SPC

Spare Parts Catalogue

Accumulator Helix 30

663651-0400

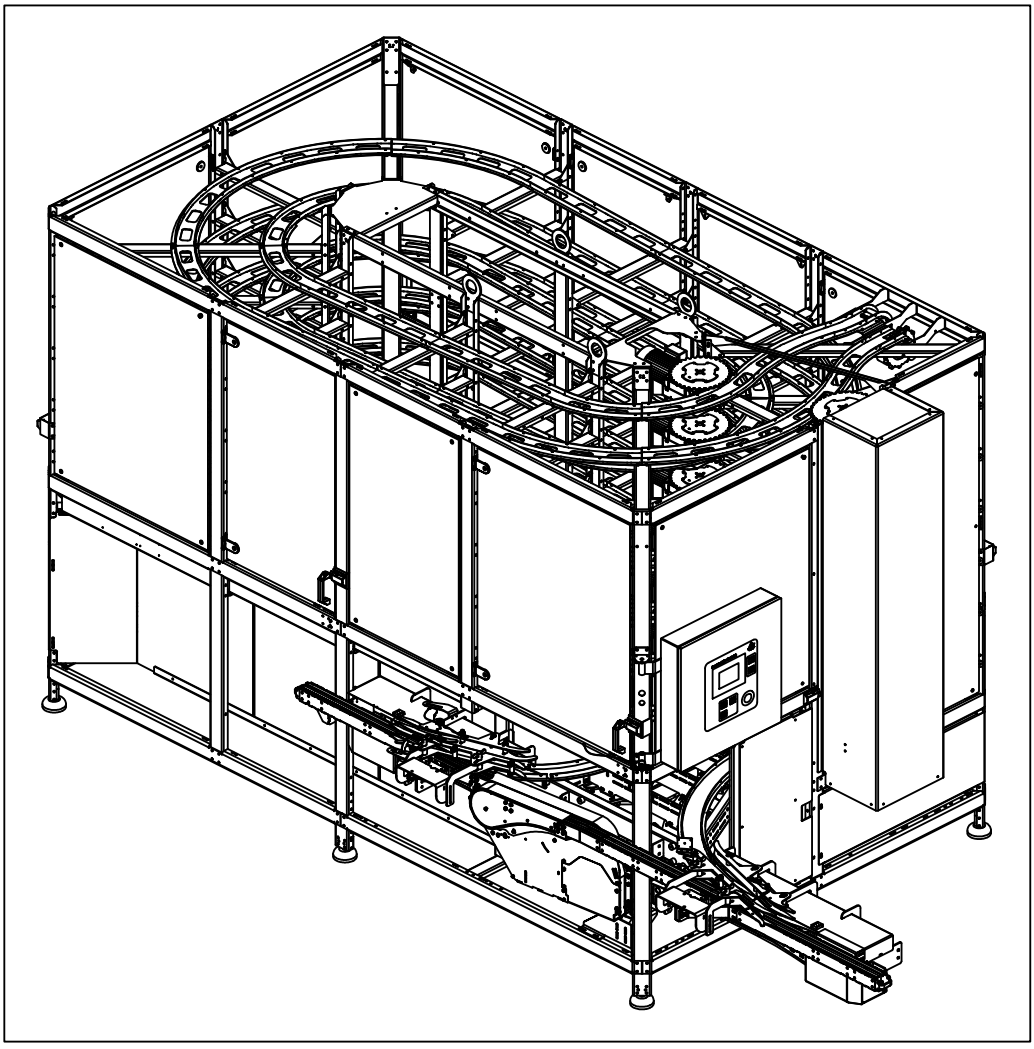

Tetra Pak

Doc. No: SPC-3008981-0101

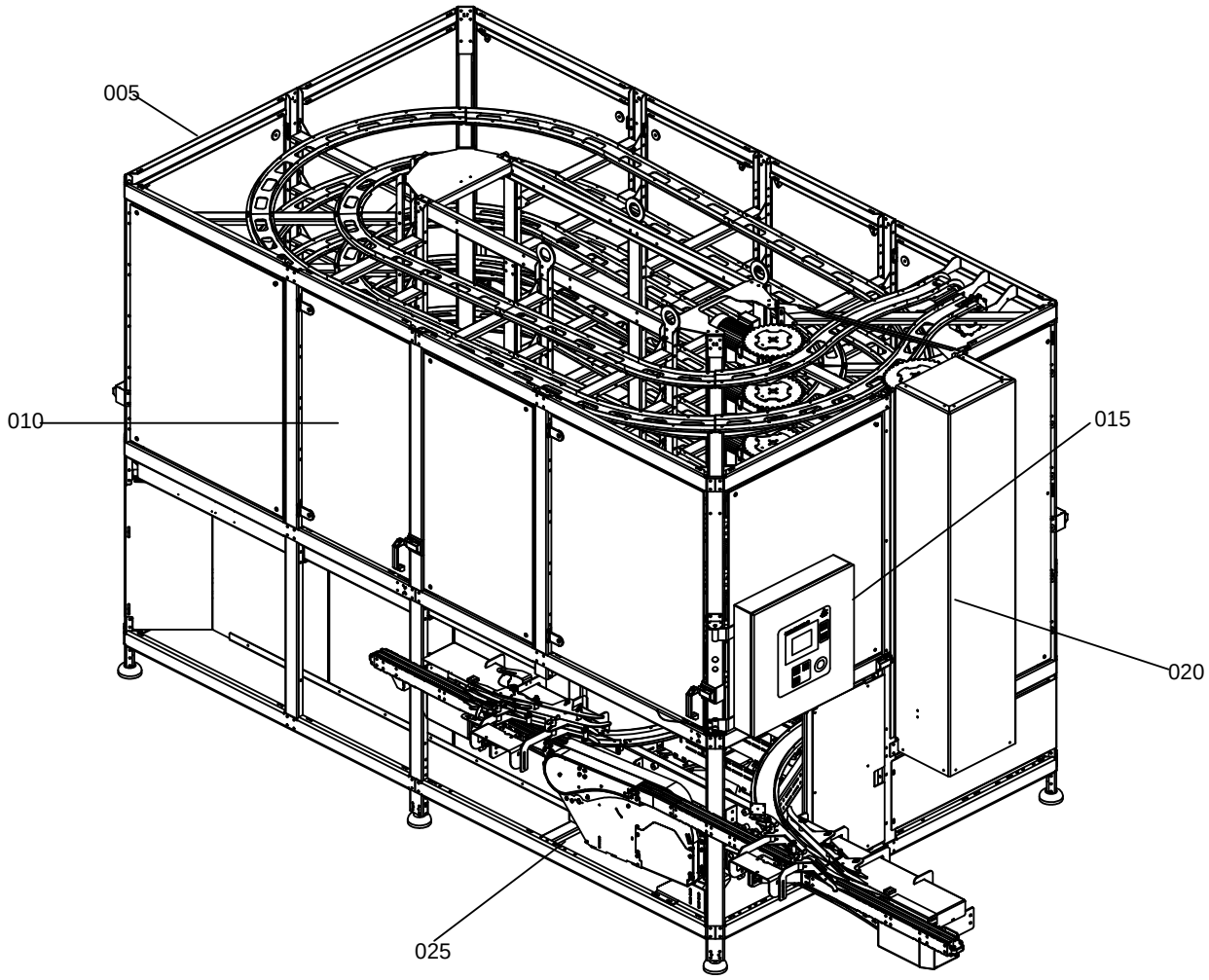

The position numbers in the illustration correspond with the chapter numbers listed on the next page.

Copyright © 2009 Tetra Pak Group

All rights reserved. No part of this document may be reproduced or copied in any form or by any means without written permission from Tetra Pak Packaging Solutions AB.

Tetra Pak and all Tetra Pak products are trademarks belonging to the Tetra Pak Group.

The content of this manual is in accordance with the design and construction of the machine or equipment at the time of publishing. Tetra Pak reserves the right to introduce design modifications without prior notice.

This document was produced by:

Tetra Pak Packaging Solutions AB
Ruben Rausings gata
221 86 Lund
SWEDEN

Additional copies can be ordered from Tetra Pak. When ordering additional copies, always provide the document number.

Doc. No. SPC-3008981-0101

Issue 2009-05

This document is valid from:

Series No/Machine No Sign.

SPC

Spare Parts Catalogue

Accumulator Helix 30
663651-0400

i Introduction

1 External Infeed

2 Accumulator

3 External Outfeed

4 Electric Equipment

5 Regular Accessories

6 Optional Equipment

ii Part Number Index

iii Alphabetical Index

iv Ref. Des. Parts Index

Machine or equipment configurations that this catalogue is valid for are described on the next page.

Doc. No: SPC-3008981-0101

Issue 2009-05

Tetra Pak

Tetra Pak Packaging Solutions

Valid for:

Name	Drawing Specification and Development Step	Additional Information
Accumulator Helix 30	663651-0400	From machine No. 75680/xxxxx

Update Log for Doc. No. SPC-3008981-0101

This table shows all changes made to this catalogue, including installed rebuilding kits, added or removed pages.

Date	Installed Kit	Added Pages (Doc. No.)	Removed Pages	Signature

Date	Installed Kit	Added Pages (Doc. No.)	Removed Pages	Signature

i Introduction

en About the Introduction Chapter
This chapter contains basic information about this catalogue and related Tetra Pak equipment.

bg За уводната глава
Тази глава съдържа основна информация за този каталог и приложимото Tetra Pak оборудване.

cs O kapitole Úvod
Tato kapitola obsahuje základní informace o této příručce a souvisejícím zařízení Tetra Pak.

da Om indledningen
Kapitlet indeholder grundlæggende oplysninger om dette katalog og tilhørende Tetra Pak-udstyr.

de Über das Einleitungskapitel
Diese Kapitel enthält grundlegende Informationen über diesen Katalog und die zugehörige Tetra Pak-Ausrüstung

el Σχετικά με το Κεφάλαιο 'Εισαγωγή'
Αυτό το κεφάλαιο περιέχει βασικές πληροφορίες για τον παρόντα κατάλογο και τον σχετικό εξοπλισμό της Tetra Pak.

es Acerca del capítulo Introducción
Este capítulo contiene información básica sobre este catálogo y el equipo Tetra Pak relacionado.

et Sissejuhatava peatüki kohta
See peatükk sisaldab teavet käesoleva kataloogi ja sellega seonduva Tetra Paki seadme kohta.

fi Tietoja Johdanto-luvusta
Tässä luvussa on perustietoja tästä luettelosta ja Tetra Pak -laitteesta.

fr À propos du chapitre Introduction
Ce chapitre contient les informations de base à propos de ce catalogue et de l'équipement Tetra Pak concerné.

hu A Bevezetés fejezetről
Ez a fejezet alapvető információkat tartalmaz a katalógusról és a hozzá tartozó Tetra Pak berendezésről.

is Um inngangskaflann
Þessi kafli inniheldur grundvallarupplýsingar um þennan vörulista og tengdan Tetra Pak búnað.

it Informazioni sul capitolo Introduzione
Questo capitolo contiene informazioni generali sul presente catalogo e sulla relativa macchina Tetra Pak.

lt Apie įvadinį skyrių
Šiame skyriuje pateikta pagrindinė informacija apie šį katalogą ir su juo susijusią "Tetra Pak" įrangą.

lv Par Ievada nodaļu
Šī nodaļa ietver galveno informāciju par šo katalogu un saistītajām Tetra Pak iekārtām.

nl Over de inleiding
Dit hoofdstuk bevat basisinformatie omtrent deze catalogus en aanverwante Tetra Pak-installatie.

no Om kapitlet Introduksjon
Dette kapitlet inneholder grunnleggende informasjon om denne katalogen og relatert Tetra Pak-utstyr.

pl Informacje na temat rozdziału wprowadzającego
Rozdział wprowadzający zawiera podstawowe informacje dotyczące niniejszego katalogu i związanej z nim maszyny Tetra Pak.

pt Acerca do Capítulo de Introdução
Este capítulo contém informações básicas sobre este catálogo e os equipamentos relacionados da Tetra Pak.

ro Despre capitolul introductiv
Acest capitol conține informații de bază despre acest catalog și despre echipamentul Tetra Pak corelat.

sk O kapitole Úvod
Táto kapitola obsahuje základné informácie o tomto návode a informácie súvisiace so zariadením Tetra Pak.

sl O uvodnem poglavju
To poglavje vsebuje osnovne informacije o tem katalogu in opremi Tetra Pak.

sv Om inledningskapitlet
Det här kapitlet innehåller grundläggande information om katalogen och Tetra Pak-utrustningen.

Introduction

Illustrations . . . . . i - 5
English Text . . . . . i - 7

Увод

Илюстрации . . . . . i - 5
Текст на български език . . . . . i -11

Úvod

Obrázky . . . . . i -5
Český text . . . . . i - 15

Indledning

Illustrationer . . . . . i - 5
Dansk tekst . . . . . i - 19

Einleitung

Abbildungen . . . . . i - 5
Deutscher Text . . . . . i - 23

Εισαγωγή

Εικόνες . . . . . i - 5
Ελληνικό Κείμενο . . . . . i - 27

Introducción

Ilustraciones . . . . . i - 5
Texto en español . . . . . i - 31

Sissejuhatus

Joonised . . . . . i - 5
Eestikeelne tekst . . . . . i - 35

Johdanto

Kuvat . . . . . i - 5
Suomenkielinen teksti . . . . . i - 39

Introduction

Illustrations . . . . . i - 5
Texte français . . . . . i - 43

Bevezetés

Ábrák . . . . . i - 5
Magyar szöveg . . . . . i - 47

Inngangur

Skýringarmyndir . . . . . i - 5
Íslenskur texti . . . . . i - 51

Introduzione

Figure . . . . . i - 5
Testo in italiano . . . . . i - 55

Įvadas

Paveikslėliai . . . . . i - 5
Lietuviškas tekstas . . . . . i - 59

Ievads

Ilustrācijas . . . . . i - 5
Teksts latviešu valodā . . . . . i - 63

Inleiding

Afbeeldingen . . . . . i - 5
Nederlands tekst . . . . . i - 67

Introduksjon

Illustrasjoner . . . . . i - 5
Norsk tekst . . . . . i - 71

Wprowadzenie

Rysunki . . . . . i - 5
Tekst polski . . . . . i - 75

Introdução

Ilustrações . . . . . i - 5
Texto em português . . . . . i - 79

Introducere

Ilustrații . . . . . i - 5
Text în limba română . . . . . i - 83

Úvod

Ilustrácie . . . . . i – 5
Slovenský text . . . . . i - 87

Uvod

Slike . . . . . i - 5
Slovensko besedilo . . . . . i - 91

Inledning

Bilder . . . . . i - 5
Svensk text . . . . . i - 95

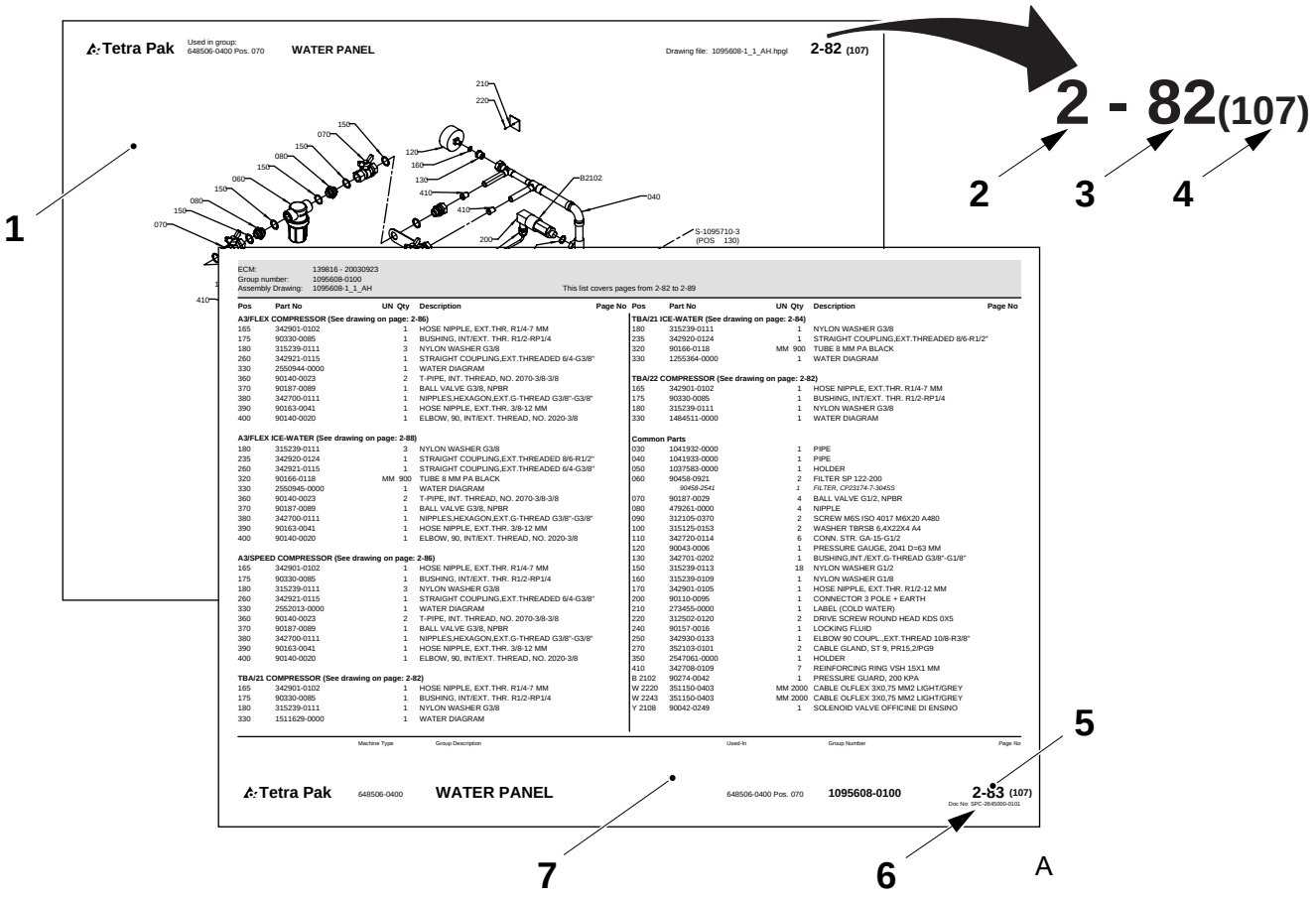
Tetra Pak
Used in group: 648506-0400 Pos. 070
WATER PANEL
Drawing file: 1095608-1_1_AH.hpgl
2-82 (107)
2 - 82(107)
1
2
3
4
5
6
7
A
ECM: 139816 - 20030923
Group number: 1095608-0100
Assembly Drawing: 1095608-1_1_AH
This list covers pages from 2-82 to 2-89
Tetra Pak
648506-0400
WATER PANEL
648506-0400 Pos. 070
1095608-0100
2-83 (107)

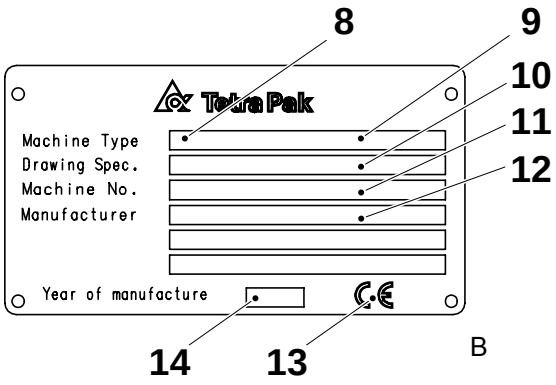
8
9
10
11
12
Tetra Pak
Machine Type
Drawing Spec.
Machine No.
Manufacturer
Year of manufacture
14
13
B

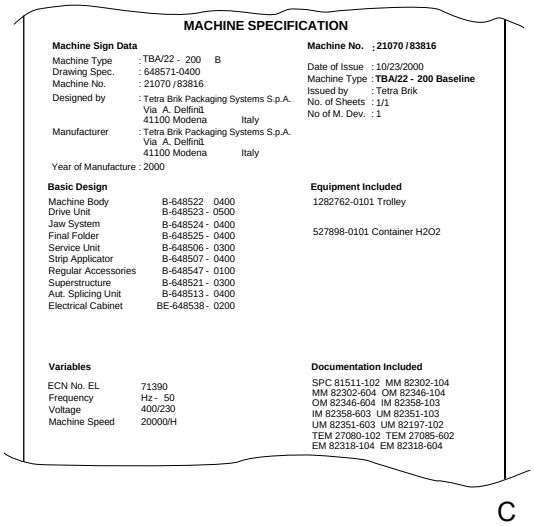
MACHINE SPECIFICATION
Machine Sign Data
Machine Type : TBA/22 - 200 B
Drawing Spec. : 648571-0400
Machine No. : 21070 / 83816
Designed by : Tetra Brik Packaging Systems S.p.A. Via A. Delfini1 41100 Modena Italy
Manufacturer : Tetra Brik Packaging Systems S.p.A. Via A. Delfini1 41100 Modena Italy
Year of Manufacture : 2000
Machine No. ; 21070 / 83816
Date of Issue : 10/23/2000
Machine Type : TBA/22 - 200 Baseline
Issued by : Tetra Brik
No. of Sheets : 1/1
No of M. Dev. : 1
Basic Design
Machine Body B-648522 0400
Drive Unit B-648523 - 0500
Jaw System B-648524 - 0400
Final Folder B-648525 - 0400
Service Unit B-648506 - 0300
Strip Applicator B-648507 - 0400
Regular Accessories B-648547 - 0100
Superstructure B-648521 - 0300
Aut. Splicing Unit B-648513 - 0400
Electrical Cabinet BE-648538 - 0200
Equipment Included
1282762-0101 Trolley
527898-0101 Container H2O2
Variables
ECN No. EL 71390
Frequency Hz - 50
Voltage 400/230
Machine Speed 20000/H
Documentation Included
SPC 81511-102 MM 82302-104
MM 82302-604 OM 82346-104
OM 82346-604 IM 82358-103
IM 82358-603 UM 82351-103
UM 82351-603 UM 82197-102
TEM 27080-102 TEM 27085-602
EM 82318-104 EM 82318-604
C

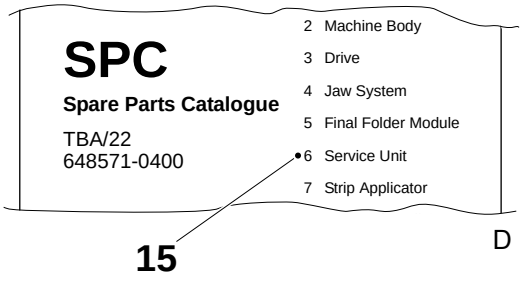
SPC
Spare Parts Catalogue
TBA/22
648571-0400
2 Machine Body
3 Drive
4 Jaw System
5 Final Folder Module
6 Service Unit
7 Strip Applicator
15
D

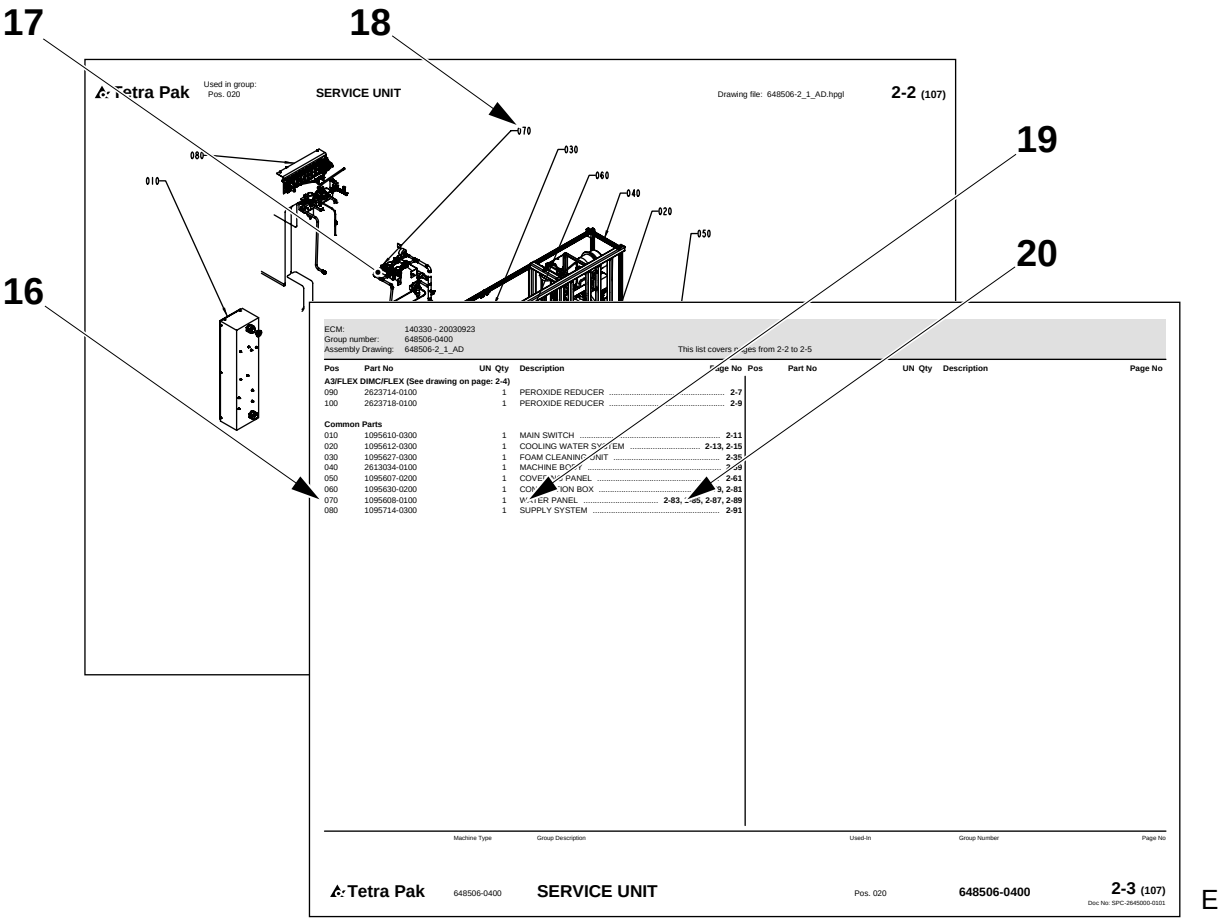
17
18
19
20
16
Tetra Pak
Used in group:
Pos. 020
SERVICE UNIT
Drawing file: 648506-2_1_AD.hpgl
2-2 (107)
070
030
080
060
010
040
020
050
ECM: 140330 - 20030923
Group number: 648506-0400
Assembly Drawing: 648506-2_1_AD
This list covers pages from 2-2 to 2-5
Pos Part No UN Qty Description Page No
A3/FLEX DIMC/FLEX (See drawing on page: 2-4)
090 2623714-0100 1 PEROXIDE REDUCER 2-7
100 2623718-0100 1 PEROXIDE REDUCER 2-9
Common Parts
010 1095610-0300 1 MAIN SWITCH 2-11
020 1095612-0300 1 COOLING WATER SYSTEM 2-13, 2-15
030 1095627-0300 1 FOAM CLEANING UNIT 2-35
040 2613034-0100 1 MACHINE BODY 2-39
050 1095607-0200 1 COVERING PANEL 2-61
060 1095630-0200 1 CONNECTION BOX 2-79, 2-81
070 1095608-0100 1 WATER PANEL 2-83, 2-85, 2-87, 2-89
080 1095714-0300 1 SUPPLY SYSTEM 2-91
Pos Part No UN Qty Description Page No
Machine Type Group Description Used-In Group Number Page No
Tetra Pak 648506-0400 SERVICE UNIT Pos. 020 648506-0400 2-3 (107)
Doc No: SPC-2645000-0101
E

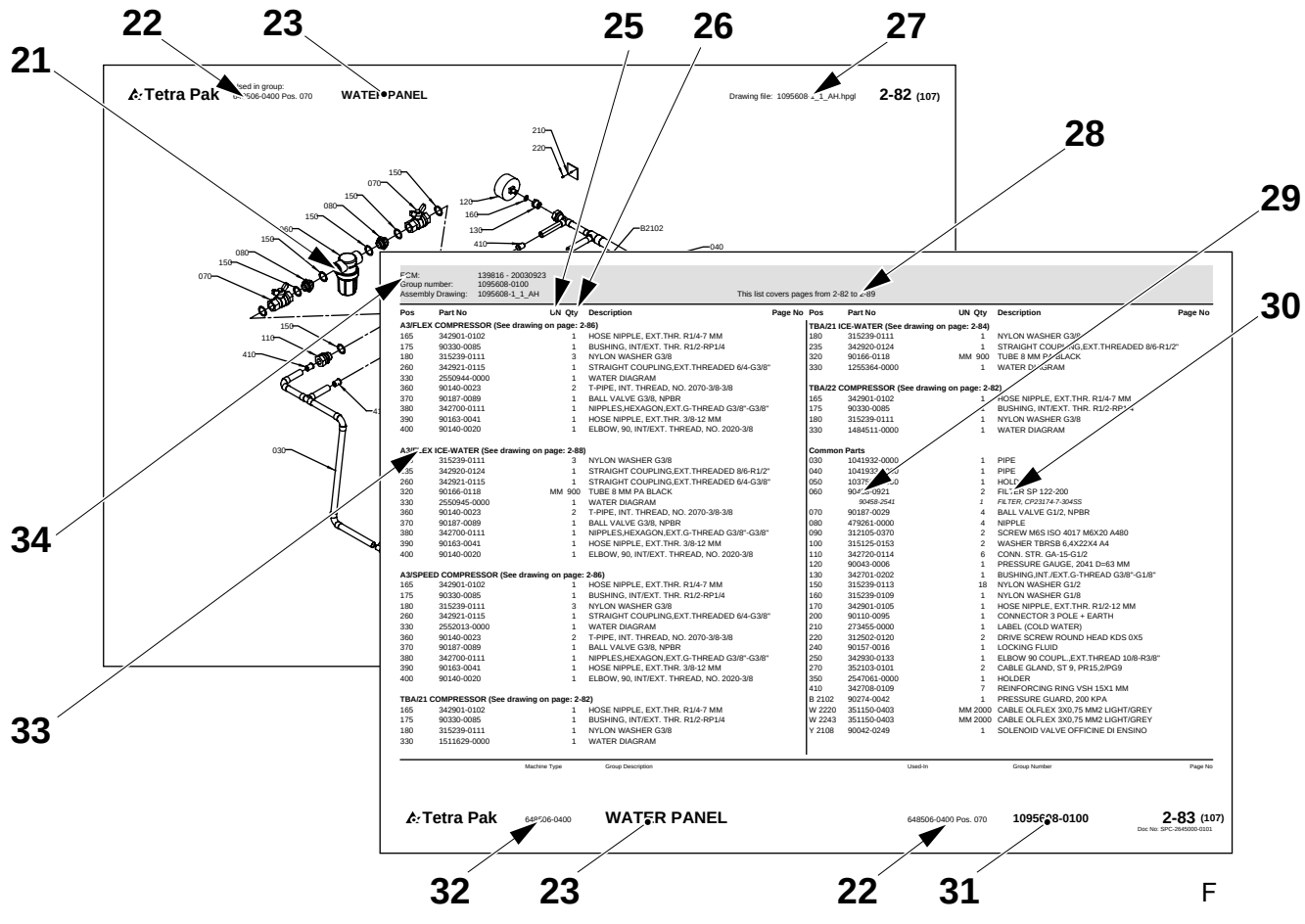
22
23
25
26
27
21
28
29
30
34
33
Tetra Pak
Used in group:
Pos. 070
WATER PANEL
Drawing file: 1095608-1_1_AH.hpgl
2-82 (107)
210
220
150
070
080
150
150
080
150
070
120
160
130
410
B2102
040
030
110
410
ECM: 139816 - 20030923
Group number: 1095608-0100
Assembly Drawing: 1095608-1_1_AH
This list covers pages from 2-82 to 2-89
Pos Part No UN Qty Description Page No
A3/FLEX COMPRESSOR (See drawing on page: 2-86)
165 342901-0102 1 HOSE NIPPLE, EXT.THR. R1/4-7 MM
175 90330-0085 1 BUSHING, INT/EXT. THR. R1/2-RP1/4
180 315239-0111 3 NYLON WASHER G3/8
260 342921-0115 1 STRAIGHT COUPLING,EXT.THREADED 6/4-G3/8"
330 2550944-0000 1 WATER DIAGRAM
360 90140-0023 2 T-PIPE, INT. THREAD, NO. 2070-3/8-3/8
370 90187-0089 1 BALL VALVE G3/8, NPBR
380 342700-0111 1 NIPPLES,HEXAGON,EXT.G-THREAD G3/8"-G3/8"
390 90163-0041 1 HOSE NIPPLE, EXT.THR. 3/8-12 MM
400 90140-0020 1 ELBOW, 90, INT/EXT. THREAD, NO. 2020-3/8
A3/FLEX ICE-WATER (See drawing on page: 2-88)
235 315239-0111 3 NYLON WASHER G3/8
235 342920-0124 1 STRAIGHT COUPLING,EXT.THREADED 8/6-R1/2"
260 342921-0115 1 STRAIGHT COUPLING,EXT.THREADED 6/4-G3/8"
320 90166-0118 MM 900 TUBE 8 MM PA BLACK
330 2550945-0000 1 WATER DIAGRAM
360 90140-0023 2 T-PIPE, INT. THREAD, NO. 2070-3/8-3/8
370 90187-0089 1 BALL VALVE G3/8, NPBR
380 342700-0111 1 NIPPLES,HEXAGON,EXT.G-THREAD G3/8"-G3/8"
390 90163-0041 1 HOSE NIPPLE, EXT.THR. 3/8-12 MM
400 90140-0020 1 ELBOW, 90, INT/EXT. THREAD, NO. 2020-3/8
A3/SPEED COMPRESSOR (See drawing on page: 2-86)
165 342901-0102 1 HOSE NIPPLE, EXT.THR. R1/4-7 MM
175 90330-0085 1 BUSHING, INT/EXT. THR. R1/2-RP1/4
180 315239-0111 3 NYLON WASHER G3/8
260 342921-0115 1 STRAIGHT COUPLING,EXT.THREADED 6/4-G3/8"
330 2552013-0000 1 WATER DIAGRAM
360 90140-0023 2 T-PIPE, INT. THREAD, NO. 2070-3/8-3/8
370 90187-0089 1 BALL VALVE G3/8, NPBR
380 342700-0111 1 NIPPLES,HEXAGON,EXT.G-THREAD G3/8"-G3/8"
390 90163-0041 1 HOSE NIPPLE, EXT.THR. 3/8-12 MM
400 90140-0020 1 ELBOW, 90, INT/EXT. THREAD, NO. 2020-3/8
TBA/21 COMPRESSOR (See drawing on page: 2-82)
165 342901-0102 1 HOSE NIPPLE, EXT.THR. R1/4-7 MM
175 90330-0085 1 BUSHING, INT/EXT. THR. R1/2-RP1/4
180 315239-0111 1 NYLON WASHER G3/8
330 1511629-0000 1 WATER DIAGRAM
TBA/21 ICE-WATER (See drawing on page: 2-84)
180 315239-0111 1 NYLON WASHER G3/8
235 342920-0124 1 STRAIGHT COUPLING,EXT.THREADED 8/6-R1/2"
320 90166-0118 MM 900 TUBE 8 MM PA BLACK
330 1255364-0000 1 WATER DIAGRAM
TBA/22 COMPRESSOR (See drawing on page: 2-82)
165 342901-0102 1 HOSE NIPPLE, EXT.THR. R1/4-7 MM
175 90330-0085 1 BUSHING, INT/EXT. THR. R1/2-RP1/4
180 315239-0111 1 NYLON WASHER G3/8
330 1484511-0000 1 WATER DIAGRAM
Common Parts
030 1041932-0000 1 PIPE
040 1041933-0000 1 PIPE
050 1037[illegible]-0000 1 HOLDER
060 90458-0921 2 FILTER SP 122-200
90458-2541 FILTER, CP23174-7-304SS
070 90187-0029 4 BALL VALVE G1/2, NPBR
080 479261-0000 4 NIPPLE
090 312105-0370 2 SCREW M6S ISO 4017 M6X20 A480
100 315125-0153 2 WASHER TBRSB 6,4X22X4 A4
110 342720-0114 6 CONN. STR. GA-15-G1/2
120 90043-0006 1 PRESSURE GAUGE, 2041 D=63 MM
130 342701-0202 1 BUSHING,INT./EXT.G-THREAD G3/8"-G1/8"
150 315239-0113 18 NYLON WASHER G1/2
160 315239-0109 1 NYLON WASHER G1/8
170 342901-0105 1 HOSE NIPPLE, EXT.THR. R1/2-12 MM
200 90110-0095 1 CONNECTOR 3 POLE + EARTH
210 273455-0000 1 LABEL (COLD WATER)
220 312502-0120 2 DRIVE SCREW ROUND HEAD KDS 0X5
240 90157-0016 1 LOCKING FLUID
250 342930-0133 1 ELBOW 90 COUPL.,EXT.THREAD 10/8-R3/8"
270 352103-0101 2 CABLE GLAND, ST 9, PR15,2/PG9
350 2547061-0000 1 HOLDER
410 342708-0109 7 REINFORCING RING VSH 15X1 MM
B 2102 90274-0042 1 PRESSURE GUARD, 200 KPA
W 2220 351150-0403 MM 2000 CABLE OLFLEX 3X0,75 MM2 LIGHT/GREY
W 2243 351150-0403 MM 2000 CABLE OLFLEX 3X0,75 MM2 LIGHT/GREY
Y 2108 90042-0249 1 SOLENOID VALVE OFFICINE DI ENSINO
Pos Part No UN Qty Description Page No
Machine Type Group Description Used-In Group Number Page No
Tetra Pak 648506-0400 WATER PANEL 648506-0400 Pos. 070 1095608-0100 2-83 (107)
Doc No: SPC-2645000-0101
32 23 22 31
F

Introduction

Manual Information

Tetra Pak recommends reading all delivered manuals carefully. Make sure that the delivered manuals are available to personnel who operate or maintain the equipment.

It is important to keep this catalogue for the lifetime of the equipment and to pass the catalogue on to any subsequent holder or user.

Tetra Pak will not be held responsible for any damage to the equipment caused by not following the instructions given in the manuals that accompany this equipment.

Delivered Manuals

Manuals delivered with this equipment may include

- CM
  The Conversion Manual provides technicians with information on converting the equipment between different production modes.
- EM
  The Electrical Manual provides technicians with information about the equipment's electrical system.
- IM
  The Installation Manual provides technicians with information required to safely install the equipment.
- MM
  The Maintenance Manual provides technicians with information on maintaining the equipment.
- OM
  The Operation Manual manual provides the operator with information on handling and operating the equipment before, during, and after production.
- SPC
  The Spare Parts Catalogue provides the information necessary to order spare parts from Tetra Pak
- TeM
  The Technical Manual
  - provides technicians with information required to safely install the equipment
  - provides technicians with information on maintaining the equipment
  - provides technicians with information about the machine's/ equipment's electrical system
  - provides the information necessary to order spare parts from Tetra Pak.

Page Layout

Refer to the illustration (A) on page i-5: The main pages in a Spare Parts Catalogue consist of an illustration page (1) and a corresponding list page (7). The page number (5) is shown in the header of an illustration page and in the footer of a list page. The document number (6) is shown in the footer of a list page.

Page Numbering

Refer to the illustration (A) on page i-5: A page number (5) has three parts:

- chapter number (2)
- consecutive page number within the chapter (3)
- total number of pages in the chapter (4)

Machine Introduction

Manufacturer

For the manufacturer's name and address, see the second page of this catalogue.

Service

To order spare parts for this machine, or to report problems associated with operating this machine, contact the nearest Tetra Pak office.

Contact the Liaison with other inquiries, comments, or suggestions for improvement regarding the equipment and its documentation.

Identification

CE Classification

This equipment complies with the basic health and safety regulations of the European Economic Area (EEA).

Machine Plate

The illustration (B) on page i-5 shows an example of a machine plate. An illustration of the valid machine plate and its location on the equipment is shown in the Introduction chapter of the manuals delivered with this equipment. The machine plate contains the data listed below, needed when contacting Tetra Pak concerning this specific equipment.

- Machine type (8)
- Volume (9)
- Drawing specifications (10)
- Machine serial number (11)
- Manufacturer (12)
- CE mark (13)
- Year of manufacture (14)

The illustration (C) on page i-5 shows an example of a machine specification. Make sure that the equipment data listed in the front pages of this manual corresponds to the machine plate data and the machine specification.

How to Use This Spare Parts Catalogue

Locate a Spare Part Number

a) Refer to the illustration (D) on page i-5: Go to the chapter number (15) indicated beside the main group that contains the part you want to locate.

Items b) and c) refer to the illustration (E) on page i-6.

b) On the main group illustration, look for the machine subgroup (17) that contains the part or subgroup you are looking for. Note the position number (18) and go to the list page that follows the illustration.

c) Look for the position number/reference designation (16) or the subgroup name (19). Go to the corresponding page number (20) listed in the right-hand column. Tetra Pak has chosen to always use the function oriented structure for reference designation. The prefix indicating function oriented structure (=) is not shown in the reference designation.

Items d) and e) refer to the illustration (F) on page i-6.

d) Locate the part (21) that you are looking for on the subgroup illustration and note the part's position number.

e) The part number (29) and part description (30) are listed beside the position number on the list page.

Information Listed in a Spare Parts Catalogue

The list below refers to the illustration (F) on page i-6. A Spare Parts Catalogue contains the following information about groups, subgroups, and spare parts for the equipment:

- Group structure reference (22). Indicates the next higher group in the equipment list structure.
- Group name (23)
- Unit of measure (25)
- Quantity (26)
- Assembly drawing number (27)
- List page range (28). Included if there are multiple pages in the group illustration or list.
- Part or subgroup number (29)
- Subgroup name or part description (30)
- Group number (31)
- Equipment number (32)
- Group information heading (33). Indicates if the section below the heading is for a specific machine variant or if it is a list of common parts. If a list has more than one variant and each variant has its own assembly drawing, a page reference to the variant's assembly drawing is shown.
- Internal information (34)

Увод

Информация за ръководството

Tetra Pak Ви препоръчва да прочетете внимателно всички доставени ръководства. Проверете дали доставените ръководства са достъпни за служителите, които поддържат или работят с оборудването.

Важно е да запазите този каталог през целия живот на оборудването и да го предадете на трети лица, които ще използват или съхраняват оборудването.

Tetra Pak не може да бъде държана под отговорност за щети върху оборудването, причинени от неспазване на даденте инструкции в ръководствата, които съпровождат оборудването.

Доставени ръководства

Ръководствата, доставени с това оборудване, могат да включват

- CM
  Ръководството за приспособяване осигурява на техническите лица информация за приспособяването на оборудване към различни производствени режими.
- EM
  Електрическото ръководство осигурява на техническите лица информация за електрическата система на оборудването.
- IM
  Ръководството за инсталиране предоставя на техническите лица информацията, която е необходима за безопасно инсталиране на оборудването.
- MM
  Ръководството за поддръжка предоставя на техническите лица информация относно поддържането на оборудването.
- OM
  Ръководството за операции предоставя на операторите информация за това, как да боравят и функционират с оборудването преди, по време на и след производство.
- SPC
  Каталогът с резервни части предоставя необходимата информация за поръчка на резервни части от Tetra Pak
- TeM
  Техническото ръководство
  - предоставя на техническите лица необходимата информация за безопасно инсталиране на оборудването
  - предоставя на техническите лица информация за поддръжка на оборудването
  - предоставя на техническите лица информация за електрическата система на машината/оборудването
  - предоставя необходимата информация за поръчка на резервни части от Tetra Pak.

Формат на страниците

Разгледайте илюстрация (A) на страница i-5: Главните страници в Каталога с резервни части се състоят от страница с илюстрация (1) и прилежаща страница със списък (7). Номерът на страницата (5) е посочен в горната част на страницата с илюстрация и в долната част на страницата със списъка. Номерът на документа (6) е показан в долната част на страницата със списъка.

Номериране на страници

Разгледайте илюстрация (A) на страница i-5: Един номер на страница (5) има три части:

- номер на глава (2)
- последователен номер на страница в една глава (3)
- общ брой страници в главата (4)

Машини Увод

Производител

Вижте втората страница на този каталог, за да проверите името и адреса на производителя.

Обслужване

За да поръчате резервни части за тази машина или да докладвате за проблеми, свързани с работата с тази машина, се свържете с най-близкия офис на Tetra Pak.

Свържете се с отдела за контакти с клиенти за други запитвания, коментари и предложения за подобрение по отношение на оборудването и прилежащата му документация.

Идентификация

Класификация на ЦЕ

Това оборудване отговаря на основните наредби, свързани с опазване на здравето и безопасността на Европейската Икономическа Общност (ЕИО).

Табелка на машина

Илюстрация (B) на страница i-5 показва пример с табелка на машина. В уводната глава на ръководствата, доставени с това оборудване, е показана илюстрация с валидната табелка на машината и нейното положение върху оборудването. Табелката на машината съдържа посочените по-долу данни, които Ви трябват, когато се свързвате с Tetra Pak относно това специфично оборудване.

- Тип машина (8)
- Обем (9)
- Спесификации за чертане (10)
- Сериен номер на машината (11)
- Производител (12)
- CE печат (13)
- Година на производство (14)

Илюстрация (C) на страница i-5 показва пример със спесификация за машина. Проверете дали данните за оборудването, изброени на предните страници в това ръководство отговарят на данните от табелката на машината и на спесификацията на машината.

Как да използвате този Каталог за резервни части

Намерете Номер на резервна част

a) Разгледайте илюстрация (D) на страница i-5: Отидете в глава номер (15) посочена до главната група, която съдържа частта, която искате да намерите.

Артикули b) и c) се отнасят до илюстрация (E) на страница i-6.

b) На главната обща илюстрация вижте подгрупата на машината (17), която съдържа частта или подгрупата, която търсите. Намерете номера на позицията (18) и отворете на страницата със списъка, която е след илюстрацията.

c) Намерете номера на позицията/референцията (16) или името на подгрупата (19). Отворете съответстващия номер на страница (20) в дясната колона. Tetra Pak е избрала да използва винаги функционално-ориентирана структура при обозначаване на референциите. Префиксът, който показва функционално-ориентирана структура (=) не е посочен в обозначаването на референциите.

Артикули d) и e) се отнасят до илюстрация (F) на страница i-6.

d) Намерете частта (21), която търсите в илюстрацията на подгрупата и запомнете номера на частта.

e) Номерът на частта (29) и описанието на частта (30) са изброени до номера на позицията на страницата със списъка.

Изброена информация в Каталога с резервни части

По-долу посоченият списък се отнася до илюстрация (F) на страница i-6. Каталогът с резервни части съдържа следната информация за групи, подгрупи и резервни части за оборудването:

- Референция за структурата (22). Показва следващата по-голяма група в структурата със списъка на оборудването.
- Име на група (23)
- Единица мярка (25)
- Количество (26)
- Номер за монтажен чертеж (27)
- Обхват на страницата със списък (28). Включен, ако има няколко страници в илюстрацията на групата или списъка.
- Номер на част или подгрупа (29)
- Име на подгрупа или описание на част (30)
- Номер на група (31)
- Номер на оборудване (32)
- Референция за информацията за групата (33). Показва дали частта под заглавието е за специфична версия на машината или е списък с общи части. Ако един списък има повече от един вариант и всеки вариант има собствен монтажен чертеж, се показва референцията на страницата към монтажния чертеж на варианта.
- Вътрешна информация (34)

Úvod

Informace o manuálu

Tetra Pak doporučuje, abyste si pozorně přečetli všechny dodané příručky. Přesvědčte se, že dodané manuály jsou k dispozici personálu, který obsluhuje nebo provádí údržbu zařízení.

Je důležité ponechat si tuto příručku po celou dobu životnosti zařízení a předat ho jakémukoliv následujícímu vlastníkovi nebo uživateli.

Tetra Pak nebude odpovídat za žádné škody zařízení, způsobené nedodržováním pokynů uvedených v této příručce.

Dodané příručky

Příručky dodané s tímto zařízením mohou obsahovat

- CM
  Konverzní manuál (CM) poskytuje technikům informace o konverzi zařízení mezi různými výrobními režimy.
- EM
  Elektrický manuál (EM) poskytuje technikům informace o elektrickém systému tohoto zařízení.
- IM
  Instalační manuál (IM) poskytuje technikům informace potřebné k bezpečné instalaci zařízení.
- MM
  Údržbový manuál (MM) poskytuje technikům informace o údržbě tohoto zařízení.
- OM
  Provozní manuál (OM) poskytuje operátorovi informace o manipulaci s tímto zařízením a provozu před, během a po výrobě.
- SPC
  Katalog náhradních dílů (SPC) poskytuje informace potřebné pro objednávání náhradních dílů od společnosti Tetra Pak
- TeM
  Technický manuál
  - poskytuje technikům informace potřebné k bezpečné instalaci tohoto zařízení
  - poskytuje technikům informace o údržbě tohoto zařízení
  - poskytuje technikům informace o elektrickém systému tohoto zařízení
  - poskytuje informace potřebné pro objednávání náhradních dílů od společnosti Tetra Pak

Rozvržení stránky

Viz obrázek (A) na straně i-5: Hlavní strany Katalogu náhradních dílů obsahují stranu s obrázky (1) a odpovídající stranu seznamu (7). Číslo strany (5) je uvedeno v záhlaví strany s obrázky a v zápatí strany seznamu. Číslo dokumentu (6) je uvedeno v zápatí strany seznamu.

Číslování stran

Viz obrázek (A) na straně i-5: Číslo strany (5) sestává ze tří částí:

- číslo kapitoly (2)
- pořadové číslo strany (3) v kapitole
- celkový počet stránek (4) v kapitole

Úvod ke stroji

Výrobce

Název a adresa výrobce je uvedena na druhé straně tohoto katalogu.

Servis

Chcete-li objednat náhradní díly nebo ohlásit problémy související s provozem tohoto stroje, kontaktujte nejbližší kancelář Tetra Pak.

S dalšími dotazy, připomínkami nebo náměty na vylepšení ohledně zařízení a této dokumentace se obracejte na kontaktní osobu.

Identifikace

Klasifikace CE

Toto zařízení splňuje základní zdravotní a bezpečnostní předpisy Evropského hospodářského prostoru (EEA).

Štítek na stroji

Obrázek (B) na straně i-5 znázorňuje příklad štítku na stroji. Obrázek platného štítku na stroji a jeho umístění na zařízení je uveden v příručkách dodaných s tímto strojem v kapitole Úvod. Na štítku jsou uvedeny údaje potřebné při kontaktování společnosti Tetra Pak, týkající se tohoto specifického zařízení.

- Typ stroje (8)
- Objem (9)
- Výkresové specifikace (10)
- Výrobní číslo stroje (11)
- Výrobce (12)
- Označení CE (13)
- Rok výroby (14)

Obrázek (C) na straně i-5 zobrazuje příklad specifikace stroje. Přesvědčte se, že údaje o zařízení uvedená v seznamu na předních stranách tohoto manuálu odpovídají údajům štítku na stroji a specifikaci stroje.

Jak používat tento Katalog náhradních dílů

Vyhledejte číslo náhradního dílu

a) Viz obrázek (D) na straně i-5: Přejděte na číslo kapitoly (15) uvedené vedle hlavní skupiny, která obsahuje hledaný díl.

Položky b) a c) odkazují na obrázek (E) na straně i-6.

b) Na vyobrazení hlavní skupiny vyhledejte strojní podskupinu (17), která obsahuje hledaný díl nebo podskupinu. Poznamenejte si číslo pozice (18) a přejděte na stranu seznamu vyplývající z obrázku.

c) Vyhledejte číslo pozice/označení odkazu (16) nebo název podskupiny (19). Přejděte na odpovídající číslo strany (20) v seznamu v pravém sloupci. Tetra Pak zvolil pro označování odkazu používat vždy uspořádání orientované na funkci. Prefix indikující uspořádání orientované na funkci (=) není uveden v označení odkazu.

Položky d) a e) odkazují na obrázek (F) na straně i-6.

d) Vyhledejte díl (21), který hledáte na vyobrazení podskupiny a poznamenejte si číslo pozice dílu.

e) Číslo dílu (29) a popis dílu (30) jsou uvedeny v seznamu vedle čísla pozice na straně seznamu.

Informace uvedené v seznamu v Katalogu náhradních dílů

Níže uvedený seznam odkazuje na obrázek (F) na straně i-6. Katalog náhradních dílů obsahuje následující informace o skupinách, podskupinách a náhradních dílech pro toto zařízení:

- Odkaz na uspořádání skupiny (22). Indikuje další vyšší skupinu v uspořádání seznamu zařízení.
- Název skupiny (23)
- Měrná jednotka (25)
- Množství (26)
- Číslo montážního výkresu (27)
- Rozsah stran seznamu (28). Včetně toho, zda existuje více stran v obrázku skupiny nebo seznamu.
- Díl nebo číslo podskupiny (29)
- Název podskupiny nebo popis dílu (30)
- Číslo skupiny (31)
- Číslo zařízení (32)
- Záhlaví informace o skupině (33). Indikuje, že oddíl pod záhlavím je pro specifickou variantu stroje nebo jde-li o seznam běžných dílů. Jestliže seznam obsahuje více než jednu variantu a každá varianta má svůj vlastní montážní výkres, pak je uveden odkaz na stranu montážního výkresu této varianty.
- Interní informace (34)

Indledning

Oplysninger om manualen

Tetra Pak anbefaler, at alle leverede manualer læses omhyggeligt. Sørg for, at de udleverede manualer er til rådighed for personale, som arbejder med eller vedligeholder udstyret.

Det er vigtigt at opbevare dette katalog hele udstyrets levetid og give kataloget videre til eventuelt kommende ejere eller brugere.

Tetra Pak kan ikke holdes ansvarlig for eventuel beskadigelse af udstyr, der opstår, fordi instruktionerne i manualerne til dette udstyr ikke følges.

Udleverede manualer

De manualer, der leveres sammen med dette udstyr, kan omfatte

- CM
  Denne konverteringsmanual forsyner teknikere med oplysninger om konvertering af udstyret mellem forskellige produktionstilstande.
- EM
  Denne elektriske manual forsyner teknikere med informationer om udstyrets elektriske system.
- IM
  Denne installationsmanual forsyner teknikere med nødvendig information i forbindelse med sikker installation af udstyret.
- MM
  Denne vedligeholdelsesmanual forsyner teknikere med information om vedligeholdelse af udstyret.
- OM
  Denne betjeningsmanual giver operatøren oplysninger om betjening af udstyret før, under og efter produktion.
- SPC
  Denne reservedelskatalog indeholder oplysninger, der er nødvendig for at bestille reservedele fra Tetra Pak
- TeM
  Den tekniske manual
  – forsyner teknikere med information, der er nødvendig for en sikker installation af udstyret.
  – forsyner teknikere med information om vedligeholdelse af udstyret.
  – forsyner teknikere med information om maskinens/udstyrets elektriske system.
  – indeholder de informationer, der er nødvendige for at kunne bestille reservedele fra Tetra Pak.

Sidelayout

Se illustration (A) på side i-5: Hovedsiderne i et reservedelskatalog består af en illustrationsside (1) og en tilsvarende listeside (7). Sidenummeret (5) vises i sidehovedet på en illlustrationsside og i sidefoden på en listeside. Dokumentnummeret (6) vises i sidefoden på en listeside.

Sidenummerering

Se illustrationen (A) på side i-5: Et sidenummer (5) har tre dele:

- kapitelnummer (2)
- fortløbende sidenummer i kapitlet (3)
- samlet sideantal i kapitlet (4)

Præsentation af maskinen

Producent

Producentens navn og adresse findes på side to i dette katalog.

Service

Kontakt nærmeste Tetra Pak-kontor for at bestille reservedele eller rapportere problemer i forbindelse med betjening af denne maskine.

Henvendelse til vores kontaktperson med andre forespørgsler, kommentarer eller forslag til forbedring angående udstyr og dokumentation.

Identificering

CE-klassificering

Dette udstyr lever op til de grundlæggende regulativer for sundhed og sikkerhed indenfor den Europæiske Økonomiske Samarbejdsområde (EØS).

Maskinskilt

Illustrationen (B) på side i-5 viser et eksempel på et maskinskilt.
En illustration af et gyldigt maskinskilt og dets placering på udstyret er vist i indledningskapitlet i de manualer, der leveres med dette udstyr. Maskinskiltet indeholder nedennævnte data. Disse er nødvendige ved kontakt med Tetra Pak vedrørende dette specifikke udstyr.

- Maskintype (8)
- Volumen (9)
- Tegningsspecifikationer (10)
- Maskinens serienummer (11)
- Producent (12)
- CE-mærke (13)
- Produktionsår (14)

Illustrationen (C) på side i-5 viser et eksempel på en maskinspecifikation. Kontroller, at de udstyrsdata, der er anført på de første sider i denne manual, svarer til maskinskiltsdataene og maskinspecifikationen.

Sådan bruges dette reservedelskatalog.

Find et reservedelsnummer

a) Se illustrationen (D) på side i-5: Gå til kapitelnummeret (15), der er angivet ved siden af hovedgruppen, der indeholder den del, der ønskes fundet.

Punkterne b) og c) refererer til illustrationen (E) på side i-6.

b) I hovedgruppeillustrationen skal man se efter maskinundergruppen (17), som indeholder den del eller undergruppe, der søges. Bemærk placeringsnummeret (18), og gå til listesiden, som følger illustrationen.

c) Se efter placeringsnummeret/henvisningsbetegnelse (16) eller undergruppens navn (19). Gå til det tilsvarende sidenummer (20) angivet i den højre kolonne. Tetra Pak har valgt altid at anvende den funktionsorienterede struktur til henvisningsbetegnelse. Præfikset angiver funktionsorienteret struktur (=) ikke vist i henvisningsbetegnelsen.

Punkterne d) og e) refererer til illustrationen (F) på side i-6.

d) Find den del (21), du søger i undergruppeillustrationen, og notér delens placeringsnummer.

e) Reservedelsnummeret (29) og -beskrivelsen (30) er angivet ved siden af placeringsnummeret på listesiden.

Informationer der er angivet i et reservedelskatalog

Listen nedenfor refererer til illustrationen (F) på side i-6. Et reservedelskatalog indeholder følgende informationer om grupper, undergrupper og reservedele til udstyret:

- Gruppestrukturreference (22). Angiver næste overordnede gruppe i udstyrslistestrukturen.
- Gruppenavn (23)
- Måleenhed (25)
- Antal (26)
- Samletegningsnummer (27)
- Listens sideområde (28). Er angivet, hvis gruppeillustrationen eller -listen inkluderer mange sider.
- Del- eller undergruppenummer (29)
- Undergruppens navn eller delsbeskrivelse (30)
- Gruppenummer (31)
- Udstyrsnummer (32)
- Overskrift for gruppeinformation (33). Angiver, om afsnittet under overskriften er for en specifik maskinvariant, eller om det er en liste over fælles dele. Hvis en liste har mere end én variant, og hver variant har sin egen samletegning, vises en sidereference til variantens samletegning.
- Intern information (34)

Einleitung

Informationen über das Handbuch

Tetra Pak empfiehlt, alle mitgelieferten Handbücher sorgfältig durchzulesen. Stellen Sie sicher, dass die Handbücher dem Personal, das die Ausrüstung betreibt oder wartet, zur Verfügung steht.

Es ist wichtig, dass Sie diesen Katalog für die gesamte Lebensdauer der Ausrüstung vorliegen haben und einem etwaigen Nachbesitzer oder -betreiber übergeben.

Tetra Pak haftet nicht für Schäden an der Ausrüstung, die aufgrund von Nichtbeachtung der Anweisungen aus den Handbüchern, die mit diesem Gerät geliefert werden, entstehen.

Gelieferte Handbücher

Die Handbücher, die mit dieser Ausrüstung geliefert wird, können Folgendes beinhalten

- CM
  Das Umbauhandbuch gibt den Technikern Informationen über den Umbau der Ausrüstung zwischen verschiedenen Produktionsweisen.
- EM
  Das Elektrohandbuch gibt den Technikern Informationen zum Elektrosystem der Ausrüstung.
- IM
  Das Installationshandbuch gibt den Technikern Informationen für die sichere Installation der Ausrüstung.
- MM
  Das Wartungshandbuch gibt den Technikern Informationen für die Wartung der Ausrüstung.
- OM
  Das Betriebshandbuch gibt dem Bediener Informationen über die Bedienung und den Betrieb der Ausrüstung vor, während und nach der Produktion.
- SPC
  Der Ersatzteilkatalog liefert die Informationen, die für die Bestellung von Ersatzteilen bei Tetra Pak erforderlich sind.
- TeM
  Das technische Handbuch
  - gibt den Technikern Informationen für die sichere Installation der Ausrüstung
  - gibt den Technikern Informationen für die Wartung der Ausrüstung
  - gibt den Techniker Informationen zum Elektrosystem der Ausrüstung/der Maschine
  - liefert die Informationen, die für die Bestellung von Ersatzteilen bei Tetra Pak erforderlich sind.

Seitenlayout

Bezugnahme auf Abbildung (A) auf Seite i-5: Die Hauptseiten in einem Ersatzteilkatalog bestehen aus einer Abbildungsseite (1) und einer entsprechenden Listenseite (7). Die Seitennummer (5) wird in der Kopfzeile einer Abbildungsseite und in der Fußzeile einer Listenseite aufgeführt. Die Dokumentennummer (6) wird in der Fußzeile einer Listenseite aufgeführt.

Seitennummerierung

Bezugnahme auf Abbildung (A) auf Seite i-5: Eine Seitennummer (5) besteht aus drei Teilen:

- Kapitelnummer (2)
- Fortlaufende Seitennummer innerhalb des Kapitels (3)
- Gesamtzahl der Seiten im Kapitel (4)

Einführung zur Maschine

Hersteller

Bitte entnehmen Sie den Namen und die Adresse des Herstellers der zweiten Seite dieses Katalogs.

Service

Zur Bestellung von Ersatzteilen für diese Maschine oder um Probleme im Zusammenhang mit dem Betrieb dieser Maschine zu melden, wenden Sie sich bitte an das nächstgelegene Büro von Tetra Pak.

Wenden Sie sich bei anderen Anfragen, Kommentaren oder Verbesserungsvorschlägen mit Bezug auf die Ausrüstung und seine Dokumentation an die Verbindungsstelle.

Identifizierung

CE-Klassifizierung

Diese Ausrüstung erfüllt die wesentlichen Anforderungen des Europäischen Wirtschaftsraum (EWR) für Gesundheitsschutz und die Sicherheit.

Maschinenschild

Die Abbildung (B) auf Seite i-5 zeigt ein Beispiel eines Maschinenschilds. Die Abbildung eines gültigen Maschinenschildes und seine Position auf der Ausrüstung wird im Einleitungskapitel der mit dieser Ausrüstung gelieferten Handbücher gezeigt. Das Maschinenschild enthält die Daten, die erforderlich sind, wenn Sie sich bezüglich dieser speziallen Ausrüstung an Tetra Pak wenden.

- Maschinentyp (8)
- Volumen (9)
- Zeichnungsspezifikationen (10)
- Seriennummer der Maschine (11)
- Hersteller (12)
- CE-Zeichen (13)
- Baujahr (14)

Die Abbildung (C) auf Seite i-5 zeigt ein Beispiel einer Maschinenspezifikation. Stellen Sie sicher, dass die Ausrüstungsdaten, die in den vorderen Seiten dieses Handbuchs aufgelistet sind, mit den Maschinenschilddaten und der Maschinenspezifikation übereinstimmen.

Benutzung dieses Ersatzteilkatalogs

Finden einer Ersatzteilnummer

a) Bezugnahme auf Abbildung (D) auf Seite i-5: Weiter zur Kapitel nummer (15), die neben der Hauptgruppe angegeben ist, die das entsprechende Teil enthält.

Die Positionen b) und c) beziehen sich auf die Abbildung (E) auf Seite i-6.

b) Suchen Sie auf der Hauptgruppenillustration nach der Maschinen-Untergruppe (17), die das gesuchte Teil oder die Untergruppe enthält. Notieren Sie die Positionsnummer (18) und gehen Sie dann zur Listenseite, die der Abbildung folgt.

c) Suchen Sie nach der Positionsnummer/Referenzbezeichnung (16) oder dem Namen der Untergruppe (19). Gehen Sie zur entsprechenden Seitennummer (20), die in der rechten Spalte aufgelistet ist. Tetra Pak hat sich dazu entschieden, stets eine funktionsorientierte Struktur für die Referenzbezeichnung zu verwenden. Die vorangestellte Kennzeichnung, welche die funktionsorientierte Struktur angibt (=), wird in der Referenzbezeichnung nicht angezeigt.

Die Positionen d) und e) beziehen sich auf die Abbildung (F) auf Seite i-6.

d) Finden Sie das gesuchte Teil (21) auf der Abbildung der Untergruppe und notieren Sie die Positionsnummer des Teils.

e) Die Teilenummer (29) und die Teilebeschreibung (30) werden neben der Positionsnummer auf der Listenseite aufgelistet.

In einem Ersatzteilkatalog aufgelistete Informationen

Die folgende Liste bezieht sich auf die Abbildung (F) auf Seite i-6. Ein Ersatzteilkatalog enthält folgende Informationen über Gruppen, Untergruppen und Ersatzteile für die Ausrüstung:

- Gruppenstrukturreferenz (22). Sie gibt die nächst höhere Gruppe in der Ausrüstungslistenstruktur an.
- Gruppenname (23)
- Maßeinheit (25)
- Menge (26)
- Nummer der Zusammenbauzeichnung (27)
- Listenseitenbereich (28). Enthalten, wenn es mehrere Seiten in der Gruppenabbildung oder Liste gibt.
- Teile- oder Untergruppennummer (29)
- Untergruppenname oder Teilebeschreibung (30)
- Gruppennummer (31)
- Ausrüstungsnummer (32)
- Gruppeninformationsüberschrift (33). Gibt an, ob sich der Abschnitt unter der Überschrift auf eine spezifische Maschinenvariante bezieht oder ob es sich um eine Liste der allgemeinen Teile handelt. Wenn eine Liste mehr als eine Variante hat und jede Variante über eine eigene Zusammenbauzeichnung verfügt, wird eine Seitenreferenz zur Zusammenbauzeichnung angezeigt.
- Interne Informationen (34)

Εισαγωγή

Πληροφορίες για το Εγχειρίδιο

Η Tetra Pak σάς συνιστά να διαβάζετε προσεκτικά όλα τα παρεχόμενα εγχειρίδια. Εξασφαλίζετε ότι όλα τα παρεχόμενα εγχειρίδια διατίθενται στο προσωπικό που χειρίζεται ή συντηρεί τον εξοπλισμό.

Είναι σημαντικό να διατηρείτε αυτό τον κατάλογο καθ' όλη τη διάρκεια ζωής του εξοπλισμού καθώς και να παραδίδετε τον κατάλογο στον τυχόν επόμενο ιδιοκτήτη ή χρήστη του εξοπλισμού.

Η Tetra Pak δεν πρόκειται να αναλάβει καμία ευθύνη για οποιαδήποτε ζημιά που μπορεί να προκληθεί στον εξοπλισμό εξαιτίας της μη τήρησης των οδηγιών οι οποίες παρέχονται στα εγχειρίδια που συνοδεύουν αυτό τον εξοπλισμό.

Παρεχόμενα Εγχειρίδια

Στα εγχειρίδια που παρέχονται μαζί μ' αυτό τον εξοπλισμό, μπορεί να περιλαμβάνονται τα εξής:

- CM
  Αυτό το Εγχειρίδιο Μετατροπής παρέχει στους τεχνικούς πληροφορίες για τη μετατροπή του εξοπλισμού μεταξύ των διάφορων λειτουργιών παραγωγής.
- EM
  Αυτό το Ηλεκτρικό Εγχειρίδιο παρέχει στους τεχνικούς πληροφορίες για το ηλεκτρικό σύστημα του εξοπλισμού.
- IM
  Αυτό το Εγχειρίδιο Εγκατάστασης παρέχει στους τεχνικούς τις απαιτούμενες πληροφορίες για την ασφαλή εγκατάσταση του εξοπλισμού.
- MM
  Αυτό το Εγχειρίδιο Συντήρησης παρέχει στους τεχνικούς πληροφορίες για τη συντήρηση του εξοπλισμού.
- OM
  Αυτό το Εγχειρίδιο Χειρισμού παρέχει στο χειριστή πληροφορίες για το χειρισμό και τη λειτουργία του εξοπλισμού πριν, κατά τη διάρκεια και μετά την παραγωγή.
- SPC
  Αυτός ο Κατάλογος Ανταλλακτικών παρέχει τις απαραίτητες πληροφορίες για την παραγγελία ανταλλακτικών από την Tetra Pak.
- TeM
  Το Τεχνικό Εγχειρίδιο
  - παρέχει στους τεχνικούς τις απαιτούμενες πληροφορίες για την ασφαλή εγκατάσταση του εξοπλισμού
  - παρέχει στους τεχνικούς πληροφορίες για τη συντήρηση του εξοπλισμού
  - παρέχει στους τεχνικούς πληροφορίες για το ηλεκτρικό σύστημα του εξοπλισμού/μηχανής
  - παρέχει τις απαραίτητες πληροφορίες για την παραγγελία ανταλλακτικών από την Tetra Pak.

Διάταξη Σελίδων

Ανατρέξτε στην εικόν (A) της σελίδας i-5: Οι κύριες σελίδες ενός Καταλόγου Ανταλλακτικών αποτελούνται από μία εικονογραφημένη σελίδα (1) και από μία αντίστοιχη σελίδα λίστας (7). Ο αριθμός σελίδας (5) εμφανίζεται στην κεφαλίδα μιας εικονογραφημένης σελίδας και στο υποσέλιδο μιας σελίδας λίστας. Ο αριθμός εγγράφου (6) εμφανίζεται στο υποσέλιδο μιας σελίδας λίστας.

Αρίθμηση Σελίδων

Ανατρέξτε στην εικόνα (A) της σελίδας i-5: Ένας αριθμός σελίδας (5) αποτελείται από τα εξής τρία μέρη:

- αριθμός κεφαλαίου (2)
- αύξων αριθμός σελίδας του κεφαλαίου (3)
- συνολικός αριθμός σελίδων του κεφαλαίου (4)

Παρουσίαση Μηχανής

Κατασκευαστής

Για το όνομα και τη διεύθυνση του κατασκευαστή, ανατρέξτε στη δεύτερη σελίδα αυτού του καταλόγου.

Τεχνική Εξυπηρέτηση

Για να παραγγείλετε ανταλλακτικά για τη συγκεκριμένη μηχανή ή για να αναφέρετε προβλήματα που σχετίζονται με τη λειτουργία αυτής της μηχανής, επικοινωνήστε με το πλησιέστερο γραφείο της Tetra Pak.

Εάν έχετε άλλου είδους ερωτήσεις, σχόλια ή προτάσεις βελτίωσης σχετικά με τον εξοπλισμό και την έγγραφη τεκμηρίωσή του, επικοινωνήστε με το Τμήμα Σχέσεων.

Στοιχεία Ταυτότητας

Σήμανση CE

Αυτός ο εξοπλισμός συμμορφώνεται με τους βασικούς κανονισμούς υγείας και ασφάλειας του Ευρωπαϊκού Οικονομικού Χώρου (ΕΟΧ).

Πινακίδα Αναγνώρισης Μηχανής

Η εικόνα (B) της σελίδας i-5 δείχνει ένα παράδειγμα μιας πινακίδας αναγνώρισης μηχανής.
Μια εικόνα που δείχνει την ενδεδειγμένη μορφή και θέση της πινακίδας αναγνώρισης μηχανής στον εξοπλισμό, παρουσιάζεται στο κεφάλαιο 'Εισαγωγή' των εγχειριδίων που παρέχονται μ' αυτόν τον εξοπλισμό.
Η πινακίδα αναγνώρισης μηχανής αναγράφει τα δεδομένα που παρατίθενται στη συνέχεια, τα οποία είναι απαραίτητα όταν επικοινωνείτε με την Tetra Pak για θέματα που αφορούν αυτό το συγκεκριμένο εξοπλισμό.

- Τύπος μηχανής (8)
- Χωρητικότητα (9)
- Στοιχεία σχεδίου (10)
- Αριθμός σειράς μηχανής (11)
- Κατασκευαστής (12)
- Σήμανση CE (13)
- Έτος κατασκευής (14)

Η εικόνα (Γ) της σελίδας i-5 δείχνει ένα παράδειγμα τεχνικών χαρακτηριστικών μηχανής. Βεβαιωθείτε ότι τα δεδομένα εξοπλισμού που παρατίθενται στις πρώτες σελίδες αυτού του εγχειριδίου συμφωνούν με τα δεδομένα της πινακίδας αναγνώρισης μηχανής και των τεχνικών χαρακτηριστικών μηχανής.

Πώς Χρησιμοποιείται Αυτός ο Κατάλογος Ανταλλακτικών

Εύρεση ενός Αριθμού Ανταλλακτικού

a) Ανατρέξτε στην εικόνα (Δ) της σελίδας i-5: Πηγαίνετε στον αριθμό κεφαλαίου (15) που υποδεικνύεται δίπλα από την κύρια ομάδα της μηχανής η οποία περιλαμβάνει το εξάρτημα που θέλετε να βρείτε.

Τα βήματα b) και c) αναφέρονται στην εικόνα (Ε) της σελίδας i-6.

b) Στην εικόνα της κύριας ομάδας μηχανής, αναζητήστε την υποομάδα μηχανής (17) η οποία περιλαμβάνει το εξάρτημα ή την υποομάδα που αναζητάτε. Σημειώστε τον αριθμό θέσης (18) και πηγαίνετε στη σελίδα λίστας που ακολουθεί την εικόνα.

c) Αναζητήστε τον αριθμό θέσης/ονομασία αναφοράς (16) ή το όνομα υποομάδας (19). Πηγαίνετε στον αντίστοιχο αριθμό σελίδας (20) που αναγράφεται στη δεξιά στήλη. Η Tetra Pak έχει επιλέξει να χρησιμοποιεί πάντα δομή ονομασίας αναφοράς με βάση τη λειτουργία. Το πρόθεμα που υποδεικνύει τη δομή με βάση τη λειτουργία (=) δε φαίνεται στο διάγραμμα αναφοράς.

Τα βήματα d) και e) αναφέρονται στην εικόνα (ΣΤ) της σελίδας i-6.

d) Βρείτε το εξάρτημα (21) που αναζητάτε στην εικόνα υποομάδας μηχανής και σημειώστε τον αριθμό θέσης του εξαρτήματος.

e) Ο αριθμός του εξαρτήματος (29) και η περιγραφή του εξαρτήματος (30) παρατίθενται δίπλα στον αριθμό θέσης στη σελίδα λίστας.

Πληροφορίες που Περιέχονται σε έναν Κατάλογο Ανταλλακτικών

Η λίστα που ακολουθεί αναφέρεται στην εικόνα (F) της σελίδας i-6. Ένας Κατάλογος Ανταλλακτικών περιέχει τις παρακάτω πληροφορίες σχετικά με τις ομάδες, τις υποομάδες και τα ανταλλακτικά του εξοπλισμού:

- Αναφορά δομής ομάδας (22). Υποδηλώνει την επόμενη μεγαλύτερη ομάδα στη δομή λίστας του εξοπλισμού.
- Όνομα ομάδας (23)
- Μονάδα μέτρησης (25)
- Ποσότητα (26)
- Αριθμός σχεδίου συγκροτήματος (27)
- Περιοχή σελίδων λίστας (28). Περιλαμβάνεται εφόσον η εικόνα ή η λίστα μιας ομάδας εκτίθεται σε περισσότερες από μία σελίδες.
- Αριθμός εξαρτήματος ή υποομάδας (29)
- Αριθμός υποομάδας ή περιγραφή εξαρτήματος (30)
- Αριθμός ομάδας (31)
- Αριθμός εξοπλισμού (32)
- Επικεφαλίδα πληροφοριών ομάδας (33). Υποδεικνύει εάν η ενότητα κάτω από την επικεφαλίδα αφορά μια συγκεκριμένη παραλλαγή μηχανής ή αποτελεί μια λίστα κοινών εξαρτημάτων. Σε περίπτωση που μια λίστα περιέχει περισσότερες από μία παραλλαγές και κάθε παραλλαγή έχει ξεχωριστό σχέδιο συγκροτήματος, εμφανίζεται μια παραπομπή προς τη σελίδα όπου βρίσκεται το σχέδιο συγκροτήματος της παραλλαγής.
- Εσωτερικές πληροφορίες (34)

Introducción

Información sobre el manual

Tetra Pak recomienda leer atentamente todos los manuales suministrados. Asegúrese de que los manuales están disponibles para el personal que opera o mantiene el equipo.

Es importante conservar este catálogo durante la vida útil del equipo, así como facilitárselo a cualquier propietario o usuario posterior.

Tetra Pak no se responsabilizará de daños en el equipo por no seguir las instrucciones proporcionadas en los manuales que acompañan este equipo.

Manuales entregados

Los manuales entregados con este equipo pueden incluir:

- CM
  El Manual de conversión proporciona a los técnicos información sobre cómo convertir el equipo a diferentes modos de producción.
- EM
  El Manual eléctrico proporciona a los técnicos información sobre el sistema eléctrico del equipo.
- IM
  El Manual de instalación proporciona a los técnicos la información necesaria para instalar el equipo de manera segura.
- MM
  El Manual de mantenimiento proporciona a los técnicos información sobre el mantenimiento del equipo.
- OM
  El Manual de funcionamiento proporciona al operador información sobre el manejo y el funcionamiento del equipo antes, durante y después de la producción.
- SPC
  El Catálogo de recambios proporciona la información necesaria para pedir las piezas de recambio a Tetra Pak.
- TeM
  El Manual técnico
  - proporciona a los técnicos la información necesaria para instalar de manera segura el equipo
  - proporciona a los técnicos información sobre el mantenimiento del equipo
  - proporciona a los técnicos información sobre el sistema eléctrico de la máquina/equipo
  - proporciona la información necesaria para pedir las piezas de recambio a Tetra Pak.

Organización de las páginas

Consultar la ilustración (A) en la página i-5: Las páginas principales en un Catálogo de recambios se componen de una página de ilustración (1) y una página de lista correspondiente (7). El número de la página (5) se muestra en el encabezado de una página de ilustración y en el pie de página de una página de lista. El número del documento (6) se muestra en el pie de página de una página de lista.

Numeración de las páginas

Consulte la ilustración (A) en la página i-5: Un número de página (5) consta de tres partes:

- número de capítulo (2)
- número de página consecutivo dentro del capítulo (3)
- número total de páginas del capítulo (4)

Introducción a la máquina

Fabricante

Para obtener el nombre y la dirección del fabricante, véase la segunda página de este catálogo.

Servicio

Para pedir recambios para esta máquina o informar de problemas asociados con el funcionamiento de la misma, póngase en contacto con la oficina de Tetra Pak más cercana.

Póngase en contacto con el representante para otras consultas, comentarios o consejos sobre mejoras referidos al equipo y su documentación.

Identificación

Clasificación de la CE

Este equipo cumple con la normativa básica sobre salud y seguridad del Espacio Económico Europeo (EEE).

Placa de máquina

La ilustración (B) en la página i-5 muestra un ejemplo de una placa de máquina.
En el capítulo Introducción de los manuales entregados con este equipo, se muestra una ilustración de la placa de máquina válida y su ubicación en el equipo. La placa de máquina contiene los datos que se enumeran a continuación, requeridos al ponerse en contacto con Tetra Pak en relación con este equipo específico.

- Tipo de máquina (8)
- Volumen (9)
- Especificaciones de plano (10)
- Número de serie de la máquina (11)
- Fabricante (12)
- Marca de la CE (13)
- Año de fabricación (14)

La ilustración (C) en la página i-5 muestra un ejemplo de especificación de la máquina. Asegúrese de que los datos de equipo que se enumeran en las páginas de la cubierta de este manual corresponden a los datos de la placa y las especificaciones de la máquina.

Cómo utilizar este Catálogo de recambios

Localizar un número de recambio

a) Consulte la ilustración (D) en la página i-5: Vaya al número de capítulo (15) indicado junto al grupo principal que contiene la pieza que desea localizar.

Los puntos b) y c) hacen referencia a la ilustración (E) en la página i-6.

b) En la ilustración del grupo principal, busque el subgrupo de la máquina (17) que contiene la pieza o el subgrupo que busca. Anote el número de posición (18) y vaya a la página de lista que sigue a la ilustración.

c) Busque el número de posición/denominación de referencia (16) o el nombre del subgrupo (19). Vaya al número de página correspondiente (20) que aparece en la columna de la derecha. Tetra Pak ha elegido utilizar siempre la estructura orientada a la función para la denominación de referencia. El prefijo que indica la estructura orientada a la función (=) no aparece en la denominación de referencia.

Los puntos d) y e) hacen referencia a la ilustración (F) en la página i-6.

d) Localice la pieza (21) que busca en la ilustración del subgrupo y anote el número de posición de la pieza.

e) El número de pieza (29) y la descripción de la misma (30) aparecen junto al número de posición en la página de lista.

Información que contiene un Catálogo de recambios

La lista que aparece a continuación hace referencia a la ilustración (F) en la página i-6. Un Catálogo de recambios contiene la siguiente información sobre grupos, subgrupos y recambios para el equipo:

- Referencia de estructura de grupo (22). Indica el siguiente grupo más alto en la estructura de lista del equipo.
- Nombre del grupo (23)
- Unidad de medida (25)
- Cantidad (26)
- Número de dibujo del conjunto (27)
- Intervalo de página de lista (28). Incluido si hay varias páginas en la ilustración o lista de grupo.
- Número de pieza o subgrupo (29)
- Nombre de subgrupo o descripción de pieza (30)
- Número de grupo (31)
- Número de equipo (32)
- Encabezado de información de grupo (33). Indica si la sección que aparece debajo del encabezado corresponde a una variante específica de la máquina o si es una lista de piezas comunes. Si la lista tiene más de una variante y cada variante tiene su propio dibujo de conjunto, se muestra una referencia de página al dibujo de conjunto de la variante.
- Información interna (34)

Sissejuhatus

Juhendi teave

Tetra Pak soovitab kõik juhendid hoolikalt läbi lugeda. Kontrollige, et juhendid oleksid seadmetega töötavatele ja neid hooldavatele isikutele kättesaadavad.

Kataloog tuleb seadme kasutusaja vältel alles hoida ning järgmisele omanikule või kasutajale edasi anda.

Tetra Pak ei vastuta seadme vigastuste eest, mis on tekkinud seadmega kaasnevate juhendite mittejärgimise tõttu.

Kaasaolevad juhendid

Seadmega kaasasolevad juhendid võivad sisaldada järgmist:

- CM
  Ümberseadistusjuhend annab tehnikutele teavet seadme ümber seadistamise kohta eri tootmisrežiimide korral.
- EM
  Elektrijuhend annab tehnikutele informatsiooni seadme elektrisüsteemi kohta.
- IM
  Paigaldusjuhend annab tehnikutele vajalikku teavet seadme ohutu paigaldamise kohta.
- MM
  Hooldusjuhend annab tehnikutele teavet seadme hoolduse kohta.
- OM
  Kasutusjuhend annab operaatorile teavet seadme käsitsemise ja kasutamise kohta enne tootmist, selle ajal ja pärast seda.
- SPC
  Varuosade kataloog annab vajalikku teavet Tetra Pakilt varuosade tellimiseks
- TeM
  Tehniline juhend
  - annab tehnikutele vajalikku teavet seadme ohutuks paigaldamiseks
  - annab tehnikutele teavet seadme hooldamise kohta
  - annab tehnikutele teavet masina/seadme elektrisüsteemi kohta
  - annab vajalikku teavet Tetra Pakilt varuosade tellimiseks.

Lehekülje kujundus

Vt joonist (A) lk i-5: Varuosade kataloogi põhilehtedeks on jooniste lehekülg (1) ja vastav loeteluleht (7). Lehekülje number (5) on toodud joonistelehe päises ja loetelulehe jaluses. Dokumendi number (6) on toodud loetelulehe jaluses.

Lehekülje nummerdus

Vt joonist (A) lk i-5: Lehekülje number (5) koosneb kolmest osast:

- peatüki number (2)
- järgneva lehekülje number (3) peatükis
- lehekülgede koguarv peatükis (4)

Sissejuhatus masina kohta

Tootja

Tootja nimi ja aadress on toodud kataloogi teisel lehel.

Teenindus

Masina varuosade tellimiseks või masina kasutamisega seonduvate probleemide teatamiseks võtke ühendust lähima Tetra Pak kontoriga.

Seadme ja dokumendiga seonduvate küsimuste, kommentaaride ja parandusettepanekute puhul võtke ühendust ettevõtte esindajaga.

Identifikatsioon

CE klassifikatsioon

Seade on kooskõlas Euroopa Majanduspiirkonna (EEA) tervishoiu- ja ohutusnõuetega.

Masina andmeplaat

Joonisel (B) leheküljel i-5 on kujutatud masina andmeplaati. Masina andmeplaadi joonis ja selle asukoht seadmel on toodud seadmega kaasasoleva juhendi sissejuhatavas peatükis. Masina andmeplaadil on toodud allpool loetletud andmed, mida vajate antud konkreetse seadmega seoses Tetra Paki poole pöördudes.

- Masina tüüp (8)
- Maht (9)
- Joonisspetsifikatsioonid (10)
- Masina seerianumber (11)
- Tootja (12)
- CE tähis (13)
- Tootmisaasta (14)

Joonisel (C) leheküljel i-5 on kujutatud näide masina spetsifikatsioonist. Veenduge, et juhendi esimestel lehekülgedel toodud andmed seadme kohta vastavad masina andmesildil olevatele andmetele ja masina spetsifikatsioonile.

Kuidas varuosade kataloogi kasutada

Leidke varuosa number

a) Vt joonist (D) lk i-5: Leidke peatükk, mille number (15) on toodud selle põhirühma juures, mis sisaldab otsitavat varuosa.

Punktid b) ja c) viitavad joonisele (E) lk i-6.

b) Põhirühma joonisel leidke masina alamrühm (17), mis sisaldab otsitavat osa või alamrühma. Leidke positsiooninumber (18) ja avage joonisele järgnev loeteluleht.

c) Leidke positsiooninumber/viite tähis (16) või alamgrupi nimetus (19). Avage parempoolses veerus loetletud vastav lehekülje number (20). Tetra Pak on valinud viite tähise puhul alatiseks kasutamiseks funktsioonile suunatud struktuuri. Funktsioonile suunatud struktuuri prefiks (=) pole viite tähises näidatud.

Punktid d) ja e) viitavad jooniselerefer (F) lk i-6.

d) Leidke otsitav osa (21) alamrühma joonisel ja seejärel osa positsioonnumber.

e) Osa number (29) ja osa kirjeldus (30) on toodud loetelulehel positsioonnumbri kõrval.

Varuosade kataloogis toodud teave

Allpool toodud loetelui viitab joonisele (F) lk i-6. Varuosade kataloog sisaldab järgmist teavet seadme rühmade, alamrühmade ja varuosade kohta:

- Rühmastruktuuri viide (22). Märgib seadme loetelu struktuuris järgmist kõrgemat rühma.
- Rühma nimetus (23)
- Mõõtühik (25)
- Kogus (26)
- Koostejoonise number (27)
- Loetelu lehekülgede vahemik (28). Kaasatud kui rühma joonised või loetelu on toodud mitmel lehel.
- Osa või alamrühma number (29)
- Alamrühma nimetus või osa kirjeldus (30)
- Rühma number (31)
- Seadme number (32)
- Rühma teabe pealkiri (33). Näitab, kas pealkirja all toodud jaotis on konkreetse masinavariandi kohta või on tegemist tavaliste varuosade loeteluga. Kui loetelus on toodud rohkem kui üks variant ja iga variandi jaoks on oma koostejoonis, esitatakse viide selle variandi koostejoonise leheküljele.
- Siseteave (34)

Johdanto

Tietoja käsikirjasta

Tetra Pak suosittelee kaikkien toimitettavien oppaiden lukemista huolellisesti. Varmista, että toimitetut oppaat ovat laitetta käyttävän tai huoltavan henkilökunnan saatavilla.

Tämä luettelo on säilytettävä laitteen käyttöiän ajan ja toimitettava edelleen mahdolliselle seuraavalle omistajalle tai käyttäjälle.

Tetra Pak ei vastaa laitevaurioista, jotka aiheutuvat laitteen mukana tulevissa oppaissa annettujen ohjeiden noudattamatta jättämisestä.

Toimitettavat ohjeet

Tämän laitteen mukana toimitettaviin ohjeisiin kuuluvat:

- CM
  Muunnoskirjassa on teknikoille tarkoitettuja ohjeita laitteiston muuttamisesta eri tuotantotiloihin.
- EM
  Sähkökirjassa on teknikoille tarkoitettuja tietoja laitteen sähköjärjestelmästä.
- IM
  Asennuskäsikirjassa on teknikoille tarkoitettuja tietoja, jotka tarvitaan laitteen turvallista asentamista varten.
- MM
  Huoltokäsikirjassa on teknikoille tarkoitettuja tietoja tämän laitteen huoltamisesta.
- OM
  Käyttäjän käsikirjassa on käyttäjälle tarkoitettuja tietoja laitteen käsittelystä ja käyttämisestä ennen tuotantoa, tuotannon aikana ja sen jälkeen.
- SPC
  Varaosaluettelossa on tietoja, joita tarvitaan varaosien tilaamiseen Tetra Pakilta.
- TeM
  Tekninen käsikirja
  - sisältää teknikoille tarkoitettuja tietoja, joita tarvitaan laitteen turvallista asentamista varten
  - sisältää teknikoille tarkoitettuja tietoja laitteen huoltamisesta
  - sisältää teknikoille tarkoitettuja tietoja koneen/laitteen sähköjärjestelmästä
  - sisältää tietoja, joita tarvitaan varaosien tilaamiseen Tetra Pakilta.

Sivujen asettelu

Katso kuva (A) sivulla i-5: Varaosaluettelon pääsivut koostuvat kuvasivusta (1) ja sitä vastaavasta luettelosivusta (7). Sivunumero (5) näytetään kuvasivun ylätunnisteessa ja luettelosivun alatunnisteessa. Asiakirjan numero (6) näytetään luettelosivun alatunnisteessa.

Sivunumerointi

Katso kuva (A) sivulla i-5: Sivunumerossa (5) on kolme osaa:

- luvun numero (2)
- perättäinen sivunumero (3) luvun sisällä
- luvun kokonaissivumäärä (4).

Koneen esittely

Valmistaja

Valmistajan nimi ja osoite on ilmoitettu tämän luettelon toisella sivulla.

Huolto

Jos haluat tilata tähän koneeseen varaosia tai jos tämän koneen käytössä ilmenee ongelmia, jotka haluat raportoida, ota yhteyttä lähimpään Tetra Pakin toimistoon.

Jos sinulla on muuta kysyttävää, huomautettavaa tai ehdotuksia ja sen asiakirjoja koskevista parannuksista, ota yhteys yhteyshenkilöön.

Tunnistetiedot

CE-luokitus

Tämä laite vastaa Euroopan talousalueen (ETA) terveyttä ja turvallisuutta koskevia perusvaatimuksia.

Koneen tyyppikilpi

Kuvassa (B) sivulla i-5 on esimerkki koneen tyyppikilvestä. Voimassa olevan tyyppikilven kuva ja sen sijainti koneessa käy ilmi laitteiston mukana tulleiden ohjeiden Johdanto-luvusta. Tyyppikilvessä on tarvitsemasi Tetra Pakin voimassa olevat yhteystiedot, kun on kyseessä tämä nimenomainen laite.

- Konetyyppi (8)
- Tilavuus (9)
- Piirustuserittely (10)
- Koneen sarjanumero (11)
- Valmistaja (12)
- CE-merkki (13)
- Valmistusvuosi (14)

Kuvassa (C) sivulla i-5 on esimerkki koneen erittelystä. Varmista, että tämän ohjeen etusivuilla ilmoitetut laitetiedot vastaavat tyyppikilven ja kone-erittelyn tietoja.

Tämän varaosaluettelon käyttäminen

Etsi varaosan numero

a) Katso kuva (D) sivulla i-5: Siirry lukuun (15), joka on ilmoitettu etsittävän osan pääryhmän vieressä.

Kohdat b) ja c) viittaavat kuvaan (E) sivulla i-6.

b) Etsi pääryhmän kuvasta koneen alaryhmä (17), joka sisältää etsimäsi osan tai alaryhmän. Merkitse muistiin paikkanumero (18) ja siirry luettelosivulle, joka seuraa kuvaa.

c) Etsi paikkanumero (16) tai alaryhmän nimi (19). Siirry vastaavalle sivunumerolle (20), joka on ilmoitettu oikeassa sarakkeessa. Tetra Pak on päättänyt aina noudattaa toimintoperusteista rakennetta viitemerkinnöissä. Viitemerkinnässä ei esitetä toimintoperusteisen rakenteen osoittavaa etuliitettä (=).

Kohdat d) ja e) viittaavat kuvaan (F) sivulla i-6.

d) Hae etsittävä osa (21) alaryhmän kuvasta ja merkitse osan paikkanumero muistiin.

e) Osanumero (29) ja osan kuvaus (30) on annettu paikkanumeron vieressä luettelosivulla.

Varaosaluettelossa olevat tiedot

Alla oleva luettelo viittaa kuvaan (F) sivulla i-6. Varaosaluettelo sisältää seuraavat tiedot ryhmistä, alaryhmistä ja laitteen varaosista:

- Ryhmärakenneviite (22). Osoittaa seuraavaksi ylemmän ryhmän laiteluettelorakenteessa.
- Ryhmän nimi (23)
- Mittayksikkö (25)
- Määrä (26)
- Kokoonpanopiirustuksen numero (27)
- Luettelon sivualue (28). Tämä on mukana, jos ryhmäkuvassa tai luettelossa on useita sivuja.
- Osan tai alaryhmän numero (29)
- Alaryhmän nimi tai osan kuvaus (30)
- Ryhmän numero (31)
- Laitteen numero (32)
- Ryhmätietojen otsikko (33). Osoittaa, koskeeko alla oleva osio tiettyä koneversiota vai onko kyseessä yhteisten osien luettelo. Jos luettelolla on useampi kuin yksi versio ja kullakin versiolla on oma kokoonpanopiirustuksensa, näytetään version kokoonpanopiirustuksen sivuviittaus.
- Sisäiset tiedot (34)

Introduction

Informations sur ce manuel

Tetra Pak recommande de lire attentivement tous les manuels remis. S'assurer que ceux-ci sont accessibles au personnel d'exploitation et de maintenance de l'équipement.

Il est important de conserver ce catalogue pendant la durée de vie de l'équipement et de le transmettre à tout détenteur ou à tout utilisateur ultérieur de l'équipement.

Tetra Pak ne pourra être tenu responsable d'aucun dommage causé à l'équipement suite au non respect des instructions fournies dans les manuels remis avec cet équipement.

Manuels remis

Les manuels remis avec cet équipement peuvent comprendre

- CM
  Le Manuel de Conversion contient les informations destinées aux techniciens pour la conversion de l'équipement en vue des différents modes de production.
- EM
  Le Manuel Electrique fournit aux techniciens des informations sur le système électrique de l'équipement.
- IM
  Le Manuel d'Installation fournit les informations nécessaires aux techniciens pour installer l'équipement en toute sécurité.
- MM
  Le Manuel d'Entretien contient les informations nécessaires aux techniciens pour la maintenance de l'équipement.
- OM
  Le Manuel d'Utilisation fournit à l'opérateur les informations nécessaires à la manutention et à l'exploitation de l'équipement, avant, pendant et après la production.
- SPC
  Le Catalogue des Pièces de Rechange contient les informations permettant de commander des pièces de rechange auprès de Tetra Pak
- TeM
  Le Manuel Technique
  - contient les informations nécessaires aux techniciens pour installer l'équipement en toute sécurité.
  - contient les informations nécessaires aux techniciens pour la maintenance de l'équipement.
  - fournit aux techniciens des informations sur le système électrique de la machine/de l'équipement.
  - fournit les informations permettant de commander des pièces de rechange auprès de Tetra Pak.

Mise en page

Reportez-vous au schéma (A) page i-5 : Dans un catalogue de Pièces de Rechange, les pages principales sont les pages de schémas (1) et les pages de listes correspondantes (7). Le numéro de page (5) est indiqué en en-tête sur une page de schéma et en bas de page sur une page de liste. Le numéro de document (6) est indiqué au bas d'une page de liste.

Numérotation des pages

Reportez-vous au schéma (A) page i-5 : Un numéro de page (5) se compose de trois éléments :

- numéro du chapitre (2)
- numéro de page séquentiel à l'intérieur du chapitre (3)
- nombre total de pages du chapitre (4)

Présentation de la machine

Fabricant

Les nom et adresse du fabricant sont donnés en deuxième page de ce catalogue.

Assistance technique

Pour commander des pièces de rechange pour cette machine ou signaler un problème lié à son fonctionnement, contactez l'agence Tetra Pak la plus proche.

Contactez le responsable de liaison pour tout autre renseignement, commentaire ou suggestion d'amélioration relatifs à l'équipement et à sa documentation.

Identification

Certification CE

Cet équipement est conforme aux réglementations essentielles en matière d'hygiène et de sécurité de l'Espace économique européen (EEE).

Plaque signalétique de la machine

Le schéma (B) de la page i-5 reproduit un exemple de plaque signalétique de la machine.
Le chapitre Introduction des manuels remis avec cet équipement comprend une reproduction de la plaque signalétique valide de la machine et indique son emplacement sur l'équipement. La plaque comporte les caractéristiques indiquées ci-dessous, nécessaires pour prendre contact avec Tetra Pak à propos de cet équipement spécifique.

- Type de la machine (8)
- Volume (9)
- Caractéristiques schéma (10)
- Numéro de série de la machine (11)
- Fabricant (12)
- Marquage CE (13)
- Année de fabrication (14)

Le schéma (C) de la page i-5 reproduit un exemple de plaque signalétique de la machine. Assurez-vous que les données relatives à l'équipement qui se trouvent au début de ce manuel correspondent bien aux données figurant sur la plaque signalétique de la machine et à ses spécifications.

Comment utiliser ce Catalogue des Pièces de Rechange

Trouver un numéro de pièce de rechange

a) Reportez-vous au schéma (D) page i-5 : Allez au numéro de chapitre (15) indiqué à côté du groupe principal contenant la pièce que vous recherchez.

Les éléments b) et c) se rapportent au schéma (E) de la page i-6.

b) Sur le schéma du groupe principal, recherchez le sous-groupe de la machine (17) contenant la pièce ou le sous-groupe que vous recherchez. Notez le numéro de position (18) et reportez-vous à la page de liste suivant le schéma.

c) Recherchez le numéro de position/la désignation de référence (16) ou le nom du sous-groupe (19). Allez au numéro de page correspondant (20) figurant dans la liste de la colonne de droite. Tetra Pak a pris le parti de toujours utiliser la structure de la fonction pour la désignation de la référence. Le préfixe indiquant la structure de la fonction (=) ne figure pas dans la désignation de la référence.

Les éléments d) et e) se rapportent au schéma (F) de la page i-6.

d) Repérez la pièce (21) que vous recherchez dans le schéma du sous-groupe et notez le numéro de position de la pièce.

e) Le numéro de la pièce (29) et sa description (30) figurent à côté du numéro de position sur la page de liste.

Informations données dans un Catalogue de Pièces de Rechange

La liste ci-dessous se rapporte au schéma (F) de la page i-6. Un Catalogue de Pièces de Rechange contient les informations suivantes concernant les groupes, sous-groupes et pièces de rechange de l'équipement :

- Référence de structure de groupe (22). Indique le groupe immédiatement supérieur dans la structure de liste de l'équipement.
- Nom du groupe (23)
- Unité de mesure (25)
- Quantité (26)
- Numéro de plan de montage (27)
- Groupe de pages de liste (28). Indiqué si la liste ou l'illustration du groupe comporte plusieurs pages.
- Numéro de pièce ou de sous-groupe (29)
- Nom du sous-groupe ou description de la pièce (30)
- Numéro de groupe (31)
- Numéro de l'équipement (32)
- Titre information du groupe (33) Indique si la section en-dessous du titre est destinée à une variante spécifique de la machine ou s'il s'agit d'une liste de pièces communes. Si une liste comprend plus d'une variante et que chaque variante a son propre plan de montage, une référence de page est donnée pour le plan de montage de la variante.
- Information interne (34)

Bevezetés

Kézikönyvre vonatkozó információk

A Tetra Pak javasolja, hogy az összes kapott kézikönyvet gondosan olvassa el. Gondoskodjon róla, hogy a kézikönyvek a berendezést üzemeltető és karbantartó személyzet számára elérhetők legyenek.

Fontos, hogy megőrizzék ezt a katalógust a berendezés élettartama alatt, és átadják a következő tulajdonosoknak és felhasználóknak.

A Tetra Pak nem vállal felelősséget a berendezés semmilyen megrongálódása esetén, ha nem követték a berendezéshez tartozó kézikönyvekben leírt utasításokat.

Szállított kézikönyvek

A berendezéssel szállított kézikönyvek az alábbiak lehetnek

- CM
  Az Átállási kézikönyv a műszaki szakemberek számára a berendezés különböző gyártási módjai közötti átállásra vonatkozó információkat tartalmaz.
- EM
  A Villamossági kézikönyv a berendezés elektronikai rendszerére vonatkozó információkat szolgáltat a műszaki szakemberek részére.
- IM
  Az Üzembe helyezési kézikönyv a berendezés biztonságos üzembe helyezésére vonatkozó információkat biztosít a technikai szakemberek részére.
- MM
  A Karbantartási kézikönyv a berendezés karbantartására vonatkozó információkat biztosít a technikai szakemberek részére.
- OM
  Az Üzemeltetési kézikönyv az üzemeltető személyzetnek szolgáltat a berendezés kezelésére és üzemeltetésére, a feldolgozás előtti, közbeni és utáni teendőkre vonatkozó információkat.
- SPC
  A Tartalékalkatrész-katalógus információt biztosít a pótalkatrészek Tetra Pak-tól történő megrendeléséhez.
- TeM
  A Technikai kézikönyv
  – a berendezés biztonságos üzembe helyezésére vonatkozó információkat biztosít a technikai szakemberek részére.
  – a berendezés karbantartására vonatkozó információkat biztosít a technikai szakemberek részére.
  – a gép/berendezés elektromos rendszerére vonatkotó információkat szolgáltat a technikai szakemberek számára.
  – információkat biztosít a pótalkatrészek Tetra Pak-tól történő megrendeléséhez.

Oldalelrendezés

Tekintse meg az i-5 oldalon lévő (A) ábrát: A Tartalékalkatrész-katalógus főoldalai egy rajzoldalból (1) és egy hozzá tartozó listaoldalból (7) állnak. Az oldalszám (5) a rajzoldal fejlécében és a listaoldal láblécében látható. A dokumentum száma (6) a listaoldal láblécében jelenik meg.

Oldalszámozás

Tekintse meg az i-5 oldalon lévő (A) ábrát: Az oldalszám (5) három részből áll:

- fejezetszám (2)
- folyamatos oldalszám (3) a fejezeten belül
- összes oldalszám (4) a fejezeten belül.

Bevezetés

Gyártó

A gyártó neve és címe a katalógus második oldalán található.

Szerviz

A gép valamely pótalkatrészének megrendelése vagy a berendezés működésével kapcsolatos zavarok bejelentése végett forduljon a legközelebbi Tetra Pak képviselethez.

Bármilyen más, a berendezésre illetve a dokumentációra vonatkozó kérdéseivel, megjegyzéseivel vagy javaslataival forduljon területi képviselőjéhez.

Azonosítás

CE besorolás

Ez a berendezés megfelel az Európai Gazdasági Régió (EEA) alapvető egészségügyi és biztonsági előírásainak.

Gépcímke

A(z) i-5 oldalon található (B) ábra a gépcímke egy példáját mutatja be. Egy érvényes gépcímkét és megfelelő elhelyezését ábrázoló rajz látható a berendezéssel szállított kézikönyv Bevezetés fejezetében. A gépcímke azokat az alább felsorolt adatokat tartalmazza, amelyek a Tetra Pak-kal történő, a berendezésre vonatkozó kommunikációhoz szükségesek.

- Géptípus (8)
- Térfogat (9)
- Tervrajzok (10)
- A gép sorozatszáma (11)
- Gyártó (12)
- CE jelzés (13)
- Gyártási év (14)

A(z) i-5 oldalon található (C) ábra a gép műszaki specifikációjának egy példáját mutatja be. Győződjön meg róla, hogy a kézikönyv első lapjain közölt berendezésadatok megegyeznek a gép adattábláján és a gép műszaki leírásában megjelenő információkkal.

A Tartalékalkatrész-katalógus használata

A tartalékalkatrész számának kikeresése

a) Tekintse meg a(z) i-5 oldalon lévő (D) ábrát: Lapozzon a keresett alkatrészt tartalmazó főcsoport mellett feltüntetett (15) számú fejezetre.

A b) és c) elemek az i-6 oldalon található ábrára vonatkoznak.

b) A főcsoport-ábrán keresse meg azt az alcsoportot (17), amelyik a keresett alkatrészt vagy alcsoportot tartalmazza. Jegyezze meg a pozíciószámot (18), majd lapozzon az ábrát követő listaoldalra.

c) Keresse meg a lejegyzett pozíciószámot/hivatkozási megjelölést (16) vagy a keresett alcsoport nevét (19). Lapozzon a jobb oldali oszlopban feltüntetett számú (20) oldalra. A Tetra Pak a hivatkozási jelöléseket mindig funkció-orientált struktúra alapján végzi el. Az előtaggal jelölt funkció-orientált struktúra (=) nem jelenik meg a hivatkozási jelölésben.

A d) és e) elemek az i-6 oldalon található (F) ábrára vonatkoznak.

d) Az alcsoport ábrán keresse meg a kívánt alkatrészt (21), és jegyezze meg az alkatrész pozíciószámát.

e) Az alkatrész száma (29) és leírása (30) a listaoldalon, a pozíciószám mellett látható.

A Tartalékalkatrész-katalógusban megtalálható információk

Az alábbi lista az i-6 oldalon található (F) ábrára vonatkozik.
A Tartalékalkatrész-katalógus a következő, csoportokra, alcsoportokra és pótalkatrészekre vonatkozó adatokat tartalmazza:

- Csoportstruktúra-hivatkozás (22). A berendezés listás struktúrájában közvetlenül az aktuális csoport fölött álló csoportot jelöli.
- Csoportnév (23)
- Mértékegység (25)
- Mennyiség (26)
- Összeszerelési rajzszám (27)
- Lista oldaltartománya (28). Abban az esetben jelenik meg, ha a csoport ábrája vagy listája többoldalas.
- Alkatrész vagy alcsoport száma (29)
- Alcsoport neve vagy alkatrész leírása (30)
- Csoportszám (31)
- Berendezésszám (32)
- Csoportinformáció fejléce (33). Azt mutatja, hogy a fejléc után következő rész egy speciális gépváltozatra vonatkozik vagy az általános pótalkatrészek listája. Ha a listának több változata van, és mindegyikhez saját összeszerelési rajz tartozik, az illető összeszerelési rajz oldalhivatkozása is megjelenik.
- Belső információ (34)

Inngangur

Upplýsingar um handbók

Tetra Pak mælir með því að allar handbækur sem afhentar eru séu lesnar vandlega. Gætið þess að afhentar handbækur séu tiltækar fyrir starfsfólk sem vinnur við eða viðheldur tækjabúnaðinum.

Það er mikilvægt að halda upp á þennan vörulista allan líftíma tækjabúnaðarins og að láta síðari eiganda eða notanda hafa vörulistann.

Ekki er hægt að gera Tetra Pak ábyrgt fyrir neinum skemmdum sem verða á tækjabúnaðinum vegna þess að ekki er farið eftir leiðbeiningunum í þeim handbókum sem fylgja tækjabúnaðinum.

Afhentar handbækur

Handbækur sem afhentar eru með þessum tækjabúnaði geta verið

- CM
  Breytingahandbók, sem veitir tæknimönnum upplýsingar um breytingar á tækjabúnaðinum milli mismunandi framleiðsluhama.
- EM
  Rafmagnshandbók, sem veitir tæknimönnum upplýsingar um rafkerfi tækjabúnaðarins.
- IM
  Uppsetningarhandbók, sem veitir tæknimönnum nauðsynlegar upplýsingar til að setja tækjabúnaðinn upp á öruggan hátt.
- MM
  Viðhaldshandbók, sem eitir tæknimönnum upplýsingar um viðhald tækjabúnaðarins.
- OM
  Notkunarhandbók, sem veitir stjórnandanum upplýsingar um meðhöndlun og notkun tækjabúnaðarins, fyrir, eftir og meðan á framleiðslu stendur.
- SPC
  Varahlutavörulisti, sem veitir nauðsynlegar upplýsingar til pöntunar varahluta frá Tetra Pak.
- TeM
  Tæknihandbók
  - sem veitir tæknimönnum nauðsynlegar upplýsingar til að setja tækjabúnaðinn upp á öruggan hátt
  - sem veitir tæknimönnum upplýsingar um viðhald tækjabúnaðarins
  - sem veitir tæknimönnum upplýsingar um rafkerfi vélarinnar/ tækjabúnaðarins
  - sem veitir nauðsynlegar upplýsingar til pöntunar varahluta frá Tetra Pak.

Umbrot

Sjá skýringarmynd (A) á síðu i-5: Aðalsíðurnar í Varahlutavörulistanum samanstanda af skýringarsíðu (1) og samsvarandi listasíðu (7). Síðunúmerið (5) er sýnt í haus síðunnar með skýringarmyndinni og í fæti listasíðunnar. Skjalnúmerið (6) er sýnt í fæti listasíðunnar.

Númerun síðu

Sjá skýringarmynd (A) á síðu i-5: Síðunúmer (5) er í þremur hlutum:

- kaflanúmer (2)
- samfellt síðunúmer innan kaflans (3)
- heildarfjölda blaðsíðna í kaflanum (4)

Kynning á vél

Framleiðandi

Fyrir nafn og heimilisfang framleiðanda, sjá síðu tvö í þessum vörulista.

Þjónusta

Til að panta varahluti fyrir þessa vél, eða til að tilkynna vandamál sem tengjast notkun þessarar vélar, skal hafa samband við næstu Tetra Pak skrifstofu.

Hafðu samband við Samskiptatengsl með aðrar fyrirspurnir, athugasemdir eða uppástungur varðandi tækjabúnaðinn og fylgiskjöl hans.

Kennsl

CE flokkun

Þessi tækjabúnaður er í samræmi við grundvallar heilbrigðis- og öryggisreglugerðir á Evrópska efnahags svæðinu (EES).

Nafnplata

Skýringarmynd (B) á síðu i-5 sýnir dæmi um nafnplötu.
Skýringarmynd af gildri nafnplötu og staðsetningu hennar á tækjabúnaðinum er sýnd í Inngangskafla handbókanna sem afhentar eru með þessum tækjabúnaði. Á nafnplötunni eru upplýsingarnar sem taldar eru upp hér að neðan, sem þörf er á þegar haft er samband við Tetra Pak varðandi þennan tiltekna tækjabúnað.

- Vélartegund (8)
- Fjöldi (9)
- Teikniupplýsingar (10)
- Raðnúmer vélar (11)
- Framleiðandi (12)
- CE merki (13)
- Framleiðsluár (14)

Skýringarmynd (C) á síðu i-5 sýnir dæmi um tæknilýsingu vélar. Gættu þess að upplýsingar um tækjabúnað sem talinn er upp á fremstu síðum þessarar handbóka samsvari upplýsingum á nafnplötu og tæknilýsingu vélar.

Hvernig nota á þennan Varahlutavörulista

Finndu varahlutarnúmer

a) Sjá skýringarmynd (D) á síðu i-5: Farðu í kaflanúmerið (15) sem gefið er til kynna við hlið aðalflokksins sem inniheldur hlutinn sem þú vilt finna.

Atriði b) og c) vísa til skýringarmyndar (E) á síðu i-6:

b) Á skýringarmynd aðalflokksins skaltu leita að undirflokki (17) vélarinnar, sem inniheldur hlutinn eða undirflokkinn sem þú ert að leita að. Taktu eftir stöðunúmerinu (18) og farðu á listasíðuna sem fylgir skýringarmyndinni.

c) Leitaðu að stöðunúmeri/tilvísunartitli (16) eða heiti undirflokksins (19). Farðu á samsvarandi síðunúmer (20) sem sýnt er í hægri dálkinum. Tetra Pak hefur kosið að nota alltaf sérhæfða skipan fyrir tilvísunartitla. Forskeytið sem gefur til kynna sérhæfða skipan (=) er ekki sýnt í tilvísunartitlinum.

Atriði d) og e) vísa til skýringarmyndar (F) á síðu i-6:

d) Finndu hlutinn (21) sem þú ert að leita að á undirflokksskýringarmyndinni og taktu eftir stöðunúmeri hlutarins.

e) Hlutarnúmerið (29) og lýsing hlutar (30) eru skráð hjá stöðunúmerinu á listasíðunni.

Upplýsingar skráðar í Varahlutavörulista

Listinn að neðan vísar til skýringarmyndar (F) á síðu i-6: Varahlutavörulisti inniheldur eftirfarandi upplýsingar um flokka, undirflokka og varahluti fyrir tækjabúnaðinn:

- Tilvísun flokkaskipunar (22). Gefur til kynna næsta flokk fyrir ofan í listaskipan tækjabúnaðarins.
- Heiti flokks (23)
- Mælieining (25)
- Magn (26)
- Númer samsetningarteikningar (27)
- Röð listasíðu (28). Fylgir með ef það eru margar blaðsíður í skýringarmynd eða lista flokksins.
- Númer hlutar eða undirflokks (29)
- Heiti undirflokks eða lýsing hlutar (30)
- Númer flokks (31)
- Númer tækjabúnaðar (32)
- Fyrirsögn flokkaskipunar (33). Gefur til kynna ef kaflinn fyrir neðan fyrirsögnina er fyrir sérstakt afbrigði vélar eða ef hann er listi yfir algenga hluti. Ef listi er með meira en eitt afbrigði og hvert afbrigði á sína eigin samsetningarteikningu, er sýnd blaðsíðutilvísun til samsetningarteikningar afbrigðisins.
- Innri upplýsingar (34)

Introduzione

Informazioni sul manuale

Tetra Pak consiglia di leggere con attenzione tutti i manuali forniti in dotazione. Assicurarsi che tutti i manuali in dotazione siano disponibili per il personale addetto al funzionamento o alla manutenzione della macchina.

È importante conservare il presente catalogo per tutta la durata della macchina e consegnarlo al successivo proprietario o utilizzatore.

Tetra Pak non sarà da ritenersi responsabile per eventuali danni alla macchina causati dal mancato rispetto delle istruzioni fornite nei manuali che accompagnano questa macchina.

Manuali in dotazione

I manuali consegnati con la presente macchina possono comprendere:

- CM (Manuale di conversione)
  Questo manuale fornisce ai tecnici le informazioni necessarie per la conversione della macchina da una modalità di produzione a un'altra.
- EM (Manuale elettrico)
  Questo manuale fornisce ai tecnici informazioni sull'impianto elettrico della macchina.
- IM (Manuale d'installazione)
  Questo manuale fornisce ai tecnici le informazioni necessarie per installare in sicurezza la macchina.
- MM (Manuale di manutenzione)
  Questo manuale fornisce ai tecnici le informazioni sulla manutenzione della macchina.
- OM (Manuale operativo)
  Questo manuale fornisce all'operatore le informazioni sull'utilizzo e il funzionamento della macchina prima, durante e dopo la produzione.
- SPC (Catalogo dei pezzi di ricambio)
  Questo catalogo fornisce le informazioni necessarie per ordinare i pezzi di ricambio a Tetra Pak.
- TeM (Manuale tecnico)
  Questo manuale:
  - fornisce ai tecnici le informazioni necessarie per installare in sicurezza la macchina
  - fornisce ai tecnici le informazioni sulla manutenzione della macchina
  - fornisce ai tecnici informazioni sull'impianto elettrico della macchina
  - fornisce le informazioni necessarie per ordinare i pezzi di ricambio a Tetra Pak.

Schema delle pagine

Consultare la figura (A) a pagina i-5: Le pagine principali di un Catalogo dei pezzi di ricambio sono costituite da una pagina con la figura (1) e una pagina elenco corrispondente (7). Il numero di pagina (5) è indicato nell'intestazione delle pagine con le figure e nel piè di pagina delle pagine elenco. Il codice del documento (6) è indicato nel piè di pagina delle pagine elenco.

Numerazione delle pagine

Consultare la figura (A) a pagina i-5: Il numero di pagina (5) è suddiviso in tre parti:

- numero del capitolo (2)
- numero progressivo di pagina all'interno del capitolo (3)
- numero totale di pagine nel capitolo (4)

Introduzione alla macchina

Fabbricante

Il nome e l'indirizzo del fabbricante sono riportati sulla seconda pagina del presente catalogo.

Assistenza

Per ordinare i pezzi di ricambio per questa macchina oppure per riferire problemi associati al funzionamento della macchina, contattare l'ufficio Tetra Pak più vicino.

Per tutte le altre richieste, commenti o suggerimenti per eventuali miglioramenti da apportare alla macchina e alla relativa documentazione, contattare il responsabile di collegamento.

Identificazione

Classificazione CE

Questa macchina è conforme alle principali norme sanitarie e di sicurezza dell'Area Economica Europea (EEA).

Targhetta della macchina

La figura (B) a pagina i-5 mostra un esempio di targhetta della macchina. Il capitolo Introduzione di tutti i manuali consegnati con la presente macchina contiene invece la figura della targhetta della macchina valida e la sua posizione sulla macchina. La targhetta riporta i dati elencati qui sotto, che sono necessari per contattare Tetra Pak in relazione a questa macchina specifica.

- Tipo di macchina (8)
- Volume (9)
- Specifiche disegno (10)
- Numero di matricola della macchina (11)
- Fabbricante (12)
- Marchio CE (13)
- Anno di fabbricazione (14)

La figura (C) a pagina i-5 mostra un esempio delle specifiche di una macchina. Verificare che i dati relativi alla macchina elencati nelle pagine iniziali del presente manuale corrispondano ai dati riportati sulla targhetta della macchina e nelle specifiche della macchina.

Come usare questo Catalogo dei pezzi di ricambio

Individuare il numero del pezzo di ricambio

a) Consultare la figura (D) a pagina i-5: andare al numero del capitolo (15) indicato accanto al gruppo principale che contiene il pezzo che si desidera individuare.

I punti b) e c) fanno riferimento alla figura (E) a pagina i-6.

b) Nella figura del gruppo principale, identificare il sottogruppo della macchina (17) che contiene il pezzo o il sottogruppo cercato. Annotare il numero di posizione (18) e andare alla pagina elenco che segue la figura.

c) Identificare il numero di posizione/l'indicazione di riferimento (16) o il nome del sottogruppo (19). Andare al numero di pagina corrispondente (20) indicato nella colonna di destra. Per le indicazioni di riferimento, Tetra Pak ha scelto di usare sempre la struttura "function-oriented". Il prefisso che indica la struttura "function-oriented" (=) non è mostrato nell'indicazione di riferimento.

I punti d) e e) fanno riferimento alla figura (F) a pagina i-6.

d) Individuare il pezzo (21) cercato sulla figura del sottogruppo e annotare il numero di posizione del pezzo.

e) Il numero del pezzo (29) e la descrizione del pezzo (30) sono indicati accanto al numero di posizione sulla pagina elenco.

Informazioni contenute nel Catalogo dei pezzi di ricambio

L'elenco seguente fa riferimento alla figura (F) a pagina i-6. Il Catalogo dei pezzi di ricambio contiene le seguenti informazioni sui gruppi, i sottogruppi e i pezzi di ricambio della macchina:

- Riferimento struttura gruppo (22). Indica il gruppo superiore successivo nella struttura elenco della macchina.
- Nome gruppo (23)
- Unità di misura (25)
- Quantità (26)
- Numero disegno di assemblaggio (27)
- Intervallo delle pagine elenco (28). Questa informazione è presente se la figura o l'elenco relativi al gruppo occupano più di una pagina del manuale.
- Numero pezzo o sottogruppo (29)
- Nome sottogruppo o descrizione pezzo (30)
- Numero gruppo (31)
- Numero macchina (32)
- Intestazione informazioni gruppo (33). Indica se la sezione che segue l'intestazione si riferisce a una variante di macchina specifica oppure se si tratta di un elenco di parti comuni. Se un elenco contiene più di una variante ed esiste un disegno di assemblaggio specifico per ogni variante, viene fornito il riferimento alla pagina in cui è mostrato il disegno di assemblaggio relativo alla variante.
- Informazioni interne (34)

Įvadas

Informacija apie instrukciją

"Tetra Pak" rekomenduoja atidžiai perskaityti visas pateiktas instrukcijas. Pasirūpinkite, kad instrukcijos būtų prieinamos darbuotojams, kurie eksploatuoja arba prižiūri įrangą.

Svarbu šį katalogą išsaugoti visą įrangos tarnavimo laiką ir perduoti jį kitam įrangos savininkui arba naudotojui.

"Tetra Pak" neprisiima atsakomybės už įrangos sugadinimą, jei nesilaikoma nurodymų, pateiktų prie šios įrangos pridedamuose kataloguose.

Pateikiamos instrukcijos

Su šia įranga pateikiamose instrukcijose gali būti

- CM
  Transformacijos instrukcija, suteikianti technikams informaciją apie įrangos transformavimą skirtingiems gamybos režimams.
- EM
  Elektrinės dalies instrukcija, suteikianti technikams informaciją apie įrangos elektros sistemą.
- IM
  Įrengimo instrukcija, suteikianti technikams informaciją, reikalingą norint saugiai sumontuoti įrangą.
- MM
  Techninės priežiūros instrukcija, suteikianti technikams informaciją apie įrangos priežiūrą.
- OM
  Eksploatavimo instrukcijos paskirtis yra suteikti informaciją operatoriui, kaip naudoti ir valdyti įrangą prieš gamybos procesą, jo metu ir po jo.
- SPC
  Atsarginių dalių katalogas, kuriame yra informacija, reikalinga atsarginėms dalims iš "Tetra Pak" užsakyti
- TeM
  Techninė instrukcija
  – suteikia technikams informaciją, reikalingą saugiai sumontuoti įrangą
  – suteikia technikams informaciją apie įrangos priežiūrą
  – suteikia technikams informaciją apie įrangos elektros sistemą
  – suteikia informaciją, reikalingą užsakyti iš "Tetra Pak" atsargines dalis

Puslapių išdėstymas

Žr. paveikslėlį (A) puslapyje i-5. Pagrindiniai atsarginių dalių katalogo puslapiai sudaryti iš paveikslėlio puslapio (1) ir atitinkamo sąrašo puslapio (7). Puslapio numeris (5) nurodomas paveikslėlio puslapio viršuje ir sąrašo puslapio apačioje. Dokumento numeris (6) nurodomas sąrašo puslapio apačioje.

Puslapių numeravimas

Žr. iliustraciją (A) puslapyje i-5. Puslapio numerį (5) sudaro trys dalys:

- skyriaus numeris (2)
- puslapio eilės numeris (3) skyriuje
- bendras puslapių skaičius (4) skyriuje

Įrenginio pristatymas

Gamintojas

Gamintojo pavadinimas ir adresas pateikti antrajame šio katalogo puslapyje.

Aptarnavimas

Jei reikia šiai įrangai užsakyti atsarginių dalių arba pranešti apie jos eksploatavimo nesklandumus, kreipkitės į artimiausią "Tetra Pak" biurą.

Su kitais klausimais, pastabomis ar įrangos ir jos dokumentacijos tobulinimo pasiūlymais kreipkitės į savo kontaktinį asmenį.

Identifikavimas

CE klasifikacija

Šis įrenginys atitinka esminius Europos ekonominės erdvės (EEE) sveikatos ir saugumo reikalavimus.

Vardinė plokštelė

Puslapyje i-5 pateiktame paveikslėlyje (B) parodytas įrangos vardinės plokštelės pavyzdys.
Atitinkamos įrangos vardinė plokštelė ir jos vieta ant įrangos parodoma su šia įranga pateikiamų instrukcijų įvade. Įrangos vardinėje plokštelėje pateikiami žemiau nurodyti duomenys, kurie reikalingi kreipiantis į "Tetra Pak" dėl konkretaus įrenginio.

- Mašinos tipas (8)
- Tomas (9)
- Brėžinių specifikacijos (10)
- Įrangos serijos numeris (11)
- Gamintojas (12)
- CE ženklas (13)
- Pagaminimo metai (14)

Paveikslėlyje (C) puslapyje i-5 parodytas įrangos specifikacijos pavyzdys. Patikrinkite, ar šios instrukcijos pirmuosiuose puslapiuose nurodyti duomenys atitinka duomenis vardinėje plokštelėje ir įrangos specifikaciją.

Kaip naudotis atsarginių dalių katalogu

Atsarginės dalies numerio suradimas

a) Žr. iliustraciją (D) puslapyje i-5. Atsiverskite skyrių (15), nurodytą šalia pagrindinio mazgo, kuriame yra jūsų ieškoma dalis.

Punktai b) ir c) atitinka paveikslėlį (E) puslapyje i-6.

b) Pagrindinio mazgo paveikslėlyje suraskite smulkesnį įrangos mazgą (17), kuriame yra jūsų ieškoma dalis arba mazgas. Pasižiūrėkite pozicijos numerį (18) ir suraskite jį toliau pateiktame sąraše.

c) Suraskite pozicijos numerį/pavadinimą (16) arba smulkesnio mazgo pavadinimą (19). Atsiverskite dešiniajame stulpelyje nurodytą puslapį (20). "Tetra Pak" nusprendė pavadinimuose visada naudoti paskirtį atitinkančią struktūrą. Pavadinimuose nepateikiamas paskirtį atitinkančios struktūros prefiksas (=).

Punktai d) ir e) atitinka paveikslėlį (F) puslapyje i-6.

d) Suraskite ieškomą dalį (21) smulkesnio mazgo paveikslėlyje ir pasižiūrėkite dalies pozicijos numerį.

e) Dalies numeris (29) ir dalies aprašymas (30) sąrašo puslapyje nurodyti šalia pozicijos numerio.

Atsarginių dalių kataloge pateikiama informacija

Žemiau pateiktas sąrašas atitinka paveikslėlį (F) puslapyje i-6. Atsarginių dalių kataloge apie įrangos mazgus, smulkesnius mazgus ir atsargines dalis pateikiama tokia informacija:

- Struktūrinė mazgo nuoroda (22). Nurodo stambesnį mazgą įrangos sąrašo struktūroje.
- Mazgo pavadinimas (23)
- Matavimo vienetai (25)
- Kiekis (26)
- Surinkimo brėžinio numeris (27)
- Sąrašo puslapių intervalas (28) Pateikiamas, jei mazgo paveikslėlis arba sąrašas užima kelis puslapius.
- Dalies arba smulkesnio mazgo numeris (29)
- Smulkesnio mazgo arba dalies aprašymas (30)
- Mazgo numeris (31)
- Įrangos numeris (32)
- Informacijos apie mazgą puslapio antraštė (33). Nurodo, ar po antrašte pateikta informacija yra specifinio įrangos varianto, ar tai paprastų dalių sąrašas. Jei yra daugiau kaip vienas sąrašo variantas ir kiekvienam variantui yra atskiras surinkimo brėžinys, nurodomas puslapis, kuriame pateiktas konkretaus varianto surinkimo brėžinys.
- Vidinė informacija (34)

Ievads

Informācija par rokasgrāmatu

Tetra Pak iesaka rūpīgi izlasīt visas piegādātās rokasgrāmatas. Jānodrošina, lai piegādātas rokasgrāmatas būtu pieejamas personālam, kas apkalpo iekārtas vai veic to apkopi.

Šo katalogu ir nepieciešams saglabāt visu laiku, kamēr iekārtas tiek izmantotas, un nodot katalogu nākamajam īpašniekam vai lietotājam.

Tetra Pak neatbild par jebkuriem iekārtas bojājumiem, kuri rodas līdz ar iekārtu piegādāto instrukciju neievērošanas rezultātā.

Piegādātas rokasgrāmatas

Līdz ar iekārtu var tikt piegādātas šādas rokasgrāmatas

- CM
  Pārslēgšanas rokasgrāmata sniedz tehniķiem informāciju par iekārtas pārslēgšanu dažādos atšķirīgos ražošanas režīmos.
- EM
  Elektriskās instalācijas rokasgrāmata sniedz tehniķiem informāciju par iekārtas elektriskās instalācijas sistēmu.
- IM
  Uzstādīšanas rokasgrāmata sniedz tehniķiem informāciju, kas nepieciešama drošai iekārtas uzstādīšanai.
- MM
  Apkopes rokasgrāmata sniedz tehniķiem informāciju par iekārtas apkopi.
- OM
  Ekspluatācijas rokasgrāmata sniedz apkalpojošajam personālam informāciju par iekārtas apkalpošanu un ekspluatēšanu pirms darba sākuma, darba laikā un pēc darba beigām.
- SPC
  Rezerves daļu katalogs sniedz informāciju, kas nepieciešama, lai pasūtītu rezerves daļas no Tetra Pak
- TeM
  Tehniskā rokasgrāmata
  - sniedz tehniķiem informāciju, kas nepieciešama drošai iekārtas uzstādīšanai
  - sniedz tehniķiem informāciju par iekārtas apkopi
  - sniedz tehniķiem informāciju par mašīnas/iekārtas elektrisko instalāciju
  - sniedz informāciju, kas nepieciešama, lai pasūtītu rezerves daļas no Tetra Pak.

Lappuses izkārtojums

Skatīt ilustrāciju (A) i-5 lappusē: Galvenās lappuses Rezerves daļu katalogā sastāv no ilustrāciju lapas (1) un atbilstīgās saraksta lapas (7). Lappuses numurs (5) ir norādīts ilustrāciju lapas galvenē un saraksta lapas kājenē. Dokumenta numurs (6) ir norādīts saraksta lapas kājenē.

Lappušu numerācija

Skatīt ilustrāciju (A) lappusē i-5: Lappuses numurs (5) sastāv no trim daļām:

- nodaļas numura (2)
- secīga lappuses numura nodaļas ietvaros (3)
- kopējā lappušu skaita nodaļā (3)

Iepazīstināšana ar iekārtu

Ražotājs

Ražotāja nosaukumu un adresi skatīt šī kataloga otrajā lappusē.

Serviss

Lai pasūtītu rezerves daļas šai mašīnai vai lai ziņotu par problēmām saistībā ar šīs mašīnas ekspluatāciju, sazinieties ar tuvāko Tetra Pak pārstāvniecību.

Ja Jums ir citi jautājumi, piezīmes vai ieteikumi par iekārtas un tās dokumentācijas uzlabošanu, tad lūdzam sazināties ar Sakaru biroju.

Identifikācija

EK klasifikācija

Šī iekārta atbilst galvenajām Eiropas Ekonomiskās Zonas (EEA) regulām, kuras attiecas uz veselību un drošību.

Mašīnas tipa plāksnīte

Ilustrācijā (B) i-5 lappusē ir redzams mašīnas tipa plāksnītes paraugs. Aktuālās mašīnas tipa plāksnīte un tās atrašanās vieta uz iekārtas ir parādīta līdz ar šo iekārtu piegādāto rokasgrāmatu Ievada nodaļā. Mašīnas tipa plāksnīte ietver turpmāk uzskaitīto informāciju, kura ir nepieciešama, sazinoties ar Tetra Pak par šo konkrēto iekārtu.

- Mašīnas tips (8)
- Daudzums (9)
- Rasējuma specifikācijas (10)
- Mašīnas sērijas numurs (11)
- Ražotājs (12)
- CE apzīmējums (13)
- Izgatavošanas gads (14)

Ilustrācijā (C) lappusē i-5 ir parādīts mašīnas specifikācijas paraugs. Pārliecinieties, ka šīs rokasgrāmatas titullapās minētā informācija par iekārtu atbilst tai, kas norādīta uz mašīnas tipa plāksnītes un mašīnas specifikācijā.

Rezerves daļu kataloga lietošana

Vajadzīgās rezerves daļas numura atrašana

a) Skatiet ilustrāciju (D) lappusē i-5: Atrodiet nodaļas numuru (15), kas norādīts līdzās galvenajai grupai, kurā ietilpst Jūsu meklētā rezerves daļa.

Pozīcijas b) un c) skatiet ilustrāciju (E) lappusē i-6.

b) Galvenās grupas ilustrācijā atrodiet mašīnas apakšgrupu (17), kurā ietilpst Jūsu meklētā detaļa vai apakšgrupa. Atzīmējiet pozīcijas numuru (18) un pievērsieties saraksta lappusei, kura seko šai ilustrācijai.

c) Sameklējiet atbilstīgo pozīcijas numuru (16) vai apakšgrupas nosaukumu (19). Pievērsieties atbilstīgajam lappuses numuram (20), kas norādīts ailē pa labi. Tetra Pak norādes apzīmēšanai ir izvēlējies vienmēr izmantot uz funkciju orientētu struktūru. Priedēklis, kas norāda uz funkciju orientētu struktūru (=), norādes apzīmējumā nav parādīts.

Pozīcijas d) un e) skatiet ilustrāciju (F) lappusē i-6.

d) Atrodiet vajadzīgo rezerves daļu (21) apakšgrupas ilustrācijā un atzīmējiet šīs detaļas pozīcijas numuru.

e) Šīs detaļas numurs (29) un apraksts (30) atrodas saraksta lapā līdzās pozīcijas numuram.

Rezerves daļu katalogā sniegtā informācija

Šis saraksts attiecas uz ilustrāciju (F) lappusē i-6. Rezerves daļu katalogs satur šādu informāciju par grupām, apakšgrupām un iekārtas rezerves daļām:

- Grupas struktūras norāde (22). Norāda nākamo augstāko grupu iekārtas saraksta struktūrā.
- Grupas nosaukums (23)
- Mērvienība (25)
- Skaits (26)
- Montāžas rasējuma numurs (27)
- Saraksta lappuses zona (28). Tiek izmantota tad, ja grupas ilustrācija vai saraksts ir uz vairākām lappusēm.
- Daļas vai apakšgrupas numurs (29)
- Apakšgrupas nosaukums vai daļas apraksts (30)
- Grupas numurs (31)
- Iekārtas numurs (32)
- Grupas informācijas iedaļas apzīmējums (33). Norāda, vai iedaļa zem šī apzīmējuma attiecas uz noteiktu mašīnas variantu, vai arī tas ir kopējo rezerves daļu saraksts. Ja sarakstam ir vairāk nekā viens variants un katram variantam ir savs montāžas rasējums, tad tiek dota atsauce uz lappusi, kur atrodams katra varianta montāžas rasējums.
- Iekšējā informācija (34)

Inleiding

Informatiehandboek

Tetra Pak adviseert alle meegeleverde handboeken zorgvuldig te lezen. Controleer of het bedienende of onderhoudspersoneel van de machine de beschikking heeft over de meegeleverde handboeken

Het is belangrijk deze catalogus tijdens de levensduur van de machine te bewaren en de catalogus door te geven aan iedere volgende eigenaar of gebruiker.

Tetra Pak stelt zich niet aansprakelijk voor eventuele schade aan de installatie als gevolg van het niet naleven van de instructies die in de meegeleverde handboeken worden gegeven.

Meegeleverde handboeken

De bij deze installatie meegeleverde handboeken omvatten

- CM
  Het conversiehandboek geeft technici informatie met betrekking tot de ombouw van de installatie tussen verschillende productiemodi.
- EM
  Het elektriciteitshandboek informeerttechnici omtrent het elektrischesysteem van de installatie.
- IM
  Het installatiehandboek informeert technici hoe men de installatie op veilige wijze installeert.
- MM
  Het onderhoudshandboek geeft technici informatie over het onderhoud van de installatie.
- OM
  Het bedieningshandboek informeert de operator betreffende het omgaan met en het bedienen van de installatie voor, tijdens en na de productie.
- SPC
  De reserveonderdelencatalogus geeft de nodige informatie omtrent het bestellen van reserveonderdelen bij Tetra Pak
- TeM
  Het technische handboek
  - informeert technici hoe men de installatie op veilige wijze installeert
  - informeert technici omtrent het onderhoud van de installatie
  - informeert technici omtrent het elektrische systeem van de machine/ installatie
  - informeert over welke informatie men nodig heeft om reserveonderdelen bij Tetra Pak te bestellen.

Pagina layout

Zie afbeelding (A) op pagina i-5: De belangrijkste bladzijden van een reserveonderdelencatalogus bestaan uit een bladzijde met afbeeldingen (1) en een bladzijde met een corresponderende lijst (7). Het bladzijde-nummer (5) is te vinden in de kop van een bladzijde met een afbeelding en in de voetnoot van een lijstbladzijde. Het documentennummer (6) is te vinden in de voetnoot van een lijstbladzijde.

Bladzijdenummering

Zie afbeelding (A) op pagina: i-5: Een bladzijdenummer (5) bestaat uit drie delen:

- hoofdstuknummer (2)
- opeenvolgend bladzijdenummer in het hoofdstuk (3)
- totaal aantal bladzijden in het hoofdstuk (4)

Introductie van de machine

Fabrikant

Zie de tweede bladzijde van deze catalogus voor naam en adres van de fabrikant.

Service

Neem voor het bestellen van reserveonderdelen voor deze machine, of om bedieningsproblemen met betrekking tot deze machine te melden, contact op met de dichtstbijzijnde Tetra Pak vestiging.

Neem contact op met de contactpersoon voor verdere informatie, opmerkingen of suggesties ter verbetering van de installatie en de bijbehorende documentatie.

Identificatie

CE-classificatie

Deze installatie voldoet aan de basisvoorschriften voor gezondheid en veiligheid voor het Europese Economische Gebied (EEG).

Machineplaatje

Afbeelding (B) op bladzijde i-5 toont een voorbeeld van een machineplaatje. Een afbeelding van het geldige machineplaatje en de plaatsing ervan worden getoond in de Inleiding van de handboeken, die bij deze installatie worden meegeleverd. Het machineplaatje bevat onderstaande gegevens, die men nodig heeft wanneer men omtrent de desbetreffende installatie contact opneemt met Tetra Pak.

- Machinetype (8)
- Volume (9)
- Specificatietekeningen (10)
- Serienummer van de machine (11)
- Fabrikant (12)
- CE-markering (13)
- Jaar van fabrikage (14)

Afbeelding (C) op pagina i-5 toont een voorbeeld van een machinespecificatie. Controleer of de gegevens betreffende de installatie op de eerste bladzijden van dit handboek overeenkomen met de gegevens op het machineplaatje en de machinespecificatie.

Gebruik van de reserveonderdelencatalogus

Vinden van het bestelnummer van een reserveonderdeel

a) Zie afbeelding (D) op pagina i-5: Ga naar het hoofdstuknummer (15) dat wordt aangeven naast de hoofdgroep waarin zich het door u gezochte onderdeel bevindt.

Items b) en c) verwijzen naar afbeelding (E) op pagina i-6.

b) Op de afbeelding van de hoofdgroep zoekt u de machinesubgroep (17), die het gezochte onderdeel of de gezochte subgroep bevat. Noteer het positienummer (18) en ga naar de lijstbladzijde die op de afbeelding volgt.

c) Zoek naar het positienummer/de referentie (16) of de subgroep-naam (19). Ga naar de corresponderende bladzijde (20) die in de rechterkolom staat vermeld. Tetra Pak heeft voor de benoeming van de referenties gekozen voor de functiegeoriënteerde structuur. De prefixaanduidende functiegeoriënteerde structuur (=) wordt niet in de referentie getoond.

Items d) en e) verwijzen naar afbeelding (F) op pagina i-6.

d) Zoek het gewenste deel (21) op de subgroepafbeelding en noteer het positienummer van het onderdeel.

e) Het bestelnummer (29) en de omschrijving (30) van het onderdeel staan naast het positienummer op de lijstbladzijde.

Informatie die in een reserveonderdelencatalogus wordt gegeven

De onderstaande lijst verwijst naar afbeelding (F) op bladzijde i-6. Een reserveonderdelencatalogus bevat de volgende informatie over groepen, subgroepen en reserveronderdelen voor de installatie:

- Referentie groepstructuur (22). Geeft de volgende hogere groep in de lijststructuur van de installatie aan.
- Groepsnaam (23)
- Meeteenheid (25)
- Hoeveelheid (26)
- Nummer montagetekening (27)
- Lijst bladzijdenreeks (28). Wordt vermeld wanneer er meerdere bladzijden in de groepsafbeelding of -lijst voorkomen.
- Deel- of subgroepnummer (29)
- Subgroepnaam of onderdeelbeschrijving (30)
- Groepsnummer (31)
- Machinenummer (32)
- Titel groepsinformatie (33). Geeft aan of het gedeelte onder de titel voor een specifieke machinesoort is of dat het een lijst met gebruikelijke onderdelen is. Indien een lijst meer dan één type bevat en ieder type zijn eigen montagetekening heeft, wordt een bladzijdereferentie getoond voor de montagetekening van het type.
- Interne informatie (34)

Introduksjon

Informasjon om manualen

Tetra Pak anbefaler at du leser nøye gjennom alle leverte manualer. Sørg for at manualene er tilgjengelige for alle som betjener eller vedlikeholder utstyret.

Det er viktig at du tar vare på denne katalogen under hele levetiden til utstyret og at du gir den videre til eventuelle nye eiere eller brukere.

Tetra Pak vil ikke være ansvarlig for skader på utstyret som oppstår fordi brukeren ikke følger instruksjonene i manualene som følger med utstyret.

Leverte manualer

Manualene som leveres med dette utstyret, kan inkludere

- CM
  Konverteringsmanualen gir teknikere informasjon om hvordan de konverterer utstyret mellom ulike produksjonsmodi.
- EM
  Den elektriske manualen gir teknikere informasjon om utstyrets elektriske system.
- IM
  Installasjonsmanualen gir teknikere informasjon som kreves for å kunne installere utstyret på en sikker måte.
- MM
  Vedlikeholdsmanualen gir teknikere informasjon om vedlikehold av utstyret.
- OM
  Driftsmanualen gir operatøren informasjon om hvordan han håndterer og bruker utstyret før, under og etter produksjon.
- SPC
  Reservedelskatalogen inneholder informasjon som du trenger for å bestille reservedeler fra Tetra Pak
- TeM
  Den tekniske manualen
  – gir teknikere informasjon om sikker installasjon av utstyret
  – gir teknikere informasjon om vedlikehold av utstyret
  – gir teknikere informasjon om maskinens/utstyrets elektriske system
  – inneholder informasjon som du trenger for å bestille reservedeler fra Tetra Pak.

Sideoppsett

Se illustrasjonen (A) på side i-5: Hovedsidene i reservedelskatalogen består av en illustrasjonsside (1) og en korresponderende listeside (7). Sidenummeret (5) vises i topteksten på illustrasjonssiden og i bunnteksten på listesiden. Dokumentnummeret (6) vises i bunnteksten på listesiden.

Sidenummerering

Se illustrasjonen (A) på side i-5: Et sidenummer (5) består av tre deler:

- kapittelnummer (2)
- etterfølgende sidenummer i kapitlet (3)
- det totale antall sider i kapitlet (4)

Introduksjon av maskinen

Produsent

Hvis du ønsker produsentens navn og adresse, kan du se side to i denne katalogen.

Service

Når du skal bestille reservedeler til denne maskinen eller rapportere problemer forbundet med driften av denne maskinen, må du kontakte ditt nærmeste Tetra Pak-kontor.

Når det gjelder andre forespørsler, kommentarer eller forslag til forbedringer av utstyret og dets dokumentasjon, kan du ta kontakt med din kontaktperson.

Identifisering

CE-klassifisering

Dette utstyret er i overensstemmelse med de grunnleggende helse- og sikkerhetsforskriftene i Det europeiske økonomiske samarbeidsområdet (EØS).

Maskinplate

Illustrasjonen (B) på side i-5 viser et eksempel på en maskinplate.
En illustrasjon av en gyldig maskinplate og hvor denne er plassert på utstyret, er vist i introduksjonskapitlet i manualene som følger med dette utstyret. Maskinplaten inneholder nedenstående data, som du trenger når du skal kontakte Tetra Pak angående dette bestemte utstyret.

- Maskintype (8)
- Volum (9)
- Tegningsspesifikasjoner (10)
- Maskin-serienummer (11)
- Produsent (12)
- CE-merke (13)
- Produksjonsår (14)

Illustrasjonen (C) på side i-5 viser et eksempel på en maskinspesifikasjon. Sørg for at utstyrsdataene som står oppført foran i denne manualen, samsvarer med dataene på maskinplaten og maskinspesifikasjonen.

Hvordan bruke denne reservedelskatalogen

Finn et reservedelsnummer

a) Se illustrasjonen (D) på side i-5: Gå til kapittelnummeret (15) som er angitt ved siden av hovedgruppen som inneholder delen du vil finne.

Punkt b) og c) viser til illustrasjonen (E) på side i-6.

b) På hovedgruppeillustrasjonen ser du etter maskinundergruppen (17) som inneholder delen eller undergruppen du ser etter. Merk deg posisjonsnummeret (18), og gå til listesiden som kommer etter illustrasjonen.

c) Se etter posisjonsnummeret/referansebetegnelsen (16) eller undergruppenavnet (19). Gå til det korresponderende sidenummeret (20) som står oppført i høyre kolonne. Tetra Pak har valgt å alltid bruke den funksjonsorienterte inndelingen for referansebetegnelse. Prefiksen som angir funksjonsorientert inndeling (=), er ikke vist i referansebetegnelsen.

Punkt d) og e) viser til illustrasjonen (F) på side i-6.

d) Finn delen (21) du ser etter på undergruppeillustrasjonen, og merk deg delens posisjonsnummer.

e) Delenummeret (29) og delebeskrivelsen (30) finner du ved siden av posisjonsnummeret på listesiden.

Informasjon i en reservedelskatalog

Listen nedenfor viser til illustrasjonen (F) på side i-6. En reservedelskatalog inneholder følgende informasjon om grupper, undergrupper og reservedeler for utstyret:

- Gruppeinndelingsreferanse (22). Angir den neste gruppen opp i inndelingen av utstyrslisten.
- Gruppenavn (23)
- Målenhet (25)
- Antall (26)
- Tegningsnummer (27)
- Listesideområde (28). Inkludert hvis det er flere sider i gruppe-illustrasjonen eller listen.
- Dele- eller undergruppenummer (29)
- Undergruppenavn eller delebeskrivelse (30)
- Gruppenummer (31)
- Utstyrsnummer (32)
- Gruppeinformasjonsoverskrift (33). Angir om avsnittet under overskriften er for en bestemt maskinvariant eller om det er en liste over vanlige deler. Hvis en liste har flere varianter og hver variant har sin egen sammenstillingstegning, vises det en sidereferanse til variantens sammenstillingstegning.
- Intern informasjon (34)

Wprowadzenie

Informacje na temat instrukcji

Firma Tetra Pak zaleca dokładne przeczytanie wszystkich dostarczonych instrukcji. Należy upewnić się, że dostarczone instrukcje są dostępne dla personelu, który obsługuje lub konserwuje maszynę.

Należy przechowywać ten katalog przez cały okres użytkowania maszyny i przekazać go kolejnemu właścicielowi lub użytkownikowi.

Firma Tetra Pak nie będzie ponosić odpowiedzialności za jakiekolwiek uszkodzenia maszyny spowodowane niestosowaniem się do zaleceń zawartych w instrukcjach dostarczonych z maszyną.

Dostarczone instrukcje

W skład dokumentacji dostarczonej z maszyną wchodzą:

- Instrukcja konwersji (CM)
  W tej instrukcji zawarte są informacje dotyczące dostosowania maszyny do różnych trybów produkcji.
- Instrukcja dotycząca wyposażenia elektrycznego (EM)
  W tej instrukcji zawarte są informacje dotyczące układu elektrycznego maszyny.
- Instrukcja instalacji (IM)
  W tej instrukcji zawarte są informacje niezbędne do bezpiecznego zainstalowania maszyny.
- Instrukcja konserwacji (MM)
  W tej instrukcji zawarte są informacje dotyczące konserwacji maszyny.
- Instrukcja obsługi (OM)
  W tej instrukcji zawarte są informacje dotyczące obsługi maszyny przed rozpoczęciem produkcji, w jej trakcie oraz po jej zakończeniu.
- Katalog części zamiennych (SPC)
  W katalogu zawarte są informacje dotyczące zamawiania części zamiennych w firmie Tetra Pak.
- Instrukcja techniczna (TeM)
  Instrukcja techniczna zawiera informacje:
  - dotyczące bezpiecznego instalowania maszyny,
  - dotyczące konserwacji maszyny,
  - dotyczące układu elektrycznego maszyny,
  - dotyczące zamawiania części zamiennych w firmie Tetra Pak.

Układ strony

Patrz rysunek (A) na stronie i-5: Główne strony w Katalogu części zamiennych składają się ze strony zawierającej rysunek (1) i odpowiadającej jej strony zawierającej listę (7). Numer strony (5) znajduje się w nagłówku strony zawierającej rysunek i w stopce strony zawierającej listę. Numer dokumentu (6) znajduje się w stopce strony zawierającej listę.

Numeracja stron

Patrz rysunek (A) na stronie i-5: Numer strony (5) składa się z trzech części:

- numeru rozdziału (2),
- kolejnego numeru strony w rozdziale (3),
- całkowitej liczby stron w rozdziale (4).

Ogólne informacje o maszynie

Producent

Nazwę i adres producenta można znaleźć na drugiej stronie niniejszego katalogu.

Serwis

Aby zamówić części zapasowe do tej maszyny lub zgłosić problemy związane z jej pracą, należy skontaktować się z najbliższym biurem Tetra Pak.

Można kontaktować się także w przypadku innych zapytań, uwag lub sugestii dotyczących udoskonalenia urządzenia i dokumentacji.

Identyfikacja

Klasyfikacja CE

Maszyna spełnia podstawowe wymogi z zakresu bezpieczeństwa i ochrony zdrowia obowiązujące w Europejskiej Strefie Ekonomicznej (EEA).

Tabliczka znamionowa

Na rysunku (B), znajdującym się na stronie i-5, pokazano przykładową tabliczkę znamionową.
Rysunek prawidłowej tabliczki znamionowej oraz jej umiejscowienie na maszynie pokazano w rozdziale Wprowadzenie zawartym w instrukcjach dostarczonych z maszyną. Tabliczka znamionowa zawiera następujące dane potrzebne w przypadku kontaktowania się z firmą Tetra Pak w sprawie dotyczącej danej maszyny:

- typ maszyny (8),
- objętość (9),
- specyfikacje rysunkowe (10),
- numer seryjny maszyny (11),
- nazwę producenta (12),
- oznaczenie CE (13),
- rok produkcji (14).

Na rysunku (C) zamieszczonym na stronie i-5 pokazano przykład specyfikacji maszyny. Należy sprawdzić, czy dane dotyczące maszyny przedstawione na pierwszej stronie tej instrukcji odpowiadają danym zawartym na tabliczce znamionowej maszyny oraz specyfikacji maszyny.

Jak korzystać z niniejszego Katalogu części zamiennych

Należy odnaleźć numer części zamiennej

a) Zapoznaj się z rysunkiem (D) na stronie i-5: przejdź do numeru rozdziału (15) pokazanego obok głównej grupy zawierającej część, którą chcesz odszukać.

Punkty b) i c) odnoszą się do rysunku (E) na stronie i-6.

b) Na rysunku grupy głównej odszukaj podgrupę maszyny (17), która zawiera odpowiednią część lub podgrupę, której szukasz. Zanotuj numer pozycji (18) i przejdź do strony z listą odpowiadającą rysunkowi.

c) Odszukaj numer pozycji/oznaczenie odnośnika (16) lub nazwę podgrupy (19). Przejdź do odpowiedniego numeru strony (20) podanego w kolumnie umieszczonej po prawej stronie. Firma Tetra Pak w przypadku oznaczenia odnośnika korzysta ze struktury ukierunkowanej na funkcję. Przedrostek wskazujący strukturę ukierunkowaną na funkcję (=) nie jest pokazany w oznaczeniu odnośnika.

Punkty d) i e) odnoszą się do rysunku (F) na stronie i-6.

d) Na rysunku podgrupyodszukaj odpowiednią część (21) i zanotuj numer pozycji części.

e) Numer części (29) oraz jej opis (30) podano na stronie zawierającej listę obok numeru pozycji.

Informacje zawarte w Katalogu części zamiennych

Poniższa lista odnosi się do rysunku (F), znajdującego się na stronie i-6. Katalog części zamiennych zawiera następujące informacje o grupach, podgrupach oraz częściach zamiennych maszyny:

- Odnośnik struktury grup (22). Wskazuje następną wyższą grupę zawartą w strukturze listy maszyny.
- Nazwa grupy (23).
- Jednostka miary (25).
- Liczba (26).
- Numer rysunku złożeniowego (27).
- Zakres stron zawierających listę (28). Podany w przypadku występowania wielu stron zawierających rysunek grupy lub listę.
- Numer części lub podgrupy (29).
- Nazwa podgrupy lub opis części (30).
- Numer grupy (31).
- Numer maszyny (32).
- Nagłówek informacyjny grupy (33). Wskazuje, czy sekcja umieszczona pod nagłówkiem dotyczy określonego wariantu maszyny, czy też jest to lista wspólna dla wszystkich wariantów. Jeśli lista występuje w wielu wariantach i dla każdego z nich dostępny jest osobny rysunek złożeniowy, podany jest odnośnik strony do rysunku złożeniowego dla danego wariantu.
- Informacje wewnętrzne (34).

Introdução

Informações sobre o Manual

A Tetra Pak recomenda que leia atentamente todos os manuais incluídos. Certifique-se de que os manuais incluídos estão disponíveis para o pessoal que utiliza ou faz a manutenção do equipamento.

É importante que mantenha este catálogo durante toda a vida útil do equipamento, devendo ainda ser fornecido a quaisquer proprietários e operadores subsequentes do mesmo.

A Tetra Pak não será responsável por quaisquer danos no equipamento provocados pelo não seguimento das instruções fornecidas nos manuais que acompanham este equipamento.

Manuais Fornecidos

Os manuais fornecidos com este equipamento podem incluir

- CM
  O Manual de Conversão (Conversion Manual) fornece aos técnicos informações sobre a conversão do equipamento entre modos de produção diferentes.
- EM
  O Manual Eléctrico (Electrical Manual) fornece aos técnicos informações sobre o sistema eléctrico do equipamento.
- IM
  O Manual de Instalação (Installation Manual) fornece aos técnicos as informações necessárias à instalação do equipamento em segurança.
- MM
  O Manual de Manutenção (Maintenance Manual) fornece aos técnicos informações sobre como realizar a manutenção do equipamento.
- OM
  O Manual de Funcionamento (Operation Manual) fornece ao operador informações sobre o manuseamento e funcionamento do equipamento antes, durante e após a produção.
- SPC
  O Spare Parts Catalogue (Catálogo das Peças Sobressalentes) fornece as informações necessárias para encomendar peças sobressalentes à Tetra Pak
- TeM
  O Manual Técnico (Technical Manual)
  - fornece aos técnicos as informações necessárias à instalação do equipamento em segurança
  - fornece aos técnicos informações sobre a manutenção do equipamento
  - fornece aos técnicos informações sobre o sistema eléctrico da máquina/equipamento
  - fornece as informações necessárias para encomendar peças sobressalentes à Tetra Pak.

Desenho da Página

Consulte a ilustração (A) na página i-5: As páginas principais num Catálogo de Peças Sobressalentes são constituídas por uma página de ilustração (1) e uma página de lista correspondente (7). O número de página (5) é apresentado no cabeçalho de uma página de ilustração e no rodapé de uma página de lista. O número do documento (6) é apresentado no rodapé de uma página de lista.

Numeração das Páginas

Consulte a ilustração (A) na página i-5: Um número de página (5) tem três partes:

- número do capítulo (2)
- número das páginas consecutivas dentro do capítulo (3)
- número de páginas total no capítulo (4)

Introdução da Máquina

Fabricante

Quanto ao nome e endereço do fabricante, consulte a segunda página deste catálogo.

Manutenção

Para encomendar peças sobressalentes para esta máquina ou para apresentar relatórios de problemas associados com o funcionamento desta máquina, contacte os escritórios mais próximos da Tetra Pak.

Contacte a Ligação com outras questões, comentários ou sugestões para melhoria referentes ao equipamento e à sua documentação.

Identificação

Classificação da CE

Este equipamento está em conformidade com as regulamentações básicas da saúde e segurança da Área Económica Europeia (AEE).

Chapa de Identificação da Máquina

A ilustração (B) na página i-5 mostra um exemplo de uma chapa de identificação da máquina.
No capítulo Introdução dos manuais entregues com este equipamento é apresentada uma ilustração da chapa de identificação válida da máquina e a sua localização no equipamento. A chapa de identificação da máquina contém os dados listados em baixo, necessários quando contactar a Tetra Pak em relação a este equipamento específico.

- Tipo de máquina (8)
- Volume (9)
- Especificações do desenho (10)
- Número de série da máquina (11)
- Fabricante (12)
- Marca da CE (13)
- Ano de fabricação (14)

A ilustração (C) na página i-5 mostra um exemplo de uma especificação da máquina. Certifique-se de que os dados do equipamento listados nas primeiras páginas deste manual correspondem aos dados indicados na chapa de identificação da máquina e às especificações da máquina.

Como utilizar este Catálogo de Peças Sobressalentes

Localize o Número da Peça Sobressalente

a) Consulte a ilustração (D) na página i-5: Vá para o número do capítulo (15) indicado no grupo principal que contém a peça que pretende localizar.

Os itens b) e c) referem-se à ilustração (E) na página i-6:

b) Na ilustração do grupo principal, procure o subgrupo da máquina (17) que contém a peça ou o subgrupo que procura. Tome nota do número de posição (18) e vá para a página de lista a seguir à ilustração.

c) Procure o número de posição/designação de referência (16) ou o nome do subgrupo (19). Vá para o número de página correspondente (20) indicado na coluna do lado direito. A Tetra Pak preferiu utilizar sempre a estrutura orientada para a função como designação de referência. O prefixo que inicia a estrutura orientada para a função (=) não está indicada na designação de referência.

Os itens d) e e) referem-se à ilustração (F) na página i-6:

d) Localize a peça (21) que procura na ilustração do subgrupo e tome nota do número de posição da peça.

e) O número de peça (29) e a descrição da peça (30) são apresentados ao lado do número da posição na página de lista.

Informações listadas num Catálogo de Peças Sobressalentes

A lista em baixo refere-se à ilustração (F) na página i-6: Um Catálogo de Peças Sobressalentes contém as seguintes informações sobre grupos, subgrupos e peças sobressalentes para o equipamento:

- Referência da estrutura do grupo (22). Indica o grupo mais elevado seguinte na estrutura da lista do equipamento.
- Nome do grupo (23)
- Unidade de medida (25)
- Quantidade (26)
- Número de série do conjunto (27)
- Intervalo de páginas da lista (28). Incluído se existirem várias páginas na ilustração ou na lista do grupo.
- Número de peça ou subgrupo (29)
- Nome do subgrupo ou descrição da peça (30)
- Número do grupo (31)
- Número do equipamento (32)
- Cabeçalho das informações do grupo (33). Indica se a secção em baixo do cabeçalho é de uma variante específica da máquina ou se é uma lista de peças comuns. Se uma lista tiver mais de uma variante e cada variante tiver o seu próprio desenho de conjunto, é apresentada uma referência de página ao desenho do conjunto da variante.
- Informações internas (34)

Introducere

Informații despre manual

Tetra Pak recomandă citirea cu atenție a tuturor manualelor livrate. Asigurați-vă că manualele livrate sunt puse la îndemâna personalului care exploatează sau întreține echipamentul.

Este important să păstrați acest catalog pe întreaga durată de viață a echipamentului și să transmiteți catalogul deținătorilor sau utilizatorilor ulteriori.

Tetra Pak nu va fi răspunzător pentru niciun defect al echipamentului cauzat prin nerespectarea instrucțiunilor date în manualele care însoțesc acest echipament.

Manuale livrate

Manualele livrate cu acest echipament pot include

- CM
  Manualul de conversie furnizează tehnicienilor informații despre conversia echipamentului între diferite moduri de producție.
- EM
  Manualul electric furnizează tehnicienilor informații despre sistemul electric al echipamentului.
- IM
  Manualul de instalare furnizează tehnicienilor informații necesare pentru instalarea în siguranță a echipamentului.
- MM
  Manualul de întreținere furnizează tehnicienilor informații cu privire la întreținerea echipamentului.
- OM
  Manualul de exploatare pune la dispoziție operatorilor informații despre manevrarea și exploatarea echipamentului înainte, în timpul și după producție.
- SPC
  Catalogul pieselor de schimb furnizează informații necesare pentru comandarea pieselor de schimb de la Tetra Pak.
- TeM
  Manualul tehnic
  – furnizează tehnicienilor informații necesare pentru instalarea în siguranță a echipamentului
  – furnizează tehnicienilor informații necesare cu privire la întreținerea echipamentului
  – furnizează tehnicienilor informații despre sistemul electric al mașinii/echipamentului
  – furnizează informații necesare pentru comandarea pieselor de schimb de la Tetra Pak.

Configurația paginilor

Examinați ilustrația (A) de pe pagina i-5: Paginile principale dintr-un catalog de piese de schimb constau dintr-o pagină de ilustrare (1) și o pagină de liste corespunzătoare (7). Numărul paginii (5) apare în antetul unei pagini de ilustrare și în subsolul unei pagini de liste. Numărul documentului (6) apare în subsolul unei pagini de liste.

Numerotarea paginilor

Examinați ilustrația (A) de la pagina i-5: Un număr de pagină (5) are trei părți:

- numărul capitolului (2)
- numărul paginii consecutive din cadrul capitolului (3)
- număr total de pagini din capitol (4)

Prezentare introductivă a mașinii

Producător

Pentru numele și adresa producătorului, consultați pagina a doua a acestui catalog.

Service

Pentru comandarea pieselor de schimb pentru această mașină sau pentru a raporta problemele asociate cu exploatarea acestei mașini, contactați cel mai apropiat birou Tetra Pak.

Contactați Liaison cu privire la alte întrebări, comentarii sau sugestii legate de îmbunătățirea echipamentului și a documentației acestuia.

Identificare

Clasificare CE

Acest echipament este fabricat în conformitate cu reglementările de bază cu privire la sănătate și siguranță din Zona economică europeană (EEA).

Plăcuța mașinii

Ilustrația (B) de la pagina i-5 arată un exemplu al unei plăcuțe de mașină. O ilustrație a plăcuței valide a mașinii și a poziției acesteia pe echipament este arătată în capitolul introductiv al manualelor livrate împreună cu acest echipament. Plăcuța mașinii conține datele listate mai jos, necesare în cazul în care contactați Tetra Pak în legătură cu acest echipament specific.

- Tip mașină (8)
- Volum (9)
- Specificații de desen (10)
- Număr de serie al mașinii (11)
- Producător (12)
- Marcaj CE (13)
- Anul fabricației (14)

Ilustrația (C) de la pagina i-5 arată un exemplu al unei specificații de mașină. Asigurați-vă că datele specifice echipamentului, listate în paginile din față ale acestui manual, corespund cu datele de pe plăcuța mașinii și cu specificațiile mașinii.

Cum se utilizează acest catalog de piese de schimb

Localizarea unui număr de piesă de schimb

a) Examinați ilustrația (D) de la pagina i-5: Treceți la numărul de capitol (15) indicat lângă grupa principală care conține piesa pe care doriți să o localizați.

Articolele b) și c) se referă la ilustrația (E) de la pagina i-6.

b) Pe ilustrația grupei principale, căutați subgrupa aferentă mașinii (17) care conține piesa sau subgrupa pe care o căutați. Notați numărul poziției (18) și treceți la pagina de liste care urmează după ilustrație.

c) Căutați numărul poziției/marcarea de referință (16) sau numele subgrupei (19). Treceți la numărul de pagină corespunzător (20) listat în coloana din partea dreaptă. Tetra Pak a optat ca întotdeauna să utilizeze structura orientată pe funcție pentru marcarea de referință. Prefixul care indică structura orientată pe funcție (=) nu este arătat în marcarea de referință.

Articolele d) și e) se referă la ilustrația (F) de la pagina i-6.

d) Localizați piesa (21) pe care o căutați pe ilustrația subgrupei și notați numărul de poziție al piesei.

e) Numărul piesei (29) și descrierea piesei (30) sunt listate lângă numărul de poziție de pe pagina de liste.

Informațiile listate într-un catalog de piese de schimb

Lista de mai jos se referă la ilustrația (F) de la pagina i-6. Un catalog de piese de schimb conține următoarele informații despre grupe, subgrupe și piese de schimb pentru echipament:

- Referința despre structura grupelor (22). Indică următoarea grupă superioară din structura de liste a echipamentului.
- Numele grupei (23)
- Unitatea de măsură (25)
- Cantitatea (26)
- Numărul de desen de ansamblu (27)
- Intervalul de pagini de liste (28). Inclus dacă există mai multe pagini în ilustrația sau lista grupei.
- Numărul piesei sau al subgrupei (29)
- Numele subgrupei sau descrierea piesei (30)
- Numărul grupei (31)
- Numărul echipamentului (32)
- Antet cu informații despre grupă (33). Indică dacă secțiunea de sub antet se referă la o anumită variantă de mașină sau este o listă de piese comune. Dacă o listă are mai multe variante și fiecare variantă are propriul său desen de ansamblu, este arătată o referință de pagină pentru desenul de ansamblu al variantei.
- Informații interne (34)

Úvod

Informácie o návode

Spoločnosť Tetra Pak odporúča, starostlivo si prečítať všetky dodané návody. Dbajte, aby pracovníci, obsluhujúci zariadenie alebo zabezpečujúci jeho údržbu, mali vždy dodané návody k dispozícii.

Je dôležité, aby bol tento katalóg k dispozícii počas celého času životnosti zariadenia, a aby sa katalóg dostal aj k jeho prípadnému ďalšiemu držiteľovi alebo používateľovi.

Spoločnosť Tetra Pak nepreberá zodpovednosť za akékoľvek poškodenie zariadenia spôsobené nedodržaním pokynov uvedených v návodoch dodávaných s týmto zariadením.

Dodané návody

S týmto zariadením vám mohli byť dodané nasledujúce návody:

- CM
  Návod na prestavovanie poskytuje technikom informácie o prestavovaní zariadenia do rôznych výrobných režimov.
- EM
  Elektrotechnický návod poskytujetechnikom informácie o elektrickom systéme zariadenia.
- IM
  Návod na inštaláciu poskytuje technikom informácie potrebné na bezpečnú inštaláciu zariadenia.
- MM
  Návod na údržbu poskytujetechnikom informácie o údržbe zariadenia.
- OM
  Návod na obsluhu poskytuje obsluhe informácie o zaobchádzaní a obsluhe zariadenia pred, počas a po prevádzke.
- SPC
  Katalóg náhradných dielcov poskytuje informácie potrebné na objednávanie náhradných dielcov od spoločnosti Tetra Pak
- TeM
  Technický návod
  - poskytuje technikom informácie potrebné na bezpečnú inštaláciu zariadenia
  - poskytuje technikom informácie o údržbe zariadenia
  - poskytuje technikom informácie o elektrickom systéme stroja/ zariadenia
  - poskytuje informácie potrebné na objednávanie náhradných dielcov od spoločnosti Tetra Pak.

Rozloženie strany

Pozri ilustráciu (A) na strane i-5: Hlavné strany Katalógu náhradných dielcov obsahujú stránku s ilustráciami (1) a príslušnú stranu so zoznamom (7). Číslo strany (5) sa uvádza v záhlaví na strane s ilustráciami a v päte strany so zoznamom. Číslo dokumentu (6) sa uvádza v päte strany so zoznamom.

Číslovanie strán

Pozri ilustráciu (A) na strane i-5: Číslo strany (5) má tri časti:

- číslo kapitoly (2)
- poradové číslo strany v rámci kapitoly (3)
- celkový počet strán v kapitole (4)

Základné informácie o stroji

Výrobca

Meno a adresa výrobcu sa uvádza na druhej strane tohto katalógu.

Servis

Pri objednávaní náhradných dielcov pre tento stroj alebo na nahlasovanie problémov súvisiacich s prevádzkou tohto stroja sa obráťte na najbližšie zastúpenie spoločnosti Tetra Pak.

S ostatnými otázkami, pripomienkami a podnetmi na vylepšenie stroja alebo zariadenia a jeho dokumentácie sa obracajte na kontaktnú osobu.

Identifikácia

Klasifikácia CE

Toto zariadenie spĺňa základné predpisy o ochrane zdravia a bezpečnosti Európskeho hospodárskeho priestoru (EEA).

Typový štítok stroja

Na ilustrácii (B) na strane i-5 uvádzame príklad typového štítku. Ilustrácia platného typového štítku stroja a jeho umiestnenia na zariadení sa uvádza v kapitole Úvod v návodoch, dodaných s týmto zariadením. Typový štítok obsahuje dolu údaje uvedené, potrebné pri kontaktoch so spoločnosťou Tetra Pak ohľadom tohto špecifického zariadenia.

- Typ stroja (8)
- Objem (9)
- Údaje o výkrese (10)
- Výrobné číslo stroja (11)
- Výrobca (12)
- Značka CE (13)
- Rok výroby (14)

Ilustrácia (C) na strane i-5 zobrazuje príklad špecifikácie stroja. Presvedčite sa, že údaje zariadenia uvedené na predných stranách tohto návodu zodpovedajú údajom na typovom štítku a v špecifikácii stroja.

Ako sa tento Katalóg náhradných dielcov používa

Vyhľadanie čísla náhradného dielca

a) Pozri ilustráciu (D) na strane i-5: Prejdite na číslo kapitoly (15) uvedené vedľa hlavnej skupiny obsahujúcej dielec, ktorý chcete vyhľadať.

Položky b) a c) odkazujú na ilustráciu (E) na strane i-6.

b) Na ilustrácii hlavnej skupiny hľadajte podskupinu stroja (17), ktorý obsahuje dielec alebo podskupinu, ktorú hľadáte. Poznamenajte si číslo položky (18) a prejdite stranu so zoznamom nasledujúcu po ilustrácii.

c) Vyhľadajte číslo položky/referenčné označenie (16) alebo názov podskupiny (19). Prejdite na príslušné číslo strany (20) uvedené v zozname v pravom stĺpci. Spoločnosť Tetra Pak sa rozhodla vždy používať funkčne zameranú štruktúru na referenčné označovanie. Predčíslie udávajúce funkčne orientovanú štruktúra (=) sa v referenčnom označení nezobrazuje.

Položky d) a e) odkazujú na ilustráciu (F) na strane i-6.

d) Nájdite dielec (21), ktorý hľadáte, na ilustrácii podskupiny a poznamenajte si číslo položky daného dielca.

e) Číslo dielca (29) a popis dielca (30) sa uvádza vedľa čísla položky na stránke so zoznamom.

Informácie uvádzané v Katalógu náhradných dielcov

Dolu uvedený zoznam odkazuje na ilustráciu (F) na strane i-6. Katalóg náhradných dielcov obsahuje nasledujúce informácia o skupinách, podskupinách a náhradných dielcov zariadenia:

- Referenčná štruktúrna skupina (22). Označuje najbližšiu vyššiu skupinu v štruktúre zoznamu zariadenia.
- Názobv skupiny (23)
- Jednotka merania (25)
- Množstvo (26)
- Číslo výkresu celkovej zostavy (27)
- Rozsah strán zoznamu (28). Uvádza sa, ak má ilustrácia alebo zoznam skupiny viac strán.
- Číslo dielca alebo podskupiny (29)
- Názov podskupiny alebo popis dielca (30)
- Číslo skupiny (31)
- Číslo zariadenia (32)
- Záhlavie informácií o skupine (33). Uvádza, či je časť nasledujúca pod záhlavím určená pre špecifický variant stroja, alebo či ide o zoznam spoločných dielcov. Ak má zoznam viac ako jeden variant a každý z variantov má vlastný výkres celkovej zostavy, uvádza sa odkaz na stranu s výkresom zostavy daného variantu.
- Interné informácie (34)

Uvod

Informacije o priročnikih

Tetra Pak priporoča, da natančno preberete vse priložene priročnike. Osebje, ki upravlja in vzdržuje opremo mora imeti dostop do priloženih priročnikov.

Katalog hranite v celotnem času uporabe opreme. V primeru, ko opremo pridobi drug imetnik ali uporabnik, mu obenem izročite tudi katalog.

Podjetje Tetra Pak ne prevzema odgovornosti za poškodbe na opremi, ki nastanejo zaradi neupoštevanja navodil iz priročnikov, ki so priloženi opremi.

Priloženi priročniki

Priročniki, ki so priloženi tej opremi, lahko vključujejo

- Priročnik za zamenjavo (CM)
  V tem priročniku so podatki, ki tehnikom omogočajo izvesti zamenjavo opreme med različnimi načini proizvodnje.
- Elektrotehnični priročnik (EM)
  Priročnik vsebuje podatke za tehnike o električnem sistemu opreme.
- Priročnik za montažo (IM)
  Priročnik vsebuje podatke, ki jih tehniki potrebujejo za varno montažo opreme.
- Priročnik za vzdrževanje (MM)
  Priročnik vsebuje podatke za tehnike o vzdrževanju opreme.
- Priročnik za obratovanje (OM)
  Priročnik je namenjen informiranju za pravilno rokovanje in upravljanje s strojem pred, med in po proizvodnem postopku.
- Katalog nadomestnih delov (SPC)
  Katalog vsebuje potrebne podatke za naročilo nadomestnih delov pri podjetju Tetra Pak.
- Tehnični priročnik (TeM)
  Priročnik
  - vsebuje podatke, ki jih tehniki potrebujejo za varno montažo opreme;
  - vsebuje podatke za tehnike o vzdrževanju opreme;
  - vsebuje podatke za tehnike o električnem sistemu stroja/opreme;
  - vsebuje potrebne podatke za naročilo nadomestnih delov pri podjetju Tetra Pak.

Postavitev strani

Poglejte sliko (A) na strani i-5: Glavne strani v Katalogu nadomestnih delov sestavljata stran s sliko (1) in ustrezna stran s seznamom (7). Številka strani (5) je prikazana na vrhu strani s sliko in na dnu strani s seznamom. Številka dokumenta (6) je prikazana na dnu strani s seznamom.

Številčenje strani

Oglejte si sliko (A) na strani i-5: Številka strani (5) ima tri dele:

- številko poglavja (2);
- zaporedno številko strani v poglavju (3);
- število vseh strani v poglavju (4).

Predstavitev stroja

Proizvajalec

Ime in naslov proizvajalca najdete na drugi strani kataloga.

Servisiranje

Za naročanje nadomestnih delov za stroj ter za sporočanje motenj pri delovanju stroja se obrnite na najbližjo servisno službo podjetja Tetra Pak.

V primeru drugih zahtev, komentarjev, predlogov za izboljšavo opreme ali dokumentacije se obrnite na odgovorno osebo.

Identifikacijska oznaka

CE-klasifikacija

Oprema je izdelana v skladu z osnovnimi zdravstvenimi in varnostnimi predpisi Evropskega gospodarskega prostora (EGS).

Napisna ploščica

Slika (B) na strani i-5 prikazuje primer napisne ploščice.
Sliko veljavne napisne ploščice in njeno mesto na opremi najdete v uvodnem poglavju priloženih priročnikov. Ploščica vsebuje spodaj navedene podatke, ki jih potrebujete, ko se v zvezi z določeno opremo obrnete na podjetje Tetra Pak:

- tip stroja (8);
- prostornino (9);
- specifikacije risbe (10);
- serijsko številko stroja (11);
- proizvajalca (12);
- oznako CE (13);
- leto izdelave (14).

Slika (C) na strani i-5 prikazuje primer specifikacije stroja. Podatki o opremi, navedeni na prvih straneh tega priročnika, se morajo ujemati s podatki o stroju, navedenimi na napisni ploščici in v specifikacijah.

Uporaba Kataloga nadomestnih delov

Iskanje številke nadomestnega dela

a) Oglejte si sliko (D) na strani i-5: Poiščite številko poglavja (15), navedeno poleg glavne skupine, ki vsebuje iskani del.

Točki b) in c) se nanašata na sliko (E) na strani i-6.

b) Na sliki glavne skupine poiščite podskupino stroja (17), ki vsebuje iskani del ali podskupino. Zapomnite si pozicijsko številko (18) in poiščite stran s seznamom, ki pripada sliki.

c) Poiščite pozicijsko številko/referenčno oznako (16) ali ime podskupine (19). Pojdite na stran (20), navedeno v desnem stolpcu. Tetra Pak za referenčno označevanje vedno uporablja funkcijsko strukturo. Predpona, ki označuje funkcijsko strukturo (=), ni prikazana v referenčni oznaki.

Točki d) in e) se nanašata na sliko (F) na strani i-6.

d) Na sliki podskupine poiščite del (21), ki ga iščete, in si zapomnite njegovo pozicijsko številko.

e) Številka (29) in opis dela (30) sta navedena poleg pozicijske številke na strani s seznamom.

Informacije v Katalogu nadomestnih delov

Spodnji seznam se nanaša na sliko (F) na strani i-6. Katalog nadomestnih delov vsebuje naslednje informacije o skupinah, podskupinah in nadomestnih delih za opremo:

- referenco strukture skupine (22); Označuje naslednjo višjo skupino v strukturi seznamov opreme.
- ime skupine (23);
- mersko enoto (25);
- količino (26);
- številko sestavne risbe (27);
- število strani seznama (28); Če je slika ali seznam skupine sestavljen iz več strani.
- številko dela ali podskupine (29);
- ime podskupine ali opis dela (30);
- številko skupine (31);
- številko opreme (32);
- naslov z informacijami o skupini (33). Označuje, ali je razdelek pod naslovom namenjen specifični izvedbi stroja ali gre za seznam skupnih delov. Če ima seznam več izvedb in če ima vsaka od njih svojo sestavno risbo, je ob vsaki izvedbi navedena referenčna stran s sestavno risbo.
- interne informacije (34).

Inledning

Information om manualen

Tetra Pak rekommenderar att alla manualer läses noggrant. Se till att manualerna är tillgängliga för personalen som använder eller underhåller utrustningen.

Det är viktigt att denna katalog behålls under utrustningens livslängd, och att den överlämnas till varje efterföljande innehavare eller användare av utrustningen.

Tetra Pak tar inte ansvar för någon skada på utrustningen som orsakats av att instruktionerna i medföljande manualer inte har följts.

Medföljande manualer

Följande manualer kan levereras tillsammans med utrustningen:

- CM
  Konverteringsmanualen (CM) innehåller information för tekniker om hur man konverterar utrustningen mellan olika produktionslägen.
- EM
  Den elektriska manualen (EM) innehåller information för tekniker om utrustningens elektriska system.
- IM
  Installationsmanualen (IM) innehåller information för tekniker om hur utrustningen installeras på ett säkert sätt.
- MM
  Underhållsmanualen (MM) innehåller information för tekniker om hur utrustningen underhålls.
- OM
  Driftsmanualen (OM) innehåller information för operatören om hur utrustningen ska hanteras före, under och efter produktion.
- SPC
  Reservdelskatalogen (SPC) innehåller den information som behövs för att beställa reservdelar från Tetra Pak.
- TeM
  Den tekniska manualen (TeM)
  - innehåller information för tekniker om hur utrustningen installeras på ett säkert sätt.
  - innehåller information för tekniker om hur utrustningen underhålls.
  - innehåller information för tekniker om maskinens/utrustningens elektriska system.
  - innehåller den information som behövs för att beställa reservdelar från Tetra Pak.

Sidlayout

Se bild (A) på sidan i-5: Huvudsidorna i reservdelskatalogen består av en bildsida (1) och en motsvarande listsida (7). Sidnumret (5) visas i sidhuvudet på bildsidan och i sidfoten på listsidan. Dokumentnumret (6) visas i sidfoten på listsidan.

Sidnumrering

Se bild (A) på sidan i-5: Ett sidnummer (5) består av tre delar:

- kapitlets nummer (2)
- löpande sidnummer inom kapitlet (3)
- totalt sidantal i kapitlet (4)

Introduktion till maskinen

Tillverkare

Tillverkarens namn och adress finns på sidan 2 i katalogen.

Service

För att beställa reservdelar till denna maskin eller för att rapportera problem som uppstått i samband med driften kontaktar du närmaste Tetra Pak-kontor.

Om du har andra frågor, kommentarer eller förslag till förbättringar av utrustningen och dokumentationen vänder du dig till din kontaktperson på Tetra Pak.

Identifiering

CE-märkning

Denna utrustning överensstämmer med den grundläggande hälso- och säkerhetslagstiftningen inom Europeiska ekonomiska samarbetsområdet (EES).

Maskinskylt

Bild (B) på sidan i-5 visar ett exempel på en maskinskylt.
En bild på giltig maskinskylt och dess placering på utrustningen visas i inledningskapitlet som medföljer utrustningen. Skylten innehåller de uppgifter som listas nedan och som behövs vid kontakt med Tetra Pak angående utrustningen.

- Maskintyp (8)
- Volym (9)
- Ritningsspecifikationer (10)
- Maskinnummer (11)
- Tillverkare (12)
- CE-märkning (13)
- Tillverkningsår (14)

Bild (C) på sidan i-5 visar ett exempel på en maskinspecifikation. Kontrollera att informationen om utrustningen som listas på de första sidorna i manualen motsvarar informationen på maskinskylten och i maskinspecifikationen.

Använda reservdelskatalogen

Hitta ett reservdelsnummer

a) Se bild (D) på sidan i-5: Gå till kapitelnumret (15) som står vid sidan om huvudgruppen som innehåller den del du vill hitta.

Punkt b) och c) hänvisar till bild (E) på sidan i-6.

b) På huvudgruppsbilden letar du efter den maskinundergrupp (17) som innehåller delen eller undergruppen du letar efter. Notera positionsnumret (18) och gå till listsidan som anges efter bilden.

c) Leta efter positionsnumret/referensbeteckningen (16) eller undergruppsnamnet (19). Gå till motsvarande sidnummer (20) som listas i den högra kolumnen. Tetra Pak har valt allt alltid använda en funktionsorienterad struktur för referensbeteckningarna. Prefixet för funktionsorienterad struktur (=) visas inte i referensbeteckningen.

Punkt d) och e) hänvisar till bild (F) på sidan i-6.

d) Leta reda på delen (21) i undergruppsbilden och notera delens positionsnummer.

e) Reservdelsnumret (29) och reservdelsbeskrivningen (30) står bredvid positionsnumret på listsidan.

Information i reservdelskatalogen

Listan nedan hänvisar till bild (F) på sidan i-6. Reservdelskatalogen innehåller följande information om grupper, undergrupper och reservdelar för utrustningen:

- Gruppstrukturreferens (22). Anger nästa högre grupp i utrustningslistans struktur.
- Gruppnamn (23)
- Måttenhet (25)
- Kvantitet (26)
- Monteringsritningsnummer (27)
- Listsideintervall (28). Anges om det finns flera sidor i gruppbilden eller grupplistan.
- Reservdels- eller undergruppsnummer (29)
- Undergruppsnamn eller reservdelsbeskrivning (30)
- Gruppnummer (31)
- Utrustningsnummer (32)
- Gruppinformationsrubrik (33). Anger om avsnittet under rubriken gäller en viss maskinvariant eller om det är en lista över allmänna delar. Om en lista har fler än en variant och varje variant har sin egen monteringsritning visas en sidhänvisning till variantens monteringsritning.
- Intern information (34)

SPC
Spare Parts Catalogue

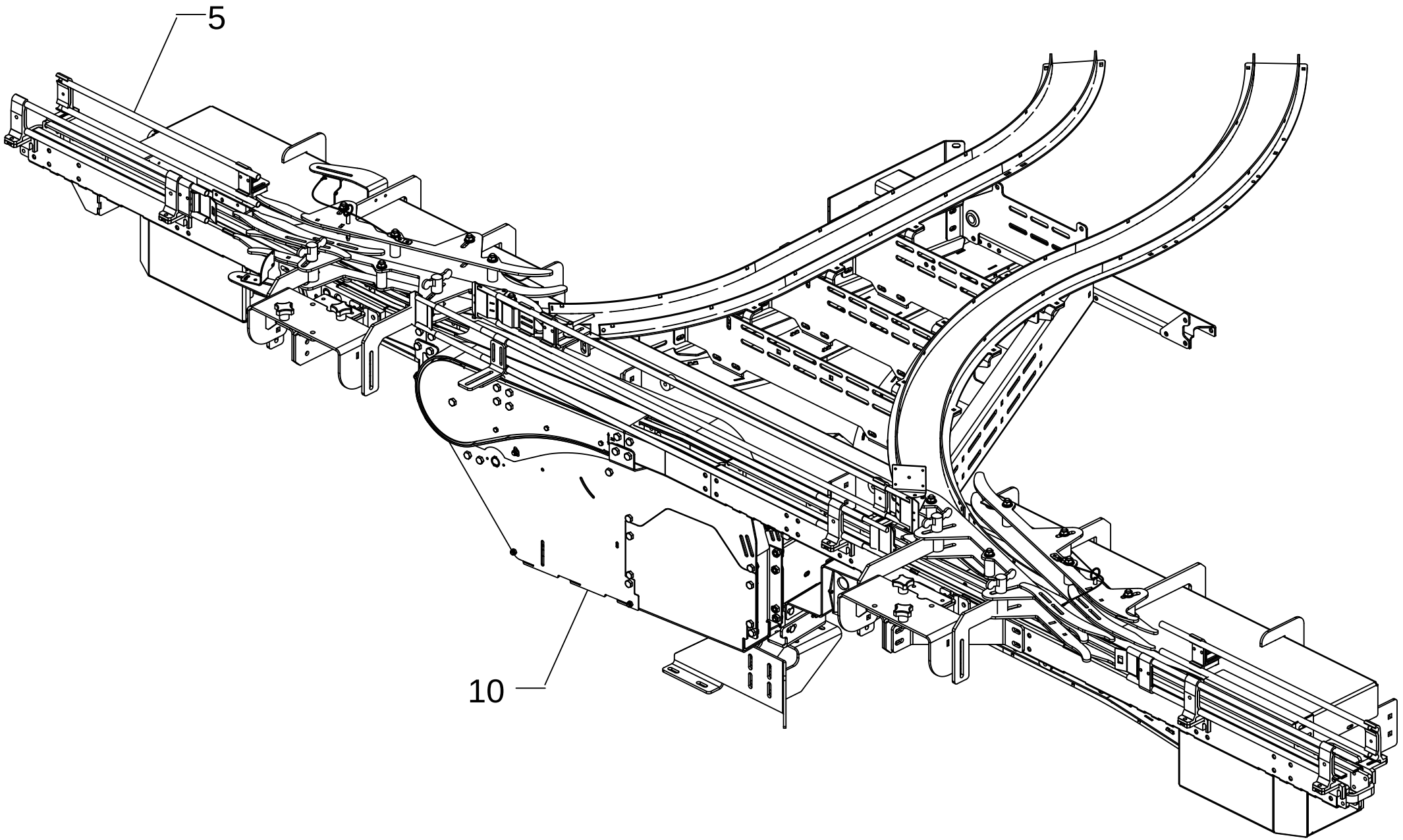
5
10

ECM: 387582 - 20090216
Group number: 663609-0100
Assembly Drawing: 663609-1_1_AA

Pos	Part No	UN	Qty	Description	Page No
FEEDSIDE = LEFT					
010	2948901-0100		1	DRIVE AND END UNIT - LINF	**1-5**
FEEDSIDE = RIGHT					
010	3008875-0100		1	DRIVE AND END UNIT - RINF	**1-15**
Common Parts					
005	2948900-0100		1	GUIDE	**1-25, 1-27**

Pos	Part No	UN	Qty	Description	Page No

DRIVE AND END UNIT - LINF

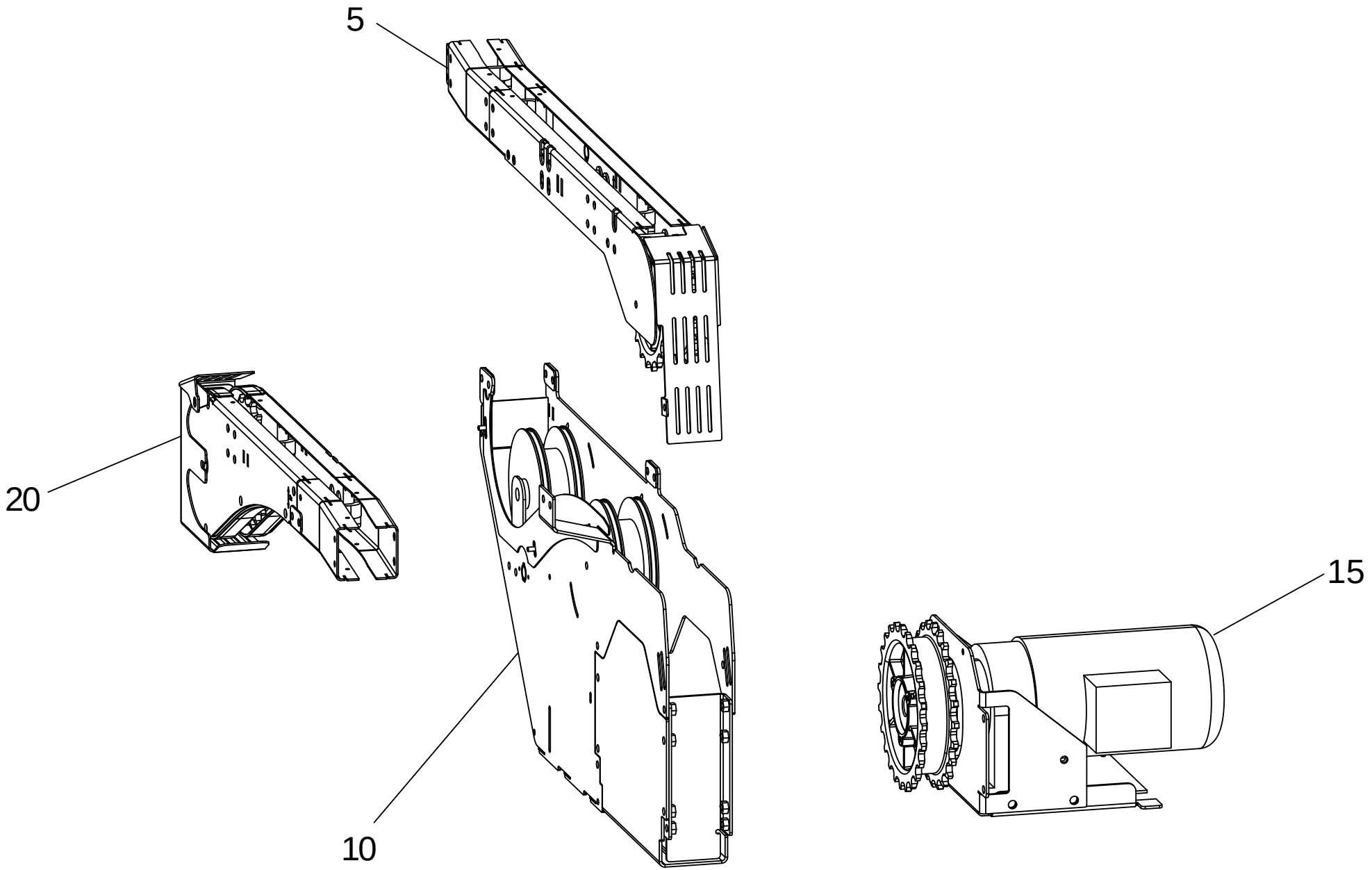

GraphicID 2948901-1.eps
Parent Drw: 2948901

ECM: 381550 - 20090203
Group number: 2948901-0100
Assembly Drawing: 2948901-1_1_AA

Pos	Part No	UN	Qty	Description	Page No
-					
005	3008839-0100		1	INFEED - LINF	**1-7**
010	3008840-0100		1	CHAIN TENSIONER LINF	**1-9**
015	3008841-0100		1	MOTOR UNIT	**1-11**
020	3008842-0100		1	OUTFEED	**1-13**

Pos	Part No	UN	Qty	Description	Page No

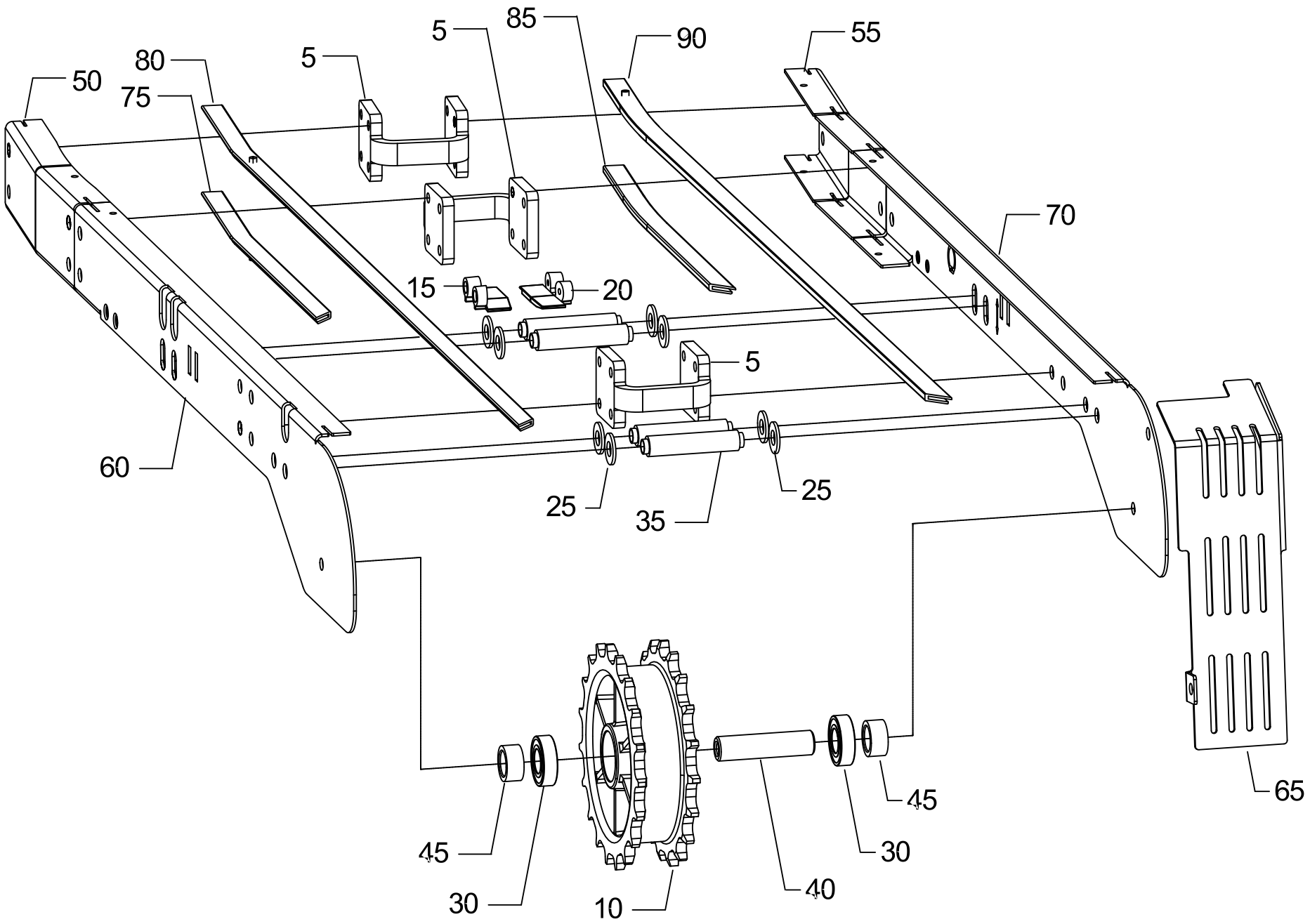
50
80
75
5
5
85
90
55
70
15
20
5
60
25
35
25
65
45
30
10
40
30
45

ECM: 388395 - 20090417
Group number: 3008839-0100
Assembly Drawing: 3008839-1_1_AB

Pos	Part No	UN	Qty	Description	Page No
-					
005	2561206-0000		3	SPACER	
010	2656672-0000		1	SPROCKET	
015	2807804-0000		1	GUIDE	
020	2807805-0000		1	GUIDE	
025	315105-0173		8	WASHER BRB 10,5X22 RFR	
030	3008843-0000		2	BALL BEARING	
035	3008844-0000		4	SPACER	
040	3008845-0000		1	SPACER	
045	3008846-0000		2	SPACER	
050	3008847-0000		1	BRACKET	
055	3008848-0000		1	BRACKET	
060	3008849-0000		1	COVER	
065	3008850-0000		1	BRACKET	
070	3008851-0000		1	COVER	
075	1550595-2950		1	SLIDING STRIP	
080	1550595-8853		1	SLIDING STRIP	
085	2699585-0293		1	SLIDING STRIP	
090	2589960-8854		1	SLIDING STRIP	

Pos	Part No	UN	Qty	Description	Page No

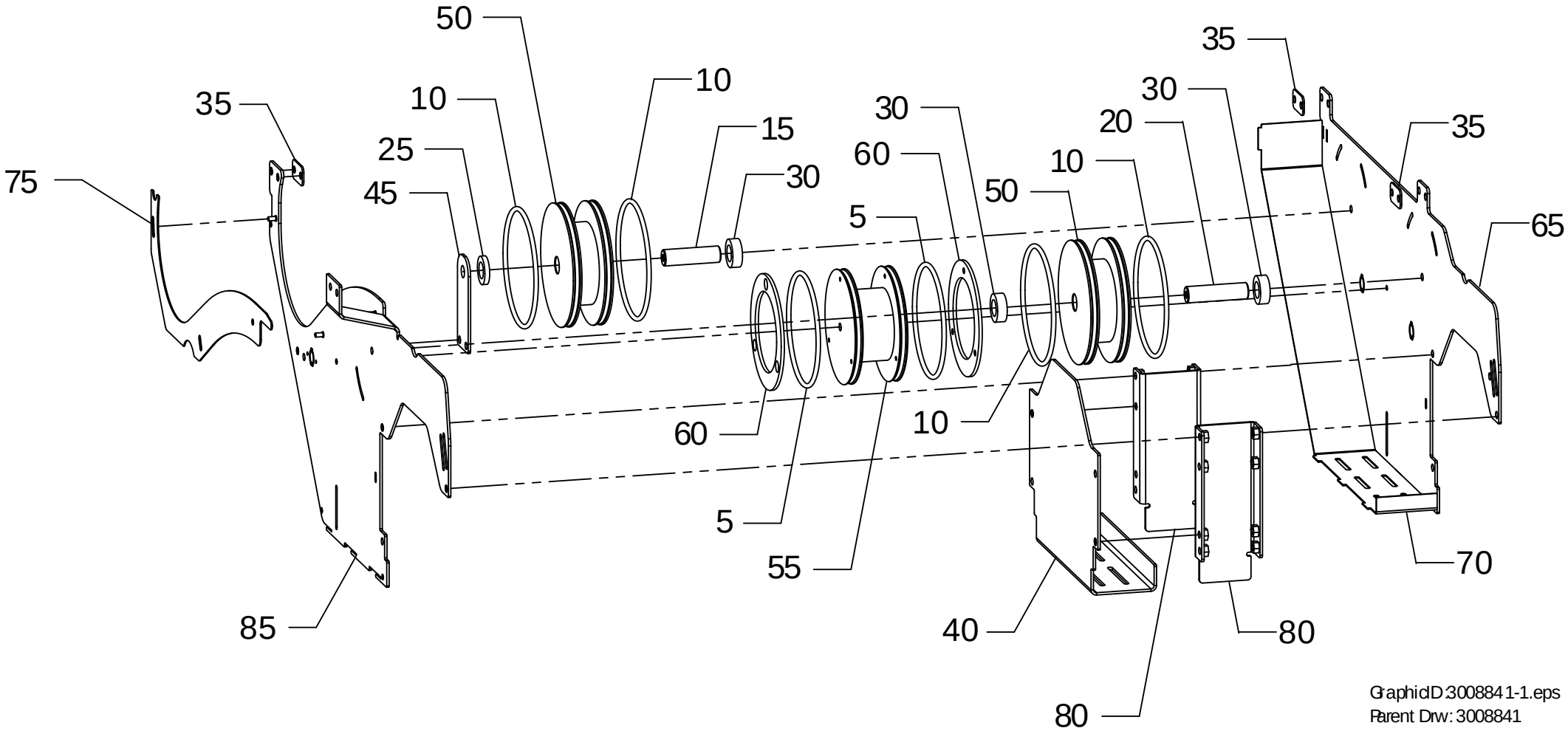

GraphicID:3008841-1.eps
Parent Drw: 3008841

ECM: 388391 - 20090417
Group number: 3008840-0100
Assembly Drawing: 3008840-1_1_AA

Pos	Part No	UN	Qty	Description	Page No
-					
005	3008852-0000		2	O-RING	
010	3008853-0000		4	O-RING	
015	3008854-0000		1	SHAFT	
020	3008855-0000		1	SHAFT	
025	3008856-0000		1	SPACER	
030	3008857-0000		3	SPACER	
035	3008858-0000		3	SPACER	
040	3008859-0000		1	BRACKET	
045	3008860-0000		1	BRACKET	
050	3008861-0000		2	IDLER	
055	3008862-0000		1	WEIGHT	
060	3008863-0000		2	SPACER	
065	3008864-0000		1	COVER	
070	3008865-0000		1	COVER	
075	3008866-0000		1	COVER	
080	3008867-0000		2	BRACKET	
085	3008868-0000		1	COVER	

Pos	Part No	UN	Qty	Description	Page No

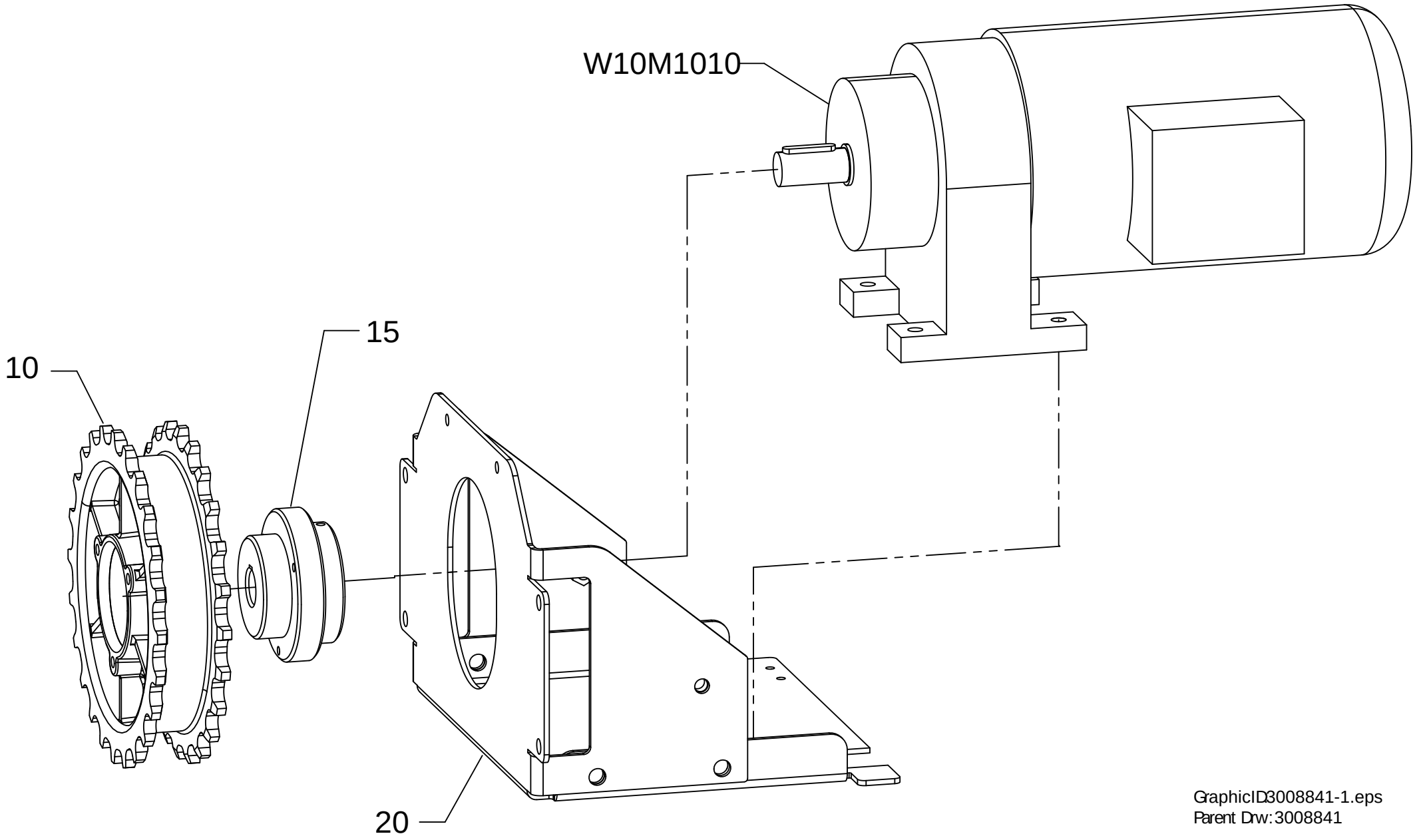

GraphicID:3008841-1.eps
Parent Drw:3008841

ECM: 388390 - 20090417
Group number: 3008841-0100
Assembly Drawing: 3008841-1_1_AB

Pos	Part No	UN	Qty	Description	Page No
-					
010	2656677-0000		1	SPROCKET	
015	3008869-0000		1	HUB	
020	3008870-0000		1	MOTOR SHELF	
W10M1010	90069-0110		1	GEARS, HELICAL MOTOR SK01-71L/4	

Pos	Part No	UN	Qty	Description	Page No

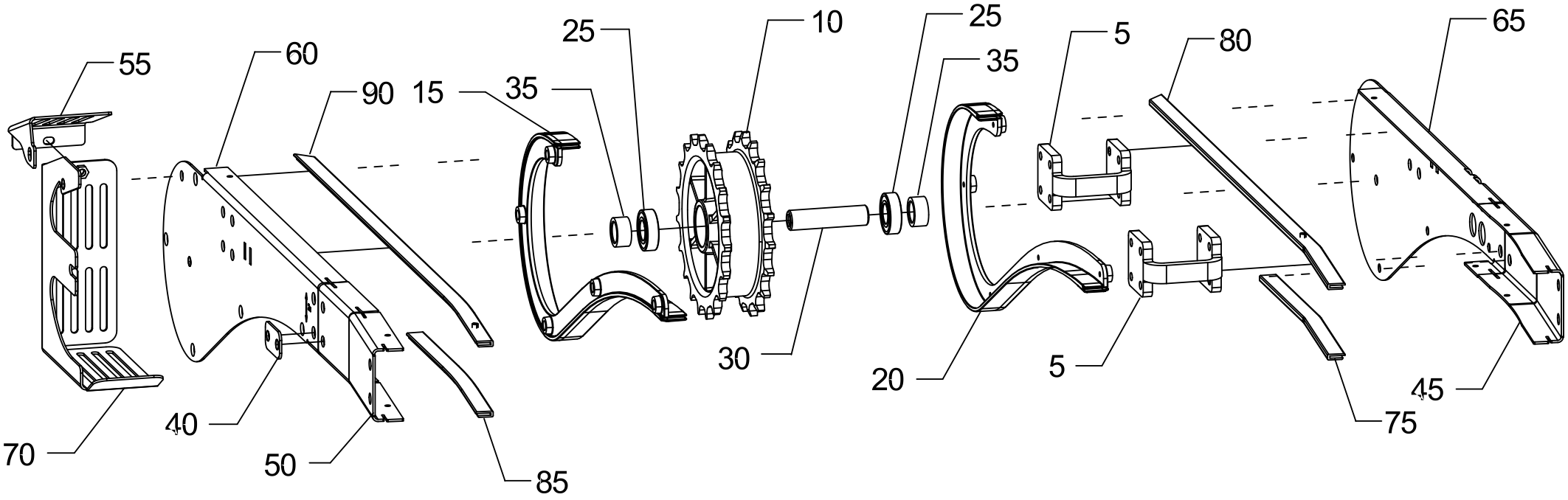
55
60
90
15
35
25
10
25
35
5
80
65
70
40
50
85
30
20
5
75
45

ECM: 388394 - 20090417
Group number: 3008842-0100
Assembly Drawing: 3008842-1_1_AB

Pos	Part No	UN	Qty	Description	Page No
-					
005	2561206-0000		2	SPACER	
010	2656672-0000		1	SPROCKET	
015	2775930-0000		1	CHAIN SUPPORT	
020	2775931-0000		1	CHAIN SUPPORT	
025	3008843-0000		2	BALL BEARING	
030	3008845-0000		1	SPACER	
035	3008846-0000		2	SPACER	
040	3008858-0000		1	SPACER	
045	3008847-0000		1	BRACKET	
050	3008848-0000		1	BRACKET	
055	3008871-0000		1	BRACKET	
060	3008872-0000		1	BRACKET	
065	3008873-0000		1	BRACKET	
070	3008874-0000		1	BRACKET	
075	1550595-2650		1	SLIDING STRIP	
080	1550595-6100		1	SLIDING STRIP	
085	2699585-0263		1	SLIDING STRIP	
090	2699585-0608		1	SLIDING STRIP	

Pos	Part No	UN	Qty	Description	Page No

Machine Type	Group Description	Used-In	Group Number	Page No

DRIVE AND END UNIT - RINF

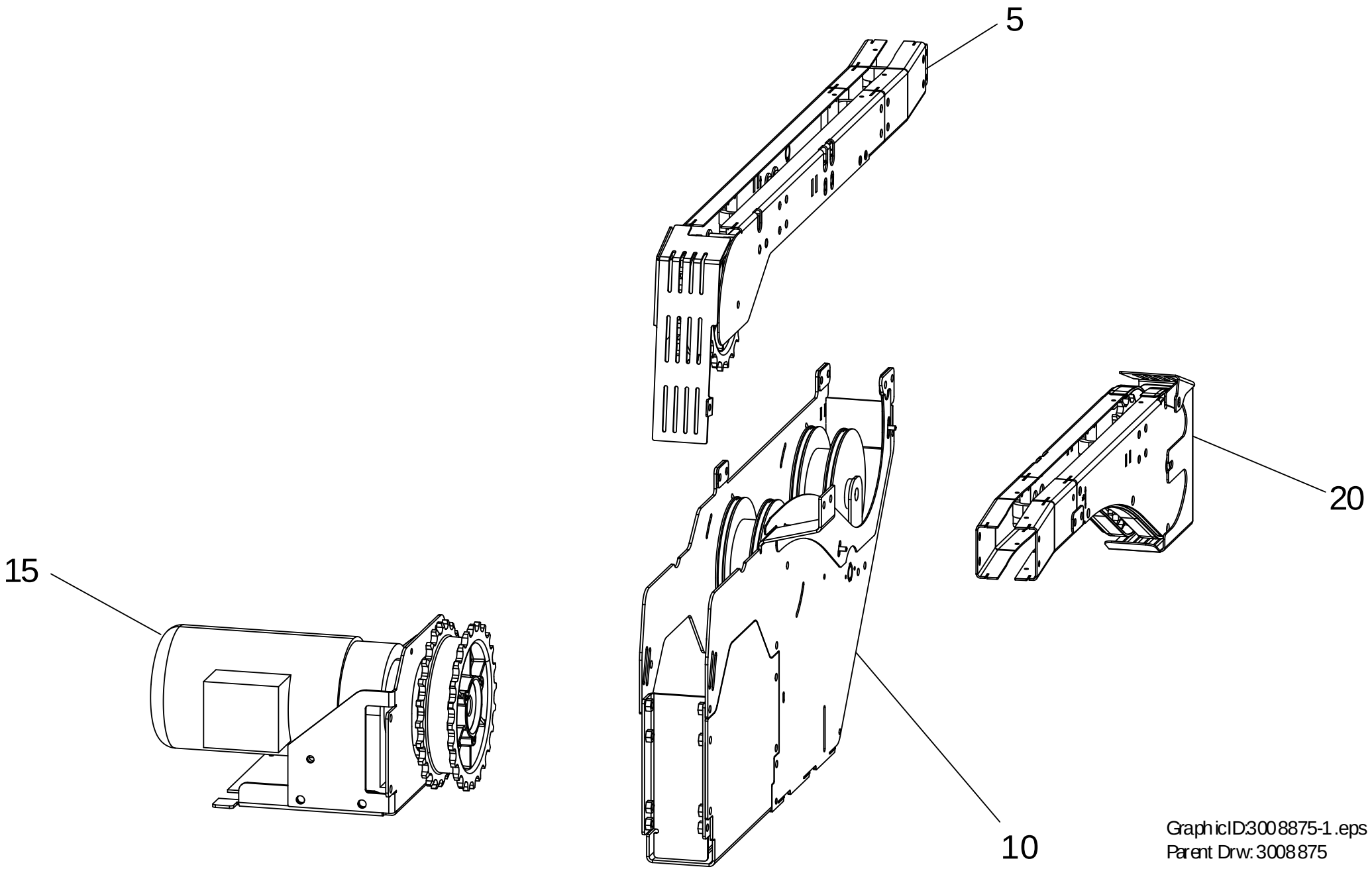

GraphicID:3008875-1.eps
Parent Drw: 3008875

ECM: 381692 - 20090203
Group number: 3008875-0100
Assembly Drawing: 3008875-1_1_AA

Pos	Part No	UN	Qty	Description	Page No
-					
005	3008876-0100		1	INFEED - RINF	**1-17**
010	3008877-0100		1	CHAIN TENSIONER RINF	**1-19**
015	3008878-0100		1	MOTOR UNIT - RINF	**1-21**
020	3008879-0100		1	OUTFEED - RINF	**1-23**

Pos	Part No	UN	Qty	Description	Page No

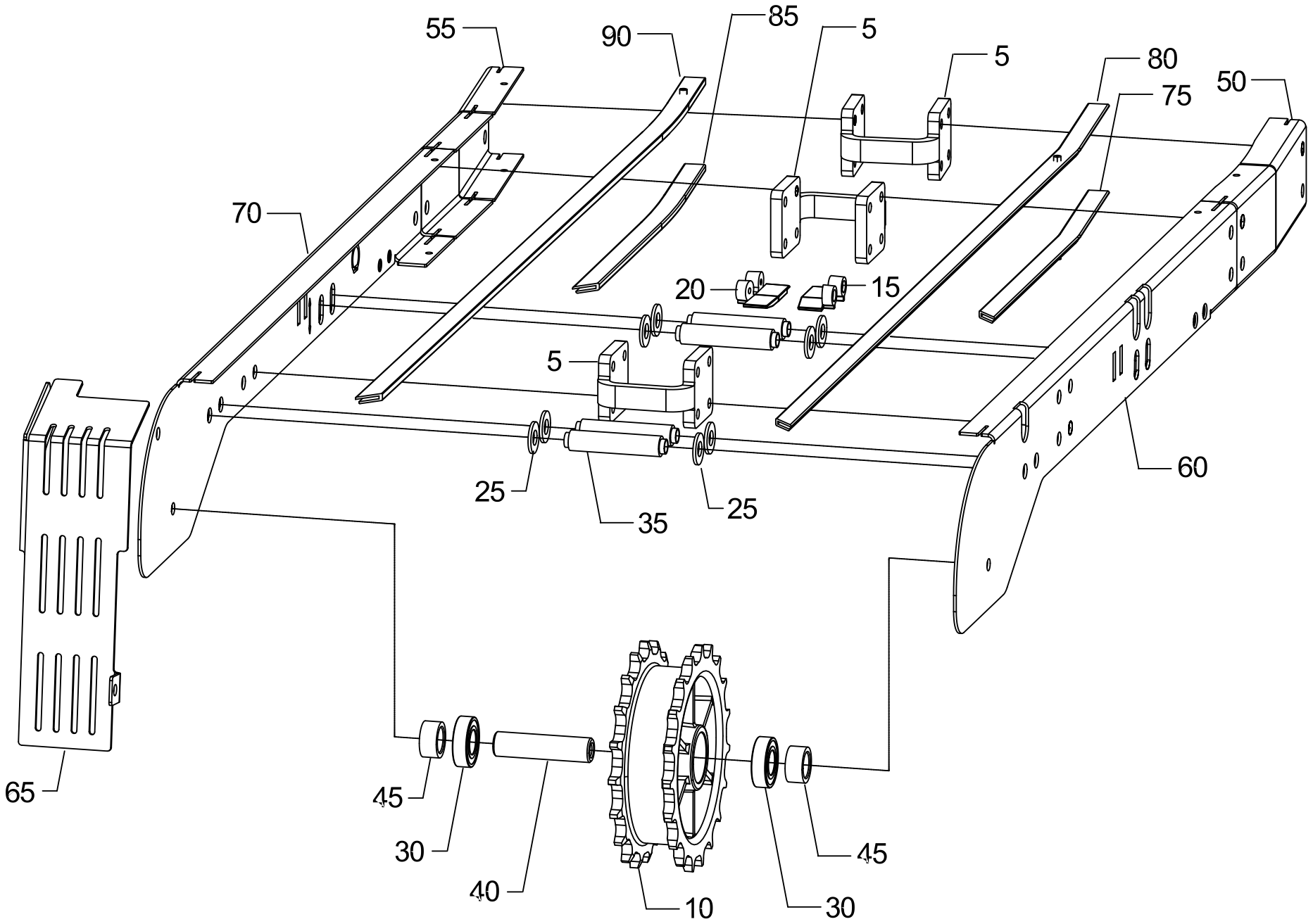
55
90
85
5
5
80
75
50
70
20
15
5
25
35
25
60
65
45
30
40
10
30
45

ECM: 388396 - 20090417
Group number: 3008876-0100
Assembly Drawing: 3008876-1_1_AB

Pos	Part No	UN	Qty	Description	Page No
-					
005	2561206-0000		3	SPACER	
010	2656672-0000		1	SPROCKET	
015	2807804-0000		1	GUIDE	
020	2807804-0000		1	GUIDE	
025	315105-0173		8	WASHER BRB 10,5X22 RFR	
030	3008843-0000		2	BALL BEARING	
035	3008844-0000		4	SPACER	
040	3008845-0000		1	SPACER	
045	3008846-0000		2	SPACER	
050	3008847-0000		1	BRACKET	
055	3008848-0000		1	BRACKET	
060	3008880-0000		1	COVER	
065	3008881-0000		1	BRACKET	
070	3008882-0000		1	COVER	
075	1550595-2950		1	SLIDING STRIP	
080	1550595-8853		1	SLIDING STRIP	
085	2699585-0293		1	SLIDING STRIP	
090	2589960-8854		1	SLIDING STRIP	

Pos	Part No	UN	Qty	Description	Page No

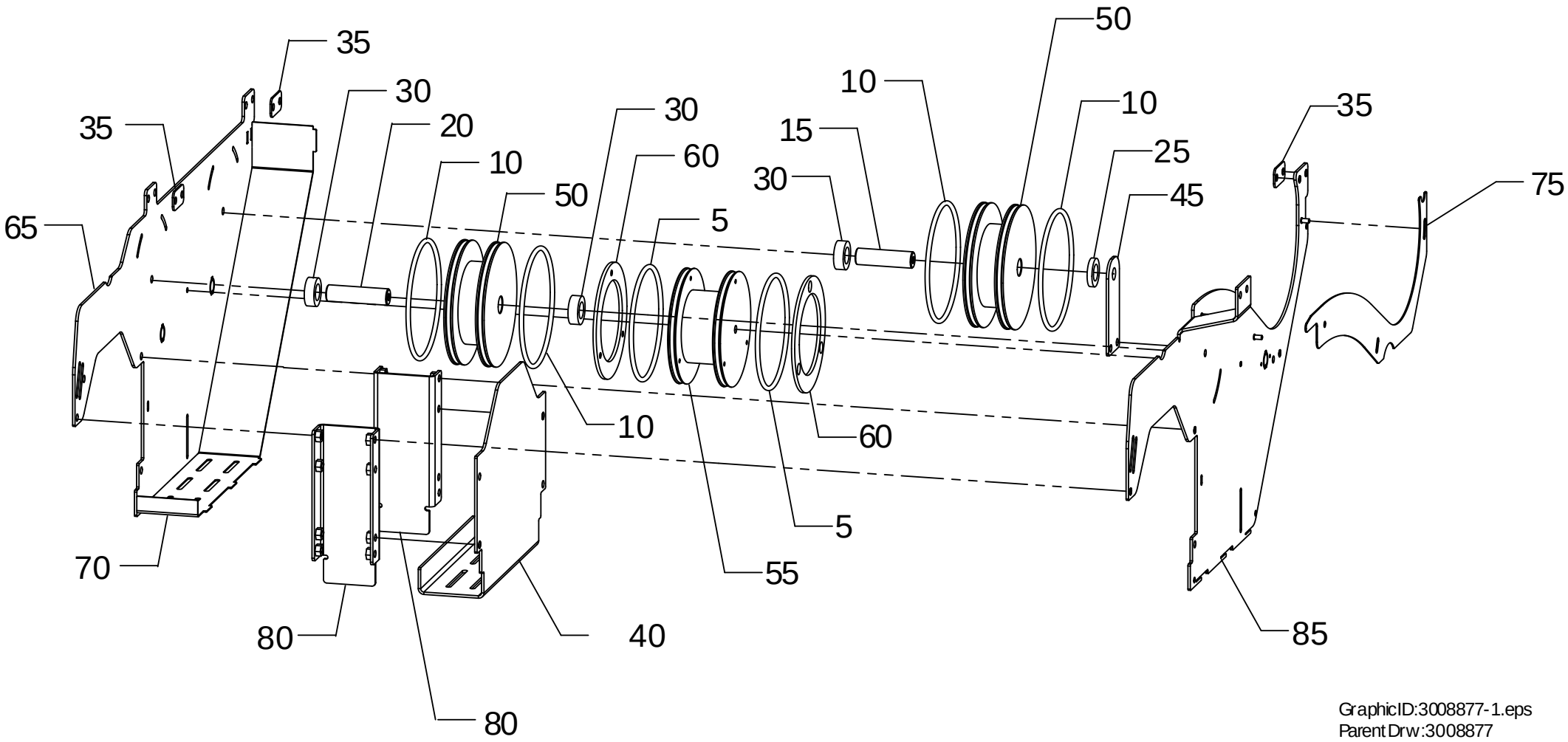

GraphicID:3008877-1.eps
Parent Drw:3008877

ECM: 388392 - 20090417
Group number: 3008877-0100
Assembly Drawing: 3008877-1_1_AA

Pos	Part No	UN	Qty	Description	Page No
-					
005	3008852-0000		2	O-RING	
010	3008853-0000		4	O-RING	
015	3008854-0000		1	SHAFT	
020	3008855-0000		1	SHAFT	
025	3008856-0000		1	SPACER	
030	3008857-0000		3	SPACER	
035	3008858-0000		3	SPACER	
040	3008859-0000		1	BRACKET	
045	3008860-0000		1	BRACKET	
050	3008861-0000		2	IDLER	
055	3008862-0000		1	WEIGHT	
060	3008863-0000		2	SPACER	
065	3008883-0000		1	COVER	
070	3008865-0000		1	COVER	
075	3008866-0000		1	COVER	
080	3008867-0000		2	BRACKET	
085	3008884-0000		1	COVER	

Pos	Part No	UN	Qty	Description	Page No

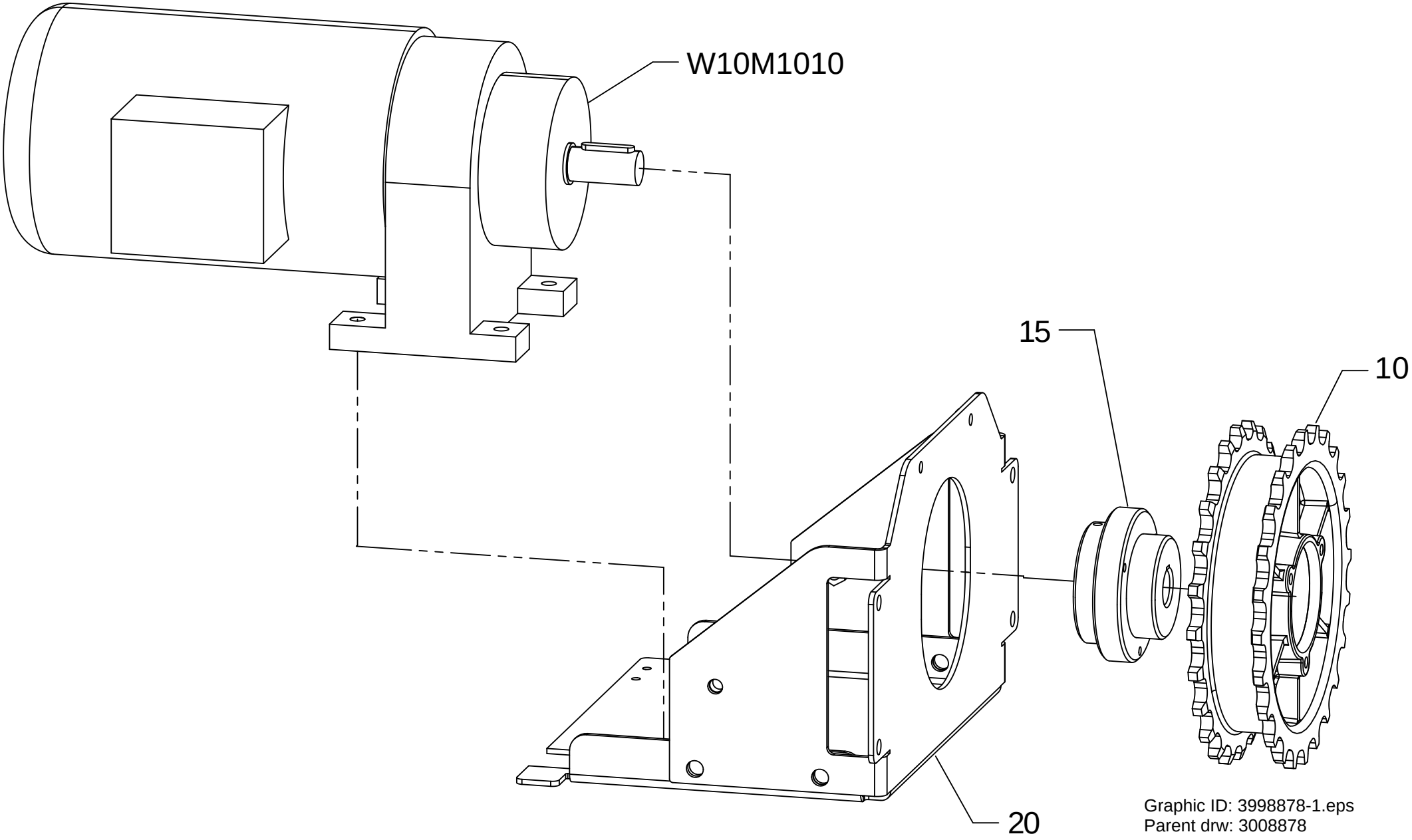

Graphic ID: 3998878-1.eps
Parent drw: 3008878

ECM: 387864 - 20090417
Group number: 3008878-0100
Assembly Drawing: 3008878-1_1_AA

Pos	Part No	UN	Qty	Description	Page No
-					
010	2656677-0000		1	SPROCKET	
015	3008869-0000		1	HUB	
020	3008885-0000		1	MOTOR SHELF	
W10M1010	90069-0110		1	GEARS, HELICAL MOTOR SK01-71L/4	

Pos	Part No	UN	Qty	Description	Page No

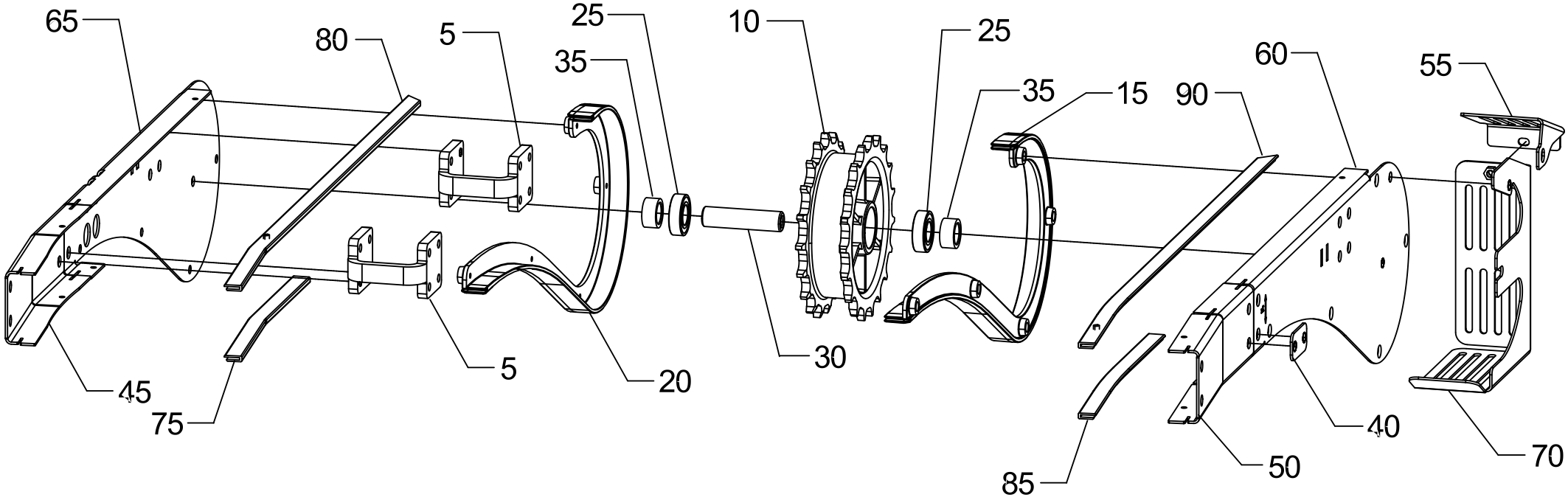
65
80
5
25
35
10
25
35
15
90
60
55
45
75
5
20
30
85
50
40
70

ECM: 388393 - 20090417
Group number: 3008879-0100
Assembly Drawing: 3008879-1_1_AB

Pos	Part No	UN	Qty	Description	Page No
-					
005	2561206-0000		2	SPACER	
010	2656672-0000		1	SPROCKET	
015	2775930-0000		1	CHAIN SUPPORT	
020	2775931-0000		1	CHAIN SUPPORT	
025	3008843-0000		2	BALL BEARING	
030	3008845-0000		1	SPACER	
035	3008846-0000		2	SPACER	
040	3008858-0000		1	SPACER	
045	3008847-0000		1	BRACKET	
050	3008848-0000		1	BRACKET	
055	3008886-0000		1	BRACKET	
060	3008887-0000		1	BRACKET	
065	3008888-0000		1	BRACKET	
070	3008889-0000		1	BRACKET	
075	1550595-2650		1	SLIDING STRIP	
080	1550595-6100		1	SLIDING STRIP	
085	2699585-0263		1	SLIDING STRIP	
090	2699585-0608		1	SLIDING STRIP	

Pos	Part No	UN	Qty	Description	Page No

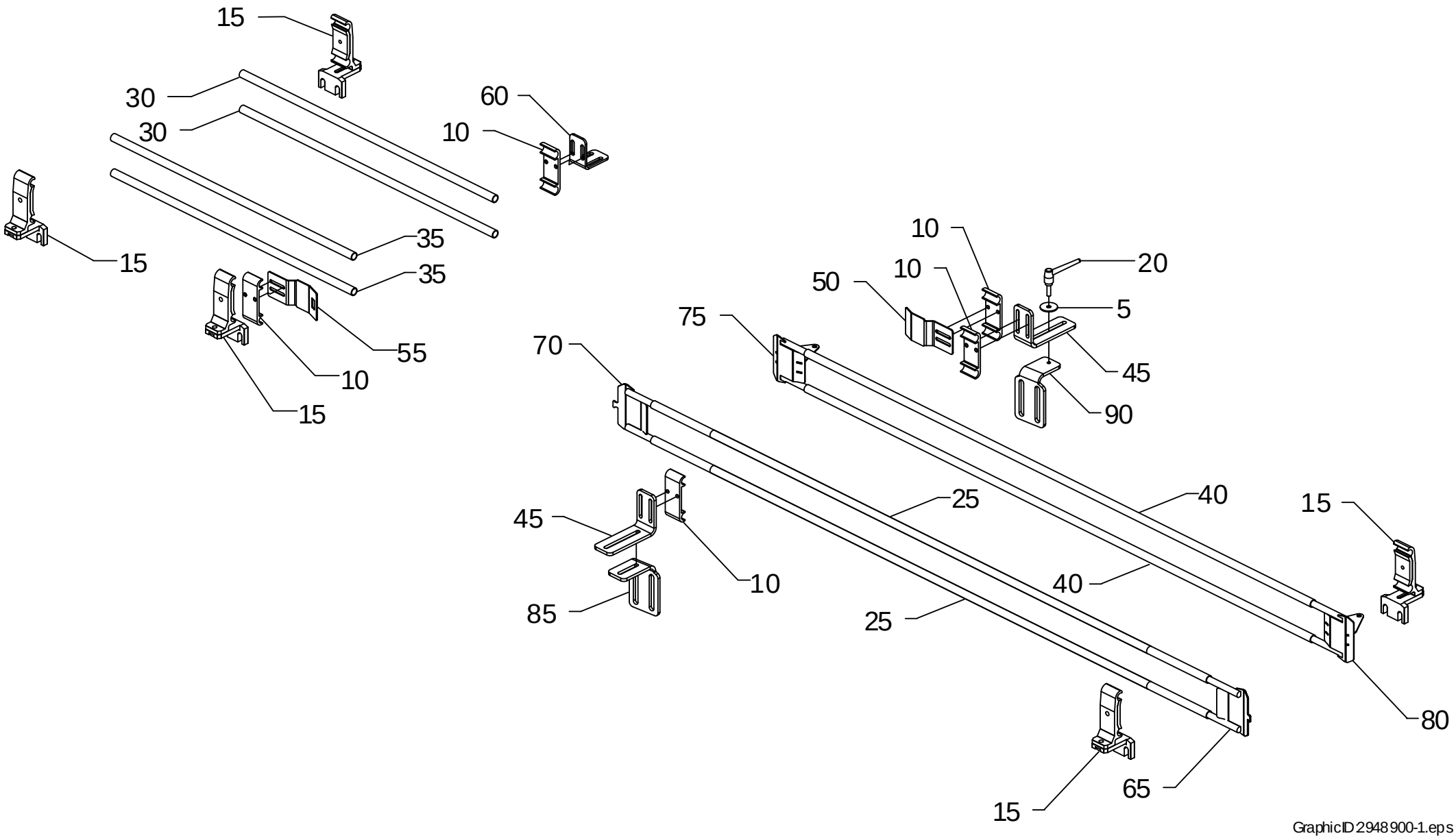

GraphicID 2948900-1.eps
Parent Drw: 2948900

ECM: 381683 - 20090203
Group number: 2948900-0100
Assembly Drawing: 2948900-1_1_AA

This list covers pages from 1-24 to 1-27

Pos	Part No	UN	Qty	Description	Page No
FEEDSIDE = LEFT (See drawing on page: 1-24)					
085	3008902-0000		1	BRACKET	
090	2948845-0000		1	BRACKET	
FEEDSIDE = RIGHT (See drawing on page: 1-26)					
085	3008903-0000		1	BRACKET	
090	3008904-0000		1	BRACKET	
Common Parts					
005	2948838-0000		1	WASHER	
010	1020637-0000		5	HOLDER	
015	1550743-0201		5	RAIL HOLDER PC23	
020	2948839-0000		1	HANDLE	
025	3008890-0000		2	RAIL	
030	3008891-0000		2	RAIL	
035	3008892-0000		2	RAIL	
040	3008893-0000		2	RAIL	
045	3008894-0000		2	RAIL	
050	3008895-0000		1	PLATE	
055	3008896-0000		1	PLATE	
060	3008897-0000		1	BRACKET	
065	3008898-0000		1	RAILING	
070	3008899-0000		1	RAILING	
075	3008900-0000		1	RAILING	
080	3008901-0000		1	RAILING	

Pos	Part No	UN	Qty	Description	Page No

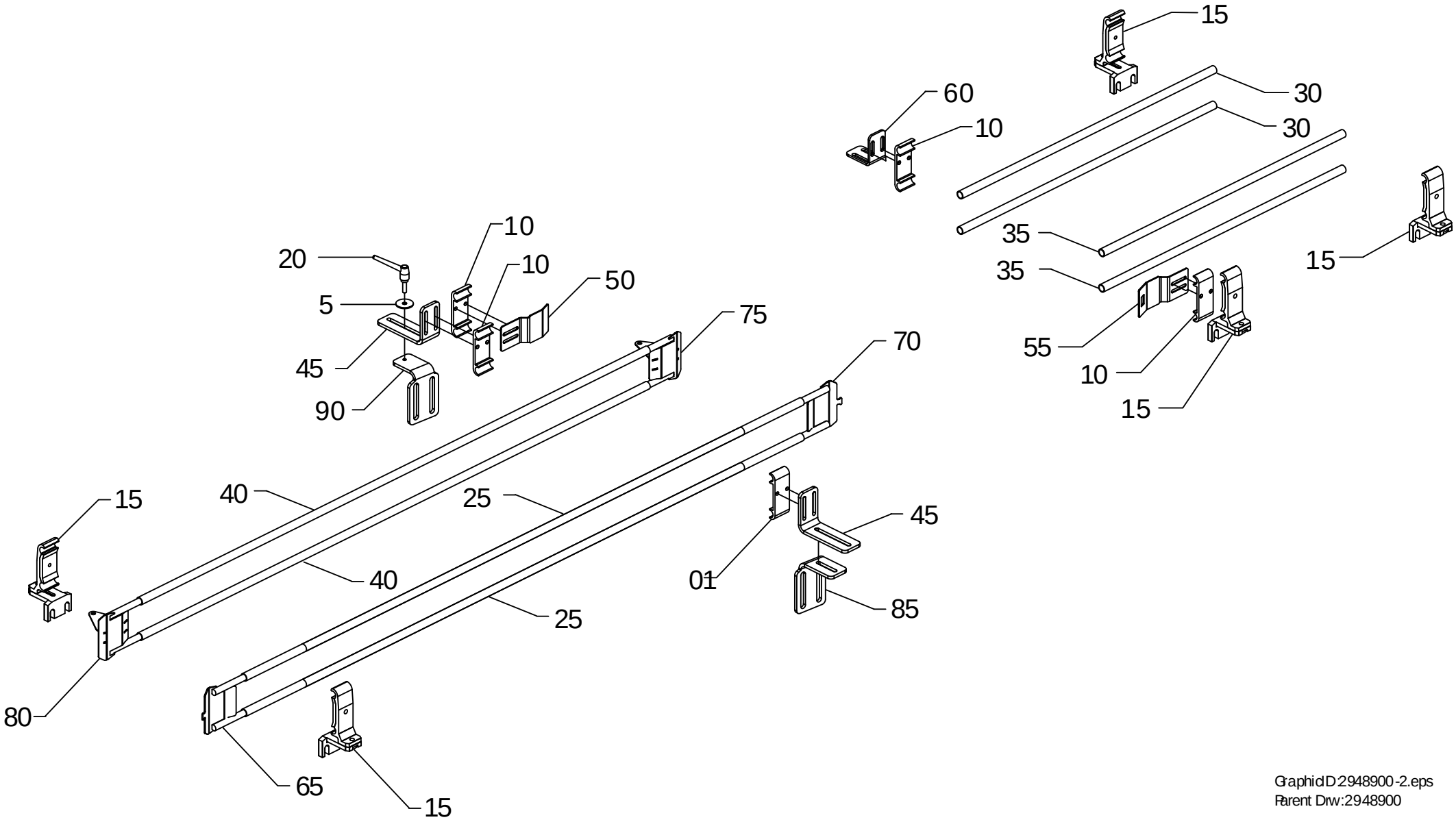

GraphicID:2948900-2.eps
Parent Drw:2948900

ECM: 381683 - 20090203
Group number: 2948900-0100
Assembly Drawing: 2948900-2_1_AA

This list covers pages from 1-24 to 1-27

Pos	Part No	UN	Qty	Description	Page No
FEEDSIDE = LEFT (See drawing on page: 1-24)					
085	3008902-0000		1	BRACKET	
090	2948845-0000		1	BRACKET	
FEEDSIDE = RIGHT (See drawing on page: 1-26)					
085	3008903-0000		1	BRACKET	
090	3008904-0000		1	BRACKET	
Common Parts					
005	2948838-0000		1	WASHER	
010	1020637-0000		5	HOLDER	
015	1550743-0201		5	RAIL HOLDER PC23	
020	2948839-0000		1	HANDLE	
025	3008890-0000		2	RAIL	
030	3008891-0000		2	RAIL	
035	3008892-0000		2	RAIL	
040	3008893-0000		2	RAIL	
045	3008894-0000		2	RAIL	
050	3008895-0000		1	PLATE	
055	3008896-0000		1	PLATE	
060	3008897-0000		1	BRACKET	
065	3008898-0000		1	RAILING	
070	3008899-0000		1	RAILING	
075	3008900-0000		1	RAILING	
080	3008901-0000		1	RAILING	

Pos	Part No	UN	Qty	Description	Page No

Tetra Pak

SPC
Spare Parts Catalogue

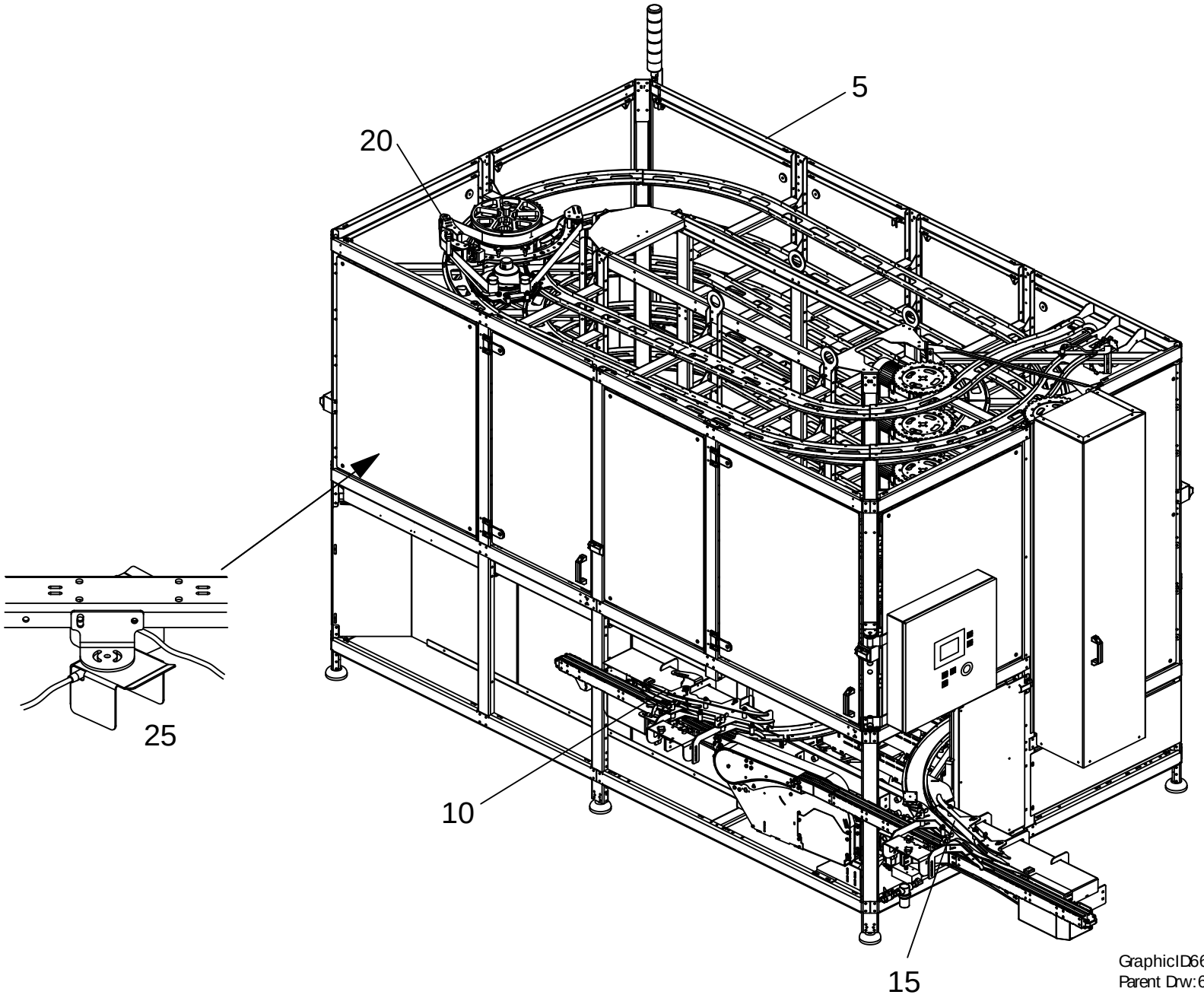

GraphicID663610.eps
Parent Drw:663610

ECM: 395874 - 20090417
Group number: 663610-0100
Assembly Drawing: 663610-1_1_AA

Pos	Part No	UN	Qty	Description	Page No
-					
005	2948902-0100		1	FRAME	**2-5**
010	2948903-0100		1	INFEED	**2-37**
015	2948904-0100		1	OUTFEED	**2-67**
020	2948905-0100		1	SPIDER UNIT	**2-91**
025	2948906-0100		1	FALLEN PACKAGE SENSOR	**2-119**
030	2948907-0100		1	WATER SYSTEM	**2-121**

Pos	Part No	UN	Qty	Description	Page No

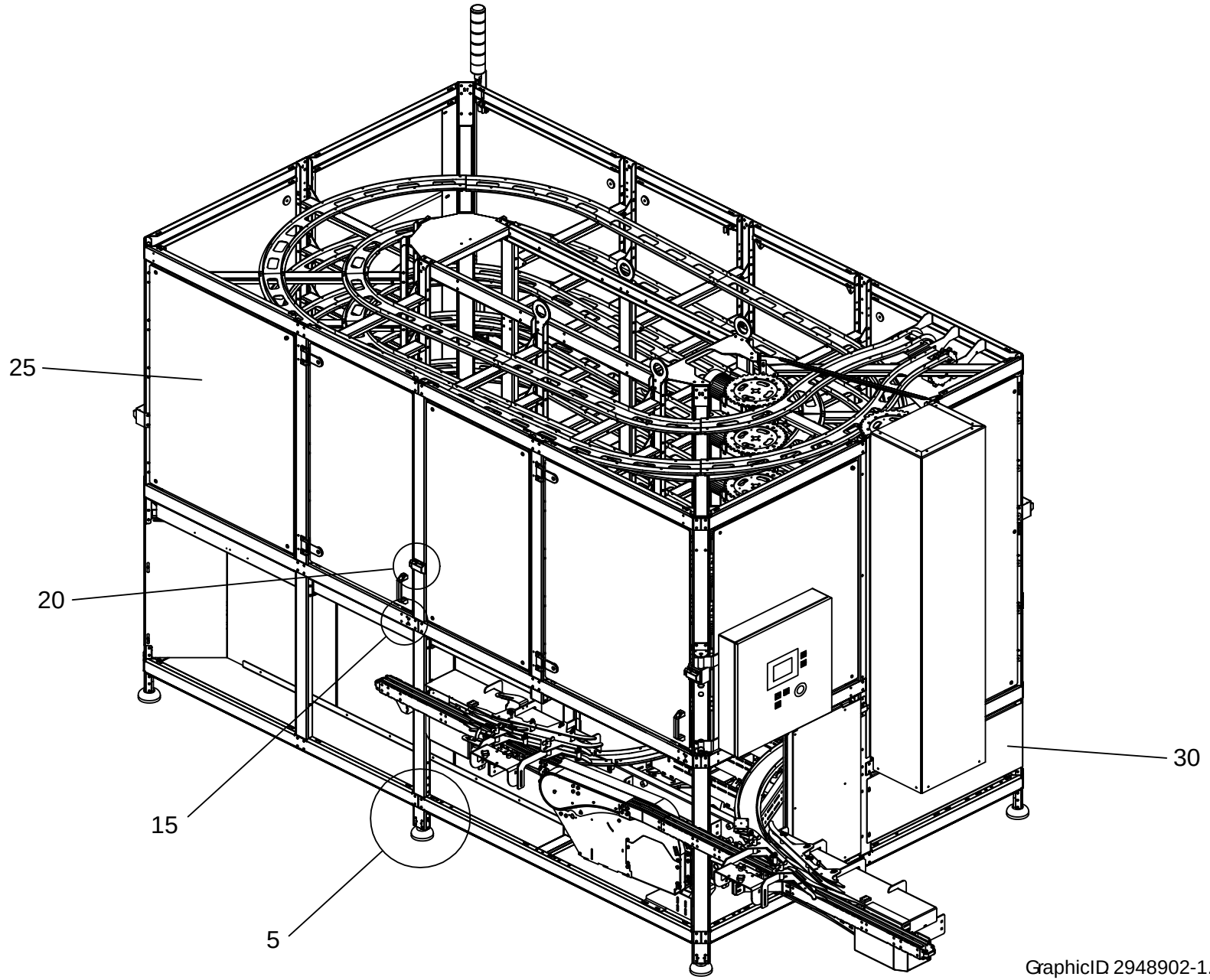

GraphicID: 2948902-1.eps
Parent Drw: 2948902

ECM: 395673 - 20090417
Group number: 2948902-0100
Assembly Drawing: 2948902-1_1_AB

Pos	Part No	UN	Qty	Description	Page No
100M, 120M					
005	2664578-0100		14	FOOT	**2-7**
47M, 75M, 90M					
005	2664578-0100		10	FOOT	**2-7**
Common Parts					
015	2948912-0100		1	DOOR SAFETY SWITCH	**2-9, 2-11, 2-13, 2-15, 2-17, 2-19**
020	2948913-0100		1	DOOR LATCHES	**2-21**
025	2948914-0100		1	GLASS PANES	**2-23, 2-25, 2-27, 2-29, 2-31, 2-33**
030	3008961-0100		1	COVERING PANEL	**2-35**

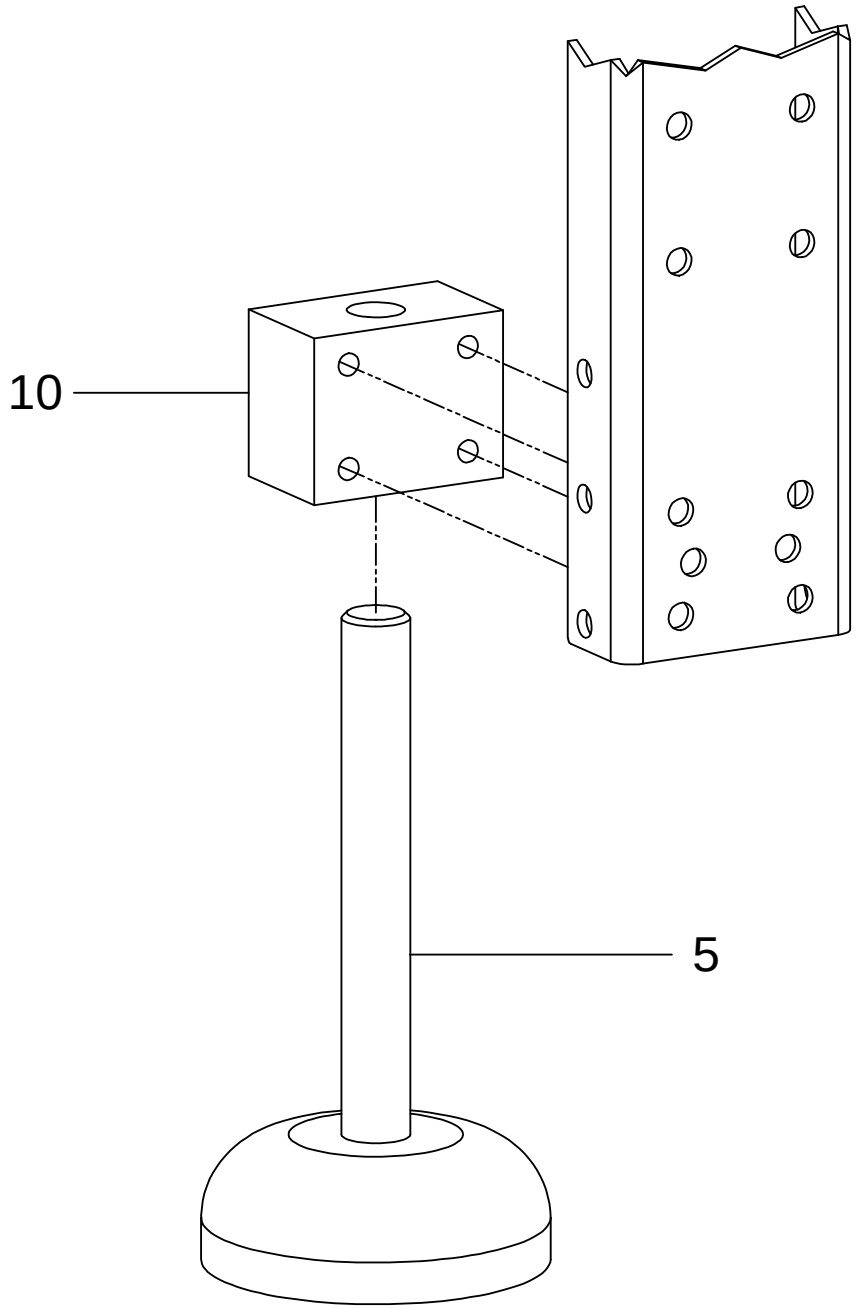
10
5

ECM: 998370 - 20060930
Group number: 2664578-0100
Assembly Drawing: 2664578-1_1_AB

Pos	Part No	UN	Qty	Description	Page No
-					
005	90458-1508		1	FLOOR PLATE, DAMPER, M105-20-160	
010	2664574-0000		1	BLOCK	

Pos	Part No	UN	Qty	Description	Page No

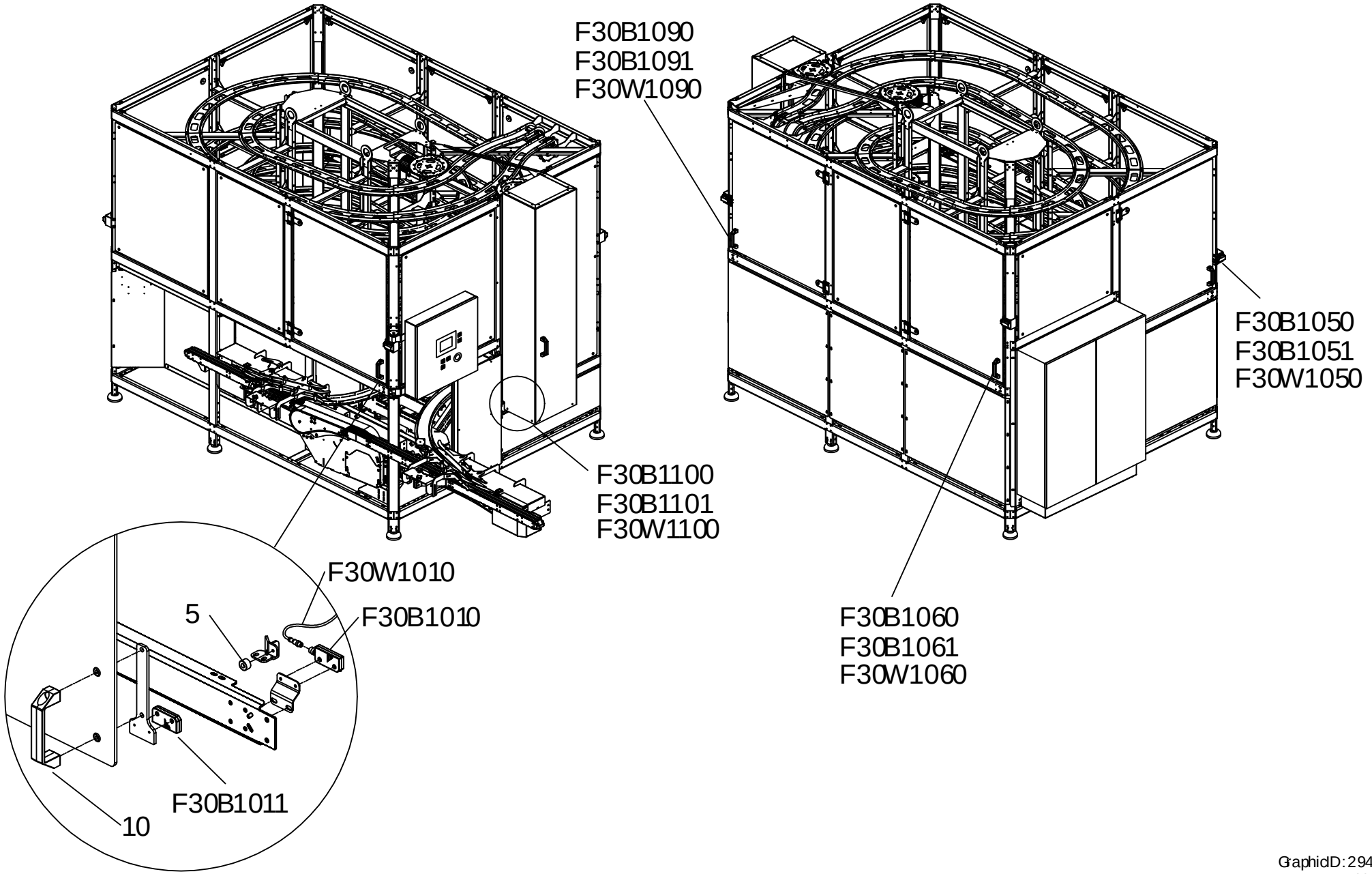

GraphicID: 2948912-1.eps
Parent Drw: 2948912

ECM: 387861 - 20090417
Group number: 2948912-0100
Assembly Drawing: 2948912-1_1_AA

This list covers pages from 2-8 to 2-19

Pos	Part No	UN	Qty	Description	Page No
100M_LINF, 120M_LINF (See drawing on page: 2-16)					
005	2855349-0000		9	DAMPER	
010	2855350-0000		9	HANDLE	
F30B1020	90459-4142		1	SENSOR, ADAM M12 20-051-00	
F30B1021	90458-2794		1	SENSOR, EVA 20-046-00	
F30B1030	90459-4142		1	SENSOR, ADAM M12 20-051-00	
F30B1031	90458-2794		1	SENSOR, EVA 20-046-00	
F30B1040	90459-4142		1	SENSOR, ADAM M12 20-051-00	
F30B1041	90458-2794		1	SENSOR, EVA 20-046-00	
F30B1070	90459-4142		1	SENSOR, ADAM M12 20-051-00	
F30B1071	90458-2794		1	SENSOR, EVA 20-046-00	
F30B1080	90459-4142		1	SENSOR, ADAM M12 20-051-00	
F30B1081	90458-2794		1	SENSOR, EVA 20-046-00	
F30W1020	90459-4876		1	FOCUS JUMPER CABLE M12 5P 3M, 20-056-21	
F30W1030	90459-4876		1	FOCUS JUMPER CABLE M12 5P 3M, 20-056-21	
F30W1040	90459-4876		1	FOCUS JUMPER CABLE M12 5P 3M, 20-056-21	
F30W1070	90459-4876		1	FOCUS JUMPER CABLE M12 5P 3M, 20-056-21	
F30W1080	90459-4876		1	FOCUS JUMPER CABLE M12 5P 3M, 20-056-21	
100M_RINF, 120M_RINF (See drawing on page: 2-18)					
005	2855349-0000		9	DAMPER	
010	2855350-0000		9	HANDLE	
F30B1020	90459-4142		1	SENSOR, ADAM M12 20-051-00	
F30B1021	90458-2794		1	SENSOR, EVA 20-046-00	
F30B1030	90459-4142		1	SENSOR, ADAM M12 20-051-00	
F30B1031	90458-2794		1	SENSOR, EVA 20-046-00	
F30B1040	90459-4142		1	SENSOR, ADAM M12 20-051-00	
F30B1041	90458-2794		1	SENSOR, EVA 20-046-00	
F30B1070	90459-4142		1	SENSOR, ADAM M12 20-051-00	
F30B1071	90458-2794		1	SENSOR, EVA 20-046-00	
F30B1080	90459-4142		1	SENSOR, ADAM M12 20-051-00	
F30B1081	90458-2794		1	SENSOR, EVA 20-046-00	
F30W1020	90459-4876		1	FOCUS JUMPER CABLE M12 5P 3M, 20-056-21	
F30W1030	90459-4876		1	FOCUS JUMPER CABLE M12 5P 3M, 20-056-21	
F30W1040	90459-4876		1	FOCUS JUMPER CABLE M12 5P 3M, 20-056-21	
F30W1070	90459-4876		1	FOCUS JUMPER CABLE M12 5P 3M, 20-056-21	
F30W1080	90459-4876		1	FOCUS JUMPER CABLE M12 5P 3M, 20-056-21	
47M_LINF (See drawing on page: 2-8)					
005	2855349-0000		4	DAMPER	
010	2855350-0000		4	HANDLE	
47M_RINF (See drawing on page: 2-10)					
005	2855349-0000		4	DAMPER	
010	2855350-0000		4	HANDLE	
75M_LINF, 90M_LINF (See drawing on page: 2-12)					
005	2855349-0000		6	DAMPER	
010	2855350-0000		6	HANDLE	
F30B1020	90459-4142		1	SENSOR, ADAM M12 20-051-00	
F30B1021	90458-2794		1	SENSOR, EVA 20-046-00	
F30B1040	90459-4142		1	SENSOR, ADAM M12 20-051-00	
F30B1041	90458-2794		1	SENSOR, EVA 20-046-00	
F30W1020	90459-4876		1	FOCUS JUMPER CABLE M12 5P 3M, 20-056-21	
F30W1040	90459-4876		1	FOCUS JUMPER CABLE M12 5P 3M, 20-056-21	
75M_RINF, 90M_RINF (See drawing on page: 2-14)					
005	2855349-0000		6	DAMPER	
010	2855350-0000		6	HANDLE	
F30B1020	90459-4142		1	SENSOR, ADAM M12 20-051-00	
F30B1021	90458-2794		1	SENSOR, EVA 20-046-00	
F30B1040	90459-4142		1	SENSOR, ADAM M12 20-051-00	
F30B1041	90458-2794		1	SENSOR, EVA 20-046-00	
F30W1020	90459-4876		1	FOCUS JUMPER CABLE M12 5P 3M, 20-056-21	
F30W1040	90459-4876		1	FOCUS JUMPER CABLE M12 5P 3M, 20-056-21	
Common Parts					
F30B1010	90459-4142		1	SENSOR, ADAM M12 20-051-00	
F30B1011	90458-2794		1	SENSOR, EVA 20-046-00	
F30B1050	90459-4142		1	SENSOR, ADAM M12 20-051-00	
F30B1051	90458-2794		1	SENSOR, EVA 20-046-00	
F30B1060	90459-4142		1	SENSOR, ADAM M12 20-051-00	
F30B1061	90458-2794		1	SENSOR, EVA 20-046-00	
F30B1090	90459-4142		1	SENSOR, ADAM M12 20-051-00	
F30B1091	90458-2794		1	SENSOR, EVA 20-046-00	
F30B1100	90459-4142		1	SENSOR, ADAM M12 20-051-00	
F30B1101	90458-2794		1	SENSOR, EVA 20-046-00	
F30W1010	90459-4876		1	FOCUS JUMPER CABLE M12 5P 3M, 20-056-21	
F30W1050	90459-4876		1	FOCUS JUMPER CABLE M12 5P 3M, 20-056-21	
F30W1060	90459-4876		1	FOCUS JUMPER CABLE M12 5P 3M, 20-056-21	
F30W1090	90459-4876		1	FOCUS JUMPER CABLE M12 5P 3M, 20-056-21	
F30W1100	90459-4876		1	FOCUS JUMPER CABLE M12 5P 3M, 20-056-21	

Machine Type | Group Description | Used-In | Group Number | Page No

DOOR SAFETY SWITCH

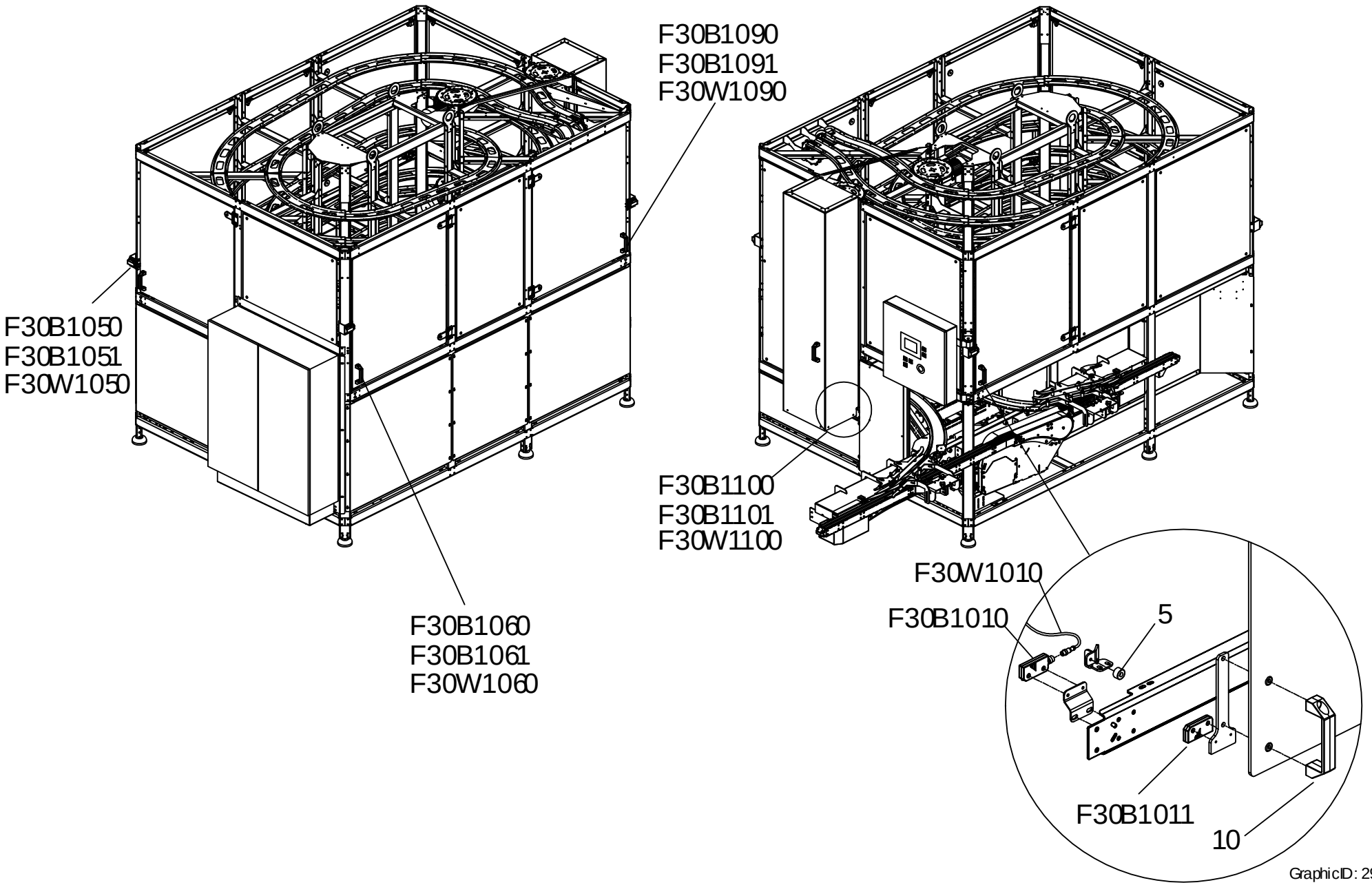

GraphicID: 2948912-2.eps
Parent Drw: 2948912

ECM: 387861 - 20090417
Group number: 2948912-0100
Assembly Drawing: 2948912-2_1_AA

This list covers pages from 2-8 to 2-19

Pos	Part No	UN	Qty	Description	Page No
100M_LINF, 120M_LINF (See drawing on page: 2-16)					
005	2855349-0000		9	DAMPER	
010	2855350-0000		9	HANDLE	
F30B1020	90459-4142		1	SENSOR, ADAM M12 20-051-00	
F30B1021	90458-2794		1	SENSOR, EVA 20-046-00	
F30B1030	90459-4142		1	SENSOR, ADAM M12 20-051-00	
F30B1031	90458-2794		1	SENSOR, EVA 20-046-00	
F30B1040	90459-4142		1	SENSOR, ADAM M12 20-051-00	
F30B1041	90458-2794		1	SENSOR, EVA 20-046-00	
F30B1070	90459-4142		1	SENSOR, ADAM M12 20-051-00	
F30B1071	90458-2794		1	SENSOR, EVA 20-046-00	
F30B1080	90459-4142		1	SENSOR, ADAM M12 20-051-00	
F30B1081	90458-2794		1	SENSOR, EVA 20-046-00	
F30W1020	90459-4876		1	FOCUS JUMPER CABLE M12 5P 3M, 20-056-21	
F30W1030	90459-4876		1	FOCUS JUMPER CABLE M12 5P 3M, 20-056-21	
F30W1040	90459-4876		1	FOCUS JUMPER CABLE M12 5P 3M, 20-056-21	
F30W1070	90459-4876		1	FOCUS JUMPER CABLE M12 5P 3M, 20-056-21	
F30W1080	90459-4876		1	FOCUS JUMPER CABLE M12 5P 3M, 20-056-21	
100M_RINF, 120M_RINF (See drawing on page: 2-18)					
005	2855349-0000		9	DAMPER	
010	2855350-0000		9	HANDLE	
F30B1020	90459-4142		1	SENSOR, ADAM M12 20-051-00	
F30B1021	90458-2794		1	SENSOR, EVA 20-046-00	
F30B1030	90459-4142		1	SENSOR, ADAM M12 20-051-00	
F30B1031	90458-2794		1	SENSOR, EVA 20-046-00	
F30B1040	90459-4142		1	SENSOR, ADAM M12 20-051-00	
F30B1041	90458-2794		1	SENSOR, EVA 20-046-00	
F30B1070	90459-4142		1	SENSOR, ADAM M12 20-051-00	
F30B1071	90458-2794		1	SENSOR, EVA 20-046-00	
F30B1080	90459-4142		1	SENSOR, ADAM M12 20-051-00	
F30B1081	90458-2794		1	SENSOR, EVA 20-046-00	
F30W1020	90459-4876		1	FOCUS JUMPER CABLE M12 5P 3M, 20-056-21	
F30W1030	90459-4876		1	FOCUS JUMPER CABLE M12 5P 3M, 20-056-21	
F30W1040	90459-4876		1	FOCUS JUMPER CABLE M12 5P 3M, 20-056-21	
F30W1070	90459-4876		1	FOCUS JUMPER CABLE M12 5P 3M, 20-056-21	
F30W1080	90459-4876		1	FOCUS JUMPER CABLE M12 5P 3M, 20-056-21	
47M_LINF (See drawing on page: 2-8)					
005	2855349-0000		4	DAMPER	
010	2855350-0000		4	HANDLE	
47M_RINF (See drawing on page: 2-10)					
005	2855349-0000		4	DAMPER	
010	2855350-0000		4	HANDLE	

Pos	Part No	UN	Qty	Description	Page No
75M_LINF, 90M_LINF (See drawing on page: 2-12)					
005	2855349-0000		6	DAMPER	
010	2855350-0000		6	HANDLE	
F30B1020	90459-4142		1	SENSOR, ADAM M12 20-051-00	
F30B1021	90458-2794		1	SENSOR, EVA 20-046-00	
F30B1040	90459-4142		1	SENSOR, ADAM M12 20-051-00	
F30B1041	90458-2794		1	SENSOR, EVA 20-046-00	
F30W1020	90459-4876		1	FOCUS JUMPER CABLE M12 5P 3M, 20-056-21	
F30W1040	90459-4876		1	FOCUS JUMPER CABLE M12 5P 3M, 20-056-21	
75M_RINF, 90M_RINF (See drawing on page: 2-14)					
005	2855349-0000		6	DAMPER	
010	2855350-0000		6	HANDLE	
F30B1020	90459-4142		1	SENSOR, ADAM M12 20-051-00	
F30B1021	90458-2794		1	SENSOR, EVA 20-046-00	
F30B1040	90459-4142		1	SENSOR, ADAM M12 20-051-00	
F30B1041	90458-2794		1	SENSOR, EVA 20-046-00	
F30W1020	90459-4876		1	FOCUS JUMPER CABLE M12 5P 3M, 20-056-21	
F30W1040	90459-4876		1	FOCUS JUMPER CABLE M12 5P 3M, 20-056-21	
Common Parts					
F30B1010	90459-4142		1	SENSOR, ADAM M12 20-051-00	
F30B1011	90458-2794		1	SENSOR, EVA 20-046-00	
F30B1050	90459-4142		1	SENSOR, ADAM M12 20-051-00	
F30B1051	90458-2794		1	SENSOR, EVA 20-046-00	
F30B1060	90459-4142		1	SENSOR, ADAM M12 20-051-00	
F30B1061	90458-2794		1	SENSOR, EVA 20-046-00	
F30B1090	90459-4142		1	SENSOR, ADAM M12 20-051-00	
F30B1091	90458-2794		1	SENSOR, EVA 20-046-00	
F30B1100	90459-4142		1	SENSOR, ADAM M12 20-051-00	
F30B1101	90458-2794		1	SENSOR, EVA 20-046-00	
F30W1010	90459-4876		1	FOCUS JUMPER CABLE M12 5P 3M, 20-056-21	
F30W1050	90459-4876		1	FOCUS JUMPER CABLE M12 5P 3M, 20-056-21	
F30W1060	90459-4876		1	FOCUS JUMPER CABLE M12 5P 3M, 20-056-21	
F30W1090	90459-4876		1	FOCUS JUMPER CABLE M12 5P 3M, 20-056-21	
F30W1100	90459-4876		1	FOCUS JUMPER CABLE M12 5P 3M, 20-056-21	

Machine Type | Group Description | Used-In | Group Number | Page No

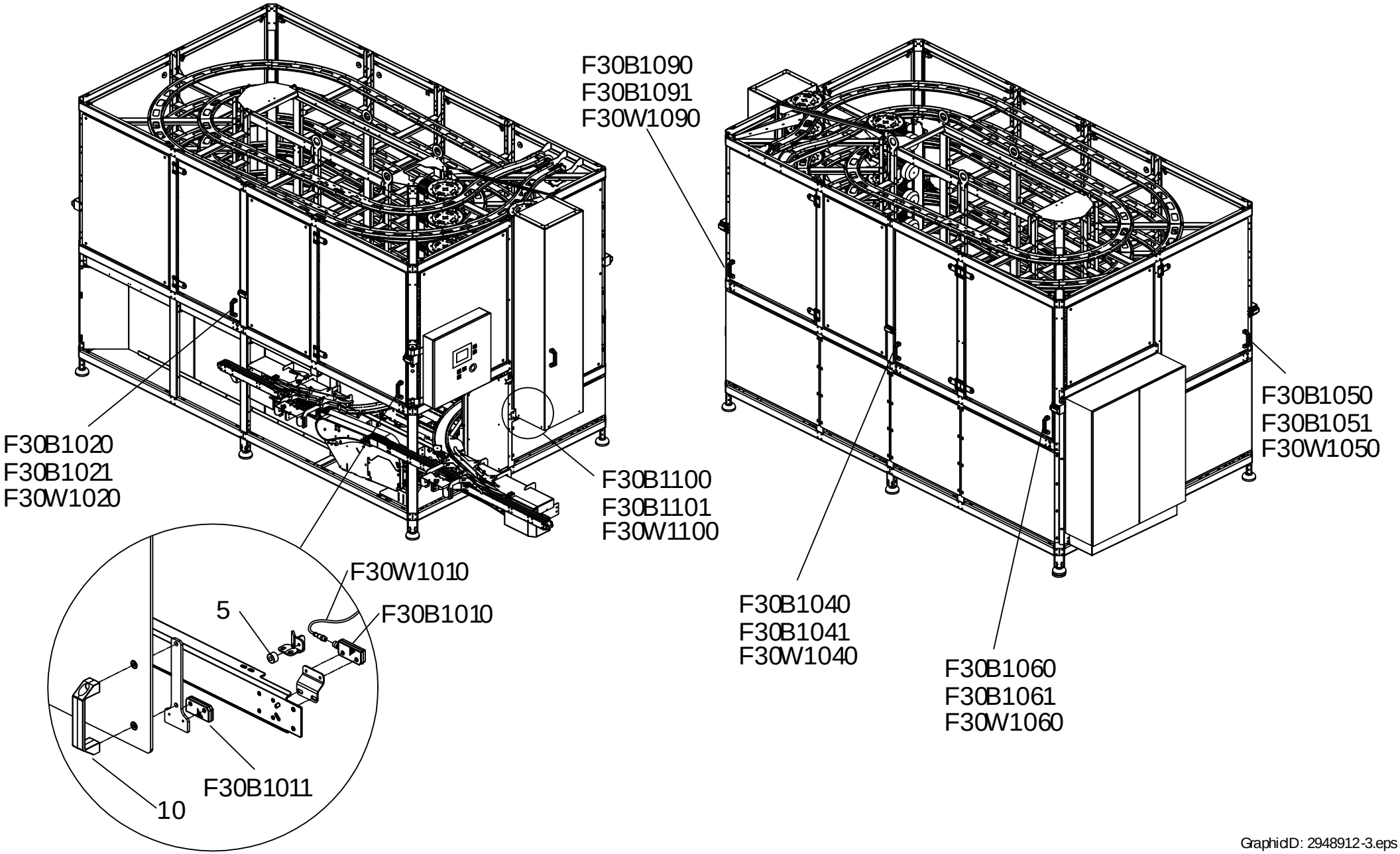

GraphicID: 2948912-3.eps
Parent Drw: 2948912

ECM: 387861 - 20090417
Group number: 2948912-0100
Assembly Drawing: 2948912-3_1_AA

This list covers pages from 2-8 to 2-19

Pos	Part No	UN	Qty	Description	Page No
100M_LINF, 120M_LINF (See drawing on page: 2-16)					
005	2855349-0000		9	DAMPER	
010	2855350-0000		9	HANDLE	
F30B1020	90459-4142		1	SENSOR, ADAM M12 20-051-00	
F30B1021	90458-2794		1	SENSOR, EVA 20-046-00	
F30B1030	90459-4142		1	SENSOR, ADAM M12 20-051-00	
F30B1031	90458-2794		1	SENSOR, EVA 20-046-00	
F30B1040	90459-4142		1	SENSOR, ADAM M12 20-051-00	
F30B1041	90458-2794		1	SENSOR, EVA 20-046-00	
F30B1070	90459-4142		1	SENSOR, ADAM M12 20-051-00	
F30B1071	90458-2794		1	SENSOR, EVA 20-046-00	
F30B1080	90459-4142		1	SENSOR, ADAM M12 20-051-00	
F30B1081	90458-2794		1	SENSOR, EVA 20-046-00	
F30W1020	90459-4876		1	FOCUS JUMPER CABLE M12 5P 3M, 20-056-21	
F30W1030	90459-4876		1	FOCUS JUMPER CABLE M12 5P 3M, 20-056-21	
F30W1040	90459-4876		1	FOCUS JUMPER CABLE M12 5P 3M, 20-056-21	
F30W1070	90459-4876		1	FOCUS JUMPER CABLE M12 5P 3M, 20-056-21	
F30W1080	90459-4876		1	FOCUS JUMPER CABLE M12 5P 3M, 20-056-21	
100M_RINF, 120M_RINF (See drawing on page: 2-18)					
005	2855349-0000		9	DAMPER	
010	2855350-0000		9	HANDLE	
F30B1020	90459-4142		1	SENSOR, ADAM M12 20-051-00	
F30B1021	90458-2794		1	SENSOR, EVA 20-046-00	
F30B1030	90459-4142		1	SENSOR, ADAM M12 20-051-00	
F30B1031	90458-2794		1	SENSOR, EVA 20-046-00	
F30B1040	90459-4142		1	SENSOR, ADAM M12 20-051-00	
F30B1041	90458-2794		1	SENSOR, EVA 20-046-00	
F30B1070	90459-4142		1	SENSOR, ADAM M12 20-051-00	
F30B1071	90458-2794		1	SENSOR, EVA 20-046-00	
F30B1080	90459-4142		1	SENSOR, ADAM M12 20-051-00	
F30B1081	90458-2794		1	SENSOR, EVA 20-046-00	
F30W1020	90459-4876		1	FOCUS JUMPER CABLE M12 5P 3M, 20-056-21	
F30W1030	90459-4876		1	FOCUS JUMPER CABLE M12 5P 3M, 20-056-21	
F30W1040	90459-4876		1	FOCUS JUMPER CABLE M12 5P 3M, 20-056-21	
F30W1070	90459-4876		1	FOCUS JUMPER CABLE M12 5P 3M, 20-056-21	
F30W1080	90459-4876		1	FOCUS JUMPER CABLE M12 5P 3M, 20-056-21	
47M_LINF (See drawing on page: 2-8)					
005	2855349-0000		4	DAMPER	
010	2855350-0000		4	HANDLE	
47M_RINF (See drawing on page: 2-10)					
005	2855349-0000		4	DAMPER	
010	2855350-0000		4	HANDLE	

Pos	Part No	UN	Qty	Description	Page No
75M_LINF, 90M_LINF (See drawing on page: 2-12)					
005	2855349-0000		6	DAMPER	
010	2855350-0000		6	HANDLE	
F30B1020	90459-4142		1	SENSOR, ADAM M12 20-051-00	
F30B1021	90458-2794		1	SENSOR, EVA 20-046-00	
F30B1040	90459-4142		1	SENSOR, ADAM M12 20-051-00	
F30B1041	90458-2794		1	SENSOR, EVA 20-046-00	
F30W1020	90459-4876		1	FOCUS JUMPER CABLE M12 5P 3M, 20-056-21	
F30W1040	90459-4876		1	FOCUS JUMPER CABLE M12 5P 3M, 20-056-21	
75M_RINF, 90M_RINF (See drawing on page: 2-14)					
005	2855349-0000		6	DAMPER	
010	2855350-0000		6	HANDLE	
F30B1020	90459-4142		1	SENSOR, ADAM M12 20-051-00	
F30B1021	90458-2794		1	SENSOR, EVA 20-046-00	
F30B1040	90459-4142		1	SENSOR, ADAM M12 20-051-00	
F30B1041	90458-2794		1	SENSOR, EVA 20-046-00	
F30W1020	90459-4876		1	FOCUS JUMPER CABLE M12 5P 3M, 20-056-21	
F30W1040	90459-4876		1	FOCUS JUMPER CABLE M12 5P 3M, 20-056-21	
Common Parts					
F30B1010	90459-4142		1	SENSOR, ADAM M12 20-051-00	
F30B1011	90458-2794		1	SENSOR, EVA 20-046-00	
F30B1050	90459-4142		1	SENSOR, ADAM M12 20-051-00	
F30B1051	90458-2794		1	SENSOR, EVA 20-046-00	
F30B1060	90459-4142		1	SENSOR, ADAM M12 20-051-00	
F30B1061	90458-2794		1	SENSOR, EVA 20-046-00	
F30B1090	90459-4142		1	SENSOR, ADAM M12 20-051-00	
F30B1091	90458-2794		1	SENSOR, EVA 20-046-00	
F30B1100	90459-4142		1	SENSOR, ADAM M12 20-051-00	
F30B1101	90458-2794		1	SENSOR, EVA 20-046-00	
F30W1010	90459-4876		1	FOCUS JUMPER CABLE M12 5P 3M, 20-056-21	
F30W1050	90459-4876		1	FOCUS JUMPER CABLE M12 5P 3M, 20-056-21	
F30W1060	90459-4876		1	FOCUS JUMPER CABLE M12 5P 3M, 20-056-21	
F30W1090	90459-4876		1	FOCUS JUMPER CABLE M12 5P 3M, 20-056-21	
F30W1100	90459-4876		1	FOCUS JUMPER CABLE M12 5P 3M, 20-056-21	

Machine Type | Group Description | Used-In | Group Number | Page No

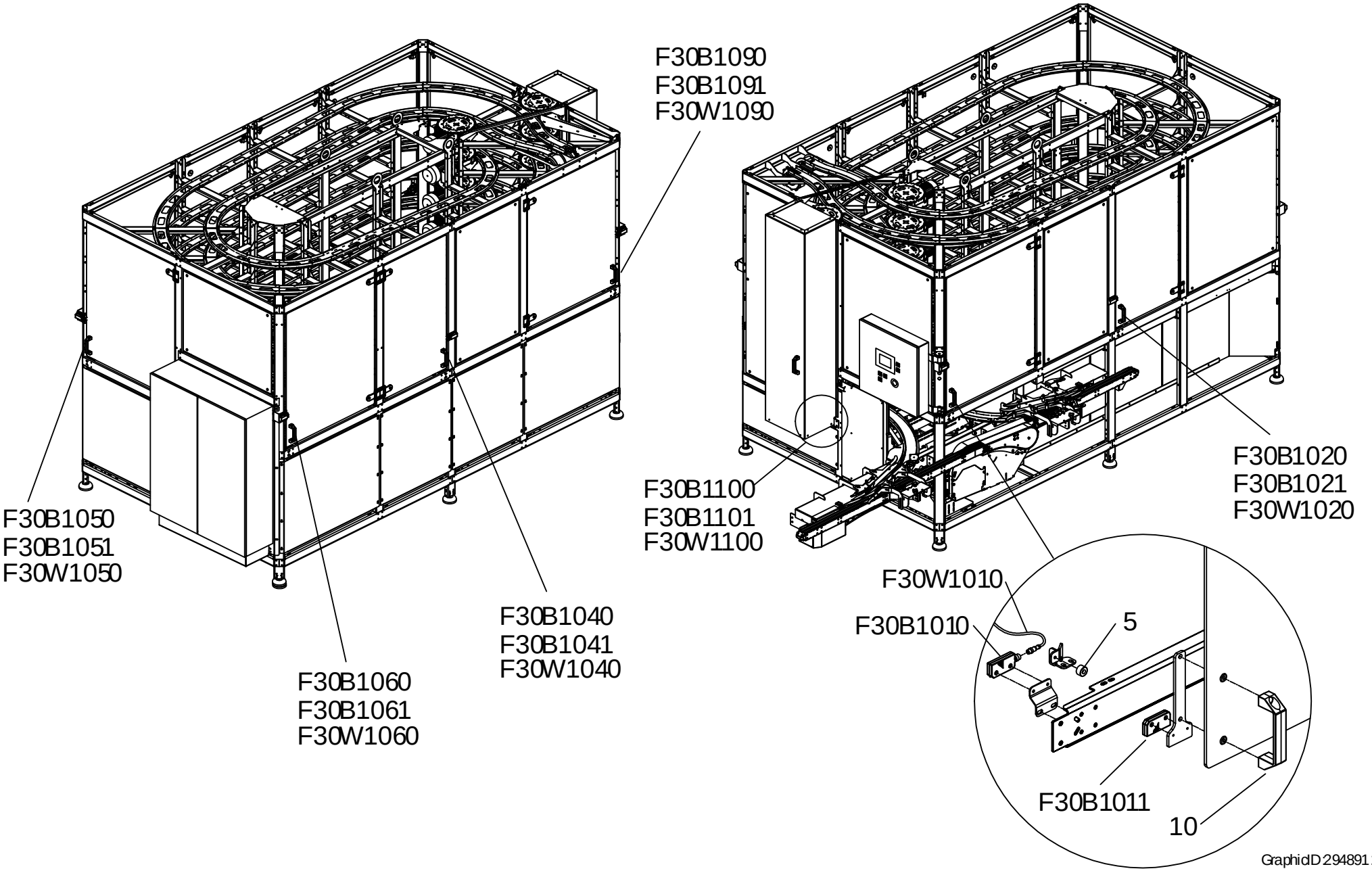

GraphicID 2948912-4
Parent Drw: 2948912

ECM: 387861 - 20090417
Group number: 2948912-0100
Assembly Drawing: 2948912-4_1_AA

This list covers pages from 2-8 to 2-19

Pos	Part No	UN	Qty	Description	Page No
100M_LINF, 120M_LINF (See drawing on page: 2-16)					
005	2855349-0000		9	DAMPER	
010	2855350-0000		9	HANDLE	
F30B1020	90459-4142		1	SENSOR, ADAM M12 20-051-00	
F30B1021	90458-2794		1	SENSOR, EVA 20-046-00	
F30B1030	90459-4142		1	SENSOR, ADAM M12 20-051-00	
F30B1031	90458-2794		1	SENSOR, EVA 20-046-00	
F30B1040	90459-4142		1	SENSOR, ADAM M12 20-051-00	
F30B1041	90458-2794		1	SENSOR, EVA 20-046-00	
F30B1070	90459-4142		1	SENSOR, ADAM M12 20-051-00	
F30B1071	90458-2794		1	SENSOR, EVA 20-046-00	
F30B1080	90459-4142		1	SENSOR, ADAM M12 20-051-00	
F30B1081	90458-2794		1	SENSOR, EVA 20-046-00	
F30W1020	90459-4876		1	FOCUS JUMPER CABLE M12 5P 3M, 20-056-21	
F30W1030	90459-4876		1	FOCUS JUMPER CABLE M12 5P 3M, 20-056-21	
F30W1040	90459-4876		1	FOCUS JUMPER CABLE M12 5P 3M, 20-056-21	
F30W1070	90459-4876		1	FOCUS JUMPER CABLE M12 5P 3M, 20-056-21	
F30W1080	90459-4876		1	FOCUS JUMPER CABLE M12 5P 3M, 20-056-21	
100M_RINF, 120M_RINF (See drawing on page: 2-18)					
005	2855349-0000		9	DAMPER	
010	2855350-0000		9	HANDLE	
F30B1020	90459-4142		1	SENSOR, ADAM M12 20-051-00	
F30B1021	90458-2794		1	SENSOR, EVA 20-046-00	
F30B1030	90459-4142		1	SENSOR, ADAM M12 20-051-00	
F30B1031	90458-2794		1	SENSOR, EVA 20-046-00	
F30B1040	90459-4142		1	SENSOR, ADAM M12 20-051-00	
F30B1041	90458-2794		1	SENSOR, EVA 20-046-00	
F30B1070	90459-4142		1	SENSOR, ADAM M12 20-051-00	
F30B1071	90458-2794		1	SENSOR, EVA 20-046-00	
F30B1080	90459-4142		1	SENSOR, ADAM M12 20-051-00	
F30B1081	90458-2794		1	SENSOR, EVA 20-046-00	
F30W1020	90459-4876		1	FOCUS JUMPER CABLE M12 5P 3M, 20-056-21	
F30W1030	90459-4876		1	FOCUS JUMPER CABLE M12 5P 3M, 20-056-21	
F30W1040	90459-4876		1	FOCUS JUMPER CABLE M12 5P 3M, 20-056-21	
F30W1070	90459-4876		1	FOCUS JUMPER CABLE M12 5P 3M, 20-056-21	
F30W1080	90459-4876		1	FOCUS JUMPER CABLE M12 5P 3M, 20-056-21	
47M_LINF (See drawing on page: 2-8)					
005	2855349-0000		4	DAMPER	
010	2855350-0000		4	HANDLE	
47M_RINF (See drawing on page: 2-10)					
005	2855349-0000		4	DAMPER	
010	2855350-0000		4	HANDLE	
75M_LINF, 90M_LINF (See drawing on page: 2-12)					
005	2855349-0000		6	DAMPER	
010	2855350-0000		6	HANDLE	
F30B1020	90459-4142		1	SENSOR, ADAM M12 20-051-00	
F30B1021	90458-2794		1	SENSOR, EVA 20-046-00	
F30B1040	90459-4142		1	SENSOR, ADAM M12 20-051-00	
F30B1041	90458-2794		1	SENSOR, EVA 20-046-00	
F30W1020	90459-4876		1	FOCUS JUMPER CABLE M12 5P 3M, 20-056-21	
F30W1040	90459-4876		1	FOCUS JUMPER CABLE M12 5P 3M, 20-056-21	
75M_RINF, 90M_RINF (See drawing on page: 2-14)					
005	2855349-0000		6	DAMPER	
010	2855350-0000		6	HANDLE	
F30B1020	90459-4142		1	SENSOR, ADAM M12 20-051-00	
F30B1021	90458-2794		1	SENSOR, EVA 20-046-00	
F30B1040	90459-4142		1	SENSOR, ADAM M12 20-051-00	
F30B1041	90458-2794		1	SENSOR, EVA 20-046-00	
F30W1020	90459-4876		1	FOCUS JUMPER CABLE M12 5P 3M, 20-056-21	
F30W1040	90459-4876		1	FOCUS JUMPER CABLE M12 5P 3M, 20-056-21	
Common Parts					
F30B1010	90459-4142		1	SENSOR, ADAM M12 20-051-00	
F30B1011	90458-2794		1	SENSOR, EVA 20-046-00	
F30B1050	90459-4142		1	SENSOR, ADAM M12 20-051-00	
F30B1051	90458-2794		1	SENSOR, EVA 20-046-00	
F30B1060	90459-4142		1	SENSOR, ADAM M12 20-051-00	
F30B1061	90458-2794		1	SENSOR, EVA 20-046-00	
F30B1090	90459-4142		1	SENSOR, ADAM M12 20-051-00	
F30B1091	90458-2794		1	SENSOR, EVA 20-046-00	
F30B1100	90459-4142		1	SENSOR, ADAM M12 20-051-00	
F30B1101	90458-2794		1	SENSOR, EVA 20-046-00	
F30W1010	90459-4876		1	FOCUS JUMPER CABLE M12 5P 3M, 20-056-21	
F30W1050	90459-4876		1	FOCUS JUMPER CABLE M12 5P 3M, 20-056-21	
F30W1060	90459-4876		1	FOCUS JUMPER CABLE M12 5P 3M, 20-056-21	
F30W1090	90459-4876		1	FOCUS JUMPER CABLE M12 5P 3M, 20-056-21	
F30W1100	90459-4876		1	FOCUS JUMPER CABLE M12 5P 3M, 20-056-21	

Machine Type | Group Description | Used-In | Group Number | Page No

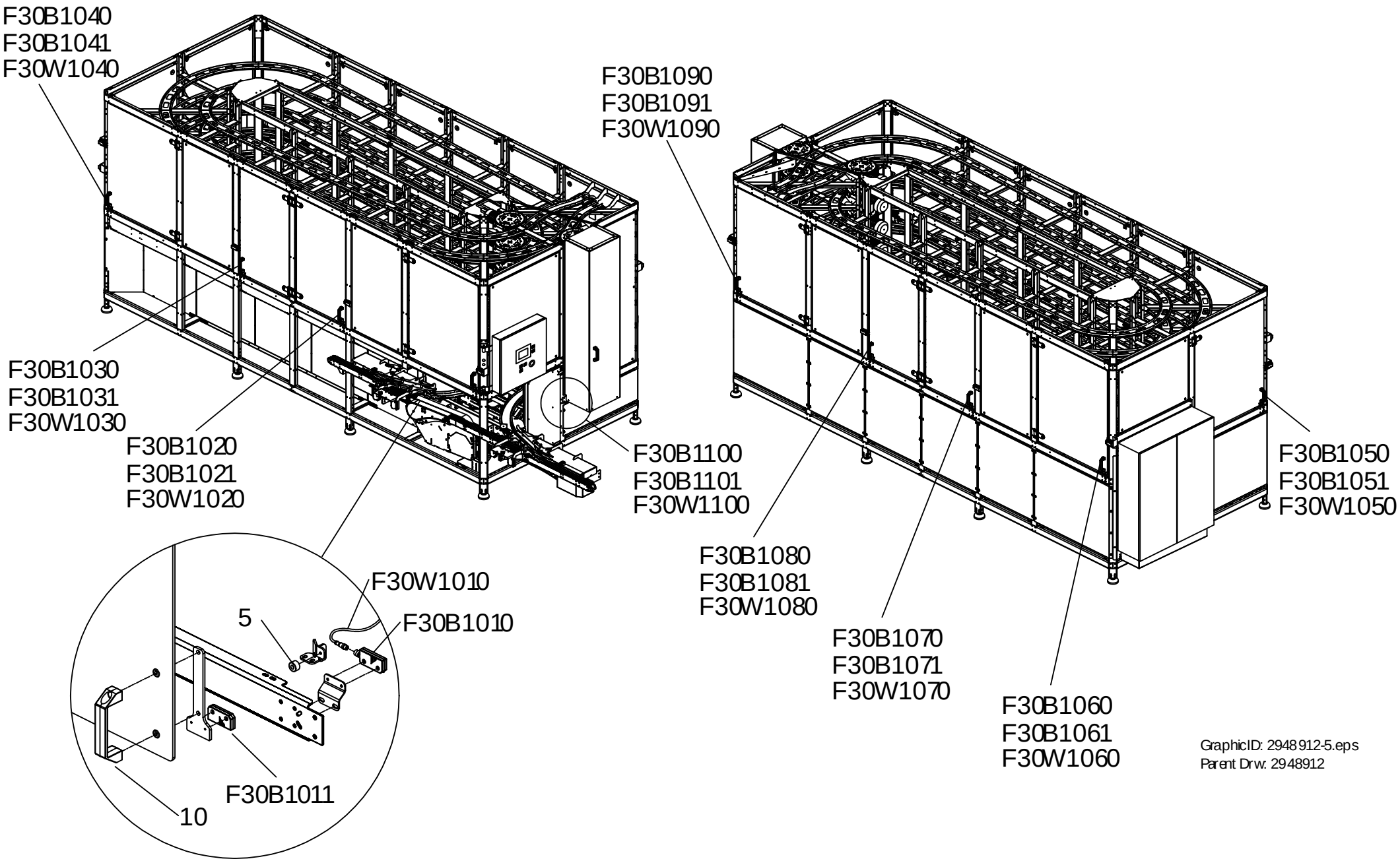

GraphicID: 2948912-5.eps
Parent Drw: 2948912

ECM: 387861 - 20090417
Group number: 2948912-0100
Assembly Drawing: 2948912-5_1_AA

This list covers pages from 2-8 to 2-19

Pos	Part No	UN	Qty	Description	Page No
100M_LINF, 120M_LINF (See drawing on page: 2-16)					
005	2855349-0000		9	DAMPER	
010	2855350-0000		9	HANDLE	
F30B1020	90459-4142		1	SENSOR, ADAM M12 20-051-00	
F30B1021	90458-2794		1	SENSOR, EVA 20-046-00	
F30B1030	90459-4142		1	SENSOR, ADAM M12 20-051-00	
F30B1031	90458-2794		1	SENSOR, EVA 20-046-00	
F30B1040	90459-4142		1	SENSOR, ADAM M12 20-051-00	
F30B1041	90458-2794		1	SENSOR, EVA 20-046-00	
F30B1070	90459-4142		1	SENSOR, ADAM M12 20-051-00	
F30B1071	90458-2794		1	SENSOR, EVA 20-046-00	
F30B1080	90459-4142		1	SENSOR, ADAM M12 20-051-00	
F30B1081	90458-2794		1	SENSOR, EVA 20-046-00	
F30W1020	90459-4876		1	FOCUS JUMPER CABLE M12 5P 3M, 20-056-21	
F30W1030	90459-4876		1	FOCUS JUMPER CABLE M12 5P 3M, 20-056-21	
F30W1040	90459-4876		1	FOCUS JUMPER CABLE M12 5P 3M, 20-056-21	
F30W1070	90459-4876		1	FOCUS JUMPER CABLE M12 5P 3M, 20-056-21	
F30W1080	90459-4876		1	FOCUS JUMPER CABLE M12 5P 3M, 20-056-21	
100M_RINF, 120M_RINF (See drawing on page: 2-18)					
005	2855349-0000		9	DAMPER	
010	2855350-0000		9	HANDLE	
F30B1020	90459-4142		1	SENSOR, ADAM M12 20-051-00	
F30B1021	90458-2794		1	SENSOR, EVA 20-046-00	
F30B1030	90459-4142		1	SENSOR, ADAM M12 20-051-00	
F30B1031	90458-2794		1	SENSOR, EVA 20-046-00	
F30B1040	90459-4142		1	SENSOR, ADAM M12 20-051-00	
F30B1041	90458-2794		1	SENSOR, EVA 20-046-00	
F30B1070	90459-4142		1	SENSOR, ADAM M12 20-051-00	
F30B1071	90458-2794		1	SENSOR, EVA 20-046-00	
F30B1080	90459-4142		1	SENSOR, ADAM M12 20-051-00	
F30B1081	90458-2794		1	SENSOR, EVA 20-046-00	
F30W1020	90459-4876		1	FOCUS JUMPER CABLE M12 5P 3M, 20-056-21	
F30W1030	90459-4876		1	FOCUS JUMPER CABLE M12 5P 3M, 20-056-21	
F30W1040	90459-4876		1	FOCUS JUMPER CABLE M12 5P 3M, 20-056-21	
F30W1070	90459-4876		1	FOCUS JUMPER CABLE M12 5P 3M, 20-056-21	
F30W1080	90459-4876		1	FOCUS JUMPER CABLE M12 5P 3M, 20-056-21	
47M_LINF (See drawing on page: 2-8)					
005	2855349-0000		4	DAMPER	
010	2855350-0000		4	HANDLE	
47M_RINF (See drawing on page: 2-10)					
005	2855349-0000		4	DAMPER	
010	2855350-0000		4	HANDLE	
75M_LINF, 90M_LINF (See drawing on page: 2-12)					
005	2855349-0000		6	DAMPER	
010	2855350-0000		6	HANDLE	
F30B1020	90459-4142		1	SENSOR, ADAM M12 20-051-00	
F30B1021	90458-2794		1	SENSOR, EVA 20-046-00	
F30B1040	90459-4142		1	SENSOR, ADAM M12 20-051-00	
F30B1041	90458-2794		1	SENSOR, EVA 20-046-00	
F30W1020	90459-4876		1	FOCUS JUMPER CABLE M12 5P 3M, 20-056-21	
F30W1040	90459-4876		1	FOCUS JUMPER CABLE M12 5P 3M, 20-056-21	
75M_RINF, 90M_RINF (See drawing on page: 2-14)					
005	2855349-0000		6	DAMPER	
010	2855350-0000		6	HANDLE	
F30B1020	90459-4142		1	SENSOR, ADAM M12 20-051-00	
F30B1021	90458-2794		1	SENSOR, EVA 20-046-00	
F30B1040	90459-4142		1	SENSOR, ADAM M12 20-051-00	
F30B1041	90458-2794		1	SENSOR, EVA 20-046-00	
F30W1020	90459-4876		1	FOCUS JUMPER CABLE M12 5P 3M, 20-056-21	
F30W1040	90459-4876		1	FOCUS JUMPER CABLE M12 5P 3M, 20-056-21	
Common Parts					
F30B1010	90459-4142		1	SENSOR, ADAM M12 20-051-00	
F30B1011	90458-2794		1	SENSOR, EVA 20-046-00	
F30B1050	90459-4142		1	SENSOR, ADAM M12 20-051-00	
F30B1051	90458-2794		1	SENSOR, EVA 20-046-00	
F30B1060	90459-4142		1	SENSOR, ADAM M12 20-051-00	
F30B1061	90458-2794		1	SENSOR, EVA 20-046-00	
F30B1090	90459-4142		1	SENSOR, ADAM M12 20-051-00	
F30B1091	90458-2794		1	SENSOR, EVA 20-046-00	
F30B1100	90459-4142		1	SENSOR, ADAM M12 20-051-00	
F30B1101	90458-2794		1	SENSOR, EVA 20-046-00	
F30W1010	90459-4876		1	FOCUS JUMPER CABLE M12 5P 3M, 20-056-21	
F30W1050	90459-4876		1	FOCUS JUMPER CABLE M12 5P 3M, 20-056-21	
F30W1060	90459-4876		1	FOCUS JUMPER CABLE M12 5P 3M, 20-056-21	
F30W1090	90459-4876		1	FOCUS JUMPER CABLE M12 5P 3M, 20-056-21	
F30W1100	90459-4876		1	FOCUS JUMPER CABLE M12 5P 3M, 20-056-21	

Machine Type | Group Description | Used-In | Group Number | Page No

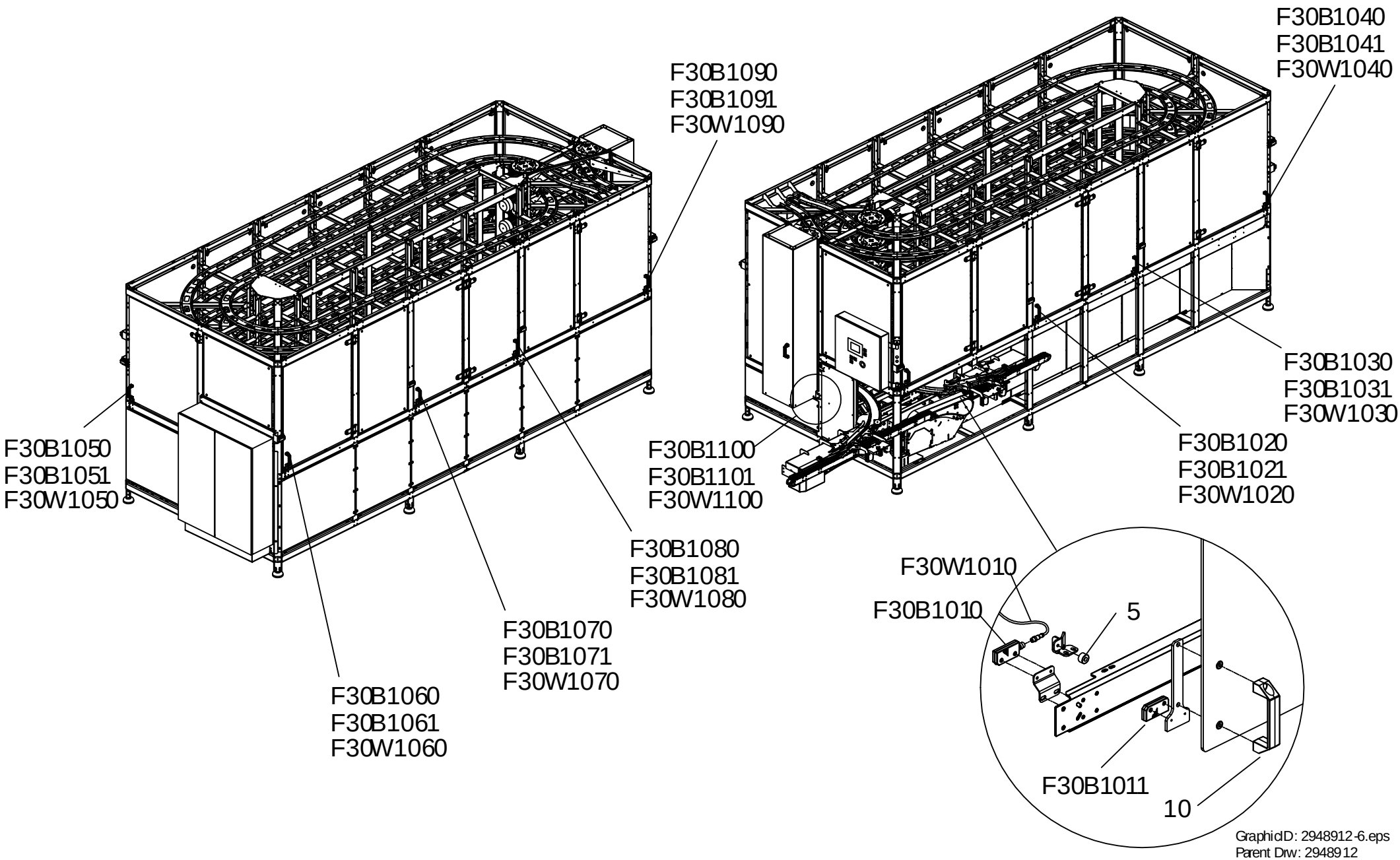

GraphicID: 2948912-6.eps
Parent Drw: 2948912

ECM: 387861 - 20090417
Group number: 2948912-0100
Assembly Drawing: 2948912-6_1_AA

This list covers pages from 2-8 to 2-19

Pos	Part No	UN	Qty	Description	Page No
100M_LINF, 120M_LINF (See drawing on page: 2-16)					
005	2855349-0000		9	DAMPER	
010	2855350-0000		9	HANDLE	
F30B1020	90459-4142		1	SENSOR, ADAM M12 20-051-00	
F30B1021	90458-2794		1	SENSOR, EVA 20-046-00	
F30B1030	90459-4142		1	SENSOR, ADAM M12 20-051-00	
F30B1031	90458-2794		1	SENSOR, EVA 20-046-00	
F30B1040	90459-4142		1	SENSOR, ADAM M12 20-051-00	
F30B1041	90458-2794		1	SENSOR, EVA 20-046-00	
F30B1070	90459-4142		1	SENSOR, ADAM M12 20-051-00	
F30B1071	90458-2794		1	SENSOR, EVA 20-046-00	
F30B1080	90459-4142		1	SENSOR, ADAM M12 20-051-00	
F30B1081	90458-2794		1	SENSOR, EVA 20-046-00	
F30W1020	90459-4876		1	FOCUS JUMPER CABLE M12 5P 3M, 20-056-21	
F30W1030	90459-4876		1	FOCUS JUMPER CABLE M12 5P 3M, 20-056-21	
F30W1040	90459-4876		1	FOCUS JUMPER CABLE M12 5P 3M, 20-056-21	
F30W1070	90459-4876		1	FOCUS JUMPER CABLE M12 5P 3M, 20-056-21	
F30W1080	90459-4876		1	FOCUS JUMPER CABLE M12 5P 3M, 20-056-21	
100M_RINF, 120M_RINF (See drawing on page: 2-18)					
005	2855349-0000		9	DAMPER	
010	2855350-0000		9	HANDLE	
F30B1020	90459-4142		1	SENSOR, ADAM M12 20-051-00	
F30B1021	90458-2794		1	SENSOR, EVA 20-046-00	
F30B1030	90459-4142		1	SENSOR, ADAM M12 20-051-00	
F30B1031	90458-2794		1	SENSOR, EVA 20-046-00	
F30B1040	90459-4142		1	SENSOR, ADAM M12 20-051-00	
F30B1041	90458-2794		1	SENSOR, EVA 20-046-00	
F30B1070	90459-4142		1	SENSOR, ADAM M12 20-051-00	
F30B1071	90458-2794		1	SENSOR, EVA 20-046-00	
F30B1080	90459-4142		1	SENSOR, ADAM M12 20-051-00	
F30B1081	90458-2794		1	SENSOR, EVA 20-046-00	
F30W1020	90459-4876		1	FOCUS JUMPER CABLE M12 5P 3M, 20-056-21	
F30W1030	90459-4876		1	FOCUS JUMPER CABLE M12 5P 3M, 20-056-21	
F30W1040	90459-4876		1	FOCUS JUMPER CABLE M12 5P 3M, 20-056-21	
F30W1070	90459-4876		1	FOCUS JUMPER CABLE M12 5P 3M, 20-056-21	
F30W1080	90459-4876		1	FOCUS JUMPER CABLE M12 5P 3M, 20-056-21	
47M_LINF (See drawing on page: 2-8)					
005	2855349-0000		4	DAMPER	
010	2855350-0000		4	HANDLE	
47M_RINF (See drawing on page: 2-10)					
005	2855349-0000		4	DAMPER	
010	2855350-0000		4	HANDLE	

Pos	Part No	UN	Qty	Description	Page No
75M_LINF, 90M_LINF (See drawing on page: 2-12)					
005	2855349-0000		6	DAMPER	
010	2855350-0000		6	HANDLE	
F30B1020	90459-4142		1	SENSOR, ADAM M12 20-051-00	
F30B1021	90458-2794		1	SENSOR, EVA 20-046-00	
F30B1040	90459-4142		1	SENSOR, ADAM M12 20-051-00	
F30B1041	90458-2794		1	SENSOR, EVA 20-046-00	
F30W1020	90459-4876		1	FOCUS JUMPER CABLE M12 5P 3M, 20-056-21	
F30W1040	90459-4876		1	FOCUS JUMPER CABLE M12 5P 3M, 20-056-21	
75M_RINF, 90M_RINF (See drawing on page: 2-14)					
005	2855349-0000		6	DAMPER	
010	2855350-0000		6	HANDLE	
F30B1020	90459-4142		1	SENSOR, ADAM M12 20-051-00	
F30B1021	90458-2794		1	SENSOR, EVA 20-046-00	
F30B1040	90459-4142		1	SENSOR, ADAM M12 20-051-00	
F30B1041	90458-2794		1	SENSOR, EVA 20-046-00	
F30W1020	90459-4876		1	FOCUS JUMPER CABLE M12 5P 3M, 20-056-21	
F30W1040	90459-4876		1	FOCUS JUMPER CABLE M12 5P 3M, 20-056-21	
Common Parts					
F30B1010	90459-4142		1	SENSOR, ADAM M12 20-051-00	
F30B1011	90458-2794		1	SENSOR, EVA 20-046-00	
F30B1050	90459-4142		1	SENSOR, ADAM M12 20-051-00	
F30B1051	90458-2794		1	SENSOR, EVA 20-046-00	
F30B1060	90459-4142		1	SENSOR, ADAM M12 20-051-00	
F30B1061	90458-2794		1	SENSOR, EVA 20-046-00	
F30B1090	90459-4142		1	SENSOR, ADAM M12 20-051-00	
F30B1091	90458-2794		1	SENSOR, EVA 20-046-00	
F30B1100	90459-4142		1	SENSOR, ADAM M12 20-051-00	
F30B1101	90458-2794		1	SENSOR, EVA 20-046-00	
F30W1010	90459-4876		1	FOCUS JUMPER CABLE M12 5P 3M, 20-056-21	
F30W1050	90459-4876		1	FOCUS JUMPER CABLE M12 5P 3M, 20-056-21	
F30W1060	90459-4876		1	FOCUS JUMPER CABLE M12 5P 3M, 20-056-21	
F30W1090	90459-4876		1	FOCUS JUMPER CABLE M12 5P 3M, 20-056-21	
F30W1100	90459-4876		1	FOCUS JUMPER CABLE M12 5P 3M, 20-056-21	

Machine Type | Group Description | Used-In | Group Number | Page No

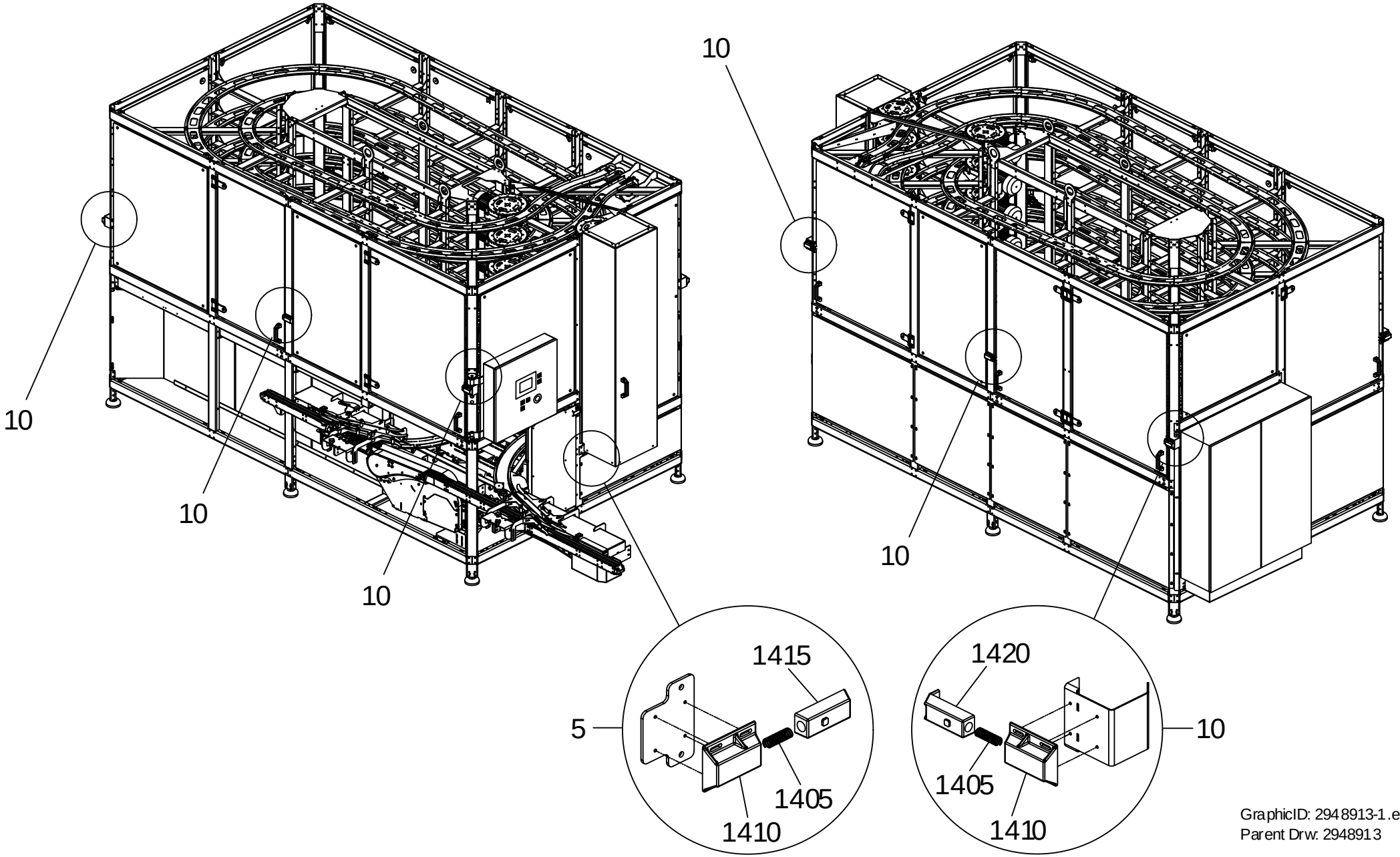

GraphicID: 2948913-1.eps
Parent Drw: 2948913

ECM: 377362 - 20090203
Group number: 2948913-0100
Assembly Drawing: 2948913-1_1_AA

Pos	Part No	UN	Qty	Description	Page No
100M, 120M					
005	2528360-0000		1	DOOR LATCH	
1405	*2664582-0000*		*1*	*SPRING*	
1410	*2664583-0000*		*1*	*BASE*	
1415	*2664584-0000*		*1*	*LATCH*	
010	2948871-0000		9	DOOR LATCH	
1405	*2664582-0000*		*1*	*SPRING*	
1410	*2664583-0000*		*1*	*BASE*	
1420	*2948861-0000*		*1*	*LATCH*	
47M					
005	2528360-0000		1	DOOR LATCH	
1405	*2664582-0000*		*1*	*SPRING*	
1410	*2664583-0000*		*1*	*BASE*	
1415	*2664584-0000*		*1*	*LATCH*	
010	2948871-0000		4	DOOR LATCH	
1405	*2664582-0000*		*1*	*SPRING*	
1410	*2664583-0000*		*1*	*BASE*	
1420	*2948861-0000*		*1*	*LATCH*	
75M, 90M					
005	2528360-0000		1	DOOR LATCH	
1405	*2664582-0000*		*1*	*SPRING*	
1410	*2664583-0000*		*1*	*BASE*	
1415	*2664584-0000*		*1*	*LATCH*	
010	2948871-0000		6	DOOR LATCH	
1405	*2664582-0000*		*1*	*SPRING*	
1410	*2664583-0000*		*1*	*BASE*	
1420	*2948861-0000*		*1*	*LATCH*	

Pos	Part No	UN	Qty	Description	Page No

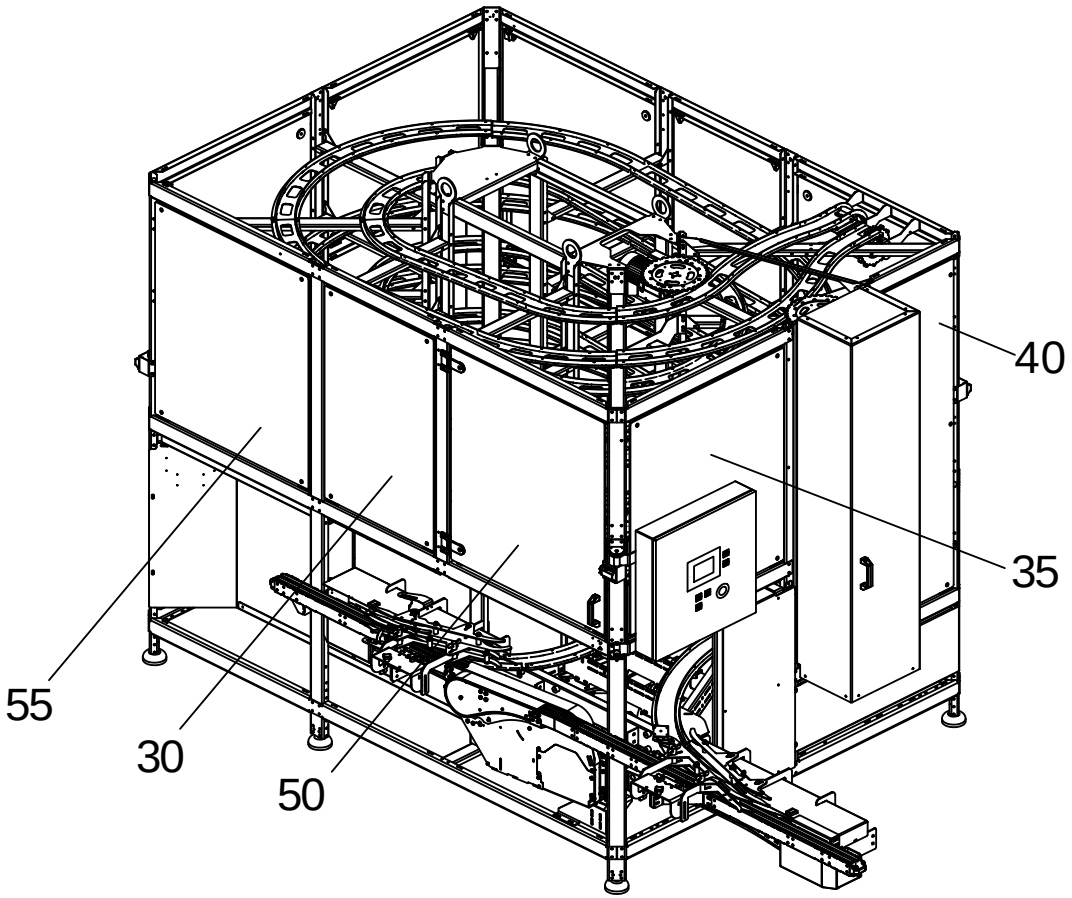

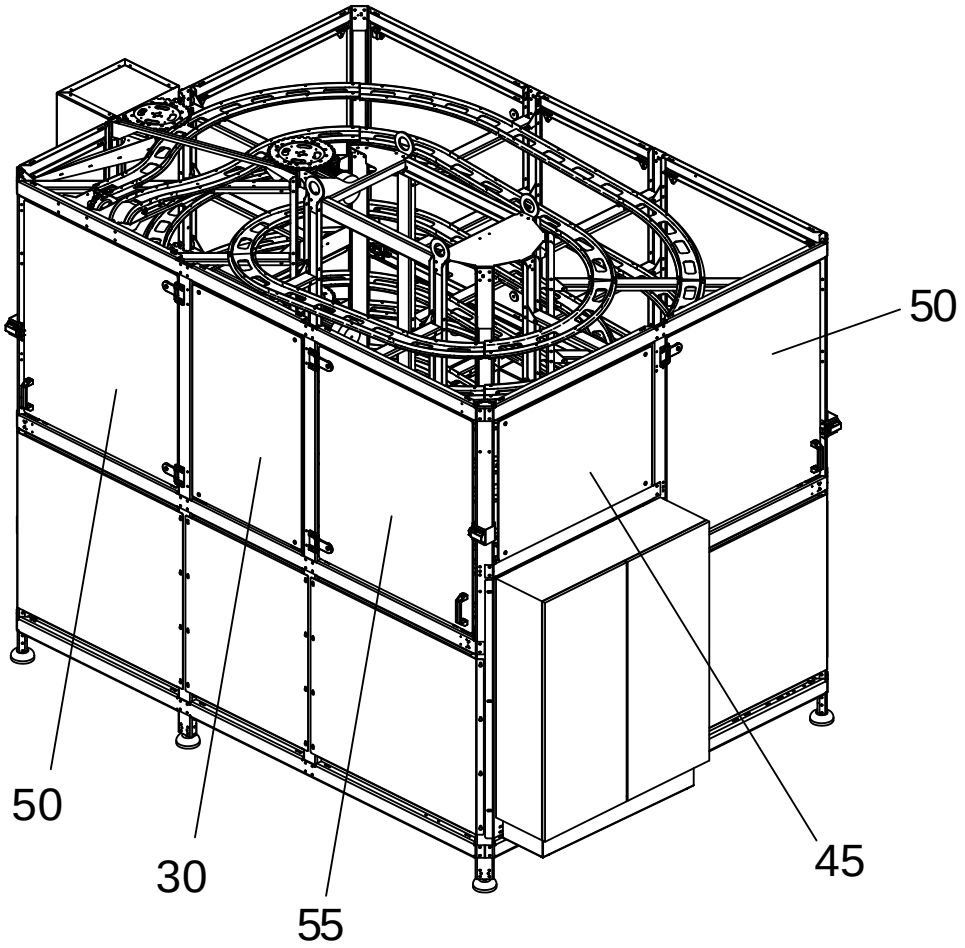

GraphicID: 2948914-1.eps
Parent Drw: 2948914

ECM: 389532 - 20090417
Group number: 2948914-0100
Assembly Drawing: 2948914-1_1_AA

This list covers pages from 2-22 to 2-33

Pos	Part No	UN	Qty	Description	Page No
100M_LINF (See drawing on page: 2-30)					
060	2855358-0000		4	GLASS PANE	
065	2855359-0000		1	GLASS PANE	
070	2855360-0000		1	GLASS PANE	
075	2854778-0000		1	COIL	
080	2855361-0000		5	GLASS PANE	
085	2855362-0000		4	GLASS PANE	
100M_RINF (See drawing on page: 2-32)					
060	2855358-0000		4	GLASS PANE	
065	2855359-0000		1	GLASS PANE	
070	2855360-0000		1	GLASS PANE	
075	2854778-0000		1	COIL	
080	2855361-0000		5	GLASS PANE	
085	2855362-0000		4	GLASS PANE	
120M_LINF (See drawing on page: 2-30)					
060	2855363-0000		4	GLASS PANE	
065	2855364-0000		1	GLASS PANE	
070	2855355-0000		1	GLASS PANE	
075	2948778-0000		1	GLASS PANE	
080	2855365-0000		5	GLASS PANE	
085	2855366-0000		4	GLASS PANE	
120M_RINF (See drawing on page: 2-32)					
060	2855363-0000		4	GLASS PANE	
065	2855364-0000		1	GLASS PANE	
070	2855355-0000		1	GLASS PANE	
075	2948778-0000		1	GLASS PANE	
080	2855365-0000		5	GLASS PANE	
085	2855366-0000		4	GLASS PANE	
47M_LINF (See drawing on page: 2-22)					
005	2855353-0000		2	GLASS PANE	
010	2855354-0000		2	GLASS PANE	
015	2855355-0000		1	GLASS PANE	
020	2948778-0000		1	GLASS PANE	
025	2855357-0000		4	GLASS PANE	
47M_RINF (See drawing on page: 2-24)					
005	2855353-0000		2	GLASS PANE	
010	2855354-0000		2	GLASS PANE	
015	2855355-0000		1	GLASS PANE	
020	2948778-0000		1	GLASS PANE	
025	2855357-0000		4	GLASS PANE	
75M_LINF (See drawing on page: 2-26)					
030	2855358-0000		2	GLASS PANE	
035	2855359-0000		2	GLASS PANE	
040	2855360-0000		1	GLASS PANE	
045	2948778-0000		1	GLASS PANE	
050	2855361-0000		5	GLASS PANE	
055	2855362-0000		2	GLASS PANE	
75M_RINF (See drawing on page: 2-28)					
030	2855358-0000		2	GLASS PANE	
035	2855359-0000		2	GLASS PANE	
040	2855360-0000		1	GLASS PANE	
045	2948778-0000		1	GLASS PANE	
050	2855361-0000		5	GLASS PANE	
055	2855362-0000		2	GLASS PANE	
90M_LINF (See drawing on page: 2-26)					
030	2855363-0000		2	GLASS PANE	
035	2855364-0000		2	GLASS PANE	
040	2855355-0000		1	GLASS PANE	
045	2948778-0000		1	GLASS PANE	
050	2855365-0000		5	GLASS PANE	
055	2855366-0000		2	GLASS PANE	
90M_RINF (See drawing on page: 2-28)					
030	2855363-0000		2	GLASS PANE	
035	2855364-0000		2	GLASS PANE	
040	2855355-0000		1	GLASS PANE	
045	2948778-0000		1	GLASS PANE	
050	2855365-0000		5	GLASS PANE	
055	2855366-0000		2	GLASS PANE	

Machine Type | Group Description | Used-In | Group Number | Page No

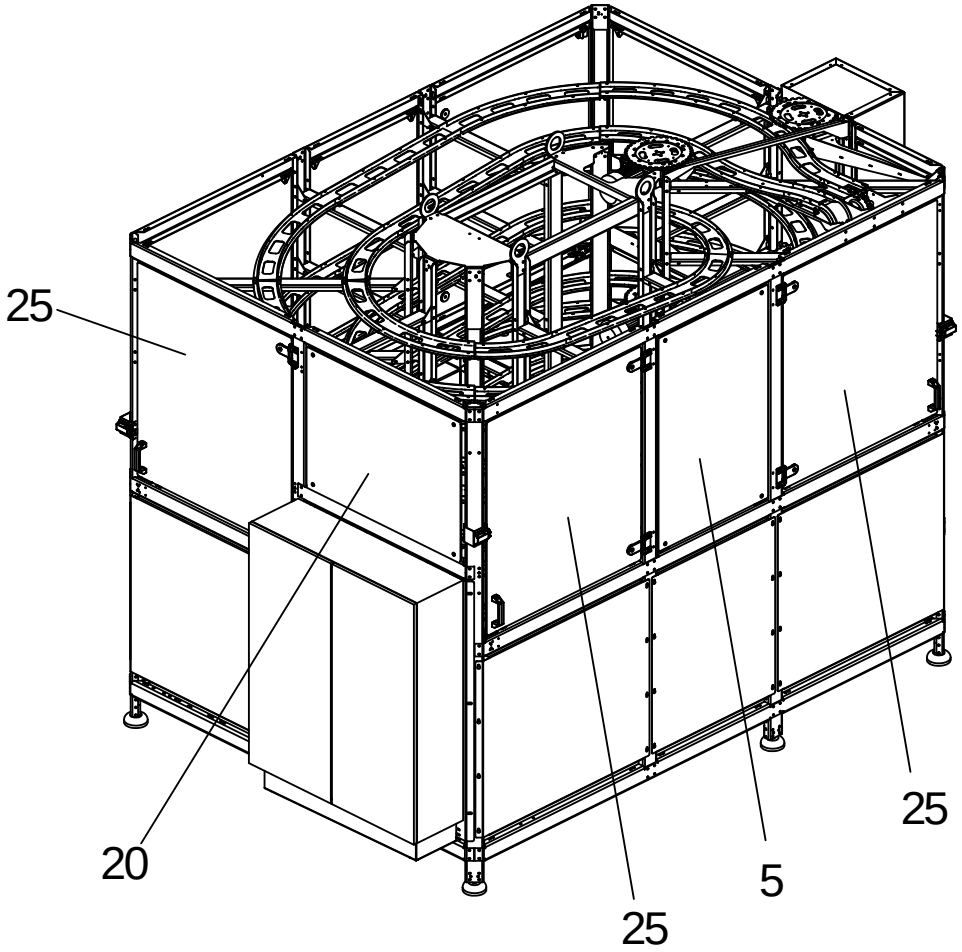

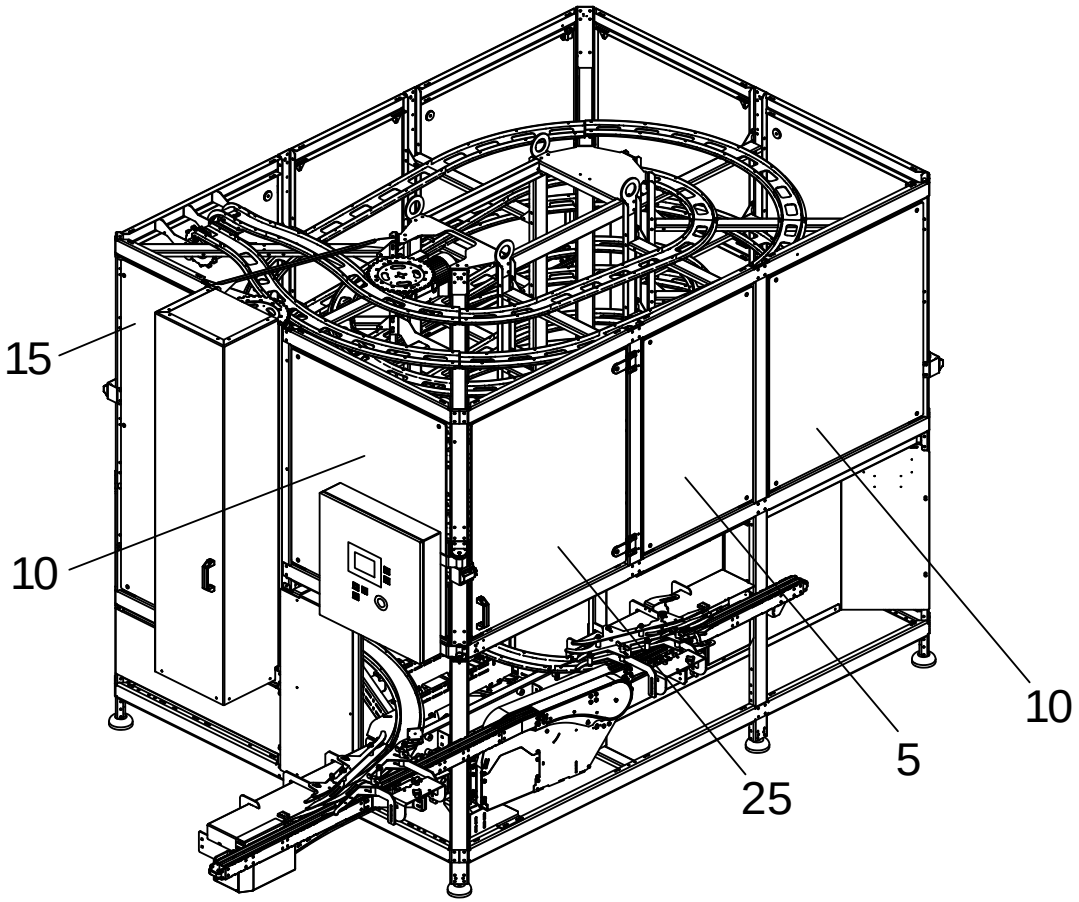

GraphicID: 2948914-2.eps
Parent Drw: 2948914

ECM: 389532 - 20090417
Group number: 2948914-0100
Assembly Drawing: 2948914-2_1_AA

This list covers pages from 2-22 to 2-33

Pos	Part No	UN	Qty	Description	Page No
100M_LINF (See drawing on page: 2-30)					
060	2855358-0000		4	GLASS PANE	
065	2855359-0000		1	GLASS PANE	
070	2855360-0000		1	GLASS PANE	
075	2854778-0000		1	COIL	
080	2855361-0000		5	GLASS PANE	
085	2855362-0000		4	GLASS PANE	
100M_RINF (See drawing on page: 2-32)					
060	2855358-0000		4	GLASS PANE	
065	2855359-0000		1	GLASS PANE	
070	2855360-0000		1	GLASS PANE	
075	2854778-0000		1	COIL	
080	2855361-0000		5	GLASS PANE	
085	2855362-0000		4	GLASS PANE	
120M_LINF (See drawing on page: 2-30)					
060	2855363-0000		4	GLASS PANE	
065	2855364-0000		1	GLASS PANE	
070	2855355-0000		1	GLASS PANE	
075	2948778-0000		1	GLASS PANE	
080	2855365-0000		5	GLASS PANE	
085	2855366-0000		4	GLASS PANE	
120M_RINF (See drawing on page: 2-32)					
060	2855363-0000		4	GLASS PANE	
065	2855364-0000		1	GLASS PANE	
070	2855355-0000		1	GLASS PANE	
075	2948778-0000		1	GLASS PANE	
080	2855365-0000		5	GLASS PANE	
085	2855366-0000		4	GLASS PANE	
47M_LINF (See drawing on page: 2-22)					
005	2855353-0000		2	GLASS PANE	
010	2855354-0000		2	GLASS PANE	
015	2855355-0000		1	GLASS PANE	
020	2948778-0000		1	GLASS PANE	
025	2855357-0000		4	GLASS PANE	
47M_RINF (See drawing on page: 2-24)					
005	2855353-0000		2	GLASS PANE	
010	2855354-0000		2	GLASS PANE	
015	2855355-0000		1	GLASS PANE	
020	2948778-0000		1	GLASS PANE	
025	2855357-0000		4	GLASS PANE	
75M_LINF (See drawing on page: 2-26)					
030	2855358-0000		2	GLASS PANE	
035	2855359-0000		2	GLASS PANE	
040	2855360-0000		1	GLASS PANE	
045	2948778-0000		1	GLASS PANE	
050	2855361-0000		5	GLASS PANE	
055	2855362-0000		2	GLASS PANE	
75M_RINF (See drawing on page: 2-28)					
030	2855358-0000		2	GLASS PANE	
035	2855359-0000		2	GLASS PANE	
040	2855360-0000		1	GLASS PANE	
045	2948778-0000		1	GLASS PANE	
050	2855361-0000		5	GLASS PANE	
055	2855362-0000		2	GLASS PANE	
90M_LINF (See drawing on page: 2-26)					
030	2855363-0000		2	GLASS PANE	
035	2855364-0000		2	GLASS PANE	
040	2855355-0000		1	GLASS PANE	
045	2948778-0000		1	GLASS PANE	
050	2855365-0000		5	GLASS PANE	
055	2855366-0000		2	GLASS PANE	
90M_RINF (See drawing on page: 2-28)					
030	2855363-0000		2	GLASS PANE	
035	2855364-0000		2	GLASS PANE	
040	2855355-0000		1	GLASS PANE	
045	2948778-0000		1	GLASS PANE	
050	2855365-0000		5	GLASS PANE	
055	2855366-0000		2	GLASS PANE	

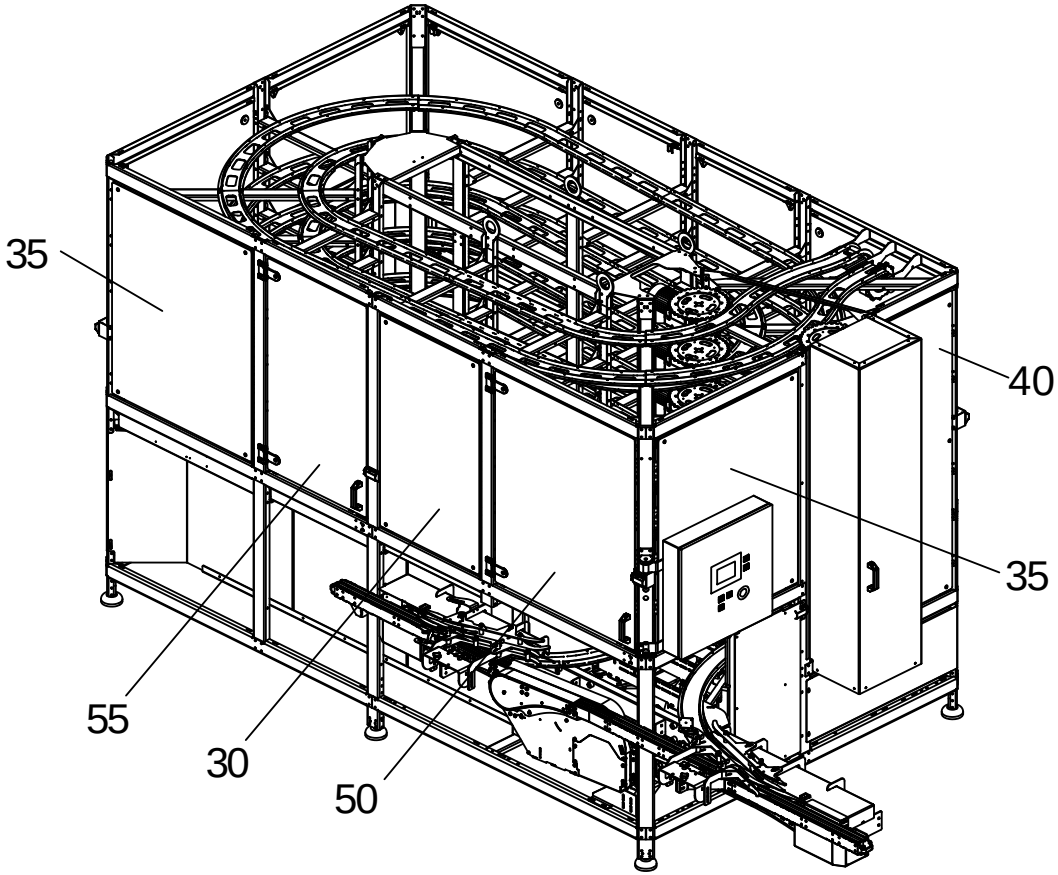

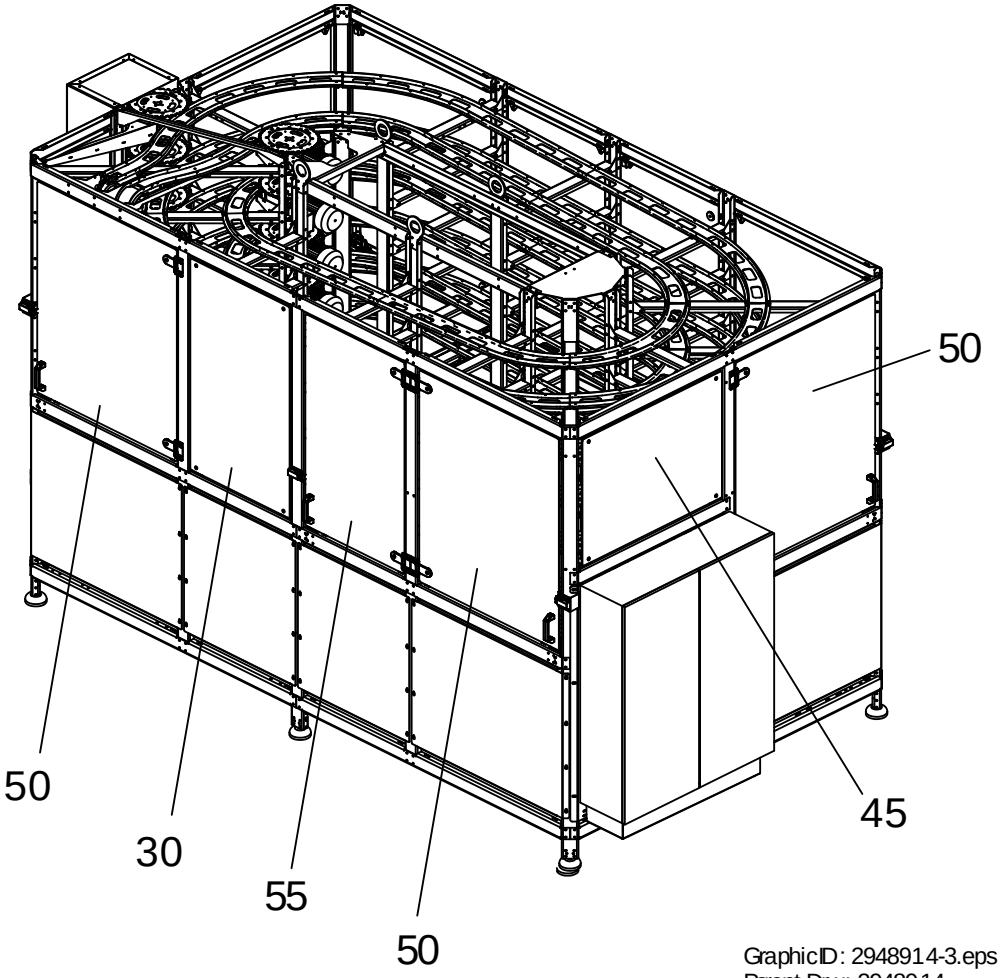

GraphicID: 2948914-3.eps
Parent Drw: 2948914

ECM: 389532 - 20090417
Group number: 2948914-0100
Assembly Drawing: 2948914-3_1_AA

This list covers pages from 2-22 to 2-33

Pos	Part No	UN	Qty	Description	Page No
100M_LINF (See drawing on page: 2-30)					
060	2855358-0000		4	GLASS PANE	
065	2855359-0000		1	GLASS PANE	
070	2855360-0000		1	GLASS PANE	
075	2854778-0000		1	COIL	
080	2855361-0000		5	GLASS PANE	
085	2855362-0000		4	GLASS PANE	
100M_RINF (See drawing on page: 2-32)					
060	2855358-0000		4	GLASS PANE	
065	2855359-0000		1	GLASS PANE	
070	2855360-0000		1	GLASS PANE	
075	2854778-0000		1	COIL	
080	2855361-0000		5	GLASS PANE	
085	2855362-0000		4	GLASS PANE	
120M_LINF (See drawing on page: 2-30)					
060	2855363-0000		4	GLASS PANE	
065	2855364-0000		1	GLASS PANE	
070	2855355-0000		1	GLASS PANE	
075	2948778-0000		1	GLASS PANE	
080	2855365-0000		5	GLASS PANE	
085	2855366-0000		4	GLASS PANE	
120M_RINF (See drawing on page: 2-32)					
060	2855363-0000		4	GLASS PANE	
065	2855364-0000		1	GLASS PANE	
070	2855355-0000		1	GLASS PANE	
075	2948778-0000		1	GLASS PANE	
080	2855365-0000		5	GLASS PANE	
085	2855366-0000		4	GLASS PANE	
47M_LINF (See drawing on page: 2-22)					
005	2855353-0000		2	GLASS PANE	
010	2855354-0000		2	GLASS PANE	
015	2855355-0000		1	GLASS PANE	
020	2948778-0000		1	GLASS PANE	
025	2855357-0000		4	GLASS PANE	
47M_RINF (See drawing on page: 2-24)					
005	2855353-0000		2	GLASS PANE	
010	2855354-0000		2	GLASS PANE	
015	2855355-0000		1	GLASS PANE	
020	2948778-0000		1	GLASS PANE	
025	2855357-0000		4	GLASS PANE	
75M_LINF (See drawing on page: 2-26)					
030	2855358-0000		2	GLASS PANE	
035	2855359-0000		2	GLASS PANE	
040	2855360-0000		1	GLASS PANE	
045	2948778-0000		1	GLASS PANE	
050	2855361-0000		5	GLASS PANE	
055	2855362-0000		2	GLASS PANE	
75M_RINF (See drawing on page: 2-28)					
030	2855358-0000		2	GLASS PANE	
035	2855359-0000		2	GLASS PANE	
040	2855360-0000		1	GLASS PANE	
045	2948778-0000		1	GLASS PANE	
050	2855361-0000		5	GLASS PANE	
055	2855362-0000		2	GLASS PANE	
90M_LINF (See drawing on page: 2-26)					
030	2855363-0000		2	GLASS PANE	
035	2855364-0000		2	GLASS PANE	
040	2855355-0000		1	GLASS PANE	
045	2948778-0000		1	GLASS PANE	
050	2855365-0000		5	GLASS PANE	
055	2855366-0000		2	GLASS PANE	
90M_RINF (See drawing on page: 2-28)					
030	2855363-0000		2	GLASS PANE	
035	2855364-0000		2	GLASS PANE	
040	2855355-0000		1	GLASS PANE	
045	2948778-0000		1	GLASS PANE	
050	2855365-0000		5	GLASS PANE	
055	2855366-0000		2	GLASS PANE	

Machine Type | Group Description | Used-In | Group Number | Page No

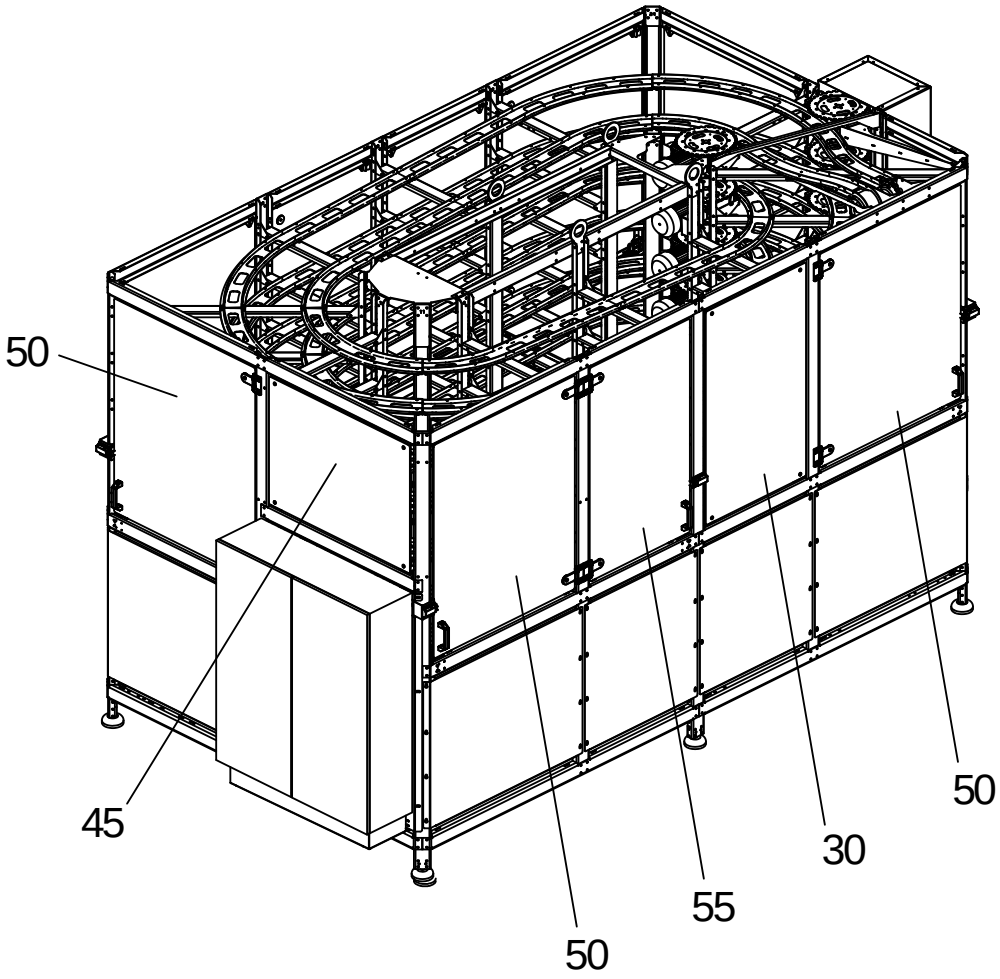

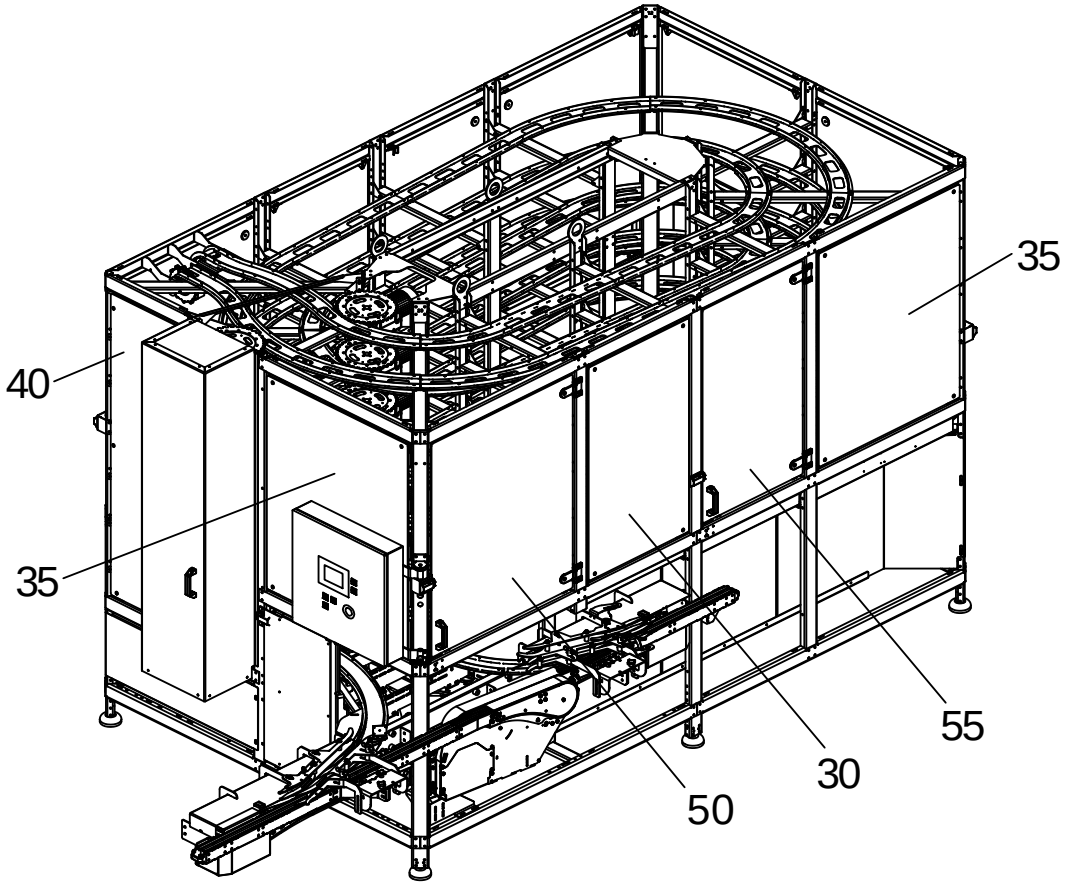

GraphicID2948914-4.eps
Parent Drw:2948914

ECM: 389532 - 20090417
Group number: 2948914-0100
Assembly Drawing: 2948914-4_1_AA

This list covers pages from 2-22 to 2-33

Pos	Part No	UN	Qty	Description	Page No
100M_LINF (See drawing on page: 2-30)					
060	2855358-0000		4	GLASS PANE	
065	2855359-0000		1	GLASS PANE	
070	2855360-0000		1	GLASS PANE	
075	2854778-0000		1	COIL	
080	2855361-0000		5	GLASS PANE	
085	2855362-0000		4	GLASS PANE	
100M_RINF (See drawing on page: 2-32)					
060	2855358-0000		4	GLASS PANE	
065	2855359-0000		1	GLASS PANE	
070	2855360-0000		1	GLASS PANE	
075	2854778-0000		1	COIL	
080	2855361-0000		5	GLASS PANE	
085	2855362-0000		4	GLASS PANE	
120M_LINF (See drawing on page: 2-30)					
060	2855363-0000		4	GLASS PANE	
065	2855364-0000		1	GLASS PANE	
070	2855355-0000		1	GLASS PANE	
075	2948778-0000		1	GLASS PANE	
080	2855365-0000		5	GLASS PANE	
085	2855366-0000		4	GLASS PANE	
120M_RINF (See drawing on page: 2-32)					
060	2855363-0000		4	GLASS PANE	
065	2855364-0000		1	GLASS PANE	
070	2855355-0000		1	GLASS PANE	
075	2948778-0000		1	GLASS PANE	
080	2855365-0000		5	GLASS PANE	
085	2855366-0000		4	GLASS PANE	
47M_LINF (See drawing on page: 2-22)					
005	2855353-0000		2	GLASS PANE	
010	2855354-0000		2	GLASS PANE	
015	2855355-0000		1	GLASS PANE	
020	2948778-0000		1	GLASS PANE	
025	2855357-0000		4	GLASS PANE	
47M_RINF (See drawing on page: 2-24)					
005	2855353-0000		2	GLASS PANE	
010	2855354-0000		2	GLASS PANE	
015	2855355-0000		1	GLASS PANE	
020	2948778-0000		1	GLASS PANE	
025	2855357-0000		4	GLASS PANE	
75M_LINF (See drawing on page: 2-26)					
030	2855358-0000		2	GLASS PANE	
035	2855359-0000		2	GLASS PANE	
040	2855360-0000		1	GLASS PANE	
045	2948778-0000		1	GLASS PANE	
050	2855361-0000		5	GLASS PANE	
055	2855362-0000		2	GLASS PANE	
75M_RINF (See drawing on page: 2-28)					
030	2855358-0000		2	GLASS PANE	
035	2855359-0000		2	GLASS PANE	
040	2855360-0000		1	GLASS PANE	
045	2948778-0000		1	GLASS PANE	
050	2855361-0000		5	GLASS PANE	
055	2855362-0000		2	GLASS PANE	
90M_LINF (See drawing on page: 2-26)					
030	2855363-0000		2	GLASS PANE	
035	2855364-0000		2	GLASS PANE	
040	2855355-0000		1	GLASS PANE	
045	2948778-0000		1	GLASS PANE	
050	2855365-0000		5	GLASS PANE	
055	2855366-0000		2	GLASS PANE	
90M_RINF (See drawing on page: 2-28)					
030	2855363-0000		2	GLASS PANE	
035	2855364-0000		2	GLASS PANE	
040	2855355-0000		1	GLASS PANE	
045	2948778-0000		1	GLASS PANE	
050	2855365-0000		5	GLASS PANE	
055	2855366-0000		2	GLASS PANE	

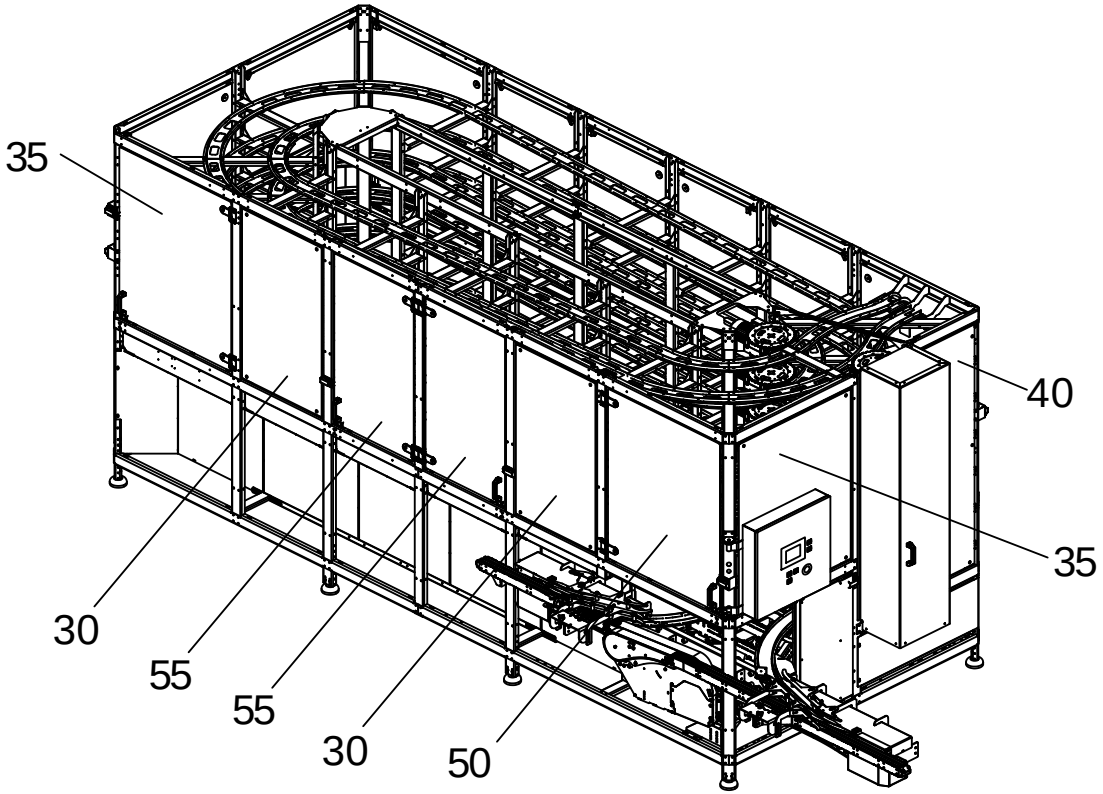

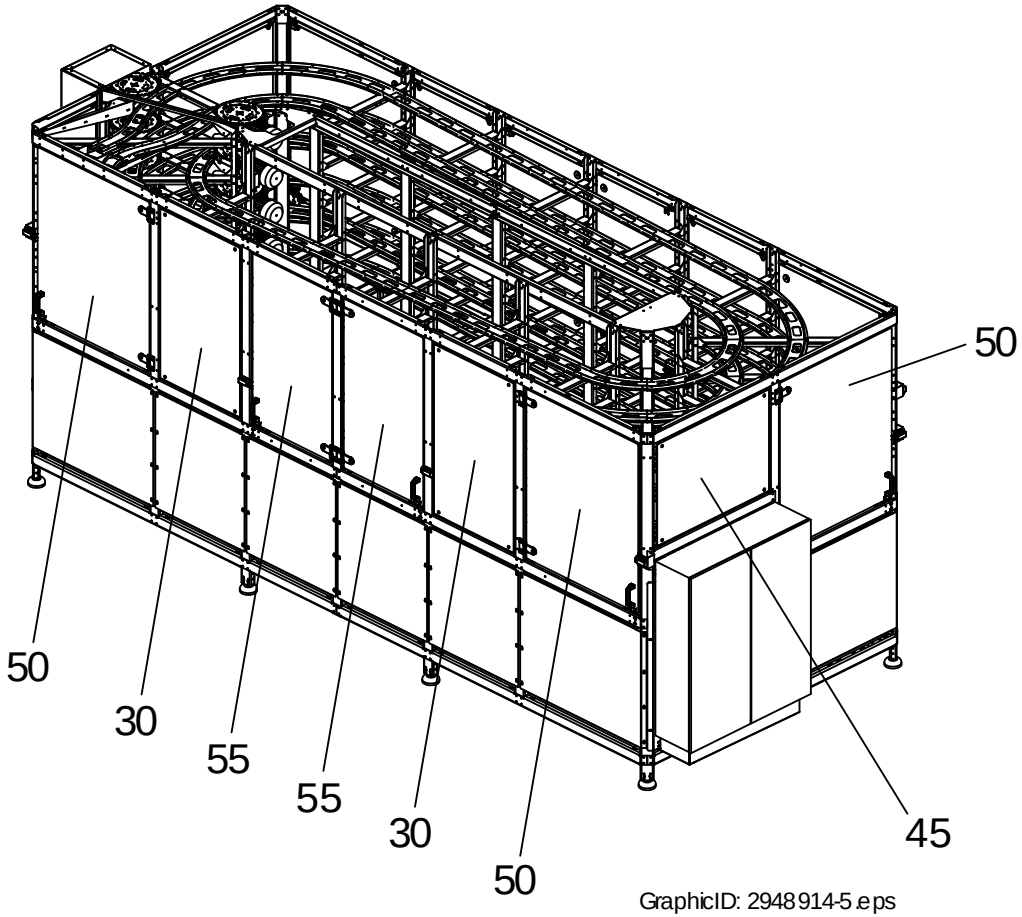

GraphicID: 2948914-5.eps
Parent Drw: 2948914

ECM: 389532 - 20090417
Group number: 2948914-0100
Assembly Drawing: 2948914-5_1_AA

This list covers pages from 2-22 to 2-33

Pos	Part No	UN	Qty	Description	Page No
100M_LINF (See drawing on page: 2-30)					
060	2855358-0000		4	GLASS PANE	
065	2855359-0000		1	GLASS PANE	
070	2855360-0000		1	GLASS PANE	
075	2854778-0000		1	COIL	
080	2855361-0000		5	GLASS PANE	
085	2855362-0000		4	GLASS PANE	
100M_RINF (See drawing on page: 2-32)					
060	2855358-0000		4	GLASS PANE	
065	2855359-0000		1	GLASS PANE	
070	2855360-0000		1	GLASS PANE	
075	2854778-0000		1	COIL	
080	2855361-0000		5	GLASS PANE	
085	2855362-0000		4	GLASS PANE	
120M_LINF (See drawing on page: 2-30)					
060	2855363-0000		4	GLASS PANE	
065	2855364-0000		1	GLASS PANE	
070	2855355-0000		1	GLASS PANE	
075	2948778-0000		1	GLASS PANE	
080	2855365-0000		5	GLASS PANE	
085	2855366-0000		4	GLASS PANE	
120M_RINF (See drawing on page: 2-32)					
060	2855363-0000		4	GLASS PANE	
065	2855364-0000		1	GLASS PANE	
070	2855355-0000		1	GLASS PANE	
075	2948778-0000		1	GLASS PANE	
080	2855365-0000		5	GLASS PANE	
085	2855366-0000		4	GLASS PANE	
47M_LINF (See drawing on page: 2-22)					
005	2855353-0000		2	GLASS PANE	
010	2855354-0000		2	GLASS PANE	
015	2855355-0000		1	GLASS PANE	
020	2948778-0000		1	GLASS PANE	
025	2855357-0000		4	GLASS PANE	
47M_RINF (See drawing on page: 2-24)					
005	2855353-0000		2	GLASS PANE	
010	2855354-0000		2	GLASS PANE	
015	2855355-0000		1	GLASS PANE	
020	2948778-0000		1	GLASS PANE	
025	2855357-0000		4	GLASS PANE	
75M_LINF (See drawing on page: 2-26)					
030	2855358-0000		2	GLASS PANE	
035	2855359-0000		2	GLASS PANE	
040	2855360-0000		1	GLASS PANE	
045	2948778-0000		1	GLASS PANE	
050	2855361-0000		5	GLASS PANE	
055	2855362-0000		2	GLASS PANE	
75M_RINF (See drawing on page: 2-28)					
030	2855358-0000		2	GLASS PANE	
035	2855359-0000		2	GLASS PANE	
040	2855360-0000		1	GLASS PANE	
045	2948778-0000		1	GLASS PANE	
050	2855361-0000		5	GLASS PANE	
055	2855362-0000		2	GLASS PANE	
90M_LINF (See drawing on page: 2-26)					
030	2855363-0000		2	GLASS PANE	
035	2855364-0000		2	GLASS PANE	
040	2855355-0000		1	GLASS PANE	
045	2948778-0000		1	GLASS PANE	
050	2855365-0000		5	GLASS PANE	
055	2855366-0000		2	GLASS PANE	
90M_RINF (See drawing on page: 2-28)					
030	2855363-0000		2	GLASS PANE	
035	2855364-0000		2	GLASS PANE	
040	2855355-0000		1	GLASS PANE	
045	2948778-0000		1	GLASS PANE	
050	2855365-0000		5	GLASS PANE	
055	2855366-0000		2	GLASS PANE	

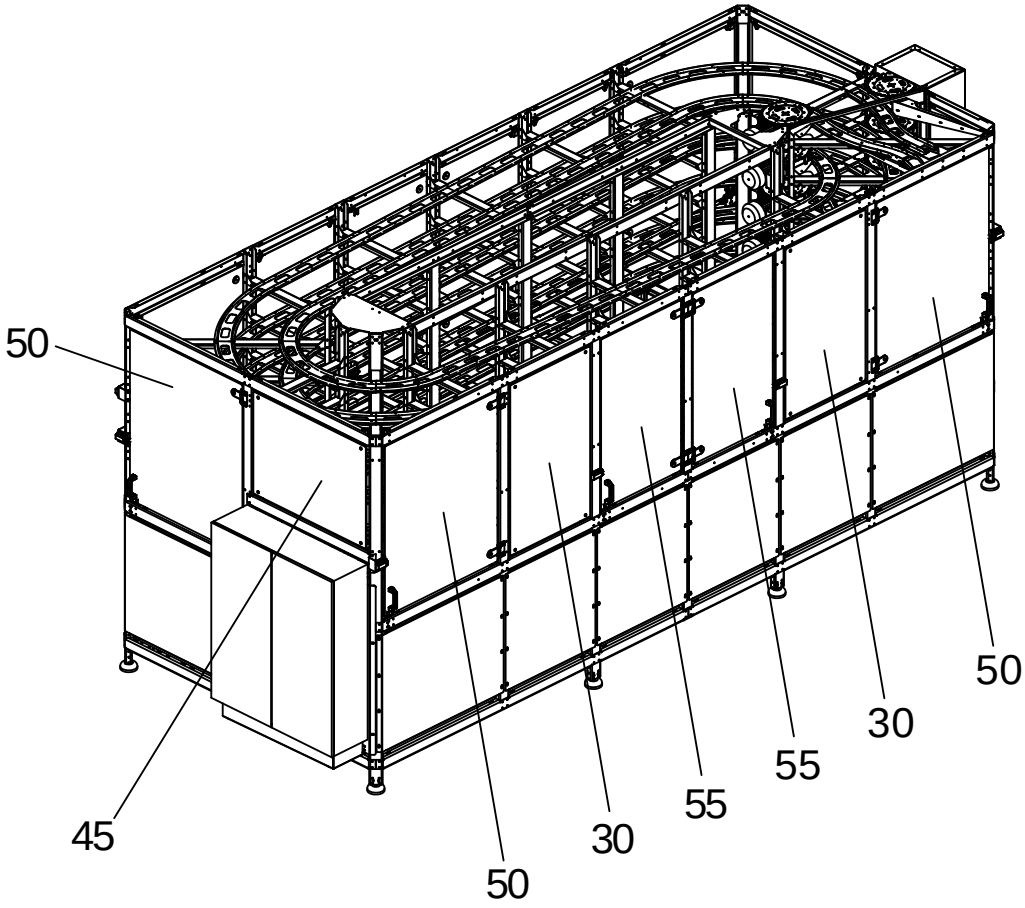

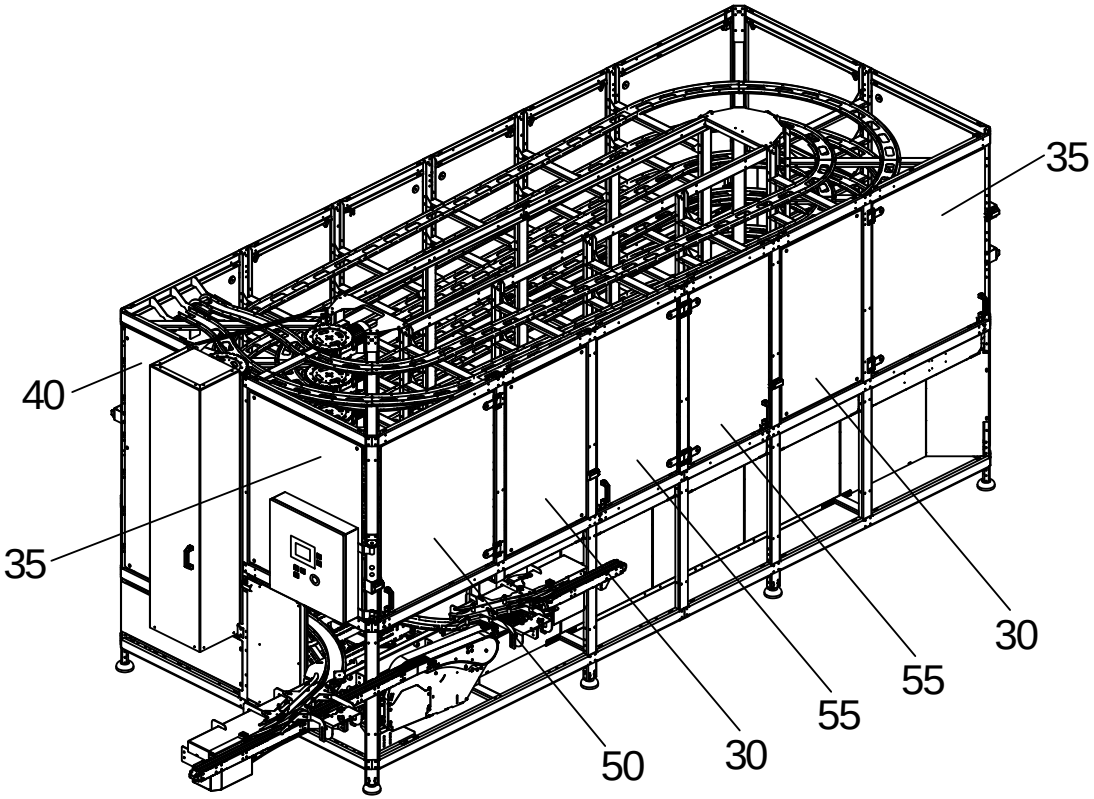

GraphicID: 2948914-6.eps
Parent Drw: 2948914

ECM: 389532 - 20090417
Group number: 2948914-0100
Assembly Drawing: 2948914-6_1_AA

This list covers pages from 2-22 to 2-33

Pos	Part No	UN	Qty	Description	Page No
100M_LINF (See drawing on page: 2-30)					
060	2855358-0000		4	GLASS PANE	
065	2855359-0000		1	GLASS PANE	
070	2855360-0000		1	GLASS PANE	
075	2854778-0000		1	COIL	
080	2855361-0000		5	GLASS PANE	
085	2855362-0000		4	GLASS PANE	
100M_RINF (See drawing on page: 2-32)					
060	2855358-0000		4	GLASS PANE	
065	2855359-0000		1	GLASS PANE	
070	2855360-0000		1	GLASS PANE	
075	2854778-0000		1	COIL	
080	2855361-0000		5	GLASS PANE	
085	2855362-0000		4	GLASS PANE	
120M_LINF (See drawing on page: 2-30)					
060	2855363-0000		4	GLASS PANE	
065	2855364-0000		1	GLASS PANE	
070	2855355-0000		1	GLASS PANE	
075	2948778-0000		1	GLASS PANE	
080	2855365-0000		5	GLASS PANE	
085	2855366-0000		4	GLASS PANE	
120M_RINF (See drawing on page: 2-32)					
060	2855363-0000		4	GLASS PANE	
065	2855364-0000		1	GLASS PANE	
070	2855355-0000		1	GLASS PANE	
075	2948778-0000		1	GLASS PANE	
080	2855365-0000		5	GLASS PANE	
085	2855366-0000		4	GLASS PANE	
47M_LINF (See drawing on page: 2-22)					
005	2855353-0000		2	GLASS PANE	
010	2855354-0000		2	GLASS PANE	
015	2855355-0000		1	GLASS PANE	
020	2948778-0000		1	GLASS PANE	
025	2855357-0000		4	GLASS PANE	
47M_RINF (See drawing on page: 2-24)					
005	2855353-0000		2	GLASS PANE	
010	2855354-0000		2	GLASS PANE	
015	2855355-0000		1	GLASS PANE	
020	2948778-0000		1	GLASS PANE	
025	2855357-0000		4	GLASS PANE	
75M_LINF (See drawing on page: 2-26)					
030	2855358-0000		2	GLASS PANE	
035	2855359-0000		2	GLASS PANE	
040	2855360-0000		1	GLASS PANE	
045	2948778-0000		1	GLASS PANE	
050	2855361-0000		5	GLASS PANE	
055	2855362-0000		2	GLASS PANE	
75M_RINF (See drawing on page: 2-28)					
030	2855358-0000		2	GLASS PANE	
035	2855359-0000		2	GLASS PANE	
040	2855360-0000		1	GLASS PANE	
045	2948778-0000		1	GLASS PANE	
050	2855361-0000		5	GLASS PANE	
055	2855362-0000		2	GLASS PANE	
90M_LINF (See drawing on page: 2-26)					
030	2855363-0000		2	GLASS PANE	
035	2855364-0000		2	GLASS PANE	
040	2855355-0000		1	GLASS PANE	
045	2948778-0000		1	GLASS PANE	
050	2855365-0000		5	GLASS PANE	
055	2855366-0000		2	GLASS PANE	
90M_RINF (See drawing on page: 2-28)					
030	2855363-0000		2	GLASS PANE	
035	2855364-0000		2	GLASS PANE	
040	2855355-0000		1	GLASS PANE	
045	2948778-0000		1	GLASS PANE	
050	2855365-0000		5	GLASS PANE	
055	2855366-0000		2	GLASS PANE	

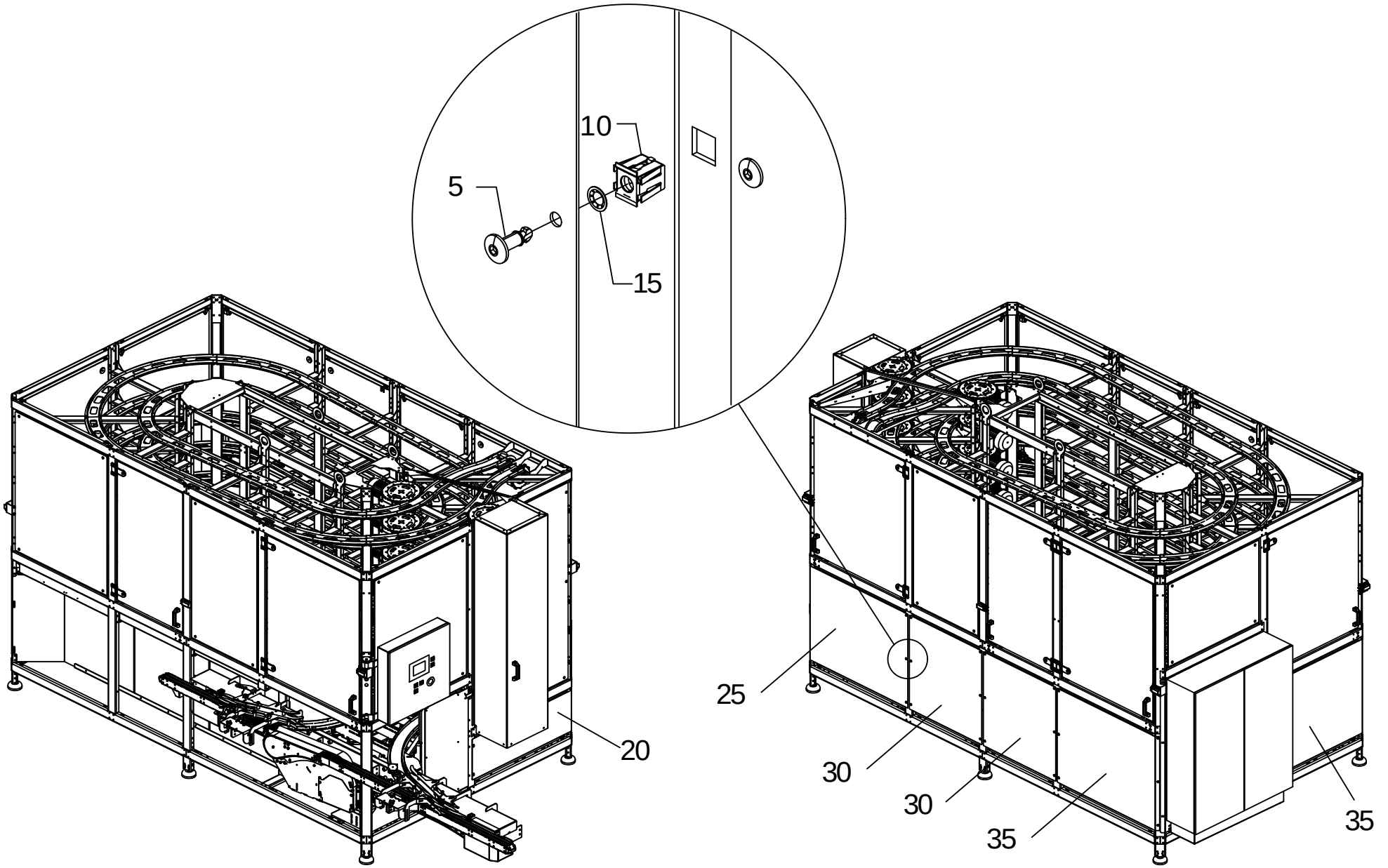

GraphicID: 3008961-1.eps
Parent Drw: 3008961

ECM: 381691 - 20090203
Group number: 3008961-0100
Assembly Drawing: 3008961-1_1_AA

Pos	Part No	UN	Qty	Description	Page No
100M					
005	2948951-0000		46	STUD	
010	2948952-0000		46	RECEPTACLE	
015	2948953-0000		46	RETAINING RING	
020	3008969-0000		1	PANEL	
025	3008970-0000		1	PANEL	
030	3008971-0000		4	PANEL	
035	3008972-0000		2	PANEL	
120M					
005	2948951-0000		46	STUD	
010	2948952-0000		46	RECEPTACLE	
015	2948953-0000		46	RETAINING RING	
020	3008973-0000		1	PANEL	
025	3008974-0000		1	PANEL	
030	3008975-0000		4	PANEL	
035	3008976-0000		2	PANEL	
47M					
005	2948951-0000		28	STUD	
010	2948952-0000		28	RECEPTACLE	
015	2948953-0000		28	RETAINING RING	
020	3008965-0000		1	PANEL	
025	3008966-0000		1	PANEL	
030	3008967-0000		1	PANEL	
035	3008968-0000		1	PANEL	
75M					
005	2948951-0000		34	STUD	
010	2948952-0000		34	RECEPTACLE	
015	2948953-0000		34	RETAINING RING	
020	3008969-0000		1	PANEL	
025	3008970-0000		1	PANEL	
030	3008971-0000		2	PANEL	
035	3008972-0000		2	PANEL	
90M					
005	2948951-0000		34	STUD	
010	2948952-0000		34	RECEPTACLE	
015	2948953-0000		34	RETAINING RING	
020	3008973-0000		1	PANEL	
025	3008974-0000		1	PANEL	
030	3008975-0000		2	PANEL	
035	3008976-0000		2	PANEL	

Pos	Part No	UN	Qty	Description	Page No

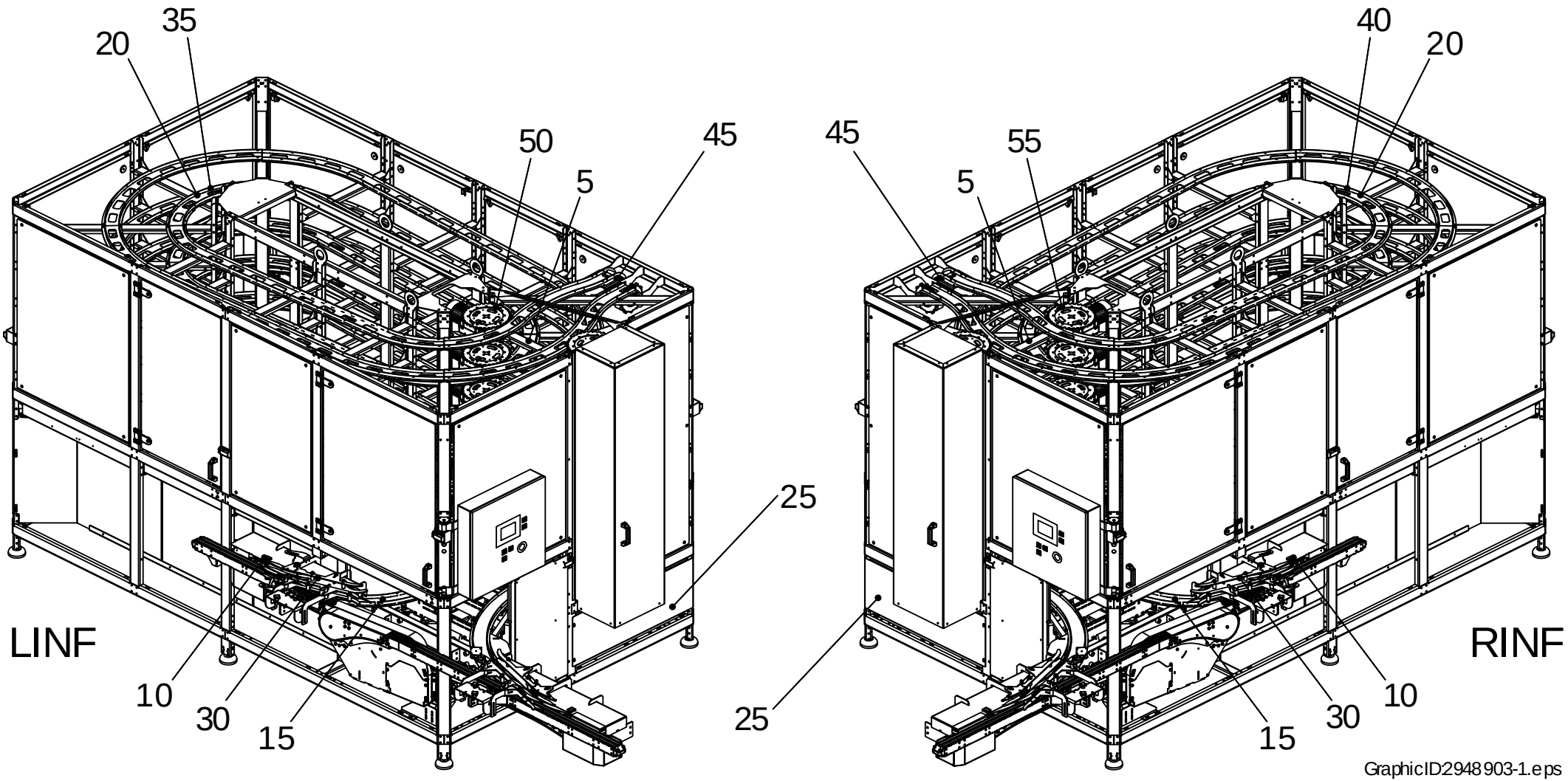

GraphicID:2948903-1.eps
Parent Drw: 2948903

ECM: 389614 - 20090417
Group number: 2948903-0100
Assembly Drawing: 2948903-1_1_AA

Pos	Part No	UN	Qty	Description	Page No
FEEDSIDE = LEFT					
035	2948921-0100		1	INFEED CHAIN - LINF	**2-39**
050	2948924-0100		1	INFEED DRIVE-LINF	**2-41**
FEEDSIDE = RIGHT					
040	2948922-0100		1	INFEED CHAIN - RINF	**2-43**
055	2948925-0100		1	INFEED DRIVE-RINF	**2-45**
Common Parts					
005	2948915-0100		1	UPPER LIMIT SENSOR	**2-47**
010	2948916-0100		1	INFEED SENSOR	**2-49**
015	2948917-0100		1	INFEED CONVEYOR	**2-51**
020	2948918-0100		1	INFEED EXTRUSION	**2-53, 2-55**
025	2948919-0100		1	CHAIN TENSIONER	**2-57, 2-59**
030	2948920-0100		1	INFEED GUIDE	**2-61, 2-63**
045	2948923-0100		1	CHAINFALL	**2-65**

Pos	Part No	UN	Qty	Description	Page No

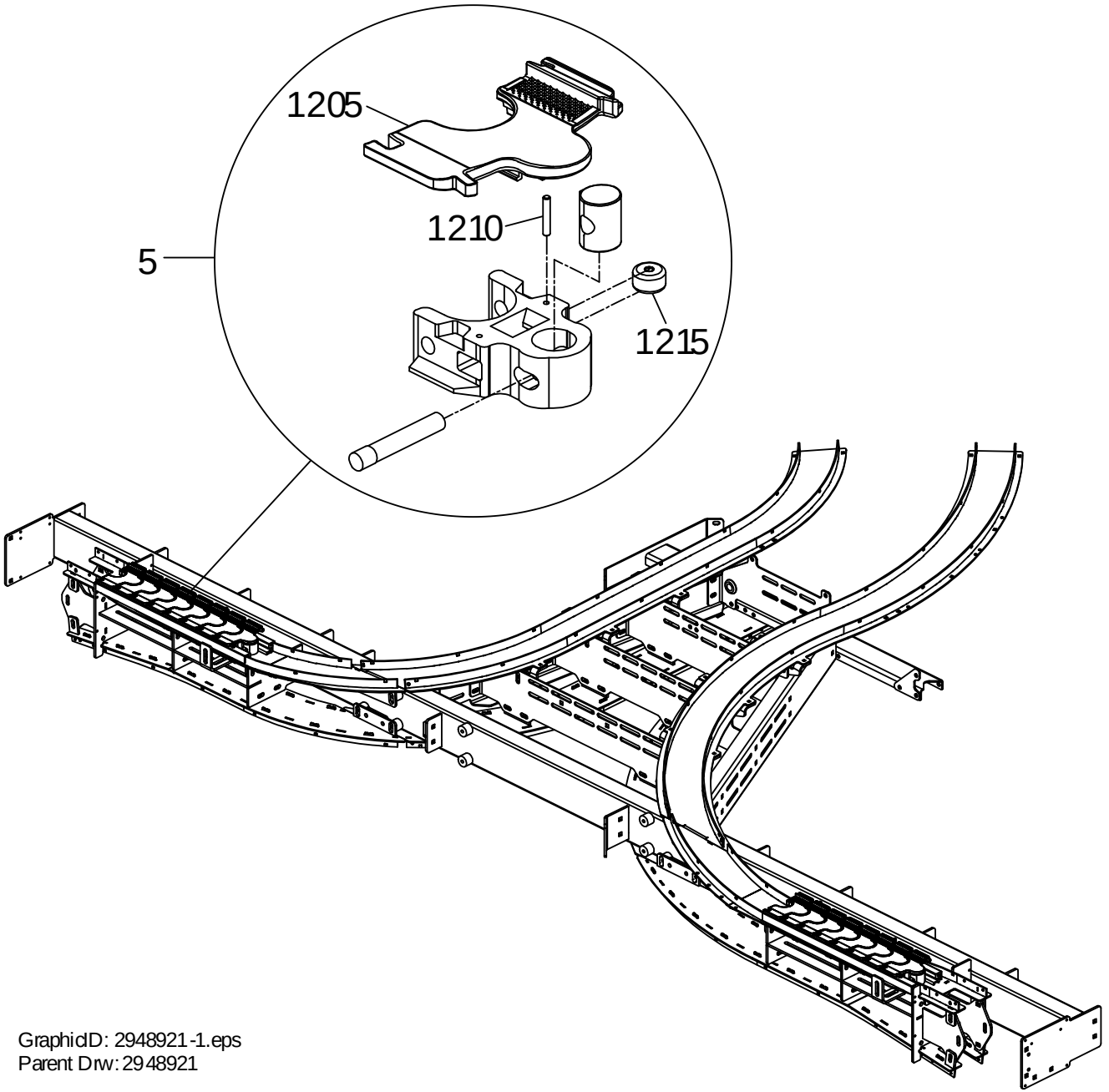

GraphicID: 2948921-1.eps
Parent Drw: 2948921

ECM: 388927 - 20090417
Group number: 2948921-0100
Assembly Drawing: 2948921-1_1_AA

Pos	Part No	UN	Qty	Description	Page No
100M_LINF					
005	2528285-1056		1	WHOLE CHAIN, INFEED, LINF, 1056 PC	
1205	*1497193-0000*		*1056*	*WING, CHAIN*	
1210	*1497067-0000*		*1056*	*PIN*	
1215	*1497069-0000*		*1056*	*ROLLER*	
120M_LINF					
005	2528285-1242		1	WHOLE CHAIN, INFEED, LINF, 1242 PC	
1205	*1497193-0000*		*1242*	*WING, CHAIN*	
1210	*1497067-0000*		*1242*	*PIN*	
1215	*1497069-0000*		*1242*	*ROLLER*	
47M_LINF					
005	2528285-0522		1	WHOLE CHAIN, INFEED, LINF, 522 PC	
1205	*1497193-0000*		*522*	*WING, CHAIN*	
1210	*1497067-0000*		*522*	*PIN*	
1215	*1497069-0000*		*522*	*ROLLER*	
75M_LINF					
005	2528285-0786		1	WHOLE CHAIN, INFEED, LINF, 786PC LINKS	
1205	*1497193-0000*		*786*	*WING, CHAIN*	
1210	*1497067-0000*		*786*	*PIN*	
1215	*1497069-0000*		*786*	*ROLLER*	
90M_LINF					
005	2528285-0894		1	WHOLE CHAIN, INFEED, LINF, 894PC LINKS	
1205	*1497193-0000*		*894*	*WING, CHAIN*	
1210	*1497067-0000*		*894*	*PIN*	
1215	*1497069-0000*		*894*	*ROLLER*	
Common Parts					
005	2528285-0060		1	SPARE CHAIN, INFEED, LINF, 60PC LINKS	
1205	*1497193-0000*		*60*	*WING, CHAIN*	
1210	*1497067-0000*		*60*	*PIN*	
1215	*1497069-0000*		*60*	*ROLLER*	

Pos	Part No	UN	Qty	Description	Page No

Machine Type | Group Description | Used-In | Group Number | Page No

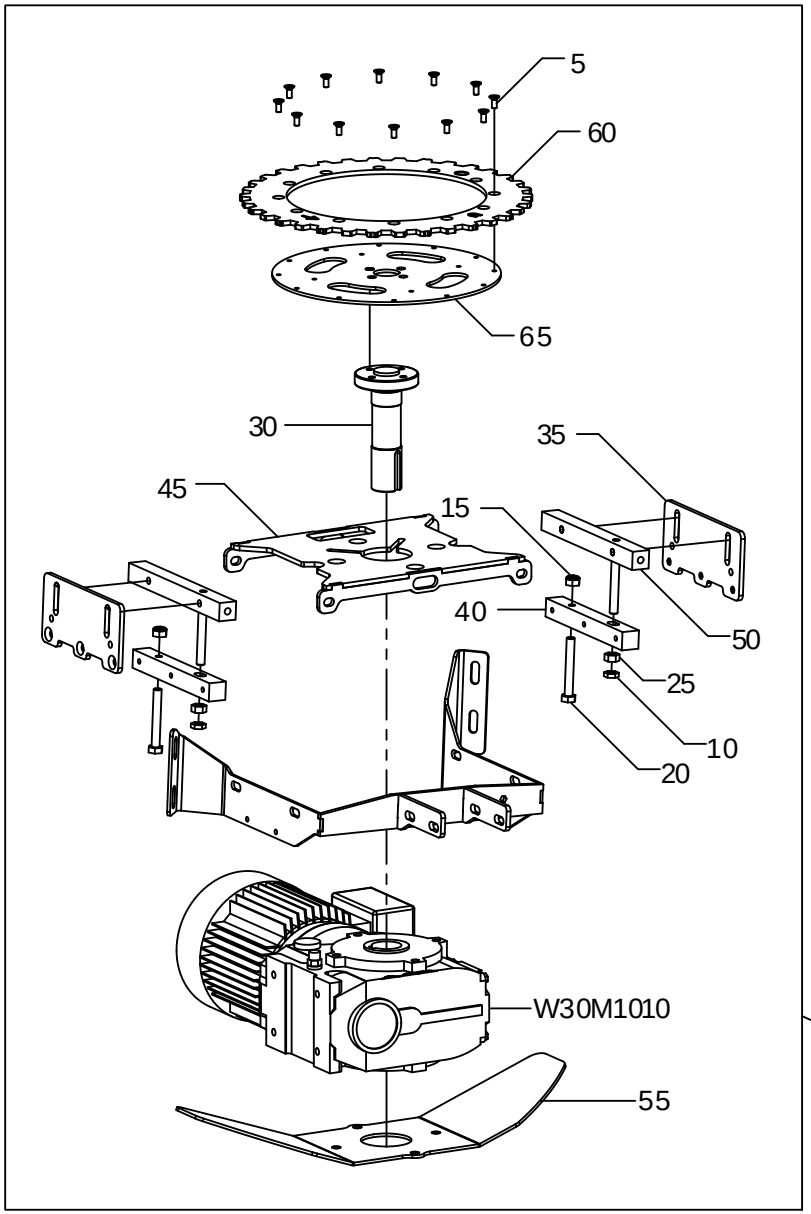

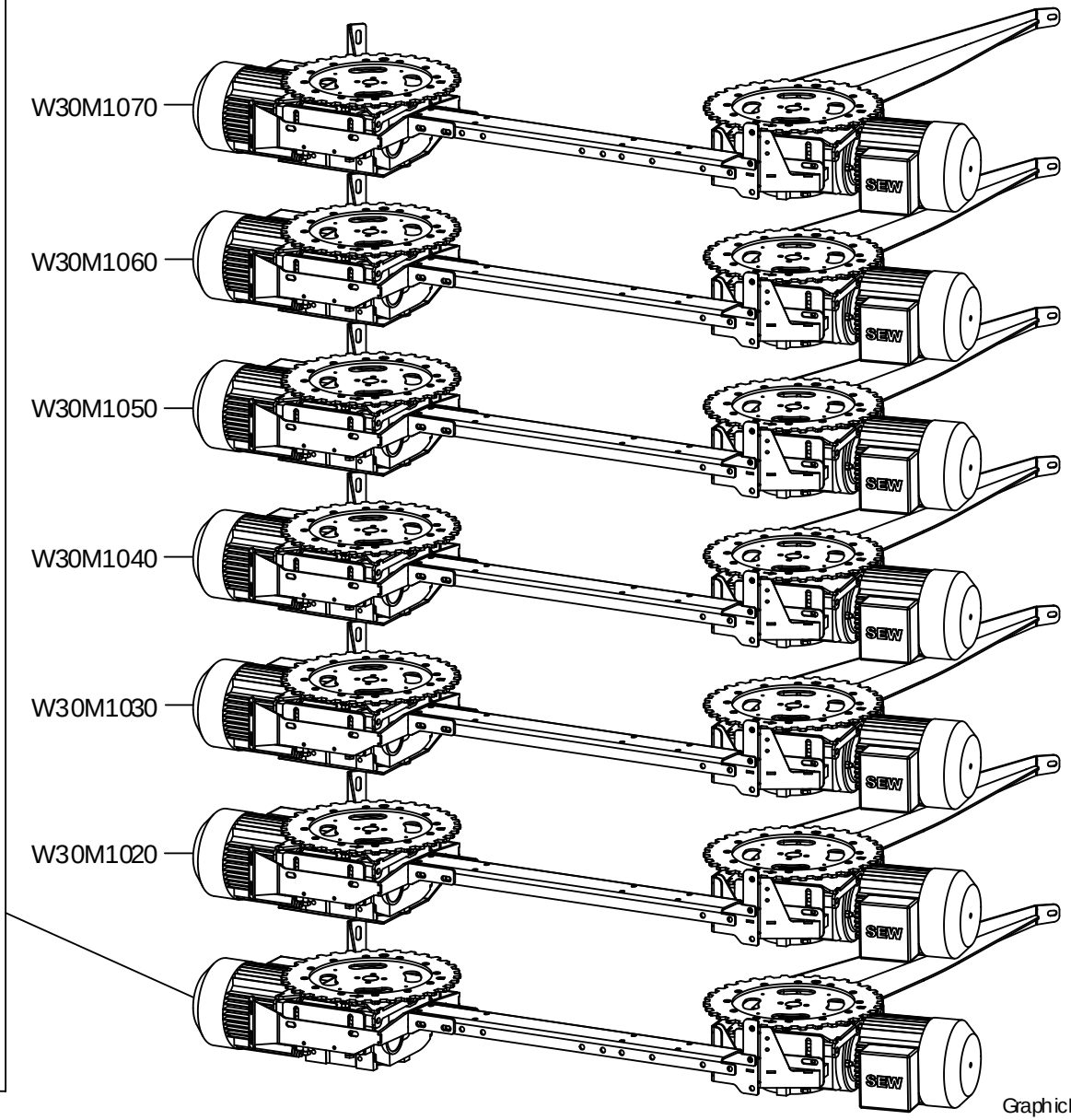

GraphicID:2948924-1.eps
Parent Drw: 2948924

ECM: 388397 - 20090417
Group number: 2948924-0100
Assembly Drawing: 2948924-1_1_AA

Pos	Part No	UN	Qty	Description	Page No
47M					
005	312155-0327		36	SCREW DIN 7991 MF6S M5X12 A4 70	
010	2664543-0000		6	NUT	
015	2727211-0000		6	NUT	
020	312105-0463		6	SCREW M6S ISO 4014 M8X60 A480	
025	312605-0318		6	HEXAGON NUT, M6M M8 A280	
030	2855340-0000		3	AXLE SUPPORT	
035	2948889-0000		6	PLATE	
040	2948890-0000		6	BAR	
045	2948891-0000		3	MOUNTING BRACKET	
050	2948892-0000		6	BAR	
060	2855375-0000		3	SPROCKET, INFEED	
065	2855377-0000		3	PLATE	
W30M1010	90600-6057		1	GEARS, WORM MOTOR SA47DT71D4-63.80-M5B-4	
W30M1020	90600-6057		1	GEARS, WORM MOTOR SA47DT71D4-63.80-M5B-4	
W30M1030	90600-6057		1	GEARS, WORM MOTOR SA47DT71D4-63.80-M5B-4	
75M, 100M					
005	312155-0327		72	SCREW DIN 7991 MF6S M5X12 A4 70	
010	2664543-0000		12	NUT	
015	2727211-0000		12	NUT	
020	312105-0463		12	SCREW M6S ISO 4014 M8X60 A480	
025	312605-0318		12	HEXAGON NUT, M6M M8 A280	
030	2855340-0000		6	AXLE SUPPORT	
035	2948889-0000		12	PLATE	
040	2948890-0000		12	BAR	
045	2948891-0000		6	MOUNTING BRACKET	
050	2948892-0000		12	BAR	
055	2948893-0000		5	GUARD	
060	2855375-0000		6	SPROCKET, INFEED	
065	2855377-0000		6	PLATE	
W30M1010	90600-4100		1	GEARS, WORM MOTOR SA47DT71D4-44.22-M5B-4	
W30M1020	90600-4100		1	GEARS, WORM MOTOR SA47DT71D4-44.22-M5B-4	
W30M1030	90600-4100		1	GEARS, WORM MOTOR SA47DT71D4-44.22-M5B-4	
W30M1040	90600-4100		1	GEARS, WORM MOTOR SA47DT71D4-44.22-M5B-4	
W30M1050	90600-4100		1	GEARS, WORM MOTOR SA47DT71D4-44.22-M5B-4	
W30M1060	90600-4100		1	GEARS, WORM MOTOR SA47DT71D4-44.22-M5B-4	
90M, 120M					
005	312155-0327		84	SCREW DIN 7991 MF6S M5X12 A4 70	
010	2664543-0000		14	NUT	
015	2727211-0000		14	NUT	
020	312105-0463		14	SCREW M6S ISO 4014 M8X60 A480	
025	312605-0318		14	HEXAGON NUT, M6M M8 A280	
030	2855340-0000		7	AXLE SUPPORT	
035	2948889-0000		14	PLATE	
040	2948890-0000		14	BAR	
045	2948891-0000		7	MOUNTING BRACKET	
050	2948892-0000		14	BAR	
055	2948893-0000		6	GUARD	
060	2855375-0000		7	SPROCKET, INFEED	
065	2855377-0000		7	PLATE	
W30M1010	90600-4100		1	GEARS, WORM MOTOR SA47DT71D4-44.22-M5B-4	
W30M1020	90600-4100		1	GEARS, WORM MOTOR SA47DT71D4-44.22-M5B-4	
W30M1030	90600-4100		1	GEARS, WORM MOTOR SA47DT71D4-44.22-M5B-4	
W30M1040	90600-4100		1	GEARS, WORM MOTOR SA47DT71D4-44.22-M5B-4	
W30M1050	90600-4100		1	GEARS, WORM MOTOR SA47DT71D4-44.22-M5B-4	
W30M1060	90600-4100		1	GEARS, WORM MOTOR SA47DT71D4-44.22-M5B-4	
W30M1070	90600-4100		1	GEARS, WORM MOTOR SA47DT71D4-44.22-M5B-4	

Machine Type | Group Description | Used-In | Group Number | Page No

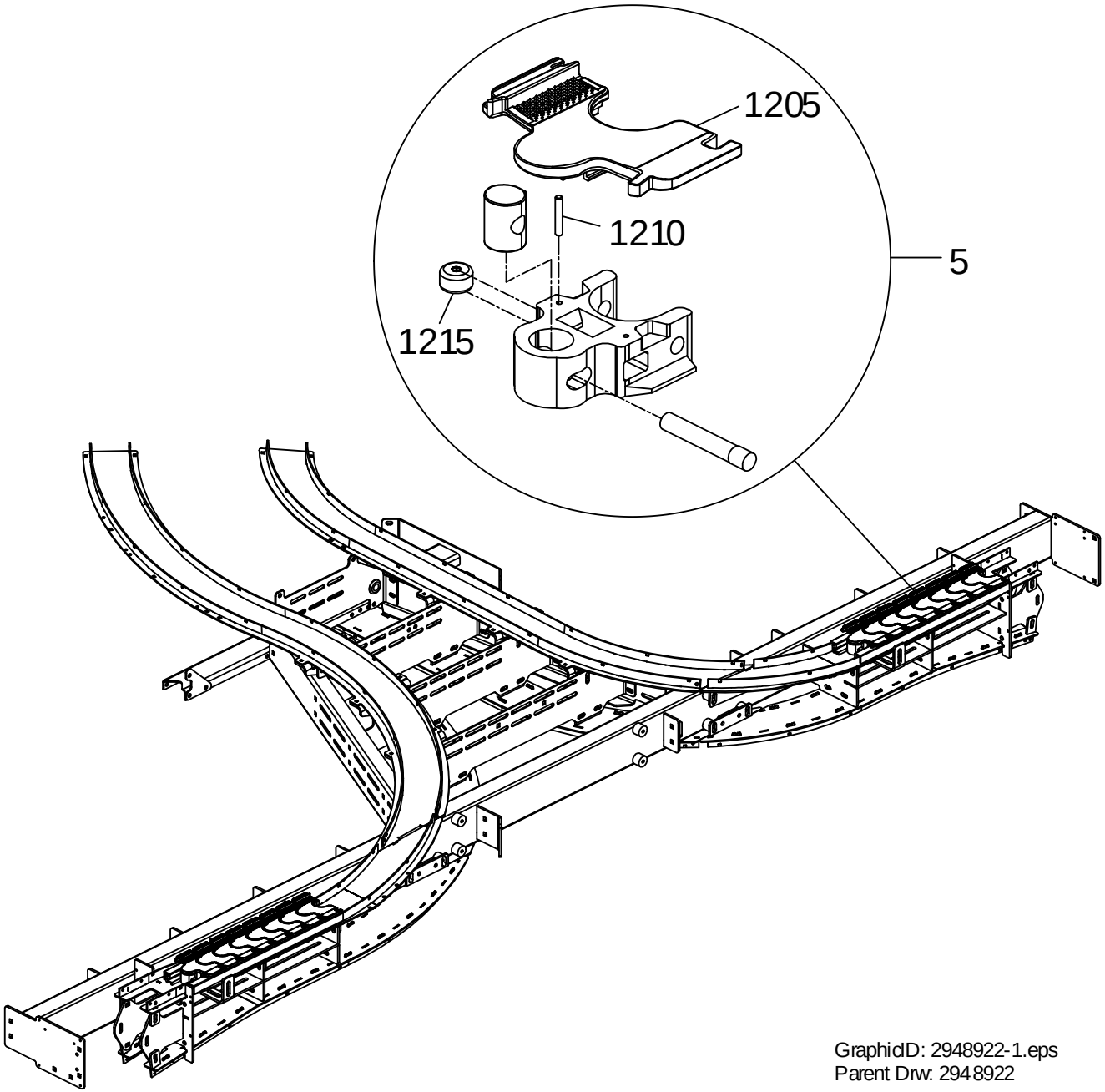

GraphidD: 2948922-1.eps
Parent Drw: 2948922

ECM: 388928 - 20090417
Group number: 2948922-0100
Assembly Drawing: 2948922-1_1_AA

Pos	Part No	UN	Qty	Description	Page No
100M_RINF					
005	2855403-1056		1	WHOLE CHAIN, INFEED, RINF, 1056 PC	
1205	*2855405-0000*		*1056*	*WING, CHAIN*	
1210	*1497067-0000*		*1056*	*PIN*	
1215	*1497069-0000*		*1056*	*ROLLER*	
120M_RINF					
005	2855403-1242		1	WHOLE CHAIN, INFEED, RINF, 1242 PC	
1205	*2855405-0000*		*1242*	*WING, CHAIN*	
1210	*1497067-0000*		*1242*	*PIN*	
1215	*1497069-0000*		*1242*	*ROLLER*	
47M_RINF					
005	2855403-0522		1	WHOLE CHAIN, INFEED, RINF, 522 PC	
1205	*2855405-0000*		*522*	*WING, CHAIN*	
1210	*1497067-0000*		*522*	*PIN*	
1215	*1497069-0000*		*522*	*ROLLER*	
75M_RINF					
005	2855403-0786		1	WHOLE CHAIN, INFEED, RINF, 786 PC	
1205	*2855405-0000*		*786*	*WING, CHAIN*	
1210	*1497067-0000*		*786*	*PIN*	
1215	*1497069-0000*		*786*	*ROLLER*	
90M_RINF					
005	2855403-0894		1	WHOLE CHAIN, INFEED, RINF, 894 PC	
1205	*2855405-0000*		*894*	*WING, CHAIN*	
1210	*1497067-0000*		*894*	*PIN*	
1215	*1497069-0000*		*894*	*ROLLER*	
Common Parts					
005	2855403-0060		1	SPARE CHAIN, INFEED, RINF, 60PC LINKS	
1205	*2855405-0000*		*60*	*WING, CHAIN*	
1210	*1497067-0000*		*60*	*PIN*	
1215	*1497069-0000*		*60*	*ROLLER*	

Pos	Part No	UN	Qty	Description	Page No

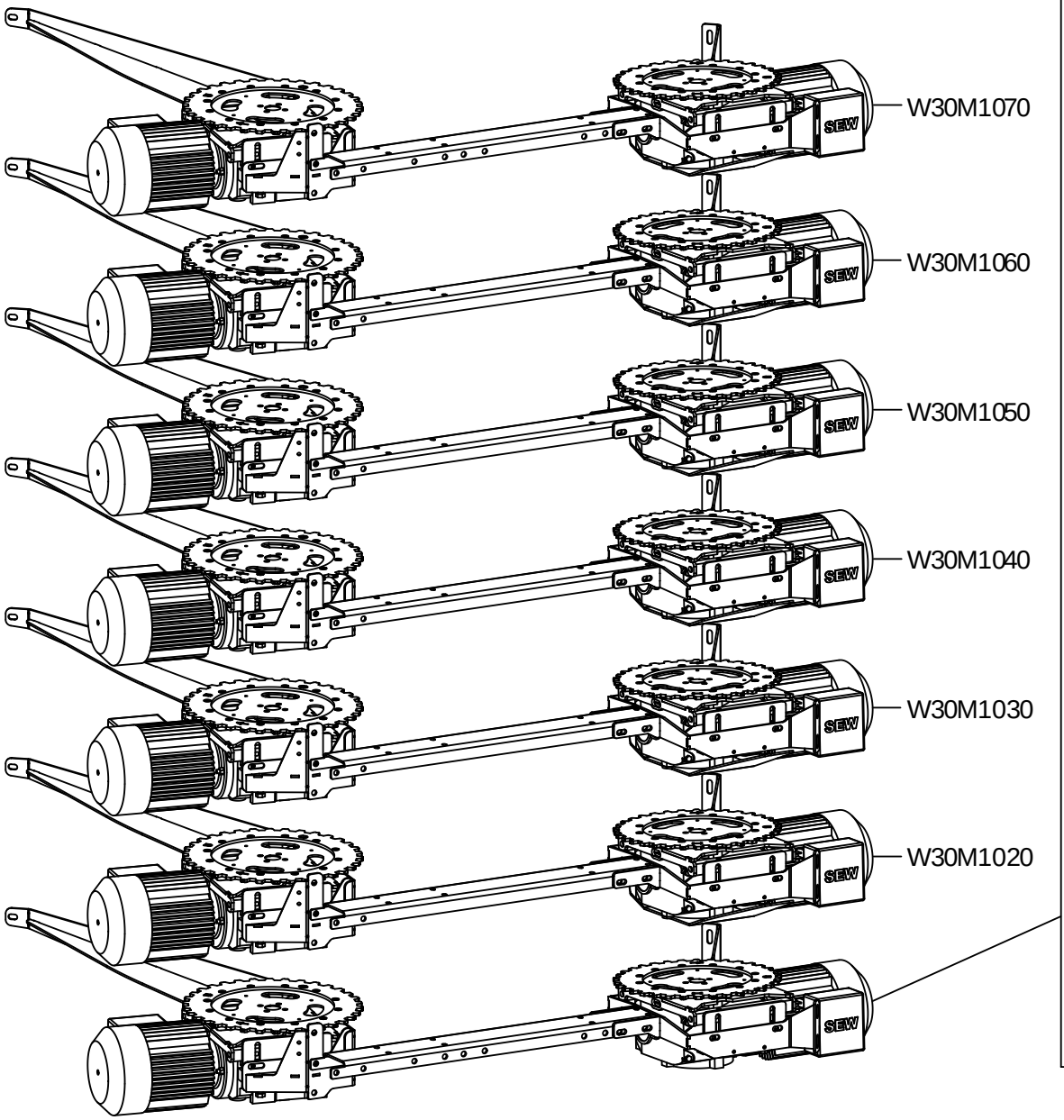

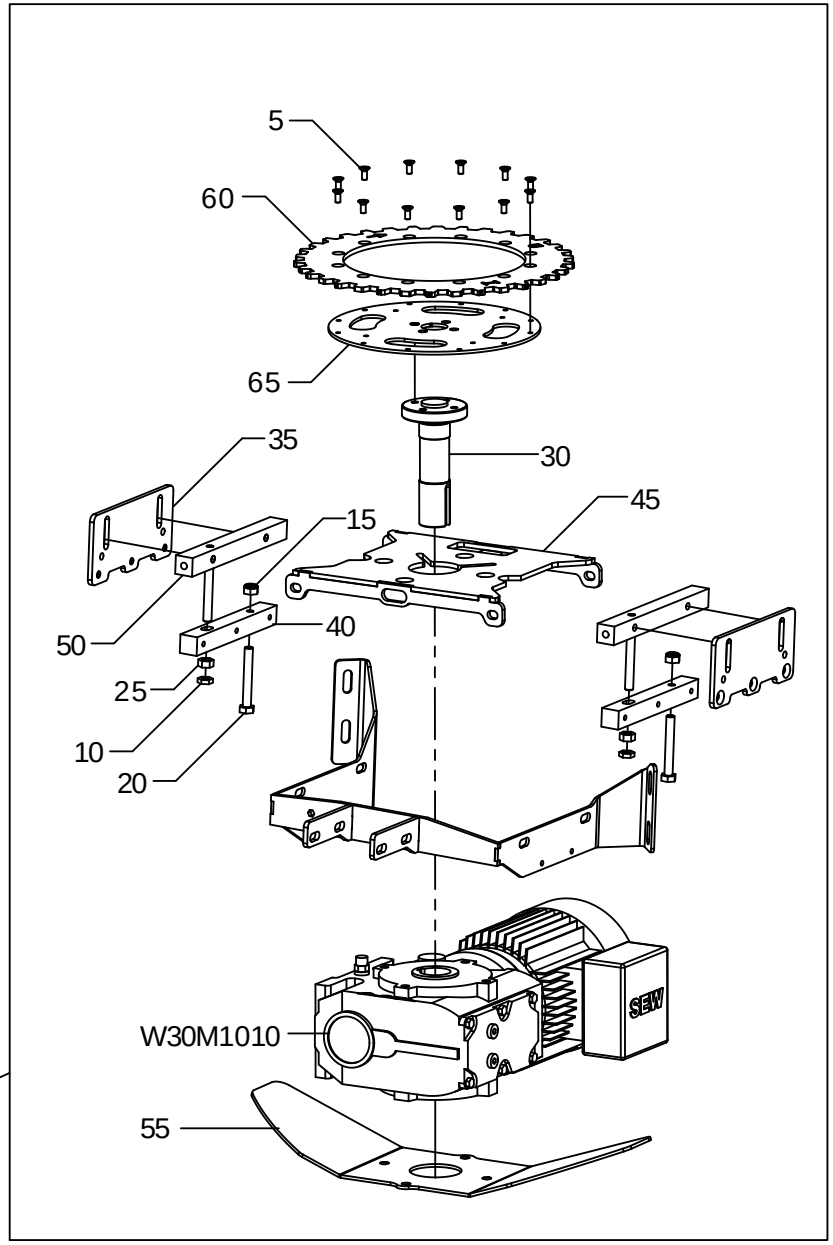

GraphicID:2948925-1.eps
Parent Drw:2948925

ECM: 388398 - 20090417
Group number: 2948925-0100
Assembly Drawing: 2948925-1_1_AA

Pos	Part No	UN	Qty	Description	Page No
47M					
005	312155-0327		36	SCREW DIN 7991 MF6S M5X12 A4 70	
010	2664543-0000		6	NUT	
015	2727211-0000		6	NUT	
020	312105-0463		6	SCREW M6S ISO 4014 M8X60 A480	
025	312605-0318		6	HEXAGON NUT, M6M M8 A280	
030	2855340-0000		3	AXLE SUPPORT	
035	2948889-0000		6	PLATE	
040	2948890-0000		6	BAR	
045	2948891-0000		3	MOUNTING BRACKET	
050	2948892-0000		6	BAR	
060	2948898-0000		3	SPROCKET	
065	2855377-0000		3	PLATE	
W30M1010	90600-6057		1	GEARS, WORM MOTOR SA47DT71D4-63.80-M5B-4	
W30M1020	90600-6057		1	GEARS, WORM MOTOR SA47DT71D4-63.80-M5B-4	
W30M1030	90600-6057		1	GEARS, WORM MOTOR SA47DT71D4-63.80-M5B-4	
75M, 100M					
005	312155-0327		72	SCREW DIN 7991 MF6S M5X12 A4 70	
010	2664543-0000		12	NUT	
015	2727211-0000		12	NUT	
020	312105-0463		12	SCREW M6S ISO 4014 M8X60 A480	
025	312605-0318		12	HEXAGON NUT, M6M M8 A280	
030	2855340-0000		6	AXLE SUPPORT	
035	2948889-0000		12	PLATE	
040	2948890-0000		12	BAR	
045	2948891-0000		6	MOUNTING BRACKET	
050	2948892-0000		12	BAR	
055	2948893-0000		5	GUARD	
060	2948898-0000		6	SPROCKET	
065	2855377-0000		6	PLATE	
W30M1010	90600-4100		1	GEARS, WORM MOTOR SA47DT71D4-44.22-M5B-4	
W30M1020	90600-4100		1	GEARS, WORM MOTOR SA47DT71D4-44.22-M5B-4	
W30M1030	90600-4100		1	GEARS, WORM MOTOR SA47DT71D4-44.22-M5B-4	
W30M1040	90600-4100		1	GEARS, WORM MOTOR SA47DT71D4-44.22-M5B-4	
W30M1050	90600-4100		1	GEARS, WORM MOTOR SA47DT71D4-44.22-M5B-4	
W30M1060	90600-4100		1	GEARS, WORM MOTOR SA47DT71D4-44.22-M5B-4	
90M, 120M					
005	312155-0327		84	SCREW DIN 7991 MF6S M5X12 A4 70	
010	2664543-0000		14	NUT	
015	2727211-0000		14	NUT	
020	312105-0463		14	SCREW M6S ISO 4014 M8X60 A480	
025	312605-0318		14	HEXAGON NUT, M6M M8 A280	
030	2855340-0000		7	AXLE SUPPORT	
035	2948889-0000		14	PLATE	
040	2948890-0000		14	BAR	
045	2948891-0000		7	MOUNTING BRACKET	
050	2948892-0000		14	BAR	
055	2948893-0000		6	GUARD	
060	2948898-0000		7	SPROCKET	
065	2855377-0000		7	PLATE	
W30M1010	90600-4100		1	GEARS, WORM MOTOR SA47DT71D4-44.22-M5B-4	
W30M1020	90600-4100		1	GEARS, WORM MOTOR SA47DT71D4-44.22-M5B-4	
W30M1030	90600-4100		1	GEARS, WORM MOTOR SA47DT71D4-44.22-M5B-4	
W30M1040	90600-4100		1	GEARS, WORM MOTOR SA47DT71D4-44.22-M5B-4	
W30M1050	90600-4100		1	GEARS, WORM MOTOR SA47DT71D4-44.22-M5B-4	
W30M1060	90600-4100		1	GEARS, WORM MOTOR SA47DT71D4-44.22-M5B-4	
W30M1070	90600-4100		1	GEARS, WORM MOTOR SA47DT71D4-44.22-M5B-4	

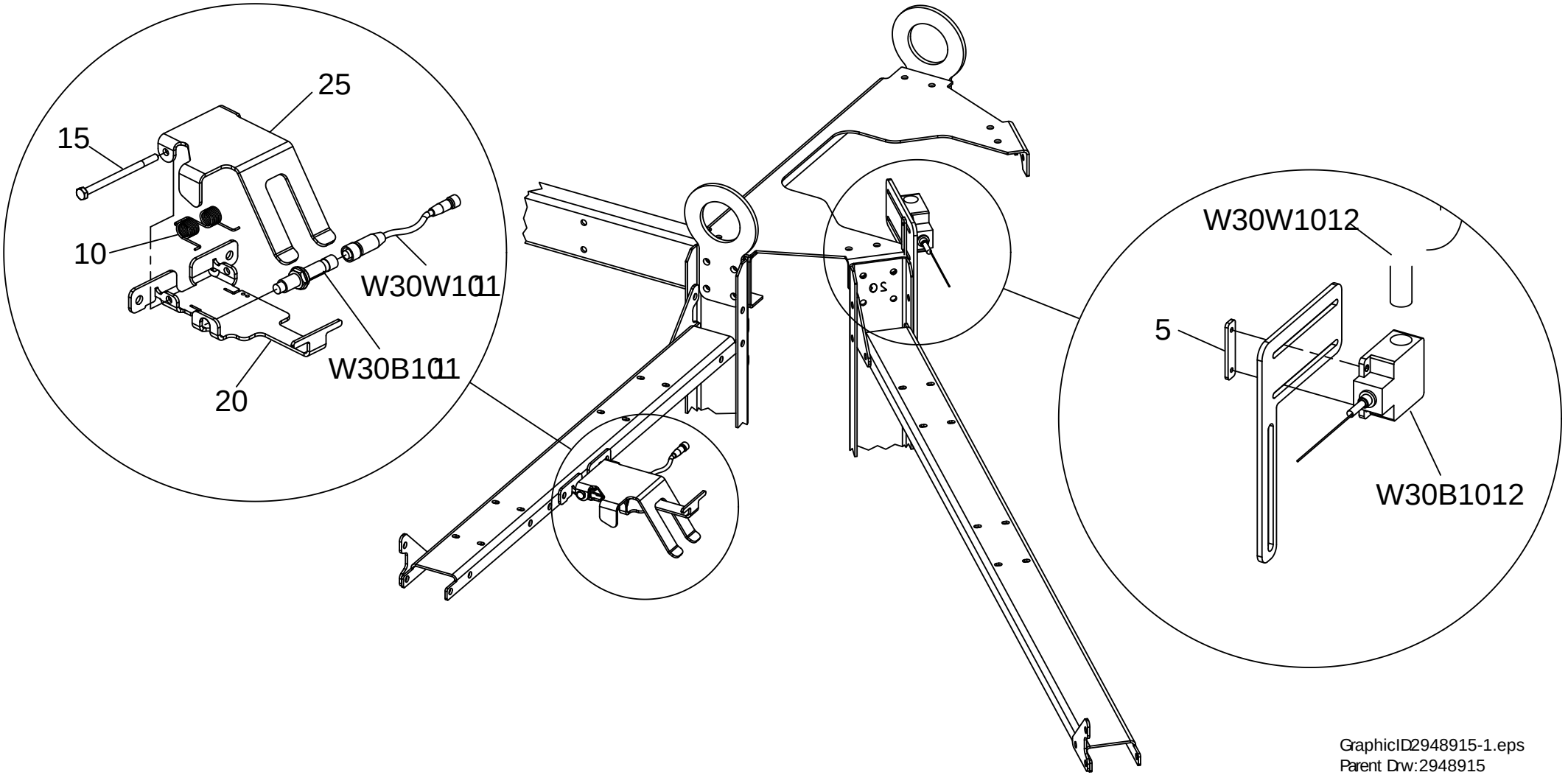

GraphicID2948915-1.eps
Parent Drw:2948915

ECM: 393761 - 20090417
Group number: 2948915-0100
Assembly Drawing: 2948915-1_1_AB

Pos	Part No	UN	Qty	Description	Page No
-					
005	2664534-0000		1	NUT PLATE	
010	1497198-0000		1	TORSION SPRING	
015	312105-0388		1	SCREW M6S ISO 4014 M6X90 A480	
020	2528341-0000		1	BASE, LOWER	
025	2528342-0000		1	BASE	
W30B1011	90600-0462		1	INDUCTIVE SWITCH, E2A-M12LN05-M1-B1-TP	
W30B1012	90600-1337		1	LIMIT SW. XCK-M106H29	
W30W1011	351405-0050		1	ACT/SENS. CABLE RSMVN 3-PRKT 4-3-06/5,0M	
W30W1012	351150-0405	M	8	CABLE OLFLEX 5X0,75 MM2 LIGHT/GREY	

Pos	Part No	UN	Qty	Description	Page No

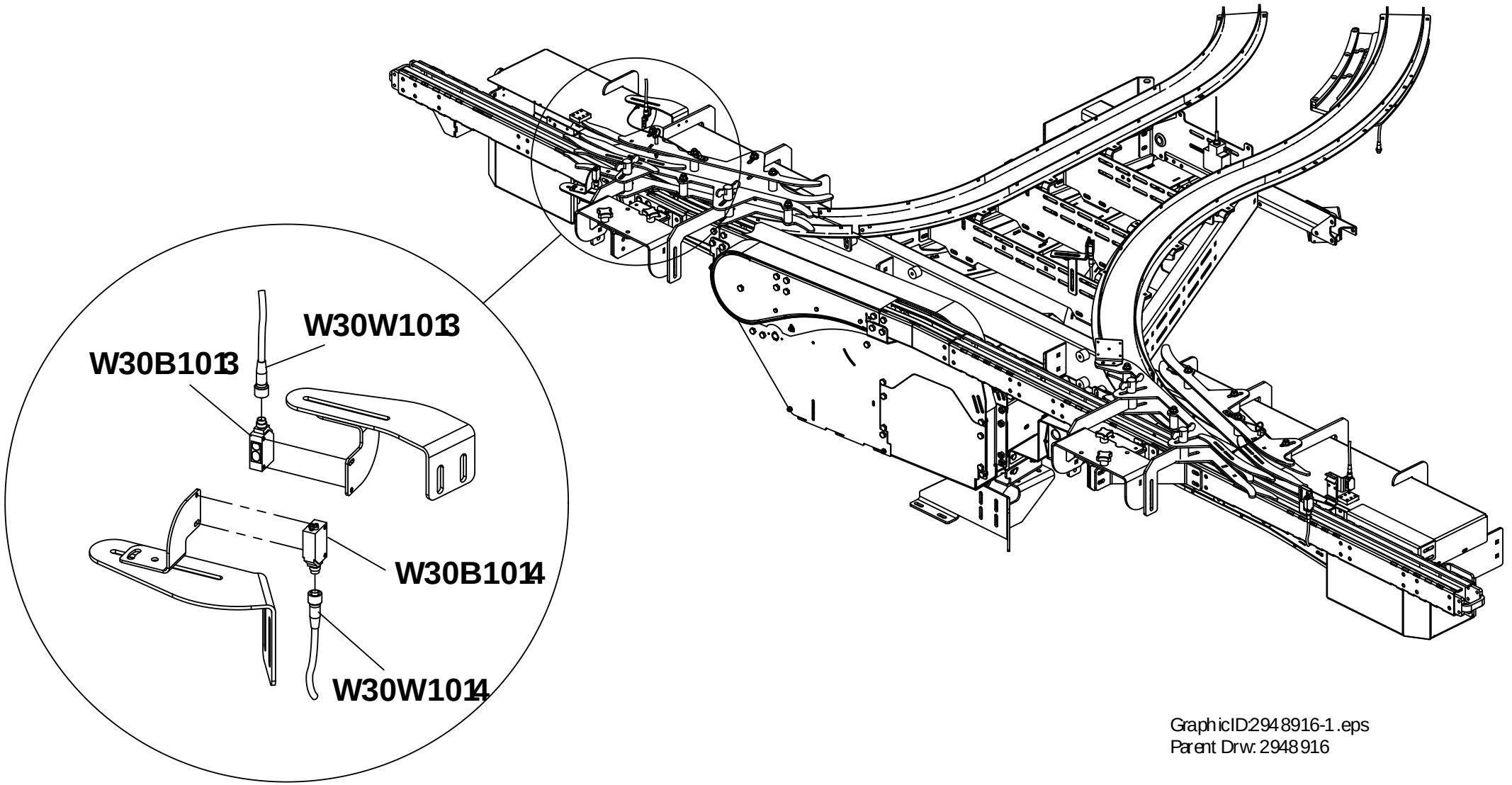

GraphicID:2948916-1.eps
Parent Drw: 2948916

ECM: 377370 - 20090203
Group number: 2948916-0100
Assembly Drawing: 2948916-1_1_AA

Pos	Part No	UN	Qty	Description	Page No
-					
W30B1013	90459-7273		1	PHOTOCELL E3Z-T81C-G0SR D-CN	
W30B1014	90459-7274		1	PHOTOCELL E3Z-T81C-G0SR L-CN	
W30W1013	351305-0150		1	ACTUATOR/SENSOR CABLE PRKMV 4-07/15M	
W30W1014	351305-0150		1	ACTUATOR/SENSOR CABLE PRKMV 4-07/15M	

Pos	Part No	UN	Qty	Description	Page No

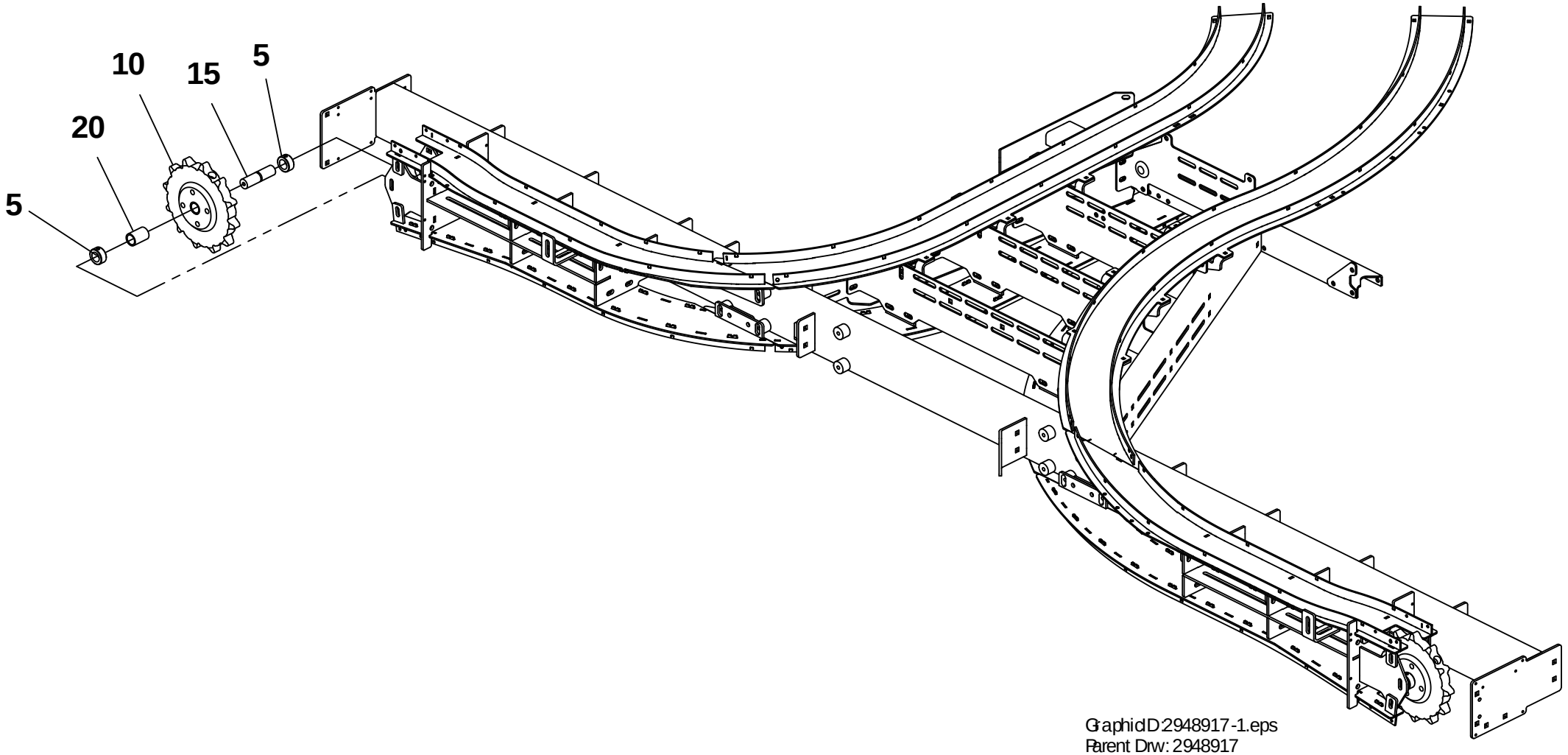

GraphicID:2948917-1.eps
Parent Drw: 2948917

ECM: 397684 - 20090504
Group number: 2948917-0100
Assembly Drawing: 2948917-1_1_AA

Pos	Part No	UN	Qty	Description	Page No
-					
005	2528345-0000		2	COLLAR	
010	2502298-0000		1	SPROCKET, RETURN	
015	2528356-0000		2	SHAFT	

Pos	Part No	UN	Qty	Description	Page No

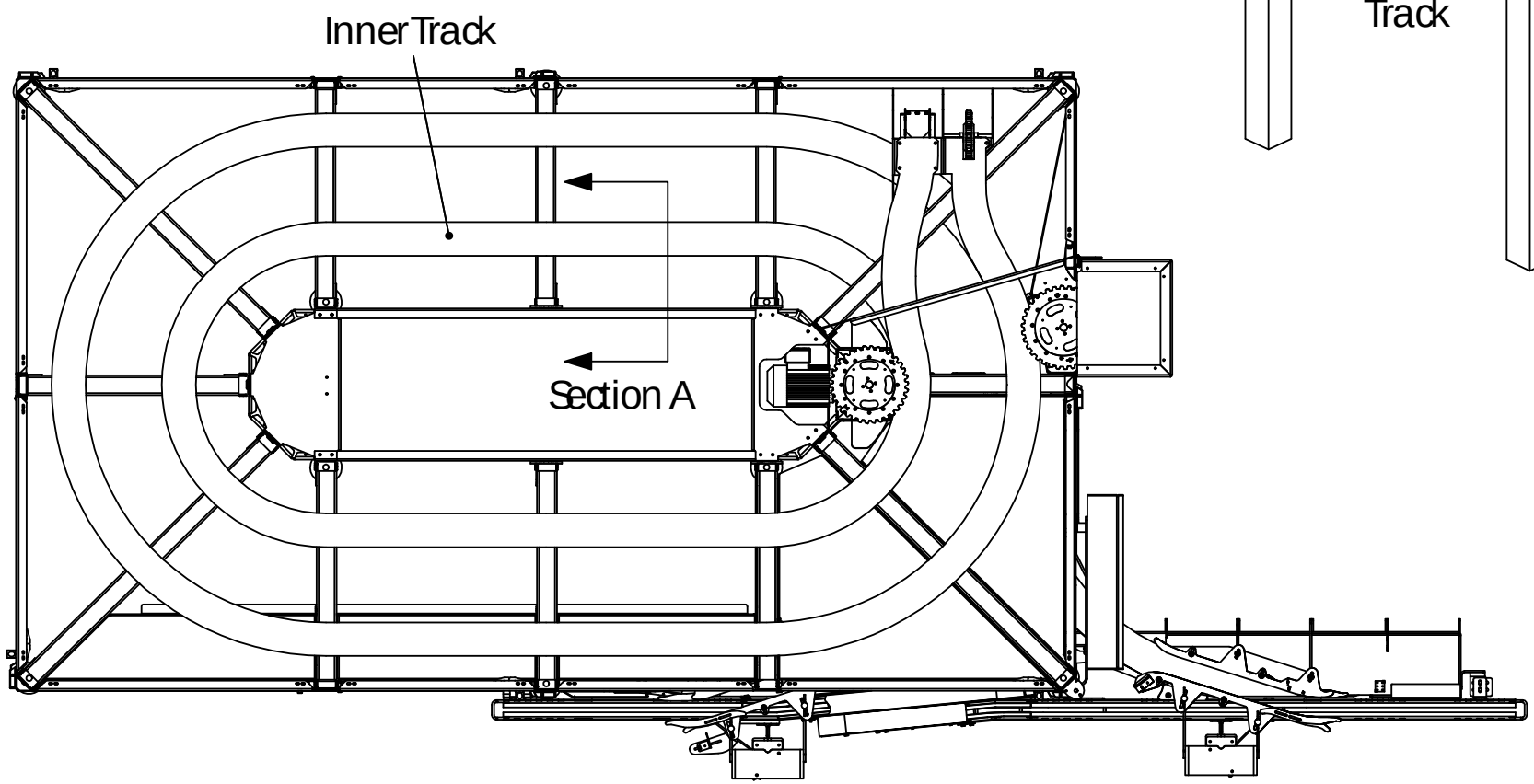

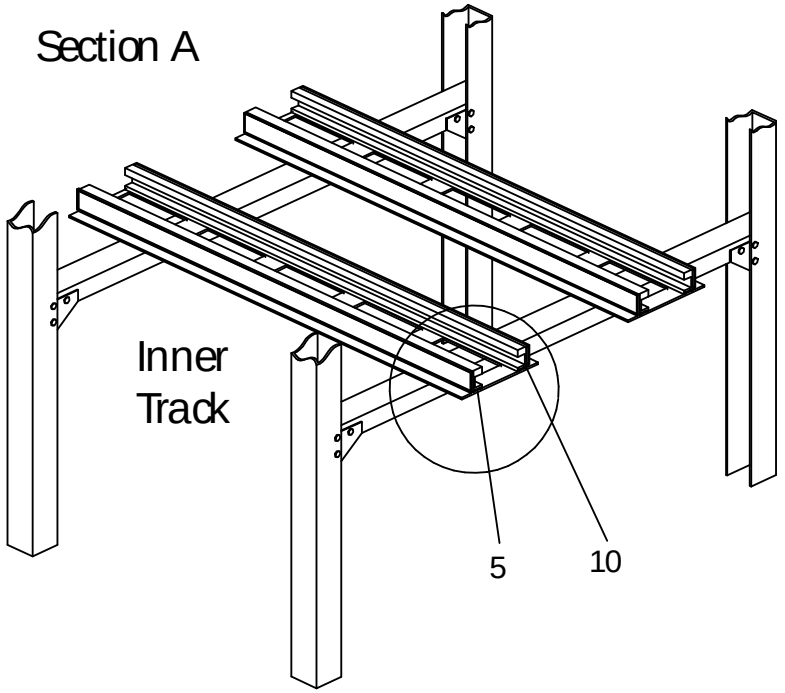

GraphicID2948918-1.eps
Parent Drw: 2948918

ECM: 389613 - 20090417
Group number: 2948918-0100
Assembly Drawing: 2948918-1_1_AA

This list covers pages from 2-52 to 2-55

Pos	Part No	UN	Qty	Description	Page No
47M_LINF, 100M_LINF, 120M_LINF (See drawing on page: 2-52)					
005	2727376-0000		1	EXTRUSION LH	
010	2727213-0000		1	EXTRUSION, RH, 205'	
47M_RINF, 100M_RINF, 120M_RINF (See drawing on page: 2-54)					
005	2727376-0000		1	EXTRUSION LH	
010	2727213-0000		1	EXTRUSION, RH, 205'	
75M_LINF, 90M_LINF (See drawing on page: 2-52)					
005	2727218-0000		1	EXTRUSION, LH, 320'	
010	2727217-0000		1	EXTRUSION, RH, 340'	
75M_RINF, 90M_RINF (See drawing on page: 2-54)					
005	2727218-0000		1	EXTRUSION, LH, 320'	
010	2727217-0000		1	EXTRUSION, RH, 340'	

Pos	Part No	UN	Qty	Description	Page No

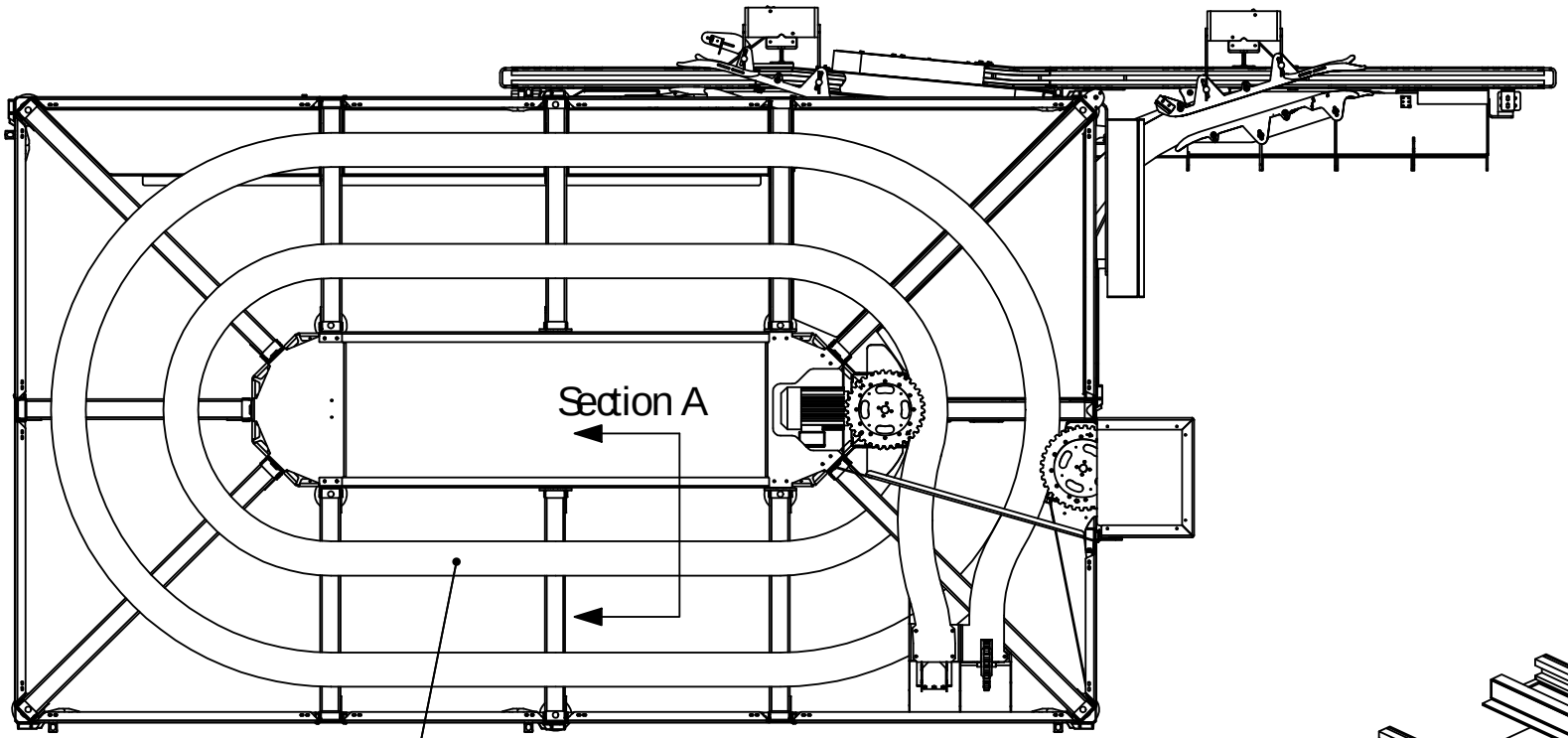

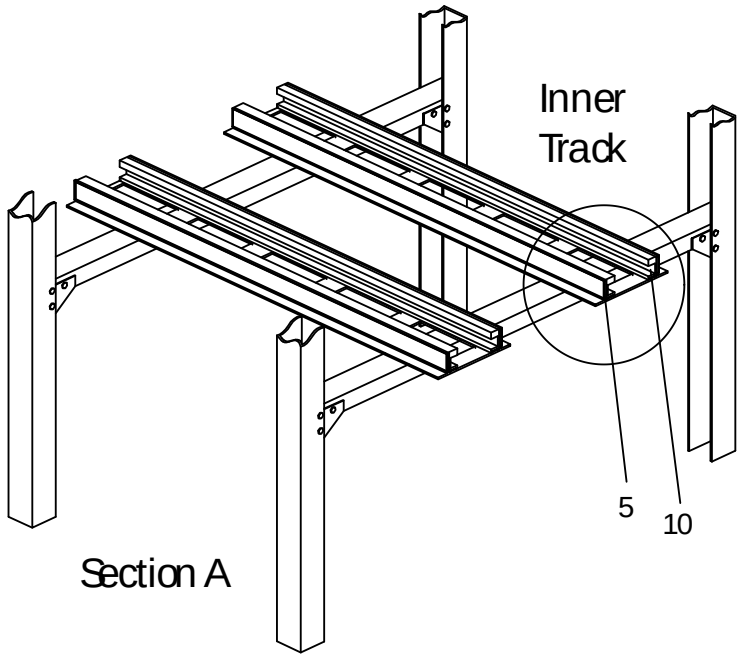

GraphicID:2948918-2.eps
Parent Drw: 2948918

ECM: 389613 - 20090417
Group number: 2948918-0100
Assembly Drawing: 2948918-2_1_AA

This list covers pages from 2-52 to 2-55

Pos	Part No	UN	Qty	Description	Page No
47M_LINF, 100M_LINF, 120M_LINF (See drawing on page: 2-52)					
005	2727376-0000		1	EXTRUSION LH	
010	2727213-0000		1	EXTRUSION, RH, 205'	
47M_RINF, 100M_RINF, 120M_RINF (See drawing on page: 2-54)					
005	2727376-0000		1	EXTRUSION LH	
010	2727213-0000		1	EXTRUSION, RH, 205'	
75M_LINF, 90M_LINF (See drawing on page: 2-52)					
005	2727218-0000		1	EXTRUSION, LH, 320'	
010	2727217-0000		1	EXTRUSION, RH, 340'	
75M_RINF, 90M_RINF (See drawing on page: 2-54)					
005	2727218-0000		1	EXTRUSION, LH, 320'	
010	2727217-0000		1	EXTRUSION, RH, 340'	

Pos	Part No	UN	Qty	Description	Page No

CHAIN TENSIONER

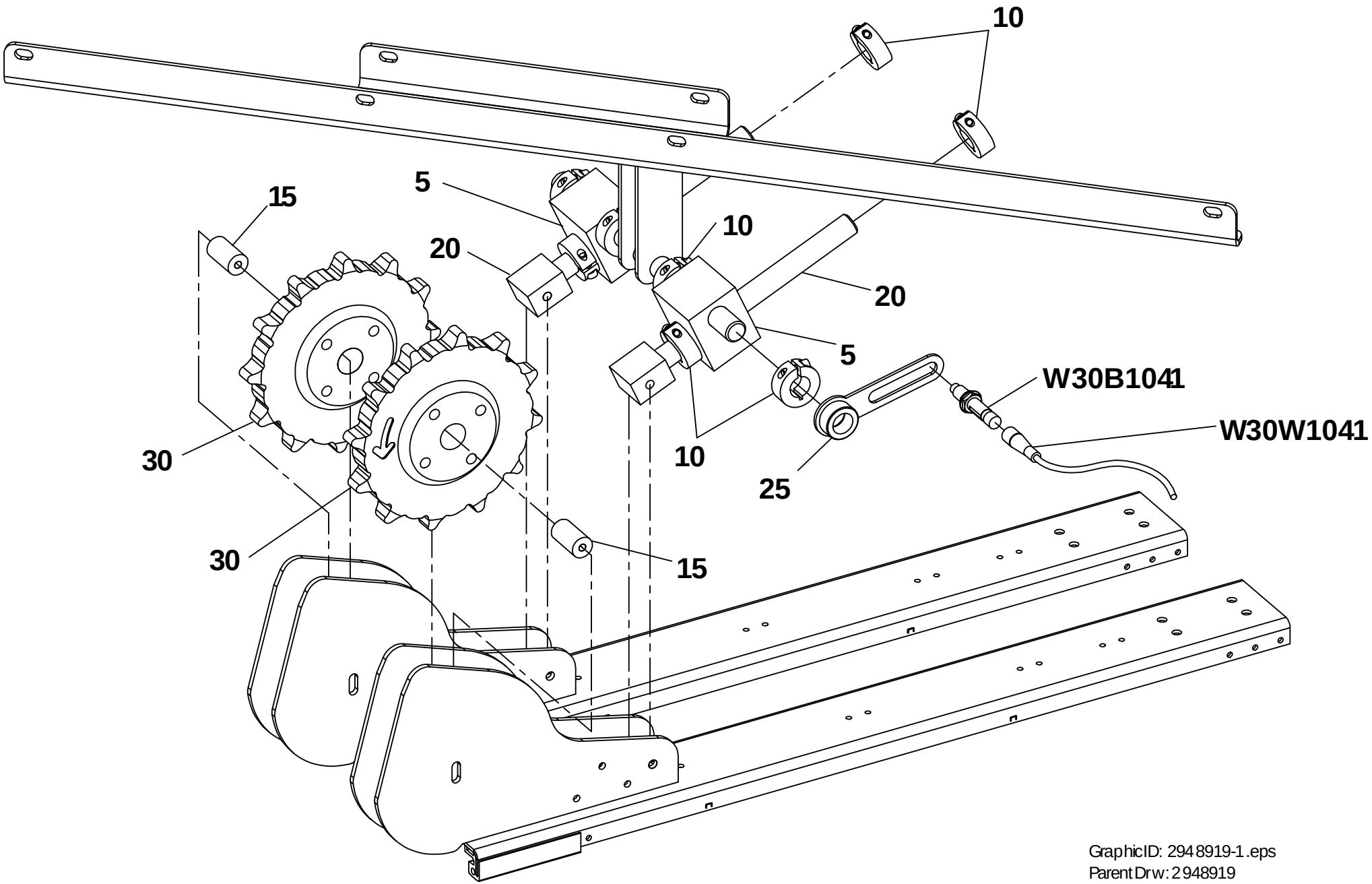

GraphicID: 2948919-1.eps
Parent Drw: 2948919

ECM: 388400 - 20090417
Group number: 2948919-0100
Assembly Drawing: 2948919-1_1_AA

This list covers pages from 2-56 to 2-59

Pos	Part No	UN	Qty	Description	Page No
-					
005	2528347-0000		2	BLOCK	
010	2528348-0000		8	COLLAR	
015	2528349-0000		2	AXLE	
020	2528350-0000		2	ROD	
025	2664486-0000		1	BRACKET	
030	2502298-0000		2	SPROCKET, RETURN	
W30B1041	90600-0462		1	INDUCTIVE SWITCH, E2A-M12LN05-M1-B1-TP	
W30W1041	90459-0036		1	SENSOR CABLE XS2F-D421-J80-A	

Pos	Part No	UN	Qty	Description	Page No

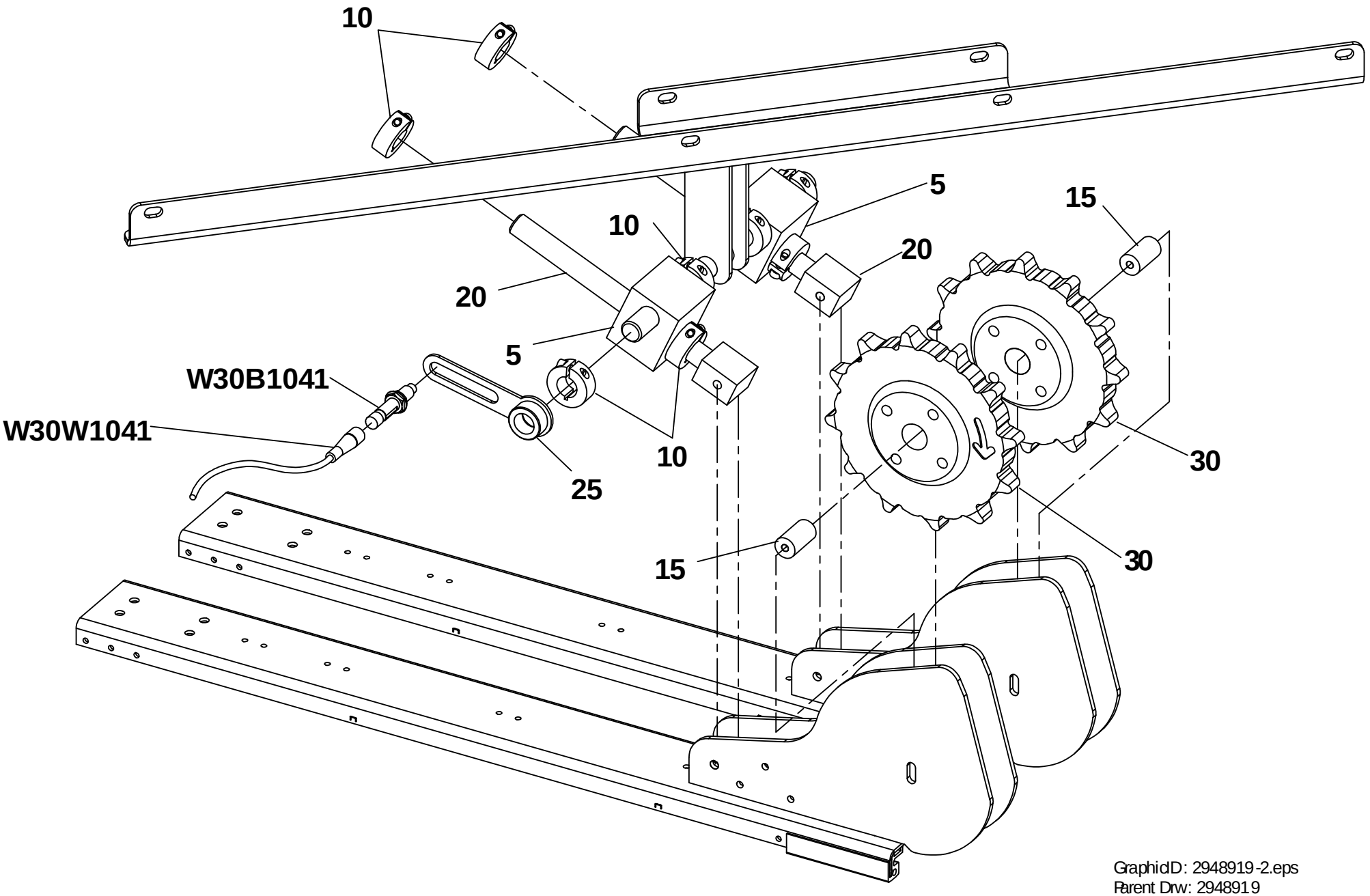

GraphicID: 2948919-2.eps
Parent Drw: 2948919

ECM: 388400 - 20090417
Group number: 2948919-0100
Assembly Drawing: 2948919-2_1_AA

This list covers pages from 2-56 to 2-59

Pos	Part No	UN	Qty	Description	Page No
-					
005	2528347-0000		2	BLOCK	
010	2528348-0000		8	COLLAR	
015	2528349-0000		2	AXLE	
020	2528350-0000		2	ROD	
025	2664486-0000		1	BRACKET	
030	2502298-0000		2	SPROCKET, RETURN	
W30B1041	90600-0462		1	INDUCTIVE SWITCH, E2A-M12LN05-M1-B1-TP	
W30W1041	90459-0036		1	SENSOR CABLE XS2F-D421-J80-A	

Pos	Part No	UN	Qty	Description	Page No

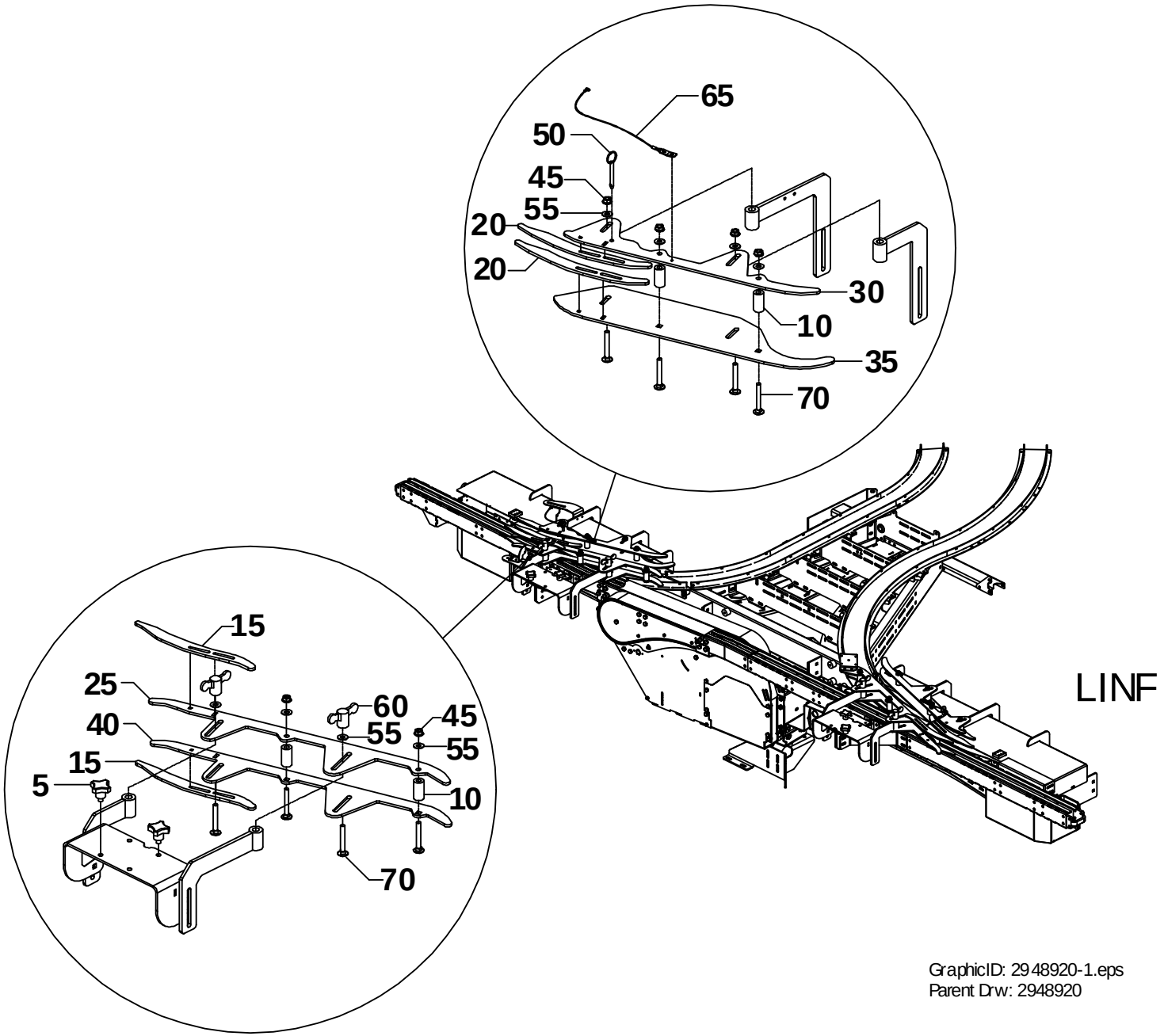

GraphicID: 2948920-1.eps
Parent Drw: 2948920

ECM: 377337 - 20090203
Group number: 2948920-0100
Assembly Drawing: 2948920-1_1_AA

This list covers pages from 2-60 to 2-63

Pos	Part No	UN	Qty	Description	Page No
-					
005	2855222-0000		2	KNOB	
010	2855223-0000		4	SPACER	
015	2855226-0000		2	RAIL	
020	2855229-0000		2	RAIL	
025	2855406-0000		1	RAIL	
030	2855231-0000		1	RAIL	
035	2855232-0000		1	RAIL	
040	2855407-0000		1	RAIL	
045	2948836-0000		6	FLANGE NUT	
050	2855346-0000		1	PIN	
055	2948804-0000		8	WASHER	
060	2855345-0000		2	WING NUT	
065	2855347-0000		1	CABLE	
070	2948837-0000		8	BOLT	

Pos	Part No	UN	Qty	Description	Page No

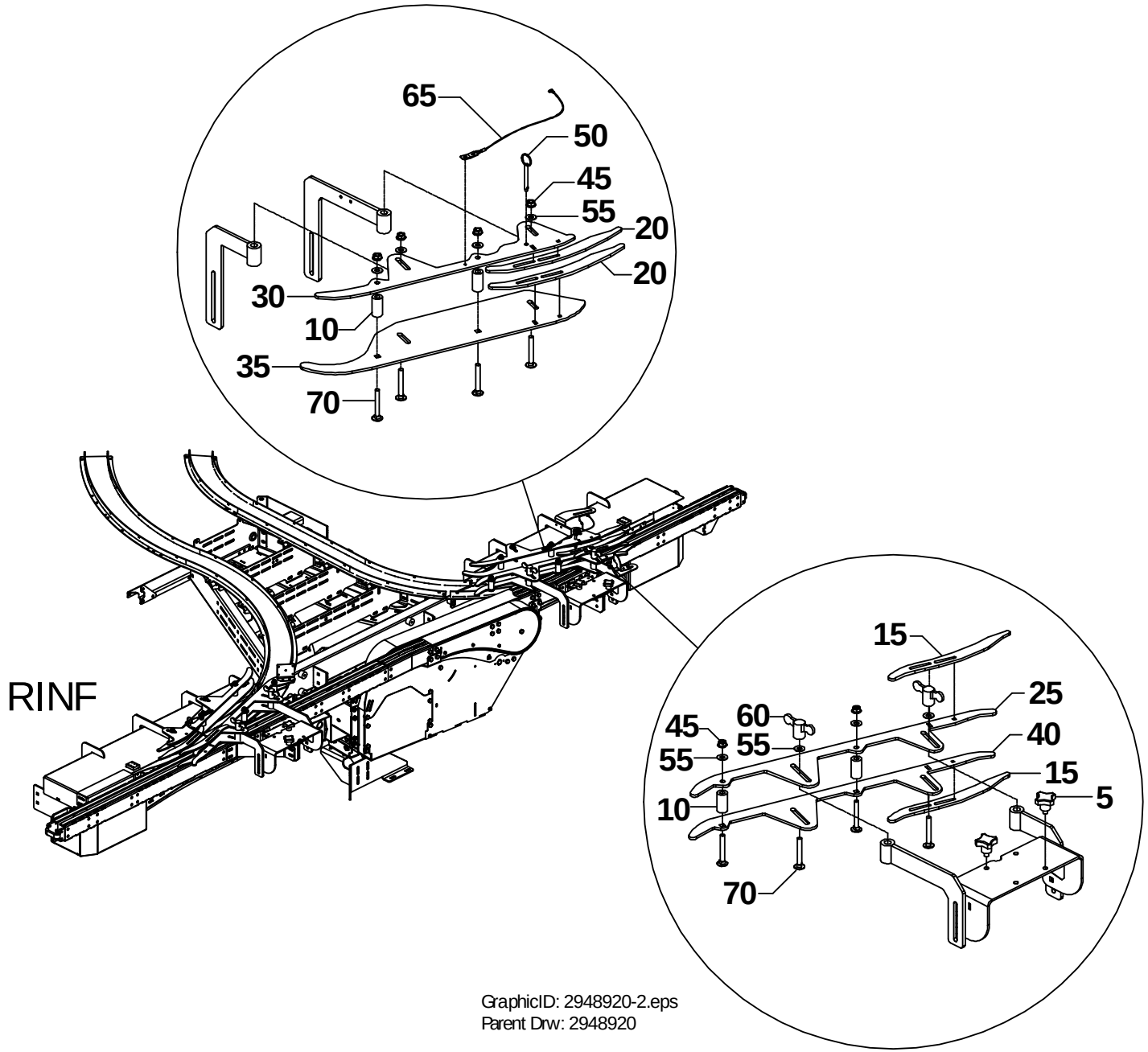

GraphicID: 2948920-2.eps
Parent Drw: 2948920

ECM: 377337 - 20090203
Group number: 2948920-0100
Assembly Drawing: 2948920-2_1_AA

This list covers pages from 2-60 to 2-63

Pos	Part No	UN	Qty	Description	Page No
-					
005	2855222-0000		2	KNOB	
010	2855223-0000		4	SPACER	
015	2855226-0000		2	RAIL	
020	2855229-0000		2	RAIL	
025	2855406-0000		1	RAIL	
030	2855231-0000		1	RAIL	
035	2855232-0000		1	RAIL	
040	2855407-0000		1	RAIL	
045	2948836-0000		6	FLANGE NUT	
050	2855346-0000		1	PIN	
055	2948804-0000		8	WASHER	
060	2855345-0000		2	WING NUT	
065	2855347-0000		1	CABLE	
070	2948837-0000		8	BOLT	

Pos	Part No	UN	Qty	Description	Page No

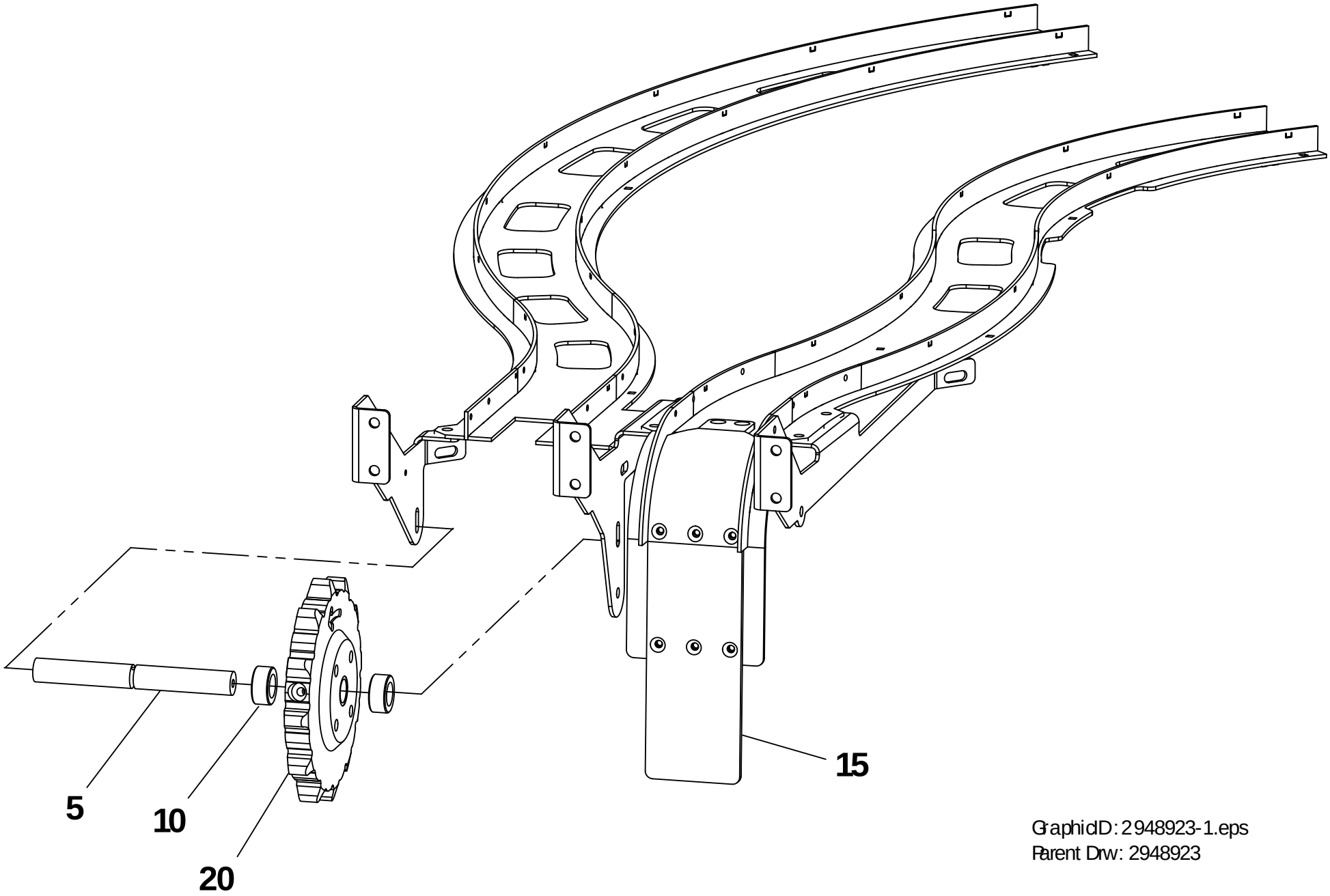

GraphicID: 2948923-1.eps
Parent Drw: 2948923

ECM: 388401 - 20090417
Group number: 2948923-0100
Assembly Drawing: 2948923-1_1_AA

Pos	Part No	UN	Qty	Description	Page No
-					
005	2528344-0000		1	SHAFT	
010	2528345-0000		2	COLLAR	
015	2528346-0000		1	PAD	
020	2502298-0000		1	SPROCKET, RETURN	

Pos	Part No	UN	Qty	Description	Page No

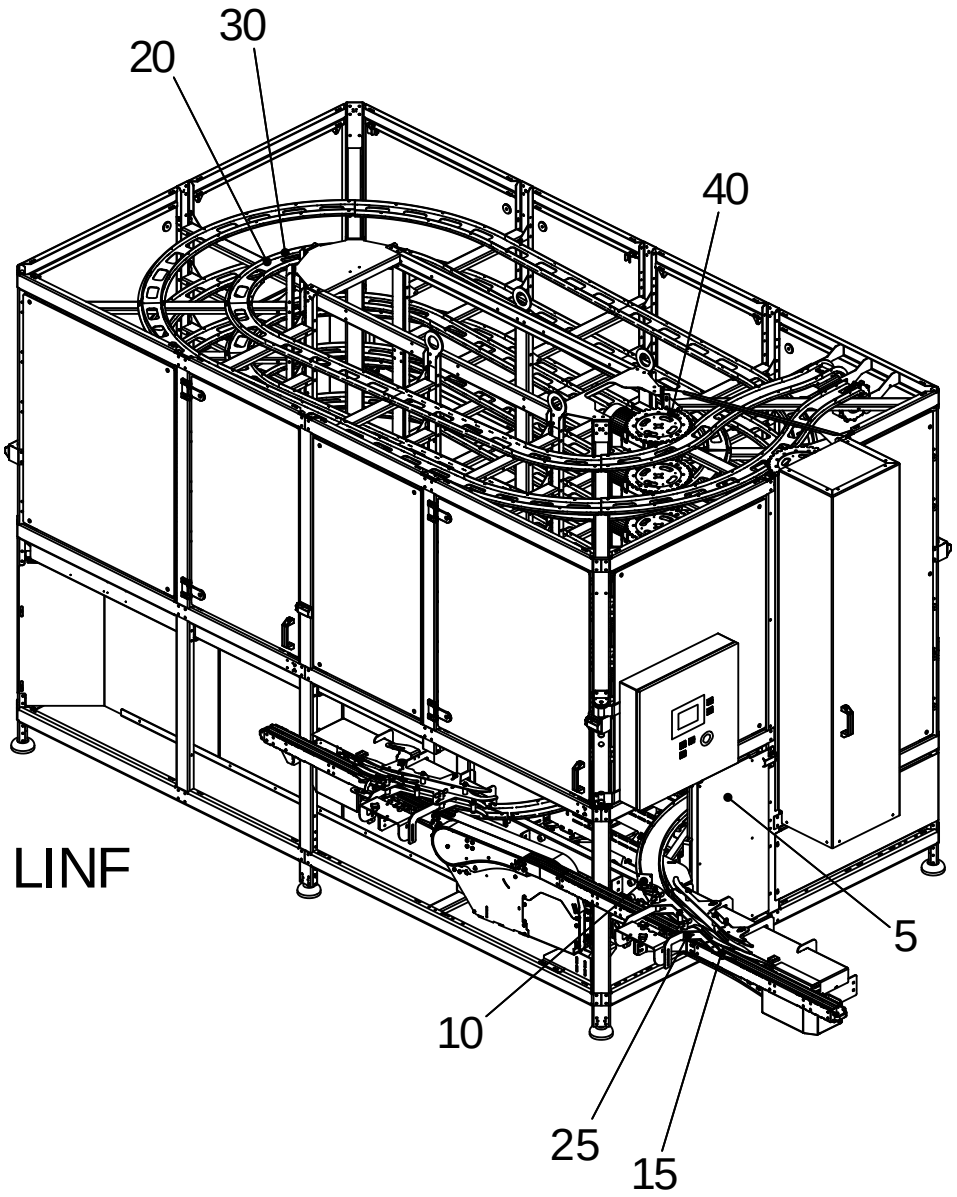

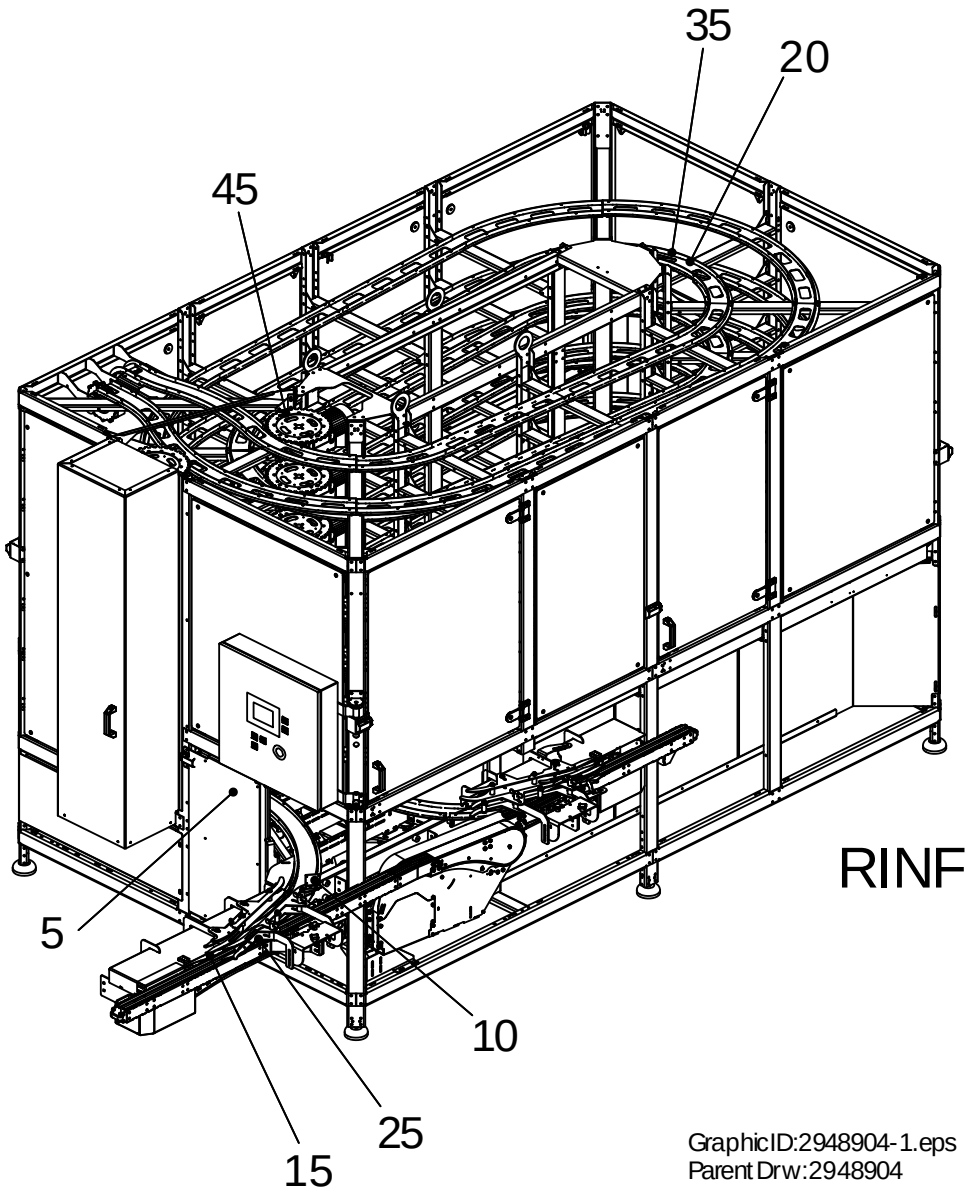

Graphic ID:2948904-1.eps
Parent Drw:2948904

ECM: 376982 - 20090203
Group number: 2948904-0100
Assembly Drawing: 2948904-1_1_AA

Pos	Part No	UN	Qty	Description	Page No
FEEDSIDE = LEFT					
030	2948930-0100		1	OUTFEED CHAIN - LINF	**2-69**
040	2948932-0100		1	OUTFEED DRIVE - LINF	**2-71**
FEEDSIDE = RIGHT					
035	2948931-0100		1	OUTFEED CHAIN -RINF	**2-73**
045	2948933-0100		1	OUTFEED DRIVE - RINF	**2-75**
Common Parts					
005	2948926-0100		1	LOWER LIMIT SENSOR	**2-77**
010	3008985-0100		1	OUTFEED JAM SENSOR	**2-79**
015	2948927-0100		1	OUTFEED CONVEYOR	**2-81**
020	2948928-0100		1	OUTFEED EXTRUSION	**2-83, 2-85**
025	2948929-0100		1	OUTFEED GUIDE	**2-87, 2-89**

Pos	Part No	UN	Qty	Description	Page No

OUTFEED CHAIN - LINF

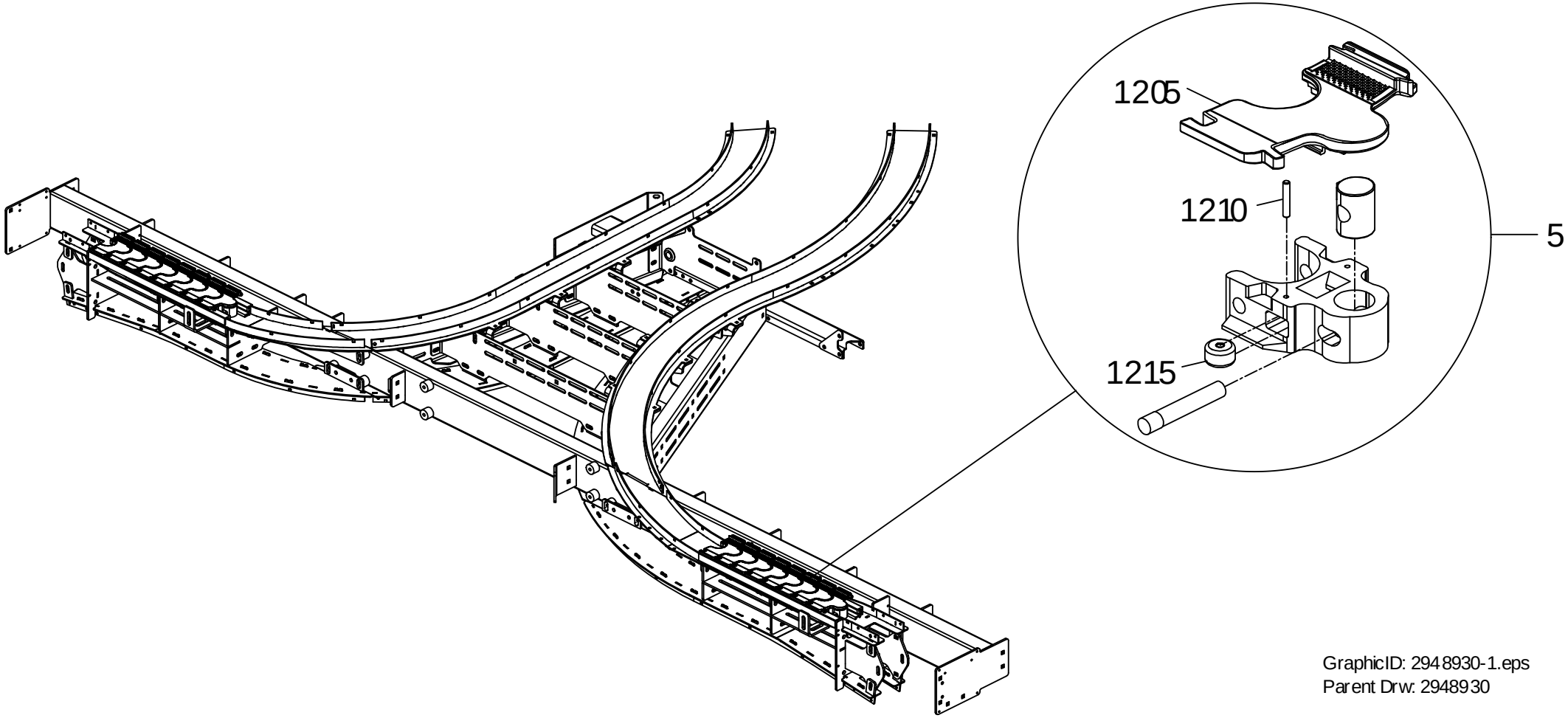

GraphicID: 2948930-1.eps
Parent Drw: 2948930

ECM: 388929 - 20090417
Group number: 2948930-0100
Assembly Drawing: 2948930-1_1_AA

Pos	Part No	UN	Qty	Description	Page No
100M_LINF					
5	2528286-1302		1	WHOLE CHAIN, OUTFEED, LINF, 1302 PC	
1205	*1497193-0000*		*1302*	*WING, CHAIN*	
1210	*1497067-0000*		*1302*	*PIN*	
1215	*1497069-0000*		*1302*	*ROLLER*	
120M_LINF					
5	2528286-1536		1	WHOLE CHAIN, OUTFEED, LINF, 1536 PC	
1205	*1497193-0000*		*1536*	*WING, CHAIN*	
1210	*1497067-0000*		*1536*	*PIN*	
1215	*1497069-0000*		*1536*	*ROLLER*	
47M_LINF					
5	2528286-0726		1	WHOLE CHAIN, OUTFEED, LINF, 726 PC	
1205	*1497193-0000*		*726*	*WING, CHAIN*	
1210	*1497067-0000*		*726*	*PIN*	
1215	*1497069-0000*		*726*	*ROLLER*	
75M_LINF					
5	2528286-1050		1	WHOLE CHAIN,OUTFEED, LINF, 1050PC LINKS	
1205	*1497193-0000*		*1050*	*WING, CHAIN*	
1210	*1497067-0000*		*1050*	*PIN*	
1215	*1497069-0000*		*1050*	*ROLLER*	
90M_LINF					
5	2528286-1182		1	WHOLE CHAIN,OUTFEED, LINF, 1182PC LINKS	
1205	*1497193-0000*		*1182*	*WING, CHAIN*	
1210	*1497067-0000*		*1182*	*PIN*	
1215	*1497069-0000*		*1182*	*ROLLER*	
Common Parts					
5	2528286-0060		1	SPARE CHAIN, OUTFEED, LINF, 60PC LINKS	
1205	*1497193-0000*		*60*	*WING, CHAIN*	
1210	*1497067-0000*		*60*	*PIN*	
1215	*1497069-0000*		*60*	*ROLLER*	

Pos	Part No	UN	Qty	Description	Page No

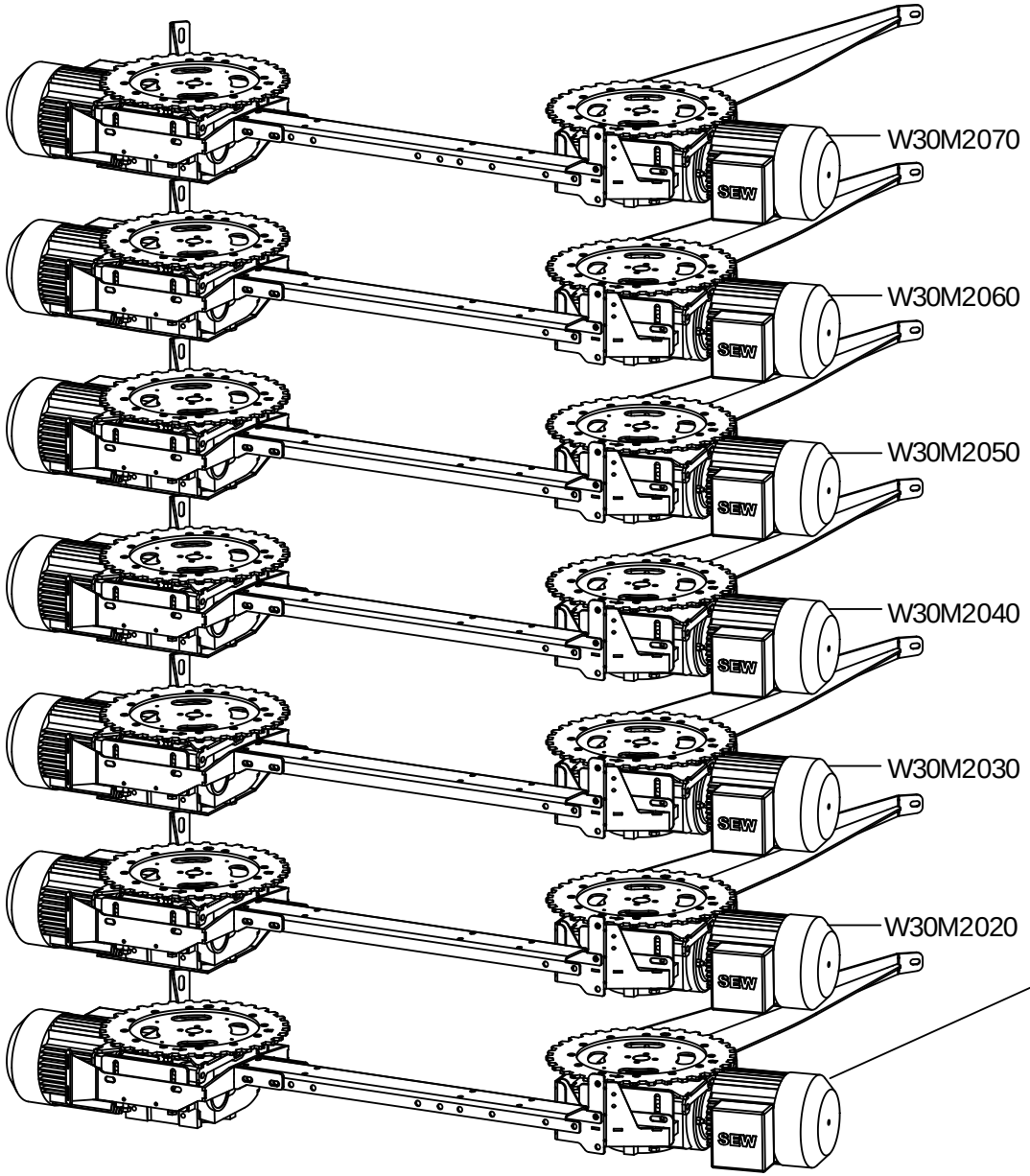

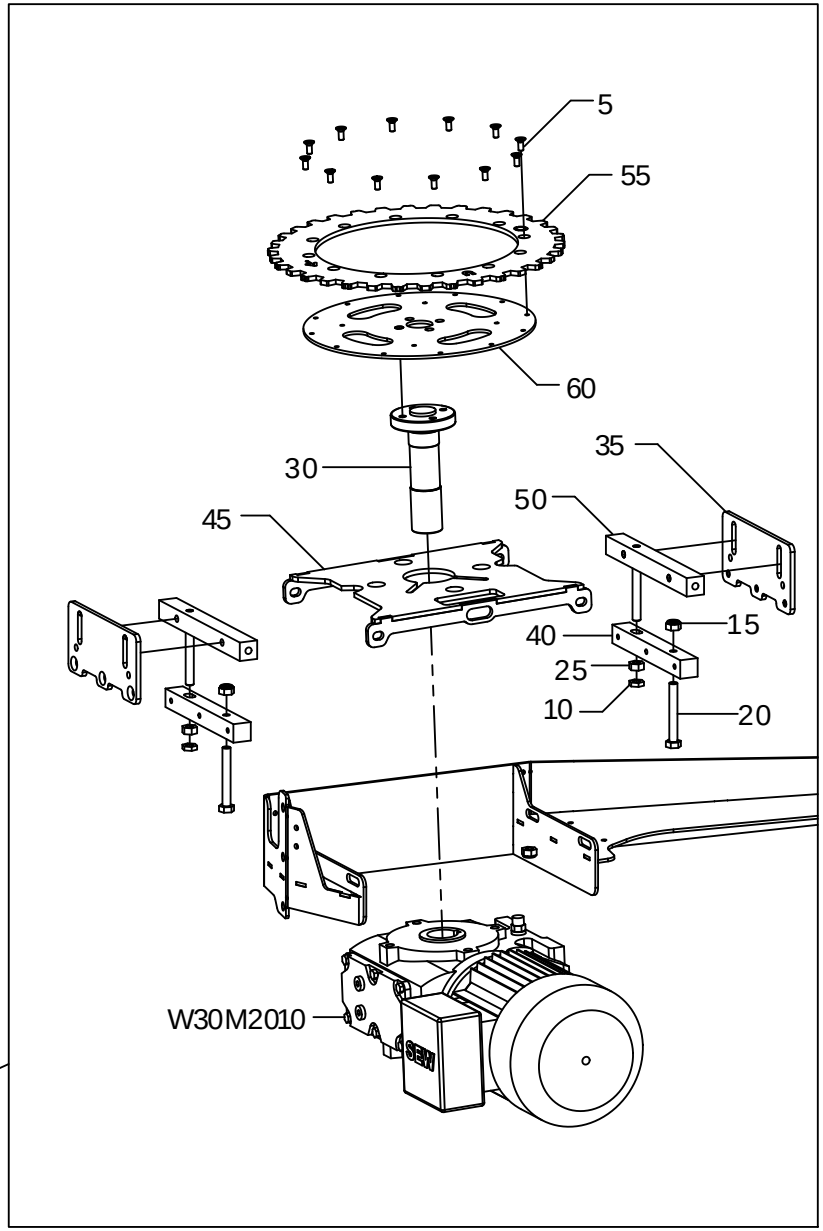

GraphicID:2948932-1.eps
Parent Drw: 2948932

ECM: 388403 - 20090417
Group number: 2948932-0100
Assembly Drawing: 2948932-1_1_AA

Pos	Part No	UN	Qty	Description	Page No
47M_LINF					
005	312155-0327		36	SCREW DIN 7991 MF6S M5X12 A4 70	
010	2664543-0000		6	NUT	
015	2727211-0000		6	NUT	
020	312105-0463		6	SCREW M6S ISO 4014 M8X60 A480	
025	312605-0318		6	HEXAGON NUT, M6M M8 A280	
030	2855340-0000		3	AXLE SUPPORT	
035	2948889-0000		6	PLATE	
040	2948890-0000		6	BAR	
045	2948891-0000		3	MOUNTING BRACKET	
050	2948892-0000		6	BAR	
055	2855376-0000		3	SPROCKET, OUTFEED	
060	2855378-0000		3	PLATE	
W30M2010	90600-6057		1	GEARS, WORM MOTOR SA47DT71D4-63.80-M5B-4	
W30M2020	90600-6057		1	GEARS, WORM MOTOR SA47DT71D4-63.80-M5B-4	
W30M2030	90600-6057		1	GEARS, WORM MOTOR SA47DT71D4-63.80-M5B-4	
75M_LINF, 100M_LINF					
005	312155-0327		72	SCREW DIN 7991 MF6S M5X12 A4 70	
010	2664543-0000		12	NUT	
015	2727211-0000		12	NUT	
020	312105-0463		12	SCREW M6S ISO 4014 M8X60 A480	
025	312605-0318		12	HEXAGON NUT, M6M M8 A280	
030	2855340-0000		6	AXLE SUPPORT	
035	2948889-0000		12	PLATE	
040	2948890-0000		12	BAR	
045	2948891-0000		6	MOUNTING BRACKET	
050	2948892-0000		12	BAR	
055	2855376-0000		6	SPROCKET, OUTFEED	
060	2855378-0000		6	PLATE	
W30M2010	90600-4100		1	GEARS, WORM MOTOR SA47DT71D4-44.22-M5B-4	
W30M2020	90600-4100		1	GEARS, WORM MOTOR SA47DT71D4-44.22-M5B-4	
W30M2030	90600-4100		1	GEARS, WORM MOTOR SA47DT71D4-44.22-M5B-4	
W30M2040	90600-4100		1	GEARS, WORM MOTOR SA47DT71D4-44.22-M5B-4	
W30M2050	90600-4100		1	GEARS, WORM MOTOR SA47DT71D4-44.22-M5B-4	
W30M2060	90600-4100		1	GEARS, WORM MOTOR SA47DT71D4-44.22-M5B-4	
90M_LINF, 120M_LINF					
005	312155-0327		84	SCREW DIN 7991 MF6S M5X12 A4 70	
010	2664543-0000		14	NUT	
015	2727211-0000		14	NUT	
020	312105-0463		14	SCREW M6S ISO 4014 M8X60 A480	
025	312605-0318		14	HEXAGON NUT, M6M M8 A280	
030	2855340-0000		7	AXLE SUPPORT	
035	2948889-0000		14	PLATE	
040	2948890-0000		14	BAR	
045	2948891-0000		7	MOUNTING BRACKET	
050	2948892-0000		14	BAR	
055	2855376-0000		7	SPROCKET, OUTFEED	
060	2855378-0000		7	PLATE	
W30M2010	90600-4100		1	GEARS, WORM MOTOR SA47DT71D4-44.22-M5B-4	
W30M2020	90600-4100		1	GEARS, WORM MOTOR SA47DT71D4-44.22-M5B-4	
W30M2030	90600-4100		1	GEARS, WORM MOTOR SA47DT71D4-44.22-M5B-4	
W30M2040	90600-4100		1	GEARS, WORM MOTOR SA47DT71D4-44.22-M5B-4	
W30M2050	90600-4100		1	GEARS, WORM MOTOR SA47DT71D4-44.22-M5B-4	
W30M2060	90600-4100		1	GEARS, WORM MOTOR SA47DT71D4-44.22-M5B-4	
W30M2070	90600-4100		1	GEARS, WORM MOTOR SA47DT71D4-44.22-M5B-4	

Machine Type | Group Description | Used-In | Group Number | Page No

OUTFEED CHAIN -RINF

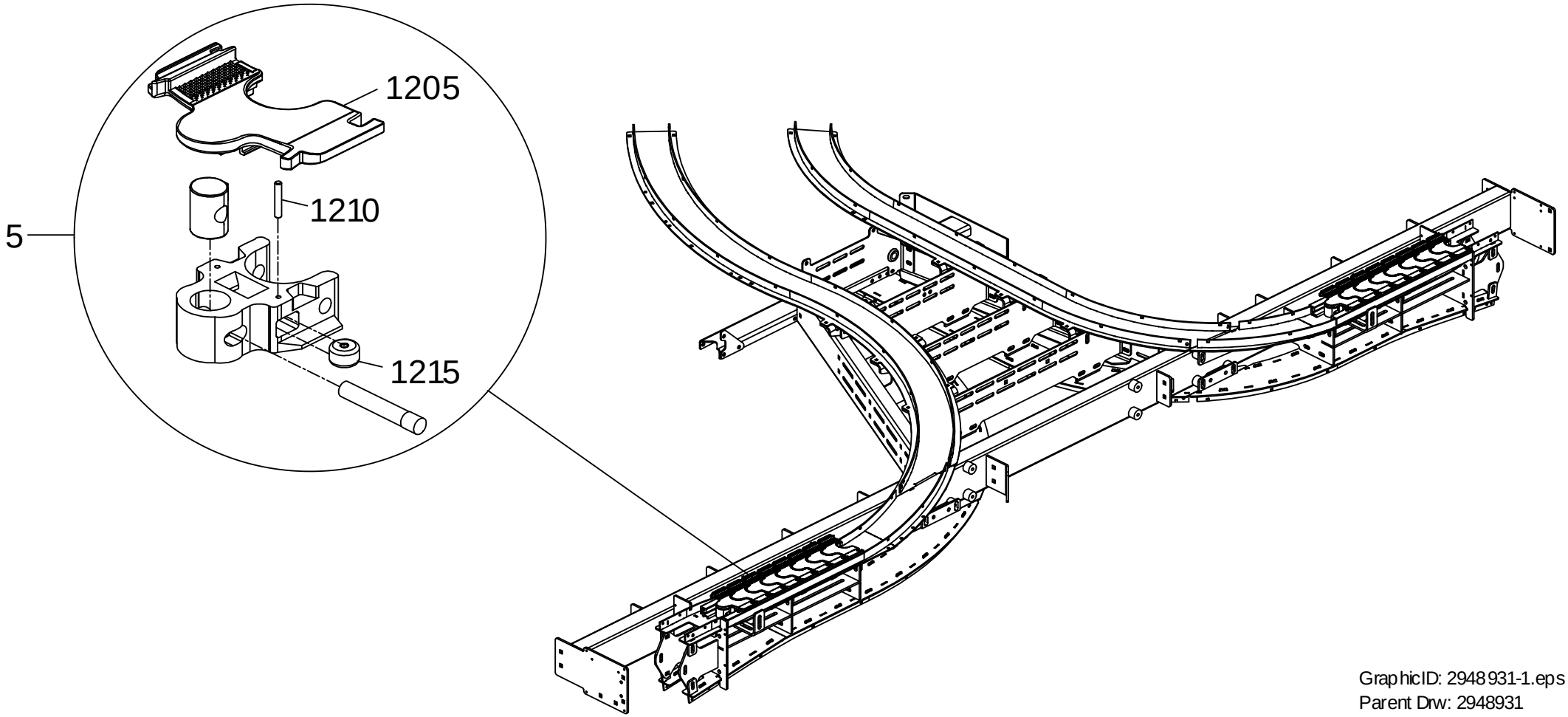

GraphicID: 2948931-1.eps
Parent Drw: 2948931

ECM: 388930 - 20090417
Group number: 2948931-0100
Assembly Drawing: 2948931-1_1_AA

Pos	Part No	UN	Qty	Description	Page No
100M_RINF					
5	2855404-1302		1	WHOLE CHAIN, OUTFEED, RINF, 1302 PC	
1205	*2855405-0000*		*1302*	*WING, CHAIN*	
1210	*1497067-0000*		*1302*	*PIN*	
1215	*1497069-0000*		*1302*	*ROLLER*	
120M_RINF					
5	2855404-1536		1	WHOLE CHAIN, OUTFEED, RINF, 1536 PC	
1205	*2855405-0000*		*1536*	*WING, CHAIN*	
1210	*1497067-0000*		*1536*	*PIN*	
1215	*1497069-0000*		*1536*	*ROLLER*	
47M_RINF					
5	2855404-0726		1	WHOLE CHAIN, OUTFEED, RINF, 726 PC	
1205	*2855405-0000*		*726*	*WING, CHAIN*	
1210	*1497067-0000*		*726*	*PIN*	
1215	*1497069-0000*		*726*	*ROLLER*	
75M_RINF					
5	2855404-1050		1	WHOLE CHAIN, OUTFEED, RINF, 1050 PC	
1205	*2855405-0000*		*1050*	*WING, CHAIN*	
1210	*1497067-0000*		*1050*	*PIN*	
1220	*1497069-0000*		*1050*	*ROLLER*	
90M_RINF					
5	2855404-1182		1	WHOLE CHAIN, OUTFEED, RINF, 1182 PC	
1205	*2855405-0000*		*1182*	*WING, CHAIN*	
1210	*1497067-0000*		*1182*	*PIN*	
1215	*1497069-0000*		*1182*	*ROLLER*	
Common Parts					
5	2855404-0060		1	SPARE CHAIN, OUTFEED, RINF, 60PC LINKS	
1205	*2855405-0000*		*60*	*WING, CHAIN*	
1210	*1497067-0000*		*60*	*PIN*	
1215	*1497069-0000*		*60*	*ROLLER*	

Pos	Part No	UN	Qty	Description	Page No

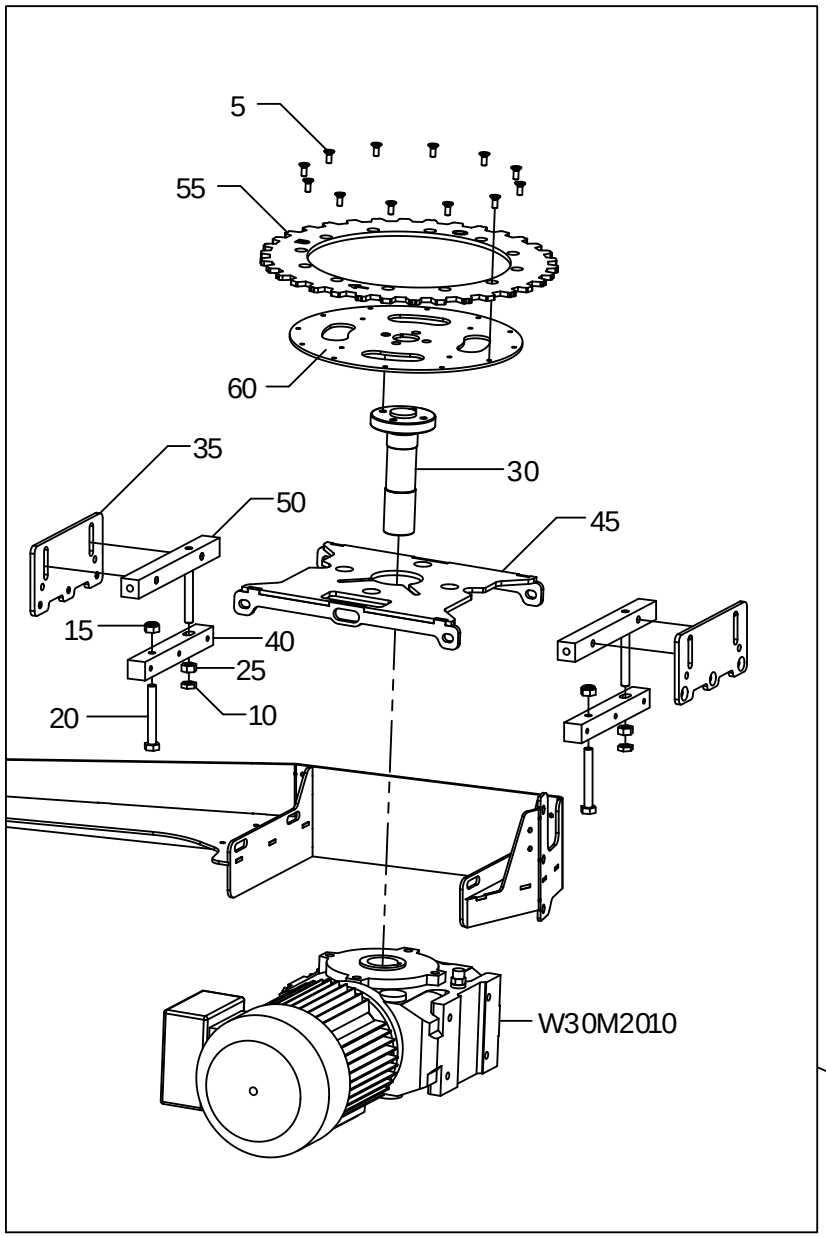

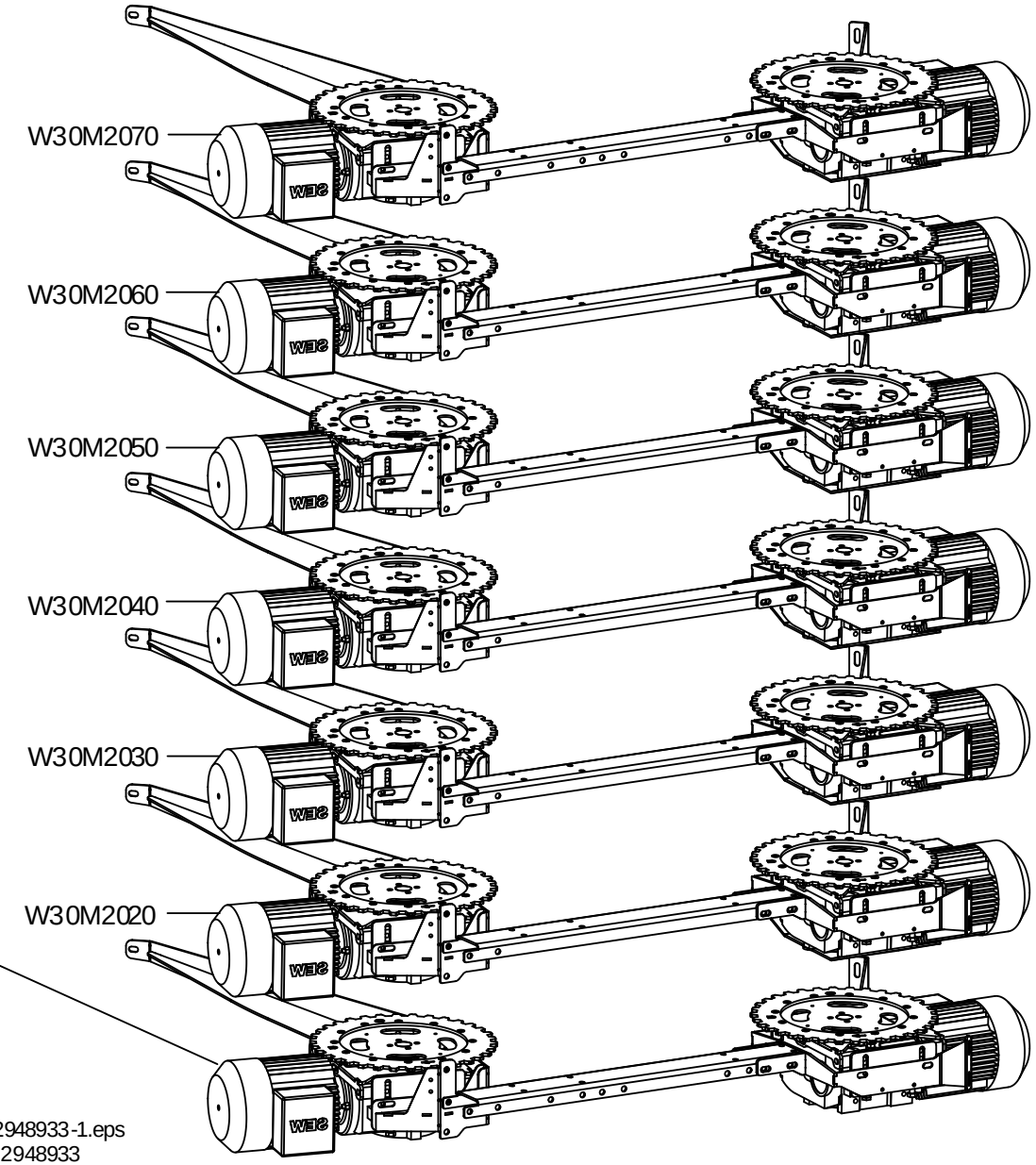

GraphicID:2948933-1.eps
Parent Drw:2948933

ECM: 388404 - 20090417
Group number: 2948933-0100
Assembly Drawing: 2948933-1_1_AA

Pos	Part No	UN	Qty	Description	Page No
47M					
005	312155-0327		36	SCREW DIN 7991 MF6S M5X12 A4 70	
010	2664543-0000		6	NUT	
015	2727211-0000		6	NUT	
020	312105-0463		6	SCREW M6S ISO 4014 M8X60 A480	
025	312605-0318		6	HEXAGON NUT, M6M M8 A280	
030	2855340-0000		3	AXLE SUPPORT	
035	2948889-0000		6	PLATE	
040	2948890-0000		6	BAR	
045	2948891-0000		3	MOUNTING BRACKET	
050	2948892-0000		6	BAR	
055	2948899-0000		3	SPROCKET	
060	2955378-0000		3	PLATE	
W30M2010	90600-6057		1	GEARS, WORM MOTOR SA47DT71D4-63.80-M5B-4	
W30M2020	90600-6057		1	GEARS, WORM MOTOR SA47DT71D4-63.80-M5B-4	
W30M2030	90600-6057		1	GEARS, WORM MOTOR SA47DT71D4-63.80-M5B-4	
75M, 100M					
005	312155-0327		72	SCREW DIN 7991 MF6S M5X12 A4 70	
010	2664543-0000		12	NUT	
015	2727211-0000		12	NUT	
020	312105-0463		12	SCREW M6S ISO 4014 M8X60 A480	
025	312605-0318		12	HEXAGON NUT, M6M M8 A280	
030	2855340-0000		6	AXLE SUPPORT	
035	2948889-0000		12	PLATE	
040	2948890-0000		12	BAR	
045	2948891-0000		6	MOUNTING BRACKET	
050	2948892-0000		12	BAR	
055	2948899-0000		6	SPROCKET	
060	2955378-0000		6	PLATE	
W30M2010	90600-4100		1	GEARS, WORM MOTOR SA47DT71D4-44.22-M5B-4	
W30M2020	90600-4100		1	GEARS, WORM MOTOR SA47DT71D4-44.22-M5B-4	
W30M2030	90600-4100		1	GEARS, WORM MOTOR SA47DT71D4-44.22-M5B-4	
W30M2040	90600-4100		1	GEARS, WORM MOTOR SA47DT71D4-44.22-M5B-4	
W30M2050	90600-4100		1	GEARS, WORM MOTOR SA47DT71D4-44.22-M5B-4	
W30M2060	90600-4100		1	GEARS, WORM MOTOR SA47DT71D4-44.22-M5B-4	
90M, 120M					
005	312155-0327		84	SCREW DIN 7991 MF6S M5X12 A4 70	
010	2664543-0000		14	NUT	
015	2727211-0000		14	NUT	
020	312105-0463		14	SCREW M6S ISO 4014 M8X60 A480	
025	312605-0318		14	HEXAGON NUT, M6M M8 A280	
030	2855340-0000		7	AXLE SUPPORT	
035	2948889-0000		14	PLATE	
040	2948890-0000		14	BAR	
045	2948891-0000		7	MOUNTING BRACKET	
050	2948892-0000		14	BAR	
055	2948899-0000		7	SPROCKET	
060	2955378-0000		7	PLATE	
W30M2010	90600-4100		1	GEARS, WORM MOTOR SA47DT71D4-44.22-M5B-4	
W30M2020	90600-4100		1	GEARS, WORM MOTOR SA47DT71D4-44.22-M5B-4	
W30M2030	90600-4100		1	GEARS, WORM MOTOR SA47DT71D4-44.22-M5B-4	
W30M2040	90600-4100		1	GEARS, WORM MOTOR SA47DT71D4-44.22-M5B-4	
W30M2050	90600-4100		1	GEARS, WORM MOTOR SA47DT71D4-44.22-M5B-4	
W30M2060	90600-4100		1	GEARS, WORM MOTOR SA47DT71D4-44.22-M5B-4	
W30M2070	90600-4100		1	GEARS, WORM MOTOR SA47DT71D4-44.22-M5B-4	

Machine Type | Group Description | Used-In | Group Number | Page No

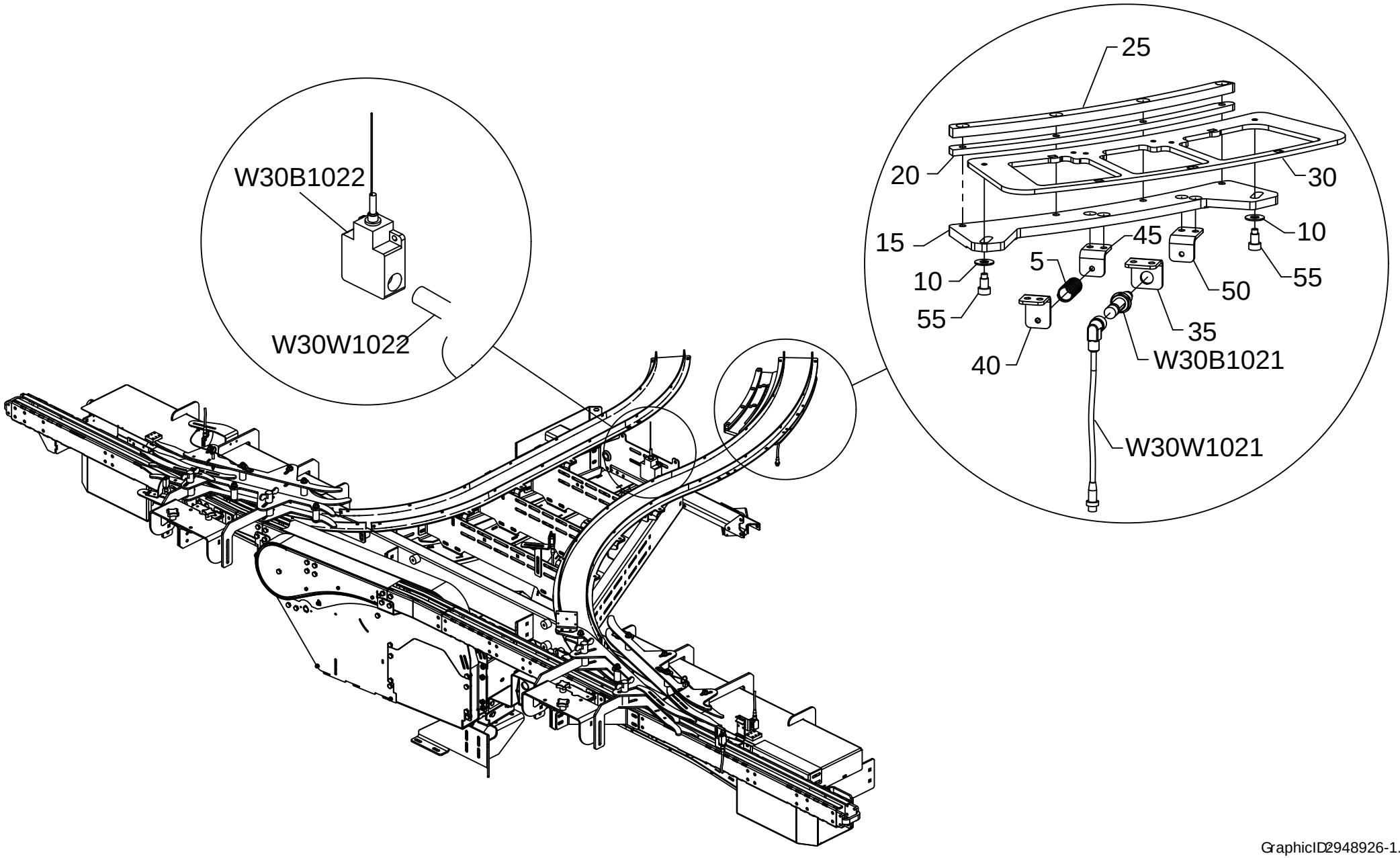

GraphicID2948926-1.eps
Parent Drw:2948926

ECM: 393762 - 20090417
Group number: 2948926-0100
Assembly Drawing: 2948926-1_1_AB

Pos	Part No	UN	Qty	Description	Page No
FEEDSIDE LEFT					
015	3009074-0000		1	PLATE	
020	3009075-0000		1	PLATE	
025	3009076-0000		1	PLATE	
FEEDSIDE RIGHT					
015	3009077-0000		1	PLATE	
020	3009078-0000		1	PLATE	
025	3009079-0000		1	PLATE	
Common Parts					
005	969082-0000		1	SPRING	
010	2948804-0000		2	WASHER	
030	3008910-0000		1	PLATE	
035	3008947-0000		1	BRACKET	
040	3009009-0000		1	BRACKET	
045	3009018-0000		1	BRACKET	
050	3009019-0000		1	BRACKET	
055	3009069-0000		2	SCREW	
W30B1021	90600-0462		1	INDUCTIVE SWITCH, E2A-M12LN05-M1-B1-TP	
W30B1022	90600-1337		1	LIMIT SW. XCK-M106H29	
W30W1021	351406-0050		1	ACT/SENS.CABLE RSMVN 3-PRKWT 4-3-06/5,0M	
W30W1022	351150-0405	M	8	CABLE OLFLEX 5X0,75 MM2 LIGHT/GREY	

Pos	Part No	UN	Qty	Description	Page No

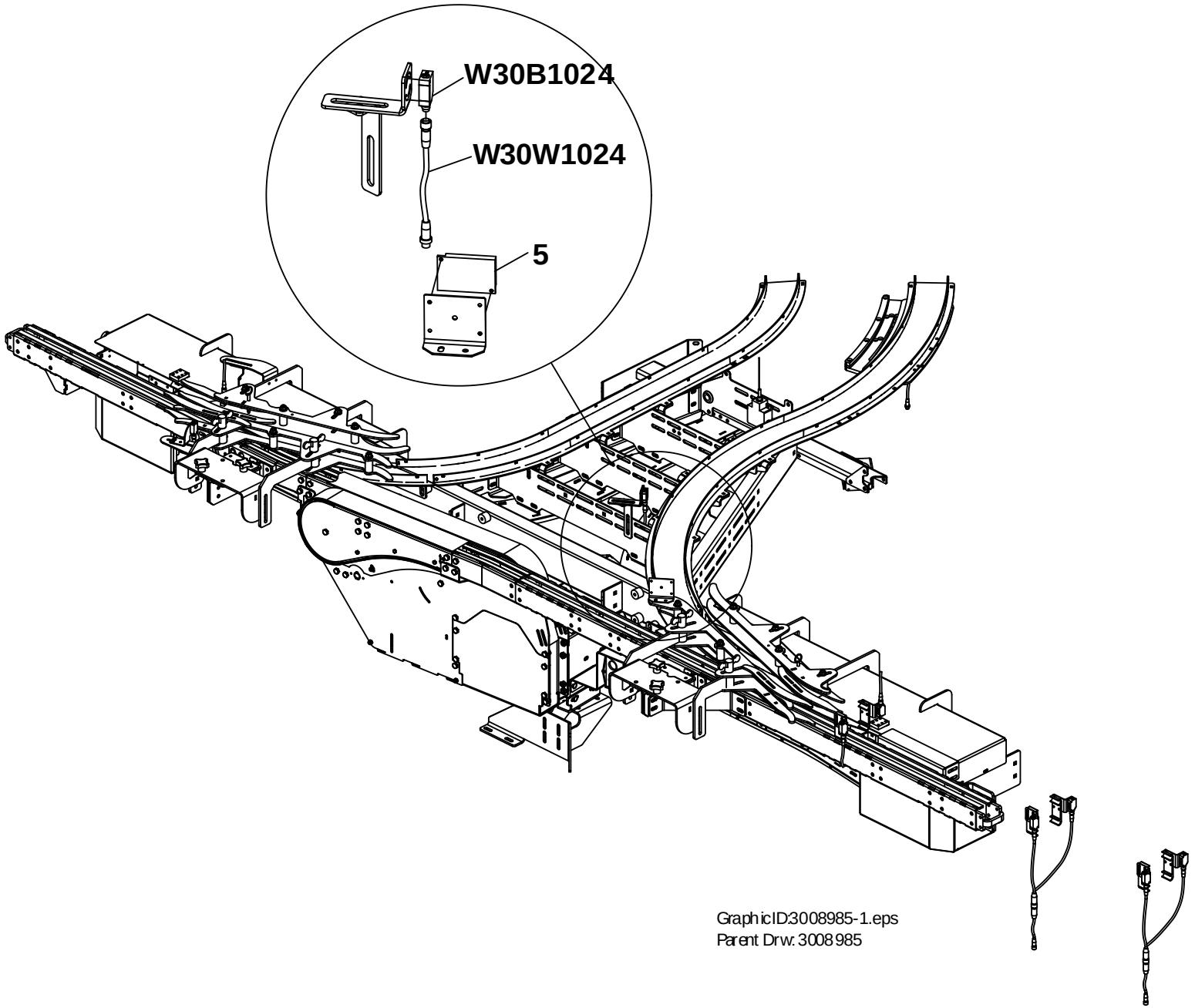
W30B1024
W30W1024
5
GraphicID:3008985-1.eps
Parent Drw: 3008985

ECM: 383676 - 20090203
Group number: 3008985-0100
Assembly Drawing: 3008985-1_1_AA

Pos	Part No	UN	Qty	Description	Page No
-					
005	90232-0333		1	REFLECTOR E39-R1	
W30B1024	90459-7275		1	PHOTOCELL E3Z-R86	
W30W1024	351403-0020		1	ACTU/SENS. CABLE RSMVN 3-PRKMV 4-06/2,0M	

Pos	Part No	UN	Qty	Description	Page No

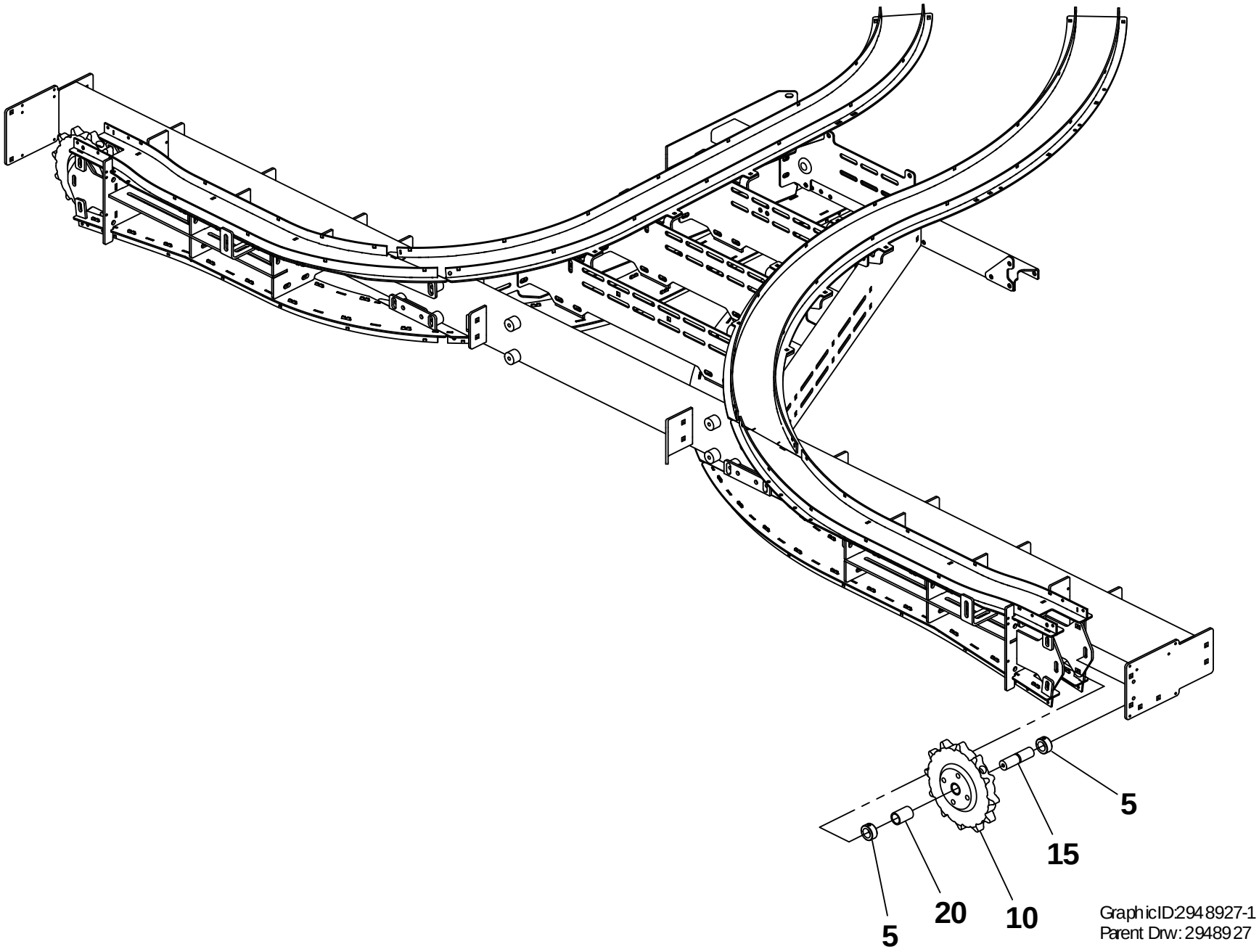
5
15
5
20
10
GraphicID:2948927-1
Parent Drw: 2948927

ECM: 388402 - 20090417
Group number: 2948927-0100
Assembly Drawing: 2948927-1_1_AA

Pos	Part No	UN	Qty	Description	Page No
-					
005	2528345-0000		2	COLLAR	
010	2502298-0000		1	SPROCKET, RETURN	
015	2528356-0000		2	SHAFT	
020	2528357-0000		2	BUSHING	

Pos	Part No	UN	Qty	Description	Page No

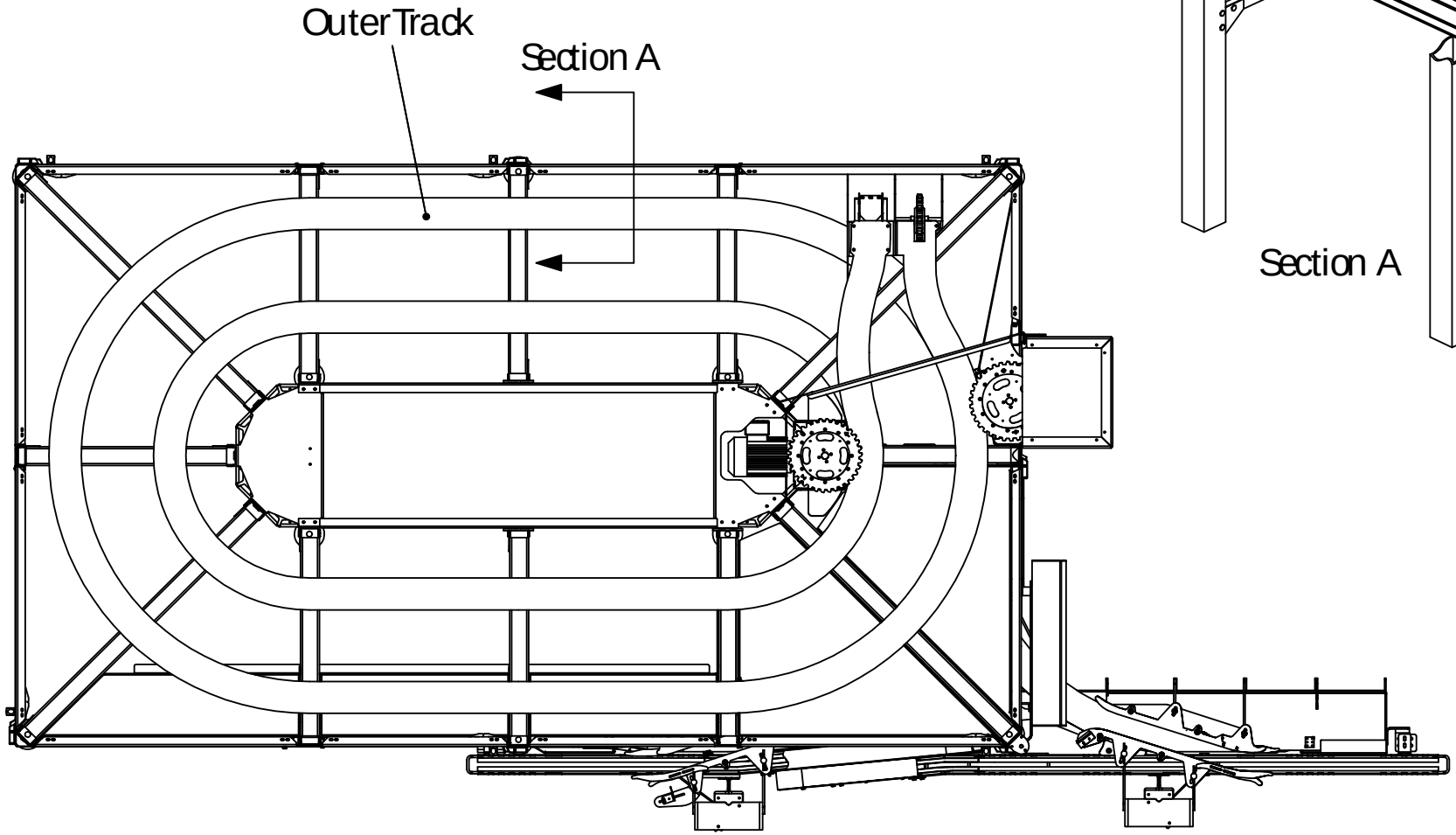

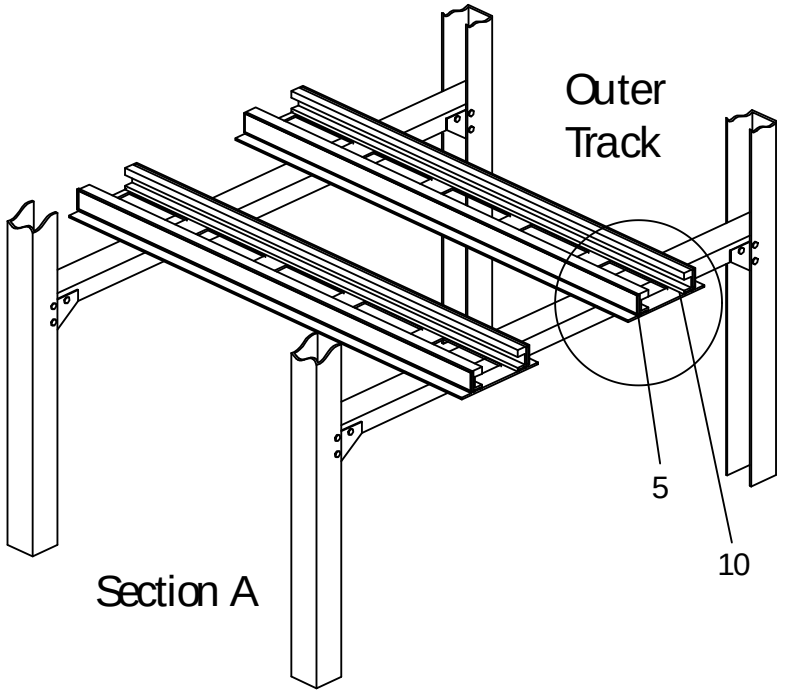

GraphicID:2948928-1.eps
Parent Drw: 2948928

ECM: 376899 - 20090203
Group number: 2948928-0100
Assembly Drawing: 2948928-1_1_AA

This list covers pages from 2-82 to 2-85

Pos	Part No	UN	Qty	Description	Page No
120M_LINF (See drawing on page: 2-82)					
005	2528281-0000		1	EXTRUSION, LH, 250'	
010	2528282-0000		1	EXTRUSION RH	
120M_RINF (See drawing on page: 2-84)					
005	2528281-0000		1	EXTRUSION, LH, 250'	
010	2528282-0000		1	EXTRUSION RH	
47M_LINF, 100M_LINF (See drawing on page: 2-82)					
005	2727376-0000		1	EXTRUSION LH	
010	2727213-0000		1	EXTRUSION, RH, 205'	
47M_RINF, 100M_RINF (See drawing on page: 2-84)					
005	2727376-0000		1	EXTRUSION LH	
010	2727213-0000		1	EXTRUSION, RH, 205'	
75M_LINF, 90M_LINF (See drawing on page: 2-82)					
005	2727218-0000		1	EXTRUSION, LH, 320'	
010	2727217-0000		1	EXTRUSION, RH, 340'	
75M_RINF, 90M_RINF (See drawing on page: 2-84)					
005	2727218-0000		1	EXTRUSION, LH, 320'	
010	2727217-0000		1	EXTRUSION, RH, 340'	

Pos	Part No	UN	Qty	Description	Page No

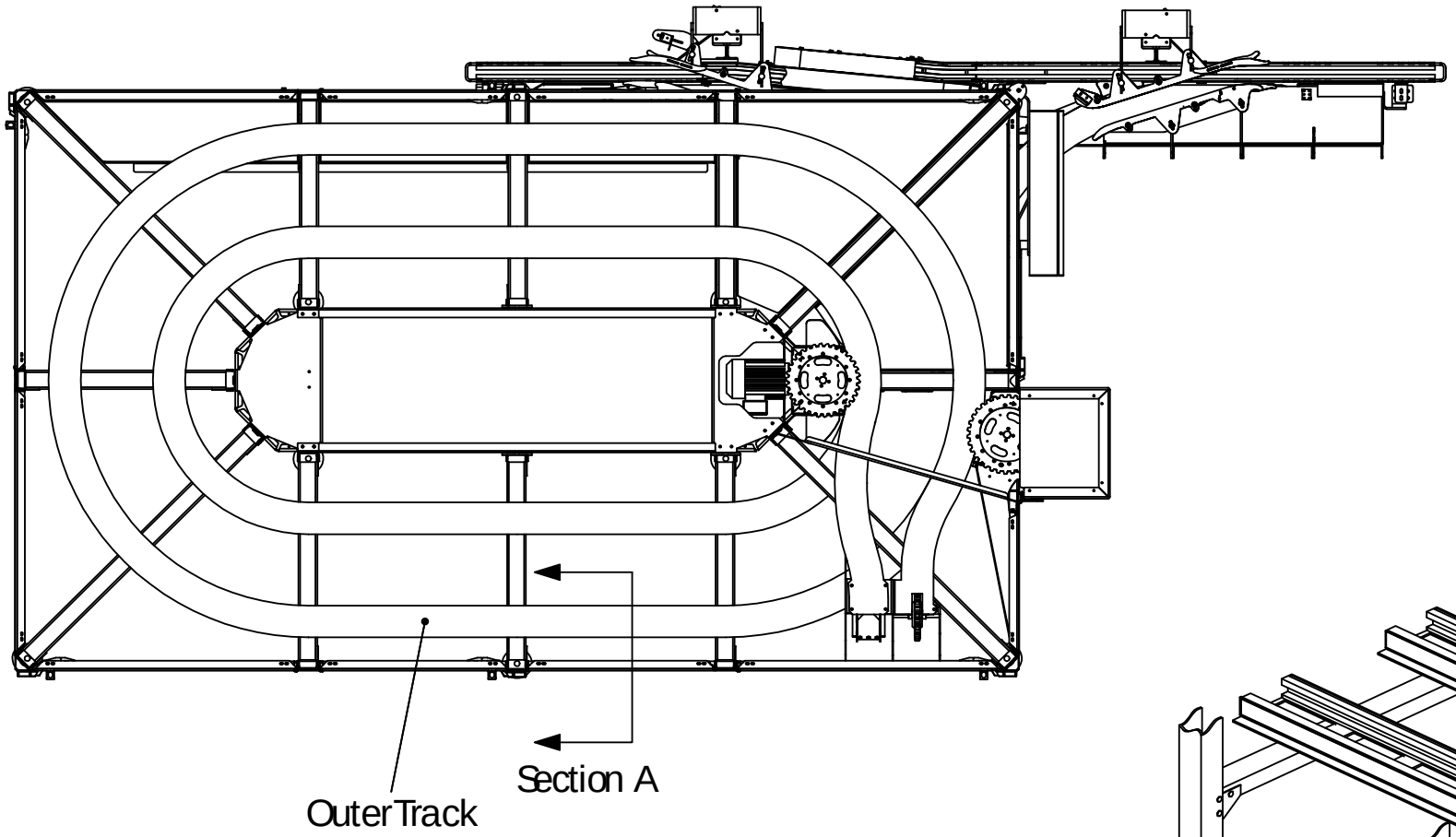

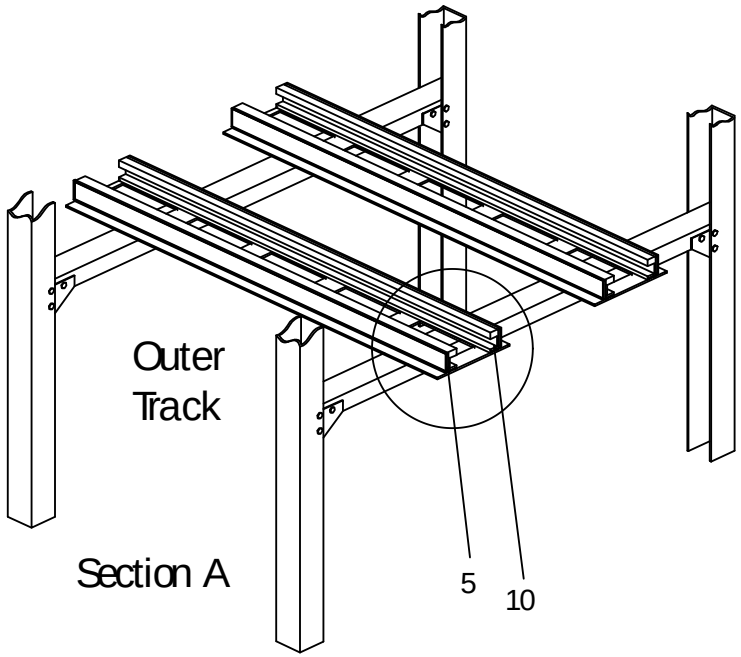

GraphicID:2948928-2.eps
Parent Drw: 2948928

ECM: 376899 - 20090203
Group number: 2948928-0100
Assembly Drawing: 2948928-2_1_AA

This list covers pages from 2-82 to 2-85

Pos	Part No	UN	Qty	Description	Page No
120M_LINF (See drawing on page: 2-82)					
005	2528281-0000		1	EXTRUSION, LH, 250'	
010	2528282-0000		1	EXTRUSION RH	
120M_RINF (See drawing on page: 2-84)					
005	2528281-0000		1	EXTRUSION, LH, 250'	
010	2528282-0000		1	EXTRUSION RH	
47M_LINF, 100M_LINF (See drawing on page: 2-82)					
005	2727376-0000		1	EXTRUSION LH	
010	2727213-0000		1	EXTRUSION, RH, 205'	
47M_RINF, 100M_RINF (See drawing on page: 2-84)					
005	2727376-0000		1	EXTRUSION LH	
010	2727213-0000		1	EXTRUSION, RH, 205'	
75M_LINF, 90M_LINF (See drawing on page: 2-82)					
005	2727218-0000		1	EXTRUSION, LH, 320'	
010	2727217-0000		1	EXTRUSION, RH, 340'	
75M_RINF, 90M_RINF (See drawing on page: 2-84)					
005	2727218-0000		1	EXTRUSION, LH, 320'	
010	2727217-0000		1	EXTRUSION, RH, 340'	

Pos	Part No	UN	Qty	Description	Page No

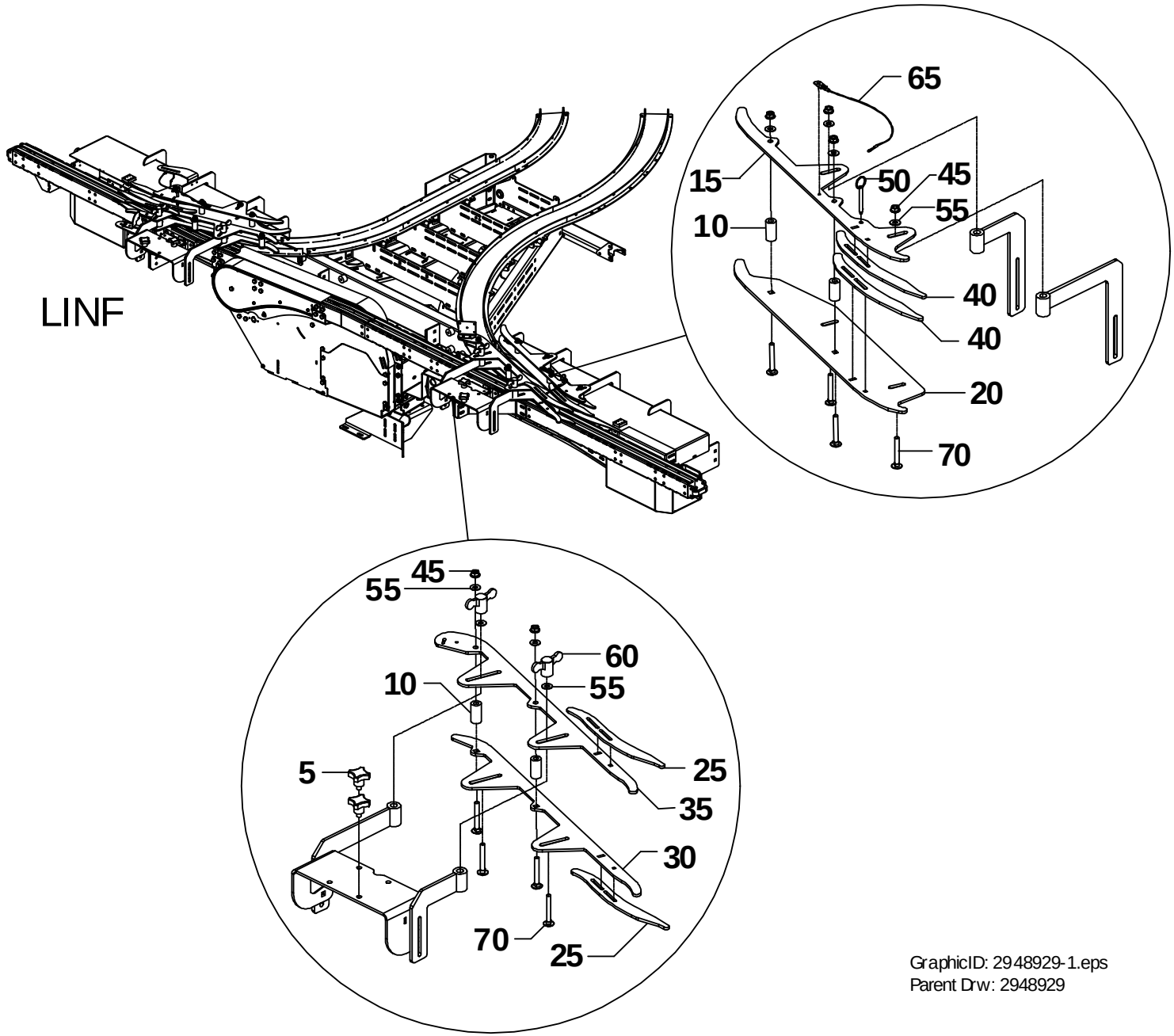

GraphicID: 2948929-1.eps
Parent Drw: 2948929

ECM: 376898 - 20090203
Group number: 2948929-0100
Assembly Drawing: 2948929-1_1_AA

This list covers pages from 2-86 to 2-89

Pos	Part No	UN	Qty	Description	Page No
-					
005	2855222-0000		2	KNOB	
010	2855223-0000		4	SPACER	
015	2855224-0000		1	RAIL	
020	2855225-0000		1	RAIL	
025	2855226-0000		2	RAIL	
030	2855227-0000		1	RAIL	
035	2855228-0000		1	RAIL	
040	2855229-0000		2	RAIL	
045	2948836-0000		6	FLANGE NUT	
050	2855346-0000		1	PIN	
055	2948804-0000		8	WASHER	
060	2855345-0000		2	WING NUT	
065	2855347-0000		1	CABLE	
070	2948837-0000		8	BOLT	

Pos	Part No	UN	Qty	Description	Page No

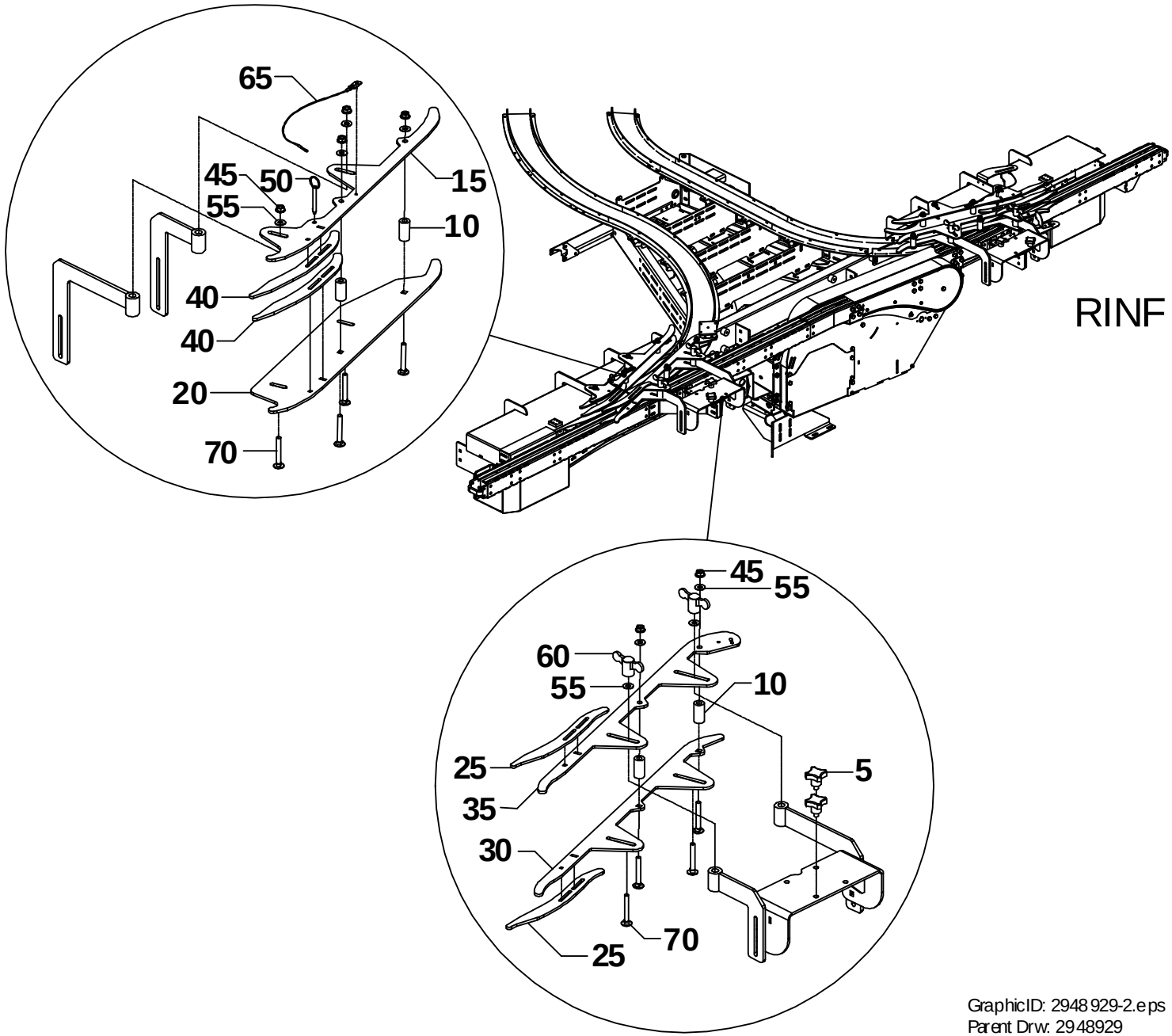

GraphicID: 2948929-2.eps
Parent Drw: 2948929

ECM: 376898 - 20090203
Group number: 2948929-0100
Assembly Drawing: 2948929-2_1_AA

This list covers pages from 2-86 to 2-89

Pos	Part No	UN	Qty	Description	Page No
-					
005	2855222-0000		2	KNOB	
010	2855223-0000		4	SPACER	
015	2855224-0000		1	RAIL	
020	2855225-0000		1	RAIL	
025	2855226-0000		2	RAIL	
030	2855227-0000		1	RAIL	
035	2855228-0000		1	RAIL	
040	2855229-0000		2	RAIL	
045	2948836-0000		6	FLANGE NUT	
050	2855346-0000		1	PIN	
055	2948804-0000		8	WASHER	
060	2855345-0000		2	WING NUT	
065	2855347-0000		1	CABLE	
070	2948837-0000		8	BOLT	

Pos	Part No	UN	Qty	Description	Page No

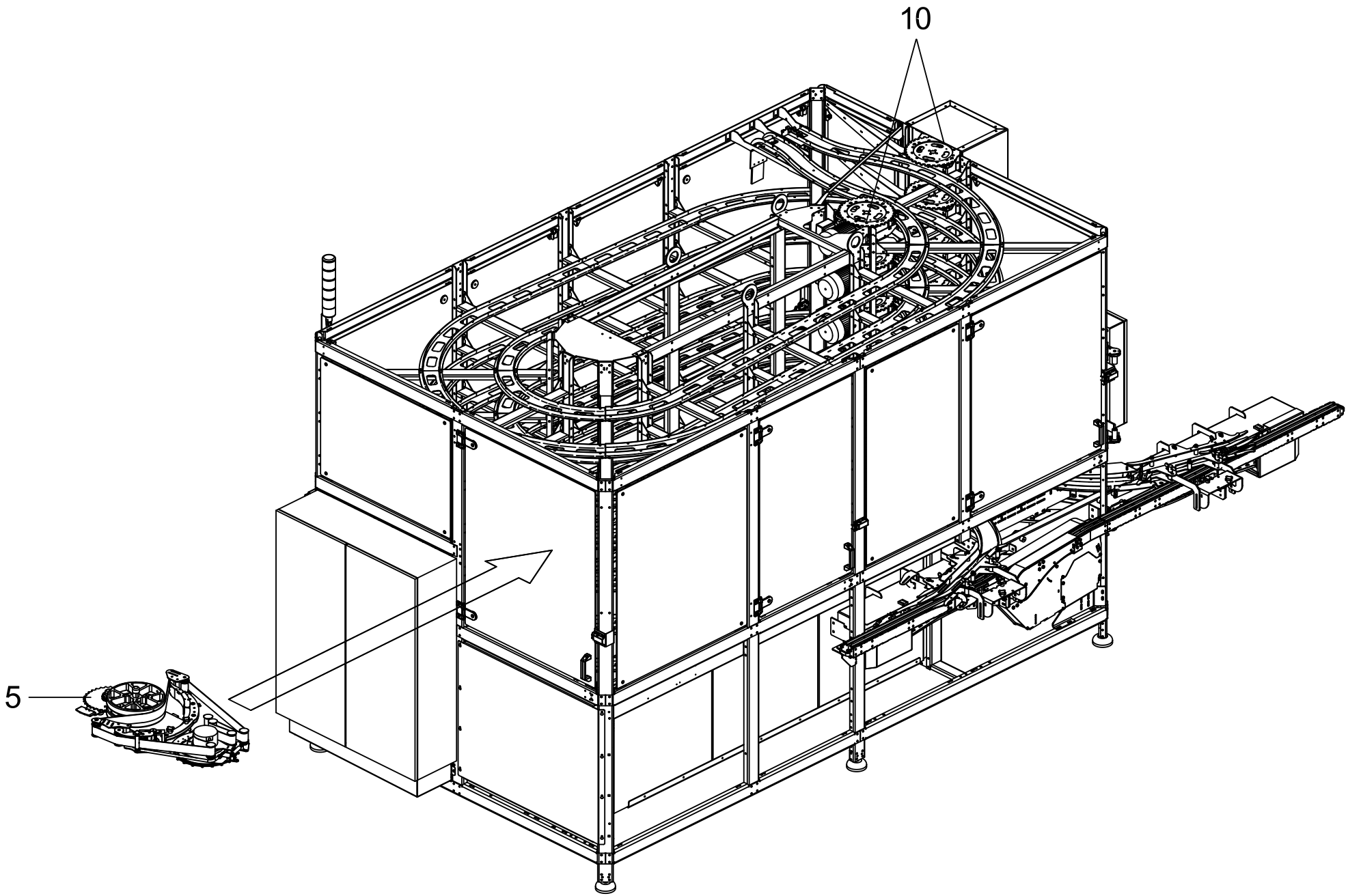
10
5

ECM: 386472 - 20090216
Group number: 2948905-0100
Assembly Drawing: 2948905-1_1_AB

Pos	Part No	UN	Qty	Description	Page No
FEEDSIDE = LEFT					
005	2948934-0100		1	SPIDER UNIT TBA/TPA/TGA - LINF	**2-93**
FEEDSIDE = RIGHT					
005	2948940-0100		1	SPIDER UNIT TBA/TPA/TGA - RINF	**2-105**
Common Parts					
010	2948946-0100		1	FILL LEVEL SENSOR	**2-117**

Pos	Part No	UN	Qty	Description	Page No

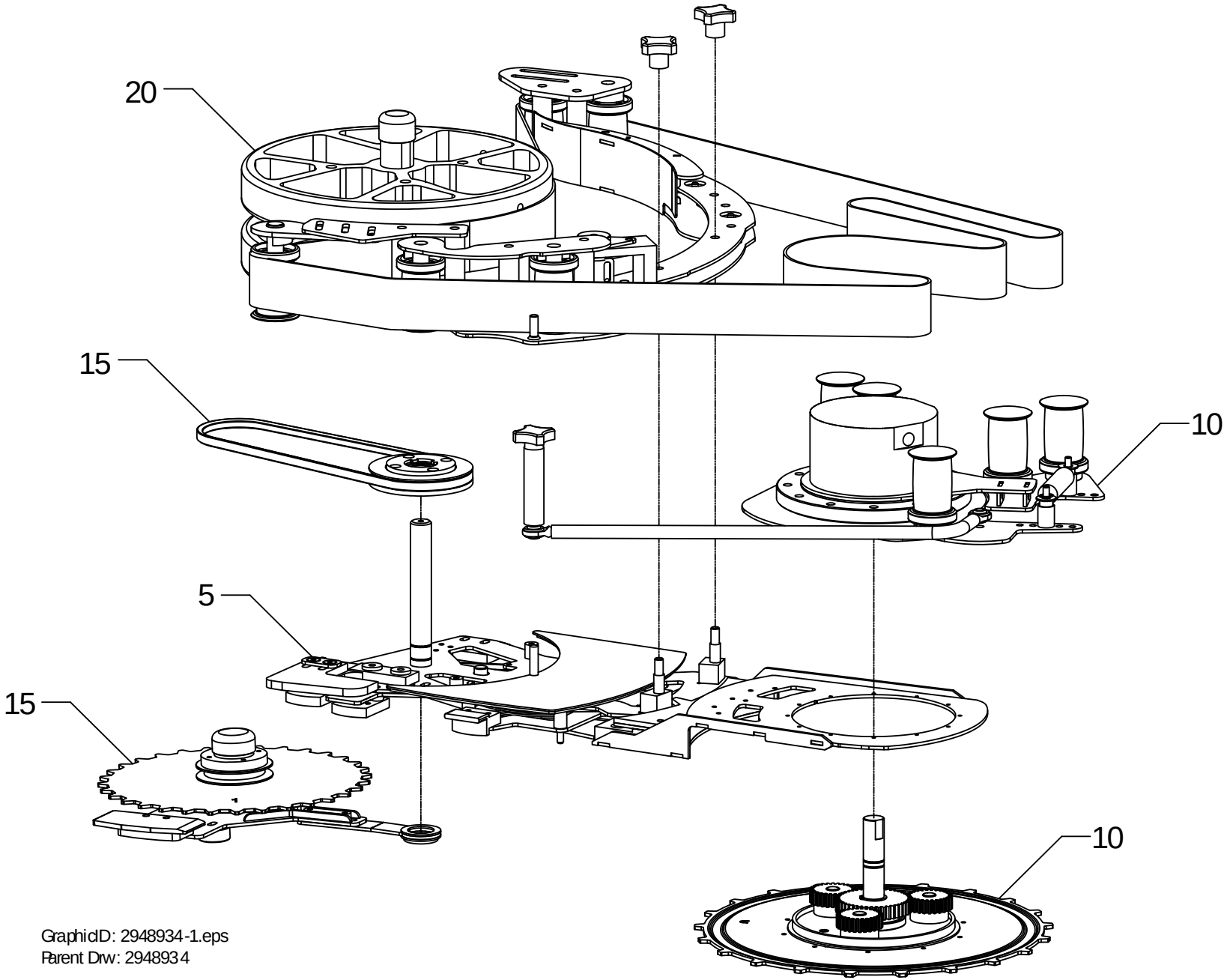

GraphicID: 2948934-1.eps
Parent Drw: 2948934

ECM: 381338 - 20090203
Group number: 2948934-0100
Assembly Drawing: 2948934-1_1_AA

Pos	Part No	UN	Qty	Description	Page No
-					
005	2948936-0100		1	BELT SPIDER BASE - LINF	**2-95**
010	2948937-0100		1	BELT SPIDER TRANSMISSION - LINF	**2-97**
015	2948938-0100		1	BELT SPIDER DRIVEN WHEEL - LINF	**2-99**
020	2855370-0100		1	VOLUME KIT -LINF	**2-101, 2-103**

Pos	Part No	UN	Qty	Description	Page No

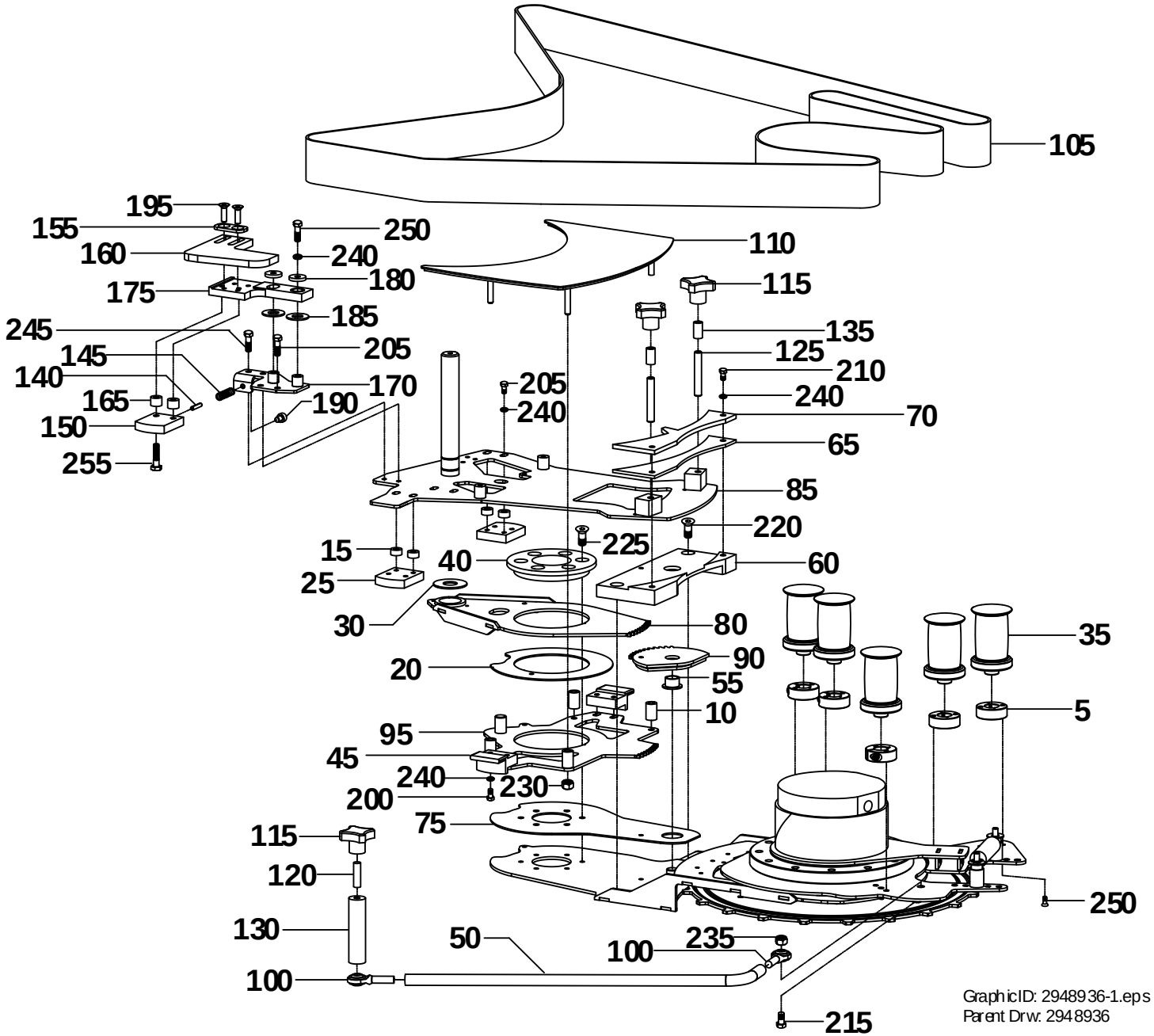
105
195
155
250
160
240
180
110
115
175
185
135
245
205
125
145
210
140
170
205
240
240
165
190
70
150
65
255
85
220
225
15
40
60
25
30
80
35
90
20
55
10
5
95
45
240
230
200
75
115
120
250
130
50
235
100
100
215
GraphicID: 2948936-1.eps
Parent Drw: 2948936

ECM: 393764 - 20090417
Group number: 2948936-0100
Assembly Drawing: 2948936-1_1_AA

Pos	Part No	UN	Qty	Description	Page No
-					
005	2948957-0000		5	COLLAR	
010	1497114-0000		4	SPRING	
015	2664396-0000		4	SPACER	
020	2664413-0000		1	BEARING	
025	2528371-0000		2	BLOCK	
030	2727354-0000		1	WASHER	
035	1497115-0000		5	ROLLER	
040	1497108-0000		1	BEARING	
045	2528367-0000		2	BLOCK	
050	2664414-0000		1	ROD, LINK	
055	2502370-0000		1	BUSHING	
060	2664397-0000		1	BLOCK	
065	2664398-0000		1	BEARING	
070	2664399-0000		1	PLATE	
075	2727188-0000		1	BEARING	
080	2855279-0000		1	DECK	
085	2855280-0000		1	SUPPORT	
090	2727187-0000		1	GEAR	
095	2528366-0000		1	PLATE	
100	90115-0156		2	ROD END, ID=8 MM, M8X1,25	
105	2948958-0000		1	BELT	
110	2948959-0000		1	DEAD PLATE	
115	2855290-0000		3	KNOB	
120	2855291-0000		1	THREADED ROD	
125	2855292-0000		2	THREADED ROD	
130	2855293-0000		1	SPACER	
135	2855294-0000		2	SLEEVE	
140	2664419-0000		1	PIN	
145	2948960-0000		1	SPRING	
150	2948961-0000		1	BLOCK	
155	2948962-0000		1	PLATE	
160	2948963-0000		1	GUIDE	
165	2948964-0000		2	SPACER	
170	2948965-0000		1	PLATE	
175	2948966-0000		1	ARM	
180	2948967-0000		2	WASHER	
185	2948968-0000		2	WASHER	
190	312115-0362		1	SCREW ISO4762 M6X8 A4 80	
195	312155-0370		2	SCREW DIN 7991 MF6S M6X20 A4 70	
200	312105-0368		4	SCREW M6S ISO 4017 M6X16 A480	
205	312105-0370		6	SCREW M6S ISO 4017 M6X20 A480	
210	312105-0374		2	SCREW M6S ISO 4014 M6X30 A480	
215	312105-0455		1	SCREW M6S ISO 4017 M8X30 A480	
220	312155-0368		2	SCREW DIN 7991 MF6S M6X16 A4 70	
225	312155-0370		6	SCREW DIN 7991 MF6S M6X20 A4 70	
230	312810-0316		4	HEXAGON NUT, NY-LOCK M6 FZB	
235	312810-0318		1	HEXAGON NUT, NY-LOCK M8 FZB	
240	315105-0153		12	WASHER BRB 6,4X12 RFR	
245	312105-0364		2	SCREW M6S ISO 4017 M6X10 A480	
250	312105-0366		12	SCREW M6S ISO 4017 M6X12 A480	
255	312105-0372		2	SCREW M6S ISO 4017 M6X25 A480	

Machine Type	Group Description	Used-In	Group Number	Page No

BELT SPIDER TRANSMISSION - LINF

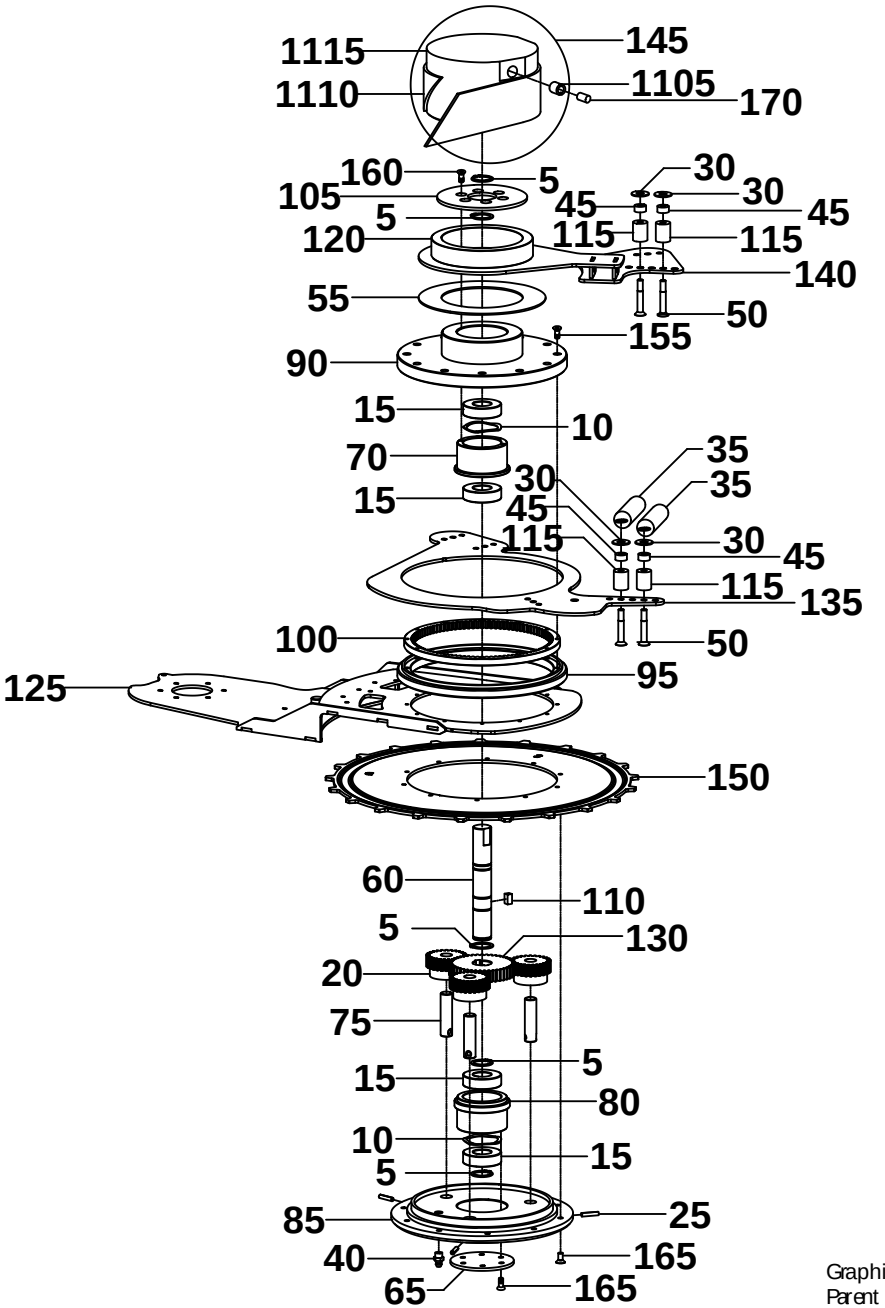

GraphicID: 2948937-1.eps
Parent Drw: 2948937

ECM: 389619 - 20090417
Group number: 2948937-0100
Assembly Drawing: 2948937-1_1_AB

Pos	Part No	UN	Qty	Description	Page No
-					
005	2664460-0000		5	RETAINING RING	
010	2502305-0000		2	BEARING, SPRING	
015	2948868-0000		4	BEARING	
020	2727233-0000		3	GEAR	
025	2664419-0000		3	PIN	
030	2948804-0000		4	WASHER	
035	1497118-0000		2	SPRING	
040	2727344-0000		1	FITTING	
045	2727194-0000		4	SPACER	
050	312155-0378		4	SCREW DIN 7991 MF6S M6X40 A4 70	
055	2948805-0000		1	BEARING	
060	2948806-0000		1	SHAFT	
065	2664405-0000		1	CAP	
070	2502312-0000		1	BUSHING	
075	2664400-0000		3	SHAFT	
080	2664407-0000		1	BUSHING	
085	2948808-0000		1	DISK	
090	2948860-0000		1	CAP	
095	2664403-0000		1	SPACER	
100	2664401-0000		1	GEAR	
105	2948810-0000		1	CAP	
110	2664418-0000		1	KEY	
115	2948811-0000		4	SPACER	
120	2948812-0000		1	BEARING	
125	2948969-0000		1	DECK	
130	2727234-0000		1	GEAR	
135	2948970-0000		1	PLATE	
140	2948971-0000		1	TENSIONER	
145	2948801-0000		1	PULLEY	
	90153-0048	*KG*	*1*	*ADHESIVE, LOCTITE HYSOL 3430 A&B*	
1105	*90026-0005*		*2*	*THREADED INSERTS, BUSHING, M8*	
1110	*2855235-0000*		*1*	*BELT*	
1115	*2948802-0000*		*1*	*PULLEY*	
150	2948803-0000		1	DRIVE GEAR	
155	312155-0301		12	SCREW DIN 7991 MF6S M4X35 A4 70	
160	312155-0323		6	SCREW DIN 7991 MF6S M5X8 A4 70	
165	312155-0327		16	SCREW DIN 7991 MF6S M5X12 A4 70	
170	312318-0447		2	SCREW ISO4029 M8X12 A4	

Pos	Part No	UN	Qty	Description	Page No

Machine Type | Group Description | Used-In | Group Number | Page No

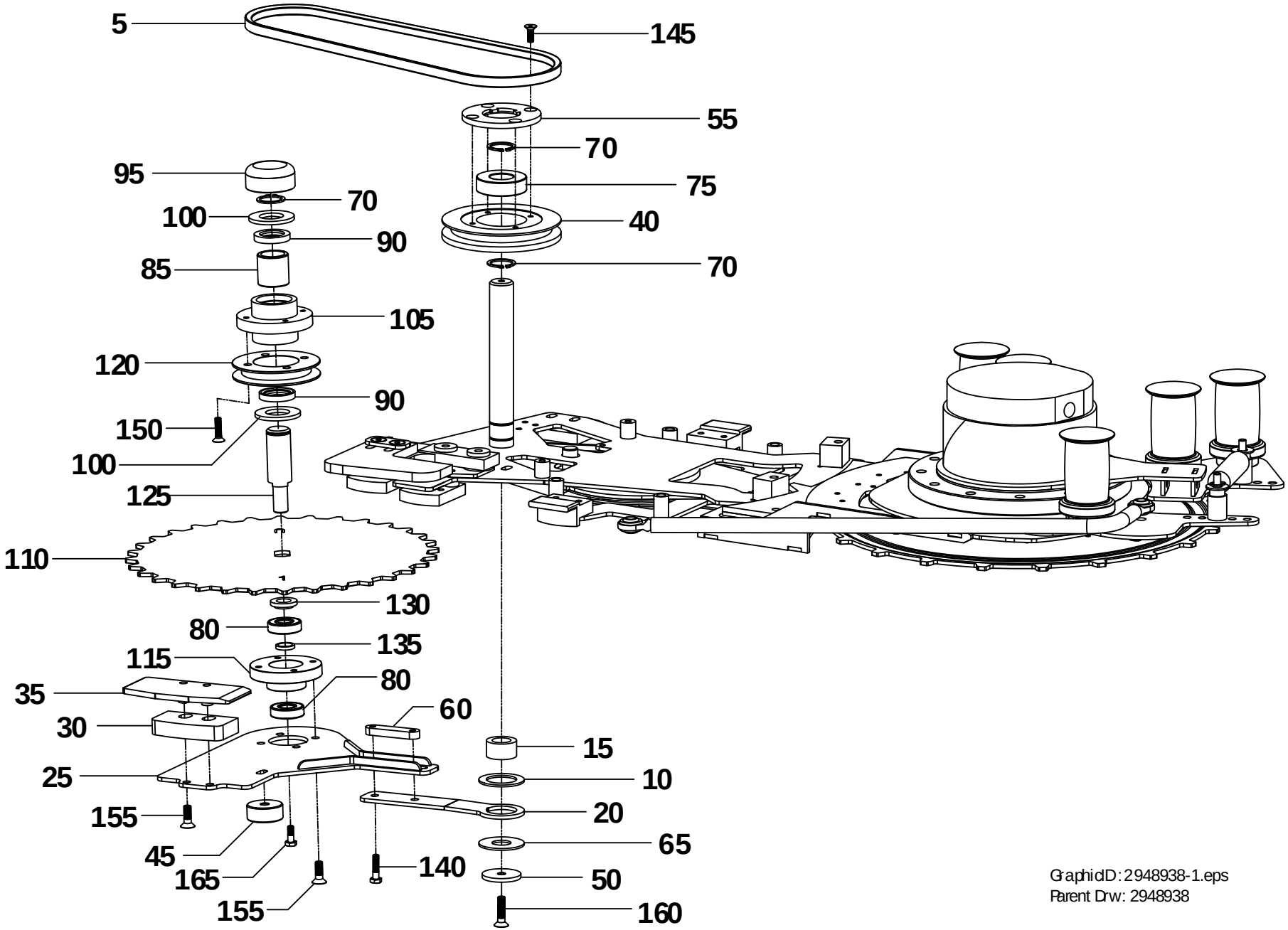

GraphicID: 2948938-1.eps
Parent Drw: 2948938

ECM: 387862 - 20090417
Group number: 2948938-0100
Assembly Drawing: 2948938-1_1_AA

Pos	Part No	UN	Qty	Description	Page No
-					
005	2727353-0000		1	BELT	
010	2855276-0000		1	WASHER	
015	2855277-0000		1	BUSHING	
020	2855278-0000		1	PLATE	
025	2727367-0000		1	BASE	
030	2727373-0000		1	BASE	
035	2528288-0000		1	PLATE	
040	2727368-0000		1	PULLEY	
045	2855288-0000		1	TRIGGER	
050	2855289-0000		1	WASHER	
055	2727370-0000		1	PLATE	
060	2727371-0000		1	PLATE	
065	2727354-0000		1	WASHER	
070	2664460-0000		3	RETAINING RING	
075	2948868-0000		1	BEARING	
080	2528296-0000		2	BALL BEARING	
085	2727356-0000		1	BEARING	
090	2727357-0000		2	SEAL	
095	2727358-0000		1	CAP	
100	2727359-0000		2	SPACER	
105	2727360-0000		1	SLEEVE	
110	2727361-0000		1	GEAR	
115	2727362-0000		1	FLANGE	
120	2727363-0000		1	PULLEY	
125	2727364-0000		1	SHAFT	
130	2727365-0000		1	SPACER	
135	2727366-0000		1	SPACER	
140	312105-0370		2	SCREW M6S ISO 4017 M6X20 A480	
145	312155-0327		4	SCREW DIN 7991 MF6S M5X12 A4 70	
150	312155-0331		4	SCREW DIN 7991 MF6S M5X20 A4 70	
155	312155-0366		6	SCREW DIN 7991 MF6S M6X12 A4 70	
160	312155-0370		1	SCREW DIN 7991 MF6S M6X20 A4 70	
165	312105-0364		1	SCREW M6S ISO 4017 M6X10 A480	

Pos	Part No	UN	Qty	Description	Page No

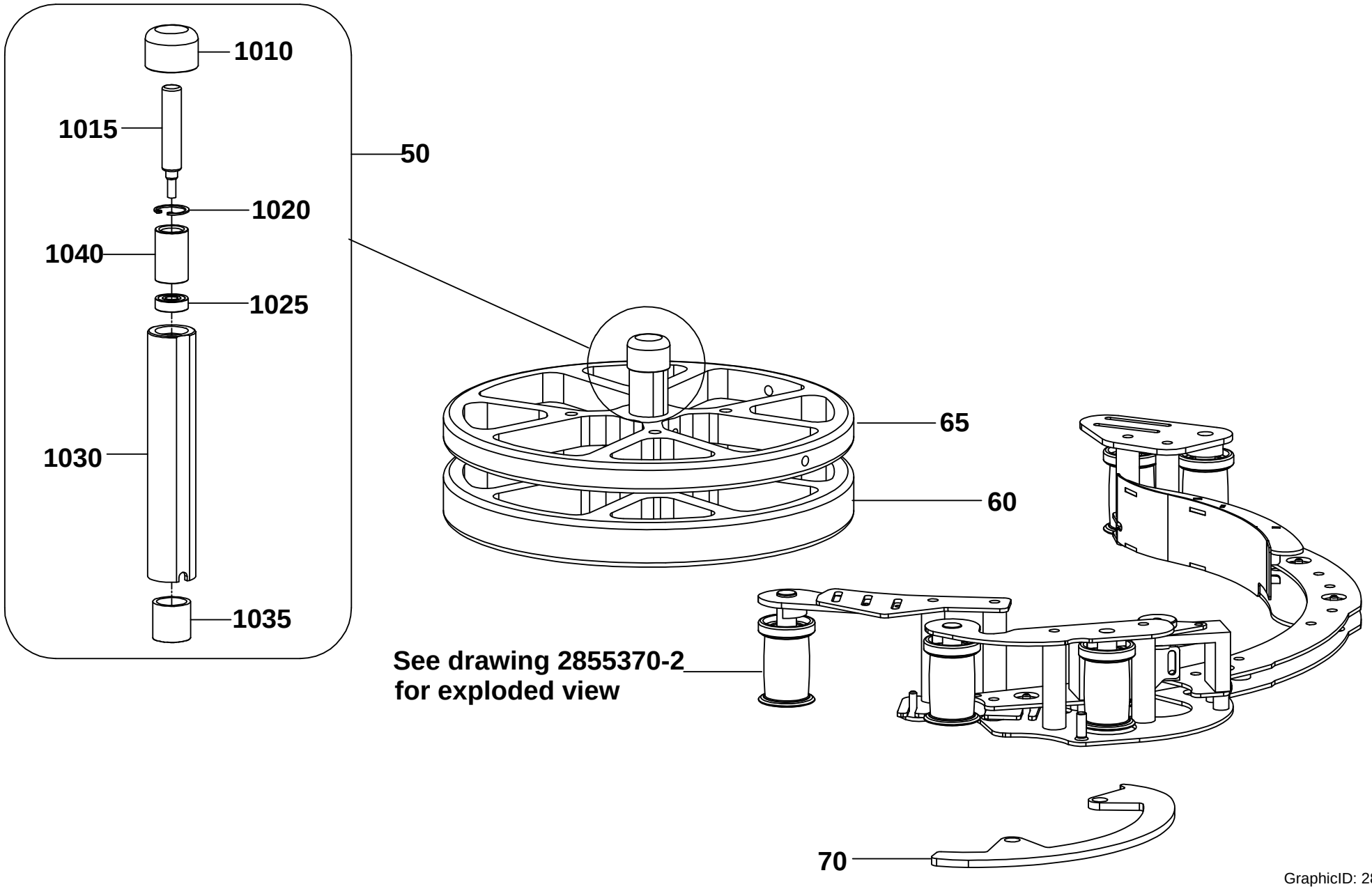
1010
1015
1020
1040
1025
1030
1035
50
65
60
See drawing 2855370-2
for exploded view
70

Pos	Part No	UN	Qty	Description	Page No
2855370-0106: TB 0568SQ, TB 1136SQ, TBA 1890S, TBA 2000S, TGA 1500SQ, TB 1000E					
050	2855248-0000		1	SLEEVE	
1010	*2727221-0000*		*1*	*CAP*	
1015	*2855255-0000*		*1*	*KNOB*	
1020	*2664459-0000*		*1*	*RETAINING RING*	
1025	*2664449-0000*		*1*	*BALL BEARING*	
1030	*2855252-0000*		*1*	*SHAFT*	
1035	*2855258-0000*		*1*	*BUSHING*	
1040	*2855259-0000*		*1*	*SPACER*	
060	2727231-0000		1	WHEEL	
065	2727231-0000		1	WHEEL	
2855370-0102: TBA 0100B, TBA 0125S					
050	2855247-0000		1	SLEEVE	
1010	*2727221-0000*		*1*	*CAP*	
1015	*2727222-0000*		*1*	*KNOB*	
1020	*2664459-0000*		*1*	*RETAINING RING*	
1025	*2664449-0000*		*1*	*BALL BEARING*	
1030	*2855251-0000*		*1*	*SHAFT*	
1035	*2855258-0000*		*1*	*BUSHING*	
060	2502301-0000		1	WHEEL	
065	2502301-0000		1	WHEEL	
2855370-0102: TBA 0160S, TBA 0200M, TBA 0200S, TBA 0250S, TB 0200S, TB 0200M					
050	2855247-0000		1	SLEEVE	
1010	*2727221-0000*		*1*	*CAP*	
1015	*2727222-0000*		*1*	*KNOB*	
1020	*2664459-0000*		*1*	*RETAINING RING*	
1025	*2664449-0000*		*1*	*BALL BEARING*	
1030	*2855251-0000*		*1*	*SHAFT*	
1035	*2855258-0000*		*1*	*BUSHING*	
060	2855369-0000		1	WHEEL	
065	2855369-0000		1	WHEEL	
2855370-0103: TBA 0180B, TBA 0200B, TBA 0284B, TBA 0250B, TBA 0300S, TBA 0330S, TB 0200B, TB 0250B					
050	2855247-0000		1	SLEEVE	
1010	*2727221-0000*		*1*	*CAP*	
1015	*2727222-0000*		*1*	*KNOB*	
1020	*2664459-0000*		*1*	*RETAINING RING*	
1025	*2664449-0000*		*1*	*BALL BEARING*	
1030	*2855251-0000*		*1*	*SHAFT*	
1035	*2855258-0000*		*1*	*BUSHING*	
060	2502364-0000		1	WHEEL	
065	2502364-0000		1	WHEEL	
2855370-0104: TBA 0200SQ, TBA 0375S, TBA 0355B, TBA 0500S, TBA 0750S, TBA 0250SQ					
050	2855247-0000		1	SLEEVE	
1010	*2727221-0000*		*1*	*CAP*	
1015	*2727222-0000*		*1*	*KNOB*	
1020	*2664459-0000*		*1*	*RETAINING RING*	
1025	*2664449-0000*		*1*	*BALL BEARING*	
1030	*2855251-0000*		*1*	*SHAFT*	
1035	*2855258-0000*		*1*	*BUSHING*	
060	2502365-0000		1	WHEEL	
065	2502365-0000		1	WHEEL	
2855370-0105: TBA 0500SQ, TBA 0500B, TBA 1000B, TBA 0750B, TBA 1000SQ, TBA 1000S, TBA 1500S, TB 1000B, TB 0500B, TB 0500SQ, TB 1000SQ, TGA 1000SQ, TGA 0750SQ, TGA 0500SQ					
050	2855248-0000		1	SLEEVE	
1010	*2727221-0000*		*1*	*CAP*	
1015	*2855255-0000*		*1*	*KNOB*	
1020	*2664459-0000*		*1*	*RETAINING RING*	
1025	*2664449-0000*		*1*	*BALL BEARING*	
1030	*2855252-0000*		*1*	*SHAFT*	
1035	*2855258-0000*		*1*	*BUSHING*	
1040	*2855259-0000*		*1*	*SPACER*	
060	2502366-0000		1	WHEEL	
065	2502366-0000		1	WHEEL	
2855370-0107: TPA 0250SQ, TPA 0200SQ					
050	2855247-0000		1	SLEEVE	
1010	*2727221-0000*		*1*	*CAP*	
1015	*2727222-0000*		*1*	*KNOB*	
1020	*2664459-0000*		*1*	*RETAINING RING*	
1025	*2664449-0000*		*1*	*BALL BEARING*	
1030	*2855251-0000*		*1*	*SHAFT*	
1035	*2855258-0000*		*1*	*BUSHING*	
060	2855309-0000		1	WHEEL	
065	2528230-0000		1	WHEEL	
070	2855299-0000		1	GUIDE	
2855370-0108: TPA 0330SQ					
050	2855247-0000		1	SLEEVE	
1010	*2727221-0000*		*1*	*CAP*	
1015	*2727222-0000*		*1*	*KNOB*	
1020	*2664459-0000*		*1*	*RETAINING RING*	
1025	*2664449-0000*		*1*	*BALL BEARING*	
1030	*2855251-0000*		*1*	*SHAFT*	
1035	*2855258-0000*		*1*	*BUSHING*	
060	2855371-0000		1	WHEEL	

Machine Type | Group Description | Used-In | Group Number | Page No

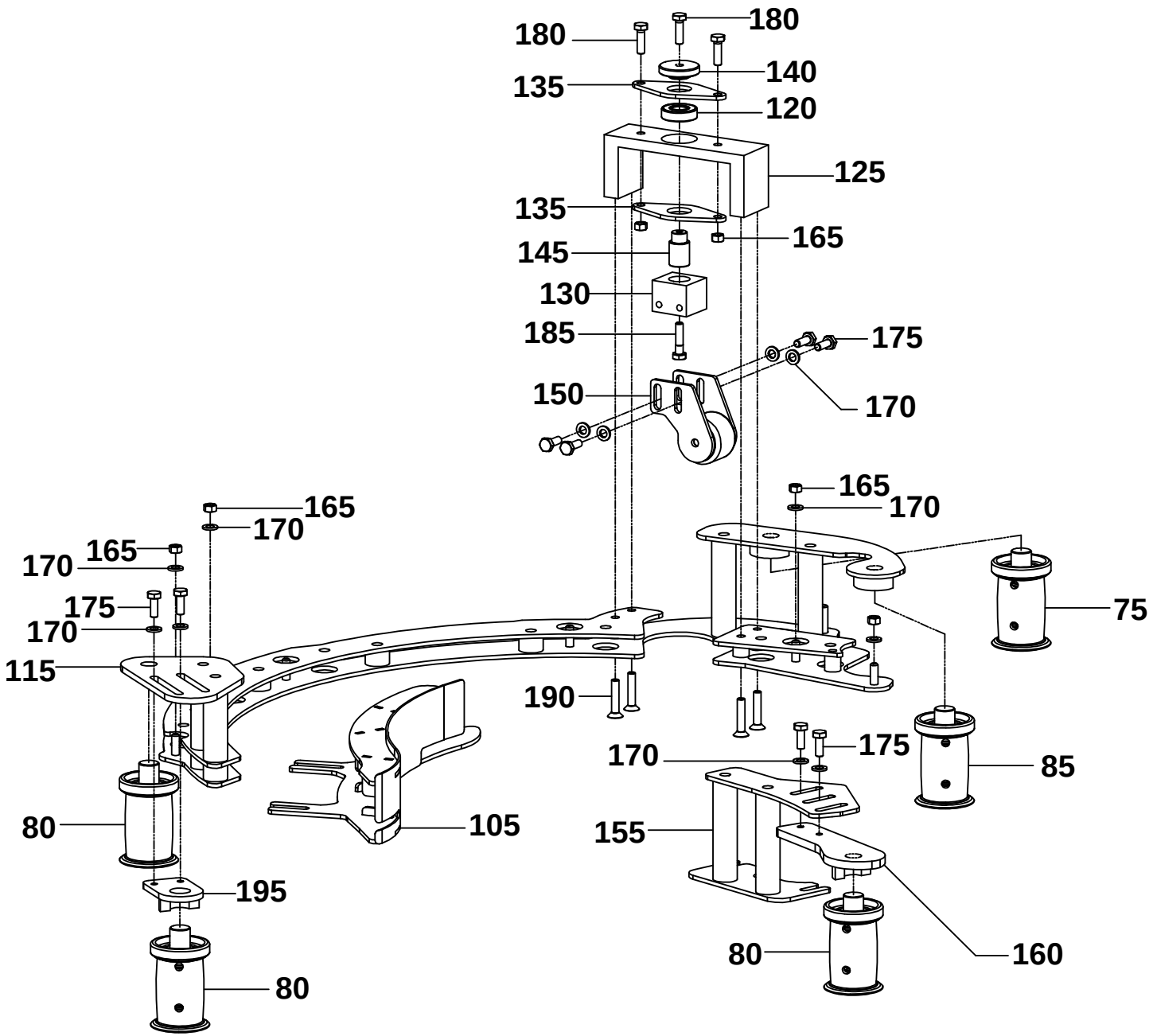

GraphicID: 2855370-2.eps
Parent Drw: 2855370

Pos	Part No	UN	Qty	Description	Page No
2855370-0108: TPA 0330SQ (Cont'd)					
065	2502336-0000		1	WHEEL	
070	2855372-0000		1	GUIDE	
2855370-0109: TPA 0500SQ					
050	2855248-0000		1	SLEEVE	
1010	*2727221-0000*		*1*	*CAP*	
1015	*2855255-0000*		*1*	*KNOB*	
1020	*2664459-0000*		*1*	*RETAINING RING*	
1025	*2664449-0000*		*1*	*BALL BEARING*	
1030	*2855252-0000*		*1*	*SHAFT*	
1035	*2855258-0000*		*1*	*BUSHING*	
1040	*2855259-0000*		*1*	*SPACER*	
060	2855264-0000		1	WHEEL	
065	2528227-0000		1	WHEEL	
070	2855303-0000		1	GUIDE	
2855370-0110: TPA 0750SQ					
050	2855250-0000		1	SLEEVE	
1010	*2727221-0000*		*1*	*CAP*	
1015	*2855257-0000*		*1*	*KNOB*	
1020	*2664459-0000*		*1*	*RETAINING RING*	
1025	*2664449-0000*		*1*	*BALL BEARING*	
1030	*2855254-0000*		*1*	*SHAFT*	
1035	*2855258-0000*		*1*	*BUSHING*	
1040	*2855261-0000*		*1*	*SPACER*	
060	2855304-0000		1	WHEEL	
065	2528226-0000		1	WHEEL	
2855370-0111: TPA 1000SQ					
050	2855249-0000		1	SLEEVE	
1010	*2727221-0000*		*1*	*CAP*	
1015	*2855256-0000*		*1*	*KNOB*	
1020	*2664459-0000*		*1*	*RETAINING RING*	
1025	*2664449-0000*		*1*	*BALL BEARING*	
1030	*2855253-0000*		*1*	*SHAFT*	
1035	*2855258-0000*		*1*	*BUSHING*	
1040	*2855260-0000*		*1*	*SPACER*	
060	2855304-0000		1	WHEEL	
065	2528226-0000		1	WHEEL	
Common Parts					
075	2855233-0000		1	ROLLER	
080	2855301-0000		3	ROLLER	
085	2855300-0000		1	ROLLER	
105	2855373-0000		1	GUIDE	
115	2855367-0000		1	ROLLER SUPPORT ARM	
120	2528296-0000		1	BALL BEARING	
125	2855239-0000		1	SUPPORT	
130	2855240-0000		1	BLOCK	
135	2855241-0000		2	BEARING	
140	2855242-0000		1	COVER	
145	2855243-0000		1	POST	
150	2855244-0000		1	WHEEL	
155	2855245-0000		1	SUPPORT	
160	2855374-0000		1	SUPPORT	
165	312810-0316		6	HEXAGON NUT, NY-LOCK M6 FZB	
170	315105-0153		12	WASHER BRB 6,4X12 RFR	
175	312105-0368		8	SCREW M6S ISO 4017 M6X16 A480	
180	312105-0370		3	SCREW M6S ISO 4017 M6X20 A480	
185	312105-0372		1	SCREW M6S ISO 4017 M6X25 A480	
190	312155-0374		4	SCREW DIN 7991 MF6S M6X30 A4 70	
195	2855368-0000		1	MOUNTING PLATE	

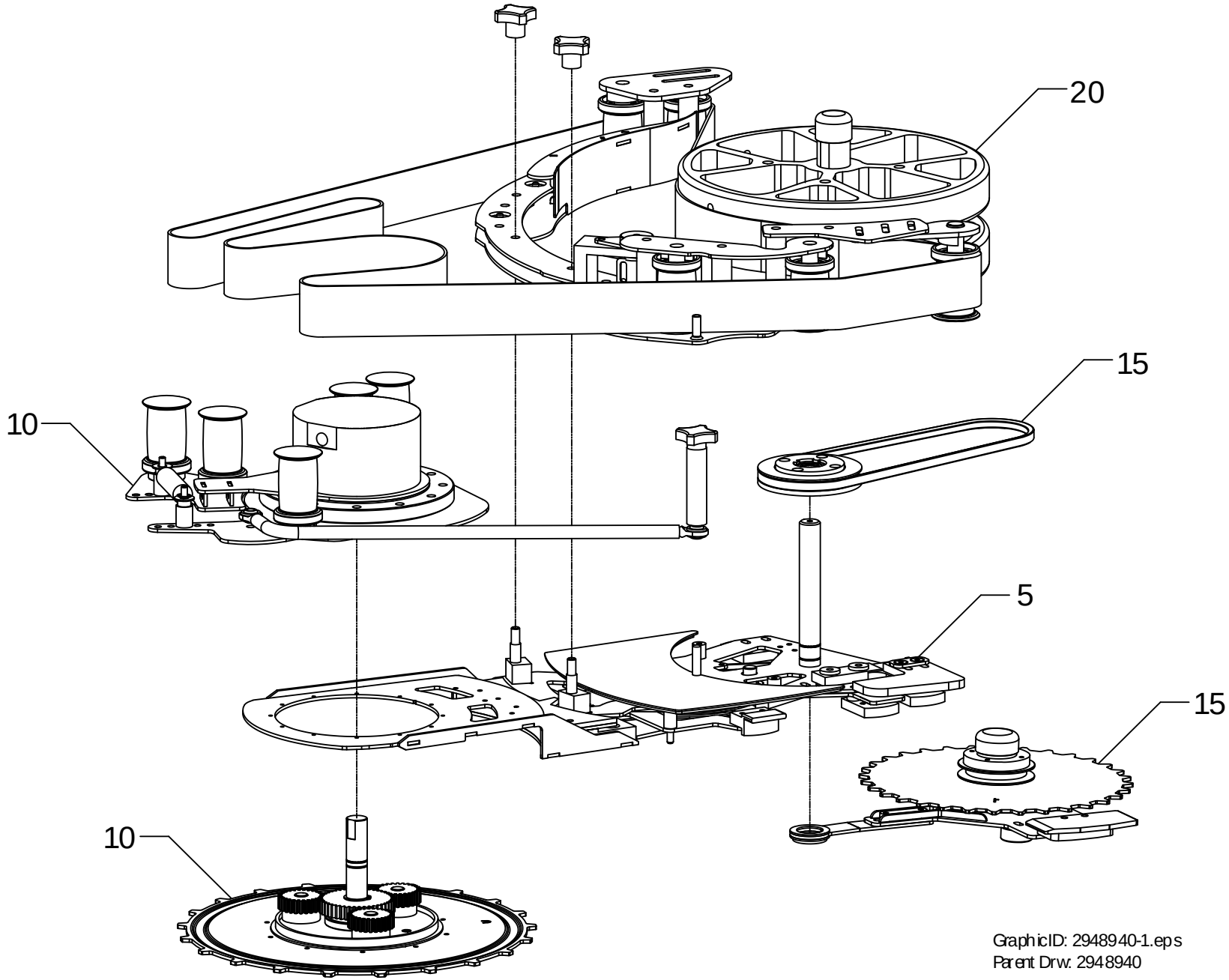

GraphicID: 2948940-1.eps
Parent Drw: 2948940

ECM: 389533 - 20090417
Group number: 2948940-0100
Assembly Drawing: 2948940-1_1_AA

Pos	Part No	UN	Qty	Description	Page No
-					
005	2948942-0100		1	BELT SPIDER BASE - RINF	**2-107**
010	2948943-0100		1	BELT SPIDER TRANSMISSION - RINF	**2-109**
015	2948944-0100		1	BELT SPIDER DRIVEN WHEEL - RINF	**2-111**
020	2948945-0100		1	VOLUME KIT -RINF	**2-113, 2-115**

Pos	Part No	UN	Qty	Description	Page No

BELT SPIDER BASE - RINF

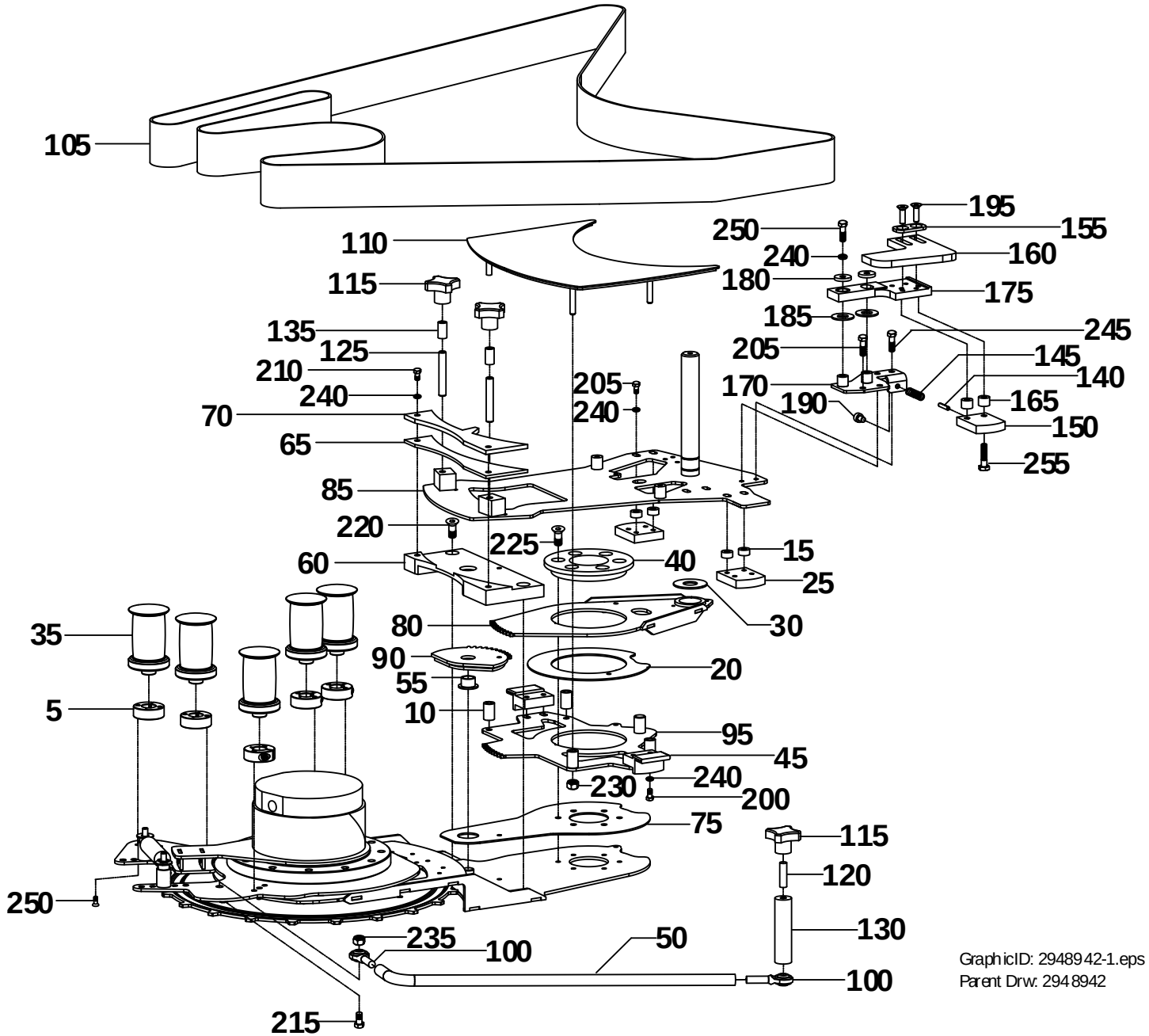

GraphicID: 2948942-1.eps
Parent Drw: 2948942

ECM: 389534 - 20090417
Group number: 2948942-0100
Assembly Drawing: 2948942-1_1_AA

Pos	Part No	UN	Qty	Description	Page No
-					
005	2948957-0000		5	COLLAR	
010	1497114-0000		4	SPRING	
015	2664396-0000		4	SPACER	
020	2664413-0000		1	BEARING	
025	2528371-0000		2	BLOCK	
030	2727354-0000		1	WASHER	
035	1497115-0000		5	ROLLER	
040	1497108-0000		1	BEARING	
045	2528367-0000		2	BLOCK	
050	2664414-0000		1	ROD, LINK	
055	2502370-0000		1	BUSHING	
060	2948973-0000		1	BLOCK	
065	2664398-0000		1	BEARING	
070	2664399-0000		1	PLATE	
075	2727188-0000		1	BEARING	
080	2948975-0000		1	DECK	
085	2948910-0000		1	SUPPORT	
090	2948935-0000		1	GEAR	
095	2948939-0000		1	DECK	
100	90115-0156		2	ROD END, ID=8 MM, M8X1,25	
105	2948958-0000		1	BELT	
110	2948972-0000		1	DEAD PLATE	
115	2855290-0000		3	KNOB	
120	2855291-0000		1	THREADED ROD	
125	2855292-0000		2	THREADED ROD	
130	2855293-0000		1	SPACER	
135	2855294-0000		2	SLEEVE	
140	2664419-0000		1	PIN	
145	2948960-0000		1	SPRING	
150	2948961-0000		1	BLOCK	
155	2948962-0000		1	PLATE	
160	2948963-0000		1	GUIDE	
165	2948964-0000		2	SPACER	
170	2948941-0000		1	PLATE	
175	3008835-0000		1	ARM	
180	2948967-0000		2	WASHER	
185	2948968-0000		2	WASHER	
190	312115-0362		1	SCREW ISO4762 M6X8 A4 80	
195	312155-0370		2	SCREW DIN 7991 MF6S M6X20 A4 70	
200	312105-0368		4	SCREW M6S ISO 4017 M6X16 A480	
205	312105-0370		6	SCREW M6S ISO 4017 M6X20 A480	
210	312105-0374		2	SCREW M6S ISO 4014 M6X30 A480	
215	312105-0455		1	SCREW M6S ISO 4017 M8X30 A480	
220	312155-0368		2	SCREW DIN 7991 MF6S M6X16 A4 70	
225	312155-0370		6	SCREW DIN 7991 MF6S M6X20 A4 70	
230	312810-0316		4	HEXAGON NUT, NY-LOCK M6 FZB	
235	312810-0318		1	HEXAGON NUT, NY-LOCK M8 FZB	
240	315105-0153		12	WASHER BRB 6,4X12 RFR	
245	312105-0364		2	SCREW M6S ISO 4017 M6X10 A480	
250	312105-0366		12	SCREW M6S ISO 4017 M6X12 A480	
255	312105-0372		2	SCREW M6S ISO 4017 M6X25 A480	

Machine Type	Group Description	Used-In	Group Number	Page No

BELT SPIDER TRANSMISSION - RINF

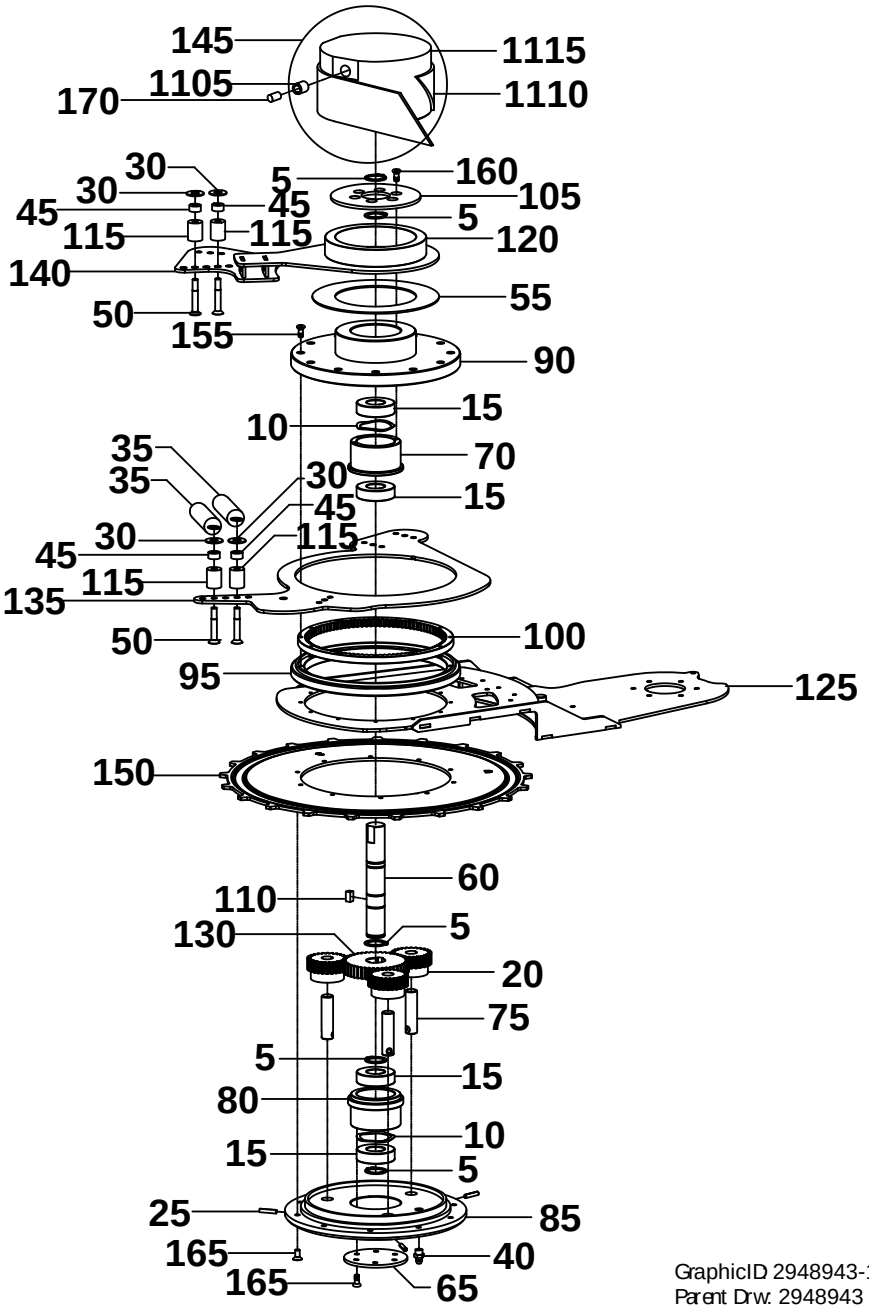

GraphicID 2948943-1.eps
Parent Drw. 2948943

ECM: 389535 - 20090417
Group number: 2948943-0100
Assembly Drawing: 2948943-1_1_AB

Pos	Part No	UN	Qty	Description	Page No
-					
005	2664460-0000		5	RETAINING RING	
010	2502305-0000		2	BEARING, SPRING	
015	2948868-0000		4	BEARING	
020	2727233-0000		3	GEAR	
025	2664419-0000		3	PIN	
030	2948804-0000		4	WASHER	
035	1497118-0000		2	SPRING	
040	2727344-0000		1	FITTING	
045	2727194-0000		4	SPACER	
050	312155-0378		4	SCREW DIN 7991 MF6S M6X40 A4 70	
055	2948805-0000		1	BEARING	
060	2948806-0000		1	SHAFT	
065	2664405-0000		1	CAP	
070	2502312-0000		1	BUSHING	
075	2664400-0000		3	SHAFT	
080	2664407-0000		1	BUSHING	
085	2948808-0000		1	DISK	
090	2948860-0000		1	CAP	
095	2664403-0000		1	SPACER	
100	2664401-0000		1	GEAR	
105	2948810-0000		1	CAP	
110	2664418-0000		1	KEY	
115	2948811-0000		4	SPACER	
120	2948812-0000		1	BEARING	
125	2948976-0000		1	DECK	
130	2727234-0000		1	GEAR	
135	3008836-0000		1	PLATE	
140	3008837-0000		1	BELT TENSIONER	
145	2948801-0000		1	PULLEY	
	90153-0048	*KG*	*1*	*ADHESIVE, LOCTITE HYSOL 3430 A&B*	
1105	*90026-0005*		*2*	*THREADED INSERTS, BUSHING, M8*	
1110	*2855235-0000*		*1*	*BELT*	
1115	*2948802-0000*		*1*	*PULLEY*	
150	2948803-0000		1	DRIVE GEAR	
155	312155-0301		12	SCREW DIN 7991 MF6S M4X35 A4 70	
160	312155-0323		6	SCREW DIN 7991 MF6S M5X8 A4 70	
165	312155-0327		16	SCREW DIN 7991 MF6S M5X12 A4 70	
170	312318-0447		2	SCREW ISO4029 M8X12 A4	

Pos	Part No	UN	Qty	Description	Page No

Machine Type | Group Description | Used-In | Group Number | Page No

BELT SPIDER DRIVEN WHEEL - RINF

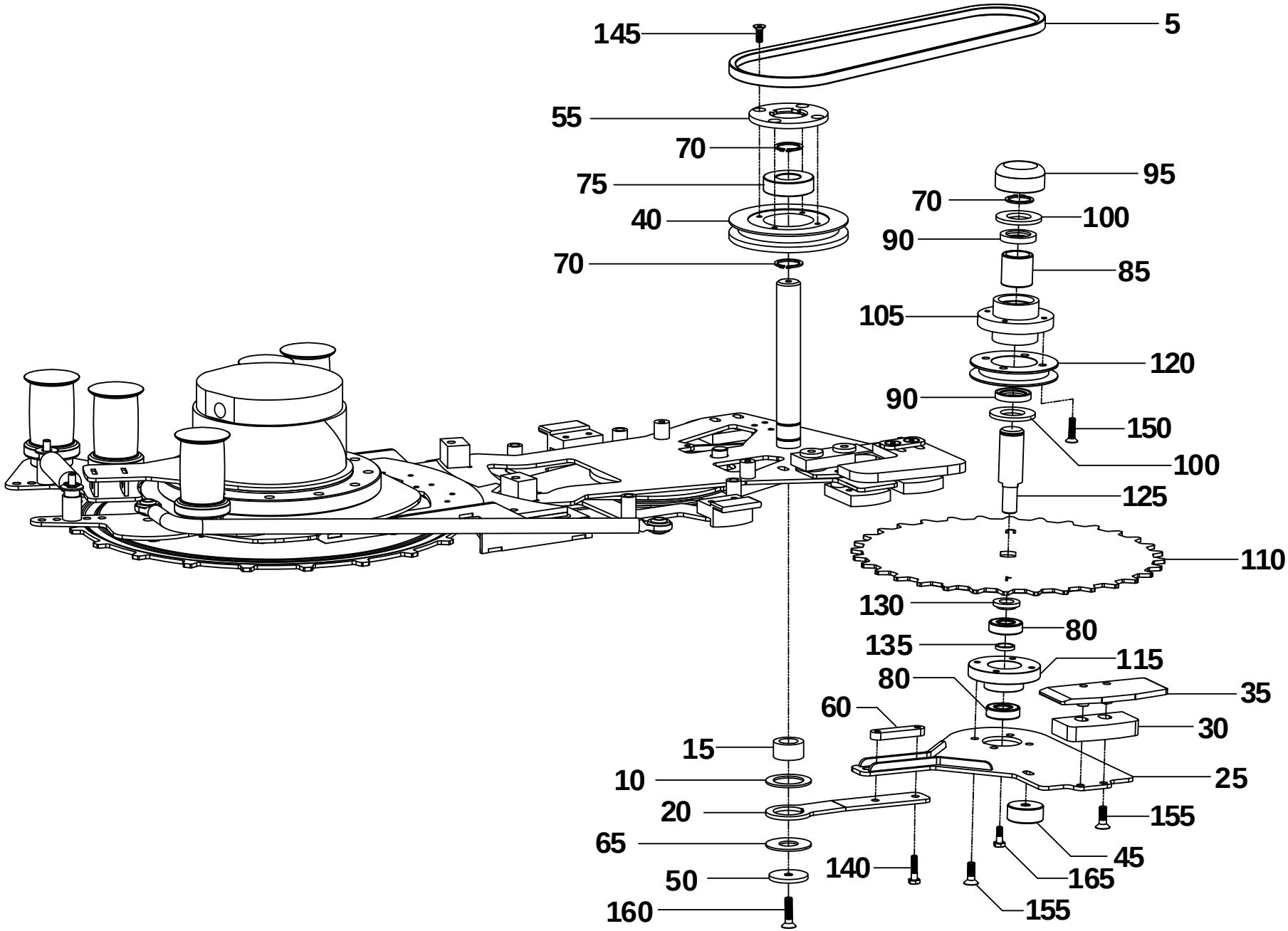

ECM: 395147 - 20090417
Group number: 2948944-0100
Assembly Drawing: 2948944-1_1_AA

Pos	Part No	UN	Qty	Description	Page No
-					
005	2727353-0000		1	BELT	
010	2855276-0000		1	WASHER	
015	2855277-0000		1	BUSHING	
020	2948974-0000		1	PLATE	
025	2948819-0000		1	BASE PLATE	
030	2727373-0000		1	BASE	
035	3008838-0000		1	PLATE	
040	2727368-0000		1	PULLEY	
045	2855288-0000		1	TRIGGER	
050	2855289-0000		1	WASHER	
055	2727370-0000		1	PLATE	
060	2727371-0000		1	PLATE	
065	2727354-0000		1	WASHER	
070	2664460-0000		3	RETAINING RING	
075	2948868-0000		1	BEARING	
080	2528296-0000		2	BALL BEARING	
085	2727356-0000		1	BEARING	
090	2727357-0000		2	SEAL	
095	2727358-0000		1	CAP	
100	2727359-0000		2	SPACER	
105	2727360-0000		1	SLEEVE	
110	2727361-0000		1	GEAR	
115	2727362-0000		1	FLANGE	
120	2727363-0000		1	PULLEY	
125	2727364-0000		1	SHAFT	
130	2727365-0000		1	SPACER	
135	2727366-0000		1	SPACER	
140	312105-0370		2	SCREW M6S ISO 4017 M6X20 A480	
145	312155-0327		4	SCREW DIN 7991 MF6S M5X12 A4 70	

Pos	Part No	UN	Qty	Description	Page No

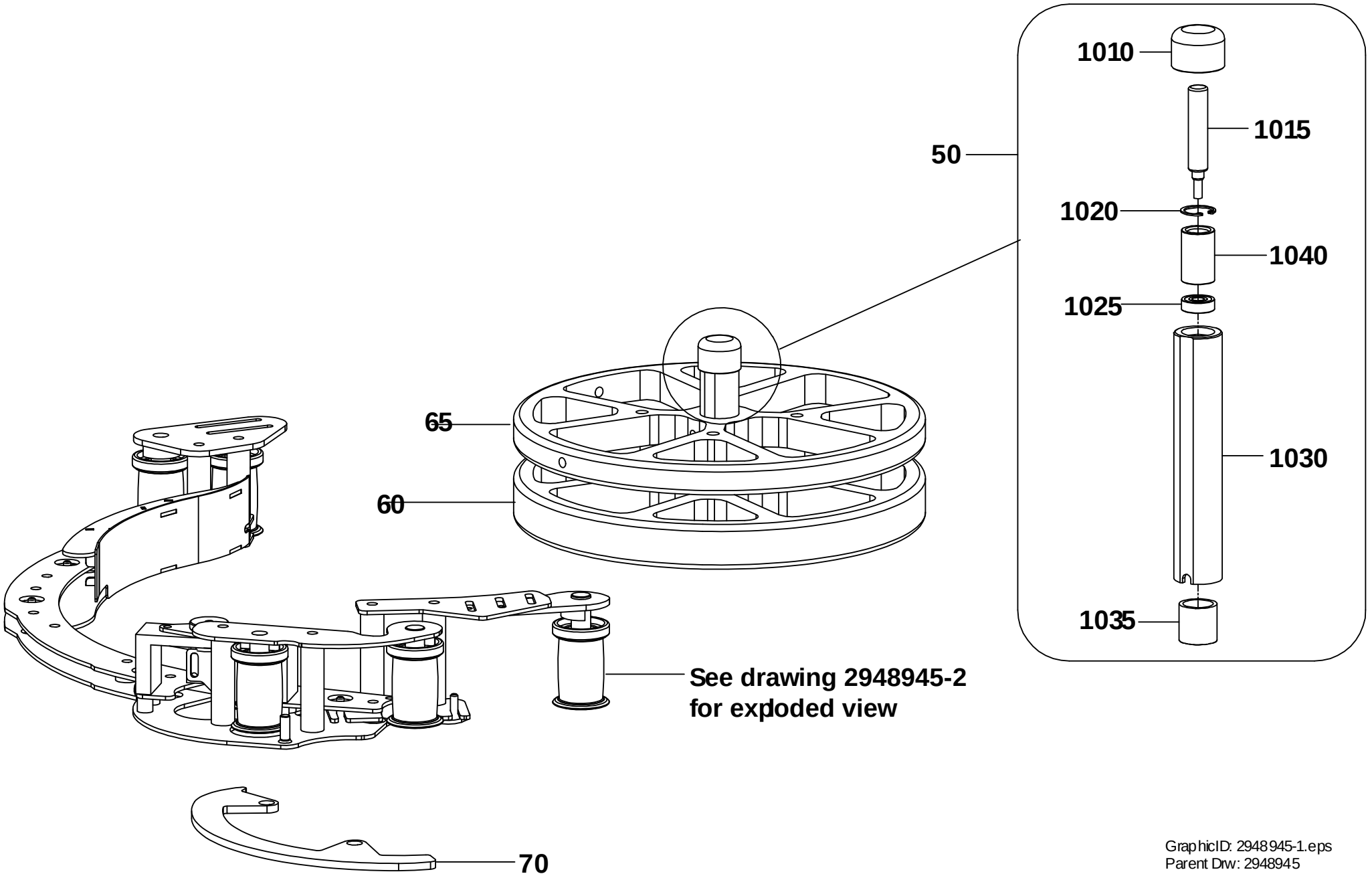

GraphicID: 2948945-1.eps
Parent Drw: 2948945

Pos	Part No	UN	Qty	Description	Page No
2855370-0106: TB 0568SQ, TB 1136SQ, TBA 1890S, TBA 2000S, TB 1000E, TGA 1500SQ					
050	3008987-0000		1	SLEEVE	
1010	*2727221-0000*		*1*	*CAP*	
1015	*3008963-0000*		*1*	*KNOB*	
1020	*2664459-0000*		*1*	*RETAINING RING*	
1025	*2664449-0000*		*1*	*BALL BEARING*	
1030	*2855252-0000*		*1*	*SHAFT*	
1035	*2855258-0000*		*1*	*BUSHING*	
1040	*2855259-0000*		*1*	*SPACER*	
060	2727231-0000		1	WHEEL	
065	2727231-0000		1	WHEEL	
2855370-0101: TBA 0100B, TBA 0125S					
050	3008986-0000		1	SLEEVE	
1010	*2727221-0000*		*1*	*CAP*	
1015	*3008962-0000*		*1*	*KNOB*	
1020	*2664459-0000*		*1*	*RETAINING RING*	
1025	*2664449-0000*		*1*	*BALL BEARING*	
1030	*2855251-0000*		*1*	*SHAFT*	
1035	*2855258-0000*		*1*	*BUSHING*	
060	2502301-0000		1	WHEEL	
065	2502301-0000		1	WHEEL	
2855370-0102: TBA 0160S, TBA 0200M, TBA 0200S, TBA 0250S, TB 0200S, TB 0200M					
050	3008986-0000		1	SLEEVE	
1010	*2727221-0000*		*1*	*CAP*	
1015	*3008962-0000*		*1*	*KNOB*	
1020	*2664459-0000*		*1*	*RETAINING RING*	
1025	*2664449-0000*		*1*	*BALL BEARING*	
1030	*2855251-0000*		*1*	*SHAFT*	
1035	*2855258-0000*		*1*	*BUSHING*	
060	2855369-0000		1	WHEEL	
065	2855369-0000		1	WHEEL	
2855370-0103: TBA 0180B, TBA 0200B, TBA 0284B, TBA 0250B, TBA 0300S, TBA 0330S, TB 0200B, TB 0250B					
050	3008986-0000		1	SLEEVE	
1010	*2727221-0000*		*1*	*CAP*	
1015	*3008962-0000*		*1*	*KNOB*	
1020	*2664459-0000*		*1*	*RETAINING RING*	
1025	*2664449-0000*		*1*	*BALL BEARING*	
1030	*2855251-0000*		*1*	*SHAFT*	
1035	*2855258-0000*		*1*	*BUSHING*	
060	2502364-0000		1	WHEEL	
065	2502364-0000		1	WHEEL	
2855370-0104: TBA 0200SQ, TBA 0375S, TBA 0355B, TBA 0500S, TBA 0750S, TBA 0250SQ					
050	3008986-0000		1	SLEEVE	
1010	*2727221-0000*		*1*	*CAP*	
1015	*3008962-0000*		*1*	*KNOB*	
1020	*2664459-0000*		*1*	*RETAINING RING*	
1025	*2664449-0000*		*1*	*BALL BEARING*	
1030	*2855251-0000*		*1*	*SHAFT*	
1035	*2855258-0000*		*1*	*BUSHING*	
060	2502365-0000		1	WHEEL	
065	2502365-0000		1	WHEEL	
2855370-0105: TBA 0500B, TBA 1000B, TBA 0750B, TBA 1000SQ, TBA 1000S, TBA 1500S, TB 1000B, TB 0500B, TB 0500SQ, TB 1000SQ, TGA 1000SQ, TGA 0750SQ, TGA 0500SQ					
050	3008987-0000		1	SLEEVE	
1010	*2727221-0000*		*1*	*CAP*	
1015	*3008963-0000*		*1*	*KNOB*	
1020	*2664459-0000*		*1*	*RETAINING RING*	
1025	*2664449-0000*		*1*	*BALL BEARING*	
1030	*2855252-0000*		*1*	*SHAFT*	
1035	*2855258-0000*		*1*	*BUSHING*	
1040	*2855259-0000*		*1*	*SPACER*	
060	2502366-0000		1	WHEEL	
065	2502366-0000		1	WHEEL	
2855370-0107: TPA 0250SQ, TPA 0200SQ					
050	3008986-0000		1	SLEEVE	
1010	*2727221-0000*		*1*	*CAP*	
1015	*3008962-0000*		*1*	*KNOB*	
1020	*2664459-0000*		*1*	*RETAINING RING*	
1025	*2664449-0000*		*1*	*BALL BEARING*	
1030	*2855251-0000*		*1*	*SHAFT*	
1035	*2855258-0000*		*1*	*BUSHING*	
060	2855309-0000		1	WHEEL	
065	2528230-0000		1	WHEEL	
070	2855299-0000		1	GUIDE	
2855370-0108: TPA 0330SQ					
050	3008986-0000		1	SLEEVE	
1010	*2727221-0000*		*1*	*CAP*	
1015	*3008962-0000*		*1*	*KNOB*	
1020	*2664459-0000*		*1*	*RETAINING RING*	
1025	*2664449-0000*		*1*	*BALL BEARING*	
1030	*2855251-0000*		*1*	*SHAFT*	
1035	*2855258-0000*		*1*	*BUSHING*	
060	2855371-0000		1	WHEEL	

Machine Type | Group Description | Used-In | Group Number | Page No

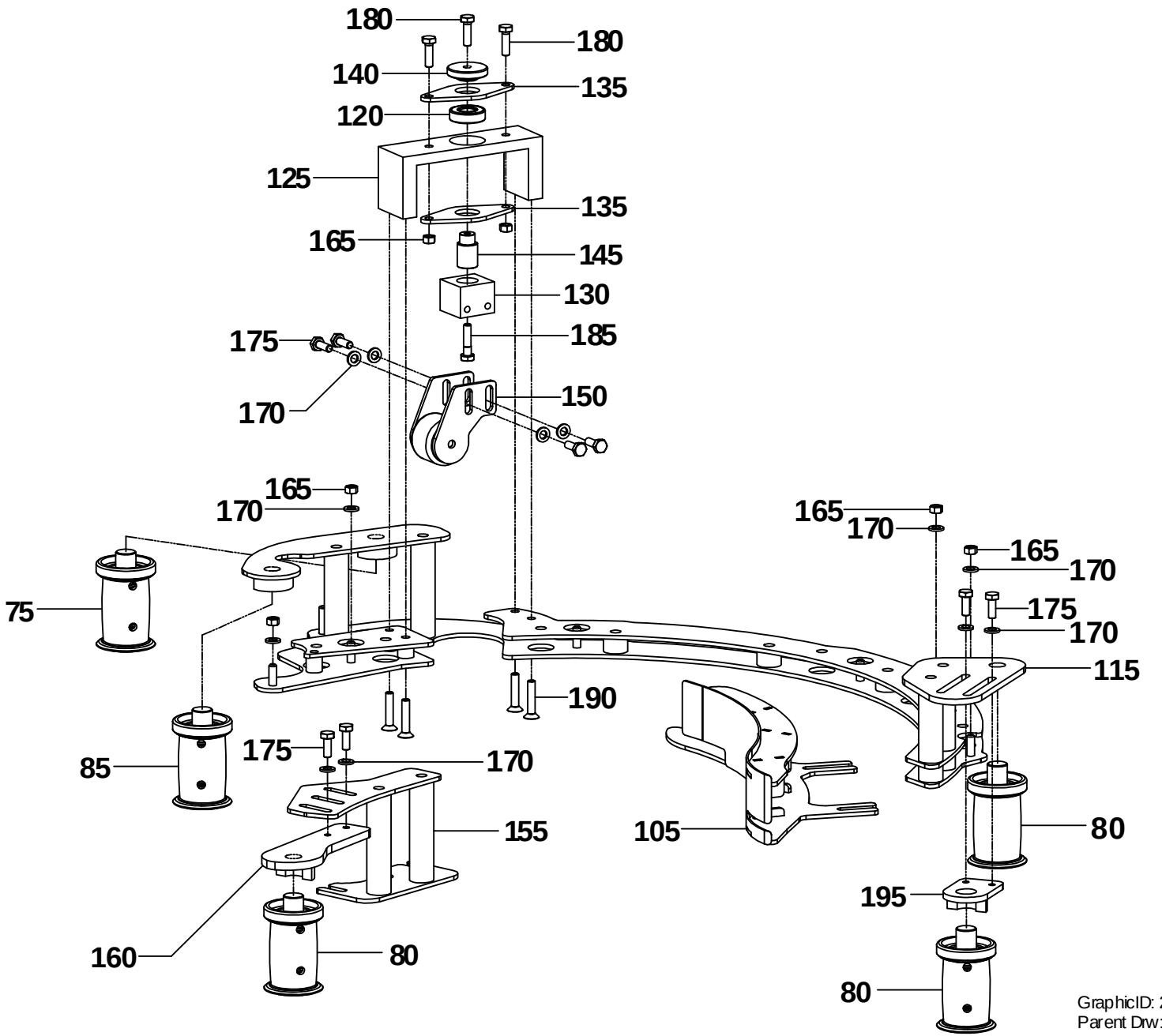
180
180
140
135
120
125
135
165
145
130
175
185
170
150
165
170
165
170
165
170
175
170
115
75
190
85
175
170
155
105
80
160
80
195
80
GraphicID: 2948945-2.eps
Parent Drw: 2948945

Pos	Part No	UN	Qty	Description	Page No
2855370-0108: TPA 0330SQ (Cont'd)					
065	2502336-0000		1	WHEEL	
070	2855372-0000		1	GUIDE	
2855370-0109: TPA 0500SQ					
050	3008987-0000		1	SLEEVE	
1010	*2727221-0000*		*1*	*CAP*	
1015	*3008963-0000*		*1*	*KNOB*	
1020	*2664459-0000*		*1*	*RETAINING RING*	
1025	*2664449-0000*		*1*	*BALL BEARING*	
1030	*2855252-0000*		*1*	*SHAFT*	
1035	*2855258-0000*		*1*	*BUSHING*	
1040	*2855259-0000*		*1*	*SPACER*	
060	2855264-0000		1	WHEEL	
065	2528227-0000		1	WHEEL	
070	2855303-0000		1	GUIDE	
2855370-0110: TPA 0750SQ					
050	3008989-0000		1	SLEEVE	
1010	*2727221-0000*		*1*	*CAP*	
1015	*3008964-0000*		*1*	*KNOB*	
1020	*2664459-0000*		*1*	*RETAINING RING*	
1025	*2664449-0000*		*1*	*BALL BEARING*	
1030	*2855254-0000*		*1*	*SHAFT*	
1035	*2855258-0000*		*1*	*BUSHING*	
1040	*2855261-0000*		*1*	*SPACER*	
060	2855304-0000		1	WHEEL	
065	2528226-0000		1	WHEEL	
2855370-0111: TPA 1000SQ					
050	3008988-0000		1	SLEEVE	
1010	*2727221-0000*		*1*	*CAP*	
1015	*3008964-0000*		*1*	*KNOB*	
1020	*2664459-0000*		*1*	*RETAINING RING*	
1025	*2664449-0000*		*1*	*BALL BEARING*	
1030	*2855253-0000*		*1*	*SHAFT*	
1035	*2855258-0000*		*1*	*BUSHING*	
1040	*2855260-0000*		*1*	*SPACER*	
060	2855304-0000		1	WHEEL	
065	2528226-0000		1	WHEEL	
Common Parts					
075	2855233-0000		1	ROLLER	
080	2855301-0000		3	ROLLER	
085	2855300-0000		1	ROLLER	
105	2948797-0000		1	GUIDE	
115	2948798-0000		1	ROLLER SUPPORT ARM	
120	2528296-0000		1	BALL BEARING	
125	2855239-0000		1	SUPPORT	
130	2855240-0000		1	BLOCK	
135	2855241-0000		2	BEARING	
140	2855242-0000		1	COVER	
145	2855243-0000		1	POST	
150	2855244-0000		1	WHEEL	
155	2948799-0000		1	SUPPORT	
160	2948800-0000		1	SUPPORT	
165	312810-0316		6	HEXAGON NUT, NY-LOCK M6 FZB	
170	315105-0153		12	WASHER BRB 6,4X12 RFR	
175	312105-0368		8	SCREW M6S ISO 4017 M6X16 A480	
180	312105-0370		3	SCREW M6S ISO 4017 M6X20 A480	
185	312105-0372		1	SCREW M6S ISO 4017 M6X25 A480	
190	312155-0374		4	SCREW DIN 7991 MF6S M6X30 A4 70	
195	2855368-0000		1	MOUNTING PLATE	

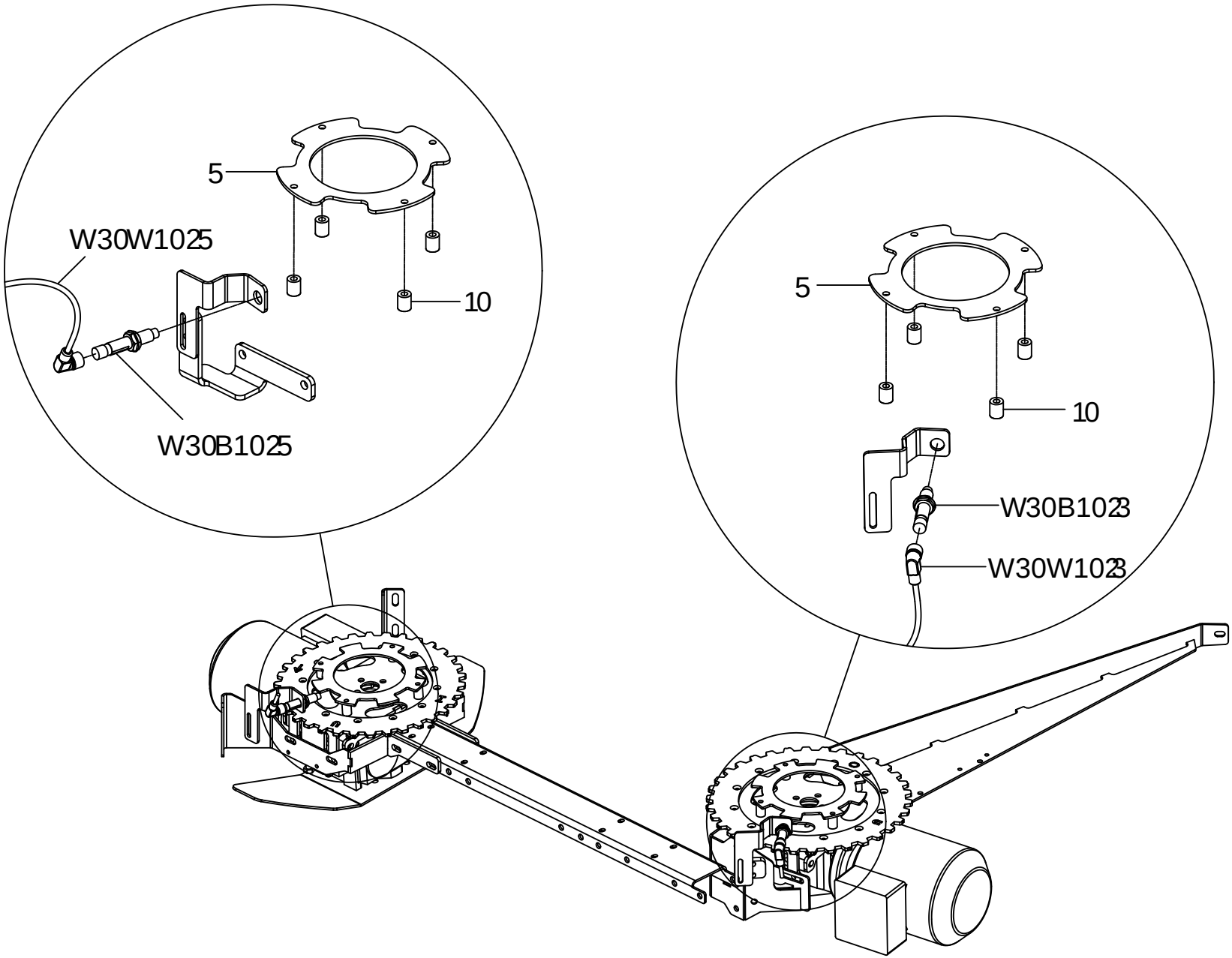

GraphicID: 2948946-1.eps
Parent Drw: 2948946

ECM: 377376 - 20090203
Group number: 2948946-0100
Assembly Drawing: 2948946-1_1_AA

Pos	Part No	UN	Qty	Description	Page No
-					
005	2948858-0000		2	PLATE	
010	2948859-0000		8	SPACER	
W30B1023	90600-0462		1	INDUCTIVE SWITCH, E2A-M12LN05-M1-B1-TP	
W30B1025	90600-0462		1	INDUCTIVE SWITCH, E2A-M12LN05-M1-B1-TP	
W30W1023	351312-0150		1	ACTUATOR/SENSOR CABLE RKWTN 4-225/15M	
W30W1025	351312-0150		1	ACTUATOR/SENSOR CABLE RKWTN 4-225/15M	

Pos	Part No	UN	Qty	Description	Page No

FALLEN PACKAGE SENSOR

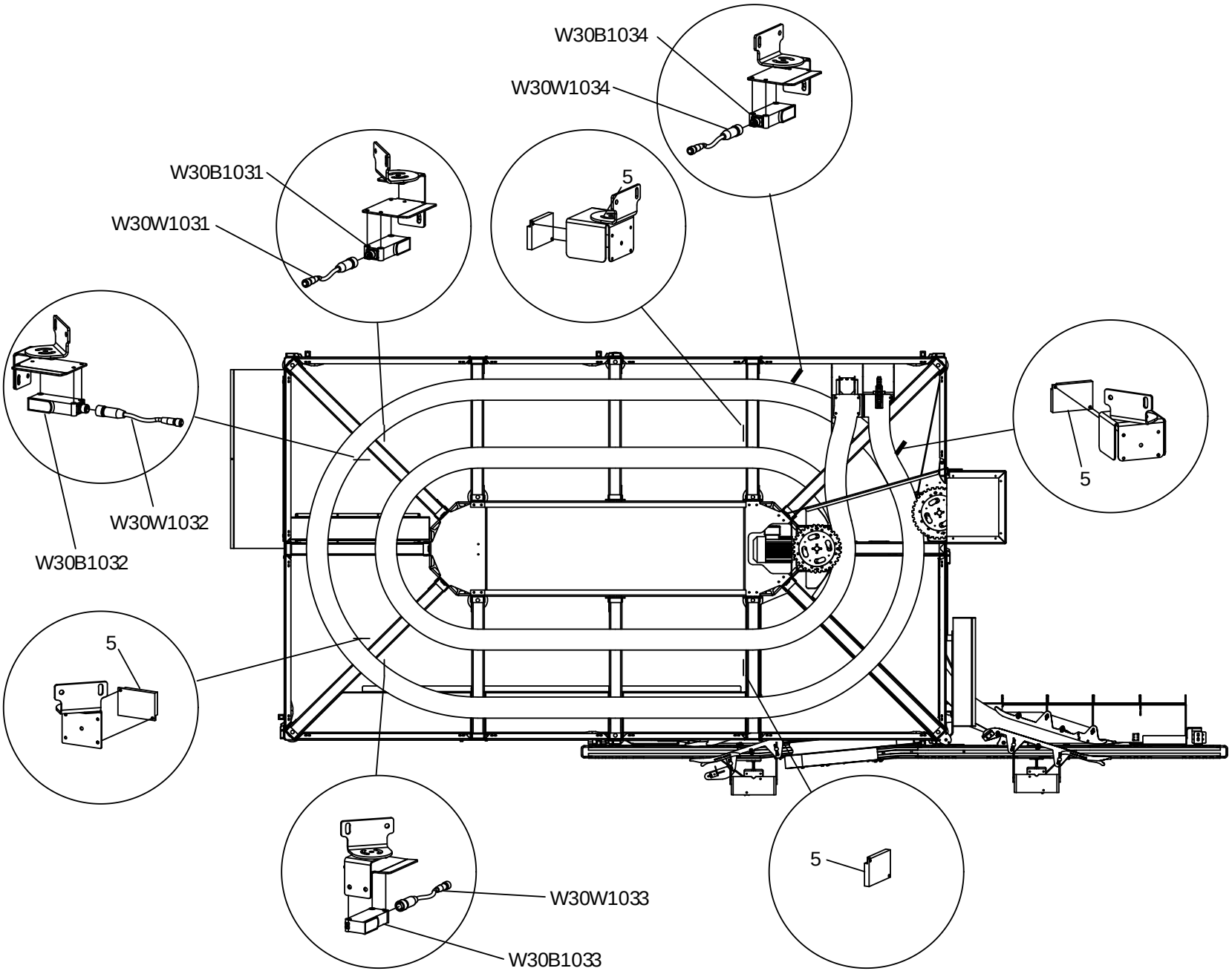

ECM: 389618 - 20090417
Group number: 2948906-0100
Assembly Drawing: 2948906-1_1_AA

Pos	Part No	UN	Qty	Description	Page No
-					
005	90458-0696		4	REFLECTOR, PL40A	
W30B1031	90600-6175		1	PHOTOCELL, WL18-3P430	
W30B1032	90600-6175		1	PHOTOCELL, WL18-3P430	
W30B1033	90600-6175		1	PHOTOCELL, WL18-3P430	
W30B1034	90600-6175		1	PHOTOCELL, WL18-3P430	
W30W1031	351405-0050		1	ACT/SENS. CABLE RSMVN 3-PRKT 4-3-06/5,0M	
W30W1032	351405-0050		1	ACT/SENS. CABLE RSMVN 3-PRKT 4-3-06/5,0M	
W30W1033	351405-0050		1	ACT/SENS. CABLE RSMVN 3-PRKT 4-3-06/5,0M	
W30W1034	351405-0050		1	ACT/SENS. CABLE RSMVN 3-PRKT 4-3-06/5,0M	

Pos	Part No	UN	Qty	Description	Page No

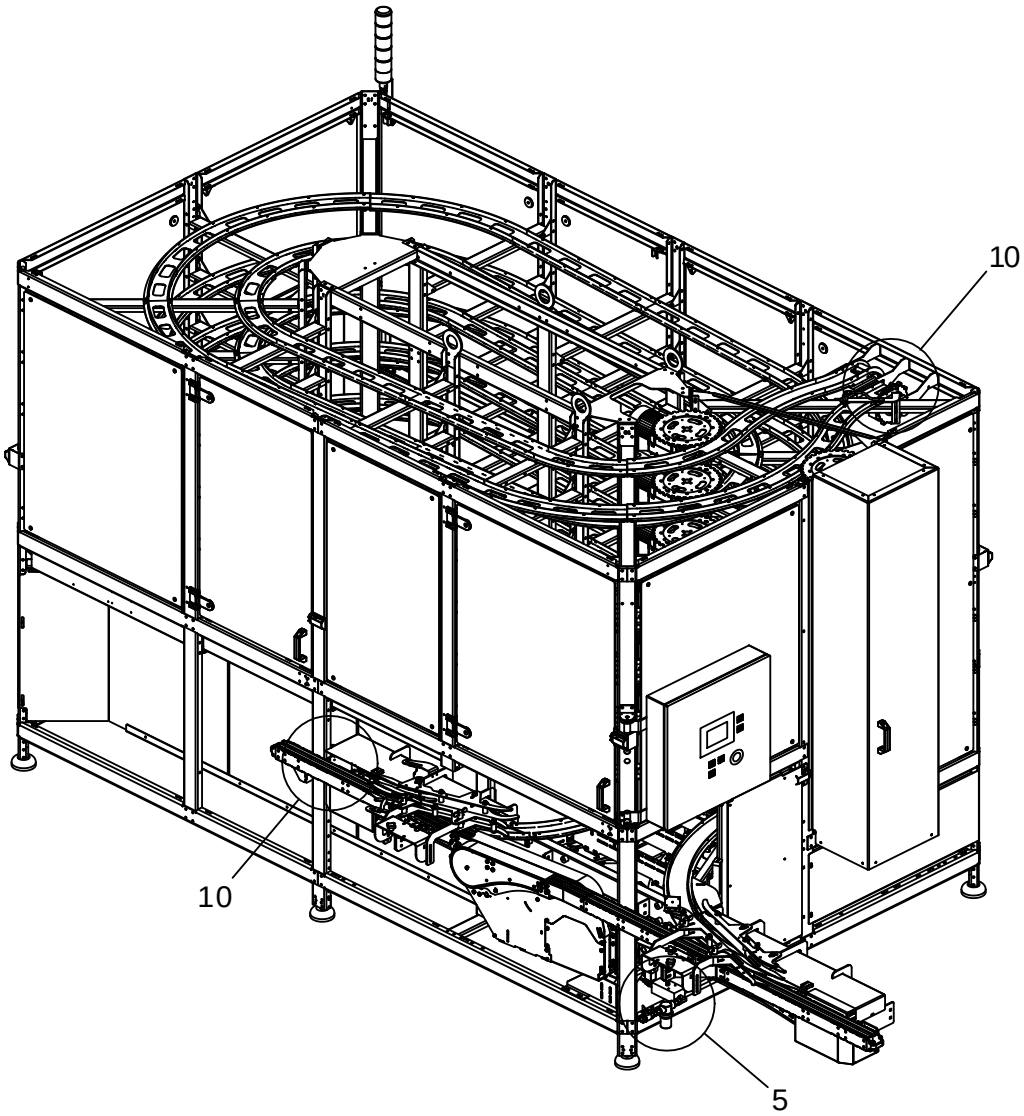

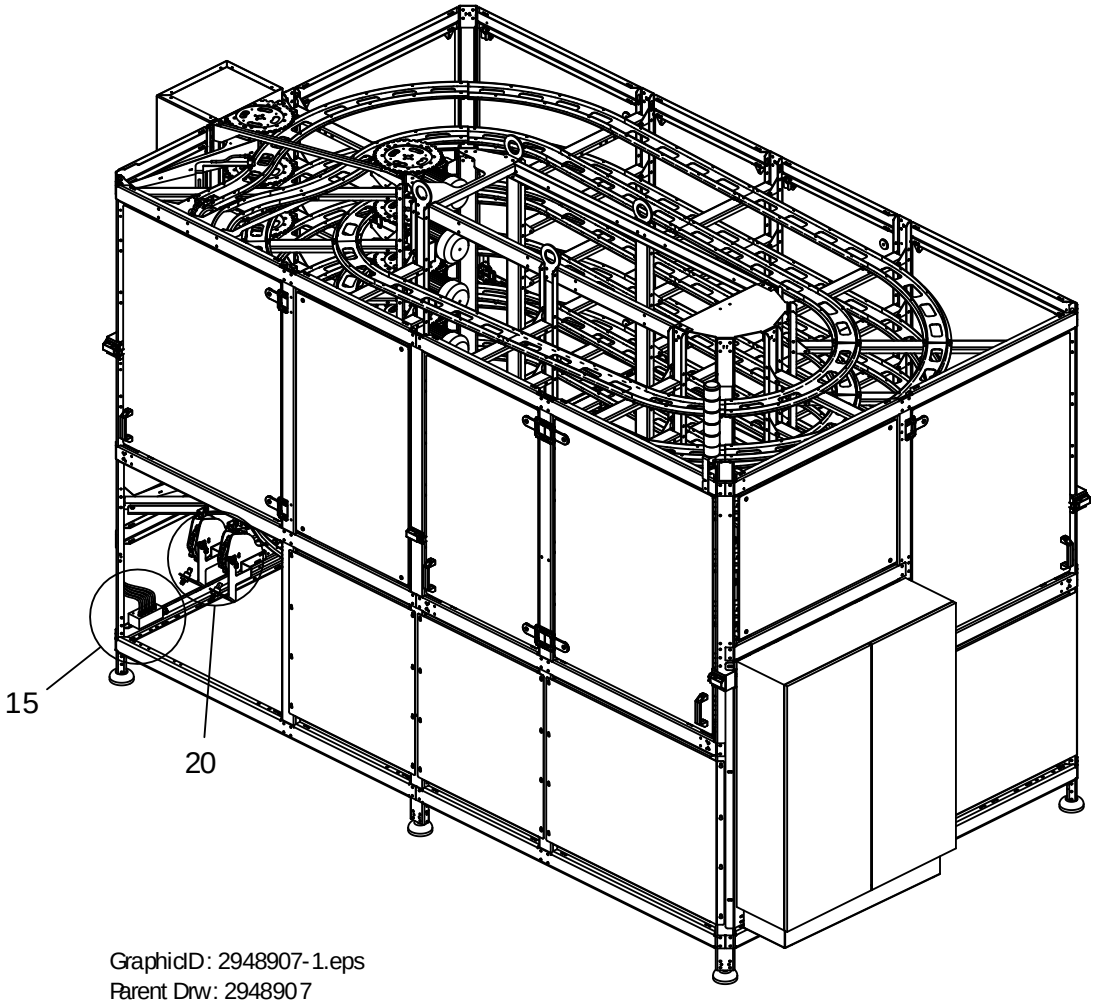

GraphicID: 2948907-1.eps
Parent Drw: 2948907

ECM: 378978 - 20090203
Group number: 2948907-0100
Assembly Drawing: 2948907-1_1_AA

Pos	Part No	UN	Qty	Description	Page No
-					
005	3008982-0100		1	SPRAY GUN	**2-123**
010	2948947-0100		1	MIST NOZZLE	**2-125**
015	3008983-0100		1	RINSE MANIFOLD	**2-127**
020	3008984-0100		1	RINSE NOZZLES	**2-129**

Pos	Part No	UN	Qty	Description	Page No

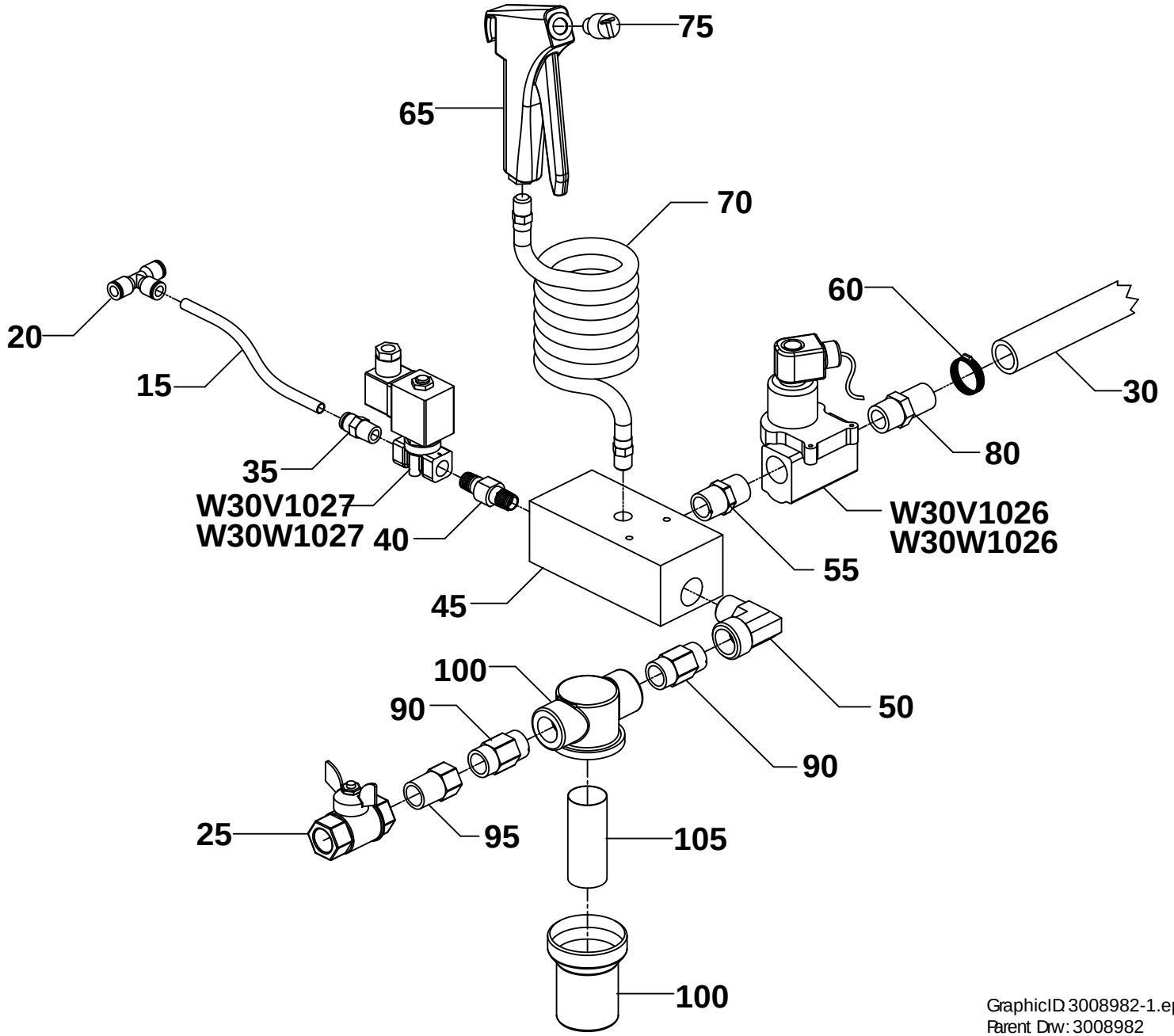

GraphicID: 3008982-1.eps
Parent Drw: 3008982

ECM: 393763 - 20090417
Group number: 3008982-0100
Assembly Drawing: 3008982-1_1_AB

Pos	Part No	UN	Qty	Description	Page No
FEEDSIDE = LEFT					
045	2855342-0000		1	MANIFOLD	
FEEDSIDE = RIGHT					
045	2855416-0000		1	MANIFOLD	
Common Parts					
015	90166-0013	M	14	TUBE 8 MM PA BLUE	
020	342748-0103		1	T-CONNECTION 8MM	
025	90187-0029		1	BALL VALVE G1/2, NPBR	
030	1039077-0000		2	HOSE, NYLON BRAID	
035	1497047-0000		1	CONNECTION	
040	2664554-0000		1	NIPPLE	
050	2855341-0000		1	ELBOW	
055	2664557-0000		2	ADAPTER	
060	1084787-0000		1	CLAMP, 3/4"	
065	90458-1483		1	SPRAY GUN WATER G1/4	
070	90458-1741		1	HOSE ASSEMBLY, CEJN 19 958 9669	
075	2506940-0000		1	NOZZLE	
080	2664558-0000		1	HOSE COUPLING	
090	2727274-0000		2	ADAPTER	
095	2727275-0000		2	ADAPTER	
100	90458-0921		1	FILTER SP 122-200	
	90458-2541		*1*	*FILTER, CP23174-7-304SS*	
105	90458-2541		1	FILTER, CP23174-7-304SS	
W30V1026	90042-0249		1	SOLENOID VALVE OFFICINE DI ENSINO	
W30V1027	90042-0248		1	SOLENOID VALVE OFFICIENE DI ENSINO	
W30W1026	351150-0431	M	8	CABLE OLFLEX 2X0,75 MM2 LIGHT/GREY	
W30W1027	351150-0431	M	8	CABLE OLFLEX 2X0,75 MM2 LIGHT/GREY	

Pos	Part No	UN	Qty	Description	Page No

MIST NOZZLE

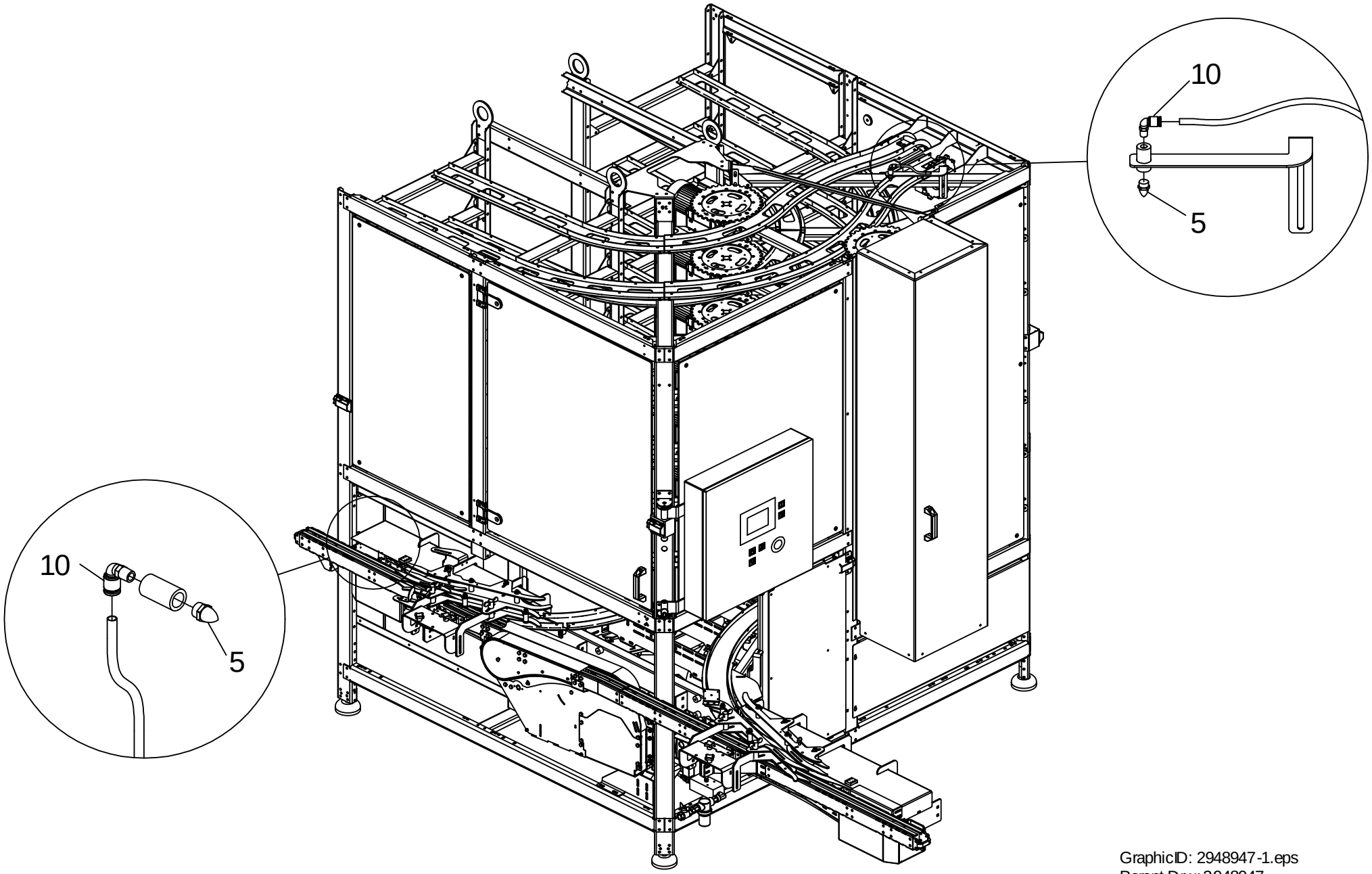

GraphicID: 2948947-1.eps
Parent Drw: 2948947

ECM: 377377 - 20090203
Group number: 2948947-0100
Assembly Drawing: 2948947-1_1_AA

Pos	Part No	UN	Qty	Description	Page No
-					
005	2528337-0000		2	NOZZLE	
010	90458-2964		2	ELBOW PIPE JOINT, EXT.THREAD, D=8MM-G1/8	

Pos	Part No	UN	Qty	Description	Page No

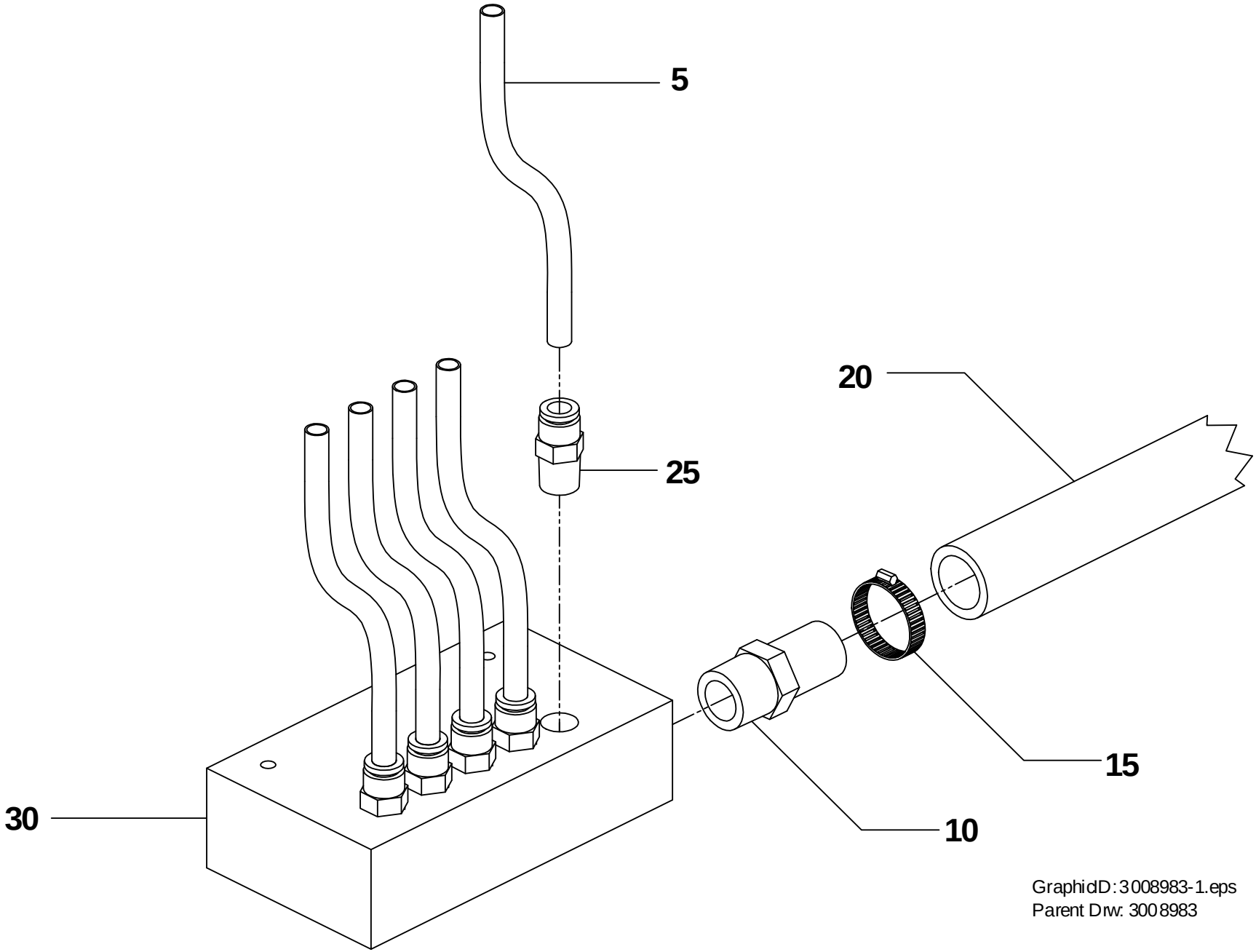

GraphidD: 3008983-1.eps
Parent Drw: 3008983

ECM: 393765 - 20090417
Group number: 3008983-0100
Assembly Drawing: 3008983-1_1_AA

Pos	Part No	UN	Qty	Description	Page No
FEEDSIDE = LEFT					
030	2855343-0000		1	MANIFOLD	
FEEDSIDE = RIGHT					
030	2948786-0000		1	MANIFOLD	
Common Parts					
005	90166-0013	M	14	TUBE 8 MM PA BLUE	
010	2664558-0000		1	HOSE COUPLING	
015	1084787-0000		1	CLAMP, 3/4"	
020	1039077-0000		1	HOSE, NYLON BRAID	
025	1497047-0000		5	CONNECTION	

Pos	Part No	UN	Qty	Description	Page No

RINSE NOZZLES

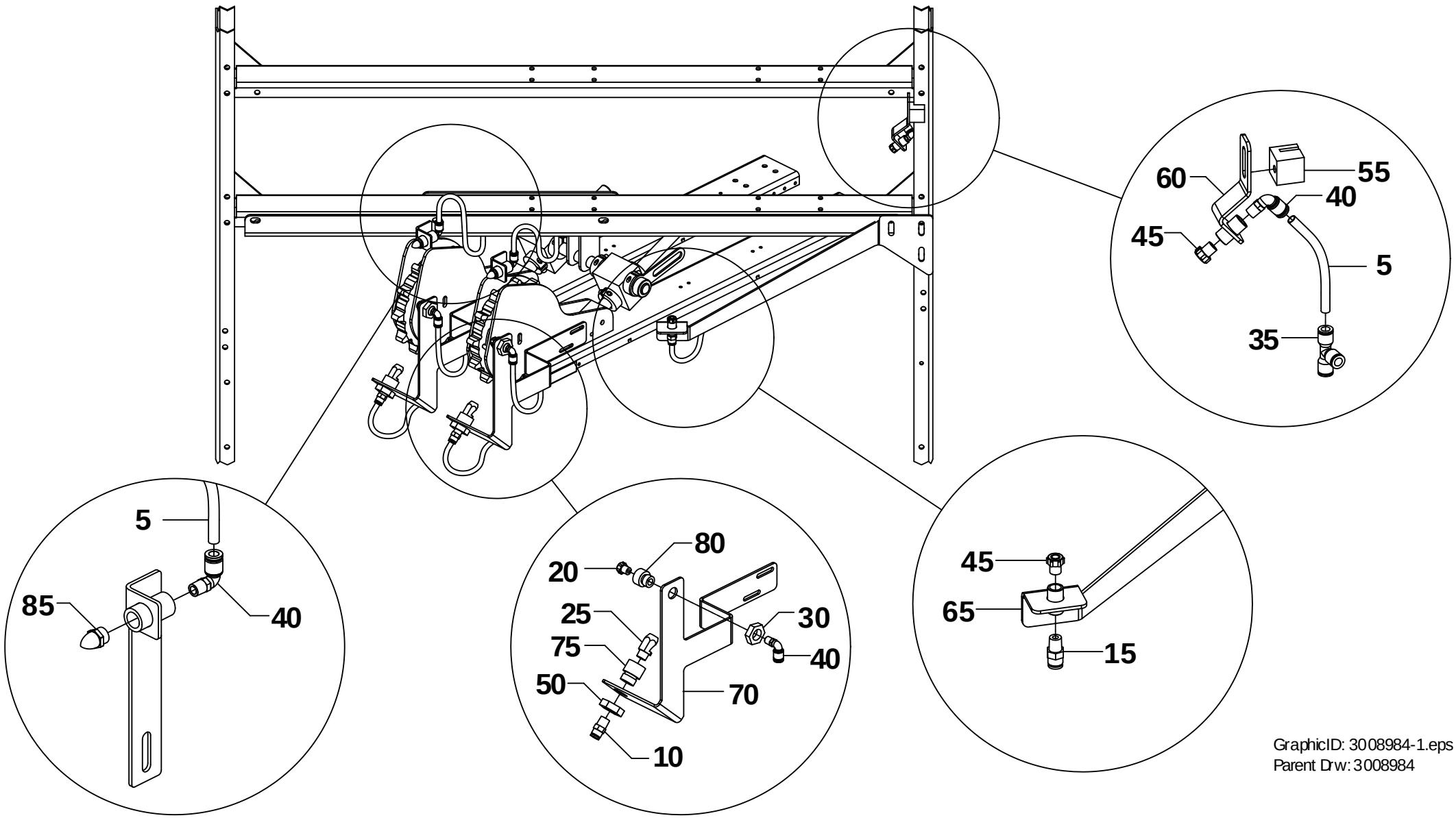

GraphicID: 3008984-1.eps
Parent Drw: 3008984

ECM: 383671 - 20090203
Group number: 3008984-0100
Assembly Drawing: 3008984-1_1_AA

Pos	Part No	UN	Qty	Description	Page No
FEEDSIDE = LEFT					
065	2664565-0000		1	BRACKET	
070	2664566-0000		2	BRACKET	
FEEDSIDE = RIGHT					
065	2948788-0000		1	BRACKET	
070	2948789-0000		2	BRACKET	
Common Parts					
005	90166-0013	M	14	TUBE 8 MM PA BLUE	
010	1497047-0000		2	CONNECTION	
015	342722-0204		1	PIPE COUPLING	
020	1497168-0000		2	NOZZLE, RINSE SYSTEM	
025	1497169-0000		2	NOZZLE, RINSE SYSTEM	
030	312631-0324		2	HEX.NUT FINE, EN 24032 M6M M16X1,5 FZB8	
035	342748-0103		3	T-CONNECTION 8MM	
040	90458-2964		5	ELBOW PIPE JOINT, EXT.THREAD, D=8MM-G1/8	
045	1084784-0000		2	NOZZLE, GREEN, POLY	
050	2664562-0000		2	NUT	
055	2664563-0000		1	BLOCK	
060	2664564-0000		1	BRACKET	
075	2664567-0000		2	COUPLING	
080	2664568-0000		2	COUPLING	
085	2528337-0000		2	NOZZLE	

Pos	Part No	UN	Qty	Description	Page No

Tetra Pak

SPC
Spare Parts Catalogue

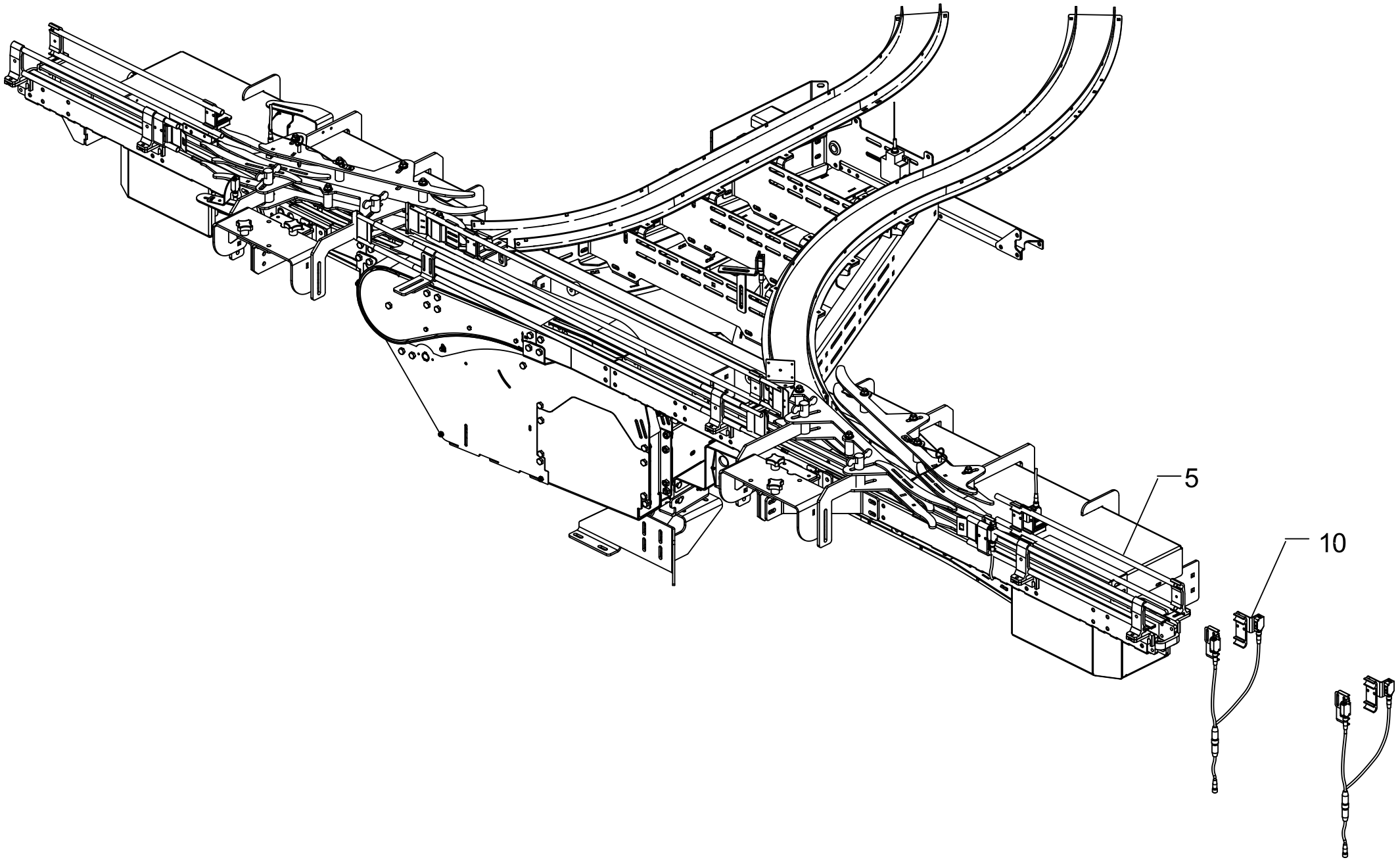
5
10

ECM: 381690 - 20090203
Group number: 663611-0100
Assembly Drawing: 663611-1_1_AA

Pos	Part No	UN	Qty	Description	Page No
-					
005	2948908-0100		1	GUIDE	**3-5, 3-7**
010	2948909-0100		1	OUTFEED SENSOR	**3-9**

Pos	Part No	UN	Qty	Description	Page No

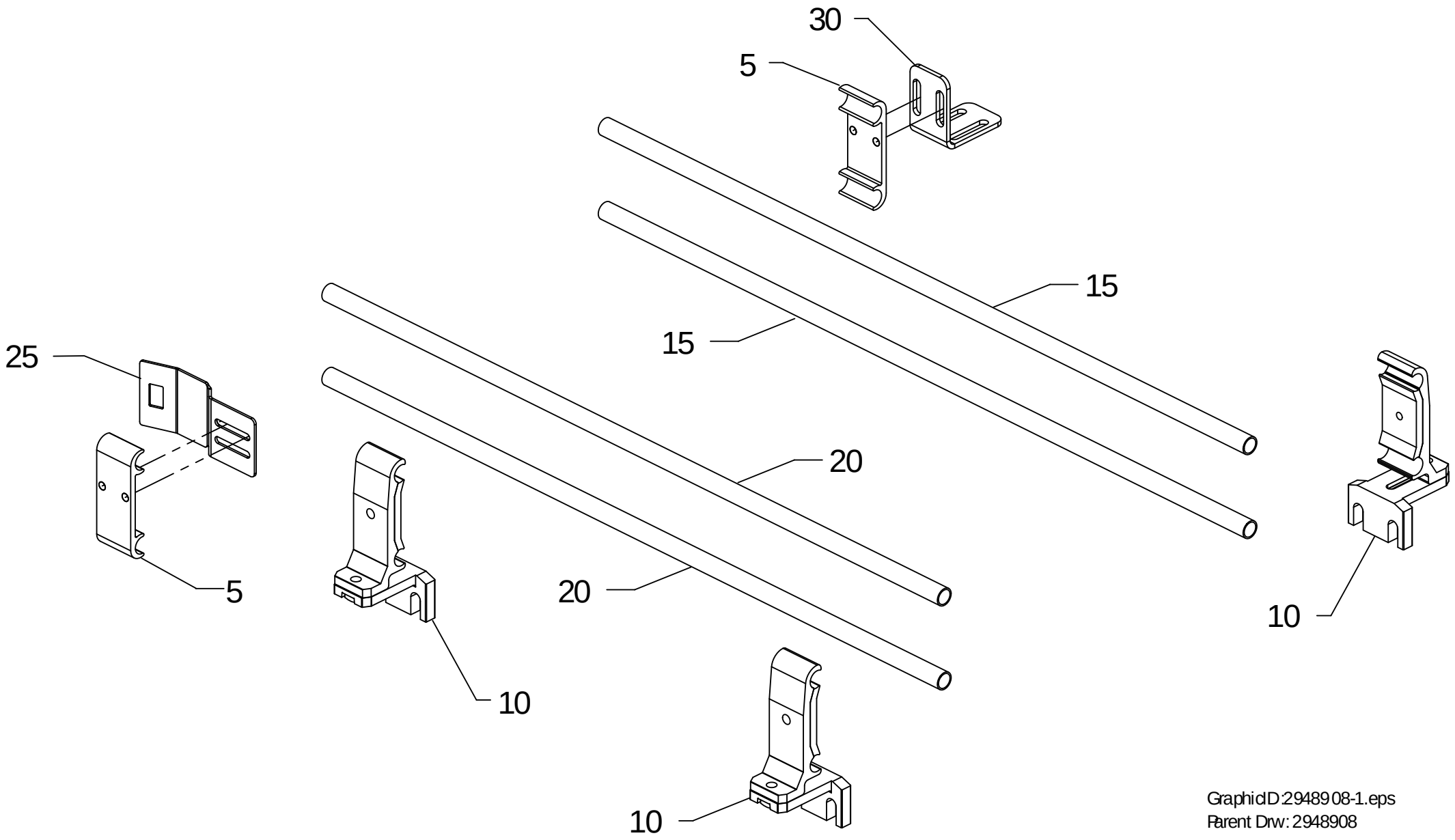

GraphicID:2948908-1.eps
Parent Drw: 2948908

ECM: 381689 - 20090203
Group number: 2948908-0100
Assembly Drawing: 2948908-1_1_AA

This list covers pages from 3-4 to 3-7

Pos	Part No	UN	Qty	Description	Page No
-					
005	1020637-0000		2	HOLDER	
010	1550743-0201		3	RAIL HOLDER PC23	
015	3008905-0000		2	RAIL	
020	3008906-0000		2	RAIL	
025	3008896-0000		1	PLATE	
030	3008897-0000		1	BRACKET	

Pos	Part No	UN	Qty	Description	Page No

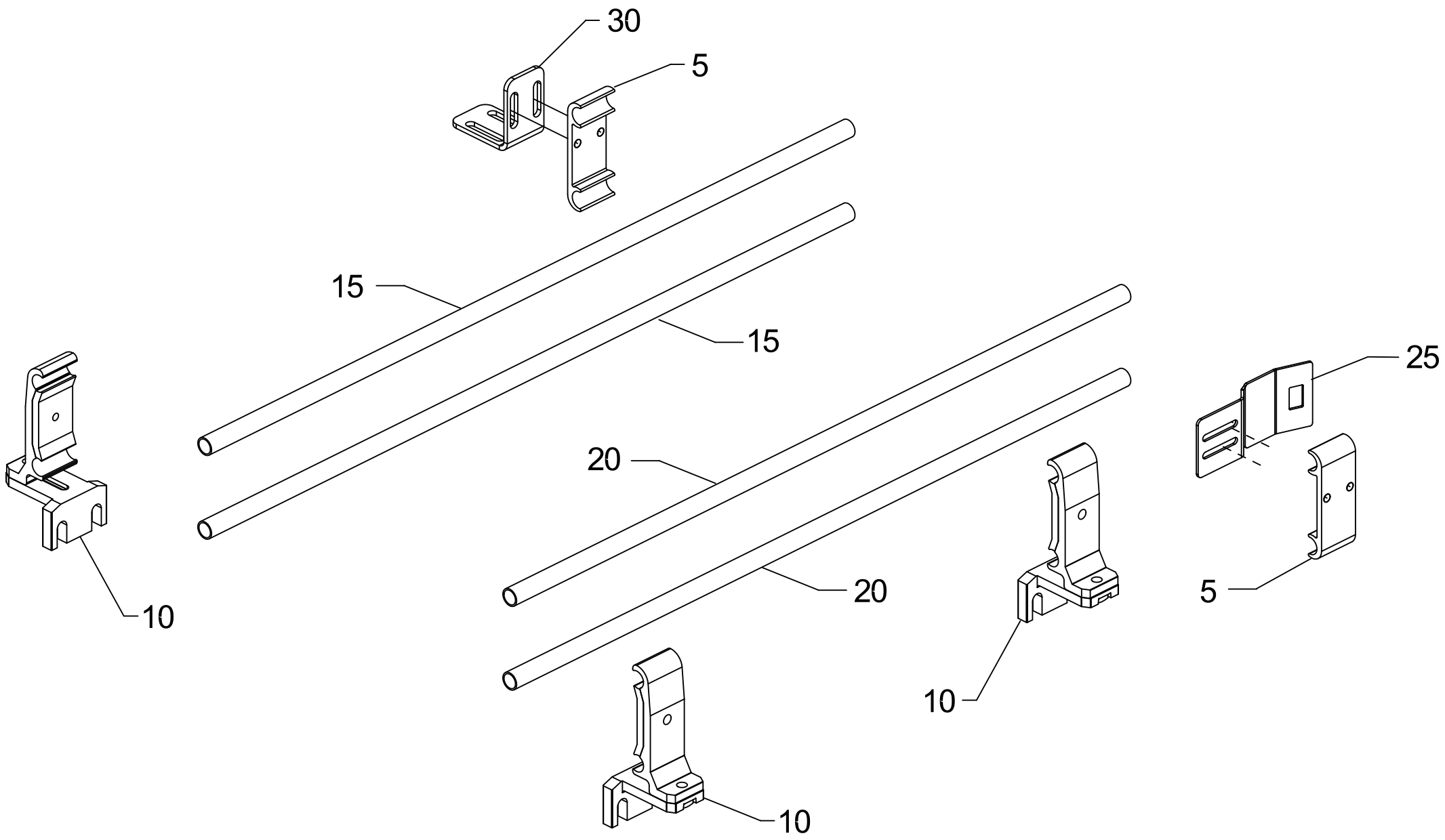
30
5
15
15
10
20
20
10
10
25
5

ECM: 381689 - 20090203
Group number: 2948908-0100
Assembly Drawing: 2948908-2_1_AA

This list covers pages from 3-4 to 3-7

Pos	Part No	UN	Qty	Description	Page No
-					
005	1020637-0000		2	HOLDER	
010	1550743-0201		3	RAIL HOLDER PC23	
015	3008905-0000		2	RAIL	
020	3008906-0000		2	RAIL	
025	3008896-0000		1	PLATE	
030	3008897-0000		1	BRACKET	

Pos	Part No	UN	Qty	Description	Page No

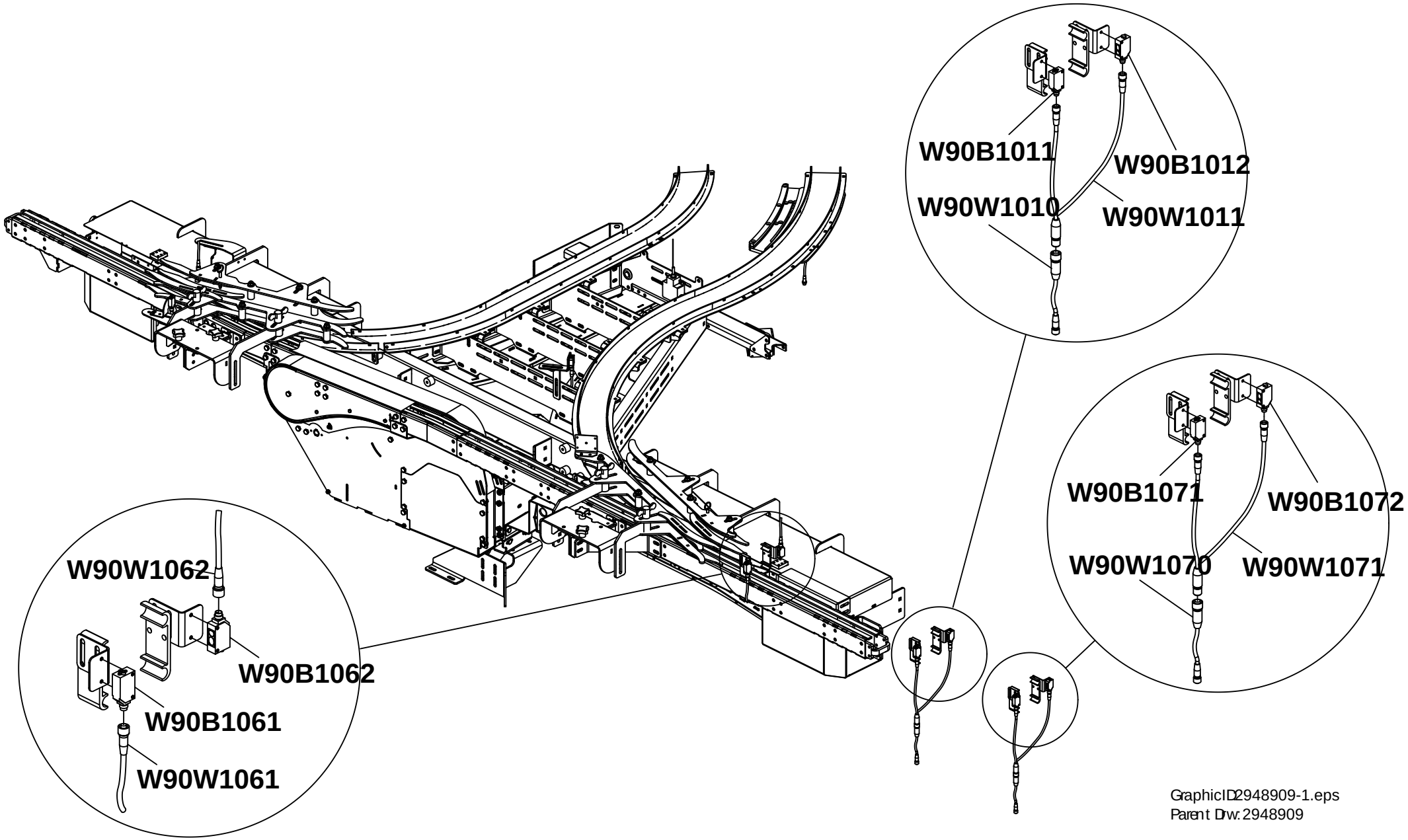
W90B1011
W90B1012
W90W1010
W90W1011
W90B1071
W90B1072
W90W1070
W90W1071
W90W1062
W90B1062
W90B1061
W90W1061
GraphicID:2948909-1.eps
Parent Drw: 2948909

ECM: 388980 - 20090417
Group number: 2948909-0100
Assembly Drawing: 2948909-1_1_AB

Pos	Part No	UN	Qty	Description	Page No
-					
W90B1011	90459-7273		1	PHOTOCELL E3Z-T81C-G0SR D-CN	
W90B1012	90459-7274		1	PHOTOCELL E3Z-T81C-G0SR L-CN	
W90B1061	90459-7273		1	PHOTOCELL E3Z-T81C-G0SR D-CN	
W90B1062	90459-7274		1	PHOTOCELL E3Z-T81C-G0SR L-CN	
W90B1071	90459-7273		1	PHOTOCELL E3Z-T81C-G0SR D-CN	
W90B1072	90459-7274		1	PHOTOCELL E3Z-T81C-G0SR L-CN	
W90W1010	351405-0050		1	ACT/SENS. CABLE RSMVN 3-PRKT 4-3-06/5,0M	
W90W1011	90459-6586		1	ACT/SENS.Y-CABLE, ASBN 2-PRKMV 4-07/0,6M	
W90W1061	351305-0150		1	ACTUATOR/SENSOR CABLE PRKMV 4-07/15M	
W90W1062	351305-0150		1	ACTUATOR/SENSOR CABLE PRKMV 4-07/15M	
W90W1070	351405-0050		1	ACT/SENS. CABLE RSMVN 3-PRKT 4-3-06/5,0M	
W90W1071	90459-6586		1	ACT/SENS.Y-CABLE, ASBN 2-PRKMV 4-07/0,6M	

Pos	Part No	UN	Qty	Description	Page No

Tetra Pak

SPC
Spare Parts Catalogue

This page is intentionally left blank.

ECM: 389536 - 20090417
Group number: 663605-0400
Assembly Drawing:

Pos	Part No	UN	Qty	Description	Page No
APPROVAL CSA					
005	2948956-0100		1	ELECTRICAL CABINET - CSA	**4-5, 4-7**
APPROVAL IEC					
005	2948955-0100		1	ELECTRICAL CABINET - IEC	**4-9, 4-11**
Common Parts					
010	2727212-0200		1	CONTROL PANEL	**4-13**
015	2948911-0100		1	WARNING LAMP	**4-15**
020	2948894-0100		1	ELECTRICAL CONNECTIONS	**4-17**
025	2920793-0200		1	SOFTWARE	**4-19**

Pos	Part No	UN	Qty	Description	Page No

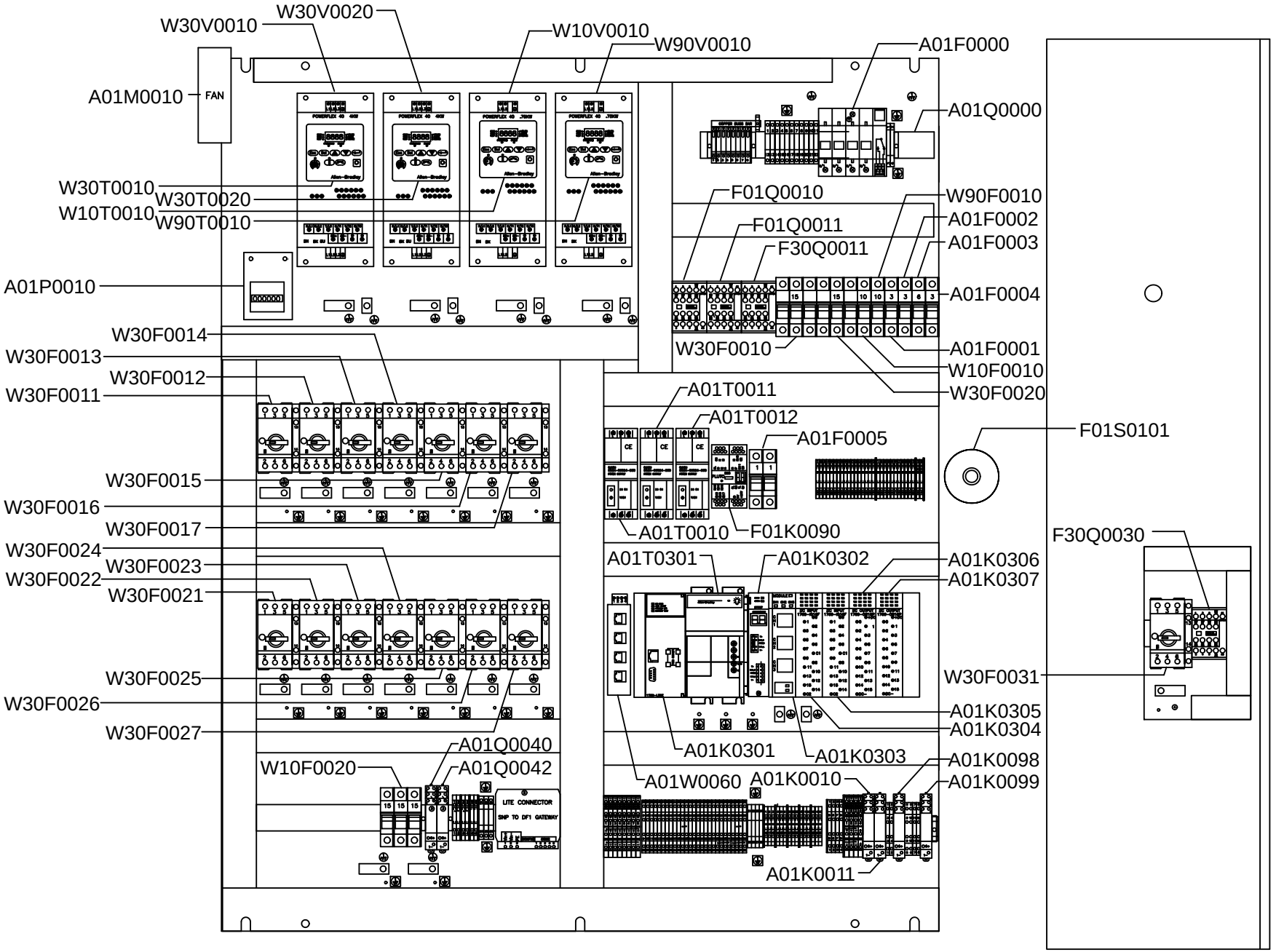

GraphicID:2948956-1.eps
Parent Drw: 2948956

ECM: 387709 - 20090417
Group number: 2948956-0100
Assembly Drawing: 2948956-1_1_AA

This list covers pages from 4-4 to 4-7

Pos	Part No	UN	Qty	Description	Page No
-					
100	2837851-0000		1	CD BOX	
A01F0000	90082-0013		1	OVER VOLT. PROTECT. PU 4C-R 230 VAC	
	90082-0301		*3*	*OVER VOLT. PROTECT. PU 0 C 833951*	
A01F0000	90082-0301		3	OVER VOLT. PROTECT. PU 0 C 833951	
A01F0001	90458-2509		1	FUSE, ATDR3	
A01F0002	90458-2509		1	FUSE, ATDR3	
A01F0003	90458-2510		1	FUSE, ATDR6	
A01F0004	90458-2509		1	FUSE, ATDR3	
A01F0005	90459-6907		2	FUSE, ATDR1	
A01K0010	90129-0018		1	BASE OMRON P2RF-08-E	
A01K0010	90119-0108		1	RELAY OMRON G2R-2-SNI-24DC	
	90129-0018		*1*	*BASE OMRON P2RF-08-E*	
A01K0011	90119-0108		1	RELAY OMRON G2R-2-SNI-24DC	
	90129-0018		*1*	*BASE OMRON P2RF-08-E*	
A01K0011	90129-0018		1	BASE OMRON P2RF-08-E	
A01K0098	90119-0108		1	RELAY OMRON G2R-2-SNI-24DC	
	90129-0018		*1*	*BASE OMRON P2RF-08-E*	
A01K0098	90129-0018		1	BASE OMRON P2RF-08-E	
A01K0099	90119-0108		1	RELAY OMRON G2R-2-SNI-24DC	
	90129-0018		*1*	*BASE OMRON P2RF-08-E*	
A01K0099	90129-0018		1	BASE OMRON P2RF-08-E	
A01K0301	90459-5260		1	PROCESSOR L32E, SERIES A, 1769-L32E	
A01K0302	90459-2483		1	DEVICENET SCANNER, 1769-SDN SERIES B	
A01K0303	90459-6553		1	PLC DSI /MODBUS COMMUN. MOD., 1769-SM2/A	
A01K0304	90459-2473		1	DIG INP. MOD.16 PTS FAST,1769-IQ16F SERA	
A01K0305	90459-2473		1	DIG INP. MOD.16 PTS FAST,1769-IQ16F SERA	
A01K0306	90459-2476		1	DIGIT. OUT. MOD. 16 P ESCP, 1769-OB16P	
A01K0307	90459-2476		1	DIGIT. OUT. MOD. 16 P ESCP, 1769-OB16P	
A01M0010	90503-3774		1	FILTER FAN PF2500 IP54 230V AC	
	90503-3783		*1*	*FILTER PF/PFA2500/3000 5 PCS*	
A01P0010	90178-0007		1	HOUR COUNTER, BG 40,17-1 12-48VDC	
A01Q0000	90459-5781		1	HANDLE, NZM1-XTVD-0	
A01Q0040	90129-0018		1	BASE OMRON P2RF-08-E	
A01Q0040	90119-0108		1	RELAY OMRON G2R-2-SNI-24DC	
	90129-0018		*1*	*BASE OMRON P2RF-08-E*	
A01Q0042	90129-0018		1	BASE OMRON P2RF-08-E	
A01T0010	90459-5632		1	POWER SUPPLY UNIT, 100-240 VAC/24VDC2,5A	
A01T0011	90459-5632		1	POWER SUPPLY UNIT, 100-240 VAC/24VDC2,5A	
A01T0012	90459-5632		1	POWER SUPPLY UNIT, 100-240 VAC/24VDC2,5A	
A01T0301	90459-2457		1	POWER SUPPLY 120/240 VAC,1769-PA4 SERIEA	
A01W0060	90459-2457		1	POWER SUPPLY 120/240 VAC,1769-PA4 SERIEA	
F01K0090	90459-6692		1	SAFETY PLC, PLUTO B20 20-070-06	
F01Q0010	90459-5316		1	CONTACTOR 4KW 24VDC, DILM9-32	
F01Q0011	90459-5316		1	CONTACTOR 4KW 24VDC, DILM9-32	
F30Q0011	90459-5316		1	CONTACTOR 4KW 24VDC, DILM9-32	
	-- Note! --			*Only with option Chain Cleaner	
F30Q0030	90459-5316		1	CONTACTOR 4KW 24VDC, DILM9-32	
F01S0101	90458-1651		1	EMERGENCY STOP, ZB4-BS-844 ZB4-BZ-104	
W10F0010	90458-2511		1	FUSE, ATDR10	
W10F0020	90458-2512		3	FUSE, ATDR15	
W30F0010	90458-2512		3	FUSE, ATDR15	
W30F0011	90259-0317		1	AUXILIARY CONTACT 072896 NHI11-PKZ0	
W30F0011	90459-5324		1	OVERLOAD PROTECTION, PKZM0-1,6	
W30F0012	90259-0317		1	AUXILIARY CONTACT 072896 NHI11-PKZ0	
W30F0012	90459-5324		1	OVERLOAD PROTECTION, PKZM0-1,6	
W30F0013	90259-0317		1	AUXILIARY CONTACT 072896 NHI11-PKZ0	
W30F0013	90459-5324		1	OVERLOAD PROTECTION, PKZM0-1,6	
W30F0014	90459-5324		1	OVERLOAD PROTECTION, PKZM0-1,6	
W30F0014	90259-0317		1	AUXILIARY CONTACT 072896 NHI11-PKZ0	
W30F0015	90259-0317		1	AUXILIARY CONTACT 072896 NHI11-PKZ0	
W30F0015	90459-5324		1	OVERLOAD PROTECTION, PKZM0-1,6	
W30F0016	90459-5324		1	OVERLOAD PROTECTION, PKZM0-1,6	
W30F0016	90259-0317		1	AUXILIARY CONTACT 072896 NHI11-PKZ0	
W30F0017	90459-5324		1	OVERLOAD PROTECTION, PKZM0-1,6	
W30F0017	90259-0317		1	AUXILIARY CONTACT 072896 NHI11-PKZ0	
W30F0021	90459-5324		1	OVERLOAD PROTECTION, PKZM0-1,6	
W30F0021	90259-0317		1	AUXILIARY CONTACT 072896 NHI11-PKZ0	
W30F0022	90259-0317		1	AUXILIARY CONTACT 072896 NHI11-PKZ0	
W30F0022	90459-5324		1	OVERLOAD PROTECTION, PKZM0-1,6	
W30F0023	90259-0317		1	AUXILIARY CONTACT 072896 NHI11-PKZ0	
W30F0023	90459-5324		1	OVERLOAD PROTECTION, PKZM0-1,6	
W30F0024	90459-5324		1	OVERLOAD PROTECTION, PKZM0-1,6	
W30F0024	90259-0317		1	AUXILIARY CONTACT 072896 NHI11-PKZ0	
W30F0025	90259-0317		1	AUXILIARY CONTACT 072896 NHI11-PKZ0	
W30F0025	90459-5324		1	OVERLOAD PROTECTION, PKZM0-1,6	
W30F0026	90259-0317		1	AUXILIARY CONTACT 072896 NHI11-PKZ0	
W30F0026	90459-5324		1	OVERLOAD PROTECTION, PKZM0-1,6	
W30F0027	90259-0317		1	AUXILIARY CONTACT 072896 NHI11-PKZ0	
W30F0027	90459-5324		1	OVERLOAD PROTECTION, PKZM0-1,6	
W30F0031	90459-5324		1	OVERLOAD PROTECTION, PKZM0-1,6	
W30F0031	90259-0317		1	AUXILIARY CONTACT 072896 NHI11-PKZ0	
W90F0010	90458-2511		1	FUSE, ATDR10	
W10T0010	90459-3442		1	VARIABLE FREQUENCY DRIVE 22B-A5P0N104	

Machine Type | Group Description | Used-In | Group Number | Page No

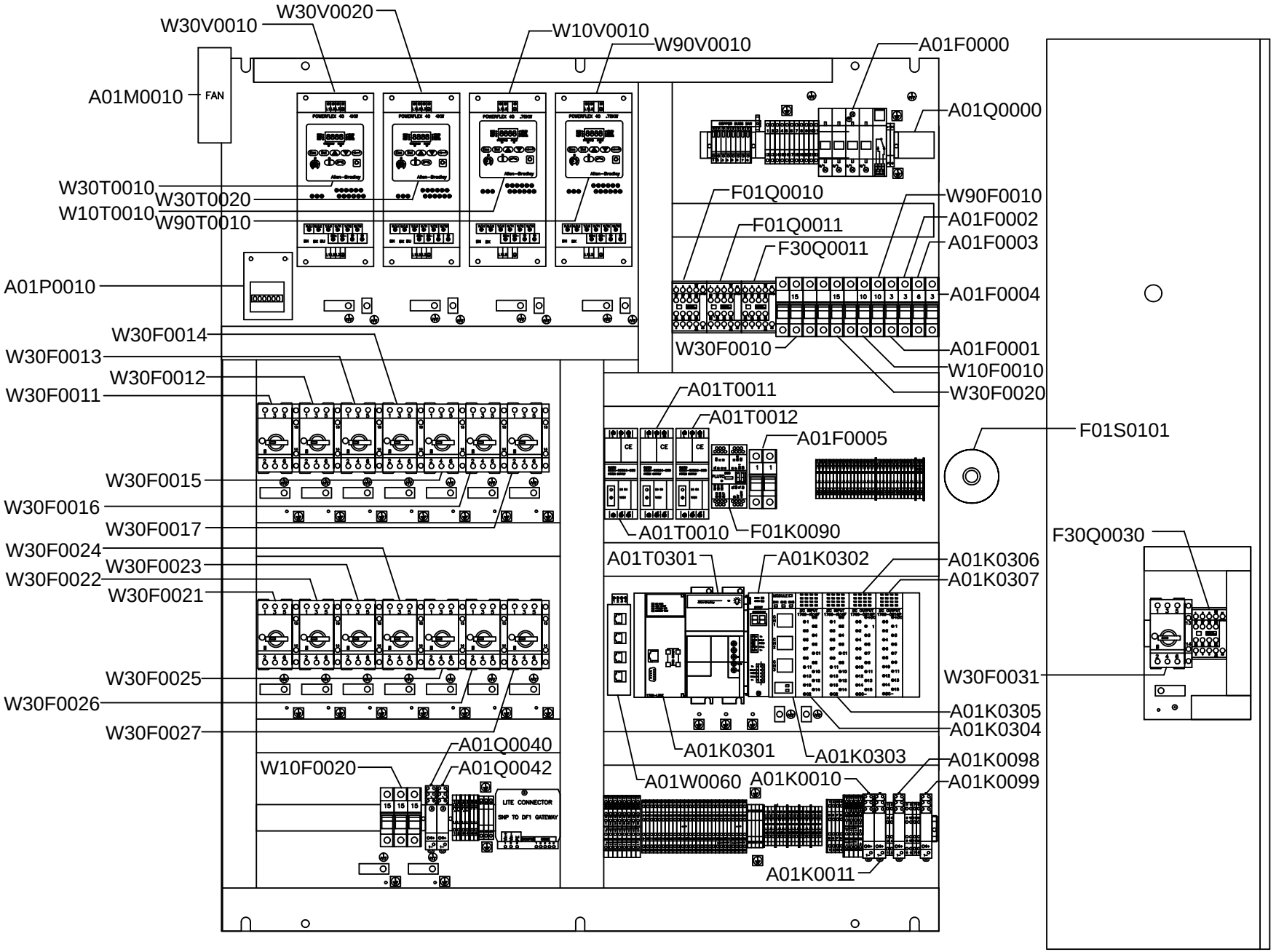

GraphicID:2948956-1.eps
Parent Drw: 2948956

Pos	Part No	UN	Qty	Description	Page No
- (Cont'd)					
W30T0010	90459-3445		1	VARIABLE FREQUENCY DRIVE 22B-D010N104	
W30T0020	90459-3445		1	VARIABLE FREQUENCY DRIVE 22B-D010N104	
W90T0010	90459-3442		1	VARIABLE FREQUENCY DRIVE 22B-A5P0N104	
W10V0010	90459-3454		1	FOOTPRINT FILTER, 22-RF018-BL	
W30V0010	90459-3458		1	FOOTPRINT FILTER 22-RF012-BL	
W30V0020	90459-3458		1	FOOTPRINT FILTER 22-RF012-BL	
W90V0010	90459-3454		1	FOOTPRINT FILTER, 22-RF018-BL	

Pos	Part No	UN	Qty	Description	Page No

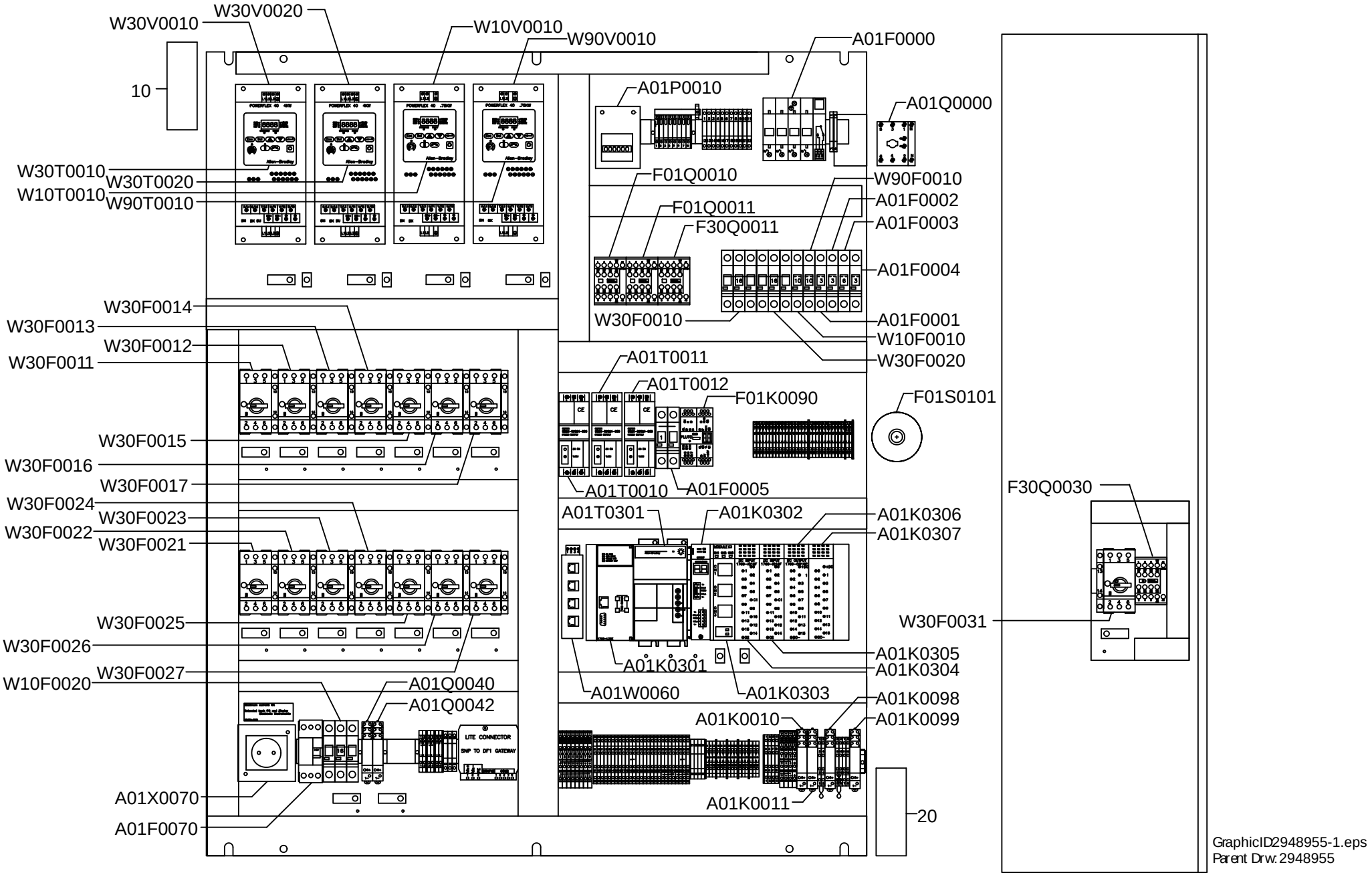

GraphicID2948955-1.eps
Parent Drw: 2948955

ECM: 397840 - 20090504
Group number: 2948955-0100
Assembly Drawing: 2948955-1_1_AB

This list covers pages from 4-8 to 4-11

Pos	Part No	UN	Qty	Description	Page No
-					
100	2837851-0000		1	CD BOX	
A01F0000	90082-0013		1	OVER VOLT. PROTECT. PU 4C-R 230 VAC	
	90082-0301		*3*	*OVER VOLT. PROTECT. PU 0 C 833951*	
A01F0001	354000-0030		1	MINIATURE CIRCUIT BREAKER, FAZ-C3/1	
A01F0002	354000-0040		1	MINIATURE CIRCUIT BREAKER, FAZ-C4/1	
A01F0003	354000-0060		1	MINIATURE CIRCUIT BREAKER, FAZ-C6/1	
A01F0004	354000-0030		1	MINIATURE CIRCUIT BREAKER, FAZ-C3/1	
A01F0005	354001-0010		1	MINIATURE CIRCUIT BREAKER, FAZ-C1/2	
A01F0070	90459-5811		1	RESIDUAL CURRENT DEVICE, FI-25/2/003-A	
A01K0010	90119-0108		1	RELAY OMRON G2R-2-SNI-24DC	
	90129-0018		*1*	*BASE OMRON P2RF-08-E*	
A01K0011	90119-0108		1	RELAY OMRON G2R-2-SNI-24DC	
	90129-0018		*1*	*BASE OMRON P2RF-08-E*	
A01K0098	90119-0108		1	RELAY OMRON G2R-2-SNI-24DC	
	90129-0018		*1*	*BASE OMRON P2RF-08-E*	
A01K0099	90119-0108		1	RELAY OMRON G2R-2-SNI-24DC	
	90129-0018		*1*	*BASE OMRON P2RF-08-E*	
A01K0301	90459-5260		1	PROCESSOR L32E, SERIES A, 1769-L32E	
A01K0302	90459-2483		1	DEVICENET SCANNER, 1769-SDN SERIES B	
A01K0303	90459-6553		1	PLC DSI /MODBUS COMMUN. MOD., 1769-SM2/A	
A01K0304	90459-2473		1	DIG INP. MOD.16 PTS FAST,1769-IQ16F SERA	
A01K0305	90459-2473		1	DIG INP. MOD.16 PTS FAST,1769-IQ16F SERA	
A01K0306	90459-2476		1	DIGIT. OUT. MOD. 16 P ESCP, 1769-OB16P	
A01K0307	90459-2476		1	DIGIT. OUT. MOD. 16 P ESCP, 1769-OB16P	
A01M0010	90264-0032		1	FAN, 4656N+LZ30+LZ 120,220V 50HZ	
A01P0010	90178-0007		1	HOUR COUNTER, BG 40,17-1 12-48VDC	
A01Q0000	90111-0132		1	MAIN SWITCH P1-25/EA/SVB-SW/N/HI11/H-P14	
A01Q0040	90119-0108		1	RELAY OMRON G2R-2-SNI-24DC	
	90129-0018		*1*	*BASE OMRON P2RF-08-E*	
A01Q0042	90119-0108		1	RELAY OMRON G2R-2-SNI-24DC	
	90129-0018		*1*	*BASE OMRON P2RF-08-E*	
A01T0010	90459-5632		1	POWER SUPPLY UNIT, 100-240 VAC/24VDC2,5A	
A01T0011	90459-5632		1	POWER SUPPLY UNIT, 100-240 VAC/24VDC2,5A	
A01T0012	90459-5632		1	POWER SUPPLY UNIT, 100-240 VAC/24VDC2,5A	
A01T0301	90459-2457		1	POWER SUPPLY 120/240 VAC,1769-PA4 SERIEA	
A01W0060	90459-2457		1	POWER SUPPLY 120/240 VAC,1769-PA4 SERIEA	
A01X0070	90001-0031		1	WALL SOCKET OUTLET	
F01K0090	90459-6692		1	SAFETY PLC, PLUTO B20 20-070-06	
F01Q0010	90459-5316		1	CONTACTOR 4KW 24VDC, DILM9-32	
F01Q0011	90459-5316		1	CONTACTOR 4KW 24VDC, DILM9-32	
F30Q0011	90459-5316		1	CONTACTOR 4KW 24VDC, DILM9-32	
F01S0101	90458-1651		1	EMERGENCY STOP, ZB4-BS-844 ZB4-BZ-104	
W10F0010	354000-0100		1	MINIATURE CIRCUIT BREAKER, FAZ-C10/1	
W10F0020	354002-0160		1	MINIATURE CIRCUIT BREAKER, FAZ-C16/3	
W30F0010	354002-0160		1	MINIATURE CIRCUIT BREAKER, FAZ-C16/3	
	Note!			* Only with option Chain Cleaner.	
W30F0011	90459-5324		1	OVERLOAD PROTECTION, PKZM0-1,6	
W30F0011	90259-0317		1	AUXILIARY CONTACT 072896 NHI11-PKZ0	
W30F0012	90259-0317		1	AUXILIARY CONTACT 072896 NHI11-PKZ0	
W30F0012	90459-5324		1	OVERLOAD PROTECTION, PKZM0-1,6	
W30F0013	90459-5324		1	OVERLOAD PROTECTION, PKZM0-1,6	
W30F0013	90259-0317		1	AUXILIARY CONTACT 072896 NHI11-PKZ0	
W30F0014	90259-0317		1	AUXILIARY CONTACT 072896 NHI11-PKZ0	
W30F0014	90459-5324		1	OVERLOAD PROTECTION, PKZM0-1,6	
W30F0015	90459-5324		1	OVERLOAD PROTECTION, PKZM0-1,6	
W30F0015	90259-0317		1	AUXILIARY CONTACT 072896 NHI11-PKZ0	
W30F0016	90459-5324		1	OVERLOAD PROTECTION, PKZM0-1,6	
W30F0016	90259-0317		1	AUXILIARY CONTACT 072896 NHI11-PKZ0	
W30F0017	90259-0317		1	AUXILIARY CONTACT 072896 NHI11-PKZ0	
W30F0017	90459-5324		1	OVERLOAD PROTECTION, PKZM0-1,6	
W30F0020	354002-0160		1	MINIATURE CIRCUIT BREAKER, FAZ-C16/3	
W30F0021	90459-5324		1	OVERLOAD PROTECTION, PKZM0-1,6	
W30F0021	90259-0317		1	AUXILIARY CONTACT 072896 NHI11-PKZ0	
W30F0022	90459-5324		1	OVERLOAD PROTECTION, PKZM0-1,6	
W30F0022	90259-0317		1	AUXILIARY CONTACT 072896 NHI11-PKZ0	
W30F0023	90459-5324		1	OVERLOAD PROTECTION, PKZM0-1,6	
W30F0023	90259-0317		1	AUXILIARY CONTACT 072896 NHI11-PKZ0	
W30F0024	90259-0317		1	AUXILIARY CONTACT 072896 NHI11-PKZ0	
W30F0024	90459-5324		1	OVERLOAD PROTECTION, PKZM0-1,6	
W30F0025	90459-5324		1	OVERLOAD PROTECTION, PKZM0-1,6	
W30F0025	90259-0317		1	AUXILIARY CONTACT 072896 NHI11-PKZ0	
W30F0026	90459-5324		1	OVERLOAD PROTECTION, PKZM0-1,6	
W30F0026	90259-0317		1	AUXILIARY CONTACT 072896 NHI11-PKZ0	
W30F0027	90459-5324		1	OVERLOAD PROTECTION, PKZM0-1,6	
W30F0027	90259-0317		1	AUXILIARY CONTACT 072896 NHI11-PKZ0	
W90F0010	354000-0100		1	MINIATURE CIRCUIT BREAKER, FAZ-C10/1	
W10T0010	90459-3442		1	VARIABLE FREQUENCY DRIVE 22B-A5P0N104	
W30T0010	90459-3445		1	VARIABLE FREQUENCY DRIVE 22B-D010N104	
W30T0020	90459-3445		1	VARIABLE FREQUENCY DRIVE 22B-D010N104	
W90T0010	90459-3442		1	VARIABLE FREQUENCY DRIVE 22B-A5P0N104	
W10V0010	90459-3454		1	FOOTPRINT FILTER, 22-RF018-BL	
W30V0010	90459-3458		1	FOOTPRINT FILTER 22-RF012-BL	
W30V0020	90459-3458		1	FOOTPRINT FILTER 22-RF012-BL	

Machine Type | Group Description | Used-In | Group Number | Page No

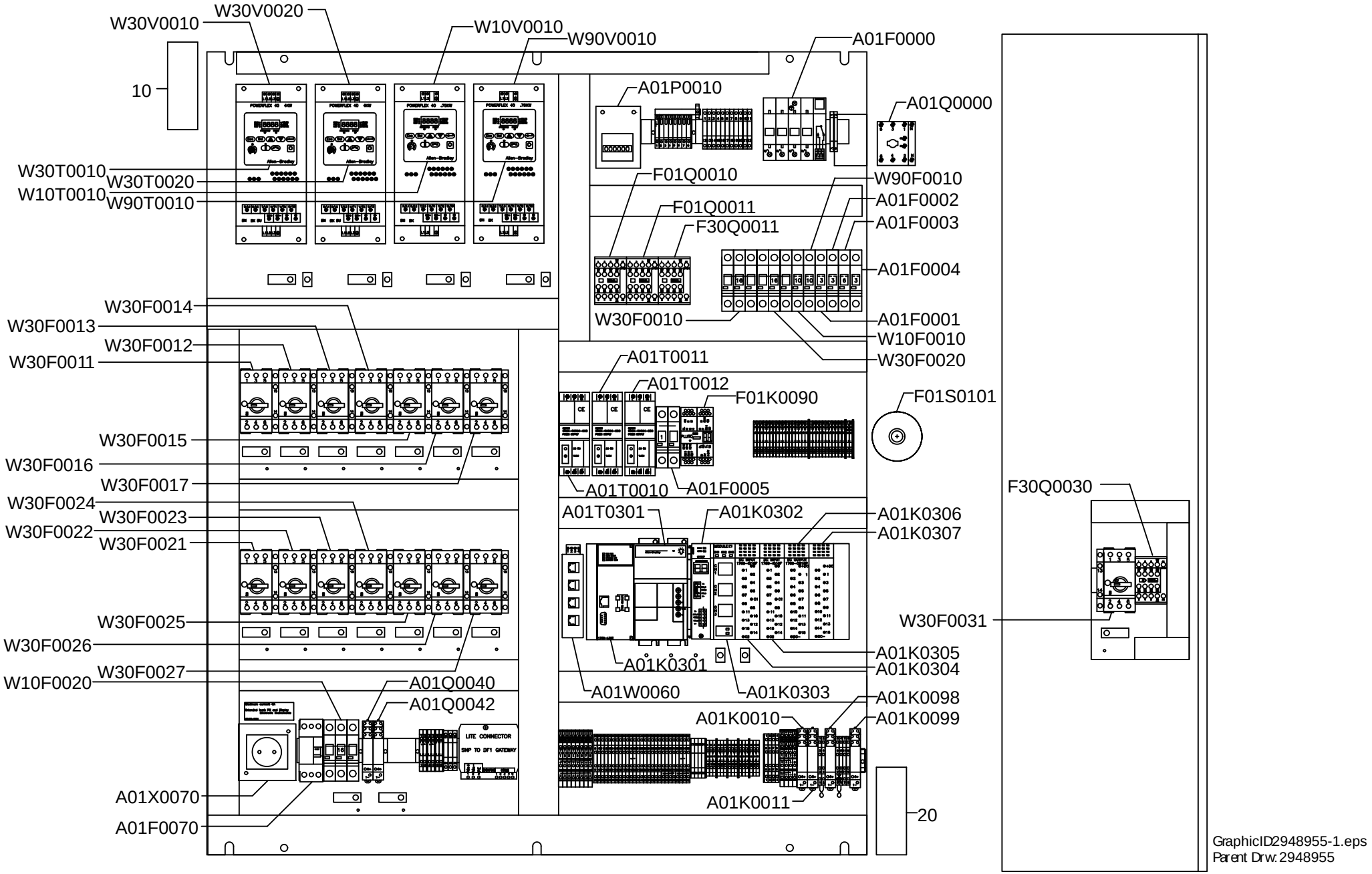

GraphicID2948955-1.eps
Parent Drw: 2948955

Pos	Part No	UN	Qty	Description	Page No	Pos	Part No	UN	Qty	Description	Page No
- (Cont'd)											
W90V0010	90459-3454		1	FOOTPRINT FILTER, 22-RF018-BL							

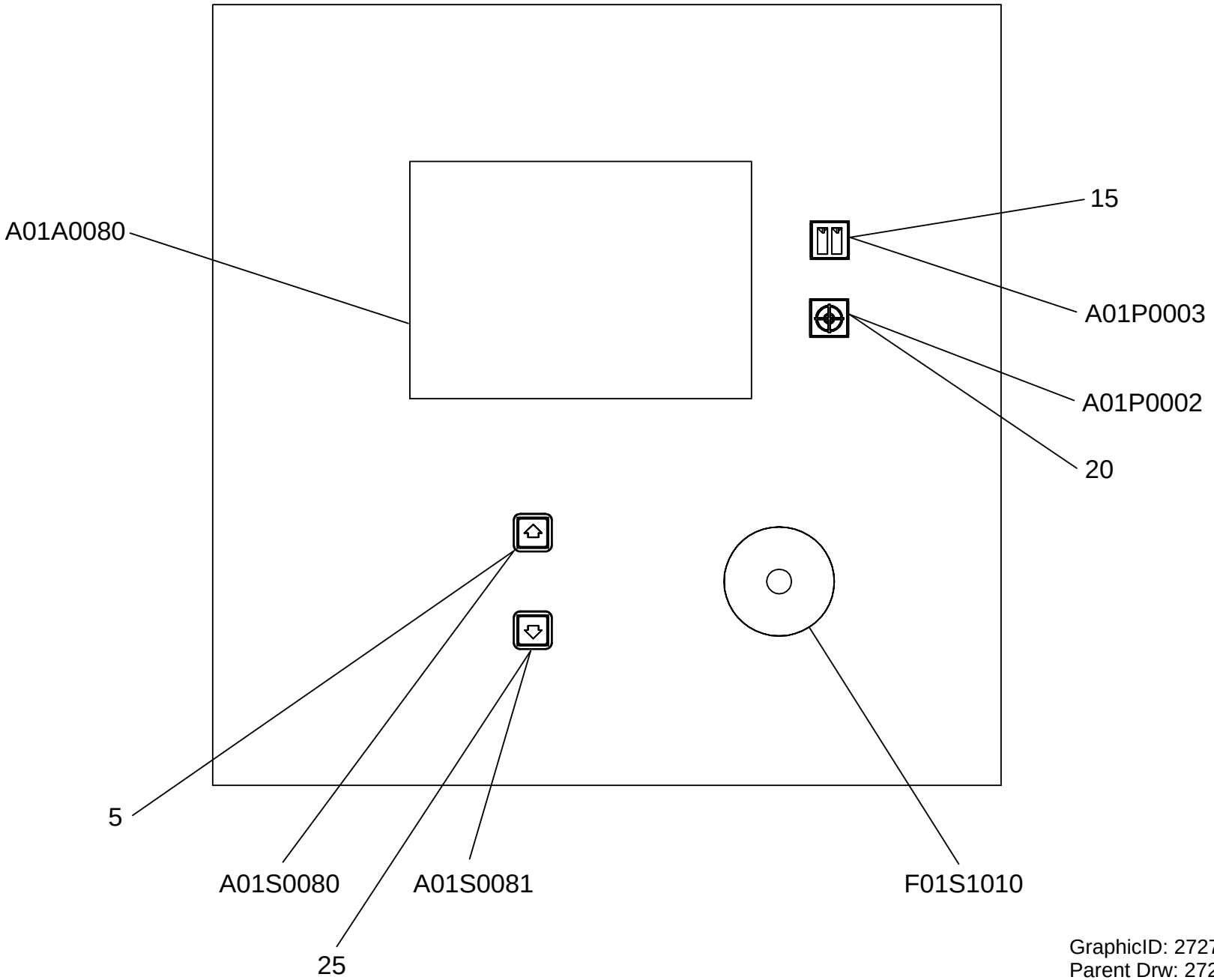

GraphicID: 2727212-2.eps
Parent Drw: 2727212

ECM: 354152 - 20080609
Group number: 2727212-0200
Assembly Drawing: 2727212-2_1_AB

Pos	Part No	UN	Qty	Description	Page No
-					
005	359301-0001		1	BUTTON SIGN, UP	
015	359301-0175		1	BUTTON SIGN, PRODUCTION ON	
020	359301-0340		1	BUTTON SIGN, SEARCH POINT	
025	359301-0005		1	BUTTON SIGN, DOWN	
A01A0080	90600-3204		1	OPERATOR PANEL 7", 2711P-T7C4D1-TP	
A01A0080	2920797-1001		1	PROGRAM OBJECT CODE HMI	
A01P0002	90064-0104		1	LAMP UNIT CLEAR, 704.206.7A+A-935-99	
A01P0003	90064-0102		1	LAMP UNIT YELLOW,704.206.7A+704.707.4+	
	90036-0057		*1*	*LIGHT BULB, BA9S 28V*	
A01S0080	90064-0082		1	PUSH BUTTON, WHITE	
	90036-0057		*1*	*LIGHT BULB, BA9S 28V*	
A01S0081	90064-0082		1	PUSH BUTTON, WHITE	
	90036-0057		*1*	*LIGHT BULB, BA9S 28V*	
F01S1010	90458-1651		1	EMERGENCY STOP, ZB4-BS-844 ZB4-BZ-104	

Pos	Part No	UN	Qty	Description	Page No

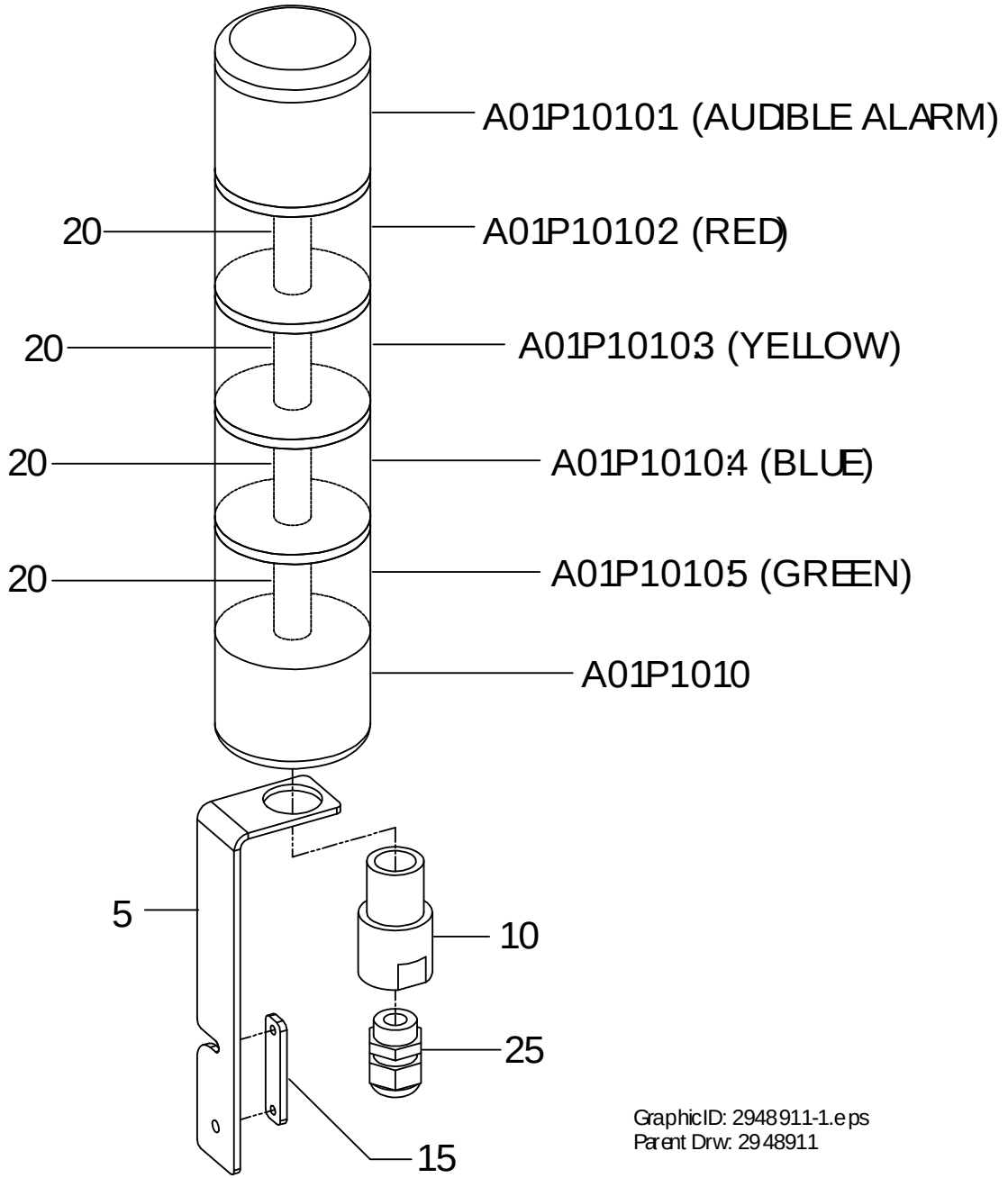

GraphicID: 2948911-1.eps
Parent Drw: 2948911

ECM: 379384 - 20090203
Group number: 2948911-0100
Assembly Drawing: 2948911-1_1_AA

Pos	Part No	UN	Qty	Description	Page No
-					
005	2528339-0000		1	BRACKET	
010	2727374-0000		1	ADAPTER	
015	2528359-0000		1	PLATE	
020	90036-0068		3	BULB 6.5W 24V	
025	90458-0307		1	CABLE GLAND, M20X1,5, NO.5311 1020	
A01P1010:5	90458-0296		1	LIGHT ELEMENT, GREEN, KL70-401G	
A01P1010:4	90458-0295		1	LIGHT ELEMENT, BLUE, KL70-401L	
A01P1010:3	90458-0294		1	LIGHT ELEMENT, YELLOW, KL70-401Y	
A01P1010:2	90458-0293		1	LIGHT ELEMENT, RED, KL70-401R	
A01P1010:1	90458-0302		1	SIREN WITH ADJUSTABLE VOLUME KS 70-3004	
A01P1010	90458-0292		1	BASE, KT70-1001	

Pos	Part No	UN	Qty	Description	Page No

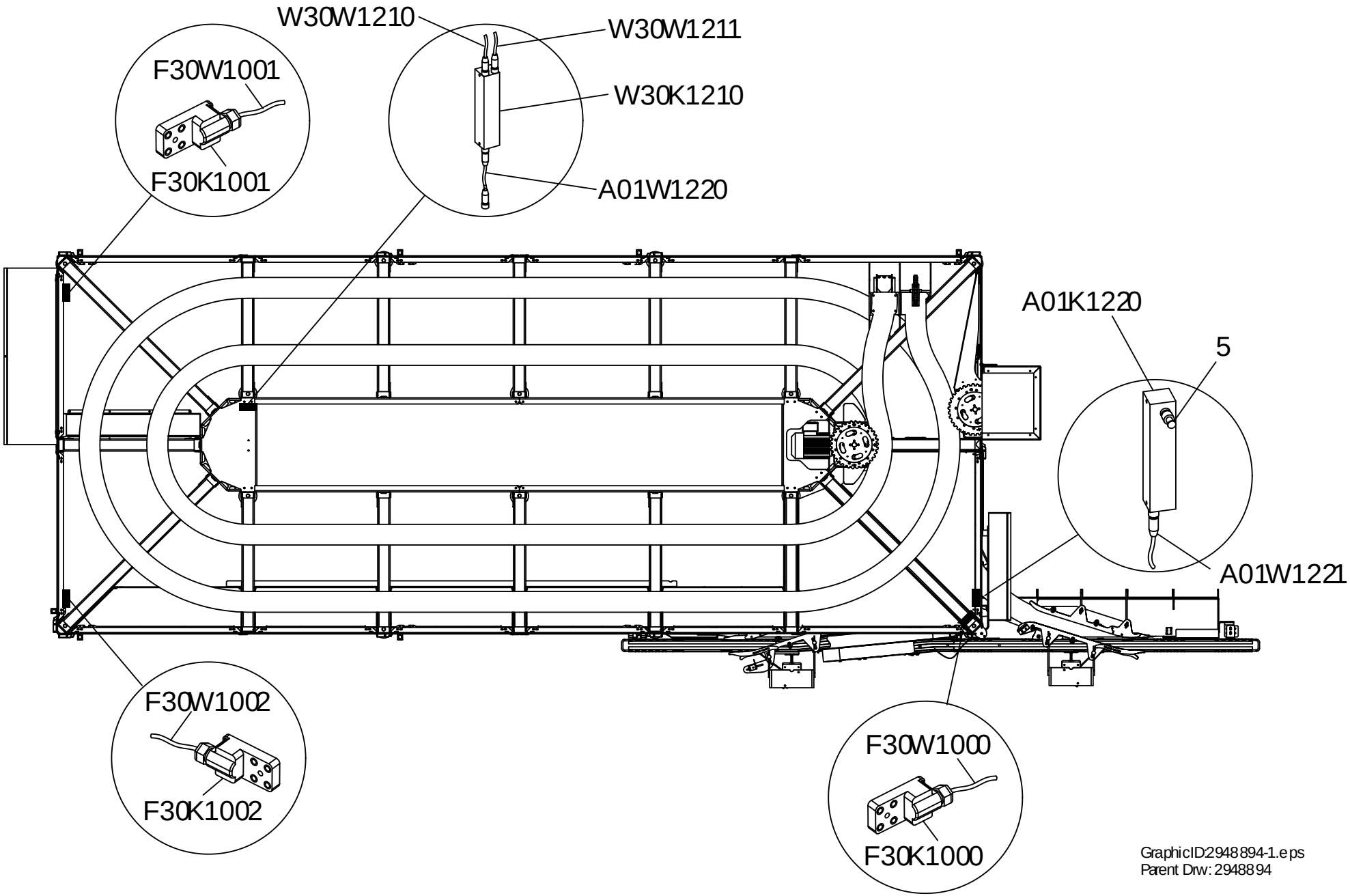

GraphicID:2948894-1.eps
Parent Drw: 2948894

ECM: 384029 - 20090203
Group number: 2948894-0100
Assembly Drawing: 2948894-1_1_AA

Pos	Part No	UN	Qty	Description	Page No
100M, 120M					
F30K1000	90459-4254		1	CONNECTION BLOCK TINA 4A, 20-054-03	
F30K1001	90459-4254		1	CONNECTION BLOCK TINA 4A, 20-054-03	
F30K1002	90459-4254		1	CONNECTION BLOCK TINA 4A, 20-054-03	
F30W1000	90459-4876		1	FOCUS JUMPER CABLE M12 5P 3M, 20-056-21	
F30W1001	90459-4876		1	FOCUS JUMPER CABLE M12 5P 3M, 20-056-21	
F30W1002	90459-4876		1	FOCUS JUMPER CABLE M12 5P 3M, 20-056-21	
47M, 75M, 90M					
F30K1000	90459-4254		1	CONNECTION BLOCK TINA 4A, 20-054-03	
F30K1001	90459-4254		1	CONNECTION BLOCK TINA 4A, 20-054-03	
F30W1000	90459-4876		1	FOCUS JUMPER CABLE M12 5P 3M, 20-056-21	
F30W1001	90459-4876		1	FOCUS JUMPER CABLE M12 5P 3M, 20-056-21	
Common Parts					
5	90459-6847		1	DEVICENET TERM. RESISTOR, 0939 CTX 101	
A01K1220	90459-6062		1	REMOTE I/O, IP67 8PTS IN/OUT SELF-CONFIG	
A01W1220	351413-0050		1	DEVICENET CONN. CABLE, 0935 361 103/5M	
A01W1221	351311-0100		1	ACTUATOR/SENSOR CABLE RKTN 4-225/10M	
W30K1210	90459-6062		1	REMOTE I/O, IP67 8PTS IN/OUT SELF-CONFIG	
W30W1210	351415-0100		1	DEVICENET CONN. CABLE, 0935 361 105/10M	
W30W1211	351311-0050		1	ACTUATOR/SENSOR CABLE RKTN 4-225/5M	

Pos	Part No	UN	Qty	Description	Page No

Machine Type | Group Description | Used-In | Group Number | Page No

This page is intentionally left blank.

ECM: 383154 - 20090203
Group number: 2920793-0200
Assembly Drawing:

Pos	Part No	UN	Qty	Description	Page No
-					
0020	3006085-2001		1	PROGRAM SOURCE CODE PLC/VISIO	
0030	3006086-2001		1	PROGRAM SOURCE CODE HMI	
0040	3006090-0001		1	SOFTWARE CD	
0020	*3006085-1001*		*1*	*PROGRAM OBJECT CODE PLC*	
0030	*3006086-1001*		*1*	*PROGRAM OBJECT CODE HMI*	
0040	*3006087-1001*		*1*	*PROGRAM OBJECT CODE PLUTO*	
0050	*3006088-1001*		*1*	*PROGRAM OBJECT CODE FLASH CARD*	
0060	*3031157-1001*		*1*	*PROGRAM OBJECT CODE GENIUS*	
0070	*3006089-1001*		*1*	*PROGRAM OBJECT CODE PLMS*	
0100	*3006083-0000*		*1*	*LABEL*	
0110	*90458-0118*		*1*	*COMPACT DISC RECORDABLE*	

Pos	Part No	UN	Qty	Description	Page No

Machine Type | Group Description | Used-In | Group Number | Page No

Tetra Pak

SPC
Spare Parts Catalogue

This page is intentionally left blank.

ECM: 383678 - 20090203
Group number: 663602-0400
Assembly Drawing:

Pos	Part No	UN	Qty	Description	Page No
-					
005	2855348-0200		1	START-UP KIT	**5-5**
010	2528333-0400		1	DOCUMENTATION	**5-7**
015	2528334-0400		1	SAFETY SIGNS ISO	**5-9**
020	2528335-0400		1	SAFETY SIGNS ANSI	**5-11**
025	2948950-0100		1	SIGN & MARKING ISO	**5-13**
030	2948949-0100		1	SIGN & MARKING ANSI	**5-15**

Pos	Part No	UN	Qty	Description	Page No

Machine Type | Group Description | Used-In | Group Number | Page No

This page is intentionally left blank.

ECM: 385431 - 20090203
Group number: 2855348-0200
Assembly Drawing:

Pos	Part No	UN	Qty	Description	Page No
LEFT					
005	1497193-0000		24	WING, CHAIN	
RIGHT					
005	2855405-0000		24	WING, CHAIN	
Common Parts					
010	2727353-0000		1	BELT	
015	2948958-0000		1	BELT	
020	1020637-0000		6	HOLDER	
025	351405-0050		3	ACT/SENS. CABLE RSMVN 3-PRKT 4-3-06/5,0M	
030	351406-0050		1	ACT/SENS.CABLE RSMVN 3-PRKWT 4-3-06/5,0M	
035	351411-0050		8	ACTU/SENS. CABLE PRST 4-PRKT 4-07/5,0	
040	3008991-0000		1	SET UP TOOL	
045	2948864-0000		1	SET UP TOOL - SPIDER	
050	2948865-0000		1	SET UP TOOL - SPIDER	
055	2948866-0000		1	SET UP TOOL - SPIDER	
060	2948867-0000		1	BRACKET	
065	2855220-0000		1	SET UP TOOL	
070	90459-6586		3	ACT/SENS.Y-CABLE, ASBN 2-PRKMV 4-07/0,6M	
075	90459-7273		3	PHOTOCELL E3Z-T81C-G0SR D-CN	
080	90459-7274		3	PHOTOCELL E3Z-T81C-G0SR L-CN	
085	90600-0462		1	INDUCTIVE SWITCH, E2A-M12LN05-M1-B1-TP	

Pos	Part No	UN	Qty	Description	Page No

This page is intentionally left blank.

ECM: 383226 - 20090203
Group number: 2528333-0400
Assembly Drawing:

Pos	Part No	UN	Qty	Description	Page No
100M_LINF, 120M_LINF					
	2948885-0000		1	INSTALLATION DRAWING	
100M_RINF, 120M_RINF					
	2948888-0000		1	INSTALLATION DRAWING	
47M_LINF					
	2948883-0000		1	INSTALLATION DRAWING	
47M_RINF					
	2948886-0000		1	INSTALLATION DRAWING	
75M_LINF, 90M_LINF					
	2948884-0000		1	INSTALLATION DRAWING	
75M_RINF, 90M_RINF					
	2948887-0000		1	INSTALLATION DRAWING	
Common Parts					
	3008981-0101		1	SPARE PARTS CATALOGUE	
	3008980-0101		1	ELECTRICAL MANUAL	
	3008979-0101		1	MAINTENANCE MANUAL	
	3008978-0101		1	OPERATION MANUAL	
	3008977-0101		1	INSTALLATION MANUAL	

Pos	Part No	UN	Qty	Description	Page No

SAFETY SIGNS ISO

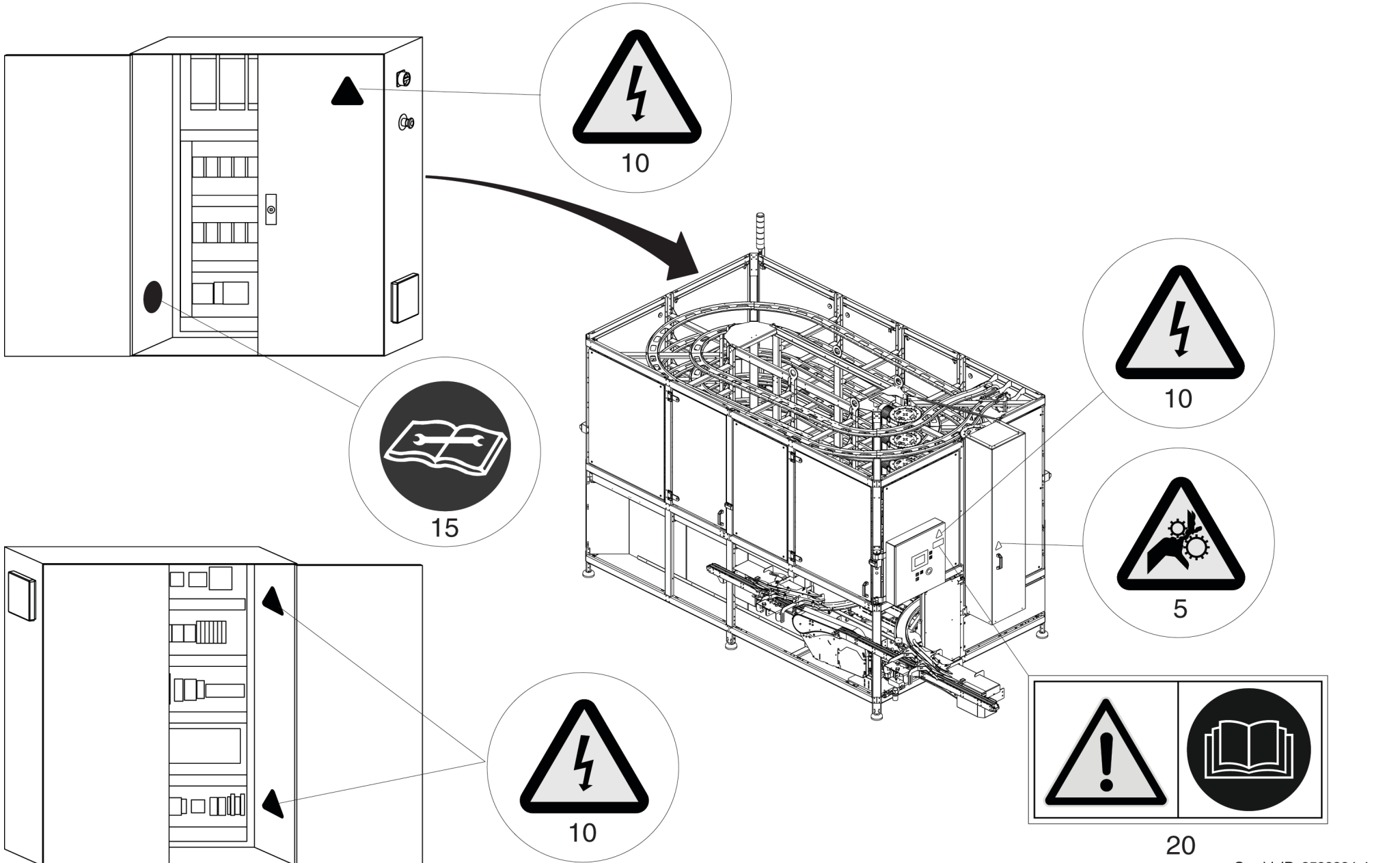

GraphicID: 2528334-4.eps
Parent Drw: 2528334

ECM: 388977 - 20090417
Group number: 2528334-0400
Assembly Drawing: 2528334-4_1_AA

Pos	Part No	UN	Qty	Description	Page No
-					
005	359705-0002		1	WARNING SIGN ISO, ENTANGLEMENT	
010	359705-0015		4	WARNING SIGN ISO, RISK OF ELECTRIC SHOCK	
015	90459-1738		1	MANDATORY ACTION SIGN ISO, READ MAINTENA	
020	90600-5235		1	MANDATORY ACTION SIGN ISO, READ MANUAL	

Pos	Part No	UN	Qty	Description	Page No

SAFETY SIGNS ANSI

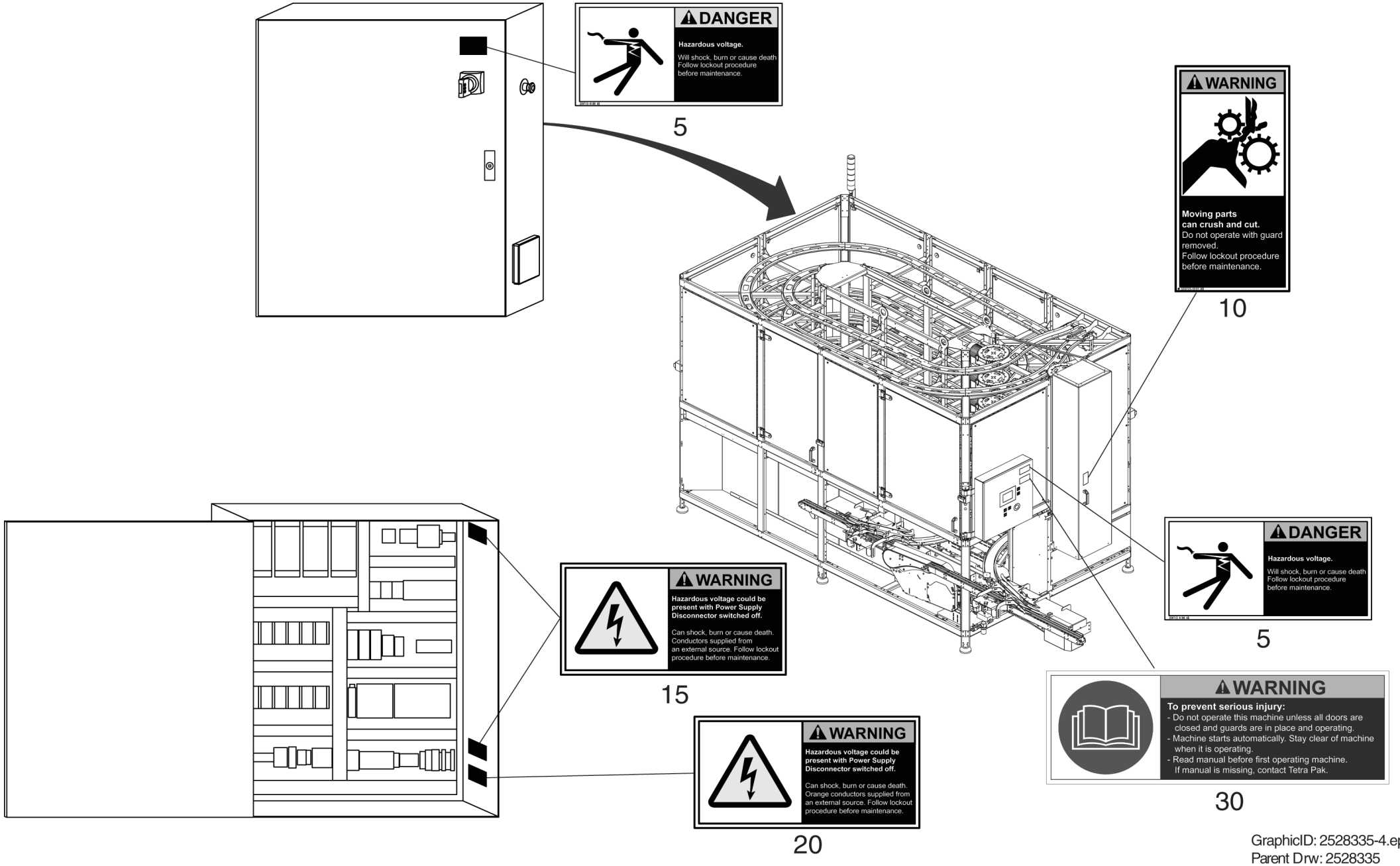

GraphicID: 2528335-4.eps
Parent Drw: 2528335

ECM: 389610 - 20090417
Group number: 2528335-0400
Assembly Drawing: 2528335-4_1_AA

Pos	Part No	UN	Qty	Description	Page No
-					
005	359715-0100		2	WARNING SIGN ANSI (H), ELECTRIC SHOCK	
010	359725-0101		1	WARNING SIGN ANSI (V), ENTANGLEMENT	
015	90458-2634		1	WARNING SIGN ANSI (H), EXTERNAL VOLTAGE	
020	90458-2635		1	WARNING SIGN ANSI(H), EXT.VOLTAGE,ORANGE	
030	90600-5233		1	WARNING SIGN ANSI (H), READ MANUAL, AUTO	

Pos	Part No	UN	Qty	Description	Page No

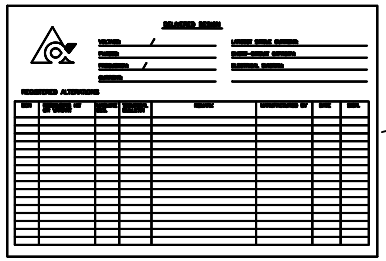

5

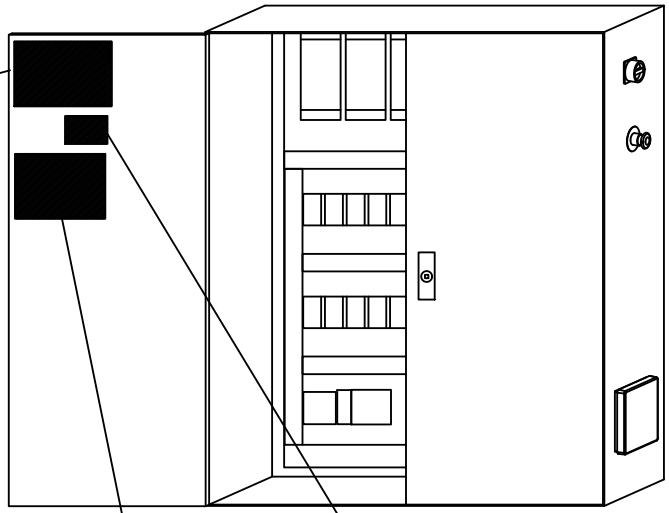

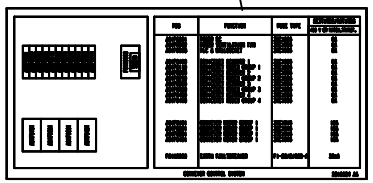

10

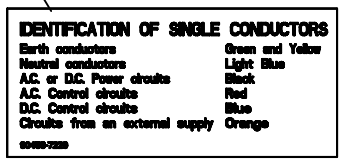

20

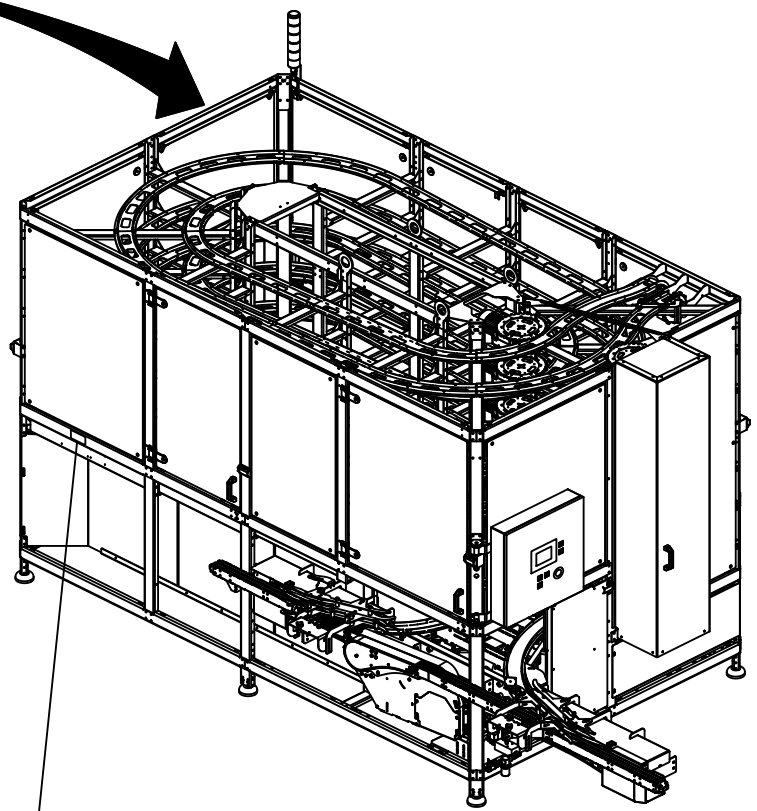

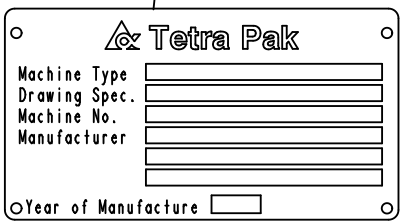

15

GraphicID: 2948950-1.eps
Parent Drw: 2948950

ECM: 388979 - 20090417
Group number: 2948950-0100
Assembly Drawing: 2948950-1_1_AA

Pos	Part No	UN	Qty	Description	Page No
47M					
010	3009002-0000		1	FUSE PANEL SIGN	
75M, 100M					
010	3009003-0000		1	FUSE PANEL SIGN	
90M, 120M					
010	3009004-0000		1	FUSE PANEL SIGN	
Common Parts					
005	3008997-0000		1	DELIVERED DESIGN	
015	596162-0000		1	MACHINE SIGN EEA SUB-SUPPLIER	
020	90459-7229		1	IDENTIF. OF SINGLE CONDUCTORS, TEMPLATE	

Pos	Part No	UN	Qty	Description	Page No

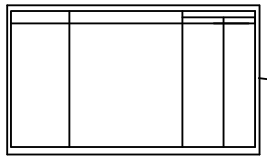

30

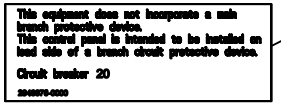

25

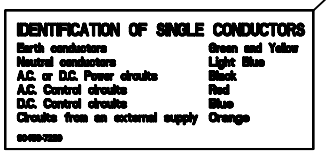

45

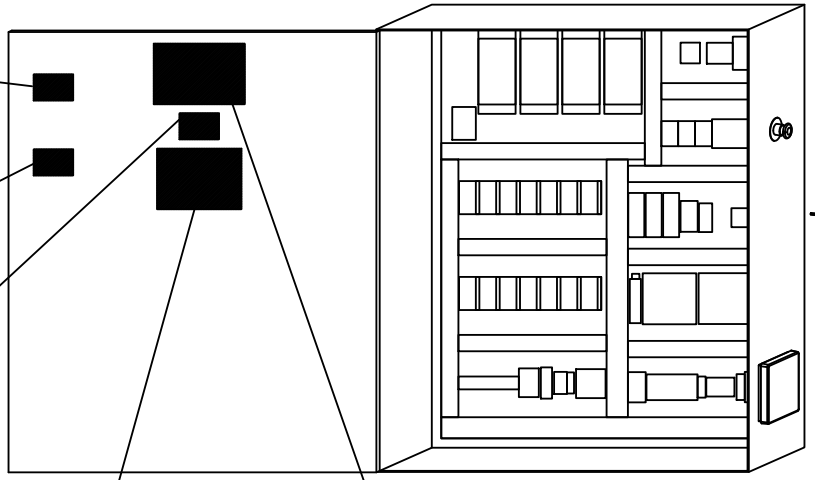

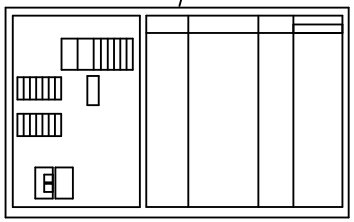

15

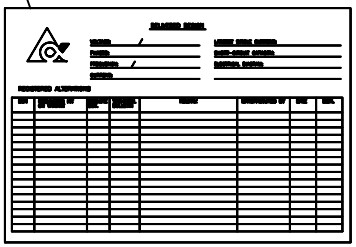

10

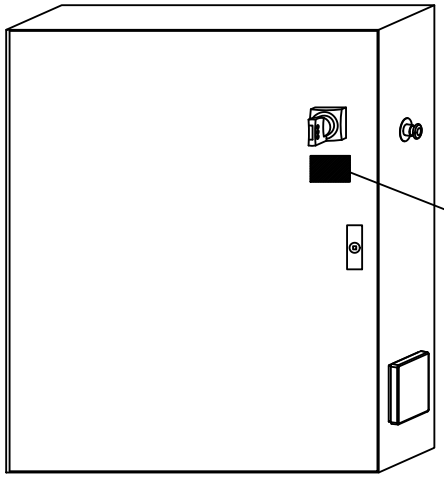

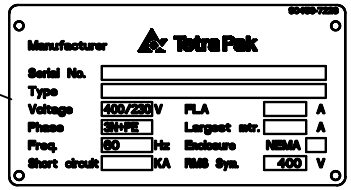

40

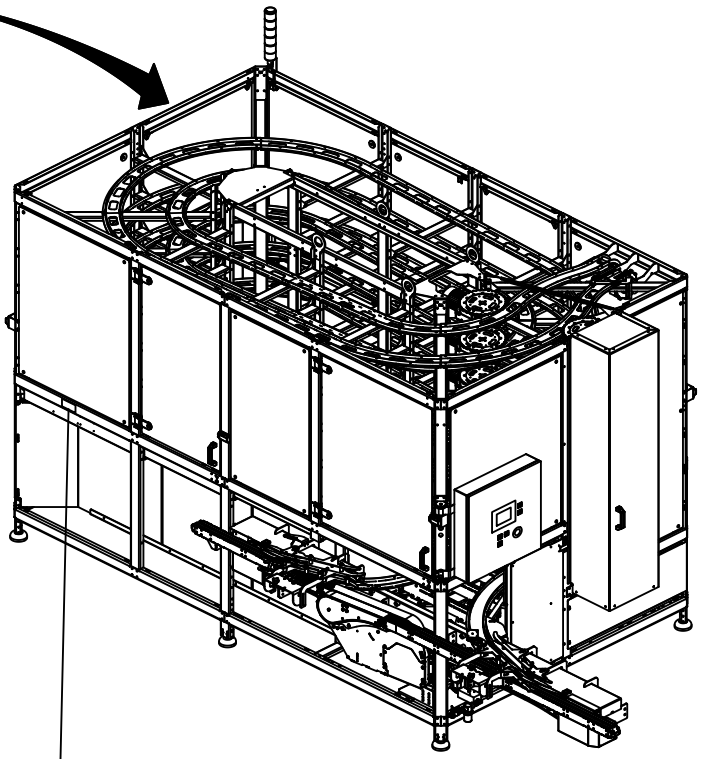

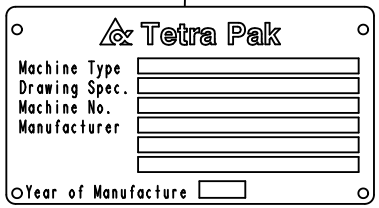

35

GraphicID: 2948949-1.eps
Parent Drw: 2948949

ECM: 388978 - 20090417
Group number: 2948949-0100
Assembly Drawing: 2948949-1_1_AB

Pos	Part No	UN	Qty	Description	Page No
47M					
015	3008998-0000		1	FUSE PANEL SIGN	
75M, 100M					
015	3008999-0000		1	FUSE PANEL SIGN	
90M, 120M					
015	3009000-0000		1	FUSE PANEL SIGN	
Common Parts					
010	3008997-0000		1	DELIVERED DESIGN	
025	3009001-0000		1	BRANCH	
030	2948877-0000		1	SIGN	
035	596162-0000		1	MACHINE SIGN EEA SUB-SUPPLIER	
040	90459-7228		1	ELECTRICAL EQUIPMENT SIGN, TEMPLATE	
045	90459-7229		1	IDENTIF. OF SINGLE CONDUCTORS, TEMPLATE	

Pos	Part No	UN	Qty	Description	Page No

Tetra Pak

SPC
Spare Parts Catalogue

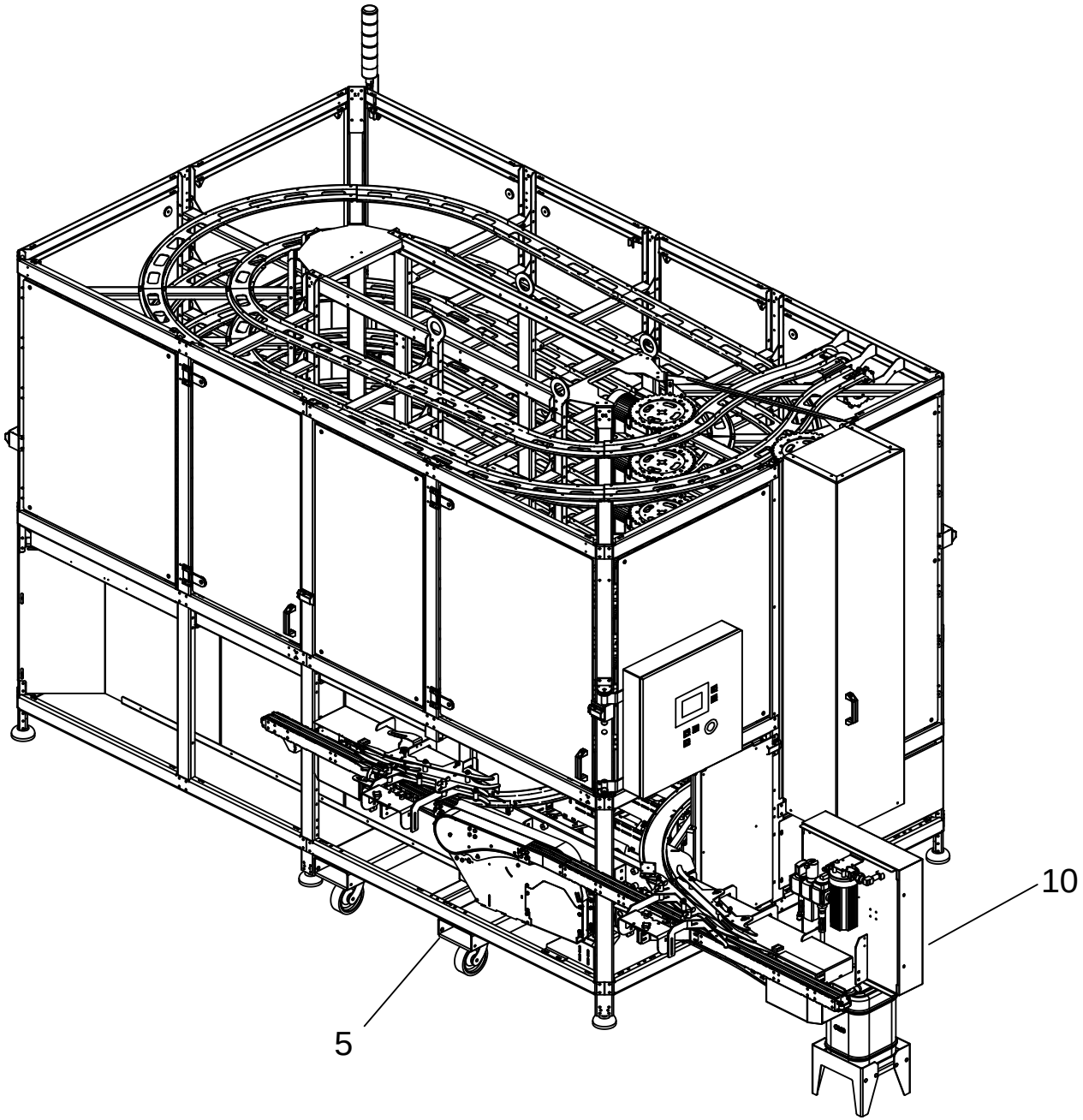
10
5

ECM: 381688 - 20090203
Group number: 663603-0200
Assembly Drawing: 663603-1_1_AA

Pos	Part No	UN	Qty	Description	Page No
-					
005	2727386-0100		1	CASTER WHEEL KIT	**6-5**
010	3008907-0100		1	CHAIN CLEANER	**6-7**
015	3008990-0100		1	GENIUS COMMUNICATION UNIT	**6-17**
020	90459-4235		1	SNP TO DF1 GATEWAY, 0220 1166 01 REV B	

Pos	Part No	UN	Qty	Description	Page No

CASTER WHEEL KIT

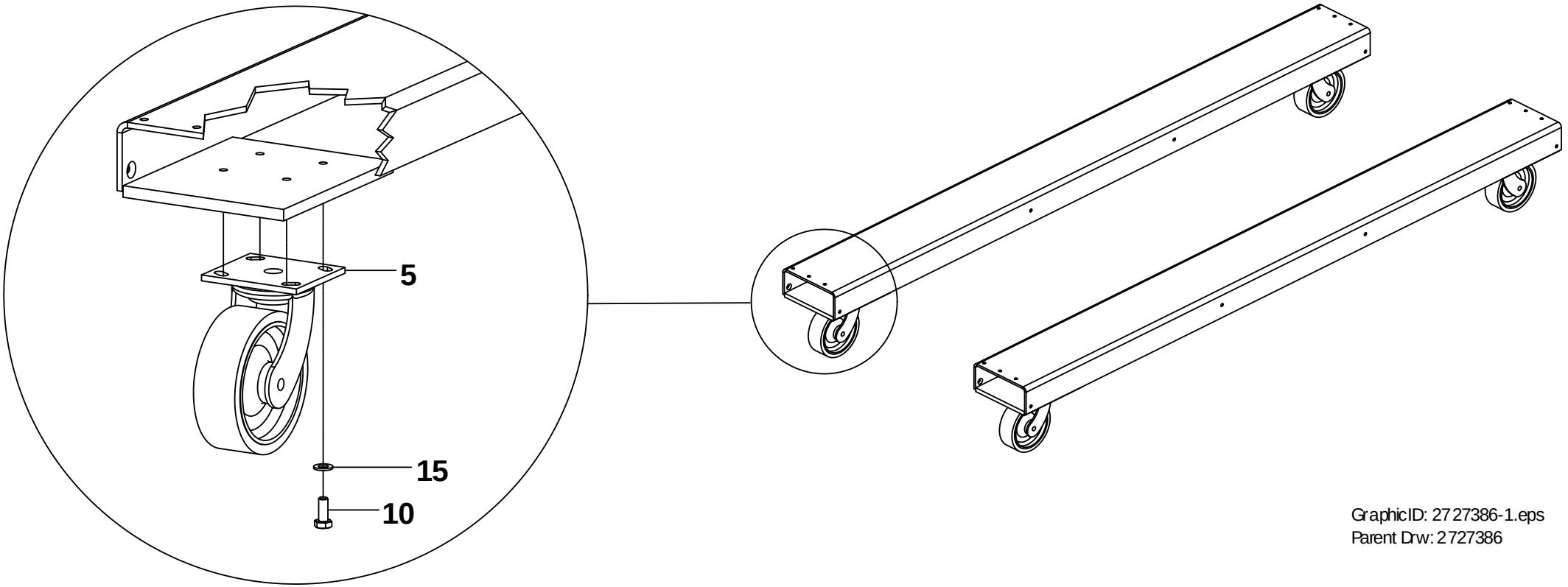

GraphicID: 2727386-1.eps
Parent Drw: 2727386

ECM: 379386 - 20090203
Group number: 2727386-0100
Assembly Drawing: 2727386-1_1_AC

Pos	Part No	UN	Qty	Description	Page No
-					
005	2664580-0000		4	CASTER WHEEL	
010	312105-0493		16	SCREW M6S ISO 4017 M10X25 A480	
015	315105-0173		16	WASHER BRB 10,5X22 RFR	

Pos	Part No	UN	Qty	Description	Page No

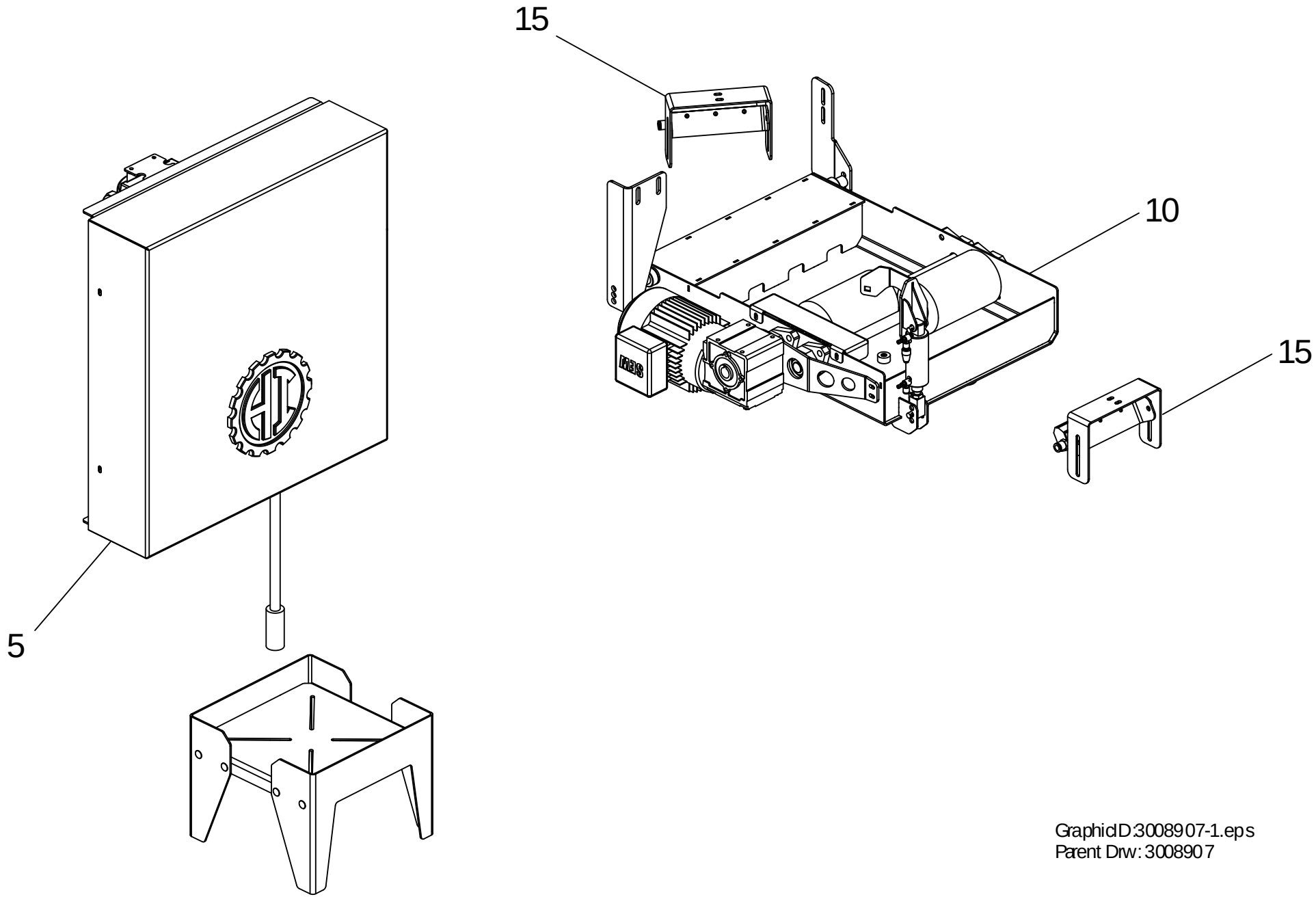

GraphicID:3008907-1.eps
Parent Drw: 3008907

ECM: 381687 - 20090203
Group number: 3008907-0100
Assembly Drawing: 3008907-1_1_AA

Pos	Part No	UN	Qty	Description	Page No
-					
005	3008908-0100		1	VALVE PANEL	**6-9**
010	3008909-0100		1	SCRUBBER UNIT	**6-11, 6-13**
015	3008911-0100		2	AIR KNIFE	**6-15**

Pos	Part No	UN	Qty	Description	Page No

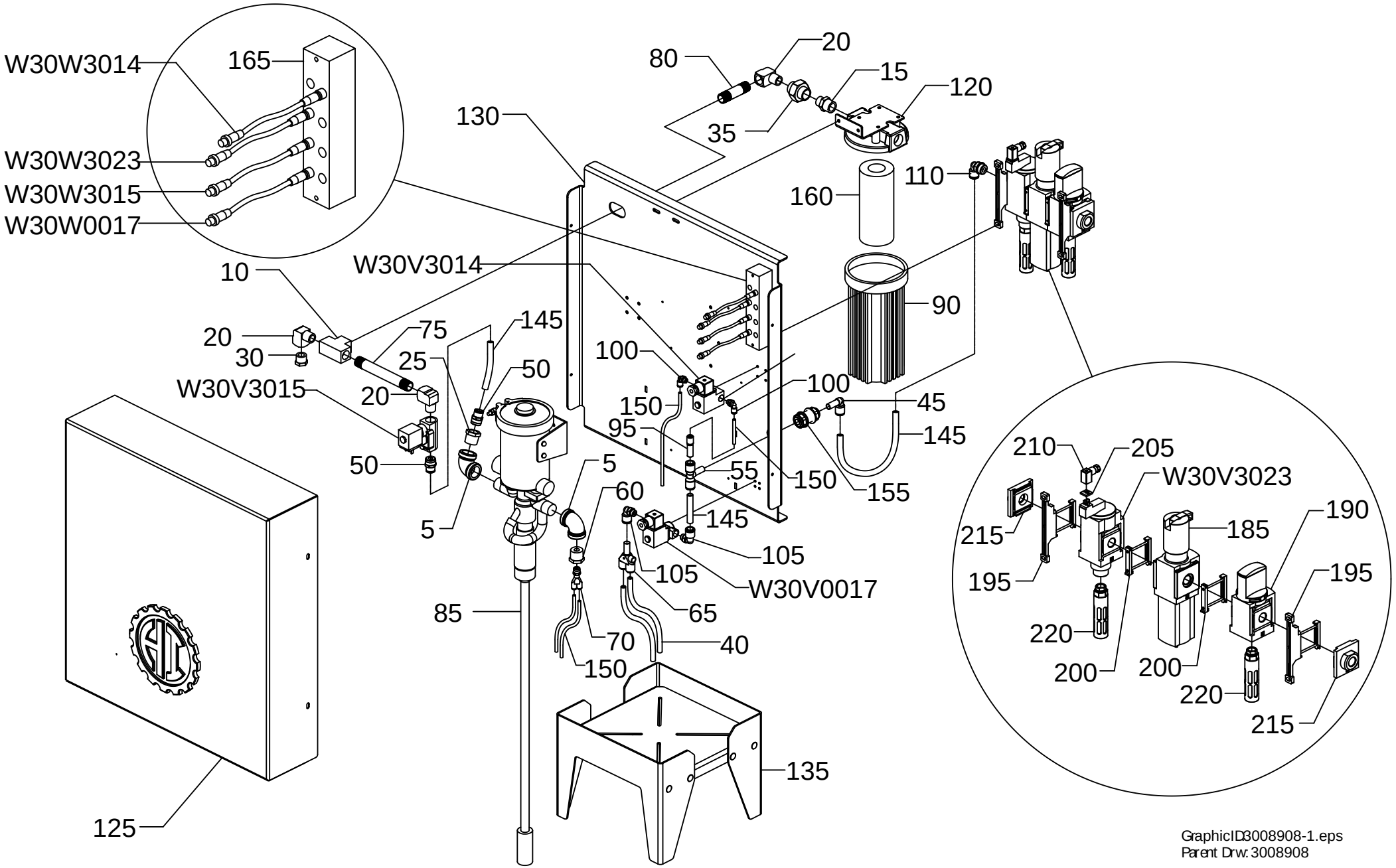

GraphicID:3008908-1.eps
Parent Drw: 3008908

ECM: 389611 - 20090417
Group number: 3008908-0100
Assembly Drawing: 3008908-1_1_AB

Pos	Part No	UN	Qty	Description	Page No
-					
005	3008942-0000		2	FITTING	
010	3008943-0000		1	FITTING	
015	3008944-0000		1	NIPPLE	
020	2664556-0000		3	FITTING	
025	1039141-0000		1	BUSHING	
030	3008945-0000		1	PLUG	
035	3008946-0000		1	CONNECTOR	
040	90166-0160	M	9.5	TUBE 10 MM PA BLUE	
045	3008948-0000		1	ELBOW	
050	3008949-0000		2	FITTING	
055	3008950-0000		1	COUPLING	
060	3008951-0000		1	BUSHING	
065	3008952-0000		1	FITTING	
070	3008953-0000		1	FITTING	
075	3008954-0000		1	NIPPLE	
080	3008955-0000		1	NIPPLE	
085	3008956-0000		1	DOSING UNIT	
090	2948954-0000		1	HOUSING	
095	342716-0210		1	REDUCER 6-12	
100	350002-0006		2	PUSH-IN L-FITTING QSL-F-G1/8-6	
105	350002-0011		2	PUSH-IN L-FITTING QSL-F-G1/4-12	
110	350002-0016		1	PUSH-IN L-FITTING QSL-F-G1/2-12	
120	3008957-0000		1	BRACKET	
125	3008958-0000		1	COVER	
130	3008959-0000		1	PANEL	
135	3008960-0000		1	STAND	
145	90166-0195	M	1.5	TUBE 12 MM PA BLUE	
150	90166-0081	M	23	TUBE 6 MM PA BLUE	
155	90458-2602		1	BULKHEAD CONNECTOR, 12 MM	
160	90459-2493		1	FILTER CARTRIDGE 20Âµ, 1300000200	
165	90459-6062		1	REMOTE I/O, IP67 8PTS IN/OUT SELF-CONFIG	
185	90459-1853		1	FILTER REGULATOR, MS6-LFR-1/2-D7-ERV-AS	
	90459-3809		*1*	*FILTER CARTRIDGE, MS6-LFP-E*	
190	90459-1852		1	SHUT OFF VALVE, MS6-EM1-1/2	
195	90459-1858		2	BRACKET, MS6-WP	
200	90459-1859		2	BRACKET, MS6-MV	
	90459-4787		*1*	*SENSOR BRACKET WSM-12-J-M5*	
205	90459-2137		1	ILLUMINATING SEAL, MEB-LD-12-24DC	
210	90459-2138		1	CONNECTOR 3 POLE	
215	90459-2617		1	END PLATE, MS6-AGD	
220	90459-5787		2	Ã§SILENCER 6844 U-1/2-B	
W30V1017	90459-6977		1	SOLENOID VALVE G1/4, V04B286N-B423A	
W30V3014	90600-5559		1	SOLENOID VALVE G1/8, V04A486L-B623A	
W30V3015	90042-0249		1	SOLENOID VALVE OFFICINE DI ENSINO	
W30V3023	90459-1854		1	SHUT OFF VALVE, MS6-EE-1/2-10V24	
W30W0017	351403-0020		1	ACTU/SENS. CABLE RSMVN 3-PRKMV 4-06/2,0M	
W30W3014	351403-0020		3	ACTU/SENS. CABLE RSMVN 3-PRKMV 4-06/2,0M	
W30W3015	351403-0020		1	ACTU/SENS. CABLE RSMVN 3-PRKMV 4-06/2,0M	

Machine Type	Group Description	Used-In	Group Number	Page No

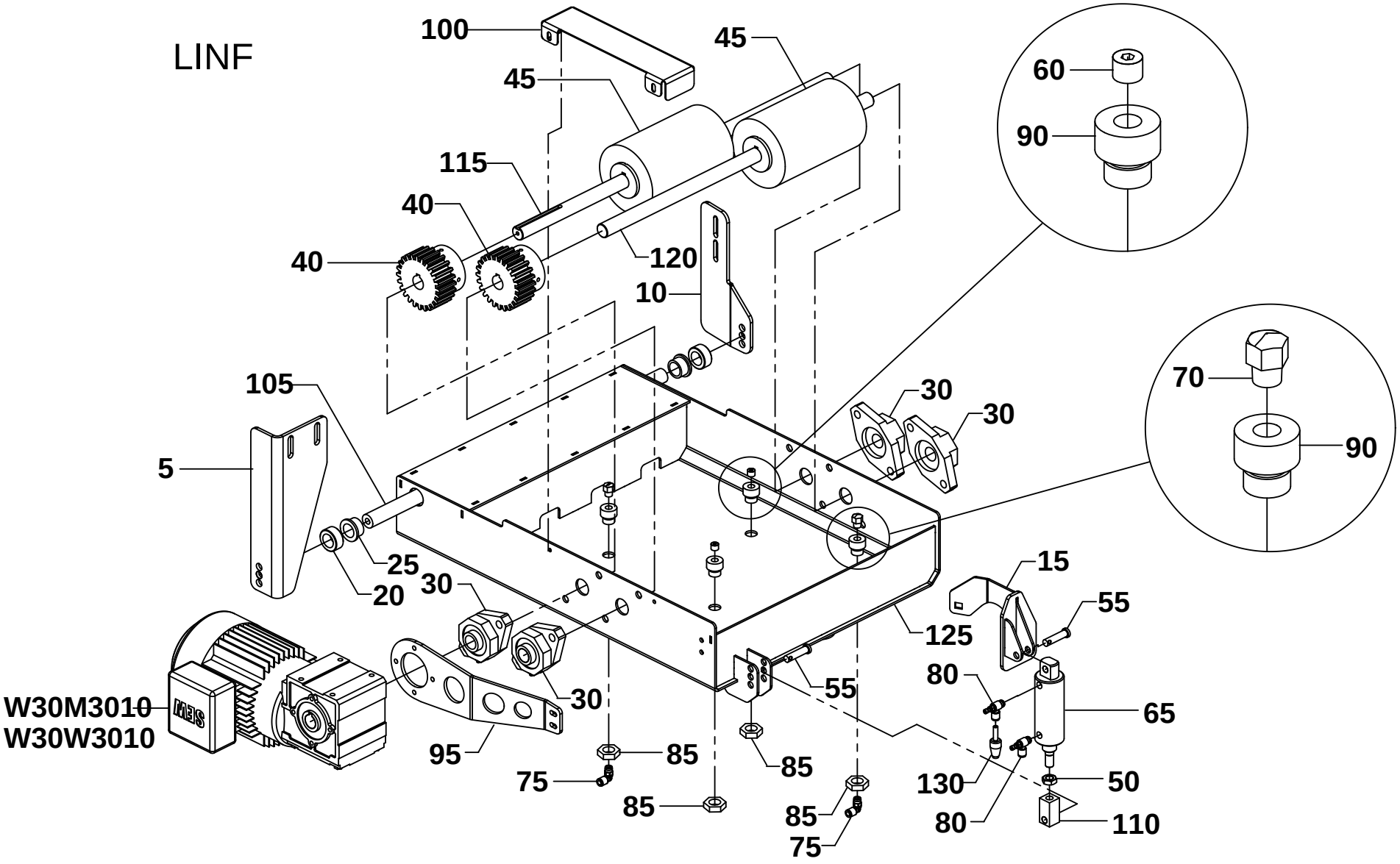

GraphicID 3008909-1.eps
Parent Drw: 3008909

ECM: 397681 - 20090504
Group number: 3008909-0100
Assembly Drawing: 3008909-1_1_AB

This list covers pages from 6-10 to 6-13

Pos	Part No	UN	Qty	Description	Page No
FEEDSIDE = LEFT (See drawing on page: 6-10)					
005	3008916-0000		1	BRACKET	
010	3008917-0000		1	BRACKET	
015	3008918-0000		1	BRACKET	
100	3008931-0000		1	COVER	
125	3008936-0000		1	FRAME	
FEEDSIDE = RIGHT (See drawing on page: 6-12)					
005	3008937-0000		1	BRACKET	
010	3008938-0000		1	BRACKET	
015	3008939-0000		1	BRACKET	
100	3008940-0000		1	COVER	
125	3008941-0000		1	FRAME	
Common Parts					
020	2528345-0000		2	COLLAR	
025	3008919-0000		2	BUSHING	
030	3008920-0000		4	BEARING	
040	3008921-0000		2	GEAR	
045	3008922-0000		2	BRUSH	
050	3008923-0000		1	NUT	
055	3008924-0000		2	PIN	
060	3008925-0000		2	PLUG	
065	3008926-0000		1	CYLINDER	
070	3008927-0000		2	NOZZLE	
075	3008928-0000		2	ELBOW	
080	3008929-0000		2	VALVE	
085	312631-0324		4	HEX.NUT FINE, EN 24032 M6M M16X1,5 FZB8	
090	2664568-0000		4	COUPLING	
095	3008930-0000		1	BRACKET	
105	3008932-0000		1	SHAFT	
110	3008933-0000		1	BLOCK	
115	3008934-0000		1	DRIVE SHAFT	
120	3008935-0000		1	SHAFT	
130	90328-0017		1	SILENCER, D=6 MM	
W30M3010	90600-5983		1	GEARS, WORM MOTOR WA 20 DT71 D4	
W30W3010	90220-0105	M	8	SCR. CABLE 4X2,5MM2	

Pos	Part No	UN	Qty	Description	Page No

Machine Type | Group Description | Used-In | Group Number | Page No

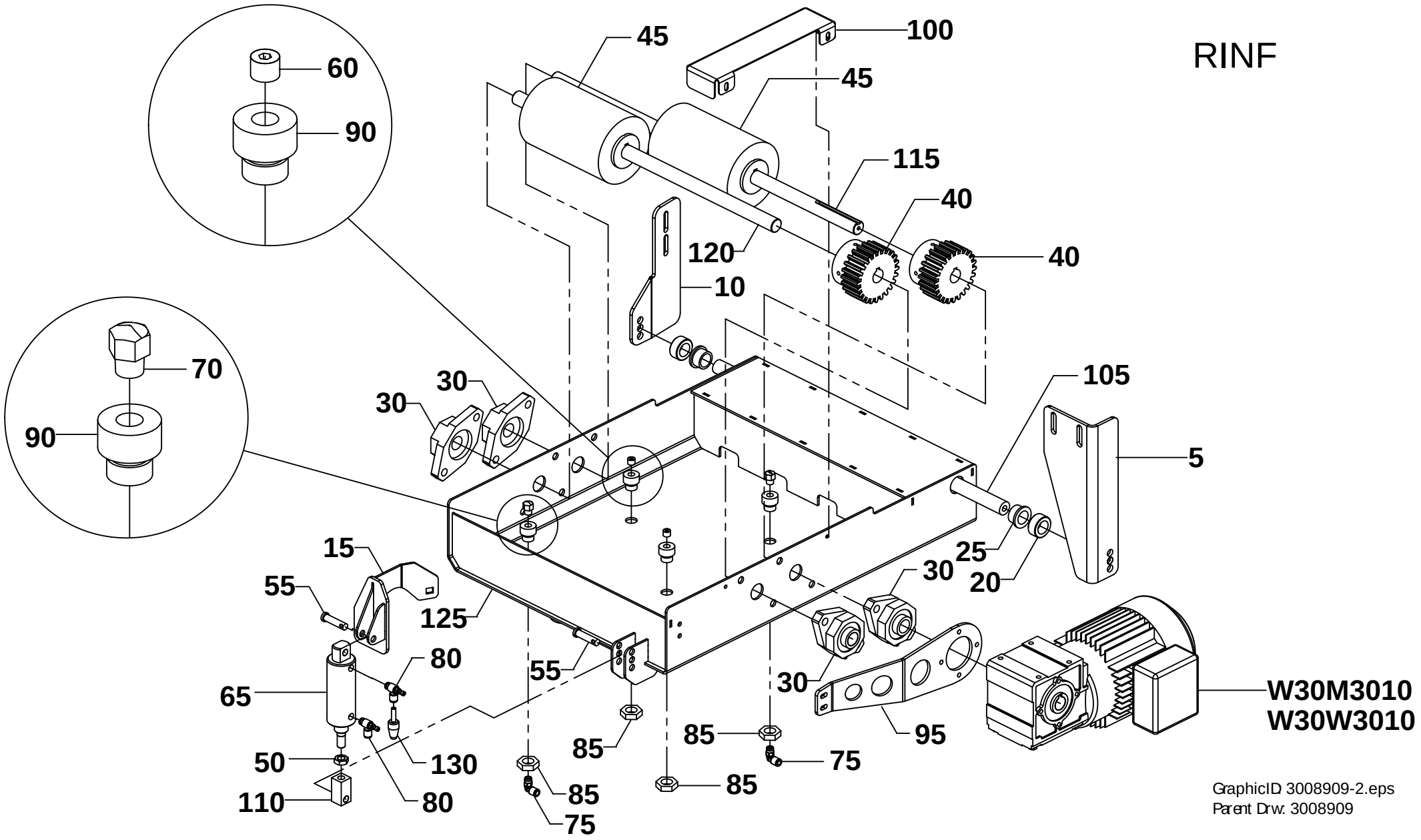

GraphicID 3008909-2.eps
Parent Drw. 3008909

ECM: 397681 - 20090504
Group number: 3008909-0100
Assembly Drawing: 3008909-2_1_AB

This list covers pages from 6-10 to 6-13

Pos	Part No	UN	Qty	Description	Page No
FEEDSIDE = LEFT (See drawing on page: 6-10)					
005	3008916-0000		1	BRACKET	
010	3008917-0000		1	BRACKET	
015	3008918-0000		1	BRACKET	
100	3008931-0000		1	COVER	
125	3008936-0000		1	FRAME	
FEEDSIDE = RIGHT (See drawing on page: 6-12)					
005	3008937-0000		1	BRACKET	
010	3008938-0000		1	BRACKET	
015	3008939-0000		1	BRACKET	
100	3008940-0000		1	COVER	
125	3008941-0000		1	FRAME	
Common Parts					
020	2528345-0000		2	COLLAR	
025	3008919-0000		2	BUSHING	
030	3008920-0000		4	BEARING	
040	3008921-0000		2	GEAR	
045	3008922-0000		2	BRUSH	
050	3008923-0000		1	NUT	
055	3008924-0000		2	PIN	
060	3008925-0000		2	PLUG	
065	3008926-0000		1	CYLINDER	
070	3008927-0000		2	NOZZLE	
075	3008928-0000		2	ELBOW	
080	3008929-0000		2	VALVE	
085	312631-0324		4	HEX.NUT FINE, EN 24032 M6M M16X1,5 FZB8	
090	2664568-0000		4	COUPLING	
095	3008930-0000		1	BRACKET	
105	3008932-0000		1	SHAFT	
110	3008933-0000		1	BLOCK	
115	3008934-0000		1	DRIVE SHAFT	
120	3008935-0000		1	SHAFT	
130	90328-0017		1	SILENCER, D=6 MM	
W30M3010	90600-5983		1	GEARS, WORM MOTOR WA 20 DT71 D4	
W30W3010	90220-0105	M	8	SCR. CABLE 4X2,5MM2	

Pos	Part No	UN	Qty	Description	Page No

Machine Type | Group Description | Used-In | Group Number | Page No

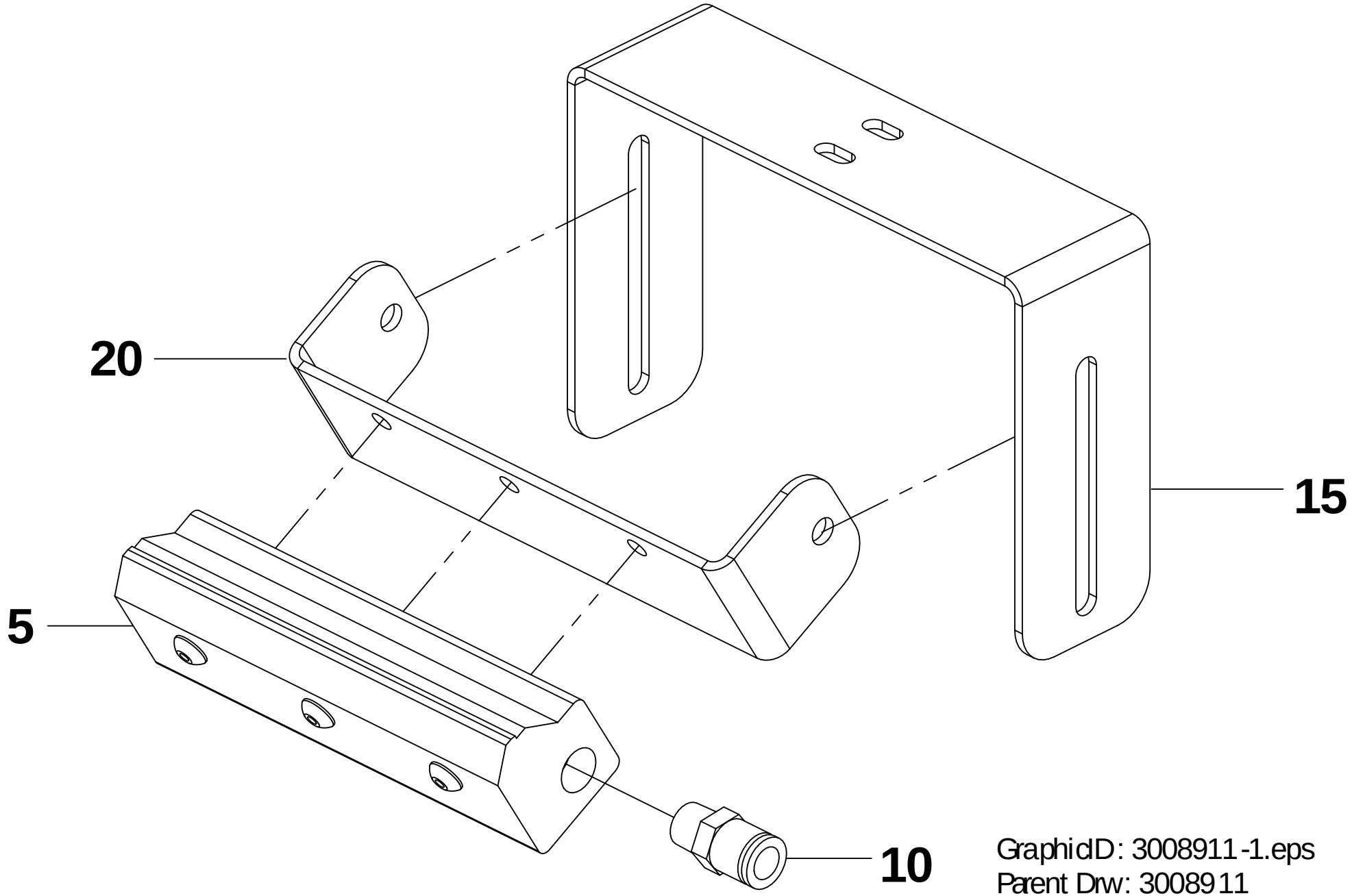

GraphicID: 3008911-1.eps
Parent Drw: 3008911

ECM: 381684 - 20090203
Group number: 3008911-0100
Assembly Drawing: 3008911-1_1_AA

Pos	Part No	UN	Qty	Description	Page No
-					
005	3008912-0000		1	AIR KNIFE	
010	3008913-0000		1	FITTING	
015	3008914-0000		1	HANGER	
020	3008915-0000		1	BRACKET	

Pos	Part No	UN	Qty	Description	Page No

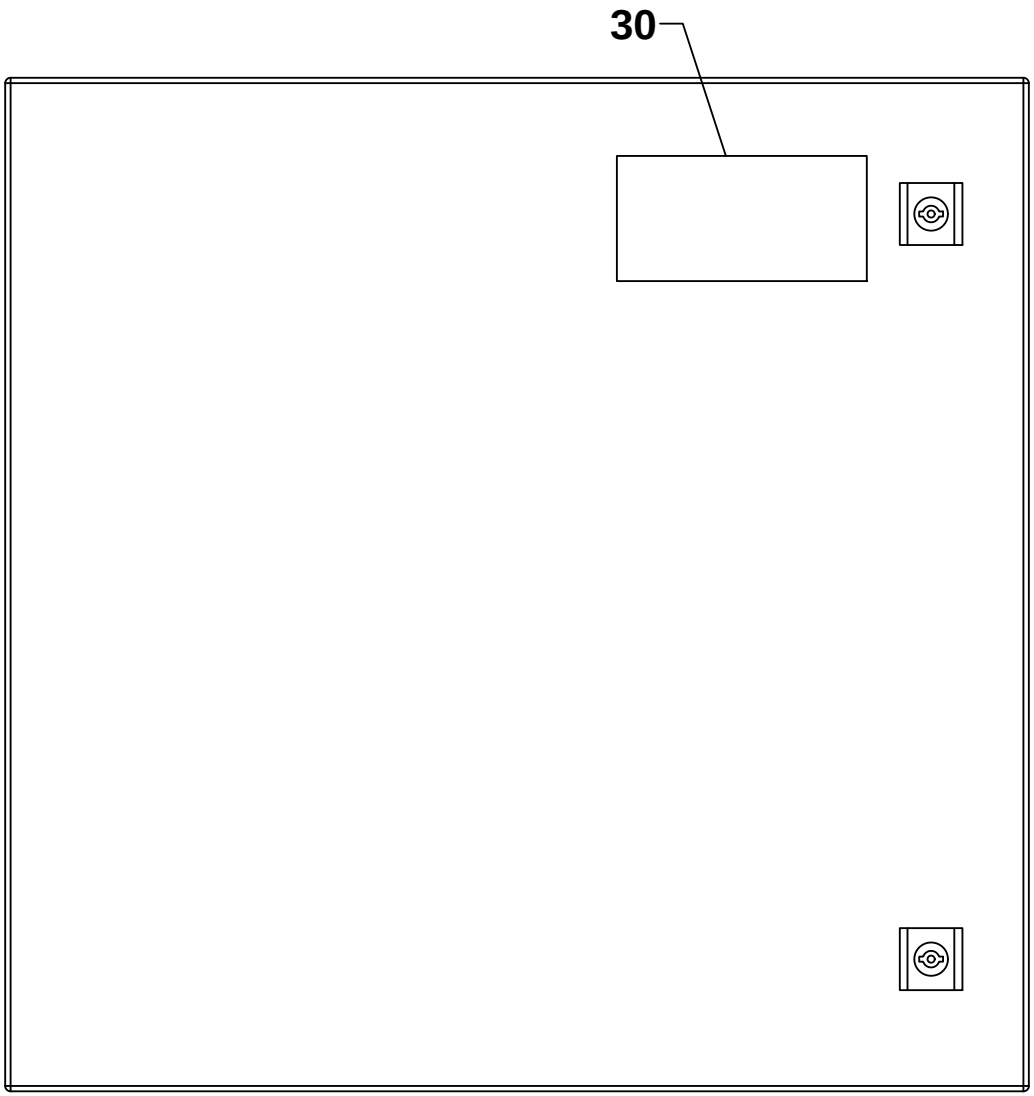

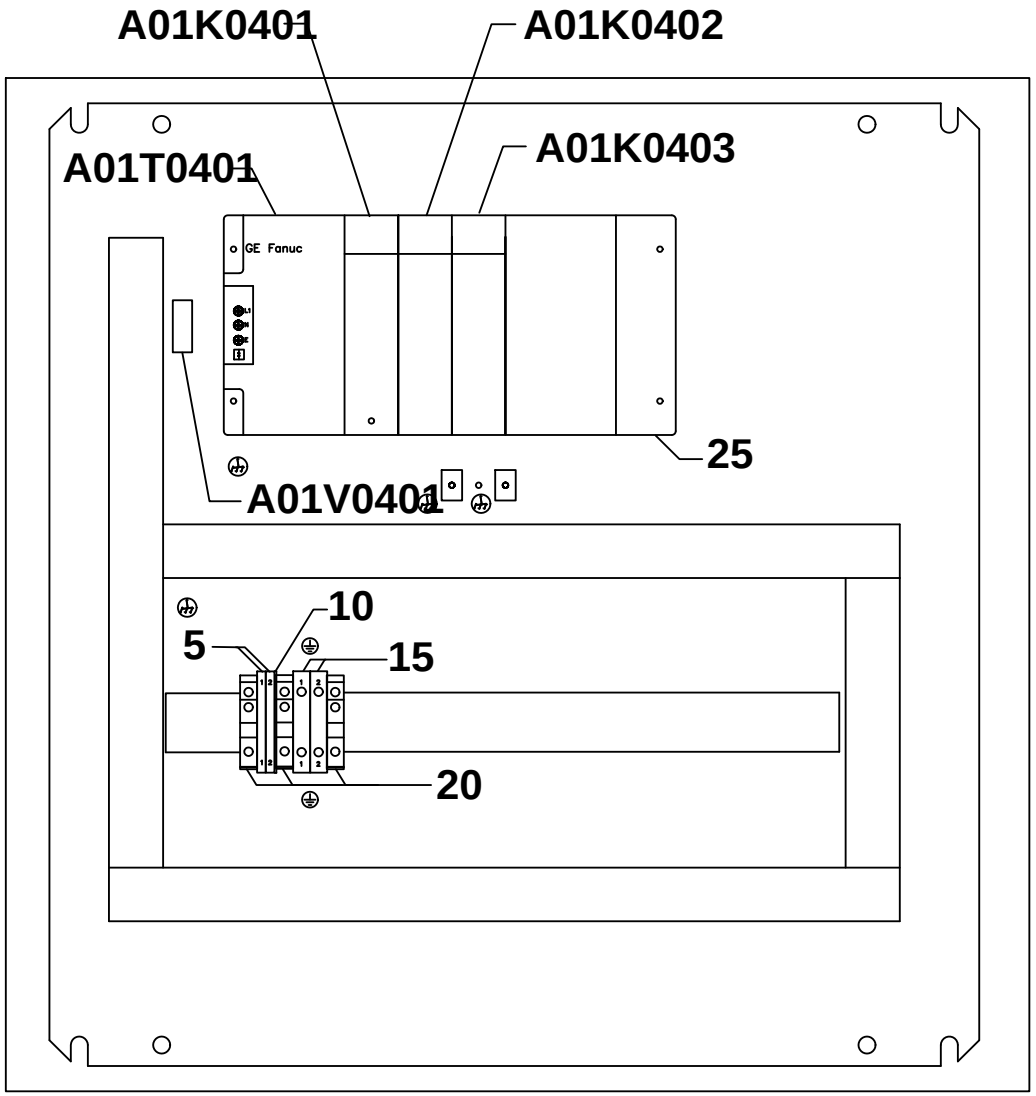

GraphicID: 3008990-1.eps
Parent Drw: 3008990

ECM: 397682 - 20090504
Group number: 3008990-0100
Assembly Drawing: 3008990-1_1_AB

Pos	Part No	UN	Qty	Description	Page No
APPROVAL CSA					
030	359715-0100		1	WARNING SIGN ANSI (H), ELECTRIC SHOCK	
APPROVAL IEC					
030	359705-0015		1	WARNING SIGN ISO, RISK OF ELECTRIC SHOCK	
Common Parts					
005	353021-0212		2	FEED THROUGH TERMINAL, 10200.0	
010	353032-0004		1	END PLATE WAP 2,5-10 BEIGE	
015	353024-0207		2	EARTH TERMINAL, 1010.3	
020	353031-0203		3	END SUPPORT, WEW 35/2	
025	90031-0050		1	BASEPLATE, 5-SLOT	
A01K0401	90031-0075		1	CPU363, SERIAL COMMUNICATION	
A01K0402	90459-4234		1	DEVICENET SLAVE MODULE	
A01K0403	90031-0031		1	ENHANCED GENIUS COMMUNICATION MODULE	
A01T0401	90031-0068		1	PLC, POWER SUPPLY	
	352551-0134		*1*	*FINE-WIRE FUSE 2 A SLOW,5X20MM*	
	90031-0301		*1*	*SPARE BATTERY CPU,PCM,2PCS*	
AO1V0401	90600-5249		1	FERRITE, B64290L616X38	

Pos	Part No	UN	Qty	Description	Page No

Machine Type | Group Description | Used-In | Group Number | Page No

Tetra Pak

SPC
Spare Parts Catalogue

Part No	Description	Page No
-- Note! --	*Only with option Chain Cleaner	4-5, 4-7, 4-9, 4-11
90001-0031	WALL SOCKET OUTLET	4-9, 4-11
90031-0031	ENHANCED GENIUS COMMUNICATION MODULE	6-17
90031-0050	BASEPLATE, 5-SLOT	6-17
90031-0068	PLC, POWER SUPPLY	6-17
90031-0075	CPU363, SERIAL COMMUNICATION	6-17
90036-0068	BULB 6.5W 24V	4-15
90042-0248	SOLENOID VALVE OFFICIENE DI ENSINO	2-123
90042-0249	SOLENOID VALVE OFFICINE DI ENSINO	2-123, 6-9
90064-0082	PUSH BUTTON, WHITE	4-13
90064-0102	LAMP UNIT YELLOW,704.206.7A+704.707.4+	4-13
90064-0104	LAMP UNIT CLEAR, 704.206.7A+A-935-99	4-13
90069-0110	GEARS, HELICAL MOTOR SK01-71L/4	1-11, 1-21
90082-0013	OVER VOLT. PROTECT. PU 4C-R 230 VAC	4-5, 4-7, 4-9, 4-11
90082-0301	OVER VOLT. PROTECT. PU 0 C 833951	4-5, 4-7
90111-0132	MAIN SWITCH P1-25/EA/SVB-SW/N/HI11/H-P14	4-9, 4-11
90115-0156	ROD END, ID=8 MM, M8X1,25	2-95, 2-107
90119-0108	RELAY OMRON G2R-2-SNI-24DC	4-5, 4-7, 4-9, 4-11
90129-0018	BASE OMRON P2RF-08-E	4-5, 4-7
90166-0013	TUBE 8 MM PA BLUE	2-123, 2-127, 2-129
90166-0081	TUBE 6 MM PA BLUE	6-9
90166-0160	TUBE 10 MM PA BLUE	6-9
90166-0195	TUBE 12 MM PA BLUE	6-9
90178-0007	HOUR COUNTER, BG 40,17-1 12-48VDC	4-5, 4-7, 4-9, 4-11
90187-0029	BALL VALVE G1/2, NPBR	2-123
90220-0105	SCR. CABLE 4X2,5MM2	6-11, 6-13
90232-0333	REFLECTOR E39-R1	2-79
90259-0317	AUXILIARY CONTACT 072896 NHI11-PKZ0	4-5, 4-7, 4-9, 4-11
90264-0032	FAN, 4656N+LZ30+LZ 120,220V 50HZ	4-9, 4-11
90328-0017	SILENCER, D=6 MM	6-11, 6-13
90458-0292	BASE, KT70-1001	4-15
90458-0293	LIGHT ELEMENT, RED, KL70-401R	4-15
90458-0294	LIGHT ELEMENT, YELLOW, KL70-401Y	4-15
90458-0295	LIGHT ELEMENT, BLUE, KL70-401L	4-15
90458-0296	LIGHT ELEMENT, GREEN, KL70-401G	4-15
90458-0302	SIREN WITH ADJUSTABLE VOLUME KS 70-3004	4-15
90458-0307	CABLE GLAND, M20X1,5, NO.5311 1020	4-15
90458-0696	REFLECTOR, PL40A	2-119
90458-0921	FILTER SP 122-200	2-123
90458-1483	SPRAY GUN WATER G1/4	2-123
90458-1508	FLOOR PLATE, DAMPER, M105-20-160	2-7
90458-1651	EMERGENCY STOP, ZB4-BS-844 ZB4-BZ-104	4-5, 4-7, 4-9, 4-11, 4-13
90458-1741	HOSE ASSEMBLY, CEJN 19 958 9669	2-123
90458-2509	FUSE, ATDR3	4-5, 4-7
90458-2510	FUSE, ATDR6	4-5, 4-7
90458-2511	FUSE, ATDR10	4-5, 4-7
90458-2512	FUSE, ATDR15	4-5, 4-7
90458-2541	FILTER, CP23174-7-304SS	2-123
90458-2602	BULKHEAD CONNECTOR, 12 MM	6-9
90458-2634	WARNING SIGN ANSI (H), EXTERNAL VOLTAGE	5-11
90458-2635	WARNING SIGN ANSI(H), EXT.VOLTAGE,ORANGE	5-11
90458-2794	SENSOR, EVA 20-046-00	2-9, 2-11, 2-13, 2-15, 2-17, 2-19
90458-2964	ELBOW PIPE JOINT, EXT.THREAD, D=8MM-G1/8	2-125, 2-129
90459-0036	SENSOR CABLE XS2F-D421-J80-A	2-57, 2-59
90459-1738	MANDATORY ACTION SIGN ISO, READ MAINTENA	5-9
90459-1852	SHUT OFF VALVE, MS6-EM1-1/2	6-9
90459-1853	FILTER REGULATOR, MS6-LFR-1/2-D7-ERV-AS	6-9
90459-1854	SHUT OFF VALVE, MS6-EE-1/2-10V24	6-9
90459-1858	BRACKET, MS6-WP	6-9
90459-1859	BRACKET, MS6-MV	6-9
90459-2137	ILLUMINATING SEAL, MEB-LD-12-24DC	6-9
90459-2138	CONNECTOR 3 POLE	6-9
90459-2457	POWER SUPPLY 120/240 VAC,1769-PA4 SERIEA	4-5, 4-7, 4-9, 4-11
90459-2473	DIG INP. MOD.16 PTS FAST,1769-IQ16F SERA	4-5, 4-7, 4-9, 4-11
90459-2476	DIGIT. OUT. MOD. 16 P ESCP, 1769-OB16P	4-5, 4-7, 4-9, 4-11
90459-2483	DEVICENET SCANNER, 1769-SDN SERIES B	4-5, 4-7, 4-9, 4-11
90459-2493	FILTER CARTRIDGE 20Âµ, 1300000200	6-9
90459-2617	END PLATE, MS6-AGD	6-9
90459-3442	VARIABLE FREQUENCY DRIVE 22B-A5P0N104	4-5, 4-7, 4-9, 4-11
90459-3445	VARIABLE FREQUENCY DRIVE 22B-D010N104	4-5, 4-7, 4-9, 4-11
90459-3454	FOOTPRINT FILTER, 22-RF018-BL	4-5, 4-7, 4-9, 4-11
90459-3458	FOOTPRINT FILTER 22-RF012-BL	4-5, 4-7, 4-9, 4-11
90459-4142	SENSOR, ADAM M12 20-051-00	2-9, 2-11, 2-13, 2-15, 2-17, 2-19
90459-4234	DEVICENET SLAVE MODULE	6-17
90459-4235	SNP TO DF1 GATEWAY, 0220 1166 01 REV B	6-3
90459-4254	CONNECTION BLOCK TINA 4A, 20-054-03	4-17
90459-4876	FOCUS JUMPER CABLE M12 5P 3M, 20-056-21	2-9, 2-11, 2-13, 2-15, 2-17, 2-19, 4-17
90459-5260	PROCESSOR L32E, SERIES A, 1769-L32E	4-5, 4-7, 4-9, 4-11
90459-5316	CONTACTOR 4KW 24VDC, DILM9-32	4-5, 4-7, 4-9, 4-11
90459-5324	OVERLOAD PROTECTION, PKZM0-1,6	4-5, 4-7, 4-9, 4-11
90459-5632	POWER SUPPLY UNIT, 100-240 VAC/24VDC2,5A	4-5, 4-7, 4-9, 4-11
90459-5781	HANDLE, NZM1-XTVD-0	4-5, 4-7
90459-5787	Ã§SILENCER 6844 U-1/2-B	6-9
90459-5811	RESIDUAL CURRENT DEVICE, FI-25/2/003-A	4-9, 4-11

Part No	Description	Page No
90459-6062	REMOTE I/O, IP67 8PTS IN/OUT SELF-CONFIG	4-17, 6-9
90459-6553	PLC DSI /MODBUS COMMUN. MOD., 1769-SM2/A	4-5, 4-7, 4-9, 4-11
90459-6586	ACT/SENS.Y-CABLE, ASBN 2-PRKMV 4-07/0,6M	3-9, 5-5
90459-6692	SAFETY PLC, PLUTO B20 20-070-06	4-5, 4-7, 4-9, 4-11
90459-6847	DEVICENET TERM. RESISTOR, 0939 CTX 101	4-17
90459-6907	FUSE, ATDR1	4-5, 4-7
90459-6977	SOLENOID VALVE G1/4, V04B286N-B423A	6-9
90459-7228	ELECTRICAL EQUIPMENT SIGN, TEMPLATE	5-15
90459-7229	IDENTIF. OF SINGLE CONDUCTORS, TEMPLATE	5-13, 5-15
90459-7273	PHOTOCELL E3Z-T81C-G0SR D-CN	2-49, 3-9, 5-5
90459-7274	PHOTOCELL E3Z-T81C-G0SR L-CN	2-49, 3-9, 5-5
90459-7275	PHOTOCELL E3Z-R86	2-79
90503-3774	FILTER FAN PF2500 IP54 230V AC	4-5, 4-7
90600-0462	INDUCTIVE SWITCH, E2A-M12LN05-M1-B1-TP	2-47, 2-57, 2-59, 2-77, 2-117, 5-5
90600-1337	LIMIT SW. XCK-M106H29	2-47, 2-77
90600-3204	OPERATOR PANEL 7", 2711P-T7C4D1-TP	4-13
90600-4100	GEARS, WORM MOTOR SA47DT71D4-44.22-M5B-4	2-41, 2-45, 2-71, 2-75
90600-5233	WARNING SIGN ANSI (H), READ MANUAL, AUTO	5-11
90600-5235	MANDATORY ACTION SIGN ISO, READ MANUAL	5-9
90600-5249	FERRITE, B64290L616X38	6-17
90600-5559	SOLENOID VALVE G1/8, V04A486L-B623A	6-9
90600-5983	GEARS, WORM MOTOR WA 20 DT71 D4	6-11, 6-13
90600-6057	GEARS, WORM MOTOR SA47DT71D4-63.80-M5B-4	2-41, 2-45, 2-71, 2-75
90600-6175	PHOTOCELL, WL18-3P430	2-119
312105-0364	SCREW M6S ISO 4017 M6X10 A480	2-95, 2-99, 2-107
312105-0366	SCREW M6S ISO 4017 M6X12 A480	2-95, 2-107
312105-0368	SCREW M6S ISO 4017 M6X16 A480	2-95, 2-101, 2-103, 2-107, 2-113, 2-115
312105-0370	SCREW M6S ISO 4017 M6X20 A480	2-95, 2-99, 2-101, 2-103, 2-107, 2-111, 2-113, 2-115
312105-0372	SCREW M6S ISO 4017 M6X25 A480	2-95, 2-101, 2-103, 2-107, 2-113, 2-115
312105-0374	SCREW M6S ISO 4014 M6X30 A480	2-95, 2-107
312105-0388	SCREW M6S ISO 4014 M6X90 A480	2-47
312105-0455	SCREW M6S ISO 4017 M8X30 A480	2-95, 2-107
312105-0463	SCREW M6S ISO 4014 M8X60 A480	2-41, 2-45, 2-71, 2-75
312105-0493	SCREW M6S ISO 4017 M10X25 A480	6-5
312115-0362	SCREW ISO4762 M6X8 A4 80	2-95, 2-107
312155-0301	SCREW DIN 7991 MF6S M4X35 A4 70	2-97, 2-109
312155-0323	SCREW DIN 7991 MF6S M5X8 A4 70	2-97, 2-109
312155-0327	SCREW DIN 7991 MF6S M5X12 A4 70	2-41, 2-45, 2-71, 2-75, 2-97, 2-99, 2-109, 2-111
312155-0331	SCREW DIN 7991 MF6S M5X20 A4 70	2-99
312155-0366	SCREW DIN 7991 MF6S M6X12 A4 70	2-99
312155-0368	SCREW DIN 7991 MF6S M6X16 A4 70	2-95, 2-107
312155-0370	SCREW DIN 7991 MF6S M6X20 A4 70	2-95, 2-99, 2-107
312155-0374	SCREW DIN 7991 MF6S M6X30 A4 70	2-101, 2-103, 2-113, 2-115
312155-0378	SCREW DIN 7991 MF6S M6X40 A4 70	2-97, 2-109
312318-0447	SCREW ISO4029 M8X12 A4	2-97, 2-109
312605-0318	HEXAGON NUT, M6M M8 A280	2-41, 2-45, 2-71, 2-75
312631-0324	HEX.NUT FINE, EN 24032 M6M M16X1,5 FZB8	2-129, 6-11, 6-13
312810-0316	HEXAGON NUT, NY-LOCK M6 FZB	2-95, 2-101, 2-103, 2-107, 2-113, 2-115
312810-0318	HEXAGON NUT, NY-LOCK M8 FZB	2-95, 2-107
315105-0153	WASHER BRB 6,4X12 RFR	2-95, 2-101, 2-103, 2-107, 2-113, 2-115
315105-0173	WASHER BRB 10,5X22 RFR	1-7, 1-17, 6-5
342716-0210	REDUCER 6-12	6-9
342722-0204	PIPE COUPLING	2-129
342748-0103	T-CONNECTION 8MM	2-123, 2-129
350002-0006	PUSH-IN L-FITTING QSL-F-G1/8-6	6-9
350002-0011	PUSH-IN L-FITTING QSL-F-G1/4-12	6-9
350002-0016	PUSH-IN L-FITTING QSL-F-G1/2-12	6-9
351150-0405	CABLE OLFLEX 5X0,75 MM2 LIGHT/GREY	2-47, 2-77
351150-0431	CABLE OLFLEX 2X0,75 MM2 LIGHT/GREY	2-123
351305-0150	ACTUATOR/SENSOR CABLE PRKMV 4-07/15M	2-49, 3-9
351311-0050	ACTUATOR/SENSOR CABLE RKTN 4-225/5M	4-17
351311-0100	ACTUATOR/SENSOR CABLE RKTN 4-225/10M	4-17
351312-0150	ACTUATOR/SENSOR CABLE RKWTN 4-225/15M	2-117
351403-0020	ACTU/SENS. CABLE RSMVN 3-PRKMV 4-06/2,0M	2-79, 6-9
351405-0050	ACT/SENS. CABLE RSMVN 3-PRKT 4-3-06/5,0M	2-47, 2-119, 3-9, 5-5
351406-0050	ACT/SENS.CABLE RSMVN 3-PRKWT 4-3-06/5,0M	2-77, 5-5
351411-0050	ACTU/SENS. CABLE PRST 4-PRKT 4-07/5,0	5-5
351413-0050	DEVICENET CONN. CABLE, 0935 361 103/5M	4-17
351415-0100	DEVICENET CONN. CABLE, 0935 361 105/10M	4-17
353021-0212	FEED THROUGH TERMINAL, 10200.0	6-17
353024-0207	EARTH TERMINAL, 1010.3	6-17
353031-0203	END SUPPORT, WEW 35/2	6-17
353032-0004	END PLATE WAP 2,5-10 BEIGE	6-17
354000-0030	MINIATURE CIRCUIT BREAKER, FAZ-C3/1	4-9, 4-11
354000-0040	MINIATURE CIRCUIT BREAKER, FAZ-C4/1	4-9, 4-11
354000-0060	MINIATURE CIRCUIT BREAKER, FAZ-C6/1	4-9, 4-11
354000-0100	MINIATURE CIRCUIT BREAKER, FAZ-C10/1	4-9, 4-11
354001-0010	MINIATURE CIRCUIT BREAKER, FAZ-C1/2	4-9, 4-11
354002-0160	MINIATURE CIRCUIT BREAKER, FAZ-C16/3	4-9, 4-11
359301-0001	BUTTON SIGN, UP	4-13
359301-0005	BUTTON SIGN, DOWN	4-13
359301-0175	BUTTON SIGN, PRODUCTION ON	4-13
359301-0340	BUTTON SIGN, SEARCH POINT	4-13
359705-0002	WARNING SIGN ISO, ENTANGLEMENT	5-9

Part No	Description	Page No
359705-0015 ...	WARNING SIGN ISO, RISK OF ELECTRIC SHOCK	5-9, 6-17
359715-0100 ...	WARNING SIGN ANSI (H), ELECTRIC SHOCK	5-11, 6-17
359725-0101 ...	WARNING SIGN ANSI (V), ENTANGLEMENT	5-11
596162-0000 ...	MACHINE SIGN EEA SUB-SUPPLIER	5-13, 5-15
969082-0000 ...	SPRING	2-77
1020637-0000 .	HOLDER	1-25, 1-27, 3-5, 3-7, 5-5
1039077-0000 .	HOSE, NYLON BRAID	2-123, 2-127
1039141-0000 .	BUSHING	6-9
1084784-0000 .	NOZZLE, GREEN, POLY	2-129
1084787-0000 .	CLAMP, 3/4"	2-123, 2-127
1497047-0000 .	CONNECTION	2-123, 2-127, 2-129
1497108-0000 .	BEARING	2-95, 2-107
1497114-0000 .	SPRING	2-95, 2-107
1497115-0000 .	ROLLER	2-95, 2-107
1497118-0000 .	SPRING	2-97, 2-109
1497168-0000 .	NOZZLE, RINSE SYSTEM	2-129
1497169-0000 .	NOZZLE, RINSE SYSTEM	2-129
1497193-0000 .	WING, CHAIN	5-5
1497198-0000 .	TORSION SPRING	2-47
1550595-2650 .	SLIDING STRIP	1-13, 1-23
1550595-2950 .	SLIDING STRIP	1-7, 1-17
1550595-6100 .	SLIDING STRIP	1-13, 1-23
1550595-8853 .	SLIDING STRIP	1-7, 1-17
1550743-0201 .	RAIL HOLDER PC23	1-25, 1-27, 3-5, 3-7
2502298-0000 .	SPROCKET, RETURN	2-51, 2-57, 2-59, 2-65, 2-81
2502301-0000 .	WHEEL	2-101, 2-103, 2-113, 2-115
2502305-0000 .	BEARING, SPRING	2-97, 2-109
2502312-0000 .	BUSHING	2-97, 2-109
2502336-0000 .	WHEEL	2-101, 2-103, 2-113, 2-115
2502364-0000 .	WHEEL	2-101, 2-103, 2-113, 2-115
2502365-0000 .	WHEEL	2-101, 2-103, 2-113, 2-115
2502366-0000 .	WHEEL	2-101, 2-103, 2-113, 2-115
2502370-0000 .	BUSHING	2-95, 2-107
2506940-0000 .	NOZZLE	2-123
2528226-0000 .	WHEEL	2-101, 2-103, 2-113, 2-115
2528227-0000 .	WHEEL	2-101, 2-103, 2-113, 2-115
2528230-0000 .	WHEEL	2-101, 2-103, 2-113, 2-115
2528281-0000 .	EXTRUSION, LH, 250'	2-83, 2-85
2528282-0000 .	EXTRUSION RH	2-83, 2-85
2528285-0060 .	SPARE CHAIN, INFEED, LINF, 60PC LINKS	2-39
2528285-0522 .	WHOLE CHAIN, INFEED, LINF, 522 PC	2-39
2528285-0786 .	WHOLE CHAIN, INFEED, LINF, 786PC LINKS	2-39
2528285-0894 .	WHOLE CHAIN, INFEED, LINF, 894PC LINKS	2-39
2528285-1056 .	WHOLE CHAIN, INFEED, LINF, 1056 PC	2-39
2528285-1242 .	WHOLE CHAIN, INFEED, LINF, 1242 PC	2-39
2528286-0060 .	SPARE CHAIN, OUTFEED, LINF, 60PC LINKS	2-69
2528286-0726 .	WHOLE CHAIN, OUTFEED, LINF, 726 PC	2-69
2528286-1050 .	WHOLE CHAIN,OUTFEED, LINF, 1050PC LINKS	2-69
2528286-1182 .	WHOLE CHAIN,OUTFEED, LINF, 1182PC LINKS	2-69
2528286-1302 .	WHOLE CHAIN, OUTFEED, LINF, 1302 PC	2-69
2528286-1536 .	WHOLE CHAIN, OUTFEED, LINF, 1536 PC	2-69
2528288-0000 .	PLATE	2-99
2528296-0000 .	BALL BEARING	2-99, 2-101, 2-103, 2-111, 2-113, 2-115
2528333-0400 .	DOCUMENTATION	5-3
2528334-0400 .	SAFETY SIGNS ISO	5-3
2528335-0400 .	SAFETY SIGNS ANSI	5-3
2528337-0000 .	NOZZLE	2-125, 2-129
2528339-0000 .	BRACKET	4-15
2528341-0000 .	BASE, LOWER	2-47
2528342-0000 .	BASE	2-47
2528344-0000 .	SHAFT	2-65
2528345-0000 .	COLLAR	2-51, 2-65, 2-81, 6-11, 6-13
2528346-0000 .	PAD	2-65
2528347-0000 .	BLOCK	2-57, 2-59
2528348-0000 .	COLLAR	2-57, 2-59
2528349-0000 .	AXLE	2-57, 2-59
2528350-0000 .	ROD	2-57, 2-59
2528356-0000 .	SHAFT	2-51, 2-81
2528357-0000 .	BUSHING	2-81
2528359-0000 .	PLATE	4-15
2528360-0000 .	DOOR LATCH	2-21
2528366-0000 .	PLATE	2-95
2528367-0000 .	BLOCK	2-95, 2-107
2528371-0000 .	BLOCK	2-95, 2-107
2561206-0000 .	SPACER	1-7, 1-13, 1-17, 1-23
2589960-8854 .	SLIDING STRIP	1-7, 1-17
2656672-0000 .	SPROCKET	1-7, 1-13, 1-17, 1-23
2656677-0000 .	SPROCKET	1-11, 1-21
2664396-0000 .	SPACER	2-95, 2-107
2664397-0000 .	BLOCK	2-95
2664398-0000 .	BEARING	2-95, 2-107
2664399-0000 .	PLATE	2-95, 2-107
2664400-0000 .	SHAFT	2-97, 2-109
2664401-0000 .	GEAR	2-97, 2-109

Part No	Description	Page No
2664403-0000	SPACER	2-97, 2-109
2664405-0000	CAP	2-97, 2-109
2664407-0000	BUSHING	2-97, 2-109
2664413-0000	BEARING	2-95, 2-107
2664414-0000	ROD, LINK	2-95, 2-107
2664418-0000	KEY	2-97, 2-109
2664419-0000	PIN	2-95, 2-97, 2-107, 2-109
2664460-0000	RETAINING RING	2-97, 2-99, 2-109, 2-111
2664486-0000	BRACKET	2-57, 2-59
2664534-0000	NUT PLATE	2-47
2664543-0000	NUT	2-41, 2-45, 2-71, 2-75
2664554-0000	NIPPLE	2-123
2664556-0000	FITTING	6-9
2664557-0000	ADAPTER	2-123
2664558-0000	HOSE COUPLING	2-123, 2-127
2664562-0000	NUT	2-129
2664563-0000	BLOCK	2-129
2664564-0000	BRACKET	2-129
2664565-0000	BRACKET	2-129
2664566-0000	BRACKET	2-129
2664567-0000	COUPLING	2-129
2664568-0000	COUPLING	2-129, 6-11, 6-13
2664574-0000	BLOCK	2-7
2664578-0100	FOOT	2-5
2664580-0000	CASTER WHEEL	6-5
2699585-0263	SLIDING STRIP	1-13, 1-23
2699585-0293	SLIDING STRIP	1-7, 1-17
2699585-0608	SLIDING STRIP	1-13, 1-23
2727187-0000	GEAR	2-95
2727188-0000	BEARING	2-95, 2-107
2727194-0000	SPACER	2-97, 2-109
2727211-0000	NUT	2-41, 2-45, 2-71, 2-75
2727212-0200	CONTROL PANEL	4-3
2727213-0000	EXTRUSION, RH, 205'	2-53, 2-55, 2-83, 2-85
2727217-0000	EXTRUSION, RH, 340'	2-53, 2-55, 2-83, 2-85
2727218-0000	EXTRUSION, LH, 320'	2-53, 2-55, 2-83, 2-85
2727231-0000	WHEEL	2-101, 2-103, 2-113, 2-115
2727233-0000	GEAR	2-97, 2-109
2727234-0000	GEAR	2-97, 2-109
2727274-0000	ADAPTER	2-123
2727275-0000	ADAPTER	2-123
2727344-0000	FITTING	2-97, 2-109
2727353-0000	BELT	2-99, 2-111, 5-5
2727354-0000	WASHER	2-95, 2-99, 2-107, 2-111
2727356-0000	BEARING	2-99, 2-111
2727357-0000	SEAL	2-99, 2-111
2727358-0000	CAP	2-99, 2-111
2727359-0000	SPACER	2-99, 2-111
2727360-0000	SLEEVE	2-99, 2-111
2727361-0000	GEAR	2-99, 2-111
2727362-0000	FLANGE	2-99, 2-111
2727363-0000	PULLEY	2-99, 2-111
2727364-0000	SHAFT	2-99, 2-111
2727365-0000	SPACER	2-99, 2-111
2727366-0000	SPACER	2-99, 2-111
2727367-0000	BASE	2-99
2727368-0000	PULLEY	2-99, 2-111
2727370-0000	PLATE	2-99, 2-111
2727371-0000	PLATE	2-99, 2-111
2727373-0000	BASE	2-99, 2-111
2727374-0000	ADAPTER	4-15
2727376-0000	EXTRUSION LH	2-53, 2-55, 2-83, 2-85
2727386-0100	CASTER WHEEL KIT	6-3
2775930-0000	CHAIN SUPPORT	1-13, 1-23
2775931-0000	CHAIN SUPPORT	1-13, 1-23
2807804-0000	GUIDE	1-7, 1-17
2807805-0000	GUIDE	1-7
2837851-0000	CD BOX	4-5, 4-7, 4-9, 4-11
2854778-0000	COIL	2-23, 2-25, 2-27, 2-29, 2-31, 2-33
2855220-0000	SET UP TOOL	5-5
2855222-0000	KNOB	2-61, 2-63, 2-87, 2-89
2855223-0000	SPACER	2-61, 2-63, 2-87, 2-89
2855224-0000	RAIL	2-87, 2-89
2855225-0000	RAIL	2-87, 2-89
2855226-0000	RAIL	2-61, 2-63, 2-87, 2-89
2855227-0000	RAIL	2-87, 2-89
2855228-0000	RAIL	2-87, 2-89
2855229-0000	RAIL	2-61, 2-63, 2-87, 2-89
2855231-0000	RAIL	2-61, 2-63
2855232-0000	RAIL	2-61, 2-63
2855233-0000	ROLLER	2-101, 2-103, 2-113, 2-115
2855239-0000	SUPPORT	2-101, 2-103, 2-113, 2-115
2855240-0000	BLOCK	2-101, 2-103, 2-113, 2-115
2855241-0000	BEARING	2-101, 2-103, 2-113, 2-115

Part No	Description	Page No
2855242-0000	COVER	2-101, 2-103, 2-113, 2-115
2855243-0000	POST	2-101, 2-103, 2-113, 2-115
2855244-0000	WHEEL	2-101, 2-103, 2-113, 2-115
2855245-0000	SUPPORT	2-101, 2-103
2855247-0000	SLEEVE	2-101, 2-103
2855248-0000	SLEEVE	2-101, 2-103
2855249-0000	SLEEVE	2-101, 2-103
2855250-0000	SLEEVE	2-101, 2-103
2855264-0000	WHEEL	2-101, 2-103, 2-113, 2-115
2855276-0000	WASHER	2-99, 2-111
2855277-0000	BUSHING	2-99, 2-111
2855278-0000	PLATE	2-99
2855279-0000	DECK	2-95
2855280-0000	SUPPORT	2-95
2855288-0000	TRIGGER	2-99, 2-111
2855289-0000	WASHER	2-99, 2-111
2855290-0000	KNOB	2-95, 2-107
2855291-0000	THREADED ROD	2-95, 2-107
2855292-0000	THREADED ROD	2-95, 2-107
2855293-0000	SPACER	2-95, 2-107
2855294-0000	SLEEVE	2-95, 2-107
2855299-0000	GUIDE	2-101, 2-103, 2-113, 2-115
2855300-0000	ROLLER	2-101, 2-103, 2-113, 2-115
2855301-0000	ROLLER	2-101, 2-103, 2-113, 2-115
2855303-0000	GUIDE	2-101, 2-103, 2-113, 2-115
2855304-0000	WHEEL	2-101, 2-103, 2-113, 2-115
2855309-0000	WHEEL	2-101, 2-103, 2-113, 2-115
2855340-0000	AXLE SUPPORT	2-41, 2-45, 2-71, 2-75
2855341-0000	ELBOW	2-123
2855342-0000	MANIFOLD	2-123
2855343-0000	MANIFOLD	2-127
2855345-0000	WING NUT	2-61, 2-63, 2-87, 2-89
2855346-0000	PIN	2-61, 2-63, 2-87, 2-89
2855347-0000	CABLE	2-61, 2-63, 2-87, 2-89
2855348-0200	START-UP KIT	5-3
2855349-0000	DAMPER	2-9, 2-11, 2-13, 2-15, 2-17, 2-19
2855350-0000	HANDLE	2-9, 2-11, 2-13, 2-15, 2-17, 2-19
2855353-0000	GLASS PANE	2-23, 2-25, 2-27, 2-29, 2-31, 2-33
2855354-0000	GLASS PANE	2-23, 2-25, 2-27, 2-29, 2-31, 2-33
2855355-0000	GLASS PANE	2-23, 2-25, 2-27, 2-29, 2-31, 2-33
2855357-0000	GLASS PANE	2-23, 2-25, 2-27, 2-29, 2-31, 2-33
2855358-0000	GLASS PANE	2-23, 2-25, 2-27, 2-29, 2-31, 2-33
2855359-0000	GLASS PANE	2-23, 2-25, 2-27, 2-29, 2-31, 2-33
2855360-0000	GLASS PANE	2-23, 2-25, 2-27, 2-29, 2-31, 2-33
2855361-0000	GLASS PANE	2-23, 2-25, 2-27, 2-29, 2-31, 2-33
2855362-0000	GLASS PANE	2-23, 2-25, 2-27, 2-29, 2-31, 2-33
2855363-0000	GLASS PANE	2-23, 2-25, 2-27, 2-29, 2-31, 2-33
2855364-0000	GLASS PANE	2-23, 2-25, 2-27, 2-29, 2-31, 2-33
2855365-0000	GLASS PANE	2-23, 2-25, 2-27, 2-29, 2-31, 2-33
2855366-0000	GLASS PANE	2-23, 2-25, 2-27, 2-29, 2-31, 2-33
2855367-0000	ROLLER SUPPORT ARM	2-101, 2-103
2855368-0000	MOUNTING PLATE	2-101, 2-103, 2-113, 2-115
2855369-0000	WHEEL	2-101, 2-103, 2-113, 2-115
2855370-0100	VOLUME KIT -LINF	2-93
2855371-0000	WHEEL	2-101, 2-103, 2-113, 2-115
2855372-0000	GUIDE	2-101, 2-103, 2-113, 2-115
2855373-0000	GUIDE	2-101, 2-103
2855374-0000	SUPPORT	2-101, 2-103
2855375-0000	SPROCKET, INFEED	2-41
2855376-0000	SPROCKET, OUTFEED	2-71
2855377-0000	PLATE	2-41, 2-45
2855378-0000	PLATE	2-71
2855403-0060	SPARE CHAIN, INFEED, RINF, 60PC LINKS	2-43
2855403-0522	WHOLE CHAIN, INFEED, RINF, 522 PC	2-43
2855403-0786	WHOLE CHAIN, INFEED, RINF, 786 PC	2-43
2855403-0894	WHOLE CHAIN, INFEED, RINF, 894 PC	2-43
2855403-1056	WHOLE CHAIN, INFEED, RINF, 1056 PC	2-43
2855403-1242	WHOLE CHAIN, INFEED, RINF, 1242 PC	2-43
2855404-0060	SPARE CHAIN, OUTFEED, RINF, 60PC LINKS	2-73
2855404-0726	WHOLE CHAIN, OUTFEED, RINF, 726 PC	2-73
2855404-1050	WHOLE CHAIN, OUTFEED, RINF, 1050 PC	2-73
2855404-1182	WHOLE CHAIN, OUTFEED, RINF, 1182 PC	2-73
2855404-1302	WHOLE CHAIN, OUTFEED, RINF, 1302 PC	2-73
2855404-1536	WHOLE CHAIN, OUTFEED, RINF, 1536 PC	2-73
2855405-0000	WING, CHAIN	5-5
2855406-0000	RAIL	2-61, 2-63
2855407-0000	RAIL	2-61, 2-63
2855416-0000	MANIFOLD	2-123
2920793-0200	SOFTWARE	4-3
2920797-1001	PROGRAM OBJECT CODE HMI	4-13
2948778-0000	GLASS PANE	2-23, 2-25, 2-27, 2-29, 2-31, 2-33
2948786-0000	MANIFOLD	2-127
2948788-0000	BRACKET	2-129
2948789-0000	BRACKET	2-129

Part No	Description	Page No
2948797-0000	GUIDE	2-113, 2-115
2948798-0000	ROLLER SUPPORT ARM	2-113, 2-115
2948799-0000	SUPPORT	2-113, 2-115
2948800-0000	SUPPORT	2-113, 2-115
2948801-0000	PULLEY	2-97, 2-109
2948803-0000	DRIVE GEAR	2-97, 2-109
2948804-0000	WASHER	2-61, 2-63, 2-77, 2-87, 2-89, 2-97, 2-109
2948805-0000	BEARING	2-97, 2-109
2948806-0000	SHAFT	2-97, 2-109
2948808-0000	DISK	2-97, 2-109
2948810-0000	CAP	2-97, 2-109
2948811-0000	SPACER	2-97, 2-109
2948812-0000	BEARING	2-97, 2-109
2948819-0000	BASE PLATE	2-111
2948836-0000	FLANGE NUT	2-61, 2-63, 2-87, 2-89
2948837-0000	BOLT	2-61, 2-63, 2-87, 2-89
2948838-0000	WASHER	1-25, 1-27
2948839-0000	HANDLE	1-25, 1-27
2948845-0000	BRACKET	1-25, 1-27
2948858-0000	PLATE	2-117
2948859-0000	SPACER	2-117
2948860-0000	CAP	2-97, 2-109
2948864-0000	SET UP TOOL - SPIDER	5-5
2948865-0000	SET UP TOOL - SPIDER	5-5
2948866-0000	SET UP TOOL - SPIDER	5-5
2948867-0000	BRACKET	5-5
2948868-0000	BEARING	2-97, 2-99, 2-109, 2-111
2948871-0000	DOOR LATCH	2-21
2948877-0000	SIGN	5-15
2948883-0000	INSTALLATION DRAWING	5-7
2948884-0000	INSTALLATION DRAWING	5-7
2948885-0000	INSTALLATION DRAWING	5-7
2948886-0000	INSTALLATION DRAWING	5-7
2948887-0000	INSTALLATION DRAWING	5-7
2948888-0000	INSTALLATION DRAWING	5-7
2948889-0000	PLATE	2-41, 2-45, 2-71, 2-75
2948890-0000	BAR	2-41, 2-45, 2-71, 2-75
2948891-0000	MOUNTING BRACKET	2-41, 2-45, 2-71, 2-75
2948892-0000	BAR	2-41, 2-45, 2-71, 2-75
2948893-0000	GUARD	2-41, 2-45
2948894-0100	ELECTRICAL CONNECTIONS	4-3
2948898-0000	SPROCKET	2-45
2948899-0000	SPROCKET	2-75
2948900-0100	GUIDE	1-3
2948901-0100	DRIVE AND END UNIT - LINF	1-3
2948902-0100	FRAME	2-3
2948903-0100	INFEED	2-3
2948904-0100	OUTFEED	2-3
2948905-0100	SPIDER UNIT	2-3
2948906-0100	FALLEN PACKAGE SENSOR	2-3
2948907-0100	WATER SYSTEM	2-3
2948908-0100	GUIDE	3-3
2948909-0100	OUTFEED SENSOR	3-3
2948910-0000	SUPPORT	2-107
2948911-0100	WARNING LAMP	4-3
2948912-0100	DOOR SAFETY SWITCH	2-5
2948913-0100	DOOR LATCHES	2-5
2948914-0100	GLASS PANES	2-5
2948915-0100	UPPER LIMIT SENSOR	2-37
2948916-0100	INFEED SENSOR	2-37
2948917-0100	INFEED CONVEYOR	2-37
2948918-0100	INFEED EXTRUSION	2-37
2948919-0100	CHAIN TENSIONER	2-37
2948920-0100	INFEED GUIDE	2-37
2948921-0100	INFEED CHAIN - LINF	2-37
2948922-0100	INFEED CHAIN - RINF	2-37
2948923-0100	CHAINFALL	2-37
2948924-0100	INFEED DRIVE-LINF	2-37
2948925-0100	INFEED DRIVE-RINF	2-37
2948926-0100	LOWER LIMIT SENSOR	2-67
2948927-0100	OUTFEED CONVEYOR	2-67
2948928-0100	OUTFEED EXTRUSION	2-67
2948929-0100	OUTFEED GUIDE	2-67
2948930-0100	OUTFEED CHAIN - LINF	2-67
2948931-0100	OUTFEED CHAIN -RINF	2-67
2948932-0100	OUTFEED DRIVE - LINF	2-67
2948933-0100	OUTFEED DRIVE - RINF	2-67
2948934-0100	SPIDER UNIT TBA/TPA/TGA - LINF	2-91
2948935-0000	GEAR	2-107
2948936-0100	BELT SPIDER BASE - LINF	2-93
2948937-0100	BELT SPIDER TRANSMISSION - LINF	2-93
2948938-0100	BELT SPIDER DRIVEN WHEEL - LINF	2-93
2948939-0000	DECK	2-107
2948940-0100	SPIDER UNIT TBA/TPA/TGA - RINF	2-91

Part No	Description	Page No
2948941-0000	PLATE	2-107
2948942-0100	BELT SPIDER BASE - RINF	2-105
2948943-0100	BELT SPIDER TRANSMISSION - RINF	2-105
2948944-0100	BELT SPIDER DRIVEN WHEEL - RINF	2-105
2948945-0100	VOLUME KIT -RINF	2-105
2948946-0100	FILL LEVEL SENSOR	2-91
2948947-0100	MIST NOZZLE	2-121
2948949-0100	SIGN & MARKING ANSI	5-3
2948950-0100	SIGN & MARKING ISO	5-3
2948951-0000	STUD	2-35
2948952-0000	RECEPTACLE	2-35
2948953-0000	RETAINING RING	2-35
2948954-0000	HOUSING	6-9
2948955-0100	ELECTRICAL CABINET - IEC	4-3
2948956-0100	ELECTRICAL CABINET - CSA	4-3
2948957-0000	COLLAR	2-95, 2-107
2948958-0000	BELT	2-95, 2-107, 5-5
2948959-0000	DEAD PLATE	2-95
2948960-0000	SPRING	2-95, 2-107
2948961-0000	BLOCK	2-95, 2-107
2948962-0000	PLATE	2-95, 2-107
2948963-0000	GUIDE	2-95, 2-107
2948964-0000	SPACER	2-95, 2-107
2948965-0000	PLATE	2-95
2948966-0000	ARM	2-95
2948967-0000	WASHER	2-95, 2-107
2948968-0000	WASHER	2-95, 2-107
2948969-0000	DECK	2-97
2948970-0000	PLATE	2-97
2948971-0000	TENSIONER	2-97
2948972-0000	DEAD PLATE	2-107
2948973-0000	BLOCK	2-107
2948974-0000	PLATE	2-111
2948975-0000	DECK	2-107
2948976-0000	DECK	2-109
2955378-0000	PLATE	2-75
3006085-2001	PROGRAM SOURCE CODE PLC/VISIO	4-19
3006086-2001	PROGRAM SOURCE CODE HMI	4-19
3006090-0001	SOFTWARE CD	4-19
3008835-0000	ARM	2-107
3008836-0000	PLATE	2-109
3008837-0000	BELT TENSIONER	2-109
3008838-0000	PLATE	2-111
3008839-0100	INFEED - LINF	1-5
3008840-0100	CHAIN TENSIONER LINF	1-5
3008841-0100	MOTOR UNIT	1-5
3008842-0100	OUTFEED	1-5
3008843-0000	BALL BEARING	1-7, 1-13, 1-17, 1-23
3008844-0000	SPACER	1-7, 1-17
3008845-0000	SPACER	1-7, 1-13, 1-17, 1-23
3008846-0000	SPACER	1-7, 1-13, 1-17, 1-23
3008847-0000	BRACKET	1-7, 1-13, 1-17, 1-23
3008848-0000	BRACKET	1-7, 1-13, 1-17, 1-23
3008849-0000	COVER	1-7
3008850-0000	BRACKET	1-7
3008851-0000	COVER	1-7
3008852-0000	O-RING	1-9, 1-19
3008853-0000	O-RING	1-9, 1-19
3008854-0000	SHAFT	1-9, 1-19
3008855-0000	SHAFT	1-9, 1-19
3008856-0000	SPACER	1-9, 1-19
3008857-0000	SPACER	1-9, 1-19
3008858-0000	SPACER	1-9, 1-13, 1-19, 1-23
3008859-0000	BRACKET	1-9, 1-19
3008860-0000	BRACKET	1-9, 1-19
3008861-0000	IDLER	1-9, 1-19
3008862-0000	WEIGHT	1-9, 1-19
3008863-0000	SPACER	1-9, 1-19
3008864-0000	COVER	1-9
3008865-0000	COVER	1-9, 1-19
3008866-0000	COVER	1-9, 1-19
3008867-0000	BRACKET	1-9, 1-19
3008868-0000	COVER	1-9
3008869-0000	HUB	1-11, 1-21
3008870-0000	MOTOR SHELF	1-11
3008871-0000	BRACKET	1-13
3008872-0000	BRACKET	1-13
3008873-0000	BRACKET	1-13
3008874-0000	BRACKET	1-13
3008875-0100	DRIVE AND END UNIT - RINF	1-3
3008876-0100	INFEED - RINF	1-15
3008877-0100	CHAIN TENSIONER RINF	1-15
3008878-0100	MOTOR UNIT - RINF	1-15
3008879-0100	OUTFEED - RINF	1-15

Part No	Description	Page No
3008880-0000	COVER	1-17
3008881-0000	BRACKET	1-17
3008882-0000	COVER	1-17
3008883-0000	COVER	1-19
3008884-0000	COVER	1-19
3008885-0000	MOTOR SHELF	1-21
3008886-0000	BRACKET	1-23
3008887-0000	BRACKET	1-23
3008888-0000	BRACKET	1-23
3008889-0000	BRACKET	1-23
3008890-0000	RAIL	1-25, 1-27
3008891-0000	RAIL	1-25, 1-27
3008892-0000	RAIL	1-25, 1-27
3008893-0000	RAIL	1-25, 1-27
3008894-0000	RAIL	1-25, 1-27
3008895-0000	PLATE	1-25, 1-27
3008896-0000	PLATE	1-25, 1-27, 3-5, 3-7
3008897-0000	BRACKET	1-25, 1-27, 3-5, 3-7
3008898-0000	RAILING	1-25, 1-27
3008899-0000	RAILING	1-25, 1-27
3008900-0000	RAILING	1-25, 1-27
3008901-0000	RAILING	1-25, 1-27
3008902-0000	BRACKET	1-25, 1-27
3008903-0000	BRACKET	1-25, 1-27
3008904-0000	BRACKET	1-25, 1-27
3008905-0000	RAIL	3-5, 3-7
3008906-0000	RAIL	3-5, 3-7
3008907-0100	CHAIN CLEANER	6-3
3008908-0100	VALVE PANEL	6-7
3008909-0100	SCRUBBER UNIT	6-7
3008910-0000	PLATE	2-77
3008911-0100	AIR KNIFE	6-7
3008912-0000	AIR KNIFE	6-15
3008913-0000	FITTING	6-15
3008914-0000	HANGER	6-15
3008915-0000	BRACKET	6-15
3008916-0000	BRACKET	6-11, 6-13
3008917-0000	BRACKET	6-11, 6-13
3008918-0000	BRACKET	6-11, 6-13
3008919-0000	BUSHING	6-11, 6-13
3008920-0000	BEARING	6-11, 6-13
3008921-0000	GEAR	6-11, 6-13
3008922-0000	BRUSH	6-11, 6-13
3008923-0000	NUT	6-11, 6-13
3008924-0000	PIN	6-11, 6-13
3008925-0000	PLUG	6-11, 6-13
3008926-0000	CYLINDER	6-11, 6-13
3008927-0000	NOZZLE	6-11, 6-13
3008928-0000	ELBOW	6-11, 6-13
3008929-0000	VALVE	6-11, 6-13
3008930-0000	BRACKET	6-11, 6-13
3008931-0000	COVER	6-11, 6-13
3008932-0000	SHAFT	6-11, 6-13
3008933-0000	BLOCK	6-11, 6-13
3008934-0000	DRIVE SHAFT	6-11, 6-13
3008935-0000	SHAFT	6-11, 6-13
3008936-0000	FRAME	6-11, 6-13
3008937-0000	BRACKET	6-11, 6-13
3008938-0000	BRACKET	6-11, 6-13
3008939-0000	BRACKET	6-11, 6-13
3008940-0000	COVER	6-11, 6-13
3008941-0000	FRAME	6-11, 6-13
3008942-0000	FITTING	6-9
3008943-0000	FITTING	6-9
3008944-0000	NIPPLE	6-9
3008945-0000	PLUG	6-9
3008946-0000	CONNECTOR	6-9
3008947-0000	BRACKET	2-77
3008948-0000	ELBOW	6-9
3008949-0000	FITTING	6-9
3008950-0000	COUPLING	6-9
3008951-0000	BUSHING	6-9
3008952-0000	FITTING	6-9
3008953-0000	FITTING	6-9
3008954-0000	NIPPLE	6-9
3008955-0000	NIPPLE	6-9
3008956-0000	DOSING UNIT	6-9
3008957-0000	BRACKET	6-9
3008958-0000	COVER	6-9
3008959-0000	PANEL	6-9
3008960-0000	STAND	6-9
3008961-0100	COVERING PANEL	2-5
3008965-0000	PANEL	2-35
3008966-0000	PANEL	2-35

Machine Type Group Description Page No

Part No	Description	Page No
3008967-0000	PANEL	2-35
3008968-0000	PANEL	2-35
3008969-0000	PANEL	2-35
3008970-0000	PANEL	2-35
3008971-0000	PANEL	2-35
3008972-0000	PANEL	2-35
3008973-0000	PANEL	2-35
3008974-0000	PANEL	2-35
3008975-0000	PANEL	2-35
3008976-0000	PANEL	2-35
3008977-0101	INSTALLATION MANUAL	5-7
3008978-0101	OPERATION MANUAL	5-7
3008979-0101	MAINTENANCE MANUAL	5-7
3008980-0101	ELECTRICAL MANUAL	5-7
3008981-0101	SPARE PARTS CATALOGUE	5-7
3008982-0100	SPRAY GUN	2-121
3008983-0100	RINSE MANIFOLD	2-121
3008984-0100	RINSE NOZZLES	2-121
3008985-0100	OUTFEED JAM SENSOR	2-67
3008986-0000	SLEEVE	2-113, 2-115
3008987-0000	SLEEVE	2-113, 2-115
3008988-0000	SLEEVE	2-113, 2-115
3008989-0000	SLEEVE	2-113, 2-115
3008990-0100	GENIUS COMMUNICATION UNIT	6-3
3008991-0000	SET UP TOOL	5-5
3008997-0000	DELIVERED DESIGN	5-13, 5-15
3008998-0000	FUSE PANEL SIGN	5-15
3008999-0000	FUSE PANEL SIGN	5-15
3009000-0000	FUSE PANEL SIGN	5-15
3009001-0000	BRANCH	5-15
3009002-0000	FUSE PANEL SIGN	5-13
3009003-0000	FUSE PANEL SIGN	5-13
3009004-0000	FUSE PANEL SIGN	5-13
3009009-0000	BRACKET	2-77
3009018-0000	BRACKET	2-77
3009019-0000	BRACKET	2-77
3009069-0000	SCREW	2-77
3009074-0000	PLATE	2-77
3009075-0000	PLATE	2-77
3009076-0000	PLATE	2-77
3009077-0000	PLATE	2-77
3009078-0000	PLATE	2-77
3009079-0000	PLATE	2-77

Part No	Description	Page No	Part No	Description	Page No

Tetra Pak

SPC
Spare Parts Catalogue

Part No	Description	Page No
-	* Only with option Chain Cleaner.	4-9, 4-11, 4-5, 4-7
351405-0050	ACT/SENS. CABLE RSMVN 3-PRKT 4-3-06/5,0M	2-47, 2-119, 3-9, 5-5
351406-0050	ACT/SENS.CABLE RSMVN 3-PRKWT 4-3-06/5,0M	2-77, 5-5
90459-6586	ACT/SENS.Y-CABLE, ASBN 2-PRKMV 4-07/0,6M	3-9, 5-5
351411-0050	ACTU/SENS. CABLE PRST 4-PRKT 4-07/5,0	5-5
351403-0020	ACTU/SENS. CABLE RSMVN 3-PRKMV 4-06/2,0M	2-79, 6-9
351305-0150	ACTUATOR/SENSOR CABLE PRKMV 4-07/15M	2-49, 3-9
351311-0100	ACTUATOR/SENSOR CABLE RKTN 4-225/10M	4-17
351311-0050	ACTUATOR/SENSOR CABLE RKTN 4-225/5M	4-17
351312-0150	ACTUATOR/SENSOR CABLE RKWTN 4-225/15M	2-117
2664557-0000	ADAPTER	2-123
2727274-0000	ADAPTER	2-123
2727275-0000	ADAPTER	2-123
2727374-0000	ADAPTER	4-15
3008911-0100	AIR KNIFE	6-7
3008912-0000	AIR KNIFE	6-15
2948966-0000	ARM	2-95
3008835-0000	ARM	2-107
90259-0317	AUXILIARY CONTACT 072896 NHI11-PKZ0	4-5, 4-7, 4-9, 4-11
2528349-0000	AXLE	2-57, 2-59
2855340-0000	AXLE SUPPORT	2-41, 2-45, 2-71, 2-75
2528296-0000	BALL BEARING	2-99, 2-101, 2-103, 2-111, 2-113, 2-115
3008843-0000	BALL BEARING	1-7, 1-13, 1-17, 1-23
90187-0029	BALL VALVE G1/2, NPBR	2-123
2948890-0000	BAR	2-41, 2-45, 2-71, 2-75
2948892-0000	BAR	2-41, 2-45, 2-71, 2-75
2528342-0000	BASE	2-47
2727367-0000	BASE	2-99
2727373-0000	BASE	2-99, 2-111
90129-0018	BASE OMRON P2RF-08-E	4-5, 4-7
2948819-0000	BASE PLATE	2-111
90458-0292	BASE, KT70-1001	4-15
2528341-0000	BASE, LOWER	2-47
90031-0050	BASEPLATE, 5-SLOT	6-17
1497108-0000	BEARING	2-95, 2-107
2664398-0000	BEARING	2-95, 2-107
2664413-0000	BEARING	2-95, 2-107
2727188-0000	BEARING	2-95, 2-107
2727356-0000	BEARING	2-99, 2-111
2855241-0000	BEARING	2-101, 2-103, 2-113, 2-115
2948805-0000	BEARING	2-97, 2-109
2948812-0000	BEARING	2-97, 2-109
2948868-0000	BEARING	2-97, 2-99, 2-109, 2-111
3008920-0000	BEARING	6-11, 6-13
2502305-0000	BEARING, SPRING	2-97, 2-109
2727353-0000	BELT	2-99, 2-111, 5-5
2948958-0000	BELT	2-95, 2-107, 5-5
2948936-0100	BELT SPIDER BASE - LINF	2-93
2948942-0100	BELT SPIDER BASE - RINF	2-105
2948938-0100	BELT SPIDER DRIVEN WHEEL - LINF	2-93
2948944-0100	BELT SPIDER DRIVEN WHEEL - RINF	2-105
2948937-0100	BELT SPIDER TRANSMISSION - LINF	2-93
2948943-0100	BELT SPIDER TRANSMISSION - RINF	2-105
3008837-0000	BELT TENSIONER	2-109
2528347-0000	BLOCK	2-57, 2-59
2528367-0000	BLOCK	2-95, 2-107
2528371-0000	BLOCK	2-95, 2-107
2664397-0000	BLOCK	2-95
2664563-0000	BLOCK	2-129
2664574-0000	BLOCK	2-7
2855240-0000	BLOCK	2-101, 2-103, 2-113, 2-115
2948961-0000	BLOCK	2-95, 2-107
2948973-0000	BLOCK	2-107
3008933-0000	BLOCK	6-11, 6-13
2948837-0000	BOLT	2-61, 2-63, 2-87, 2-89
2528339-0000	BRACKET	4-15
2664486-0000	BRACKET	2-57, 2-59
2664564-0000	BRACKET	2-129
2664565-0000	BRACKET	2-129
2664566-0000	BRACKET	2-129
2948788-0000	BRACKET	2-129
2948789-0000	BRACKET	2-129
2948845-0000	BRACKET	1-25, 1-27
2948867-0000	BRACKET	5-5
3008847-0000	BRACKET	1-7, 1-13, 1-17, 1-23
3008848-0000	BRACKET	1-7, 1-13, 1-17, 1-23
3008850-0000	BRACKET	1-7
3008859-0000	BRACKET	1-9, 1-19
3008860-0000	BRACKET	1-9, 1-19
3008867-0000	BRACKET	1-9, 1-19
3008871-0000	BRACKET	1-13
3008872-0000	BRACKET	1-13
3008873-0000	BRACKET	1-13
3008874-0000	BRACKET	1-13

Part No	Description	Page No
3008881-0000	BRACKET	1-17
3008886-0000	BRACKET	1-23
3008887-0000	BRACKET	1-23
3008888-0000	BRACKET	1-23
3008889-0000	BRACKET	1-23
3008897-0000	BRACKET	1-25, 1-27, 3-5, 3-7
3008902-0000	BRACKET	1-25, 1-27
3008903-0000	BRACKET	1-25, 1-27
3008904-0000	BRACKET	1-25, 1-27
3008915-0000	BRACKET	6-15
3008916-0000	BRACKET	6-11, 6-13
3008917-0000	BRACKET	6-11, 6-13
3008918-0000	BRACKET	6-11, 6-13
3008930-0000	BRACKET	6-11, 6-13
3008937-0000	BRACKET	6-11, 6-13
3008938-0000	BRACKET	6-11, 6-13
3008939-0000	BRACKET	6-11, 6-13
3008947-0000	BRACKET	2-77
3008957-0000	BRACKET	6-9
3009009-0000	BRACKET	2-77
3009018-0000	BRACKET	2-77
3009019-0000	BRACKET	2-77
90459-1859	BRACKET, MS6-MV	6-9
90459-1858	BRACKET, MS6-WP	6-9
3009001-0000	BRANCH	5-15
3008922-0000	BRUSH	6-11, 6-13
90036-0068	BULB 6.5W 24V	4-15
90458-2602	BULKHEAD CONNECTOR, 12 MM	6-9
1039141-0000	BUSHING	6-9
2502312-0000	BUSHING	2-97, 2-109
2502370-0000	BUSHING	2-95, 2-107
2528357-0000	BUSHING	2-81
2664407-0000	BUSHING	2-97, 2-109
2855277-0000	BUSHING	2-99, 2-111
3008919-0000	BUSHING	6-11, 6-13
3008951-0000	BUSHING	6-9
359301-0005	BUTTON SIGN, DOWN	4-13
359301-0175	BUTTON SIGN, PRODUCTION ON	4-13
359301-0340	BUTTON SIGN, SEARCH POINT	4-13
359301-0001	BUTTON SIGN, UP	4-13
2855347-0000	CABLE	2-61, 2-63, 2-87, 2-89
90458-0307	CABLE GLAND, M20X1,5, NO.5311 1020	4-15
351150-0431	CABLE OLFLEX 2X0,75 MM2 LIGHT/GREY	2-123
351150-0405	CABLE OLFLEX 5X0,75 MM2 LIGHT/GREY	2-47, 2-77
2664405-0000	CAP	2-97, 2-109
2727358-0000	CAP	2-99, 2-111
2948810-0000	CAP	2-97, 2-109
2948860-0000	CAP	2-97, 2-109
2664580-0000	CASTER WHEEL	6-5
2727386-0100	CASTER WHEEL KIT	6-3
2837851-0000	CD BOX	4-5, 4-7, 4-9, 4-11
3008907-0100	CHAIN CLEANER	6-3
2775930-0000	CHAIN SUPPORT	1-13, 1-23
2775931-0000	CHAIN SUPPORT	1-13, 1-23
2948919-0100	CHAIN TENSIONER	2-37
3008840-0100	CHAIN TENSIONER LINF	1-5
3008877-0100	CHAIN TENSIONER RINF	1-15
2948923-0100	CHAINFALL	2-37
1084787-0000	CLAMP, 3/4"	2-123, 2-127
2854778-0000	COIL	2-23, 2-25, 2-27, 2-29, 2-31, 2-33
2528345-0000	COLLAR	2-51, 2-65, 2-81, 6-11, 6-13
2528348-0000	COLLAR	2-57, 2-59
2948957-0000	COLLAR	2-95, 2-107
1497047-0000	CONNECTION	2-123, 2-127, 2-129
90459-4254	CONNECTION BLOCK TINA 4A, 20-054-03	4-17
3008946-0000	CONNECTOR	6-9
90459-2138	CONNECTOR 3 POLE	6-9
90459-5316	CONTACTOR 4KW 24VDC, DILM9-32	4-5, 4-7, 4-9, 4-11
2727212-0200	CONTROL PANEL	4-3
2664567-0000	COUPLING	2-129
2664568-0000	COUPLING	2-129, 6-11, 6-13
3008950-0000	COUPLING	6-9
2855242-0000	COVER	2-101, 2-103, 2-113, 2-115
3008849-0000	COVER	1-7
3008851-0000	COVER	1-7
3008864-0000	COVER	1-9
3008865-0000	COVER	1-9, 1-19
3008866-0000	COVER	1-9, 1-19
3008868-0000	COVER	1-9
3008880-0000	COVER	1-17
3008882-0000	COVER	1-17
3008883-0000	COVER	1-19
3008884-0000	COVER	1-19
3008931-0000	COVER	6-11, 6-13

Part No	Description	Page No
3008940-0000	COVER	6-11, 6-13
3008958-0000	COVER	6-9
3008961-0100	COVERING PANEL	2-5
90031-0075	CPU363, SERIAL COMMUNICATION	6-17
3008926-0000	CYLINDER	6-11, 6-13
2855349-0000	DAMPER	2-9, 2-11, 2-13, 2-15, 2-17, 2-19
2948959-0000	DEAD PLATE	2-95
2948972-0000	DEAD PLATE	2-107
2855279-0000	DECK	2-95
2948939-0000	DECK	2-107
2948969-0000	DECK	2-97
2948975-0000	DECK	2-107
2948976-0000	DECK	2-109
3008997-0000	DELIVERED DESIGN	5-13, 5-15
351413-0050	DEVICENET CONN. CABLE, 0935 361 103/5M	4-17
351415-0100	DEVICENET CONN. CABLE, 0935 361 105/10M	4-17
90459-2483	DEVICENET SCANNER, 1769-SDN SERIES B	4-5, 4-7, 4-9, 4-11
90459-4234	DEVICENET SLAVE MODULE	6-17
90459-6847	DEVICENET TERM. RESISTOR, 0939 CTX 101	4-17
90459-2473	DIG INP. MOD.16 PTS FAST,1769-IQ16F SERA	4-5, 4-7, 4-9, 4-11
90459-2476	DIGIT. OUT. MOD. 16 P ESCP, 1769-OB16P	4-5, 4-7, 4-9, 4-11
2948808-0000	DISK	2-97, 2-109
2528333-0400	DOCUMENTATION	5-3
2528360-0000	DOOR LATCH	2-21
2948871-0000	DOOR LATCH	2-21
2948913-0100	DOOR LATCHES	2-5
2948912-0100	DOOR SAFETY SWITCH	2-5
3008956-0000	DOSING UNIT	6-9
2948901-0100	DRIVE AND END UNIT - LINF	1-3
3008875-0100	DRIVE AND END UNIT - RINF	1-3
2948803-0000	DRIVE GEAR	2-97, 2-109
3008934-0000	DRIVE SHAFT	6-11, 6-13
353024-0207	EARTH TERMINAL, 1010.3	6-17
2855341-0000	ELBOW	2-123
3008928-0000	ELBOW	6-11, 6-13
3008948-0000	ELBOW	6-9
90458-2964	ELBOW PIPE JOINT, EXT.THREAD, D=8MM-G1/8	2-125, 2-129
2948956-0100	ELECTRICAL CABINET - CSA	4-3
2948955-0100	ELECTRICAL CABINET - IEC	4-3
2948894-0100	ELECTRICAL CONNECTIONS	4-3
90459-7228	ELECTRICAL EQUIPMENT SIGN, TEMPLATE	5-15
3008980-0101	ELECTRICAL MANUAL	5-7
90458-1651	EMERGENCY STOP, ZB4-BS-844 ZB4-BZ-104	4-5, 4-7, 4-9, 4-11, 4-13
353032-0004	END PLATE WAP 2,5-10 BEIGE	6-17
90459-2617	END PLATE, MS6-AGD	6-9
353031-0203	END SUPPORT, WEW 35/2	6-17
90031-0031	ENHANCED GENIUS COMMUNICATION MODULE	6-17
2727376-0000	EXTRUSION LH	2-53, 2-55, 2-83, 2-85
2528282-0000	EXTRUSION RH	2-83, 2-85
2528281-0000	EXTRUSION, LH, 250'	2-83, 2-85
2727218-0000	EXTRUSION, LH, 320'	2-53, 2-55, 2-83, 2-85
2727213-0000	EXTRUSION, RH, 205'	2-53, 2-55, 2-83, 2-85
2727217-0000	EXTRUSION, RH, 340'	2-53, 2-55, 2-83, 2-85
2948906-0100	FALLEN PACKAGE SENSOR	2-3
90264-0032	FAN, 4656N+LZ30+LZ 120,220V 50HZ	4-9, 4-11
353021-0212	FEED THROUGH TERMINAL, 10200.0	6-17
90600-5249	FERRITE, B64290L616X38	6-17
2948946-0100	FILL LEVEL SENSOR	2-91
90459-2493	FILTER CARTRIDGE 20Âµ, 1300000200	6-9
90503-3774	FILTER FAN PF2500 IP54 230V AC	4-5, 4-7
90459-1853	FILTER REGULATOR, MS6-LFR-1/2-D7-ERV-AS	6-9
90458-0921	FILTER SP 122-200	2-123
90458-2541	FILTER, CP23174-7-304SS	2-123
2664556-0000	FITTING	6-9
2727344-0000	FITTING	2-97, 2-109
3008913-0000	FITTING	6-15
3008942-0000	FITTING	6-9
3008943-0000	FITTING	6-9
3008949-0000	FITTING	6-9
3008952-0000	FITTING	6-9
3008953-0000	FITTING	6-9
2727362-0000	FLANGE	2-99, 2-111
2948836-0000	FLANGE NUT	2-61, 2-63, 2-87, 2-89
90458-1508	FLOOR PLATE, DAMPER, M105-20-160	2-7
90459-4876	FOCUS JUMPER CABLE M12 5P 3M, 20-056-21	2-9, 2-11, 2-13, 2-15, 2-17, 2-19, 4-17
2664578-0100	FOOT	2-5
90459-3458	FOOTPRINT FILTER 22-RF012-BL	4-5, 4-7, 4-9, 4-11
90459-3454	FOOTPRINT FILTER, 22-RF018-BL	4-5, 4-7, 4-9, 4-11
2948902-0100	FRAME	2-3
3008936-0000	FRAME	6-11, 6-13
3008941-0000	FRAME	6-11, 6-13
3008998-0000	FUSE PANEL SIGN	5-15
3008999-0000	FUSE PANEL SIGN	5-15
3009000-0000	FUSE PANEL SIGN	5-15

Part No	Description	Page No
3009002-0000	FUSE PANEL SIGN	5-13
3009003-0000	FUSE PANEL SIGN	5-13
3009004-0000	FUSE PANEL SIGN	5-13
90459-6907	FUSE, ATDR1	4-5, 4-7
90458-2511	FUSE, ATDR10	4-5, 4-7
90458-2512	FUSE, ATDR15	4-5, 4-7
90458-2509	FUSE, ATDR3	4-5, 4-7
90458-2510	FUSE, ATDR6	4-5, 4-7
2664401-0000	GEAR	2-97, 2-109
2727187-0000	GEAR	2-95
2727233-0000	GEAR	2-97, 2-109
2727234-0000	GEAR	2-97, 2-109
2727361-0000	GEAR	2-99, 2-111
2948935-0000	GEAR	2-107
3008921-0000	GEAR	6-11, 6-13
90069-0110	GEARS, HELICAL MOTOR SK01-71L/4	1-11, 1-21
90600-4100	GEARS, WORM MOTOR SA47DT71D4-44.22-M5B-4	2-41, 2-45, 2-71, 2-75
90600-6057	GEARS, WORM MOTOR SA47DT71D4-63.80-M5B-4	2-41, 2-45, 2-71, 2-75
90600-5983	GEARS, WORM MOTOR WA 20 DT71 D4	6-11, 6-13
3008990-0100	GENIUS COMMUNICATION UNIT	6-3
2855353-0000	GLASS PANE	2-23, 2-25, 2-27, 2-29, 2-31, 2-33
2855354-0000	GLASS PANE	2-23, 2-25, 2-27, 2-29, 2-31, 2-33
2855355-0000	GLASS PANE	2-23, 2-25, 2-27, 2-29, 2-31, 2-33
2855357-0000	GLASS PANE	2-23, 2-25, 2-27, 2-29, 2-31, 2-33
2855358-0000	GLASS PANE	2-23, 2-25, 2-27, 2-29, 2-31, 2-33
2855359-0000	GLASS PANE	2-23, 2-25, 2-27, 2-29, 2-31, 2-33
2855360-0000	GLASS PANE	2-23, 2-25, 2-27, 2-29, 2-31, 2-33
2855361-0000	GLASS PANE	2-23, 2-25, 2-27, 2-29, 2-31, 2-33
2855362-0000	GLASS PANE	2-23, 2-25, 2-27, 2-29, 2-31, 2-33
2855363-0000	GLASS PANE	2-23, 2-25, 2-27, 2-29, 2-31, 2-33
2855364-0000	GLASS PANE	2-23, 2-25, 2-27, 2-29, 2-31, 2-33
2855365-0000	GLASS PANE	2-23, 2-25, 2-27, 2-29, 2-31, 2-33
2855366-0000	GLASS PANE	2-23, 2-25, 2-27, 2-29, 2-31, 2-33
2948778-0000	GLASS PANE	2-23, 2-25, 2-27, 2-29, 2-31, 2-33
2948914-0100	GLASS PANES	2-5
2948893-0000	GUARD	2-41, 2-45
2807804-0000	GUIDE	1-7, 1-17
2807805-0000	GUIDE	1-7
2855299-0000	GUIDE	2-101, 2-103, 2-113, 2-115
2855303-0000	GUIDE	2-101, 2-103, 2-113, 2-115
2855372-0000	GUIDE	2-101, 2-103, 2-113, 2-115
2855373-0000	GUIDE	2-101, 2-103
2948797-0000	GUIDE	2-113, 2-115
2948900-0100	GUIDE	1-3
2948908-0100	GUIDE	3-3
2948963-0000	GUIDE	2-95, 2-107
2855350-0000	HANDLE	2-9, 2-11, 2-13, 2-15, 2-17, 2-19
2948839-0000	HANDLE	1-25, 1-27
90459-5781	HANDLE, NZM1-XTVD-0	4-5, 4-7
3008914-0000	HANGER	6-15
312631-0324	HEX.NUT FINE, EN 24032 M6M M16X1,5 FZB8	2-129, 6-11, 6-13
312605-0318	HEXAGON NUT, M6M M8 A280	2-41, 2-45, 2-71, 2-75
312810-0316	HEXAGON NUT, NY-LOCK M6 FZB	2-95, 2-101, 2-103, 2-107, 2-113, 2-115
312810-0318	HEXAGON NUT, NY-LOCK M8 FZB	2-95, 2-107
1020637-0000	HOLDER	1-25, 1-27, 3-5, 3-7, 5-5
90458-1741	HOSE ASSEMBLY, CEJN 19 958 9669	2-123
2664558-0000	HOSE COUPLING	2-123, 2-127
1039077-0000	HOSE, NYLON BRAID	2-123, 2-127
90178-0007	HOUR COUNTER, BG 40,17-1 12-48VDC	4-5, 4-7, 4-9, 4-11
2948954-0000	HOUSING	6-9
3008869-0000	HUB	1-11, 1-21
90459-7229	IDENTIF. OF SINGLE CONDUCTORS, TEMPLATE	5-13, 5-15
3008861-0000	IDLER	1-9, 1-19
90459-2137	ILLUMINATING SEAL, MEB-LD-12-24DC	6-9
90600-0462	INDUCTIVE SWITCH, E2A-M12LN05-M1-B1-TP	2-47, 2-57, 2-59, 2-77, 2-117, 5-5
2948903-0100	INFEED	2-3
3008839-0100	INFEED - LINF	1-5
3008876-0100	INFEED - RINF	1-15
2948921-0100	INFEED CHAIN - LINF	2-37
2948922-0100	INFEED CHAIN - RINF	2-37
2948917-0100	INFEED CONVEYOR	2-37
2948924-0100	INFEED DRIVE-LINF	2-37
2948925-0100	INFEED DRIVE-RINF	2-37
2948918-0100	INFEED EXTRUSION	2-37
2948920-0100	INFEED GUIDE	2-37
2948916-0100	INFEED SENSOR	2-37
2948883-0000	INSTALLATION DRAWING	5-7
2948884-0000	INSTALLATION DRAWING	5-7
2948885-0000	INSTALLATION DRAWING	5-7
2948886-0000	INSTALLATION DRAWING	5-7
2948887-0000	INSTALLATION DRAWING	5-7
2948888-0000	INSTALLATION DRAWING	5-7
3008977-0101	INSTALLATION MANUAL	5-7
2664418-0000	KEY	2-97, 2-109

Part No	Description	Page No
2855222-0000	KNOB	2-61, 2-63, 2-87, 2-89
2855290-0000	KNOB	2-95, 2-107
90064-0104	LAMP UNIT CLEAR, 704.206.7A+A-935-99	4-13
90064-0102	LAMP UNIT YELLOW,704.206.7A+704.707.4+	4-13
90458-0295	LIGHT ELEMENT, BLUE, KL70-401L	4-15
90458-0296	LIGHT ELEMENT, GREEN, KL70-401G	4-15
90458-0293	LIGHT ELEMENT, RED, KL70-401R	4-15
90458-0294	LIGHT ELEMENT, YELLOW, KL70-401Y	4-15
90600-1337	LIMIT SW. XCK-M106H29	2-47, 2-77
2948926-0100	LOWER LIMIT SENSOR	2-67
596162-0000	MACHINE SIGN EEA SUB-SUPPLIER	5-13, 5-15
90111-0132	MAIN SWITCH P1-25/EA/SVB-SW/N/HI11/H-P14	4-9, 4-11
3008979-0101	MAINTENANCE MANUAL	5-7
90459-1738	MANDATORY ACTION SIGN ISO, READ MAINTENA	5-9
90600-5235	MANDATORY ACTION SIGN ISO, READ MANUAL	5-9
2855342-0000	MANIFOLD	2-123
2855343-0000	MANIFOLD	2-127
2855416-0000	MANIFOLD	2-123
2948786-0000	MANIFOLD	2-127
354001-0010	MINIATURE CIRCUIT BREAKER, FAZ-C1/2	4-9, 4-11
354000-0100	MINIATURE CIRCUIT BREAKER, FAZ-C10/1	4-9, 4-11
354002-0160	MINIATURE CIRCUIT BREAKER, FAZ-C16/3	4-9, 4-11
354000-0030	MINIATURE CIRCUIT BREAKER, FAZ-C3/1	4-9, 4-11
354000-0040	MINIATURE CIRCUIT BREAKER, FAZ-C4/1	4-9, 4-11
354000-0060	MINIATURE CIRCUIT BREAKER, FAZ-C6/1	4-9, 4-11
2948947-0100	MIST NOZZLE	2-121
3008870-0000	MOTOR SHELF	1-11
3008885-0000	MOTOR SHELF	1-21
3008841-0100	MOTOR UNIT	1-5
3008878-0100	MOTOR UNIT - RINF	1-15
2948891-0000	MOUNTING BRACKET	2-41, 2-45, 2-71, 2-75
2855368-0000	MOUNTING PLATE	2-101, 2-103, 2-113, 2-115
2664554-0000	NIPPLE	2-123
3008944-0000	NIPPLE	6-9
3008954-0000	NIPPLE	6-9
3008955-0000	NIPPLE	6-9
2506940-0000	NOZZLE	2-123
2528337-0000	NOZZLE	2-125, 2-129
3008927-0000	NOZZLE	6-11, 6-13
1084784-0000	NOZZLE, GREEN, POLY	2-129
1497168-0000	NOZZLE, RINSE SYSTEM	2-129
1497169-0000	NOZZLE, RINSE SYSTEM	2-129
2664543-0000	NUT	2-41, 2-45, 2-71, 2-75
2664562-0000	NUT	2-129
2727211-0000	NUT	2-41, 2-45, 2-71, 2-75
3008923-0000	NUT	6-11, 6-13
2664534-0000	NUT PLATE	2-47
3008852-0000	O-RING	1-9, 1-19
3008853-0000	O-RING	1-9, 1-19
3008978-0101	OPERATION MANUAL	5-7
90600-3204	OPERATOR PANEL 7", 2711P-T7C4D1-TP	4-13
2948904-0100	OUTFEED	2-3
3008842-0100	OUTFEED	1-5
3008879-0100	OUTFEED - RINF	1-15
2948930-0100	OUTFEED CHAIN - LINF	2-67
2948931-0100	OUTFEED CHAIN -RINF	2-67
2948927-0100	OUTFEED CONVEYOR	2-67
2948932-0100	OUTFEED DRIVE - LINF	2-67
2948933-0100	OUTFEED DRIVE - RINF	2-67
2948928-0100	OUTFEED EXTRUSION	2-67
2948929-0100	OUTFEED GUIDE	2-67
3008985-0100	OUTFEED JAM SENSOR	2-67
2948909-0100	OUTFEED SENSOR	3-3
90082-0301	OVER VOLT. PROTECT. PU 0 C 833951	4-5, 4-7
90082-0013	OVER VOLT. PROTECT. PU 4C-R 230 VAC	4-5, 4-7, 4-9, 4-11
90459-5324	OVERLOAD PROTECTION, PKZM0-1,6	4-5, 4-7, 4-9, 4-11
2528346-0000	PAD	2-65
3008959-0000	PANEL	6-9
3008965-0000	PANEL	2-35
3008966-0000	PANEL	2-35
3008967-0000	PANEL	2-35
3008968-0000	PANEL	2-35
3008969-0000	PANEL	2-35
3008970-0000	PANEL	2-35
3008971-0000	PANEL	2-35
3008972-0000	PANEL	2-35
3008973-0000	PANEL	2-35
3008974-0000	PANEL	2-35
3008975-0000	PANEL	2-35
3008976-0000	PANEL	2-35
90459-7275	PHOTOCELL E3Z-R86	2-79
90459-7273	PHOTOCELL E3Z-T81C-G0SR D-CN	2-49, 3-9, 5-5
90459-7274	PHOTOCELL E3Z-T81C-G0SR L-CN	2-49, 3-9, 5-5
90600-6175	PHOTOCELL, WL18-3P430	2-119

Part No	Description	Page No
2664419-0000	PIN	2-95, 2-97, 2-107, 2-109
2855346-0000	PIN	2-61, 2-63, 2-87, 2-89
3008924-0000	PIN	6-11, 6-13
342722-0204	PIPE COUPLING	2-129
2528288-0000	PLATE	2-99
2528359-0000	PLATE	4-15
2528366-0000	PLATE	2-95
2664399-0000	PLATE	2-95, 2-107
2727370-0000	PLATE	2-99, 2-111
2727371-0000	PLATE	2-99, 2-111
2855278-0000	PLATE	2-99
2855377-0000	PLATE	2-41, 2-45
2855378-0000	PLATE	2-71
2948858-0000	PLATE	2-117
2948889-0000	PLATE	2-41, 2-45, 2-71, 2-75
2948941-0000	PLATE	2-107
2948962-0000	PLATE	2-95, 2-107
2948965-0000	PLATE	2-95
2948970-0000	PLATE	2-97
2948974-0000	PLATE	2-111
2955378-0000	PLATE	2-75
3008836-0000	PLATE	2-109
3008838-0000	PLATE	2-111
3008895-0000	PLATE	1-25, 1-27
3008896-0000	PLATE	1-25, 1-27, 3-5, 3-7
3008910-0000	PLATE	2-77
3009074-0000	PLATE	2-77
3009075-0000	PLATE	2-77
3009076-0000	PLATE	2-77
3009077-0000	PLATE	2-77
3009078-0000	PLATE	2-77
3009079-0000	PLATE	2-77
90459-6553	PLC DSI /MODBUS COMMUN. MOD., 1769-SM2/A	4-5, 4-7, 4-9, 4-11
90031-0068	PLC, POWER SUPPLY	6-17
3008925-0000	PLUG	6-11, 6-13
3008945-0000	PLUG	6-9
2855243-0000	POST	2-101, 2-103, 2-113, 2-115
90459-2457	POWER SUPPLY 120/240 VAC,1769-PA4 SERIEA	4-5, 4-7, 4-9, 4-11
90459-5632	POWER SUPPLY UNIT, 100-240 VAC/24VDC2,5A	4-5, 4-7, 4-9, 4-11
90459-5260	PROCESSOR L32E, SERIES A, 1769-L32E	4-5, 4-7, 4-9, 4-11
2920797-1001	PROGRAM OBJECT CODE HMI	4-13
3006086-2001	PROGRAM SOURCE CODE HMI	4-19
3006085-2001	PROGRAM SOURCE CODE PLC/VISIO	4-19
2727363-0000	PULLEY	2-99, 2-111
2727368-0000	PULLEY	2-99, 2-111
2948801-0000	PULLEY	2-97, 2-109
90064-0082	PUSH BUTTON, WHITE	4-13
350002-0016	PUSH-IN L-FITTING QSL-F-G1/2-12	6-9
350002-0011	PUSH-IN L-FITTING QSL-F-G1/4-12	6-9
350002-0006	PUSH-IN L-FITTING QSL-F-G1/8-6	6-9
2855224-0000	RAIL	2-87, 2-89
2855225-0000	RAIL	2-87, 2-89
2855226-0000	RAIL	2-61, 2-63, 2-87, 2-89
2855227-0000	RAIL	2-87, 2-89
2855228-0000	RAIL	2-87, 2-89
2855229-0000	RAIL	2-61, 2-63, 2-87, 2-89
2855231-0000	RAIL	2-61, 2-63
2855232-0000	RAIL	2-61, 2-63
2855406-0000	RAIL	2-61, 2-63
2855407-0000	RAIL	2-61, 2-63
3008890-0000	RAIL	1-25, 1-27
3008891-0000	RAIL	1-25, 1-27
3008892-0000	RAIL	1-25, 1-27
3008893-0000	RAIL	1-25, 1-27
3008894-0000	RAIL	1-25, 1-27
3008905-0000	RAIL	3-5, 3-7
3008906-0000	RAIL	3-5, 3-7
1550743-0201	RAIL HOLDER PC23	1-25, 1-27, 3-5, 3-7
3008898-0000	RAILING	1-25, 1-27
3008899-0000	RAILING	1-25, 1-27
3008900-0000	RAILING	1-25, 1-27
3008901-0000	RAILING	1-25, 1-27
2948952-0000	RECEPTACLE	2-35
342716-0210	REDUCER 6-12	6-9
90232-0333	REFLECTOR E39-R1	2-79
90458-0696	REFLECTOR, PL40A	2-119
90119-0108	RELAY OMRON G2R-2-SNI-24DC	4-5, 4-7, 4-9, 4-11
90459-6062	REMOTE I/O, IP67 8PTS IN/OUT SELF-CONFIG	4-17, 6-9
90459-5811	RESIDUAL CURRENT DEVICE, FI-25/2/003-A	4-9, 4-11
2664460-0000	RETAINING RING	2-97, 2-99, 2-109, 2-111
2948953-0000	RETAINING RING	2-35
3008983-0100	RINSE MANIFOLD	2-121
3008984-0100	RINSE NOZZLES	2-121
2528350-0000	ROD	2-57, 2-59

Machine Type Group Description Page No

Part No	Description	Page No
90115-0156	ROD END, ID=8 MM, M8X1,25	2-95, 2-107
2664414-0000	ROD, LINK	2-95, 2-107
1497115-0000	ROLLER	2-95, 2-107
2855233-0000	ROLLER	2-101, 2-103, 2-113, 2-115
2855300-0000	ROLLER	2-101, 2-103, 2-113, 2-115
2855301-0000	ROLLER	2-101, 2-103, 2-113, 2-115
2855367-0000	ROLLER SUPPORT ARM	2-101, 2-103
2948798-0000	ROLLER SUPPORT ARM	2-113, 2-115
90459-6692	SAFETY PLC, PLUTO B20 20-070-06	4-5, 4-7, 4-9, 4-11
2528335-0400	SAFETY SIGNS ANSI	5-3
2528334-0400	SAFETY SIGNS ISO	5-3
90220-0105	SCR. CABLE 4X2,5MM2	6-11, 6-13
3009069-0000	SCREW	2-77
312155-0301	SCREW DIN 7991 MF6S M4X35 A4 70	2-97, 2-109
312155-0327	SCREW DIN 7991 MF6S M5X12 A4 70	2-41, 2-45, 2-71, 2-75, 2-97, 2-99, 2-109, 2-111
312155-0331	SCREW DIN 7991 MF6S M5X20 A4 70	2-99
312155-0323	SCREW DIN 7991 MF6S M5X8 A4 70	2-97, 2-109
312155-0366	SCREW DIN 7991 MF6S M6X12 A4 70	2-99
312155-0368	SCREW DIN 7991 MF6S M6X16 A4 70	2-95, 2-107
312155-0370	SCREW DIN 7991 MF6S M6X20 A4 70	2-95, 2-99, 2-107
312155-0374	SCREW DIN 7991 MF6S M6X30 A4 70	2-101, 2-103, 2-113, 2-115
312155-0378	SCREW DIN 7991 MF6S M6X40 A4 70	2-97, 2-109
312318-0447	SCREW ISO4029 M8X12 A4	2-97, 2-109
312115-0362	SCREW ISO4762 M6X8 A4 80	2-95, 2-107
312105-0374	SCREW M6S ISO 4014 M6X30 A480	2-95, 2-107
312105-0388	SCREW M6S ISO 4014 M6X90 A480	2-47
312105-0463	SCREW M6S ISO 4014 M8X60 A480	2-41, 2-45, 2-71, 2-75
312105-0493	SCREW M6S ISO 4017 M10X25 A480	6-5
312105-0364	SCREW M6S ISO 4017 M6X10 A480	2-95, 2-99, 2-107
312105-0366	SCREW M6S ISO 4017 M6X12 A480	2-95, 2-107
312105-0368	SCREW M6S ISO 4017 M6X16 A480	2-95, 2-101, 2-103, 2-107, 2-113, 2-115
312105-0370	SCREW M6S ISO 4017 M6X20 A480	2-95, 2-99, 2-101, 2-103, 2-107, 2-111, 2-113, 2-115
312105-0372	SCREW M6S ISO 4017 M6X25 A480	2-95, 2-101, 2-103, 2-107, 2-113, 2-115
312105-0455	SCREW M6S ISO 4017 M8X30 A480	2-95, 2-107
3008909-0100	SCRUBBER UNIT	6-7
2727357-0000	SEAL	2-99, 2-111
90459-0036	SENSOR CABLE XS2F-D421-J80-A	2-57, 2-59
90459-4142	SENSOR, ADAM M12 20-051-00	2-9, 2-11, 2-13, 2-15, 2-17, 2-19
90458-2794	SENSOR, EVA 20-046-00	2-9, 2-11, 2-13, 2-15, 2-17, 2-19
2855220-0000	SET UP TOOL	5-5
3008991-0000	SET UP TOOL	5-5
2948864-0000	SET UP TOOL - SPIDER	5-5
2948865-0000	SET UP TOOL - SPIDER	5-5
2948866-0000	SET UP TOOL - SPIDER	5-5
2528344-0000	SHAFT	2-65
2528356-0000	SHAFT	2-51, 2-81
2664400-0000	SHAFT	2-97, 2-109
2727364-0000	SHAFT	2-99, 2-111
2948806-0000	SHAFT	2-97, 2-109
3008854-0000	SHAFT	1-9, 1-19
3008855-0000	SHAFT	1-9, 1-19
3008932-0000	SHAFT	6-11, 6-13
3008935-0000	SHAFT	6-11, 6-13
90459-1854	SHUT OFF VALVE, MS6-EE-1/2-10V24	6-9
90459-1852	SHUT OFF VALVE, MS6-EM1-1/2	6-9
2948877-0000	SIGN	5-15
2948949-0100	SIGN & MARKING ANSI	5-3
2948950-0100	SIGN & MARKING ISO	5-3
90328-0017	SILENCER, D=6 MM	6-11, 6-13
90458-0302	SIREN WITH ADJUSTABLE VOLUME KS 70-3004	4-15
2727360-0000	SLEEVE	2-99, 2-111
2855247-0000	SLEEVE	2-101, 2-103
2855248-0000	SLEEVE	2-101, 2-103
2855249-0000	SLEEVE	2-101, 2-103
2855250-0000	SLEEVE	2-101, 2-103
2855294-0000	SLEEVE	2-95, 2-107
3008986-0000	SLEEVE	2-113, 2-115
3008987-0000	SLEEVE	2-113, 2-115
3008988-0000	SLEEVE	2-113, 2-115
3008989-0000	SLEEVE	2-113, 2-115
1550595-2650	SLIDING STRIP	1-13, 1-23
1550595-2950	SLIDING STRIP	1-7, 1-17
1550595-6100	SLIDING STRIP	1-13, 1-23
1550595-8853	SLIDING STRIP	1-7, 1-17
2589960-8854	SLIDING STRIP	1-7, 1-17
2699585-0263	SLIDING STRIP	1-13, 1-23
2699585-0293	SLIDING STRIP	1-7, 1-17
2699585-0608	SLIDING STRIP	1-13, 1-23
90459-4235	SNP TO DF1 GATEWAY, 0220 1166 01 REV B	6-3
2920793-0200	SOFTWARE	4-3
3006090-0001	SOFTWARE CD	4-19
90459-6977	SOLENOID VALVE G1/4, V04B286N-B423A	6-9
90600-5559	SOLENOID VALVE G1/8, V04A486L-B623A	6-9
90042-0248	SOLENOID VALVE OFFICIENE DI ENSINO	2-123

Part No	Description	Page No
90042-0249	SOLENOID VALVE OFFICINE DI ENSINO	2-123, 6-9
2561206-0000	SPACER	1-7, 1-13, 1-17, 1-23
2664396-0000	SPACER	2-95, 2-107
2664403-0000	SPACER	2-97, 2-109
2727194-0000	SPACER	2-97, 2-109
2727359-0000	SPACER	2-99, 2-111
2727365-0000	SPACER	2-99, 2-111
2727366-0000	SPACER	2-99, 2-111
2855223-0000	SPACER	2-61, 2-63, 2-87, 2-89
2855293-0000	SPACER	2-95, 2-107
2948811-0000	SPACER	2-97, 2-109
2948859-0000	SPACER	2-117
2948964-0000	SPACER	2-95, 2-107
3008844-0000	SPACER	1-7, 1-17
3008845-0000	SPACER	1-7, 1-13, 1-17, 1-23
3008846-0000	SPACER	1-7, 1-13, 1-17, 1-23
3008856-0000	SPACER	1-9, 1-19
3008857-0000	SPACER	1-9, 1-19
3008858-0000	SPACER	1-9, 1-13, 1-19, 1-23
3008863-0000	SPACER	1-9, 1-19
2528285-0060	SPARE CHAIN, INFEED, LINF, 60PC LINKS	2-39
2855403-0060	SPARE CHAIN, INFEED, RINF, 60PC LINKS	2-43
2528286-0060	SPARE CHAIN, OUTFEED, LINF, 60PC LINKS	2-69
2855404-0060	SPARE CHAIN, OUTFEED, RINF, 60PC LINKS	2-73
3008981-0101	SPARE PARTS CATALOGUE	5-7
2948905-0100	SPIDER UNIT	2-3
2948934-0100	SPIDER UNIT TBA/TPA/TGA - LINF	2-91
2948940-0100	SPIDER UNIT TBA/TPA/TGA - RINF	2-91
3008982-0100	SPRAY GUN	2-121
90458-1483	SPRAY GUN WATER G1/4	2-123
969082-0000	SPRING	2-77
1497114-0000	SPRING	2-95, 2-107
1497118-0000	SPRING	2-97, 2-109
2948960-0000	SPRING	2-95, 2-107
2656672-0000	SPROCKET	1-7, 1-13, 1-17, 1-23
2656677-0000	SPROCKET	1-11, 1-21
2948898-0000	SPROCKET	2-45
2948899-0000	SPROCKET	2-75
2855375-0000	SPROCKET, INFEED	2-41
2855376-0000	SPROCKET, OUTFEED	2-71
2502298-0000	SPROCKET, RETURN	2-51, 2-57, 2-59, 2-65, 2-81
3008960-0000	STAND	6-9
2855348-0200	START-UP KIT	5-3
2948951-0000	STUD	2-35
2855239-0000	SUPPORT	2-101, 2-103, 2-113, 2-115
2855245-0000	SUPPORT	2-101, 2-103
2855280-0000	SUPPORT	2-95
2855374-0000	SUPPORT	2-101, 2-103
2948799-0000	SUPPORT	2-113, 2-115
2948800-0000	SUPPORT	2-113, 2-115
2948910-0000	SUPPORT	2-107
342748-0103	T-CONNECTION 8MM	2-123, 2-129
2948971-0000	TENSIONER	2-97
2855291-0000	THREADED ROD	2-95, 2-107
2855292-0000	THREADED ROD	2-95, 2-107
1497198-0000	TORSION SPRING	2-47
2855288-0000	TRIGGER	2-99, 2-111
90166-0160	TUBE 10 MM PA BLUE	6-9
90166-0195	TUBE 12 MM PA BLUE	6-9
90166-0081	TUBE 6 MM PA BLUE	6-9
90166-0013	TUBE 8 MM PA BLUE	2-123, 2-127, 2-129
2948915-0100	UPPER LIMIT SENSOR	2-37
3008929-0000	VALVE	6-11, 6-13
3008908-0100	VALVE PANEL	6-7
90459-3442	VARIABLE FREQUENCY DRIVE 22B-A5P0N104	4-5, 4-7, 4-9, 4-11
90459-3445	VARIABLE FREQUENCY DRIVE 22B-D010N104	4-5, 4-7, 4-9, 4-11
2855370-0100	VOLUME KIT -LINF	2-93
2948945-0100	VOLUME KIT -RINF	2-105
90001-0031	WALL SOCKET OUTLET	4-9, 4-11
2948911-0100	WARNING LAMP	4-3
359715-0100	WARNING SIGN ANSI (H), ELECTRIC SHOCK	5-11, 6-17
90458-2634	WARNING SIGN ANSI (H), EXTERNAL VOLTAGE	5-11
90600-5233	WARNING SIGN ANSI (H), READ MANUAL, AUTO	5-11
359725-0101	WARNING SIGN ANSI (V), ENTANGLEMENT	5-11
90458-2635	WARNING SIGN ANSI(H), EXT.VOLTAGE,ORANGE	5-11
359705-0002	WARNING SIGN ISO, ENTANGLEMENT	5-9
359705-0015	WARNING SIGN ISO, RISK OF ELECTRIC SHOCK	5-9, 6-17
2727354-0000	WASHER	2-95, 2-99, 2-107, 2-111
2855276-0000	WASHER	2-99, 2-111
2855289-0000	WASHER	2-99, 2-111
2948804-0000	WASHER	2-61, 2-63, 2-77, 2-87, 2-89, 2-97, 2-109
2948838-0000	WASHER	1-25, 1-27
2948967-0000	WASHER	2-95, 2-107
2948968-0000	WASHER	2-95, 2-107

Part No	Description	Page No
315105-0173 ...	WASHER BRB 10,5X22 RFR	1-7, 1-17, 6-5
315105-0153 ...	WASHER BRB 6,4X12 RFR	2-95, 2-101, 2-103, 2-107, 2-113, 2-115
2948907-0100 .	WATER SYSTEM	2-3
3008862-0000 .	WEIGHT	1-9, 1-19
2502301-0000 .	WHEEL	2-101, 2-103, 2-113, 2-115
2502336-0000 .	WHEEL	2-101, 2-103, 2-113, 2-115
2502364-0000 .	WHEEL	2-101, 2-103, 2-113, 2-115
2502365-0000 .	WHEEL	2-101, 2-103, 2-113, 2-115
2502366-0000 .	WHEEL	2-101, 2-103, 2-113, 2-115
2528226-0000 .	WHEEL	2-101, 2-103, 2-113, 2-115
2528227-0000 .	WHEEL	2-101, 2-103, 2-113, 2-115
2528230-0000 .	WHEEL	2-101, 2-103, 2-113, 2-115
2727231-0000 .	WHEEL	2-101, 2-103, 2-113, 2-115
2855244-0000 .	WHEEL	2-101, 2-103, 2-113, 2-115
2855264-0000 .	WHEEL	2-101, 2-103, 2-113, 2-115
2855304-0000 .	WHEEL	2-101, 2-103, 2-113, 2-115
2855309-0000 .	WHEEL	2-101, 2-103, 2-113, 2-115
2855369-0000 .	WHEEL	2-101, 2-103, 2-113, 2-115
2855371-0000 .	WHEEL	2-101, 2-103, 2-113, 2-115
2528285-1056 .	WHOLE CHAIN, INFEED, LINF, 1056 PC	2-39
2528285-1242 .	WHOLE CHAIN, INFEED, LINF, 1242 PC	2-39
2528285-0522 .	WHOLE CHAIN, INFEED, LINF, 522 PC	2-39
2528285-0786 .	WHOLE CHAIN, INFEED, LINF, 786PC LINKS	2-39
2528285-0894 .	WHOLE CHAIN, INFEED, LINF, 894PC LINKS	2-39
2855403-1056 .	WHOLE CHAIN, INFEED, RINF, 1056 PC	2-43
2855403-1242 .	WHOLE CHAIN, INFEED, RINF, 1242 PC	2-43
2855403-0522 .	WHOLE CHAIN, INFEED, RINF, 522 PC	2-43
2855403-0786 .	WHOLE CHAIN, INFEED, RINF, 786 PC	2-43
2855403-0894 .	WHOLE CHAIN, INFEED, RINF, 894 PC	2-43
2855404-1302 .	WHOLE CHAIN, OUTFEED, RINF, 1302 PC	2-73
2528286-1302 .	WHOLE CHAIN, OUTFEED, LINF, 1302 PC	2-69
2528286-1536 .	WHOLE CHAIN, OUTFEED, LINF, 1536 PC	2-69
2528286-0726 .	WHOLE CHAIN, OUTFEED, LINF, 726 PC	2-69
2855404-1050 .	WHOLE CHAIN, OUTFEED, RINF, 1050 PC	2-73
2855404-1182 .	WHOLE CHAIN, OUTFEED, RINF, 1182 PC	2-73
2855404-1536 .	WHOLE CHAIN, OUTFEED, RINF, 1536 PC	2-73
2855404-0726 .	WHOLE CHAIN, OUTFEED, RINF, 726 PC	2-73
2528286-1050 .	WHOLE CHAIN,OUTFEED, LINF, 1050PC LINKS	2-69
2528286-1182 .	WHOLE CHAIN,OUTFEED, LINF, 1182PC LINKS	2-69
2855345-0000 .	WING NUT	2-61, 2-63, 2-87, 2-89
1497193-0000 .	WING, CHAIN	5-5
2855405-0000 .	WING, CHAIN	5-5
90459-5787	Ã§SILENCER 6844 U-1/2-B	6-9

Tetra Pak

SPC
Spare Parts Catalogue

Pos	Part No	Description	Page No
A			
A01X0070	90001-0031	WALL SOCKET OUTLET	4-9, 4-11
A01K0403	90031-0031	ENHANCED GENIUS COMMUNICATION MODULE	6-17
A01T0401	90031-0068	PLC, POWER SUPPLY	6-17
A01K0401	90031-0075	CPU363, SERIAL COMMUNICATION	6-17
A01S0080	90064-0082	PUSH BUTTON, WHITE	4-13
A01S0081	90064-0082	PUSH BUTTON, WHITE	4-13
A01P0003	90064-0102	LAMP UNIT YELLOW,704.206.7A+704.707.4+	4-13
A01P0002	90064-0104	LAMP UNIT CLEAR, 704.206.7A+A-935-99	4-13
A01F0000	90082-0013	OVER VOLT. PROTECT. PU 4C-R 230 VAC	4-5, 4-7, 4-9, 4-11
A01F0000	90082-0301	OVER VOLT. PROTECT. PU 0 C 833951	4-5, 4-7
A01Q0000	90111-0132	MAIN SWITCH P1-25/EA/SVB-SW/N/HI11/H-P14	4-9, 4-11
A01K0010	90119-0108	RELAY OMRON G2R-2-SNI-24DC	4-5
A01K0011	90119-0108	RELAY OMRON G2R-2-SNI-24DC	4-5
A01K0098	90119-0108	RELAY OMRON G2R-2-SNI-24DC	4-5
A01K0099	90119-0108	RELAY OMRON G2R-2-SNI-24DC	4-5
A01Q0040	90119-0108	RELAY OMRON G2R-2-SNI-24DC	4-5
A01K0010	90119-0108	RELAY OMRON G2R-2-SNI-24DC	4-7
A01K0011	90119-0108	RELAY OMRON G2R-2-SNI-24DC	4-7
A01K0098	90119-0108	RELAY OMRON G2R-2-SNI-24DC	4-7
A01K0099	90119-0108	RELAY OMRON G2R-2-SNI-24DC	4-7
A01Q0040	90119-0108	RELAY OMRON G2R-2-SNI-24DC	4-7
A01K0010	90119-0108	RELAY OMRON G2R-2-SNI-24DC	4-9
A01K0011	90119-0108	RELAY OMRON G2R-2-SNI-24DC	4-9
A01K0098	90119-0108	RELAY OMRON G2R-2-SNI-24DC	4-9
A01K0099	90119-0108	RELAY OMRON G2R-2-SNI-24DC	4-9
A01Q0040	90119-0108	RELAY OMRON G2R-2-SNI-24DC	4-9
A01Q0042	90119-0108	RELAY OMRON G2R-2-SNI-24DC	4-9
A01K0010	90119-0108	RELAY OMRON G2R-2-SNI-24DC	4-11
A01K0011	90119-0108	RELAY OMRON G2R-2-SNI-24DC	4-11
A01K0098	90119-0108	RELAY OMRON G2R-2-SNI-24DC	4-11
A01K0099	90119-0108	RELAY OMRON G2R-2-SNI-24DC	4-11
A01Q0040	90119-0108	RELAY OMRON G2R-2-SNI-24DC	4-11
A01Q0042	90119-0108	RELAY OMRON G2R-2-SNI-24DC	4-11
A01K0010	90129-0018	BASE OMRON P2RF-08-E	4-5
A01K0011	90129-0018	BASE OMRON P2RF-08-E	4-5
A01K0098	90129-0018	BASE OMRON P2RF-08-E	4-5
A01K0099	90129-0018	BASE OMRON P2RF-08-E	4-5
A01Q0040	90129-0018	BASE OMRON P2RF-08-E	4-5
A01Q0042	90129-0018	BASE OMRON P2RF-08-E	4-5
A01K0010	90129-0018	BASE OMRON P2RF-08-E	4-7
A01K0011	90129-0018	BASE OMRON P2RF-08-E	4-7
A01K0098	90129-0018	BASE OMRON P2RF-08-E	4-7
A01K0099	90129-0018	BASE OMRON P2RF-08-E	4-7
A01Q0040	90129-0018	BASE OMRON P2RF-08-E	4-7
A01Q0042	90129-0018	BASE OMRON P2RF-08-E	4-7
A01P0010	90178-0007	HOUR COUNTER, BG 40,17-1 12-48VDC	4-5, 4-7, 4-9, 4-11
A01M0010	90264-0032	FAN, 4656N+LZ30+LZ 120,220V 50HZ	4-9, 4-11
A01P1010	90458-0292	BASE, KT70-1001	4-15
A01F0001	90458-2509	FUSE, ATDR3	4-5
A01F0002	90458-2509	FUSE, ATDR3	4-5
A01F0004	90458-2509	FUSE, ATDR3	4-5
A01F0001	90458-2509	FUSE, ATDR3	4-7
A01F0002	90458-2509	FUSE, ATDR3	4-7
A01F0004	90458-2509	FUSE, ATDR3	4-7
A01F0003	90458-2510	FUSE, ATDR6	4-5, 4-7
A01T0301	90459-2457	POWER SUPPLY 120/240 VAC,1769-PA4 SERIEA	4-5
A01W0060	90459-2457	POWER SUPPLY 120/240 VAC,1769-PA4 SERIEA	4-5
A01T0301	90459-2457	POWER SUPPLY 120/240 VAC,1769-PA4 SERIEA	4-7
A01W0060	90459-2457	POWER SUPPLY 120/240 VAC,1769-PA4 SERIEA	4-7
A01T0301	90459-2457	POWER SUPPLY 120/240 VAC,1769-PA4 SERIEA	4-9
A01W0060	90459-2457	POWER SUPPLY 120/240 VAC,1769-PA4 SERIEA	4-9
A01T0301	90459-2457	POWER SUPPLY 120/240 VAC,1769-PA4 SERIEA	4-11
A01W0060	90459-2457	POWER SUPPLY 120/240 VAC,1769-PA4 SERIEA	4-11
A01K0304	90459-2473	DIG INP. MOD.16 PTS FAST,1769-IQ16F SERA	4-5
A01K0305	90459-2473	DIG INP. MOD.16 PTS FAST,1769-IQ16F SERA	4-5
A01K0304	90459-2473	DIG INP. MOD.16 PTS FAST,1769-IQ16F SERA	4-7
A01K0305	90459-2473	DIG INP. MOD.16 PTS FAST,1769-IQ16F SERA	4-7
A01K0304	90459-2473	DIG INP. MOD.16 PTS FAST,1769-IQ16F SERA	4-9
A01K0305	90459-2473	DIG INP. MOD.16 PTS FAST,1769-IQ16F SERA	4-9
A01K0304	90459-2473	DIG INP. MOD.16 PTS FAST,1769-IQ16F SERA	4-11
A01K0305	90459-2473	DIG INP. MOD.16 PTS FAST,1769-IQ16F SERA	4-11
A01K0306	90459-2476	DIGIT. OUT. MOD. 16 P ESCP, 1769-OB16P	4-5
A01K0307	90459-2476	DIGIT. OUT. MOD. 16 P ESCP, 1769-OB16P	4-5
A01K0306	90459-2476	DIGIT. OUT. MOD. 16 P ESCP, 1769-OB16P	4-7
A01K0307	90459-2476	DIGIT. OUT. MOD. 16 P ESCP, 1769-OB16P	4-7
A01K0306	90459-2476	DIGIT. OUT. MOD. 16 P ESCP, 1769-OB16P	4-9
A01K0307	90459-2476	DIGIT. OUT. MOD. 16 P ESCP, 1769-OB16P	4-9
A01K0306	90459-2476	DIGIT. OUT. MOD. 16 P ESCP, 1769-OB16P	4-11
A01K0307	90459-2476	DIGIT. OUT. MOD. 16 P ESCP, 1769-OB16P	4-11
A01K0302	90459-2483	DEVICENET SCANNER, 1769-SDN SERIES B	4-5, 4-7, 4-9, 4-11
A01K0402	90459-4234	DEVICENET SLAVE MODULE	6-17
A01K0301	90459-5260	PROCESSOR L32E, SERIES A, 1769-L32E	4-5, 4-7, 4-9, 4-11

Pos	Part No	Description	Page No
A			
A01T0010	90459-5632	POWER SUPPLY UNIT, 100-240 VAC/24VDC2,5A	4-5
A01T0011	90459-5632	POWER SUPPLY UNIT, 100-240 VAC/24VDC2,5A	4-5
A01T0012	90459-5632	POWER SUPPLY UNIT, 100-240 VAC/24VDC2,5A	4-5
A01T0010	90459-5632	POWER SUPPLY UNIT, 100-240 VAC/24VDC2,5A	4-7
A01T0011	90459-5632	POWER SUPPLY UNIT, 100-240 VAC/24VDC2,5A	4-7
A01T0012	90459-5632	POWER SUPPLY UNIT, 100-240 VAC/24VDC2,5A	4-7
A01T0010	90459-5632	POWER SUPPLY UNIT, 100-240 VAC/24VDC2,5A	4-9
A01T0011	90459-5632	POWER SUPPLY UNIT, 100-240 VAC/24VDC2,5A	4-9
A01T0012	90459-5632	POWER SUPPLY UNIT, 100-240 VAC/24VDC2,5A	4-9
A01T0010	90459-5632	POWER SUPPLY UNIT, 100-240 VAC/24VDC2,5A	4-11
A01T0011	90459-5632	POWER SUPPLY UNIT, 100-240 VAC/24VDC2,5A	4-11
A01T0012	90459-5632	POWER SUPPLY UNIT, 100-240 VAC/24VDC2,5A	4-11
A01Q0000	90459-5781	HANDLE, NZM1-XTVD-0	4-5, 4-7
A01F0070	90459-5811	RESIDUAL CURRENT DEVICE, FI-25/2/003-A	4-9, 4-11
A01K1220	90459-6062	REMOTE I/O, IP67 8PTS IN/OUT SELF-CONFIG	4-17
A01K0303	90459-6553	PLC DSI /MODBUS COMMUN. MOD., 1769-SM2/A	4-5, 4-7, 4-9, 4-11
A01F0005	90459-6907	FUSE, ATDR1	4-5, 4-7
A01M0010	90503-3774	FILTER FAN PF2500 IP54 230V AC	4-5, 4-7
A01A0080	90600-3204	OPERATOR PANEL 7", 2711P-T7C4D1-TP	4-13
A01W1221	351311-0100	ACTUATOR/SENSOR CABLE RKTN 4-225/10M	4-17
A01W1220	351413-0050	DEVICENET CONN. CABLE, 0935 361 103/5M	4-17
A01F0001	354000-0030	MINIATURE CIRCUIT BREAKER, FAZ-C3/1	4-9
A01F0004	354000-0030	MINIATURE CIRCUIT BREAKER, FAZ-C3/1	4-9
A01F0001	354000-0030	MINIATURE CIRCUIT BREAKER, FAZ-C3/1	4-11
A01F0004	354000-0030	MINIATURE CIRCUIT BREAKER, FAZ-C3/1	4-11
A01F0002	354000-0040	MINIATURE CIRCUIT BREAKER, FAZ-C4/1	4-9, 4-11
A01F0003	354000-0060	MINIATURE CIRCUIT BREAKER, FAZ-C6/1	4-9, 4-11
A01F0005	354001-0010	MINIATURE CIRCUIT BREAKER, FAZ-C1/2	4-9, 4-11
A01A0080	2920797-1001	PROGRAM OBJECT CODE HMI	4-13
A01P1010:1	90458-0302	SIREN WITH ADJUSTABLE VOLUME KS 70-3004	4-15
A01P1010:2	90458-0293	LIGHT ELEMENT, RED, KL70-401R	4-15
A01P1010:3	90458-0294	LIGHT ELEMENT, YELLOW, KL70-401Y	4-15
A01P1010:4	90458-0295	LIGHT ELEMENT, BLUE, KL70-401L	4-15
A01P1010:5	90458-0296	LIGHT ELEMENT, GREEN, KL70-401G	4-15
AO1V0401	90600-5249	FERRITE, B64290L616X38	6-17
F			
F01S0101	90458-1651	EMERGENCY STOP, ZB4-BS-844 ZB4-BZ-104	4-5, 4-7, 4-9, 4-11
F01S1010	90458-1651	EMERGENCY STOP, ZB4-BS-844 ZB4-BZ-104	4-13
F01Q0010	90459-5316	CONTACTOR 4KW 24VDC, DILM9-32	4-5
F01Q0011	90459-5316	CONTACTOR 4KW 24VDC, DILM9-32	4-5
F01Q0010	90459-5316	CONTACTOR 4KW 24VDC, DILM9-32	4-7
F01Q0011	90459-5316	CONTACTOR 4KW 24VDC, DILM9-32	4-7
F01Q0010	90459-5316	CONTACTOR 4KW 24VDC, DILM9-32	4-9
F01Q0011	90459-5316	CONTACTOR 4KW 24VDC, DILM9-32	4-9
F01Q0010	90459-5316	CONTACTOR 4KW 24VDC, DILM9-32	4-11
F01Q0011	90459-5316	CONTACTOR 4KW 24VDC, DILM9-32	4-11
F01K0090	90459-6692	SAFETY PLC, PLUTO B20 20-070-06	4-5, 4-7, 4-9, 4-11
F30Q0030	-- Note! --	*Only with option Chain Cleaner	4-5, 4-7
F30B1021	90458-2794	SENSOR, EVA 20-046-00	2-9
F30B1031	90458-2794	SENSOR, EVA 20-046-00	2-9
F30B1041	90458-2794	SENSOR, EVA 20-046-00	2-9
F30B1071	90458-2794	SENSOR, EVA 20-046-00	2-9
F30B1081	90458-2794	SENSOR, EVA 20-046-00	2-9
F30B1021	90458-2794	SENSOR, EVA 20-046-00	2-9
F30B1031	90458-2794	SENSOR, EVA 20-046-00	2-9
F30B1041	90458-2794	SENSOR, EVA 20-046-00	2-9
F30B1071	90458-2794	SENSOR, EVA 20-046-00	2-9
F30B1081	90458-2794	SENSOR, EVA 20-046-00	2-9
F30B1021	90458-2794	SENSOR, EVA 20-046-00	2-9
F30B1041	90458-2794	SENSOR, EVA 20-046-00	2-9
F30B1021	90458-2794	SENSOR, EVA 20-046-00	2-9
F30B1041	90458-2794	SENSOR, EVA 20-046-00	2-9
F30B1011	90458-2794	SENSOR, EVA 20-046-00	2-9
F30B1051	90458-2794	SENSOR, EVA 20-046-00	2-9
F30B1061	90458-2794	SENSOR, EVA 20-046-00	2-9
F30B1091	90458-2794	SENSOR, EVA 20-046-00	2-9
F30B1101	90458-2794	SENSOR, EVA 20-046-00	2-9
F30B1021	90458-2794	SENSOR, EVA 20-046-00	2-11
F30B1031	90458-2794	SENSOR, EVA 20-046-00	2-11
F30B1041	90458-2794	SENSOR, EVA 20-046-00	2-11
F30B1071	90458-2794	SENSOR, EVA 20-046-00	2-11
F30B1081	90458-2794	SENSOR, EVA 20-046-00	2-11
F30B1021	90458-2794	SENSOR, EVA 20-046-00	2-11
F30B1031	90458-2794	SENSOR, EVA 20-046-00	2-11
F30B1041	90458-2794	SENSOR, EVA 20-046-00	2-11
F30B1071	90458-2794	SENSOR, EVA 20-046-00	2-11
F30B1081	90458-2794	SENSOR, EVA 20-046-00	2-11
F30B1021	90458-2794	SENSOR, EVA 20-046-00	2-11
F30B1041	90458-2794	SENSOR, EVA 20-046-00	2-11
F30B1021	90458-2794	SENSOR, EVA 20-046-00	2-11
F30B1041	90458-2794	SENSOR, EVA 20-046-00	2-11
F30B1011	90458-2794	SENSOR, EVA 20-046-00	2-11

Pos	Part No	Description	Page No
F			
F30B1051	90458-2794	SENSOR, EVA 20-046-00	2-11
F30B1061	90458-2794	SENSOR, EVA 20-046-00	2-11
F30B1091	90458-2794	SENSOR, EVA 20-046-00	2-11
F30B1101	90458-2794	SENSOR, EVA 20-046-00	2-11
F30B1021	90458-2794	SENSOR, EVA 20-046-00	2-13
F30B1031	90458-2794	SENSOR, EVA 20-046-00	2-13
F30B1041	90458-2794	SENSOR, EVA 20-046-00	2-13
F30B1071	90458-2794	SENSOR, EVA 20-046-00	2-13
F30B1081	90458-2794	SENSOR, EVA 20-046-00	2-13
F30B1021	90458-2794	SENSOR, EVA 20-046-00	2-13
F30B1031	90458-2794	SENSOR, EVA 20-046-00	2-13
F30B1041	90458-2794	SENSOR, EVA 20-046-00	2-13
F30B1071	90458-2794	SENSOR, EVA 20-046-00	2-13
F30B1081	90458-2794	SENSOR, EVA 20-046-00	2-13
F30B1021	90458-2794	SENSOR, EVA 20-046-00	2-13
F30B1041	90458-2794	SENSOR, EVA 20-046-00	2-13
F30B1021	90458-2794	SENSOR, EVA 20-046-00	2-13
F30B1041	90458-2794	SENSOR, EVA 20-046-00	2-13
F30B1011	90458-2794	SENSOR, EVA 20-046-00	2-13
F30B1051	90458-2794	SENSOR, EVA 20-046-00	2-13
F30B1061	90458-2794	SENSOR, EVA 20-046-00	2-13
F30B1091	90458-2794	SENSOR, EVA 20-046-00	2-13
F30B1101	90458-2794	SENSOR, EVA 20-046-00	2-13
F30B1021	90458-2794	SENSOR, EVA 20-046-00	2-15
F30B1031	90458-2794	SENSOR, EVA 20-046-00	2-15
F30B1041	90458-2794	SENSOR, EVA 20-046-00	2-15
F30B1071	90458-2794	SENSOR, EVA 20-046-00	2-15
F30B1081	90458-2794	SENSOR, EVA 20-046-00	2-15
F30B1021	90458-2794	SENSOR, EVA 20-046-00	2-15
F30B1031	90458-2794	SENSOR, EVA 20-046-00	2-15
F30B1041	90458-2794	SENSOR, EVA 20-046-00	2-15
F30B1071	90458-2794	SENSOR, EVA 20-046-00	2-15
F30B1081	90458-2794	SENSOR, EVA 20-046-00	2-15
F30B1021	90458-2794	SENSOR, EVA 20-046-00	2-15
F30B1041	90458-2794	SENSOR, EVA 20-046-00	2-15
F30B1021	90458-2794	SENSOR, EVA 20-046-00	2-15
F30B1041	90458-2794	SENSOR, EVA 20-046-00	2-15
F30B1011	90458-2794	SENSOR, EVA 20-046-00	2-15
F30B1051	90458-2794	SENSOR, EVA 20-046-00	2-15
F30B1061	90458-2794	SENSOR, EVA 20-046-00	2-15
F30B1091	90458-2794	SENSOR, EVA 20-046-00	2-15
F30B1101	90458-2794	SENSOR, EVA 20-046-00	2-15
F30B1021	90458-2794	SENSOR, EVA 20-046-00	2-17
F30B1031	90458-2794	SENSOR, EVA 20-046-00	2-17
F30B1041	90458-2794	SENSOR, EVA 20-046-00	2-17
F30B1071	90458-2794	SENSOR, EVA 20-046-00	2-17
F30B1081	90458-2794	SENSOR, EVA 20-046-00	2-17
F30B1021	90458-2794	SENSOR, EVA 20-046-00	2-17
F30B1031	90458-2794	SENSOR, EVA 20-046-00	2-17
F30B1041	90458-2794	SENSOR, EVA 20-046-00	2-17
F30B1071	90458-2794	SENSOR, EVA 20-046-00	2-17
F30B1081	90458-2794	SENSOR, EVA 20-046-00	2-17
F30B1021	90458-2794	SENSOR, EVA 20-046-00	2-17
F30B1041	90458-2794	SENSOR, EVA 20-046-00	2-17
F30B1021	90458-2794	SENSOR, EVA 20-046-00	2-17
F30B1041	90458-2794	SENSOR, EVA 20-046-00	2-17
F30B1011	90458-2794	SENSOR, EVA 20-046-00	2-17
F30B1051	90458-2794	SENSOR, EVA 20-046-00	2-17
F30B1061	90458-2794	SENSOR, EVA 20-046-00	2-17
F30B1091	90458-2794	SENSOR, EVA 20-046-00	2-17
F30B1101	90458-2794	SENSOR, EVA 20-046-00	2-17
F30B1021	90458-2794	SENSOR, EVA 20-046-00	2-19
F30B1031	90458-2794	SENSOR, EVA 20-046-00	2-19
F30B1041	90458-2794	SENSOR, EVA 20-046-00	2-19
F30B1071	90458-2794	SENSOR, EVA 20-046-00	2-19
F30B1081	90458-2794	SENSOR, EVA 20-046-00	2-19
F30B1021	90458-2794	SENSOR, EVA 20-046-00	2-19
F30B1031	90458-2794	SENSOR, EVA 20-046-00	2-19
F30B1041	90458-2794	SENSOR, EVA 20-046-00	2-19
F30B1071	90458-2794	SENSOR, EVA 20-046-00	2-19
F30B1081	90458-2794	SENSOR, EVA 20-046-00	2-19
F30B1021	90458-2794	SENSOR, EVA 20-046-00	2-19
F30B1041	90458-2794	SENSOR, EVA 20-046-00	2-19
F30B1011	90458-2794	SENSOR, EVA 20-046-00	2-19
F30B1051	90458-2794	SENSOR, EVA 20-046-00	2-19
F30B1061	90458-2794	SENSOR, EVA 20-046-00	2-19
F30B1091	90458-2794	SENSOR, EVA 20-046-00	2-19
F30B1101	90458-2794	SENSOR, EVA 20-046-00	2-19
F30B1020	90459-4142	SENSOR, ADAM M12 20-051-00	2-9
F30B1030	90459-4142	SENSOR, ADAM M12 20-051-00	2-9

Pos	Part No	Description	Page No
F			
F30B1040	90459-4142	SENSOR, ADAM M12 20-051-00	2-9
F30B1070	90459-4142	SENSOR, ADAM M12 20-051-00	2-9
F30B1080	90459-4142	SENSOR, ADAM M12 20-051-00	2-9
F30B1020	90459-4142	SENSOR, ADAM M12 20-051-00	2-9
F30B1030	90459-4142	SENSOR, ADAM M12 20-051-00	2-9
F30B1040	90459-4142	SENSOR, ADAM M12 20-051-00	2-9
F30B1070	90459-4142	SENSOR, ADAM M12 20-051-00	2-9
F30B1080	90459-4142	SENSOR, ADAM M12 20-051-00	2-9
F30B1020	90459-4142	SENSOR, ADAM M12 20-051-00	2-9
F30B1040	90459-4142	SENSOR, ADAM M12 20-051-00	2-9
F30B1020	90459-4142	SENSOR, ADAM M12 20-051-00	2-9
F30B1040	90459-4142	SENSOR, ADAM M12 20-051-00	2-9
F30B1010	90459-4142	SENSOR, ADAM M12 20-051-00	2-9
F30B1050	90459-4142	SENSOR, ADAM M12 20-051-00	2-9
F30B1060	90459-4142	SENSOR, ADAM M12 20-051-00	2-9
F30B1090	90459-4142	SENSOR, ADAM M12 20-051-00	2-9
F30B1100	90459-4142	SENSOR, ADAM M12 20-051-00	2-9
F30B1020	90459-4142	SENSOR, ADAM M12 20-051-00	2-11
F30B1030	90459-4142	SENSOR, ADAM M12 20-051-00	2-11
F30B1040	90459-4142	SENSOR, ADAM M12 20-051-00	2-11
F30B1070	90459-4142	SENSOR, ADAM M12 20-051-00	2-11
F30B1080	90459-4142	SENSOR, ADAM M12 20-051-00	2-11
F30B1020	90459-4142	SENSOR, ADAM M12 20-051-00	2-11
F30B1030	90459-4142	SENSOR, ADAM M12 20-051-00	2-11
F30B1040	90459-4142	SENSOR, ADAM M12 20-051-00	2-11
F30B1070	90459-4142	SENSOR, ADAM M12 20-051-00	2-11
F30B1080	90459-4142	SENSOR, ADAM M12 20-051-00	2-11
F30B1020	90459-4142	SENSOR, ADAM M12 20-051-00	2-11
F30B1040	90459-4142	SENSOR, ADAM M12 20-051-00	2-11
F30B1020	90459-4142	SENSOR, ADAM M12 20-051-00	2-11
F30B1040	90459-4142	SENSOR, ADAM M12 20-051-00	2-11
F30B1010	90459-4142	SENSOR, ADAM M12 20-051-00	2-11
F30B1050	90459-4142	SENSOR, ADAM M12 20-051-00	2-11
F30B1060	90459-4142	SENSOR, ADAM M12 20-051-00	2-11
F30B1090	90459-4142	SENSOR, ADAM M12 20-051-00	2-11
F30B1100	90459-4142	SENSOR, ADAM M12 20-051-00	2-11
F30B1020	90459-4142	SENSOR, ADAM M12 20-051-00	2-13
F30B1030	90459-4142	SENSOR, ADAM M12 20-051-00	2-13
F30B1040	90459-4142	SENSOR, ADAM M12 20-051-00	2-13
F30B1070	90459-4142	SENSOR, ADAM M12 20-051-00	2-13
F30B1080	90459-4142	SENSOR, ADAM M12 20-051-00	2-13
F30B1020	90459-4142	SENSOR, ADAM M12 20-051-00	2-13
F30B1030	90459-4142	SENSOR, ADAM M12 20-051-00	2-13
F30B1040	90459-4142	SENSOR, ADAM M12 20-051-00	2-13
F30B1020	90459-4142	SENSOR, ADAM M12 20-051-00	2-13
F30B1040	90459-4142	SENSOR, ADAM M12 20-051-00	2-13
F30B1010	90459-4142	SENSOR, ADAM M12 20-051-00	2-13
F30B1050	90459-4142	SENSOR, ADAM M12 20-051-00	2-13
F30B1060	90459-4142	SENSOR, ADAM M12 20-051-00	2-13
F30B1090	90459-4142	SENSOR, ADAM M12 20-051-00	2-13
F30B1100	90459-4142	SENSOR, ADAM M12 20-051-00	2-13
F30B1020	90459-4142	SENSOR, ADAM M12 20-051-00	2-15
F30B1030	90459-4142	SENSOR, ADAM M12 20-051-00	2-15
F30B1040	90459-4142	SENSOR, ADAM M12 20-051-00	2-15
F30B1070	90459-4142	SENSOR, ADAM M12 20-051-00	2-15
F30B1080	90459-4142	SENSOR, ADAM M12 20-051-00	2-15
F30B1020	90459-4142	SENSOR, ADAM M12 20-051-00	2-15
F30B1030	90459-4142	SENSOR, ADAM M12 20-051-00	2-15
F30B1040	90459-4142	SENSOR, ADAM M12 20-051-00	2-15
F30B1070	90459-4142	SENSOR, ADAM M12 20-051-00	2-15
F30B1080	90459-4142	SENSOR, ADAM M12 20-051-00	2-15
F30B1020	90459-4142	SENSOR, ADAM M12 20-051-00	2-15
F30B1040	90459-4142	SENSOR, ADAM M12 20-051-00	2-15
F30B1010	90459-4142	SENSOR, ADAM M12 20-051-00	2-15
F30B1050	90459-4142	SENSOR, ADAM M12 20-051-00	2-15
F30B1060	90459-4142	SENSOR, ADAM M12 20-051-00	2-15
F30B1090	90459-4142	SENSOR, ADAM M12 20-051-00	2-15
F30B1100	90459-4142	SENSOR, ADAM M12 20-051-00	2-15
F30B1020	90459-4142	SENSOR, ADAM M12 20-051-00	2-17
F30B1030	90459-4142	SENSOR, ADAM M12 20-051-00	2-17
F30B1040	90459-4142	SENSOR, ADAM M12 20-051-00	2-17
F30B1070	90459-4142	SENSOR, ADAM M12 20-051-00	2-17
F30B1080	90459-4142	SENSOR, ADAM M12 20-051-00	2-17
F30B1020	90459-4142	SENSOR, ADAM M12 20-051-00	2-17
F30B1030	90459-4142	SENSOR, ADAM M12 20-051-00	2-17
F30B1040	90459-4142	SENSOR, ADAM M12 20-051-00	2-17

Pos	Part No	Description	Page No
F			
F30B1070	90459-4142	SENSOR, ADAM M12 20-051-00	2-17
F30B1080	90459-4142	SENSOR, ADAM M12 20-051-00	2-17
F30B1020	90459-4142	SENSOR, ADAM M12 20-051-00	2-17
F30B1040	90459-4142	SENSOR, ADAM M12 20-051-00	2-17
F30B1020	90459-4142	SENSOR, ADAM M12 20-051-00	2-17
F30B1040	90459-4142	SENSOR, ADAM M12 20-051-00	2-17
F30B1010	90459-4142	SENSOR, ADAM M12 20-051-00	2-17
F30B1050	90459-4142	SENSOR, ADAM M12 20-051-00	2-17
F30B1060	90459-4142	SENSOR, ADAM M12 20-051-00	2-17
F30B1090	90459-4142	SENSOR, ADAM M12 20-051-00	2-17
F30B1100	90459-4142	SENSOR, ADAM M12 20-051-00	2-17
F30B1020	90459-4142	SENSOR, ADAM M12 20-051-00	2-19
F30B1030	90459-4142	SENSOR, ADAM M12 20-051-00	2-19
F30B1040	90459-4142	SENSOR, ADAM M12 20-051-00	2-19
F30B1070	90459-4142	SENSOR, ADAM M12 20-051-00	2-19
F30B1080	90459-4142	SENSOR, ADAM M12 20-051-00	2-19
F30B1020	90459-4142	SENSOR, ADAM M12 20-051-00	2-19
F30B1030	90459-4142	SENSOR, ADAM M12 20-051-00	2-19
F30B1040	90459-4142	SENSOR, ADAM M12 20-051-00	2-19
F30B1070	90459-4142	SENSOR, ADAM M12 20-051-00	2-19
F30B1080	90459-4142	SENSOR, ADAM M12 20-051-00	2-19
F30B1020	90459-4142	SENSOR, ADAM M12 20-051-00	2-19
F30B1040	90459-4142	SENSOR, ADAM M12 20-051-00	2-19
F30B1020	90459-4142	SENSOR, ADAM M12 20-051-00	2-19
F30B1040	90459-4142	SENSOR, ADAM M12 20-051-00	2-19
F30B1010	90459-4142	SENSOR, ADAM M12 20-051-00	2-19
F30B1050	90459-4142	SENSOR, ADAM M12 20-051-00	2-19
F30B1060	90459-4142	SENSOR, ADAM M12 20-051-00	2-19
F30B1090	90459-4142	SENSOR, ADAM M12 20-051-00	2-19
F30B1100	90459-4142	SENSOR, ADAM M12 20-051-00	2-19
F30K1000	90459-4254	CONNECTION BLOCK TINA 4A, 20-054-03	4-17
F30K1001	90459-4254	CONNECTION BLOCK TINA 4A, 20-054-03	4-17
F30K1002	90459-4254	CONNECTION BLOCK TINA 4A, 20-054-03	4-17
F30K1000	90459-4254	CONNECTION BLOCK TINA 4A, 20-054-03	4-17
F30K1001	90459-4254	CONNECTION BLOCK TINA 4A, 20-054-03	4-17
F30W1020	90459-4876	FOCUS JUMPER CABLE M12 5P 3M, 20-056-21	2-9
F30W1030	90459-4876	FOCUS JUMPER CABLE M12 5P 3M, 20-056-21	2-9
F30W1040	90459-4876	FOCUS JUMPER CABLE M12 5P 3M, 20-056-21	2-9
F30W1070	90459-4876	FOCUS JUMPER CABLE M12 5P 3M, 20-056-21	2-9
F30W1080	90459-4876	FOCUS JUMPER CABLE M12 5P 3M, 20-056-21	2-9
F30W1020	90459-4876	FOCUS JUMPER CABLE M12 5P 3M, 20-056-21	2-9
F30W1070	90459-4876	FOCUS JUMPER CABLE M12 5P 3M, 20-056-21	2-13
F30W1030	90459-4876	FOCUS JUMPER CABLE M12 5P 3M, 20-056-21	2-9
F30W1040	90459-4876	FOCUS JUMPER CABLE M12 5P 3M, 20-056-21	2-9
F30W1070	90459-4876	FOCUS JUMPER CABLE M12 5P 3M, 20-056-21	2-9
F30W1080	90459-4876	FOCUS JUMPER CABLE M12 5P 3M, 20-056-21	2-9
F30W1020	90459-4876	FOCUS JUMPER CABLE M12 5P 3M, 20-056-21	2-9
F30W1040	90459-4876	FOCUS JUMPER CABLE M12 5P 3M, 20-056-21	2-9
F30W1010	90459-4876	FOCUS JUMPER CABLE M12 5P 3M, 20-056-21	2-9
F30W1050	90459-4876	FOCUS JUMPER CABLE M12 5P 3M, 20-056-21	2-9
F30W1060	90459-4876	FOCUS JUMPER CABLE M12 5P 3M, 20-056-21	2-9
F30W1090	90459-4876	FOCUS JUMPER CABLE M12 5P 3M, 20-056-21	2-9
F30W1100	90459-4876	FOCUS JUMPER CABLE M12 5P 3M, 20-056-21	2-9
F30W1020	90459-4876	FOCUS JUMPER CABLE M12 5P 3M, 20-056-21	2-11
F30W1030	90459-4876	FOCUS JUMPER CABLE M12 5P 3M, 20-056-21	2-11
F30W1040	90459-4876	FOCUS JUMPER CABLE M12 5P 3M, 20-056-21	2-11
F30W1070	90459-4876	FOCUS JUMPER CABLE M12 5P 3M, 20-056-21	2-11
F30W1080	90459-4876	FOCUS JUMPER CABLE M12 5P 3M, 20-056-21	2-11
F30W1020	90459-4876	FOCUS JUMPER CABLE M12 5P 3M, 20-056-21	2-11
F30W1030	90459-4876	FOCUS JUMPER CABLE M12 5P 3M, 20-056-21	2-11
F30W1040	90459-4876	FOCUS JUMPER CABLE M12 5P 3M, 20-056-21	2-11
F30W1070	90459-4876	FOCUS JUMPER CABLE M12 5P 3M, 20-056-21	2-11
F30W1080	90459-4876	FOCUS JUMPER CABLE M12 5P 3M, 20-056-21	2-11
F30W1020	90459-4876	FOCUS JUMPER CABLE M12 5P 3M, 20-056-21	2-11
F30W1040	90459-4876	FOCUS JUMPER CABLE M12 5P 3M, 20-056-21	2-11
F30W1020	90459-4876	FOCUS JUMPER CABLE M12 5P 3M, 20-056-21	2-11
F30W1040	90459-4876	FOCUS JUMPER CABLE M12 5P 3M, 20-056-21	2-11
F30W1010	90459-4876	FOCUS JUMPER CABLE M12 5P 3M, 20-056-21	2-11
F30W1050	90459-4876	FOCUS JUMPER CABLE M12 5P 3M, 20-056-21	2-11
F30W1060	90459-4876	FOCUS JUMPER CABLE M12 5P 3M, 20-056-21	2-11
F30W1090	90459-4876	FOCUS JUMPER CABLE M12 5P 3M, 20-056-21	2-11
F30W1100	90459-4876	FOCUS JUMPER CABLE M12 5P 3M, 20-056-21	2-11
F30W1020	90459-4876	FOCUS JUMPER CABLE M12 5P 3M, 20-056-21	2-13
F30W1030	90459-4876	FOCUS JUMPER CABLE M12 5P 3M, 20-056-21	2-13
F30W1040	90459-4876	FOCUS JUMPER CABLE M12 5P 3M, 20-056-21	2-13
F30W1070	90459-4876	FOCUS JUMPER CABLE M12 5P 3M, 20-056-21	2-13
F30W1080	90459-4876	FOCUS JUMPER CABLE M12 5P 3M, 20-056-21	2-13
F30W1020	90459-4876	FOCUS JUMPER CABLE M12 5P 3M, 20-056-21	2-13
F30W1030	90459-4876	FOCUS JUMPER CABLE M12 5P 3M, 20-056-21	2-13
F30W1040	90459-4876	FOCUS JUMPER CABLE M12 5P 3M, 20-056-21	2-13
F30W1070	90459-4876	FOCUS JUMPER CABLE M12 5P 3M, 20-056-21	2-13

Pos	Part No	Description	Page No
F			
F30W1080	90459-4876	FOCUS JUMPER CABLE M12 5P 3M, 20-056-21	2-13
F30W1020	90459-4876	FOCUS JUMPER CABLE M12 5P 3M, 20-056-21	2-13
F30W1040	90459-4876	FOCUS JUMPER CABLE M12 5P 3M, 20-056-21	2-13
F30W1020	90459-4876	FOCUS JUMPER CABLE M12 5P 3M, 20-056-21	2-13
F30W1040	90459-4876	FOCUS JUMPER CABLE M12 5P 3M, 20-056-21	2-13
F30W1010	90459-4876	FOCUS JUMPER CABLE M12 5P 3M, 20-056-21	2-13
F30W1050	90459-4876	FOCUS JUMPER CABLE M12 5P 3M, 20-056-21	2-13
F30W1060	90459-4876	FOCUS JUMPER CABLE M12 5P 3M, 20-056-21	2-13
F30W1090	90459-4876	FOCUS JUMPER CABLE M12 5P 3M, 20-056-21	2-13
F30W1100	90459-4876	FOCUS JUMPER CABLE M12 5P 3M, 20-056-21	2-13
F30W1020	90459-4876	FOCUS JUMPER CABLE M12 5P 3M, 20-056-21	2-15
F30W1030	90459-4876	FOCUS JUMPER CABLE M12 5P 3M, 20-056-21	2-15
F30W1040	90459-4876	FOCUS JUMPER CABLE M12 5P 3M, 20-056-21	2-15
F30W1070	90459-4876	FOCUS JUMPER CABLE M12 5P 3M, 20-056-21	2-15
F30W1080	90459-4876	FOCUS JUMPER CABLE M12 5P 3M, 20-056-21	2-15
F30W1020	90459-4876	FOCUS JUMPER CABLE M12 5P 3M, 20-056-21	2-15
F30W1030	90459-4876	FOCUS JUMPER CABLE M12 5P 3M, 20-056-21	2-15
F30W1040	90459-4876	FOCUS JUMPER CABLE M12 5P 3M, 20-056-21	2-15
F30W1070	90459-4876	FOCUS JUMPER CABLE M12 5P 3M, 20-056-21	2-15
F30W1080	90459-4876	FOCUS JUMPER CABLE M12 5P 3M, 20-056-21	2-15
F30W1020	90459-4876	FOCUS JUMPER CABLE M12 5P 3M, 20-056-21	2-15
F30W1040	90459-4876	FOCUS JUMPER CABLE M12 5P 3M, 20-056-21	2-15
F30W1020	90459-4876	FOCUS JUMPER CABLE M12 5P 3M, 20-056-21	2-15
F30W1040	90459-4876	FOCUS JUMPER CABLE M12 5P 3M, 20-056-21	2-15
F30W1010	90459-4876	FOCUS JUMPER CABLE M12 5P 3M, 20-056-21	2-15
F30W1050	90459-4876	FOCUS JUMPER CABLE M12 5P 3M, 20-056-21	2-15
F30W1060	90459-4876	FOCUS JUMPER CABLE M12 5P 3M, 20-056-21	2-15
F30W1090	90459-4876	FOCUS JUMPER CABLE M12 5P 3M, 20-056-21	2-15
F30W1100	90459-4876	FOCUS JUMPER CABLE M12 5P 3M, 20-056-21	2-15
F30W1020	90459-4876	FOCUS JUMPER CABLE M12 5P 3M, 20-056-21	2-17
F30W1030	90459-4876	FOCUS JUMPER CABLE M12 5P 3M, 20-056-21	2-17
F30W1040	90459-4876	FOCUS JUMPER CABLE M12 5P 3M, 20-056-21	2-17
F30W1070	90459-4876	FOCUS JUMPER CABLE M12 5P 3M, 20-056-21	2-17
F30W1080	90459-4876	FOCUS JUMPER CABLE M12 5P 3M, 20-056-21	2-17
F30W1020	90459-4876	FOCUS JUMPER CABLE M12 5P 3M, 20-056-21	2-17
F30W1030	90459-4876	FOCUS JUMPER CABLE M12 5P 3M, 20-056-21	2-17
F30W1040	90459-4876	FOCUS JUMPER CABLE M12 5P 3M, 20-056-21	2-17
F30W1070	90459-4876	FOCUS JUMPER CABLE M12 5P 3M, 20-056-21	2-17
F30W1080	90459-4876	FOCUS JUMPER CABLE M12 5P 3M, 20-056-21	2-17
F30W1020	90459-4876	FOCUS JUMPER CABLE M12 5P 3M, 20-056-21	2-17
F30W1040	90459-4876	FOCUS JUMPER CABLE M12 5P 3M, 20-056-21	2-17
F30W1020	90459-4876	FOCUS JUMPER CABLE M12 5P 3M, 20-056-21	2-17
F30W1040	90459-4876	FOCUS JUMPER CABLE M12 5P 3M, 20-056-21	2-17
F30W1020	90459-4876	FOCUS JUMPER CABLE M12 5P 3M, 20-056-21	2-17
F30W1040	90459-4876	FOCUS JUMPER CABLE M12 5P 3M, 20-056-21	2-17
F30W1070	90459-4876	FOCUS JUMPER CABLE M12 5P 3M, 20-056-21	2-17
F30W1080	90459-4876	FOCUS JUMPER CABLE M12 5P 3M, 20-056-21	2-17
F30W1020	90459-4876	FOCUS JUMPER CABLE M12 5P 3M, 20-056-21	2-17
F30W1040	90459-4876	FOCUS JUMPER CABLE M12 5P 3M, 20-056-21	2-17
F30W1020	90459-4876	FOCUS JUMPER CABLE M12 5P 3M, 20-056-21	2-17
F30W1040	90459-4876	FOCUS JUMPER CABLE M12 5P 3M, 20-056-21	2-17
F30W1070	90459-4876	FOCUS JUMPER CABLE M12 5P 3M, 20-056-21	2-17
F30W1080	90459-4876	FOCUS JUMPER CABLE M12 5P 3M, 20-056-21	2-17
F30W1020	90459-4876	FOCUS JUMPER CABLE M12 5P 3M, 20-056-21	2-17
F30W1040	90459-4876	FOCUS JUMPER CABLE M12 5P 3M, 20-056-21	2-17

Pos	Part No	Description	Page No
F30W1020	90459-4876	FOCUS JUMPER CABLE M12 5P 3M, 20-056-21	2-17
F30W1040	90459-4876	FOCUS JUMPER CABLE M12 5P 3M, 20-056-21	2-17
F30W1010	90459-4876	FOCUS JUMPER CABLE M12 5P 3M, 20-056-21	2-17
F30W1050	90459-4876	FOCUS JUMPER CABLE M12 5P 3M, 20-056-21	2-17
F30W1060	90459-4876	FOCUS JUMPER CABLE M12 5P 3M, 20-056-21	2-17
F30W1090	90459-4876	FOCUS JUMPER CABLE M12 5P 3M, 20-056-21	2-17
F30W1100	90459-4876	FOCUS JUMPER CABLE M12 5P 3M, 20-056-21	2-17
F30W1020	90459-4876	FOCUS JUMPER CABLE M12 5P 3M, 20-056-21	2-19
F30W1030	90459-4876	FOCUS JUMPER CABLE M12 5P 3M, 20-056-21	2-19
F30W1040	90459-4876	FOCUS JUMPER CABLE M12 5P 3M, 20-056-21	2-19
F30W1070	90459-4876	FOCUS JUMPER CABLE M12 5P 3M, 20-056-21	2-19
F30W1080	90459-4876	FOCUS JUMPER CABLE M12 5P 3M, 20-056-21	2-19
F30W1020	90459-4876	FOCUS JUMPER CABLE M12 5P 3M, 20-056-21	2-19
F30W1030	90459-4876	FOCUS JUMPER CABLE M12 5P 3M, 20-056-21	2-19
F30W1040	90459-4876	FOCUS JUMPER CABLE M12 5P 3M, 20-056-21	2-19
F30W1070	90459-4876	FOCUS JUMPER CABLE M12 5P 3M, 20-056-21	2-19
F30W1080	90459-4876	FOCUS JUMPER CABLE M12 5P 3M, 20-056-21	2-19
F30W1020	90459-4876	FOCUS JUMPER CABLE M12 5P 3M, 20-056-21	2-19
F30W1040	90459-4876	FOCUS JUMPER CABLE M12 5P 3M, 20-056-21	2-19
F30W1020	90459-4876	FOCUS JUMPER CABLE M12 5P 3M, 20-056-21	2-19
F30W1040	90459-4876	FOCUS JUMPER CABLE M12 5P 3M, 20-056-21	2-19
F30W1010	90459-4876	FOCUS JUMPER CABLE M12 5P 3M, 20-056-21	2-19
F30W1050	90459-4876	FOCUS JUMPER CABLE M12 5P 3M, 20-056-21	2-19
F30W1060	90459-4876	FOCUS JUMPER CABLE M12 5P 3M, 20-056-21	2-19
F30W1090	90459-4876	FOCUS JUMPER CABLE M12 5P 3M, 20-056-21	2-19
F30W1100	90459-4876	FOCUS JUMPER CABLE M12 5P 3M, 20-056-21	2-19
F30W1000	90459-4876	FOCUS JUMPER CABLE M12 5P 3M, 20-056-21	4-17
F30W1001	90459-4876	FOCUS JUMPER CABLE M12 5P 3M, 20-056-21	4-17
F30W1002	90459-4876	FOCUS JUMPER CABLE M12 5P 3M, 20-056-21	4-17
F30W1000	90459-4876	FOCUS JUMPER CABLE M12 5P 3M, 20-056-21	4-17
F30W1001	90459-4876	FOCUS JUMPER CABLE M12 5P 3M, 20-056-21	4-17
F30Q0011	90459-5316	CONTACTOR 4KW 24VDC, DILM9-32	4-5
F30Q0030	90459-5316	CONTACTOR 4KW 24VDC, DILM9-32	4-5
F30Q0011	90459-5316	CONTACTOR 4KW 24VDC, DILM9-32	4-7
F30Q0030	90459-5316	CONTACTOR 4KW 24VDC, DILM9-32	4-7
F30Q0011	90459-5316	CONTACTOR 4KW 24VDC, DILM9-32	4-9, 4-11
W			
W10M1010	90069-0110	GEARS, HELICAL MOTOR SK01-71L/4	1-11, 1-21
W10F0010	90458-2511	FUSE, ATDR10	4-5, 4-7
W10F0020	90458-2512	FUSE, ATDR15	4-5, 4-7
W10T0010	90459-3442	VARIABLE FREQUENCY DRIVE 22B-A5P0N104	4-5, 4-7, 4-9, 4-11

Machine Type Group Description Page No

W

Pos	Part No	Description	Page No
W10V0010	90459-3454	FOOTPRINT FILTER, 22-RF018-BL	4-5, 4-7, 4-9, 4-11
W10F0010	354000-0100	MINIATURE CIRCUIT BREAKER, FAZ-C10/1	4-9, 4-11
W10F0020	354002-0160	MINIATURE CIRCUIT BREAKER, FAZ-C16/3	4-9, 4-11
W30F0011	-	* Only with option Chain Cleaner.	4-9, 4-11
W30V1027	90042-0248	SOLENOID VALVE OFFICIENE DI ENSINO	2-123
W30V1026	90042-0249	SOLENOID VALVE OFFICINE DI ENSINO	2-123
W30V3015	90042-0249	SOLENOID VALVE OFFICINE DI ENSINO	6-9
W30W3010	90220-0105	SCR. CABLE 4X2,5MM2	6-11, 6-13
W30F0011	90259-0317	AUXILIARY CONTACT 072896 NHI11-PKZ0	4-5
W30F0012	90259-0317	AUXILIARY CONTACT 072896 NHI11-PKZ0	4-5
W30F0013	90259-0317	AUXILIARY CONTACT 072896 NHI11-PKZ0	4-5
W30F0014	90259-0317	AUXILIARY CONTACT 072896 NHI11-PKZ0	4-5
W30F0015	90259-0317	AUXILIARY CONTACT 072896 NHI11-PKZ0	4-5
W30F0016	90259-0317	AUXILIARY CONTACT 072896 NHI11-PKZ0	4-5
W30F0017	90259-0317	AUXILIARY CONTACT 072896 NHI11-PKZ0	4-5
W30F0021	90259-0317	AUXILIARY CONTACT 072896 NHI11-PKZ0	4-5
W30F0022	90259-0317	AUXILIARY CONTACT 072896 NHI11-PKZ0	4-5
W30F0023	90259-0317	AUXILIARY CONTACT 072896 NHI11-PKZ0	4-5
W30F0024	90259-0317	AUXILIARY CONTACT 072896 NHI11-PKZ0	4-5
W30F0025	90259-0317	AUXILIARY CONTACT 072896 NHI11-PKZ0	4-5
W30F0026	90259-0317	AUXILIARY CONTACT 072896 NHI11-PKZ0	4-5
W30F0027	90259-0317	AUXILIARY CONTACT 072896 NHI11-PKZ0	4-5
W30F0031	90259-0317	AUXILIARY CONTACT 072896 NHI11-PKZ0	4-5
W30F0011	90259-0317	AUXILIARY CONTACT 072896 NHI11-PKZ0	4-7
W30F0012	90259-0317	AUXILIARY CONTACT 072896 NHI11-PKZ0	4-7
W30F0013	90259-0317	AUXILIARY CONTACT 072896 NHI11-PKZ0	4-7
W30F0014	90259-0317	AUXILIARY CONTACT 072896 NHI11-PKZ0	4-7
W30F0015	90259-0317	AUXILIARY CONTACT 072896 NHI11-PKZ0	4-7
W30F0016	90259-0317	AUXILIARY CONTACT 072896 NHI11-PKZ0	4-7
W30F0017	90259-0317	AUXILIARY CONTACT 072896 NHI11-PKZ0	4-7
W30F0021	90259-0317	AUXILIARY CONTACT 072896 NHI11-PKZ0	4-7
W30F0022	90259-0317	AUXILIARY CONTACT 072896 NHI11-PKZ0	4-7
W30F0023	90259-0317	AUXILIARY CONTACT 072896 NHI11-PKZ0	4-7
W30F0024	90259-0317	AUXILIARY CONTACT 072896 NHI11-PKZ0	4-7
W30F0025	90259-0317	AUXILIARY CONTACT 072896 NHI11-PKZ0	4-7
W30F0026	90259-0317	AUXILIARY CONTACT 072896 NHI11-PKZ0	4-7
W30F0027	90259-0317	AUXILIARY CONTACT 072896 NHI11-PKZ0	4-7
W30F0031	90259-0317	AUXILIARY CONTACT 072896 NHI11-PKZ0	4-7
W30F0011	90259-0317	AUXILIARY CONTACT 072896 NHI11-PKZ0	4-9
W30F0012	90259-0317	AUXILIARY CONTACT 072896 NHI11-PKZ0	4-9
W30F0013	90259-0317	AUXILIARY CONTACT 072896 NHI11-PKZ0	4-9
W30F0014	90259-0317	AUXILIARY CONTACT 072896 NHI11-PKZ0	4-9
W30F0015	90259-0317	AUXILIARY CONTACT 072896 NHI11-PKZ0	4-9
W30F0016	90259-0317	AUXILIARY CONTACT 072896 NHI11-PKZ0	4-9
W30F0017	90259-0317	AUXILIARY CONTACT 072896 NHI11-PKZ0	4-9
W30F0021	90259-0317	AUXILIARY CONTACT 072896 NHI11-PKZ0	4-9
W30F0022	90259-0317	AUXILIARY CONTACT 072896 NHI11-PKZ0	4-9
W30F0023	90259-0317	AUXILIARY CONTACT 072896 NHI11-PKZ0	4-9
W30F0024	90259-0317	AUXILIARY CONTACT 072896 NHI11-PKZ0	4-9
W30F0025	90259-0317	AUXILIARY CONTACT 072896 NHI11-PKZ0	4-9
W30F0026	90259-0317	AUXILIARY CONTACT 072896 NHI11-PKZ0	4-9
W30F0027	90259-0317	AUXILIARY CONTACT 072896 NHI11-PKZ0	4-9
W30F0011	90259-0317	AUXILIARY CONTACT 072896 NHI11-PKZ0	4-11
W30F0012	90259-0317	AUXILIARY CONTACT 072896 NHI11-PKZ0	4-11
W30F0013	90259-0317	AUXILIARY CONTACT 072896 NHI11-PKZ0	4-11
W30F0014	90259-0317	AUXILIARY CONTACT 072896 NHI11-PKZ0	4-11
W30F0015	90259-0317	AUXILIARY CONTACT 072896 NHI11-PKZ0	4-11
W30F0016	90259-0317	AUXILIARY CONTACT 072896 NHI11-PKZ0	4-11
W30F0017	90259-0317	AUXILIARY CONTACT 072896 NHI11-PKZ0	4-11
W30F0021	90259-0317	AUXILIARY CONTACT 072896 NHI11-PKZ0	4-11
W30F0022	90259-0317	AUXILIARY CONTACT 072896 NHI11-PKZ0	4-11
W30F0023	90259-0317	AUXILIARY CONTACT 072896 NHI11-PKZ0	4-11
W30F0024	90259-0317	AUXILIARY CONTACT 072896 NHI11-PKZ0	4-11
W30F0025	90259-0317	AUXILIARY CONTACT 072896 NHI11-PKZ0	4-11
W30F0026	90259-0317	AUXILIARY CONTACT 072896 NHI11-PKZ0	4-11
W30F0027	90259-0317	AUXILIARY CONTACT 072896 NHI11-PKZ0	4-11
W30F0010	90458-2512	FUSE, ATDR15	4-5, 4-7
W30W1041	90459-0036	SENSOR CABLE XS2F-D421-J80-A	2-57, 2-59
W30V3023	90459-1854	SHUT OFF VALVE, MS6-EE-1/2-10V24	6-9
W30T0010	90459-3445	VARIABLE FREQUENCY DRIVE 22B-D010N104	4-5
W30T0020	90459-3445	VARIABLE FREQUENCY DRIVE 22B-D010N104	4-5
W30T0010	90459-3445	VARIABLE FREQUENCY DRIVE 22B-D010N104	4-7
W30T0020	90459-3445	VARIABLE FREQUENCY DRIVE 22B-D010N104	4-7
W30T0010	90459-3445	VARIABLE FREQUENCY DRIVE 22B-D010N104	4-9
W30T0020	90459-3445	VARIABLE FREQUENCY DRIVE 22B-D010N104	4-9
W30T0010	90459-3445	VARIABLE FREQUENCY DRIVE 22B-D010N104	4-11
W30T0020	90459-3445	VARIABLE FREQUENCY DRIVE 22B-D010N104	4-11
W30V0010	90459-3458	FOOTPRINT FILTER 22-RF012-BL	4-5
W30V0020	90459-3458	FOOTPRINT FILTER 22-RF012-BL	4-5
W30V0010	90459-3458	FOOTPRINT FILTER 22-RF012-BL	4-7
W30V0020	90459-3458	FOOTPRINT FILTER 22-RF012-BL	4-7
W30V0010	90459-3458	FOOTPRINT FILTER 22-RF012-BL	4-9

Pos	Part No	Description	Page No
W			
W30V0020	90459-3458	FOOTPRINT FILTER 22-RF012-BL	4-9
W30V0010	90459-3458	FOOTPRINT FILTER 22-RF012-BL	4-11
W30V0020	90459-3458	FOOTPRINT FILTER 22-RF012-BL	4-11
W30F0011	90459-5324	OVERLOAD PROTECTION, PKZM0-1,6	4-5
W30F0012	90459-5324	OVERLOAD PROTECTION, PKZM0-1,6	4-5
W30F0013	90459-5324	OVERLOAD PROTECTION, PKZM0-1,6	4-5
W30F0014	90459-5324	OVERLOAD PROTECTION, PKZM0-1,6	4-5
W30F0015	90459-5324	OVERLOAD PROTECTION, PKZM0-1,6	4-5
W30F0016	90459-5324	OVERLOAD PROTECTION, PKZM0-1,6	4-5
W30F0017	90459-5324	OVERLOAD PROTECTION, PKZM0-1,6	4-5
W30F0021	90459-5324	OVERLOAD PROTECTION, PKZM0-1,6	4-5
W30F0022	90459-5324	OVERLOAD PROTECTION, PKZM0-1,6	4-5
W30F0023	90459-5324	OVERLOAD PROTECTION, PKZM0-1,6	4-5
W30F0024	90459-5324	OVERLOAD PROTECTION, PKZM0-1,6	4-5
W30F0025	90459-5324	OVERLOAD PROTECTION, PKZM0-1,6	4-5
W30F0026	90459-5324	OVERLOAD PROTECTION, PKZM0-1,6	4-5
W30F0027	90459-5324	OVERLOAD PROTECTION, PKZM0-1,6	4-5
W30F0031	90459-5324	OVERLOAD PROTECTION, PKZM0-1,6	4-5
W30F0011	90459-5324	OVERLOAD PROTECTION, PKZM0-1,6	4-7
W30F0012	90459-5324	OVERLOAD PROTECTION, PKZM0-1,6	4-7
W30F0013	90459-5324	OVERLOAD PROTECTION, PKZM0-1,6	4-7
W30F0014	90459-5324	OVERLOAD PROTECTION, PKZM0-1,6	4-7
W30F0015	90459-5324	OVERLOAD PROTECTION, PKZM0-1,6	4-7
W30F0016	90459-5324	OVERLOAD PROTECTION, PKZM0-1,6	4-7
W30F0017	90459-5324	OVERLOAD PROTECTION, PKZM0-1,6	4-7
W30F0021	90459-5324	OVERLOAD PROTECTION, PKZM0-1,6	4-7
W30F0022	90459-5324	OVERLOAD PROTECTION, PKZM0-1,6	4-7
W30F0023	90459-5324	OVERLOAD PROTECTION, PKZM0-1,6	4-7
W30F0024	90459-5324	OVERLOAD PROTECTION, PKZM0-1,6	4-7
W30F0025	90459-5324	OVERLOAD PROTECTION, PKZM0-1,6	4-7
W30F0026	90459-5324	OVERLOAD PROTECTION, PKZM0-1,6	4-7
W30F0027	90459-5324	OVERLOAD PROTECTION, PKZM0-1,6	4-7
W30F0031	90459-5324	OVERLOAD PROTECTION, PKZM0-1,6	4-7
W30F0011	90459-5324	OVERLOAD PROTECTION, PKZM0-1,6	4-9
W30F0012	90459-5324	OVERLOAD PROTECTION, PKZM0-1,6	4-9
W30F0013	90459-5324	OVERLOAD PROTECTION, PKZM0-1,6	4-9
W30F0014	90459-5324	OVERLOAD PROTECTION, PKZM0-1,6	4-9
W30F0015	90459-5324	OVERLOAD PROTECTION, PKZM0-1,6	4-9
W30F0016	90459-5324	OVERLOAD PROTECTION, PKZM0-1,6	4-9
W30F0017	90459-5324	OVERLOAD PROTECTION, PKZM0-1,6	4-9
W30F0021	90459-5324	OVERLOAD PROTECTION, PKZM0-1,6	4-9
W30F0022	90459-5324	OVERLOAD PROTECTION, PKZM0-1,6	4-9
W30F0023	90459-5324	OVERLOAD PROTECTION, PKZM0-1,6	4-9
W30F0024	90459-5324	OVERLOAD PROTECTION, PKZM0-1,6	4-9
W30F0025	90459-5324	OVERLOAD PROTECTION, PKZM0-1,6	4-9
W30F0026	90459-5324	OVERLOAD PROTECTION, PKZM0-1,6	4-9
W30F0027	90459-5324	OVERLOAD PROTECTION, PKZM0-1,6	4-9
W30F0011	90459-5324	OVERLOAD PROTECTION, PKZM0-1,6	4-11
W30F0012	90459-5324	OVERLOAD PROTECTION, PKZM0-1,6	4-11
W30F0013	90459-5324	OVERLOAD PROTECTION, PKZM0-1,6	4-11
W30F0014	90459-5324	OVERLOAD PROTECTION, PKZM0-1,6	4-11
W30F0015	90459-5324	OVERLOAD PROTECTION, PKZM0-1,6	4-11
W30F0016	90459-5324	OVERLOAD PROTECTION, PKZM0-1,6	4-11
W30F0017	90459-5324	OVERLOAD PROTECTION, PKZM0-1,6	4-11
W30F0021	90459-5324	OVERLOAD PROTECTION, PKZM0-1,6	4-11
W30F0022	90459-5324	OVERLOAD PROTECTION, PKZM0-1,6	4-11
W30F0023	90459-5324	OVERLOAD PROTECTION, PKZM0-1,6	4-11
W30F0024	90459-5324	OVERLOAD PROTECTION, PKZM0-1,6	4-11
W30F0025	90459-5324	OVERLOAD PROTECTION, PKZM0-1,6	4-11
W30F0026	90459-5324	OVERLOAD PROTECTION, PKZM0-1,6	4-11
W30F0027	90459-5324	OVERLOAD PROTECTION, PKZM0-1,6	4-11
W30K1210	90459-6062	REMOTE I/O, IP67 8PTS IN/OUT SELF-CONFIG	4-17
W30V1017	90459-6977	SOLENOID VALVE G1/4, V04B286N-B423A	6-9
W30B1013	90459-7273	PHOTOCELL E3Z-T81C-G0SR D-CN	2-49
W30B1014	90459-7274	PHOTOCELL E3Z-T81C-G0SR L-CN	2-49
W30B1024	90459-7275	PHOTOCELL E3Z-R86	2-79
W30B1011	90600-0462	INDUCTIVE SWITCH, E2A-M12LN05-M1-B1-TP	2-47
W30B1041	90600-0462	INDUCTIVE SWITCH, E2A-M12LN05-M1-B1-TP	2-57, 2-59
W30B1021	90600-0462	INDUCTIVE SWITCH, E2A-M12LN05-M1-B1-TP	2-77
W30B1023	90600-0462	INDUCTIVE SWITCH, E2A-M12LN05-M1-B1-TP	2-117
W30B1025	90600-0462	INDUCTIVE SWITCH, E2A-M12LN05-M1-B1-TP	2-117
W30B1012	90600-1337	LIMIT SW. XCK-M106H29	2-47
W30B1022	90600-1337	LIMIT SW. XCK-M106H29	2-77
W30M1010	90600-4100	GEARS, WORM MOTOR SA47DT71D4-44.22-M5B-4	2-41
W30M1020	90600-4100	GEARS, WORM MOTOR SA47DT71D4-44.22-M5B-4	2-41
W30M1030	90600-4100	GEARS, WORM MOTOR SA47DT71D4-44.22-M5B-4	2-41
W30M1040	90600-4100	GEARS, WORM MOTOR SA47DT71D4-44.22-M5B-4	2-41
W30M1050	90600-4100	GEARS, WORM MOTOR SA47DT71D4-44.22-M5B-4	2-41
W30M1060	90600-4100	GEARS, WORM MOTOR SA47DT71D4-44.22-M5B-4	2-41
W30M1010	90600-4100	GEARS, WORM MOTOR SA47DT71D4-44.22-M5B-4	2-41
W30M1020	90600-4100	GEARS, WORM MOTOR SA47DT71D4-44.22-M5B-4	2-41
W30M1030	90600-4100	GEARS, WORM MOTOR SA47DT71D4-44.22-M5B-4	2-41

Pos	Part No	Description	Page No
W			
W30M1040	90600-4100	GEARS, WORM MOTOR SA47DT71D4-44.22-M5B-4	2-41
W30M1050	90600-4100	GEARS, WORM MOTOR SA47DT71D4-44.22-M5B-4	2-41
W30M1060	90600-4100	GEARS, WORM MOTOR SA47DT71D4-44.22-M5B-4	2-41
W30M1070	90600-4100	GEARS, WORM MOTOR SA47DT71D4-44.22-M5B-4	2-41
W30M1010	90600-4100	GEARS, WORM MOTOR SA47DT71D4-44.22-M5B-4	2-45
W30M1020	90600-4100	GEARS, WORM MOTOR SA47DT71D4-44.22-M5B-4	2-45
W30M1030	90600-4100	GEARS, WORM MOTOR SA47DT71D4-44.22-M5B-4	2-45
W30M1040	90600-4100	GEARS, WORM MOTOR SA47DT71D4-44.22-M5B-4	2-45
W30M1050	90600-4100	GEARS, WORM MOTOR SA47DT71D4-44.22-M5B-4	2-45
W30M1060	90600-4100	GEARS, WORM MOTOR SA47DT71D4-44.22-M5B-4	2-45
W30M1010	90600-4100	GEARS, WORM MOTOR SA47DT71D4-44.22-M5B-4	2-45
W30M1020	90600-4100	GEARS, WORM MOTOR SA47DT71D4-44.22-M5B-4	2-45
W30M1030	90600-4100	GEARS, WORM MOTOR SA47DT71D4-44.22-M5B-4	2-45
W30M1040	90600-4100	GEARS, WORM MOTOR SA47DT71D4-44.22-M5B-4	2-45
W30M1050	90600-4100	GEARS, WORM MOTOR SA47DT71D4-44.22-M5B-4	2-45
W30M1060	90600-4100	GEARS, WORM MOTOR SA47DT71D4-44.22-M5B-4	2-45
W30M1070	90600-4100	GEARS, WORM MOTOR SA47DT71D4-44.22-M5B-4	2-45
W30M2010	90600-4100	GEARS, WORM MOTOR SA47DT71D4-44.22-M5B-4	2-71
W30M2020	90600-4100	GEARS, WORM MOTOR SA47DT71D4-44.22-M5B-4	2-71
W30M2030	90600-4100	GEARS, WORM MOTOR SA47DT71D4-44.22-M5B-4	2-71
W30M2040	90600-4100	GEARS, WORM MOTOR SA47DT71D4-44.22-M5B-4	2-71
W30M2050	90600-4100	GEARS, WORM MOTOR SA47DT71D4-44.22-M5B-4	2-71
W30M2060	90600-4100	GEARS, WORM MOTOR SA47DT71D4-44.22-M5B-4	2-71
W30M2010	90600-4100	GEARS, WORM MOTOR SA47DT71D4-44.22-M5B-4	2-71
W30M2020	90600-4100	GEARS, WORM MOTOR SA47DT71D4-44.22-M5B-4	2-71
W30M2030	90600-4100	GEARS, WORM MOTOR SA47DT71D4-44.22-M5B-4	2-71
W30M2040	90600-4100	GEARS, WORM MOTOR SA47DT71D4-44.22-M5B-4	2-71
W30M2050	90600-4100	GEARS, WORM MOTOR SA47DT71D4-44.22-M5B-4	2-71
W30M2060	90600-4100	GEARS, WORM MOTOR SA47DT71D4-44.22-M5B-4	2-71
W30M2070	90600-4100	GEARS, WORM MOTOR SA47DT71D4-44.22-M5B-4	2-71
W30M2010	90600-4100	GEARS, WORM MOTOR SA47DT71D4-44.22-M5B-4	2-75
W30M2020	90600-4100	GEARS, WORM MOTOR SA47DT71D4-44.22-M5B-4	2-75
W30M2030	90600-4100	GEARS, WORM MOTOR SA47DT71D4-44.22-M5B-4	2-75
W30M2040	90600-4100	GEARS, WORM MOTOR SA47DT71D4-44.22-M5B-4	2-75
W30M2050	90600-4100	GEARS, WORM MOTOR SA47DT71D4-44.22-M5B-4	2-75
W30M2060	90600-4100	GEARS, WORM MOTOR SA47DT71D4-44.22-M5B-4	2-75
W30M2010	90600-4100	GEARS, WORM MOTOR SA47DT71D4-44.22-M5B-4	2-75
W30M2020	90600-4100	GEARS, WORM MOTOR SA47DT71D4-44.22-M5B-4	2-75
W30M2030	90600-4100	GEARS, WORM MOTOR SA47DT71D4-44.22-M5B-4	2-75
W30M2040	90600-4100	GEARS, WORM MOTOR SA47DT71D4-44.22-M5B-4	2-75
W30M2050	90600-4100	GEARS, WORM MOTOR SA47DT71D4-44.22-M5B-4	2-75
W30M2060	90600-4100	GEARS, WORM MOTOR SA47DT71D4-44.22-M5B-4	2-75
W30M2070	90600-4100	GEARS, WORM MOTOR SA47DT71D4-44.22-M5B-4	2-75
W30V3014	90600-5559	SOLENOID VALVE G1/8, V04A486L-B623A	6-9
W30M3010	90600-5983	GEARS, WORM MOTOR WA 20 DT71 D4	6-11, 6-13
W30M1010	90600-6057	GEARS, WORM MOTOR SA47DT71D4-63.80-M5B-4	2-41, 2-45
W30M2010	90600-6057	GEARS, WORM MOTOR SA47DT71D4-63.80-M5B-4	2-71
W30M2020	90600-6057	GEARS, WORM MOTOR SA47DT71D4-63.80-M5B-4	2-71
W30M2030	90600-6057	GEARS, WORM MOTOR SA47DT71D4-63.80-M5B-4	2-71
W30M2010	90600-6057	GEARS, WORM MOTOR SA47DT71D4-63.80-M5B-4	2-75
W30M2020	90600-6057	GEARS, WORM MOTOR SA47DT71D4-63.80-M5B-4	2-75
W30M2030	90600-6057	GEARS, WORM MOTOR SA47DT71D4-63.80-M5B-4	2-75
W30B1031	90600-6175	PHOTOCELL, WL18-3P430	2-119
W30B1032	90600-6175	PHOTOCELL, WL18-3P430	2-119
W30B1033	90600-6175	PHOTOCELL, WL18-3P430	2-119
W30B1034	90600-6175	PHOTOCELL, WL18-3P430	2-119
W30W1012	351150-0405	CABLE OLFLEX 5X0,75 MM2 LIGHT/GREY	2-47
W30W1022	351150-0405	CABLE OLFLEX 5X0,75 MM2 LIGHT/GREY	2-77
W30W1026	351150-0431	CABLE OLFLEX 2X0,75 MM2 LIGHT/GREY	2-123
W30W1027	351150-0431	CABLE OLFLEX 2X0,75 MM2 LIGHT/GREY	2-123
W30W1013	351305-0150	ACTUATOR/SENSOR CABLE PRKMV 4-07/15M	2-49
W30W1014	351305-0150	ACTUATOR/SENSOR CABLE PRKMV 4-07/15M	2-49
W30W1211	351311-0050	ACTUATOR/SENSOR CABLE RKTN 4-225/5M	4-17
W30W1023	351312-0150	ACTUATOR/SENSOR CABLE RKWTN 4-225/15M	2-117
W30W1025	351312-0150	ACTUATOR/SENSOR CABLE RKWTN 4-225/15M	2-117
W30W1024	351403-0020	ACTU/SENS. CABLE RSMVN 3-PRKMV 4-06/2,0M	2-79
W30W0017	351403-0020	ACTU/SENS. CABLE RSMVN 3-PRKMV 4-06/2,0M	6-9
W30W3014	351403-0020	ACTU/SENS. CABLE RSMVN 3-PRKMV 4-06/2,0M	6-9
W30W3015	351403-0020	ACTU/SENS. CABLE RSMVN 3-PRKMV 4-06/2,0M	6-9
W30W1011	351405-0050	ACT/SENS. CABLE RSMVN 3-PRKT 4-3-06/5,0M	2-47
W30W1031	351405-0050	ACT/SENS. CABLE RSMVN 3-PRKT 4-3-06/5,0M	2-119
W30W1032	351405-0050	ACT/SENS. CABLE RSMVN 3-PRKT 4-3-06/5,0M	2-119
W30W1033	351405-0050	ACT/SENS. CABLE RSMVN 3-PRKT 4-3-06/5,0M	2-119
W30W1034	351405-0050	ACT/SENS. CABLE RSMVN 3-PRKT 4-3-06/5,0M	2-119
W30W1021	351406-0050	ACT/SENS.CABLE RSMVN 3-PRKWT 4-3-06/5,0M	2-77
W30W1210	351415-0100	DEVICENET CONN. CABLE, 0935 361 105/10M	4-17
W30F0010	354002-0160	MINIATURE CIRCUIT BREAKER, FAZ-C16/3	4-9
W30F0020	354002-0160	MINIATURE CIRCUIT BREAKER, FAZ-C16/3	4-9
W30F0010	354002-0160	MINIATURE CIRCUIT BREAKER, FAZ-C16/3	4-11
W30F0020	354002-0160	MINIATURE CIRCUIT BREAKER, FAZ-C16/3	4-11
W90F0010	90458-2511	FUSE, ATDR10	4-5, 4-7
W90T0010	90459-3442	VARIABLE FREQUENCY DRIVE 22B-A5P0N104	4-5, 4-7, 4-9, 4-11

Pos	Part No	Description	Page No
W			
W90V0010	90459-3454	FOOTPRINT FILTER, 22-RF018-BL	4-5, 4-7, 4-9, 4-11
W90W1011	90459-6586	ACT/SENS.Y-CABLE, ASBN 2-PRKMV 4-07/0,6M	3-9
W90W1071	90459-6586	ACT/SENS.Y-CABLE, ASBN 2-PRKMV 4-07/0,6M	3-9
W90B1011	90459-7273	PHOTOCELL E3Z-T81C-G0SR D-CN	3-9
W90B1061	90459-7273	PHOTOCELL E3Z-T81C-G0SR D-CN	3-9
W90B1071	90459-7273	PHOTOCELL E3Z-T81C-G0SR D-CN	3-9
W90B1012	90459-7274	PHOTOCELL E3Z-T81C-G0SR L-CN	3-9
W90W1061	351305-0150	ACTUATOR/SENSOR CABLE PRKMV 4-07/15M	3-9
W90W1062	351305-0150	ACTUATOR/SENSOR CABLE PRKMV 4-07/15M	3-9
W90W1010	351405-0050	ACT/SENS. CABLE RSMVN 3-PRKT 4-3-06/5,0M	3-9
W90F0010	354000-0100	MINIATURE CIRCUIT BREAKER, FAZ-C10/1	4-9, 4-11

Tetra Pak

SPC binder labels. 40 mm Full width
using the **variable definitions** *made in the* **front page** *file!!*

Note! This page is generated **automatically.**

Accumulator Helix 30
663651-0400
Issue: 2009-05 Doc No: SPC-3008981-0101

Accumulator Helix 30
663651-0400
Issue: 2009-05 Doc No: SPC-3008981-0101

Accumulator Helix 30
663651-0400
Issue: 2009-05 Doc No: SPC-3008981-0101

Accumulator Helix 30
663651-0400
Issue: 2009-05 Doc No: SPC-3008981-0101

Accumulator Helix 30
663651-0400
Issue: 2009-05 Doc No: SPC-3008981-0101

Accumulator Helix 30
663651-0400
Issue: 2009-05 Doc No: SPC-3008981-0101

Accumulator Helix 30
663651-0400
Issue: 2009-05 Doc No: SPC-3008981-0101

Accumulator Helix 30
663651-0400
Issue: 2009-05 Doc No: SPC-3008981-0101

Accumulator Helix 30
663651-0400
Issue: 2009-05 Doc No: SPC-3008981-0101

Accumulator Helix 30
663651-0400
Issue: 2009-05 Doc No: SPC-3008981-0101

Accumulator Helix 30
663651-0400
Issue: 2009-05 Doc No: SPC-3008981-0101

SPC binder labels. 30 mm Half width using the **variable definitions** *made in the* **front page** *file!!*

Note! This page is generated **automatically.**

Accumulator Helix 30

663651-0400

Issue: 2009-05 Doc No: SPC-3008981-0101

Accumulator Helix 30

663651-0400

Issue: 2009-05 Doc No: SPC-3008981-0101

Accumulator Helix 30

663651-0400

Issue: 2009-05 Doc No: SPC-3008981-0101

Accumulator Helix 30

663651-0400

Issue: 2009-05 Doc No: SPC-3008981-0101

Accumulator Helix 30

663651-0400

Issue: 2009-05 Doc No: SPC-3008981-0101

Accumulator Helix 30

663651-0400

Issue: 2009-05 Doc No: SPC-3008981-0101

Accumulator Helix 30

663651-0400

Issue: 2009-05 Doc No: SPC-3008981-0101

Accumulator Helix 30

663651-0400

Issue: 2009-05 Doc No: SPC-3008981-0101

Accumulator Helix 30

663651-0400

Issue: 2009-05 Doc No: SPC-3008981-0101

Accumulator Helix 30

663651-0400

Issue: 2009-05 Doc No: SPC-3008981-0101

Accumulator Helix 30

663651-0400

Issue: 2009-05 Doc No: SPC-3008981-0101

Accumulator Helix 30

663651-0400

Issue: 2009-05 Doc No: SPC-3008981-0101

Accumulator Helix 30

663651-0400

Issue: 2009-05 Doc No: SPC-3008981-0101