EM

Electrical Manual

Accumulator Helix 30

663651-0500

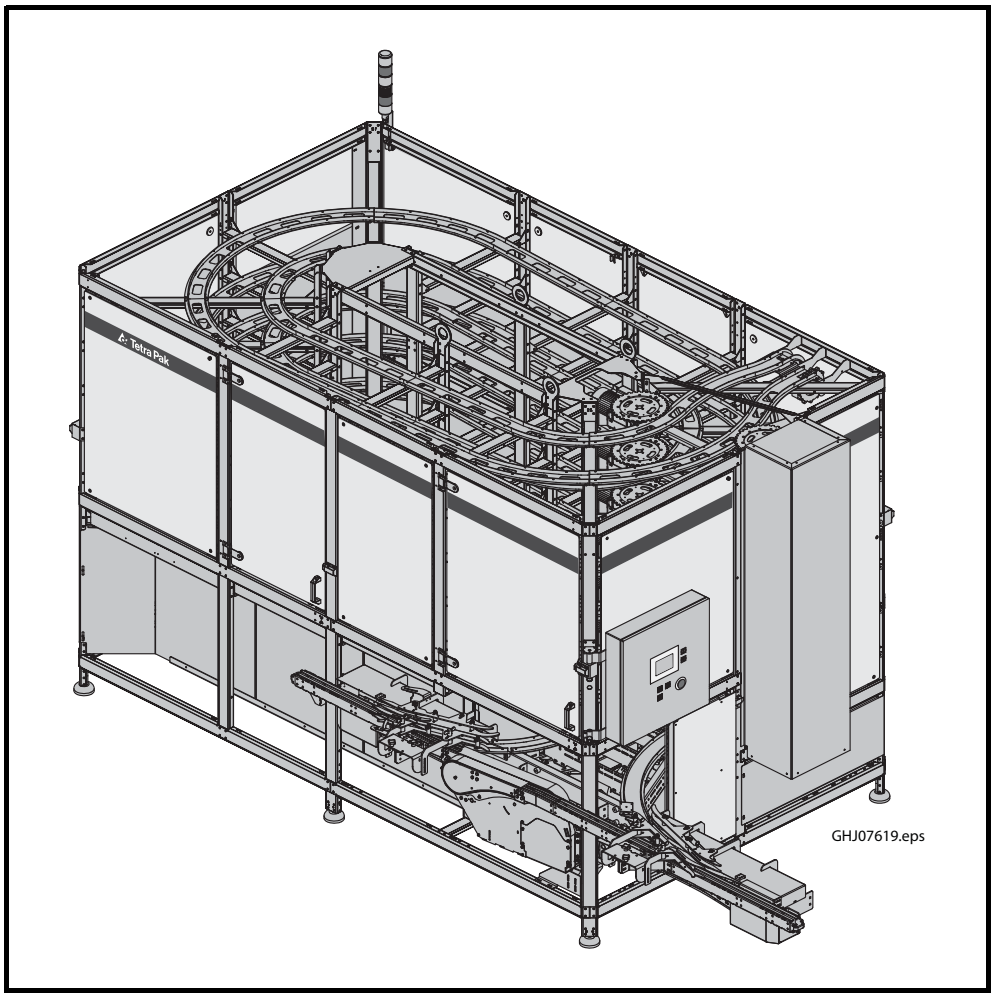

WARNING

Read and follow all safety precaution instructions throughout this manual and on safety signs attached to this equipment.
Failure to follow all safety precaution instructions could result in death or serious injury.

Tetra Pak

Doc. No. EM-3030592-0102

Copyright © 2010 Tetra Pak Group

All rights reserved. No part of this document may be reproduced or copied in any form or by any means without written permission from Hartness International.

Tetra Pak and all Tetra Pak products are trademarks belonging to the Tetra Pak Group.

The content of this manual is in accordance with the design and construction of the machine or equipment at the time of publishing. Tetra Pak reserves the right to introduce design modifications without prior notice.

The English language version of this document contains the original instructions. All other language versions are translations of the original instructions.

This document was produced by:

Hartness International
1200 Garlington Road
Greenville, SC 29609
USA

Additional copies can be ordered from Tetra Pak. When ordering additional copies, always provide the document number.

Doc. No. EM-3030592-0102

Issue 2010-10

This manual is valid for:

Series No./ Machine No. Sign.

EM

Electrical Manual

Accumulator Helix 30
663651-0500

Note!
The ACHX30 consists of the following machine variants:

47M	100M
75M	120M
90M	

The base machine variant in the manual is the ACHX30 90M (IEC). This variant is shown when the subject is not affected by the variation in machine. When variations affect the subject, illustrations of those specific variants are also shown in the manual.

Machine or equipment configurations for which this manual is valid are described on the next page.

i Introduction

ii Safety Precautions

1 Electrical Systems Description

2 Document List

3 Position Summary

4 Circuit Diagrams

5 Line Summary

6 Cabinet Terminal Summary

7 Cable Connection List

8 Mains Connection Diagram

9 Component Location

10 Other Information

Doc. No. EM-3030592-0102

Issue 2010-10

Tetra Pak

Hartness International

Valid for:

Name	Drawing Specification and Development Step	Additional Information
Accumulator Helix ACHX30-0500	663651-0500	Machine Variants: - ACHX30 / 47M / Left Infeed (LINF) - ACHX30 / 47M / Right Infeed (RINF) - ACHX30 / 75M / Left Infeed (LINF) - ACHX30 / 75M / Right Infeed (RINF) - ACHX30 / 90M / Left Infeed (LINF) - ACHX30 / 90M / Right Infeed (RINF) - ACHX30 / 100M / Left Infeed (LINF) - ACHX30 / 100M / Right Infeed (RINF) - ACHX30 / 120M / Left Infeed (LINF) - ACHX30 / 120M / Right Infeed (RINF)
		Optional Equipment: - Caster Wheel Kit (2727386-0100) - SNP Communications (90459-4235) - Genius Communications (3008990-0100) - Chain Cleaner (3008907-0100)

Update Log for Doc. No. EM-3030592-0102

This table shows all changes made to this manual, including installed rebuilding kits, added, or removed pages. Page numbering on added pages begins with UP.

Date	Installed Kit	Added Pages (Doc. No.)	Removed Pages	Signature

Date	Installed Kit	Added Pages (Doc. No.)	Removed Pages	Signature

i Introduction

Description

This chapter contains basic information about this manual and related Tetra Pak equipment.

Abbreviations and Terminology . . . . . i - 5
Manual Information . . . . . i - 6
Delivered Manuals . . . . . i - 6
Page Layout . . . . . i - 7
Page Numbering. . . . . i - 8
Typographical Conventions . . . . . i - 8
Symbols . . . . . i - 8
Spare parts . . . . . i - 9
Machine Introduction . . . . . i - 10
Intended Use of the Machine . . . . . i - 10
Manufacturer . . . . . i - 10
Support and Feedback . . . . . i - 10
Declaration of Conformity . . . . . i - 10
Identification . . . . . i - 11
CE Classification . . . . . i - 11
Machine Plate . . . . . i - 11
Machine Variants . . . . . i - 12
Orientation . . . . . i - 14
Hygiene. . . . . i - 16
How to Use This EM . . . . . i - 17
Reference Designation . . . . . i - 18
List of Function Codes . . . . . i - 19
How to Find Electrical Components Using the SPC . . . . . i - 20

This page intentionally left blank

Abbreviations and Terminology

Abbreviation/ Terminology	Meaning	Translation
CE	Communautés Européennes / European Communities	
CSA	For Canada / USA Machines Only	
DE	Distribution Equipment	
D/E	Drive and End Unit	
EEA	European Economic Area	
EM	Electrical Manual	
I/O	Input / Output (module)	
IM	Installation Manual	
LC	Line Controller	
LED	Light Emitting Diode	
LINF	Left Infeed	
MCR	Master Control Relay	
MM	Maintenance Manual	
OM	Operation Manual	
PLC	Programmable Logic Controller	
RINF	Right Infeed	
SDS	Safety Data Sheet	
SPC	Spare Parts Catalogue	
TPMS	Tetra Pak Maintenance System	
TPOP	Tetra Pak Operator Panel	

Manual Information

Tetra Pak recommends reading all delivered manuals carefully. Make sure that the delivered manuals are available to personnel who operate or maintain the equipment.

It is important to keep this manual for the lifetime of the equipment and to pass the manual on to any subsequent holder or user.

Tetra Pak will not be held responsible for any damage to the equipment caused by not following the instructions given in this manual.

Delivered Manuals

Manuals delivered with this equipment:

- EM
  The Electrical Manual provides technicians with information about the equipment's electrical system.
- IM
  The Installation Manual provides technicians with information required to safely install the equipment.
- MM
  The Maintenance Manual provides technicians with information on maintaining the equipment.
- OM
  The Operation Manual provides the operator with information on handling and operating the equipment before, during, and after production.
- SPC
  The Spare Parts Catalogue provides the information necessary to order spare parts from Tetra Pak

Page Layout

Every main page in a manual contains a header and a footer. The page header contains the chapter name (1) and the section name (2). The page footer contains the page number (3), and the document number (4). See also the Page Numbering section.

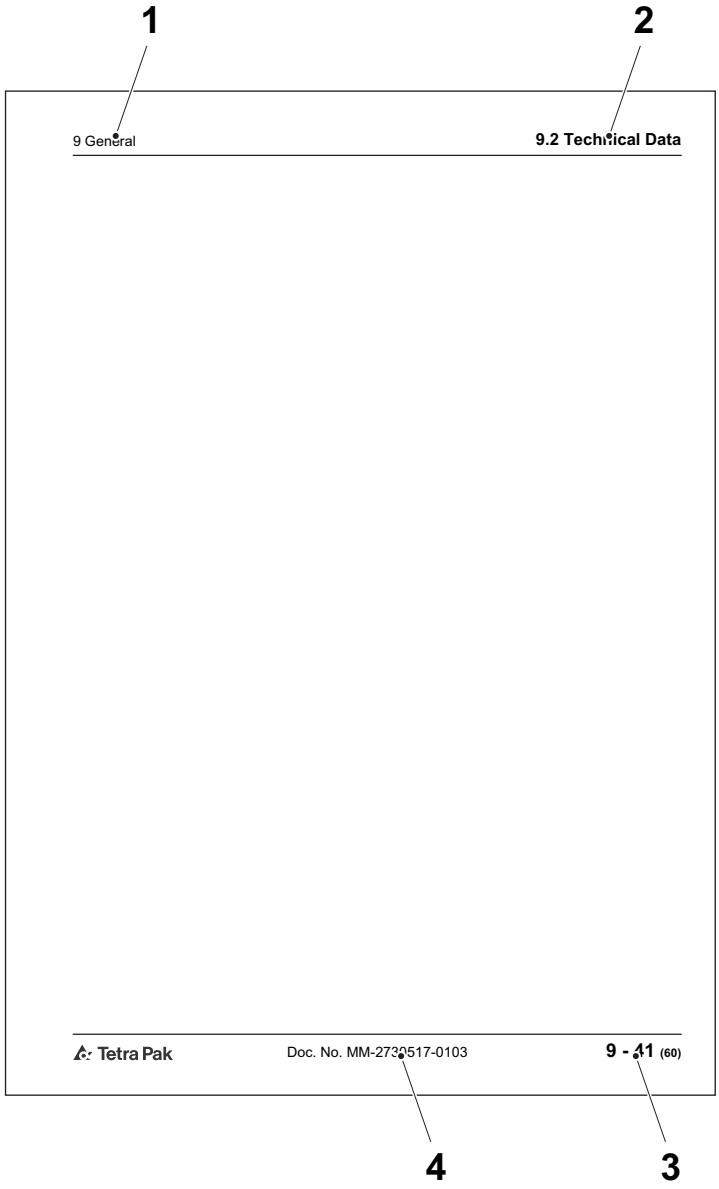

1 Chapter name
2 Section name
3 Page number
4 Document number

Page Numbering

A page number has three parts:

- chapter number (1)
- consecutive page number (2) within the chapter
- total number of pages (3) in the chapter.

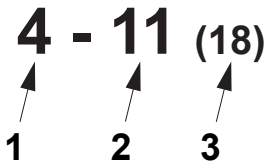

1 Chapter number
2 Consecutive page number
3 Total number of pages

Typographical Conventions

Controls on the operator panel, emergency stop devices, and program steps are printed in CAPITAL LETTERS.

Menu names, button names and other text displayed in software are printed in `Courier`.

Cross-references are underlined.

Symbols

Symbols used in illustrations.

	A pointer arrow indicates the position of an object.
	A zoom arrow indicates that an object view is enlarged. The arrow points towards the enlarged view of the object.
	A rotation movement arrow indicates rotational movement of an object. The arrow points in the direction of rotation.
	A straight movement arrow indicates movement of an object. The arrow points in the direction of movement.

Spare parts

When ordering spare parts for your machine, contact the nearest Tetra Pak service station.

When ordering spare parts **not** specified in the Spare Parts chapter, please contact:

Hartness International
1200 Garlington Road
Greenville, South Carolina 29616
USA
Ph: 1-864-297-1200
GMT-05:00 Eastern Time (US and Canada)
Fax: 1-864-288-5390
Email: spareparts@hartness.com

Machine Introduction

Intended Use of the Machine

The Accumulator Helix 30 is designed to operate as a buffer system within the complete Tetra Pak production line. It stores and retrieves packages as necessary to maximize line efficiency.

All other use is prohibited. Tetra Pak will not be held responsible for injury or damage if the equipment is used for any other purpose.

Manufacturer

This equipment has been manufactured by:

Hartness International
1200 Garlington Road
Greenville, South Carolina 29616
USA
Ph: 1-864-297-1200
GMT-05:00 Eastern Time (US and Canada)

Support and Feedback

If you encounter problems when operating this equipment or have other inquiries, comments, or suggestions for improvement, contact Tetra Pak.

Declaration of Conformity

A copy of the Declaration of Conformity can be found in the Installation Manual. The signed Declaration of Conformity is delivered separately with the equipment.

Identification

CE Classification

This equipment complies with the basic health and safety regulations of the European Economic Area (EEA).

Machine Plate

The illustration below shows an example of the machine plate and its location on the equipment. The machine plate carries data needed when contacting Tetra Pak concerning this specific equipment.

Make sure the equipment data in the front pages of this manual corresponds with the machine plate data and the machine specification.

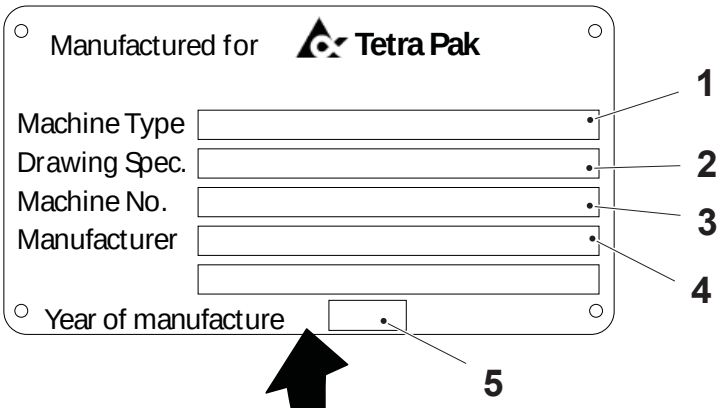

1 Machine type
2 Drawing specifications
3 Machine serial number
4 Manufacturer
5 Year of manufacture

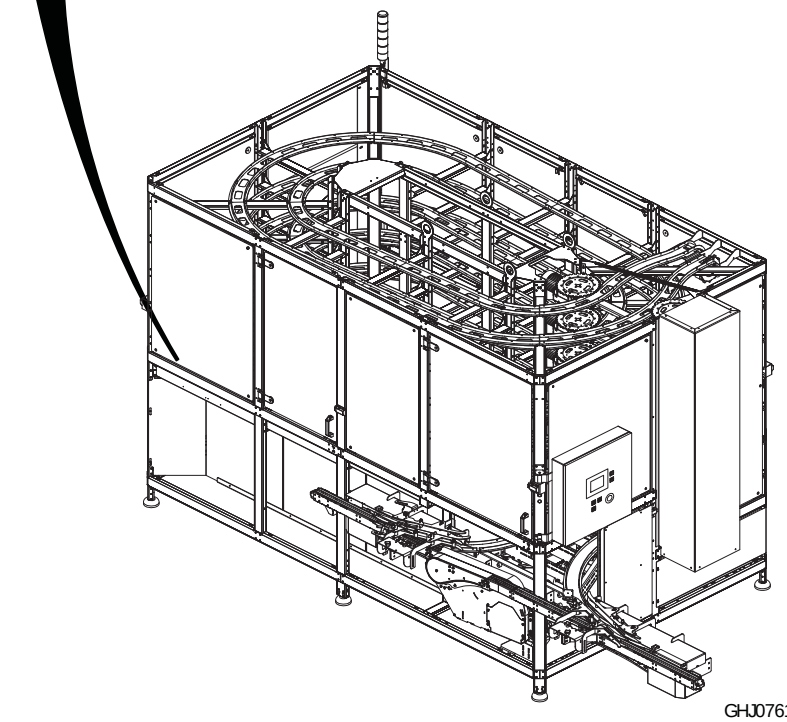

GHJ07618.eps

Machine Variants

The Accumulator Helix 30 handles TB, TBA, TGA, TPA, and TRC packages. It is available in the following ten options:

Machine	**Variant**	**Feed Side**	**Filling Machines** (Note: Exceptions do occur on some volumes.)
ACHX30	47M	LINF	A3/Flex A3/Flex iLine TBA/8 TBA/19 TB/19 C3/Flex
		RINF	
	75M	LINF	A3/Speed
		RINF	
	90M	LINF	TBA/22, A3/Speed iLine TP R1
		RINF	
	100M	LINF	A3/Speed iLine
		RINF	
	120M	LINF	A3/Speed iLine TP R1
		RINF	
Note! See also the Tetra Pak Product Portfolio Configurator.			

The base machine variant in the manual is the 90M. This variant is shown in the manual when the subject is not affected by the variation in machine. When variations affect the subject, illustrations of those specific variants are also shown in the manual. To determine the machine variant you have, check the machine plate bolted to the machine. See Machine Plate on page i-11.

(Cont'd)

(Cont'd)

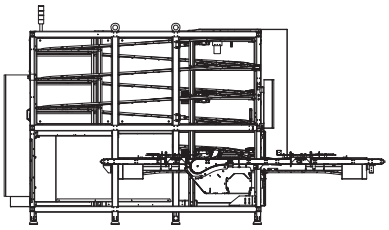

ACHX30 47M
4 Layers

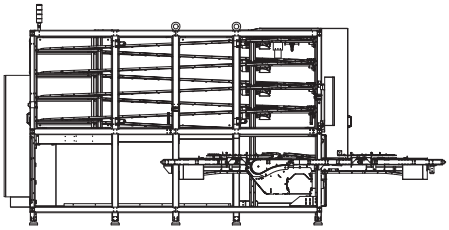

ACHX30 75M
5 Layers

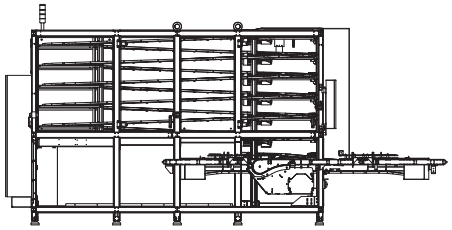

ACHX30 90M
6 Layers

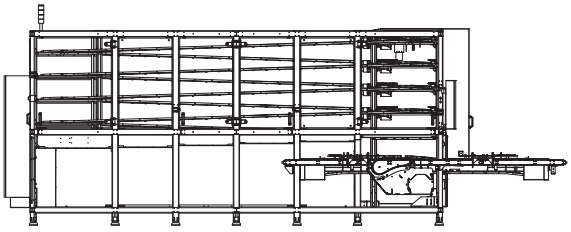

ACHX30 100M
5 Layers

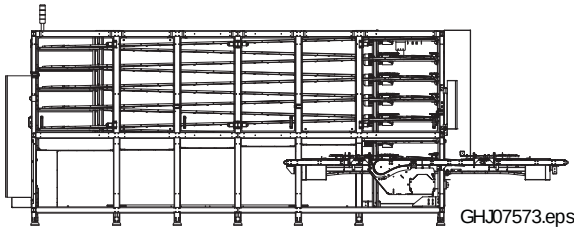

ACHX30 120M
6 Layers

Orientation

The illustrations below show the orientation of the equipment. This orientation information will be used throughout this manual. The arrows indicate the flow of material.

Left Infeed (LINF)
When the operator is facing the TPOP, the product flows to his or her left.

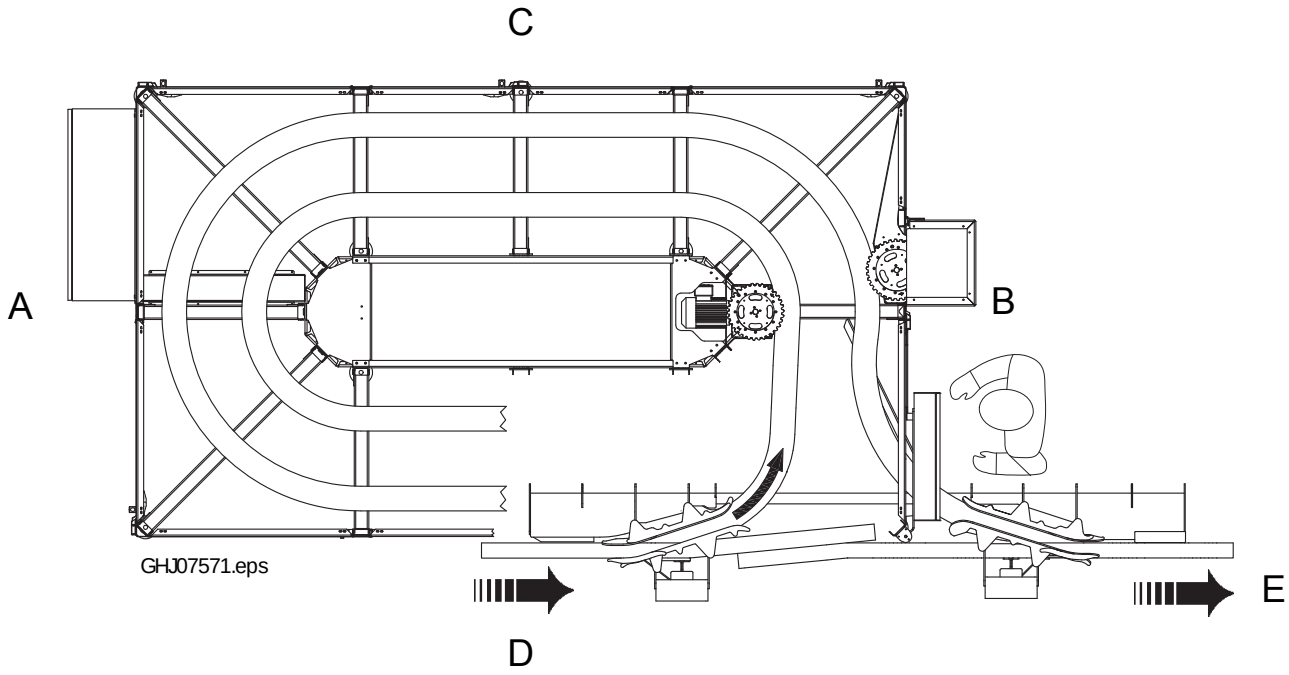

A Rear
B Front
C Right side
D Left infeed side (LINF)
E Discharge

(Cont'd)

(Cont'd)

Right Infeed (RINF)
When the operator is facing the TPOP, the product flows to his or her right.

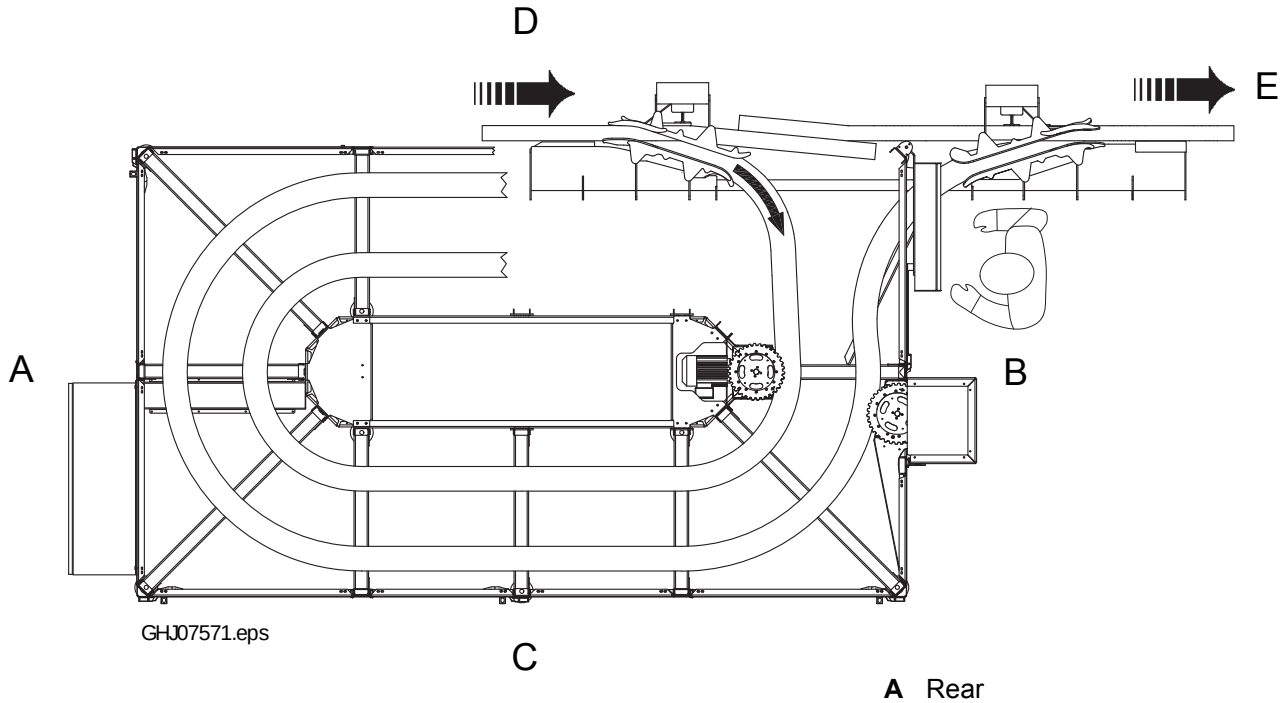

A Rear
B Front
C Left side
D Right infeed side (RINF)
E Discharge

Hygiene

Avoid microbiological pollution of the packaging material:

- Keep your hands and gloves clean.
- Always wear some type of hair protection (cap or hairnet) and clean clothes (preferably white).
- Do not wear a watch, ring, necklace, earrings, or any other exposed jewellery.

How to Use This EM

The chapters following Introduction and Safety Precautions are divided as follows:

Chapter	Name	First Drawing No. in Group
1	Electrical Systems Description	
2	Document List	64-501-024:59
3	Position Summary	64-501-024:61
4	Circuit Diagrams	64-501-024:1
5	Line Summary	64-501-024:44
6	Cabinet Terminal Summary	64-501-024:51
7	Cable Connection List	64-501-024:34
8	Mains Connection	64-511-024:E1
9	Component Location	64-511-024:3 (IEC) 64-511-024:7 (CSA)
10	Drawing Remarks	64-501-024:66

The Document List chapter is a table of contents for the chapters 3 to 9, listing all drawings included.

In the Circuit Diagrams, the first pages are reserved for distribution terminals and the last pages can be used for pre-connected cables. Pre-connected cables are connected to spare terminals and are reserved for future use.

The diagrams in the Mains Connection chapter show how the machine should be connected to the local supply, the dimensions of the connection cable, and the connection of the matching transformer, when used.

The Drawing Remarks chapter lists the drawing remarks indicated with a number in the drawing.

Reference Designation

Components are identified by the reference designation, defined by a function code (1), and a component code (2).

The object code for the group level (3) refers to the purpose or task of the group level that the component serves or supplies. See the List of Function Codes section.

The object code for the component level (4) refers to the purpose or task of the current object. The letter is in accordance with international standards. Examples: Code P for components that present information, such as an alarm lamp, a clock, or a volt meter. Code M for components that provide mechanical energy such as an actuator, or an electric motor.

Tetra Pak has chosen to always use the function oriented structure for reference designation. The prefix indicating function oriented structure (=) is not shown in the reference designation.

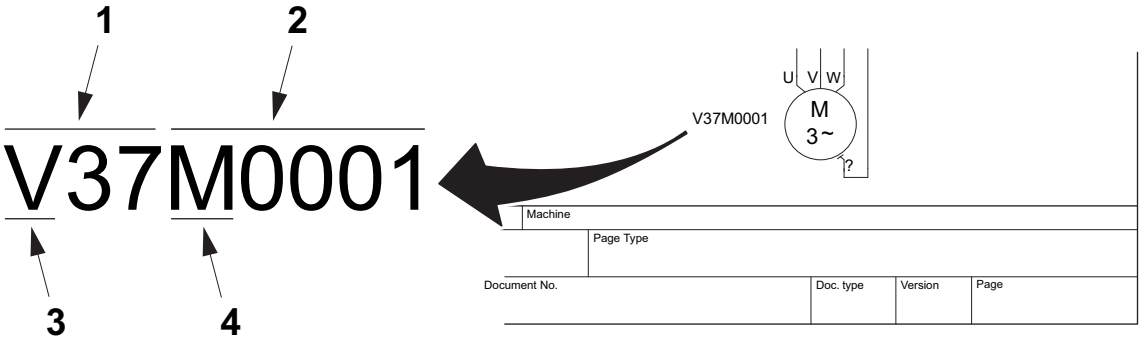

1 Function code
2 Component code
3 Object code, group level
4 Object code, component level

List of Function Codes

The function codes for this equipment are as follows:

Function Code	Identification
A01	General use; Equipment that serves one or more of the modules below.
W10	Equipment that functionally serves the external infeed.
W30	Equipment that functionally serves the accumulator.
W90	Equipment that functionally serves the external outfeed.
F01	Safety; Pluto and emergency stop circuit that stops the entire machine.
F30	Doors; Doors that stop the accumulator.

How to Find Electrical Components Using the SPC

The Reference Designation Parts Index in the Spare Parts Catalogue, SPC, is used to locate electrical parts. For SPCs without a Reference Designation Parts Index, see the Component Location chapter in this manual.

The illustration below shows how to find component A04B0041 in the SPC. The Reference Designation Parts Index refers to page 2-5. In the drawing on page 2-4, the position number is the same as the reference designation for the component.

Tetra Pak Used in group: Pos. 020 CHAIN GUIDE Drawing file: 26906234_1_AA.hpgl **2-4** (6)

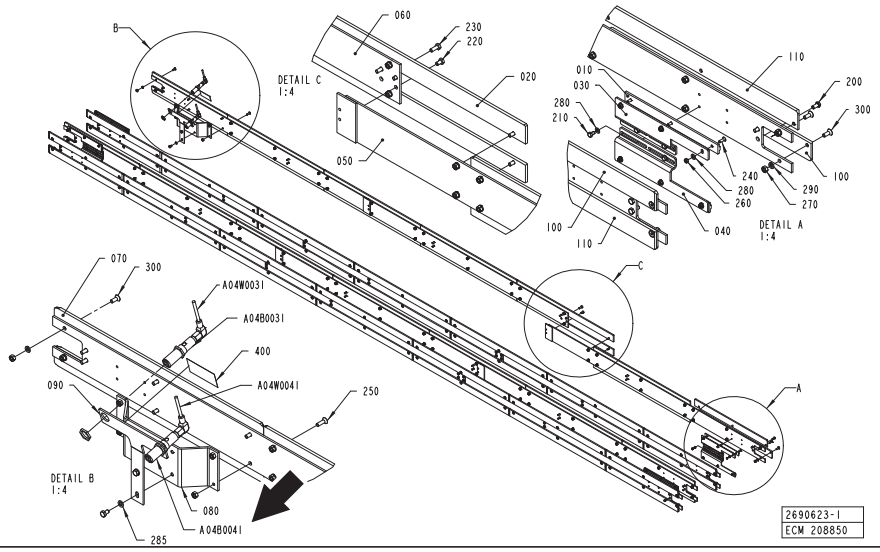

ECM: 209071 - 50001231
Group number: 2690623-0100
Assembly Drawing: 2690623-1_1_AA
This list covers pages from 2-2 to 2-5

Pos	Part No	UN	Qty	Description	Page No
-					
010	2597877-0000		8	CHAIN GUIDE	
020	2653358-0000		40	CHAIN GUIDE	
030	2653365-0000		4	SUPPORT	
040	2653366-0000		4	SUPPORT	
050	2653367-0000		8	PLATE	
060	2653368-0000		4	PLATE	
070	2653369-0000		8	CHAIN GUIDE	
080	2690632-0000		1	HOLDER	
090	2690633-0000		1	HOLDER	
100	2730969-0000		4	CHAIN GUIDE	
110	2730970-0000		4	CHAIN GUIDE	
200	90458-0072		8	SCREW ISO 7380 S M6X12 A2	
210	312105-0287		16	SCREW M6S ISO4017 M4X8 A470	
220	312105-0364		18	SCREW M6S ISO 4017 M6X10 A480	
230	312105-0368		40	SCREW M6S ISO 4017 M6X16 A480	
240	312155-0291		24	SCREW DIN 7991 MF6S M4X12 A4 70	
250	312155-0370		4	SCREW DIN 7991 MF6S M6X20 A4 70	
260	312605-0312		24	HEXAGON NUT, M6M M4 A280	
270	312605-0316		168	HEXAGON NUT, M6M M6 A280	
280	315105-0146		40	WASHER BRB5,3X10RFR	
285	315105-0153		2	WASHER BRB6,4X12RFR	
290	315402-0156		164	LOCK WASHER FBB 6,5	
300	31[illegible]-0368		164	SCREW DIN 7991 MF6S M6X16 A4 70	
400	[illegible]-98		1	WARNING SIGN ISO, LASER RADIATION	
A04W0041	[illegible]-0050		1	ACTUATOR/SENSOR CABLE RKWTN 4-225/5M	
A04W0031	[illegible]-0050		1	ACTUATOR/SENSOR CABLE RKWTN 4-225/5M	
A04B0041	90459-5012		1	LASER SENSOR, YD24PA3	
C05C0041	2690632-0000		1	HOLDER	
C05C0031	2653367-0000		8	PLATE	
T04B0031	90459-5012		1	LASER SENSOR, YD24PA3	
T05C0041	2653369-0000		8	CHAIN GUIDE	
T05C0031	2653368-0000		4	PLATE	

Tetra Pak **iv-2** (4)
Doc No: SPC-654654-0101

Pos	Part No	Description	Page No
A			
F09A0332	[illegible]	THERMOCOUPLE CABLE K/PVC/20AWG 2X0,5MM2	1-3, 1-5
T03A0321	[illegible]	THERMOCOUPLE CABLE K/PVC/20AWG 2X0,5MM2	1-3, 1-5
T03A0322	[illegible]	HEATING ELEMENT, 3000W, 220V	1-3, 1-5
B			
A04B0041	90459-5012	LASER SENSOR, YD24PA3	2-3, 2-5
C01B0001	351120-0145	CABLE SILFLEX SIHF 3X2,5 0046020	1-3, 1-5
C32B0001	90220-2259	THERMOCOUPLE CABLE K/PVC/20AWG 2X0,5MM2	1-3, 1-5
T04B0031	90459-5012	LASER SENSOR, YD24PA3	2-3, 2-5
C			
C05C0031	2653367-0000	PLATE	2-3, 2-5
C05C0041	2690632-0000	HOLDER	2-3, 2-5
T05C0031	2653368-0000	PLATE	2-3, 2-5

Page No

2-5 (6)
Doc No: SPC-654654-0101

ii Safety Precautions

Safety Precaution Instructions

WARNING

Read all safety precaution instructions throughout this manual and on safety signs attached to this equipment.
Failure to follow all safety precaution instructions could result in death or serious injury.

Definition of Lockout Procedure

A lockout procedure is a procedure to put each necessary energy isolating device in its safe position to prevent the energisation of the equipment, such as when a maintenance procedure should be carried out.

A lockout is the use of a device, for example, a padlock, to make sure that an energy isolating device cannot be operated.

An energy isolating device is a mechanical device that physically prevents transmission or release of energy, such as a power supply disconnector.

Safety Messages Description . . . . . ii - 5
Personnel Requirements . . . . . ii - 6
Skilled Person . . . . . ii - 6
Instructed Person. . . . . ii - 6
Safety Signs . . . . . ii - 7
Locations of Safety Signs . . . . . ii - 10
ISO Version. . . . . ii - 10
ANSI Version . . . . . ii - 11
Protective Devices. . . . . ii - 12
Emergency Stop . . . . . ii - 13
EMERGENCY STOP Push-Buttons . . . . . ii - 13
Safeguards . . . . . ii - 14
Warning Lamp . . . . . ii - 17
Audible Alarm. . . . . ii - 17
Personal Protection. . . . . ii - 18
Entanglement Hazard . . . . . ii - 18
Hazardous Substances . . . . . ii - 19
Disposal of Chemical Substances . . . . . ii - 20
Supply Systems . . . . . ii - 21
Power Supply . . . . . ii - 21
Residual Voltage . . . . . ii - 22
Electrical Cabinet. . . . . ii - 22
Socket Outlet . . . . . ii - 23
Air Supply (option). . . . . ii - 24
Water Supply . . . . . ii - 25

This page intentionally left blank

Safety Messages Description

A safety message is always accompanied by a safety alert symbol and a signal word.

The safety alert symbol is used to alert about potential personal injury hazards. To avoid hazards, obey all safety messages that follow this symbol.

The following safety alert symbols and signal words are used in this manual to inform the user of hazards.

DANGER	Danger indicates an imminently hazardous situation which, if not avoided, will result in death or serious injury.
WARNING	Warning indicates a potentially hazardous situation which, if not avoided, **could** result in **death or serious injury**.
CAUTION	Caution indicates a potentially hazardous situation which, if not avoided, **may** result in **minor or moderate injury.** It may also be used to alert against unsafe practices.
CAUTION	Caution without the safety alert symbol indicates a potentially hazardous situation which, if not avoided, **may** result in **property damage**.

Personnel Requirements

Note! Personnel includes all persons working on or near this equipment.

Only skilled or instructed persons are allowed to work with this equipment.

Skilled Person

A skilled person must have relevant education and experience to enable him or her to identify hazards, analyse risks, and avoid hazards which electricity, machinery, chemicals, other energies, and supply systems on this equipment can create.

Skilled persons must meet local regulations, such as certifications and qualifications for working with these energies and systems.

Instructed Person

An instructed person must be adequately advised or supervised by a skilled person. The skilled person enables the instructed person to identify hazards, analyse risks, and avoid hazards which electricity, machinery, chemicals, other energies, and supply systems on this equipment can create.

Safety Signs

WARNING

Damaged or missing safety signs increase the risk of death or serious injury.

Replace all missing or damaged safety signs immediately.

Safety signs are attached to the equipment. The table below lists all the signs that are used, and illustrations show their locations on the equipment. Each position number refers to two variants of a safety sign in the table, but only one is used on the equipment.

- Make sure that each safety sign is legible and in its correct position after installation and maintenance.
- Replace all missing or damaged safety signs immediately.

(Cont'd)

(Cont'd)

Pos.	ISO sign	ANSI sign
1		
	Moving parts can crush and cut. Do not operate with guard removed. Follow lockout procedure before maintenance.	
2		
	Hazardous voltage. Will shock, burn, or cause death. Follow lockout procedure before maintenance.	
3		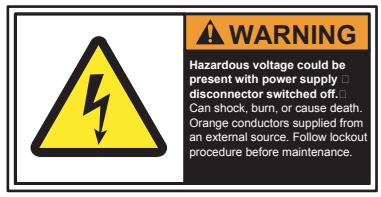
	Hazardous voltage could be present with power supply disconnector switched off. Can shock, burn, or cause death. Orange conductors supplied from an external source. Follow lockout procedure before maintenance.	
4		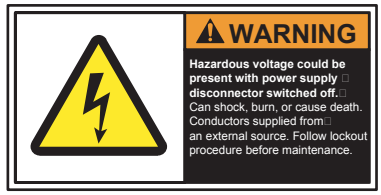
	Hazardous voltage could be present with power supply disconnector switched off. Can shock, burn or cause death. Conductors supplied from an external source. Follow lockout procedure before maintenance.	
5		
	Hazardous voltage. Can shock, burn, or cause death. Read Maintenance Manual (MM) before using this socket outlet.	

Pos.	ISO sign	ANSI sign
6		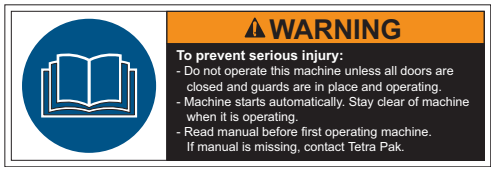
	To prevent serious injury: Do not operate this machine unless all doors are closed and guards are in place and operating. Machine starts automatically. Stay clear of machine when it is operating. Read manual before first operating machine. If manual is missing, contact Tetra Pak.	
7		
	Do not reach in. Moving parts may cause injury. Follow instructions for safe work practice.	
8		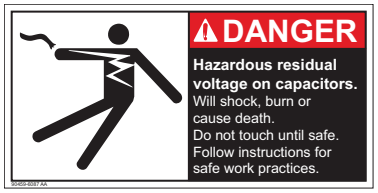
	Hazardous residual voltage on capacitors Can shock, burn, or cause death. Do not touch until safe. Follow instructions for safe work practice.	

Locations of Safety Signs

ISO Version

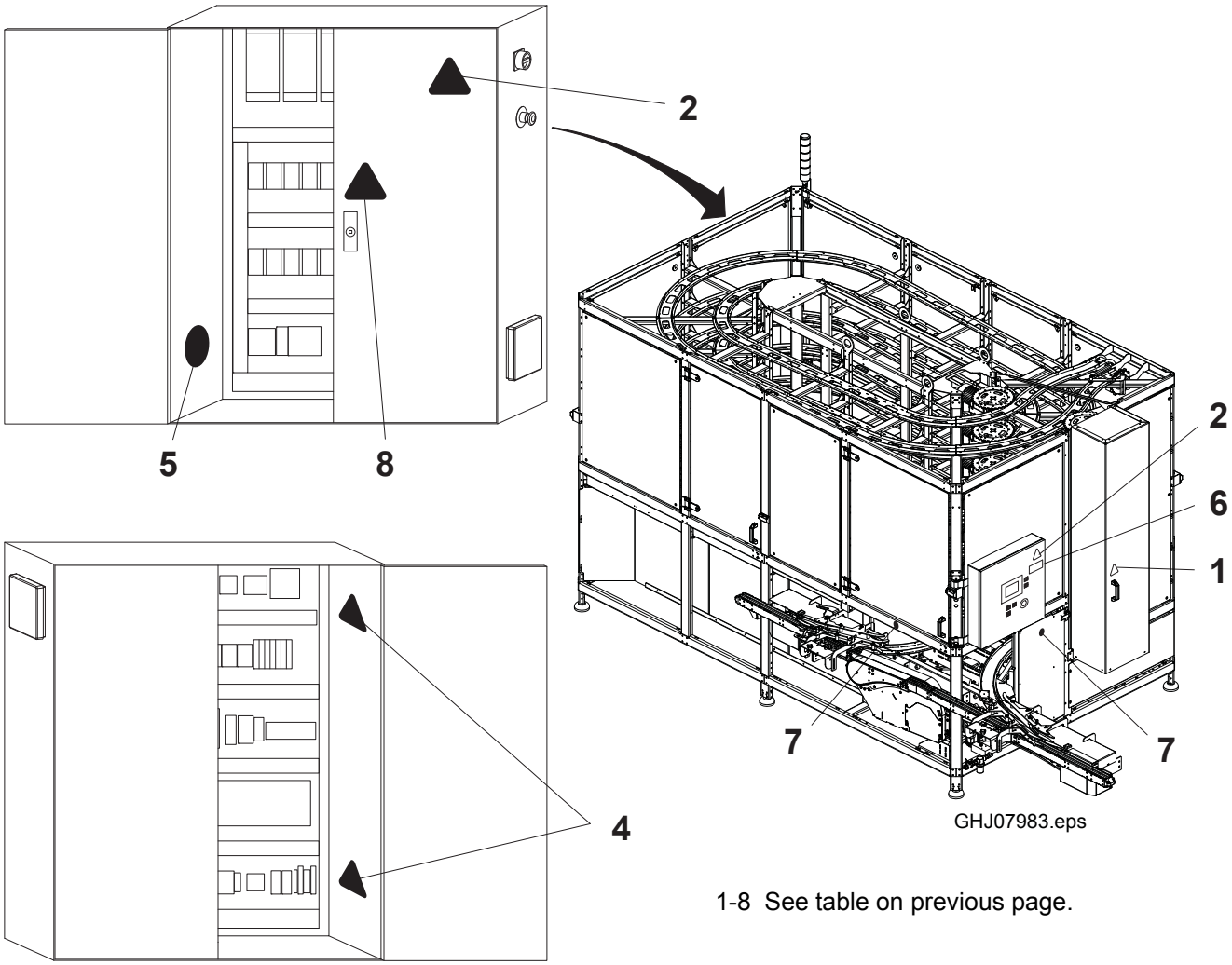

1-8 See table on previous page.

(Cont'd)

(Cont'd)

ANSI Version

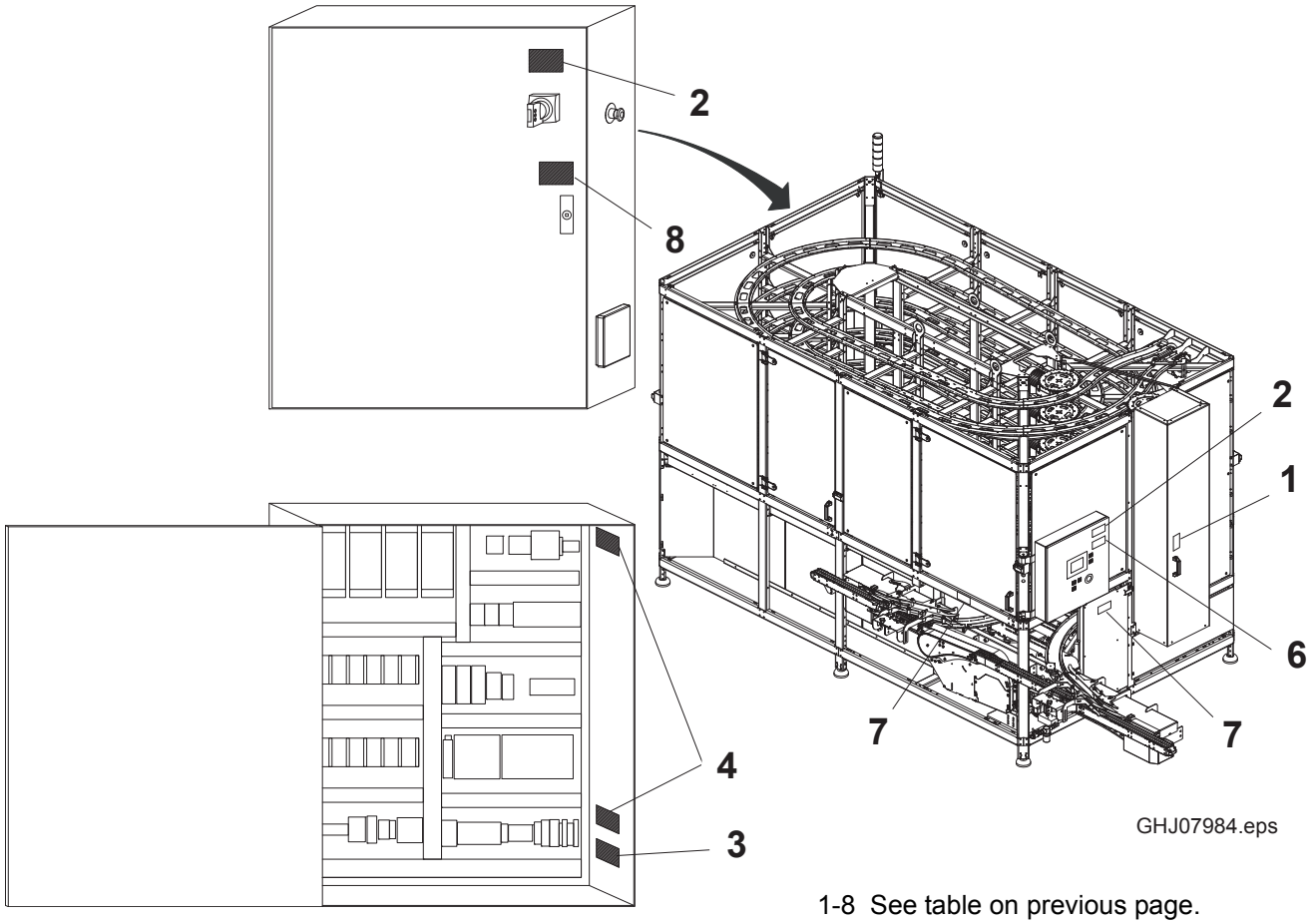

1-8 See table on previous page.

Protective Devices

There are different kinds of protective devices designed to ensure safe use of the equipment. See the sections below.

WARNING

Hazardous zones.

Hazardous zones are safeguarded and provided with protective devices. Do not inch or run this equipment if any protective device is inoperative.

Change inoperative components of the safety system immediately.

For the location of safeguards and/or other protective devices not mentioned in this section, see the Maintenance Manual.

WARNING

Hazardous voltage.

Hazardous voltage remains on this equipment after activating an EMERGENCY STOP or an interlocking device.

Emergency Stop

Emergency stop devices are used to stop this equipment immediately in an hazardous situation. Learn the positions of all emergency stop devices and how to use them.

Instructions for a normal production stop are included in the Stop chapter of the Operation Manual.

EMERGENCY STOP Push-Buttons

Push one of the EMERGENCY STOP push-buttons to stop this equipment immediately.

The location of each EMERGENCY STOP push-button is shown by an arrow.

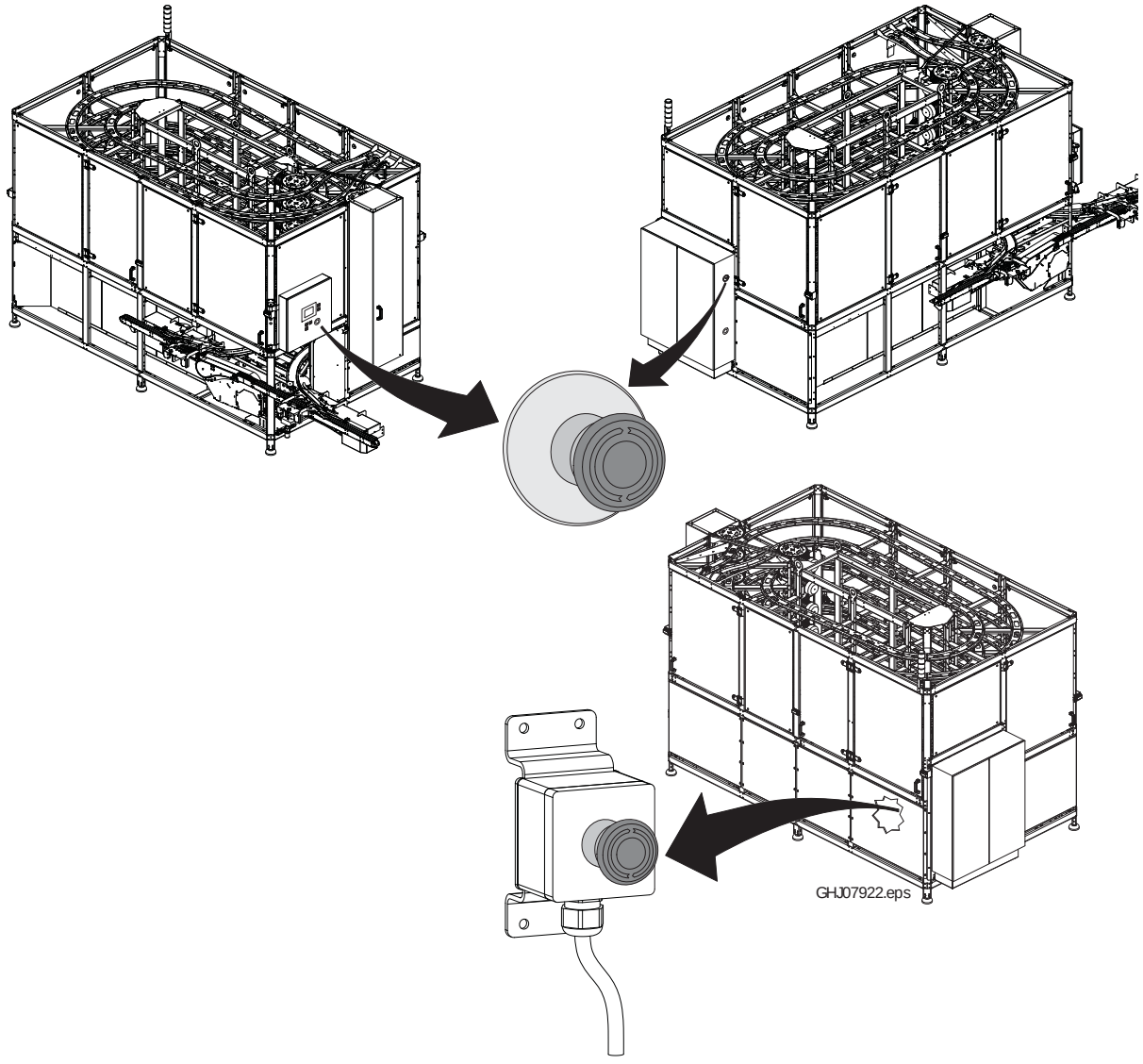

Safeguards

WARNING
Moving machinery.
Never defeat or bypass the interlocking devices.

Movable guards, for example, doors and covers leading to hazardous zones, are fitted with interlocking devices where required. These devices are usually electric safety switches that are parts of the safety system and must never be defeated, bypassed, or otherwise made inoperative.

WARNING
Corners and edges.
To prevent injury from corners and edges of open doors and covers, close them unless they must be open during such work. Be careful when working under an open door, cover or elsewhere below parts of the equipment with corners and edges.

CAUTION
Equipment damage.
Never stop this equipment by opening a interlocking guard.

(Cont'd)

(Cont'd)

The location of each interlocking guard is shown by an arrow.

Left Hand Infeed

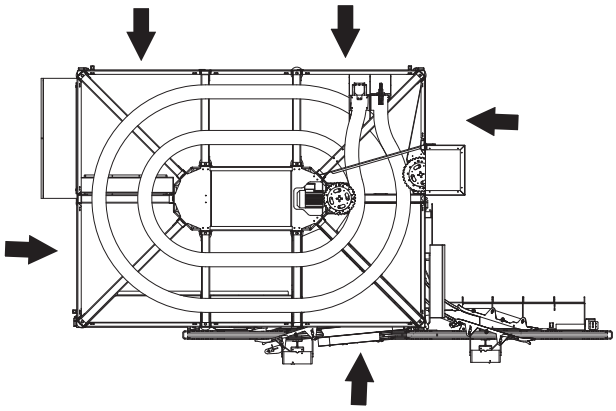

ACHX30 47M

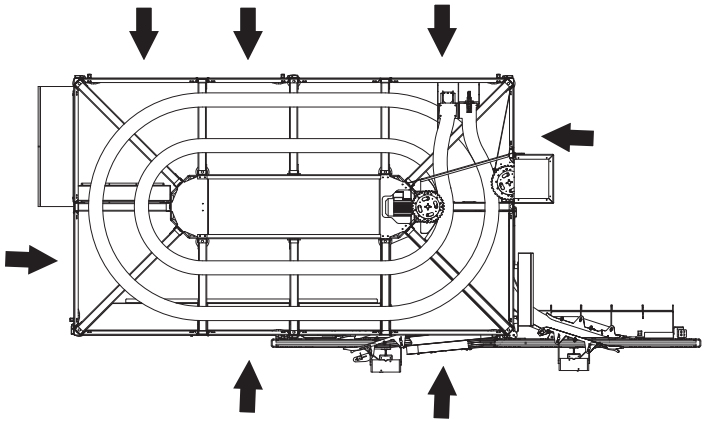

ACHX30 75M / 90M

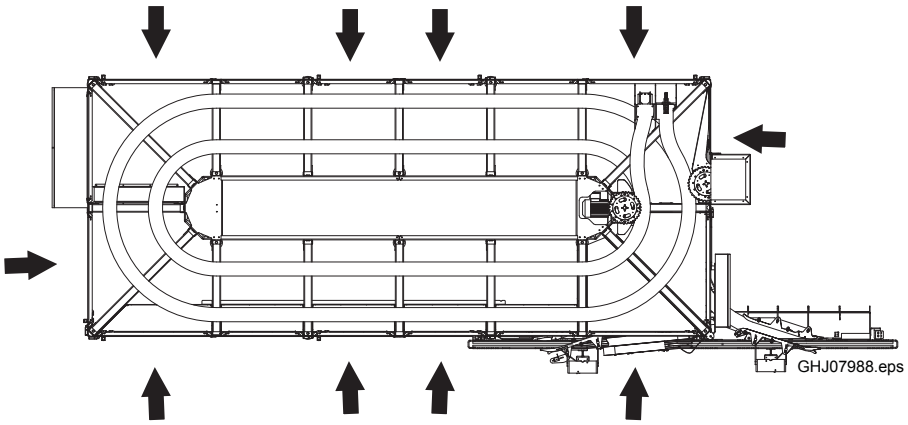

ACHX30 100M / 120M

The location of each interlocking guard is shown by an arrow.

Right Hand Infeed

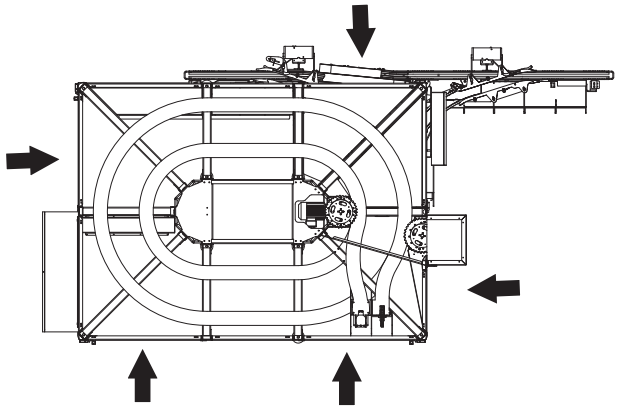

ACHX30 47M

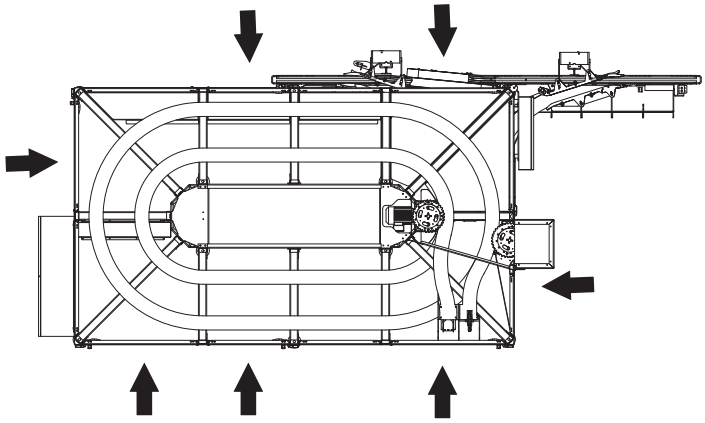

ACHX30 75M / 90M

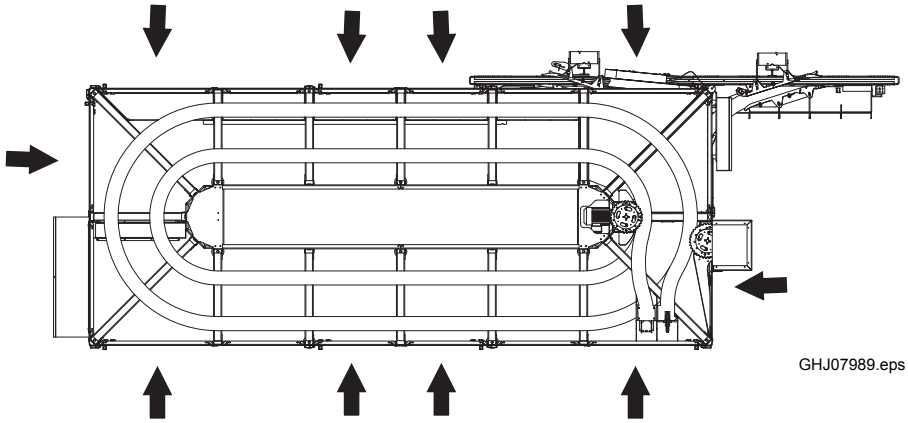

ACHX30 100M / 120M

Warning Lamp

A warning lamp is a column of warning lights:

- A red light (2) indicates a hazardous condition. This is a situation that requires immediate action.
- A yellow light (3) indicates an abnormal or impending critical condition. This is a condition calling for action by the operator.
- A blue light (4) indicates that operator action is required.
- A green light (5) indicates a normal condition.

Audible Alarm

The audible alarm (1) produces a warning signal before the safety circuit is reset. The warning signal sounds for approximately three seconds to alert personnel. Resetting the safety circuit makes it possible to step up the machine and allows the equipment to start.

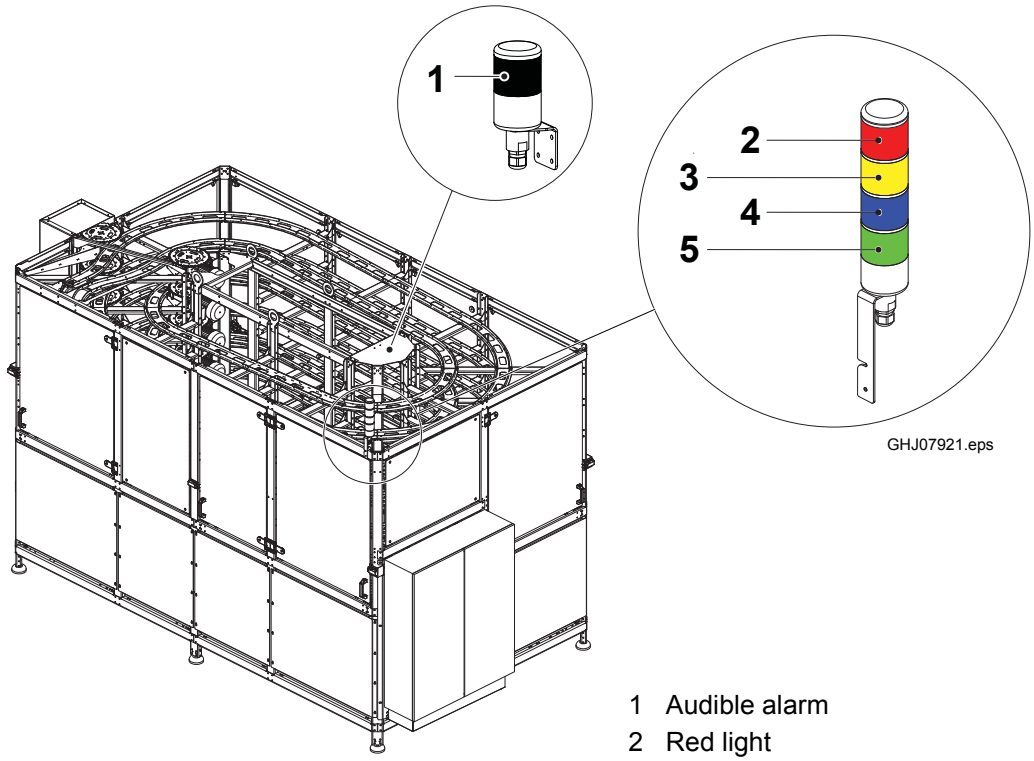

1 Audible alarm
2 Red light
3 Yellow light
4 Blue light
5 Green light

Personal Protection

This section applies to all personnel at all times when this equipment is in operation.

Entanglement Hazard

WARNING

Risk of entanglement.

Do not wear jewellery or loose clothing when working on or near this equipment. Long hair may not be loose.

Hazardous Substances

WARNING

Contact with chemicals can cause death, serious injury, or illness.
Always read and follow the instructions in the safety data sheet supplied by the manufacturer or local supplier, when handling chemicals.

Make sure that

- the safety data sheet is available
- the showers work
- an eyewash device, movable or wall-mounted, is available and operational
- additional washing facilities are nearby

Note! Learn the locations of all washing facilities in order to act immediately in case of an accident





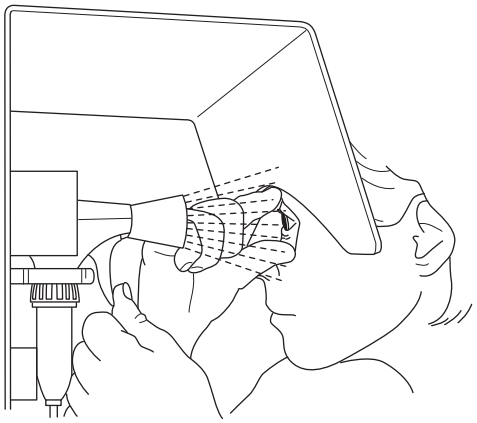

Disposal of Chemical Substances

Always read and follow the disposal instructions in the safety data sheet supplied by the manufacturer or local supplier.

It is strongly recommended that used chemical containers are

- disposed of according to the instructions immediately after use
- not used as disposal containers for other chemicals in order to avoid uncontrolled chemical reactions within the container

Supply Systems

Power Supply

DANGER

Hazardous voltage and moving machinery.
The power supply disconnector must be turned off and secured with a lock before any maintenance.

Note! The key to the lock must be removed by the technician and retained in his/her possession until all work is completed.

Certain maintenance procedures may require power supply systems to be on. These exceptions are clearly stated in the MM.

The illustrations show the power supply disconnector and its location.

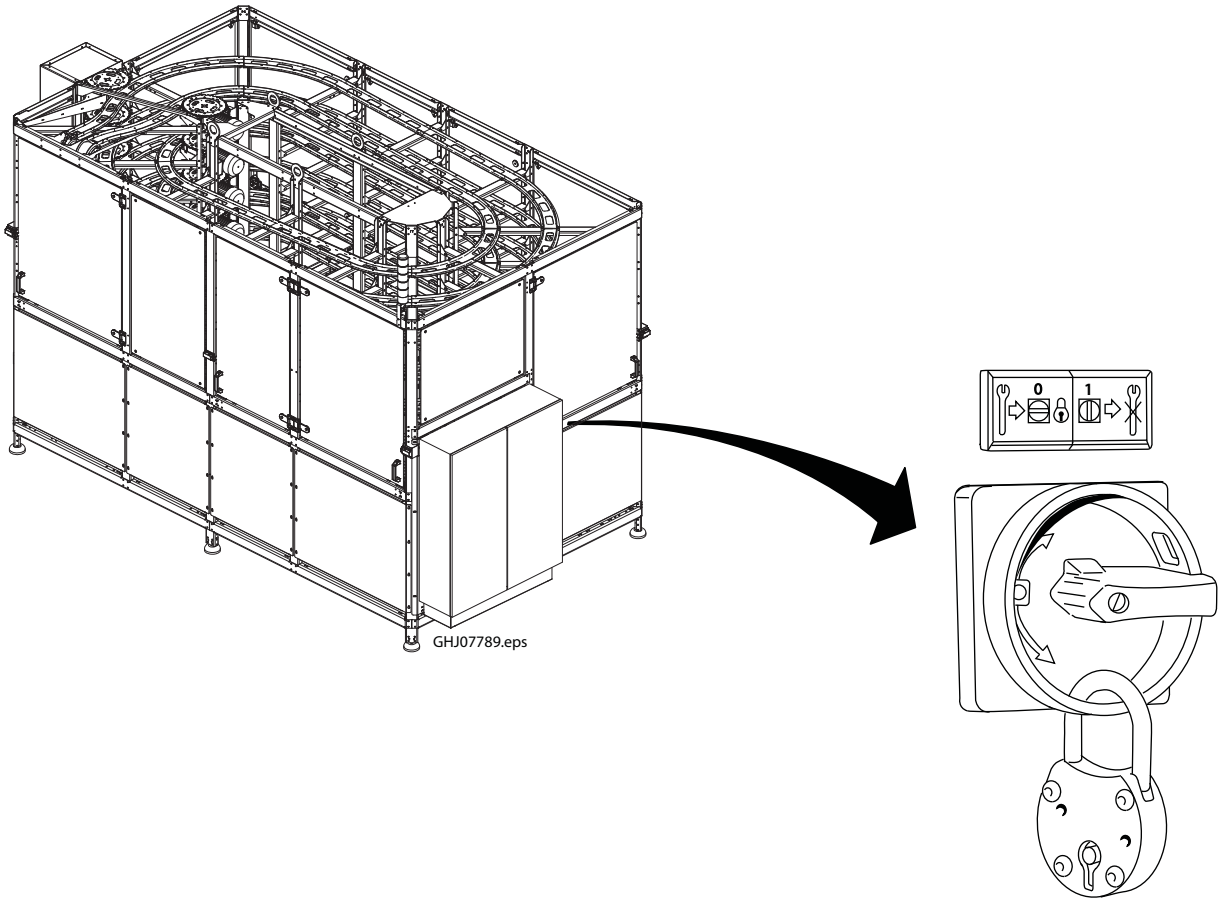

Residual Voltage

DANGER

Hazardous voltage.
Do not touch any terminals immediately after the power supply disconnector is turned off. Ensure that no residual voltage remains on the capacitors before touching. Wait five minutes. Failure to observe this information will cause death or serious injury.

After the power supply disconnector is turned off, residual voltage remains in the capacitor circuits.

Electrical Cabinet

DANGER

Hazardous voltage.
Will shock, burn, or cause death.
The power supply disconnector must be turned off and secured with a lock before maintenance inside the electrical cabinet.

Note! The key to the lock must be removed by the technician and retained in his/her possession until all work is completed.

Make sure that the electrical cabinet doors are closed after working inside the electrical cabinet. Doors with lock must be locked.

The location of each electrical cabinet is shown by an arrow.



GH100784.eps

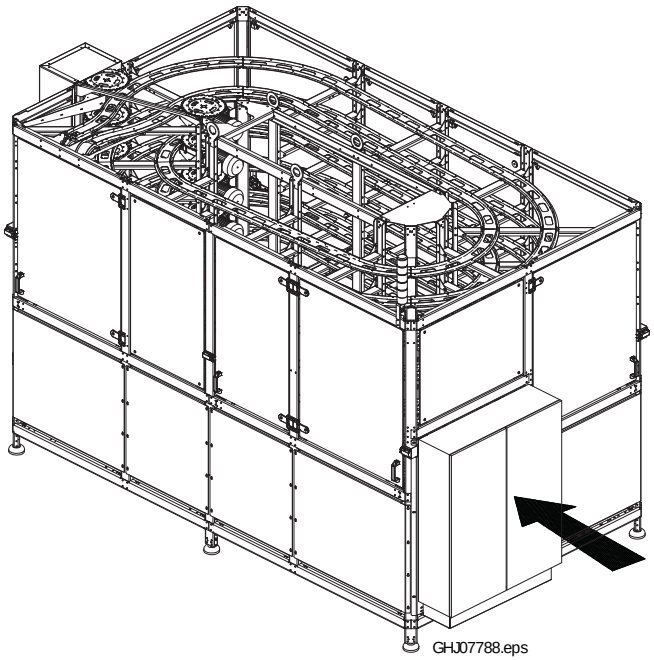

GHJ07788.eps

Socket Outlet

WARNING

Hazardous voltage.

Can shock, burn, or cause death. Read the Maintenance Manual before using this socket outlet.

The socket outlet (1) is connected to a residual current device (2) to protect users against electrical shock if there is an earth fault in the connected equipment. The residual current device shall be tested each time before the socket outlet is being used. See the MM for test procedure.

The illustration shows the socket outlet, the residual current device, and their locations.

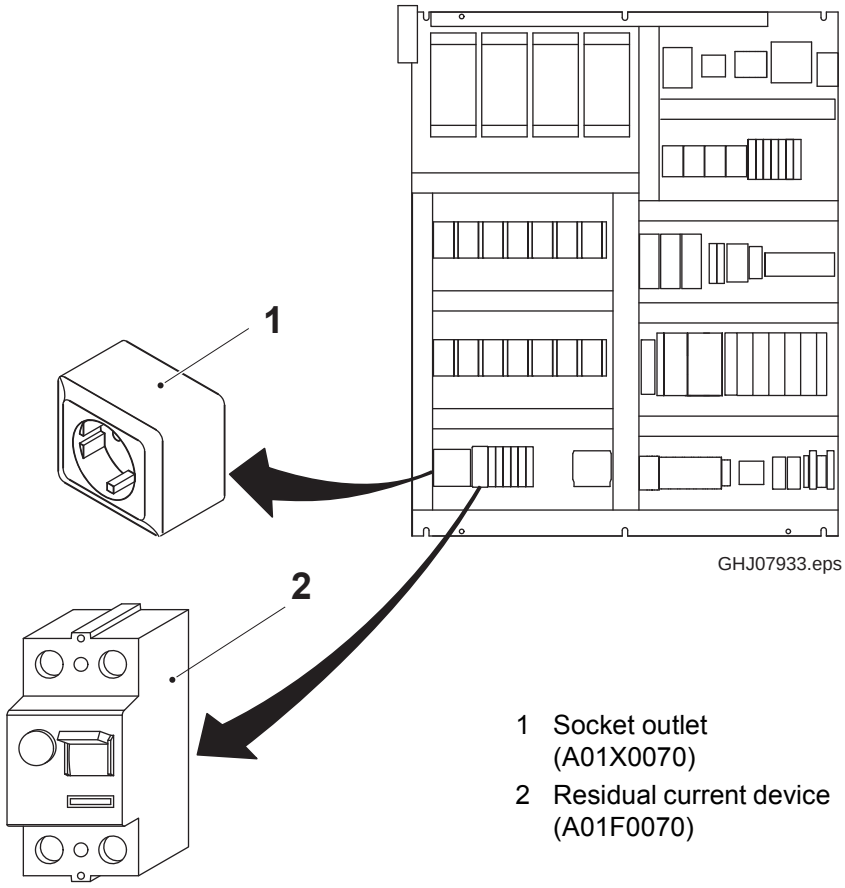

1 Socket outlet (A01X0070)
2 Residual current device (A01F0070)

Air Supply (option)

The air supply is applicable when the optional chain cleaner is installed.

WARNING

Compressed air and moving machinery.
Close the main air valve and lock it before any maintenance.

Note! The key to the lock must be removed by the technician and retained in his/her possession until all work is completed.

Certain maintenance procedures may require air supply systems to be on. These exceptions are clearly stated in the MM.

The illustration shows the main air valve (1) and its location.

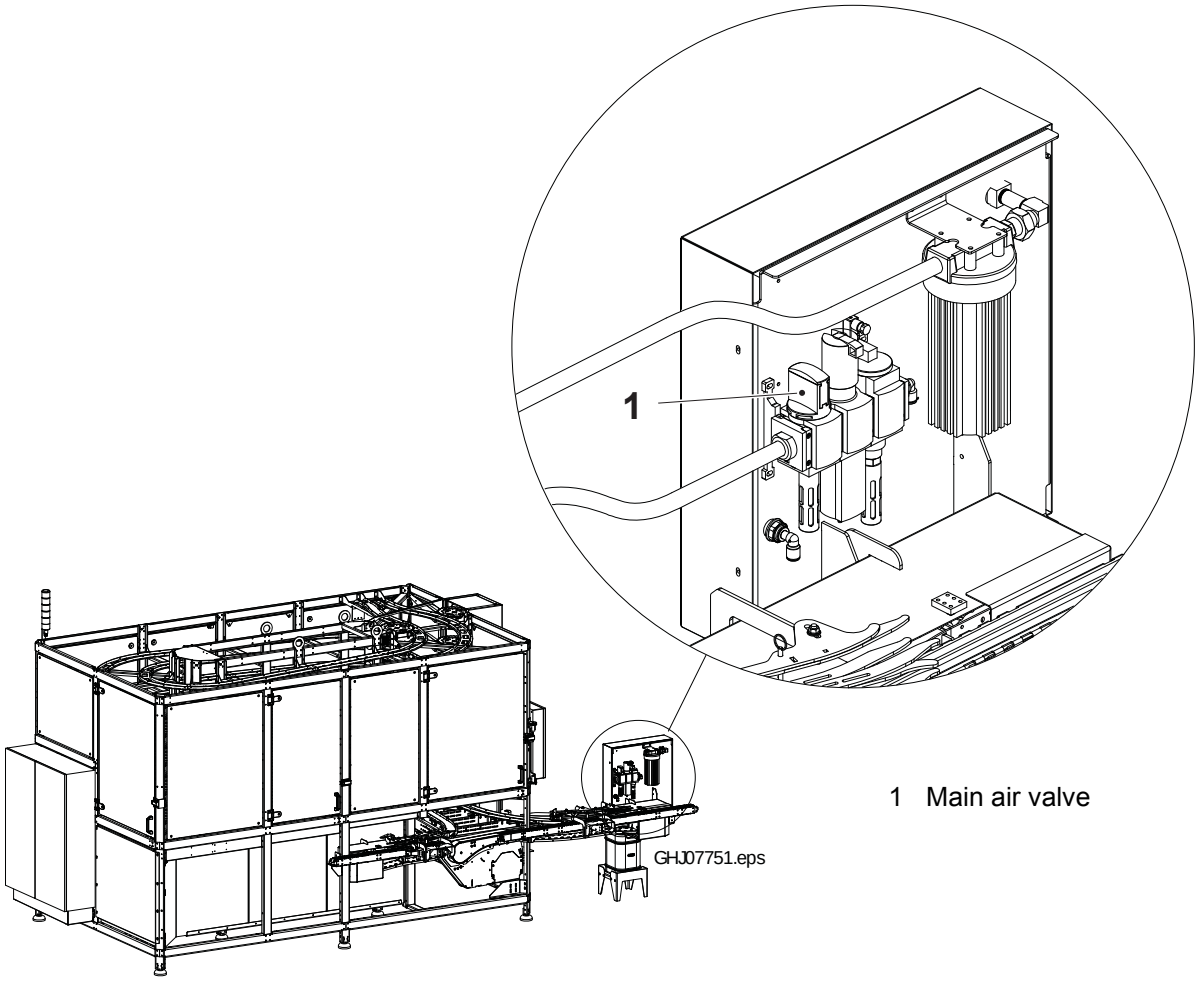

1 Main air valve

Water Supply

CAUTION

Water under pressure.

Close the water supply valves before any maintenance.

Certain maintenance procedures may require water supply systems to be on. These exceptions are clearly stated in the MM.

The illustration shows the water supply valve and its location.

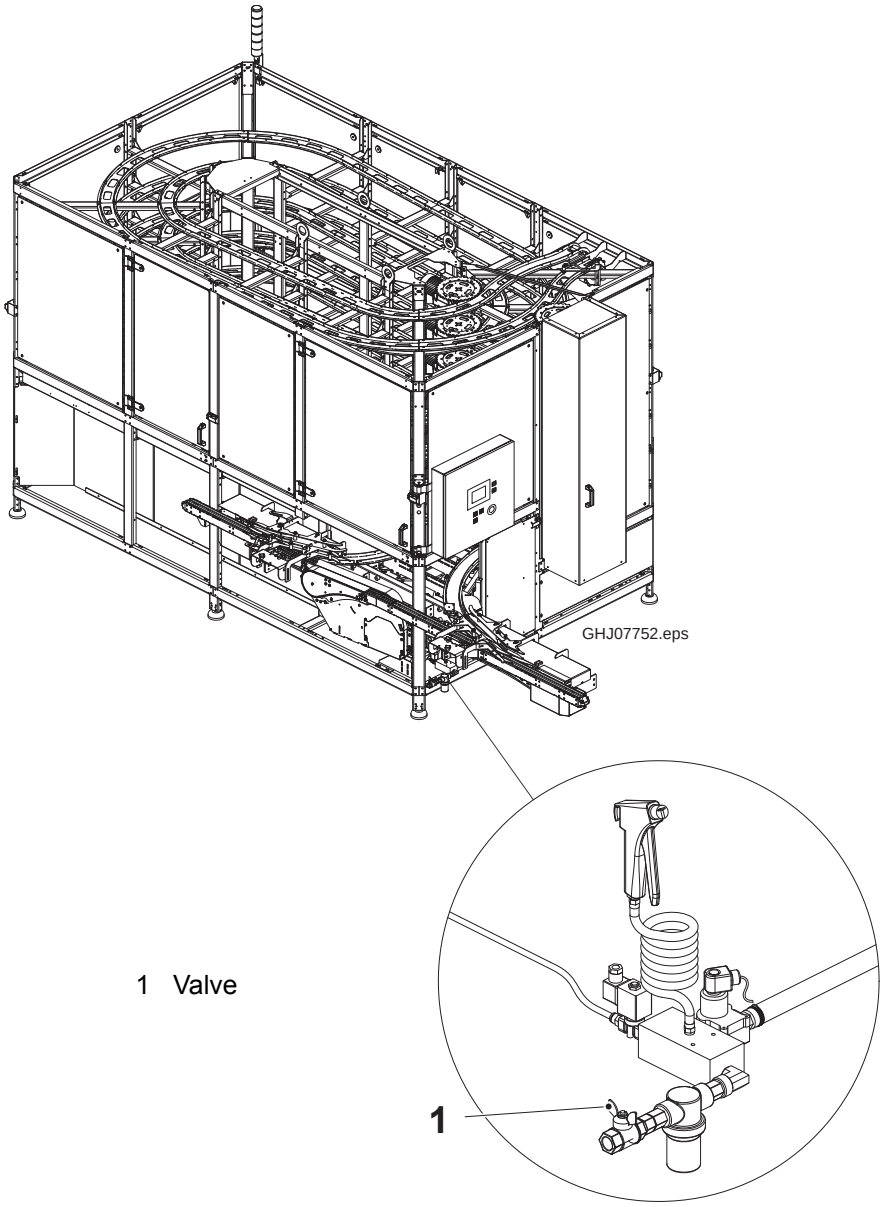

1 Valve

This page intentionally left blank

1 Electrical Systems Description

Description

This chapter contains a description of the electrical system in the machine or equipment.

1.1 Safety System and Door Guards . . . . . 1 - 5

1.2 Emergency Stop Line Zoning . . . . . 1 - 6

This page intentionally left blank

1.1 Safety System and Door Guards

E-STOP SAFETY CIRCUITS

F01S0101	EMERGENCY STOP, MAIN PANEL
F01S1010	EMERGENCY STOP, PANEL
F01S1020	EMERGENCY STOP, MACHINE
F01K0090	SAFETY RELAY

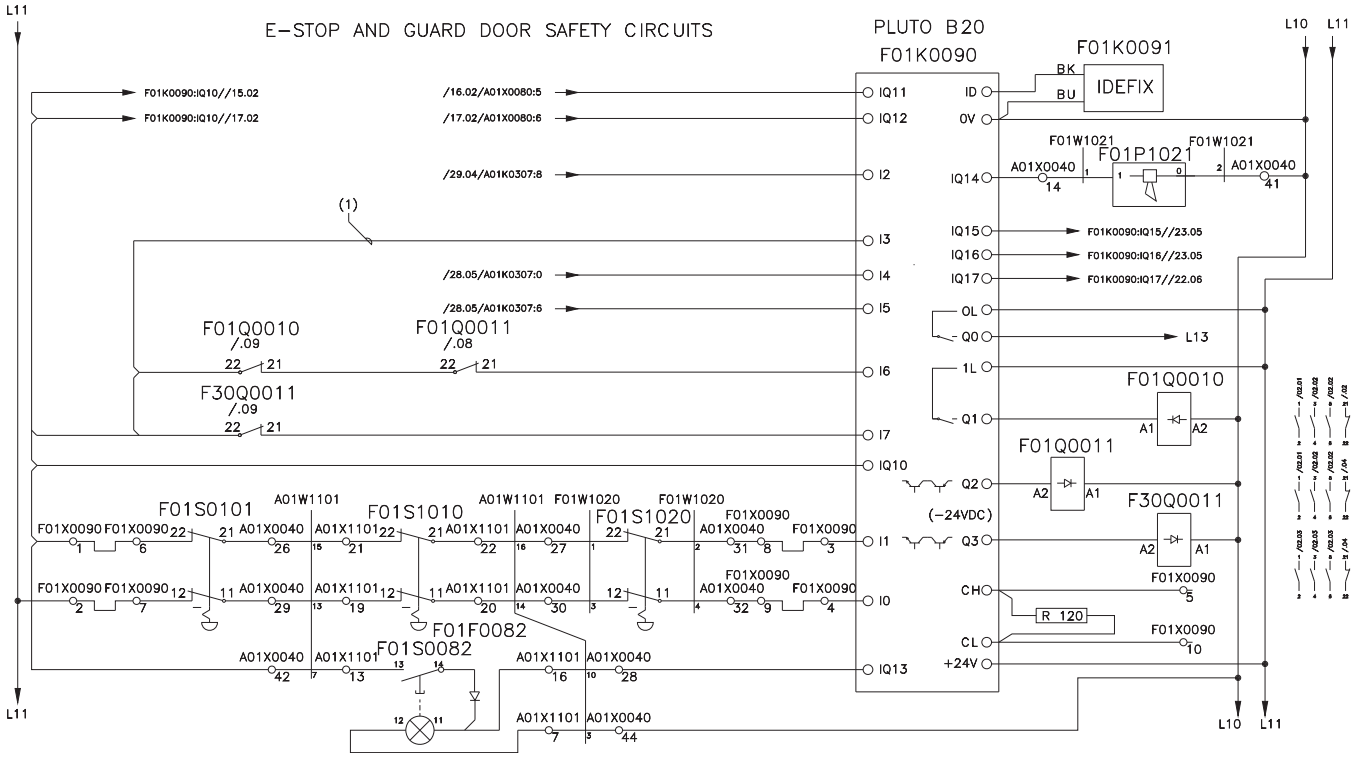

1.2 Emergency Stop Line Zoning

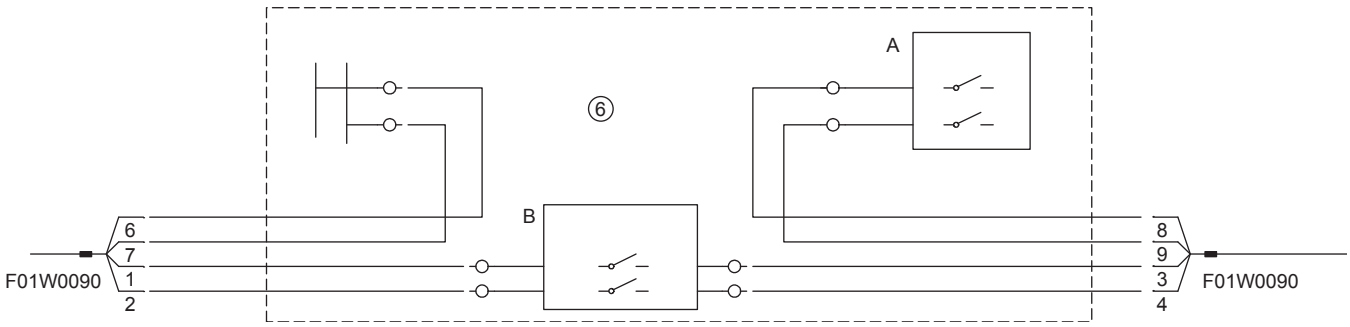

TO LINE ZONING CONTROL SYSTEM

It is possible to disconnect the emergency stops from the ACHX and connect them to a line zoning control system.

Remove the bridge between:

- F01X0090:1, 6
- F01X0090:2, 7
- F01X0090:3, 8
- F01X0090:4, 9

The emergency stops can then be connected to a line zoning control system through terminals F01X0090:6, 7, 8, 9.

Terminals F01X0090:1, 2, 3, 4 should be used to connect through two contacts in the line zoning control system.

Note! It is also possible to connect safety relays for different machines using Pluto's canbus.

- Terminal F01X0090:5
- Terminal F01X0090:10

Note! When the emergency stop chain is intact, there must be an A-pulse on F01X0090:3 for the Safety Relay on the ACHX to work.

When the emergency stop chain is intact, there must be 24VDC on F01X0090:4 for the Safety Relay on the ACHX to work.

2 Document List

Description

This chapter is a table of contents that includes the drawing specification for each electrical document valid for the equipment.

2.1 IEC Version . . . . . 2 - 5

2.2 CSA Version . . . . . 2 - 9

This page intentionally left blank

2.1 IEC Version

This page intentionally left blank

Hartness International, Inc.

Pos	Sheet	Sheet Description	Date	Sign
			ymd	
1001	64-501-024:59	DOCUMENTATION LIST	090618	DCD
1002	64-501-024:60	DOCUMENTATION LIST	090618	DCD
1003	64-501-024:61	POSITION SUMMARY	090618	DCD
1004	64-501-024:62	POSITION SUMMARY	090618	DCD
1005	64-501-024:63	POSITION SUMMARY	090618	DCD
1006	64-501-024:64	POSITION SUMMARY	090618	DCD
1007	64-501-024:65	POSITION SUMMARY	090618	DCD
1008	64-511-024:E1	MAINS CONNECTION DIAGRAM	090618	DCD
1009	64-511-024:E2	MAINS CONNECTION DIAGRAM	090618	DCD
1010	64-501-024:1	AC DISTRIBUTION	090618	DCD
1011	64-501-024:2	AC DISTRIBUTION	090618	DCD
1012	64-501-024:3	AC DISTRIBUTION	090618	DCD
1013	64-501-024:4	AC DISTRIBUTION	090618	DCD
1014	64-501-024:5	AC DISTRIBUTION	090618	DCD
1015	64-501-024:6	AC DISTRIBUTION	090618	DCD
1016	64-501-024:7	AC DISTRIBUTION	090618	DCD
1017	64-501-024:8	AC DISTRIBUTION	090618	DCD
1018	64-501-024:9	AC DISTRIBUTION	090618	DCD
1019	64-501-024:10	AC DISTRIBUTION	090618	DCD
1020	64-501-024:11	AC DISTRIBUTION	090618	DCD
1021	64-501-024:12	AC DISTRIBUTION	090618	DCD
1022	64-501-024:13	AC DISTRIBUTION	090618	DCD
1023	64-501-024:14	DC DISTRIBUTION	090618	DCD
1024	64-501-024:15	DC DISTRIBUTION	090618	DCD
1025	64-501-024:16	DC DISTRIBUTION	090618	DCD
1026	64-501-024:17	DC DISTRIBUTION	090618	DCD
1027	64-501-024:18	DC DISTRIBUTION	090618	DCD
1028	64-501-024:19	LINE COMMUNICATION	090618	DCD
1029	64-501-024:20	D-NET COMMUNICATION	090618	DCD
1030	64-501-024:21	SM2 MODULE	090618	DCD
1031	64-501-024:22	INPUT/OUTPUT	090618	DCD
1032	64-501-024:23	INPUT/OUTPUT	090618	DCD
1033	64-501-024:24	INPUT/OUTPUT	090618	DCD
1034	64-501-024:25	INPUT/OUTPUT	090618	DCD
1035	64-501-024:26	INPUT/OUTPUT	090618	DCD
1036	64-501-024:27	INPUT/OUTPUT	090618	DCD
1037	64-501-024:28	INPUT/OUTPUT	090618	DCD
1038	64-501-024:29	INPUT/OUTPUT	090618	DCD
1039	64-501-024:30	ARMORBLOCK COMM	090618	DCD

DATE: 2009-06

ISSUE: **DESC: DOCUMENTATION LIST**

MACHINE: ACHX 30-0500 IEC 64-501-024:59

DATE: 2009-06

SIGN: DCD 1 OF 2

Hartness International, Inc.

Pos	Sheet	Sheet Description	Date	Sign
1040	64-501-024:31	ARMOR BLOCK I/O	090618	DCD
1041	64-501-024:32	ARMOR BLOCK I/O	090618	DCD
1042	64-501-024:33	ARMOR BLOCK I/O	090618	DCD
1043	64-501-024:34	CABLING	090618	DCD
1044	64-501-024:35	CABLING	090618	DCD
1045	64-501-024:36	CABLING	090618	DCD
1046	64-501-024:37	CABLING	090618	DCD
1047	64-501-024:38	CABLING	090618	DCD
1048	64-501-024:39	CABLING	090618	DCD
1049	64-501-024:40	CABLING	090618	DCD
1050	64-501-024:41	DISTRIBUTION TERMINALS	090618	DCD
1051	64-501-024:42	DEVICENET LOCAL	090618	DCD
1052	64-501-024:43	ETHERNET LOCAL	090618	DCD
1053	64-501-024:44	LINE SUMMARY	090618	DCD
1054	64-501-024:45	LINE SUMMARY	090618	DCD
1055	64-501-024:46	LINE SUMMARY	090618	DCD
1056	64-501-024:47	LINE SUMMARY	090618	DCD
1057	64-501-024:48	LINE SUMMARY	090618	DCD
1058	64-501-024:49	LINE SUMMARY	090618	DCD
1059	64-501-024:50	LINE SUMMARY	090618	DCD
1060	64-501-024:51	TERMINAL SUMMARY	090618	DCD
1061	64-501-024:52	TERMINAL SUMMARY	090618	DCD
1062	64-501-024:53	TERMINAL SUMMARY	090618	DCD
1063	64-501-024:54	TERMINAL SUMMARY	090618	DCD
1064	64-501-024:55	TERMINAL SUMMARY	090618	DCD
1065	64-501-024:56	TERMINAL SUMMARY	090618	DCD
1066	64-501-024:57	TERMINAL SUMMARY	090618	DCD
1067	64-501-024:58	TERMINAL SUMMARY	090618	DCD
1068	64-511-024:3	PANEL LAYOUT	090618	DCD
1069	64-511-024:4	TPOP LAYOUT	090618	DCD
1070	64-511-024:5	GENIUS OPTION LAYOUT	090618	DCD
1072	64-501-024:66	ELECTRICAL DRAWING NOTES	090618	DCD

DATE: 2009-06

ISSUE: **DESC: DOCUMENTATION LIST**

MACHINE: ACHX 30-0500 IEC 64-501-024:60

DATE: 2009-06

SIGN: DCD 2 OF 2

2.2 CSA Version

This page intentionally left blank

Hartness International, Inc.

Pos	Sheet	Sheet Description	Date	Sign
			ymd	
1001	64-501-024:59	DOCUMENTATION LIST	090618	DCD
1002	64-501-024:60	DOCUMENTATION LIST	090618	DCD
1003	64-501-024:61	POSITION SUMMARY	090618	DCD
1004	64-501-024:62	POSITION SUMMARY	090618	DCD
1005	64-501-024:63	POSITION SUMMARY	090618	DCD
1006	64-501-024:64	POSITION SUMMARY	090618	DCD
1007	64-501-024:65	POSITION SUMMARY	090618	DCD
1008	64-511-024:E1	MAINS CONNECTION DIAGRAM	090618	DCD
1009	64-511-024:E2	MAINS CONNECTION DIAGRAM	090618	DCD
1010	64-501-024:1	AC DISTRIBUTION	090618	DCD
1011	64-501-024:2	AC DISTRIBUTION	090618	DCD
1012	64-501-024:3	AC DISTRIBUTION	090618	DCD
1013	64-501-024:4	AC DISTRIBUTION	090618	DCD
1014	64-501-024:5	AC DISTRIBUTION	090618	DCD
1015	64-501-024:6	AC DISTRIBUTION	090618	DCD
1016	64-501-024:7	AC DISTRIBUTION	090618	DCD
1017	64-501-024:8	AC DISTRIBUTION	090618	DCD
1018	64-501-024:9	AC DISTRIBUTION	090618	DCD
1019	64-501-024:10	AC DISTRIBUTION	090618	DCD
1020	64-501-024:11	AC DISTRIBUTION	090618	DCD
1021	64-501-024:12	AC DISTRIBUTION	090618	DCD
1022	64-501-024:13	AC DISTRIBUTION	090618	DCD
1023	64-501-024:14	DC DISTRIBUTION	090618	DCD
1024	64-501-024:15	DC DISTRIBUTION	090618	DCD
1025	64-501-024:16	DC DISTRIBUTION	090618	DCD
1026	64-501-024:17	DC DISTRIBUTION	090618	DCD
1027	64-501-024:18	DC DISTRIBUTION	090618	DCD
1028	64-501-024:19	LINE COMMUNICATION	090618	DCD
1029	64-501-024:20	D-NET COMMUNICATION	090618	DCD
1030	64-501-024:21	SM2 MODULE	090618	DCD
1031	64-501-024:22	INPUT/OUTPUT	090618	DCD
1032	64-501-024:23	INPUT/OUTPUT	090618	DCD
1033	64-501-024:24	INPUT/OUTPUT	090618	DCD
1034	64-501-024:25	INPUT/OUTPUT	090618	DCD
1035	64-501-024:26	INPUT/OUTPUT	090618	DCD
1036	64-501-024:27	INPUT/OUTPUT	090618	DCD
1037	64-501-024:28	INPUT/OUTPUT	090618	DCD
1038	64-501-024:29	INPUT/OUTPUT	090618	DCD
1039	64-501-024:30	ARMORBLOCK COMM	090618	DCD

ISSUE: **DESC: DOCUMENTATION LIST**
MACHINE: ACHX 30-0500 CSA 64-501-024:59
DATE: 2009-07
SIGN: DCD 1 OF 2

Hartness International, Inc.

Pos	Sheet	Sheet Description	Date	Sign
1040	64-501-024:31	ARMOR BLOCK I/O	090618	DCD
1041	64-501-024:32	ARMOR BLOCK I/O	090618	DCD
1042	64-501-024:33	ARMOR BLOCK I/O	090618	DCD
1043	64-501-024:34	CABLING	090618	DCD
1044	64-501-024:35	CABLING	090618	DCD
1045	64-501-024:36	CABLING	090618	DCD
1046	64-501-024:37	CABLING	090618	DCD
1047	64-501-024:38	CABLING	090618	DCD
1048	64-501-024:39	CABLING	090618	DCD
1049	64-501-024:40	CABLING	090618	DCD
1050	64-501-024:41	DISTRIBUTION TERMINALS	090618	DCD
1051	64-501-024:42	DEVICENET LOCAL	090618	DCD
1052	64-501-024:43	ETHERNET LOCAL	090618	DCD
1053	64-501-024:44	LINE SUMMARY	090618	DCD
1054	64-501-024:45	LINE SUMMARY	090618	DCD
1055	64-501-024:46	LINE SUMMARY	090618	DCD
1056	64-501-024:47	LINE SUMMARY	090618	DCD
1057	64-501-024:48	LINE SUMMARY	090618	DCD
1058	64-501-024:49	LINE SUMMARY	090618	DCD
1059	64-501-024:50	LINE SUMMARY	090618	DCD
1060	64-501-024:51	TERMINAL SUMMARY	090618	DCD
1061	64-501-024:52	TERMINAL SUMMARY	090618	DCD
1062	64-501-024:53	TERMINAL SUMMARY	090618	DCD
1063	64-501-024:54	TERMINAL SUMMARY	090618	DCD
1064	64-501-024:55	TERMINAL SUMMARY	090618	DCD
1065	64-501-024:56	TERMINAL SUMMARY	090618	DCD
1066	64-501-024:57	TERMINAL SUMMARY	090618	DCD
1067	64-501-024:58	TERMINAL SUMMARY	090618	DCD
1068	64-511-024:7	PANEL LAYOUT	090618	DCD
1069	64-511-024:4	TPOP LAYOUT	090618	DCD
1070	64-511-024:5	GENIUS OPTION LAYOUT	090618	DCD
1072	64-501-024:66	ELECTRICAL DRAWING NOTES	090618	DCD

ISSUE:		**DESC: DOCUMENTATION LIST**	
		MACHINE: ACHX 30-0500 CSA	64-501-024:60
DATE:	2009-07		
SIGN:	DCD		2 OF 2

3 Position Summary

Description

This chapter is a list of all electrical components that are shown in the electrical drawings, with page references to the drawings where they are located.

3.1 IEC Version . . . . . 3 - 5

3.2 CSA Version . . . . . 3 - 13

This page intentionally left blank

3.1 IEC Version

This page intentionally left blank

Hartness International, Inc.

Comp	Sheet	Position
A01B4023	64-501-024:22	4
A01B4024	64-501-024:22	4
A01F0000	64-501-024:01	4
A01F0001	64-501-024:11	7
A01F0002	64-501-024:12	5
A01F0003	64-501-024:11	2
A01F0004	64-501-024:10	5
A01F0005	64-501-024:12	6
A01F0070	64-501-024:11	2
A01K0010	64-501-024:27	6
A01K0011	64-501-024:27	6
A01K0060	64-501-024:18	4
A01K0097	64-501-024:19	4
A01K0097	64-501-024:27	6
A01K0098	64-501-024:19	6
A01K0098	64-501-024:26	5
A01K0099	64-501-024:19	4
A01K0099	64-501-024:26	5
A01K0301	64-501-024:11	7
A01K0302	64-501-024:11	7
A01K0302	64-501-024:20	1
A01K0303	64-501-024:11	7
A01K0303	64-501-024:21	1
A01K0304	64-501-024:11	7
A01K0304	64-501-024:22	8
A01K0304	64-501-024:23	8
A01K0305	64-501-024:11	7
A01K0305	64-501-024:24	8
A01K0305	64-501-024:25	8
A01K0306	64-501-024:11	7
A01K0306	64-501-024:26	1
A01K0306	64-501-024:27	1
A01K0307	64-501-024:11	7
A01K0307	64-501-024:28	2
A01K0307	64-501-024:29	2
A01K0401	64-501-024:13	3
A01K0402	64-501-024:13	3
A01K0403	64-501-024:13	3
A01K1220	64-501-024:30	5
A01K1220	64-501-024:32	7
A01M0010	64-501-024:11	3
A01M0011	64-501-024:11	5
A01M4010	64-501-024:10	5

DATE: 2009-09

ISSUE: **DESCRIPTION: POSITION SUMMARY**

MACHINE: ACHX 30-0500 IEC 64-501-024:61

DATE: 2009-09

SIGN: DCD 1 OF5

Hartness International, Inc.

Comp	Sheet	Position
A01P0002	64-501-024:27	5
A01P0003	64-501-024:27	5
A01P0010	64-501-024:28	6
A01P1010	64-501-024:26	5
A01Q0000	64-501-024:1	2
A01Q0040	64-501-024:10	5
A01Q0040	64-501-024:28	6
A01Q0042	64-501-024:18	7
A01Q0042	64-501-024:28	6
A01S0080	64-501-024:22	4
A01S0080	64-501-024:27	5
A01S0081	64-501-024:22	4
A01S0081	64-501-024:27	5
A01T0010	64-501-024:12	5
A01T0011	64-501-024:12	6
A01T0012	64-501-024:12	8
A01T0301	64-501-024:11	7
A01T0401	64-501-024:13	3
A01V4022	64-501-024:18	7
A01V0301	64-501-024:11	7
A01V0302	64-501-024:20	2
A01V0401	64-501-024:13	3
A01X0070	64-501-024:11	2
F01F0082	64-501-024:14	4
F01K0090	64-501-024:14	7
F01K0091	64-501-024:14	9
F01P1021	64-501-024:14	9
F01Q0010	64-501-024:02	1
F01Q0010	64-501-024:14	2
F01Q0010	64-501-024:14	9
F01Q0011	64-501-024:02	3
F01Q0011	64-501-024:14	4
F01Q0011	64-501-024:14	8
F01S0082	64-501-024:14	4
F01S0101	64-501-024:14	2
F01S1010	64-501-024:14	3
F01S1020	64-501-024:14	5
F30B1010	64-501-024:15	9
F30B1020	64-501-024:15	9
F30B1030	64-501-024:17	9
F30B1040	64-501-024:17	9
F30B1050	64-501-024:16	9
F30B1060	64-501-024:16	9

DATE: 2009-09

ISSUE:

DESCRIPTION: POSITION SUMMARY

MACHINE: ACHX 30-0500 IEC 64-501-024:62

DATE: 2009-09

SIGN: DCD

2 OF5

Hartness International, Inc.

Comp	Sheet	Position
F30B1070	64-501-024:16	9
F30B1080	64-501-024:16	9
F30B1090	64-501-024:15	9
F30B1100	64-501-024:15	9
F30K1000	64-501-024:15	6
F30K1001	64-501-024:16	6
F30K1002	64-501-024:17	6
F30Q0011	64-501-024:02	1
F30Q0011	64-501-024:14	2
F30Q0011	64-501-024:14	9
W10B0925	64-501-024:32	4
W10F0010	64-501-024:08	2
W10F0020	64-501-024:09	1
W10M1010	64-501-024:08	4
W10M1020	64-501-024:09	6
W10T0010	64-501-024:08	2
W10T0020	64-501-024:09	3
W10V0010	64-501-024:08	2
W10V1030	64-501-024:26	5
W10X1024	64-501-024:09	4
W30B1011	64-501-024:31	3
W30B1012	64-501-024:02	5
W30B1012	64-501-024:23	5
W30B1013	64-501-024:24	6
W30B1014	64-501-024:24	5
W30B1021	64-501-024:31	3
W30B1022	64-501-024:05	5
W30B1022	64-501-024:23	5
W30B1023	64-501-024:24	5
W30B1024	64-501-024:32	4
W30B1025	64-501-024:24	5
W30B1031	64-501-024:31	3
W30B1032	64-501-024:31	3
W30B1033	64-501-024:31	3
W30B1034	64-501-024:31	3
W30B1041	64-501-024:31	3
W30F0010	64-501-024:02	7
W30F0011	64-501-024:03	2
W30F0011	64-501-024:22	2
W30F0012	64-501-024:03	4
W30F0012	64-501-024:22	2
W30F0013	64-501-024:03	6

DATE: 2009-09

ISSUE: **DESCRIPTION: POSITION SUMMARY**

MACHINE: ACHX 30-0500 IEC 64-501-024:63

DATE: 2009-09

SIGN: DCD 3 OF5

Hartness International, Inc.

Comp	Sheet	Position
W30F0013	64-501-024:22	3
W30F0014	64-501-024:03	8
W30F0014	64-501-024:22	3
W30F0015	64-501-024:04	2
W30F0015	64-501-024:22	4
W30F0016	64-501-024:04	4
W30F0016	64-501-024:22	4
W30F0017	64-501-024:04	6
W30F0017	64-501-024:22	5
W30F0020	64-501-024:05	7
W30F0021	64-501-024:06	2
W30F0021	64-501-024:22	2
W30F0022	64-501-024:06	4
W30F0022	64-501-024:22	2
W30F0023	64-501-024:06	6
W30F0023	64-501-024:22	3
W30F0024	64-501-024:06	9
W30F0024	64-501-024:22	3
W30F0025	64-501-024:07	2
W30F0025	64-501-024:22	4
W30F0026	64-501-024:07	4
W30F0026	64-501-024:22	4
W30F0027	64-501-024:07	7
W30F0027	64-501-024:22	5
W30F0031	64-501-024:10	3
W30F0031	64-501-024:24	5
W30K1210	64-501-024:30	2
W30K1210	64-501-024:31	7
W30K1240	64-501-024:30	7
W30K1240	64-501-024:33	5
W30M1010	64-501-024:03	2
W30M1020	64-501-024:03	4
W30M1030	64-501-024:03	6
W30M1040	64-501-024:03	9
W30M1050	64-501-024:04	2
W30M1060	64-501-024:04	4
W30M1070	64-501-024:04	7
W30M2010	64-501-024:06	2
W30M2020	64-501-024:06	4
W30M2030	64-501-024:06	6
W30M2040	64-501-024:06	9

DATE: 2009-09

ISSUE:

DESCRIPTION: POSITION SUMMARY

MACHINE: ACHX 30-0500 IEC 64-501-024:64

DATE: 2009-09

SIGN: DCD

4 OF5

Hartness International, Inc.

Comp	Sheet	Position
W30M2050	64-501-024:07	2
W30M2060	64-501-024:07	4
W30M2070	64-501-024:07	7
W30M3010	64-501-024:10	3
W30Q0030	64-501-024:10	3
W30Q0030	64-501-024:28	6
W30T0010	64-501-024:02	7
W30T0020	64-501-024:05	7
W30V0010	64-501-024:02	7
W30V0020	64-501-024:05	7
W30V1026	64-501-024:28	6
W30V1027	64-501-024:28	6
W30V3014	64-501-024:33	8
W30V3015	64-501-024:33	8
W30V3017	64-501-024:33	8
W30V3023	64-501-024:33	8
W90B1011	64-501-024:32	3
W90B1012	64-501-024:32	4
W90B1030	64-501-024:32	4
W90B1041	64-501-024:32	3
W90B1042	64-501-024:32	4
W90B1051	64-501-024:32	3
W90B1052	64-501-024:32	4
W90B1061	64-501-024:24	6
W90B1062	64-501-024:24	5
W90B1071	64-501-024:32	3
W90B1072	64-501-024:32	4
W90F0010	64-501-024:08	7
W90M1010	64-501-024:08	10
W90M1020	64-501-024:09	9
W90T0010	64-501-024:08	7
W90T0020	64-501-024:09	7
W90V0010	64-501-024:08	7
W90X1024	64-501-024:09	7

DATE: 2009-09

ISSUE: **DESCRIPTION: POSITION SUMMARY**

MACHINE: ACHX 30-0500 IEC 64-501-024:65

DATE: 2009-09

SIGN: DCD 5 OF5

This page intentionally left blank

3.2 CSA Version

This page intentionally left blank

Hartness International, Inc.

Comp	Sheet	Position
A01B4023	64-501-024:22	4
A01B4024	64-501-024:22	4
A01F0000	64-501-024:01	4
A01F0001	64-501-024:11	7
A01F0002	64-501-024:12	5
A01F0003	64-501-024:11	2
A01F0004	64-501-024:10	5
A01F0005	64-501-024:12	6
A01F0070	64-501-024:11	2
A01K0010	64-501-024:27	6
A01K0011	64-501-024:27	6
A01K0060	64-501-024:18	4
A01K0097	64-501-024:19	4
A01K0097	64-501-024:27	6
A01K0098	64-501-024:19	6
A01K0098	64-501-024:26	5
A01K0099	64-501-024:19	4
A01K0099	64-501-024:26	5
A01K0301	64-501-024:11	7
A01K0302	64-501-024:11	7
A01K0302	64-501-024:20	1
A01K0303	64-501-024:11	7
A01K0303	64-501-024:21	1
A01K0304	64-501-024:11	7
A01K0304	64-501-024:22	8
A01K0304	64-501-024:23	8
A01K0305	64-501-024:11	7
A01K0305	64-501-024:24	8
A01K0305	64-501-024:25	8
A01K0306	64-501-024:11	7
A01K0306	64-501-024:26	1
A01K0306	64-501-024:27	1
A01K0307	64-501-024:11	7
A01K0307	64-501-024:28	2
A01K0307	64-501-024:29	2
A01K0401	64-501-024:13	3
A01K0402	64-501-024:13	3
A01K0403	64-501-024:13	3
A01K1220	64-501-024:30	5
A01K1220	64-501-024:32	7
A01M0010	64-501-024:11	3
A01M0011	64-501-024:11	5
A01M4010	64-501-024:10	5

DATE: 2009-09

ISSUE: **DESCRIPTION: POSITION SUMMARY**

MACHINE: ACHX 30-0500 CSA 64-501-024:61

DATE: 2009-09

SIGN: DCD 1 OF5

Hartness International, Inc.

Comp	Sheet	Position
A01P0002	64-501-024:27	5
A01P0003	64-501-024:27	5
A01P0010	64-501-024:28	6
A01P1010	64-501-024:26	5
A01Q0000	64-501-024:1	2
A01Q0040	64-501-024:10	5
A01Q0040	64-501-024:28	6
A01Q0042	64-501-024:18	7
A01Q0042	64-501-024:28	6
A01S0080	64-501-024:22	4
A01S0080	64-501-024:27	5
A01S0081	64-501-024:22	4
A01S0081	64-501-024:27	5
A01T0010	64-501-024:12	5
A01T0011	64-501-024:12	6
A01T0012	64-501-024:12	8
A01T0301	64-501-024:11	7
A01T0401	64-501-024:13	3
A01V4022	64-501-024:18	7
A01V0301	64-501-024:11	7
A01V0302	64-501-024:20	2
A01V0401	64-501-024:13	3
F01F0082	64-501-024:14	4
F01K0090	64-501-024:14	7
F01K0091	64-501-024:14	9
F01P1021	64-501-024:14	9
F01Q0010	64-501-024:02	1
F01Q0010	64-501-024:14	2
F01Q0010	64-501-024:14	9
F01Q0011	64-501-024:02	3
F01Q0011	64-501-024:14	4
F01Q0011	64-501-024:14	8
F01S0082	64-501-024:14	4
F01S0101	64-501-024:14	2
F01S1010	64-501-024:14	3
F01S1020	64-501-024:14	5
F30B1010	64-501-024:15	9
F30B1020	64-501-024:15	9
F30B1030	64-501-024:17	9
F30B1040	64-501-024:17	9
F30B1050	64-501-024:16	9
F30B1060	64-501-024:16	9

DATE: 2009-09

ISSUE: **DESCRIPTION: POSITION SUMMARY**

MACHINE: ACHX 30-0500 CSA 64-501-024:62

DATE: 2009-09

SIGN: DCD 2 OF5

Hartness International, Inc.

Comp	Sheet	Position
F30B1070	64-501-024:16	9
F30B1080	64-501-024:16	9
F30B1090	64-501-024:15	9
F30B1100	64-501-024:15	9
F30K1000	64-501-024:15	6
F30K1001	64-501-024:16	6
F30K1002	64-501-024:17	6
F30Q0011	64-501-024:02	1
F30Q0011	64-501-024:14	2
F30Q0011	64-501-024:14	9
W10B0925	64-501-024:32	4
W10F0010	64-501-024:08	2
W10F0020	64-501-024:09	1
W10M1010	64-501-024:08	4
W10M1020	64-501-024:09	6
W10T0010	64-501-024:08	2
W10T0020	64-501-024:09	3
W10V0010	64-501-024:08	2
W10V1030	64-501-024:26	5
W10X1024	64-501-024:09	4
W30B1011	64-501-024:31	3
W30B1012	64-501-024:02	5
W30B1012	64-501-024:23	5
W30B1013	64-501-024:24	6
W30B1014	64-501-024:24	5
W30B1021	64-501-024:31	3
W30B1022	64-501-024:05	5
W30B1022	64-501-024:23	5
W30B1023	64-501-024:24	5
W30B1024	64-501-024:32	4
W30B1025	64-501-024:24	5
W30B1031	64-501-024:31	3
W30B1032	64-501-024:31	3
W30B1033	64-501-024:31	3
W30B1034	64-501-024:31	3
W30B1041	64-501-024:31	3
W30F0010	64-501-024:02	7
W30F0011	64-501-024:03	2
W30F0011	64-501-024:22	2
W30F0012	64-501-024:03	4
W30F0012	64-501-024:22	2
W30F0013	64-501-024:03	6

DATE: 2009-09

ISSUE: **DESCRIPTION: POSITION SUMMARY**

MACHINE: ACHX 30-0500 CSA 64-501-024:63

DATE: 2009-09

SIGN: DCD 3 OF5

Hartness International, Inc.

Comp	Sheet	Position
W30F0013	64-501-024:22	3
W30F0014	64-501-024:03	8
W30F0014	64-501-024:22	3
W30F0015	64-501-024:04	2
W30F0015	64-501-024:22	4
W30F0016	64-501-024:04	4
W30F0016	64-501-024:22	4
W30F0017	64-501-024:04	6
W30F0017	64-501-024:22	5
W30F0020	64-501-024:05	7
W30F0021	64-501-024:06	2
W30F0021	64-501-024:22	2
W30F0022	64-501-024:06	4
W30F0022	64-501-024:22	2
W30F0023	64-501-024:06	6
W30F0023	64-501-024:22	3
W30F0024	64-501-024:06	9
W30F0024	64-501-024:22	3
W30F0025	64-501-024:07	2
W30F0025	64-501-024:22	4
W30F0026	64-501-024:07	4
W30F0026	64-501-024:22	4
W30F0027	64-501-024:07	7
W30F0027	64-501-024:22	5
W30F0031	64-501-024:10	3
W30F0031	64-501-024:24	5
W30K1210	64-501-024:30	2
W30K1210	64-501-024:31	7
W30K1240	64-501-024:30	7
W30K1240	64-501-024:33	5
W30M1010	64-501-024:03	2
W30M1020	64-501-024:03	4
W30M1030	64-501-024:03	6
W30M1040	64-501-024:03	9
W30M1050	64-501-024:04	2
W30M1060	64-501-024:04	4
W30M1070	64-501-024:04	7
W30M2010	64-501-024:06	2
W30M2020	64-501-024:06	4
W30M2030	64-501-024:06	6
W30M2040	64-501-024:06	9

DATE: 2009-09

ISSUE: **DESCRIPTION: POSITION SUMMARY**

MACHINE: ACHX 30-0500 CSA 64-501-024:64

DATE: 2009-09

SIGN: DCD 4 OF5

Hartness International, Inc.

Comp	Sheet	Position
W30M2050	64-501-024:07	2
W30M2060	64-501-024:07	4
W30M2070	64-501-024:07	7
W30M3010	64-501-024:10	3
W30Q0030	64-501-024:10	3
W30Q0030	64-501-024:28	6
W30T0010	64-501-024:02	7
W30T0020	64-501-024:05	7
W30V0010	64-501-024:02	7
W30V0020	64-501-024:05	7
W30V1026	64-501-024:28	6
W30V1027	64-501-024:28	6
W30V3014	64-501-024:33	8
W30V3015	64-501-024:33	8
W30V3017	64-501-024:33	8
W30V3023	64-501-024:33	8
W90B1011	64-501-024:32	3
W90B1012	64-501-024:32	4
W90B1030	64-501-024:32	4
W90B1041	64-501-024:32	3
W90B1042	64-501-024:32	4
W90B1051	64-501-024:32	3
W90B1052	64-501-024:32	4
W90B1061	64-501-024:24	6
W90B1062	64-501-024:24	5
W90B1071	64-501-024:32	3
W90B1072	64-501-024:32	4
W90F0010	64-501-024:08	7
W90M1010	64-501-024:08	10
W90M1020	64-501-024:09	9
W90T0010	64-501-024:08	7
W90T0020	64-501-024:09	7
W90V0010	64-501-024:08	7
W90X1024	64-501-024:09	7

	DATE: 2009-09	
ISSUE:		**DESCRIPTION: POSITION SUMMARY**
		MACHINE: ACHX 30-0500 CSA 64-501-024:65
DATE:	2009-09	
SIGN:	DCD	5 OF5

This page intentionally left blank

4 Circuit Diagrams

Description

All component drawings, such as programmable logic controller (PLC) modules, terminals, and cables are included in this chapter. Other chapter lists are generated from these pages.

4.1 IEC Version . . . . . 4 - 5

4.2 CSA Version . . . . . 4 - 41

This page intentionally left blank

4.1 IEC Version

This page intentionally left blank

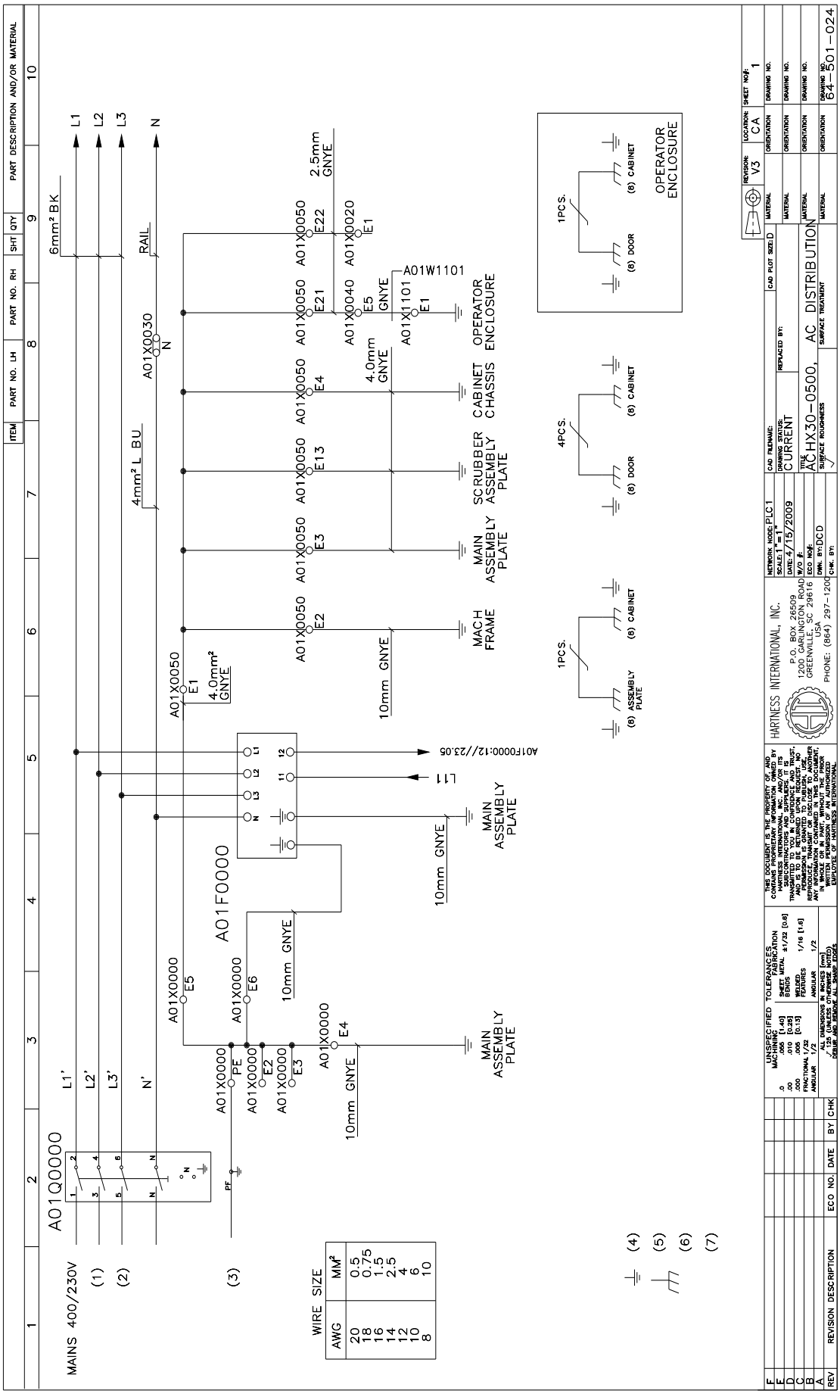
MAINS 400/230V
A01Q0000
L1'
L2'
L3'
N'
PE
(1)
(2)
(3)
A01F0000
A01X0000 E1
A01X0000 E2
A01X0000 E3
A01X0000 E4
A01X0000 E5
A01X0000 E6
A01X0000 PE
4mm² L BU
4.0mm² GNYE
10mm GNYE
6mm² BK
2.5mm GNYE
4.0mm GNYE
A01X0030
RAIL
A01X0050 E1
A01X0050 E2
A01X0050 E3
A01X0050 E4
A01X0050 E13
A01X0050 E21
A01X0050 E22
A01X0040 E5
A01X0020 E1
A01X1101 E1
A01W1101
A01F0000:12//23.05
L11
MACH FRAME
MAIN ASSEMBLY PLATE
SCRUBBER ASSEMBLY PLATE
CABINET CHASSIS
OPERATOR ENCLOSURE
1PCS.
4PCS.
(8) ASSEMBLY PLATE
(8) CABINET
(8) DOOR
(4)
(5)
(6)
(7)
WIRE SIZE
AWG
MM²
20 0.5
18 0.75
16 1.5
14 2.5
12 4
10 6
8 10
HARTNESS INTERNATIONAL, INC.
P.O. BOX 26509
1200 GARLINGTON ROAD
GREENVILLE, SC 29616
USA
PHONE: (864) 297-1200
AC HX30-0500, AC DISTRIBUTION
DRAWING NO. 64-501-024
REVISION: V3
LOCATION: CA
SHEET NO#: 1
REVISION DESCRIPTION
ECO NO.
DATE
BY
CHK

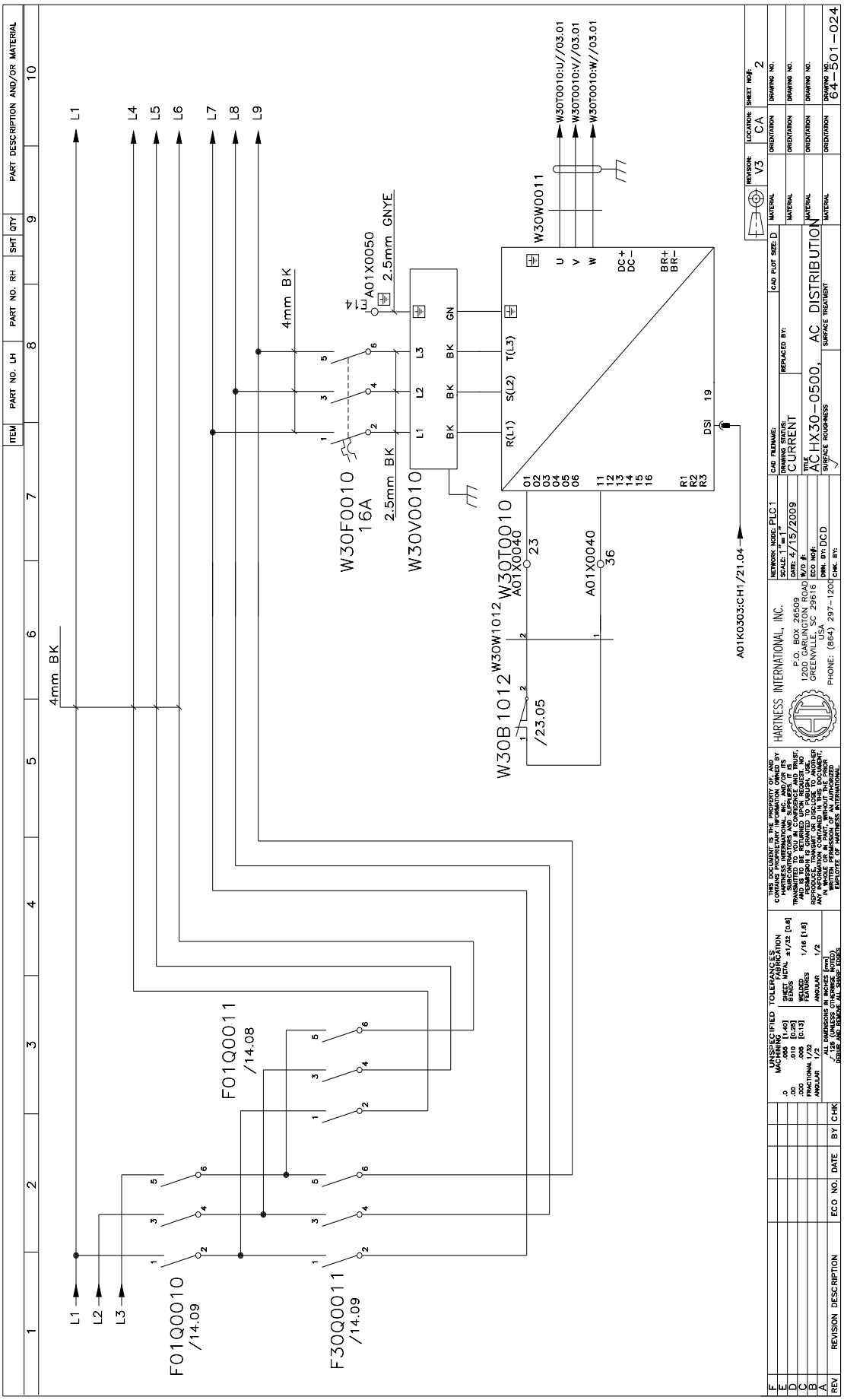
L1
L2
L3
L4
L5
L6
L7
L8
L9
4mm BK
F01Q0010
/14.09
F01Q0011
/14.08
F30Q0011
/14.09
W30F0010
16A
2.5mm BK
W30V0010
A01X0050
2.5mm GNYE
W30W0011
W30T0010:U//03.01
W30T0010:V//03.01
W30T0010:W//03.01
W30B1012
W30W1012
W30T0010
A01X0040
A01K0303:CH1/21.04
/23.05
AC DISTRIBUTION
AC HX30-0500,
64-5501-024
HARTNESS INTERNATIONAL, INC.
P.O. BOX 26509
1200 CARLINGTON ROAD
GREENVILLE, SC 29616
PHONE: (864) 297-1200

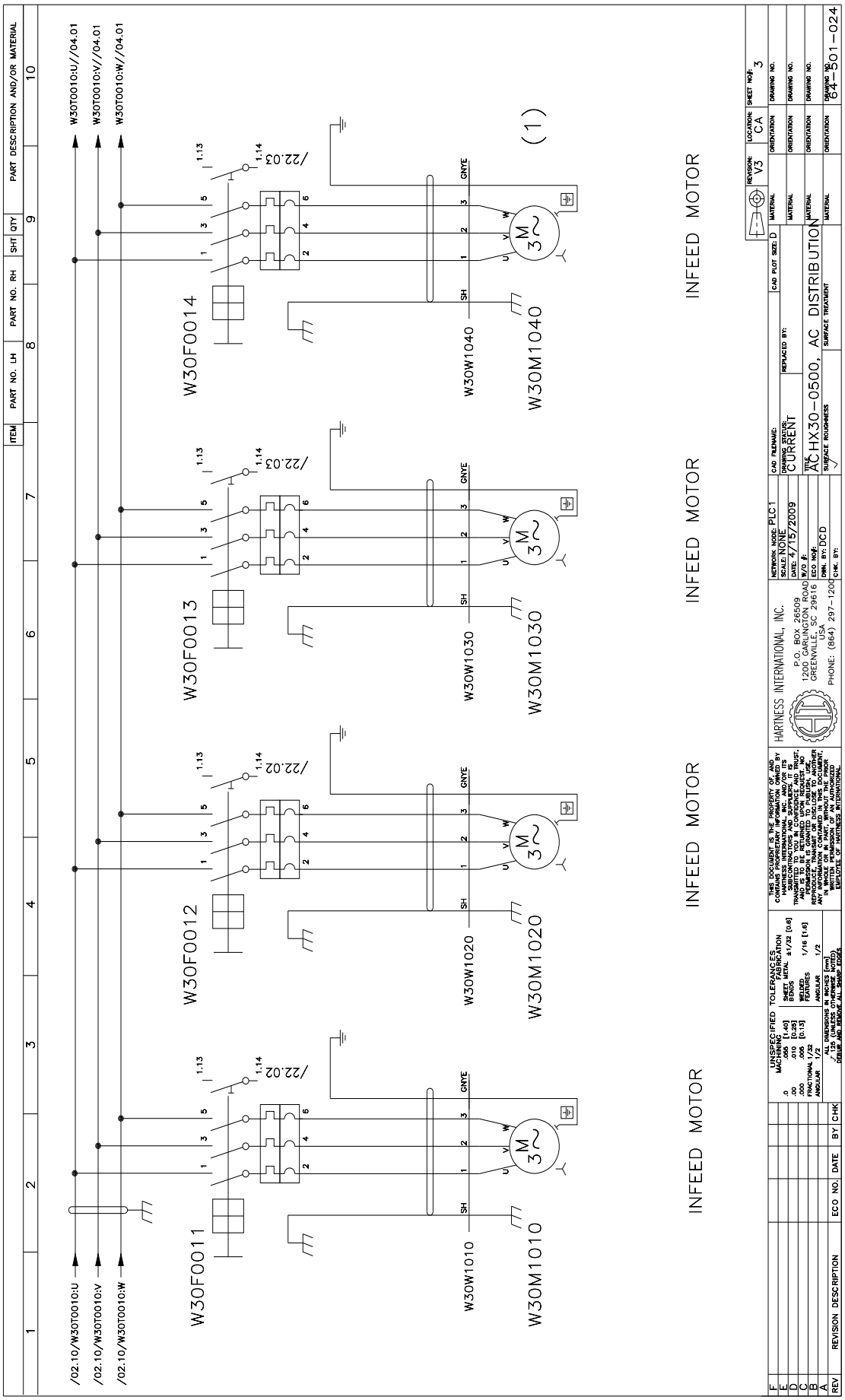
/02.10/W30T0010:U
/02.10/W30T0010:V
/02.10/W30T0010:W
W30T0010:U//04.01
W30T0010:V//04.01
W30T0010:W//04.01
W30F0011
W30F0012
W30F0013
W30F0014
W30W1010
W30W1020
W30W1030
W30W1040
W30M1010
W30M1020
W30M1030
W30M1040
/22.02
/22.03
INFEED MOTOR
INFEED MOTOR
INFEED MOTOR
INFEED MOTOR
(1)
HARTNESS INTERNATIONAL, INC.
P.O. BOX 26509
1200 GARLINGTON ROAD
GREENVILLE, SC 29616
USA
PHONE: (864) 297-1200
AC HX30-0500, AC DISTRIBUTION
64-301-024

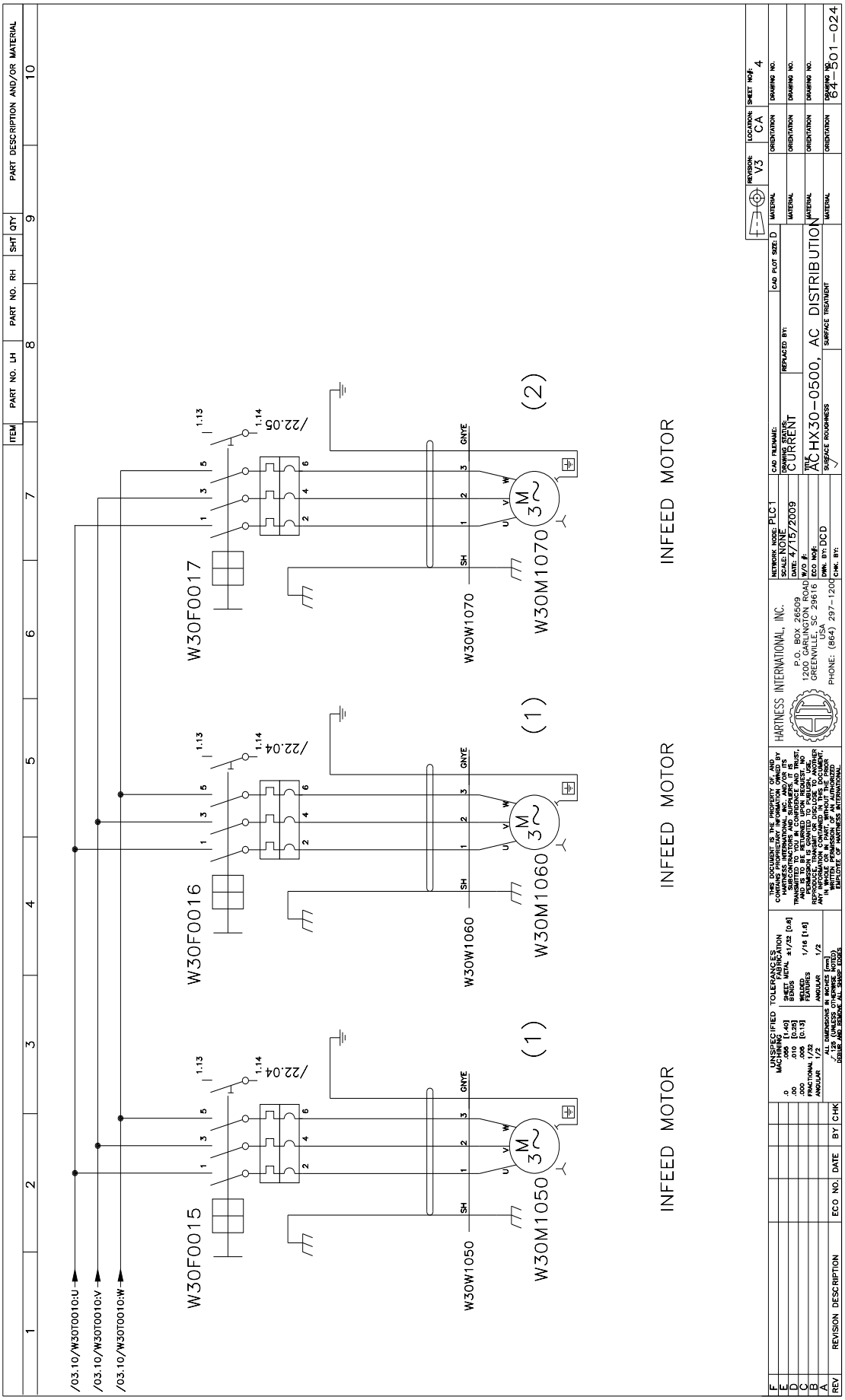
/03.10/W30T0010:U
/03.10/W30T0010:V
/03.10/W30T0010:W
W30F0015
W30F0016
W30F0017
/22.04
/22.05
W30W1050
W30W1060
W30W1070
W30M1050
W30M1060
W30M1070
(1)
(1)
(2)
INFEED MOTOR
INFEED MOTOR
INFEED MOTOR
HARTNESS INTERNATIONAL, INC.
P.O. BOX 26509
1200 CARLINGTON ROAD
GREENVILLE, SC 29616 USA
PHONE: (864) 297-1200
AC HX30-0500, AC DISTRIBUTION
CURRENT
64-501-024

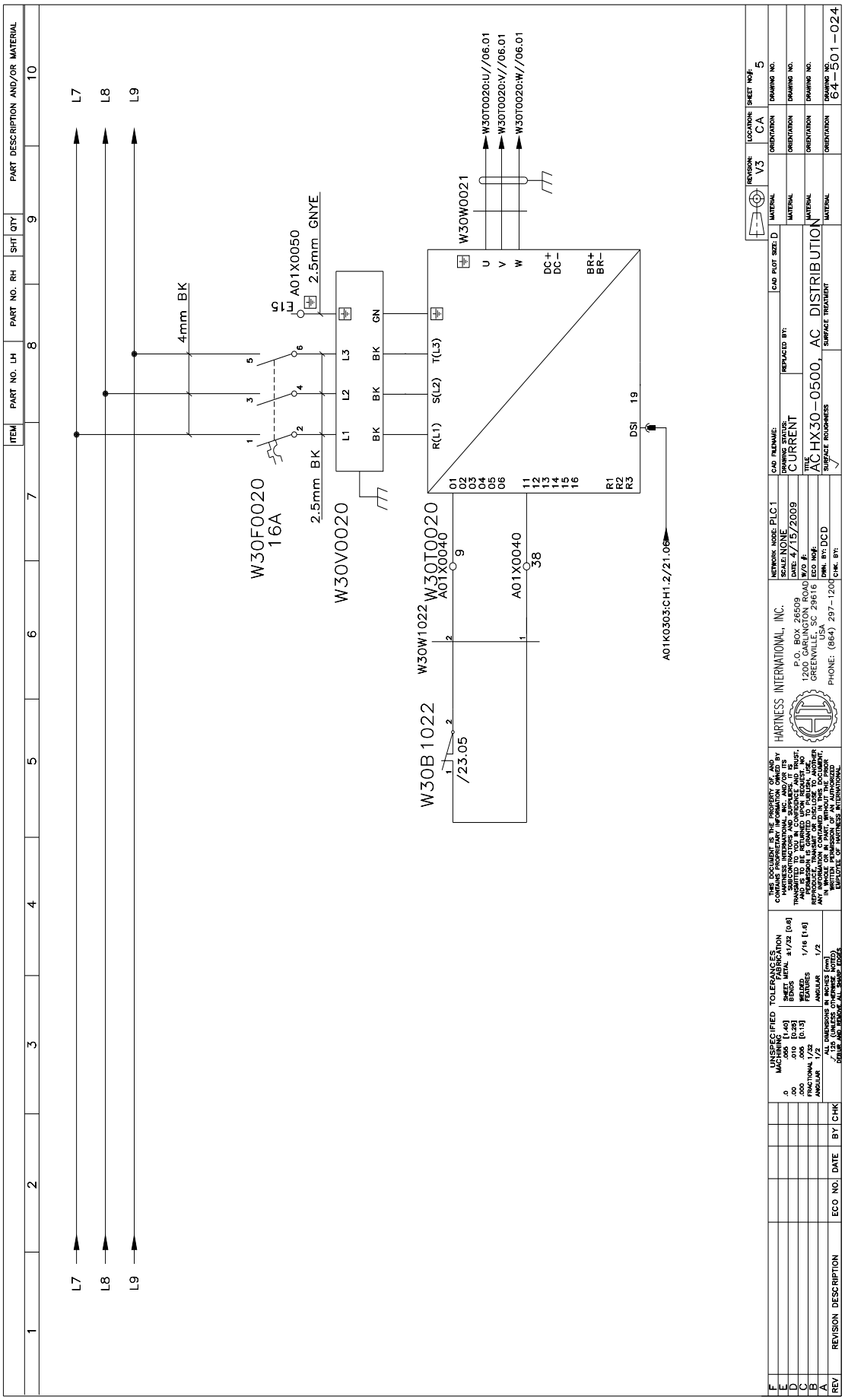
L7
L8
L9
4mm BK
W30F0020
16A
2.5mm BK
W30V0020
F15
A01X0050
2.5mm GNYE
W30W0021
W30T0020:U//06.01
W30T0020:V//06.01
W30T0020:W//06.01
W30W1022
W30T0020
A01X0040
W30B1022
/23.05
A01X0040
A01K0303:CH1.2/21.06
AC DISTRIBUTION
AC HX30-0500
CURRENT
HARTNESS INTERNATIONAL, INC.
P.O. BOX 26509
1200 GARLINGTON ROAD
GREENVILLE, SC 29616
USA
PHONE: (864) 297-1200
64-501-024

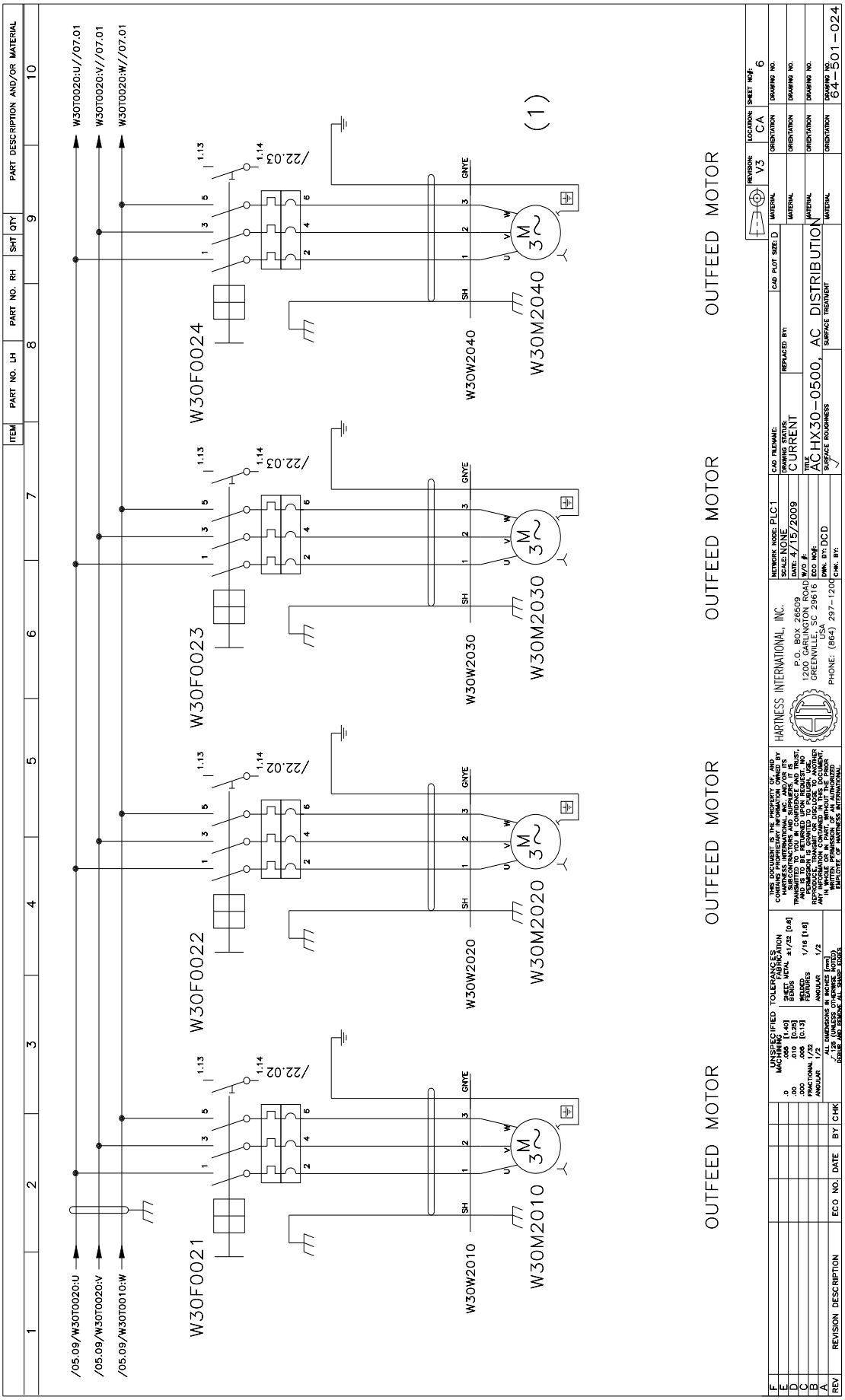
/05.09/W30T0020:U
/05.09/W30T0020:V
/05.09/W30T0010:W
W30T0020:U//07.01
W30T0020:V//07.01
W30T0020:W//07.01
W30F0021
W30F0022
W30F0023
W30F0024
W30M2010
W30M2020
W30M2030
W30M2040
W30W2010
W30W2020
W30W2030
W30W2040
OUTFEED MOTOR
(1)
HARTNESS INTERNATIONAL, INC.
AC HX30-0500, AC DISTRIBUTION
64-501-024

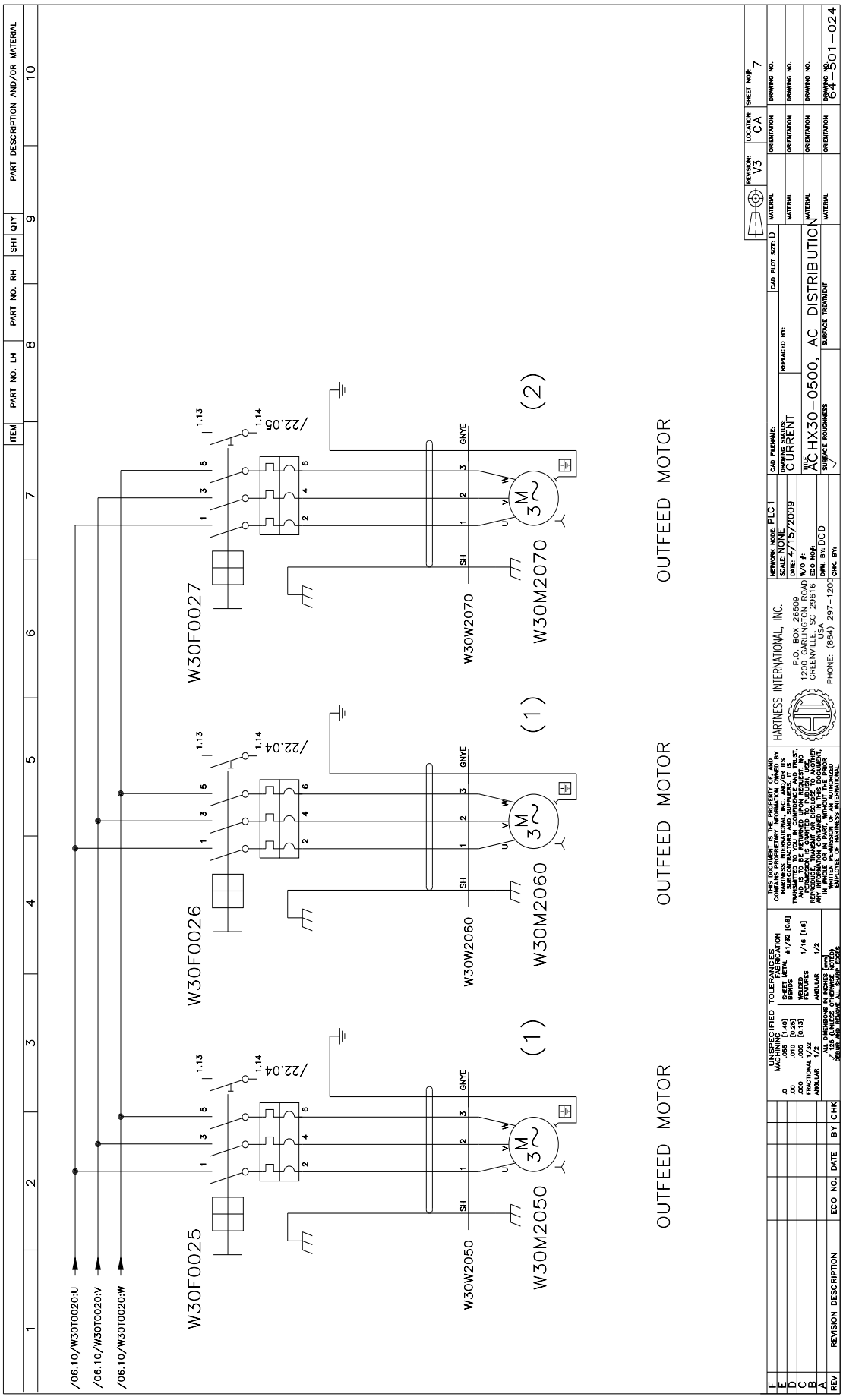
/06.10/W30T0020:U
/06.10/W30T0020:V
/06.10/W30T0020:W
W30F0025
W30F0026
W30F0027
/22.04
/22.05
W30W2050
W30W2060
W30W2070
W30M2050
W30M2060
W30M2070
(1)
(2)
OUTFEED MOTOR
OUTFEED MOTOR
OUTFEED MOTOR
HARTNESS INTERNATIONAL, INC.
P.O. BOX 26509
1200 GARLINGTON ROAD
GREENVILLE, SC 29616
USA
PHONE: (864) 297-1200
AC HX30-0500, AC DISTRIBUTION
CURRENT
4/15/2009
PLC1
NONE
64-301-024

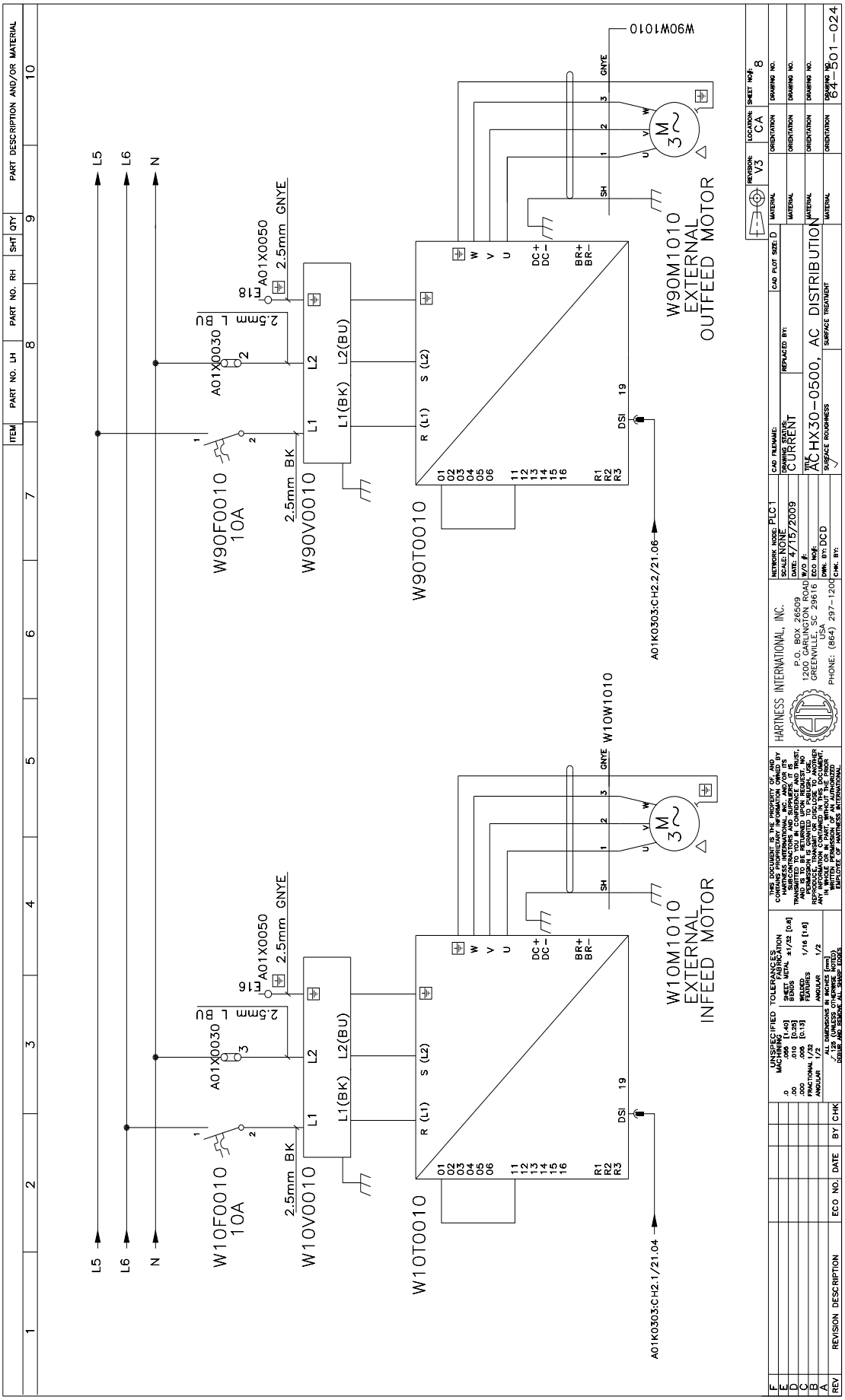
L5
L6
N
W10F0010
10A
W10V0010
2.5mm BK
A01X0030
2.5mm BU
A01X0050
2.5mm GNYE
F16
W10T0010
W10M1010
EXTERNAL
INFEED MOTOR
W10W1010
A01K0303:CH2.1/21.04
W90F0010
10A
W90V0010
F18
W90T0010
W90M1010
EXTERNAL
OUTFEED MOTOR
W90W1010
A01K0303:CH2.2/21.06
HARTNESS INTERNATIONAL, INC.
P.O. BOX 26509
1200 GARLINGTON ROAD
GREENVILLE, SC 29616
PHONE: (864) 297-1200
AC HX30-0500, AC DISTRIBUTION
84-501-024

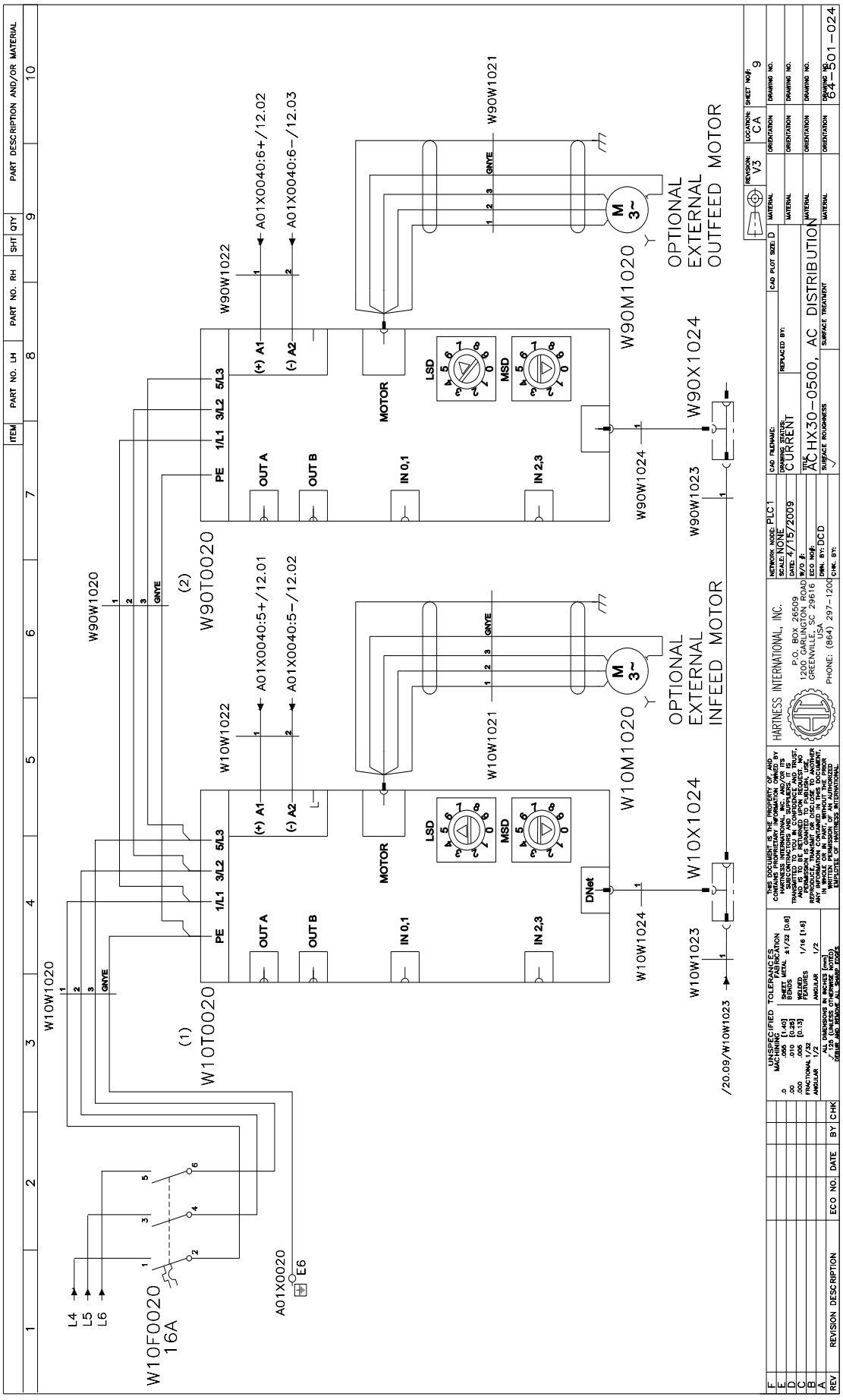
W10F0020
16A
L4
L5
L6
A01X0020
E6
W10W1020
(1)
W10T0020
W10W1022
A01X0040:5+/12.01
A01X0040:5−/12.02
(+) A1
(-) A2
PE
1/L1
3/L2
5/L3
OUT A
OUT B
IN 0,1
IN 2,3
MOTOR
LSD
MSD
DNet
W10W1021
W10M1020
M
3~
OPTIONAL
EXTERNAL
INFEED MOTOR
W10W1024
W10X1024
W10W1023
/20.09/W10W1023
W90W1020
(2)
W90T0020
W90W1022
A01X0040:6+/12.02
A01X0040:6−/12.03
W90W1021
W90M1020
OPTIONAL
EXTERNAL
OUTFEED MOTOR
W90W1024
W90X1024
W90W1023
ITEM
PART NO. LH
PART NO. RH
SHT
QTY
PART DESCRIPTION AND/OR MATERIAL
REV
REVISION DESCRIPTION
ECO NO.
DATE
BY
CHK
UNSPECIFIED TOLERANCES
MACHINING
SHEET METAL
WELDED ASSEMBLIES
ANGULAR
ALL DIMENSIONS IN INCHES [mm]
UNLESS OTHERWISE NOTED
DRAWN AND MODEL ALL SHARP EDGES
THIS DOCUMENT IS THE PROPERTY OF AND CONTAINS PROPRIETARY INFORMATION OWNED BY HARTNESS INTERNATIONAL, INC. AND/OR ITS SUBCONTRACTORS AND SUPPLIERS. IT IS TRANSMITTED TO YOU IN CONFIDENCE AND TRUST, AND IS TO BE RETURNED UPON REQUEST. NO PROPRIETARY RIGHTS ARE CONVEYED. IT MUST NOT BE REPRODUCED, TRANSMIT OR DISCLOSE TO ANOTHER PERSON OR USED IN ANY MANNER NOT EXPRESSLY AUTHORIZED IN WRITING BY HARTNESS INTERNATIONAL.
HARTNESS INTERNATIONAL, INC.
P.O. BOX 26509
1200 GARLINGTON ROAD
GREENVILLE, SC 29616
USA
PHONE: (864) 297-1200
NETWORK NODE: PLC1
SCALE: NONE
DATE: 4/15/2009
W/O #:
ECO NO#:
DWN. BY: DCD
CHK. BY:
CAD FILENAME:
DRAWING STATUS: CURRENT
REPLACED BY:
CAD PLOT SIZE: D
TITLE
AC HX30−0500, AC DISTRIBUTION
SURFACE ROUGHNESS
SURFACE TREATMENT
MATERIAL
ORIENTATION
REVISION: V3
LOCATION: CA
SHEET NO#: 9
DRAWING NO.
64−301−024

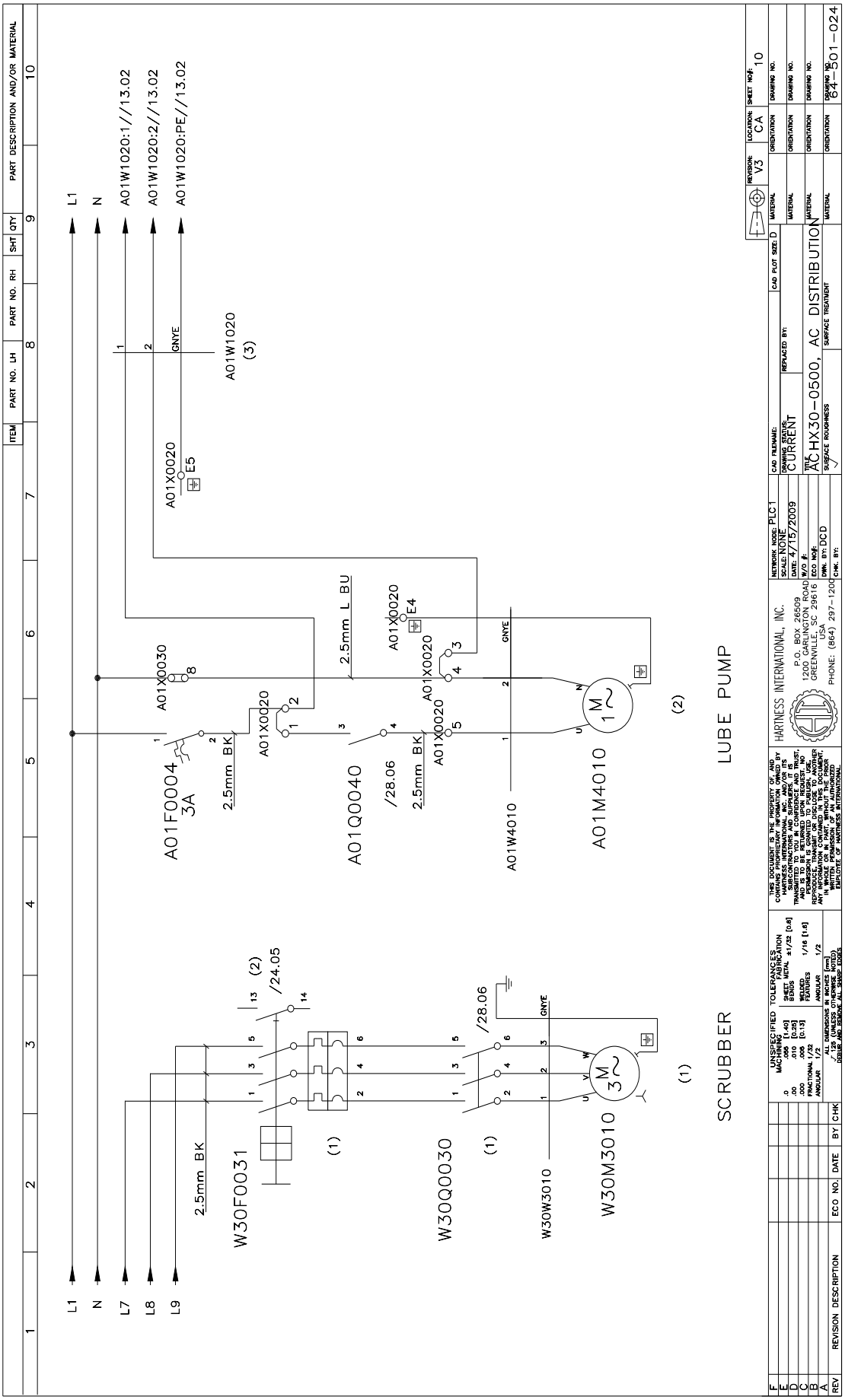
L1
N
L7
L8
L9
A01W1020:1//13.02
A01W1020:2//13.02
A01W1020:PE//13.02
A01W1020
(3)
A01X0020
E5
A01F0004
3A
A01X0030
2.5mm BK
A01X0020
2.5mm L BU
A01Q0040
/28.06
A01X0020
E4
A01W4010
A01M4010
LUBE PUMP
(2)
W30F0031
/24.05
(2)
(1)
W30Q0030
/28.06
(1)
W30W3010
W30M3010
SCRUBBER
(1)
PART DESCRIPTION AND/OR MATERIAL
QTY
PART NO. RH
PART NO. LH
ITEM
REVISION DESCRIPTION
ECO NO.
DATE
BY
CHK
HARTNESS INTERNATIONAL, INC.
P.O. BOX 26509
1200 GARLINGTON ROAD
GREENVILLE, SC 29616
USA
PHONE: (864) 297-1200
NETWORK NODE: PLC1
SCALE: NONE
DATE: 4/15/2009
W/O #:
ECO NO#:
DWN. BY: DCD
CHK. BY:
CAD FILENAME:
DRAWING STATUS: CURRENT
REPLACED BY:
CAD PLOT SIZE: D
TITLE: AC HX30-0500, AC DISTRIBUTION
SURFACE TREATMENT
SURFACE ROUGHNESS
REVISION: V3
LOCATION: CA
SHEET NO#: 10
DRAWING NO. 84-501-024

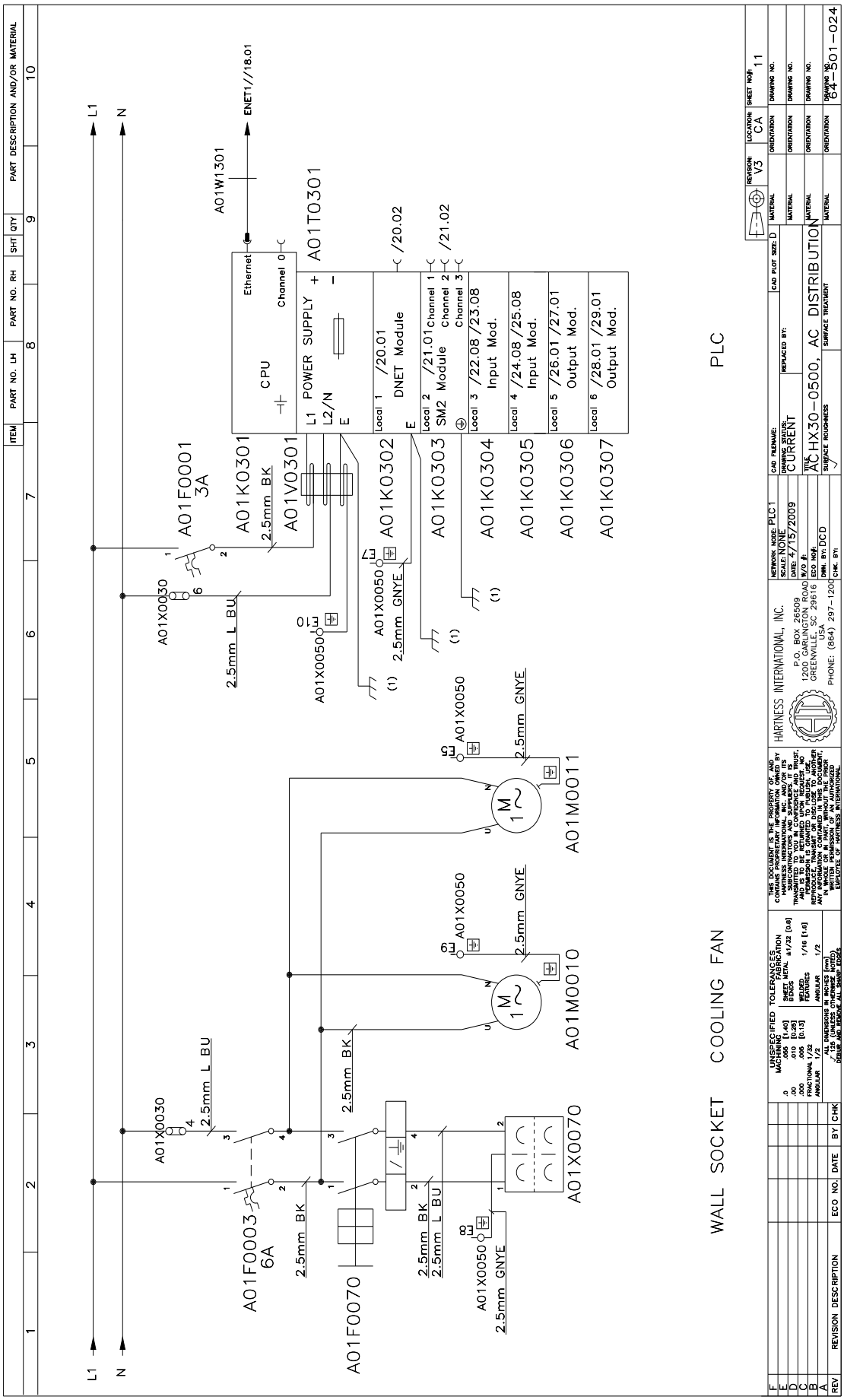
L1
N
A01F0070
A01F0003
6A
2.5mm BK
2.5mm L BU
2.5mm GNYE
A01X0030
A01X0050
A01X0070
A01M0010
A01M0011
A01F0001
3A
A01K0301
A01V0301
A01T0301
A01W1301
ENET1//18.01
CPU
Ethernet
Channel 0
L1 POWER SUPPLY
L2/N
E
/20.01
DNET Module
/20.02
/21.01
SM2 Module
Channel 1
Channel 2
Channel 3
/21.02
/22.08 /23.08
Input Mod.
/24.08 /25.08
Input Mod.
/26.01 /27.01
Output Mod.
/28.01 /29.01
Output Mod.
A01K0302
A01K0303
A01K0304
A01K0305
A01K0306
A01K0307
PLC
WALL SOCKET COOLING FAN
HARTNESS INTERNATIONAL, INC.
P.O. BOX 26509
1200 GARLINGTON ROAD
GREENVILLE, SC 29616
USA
PHONE: (864) 297-1200
AC HX30-0500, AC DISTRIBUTION
64-301-024

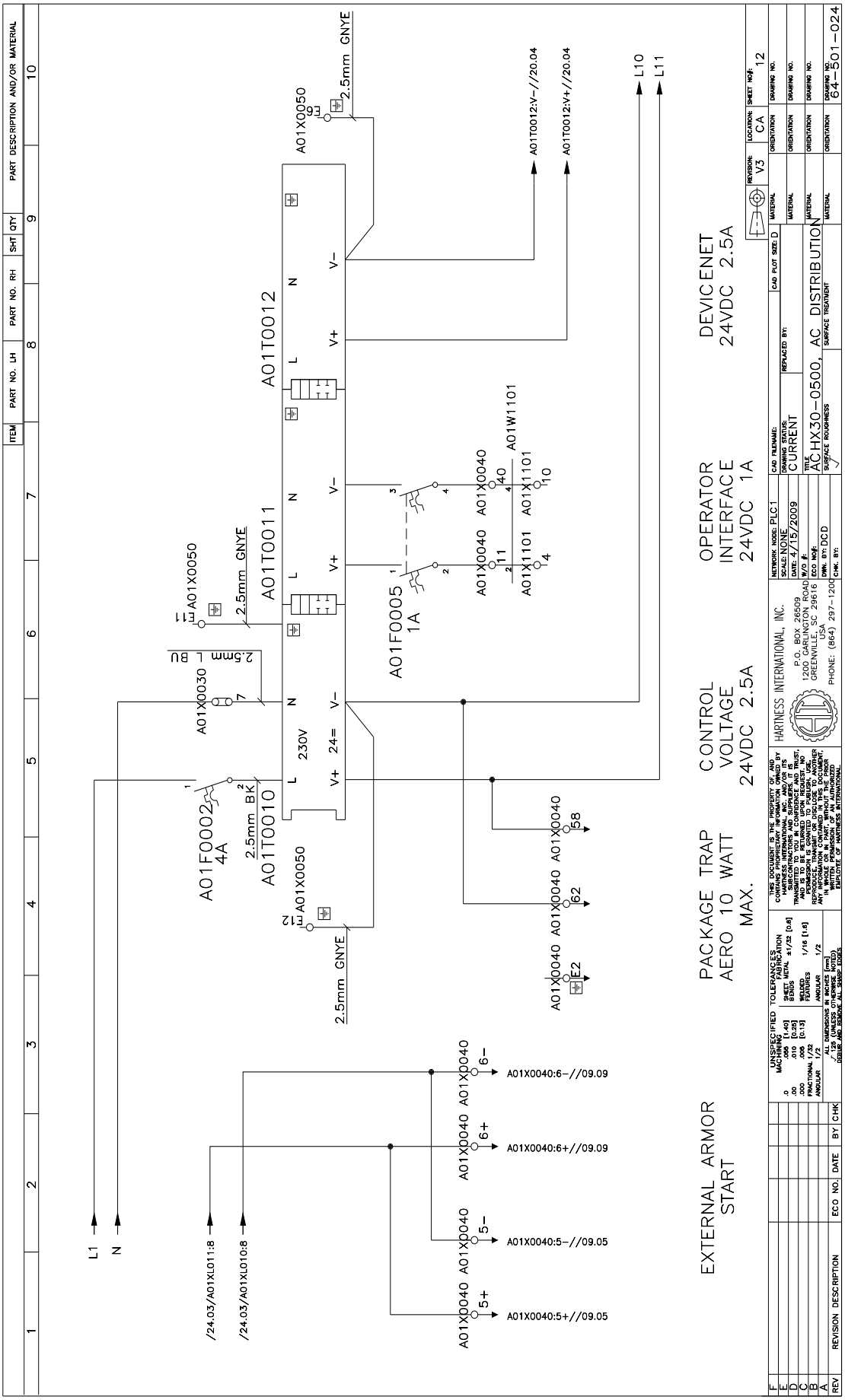
EXTERNAL ARMOR START
PACKAGE TRAP AERO 10 WATT MAX.
CONTROL VOLTAGE 24VDC 2.5A
OPERATOR INTERFACE 24VDC 1A
DEVICENET 24VDC 2.5A
A01F0002 4A
A01T0010
A01T0011
A01T0012
A01F0005 1A
A01X0030
A01X0040
A01X0050
A01W1101
A01X1101
2.5mm GNYE
2.5mm BK
2.5mm BU
L1
N
L10
L11
/24.03/A01XL011:8
/24.03/A01XL010:8
A01X0040:6-//09.09
A01X0040:6+//09.09
A01X0040:5-//09.05
A01X0040:5+//09.05
A01T0012:V-//20.04
A01T0012:V+//20.04
HARTNESS INTERNATIONAL, INC.
P.O. BOX 26509
1200 GARLINGTON ROAD
GREENVILLE, SC 29616
PHONE: (864) 297-1200
AC HX30-0500, AC DISTRIBUTION
64-5501-024

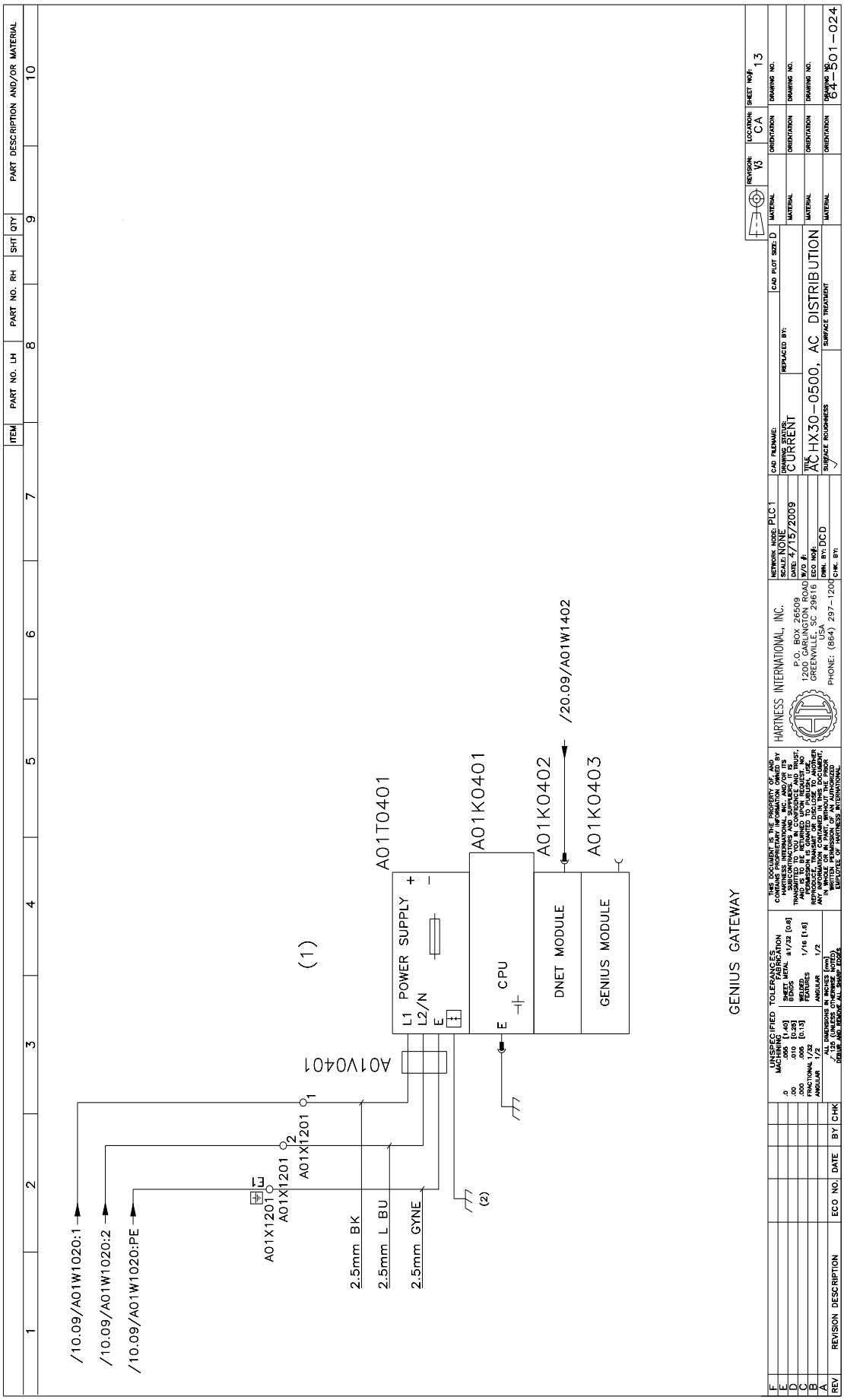
/10.09/A01W1020:1
/10.09/A01W1020:2
/10.09/A01W1020:PE
A01X1201
A01X1201
A01X1201
A01V0401
2.5mm BK
2.5mm L BU
2.5mm GYNE
(1)
(2)
A01T0401
L1 POWER SUPPLY
L2/N
E
A01K0401
CPU
A01K0402
DNET MODULE
A01K0403
GENIUS MODULE
/20.09/A01W1402
GENIUS GATEWAY
HARTNESS INTERNATIONAL, INC.
P.O. BOX 26509
1200 GARLINGTON ROAD
GREENVILLE, SC 29616
USA
PHONE: (864) 297-1200
NETWORK NODE: PLC1
SCALE: NONE
DATE: 4/15/2009
W/O #:
ECO NO#:
DWN. BY: DCD
CHK. BY:
CAD FILENAME:
DRAWING STATUS: CURRENT
REPLACED BY:
CAD PLOT SIZE: D
TITLE: AC HX30-0500, AC DISTRIBUTION
SURFACE ROUGHNESS
SURFACE TREATMENT
REVISION: V3
LOCATION: CA
SHEET NO#: 13
DRAWING NO: 64-3501-024
ITEM
PART NO. LH
PART NO. RH
SHT
QTY
PART DESCRIPTION AND/OR MATERIAL
REVISION DESCRIPTION
ECO NO.
DATE
BY
CHK
UNSPECIFIED MACHINING TOLERANCES
FRACTIONAL 1/32
ANGULAR 1/2
SHEET METAL ±1/32 [0.8]
WELDED STRUCTURES 1/16 [1.6]
ALL DIMENSIONS IN INCHES [mm]
TOLERANCES PER ASME Y14.5M-1994
THIS DOCUMENT IS THE PROPERTY OF AND CONTAINS PROPRIETARY INFORMATION OWNED BY HARTNESS INTERNATIONAL, INC. AND ITS SUBCONTRACTORS AND SUPPLIERS. AT ITS TRANSMITTAL IT IS LOANED IN CONFIDENCE AND TRUST, AND IS TO BE RETURNED UPON REQUEST. NO PORTION IS TO BE COPIED, REPRODUCED, TRANSMITTED OR DISCLOSED TO ANOTHER PERSON OR ENTITY WITHOUT THE EXPRESS WRITTEN PERMISSION OF HARTNESS INTERNATIONAL.
ANY INFRINGEMENT OF COPYRIGHT IN THIS DRAWING WITHOUT WRITTEN PERMISSION OF AN AUTHORIZED OFFICER OF HARTNESS INTERNATIONAL IS PROHIBITED.

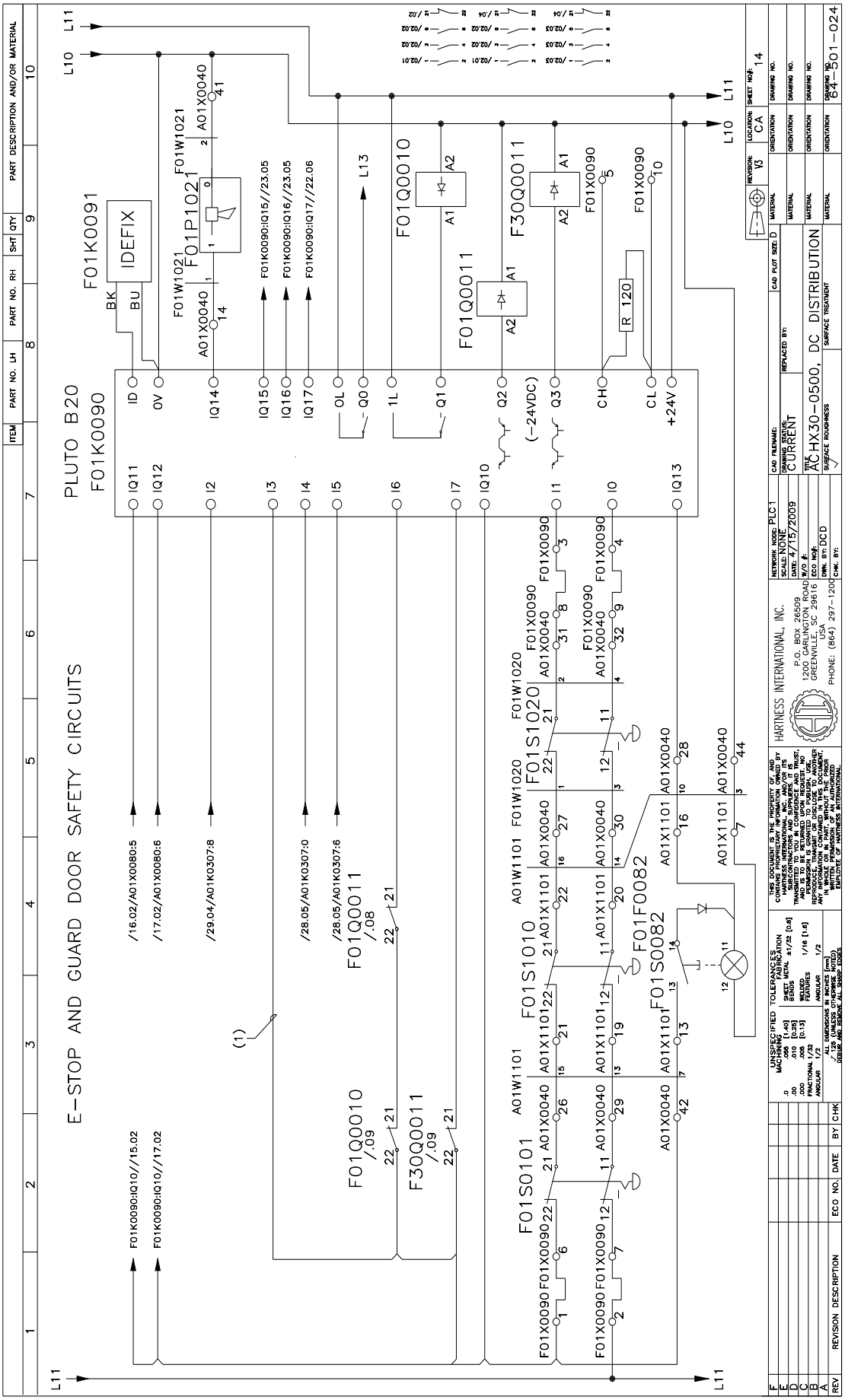
E-STOP AND GUARD DOOR SAFETY CIRCUITS
PLUTO B20
F01K0090
F01K0091
IDEFIX
F01P1021
F01Q0010
F01Q0011
F30Q0011
F01S0101
F01S1010
F01S1020
F01F0082
F01S0082
F01X0090
A01X0040
A01X1101
A01W1101
F01W1020
F01W1021
R 120
(-24VDC)
+24V
HARTNESS INTERNATIONAL, INC.
P.O. BOX 26509
1200 GARLINGTON ROAD
GREENVILLE, SC 29616
PHONE: (864) 297-1200
AC HX30-0500, DC DISTRIBUTION
CURRENT
64-5501-024

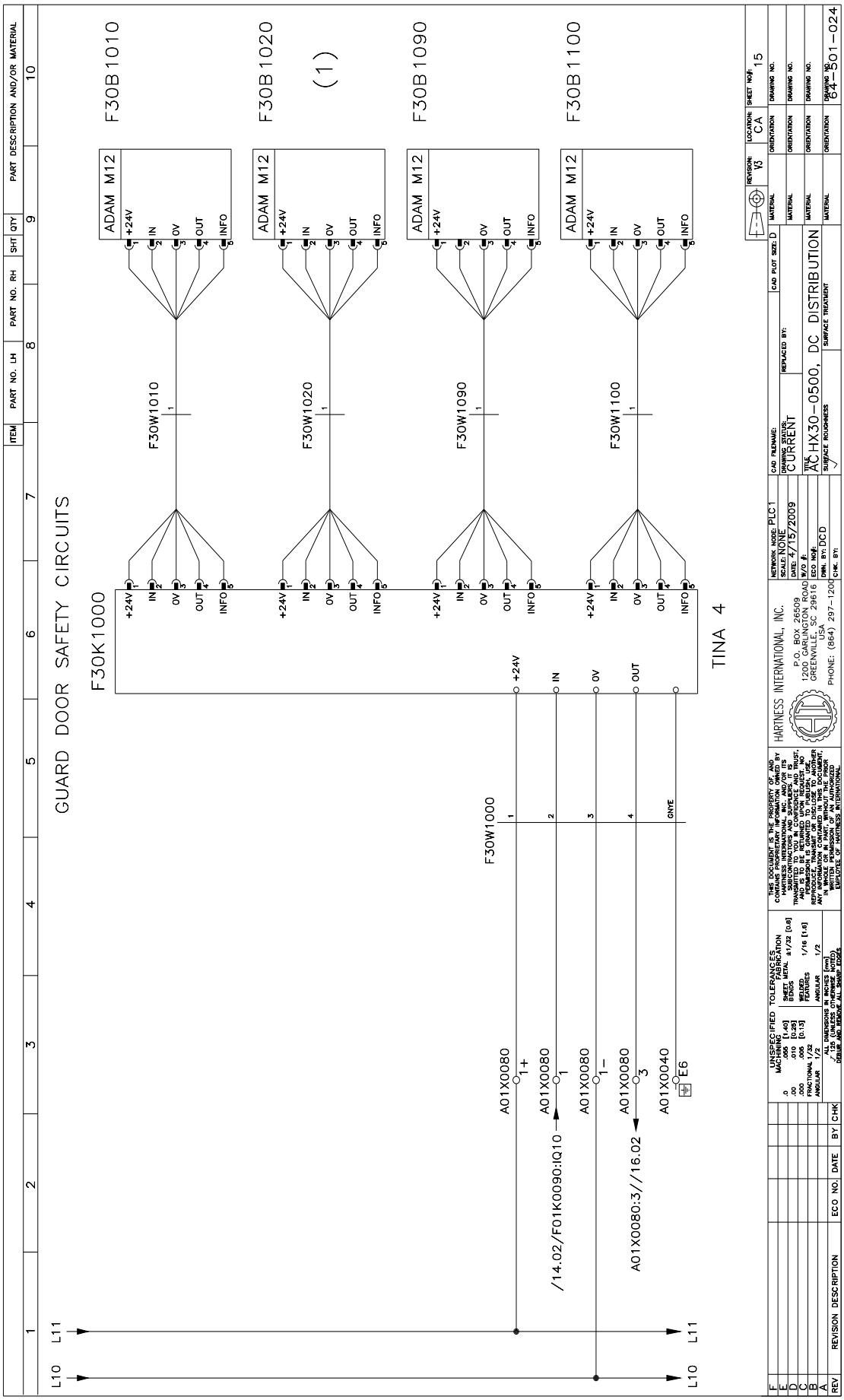
GUARD DOOR SAFETY CIRCUITS
F30K1000
TINA 4
F30B1010
F30B1020
(1)
F30B1090
F30B1100
ADAM M12
+24V
IN
0V
OUT
INFO
F30W1010
F30W1020
F30W1090
F30W1100
F30W1000
L10
L11
A01X0080
A01X0040
/14.02/F01K0090:IQ10
A01X0080:3//16.02
HARTNESS INTERNATIONAL, INC.
P.O. BOX 26509
1200 GARLINGTON ROAD
GREENVILLE, SC 29616
USA
PHONE: (864) 297-1200
AC HX30-0500, DC DISTRIBUTION
DRAWING NO. 84-301-024

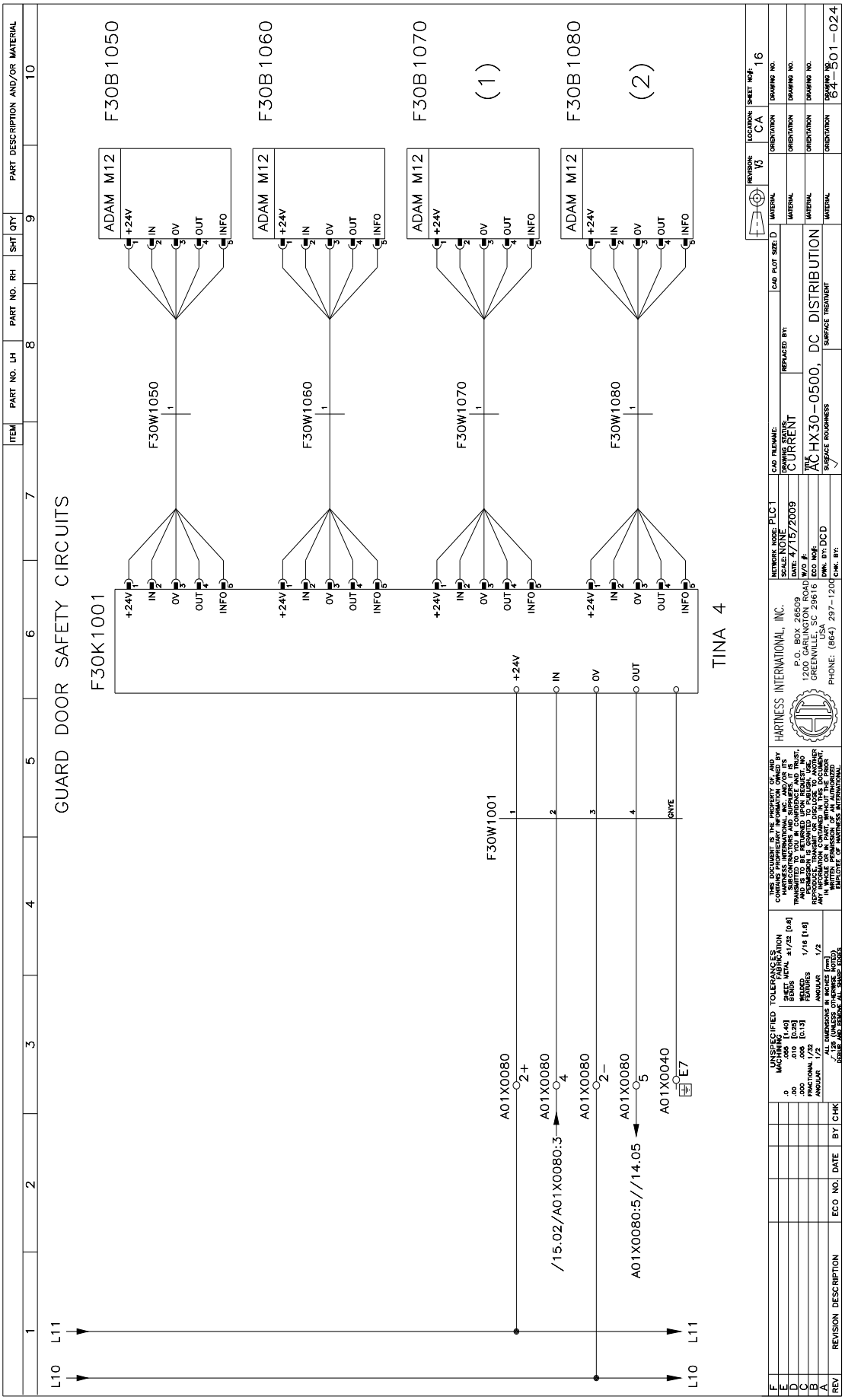
GUARD DOOR SAFETY CIRCUITS
F30K1001
TINA 4
F30B1050
F30B1060
F30B1070
(1)
F30B1080
(2)
ADAM M12
+24V
IN
0V
OUT
INFO
F30W1050
F30W1060
F30W1070
F30W1080
L10
L11
A01X0080
2+
/15.02/A01X0080:3
4
2-
A01X0080:5//14.05
5
A01X0040
E7
HARTNESS INTERNATIONAL, INC.
P.O. BOX 26509
1200 GARLINGTON ROAD
GREENVILLE, SC 29616 USA
PHONE: (864) 297-1200
AC HX30-0500, DC DISTRIBUTION
DRAWING NO. 84-501-024

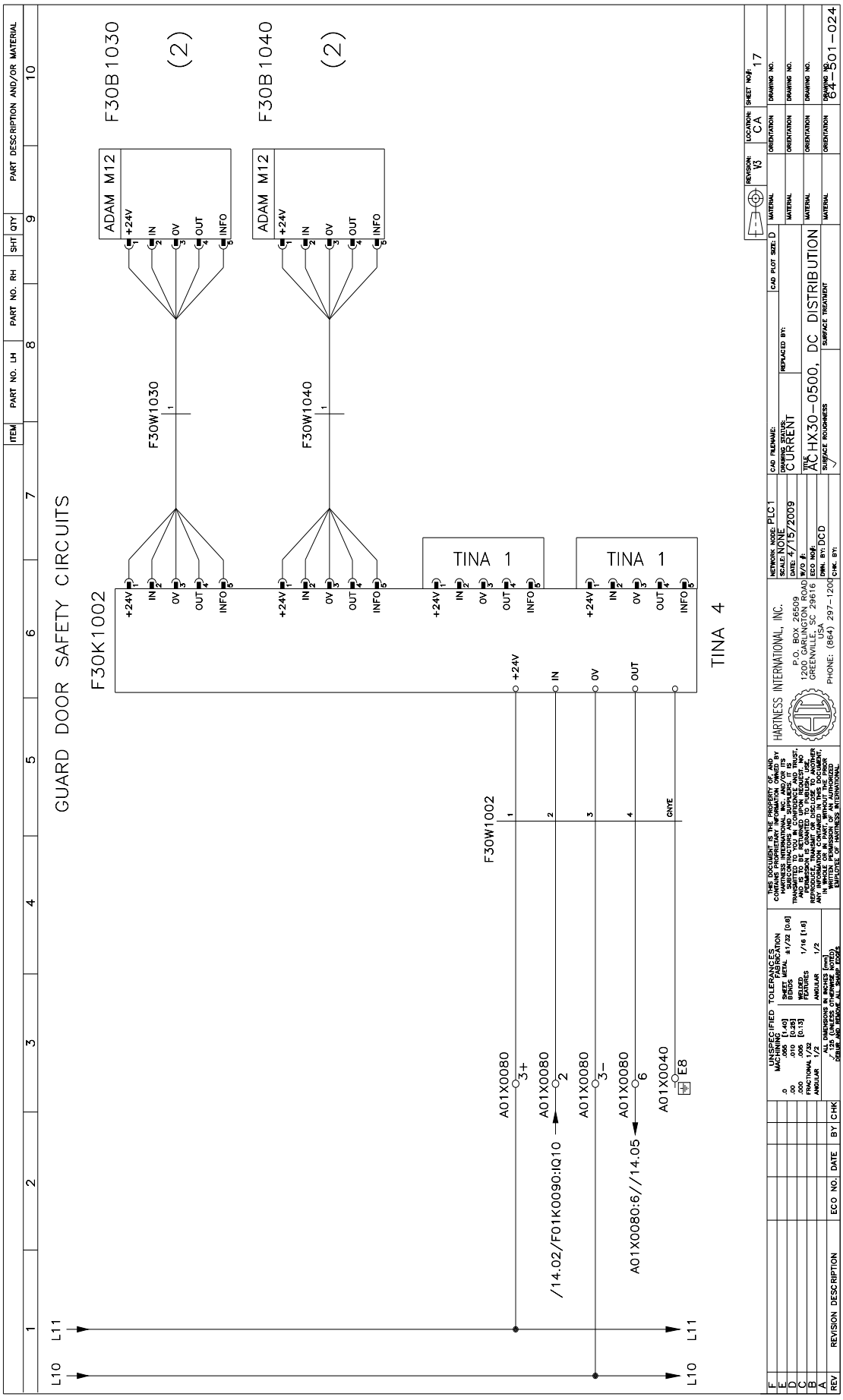
GUARD DOOR SAFETY CIRCUITS
F30K1002
F30B1030
(2)
F30B1040
(2)
ADAM M12
+24V
IN
0V
OUT
INFO
F30W1030
F30W1040
TINA 1
TINA 4
F30W1002
A01X0080
A01X0040
/14.02/F01K0090:IQ10
A01X0080:6//14.05
L10
L11
HARTNESS INTERNATIONAL, INC.
P.O. BOX 26509
1200 GARLINGTON ROAD
GREENVILLE, SC 29616
USA
PHONE: (864) 297-1200
AC HX30-0500, DC DISTRIBUTION
CURRENT
64-301-024

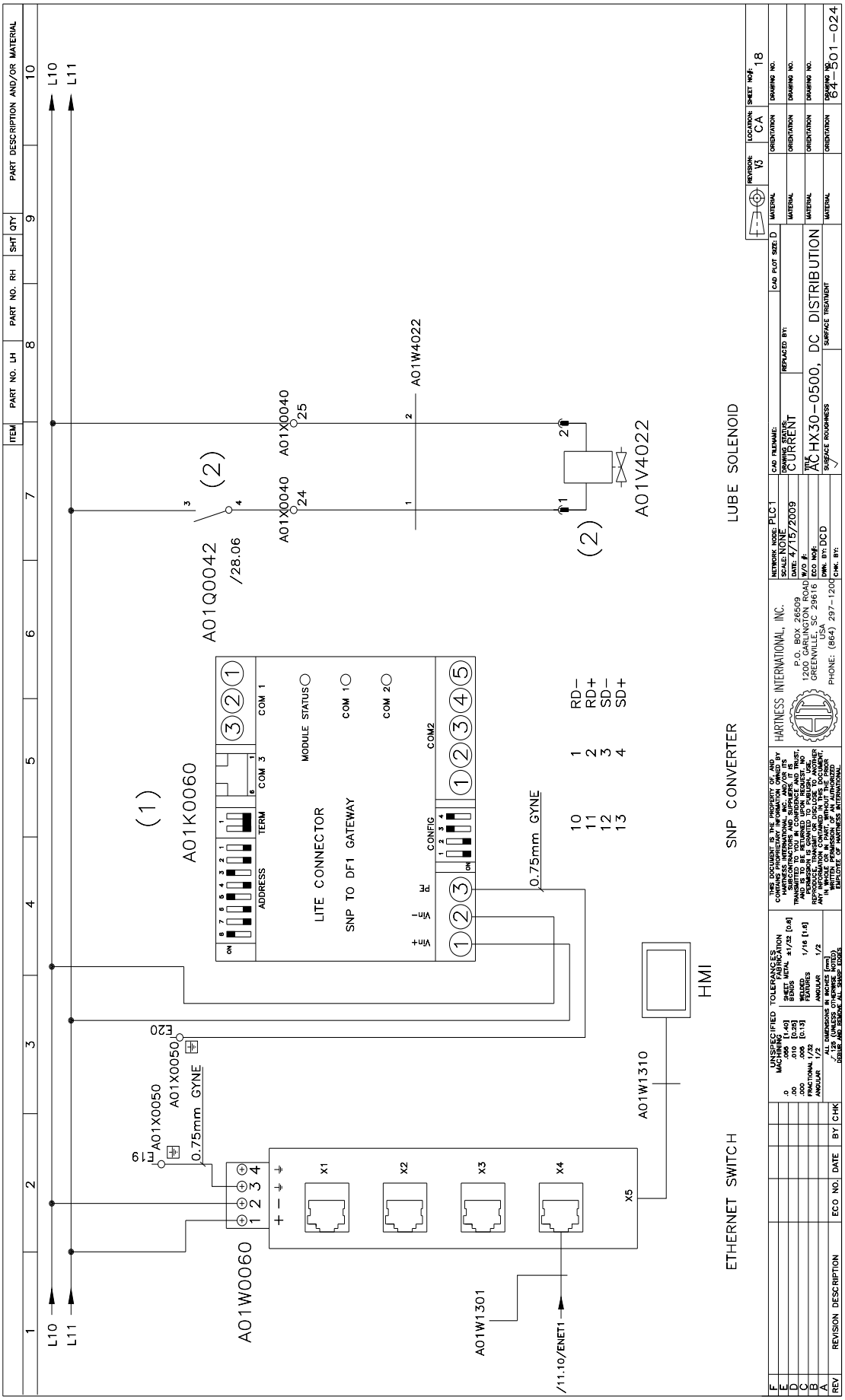
L10
L11
A01W0060
A01X0050
E19
E20
0.75mm GYNE
X1
X2
X3
X4
X5
ETHERNET SWITCH
A01W1310
HMI
A01W1301
/11.10/ENET1
A01K0060
LITE CONNECTOR
SNP TO DF1 GATEWAY
ADDRESS
TERM
COM 3
COM 1
COM 2
MODULE STATUS
CONFIG
COM2
RD−
RD+
SD−
SD+
SNP CONVERTER
A01Q0042
/28.06
A01X0040
25
24
A01W4022
A01V4022
LUBE SOLENOID
AC HX30−0500, DC DISTRIBUTION
HARTNESS INTERNATIONAL, INC.
P.O. BOX 26509
1200 GARLINGTON ROAD
GREENVILLE, SC 29616 USA
PHONE: (864) 297-1200
CAD FILENAME:
DRAWING STATUS: CURRENT
SCALE: NONE
DATE: 4/15/2009
W/O #:
ECO NO#:
DWN. BY: DCD
CHK. BY:
NETWORK NODE: PLC1
REPLACED BY:
CAD PLOT SIZE: D
SURFACE ROUGHNESS
SURFACE TREATMENT
REVISION: V3
LOCATION: CA
SHEET NO#: 18
DRAWING NO. 84−501−024
ITEM
PART NO. LH
PART NO. RH
SHT QTY
PART DESCRIPTION AND/OR MATERIAL
REV
REVISION DESCRIPTION
ECO NO.
DATE
BY
CHK

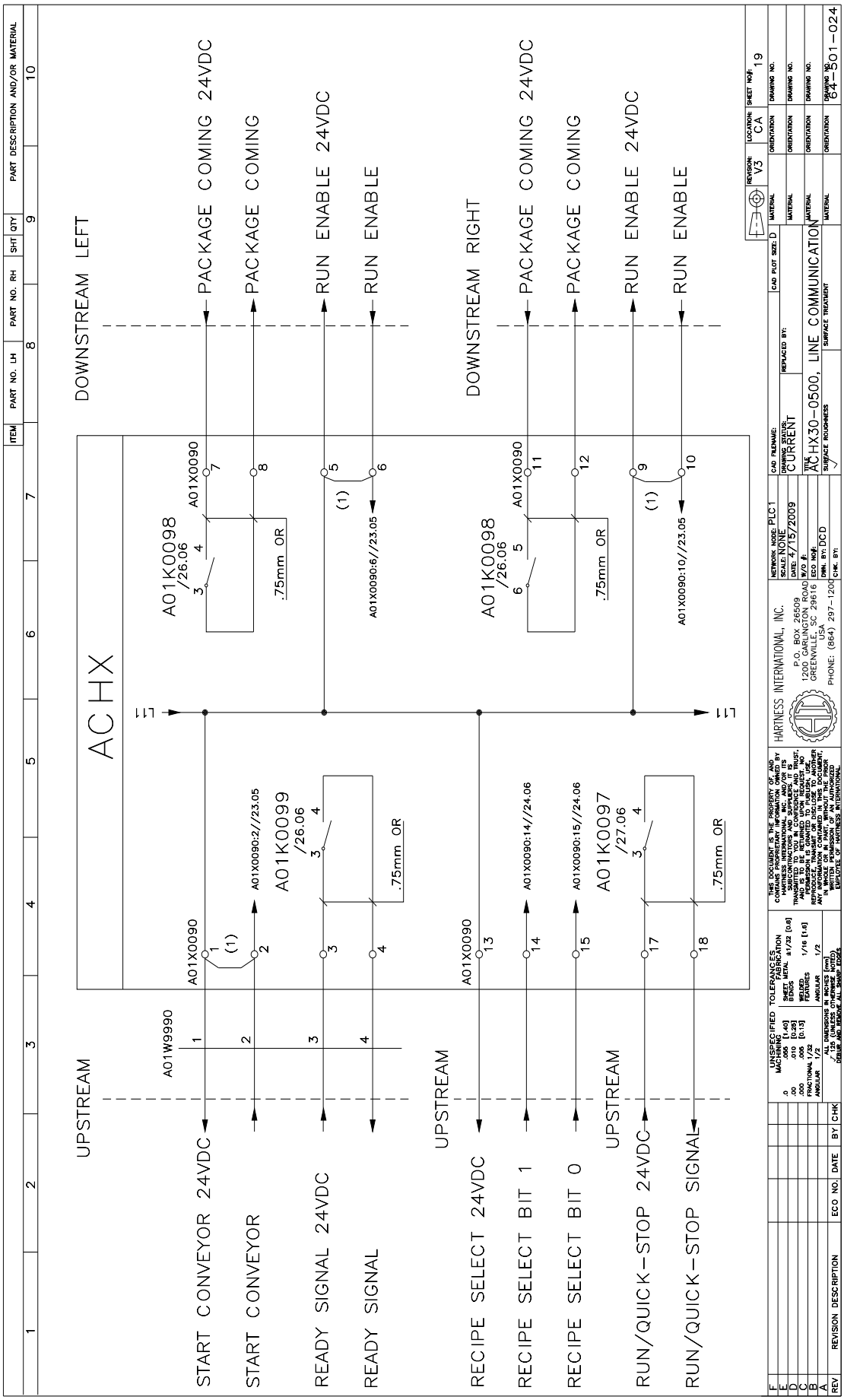
ACHX
UPSTREAM
DOWNSTREAM LEFT
DOWNSTREAM RIGHT
START CONVEYOR 24VDC
START CONVEYOR
READY SIGNAL 24VDC
READY SIGNAL
RECIPE SELECT 24VDC
RECIPE SELECT BIT 1
RECIPE SELECT BIT 0
RUN/QUICK-STOP 24VDC
RUN/QUICK-STOP SIGNAL
PACKAGE COMING 24VDC
PACKAGE COMING
RUN ENABLE 24VDC
RUN ENABLE
A01W9990
A01X0090
A01K0098 /26.06
A01K0099 /26.06
A01K0097 /27.06
A01X0090:2//23.05
A01X0090:6//23.05
A01X0090:14//24.06
A01X0090:15//24.06
A01X0090:10//23.05
.75mm OR
HARTNESS INTERNATIONAL, INC.
P.O. BOX 26509
1200 GARLINGTON ROAD
GREENVILLE, SC 29616
USA
PHONE: (864) 297-1200
NETWORK NODE: PLC1
SCALE: NONE
DATE: 4/15/2009
W/O #:
ECO NO#:
DWN. BY: DCD
CHK. BY:
DRAWING STATUS: CURRENT
TITLE: ACHX30-0500, LINE COMMUNICATION
SURFACE ROUGHNESS
SURFACE TREATMENT
REVISION: V3
LOCATION: CA
SHEET NO#: 19
DRAWING NO: 84-301-024

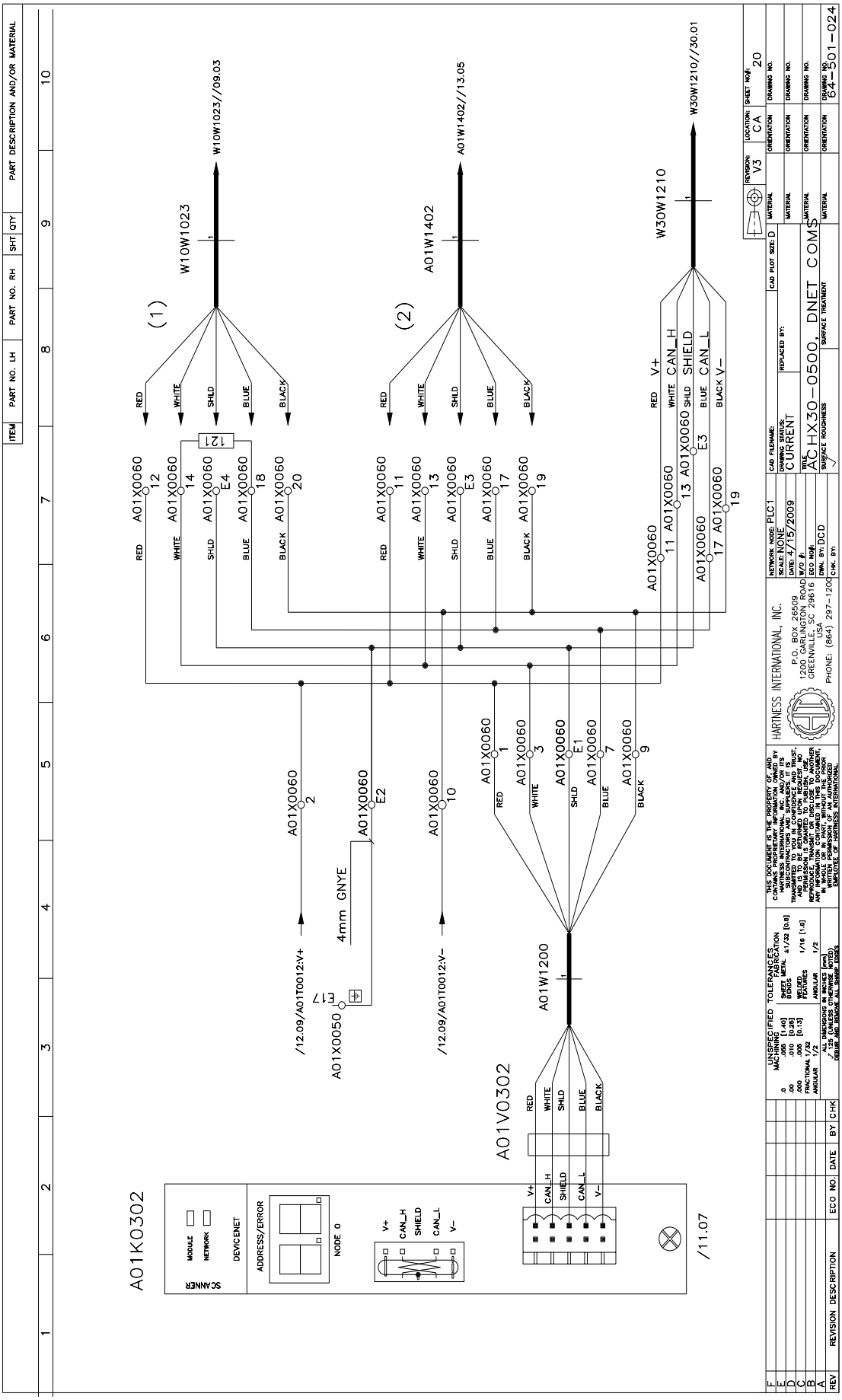
A01K0302
A01V0302
A01W1200
W10W1023//09.03
A01W1402//13.05
W30W1210//30.01
W10W1023
A01W1402
W30W1210
(1)
(2)
RED
WHITE
SHLD
BLUE
BLACK
V+
CAN_H
SHIELD
CAN_L
V-
4mm GNYE
/12.09/A01T0012:V+
/12.09/A01T0012:V-
A01X0050
E17
/11.07
HARTNESS INTERNATIONAL, INC.
P.O. BOX 26509
1200 GARLINGTON ROAD
GREENVILLE, SC 29616
U.S.A.
PHONE: (864) 297-1200
NETWORK NODE: PLC1
DRAWING STATUS: CURRENT
TITLE: ACHX30-0500, DNET COMS
DRAWING NO. 64-501-024

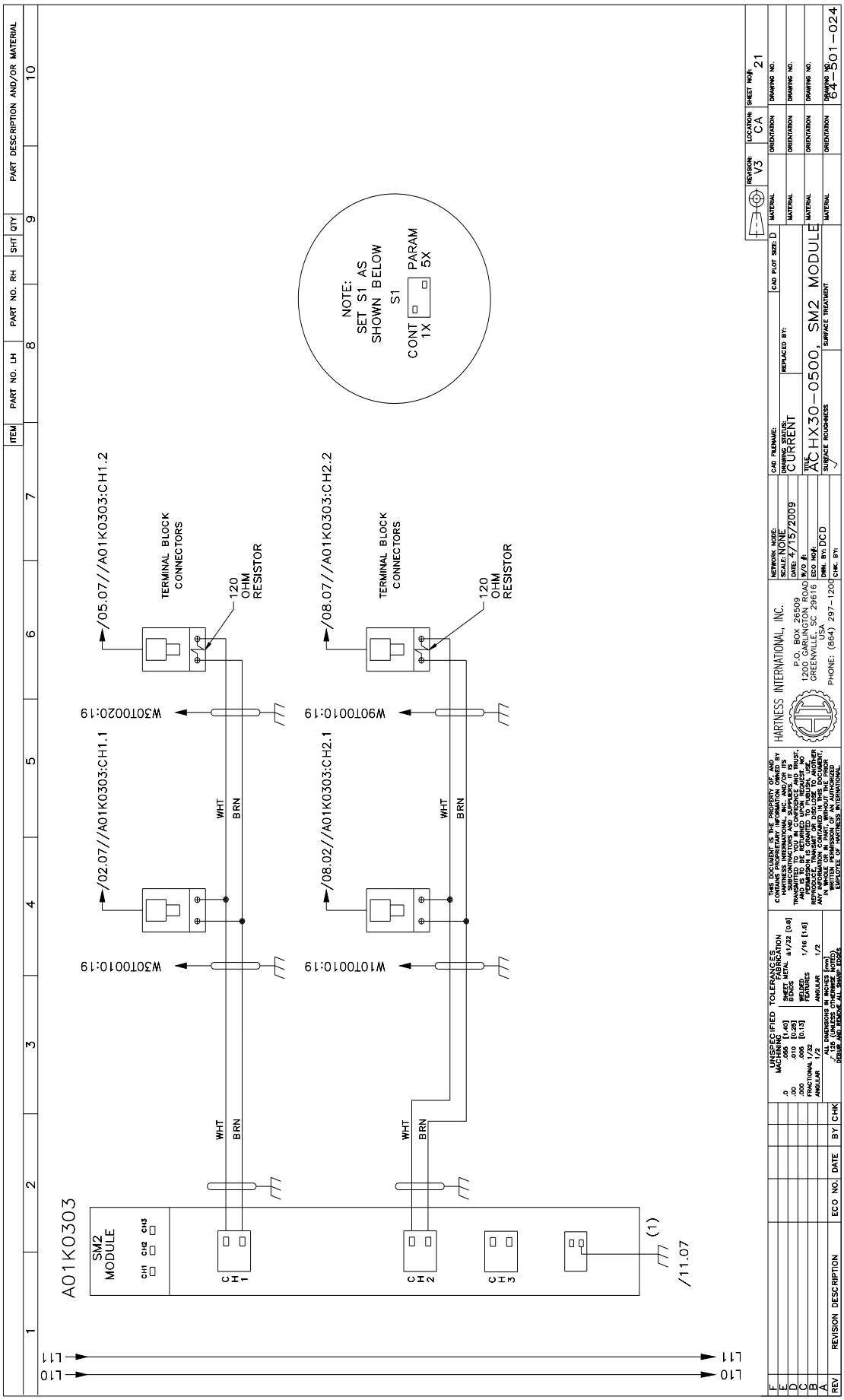
NOTE:
SET S1 AS
SHOWN BELOW
S1
CONT
1X
PARAM
5X
TERMINAL BLOCK
CONNECTORS
120
OHM
RESISTOR
/05.07///A01K0303:CH1.2
/08.07///A01K0303:CH2.2
/02.07///A01K0303:CH1.1
/08.02///A01K0303:CH2.1
W30T0020:19
W90T0010:19
W30T0010:19
W10T0010:19
WHT
BRN
A01K0303
SM2
MODULE
CH1
CH2
CH3
(1)
/11.07
L11
L10
HARTNESS INTERNATIONAL, INC.
P.O. BOX 26509
1200 GARLINGTON ROAD
GREENVILLE, SC 29616
USA
PHONE: (864) 297-1200
AC HX30-0500, SM2 MODULE
CURRENT
4/15/2009
SCALE: NONE
REVISION: V3
LOCATION: CA
SHEET NO#: 21
64-301-024

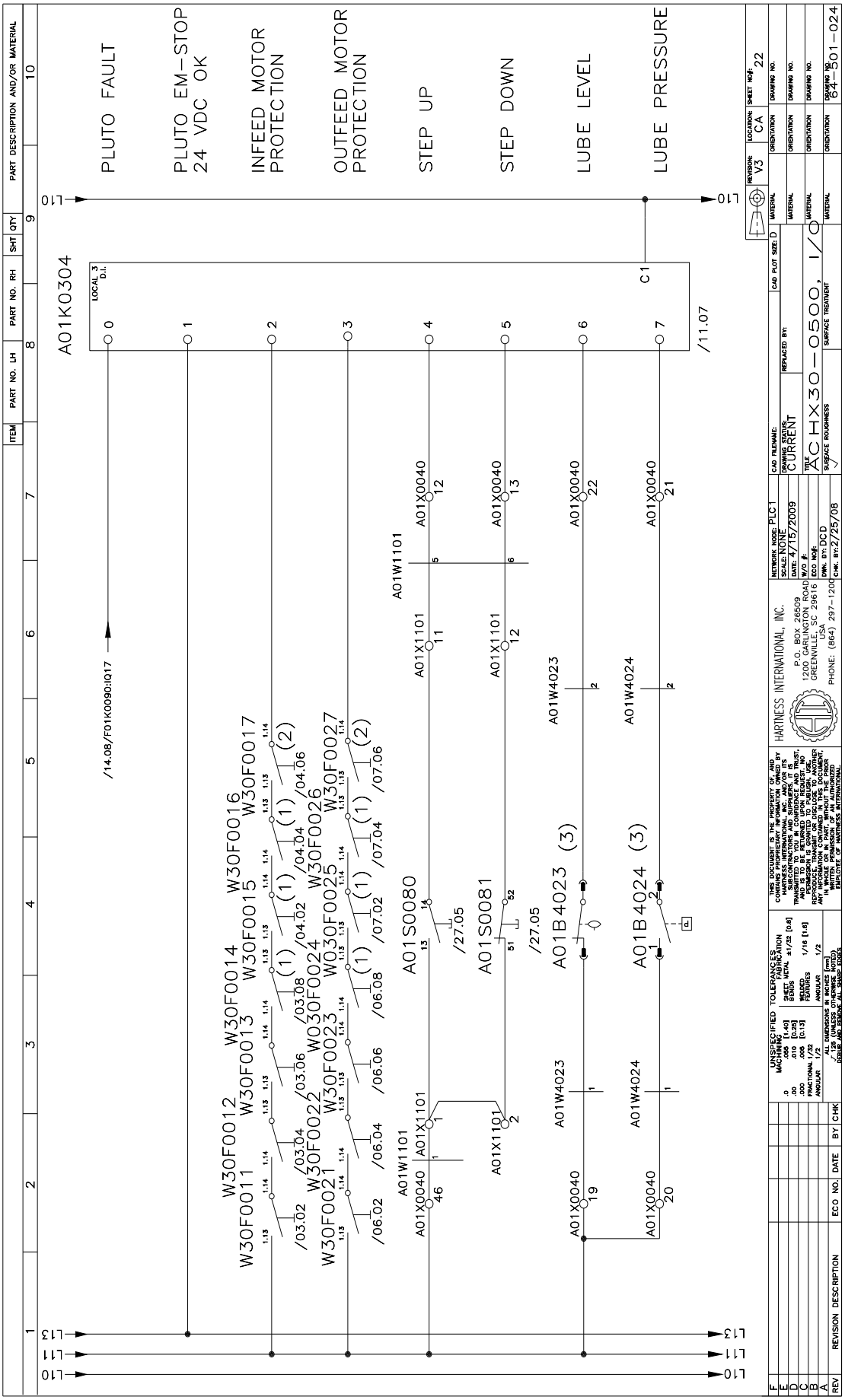
PLUTO FAULT
PLUTO EM-STOP 24 VDC OK
INFEED MOTOR PROTECTION
OUTFEED MOTOR PROTECTION
STEP UP
STEP DOWN
LUBE LEVEL
LUBE PRESSURE
A01K0304
A01W1101
A01W4023
A01W4024
A01S0080
A01S0081
A01B4023 (3)
A01B4024 (3)
W30F0011
W30F0012
W30F0013
W30F0014
W30F0015
W30F0016
W30F0017
W30F0021
W30F0022
W30F0023
W30F0024
W30F0025
W30F0026
W30F0027
/14.08/F01K0090:IQ17
/11.07
HARTNESS INTERNATIONAL, INC.
P.O. BOX 26509
1200 GARLINGTON ROAD
GREENVILLE, SC 29616
PHONE: (864) 297-1200
AC HX30-0500, I/O
84-501-024

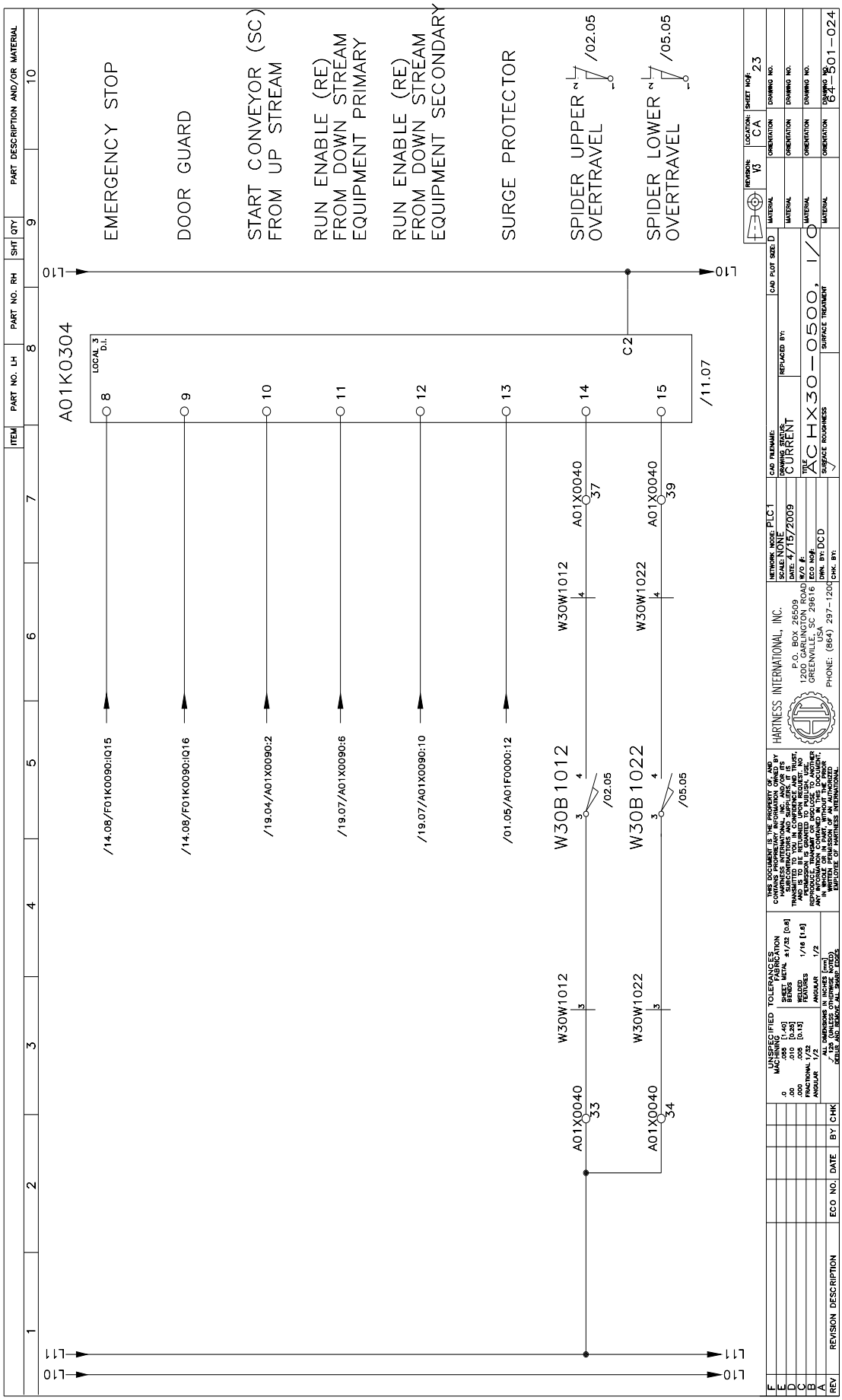
EMERGENCY STOP
DOOR GUARD
START CONVEYOR (SC)
FROM UP STREAM
RUN ENABLE (RE)
FROM DOWN STREAM
EQUIPMENT PRIMARY
RUN ENABLE (RE)
FROM DOWN STREAM
EQUIPMENT SECONDARY
SURGE PROTECTOR
SPIDER UPPER OVERTRAVEL /02.05
SPIDER LOWER OVERTRAVEL /05.05
A01K0304
W30B1012
W30B1022
A01X0040
/14.08/F01K0090:IQ15
/14.08/F01K0090:IQ16
/19.04/A01X0090:2
/19.07/A01X0090:6
/19.07/A01X0090:10
/01.05/A01F0000:12
/11.07
/02.05
/05.05
HARTNESS INTERNATIONAL, INC.
P.O. BOX 26509
1200 GARLINGTON ROAD
GREENVILLE, SC 29616
USA
PHONE: (864) 297-1200
ACHX30-0500, I/O
DRAWING NO. 64-501-024

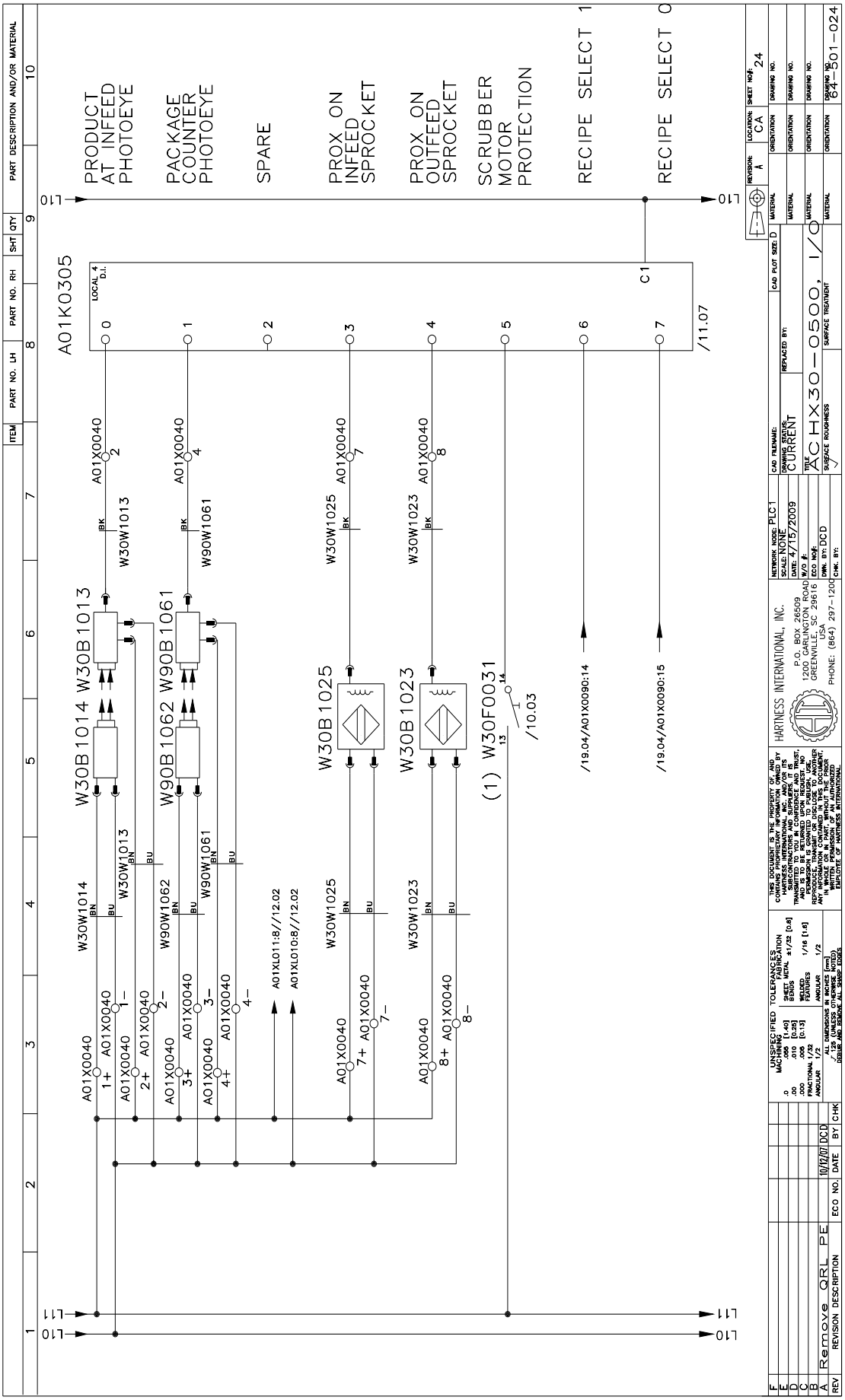
PRODUCT AT INFEED PHOTOEYE
PACKAGE COUNTER PHOTOEYE
SPARE
PROX ON INFEED SPROCKET
PROX ON OUTFEED SPROCKET
SCRUBBER MOTOR PROTECTION
RECIPE SELECT 1
RECIPE SELECT 0
A01K0305
W30B1014 W30B1013
W90B1062 W90B1061
W30B1025
W30B1023
(1) W30F0031
W30W1014
W30W1013
W90W1062
W90W1061
W30W1025
W30W1023
A01X0040
A01XL011:8/12.02
A01XL010:8/12.02
/19.04/A01X0090:14
/19.04/A01X0090:15
/10.03
/11.07
L10
L11
C1
HARTNESS INTERNATIONAL, INC.
P.O. BOX 26509
1200 GARLINGTON ROAD
GREENVILLE, SC 29616 USA
PHONE: (864) 297-1200
AC HX30-0500, I/O
84-501-024

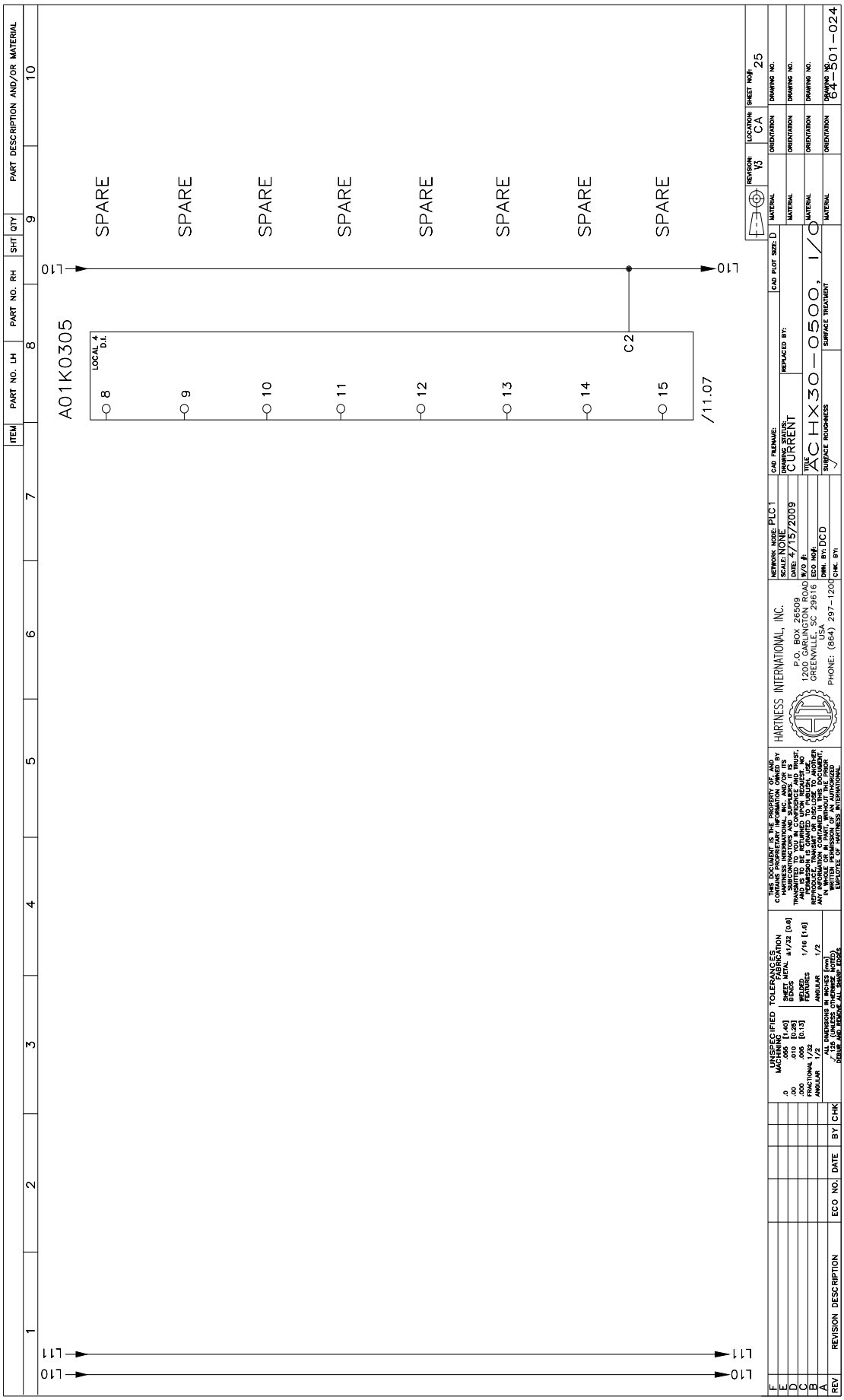
SPARE
SPARE
SPARE
SPARE
SPARE
SPARE
SPARE
SPARE
A01K0305
LOCAL 4 D.I.
8
9
10
11
12
13
14
15
C2
/11.07
L10
L11
PART DESCRIPTION AND/OR MATERIAL
QTY
SHT
PART NO. RH
PART NO. LH
ITEM
REVISION DESCRIPTION
ECO NO.
DATE
BY
CHK
UNSPECIFIED TOLERANCES
MACHINING
SHEET METAL
WELDED
ASSEMBLIES
ANGULAR
ALL DIMENSIONS IN INCHES [mm]
HARTNESS INTERNATIONAL, INC.
P.O. BOX 26509
1200 DARLINGTON ROAD
GREENVILLE, SC 29616
USA
PHONE: (864) 297-1200
NETWORK NODE: PLC1
SCALE: NONE
DATE: 4/15/2009
W/O #:
ECO NO#:
DWN. BY: DCD
CHK. BY:
CAD FILENAME:
DRAWING STATUS: CURRENT
REPLACED BY:
TITLE
AC HX30-0500, I/O
SURFACE ROUGHNESS
SURFACE TREATMENT
CAD PLOT SIZE: D
MATERIAL
REVISION: V3
LOCATION: CA
SHEET NO#: 25
ORIENTATION
DRAWING NO.
64-301-024

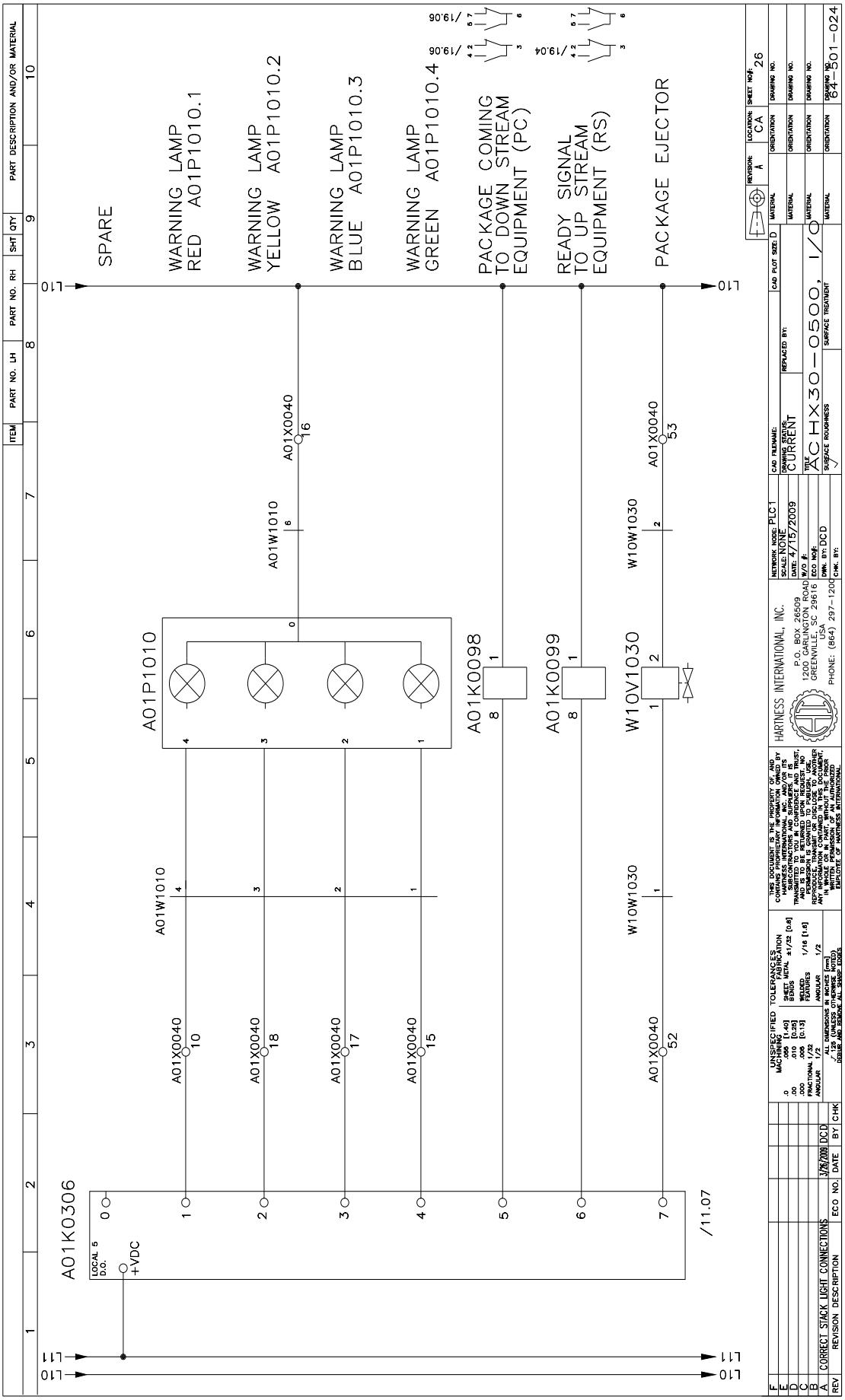
SPARE
WARNING LAMP RED A01P1010.1
WARNING LAMP YELLOW A01P1010.2
WARNING LAMP BLUE A01P1010.3
WARNING LAMP GREEN A01P1010.4
PACKAGE COMING TO DOWN STREAM EQUIPMENT (PC)
READY SIGNAL TO UP STREAM EQUIPMENT (RS)
PACKAGE EJECTOR
A01K0306
A01P1010
A01K0098
A01K0099
W10V1030
A01W1010
W10W1030
A01X0040
+VDC
HARTNESS INTERNATIONAL, INC.
P.O. BOX 26509
1200 GARLINGTON ROAD
GREENVILLE, SC 29616
PHONE: (864) 297-1200
AC HX30-0500, I/O
CURRENT
CORRECT STACK LIGHT CONNECTIONS
REVISION DESCRIPTION

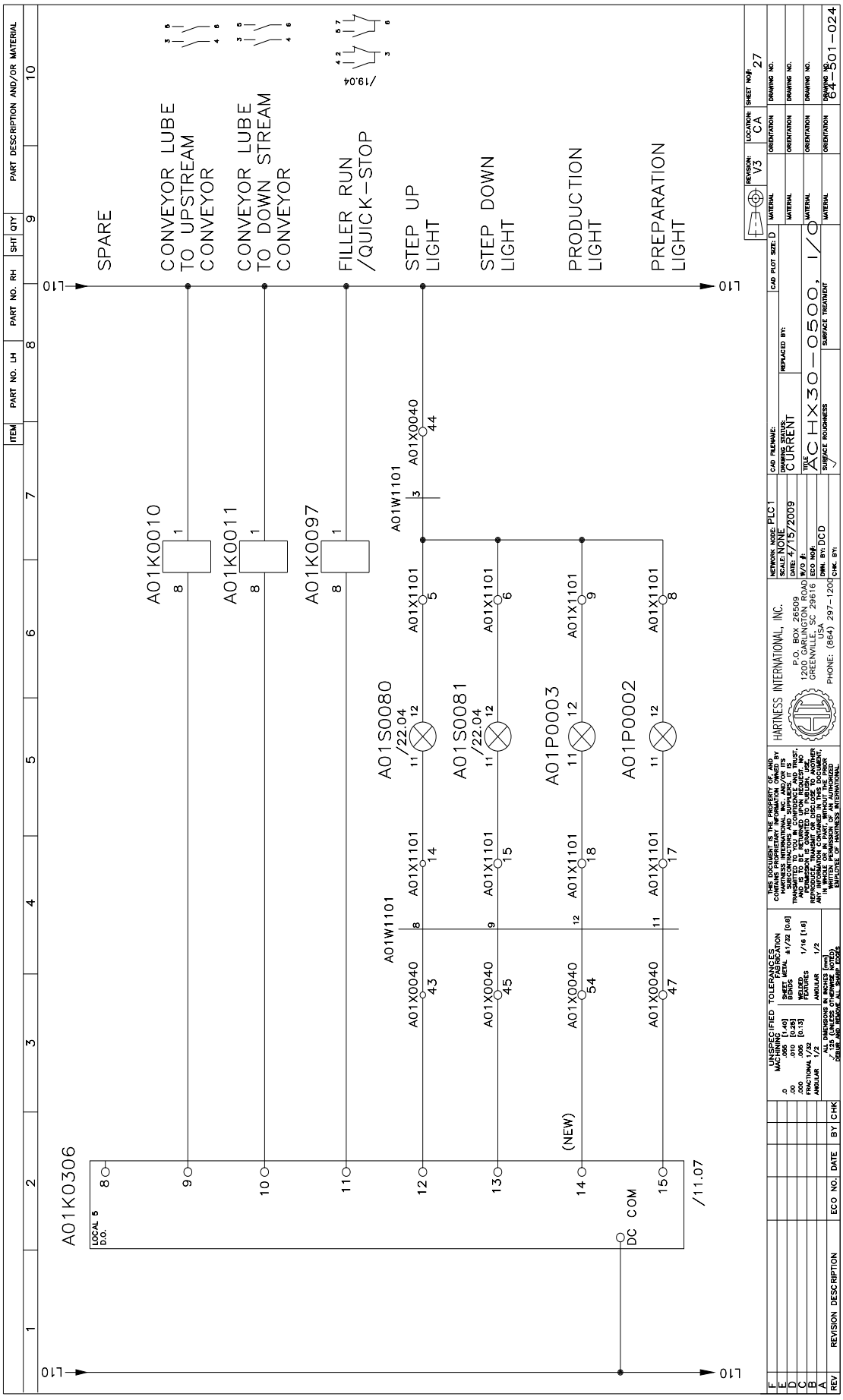
SPARE
CONVEYOR LUBE TO UPSTREAM CONVEYOR
CONVEYOR LUBE TO DOWN STREAM CONVEYOR
FILLER RUN /QUICK-STOP
STEP UP LIGHT
STEP DOWN LIGHT
PRODUCTION LIGHT
PREPARATION LIGHT
A01K0306
A01K0010
A01K0011
A01K0097
A01S0080
A01S0081
A01P0003
A01P0002
A01W1101
A01X0040
A01X1101
(NEW)
DC COM
HARTNESS INTERNATIONAL, INC.
P.O. BOX 26509
1200 GARLINGTON ROAD
GREENVILLE, SC 29616
USA
PHONE: (864) 297-1200
AC HX30-0500, I/O
CURRENT
4/15/2009
NONE
PLC1

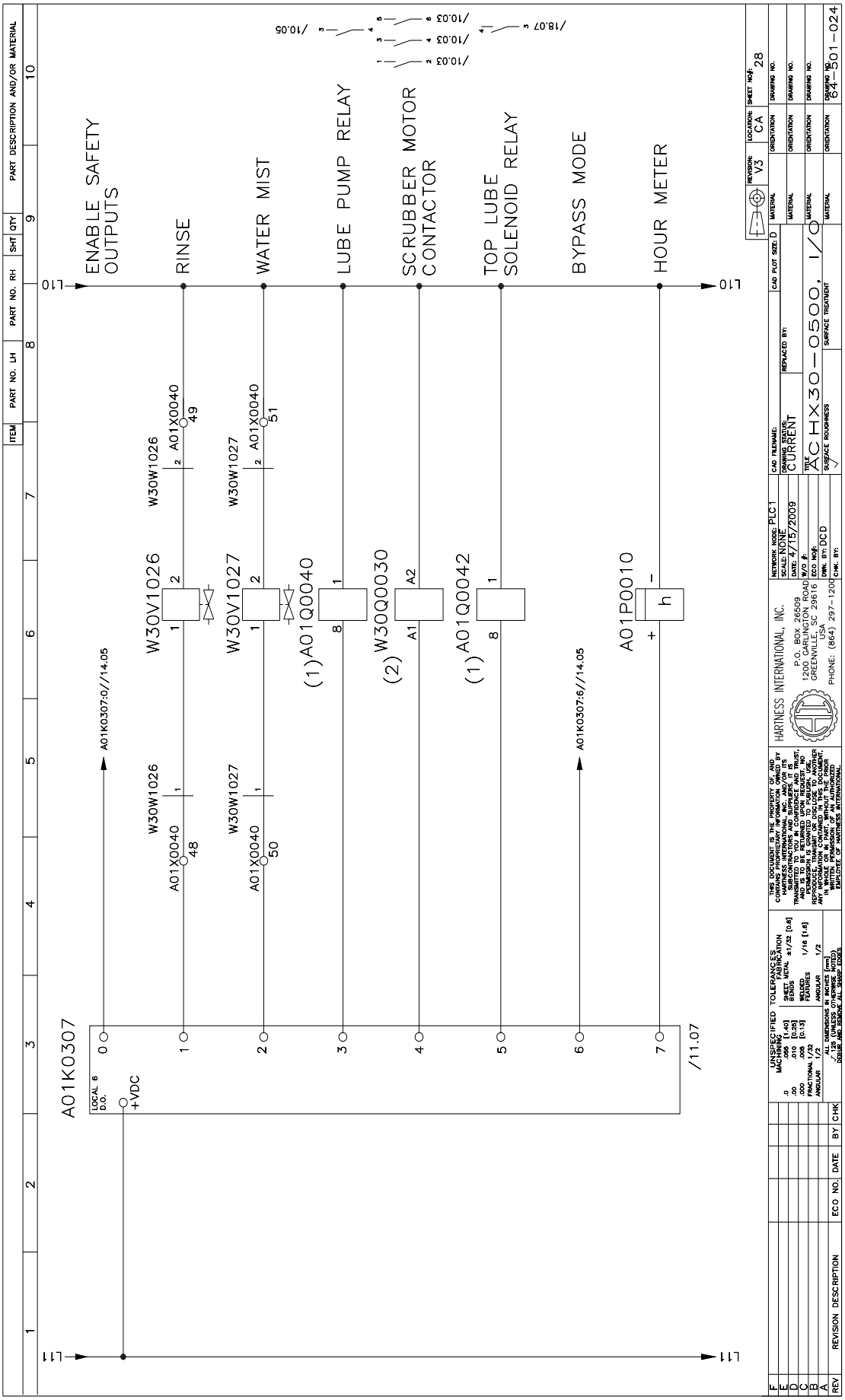
ENABLE SAFETY OUTPUTS
RINSE
WATER MIST
LUBE PUMP RELAY
SCRUBBER MOTOR CONTACTOR
TOP LUBE SOLENOID RELAY
BYPASS MODE
HOUR METER
A01K0307
+VDC
W30V1026
W30V1027
W30W1026
W30W1027
A01X0040
48
49
50
51
(1)A01Q0040
(2)W30Q0030
(1)A01Q0042
A01P0010
A01K0307:0//14.05
A01K0307:6//14.05
/11.07
/10.05
/10.03
/18.07
L10
L11
HARTNESS INTERNATIONAL, INC.
P.O. BOX 26509
1200 GARLINGTON ROAD
GREENVILLE, SC 29616 USA
PHONE: (864) 297-1200
AC HX30-0500, I/O
64-501-024

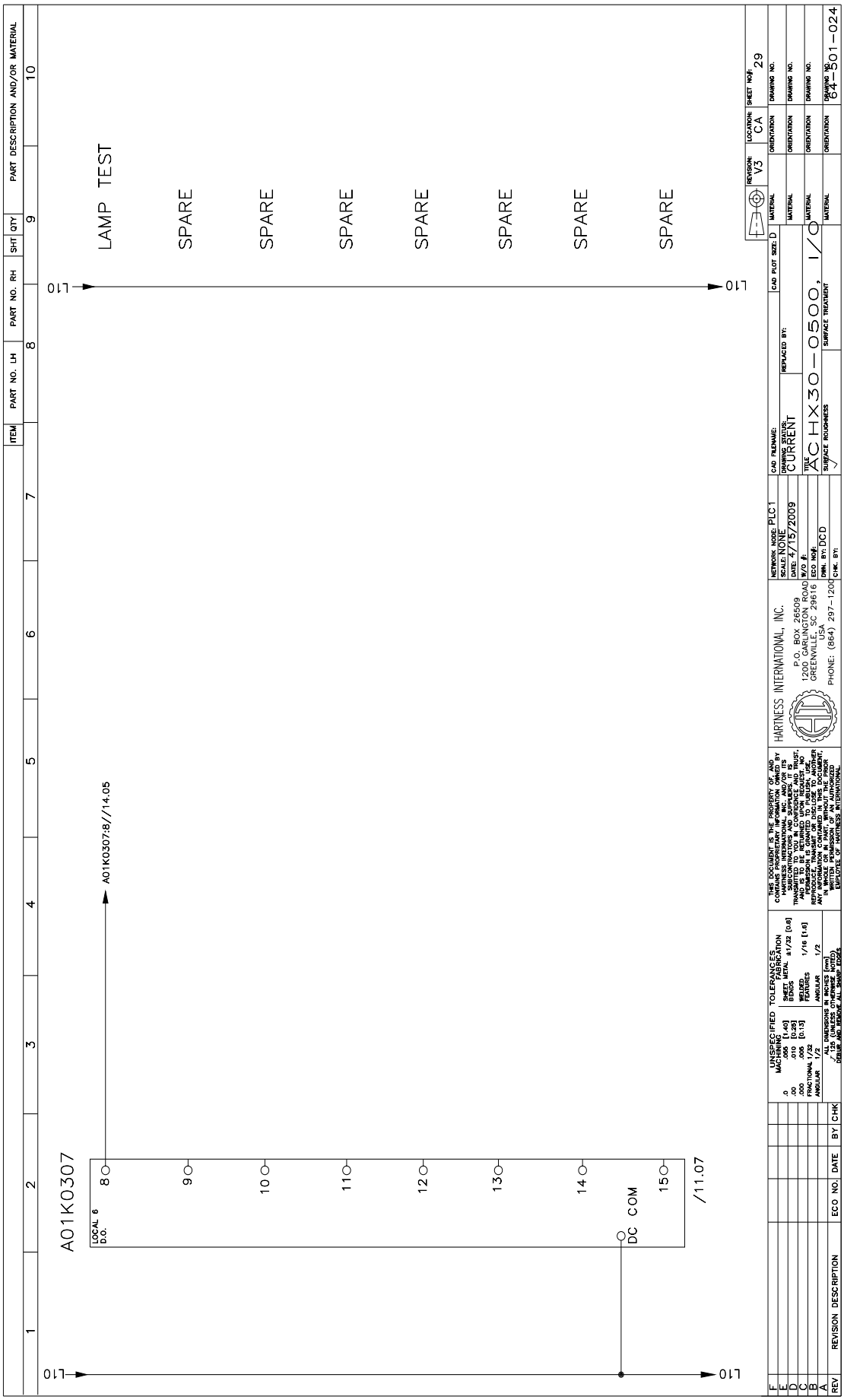
LAMP TEST
SPARE
SPARE
SPARE
SPARE
SPARE
SPARE
SPARE
A01K0307
A01K0307:8//14.05
LOCAL I/O
8
9
10
11
12
13
14
15
DC COM
/11.07
L10
ITEM
PART NO. LH
PART NO. RH
SHT
QTY
PART DESCRIPTION AND/OR MATERIAL
REV
REVISION DESCRIPTION
ECO NO.
DATE
BY
CHK
HARTNESS INTERNATIONAL, INC.
P.O. BOX 26509
1200 DARLINGTON ROAD
GREENVILLE, SC 29616
USA
PHONE: (864) 297-1200
NETWORK NODE: PLC1
SCALE: NONE
DATE: 4/15/2009
W/O #:
ECO NO#:
DWN. BY: DCD
CHK. BY:
CAD FILENAME:
DRAWING STATUS: CURRENT
REPLACED BY:
TITLE
AC HX30-0500, I/O
SURFACE ROUGHNESS
SURFACE TREATMENT
CAD PLOT SIZE: D
MATERIAL
ORIENTATION
REVISION: V3
LOCATION: CA
SHEET NO#: 29
DRAWING NO.
64-301-024
UNSPECIFIED TOLERANCES
MACHINING
.0 ANGLES [1.0]
.00 .010 [0.25]
.000 .005 [0.13]
FRACTIONAL 1/32
ANGULAR 1/2
FABRICATION
SHEET METAL ±1/32 [0.8]
BENDS 1/16 [1.6]
WELDED FEATURES 1/2
ALL DIMENSIONS IN INCHES [mm]
X.125 (UNLESS OTHERWISE NOTED)
DEBUR AND BREAK ALL SHARP EDGES
THIS DOCUMENT IS THE PROPERTY OF AND CONTAINS PROPRIETARY INFORMATION OWNED BY HARTNESS INTERNATIONAL, INC. AND/OR ITS SUBCONTRACTORS AND SUPPLIERS. IT IS TRANSMITTED TO YOU IN CONFIDENCE AND TRUST, AND IS TO BE RETURNED UPON REQUEST. NO PROPRIETARY RIGHTS ARE CONVEYED TO YOU. YOU MAY NOT REPRODUCE, TRANSMIT OR DISCLOSE TO ANOTHER ANY INFORMATION CONTAINED IN THIS DRAWING WITHOUT PERMISSION OF AN AUTHORIZED EMPLOYEE OF HARTNESS INTERNATIONAL.

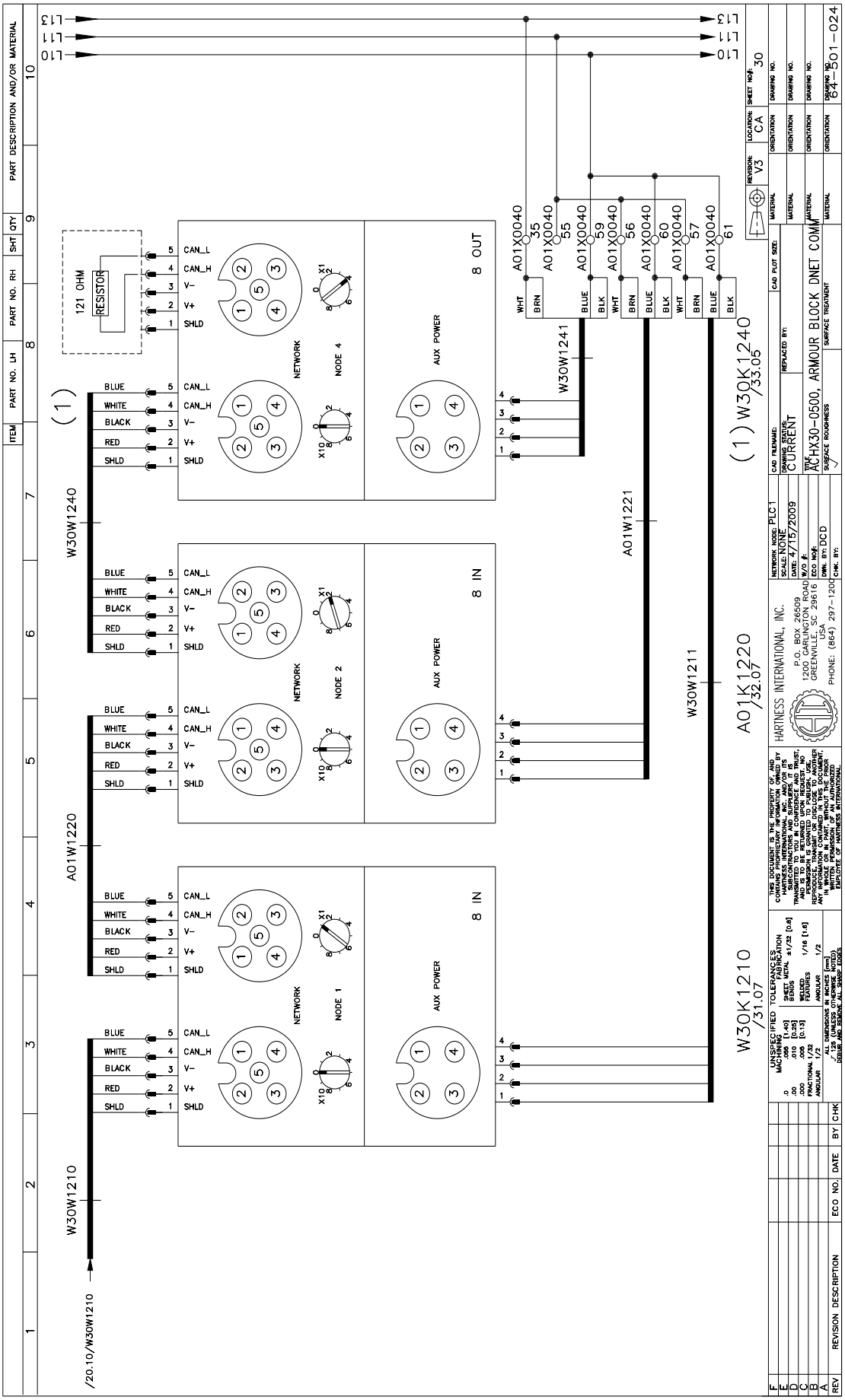
W30W1210
W30W1240
A01W1220
A01W1221
W30W1211
W30W1241
W30K1210 /31.07
A01K1220 /32.07
(1) W30K1240 /33.05
121 OHM RESISTOR
NETWORK
AUX POWER
8 IN
8 OUT
NODE 1
NODE 2
NODE 4
CAN_L
CAN_H
V–
V+
SHLD
BLUE
WHITE
BLACK
RED
SHLD
A01X0040 35
A01X0040 55
A01X0040 59
A01X0040 56
A01X0040 60
A01X0040 57
A01X0040 61
WHT
BRN
BLUE
BLK
L13
L11
L10
HARTNESS INTERNATIONAL, INC.
P.O. BOX 26509
1200 GARLINGTON ROAD
GREENVILLE, SC 29616
PHONE: (864) 297-1200
ACHX30-0500, ARMOUR BLOCK DNET COMM
CURRENT
4/15/2009
NONE
PLC1
DCD
CA
V3
30
/20.10/W30W1210

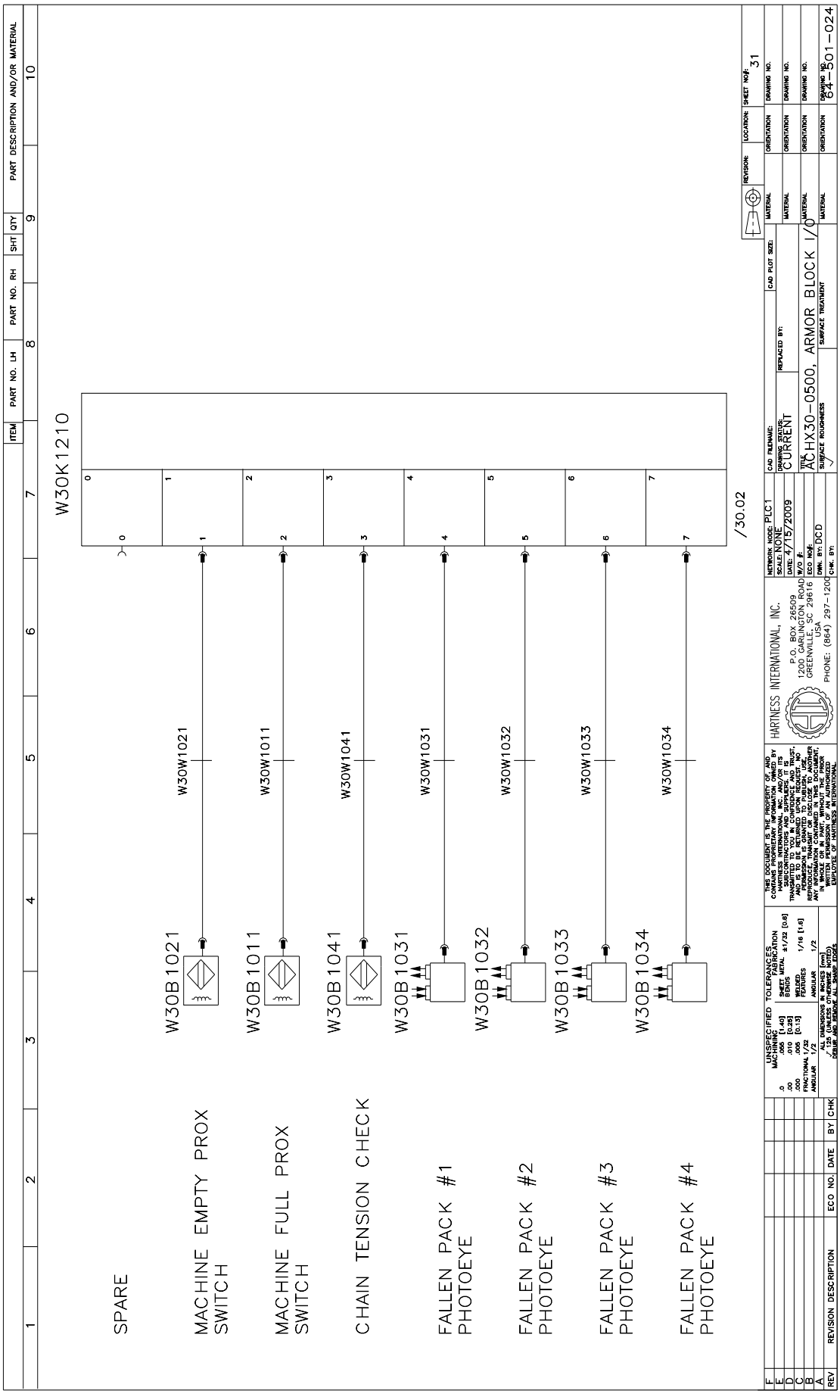
W30K1210
SPARE
MACHINE EMPTY PROX SWITCH
MACHINE FULL PROX SWITCH
CHAIN TENSION CHECK
FALLEN PACK #1 PHOTOEYE
FALLEN PACK #2 PHOTOEYE
FALLEN PACK #3 PHOTOEYE
FALLEN PACK #4 PHOTOEYE
W30B1021
W30B1011
W30B1041
W30B1031
W30B1032
W30B1033
W30B1034
W30W1021
W30W1011
W30W1041
W30W1031
W30W1032
W30W1033
W30W1034
/30.02
HARTNESS INTERNATIONAL, INC.
P.O. BOX 26509
1200 GARLINGTON ROAD
GREENVILLE, SC 29616
USA
PHONE: (864) 297-1200
NETWORK NODE: PLC1
SCALE: NONE
DATE: 4/15/2009
W/O #:
ECO NO#:
DWN. BY: DCD
CHK. BY:
CAD FILENAME:
DRAWING STATUS: CURRENT
REPLACED BY:
CAD PLOT SIZE:
TITLE: AC HX30-0500, ARMOR BLOCK I/O
SURFACE ROUGHNESS
SURFACE TREATMENT
MATERIAL
ORIENTATION
DRAWING NO.
64-301-024
REVISION:
LOCATION:
SHEET NO#: 31
ITEM
PART NO. LH
PART NO. RH
SHT
QTY
PART DESCRIPTION AND/OR MATERIAL
REV
REVISION DESCRIPTION
ECO NO.
DATE
BY
CHK
UNSPECIFIED TOLERANCES
MACHINING
.0 ANGLES [1.40]
.00 .010 [0.25]
.000 .005 [0.13]
FRACTIONAL 1/32
ANGULAR 1°/2
SHEET METAL ±1/32 [0.8]
BENDS 1/16 [1.6]
WELDED FEATURES 1/16 [1.6]
ANGULAR 1/2
ALL DIMENSIONS IN INCHES [mm]
12b (UNLESS OTHERWISE NOTED)
DEBUR AND BREAK ALL SHARP EDGES
THIS DOCUMENT IS THE PROPERTY OF AND CONTAINS PROPRIETARY INFORMATION OWNED BY HARTNESS INTERNATIONAL, INC. AND/OR ITS SUBCONTRACTORS AND SUPPLIERS. IT IS TRANSMITTED TO YOU IN CONFIDENCE AND TRUST, AND IS TO BE RETURNED UPON REQUEST. NO PROPERTY RIGHTS IN THIS DOCUMENT ARE CONVEYED. REPRODUCE, TRANSMIT OR DISCLOSE TO ANOTHER PARTY, IN WHOLE OR IN PART, IN ANY FORM, WITHOUT THE WRITTEN PERMISSION OF AN AUTHORIZED OFFICER OF HARTNESS INTERNATIONAL.

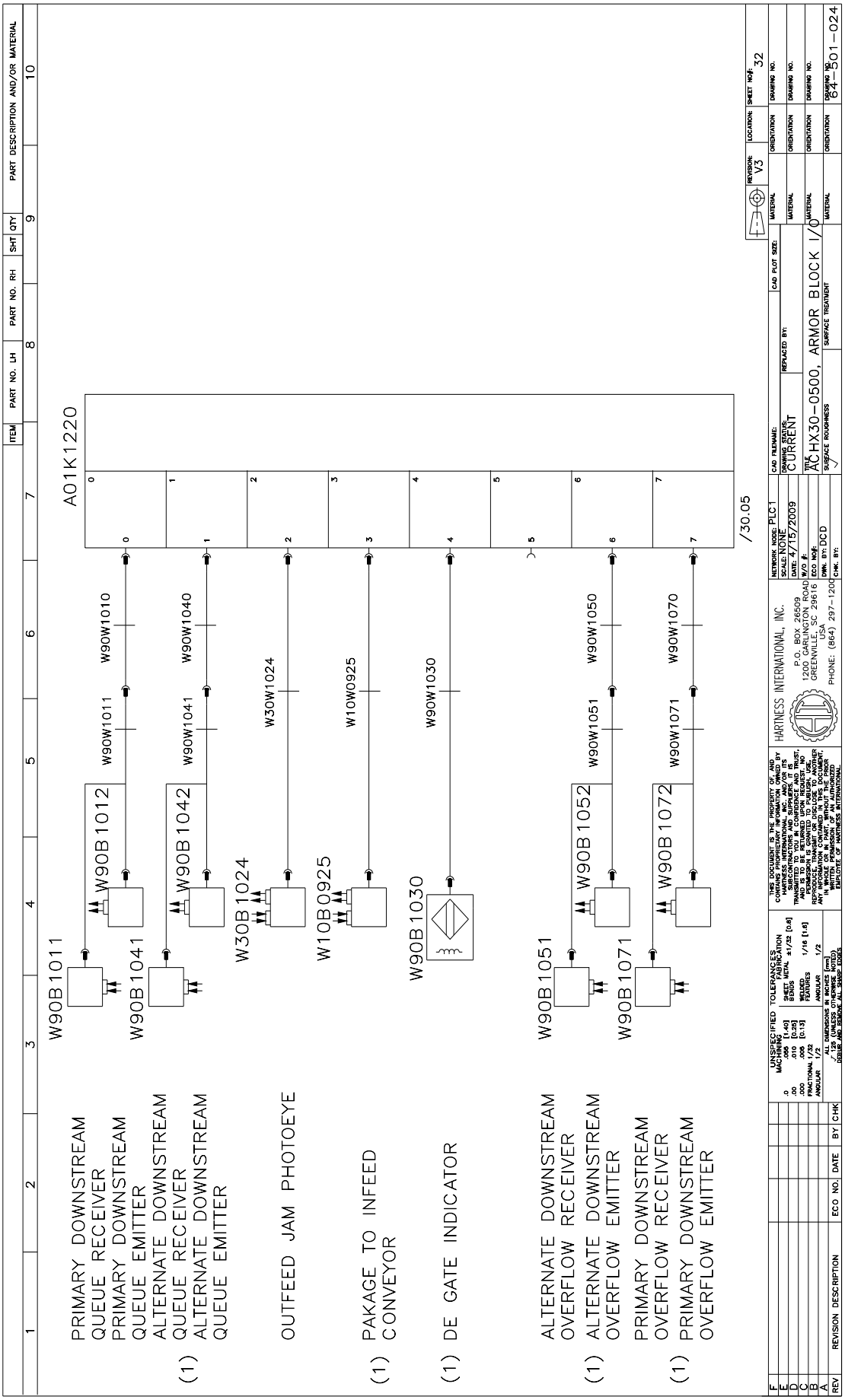
PRIMARY DOWNSTREAM QUEUE RECEIVER
PRIMARY DOWNSTREAM QUEUE EMITTER
ALTERNATE DOWNSTREAM QUEUE RECEIVER
(1) ALTERNATE DOWNSTREAM QUEUE EMITTER
OUTFEED JAM PHOTOEYE
(1) PAKAGE TO INFEED CONVEYOR
(1) DE GATE INDICATOR
ALTERNATE DOWNSTREAM OVERFLOW RECEIVER
(1) ALTERNATE DOWNSTREAM OVERFLOW EMITTER
PRIMARY DOWNSTREAM OVERFLOW RECEIVER
(1) PRIMARY DOWNSTREAM OVERFLOW EMITTER
W90B1011
W90B1041
W90B1012
W90B1042
W30B1024
W10B0925
W90B1030
W90B1051
W90B1071
W90B1052
W90B1072
W90W1010
W90W1040
W30W1024
W10W0925
W90W1030
W90W1050
W90W1070
W90W1011
W90W1041
W90W1051
W90W1071
A01K1220
/30.05
HARTNESS INTERNATIONAL, INC.
P.O. BOX 26509
1200 GARLINGTON ROAD
GREENVILLE, SC 29616 USA
PHONE: (864) 297-1200
NETWORK NODE: PLC1
SCALE: NONE
DATE: 4/15/2009
W/O #:
ECO NO#:
DWN. BY: DCD
CHK. BY:
CAD FILENAME:
DRAWING STATUS: CURRENT
REPLACED BY:
CAD PLOT SIZE:
TITLE: AC HX30-0500, ARMOR BLOCK I/O
SURFACE TREATMENT
REVISION: V3
LOCATION:
SHEET NO#: 32
DRAWING NO. 84-501-024

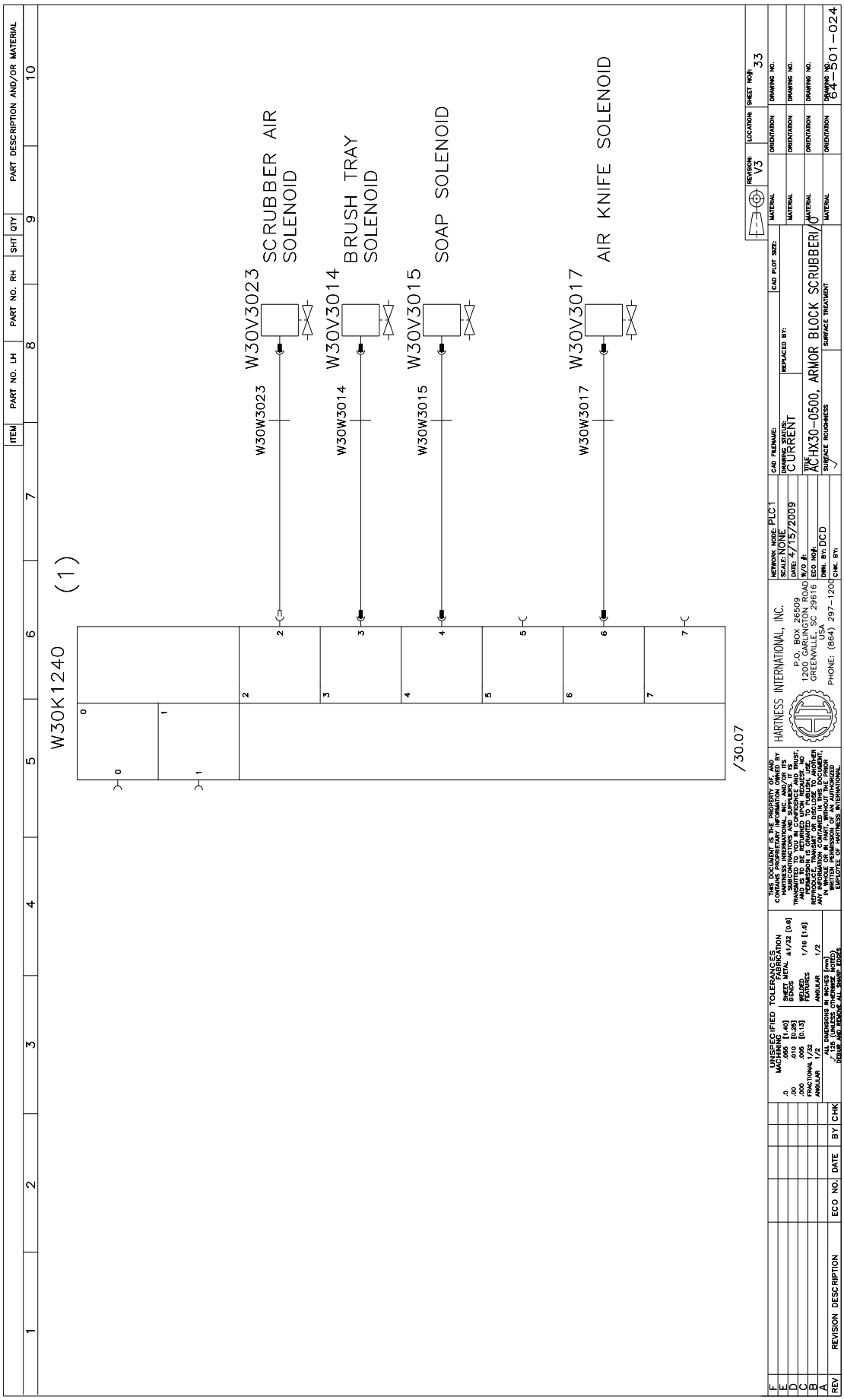
W30K1240
(1)
/30.07
W30W3023
W30V3023
SCRUBBER AIR SOLENOID
W30W3014
W30V3014
BRUSH TRAY SOLENOID
W30W3015
W30V3015
SOAP SOLENOID
W30W3017
W30V3017
AIR KNIFE SOLENOID
HARTNESS INTERNATIONAL, INC.
P.O. BOX 26509
1200 GARLINGTON ROAD
GREENVILLE, SC 29616
USA
PHONE: (864) 297-1200
NETWORK NODE: PLC1
SCALE: NONE
DATE: 4/15/2009
W/O #:
ECO NO#:
DWN. BY: DCD
CHK. BY:
CAD FILENAME:
DRAWING STATUS: CURRENT
REPLACED BY:
CAD PLOT SIZE:
TITLE: ACHX30-0500, ARMOR BLOCK SCRUBBER
SURFACE ROUGHNESS
SURFACE TREATMENT
MATERIAL
REVISION: V3
LOCATION:
SHEET NO#: 33
ORIENTATION
DRAWING NO.
64-301-024
ITEM
PART NO. LH
PART NO. RH
SHT
QTY
PART DESCRIPTION AND/OR MATERIAL
REV
REVISION DESCRIPTION
ECO NO.
DATE
BY
CHK
UNSPECIFIED TOLERANCES
MACHINING
SHEET METAL ±1/32 [0.8]
WELDED ASSEMBLIES 1/16 [1.6]
FRACTIONAL 1/32
ANGULAR 1/2
ALL DIMENSIONS IN INCHES [mm]
.125 (UNLESS OTHERWISE NOTED)
DEBUR AND BREAK ALL SHARP EDGES
THIS DOCUMENT IS THE PROPERTY OF AND CONTAINS PROPRIETARY INFORMATION OWNED BY HARTNESS INTERNATIONAL, INC. AND ITS SUBCONTRACTORS AND SUPPLIERS. IT IS TRANSMITTED TO YOU IN CONFIDENCE AND TRUST, AND IS TO BE RETURNED UPON REQUEST. NO PROPRIETARY RIGHTS ARE CONVEYED TO YOU. IT MAY NOT BE REPRODUCED, TRANSMIT OR DISCLOSE TO ANOTHER PERSON IN WHOLE OR IN PART, NOR USED FOR ANY PURPOSE OTHER THAN THAT FOR WHICH IT IS FURNISHED, WITHOUT PERMISSION OF AN AUTHORIZED EXECUTIVE OF HARTNESS INTERNATIONAL.

This page intentionally left blank

4.2 CSA Version

This page intentionally left blank

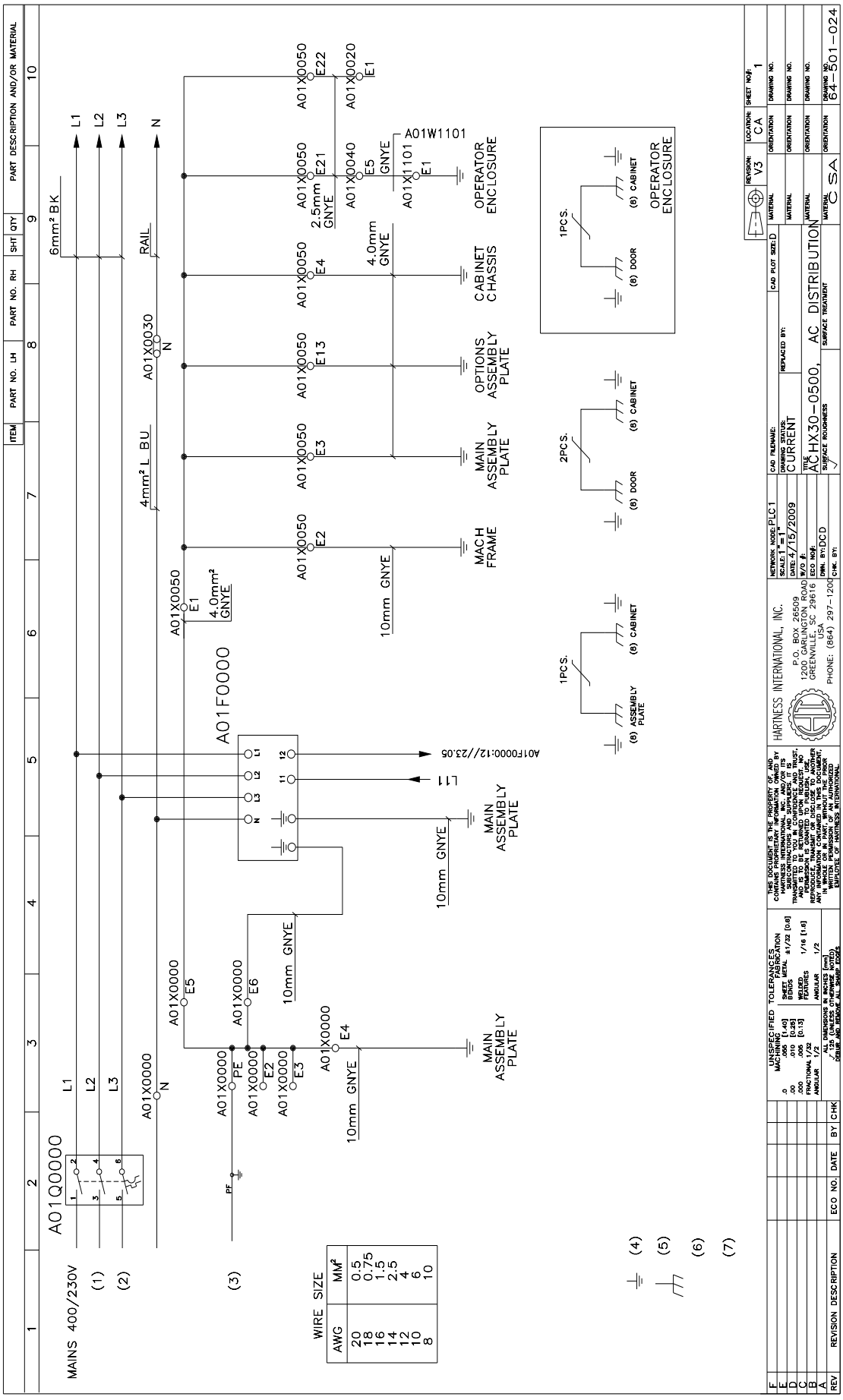
MAINS 400/230V
A01Q0000
L1
L2
L3
N
PE
(1)
(2)
(3)
(4)
(5)
(6)
(7)
A01X0000
A01X0030
A01X0050
A01X0020
A01X0040
A01X1101
A01W1101
A01F0000
6mm² BK
4mm² L BU
4.0mm² GNYE
2.5mm GNYE
4.0mm GNYE
10mm GNYE
RAIL
MACH FRAME
MAIN ASSEMBLY PLATE
OPTIONS ASSEMBLY PLATE
CABINET CHASSIS
OPERATOR ENCLOSURE
1PCS.
2PCS.
(8) CABINET
(8) DOOR
(8) ASSEMBLY PLATE
A01F0000:12//23.05
WIRE SIZE
AWG
MM²
20 0.5
18 0.75
16 1.5
14 2.5
12 4
10 6
8 10
HARTNESS INTERNATIONAL, INC.
P.O. BOX 26509
1200 GARLINGTON ROAD
GREENVILLE, SC 29616
USA
PHONE: (864) 297-1200
AC HX30-0500, AC DISTRIBUTION
DRAWING NO. 64-501-024
REVISION: V3
SHEET NO#: 1

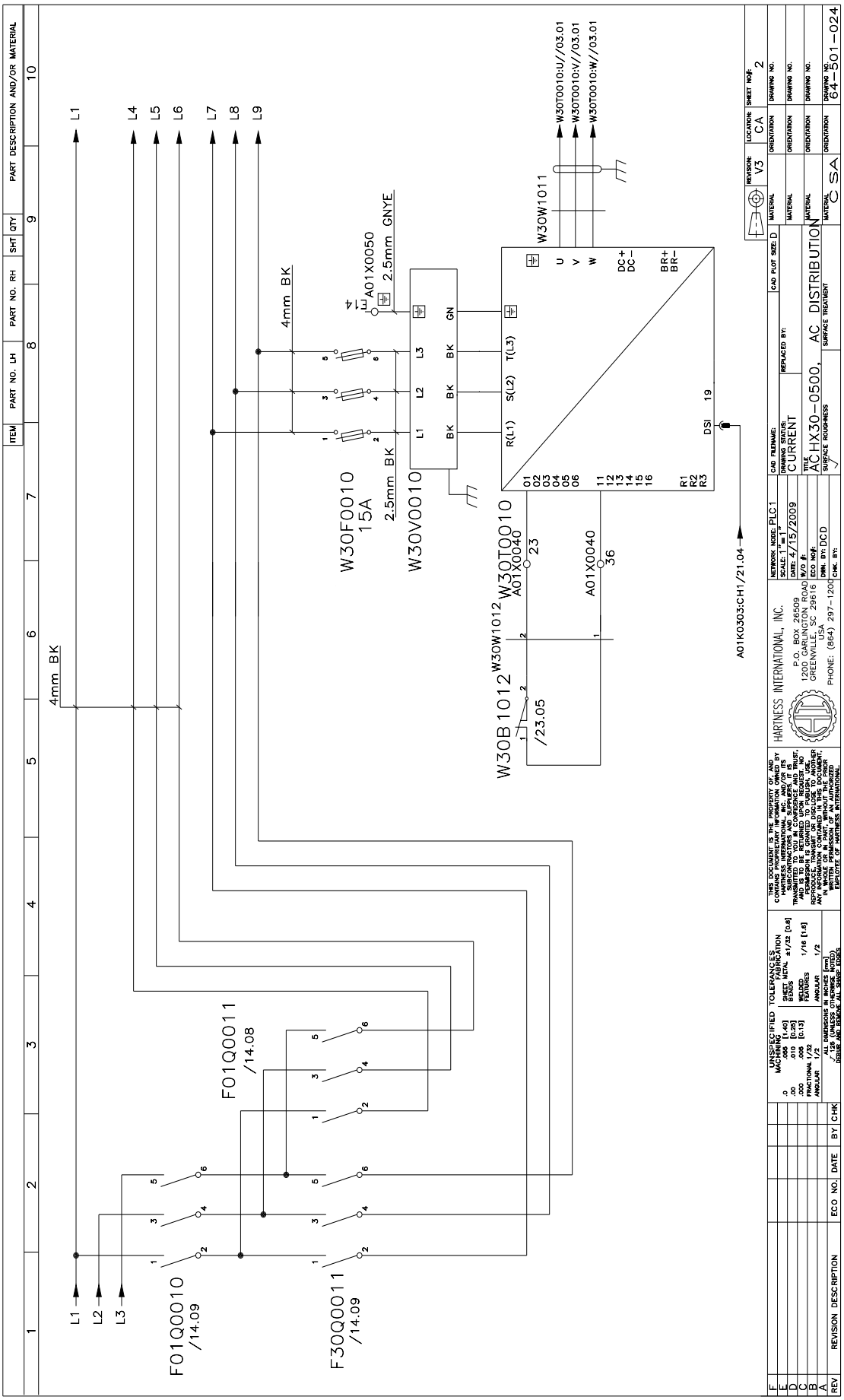
L1
L2
L3
L4
L5
L6
L7
L8
L9
4mm BK
4mm BK
2.5mm BK
2.5mm GNYE
W30F0010
15A
W30V0010
A01X0050
W30W1011
W30T0010:U//03.01
W30T0010:V//03.01
W30T0010:W//03.01
W30B1012
W30W1012
W30T0010
A01X0040
A01X0040
/23.05
A01K0303:CH1/21.04
F01Q0010
/14.09
F01Q0011
/14.08
F30Q0011
/14.09
R(L1)
S(L2)
T(L3)
DC+
DC-
BR+
BR-
DSI
R1
R2
R3
U
V
W
HARTNESS INTERNATIONAL, INC.
P.O. BOX 26509
1200 GARLINGTON ROAD
GREENVILLE, SC 29616
PHONE: (864) 297-1200
AC DISTRIBUTION
ACHX30-0500,
CSA
64-501-024

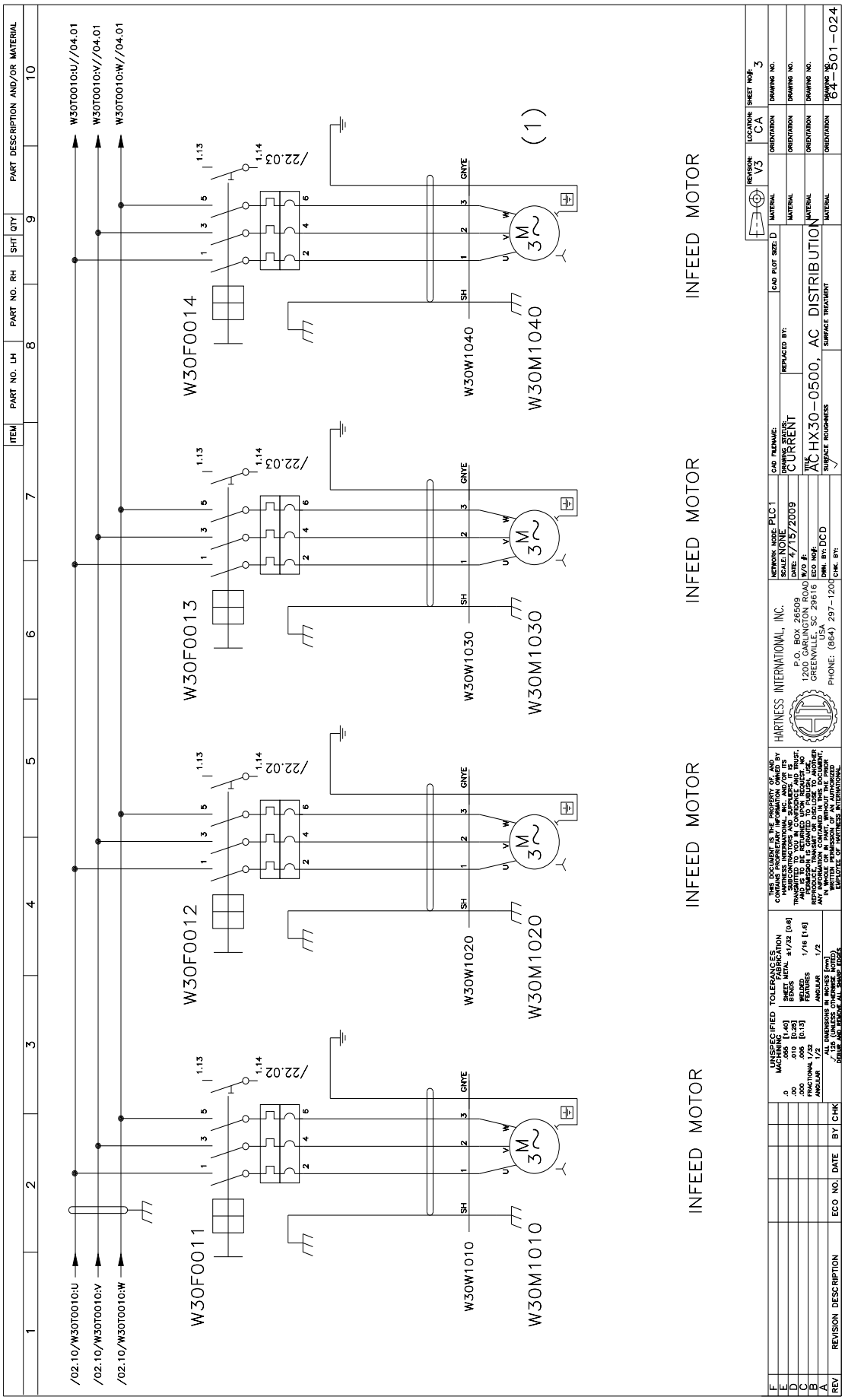
/02.10/W30T0010:U
/02.10/W30T0010:V
/02.10/W30T0010:W
W30T0010:U//04.01
W30T0010:V//04.01
W30T0010:W//04.01
W30F0011
W30F0012
W30F0013
W30F0014
W30W1010
W30W1020
W30W1030
W30W1040
W30M1010
W30M1020
W30M1030
W30M1040
/22.02
/22.03
INFEED MOTOR
INFEED MOTOR
INFEED MOTOR
INFEED MOTOR
(1)
AC HX30-0500, AC DISTRIBUTION
HARTNESS INTERNATIONAL, INC.
P.O. BOX 26509
1200 GARLINGTON ROAD
GREENVILLE, SC 29616
USA
PHONE: (864) 297-1200
CURRENT
NETWORK NODE: PLC1
SCALE: NONE
DATE: 4/15/2009
W/O #:
ECO NO#:
DWN. BY: DCD
CHK. BY:
REVISION: V3
LOCATION: CA
SHEET NO#: 3
64-301-024

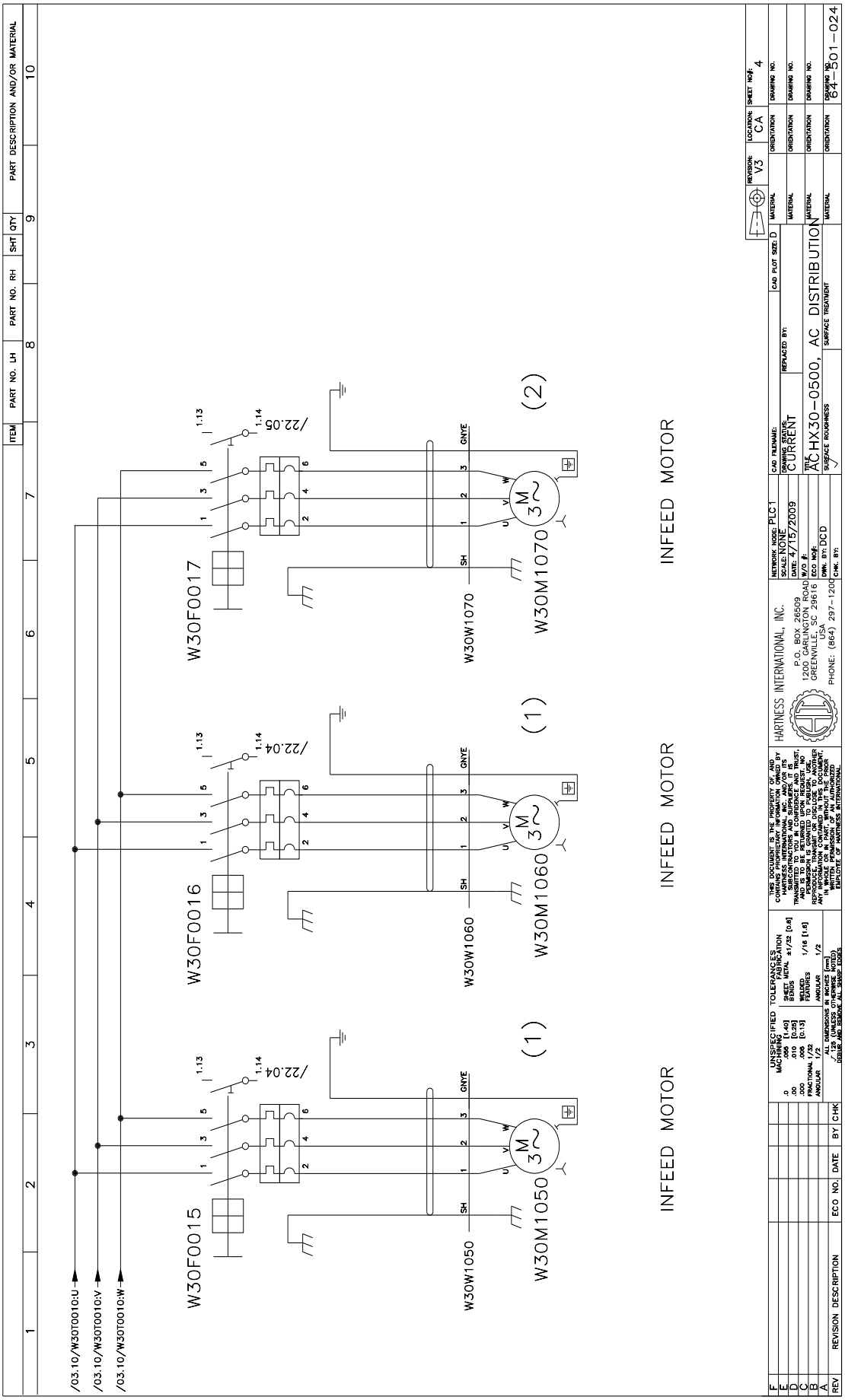
/03.10/W30T0010:U
/03.10/W30T0010:V
/03.10/W30T0010:W
W30F0015
W30F0016
W30F0017
/22.04
/22.05
1.13
1.14
W30W1050
W30W1060
W30W1070
W30M1050
W30M1060
W30M1070
(1)
(2)
INFEED MOTOR
INFEED MOTOR
INFEED MOTOR
HARTNESS INTERNATIONAL, INC.
P.O. BOX 26509
1200 GARLINGTON ROAD
GREENVILLE, SC 29616
PHONE: (864) 297-1200
AC HX30-0500, AC DISTRIBUTION
CURRENT
4/15/2009
PLC1
NONE
D
V3
CA
4
64-501-024

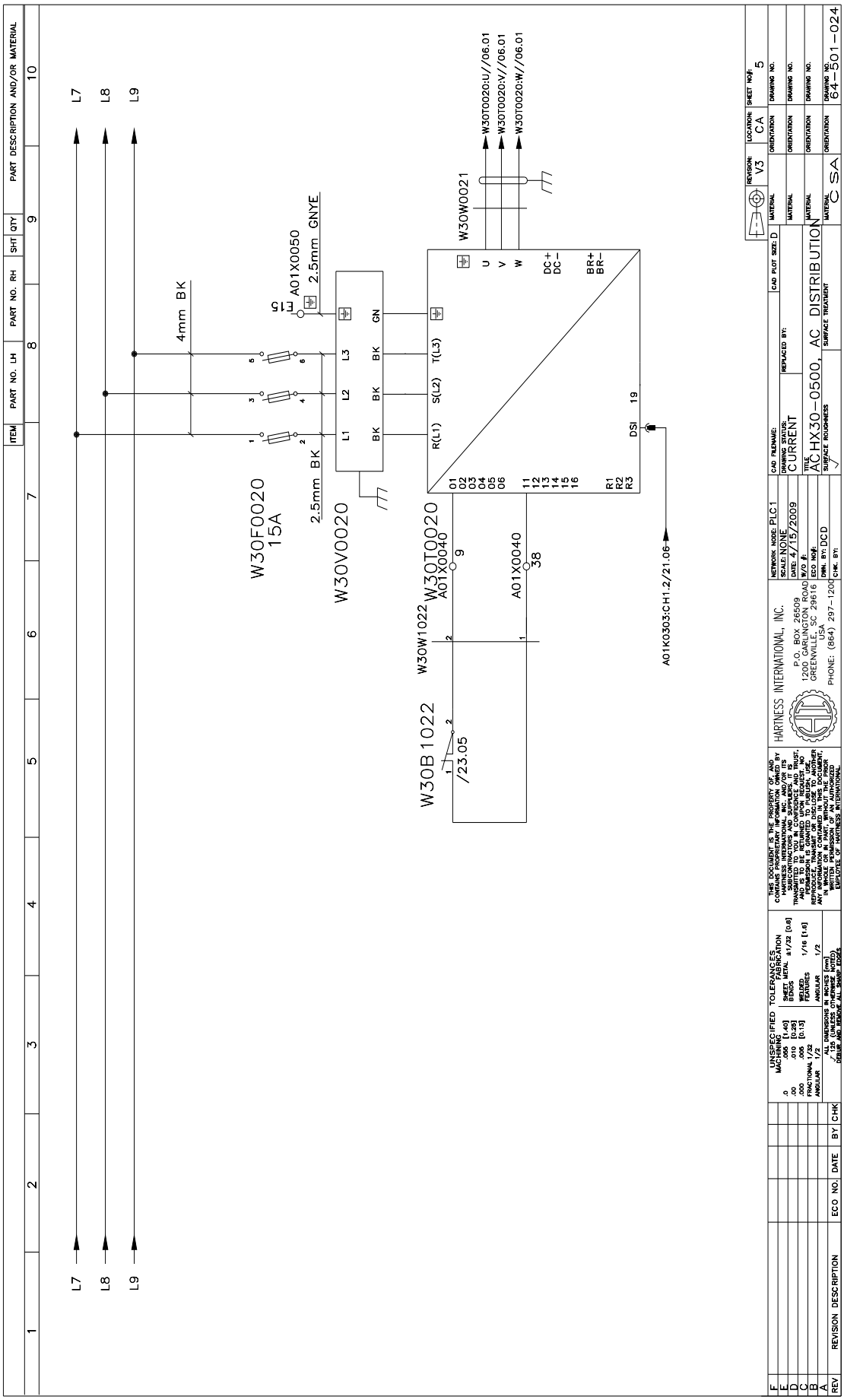
L7
L8
L9
4mm BK
W30F0020
15A
2.5mm BK
W30V0020
F15
A01X0050
2.5mm GNYE
W30W0021
W30T0020:U//06.01
W30T0020:V//06.01
W30T0020:W//06.01
W30B1022
/23.05
W30W1022
W30T0020
A01X0040
A01X0040
A01K0303:CH1.2/21.06
R(L1)
S(L2)
T(L3)
DSI
DC+
DC-
BR+
BR-
HARTNESS INTERNATIONAL, INC.
P.O. BOX 26509
1200 GARLINGTON ROAD
GREENVILLE, SC 29616
USA
PHONE: (864) 297-1200
AC HX30-0500, AC DISTRIBUTION
CSA
64-501-024

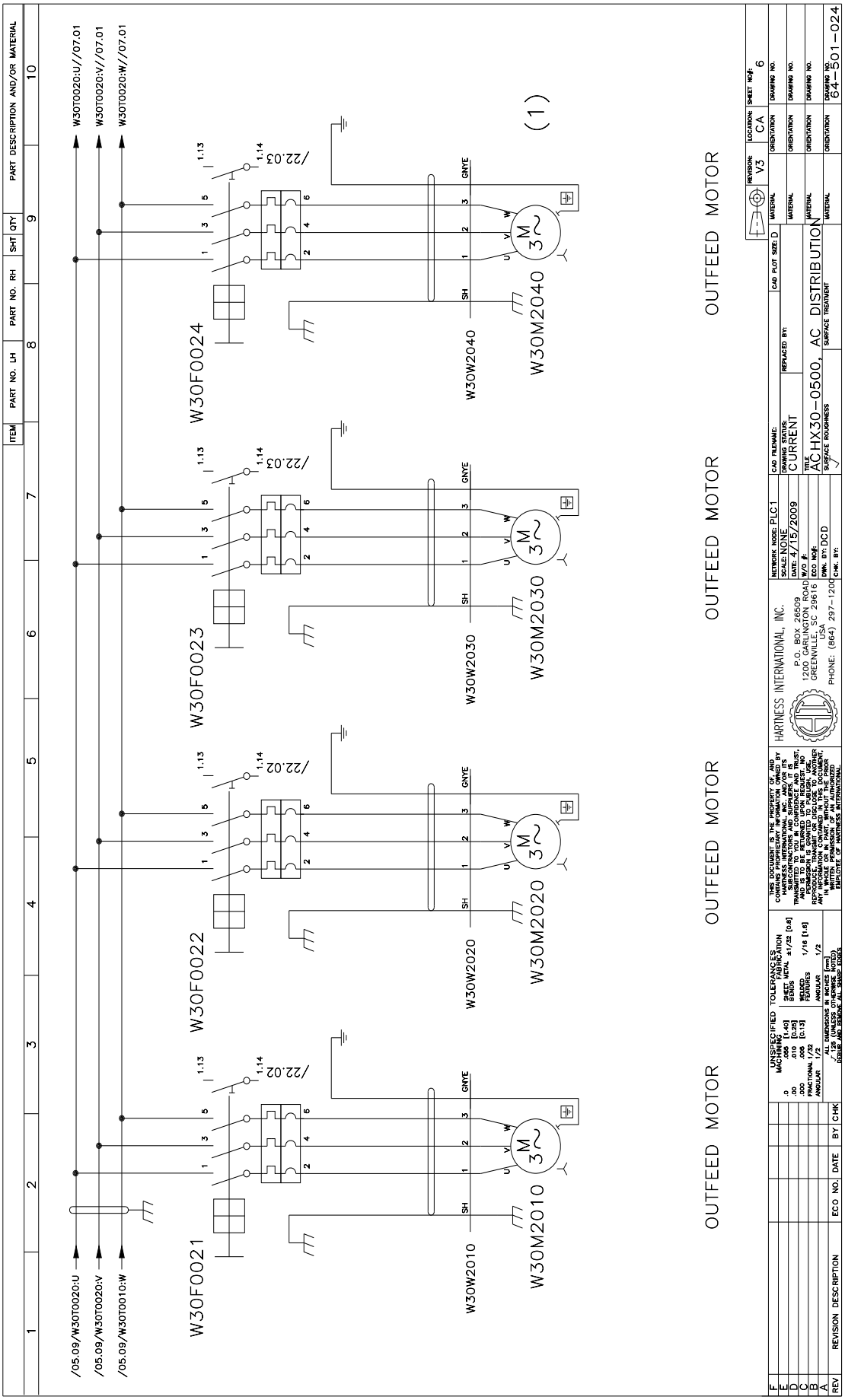
/05.09/W30T0020:U
/05.09/W30T0020:V
/05.09/W30T0010:W
W30T0020:U//07.01
W30T0020:V//07.01
W30T0020:W//07.01
W30F0021
W30F0022
W30F0023
W30F0024
W30M2010
W30M2020
W30M2030
W30M2040
W30W2010
W30W2020
W30W2030
W30W2040
OUTFEED MOTOR
(1)
HARTNESS INTERNATIONAL, INC.
AC HX30-0500, AC DISTRIBUTION
64-501-024

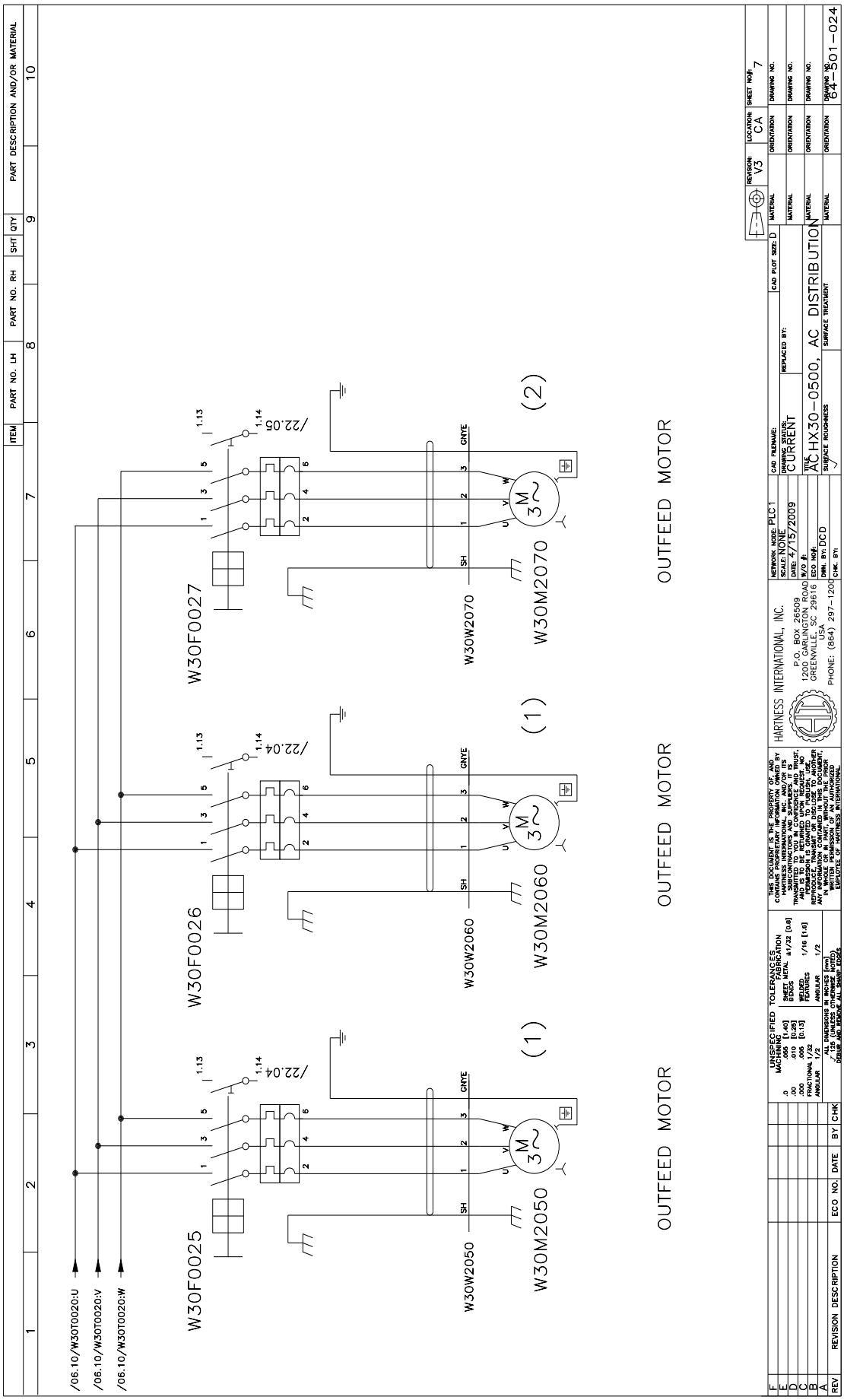
/06.10/W30T0020:U
/06.10/W30T0020:V
/06.10/W30T0020:W
W30F0025
W30F0026
W30F0027
/22.04
/22.05
W30W2050
W30W2060
W30W2070
W30M2050
W30M2060
W30M2070
(1)
(2)
OUTFEED MOTOR
OUTFEED MOTOR
OUTFEED MOTOR
HARTNESS INTERNATIONAL, INC.
P.O. BOX 26509
1200 GARLINGTON ROAD
GREENVILLE, SC 29616
USA
PHONE: (864) 297-1200
AC HX30-0500, AC DISTRIBUTION
DRAWING STATUS: CURRENT
DATE: 4/15/2009
SCALE: NONE
NETWORK NODE: PLC1
REVISION: V3
LOCATION: CA
SHEET NO#: 7
DRAWING NO. 64-301-024

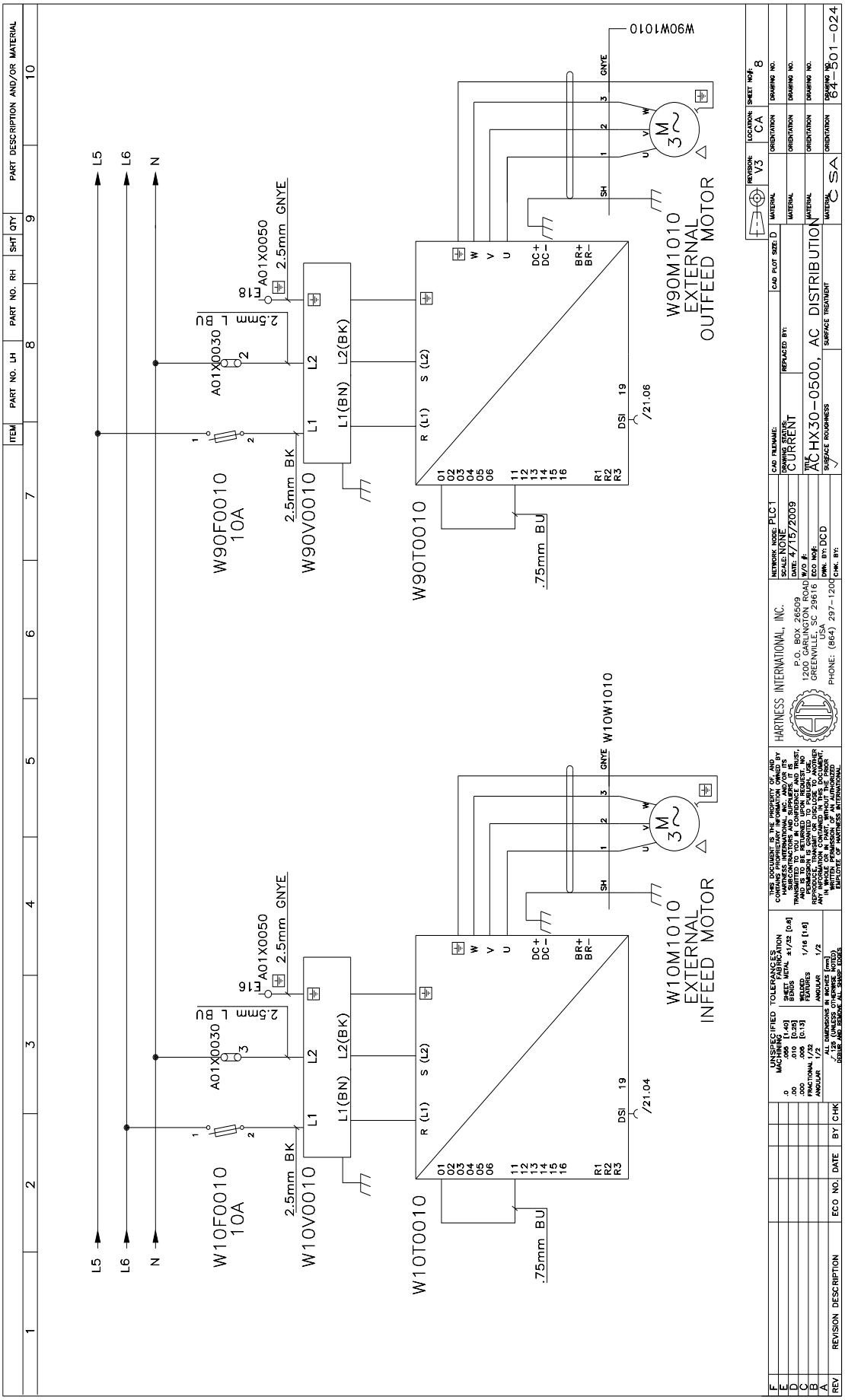
L5
L6
N
W10F0010
10A
W10V0010
2.5mm BK
A01X0030
2.5mm BU
A01X0050
2.5mm GNYE
F16
W10T0010
.75mm BU
W10M1010
EXTERNAL
INFEED MOTOR
W10W1010
W90F0010
10A
W90V0010
F18
W90T0010
W90M1010
EXTERNAL
OUTFEED MOTOR
W90W1010
HARTNESS INTERNATIONAL, INC.
P.O. BOX 26509
1200 GARLINGTON ROAD
GREENVILLE, SC 29616
PHONE: (864) 297-1200
NETWORK NODE: PLC1
SCALE: NONE
DATE: 4/15/2009
W/O #:
ECO NO#:
DWN. BY: DCD
CHK. BY:
DRAWING STATUS: CURRENT
REPLACED BY:
CAD FILENAME:
CAD PLOT SIZE: D
TITLE: AC HX30-0500, AC DISTRIBUTION
SURFACE TREATMENT
SURFACE ROUGHNESS
MATERIAL
REVISION: V3
LOCATION: CA
SHEET NO#: 8
DRAWING NO. 84-501-024
CSA
ITEM
PART NO. LH
PART NO. RH
SHT
QTY
PART DESCRIPTION AND/OR MATERIAL
REV
REVISION DESCRIPTION
ECO NO.
DATE
BY
CHK

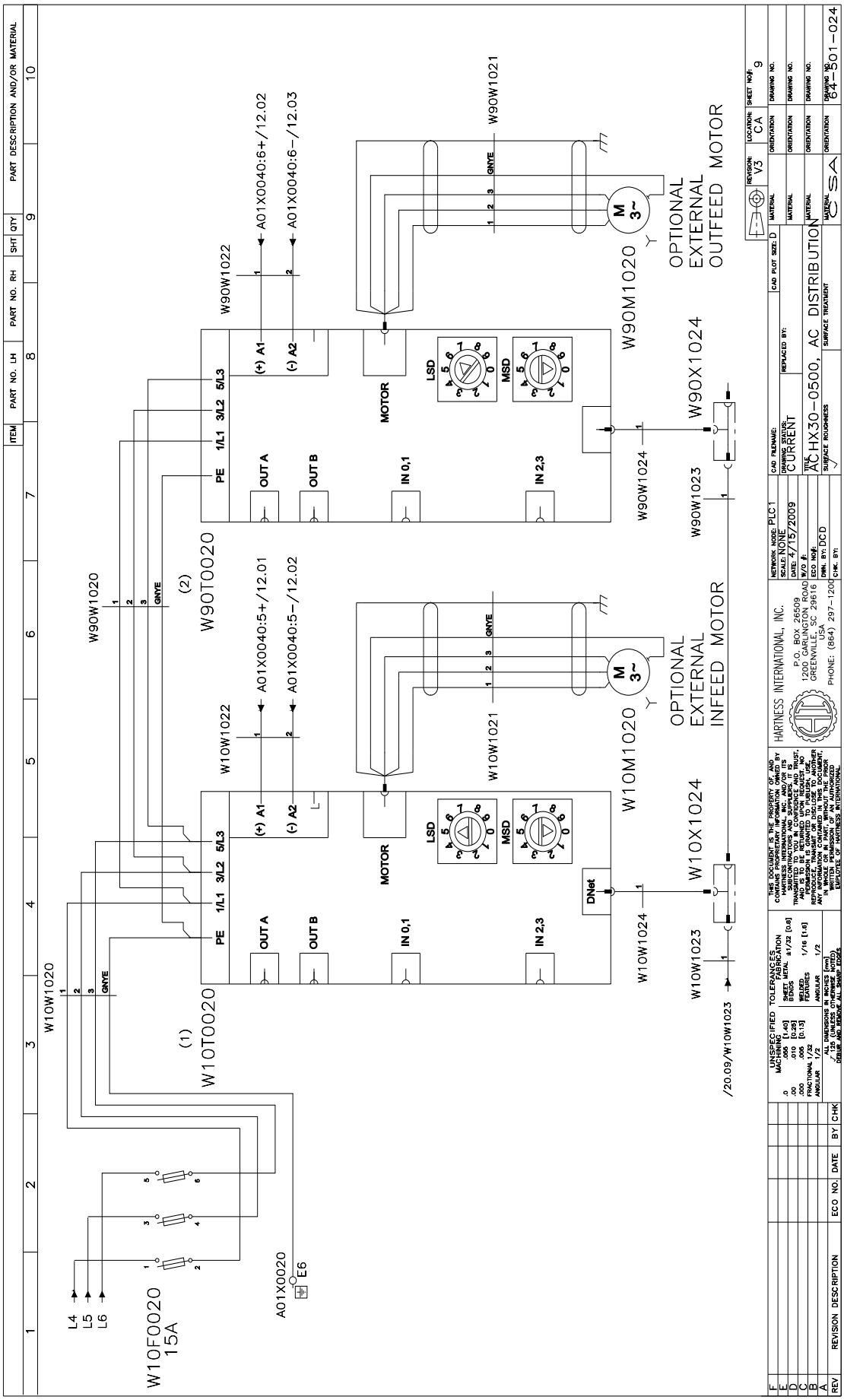
W10F0020
15A
L4
L5
L6
A01X0020
E6
W10W1020
(1)
W10T0020
W10W1022
W10W1021
W10M1020
W10X1024
W10W1023
/20.09/W10W1023
W10W1024
DNet
PE
1/L1
3/L2
5/L3
OUT A
OUT B
IN 0,1
IN 2,3
MOTOR
LSD
MSD
(+) A1
(-) A2
A01X0040:5+/12.01
A01X0040:5-/12.02
GNYE
OPTIONAL
EXTERNAL
INFEED MOTOR
(2)
W90T0020
W90W1020
W90W1022
W90W1021
W90M1020
W90X1024
W90W1023
W90W1024
A01X0040:6+/12.02
A01X0040:6-/12.03
OPTIONAL
EXTERNAL
OUTFEED MOTOR
M
3~
ITEM
PART NO. LH
PART NO. RH
SHT
QTY
PART DESCRIPTION AND/OR MATERIAL
REV
REVISION DESCRIPTION
ECO NO.
DATE
BY
CHK
UNSPECIFIED TOLERANCES
MACHINING
SHEET METAL
WELDED ASSEMBLIES
ANGULAR
ALL DIMENSIONS IN INCHES [mm]
UNLESS OTHERWISE NOTED
THIS DOCUMENT IS THE PROPERTY OF AND CONTAINS PROPRIETARY INFORMATION OWNED BY HARTNESS INTERNATIONAL, INC. AND/OR ITS SUBCONTRACTORS AND SUPPLIERS. IT IS TRANSMITTED TO YOU IN CONFIDENCE AND TRUST, AND IS TO BE RETURNED UPON REQUEST. NO PROPRIETARY RIGHTS ARE TO BE WAIVED. IT MAY NOT BE REPRODUCED, TRANSMIT OR DISCLOSE TO ANOTHER PERSON OR ENTITY, OR USED FOR ANY PURPOSE OTHER THAN THAT FOR WHICH IT IS FURNISHED, WITHOUT PERMISSION OF AN AUTHORIZED OFFICER OF HARTNESS INTERNATIONAL.
HARTNESS INTERNATIONAL, INC.
P.O. BOX 26509
1200 GARLINGTON ROAD
GREENVILLE, SC 29616
USA
PHONE: (864) 297-1200
NETWORK NODE: PLC1
SCALE: NONE
DATE: 4/15/2009
W/O #:
ECO NO#:
DWN. BY: DCD
CHK. BY:
CAD FILENAME:
DRAWING STATUS: CURRENT
REPLACED BY:
CAD PLOT SIZE: D
TITLE
AC HX30-0500, AC DISTRIBUTION
SURFACE ROUGHNESS
SURFACE TREATMENT
MATERIAL
REVISION: V3
LOCATION: CA
SHEET NO#: 9
DRAWING NO.
64-301-024

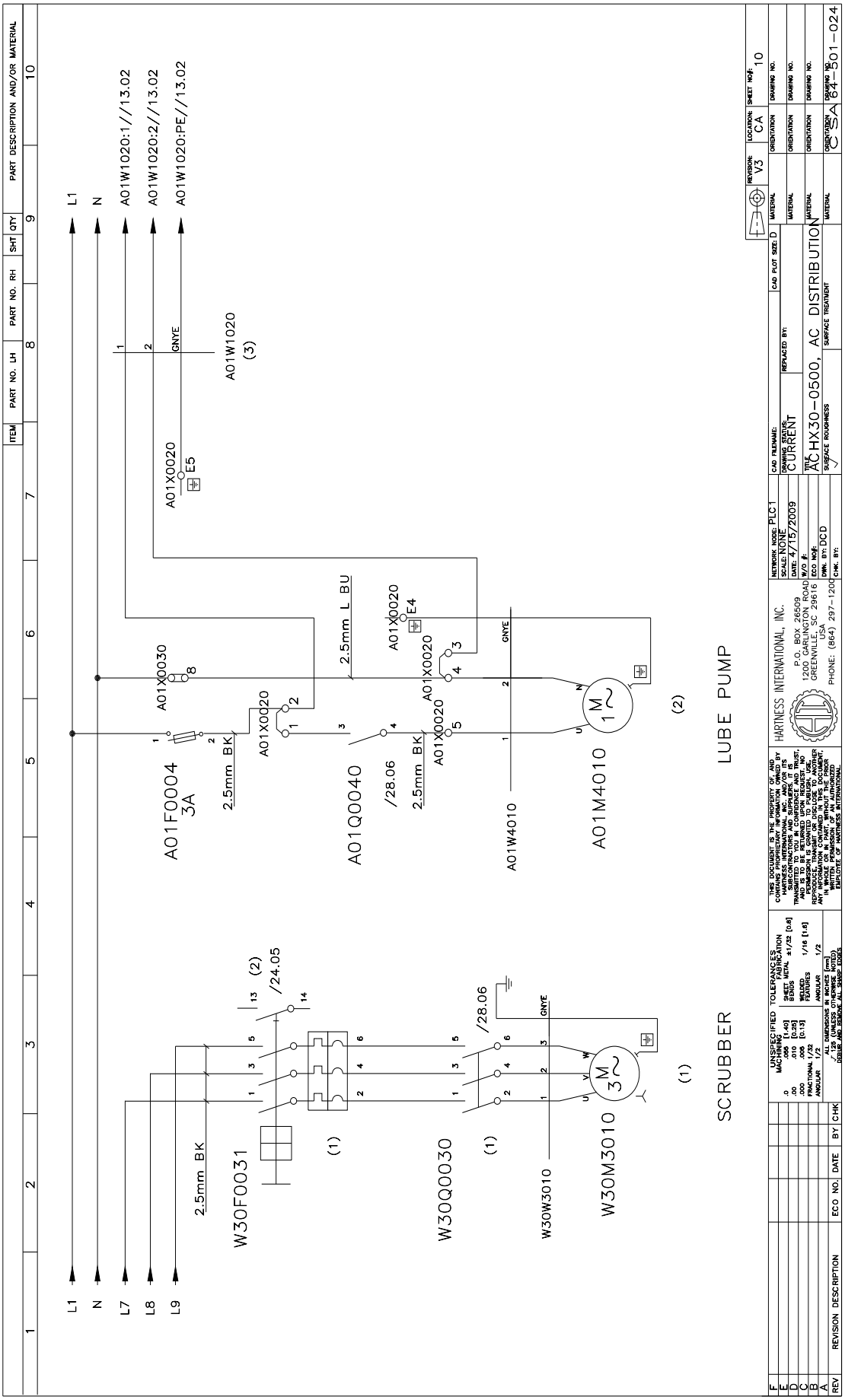
L1
N
L7
L8
L9
A01W1020:1//13.02
A01W1020:2//13.02
A01W1020:PE//13.02
A01W1020
(3)
A01X0020
E5
A01X0030
A01F0004
3A
2.5mm BK
A01Q0040
/28.06
2.5mm L BU
A01X0020
E4
A01W4010
A01M4010
LUBE PUMP
(2)
W30F0031
/24.05
(1)
W30Q0030
/28.06
W30W3010
W30M3010
SCRUBBER
(1)
GNYE
PART DESCRIPTION AND/OR MATERIAL
PART NO. RH
PART NO. LH
ITEM
QTY
SHT
REVISION: V3
LOCATION: CA
SHEET NO#: 10
HARTNESS INTERNATIONAL, INC.
P.O. BOX 26509
1200 GARLINGTON ROAD
GREENVILLE, SC 29616 USA
PHONE: (864) 297-1200
NETWORK NODE: PLC1
SCALE: NONE
DATE: 4/15/2009
W/O #:
ECO NO#:
DWN. BY: DCD
CHK. BY:
CAD FILENAME:
DRAWING STATUS: CURRENT
REPLACED BY:
CAD PLOT SIZE: D
TITLE: AC HX30-0500, AC DISTRIBUTION
SURFACE ROUGHNESS
SURFACE TREATMENT
MATERIAL
ORIENTATION
DRAWING NO.
CSA 64-501-024
REV
REVISION DESCRIPTION
ECO NO.
DATE
BY
CHK
UNSPECIFIED TOLERANCES
MACHINING
SHEET METAL
WELDS
FEATURES
ANGULAR
ALL DIMENSIONS IN INCHES [mm]
REMOVE BURRS AND BREAK ALL SHARP EDGES
THIS DOCUMENT IS THE PROPERTY OF AND CONTAINS PROPRIETARY INFORMATION OWNED BY HARTNESS INTERNATIONAL, INC. AND/OR ITS AFFILIATES AND IS ISSUED IN STRICT CONFIDENCE AND TRUST, AND IS TRANSMITTED TO YOU IN CONFIDENCE AND TRUST, AND IS SUBJECT TO RETURN ON DEMAND. NO PERMISSION IS GRANTED TO PUBLISH, USE, REPRODUCE, OR DISCLOSE TO ANOTHER PERSON, FIRM OR CORPORATION THIS DRAWING OR IN WHOLE OR IN PART, WITHOUT THE PRIOR WRITTEN PERMISSION OF AN AUTHORIZED EMPLOYEE OF HARTNESS INTERNATIONAL

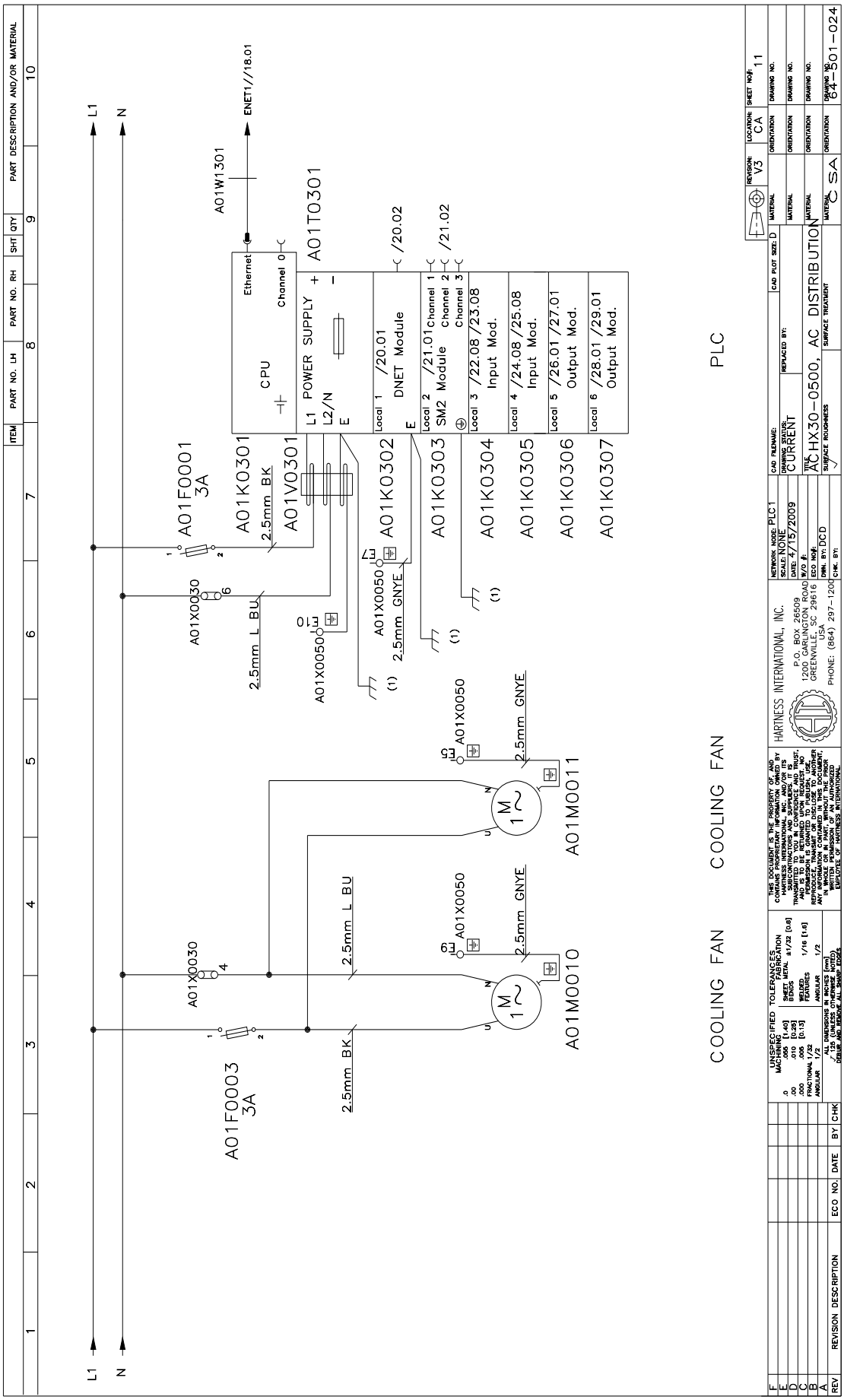
L1
N
A01F0001
3A
A01K0301
2.5mm BK
A01V0301
A01W1301
ENET1//18.01
A01T0301
CPU
Ethernet
Channel 0
L1 POWER SUPPLY
L2/N
E
+
-
A01X0030
6
2.5mm L BU
A01X0050
E10
A01X0050
E7
2.5mm GNYE
A01K0302
A01K0303
A01K0304
A01K0305
A01K0306
A01K0307
Local 1 /20.01
DNET Module
Local 2 /21.01
SM2 Module
Channel 1
Channel 2
Channel 3
/20.02
/21.02
Local 3 /22.08 /23.08
Input Mod.
Local 4 /24.08 /25.08
Input Mod.
Local 5 /26.01 /27.01
Output Mod.
Local 6 /28.01 /29.01
Output Mod.
(1)
A01X0050
E5
2.5mm GNYE
A01M0011
A01X0030
4
2.5mm L BU
A01X0050
E9
2.5mm GNYE
A01M0010
A01F0003
3A
2.5mm BK
COOLING FAN
COOLING FAN
PLC
ITEM
PART NO. LH
PART NO. RH
SHT
QTY
PART DESCRIPTION AND/OR MATERIAL
REV
REVISION DESCRIPTION
ECO NO.
DATE
BY
CHK
UNSPECIFIED TOLERANCES
MACHINING
SHEET METAL
WELDED ASSEMBLIES
FRACTIONAL
ANGULAR
THIS DOCUMENT IS THE PROPERTY OF, AND CONTAINS PROPRIETARY INFORMATION OWNED BY HARTNESS INTERNATIONAL, INC. AND/OR ITS SUBCONTRACTORS AND SUPPLIERS. IT IS TRANSMITTED TO YOU IN CONFIDENCE AND TRUST, AND IS TO BE RETURNED UPON REQUEST. NO PORTION HEREOF MAY BE COPIED, USED, REPRODUCED, TRANSMIT OR DISCLOSE TO ANOTHER PERSON OR ENTITY WITHOUT THE PRIOR AND WRITTEN PERMISSION OF AN AUTHORIZED OFFICER OF HARTNESS INTERNATIONAL.
HARTNESS INTERNATIONAL, INC.
P.O. BOX 26509
1200 GARLINGTON ROAD
GREENVILLE, SC 29616
USA
PHONE: (864) 297-1200
NETWORK NODE: PLC1
SCALE: NONE
DATE: 4/15/2009
W/O #:
ECO NO#:
DWN. BY: DCD
CHK. BY:
CAD FILENAME:
DRAWING STATUS: CURRENT
REPLACED BY:
TITLE: AC HX30-0500, AC DISTRIBUTION
SURFACE ROUGHNESS
SURFACE TREATMENT
CAD PLOT SIZE: D
REVISION: V3
LOCATION: CA
SHEET NO#: 11
DRAWING NO. 84-301-024

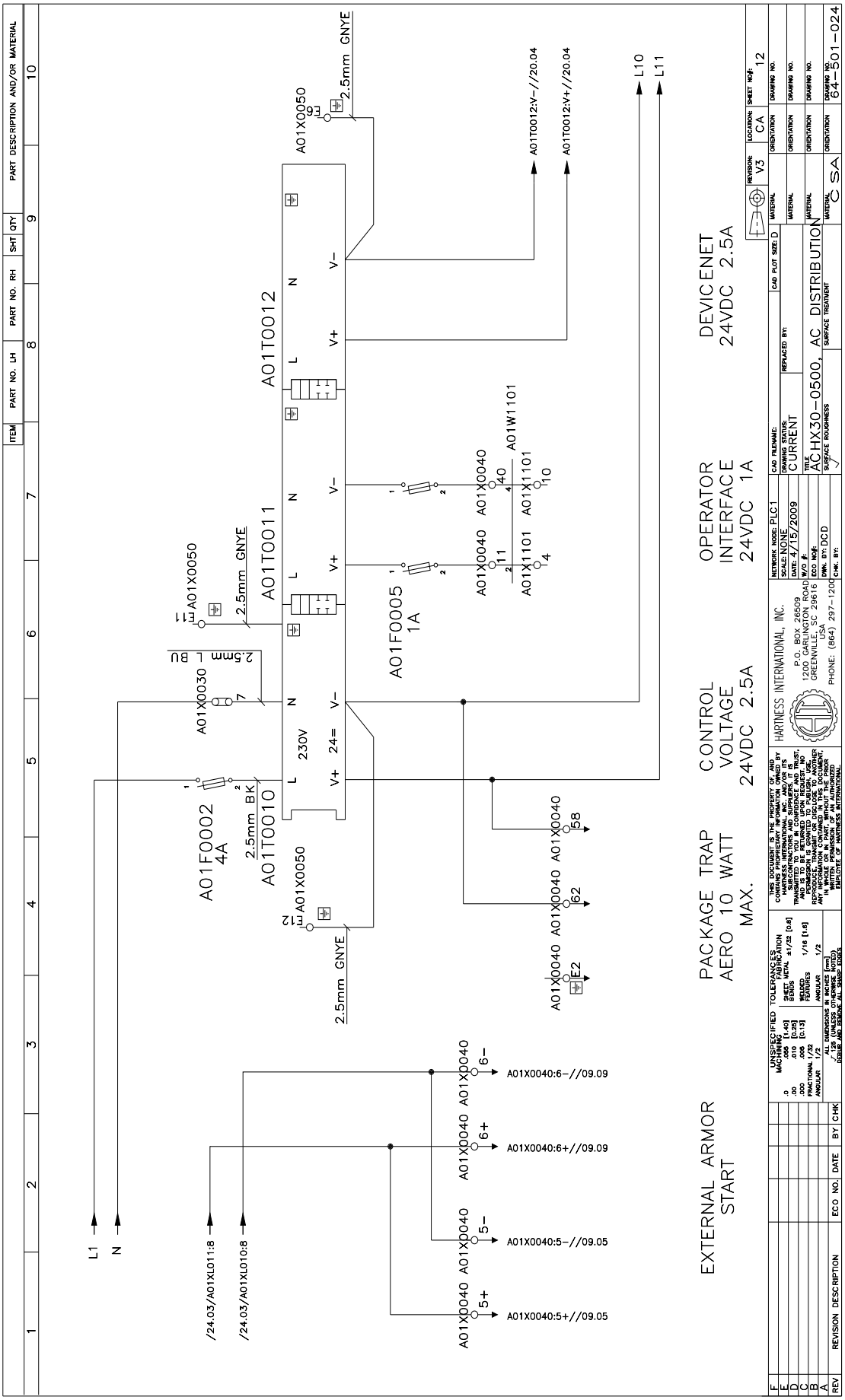
EXTERNAL ARMOR START
PACKAGE TRAP AERO 10 WATT MAX.
CONTROL VOLTAGE 24VDC 2.5A
OPERATOR INTERFACE 24VDC 1A
DEVICENET 24VDC 2.5A
A01T0010
A01T0011
A01T0012
A01F0002 4A
A01F0005 1A
A01X0050
A01X0030
A01X0040
A01W1101
A01X1101
2.5mm GNYE
2.5mm BK
2.5mm BU
L1
N
L10
L11
A01T0012:V-//20.04
A01T0012:V+//20.04
/24.03/A01XL011:8
/24.03/A01XL010:8
A01X0040:6-//09.09
A01X0040:6+//09.09
A01X0040:5-//09.05
A01X0040:5+//09.05
HARTNESS INTERNATIONAL, INC.
P.O. BOX 26509
1200 GARLINGTON ROAD
GREENVILLE, SC 29616
PHONE: (864) 297-1200
AC HX30-0500, AC DISTRIBUTION
CSA
64-501-024

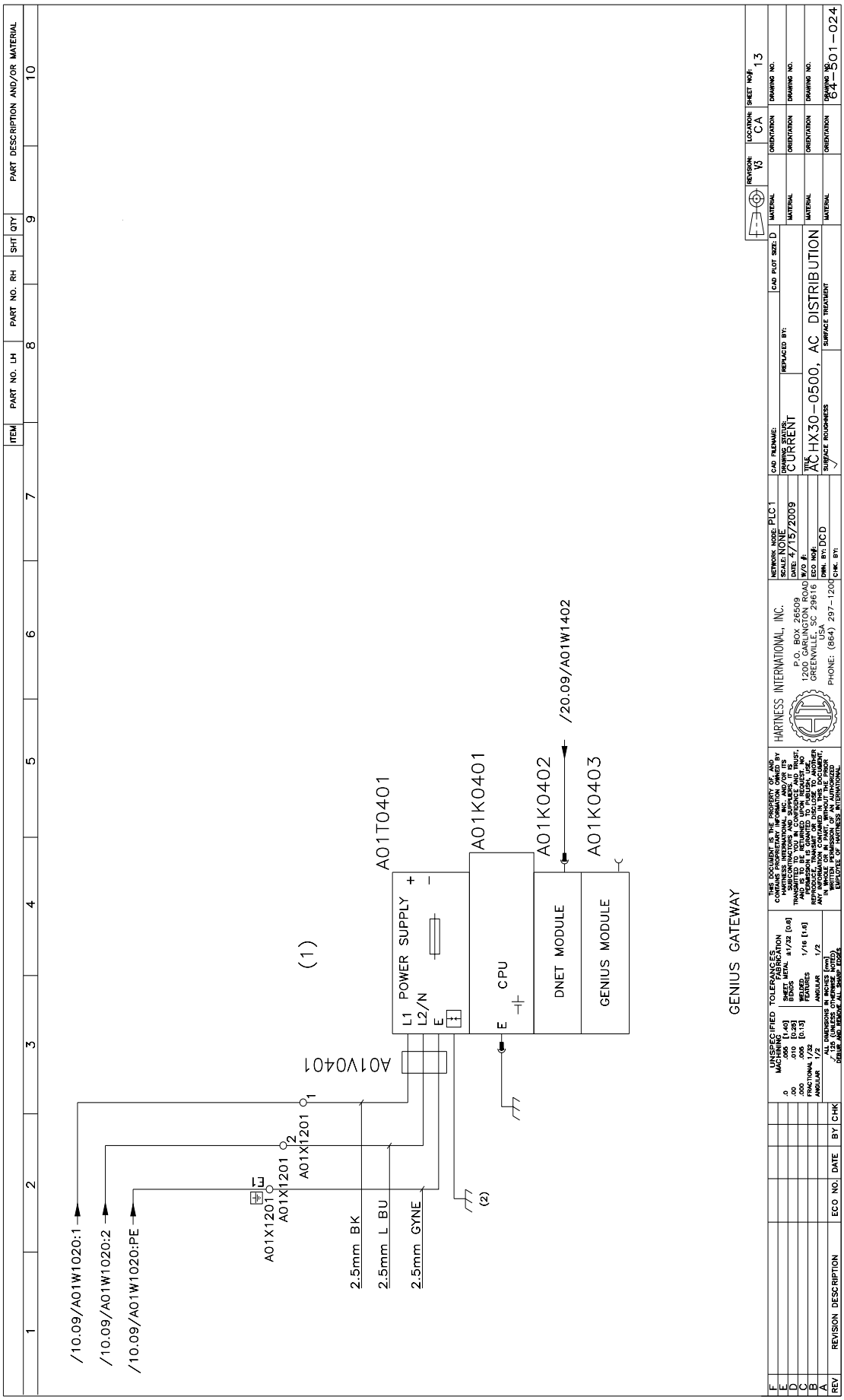
/10.09/A01W1020:1
/10.09/A01W1020:2
/10.09/A01W1020:PE
A01X1201
A01X1201
A01X1201
2.5mm BK
2.5mm L BU
2.5mm GYNE
A01V0401
(1)
(2)
A01T0401
L1 POWER SUPPLY
L2/N
E
A01K0401
CPU
A01K0402
DNET MODULE
A01K0403
GENIUS MODULE
/20.09/A01W1402
GENIUS GATEWAY
HARTNESS INTERNATIONAL, INC.
P.O. BOX 26509
1200 GARLINGTON ROAD
GREENVILLE, SC 29616
USA
PHONE: (864) 297-1200
AC HX30-0500, AC DISTRIBUTION
64-301-024

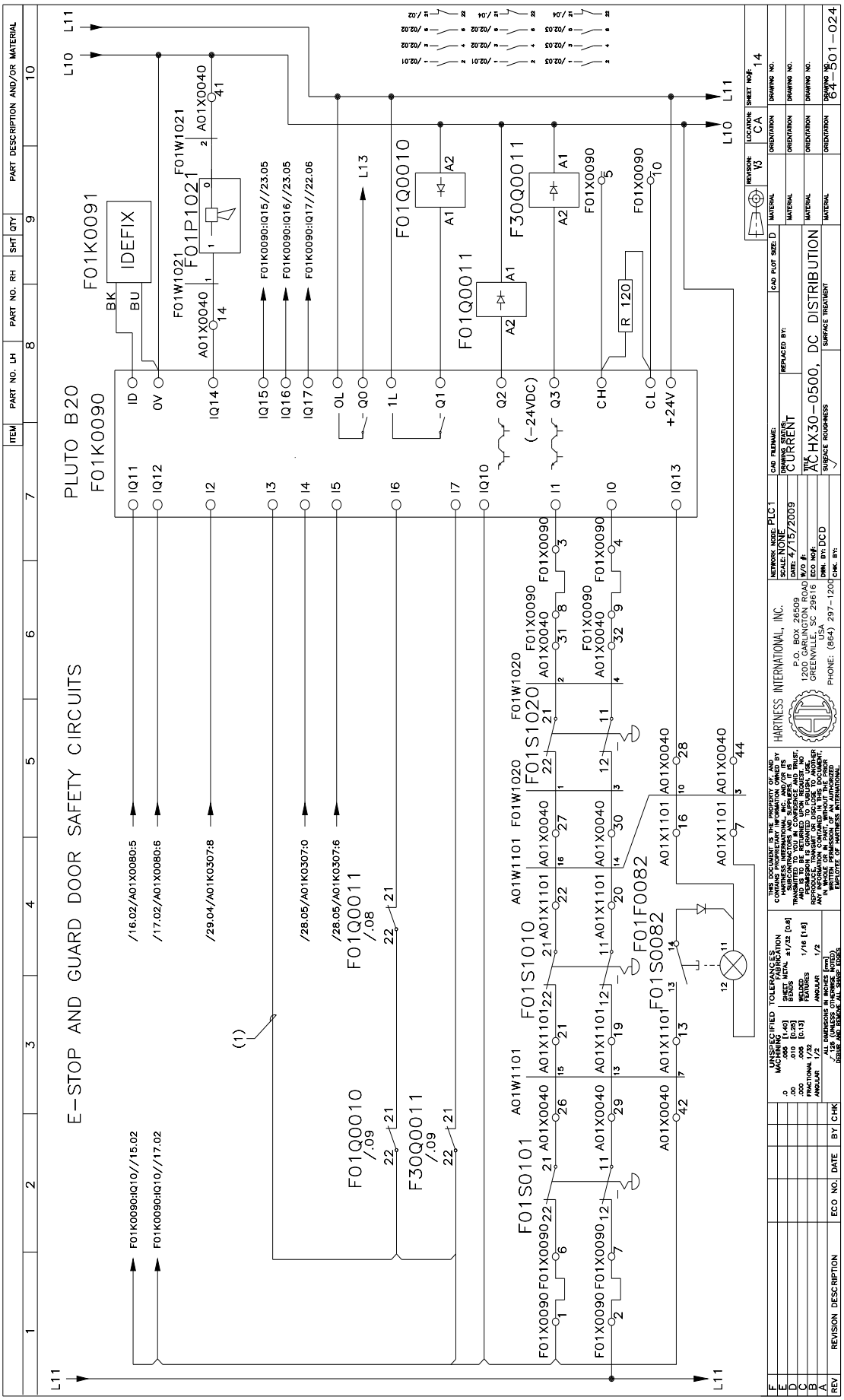
E-STOP AND GUARD DOOR SAFETY CIRCUITS
PLUTO B20
F01K0090
IDEFIX
F01K0091
F01P1021
F01W1021
F01Q0010
F01Q0011
F30Q0011
F01S0101
F01S1010
F01S1020
F01S0082
F01W1020
F01W1101
F01X0090
F01X0040
A01X0040
A01X1101
A01W1101
F01Q0010 /.09
F30Q0011 /.09
F01Q0011 /.08
R 120
(-24VDC)
+24V
L10
L11
L13
HARTNESS INTERNATIONAL, INC.
P.O. BOX 26509
1200 GARLINGTON ROAD
GREENVILLE, SC 29616
PHONE: (864) 297-1200
AC HX30-0500, DC DISTRIBUTION
64-501-024

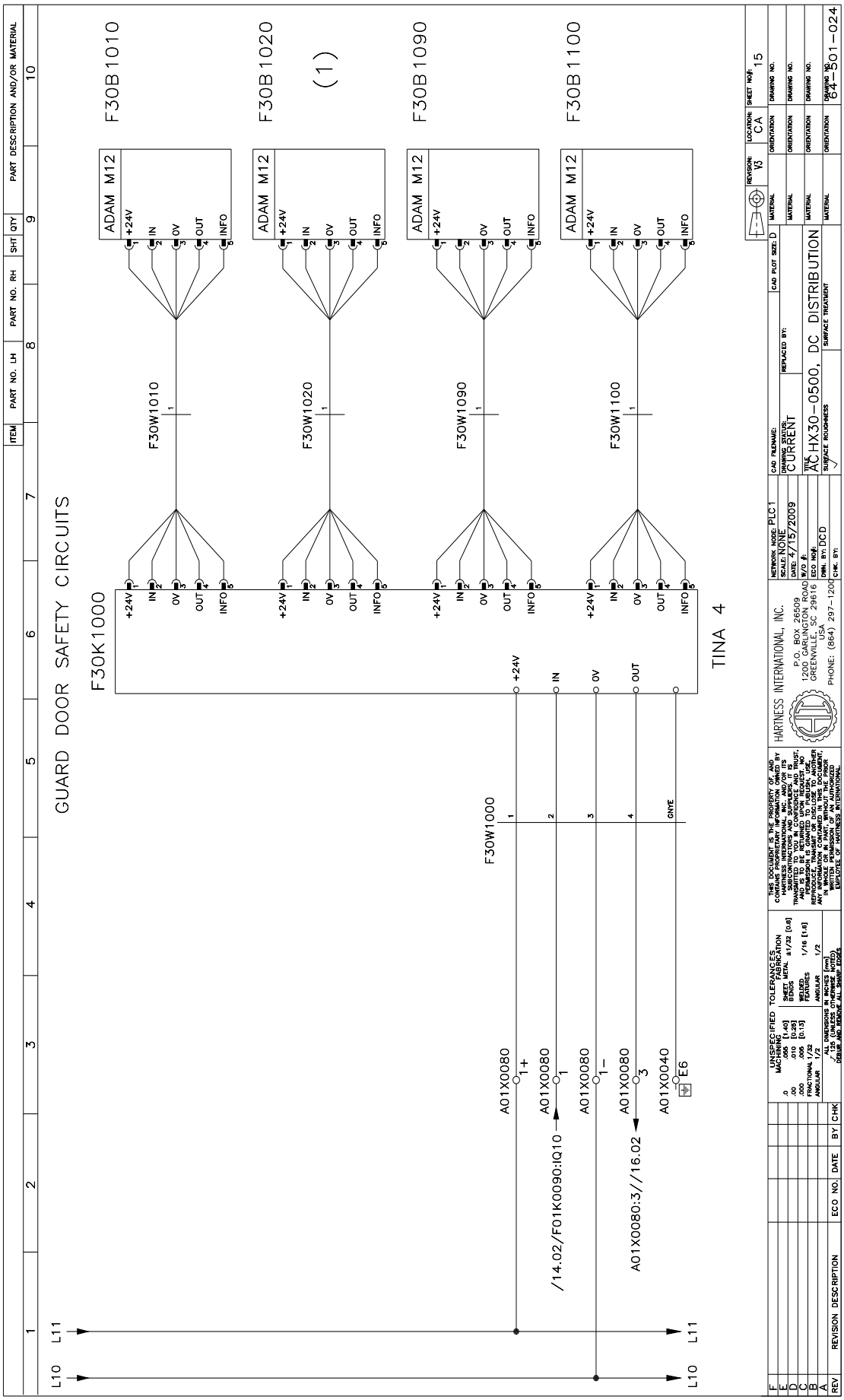
GUARD DOOR SAFETY CIRCUITS
F30K1000
F30B1010
F30B1020
(1)
F30B1090
F30B1100
ADAM M12
+24V
IN
0V
OUT
INFO
F30W1010
F30W1020
F30W1090
F30W1100
F30W1000
A01X0080
A01X0040
/14.02/F01K0090:IQ10
A01X0080:3//16.02
E6
TINA 4
L10
L11
HARTNESS INTERNATIONAL, INC.
P.O. BOX 26509
1200 GARLINGTON ROAD
GREENVILLE, SC 29616
USA
PHONE: (864) 297-1200
AC HX30-0500, DC DISTRIBUTION
64-301-024

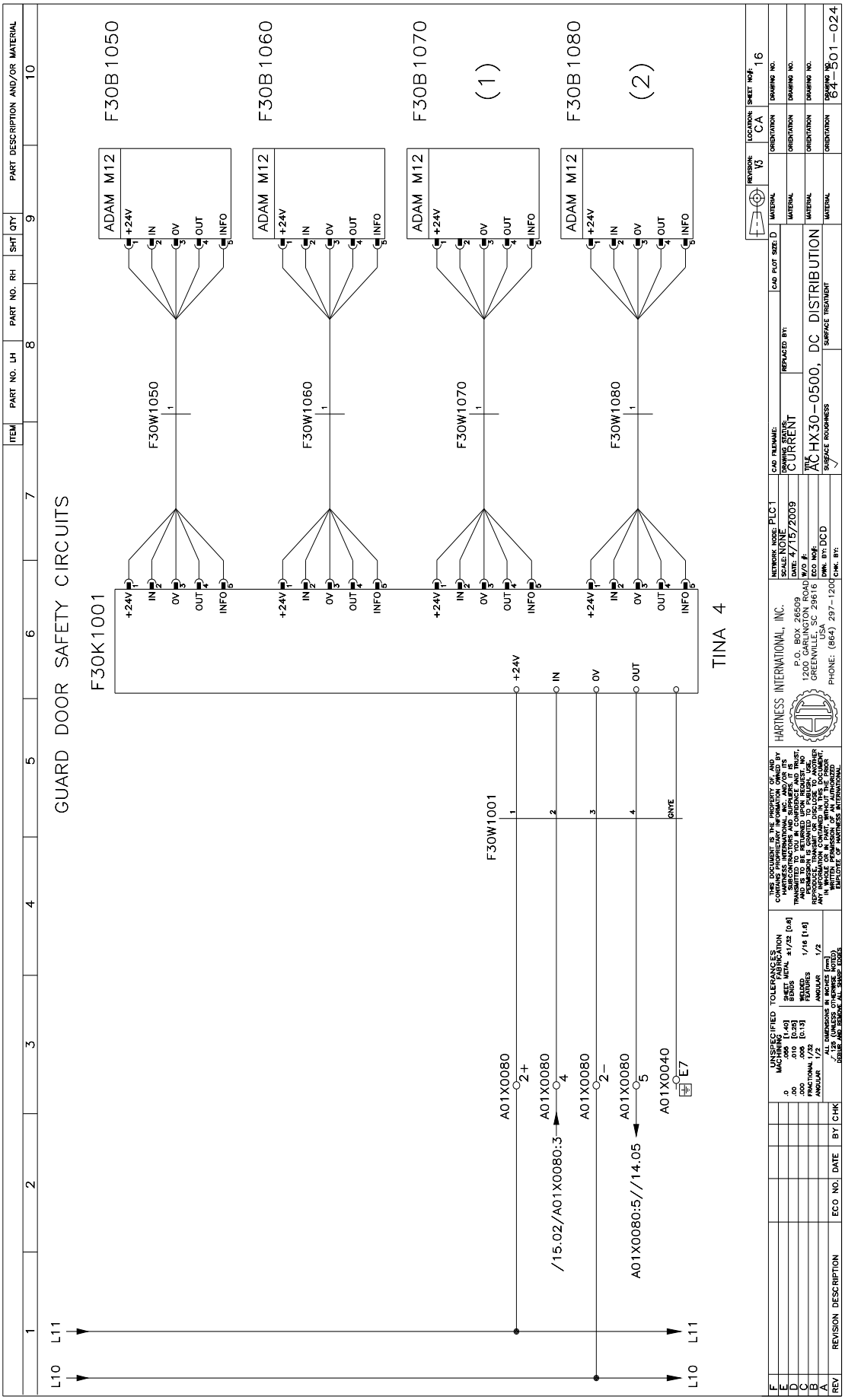
GUARD DOOR SAFETY CIRCUITS
F30K1001
F30B1050
F30B1060
F30B1070
(1)
F30B1080
(2)
ADAM M12
+24V
IN
0V
OUT
INFO
F30W1050
F30W1060
F30W1070
F30W1080
TINA 4
L10
L11
A01X0080
2+
/15.02/A01X0080:3
4
2-
A01X0080:5//14.05
5
A01X0040
E7
HARTNESS INTERNATIONAL, INC.
P.O. BOX 26509
1200 GARLINGTON ROAD
GREENVILLE, SC 29616 USA
PHONE: (864) 297-1200
AC HX30-0500, DC DISTRIBUTION
CURRENT
PLC1
NONE
4/15/2009
DCD
CA
16
84-501-024

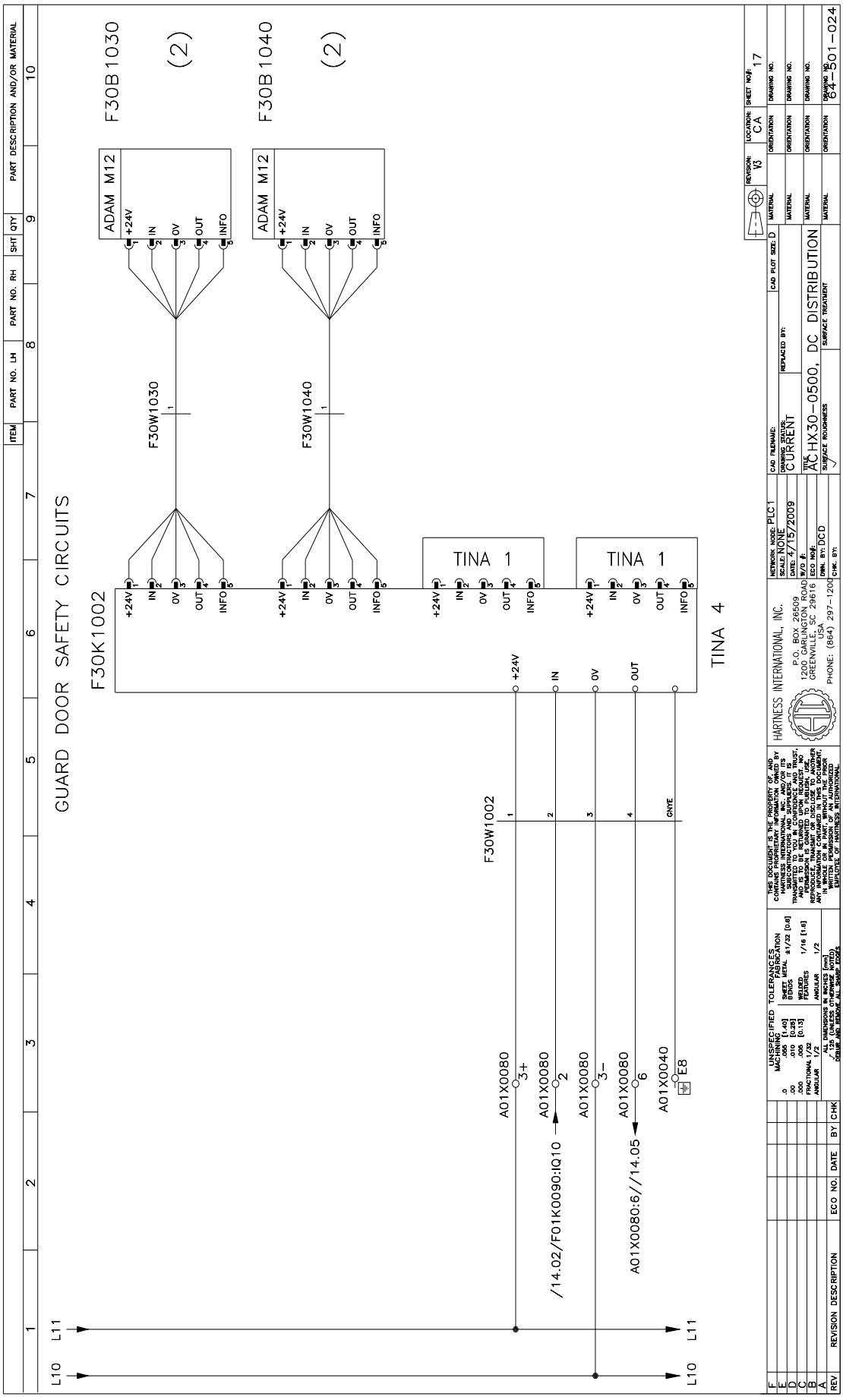
GUARD DOOR SAFETY CIRCUITS
F30K1002
F30B1030
(2)
ADAM M12
+24V
IN
0V
OUT
INFO
F30W1030
F30B1040
(2)
ADAM M12
F30W1040
TINA 1
TINA 1
TINA 4
F30W1002
L10
L11
A01X0080
3+
A01X0080
2
A01X0080
3-
A01X0080
6
A01X0040
E8
/14.02/F01K0090:IQ10
A01X0080:6//14.05
+24V
IN
0V
OUT
GNYE
HARTNESS INTERNATIONAL, INC.
P.O. BOX 26509
1200 GARLINGTON ROAD
GREENVILLE, SC 29616
USA
PHONE: (864) 297-1200
AC HX30-0500, DC DISTRIBUTION
CURRENT
4/15/2009
PLC1
NONE
REVISION: V3
LOCATION: CA
SHEET NO#: 17
DRAWING NO. 84-501-024
REV
REVISION DESCRIPTION
ECO NO.
DATE
BY
CHK
PART DESCRIPTION AND/OR MATERIAL
ITEM
PART NO. LH
PART NO. RH
SHT
QTY

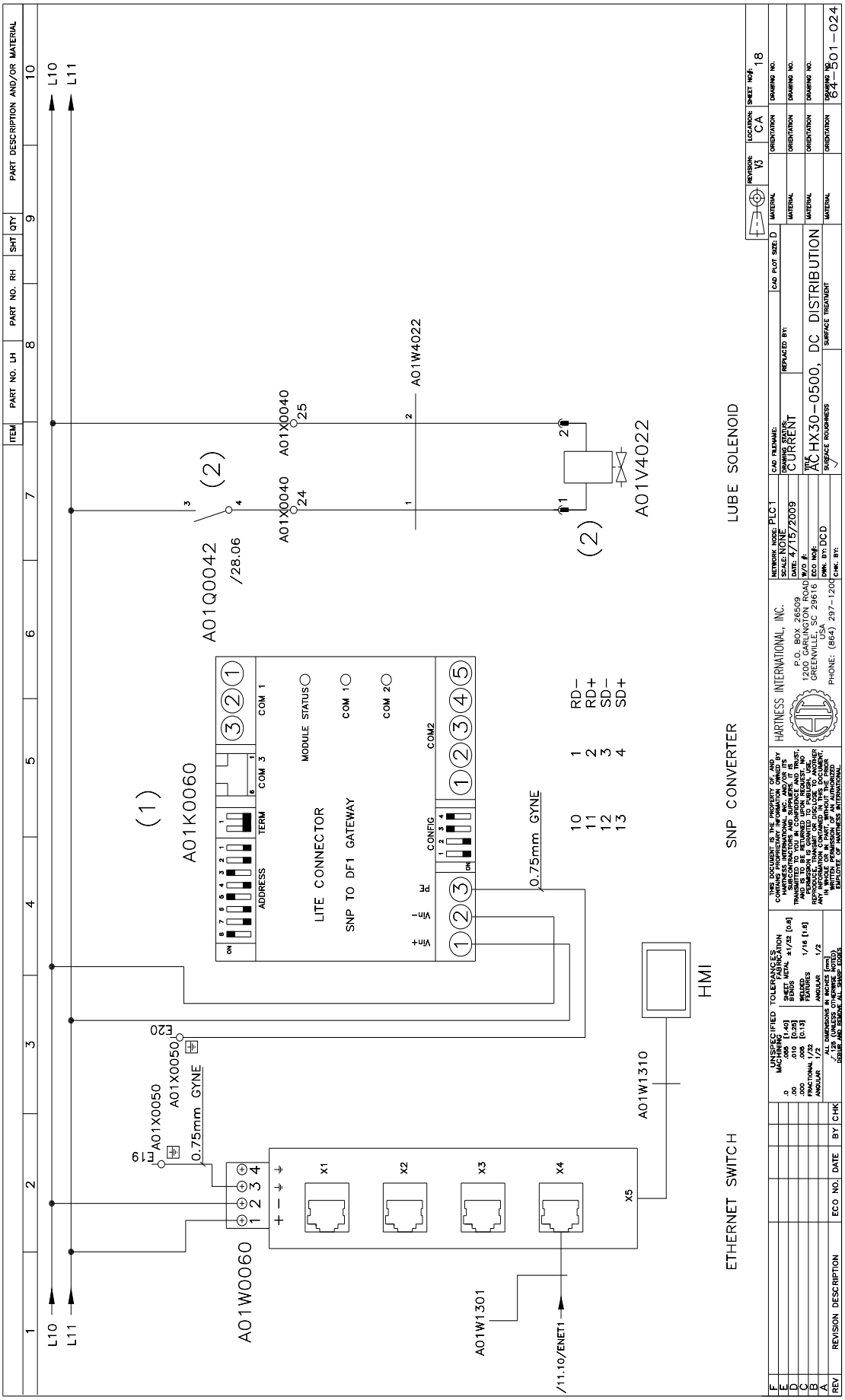
L10
L11
A01W0060
A01X0050
E19
E20
0.75mm GYNE
X1
X2
X3
X4
X5
A01W1301
/11.10/ENET1
ETHERNET SWITCH
A01W1310
HMI
(1)
A01K0060
LITE CONNECTOR
SNP TO DF1 GATEWAY
ADDRESS
TERM
COM 3
COM 1
MODULE STATUS
COM 1
COM 2
CONFIG
COM2
SNP CONVERTER
0.75mm GYNE
10 RD−
11 RD+
12 SD−
13 SD+
A01Q0042
/28.06
(2)
A01X0040
24
25
A01W4022
A01V4022
LUBE SOLENOID
HARTNESS INTERNATIONAL, INC.
P.O. BOX 26509
1200 GARLINGTON ROAD
GREENVILLE, SC 29616
PHONE: (864) 297-1200
AC HX30-0500, DC DISTRIBUTION
84-501-024

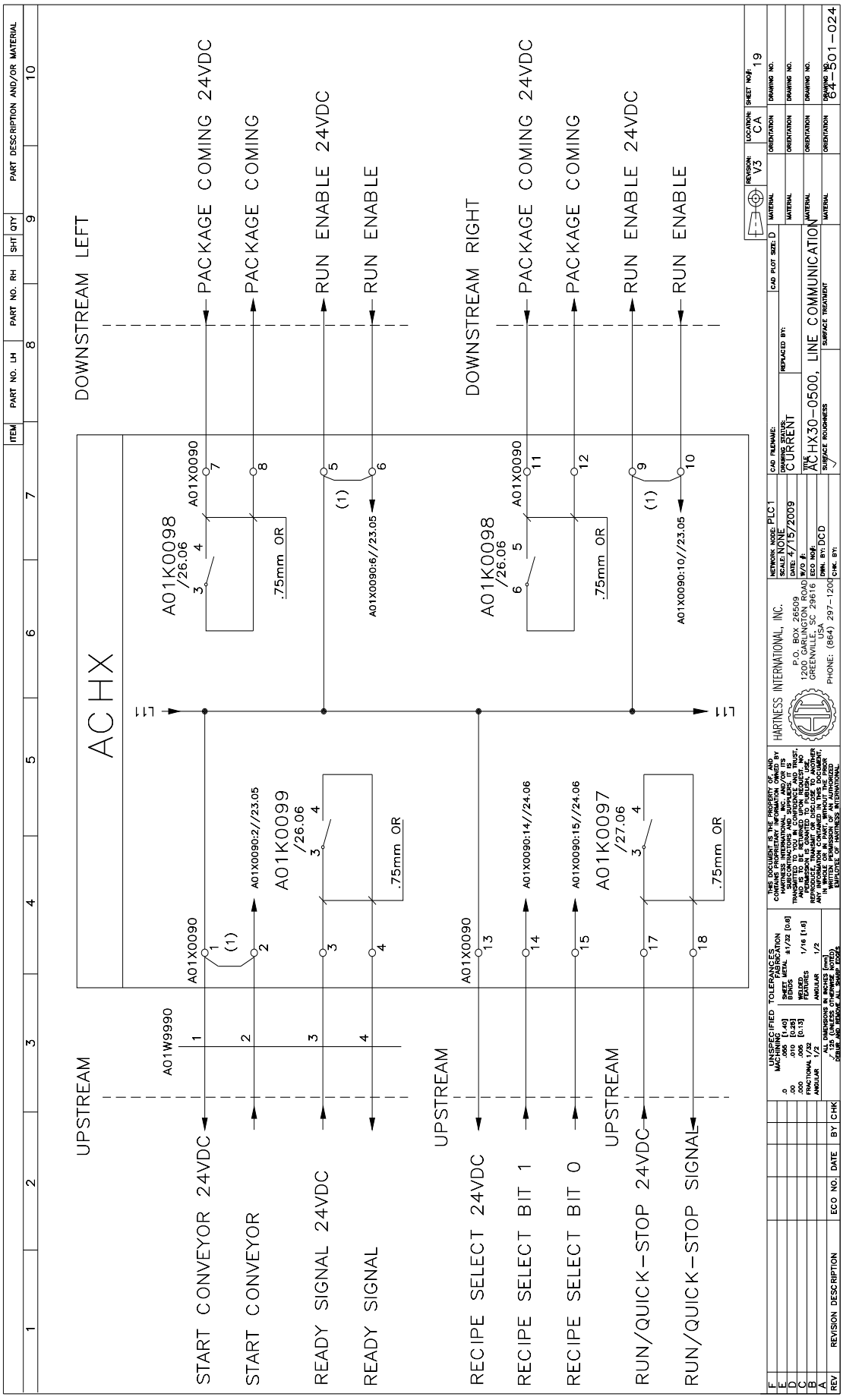
ACHX
UPSTREAM
DOWNSTREAM LEFT
DOWNSTREAM RIGHT
START CONVEYOR 24VDC
START CONVEYOR
READY SIGNAL 24VDC
READY SIGNAL
RECIPE SELECT 24VDC
RECIPE SELECT BIT 1
RECIPE SELECT BIT 0
RUN/QUICK-STOP 24VDC
RUN/QUICK-STOP SIGNAL
PACKAGE COMING 24VDC
PACKAGE COMING
RUN ENABLE 24VDC
RUN ENABLE
A01W9990
A01X0090
A01K0098 /26.06
A01K0099 /26.06
A01K0097 /27.06
A01X0090:2//23.05
A01X0090:6//23.05
A01X0090:10//23.05
A01X0090:14//24.06
A01X0090:15//24.06
.75mm OR
HARTNESS INTERNATIONAL, INC.
P.O. BOX 26509
1200 GARLINGTON ROAD
GREENVILLE, SC 29616
USA
PHONE: (864) 297-1200
NETWORK NODE: PLC1
SCALE: NONE
DATE: 4/15/2009
W/O #:
ECO NO#:
DWN. BY: DCD
CHK. BY:
CAD FILENAME:
DRAWING STATUS: CURRENT
REPLACED BY:
CAD PLOT SIZE: D
TITLE: ACHX30-0500, LINE COMMUNICATION
SURFACE ROUGHNESS
SURFACE TREATMENT
MATERIAL
REVISION: V3
LOCATION: CA
SHEET NO#: 19
DRAWING NO: 84-501-024
REV
REVISION DESCRIPTION
ECO NO.
DATE
BY
CHK

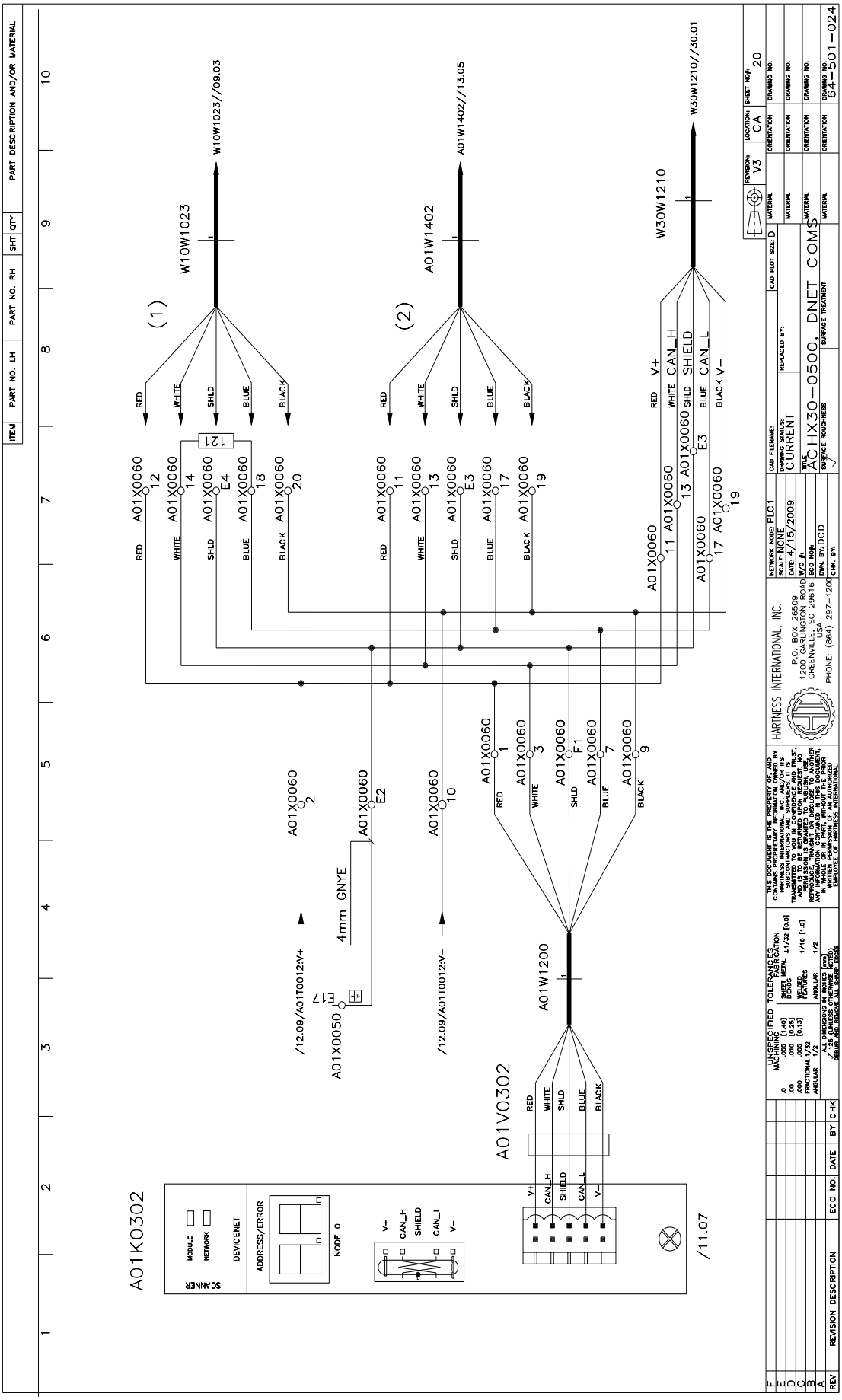
A01K0302
A01V0302
A01W1200
A01X0050
A01X0060
W10W1023//09.03
A01W1402//13.05
W30W1210//30.01
4mm GNYE
/12.09/A01T0012:V+
/12.09/A01T0012:V-
/11.07
RED
WHITE
SHLD
BLUE
BLACK
V+
CAN_H
SHIELD
CAN_L
V-
HARTNESS INTERNATIONAL, INC.
P.O. BOX 26509
1200 GARLINGTON ROAD
GREENVILLE, SC 29616
U.S.A.
PHONE: (864) 297-1200
ACHX30-0500, DNET COMS
64-501-024

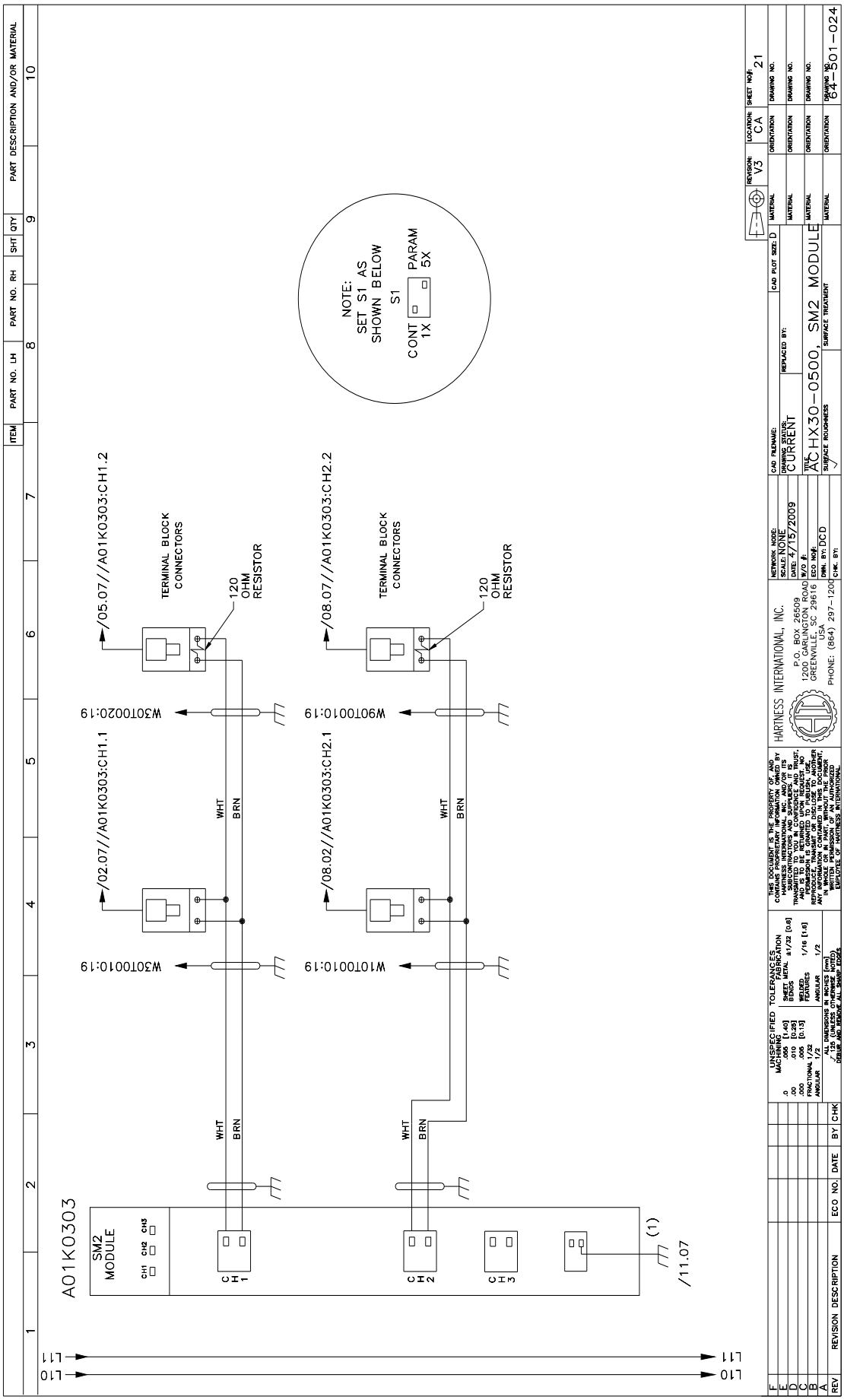
NOTE:
SET S1 AS
SHOWN BELOW
S1
CONT
1X
PARAM
5X
TERMINAL BLOCK
CONNECTORS
120
OHM
RESISTOR
/05.07///A01K0303:CH1.2
/08.07///A01K0303:CH2.2
/02.07///A01K0303:CH1.1
/08.02///A01K0303:CH2.1
W30T0020:19
W90T0010:19
W30T0010:19
W10T0010:19
WHT
BRN
A01K0303
SM2
MODULE
CH1
CH2
CH3
(1)
/11.07
L11
L10
HARTNESS INTERNATIONAL, INC.
P.O. BOX 26509
1200 GARLINGTON ROAD
GREENVILLE, SC 29616
USA
PHONE: (864) 297-1200
AC HX30-0500, SM2 MODULE
CURRENT
4/15/2009
DCD
SURFACE TREATMENT
REVISION: V3
LOCATION: CA
SHEET NO#: 21
64-3501-024
REV
REVISION DESCRIPTION
ECO NO.
DATE
BY
CHK
PART DESCRIPTION AND/OR MATERIAL
PART NO. RH
PART NO. LH
ITEM
SHT
QTY

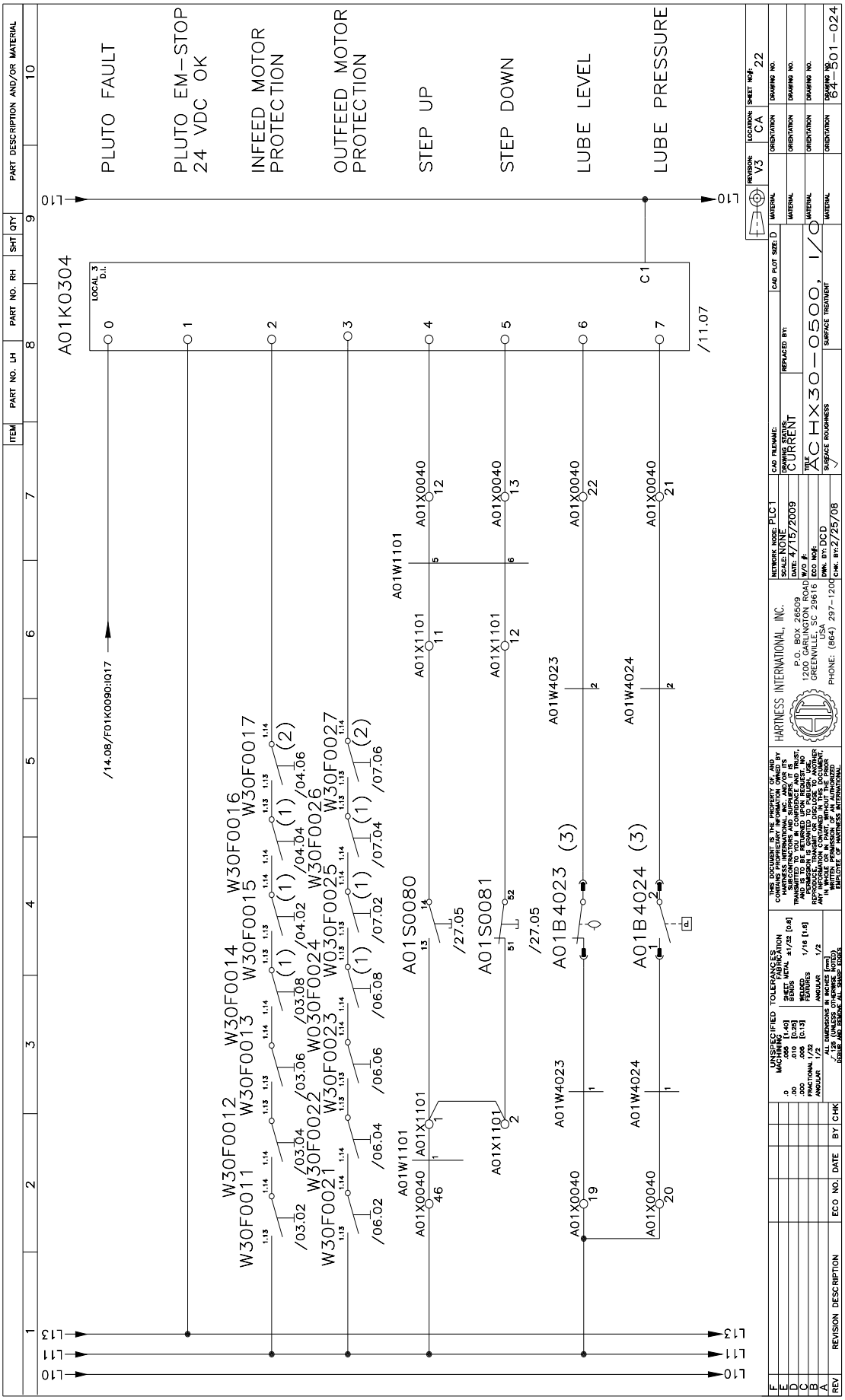
PLUTO FAULT
PLUTO EM-STOP 24 VDC OK
INFEED MOTOR PROTECTION
OUTFEED MOTOR PROTECTION
STEP UP
STEP DOWN
LUBE LEVEL
LUBE PRESSURE
A01K0304
/14.08/F01K0090:IQ17
/11.07
A01W1101
A01W4023
A01W4024
A01S0080
A01S0081
A01B4023 (3)
A01B4024 (3)
A01X0040
A01X1101
W30F0011
W30F0012
W30F0013
W30F0014
W30F0015
W30F0016
W30F0017
W30F0021
W30F0022
W30F0023
W30F0024
W30F0025
W30F0026
W30F0027
HARTNESS INTERNATIONAL, INC.
P.O. BOX 26509
1200 GARLINGTON ROAD
GREENVILLE, SC 29616
PHONE: (864) 297-1200
AC HX30-0500, I/O
64-501-024

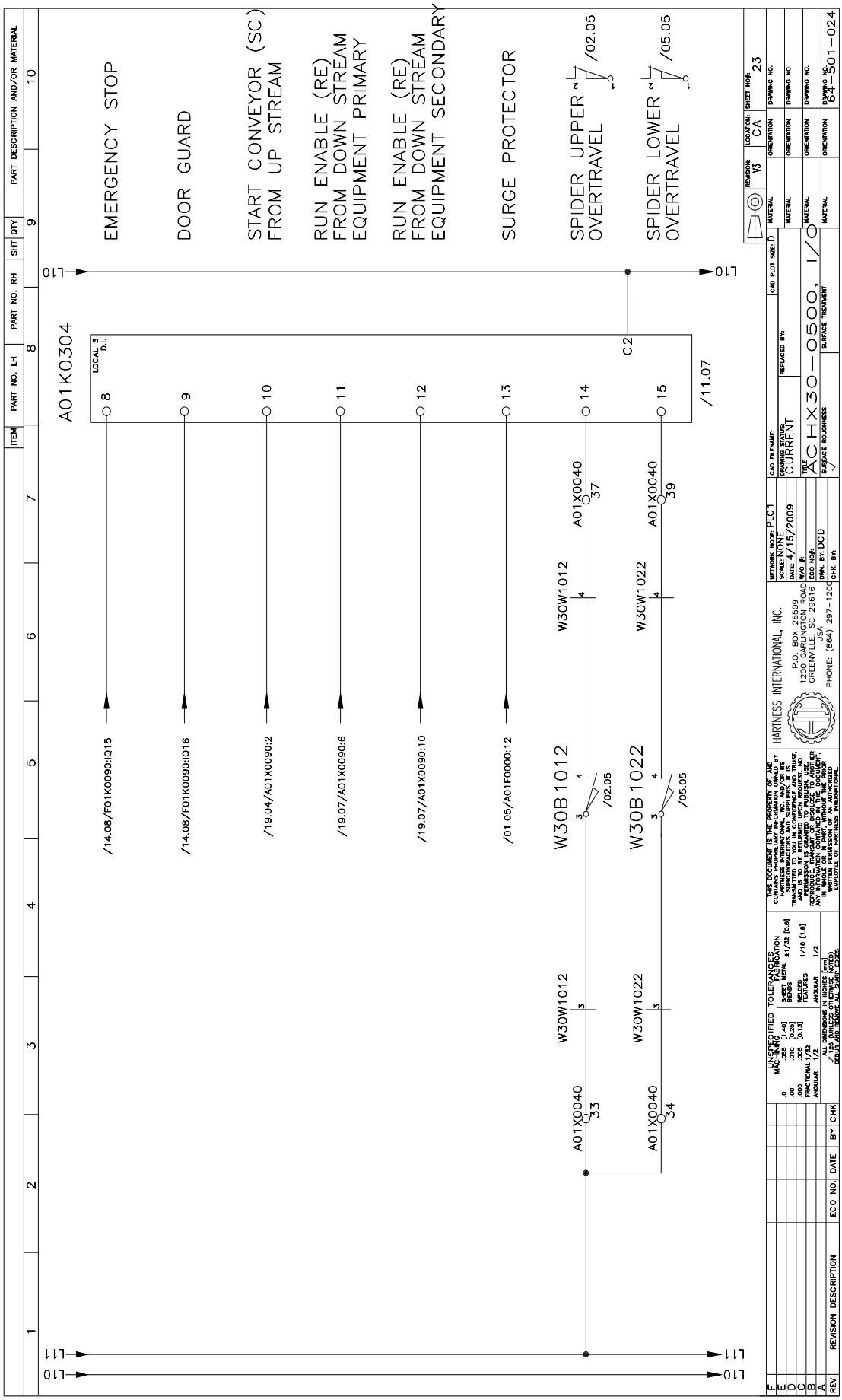
EMERGENCY STOP
DOOR GUARD
START CONVEYOR (SC)
FROM UP STREAM
RUN ENABLE (RE)
FROM DOWN STREAM
EQUIPMENT PRIMARY
RUN ENABLE (RE)
FROM DOWN STREAM
EQUIPMENT SECONDARY
SURGE PROTECTOR
SPIDER UPPER OVERTRAVEL /02.05
SPIDER LOWER OVERTRAVEL /05.05
A01K0304
LOCAL 3 D.I.
/14.08/F01K0090:IQ15
/14.08/F01K0090:IQ16
/19.04/A01X0090:2
/19.07/A01X0090:6
/19.07/A01X0090:10
/01.05/A01F0000:12
/11.07
W30B1012
W30B1022
A01X0040
W30W1012
W30W1022
/02.05
/05.05
L10
L11
C2
HARTNESS INTERNATIONAL, INC.
P.O. BOX 26509
1200 GARLINGTON ROAD
GREENVILLE, SC 29616
USA
PHONE: (864) 297-1200
NETWORK NODE: PLC1
SCALE: NONE
DATE: 4/15/2009
W/O #:
ECO NO#:
DWN. BY: DCD
CHK. BY:
CAD FILENAME:
DRAWING STATUS: CURRENT
REPLACED BY:
TITLE ACHX30-0500, I/O
SURFACE ROUGHNESS
CAD PLOT SIZE: D
MATERIAL
REVISION: V3
LOCATION: CA
SHEET NO#: 23
ORIENTATION
DRAWING NO.
64-501-024
UNSPECIFIED MACHINING .0 ±1/32 [0.8] .00 ±.010 [0.25] .000 ±.005 [0.13] FRACTIONAL ±1/32 ANGULAR 1/2
TOLERANCES FABRICATION SHEET METAL ±1/32 [0.8] BENDS 1/16 [1.6] WELDED FEATURES 1/2 ANGULAR 1/2
ALL DIMENSIONS IN INCHES [mm] ±.126 (UNLESS OTHERWISE NOTED) DEBUR AND BREAK ALL SHARP EDGES
THIS DOCUMENT IS THE PROPERTY OF, AND CONTAINS CONFIDENTIAL INFORMATION OWNED BY HARTNESS INTERNATIONAL, INC. AND/OR ITS SUBCONTRACTORS AND SUPPLIERS. IT IS TRANSMITTED TO YOU IN CONFIDENCE AND TRUST, AND IS TO BE RETURNED UPON REQUEST. NO RIGHTS TO THIS DESIGN ARE CONVEYED TO YOU. REPRODUCE, TRANSMIT OR DISCLOSE TO ANOTHER ANY INFORMATION CONTAINED HEREIN, USE IN WHOLE OR IN PART, WITHOUT THE PRIOR WRITTEN PERMISSION OF AN AUTHORIZED OFFICER OF HARTNESS INTERNATIONAL.
REV | REVISION DESCRIPTION | ECO NO. | DATE | BY | CHK

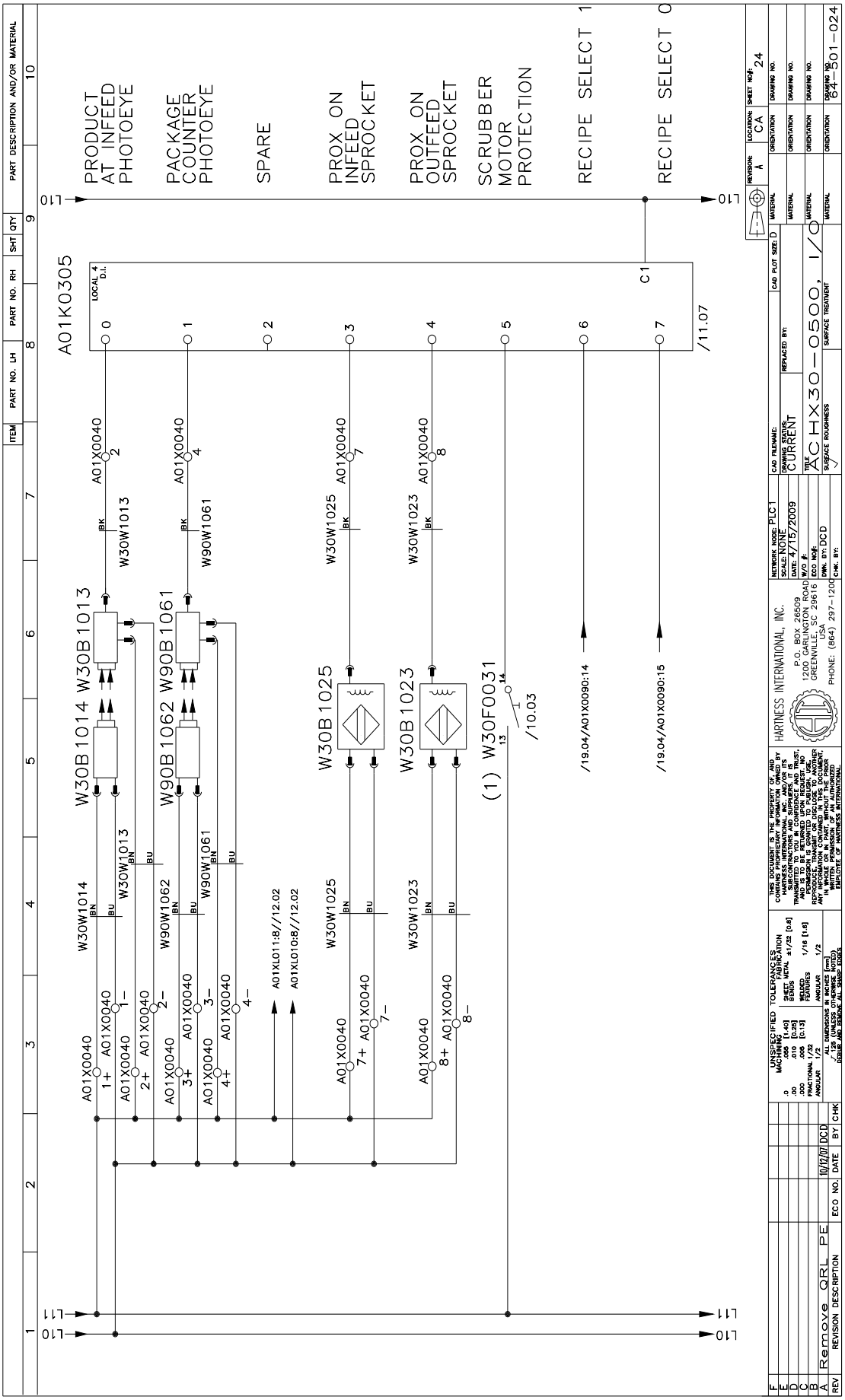
PRODUCT AT INFEED PHOTOEYE
PACKAGE COUNTER PHOTOEYE
SPARE
PROX ON INFEED SPROCKET
PROX ON OUTFEED SPROCKET
SCRUBBER MOTOR PROTECTION
RECIPE SELECT 1
RECIPE SELECT 0
A01K0305
W30B1014 W30B1013
W90B1062 W90B1061
W30B1025
W30B1023
(1) W30F0031
W30W1014
W30W1013
W90W1062
W90W1061
W30W1025
W30W1023
A01X0040
A01XL011:8/12.02
A01XL010:8/12.02
/19.04/A01X0090:14
/19.04/A01X0090:15
/10.03
/11.07
L10
L11
C1
HARTNESS INTERNATIONAL, INC.
P.O. BOX 26509
1200 GARLINGTON ROAD
GREENVILLE, SC 29616 USA
PHONE: (864) 297-1200
AC HX30-0500, I/O
84-501-024
Remove QRL PE
10/12/07 DCD

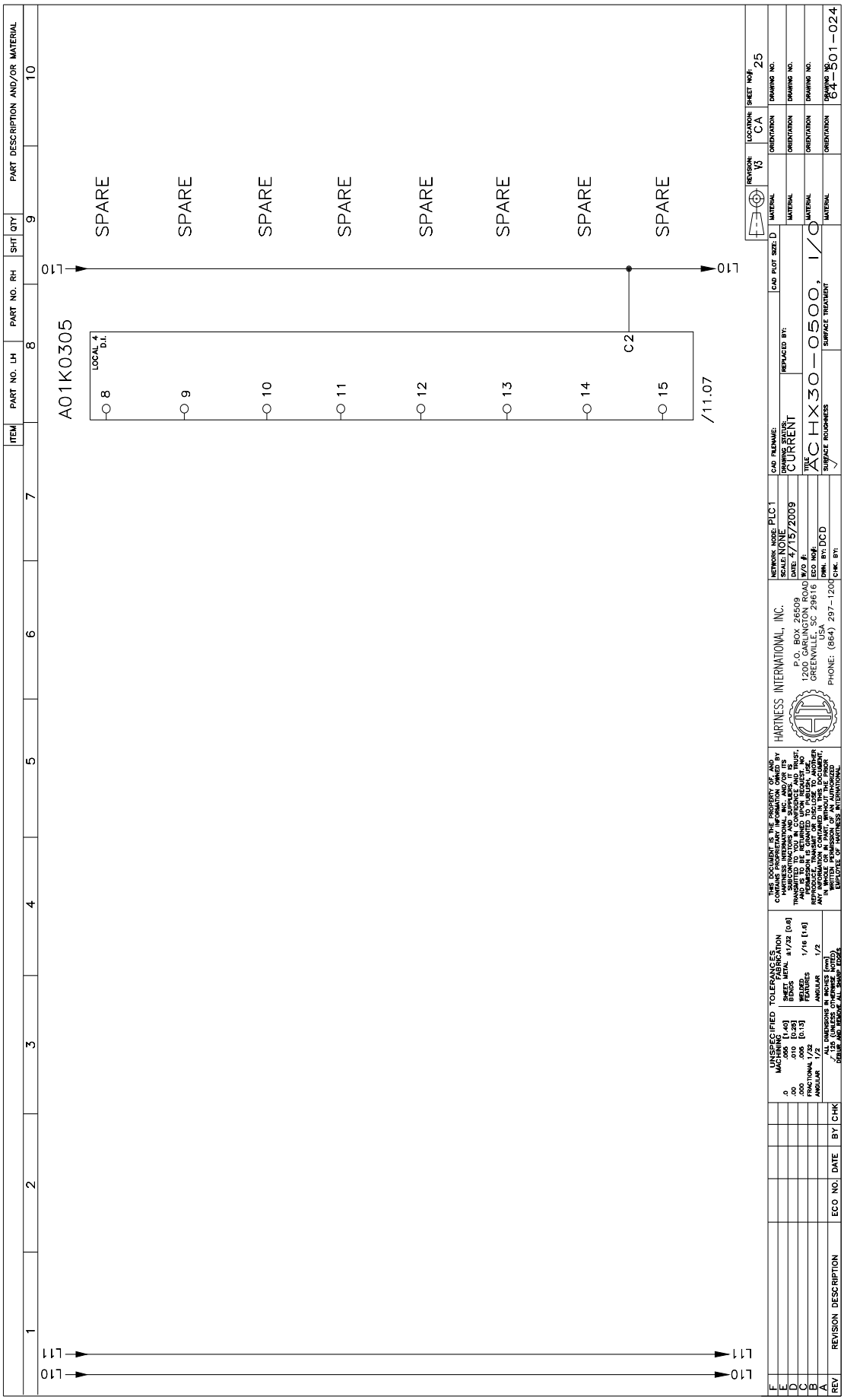
SPARE
SPARE
SPARE
SPARE
SPARE
SPARE
SPARE
SPARE
A01K0305
LOCAL 4 D.I.
8
9
10
11
12
13
14
15
C2
/11.07
L10
L11
HARTNESS INTERNATIONAL, INC.
P.O. BOX 26509
1200 GARLINGTON ROAD
GREENVILLE, SC 29616
USA
PHONE: (864) 297-1200
NETWORK NODE: PLC1
SCALE: NONE
DATE: 4/15/2009
W/O #:
ECO NO#:
DWN. BY: DCD
CHK. BY:
CAD FILENAME:
DRAWING STATUS: CURRENT
REPLACED BY:
TITLE
AC HX30-0500, 1/0
SURFACE ROUGHNESS
SURFACE TREATMENT
CAD PLOT SIZE: D
REVISION: V3
LOCATION: CA
SHEET NO#: 25
DRAWING NO. 64-301-024
ITEM
PART NO. LH
PART NO. RH
SHT
QTY
PART DESCRIPTION AND/OR MATERIAL
REV
REVISION DESCRIPTION
ECO NO.
DATE
BY
CHK
UNSPECIFIED TOLERANCES
MACHINING
SHEET METAL ±1/32 [0.8]
WELDED ASSEMBLIES 1/16 [1.6]
FRACTIONAL 1/32
ANGULAR 1/2
ALL DIMENSIONS IN INCHES [mm]
.125 (UNLESS OTHERWISE NOTED)
REMOVE AND BREAK ALL SHARP EDGES
THIS DOCUMENT IS THE PROPERTY OF AND CONTAINS PROPRIETARY INFORMATION OWNED BY HARTNESS INTERNATIONAL, INC. AND ITS SUBCONTRACTORS AND SUPPLIERS. IT IS TRANSMITTED IN CONFIDENCE AND TRUST, AND IS TO BE RETURNED UPON REQUEST. NO PORTION IS TO BE COPIED, REPRODUCED, TRANSMIT OR DISCLOSE TO ANOTHER OR USED IN ANY MANUFACTURE WITHOUT THE WRITTEN PERMISSION OF AN AUTHORIZED OFFICER OF HARTNESS INTERNATIONAL.

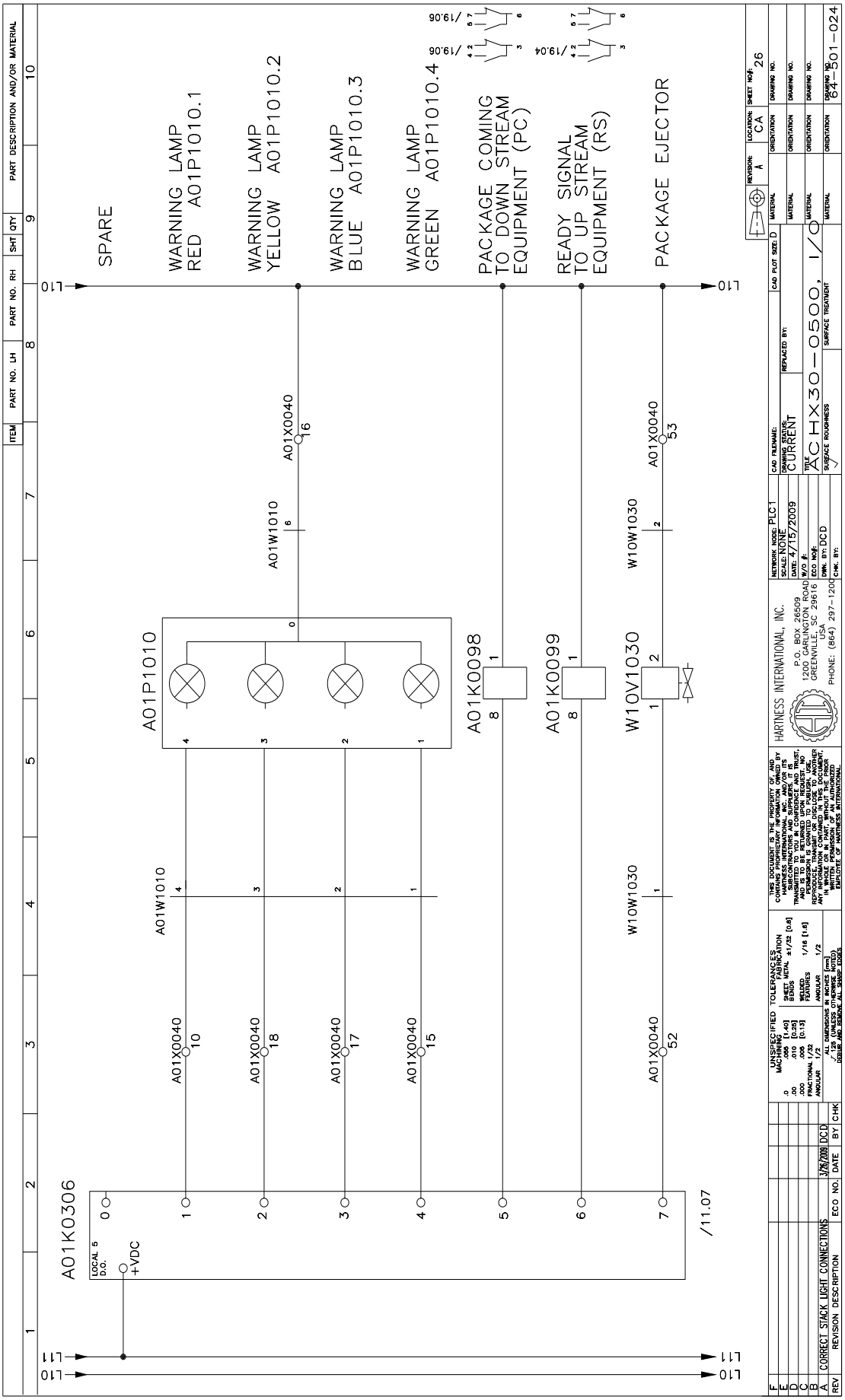
SPARE
WARNING LAMP RED A01P1010.1
WARNING LAMP YELLOW A01P1010.2
WARNING LAMP BLUE A01P1010.3
WARNING LAMP GREEN A01P1010.4
PACKAGE COMING TO DOWN STREAM EQUIPMENT (PC)
READY SIGNAL TO UP STREAM EQUIPMENT (RS)
PACKAGE EJECTOR
A01K0306
A01P1010
A01K0098
A01K0099
W10V1030
A01W1010
W10W1030
A01X0040
+VDC
HARTNESS INTERNATIONAL, INC.
AC HX30-0500, I/O
CURRENT
PLC1
64-501-024

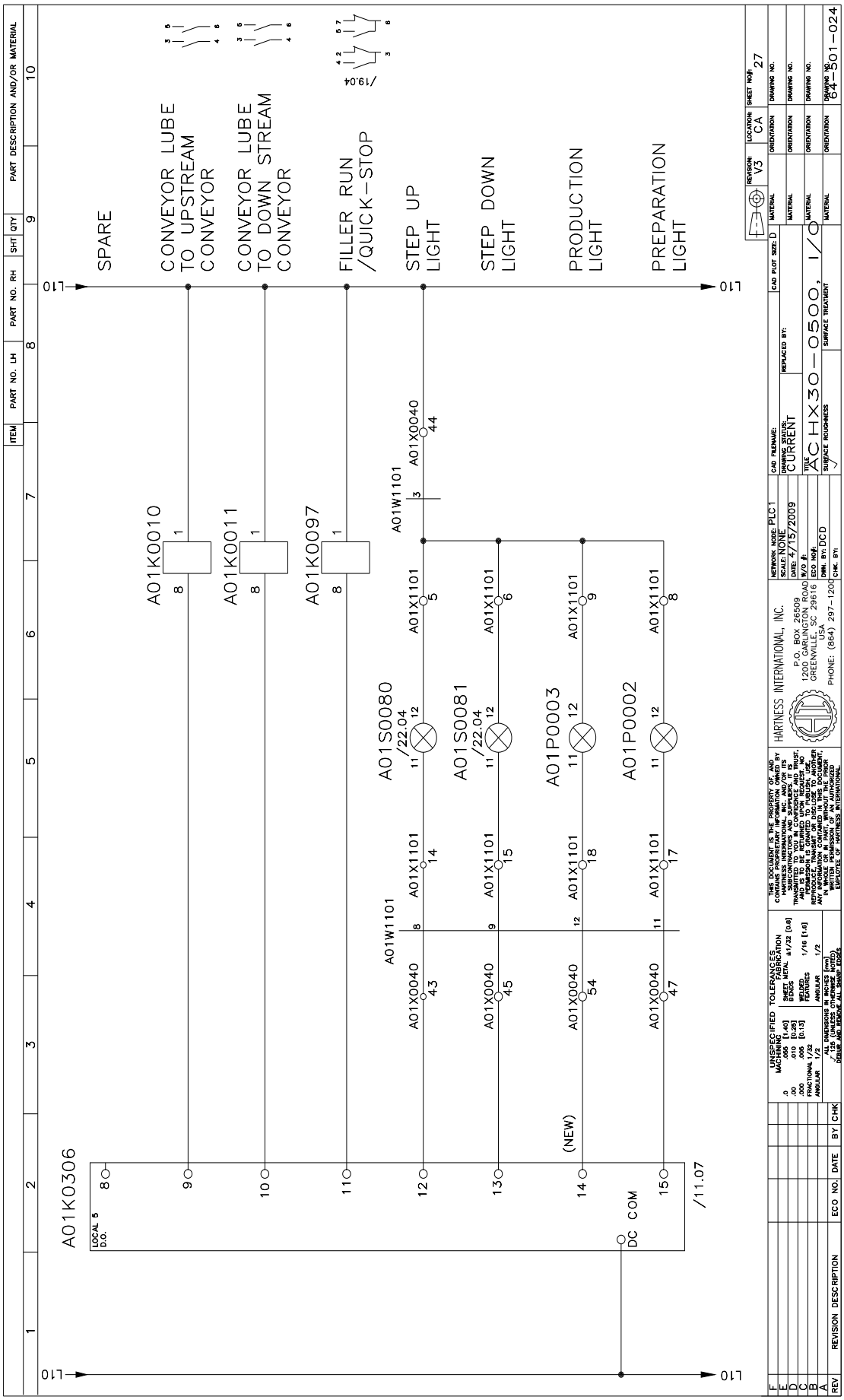
SPARE
CONVEYOR LUBE TO UPSTREAM CONVEYOR
CONVEYOR LUBE TO DOWN STREAM CONVEYOR
FILLER RUN /QUICK-STOP
STEP UP LIGHT
STEP DOWN LIGHT
PRODUCTION LIGHT
PREPARATION LIGHT
A01K0010
A01K0011
A01K0097
A01K0306
A01W1101
A01S0080
A01S0081
A01P0003
A01P0002
A01X0040
A01X1101
DC COM
(NEW)
HARTNESS INTERNATIONAL, INC.
P.O. BOX 26509
1200 GARLINGTON ROAD
GREENVILLE, SC 29616
USA
PHONE: (864) 297-1200
AC HX30-0500, I/O
CURRENT
4/15/2009
NONE
DCD
CA
27
64-301-024

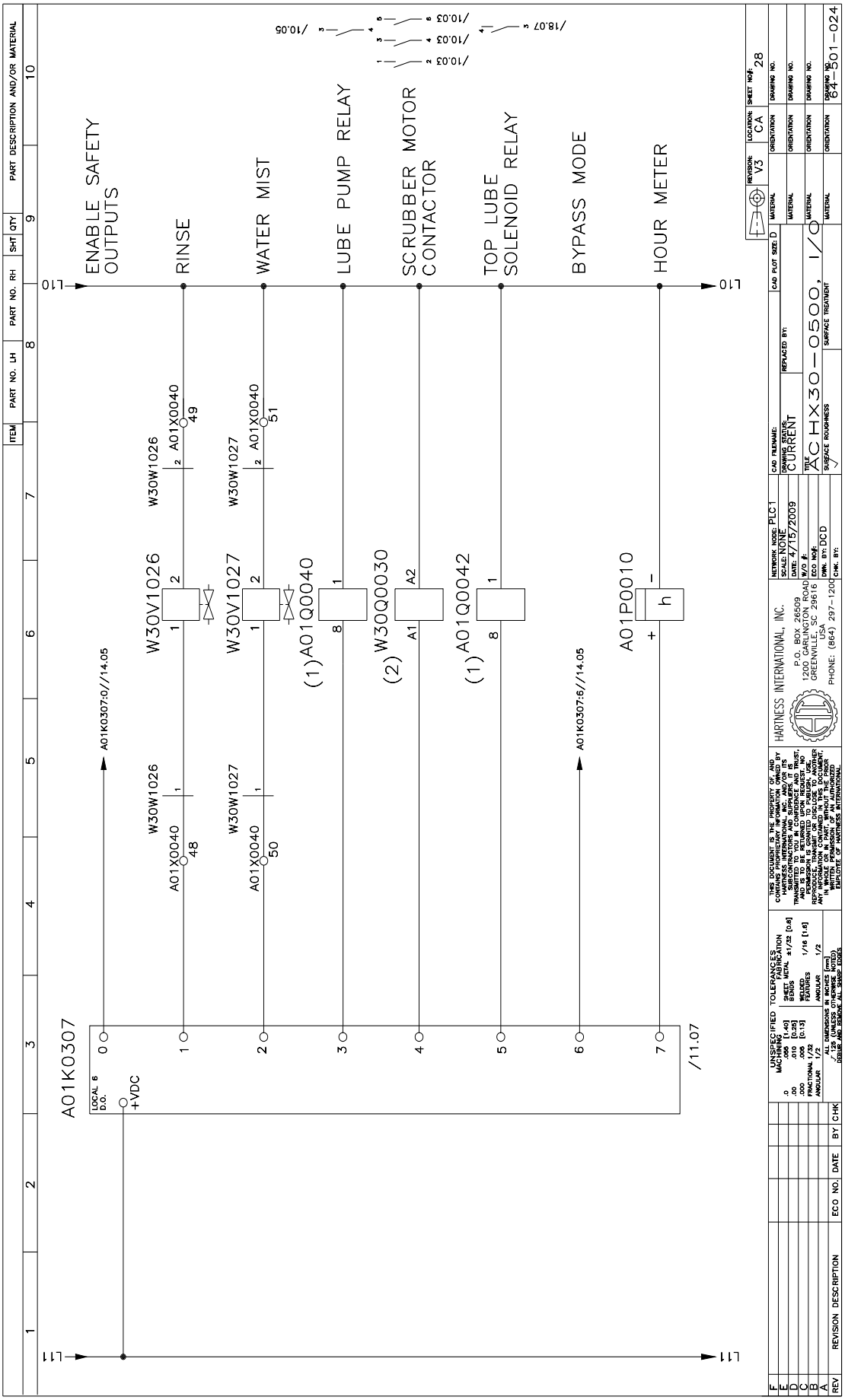
ENABLE SAFETY OUTPUTS
RINSE
WATER MIST
LUBE PUMP RELAY
SCRUBBER MOTOR CONTACTOR
TOP LUBE SOLENOID RELAY
BYPASS MODE
HOUR METER
A01K0307
W30V1026
W30V1027
W30W1026
W30W1027
A01X0040
A01Q0040
W30Q0030
A01P0010
+VDC
HARTNESS INTERNATIONAL, INC.
P.O. BOX 26509
1200 GARLINGTON ROAD
GREENVILLE, SC 29616 USA
PHONE: (864) 297-1200
AC HX30-0500, I/O
84-501-024

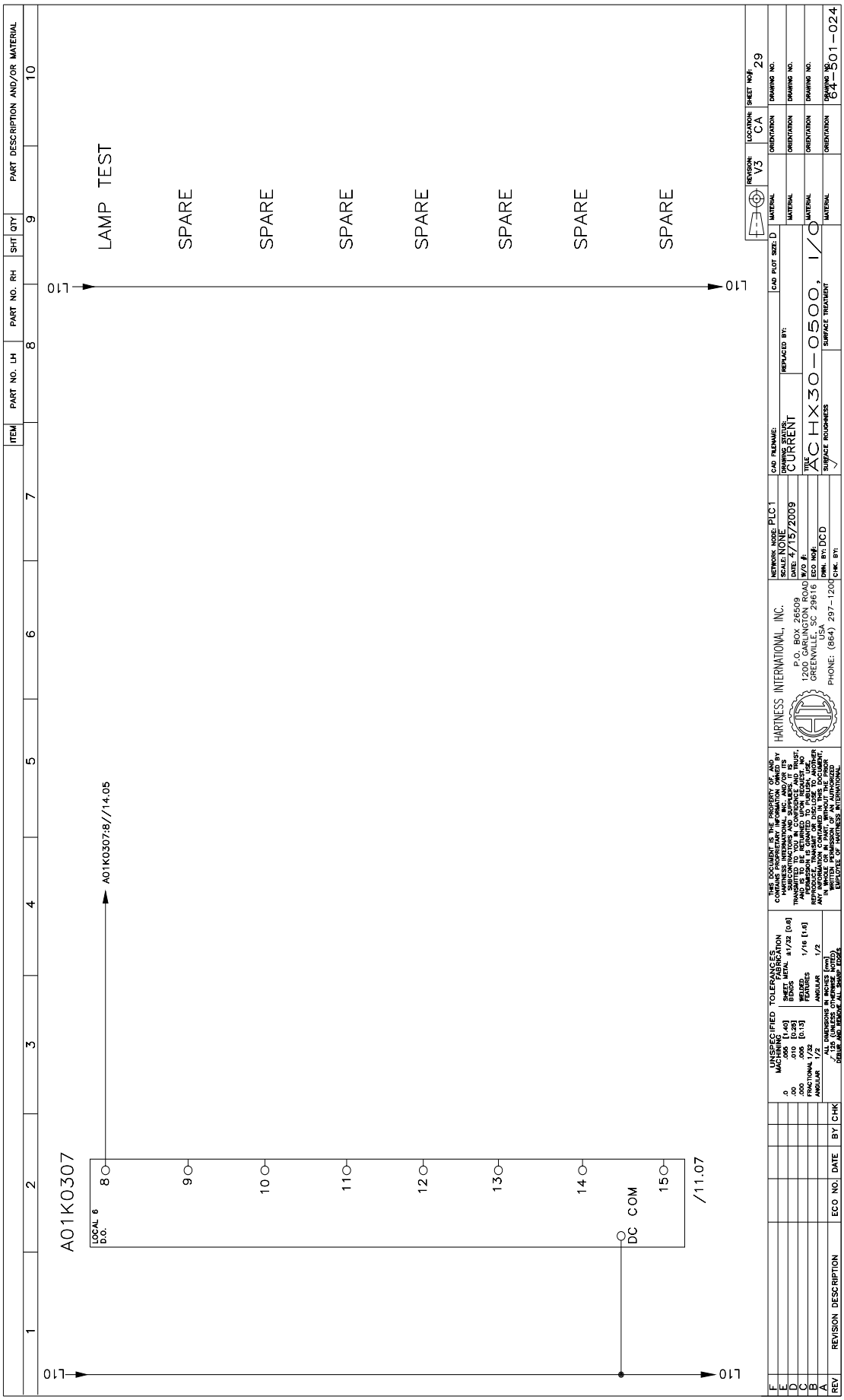
LAMP TEST
SPARE
SPARE
SPARE
SPARE
SPARE
SPARE
SPARE
A01K0307
A01K0307:8//14.05
LOCAL 6 D.O.
8
9
10
11
12
13
14
15
DC COM
/11.07
L10
ITEM
PART NO. LH
PART NO. RH
SHT
QTY
PART DESCRIPTION AND/OR MATERIAL
REVISION: V3
LOCATION: CA
SHEET NO#: 29
CAD FILENAME:
DRAWING STATUS: CURRENT
DATE: 4/15/2009
W/O #:
ECO NO#:
DWN. BY: DCD
CHK. BY:
NETWORK NODE: PLC1
SCALE: NONE
REPLACED BY:
CAD PLOT SIZE: D
TITLE AC HX30-0500, 1/0
SURFACE ROUGHNESS
SURFACE TREATMENT
MATERIAL
ORIENTATION
DRAWING NO.
64-301-024
HARTNESS INTERNATIONAL, INC.
P.O. BOX 26509
1200 GARLINGTON ROAD
GREENVILLE, SC 29616
USA
PHONE: (864) 297-1200
UNSPECIFIED TOLERANCES
MACHINING
.0 ANGLES [1.0]
.00 .010 [0.25]
.000 .005 [0.13]
FRACTIONAL 1/32
ANGULAR 1/2
SHEET METAL ±1/32 [0.8]
BENDS
WELDED ASSEMBLIES 1/16 [1.6]
ANGULAR 1/2
ALL DIMENSIONS IN INCHES [mm]
∠ 125 (UNLESS OTHERWISE NOTED)
DEBUR AND BREAK ALL SHARP EDGES
THIS DOCUMENT IS THE PROPERTY OF AND CONTAINS PROPRIETARY INFORMATION OWNED BY HARTNESS INTERNATIONAL, INC. AND ITS SUBCONTRACTORS AND SUPPLIERS. IT IS TRANSMITTED TO YOU IN CONFIDENCE AND TRUST, AND IS TO BE RETURNED UPON REQUEST. NO PROPRIETARY RIGHTS ARE CONVEYED TO YOU. YOU MUST NOT REPRODUCE, TRANSMIT OR DISCLOSE TO ANOTHER ANY INFORMATION CONTAINED IN THIS DOCUMENT; IN WHOLE OR IN PART, WITHOUT THE PRIOR WRITTEN PERMISSION OF AN AUTHORIZED EXECUTIVE OF HARTNESS INTERNATIONAL.
REV
REVISION DESCRIPTION
ECO NO.
DATE
BY
CHK

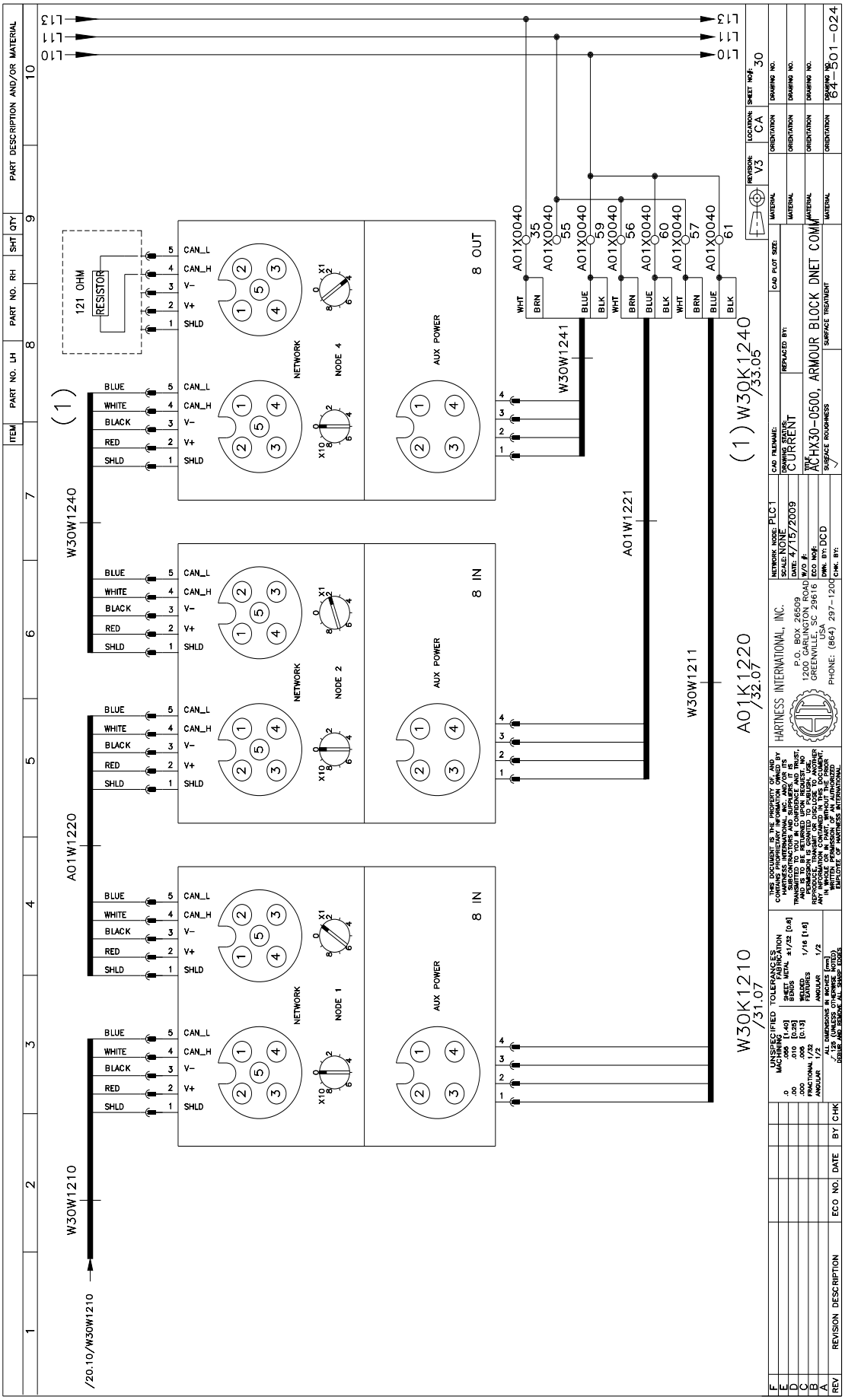
L13
L11
L10
121 OHM RESISTOR
W30W1240
W30W1241
W30W1210
W30W1211
A01W1220
A01W1221
W30K1210 /31.07
A01K1220 /32.07
(1) W30K1240 /33.05
/20.10/W30W1210
NETWORK
AUX POWER
NODE 1
NODE 2
NODE 4
8 IN
8 OUT
CAN_L
CAN_H
V–
V+
SHLD
BLUE
WHITE
BLACK
RED
WHT
BRN
BLK
A01X0040 35
A01X0040 55
A01X0040 59
A01X0040 56
A01X0040 60
A01X0040 57
A01X0040 61
HARTNESS INTERNATIONAL, INC.
P.O. BOX 26509
1200 GARLINGTON ROAD
GREENVILLE, SC 29616 USA
PHONE: (864) 297-1200
NETWORK NODE: PLC1
SCALE: NONE
DATE: 4/15/2009
W/O #:
ECO NO#:
DWN. BY: DCD
CHK. BY:
CAD FILENAME:
DRAWING STATUS: CURRENT
REPLACED BY:
TITLE: ACHX30-0500, ARMOUR BLOCK DNET COMM
SURFACE ROUGHNESS
SURFACE TREATMENT
CAD PLOT SIZE:
MATERIAL
REVISION: V3
LOCATION: CA
SHEET NO#: 30
ORIENTATION
DRAWING NO.
84-501-024
UNSPECIFIED TOLERANCES
MACHINING
SHEET METAL ±1/32 [0.8]
BENDS
WELDED
FEATURES 1/16 [1.5]
ANGULAR 1/2
FRACTIONAL 1/32
ANGULAR 1/2
ALL DIMENSIONS IN INCHES [mm]
REMOVE BURRS AND BREAK ALL SHARP EDGES
REV
REVISION DESCRIPTION
ECO NO.
DATE
BY
CHK
ITEM
PART NO. LH
PART NO. RH
SHT
QTY
PART DESCRIPTION AND/OR MATERIAL

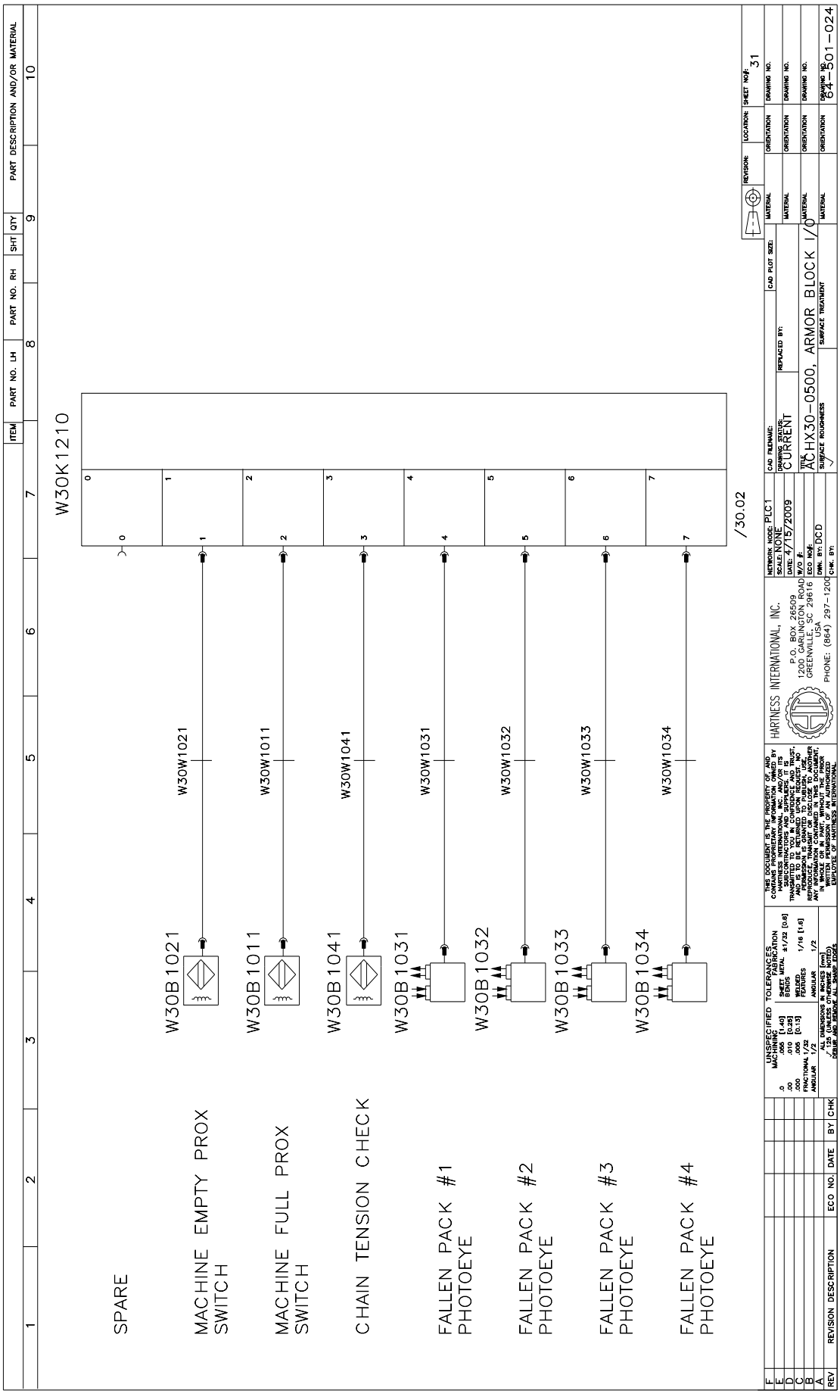
W30K1210
/30.02
SPARE
MACHINE EMPTY PROX SWITCH
MACHINE FULL PROX SWITCH
CHAIN TENSION CHECK
FALLEN PACK #1 PHOTOEYE
FALLEN PACK #2 PHOTOEYE
FALLEN PACK #3 PHOTOEYE
FALLEN PACK #4 PHOTOEYE
W30B1021
W30B1011
W30B1041
W30B1031
W30B1032
W30B1033
W30B1034
W30W1021
W30W1011
W30W1041
W30W1031
W30W1032
W30W1033
W30W1034
HARTNESS INTERNATIONAL, INC.
P.O. BOX 26509
1200 GARLINGTON ROAD
GREENVILLE, SC 29616
USA
PHONE: (864) 297-1200
NETWORK NODE: PLC1
SCALE: NONE
DATE: 4/15/2009
W/O #:
ECO NO#:
DWN. BY: DCD
CHK. BY:
CAD FILENAME:
DRAWING STATUS: CURRENT
REPLACED BY:
CAD PLOT SIZE:
TITLE: AC HX30-0500, ARMOR BLOCK 1/0
SURFACE ROUGHNESS
SURFACE TREATMENT
MATERIAL
ORIENTATION
DRAWING NO. 64-301-024
REVISION:
LOCATION:
SHEET NO#: 31
ITEM
PART NO. LH
PART NO. RH
SHT
QTY
PART DESCRIPTION AND/OR MATERIAL
REV
REVISION DESCRIPTION
ECO NO.
DATE
BY
CHK
UNSPECIFIED TOLERANCES
MACHINING
.0 ANGLES [1.0]
.00 .010 [0.25]
.000 .005 [0.13]
FRACTIONAL 1/32
ANGULAR 1°/2
SHEET METAL ±1/32 [0.8]
WELDED ASSEMBLIES 1/16 [1.6]
ANGULAR 1/2
ALL DIMENSIONS IN INCHES [mm]
1.125 (UNLESS OTHERWISE NOTED)
DEBUR AND BREAK ALL SHARP EDGES
THIS DOCUMENT IS THE PROPERTY OF AND CONTAINS PROPRIETARY INFORMATION OWNED BY HARTNESS INTERNATIONAL, INC. AND/OR ITS SUBCONTRACTORS AND SUPPLIERS. IT IS TRANSMITTED IN CONFIDENCE AND TRUST, AND IS TO BE RETURNED UPON REQUEST. NO PROPRIETARY RIGHTS ARE CONVEYED. NO REPRODUCE, TRANSMIT OR DISCLOSE TO ANOTHER ANY WHOLE OR PART OF THIS DOCUMENT WITHOUT PERMISSION OF AN AUTHORIZED EMPLOYEE OF HARTNESS INTERNATIONAL.

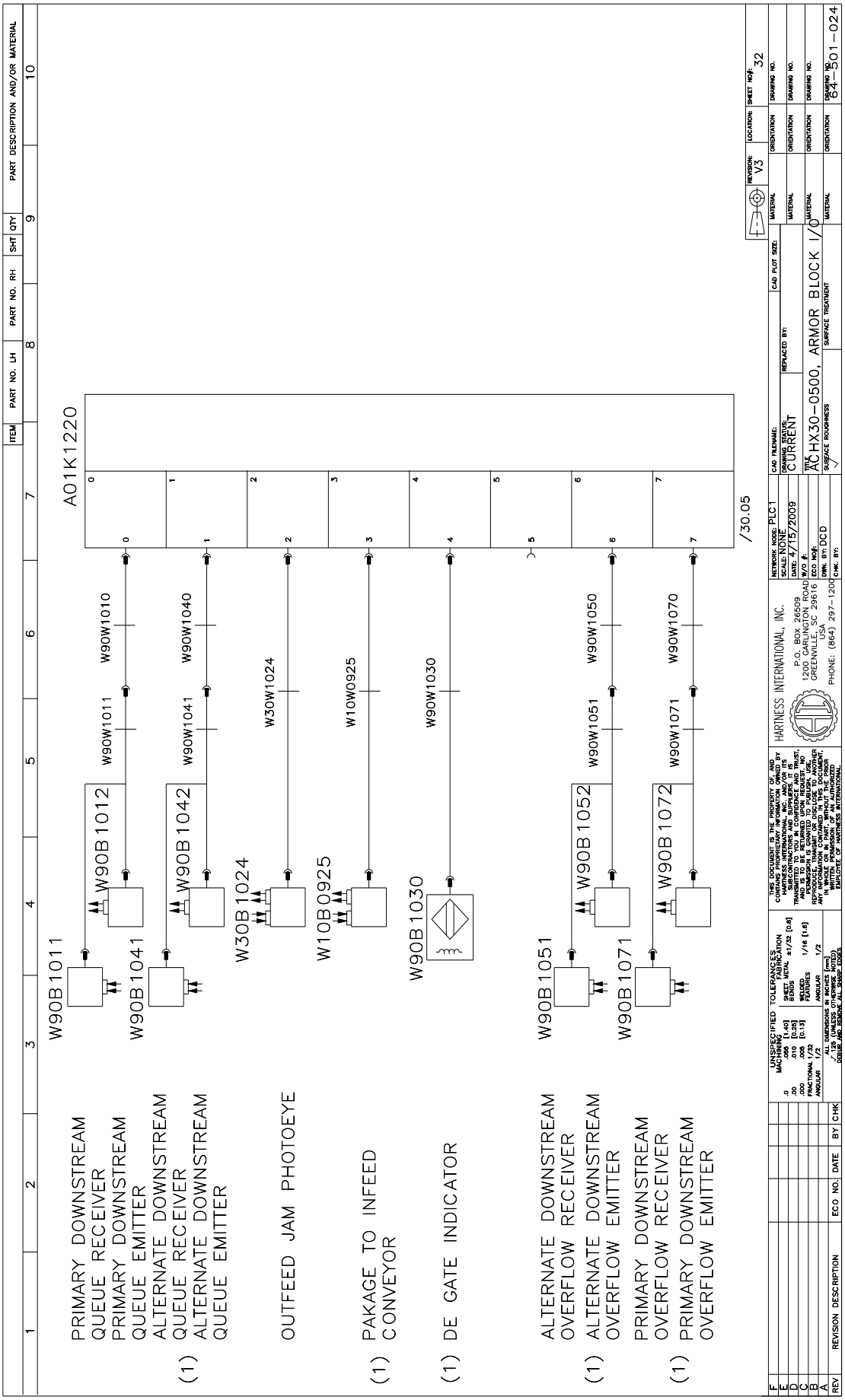
PRIMARY DOWNSTREAM QUEUE RECEIVER
PRIMARY DOWNSTREAM QUEUE EMITTER
ALTERNATE DOWNSTREAM QUEUE RECEIVER
(1) ALTERNATE DOWNSTREAM QUEUE EMITTER
OUTFEED JAM PHOTOEYE
(1) PAKAGE TO INFEED CONVEYOR
(1) DE GATE INDICATOR
ALTERNATE DOWNSTREAM OVERFLOW RECEIVER
(1) ALTERNATE DOWNSTREAM OVERFLOW EMITTER
PRIMARY DOWNSTREAM OVERFLOW RECEIVER
(1) PRIMARY DOWNSTREAM OVERFLOW EMITTER
W90B1011
W90B1041
W90B1012
W90B1042
W30B1024
W10B0925
W90B1030
W90B1051
W90B1071
W90B1052
W90B1072
W90W1010
W90W1040
W30W1024
W10W0925
W90W1030
W90W1050
W90W1070
W90W1011
W90W1041
W90W1051
W90W1071
A01K1220
/30.05
HARTNESS INTERNATIONAL, INC.
P.O. BOX 26509
1200 GARLINGTON ROAD
GREENVILLE, SC 29616 USA
PHONE: (864) 297-1200
AC HX30-0500, ARMOR BLOCK I/O
64-501-024

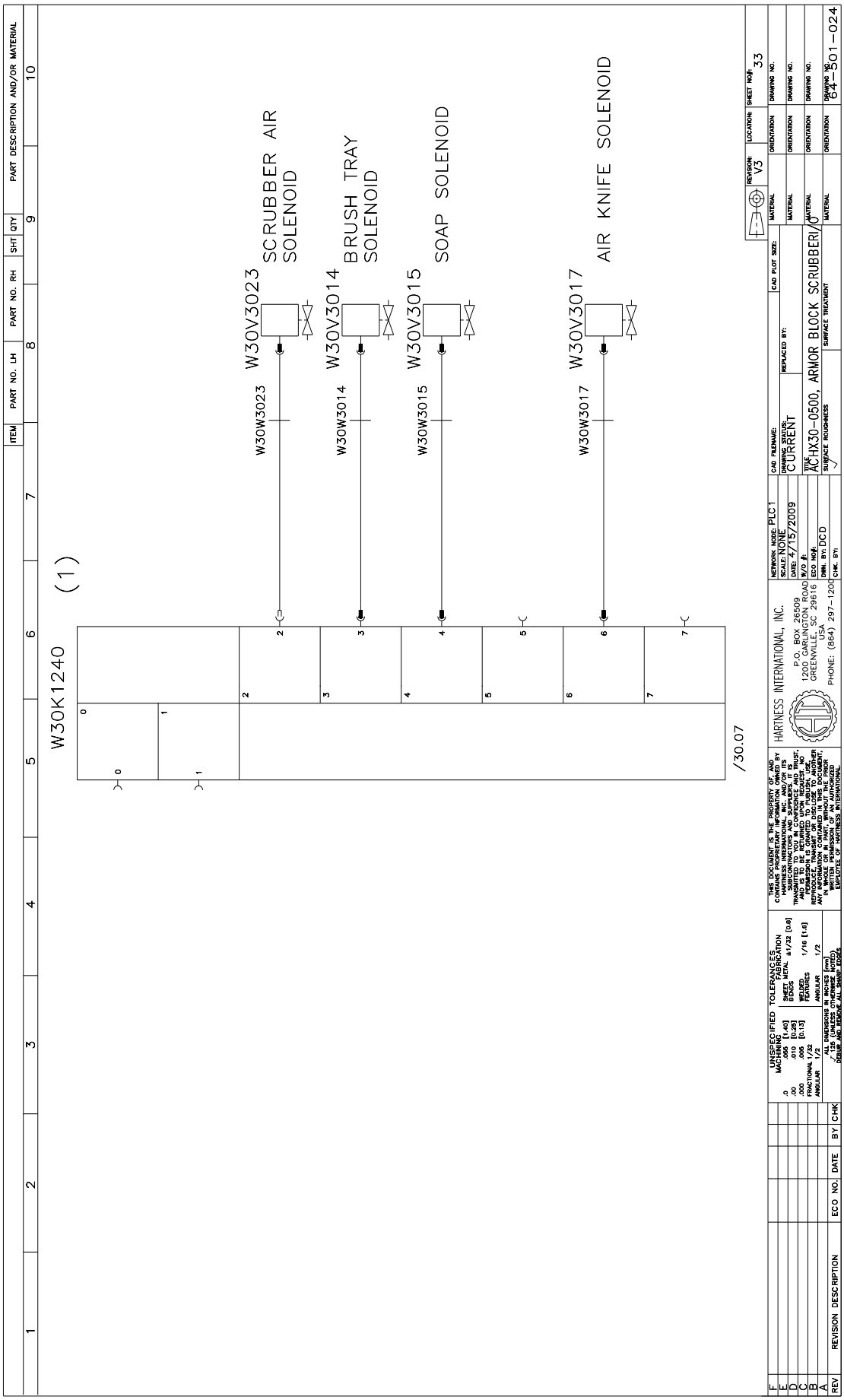
W30K1240
(1)
/30.07
W30W3023
W30V3023
SCRUBBER AIR SOLENOID
W30W3014
W30V3014
BRUSH TRAY SOLENOID
W30W3015
W30V3015
SOAP SOLENOID
W30W3017
W30V3017
AIR KNIFE SOLENOID
ITEM
PART NO. LH
PART NO. RH
SHT
QTY
PART DESCRIPTION AND/OR MATERIAL
REVISION: V3
LOCATION:
SHEET NO#: 33
HARTNESS INTERNATIONAL, INC.
P.O. BOX 26509
1200 GARLINGTON ROAD
GREENVILLE, SC 29616
USA
PHONE: (864) 297-1200
NETWORK NODE: PLC1
SCALE: NONE
DATE: 4/15/2009
W/O #:
ECO NO#:
DWN. BY: DCD
CHK. BY:
CAD FILENAME:
DRAWING STATUS: CURRENT
REPLACED BY:
CAD PLOT SIZE:
TITLE
ACHX30-0500, ARMOR BLOCK SCRUBBER/
SURFACE ROUGHNESS
SURFACE TREATMENT
MATERIAL
ORIENTATION
DRAWING NO.
64-3501-024
UNSPECIFIED MACHINING TOLERANCES
TOLERANCES, FABRICATION
WELDED ASSEMBLIES
ANGULAR
ALL DIMENSIONS IN INCHES [mm]
REMOVE ALL BREAK ALL SHARP EDGES
THIS DOCUMENT IS THE PROPERTY OF AND CONTAINS PROPRIETARY INFORMATION OWNED BY HARTNESS INTERNATIONAL, INC. AND/OR ITS SUBCONTRACTORS AND SUPPLIERS. IT IS TRANSMITTED TO YOU IN CONFIDENCE AND TRUST, AND IS TO BE RETURNED UPON REQUEST. NO PROPRIETARY RIGHTS ARE CONVEYED TO YOU. YOU MAY NOT REPRODUCE, TRANSMIT OR DISCLOSE TO ANOTHER ANY INFORMATION CONTAINED HEREIN OR USE IT IN WHOLE OR IN PART FOR ANY PURPOSE WITHOUT WRITTEN PERMISSION OF AN AUTHORIZED OFFICER OF HARTNESS INTERNATIONAL.
REV
REVISION DESCRIPTION
ECO NO.
DATE
BY
CHK

This page intentionally left blank

5 Line Summary

Description

All connections inside the electrical cabinet are listed in this chapter.

5.1 IEC Version . . . . . 5 - 5

5.2 CSA Version . . . . . 5 - 15

This page intentionally left blank

5.1 IEC Version

This page intentionally left blank

Hartness International, Inc.

Line	Component	Sheet	Position	Area	Color
L1	A01Q0000:2	64-501-024:1	2		BK
	A01F0000:L/N	64-501-024:1	5	6.0	BK
	F01Q0010:1	64-501-024:2	1	6.0	BK
	A01F0001:1	64-501-024:11	6	4.0	BK
	A01F0002:1	64-501-024:12	5	4.0	BK
	A01F0003:1	64-501-024:11	2	4.0	BK
	A01F0004:1	64-501-024:10	5	4.0	BK
L2	A01Q0000:4	64-501-024:1	2		BK
	A01F0000:L/N	64-501-024:1	5	6.0	BK
	F01Q0010:3	64-501-024:2	2	6.0	BK
L3	A01Q0000:6	64-501-024:1	2		BK
	A01F0000:L/N	64-501-024:1	5	6.0	BK
	F01Q0010:5	64-501-024:2	2	6.0	BK
L4	F30Q0011:2	64-501-024:2	1		BK
	W10F0020:1	64-501-024:9	1	4.0	BK
L5	F30Q0011:4	64-501-024:2	2		BK
	W90F0010:1	64-501-024:8	7	4.0	BK
	W10F0020:3	64-501-024:9	1	4.0	BK
L6	F30Q0011:6	64-501-024:2	2		BK
	W10F0010:1	64-501-024:8	2	4.0	BK
	W10F0020:5	64-501-024:9	1	4.0	BK
L7	F30Q0011:2	64-501-024:2	1		BK
	W30F0010:1	64-501-024:2	7	4.0	BK
	W30F0020:1	64-501-024:5	7	4.0	BK
	W30F0031:1	64-501-024:10	3	4.0	BK
L8	F30Q0011:4	64-501-024:2	2	4.0	BK
	W30F0010:3	64-501-024:2	8	4.0	BK
	W30F0020:3	64-501-024:5	8	4.0	BK
	W30F0031:3	64-501-024:10	3	4.0	BK
L9	F30Q0011:6	64-501-024:2	2	4.0	BK
	W30F0010:5	64-501-024:2	8	4.0	BK
	W30F0020:5	64-501-024:5	8	4.0	BK
	W30F0031:5	64-501-024:10	3	4.0	BK

DATE: 2009-06

ISSUE: **DESCRIPTION: LINE SUMMARY**

MACHINE: ACHX 30-0500 IEC 64-501-024:44

DATE: 2009-06

SIGN: DCD 1 OF 7

Hartness International, Inc.

Line	Component	Sheet	Position	Area	Color
L10	A01T0010:V-	64-501-024:12	5	0.75	BU
	A01XL010:1	64-501-024:12	5		
L10	A01T0010:V-	64-501-024:12	5	2.50	GNYE
	A01X0050:E12	64-501-024:12	4		
L10	A01XL010:2	64-501-024:12	4	0.75	BU
	A01X0040:62	64-501-024:12	4		
L10	A01XL010:3	64-501-024:26	8	0.75	BU
	A01X0040:16	64-501-024:26	7		
L10	A01XL010:4	64-501-024:28	8	0.75	BU
	A01P0010:-	64-501-024:28	6		
L10	A01XL010:5	64-501-024:14	10	0.75	BU
	F30Q0011:A1	64-501-024:14	9		
L10	A01XL010:6				
L10	A01XL010:7	64-501-024:22	9	0.75	BU
	A01K0304:C1	64-501-024:22	9		
L10	A01XL010:8	64-501-024:24	2	0.75	BU
	A01X0040:1-	64-501-024:24	3		
	A01X0040:2-	64-501-024:24	3		
	A01X0040:3-	64-501-024:24	3		
	A01X0040:4-	64-501-024:24	3		
	A01X0040:5-	64-501-024:12	2		
	A01X0040:6-	64-501-024:12	3		
	A01X0040:7-	64-501-024:24	3		
	A01X0040:8-	64-501-024:24	3		
L10	A01XL010:9	64-501-024:26	8	0.75	BU
	A01K0099:1	64-501-024:26	6		
L10	A01XL010:10	64-501-024:28	8	0.75	BU
	W30Q0030:A2	64-501-024:28	6		
L10	A01XL010:11	64-501-024:28	8	0.75	BU
	A01Q0042:1	64-501-024:28	6		

DATE: 2009-06

ISSUE: **DESCRIPTION: LINE SUMMARY**

MACHINE: ACHX 30-0500 IEC 64-501-024:45

DATE: 2009-06

SIGN: DCD 2 OF 7

Hartness International, Inc.

Line	Component	Sheet	Position	Area	Color
L10	A01XL010:12	64-501-024:30	10	0.75	BU
	A01X0040:59	64-501-024:30	9		
	A01X0040:60	64-501-024:30	9		
	A01X0040:61	64-501-024:30	9		
	A01X0040:62	64-501-024:12	4		
L10	A01XL010:13	64-501-024:29	1	0.75	BU
	A01K0307:DC COM	64-501-024:29	2		
L10	A01XL010:14	64-501-024:14		0.75	BU
	A01X0040:41	64-501-024:14	10		
L10	A01XL010:15	64-501-024:14	10	0.75	BU
	F01Q0010:A2	64-501-024:14	9		
L10	A01XL010:16	64-501-024:18	7	0.75	BU
	A01X0040:25	64-501-024:18	7		
L10	A01XL010:17	64-501-024:14	9	0.75	BU
	F01K0090:0V	64-501-024:14	7		
	F01K0091:BU	64-501-024:14	8		
L10	A01XL010:18	64-501-024:28	8	0.75	BU
	A01X0040:51	64-501-024:28	8		
L10	A01XL010:19	64-501-024:27	8	0.75	BU
	A01K0010:1	64-501-024:27	7		
L10	A01XL010:20	64-501-024:27		0.75	BU
	A01K0306:DC COM	64-501-024:27	1		
L10	A01XL010:21	64-501-024:15	1	0.75	BU
	A01X0080:1-	64-501-024:15	3		
	A01X0080:2-	64-501-024:16	3		
	A01X0080:3-	64-501-024:17	3		
L10	A01XL010:22	64-501-024:26	8	0.75	BU
	A01K0098:1	64-501-024:26	6		
L10	A01XL010:23	64-501-024:28	8	0.75	BU
	A01X0040:49	64-501-024:28	8		

DATE: 2009-06

ISSUE: **DESCRIPTION: LINE SUMMARY**

MACHINE: ACHX 30-0500 IEC 64-501-024:46

DATE: 2009-06

SIGN: DCD 3 OF 7

Hartness International, Inc.

Line	Component	Sheet	Position	Area	Color
L10	A01XL010:24	64-501-024:27	8	0.75	BU
	A01K0011:1	64-501-024:27	7		
L10	A01XL010:25	64-501-024:18	4	0.75	BU
	A01K0060:2	64-501-024:18	4		
L10	A01XL010:26	64-501-024:18	2	0.75	BU
	A01W0060:2	64-501-024:18	2		
L10	A01XL010:27	64-501-024:14	10	0.75	BU
	F01Q0011:A1	64-501-024:14	9		
L10	A01XL010:28	64-501-024:22	8	0.50	BU
	A01K0304:C2	64-501-024:23	8		
L10	A01XL010:29	64-501-024:27	8	0.75	BU
	A01X0040:44	64-501-024:27	8		
L10	A01XL010:30	64-501-024:26	8	0.75	BU
	A01X0040:53	64-501-024:26	7		
L10	A01XL010:31	64-501-024:27	8	0.75	BU
	A01K0097:1	64-501-024:27	7		
L10	A01XL010:32	64-501-024:24	9	0.75	BU
	A01K0305:C1	64-501-024:24	9		
L10	A01XL010:33	64-501-024:28	8	0.75	BU
	A01Q0040:1	64-501-024:28	6		
L10	A01XL010:34	64-501-024:25	8	0.75	BU
	A01K0305:C2	64-501-024:25	8		
L11	A01T0010:V+	64-501-024:12	5	0.75	BU
	A01XL011:1	64-501-024:12	5		
L11	A01XL011:2	64-501-024:24	1	0.75	BU
	W30F0031:13	64-501-024:24	5		
L11	A01XL011:3	64-501-024:26	1	0.75	BU
	A01K0306:+VDC	64-501-024:26	1		

DATE: 2009-06

ISSUE: **DESCRIPTION: LINE SUMMARY**

MACHINE: ACHX 30-0500 IEC 64-501-024:47

DATE: 2009-06

SIGN: DCD 4 OF 7

Hartness International, Inc.

Line	Component	Sheet	Position	Area	Color
L11	A01XL011:4	64-501-024:1	5	0.75	BU
	A01F0000:11	64-501-024:1	5		
L11	A01XL011:5	64-501-024:19	5	0.75	BU
	A01X0090:5	64-501-024:19	7		
	A01X0090:9	64-501-024:19	7		
L11	A01XL011:6	64-501-024:14	8	0.75	BU
	F01K0090:1L	64-501-024:14	8		
L11	A01XL011:7	64-501-024:18	7	0.75	BU
	A01Q0042:3	64-501-024:18	7		
L11	A01XL011:8	64-501-024:24	1	0.75	BU
	A01X0040:1+	64-501-024:24	3		
	A01X0040:2+	64-501-024:24	3		
	A01X0040:3+	64-501-024:24	3		
	A01X0040:4+	64-501-024:24	3		
	A01X0040:5+	64-501-024:12	1		
	A01X0040:6+	64-501-024:12	2		
	A01X0040:7+	64-501-024:24	3		
	A01X0040:8+	64-501-024:24	3		
L11	A01XL011:9	64-501-024:22	1	0.75	BU
	W30F0021:13	64-501-024:22	2		
L11	A01XL011:10	64-501-024:22	1	0.75	BU
	W30F0011:13	64-501-024:22	2		
L11	A01XL011:11	64-501-024:30	10	0.75	BU
	A01X0040:55	64-501-024:30	9		
	A01X0040:56	64-501-024:30	9		
	A01X0040:57	64-501-024:30	9		
	A01X0040:58	64-501-024:12	5		
L11	A01XL011:12	64-501-024:22	1	0.75	BU
	A01X0040:19	64-501-024:22	2		
	A01X0040:20	64-501-024:22	2		
L11	A01XL011:13	64-501-024:14	1	0.75	BU
	F01X0090:+24V	64-501-024:14	8		

Hartness International, Inc.

Line	Component	Sheet	Position	Area	Color
L11	A01XL011:14	64-501-024:14	1	0.75	BU
	F01X0090:2	64-501-024:14	1		
L11	A01XL011:15	64-501-024:28	1	0.75	BU
	A01K0307:+VDC	64-501-024:28	2		
L11	A01XL011:16	64-501-024:23	1	0.75	BU
	A01X0040:33	64-501-024:23	2		
	A01X0040:34	64-501-024:23	2		
L11	A01XL011:17	64-501-024:18	3	0.75	BU
	A01K0060:1	64-501-024:18	4		
L11	A01XL011:18	64-501-024:14	9	0.75	BU
	F01K0090:OL	64-501-024:14	8		
L11	A01XL011:19	64-501-024:15	1	0.75	BU
	A01X0080:1+	64-501-024:15	3		
	A01X0080:2+	64-501-024:16	3		
	A01X0080:3+	64-501-024:17	3		
	A01X0090:13	64-501-024:19	4		
L11	A01XL011:20	64-501-024:22	1	0.75	BU
	A01X0040:46	64-501-024:22	2		
L11	A01XL011:21	64-501-024:18	2	0.75	BU
	A01W0060:1	64-501-024:18	2		
L11	A01XL011:22	64-501-024:19	5	0.75	BU
	A01X0090:1	64-501-024:19	4		
L13	F01K0090:Q0	64-501-024:14	6	0.75	BU
	A01XL013:1	64-501-024:14	9		
L13	A01XL013:2	64-501-024:22	1	0.75	BU
	A01K0304:1	64-501-024:22	8		
L13	A01XL013:3	64-501-024:30	10	0.75	BU
	A01X0040:35	64-501-024:30	9		

DATE: 2009-06

ISSUE: **DESCRIPTION: LINE SUMMARY**

MACHINE: ACHX 30-0500 IEC 64-501-024:49

DATE: 2009-06

SIGN: DCD 6 OF 7

Hartness International, Inc.

Line	Component	Sheet	Position	Area	Color
N	A01Q0000:N	64-501-024:1	2	4	L BU
	A01F0000:L/N	64-501-024:1	5		
N	A01F0000:L/N	64-501-024:1	5	4	L BU
	A01X0030:N	64-501-024:1	8		
N	A01X0030:2	64-501-024:8	8	2.50	L BU
	W90V0010:L2	64-501-024:8	8		
N	A01X0030:3	64-501-024:8	3	2.50	L BU
	W10V0010:L2	64-501-024:8	3		
N	A01X0030:4	64-501-024:11	2	2.5	L BU
	A01F0003:3	64-501-024:11	2		
N	A01X0030:5	64-501-024:11	3	2.5	L BU
N	A01X0030:6	64-501-024:11	6	2.50	L BU
	A01T0301:L2/N	64-501-024:11	7		
N	A01X0030:7	64-501-024:12	5	2.5	L BU
	A01T0010:N	64-501-024:12	5		
N	A01X0030:8	64-501-024:10	6	2.50	L BU
	A01X0020:4	64-501-024:10	6		

DATE: 2009-06

ISSUE: **DESCRIPTION: LINE SUMMARY**

MACHINE: ACHX 30-0500 IEC 64-501-024:50

DATE: 2009-06

SIGN: DCD 7 OF 7

This page intentionally left blank

5.2 CSA Version

This page intentionally left blank

Hartness International, Inc.

Line	Component	Sheet	Position	Area	Color
L1	A01Q0000:2	64-501-024:1	2		BK
	A01F0000:L/N	64-501-024:1	5	6.0	BK
	F01Q0010:1	64-501-024:2	1	6.0	BK
	A01F0001:1	64-501-024:11	6	4.0	BK
	A01F0002:1	64-501-024:12	5	4.0	BK
	A01F0003:1	64-501-024:11	2	4.0	BK
	A01F0004:1	64-501-024:10	5	4.0	BK
L2	A01Q0000:4	64-501-024:1	2		BK
	A01F0000:L/N	64-501-024:1	5	6.0	BK
	F01Q0010:3	64-501-024:2	2	6.0	BK
L3	A01Q0000:6	64-501-024:1	2		BK
	A01F0000:L/N	64-501-024:1	5	6.0	BK
	F01Q0010:5	64-501-024:2	2	6.0	BK
L4	F30Q0011:2	64-501-024:2	1		BK
	W10F0020:1	64-501-024:9	1	4.0	BK
L5	F30Q0011:4	64-501-024:2	2		BK
	W90F0010:1	64-501-024:8	7	4.0	BK
	W10F0020:3	64-501-024:9	1	4.0	BK
L6	F30Q0011:6	64-501-024:2	2		BK
	W10F0010:1	64-501-024:8	2	4.0	BK
	W10F0020:5	64-501-024:9	1	4.0	BK
L7	F30Q0011:2	64-501-024:2	1		BK
	W30F0010:1	64-501-024:2	7	4.0	BK
	W30F0020:1	64-501-024:5	7	4.0	BK
	W30F0031:1	64-501-024:10	3	4.0	BK
L8	F30Q0011:4	64-501-024:2	2	4.0	BK
	W30F0010:3	64-501-024:2	8	4.0	BK
	W30F0020:3	64-501-024:5	8	4.0	BK
	W30F0031:3	64-501-024:10	3	4.0	BK
L9	F30Q0011:6	64-501-024:2	2	4.0	BK
	W30F0010:5	64-501-024:2	8	4.0	BK
	W30F0020:5	64-501-024:5	8	4.0	BK
	W30F0031:5	64-501-024:10	3	4.0	BK

DATE: 2009-06

ISSUE: **DESCRIPTION: LINE SUMMARY**

MACHINE: ACHX 30-0500 CSA 64-501-024:44

DATE: 2009-06

SIGN: DCD 1 OF 7

Hartness International, Inc.

Line	Component	Sheet	Position	Area	Color
L10	A01T0010:V-	64-501-024:12	5	0.75	BU
	A01XL010:1	64-501-024:12	5		
L10	A01T0010:V-	64-501-024:12	5	2.50	GNYE
	A01X0050:E12	64-501-024:12	4		
L10	A01XL010:2	64-501-024:12	4	0.75	BU
	A01X0040:62	64-501-024:12	4		
L10	A01XL010:3	64-501-024:26	8	0.75	BU
	A01X0040:16	64-501-024:26	7		
L10	A01XL010:4	64-501-024:28	8	0.75	BU
	A01P0010:-	64-501-024:28	6		
L10	A01XL010:5	64-501-024:14	10	0.75	BU
	F30Q0011:A1	64-501-024:14	9		
L10	A01XL010:6				
L10	A01XL010:7	64-501-024:22	9	0.75	BU
	A01K0304:C1	64-501-024:22	9		
L10	A01XL010:8	64-501-024:24	2	0.75	BU
	A01X0040:1-	64-501-024:24	3		
	A01X0040:2-	64-501-024:24	3		
	A01X0040:3-	64-501-024:24	3		
	A01X0040:4-	64-501-024:24	3		
	A01X0040:5-	64-501-024:12	2		
	A01X0040:6-	64-501-024:12	3		
	A01X0040:7-	64-501-024:24	3		
	A01X0040:8-	64-501-024:24	3		
L10	A01XL010:9	64-501-024:26	8	0.75	BU
	A01K0099:1	64-501-024:26	6		
L10	A01XL010:10	64-501-024:28	8	0.75	BU
	W30Q0030:A2	64-501-024:28	6		
L10	A01XL010:11	64-501-024:28	8	0.75	BU
	A01Q0042:1	64-501-024:28	6		

DATE: 2009-06

ISSUE: **DESCRIPTION: LINE SUMMARY**

MACHINE: ACHX 30-0500 CSA 64-501-024:45

DATE: 2009-06

SIGN: DCD 2 OF 7

Hartness International, Inc.

Line	Component	Sheet	Position	Area	Color
L10	A01XL010:12	64-501-024:30	10	0.75	BU
	A01X0040:59	64-501-024:30	9		
	A01X0040:60	64-501-024:30	9		
	A01X0040:61	64-501-024:30	9		
	A01X0040:62	64-501-024:12	4		
L10	A01XL010:13	64-501-024:29	1	0.75	BU
	A01K0307:DC COM	64-501-024:29	2		
L10	A01XL010:14	64-501-024:14		0.75	BU
	A01X0040:41	64-501-024:14	10		
L10	A01XL010:15	64-501-024:14	10	0.75	BU
	F01Q0010:A2	64-501-024:14	9		
L10	A01XL010:16	64-501-024:18	7	0.75	BU
	A01X0040:25	64-501-024:18	7		
L10	A01XL010:17	64-501-024:14	9	0.75	BU
	F01K0090:0V	64-501-024:14	7		
	F01K0091:BU	64-501-024:14	8		
L10	A01XL010:18	64-501-024:28	8	0.75	BU
	A01X0040:51	64-501-024:28	8		
L10	A01XL010:19	64-501-024:27	8	0.75	BU
	A01K0010:1	64-501-024:27	7		
L10	A01XL010:20	64-501-024:27		0.75	BU
	A01K0306:DC COM	64-501-024:27	1		
L10	A01XL010:21	64-501-024:15	1	0.75	BU
	A01X0080:1-	64-501-024:15	3		
	A01X0080:2-	64-501-024:16	3		
	A01X0080:3-	64-501-024:17	3		
L10	A01XL010:22	64-501-024:26	8	0.75	BU
	A01K0098:1	64-501-024:26	6		
L10	A01XL010:23	64-501-024:28	8	0.75	BU
	A01X0040:49	64-501-024:28	8		

DATE: 2009-06

ISSUE: **DESCRIPTION: LINE SUMMARY**

MACHINE: ACHX 30-0500 CSA 64-501-024:46

DATE: 2009-06

SIGN: DCD 3 OF 7

Hartness International, Inc.

Line	Component	Sheet	Position	Area	Color
L10	A01XL010:24	64-501-024:27	8	0.75	BU
	A01K0011:1	64-501-024:27	7		
L10	A01XL010:25	64-501-024:18	4	0.75	BU
	A01K0060:2	64-501-024:18	4		
L10	A01XL010:26	64-501-024:18	2	0.75	BU
	A01W0060:2	64-501-024:18	2		
L10	A01XL010:27	64-501-024:14	10	0.75	BU
	F01Q0011:A1	64-501-024:14	9		
L10	A01XL010:28	64-501-024:22	8	0.50	BU
	A01K0304:C2	64-501-024:23	8		
L10	A01XL010:29	64-501-024:27	8	0.75	BU
	A01X0040:44	64-501-024:27	8		
L10	A01XL010:30	64-501-024:26	8	0.75	BU
	A01X0040:53	64-501-024:26	7		
L10	A01XL010:31	64-501-024:27	8	0.75	BU
	A01K0097:1	64-501-024:27	7		
L10	A01XL010:32	64-501-024:24	9	0.75	BU
	A01K0305:C1	64-501-024:24	9		
L10	A01XL010:33	64-501-024:28	8	0.75	BU
	A01Q0040:1	64-501-024:28	6		
L10	A01XL010:34	64-501-024:25	8	0.75	BU
	A01K0305:C2	64-501-024:25	8		
L11	A01T0010:V+	64-501-024:12	5	0.75	BU
	A01XL011:1	64-501-024:12	5		
L11	A01XL011:2	64-501-024:24	1	0.75	BU
	W30F0031:13	64-501-024:24	5		
L11	A01XL011:3	64-501-024:26	1	0.75	BU
	A01K0306:+VDC	64-501-024:26	1		

DATE: 2009-06

ISSUE: **DESCRIPTION: LINE SUMMARY**

MACHINE: ACHX 30-0500 CSA 64-501-024:47

DATE: 2009-06

SIGN: DCD 4 OF 7

Hartness International, Inc.

Line	Component	Sheet	Position	Area	Color
L11	A01XL011:4	64-501-024:1	5	0.75	BU
	A01F0000:11	64-501-024:1	5		
L11	A01XL011:5	64-501-024:19	5	0.75	BU
	A01X0090:5	64-501-024:19	7		
	A01X0090:9	64-501-024:19	7		
L11	A01XL011:6	64-501-024:14	8	0.75	BU
	F01K0090:1L	64-501-024:14	8		
L11	A01XL011:7	64-501-024:18	7	0.75	BU
	A01Q0042:3	64-501-024:18	7		
L11	A01XL011:8	64-501-024:24	1	0.75	BU
	A01X0040:1+	64-501-024:24	3		
	A01X0040:2+	64-501-024:24	3		
	A01X0040:3+	64-501-024:24	3		
	A01X0040:4+	64-501-024:24	3		
	A01X0040:5+	64-501-024:12	1		
	A01X0040:6+	64-501-024:12	2		
	A01X0040:7+	64-501-024:24	3		
	A01X0040:8+	64-501-024:24	3		
L11	A01XL011:9	64-501-024:22	1	0.75	BU
	W30F0021:13	64-501-024:22	2		
L11	A01XL011:10	64-501-024:22	1	0.75	BU
	W30F0011:13	64-501-024:22	2		
L11	A01XL011:11	64-501-024:30	10	0.75	BU
	A01X0040:55	64-501-024:30	9		
	A01X0040:56	64-501-024:30	9		
	A01X0040:57	64-501-024:30	9		
	A01X0040:58	64-501-024:12	5		
L11	A01XL011:12	64-501-024:22	1	0.75	BU
	A01X0040:19	64-501-024:22	2		
	A01X0040:20	64-501-024:22	2		
L11	A01XL011:13	64-501-024:14	1	0.75	BU
	F01X0090:+24V	64-501-024:14	8		

DATE: 2009-06

ISSUE: **DESCRIPTION: LINE SUMMARY**

MACHINE: ACHX 30-0500 CSA 64-501-024:48

DATE: 2009-06

SIGN: DCD 5 OF 7

Hartness International, Inc.

Line	Component	Sheet	Position	Area	Color
L11	A01XL011:14	64-501-024:14	1	0.75	BU
	F01X0090:2	64-501-024:14	1		
L11	A01XL011:15	64-501-024:28	1	0.75	BU
	A01K0307:+VDC	64-501-024:28	2		
L11	A01XL011:16	64-501-024:23	1	0.75	BU
	A01X0040:33	64-501-024:23	2		
	A01X0040:34	64-501-024:23	2		
L11	A01XL011:17	64-501-024:18	3	0.75	BU
	A01K0060:1	64-501-024:18	4		
L11	A01XL011:18	64-501-024:14	9	0.75	BU
	F01K0090:OL	64-501-024:14	8		
L11	A01XL011:19	64-501-024:15	1	0.75	BU
	A01X0080:1+	64-501-024:15	3		
	A01X0080:2+	64-501-024:16	3		
	A01X0080:3+	64-501-024:17	3		
	A01X0090:13	64-501-024:19	4		
L11	A01XL011:20	64-501-024:22	1	0.75	BU
	A01X0040:46	64-501-024:22	2		
L11	A01XL011:21	64-501-024:18	2	0.75	BU
	A01W0060:1	64-501-024:18	2		
L11	A01XL011:22	64-501-024:19	5	0.75	BU
	A01X0090:1	64-501-024:19	4		
L13	F01K0090:Q0	64-501-024:14	6	0.75	BU
	A01XL013:1	64-501-024:14	9		
L13	A01XL013:2	64-501-024:22	1	0.75	BU
	A01K0304:1	64-501-024:22	8		
L13	A01XL013:3	64-501-024:30	10	0.75	BU
	A01X0040:35	64-501-024:30	9		

DATE: 2009-06

ISSUE: **DESCRIPTION: LINE SUMMARY**

MACHINE: ACHX 30-0500 CSA 64-501-024:49

DATE: 2009-06

SIGN: DCD 6 OF 7

Hartness International, Inc.

Line	Component	Sheet	Position	Area	Color
N	A01F0000:L/N	64-501-024:1	5	4	L BU
	A01X0030:N	64-501-024:1	8		
N	A01X0000:N	64-501-024:1	2	2.50	L BU
	A01F0000:L/N	64-501-024:1	5		
N	A01X0030:2	64-501-024:8	8	2.50	L BU
	W90V0010:L2	64-501-024:8	8		
N	A01X0030:3	64-501-024:8	3	2.50	L BU
	W10V0010:L2	64-501-024:8	3		
N	A01X0030:4	64-501-024:11	4	2.5	L BU
	A01M0010:N	64-501-024:11	4		
	A01M0011:N	64-501-024:11	5		
N	A01X0030:5	64-501-024:11	3	2.5	L BU
N	A01X0030:6	64-501-024:11	6	2.50	L BU
	A01T0301:L2/N	64-501-024:11	7		
N	A01X0030:7	64-501-024:12	5	2.5	L BU
	A01T0010:N	64-501-024:12	5		
N	A01X0030:8	64-501-024:10	6	2.50	L BU
	A01X0020:4	64-501-024:10	6		

DATE: 2009-06

ISSUE: **DESCRIPTION: LINE SUMMARY**

MACHINE: ACHX 30-0500 CSA 64-501-024:50

DATE: 2009-06

SIGN: DCD 7 OF 7

This page intentionally left blank

6 Cabinet Terminal Summary

Description

All terminals inside the electrical cabinet are listed in this chapter.

6.1 IEC Version . . . . . 6 - 5

6.2 CSA Version . . . . . 6 - 15

This page intentionally left blank

6.1 IEC Version

This page intentionally left blank

Hartness International, Inc.

Term	Block	Sheet	Position
A01X0000:	PE	64-501-024:1	3
	E2	64-501-024:1	3
	E3	64-501-024:1	3
	E4	64-501-024:1	3
	E5	64-501-024:1	3
	E6	64-501-024:1	3
A01X0020:	1	64-501-024:10	5
	2	64-501-024:10	6
	3	64-501-024:10	6
	4	64-501-024:10	6
	5	64-501-024:10	5
	E1	64-501-024:1	9
	E2		
	E3	64-501-024:10	6
	E4	64-501-024:9	1
	E5	64-501-024:10	7
	E6		
A01X0030:	N	64-501-024:1	8
	1		
	2	64-501-024:8	8
	3	64-501-024:8	3
	4	64-501-024:11	2
	5		
	6	64-501-024:11	6
	7	64-501-024:12	5
	8	64-501-024:10	6

Hartness International, Inc.

Term	Block	Sheet	Position
A01X0040:	1		
	1+	64-501-024:24	3
	1-	64-501-024:24	3
	2	64-501-024:24	7
	2+	64-501-024:24	3
	2-	64-501-024:24	3
	3		
	3+	64-501-024:24	3
	3-	64-501-024:24	3
	4	64-501-024:24	7
	4+	64-501-024:24	3
	4-	64-501-024:24	3
	5		
	5+	64-501-024:12	1
	5-	64-501-024:12	2
	6		
	6+	64-501-024:12	2
	6-	64-501-024:12	3
	7	64-501-024:24	7
	7+	64-501-024:24	3
	7-	64-501-024:24	3
	8	64-501-024:24	7
	8+	64-501-024:24	3
	8-	64-501-024:24	3
	9	64-501-024:5	7
	10	64-501-024:26	3
	11	64-501-024:12	6
	12	64-501-024:22	7
	13	64-501-024:22	7
	14	64-501-024:14	8
	15	64-501-024:26	3
	16	64-501-024:26	7
	17	64-501-024:26	3
	18	64-501-024:26	3
	19	64-501-024:22	2
	20	64-501-024:22	2
	21	64-501-024:22	7
	22	64-501-024:22	7
	23	64-501-024:2	7
	24	64-501-024:18	7

Hartness International, Inc.

Term	Block	Sheet	Position
	25	64-501-024:18	7
	26	64-501-024:14	3
	27	64-501-024:14	5
	28	64-501-024:14	5
	29	64-501-024:14	3
	30	64-501-024:14	5
	31	64-501-024:14	6
	32	64-501-024:14	6
	33	64-501-024:23	3
	34	64-501-024:23	3
	35	64-501-024:30	9
	36	64-501-024:2	7
	37	64-501-024:23	7
	38	64-501-024:5	7
A01X0040:	39	64-501-024:23	7
	40	64-501-024:12	7
	41	64-501-024:14	10
	42	64-501-024:14	3
	43	64-501-024:27	3
	44	64-501-024:14	5
	44	64-501-024:27	7
	45	64-501-024:27	3
	46	64-501-024:22	2
	47	64-501-024:27	3
	48	64-501-024:28	4
	49	64-501-024:28	8
	50	64-501-024:28	4
	51	64-501-024:28	8
	52	64-501-024:26	3
	53	64-501-024:26	7
	54	64-501-024:27	3
	55	64-501-024:30	9
	56	64-501-024:30	9
	57	64-501-024:30	9
	58	64-501-024:12	4
	59	64-501-024:30	9
	60	64-501-024:30	9
	61	64-501-024:30	9
	62	64-501-024:12	4

Hartness International, Inc.

Term	Block	Sheet	Position
A01X0040:	E1	64-501-024:1	9
	E2		
	E3		
	E4		
	E5	64-501-024:1	8
	E6	64-501-024:26	7
	E7	64-501-024:12	4
	E8	64-501-024:14	9
A01X0050:	E1	64-501-024:1	6
	E2	64-501-024:1	6
	E3	64-501-024:1	7
	E4	64-501-024:1	8
	E5	64-501-024:11	5
	E6	64-501-024:12	10
	E7	64-501-024:11	6
	E8	64-501-024:11	2
	E9	64-501-024:11	4
	E10	64-501-024:11	6
	E11	64-501-024:12	6
	E12	64-501-024:12	4
	E13	64-501-024:1	7
	E14	64-501-024:2	8
	E15	64-501-024:5	8
	E16	64-501-024:8	3
	E17	64-501-024:20	3
	E18	64-501-024:8	8
	E19	64-501-024:18	2
	E20	64-501-024:18	3
	E21	64-501-024:1	8
	E22	64-501-024:1	9

		DATE: 2009-06	
ISSUE:		**DESCRIPTION: TERMINAL SUMMARY**	
		MACHINE: ACHX 30-0500 IEC	64-501-024:54
DATE:	2009-06		
SIGN:	DCD	4 OF 8	

Hartness International, Inc.

Term	Block	Sheet	Position
A01X0060:	1	64-501-024:20	5
	1		
	2	64-501-024:20	5
	2		
	3	64-501-024:20	5
	3		
	4		
	4		
	E1	64-501-024:20	5
	E1		
	E2	64-501-024:20	5
	E2		
	7	64-501-024:20	5
	7		
	8		
	8		
	9	64-501-024:20	5
	9		
	10	64-501-024:20	5
	10		
	11	64-501-024:20	7
	11	64-501-024:20	7
	12	64-501-024:20	7
	12		
	13	64-501-024:20	7
	13	64-501-024:20	7
	14	64-501-024:20	7
	14		
	E3	64-501-024:20	7
	E3	64-501-024:20	7
	E4	64-501-024:20	7
	E4		
	17	64-501-024:20	7
	17	64-501-024:20	7
	18	64-501-024:20	7
	18		
	19	64-501-024:20	7
	19	64-501-024:20	7
	20	64-501-024:20	7
	20		

DATE: 2009-06

ISSUE: **DESCRIPTION: TERMINAL SUMMARY**

MACHINE: ACHX 30-0500 IEC 64-501-024:55

DATE: 2009-06

SIGN: DCD 5 OF 8

Hartness International, Inc.

Term	Block	Sheet	Position
A01X0080:	1	64-501-024:15	3
	1+	64-501-024:15	3
	1-	64-501-024:15	3
	2	64-501-024:17	3
	2+	64-501-024:16	3
	2-	64-501-024:16	3
	3	64-501-024:15	3
A01X0080:	3+	64-501-024:17	3
	3-	64-501-024:17	3
	4	64-501-024:16	3
	5	64-501-024:16	3
	6	64-501-024:17	3
A01X0090:	1	64-501-024:19	4
	2	64-501-024:19	4
	3	64-501-024:19	4
	4	64-501-024:19	4
	5	64-501-024:19	7
	6	64-501-024:19	7
	7	64-501-024:19	7
	8	64-501-024:19	7
	9	64-501-024:19	7
	10	64-501-024:19	7
	11	64-501-024:19	7
	12	64-501-024:19	7
	13	64-501-024:19	4
	14	64-501-024:19	4
	15	64-501-024:19	4
	16	64-501-024:19	4
	17	64-501-024:19	4
	18	64-501-024:19	4

DATE: 2009-06

ISSUE: **DESCRIPTION: TERMINAL SUMMARY**

MACHINE: ACHX 30-0500 IEC 64-501-024:56

DATE: 2009-06

SIGN: DCD 6 OF 8

Hartness International, Inc.

Term	Block	Sheet	Position
A01X1101:	1	64-501-024:22	2
	2	64-501-024:22	2
	3		
	4	64-501-024:12	6
	5	64-501-024:27	6
	6	64-501-024:27	6
	7	64-501-024:14	5
	8	64-501-024:27	6
	9	64-501-024:27	6
	10	64-501-024:12	7
	11	64-501-024:22	6
	12	64-501-024:22	6
	13	64-501-024:14	3
	14	64-501-024:27	4
	15	64-501-024:27	4
	16	64-501-024:14	5
	17	64-501-024:27	4
	18	64-501-024:27	4
	19	64-501-024:14	3
	20	64-501-024:14	4
	21	64-501-024:14	3
	22	64-501-024:14	4
	E1	64-501-024:1	8

Hartness International, Inc.

Term	Block	Sheet	Position
A01X1201:	1	64-501-024:13	3
	2	64-501-024:13	2
	E1	64-501-024:13	2
F01X0090:	1	64-501-024:14	1
	2	64-501-024:14	1
	3	64-501-024:14	7
	4	64-501-024:14	7
	5	64-501-024:14	9
	6	64-501-024:14	2
	7	64-501-024:14	2
	8	64-501-024:14	6
	9	64-501-024:14	6
	10	64-501-024:14	9

DATE: 2009-06

ISSUE: **DESCRIPTION: TERMINAL SUMMARY**

MACHINE: ACHX 30-0500 IEC 64-501-024:58

DATE: 2009-06

SIGN: DCD 8 OF 8

6.2 CSA Version

This page intentionally left blank

Hartness International, Inc.

Term	Block	Sheet	Position
A01X0000:	N	64-501-024:1	3
	PE	64-501-024:1	3
	E2	64-501-024:1	3
	E3	64-501-024:1	3
	E4	64-501-024:1	3
	E5	64-501-024:1	3
	E6	64-501-024:1	3
A01X0020:	1	64-501-024:10	5
	2	64-501-024:10	6
	3	64-501-024:10	6
	4	64-501-024:10	6
	5	64-501-024:10	5
	E1	64-501-024:1	9
	E2		
	E3		
	E4	64-501-024:10	6
	E5	64-501-024:10	7
	E6	64-501-024:9	1
A01X0030:	N	64-501-024:1	8
	1		
	2	64-501-024:8	8
	3	64-501-024:8	3
	4	64-501-024:11	4
	5		
	6	64-501-024:11	6
	7	64-501-024:12	5
	8	64-501-024:10	6

DATE: 2009-06

ISSUE: **DESCRIPTION: TERMINAL SUMMARY**

MACHINE: ACHX 30-0500 CSA 64-501-024:51

DATE: 2009-06

SIGN: DCD 1 OF 8

Hartness International, Inc.

Term	Block	Sheet	Position
A01X0040:	1		
	1+	64-501-024:24	3
	1-	64-501-024:24	3
	2	64-501-024:24	7
	2+	64-501-024:24	3
	2-	64-501-024:24	3
	3		
	3+	64-501-024:24	3
	3-	64-501-024:24	3
	4	64-501-024:24	7
	4+	64-501-024:24	3
	4-	64-501-024:24	3
	5		
	5+	64-501-024:12	1
	5-	64-501-024:12	2
	6		
	6+	64-501-024:12	2
	6-	64-501-024:12	3
	7	64-501-024:24	7
	7+	64-501-024:24	3
	7-	64-501-024:24	3
	8	64-501-024:24	7
	8+	64-501-024:24	3
	8-	64-501-024:24	3
	9	64-501-024:5	7
	10	64-501-024:26	3
	11	64-501-024:12	6
	12	64-501-024:22	7
	13	64-501-024:22	7
	14	64-501-024:14	8
	15	64-501-024:26	3
	16	64-501-024:26	7
	17	64-501-024:26	3
	18	64-501-024:26	3
	19	64-501-024:22	2
	20	64-501-024:22	2
	21	64-501-024:22	7
	22	64-501-024:22	7
	23	64-501-024:2	7
	24	64-501-024:18	7

Hartness International, Inc.

Term	Block	Sheet	Position
	25	64-501-024:18	7
	26	64-501-024:14	3
	27	64-501-024:14	5
	28	64-501-024:14	5
	29	64-501-024:14	3
	30	64-501-024:14	5
	31	64-501-024:14	6
	32	64-501-024:14	6
	33	64-501-024:23	3
	34	64-501-024:23	3
	35	64-501-024:30	9
	36	64-501-024:2	7
	37	64-501-024:23	7
	38	64-501-024:5	7
A01X0040:	39	64-501-024:23	7
	40	64-501-024:12	7
	41	64-501-024:14	10
	42	64-501-024:14	3
	43	64-501-024:27	3
	44	64-501-024:14	5
	44	64-501-024:27	7
	45	64-501-024:27	3
	46	64-501-024:22	2
	47	64-501-024:27	3
	48	64-501-024:28	4
	49	64-501-024:28	8
	50	64-501-024:28	4
	51	64-501-024:28	8
	52	64-501-024:26	3
	53	64-501-024:26	7
	54	64-501-024:27	3
	55	64-501-024:30	9
	56	64-501-024:30	9
	57	64-501-024:30	9
	58	64-501-024:12	4
	59	64-501-024:30	9
	60	64-501-024:30	9
	61	64-501-024:30	9
	62	64-501-024:12	4

DATE: 2009-06

ISSUE: **DESCRIPTION: TERMINAL SUMMARY**

MACHINE: ACHX 30-0500 CSA 64-501-024:53

DATE: 2009-06

SIGN: DCD 3 OF 8

Hartness International, Inc.

Term	Block	Sheet	Position
A01X0040:	E1	64-501-024:1	9
	E2		
	E3		
	E4		
	E5	64-501-024:1	8
	E6	64-501-024:26	7
	E7	64-501-024:12	4
	E8	64-501-024:14	9
A01X0050:	E1	64-501-024:1	6
	E2	64-501-024:1	6
	E3	64-501-024:1	7
	E4	64-501-024:1	8
	E5	64-501-024:11	5
	E6	64-501-024:12	10
	E7	64-501-024:11	6
	E8	64-501-024:11	2
	E9	64-501-024:11	4
	E10	64-501-024:11	6
	E11	64-501-024:12	6
	E12	64-501-024:12	4
	E13	64-501-024:1	7
	E14	64-501-024:2	8
	E15	64-501-024:5	8
	E16	64-501-024:8	3
	E17	64-501-024:20	3
	E18	64-501-024:8	8
	E19	64-501-024:18	2
	E20	64-501-024:18	3
	E21	64-501-024:1	8
	E22	64-501-024:1	9

DATE: 2009-06

ISSUE: **DESCRIPTION: TERMINAL SUMMARY**

MACHINE: ACHX 30-0500 CSA 64-501-024:54

DATE: 2009-06

SIGN: DCD 4 OF 8

Hartness International, Inc.

Term	Block	Sheet	Position
A01X0060:	1	64-501-024:20	5
	1		
	2	64-501-024:20	5
	2		
	3	64-501-024:20	5
	3		
	4		
	4		
	E1	64-501-024:20	5
	E1		
	E2	64-501-024:20	5
	E2		
	7	64-501-024:20	5
	7		
	8		
	8		
	9	64-501-024:20	5
	9		
	10	64-501-024:20	5
	10		
	11	64-501-024:20	7
	11	64-501-024:20	7
	12	64-501-024:20	7
	12		
	13	64-501-024:20	7
	13	64-501-024:20	7
	14	64-501-024:20	7
	14		
	E3	64-501-024:20	7
	E3	64-501-024:20	7
	E4	64-501-024:20	7
	E4		
	17	64-501-024:20	7
	17	64-501-024:20	7
	18	64-501-024:20	7
	18		
	19	64-501-024:20	7
	19	64-501-024:20	7
	20	64-501-024:20	7
	20		

Hartness International, Inc.

Term	Block	Sheet	Position
A01X0080:	1	64-501-024:15	3
	1+	64-501-024:15	3
	1-	64-501-024:15	3
	2	64-501-024:17	3
	2+	64-501-024:16	3
	2-	64-501-024:16	3
	3	64-501-024:15	3
A01X0080:	3+	64-501-024:17	3
	3-	64-501-024:17	3
	4	64-501-024:16	3
	5	64-501-024:16	3
	6	64-501-024:17	3
A01X0090:	1	64-501-024:19	4
	2	64-501-024:19	4
	3	64-501-024:19	4
	4	64-501-024:19	4
	5	64-501-024:19	7
	6	64-501-024:19	7
	7	64-501-024:19	7
	8	64-501-024:19	7
	9	64-501-024:19	7
	10	64-501-024:19	7
	11	64-501-024:19	7
	12	64-501-024:19	7
	13	64-501-024:19	4
	14	64-501-024:19	4
	15	64-501-024:19	4
	16	64-501-024:19	4
	17	64-501-024:19	4
	18	64-501-024:19	4

DATE: 2009-06

ISSUE: **DESCRIPTION: TERMINAL SUMMARY**

MACHINE: ACHX 30-0500 CSA 64-501-024:56

DATE: 2009-06

SIGN: DCD 6 OF 8

Hartness International, Inc.

Term	Block	Sheet	Position
A01X1101:	1	64-501-024:22	2
	2	64-501-024:22	2
	3		
	4	64-501-024:12	6
	5	64-501-024:27	6
	6	64-501-024:27	6
	7	64-501-024:14	5
	8	64-501-024:27	6
	9	64-501-024:27	6
	10	64-501-024:12	7
	11	64-501-024:22	6
	12	64-501-024:22	6
	13	64-501-024:14	3
	14	64-501-024:27	4
	15	64-501-024:27	4
	16	64-501-024:14	5
	17	64-501-024:27	4
	18	64-501-024:27	4
	19	64-501-024:14	3
	20	64-501-024:14	4
	21	64-501-024:14	3
	22	64-501-024:14	4
	E1	64-501-024:1	8

Hartness International, Inc.

Term	Block	Sheet	Position
A01X1201:	1	64-501-024:13	3
	2	64-501-024:13	2
	E1	64-501-024:13	2
F01X0090:	1	64-501-024:14	1
	2	64-501-024:14	1
	3	64-501-024:14	7
	4	64-501-024:14	7
	5	64-501-024:14	9
	6	64-501-024:14	2
	7	64-501-024:14	2
	8	64-501-024:14	6
	9	64-501-024:14	6
	10	64-501-024:14	9

	DATE: 2009-06		
ISSUE:		**DESCRIPTION: TERMINAL SUMMARY**	
		MACHINE: ACHX 30-0500 CSA	64-501-024:58
DATE:	2009-06		
SIGN:	DCD	8 OF 8	

7 Cable Connection List

Description

All cable connections used in the equipment are listed in this chapter.

7.1 IEC Version . . . . . 7 - 5

7.2 CSA Version . . . . . 7 - 17

This page intentionally left blank

7.1 IEC Version

This page intentionally left blank

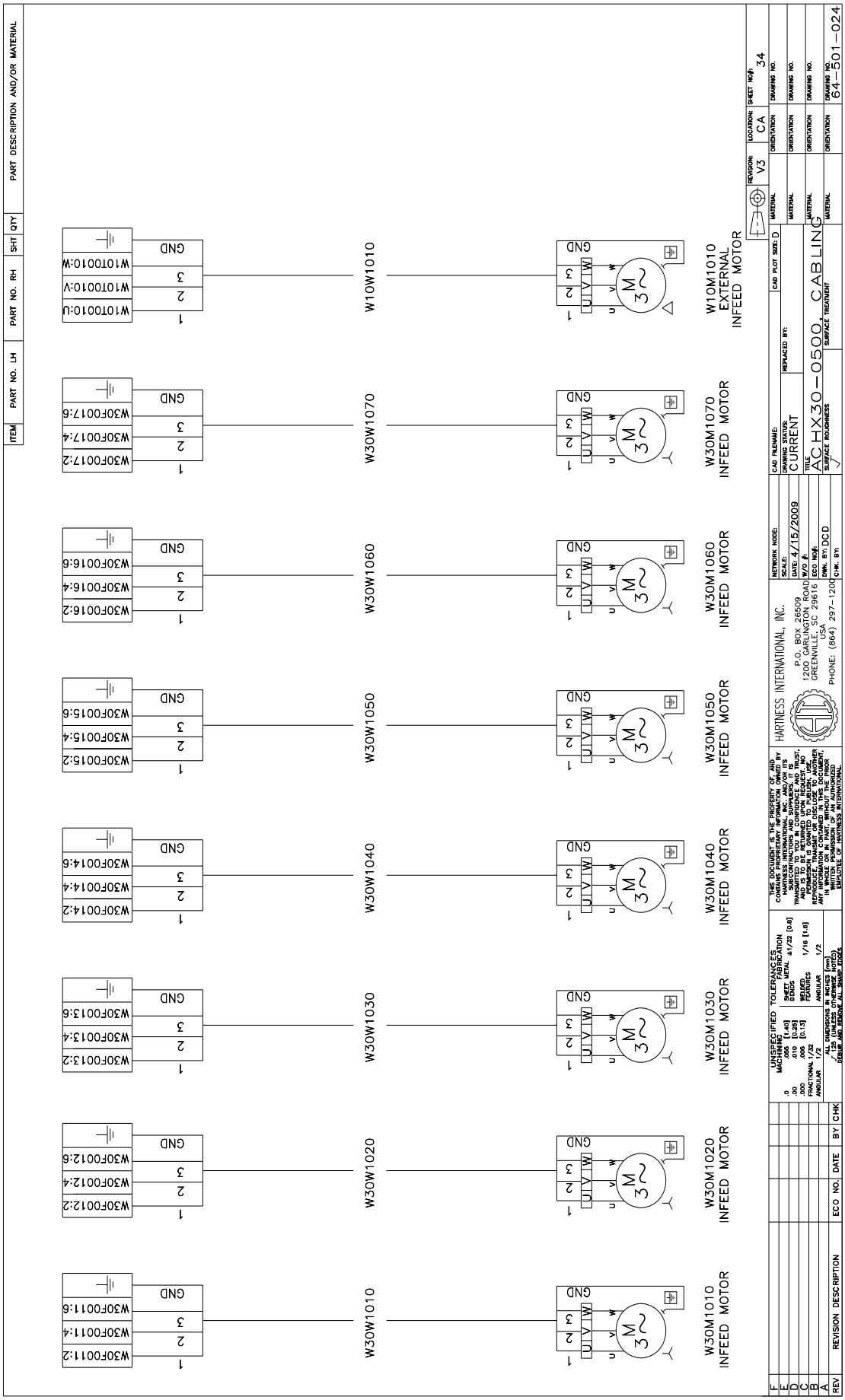
ITEM
PART NO. LH
PART NO. RH
SHT
QTY
PART DESCRIPTION AND/OR MATERIAL
W10T00010:U
W10T00010:V
W10T00010:W
GND
W10W1010
W10M1010
EXTERNAL
INFEED MOTOR
W30F00017:2
W30F00017:4
W30F00017:6
W30W1070
W30M1070
INFEED MOTOR
W30F00016:2
W30F00016:4
W30F00016:6
W30W1060
W30M1060
INFEED MOTOR
W30F00015:2
W30F00015:4
W30F00015:6
W30W1050
W30M1050
INFEED MOTOR
W30F00014:2
W30F00014:4
W30F00014:6
W30W1040
W30M1040
INFEED MOTOR
W30F00013:2
W30F00013:4
W30F00013:6
W30W1030
W30M1030
INFEED MOTOR
W30F00012:2
W30F00012:4
W30F00012:6
W30W1020
W30M1020
INFEED MOTOR
W30F00011:2
W30F00011:4
W30F00011:6
W30W1010
W30M1010
INFEED MOTOR
REVISION: V3
LOCATION: CA
SHEET NO/#: 34
CAD PLOT SIZE: D
DRAWING STATUS: CURRENT
TITLE: AC HX30-0500 CABLING
SURFACE ROUGHNESS
SURFACE TREATMENT
HARTNESS INTERNATIONAL, INC.
P.O. BOX 26509
1200 GARLINGTON ROAD
GREENVILLE, SC 29616
USA
PHONE: (864) 297-1200
DRAWING NO. 64-501-024
REV
REVISION DESCRIPTION
ECO NO.
DATE
BY
CHK

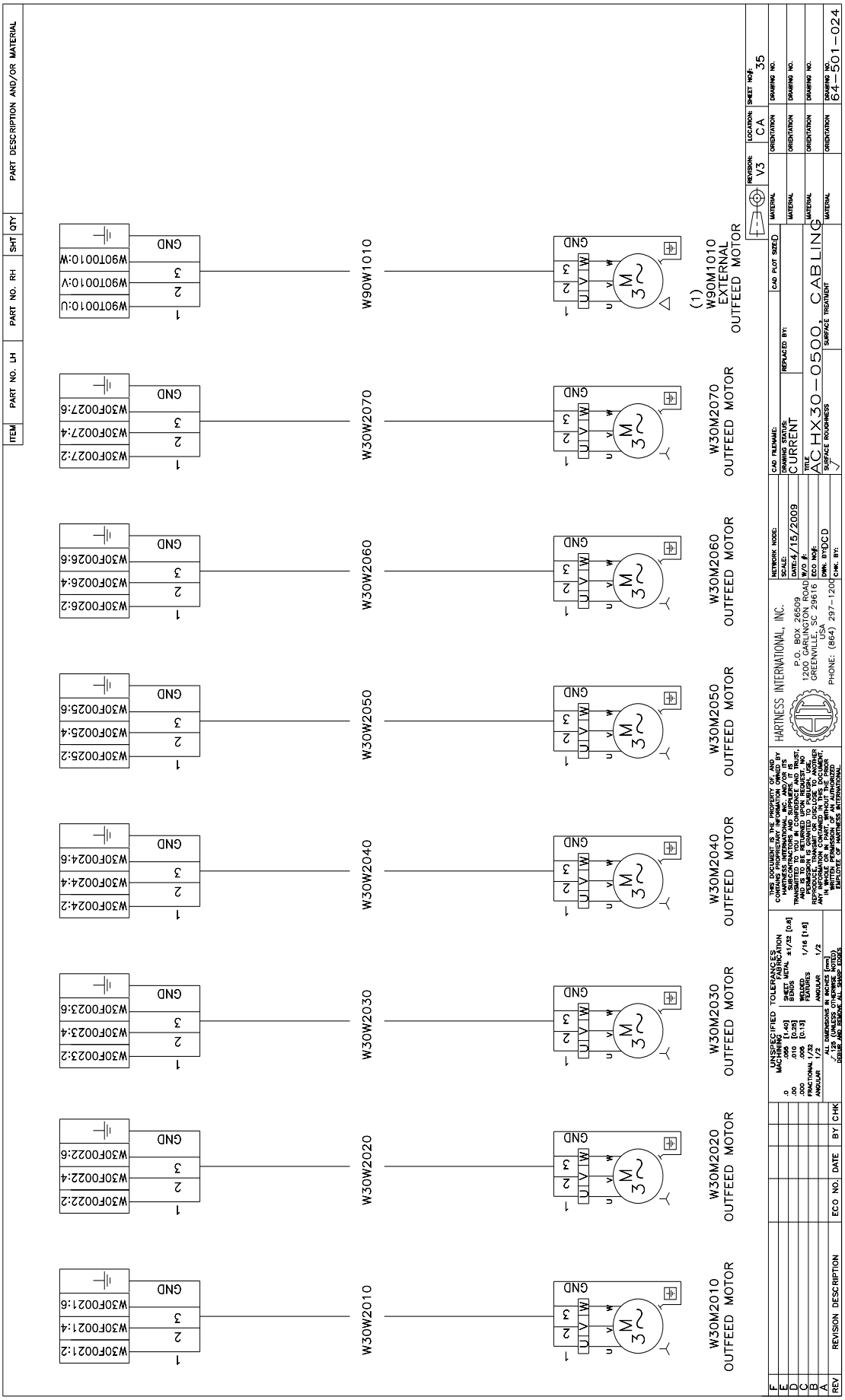
ITEM
PART NO. LH
PART NO. RH
SHT
QTY
PART DESCRIPTION AND/OR MATERIAL
W30M2010 OUTFEED MOTOR
W30W2010
W30F00213:6
W30F00214:4
W30F00212:2
GND
W30M2020 OUTFEED MOTOR
W30W2020
W30F00226:6
W30F00224:4
W30F00222:2
GND
W30M2030 OUTFEED MOTOR
W30W2030
W30F00236:6
W30F00234:4
W30F00232:2
GND
W30M2040 OUTFEED MOTOR
W30W2040
W30F00246:6
W30F00244:4
W30F00242:2
GND
W30M2050 OUTFEED MOTOR
W30W2050
W30F00256:6
W30F00254:4
W30F00252:2
GND
W30M2060 OUTFEED MOTOR
W30W2060
W30F00266:6
W30F00264:4
W30F00262:2
GND
W30M2070 OUTFEED MOTOR
W30W2070
W30F00276:6
W30F00274:4
W30F00272:2
GND
(1) W90M1010 EXTERNAL OUTFEED MOTOR
W90W1010
W90T00110:W
W90T00110:V
W90T00110:U
GND
REV
REVISION DESCRIPTION
ECO NO.
DATE
BY
CHK
UNSPECIFIED TOLERANCES
MACHINING DIMENSIONS
SHEET METAL
BENDS
WELDED FEATURES
FRACTIONAL
ANGULAR
ALL DIMENSIONS IN INCHES [mm]
REMOVE ALL BURRS AND BREAK ALL SHARP EDGES
THIS DOCUMENT IS THE PROPERTY OF AND CONTAINS PROPRIETARY INFORMATION OWNED BY HARTNESS INTERNATIONAL, INC. AND/OR ITS SUBSIDIARIES AND IS TO BE USED AS IT IS TRANSMITTED TO YOU IN CONFIDENCE AND TRUST, AND NOT COPIED, REPRODUCED OR USED IN ANY WAY. NO PERMISSION IS GRANTED TO PUBLISH, USE, REPRODUCE, TRANSMIT OR DISCLOSE TO ANOTHER PERSON OR COMPANY ANY PART OF THIS DOCUMENT IN WHOLE OR IN PART, WITHOUT THE PRIOR WRITTEN PERMISSION OF AN AUTHORIZED EMPLOYEE OF HARTNESS INTERNATIONAL.
HARTNESS INTERNATIONAL, INC.
P.O. BOX 26509
1200 GARLINGTON ROAD
GREENVILLE, SC 29616
PHONE: (864) 297-1200
NETWORK NODE:
SCALE:
DATE: 4/15/2009
W/O #:
ECO NO#:
DWN. BY: DCD
CHK. BY:
CAD FILENAME:
DRAWING STATUS: CURRENT
REPLACED BY:
CAD PLOT SIZED
TITLE
AC HX30-0500, CABLING
SURFACE ROUGHNESS
SURFACE TREATMENT
MATERIAL
ORIENTATION
REVISION: V3
LOCATION: CA
SHEET NO#: 35
DRAWING NO.
64-501-024

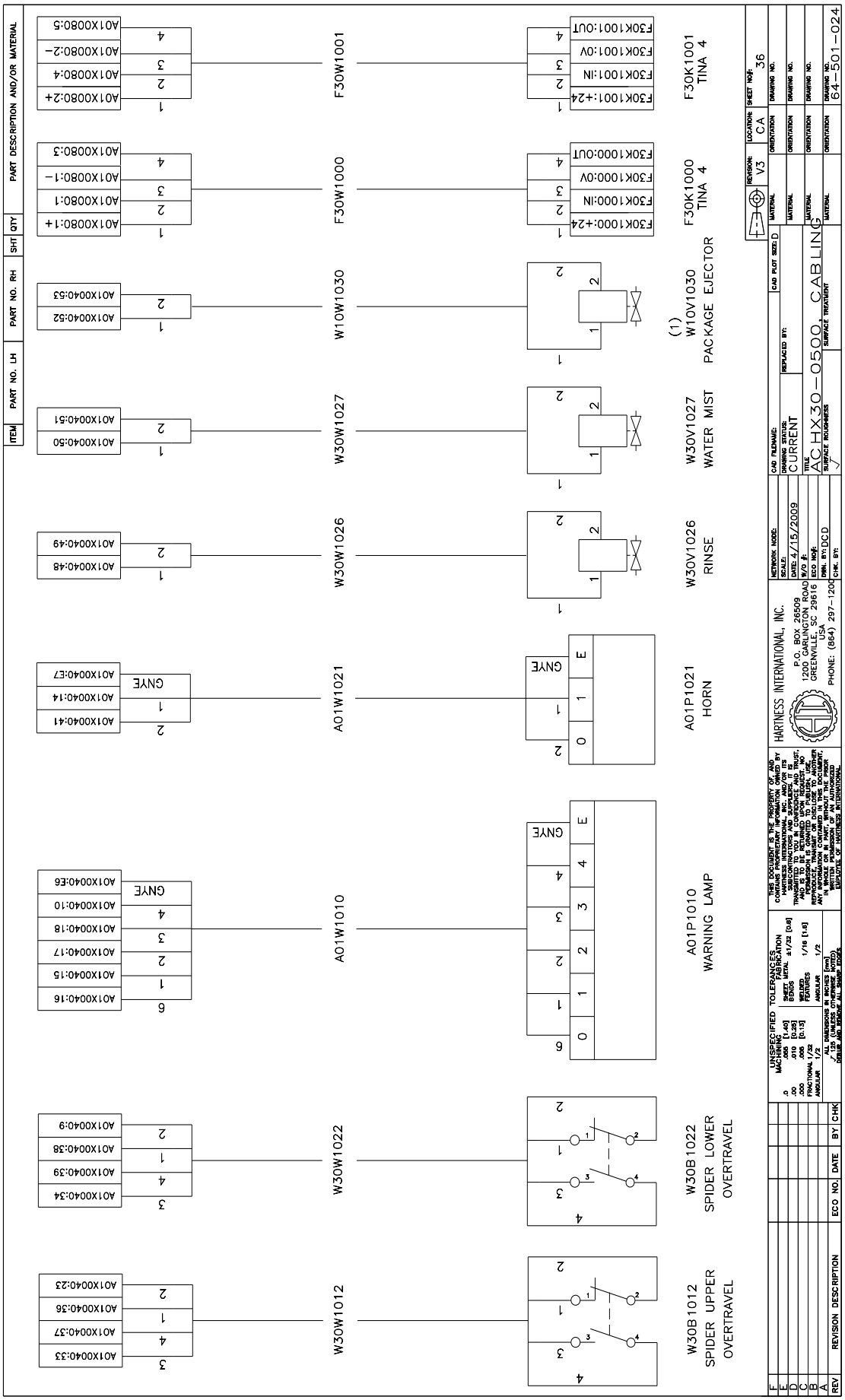
ITEM
PART NO. LH
PART NO. RH
SHT
QTY
PART DESCRIPTION AND/OR MATERIAL
W30B1012
SPIDER UPPER OVERTRAVEL
W30W1012
A01X00040:33
A01X00040:36
A01X00040:37
A01X00040:23
W30B1022
SPIDER LOWER OVERTRAVEL
W30W1022
A01X00040:34
A01X00040:39
A01X00040:38
A01X00040:9
A01P1010
WARNING LAMP
A01W1010
A01X00040:16
A01X00040:15
A01X00040:17
A01X00040:18
A01X00040:10
A01X00040:E6
A01P1021
HORN
A01W1021
A01X00040:41
A01X00040:14
A01X00040:E7
W30V1026
RINSE
W30W1026
A01X00040:48
A01X00040:49
W30V1027
WATER MIST
W30W1027
A01X00040:50
A01X00040:51
(1)
W10V1030
PACKAGE EJECTOR
W10W1030
A01X00040:52
A01X00040:53
F30K1001
TINA 4
F30W1001
A01X00080:2+
A01X00080:4
A01X00080:2−
A01X00080:5
F30K1000
TINA 4
F30W1000
A01X00080:1+
A01X00080:1
A01X00080:1−
A01X00080:3
HARTNESS INTERNATIONAL, INC.
P.O. BOX 26509
1200 GARLINGTON ROAD
GREENVILLE, SC 29616
USA
PHONE: (864) 297-1200
AC HX30-0500 CABLING
CURRENT
SURFACE ROUGHNESS
SURFACE TREATMENT
REVISION: V3
LOCATION: CA
SHEET NO#: 36
DRAWING NO. 64-501-024
REV
REVISION DESCRIPTION
ECO NO.
DATE
BY
CHK

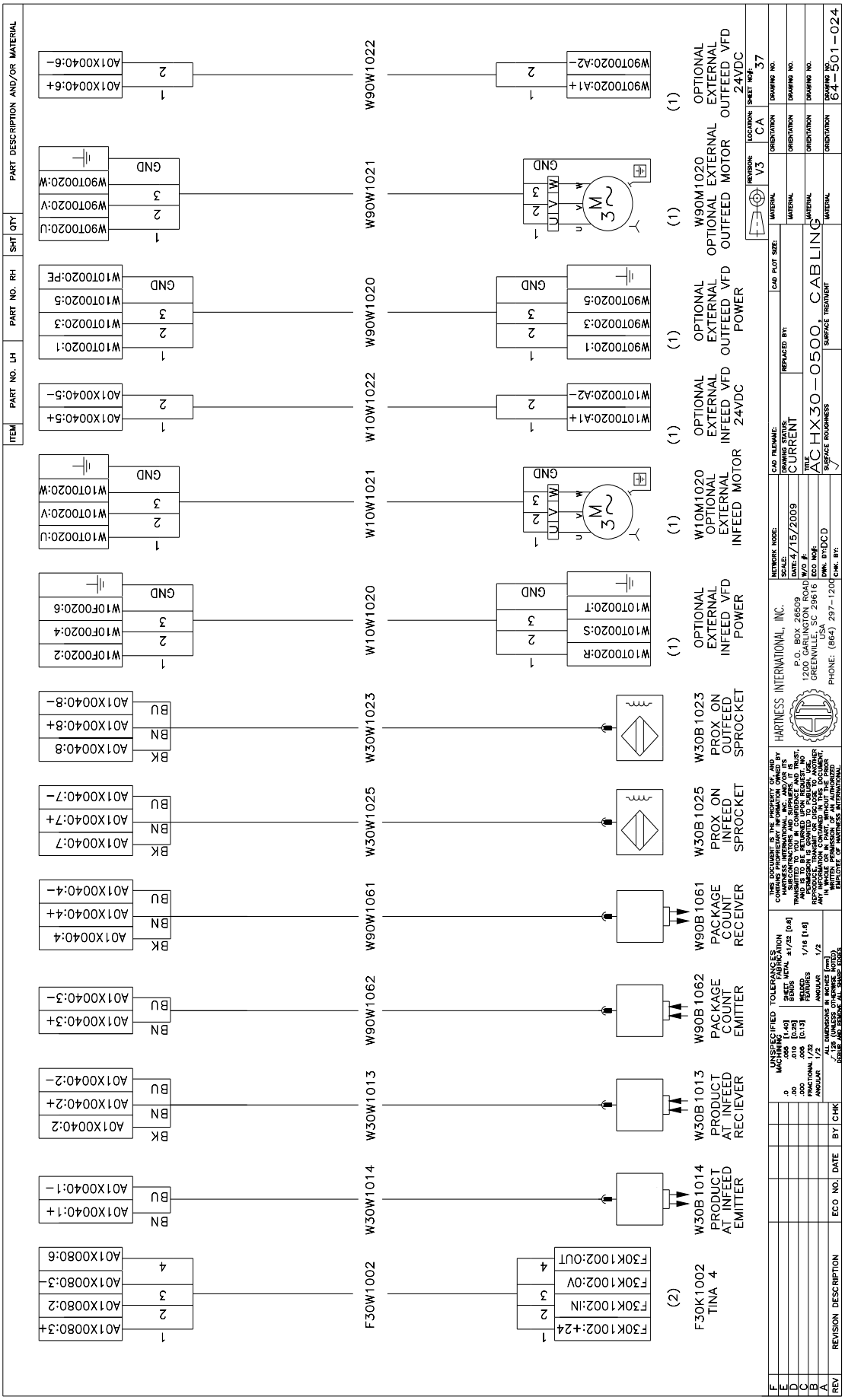

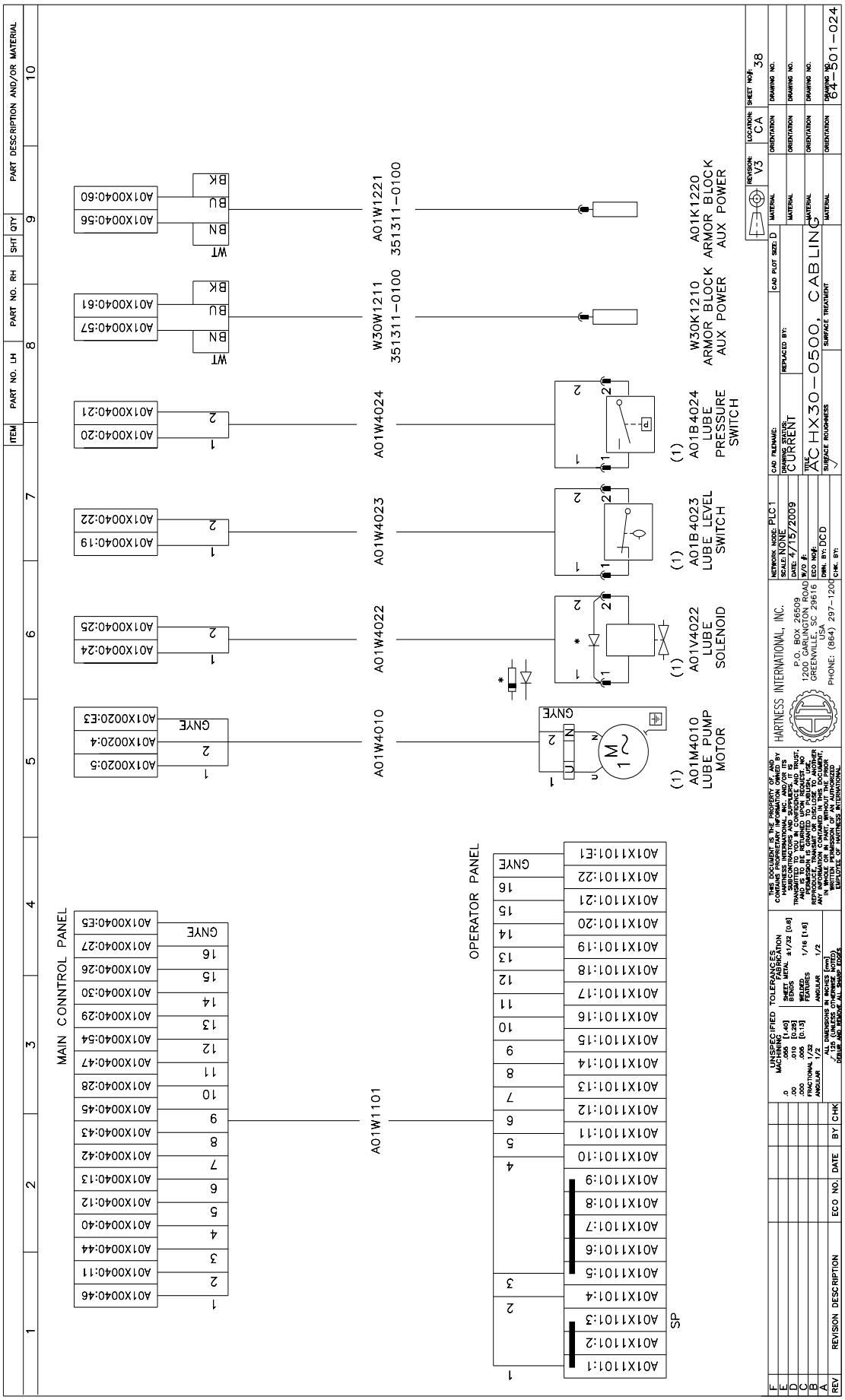
MAIN CONNTROL PANEL
OPERATOR PANEL
A01W1101
A01W4010
A01W4022
A01W4023
A01W4024
W30W1211
351311-0100
A01W1221
351311-0100
W30K1210
ARMOR BLOCK
AUX POWER
A01K1220
ARMOR BLOCK
AUX POWER
A01M4010
LUBE PUMP
MOTOR
A01V4022
LUBE
SOLENOID
A01B4023
LUBE LEVEL
SWITCH
A01B4024
LUBE
PRESSURE
SWITCH
HARTNESS INTERNATIONAL, INC.
P.O. BOX 26509
1200 GARLINGTON ROAD
GREENVILLE, SC 29616
USA
PHONE: (864) 297-1200
ACHX30-0500, CABLING
NETWORK NODE: PLC1
SCALE: NONE
DATE: 4/15/2009
W/O #:
ECO NO#:
DWN. BY: DCD
CHK. BY:
DRAWING STATUS: CURRENT
REVISION: V3
LOCATION: CA
SHEET NO#: 38
DRAWING NO. 84-3501-024

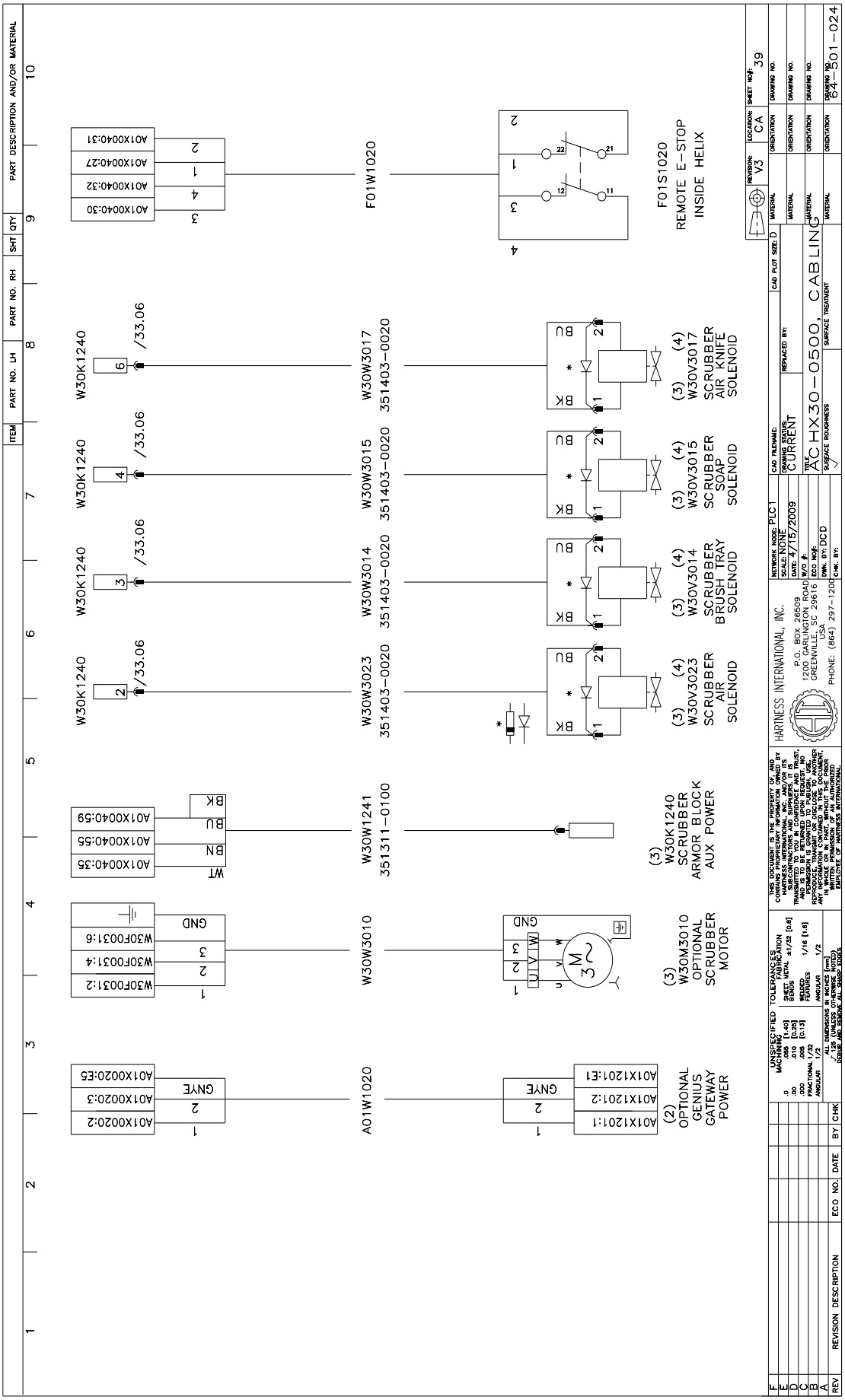
A01W1020
(2) OPTIONAL GENIUS GATEWAY POWER
A01X00020:2
A01X00020:3
A01X00020:E5
GNYE
2
1
A01X1201:1
A01X1201:2
A01X1201:E1
GNYE
2
1
W30W3010
(3) W30M3010 OPTIONAL SCRUBBER MOTOR
W30F00316
W30F00314
W30F00312
GND
3
2
1
GND
U V W
M 3~
W30W1241
351311-0100
(3) W30K1240 SCRUBBER ARMOR BLOCK AUX POWER
A01X00040:59
A01X00040:55
A01X00040:35
BK
BU
BN
WT
W30K1240
2
/33.06
W30W3023
351403-0020
(3) (4) W30V3023 SCRUBBER AIR SOLENOID
W30K1240
3
/33.06
W30W3014
351403-0020
(3) (4) W30V3014 SCRUBBER BRUSH TRAY SOLENOID
W30K1240
4
/33.06
W30W3015
351403-0020
(3) (4) W30V3015 SCRUBBER SOAP SOLENOID
W30K1240
6
/33.06
W30W3017
351403-0020
(3) (4) W30V3017 SCRUBBER AIR KNIFE SOLENOID
BK
BU
*
1
2
A01X00040:30
A01X00040:32
A01X00040:27
A01X00040:31
4
1
2
3
F01W1020
F01S1020
REMOTE E-STOP
INSIDE HELIX
22
21
12
11
4
3
2
1
ITEM
PART NO. LH
PART NO. RH
SHT QTY
PART DESCRIPTION AND/OR MATERIAL
REV
REVISION DESCRIPTION
ECO NO.
DATE
BY
CHK
UNSPECIFIED TOLERANCES
MACHINING SHEET METAL BENDS FEATURES
.0 [.4] ±1/32 [0.8]
.005 [.13] ±1/16 [1.6]
.010 [.25] ±1/2
.020 [.5] ANGULAR ±1/2
.030 [.8]
FRACTIONAL 1/32
ANGULAR 1/2
ALL DIMENSIONS IN INCHES [mm]
REMOVE BURRS AND BREAK ALL SHARP EDGES
THIS DOCUMENT IS THE PROPERTY OF AND CONTAINS CONFIDENTIAL INFORMATION OWNED BY HARTNESS INTERNATIONAL, INC. AND/OR ITS SUBSIDIARIES AND AFFILIATES. IT IS TRANSMITTED TO YOU IN CONFIDENCE AND TRUST, AND YOU AGREE TO TREAT IT IN STRICT CONFIDENCE. PERMISSION IS GRANTED TO PUBLISH, USE, REPRODUCE, TRANSMIT OR DISCLOSE TO ANOTHER PERSON, FIRM OR CORPORATION THIS DOCUMENT IN WHOLE OR IN PART, WITHOUT THE PRIOR WRITTEN PERMISSION OF AN AUTHORIZED EMPLOYEE OF HARTNESS INTERNATIONAL.
HARTNESS INTERNATIONAL, INC.
P.O. BOX 26509
1200 GARLINGTON ROAD
GREENVILLE, SC 29616
PHONE: (864) 297-1200
NETWORK NODE: PLC1
SCALE: NONE
DATE: 4/15/2009
W/O #:
ECO NO#:
DWN. BY: DCD
CHK. BY:
CAD FILENAME:
DRAWING STATUS: CURRENT
REPLACED BY:
CAD PLOT SIZE: D
TITLE: ACHX30-0500, CABLING
SURFACE TREATMENT
SURFACE ROUGHNESS
REVISION: V3
LOCATION: CA
SHEET NO#: 39
MATERIAL
ORIENTATION
DRAWING NO.
DRAWING NO. 84-501-024

HOLE #	CABLE #	CABLE
1	W30W2010	E
2	W30W1010	E
3	W30W2020	E
4	W30W1020	E
5	W30W2030	E
6	W30W1030	E
7	W30W2040	E
8	W30W1040	E
9	W30W2050	E
10	W30W1050	E
11	W30W2060	E
12	W30W1060	E
13	W30W2070	E
14	W30W1070	E
15	W10W1010	E
16	W10W1020	E
17	W90W1010	E
18	W90W1020	E
19	W30W3010	E
20	A01W4010	E
21	A01W1020	E
22	A01W1310	N
23	LC COMS	N
24	A01W1010	L
25	A01W1101	F
26	MACHINE GROUND	G
27	W30W1013	B
28	W30W1014	B
29	W90W1062	B
30	W90W1061	B
31	W30W1023	A
32	W30W1025	A
33	W30W1210	K
34	W30W1211	H
35	A01W1221	J
36	W30W1241	J
37	F30W1000	C
38	F30W1001	C
39	F30W1002	C

HOLE #	CABLE #	CABLE
40	W30W1012	C
41	W30W1022	C
42	W90W1022	C
43	W30W1026	D
44	W30W1027	D
45	A01W9990	C
46	DOWNSTREAM LEFT	C
47	DOWNSTREAM RIGHT	C
48	W10W1023	K
49	A01W1402	M
50	W10W1022	C
51	RECIPE SELECT	C
52	W10W1030	D
53	PACKAGE TRAP AERO	D
54	A01W4022	D
55	A01W4023	D
56	A01W4024	D
57	UPSTREAM LUBE	D
58	DOWNSTREAM LUBE	D
59	QUICK-STOP	D
60		
61	A01W1021	C
62	F01W1020	L

ITEM	PART NO. LH	PART NO. RH	SHT	QTY	PART DESCRIPTION AND/OR MATERIAL

CABLE GLANDS

90458-0305 M12
90458-0306 M16
90458-0307 M20
90458-0308 M25

ACHX30-400 CABLES & GLANDS

A	C-1084 Micro 90 15M	M12
B	C-4502 M8 10W ST	M12
C	351150-0405 5x18	M16
D	351150-122 2x18	M16
E	90220-0105 4x14 SHLD	M20
F	351150-0425 25x18	M25
G	351175-108 8 AWG GN/YE	M12
H	351311-0050 M12 5M ST	M16
J	351311-0100 M12 10W ST	M16
K	351415-0100 M12 10W ST D-NET	M16
L	351150-406 7X18	M20
M	C-4119 THIN DEVICENET	M20
N	ETHERNET	M20

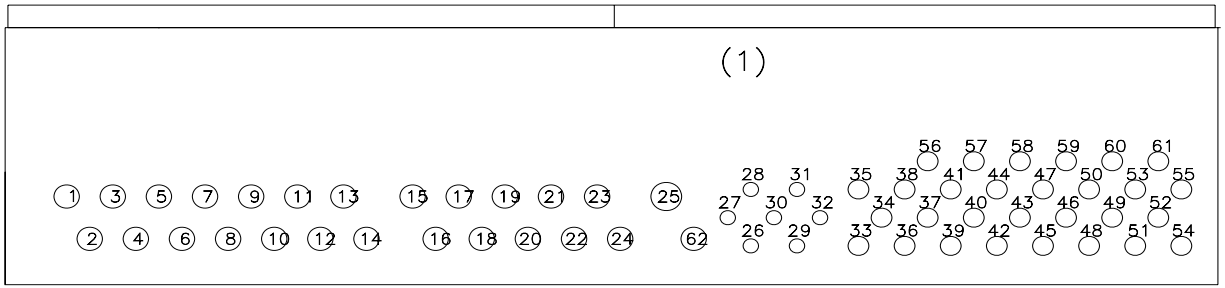

REV	REVISION DESCRIPTION	ECO NO.	DATE	BY	CHK
F					
E					
D					
C					
B					
A					

UNSPECIFIED TOLERANCES
MACHINING
.0 .055 [1.40]
.00 .010 [0.25]
.000 .005 [0.13]
FRACTIONAL 1/32
ANGULAR 1/2
FABRICATION
SHEET METAL ±1/32 [0.8]
BENDS
WELDED FEATURES 1/16 [1.6]
ANGULAR 1/2
ALL DIMENSIONS IN INCHES [mm]
√ 125 (UNLESS OTHERWISE NOTED)
DEBUR AND REMOVE ALL SHARP EDGES

THIS DOCUMENT IS THE PROPERTY OF, AND CONTAINS PROPRIETARY INFORMATION OWNED BY HARTNESS INTERNATIONAL, INC. AND/OR ITS SUBCONTRACTORS AND SUPPLIERS. IT IS TRANSMITTED TO YOU IN CONFIDENCE AND TRUST, AND IS TO BE RETURNED UPON REQUEST. NO PERMISSION IS GRANTED TO PUBLISH, USE, REPRODUCE, TRANSMIT OR DISCLOSE TO ANOTHER ANY INFORMATION CONTAINED IN THIS DOCUMENT, IN WHOLE OR IN PART, WITHOUT THE PRIOR WRITTEN PERMISSION OF AN AUTHORIZED EMPLOYEE OF HARTNESS INTERNATIONAL.

HARTNESS INTERNATIONAL, INC.
P.O. BOX 26509
1200 GARLINGTON ROAD
GREENVILLE, SC 29616
USA
PHONE: (864) 297-1200

NETWORK NODE:
SCALE: NONE
DATE: 4/15/2009
W/O #:
ECO NO#:
DWN. BY: DCD
CHK. BY:

CAD FILENAME:
CAD PLOT SIZE: D
DRAWING STATUS: CURRENT
REPLACED BY:
TITLE: TETRA HELIX CABLING
SURFACE ROUGHNESS
SURFACE TREATMENT

REVISION:
LOCATION: CA
SHEET NO#: 40

MATERIAL | ORIENTATION | DRAWING NO.
MATERIAL | ORIENTATION | DRAWING NO.
MATERIAL | ORIENTATION | DRAWING NO.
MATERIAL | ORIENTATION | DRAWING NO. 64-501-024E

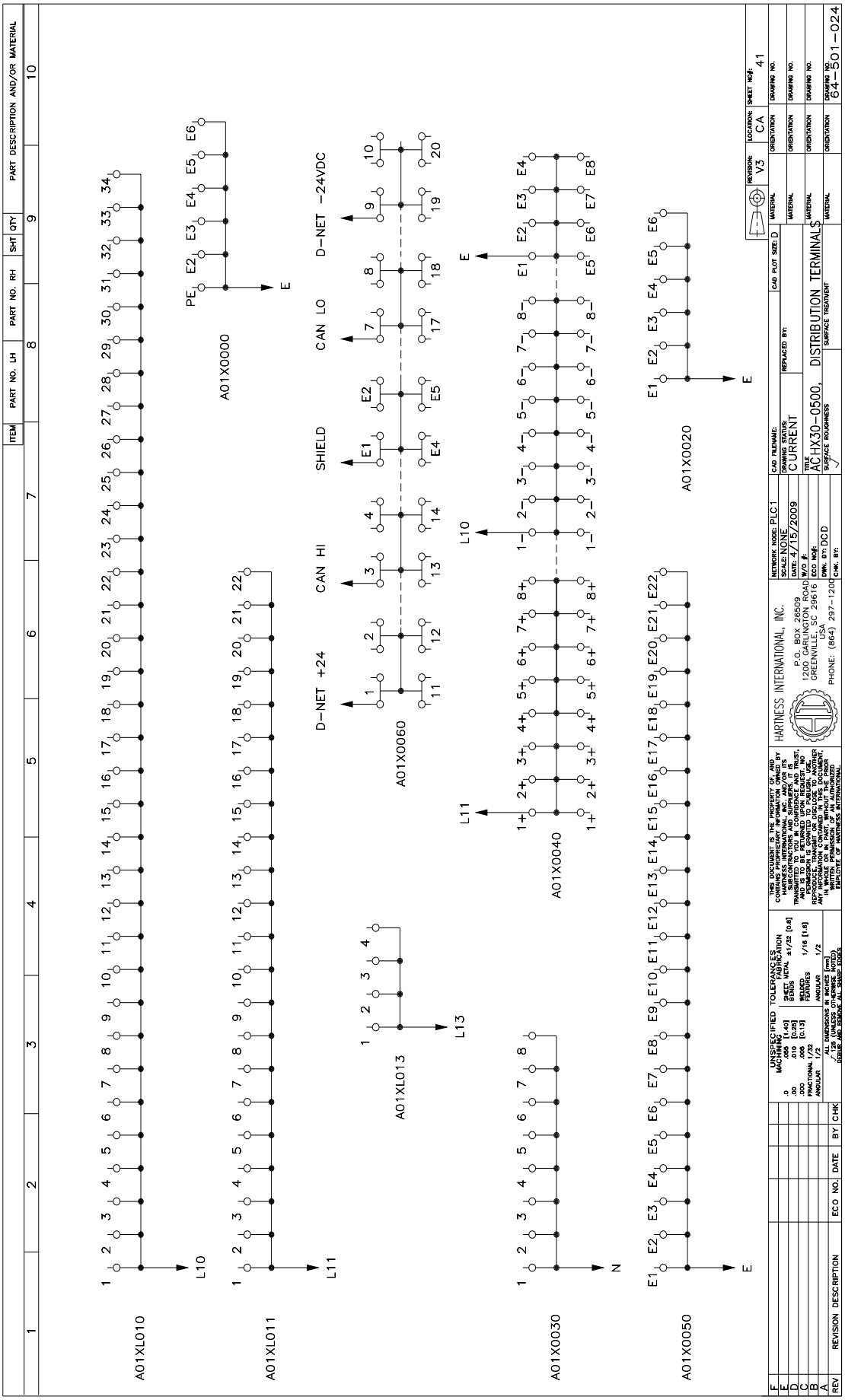
A01XL010
A01XL011
A01XO030
A01XO050
A01XO000
A01XO060
A01XL013
A01XO040
A01XO020
D-NET +24
CAN HI
SHIELD
CAN LO
D-NET -24VDC
PE
L10
L11
L13
N
E
HARTNESS INTERNATIONAL, INC.
P.O. BOX 26509
1200 GARLINGTON ROAD
GREENVILLE, SC 29616
PHONE: (864) 297-1200
AC HX30-0500, DISTRIBUTION TERMINALS
CURRENT
4/15/2009
PLC1
NONE
DCD
CA
41
V3
64-501-024

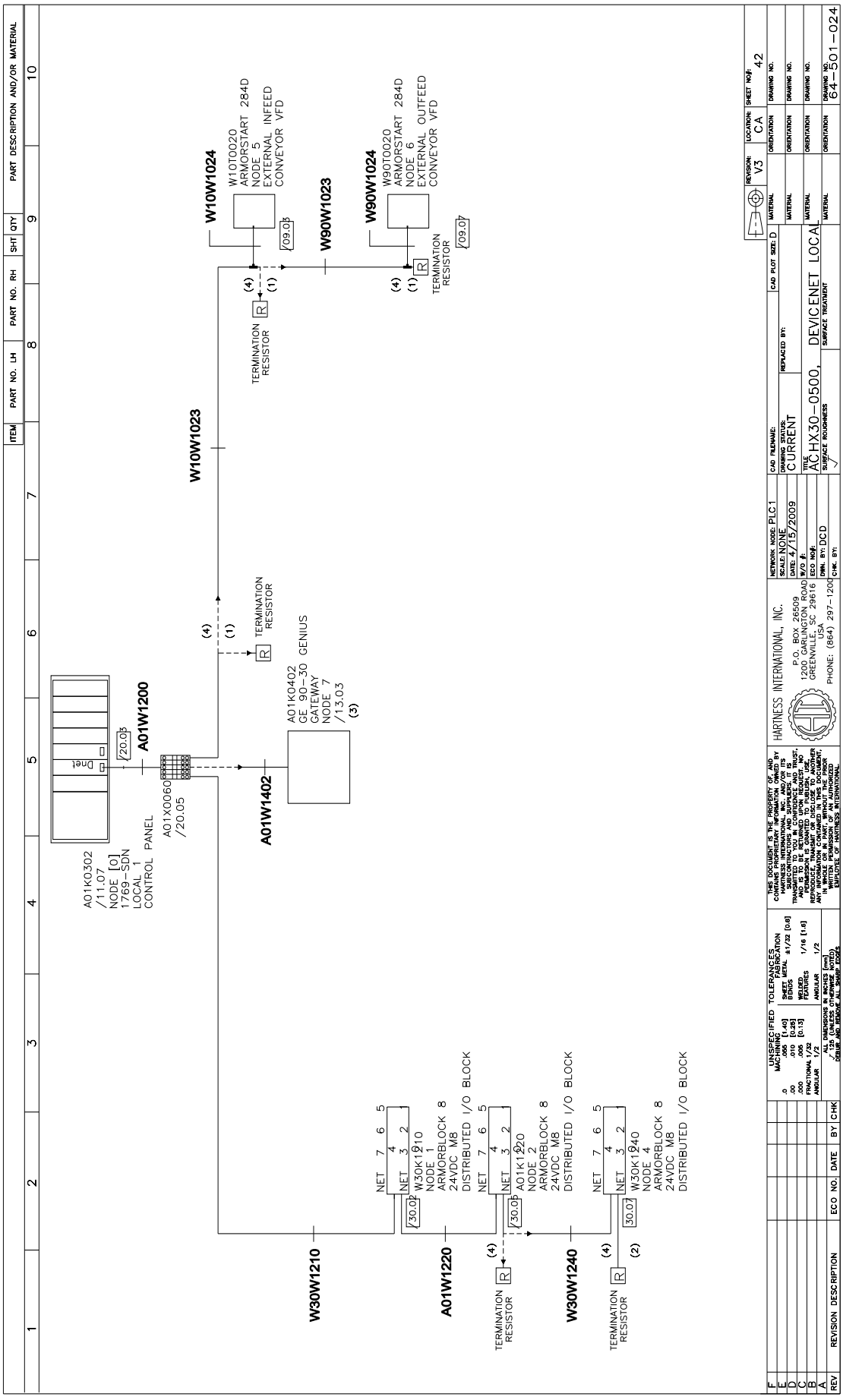
A01K0302
/11.07
NODE [0]
1769-SDN
LOCAL 1
CONTROL PANEL
A01X0060
/20.05
A01W1200
A01W1402
W10W1023
W30W1210
W30W1220
W30W1240
W10W1024
W90W1023
W90W1024
A01K0402
GE 90-30 GENIUS
GATEWAY
NODE 7
/13.03
W30K1910
NODE 1
ARMORBLOCK 8
24VDC M8
DISTRIBUTED I/O BLOCK
A01K1920
NODE 2
W30K1940
NODE 4
W10T0020
ARMORSTART 284D
NODE 5
EXTERNAL INFEED
CONVEYOR VFD
W90T0020
NODE 6
EXTERNAL OUTFEED
TERMINATION
RESISTOR
HARTNESS INTERNATIONAL, INC.
P.O. BOX 26509
1200 GARLINGTON ROAD
GREENVILLE, SC 29616
PHONE: (864) 297-1200
DEVICENET LOCAL
ACHX30-0500,
REVISION: V3
LOCATION: CA
SHEET NO#: 42
DRAWING NO. 64-501-024

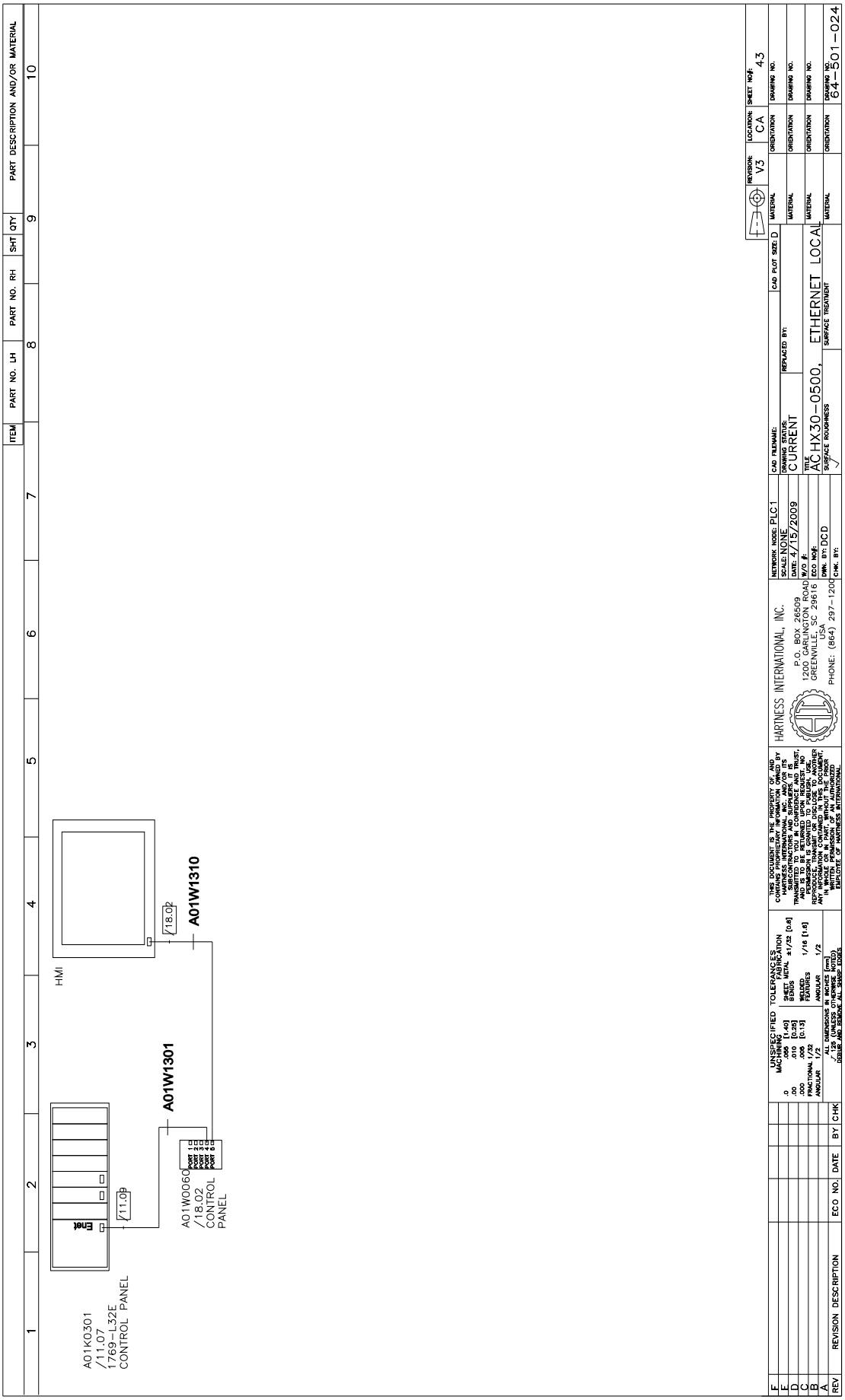
A01K0301
/11.07
1769-L32E
CONTROL PANEL
Enet
/11.0D
A01W0060
/18.02
CONTROL
PANEL
Port 1
Port 3
Port 4
A01W1301
HMI
/18.0D
A01W1310
ITEM
PART NO. LH
PART NO. RH
SHT QTY
PART DESCRIPTION AND/OR MATERIAL
REV
REVISION DESCRIPTION
ECO NO.
DATE
BY
CHK
UNSPECIFIED TOLERANCES
MACHINING APPLICATION
SHEET METAL ±1/32 [0.8]
BENDS
WELDED
FEATURES 1/16 [1.6]
ANGULAR 1/2
ALL DIMENSIONS IN INCHES [mm]
REMOVE ALL BURRS AND BREAK ALL SHARP EDGES
THIS DOCUMENT IS THE PROPERTY OF AND CONTAINS CONFIDENTIAL INFORMATION OWNED BY HARTNESS INTERNATIONAL, INC. AND/OR ITS SUBSIDIARIES AND AFFILIATES. IT IS TRANSMITTED TO YOU IN CONFIDENCE AND TRUST, AND YOU AGREE TO TREAT IT IN STRICT CONFIDENCE. NO PERMISSION IS GRANTED TO PUBLISH, USE, REPRODUCE, TRANSMIT OR DISCLOSE TO ANOTHER PARTY ANY PART OF THIS DOCUMENT, NOR TO USE IT IN WHOLE OR IN PART, WITHOUT THE PRIOR AND WRITTEN PERMISSION OF AN AUTHORIZED EMPLOYEE OF HARTNESS INTERNATIONAL.
HARTNESS INTERNATIONAL, INC.
P.O. BOX 26509
1200 GARLINGTON ROAD
GREENVILLE, SC 29616 USA
PHONE: (864) 297-1200
NETWORK NODE: PLC1
SCALE: NONE
DATE: 4/15/2009
W/O #:
ECO NO#:
DWN. BY: DCD
CHK. BY:
CAD FILENAME:
DRAWING STATUS: CURRENT
REPLACED BY:
TITLE: AC HX30-0500, ETHERNET LOCAL
SURFACE ROUGHNESS
SURFACE TREATMENT
CAD PLOT SIZE: D
REVISION: V3
LOCATION: CA
SHEET NO#: 43
MATERIAL
ORIENTATION
DRAWING NO.
64-501-024

7.2 CSA Version

This page intentionally left blank

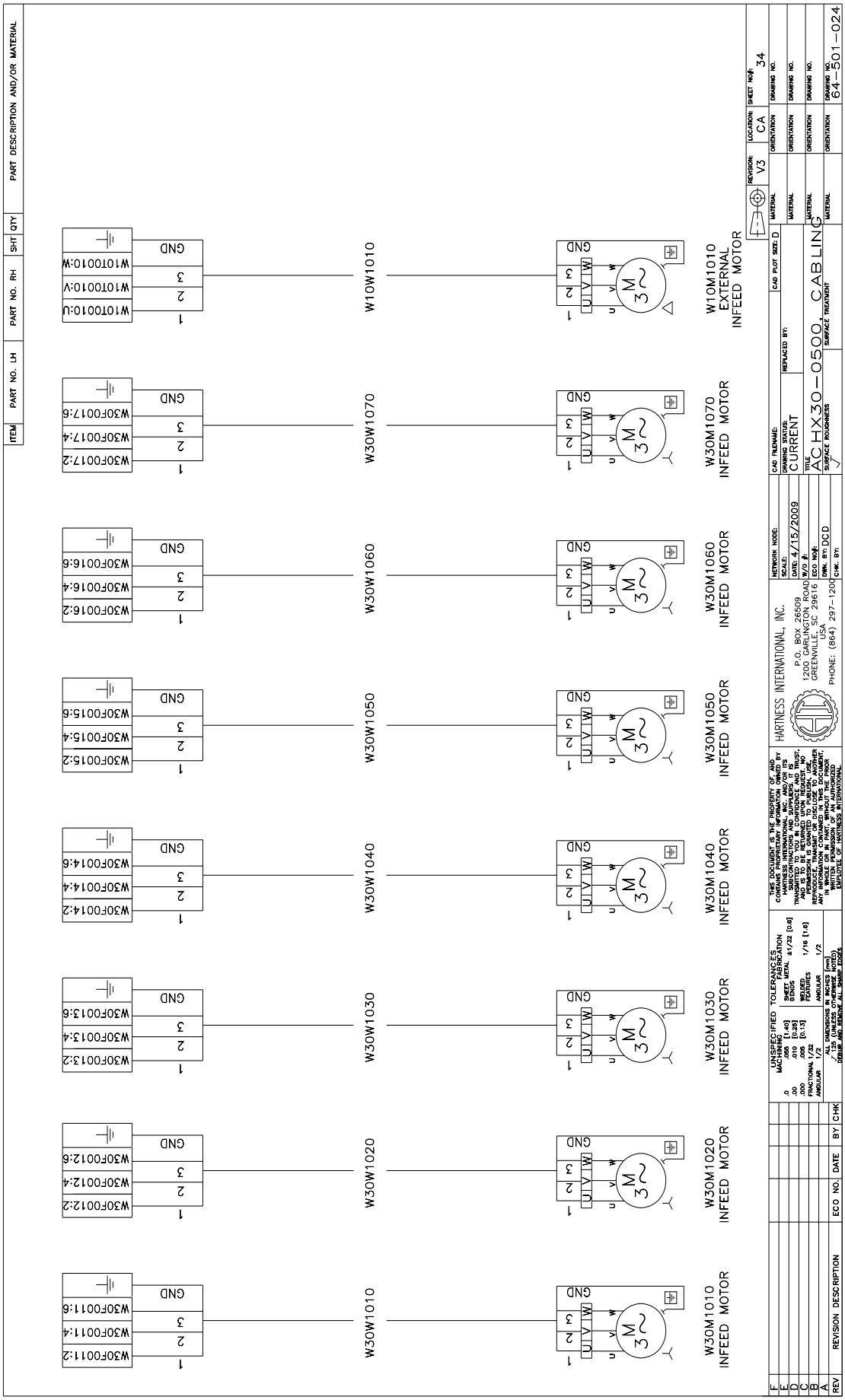
ITEM
PART NO. LH
PART NO. RH
SHT
QTY
PART DESCRIPTION AND/OR MATERIAL
W10T00010:U
W10T00010:V
W10T00010:W
GND
W10W1010
W10M1010
EXTERNAL
INFEED MOTOR
W30F00172:6
W30F00172:4
W30F00172:2
W30W1070
W30M1070
INFEED MOTOR
W30F00166:6
W30F00166:4
W30F00166:2
W30W1060
W30M1060
INFEED MOTOR
W30F00155:6
W30F00155:4
W30F00155:2
W30W1050
W30M1050
INFEED MOTOR
W30F00144:6
W30F00144:4
W30F00144:2
W30W1040
W30M1040
INFEED MOTOR
W30F00133:6
W30F00133:4
W30F00133:2
W30W1030
W30M1030
INFEED MOTOR
W30F00122:6
W30F00122:4
W30F00122:2
W30W1020
W30M1020
INFEED MOTOR
W30F00111:6
W30F00111:4
W30F00111:2
W30W1010
W30M1010
INFEED MOTOR
REVISION: V3
LOCATION: CA
SHEET NO#: 34
CAD PLOT SIZE: D
DRAWING STATUS: CURRENT
TITLE: ACHX30-0500 CABLING
SURFACE ROUGHNESS
SURFACE TREATMENT
NETWORK NODE:
SCALE:
DATE: 4/15/2009
W/O #:
ECO NO#:
DWN. BY: DCD
CHK. BY:
HARTNESS INTERNATIONAL, INC.
P.O. BOX 26509
1200 GARLINGTON ROAD
GREENVILLE, SC 29616
USA
PHONE: (864) 297-1200
DRAWING NO. 64-501-024
REV
REVISION DESCRIPTION
ECO NO.
DATE
BY
CHK

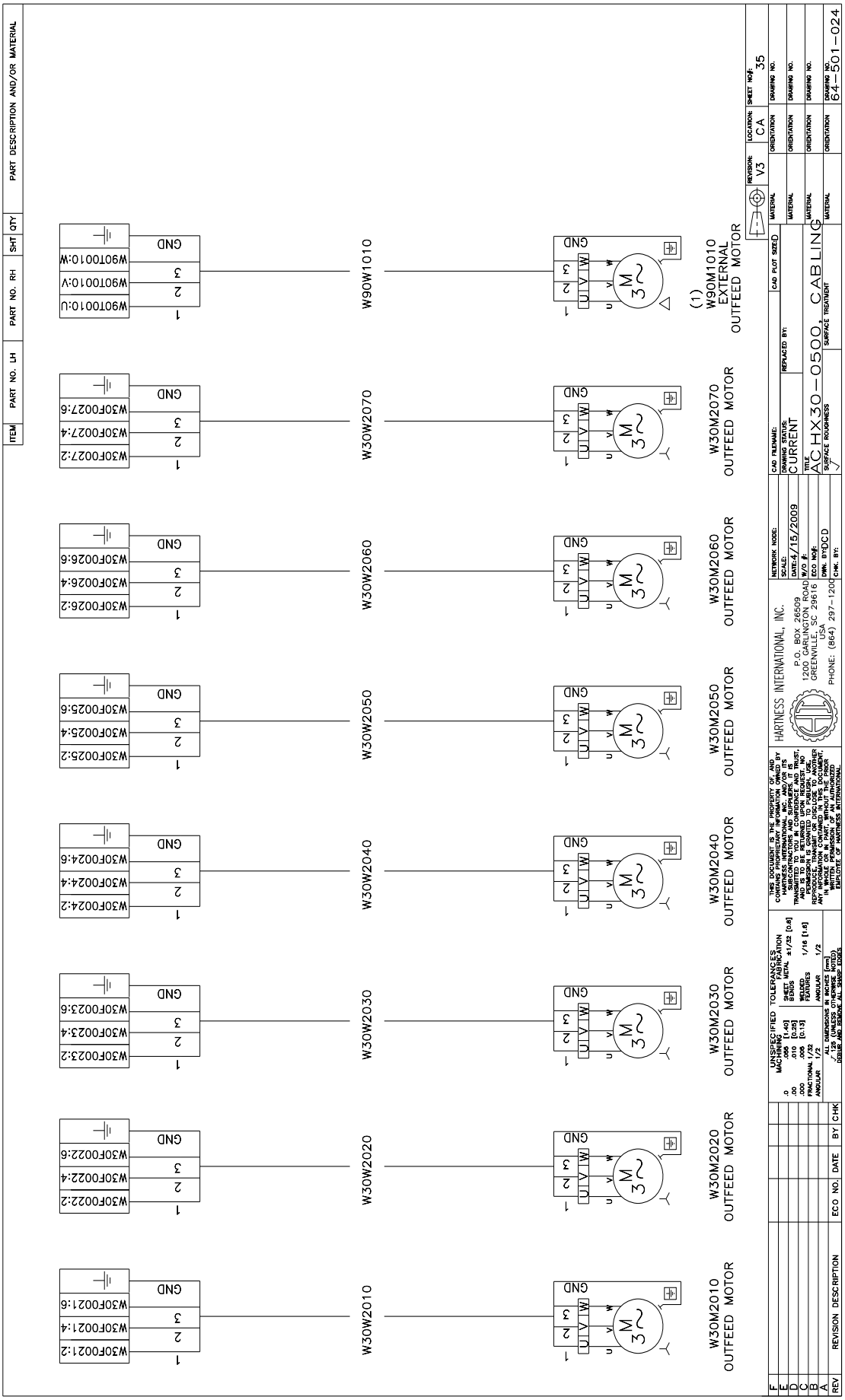
ITEM
PART NO. LH
PART NO. RH
SHT
QTY
PART DESCRIPTION AND/OR MATERIAL
W30M2010
OUTFEED MOTOR
W30W2010
W30F00213:6
W30F00214:4
W30F00212:2
W90T0010:W
W90T0010:V
W90T0010:U
W90W1010
(1)
W90M1010
EXTERNAL
OUTFEED MOTOR
W30M2020
OUTFEED MOTOR
W30W2020
W30F00226:6
W30F00224:4
W30F00222:2
W30M2030
OUTFEED MOTOR
W30W2030
W30F00236:6
W30F00234:4
W30F00232:2
W30M2040
OUTFEED MOTOR
W30W2040
W30F00246:6
W30F00244:4
W30F00242:2
W30M2050
OUTFEED MOTOR
W30W2050
W30F00256:6
W30F00254:4
W30F00252:2
W30M2060
OUTFEED MOTOR
W30W2060
W30F00266:6
W30F00264:4
W30F00262:2
W30M2070
OUTFEED MOTOR
W30W2070
W30F00276:6
W30F00274:4
W30F00272:2
GND
U V W
REVISION: V3
LOCATION: CA
SHEET NO#: 35
REV
REVISION DESCRIPTION
ECO NO.
DATE
BY
CHK
UNSPECIFIED TOLERANCES
MACHINING
SHEET METAL
BENDS
WELDS
FEATURES
ANGULAR
ALL DIMENSIONS IN INCHES [mm]
REMOVE BURRS AND BREAK ALL SHARP EDGES
THIS DOCUMENT IS THE PROPERTY OF AND CONTAINS PROPRIETARY INFORMATION OWNED BY HARTNESS INTERNATIONAL, INC. AND/OR ITS SUBSIDIARIES AND IS NOT TO BE REPRODUCED, TRANSMITTED TO YOU IN CONFIDENCE AND TRUST, AND MUST NOT BE USED FOR ANY PURPOSE EXCEPT AS PERMISSION IS GRANTED TO PUBLISH, USE, REPRODUCE, TRANSMIT OR DISCLOSE TO ANOTHER IN WHOLE OR IN PART, WITHOUT THE PRIOR WRITTEN PERMISSION OF AN AUTHORIZED EMPLOYEE OF HARTNESS INTERNATIONAL
HARTNESS INTERNATIONAL, INC.
P.O. BOX 26509
1200 GARLINGTON ROAD
GREENVILLE, SC 29616 USA
PHONE: (864) 297-1200
NETWORK NODE:
SCALE:
DATE: 4/15/2009
W/O #:
ECO NO#:
DWN. BY: DCD
CHK. BY:
CAD FILENAME:
DRAWING STATUS: CURRENT
REPLACED BY:
CAD PLOT SIZED
TITLE
AC HX30-0500, CABLING
SURFACE ROUGHNESS
SURFACE TREATMENT
MATERIAL
ORIENTATION
DRAWING NO.
64-501-024

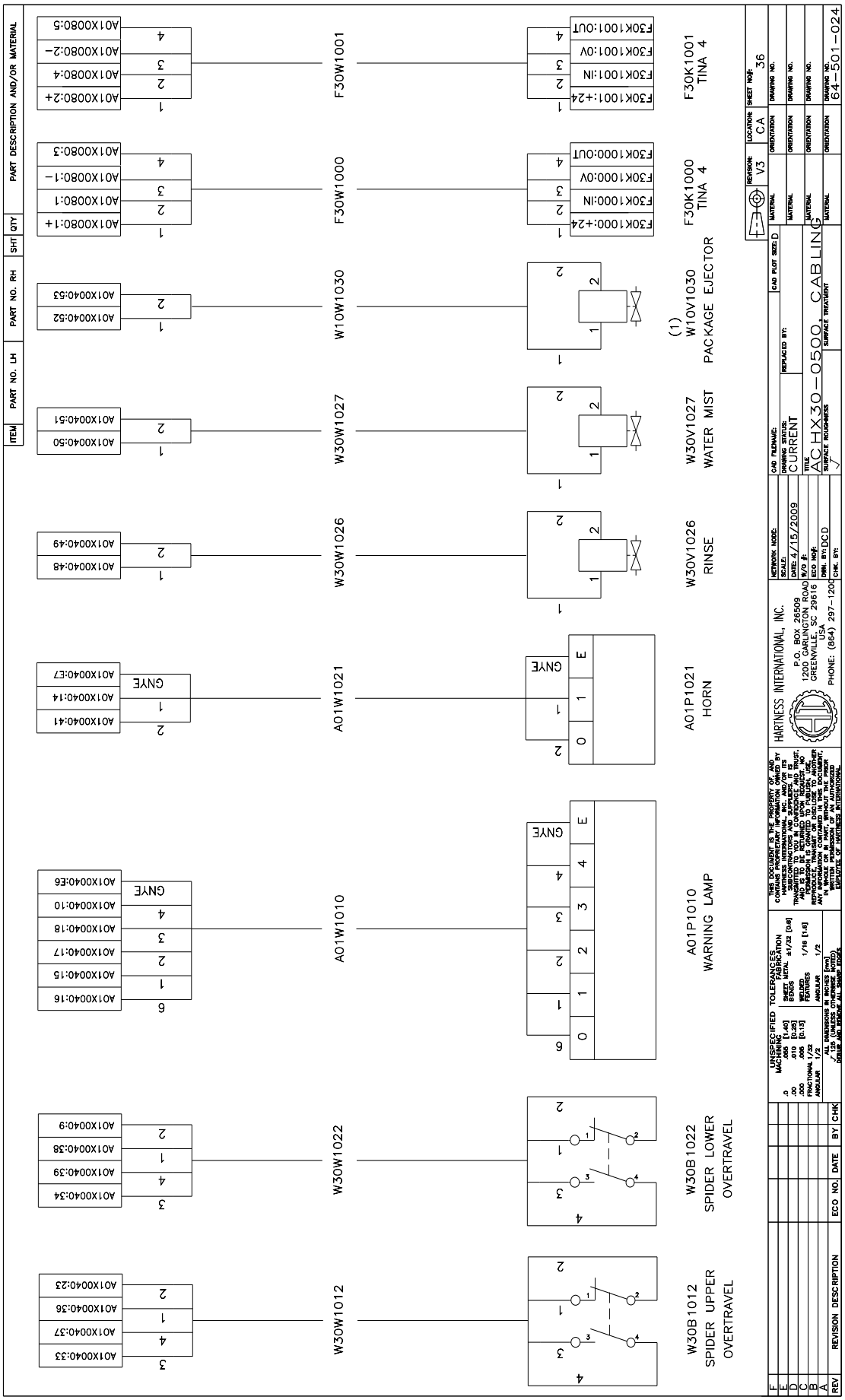
ITEM
PART NO. LH
PART NO. RH
SHT
QTY
PART DESCRIPTION AND/OR MATERIAL
W30B1012
SPIDER UPPER OVERTRAVEL
W30W1012
A01X00040:33
A01X00040:36
A01X00040:37
A01X00040:23
W30B1022
SPIDER LOWER OVERTRAVEL
W30W1022
A01X00040:34
A01X00040:39
A01X00040:38
A01X00040:9
A01P1010
WARNING LAMP
A01W1010
A01X00040:16
A01X00040:15
A01X00040:17
A01X00040:18
A01X00040:10
A01X00040:E6
A01P1021
HORN
A01W1021
A01X00040:41
A01X00040:14
A01X00040:E7
W30V1026
RINSE
W30W1026
A01X00040:48
A01X00040:49
W30V1027
WATER MIST
W30W1027
A01X00040:50
A01X00040:51
(1)
W10V1030
PACKAGE EJECTOR
W10W1030
A01X00040:52
A01X00040:53
F30K1001
TINA 4
F30W1001
A01X00080:2+
A01X00080:4
A01X00080:2−
A01X00080:5
F30K1000
TINA 4
F30W1000
A01X00080:1+
A01X00080:1
A01X00080:1−
A01X00080:3
HARTNESS INTERNATIONAL, INC.
P.O. BOX 26509
1200 GARLINGTON ROAD
GREENVILLE, SC 29616
USA
PHONE: (864) 297-1200
THIS DOCUMENT IS THE PROPERTY OF AND CONTAINS PROPRIETARY INFORMATION OWNED BY HARTNESS INTERNATIONAL INC. AND IS SUBMITTED IN CONFIDENCE AND SUPPLIED AT ITS TRANSMITTED VOLUNTARILY WITH THE UNDERSTANDING THAT IT MUST, AND IS TO BE RETURNED UPON REQUEST. NO REPRODUCE, TRANSMIT OR DISCLOSE TO ANOTHER ANY WHOLE OR PART OF IT IS PERMITTED. WRITTEN PERMISSION OF AN AUTHORIZED OFFICER OF HARTNESS INTERNATIONAL.
UNSPECIFIED TOLERANCES
MACHINING
.0 ±1/32 [0.8]
.00 ±.010 [0.25]
.000 ±.005 [0.13]
FRACTIONAL ±1/32
ANGULAR ±1°
SHEET METAL ±1/32 [0.8]
WELDED ASSEMBLIES 1/16 [1.6]
ANGULAR 1/2°
ALL DIMENSIONS IN INCHES [mm]
∠ 125 (UNLESS OTHERWISE NOTED)
REMOVE ANY BREAKS ALL SHARP CORNERS
NETWORK NODE:
SCALE:
DATE: 4/15/2009
W/O #:
ECO NO#:
DWN. BY: DCD
CHK. BY:
CAD FILENAME:
DRAWING STATUS: CURRENT
REPLACED BY:
CAD PLOT SIZE: D
TITLE
ACHX30-0500 CABLING
SURFACE ROUGHNESS
SURFACE TREATMENT
REVISION: V3
LOCATION: CA
SHEET NO#: 36
MATERIAL
ORIENTATION
DRAWING NO.
64-501-024
REV
REVISION DESCRIPTION
ECO NO.
DATE
BY
CHK

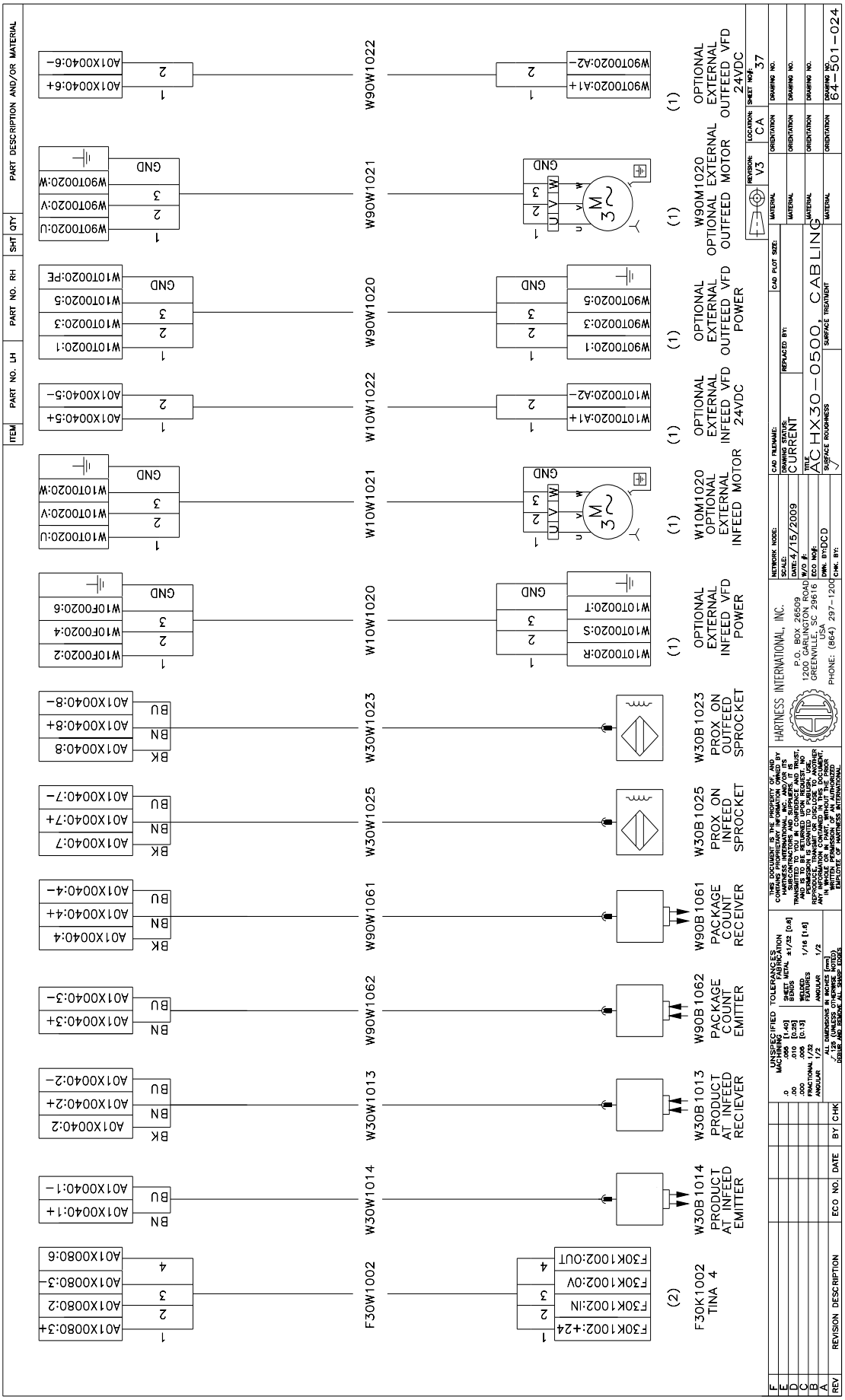

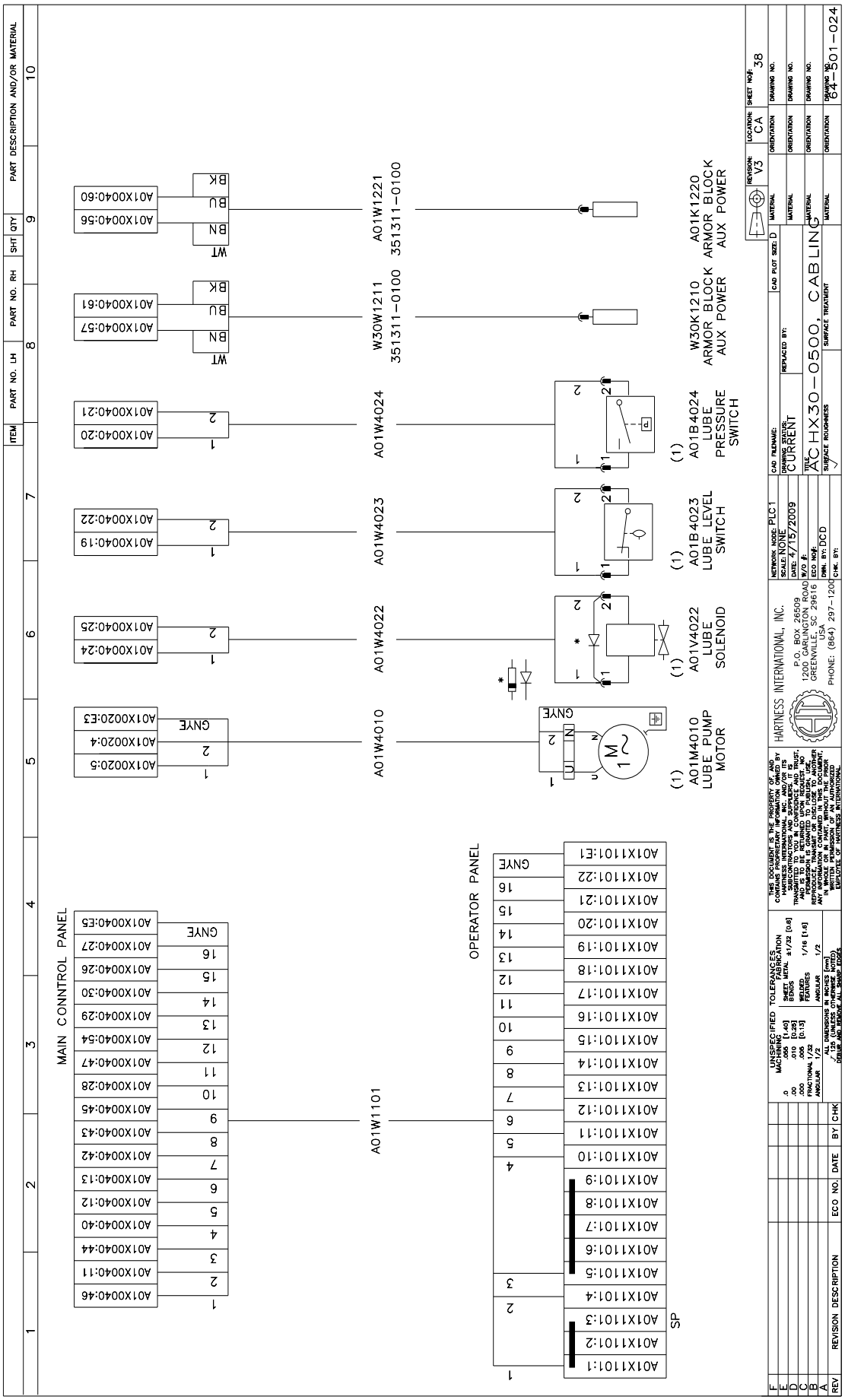
MAIN CONNTROL PANEL
OPERATOR PANEL
A01W1101
A01W4010
A01W4022
A01W4023
A01W4024
W30W1211
351311-0100
A01W1221
351311-0100
W30K1210
ARMOR BLOCK
AUX POWER
A01K1220
ARMOR BLOCK
AUX POWER
A01M4010
LUBE PUMP
MOTOR
A01V4022
LUBE
SOLENOID
A01B4023
LUBE LEVEL
SWITCH
A01B4024
LUBE
PRESSURE
SWITCH
HARTNESS INTERNATIONAL, INC.
P.O. BOX 26509
1200 GARLINGTON ROAD
GREENVILLE, SC 29616
USA
PHONE: (864) 297-1200
ACHX30-0500, CABLING
CURRENT
NETWORK NODE: PLC1
SCALE: NONE
DATE: 4/15/2009
W/O #:
ECO NO#:
DWN. BY: DCD
CHK. BY:
CAD FILENAME:
DRAWING STATUS:
REPLACED BY:
CAD PLOT SIZE: D
MATERIAL
SURFACE TREATMENT
SURFACE ROUGHNESS
LOCATION: CA
SHEET NO#: 38
DRAWING NO. 84-501-024
REVISION: V3
ORIENTATION
UNSPECIFIED TOLERANCES
MACHINING
SHEET METAL
WELDED
FASTENERS
ANGULAR
ALL DIMENSIONS IN INCHES [mm]
UNLESS OTHERWISE NOTED
REV
REVISION DESCRIPTION
ECO NO.
DATE
BY
CHK
ITEM
PART NO. LH
PART NO. RH
SHT
QTY
PART DESCRIPTION AND/OR MATERIAL

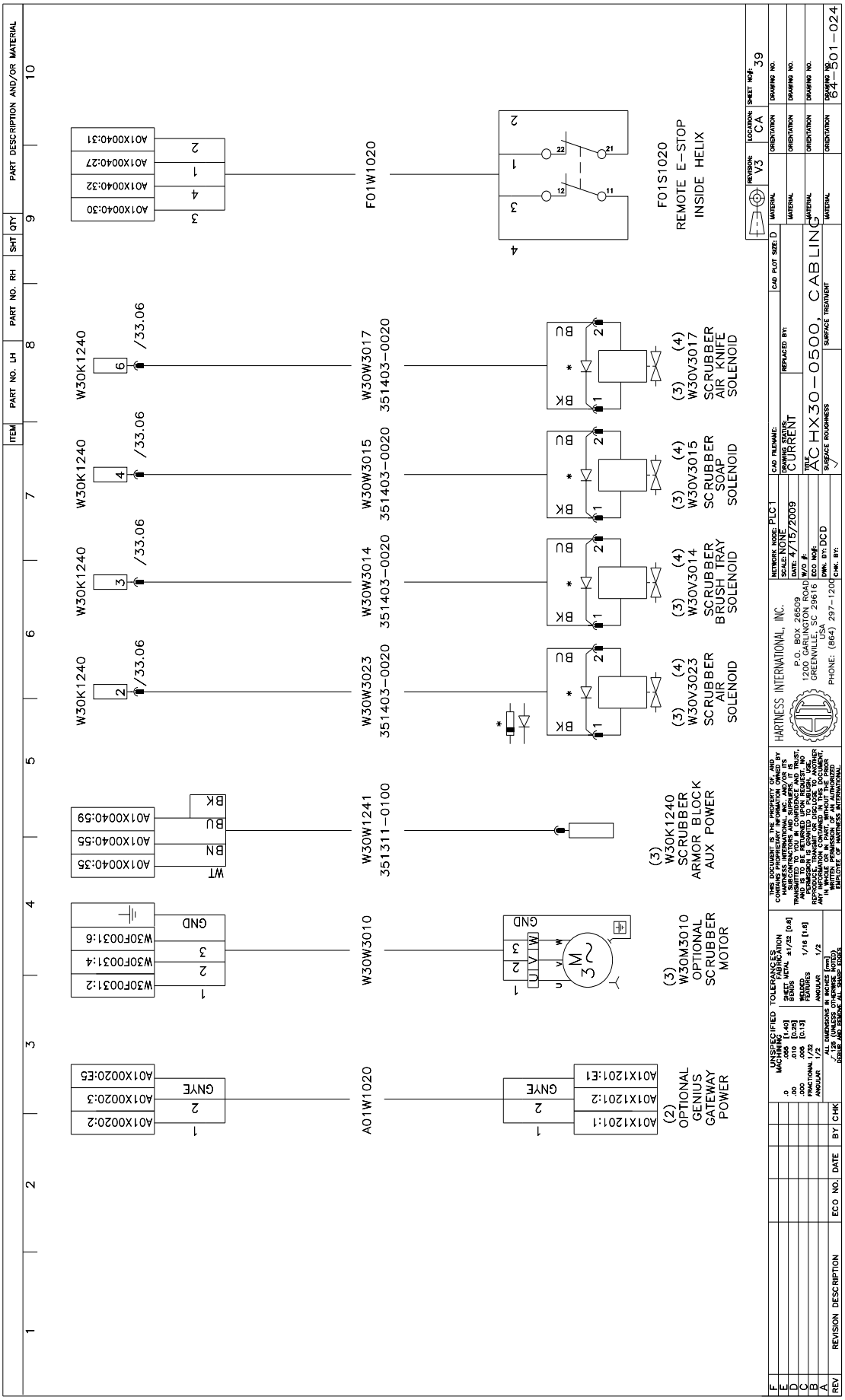
A01W1020
(2) OPTIONAL GENIUS GATEWAY POWER
A01X0020:2
A01X0020:3
A01X0020:E5
GNYE
2
1
A01X1201:1
A01X1201:2
A01X1201:E1
GNYE
2
1
W30W3010
(3) W30M3010 OPTIONAL SCRUBBER MOTOR
W30F00316
W30F00314
W30F00312
GND
3
2
1
GND
U V W
M 3~
W30W1241
351311-0100
(3) W30K1240 SCRUBBER ARMOR BLOCK AUX POWER
A01X0040:59
A01X0040:55
A01X0040:35
BK
BU
BN
WT
W30K1240
2
/33.06
W30W3023
351403-0020
(3) (4) W30V3023 SCRUBBER AIR SOLENOID
W30K1240
3
/33.06
W30W3014
351403-0020
(3) (4) W30V3014 SCRUBBER BRUSH TRAY SOLENOID
W30K1240
4
/33.06
W30W3015
351403-0020
(3) (4) W30V3015 SCRUBBER SOAP SOLENOID
W30K1240
6
/33.06
W30W3017
351403-0020
(3) (4) W30V3017 SCRUBBER AIR KNIFE SOLENOID
BK
BU
1
2
*
A01X0040:30
A01X0040:32
A01X0040:27
A01X0040:31
3
4
1
2
F01W1020
4
3
1
2
22
21
12
11
F01S1020
REMOTE E-STOP
INSIDE HELIX
ITEM
PART NO. LH
PART NO. RH
SHT QTY
PART DESCRIPTION AND/OR MATERIAL
REV
REVISION DESCRIPTION
ECO NO.
DATE
BY
CHK
UNSPECIFIED TOLERANCES
MACHINING
.0 ± .030 [1.40]
.005 [.13]
.010 [.25]
.030 [.8]
.005 [.13]
FRACTIONAL 1/32
ANGULAR 1/2
SHEET METAL ±1/32 [0.8]
BENDS 1/2
WELDING
FEATURES 1/16 [1.6]
ANGULAR 1/2
ALL DIMENSIONS IN INCHES [mm]
UNLESS NOTED OTHERWISE
DEBUR AND BREAK ALL SHARP EDGES
THIS DOCUMENT IS THE PROPERTY OF AND CONTAINS CONFIDENTIAL INFORMATION OWNED BY HARTNESS INTERNATIONAL, INC. AND/OR ITS AFFILIATES. IT IS TRANSMITTED TO YOU IN CONFIDENCE AND TRUST, AND YOU AGREE TO TREAT IT IN STRICT CONFIDENCE. NO PERMISSION IS GRANTED TO PUBLISH, USE, REPRODUCE, TRANSFER OR DISCLOSE TO ANOTHER PERSON OR ENTITY THIS DOCUMENT OR ANY PART IN WHOLE OR IN PART, WITHOUT THE PRIOR WRITTEN PERMISSION OF AN AUTHORIZED EMPLOYEE OF HARTNESS INTERNATIONAL.
HARTNESS INTERNATIONAL, INC.
P.O. BOX 26509
1200 GARLINGTON ROAD
GREENVILLE, SC 29616
PHONE: (864) 297-1200
NETWORK NODE: PLC1
SCALE: NONE
DATE: 4/15/2009
W/O #:
ECO NO#:
DWN. BY: DCD
CHK. BY:
CAD FILENAME:
DRAWING STATUS: CURRENT
REPLACED BY:
TITLE
ACHX30-0500, CABLING
SURFACE ROUGHNESS
SURFACE TREATMENT
CAD PLOT SIZE: D
REVISION: V3
LOCATION: CA
SHEET NO#: 39
MATERIAL
ORIENTATION
DRAWING NO.
DRAWING NO. 84-501-024

HOLE #	CABLE #	CABLE
1	W30W2010	E
2	W30W1010	E
3	W30W2020	E
4	W30W1020	E
5	W30W2030	E
6	W30W1030	E
7	W30W2040	E
8	W30W1040	E
9	W30W2050	E
10	W30W1050	E
11	W30W2060	E
12	W30W1060	E
13	W30W2070	E
14	W30W1070	E
15	W10W1010	E
16	W10W1020	E
17	W90W1010	E
18	W90W1020	E
19	W30W3010	E
20	A01W4010	E
21	A01W1020	E
22	A01W1310	N
23	LC COMS	N
24	A01W1010	L
25	A01W1101	F
26	MACHINE GROUND	G
27	W30W1013	B
28	W30W1014	B
29	W90W1062	B
30	W90W1061	B
31	W30W1023	A
32	W30W1025	A
33	W30W1210	K
34	W30W1211	H
35	A01W1221	J
36	W30W1241	J
37	F30W1000	C
38	F30W1001	C
39	F30W1002	C

HOLE #	CABLE #	CABLE
40	W30W1012	C
41	W30W1022	C
42	W90W1022	C
43	W30W1026	D
44	W30W1027	D
45	A01W9990	C
46	DOWNSTREAM LEFT	C
47	DOWNSTREAM RIGHT	C
48	W10W1023	K
49	A01W1402	M
50	W10W1022	C
51	RECIPE SELECT	C
52	W10W1030	D
53	PACKAGE TRAP AERO	D
54	A01W4022	D
55	A01W4023	D
56	A01W4024	D
57	UPSTREAM LUBE	D
58	DOWNSTREAM LUBE	D
59	QUICK-STOP	D
60		
61	A01W1021	C
62	F01W1020	L

ITEM	PART NO. LH	PART NO. RH	SHT	QTY	PART DESCRIPTION AND/OR MATERIAL

CABLE GLANDS

90458-0305 M12
90458-0306 M16
90458-0307 M20
90458-0308 M25

ACHX30-400 CABLES & GLANDS

A	C-1084 Micro 90 15M	M12
B	C-4502 M8 10W ST	M12
C	351150-0405 5x18	M16
D	351150-122 2x18	M16
E	90220-0105 4x14 SHLD	M20
F	351150-0425 25x18	M25
G	351175-108 8 AWG GN/YE	M12
H	351311-0050 M12 5M ST	M16
J	351311-0100 M12 10W ST	M16
K	351415-0100 M12 10W ST D-NET	M16
L	351150-406 7X18	M20
M	C-4119 THIN DEVICENET	M20
N	ETHERNET	M20

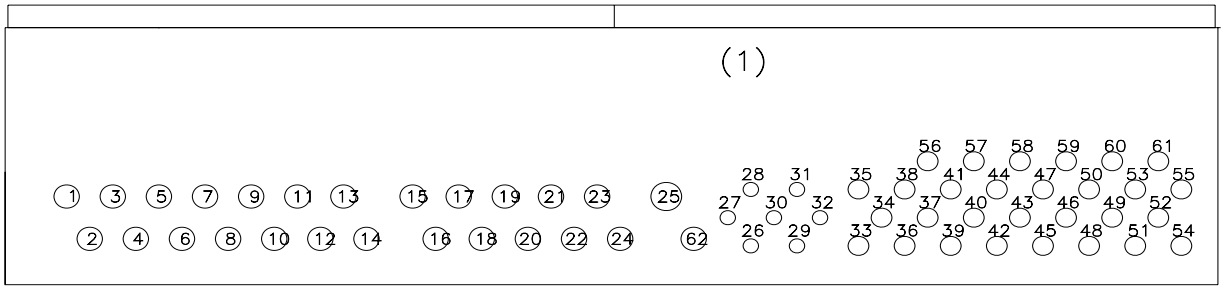

REV	REVISION DESCRIPTION	ECO NO.	DATE	BY	CHK
F					
E					
D					
C					
B					
A					

UNSPECIFIED TOLERANCES
MACHINING: .0 .005 [1.40]; .00 .010 [0.25]; .000 .005 [0.13]; FRACTIONAL 1/32; ANGULAR 1/2
FABRICATION: SHEET METAL BENDS ±1/32 [0.8]; WELDED FEATURES 1/16 [1.6]; ANGULAR 1/2
ALL DIMENSIONS IN INCHES [mm]
√ 125 (UNLESS OTHERWISE NOTED)
DEBUR AND REMOVE ALL SHARP EDGES

THIS DOCUMENT IS THE PROPERTY OF, AND CONTAINS PROPRIETARY INFORMATION OWNED BY HARTNESS INTERNATIONAL, INC. AND/OR ITS SUBCONTRACTORS AND SUPPLIERS. IT IS TRANSMITTED TO YOU IN CONFIDENCE AND TRUST, AND IS TO BE RETURNED UPON REQUEST. NO PERMISSION IS GRANTED TO PUBLISH, USE, REPRODUCE, TRANSMIT OR DISCLOSE TO ANOTHER ANY INFORMATION CONTAINED IN THIS DOCUMENT, IN WHOLE OR IN PART, WITHOUT THE PRIOR WRITTEN PERMISSION OF AN AUTHORIZED EMPLOYEE OF HARTNESS INTERNATIONAL.

HARTNESS INTERNATIONAL, INC.
P.O. BOX 26509
1200 GARLINGTON ROAD
GREENVILLE, SC 29616
USA
PHONE: (864) 297-1200

NETWORK NODE:
SCALE: NONE
DATE: 4/15/2009
W/O #:
ECO NO#:
DWN. BY: DCD
CHK. BY:

CAD FILENAME:
CAD PLOT SIZE: D
DRAWING STATUS: CURRENT
REPLACED BY:
TITLE: TETRA HELIX CABLING
SURFACE ROUGHNESS
SURFACE TREATMENT

REVISION:
LOCATION: CA
SHEET NO#: 40

MATERIAL | ORIENTATION | DRAWING NO.
MATERIAL | ORIENTATION | DRAWING NO.
MATERIAL | ORIENTATION | DRAWING NO.
MATERIAL | ORIENTATION | DRAWING NO. 64-501-024E

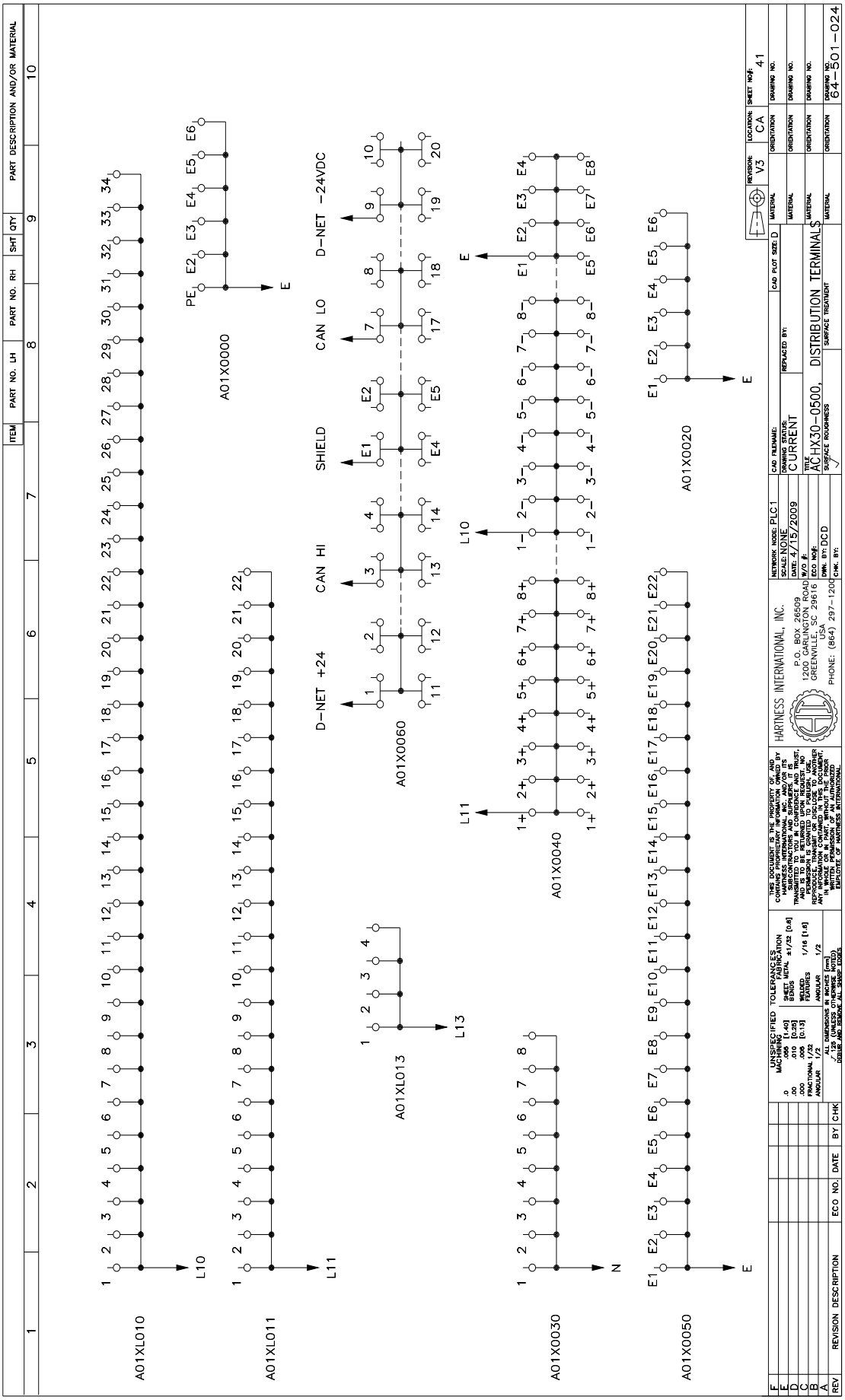
A01XL010
A01XL011
A01XL013
A01X0030
A01X0040
A01X0050
A01X0060
A01X0000
A01X0020
L10
L11
L13
N
E
PE
D-NET +24
CAN HI
SHIELD
CAN LO
D-NET -24VDC
HARTNESS INTERNATIONAL, INC.
P.O. BOX 26509
1200 GARLINGTON ROAD
GREENVILLE, SC 29616
PHONE: (864) 297-1200
AC HX30-0500, DISTRIBUTION TERMINALS
CURRENT
4/15/2009
NONE
PLC1
64-501-024
REVISION DESCRIPTION
ECO NO.
DATE
BY
CHK

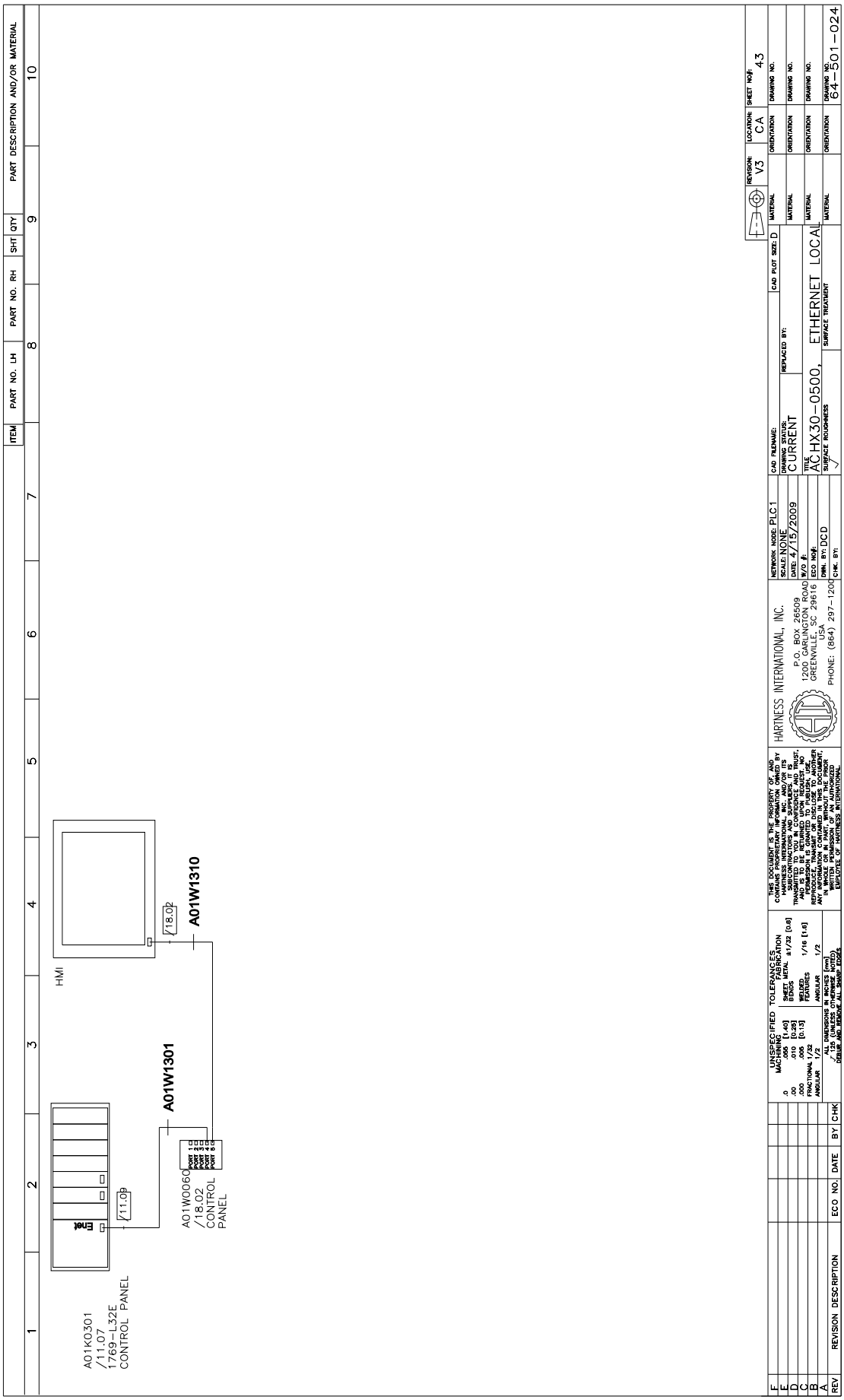
A01K0301
/11.07
1769-L32E
CONTROL PANEL
Enet
/11.08
A01W0060
/18.02
CONTROL
PANEL
PORT 1
PORT 2
PORT 4
PORT 5
A01W1301
HMI
/18.02
A01W1310
ITEM
PART NO. LH
PART NO. RH
SHT
QTY
PART DESCRIPTION AND/OR MATERIAL
REV
REVISION DESCRIPTION
ECO NO.
DATE
BY
CHK
UNSPECIFIED TOLERANCES
MACHINING
SHEET METAL
WELDED ASSEMBLIES
FRACTIONAL
ANGULAR
ALL DIMENSIONS IN INCHES [mm]
X.125 (UNLESS OTHERWISE NOTED)
REMOVE ALL BREAK ALL SHARP EDGES
THIS DOCUMENT IS THE PROPERTY OF, AND CONTAINS PROPRIETARY INFORMATION OWNED BY HARTNESS INTERNATIONAL, INC. AND ITS SUBCONTRACTORS AND SUPPLIERS. IT IS TRANSMITTED TO YOU IN CONFIDENCE AND TRUST, AND IS TO BE RETURNED UPON REQUEST. NO PROPRIETARY RIGHTS ARE CONVEYED TO YOU. REPRODUCE, TRANSMIT OR DISCLOSE TO ANOTHER ANY WHOLE OR PART OF THIS DOCUMENT; WITHOUT PERMISSION OF AN AUTHORIZED EXECUTIVE OF HARTNESS INTERNATIONAL.
HARTNESS INTERNATIONAL, INC.
P.O. BOX 26509
1200 GARLINGTON ROAD
GREENVILLE, SC 29616
USA
PHONE: (864) 297-1200
NETWORK NODE: PLC.1
SCALE: NONE
DATE: 4/15/2009
W/O #:
ECO NO#:
DWN. BY: DCD
CHK. BY:
CAD FILENAME:
DRAWING STATUS: CURRENT
REPLACED BY:
CAD PLOT SIZE: D
TITLE
ACHX30-0500, ETHERNET LOCAL
SURFACE ROUGHNESS
SURFACE TREATMENT
MATERIAL
ORIENTATION
REVISION: V3
LOCATION: CA
SHEET NO#: 43
DRAWING NO.
64-501-024

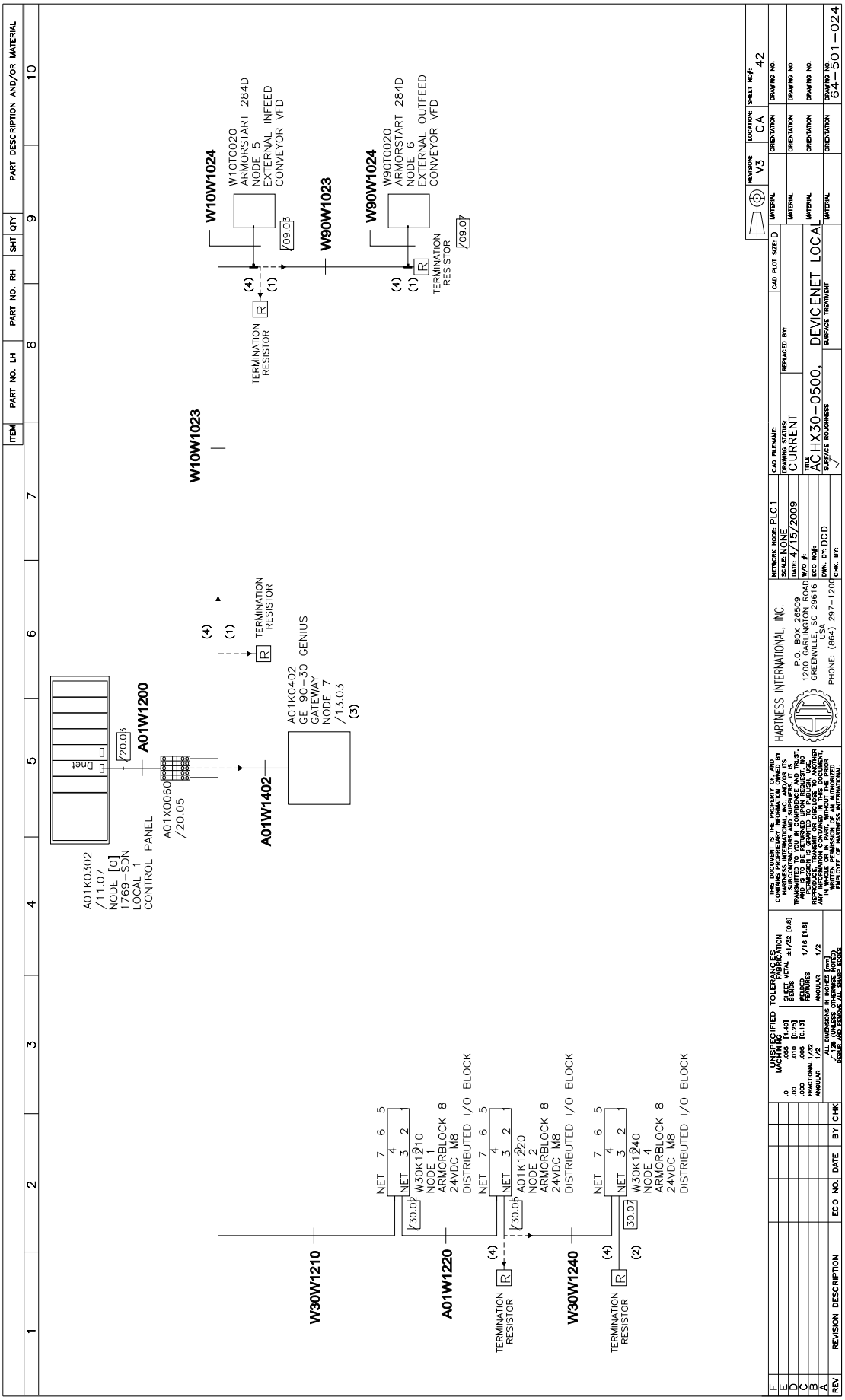
A01K0302
/11.07
NODE [0]
1769-SDN
LOCAL 1
CONTROL PANEL
A01X0060
/20.05
/20.03
A01W1200
A01W1402
A01K0402
GE 90-30 GENIUS
GATEWAY
NODE 7
/13.03
(3)
W10W1023
W10W1024
W10T0020
ARMORSTART 284D
NODE 5
EXTERNAL INFEED
CONVEYOR VFD
/09.05
W90W1023
W90W1024
W90T0020
ARMORSTART 284D
NODE 6
EXTERNAL OUTFEED
CONVEYOR VFD
/09.07
TERMINATION RESISTOR
W30W1210
W30K1210
NODE 1
ARMORBLOCK 8
24VDC M8
DISTRIBUTED I/O BLOCK
/30.05
A01W1220
A01K1220
NODE 2
W30W1240
W30K1240
NODE 4
NET 7 6 5
NET 4 3 2
HARTNESS INTERNATIONAL, INC.
P.O. BOX 26509
1200 GARLINGTON ROAD
GREENVILLE, SC 29616 USA
PHONE: (864) 297-1200
NETWORK NODE: PLC1
SCALE: NONE
DATE: 4/15/2009
DRAWING STATUS: CURRENT
TITLE: ACHX30-0500, DEVICENET LOCAL
SURFACE ROUGHNESS
SURFACE TREATMENT
REVISION: V3
LOCATION: CA
SHEET NO#: 42
DRAWING NO. 64-5501-024

8 Mains Connection Diagram

Description

The drawings that show the connection from the mains power to the electrical cabinet are included in this chapter.

8.1 IEC Version . . . . . 8 - 5
8.2 CSA Version . . . . . 8 - 9

This page intentionally left blank

8.1 IEC Version

This page intentionally left blank

ITEM	PART NO. LH	PART NO. RH	SHT	QTY	PART DESCRIPTION AND/OR MATERIAL

1	2		3		4	5	6	7	8	9	10
MAIN VOLTAGE	FUSES (SLOW) ① F001	FUSES (SLOW) ① F002	AREA/GAUGE OF CU CABLES 1	2	3	PRIMARY CONN. ON MATCHING TRANSFORMER		SECONDARY CONN. ON MATCHING TRANSFORMER	MATCHING TRANSFORMER 90245-0022		
V	A	A	mm2 AWG	mm2 AWG	mm2 AWG	MAINS	TAP / CONNECT				
600/347 3x600	15/16	25	4x2.5 4X14	5x6.0 5X10	5x6.0 5X10	PHASE L1 PHASE L2 PHASE L3 N N GROUND ⏚	1U9 1V9 1W9 N 1PE	1U3–U4 1V3–V4 1W3–W4			
550/318 3x550	15/16	25	4x2.5 4X14	5x6.0 5X10	5x6.0 5X10	PHASE L1 PHASE L2 PHASE L3 N N GROUND ⏚	1U8 1V8 1W8 N 1PE	1U3–U4 1V3–V4 1W3–W4			
500/289 3x500	20	25	4x4.0 4X12	5x6.0 5X10	5x6.0 5X10	PHASE L1 PHASE L2 PHASE L3 N N GROUND ⏚	1U7 1V7 1W7 N 1PE	1U3–U4 1V3–V4 1W3–W4			
480/277 3x480	25	25	4x6.0 4X10	5x6.0 5X10	5x6.0 5X10	PHASE L1 PHASE L2 PHASE L3 N N GROUND ⏚	1U6 1V6 1W6 N 1PE	1U3–U4 1V3–V4 1W3–W4			
440/254 3x440	25	25	4x6.0 4X10	5x6.0 5X10	5x6.0 5X10	PHASE L1 PHASE L2 PHASE L3 N N GROUND ⏚	1U5 1V5 1W5 N 1PE	1U2–U4 1V2–V4 1W2–W4			
415/240 3x415	25	25	4x6.0 4X10	5x6.0 5X10	5x6.0 5X10	PHASE L1 PHASE L2 PHASE L3 N N GROUND ⏚	1U5 1V5 1W5 N 1PE	1U1–U4 1V1–V4 1W1–W4			
3x400 (3x380)	25			5x6.0 5X10	5x6.0 5X10	PHASE L1 PHASE L2 PHASE L3 N N GROUND ⏚	1U4 1V4 1W4 N 1PE	1U1–U4 1V1–V4 1W1–W4			
240/140 3x240	50	25	4x16.0 4X6	5x6.0 5X10	5x6.0 5X10	PHASE L1 PHASE L2 PHASE L3 N N GROUND ⏚	1U3 1V3 1W3 N 1PE	U3–U4 1U3–1U6 V3–V4 1V3–1V6 W3–W4 1W3–1W6			
220/127 3x220	50	25	4x16.0 4X6	5x6.0 5X10	5x6.0 5X10	PHASE L1 PHASE L2 PHASE L3 N N GROUND ⏚	1U2 1V2 1W2 N 1PE	U3–U4 1U2–1U5 V3–V4 1V2–1V5 W3–W4 1W2–1W5			
200/115 3x200	50	25	4x16.0 4X6	5x6.0 5X10	5x6.0 5X10	PHASE L1 PHASE L2 PHASE L3 N N GROUND ⏚	1U1 1V1 1W1 N 1PE	U3–U4 1U1–1U4 V3–V4 1V1–1V4 W3–W4 1W1–1W4			

SECONDARY CONN. ON MATCHING TRANSFORMER:

PHASE L1 2U
PHASE L2 2V
PHASE L3 2W
NEUTRAL N
EARTH 2PE
(GROUND)

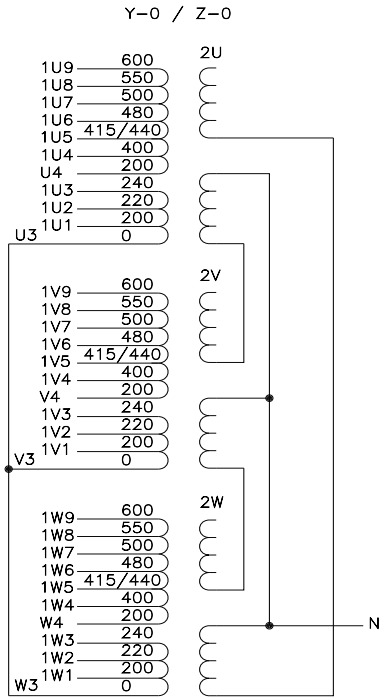

REVISION:	LOCATION:	SHEET NO#:
O	CA	E2

REV	REVISION DESCRIPTION	ECO NO.	DATE	BY	CHK
F					
E					
D					
C					
B					
A					

UNSPECIFIED TOLERANCES
MACHINING: .0 .055 [1.40]; .00 .010 [0.25]; .000 .005 [0.13]; FRACTIONAL 1/32; ANGULAR 1/2
FABRICATION: SHEET METAL BENDS ±1/32 [0.8]; WELDED FEATURES 1/16 [1.6]; ANGULAR 1/2
ALL DIMENSIONS IN INCHES [mm]
√ 125 (UNLESS OTHERWISE NOTED)
DEBUR AND REMOVE ALL SHARP EDGES

THIS DOCUMENT IS THE PROPERTY OF, AND CONTAINS PROPRIETARY INFORMATION OWNED BY HARTNESS INTERNATIONAL, INC. AND/OR ITS SUBCONTRACTORS AND SUPPLIERS. IT IS TRANSMITTED TO YOU IN CONFIDENCE AND TRUST, AND IS TO BE RETURNED UPON REQUEST. NO PERMISSION IS GRANTED TO PUBLISH, USE, REPRODUCE, TRANSMIT OR DISCLOSE TO ANOTHER ANY INFORMATION CONTAINED IN THIS DOCUMENT, IN WHOLE OR IN PART, WITHOUT THE PRIOR WRITTEN PERMISSION OF AN AUTHORIZED EMPLOYEE OF HARTNESS INTERNATIONAL.

HARTNESS INTERNATIONAL, INC.
P.O. BOX 26509
1200 CARLINGTON ROAD
GREENVILLE, SC 29616 USA
PHONE: (864) 297-1200

NETWORK NODE:	
SCALE: NONE	
DATE: 6/18/2009	
W/O #:	
ECO NO#:	
DWN. BY: DCD	
CHK. BY:	
CAD FILENAME:	CAD PLOT SIZE: D
DRAWING STATUS: CURRENT	REPLACED BY:
TITLE: ACHX30-0500 MAINS CONNECTION DIAGRAM	
SURFACE ROUGHNESS ✓	SURFACE TREATMENT
MATERIAL	ORIENTATION
DRAWING NO.	
MATERIAL	ORIENTATION
DRAWING NO.	
MATERIAL	ORIENTATION
DRAWING NO.	
MATERIAL	ORIENTATION
DRAWING NO. 64-511-024	

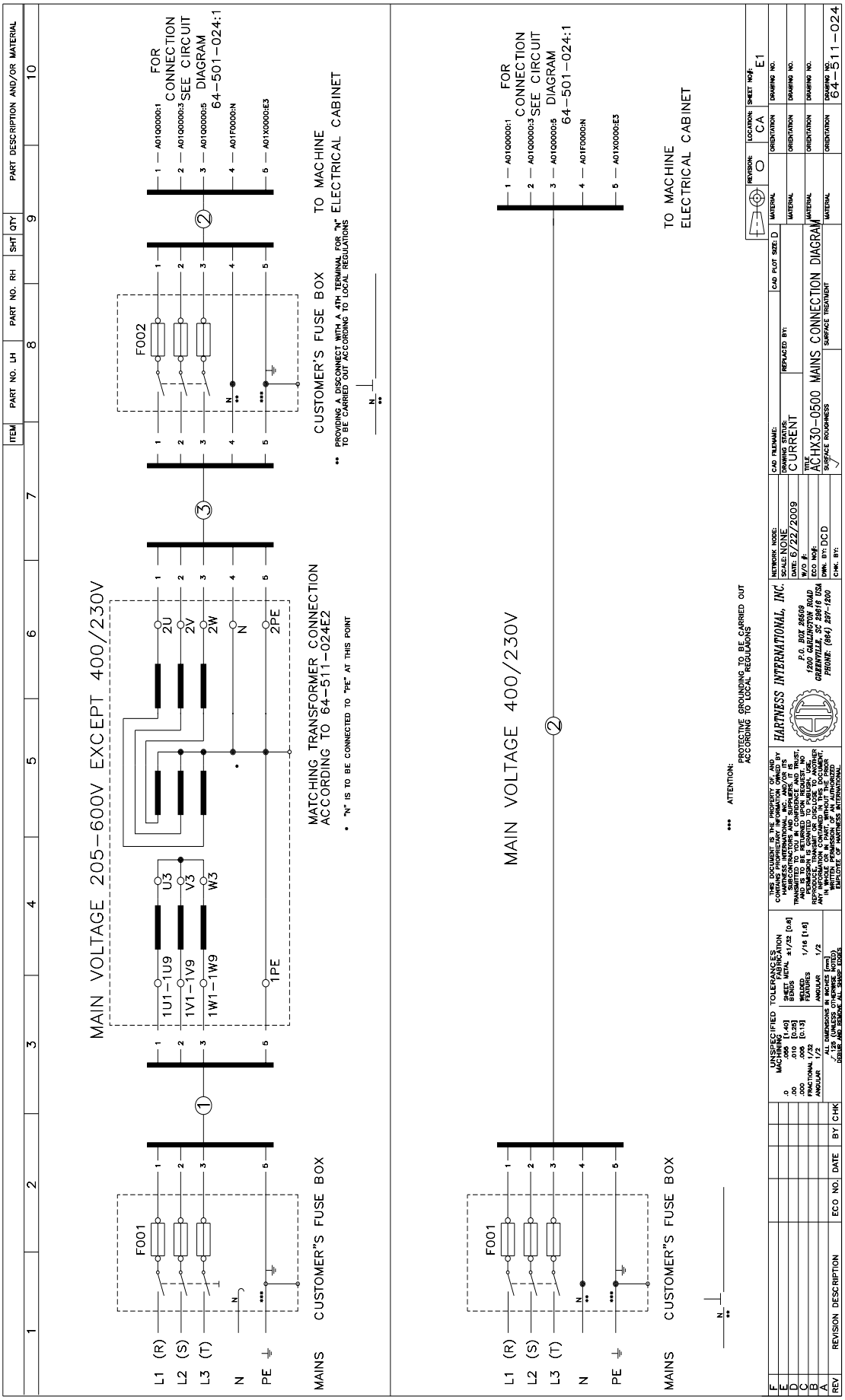
MAIN VOLTAGE 205–600V EXCEPT 400/230V
MAIN VOLTAGE 400/230V
F001
F002
L1 (R)
L2 (S)
L3 (T)
N
PE
MAINS
CUSTOMER'S FUSE BOX
MATCHING TRANSFORMER CONNECTION ACCORDING TO 64–511–024E2
* "N" IS TO BE CONNECTED TO "PE" AT THIS POINT
** PROVIDING A DISCONNECT WITH A 4TH TERMINAL FOR "N" TO BE CARRIED OUT ACCORDING TO LOCAL REGULATIONS
*** ATTENTION: PROTECTIVE GROUNDING TO BE CARRIED OUT ACCORDING TO LOCAL REGULATIONS
TO MACHINE ELECTRICAL CABINET
FOR CONNECTION SEE CIRCUIT DIAGRAM 64–501–024:1
A01Q0000:1
A01Q0000:3
A01Q0000:5
A01F0000:N
A01X0000:E3
1U1–1U9
1V1–1V9
1W1–1W9
1PE
2U
2V
2W
2PE
U3
V3
W3
ACHX30–0500 MAINS CONNECTION DIAGRAM
64–511–024

8.2 CSA Version

This page intentionally left blank

ITEM	PART NO. LH	PART NO. RH	SHT	QTY	PART DESCRIPTION AND/OR MATERIAL

1	2		3		4	5	6	7	8	9	10
MAIN VOLTAGE	FUSES (SLOW) ① F001	FUSES (SLOW) ① F002	AREA/GAUGE OF CU CABLES 1	2	3	PRIMARY CONN. ON MATCHING TRANSFORMER MAINS	TAP	CONNECT	SECONDARY CONN. ON MATCHING TRANSFORMER	MATCHING TRANSFORMER 90245-0022	
V	A	A	mm2 AWG	mm2 AWG	mm2 AWG						
600/347 3x600	15/16	25	4x2.5 4X14	5x6.0 5X10	5x6.0 5X10	PHASE L1 PHASE L2 PHASE L3 N N GROUND ⏚	1U9 1V9 1W9 N 1PE	1U3–U4 1V3–V4 1W3–W4	PHASE L1 2U PHASE L2 2V PHASE L3 2W NEUTRAL N EARTH 2PE (GROUND)	Y–0 / Z–0 2U: 1U9 600, 1U8 550, 1U7 500, 1U6 480, 1U5 415/440, 1U4 400, 1U3 200, 1U2 240, 1U1 220, U3 200, 0 2V: 1V9 600, 1V8 550, 1V7 500, 1V6 480, 1V5 415/440, 1V4 400, V4 200, 1V3 240, 1V2 220, 1V1 200, V3 0 2W: 1W9 600, 1W8 550, 1W7 500, 1W6 480, 1W5 415/440, 1W4 400, W4 200, 1W3 240, 1W2 220, 1W1 200, W3 0 N	
550/318 3x550	15/16	25	4x2.5 4X14	5x6.0 5X10	5x6.0 5X10	PHASE L1 PHASE L2 PHASE L3 N N GROUND ⏚	1U8 1V8 1W8 N 1PE	1U3–U4 1V3–V4 1W3–W4			
500/289 3x500	20	25	4x4.0 4X12	5x6.0 5X10	5x6.0 5X10	PHASE L1 PHASE L2 PHASE L3 N N GROUND ⏚	1U7 1V7 1W7 N 1PE	1U3–U4 1V3–V4 1W3–W4			
480/277 3x480	25	25	4x6.0 4X10	5x6.0 5X10	5x6.0 5X10	PHASE L1 PHASE L2 PHASE L3 N N GROUND ⏚	1U6 1V6 1W6 N 1PE	1U3–U4 1V3–V4 1W3–W4			
440/254 3x440	25	25	4x6.0 4X10	5x6.0 5X10	5x6.0 5X10	PHASE L1 PHASE L2 PHASE L3 N N GROUND ⏚	1U5 1V5 1W5 N 1PE	1U2–U4 1V2–V4 1W2–W4			
415/240 3x415	25	25	4x6.0 4X10	5x6.0 5X10	5x6.0 5X10	PHASE L1 PHASE L2 PHASE L3 N N GROUND ⏚	1U5 1V5 1W5 N 1PE	1U1–U4 1V1–V4 1W1–W4			
3x400 (3x380)	25			5x6.0 5X10	5X10	PHASE L1 PHASE L2 PHASE L3 N N GROUND ⏚	1U4 1V4 1W4 N 1PE	1U1–U4 1V1–V4 1W1–W4			
240/140 3x240	50	25	4x16.0 4X6	5x6.0 5X10	5x6.0 5X10	PHASE L1 PHASE L2 PHASE L3 N N GROUND ⏚	1U3 1V3 1W3 N 1PE	U3–U4 1U3–1U6 V3–V4 1V3–1V6 W3–W4 1W3–1W6			
220/127 3x220	50	25	4x16.0 4X6	5x6.0 5X10	5x6.0 5X10	PHASE L1 PHASE L2 PHASE L3 N N GROUND ⏚	1U2 1V2 1W2 N 1PE	U3–U4 1U2–1U5 V3–V4 1V2–1V5 W3–W4 1W2–1W5			
200/115 3x200	50	25	4x16.0 4X6	5x6.0 5X10	5x6.0 5X10	PHASE L1 PHASE L2 PHASE L3 N N GROUND ⏚	1U1 1V1 1W1 N 1PE	U3–U4 1U1–1U4 V3–V4 1V1–1V4 W3–W4 1W1–1W4			

REV	REVISION DESCRIPTION	ECO NO.	DATE	BY	CHK
F					
E					
D					
C					
B					
A					

UNSPECIFIED TOLERANCES
MACHINING: .0 .055 [1.40]; .00 .010 [0.25]; .000 .005 [0.13]; FRACTIONAL 1/32; ANGULAR 1/2
FABRICATION: SHEET METAL BENDS ±1/32 [0.8]; WELDED FEATURES 1/16 [1.6]; ANGULAR 1/2
ALL DIMENSIONS IN INCHES [mm]
√125 (UNLESS OTHERWISE NOTED)
DEBUR AND REMOVE ALL SHARP EDGES

THIS DOCUMENT IS THE PROPERTY OF, AND CONTAINS PROPRIETARY INFORMATION OWNED BY HARTNESS INTERNATIONAL, INC. AND/OR ITS SUBCONTRACTORS AND SUPPLIERS. IT IS TRANSMITTED TO YOU IN CONFIDENCE AND TRUST, AND IS TO BE RETURNED UPON REQUEST. NO PERMISSION IS GRANTED TO PUBLISH, USE, REPRODUCE, TRANSMIT OR DISCLOSE TO ANOTHER ANY INFORMATION CONTAINED IN THIS DOCUMENT, IN WHOLE OR IN PART, WITHOUT THE PRIOR WRITTEN PERMISSION OF AN AUTHORIZED EMPLOYEE OF HARTNESS INTERNATIONAL.

HARTNESS INTERNATIONAL, INC.
P.O. BOX 26509
1200 CARLINGTON ROAD
GREENVILLE, SC 29616 USA
PHONE: (864) 297-1200

NETWORK NODE:
SCALE: NONE
DATE: 6/18/2009
W/O #:
ECO NO#:
DWN. BY: DCD
CHK. BY:

CAD FILENAME:
CAD PLOT SIZE: D
DRAWING STATUS: CURRENT
REPLACED BY:
TITLE: ACHX30-0500 MAINS CONNECTION DIAGRAM
SURFACE ROUGHNESS ✓
SURFACE TREATMENT

REVISION: O | LOCATION: CA | SHEET NO#: E2

MATERIAL | ORIENTATION | DRAWING NO.
MATERIAL | ORIENTATION | DRAWING NO.
MATERIAL | ORIENTATION | DRAWING NO.
MATERIAL | ORIENTATION | DRAWING NO. 64-511-024

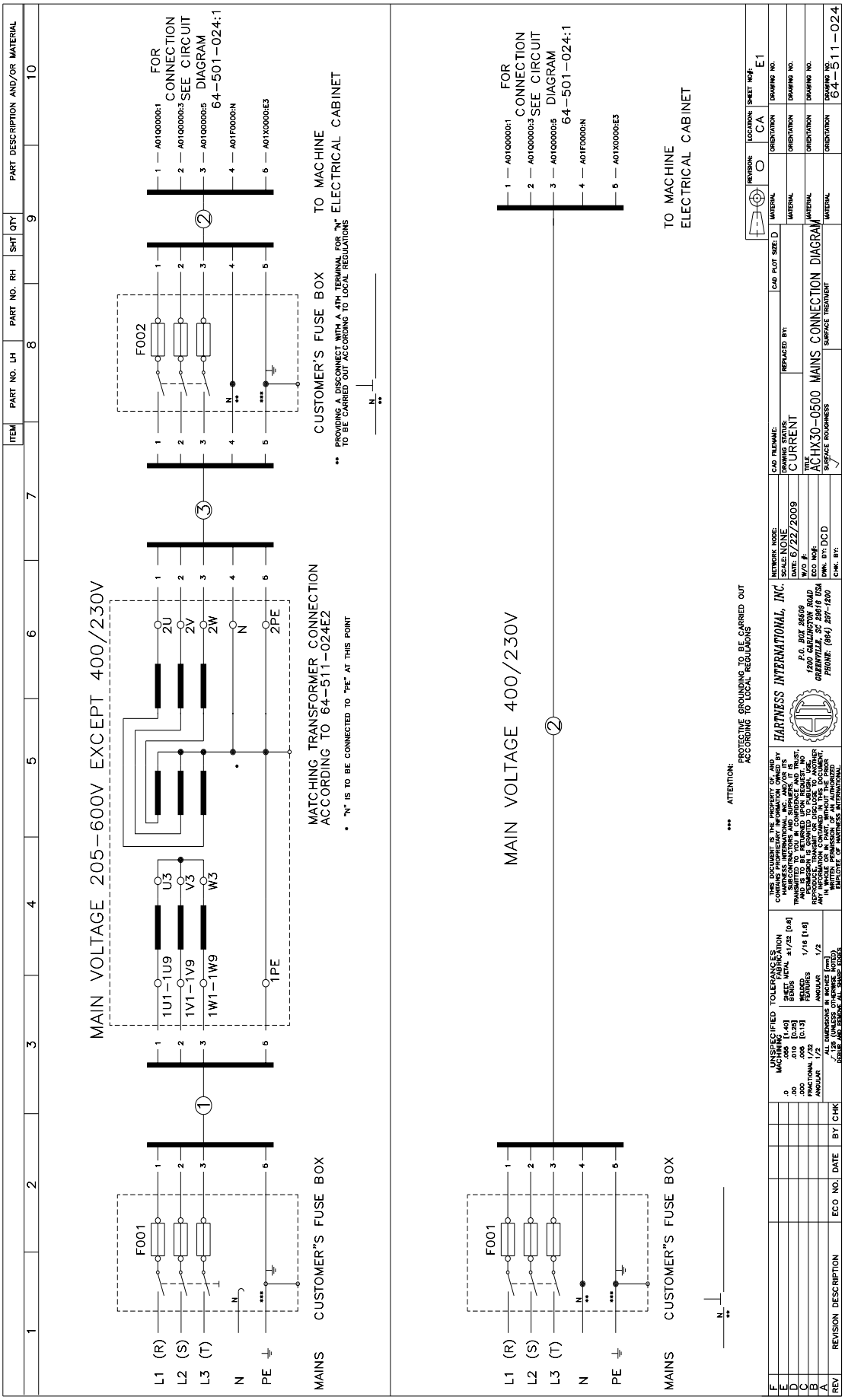
MAIN VOLTAGE 205–600V EXCEPT 400/230V
MAIN VOLTAGE 400/230V
MAINS
CUSTOMER'S FUSE BOX
L1 (R)
L2 (S)
L3 (T)
N
PE
F001
F002
1U1–1U9
1V1–1V9
1W1–1W9
1PE
2U
2V
2W
2PE
U3
V3
W3
MATCHING TRANSFORMER CONNECTION ACCORDING TO 64–511–024E2
* "N" IS TO BE CONNECTED TO "PE" AT THIS POINT
CUSTOMER'S FUSE BOX
TO MACHINE
ELECTRICAL CABINET
** PROVIDING A DISCONNECT WITH A 4TH TERMINAL FOR "N" TO BE CARRIED OUT ACCORDING TO LOCAL REGULATIONS
*** ATTENTION: PROTECTIVE GROUNDING TO BE CARRIED OUT ACCORDING TO LOCAL REGULATIONS
A01Q0000:1
A01Q0000:3
A01Q0000:5
A01F0000:N
A01X0000:E3
FOR CONNECTION SEE CIRCUIT DIAGRAM 64–501–024:1
ITEM
PART NO. LH
PART NO. RH
SHT
QTY
PART DESCRIPTION AND/OR MATERIAL
REV
REVISION DESCRIPTION
ECO NO.
DATE
BY
CHK
UNSPECIFIED TOLERANCES
MACHINING (UNLESS OTHERWISE NOTED)
SHEET METAL
WELDED
ANGULAR
ALL DIMENSIONS IN INCHES [mm]
DEBUR AND BREAK ALL SHARP EDGES
THIS DOCUMENT IS THE PROPERTY OF AND CONTAINS CONFIDENTIAL INFORMATION OWNED BY HARTNESS INTERNATIONAL, INC. AND/OR ITS SUBSIDIARIES AND AFFILIATES. IT IS TRANSMITTED TO YOU IN CONFIDENCE AND TRUST, AND SUBJECT TO THE TERMS AND CONDITIONS UNDER WHICH PERMISSION IS GRANTED TO PUBLISH, USE, REPRODUCE, TRANSMIT OR DISCLOSE TO ANOTHER PARTY ANY PORTION HEREOF. NO RIGHT IS GRANTED TO MAKE THIS DOCUMENT, OR ANY PART THEREOF, AVAILABLE IN ANY MANNER TO ANY PARTY OTHER THAN A BONA FIDE EMPLOYEE OF HARTNESS INTERNATIONAL.
HARTNESS INTERNATIONAL, INC.
P.O. BOX 28569
1200 GARLINGTON ROAD
GREENVILLE, SC 29616 USA
PHONE: (864) 297-1200
NETWORK NODE:
SCALE: NONE
DATE: 6/22/2009
W/O #:
ECO NO#:
DWN. BY: DCD
CHK. BY:
CAD FILENAME:
DRAWING STATUS: CURRENT
REPLACED BY:
TITLE: ACHX30–0500 MAINS CONNECTION DIAGRAM
SURFACE ROUGHNESS
SURFACE TREATMENT
CAD PLOT SIZE: D
REVISION: O
LOCATION: CA
SHEET NO#: E1
MATERIAL
ORIENTATION
DRAWING NO.
64–511–024

9 Component Location

Description

This chapter contains information on the physical location of the components in the electrical cabinet.

9.1 IEC Version . . . . . 9 - 5

9.2 CSA Version . . . . . 9 - 11

This page intentionally left blank

9.1 IEC Version

This page intentionally left blank

ITEM	PART NO. LH	PART NO. RH	SHT	QTY	PART DESCRIPTION AND/OR MATERIAL

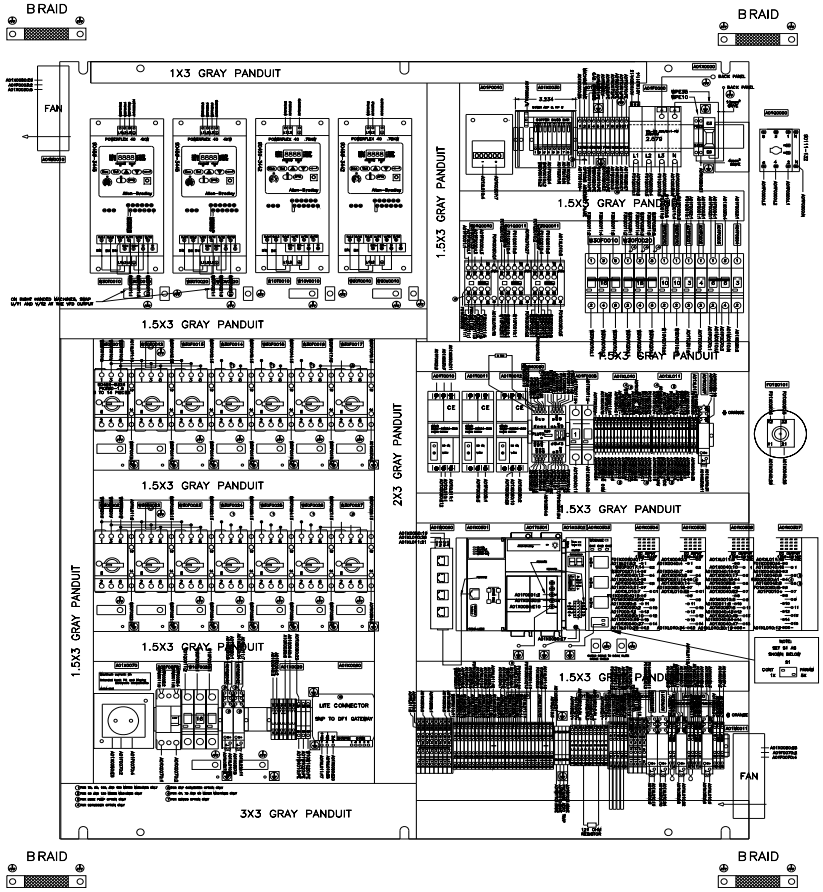

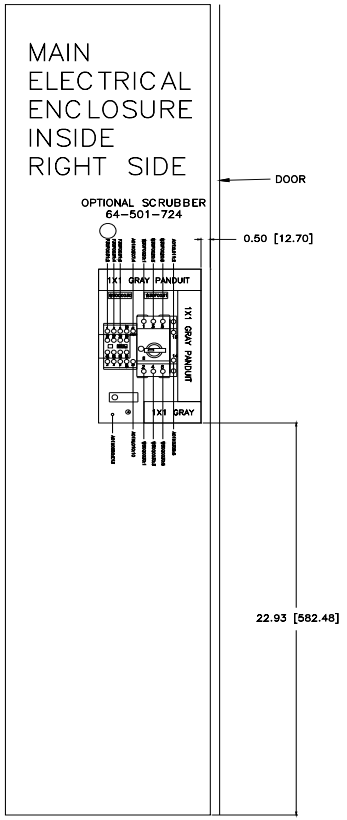

REVISION:	LOCATION:	SHEET NO#:
B	CA	3

REV	REVISION DESCRIPTION	ECO NO.	DATE	BY	CHK
F					
E					
D					
C					
B	CHANGE SURGE SUPPRESSOR		8/27/2009	DCD	
A	ADD 3" WIREWAY		3/26/2009	DCD	

UNSPECIFIED TOLERANCES

MACHINING		FABRICATION	
.0	.055 [1.40]	SHEET METAL BENDS	±1/32 [0.8]
.00	.010 [0.25]		
.000	.005 [0.13]	WELDED FEATURES	1/16 [1.6]
FRACTIONAL	1/32		
ANGULAR	1/2	ANGULAR	1/2

ALL DIMENSIONS IN INCHES [mm]
✓ 125 (UNLESS OTHERWISE NOTED)
DEBUR AND REMOVE ALL SHARP EDGES

THIS DOCUMENT IS THE PROPERTY OF, AND CONTAINS PROPRIETARY INFORMATION OWNED BY HARTNESS INTERNATIONAL, INC. AND/OR ITS SUBCONTRACTORS AND SUPPLIERS. IT IS TRANSMITTED TO YOU IN CONFIDENCE AND TRUST, AND IS TO BE RETURNED UPON REQUEST. NO PERMISSION IS GRANTED TO PUBLISH, USE, REPRODUCE, TRANSMIT OR DISCLOSE TO ANOTHER ANY INFORMATION CONTAINED IN THIS DOCUMENT, IN WHOLE OR IN PART, WITHOUT THE PRIOR WRITTEN PERMISSION OF AN AUTHORIZED EMPLOYEE OF HARTNESS INTERNATIONAL.

HARTNESS INTERNATIONAL, INC.
P.O. BOX 26509
1200 GARLINGTON ROAD
GREENVILLE, SC 29616
USA
PHONE: (864) 297-1200

NETWORK NODE:
SCALE:
DATE: 5/27/2009
W/O #:
ECO NO#:
DWN. BY: DCD
CHK. BY:

CAD FILENAME:
CAD PLOT SIZE: D
DRAWING STATUS: CURRENT
REPLACED BY:
TITLE: AC HX30-0500, PANEL LAYOUT
SURFACE ROUGHNESS ✓
SURFACE TREATMENT

MATERIAL	ORIENTATION	DRAWING NO.
MATERIAL	ORIENTATION	DRAWING NO.
MATERIAL	ORIENTATION	DRAWING NO.
MATERIAL	ORIENTATION	DRAWING NO. 64-515-024

ITEM	PART NO. LH	PART NO. RH	SHT	QTY	PART DESCRIPTION AND/OR MATERIAL

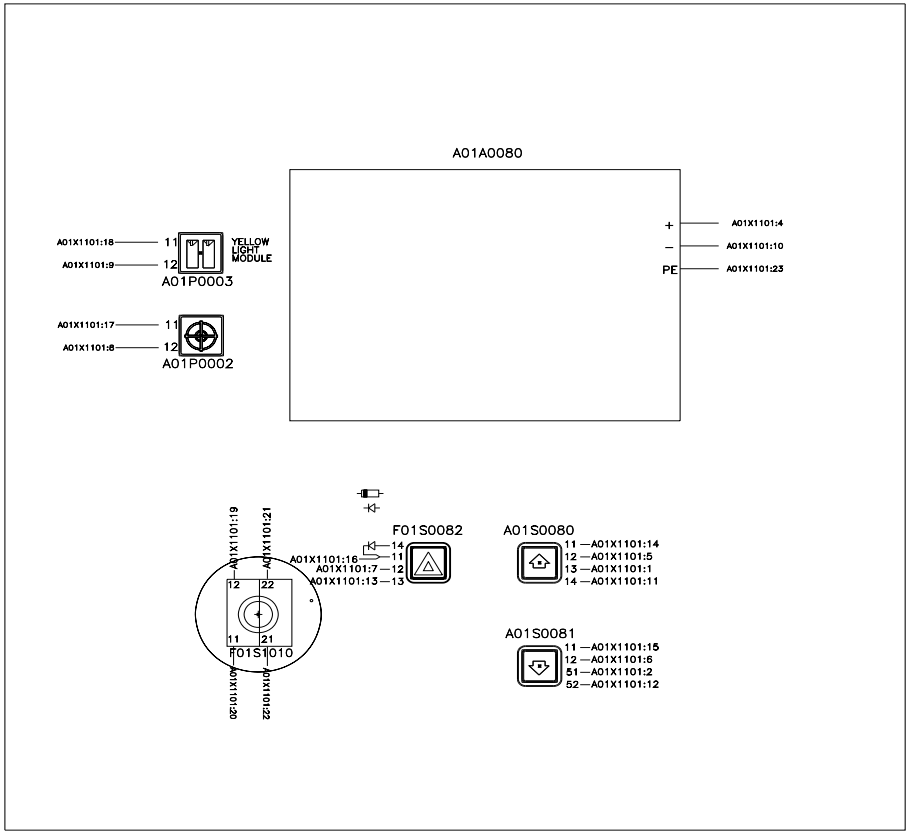



REVISION:	LOCATION:	SHEET NO#:
V3	CA	4

REV	REVISION DESCRIPTION	ECO NO.	DATE	BY	CHK
F					
E					
D					
C					
B					
A					

UNSPECIFIED TOLERANCES

MACHINING		FABRICATION	
.0	.055 [1.40]	SHEET METAL BENDS	±1/32 [0.8]
.00	.010 [0.25]		
.000	.005 [0.13]	WELDED FEATURES	1/16 [1.6]
FRACTIONAL	1/32		
ANGULAR	1/2	ANGULAR	1/2

ALL DIMENSIONS IN INCHES [mm]
√ 125 (UNLESS OTHERWISE NOTED)
DEBUR AND REMOVE ALL SHARP EDGES

THIS DOCUMENT IS THE PROPERTY OF, AND CONTAINS PROPRIETARY INFORMATION OWNED BY HARTNESS INTERNATIONAL, INC. AND/OR ITS SUBCONTRACTORS AND SUPPLIERS. IT IS TRANSMITTED TO YOU IN CONFIDENCE AND TRUST, AND IS TO BE RETURNED UPON REQUEST. NO PERMISSION IS GRANTED TO PUBLISH, USE, REPRODUCE, TRANSMIT OR DISCLOSE TO ANOTHER ANY INFORMATION CONTAINED IN THIS DOCUMENT, IN WHOLE OR IN PART, WITHOUT THE PRIOR WRITTEN PERMISSION OF AN AUTHORIZED EMPLOYEE OF HARTNESS INTERNATIONAL.

HARTNESS INTERNATIONAL, INC.
P.O. BOX 26509
1200 GARLINGTON ROAD
GREENVILLE, SC 29616
USA
PHONE: (864) 297-1200

NETWORK NODE:
SCALE: 1/2"=1"
DATE: 5/27/2009
W/O #:
ECO NO#:
DWN. BY: DCD
CHK. BY:

CAD FILENAME:
CAD PLOT SIZE: C
DRAWING STATUS: CURRENT
REPLACED BY:
TITLE: ACHX30-0500, OPERATOR PANEL
SURFACE ROUGHNESS: √
SURFACE TREATMENT:

MATERIAL	ORIENTATION	DRAWING NO.
MATERIAL	ORIENTATION	DRAWING NO.
MATERIAL	ORIENTATION	DRAWING NO.
MATERIAL	ORIENTATION	DRAWING NO. 64-515-024

ITEM	PART NO. LH	PART NO. RH	SHT	QTY	PART DESCRIPTION AND/OR MATERIAL

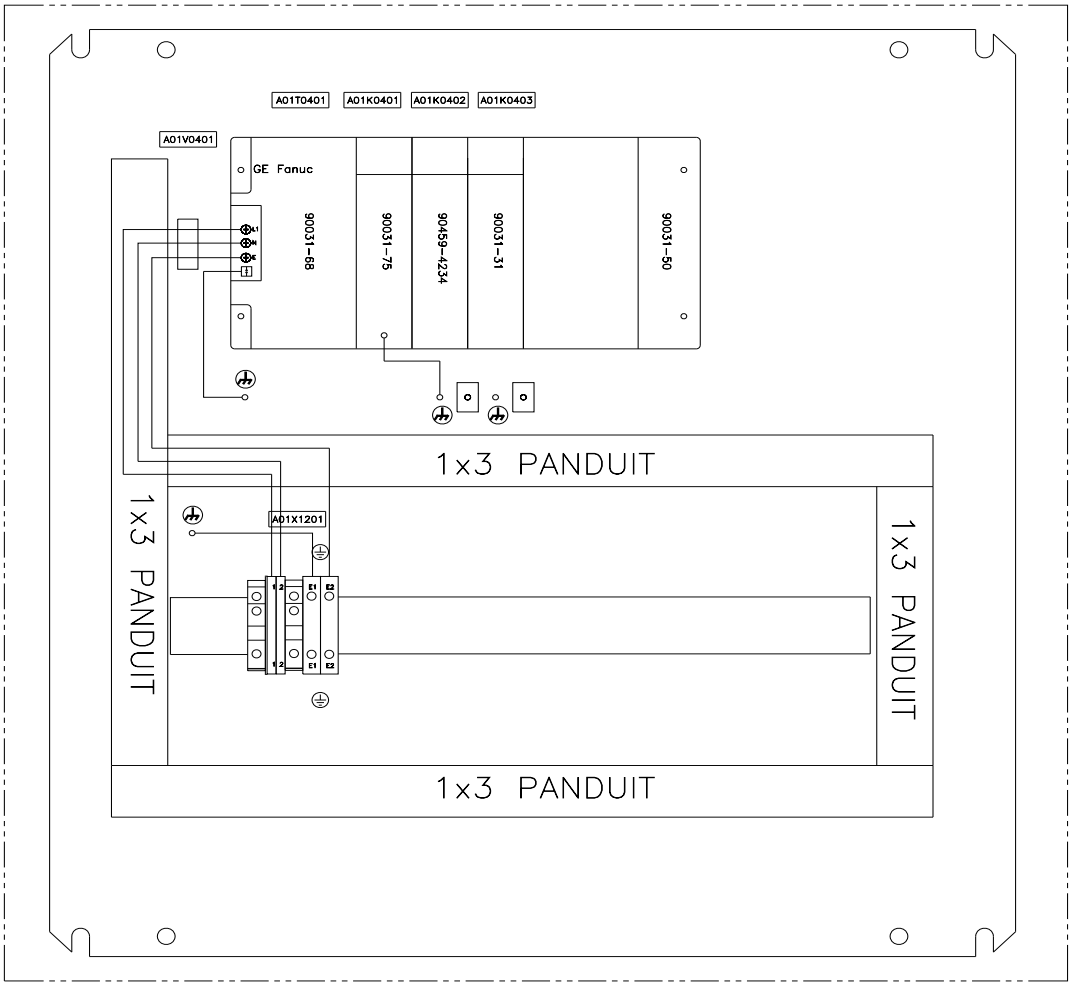



REVISION:	LOCATION:	SHEET NO#:
V1	CA	5

REV	REVISION DESCRIPTION	ECO NO.	DATE	BY	CHK
F					
E					
D					
C					
B					
A					

UNSPECIFIED TOLERANCES

MACHINING			FABRICATION	
.0	.055	[1.40]	SHEET METAL BENDS	±1/32 [0.8]
.00	.010	[0.25]		
.000	.005	[0.13]	WELDED FEATURES	1/16 [1.6]
FRACTIONAL	1/32			
ANGULAR	1/2		ANGULAR	1/2

ALL DIMENSIONS IN INCHES [mm]
√ 125 (UNLESS OTHERWISE NOTED)
DEBUR AND REMOVE ALL SHARP EDGES

THIS DOCUMENT IS THE PROPERTY OF, AND CONTAINS PROPRIETARY INFORMATION OWNED BY HARTNESS INTERNATIONAL, INC. AND/OR ITS SUBCONTRACTORS AND SUPPLIERS. IT IS TRANSMITTED TO YOU IN CONFIDENCE AND TRUST, AND IS TO BE RETURNED UPON REQUEST. NO PERMISSION IS GRANTED TO PUBLISH, USE, REPRODUCE, TRANSMIT OR DISCLOSE TO ANOTHER ANY INFORMATION CONTAINED IN THIS DOCUMENT, IN WHOLE OR IN PART, WITHOUT THE PRIOR WRITTEN PERMISSION OF AN AUTHORIZED EMPLOYEE OF HARTNESS INTERNATIONAL.

HARTNESS INTERNATIONAL, INC.
P.O. BOX 26509
1200 GARLINGTON ROAD
GREENVILLE, SC 29616
USA
PHONE: (864) 297-1200

NETWORK NODE:
SCALE: 1/2"=1"
DATE: 5/27/2009
W/O #:
ECO NO#:
DWN. BY: DCD
CHK. BY:

CAD FILENAME:
CAD PLOT SIZE: C
DRAWING STATUS: CURRENT
REPLACED BY:
TITLE: ACHX30-0500, GENIUS OPTION
SURFACE ROUGHNESS √
SURFACE TREATMENT

MATERIAL	ORIENTATION	DRAWING NO.
MATERIAL	ORIENTATION	DRAWING NO.
MATERIAL	ORIENTATION	DRAWING NO.
MATERIAL	ORIENTATION	DRAWING NO. 64-515-024

This page intentionally left blank

9.2 CSA Version

This page intentionally left blank

ITEM	PART NO. LH	PART NO. RH	SHT	QTY	PART DESCRIPTION AND/OR MATERIAL

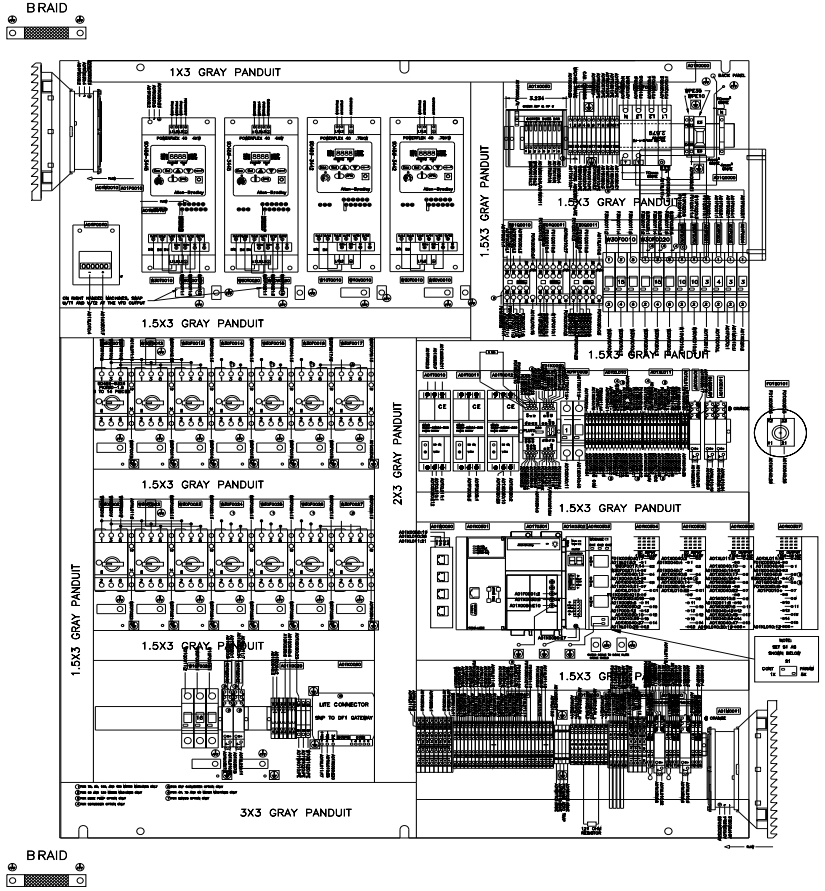

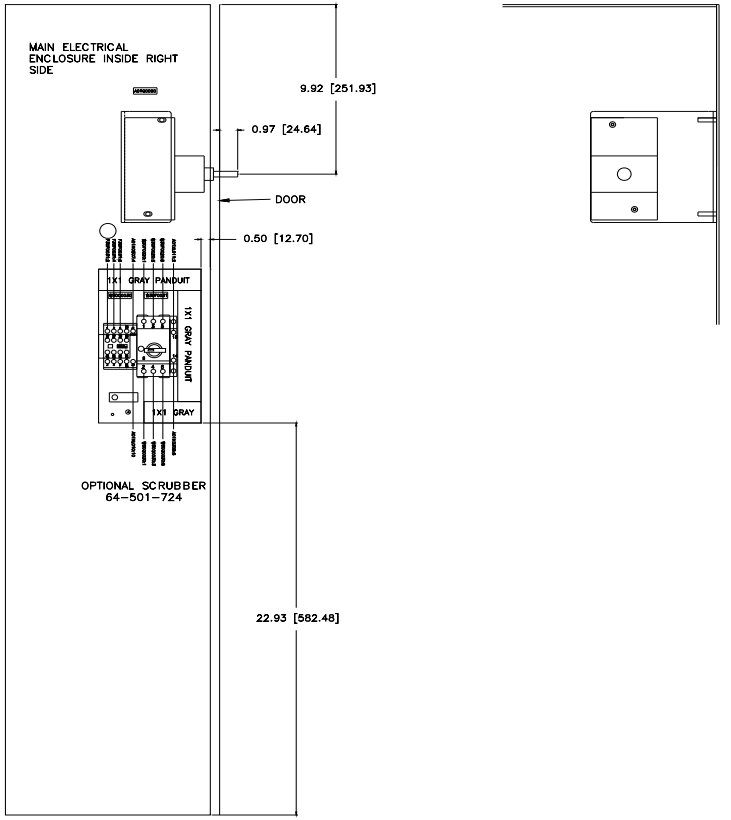

REV	REVISION DESCRIPTION	ECO NO.	DATE	BY	CHK
F					
E					
D					
C					
B	CHANGE SURGE SUPPRESSOR		8/27/2009	DCD	
A	ADD 3" WIREWAY		3/26/2009	DCD	

UNSPECIFIED TOLERANCES

MACHINING			FABRICATION	
.0	.055	[1.40]	SHEET METAL BENDS	±1/32 [0.8]
.00	.010	[0.25]		
.000	.005	[0.13]	WELDED FEATURES	1/16 [1.6]
FRACTIONAL	1/32			
ANGULAR	1/2		ANGULAR	1/2

ALL DIMENSIONS IN INCHES [mm]
√ 125 (UNLESS OTHERWISE NOTED)
DEBUR AND REMOVE ALL SHARP EDGES

THIS DOCUMENT IS THE PROPERTY OF, AND CONTAINS PROPRIETARY INFORMATION OWNED BY HARTNESS INTERNATIONAL, INC. AND/OR ITS SUBCONTRACTORS AND SUPPLIERS. IT IS TRANSMITTED TO YOU IN CONFIDENCE AND TRUST, AND IS TO BE RETURNED UPON REQUEST. NO PERMISSION IS GRANTED TO PUBLISH, USE, REPRODUCE, TRANSMIT OR DISCLOSE TO ANOTHER ANY INFORMATION CONTAINED IN THIS DOCUMENT, IN WHOLE OR IN PART, WITHOUT THE PRIOR WRITTEN PERMISSION OF AN AUTHORIZED EMPLOYEE OF HARTNESS INTERNATIONAL.

HARTNESS INTERNATIONAL, INC.
P.O. BOX 26509
1200 GARLINGTON ROAD
GREENVILLE, SC 29616
USA
PHONE: (864) 297-1200

NETWORK NODE:
SCALE:
DATE: 5/27/2009
W/O #:
ECO NO#:
DWN. BY: DCD
CHK. BY:

CAD FILENAME: | CAD PLOT SIZE: D
DRAWING STATUS: CURRENT | REPLACED BY:
TITLE: ACHX30-0500, CSA PANEL LAYOUT
SURFACE ROUGHNESS √ | SURFACE TREATMENT

REVISION: B | LOCATION: CA | SHEET NO#: 7

MATERIAL	ORIENTATION	DRAWING NO.
CSA		64-515-024

ITEM	PART NO. LH	PART NO. RH	SHT	QTY	PART DESCRIPTION AND/OR MATERIAL

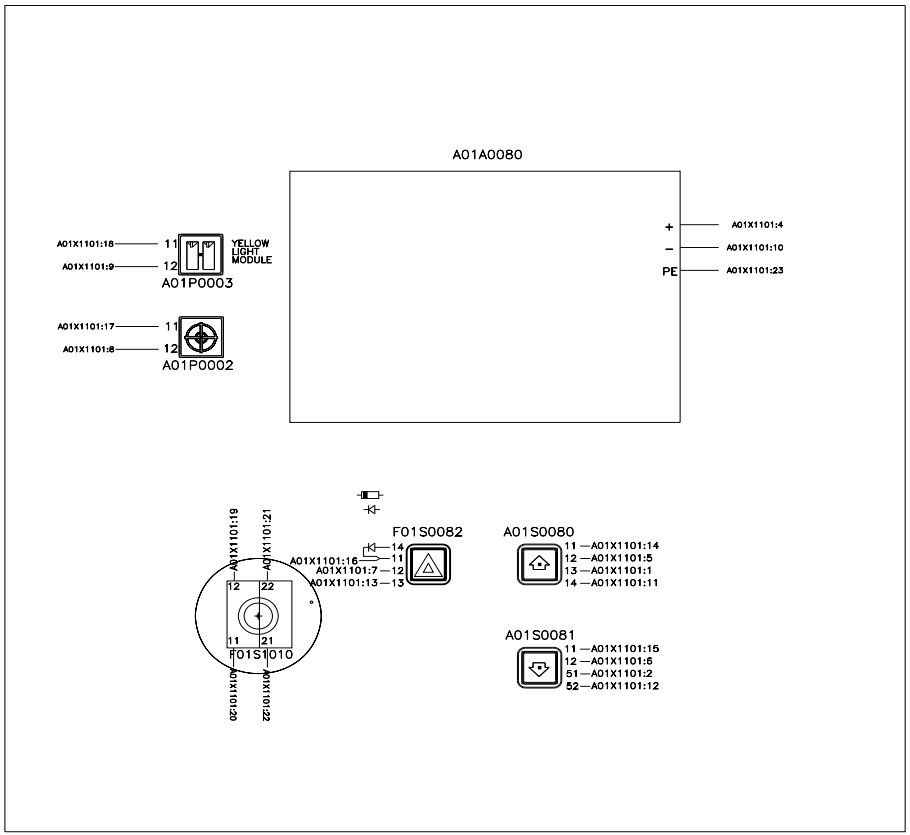



REV	REVISION DESCRIPTION	ECO NO.	DATE	BY	CHK
F					
E					
D					
C					
B					
A					

UNSPECIFIED TOLERANCES

MACHINING		FABRICATION	
.0	.055 [1.40]	SHEET METAL BENDS	±1/32 [0.8]
.00	.010 [0.25]	WELDED FEATURES	1/16 [1.6]
.000	.005 [0.13]		
FRACTIONAL	1/32		
ANGULAR	1/2	ANGULAR	1/2

ALL DIMENSIONS IN INCHES [mm]
√ 125 (UNLESS OTHERWISE NOTED)
DEBUR AND REMOVE ALL SHARP EDGES

THIS DOCUMENT IS THE PROPERTY OF, AND CONTAINS PROPRIETARY INFORMATION OWNED BY HARTNESS INTERNATIONAL, INC. AND/OR ITS SUBCONTRACTORS AND SUPPLIERS. IT IS TRANSMITTED TO YOU IN CONFIDENCE AND TRUST, AND IS TO BE RETURNED UPON REQUEST. NO PERMISSION IS GRANTED TO PUBLISH, USE, REPRODUCE, TRANSMIT OR DISCLOSE TO ANOTHER ANY INFORMATION CONTAINED IN THIS DOCUMENT, IN WHOLE OR IN PART, WITHOUT THE PRIOR WRITTEN PERMISSION OF AN AUTHORIZED EMPLOYEE OF HARTNESS INTERNATIONAL.

HARTNESS INTERNATIONAL, INC.
P.O. BOX 26509
1200 GARLINGTON ROAD
GREENVILLE, SC 29616
USA
PHONE: (864) 297-1200

NETWORK NODE:
SCALE: 1/2"=1"
DATE: 5/27/2009
W/O #:
ECO NO#:
DWN. BY: DCD
CHK. BY:

CAD FILENAME:
CAD PLOT SIZE: C
DRAWING STATUS: CURRENT
REPLACED BY:
TITLE: ACHX30-0500, OPERATOR PANEL
SURFACE ROUGHNESS: √
SURFACE TREATMENT:

REVISION: V3
LOCATION: CA
SHEET NO#: 4

MATERIAL	ORIENTATION	DRAWING NO.
MATERIAL	ORIENTATION	DRAWING NO.
MATERIAL	ORIENTATION	DRAWING NO.
MATERIAL	ORIENTATION	DRAWING NO. 64-515-024

ITEM	PART NO. LH	PART NO. RH	SHT	QTY	PART DESCRIPTION AND/OR MATERIAL

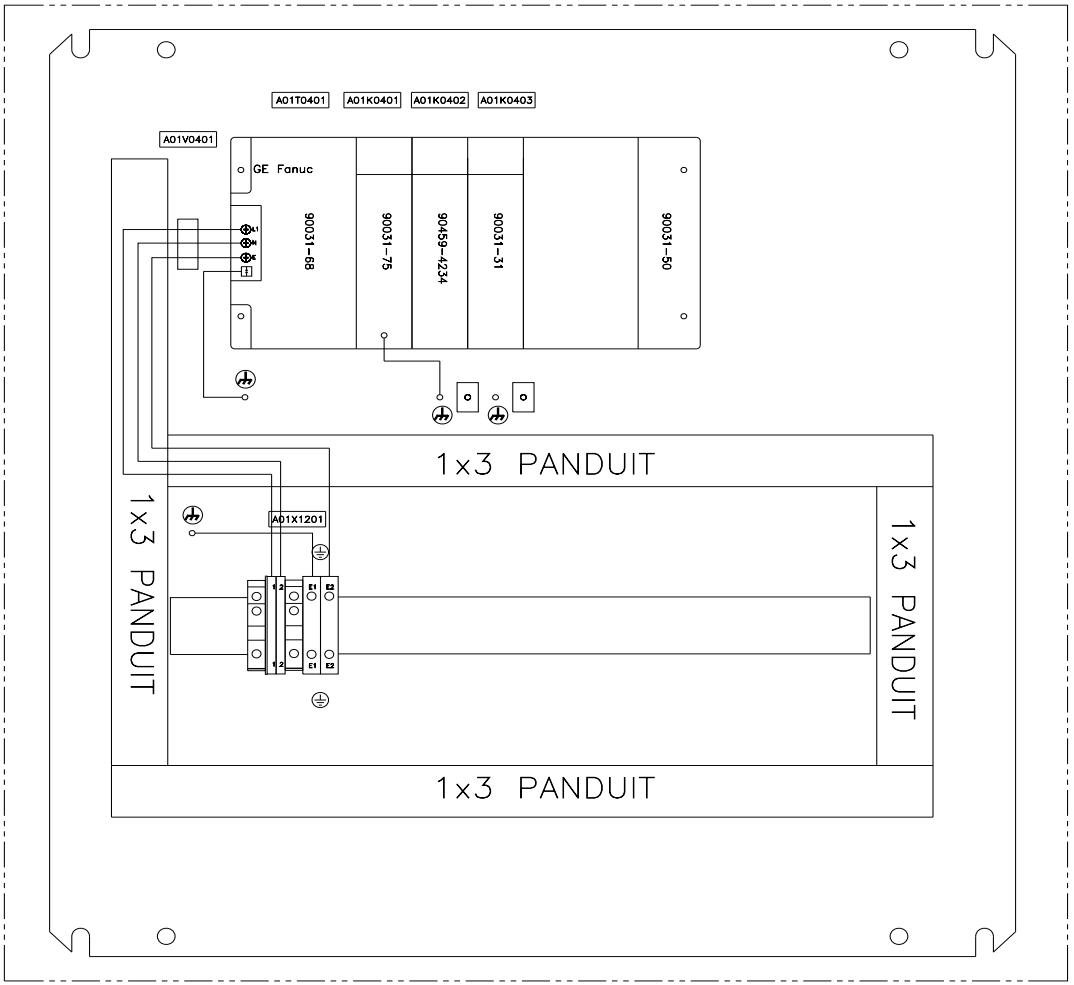



REVISION:	LOCATION:	SHEET NO#:
V1	CA	5

REV	REVISION DESCRIPTION	ECO NO.	DATE	BY	CHK
F					
E					
D					
C					
B					
A					

UNSPECIFIED TOLERANCES

MACHINING			FABRICATION	
.0	.055	[1.40]	SHEET METAL BENDS	±1/32 [0.8]
.00	.010	[0.25]		
.000	.005	[0.13]	WELDED FEATURES	1/16 [1.6]
FRACTIONAL	1/32			
ANGULAR	1/2		ANGULAR	1/2

ALL DIMENSIONS IN INCHES [mm]
√ 125 (UNLESS OTHERWISE NOTED)
DEBUR AND REMOVE ALL SHARP EDGES

THIS DOCUMENT IS THE PROPERTY OF, AND CONTAINS PROPRIETARY INFORMATION OWNED BY HARTNESS INTERNATIONAL, INC. AND/OR ITS SUBCONTRACTORS AND SUPPLIERS. IT IS TRANSMITTED TO YOU IN CONFIDENCE AND TRUST, AND IS TO BE RETURNED UPON REQUEST. NO PERMISSION IS GRANTED TO PUBLISH, USE, REPRODUCE, TRANSMIT OR DISCLOSE TO ANOTHER ANY INFORMATION CONTAINED IN THIS DOCUMENT, IN WHOLE OR IN PART, WITHOUT THE PRIOR WRITTEN PERMISSION OF AN AUTHORIZED EMPLOYEE OF HARTNESS INTERNATIONAL.

HARTNESS INTERNATIONAL, INC.
P.O. BOX 26509
1200 GARLINGTON ROAD
GREENVILLE, SC 29616
USA
PHONE: (864) 297-1200

NETWORK NODE:
SCALE: 1/2"=1"
DATE: 5/27/2009
W/O #:
ECO NO#:
DWN. BY: DCD
CHK. BY:

CAD FILENAME:
CAD PLOT SIZE: C
DRAWING STATUS: CURRENT
REPLACED BY:
TITLE: ACHX30-0500, GENIUS OPTION
SURFACE ROUGHNESS √
SURFACE TREATMENT

MATERIAL	ORIENTATION	DRAWING NO.
MATERIAL	ORIENTATION	DRAWING NO.
MATERIAL	ORIENTATION	DRAWING NO.
MATERIAL	ORIENTATION	DRAWING NO. 64-515-024

This page intentionally left blank

10 Other Information

Description

This chapter contains drawing remarks. If there is a machine deviation, the documentation is also found in this chapter.

10.1 Drawing Remarks . . . . . 10 - 5

10.1.1 IEC Version . . . . . 10 - 5

10.1.2 CSA Version . . . . . 10 - 7

10.2 Machine Deviation . . . . . 10 - 9

This page intentionally left blank

10.1 Drawing Remarks

10.1.1 IEC Version

Drawing No.	Sheet	Note	Remark
64-501-024E	1	1	To customer 25A disconnect
	1	1	Mains 400/230V
	1	2	Mains Connection Drawing 64-511-024E1
	1	3	Customer must provide a good "earth" ground
	1	4	This symbol represents a connection to the ground buss with a ground wire
	1	5	This symbol represents a "Low Impedance Bond" to the machine/chassis ground
	1	6	For type of wire, wiring instructions, etc. see specification for sub-suppliers TPUS 3502.22
	1	7	Where nothing else is stated or line summary is valid: 0.75 mm² BU. Star or blue marking must be used for showing continuous wire.
	1	8	EMC braid and protective earth
	3	1	For 75, 90, 100, and 120 meter machines only
	4	1	For 75, 90, 100, and 120 meter machines only
	4	2	For 90 and 120 meter machines only
	6	1	For 75, 90, 100, and 120 meter machines only
	7	1	For 75, 90, 100, and 120 meter machines only
	7	2	For 90 and 120 meter machines only
	9	1	Optional decentral external infeed
	9	2	Optional decentral external outfeed
	10	1	Optional chain scrubber
	10	2	Optional lubrication pump
	10	3	Optional Genius Gateway
	11	1	To assembly plate. Use braided shield cable 95045
	13	1	Optional Genius Gateway
	13	2	To assembly plate. Use braided shield cable 95045
	14	1	Do not install this jumper on 100 and 120 meter machines
	15	1	For 75, 90, 100, and 120 meter machines only
	16	1	For 75, 90, 100, and 120 meter machines only
	16	2	For 100 and 120 meter machines only
	17	2	For 100 and 120 meter machines only
	18	1	Optional SNP to DF1 gateway
	18	2	Optional lubrication system
	19	1	Bridge if no machine is connected
	20	1	Use with optional decentral VFD

Drawing No.	Sheet	Note	Remark
64-501-024E	20	1	To extend DeviceNet buss: Remove 121 ohm resistor from A01X0060:20 and 26. Attach devicenet cable to A01X0060:17 (red), 20 (white), 23 (shield), 26 (blue), & 29 (black). Terminate buss with 121 ohm resistor (white - blue) or other suitable terminator at new end of buss.
	20	2	Use with optional Genius gateway
	20	2	To add DeviceNet drop (max length 7.5m): Attach devicenet cable to A01X0060:18 (red), 21 (wht), 24 (shld), 27 (blue), & 30 (blk). Do not terminate the new drop.
	21	1	Connect to backpanel, use 95045 braid shield cable
	22	1	For 75, 90, 100, and 120 meter machines only
	22	2	For 90 and 120 meter machines only
	22	3	Optional lubrication system
	24	1	Optional chain scrubber
	28	1	Optional lubrication system
	28	2	Optional chain scrubber
	30	1	Optional chain scrubber
	32	1	Optional sensors
	33	1	Optional chain scrubber
	35	1	Optional Equipment
	36	1	Optional Equipment
	36	2	For 100 and 120 meter machines only
	37	1	Optional decentral external VFD
	38	1	Optional lubrication system. Install C-673 diode in solenoid cap.
	39	2	Optional Genius gateway
	39	3	Optional chain scrubber
	39	4	Install C-673 diode in solenoid cap; maintain proper orientation
	40	1	As viewed from bottom of enclosure
	42	1	Optional Armor Start external decentral VFD
	42	2	Optional chain scrubber
	42	3	Optional Genius gateway
	42	4	The DeviceNet trunk must have a 121 ohm resistor termination at each of two ends. Use exactly two terminating resistors.
	42		Each unterminated DeviceNet drop may be a maximum of 7.5 meters in length.

10.1.2 CSA Version

Drawing No.	Sheet	Note	Remark
64-501-024E	1	1	To customer 25A disconnect
	1	1	Mains 400/230V
	1	2	Mains Connection Drawing 64-511-024E1
	1	3	Customer must provide a good "earth" ground
	1	4	This symbol represents a connection to the ground buss with a ground wire
	1	5	This symbol represents a "Low Impedance Bond" to the machine/chassis ground
	1	6	For type of wire, wiring instructions, etc. see specification for sub-suppliers TPUS 3502.22
	1	7	Where nothing else is stated or line summary is valid: 0.75 mm² BU. Star or blue marking must be used for showing continuous wire.
	1	8	EMC braid and protective earth
	3	1	For 75, 90, 100, and 120 meter machines only
	4	1	For 75, 90, 100, and 120 meter machines only
	4	2	For 90 and 120 meter machines only
	6	1	For 75, 90, 100, and 120 meter machines only
	7	1	For 75, 90, 100, and 120 meter machines only
	7	2	For 90 and 120 meter machines only
	9	1	Optional decentral external infeed
	9	2	Optional decentral external outfeed
	10	1	Optional chain scrubber
	10	2	Optional lubrication pump
	10	3	Optional Genius Gateway
	11	1	To assembly plate. Use braided shield cable 95045
	13	1	Optional Genius Gateway
	13	2	To assembly plate. Use braided shield cable 95045
	14	1	Do not install this jumper on 100 and 120 meter machines
	15	1	For 75, 90, 100, and 120 meter machines only
	16	1	For 75, 90, 100, and 120 meter machines only
	16	2	For 100 and 120 meter machines only
	17	2	For 100 and 120 meter machines only
	18	1	Optional SNP to DF1 gateway
	18	2	Optional lubrication system
	19	1	Bridge if no machine is connected
	20	1	Use with optional decentral VFD

Drawing No.	Sheet	Note	Remark
64-501-024E	20	1	To extend DeviceNet buss: Remove 121 ohm resistor from A01X0060:20 and 26. Attach devicenet cable to A01X0060:17 (red), 20 (white), 23 (shield), 26 (blue), & 29 (black). Terminate buss with 121 ohm resistor (white - blue) or other suitable terminator at new end of buss.
	20	2	Use with optional Genius gateway
	20	2	To add DeviceNet drop (max length 7.5m): Attach devicenet cable to A01X0060:18 (red), 21 (wht), 24 (shld), 27 (blue), & 30 (blk). Do not terminate the new drop.
	21	1	Connect to backpanel, use 95045 braid shield cable
	22	1	For 75, 90, 100, and 120 meter machines only
	22	2	For 90 and 120 meter machines only
	22	3	Optional lubrication system
	24	1	Optional chain scrubber
	28	1	Optional lubrication system
	28	2	Optional chain scrubber
	30	1	Optional chain scrubber
	32	1	Optional sensors
	33	1	Optional chain scrubber
	35	1	Optional Equipment
	36	1	Optional Equipment
	36	2	For 100 and 120 meter machines only
	37	1	Optional decentral external VFD
	38	1	Optional lubrication system. Install C-673 diode in solenoid cap.
	39	2	Optional Genius gateway
	39	3	Optional chain scrubber
	39	4	Install C-673 diode in solenoid cap; maintain proper orientation
	40	1	As viewed from bottom of enclosure
	42	1	Optional Armor Start external decentral VFD
	42	2	Optional chain scrubber
	42	3	Optional Genius gateway
	42	4	The DeviceNet trunk must have a 121 ohm resistor termination at each of two ends. Use exactly two terminating resistors.
	42		Each unterminated DeviceNet drop may be a maximum of 7.5 meters in length.

10.2 Machine Deviation

This page intentionally left blank

Tetra Pak

***Note!** This page is generated **automatically**.*
*using the **variable definitions** made in the **front page** file!*

Accumulator Helix 30
663651-0500
Issue 2010-10 Doc. No. EM-3030592-0102

Accumulator Helix 30 1(2)
663651-0500
Issue 2010-10 Doc. No. EM-3030592-0102

Accumulator Helix 30
663651-0500
Issue 2010-10 Doc. No. EM-3030592-0102

Accumulator Helix 30 1(2)
663651-0500
Issue 2010-10 Doc. No. EM-3030592-0102

Accumulator Helix 30
663651-0500
Issue 2010-10 Doc. No. EM-3030592-0102

Accumulator Helix 30 1(2)
663651-0500
Issue 2010-10 Doc. No. EM-3030592-0102

Accumulator Helix 30
663651-0500
Issue 2010-10 Doc. No. EM-3030592-0102

Accumulator Helix 30 1(2)
663651-0500
Issue 2010-10 Doc. No. EM-3030592-0102

Accumulator Helix 30
663651-0500
Issue 2010-10 Doc. No. EM-3030592-0102

Accumulator Helix 30 2(2)
663651-0500
Issue 2010-10 Doc. No. EM-3030592-0102

Accumulator Helix 30
663651-0500
Issue 2010-10 Doc. No. EM-3030592-0102

Accumulator Helix 30 2(2)
663651-0500
Issue 2010-10 Doc. No. EM-3030592-0102

Accumulator Helix 30
663651-0500
Issue 2010-10 Doc. No. EM-3030592-0102

Accumulator Helix 30 2(2)
663651-0500
Issue 2010-10 Doc. No. EM-3030592-0102

Accumulator Helix 30
663651-0500
Issue 2010-10 Doc. No. EM-3030592-0102

Accumulator Helix 30 2(2)
663651-0500
Issue 2010-10 Doc. No. EM-3030592-0102

40 mm Full width ***Note!*** *This page is generated* ***automatically****.*
using the ***variable definitions*** *made in the* ***front page*** *file!*

Accumulator Helix 30
663651-0500

Issue 2010-10 Doc. No. EM-3030592-0102

Accumulator Helix 30 1(2)
663651-0500

Issue 2010-10 Doc. No. EM-3030592-0102

Accumulator Helix 30
663651-0500

Issue 2010-10 Doc. No. EM-3030592-0102

Accumulator Helix 30 1(2)
663651-0500

Issue 2010-10 Doc. No. EM-3030592-0102

Accumulator Helix 30
663651-0500

Issue 2010-10 Doc. No. EM-3030592-0102

Accumulator Helix 30 1(2)
663651-0500

Issue 2010-10 Doc. No. EM-3030592-0102

Accumulator Helix 30
663651-0500

Issue 2010-10 Doc. No. EM-3030592-0102

Accumulator Helix 30 2(2)
663651-0500

Issue 2010-10 Doc. No. EM-3030592-0102

Accumulator Helix 30
663651-0500

Issue 2010-10 Doc. No. EM-3030592-0102

Accumulator Helix 30 2(2)
663651-0500

Issue 2010-10 Doc. No. EM-3030592-0102

Accumulator Helix 30
663651-0500

Issue 2010-10 Doc. No. EM-3030592-0102

Accumulator Helix 30 2(2)
663651-0500

Issue 2010-10 Doc. No. EM-3030592-0102