IM

Installation Manual

Accumulator Helix 30

663651-0500

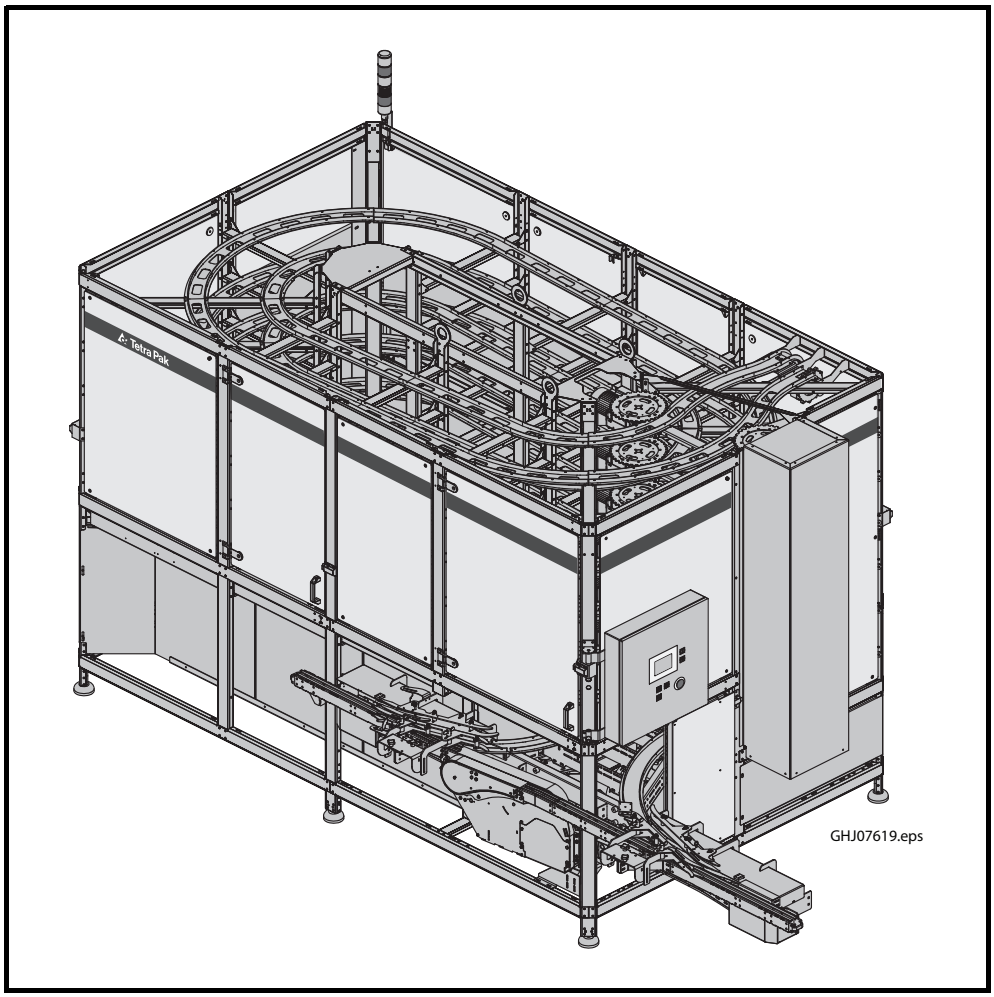

WARNING

Read and follow all safety precaution instructions throughout this manual and on safety signs attached to this equipment.
Failure to follow all safety precaution instructions could result in death or serious injury.

Tetra Pak

Doc. No. IM-3030589-0101

Copyright © 2009 Tetra Pak Group

All rights reserved. No part of this document may be reproduced or copied in any form or by any means without written permission from Hartness International.

Tetra Pak and all Tetra Pak products are trademarks belonging to the Tetra Pak Group.

The content of this manual is in accordance with the design and construction of the machine or equipment at the time of publishing. Tetra Pak reserves the right to introduce design modifications without prior notice.

The English language version of this document contains the original instructions. All other language versions are translations of the original instructions.

This document was produced by:

Hartness International
1200 Garlington Road
Greenville, SC 29615
USA

Additional copies can be ordered from Tetra Pak. When ordering additional copies, always provide the document number.

Doc. No. IM-3030589-0101

Issue 2009-08

This manual is valid for:

Series No./ Machine No. Sign.

IM

Installation Manual

Accumulator Helix 30
663651-0500

The Accumulator Helix 30 consists of the following machine variants:

- ACHX30 / 47M / Left Infeed (LINF)
- ACHX30 / 47M / Right Infeed (RINF)
- ACHX30 / 75M / Left Infeed (LINF)
- ACHX30 / 75M / Right Infeed (RINF)
- ACHX30 / 90M / Left Infeed (LINF)
- ACHX30 / 90M / Right Infeed (RINF)
- ACHX30 / 100M / Left Infeed (LINF)
- ACHX30 / 100M / Right Infeed (RINF)
- ACHX30 / 120M / Left Infeed (LINF)
- ACHX30 / 120M / Right Infeed (RINF)

The base machine variant in the manual is the ACHX30 90M (IEC). This variant is shown when the subject is not affected by the variation in machine. When variations affect the subject, illustrations of those specific variants are also shown in the manual.

Machine or equipment configurations for which this manual is valid are described on the next page.

i Introduction

ii Safety Precautions

1 Technical Specification

2 Preparatory Requirements

3 Mechanical Completion

4 Commissioning

5 Performance Validation

6 Disassembly and Removal

Doc. No. IM-3030589-0101

Issue 2009-08

Tetra Pak

Hartness International

Valid for:

Name	Drawing Specification and Development Step	Additional Information
Accumulator Helix ACHX30-0500	663651-0500	Machine Variants: - ACHX30 / 47M / Left Infeed (LINF) - ACHX30 / 47M / Right Infeed (RINF) - ACHX30 / 75M / Left Infeed (LINF) - ACHX30 / 75M / Right Infeed (RINF) - ACHX30 / 90M / Left Infeed (LINF) - ACHX30 / 90M / Right Infeed (RINF) - ACHX30 / 100M / Left Infeed (LINF) - ACHX30 / 100M / Right Infeed (RINF) - ACHX30 / 120M / Left Infeed (LINF) - ACHX30 / 120M / Right Infeed (RINF)
		Optional Equipment: - Caster Wheel Kit (2727386-0100) - SNP Communications (90459-4235) - Genius Communications (3008990-0100) - Chain Cleaner (3008907-0100)

i Introduction

Description

This chapter contains basic information about this manual and related Tetra Pak equipment.

Abbreviations and Terminology . . . . . i - 5
Manual Information . . . . . i - 6
Delivered Manuals . . . . . i - 6
Page Layout . . . . . i - 7
Page Numbering. . . . . i - 8
Typographical Conventions . . . . . i - 8
Symbols . . . . . i - 8
Spare parts . . . . . i - 9
Machine Introduction . . . . . i - 10
Intended Use of the Machine . . . . . i - 10
Manufacturer . . . . . i - 10
Support and Feedback . . . . . i - 10
Declaration of Conformity . . . . . i - 10
Identification . . . . . i - 12
CE Classification . . . . . i - 12
Machine Plate . . . . . i - 12
Machine Variants . . . . . i - 13
Orientation . . . . . i - 15
Hygiene. . . . . i - 17
How to Use This IM . . . . . i - 18
Purpose of the IM . . . . . i - 18
Installation Workflow . . . . . i - 18

This page intentionally left blank

Abbreviations and Terminology

Abbreviation/ Terminology	Meaning	Translation
CE	Communautés Européennes / European Communities	
CSA	For Canada / US Machines Only	
DE	Distribution Equipment	
D/E	Drive and End Unit	
EEA	European Economic Area	
EM	Electrical Manual	
I/O	Input / Output (module)	
IM	Installation Manual	
LC	Line Controller	
LED	Light Emitting Diode	
LINF	Left Infeed	
MCR	Master Control Relay	
MM	Maintenance Manual	
OM	Operation Manual	
PLC	Programmable Logic Controller	
RINF	Right Infeed	
SDS	Safety Data Sheet	
SPC	Spare Parts Catalogue	
TPMS	Tetra Pak Maintenance System	
TPOP	Tetra Pak Operator Panel	

Manual Information

Tetra Pak recommends reading all delivered manuals carefully. Make sure that the delivered manuals are available to personnel who operate or maintain the equipment.

It is important to keep this manual for the lifetime of the equipment and to pass the manual on to any subsequent holder or user.

Tetra Pak will not be held responsible for any damage to the equipment caused by not following the instructions given in this manual.

Delivered Manuals

Manuals delivered with this equipment:

- EM
  The Electrical Manual provides technicians with information about the equipment's electrical system.
- IM
  The Installation Manual provides technicians with information required to safely install the equipment.
- MM
  The Maintenance Manual provides technicians with information on maintaining the equipment.
- OM
  The Operation Manual provides the operator with information on handling and operating the equipment before, during, and after production.
- SPC
  The Spare Parts Catalogue provides the information necessary to order spare parts from Tetra Pak

Page Layout

Every main page in a manual contains a header and a footer. The page header contains the chapter name (1) and the section name (2). The page footer contains the page number (3), and the document number (4). See also the Page Numbering section.

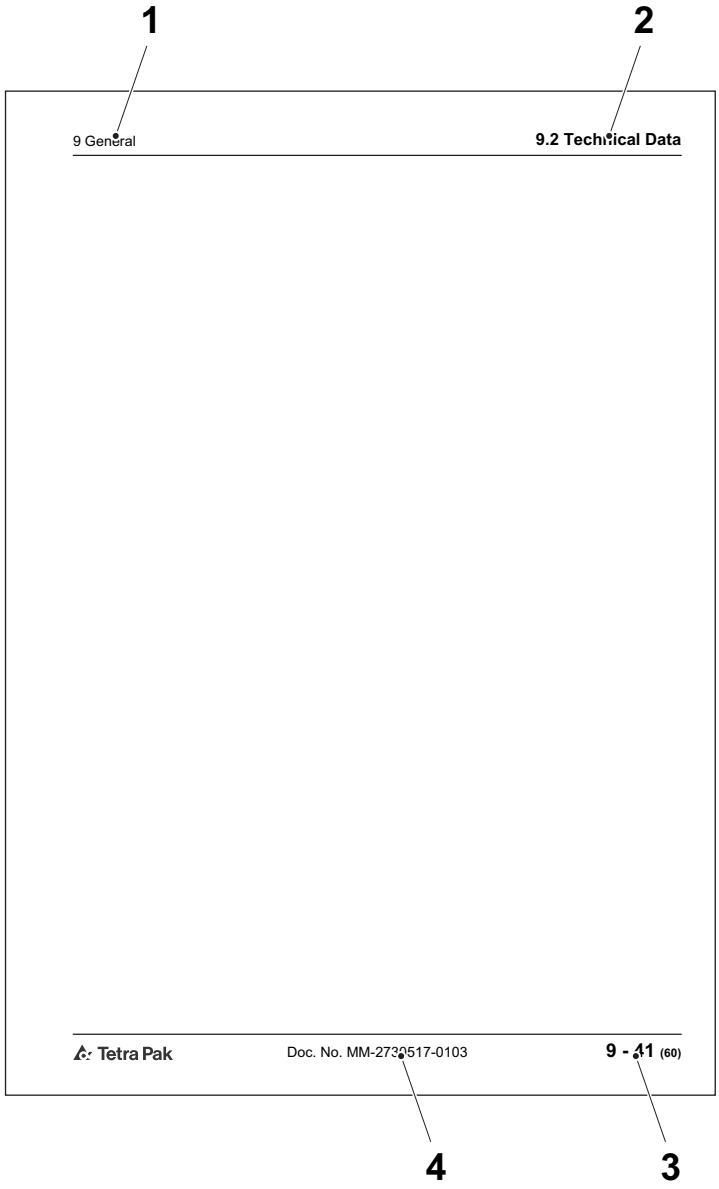

1 Chapter name
2 Section name
3 Page number
4 Document number

Page Numbering

A page number has three parts:

- chapter number (1)
- consecutive page number (2) within the chapter
- total number of pages (3) in the chapter.

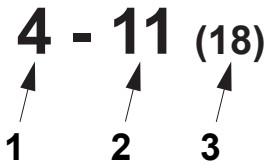

1 Chapter number
2 Consecutive page number
3 Total number of pages

Typographical Conventions

Controls on the operator panel, emergency stop devices, and program steps are printed in CAPITAL LETTERS.

Menu names, button names and other text displayed in software are printed in `Courier`.

Cross-references are underlined.

Symbols

Symbols used in illustrations.

	A pointer arrow indicates the position of an object.
	A zoom arrow indicates that an object view is enlarged. The arrow points towards the enlarged view of the object.
	A rotation movement arrow indicates rotational movement of an object. The arrow points in the direction of rotation.
	A straight movement arrow indicates movement of an object. The arrow points in the direction of movement.

Spare parts

When ordering spare parts for your machine, contact the nearest Tetra Pak service station.

When ordering spare parts **not** specified in the Spare Parts chapter, please contact:

Hartness International
1200 Garlington Road
Greenville, South Carolina 29616
USA
Ph: 1-864-297-1200
GMT-05:00 Eastern Time (US and Canada)
Fax: 1-864-288-5390
Email: spareparts@hartness.com

Machine Introduction

Intended Use of the Machine

The Accumulator Helix 30 is designed to operate as a buffer system within the complete Tetra Pak production line. It stores and retrieves packages as necessary to maximize line efficiency.

All other use is prohibited. Tetra Pak will not be held responsible for injury or damage if the equipment is used for any other purpose.

Manufacturer

This equipment has been manufactured by:

Hartness International
1200 Garlington Road
Greenville, South Carolina 29616
USA
Ph: 1-864-297-1200
GMT-05:00 Eastern Time (US and Canada)

Support and Feedback

If you encounter problems when operating this equipment or have other inquiries, comments, or suggestions for improvement, contact Tetra Pak.

Declaration of Conformity

A copy of the Declaration of Conformity can be found on the following pages. The signed Declaration of Conformity is delivered separately with the equipment.

HARTNESS INTERNATIONAL

Declaration of Conformity

Hartness International
1200 Garlington Road
Greenville, SC
USA

declare that this machine/ equipment/ complex installation:

Accumulator Helix
Serial No.

is in conformity with the following harmonized standards:

EN ISO 12100-1:2003
EN ISO 12100-2:2003
EN ISO 13857:2008
EN ISO 13850:2008
EN 61000-6-2:2005
EN 61000-6-4:2007
EN 60204-1:2006
EN 1672-2:2005

and is in conformity with the provisions of the Directive(s) - including amendments:

[X] 98/37/EC Machinery (until Dec. 29, 2009)
[X] 2006/42/EC Machinery (from Dec. 29, 2009)
[X] 2004/108/EC Electromagnetic compatibility (EMC)
[X] 2006/95/EC Low Voltage

The following person is authorised to compile the technical file:

Phil Johnson
Hartness International
Siemensstr. 32
D-47533 KLEVE
Germany

Greenville, SC 7/7/2009

Sean Hartness
Executive Vice President

English
FORM 5292 version 2009-07-01

Identification

CE Classification

This equipment complies with the basic health and safety regulations of the European Economic Area (EEA).

Machine Plate

The illustration below shows an example of the machine plate and its location on the equipment. The machine plate carries data needed when contacting Tetra Pak concerning this specific equipment.

Make sure the equipment data in the front pages of this manual corresponds with the machine plate data and the machine specification.

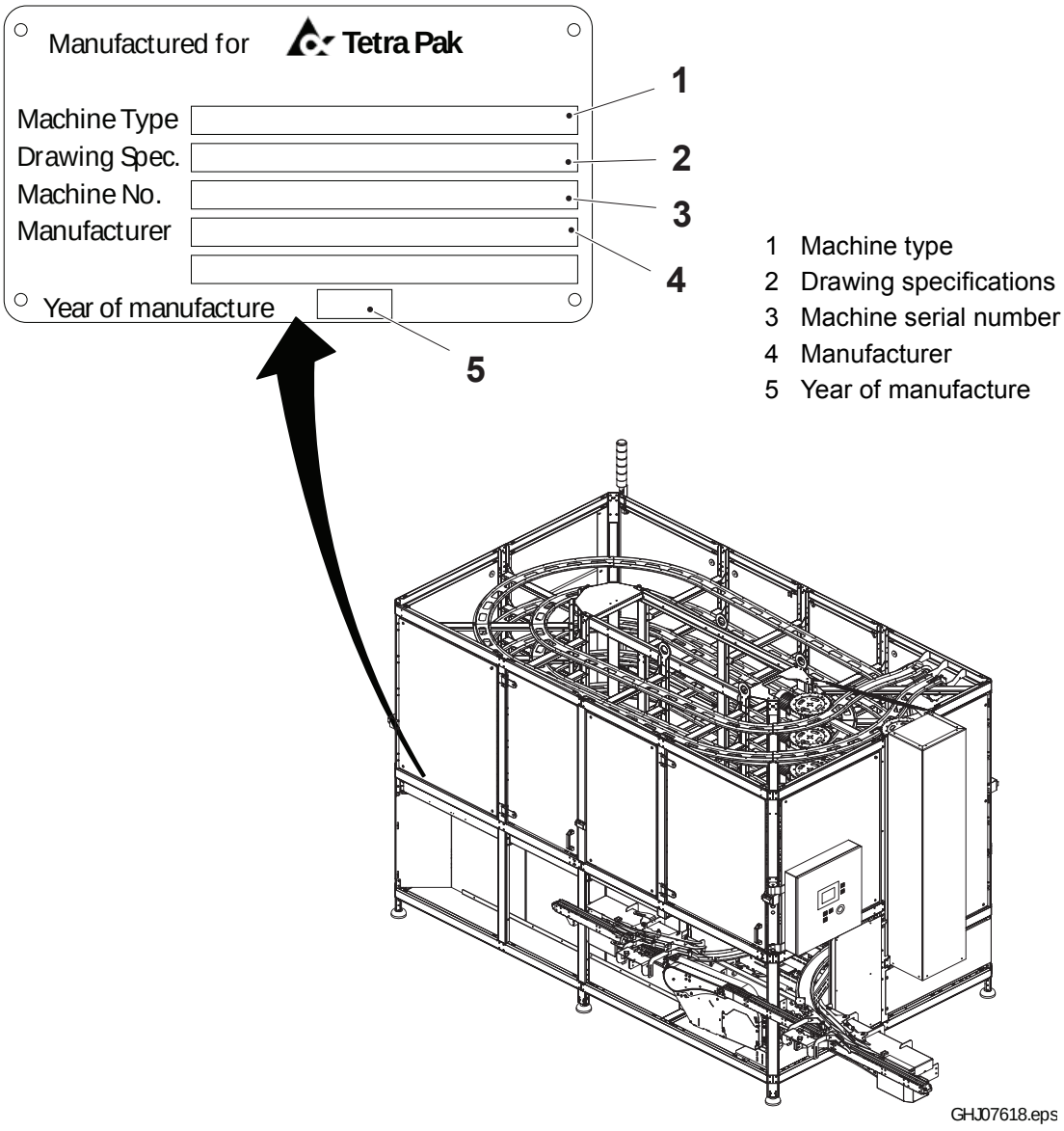

Machine Variants

The Accumulator Helix 30 handles TB, TBA, TGA, TPA, and TRC packages. It is available in the following ten options:

Machine	**Variant**	**Feed Side**	**Lines** (Note: Exceptions do occur on some volumes.)
ACHX30	47M	LINF	A3/Flex, A3/Flex iLine, TBA/8, TBA/19, TB/19, C3/Flex
		RINF	
	75M	LINF	A3/Speed
		RINF	
	90M	LINF	TBA/22 A3/Speed iLine TP R1
		RINF	
	100M	LINF	A3/Speed iLine
		RINF	
	120M	LINF	A3/Speed iLine TP R1
		RINF	
Note! See also the Tetra Pak Product Portfolio Configurator.			

Note! The base machine variant in the manual is the 90M. This variant is shown in the manual when the subject is not affected by the variation in machine. When variations affect the subject, illustrations of those specific variants are also shown in the manual. To determine the machine variant you have, check the machine plate bolted to the machine. See Machine Plate on page i-12.

(Cont'd)

(Cont'd)

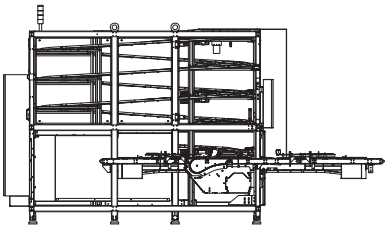

ACHX30 47M
4 Layers

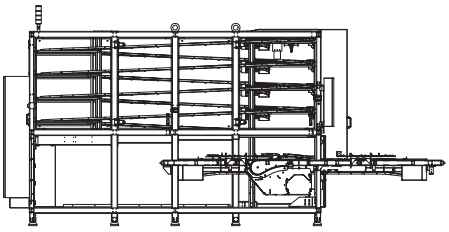

ACHX30 75M
5 Layers

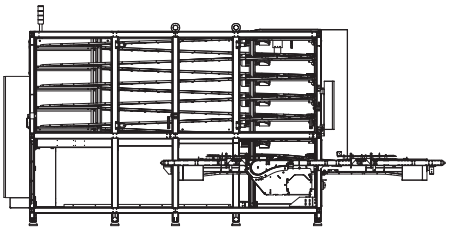

ACHX30 90M
6 Layers

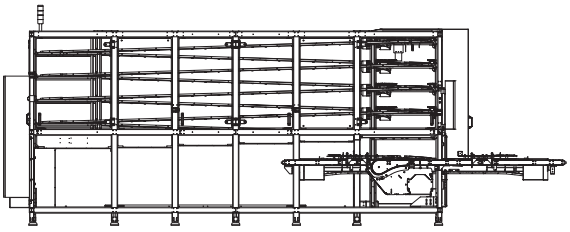

ACHX30 100M
5 Layers

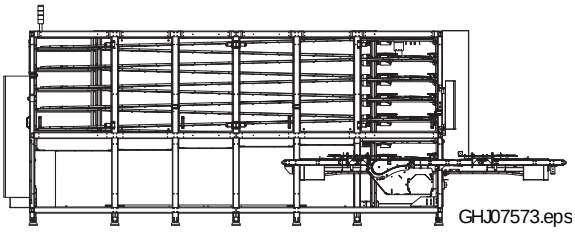

ACHX30 120M
6 Layers

Orientation

The illustrations below show the orientation of the equipment. This orientation information will be used throughout this manual. The arrows indicate the flow of material.

Left Infeed (LINF)
When the operator is facing the TPOP, the product flows to his or her left.

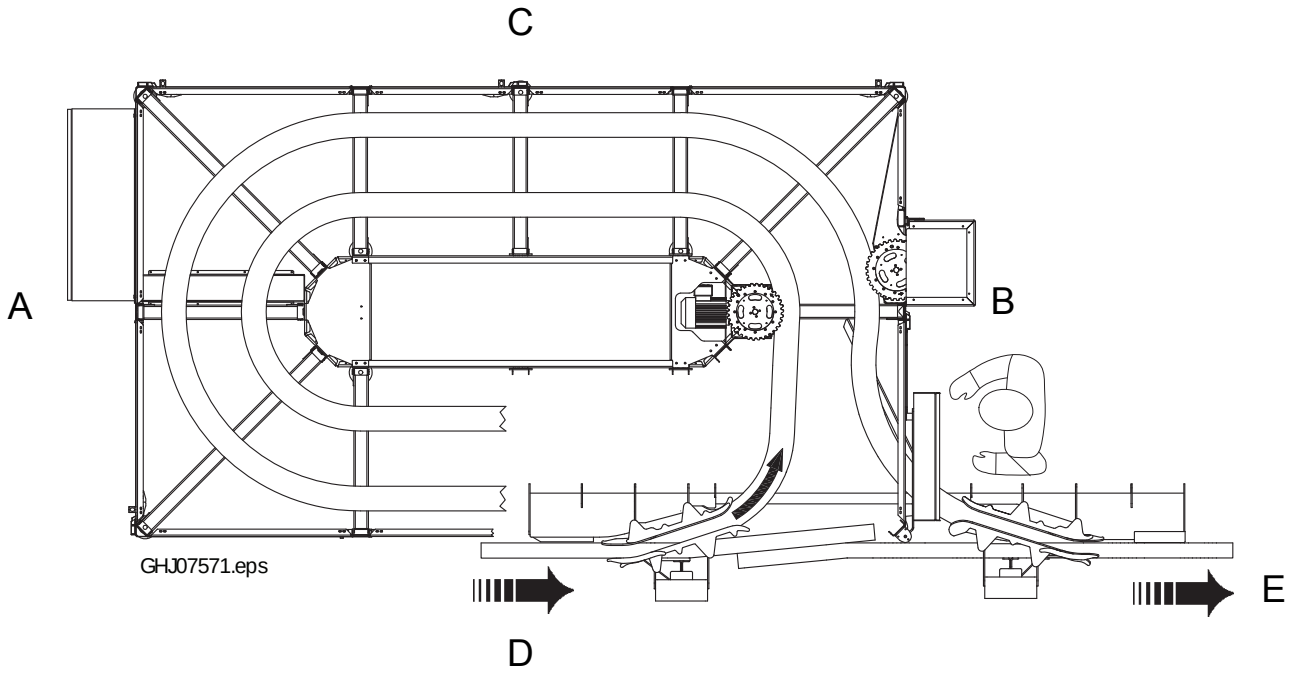

A Rear
B Front
C Right side
D Left infeed side (LINF)
E Discharge

(Cont'd)

(Cont'd)

Right Infeed (RINF)
When the operator is facing the TPOP, the product flows to his or her right.

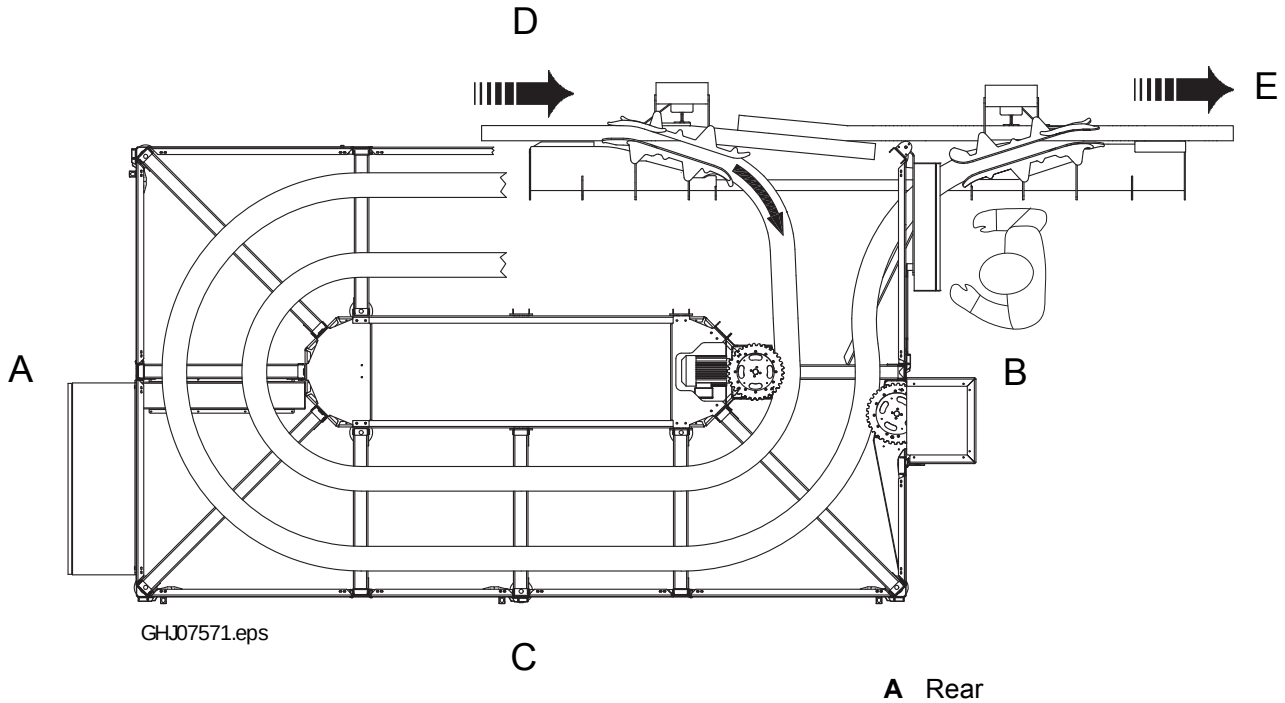

A Rear
B Front
C Left side
D Right infeed side (RINF)
E Discharge

Hygiene

Avoid microbiological pollution of the packaging material:

- Keep your hands and gloves clean.
- Always wear some type of hair protection (cap or hairnet) and clean clothes (preferably white).
- Do not wear a watch, ring, necklace, earrings, or any other exposed jewellery.

How to Use This IM

Purpose of the IM

The IM provides technical specifications and preparatory information needed during the quotation of the equipment and during the entire installation process. The IM describes the equipment requirements in the packaging line. It also provides instructions on how to mechanically install, commission, and validate the performance of the equipment, and how to disassemble and remove the equipment.

The intended users of the IM are project leaders, installation planners, installation technicians, and other technicians involved in the equipment installation project.

Installation Workflow

An installation of any Tetra Pak equipment follows the Installation to Performance process. The process consists of five main activities and the IM is structured to support the process. See the illustration and the table below.

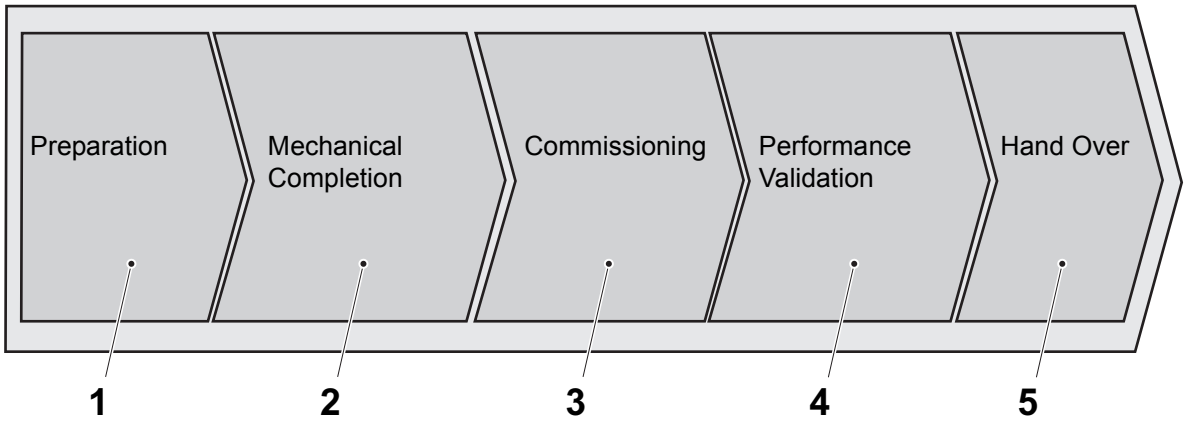

Pos.	Process Activity	End State	Related IM Chapters	Intended User
1	Preparation	Equipment at prepared site	Chapters 1 and 2	Installation planner/ Project leader
2	Mechanical Completion	Equipment mechanically installed	Chapter 3	Installation technician
3	Commissioning	Equipment commissioned and functionally validated	Chapter 4	Installation technician
4	Performance Validation	Equipment performance validated	Chapter 5	Project leader
5	Hand Over	Contract fulfilled	-	-

ii Safety Precautions

Safety Precaution Instructions

WARNING

Read all safety precaution instructions throughout this manual and on safety signs attached to this equipment.
Failure to follow all safety precaution instructions could result in death or serious injury.

Definition of Lockout Procedure

A lockout procedure is a procedure to put each necessary energy isolating device in its safe position to prevent the energisation of the equipment, such as when a maintenance procedure should be carried out.

A lockout is the use of a device, for example, a padlock, to make sure that an energy isolating device cannot be operated.

An energy isolating device is a mechanical device that physically prevents transmission or release of energy, such as a power supply disconnector.

Safety Messages Description . . . . . ii - 5
Personnel Requirements . . . . . ii - 6
Skilled Person . . . . . ii - 6
Instructed Person. . . . . ii - 6
Safety Signs . . . . . ii - 7
Locations of Safety Signs . . . . . ii - 10
ISO Version. . . . . ii - 10
ANSI Version . . . . . ii - 11
Protective Devices. . . . . ii - 12
Emergency Stop . . . . . ii - 13
EMERGENCY STOP Push-Buttons . . . . . ii - 13
Safeguards . . . . . ii - 14
Warning Lamp . . . . . ii - 17
Audible Alarm. . . . . ii - 17
Personal Protection. . . . . ii - 18
Entanglement Hazard . . . . . ii - 18
Hazardous Substances . . . . . ii - 19
Disposal of Chemical Substances . . . . . ii - 20
Supply Systems . . . . . ii - 21
Power Supply . . . . . ii - 21
Residual Voltage . . . . . ii - 22
Electrical Cabinet. . . . . ii - 22
Socket Outlet . . . . . ii - 23
Air Supply (option). . . . . ii - 24
Water Supply . . . . . ii - 25

This page intentionally left blank

Safety Messages Description

A safety message is always accompanied by a safety alert symbol and a signal word.

The safety alert symbol is used to alert about potential personal injury hazards. To avoid hazards, obey all safety messages that follow this symbol.

The following safety alert symbols and signal words are used in this manual to inform the user of hazards.

⚠ **DANGER**	Danger indicates an imminently hazardous situation which, if not avoided, will result in death or serious injury.
⚠ **WARNING**	Warning indicates a potentially hazardous situation which, if not avoided, **could** result in **death or serious injury**.
⚠ **CAUTION**	Caution indicates a potentially hazardous situation which, if not avoided, **may** result in **minor or moderate injury.** It may also be used to alert against unsafe practices.
CAUTION	Caution without the safety alert symbol indicates a potentially hazardous situation which, if not avoided, **may** result in **property damage**.

Personnel Requirements

Note! Personnel includes all persons working on or near this equipment.

Only skilled or instructed persons are allowed to work with this equipment.

Skilled Person

A skilled person must have relevant education and experience to enable him or her to identify hazards, analyse risks, and avoid hazards which electricity, machinery, chemicals, other energies, and supply systems on this equipment can create.

Skilled persons must meet local regulations, such as certifications and qualifications for working with these energies and systems.

Instructed Person

An instructed person must be adequately advised or supervised by a skilled person. The skilled person enables the instructed person to identify hazards, analyse risks, and avoid hazards which electricity, machinery, chemicals, other energies, and supply systems on this equipment can create.

Safety Signs

WARNING

Damaged or missing safety signs increase the risk of death or serious injury.

Replace all missing or damaged safety signs immediately.

Safety signs are attached to the equipment. The table below lists all the signs that are used, and illustrations show their locations on the equipment. Each position number refers to two variants of a safety sign in the table, but only one is used on the equipment.

- Make sure that each safety sign is legible and in its correct position after installation and maintenance.
- Replace all missing or damaged safety signs immediately.

(Cont'd)

(Cont'd)

Pos.	ISO sign ANSI sign
1	  **Moving parts can crush and cut.** Do not operate with guard removed. Follow lockout procedure before maintenance.
2	  **Hazardous voltage.** Will shock, burn, or cause death. Follow lockout procedure before maintenance.
3	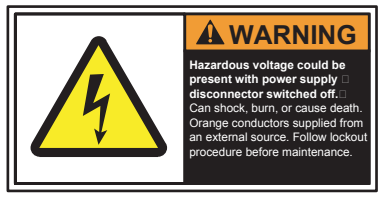 **Hazardous voltage could be present with power supply disconnector switched off.** Can shock, burn, or cause death. Orange conductors supplied from an external source. Follow lockout procedure before maintenance.
4	 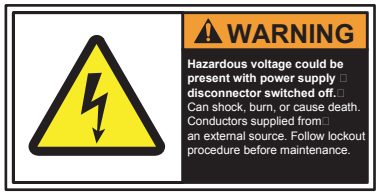 **Hazardous voltage could be present with power supply disconnector switched off.** Can shock, burn or cause death. Conductors supplied from an external source. Follow lockout procedure before maintenance.
5	 **Hazardous voltage.** Can shock, burn, or cause death. Read Maintenance Manual (MM) before using this socket outlet.

Pos.	ISO sign	ANSI sign
6		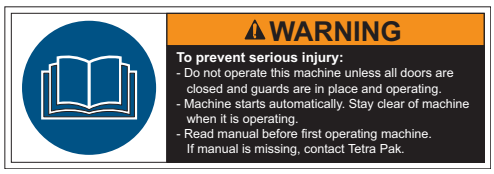
	To prevent serious injury: Do not operate this machine unless all doors are closed and guards are in place and operating. Machine starts automatically. Stay clear of machine when it is operating. Read manual before first operating machine. If manual is missing, contact Tetra Pak.	
7		
	Do not reach in. Moving parts may cause injury. Follow instructions for safe work practice.	
8		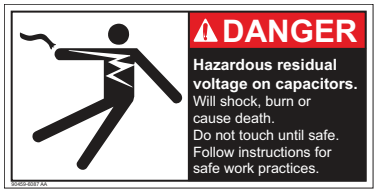
	Hazardous residual voltage on capacitors Can shock, burn, or cause death. Do not touch until safe. Follow instructions for safe work practice.	

Locations of Safety Signs

ISO Version

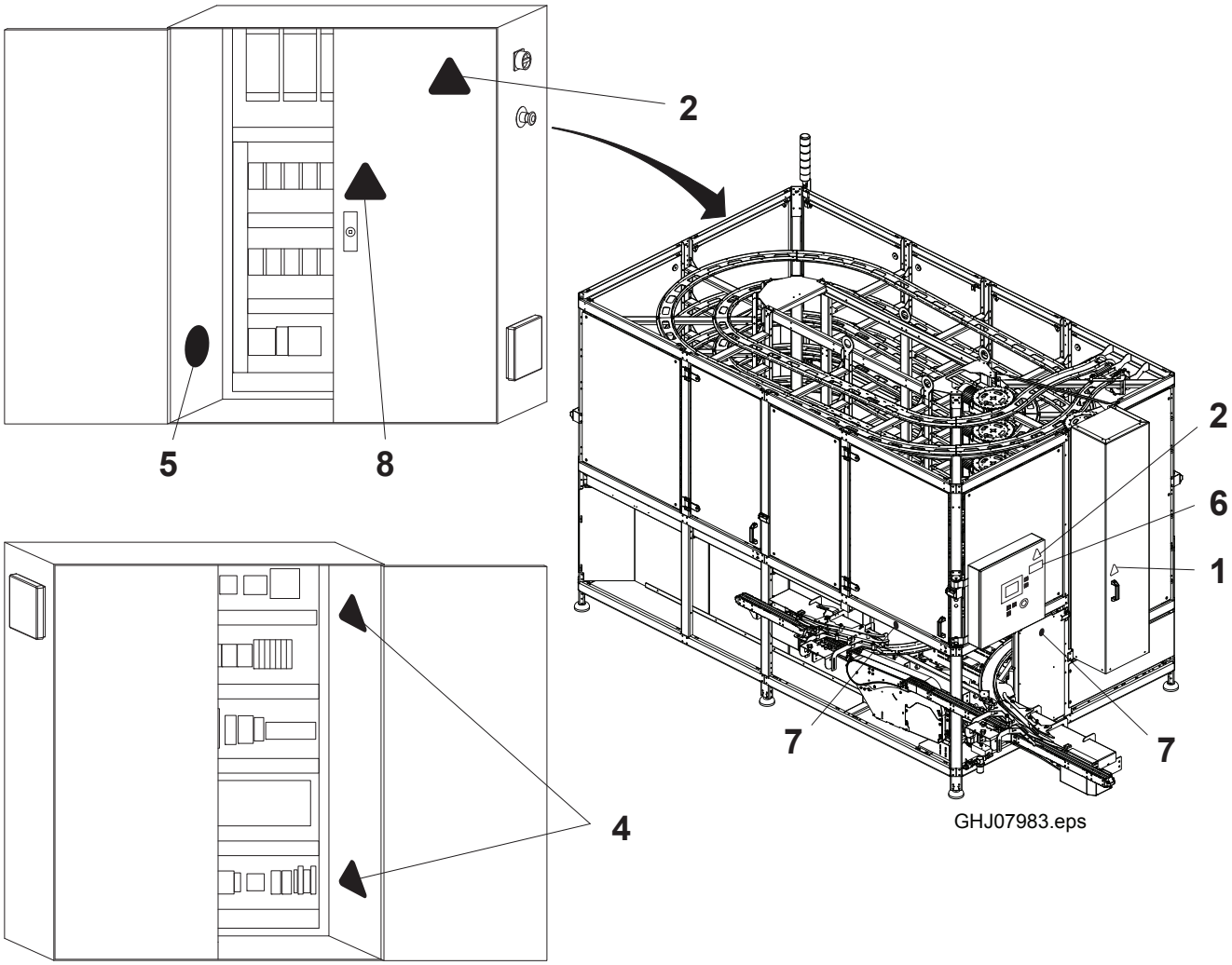

(Cont'd)

(Cont'd)

ANSI Version

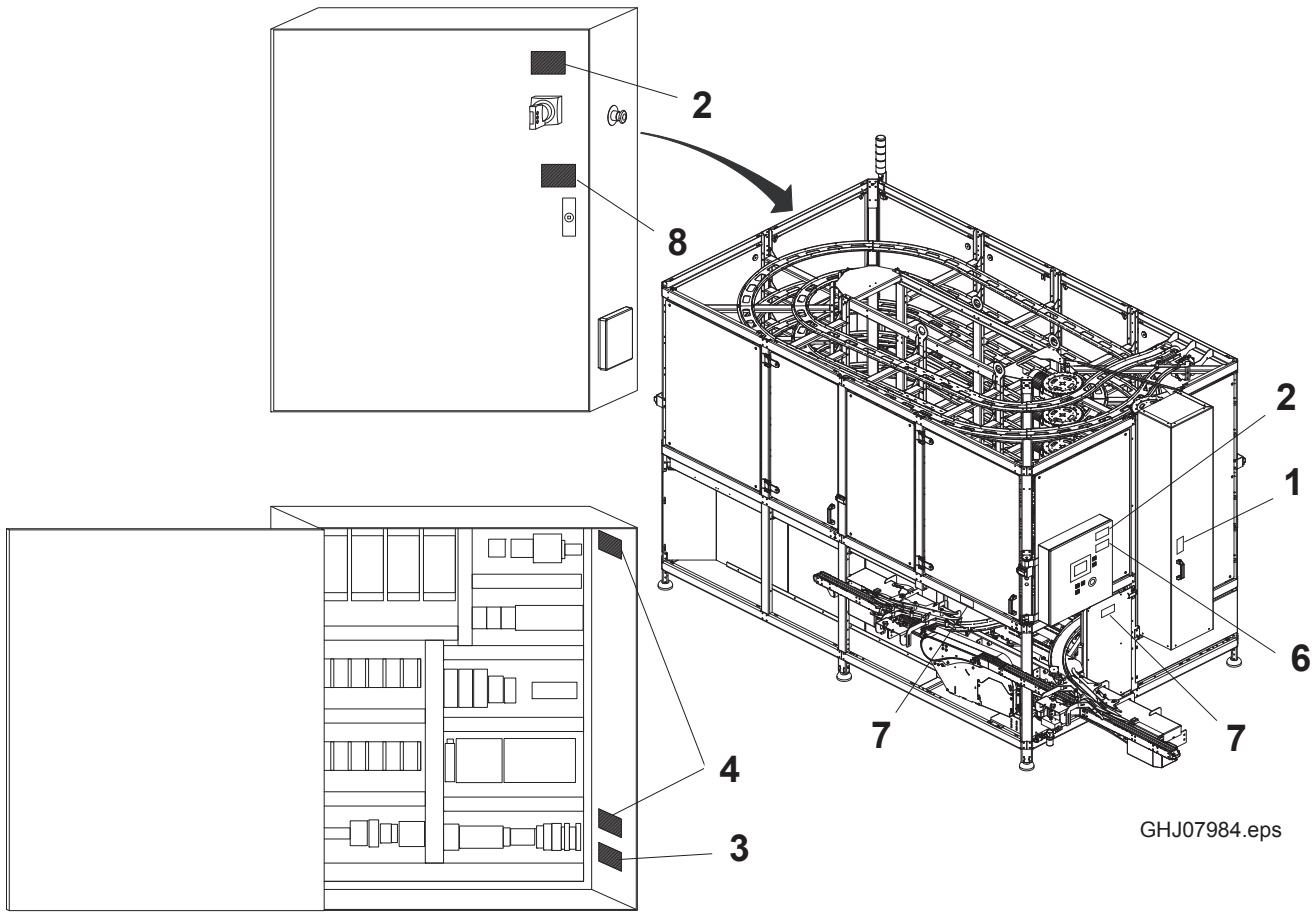

Protective Devices

There are different kinds of protective devices designed to ensure safe use of the equipment. See the sections below.

WARNING

Hazardous zones.

Hazardous zones are safeguarded and provided with protective devices. Do not inch or run this equipment if any protective device is inoperative.

Change inoperative components of the safety system immediately.

For the location of safeguards and/or other protective devices not mentioned in this section, see the Maintenance Manual.

WARNING

Hazardous voltage.

Hazardous voltage remains on this equipment after activating an EMERGENCY STOP or an interlocking device.

Emergency Stop

Emergency stop devices are used to stop this equipment immediately in an hazardous situation. Learn the positions of all emergency stop devices and how to use them.

Instructions for a normal production stop are included in the Stop chapter of the Operation Manual.

EMERGENCY STOP Push-Buttons

Push one of the EMERGENCY STOP push-buttons to stop this equipment immediately.

The location of each EMERGENCY STOP push-button is shown by an arrow.

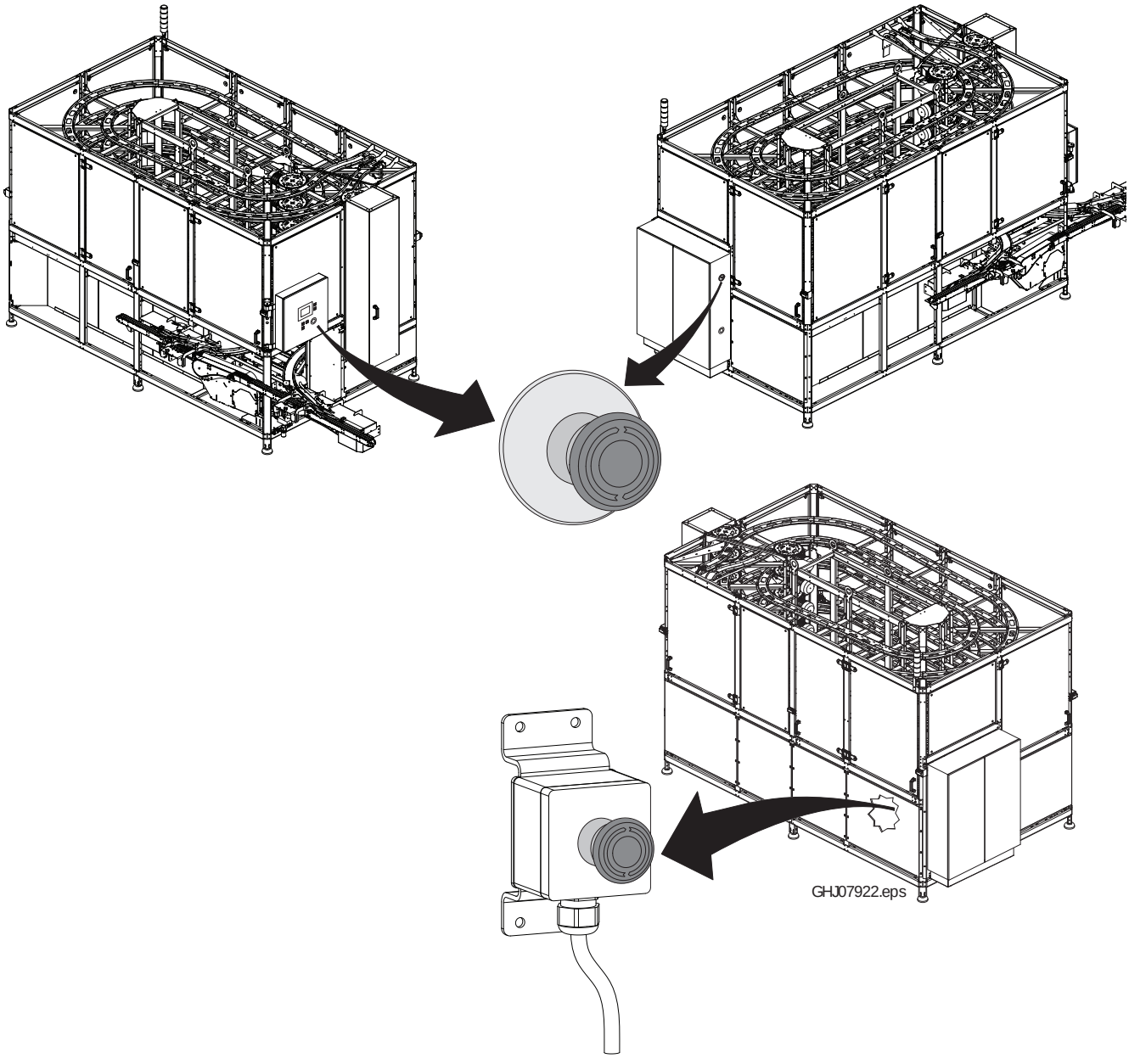

Safeguards

WARNING
Moving machinery.
Never defeat or bypass the interlocking devices.

Movable guards, for example, doors and covers leading to hazardous zones, are fitted with interlocking devices where required. These devices are usually electric safety switches that are parts of the safety system and must never be defeated, bypassed, or otherwise made inoperative.

WARNING
Corners and edges.
To prevent injury from corners and edges of open doors and covers, close them unless they must be open during such work. Be careful when working under an open door, cover or elsewhere below parts of the equipment with corners and edges.

CAUTION
Equipment damage.
Never stop this equipment by opening an interlocking guard.

(Cont'd)

(Cont'd)

The location of each interlocking guard is shown by an arrow.

Left Hand Infeed

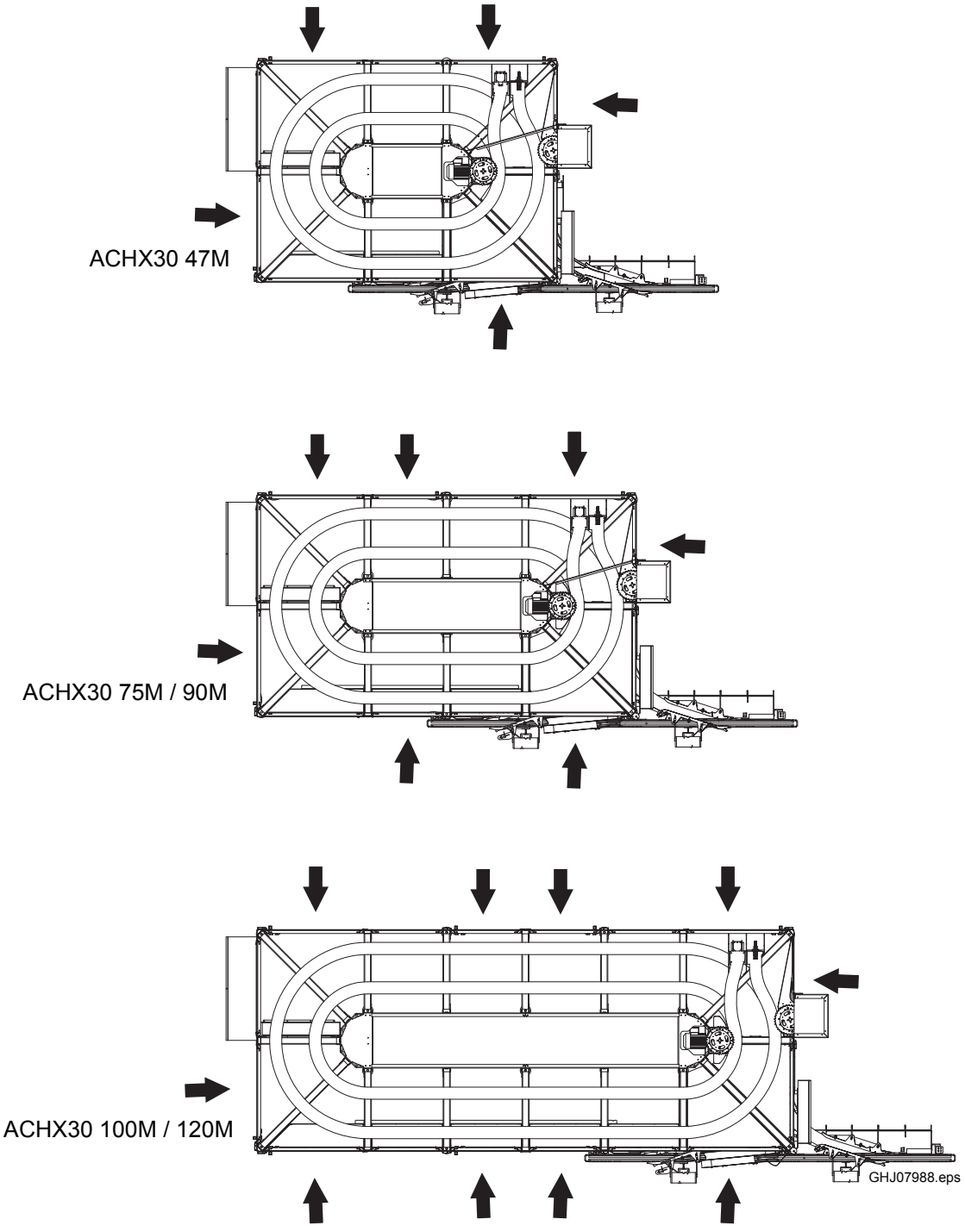

(Cont'd)

(Cont'd)

The location of each interlocking guard is shown by an arrow.

Right Hand Infeed

ACHX30 47M

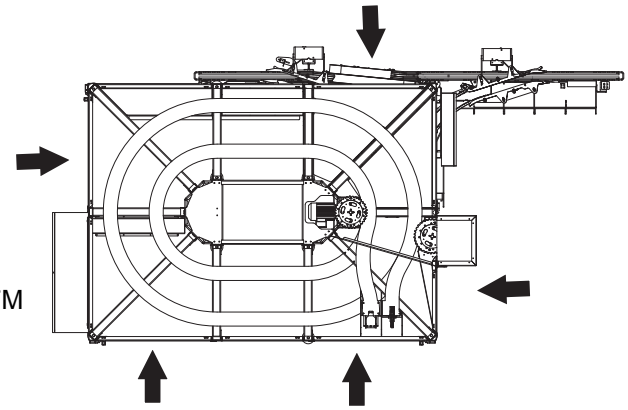

ACHX30 75M / 90M

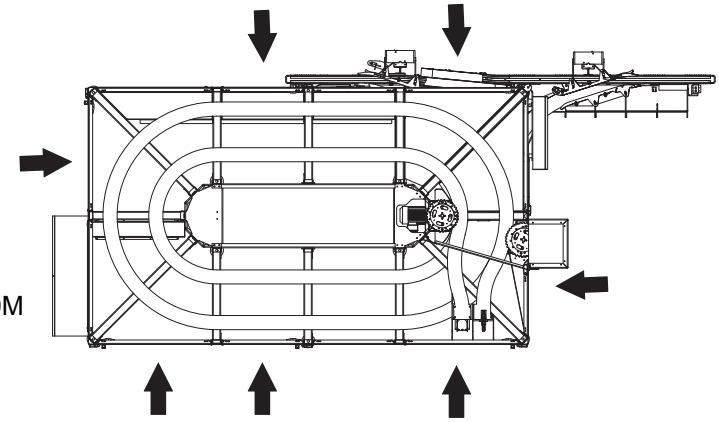

ACHX30 100M / 120M

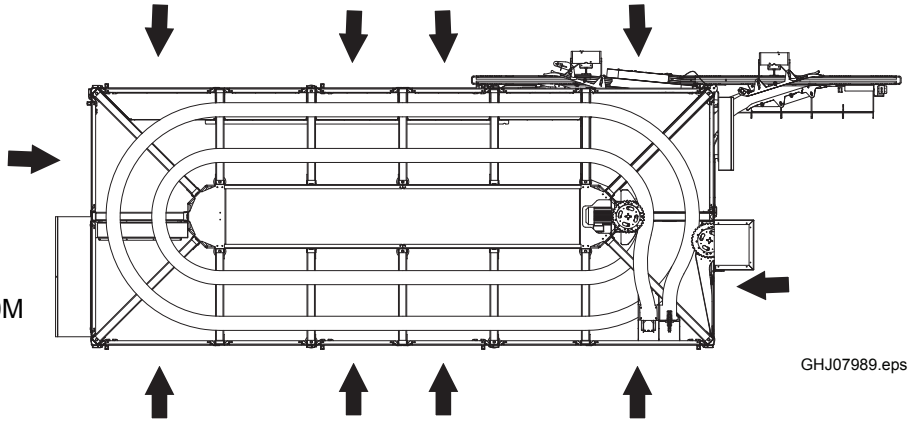

GHJ07989.eps

Warning Lamp

A warning lamp is a column of warning lights:

- A red light (2) indicates a hazardous condition. This is a situation that requires immediate action.
- A yellow light (3) indicates an abnormal or impending critical condition. This is a condition calling for action by the operator.
- A blue light (4) indicates that operator action is required.
- A green light (5) indicates a normal condition.

Audible Alarm

The audible alarm (1) produces a warning signal before the safety circuit is reset. The warning signal sounds for approximately three seconds to alert personnel. Resetting the safety circuit makes it possible to step up the machine and allows the equipment to start.

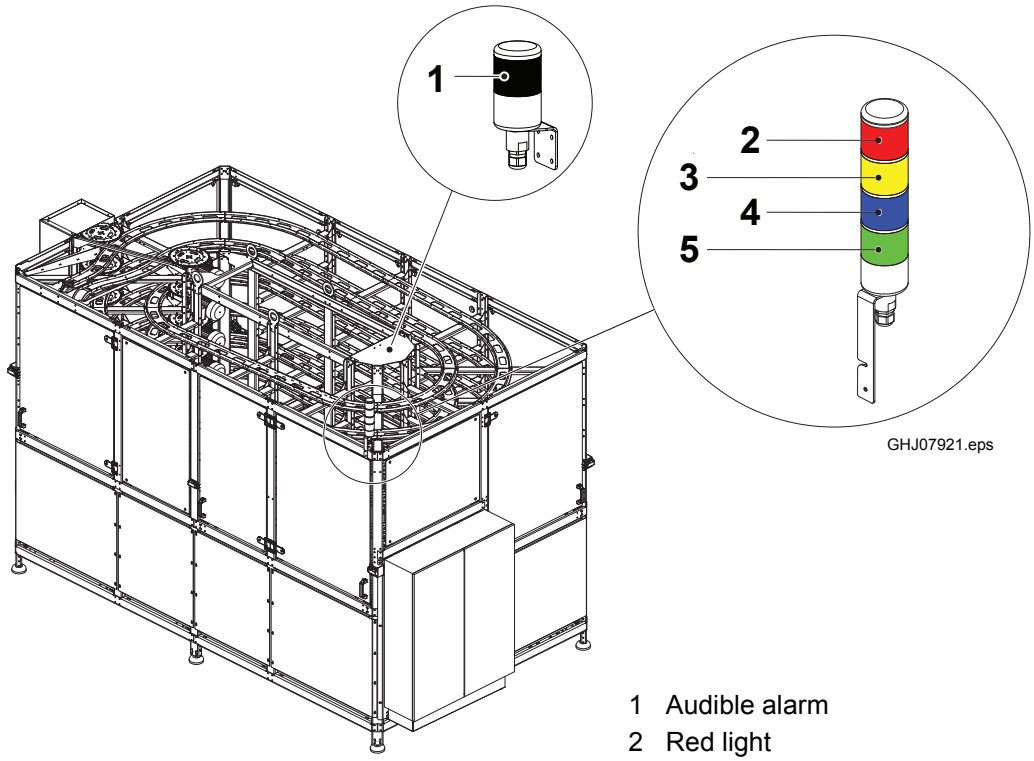

1 Audible alarm
2 Red light
3 Yellow light
4 Blue light
5 Green light

Personal Protection

This section applies to all personnel at all times when this equipment is in operation.

Entanglement Hazard

WARNING

Risk of entanglement.

Do not wear jewellery or loose clothing when working on or near this equipment. Long hair may not be loose.

Hazardous Substances

WARNING

Contact with chemicals can cause death, serious injury, or illness.
Always read and follow the instructions in the safety data sheet supplied by the manufacturer or local supplier, when handling chemicals.

Make sure that

- the safety data sheet is available
- the showers work
- an eyewash device, movable or wall-mounted, is available and operational
- additional washing facilities are nearby

Note! Learn the locations of all washing facilities in order to act immediately in case of an accident





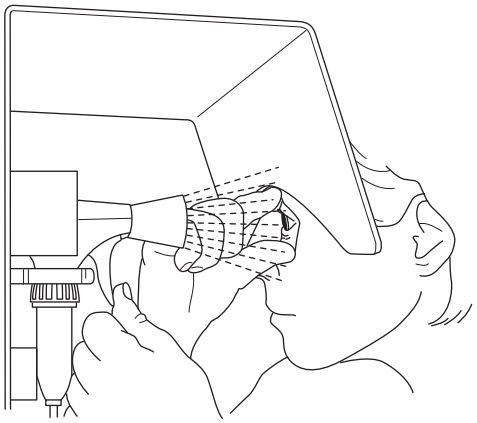

Disposal of Chemical Substances

Always read and follow the disposal instructions in the safety data sheet supplied by the manufacturer or local supplier.

It is strongly recommended that used chemical containers are

- disposed of according to the instructions immediately after use
- not used as disposal containers for other chemicals in order to avoid uncontrolled chemical reactions within the container

Supply Systems

Power Supply

DANGER

Hazardous voltage and moving machinery.
The power supply disconnector must be turned off and secured with a lock before any maintenance.

Note! The key to the lock must be removed by the technician and retained in his/her possession until all work is completed.

Certain maintenance procedures may require power supply systems to be on. These exceptions are clearly stated in the Maintenance Manual.

The illustrations show the power supply disconnector and its location.

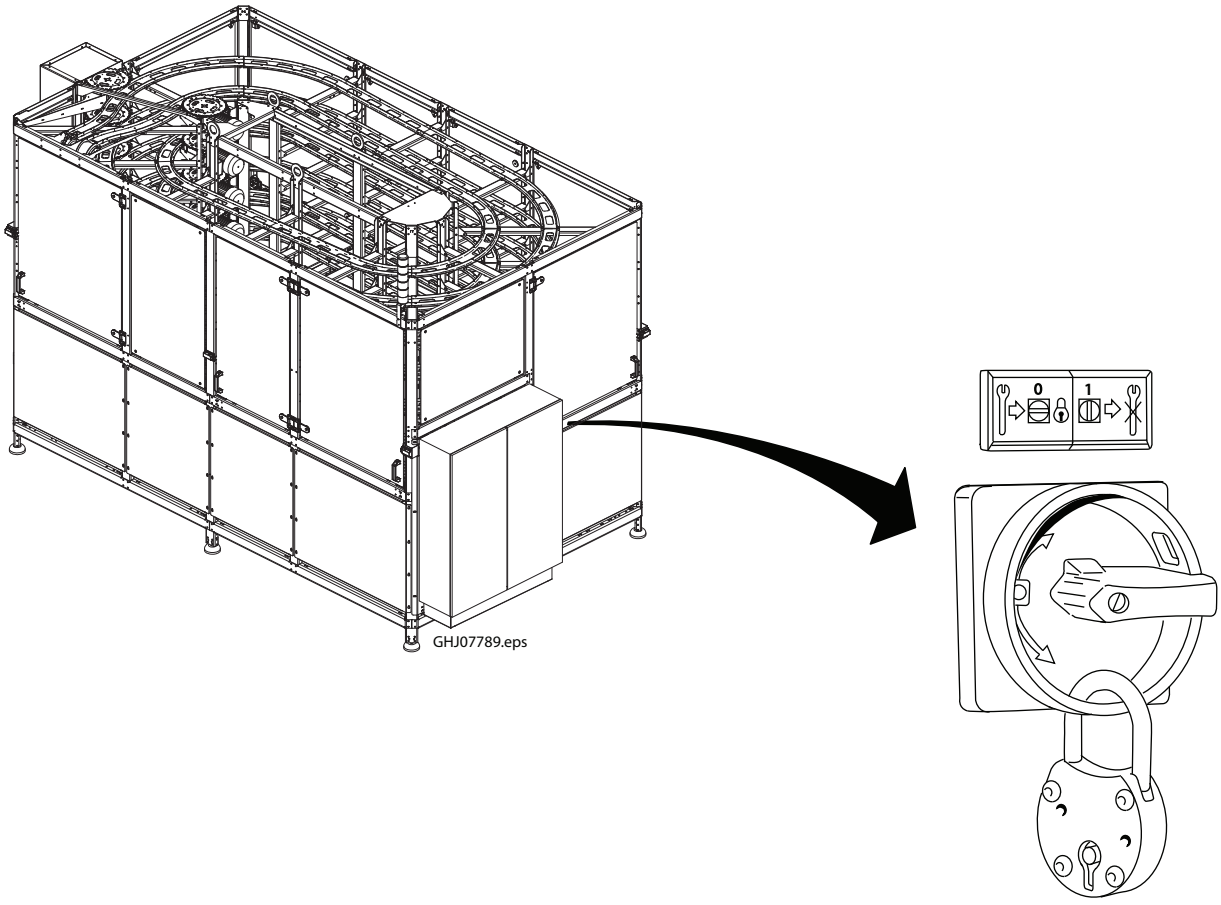

(Cont'd)

(Cont'd)

Residual Voltage

DANGER

Hazardous voltage.
Do not touch any terminals immediately after the power supply disconnector is turned off. Ensure that no residual voltage remains on the capacitors before touching. Wait five minutes. Failure to observe this information will cause death or serious injury.

After the power supply disconnector is turned off, residual voltage remains in the capacitor circuits.

Electrical Cabinet

DANGER

Hazardous voltage.
Will shock, burn, or cause death.
The power supply disconnector must be turned off and secured with a lock before maintenance inside the electrical cabinet.

Note! The key to the lock must be removed by the technician and retained in his/her possession until all work is completed.

Make sure that the electrical cabinet doors are closed after working inside the electrical cabinet. Doors with lock must be locked.

The location of each electrical cabinet is shown by an arrow.



GH100784.eps

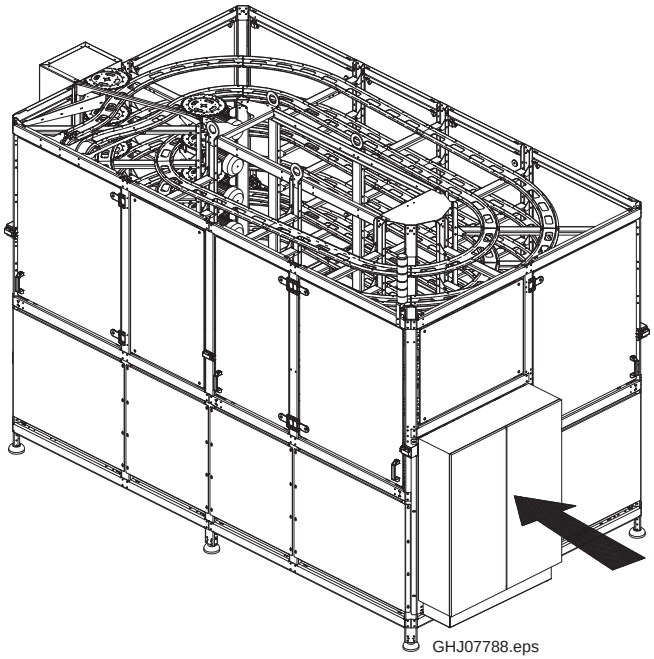

GHJ07788.eps

Socket Outlet

WARNING

Hazardous voltage.

Can shock, burn, or cause death. Read the Maintenance Manual before using this socket outlet.

The socket outlet (1) is connected to a residual current device (2) to protect users against electrical shock if there is an earth fault in the connected equipment. The residual current device shall be tested each time before the socket outlet is being used. See the MM for test procedure.

The illustration shows the socket outlet, the residual current device, and their locations.

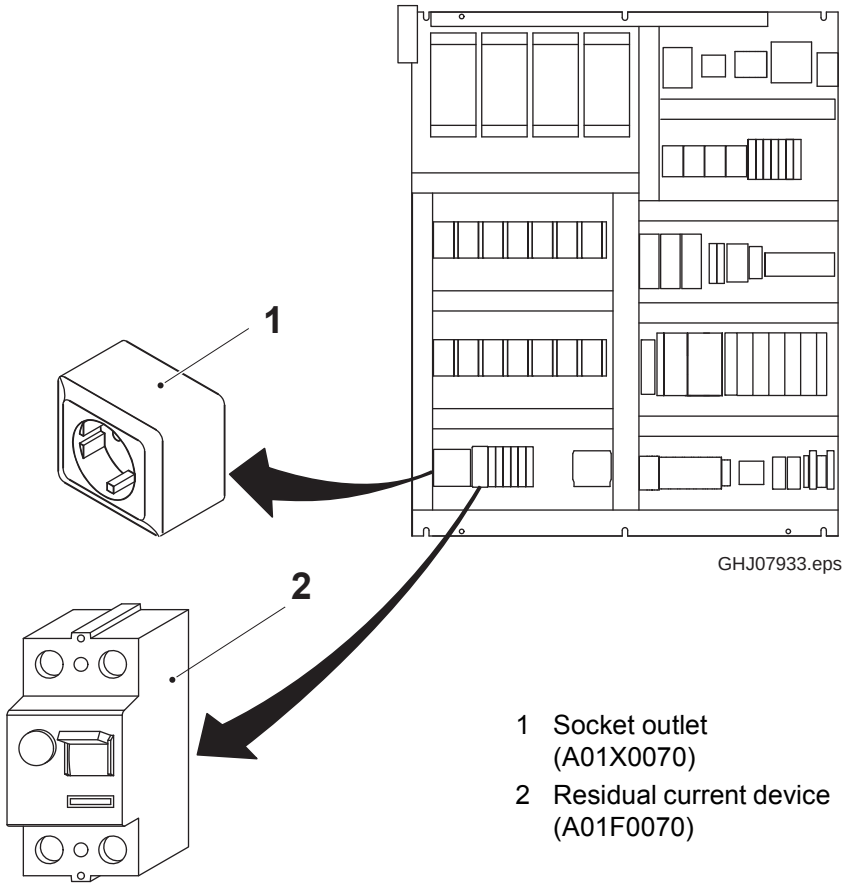

1 Socket outlet (A01X0070)
2 Residual current device (A01F0070)

Air Supply (option)

The air supply is applicable when the optional chain cleaner is installed.

WARNING

Compressed air and moving machinery.
Close the main air valve and lock it before any maintenance.

Note! The key to the lock must be removed by the technician and retained in his/her possession until all work is completed.

Certain maintenance procedures may require air supply systems to be on. These exceptions are clearly stated in the Maintenance Manual.

The illustration shows the main air valve (1) and its location.

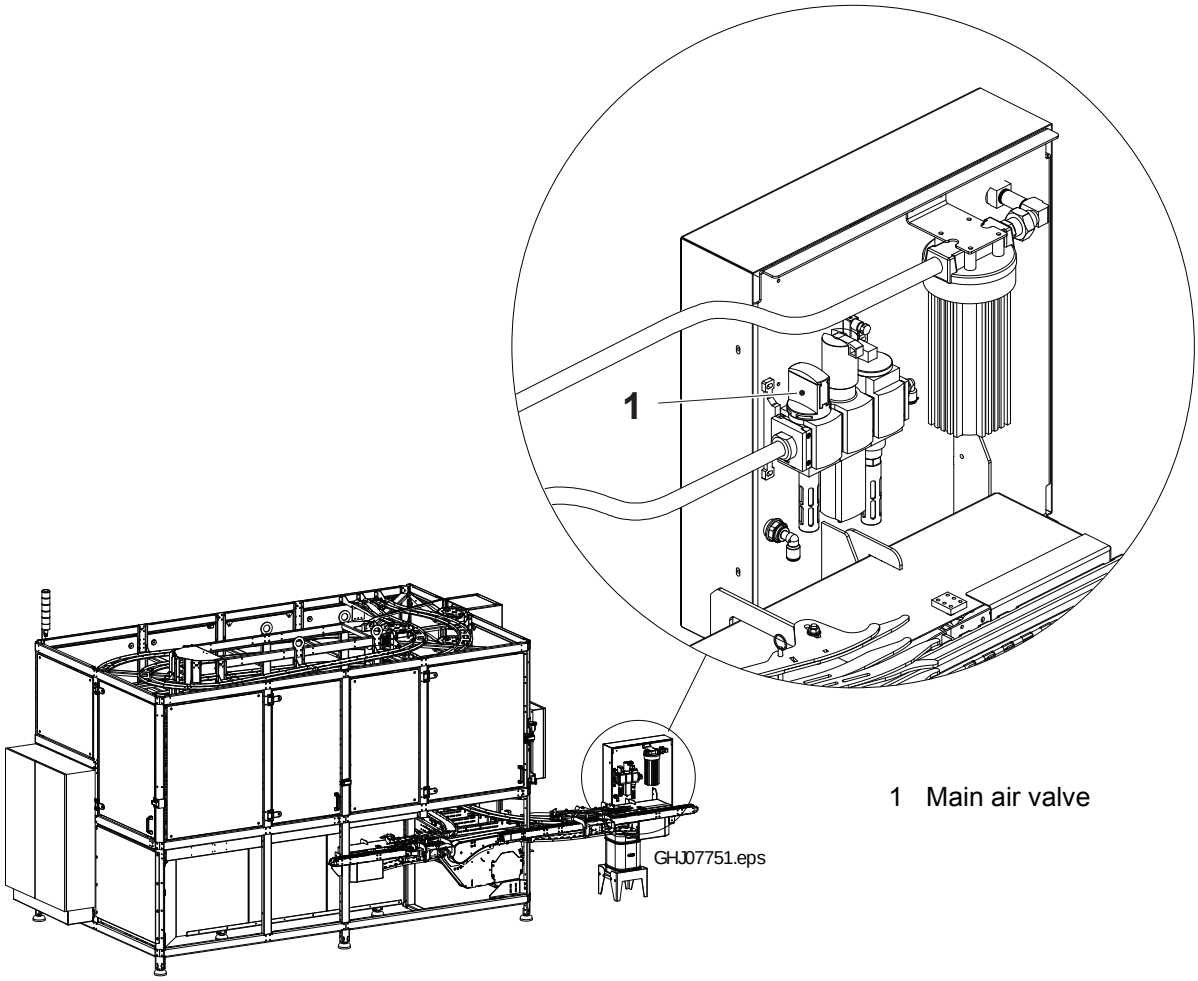

1 Main air valve

Water Supply

CAUTION

Water under pressure.

Close the water supply valves before any maintenance.

Certain maintenance procedures may require water supply systems to be on. These exceptions are clearly stated in the Maintenance Manual.

The illustration shows the water supply valve and its location.

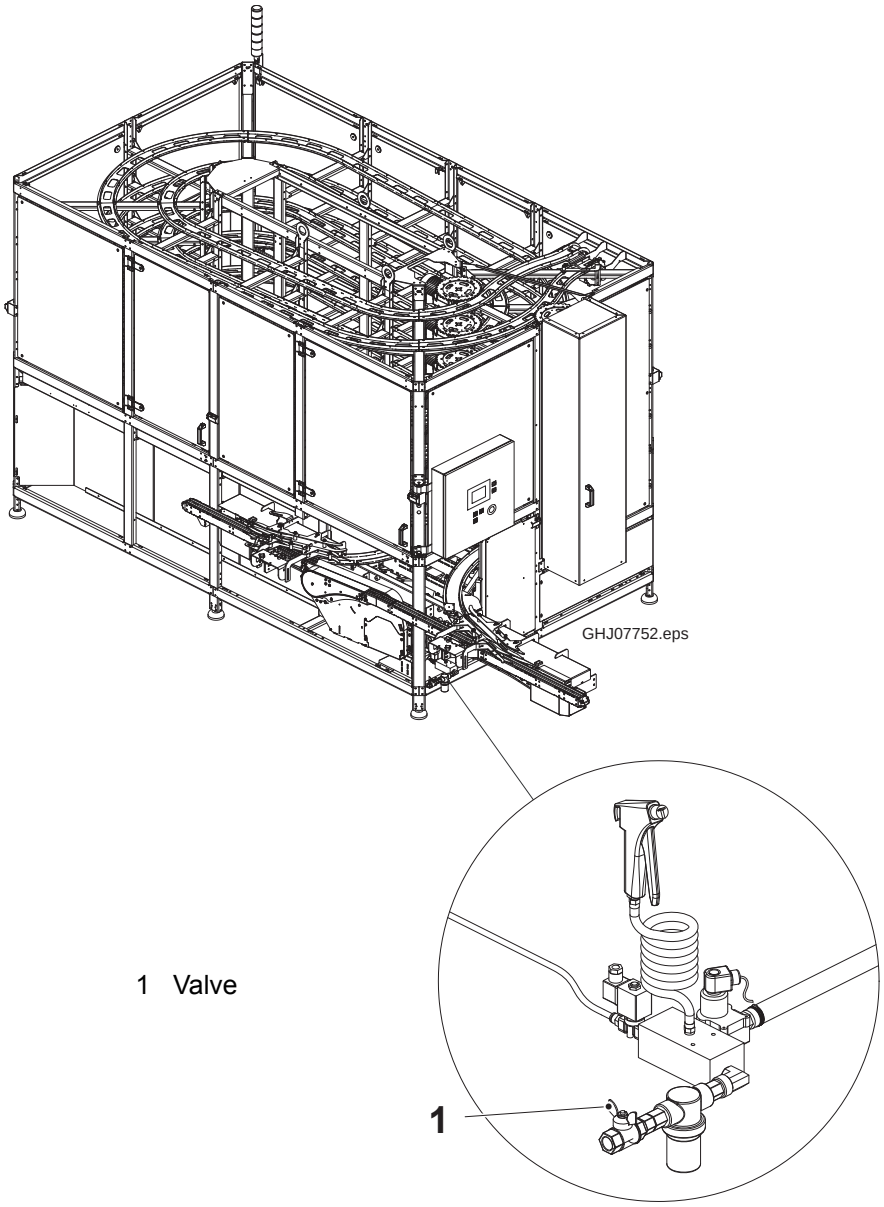

1 Valve

This page intentionally left blank

1 Technical Specification

Description

This chapter describes the equipment's technical specification and data. The information is used during the planning and installation of the equipment.

1.1 Installation Drawings. . . . . 1 - 5
1.1.1 Left Infeed (LINF) Machine . . . . . 1 - 5
1.1.2 Right Infeed (RINF) Machine . . . . . 1 - 11
1.1.3 Foot Positions . . . . . 1 - 17
1.1.4 Conveyor equipment . . . . . 1 - 20
1.2 Equipment Specifications. . . . . 1 - 22
1.2.1 Machine Configurations . . . . . 1 - 22
1.2.1.1 General . . . . . 1 - 22
1.2.1.2 Accumulation Capacity . . . . . 1 - 23
1.2.2 Optional Equipment . . . . . 1 - 24
1.2.3 Mass . . . . . 1 - 24
1.2.4 External Infeed and External Outfeed Requirements . . . . . 1 - 25
1.2.4.1 External Infeed Conveyor . . . . . 1 - 25
1.2.4.2 Extra External Infeed Conveyor (option) . . . . . 1 - 26
1.2.4.3 External Outfeed Conveyor. . . . . 1 - 27
1.2.4.4 Extra External Outfeed Conveyor (option) . . . . . 1 - 28
1.2.5 Additional Materials . . . . . 1 - 29
1.3 Lifting and Transportation Data . . . . . 1 - 30
1.3.1 Crate and Equipment . . . . . 1 - 30
1.3.2 Auxiliary Equipment . . . . . 1 - 31
1.3.2.1 Recommended Equipment . . . . . 1 - 31
1.3.2.2 Forklift Requirements . . . . . 1 - 33
1.3.3 Space Requirements . . . . . 1 - 34
1.4 Utility and Utility Connection Data. . . . . 1 - 35
1.4.1 Electrical Power Specification . . . . . 1 - 35
1.4.2 Water Specification . . . . . 1 - 37
1.4.2.1 Standard . . . . . 1 - 37
1.4.2.2 With Chain Cleaner (Optional) . . . . . 1 - 37

1.4.3 Compressed Air Specification . . . . . 1 - 37
1.4.3.1 With Chain Cleaner (Optional) . . . . . 1 - 37
1.5 Mechanical Line Integration and Connection . 1 - 38
1.5.1 Non Line Controller Lines . . . . . 1 - 38
1.5.1.1 Upstream Connections . . . . . 1 - 38
1.5.1.2 Downstream Connections to a DE Machine . . . . 1 - 41
1.5.2 Line Controller Lines . . . . . 1 - 52
1.5.2.1 Upstream Connections . . . . . 1 - 52
1.5.2.2 Downstream Connections to a DE Machine . . . . 1 - 55
1.6 Communication . . . . . 1 - 67
1.6.1 Non Line Controller. . . . . 1 - 67
1.6.1.1 Line Communication Signals Relay . . . . . 1 - 67
1.6.1.2 Line Communication Signals Genius (option) . . 1 - 68
1.6.2 Line Controller. . . . . 1 - 69
1.6.2.1 Line Communication Signals . . . . . 1 - 69
1.6.3 Recart Communication Through Ethernet . . . . 1 - 70
1.7 Noise . . . . . 1 - 71
1.8 Site Environment Specification . . . . . 1 - 72
1.8.1 Ambient Conditions . . . . . 1 - 72
1.8.2 Space Requirements . . . . . 1 - 72

1.1 Installation Drawings

1.1.1 Left Infeed (LINF) Machine

ACHX30 47M

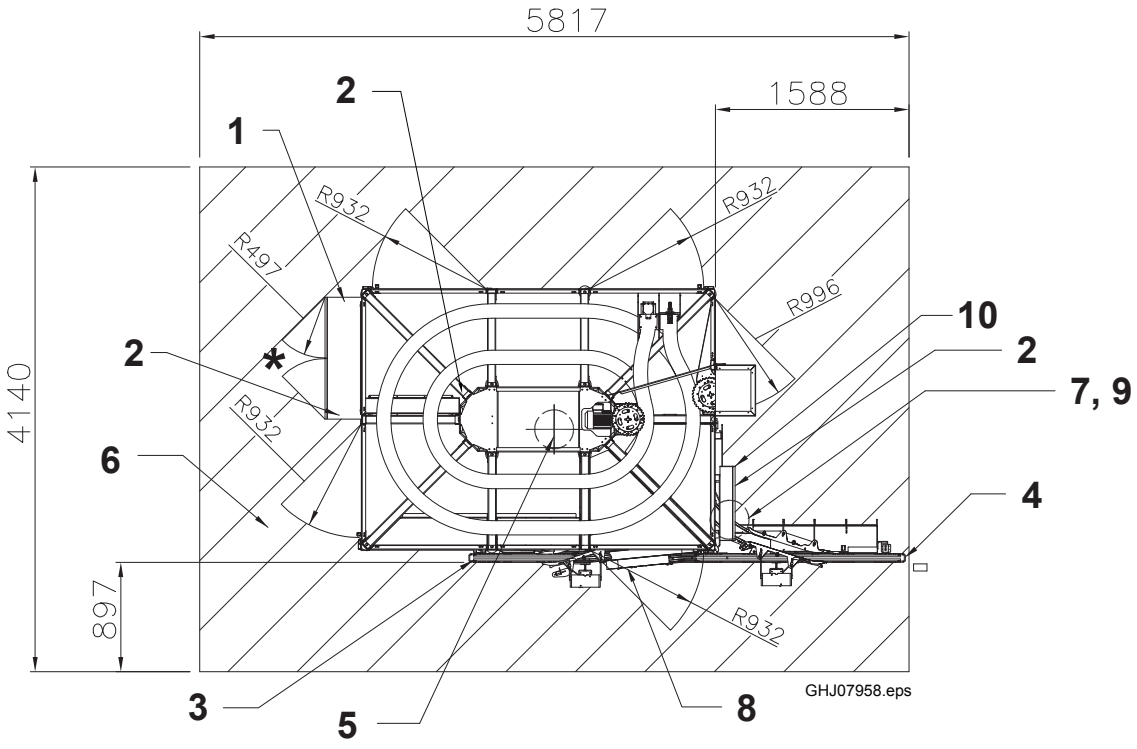

* The radius for the single-door enclosure on CSA machines is 987 mm.

1 Electrical cabinet, Power supply disconnect, Electrical connection height 1288 mm
2 EMERGENCY STOP (The Emergency Stop located inside the machine does not affect installation.)
3 Infeed connection point
4 Outfeed connection point
5 Centre of gravity
6 Service area
7 Water connection for rinse system, height 200 mm
8 Drive and end unit
9 Water pistol
10 TPOP

(Cont'd)

(Cont'd)

Note! The drive and end unit is included with the machine. See item 8 on the previous page and in the graphic below.

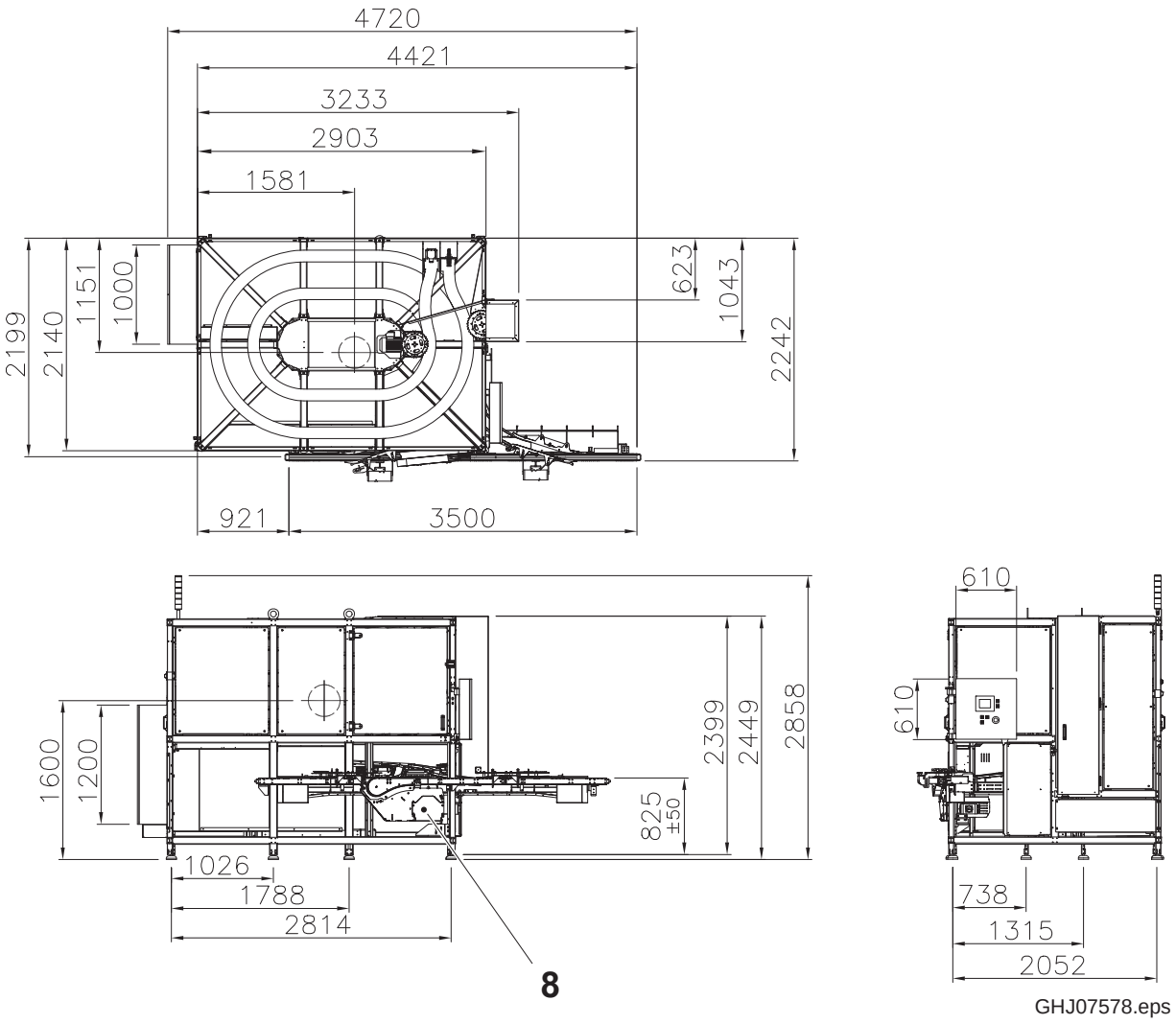

8 Drive and end unit

(Cont'd)

(Cont'd)

ACHX30 75M and 90M

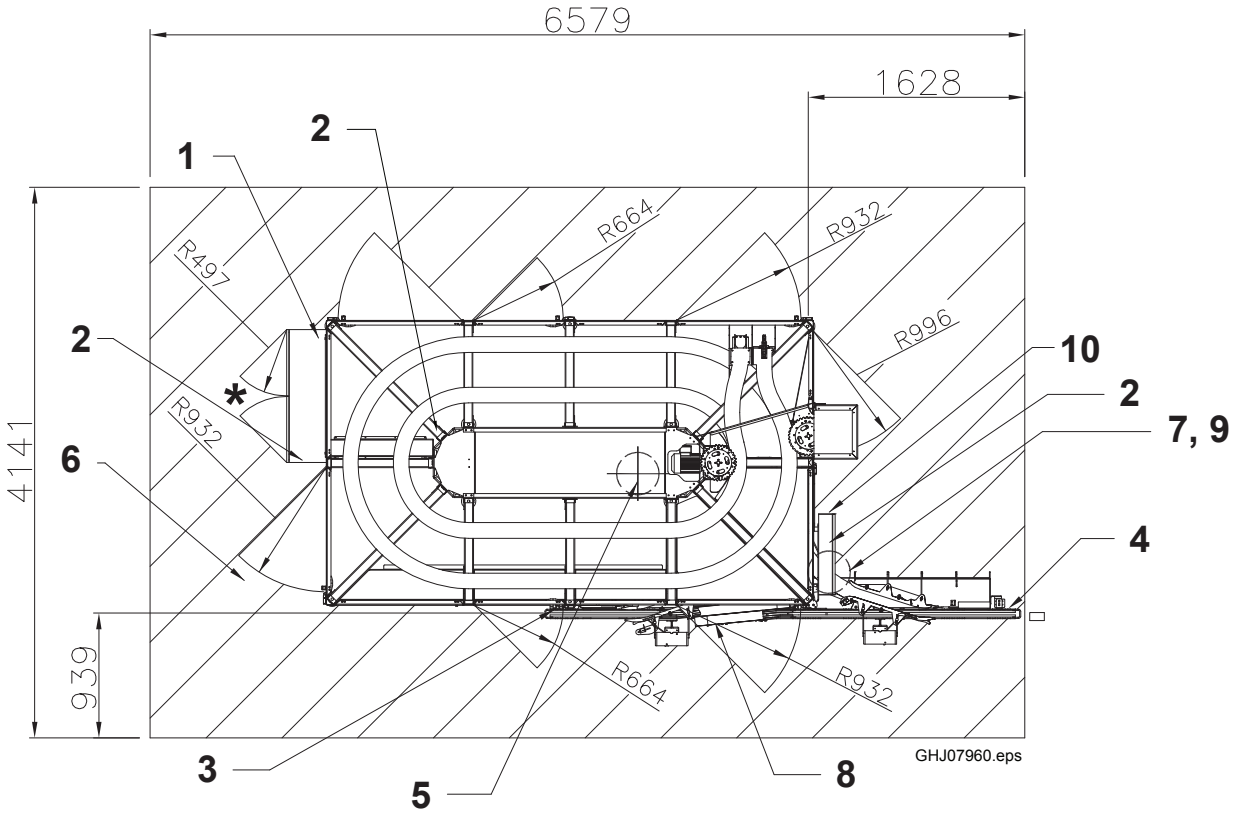

* The radius for the single-door enclosure on CSA machines is 987 mm.

1 Electrical cabinet, Power supply disconnect, Electrical connection height 1288 mm
2 EMERGENCY STOP (The Emergency Stop located inside the machine does not affect installation.)
3 Infeed connection point
4 Outfeed connection point
5 Centre of gravity
6 Service area
7 Water connection for rinse system, height 200 mm
8 Drive and end unit
9 Water pistol
10 TPOP

(Cont'd)

(Cont'd)

Note! The drive and end unit is included with the machine. See item 8 on the previous page and in the graphic below.

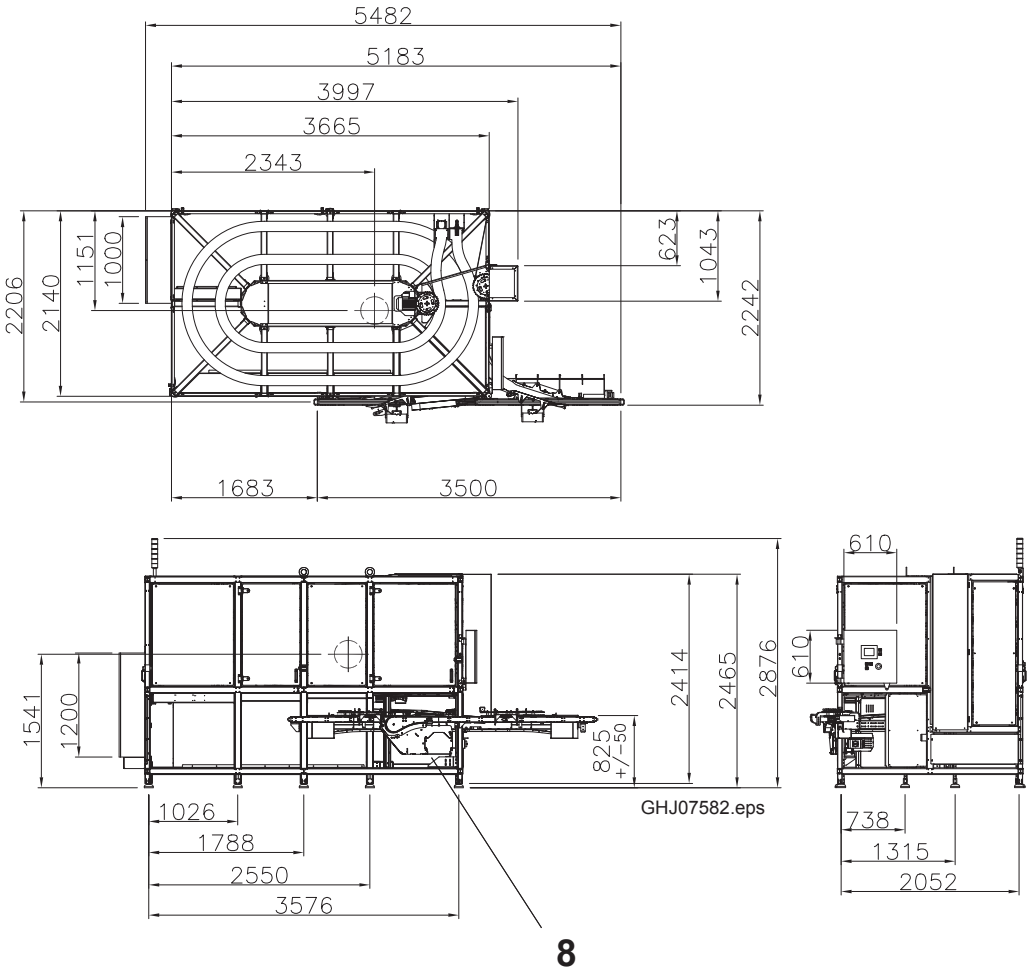

8 Drive and end unit

(Cont'd)

(Cont'd)

ACHX30 100M and 120M

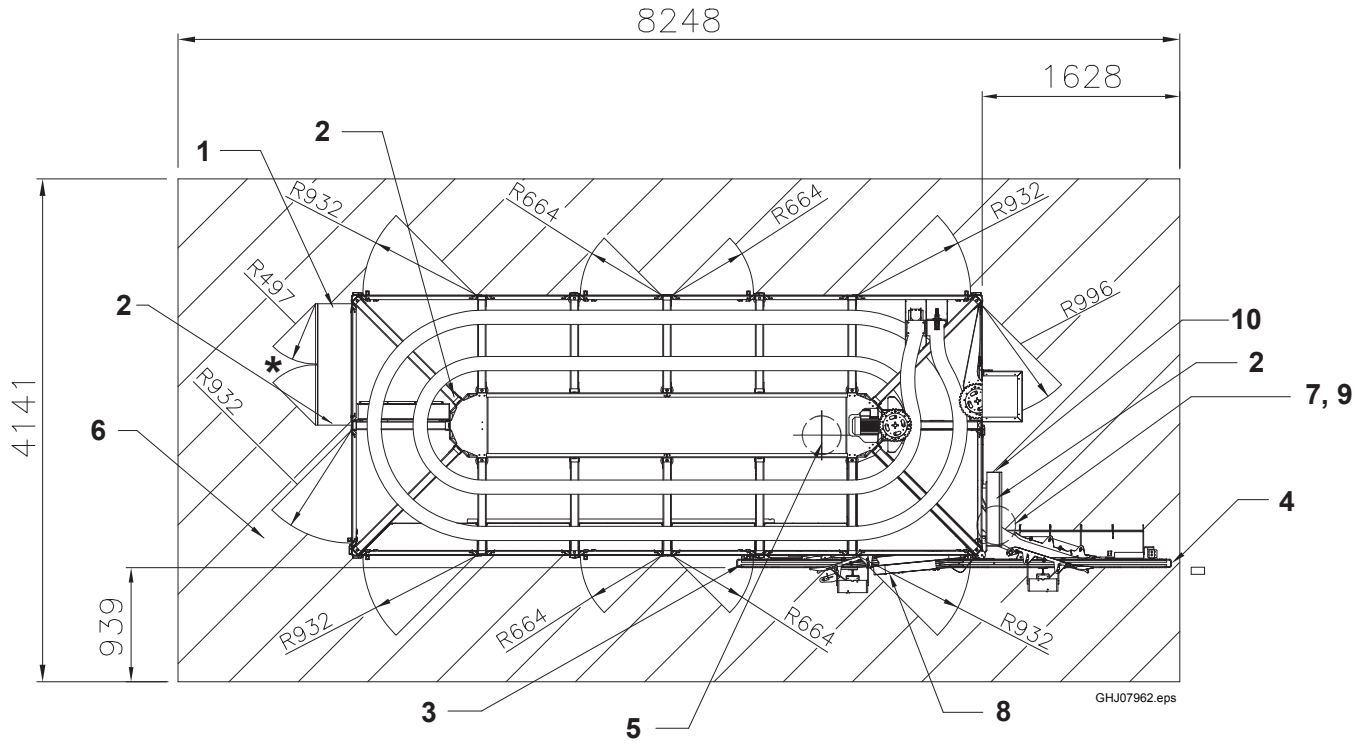

* The radius for the single-door enclosure on CSA machines is 987 mm.

1 Electrical cabinet, Power supply disconnect, Electrical connection height 1288 mm
2 EMERGENCY STOP (The Emergency Stop located inside the machine does not affect installation.)
3 Infeed connection point
4 Outfeed connection point
5 Centre of gravity
6 Service area
7 Water connection for rinse system, height 200 mm
8 Drive and end unit
9 Water pistol
10 TPOP

(Cont'd)

(Cont'd)

Note! The drive and end unit is included with the machine. See item 8 on the previous page and in the graphic below.

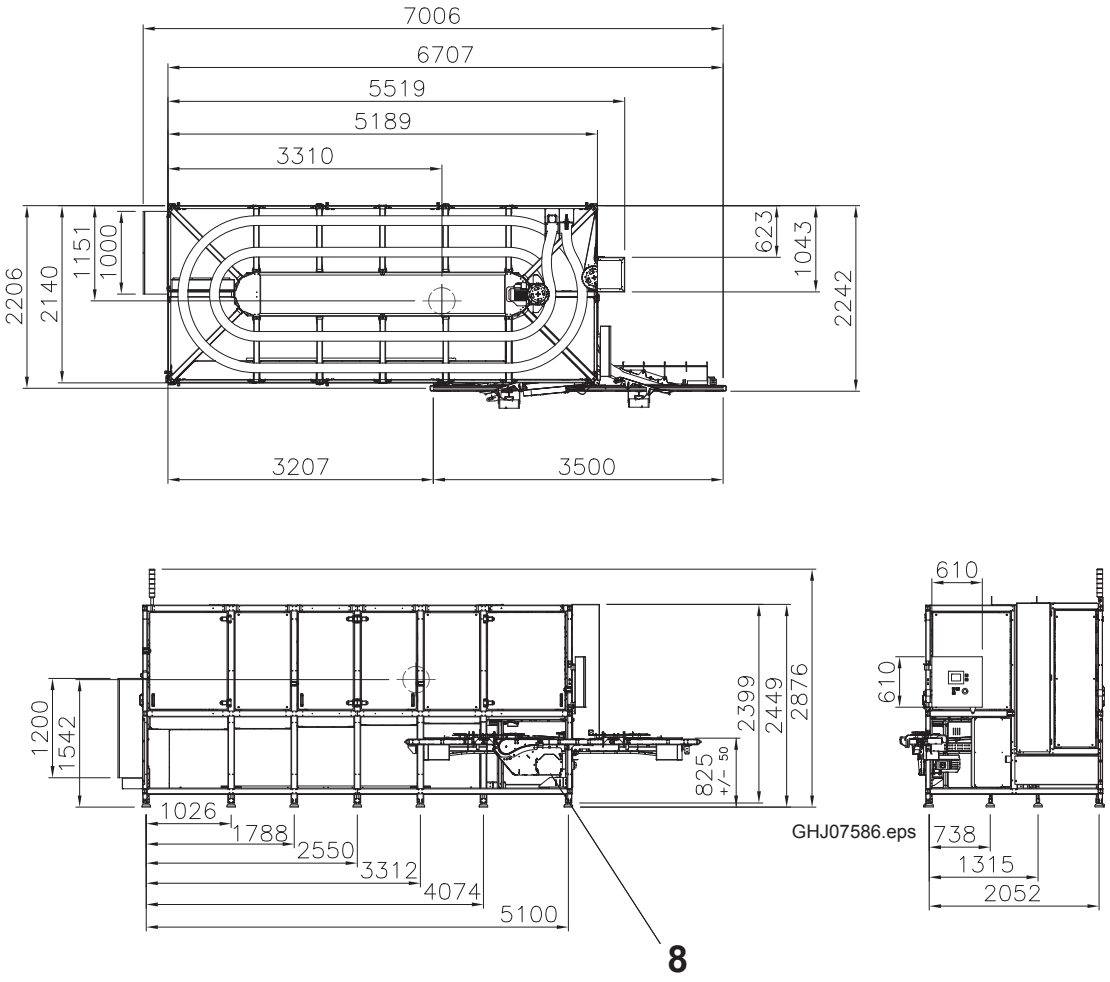

8 Drive and end unit

1.1.2 Right Infeed (RINF) Machine

ACHX30 47M

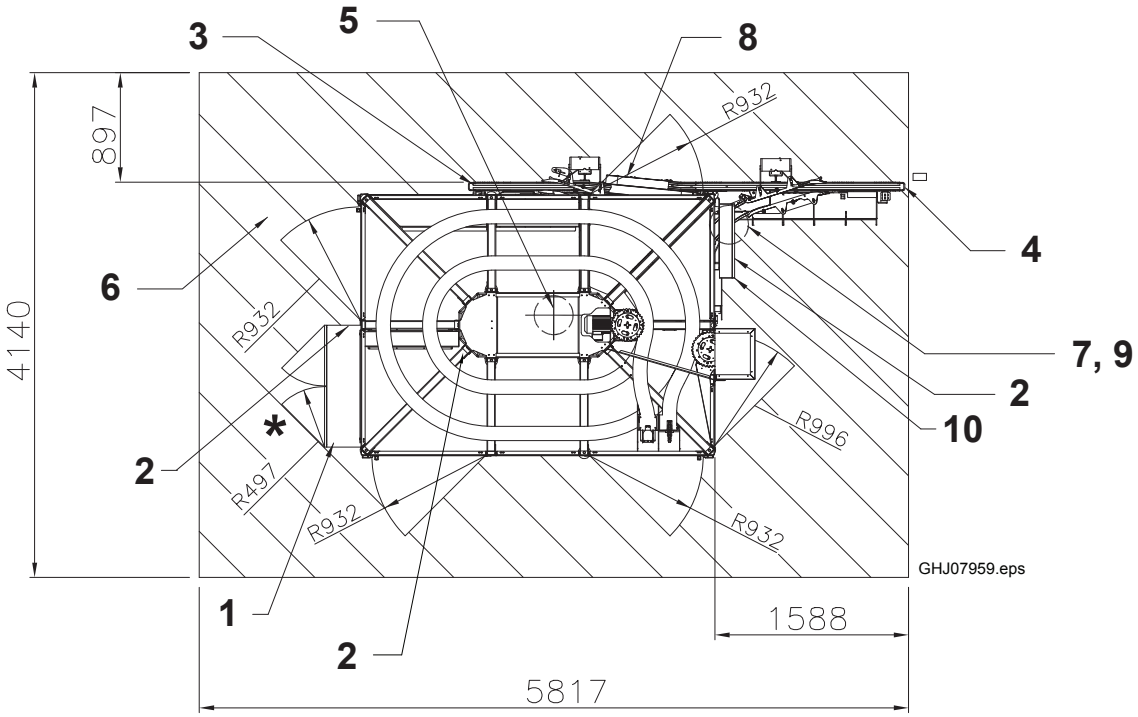

* The radius for the single-door enclosure on CSA machines is 987 mm.

1 Electrical cabinet, Power supply disconnect, Electrical connection height 1288 mm
2 EMERGENCY STOP (The Emergency Stop located inside the machine does not affect installation.)
3 Infeed connection point
4 Outfeed connection point
5 Centre of gravity
6 Service area
7 Water connection for rinse system, height 200 mm
8 Drive and end unit
9 Water pistol
10 TPOP

(Cont'd)

(Cont'd)

Note! The drive and end unit is included with the machine. See item 8 on the previous page and in the graphic below.

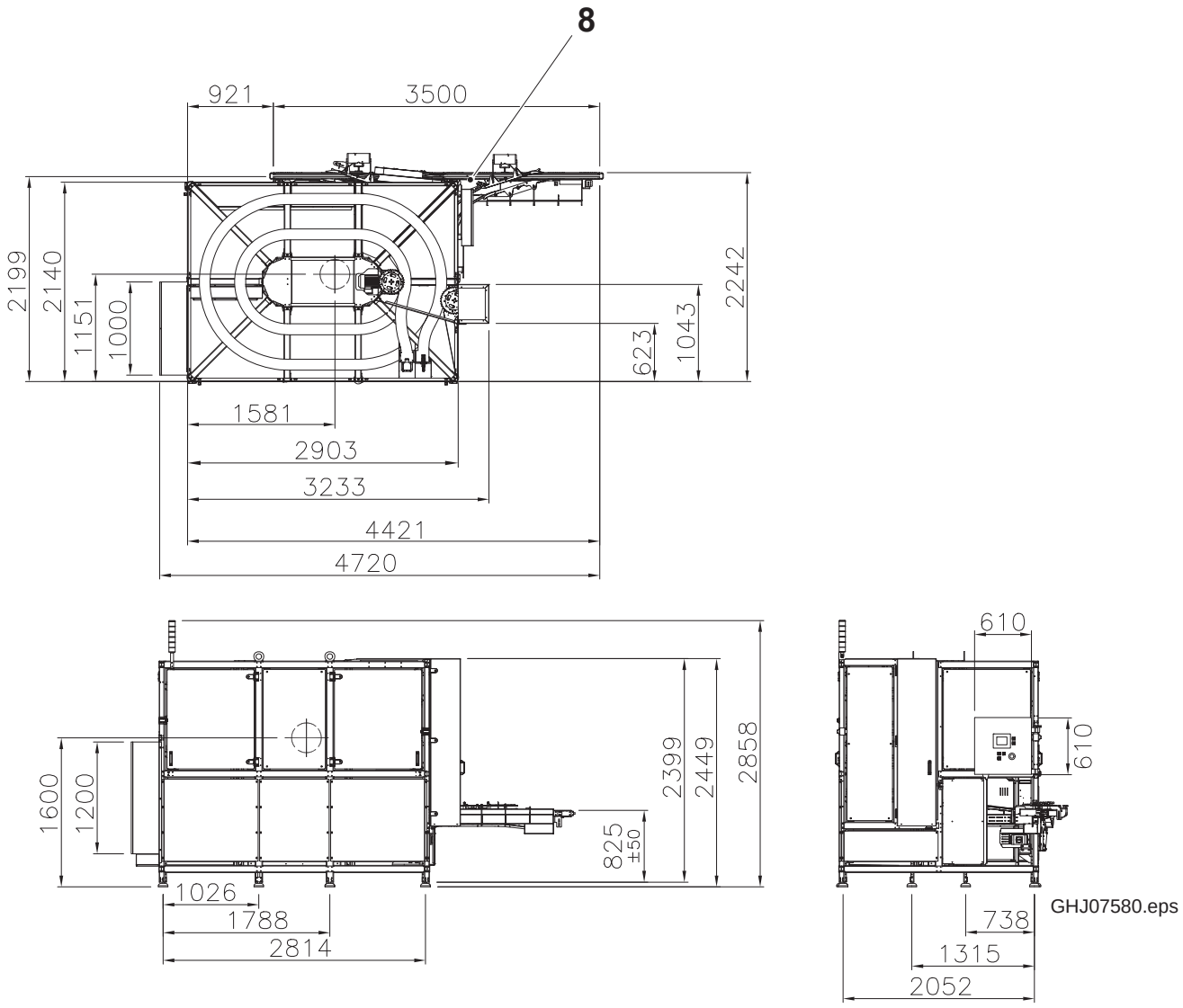

8 Drive and end unit

(Cont'd)

(Cont'd)

ACHX30 75M and 90M

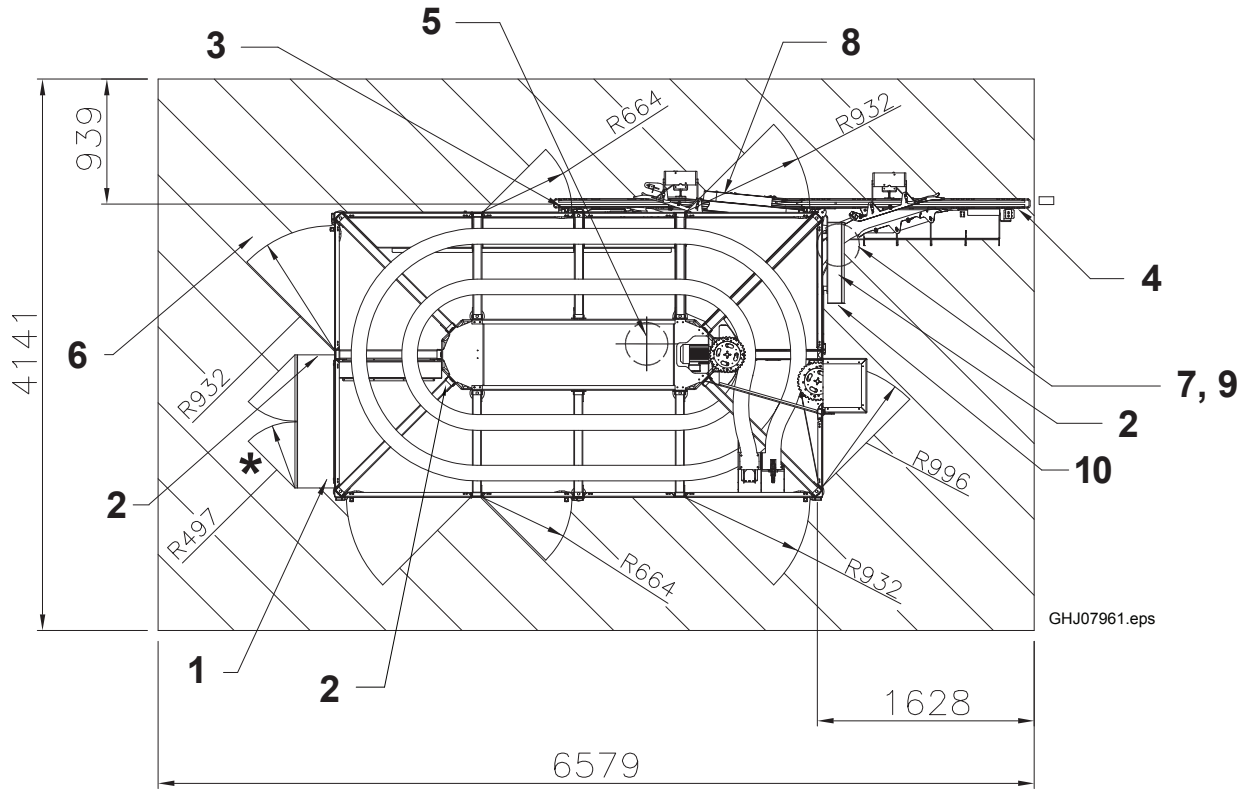

* The radius for the single-door enclosure on CSA machines is 987 mm.

1 Electrical cabinet, Power supply disconnect, Electrical connection height 1288 mm
2 EMERGENCY STOP (The Emergency Stop located inside the machine does not affect installation.)
3 Infeed connection point
4 Outfeed connection point
5 Centre of gravity
6 Service area
7 Water connection for rinse system, height 200 mm
8 Drive and end unit
9 Water pistol
10 TPOP

(Cont'd)

(Cont'd)

Note! The drive and end unit is included with the machine. See item 8 on the previous page and in the graphic below.

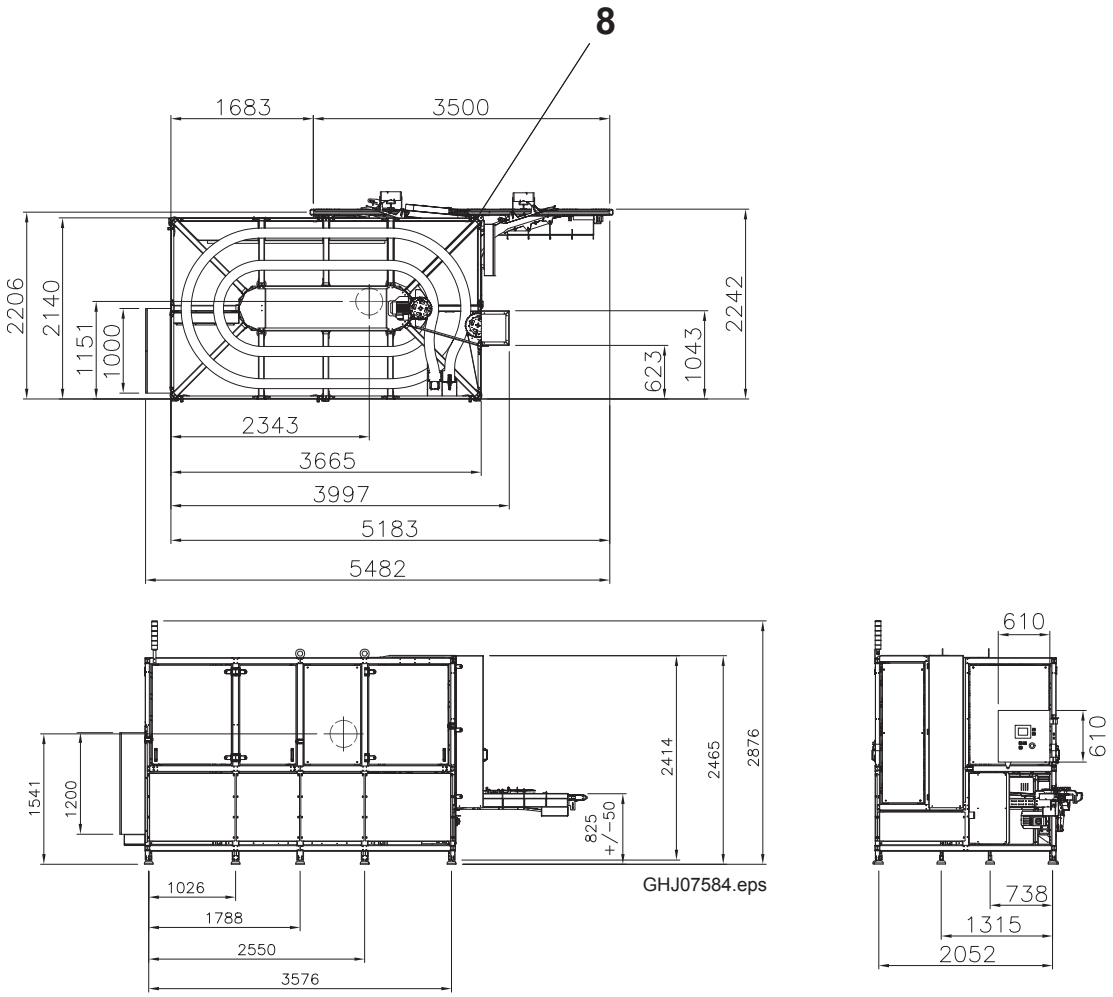

8 Drive and end unit

(Cont'd)

(Cont'd)

ACHX30 100M and 120M

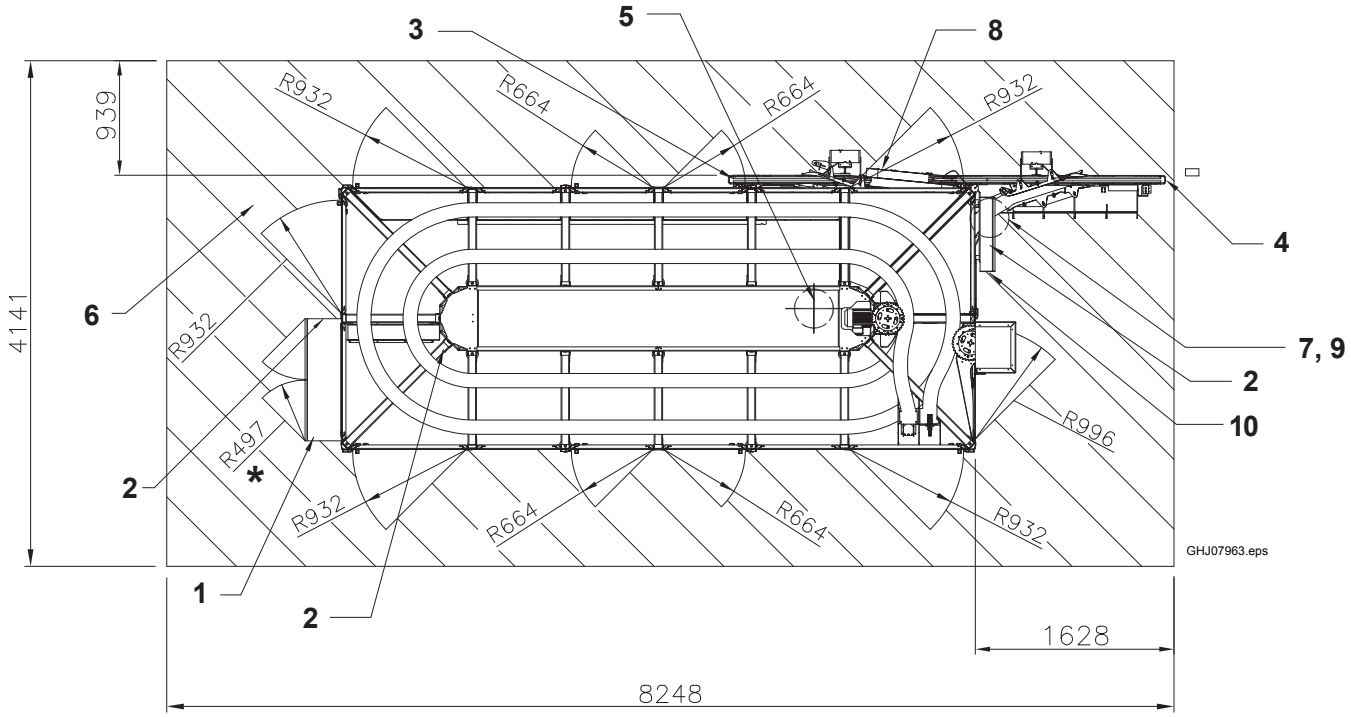

* The radius for the single-door enclosure on CSA machines is 987 mm.

1 Electrical cabinet, Power supply disconnect, Electrical connection height 1288 mm
2 EMERGENCY STOP (The Emergency Stop located inside the machine does not affect installation.)
3 Infeed connection point
4 Outfeed connection point
5 Centre of gravity
6 Service area
7 Water connection for rinse system, height 200 mm
8 Drive and end unit
9 Water pistol
10 TPOP

(Cont'd)

(Cont'd)

Note! The drive and end unit is included with the machine. See item 8 on the previous page and in the graphic below.

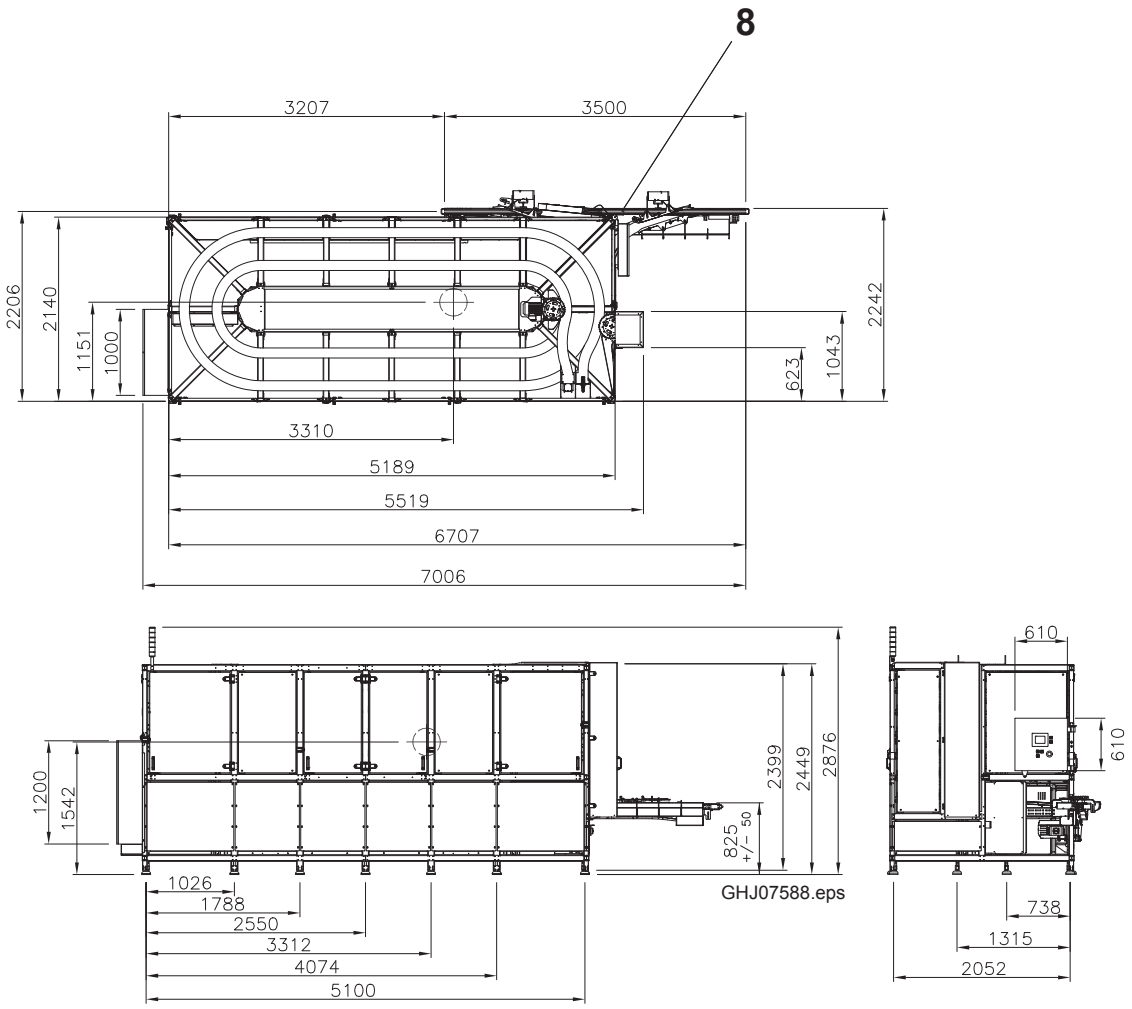

8 Drive and end unit

1.1.3 Foot Positions

The drawing below shows the foot positions for each machine variant.

Note! The LINF view only is shown in this section.

ACHX30 47M

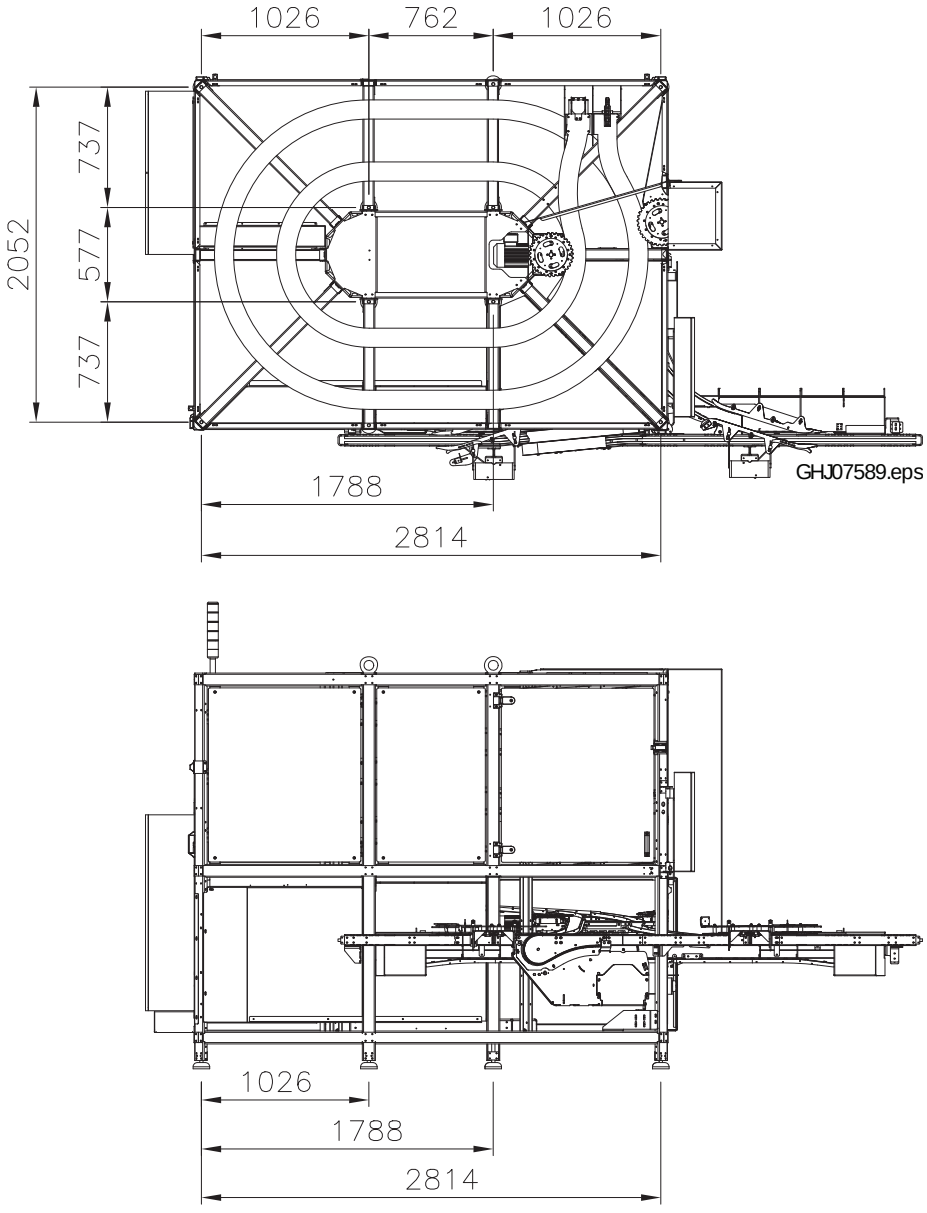

(Cont'd)

(Cont'd)

ACHX30 75M and 90M

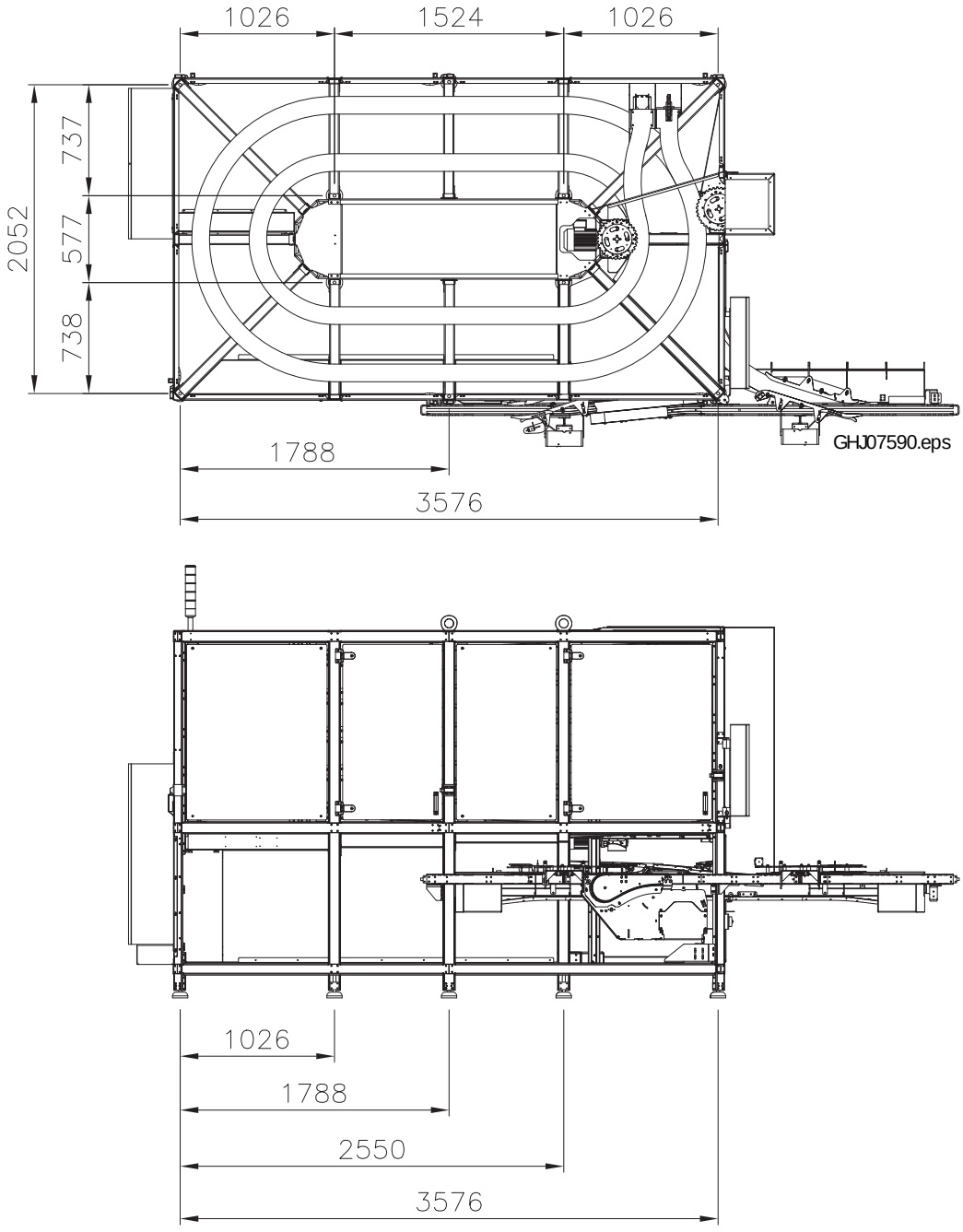

(Cont'd)

(Cont'd)

ACHX30 100M and 120M

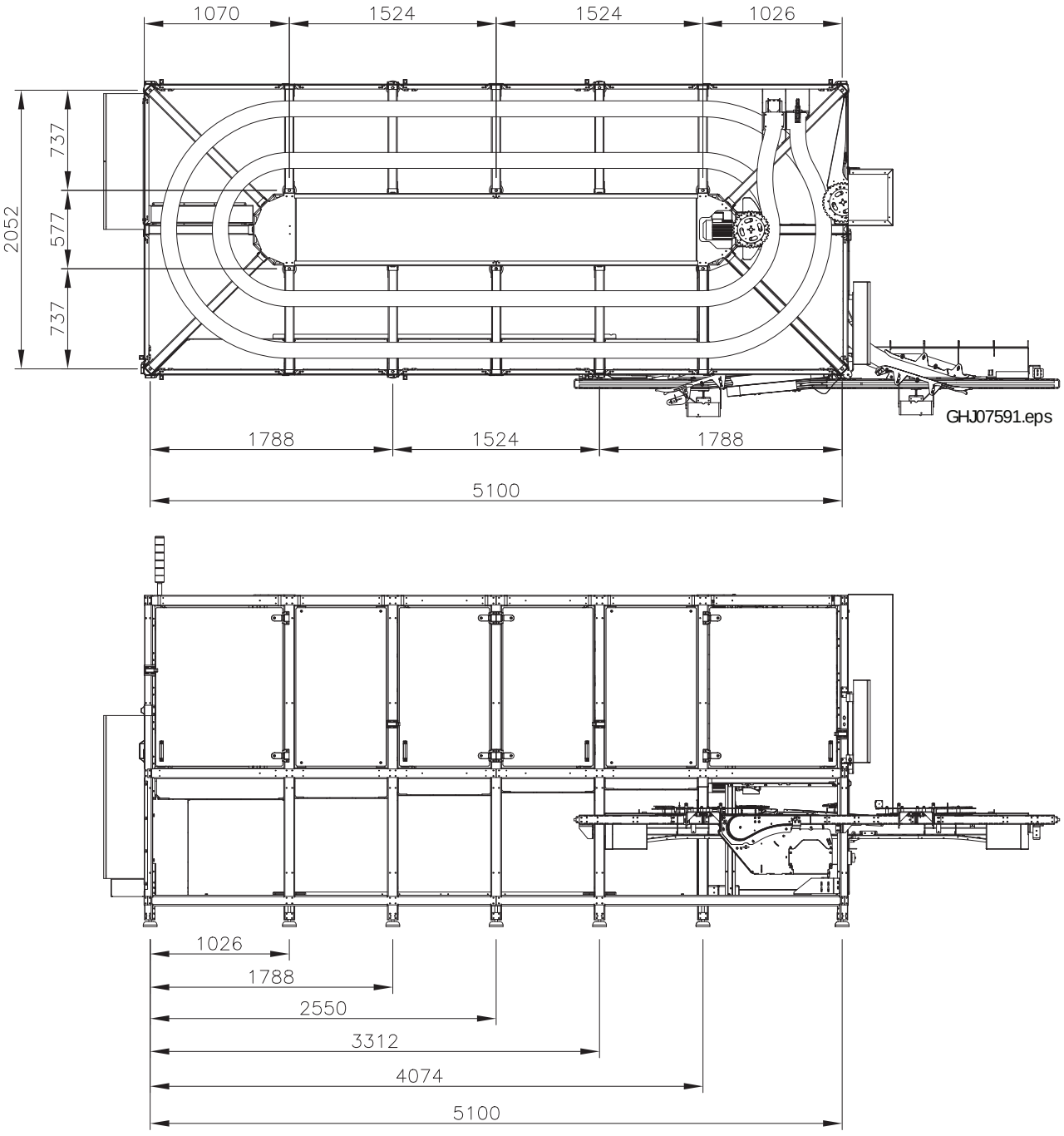

1.1.4 Conveyor equipment

General

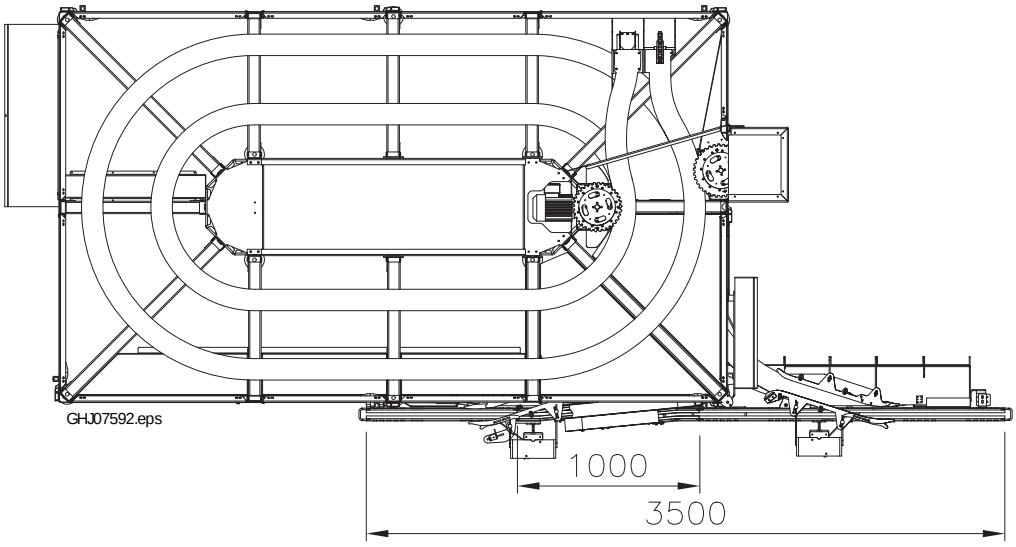

(Cont'd)

(Cont'd)

Package Conveyor 23

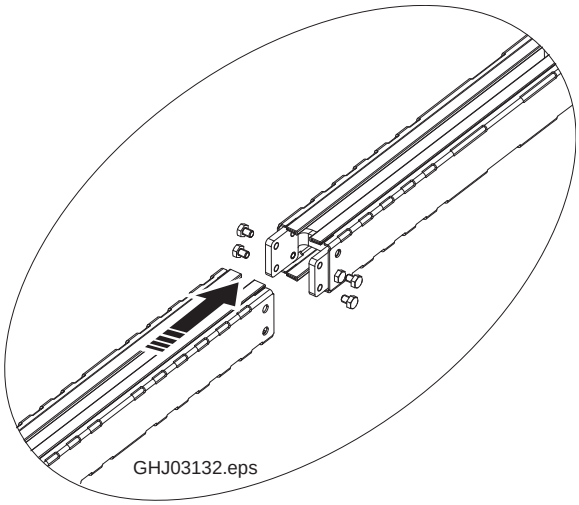

Note! For further information on connecting the conveyor, see 3.2.3.3 Assembling Drive and End Unit.

1.2 Equipment Specifications

1.2.1 Machine Configurations

1.2.1.1 General

The Accumulator Helix 30 handles TB, TBA, TGA, TPA, and TRC packages. It is available in the following ten options:

Machine	Variant	Feed Side	Filling Machines (Note: Exceptions do occur on some volumes.)
ACHX30	47M	LINF	A3/Flex A3/Flex iLine TBA/8 TBA/19 TB/19 C3/Flex
		RINF	
	75M	LINF	A3/Speed
		RINF	
	90M	LINF	TBA/22, A3/Speed iLine TP R1
		RINF	
	100M	LINF	A3/Speed iLine
		RINF	
	120M	LINF	A3/Speed iLine TP R1
		RINF	
Note! See also the Tetra Pak Product Portfolio Configurator.			

Note! The base machine variant in the manual is the 90M. This variant is shown in the manual when the subject is not affected by the variation in machine. When variations affect the subject, illustrations of those specific variants are also shown in the manual. To determine the machine variant you have, check the machine plate bolted to the machine. See Machine Plate on page i-12.

(Cont'd)

(Cont'd)

1.2.1.2 Accumulation Capacity

To calculate minutes of accumulation, use the following formula:

$$\text{Accumulation Time (Minutes)} = \frac{\text{(Accumulation Capacity (m))} * 60{,}000}{\text{(Pack Width (mm))} * 1.15 * \text{(Filler Rate (packs/hour))}}$$

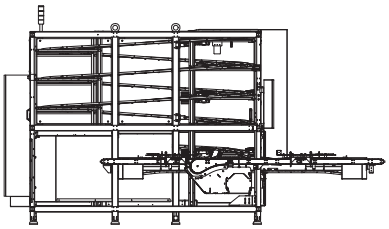

ACHX30 47M
4 Layers / 43M of Accumulation

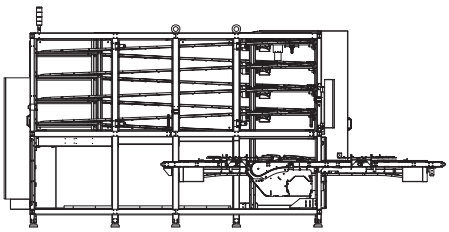

ACHX30 75M
5 Layers / 69M of Accumulation

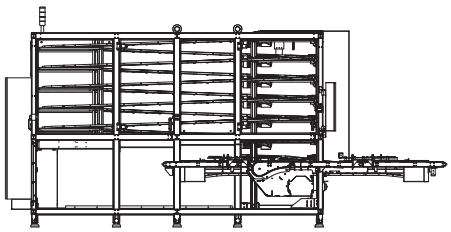

ACHX30 90M
6 Layers / 84M of Accumulation

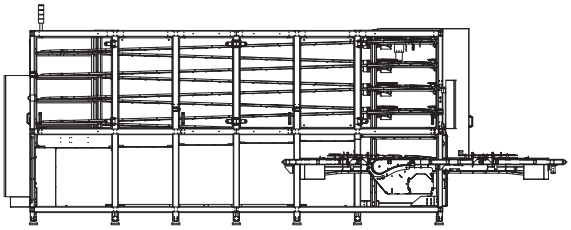

ACHX30 100M
5 Layers / 100M of Accumulation

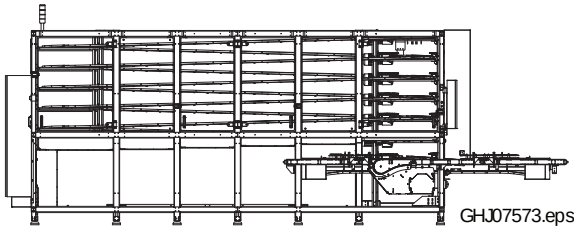

ACHX30 120M
6 Layers / 120M of Accumulation

1.2.2 Optional Equipment

Equipment	Characteristic	TP No.
Caster Wheel Kit	Use when transporting the uncrated equipment to the installation site.	2727386-0100
Chain Cleaner	The chain cleaner is designed to clean the conveyor chains using soap and water.	3008907-0100
Genius Communications	Use when machine requires Genius communications system.	3008990-0100
SNP Communications	Use when machine is equipped with an SNP communications system.	90459-4235

1.2.3 Mass

Variants	47M	75M	90M	100M	120M
Machine Weight (Uncrated)	1587 kg	2255 kg	2390 kg	2700 kg	2810 kg
With Chain Cleaner (Option)	1657 kg	2325 kg	2460 kg	2770 kg	2880 kg

(Cont'd)

(Cont'd)

1.2.4 External Infeed and External Outfeed Requirements

1.2.4.1 External Infeed Conveyor

Characteristic	Value	Note
Type	Package Conveyor 23	
Type of chain	PC 23	Chain MOD 04 only
Width	Not applicable	
Infeed height (top of chain)	825 +/- 50 mm	
Required chain length	8.0 m	Drive and end unit included
Maximum chain length that can be pulled (equivalent to straight conveyor)	See TeM Conveyor (or PIM Conveyor)	
External drive and end units controlled from the machine	Yes	
External drive and end unit included in the machine	Yes	Speed is dependent upon: 1. Filling machine capacity 2. Package dimensions For specifications on the D&E unit delivered with the machine, see the machine specification in the electrical cabinet.
Chain tensioner required	Yes	Included on PC 23 drive and end unit
Conveyor chain lubricant	Water lubrication recommended, but other alternatives are available. Contact Tetra Pak Packaging Solutions AB or Hartness International.	

1.2.4.2 Extra External Infeed Conveyor (option)

This section describes external equipment that is not included with the ACHX and is not always used.

Characteristic	**Value**	**Note**
Type	Package Conveyor 23	
Type of chain	PC 23	Chain MOD 04 only
Width	Not applicable	
Infeed height (top of chain)	825 +/- 50 mm	
Required chain length	Not applicable	
Maximum chain length that can be pulled (equivalent to straight conveyor)	See TeM Conveyor (or PIM Conveyor)	
External drive and end units controlled from the machine	Yes	See 1.5 Mechanical Line Integration and Connection for information on ArmorStarts.
External drive and end unit included in the machine	No	
Chain tensioner required	Yes	Included on PC 23 drive and end unit
Drive and end unit	Filler Rate < 11,000 packs / hour 15 m / min. @ 50 HZ Filler Rate > or = 11,000 packs / hour and < 24000 packs / hour 21 m / min. @ 50 HZ Filler Rate > or = 24,000 packs / hour 33 m / min. @ 50 HZ	
Conveyor chain lubricant	Water lubrication recommended, but other alternatives are available. Contact Tetra Pak Packaging Solutions AB or Hartness International.	

Note! Refer to 1.5 Mechanical Line Integration and Connection for parts that need to be ordered when this option is used.

1.2.4.3 External Outfeed Conveyor

Characteristic	Value	Note
Type	Package Conveyor 23	
Type of chain	PC 23	Chain MOD 04 only
Width	Not applicable	
Discharge height (top of chain)	825 +/- 50 mm	
Maximum chain length that can be pulled (equivalent to straight conveyor)	See TeM Conveyor (or PIM Conveyor)	
Time to complete a sequential stop	Not applicable	
External drive and end units controlled from the machine	Yes	See 1.5 Mechanical Line Integration and Connection for information on ArmorStarts.
External drive and end unit included in the machine	No	
Drive and end unit	Filler Rate < 11,000 packs / hour 21 m / min. @ 50 HZ Filler Rate > or = 11,000 packs / hour and < 24000 packs / hour 25 m / min. @ 50 HZ Filler Rate > or = 24,000 packs / hour 39 m / min. @ 50 HZ	
Conveyor chain lubricant	Note! Water lubrication recommended, but other alternatives are available. Contact Tetra Pak Packaging Solutions AB or Hartness International.	
Note: Cable for connection of external outfeed conveyor motor is not included. (Part no. 90220-0104)		

1.2.4.4 Extra External Outfeed Conveyor (option)

This section describes external equipment that is not included with the ACHX and is not always used.

Characteristic	Value	Note
Type	Package Conveyor 23	
Type of chain	PC 23	Chain MOD 04 only
Width	Not applicable	
Discharge height (top of chain)	825 +/- 50 mm	
Maximum chain length that can be pulled (equivalent to straight conveyor)	See TeM Conveyor (or PIM Conveyor)	
Time to complete a sequential stop	Not applicable	
External drive and end units controlled from the machine	Yes	
External drive and end unit included in the machine	No	
Drive and end unit	Filler Rate < 11,000 packs / hour 21 m / min. @ 50 HZ Filler Rate > or = 11,000 packs / hour and < 24000 packs / hour 25 m / min. @ 50 HZ Filler Rate > or = 24,000 packs / hour 39 m / min. @ 50 HZ	
Conveyor chain lubricant	Note! Water lubrication recommended, but other alternatives are available. Contact Tetra Pak Packaging Solutions AB or Hartness International.	

Note! Refer to 1.5 Mechanical Line Integration and Connection for parts that need to be ordered when this option is used.

1.2.5 Additional Materials

Material	TP No.	Note
Start-up kit (TBA/TGA/TPA/TRC)	2855348-0201 (LINF) 2855348-0201 (RINF)	Included in delivery
Cable for connection of external outfeed conveyor motor	90220-0104	NOT included in delivery (Parts are sold by Technical Service.)

1.3 Lifting and Transportation Data

This section includes all data needed during the lifting and transportation of the equipment.

DANGER

Immediate danger to life!

To safely and efficiently lift and unload the crate from the delivery vehicle, refer to 3.1.1 Unloading the Crated Equipment.

1.3.1 Crate and Equipment

The following table contains data needed for handling the crate and equipment.

Variants	ACHX30 47M	ACHX30 75M	ACHX30 90M	ACHX30 100M	ACHX30 120M
Shipping data					
Machine weight (uncrated)	1587 kg	2255 kg	2390 kg	2700 kg	2810 kg
Number of crates	1				
Shipping weight (crated)	2487 kg	3155 kg	3290 kg	3800 kg	3910 kg
Shipping volume (crated)	Length = 5825 mm Width = 2300 mm Height = 2555 mm			Length = 7350 mm Width = 2300 mm Height = 2555 mm	

1.3.2 Auxiliary Equipment

This section specifies equipment used for lifting, unloading, and moving the crated and uncrated equipment.

DANGER

Immediate danger to life!

Follow the recommendations below to avoid injury!

1.3.2.1 Recommended Equipment

The following equipment is recommended for smooth and safe handling of the crate and its contents. The recommended equipment depends upon site conditions. Make sure the lifting equipment has been properly tested to handle the weight of the machine.

Unloading and Transporting Crated Equipment

Refer to 3.1.1 Unloading the Crated Equipment.

Equipment	Quantity	Notes
Forklift	1	5000 kg minimum capacity
Nylon Strap (Eye and Eye) or other comparable equipment	1	

(Cont'd)

(Cont'd)

Note! The machine may be moved in several different ways depending upon available equipment and purchased options. Refer to the data below for the corresponding recommended equipment.

Transporting Uncrated Machine Using Forklift Channels

Refer to Lifting Machine Using Forklift Channels on page 3-26.

Equipment	**Capacity** minimum kg	**Quantity**	**Notes**
Forklift	5000	1	

Transporting Uncrated Machine Using Caster Wheels (Option)

Refer to 3.2.1.4 Rolling Machine.

Equipment	**Capacity** minimum kg	**Quantity**	**Notes**
Forklift	5000	1	
Optional Caster Wheels		4	TP Part No. 2727386-0100

Transporting Uncrated Machine Using Lifting Lugs (Overhead)

Refer to Lifting Machine from Above on page 3-28.

Equipment	**Capacity** minimum kg	**Quantity**	**Notes**
Spreader Bar	5000	1	Follow local safety regulations and practices.
Approved Overhead Lifting Device			

(Cont'd)

1.3.2.2 Forklift Requirements

Note the forklift positions and required characteristics as shown below.

A	1219 mm minimum fork length
B	Centre of fork to centre of fork = 982 mm
C	160 mm (minimum); 190 mm (maximum)
D	=/< 67 mm fork depth

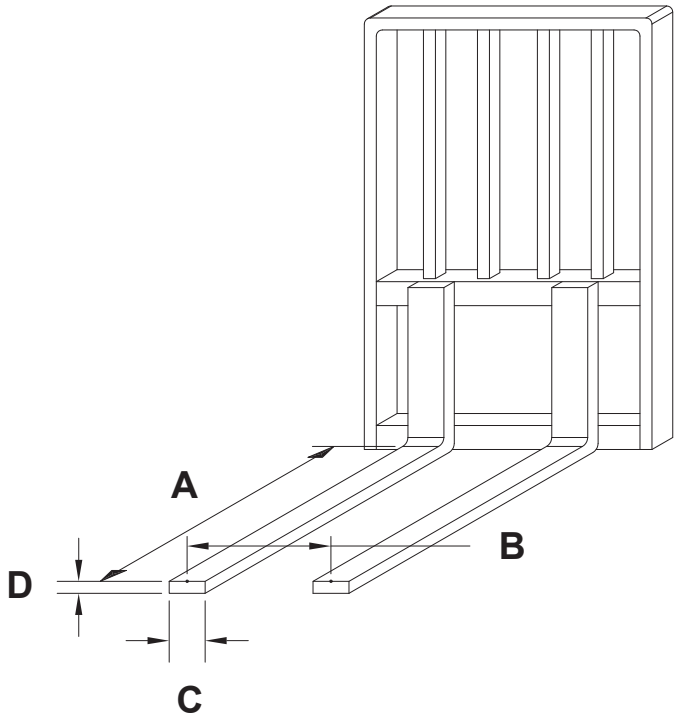

1.3.3 Space Requirements

The space requirements for this machine are given in the installation drawings shown in 1.1 Installation Drawings.

1.4 Utility and Utility Connection Data

This section contains all utility connection data required for optimal equipment performance.

WARNING

This product can cause a current in the protective earthing conductor. The external protective conductor associated with the power supply to this product must have a cross-sectional area of at least 10mm². Where a residual current-operated protective (RCD) or monitoring (RCM) device is used for protection in case of direct or indirect contact, only an RCD or RCM of Type B is allowed on the supply side of this product.

1.4.1 Electrical Power Specification

Variants	ACHX30 47M	ACHX30 75M	ACHX30 90M	ACHX30 100M	ACHX30 120M
Electricity					
Control system	Rockwell CompactLogix				
Power Consumption (Consumption measured at no load with all options turned on)					
Production	2.4 kW	4.0 kW	4.8 kw	4.6 kW	5.4 kw
Phase	3N~	3N~	3N~	3N~	3N~
Frequency	50 Hz, 60 Hz	50 Hz, 60 Hz	50 Hz, 60 Hz	50 Hz, 60 Hz	50 Hz, 60 Hz
Voltage	400/230 V	400/230 V	400/230 V	400/230 V	400/230 V
Fuse dimension	25A	25A	25A	25A	25A
Cable area (copper min.)	6.0 mm^2	6.0 mm^2	6.0 mm^2	6.0 mm^2	6.0 mm^2
Earth leakage in GNYE	100 ma	100 ma	100 ma	100 ma	100 ma
Protective bonding conductor due to leakage current	Max 10mm² Connect to A01X0000:E2				
Plant grounding conductor	Max 25mm² Connect to A01X0000:E3				
Short breaking capacity	15 KA	15 KA	15 KA	15 KA	15 KA
Cable type	5 x 6.0 / 6.0 or follow local regulations				
Line control Genius	Refer to 1.6 Communication.				
Line control I/O					
Line controller (LC)					
PLMS-version	SNP 5.0 PLMS NRG 100 PLMSLA 4				
PLMS cable	TP No. 90220-0091 for SNP 5.0 and PLMSLA 4 Ethernet cable for PLMS NRG 100, no cable included				
Line control cables	Cables for connection of line communication signals: Relay communication: 351150-0405 Genius Line communication / PLMS: See the filling machine manuals for more info on this. SNP PLMS: See the filling machine manuals for more info on this. LineController line communication / PLMS: See the LineController manuals for more information.				
Machine has air supply and power supply for package trap aero	Air = No Power Supply = Yes				

Machine has control function for conveyor lubrication solenoid valve	Yes				
Thermal load (heat emission)	2.4kw	4.0kw	4.8kw	4.6kw	5.4kw
Attachment of the machine to the floor	Yes				

1.4.2 Water Specification

Note! Refer to the World Health Organization's guidelines for drinking-water quality.

1.4.2.1 Standard

Variants	**ACHX30 47M**	**ACHX30 75M**	**ACHX30 90M**	**ACHX30 100M**	**ACHX30 120M**
Water Consumption					
Average	0.4 liters/minute				
Peak	21 liters/minute*				
Water connection at Helix	1/2 BSPT at 4.17 bar				

1.4.2.2 With Chain Cleaner (Optional)

Variants	**ACHX30 47M**	**ACHX30 75M**	**ACHX30 90M**	**ACHX30 100M**	**ACHX30 120M**
Water Consumption					
Average	0.6 litres/minute				
Peak	24.4 litres/minute*				
Water connection at Helix	1/2 BSPT at 4.17 bar				
Water connection at chain cleaner	3/4 NPT at 4.17 bar, 3/4 BSPT adaptor included				

* The draining system must be capable of handling peak flow rate.

1.4.3 Compressed Air Specification

1.4.3.1 With Chain Cleaner (Optional)

Variants	**ACHX30 47M**	**ACHX30 75M**	**ACHX30 90M**	**ACHX30 100M**	**ACHX30 120M**
Air Consumption					
Average	.01 m^3/minute				
Peak	.04 m^3/minute				
Connection	1/2 BSPP, 1/2 NPT adaptor included				

1.5 Mechanical Line Integration and Connection

Note! The machines shown in the following layouts represent a generic machine and may not reflect the specific machine being installed.

1.5.1 Non Line Controller Lines

1.5.1.1 Upstream Connections

Note! These layouts are only examples. Other setups may occur. It is always recommended to use line communications between the machines.

(Cont'd)

(Cont'd)

Upstream Connection Short / Medium

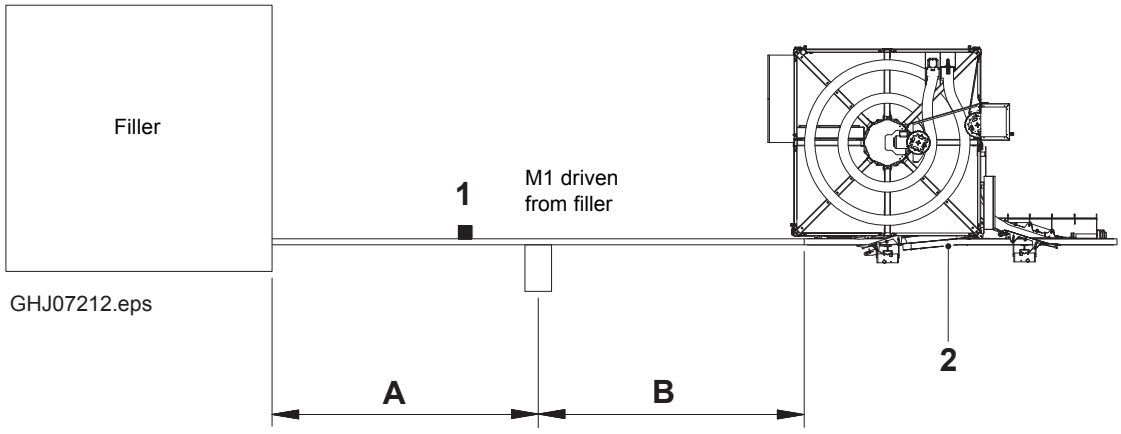

Filler:	**Refer to 1.2.1.1 General for filling machines.**
1:	**Shortstop photocell for the filler** The photocell should be installed according to the filler IM.
2:	**External infeed motor ACHX30** The D/E unit is included in the ACHX30.
M1:	**Filling machine's outfeed conveyor motor** This motor drives the filling machine's outfeed conveyor. It is powered and controlled from the filler. It must stop as soon as the final folder is empty when the ACHX30 sends a stop signal.
Short interface:	
A:	= 3 - 6 meters; Depends on package type and filler capacity.This is the required distance to empty the final folder of all packages.
B:	> 1 meter; This may be extended up to the maximum distance the drive end unit can pull.
Medium interface:	
A:	= 3 - 6 meters; Depends on package type and filler capacity.This is the required distance to empty the final folder of all packages.
B:	>= A/3,5 meter; This may be extended up to the maximum distance the drive motor can pull. If this condition is not fulfilled, fallen and jammed packages may occur inside the ACHX30.

Upstream Connection Long

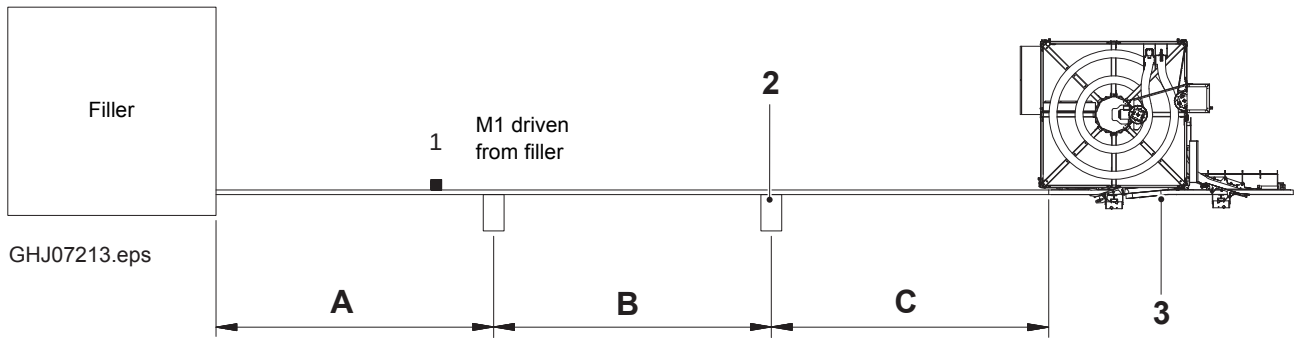

Filler:	**Refer to 1.2.1.1 General for filling machines.**
1:	**Shortstop photocell for the filler** The photocell should be installed according to the filler IM.
2:	**Extra external infeed motor ACHX30** This motor is controlled via a decentralized frequency converter. **Note!** The following articles need to be ordered: PC 23 Drive and End Unit: (a) Drive and end unit (motor on bottom) 50 Hz, 21m/min. (b) Drive and end unit (motor on top), 50 Hz, 21m/min. (c) Frequency converter with accessories 2807650-0101. (For this option, order XH two leg system. For more information, see PIM Conveyor / Conveyor Accessories.) (d) Resistor kit 2807658-0101. (Enough for one or two ArmorStarts. For more information, see PIM Conveyor / Conveyor Accessories.) (e) Cable kit 2807659-0101. (Enough for one or two ArmorStarts. For more information, see PIM Conveyor / Conveyor Accessories.)
3:	**External infeed motor ACHX30** The D/E unit is included in and connected to the ACHX30.
M1:	**Filling Machine's Outfeed Conveyor Motor** This motor drives the filling machine's outfeed conveyor. It is powered and controlled from the filler. It must stop as soon as the final folder is empty when the ACHX30 sends a stop signal.
Long interface:	
A:	= 3 - 6 meters. Depends on package type and filler capacity.This is the required distance to empty the final folder of all packages.
B:	This may be extended up to the maximum distance the drive end unit can pull.
C:	

1.5.1.2 Downstream Connections to a DE Machine

Note! These layouts are only examples. Other setups may occur. It is always recommended to use line communications between the machines.

Downstream Connection Short

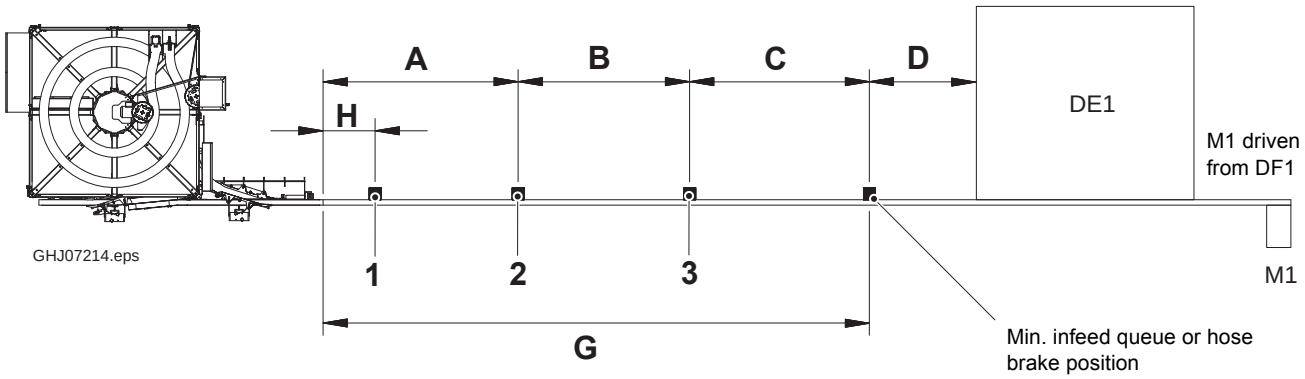

DE1:	**Any distribution equipment can be connected to the ACHX30 as long as these examples are followed.**
1:	**Counting photocell** This photocell is used to regulate the output speed of the ACHX30 to the requested packs / hour rate. It is included and connected in the ACHX30.
2:	**Queue photocell** This photocell is used to stop the ACHX30 outfeed. It is included and connected in the ACHX30.
3:	**Overflow photocell** A program function reduces the output speed of the ACHX30. It is included in and connected to the ACHX30.
A:	0,5-1m
B:	0,5-1m
C:	1,1-1,9m
D:	See DE1 IM for further information
G:	2,1-3,5m
H:	0,1-1m

Downstream Connection Medium

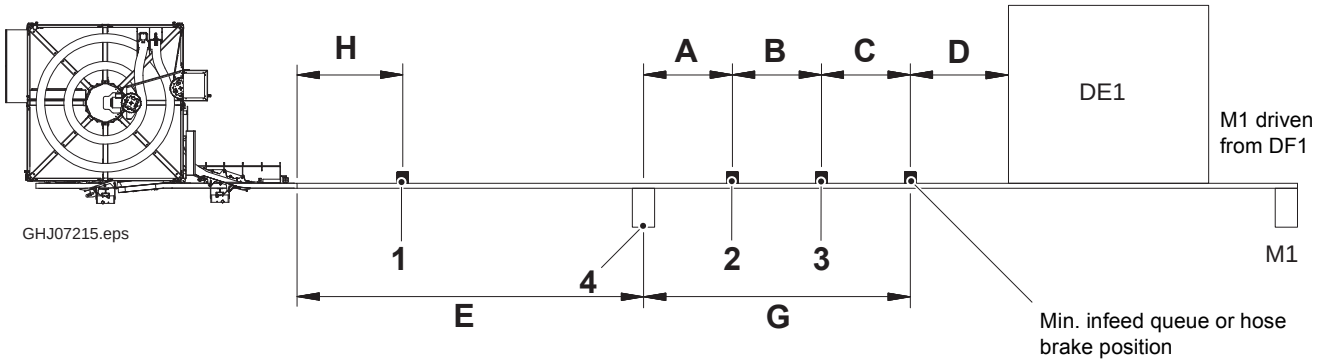

DE1:	**Any distribution equipment can be connected to the ACHX30 as long as these examples are followed.**
1:	**Counting photocell** This photocell is used to regulate the output speed of the ACHX30 to the requested packs / hour rate. It is included in and connected to the ACHX30.
2:	**Queue photocell** This photocell is used to stop the ACHX30 outfeed. It is included in and connected to the ACHX30.
3:	**Overflow photocell** A program function reduces the output speed of the ACHX30. It is included in and connected to the ACHX30.
4:	**External outfeed ACHX30** **Note!** The frequency drive is included in the ACHX30. The D/E unit is not included in ACHX30. PC 23 drive and end unit: (a) Drive and end unit (motor on bottom) 50 Hz, 21m/min. (b) Drive and end unit (motor on top), 50 Hz, 21m/min.

(Cont'd)

(Cont'd)

A:	0-0,5m
B:	0,5-1m
C:	1,1-1,9m
D:	See DE1 IM for further information
E:	Maximum distance between drive and end units pulled by motor.
G:	2-3m
H:	0,1-1m

Downstream Connection Long

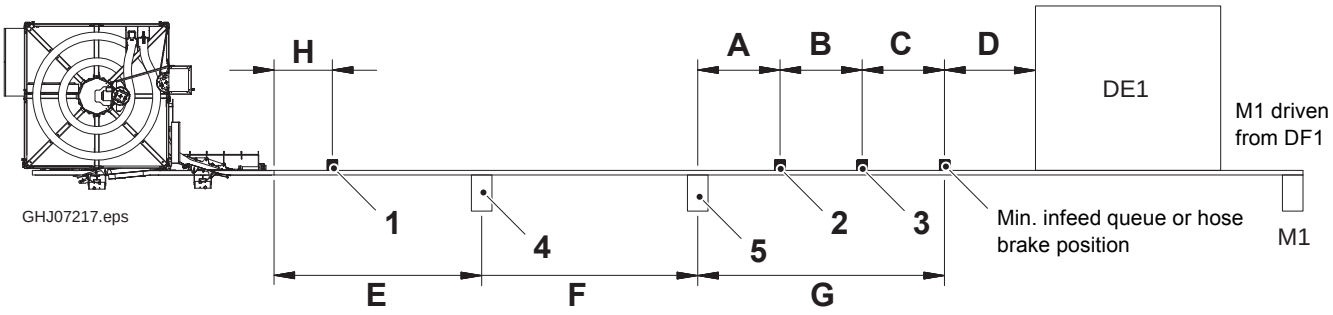

DE1:	**Any distribution equipment can be connected to the ACHX30 as long as these examples are followed.**
1:	**Counting photocell** This photocell is used to regulate the output speed of the ACHX30 to the requested packs / hour rate. It is included in and connected to the ACHX30.
2:	**Queue photocell** This photocell is used to stop the ACHX30 outfeed. It is included in and connected to the ACHX30.
3:	**Overflow photocell** A program function reduces the output speed of the ACHX30. It is included in and connected to the ACHX30.

(Cont'd)

(Cont'd)

4:	**External outfeed ACHX30** **Note!** The frequency drive is included in the ACHX30. The D/E unit is not included in the ACHX30. PC 23 drive and end unit to be ordered: (a) Drive and end unit (motor on bottom) 50 Hz, 21m/min. (b) Drive and end unit (motor on top), 50 Hz, 21m/min.
5:	**Extra external outfeed motor ACHX30** This motor is controlled via a decentralized frequency converter. The following articles need to be ordered: PC 23 Drive and End Unit: (a) Drive and end unit (motor on bottom) 50 Hz, 21m/min. (b) Drive and end unit (motor on top), 50 Hz, 21m/min. (c) Frequency converter with accessories 2807650-0101. (For this option, order XH two leg system. For more information, see PIM Conveyor / Conveyor Accessories.) (d) Resistor kit 2807658-0101. (Enough for one or two ArmorStarts. For more information, see PIM Conveyor / Conveyor Accessories.) (e) Cable kit 2807659-0101. (Enough for one or two ArmorStarts. For more information, see PIM Conveyor / Conveyor Accessories.)
A:	0-0,5m
B:	0,5-1m
C:	1,1-1,9m
D:	See DE1 IM for further information
E:	Maximum distance between drive and end units pulled by motor.
F:	
G:	2-3m
H:	0,1-1m

Downstream Connection Parallel

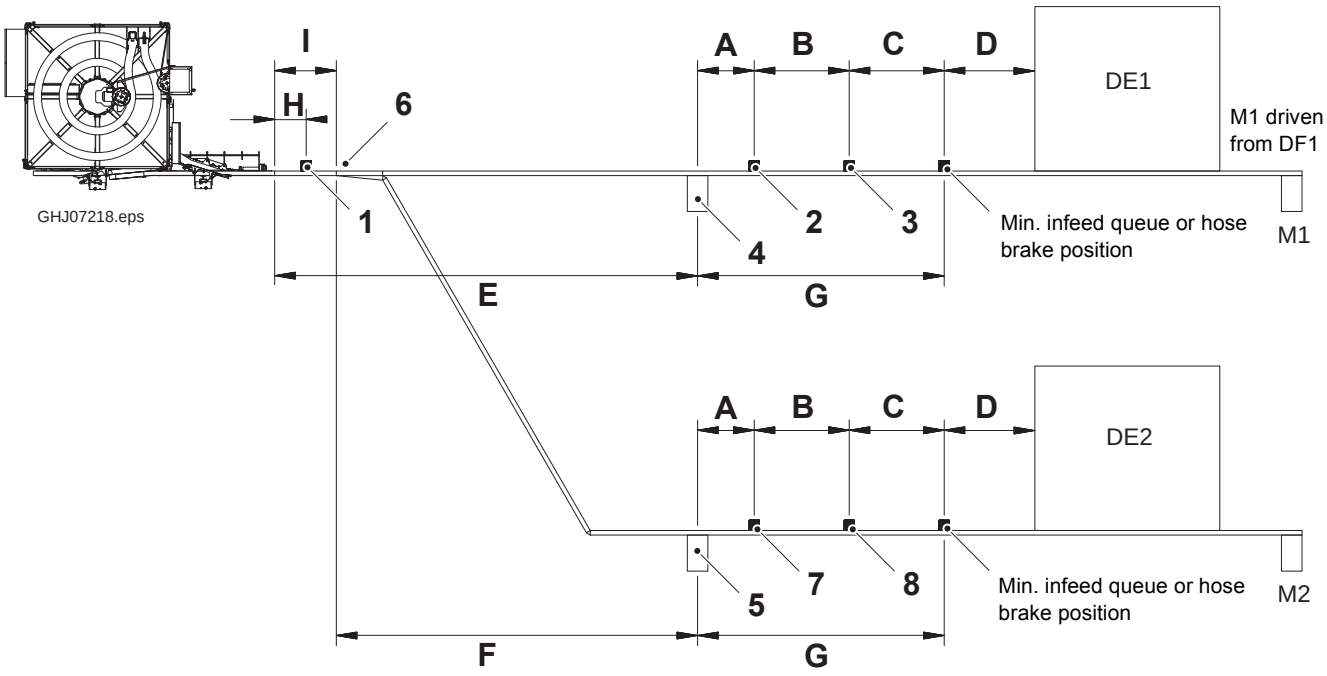

DE1/ DE2:	**Any distribution equipment can be connected to the ACHX30 as long as these examples are followed.**
1:	**Counting photocell** This photocell is used to regulate the output speed of the ACHX30 to the requested packs / hour rate. It is included in and connected to the ACHX30.
2:	**Queue photocell** This photocell is used to stop the ACHX30 outfeed. It is included in and connected to the ACHX30.
3:	**Overflow photocell** A program function reduces the output speed of the ACHX30. It is included in and connected to the ACHX30.
4:	**External outfeed ACHX30** **Note!** The frequency drive is included in the ACHX30. The D/E unit is not included in the ACHX30. PC 23 drive and end unit to be ordered: (a) Drive and end unit (motor on bottom) 50 Hz, 21m/min. (b) Drive and end unit (motor on top), 50 Hz, 21m/min.

(Cont'd)

(Cont'd)

5:	**Extra external outfeed motor ACHX30** This motor is controlled via a decentralized frequency converter. The following articles need to be ordered: PC 23 drive and end unit: (a) Drive and end unit (motor on bottom) 50 Hz, 21m/min. (b) Drive and end unit (motor on top), 50 Hz, 21m/min. (c) Frequency converter with accessories 2807650-0101. (For this option, order XH two leg system. For more information, see PIM Conveyor / Conveyor Accessories.) (d) Resistor kit 2807658-0101. (Enough for one or two ArmorStarts. For more information, see PIM Conveyor / Conveyor Accessories.) (e) Cable kit 2807659-0101. (Enough for one or two ArmorStarts. For more information, see PIM Conveyor / Conveyor Accessories.)
6:	**Gate Indicator for Manual 1-2 Conveyor Switch** It is to be connected to the ACHX30.
7:	**Queue photocell** This photocell is used to stop the ACHX30 outfeed. It is included in and connected to the ACHX30.
8:	**Overflow photocell** A program function reduces the output speed of the ACHX30. It is included in and connected to the ACHX30.
A:	0-0,5m
B:	0,5-1m
C:	1,1-1,9m
D:	See DE1 and DE2 IM for further information.
E:	Maximum distance between drive and end units pulled by motor.
F:	
G:	2-3m
H:	0,1-1m
I:	Dimension to 1-2 conveyor switch

Downstream Connection Parallel - No Intermediate Motor

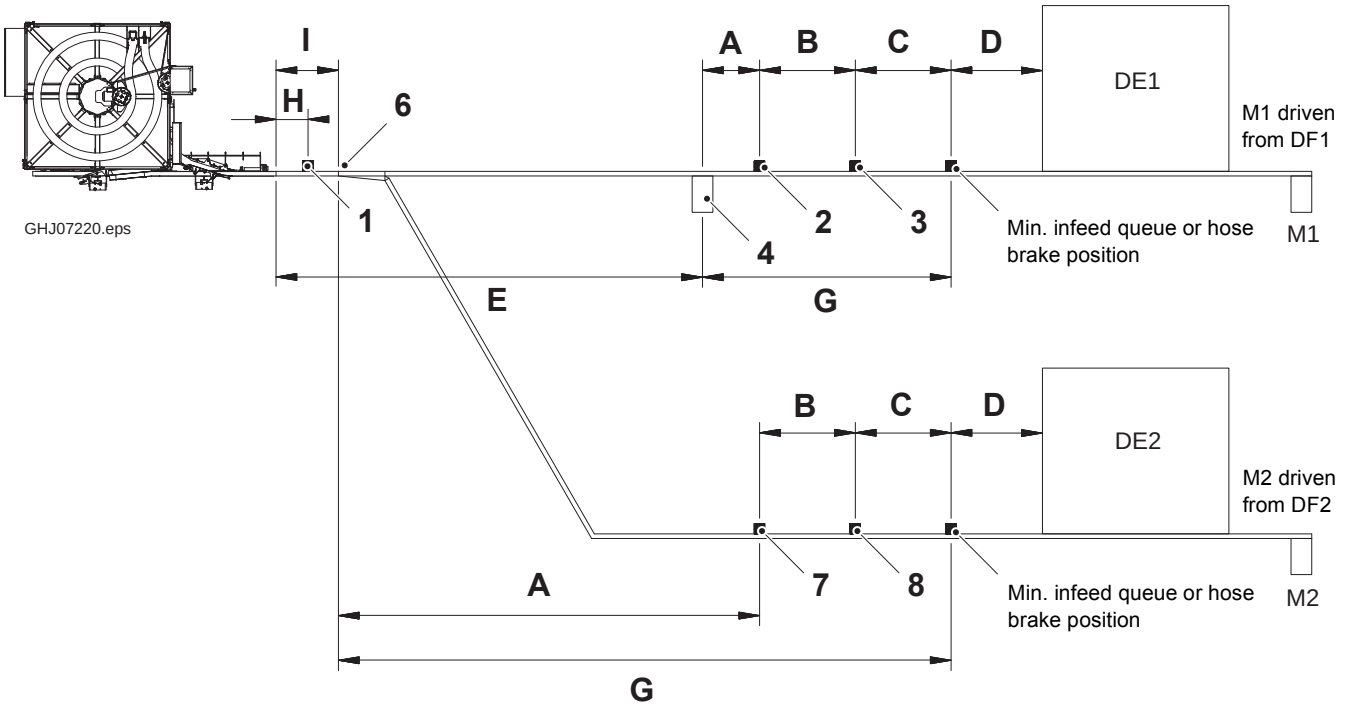

DE1/ DE2:	**Any distribution equipment can be connected to the ACHX30 as long as these examples are followed.**
1:	**Counting photocell** This photocell is used to regulate the output speed of the ACHX30 to the requested packs / hour rate. It is included in and connected to the ACHX30.
2:	**Queue photocell** This photocell is used to stop the ACHX30 outfeed. It is included in and connected to the ACHX30.
3:	**Overflow photocell** A program function reduces the output speed of the ACHX30. It is included in and connected to the ACHX30.

(Cont'd)

(Cont'd)

4:	**External outfeed ACHX30** **Note!** The frequency drive is included in the ACHX30. The D/E unit is not included in the ACHX30. PC 23 drive and end unit to be ordered: (a) Drive and end unit (motor on bottom) 50 Hz, 21m/min. (b) Drive and end unit (motor on top), 50 Hz, 21m/min.
6:	**Gate Indicator for Manual 1-2 Conveyor Switch** It is to be connected to the ACHX30
7:	**Queue photocell** This photocell is used to stop the ACHX30 outfeed. It is included in and connected to the ACHX30.
8:	**Overflow photocell** A program function reduces the output speed of the ACHX30. It is included in and connected to the ACHX30.
A:	0-0,5m
B:	0,5-1m
C:	1,1-1,9m
D:	See DE1 and DE2 IM for further information.
E:	Maximum distance between drive and end units pulled by motor.
G:	2-3m
H:	0,1-1m
I:	Dimension to 1-2 conveyor switch

Downstream Connection Bypass

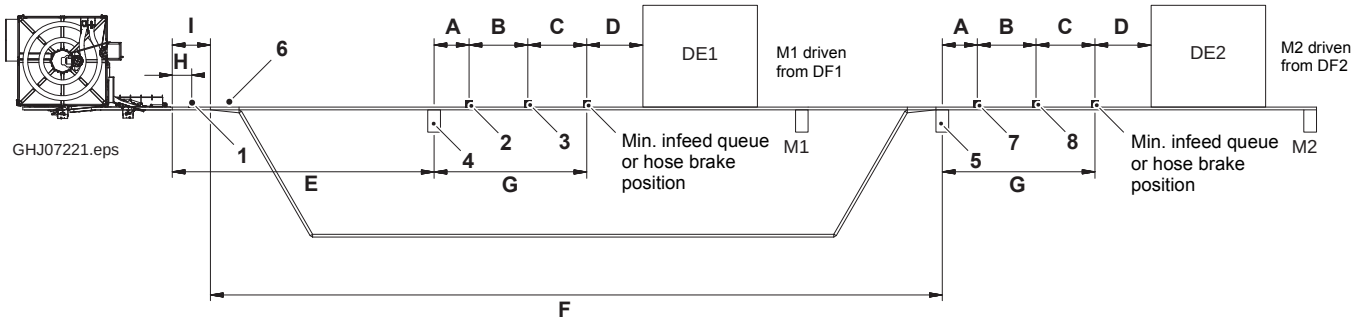

DE1/ DE2:	**Any distribution equipment can be connected to the ACHX30 as long as these examples are followed.**
1:	**Counting photocell** This photocell is used to regulate the output speed of the ACHX30 to the requested packs / hour rate. It is included in and connected to the ACHX30.
2:	**Queue photocell** This photocell is used to stop the ACHX30 outfeed. See the SPC for more information on TP numbers. It is included in and connected to the ACHX30.
3:	**Overflow photocell** A program function reduces the output speed of the ACHX30. It is included in and connected to the ACHX30.
4:	**External outfeed ACHX30** **Note!** The frequency drive is included in the ACHX30. The D/E unit is not included in the ACHX30. PC 23 drive and end unit to be ordered: (a) Drive and end unit (motor on bottom) 50 Hz, 21m/min. (b) Drive and end unit (motor on top), 50 Hz, 21m/min.

(Cont'd)

(Cont'd)

5:	**Extra external outfeed motor ACHX30** This motor is controlled via a decentralized frequency converter. The following articles need to be ordered: PC 23 drive and end unit: (a) Drive and end unit (motor on bottom) 50 Hz, 21m/min. (b) Drive and end unit (motor on top), 50 Hz, 21m/min. (c) Frequency converter with accessories 2807650-0101. (For this option, order XH two leg system. For more information, see PIM Conveyor / Conveyor Accessories.) (d) Resistor kit 2807658-0101. (Enough for one or two ArmorStarts. For more information, see PIM Conveyor / Conveyor Accessories.) (e) Cable kit 2807659-0101. (Enough for one or two ArmorStarts. For more information, see PIM Conveyor / Conveyor Accessories.)
6:	**Gate Indicator for Manual 1-2 Conveyor Switch** It is to be connected to the ACHX30
7:	**Queue photocell** This photocell is used to stop the ACHX30 outfeed. It is included in and connected to the ACHX30.
8:	**Overflow photocell** A program function reduces the output speed of the ACHX30. It is included in and connected to the ACHX30.
A:	0-0,5m
B:	0,5-1m
C:	1,1-1,9m
D:	See DE1 and DE2 IM for further information.
E:	Maximum distance between drive and end units pulled by motor.
F:	
G:	2-3m
H:	0,1-1m
I:	Dimension to 1-2 conveyor switch

1.5.2 Line Controller Lines

1.5.2.1 Upstream Connections

Note! These layouts are only examples. Other setups may occur. It is always recommended to use line communications between the machines.

Upstream Connection - Short / Medium

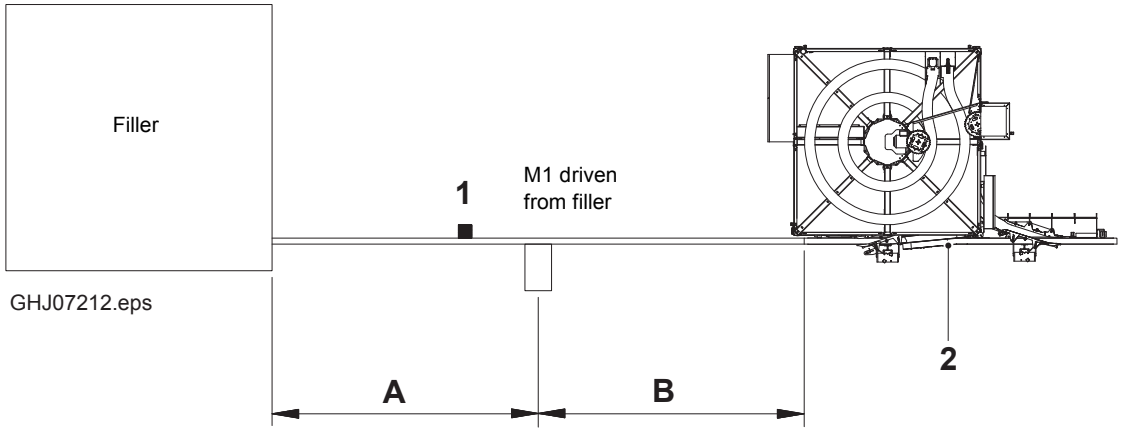

Filler:	**Refer to 1.2.1.1 General for filling machines.**
1:	**Shortstop photocell for the filler** The photocell should be installed according to the filler IM.
2:	**External infeed motor ACHX30** The D/E unit is included and connected in the ACHX30.
M1:	**Filling machine's outfeed conveyor motor** This motor drives the filling machine's outfeed conveyor. It is powered and controlled from the filler. It must stop as soon as the final folder is empty when the ACHX30 sends a stop signal.
Short interface:	
A:	= 3 - 6 meters; Depends on package type and filler capacity.This is the required distance to empty the final folder of all packages.
B:	> 1 meter; This may be extended up to the maximum distance the drive end unit can pull.
Medium interface:	
A:	= 4 meters; This is the distance required to empty the final folder from all types of packages. This may be extended up to the maximum distance the drive end unit can pull.
B:	>= A/3,5 meter; This may be extended up to the maximum distance the drive motor can pull. If this condition is not fulfilled, fallen and jammed packages may occur inside the ACHX30.

Upstream Connection Long

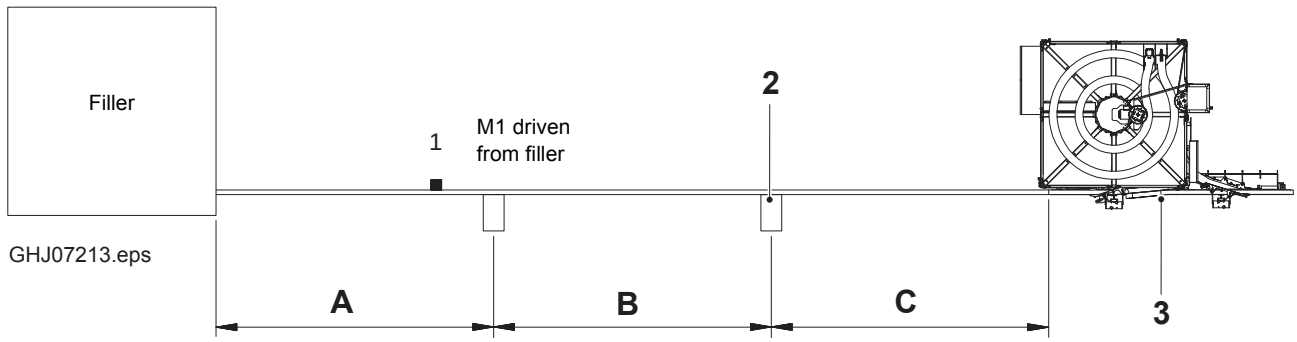

Filler:	**Refer to 1.2.1.1 General for filling machines.**
1:	**Shortstop photocell for the filler** The photocell should be installed according to the filler IM.
2:	**Extra external infeed motor** This motor is powered and controlled from the Line Controller. It should be installed according to the Line Controller IM.
3:	**External infeed motor ACHX30** The D/E unit is included and connected in the ACHX30.
M1:	**Filling machine's outfeed conveyor motor** This motor drives the filling machine's outfeed conveyor. It is powered and controlled from the filler. It must stop as soon as the final folder is empty when the ACHX30 sends a stop signal.
Long interface:	
A:	= 4 meters; This is the distance required to empty the final folder from all types of packages.
B:	This may be extended up to the maximum distance the drive end unit can pull.
C:	This may be extended up to the maximum distance the drive end unit can pull.

1.5.2.2 Downstream Connections to a DE Machine

Note! These layouts are only examples. Other setups may occur. It is always recommended to use line communications between the machines.

Downstream Connection Short

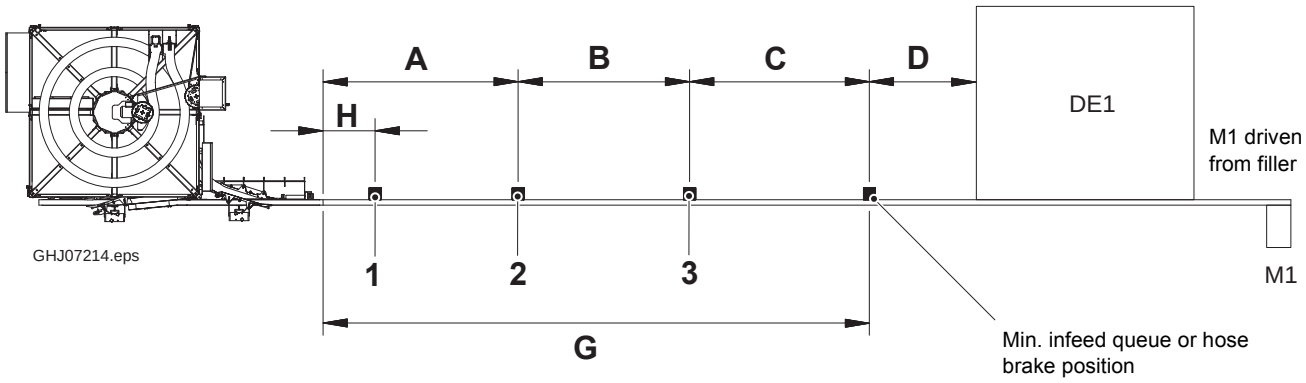

DE1:	**Any distribution equipment can be connected to the ACHX30 as long as these examples are followed.**
1:	**Counting photocell** This photocell is used to regulate the output speed of the ACHX30 to the requested packs / hour rate. It is included in and connected to the ACHX30.
2:	**Queue photocell** This photocell is used to stop the ACHX30 outfeed. It is included in and connected to the ACHX30.
3:	**Overflow photocell** Through line communication, it reduces the output speed of the ACHX30. It is not connected to the ACHX30.
A:	0,5-1m
B:	0,5-1m
C:	See DE1 IM for further information
D:	
G:	2,1-3,5m
H:	0,1-1m

Downstream Connection Medium

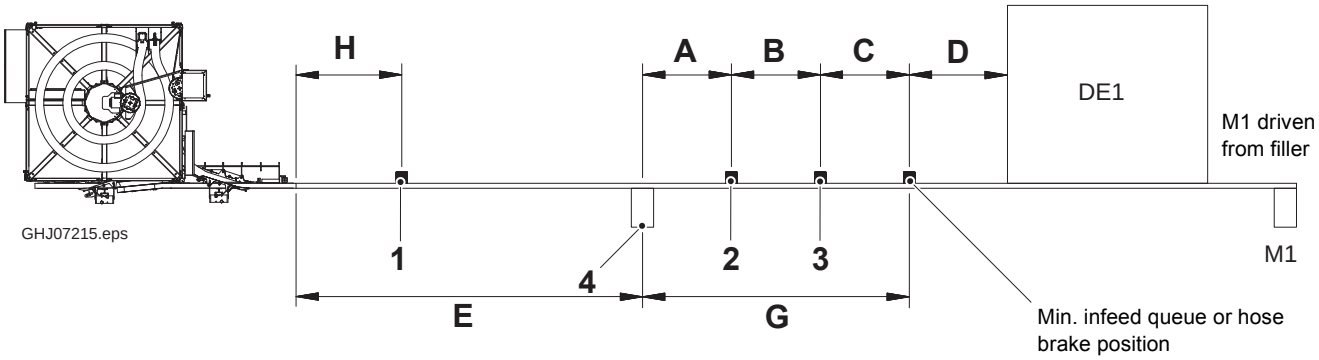

DE1:	**Any distribution equipment can be connected to the ACHX30 as long as these examples are followed.**
1:	**Counting photocell** This photocell is used to regulate the output speed of the ACHX30 to the requested packs / hour rate. It is included in and connected to the ACHX30.
2:	**Queue photocell** This photocell is used to stop the ACHX30 outfeed. It is included in and connected to the ACHX30.
3:	**Overflow photocell** Through line communication, it reduces the output speed of the ACHX30. It is not connected to the ACHX30.
4:	**External outfeed ACHX30** **Note!** The frequency drive is included in the ACHX30. The D/E unit is not included in ACHX30. PC 23 drive and end unit: (a) Drive and end unit (motor on bottom) 50 Hz, 21m/min. (b) Drive and end unit (motor on top), 50 Hz, 21m/min.

(Cont'd)

(Cont'd)

A:	0-0,5m
B:	0,5-1m
C:	See DE1 IM for further information
D:	
E:	Maximum distance between drive and end units pulled by motor.
G:	2-3m
H:	0,1-1m

Downstream Connection Long

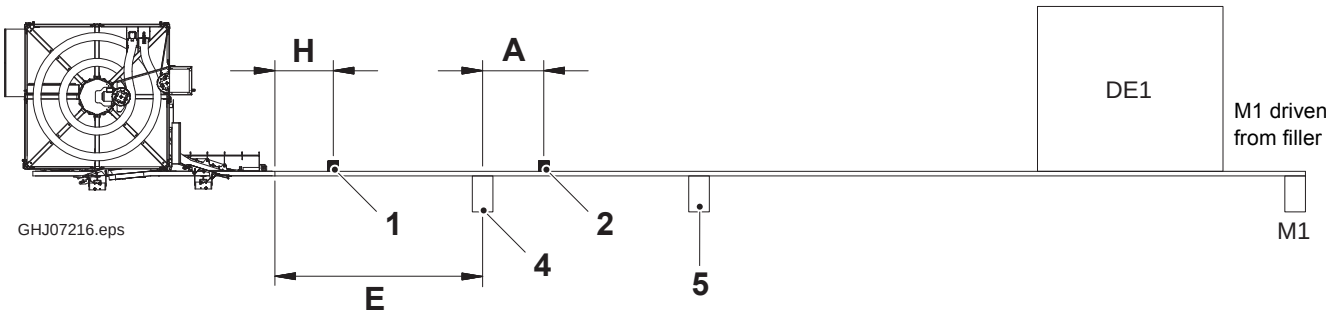

DE1:	**Any distribution equipment can be connected to the ACHX30 as long as these examples are followed.**
1:	**Counting photocell** This photocell is used to regulate the output speed of the ACHX30 to the requested packs / hour rate. It is included in and connected to the ACHX30.
2:	**Queue photocell** This photocell is used to stop the ACHX30 outfeed. It is included in and connected to the ACHX30.
4:	**External outfeed ACHX30** **Note!** The frequency drive is included in the ACHX30. The D/E unit is not included in ACHX30. PC 23 drive and end unit to be ordered: (a) Drive and end unit (motor on bottom) 50 Hz, 21m/min. (b) Drive and end unit (motor on top), 50 Hz, 21m/min.
5:	**Extra external outfeed motor ACHX30** This motor is powered and controlled from the Line Controller IM. It should be installed according to the Line Controller IM.

(Cont'd)

(Cont'd)

A:	0-0,5m
E:	Maximum distance between drive and end units pulled by motor.
H:	0,1-1m

Downstream Connection Parallel

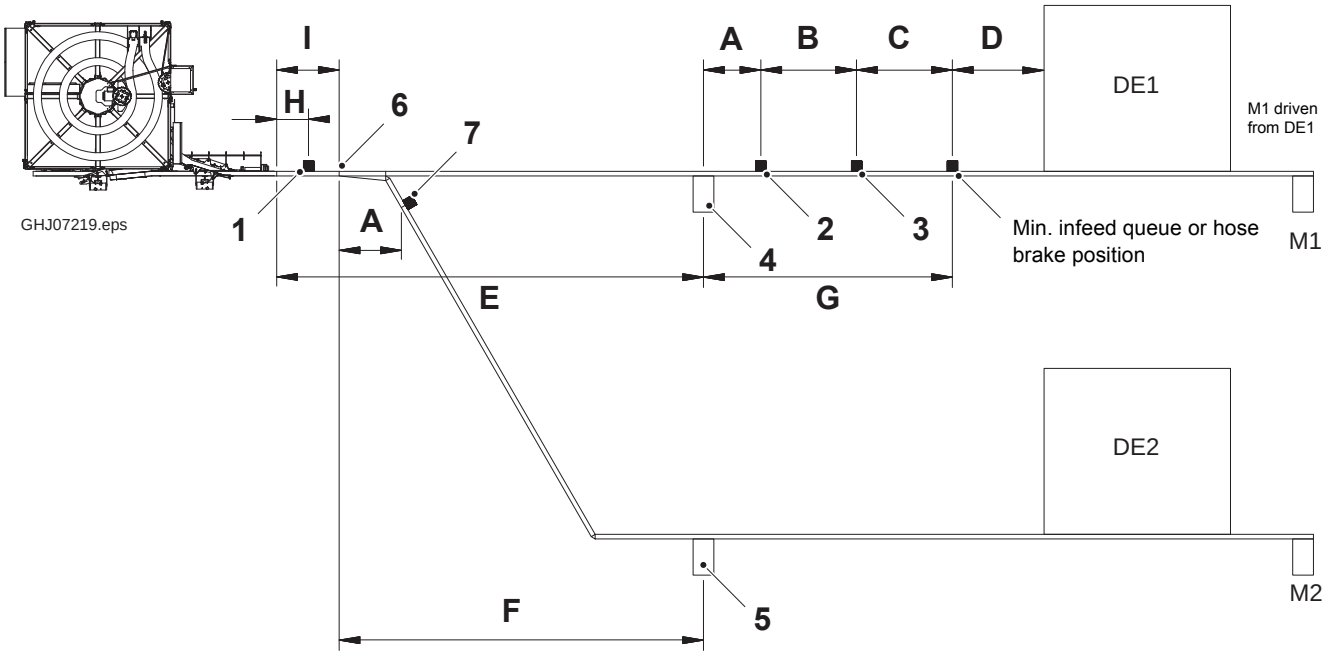

DE1/ DE2:	**Any distribution equipment can be connected to the ACHX30 as long as these examples are followed.**
1:	**Counting photocell** This photocell is used to regulate the output speed of the ACHX30 to the requested packs / hour rate. It is included in and connected to the ACHX30.
2:	**Queue photocell** This photocell is used to stop the ACHX30 outfeed. It is included in and connected to the ACHX30.
3:	**Overflow photocell** Through line communication, it reduces the output speed of the ACHX30. It is not connected to the ACHX30.

(Cont'd)

(Cont'd)

4:	**External outfeed ACHX30** **Note!** The frequency drive is included in the ACHX30. The D/E unit is not included in the ACHX30. PC 23 drive and end unit to be ordered: (a) Drive and end unit (motor on bottom) 50 Hz, 21m/min. (b) Drive and end unit (motor on top), 50 Hz, 21m/min.
5:	**Extra external outfeed motor** This motor is powered and controlled from the Line Controller. It should be installed according to the Line Controller IM.
6:	**Gate indicator for manual 1-2 conveyor switch** It is not connected to the ACHX30
7:	**Queue photocell** This photocell is used to stop the ACHX30 outfeed. It is included in and connected to the ACHX30.
A:	0-0,5m
B:	0,5-1m
C:	See DE1 IM for further information.
D:	
E:	Maximum distance between drive and end units pulled by motor.
F:	
G:	2-3m
H:	0,1-1m
I:	Dimension to 1-2 conveyor switch

Downstream Connection Parallel - No Intermediate Motor - Line Controller

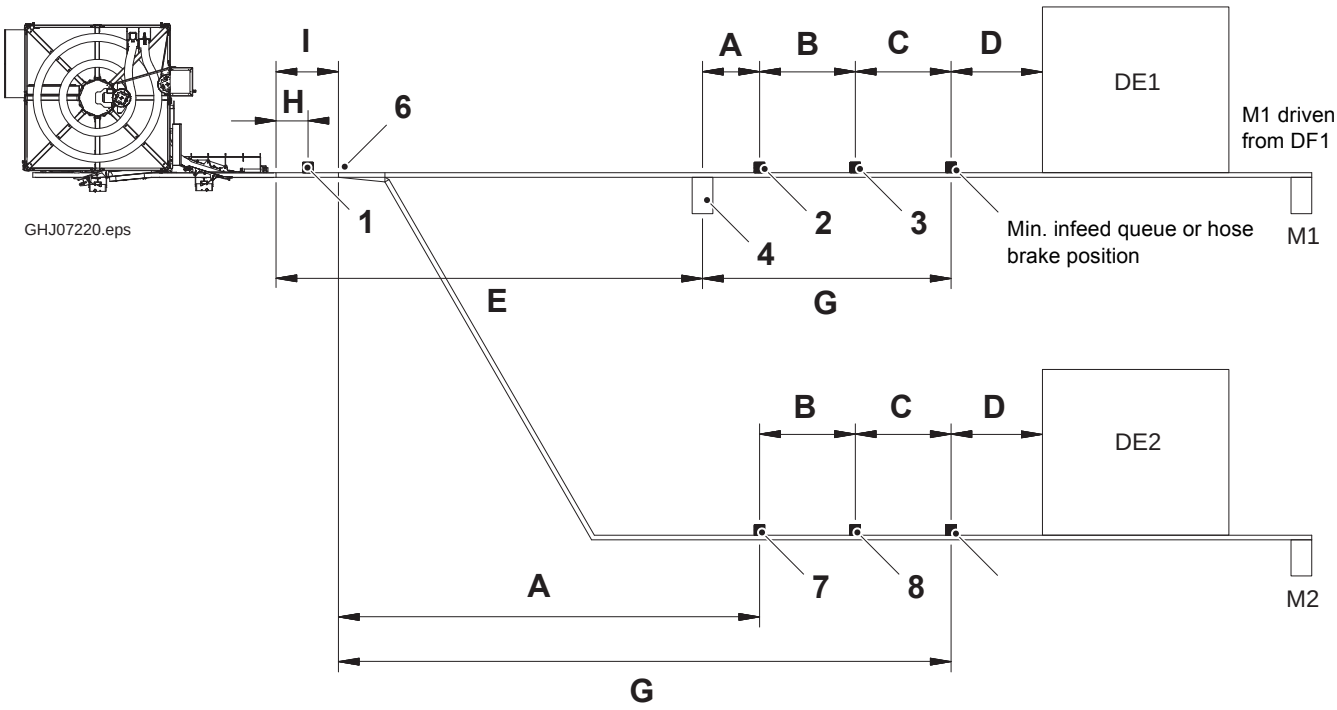

DE1/ DE2:	**Any distribution equipment can be connected to the ACHX30 as long as these examples are followed.**
1:	**Counting photocell** This photocell is used to regulate the output speed of the ACHX30 to the requested packs / hour rate. It is included in and connected to the ACHX30.
2:	**Queue photocell** This photocell is used to stop the ACHX30 outfeed. It is included in and connected to the ACHX30.
3:	**Overflow photocell** Through line communication, it reduces the output speed of the ACHX30. It is not connected to the ACHX30.

(Cont'd)

(Cont'd)

4:	**External outfeed ACHX30** **Note!** The frequency drive is included in the ACHX30. The D/E unit is not included in the ACHX30. PC 23 drive and end unit to be ordered: (a) Drive and end unit (motor on bottom) 50 Hz, 21m/min. (b) Drive and end unit (motor on top), 50 Hz, 21m/min.
6:	**Gate indicator for manual 1-2 conveyor switch** It is to be connected to the ACHX30
7:	**Queue photocell** This photocell is used to stop the ACHX30 outfeed. It is included and connected in the ACHX30.
8:	**Overflow photocell** Through line communication, it reduces the output speed of the ACHX30. It is not connected to the ACHX30.
A:	0-0,5m
B:	0,5-1m
C:	See DE1 and DE2 IM for further information.
D:	
E:	Maximum distance between drive and end units pulled by motor.
G:	2-3m
H:	0,1-1m
I:	Dimension to 1-2 conveyor switch

Downstream Connection Bypass - Line Controller

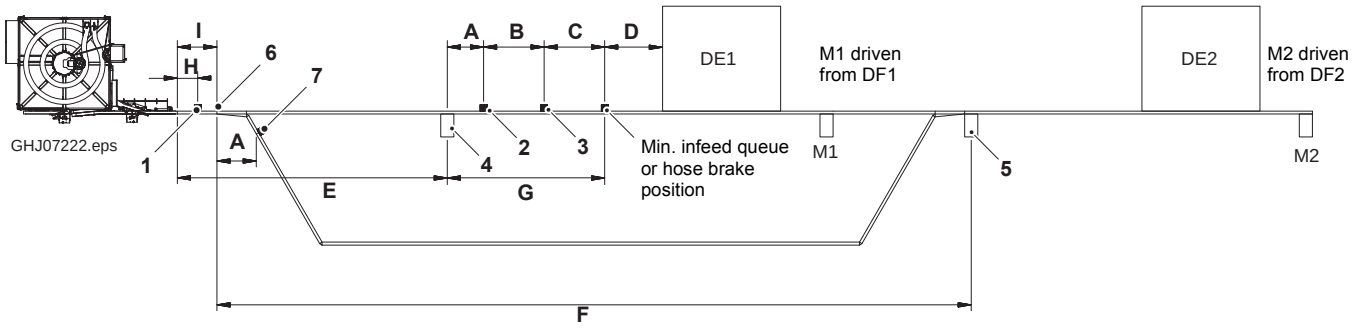

DE1/ DE2:	**Any distribution equipment can be connected to the ACHX30 as long as these examples are followed.**
1:	**Counting photocell** This photocell is used to regulate the output speed of the ACHX30 to the requested packs / hour rate. It is included in and connected to the ACHX30.
2:	**Queue photocell** This photocell is used to stop the ACHX30 outfeed. It is included in and connected to the ACHX30.
3:	**Overflow photocell** Through line communication, it reduces the output speed of the ACHX30. It is not connected to the ACHX30.

(Cont'd)

(Cont'd)

4:	**External outfeed ACHX30** **Note!** The frequency drive is included in the ACHX30. The D/E unit is not included in the ACHX30. PC 23 drive and end unit to be ordered: (a) Drive and end unit (motor on bottom) 50 Hz, 21m/min. (b) Drive and end unit (motor on top), 50 Hz, 21m/min.
5:	**Extra external outfeed motor ACHX30** This motor is powered and controlled from the Line Controller. It should be installed according to the Line Controller IM.
6:	**Gate indicator for manual 1-2 conveyor switch** It is not connected to the ACHX30
7:	**Queue photocell** This photocell is used to stop the ACHX30 outfeed. It is included in and connected to the ACHX30.

(Cont'd)

(Cont'd)

A:	0-0,5m
B:	0,5-1m
C:	See DE1 and DE2 IM for further information.
D:	
E:	Maximum distance between drive and end units pulled by motor.
F:	
G:	2-3m
H:	0,1-1m
I:	Dimension to 1-2 conveyor switch

1.6 Communication

This section specifies all communication and signals to and from the equipment.

1.6.1 Non Line Controller

1.6.1.1 Line Communication Signals Relay

Description

Signal	Description
Ready Signal (RS), Relay OUT	This signal is kept high (relay closed) as long as the ACHX30 can receive packages. When the ACHX30 is almost full, the relay opens and the Ready Signal is no longer sent to the upstream machine (normally the filling machine).
Start Conveyor (SC), PLC IN	When there are packages coming from the upstream machine (normally the filling machine), the Start Conveyor PLC input signal is high. When this input is high, the external infeed conveyor of the ACHX30 should be running.
Package Coming (PC), Relay OUT	This signal is kept high (relay closed) while packages are leaving the discharge of the ACHX30.
Run Enable (RE), PLC IN	When the downstream DE is ready to receive packages, this PLC input signal goes high. When this PLC input is high, the ACHX30 is allowed to discharge packages.
Quick Stop Signal	This signal is high when the ACHX30 can receive packages and low when the ACHX30 has had a quick stop. For example, this stop could be an emergency stop. The upstream equipment then needs to stop more quickly than in normal cases.
Recipe Select 1 / 2	Upstream equipment can automatically select up to 4 different recipes in the ACHX30 according to the table below.

Recipe Select Bit 1	Recipe Select Bit 2	Recipe
0	0	Recipe 1
0	1	Recipe 2
1	0	Recipe 3
1	1	Recipe 4

Connection of Line Communication Signals

Note! Refer to 3.5 Circuit Diagrams in the Electrical Manual for connecting the line communication signals.

Note! If the line communication cable is not connected, the optional Package to Infeed Conveyor photocell must be used and connected according to the electrical schematics.

1.6.1.2 Line Communication Signals Genius (option)

Every machine gives the following signals:

Description

Signal	Description
Machine Running	This signal is kept high when the machine is running. This signal is then used by the machine downstream as a package coming signal.
Machine Ready	This signal is kept high when the machine is ready. This signal is then used by the machine upstream to start production.

Note! For more information on Genius line communication, see TBA/22 manuals.

1.6.2 Line Controller

1.6.2.1 Line Communication Signals

Description

The Line Controller generates commands to be dispatched to each piece of Distribution Equipment.

Commands	Description
StartProduction	The machine starts to produce. For DE machines, this command opens the infeed gate and runs the infeed conveyor so production starts and incoming products arrive. For Buffer and Conveyor machines, this command runs conveyor belts. The machine must be in running step whenever the command is at high level.
StopImmediate	This command is dispatched when the Line Controller detects that a machine downstream from the actual machine has stopped. Action expected on this signal: The machine stops and feeds out the minimum amount of packages possible depending on the machine type. (When receiving this signal, the machine immediately stops, if possible, to feed out packages). Machines with the ability to stop feeding out but that still have the possibility to receive packages should take in as many packages as possible to minimize risk of queue pressure. Conclusion: The machine stops and a few packages are fed out from the machine. In the best case, the machine takes in some packages, too. A machine with behaviour like a buffer starts to accumulate.
NormalStop	This command is dispatched when the Line Controller detects that a machine upstream the actual machine is stopped. The infeed is active to consume packages on the conveyor already produced by the previous machine. The machine feeds out as many complete products (packages/clusters/trays) as possible, leaving semi-finished products in the machine. The machine resumes production when the upstream machine is again producing.

(Cont'd)

(Cont'd)

Lubrication	This command initiates a lubrication procedure. The lubrication procedure is performed when the machine is in Preparation state, before production starts. The machine runs the infeed and the outfeed conveyor when the signal is High and stops the conveyors when the signal is Low.
Cleaning	This command initiates a cleaning procedure. The cleaning procedure is performed only when the machine is in Preparation state. In any other state, the machine ignores this command. The machine runs the infeed and the outfeed conveyors when the signal is High and stops the conveyors when the signal is Low.
EndProduction	This command is used to finish the production process. When the equipment receives this command (signal is High), it manages the complete empty procedure. The equipment empty procedure depends on the behaviours of the different equipment. The signal is set Low when the equipment state is Ready for production.

1.6.3 Recart Communication Through Ethernet

Signal	**Status**
MC_AchxGreen	Equipment ready to receive packages
MC_AchxBlue	Blue Alarm present Operator action required
MC_AchxYellow	Yellow alarm present Abnormal condition
MC_AchxRed	Red alarm present Hazardous condition

1.7 Noise

The following table gives noise level measurements for ACHX30 machines.

Note! Measurement Uncertainty is estimated to be “not significant” and no correction for the uncertainty has been included in the calculations.

DECLARED DUAL-NUMBER NOISE EMISSION VALUES Noise level according to ISO 11201 Machine: ACHX30		
Measuring position number	**Measured equivalent sound pressure level dB(A).** **Production**	**Measured equivalent sound pressure level dB(A).** **Production no packages**
1	64.5 dB(A)	65.0 dB(A)
2	61.5 dB(A)	62.5 dB(A)
3	64.5 dB(A)	64.5 dB(A)
4	64.5 dB(A)	64.0 dB(A)

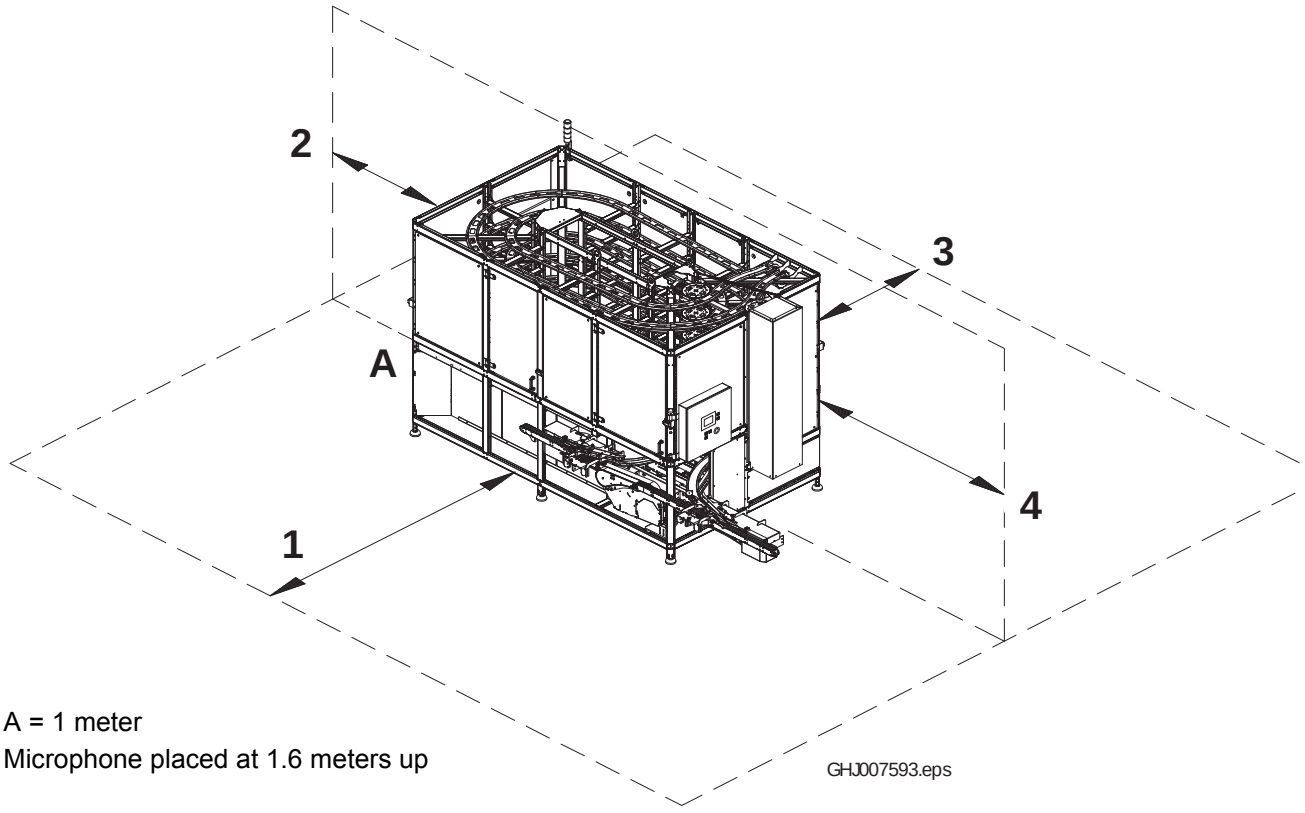

A = 1 meter
Microphone placed at 1.6 meters up

1.8 Site Environment Specification

1.8.1 Ambient Conditions

Make sure that the site environment respects the following conditions for the ACHX30.

Note! The machine is crated for transportation only. For long-term storage, take necessary precautions required to protect the machine against corrosion, etc.

Type	Recommended Temperature	Recommended Humidity
ACHX30	5° C to +50° C	< 50% at max 40° C

1.8.2 Space Requirements

Refer to 1.1 Installation Drawings.

2 Preparatory Requirements

Description

This chapter describes preparatory requirements and recommendations to ensure a good installation. Its purpose is to help the installation technicians and others involved in the installation project to quickly locate information about the site preparation, including requirements for utility, space, tools, and other required installation equipment, and specific construction details.

2.1 Organization and Training . . . . . 2 - 5
2.1.1 Resources . . . . . 2 - 5
2.1.2 Special Skills . . . . . 2 - 5
2.1.3 Special Practices . . . . . 2 - 5
2.1.4 Training . . . . . 2 - 5
2.2 Special Equipment . . . . . 2 - 6
2.3 Consumables . . . . . 2 - 7
2.3.1 Detergent for Optional Chain Cleaner . . . . . 2 - 7
2.4 Maintenance Details . . . . . 2 - 8
2.5 Spare Parts Supply . . . . . 2 - 9
2.5.1 Start-Up Parts . . . . . 2 - 9
2.5.2 Parts Inventory Management System . . . . . 2 - 9
2.5.3 Parts Recommendation Tool . . . . . 2 - 9
2.6 Quality Level and Procedures . . . . . 2 - 10
2.6.1 Good Manufacturing Practices . . . . . 2 - 10
2.7 Site Preparation . . . . . 2 - 11
2.7.1 General . . . . . 2 - 11
2.7.2 Floor . . . . . 2 - 11

This page intentionally left blank

2.1 Organization and Training

2.1.1 Resources

During Installation		
Personnel	**No.**	**Note**
Technician	2	
Electrician	1	
During Production		
Personnel	**No.**	**Note**
Operator	1	
Technician	1	For troubleshooting purposes
During Maintenance		
Personnel	**No.**	**Note**
Technician	1	
Electrician	0	Not typical, but may be required on occasion

2.1.2 Special Skills

No special skills beyond standard technician knowledge are required.

2.1.3 Special Practices

Tetra Pak recommends that Tetra Pak staff and the final users cooperate during installation, commissioning, and validation of the equipment. The cooperation is a part of the training in how to operate and maintain the equipment.

2.1.4 Training

Tetra Pak strongly recommends all operators participate in Tetra Pak operator training.

2.2 Special Equipment

This section specifies any special tools and equipment required to install, operate, and maintain the equipment.

Item	Function	Reference	**Note**
Volume Kit Straightening Guide Template	Sets the straightening guide for TPA packages	See MM section Volume Kit - Change.	Included in Install Kit shipped in the crate and labelled position #102
Drive Assembly Setup Tool	Verifies that the end of the sprocket tooth is a certain dimension from the inner wall of the chain pocket.	See MM section Infeed Drive Assembly - Check.	
Level	Checks that the machine is level to ensure efficiency and smooth operation	See IM section 3.2.4.1 Levelling.	Provided by customer
Tachometer	Measures conveyor speed to assist in calibration procedures.	See MM section Accumulator Maintenance.	

2.3 Consumables

2.3.1 Detergent for Optional Chain Cleaner

Product	Company	Contact
LIQUI-DET® MSDS No.: REL_4540	Oakite Products, Inc. 675 Central Avenue New Providence, NJ 07974	1-800-526-4473 (TEL) 1-908-464-4658 (FAX) www.chemetall.com
SAFEFOAM VF9L	JohnsonDiversey 8310 16th Street P.O. Box 902 Sturtevant, WI 53177-0902	1-262-631-4001 (TEL) www.johnsondiversey.com

The detergent container should not exceed the maximum dimensions illustrated below.

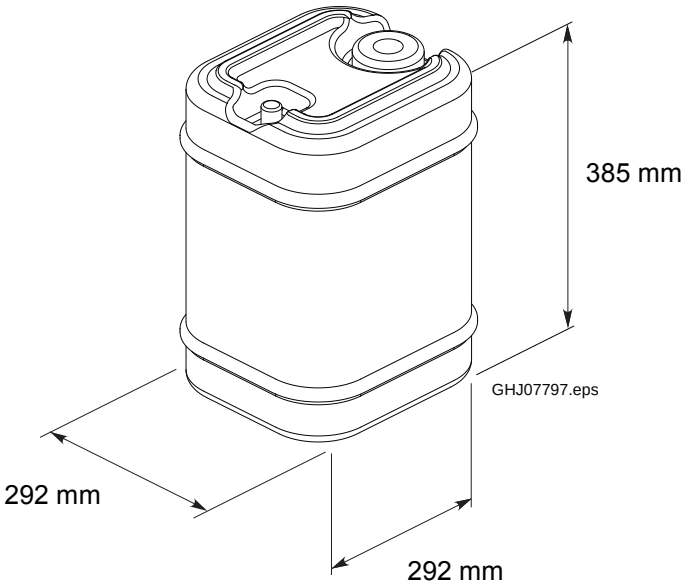

2.4 Maintenance Details

Tetra Pak recommends that the Tetra Pak Maintenance System (TPMS) is used. Refer to the TPMS section in the Introduction chapter in the MM.

2.5 Spare Parts Supply

The spare parts supply must be managed to ensure the availability of needed spare parts. Tetra Pak provides services to support the spare parts supply.

2.5.1 Start-Up Parts

Start-Up Parts is a service that supports the final user of the equipment in optimizing the on-site parts inventory for selected equipment. The services is available during the first 12 months of production or 3000 hours of production. Tetra Pak and the final user regularly analyse parts consumption and optimize the inventory accordingly.

The service gives good parts management, optimized total parts cost, easy access to the right parts at the right time, improved cash flow, and reduced working capital, all of which leads to increased production availability.

2.5.2 Parts Inventory Management System

Parts Inventory Management System (PIMS) has been developed to provide an appropriate level of administration and control of the stock held on the final user's site. The main purpose of the system is to optimize the quantity of stock held, in order to ensure that the correct spare parts are available when needed.

2.5.3 Parts Recommendation Tool

The Parts Recommendation Tool identifies the type and quantity of parts the final user of the equipment should have on hand when installing new equipment. This recommendation focuses on the first 3000 production hours and is based on the final user's operation, equipment, and level of security and risk.

2.6 Quality Level and Procedures

2.6.1 Good Manufacturing Practices

Good Manufacturing Practices (GMPs) are guidelines used by food processing and packaging facilities. Important GMPs are listed below:

- Keep facilities clean and in good repair.
- Use well constructed trash receptacles and keep them clean and in good repair.
- Provide adequate ventilation to minimize odours and vapours.
- Clean and decontaminate all product-contact surfaces regularly. See the Operation Manual for information about cleaning procedures.
- Make sure that sewage and liquid waste are drained from the product processing and packaging areas.
- Provide adequate floor drainage for water, cleaning solutions, and product that is released onto the floor.
- Sewers and drains must be accessible for cleaning. Drains should never be located directly underneath the equipment.
- Provide convenient hand washing facilities with warm running water.
- Provide properly designed heating, venting, and air condition (HVAC) systems to reduce the risk of airborne contamination.
- Provide proper personal hygiene apparel as described in your facility's GMPs and operating and safety procedures.

2.7 Site Preparation

2.7.1 General

Place the equipment in a working environment that is compatible with the hygienic design and function of the machine. High environmental standards in the distribution equipment room ensure that the product will have the longest possible shelf life. We recommend that you take advantage of Tetra Pak's technical consulting services during the planning stages.

2.7.2 Floor

To obtain a proper production, it is necessary that the machine is standing stable on the floor. It is important that the floor is in good condition.

This page intentionally left blank

3 Mechanical Completion

Description

This chapter describes the mechanical completion of the equipment. The mechanical completion covers all activities from receipt of the equipment until the equipment is mechanically installed. The mechanical completion activity is finalized when a mechanical completion certificate is signed.

The chapter includes procedures to receive, assemble, and install the equipment. It also includes a checklist used to verify that the equipment is mechanical correctly installed.

3.1 Crate Handling . . . . . 3 - 5
3.1.1 Unloading the Crated Equipment . . . . . 3 - 6
3.1.1.1 Labelling on Crate . . . . . 3 - 7
3.1.1.2 Centre of Gravity . . . . . 3 - 8
3.1.1.3 Removing Crate from Delivery Vehicle . . . . . 3 - 9
3.1.2 Moving the Crated Equipment . . . . . 3 - 10
3.1.2.1 Auxiliary Equipment . . . . . 3 - 10
3.1.2.2 Forklift Points . . . . . 3 - 11
3.1.2.3 Moving Crate . . . . . 3 - 12
3.1.3 Storing the Crated Equipment . . . . . 3 - 13
3.1.4 Opening the Crate . . . . . 3 - 14
3.1.5 Unpacking the Crate . . . . . 3 - 16
3.1.6 Delivery Checks . . . . . 3 - 18
3.1.6.1 Inspection . . . . . 3 - 18
3.1.6.2 Glass Doors . . . . . 3 - 18
3.1.7 Disposal of Reusable Material and Waste . . . . . 3 - 19
3.2 Positioning and Assembly . . . . . 3 - 20
3.2.1 Transporting the Machine . . . . . 3 - 21
3.2.1.1 General . . . . . 3 - 21
3.2.1.2 Door Opening . . . . . 3 - 22
3.2.1.3 Lifting Machine . . . . . 3 - 25
3.2.1.4 Rolling Machine . . . . . 3 - 30
3.2.2 Positioning the Machine . . . . . 3 - 31
3.2.2.1 Lifting Machine . . . . . 3 - 31
3.2.2.2 Installing Feet . . . . . 3 - 32
3.2.2.3 Removing Optional Caster Wheels . . . . . 3 - 33
3.2.2.4 Removing Forklift Channels . . . . . 3 - 34
3.2.3 Assembly . . . . . 3 - 35
3.2.3.1 Mounting Door Latches and Handles . . . . . 3 - 35
3.2.3.2 Warning Lamp . . . . . 3 - 36
3.2.3.3 Assembling Drive and End Unit . . . . . 3 - 37

3.2.3.4 Installing Drive and End Unit with Auxiliary Infeed and Outfeed Conveyor Connections . . . . . 3 - 38
3.2.3.5 Installing Infeed and Outfeed Guides . . . . . 3 - 43
3.2.3.6 Installing the Spider Unit . . . . . 3 - 45
3.2.4 Levelling and Squaring the Machine . . . . . 3 - 51
3.2.4.1 Levelling . . . . . 3 - 51
3.2.4.2 Squaring . . . . . 3 - 52
3.3 Equipment Interfaces and Connections . . . . . 3 - 53
3.3.1 Electrical Connection . . . . . 3 - 53
3.3.1.1 Routing of Mains Supply Cable . . . . . 3 - 54
3.3.1.2 Site Test. . . . . 3 - 55
3.3.2 Connecting External Equipment . . . . . 3 - 75
3.3.2.1 Installing ArmorStart on the Conveyor . . . . . 3 - 76
3.3.2.2 DeviceNet Cable Connection . . . . . 3 - 79
3.3.3 Water Mist Lubrication and Rinse System . . . . 3 - 83
3.3.4 Chain Cleaner (optional) . . . . . 3 - 85
3.4 Restore Tools and Site . . . . . 3 - 86
3.5 Mechanical Completion Inspection . . . . . 3 - 87
3.5.1 Mechanical Completion Checklist . . . . . 3 - 88
3.5.2 Crate Handling . . . . . 3 - 88
3.5.3 Positioning and Assembly . . . . . 3 - 90
3.5.4 Equipment Interfaces and Connections . . . . . 3 - 92
3.5.5 Mechanical Completion Inspection . . . . . 3 - 95

3.1 Crate Handling

This section contains the procedures for receiving and opening the crate and unpacking the equipment.

Variants	ACHX30 47M	ACHX30 75M	ACHX30 90M	ACHX30 100M	ACHX30 120M
Shipping data					
Number of crates	1				
Shipping weight (crated)	2487 kg	3155 kg	3290 kg	3800 kg	3910 kg
Shipping weight (crated, with optional chain cleaner)	2557 kg	3225 kg	3360 kg	3870 kg	3980 kg
Shipping volume (crated)	Length = 5825 mm Width = 2300 mm Height = 2555 mm			Length = 7350 mm Width = 2300 mm Height = 2555 mm	

3.1.1 Unloading the Crated Equipment

This section contains information necessary to safely and efficiently unload crated equipment from delivery vehicles.

DANGER

Immediate danger to life!

To safely and efficiently lift and unload the crate from the delivery vehicle, read the instructions on the following pages.

3.1.1.1 Labelling on Crate

Symbol	Meaning
	Centre of gravity.
	Lifting points for chains, cables, ropes or slings.
	This way up
	Fragile
	Keep dry
HANDLE WITH CARE	“Handle with care” warning
NOT TO BE DROPPED	“Not to be dropped” warning
DO NOT STACK ON TOP	“Do not stack on top” warning
REMOVE THIS SIDE FIRST	Indicates which side of the crate to remove first
GROSS KG.	“Gross weight” value
NET KG.	“Net weight” value
L W H MM	Dimensions
OPEN FOR CUSTOMS INSPECTION ONLY	Open for customs inspection only

3.1.1.2 Centre of Gravity

The illustration below shows how the centre of gravity is indicated on a Tetra Pak crate.

WARNING

Example only!

The purpose of the illustration below is to give an example of how the centre of gravity is indicated on a crate. For information on the location of the centre of gravity for a specific crate, see the actual marks on the crate.

DANGER

Immediate danger to life.

The crate will tilt if the centre of gravity (1) is not observed. Failure to observe will result in immediate danger to life and / or major damage to equipment.

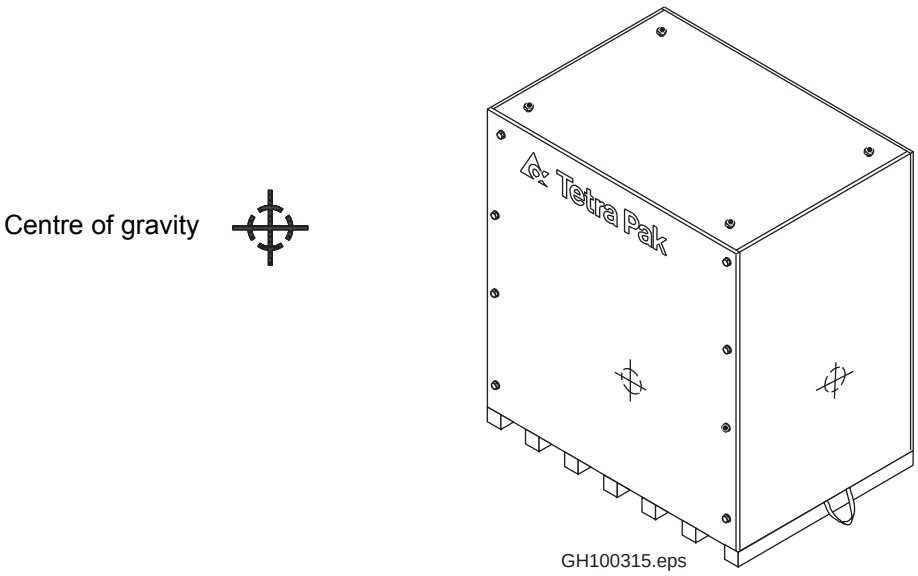

3.1.1.3 Removing Crate from Delivery Vehicle

Plan the location of the crate such that it is not on a sloped surface. Ensure that the skid (bottom surface of the crate) is supported fully along its length.

WARNING

Risk of serious personal injury!

Follow local safety regulations and procedures when removing the crate.

Use the crate strap (2) to remove the crate from the container. Refer to 1.3.2.1 Recommended Equipment.

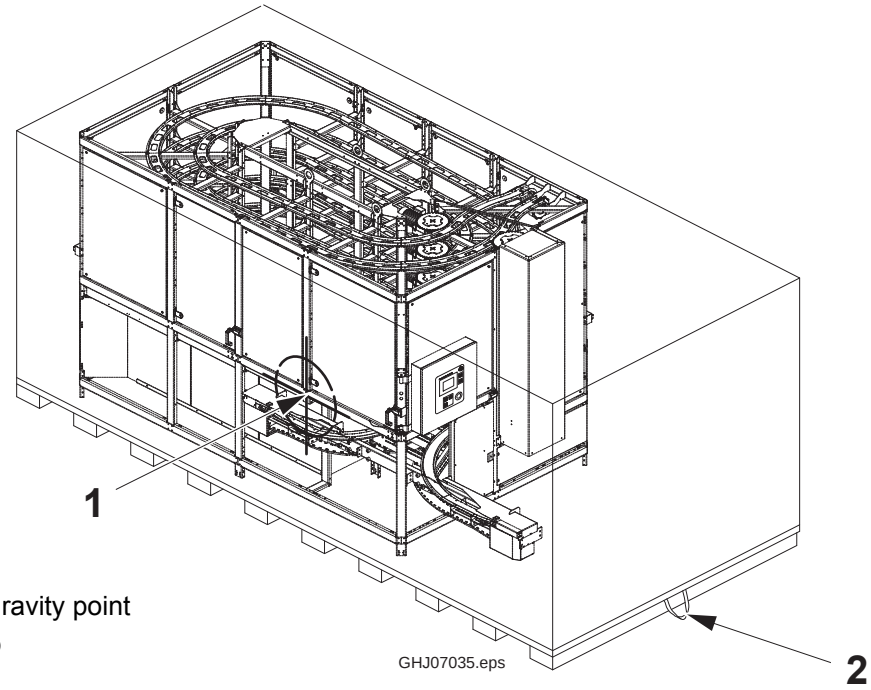

1 Centre of gravity point
2 Crate strap

3.1.2 Moving the Crated Equipment

This section contains information necessary to safely move the crate containing the equipment.

DANGER

Immediate danger to life!

The machine may tilt if the centre of gravity or the forklift points are not observed. Failure to observe may result in immediate danger to life and major damage to equipment.

3.1.2.1 Auxiliary Equipment

The following equipment is needed to move the crate.

Equipment	Capacity minimum Kg	Quantity
Forklift	5000	1

3.1.2.2 Forklift Points

The crate is marked with the centre of gravity symbol (1). The lifting forks (2) must be positioned at equal distances from the symbol when lifting the crate. The forks should be set as wide as possible.

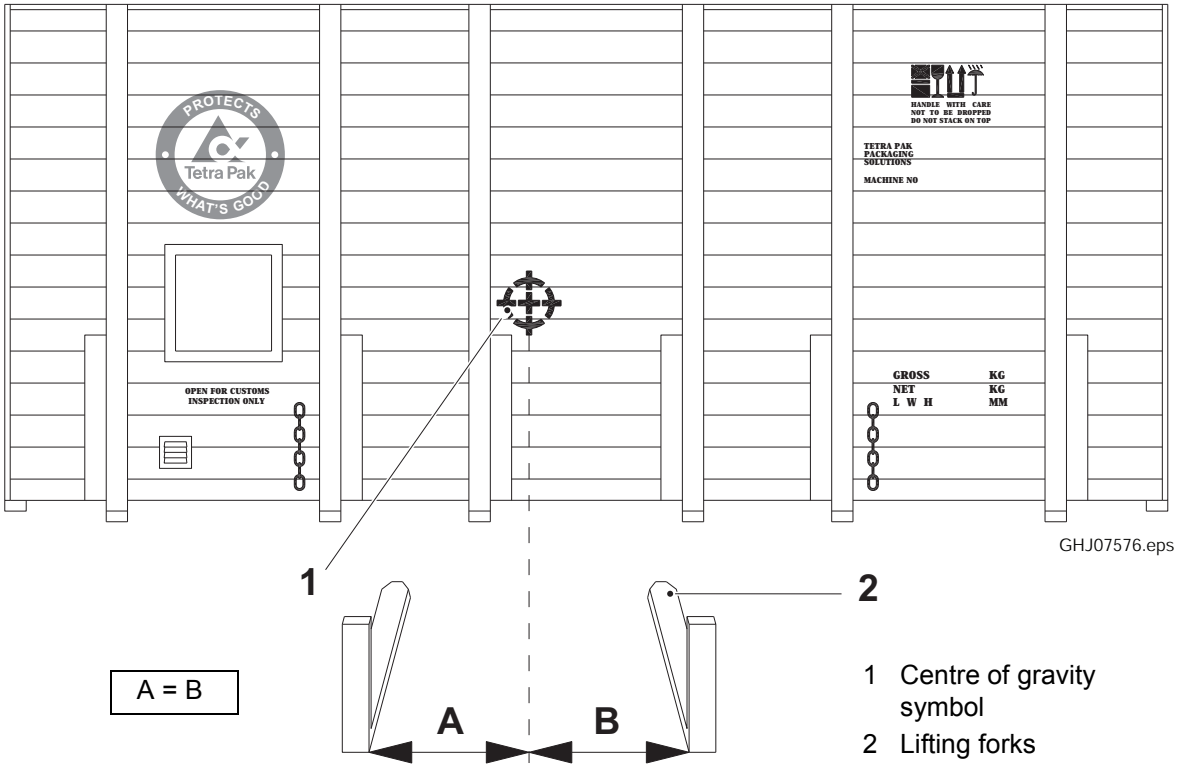

1 Centre of gravity symbol
2 Lifting forks

3.1.2.3 Moving Crate

CAUTION

Move the crate slowly and gently.

a) Lift the crate only enough to clear the floor.

b) Make sure the crate remains stable on the lifting equipment.

c) Move the crate to its destination.

d) Look through the customs inspection panel to see in what way the contents are facing. Position the crate to face the most convenient direction.

e) Lower the crate gently to the floor, leaving enough room around it for easy access to all sides.

f) Remove the lifting equipment.

3.1.3 Storing the Crated Equipment

CAUTION

Risk of equipment damage.
Store the crates indoors. Exposure to damp or to high or low temperatures may damage the equipment.

Note! The machine is crated for transportation only. For long-term storage, take necessary precautions required to protect the machine against corrosion, etc.

Make sure that the storage environment respects the following conditions:

Contents	Recommended storage temperature	Recommended storage humidity	Special recommendations
ACHX30	-20° C to +70° C	< 50% at max 40° C	Keep dry to prevent condensation and corrosion on connections inside the electrical cabinet.

3.1.4 Opening the Crate

This section contains information necessary to safely open the crate.

Open the crate in the following order:

a) Loosen the top bolts (1) on the lid (2). The lid is in two pieces.
b) Remove the lid (2).
c) Remove the support rail bolts (3).
d) Remove the support rails (4).

CAUTION
Risk of minor personal injury!
Use caution when handling the panels. They will begin to fall away from the crate when bolts (5) and (6) in the side panels (8) and (9) are removed.

e) Remove bolts (5) and (6).
f) Remove the right end panel (7).
g) Remove the side panels (8) and (9).
h) Remove the left end panel (10).

DANGER
Immediate danger to life!
Before removing the machine from the crate, read 3.1.1.2 Centre of Gravity and 3.1.2.3 Moving Crate.

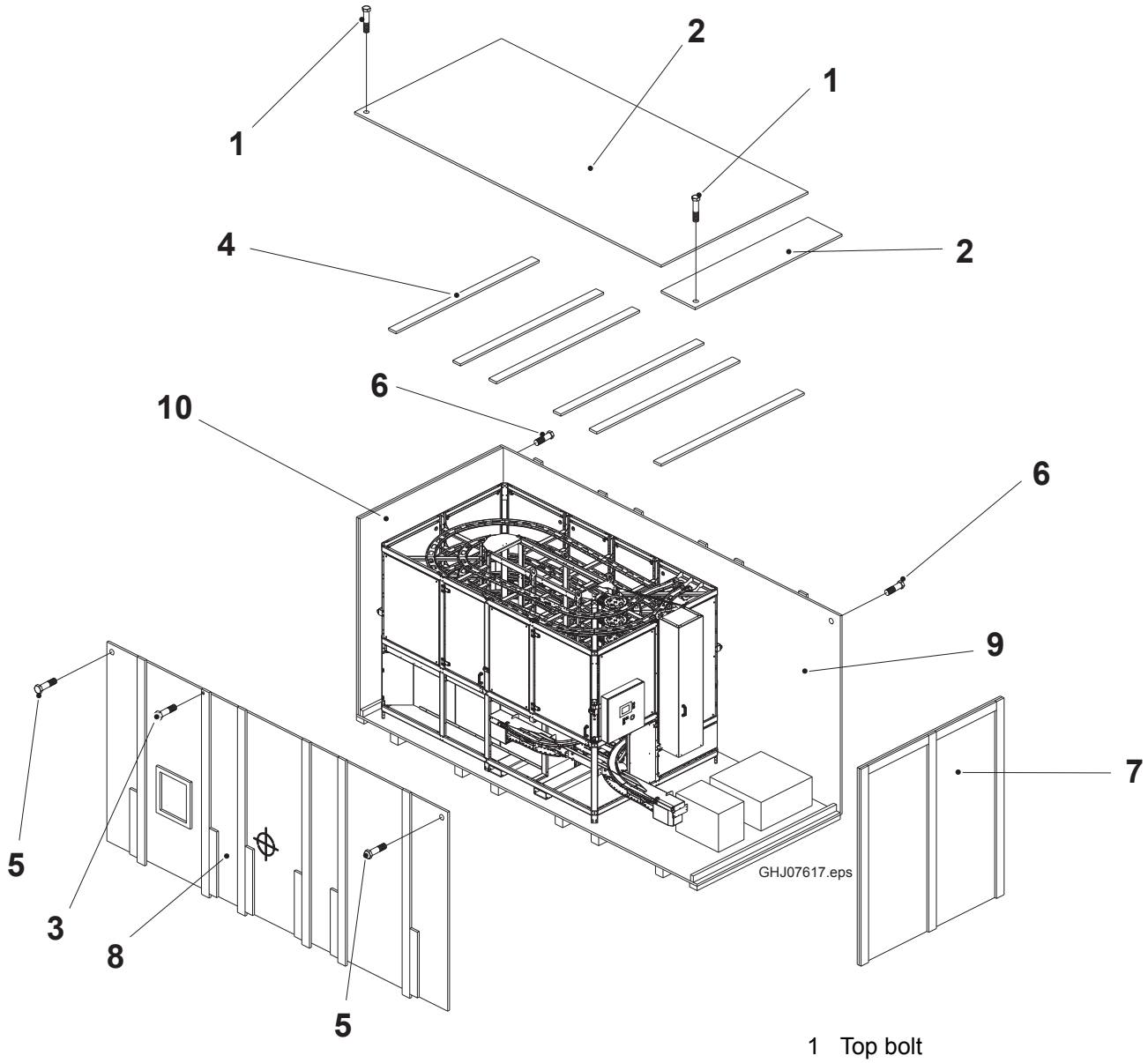

1 Top bolt
2 Lid
3 Support rail bolt
4 Support rail
5 Bolt
6 Bolt
7 Right end panel
8 Side panel
9 Side panel
10 Left end panel

3.1.5 Unpacking the Crate

This section contains information necessary to safely unpack the crate.

a) Remove the interface assembly (detached outfeed section) (1).

b) Remove the interface assembly (2).

c) Remove boxes (3), (4), (5), and (6).

d) Remove the lag bolts that fasten the Helix to the base of the crate.

e) Refer to the instructions in 3.2.1 Transporting the Machine to remove the machine from the crate.

Pos.	Pos. No. in Crate	Description
1	110	Interface assembly (detached outfeed section)
2	110	Interface assembly
3	106	Counterweight for interface assembly
	111	Foot assemblies
4	109	Documentation
5	102	Install kit
	104	Door latches
	105	Infeed guide rail
	107	Lifting lugs
	108	Outfeed guide rail
	112	Caster wheels (option)
	113	Soap stand (option)
6	103	Spider
	114	Volume kit

(Cont'd)

(Cont'd)

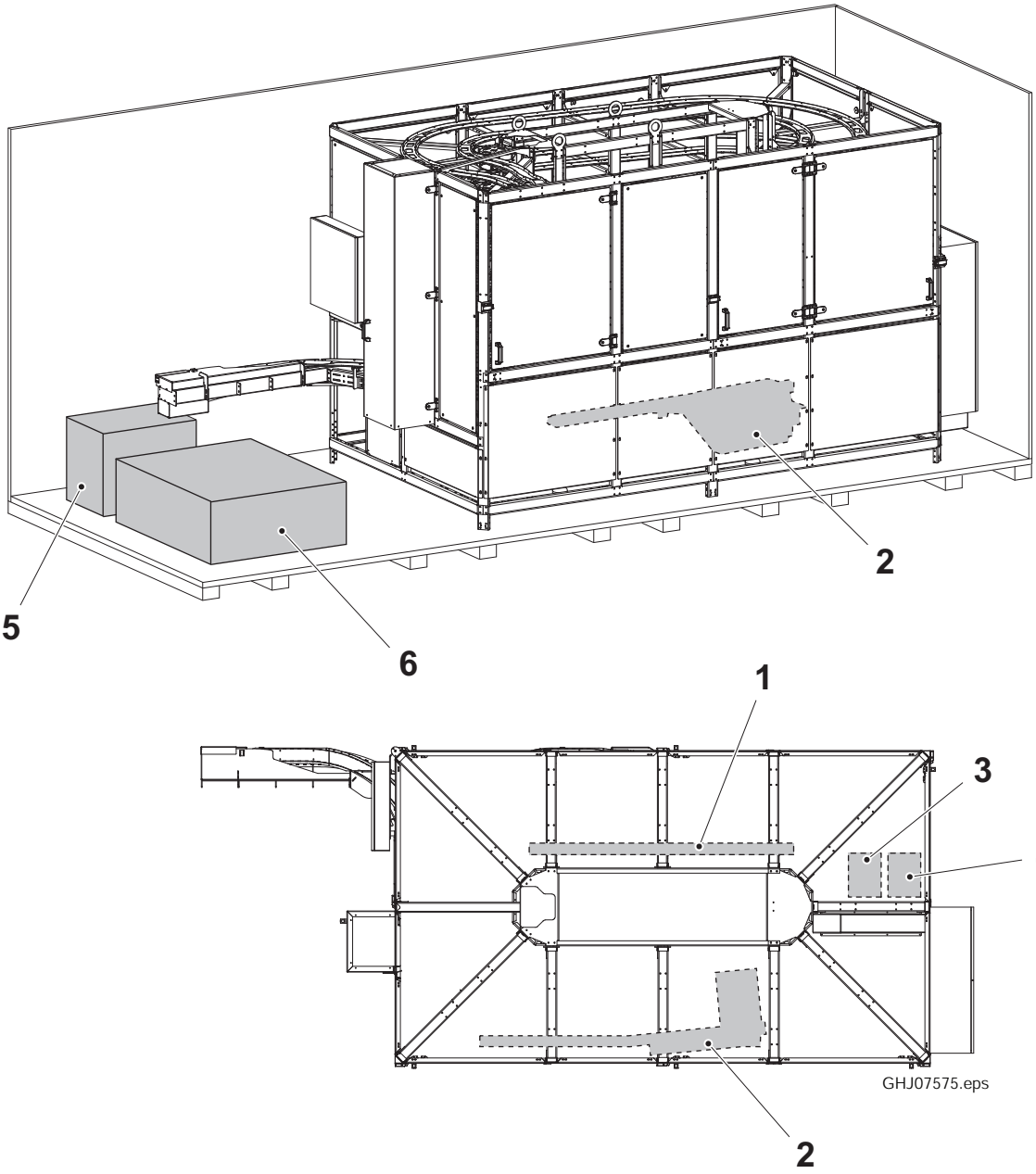

3.1.6 Delivery Checks

This section contains a description of the correct procedures for filling out damage reports and inspection forms.

3.1.6.1 Inspection

a) Use the packing list to check that nothing is missing. The packing list is located on the inside of the crate door labelled Open for Customs Only.

b) Open the machine document box and check that the documentation corresponds with the machine and the machine number.

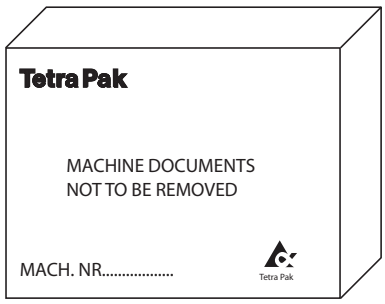

c) Inspect the equipment for damage. Report any damage to Tetra Pak through the appropriate channels.

3.1.6.2 Glass Doors

Verify upon uncrating that all glass doors and panels are in good condition. If there is any broken glass debris, refer to the Glass Panes section in the MM.

3.1.7 Disposal of Reusable Material and Waste

Re-usable Packing Materials and Structures
Re-usable packaging materials and structures should be collected and re-used in accordance with local regulations.

Non re-usable Packing Materials and Structures
Non re-usable packaging materials and structures should be collected and disposed of in accordance with local regulations.

3.2 Positioning and Assembly

All procedures in this section are related to the uncrated equipment, including the following main phases of the installation process:

- Transporting the machine
- Positioning the machine
- Assembling the machine
- Connecting the machine to supply systems or to other equipment

3.2.1 Transporting the Machine

This section contains information about the correct methods for safely moving the equipment into position for assembly.

3.2.1.1 General

Prior to moving the machine into position for installation, check that the machine can be transported to the installation site without any problems regarding ceiling height, doors, passages, etc.

DANGER

Immediate danger to life!

The machine will tilt if the centre of gravity or the forklift points are not observed. Failure to observe will result in immediate danger to life and/or major damage to equipment.

Make sure the equipment can be lifted in accordance with the instructions in 3.1.1.2 Centre of Gravity.

3.2.1.2 Door Opening

Prior to moving the machine through any opening, be certain that adequate distance is allowed for height and width clearance.

Note! The illustrations below show LINF machines mounted on casters.

ACHX30 47M

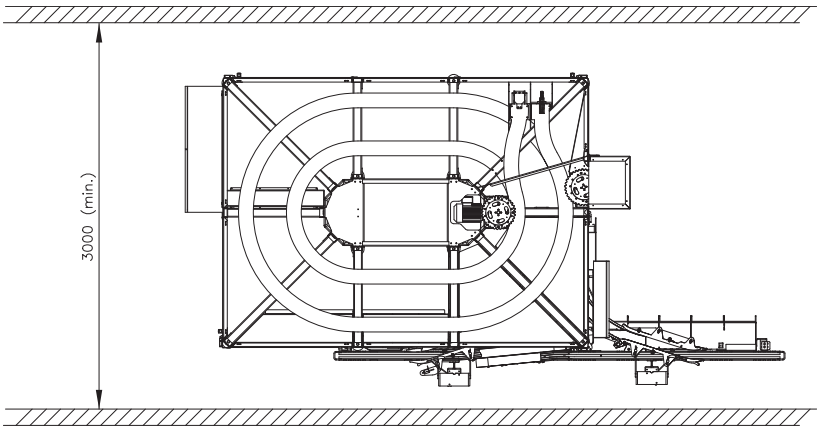

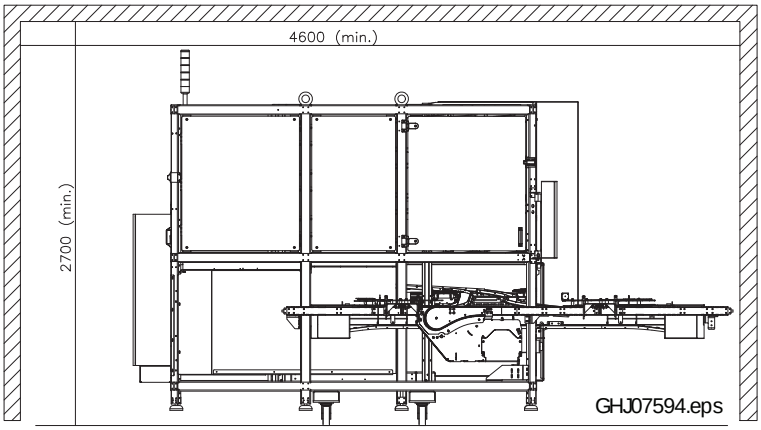

(Cont'd)

(Cont'd)

ACHX30 75M and 90M

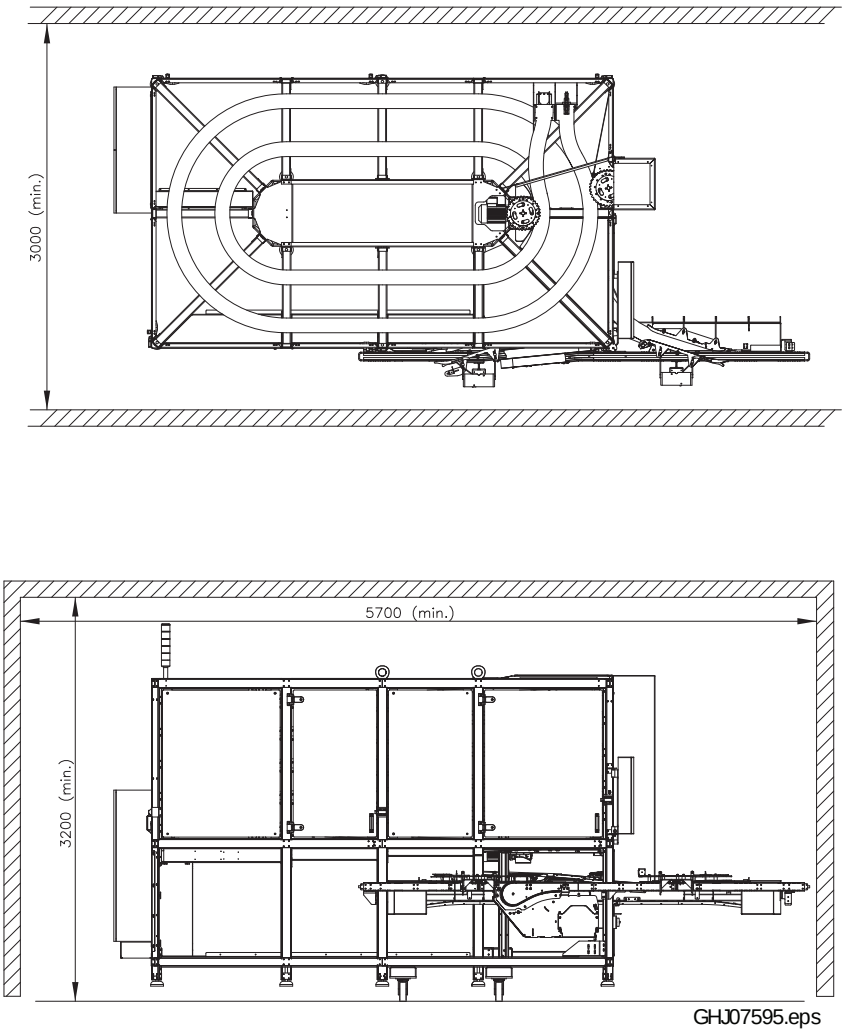

(Cont'd)

(Cont'd)

ACHX30 100M and 120M

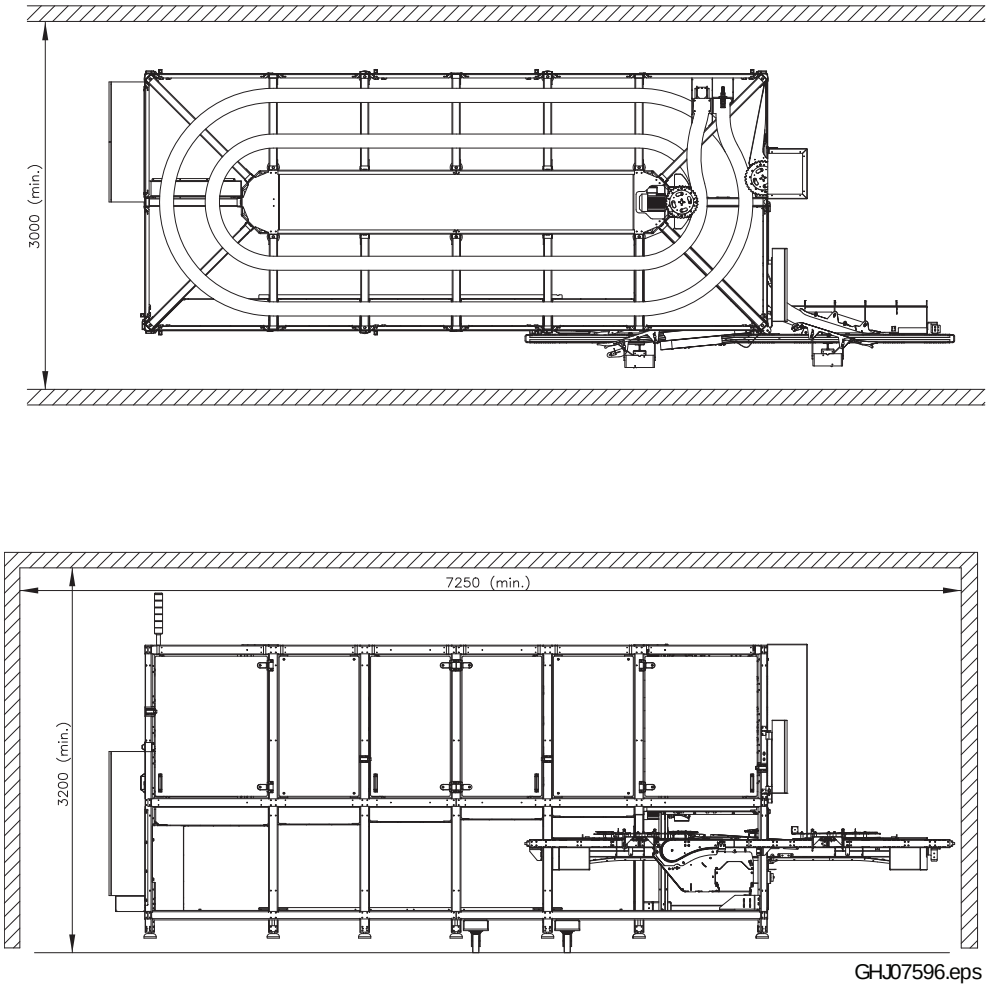

GHJ07596.eps

3.2.1.3 Lifting Machine

DANGER

Immediate danger to life!

Keep body parts clear from under the machine while it is lifted.

The machine can be lifted in the following two ways:

- By forklift using the forklift channels. See Lifting Machine Using Forklift Channels on page 3-26.
- From above using the lug brackets. See Lifting Machine from Above on page 3-28.

Lifting Machine Using Forklift Channels

DANGER

Immediate danger to life!

The machine will tilt if the centre of gravity or the forklift points are not observed. Failure to observe will result in immediate danger to life and / or major damage to equipment. Refer to 1.3 Lifting and Transportation Data.

The ACHX30 should be lifted from underneath using the channels as indicated.

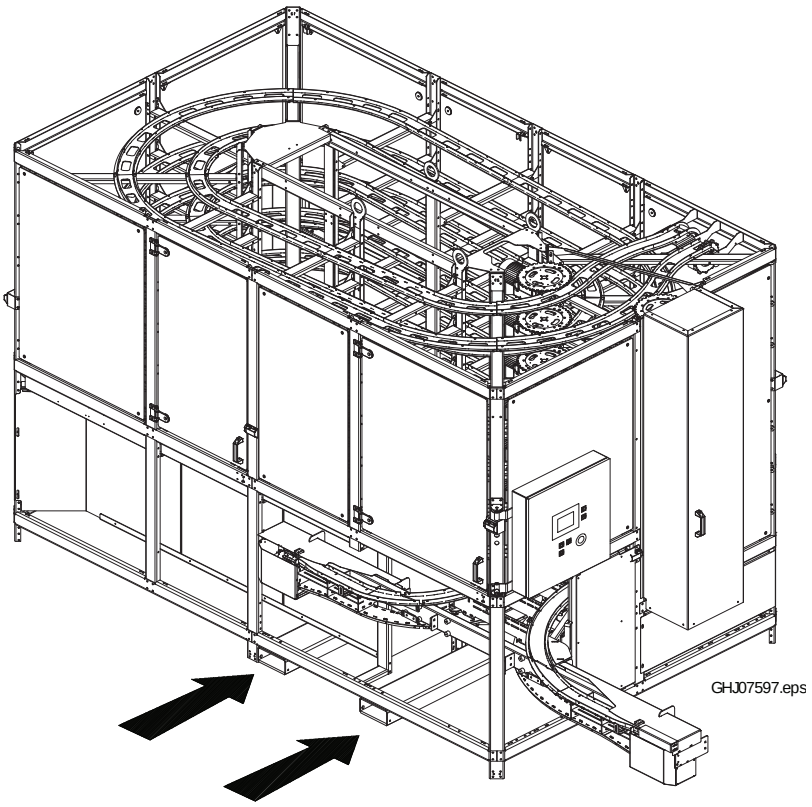

(Cont'd)

(Cont'd)

CAUTION
Risk of damage to machine!
Do not lift the machine without the forklift channels in place. If the channels have been removed, re-install them before moving the machine.

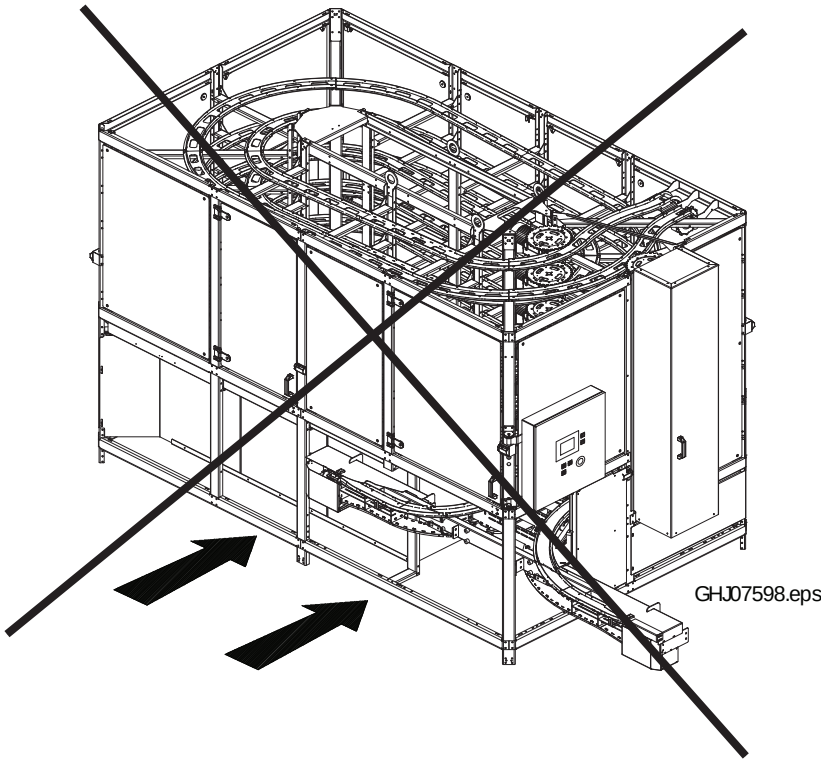

Lifting Machine from Above

Before the machine can be lifted from above, the lifting lug brackets must be installed.

Install the two lifting lug brackets (1) to the uprights (2) using the existing bolts (3).

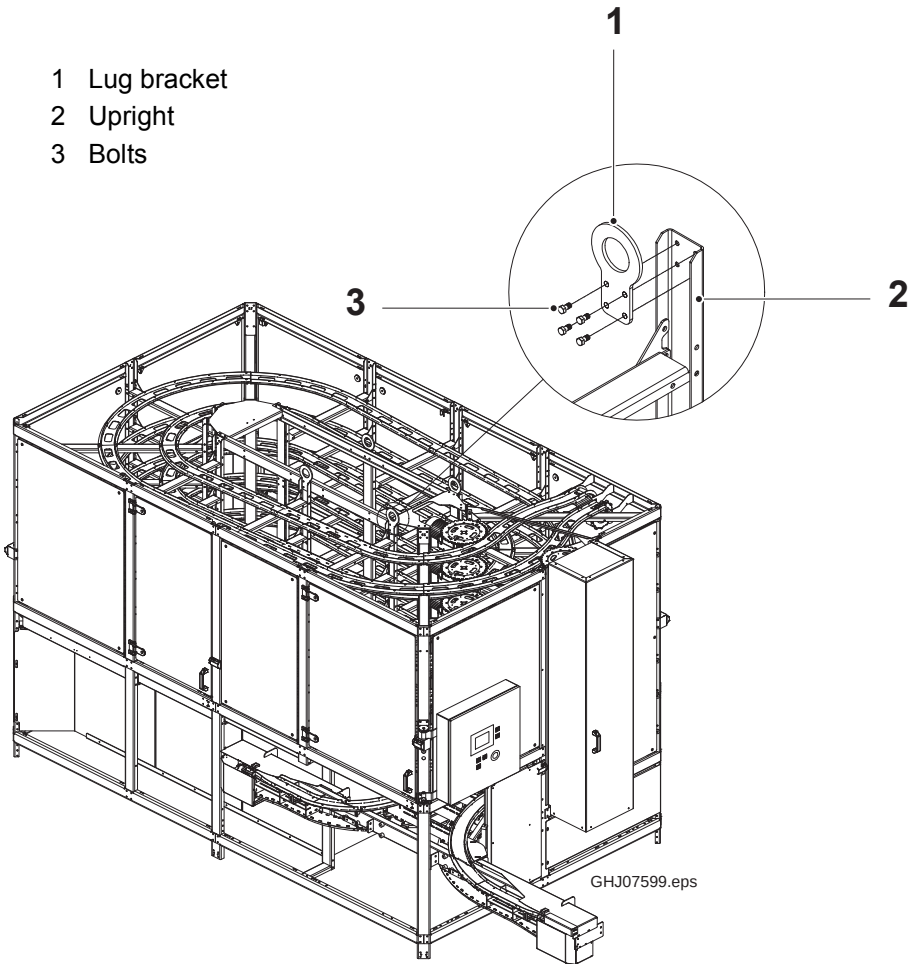

(Cont'd)

(Cont'd)

The machine should be lifted using a locally-approved lifting device at the indicated positions.

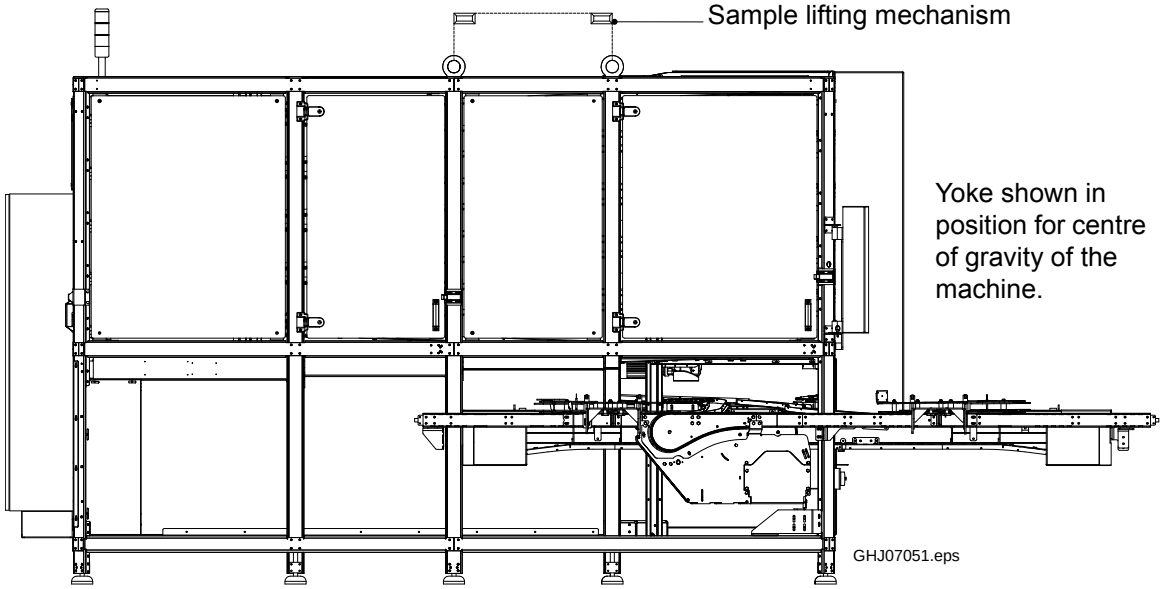

CAUTION
Risk of damage to machine!
Do not lift machine as shown below.

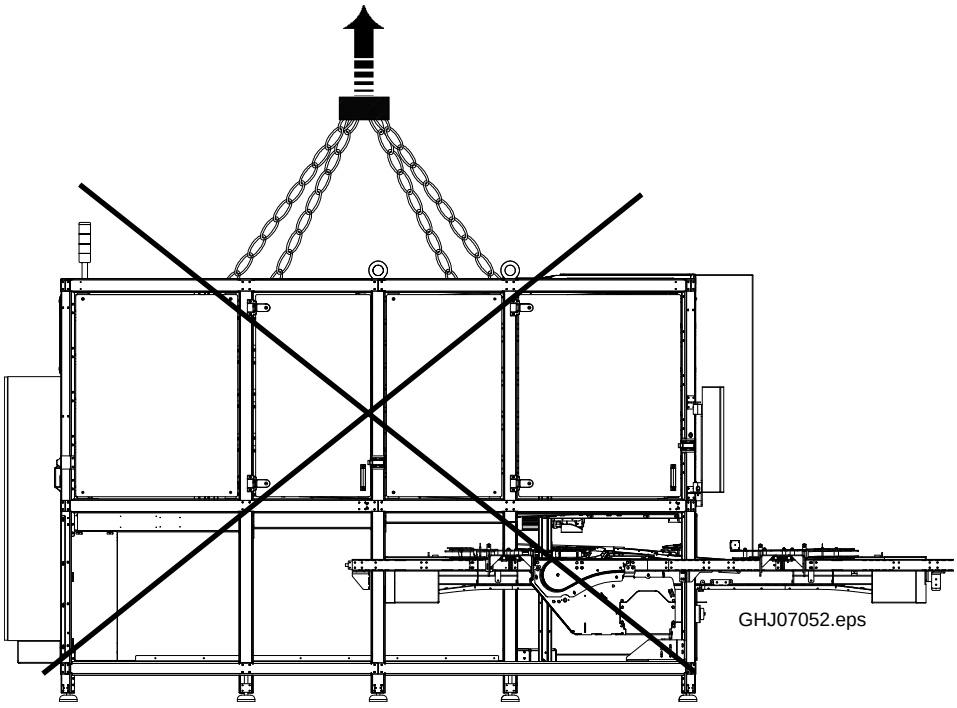

3.2.1.4 Rolling Machine

Caster Wheels Kit (Optional)

If the ACHX30 is shipped with the optional caster wheels kit consisting of four casters, it can be rolled to its required position.

Check that the machine can be transported to the assembly site without any problems in regards to ceiling height, doors, passages, etc.

Installing Casters

a) Lift the machine with forks in channels (1).

Note! The machine can be lifted with a forklift using the channels (see page 3-26) or with an overhead lifting device (see 3-28).

a) Install the casters (2) on both sides of the machine with the attaching screws (3) and washers (4).

b) Lower the machine onto the casters.

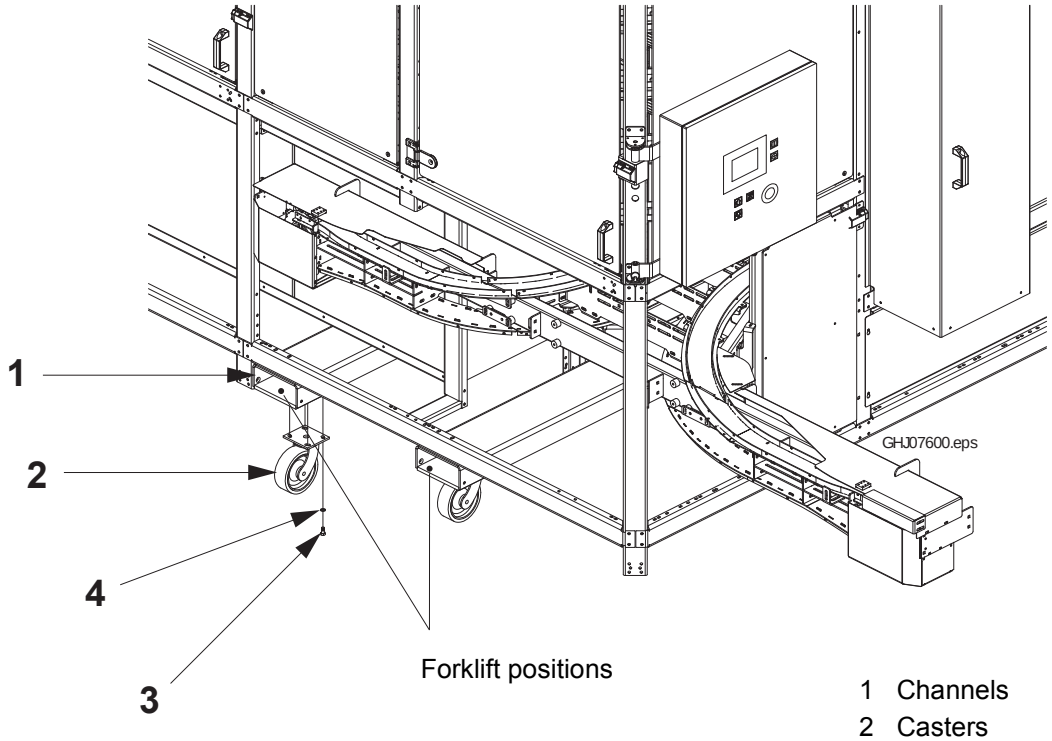

Forklift positions

1 Channels
2 Casters
3 Screws
4 Washer

3.2.2 Positioning the Machine

This section contains instructions for moving the equipment into its final position.

Check that the machine can be transported to the assembly site without any problems in regards to ceiling height, doors, passages, etc.

Make sure there is adequate space in the installation area around the machine to accommodate a forklift (or the use of an overhead lifting device).

DANGER

Immediate danger to life!

The machine will tilt if the centre of gravity or the forklift points are not observed. Failure to observe will result in immediate danger to life and / or major damage to equipment.

Make sure that the machine can be lifted and moved in accordance with 1.3 Lifting and Transportation Data.

3.2.2.1 Lifting Machine

Once the machine is in its desired position for installation, lift the machine.

Note! The machine can be lifted with a forklift using the channels (see 3-26) or with an overhead lifting device (see 3-28).

3.2.2.2 Installing Feet

While the machine is elevated, install the feet as described below.

DANGER

Immediate danger to life!

Keep body parts clear from under the machine while it is lifted. If possible, block the machine while it is lifted to avoid injury.

Attach the feet (1) to the frame uprights (2) with the screws (3).

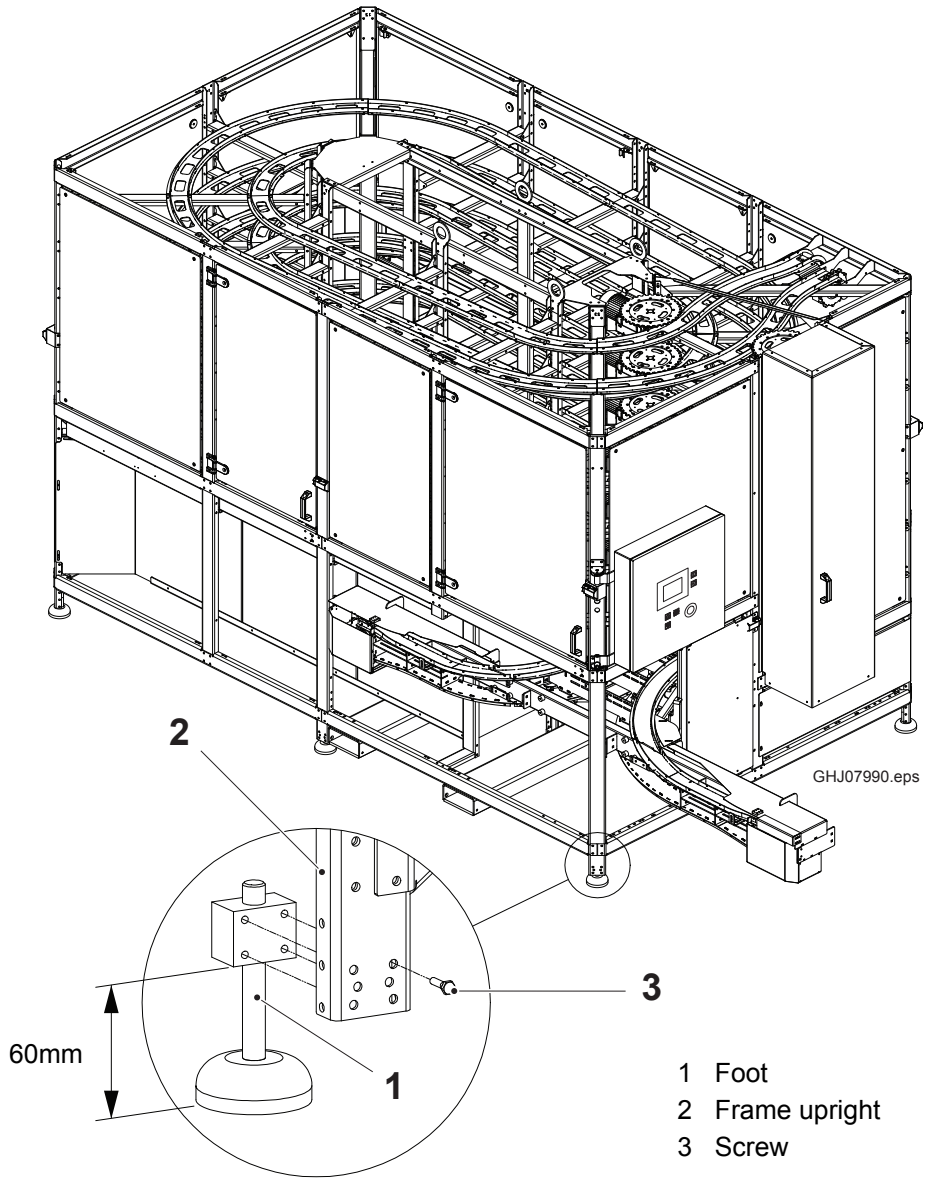

1 Foot
2 Frame upright
3 Screw

3.2.2.3 Removing Optional Caster Wheels

While the machine is elevated, remove the casters as described below.

DANGER

Immediate danger to life!

Keep body parts clear from under the machine while it is lifted. If possible, block the machine while it is lifted to avoid injury.

a) Remove the attaching screws (1) and washers (2).

b) Remove the casters (3).

c) Lower the machine onto its feet.

d) Store the casters for later use.

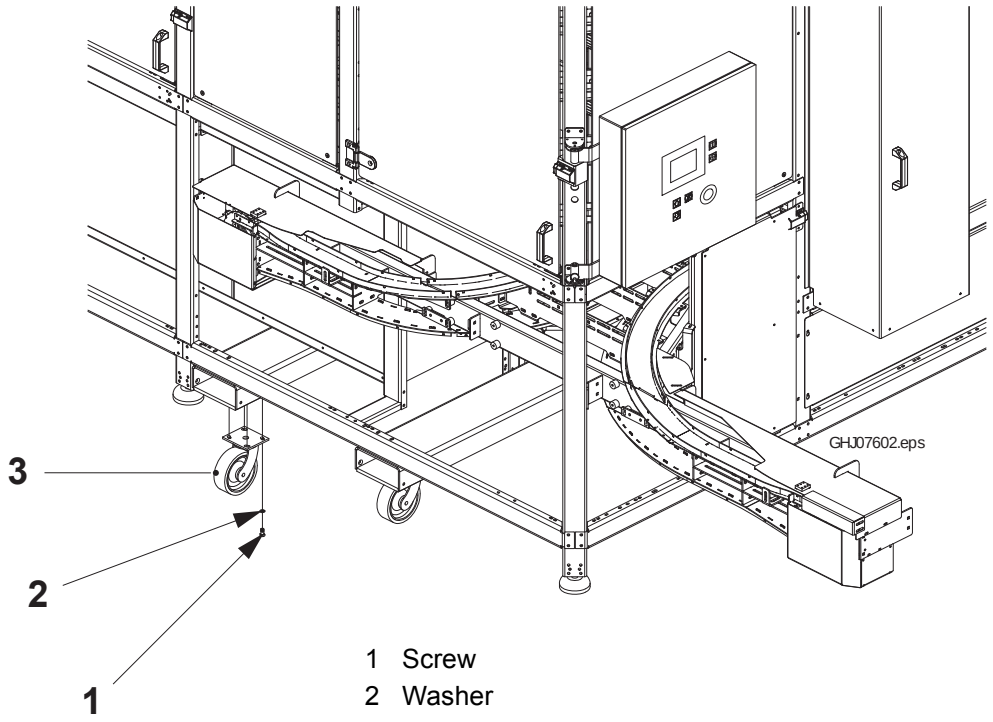

1 Screw
2 Washer
3 Caster

3.2.2.4 Removing Forklift Channels

Remove the forklift channels as they will rust and / or corrode over time when exposed to water.

CAUTION

Pinch Hazard

Exercise caution when lowering the channels since a possible pinch hazard exists from the weight of the channels.

a) Support the channels with blocks.

b) Remove the attaching hardware.

c) Lower the channels onto the blocks.

d) Use a forklift to remove the channels from the blocks.

3.2.3 Assembly

This section contains instructions for assembling the equipment on site.

3.2.3.1 Mounting Door Latches and Handles

Mount the door latches (1) and handles (2) on both sides of the machine.

Note! The handles and doors are colour coded to match. Reinstall each handle to the matching door to ensure the interlock switches work correctly.

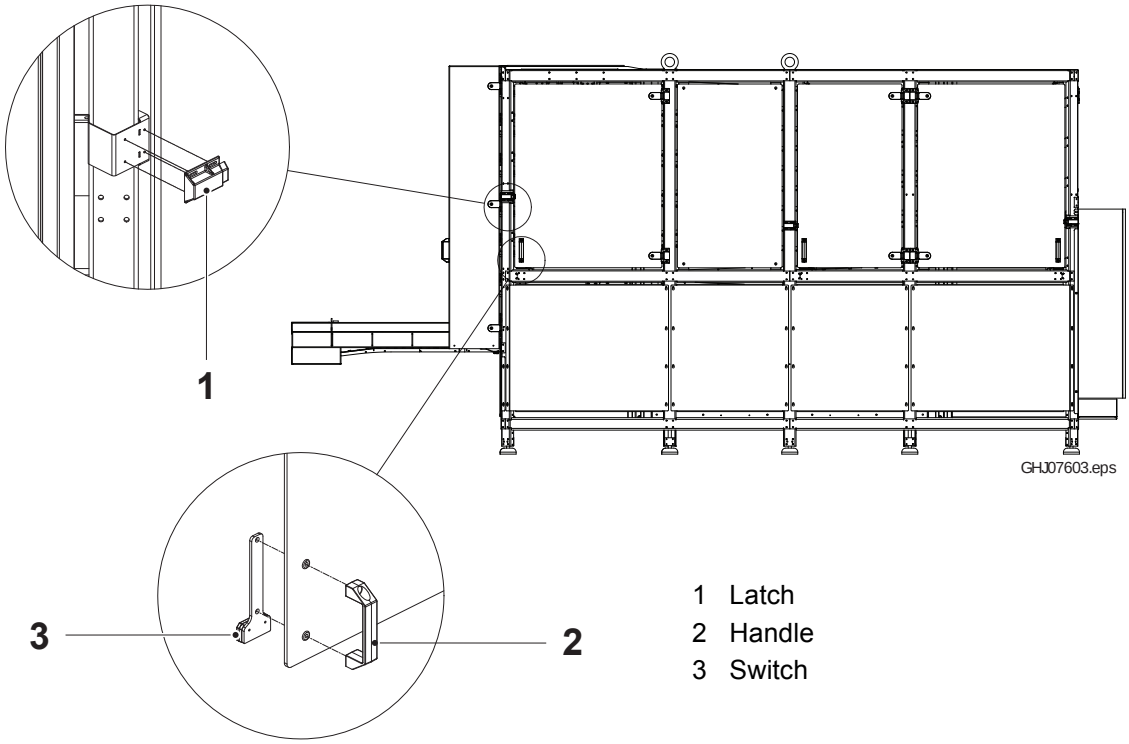

1 Latch
2 Handle
3 Switch

3.2.3.2 Warning Lamp

Attach the lamp bracket (1) to the frame perimeter (2) with screws (3) as shown.

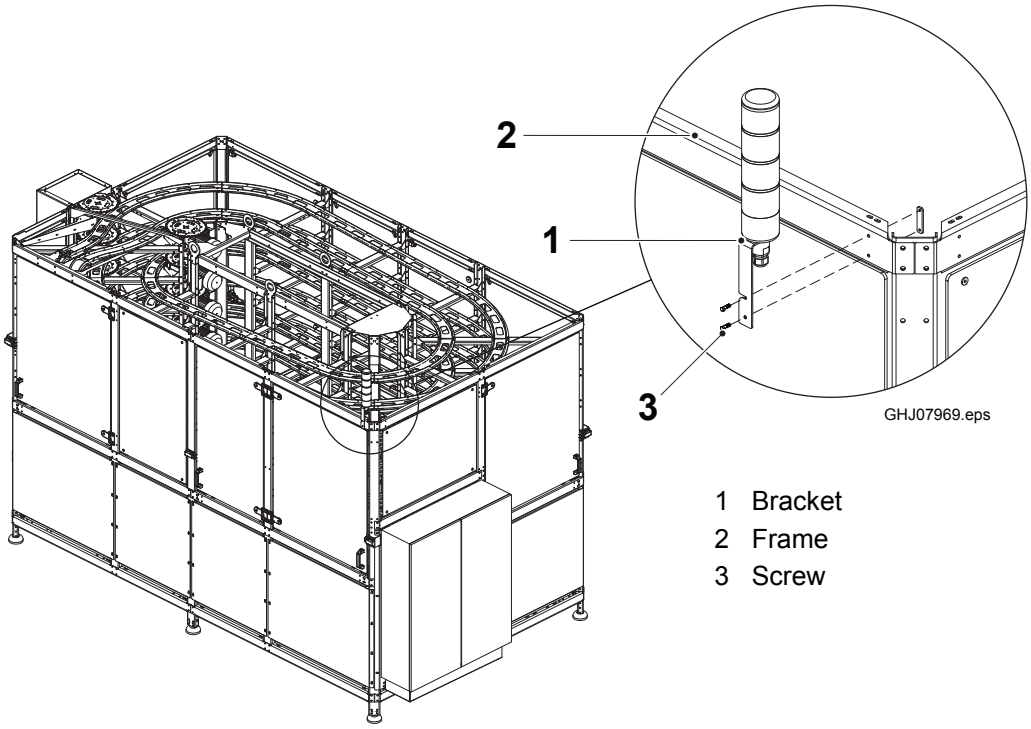

1 Bracket
2 Frame
3 Screw

3.2.3.3 Assembling Drive and End Unit

Assemble the drive and end unit as illustrated below.

a) Attach the conveyor section (1) to the drive and end unit (2).

Note! Make sure the conveyor section is installed parallel to the other sections before tightening the bolts.

b) Secure with bolts (3) on both sides.

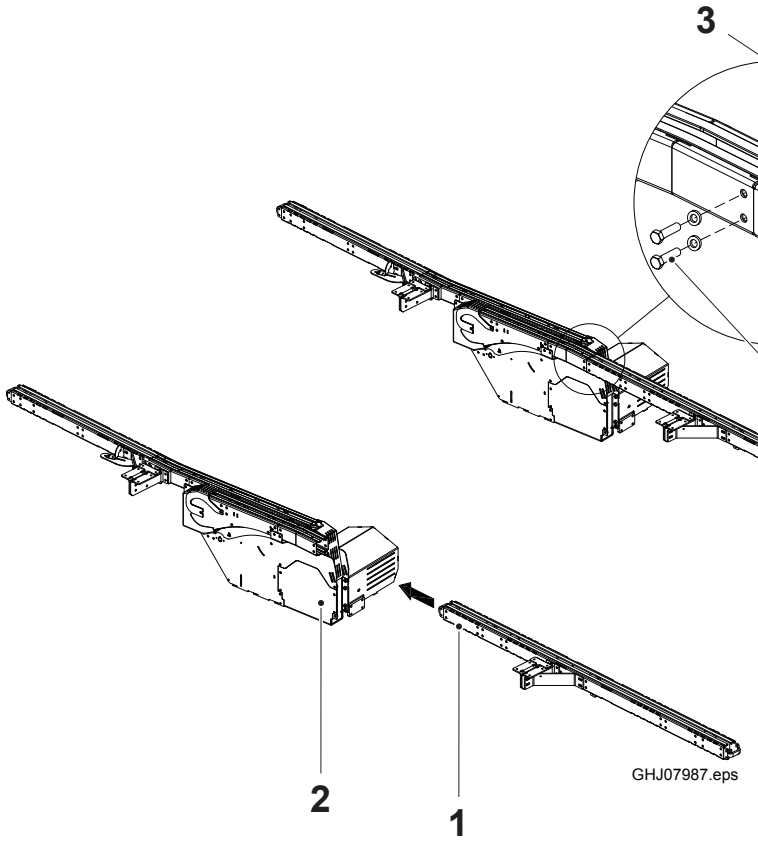

1 Conveyor section
2 Drive and end unit
3 Bolt

3.2.3.4 Installing Drive and End Unit with Auxiliary Infeed and Outfeed Conveyor Connections

CAUTION

Heavy equipment may cause personal injury.

Be careful when moving and installing the drive and end unit. Do not drop it on your foot or pinch your hand when installing.

Note! The mounting bracket positions were preset at the factory. Only minimal adjustments are required.

a) Place the interface assembly next to the ACHX30 in approximate position.

(Cont'd)

(Cont'd)

b) Lift the interface assembly and rest bracket (1) on top of bracket (2) already installed on the ACHX30.

Note! Make certain brackets near the ends of the interface assembly rest on top of the brackets mounted to the ends of the infeed/outfeed tube.

Note! When the wedge spacer is rotated, the rails are angled and suitable for all TPA packages.

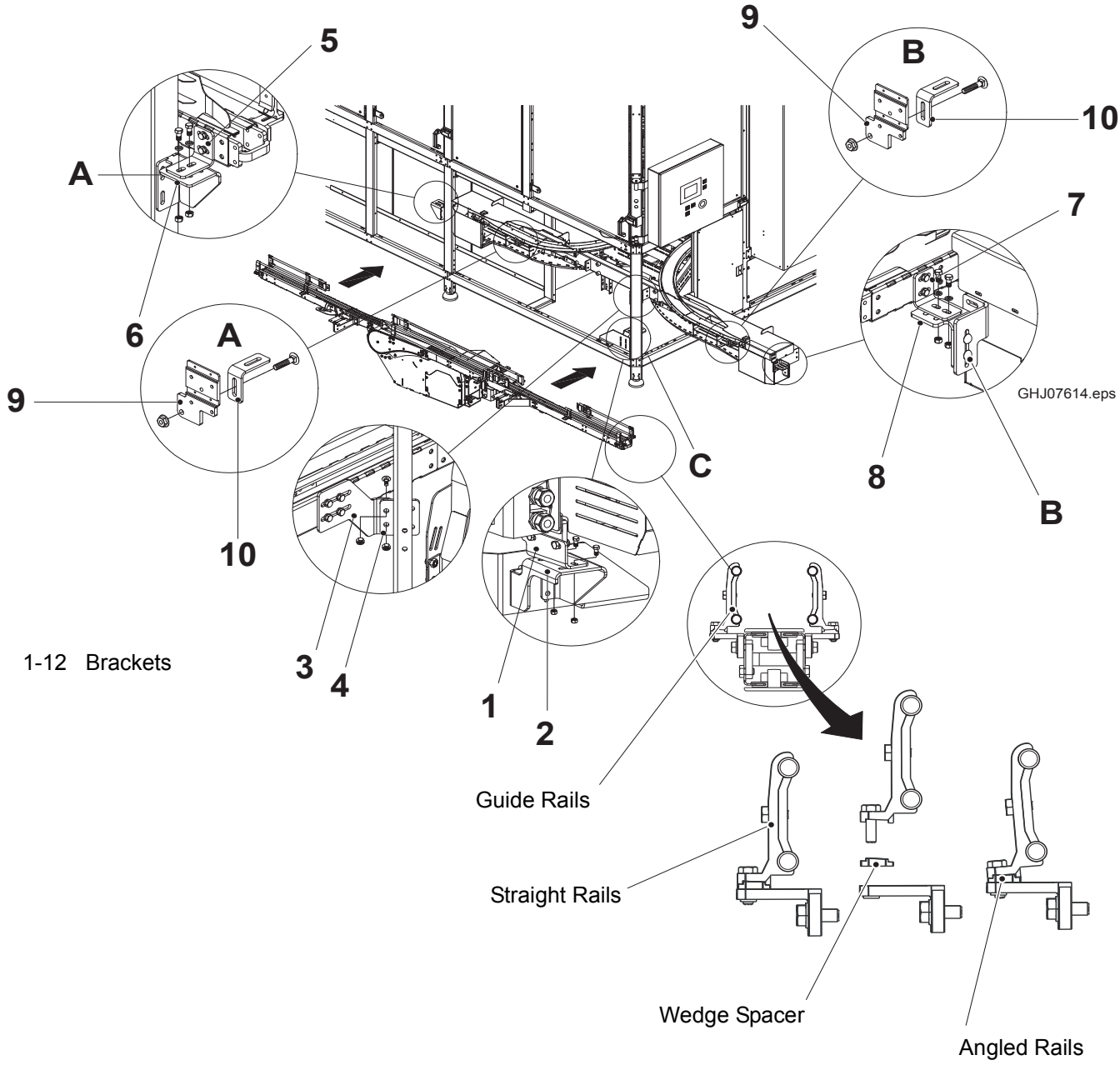

(Cont'd)

(Cont'd)

c) Use two M8x25 carriage bolts and two M8 hex nuts to secure bracket (1) to bracket (2).

d) Use two M8x25 carriage bolts and two M8 hex nuts to secure bracket (3) to bracket (4).

e) Use two M8x25 carriage bolts and two M8 hex nuts to secure bracket (5) to bracket (6) already installed on the infeed end of the ACHX30 tube assembly.

f) Use two M8x25 Hex-head bolts and two M8 hex nuts to secure bracket (7) to bracket (8) already installed on the outfeed end of the ACHX30 tube assembly.

g) Use one M8X25 carriage bolt and one M8 hex nut to secure bracket (9) to bracket (10) on the infeed conveyor section of the ACHX30.

h) Use one M8X25 carriage bolt and one M8 hex nut to secure bracket (11) to bracket (12) on the outfeed conveyor section of the ACHX30.

Due to possible movements during shipment, verify the following:

- The infeed chain of the interface is 1-2 mm above the infeed chain of the ACHX30.
- The outfeed chain of the interface is 1-2 mm below the outfeed chain of the ACHX30.
- The infeed and outfeed chains are level. Verify using a level.
- The curve of the ACHX30 infeed section does not interfere with the interface assembly.

(Cont'd)

(Cont'd)

Chain Height Adjustments

If chain height adjustments are necessary, complete the following steps:

a) Determine which of the mounting bracket locations needs to be adjusted to achieve the dimensions in the steps above.
   – Vertical adjustment locations are marked (A), (B), and (C).

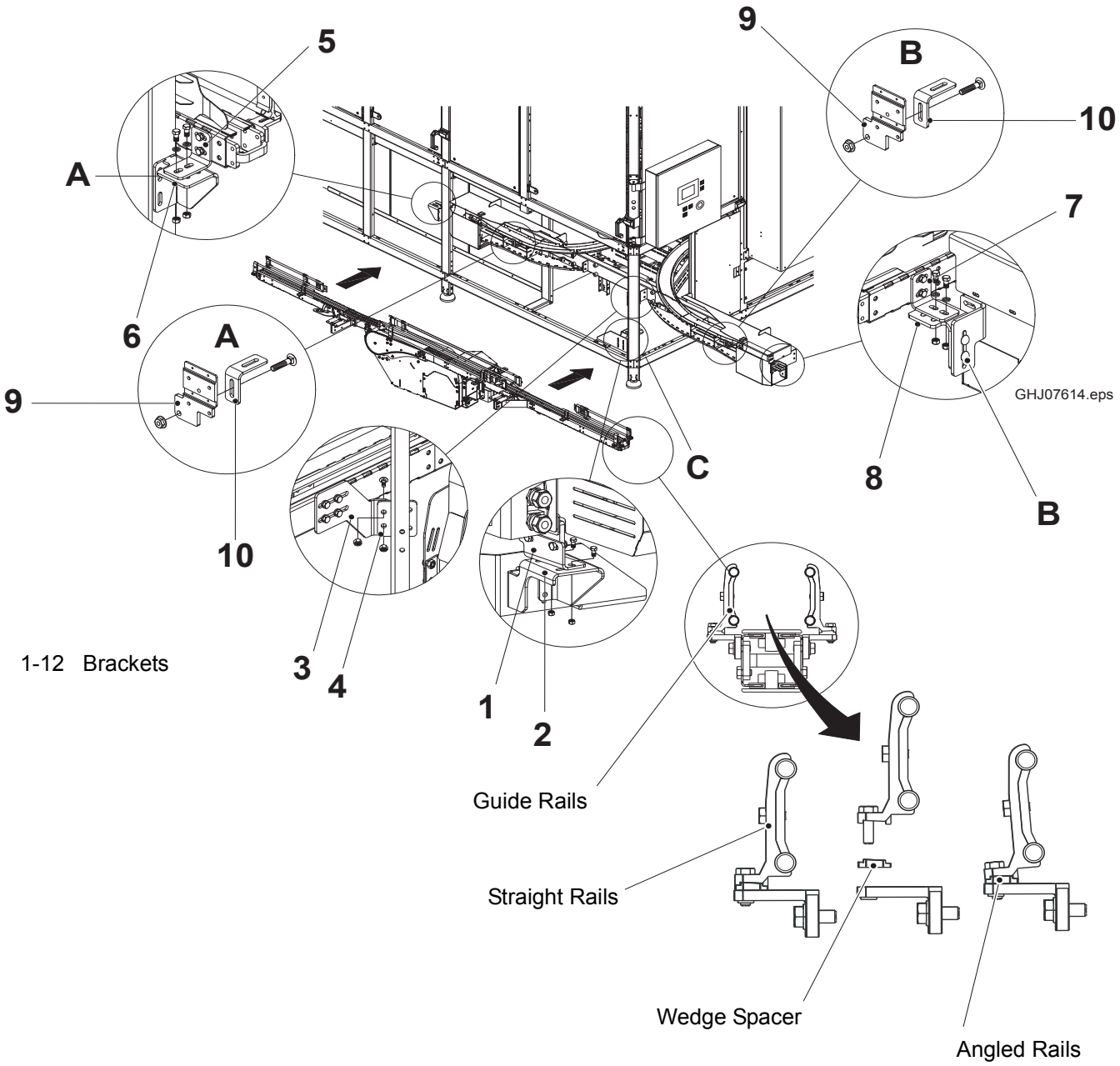

(Cont'd)

(Cont'd)

b) If only the infeed chain needs to be adjusted, loosen the positions marked (A) only.
   - Adjust the height and / or level of the conveyor and retighten the brackets.

c) If only the outfeed chain needs to be adjusted, loosen the positions marked (B) only.
   - Adjust the height and / or level of the conveyor and retighten the brackets.

d) If the entire conveyor needs to be adjusted:
   - Position a lifting device under the interface assembly drive and end unit.
   - Loosen the position marked (C).
   - Raise / lower the interface assembly.
   - Retighten the bracket.
   - Repeat previous steps.

e) After all dimensions listed above are verified, check that all mounting bolts are tightened.

3.2.3.5 Installing Infeed and Outfeed Guides

TB/TBA/TPA/TRC Guides
Replace guide rails #2 and #3 only.

Left Infeed Machine (LINF)

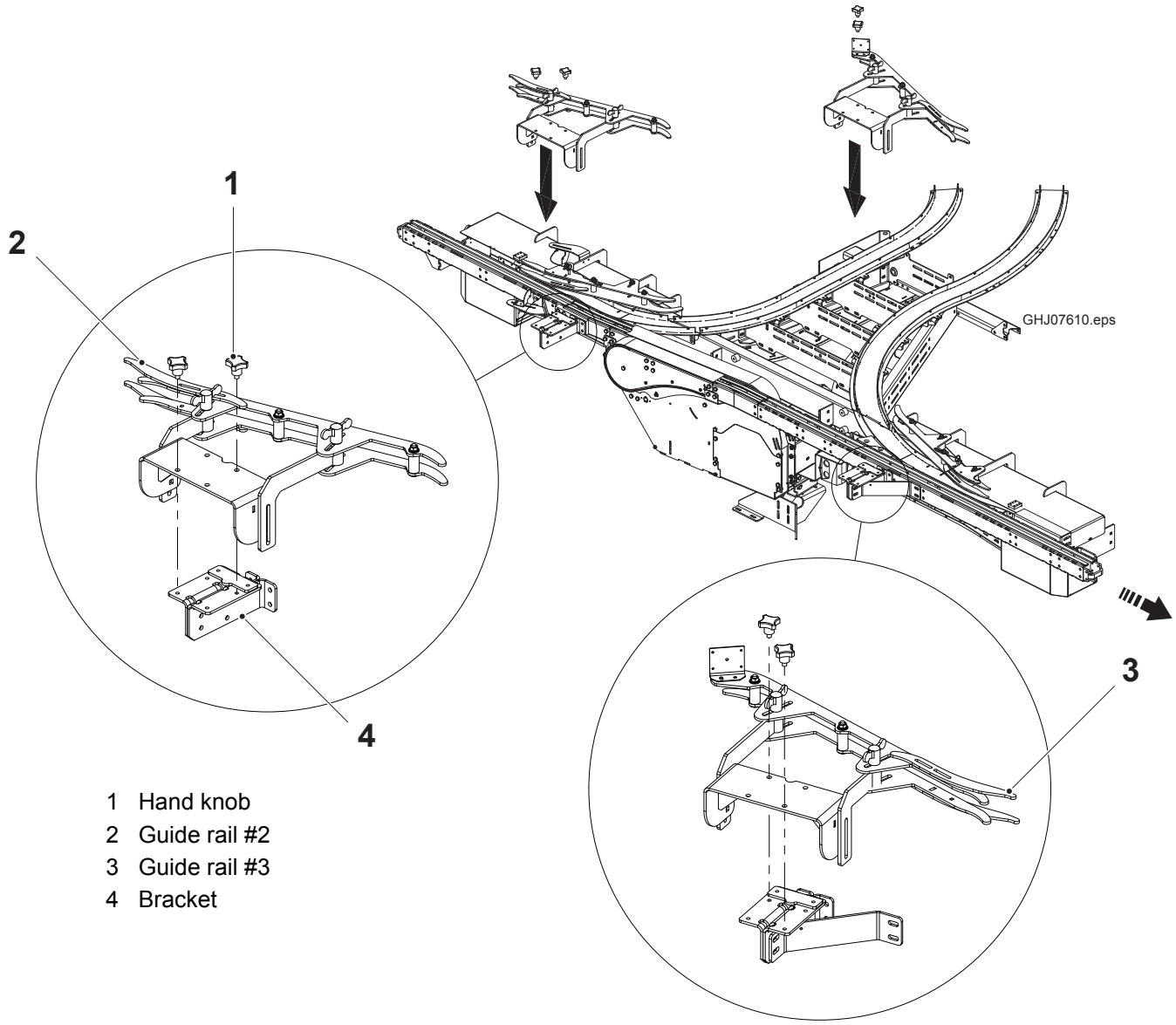

1 Hand knob
2 Guide rail #2
3 Guide rail #3
4 Bracket

(Cont'd)

(Cont'd)

Right Infeed Machine (RINF)

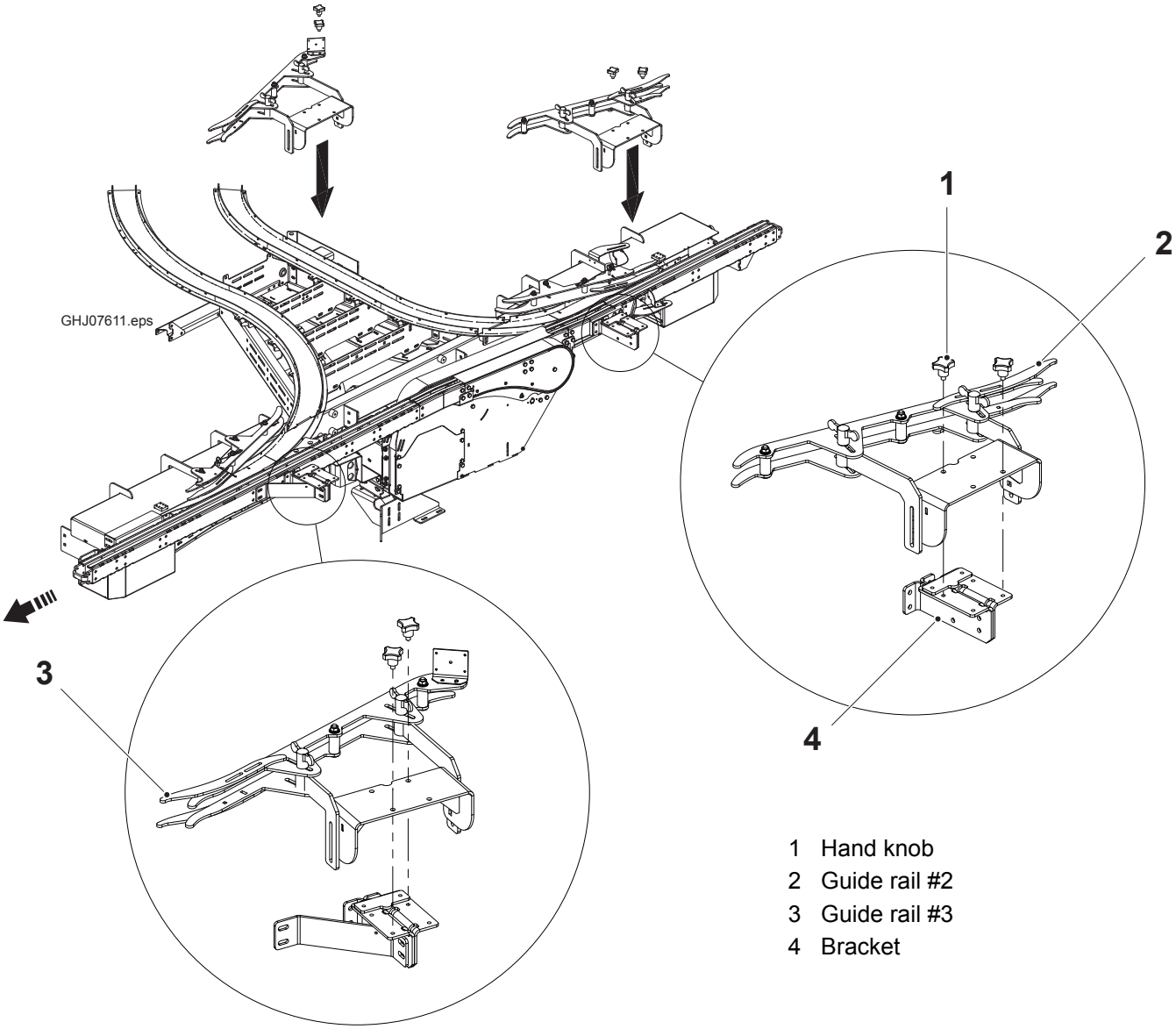

1 Hand knob
2 Guide rail #2
3 Guide rail #3
4 Bracket

3.2.3.6 Installing the Spider Unit

Complete the following steps to install the spider (1).

CAUTION

Risk of minor personal injury!

Two people are required to install the spider.

a) Open the door (2).

Left Infeed Machine (LINF) View

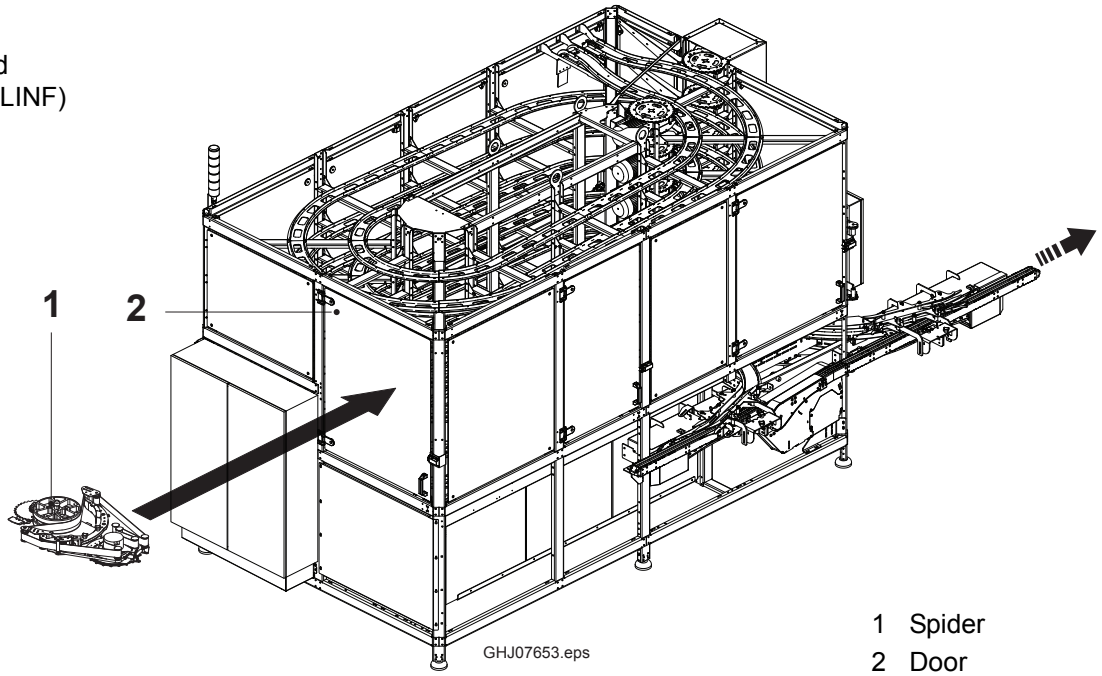

1 Spider
2 Door

Right Infeed Machine (RINF) View

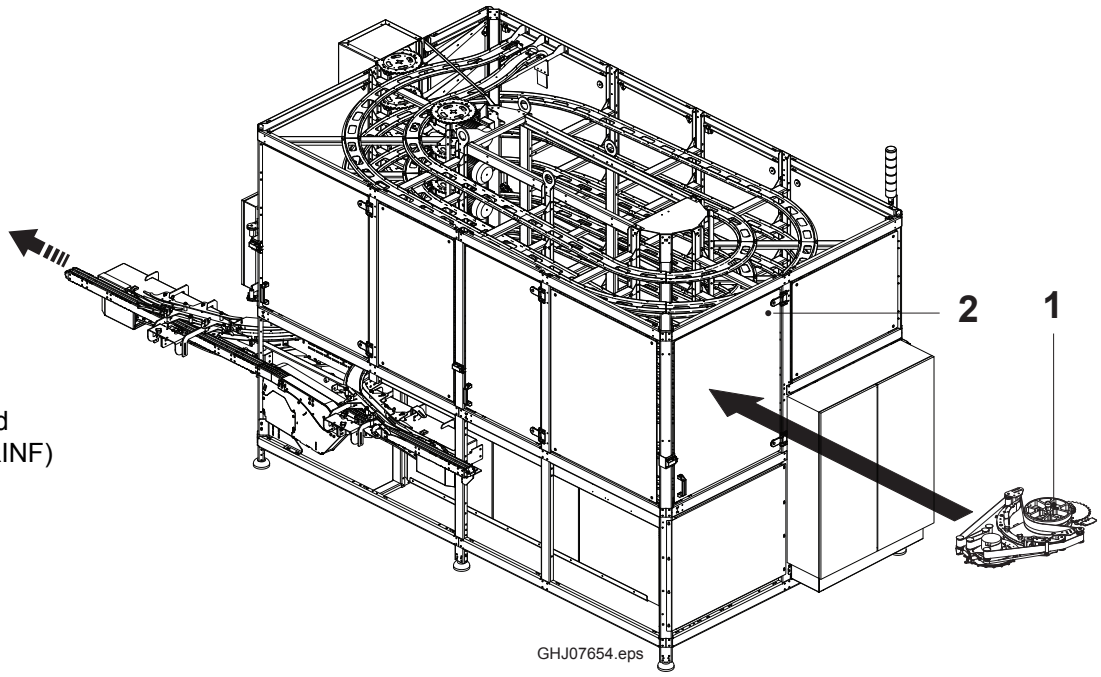

(Cont'd)

(Cont'd)

b) Remove the chain tops (3) as indicated on both the infeed conveyor (4) and outfeed conveyor (5). Refer to the MM for detailed instructions.

Note! Remove only a few chain tops on the infeed conveyor to verify spider gear engagement.

Left Infeed Machine (LINF)

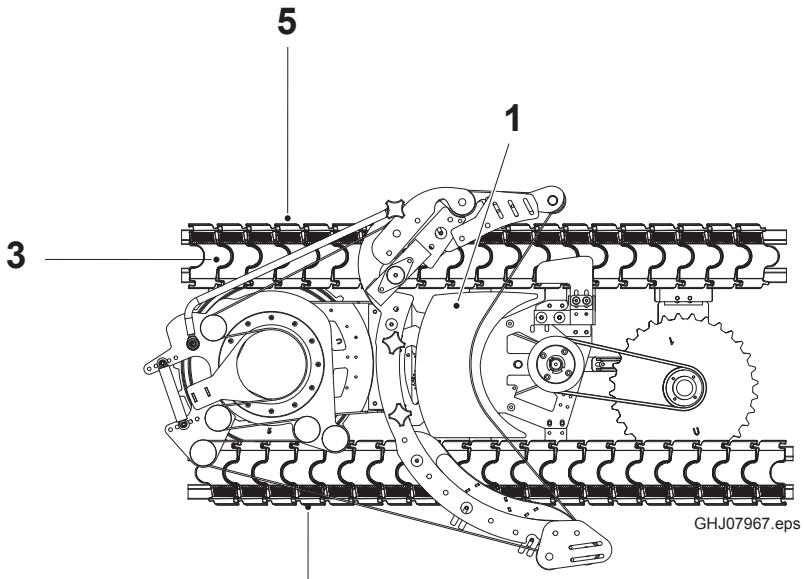

Spider shown in position with chain tops

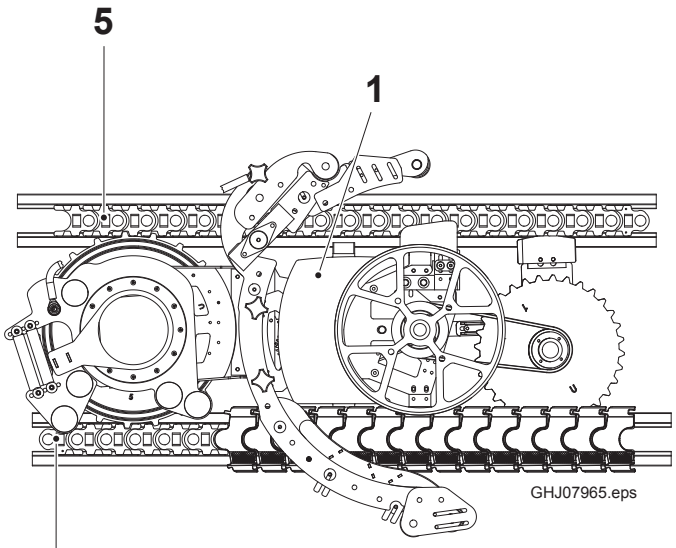

Spider shown in position without chain tops

1 Spider
3 Chain tops
4 Infeed conveyor
5 Outfeed conveyor

(Cont'd)

(Cont'd)

Right Infeed Machine (RINF)

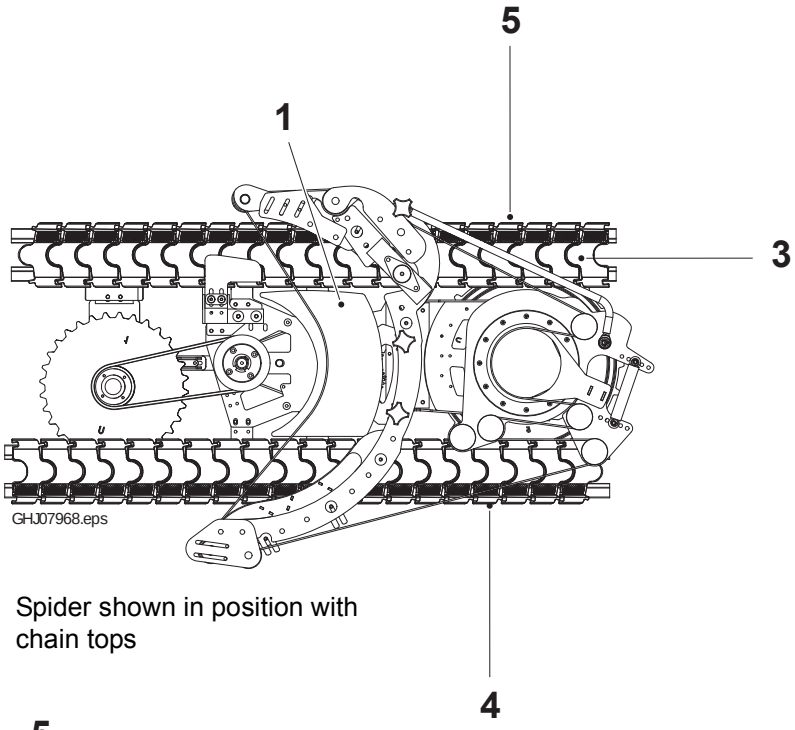

Spider shown in position with chain tops

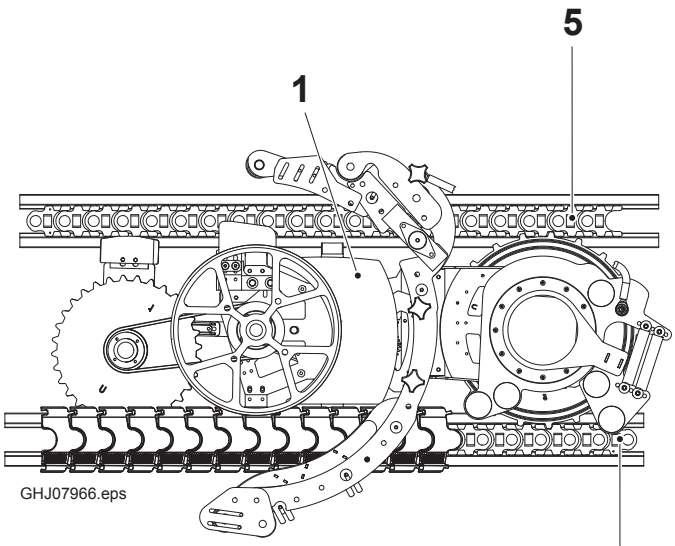

Spider shown in position without chain tops

1 Spider
3 Chain tops
4 Infeed conveyor
5 Outfeed conveyor

(Cont'd)

(Cont'd)

c) Place the spider in the machine and engage the inside feet of the spider underneath the chain and on top of the extrusion.

d) Engage the tooth (6) of the spider gear in the infeed conveyor chain.

Note! Only use the solid pocket (7) for spider gear tooth engagement.

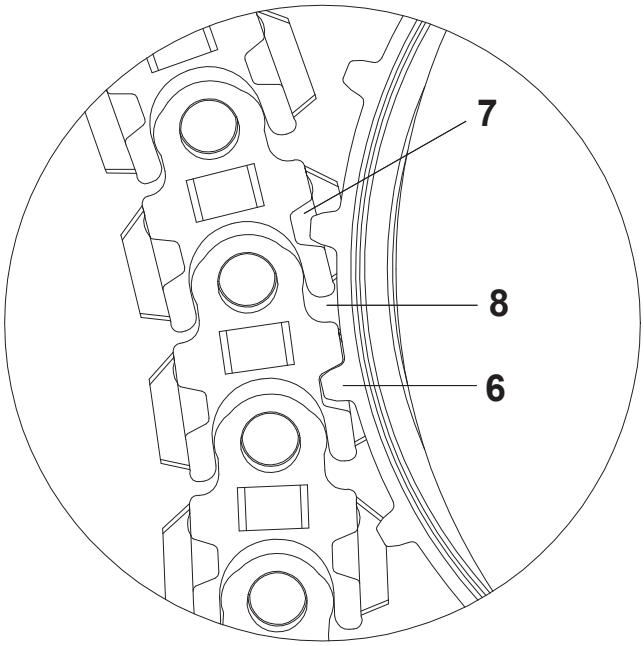

GHJ00301.eps

6 Sprocket tooth
7 Solid pocket
8 Split pocket

(Cont'd)

(Cont'd)

e) Pull outward on the outfeed conveyor chain to engage the tooth of the sprocket.

Note! The front sprocket (9) must engage the infeed chain (10).

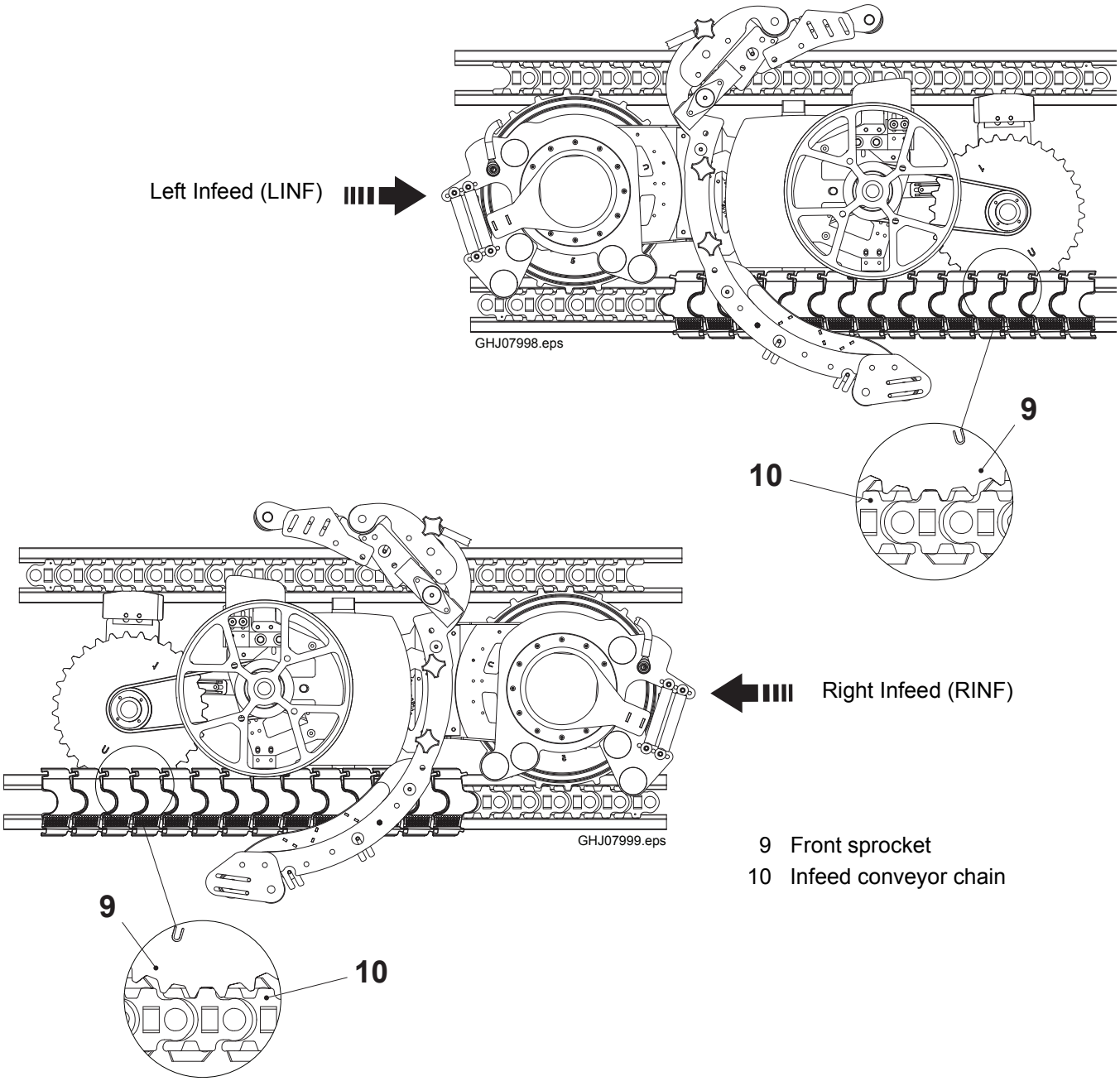

9 Front sprocket
10 Infeed conveyor chain

(Cont'd)

(Cont'd)

f) Jog the infeed conveyor until the section of chain from which the chain tops have been removed comes back around one level up and within reach from the access door.

g) Install the missing chain tops on the infeed and outfeed conveyor chains.

h) Jog the outfeed conveyor to locate the spider unit between two cross members on the first level of the machine for access.

i) Verify the spider guide blocks (11) are dimension A from the infeed and outfeed extrusion (12).

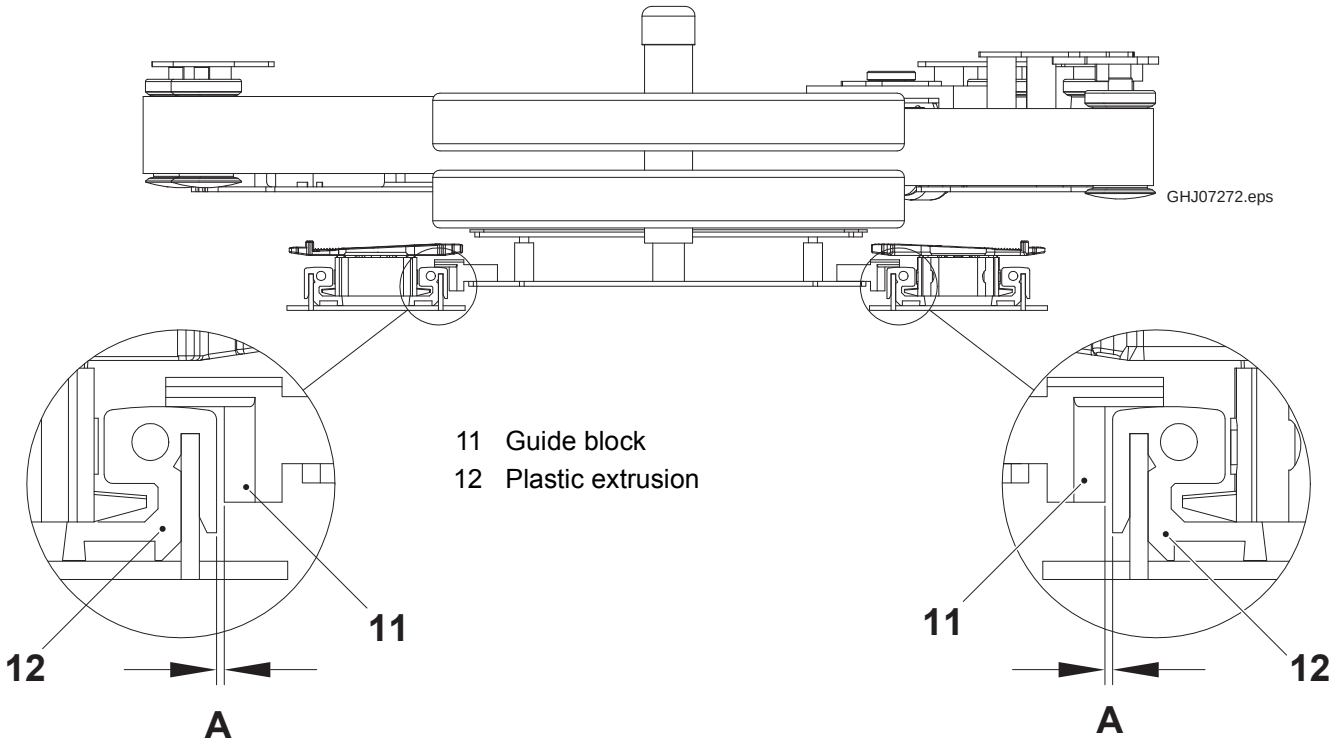

A = 1 - 2 mm

3.2.4 Levelling and Squaring the Machine

The machine framework may shift during shipment. It is important to level and square the machine to ensure machine efficiency and smooth operation during production.

3.2.4.1 Levelling

Complete the following steps to level the machine.

a) Using the machine feet, adjust the height of the drive and end unit to equal the infeed/outfeed conveyor height.

b) Place a level across the conveyor chain on the drive and end unit to level. (See Location #1 on the illustration below.)

c) Open the guard doors to access the lower frame crossmembers. Place a level on the bottom perimeter of the machine. Check all four sides. (See Locations #2 below.) Adjust the machine feet accordingly.

d) Place a level on the angled cross members inside the machine. Adjust the inside feet if necessary. (See Location #3 below.)

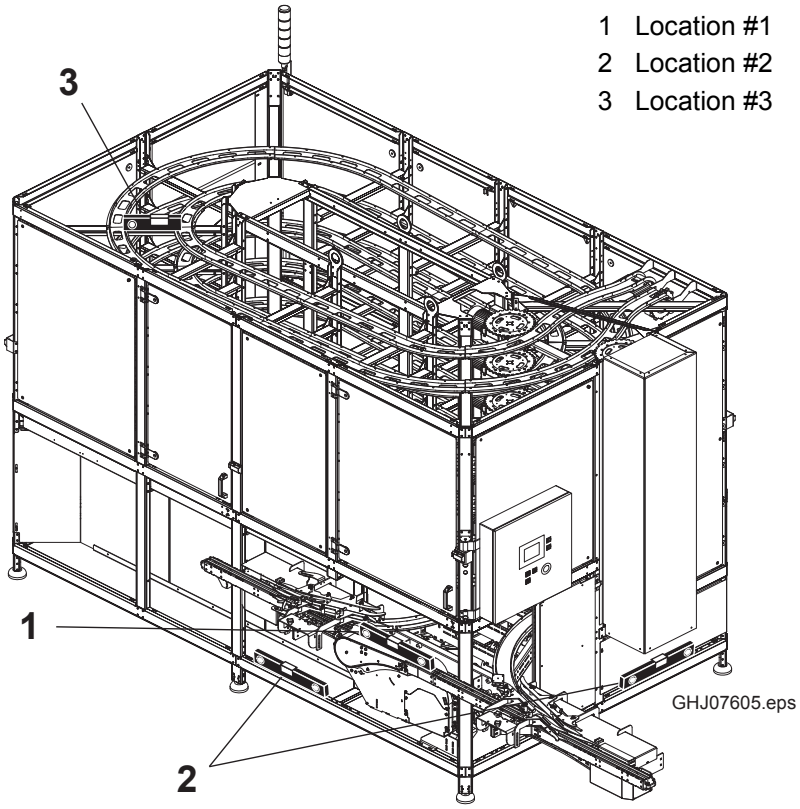

3.2.4.2 Squaring

Follow the instructions below to square the machine.

a) Check for equal measurements from opposing corners.

b) Once the machine is placed in the desired location for the drive and end unit, secure the feet to the floor at the three positions indicated below.

c) If the machine is out of square tolerance (±6.35mm), determine how far the opposite end needs to be moved and in which direction. Use a pry bar to gently force the opposite side of the frame in the desired direction.

d) Secure the feet in place after the adjustment is made.

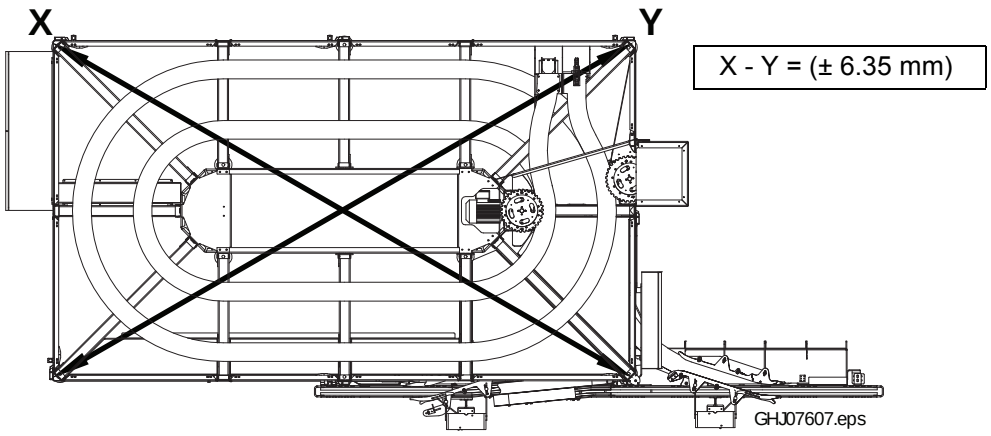

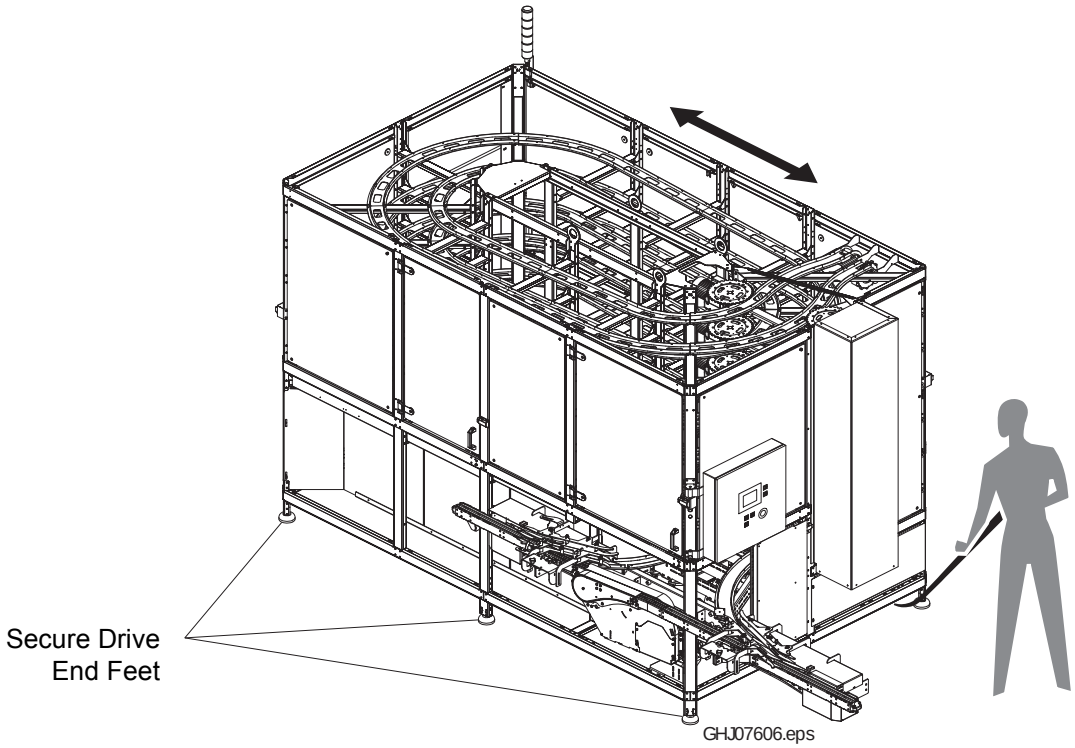

3.3 Equipment Interfaces and Connections

This section contains information about connections to utility sources and equipment.

3.3.1 Electrical Connection

To connect the electricity, see Mains Connection in the Electrical Manual.

DANGER

Risk of electrical shock and short circuits!
Make sure that power is switched OFF upstream before performing any work on cables and electrical components.

Route the mains connections power cable through the hole located at the top of the electrical cabinet shown in the illustration below.

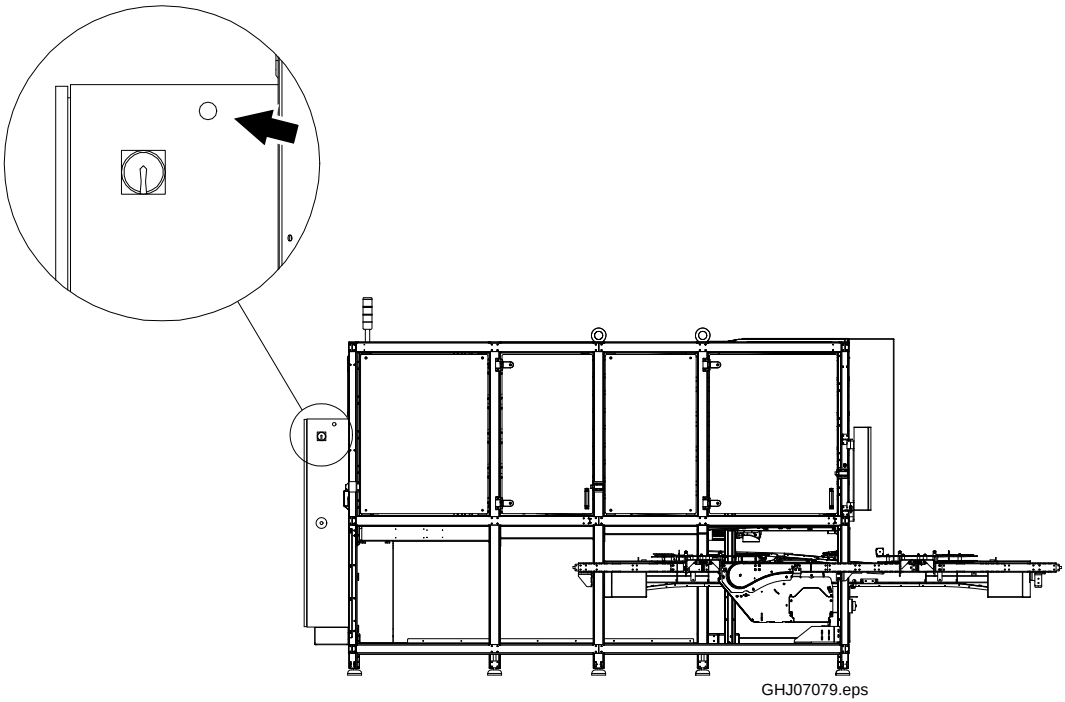
GHJ07079.eps

3.3.1.1 Routing of Mains Supply Cable

Route the mains supply cable 1 m straight up from the top of the machine before it turns away. The mains supply cable must never be routed through the machine or strapped together with other cables / conductors belonging to the machine.

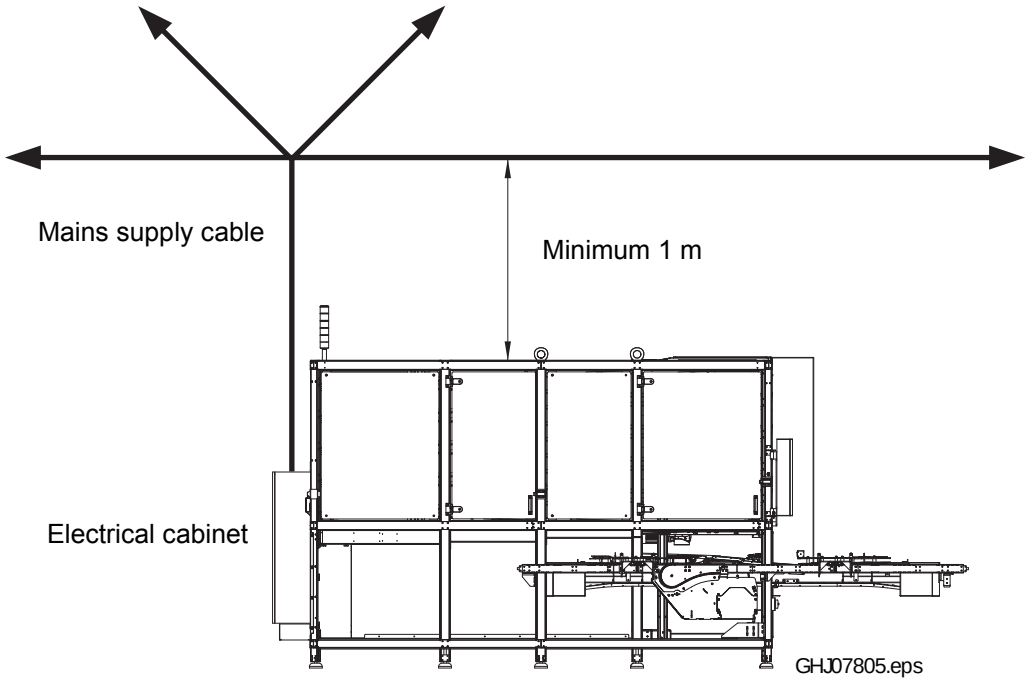

3.3.1.2 Site Test

The Site Test should be performed according to the following pages when **all electrical connections are complete** (including all external equipment, like ArmorStart, if used).

This page intentionally left blank

Tetra Pak (Sweden) **ACHX30-0500**	**Electrical Site Test Instruction**		**DE-P447 1**
	Date	Issue	Page
	2009-06-29	1	1 (10)

INSTRUCTION
for verification of electrical equipment of machines in accordance with Site Tests described in Tetra Pak Corporate Standard KA 2727.10

Machine type: ACHX30-0500

Electrical equipment number: 663651-0500

Instruction template for the Site tests
Template ID: P&PS 584-0101, Dated: 2009-06-16

Handled by	Approved by
DCD	PNS

Tetra Pak (Sweden)	Electrical Site Test Instruction	DE-P447 1	
ACHX30-0500	Date	Issue	Page
	2009-06-29	1	2 (10)

This instruction is based on the following corporate standards:

- KA 2726.30 issue 4
- KA 2727.10 issue 2

Reporting of test results

Test results shall be reported in the Site Test Results document DE-P446 1 issue 1. Fill in information about Equipment under test, Test equipment and Test instruction.

All tests and verifications must be completed with result pass before the Test Result document is signed.

Position numbering in this document corresponds to position numbering in the Site Test Result document.

Identification of test personnel

Fill in personnel details under Test personnel on the last page of the Site Test Results document.

1. Preparation for test

1.1 Prepare the Machine and the Test Area as applicable in accordance with KA 2727.10 clauses 8.1 and 8.3.
Tick off pos 1.1 when completed.

1.2 Take the applicable safety precautions listed in KA 2727.10 clauses 8.2.
Tick off pos 1.2 when completed.

2. Connection and disconnection on the test object before earth connection test and protective bonding circuit tests

2.1 Ensure that the machine is disconnected from the power supply. Ensure that the protective earth conductors remain connected.

2.2 Ensure that all related external conveyor motors and drives are connected and that earth conductors are properly terminated.

2.3 Switch ON the supply disconnector on the machine.

2.4 Connect the test equipment to the machine.

WARNING!

During the following tests the machine is powered and might become live in the event of a failure. The power must not be switched ON until it is made sure that no one is touching the machine. The test personnel must always be prepared to switch OFF the power. Only authorized persons must be present within the test area.

2.5 Connect the test equipment to the power supply. Tick off pos 2.5 when completed.

2.6 Activate the devices listed below with an auxiliary 24vdc power supply. Check each device listed in the table below and Tick-off each activated device.

Ref.Des.	Activated	Ref.Des.	Activated	Ref.Des.	Activated
F01Q0010		F01Q0011		F30Q0011	

3. Test equipment preparation

3.1 Check visually on the test equipment that the connection of the PE conductor probe, the probe and the cable are intact.

3.2 Turn ON the power switch on the PE Conductor Tester.

3.3 To verify the test equipment, press both probes to the metallic structure of the machine and check that the resistance is sufficiently low (direct contact between the two probes should give < 1 mΩ).

Tick off 3.3 in the Check column of the Test Result document when verified.

4. Verification of the continuity of the protective bonding circuit

4.1 Set, if applicable, the PE conductor Tester in accordance with the conditions depending on the conductor area.

4.2 For each object listed in the Tests Report document, press the probe to the test point. Keep the probe pressed against the test point until a stable reading is obtained. Read and enter the resistance value in the Test Results document. Check that the measured value is lower than the test limit value. Enter N/A in the check-box where the Site Test Result document contains a reference designation which is not to be installed on the machine.

4.3 After the test, turn OFF the power switch on the PE Conductor Tester.

5. Connection and disconnection after test

5.1 Restore all disconnections. Tick off pos 5.1 when completed.

6. Fault loop verification

6.1 Check if the supply source impedance at the site (Z_I for the supply transformer plus the supply cable) is lower than the maximum stated in KA 2726.30 Table 1. Tick-off 6.1 in the Test Result document.

If the supply source impedance at the site is lower than maximum allowed for the machine, this completes the fault loop verification. In such case, proceed to section 11 below. Otherwise continue with section 6.2.

Continue with section 6.2 also if no maximum supply source impedance is predetermined for the machine.

Instruction template for the Site tests
Template ID: P&PS 584-0101, Dated: 2009-06-16

Continue with section 6.2 also if, during installation and commissioning, any power cables have been substituted by longer or smaller cables or if an over-current protective device are replaced with, or set at, a higher nominal tripping current compared with the machine status at its type test.

Continue with section 6.2 also if external drive(s) are installed to W10F0020 and the connected cable is not 2.5 mm² or the length is greater than 34M.

A verification of the protective bonding circuit in accordance with the Manufacturing Test must have been conducted satisfactorily before making the fault loop verifications described in sections 1 to 6 below.

NOTE – Resistance values R are allowed to substitute impedance values Z in all calculations below.

6.2 Enter for each power load listed in the Test Results document, the cross sectional area of the associated protective conductor into the column "Area (mm^2)".

NOTE 1 – Where different cable areas are installed to one power load, enter the area of the smallest cable outside enclosed electrical operating areas i.e. outside the electrical cabinet.

NOTE 2 – The power loads (identified by the reference designation of their over-current protective device) are pre-entered into the Test Results document as a part of its preparation procedure described in the Guideline document.

6.3 Enter for each power load listed in the Test Results document, the I_N value of its protective device (obtained from the actual nominal rating for the device installed in the actual machine) into the column "I_N".

6.4 Enter for each power load listed in the Test Results document, the $I_{a(5s)}$ value of its protective device (obtained from the datasheet and the characteristics diagram for the protective device installed in the actual machine) into the column "$I_{a(5s)}$".

6.5 Enter for each power load listed in the Test Results document, the length of the protected cable from the over-current protective device up to the load (obtained from the cable list and visually verified on the actual machine) into the column "cable length".

NOTE – Where a part of the cable with an area different than entered in section 6.2 is installed, calculate its equivalent cable length from the formula:

$$l_{1e} = (l_1 * R_1 + l_2 * R_2) / R_{1e}$$

where:

l_{1e}: is the equivalent cable length (to be calculated)

l_1: is the length of the cable with the area entered in 6.2

R_1: is the resistance per kilometre for the cable area entered in 6.2

l_2: is the length of the cable with a different cable area

R_2: is the resistance per kilometre for the cable with a different cable area

Instruction template for the Site tests
Template ID: P&PS 584-0101, Dated: 2009-06-16

R_{1e}: is the resistance per kilometre for the equivalent cable i.e. for the cable area entered in 6.2

Example 1; 15 m 2,5 mm^2 + 3 m 6 mm^2:

l_{1e} = (15m*8,21Ω/km + 3m*3,39Ω/km)/8,21Ω/km = (123 + 10,2)/8,21 = 16,2m

Example 2; 15 m 2,5 mm^2 + 3 m 1,5 mm^2:

l_{1e} = (15m*8,21Ω/km + 3m*13,7Ω/km)/8,21Ω/km = (123 + 41,1)/8,21 = 20m

NOTE – The resistances can be obtained from Table 6 of KA 2727.10

6.6 For each power load, tick off with a YES or NO in the column ”Short cable” in the Test Results document, If the associated cable length is shorter than or equal to the maximum length indicated in Table 1 of KA 2726.30, tick YES; otherwise tick NO.

Table 1 of KA 2726.30 is valid under certain conditions only. Irrespective of cable length, enter NO if not all of the following conditions are satisfied:

- the cables are PVC-cables with copper conductors;
- the cables are intended for a 3-phase system with nominal voltage 400 V; and
- the nominal value of the over-current protective devices are not higher than the corresponding limit given in column 3 of Table 1 of KA 2726.30.

6.7 For each power load marked NO in the column “Short cable”, calculate the maximum value allowed for Z_S from the formula:

$Z_{Smax} \leq (2/3) * (U_0 / I_{a(5s)})$ equation #2 of KA 2726.30.

where:

U_0: is the nominal phase voltage (normally 230V)

$I_{a(5s)}$: is the current that causes the protective device to trip within 5 s (see pos. 1.1).

Enter the calculated maximum value of Z_S for the power load into the Test Result document column “Z_{Smax}”

6.8 For each power load marked NO in the column “Short cable” calculate the actual Z_S value in accordance with equation #1 of KA 2727.10:

$Z_S = Z_I + Z_L + Z_{PE}$

where:

Z_I: is the supply source impedance at the site;

Z_L: is the impedance of the phase conductor between the protective device of the cable and the load (can be calculated from Table 6 of KA 2727.10);

Z_{PE}: is the impedance of the protective conductor between the load and the PE terminal of the machine (can be calculated from Table 6 of KA 2727.10). An exact value for R_{PE} may be obtained from table 4 above, if it has been measured

Instruction template for the Site tests
Template ID: P&PS 584-0101, Dated: 2009-06-16

on site. It is also possible to calculate the R_{PE} value from Table 5 of the Manufacturing Test Result document.

Enter the calculated value of Z_S for the power load into the Test Result document column "Test value Z_S (mΩ)".

6.9 For each power load marked NO in the column "Short cable" check that the actual Z_S value is lower than the Z_{Smax} value. Tick off pos 6.9 if so.

7. Connection and disconnection on the test object before fault loop measurement

NOTE – This section need not be complied with if no measurements are needed. Enter N/A in the check column for 7.4 and proceed in such case with section 10.

7.1 See the manual of the measuring equipment for detailed instructions on how to handle it.

7.2 Two phases of three phase driven motors must be disconnected on motors that cannot be running during the test.

7.3 The electrical power shall be ON all the way to the load during the measurement. **Do not switch it ON yet!** Where a motor cannot be running, all live conductors except the measured must be disconnected.

Where the actual connections and disconnections are practically better made between measurements of each power load, this is an alternative procedure, see item 8.1.

7.4 Tick off column 7.4 when connected.

WARNING!

During the following tests the machine is powered and might become live in the event of a failure. The power must not be switched ON until it is made sure that no one is touching the machine. The test personnel must always be prepared to switch OFF the power. Only authorized persons must be present within the test area.

8. Fault loop measurement

NOTE – This section need not be complied with if no measurements are needed, proceed in such case with section 10.

8.1 Consult item 7.1 and make, or just check, the connections and/or disconnections required for the measurement of the particular power consumer.

8.2 Connect the test equipment to a power supply, if required.

8.3 Switch ON the supply disconnector on the machine.

8.4 Apply the probes of the test equipment to each already entered power consumer lacking a determined value in the column "Test value Z_S (mΩ)". Measure the fault loop impedance Z_S and enter this value into the same column.

8.5 Switch OFF the supply disconnector on the machine.

Instruction template for the Site tests
Template ID: P&PS 584-0101, Dated: 2009-06-16

8.6 Restart at 8.1 for the next power consumer not yet measured.

8.7 When all measurements is done proceed with item 9.

9. Restoration after test

NOTE – This section need not be complied with if no measurements are needed, proceed in such case with section 10.

9.1 Restore all disconnections and engaged contactors. Tick off column 9.1 when restored.

10. Verification of over-current protective devices

10.1 Enter the maximum allowed $I_{a(5s)}$ value for the protective device obtained from the values given in Table 6 of KA 2727.10 into the "max $I_{a(5s)}$" column of the Tests Report document.

10.2 Check that the actual $I_{a(5s)}$ value is lower than the "max $I_{a(5s)}$" value. Tick off pos 10.2 if so.

11. Functional tests, safeguarding

NOTE – By the expression "safety relay" is meant any safety related hold-function, also such performed by a programmable Safety Related Control System.

11.1 The machine shall be stopped normally i.e. stopped by a category 2 stop.

11.2 For each safeguard listed in the Test Result document, effect it (e.g. open the door) and proceed through the items below.

NOTE – The test objects (identified by their reference designations) are pre-entered into the Test Results document as a part of its preparation procedure described in the Guideline document.

11.3 Where the Site Test Result document contains a reference designation for a safety relay in this column, check that the safety relay has tripped. Tick off the corresponding check-box in the Test Result document. Enter N/A in the check-box where the Site Test Result document contains no reference designation.

11.4 Check that the intended machine common safety relay (e.g. a safety relay common for a certain safety zone) has tripped. Tick off the corresponding check-box in the Test Result document. Enter N/A in the check-box where the Site Test Result document contains no reference designation.

11.5 Check that the intended possible expansion modules to a safety related control system have tripped. Tick off the corresponding check-box in the Test Result document. Enter N/A in the check-box where the Site Test Result document contains no reference designation.

11.6 Check that the intended 1st level power disconnection contactor(s) are opened and/or power valve(s) are closed. Tick off the corresponding check-boxes in the Test Result

Instruction template for the Site tests
Template ID: P&PS 584-0101, Dated: 2009-06-16

document. Enter N/A in the check-box where the Site Test Result document contains no reference designation.

11.7 Check that the intended 2nd level power disconnection contactor(s) are opened and/or power valve(s) are closed. Tick off the corresponding check-boxes in the Test Result document. Enter N/A in the check-box where the Site Test Result document contains no reference designation.

11.8 Where the contactors and valves for normal machine operation comprise the 2nd level of power disconnection, check first that all are disengaged, thereafter force one by one those contactors to close i.e. force motors to start, and/or force one by one those valves to open i.e. force cylinders to move (where the operator panel do not allow such forcing operations make the forcing from a programmers console or similar). Check that no contactor or valve engages. Tick off the corresponding check-box in the Test Result document.

11.9 Try to start the machine (without any resetting). The machine shall not start. Tick off the corresponding check-box in the Test Result document.

11.10 Restore the safeguard. Check that no contactor or valve or safety relay or expansion module engages. Tick off the corresponding check-box in the Test Result document.

11.11 Reset the safeguard locally where applicable; otherwise enter N/A in the checkbox. Check that only the safety relay which is associated with the safeguard, engage. Tick off the corresponding check-box in the Test Result document.

11.12 Reset the machine, but do not start the machine. Check that a possible start warning is active. Check when releasing the reset push-button tha the start warning goes off and that the reset is not fulfilled. Tick off the corresponding check-box in the Test Result document.

11.13 Reset the machine, but do not start the machine. Check that the machine common safety relay and its associated power contactor(s) and/or valve(s) engage, but not until after a possible start warning period. Tick off the corresponding check-box in the Test Result document.

11.14 Proceed from 11.2 above with the next safeguard.

12. Functional tests, emergency stop

NOTE – By the expression “safety relay” is meant any safety related hold-function, also such performed by a programmable Safety Related Control System.

12.1 The machine shall be stopped normally i.e. stopped by a category 2 stop.

12.2 For each emergency stop listed in the Test Result document, effect it (push-buttons or line cords) and proceed through the items below.

NOTE – The test objects (identified by their reference designations) are pre-entered into the Test Results document as a part of its preparation procedure described in the Guideline document.

Instruction template for the Site tests
Template ID: P&PS 584-0101, Dated: 2009-06-16

12.3 Check that the intended emergency stopping safety relay trips. Tick off the corresponding check-box in the Test Result document

12.4 Check that the intended possible expansion modules to a safety related control system have tripped. Tick off the corresponding check-box in the Test Result document. Enter N/A in the check-box where the Site Test Result document contains no reference designation.

12.5 Check that the intended 1st level power disconnection contactor(s) are opened and/or power valve(s) are closed. Tick off the corresponding check-boxes in the Test Result document.

12.6 Check that the intended 2nd level power disconnection contactor(s) are opened and/or power valve(s) are closed. Tick off the corresponding check-boxes in the Test Result document.

12.7 Where the contactors and valves for normal machine operation comprise the 2nd level of power disconnection, check first that all are disengaged, thereafter force one by one those contactors to close i.e. force motors to start, and/or force one by one those valves to open i.e. force cylinders to move (where the operator panel do not allow such forcing operations make the forcing from a programmers console or similar). Check that no contactor or valve engages. Tick off the corresponding check-box in the Test Result document.

12.8 Try to start the machine (without any resetting). The machine shall not start. Tick off the corresponding check-box in the Test Result document.

12.9 Restore (unlatch) the emergency stop device. Check that no contactor or safety relay engages. Tick off the corresponding check-box in the Test Result document.

12.10 Reset the machine, but do not start the machine. Check that a possible start warning is active. Check when releasing the reset push-button that the start warning goes off and that the reset is not fulfilled. Tick off the corresponding check-box in the Test Result document.

12.11 Reset the machine, but do not start the machine. Check that the emergency stopping safety relay and its associated power contactor(s) and valve(s) engage, but not until after a possible start warning period. Tick off the corresponding check-box in the Test Result document.

12.12 Proceed from 16.2 above with the next safeguard.

13. Test of residual current protective devices RCDs

13.1 Press the test button of each device and check that it trips.

NOTE – The test objects (identified by their reference designations) are pre-entered into the Test Results document as a part of its preparation procedure described in the Guideline document.

Tetra Pak (Sweden)	Electrical Site Test Instruction	DE-P447 1	
ACHX30-0500	Date	Issue	Page
	2009-06-29	1	10 (10)

End procedure

Restore the machine.

Check that all positions are signed in the Test Results document.

The verifications within the Type Test of the electrical equipment of the machine are now completed.

Handled by	Approved by
DCD	PNS

Instruction template for the Site tests
Template ID: P&PS 584-0101, Dated: 2009-06-16

Tetra Pak (Sweden)

ACHX30-0500

Electrical Site Test Result

DE-P447 1

Date	Issue	Page
2009-06-29	1	1 (8)

Verification of electrical equipment of machines in accordance with Site Tests described in Tetra Pak Corporate Standard KA 2727.10

Equipment under test
Machine type: **ACHX30-0500**
Machine No:
Marked electric rating: 400/230 VAC

Test equipment
Manufacturer:
Model:
Id No.:
Date of last calibration:

Test instruction
Tests and verifications performed according to instruction: **DE-P447 1**
Issue: 1
The tests and verifications have been performed according to the Site Test Instruction. The Pos. numbers in this document corresponds with the pos. numbers of the Site Test Instruction.

1. Preparation for test		
Pos.	**Description**	**Check**
1.1	Machine and Test Area prepared	
1.2	Safety precautions complied with	

Tetra Pak (Sweden)

ACHX30-0500

Electrical Site Test Result

DE-P447 1

Date	Issue	Page
2009-06-29	1	2 (8)

2. Connection and disconnection on the test object before earth connection test and protective bonding circuit tests		
Pos.	**Description**	**Check**
2.5	Connection and disconnection performed for the test	

3. Test equipment preparation		
Pos.	**Description**	**Check**
3.3	Test equipment inspected and tested for short circuit, measuring less than 1 mΩ	

NOTE – to table for section 4:
Where the site verification of the continuity of the protective bonding circuit is performed with the "ELABO" tester, use table 5 of the Manufacturing Test Result document instead.

4. Verification of the continuity of the protective bonding circuit					
			4.1	R_{PE}	
Pos.	**Test object (reference designation)**	**Test point**	**Area (mm^2)**	4.2 **Test limit (mΩ)**	4.2 **Test value (mΩ)**
4.2.1	W10M1010	**Cover screw**	2.5	<196	
4.2.2	W90M1010	**Cover screw**	2.5	<196	
4.2.3	W10M1020	**Cover screw**	2.5	<196	
4.2.4	W90M1020	**Cover screw**	2.5	<196	

5. Connection and disconnection after test		
Pos.	**Description**	**Check**
5.1	Connections and disconnections performed after test	

Tetra Pak (Sweden)

ACHX30-0500

Electrical Site Test Result

DE-P447 1

Date	Issue	Page
2009-06-29	1	3 (8)

6. Fault loop verification		
Pos.	**Description**	**Check**
6.1	Supply source impedance (transformer + cable) is lower than maximum (400mΩ) allowed for the machine. Refer to KA 2727.10 9.3.3 if the supply cable is not 6,0mm² or cable exceeds 40 M in length.	

6. Fault loop verification;
8. Fault loop measurement; and
10. Verification of over-current protective devices
Assumptions:

Item 4 in this document has been completed successfully.
Supply source impedance do not exceed the values given in KA 2726.30 Table 1
Cable is PVC w/copper conductors intended for 3 phase system with nominal voltage of 400 VAC
The length of the conductors do not exceed the lengths listed in column 6.5 below

Pos.:	6.2	6.3	6.4	10.1	10.2	6.5	6.6	6.7	6.8 8.4	6.9
Power load; over-current protective device (ref. des.)	**Area (mm^2)**	**I_N (A)**	**$I_{a(5s)}$ (A)**	**max $I_{a(5s)}$ (A)**	**$I_{a(5s)}$ check**	**Cable length (m)**	**Short cable (Yes/No)**	**max Z_S (mΩ)**	**Test value Z_S (mΩ)**	**Z_S check**
W10F0020	2,5	16	96	170		34	Yes	1597	--	
W10F0010	2,5	10	60	170		<5	Yes	2556	--	
W30F0010	2,5	16	96	170		<5	Yes	1597	--	
W30F0020	2,5	16	96	170		<5	Yes	1597	--	
W90F0010	2,5	10	60	170		<5	Yes	2556	--	
A01F0001	2,5	3	18	170		<5	Yes	8519	--	
A01F0002	2,5	4	24	170		<5	Yes	6389	--	
A01F0003	2,5	6	60	170		<5	Yes	2556	--	
A01F0004	2,5	3	18	170		<5	Yes	8519	--	

Tetra Pak (Sweden)

ACHX30-0500

Electrical Site Test Result

DE-P447 1

Date	Issue	Page
2009-06-29	1	4 (8)

NOTE – Use additional rows for remarks and/or re-calculations/re-measurements.

7, Connections and disconnections on the test object before fault loop measurement		
Pos,	**Description**	**Check**
7,4	Connection and disconnection performed for the test	

9, Restoration after test		
Pos,	**Description**	**Check**
9,1	All disconnections and disengaged or engaged devices restored	

11, Functional tests, safeguarding											
Ref, des,	**Ref, des, : (input terminal des,)**		**Ref, des,**					**Check "No start"**			**Time**
								11,9	11,10	11,11	
11,2 **Safeguard**	**Common safety relay/SRCS**	**Safeguard safety relay/SRCS**	**Expansion module**	**1st level Power contactors**	**1st level Power valves**	**2nd level Power contactors**	**2nd level Power valves**	**Starting**	**Resto-ration**	**Local reset**	**Start warning period**
F30B1010	F01K0090:IQ11, IQ12	N/A	N/A	N/A	W30V3023	F30Q0011	N/A			N/A	3 s
Check disengagement:	11,3	11,4	11,5	11,6	11,6	11,7	11,7	**Check interruption releasing push-button:**			11,12
Comment:				**Check forcing no engagement:**		11,8	11,8	**Check no engagement until end of period:**			11,13

Test Result document template for the Site tests
Template ID: P&PS 586-0101, Dated: 2009-06-16

Tetra Pak (Sweden)

ACHX30-0500

Electrical Site Test Result

DE-P447 1

Date	Issue	Page
2009-06-29	1	5 (8)

11, Functional tests, safeguarding											
Ref, des,	**Ref, des, : (input terminal des,)**		**Ref, des,**					**Check "No start"**			**Time**
								11,9	11,10	11,11	
11,2 **Safeguard**	**Common safety relay/SRCS**	**Safeguard safety relay/SRCS**	**Expansion module**	**1st level Power contactors**	**1st level Power valves**	**2nd level Power contactors**	**2nd level Power valves**	**Starting**	**Resto-ration**	**Local reset**	**Start warning period**
F30B1020	F01K0090:IQ11, IQ12	N/A	N/A	N/A	W30V3023	F30Q0011	N/A			N/A	3 s
Check disengagement:	11,3	11,4	11,5	11,6	11,6	11,7	11,7	**Check interruption releasing push-button:**			11,12
Comment:				**Check forcing no engagement:**		11,8	11,8	**Check no engagement until end of period:**			11,13
F30B1100	F01K0090:IQ11, IQ12	N/A	N/A	N/A	W30V3023	F30Q0011	N/A			N/A	3 s
Check disengagement:	11,3	11,4	11,5	11,6	11,6	11,7	11,7	**Check interruption releasing push-button:**			11,12
Comment:				**Check forcing no engagement:**		11,8	11,8	**Check no engagement until end of period:**			11,13
F30B1050	F01K0090:IQ11, IQ12	N/A	N/A	N/A	W30V3023	F30Q0011	N/A			N/A	3 s
Check disengagement:	11,3	11,4	11,5	11,6	11,6	11,7	11,7	**Check interruption releasing push-button:**			11,12
Comment:				**Check forcing no engagement:**		11,8	11,8	**Check no engagement until end of period:**			11,13
F30B1060	F01K0090:IQ11, IQ12	N/A	N/A	N/A	W30V3023	F30Q0011	N/A			N/A	3 s
Check disengagement:	11,3	11,4	11,5	11,6	11,6	11,7	11,7	**Check interruption releasing push-button:**			11,12
Comment:				**Check forcing no engagement:**		11,8	11,8	**Check no engagement until end of period:**			11,13

Tetra Pak (Sweden)

ACHX30-0500

Electrical Site Test Result

DE-P447 1

Date	Issue	Page
2009-06-29	1	6 (8)

11, Functional tests, safeguarding											
Ref, des,	**Ref, des, : (input terminal des,)**		**Ref, des,**					**Check "No start"**			**Time**
								11,9	11,10	11,11	
11,2 **Safeguard**	**Common safety relay/SRCS**	**Safeguard safety relay/SRCS**	**Expansion module**	**1st level Power contactors**	**1st level Power valves**	**2nd level Power contactors**	**2nd level Power valves**	**Starting**	**Resto-ration**	**Local reset**	**Start warning period**
F30B1070	F01K0090:IQ11, IQ12	N/A	N/A	N/A	W30V3023	F30Q0011	N/A			N/A	3 s
Check disengagement:	11,3	11,4	11,5	11,6	11,6	11,7	11,7	**Check interruption releasing push-button:**			11,12
Comment:				**Check forcing no engagement:**		11,8	11,8	**Check no engagement until end of period:**			11,13
F30B1080	F01K0090:IQ11, IQ12	N/A	N/A	N/A	W30V3023	F30Q0011	N/A			N/A	3 s
Check disengagement:	11,3	11,4	11,5	11,6	11,6	11,7	11,7	**Check interruption releasing push-button:**			11,12
Comment:				**Check forcing no engagement:**		11,8	11,8	**Check no engagement until end of period:**			11,13
F30B1030	F01K0090:IQ11, IQ12	N/A	N/A	N/A	W30V3023	F30Q0011	N/A			N/A	3 s
Check disengagement:	11,3	11,4	11,5	11,6	11,6	11,7	11,7	**Check interruption releasing push-button:**			11,12
Comment:				**Check forcing no engagement:**		11,8	11,8	**Check no engagement until end of period:**			11,13
F30B1040	F01K0090:IQ11, IQ12	N/A	N/A	N/A	W30V3023	F30Q0011	N/A			N/A	3 s
Check disengagement:	11,3	11,4	11,5	11,6	11,6	11,7	11,7	**Check interruption releasing push-button:**			11,12
Comment:				**Check forcing no engagement:**		11,8	11,8	**Check no engagement until end of period:**			11,13

Test Result document template for the Site tests
Template ID: P&PS 586-0101, Dated: 2009-06-16

Tetra Pak (Sweden)

ACHX30-0500

Electrical Site Test Result

DE-P447 1

Date	Issue	Page
2009-06-29	1	7 (8)

12, Functional tests, emergency stop

Ref, des,	Ref, des, : (input terminal des,)		Ref, des,				Check "No start"		Time
							12,8	12,9	
12,2 **Emergency stop device**	**Common safety relay/SRCS**	**Expansion module**	**1st level Power contactors**	**1st level Power valves**	**2nd level Power contactors**	**2nd level Power valves**	**Starting**	**Restoration**	**Start warning period**
F01S0101	F01K0090:I0, I1	N/A	F01Q0010	W30V3023	F30Q0011 F01Q0011	N/A			3 s
Check disengagement:	12,3	12,4	12,5	12,5	12,6	12,6	**Check interruption releasing push-button:**		12,10
Comment:			**Check forcing no engagement:**		12,7	12,7	**Check no engagement until end of period:**		12,11
F01S1010	F01K0090:I0, I1	N/A	F01Q0010	W30V3023	F30Q0011 F01Q0011	N/A			3 s
Check disengagement:	12,3	12,4	12,5	12,5	12,6	12,6	**Check interruption releasing push-button:**		12,10
Comment:			**Check forcing no engagement:**		12,7	12,7	**Check no engagement until end of period:**		12,11
F01S1020	F01K0090:I0, I1	N/A	F01Q0010	W30V3023	F30Q0011 F01Q0011	N/A			3 s
Check disengagement:	12,3	12,4	12,5	12,5	12,6	12,6	**Check interruption releasing push-button:**		12,10
Comment:			**Check forcing no engagement:**		12,7	12,7	**Check no engagement until end of period:**		12,11

13 Test of residual current protective devices RCDs	
Test object :	**check**
A01X0070	

Test Result document template for the Site tests
Template ID: P&PS 586-0101, Dated: 2009-06-16

Tetra Pak (Sweden)

ACHX30-0500

Electrical Site Test Result

DE-P447 1

Date	Issue	Page
2009-06-29	1	8 (8)

Notes:

Submitter

Hartness International

1200 Garlington Road / PO Box 26509
Greenville, SC 29616-1509 USA

Electrical designer: Dan Dietzen

Test personnel

Company name: ……,

Address: ……,

Performed by: ……

Signature: ……,,.,

Assisted by: ……

Signature: ……

Date: ……,,,

Test Result document template for the Site tests
Template ID: P&PS 586-0101, Dated: 2009-06-16

3.3.2 Connecting External Equipment

This section describes external equipment (ArmorStart) that is not included with the ACHX30 and is not always used.

Refer to the ArmorStart I/O Modules - Set Node Address instructions in the MM.

3.3.2.1 Installing ArmorStart on the Conveyor

Assemble the ArmorStart on an XH leg as illustrated below.

CAUTION

Risk of hazardous situation!

If the conveyor drive motor has a switch mounted, it **should** be removed. ArmorStart already contains a switch.

It is also important to mark both the conveyor motor and the ArmorStart with clear identification. Preferably use the identification from the Electrical Manual.

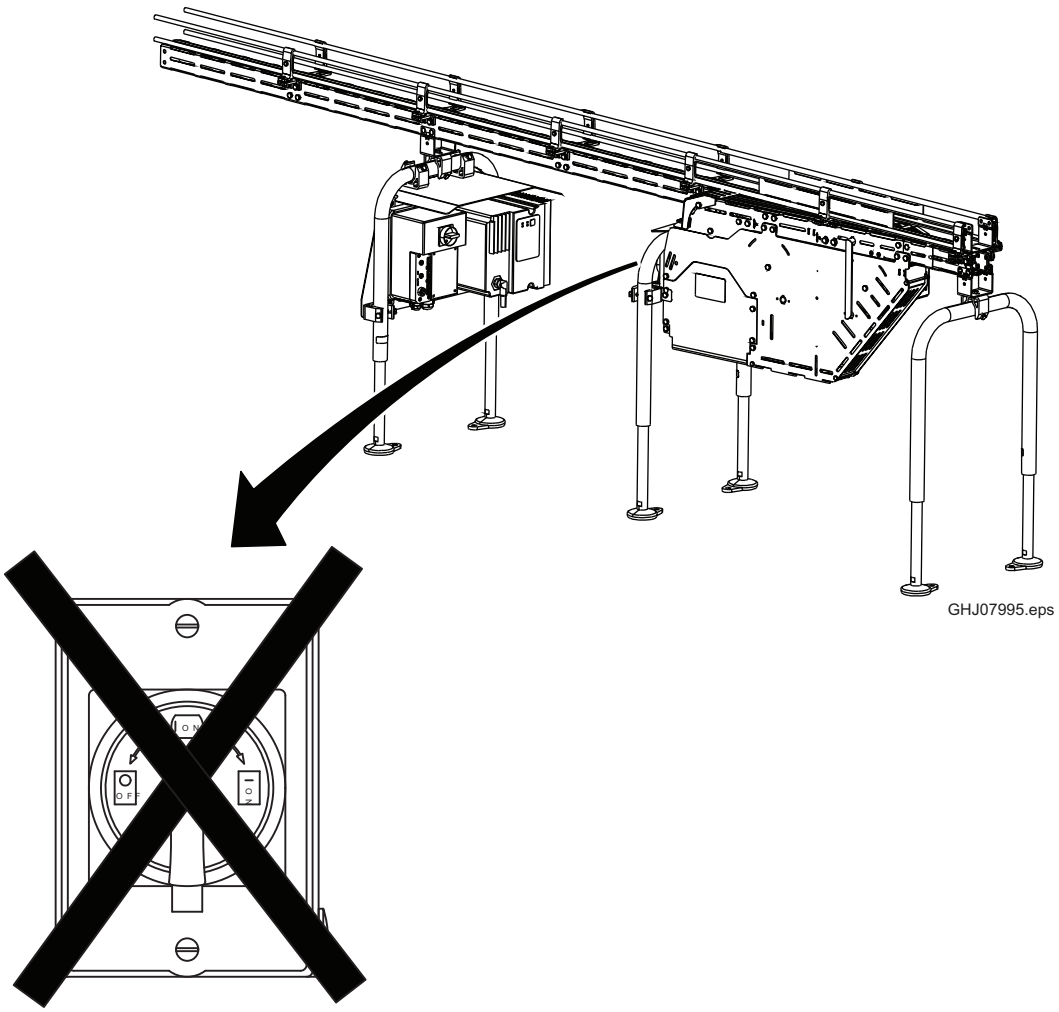

(Cont'd)

400VAC Cable and 24VDC Cable Connection

a) Open the cover plate (1) of the ArmorStart module (2) to access the terminal block (3).

The terminal block (3) is made by 12 terminals divided in two rows. The upper terminals are called PRIMARY TERMINALS (4) and the lower terminals are called SECONDARY TERMINALS (5).

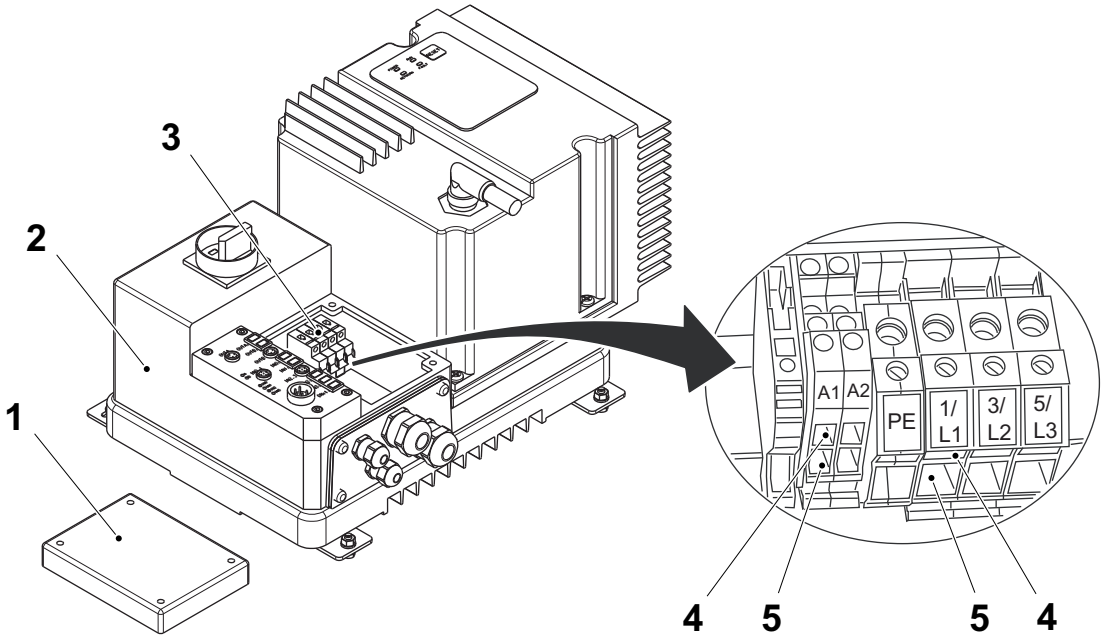

1 Cover plate
2 ArmorStart module
3 Terminal block
4 Primary terminals
5 Secondary terminals

(Cont'd)

(Cont'd)

b) Thread the 400VAC cable (6) and the 24VDC cable (7) from the ACHX cabinet to the first ArmorStart module and insert them through the holes (8).

c) Connect as follows:

Cable	Direction	Terminals
400VAC	Ingoing	Secondary 1/L1, 3/L2, 5/L3, PE
24VDC	Ingoing	Secondary (wire 1:A1, wire 2:A2)
400VAC	Outgoing	Primary 1/L1, 3/L2, 5/L3, PE
24VDC	Outgoing	Primary (wire 1:A1, wire 2:A2)

d) Thread the outgoing cables (9) to the next ArmorStart module and wire in the same way.

e) Proceed connecting all the ArmorStart modules present in the line.

f) On the last ArmorStart, plug the secondary glands with the enclosed (resistor kit) plugs.

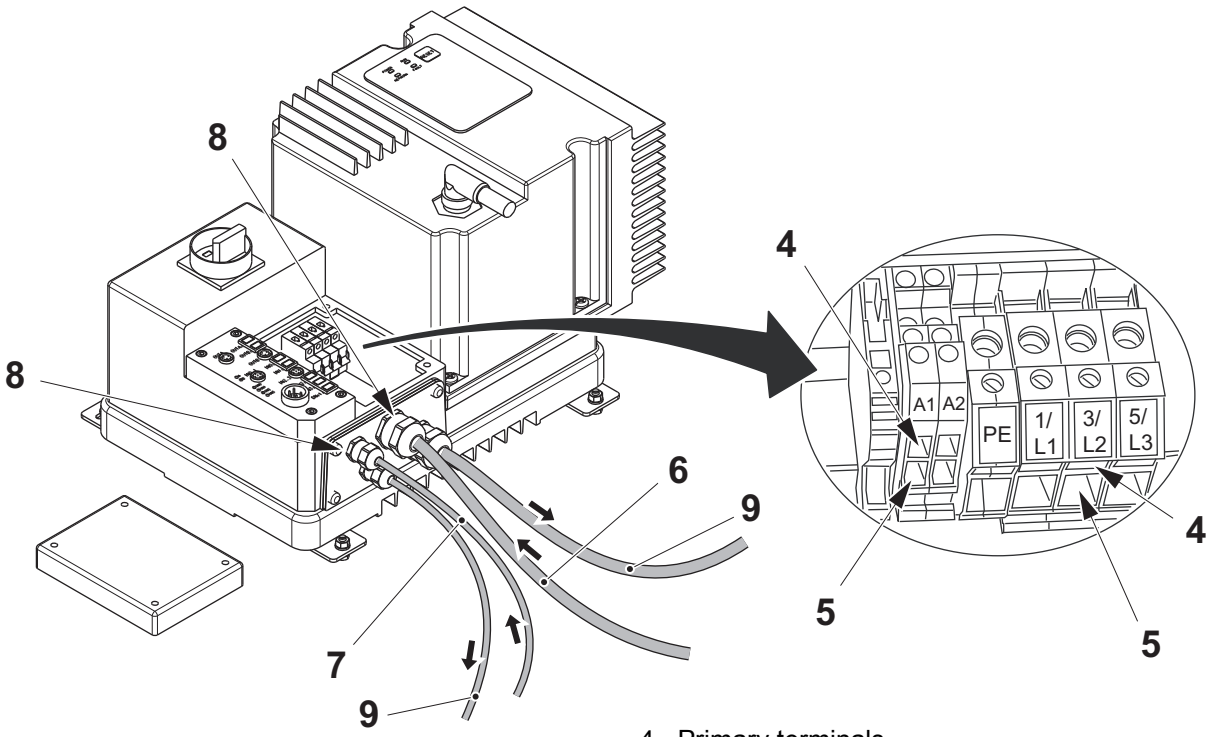

4 Primary terminals
5 Secondary terminals
6 400VAC cable
7 24VDC cable
8 Hole
9 Cable

3.3.2.2 DeviceNet Cable Connection

Machine Status	Power Supply Disconnector OFF

To perform the DeviceNet cabling in “trunk line” configuration, the following components must be used:

- T-Connector left type (90600-2756)
- Patch-Cord (90600-2759)
- Straight Male PG16 (90600-2758)
- Straight Female PG16 (90600-2757)
- Terminator Male (90600-2760).

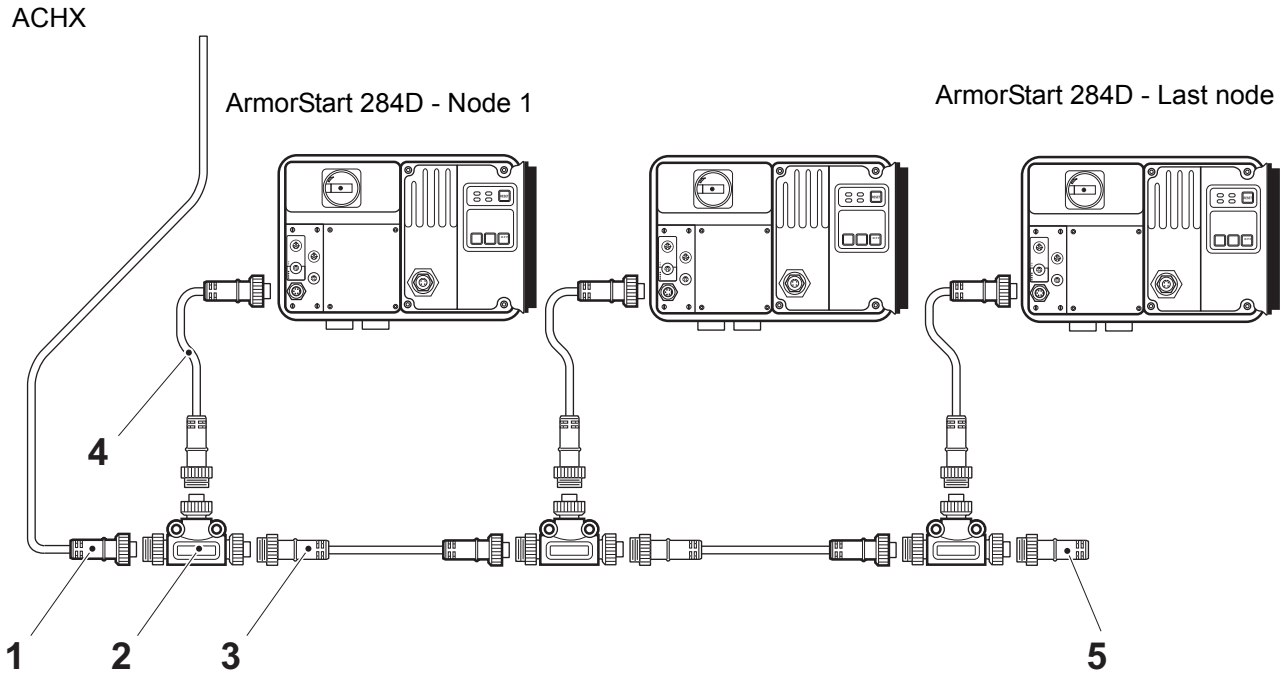

1 Female connector
2 T-connector
3 Male connector
4 Patch cord
5 Terminator male

(Cont'd)

(Cont'd)

Preparing and Connecting the Connectors

a) Insert the DeviceNet round, thick cable through the gland into the ACHX cabinet and connect it to the terminal block in order to fulfil the colour code of the wires. See 3.4 Circuit Diagrams in the Electrical Manual. This is the beginning of the trunk line.

b) Turn the casing (1) until the opening is shown at the hole (2).

c) Insert a pin (3) or similar into the hole (2) and remove the casing (1).



1 Casing
2 Hole
3 Pin

(Cont'd)

(Cont'd)

d) Dismantle the cable 30 mm and strip the wires 7 mm as illustrated below.

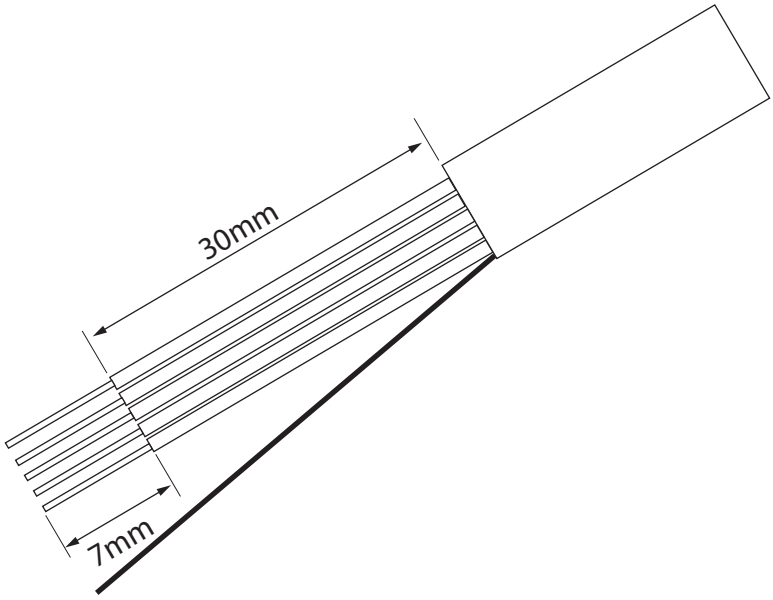

e) Remove the gland fitting as illustrated below.

f) Insert the DeviceNet cable as illustrated below.



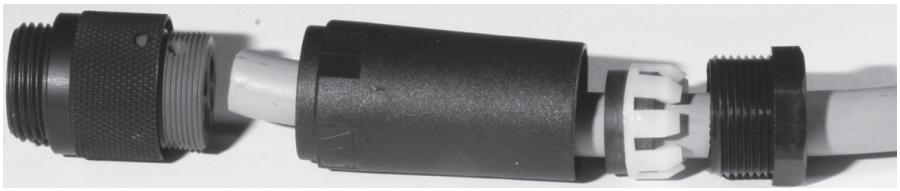

(Cont'd)

(Cont'd)

g) Connect the DeviceNet cable to the first T-connector using a **female** connector (4).

Note! Check that the cabling of the 5 wires correspond to the pinout for the female connector shown below.

h) Take another DeviceNet cable and connect the end of the first T-connector using a **male** connector (5).

Note! Check that the cabling of the 5 wires correspond to the pinout for the male connector shown below.

i) Connect the other end of the DeviceNet cable to the next T-connector using a female connector (4).

j) Take a Patch-Cord and connect the T-connector to the connection of the ArmorStart module.

k) Continue cabling in the same way every ArmorStart module as shown in 3.3.2.2 DeviceNet Cable Connection on page 3-79.

l) Fit the male terminator to the last T-connector of the trunk line in order to reduce reflections of the communication signals on the network.

Female connector PG16 (4)

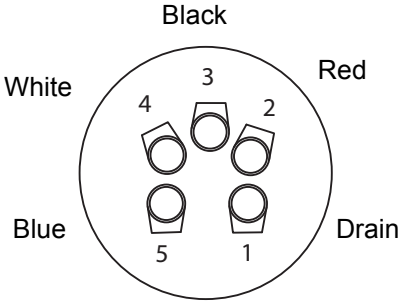

Male connector PG16 (5)

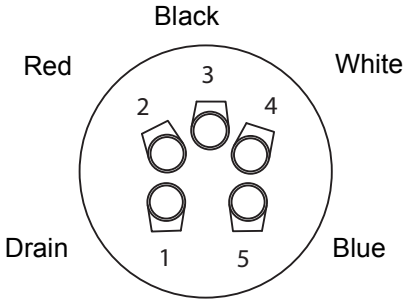

3.3.3 Water Mist Lubrication and Rinse System

1) Connect the 1/2” BSP water line to the water shut-off valve for the water mist lubrication and rinse system.

Note! The water line should have a minimum pressure rating of 4 bar.

Note! The water mist bracket (1) was lowered for shipment of the machine.

2) Raise the bracket (1) so the nozzle (2) sprays directly onto the outfeed chain of the machine.

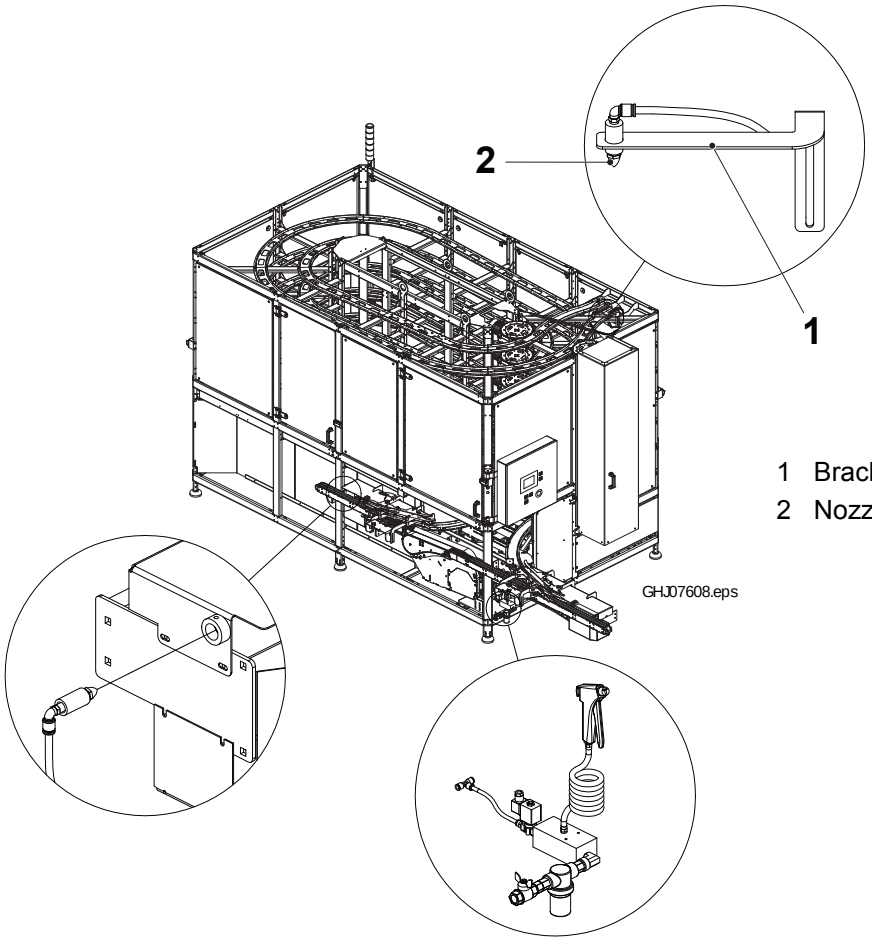

1 Bracket
2 Nozzle

(Cont'd)

(Cont'd)

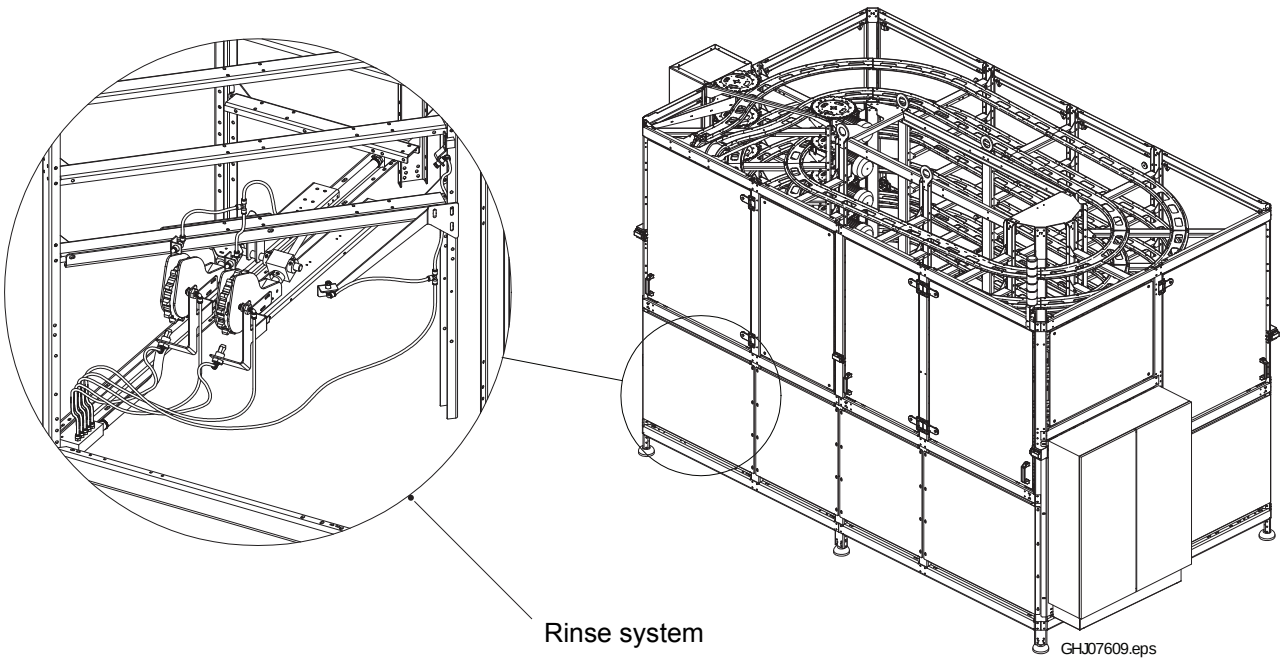

3.3.4 Chain Cleaner (optional)

The chain cleaner is designed to clean the conveyor chains using soap and water. The cleaning sequence consists of a soap cycle, rinse cycle, and dry cycle.

a) Connect the air utility (1) to the air filter (2) located on the back of the pedestal (3). Recommended pressure is 3 - 6.0 bar.

b) Connect the water utility (4) to the water filter (5) located on the back of the pedestal. Recommended pressure is 4 - 5.5 bar.

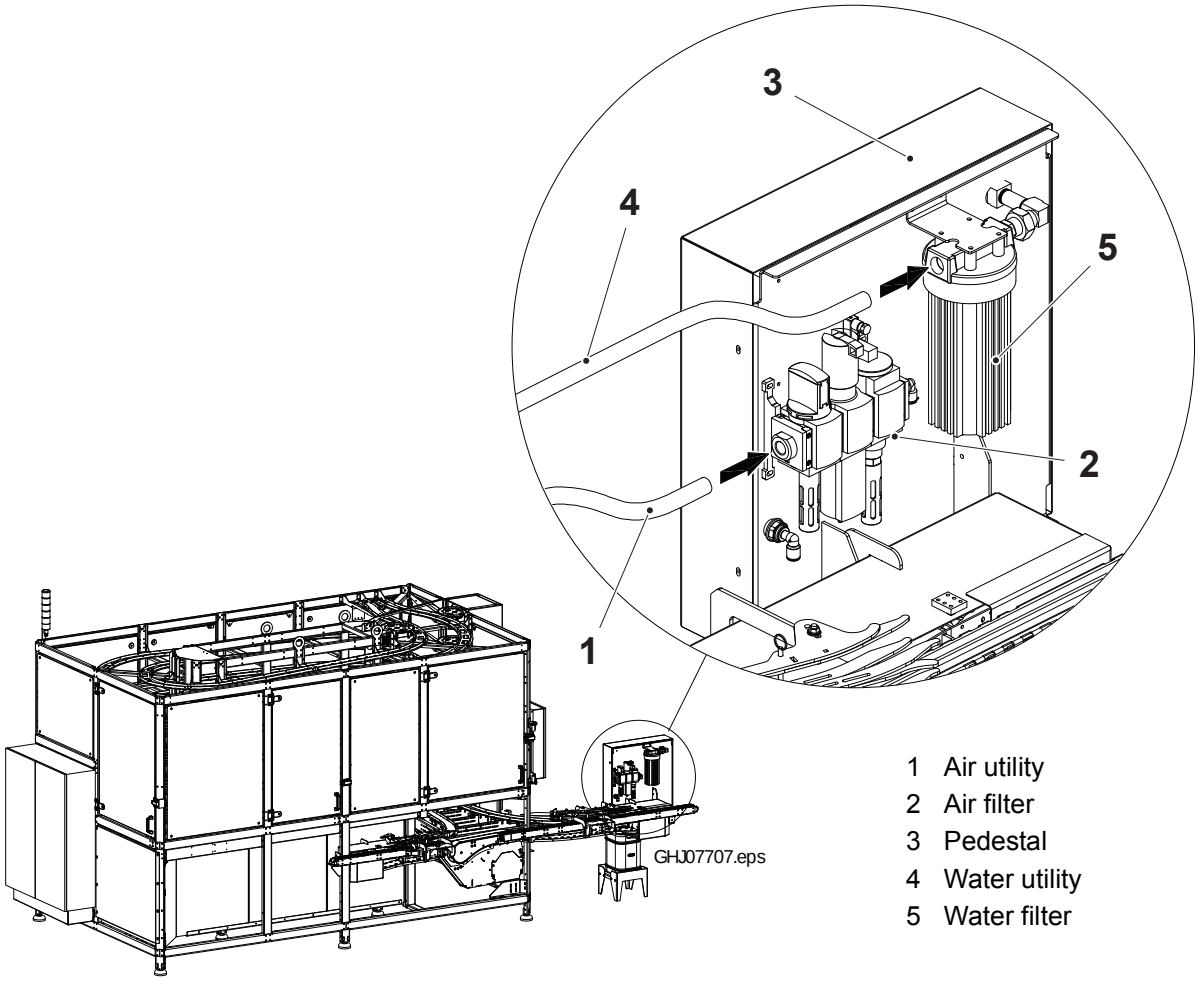

1 Air utility
2 Air filter
3 Pedestal
4 Water utility
5 Water filter

(Cont'd)

3.4 Restore Tools and Site

Make sure that:

- all protective plastic is removed from the equipment.
- all lifting tools and other installation tools are removed from the area around the equipment.
- the area around the equipment is properly cleaned.
- the equipment is properly cleaned.
- the site is restored to production status.

3.5 Mechanical Completion Inspection

The purpose of the mechanical completion inspection is to verify that the equipment in question has been delivered and is installed in accordance with the relevant documentation. This inspection must be carried out in conjunction with all involved parties, and prior to commissioning. All relevant installation documents are to be used for this task.

Defects or faults together with necessary actions and timing to correct the deviations must be recorded in the checklist. See 3.5.1 Mechanical Completion Checklist. Commissioning must not be started until the mechanical completion inspection has been completed.

Use the checklist as follows:

- Under Note, document any deviations, incorrect values, or comments.
- Under Value, document the actual value.
- Under Signature, sign that the check is performed.

3.5.1 Mechanical Completion Checklist

Machine No.	Country	Final User	Site
		Checklist completed by	Checklist completion date

3.5.2 Crate Handling

	Check	Reference Document (IM unless other document specified)	Note	Value	Signature
1	All equipment has been delivered according to packing list. All delivered equipment has been checked for transport damages All transport damages have been reported.	Packing list Crate opening/Damage report			
2	Check that the Start-up kit is delivered with the machine.				
3	Ensure that the documents below are available in the correct language, quantity (2 of each), and correspond with the specific machine. – IM – MM – OM – SPC – EM All documentation has been stored as agreed with the user.	Receipt of Documentation (ItP)			

	Check	Reference Document (IM unless other document specified)	Note	Value	Signature
4	Secure that the IMD (Individual Machine Documentation) is included in the delivery and contains the following: - Machine Specification - Setting Values - Machine Deviation (if relevant) - Declaration of Conformity ACHX30	Receipt of Documentation (ItP)			
5	Ensure the Machine Program CD (P/N 3006090-0001) is included in the delivery containing: - PLC Program - Pluto Program - PLMS Configuration File - Copy of Compact Flash Card - TPOP Program				
6	The disposal/return of crates has been taken care of as agreed with the user.				

3.5.3 Positioning and Assembly

	Check	Reference document IM unless other document specified	Note	Value	Signature
1	The machine is positioned according to approved layout and without interference with service area.	Layout drawing			
2	The external DeviceNet cables are connected to the terminals in the electrical cabinet.				
3	The communications and power cables are connected to the terminals.				
4	Make sure all delivered equipment is assembled in accordance with the IM. - Feet - Door Latches and Handles - Chain Drive & End Unit - Infeed and Outfeed Guides - Levelling and Squaring - Electrical Connections - Spider Unit - Water Mist Lubrication and Rinse System - Warning Lamp				
5	The machine body work is finished: - All the doors open and close correctly. - All covers are fitted.				
6	The warning lamp and alarms are fitted and connected.				
7	The interface assembly is assembled properly and mounted to the Helix.				

	Check	Reference document IM unless other document specified	Note	Value	Signature
8	The transport equipment is stored at the user site or sent to Tetra Pak according to agreement.				

3.5.4 Equipment Interfaces and Connections

	Check	Reference document IM unless other document specified	Note	Value	Signature
1	Matching transformer (if applicable): - connected according to the drawing.	EM			
2	Electrical supply: - fuse rating checked - cable installation is finished - connection of phases, neutral, and earth have been checked - all protective covers are in place and secure.	EM			
3	The utility lines are cleaned/flushed before connection to the machine: – water – compressed air (for optional chain cleaner only)				
4	All connections are secure: - utility connections (air and water) - electrical connections				
5	The communication cables to the filling machine and the DE are connected.	EM			
6	Verify signal exchange with the filling machine and downstream equipment in the PLMS.				
7	The serial communication cable between the distribution equipment machine and the Master PC is connected (if applicable).				
8	Check the compressed air connection (for optional chain cleaner only). Make sure the connection is done correctly.				

	Check	Reference document IM unless other document specified	Note	Value	Signature
9	Check the electrical connection. Make sure the connection is done correctly. **WARNING** **Risk of electrical shock.** The voltage is 400 V inside the electrical cabinet. Contact with a 400 V voltage may cause electrical shock or serious injury. In case of an accident, immediately call for medical attention.				
10	Check that the machine stops when an EMERGENCY STOP button is pushed. Test **all** EMERGENCY STOP buttons. See sub-section Emergency Stop in the Safety Precaution chapter. **WARNING** **Risk of serious injury.** Never run the machine if any of the emergency stop buttons are non-operational.				

	Check	Reference document IM unless other document specified	Note	Value	Signature
11	Make sure the machine stops when doors fitted with safety switches are opened. This should be tested for **all** safety switches. Make sure all covers are fitted to the machine before it is run. See sub-section Safeguards in the Safety Precautions chapter. **WARNING** **Risk of serious injury.** Never run the machine if any safety switch is non-operational or any cover is not fitted.				
12	Make sure site test is performed. See 3.3.1.2 Site Test on page 3-55.				
13	Check pressure gauge setting (on optional chain cleaner only).	OM			

3.5.5 Mechanical Completion Inspection

Note! This machine has been tested with dummies and might need a fine tuning on settings to fit packages at site. Note that filling machine packages made of fibre can differ from each other.

WARNING

Risk of serious injury.

Never run the machine if any of the EMERGENCY STOP buttons is nonoperational.

	Check	Reference document IM unless other document specified	Note	Value	Signature
1	Position and assembly of the equipment verified.	IM/Layout drawing			
2	Layout drawing(s) updated to “as built” status if applicable.				
3	Connections (utilities and communication) verified.				
4	Risk and safety assessment completed.	KA 2157.12			
5	Machine is correctly connected to the infeed and discharge conveyors.				

	Check	Reference document IM unless other document specified	Note	Value	Signature
7	Check the direction of all machine movements.				
	Check the direction of the infeed chain by stepping the machine to PREPARATION and using the infeed jog function to jog the chain.The spider should move up into the machine.	Refer to Jogging Internal Infeed Conveyor in the MM.			
	Check the direction of the outfeed chain using stepping the machine to PREPARATION and using the outfeed jog function to jog the outfeed chain. The spider should move down the machine.	Refer to Jogging Internal Outfeed Conveyor in the MM.			
	Check the direction of the external infeed chain by stepping the machine to PREPARATION and using the External Infeed Calibration function to jog the chain. The conveyor should move toward the Helix infeed.	Refer to Calibrating External Infeed Conveyor in the MM.			
	Check the direction of the external outfeed chain by stepping the machine to PREPARATION and using the External Outfeed Calibration function to jog the chain. The conveyor should move away from the Helix outfeed.	Refer to Calibrating External Outfeed Conveyor in the MM.			
8	Verify proper operation of the infeed and outfeed photocells.	OM			
9	Check the machine program (function, program steps and alarms).	OM			
10	Make sure the conveyor chain is running smoothly in the machine.				

	Check	Reference document IM unless other document specified	Note	Value	Signature
11	Make sure that there are no abnormal noises or vibrations when the machine is running.				

This page intentionally left blank

4 Commissioning

Description

This chapter describes the commissioning of the equipment. The commissioning covers all activities from the first start up of the equipment until the equipment is validated and ready for commercial production. The commissioning activity is finalized when a commissioning certificate is signed.

The chapter includes procedures to start up and validate the function of the equipment. It also describes the commissioning validation of the equipment.

4.1 Functional Validation . . . . . 4 - 5
4.1.1 Start Up . . . . . 4 - 5
4.1.1.1 Machine Configuration . . . . . 4 - 5
4.1.1.2 TPOP Settings . . . . . 4 - 5
4.1.1.3 Calibration Procedures . . . . . 4 - 6
4.1.1.4 Checks Before Test Run . . . . . 4 - 7
4.1.2 Test Run . . . . . 4 - 8
4.1.2.1 Verify PLMS Reports . . . . . 4 - 8
4.2 Commissioning Inspection. . . . . 4 - 9
4.2.1 Commissioning Checklist ACHX30 . . . . . 4 - 10
4.2.2 Functional Validation . . . . . 4 - 10
4.2.2.1 Presence and Correctness . . . . . 4 - 10
4.2.2.2 Start Up . . . . . 4 - 11
4.2.2.3 Check Utility Values. . . . . 4 - 13
4.2.2.4 Check Normal Operation. . . . . 4 - 14
4.2.3 Commissioning Validation . . . . . 4 - 15
4.2.3.1 Training. . . . . 4 - 15
4.2.3.2 TPMS. . . . . 4 - 16
4.2.4 Commissioning Inspection . . . . . 4 - 16

This page intentionally left blank

4.1 Functional Validation

4.1.1 Start Up

This section describes the start up of the equipment.

4.1.1.1 Machine Configuration

Configure the machine according to the TPOP section of the MM as indicated below.

Function	Description / Reference in MM
Enable / disable the extra external infeed motor.	Extra External Infeed Motor Enable
Enable / disable the extra external outfeed motor.	Extra External Outfeed Motor Enable
Check Ethernet IP address.	Ethernet IP Address
Check machine variant	Machine Variant
Check machine serial number.	Machine Serial Number
Check the package type.	Package Handling
Select the appropriate automation line type.	Line Automation Type
Select the appropriate PLMS type.	PLMS Type
Indicate whether or not the gate indicator switch on the external outfeed conveyor is present.	(Gate Indicator) Switch Connected

4.1.1.2 TPOP Settings

Configure the TPOP by entering the following information. See the OM for descriptions and detailed explanations of the TPOP.

Function	Description / Reference
Set the language.	See Language Selection on page 2-10 in OM.
Check that the required recipe has been created.	See the Conversions chapter in the OM.

(Cont'd)

(Cont'd)

4.1.1.3 Calibration Procedures

Perform the following calibration procedures from the TPOP section in the MM as indicated below.

Function	Description / Reference
Calibrate the external outfeed conveyor.	Calibrating External Outfeed Conveyor
Set the external outfeed conveyor length.	Setting External Outfeed Conveyor Length
Set the external infeed conveyor length.	Setting External Infeed Conveyor Length
Calibrate the external infeed conveyor.	Calibrating External Infeed Conveyor
Calibrate the extra external infeed conveyor (if equipped).	Calibrating Extra External Infeed Conveyor
Calibrate the extra external outfeed conveyor (if equipped).	Calibrating Extra External Outfeed Conveyor
Calibrate the spider position.	Calibrating Spider Position

(Cont'd)

(Cont'd)

4.1.1.4 Checks Before Test Run

Before the test run of the equipment, complete the following checks. Make sure that:

- all installation checks have been completed
- all required production personnel are available
- the operators have been trained and informed about
  - machine operation
  - use of the Operation Manual
  - emergency stop and utility supply shut-off devices
  - safety and hazard information
- all site preparation is finished
- the floor work is finished, including gutters and drains
- the utility supplies are sufficient and stable
  - water
  - compressed air (for chain cleaner only)
  - electrical power
- the utility supply shut-off devices are working properly

4.1.2 Test Run

The machine's operation must be verified. This verification must include all functions of the machine.

- Perform a test of the machine by hand feeding some packages through the machine. Verify the settings and movements of different parts on the machine.
- Make final adjustments of the machine, if necessary.
- Perform line test and verify the functions on the machine. Verify all communications with different machines, line communication, and PLMS.
- Verify the package integrity.

For additional information about the test run, contact Tetra Pak.

4.1.2.1 Verify PLMS Reports

Make sure the PLMS reporting system is running properly. Make sure the production figures match your figures for the distribution equipment machine.

4.2 Commissioning Inspection

The purpose of the commissioning inspection is to verify that the equipment in question is ready for commercial production. This inspection must be carried out in conjunction with all involved parties, and prior to the performance validation.

Defects or faults together with necessary actions and timing to correct the deviations must be recorded in the checklist. See 4.2.1 Commissioning Checklist ACHX30. Performance validation must not be started until the commissioning inspection has been completed.

Use the checklist as follows:

- Under Note, document any deviations, incorrect values, or comments.
- Under Value, document the actual value.
- Under Signature, sign that the check is performed.

4.2.1 Commissioning Checklist ACHX30

Machine No.	Country	Final User	Site
		Checklist completed by	Checklist completion date

4.2.2 Functional Validation

4.2.2.1 Presence and Correctness

	Check	Reference document IM unless other document specified	Note	Value	Signature
1	The OM is available to the operator.				
2	The spare parts have been deposited in the spare parts stores.				
3	The tools and templates are on site and stored in an appropriate way.				
4	Consumables according to specification are available on site. Note: Detergent is applicable only for optional chain cleaner.				

4.2.2.2 Start Up

ACHX30 (Power switched ON)

	Check	Reference document IM unless other document specified	Note	Value	Signature
1	Electrical power supply: - voltage - the direction of rotation has been checked on all electrical motors				
2	Confirm that the machine configuration is correct (TPOP).	MM			
3	Select the appropriate recipe (if no line controller).	OM			
4	Test the machine safety systems.				

ACHX30 (Power, Water, and Compressed Air Switched ON)

	Check	Reference document IM unless other document specified	Note	Value	Signature
1	Ensure the following supplies are sufficient for initial step-up of the machine. - Water - Compressed Air (for optional chain cleaner only)				
2	Check that all EMERGENCY STOP buttons activate the correct alarm on the TPOP.	OM			
3	Check that door, cover, and guard safety switches activate the correct alarms on the TPOP.	OM			

4.2.2.3 Check Utility Values

Make sure the utility values are correct and include actual values in the value column.
Ask for assistance by the final user's technical personnel if necessary.
If a value can not be measured, make a note of the value started by the final user.
If values are not according to specification in the IM, inform the final user's technical personnel.
If the value can not be corrected, a comment about the incorrect value should be added in the "Note" column.

ACHX30

	Check	**Reference document IM unless other document specified**	**Note**	**Value**	**Signature**
1	Electrical power supply: - max. voltage fluctuation during production - max./min. voltage during 24 h (to cover one full day of operation and possible increase of voltage during the night).				
2	Water (standard) and compressed air supply (for optional chain cleaner only): - pressure - max. pressure fluctuation (during production) - max. particle size * - max. particle content * - dew point * - oil content *	*According to system specifications			

4.2.2.4 Check Normal Operation

	Check	Reference document IM unless other document specified	Note	Value	Signature
1	Check the gap between the packages on the infeed.	MM			
2	Check the function of the outfeed jam photocell.	MM			
3	Check the package position on the outfeed chain.	MM			
4	Check spider. - Check for proper installation. - Check that the spider runs with no interference. - Check that the spider is adjusted properly.	MM			
5	Verify proper operation of the bypass function.	MM			

4.2.3 Commissioning Validation

4.2.3.1 Training

	Check	Reference document IM unless other document specified	Note	Value	Signature
1	Training level of final user technicians - Participation during installation work - Service work				
2	Training level of final user operators - Operator training completed - Number of operators trained - Names of operators trained	OM			
3	Training, final user laboratory personnel - Operator training completed (applicable parts) - Quality control procedures are in place	OM			

4.2.3.2 TPMS

	Check	Reference document IM unless other document specified	Note	Value	Signature
1	Procedures for maintenance (TPMS) have been established (not later than in time for the completion of the Commissioning) - Daily check list - Weekly check list				

4.2.4 Commissioning Inspection

	Check	Reference document IM unless other document specified	Note	Value	Signature
1	Functional validation performed.				
2	Commissioning validation performed.				
3	Commissioning certificate issued.				

5 Performance Validation

Description

This chapter describes the performance validation of the equipment. The performance validation covers the activities from when the equipment is ready for commercial production until the equipment is handed over to the final user.

The chapter includes information on how to verify that the equipment achieves the performance targets during commercial production.

5.1 Performance Validation. . . . . 5 - 5
5.1.1 Performance Preconditions . . . . . 5 - 5
5.2 Commercial Production . . . . . 5 - 6
5.3 Monitor and Improve Performance . . . . . 5 - 7
5.4 Performance Test . . . . . 5 - 8
5.5 Performance Validation Inspection . . . . . 5 - 9
5.5.1 Performance Validation Checklist ACHX30. . . . 5 - 10
5.5.2 Performance Validation Criteria . . . . . 5 - 11
5.5.3 Performance Validation Completed . . . . . 5 - 12

This page intentionally left blank

5.1 Performance Validation

5.1.1 Performance Preconditions

To ensure an effective and successful performance validation, the following must first be in place:

- Commercial production
  - Commercial production must have started.
- Attendance
  - Both Tetra Pak and the final user must have appointed representatives to participate in the performance validation.
- Operation
  - The equipment must be operated according to the Operation Manual for each component in the line.
  - Qualified personnel from the final user should operate the equipment during the performance validation procedures.
- Production plan
  - A production plan covering the duration of the performance validation must be available and agreed between Tetra Pak and the final user of the equipment before the start of performance validation.
  - The production plan should reflect the normal constant running conditions, including the range of products and packaging material that the final user intends to use with the equipment, as well as any expected product changes.

  The production plan should include, in particular:
  - preparation schedule
  - production schedule and resources
  - volume to be produced
  - number of product changes and product availability
  - number of design changes and packaging/additional material availability
- Packaging material
  - All packaging materials must be available.
- Consumables
  - All relevant consumables (lubricants, and so on) must be available.
- Parts
  - An adequate supply of spare parts must be maintained on site according to Tetra Pak recommendations.

5.2 Commercial Production

The performance validation is performed when the equipment runs in commercial production. See the sales agreement for more information.

5.3 Monitor and Improve Performance

During the performance-monitoring period, the actual performance of the equipment is measured and any non-performance issues are solved. See the sales agreement for more information.

5.4 Performance Test

During the performance test, the actual performance of the equipment during a pre-defined period is measured. The result of the performance test is recorded as the certified performance in the performance certificate. See the sales agreement for more information.

5.5 Performance Validation Inspection

The purpose of the performance validation inspection is to verify that the equipment in question fulfils the performance agreed upon. This inspection must be carried out in conjunction with all involved parties, prior to final handover of the equipment.

Defects or faults together with necessary actions and time to correct the deviations must be recorded in the checklist. See 5.5.1 Performance Validation Checklist ACHX30.

Use the checklist as follows:

- Under Note, document any deviations, incorrect values, or comments.
- Under Value, document the actual value.
- Under Signature, sign that the check is performed.

5.5.1 Performance Validation Checklist ACHX30

Machine No.	Country	Final User	Site
		Checklist completed by	Checklist completion date

5.5.2 Performance Validation Criteria

	Check	Reference document IM unless other document specified	Note	Value	Signature
1	Commercial production started.				
2	The General Performance Preconditions are fulfilled.	Sales agreement with schedules			
3	The Special Performance Preconditions are fulfilled (if applicable).	Sales agreement with schedules			
4	A production plan for the performance validation period is established and communicated.	Sales agreement with schedules			
5	The Machine Mechanical Efficiency (MME) and Line Machine Mechanical Efficiency (LMME) has been monitored and optimized.				
6	Performance Test has been carried out (if applicable).	PLMS, Performance specification			
7	PLMS data has been downloaded for Performance Monitoring Period and Line Performance Test and sent back to BSTT.	PLMS			

5.5.3 Performance Validation Completed

	Check	Reference document IM unless other document specified	Note	Value	Signature
1	Performance certificate issued.				

6 Disassembly and Removal

Description

The chapter contains information about how to safely disassemble and remove the machine for reuse in another location or for final disposal.

6.1 General . . . . . 6 - 5
6.1.1 Personnel Requirements . . . . . 6 - 5
6.1.2 Transport and Auxiliary Equipment . . . . . 6 - 5
6.1.3 Utility Connections . . . . . 6 - 5
6.2 Draining . . . . . 6 - 6
6.3 Move and Store . . . . . 6 - 7
6.3.1 Disassemble Machine . . . . . 6 - 8
6.3.2 Storage Preparation . . . . . 6 - 12
6.4 Return to Manufacturer . . . . . 6 - 13
6.5 Final Disposal . . . . . 6 - 14

This page intentionally left blank

6.1 General

6.1.1 Personnel Requirements

Only skilled or instructed installation technicians are allowed to disassemble the equipment for moving to other positions.

6.1.2 Transport and Auxiliary Equipment

For required tools and auxiliary equipment needed for the job, see sub-section 1.3 Lifting and Transportation Data.

6.1.3 Utility Connections

De-energise the machine by shutting off supplies of water, electricity, and compressed air (if applicable). See ii Safety Precautions.

6.2 Draining

WARNING

Make sure that the water and air supply is disconnected before proceeding.

CAUTION

Risk of damage to the equipment.

If the machine is to be transported in weather conditions where it is risk of low temperatures, it must be drained.

a) Turn the ball valve (1) to the OFF position.

a) Use the lever (2) on the spray gun to relieve any water pressure remaining in the Helix water system.

b) Loosen the filter cap (3). Any remaining water will drain from the filter housing.

c) Empty water from the filter cap (3).

d) Reinstall the filter cap (3).

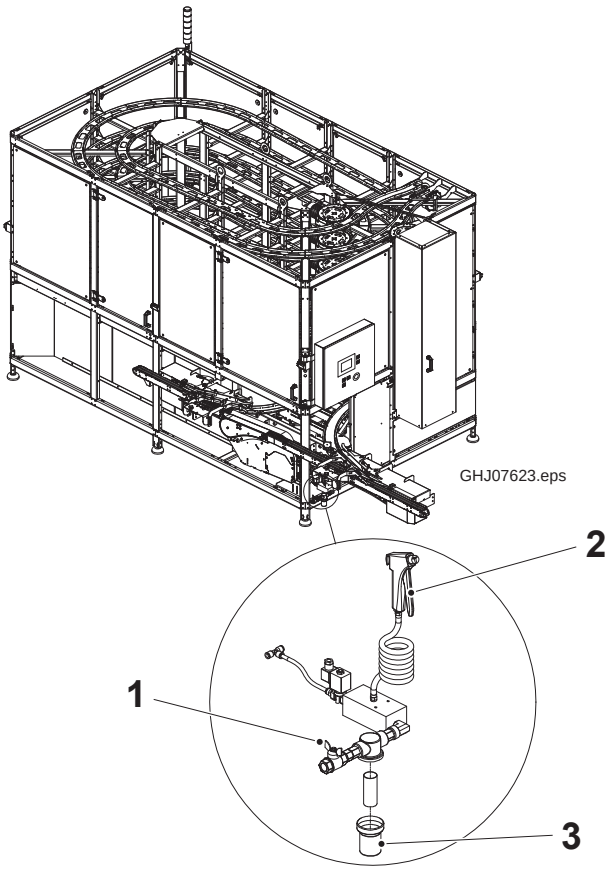

1 Valve
2 Lever
3 Filter cap

6.3 Move and Store

DANGER

Immediate danger to life.
The machine may tilt if not observing the centre of gravity or the forklift points. Failure to observe may result in immediate danger to life and/or major damage to equipment.

Before lifting and moving the machine from its production site, do the following:

- Check that the machine can be transported without any problems with the ceiling height, doors and passages.
- Make sure that the machine can be lifted in accordance to 1.2 Equipment Specifications.

6.3.1 Disassemble Machine

WARNING
Risk of personal injury.
Before disassembling the machine, read ii Safety Precautions. If safety precautions are not followed, there is risk of personal injury.

CAUTION
Risk of damage to the equipment.
Make sure that sections 1.4 Utility and Utility Connection Data and, if necessary, 6.2 Draining are followed.

Note! In order to simplify re-assembly of the machine, put all loosened screws, nuts, washers, and so on, in plastic bags and mark them.

a) Clean the machine according to the OM.

b) Put the spider in the maintenance position and remove it from the Helix. Refer to the Belt Spider Unit - Remove section in the MM.

c) Turn off the main power disconnect switch.

d) Loosen the screw terminals on the disconnect and remove the cable from the main electrical enclosure. Refer to Mains Connection in the EM.

e) Disconnect and remove either the:
   – line controller communications cables or
   – relay communications cables or
   – Genius communications cables

f) Disconnect and remove the external outfeed power cables. Refer to the VFD Connection in the Position Summary in the EM.

g) Remove photocells and sensors from upstream and downstream conveyor. Bundle the wires and tie-wrap them to the Helix.

(Cont'd)

(Cont'd)

h) Disconnect the water utility at the ball valve (1) of the Helix.

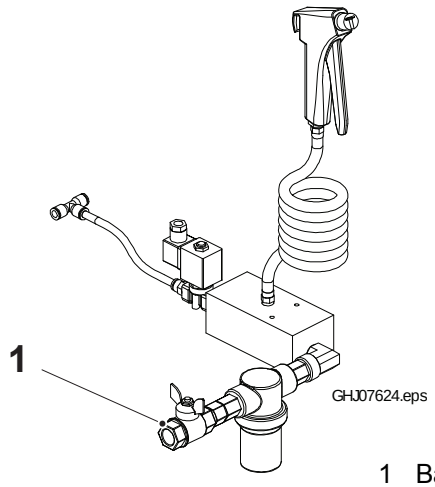

1 Ball valve

i) If the machine has a chain cleaner, disconnect the air (2) and water (3) from the chain cleaner.

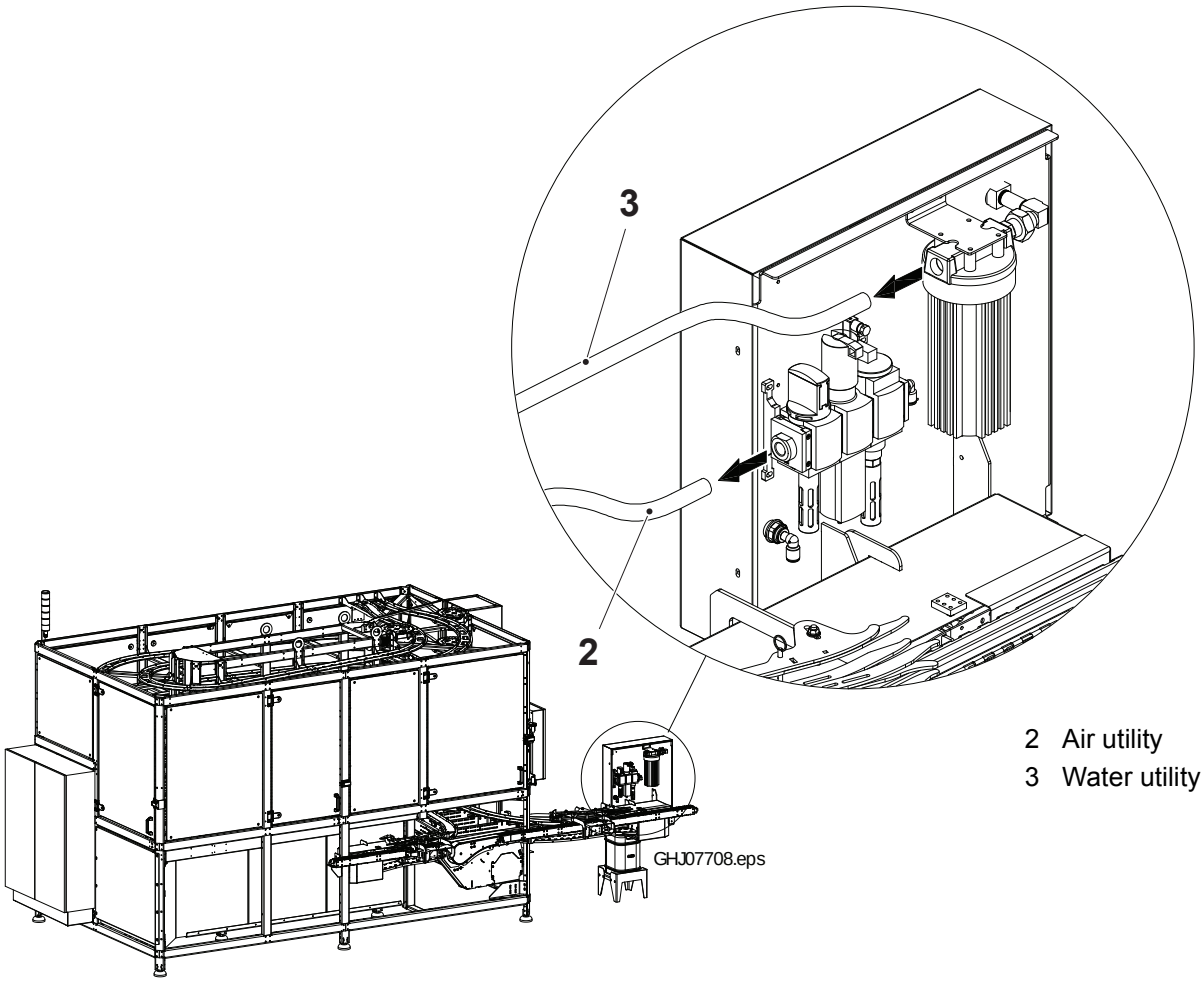

2 Air utility
3 Water utility

j) Uninstall the conveyor interface assembly. Refer to 3.2.3.4 Installing Drive and End Unit with Auxiliary Infeed and Outfeed Conveyor Connections and complete the steps in reverse order.

k) Loosen and remove the bolts securing the warning lamp (1) to the frame perimeter. Refer to 3.2.3.2 Warning Lamp.

l) Protect and secure the warning lamp (1) to the diagonal cross member (2).

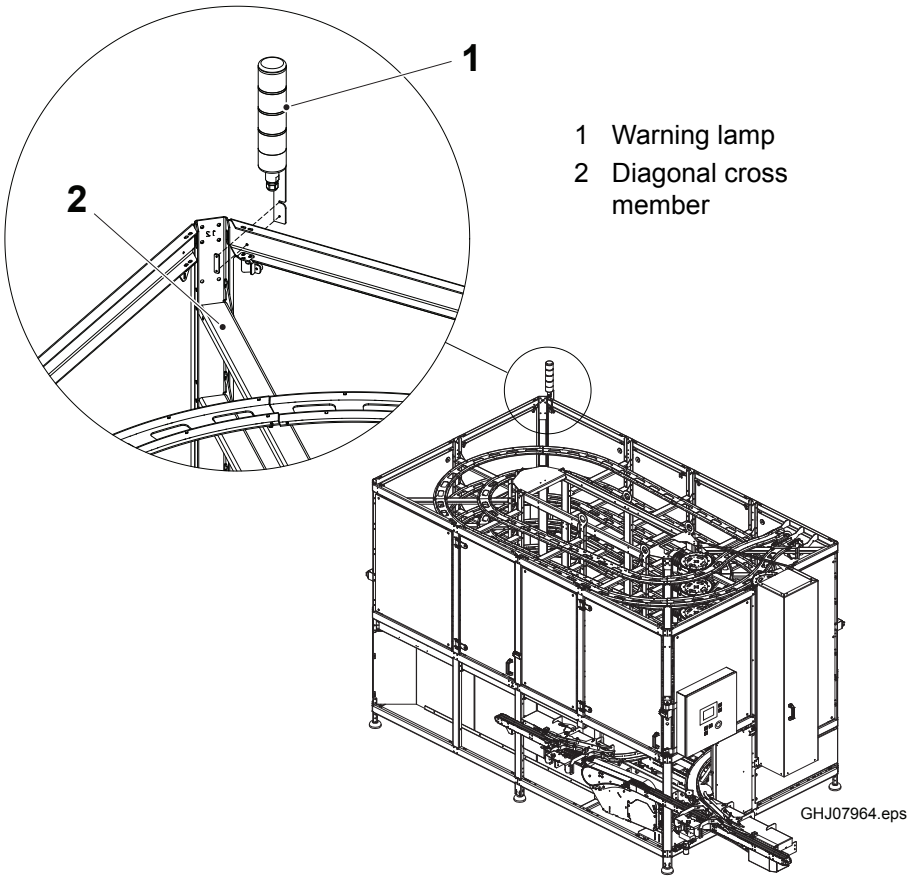

(Cont'd)

(Cont'd)

m) Disconnect the external infeed and outfeed conveyors from the conveyor interface assembly supplied with the Helix.

6.3.2 Storage Preparation

If the machine is going to be transported to a storage site, see 1.8 Site Environment Specification for more information about environmental factors, such as acceptable storage humidity and temperature range.

6.4 Return to Manufacturer

Read the instructions in 3.1.4 Opening the Crate. Re-crate the machine in the reverse order.

6.5 Final Disposal

If the equipment is to be permanently disposed of, perform the following operations:

WARNING
Risk of personal injury.
Hazardous substances. See Hazardous Substances.

a) Drain the equipment. See 6.2 Draining.
b) Remove all packaging material and dispose of these according to local regulations.
c) Disassemble the machine as far as possible and separate the following materials:
   – stainless steel (panels and frame)
   – glass (doors)
   – rubber (seals, O-rings and so on)
   – nylon and other plastics
   – electrical cables
   – water hoses
   – pneumatic hoses
d) Recycle or dispose of all materials, groups, and components according to local regulations.

Tetra Pak

***Note!** This page is generated **automatically**.*
*using the **variable definitions** made in the **front page** file!*

Accumulator Helix 30
663651-0500
Issue 2009-08 Doc. No. IM-3030589-0101

Accumulator Helix 30 1(2)
663651-0500
Issue 2009-08 Doc. No. IM-3030589-0101

Accumulator Helix 30
663651-0500
Issue 2009-08 Doc. No. IM-3030589-0101

Accumulator Helix 30 1(2)
663651-0500
Issue 2009-08 Doc. No. IM-3030589-0101

Accumulator Helix 30
663651-0500
Issue 2009-08 Doc. No. IM-3030589-0101

Accumulator Helix 30 1(2)
663651-0500
Issue 2009-08 Doc. No. IM-3030589-0101

Accumulator Helix 30
663651-0500
Issue 2009-08 Doc. No. IM-3030589-0101

Accumulator Helix 30 1(2)
663651-0500
Issue 2009-08 Doc. No. IM-3030589-0101

Accumulator Helix 30
663651-0500
Issue 2009-08 Doc. No. IM-3030589-0101

Accumulator Helix 30 2(2)
663651-0500
Issue 2009-08 Doc. No. IM-3030589-0101

Accumulator Helix 30
663651-0500
Issue 2009-08 Doc. No. IM-3030589-0101

Accumulator Helix 30 2(2)
663651-0500
Issue 2009-08 Doc. No. IM-3030589-0101

Accumulator Helix 30
663651-0500
Issue 2009-08 Doc. No. IM-3030589-0101

Accumulator Helix 30 2(2)
663651-0500
Issue 2009-08 Doc. No. IM-3030589-0101

Accumulator Helix 30
663651-0500
Issue 2009-08 Doc. No. IM-3030589-0101

Accumulator Helix 30 2(2)
663651-0500
Issue 2009-08 Doc. No. IM-3030589-0101

Accumulator Helix 30
663651-0500

Issue 2009-08 Doc. No. IM-3030589-0101

Accumulator Helix 30 1(2)
663651-0500

Issue 2009-08 Doc. No. IM-3030589-0101

Accumulator Helix 30
663651-0500

Issue 2009-08 Doc. No. IM-3030589-0101

Accumulator Helix 30 1(2)
663651-0500

Issue 2009-08 Doc. No. IM-3030589-0101

Accumulator Helix 30
663651-0500

Issue 2009-08 Doc. No. IM-3030589-0101

Accumulator Helix 30 1(2)
663651-0500

Issue 2009-08 Doc. No. IM-3030589-0101

Accumulator Helix 30
663651-0500

Issue 2009-08 Doc. No. IM-3030589-0101

Accumulator Helix 30 2(2)
663651-0500

Issue 2009-08 Doc. No. IM-3030589-0101

Accumulator Helix 30
663651-0500

Issue 2009-08 Doc. No. IM-3030589-0101

Accumulator Helix 30 2(2)
663651-0500

Issue 2009-08 Doc. No. IM-3030589-0101

Accumulator Helix 30
663651-0500

Issue 2009-08 Doc. No. IM-3030589-0101

Accumulator Helix 30 2(2)
663651-0500

Issue 2009-08 Doc. No. IM-3030589-0101