MM

Maintenance Manual

Accumulator Helix 30

663651-0500

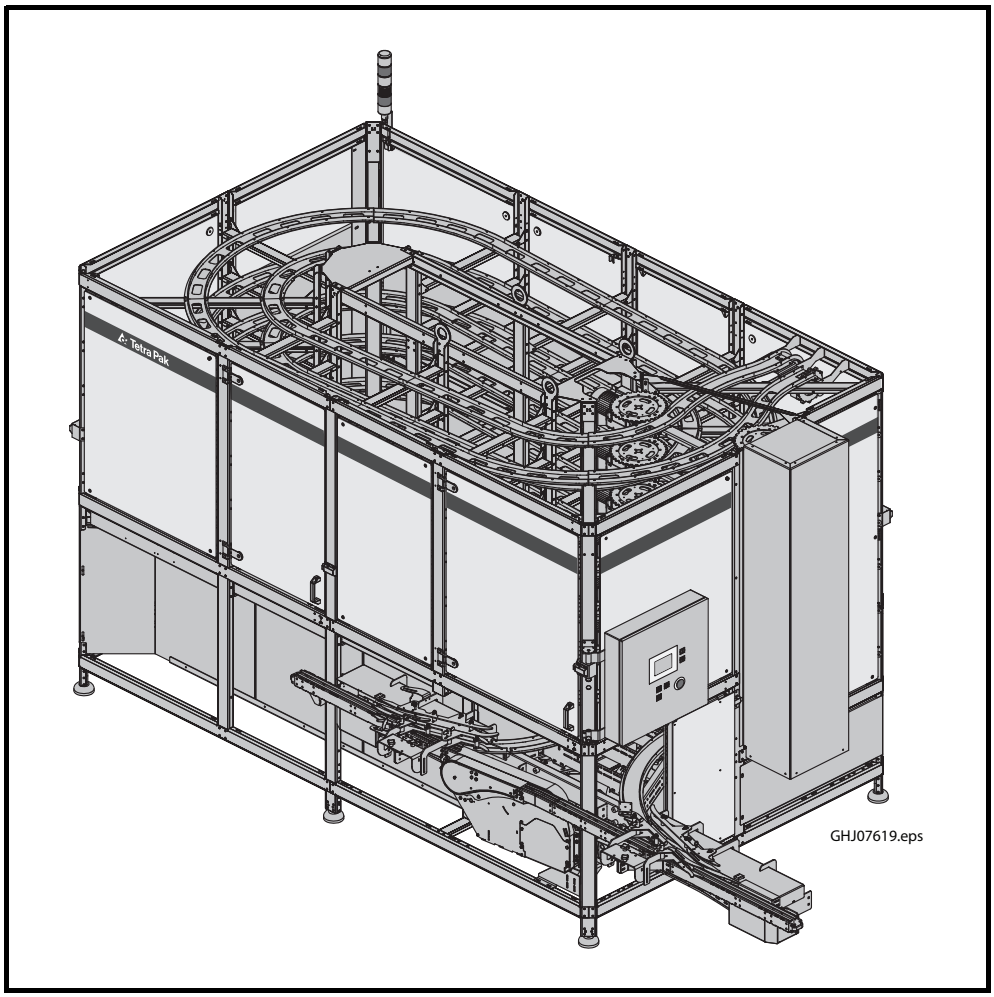

WARNING

Read and follow all safety precaution instructions throughout this manual and on safety signs attached to this equipment.
Failure to follow all safety precaution instructions could result in death or serious injury.

Tetra Pak

Doc. No. MM-3030591-0101

Copyright © 2009 Tetra Pak Group

All rights reserved. No part of this document may be reproduced or copied in any form or by any means without written permission from Hartness International.

Tetra Pak and all Tetra Pak products are trademarks belonging to the Tetra Pak Group.

The content of this manual is in accordance with the design and construction of the machine or equipment at the time of publishing. Tetra Pak reserves the right to introduce design modifications without prior notice.

The English language version of this document contains the original instructions. All other language versions are translations of the original instructions.

This document was produced by:

Hartness International
1200 Garlington Road
Greenville, SC 29609
USA

Additional copies can be ordered from Tetra Pak. When ordering additional copies, always provide the document number.

Doc. No. MM-3030591-0101

Issue 2009-08

This manual is valid for:

Series No./ Machine No. Sign.

MM

Maintenance Manual

Accumulator Helix 30
663651-0500

Note!
The ACHX30 consists of the following machine variants:

47M	100M
75M	120M
90M	

The base machine variant in the manual is the ACHX30 90M (IEC). This variant is shown when the subject is not affected by the variation in machine. When variations affect the subject, illustrations of those specific variants are also shown in the manual.

Machine or equipment configurations for which this manual is valid are described on the next page.

i Introduction

ii Safety Precautions

1 External Infeed

2 Accumulator

3 External Outfeed

4 Electrical Equipment

5 Optional Equipment

6 General

iii Index

Doc. No. MM-3030591-0101

Issue 2009-08

Tetra Pak

Hartness International

Valid for:

Name	Drawing Specification and Development Step	Additional Information
Accumulator Helix ACHX30-0500	663651-0500	Machine Variants: - ACHX30 / 47M / Left Infeed (LINF) - ACHX30 / 47M / Right Infeed (RINF) - ACHX30 / 75M / Left Infeed (LINF) - ACHX30 / 75M / Right Infeed (RINF) - ACHX30 / 90M / Left Infeed (LINF) - ACHX30 / 90M / Right Infeed (RINF) - ACHX30 / 100M / Left Infeed (LINF) - ACHX30 / 100M / Right Infeed (RINF) - ACHX30 / 120M / Left Infeed (LINF) - ACHX30 / 120M / Right Infeed (RINF)
		Optional Equipment: - Caster Wheel Kit (2727386-0100) - SNP Communications (90459-4235) - Genius Communications (3008990-0100) - Chain Cleaner (3008907-0100)

Update Log for Doc. No. MM-3030591-0101

This table shows all changes made to this manual, including installed rebuilding kits, added, or removed pages. Page numbering on added pages begins with UP.

Date	Installed Kit	Added Pages (Doc. No.)	Removed Pages	Signature

Date	Installed Kit	Added Pages (Doc. No.)	Removed Pages	Signature

i Introduction

Description

This chapter contains basic information about this manual and related Tetra Pak equipment.

Abbreviations and Terminology . . . . . i - 5
Manual Information . . . . . i - 6
Delivered Manuals . . . . . i - 6
Page Layout . . . . . i - 7
Page Numbering. . . . . i - 8
Typographical Conventions . . . . . i - 8
Symbols . . . . . i - 8
Spare parts . . . . . i - 9
Machine Introduction . . . . . i - 10
Intended Use of the Machine . . . . . i - 10
Manufacturer . . . . . i - 10
Support and Feedback . . . . . i - 10
Declaration of Conformity . . . . . i - 10
Identification . . . . . i - 11
CE Classification . . . . . i - 11
Machine Plate . . . . . i - 11
Machine Variants . . . . . i - 12
Orientation . . . . . i - 14
Hygiene. . . . . i - 16
How to Use This MM . . . . . i - 17
Procedures . . . . . i - 17
Procedure Start Table . . . . . i - 17
TPMS . . . . . i - 18
Planned Maintenance Program . . . . . i - 18
Checklists and Spare Parts Recommendations . . i - 18

This page intentionally left blank

Abbreviations and Terminology

Abbreviation/ Terminology	Meaning	Translation
CE	Communautés Européennes / European Communities	
CSA	For Canada / USA Machines Only	
DE	Distribution Equipment	
D/E	Drive and End Unit	
EEA	European Economic Area	
EM	Electrical Manual	
I/O	Input / Output (module)	
IM	Installation Manual	
LC	Line Controller	
LED	Light Emitting Diode	
LINF	Left Infeed	
MCR	Master Control Relay	
MM	Maintenance Manual	
OM	Operation Manual	
PLC	Programmable Logic Controller	
RINF	Right Infeed	
SDS	Safety Data Sheet	
SPC	Spare Parts Catalogue	
TPMS	Tetra Pak Maintenance System	
TPOP	Tetra Pak Operator Panel	

Manual Information

Tetra Pak recommends reading all delivered manuals carefully. Make sure that the delivered manuals are available to personnel who operate or maintain the equipment.

It is important to keep this manual for the lifetime of the equipment and to pass the manual on to any subsequent holder or user.

Tetra Pak will not be held responsible for any damage to the equipment caused by not following the instructions given in this manual.

Delivered Manuals

Manuals delivered with this equipment:

- EM
  The Electrical Manual provides technicians with information about the equipment's electrical system.
- IM
  The Installation Manual provides technicians with information required to safely install the equipment.
- MM
  The Maintenance Manual provides technicians with information on maintaining the equipment.
- OM
  The Operation Manual provides the operator with information on handling and operating the equipment before, during, and after production.
- SPC
  The Spare Parts Catalogue provides the information necessary to order spare parts from Tetra Pak

Page Layout

Every main page in a manual contains a header and a footer. The page header contains the chapter name (1) and the section name (2). The page footer contains the page number (3), and the document number (4). See also the Page Numbering section.

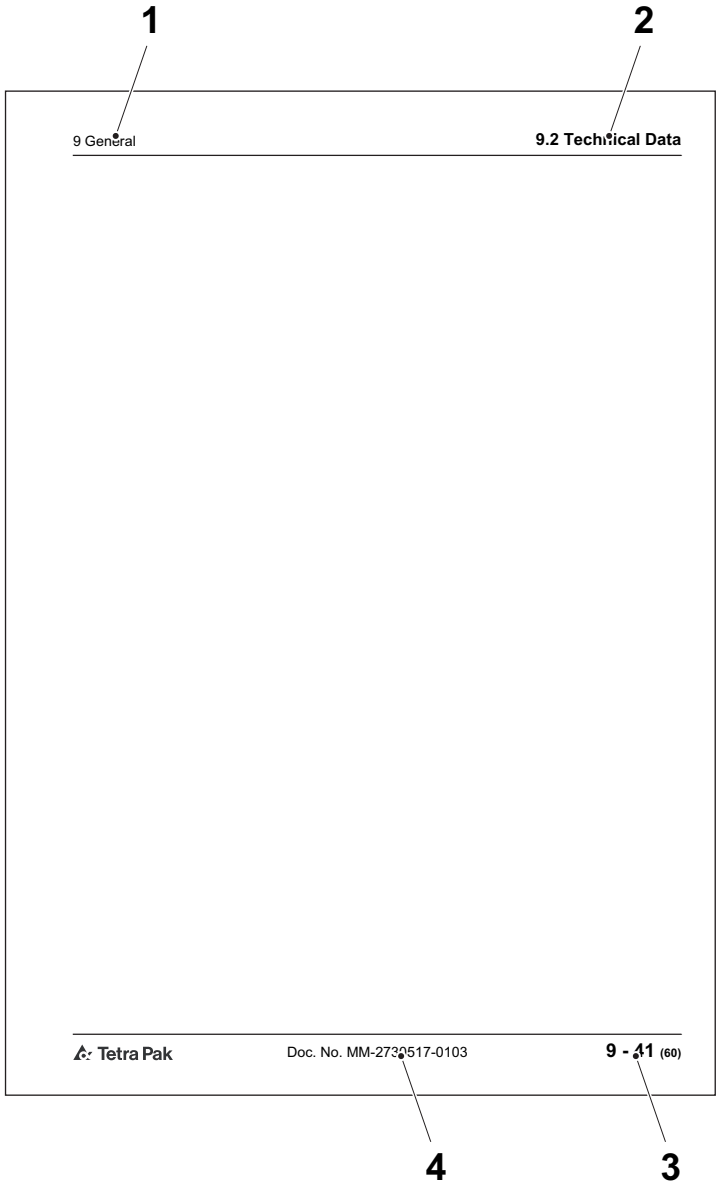

1 Chapter name
2 Section name
3 Page number
4 Document number

Page Numbering

A page number has three parts:

- chapter number (1)
- consecutive page number (2) within the chapter
- total number of pages (3) in the chapter.

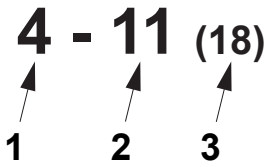

1 Chapter number
2 Consecutive page number
3 Total number of pages

Typographical Conventions

Controls on the operator panel, emergency stop devices, and program steps are printed in CAPITAL LETTERS.

Menu names, button names and other text displayed in software are printed in `Courier`.

Cross-references are underlined.

Symbols

Symbols used in illustrations.

	A pointer arrow indicates the position of an object.
	A zoom arrow indicates that an object view is enlarged. The arrow points towards the enlarged view of the object.
	A rotation movement arrow indicates rotational movement of an object. The arrow points in the direction of rotation.
	A straight movement arrow indicates movement of an object. The arrow points in the direction of movement.

Spare parts

When ordering spare parts for your machine, contact the nearest Tetra Pak service station.

When ordering spare parts **not** specified in the Spare Parts chapter, please contact:

Hartness International
1200 Garlington Road
Greenville, South Carolina 29616
USA
Ph: 1-864-297-1200
GMT-05:00 Eastern Time (US and Canada)
Fax: 1-864-288-5390
Email: spareparts@hartness.com

Machine Introduction

Intended Use of the Machine

The Accumulator Helix 30 is designed to operate as a buffer system within the complete Tetra Pak production line. It stores and retrieves packages as necessary to maximize line efficiency.

All other use is prohibited. Tetra Pak will not be held responsible for injury or damage if the equipment is used for any other purpose.

Manufacturer

This equipment has been manufactured by:

Hartness International
1200 Garlington Road
Greenville, South Carolina 29616
USA
Ph: 1-864-297-1200
GMT-05:00 Eastern Time (US and Canada)

Support and Feedback

If you encounter problems when operating this equipment or have other inquiries, comments, or suggestions for improvement, contact Tetra Pak.

Declaration of Conformity

A copy of the Declaration of Conformity can be found in the Installation Manual. The signed Declaration of Conformity is delivered separately with the equipment.

Identification

CE Classification

This equipment complies with the basic health and safety regulations of the European Economic Area (EEA).

Machine Plate

The illustration below shows an example of the machine plate and its location on the equipment. The machine plate carries data needed when contacting Tetra Pak concerning this specific equipment.

Make sure the equipment data in the front pages of this manual corresponds with the machine plate data and the machine specification.

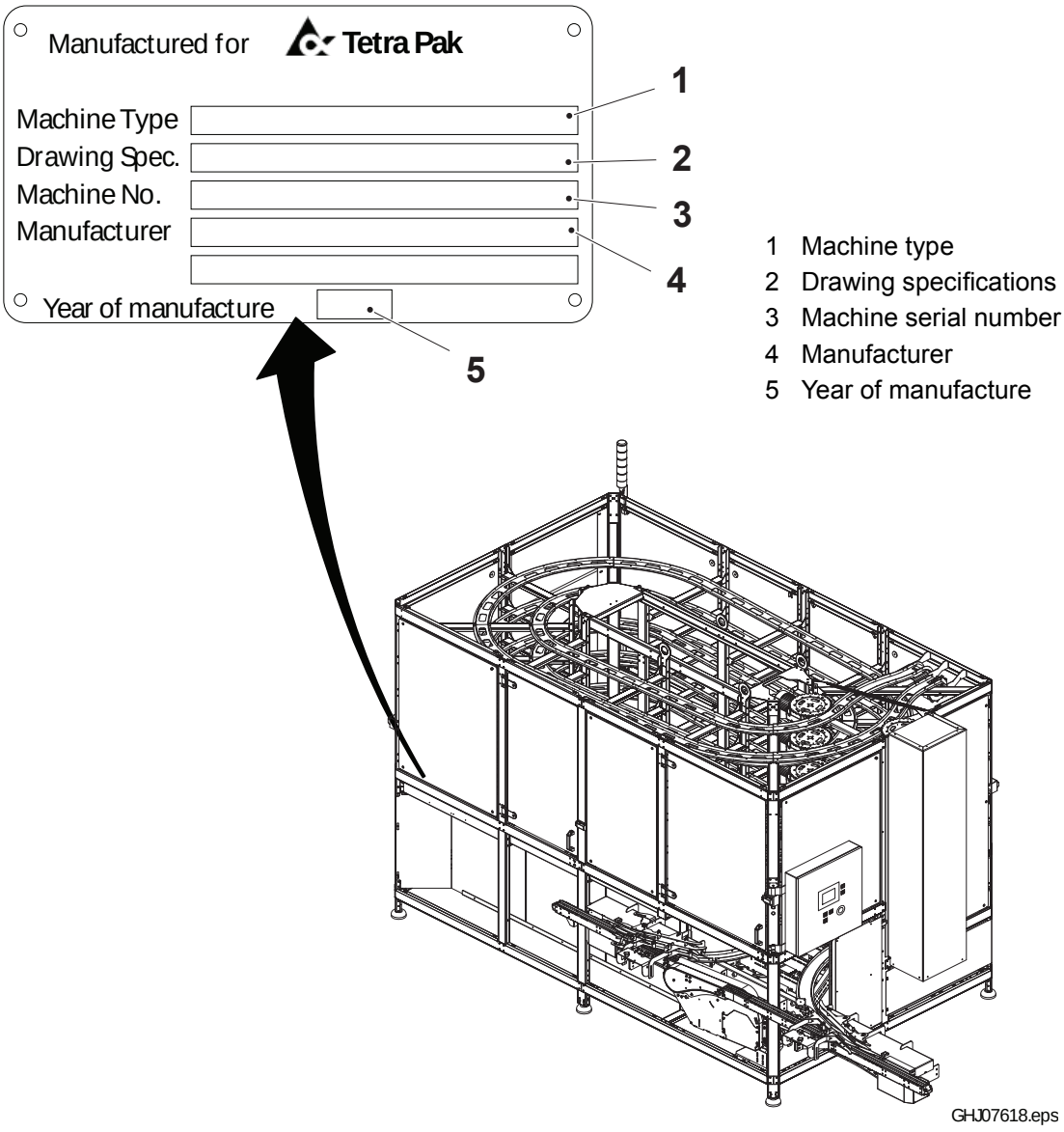

Machine Variants

The Accumulator Helix 30 handles TB, TBA, TGA, TPA, and TRC packages. It is available in the following ten options:

Machine	**Variant**	**Feed Side**	**Filling Machines** (Note: Exceptions do occur on some volumes.)
ACHX30	47M	LINF	A3/Flex A3/Flex iLine TBA/8 TBA/19 TB/19 C3/Flex
		RINF	
	75M	LINF	A3/Speed
		RINF	
	90M	LINF	TBA/22, A3/Speed iLine TP R1
		RINF	
	100M	LINF	A3/Speed iLine
		RINF	
	120M	LINF	A3/Speed iLine TP R1
		RINF	
Note! See also the Tetra Pak Product Portfolio Configurator.			

The base machine variant in the manual is the 90M. This variant is shown in the manual when the subject is not affected by the variation in machine. When variations affect the subject, illustrations of those specific variants are also shown in the manual. To determine the machine variant you have, check the machine plate bolted to the machine. See Machine Plate on page i-11.

(Cont'd)

(Cont'd)

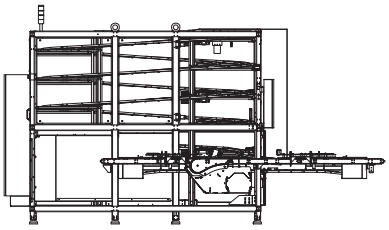

ACHX30 47M
4 Layers

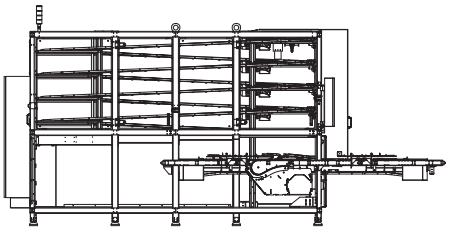

ACHX30 75M
5 Layers

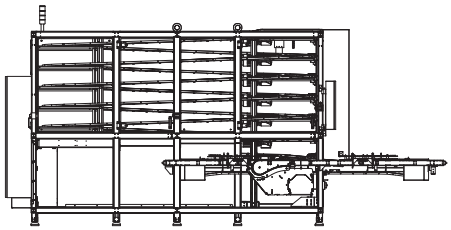

ACHX30 90M
6 Layers

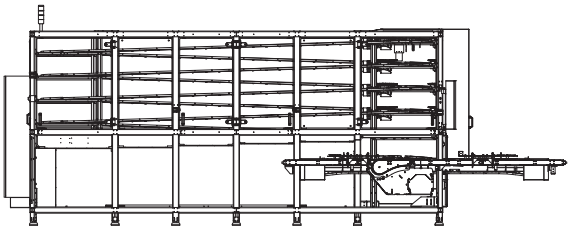

ACHX30 100M
5 Layers

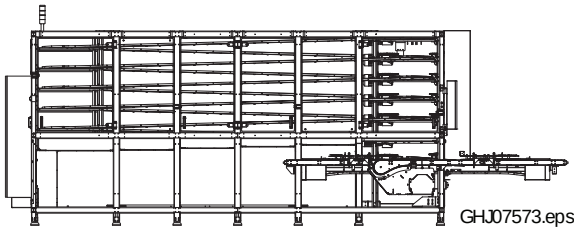

ACHX30 120M
6 Layers

Orientation

The illustrations below show the orientation of the equipment. This orientation information will be used throughout this manual. The arrows indicate the flow of material.

Left Infeed (LINF)
When the operator is facing the TPOP, the product flows to his or her left.

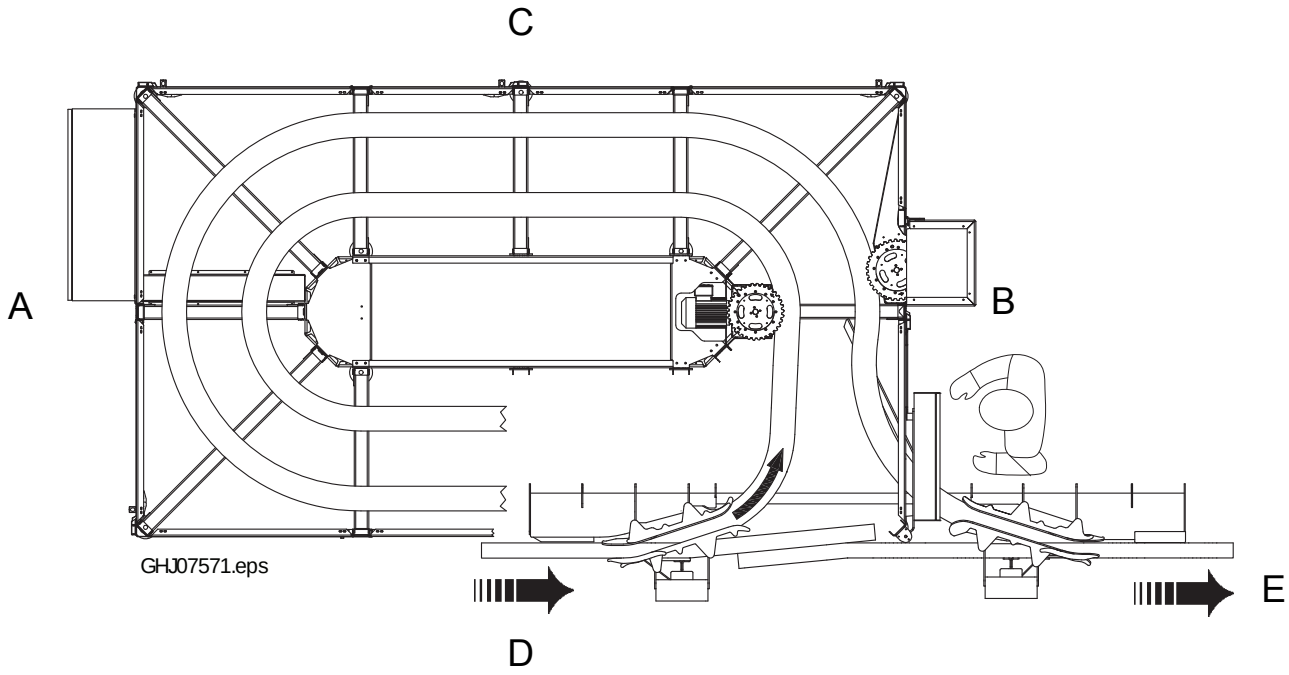

A Rear
B Front
C Right side
D Left infeed side (LINF)
E Discharge

(Cont'd)

(Cont'd)

Right Infeed (RINF)
When the operator is facing the TPOP, the product flows to his or her right.

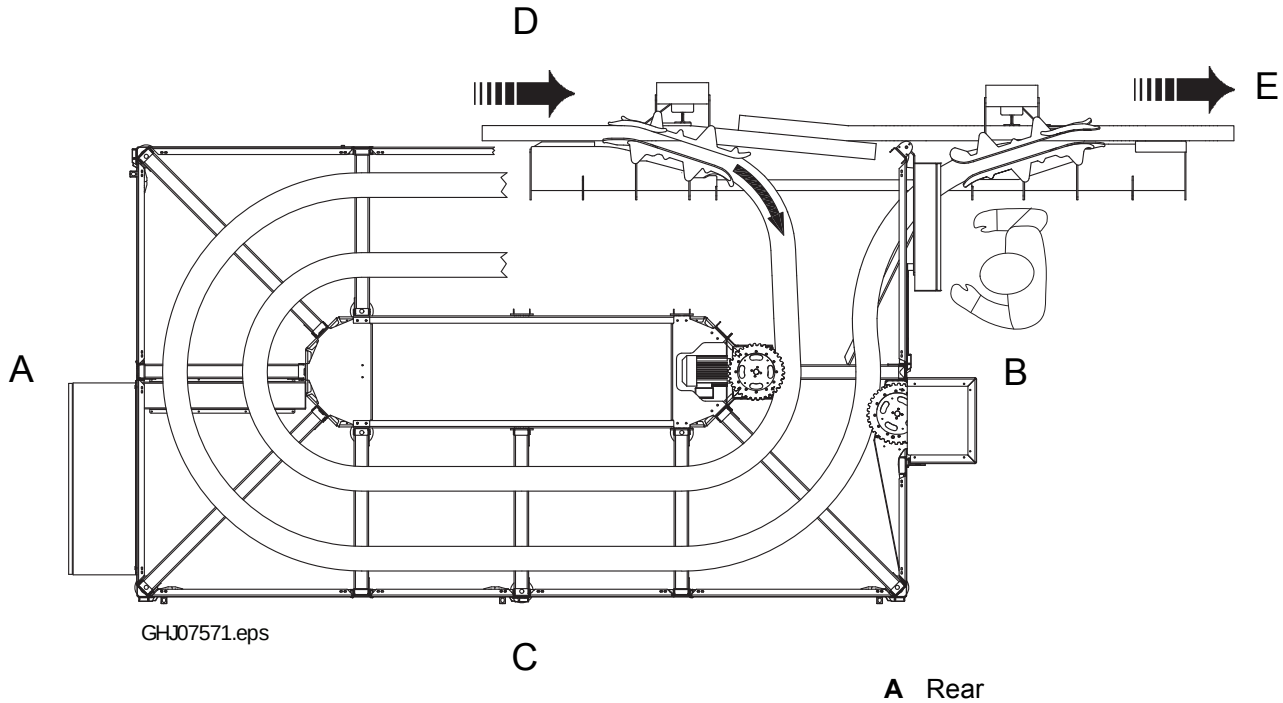

A Rear
B Front
C Left side
D Right infeed side (RINF)
E Discharge

Hygiene

Avoid microbiological pollution of the packaging material:

- Keep your hands and gloves clean.
- Always wear some type of hair protection (cap or hairnet) and clean clothes (preferably white).
- Do not wear a watch, ring, necklace, earrings, or any other exposed jewellery.

How to Use This MM

Procedures

The name of the chapters and sections in the MM correspond to the groups in the structure of the equipment. Procedures correspond to a chapter or a section:

- The dashes indicate that it is a procedure heading. The example below shows a heading for Procedure number 3 in Section 1.5.
- The text after the second dash tells what type of procedure it is. Check, Change and Set are common procedure types.

1.5-3 Outfeed Servo - Change Bearings

Maintenance procedures in this manual are connected to the Tetra Pak Maintenance System, TPMS. See the TPMS section.

Procedure Start Table

Procedures in this manual begin with a table providing information needed to begin the procedure.

- Machine Status (1) shows actuator status, program step, and any other machine status necessary to begin the procedure.
- Special Equipment (2) shows a list of personal protective equipment and special tools that are not normally carried by a service technician, but are needed in the procedure.
- Consumables (3) shows items, such as lubricants, that are required to perform the procedure. Consumables do not include replacement parts.
- SPC Reference (4) shows the assembly number, found in the index of the SPC.

1	Machine Status	Power supply disconnector OFF Air valve OFF Water valve OFF
2	Special Equipment	Hook spanner TP No. 777170-0105 Dial indicator
3	Consumables	Grease code F
4	SPC Reference	2501234-0100

1 Machine Status
2 Special Equipment
3 Consumables
4 SPC Reference

TPMS

To ensure uninterrupted production, all machines and equipment must be maintained on a regular basis.

Tetra Pak has developed a planned maintenance system to keep pace with the ongoing development of new and existing machines and equipment from Tetra Pak, and to meet the demands set by Tetra Pak's customers for higher efficiency and better economy.

Planned Maintenance Program

The Tetra Pak planned maintenance system reduces unplanned downtime and maintenance time for complete production lines, as well as for individual machines and equipment.

With the Tetra Pak planned maintenance system, preventive maintenance can be performed before production is affected. The system is continually updated based on experience with Tetra Pak machines and equipment worldwide.

The Tetra Pak planned maintenance system maintains records of when maintenance is performed, when parts are changed, whether alterations are made, and so on. These records, combined with usage statistics, enable reliable predictions of the service life of all machine and equipment parts.

Checklists and Spare Parts Recommendations

Customers using the Tetra Pak planned maintenance system receive checklists from their local Tetra Pak office whenever planned maintenance is due. These checklists are individualised for each of Tetra Pak's customer, according to the type of machine, equipment usage, and maintenance occasion. In addition, the system recommends spare parts, maintenance units, tools, and templates according to the statistics collected.

Tip! Contact the local Tetra Pak office for additional information about the Tetra Pak Maintenance System and its planned maintenance program.

ii Safety Precautions

Safety Precaution Instructions

WARNING

Read all safety precaution instructions throughout this manual and on safety signs attached to this equipment.
Failure to follow all safety precaution instructions could result in death or serious injury.

Definition of Lockout Procedure

A lockout procedure is a procedure to put each necessary energy isolating device in its safe position to prevent the energisation of the equipment, such as when a maintenance procedure should be carried out.

A lockout is the use of a device, for example, a padlock, to make sure that an energy isolating device cannot be operated.

An energy isolating device is a mechanical device that physically prevents transmission or release of energy, such as a power supply disconnector.

Safety Messages Description . . . . . ii - 5
Personnel Requirements . . . . . ii - 6
Skilled Person . . . . . ii - 6
Instructed Person. . . . . ii - 6
Safety Signs . . . . . ii - 7
Locations of Safety Signs . . . . . ii - 10
ISO Version. . . . . ii - 10
ANSI Version . . . . . ii - 11
Protective Devices. . . . . ii - 12
Emergency Stop . . . . . ii - 13
EMERGENCY STOP Push-Buttons . . . . . ii - 13
Safeguards . . . . . ii - 14
Warning Lamp . . . . . ii - 17
Audible Alarm. . . . . ii - 17
Personal Protection. . . . . ii - 18
Entanglement Hazard . . . . . ii - 18
Hazardous Substances . . . . . ii - 19
Disposal of Chemical Substances . . . . . ii - 20
Supply Systems . . . . . ii - 21
Power Supply . . . . . ii - 21
Residual Voltage . . . . . ii - 22
Electrical Cabinet. . . . . ii - 22
Socket Outlet . . . . . ii - 23
Air Supply (option). . . . . ii - 24
Water Supply . . . . . ii - 25

This page intentionally left blank

Safety Messages Description

A safety message is always accompanied by a safety alert symbol and a signal word.

The safety alert symbol is used to alert about potential personal injury hazards. To avoid hazards, obey all safety messages that follow this symbol.

The following safety alert symbols and signal words are used in this manual to inform the user of hazards.

DANGER	Danger indicates an imminently hazardous situation which, if not avoided, will result in death or serious injury.
WARNING	Warning indicates a potentially hazardous situation which, if not avoided, **could** result in **death or serious injury**.
CAUTION	Caution indicates a potentially hazardous situation which, if not avoided, **may** result in **minor or moderate injury.** It may also be used to alert against unsafe practices.
CAUTION	Caution without the safety alert symbol indicates a potentially hazardous situation which, if not avoided, **may** result in **property damage**.

Personnel Requirements

Note! Personnel includes all persons working on or near this equipment.

Only skilled or instructed persons are allowed to work with this equipment.

Skilled Person

A skilled person must have relevant education and experience to enable him or her to identify hazards, analyse risks, and avoid hazards which electricity, machinery, chemicals, other energies, and supply systems on this equipment can create.

Skilled persons must meet local regulations, such as certifications and qualifications for working with these energies and systems.

Instructed Person

An instructed person must be adequately advised or supervised by a skilled person. The skilled person enables the instructed person to identify hazards, analyse risks, and avoid hazards which electricity, machinery, chemicals, other energies, and supply systems on this equipment can create.

Safety Signs

WARNING

Damaged or missing safety signs increase the risk of death or serious injury.

Replace all missing or damaged safety signs immediately.

Safety signs are attached to the equipment. The table below lists all the signs that are used, and illustrations show their locations on the equipment. Each position number refers to two variants of a safety sign in the table, but only one is used on the equipment.

- Make sure that each safety sign is legible and in its correct position after installation and maintenance.
- Replace all missing or damaged safety signs immediately.

(Cont'd)

(Cont'd)

Pos.	ISO sign ANSI sign
1	  **Moving parts can crush and cut.** Do not operate with guard removed. Follow lockout procedure before maintenance.
2	  **Hazardous voltage.** Will shock, burn, or cause death. Follow lockout procedure before maintenance.
3	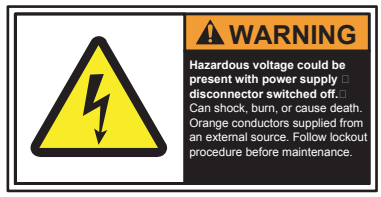 **Hazardous voltage could be present with power supply disconnector switched off.** Can shock, burn, or cause death. Orange conductors supplied from an external source. Follow lockout procedure before maintenance.
4	 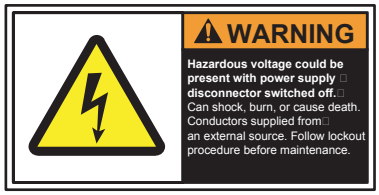 **Hazardous voltage could be present with power supply disconnector switched off.** Can shock, burn or cause death. Conductors supplied from an external source. Follow lockout procedure before maintenance.
5	 **Hazardous voltage.** Can shock, burn, or cause death. Read Maintenance Manual (MM) before using this socket outlet.

Pos.	ISO sign	ANSI sign
6		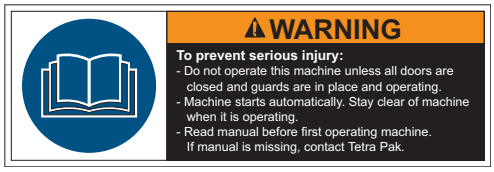
	To prevent serious injury: Do not operate this machine unless all doors are closed and guards are in place and operating. Machine starts automatically. Stay clear of machine when it is operating. Read manual before first operating machine. If manual is missing, contact Tetra Pak.	
7		
	Do not reach in. Moving parts may cause injury. Follow instructions for safe work practice.	
8		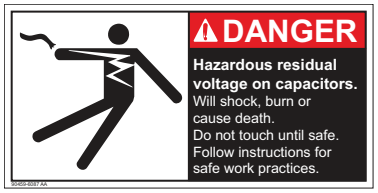
	Hazardous residual voltage on capacitors Can shock, burn, or cause death. Do not touch until safe. Follow instructions for safe work practice.	

Locations of Safety Signs

ISO Version

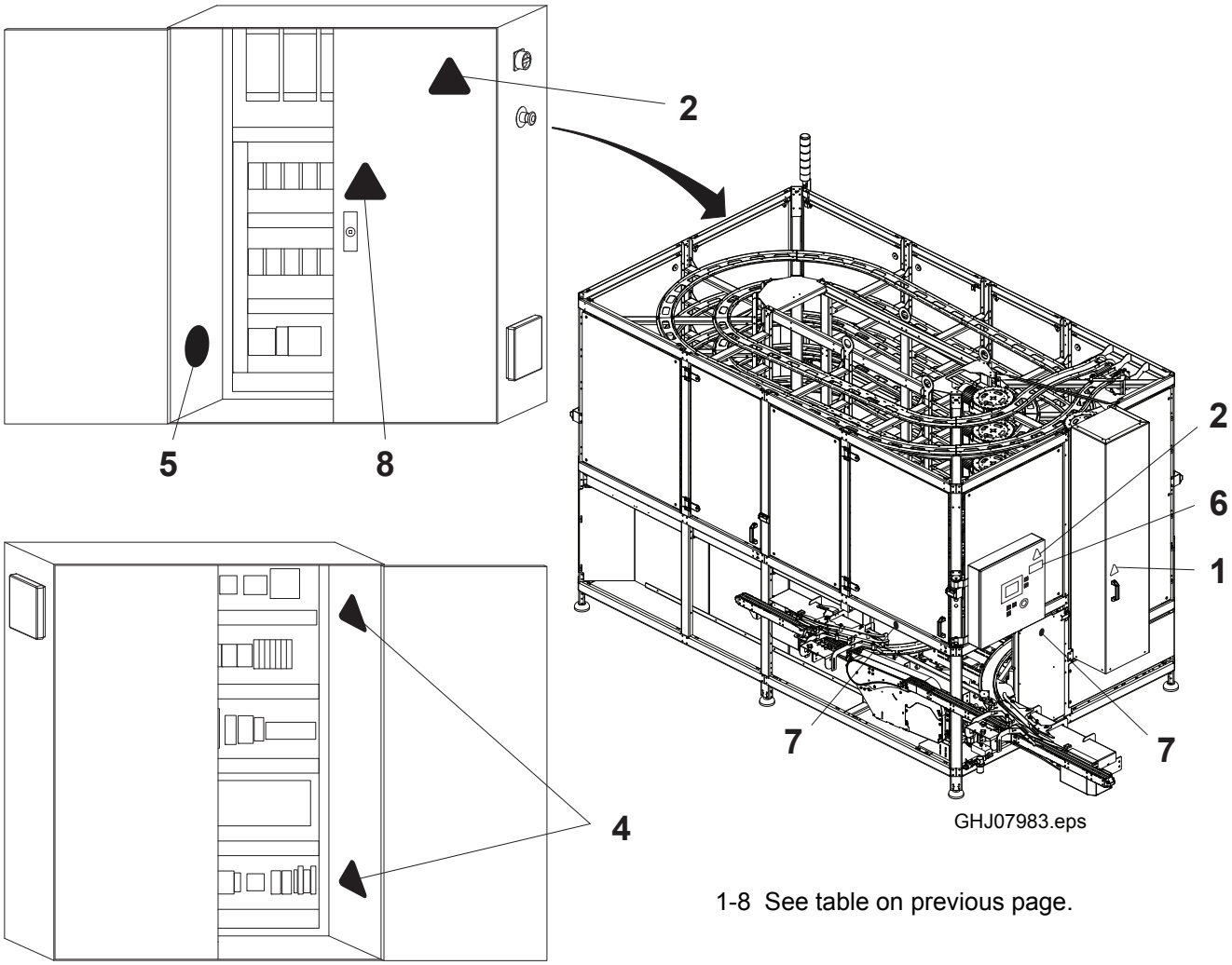

1-8 See table on previous page.

(Cont'd)

(Cont'd)

ANSI Version

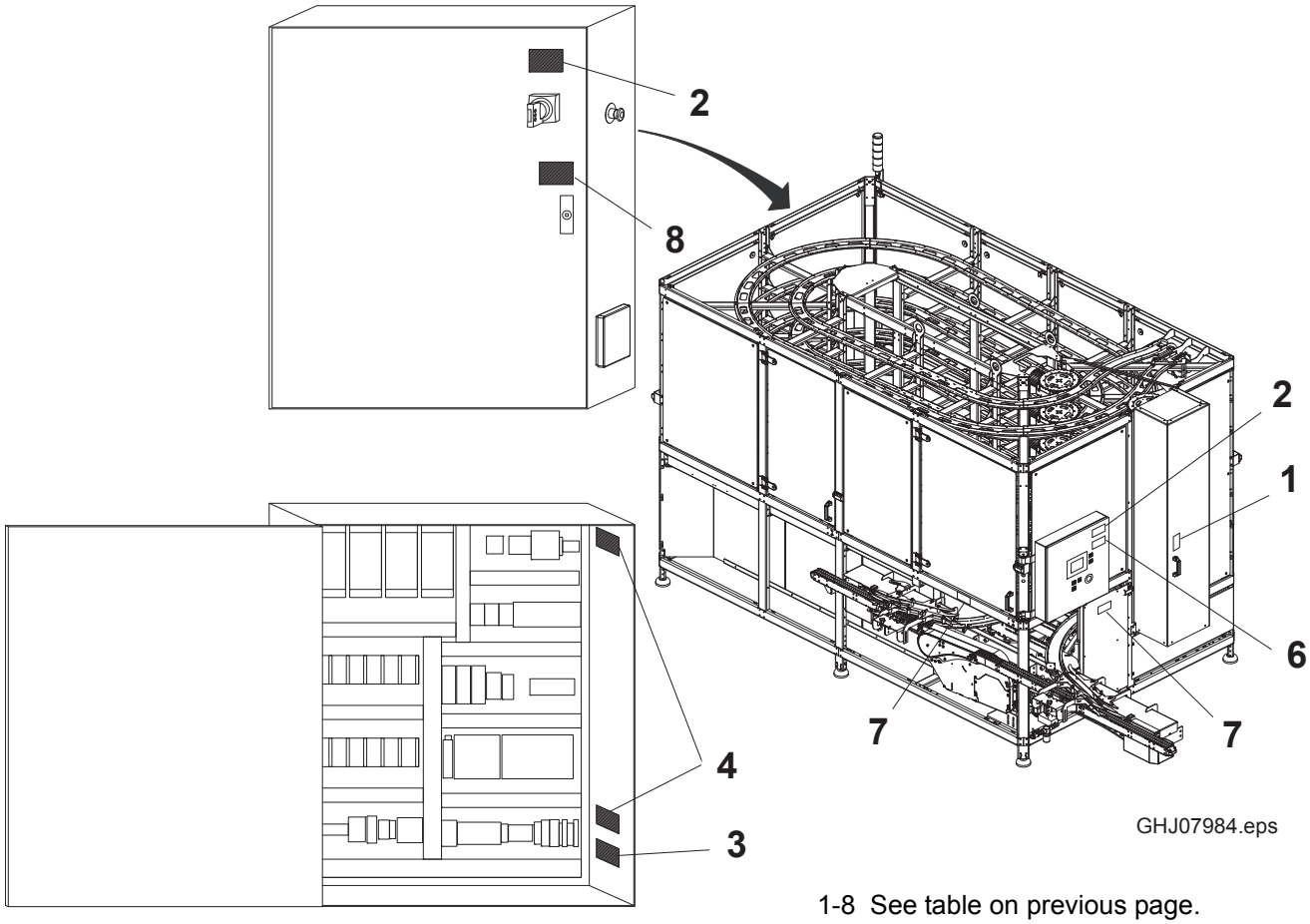

1-8 See table on previous page.

Protective Devices

There are different kinds of protective devices designed to ensure safe use of the equipment. See the sections below.

WARNING

Hazardous zones.

Hazardous zones are safeguarded and provided with protective devices. Do not inch or run this equipment if any protective device is inoperative.

Change inoperative components of the safety system immediately.

For the location of safeguards and/or other protective devices not mentioned in this section, see the Maintenance Manual.

WARNING

Hazardous voltage.

Hazardous voltage remains on this equipment after activating an EMERGENCY STOP or an interlocking device.

Emergency Stop

Emergency stop devices are used to stop this equipment immediately in an hazardous situation. Learn the positions of all emergency stop devices and how to use them.

Instructions for a normal production stop are included in the Stop chapter of the Operation Manual.

EMERGENCY STOP Push-Buttons

Push one of the EMERGENCY STOP push-buttons to stop this equipment immediately.

The location of each EMERGENCY STOP push-button is shown by an arrow.

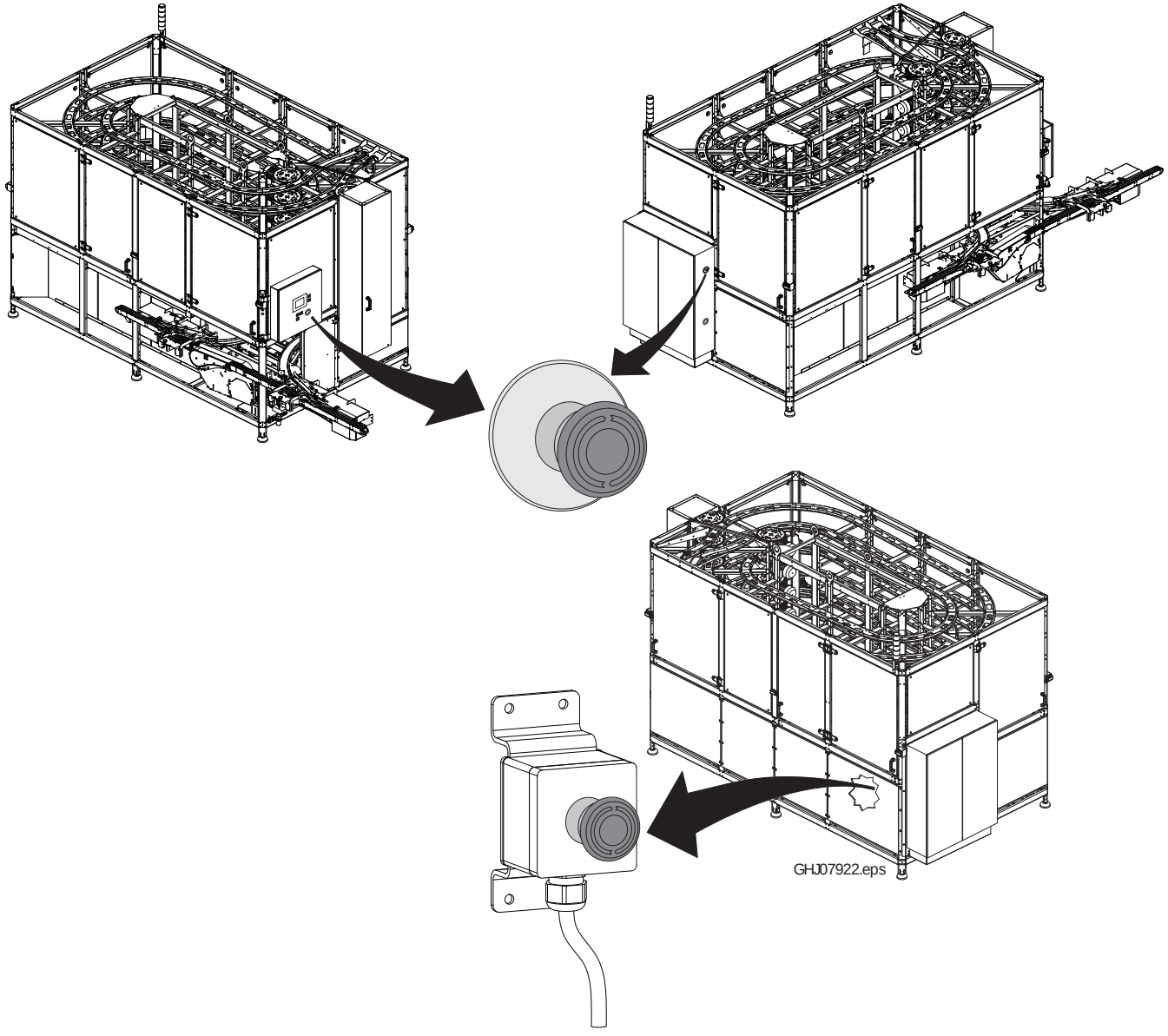

Safeguards

WARNING
Moving machinery.
Never defeat or bypass the interlocking devices.

Movable guards, for example, doors and covers leading to hazardous zones, are fitted with interlocking devices where required. These devices are usually electric safety switches that are parts of the safety system and must never be defeated, bypassed, or otherwise made inoperative.

WARNING
Corners and edges.
To prevent injury from corners and edges of open doors and covers, close them unless they must be open during such work. Be careful when working under an open door, cover or elsewhere below parts of the equipment with corners and edges.

CAUTION
Equipment damage.
Never stop this equipment by opening a interlocking guard.

(Cont'd)

(Cont'd)

The location of each interlocking guard is shown by an arrow.

Left Hand Infeed

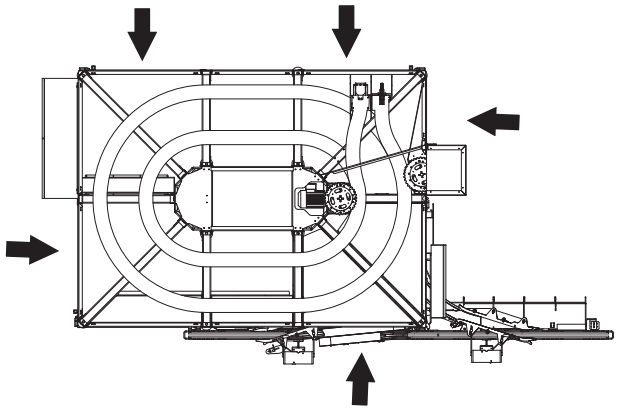

ACHX30 47M

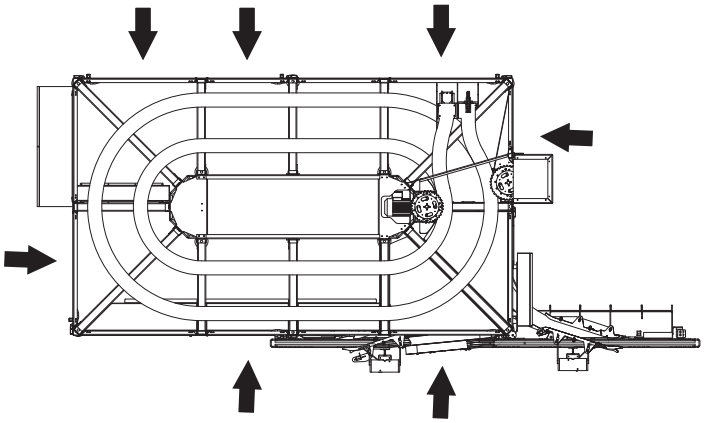

ACHX30 75M / 90M

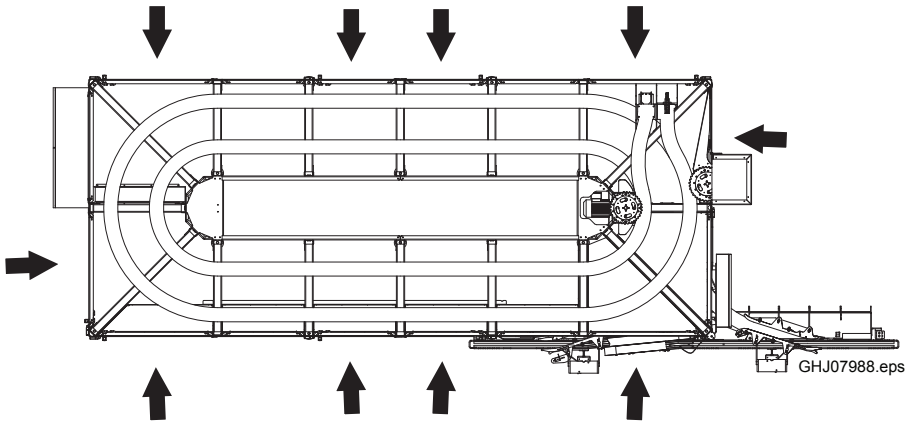

ACHX30 100M / 120M

The location of each interlocking guard is shown by an arrow.

Right Hand Infeed

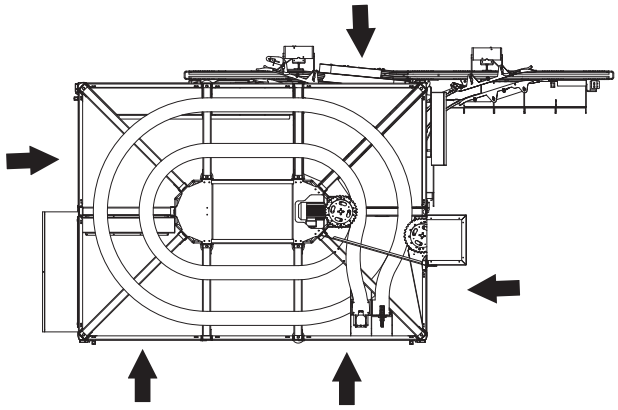

ACHX30 47M

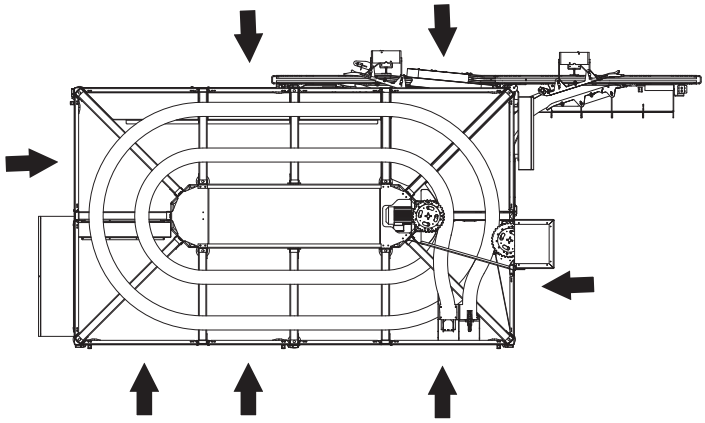

ACHX30 75M / 90M

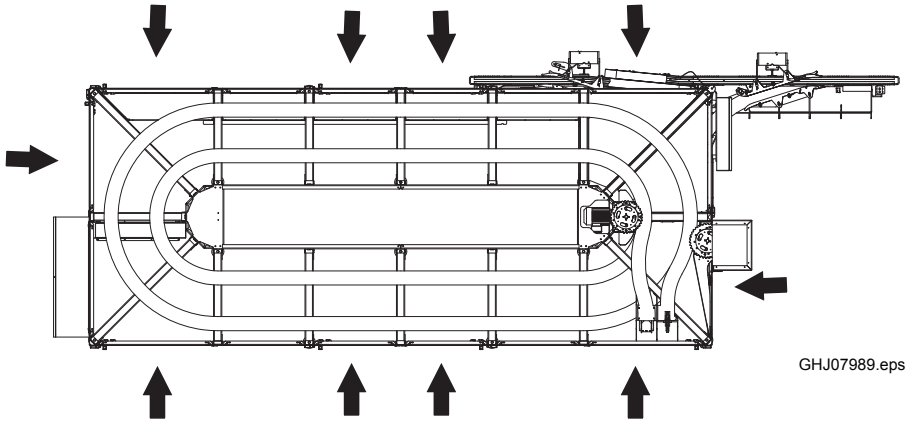

ACHX30 100M / 120M

Warning Lamp

A warning lamp is a column of warning lights:

- A red light (2) indicates a hazardous condition. This is a situation that requires immediate action.
- A yellow light (3) indicates an abnormal or impending critical condition. This is a condition calling for action by the operator.
- A blue light (4) indicates that operator action is required.
- A green light (5) indicates a normal condition.

Audible Alarm

The audible alarm (1) produces a warning signal before the safety circuit is reset. The warning signal sounds for approximately three seconds to alert personnel. Resetting the safety circuit makes it possible to step up the machine and allows the equipment to start.

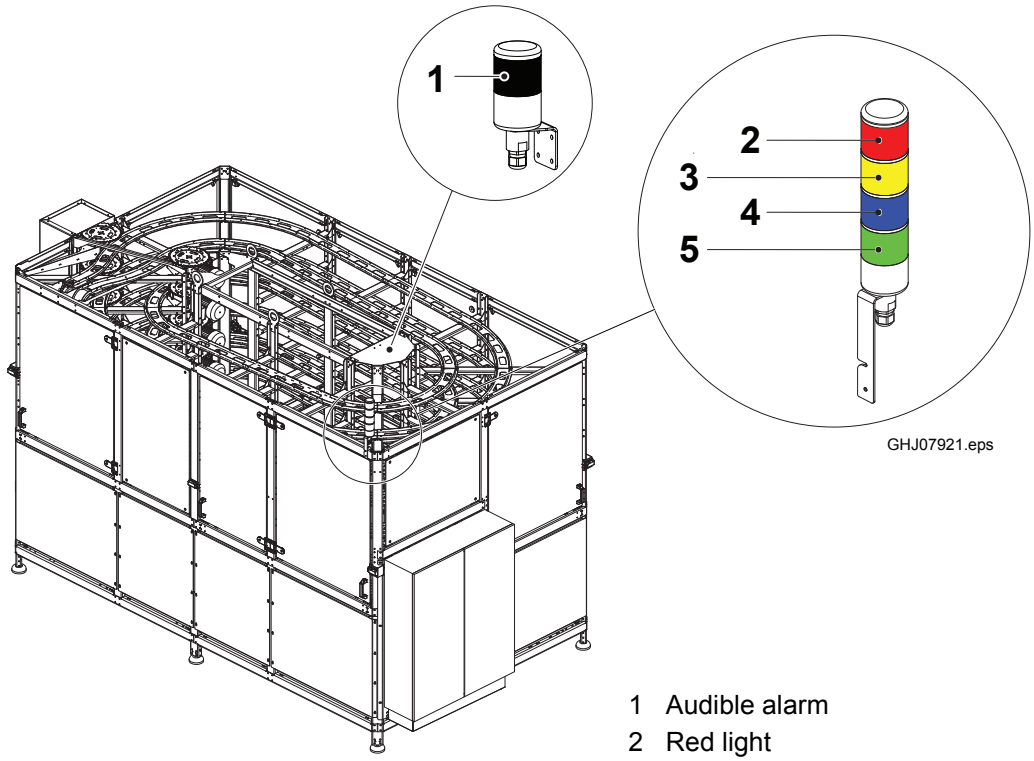

1 Audible alarm
2 Red light
3 Yellow light
4 Blue light
5 Green light

Personal Protection

This section applies to all personnel at all times when this equipment is in operation.

Entanglement Hazard

WARNING

Risk of entanglement.

Do not wear jewellery or loose clothing when working on or near this equipment. Long hair may not be loose.

Hazardous Substances

WARNING

Contact with chemicals can cause death, serious injury, or illness.
Always read and follow the instructions in the safety data sheet supplied by the manufacturer or local supplier, when handling chemicals.

Make sure that

- the safety data sheet is available
- the showers work
- an eyewash device, movable or wall-mounted, is available and operational
- additional washing facilities are nearby

Note! Learn the locations of all washing facilities in order to act immediately in case of an accident





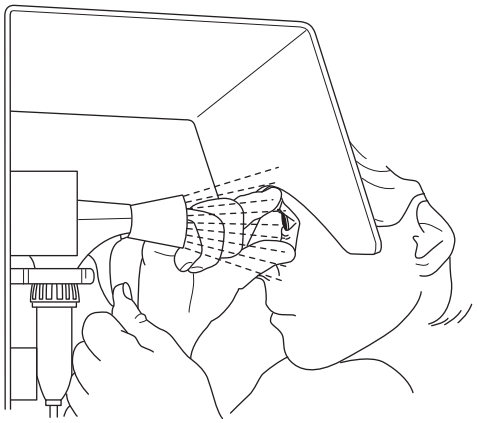

Disposal of Chemical Substances

Always read and follow the disposal instructions in the safety data sheet supplied by the manufacturer or local supplier.

It is strongly recommended that used chemical containers are

- disposed of according to the instructions immediately after use
- not used as disposal containers for other chemicals in order to avoid uncontrolled chemical reactions within the container

Supply Systems

Power Supply

DANGER

Hazardous voltage and moving machinery.
The power supply disconnector must be turned off and secured with a lock before any maintenance.

Note! The key to the lock must be removed by the technician and retained in his/her possession until all work is completed.

Certain maintenance procedures may require power supply systems to be on. These exceptions are clearly stated in the MM.

The illustrations show the power supply disconnector and its location.

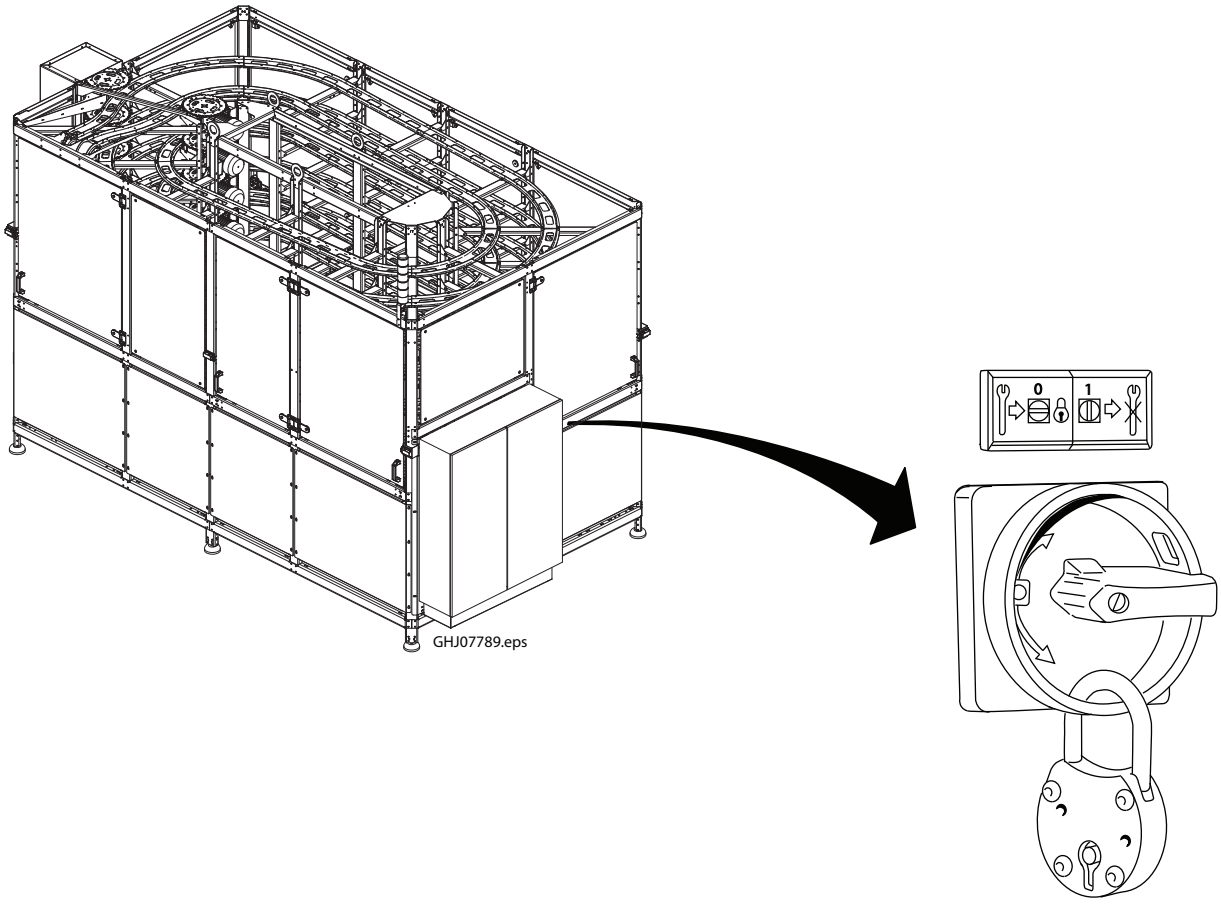

Residual Voltage

DANGER

Hazardous voltage.
Do not touch any terminals immediately after the power supply disconnector is turned off. Ensure that no residual voltage remains on the capacitors before touching. Wait five minutes. Failure to observe this information will cause death or serious injury.

After the power supply disconnector is turned off, residual voltage remains in the capacitor circuits.

Electrical Cabinet

DANGER

Hazardous voltage.
Will shock, burn, or cause death.
The power supply disconnector must be turned off and secured with a lock before maintenance inside the electrical cabinet.

Note! The key to the lock must be removed by the technician and retained in his/her possession until all work is completed.

Make sure that the electrical cabinet doors are closed after working inside the electrical cabinet. Doors with lock must be locked.

The location of each electrical cabinet is shown by an arrow.



GH100784.eps

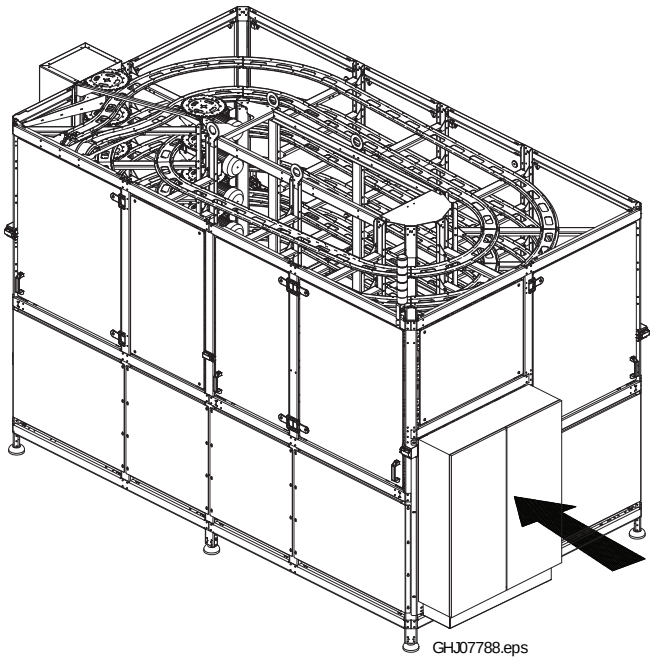

GHJ07788.eps

Socket Outlet

WARNING

Hazardous voltage.

Can shock, burn, or cause death. Read the Maintenance Manual before using this socket outlet.

The socket outlet (1) is connected to a residual current device (2) to protect users against electrical shock if there is an earth fault in the connected equipment. The residual current device shall be tested each time before the socket outlet is being used. See the MM for test procedure.

The illustration shows the socket outlet, the residual current device, and their locations.

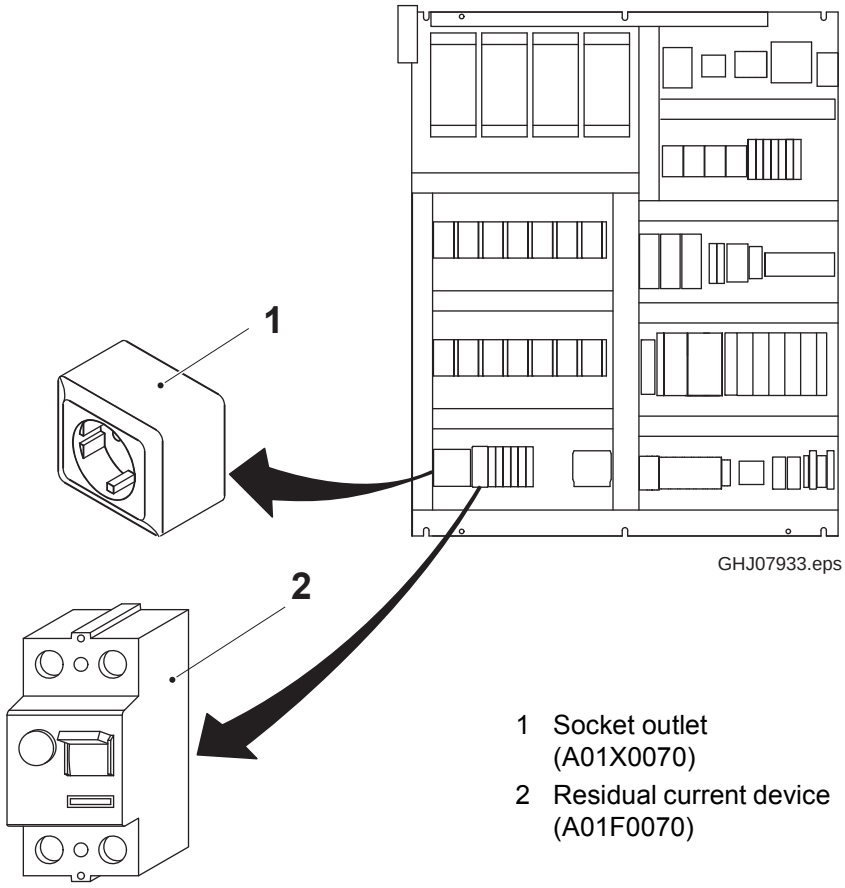

1 Socket outlet (A01X0070)
2 Residual current device (A01F0070)

Air Supply (option)

The air supply is applicable when the optional chain cleaner is installed.

WARNING

Compressed air and moving machinery.
Close the main air valve and lock it before any maintenance.

Note! The key to the lock must be removed by the technician and retained in his/her possession until all work is completed.

Certain maintenance procedures may require air supply systems to be on. These exceptions are clearly stated in the MM.

The illustration shows the main air valve (1) and its location.

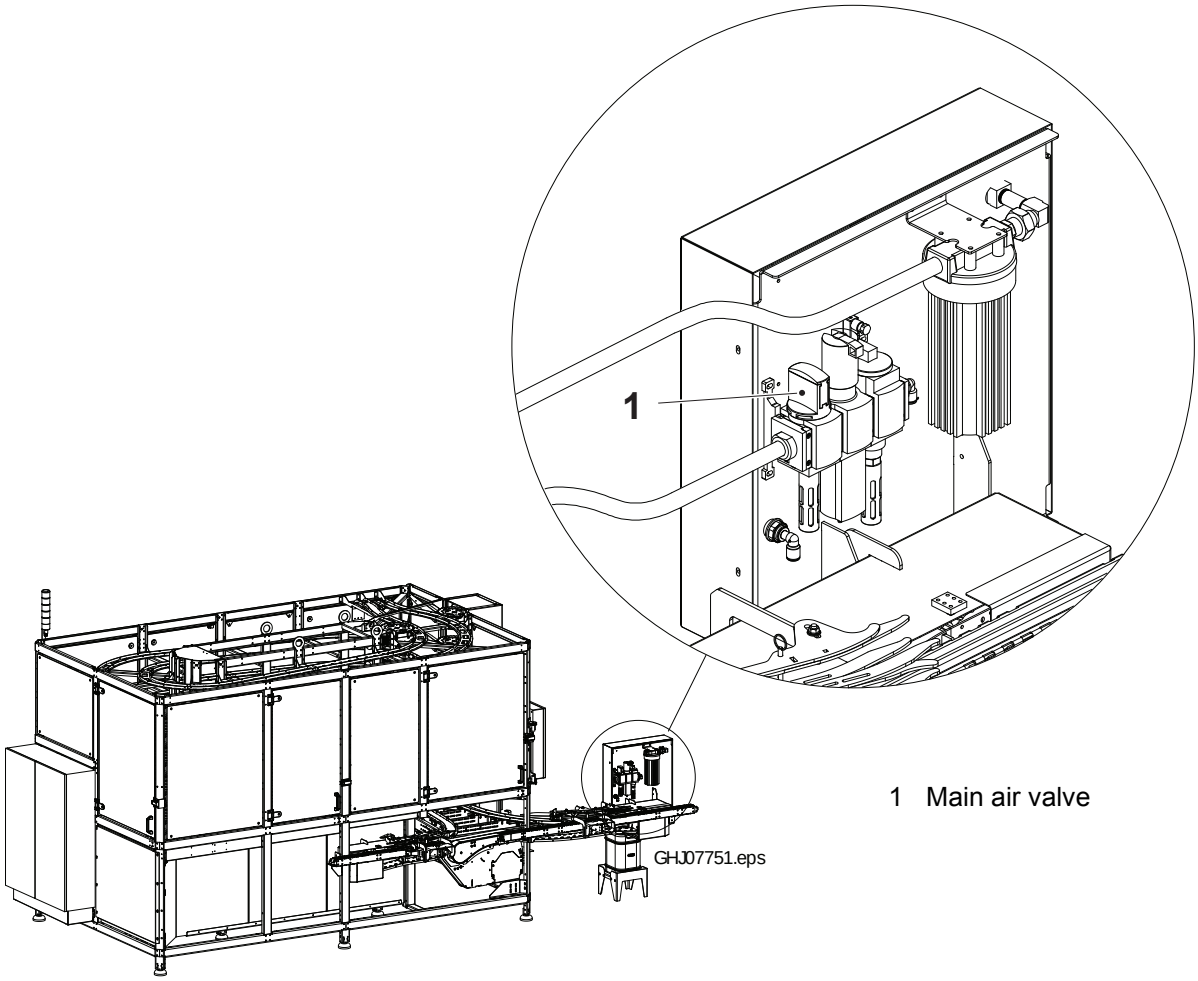

1 Main air valve

Water Supply

CAUTION

Water under pressure.

Close the water supply valves before any maintenance.

Certain maintenance procedures may require water supply systems to be on. These exceptions are clearly stated in the MM.

The illustration shows the water supply valve and its location.

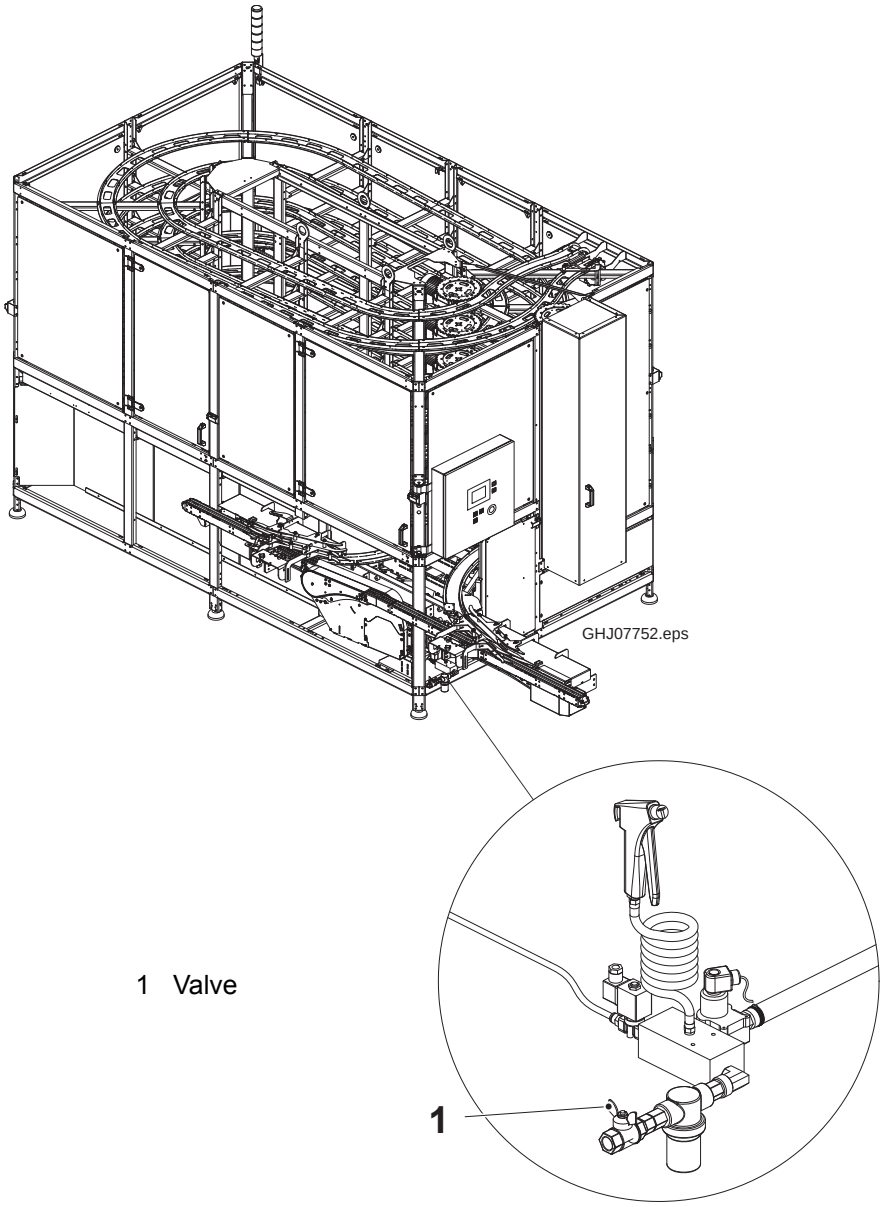

1 Valve

This page intentionally left blank

1 External Infeed

Description

SPC	663609-0200

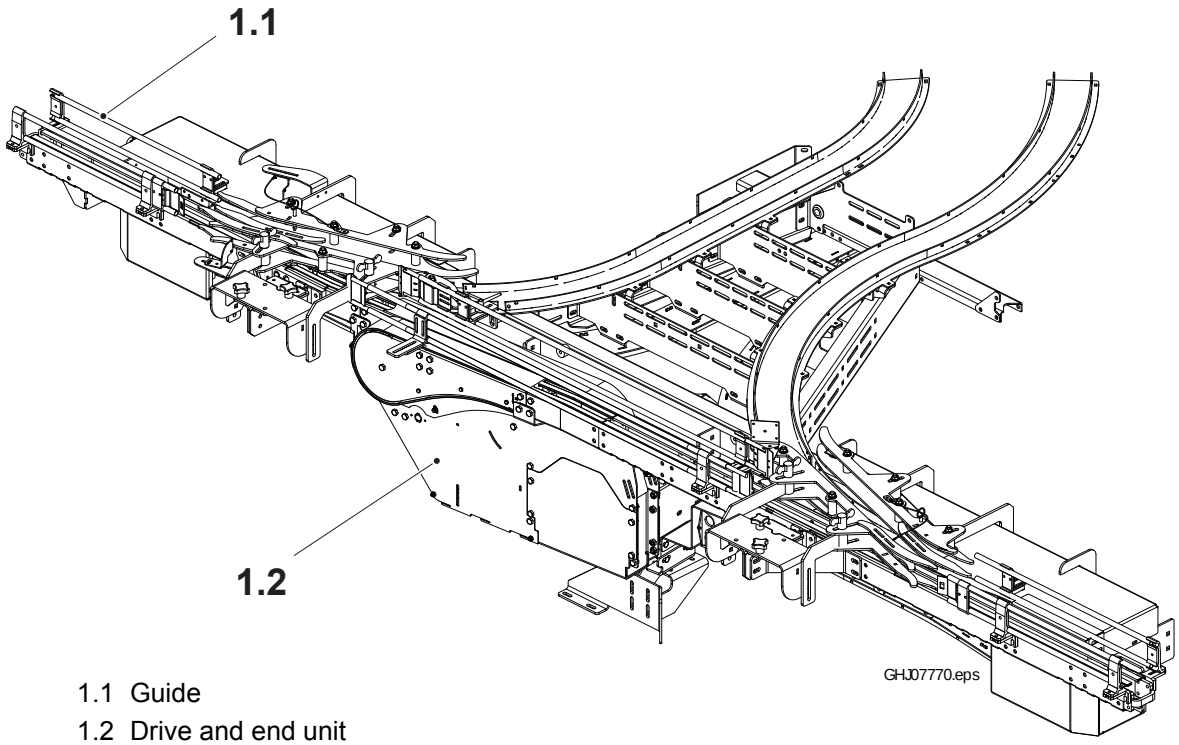

1.1 Guide
1.2 Drive and end unit

Functional Description . . . . . 1 - 4

1.1 Guide . . . . . 1 - 5

1.2 Drive and End Unit . . . . . 1 - 6

1.2.1 Infeed. . . . . 1 - 6

1.2.1-1 Chain - Check Height and Length . . . . . 1 - 6

1.2.1-2 Chain - Set Height and Length . . . . . 1 - 7

1.2.1-3 Sliding Strips - Check . . . . . 1 - 9

1.2.1-4 Sliding Strips - Change . . . . . 1 - 10

1.2.2 Motor Unit . . . . . 1 - 15

1.2.2-1 Oil - Change . . . . . 1 - 15

1.2.3 Outfeed . . . . . 1 - 16

1.2.3-1 Sliding Strips - Check . . . . . 1 - 16

1.2.3-2 Sliding Strips - Change . . . . . 1 - 16

1.2.4 Sprockets, Wheels, and Bearings. . . . . 1 - 17

1.2.4-1 Sprockets, Wheels, and Bearings - Check . . . . . 1 - 17

1.2.4-2 Sprockets, Wheels, and Bearings - Change . . . . 1 - 20

Functional Description

The external infeed module consists of the package conveyor into the Accumulator and all equipment belonging to it. The motor from the external infeed conveyor is controlled from a frequency inverter within the Accumulator. The speed of the motor is set up to achieve a small gap between the packages prior to entering the Accumulator.

1.1 Guide

No maintenance is required on the external infeed guide.

1.2 Drive and End Unit

1.2.1 Infeed

1.2.1-1 Chain - Check Height and Length

Machine Status	Power Supply Disconnector OFF
SPC	3008839-0200 (LINF) 3008842-0200 (LINF) 3008876-0200 (RINF) 3008879-0200 (RINF)

Height

When a package is passing from one chain to another, the infeed chain (1) should be in a higher position than the outfeed chain (2). The difference should be 0 - 1 mm. If the difference is outside this range, adjust the chain height. Refer to 1.2.1-2 Chain - Set Height and Length.

Length

The conveyor chain should be as short as possible, however some slack is necessary. If the chain can be seen in the opening (3), the chain is too long and needs to be adjusted. Refer to 1.2.1-2 Chain - Set Height and Length.

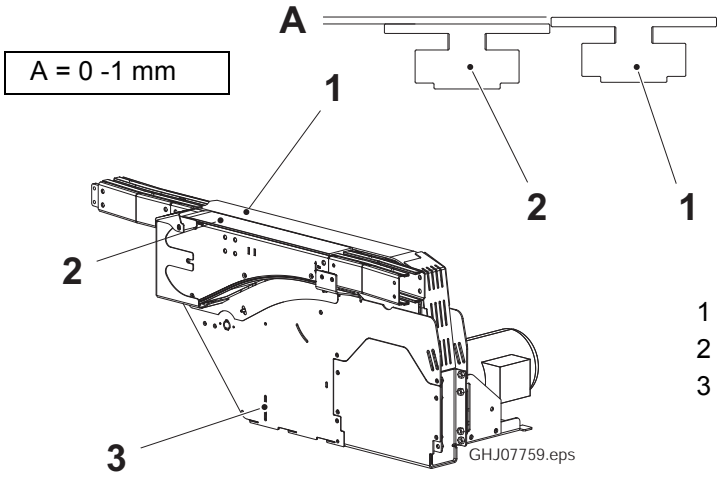

1 Infeed chain
2 Outfeed chain
3 Opening

1.2.1-2 Chain - Set Height and Length

Machine Status	Power Supply Disconnector OFF
SPC	3008839-0200 (LINF) 3008842-0200 (LINF) 3008876-0200 (RINF) 3008879-0200 (RINF)

Height

a) Loosen the screws (1, 2, 3).

b) Adjust the height of the end unit (4) so the infeed chain is 0-1mm higher than the outfeed chain.

c) Tighten the screws.

d) Loosen the screws (6) and adjust the cover (5) so that the gap between the cover (5) and chain is 1-2mm.

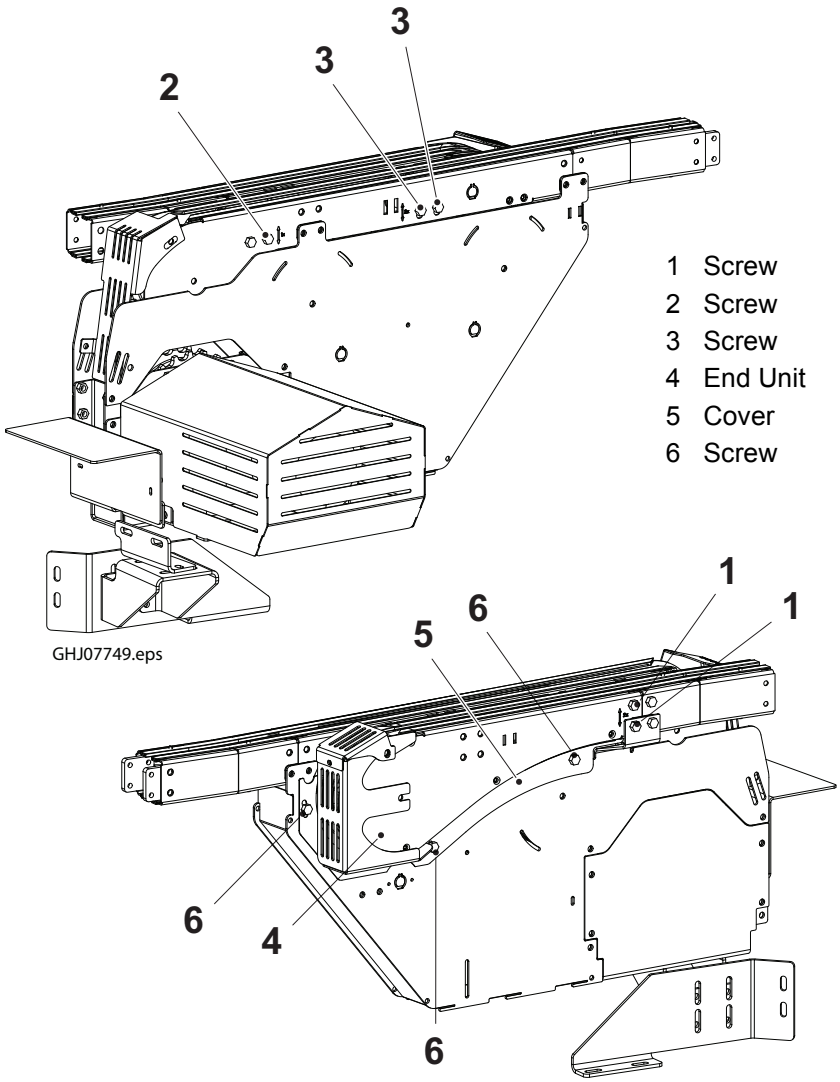

(Cont'd)

(Cont'd)

Length

a) Remove the plate (8) fastened with the four screws (9).

b) Pull the chain downward and lock the weight through the hole (10).

c) Split the chain, remove eight links, and mount the chain.

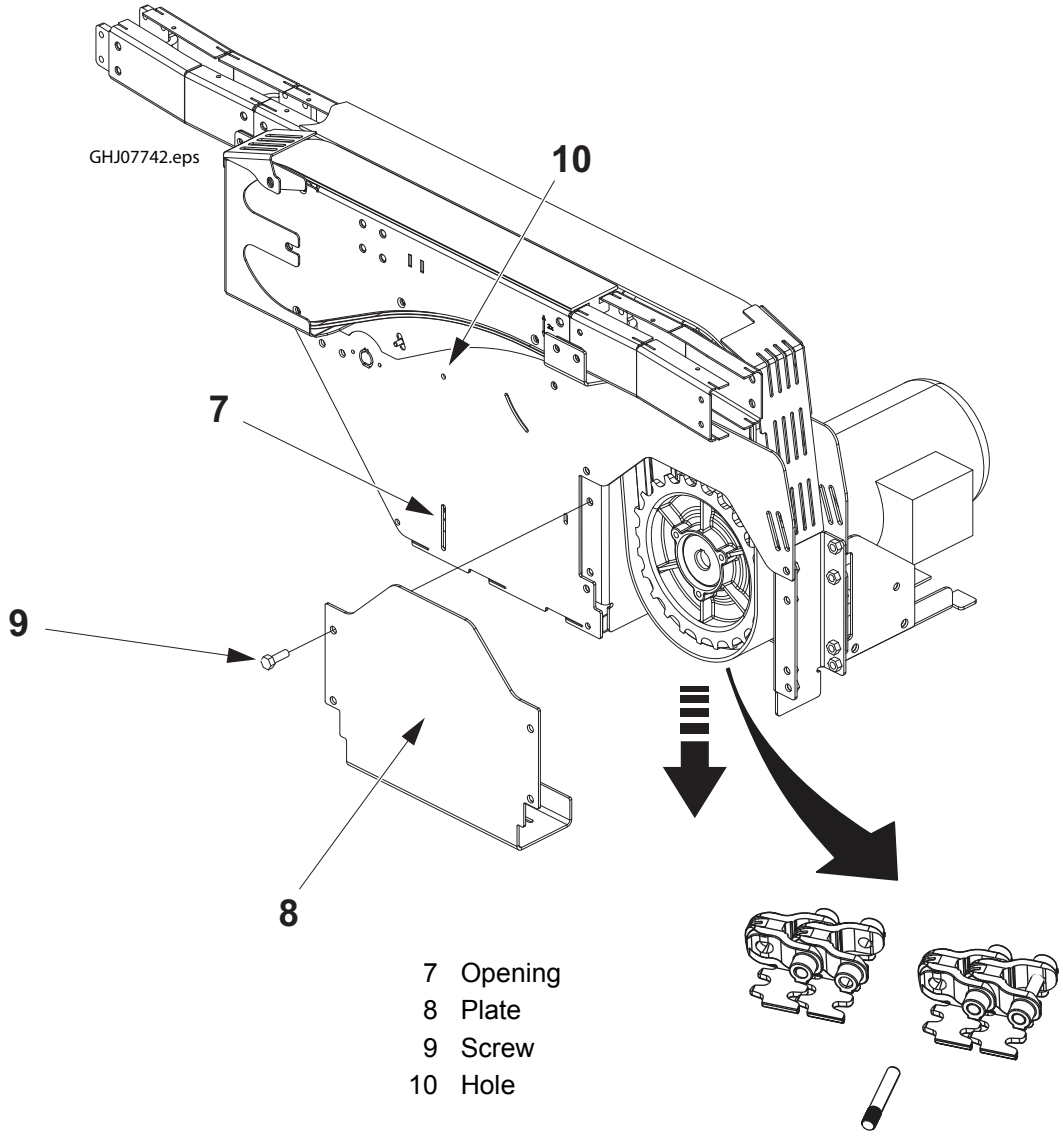

7 Opening
8 Plate
9 Screw
10 Hole

1.2.1-3 Sliding Strips - Check

Machine Status	Power Supply Disconnector OFF
SPC	3008839-0200 (LINF) 3008876-0200 (RINF)

Check the sliding strips for wear. If metal is showing through the strip or if the strip is damaged, replace the sliding strip according to 1.2.1-4 Sliding Strips - Change.

1.2.1-4 Sliding Strips - Change

Machine Status	Power Supply Disconnector OFF
SPC	3008839-0200 (LINF) 3008876-0200 (RINF)

- Make sure the correct sliding strip is installed. Each sliding strip is cut to length according to the unit for which it is ordered. If the sliding strips are delivered in 3m sections, use the old sliding strip as a template to cut the new one.
- Secure each sliding strip at the entrance side of the chain or according to the illustrations.

Note! If the sliding strips are difficult to install, a heat gun can be used to more easily install them.

(Cont'd)

(Cont'd)

Straight Conveyor

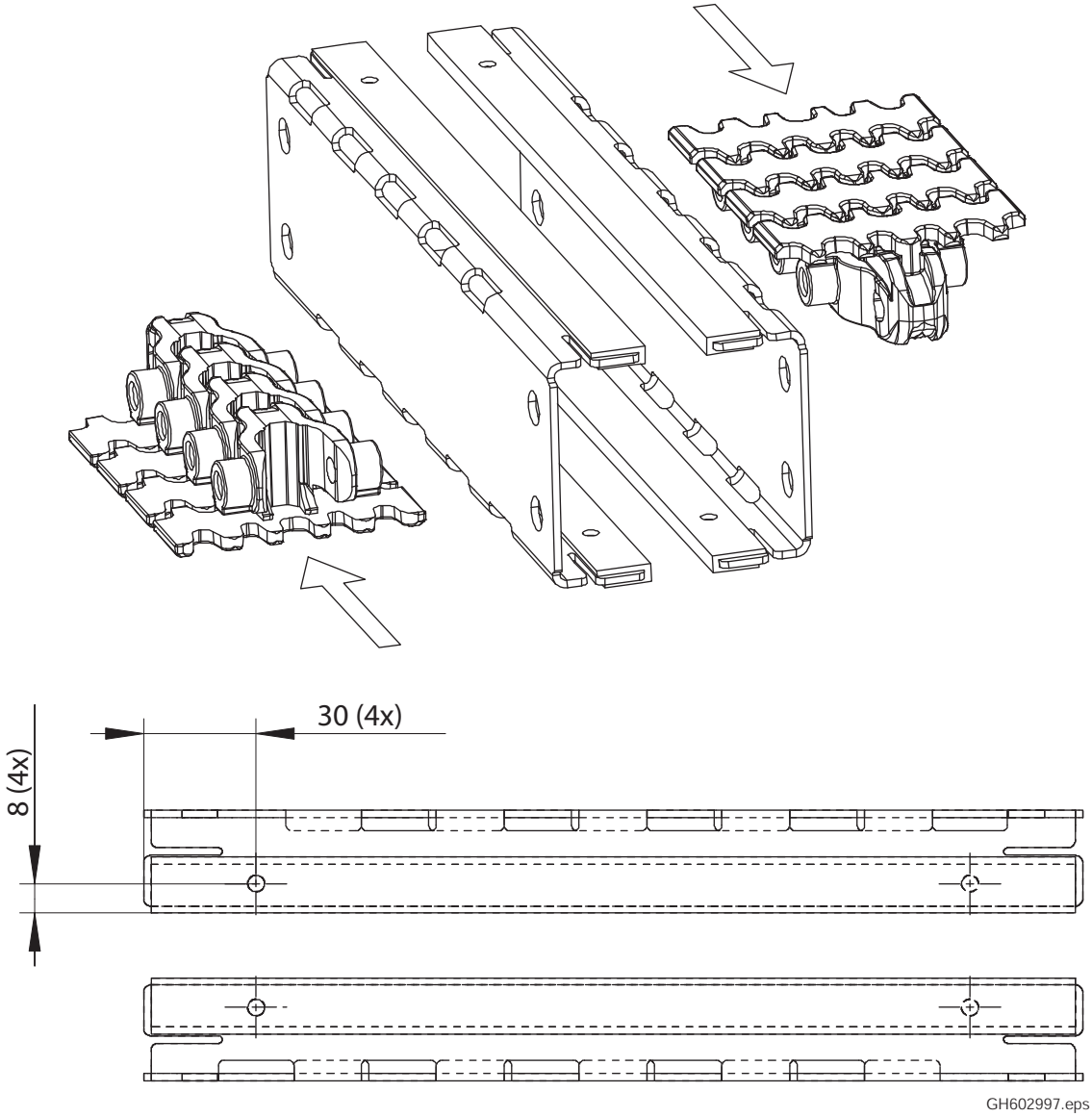

(Cont'd)

(Cont'd)

D/E Unit

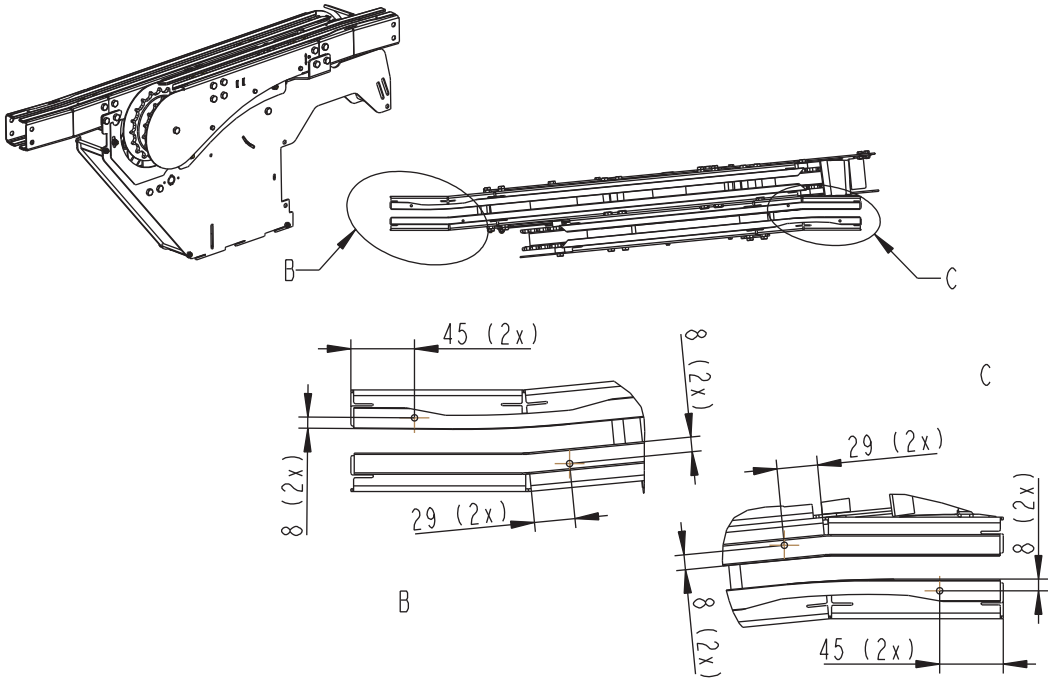

(Cont'd)

(Cont'd)

To install the sliding strips, perform the following steps:

a) Drill holes through the sliding strips according to the illustration below. Use the existing hole on the side plate as a guide.

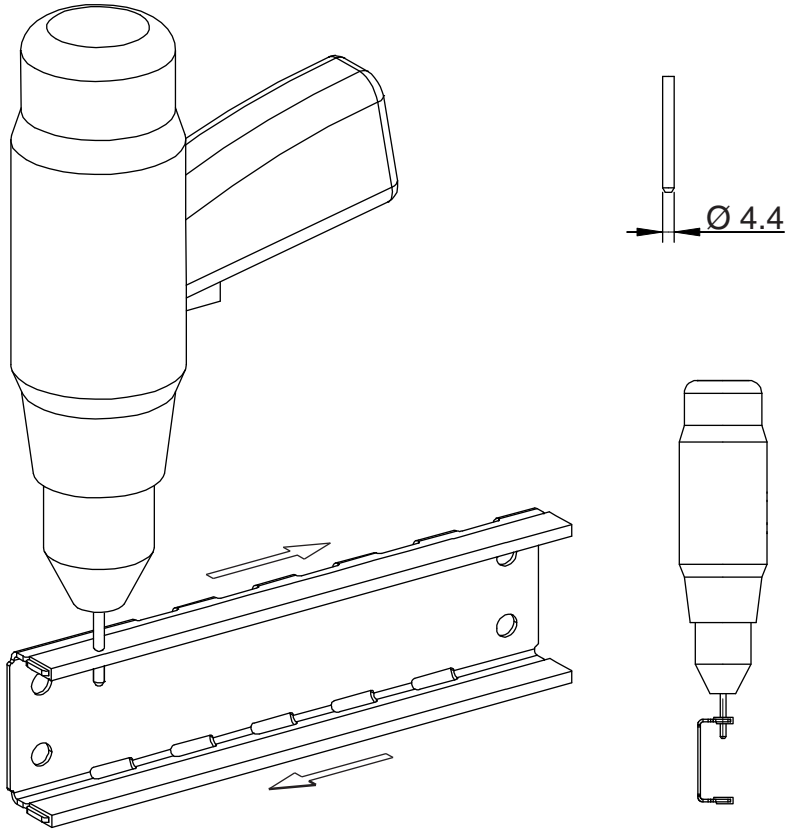

(Cont'd)

(Cont'd)

b) Tighten the screw as indicated.

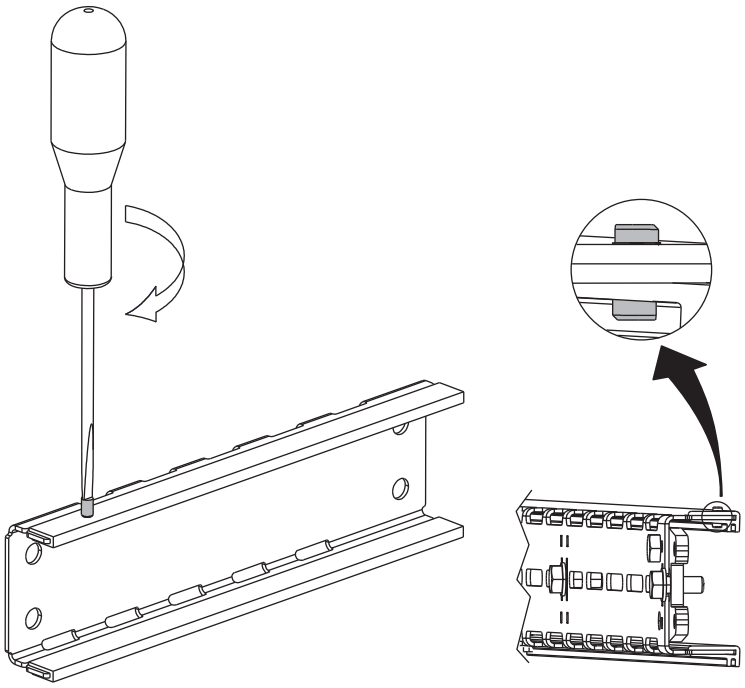

c) Make sure the screws are cut according to the measurements below. Avoid cutting the sliding strip.

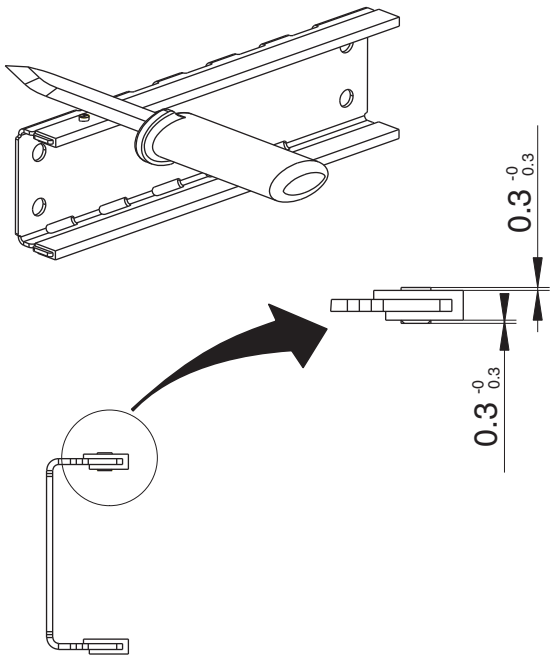

1.2.2 Motor Unit

1.2.2-1 Oil - Change

Machine Status	Power Supply Disconnector OFF
SPC	3008841-0100 (LINF) 3008878-0100 (RINF)

WARNING

Risk of burns!

During production, the motor gets hot. Do not touch the motor!

Change the oil. Use BP GRXP 220 or equivalent quality of another manufacture. Volume 0.25 litres.

1.2.3 Outfeed

1.2.3-1 Sliding Strips - Check

Machine Status	Power Supply Disconnector OFF
SPC	308842-0200 (LINF) 308879-0200 (RINF)

Check the sliding strips for wear. If metal is showing through the strip or if the strip is damaged, replace the sliding strip according to 1.2.1-4 Sliding Strips - Change.

1.2.3-2 Sliding Strips - Change

Machine Status	Power Supply Disconnector OFF
SPC	308842-0200 (LINF) 308879-0200 (RINF)

Refer to 1.2.1-4 Sliding Strips - Change.

1.2.4 Sprockets, Wheels, and Bearings

1.2.4-1 Sprockets, Wheels, and Bearings - Check

Machine Status	Power Supply Disconnector OFF
SPC	2948901-0200 (LINF) 3008875-0200 (RINF)

For the following procedures, it is necessary to split the infeed and outfeed chains.

a) Remove the sprocket cover plate (1) fitted with four screws (2).

b) Check the drive sprocket (3) and idler sprockets (4) for wear. Replace if necessary.

c) Check that the idler sprockets (4) run smoothly. If not, replace the ball bearings.

d) Assemble the unit in reverse order.

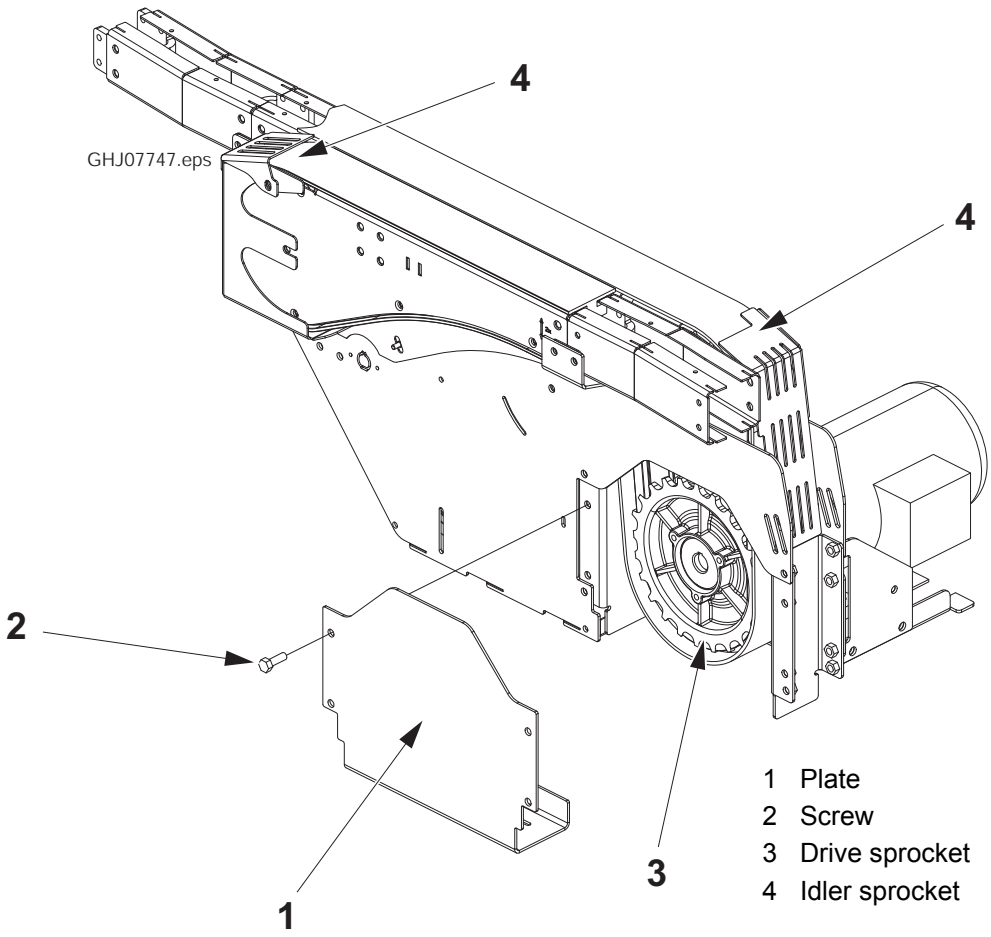

(Cont'd)

(Cont'd)

Note! The unit is shown without the side plate.

WARNING
Risk of burns!
During production the motor gets hot. Do not touch the motor!

e) Remove the screw and nut (6) and remove the guard (5).

WARNING
The weight is held only by the conveyor chain.

f) Check the play between the wheel and shaft of the two idling wheels (7,8). The idling wheel (8) can be checked from the bottom. If play exceeds 1mm, replace the idling wheels.

g) Check the o-rings (9) on the idling wheels and the weight. If the o-rings are broken, replace them.

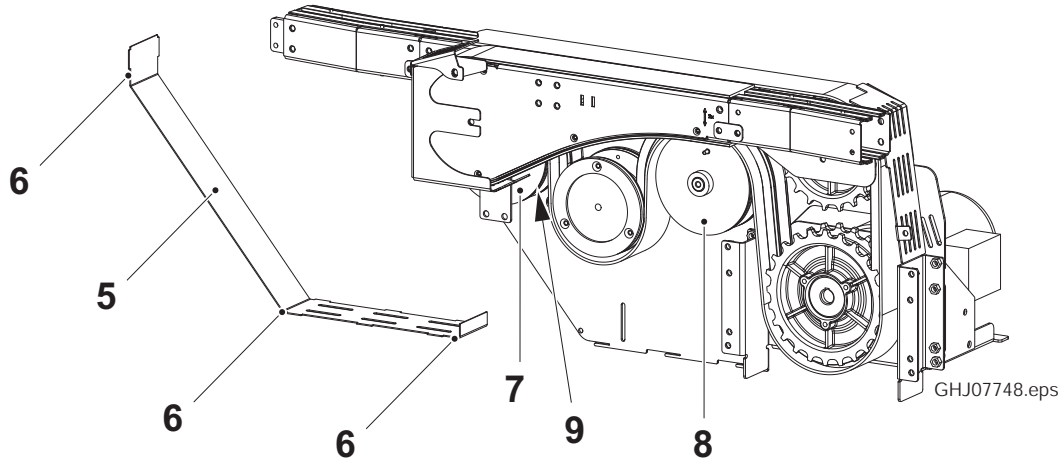

5 Guard
6 Screw and nut
7 Idling wheel
8 Idling wheel
9 O-ring

(Cont'd)

(Cont'd)

h) Remove the motor cover (10) fitted with two screws (11). Check the condition of the bearings on the geared motor (12).

i) Assemble the unit in reverse order.

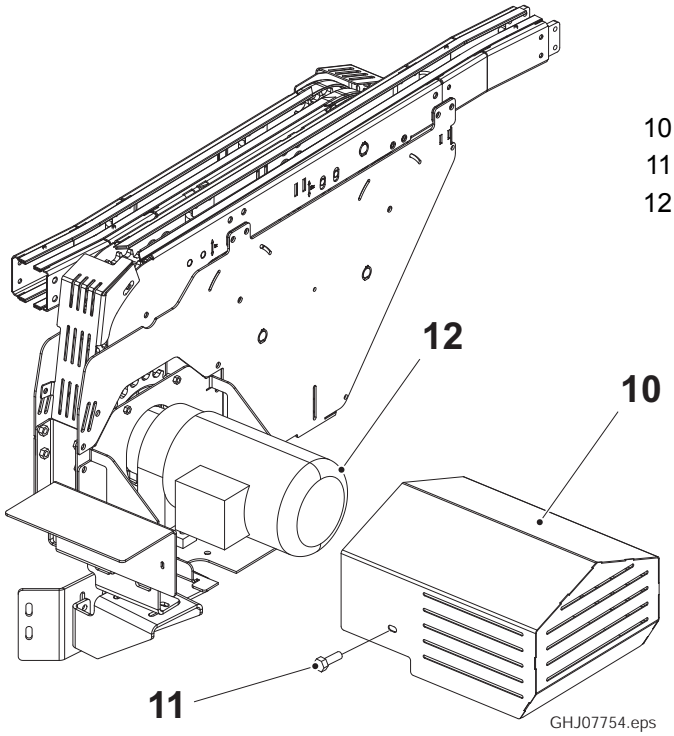

10 Motor cover
11 Screw
12 Geared motor

1.2.4-2 Sprockets, Wheels, and Bearings - Change

Machine Status	Power Supply Disconnector OFF
SPC	2948901-0200 (LINF) 3008875-0200 (RINF)

For the following procedures, it is necessary to split the infeed and outfeed chains.

Note! The unit is shown without the side plate and chain.

WARNING

The weight is held only by the conveyor chain.

Idler Sprocket

a) Remove the guard (1) fitted with three screws (2).

b) Remove the cover (3).

c) Remove the screw (4).

d) Remove the idler sprocket (5).

e) Remove screws (6,7) and side plate (8).

f) Remove the idler sprocket (9).

g) If the ball bearings are worn out, remove the shaft from the idler sprocket (5,9) and replace the ball bearings.

h) Install the new idler sprockets (5,9) and assemble the unit in reverse order.

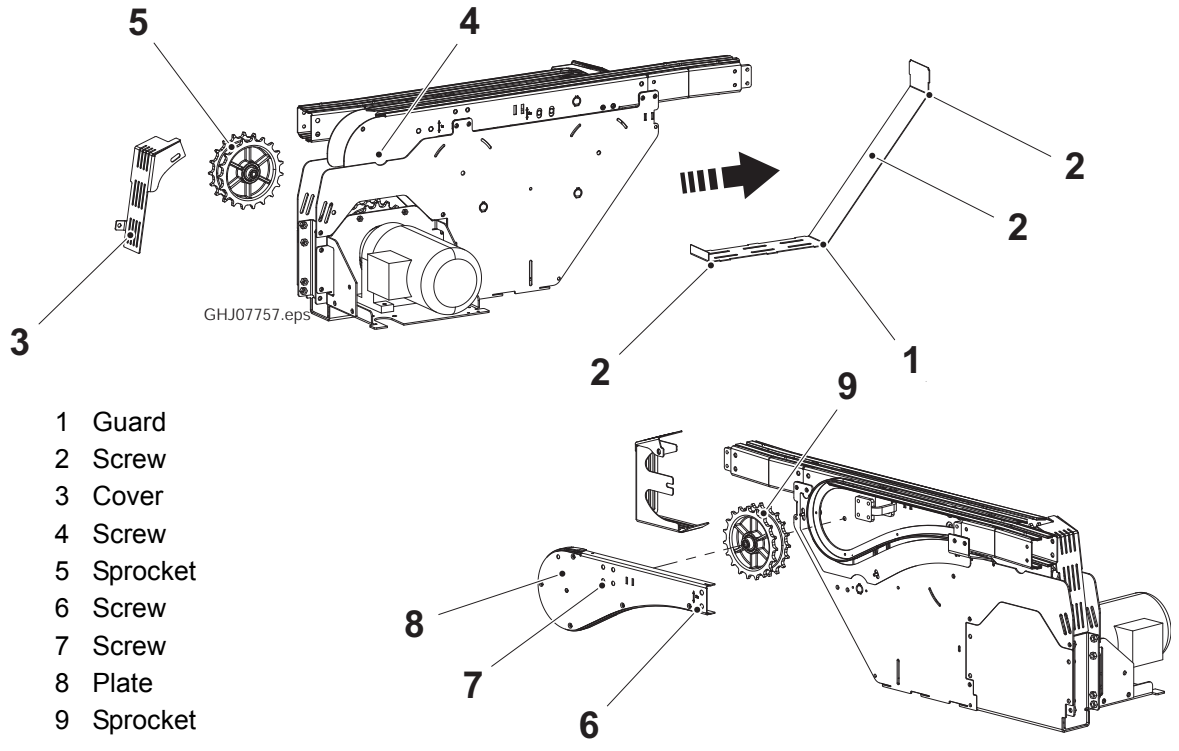

1 Guard
2 Screw
3 Cover
4 Screw
5 Sprocket
6 Screw
7 Screw
8 Plate
9 Sprocket

(Cont'd)

(Cont'd)

Idling Wheel

a) Remove screws (10,11) and remove the idling wheel (12).

b) Remove screw (13) and remove the idling wheel (14).

c) If the ball bearings are worn out, remove the shaft from the idling wheel (12,14) and replace the ball bearings.

d) Replace the idling wheels (12,14) and assemble the unit in reverse order.

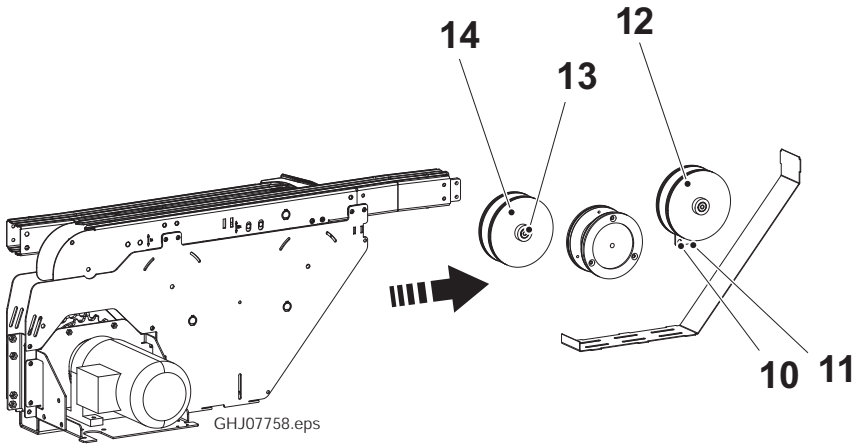

10 Screw
11 Screw
12 Wheel
13 Screw
14 Wheel

(Cont'd)

(Cont'd)

Drive Sprocket

a) Remove the four screws (15) and remove the plate (16).

b) Remove the three screws (17).

c) Remove and replace the drive sprocket (18) and assemble the unit in reverse order.

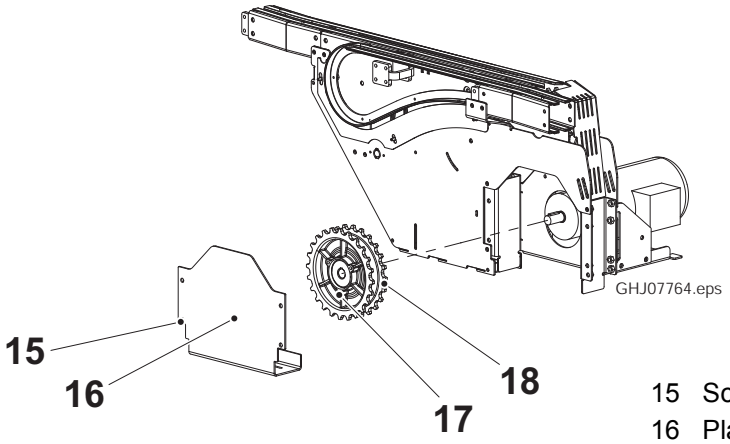

15 Screw
16 Plate
17 Screw
18 Sprocket

2 Accumulator

Description

SPC Reference	663610-0200

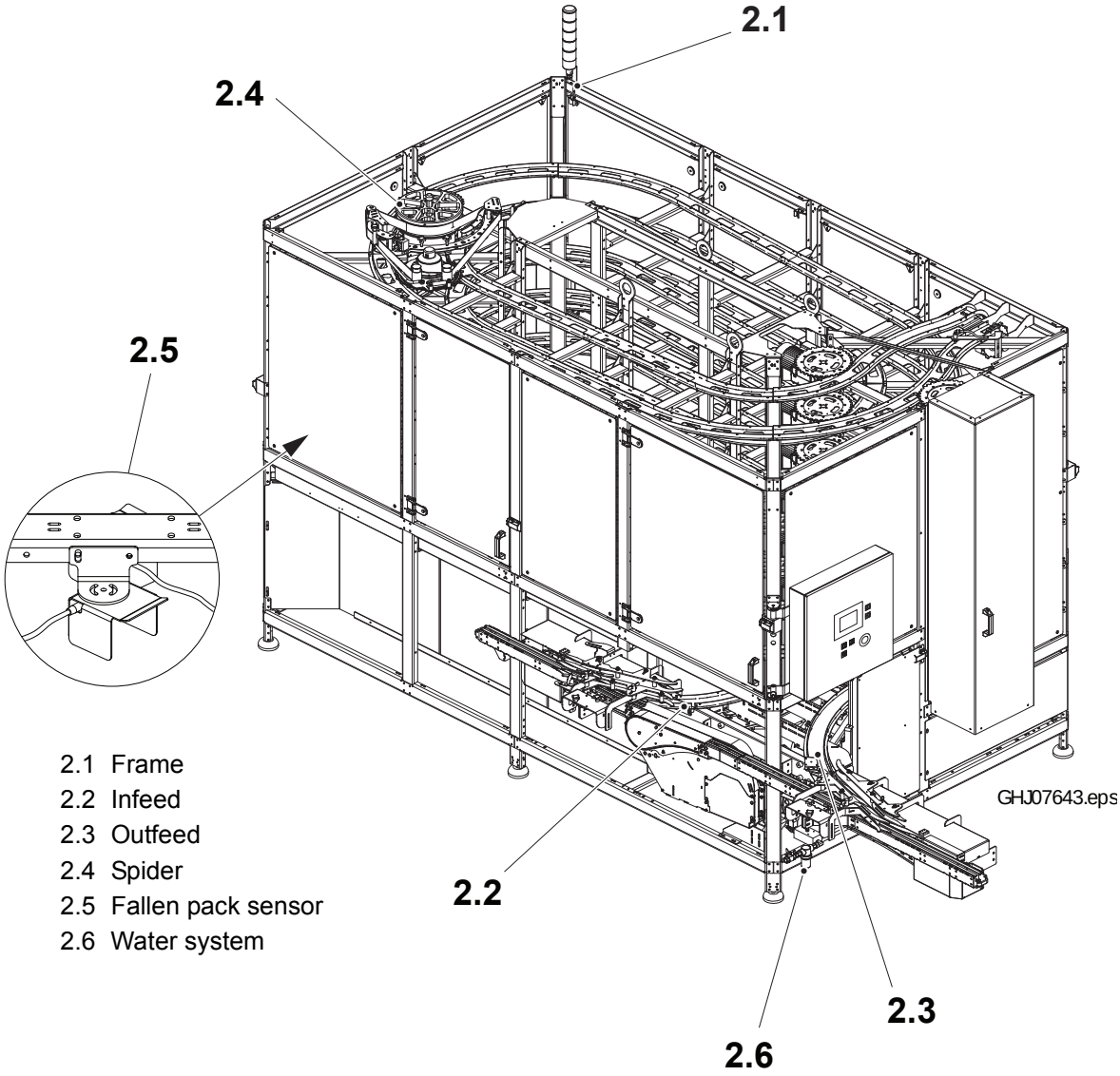

2.1 Frame
2.2 Infeed
2.3 Outfeed
2.4 Spider
2.5 Fallen pack sensor
2.6 Water system

Functional Description . . . . . 2 - 7

2.1 Frame . . . . . 2 - 18

2.1.1 Warning Lamp . . . . . 2 - 18

2.1.1-1 Warning Lamp - Check . . . . . 2 - 18

2.1.2 Safety Equipment. . . . . 2 - 20

2.1.2.1 Door Safety Switch . . . . . 2 - 20

2.1.3 Glass Panes . . . . . 2 - 21

2.1.3-1 Glass Panes - Remove Broken Glass . . . . . 2 - 21

2.1.3-2 Glass Panes - Install Panes at Fixed Panels . . . . 2 - 22

2.1.3-3 Glass Panes - Install Panes at Doors . . . . . 2 - 24

2.1.4 Covering Panels. . . . . 2 - 27

2.1.4-1 Stainless Covering Panels - Remove and Install 2 - 27

2.2 Infeed . . . . . 2 - 28

2.2.1 Sensors. . . . . 2 - 28

2.2.2 Infeed Chain Tensioner . . . . . 2 - 29

2.2.2-1 Infeed Chain Tensioner - Check . . . . . 2 - 29

2.2.2-2 Infeed Chain Tensioner - Set . . . . . 2 - 30

2.2.2-3 Infeed Chain Tension Monitor - Set . . . . . 2 - 31

2.2.3 Infeed Guide . . . . . 2 - 32

2.2.3.1 Infeed Guide Rails . . . . . 2 - 32

2.2.3.1-1 Infeed Guide Rails - Check . . . . . 2 - 32

2.2.3.1-2 Infeed Guide Rails - Set . . . . . 2 - 34

2.2.4 Infeed Chain . . . . . 2 - 39

2.2.4.1 Chain Top . . . . . 2 - 39

2.2.4.1-1 Chain Top - Remove and Install . . . . . 2 - 39

2.2.4.2 Chain. . . . . 2 - 41

2.2.4.2-1 Chain - Check . . . . . 2 - 41

2.2.5 Infeed Drive. . . . . 2 - 42

2.2.5.1 Infeed Drive Assembly . . . . . 2 - 42

2.2.5.1-1 Infeed Drive Assembly - Check . . . . . 2 - 43

2.2.5.1-2 Infeed Drive Assembly - Adjust . . . . . 2 - 46

2.2.5.2 Infeed Drive Sprocket . . . . . 2 - 48
2.2.5.2-1 Infeed Drive Sprocket - Check . . . . . 2 - 48
2.2.5.2-2 Infeed Drive Sprocket - Set . . . . . 2 - 49
2.2.5.2-3 Infeed Drive Sprocket - Change . . . . . 2 - 51

2.3 Outfeed . . . . . 2 - 53
2.3.1 Sensors . . . . . 2 - 53
2.3.2 Outfeed Chain Tensioner . . . . . 2 - 54
2.3.2-1 Outfeed Chain Tensioner - Check . . . . . 2 - 54
2.3.2-2 Outfeed Conveyor Chain Tensioner - Set . . . . . 2 - 56
2.3.3 Outfeed Guide . . . . . 2 - 57
2.3.3.1 Outfeed Guide Rails . . . . . 2 - 57
2.3.3.1-1 Outfeed Guide Rails - Check . . . . . 2 - 57
2.3.3.1-2 Outfeed Guide Rails - Set . . . . . 2 - 59
2.3.4 Outfeed Chain . . . . . 2 - 64
2.3.4.1 Chain Top . . . . . 2 - 64
2.3.4.1-1 Chain Top - Remove and Install . . . . . 2 - 64
2.3.4.2 Base Chain . . . . . 2 - 64
2.3.4.2-1 Base Chain - Check . . . . . 2 - 64
2.3.5 Outfeed Drive . . . . . 2 - 65
2.3.5.1 Outfeed Drive Assembly . . . . . 2 - 65
2.3.5.1-1 Outfeed Drive Assembly - Check . . . . . 2 - 66
2.3.5.1-2 Outfeed Drive Assembly - Adjust . . . . . 2 - 67
2.3.5.2 Outfeed Drive Sprocket . . . . . 2 - 70
2.3.5.2-1 Outfeed Drive Sprocket - Check . . . . . 2 - 70
2.3.5.2-2 Outfeed Drive Sprocket - Set . . . . . 2 - 71

2.4 Spider Unit . . . . . 2 - 72
2.4.1 Belt Spider Unit . . . . . 2 - 72
2.4.1-1 Belt Spider Unit - Remove . . . . . 2 - 72
2.4.1-2 Belt Spider Unit - Overhaul . . . . . 2 - 78
2.4.1-3 Belt Spider Unit - Set . . . . . 2 - 87
2.4.2 Belt Spider Base . . . . . 2 - 89
2.4.2.1 Spider Guide Blocks . . . . . 2 - 89

2.4.2.1-1 Spider Guide Blocks - Check . . . . . 2 - 89
2.4.2.2-2 Spider Guide Blocks - Set . . . . . 2 - 90
2.4.2.2 Belt Rollers . . . . . 2 - 91
2.4.2.2-1 Belt Rollers - Check . . . . . 2 - 91
2.4.2.3 Dead Plate . . . . . 2 - 92
2.4.2.3-1 Dead Plate - Check . . . . . 2 - 92
2.4.2.3-2 Dead Plate - Set . . . . . 2 - 93
2.4.3 Belt Spider Transmission . . . . . 2 - 95
2.4.3.1 Transmission . . . . . 2 - 95
2.4.3.1-1 Transmission - Check . . . . . 2 - 95
2.4.3.1-2 Transmission - Lubricate . . . . . 2 - 97
2.4.3.2 Spider Drive Gear . . . . . 2 - 98
2.4.3.2-1 Spider Drive Gear - Set . . . . . 2 - 98
2.4.3.3 Spider Pulley Belt . . . . . 2 - 103
2.4.3.3-1 Spider Pulley Belt - Check . . . . . 2 - 103
2.4.3.3-2 Spider Pulley Belt - Change . . . . . 2 - 104
2.4.4 Belt Spider Driven Wheel . . . . . 2 - 106
2.4.4-1 Driven Wheel Assembly - Check . . . . . 2 - 106
2.4.4-2 Driven Wheel Assembly - Set . . . . . 2 - 108
2.4.5 Volume Kit. . . . . 2 - 109
2.4.5.1 Volume Kit . . . . . 2 - 109
2.4.5.1-1 Volume Kit - Change . . . . . 2 - 114
2.4.5.1-2 Spider Transfer Wheel - Check . . . . . 2 - 116
2.4.5.1-3 Spider Transfer Wheel - Set . . . . . 2 - 117
2.5 Fallen Package Sensor . . . . . 2 - 121
2.6 Water System . . . . . 2 - 122
2.6-1 Water System - Check . . . . . 2 - 122

This page intentionally left blank

Functional Description

The Accumulator functions as a package buffering system within a packaging production line, most often immediately following a filler operation. The accumulator accepts a pre-determined quantity of packages based on the size and height of the accumulator and the number of tiers or conveyor levels. The accumulated packages provide a consistent flow within the packaging line in the event of a processing slowdown or momentary stoppage either upstream or downstream of the accumulator.

(Cont'd)

(Cont'd)

Infeed / Outfeed Conveyors

Consistent package flow is accomplished through the use of two parallel, flexible plastic chain conveyors designed in an upward spiral or 'helix'. The inner conveyor chain serves as the infeed (1), while the outer serves as the outfeed (2).

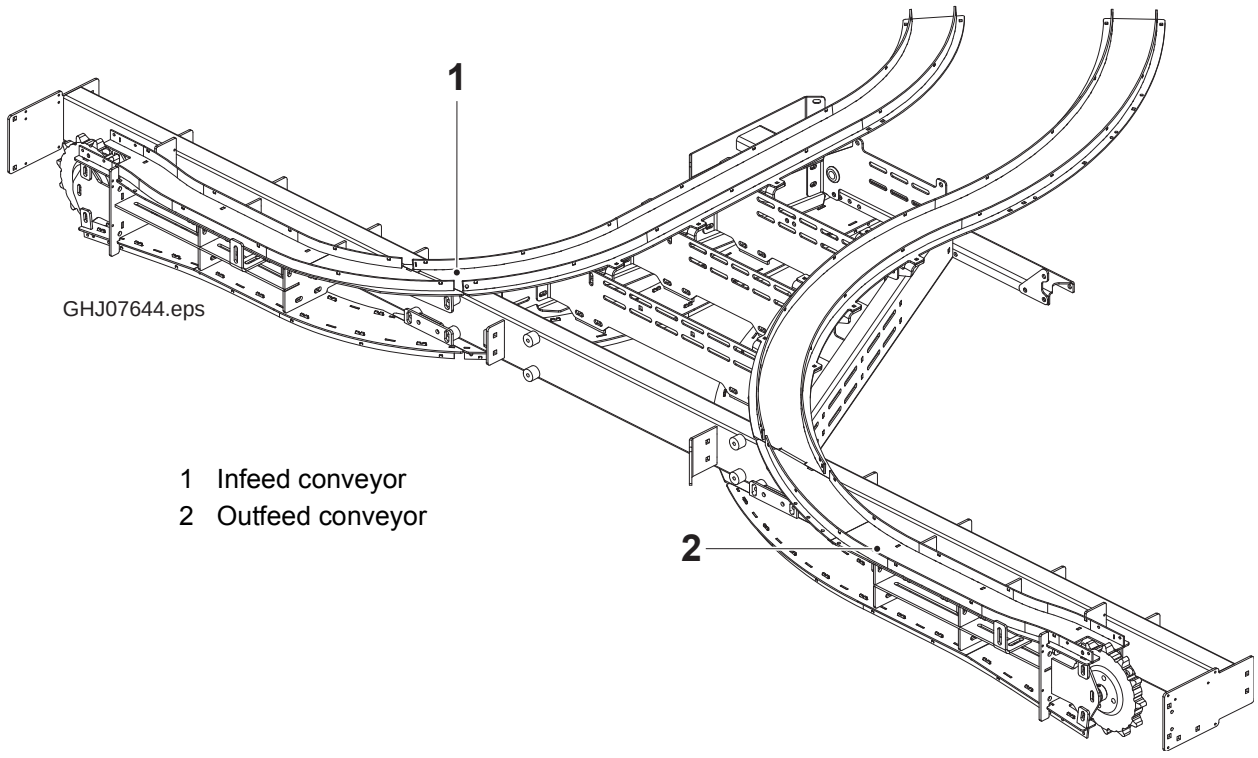

1 Infeed conveyor
2 Outfeed conveyor

(Cont'd)

(Cont'd)

Drives

The Helix employs separate drive motors (3) and (4) and sprockets (5) and (6) which interface with, and drive, the chains. All infeed drive motors operate in unison, as do all outfeed drive motors. Drive sprockets are engaged in the infeed and outfeed conveyor chain respectively.

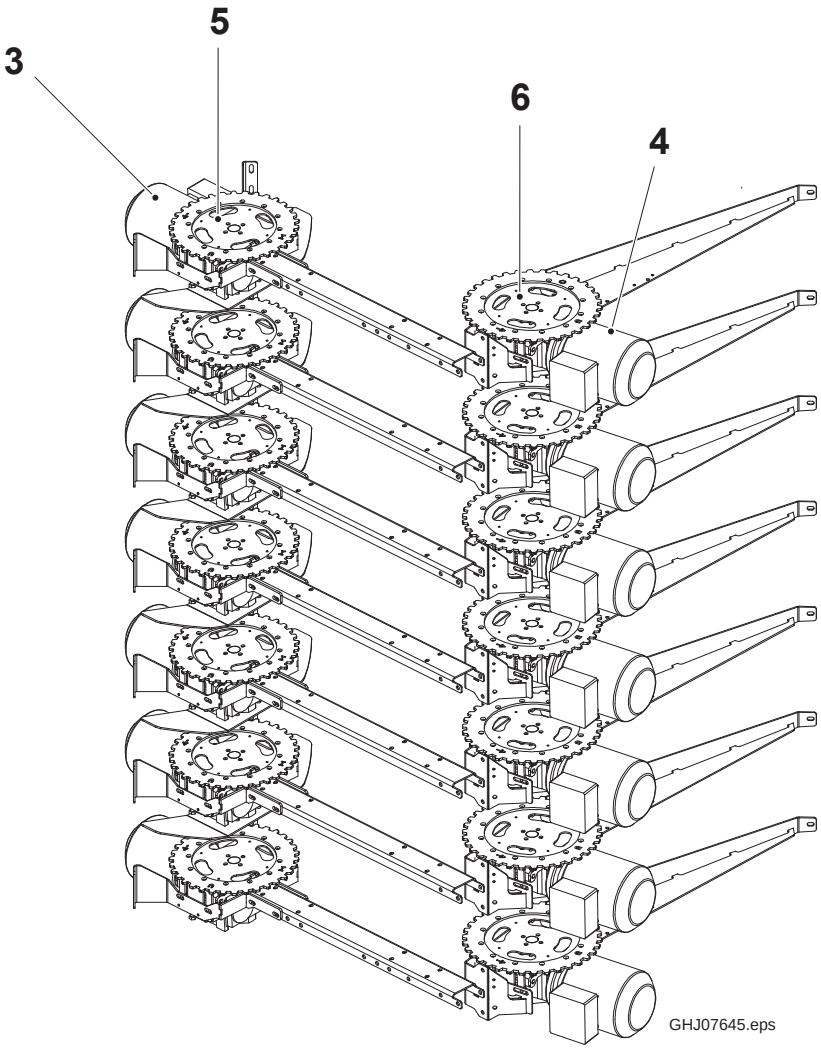

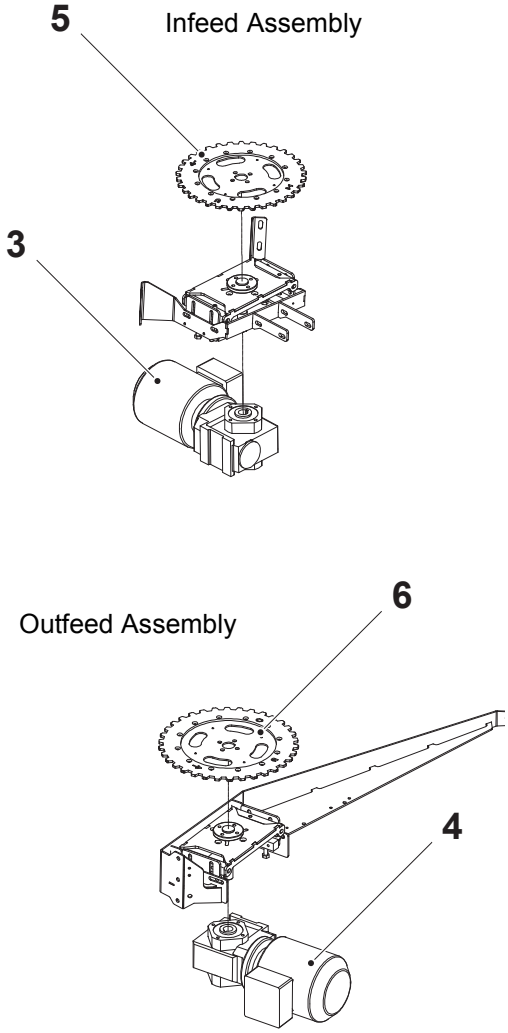

3 Infeed drive motor
4 Outfeed drive motor
5 Infeed drive sprocket
6 Outfeed drive sprocket

(Cont'd)

(Cont'd)

There are return sprockets (7) and (8) at the infeed and outfeed conveyor sections, and return sprockets (9) and (10) at the infeed return and outfeed return areas.

Guides

Guide rails (11) and (12) at the infeed and outfeed assist with package transfer in and out of the machine.

(Cont'd)

(Cont'd)

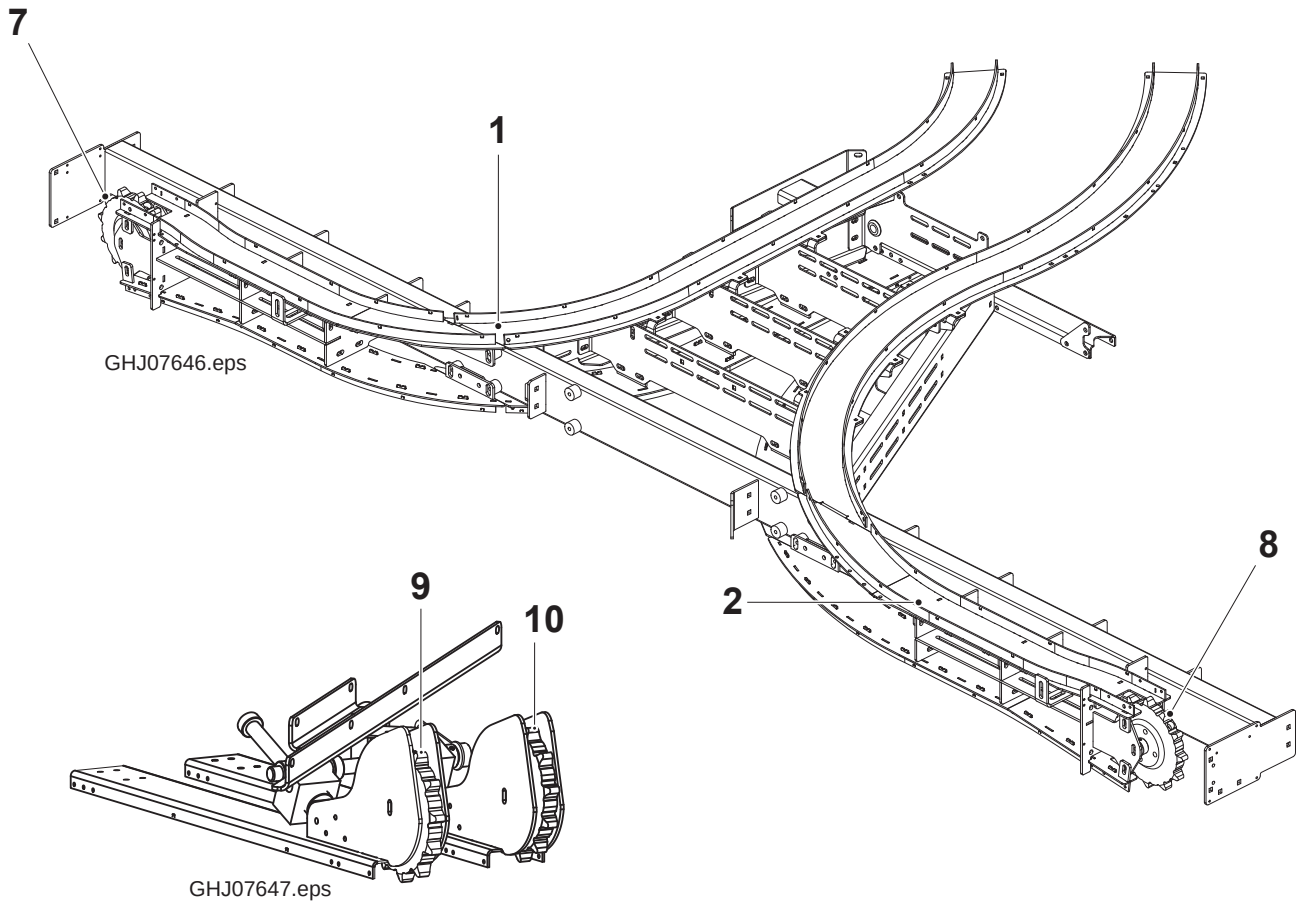

1 Infeed conveyor
2 Outfeed conveyor
7 Infeed conveyor sprocket
8 Outfeed conveyor sprocket
9 Outfeed return sprocket
10 Infeed return sprocket
11 Infeed guide rail
12 Outfeed guide rail

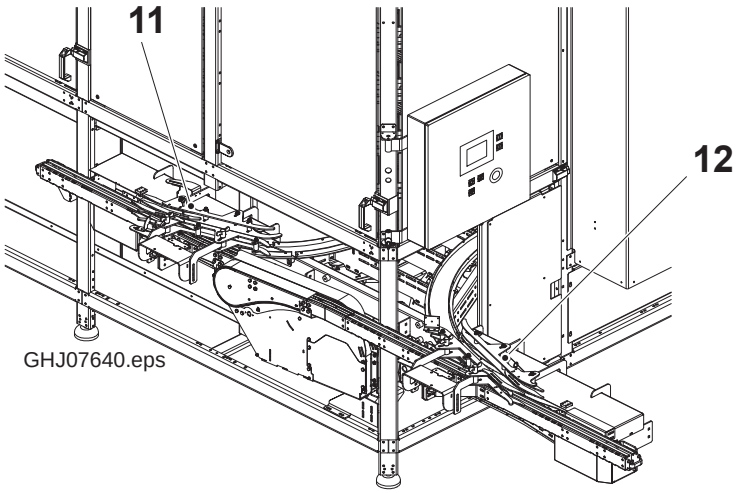

(Cont'd)

(Cont'd)

Spider

A rotary package transfer assembly, identified as a spider unit (13), is installed between the two conveyor chains and transfers packages from the infeed conveyor (1) to the outfeed conveyor (2).

Like the drive motor sprockets, a sprocket on the spider unit also interfaces with the conveyor chains. The movement of the conveyors provides the action and travel for the spider via the sprocket.

The spider is designed to move up or down (travel) within the Helix, accepting and accumulating packages as necessary and discharging packages from the Helix as demand requires. While production is operating normally and both conveyors are running at the same pace, the spider remains stationary between the conveyors and simply transfers packages from the infeed line to the outfeed line.

(Cont'd)

(Cont'd)

If a downstream stoppage or slowdown occurs in the production line, the spider (13) travels upward through the Helix allowing packages from the infeed (1) to be accumulated.

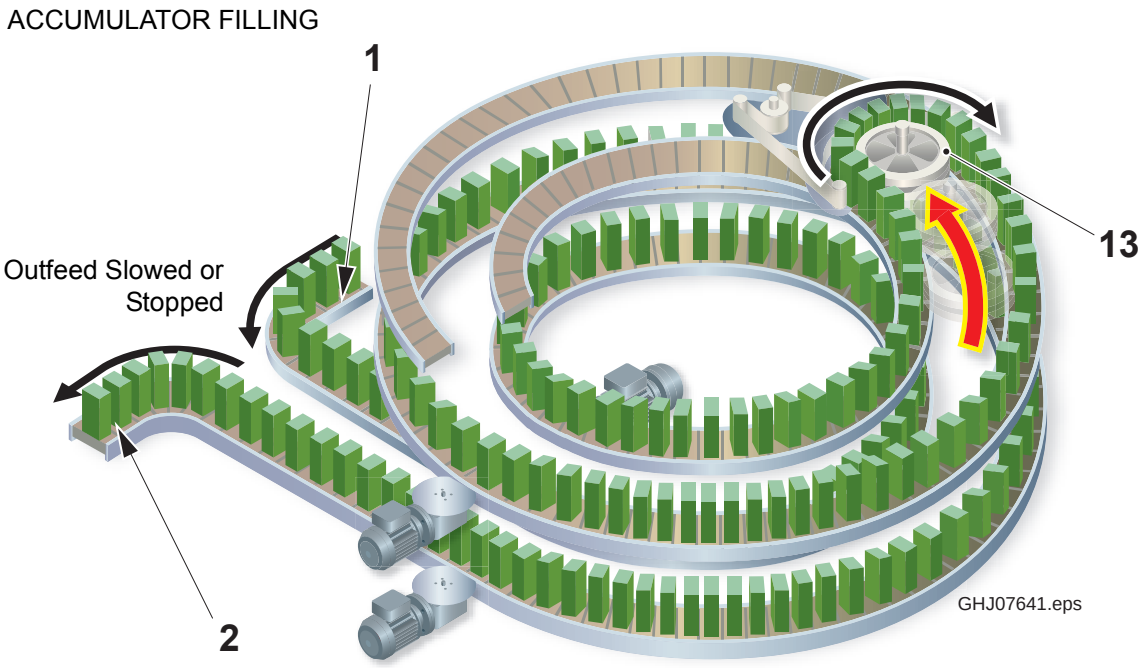

1 Infeed conveyor
2 Outfeed conveyor
13 Spider

(Cont'd)

(Cont'd)

If an upstream stoppage occurs, the spider (13) travels downward discharging accumulated packages to the outfeed conveyor (2).

ACCUMULATOR EMPTYING

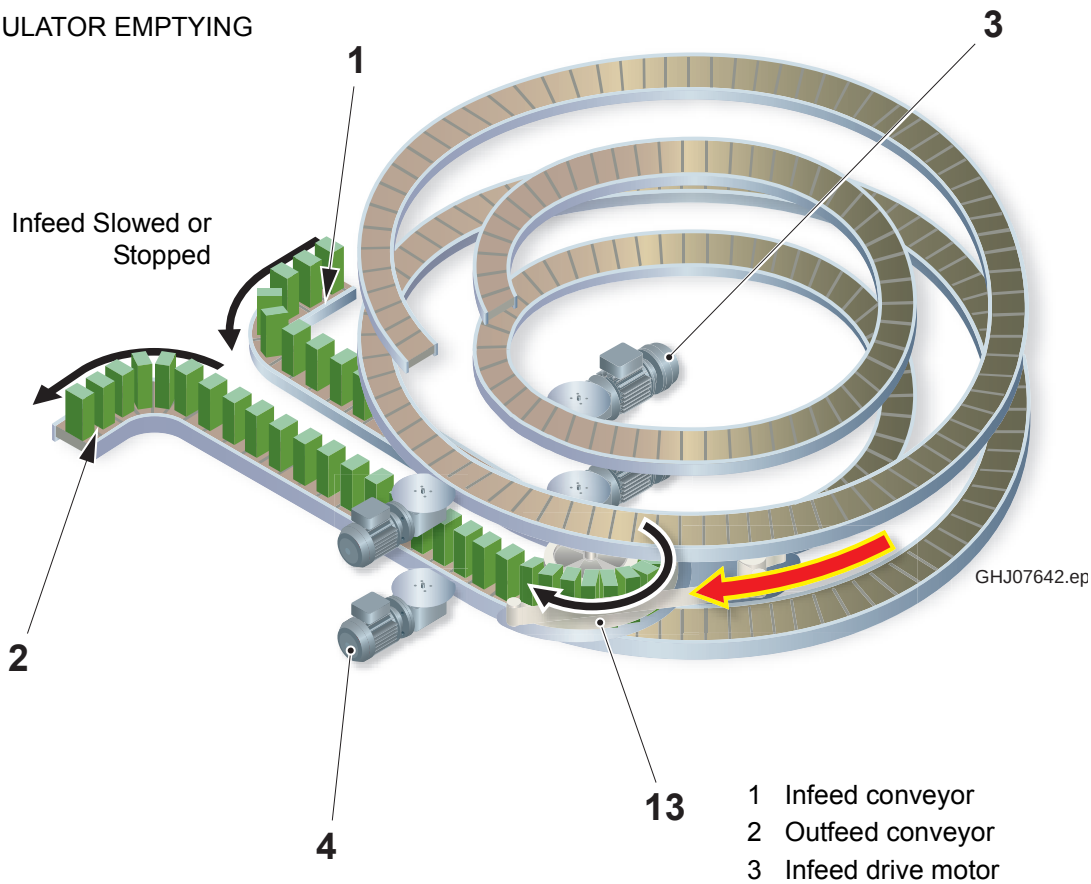

1 Infeed conveyor
2 Outfeed conveyor
3 Infeed drive motor
4 Outfeed drive motor
13 Spider

(Cont'd)

(Cont'd)

This action provides a consistent package flow while the upstream or downstream problem is being addressed. If the spider reaches its uppermost point before the problem is corrected, it activates a Machine Full sensor stopping the infeed conveyor. Likewise, if an upstream delay occurs and all accumulated packages have been discharged, the spider reaches its lowest point in the accumulator and a Machine Empty sensor is activated stopping the outfeed conveyor.

Once the problem has been corrected and production restarted, the delayed infeed or outfeed conveyor resumes operation at a normal pace. The spider travels through the Helix and discharges or accumulates packages as necessary.

(Cont'd)

(Cont'd)

Water Mist Lubrication and Rinse System

The Helix chain life and package handling are improved through the use of the water mist lubrication and rinse system. The water mist lubrication system is designed to lubricate the base chain and chain tops during normal production. The rinse system is designed to clean the base chain and chain tops during non-production periods and can be used for pre-production lubrication.

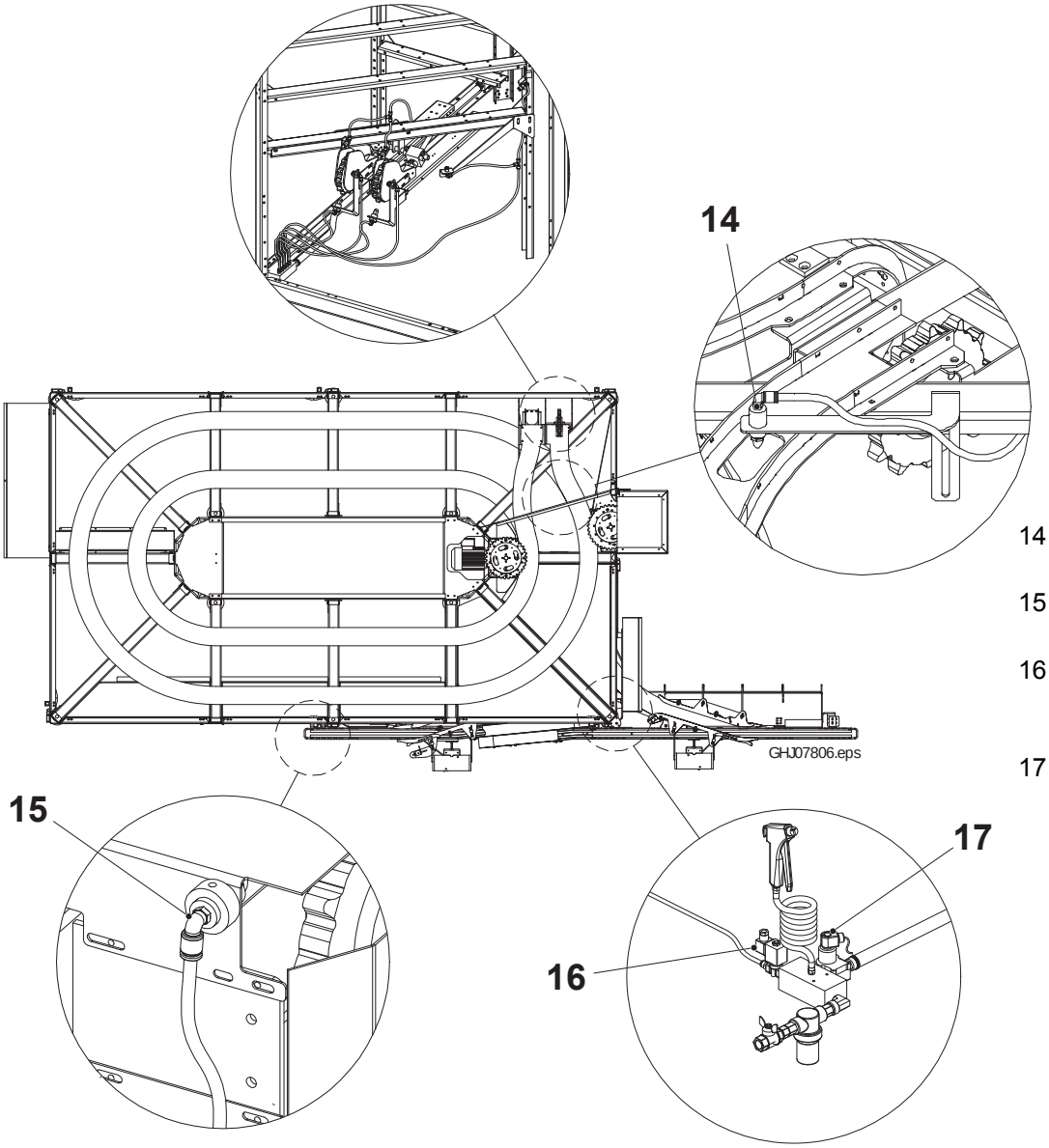

14 Outfeed chain top lubrication nozzle
15 Infeed chain top lubrication nozzle
16 Water mist lubrication control valve
17 Rinse system control valve

(Cont'd)

(Cont'd)

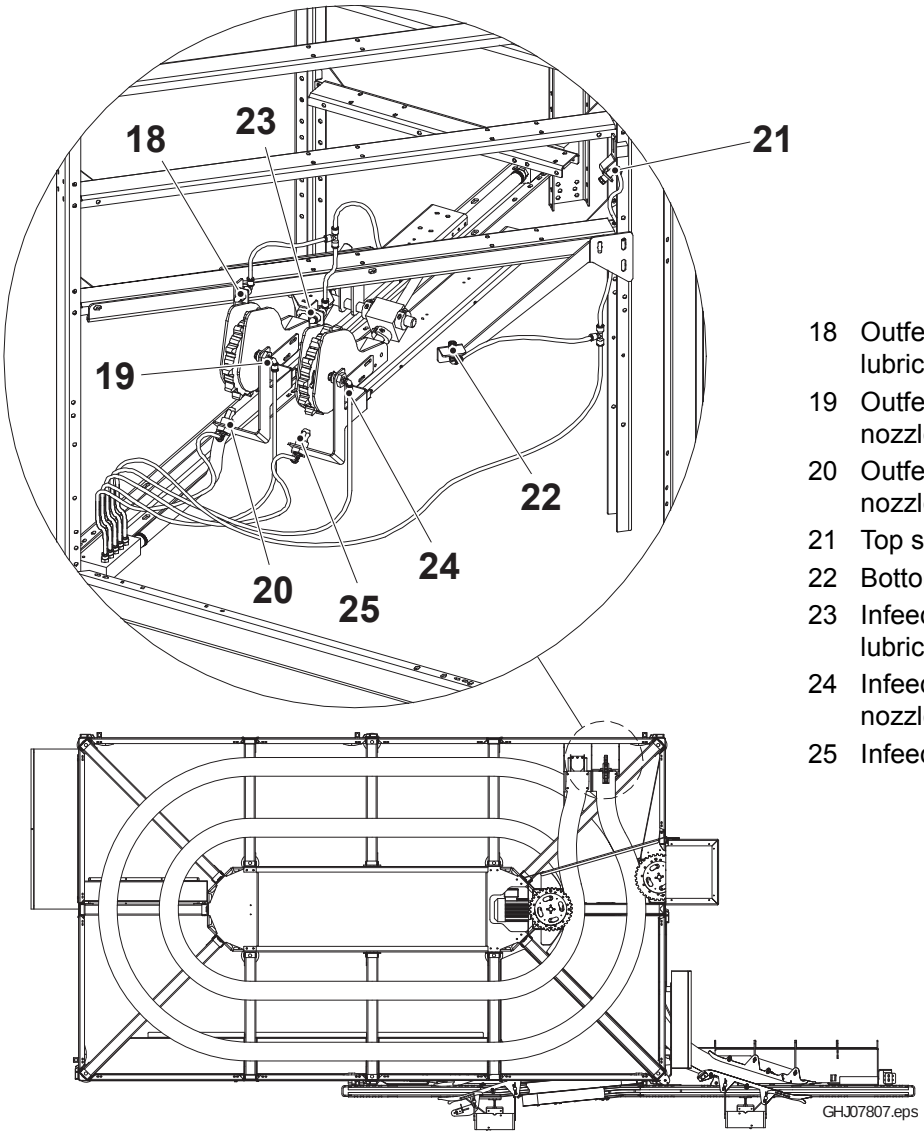

18 Outfeed base chain mist lubrication nozzle
19 Outfeed base chain rinse nozzle
20 Outfeed chain top rinse nozzle
21 Top spider rinse nozzle
22 Bottom spider rinse nozzle
23 Infeed base chain mist lubrication nozzle
24 Infeed base chain rinse nozzle
25 Infeed chain top rinse nozzle

2.1 Frame

2.1.1 Warning Lamp

2.1.1-1 Warning Lamp - Check

Machine Status	Power Supply Disconnector ON
SPC Reference	2664579-0400

a) At the TPOP, press the MAINTENANCE WINDOW button (1).

b) Press the SERVICE MAINTENANCE WINDOW button (2).

c) Press the LAMP TEST button (3).

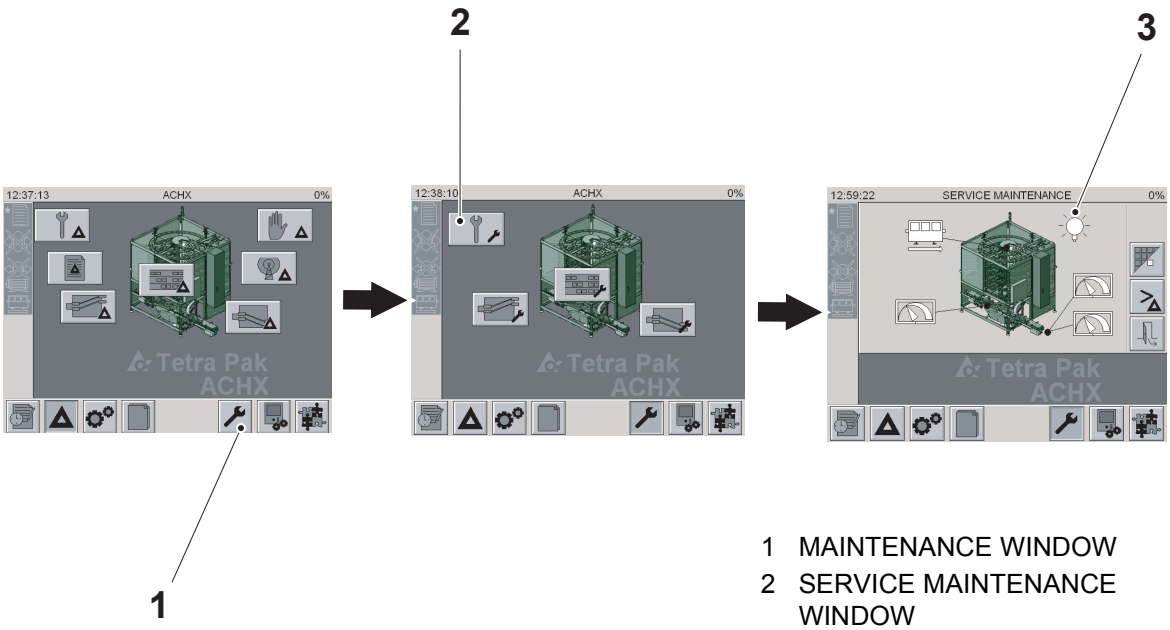

1 MAINTENANCE WINDOW
2 SERVICE MAINTENANCE WINDOW
3 LAMP TEST

(Cont'd)

(Cont'd)

d) Press the START button. (See 4.2.4 General Function and Setting Information.)

e) Check that all indicator lamps on the control panel illuminate.

f) Check that all bulbs in the warning lamp illuminate.

g) Verify that the audible alarm sounds.

h) Press the STOP button. (See 4.2.4 General Function and Setting Information.)

If necessary, replace burned out bulbs and the audible alarm.

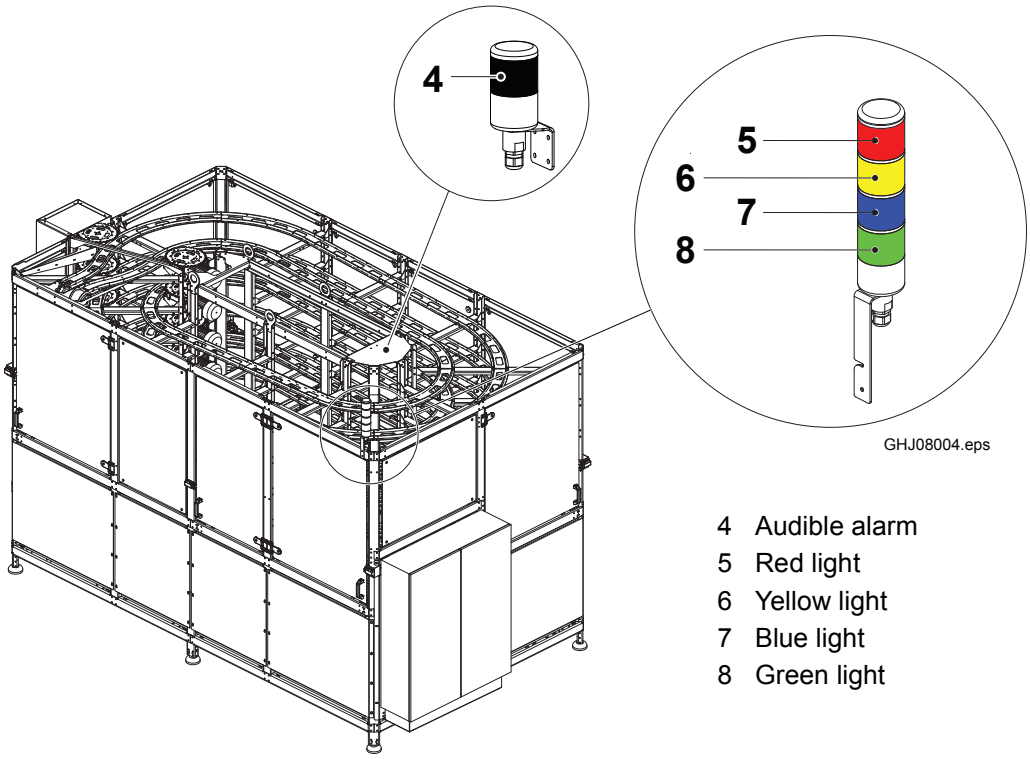

4 Audible alarm
5 Red light
6 Yellow light
7 Blue light
8 Green light

2.1.2 Safety Equipment

2.1.2.1 Door Safety Switch

For information on the safety switch fault codes, refer to 4.1.9-11 Pluto Manager - Safety Switch Fault Codes.

2.1.3 Glass Panes

2.1.3-1 Glass Panes - Remove Broken Glass

Machine Status	Power Supply Disconnector OFF
Special Equipment	Safety Gloves, Safety Glasses
SPC Reference	2948914-0100

CAUTION
Broken glass
Will cut and cause injury. Wear appropriate personal protective devices (such as gloves and safety glasses).

CAUTION
Broken Glass
Will cause machine damage. Clean up broken glass immediately.

If a glass pane breaks and glass is in the machine, make sure all glass particles are carefully removed from the chain and machine.

DANGER
Moving machinery
Never defeat or bypass the interlocking devices.

a) Vacuum or sweep up all visible debris.
b) If glass particles have fallen into the chain, remove the chain tops. Refer to 2.2.4.1-1 Chain Top - Remove and Install.
c) Vacuum and wipe clean the affected area.
d) Dispose of the glass in an appropriate container.
e) Refer to the SPC and order a new glass pane from Technical Service immediately.

CAUTION
Machine damage
In severe cases, it may be necessary to remove the chain from the machine.

2.1.3-2 Glass Panes - Install Panes at Fixed Panels

Machine Status	Power Supply Disconnector OFF
Special Equipment	Safety Gloves, Safety Glasses
SPC Reference	2948914-0100

CAUTION

Broken glass

Will cut and cause injury. Wear appropriate personal protective devices (such as gloves and safety glasses).

Installation of new glass requires the following hardware from the broken or removed pane:

- fasteners
- rubber washers
- nylon insert

(Cont'd)

(Cont'd)

a) Assemble bolt (1), flat washer (2), front rubber washer (3), and nylon insert (4).

b) Insert bolt assembly into the hole in the glass.

c) Install the rear rubber washer (5) onto the installed bolt assembly.

d) Repeat steps a) through c) for each of the four mounting locations.

e) Position the pane at the mounting brackets (6) on the machine.

f) Install the flat washer (7) and hex nut (8).

CAUTION
Do not overtighten!

g) Tighten the hex nut (8) until the rubber washers (3) and (5) begin to compress.

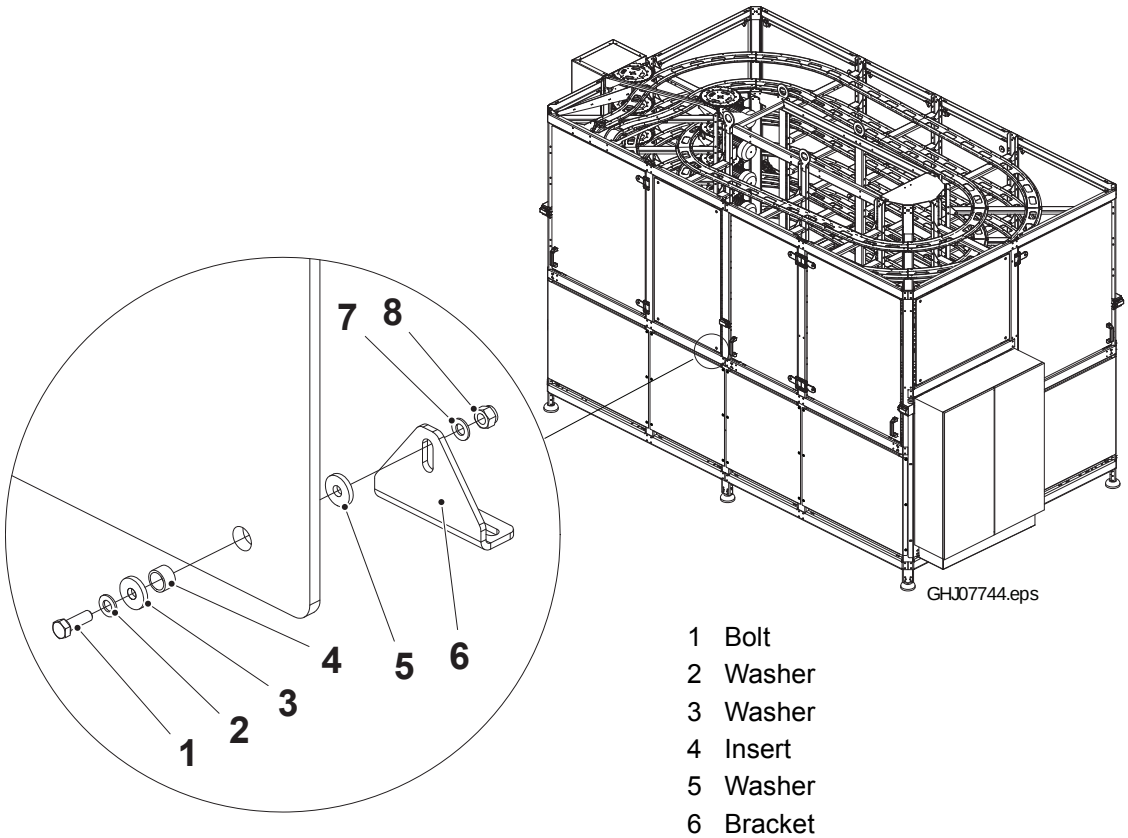

1 Bolt
2 Washer
3 Washer
4 Insert
5 Washer
6 Bracket
7 Washer
8 Nut

2.1.3-3 Glass Panes - Install Panes at Doors

Machine Status	Power Supply Disconnector OFF
Special Equipment	Safety Gloves, Safety Glasses
SPC Reference	2948912-0100 2948913-0100 2948914-0100

CAUTION

Broken glass

Will cut and cause injury. Wear appropriate personal protective devices (such as gloves and safety glasses).

Installation of new glass requires the following hardware from the broken or removed pane:

- fasteners
- rubber washers
- nylon insert
- rubber grommets
- handle
- switch mount

(Cont'd)

(Cont'd)

a) Install the rubber grommets (1) into the two handle-mounting holes in the glass pane.

b) Insert the bolts (2) into the handle (3).

c) Pass the bolts (2) through the rubber grommets (1).

d) Install the switch mount (4) on the back side of the pane.

CAUTION
Do not overtighten!

e) Install and tighten the hex nuts (5) until the rubber grommets (1) begin to compress.

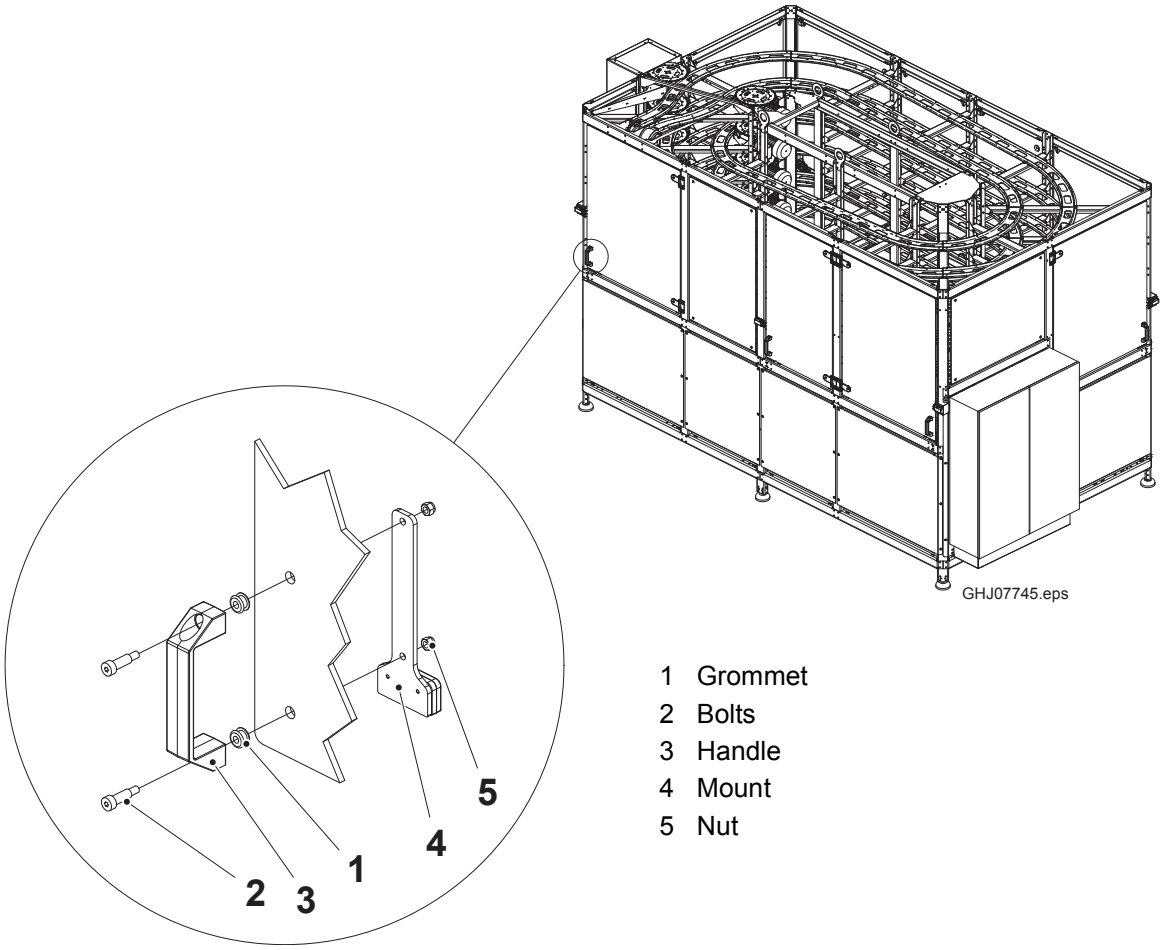

1 Grommet
2 Bolts
3 Handle
4 Mount
5 Nut

(Cont'd)

(Cont'd)

f) Insert the bolt (6) through the hinge (7) on the machine (at two locations).

g) Install the rubber washer (8).

h) Install the nylon insert (9) onto the bolt (6).

i) Position the panel at the hinges on the machine.

j) Insert the bolt (6) and nylon insert (9) into the holes in the glass.

k) Install the rubber washer (10) on the back side of the pane.

l) Install the clamping washer (11).

CAUTION
Do not overtighten!

m) Install and tighten the hex nuts (12) until the rubber washers begin to compress.

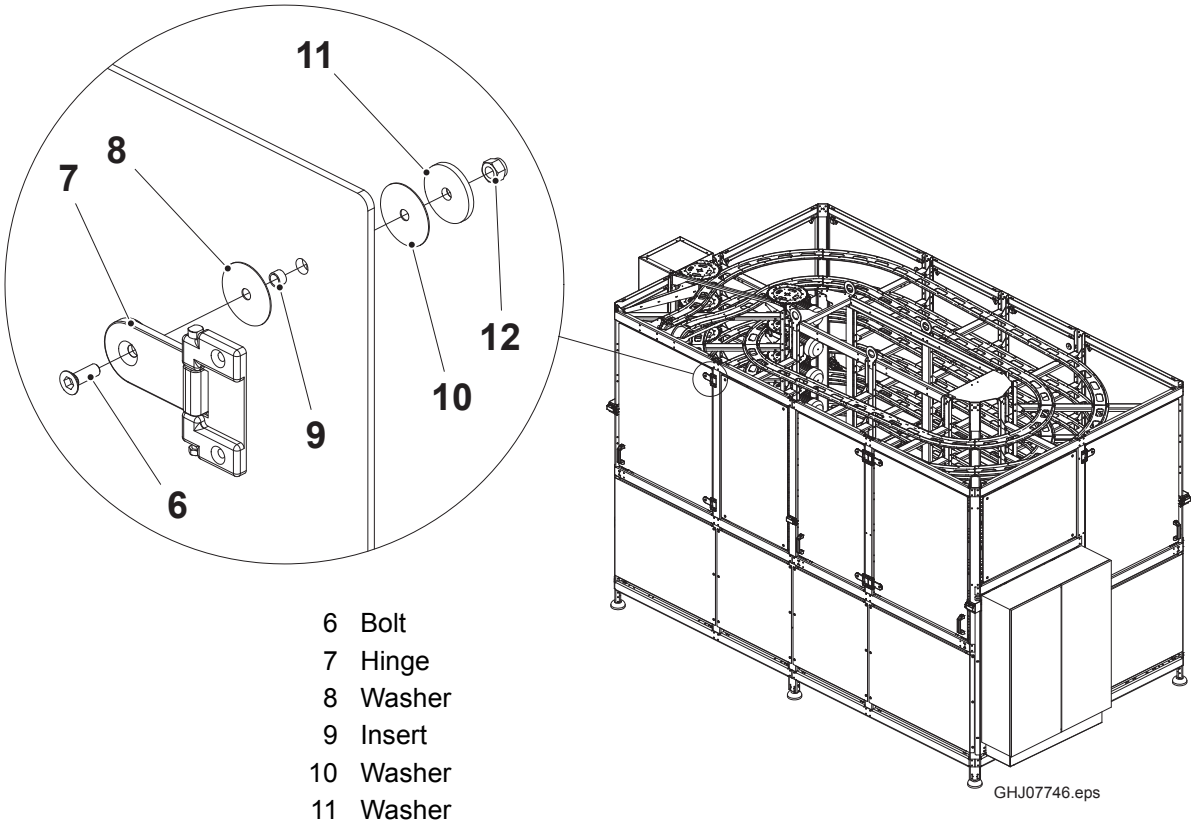

6 Bolt
7 Hinge
8 Washer
9 Insert
10 Washer
11 Washer
12 Nut

2.1.4 Covering Panels

Machine Status	Power Supply Disconnector OFF
Special Equipment	4 mm hex wrench
SPC Reference	3008961-0100

2.1.4-1 Stainless Covering Panels - Remove and Install

To gain access to the machine to perform maintenance procedures, it may be necessary to remove one or more stainless panels (1).

There are six studs (2) (3 per side) attached to each panel (1).

Remove

a) Rotate each stud 90 degrees counter clockwise to loosen.

b) Remove the panel.

Install

c) Position each panel

d) Rotate each stud 90 degrees clockwise.

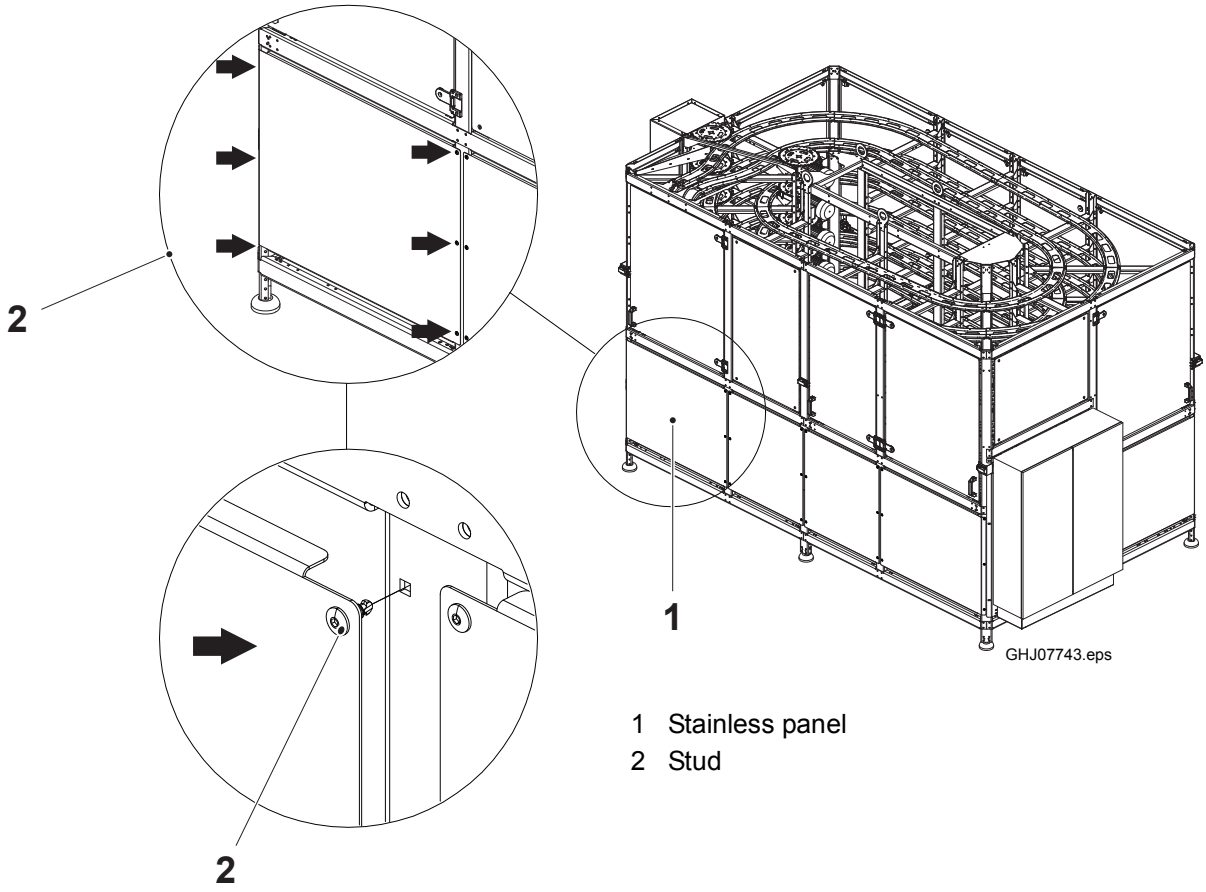

1 Stainless panel
2 Stud

(Cont'd)

2.2 Infeed

2.2.1 Sensors

For information on the upper limit proximity switch, refer to 4.3.3-1 Proximity Switches - Set.

For more information on the infeed sensor, refer to 4.3.2.2-4 Photocell - Emitter-Receiver and Reflecting Type - Check Sensitivity and 4.3.2.2-2 Photocell - Reflecting Type - Adjust Alignment.

2.2.2 Infeed Chain Tensioner

The conveyor chain may stretch after initial start-up and up to 70 hours of production. Infeed chain tension is monitored by a proximity switch (1).

2.2.2-1 Infeed Chain Tensioner - Check

Machine Status	Power Supply Disconnector OFF
SPC Reference	2948919-0100

a) Check that the chain return arm (2) moves freely on the shaft (3) in block (4).

b) When the chain return arm (2) is resting down against the chain, check that the arm (2) is approximately level / horizontal.

If necessary, set the infeed conveyor chain according to 2.2.2-3 Infeed Chain Tension Monitor - Set.

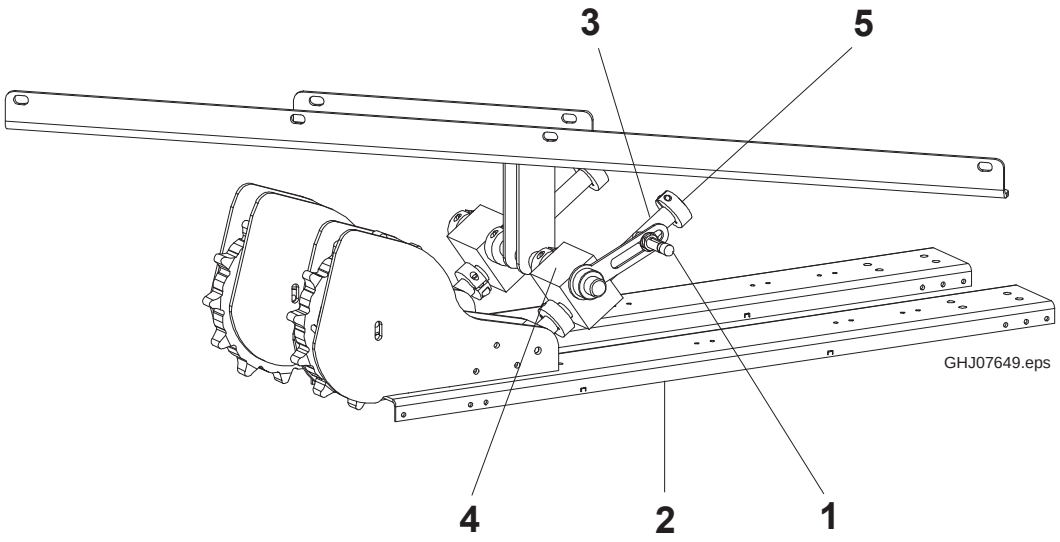

1 Proximity switch
2 Arm
3 Shaft
4 Block
5 Collar

2.2.2-2 Infeed Chain Tensioner - Set

Machine Status	Power Supply Disconnector OFF
SPC Reference	2948919-0100

Remove or add chain links to achieve dimension A between block (4) and collar (5). Refer to 2.2.4.1-1 Chain Top - Remove and Install.

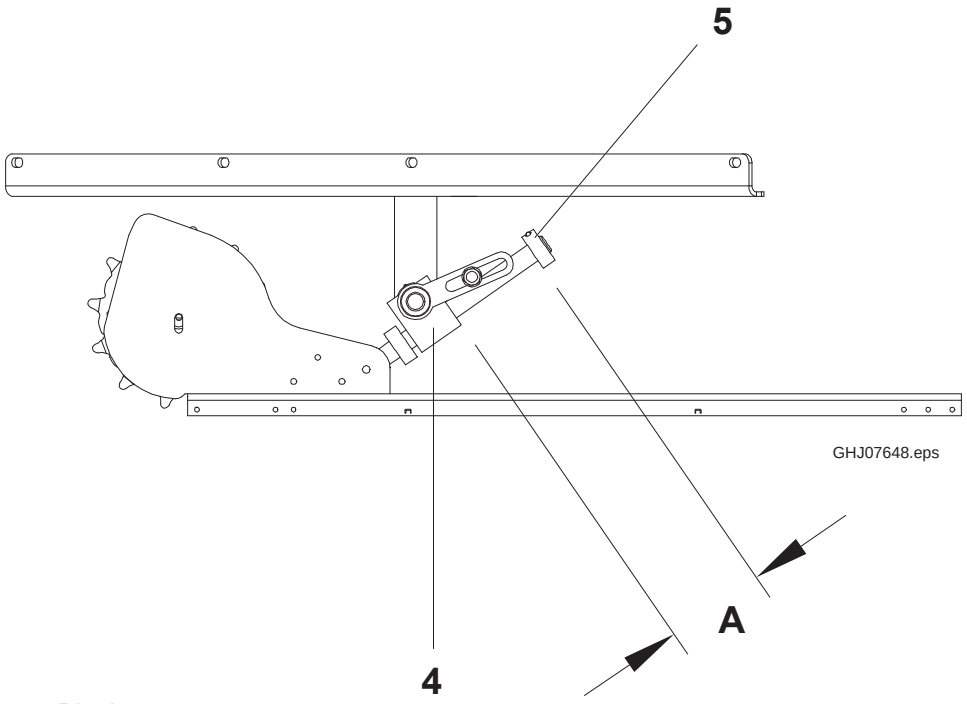

4 Block
5 Collar

A ≥ 100mm

2.2.2-3 Infeed Chain Tension Monitor - Set

Machine Status	Power Supply Disconnector OFF
SPC Reference	2948919-0100

The infeed conveyor chain return has a chain tension monitor proximity switch (1). When activated, the switch alerts the operator that the infeed chain has too much slack and needs to have links removed (approximately 1-2 links).

To set the proximity switch:

a) Move the collar (5) to the end of the shaft (3).

b) Break the infeed conveyor chain. (Refer to 2.2.4.1-1 Chain Top - Remove and Install.)

c) Lower the swing arm (2) until dimension A is 25 mm.

d) Align the proximity switch (1) so that it is activated by the collar (5) on the shaft (3).

e) Reconnect the infeed conveyor chain.

Note! The proximity switch should not be activated after the chain is reconnected.

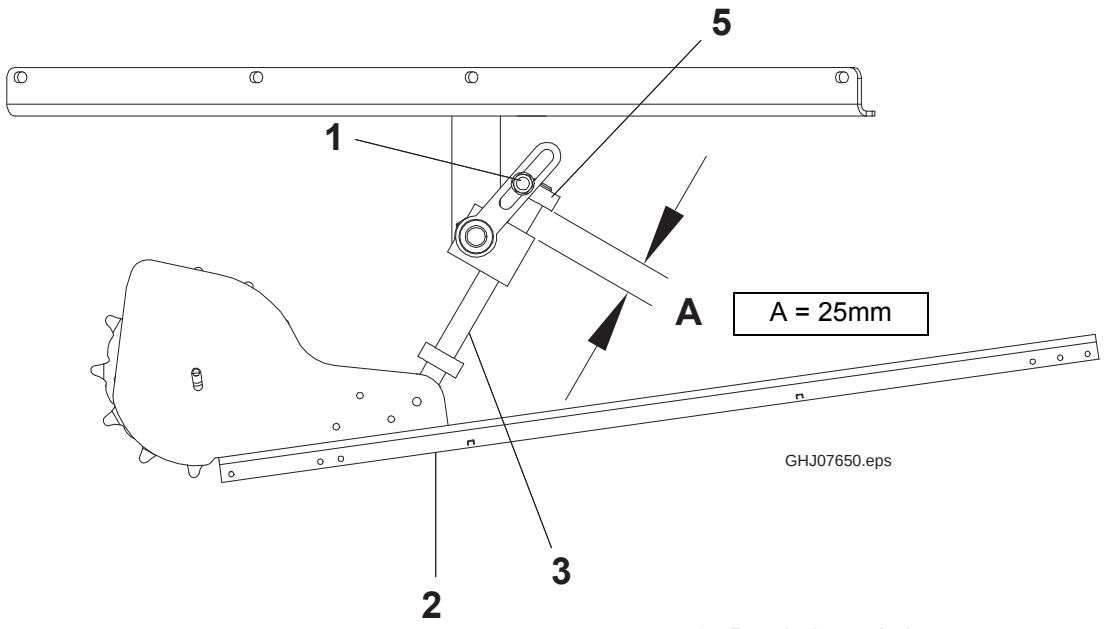

1 Proximity switch
2 Arm
3 Shaft
5 Collar

2.2.3 Infeed Guide

2.2.3.1 Infeed Guide Rails

2.2.3.1-1 Infeed Guide Rails - Check

Machine Status	Power Supply Disconnector OFF
SPC Reference	2948920-0100

a) Check for any fats or sugar build up on the Teflon® guide rail surfaces (1) and (2).

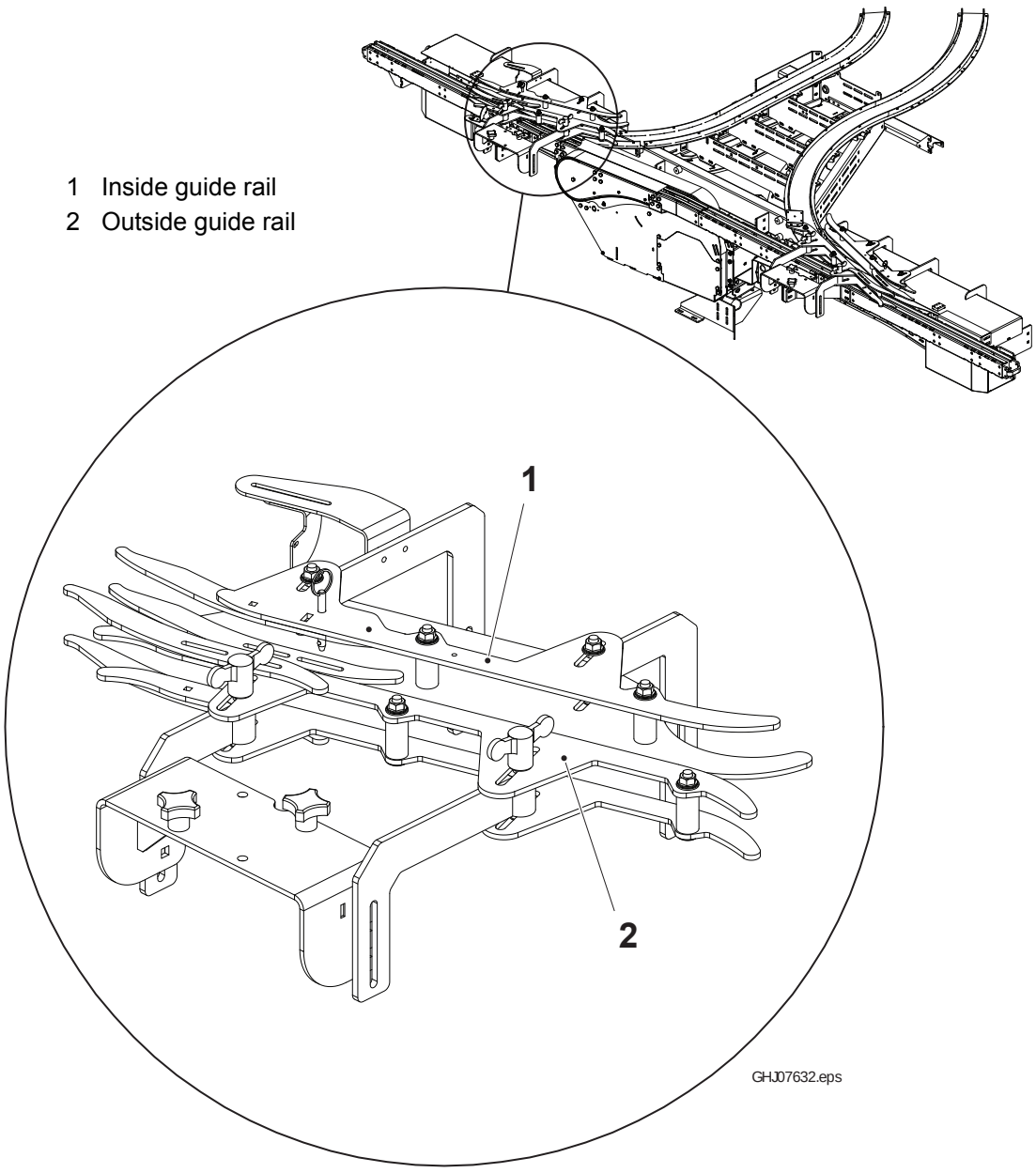

(Cont'd)

(Cont'd)

b) Check for damage to guide surfaces and guide rails (1) and (2).

c) Check that the inside and outside guide rails (1) and (2) are set correctly for package width. Refer to section 2.2.3.1-2 Infeed Guide Rails - Set.

Note! Inside guide rails (1) are factory set and should not require adjustment.

2.2.3.1-2 Infeed Guide Rails - Set

Machine Status	Power Supply Disconnector OFF
SPC Reference	2948920-0100

Set the outside guide rails for package width:

a) Loosen the hand knobs (1) on the outside guide rails (2).

Note! Dimension A measures the distance between the bottom set of guides.

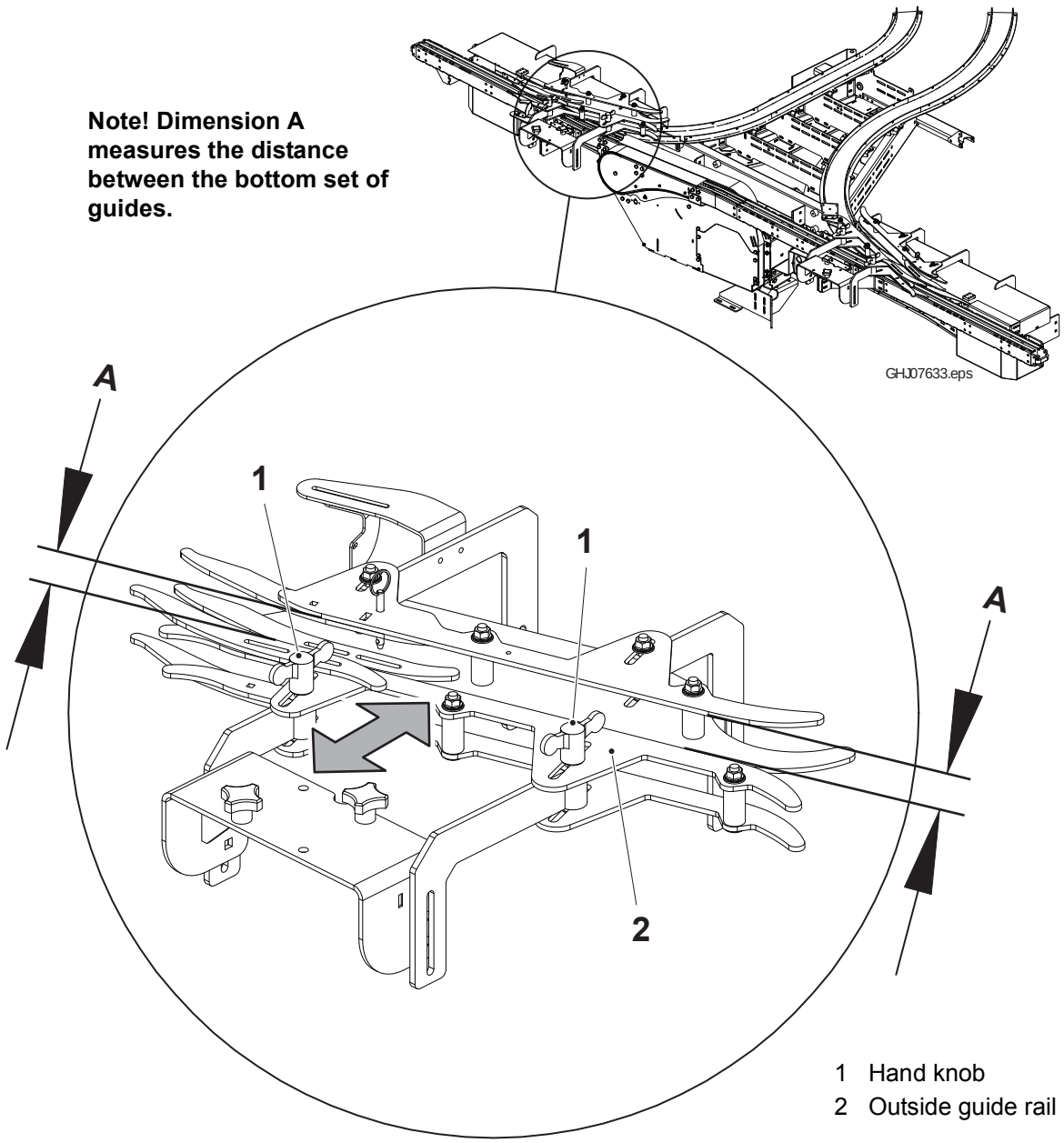

1 Hand knob
2 Outside guide rail

(Cont'd)

(Cont'd)

b) Adjust the outside guide rails (2) according to dimension A in the Guide Rails Volume Change Table on page 2-37.

c) Verify the dimension set in step b) is correct according to the table.

d) Tighten the hand knobs (1).

Note! Inside guide rails (3) are factory set and should not require adjustment.

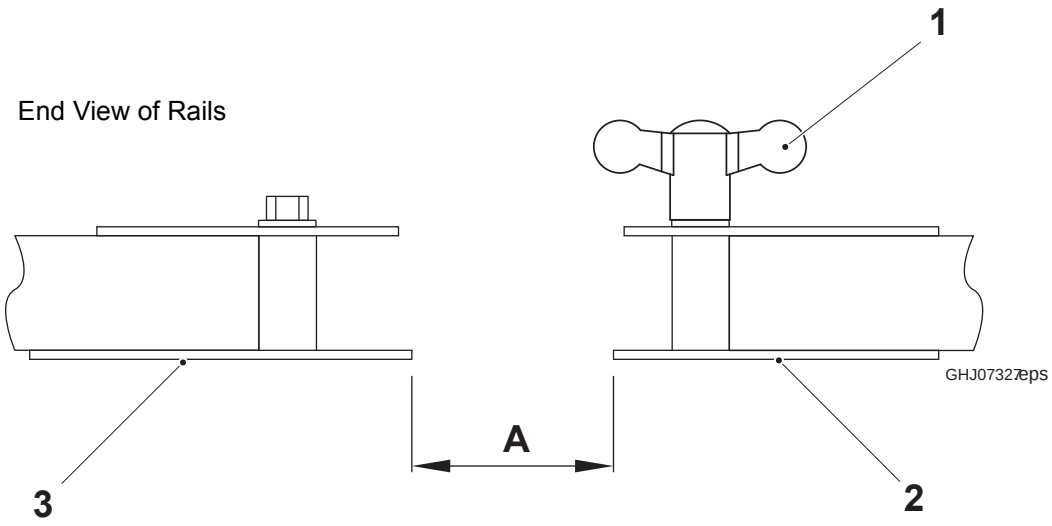

1 Hand knob
2 Outside guide rail
3 Inside guide rail

(Cont'd)

(Cont'd)

Note! When inside guide rails (3) are factory set, there is approximately 1mm of clearance between the package and the inside wall of the chain top (4).

Note! After outside guide rails (2) are set, there should be approximately 5mm of clearance between the edge of the package and the guide rail.

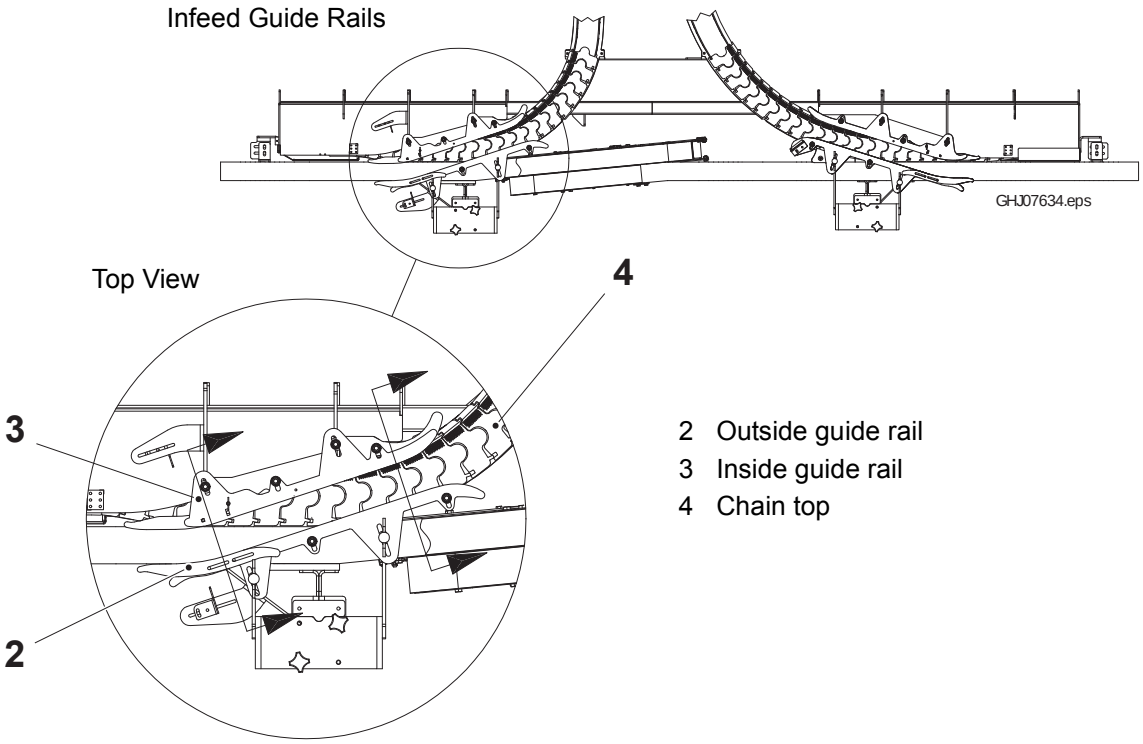

2 Outside guide rail
3 Inside guide rail
4 Chain top

(Cont'd)

(Cont'd)

Guide Rails Volume Change Table

		Lower Rail Dimension (mm)
Package Type	**Volume**	**A**
TB	568SQ	84
	1000E	
	1136SQ	
TB/TBA	200S	48
	200B	49
	200M	45
	250B	49
	500B	77
	500SQ	80
	1000B	
	1000SQ	
TBA	100B	38
	125S	
	160S	46
	180B	47
	200SQ	58
	250S	47
	250SQ	58
	284B	48
	300S	50
	330S	48
	355B	53
	375S	57
	500S	
	750S	76
	750B	
	1000M	80
	1000S	76
	1500S	75
	1890S	84
	2000S	
TPA	200SQ	50
	250SQ	
	330SQ	56
	500SQ	60
	750SQ	70
	1000SQ	

		Lower Rail Dimension (mm)
Package Type	**Volume**	**A**
TGA	500SQ	73
	750SQ	
	1000SQ	
	1500SQ	84
TRC	340MIDI	57
	390MIDI	
	500MIDI	

If a package is not listed in the table on the previous page, use the following formula to approximate the setting:

Dim A = Package Depth + 8mm

Note! The data contained in the table was established using empirical methods and may not agree with the formula.

2.2.4 Infeed Chain

2.2.4.1 Chain Top

2.2.4.1-1 Chain Top - Remove and Install

Machine Status	Power Supply Disconnector OFF
SPC Reference	2948921-0100 (LINF) 2948922-0100 (RINF)

When it is necessary to remove a section of chain to adjust the chain tension use the following procedure:

Note! Chain tops and links should be removed in the chain return area only.

a) Remove chain top (1) by inserting a standard screwdriver (2) just under and from the side of the chain top and toward the centre of the chain top.

b) Lift the screwdriver (2) perpendicular to the chain to pop off the chain top (1).

c) Once tops (1) are removed, remove the pin (3) from each chain link (4) to be removed. Eject the pin toward the roller (5) side of the chain.

d) Chain links (4) and tops (1) can be installed by reversing steps a) through c).

Note! Re-insert the pin (3) from the roller (5) side of the chain. The knurled end is always on the same side of the link (4) as the roller (5). Make certain that the knuckle (6) is present in the chain.

(Cont'd)

(Cont'd)

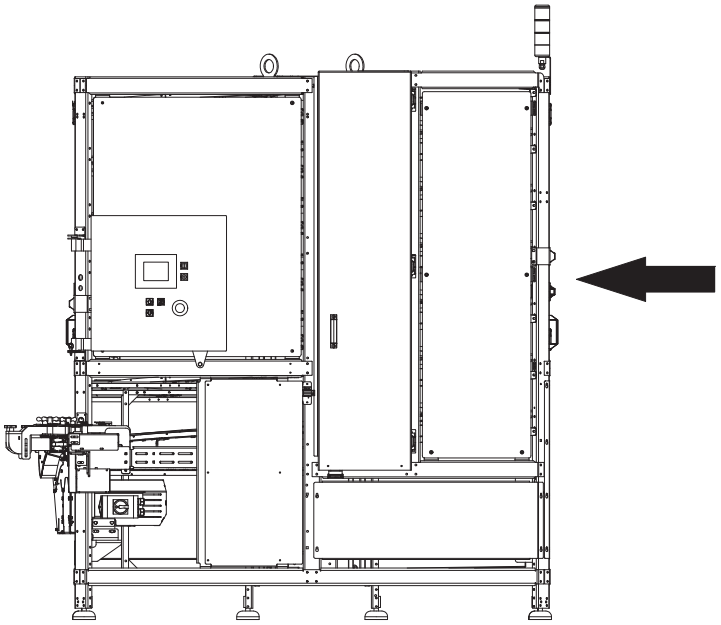

GHJ07319.eps

1 Chain top
2 Screwdriver
3 Pin
4 Link
5 Roller
6 Knuckle

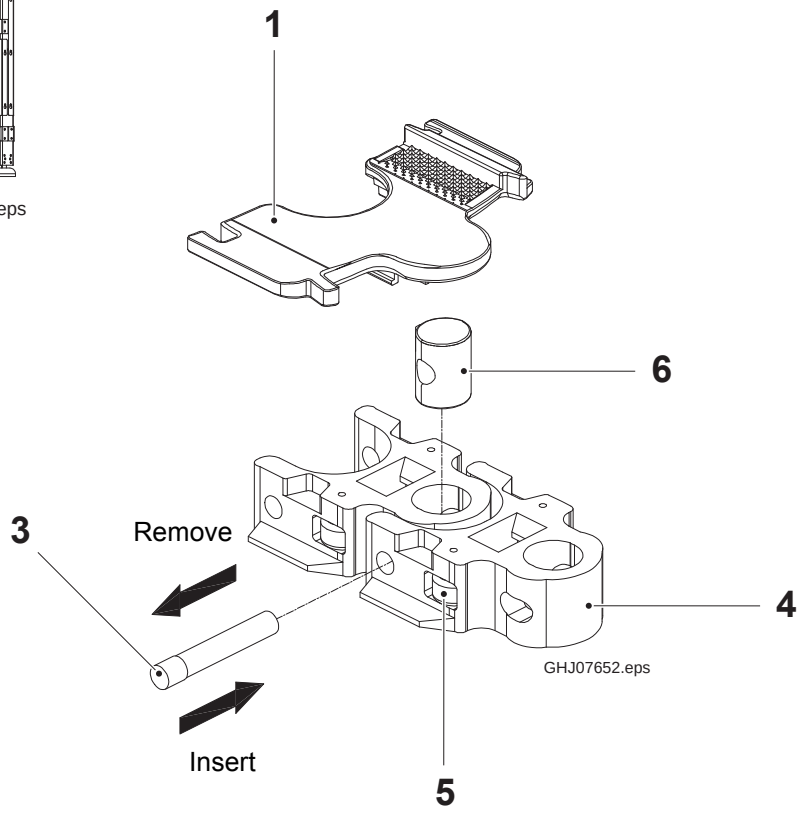

GHJ07652.eps

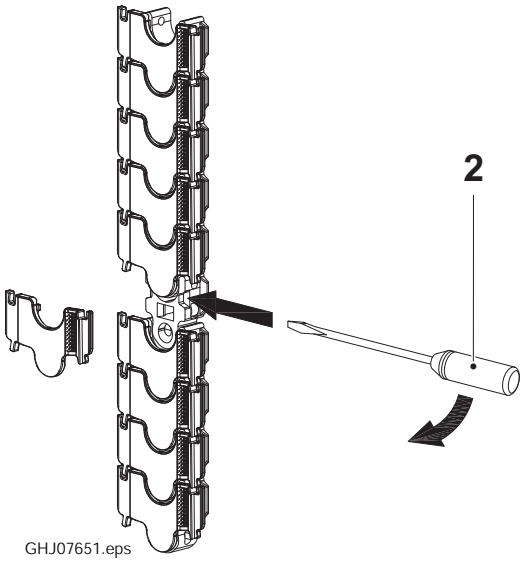

GHJ07651.eps

2.2.4.2 Chain

2.2.4.2-1 Chain - Check

Machine Status	Power Supply Disconnector OFF
SPC Reference	2948921-0100 (LINF) 2948922-0100 (RINF)

a) Remove approximately 1 meter of chain top from the infeed and outfeed conveyors. Refer to 2.2.4.1-1 Chain Top - Remove and Install.

b) Check for any wear in the split pocket (1) of the base chain on the side of the chain where the spider is engaged.

c) If wear is present, reinstall the chain top and refer to 2.4.3.2-1 Spider Drive Gear - Set to set the position of the spider gear.

d) If wear is not present, reinstall the chain top.

2.2.5 Infeed Drive

2.2.5.1 Infeed Drive Assembly

The drive configuration varies depending upon the machine variant. For more information, see Machine Variants in the Introduction chapter.

Drive configurations (Infeed)	
Machine Variant	No. of infeed gear motors
47M	3
75M / 100M	6
90M / 120M	7

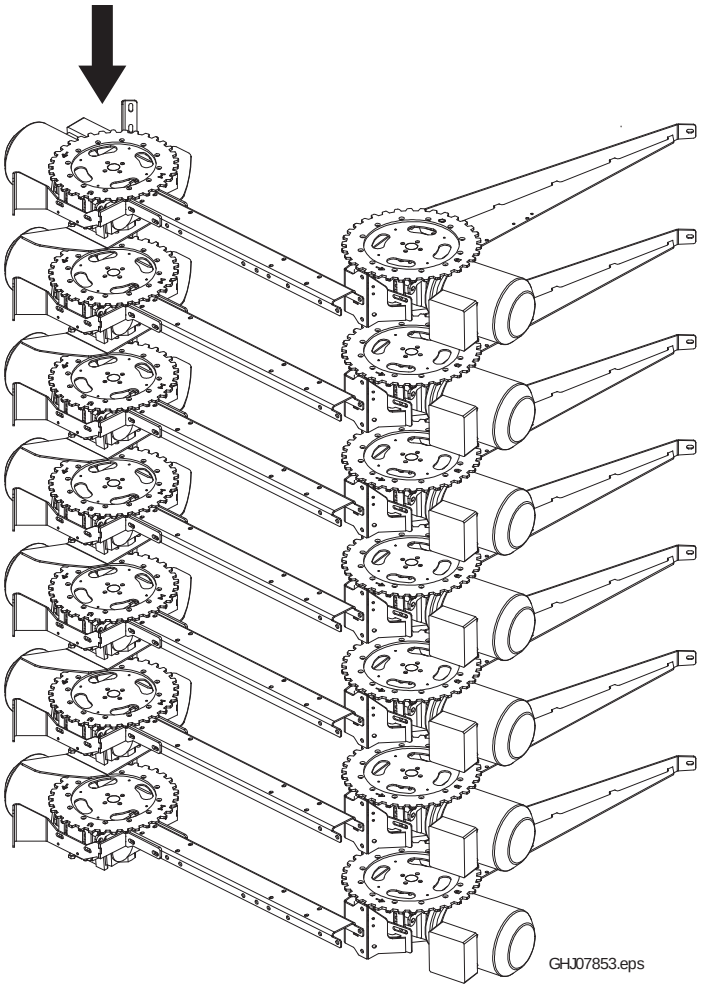

2.2.5.1-1 Infeed Drive Assembly - Check

Machine Status	Power Supply Disconnector OFF
SPC Reference	2948924-0200 (LINF) 2948925-0200 (RINF)

Check the following items on the infeed drive assembly:

a) Verify that the sprocket (1) is parallel to the extrusion (2) and the base chain (3).

b) Verify that the vertical adjustment of the motor mount is set so that the sprocket is less than 1mm above the extrusion.

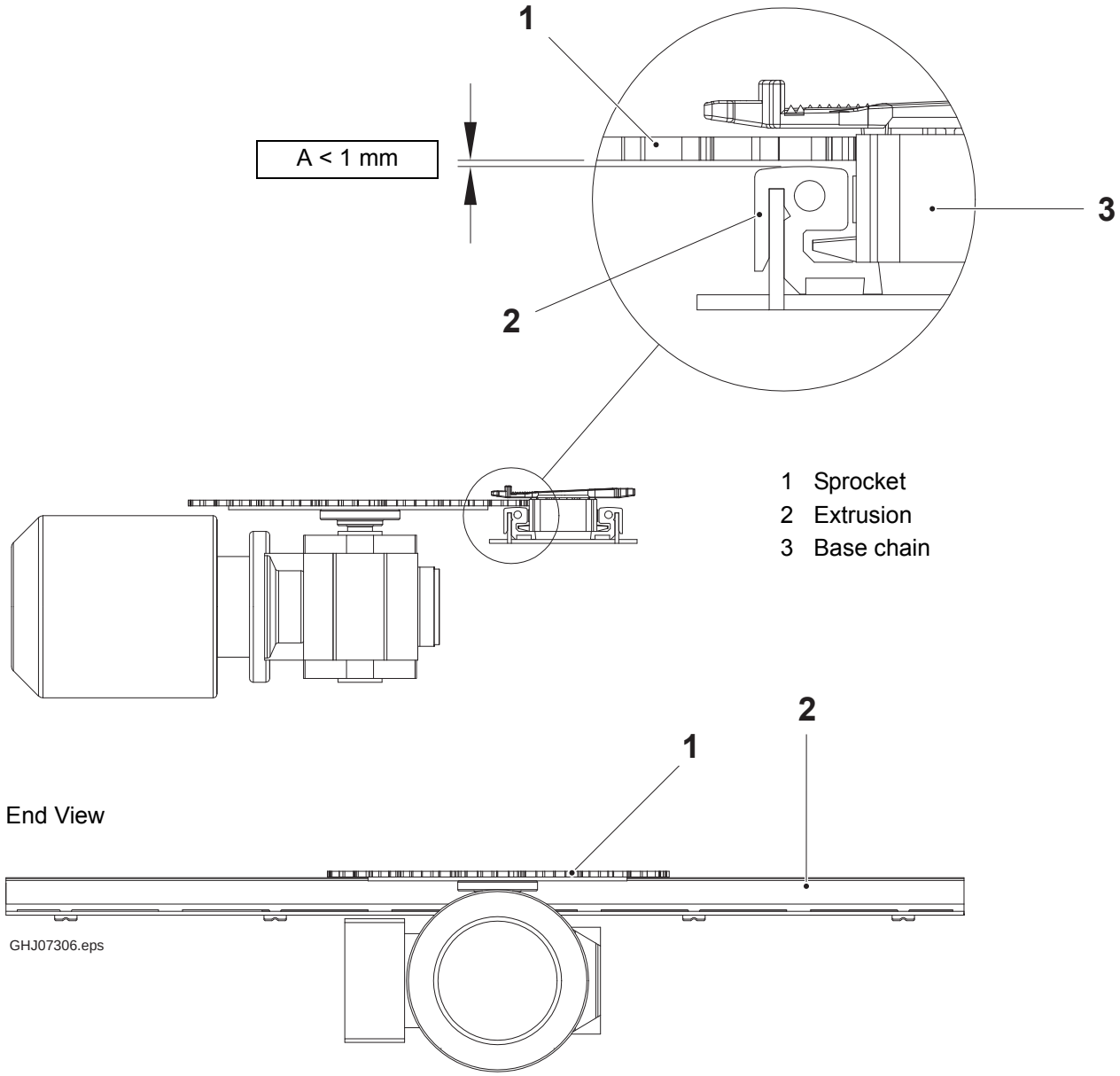

(Cont'd)

(Cont'd)

Note! The setup tool (4) described below is included in the Installation Kit. (The Installation Kit was shipped in the crate and labelled position #102.)

c) Use the provided setup tool (4) to verify that the end of the sprocket tooth without the notch (5) is dimension B from the inner wall of the chain pocket (6). When the spacing is correct, the setup tool (4) contacts both the sprocket tooth (5) and the inner wall of the chain pocket (6).

(Cont'd)

(Cont'd)

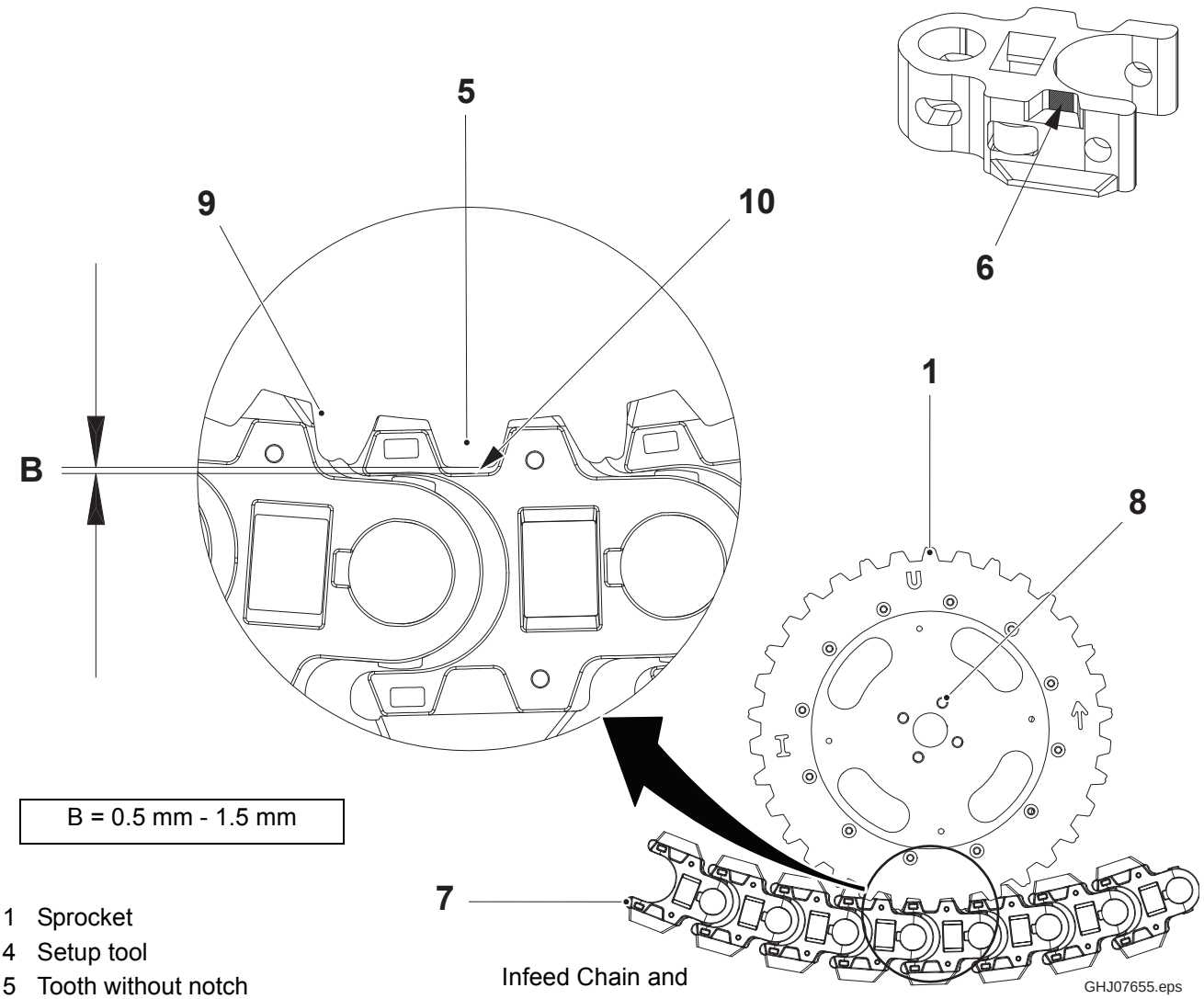

1 Sprocket
4 Setup tool
5 Tooth without notch
6 Inner wall of chain pocket
7 Conveyor chain
8 Screw location
9 Tooth with notch
10 Placement of set-up tool

Infeed Chain and Sprocket Shown

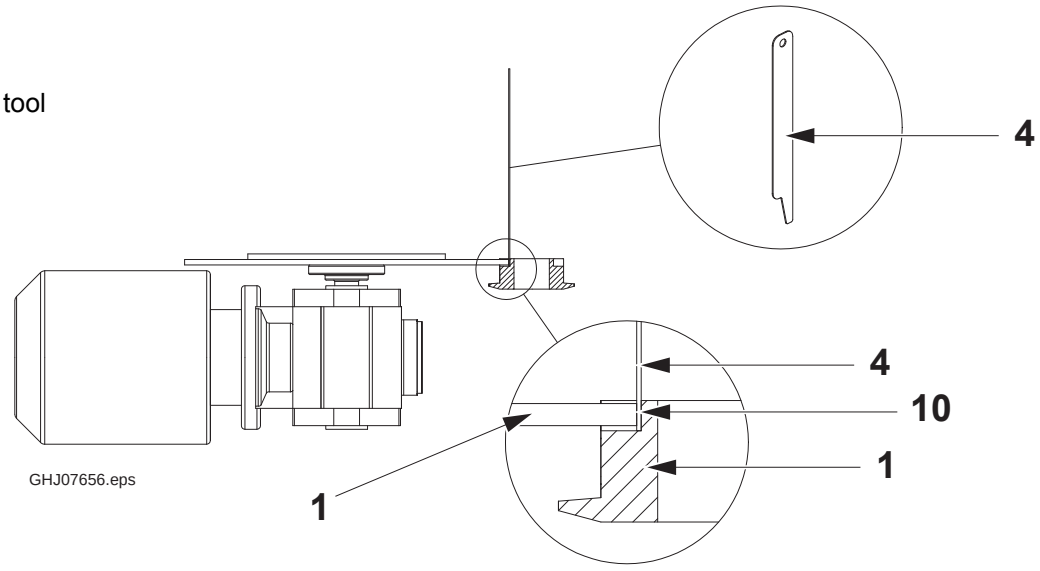

2.2.5.1-2 Infeed Drive Assembly - Adjust

Machine Status	Power Supply Disconnector OFF
SPC Reference	2948924-0200 (LINF) 2948925-0200 (RINF)

Note! The minor shifting that may occur during shipping does not affect the performance of the drive assemblies. Only adjust the drives if severe shifting occurred during shipment. Do not make minor adjustments to the drive assemblies.

Use the horizontal, vertical, and pan/tilt adjustment points to pivot and level the motor. The motor pivots in all directions.

a) Loosen bolts (1) to make all vertical adjustments. Loosen bolts (2) to make all horizontal adjustments.

b) Make horizontal and vertical adjustments at indicated points.

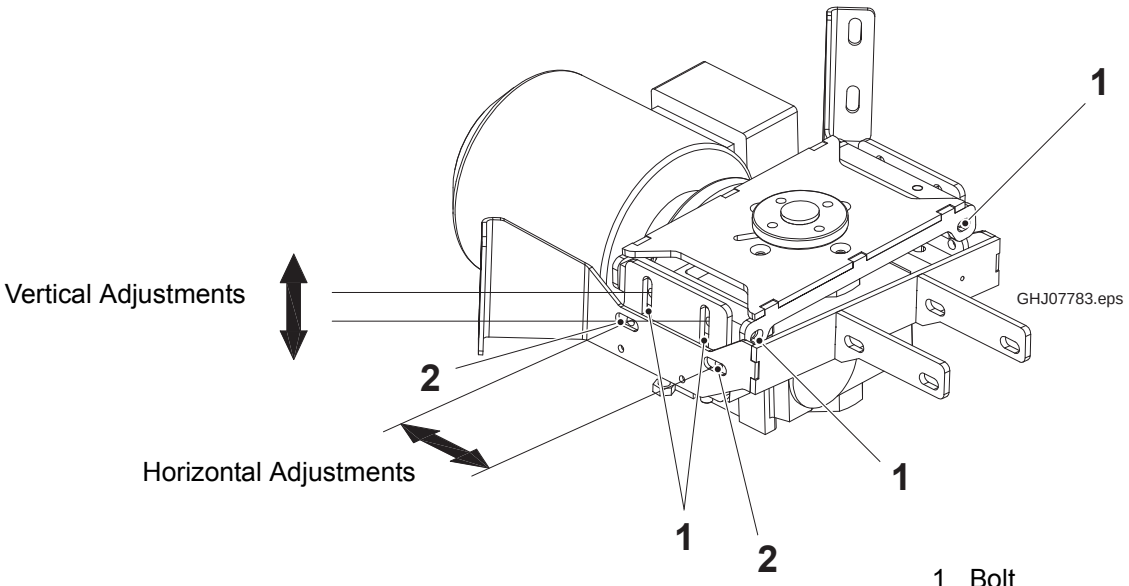

1 Bolt
2 Bolt

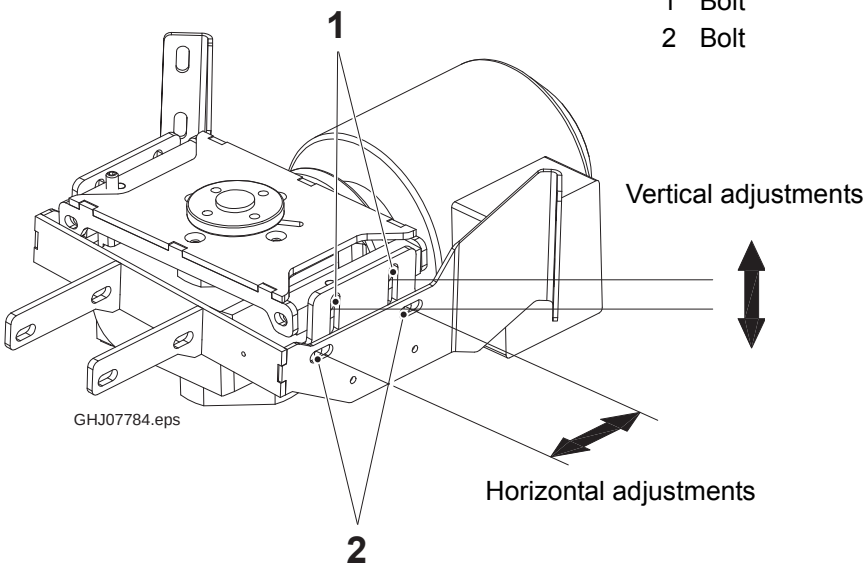

(Cont'd)

(Cont'd)

c) To make pan / tilt adjustments:
   - Loosen the lower nuts (3).
   - Adjust the upper nuts (4) and bolts (5) to the desired positions.
   - Re-tighten the lower nuts (3).
   - Tighten the bolts (1).

d) Using the provided setup tool, verify that the end of the sprocket tooth is dimension B from the inner wall of the chain pocket. (See the chain pocket illustration and dimension B on page 2-45.)
   - When the spacing is correct, the setup tool contacts both the sprocket tooth and the inner wall of the chain pocket.
   - When adjusting the sprocket, position it so that it does not push against the inner wall of the pocket.

e) Re-tighten the bolts (2).

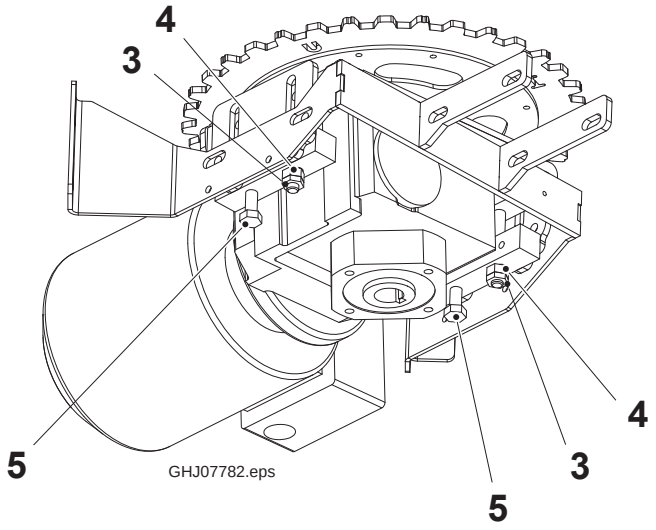

Bottom View Showing Pan / Tilt Adjustments

2.2.5.2 Infeed Drive Sprocket

2.2.5.2-1 Infeed Drive Sprocket - Check

Machine Status	Power Supply Disconnector OFF
SPC Reference	2948924-0200 (LINF) 2948925-0200 (RINF)

a) Check that the sprocket tooth without the notch (1) is engaged in the pocket of the chain. If necessary, set the sprocket according to 2.2.5.2-2 Infeed Drive Sprocket - Set.

b) Check that the infeed sprocket (2) does not show any signs of wear or damage on the sprocket teeth. If necessary, change the sprocket (2) according to 2.2.5.2-3 Infeed Drive Sprocket - Change.

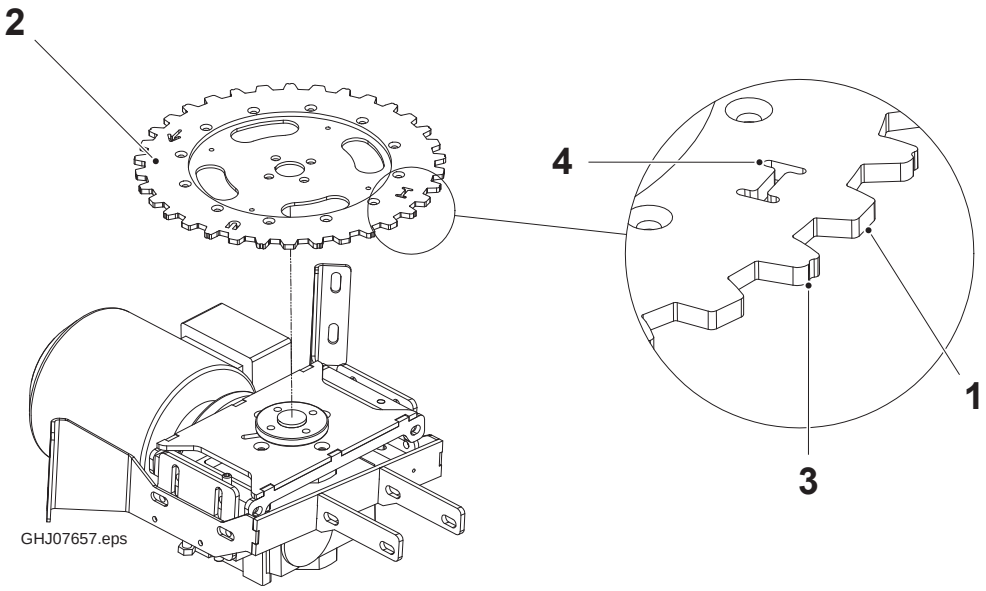

1 Tooth without notch
2 Sprocket
3 Tooth with notch
4 Infeed sprocket indicator (I)

2.2.5.2-2 Infeed Drive Sprocket - Set

Machine Status	Power Supply Disconnector OFF
SPC Reference	2948924-0200 (LINF) 2948925-0200 (RINF)

a) Remove chain tops on the infeed conveyor chain (5) in the area around the sprocket (2). Refer to 2.2.4.1-1 Chain Top - Remove and Install.

b) Loosen and remove the screws (6) from the sprocket (2).

c) Rotate the sprocket (2) so the tooth without the notch (1) is positioned between the chain pockets as shown.

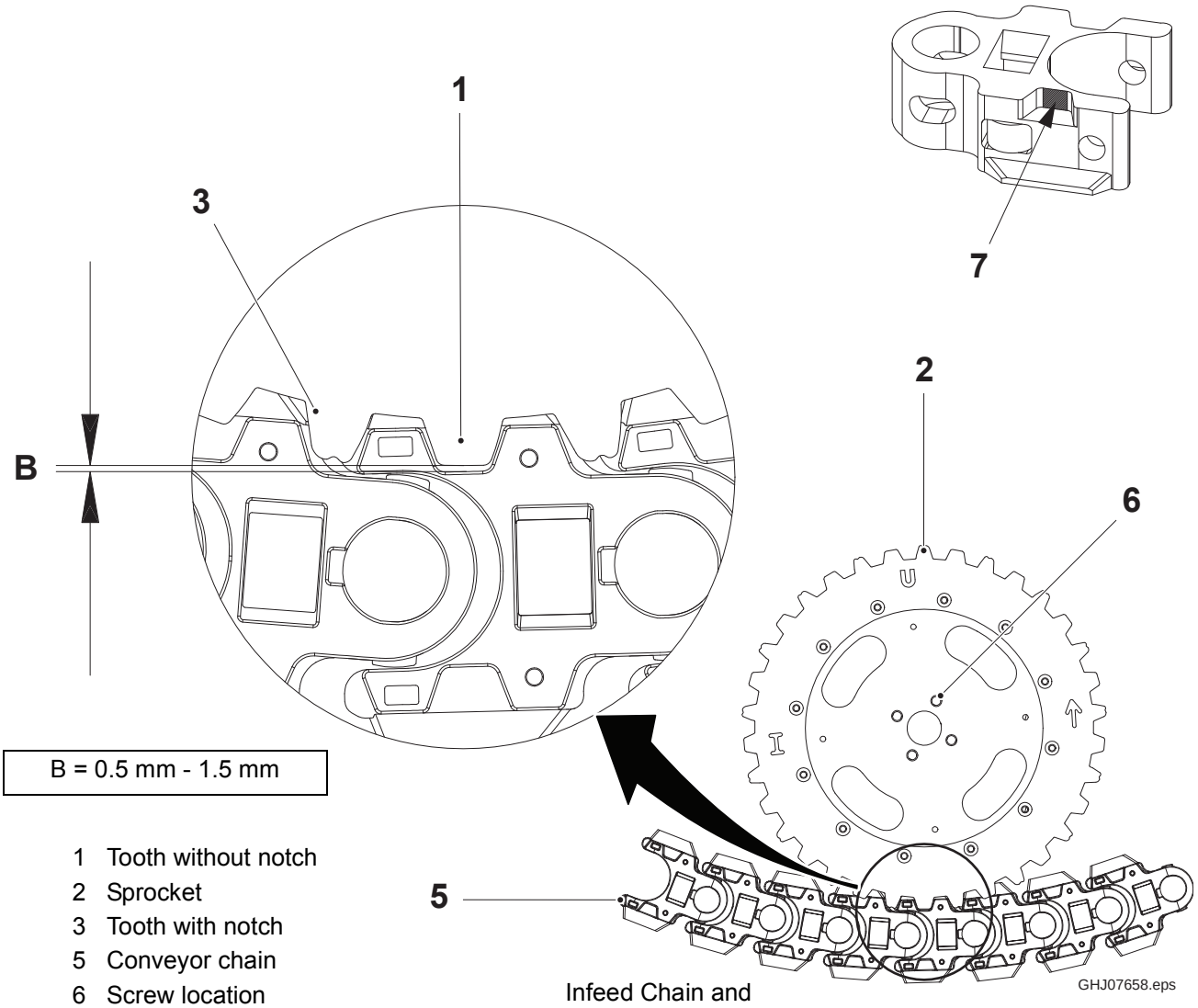

1 Tooth without notch
2 Sprocket
3 Tooth with notch
5 Conveyor chain
6 Screw location
7 Inner wall of chain pocket

Infeed Chain and Sprocket Shown

(Cont'd)

(Cont'd)

d) Reinstall and tighten the screws (6).

e) Using the setup tool, check the distance between the end of the sprocket tooth (1) and the inner wall of the chain pocket (7). See 2.2.5.1-1 Infeed Drive Assembly - Check for detailed instruction.

f) Reinstall the chain tops.

2.2.5.2-3 Infeed Drive Sprocket - Change

Machine Status	Power Supply Disconnector OFF
SPC Reference	2948924-0200 (LINF) 2948925-0200 (RINF)

a) Remove chain tops on the infeed conveyor chain (5) in the area around the sprocket (2). Refer to 2.2.4.1-1 Chain Top - Remove and Install.

b) Loosen and remove the screws (6) from the sprocket (2).

c) Remove the worn sprocket (2).

d) Install the new sprocket (2).

e) Rotate the sprocket (2) so the tooth without the notch (1) is positioned between the chain pockets as shown.

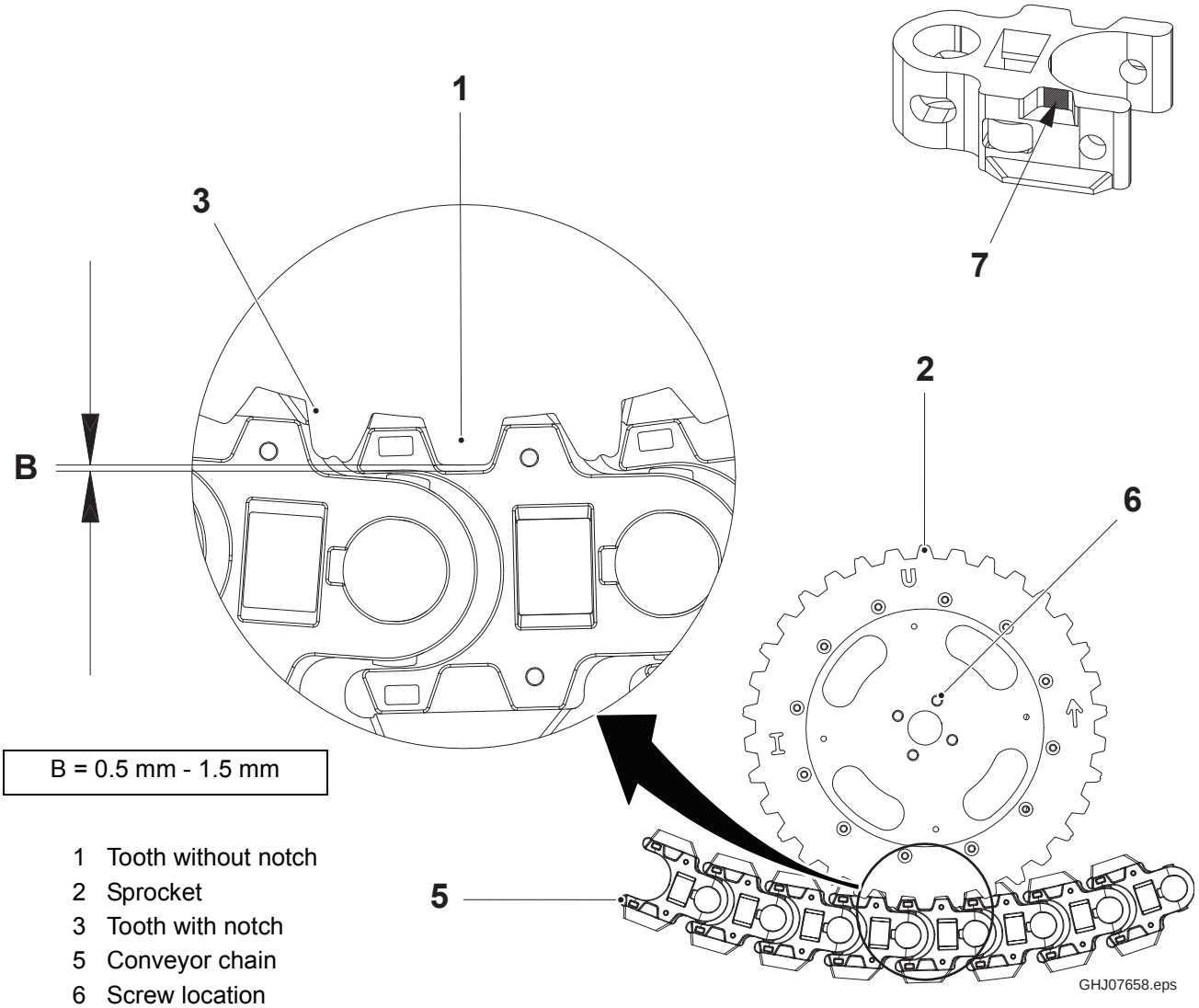

1 Tooth without notch
2 Sprocket
3 Tooth with notch
5 Conveyor chain
6 Screw location
7 Inner wall of chain pocket

(Cont'd)

(Cont'd)

f) Reinstall and tighten the screws (6).

g) Using the setup tool, check the distance between the end of the sprocket tooth (1) and the inner wall of the chain pocket (7). See 2.2.5.1-1 Infeed Drive Assembly - Check for detailed instruction.

h) Reinstall the chain tops.

2.3 Outfeed

2.3.1 Sensors

For information on the lower limit proximity switch, refer to 4.3.3-1 Proximity Switches - Set.

For more information on the outfeed jam sensor, refer to 4.3.2.2 Photocell - Reflecting Type.

2.3.2 Outfeed Chain Tensioner

The conveyor chain may stretch after initial start-up and up to 70 hours of production.

2.3.2-1 Outfeed Chain Tensioner - Check

Machine Status	Power Supply Disconnector OFF
SPC Reference	2948919-0100

a) Check that the chain return arm (1) moves freely on the shaft (2) in the block (3).

b) When the chain return arm (1) is resting down against the chain, check that the arm (1) is approximately level / horizontal.

c) In the chain return area, pull outwardly the slack in the outfeed conveyor chain.

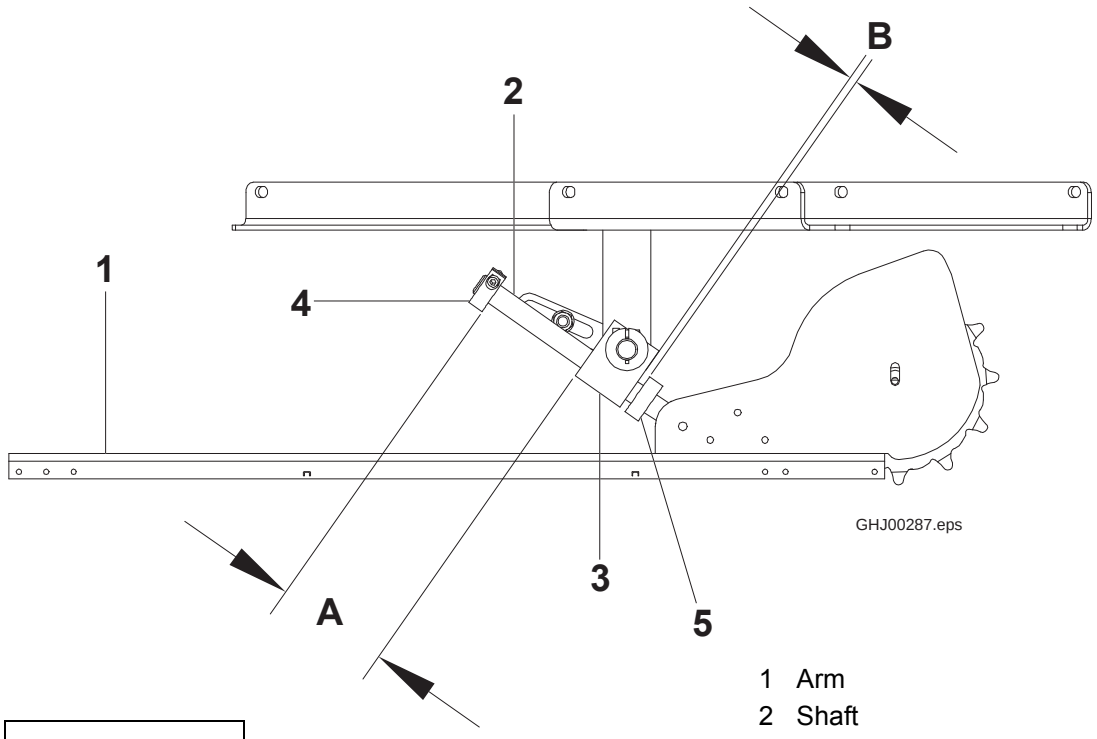

A >= 50 mm
B = 1 - 6 mm

1 Arm
2 Shaft
3 Block
4 Top Collar
5 Bottom Collar

(Cont'd)

(Cont'd)

d) Release the conveyor chain and check the chain tension by measuring the distance between the block (3) and the top collar (4).

Note! If the distance between the block (3) and the top collar (4) is not according to dimension A, refer to 2.3.2-2 Outfeed Conveyor Chain Tensioner - Set.

e) While the machine is idle, check dimension B between the block (3) and the bottom collar (5).

Note! If the distance between the block (3) and the bottom collar (5) is not according to dimension B, refer to 2.3.2-2 Outfeed Conveyor Chain Tensioner - Set.

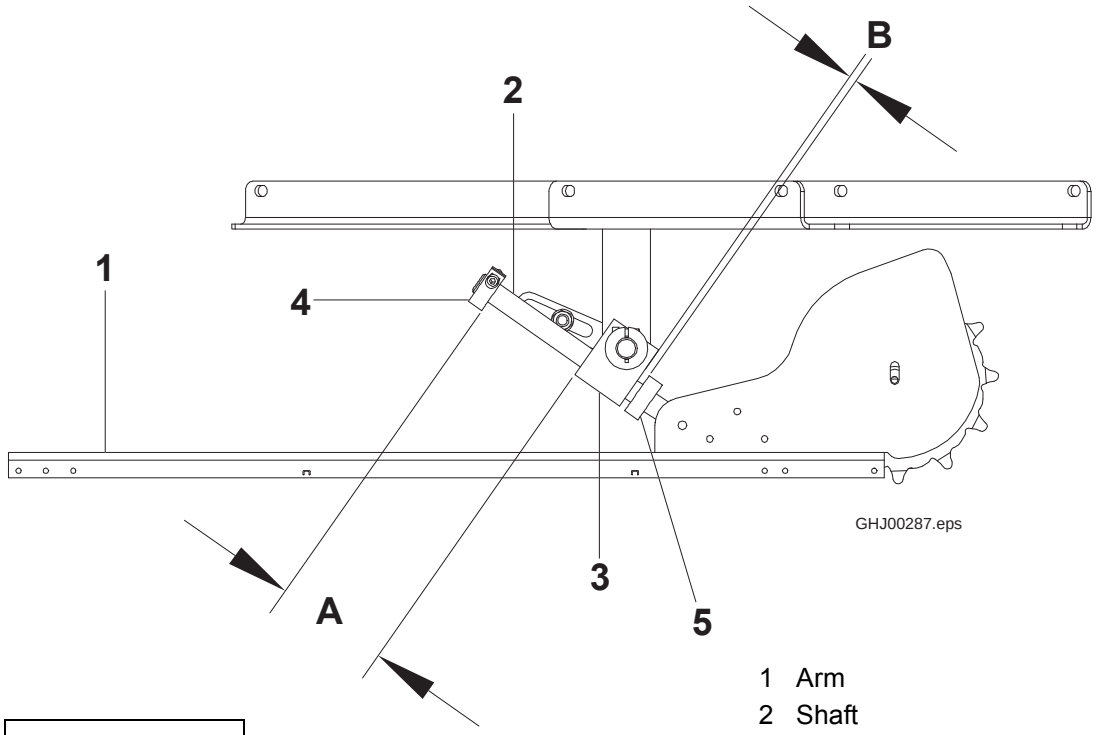

A >= 50 mm
B = 1 - 6 mm

1 Arm
2 Shaft
3 Block
4 Top Collar
5 Bottom Collar

2.3.2-2 Outfeed Conveyor Chain Tensioner - Set

Machine Status	Power Supply Disconnector OFF
SPC Reference	2948919-0100

a) Remove or add chain links to achieve dimension A between the block (3) and the top collar (4). Refer to 2.2.4.1-1 Chain Top - Remove and Install.

b) Adjust the bottom collar (5) to maintain dimension B between the bottom collar (5) and the block (3).

A >= 50 mm
B = 1 - 6 mm

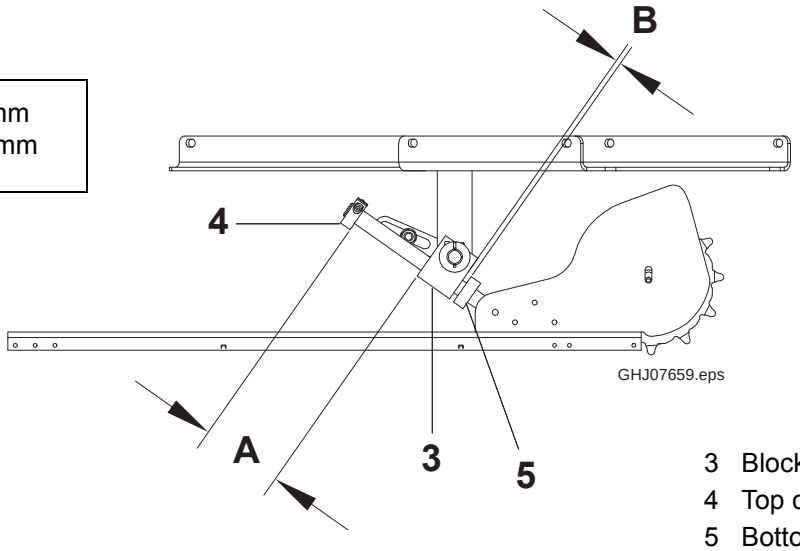

3 Block
4 Top collar
5 Bottom collar

2.3.3 Outfeed Guide

2.3.3.1 Outfeed Guide Rails

2.3.3.1-1 Outfeed Guide Rails - Check

Machine Status	Power Supply Disconnector OFF
SPC Reference	2948929-0100

a) Check for any fats or sugar build up on the Teflon® guide rail surfaces (1) and (2).

1 Inside guide rail
2 Outside guide rail

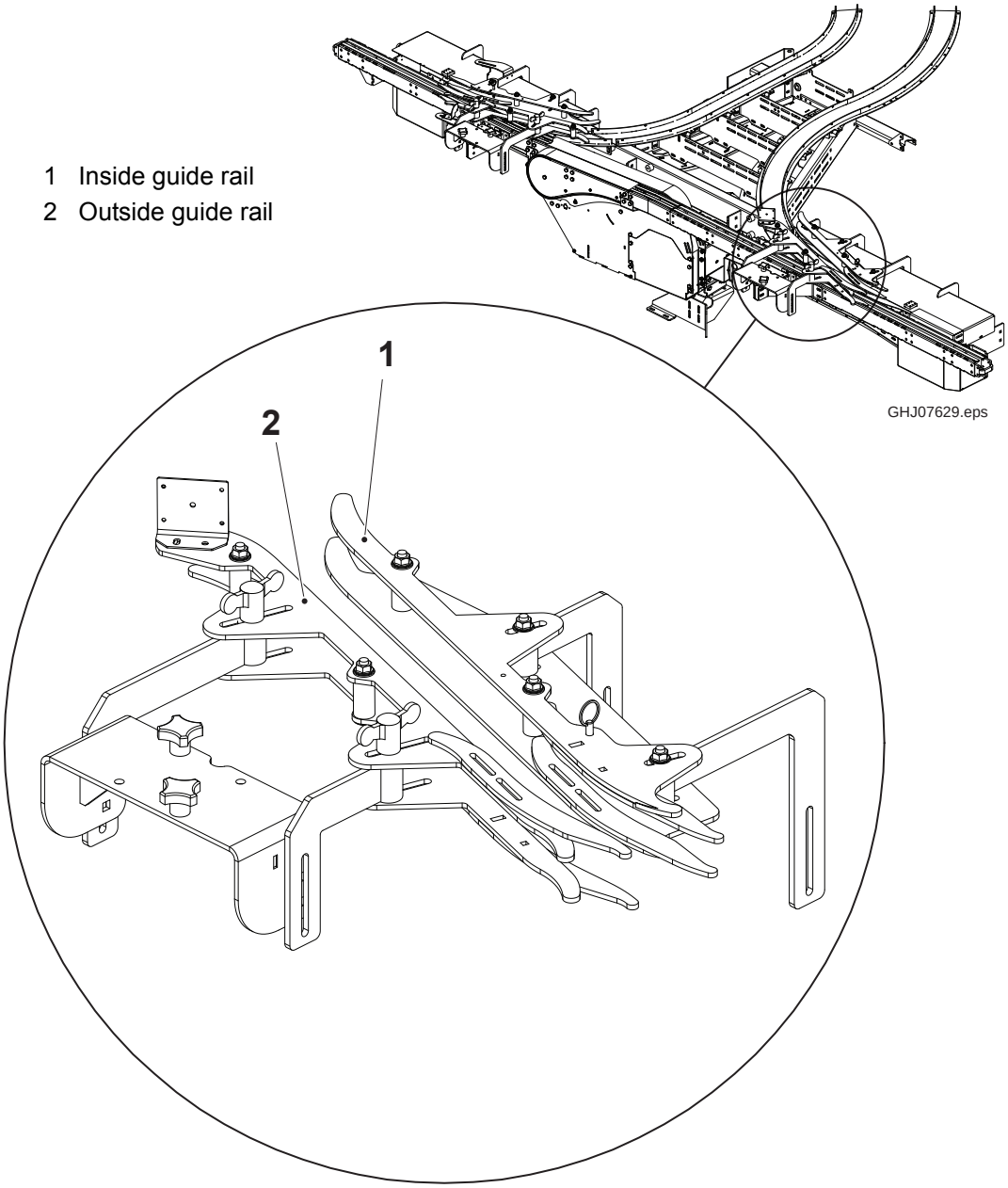

(Cont'd)

(Cont'd)

b) Check for damage to guide surfaces and guide rails.

c) Check that the inside and outside guide rails (1) and (2) are set correctly for package width. Refer to section 2.3.3.1-2 Outfeed Guide Rails - Set.

Note! Inside guide rails (1) are factory set and should not require adjustment.

2.3.3.1-2 Outfeed Guide Rails - Set

Machine Status	Power Supply Disconnector OFF
SPC Reference	2948929-0100

Set the outside guide rails for package width:

a) Loosen the hand knobs (1) on the outside guide rails (2).

1 Hand knob
2 Outside guide rail

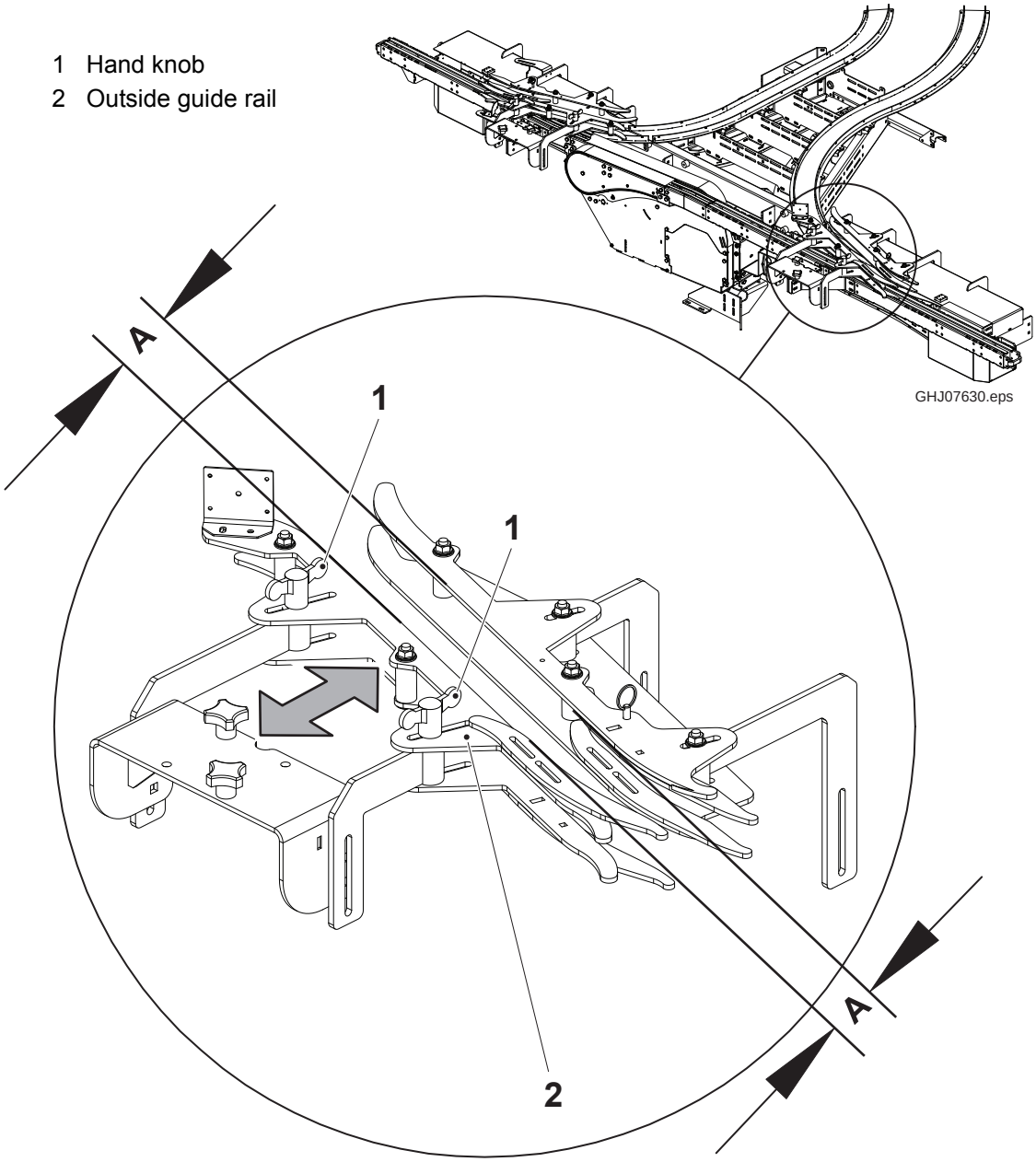

Note! Dimension A measures the distance between the bottom set of guides.

(Cont'd)

(Cont'd)

b) Adjust the outside guide rails (2) according to dimension A in the Guide Rails Volume Change Table on page 2-62.

c) Verify the dimension set in step b) is correct according to the table.

d) Tighten the hand knobs (1).

Note! Inside guide rails (3) are factory set and should not require adjustment.

End View of Rails

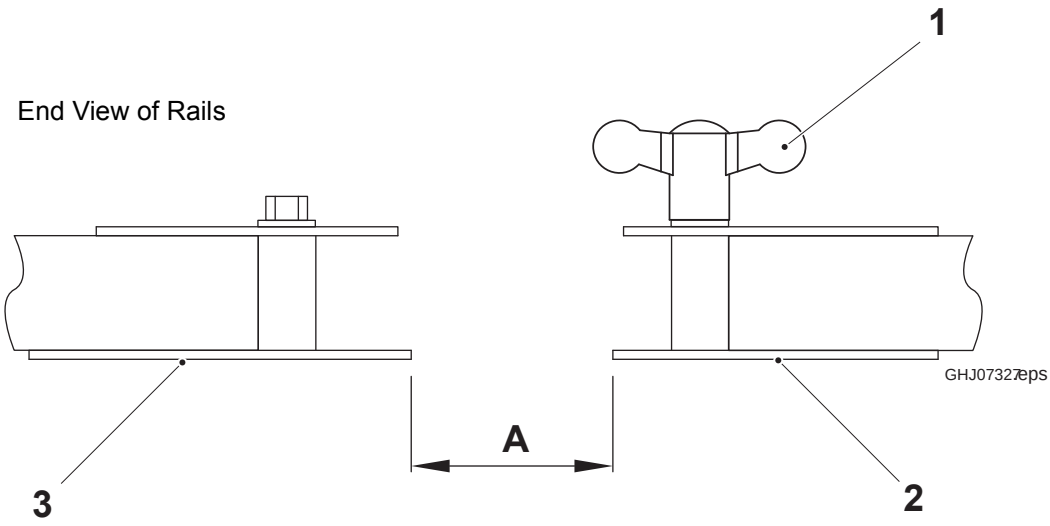

1 Hand knob
2 Outside guide rail
3 Inside guide rail

(Cont'd)

(Cont'd)

Note! When inside guide rails (3) are factory set, there is approximately 1mm of clearance between the package and the inside wall of the chain top (4).

Note! After outside guide rails (2) are set, there should be approximately 5mm of clearance between the edge of the package and the guide rail.

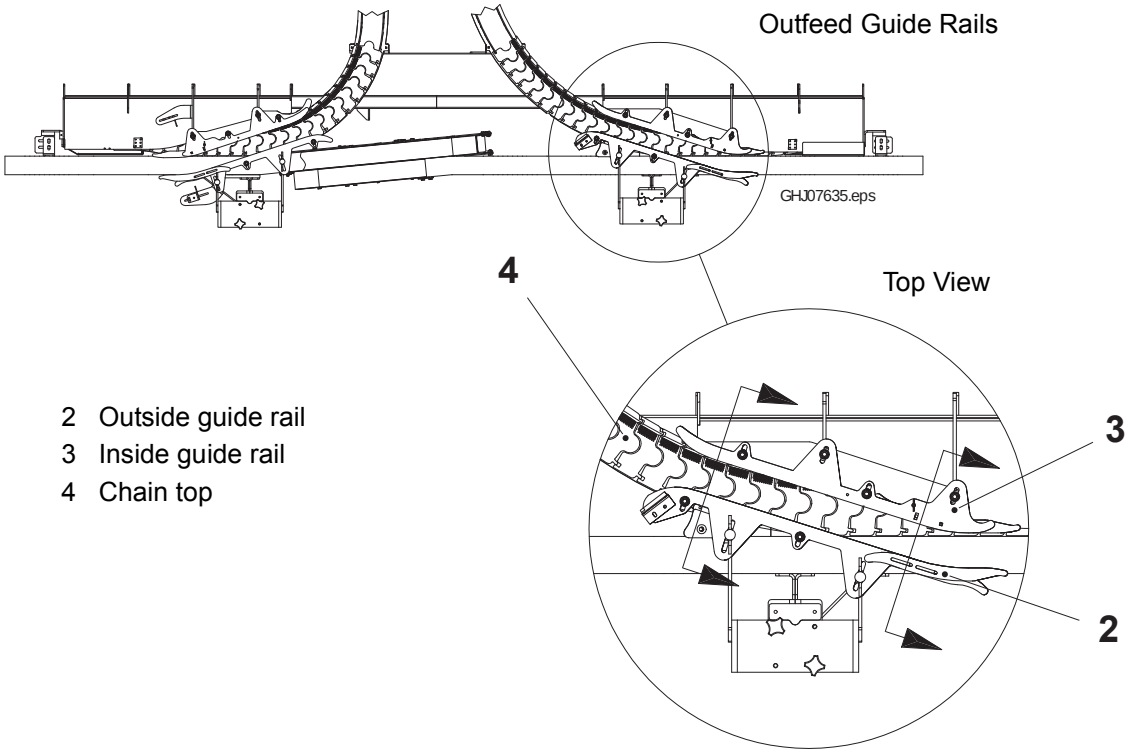

2 Outside guide rail
3 Inside guide rail
4 Chain top

(Cont'd)

(Cont'd)

Guide Rails Volume Change Table

		Lower Rail Dimension (mm)
Package Type	**Volume**	**A**
TB	568SQ	84
	1000E	
	1136SQ	
TB/TBA	200S	48
	200B	49
	200M	45
	250B	49
	500B	77
	500SQ	80
	1000B	
	1000SQ	
TBA	100B	38
	125S	
	160S	46
	180B	47
	200SQ	58
	250S	47
	250SQ	58
	284B	48
	300S	50
	330S	48
	355B	53
	375S	57
	500S	
	750S	76
	750B	
	1000M	80
	1000S	76
	1500S	75
	1890S	84
	2000S	
TPA	200SQ	50
	250SQ	
	330SQ	56
	500SQ	60
	750SQ	70
	1000SQ	

		Lower Rail Dimension (mm)
Package Type	**Volume**	**A**
TGA	500SQ	73
	750SQ	
	1000SQ	
	1500SQ	84
TRC	340MIDI	57
	390MIDI	
	500MIDI	

If a package is not listed in the table on the previous page, use the following formula to approximate the setting:

Dim A = Package Depth + 8mm

Note! The data contained in the table was established using empirical methods and may not agree with the formula.

2.3.4 Outfeed Chain

2.3.4.1 Chain Top

2.3.4.1-1 Chain Top - Remove and Install

Machine Status	Power Supply Disconnector OFF
SPC Reference	2948930-0100 (LINF) 2948931-0100 (RINF)

When it is necessary to remove a section of chain to adjust chain tension, refer to 2.2.4.1-1 Chain Top - Remove and Install.

2.3.4.2 Base Chain

2.3.4.2-1 Base Chain - Check

Machine Status	Power Supply Disconnector OFF
SPC Reference	2948930-0100 (LINF) 2948931-0100 (RINF)

Refer to 2.2.4.2-1 Chain - Check.

2.3.5 Outfeed Drive

2.3.5.1 Outfeed Drive Assembly

The drive configuration varies depending upon the machine variant. For more information, see Machine Variants in the Introduction chapter.

Drive configurations (Infeed)	
Machine Variant	No. of outfeed gear motors
47M	3
75M / 100M	6
90M / 120M	7

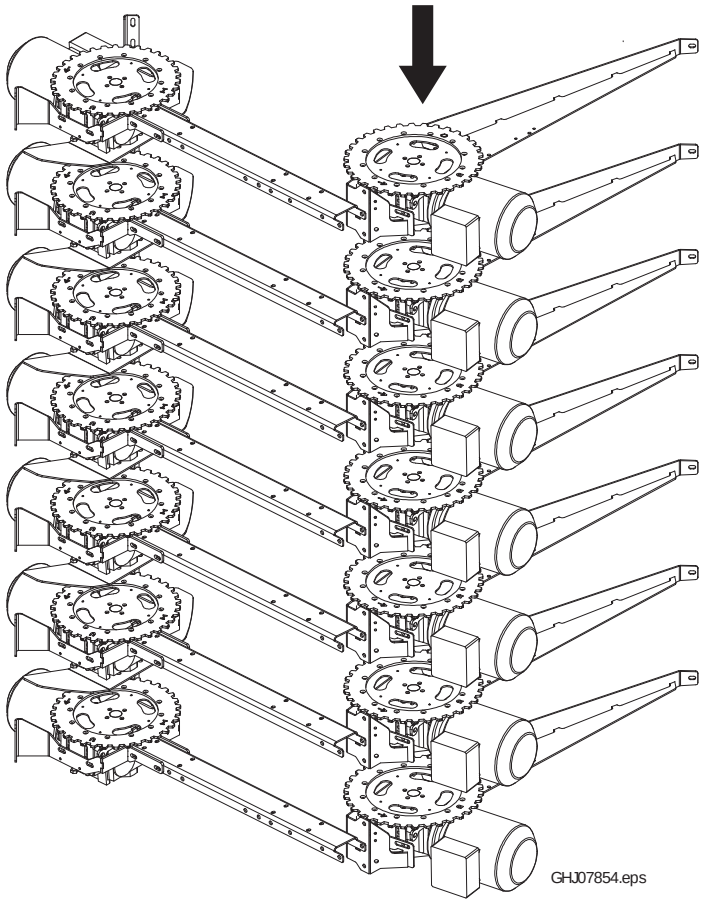

2.3.5.1-1 Outfeed Drive Assembly - Check

Machine Status	Power Supply Disconnector OFF
SPC Reference	2948932-0200 (LINF) 2948933-0200 (RINF)

Follow the instructions 2.2.5.1-1 Infeed Drive Assembly - Check.

2.3.5.1-2 Outfeed Drive Assembly - Adjust

Machine Status	Power Supply Disconnector OFF
SPC Reference	2948932-0200 (LINF) 2948933-0200 (RINF)

Note! The minor shifting that may occur during shipping does not affect the performance of the drive assemblies. Only adjust the drives if severe shifting occurs during shipment. Do not make minor adjustments to the drive assemblies.

(Cont'd)

(Cont'd)

Use the horizontal, vertical and pan/tilt adjustment points to pivot and level the motor. The motor pivots in all directions.

a) Loosen bolts (1) to make vertical adjustments. Loosen bolts (2) to make horizontal adjustments.

b) Make horizontal and vertical adjustments at indicated points.

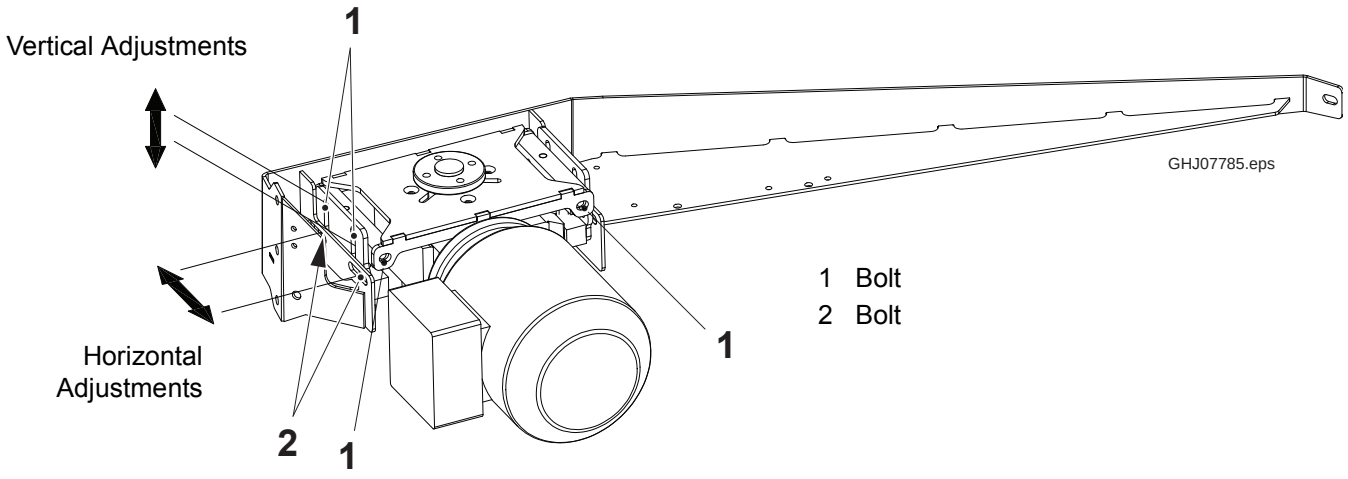

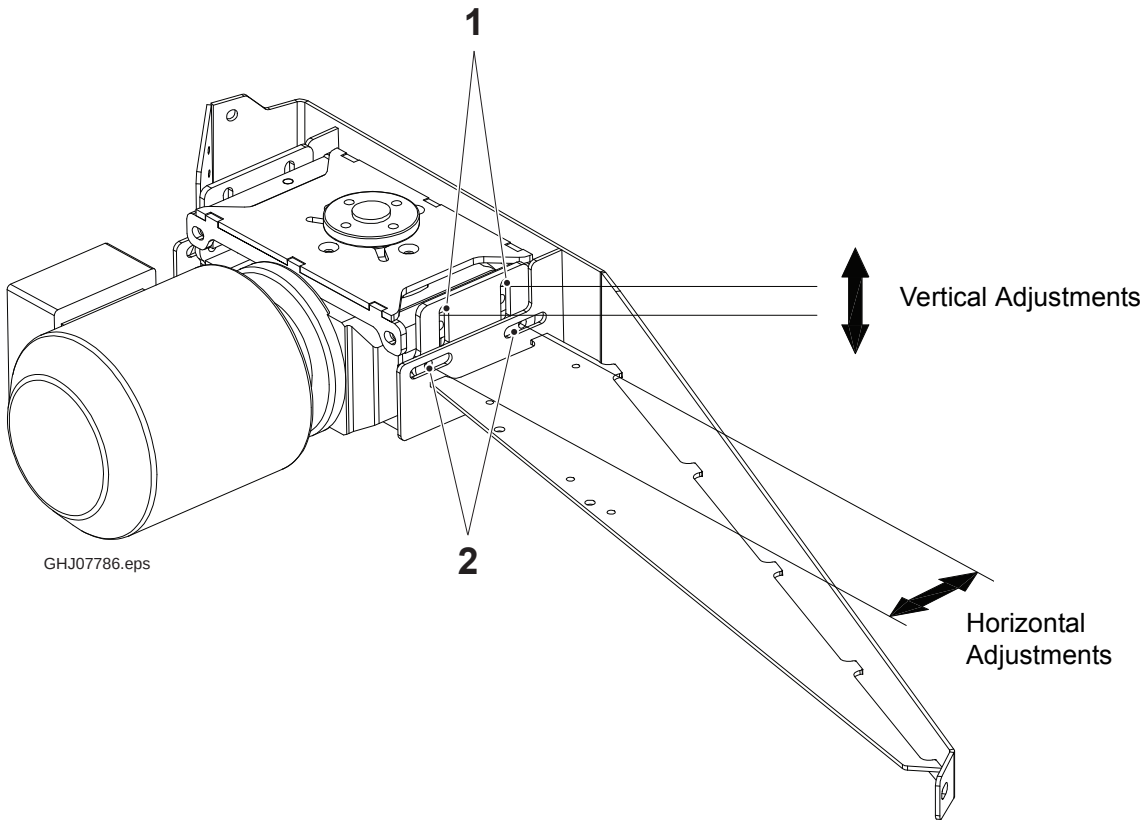

(Cont'd)

(Cont'd)

c) Make pan / tilt adjustments:
   - Loosen the lower nuts (3).
   - Adjust the upper nuts (4) and bolts (5) to the desired positions.
   - Tighten the lower nuts (3).
   - Tighten the bolts (1)

d) Using the provided setup tool, verify that the end of the sprocket tooth is dimension B from the inner wall of the chain pocket. (See the chain pocket illustration and dimension B on page 2-45.)
   - When the spacing is correct, the setup tool contacts both the sprocket tooth and the inner wall of the chain pocket.
   - When adjusting the sprocket, position it so that it does not push against the inner wall of the pocket.

e) Re-tighten the bolts (2).

Bottom View Showing Pan / Tilt Adjustments

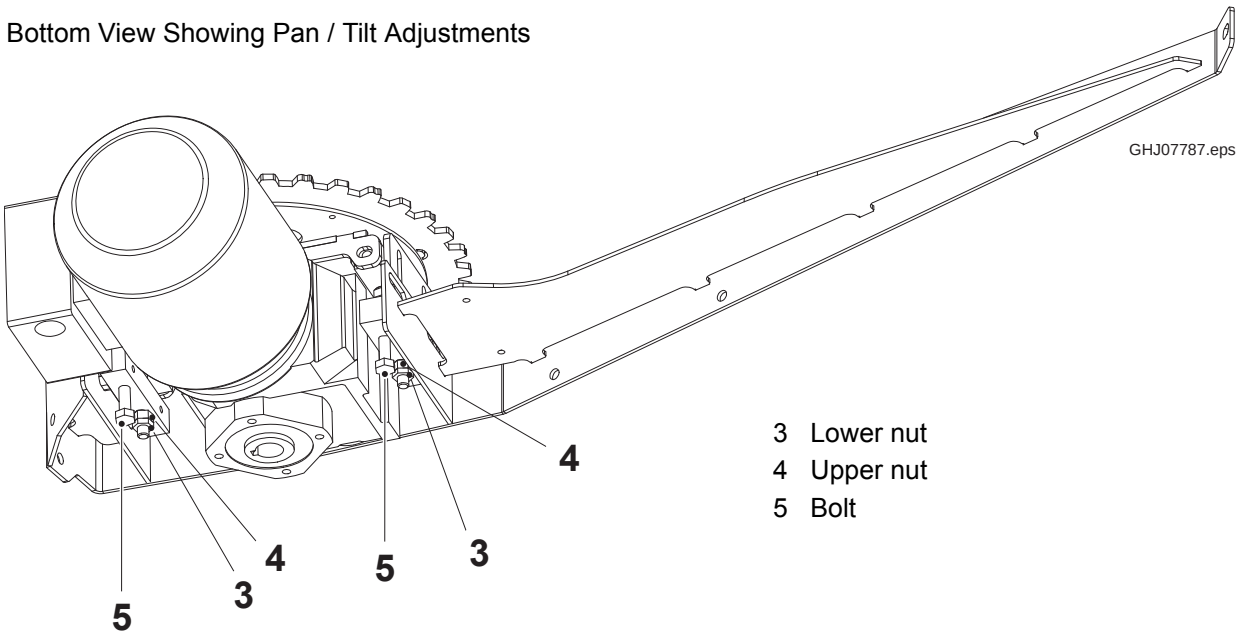

2.3.5.2 Outfeed Drive Sprocket

2.3.5.2-1 Outfeed Drive Sprocket - Check

Machine Status	Power Supply Disconnector OFF
SPC Reference	2948932-0200 (LINF) 2948933-0200 (RINF)

a) Check that the sprocket tooth without the notch (1) is engaged in the pocket of the chain. If necessary, set the sprocket according to 2.2.5.2-2 Infeed Drive Sprocket - Set.

b) Check that the outfeed sprocket (2) does not show any signs of wear or damage on the sprocket teeth. If necessary, change the sprocket (2) according to 2.2.5.2-3 Infeed Drive Sprocket - Change.

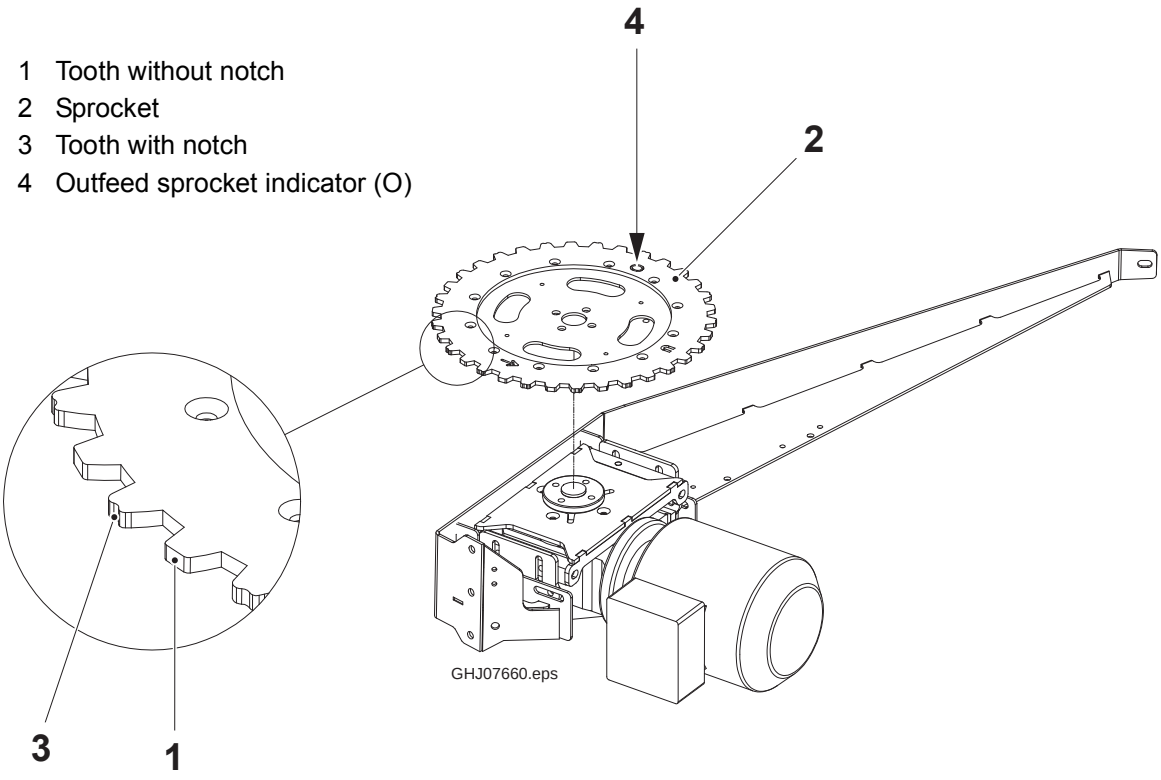

2.3.5.2-2 Outfeed Drive Sprocket - Set

Machine Status	Power Supply Disconnector OFF
SPC Reference	2948932-0200 (LINF) 2948933-0200 (RINF)

Follow the instructions 2.2.5.2-2 Infeed Drive Sprocket - Set.

2.4 Spider Unit

2.4.1 Belt Spider Unit

2.4.1-1 Belt Spider Unit - Remove

Positioning Spider for Removal (Automatically)

Machine Status	PREPARATION STEP
SPC Reference	2948934-0100 (LINF) 2948940-0100 (RINF)

a) At the Home Window, press the MAINTENANCE button.

b) At the Maintenance Home Window, press the ACCUMULATOR MAINTENANCE button.

c) At the Accumulator Maintenance Window, press the SPIDER MAINTENANCE POSITION button (1).

d) Press the START button (2) to activate automatic spider travel.

The spider automatically travels and stops at the lowest level of the machine adjacent to the rear guard door. From here, the spider can be easily accessed for maintenance or removal.

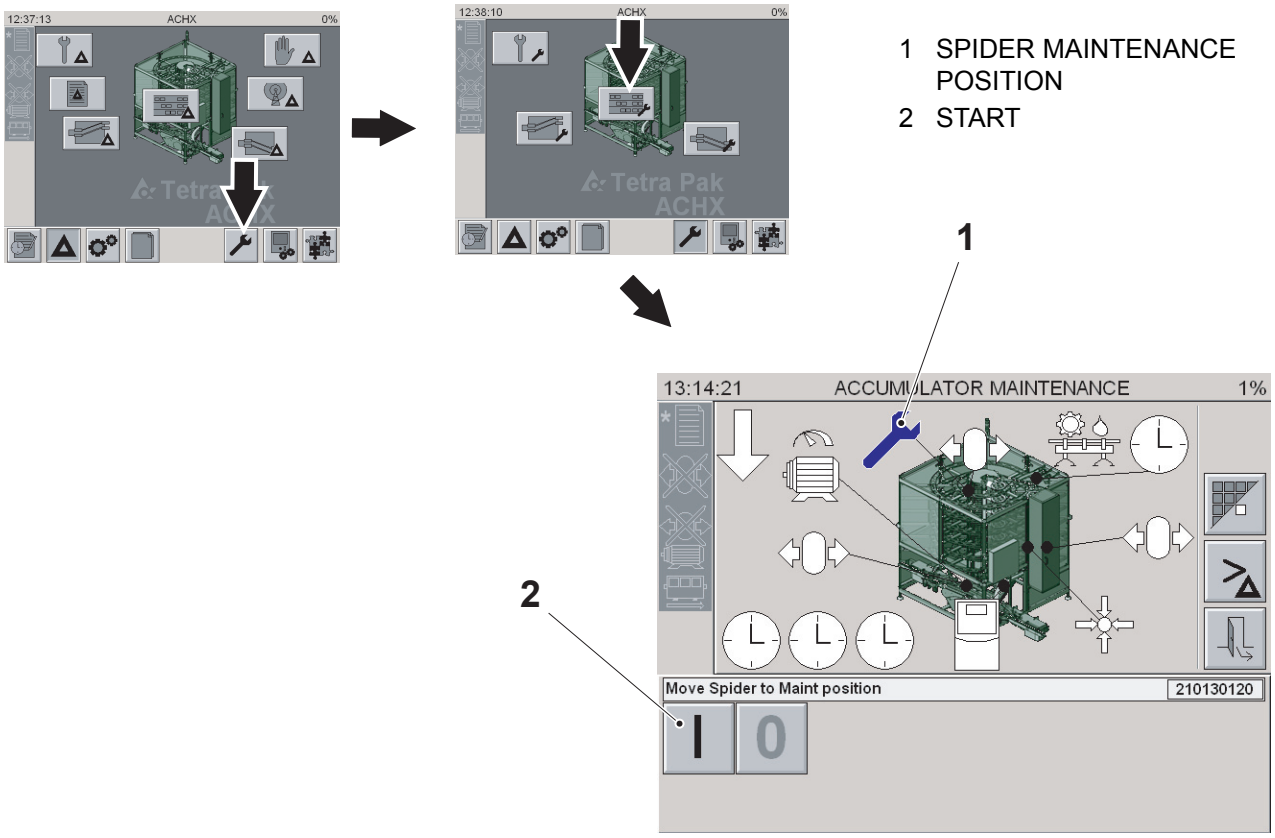

1 SPIDER MAINTENANCE POSITION
2 START

(Cont'd)

(Cont'd)

Positioning Spider for Removal (Manually)

Machine Status	PREPARATION STEP
SPC Reference	2948934-0100 (LINF) 2948940-0100 (RINF)

The spider can also be positioned manually using the INTERNAL INFEED / INTERNAL OUTFEED JOG buttons located on the Accumulator Settings Window.

To position the spider manually, perform the following:

a) At the Home Window, press the SETTINGS button.

b) At the Settings Window, press the ACCUMULATOR SETTINGS button.

c) At the Accumulator Settings Window, press the INTERNAL OUTFEED JOG button (1) to select the function. The INTERNAL OUTFEED JOG button causes the spider to travel downwards in the machine.

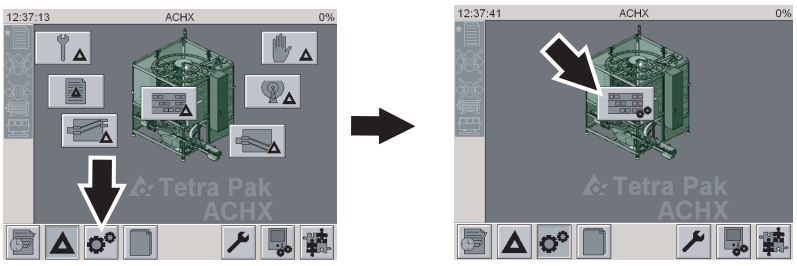

1 INTERNAL OUTFEED CONVEYOR JOG
2 INTERNAL INFEED CONVEYOR JOG
3 START
4 STOP

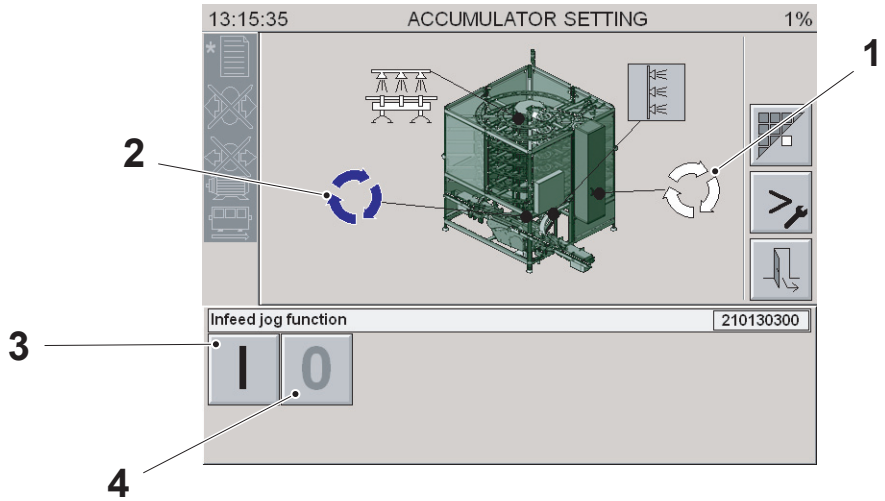

(Cont'd)

(Cont'd)

d) Press the START button (3) to activate spider travel.

e) Press the STOP button (4) to stop spider travel when the spider is in the desired position.

If the INTERNAL INFEED JOG button (2) is selected, the spider travels upwards in the machine.

Note! The jog internal outfeed conveyor function cannot be activated if the spider is at the lowest position (Machine Empty sensor activated). The jog internal infeed conveyor function cannot be activated if the spider is at the highest position (Machine Full sensor activated).

(Cont'd)

Removing Spider Unit

Machine Status	Power Supply Disconnector OFF
SPC Reference	2948934-0100 (LINF) 2948940-0100 (RINF)

a) Once the spider (1) has been positioned for removal, press and hold the STEP DOWN button for two seconds to shut down the machine.

b) Open the rear guard door (2) and remove 24 chain tops (3) on both infeed conveyor (4) and outfeed conveyor (5) as shown on page 2-77. Refer to 2.3.4.1-1 Chain Top - Remove and Install.

c) Lift and remove the spider assembly (1) through door opening (2).

The spider assembly (1) can be reinstalled by reversing procedures a) through c) and referring to section 2.4.3.2-1 Spider Drive Gear - Set. After the spider is reinstalled, step up the machine to PREPARATION step.

d) Jog the infeed conveyor until the section of chain from which the chain tops have been removed comes back around one level up and within reach from the access door.

e) Install the missing chain tops on the infeed and outfeed conveyor chains.

f) Use the outfeed jog function to return the spider to the Empty position.

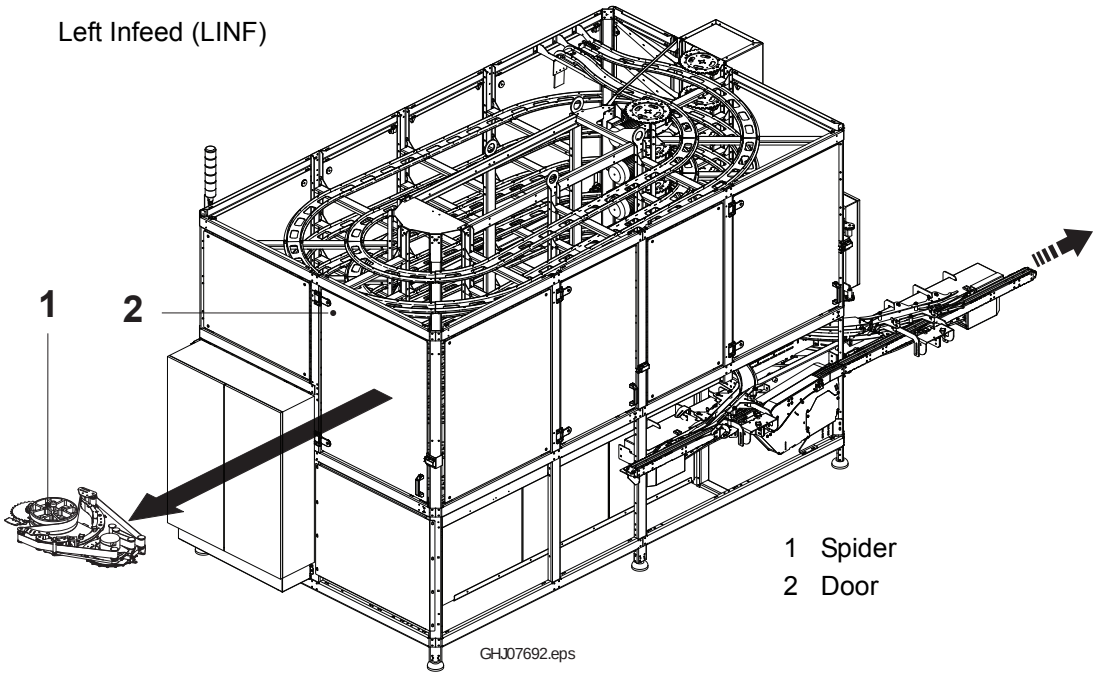

(Cont'd)

(Cont'd)

Spider Unit - Remove

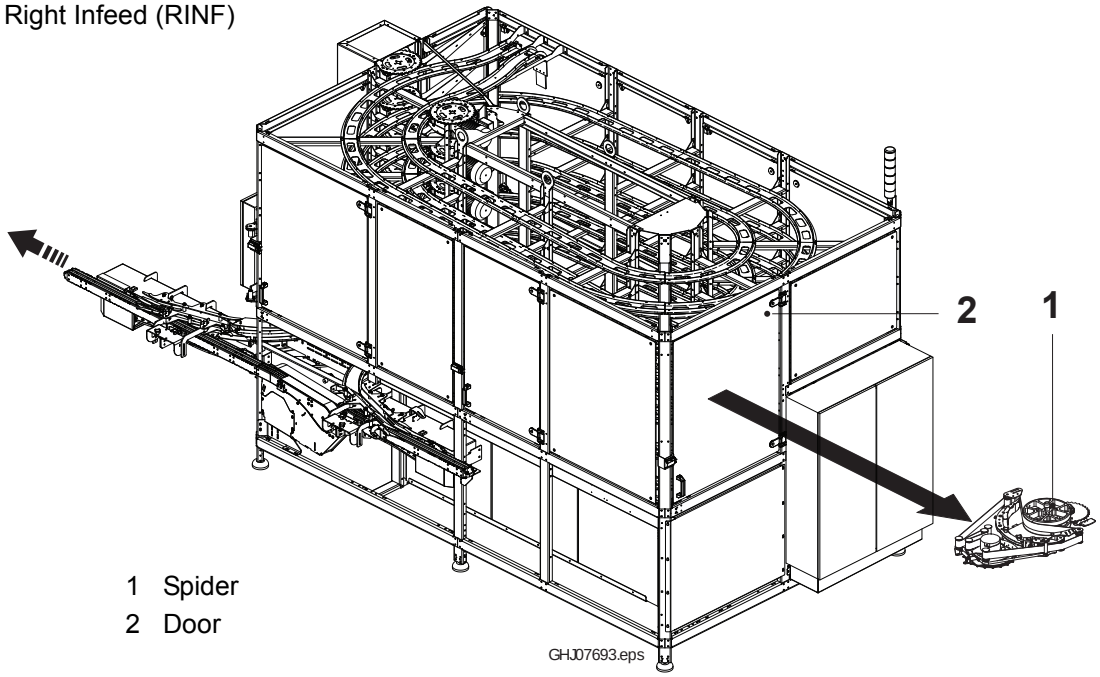

1 Spider
2 Door

(Cont'd)

(Cont'd)

Spider shown in position with chain tops

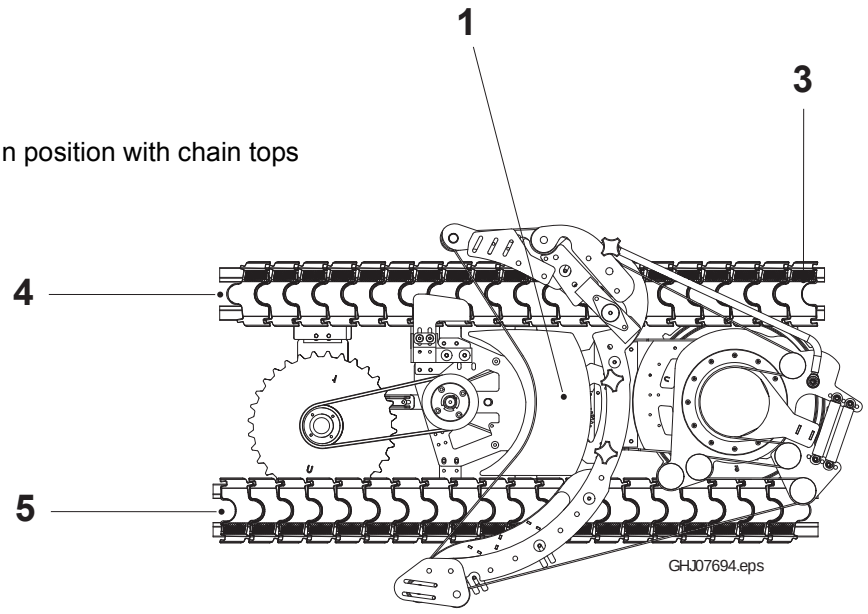

Spider shown in position without chain tops

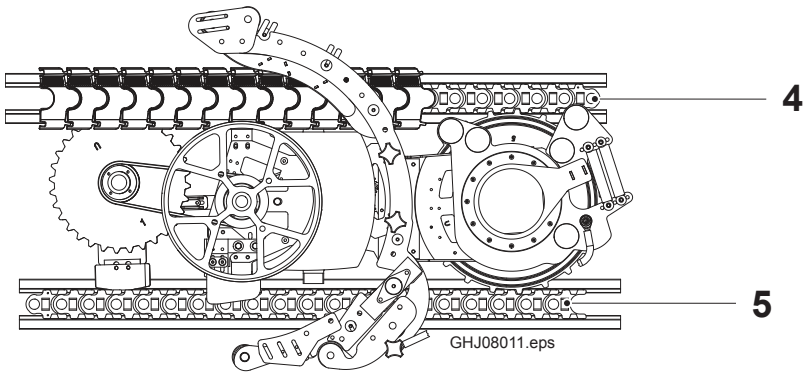

1 Spider assembly
3 Chain tops
4 Infeed conveyor
5 Outfeed conveyor

(Cont'd)

2.4.1-2 Belt Spider Unit - Overhaul

Machine Status	Power Supply Disconnector OFF
SPC Reference	2948934-0100 (LINF) 2948940-0100 (RINF)

The following is a general description of the overhaul process for the spider unit. The spider unit has four main assembly areas:

1) Spider transmission assembly (See page 2-79.)
2) Spider transfer assembly (See page 2-83.)
3) Driven wheel assembly (See page 2-84.)
4) Spider top end assembly (See page 2-86.)

Spider Transmission Assembly

The spider transmission assembly is composed of three major sections:

1) Gear drive (See page 2-80.)
2) Deck (See page 2-81.)
3) Tension roller (See page 2-82.)

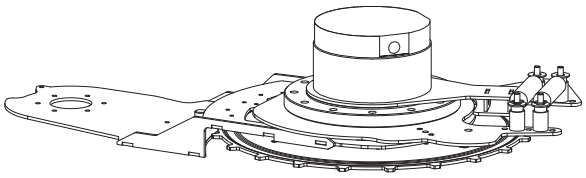

GHJ07696.eps

1 Gear drive
2 Deck
3 Tension roller

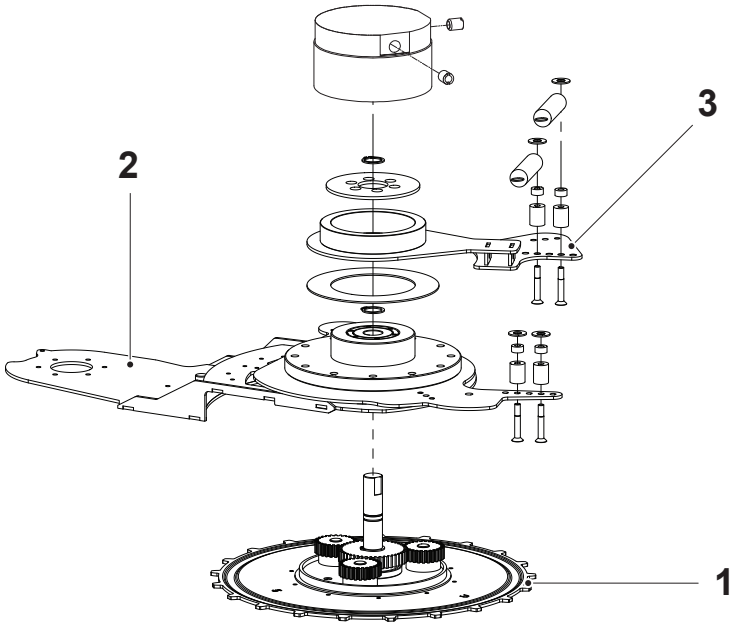

(Cont'd)

(Cont'd)

Note! When reassembling the spider unit after maintenance, clean the parts thoroughly and grease parts (8,12,13) with food-grade grease or silicon-based lubricant.

Use the following procedures to assemble the unit.

Spider Transmission Assembly - Gear Drive

Note! Use red Loctite on screws.

a) Assemble components (3) through (13) to base (1) and drive sprocket (2).

b) Make sure the three outside gears (12) mesh with the inside gear (13) as shown.

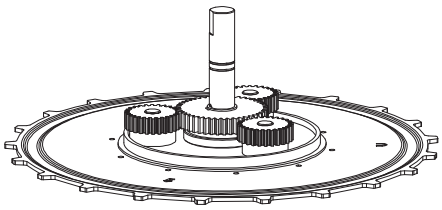

GHJ07351.eps

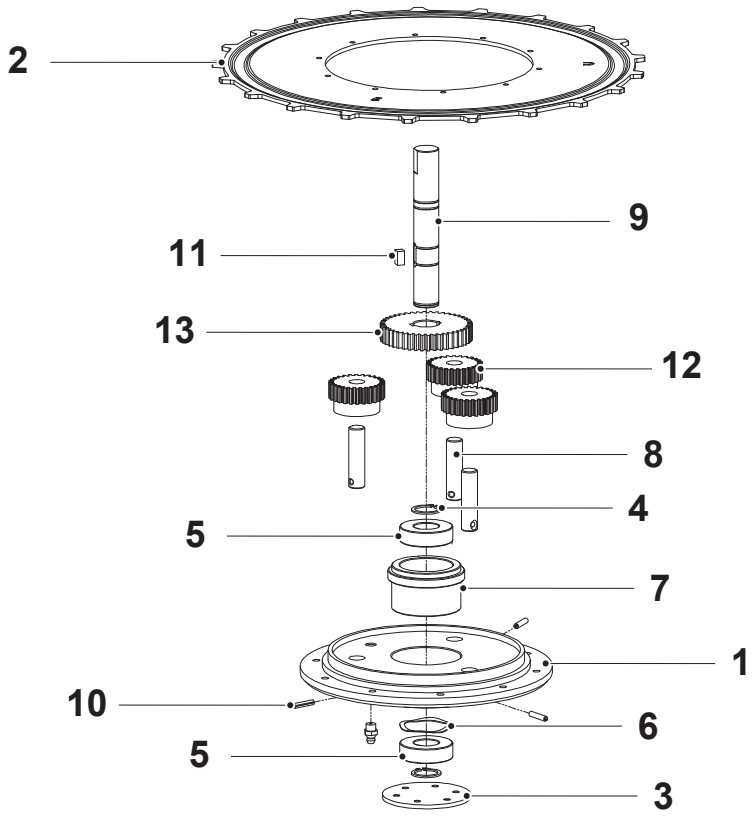

1 Base
2 Sprocket
3 Cap
4 Snap ring
5 Bearing
6 Bearing
7 Bushing
8 Shaft
9 Shaft
10 Roll pin
11 Key
12 Outside gear
13 Inside gear

(Cont'd)

(Cont'd)

Spider Transmission Assembly - Deck

Note! Use blue Loctite on screws.

Note! Do not overtighten screws (9).

a) Assemble internal gear cap components (1) through (5) as shown.

b) Attach the sub-assembled internal gear cap with components (6) and (7) to deck component (8) using screws (9).

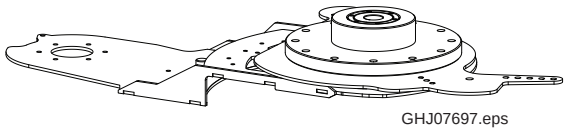

GHJ07697.eps

1 Cap
2 Bearing
3 Bearing
4 Bushing
5 Gear
6 Base
7 Spacer
8 Deck
9 Screw

(Cont'd)

(Cont'd)

Spider Transmission Assembly - Tension Roller

Note! Use red Loctite on screws.

Assemble components (1) through (4) of the tension roller assembly as shown.

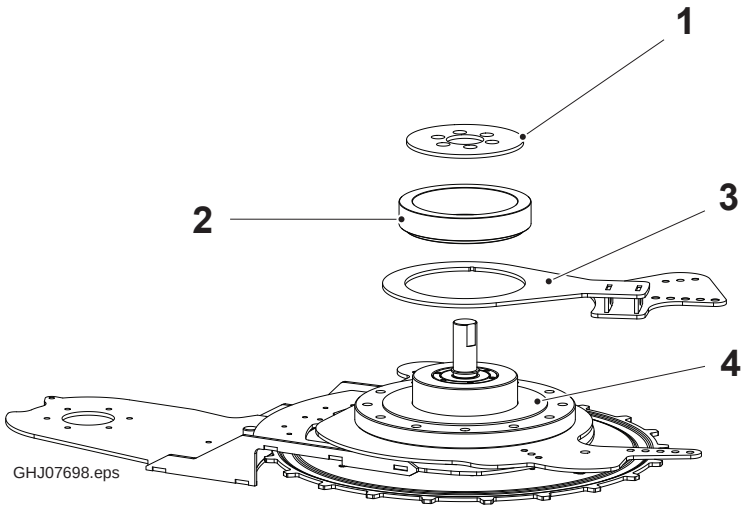

1 Cap
2 Bushing
3 Holder
4 Thrust bearing

(Cont'd)

(Cont'd)

Spider Transfer Assembly

Note! Use red Loctite for screws.

Assemble all components (2) through (13) to the deck (1) as shown.

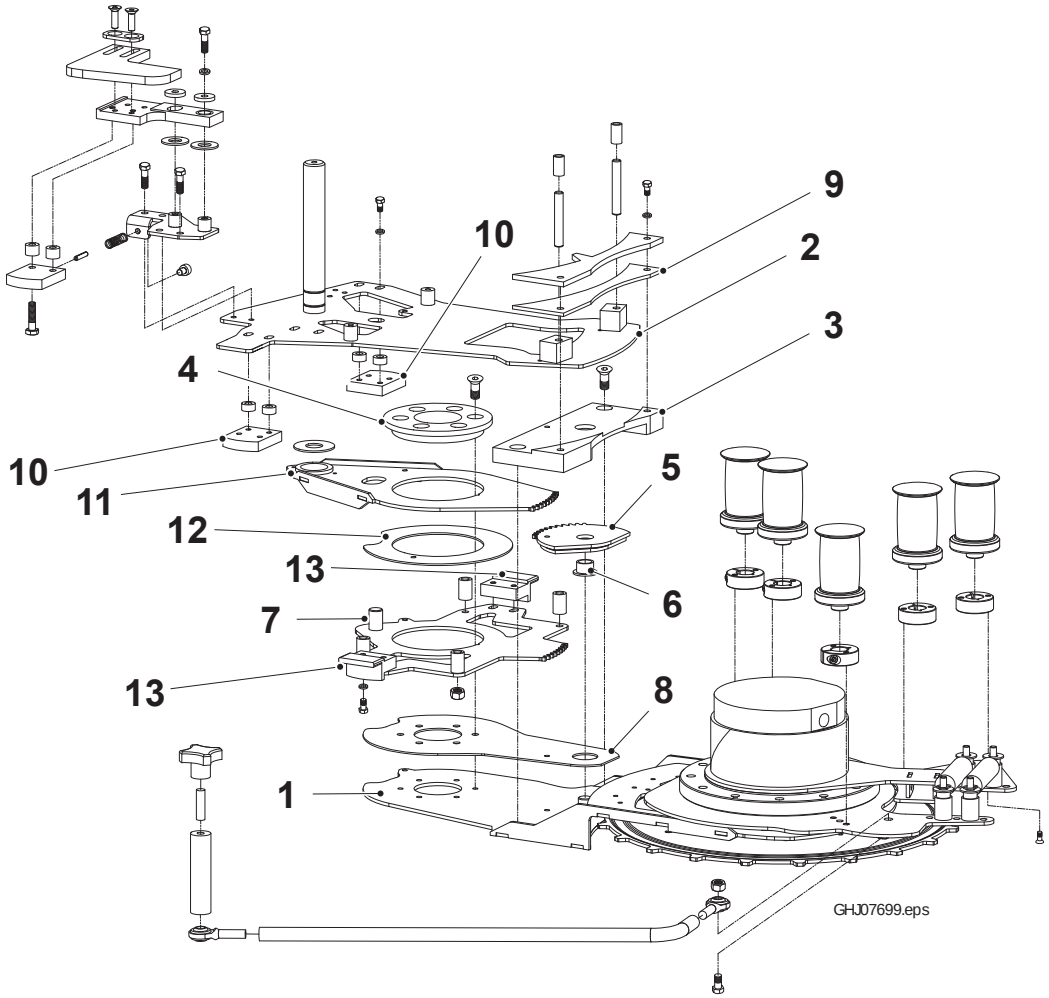

1 Deck
2 Support assembly
3 Block
4 Bearing
5 Timing gear
6 Bushing
7 Dead plate support deck
8 Bearing
9 Bearing
10 Guide block
11 Deck
12 Bearing
13 Guide block

(Cont'd)

(Cont'd)

Driven Wheel Assembly

a) Assemble components (1) through (6) and (26) and mount to the base plate (7).

b) Assemble components (9) through (13). Slide the assembly and washer (8) over the shaft (5) and secure with the snap ring (14). Install the cap (15).

c) Assemble the plate (17) and the guide block (16) to base plate (7).

d) Assemble the neck plate (18) to the base assembly (7) using the nut plate (19) and spacer plate (27).

e) Mount the assembly to the deck plate using the washer (21) and the retainer (20).

f) Assemble the two snap rings (14), the bearing (22), and the pulley (23) to the main shaft on the deck plate.

g) Fasten the drive plate (24) to the pulley (23).

h) Install the drive belt (25) over the pulleys (23) and (10).

(Cont'd)

(Cont'd)

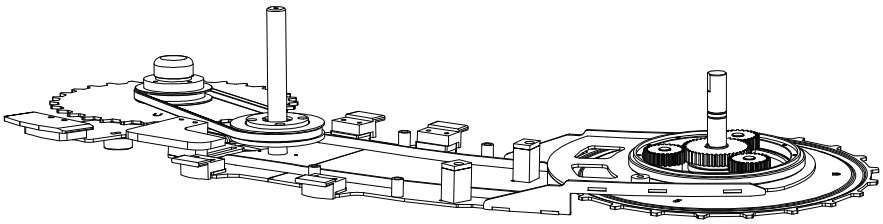

GHJ07354.eps

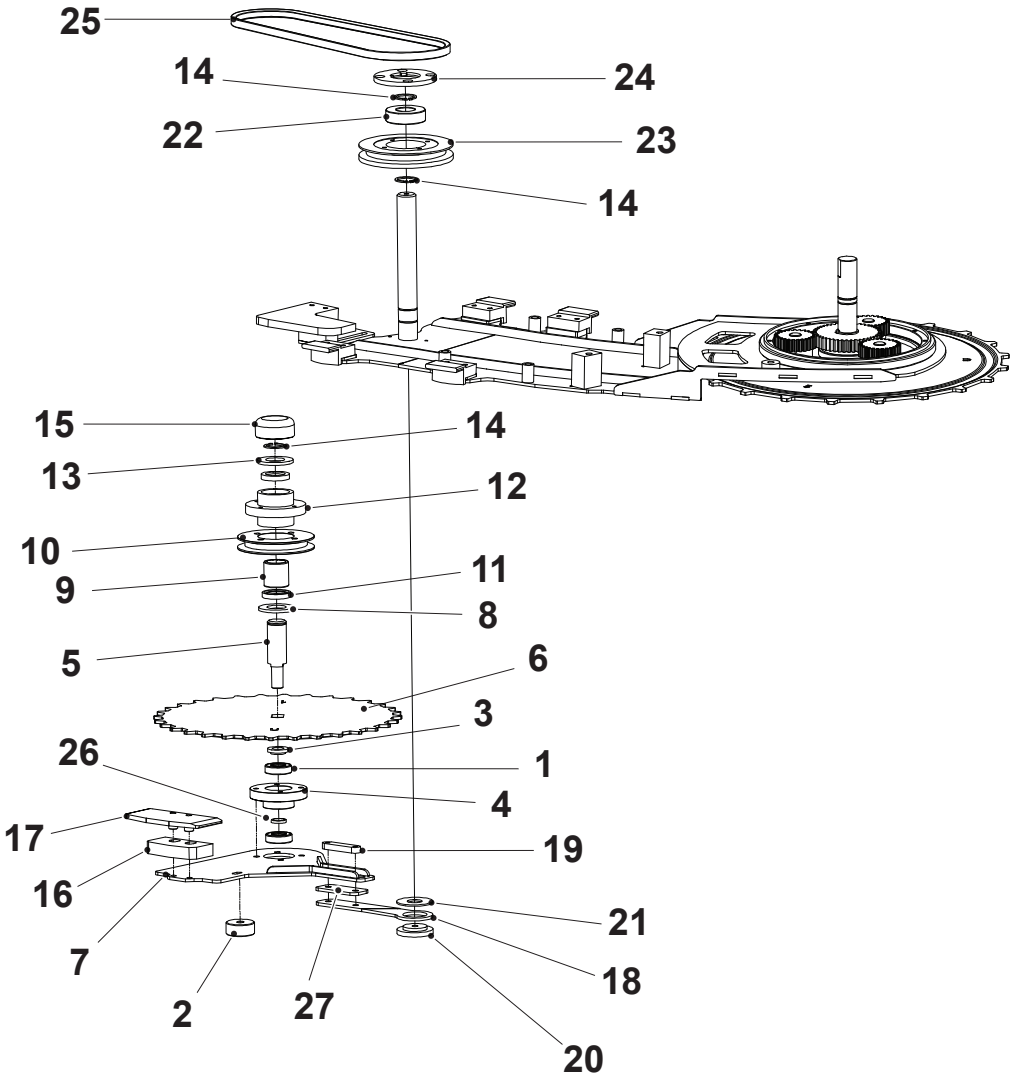

1 Bearing
2 Sensor trigger
3 Spacer
4 Housing
5 Shaft
6 Drive sprocket
7 Base plate
8 Washer
9 Clutch
10 Pulley
11 Seal
12 Housing
13 Washer
14 Snap ring
15 Cap
16 Guide block
17 Plate
18 Neck plate
19 Nut plate
20 Retainer
21 Washer
22 Bearing
23 Pulley
24 Drive plate
25 Drive belt
26 Spacer
27 Spacer plate

(Cont'd)

(Cont'd)

Spider Top End Assembly

a) Assemble components (1) through (4) to the spider transfer assembly's dead plate support deck (5). Springs (4) should be placed under the dead plate (1).

b) Route the belt (7) around the rollers (3) as shown.

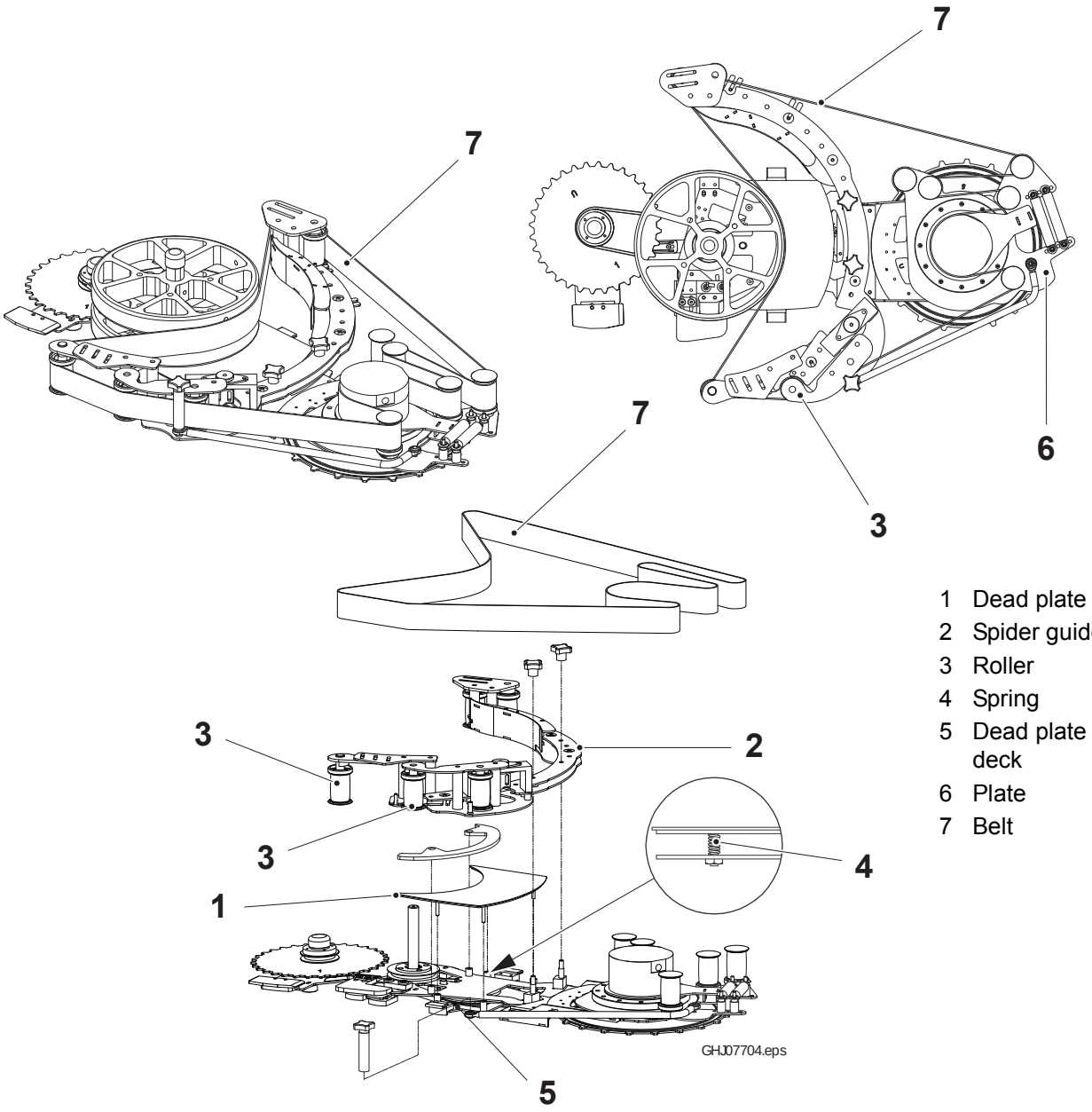

1 Dead plate
2 Spider guide
3 Roller
4 Spring
5 Dead plate support deck
6 Plate
7 Belt

2.4.1-3 Belt Spider Unit - Set

Machine Status	Power Supply Disconnector OFF
SPC Reference	2948934-0100 (LINF) 2948940-0100 (RINF)

After maintenance and reassembly of the spider, the unit can be set outside the machine so that there is minimal manual adjustment required when it is reinstalled. Reference preset dimensions are provided below.

Note! When the spider is placed in the machine, it must be calibrated before operation. Refer to Calibrating Spider Position on page 4-105.

(Cont'd)

(Cont'd)

A	Distance between front guide block (2) and (3) = 284 mm
B	Distance between rear guide block (4) and (5) = 284 mm
C	Distance between plate edge (1) and guide block (5) = 13mm
D	Dead plate height distance = 25 mm

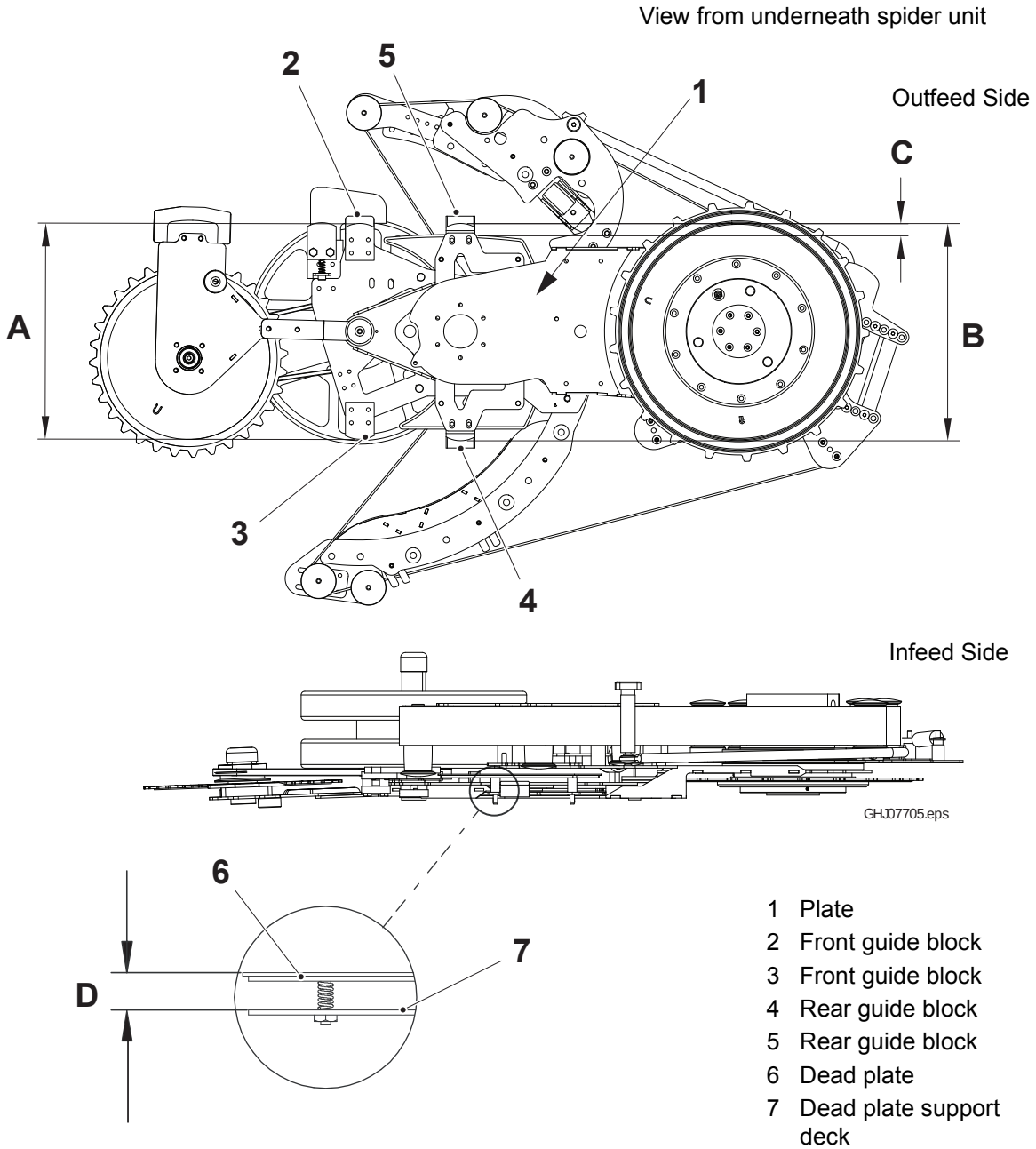

1 Plate
2 Front guide block
3 Front guide block
4 Rear guide block
5 Rear guide block
6 Dead plate
7 Dead plate support deck

2.4.2 Belt Spider Base

2.4.2.1 Spider Guide Blocks

2.4.2.1-1 Spider Guide Blocks - Check

Machine Status	PREPARATION STEP
SPC Reference	2948936-0100 (LINF) 2948942-0100 (RINF)

a) Locate the spider unit between two cross members on the first level of the machine for access.

b) Verify the spider guide blocks (1) are dimension A from the infeed and outfeed extrusion (2).

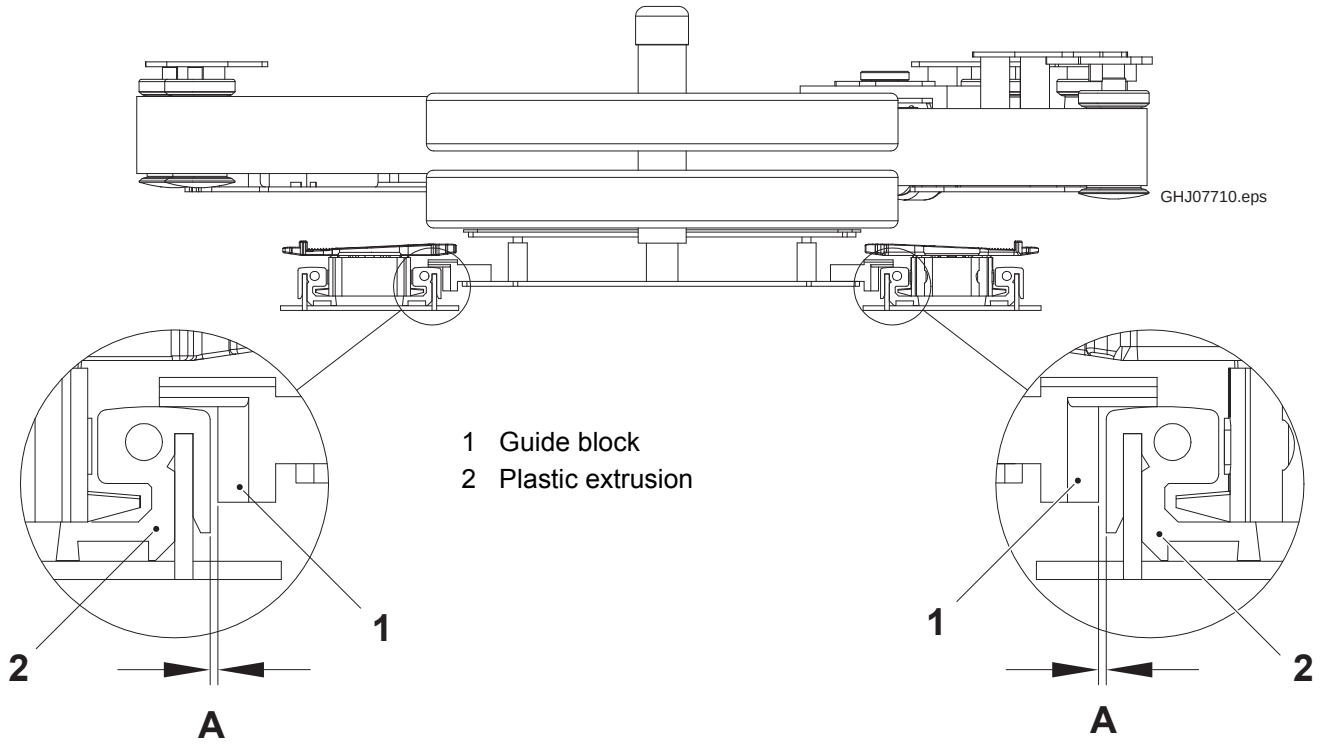

A = 1 - 2 mm

2.4.2.2-2 Spider Guide Blocks - Set

Machine Status	Power Supply Disconnector OFF
SPC Reference	2948936-0100 (LINF) 2948942-0100 (RINF)

a) Loosen the bolts (1) mounting the guide blocks to the spider base.

b) Centre the spider between the infeed and outfeed chains.

c) Position the guide blocks to satisfy dimension A. See 2.4.2.1-1 Spider Guide Blocks - Check.

d) Tighten the bolts.

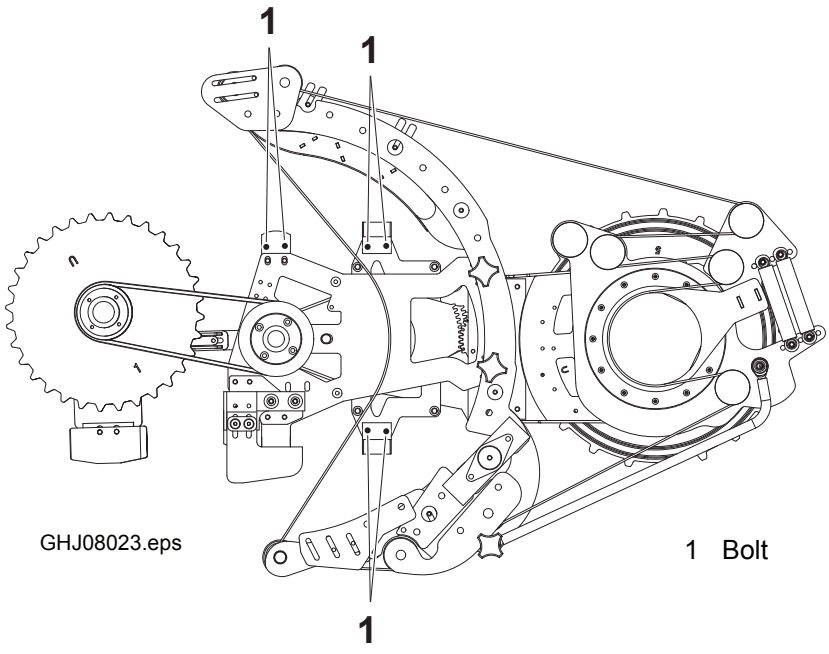

2.4.2.2 Belt Rollers

2.4.2.2-1 Belt Rollers - Check

Machine Status	Power Supply Disconnector OFF
SPC Reference	2948936-0100 (LINF) 2948942-0100 (RINF)

a) Check that the belt rollers (1) move freely. If they do not move freely, replace the belt roller assembly.

b) Check that the belt guide nuts (2) are tightened. If not, tighten the nuts.

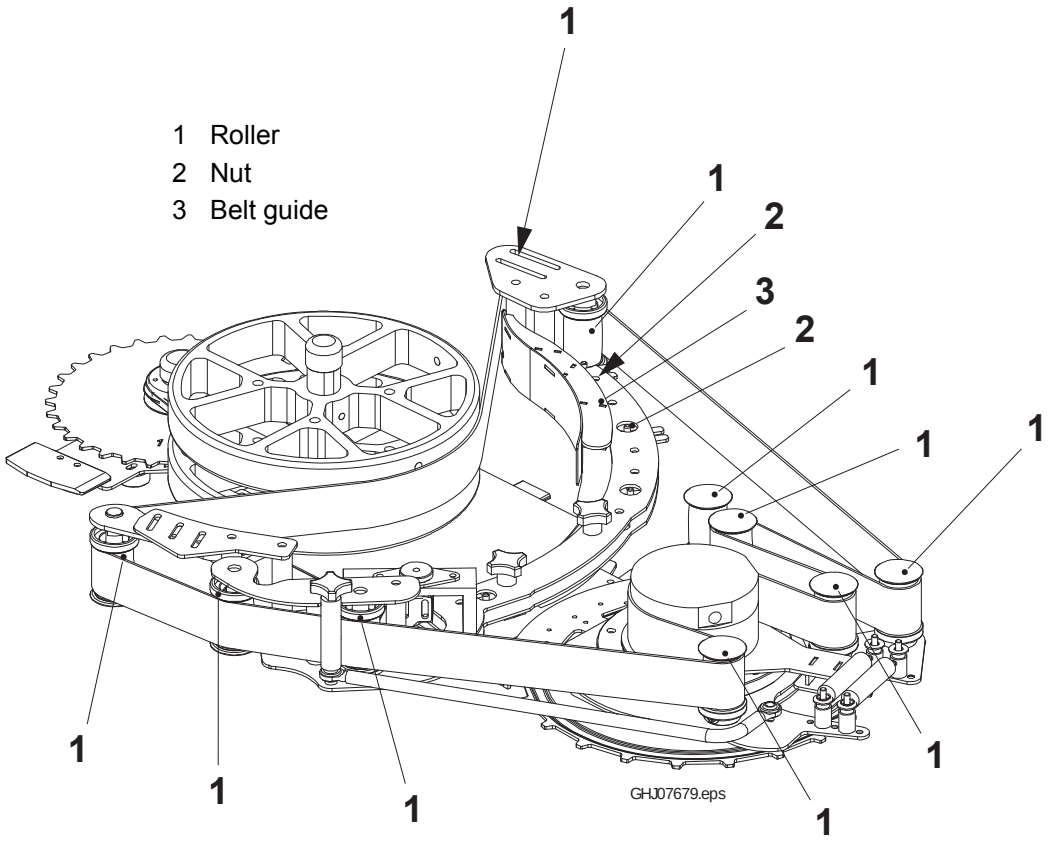

2.4.2.3 Dead Plate

2.4.2.3-1 Dead Plate - Check

Machine Status	Power Supply Disconnector OFF
SPC Reference	2948936-0100 (LINF) 2948942-0100 (RINF)

a) Check that the dead plate (1) is approximately 1 -2 mm below the infeed conveyor (2).

b) Check that the dead plate (1) is approximately 1 - 2 mm above the outfeed conveyor (3).

1 Dead plate
2 Infeed conveyor
3 Outfeed conveyor

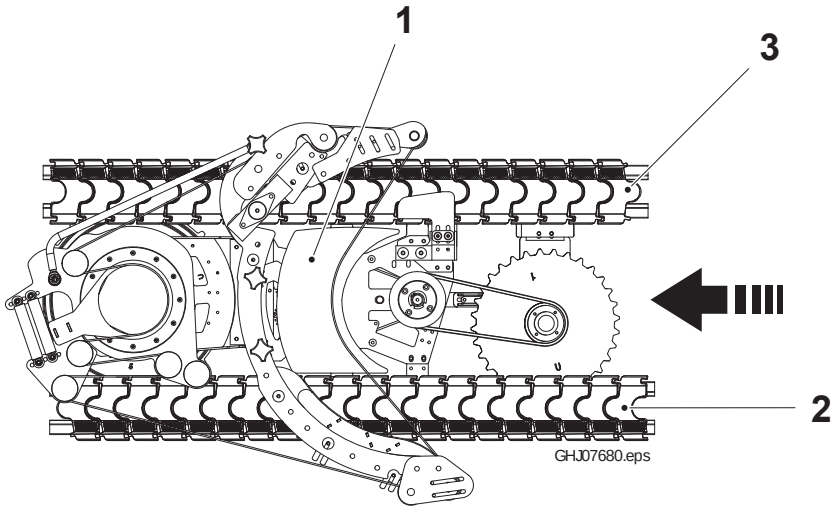

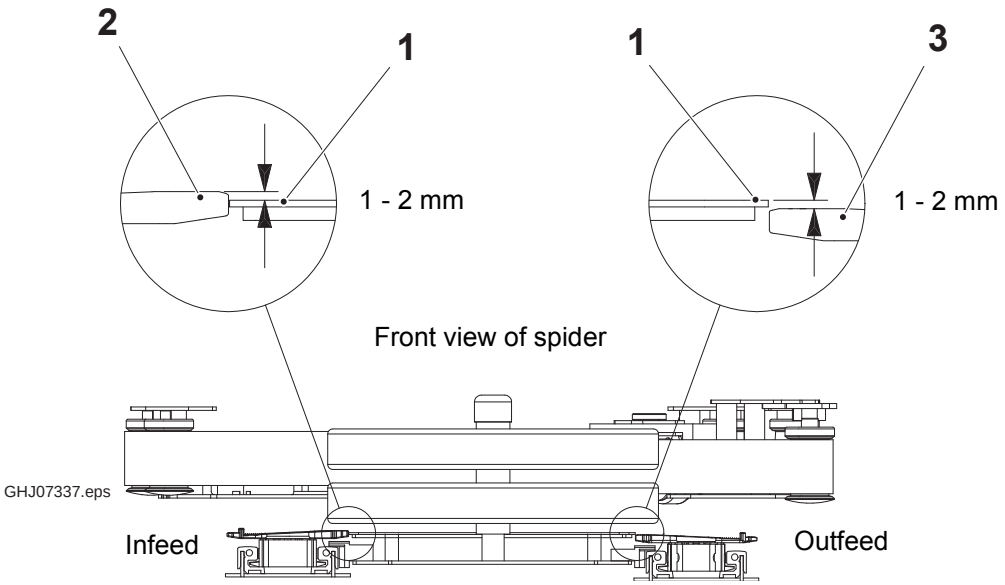

2.4.2.3-2 Dead Plate - Set

Machine Status	Power Supply Disconnector OFF
SPC Reference	2948936-0100 (LINF) 2948942-0100 (RINF)

Four locknuts (4) on threaded studs (5) are located on the underside of the dead plate (1).

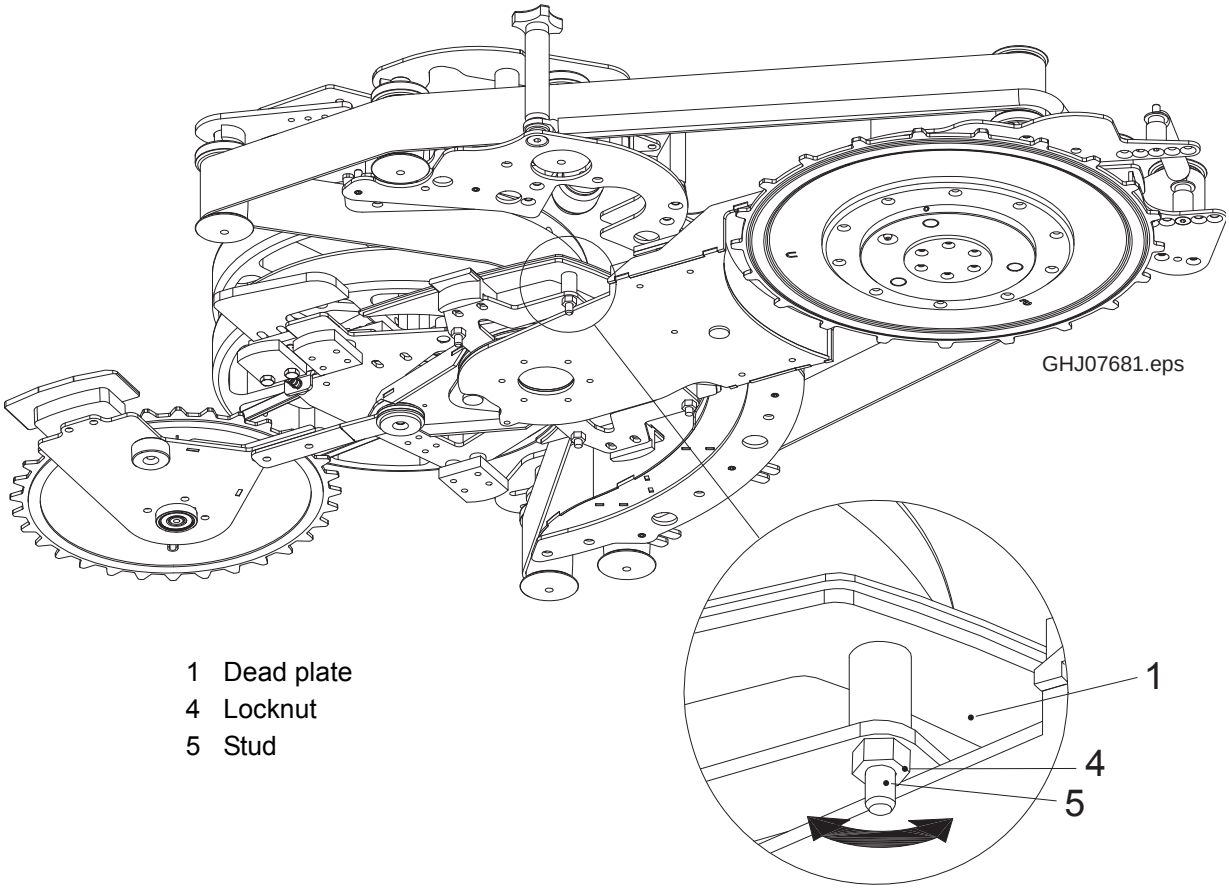

1 Dead plate
4 Locknut
5 Stud

(Cont'd)

(Cont'd)

a) Turn the locknuts clockwise (viewed from underneath) to lower or counterclockwise to raise the dead plate to adjust its height relative to the infeed conveyor (2) or outfeed conveyor (3).
   – Adjust the dead plate (1) height so that it is 1 - 2 mm below the infeed conveyor (2).
   – Adjust the dead plate (1) height so that it is 1 - 2 mm above the outfeed conveyor (3).

b) Check the dead plate height.

c) Check the clearance of the packages moving from the infeed conveyor to the outfeed conveyor.

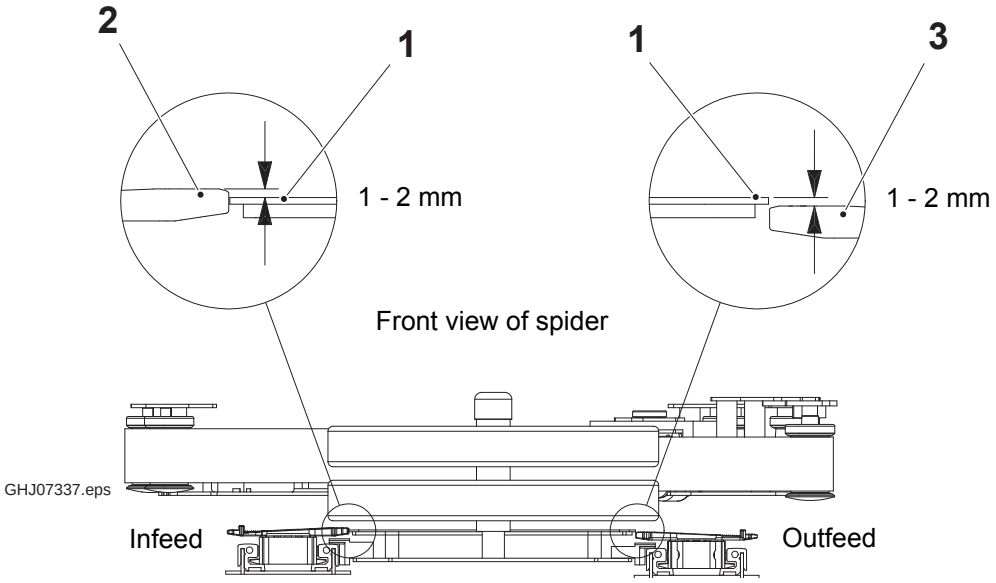

1 Dead plate
2 Infeed conveyor
3 Outfeed conveyor

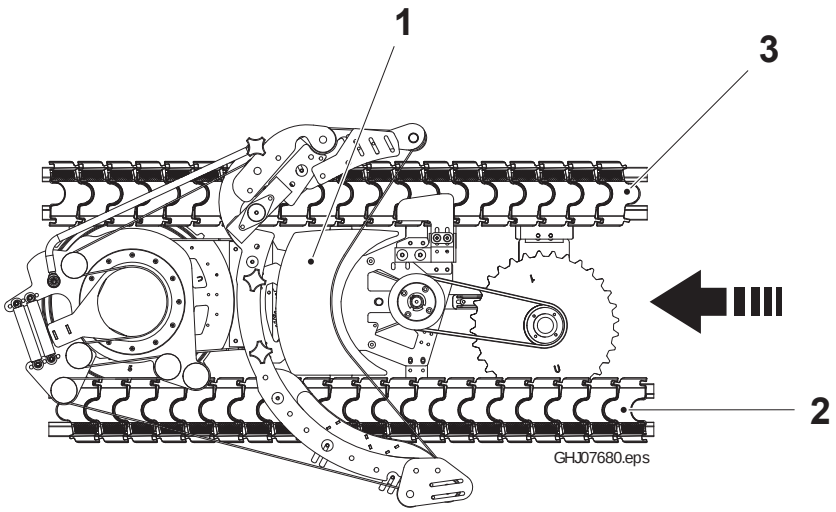

2.4.3 Belt Spider Transmission

2.4.3.1 Transmission

2.4.3.1-1 Transmission - Check

Machine Status	Power Supply Disconnector OFF
SPC Reference	2948937-0100 (LINF) 2948943-0100 (RINF)

a) Check that the setscrews (1) are tightened in the hub of the drive pulley (2).

b) Check that the tensioner springs (3) are positioned as indicated. See Detail A. The additional holes are provided for any necessary adjustment to the belt tension due to unexpected package variation.

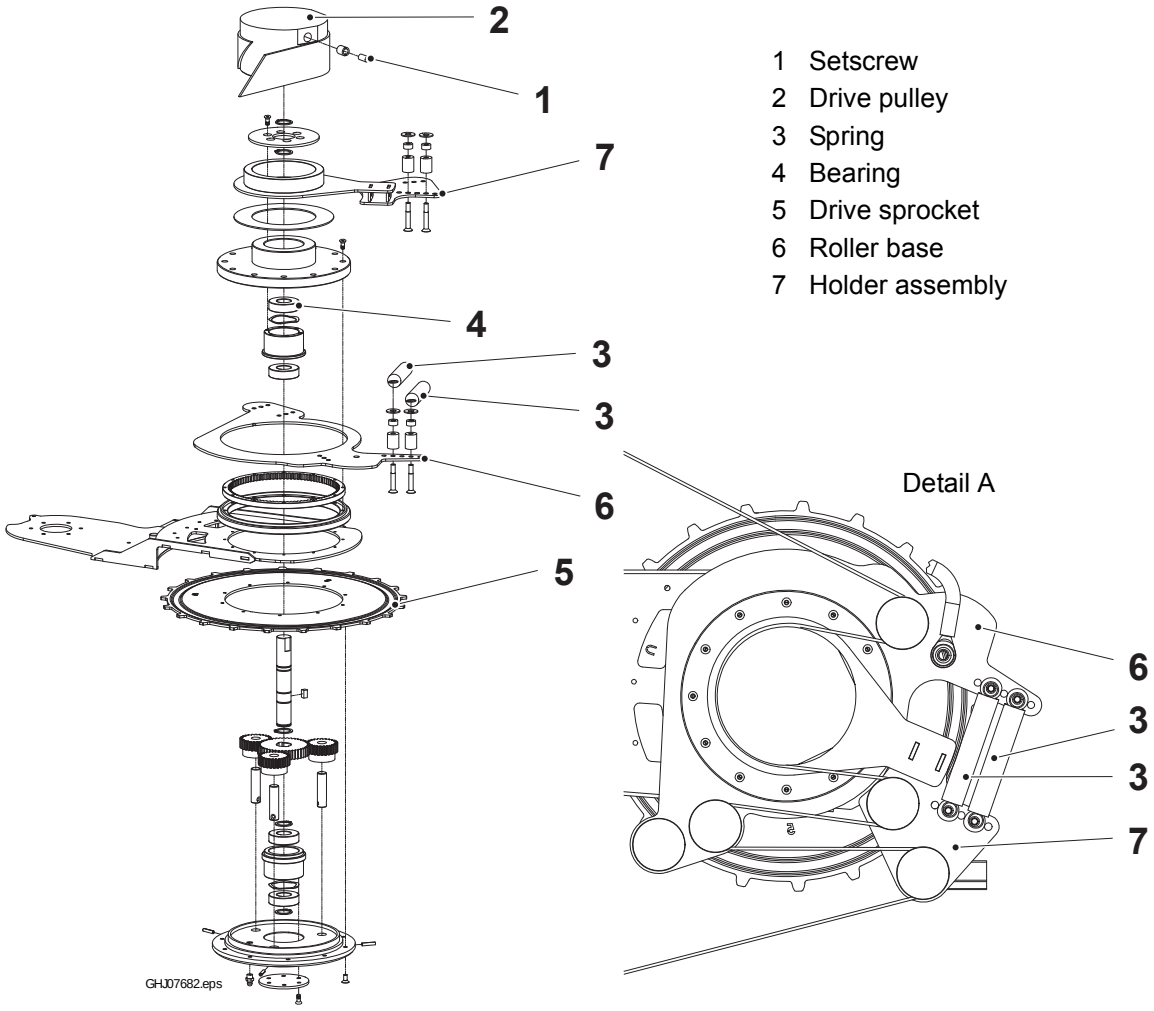

1 Setscrew
2 Drive pulley
3 Spring
4 Bearing
5 Drive sprocket
6 Roller base
7 Holder assembly

(Cont'd)

(Cont'd)

c) Check the bearings (4) for wear. Grasp the hub of the drive pulley (2) and drive sprocket (5) and move the transmission back and forth to check for radial play in the assembly. Play is defined as radial movement of the drive sprocket hub relative to the spider base. If play exceeds 1 mm, replace the bearings.

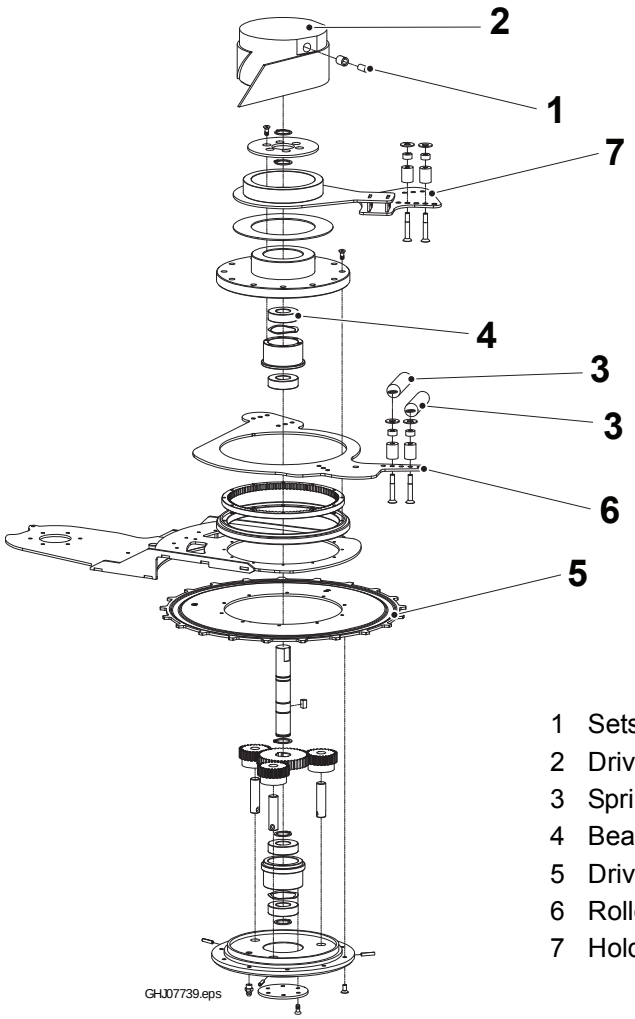

1 Setscrew
2 Drive pulley
3 Spring
4 Bearing
5 Drive sprocket
6 Roller base
7 Holder assembly

2.4.3.1-2 Transmission - Lubricate

Machine Status	Power Supply Disconnector OFF
SPC Reference	2948937-0100 (LINF) 2948943-0100 (RINF)

a) Using a grease gun with food-grade grease, lubricate the bearing in the nylon base of the drive sprocket hub through the grease fitting (1).

b) Fill with approximately 6 cm³ of grease.

c) Dry off all lubricant that comes out of the grease fitting or bearing.

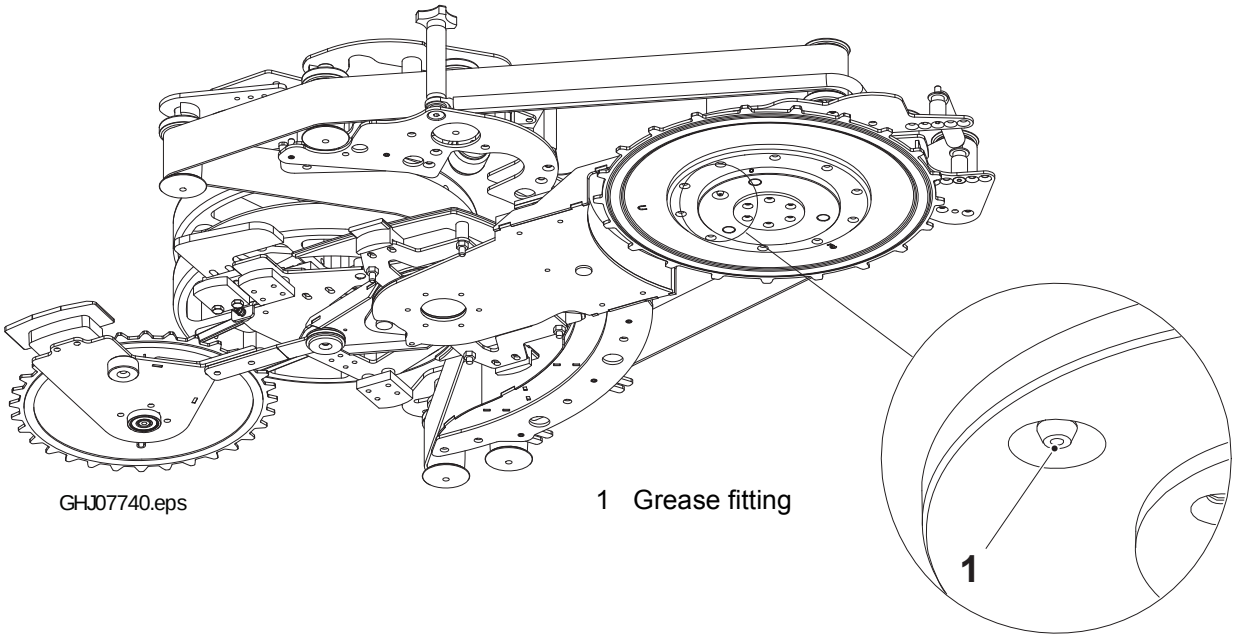

GHJ07740.eps

1 Grease fitting

2.4.3.2 Spider Drive Gear

2.4.3.2-1 Spider Drive Gear - Set

Machine Status	Power Supply Disconnector OFF
SPC Reference	2948937-0100 (LINF) 2948943-0100 (RINF)

a) Make sure the spider is in Maintenance Position. See 2-72 and 2-73.

b) Remove six chain tops (1) from the infeed conveyor (2) and six chain tops from the outfeed conveyor (3) as indicated below. Refer to 2.2.4.1-1 Chain Top - Remove and Install.

Left Infeed Machine (LINF)

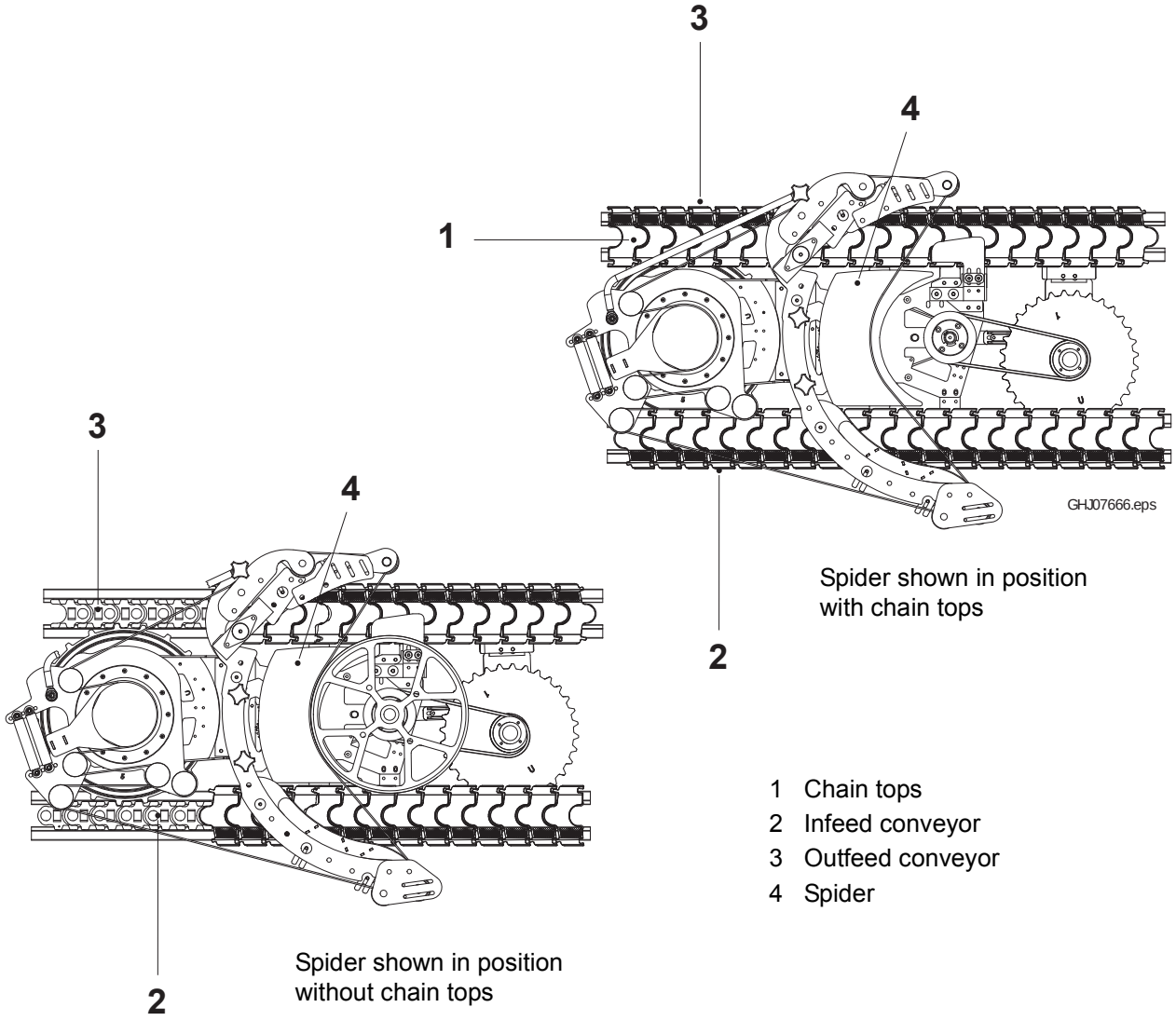

Spider shown in position with chain tops

Spider shown in position without chain tops

1 Chain tops
2 Infeed conveyor
3 Outfeed conveyor
4 Spider

(Cont'd)

(Cont'd)

Right Infeed Machine (RINF)

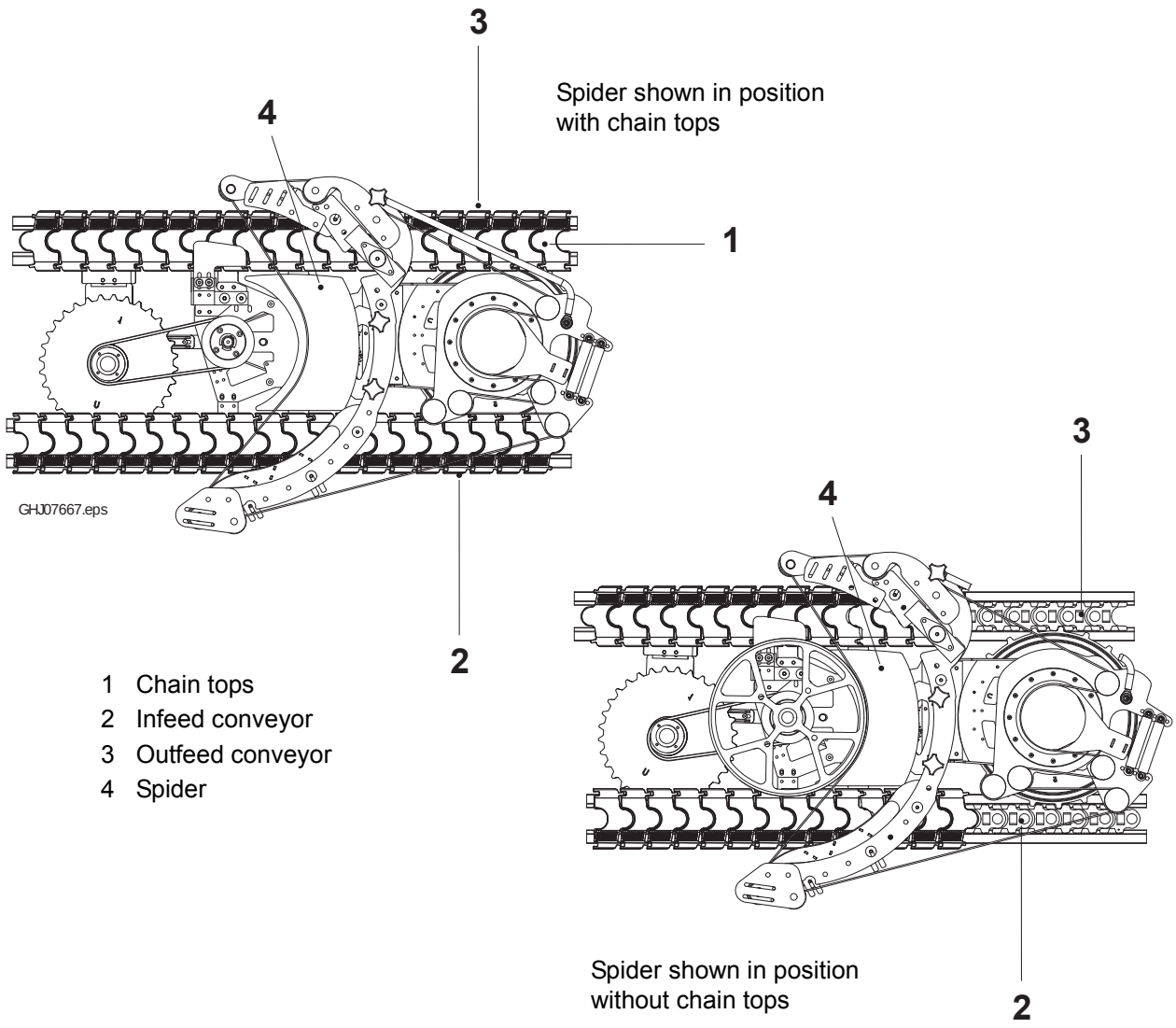

1 Chain tops
2 Infeed conveyor
3 Outfeed conveyor
4 Spider

(Cont'd)

(Cont'd)

c) Engage the sprocket tooth (5) of the spider gear in the infeed conveyor chain.

d) Make sure the drive gear sprocket teeth (5) are engaged in the solid pockets (6) of the chain as shown. Do not set up the sprocket teeth in the split pockets (7) (between the chain links).

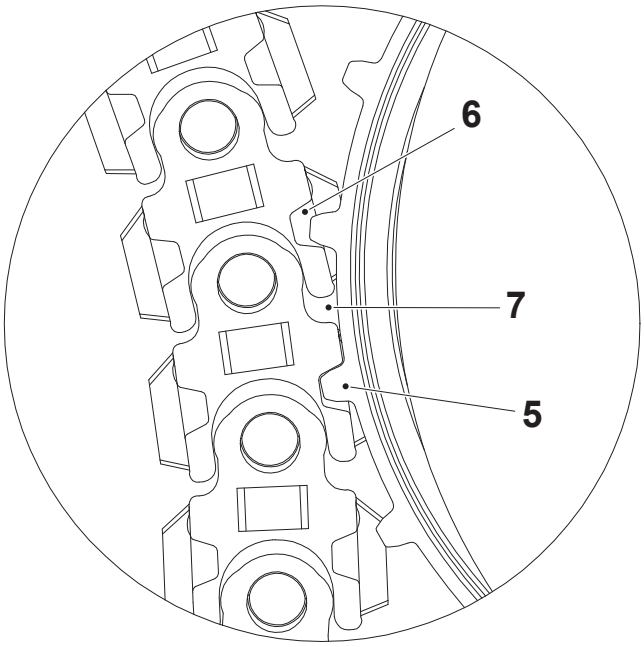

5 Sprocket tooth
6 Solid pocket
7 Split pocket

GHJ07668.eps

(Cont'd)

(Cont'd)

e) Pull outward on the outfeed conveyor chain to engage the tooth of the sprocket.

Note! The front sprocket (8) must engage the infeed chain (2).

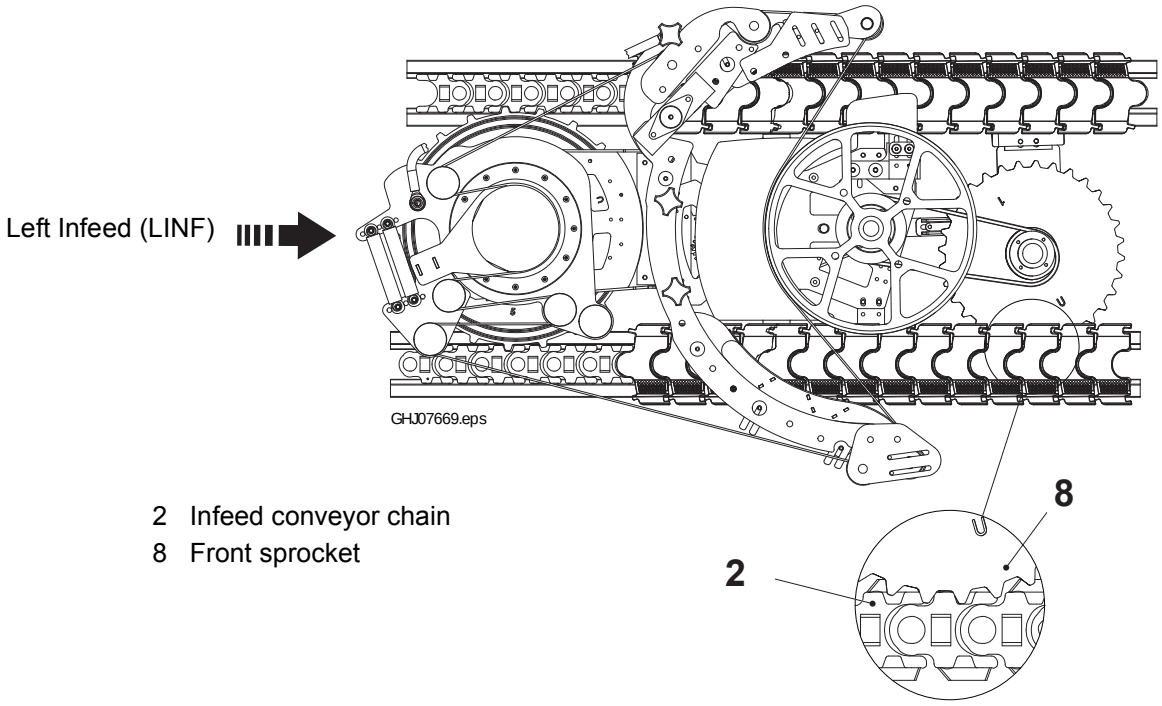

2 Infeed conveyor chain
8 Front sprocket

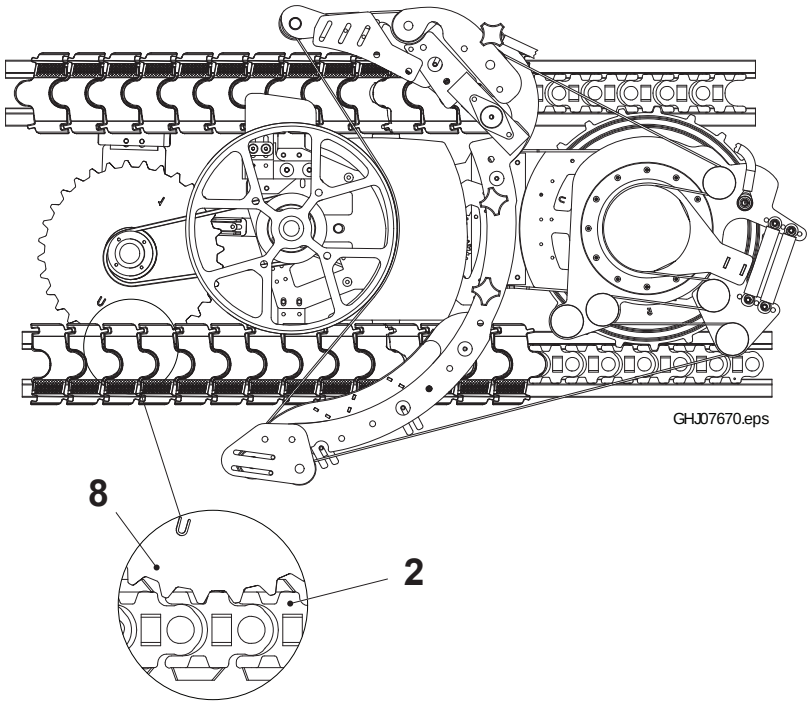

1 Belt
2 Pulley

(Cont'd)

(Cont'd)

Machine Status	PREPARATION STEP

f) Reinstall the chain tops.

2.4.3.3 Spider Pulley Belt

2.4.3.3-1 Spider Pulley Belt - Check

Machine Status	Power Supply Disconnector OFF
SPC Reference	2948937-0100 (LINF) 2948943-0100 (RINF)

Check the spider pulley belt as follows:

a) Check that the spider pulley belt (1) is securely adhered to the pulley (2).

b) Check for belt surface debris, sugars, or fats.

c) Check that the friction on the belt surface is still adequate and that the belt surface has not become smooth or slick.

d) If necessary, replace the belt (1) as outlined in 2.4.3.3-2 Spider Pulley Belt - Change.

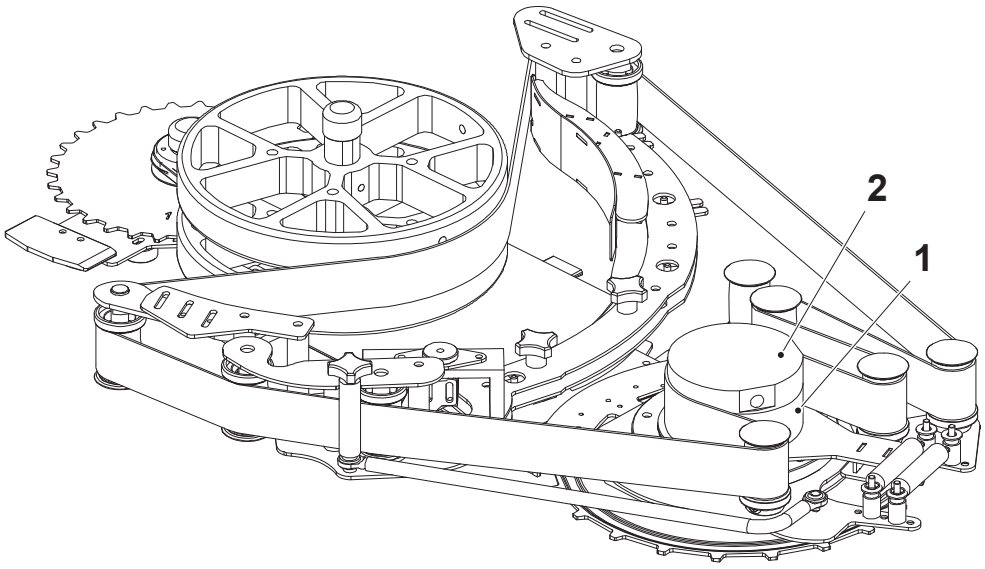

1 Belt
2 Pulley

2.4.3.3-2 Spider Pulley Belt - Change

Machine status	PREPARATION STEP
Consumables	Contact Cement (90153-0048)
SPC Reference	2948937-0100 (LINF) 2948943-0100 (RINF)

If the spider pulley belt (1) requires replacing, use the following procedure:

a) Put the spider in the maintenance position. Refer to 2.4.1-1 Belt Spider Unit - Remove.

b) Loosen the setscrews (3) in the pulley hub, and lift the pulley (2) from its mounting shaft.

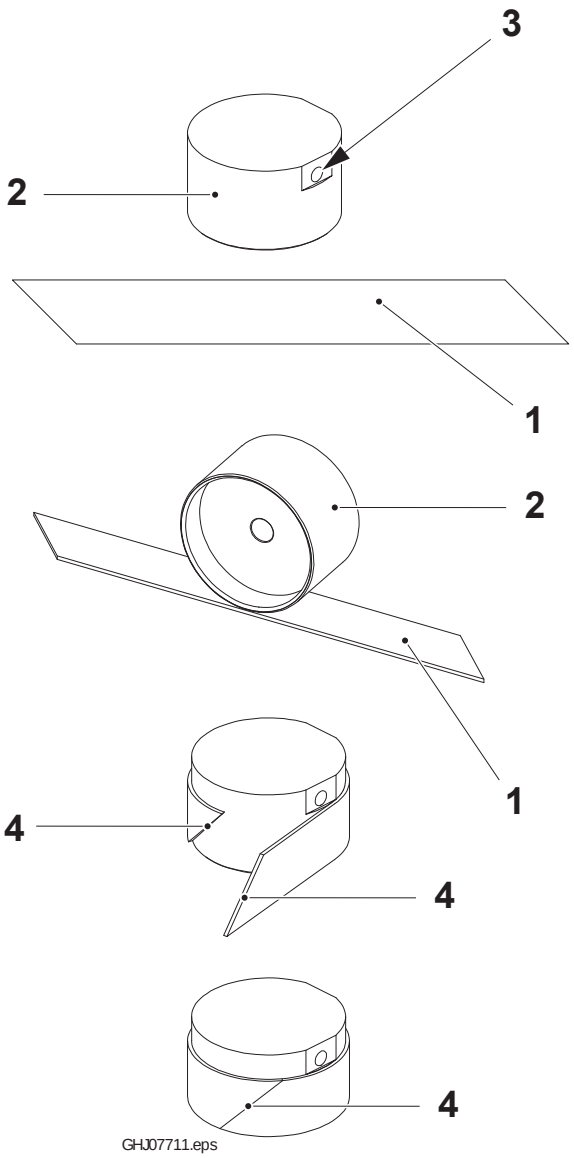

1 Belt
2 Pulley
3 Setscrew
4 Ends of belt

(Cont'd)

(Cont'd)

c) Remove the old pulley belt (1) by cutting it off the pulley surface with a knife blade. Be careful not to cut into the surface of the pulley (2).

d) Clean the surface of the pulley (2) with alcohol-based cleaner.

e) Lay the new belting (1) on a work bench with the cloth side up.

f) Saturate the cloth side of the belt with contact cement and let it cure for 30 minutes.

g) Apply a thin layer of contact cement to the surface of the pulley (2) and let it cure for 30 minutes before applying it to the belt (1).

h) To apply the belt (1) to the pulley (2), align the bottom edge of the pulley (2) with the bottom edge of the belt (1), approximately in the center of the belt length.

i) Roll the pulley (2) in one direction to wrap the belt (1). Then roll the pulley (2) back in the other direction to complete the wrap around the circumference and join the ends (4) of the belt (1).

j) Work the ends (4) of the belt (1) so they are flush while the rubber cement is still wet.

k) Reinstall the pulley onto its mounting shaft on the spider, after the allotted wait time. Make sure the pulley setscrews are secure.

2.4.4 Belt Spider Driven Wheel

2.4.4-1 Driven Wheel Assembly - Check

Machine Status	Power Supply Disconnector OFF
SPC Reference	2948938-0100 (LINF) 2948944-0100 (RINF)

Check the following items on the driven wheel (1) assembly:

a) Check that the drive belt (2) is engaged in the pulleys (3).

b) Check for any wear or damage to the drive belt (2).

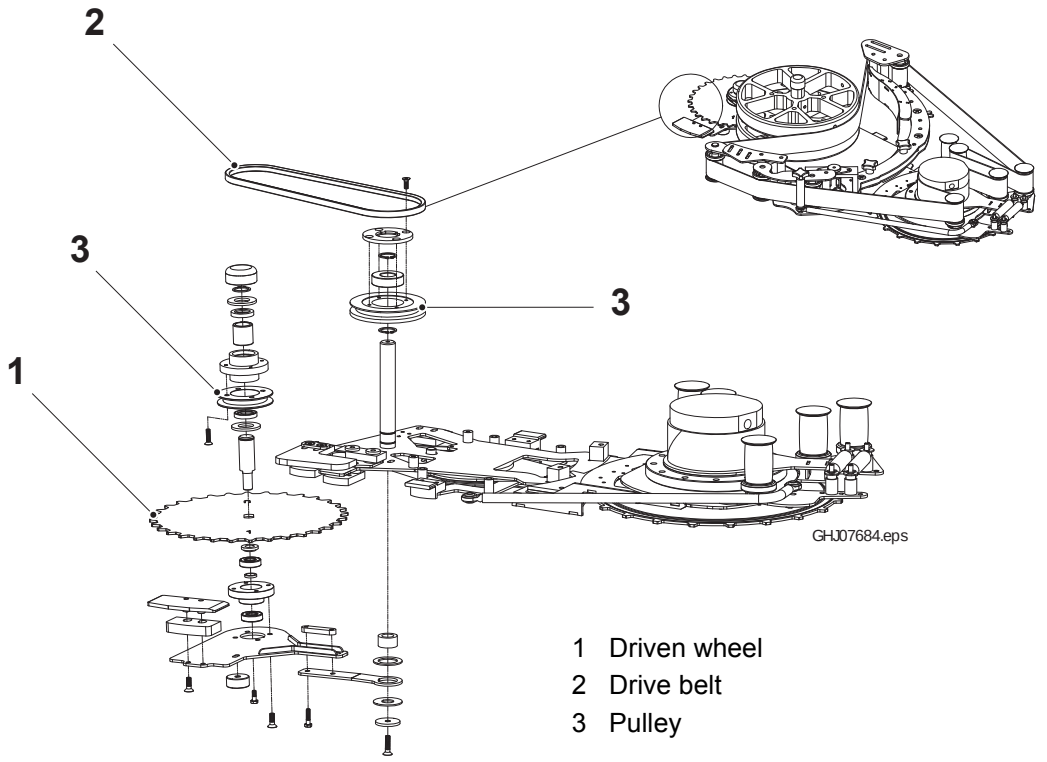

1 Driven wheel
2 Drive belt
3 Pulley

(Cont'd)

(Cont'd)

c) Check for proper tension of the drive belt.
   - The transfer wheels should not rotate in the direction opposite product flow. (Refer to 2.4.5.1-2 Spider Transfer Wheel - Check.)
   - The tension on the drive belt should not be too tight. Tension is correct when the drive gear rests on top of the extrusion.

2.4.4-2 Driven Wheel Assembly - Set

Machine Status	Power Supply Disconnector OFF
SPC Reference	2948938-0100 (LINF) 2948944-0100 (RINF)

To set the drive belt (1) tension:

a) Loosen the two bolts (2) in the neck of the base assembly (3).

b) Pull the base in the direction shown below to tension the belt (1).

c) While applying approximately 66 N (15 lbs.) of pull force to tension the belt, tighten the two bolts in the neck of the base assembly.

d) Re-check the tension according to 2.4.4-1 Driven Wheel Assembly - Check.

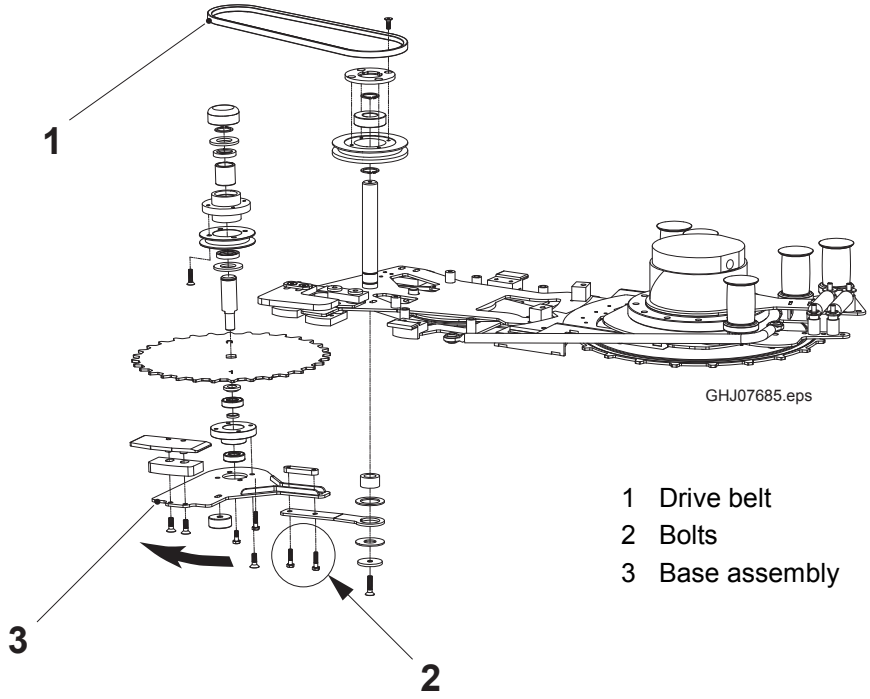

1 Drive belt
2 Bolts
3 Base assembly

2.4.5 Volume Kit

2.4.5.1 Volume Kit

When a package change results in a different package type or footprint, some parts of the spider unit must be changed. The volume kit contains all the spider parts that need to be changed out during a package changeover.

Volume kits are used to simplify spider change parts ordering. Each volume kit contains all the necessary parts for a specific size package change. Choose a volume kit based on the size/type package that will be used. See Conversion Volume Kit Selection on page 2-111).

An example of one of the available volume kits is shown below.

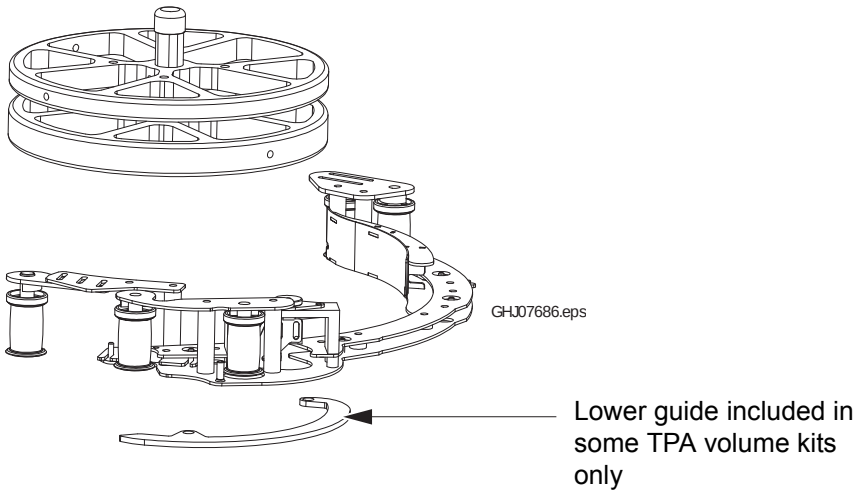

Package Conversion Volume Kit

(Cont'd)

(Cont'd)

During a package size change, the parts contained in the package conversion volume kit shown below must be changed.

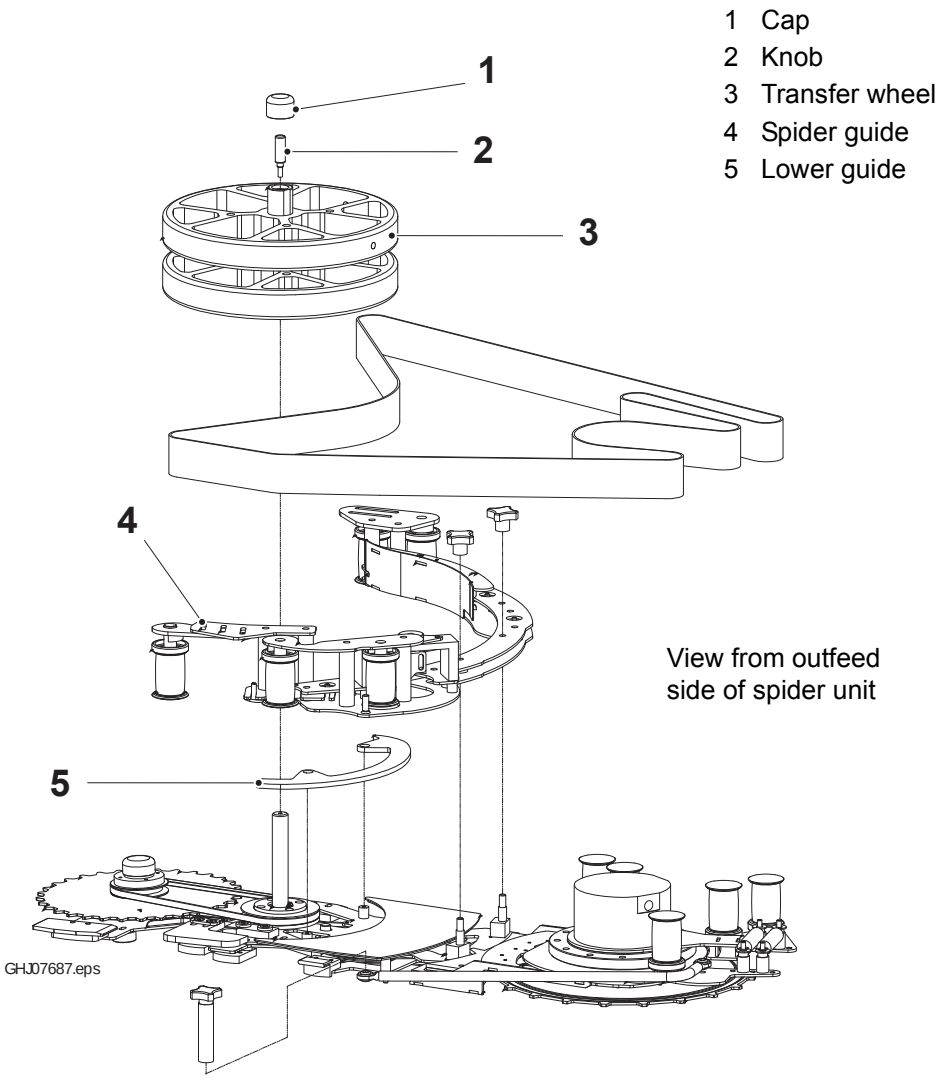

Package Conversion Volume Kit

Conversion Volume Kit Selection

Left Infeed Kit No.	Right Infeed Kit No.	Package Sizes Handled
2855370-0101	2948945-0101	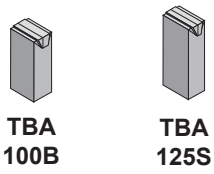
2855370-0102	2948945-0102	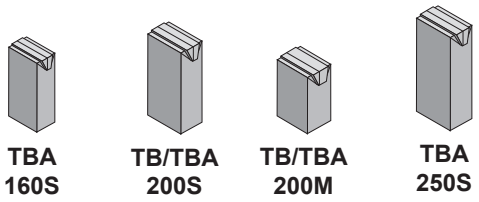
2855370-0103	2948945-0103	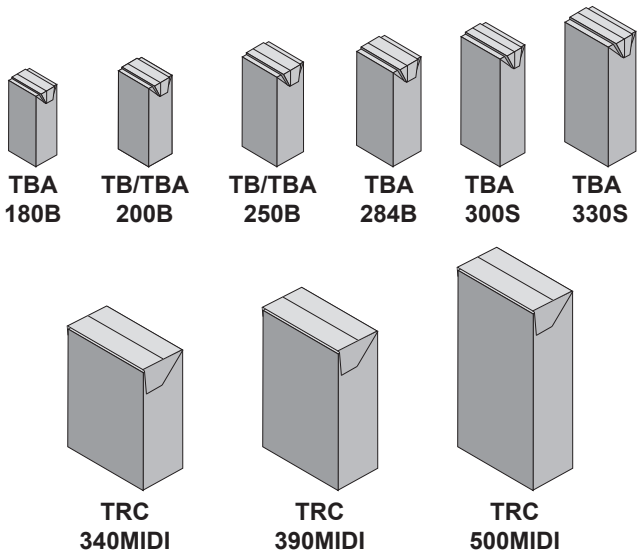
2855370-0104	2948945-0104	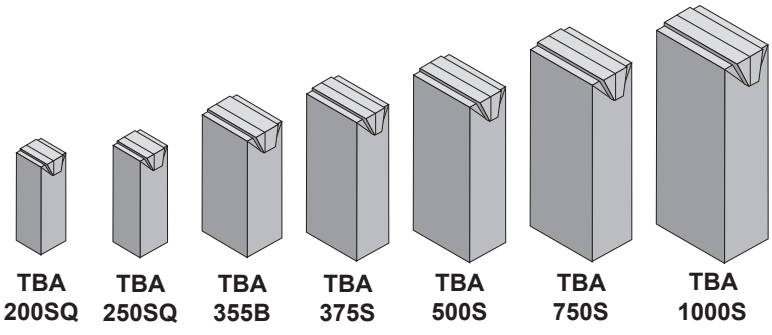

Left Infeed Kit No.	Right Infeed Kit No.	Package Sizes Handled
2855370-0105	2948945-0105	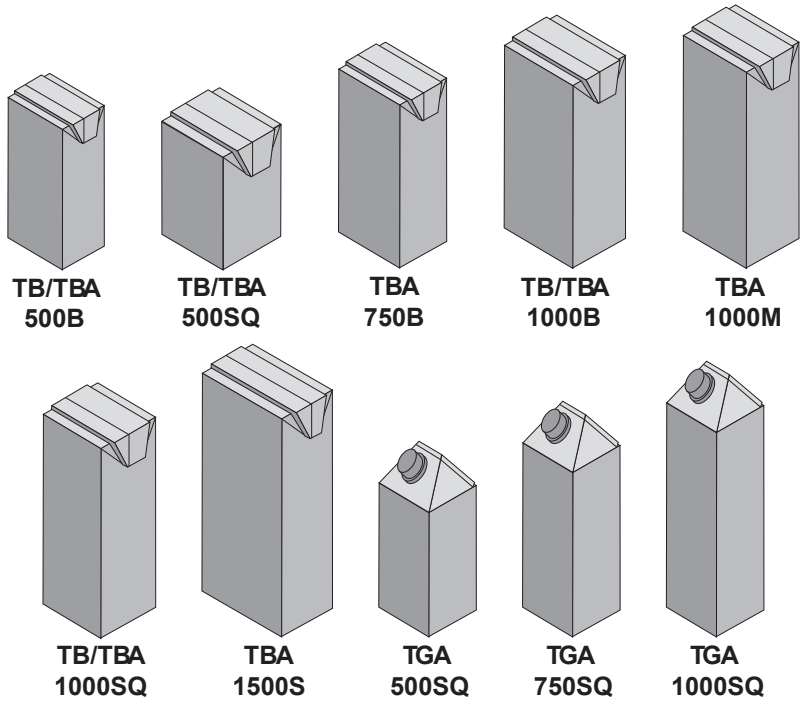
2855370-0106	2948945-0106	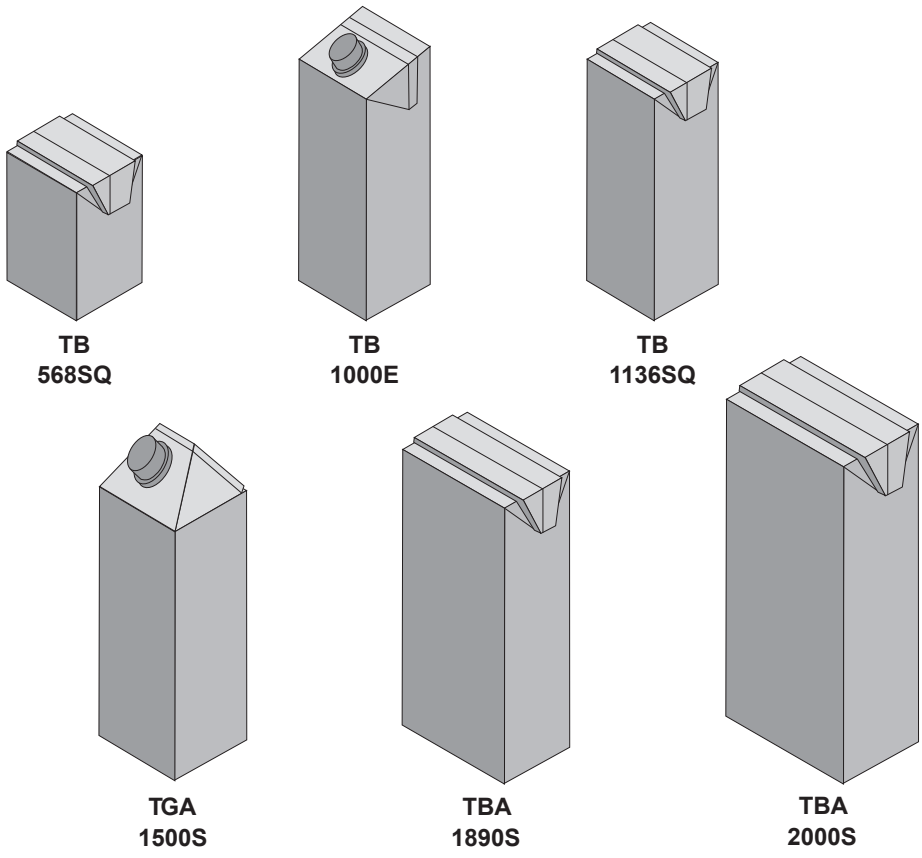

Left Infeed Kit No.	Right Infeed Kit No.	Package Sizes Handled
2855370-0107	2948945-0107	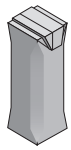 TPA 200SQ 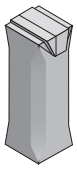 TPA 250SQ
2855370-0108	2948945-0108	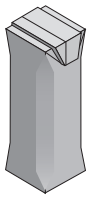 TPA 330SQ
2855370-0109	2948945-0109	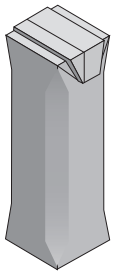 TPA 500SQ
2855370-0110	2948945-0110	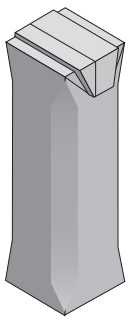 TPA 750SQ
2855370-0111	2948945-0111	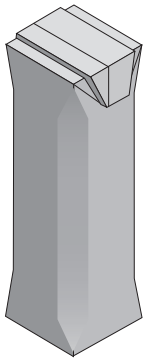 TPA 1000SQ

2.4.5.1-1 Volume Kit - Change

Machine Status	Power Supply Disconnector OFF
SPC Reference	2855370-0100 (LINF) 2948945-0100 (RINF)

a) Remove the cap (1) and loosen the knob (2).

Note! For LINF: Turn knob counterclockwise to loosen. For RINF: Turn knob clockwise to loosen.

b) Remove the existing transfer wheels (3).

c) Loosen and remove the two knobs (4) and remove the spider guide (5).

d) Remove the two retaining bolts (6) and remove the lower guide (7) from the spider (if applicable).

e) Install the new lower guide (7) (if applicable), spider guide (5), transfer wheels (3), knob (2), and cap (1).

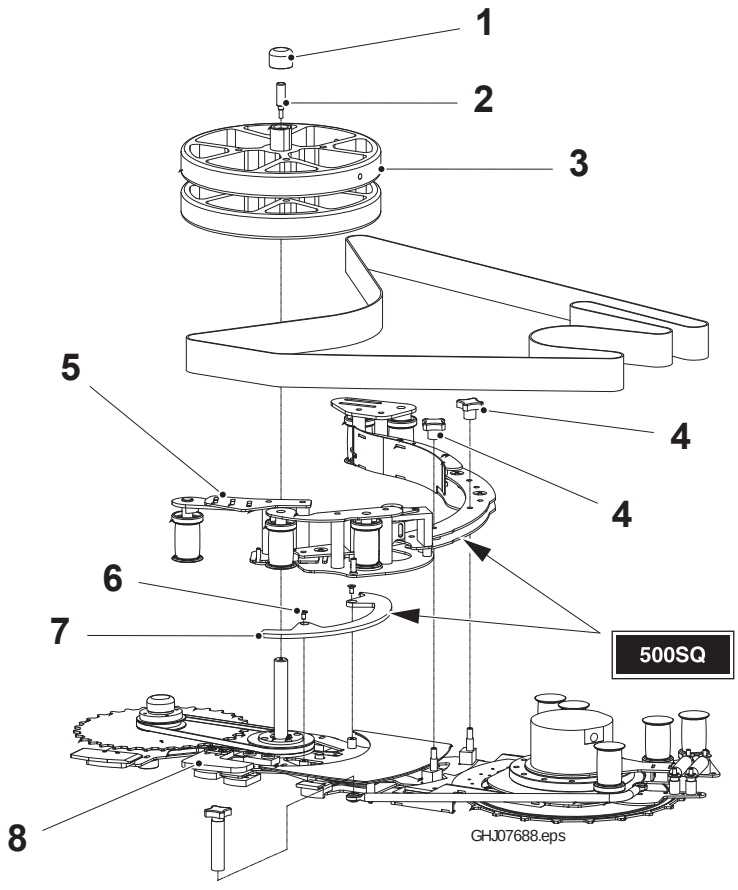

1 Cap
2 Knob
3 Transfer wheel
4 Knob
5 Spider guide
6 Retaining bolt
7 Lower guide (If applicable)
8 Straightening guide

500SQ

Note! Volume kit parts are marked with engraved identifying tags.

(Cont'd)

(Cont'd)

f) Adjust the straightening guide (8).

- For applications other than TPA, set the straightening guide (8) flush with the outside edge of the transfer wheels (3). See 2.4.5.1-3 Spider Transfer Wheel - Set.
- For TPA applications only, use the supplied template (9) to set the straightening guide (8).
  - Move the spider to the maintenance position at the rear door. See 2.4.1-1 Belt Spider Unit - Remove.
  - Loosen the two straightening guide mounting bolts (10).
  - Place the template (9) on the conveyor chain and securely hold the straightening guide (8) in the profiled cut-out in the template.
  - Move the straightening guide (8) and template (9) toward the outside of the machine until the outside radius of the template is firmly against the conveyor chain fence (11).
  - Tighten the straightening guide mounting bolts (10) in place and remove the template (9).

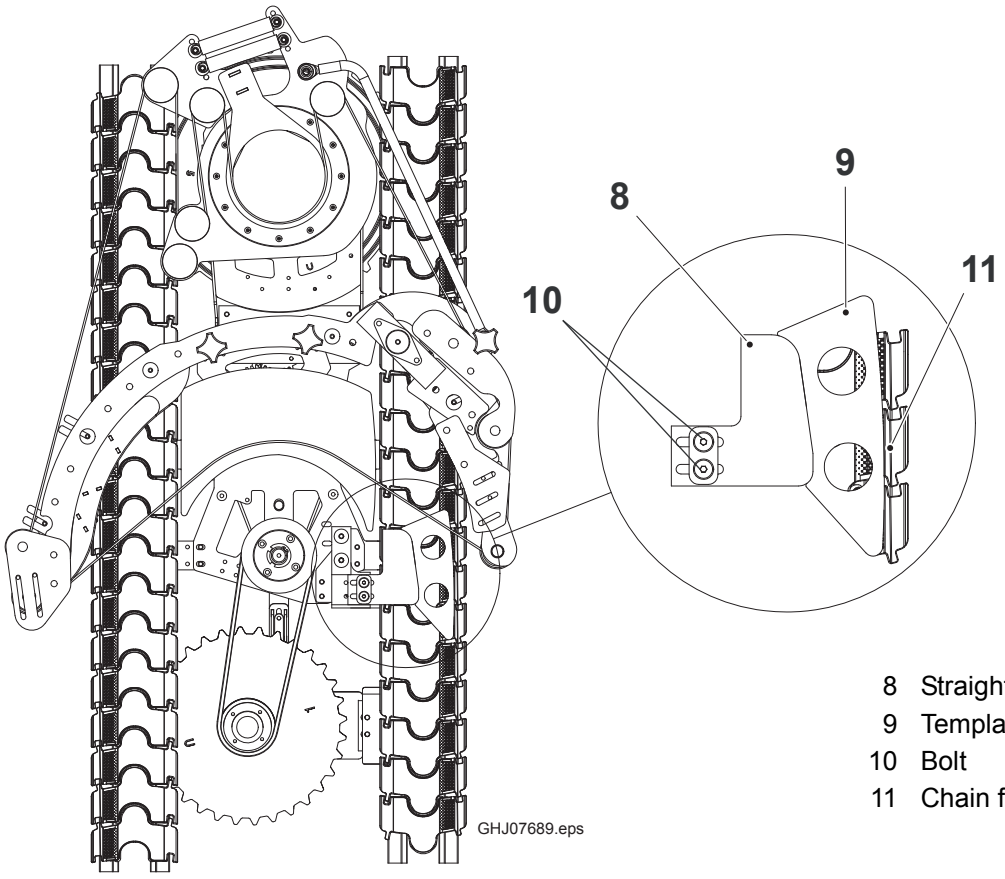

8 Straightening guide
9 Template
10 Bolt
11 Chain fence

2.4.5.1-2 Spider Transfer Wheel - Check

Machine Status	Power Supply Disconnector OFF
SPC Reference	2855370-0100 (LINF) 2948945-0100 (RINF)

a) Check that the spider transfer wheel (1) is installed according to Spider Transfer Wheel Selection Table on page 2-119 for the specific volume.

b) Check that the wheel spins freely in the direction of normal operation. It should not turn freely in the opposite direction.

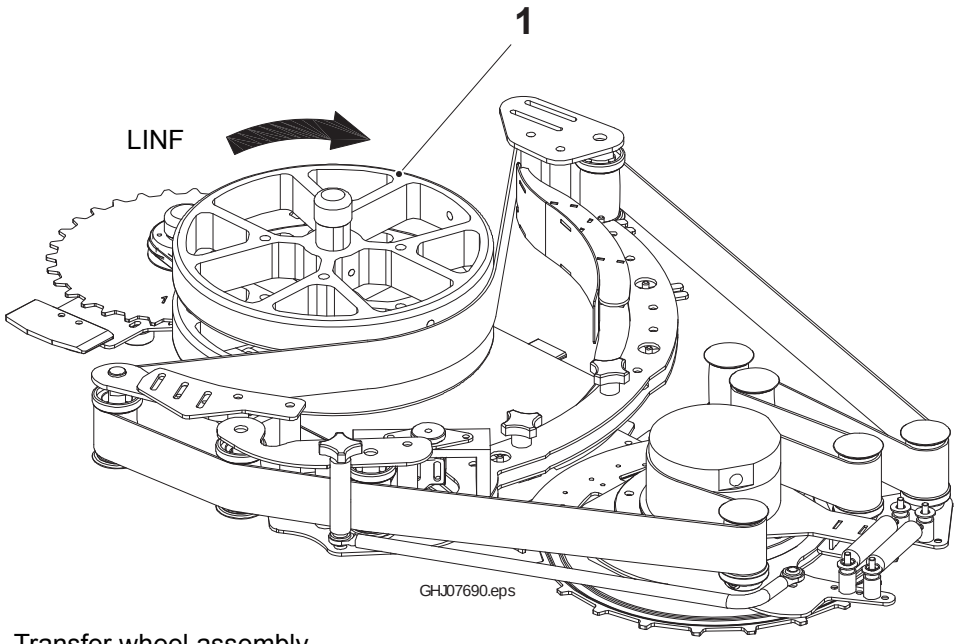

1 Transfer wheel assembly

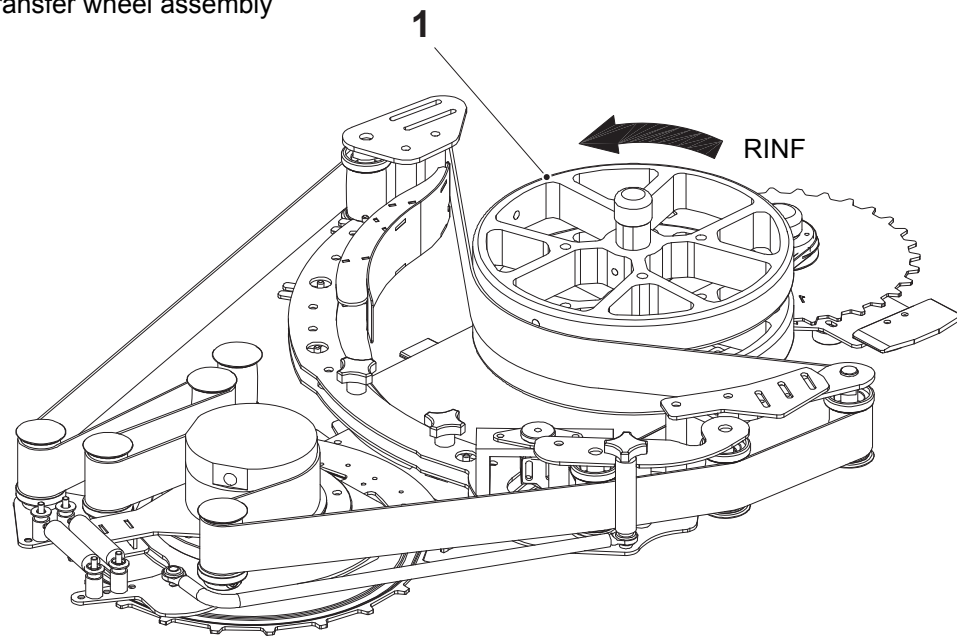

2.4.5.1-3 Spider Transfer Wheel - Set

Machine Status	Power Supply Disconnector OFF
SPC Reference	2855370-0100 (LINF) 2948945-0100 (RINF)

Note! As part of a volume kit, the transfer wheels are preset and should require no adjustment. The following explains transfer wheel replacement and the proper settings for the transfer wheels in the event that they must be manually adjusted.

a) Remove the cap (1) from the transfer wheel sleeve (2).

b) Remove the knob (3) from the transfer wheel sleeve (2).

Note! For LINF: Turn knob counterclockwise to loosen. For RINF: Turn knob clockwise to loosen.

c) Lift the transfer wheel (4) assembly from the spider base shaft.

d) Loosen the upper and lower setscrews (5) (2 per wheel).

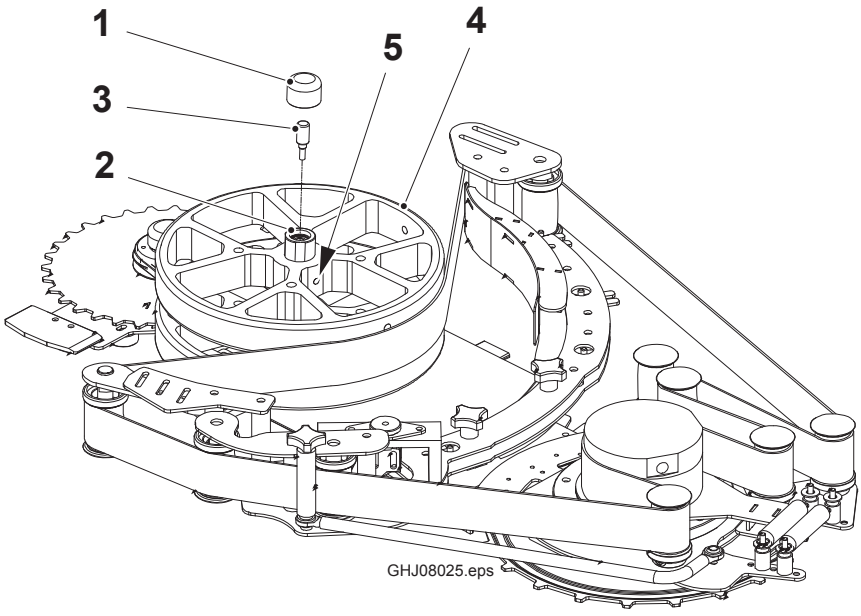

1 Cap
2 Sleeve
3 Knob
4 Transfer wheel assembly
5 Setscrew

(Cont'd)

(Cont'd)

e) Position the lower transfer wheel (6) so that it is 12mm from the bottom of the sleeve.

f) Tighten the lower setscrews.

g) Position the upper transfer wheel (7) according to dimension A. See Spider Transfer Wheel Selection Table on page 2-119.

h) Tighten the upper setscrews.

i) Reinstall the transfer wheel assembly (4) onto the base shaft and reinstall the knob (3) and cap (1).

A	Distance from the bottom edge of the upper transfer wheel to the bottom edge of the lower transfer wheel.

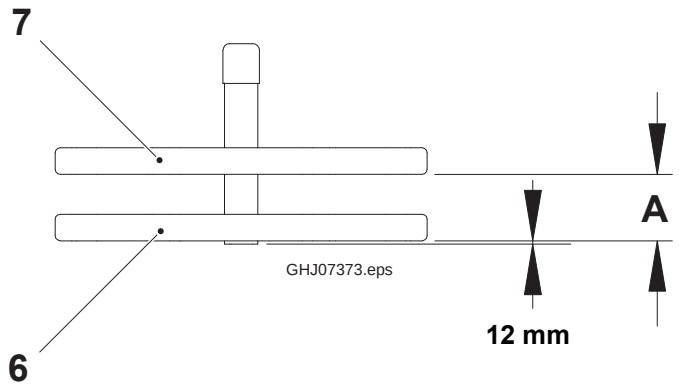

6 Lower transfer wheel
7 Upper transfer wheel

(Cont'd)

(Cont'd)

Spider Transfer Wheel Selection Table

Volume Kit (LINF)	**Volume Kit** (RINF)	**Wheel Diameter Ref. (mm)**	**Package Type**	**Volume**	**A (mm)**
2855370-0101	2948945-0101	394	TBA	100B	76
				125S	
2855370-0102	2948945-0102	381	TBA	160S	76
			TB/TBA	200S	
			TB/TBA	200M	
			TBA	250S	
2855370-0103	2948945-0103	368	TBA	180B	76
			TB/TBA	200B	
			TB/TBA	250B	
			TBA	284B	
			TBA	300S	
			TBA	330S	85
			TRC	340MIDI	76
				390MIDI	
				500MIDI	
2855370-0104	2948945-0104	343	TBA	200SQ	76
				250SQ	85
				355B	76
				375S	85
				500S	87
				750S	90
				1000S	
2855370-0105	2948945-0105	311	TB/TBA	500B	76
			TB/TBA	500SQ	
			TGA	500SQ	
			TBA	750B	85
			TGA	750SQ	
			TB/TBA	1000B	87
			TBA	1000M	85
			TB/TBA	1000SQ	90
			TGA	1000SQ	
			TBA	1500S	100
2855370-0106	2948945-0106	298	TB	568SQ	76
			TB	1000E	90
			TB	1136SQ	
			TGA	1500S	
			TBA	1890S	100
			TBA	2000S	100

Volume Kit (LINF)	**Volume Kit** (RINF)	**Wheel Diameter Ref. (mm)**	**Package Type**	**Volume**	**A (mm)**
2855370-0107	2948945-0107	362	TPA	200SQ	88
				250SQ	
2855370-0108	2948945-0108	349	TPA	330SQ	88
2855370-0109	2948945-0109	336	TPA	500SQ	110
2855370-0110	2948945-0110	330	TPA	750SQ	133
2855370-0111	2948945-0111	330	TPA	1000SQ	185

2.5 Fallen Package Sensor

For information on the fallen package sensor, refer to 4.3.2.2-2 Photocell - Reflecting Type - Adjust Alignment and 4.3.2.2-3 Photocell - Reflecting Type - Set Sensitivity.

2.6 Water System

2.6-1 Water System - Check

Machine Status	Power Supply Disconnector OFF
SPC Reference	2948907-0100

a) Check that the water connection is 1/2” BSPT and is sufficiently tightened.

b) Check that the water pressure supplied for the system is between 4 to 5 bar.

c) Check all mist lubrication nozzles (1) and rinse nozzle (2) positions for tightness and spray direction.

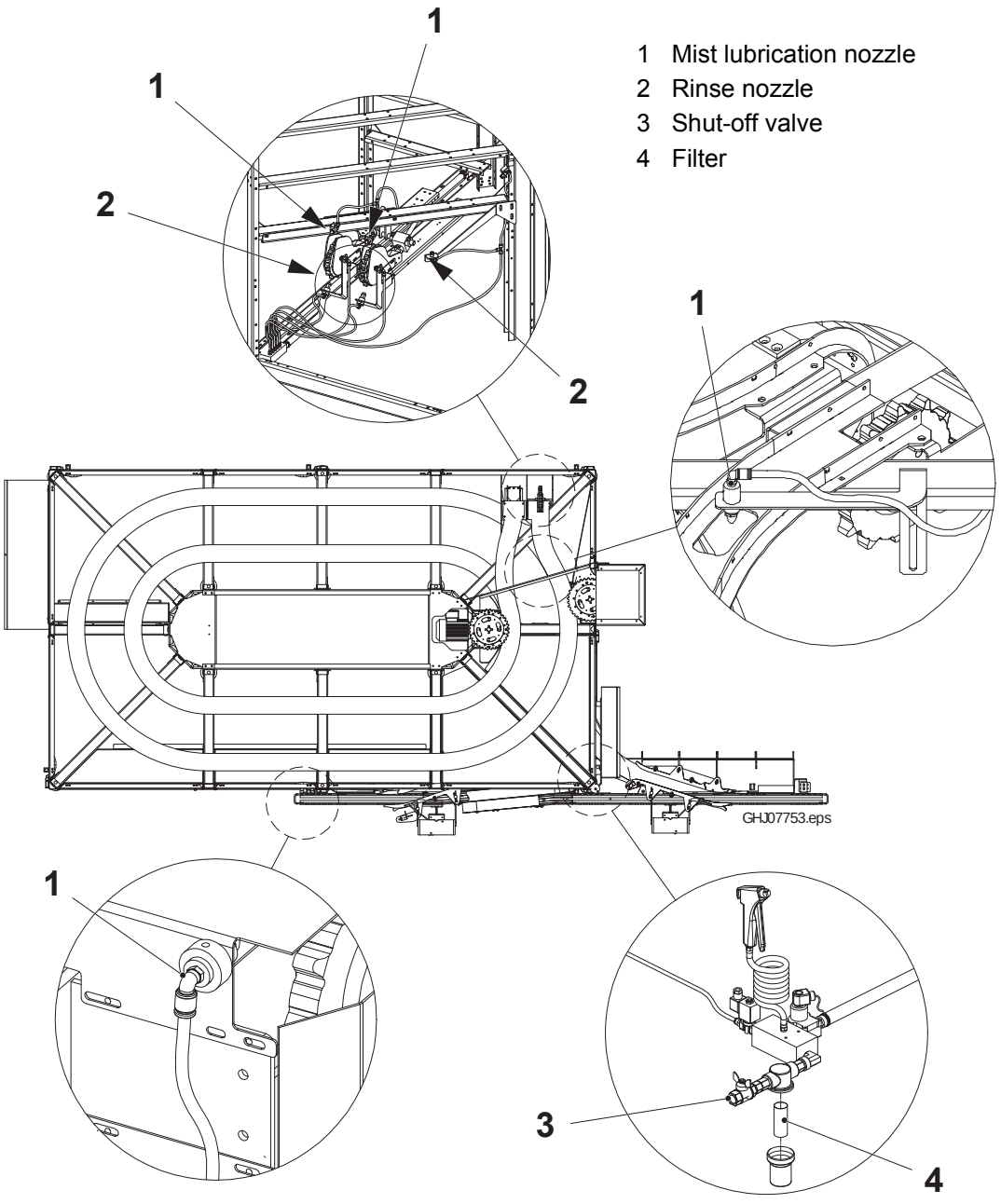

1 Mist lubrication nozzle
2 Rinse nozzle
3 Shut-off valve
4 Filter

(Cont'd)

(Cont'd)

d) Check that the water shut-off valve (3) is opening and closing the system correctly.

e) If there is diminished or restricted flow from the mist lubrication nozzles, replace the filter (4). Filter replacement frequency depends upon local water quality.

Note! Ensure that only WHO drinking quality water is connected to the ACHX30.

Note! Please see the Operation Manual for cleaning instructions on the water filter.

This page intentionally left blank

3 External Outfeed

Description

SPC	663611-0100

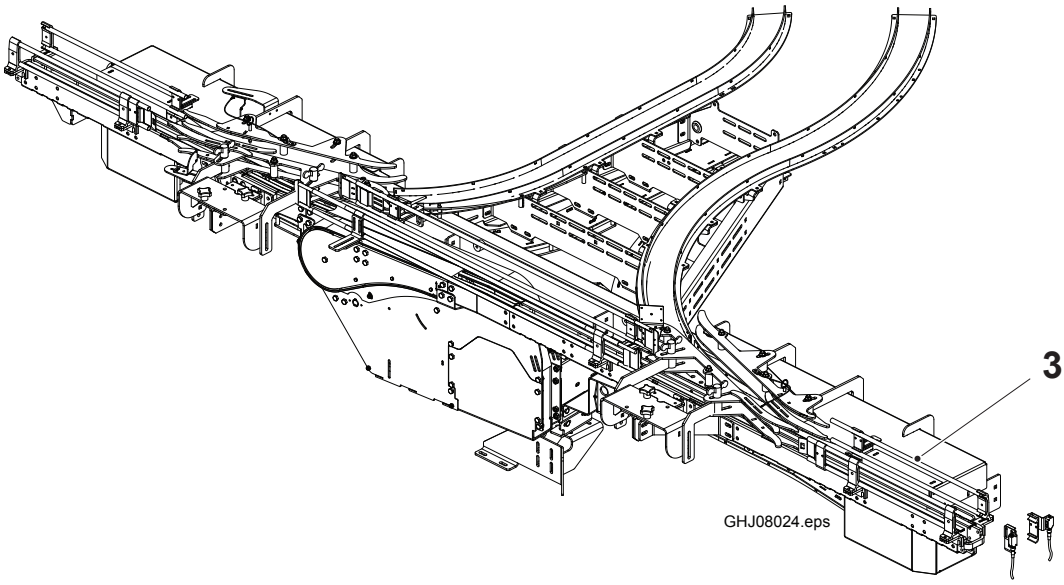

3.1 Guide
3.2 Outfeed Sensors

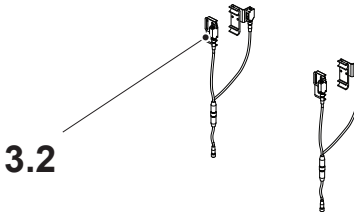

Functional Description . . . . . 3 - 5

3.1 Guide . . . . . 3 - 6

3.2 Outfeed Sensors . . . . . 3 - 7

This page intentionally left blank

Functional Description

The external outfeed module is the package conveyor interface to the DE after the Accumulator. It is possible to adjust the speed of the external outfeed to produce the desired spacing between packages prior to entering the DE.

3.1 Guide

No maintenance is required on the external outfeed guide.

3.2 Outfeed Sensors

Refer to 4.3.2 Photocells for information on the outfeed sensors.

This page intentionally left blank

4 Electrical Equipment

Description

SPC	663605-0500

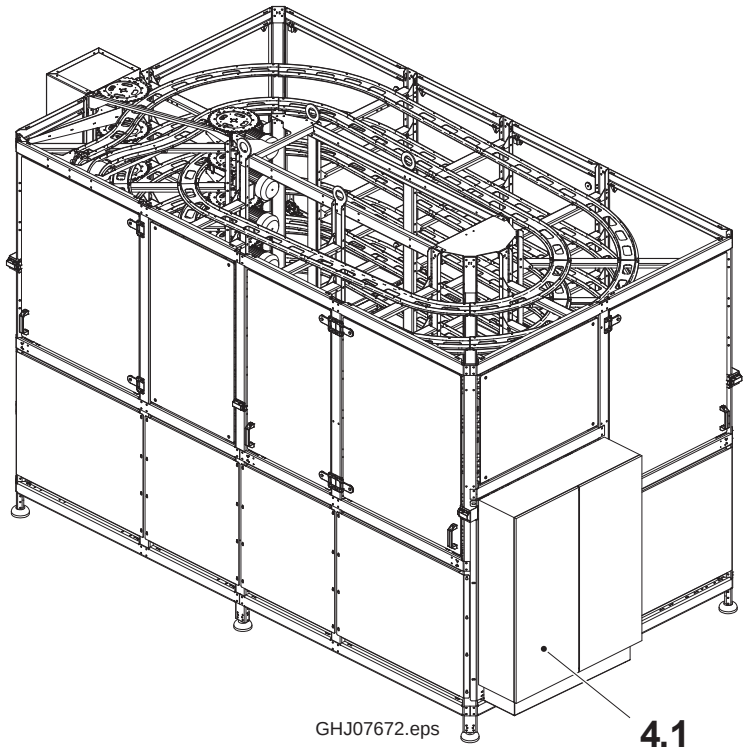

4.1 Electrical Cabinet (IEC)*
4.2 Control Panel (TPOP)

* CSA versions of the machine are equipped with single-door electrical cabinets.

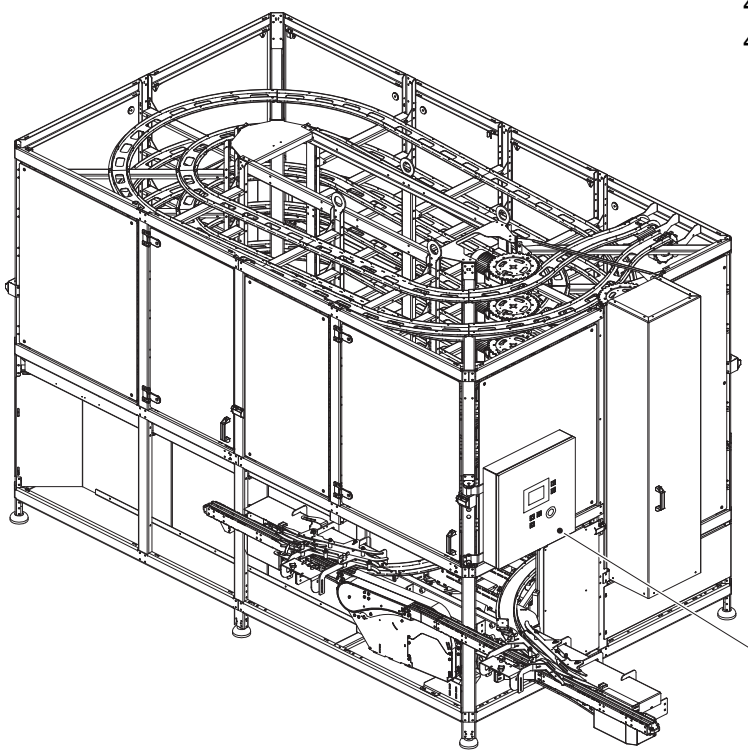

4.1 Electrical Cabinet . . . . . 4 - 7

4.1.1 Fan . . . . . 4 - 7

4.1.1-1 Fan - Check . . . . . 4 - 7

4.1.2 Control System . . . . . 4 - 8

4.1.2.1 CompactLogix Module . . . . . 4 - 8

4.1.2.1-1 CompactLogix Module - Remove . . . . . 4 - 8

4.1.2.1-2 CompactLogix Module - Install . . . . . 4 - 10

4.1.2.2 PLC . . . . . 4 - 12

4.1.2.2-1 PLC - Configure . . . . . 4 - 12

4.1.2.2-2 PLC - PLC Status . . . . . 4 - 13

4.1.2.2-3 PLC - Change Battery . . . . . 4 - 15

4.1.2.2-4 PLC Power Supply - Change Fuse . . . . . 4 - 16

4.1.2.2-5 PLC Power Supply - Change Module . . . . . 4 - 17

4.1.2.2-6 PLC - CompactFlash Card - Restore Program . . 4 - 18

4.1.2.3 SM2 - Serial Communications . . . . . 4 - 20

4.1.2.3-1 SM2 - Configure . . . . . 4 - 20

4.1.2.3-2 SM2 - Check Status . . . . . 4 - 21

4.1.2.4 DeviceNet Scanner (SDN) . . . . . 4 - 22

4.1.2.4-1 DeviceNet Scanner (Node 0) - Troubleshoot . . . 4 - 23

4.1.3 DeviceNet . . . . . 4 - 28

4.1.3.1 Distributed I/O and Network - Overview . . . . . 4 - 28

4.1.3.2 DeviceNet ArmorBlock Modules . . . . . 4 - 29

4.1.3.2-1 ArmorBlock I/O Modules - Set Node Address . 4 - 30

4.1.3.2-2 ArmorBlock I/O Modules - Troubleshoot . . . . . 4 - 31

4.1.3.3 DeviceNet ArmorStart Modules . . . . . 4 - 34

4.1.3.3-1 ArmorStart I/O Modules - Set Node Address . . 4 - 35

4.1.3.3-2 ArmorStart I/O Modules - Troubleshoot . . . . . 4 - 36

4.1.3.4 General DeviceNet Error . . . . . 4 - 41

4.1.4 SNP Module (option) . . . . . 4 - 42

4.1.4-1 SNP Module - Select . . . . . 4 - 42

4.1.4-2 SNP Module - Change . . . . . 4 - 43

4.1.4-3 SNP Module - Set . . . . . 4 - 44

4.1.5 Genius Module (option) . . . . . 4 - 47

4.1.5-1 Genius Module - Set . . . . . 4 - 47
4.1.5-2 Genius Module Program - Install . . . . . 4 - 48
4.1.5-3 Genius Module - Troubleshoot . . . . . 4 - 48
4.1.6 Overvoltage Protector . . . . . 4 - 49
4.1.6-1 Overvoltage Protector - Change Fuse . . . . . 4 - 49
4.1.7 Residual Current Device . . . . . 4 - 50
4.1.7-1 Residual Current Device - Check . . . . . 4 - 50
4.1.8 Fuse . . . . . 4 - 52
4.1.8-1 Fuse - Reset . . . . . 4 - 52
4.1.8-2 Fuse - Replace . . . . . 4 - 53
4.1.9 Safety System (Pluto) . . . . . 4 - 54
4.1.9-1 Safety System (Pluto) - Description . . . . . 4 - 54
4.1.9-2 Pluto Manager - Install . . . . . 4 - 55
4.1.9-3 Pluto Manager - Set Project . . . . . 4 - 56
4.1.9-4 Pluto Manager - Check Firmware and Software 4 - 57
4.1.9-5 Pluto Manager - Set an IDFIX Address . . . . . 4 - 58
4.1.9-6 Pluto Manager - Install Pluto without PC . . . . . 4 - 60
4.1.9-7 Pluto Manager - Install Pluto from PC . . . . . 4 - 61
4.1.9-8 Pluto Manager - Remove Firmware Alarms . . . 4 - 62
4.1.9-9 Pluto Manager - Change Firmware . . . . . 4 - 63
4.1.9-10 Pluto Manager - Troubleshoot Safety System . . 4 - 65
4.1.9-11 Pluto Manager - Safety Switch Fault Codes . . . 4 - 68
4.1.9-12 Safety Relay - Proof Test . . . . . 4 - 69
4.1.10 Infeed/Outfeed Frequency Converter . . . . . 4 - 73
4.1.10-1 Frequency Converter - Change . . . . . 4 - 74
4.1.10-2 Frequency Converter - Set . . . . . 4 - 75
4.1.10-3 Infeed/Outfeed Frequency Converter - Fault Codes . . . . . 4 - 81
4.2 Control Panel - TPOP . . . . . 4 - 83
4.2.1 General . . . . . 4 - 83
4.2.2 Summary of TPOP Functions . . . . . 4 - 83
4.2.2.1 Operator Functions . . . . . 4 - 83
4.2.2.2 Water System Settings . . . . . 4 - 83

4.2.2.3 Settings and Checks Before Start-up/Installation 4 - 84
4.2.2.4 Settings When Running Continuous Production 4 - 84
4.2.2.5 User Management Settings. . . . . 4 - 85
4.2.2.6 Other Functions . . . . . 4 - 85
4.2.3 Alarm Home Window . . . . . 4 - 86
4.2.3.1 Status Bar . . . . . 4 - 88
4.2.3.2 Title Bar . . . . . 4 - 89
4.2.4 General Function and Setting Information . . . . 4 - 90
4.2.4.1 General Function and Numeric Setting Panel. . . 4 - 90
4.2.4.2 General Keypad Information. . . . . 4 - 91
4.2.4.3 Binary Input Panel . . . . . 4 - 92
4.2.4.4 List Selection Panel. . . . . 4 - 92
4.2.4.5 Multiple Numeric Input Panel . . . . . 4 - 93
4.2.5 PLMS Window . . . . . 4 - 94
4.2.6 Accumulator Settings . . . . . 4 - 95
4.2.7 Recipe Window. . . . . 4 - 97
4.2.8 Maintenance Window. . . . . 4 - 101
4.2.8.1 Service Maintenance . . . . . 4 - 102
4.2.8.2 Accumulator Maintenance . . . . . 4 - 104
4.2.8.3 External Outfeed Maintenance . . . . . 4 - 110
4.2.8.4 External Infeed Maintenance . . . . . 4 - 113
4.2.9 System Window . . . . . 4 - 116
4.2.9.1 User Management Window . . . . . 4 - 117
4.2.9.2 Shutdown Confirmation Window . . . . . 4 - 119
4.2.10 Configuration Window. . . . . 4 - 120
4.2.11 TPOP Communications Configuration. . . . . 4 - 125
4.2.11.1 Default Settings . . . . . 4 - 125
4.2.11.2 TPOP Preparation . . . . . 4 - 125
4.2.11.3 Program Installation . . . . . 4 - 126
4.2.11.4 Troubleshooting. . . . . 4 - 127
4.3 Electrical Equipment . . . . . 4 - 128
4.3.1 Electrical Components Overview . . . . . 4 - 128

4.3.1.1 Electrical Components . . . . . 4 - 128

4.3.1.2 Door Switches . . . . . 4 - 130

4.3.2 Photocells . . . . . 4 - 132

4.3.2.1 Photocell - Emitter-Receiver Type . . . . . 4 - 133

4.3.2.1-1 Photocell - Emitter-Receiver Type - Check Sensitivity . . . . . 4 - 135

4.3.2.1-2 Photocell - Emitter-Receiver Type - Set Sensitivity . . . . . 4 - 135

4.3.2.2 Photocell - Reflecting Type . . . . . 4 - 136

4.3.2.2-1 Photocell - Reflecting Type - Check Alignment 4 - 136

4.3.2.2-2 Photocell - Reflecting Type - Adjust Alignment . . . . . 4 - 137

4.3.2.2-3 Photocell - Reflecting Type - Set Sensitivity . . 4 - 138

4.3.2.2-4 Photocell - Emitter-Receiver and Reflecting Type - Check Sensitivity . . . . . 4 - 140

4.3.3 Proximity Switches . . . . . 4 - 141

4.3.3-1 Proximity Switches - Set . . . . . 4 - 142

4.3.4 Motors . . . . . 4 - 143

4.3.5 Switches . . . . . 4 - 144

4.3.6 Warnings . . . . . 4 - 145

4.3.7 Terminals . . . . . 4 - 145

4.3.8 Miscellaneous . . . . . 4 - 145

4.1 Electrical Cabinet

Note! To open the electrical cabinet door on CSA versions of the machine, the main power disconnect switch must be in the OFF position.

4.1.1 Fan

4.1.1-1 Fan - Check

Machine Status	PRODUCTION STEP
SPC Reference	2948955-0200 (IEC) 2948956-0200 (CSA)

a) Check that the fans (1) are running without any noise from worn parts.

b) Check the function of the fans, and replace if necessary.

c) Clean the filter (2) if clogged, or replace if damaged.

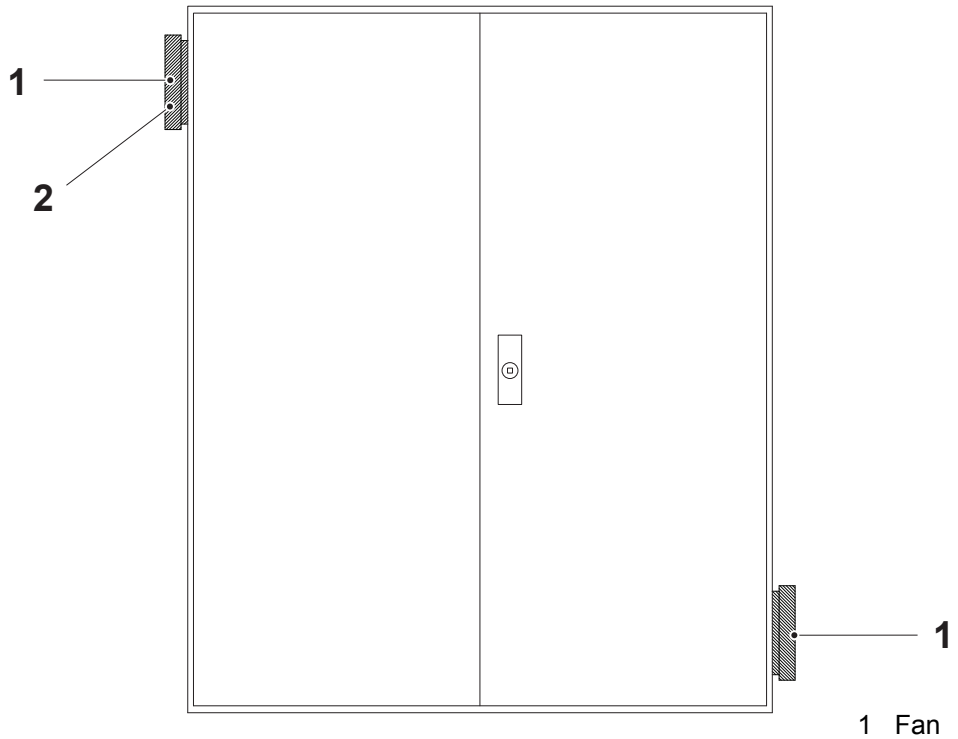

1 Fan
2 Filter

4.1.2 Control System

4.1.2.1 CompactLogix Module

4.1.2.1-1 CompactLogix Module - Remove

Machine Status	Power Supply Disconnector OFF
SPC Reference	2948955-0200 (IEC) 2948956-0200 (CSA)

Follow the instructions below to remove any CompactLogix module.

a) Remove all wired connections.

b) Check that the bus lever (1) of the module (2) to be removed is in the unlocked (fully right) position. If a module exists to the right of the module to be removed, check that its bus lever is also in the unlocked position.

c) Slide the upper and lower latches (3) to the open position.

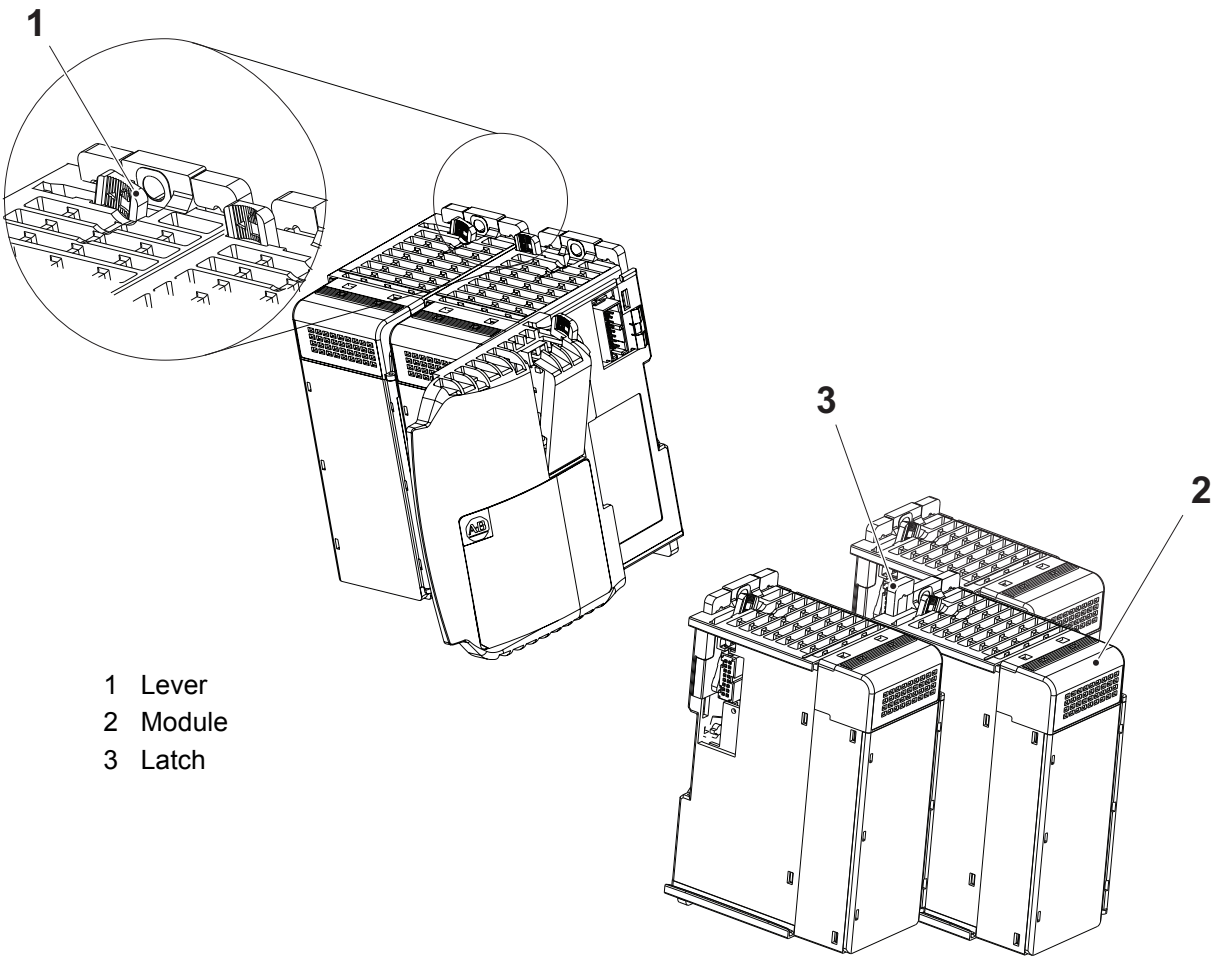

1 Lever
2 Module
3 Latch

(Cont'd)

(Cont'd)

Note! Some modules may have more than one upper and lower latch.

d) Slide and remove the module.

Note! If replacing a PLC processor, remove the CompactFlash card from the PLC module being removed and install it in the PLC module being installed.

4.1.2.1-2 CompactLogix Module - Install

Machine Status	Power Supply Disconnector OFF
SPC Reference	2948955-0200 (IEC) 2948956-0200 (CSA)

Follow the instructions below to install any CompactLogix module.

Note! When attaching any CompactLogix module, it is very important that the bus connectors are securely locked together to ensure proper electrical connection.

Note! If installing an SM2 module, set the switches according to section Configuration Mode and Single/Multi-Drive Operation Switch Locations.

a) Make sure the power is disconnected.

(Cont'd)

(Cont'd)

b) Check that the bus lever (1) of the module (2) to be installed is in the unlocked (fully right) position. If a module exists to the right of the module to be installed, check that its bus lever is also in the unlocked position, too.

c) Slide the upper and lower latches (3) to the open position.

Note! Some modules may have more than one upper and lower latch.

d) Use the upper tongue-and-groove slot (4) and the lower tongue-and-groove slot (5) to secure the modules together.

e) Slide the module (2) until it touches the back panel.

f) Close the upper and lower latches (3).

g) Move the bus lever (1) to the locked (fully left) position. If a module exists to the right of the module to be installed, move its bus lever to the locked position, too.

h) Rewire the module (2) according to the electrical schematics.

Note! The module at either end of the CompactLogix system must have an end cap.

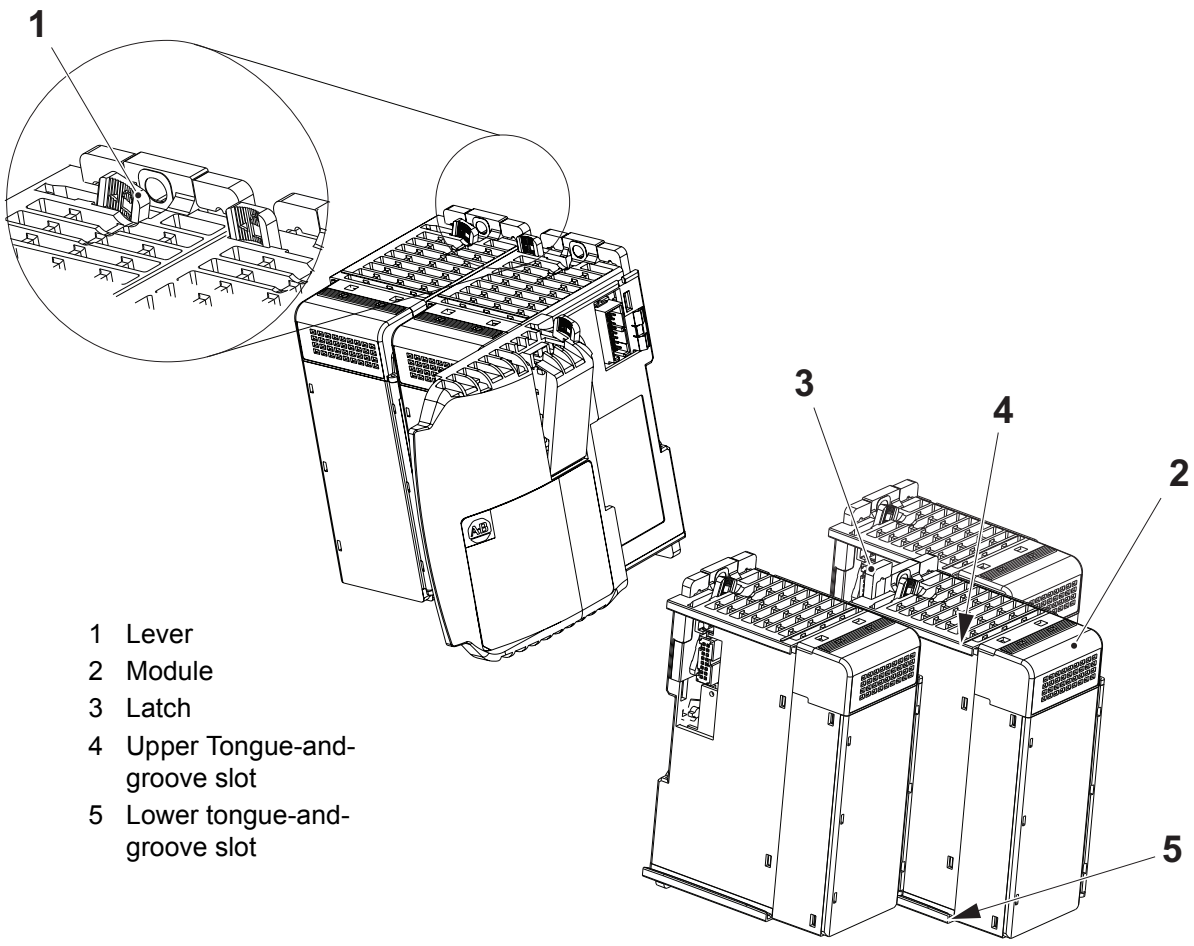

1 Lever
2 Module
3 Latch
4 Upper Tongue-and-groove slot
5 Lower tongue-and-groove slot

4.1.2.2 PLC

4.1.2.2-1 PLC - Configure

Machine Status	Power Supply Disconnector On
SPC Reference	2948955-0200 (IEC) 2948956-0200 (CSA)

Follow the steps below to configure the PLC.

a) Ensure the key (1) is in the keyswitch and in the REM position.

b) Ensure the CompactFlash card (2) is inserted in the CompactFlash slot.

When the PLC is turned ON, programs are read from the CompactFlash card.

Note! It may take up to three minutes for the programs to load from the CompactFlash card.

Note! Do not remove CompactFlash card while CompactFlash Active LED (3) is lit.

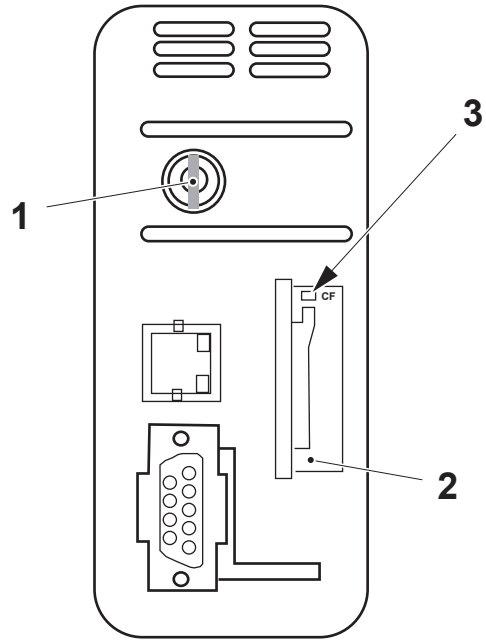

1 Key
2 CompactFlash card
3 CompactFlash Active LED

4.1.2.2-2 PLC - PLC Status

Machine Status	Power Supply Disconnector ON
SPC Reference	2948955-0200 (IEC) 2948956-0200 (CSA)

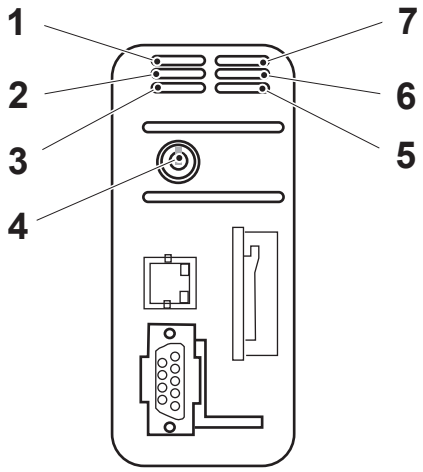

1 RUN LED
2 FORCE LED
3 BATT LED
4 Key
5 DCH.0
6 OK LED
7 I/O LED

Indicator:	Colour:	Description:
RUN	Off	The controller is in Program or Test mode.
	Solid green	The controller is in Run mode.
I/O	Off	There are no devices in the I/O configuration of the controller. or The controller does not contain a project (controller memory is empty).
	Solid green	The controller is communicating with all the devices in its I/O configuration.
	Flashing green	One or more devices in the I/O configuration of the controller are not responding.
	Flashing red	The chassis is bad. Replace the chassis.
FORCE	Off	No tags contain I/O force values. I/O forces are inactive (disabled).
	Solid amber	I/O forces are active (enabled). I/O force values may or may not exist.
DCH.0	Off	There is no activity.
	Solid green	Data is being received or transmitted.

(Cont'd)

(Cont'd)

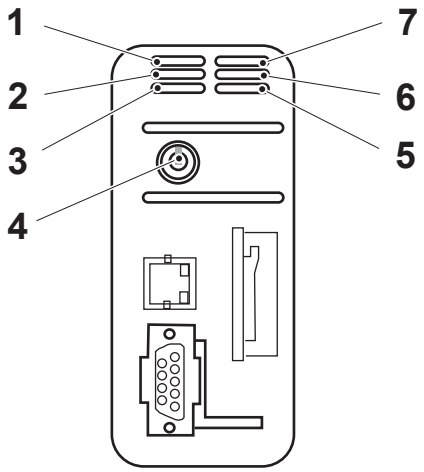

1 RUN LED
2 FORCE LED
3 BATT LED
4 Key
5 DCH.0
6 OK LED
7 I/O LED

Indicator:	Colour:	Description:
BAT	Off	The battery supports memory.
	Solid red	The battery is not installed. or The battery is 95% discharged and should be replaced.
OK	Off	No power is applied.
	Flashing red	If the controller is a new controller, then the controller requires a firmware update. If the controller is **not** a new controller, then Board Major fault has occurred. To clear the fault, either turn the key to PROG, then to RUN and then back to PROG again or go on-line with RSLogix 5000 software.
	Solid red	The controller detected a non-recoverable fault, so it cleared the project from memory. To recover: 1. Cycle power to the chassis. 2. Download the project. 3. Change to Run mode. If the OK LED remains solid red, contact your Rockwell Automation representative or local distributor.
	Solid green	The controller is OK.
	Flashing green	The controller is storing or loading a project to or from nonvolatile memory.

4.1.2.2-3 PLC - Change Battery

Machine Status	Power Supply Disconnector OFF
Consumables	Battery 1769-BA
SPC Reference	2948955-0200 (IEC) 2948956-0200 (CSA)

WARNING

Risk of electroshock

When the battery is connected or disconnected, an electrical arc can occur. This could cause an explosion in hazardous location installations. Be sure that power is removed or the area is non hazardous before proceeding.

When the battery indicator (1) lights up, change the battery (2).

a) Disconnect the ethernet cable (3) and the channel 0 cable (4). Pull up the mounting tab (5) and pull down the tab (6).

b) Pull aside the tab (7) on the I/O module and remove the PLC CPU.

c) Slide the battery door (8) forward.

Note! Do not remove the plastic insulation covering the battery. The insulation is necessary to protect the battery contacts.

d) Insert the battery into the battery port (9) and the battery connector into the connector port (10).

e) Slide the battery door (8) until it clicks into position.

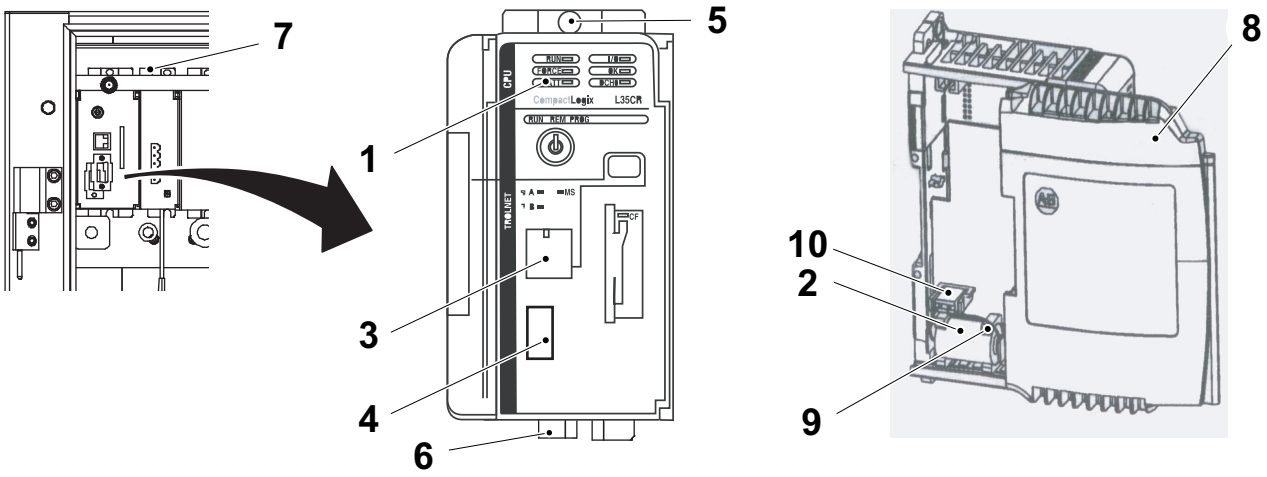

1 Indicator
2 Battery
3 Ethernet cable
4 Channel 0 cable
5 Mounting tab
6 Tab
7 Tab
8 Battery door
9 Battery port
10 Connector port

4.1.2.2-4 PLC Power Supply - Change Fuse

Machine Status	Power Supply Disconnector OFF
SPC Reference	2948955-0200 (IEC) 2948956-0200 (CSA)

a) Remove Compact I/O system power and correct the conditions causing the short circuit.

b) Place a slotted screwdriver under the tab (1) and remove the fuse housing cover (2).

c) Use a fuse puller (or similar device) to remove the front access fuse.

Note! Use care so that the printed circuit board and surrounding electronics are not damaged.

d) Replace the front access fuse. Centre the replacement fuse over the fuse clip and press down. If a tool is used to press the fuse in place, apply pressure to the metal end caps only - not the centre of the fuse.

e) Assemble the fuse housing cover.

f) Restore Compact I/O system power.

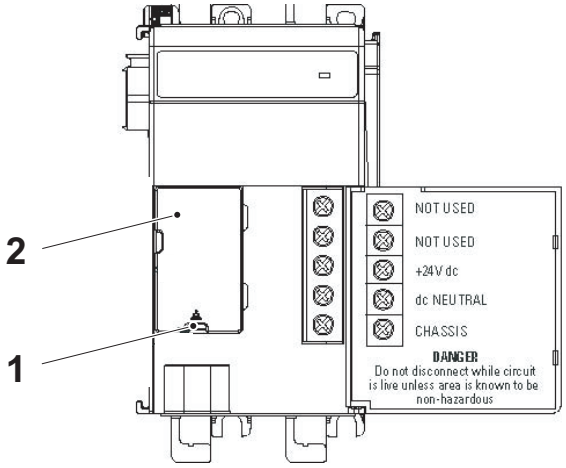

1 Tab
2 Cover

4.1.2.2-5 PLC Power Supply - Change Module

Machine Status	Power Supply Disconnector OFF
SPC Reference	2948955-0200 (IEC) 2948956-0200 (CSA)

If replacing the PLC power supply, set the power selector switch (1) to 240V.

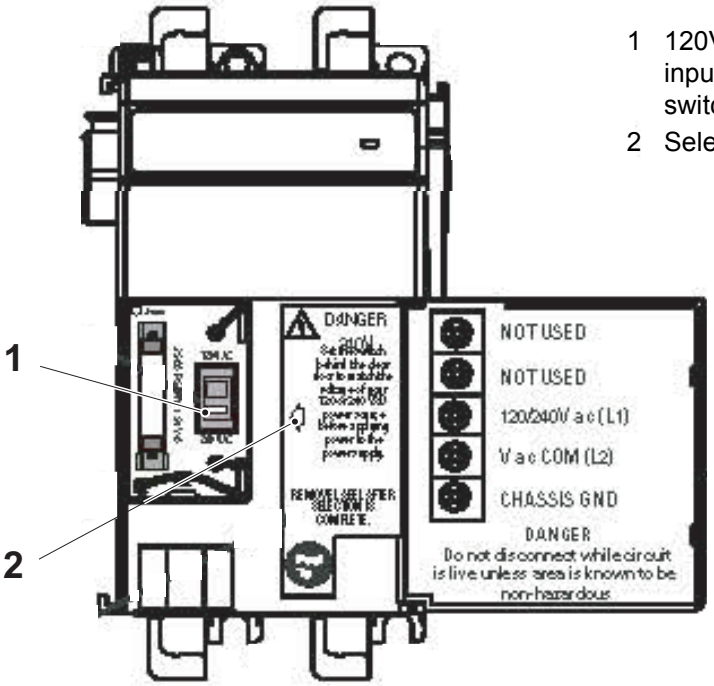

1 120V AC or 240V AC line input power selector switch (PA4)
2 Selector switch label (PA4)

(Cont'd)

4.1.2.2-6 PLC - CompactFlash Card - Restore Program

Machine Status	Power Supply Disconnector OFF
Special Equipment	PC with CD Drive Software CD 3039934-0001 CompactFlash card reader New CompactFlash card
SPC Reference	2948955-0200 (IEC) 2948956-0200 (CSA)

The CompactFlash card contains the PLC firmware, program, and recipes.

In the event that the CompactFlash card becomes corrupt, follow the steps below to create another one.

a) Insert the new CompactFlash card into the reader and connect the reader to the PC.

b) Insert the CD into the PC's CD-ROM drive.

c) Open the folder named `CompactFlash_Image`.

d) Copy the contents of the folder to the root directory of the drive assigned to the card reader.

Note! Do not copy the folder. Be sure to copy only the files inside the folder.

e) In Windows Explorer, the contents of the CompactFlash Card should look similar to the following. There is one file for each recipe entered. The example shows one recipe.

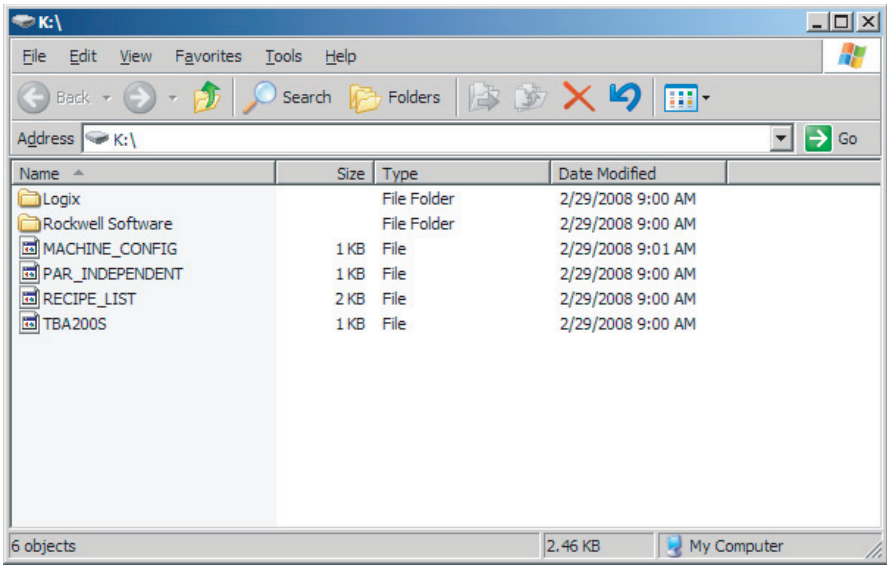

(Cont'd)

(Cont'd)

f) Click on `Safely Remove Hardware` on the Windows Taskbar and disconnect the card reader.

g) Insert the new CompactFlash card into the PLC.

When the machine is powered up, the program as shipped from the factory is loaded into the PLC. Any recipes created by the user need to be re-entered.

4.1.2.3 SM2 - Serial Communications

4.1.2.3-1 SM2 - Configure

Machine Status	Power Supply Disconnector OFF
SPC Reference	2948955-0200 (IEC) 2948956-0200 (CSA)

Configuration Mode and Single/Multi-Drive Operation Switch Locations

CAUTION

Before inserting or removing modules you must be electrostatically discharged.

Note! When handling the card, hold it by the card edges. Do not touch the solder side or component side.

Set the switches at Controller position (CONT) and Multi-drive operation position (5X).

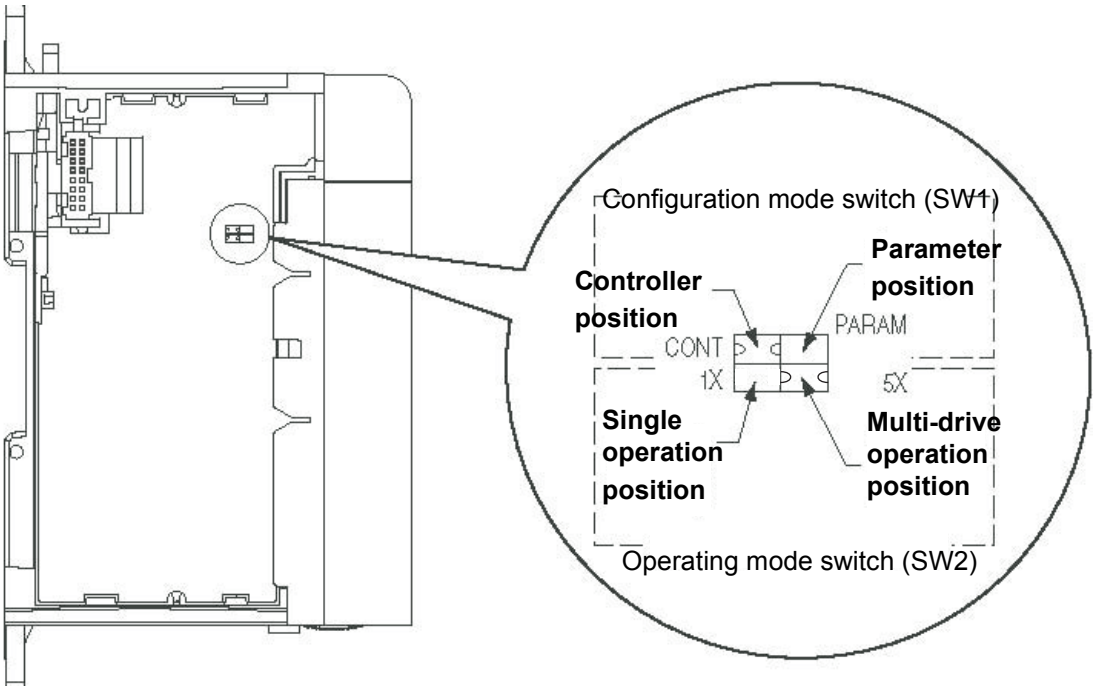

4.1.2.3-2 SM2 - Check Status

Machine Status	Power Supply Disconnector ON
SPC Reference	2948955-0200 (IEC) 2948956-0200 (CSA)

The SM2 module has four status indicators. They can be viewed on the front of the module.

Status	Cause	Corrective Action
Off	The module is not powered.	Apply power to the module.
	The channel is not connected to a DSI-supported drive.	Apply power to the DSI-supported drive.
	The channel is operating in Modbus RTU Master mode but is not transmitting.	Connect the module channel to the drive using a communications cable.
Flashing Red	In Single mode, the channel is not receiving communication from the drive. In Multi-Drive mode, the channel is not receiving communication from one or more configured drives. **Note!** If the program is in the IDLE step, the drives are not powered up and the LED flashes red.	Verify that the 22-RJ45CBL-C* communications cable is securely connected and not damaged. Replace cable if necessary.
		Verify the setting for the DSI I/O Cfg x parameter.
		Verify the settings for the Drv x Addr x parameters.
		Verify the settings for the node address and data parameters in the drive.
		Cycle power to the drive.
Flashing Green	The channel is properly connected and is communicating with the drive, but is not sending I/O to the drive. The channel is operating in Modbus RTU Master mode, and is transmitting.	No action required.
Solid Green	The channel is properly connected, is communicating with the drive, and is sending I/O to the drive.	No action required.

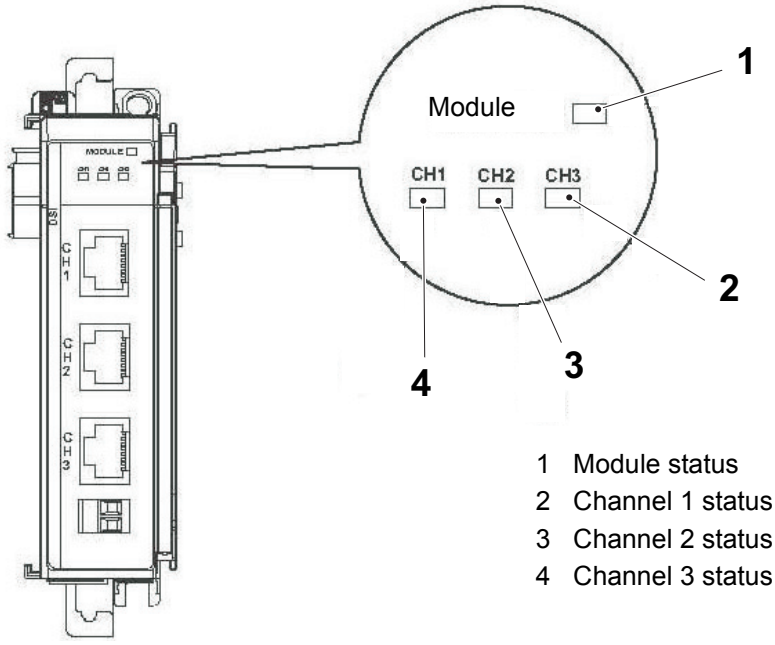

1 Module status
2 Channel 1 status
3 Channel 2 status
4 Channel 3 status

4.1.2.4 DeviceNet Scanner (SDN)

The DeviceNet Scanner (1) is located in the CompactLogix system. The scanner connects the external DeviceNet modules to the PLC.

Status indicators and an alphanumeric display are provided to report the status of the module and the DeviceNet.

The DeviceNet Scanner node number, baud rate, and scan list are automatically configured by the PLC program.

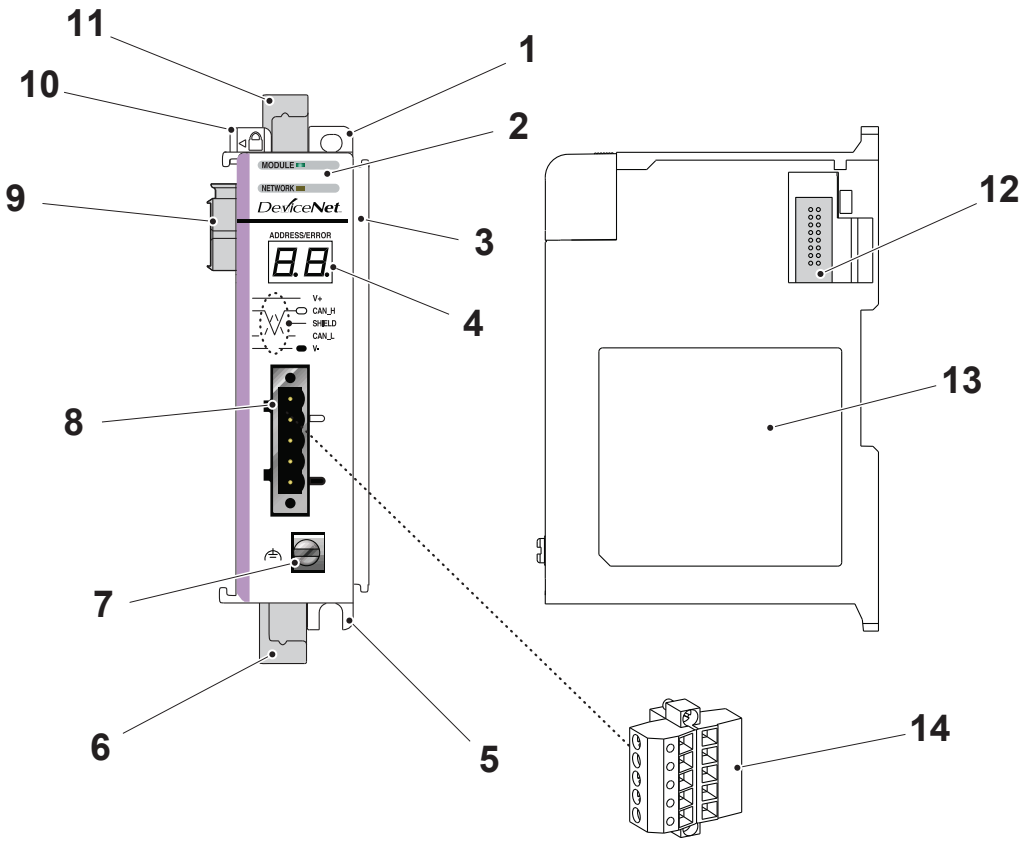

1 Upper panel mounting tab
2 Module and Network status LEDs
3 Bus connector with male pins
4 Address and Error numeric display
5 Lower panel mounting tab
6 Lower DIN rail latch
7 Grounding screw
8 DeviceNet mating male receptacle
9 Movable bus connector with pins
10 Bus lever (with locking function)
11 Upper DIN rail latch
12 Bus connector with male pins
13 Nameplate label
14 Removable DeviceNet female connector

4.1.2.4-1 DeviceNet Scanner (Node 0) - Troubleshoot

Machine Status	Power Supply Disconnector ON
SPC Reference	2948955-0200 (IEC) 2948956-0200 (CSA)

Troubleshooting the Status Indicators and Numeric Display

To locate the source of the error and find the cause, follow the instructions below.

a) At the CompactLogix chassis in the electrical cabinet, note the status on the DeviceNet scanner indicated by the:
   - Numeric display (1)
   - Network LED (2)
   - Module LED (3)

b) Use the tables on the following pages to determine the cause of the error.

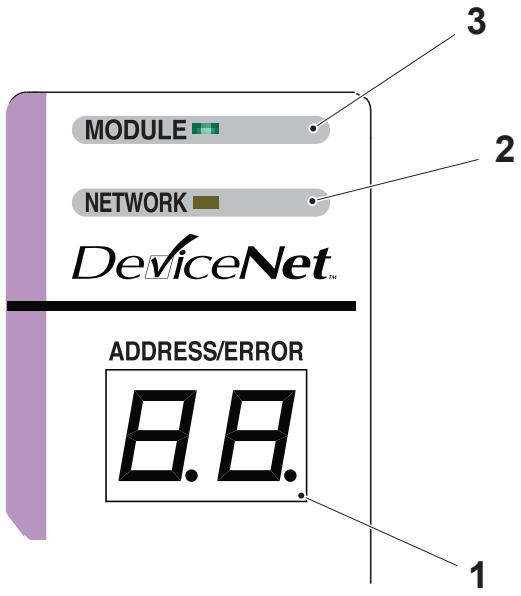

1 Display
2 Network LED
3 Module LED

(Cont'd)

(Cont'd)

Status Indicators and Numeric Display

This table summarizes the meanings of the status indicators and the numeric codes.

Indicator	Color/Status	Indicates	Recommended Action
Module	OFF	No power applied to module.	Apply power.
	Flashing Green	No bus master (CompactLogix controller) present.	Verify module connectors are properly seated. If they are, cycle power to the controller. If this does not correct the problem, replace the controller. If replacing the controller does not correct the problem, replace the scanner.
	Solid Green	Normal operation.	No action required.
	Flashing Red	Recoverable Fault - Memory has been erased or is being programmed.	Complete flash update or start a new update.
		Bad firmware in module.	Replace firmware.
	Solid Red	Unrecoverable fault.	Verify module connectors are properly seated. If the are, verify that bus terminator / end cap is installed. Cycle power. If still faulted, replace the module.
Network	OFF	No module power, no network power, or communications are not occurring between the module and the DeviceNet network. (This may be an acceptable condition.)	Verify module has power. Check that the DeviceNet cable is securely connected and the DeviceNet network is powered. Verify that network power is adequate (11...5V dc.)
	Flashing Green	Device is operational. There are no connections established with any of the network devices.	If the module is supposed to be controlling DeviceNet slaves, configure the module's scanlist.
	Solid Green	Normal operation. Scanlist if configured. Module is not in Idle mode.	No action required.
	Flashing Red	One or more of the devices that the scanner module is communicating with is in a timed out state.	Monitor the status display, or the module's status field to determine which slave device is offline.
	Solid Red	Critical network failure. Duplicate DeviceNet node address detected.	Reset module. Change module's node address or change conflicting device's node address. If failure continues, replace module.

(Cont'd)

(Cont'd)

Status Indicators and Numeric Display

Indicator	Status	Indicates
Node Address and Status Display	0...63	DeviceNet node address.
	67...69	Backup status
	70...99	Error code for the displayed node address
	Alternating numbers	One is the error code (70...99), and the other is the node number (0...63) that has generated the error.

Error Codes

This table describes the error codes indicated by the numeric display.

Code (decimal)	Name	Description	Recommended Action
67	Backup Mode	Scanner in Backup Scanner mode.	None
68	No Backup Scanner	No backup scanner module present.	Install and configure a backup scanner, if needed.
69	Backup Scanner Invalid CRC	The configuration of the primary and the secondary controller does not match. Either one or both of the configurations is not correct.	Be sure that the same configuration is downloaded to both scanners.
70	Duplicate Node	Controller has Failed Duplicate Node Address Check. The node address selected is already in use.	Change the module's or conflicting device's network address (node number) to an available one.
71	Illegal Scanlist Data	Illegal data in scanlist.	Reconfigure the scanlist table and remove any illegal data.
72	Slave Timeout	One of the module's slave devices has stopped communicating.	Inspect the module's slave devices and verify the DeviceNet connections.
73	Electronic Key Mismatch	The slave device Vendor ID key parameter does not match the slave's configuration in the module's scanlist.	Make sure that the device at the flashing node address matches the desired electronic key (vendor, product code, product type).
75	No Messages Received	No network traffic received by the scanner. 10 seconds have elapsed and no network traffic for the module or for any other device have been received by the module.	Verify the scanlist is correctly configured to scan slave devices. Verify DeviceNet network connections.
76	No Message for Scanner	No direct network traffic for the scanner module detected. 10 seconds elapsed and no DeviceNet input being screened by the module has been received.	None. There are other active devices on the network, initiating messages, but none of the messages are for the module.
77	Slave Data Size Mismatch	The data being received from the slave device does not match the configuration in the scanlist.	Either reconfigure the slave device, or change the module's scanlist to match the slave device.
78	No Such Device	Slave device in scanlist does not exist.	Either add the device to the DeviceNet network, or delete the device's entry in the scanlist.
79	Transmit Failure	The module has failed to transmit a message.	Make sure that the module is connected to a valid network. Check for disconnected cables.
80	In Idle Mode	Module is in Idle Mode.	Put the controller into RUN mode and enable the RUN bit in the Module Command Array.

Code (decimal)	Name	Description	Recommended Action
81	Scanner Faulted	The scanner module has stopped producing and consuming I/O data. This condition does not affect the scanner's system or messaging modes.	Check the FAULT value in the Module Command Array.
82	Fragmentation Error	Error detected in sequence of fragmented I/O messages from device.	Check scanlist table entry for slave device to make sure that input and output data lengths are correct. Check slave device configuration.
83	Slave Init Error	Slave device is returning error responses when the module attempts to communicate with it.	Check slave device's configuration. Reboot slave device.
84	Not Yet Initialized	Module has not completed its initial attempt to establish communication with its slaves.	None. This code clears itself once the module properly initializes all slave device on the network.
85	Receive Buffer Overflow	Data size returned is larger than expected.	Configure the slave device for a smaller data size.
86	Device Went Idle	Device is producing idle state.	Check the device configuration and slave node status.
89	Auto Device Replacement (ADR) Error	Slave device responded with an error to the initialization data sent to it by the scanner; or the configuration table in the scanner's flash memory is not valid for a slave node.	Try the ADR download again. If it still fails, try clearing the ADR flash by downloading an empty ADR configuration to the scanner module and then try the ADR configuration again.
90	Disabled Network	DeviceNet Port is disabled.	Check for the DISABLE being set in the Module Command Array.
91	Bus Off	Bus off condition detected on integral DeviceNet port.	Check the DeviceNet connections and physical media integrity. Check system for the failed salve devices or other possible sources of network interference. Check the Baud Rate.
92	No DeviceNet Power	No network power detected on DeviceNet port.	Provide network power. Make sure the module drop cable is providing the proper power to the DeviceNet port.
95	FLASH Update	Flash Update in Progress	None. Do not disconnect the module from the network while a FLASH update is in progress.
98	Firmware Corrupted	Firmware is corrupted.	Reflash module firmware. Do not power cycle the module. Doing so may cause the module to become inoperable. If the problem persists, contact Technical Support.
99	Hard Fault		Cycle power. Reflash module firmware. Contact Technical Support.

4.1.3 DeviceNet

4.1.3.1 Distributed I/O and Network - Overview

General

Distributed I/O is a generic term for I/O devices in the system that communicate, via a network, to a component or components in the CompactLogix Rack.

Machine

In this machine, there are up to six devices that communicate with the SDN DeviceNet Scanner in the CompactLogix Rack:

- Two ArmorBlock DeviceNet I/O modules (assigned node addresses 1 and 2).
- One optional ArmorBlock DeviceNet I/O module (for chain cleaner) (assigned node address 4).
- Two optional ArmorStart DeviceNet I/O modules (assigned node addresses 5 and 6).
- One optional Genius DeviceNet module (assigned node address 7).

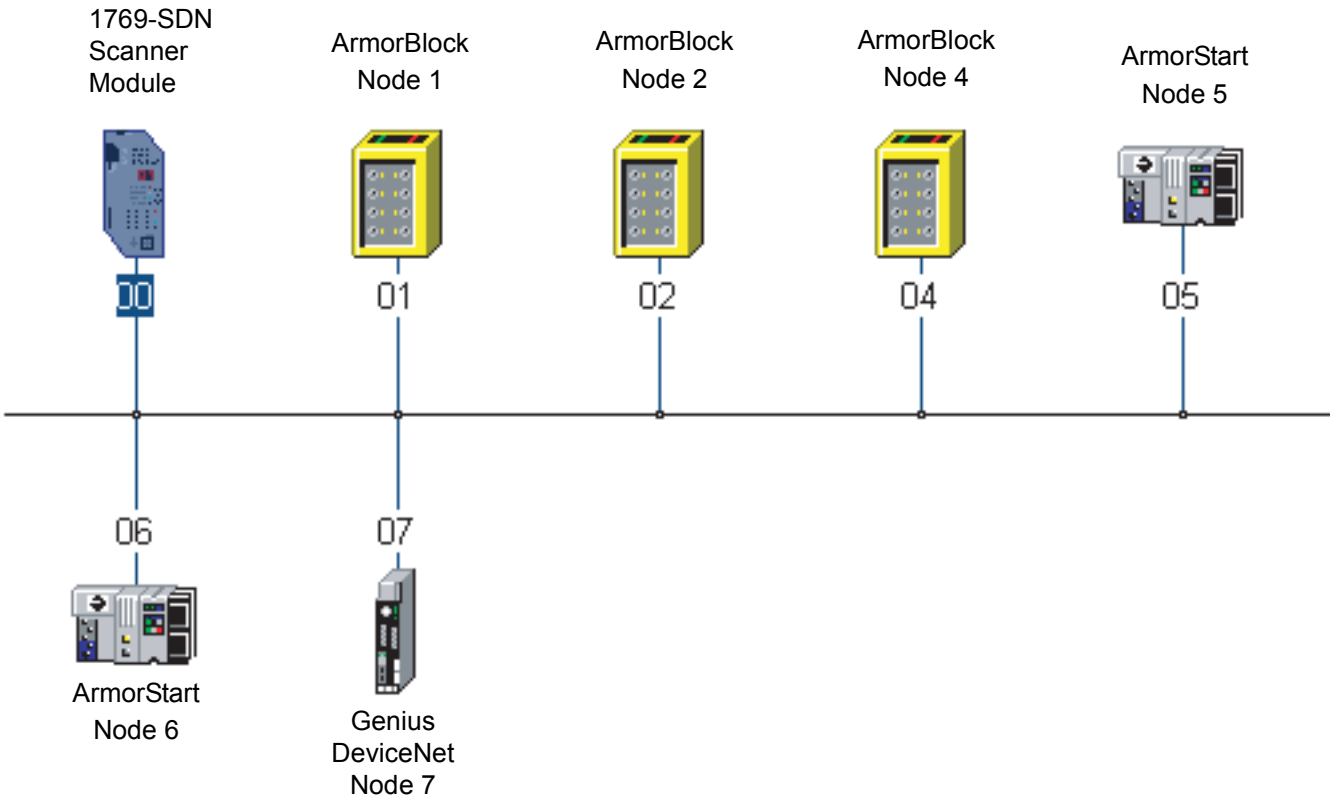

4.1.3.2 DeviceNet ArmorBlock Modules

DeviceNet ArmorBlock Modules (1) are used to monitor components in the machine and transmit the information via the DeviceNet to the PLC.

The node address numbers are set by rotary switches on the module.

Status indicators are provided to report the status of the module and the DeviceNet.

If a module is changed, set the node address number(s) to match the one(s) replaced. (See 4.1.3.2-1 ArmorBlock I/O Modules - Set Node Address.)

For DeviceNet troubleshooting information regarding this module, see 4.1.3.2-2 ArmorBlock I/O Modules - Troubleshoot and 4.1.5 Genius Module (option).

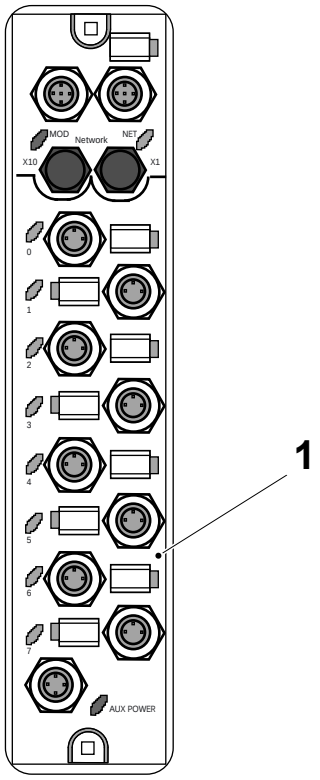

1 DeviceNet ArmorBlock Module

4.1.3.2-1 ArmorBlock I/O Modules - Set Node Address

Machine Status	Power Supply Disconnector OFF
SPC Reference	2948955-0200 (IEC) 2948956-0200 (CSA)

a) At the ArmorBlock modules (1) referred to in the following table, remove the X1 protective cap (2) from the X1 switch access hole (3).

b) Use a small screw driver to set the node address for that module.

c) Fit the protective cap (2).

d) Remove the X10 protective cap (4), and check that the X10 switch (5) is set to 0. If not, turn the X10 switch (5) to that position.

Machine Type	Module Number	Switch X1 Position	Switch X10 Position	Node Address
All machines	W30K1210	1	0	1
	A01K1220	2	0	2
	W30K1240	4	0	4

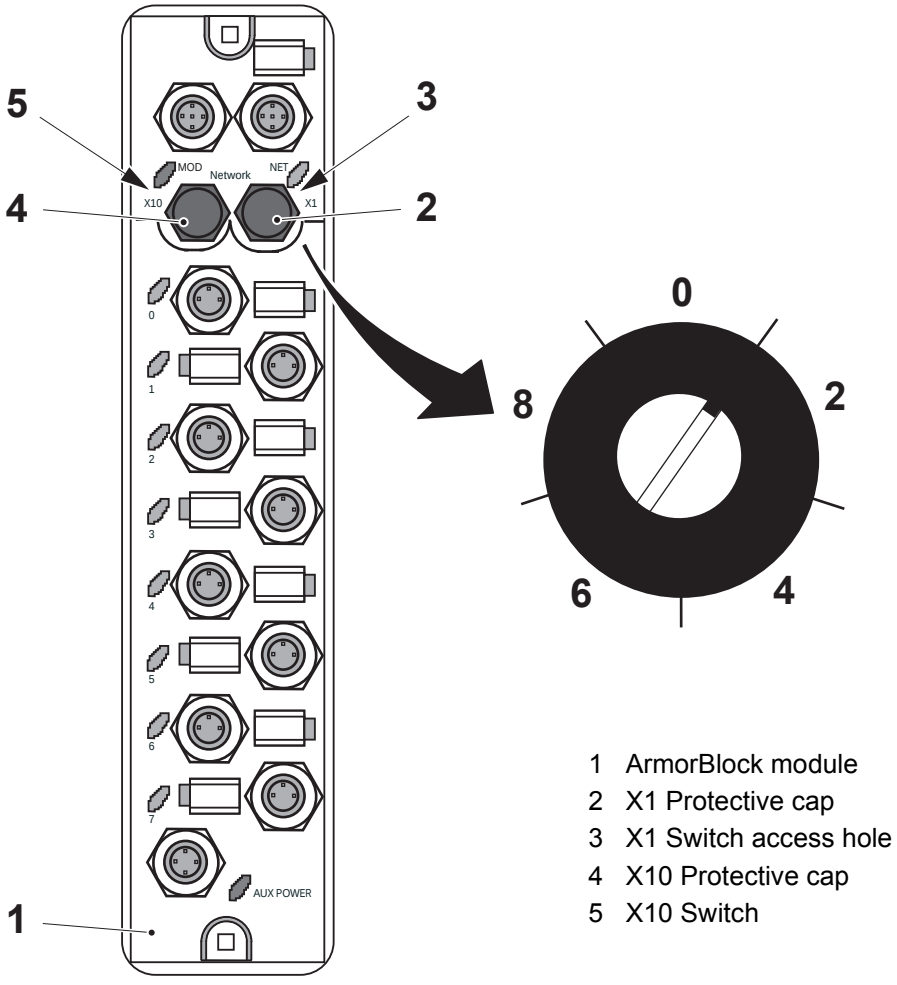

1 ArmorBlock module
2 X1 Protective cap
3 X1 Switch access hole
4 X10 Protective cap
5 X10 Switch

4.1.3.2-2 ArmorBlock I/O Modules - Troubleshoot

Machine Status	Power Supply Disconnector ON
SPC Reference	2948955-0200 (IEC) 2948956-0200 (CSA)

DeviceNet Error Indicators on the ArmorBlock I/O Modules

a) At the ArmorBlock modules (nodes 1 and 2), note the status indicated by the MOD, NET, AUX POWER and I/O status LEDs (1), (2), (3) and (4).

b) Use the following tables to determine the cause of the error.

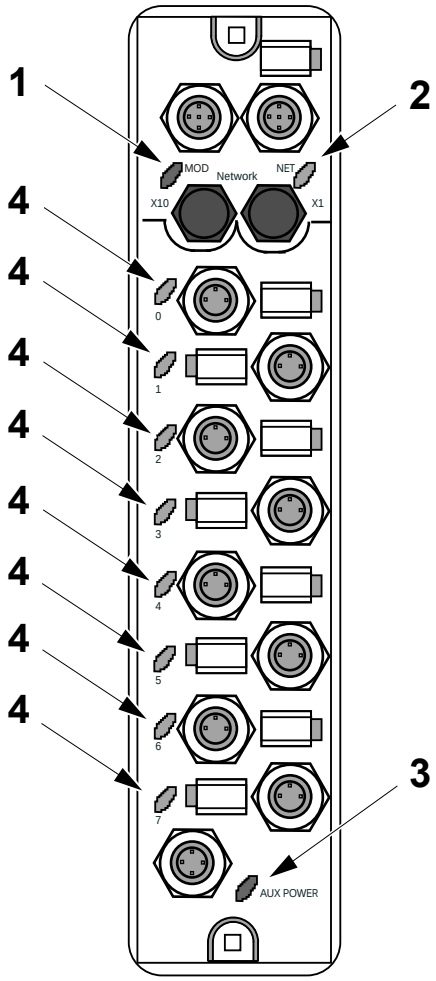

1 MOD LED
2 NET LED
3 AUX POWER LED
4 I/O LED

(Cont'd)

(Cont'd)

DeviceNet Error Indications on the ArmorBlock I/O Modules

NET LED

State	Status	Description	Recommendation
OFF	No power or not on line	The module is not online.	Wait until module has completed the dup_MAC_id test or power the module.
GREEN	Online Connected	Device is operating normally and is online with connections established.	None
FLASHING GREEN	Online but not connected	The module is online with connections established.	Establish connections to other nodes.
RED	Critical link failure	Failed communication module.	Check the communication and cycle power.
FLASHING RED	Connection time out	An I/O connection has timed out	Cycle power to the module.

MOD LED

State	Status	Description	Recommendation
OFF	No power	There is no power applied to the module.	Apply power to the module.
GREEN	Module operational	The module is operating normally.	None
FLASHING GREEN	Module needs commissioning	The module needs commissioning due to missing, incomplete or an incorrect configuration.	Check the configuration and cycle power
FLASHING RED	Minor fault	The module has a recoverable fault.	Check the configuration and cycle power
RED	Critical fault	Watchdog timeout or the module has an unrecoverable fault.	Cycle power to the module. If this not solve the problem contact the Tetra Pak service desk. The module may need to be changed.

(Cont'd)

(Cont'd)

DeviceNet Error Indications on the ArmorBlock I/O Modules

AUX POWER LED

State	Status	Description	Recommendation
OFF	No auxiliary power	There is no auxiliary power applied to the module.	Apply auxiliary power to the module.
GREEN	Auxiliary power present	There is auxiliary power applied to the module.	None

I/O LED

State	Status	Description	Recommendation
OFF	Output not energised or no valid input	Output is not energised or input not valid	None
YELLOW	Output energised or valid input	Output is energised or input is valid	None

4.1.3.3 DeviceNet ArmorStart Modules

These devices are used to control the conveyor motors.

The node address numbers are set by rotary switches on the module.

Status indicators are provided to report the status of the module and the DeviceNet.

If a module is changed, set the node address number(s) to match the one(s) replaced. See 4.1.3.3-1 ArmorStart I/O Modules - Set Node Address.

For DeviceNet troubleshooting information regarding this module, see 4.1.3.3-2 ArmorStart I/O Modules - Troubleshoot.

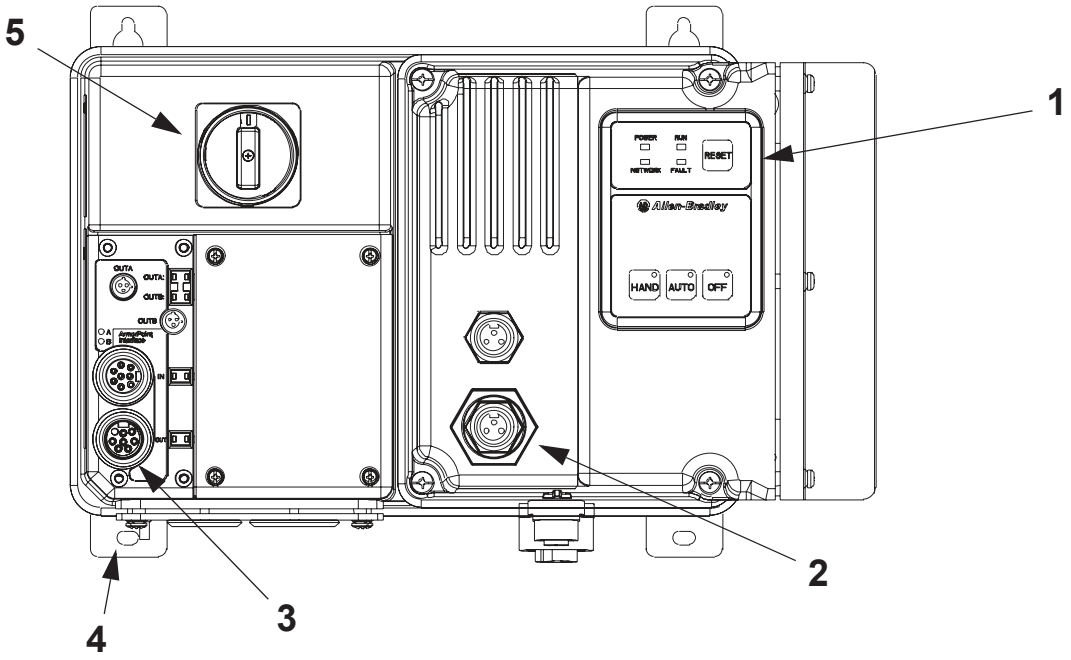

1 LED Status Indicator
2 Motor Connector
3 DeviceNet Connection
4 Ground Terminal
5 Local Disconnect

4.1.3.3-1 ArmorStart I/O Modules - Set Node Address

Machine Status	Power Supply Disconnector OFF
Special Equipment	Screw driver PH3, min 165 mm long blade Screw driver 3 mm, for slotted screw
SPC Reference	2948955-0200 (IEC) 2948956-0200 (CSA)

a) Remove the control module (1) with the screws (2).

b) Turn the control module (2) upside down to locate the node switches.

c) Set the MSD switch (3) and the LSD switch (4) according to the table below.

d) Assemble in reverse order.

Motor	Node	MSD	LSD
External infeed	5	0	5
External outfeed	6	0	6

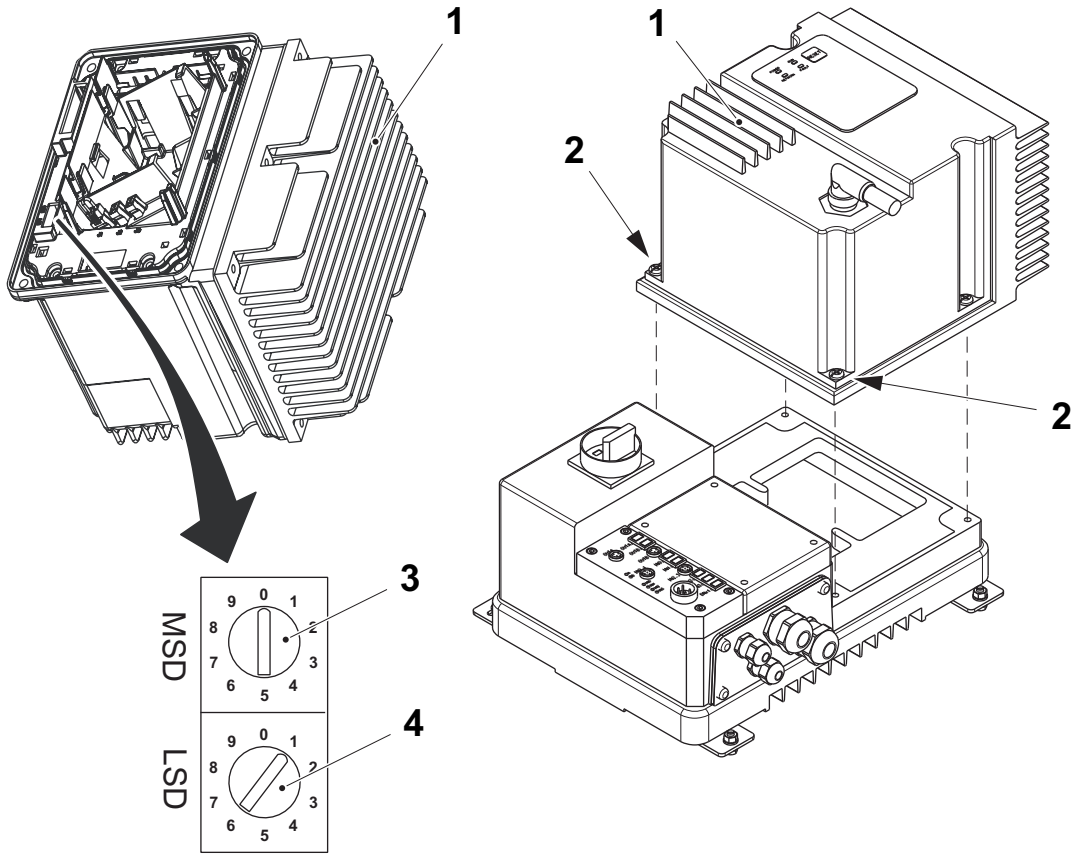

1 Control module
2 Screw
3 MSD switch
4 LSD switch

4.1.3.3-2 ArmorStart I/O Modules - Troubleshoot

Machine Status	Power Supply Disconnector ON
SPC Reference	2948955-0200 (IEC) 2948956-0200 (CSA)

LED Status Indication

There are four LEDs on the front of the ArmorStart. The following is a brief explanation of the operation of each LED.

LED	Definition
Power	The LED is illuminated solid green when control power is present and with the proper polarity.
Run	The LED is illuminated solid green when a start command and control power are present.
Network	This bi-colour (red/green) LED indicates the status of the DeviceNet network. (See the Network LED Status Indication table on page 4-37 for additional information.)
Fault	This LED indicates the fault status of the ArmorStart. When the unit is faulted, it responds with a specific blink pattern to identify the fault. (See the Controller Fault LED Definitions table on page 4-38 for additional information.)

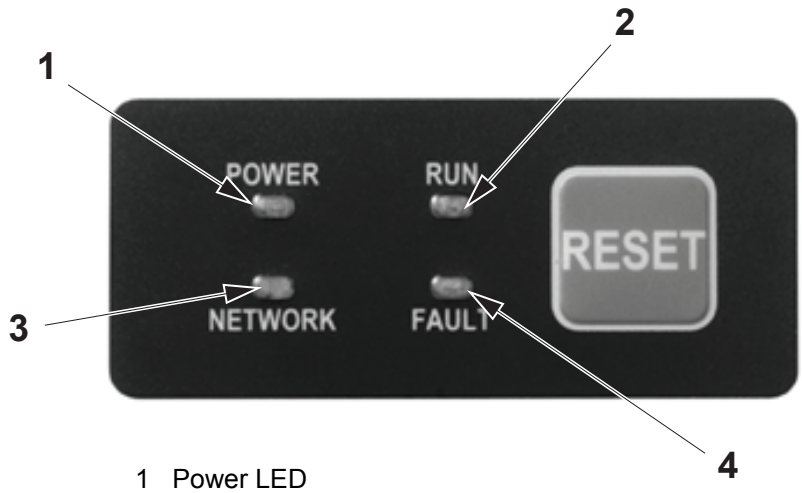

1 Power LED
2 Run LED
3 Network LED
4 Fault LED

(Cont'd)

(Cont'd)

Network LED Status Indication

Network Status LED	Definition	Possible Causes
Off	The device has not completed the initialization, is not on the active network, or may not be powered up.	Check to make sure the product is properly wired and configured on the network.
Flashes Green-Red-Off	While waiting to detect the network baud rate, the LED will flash this pattern about every 3 seconds.	If the product stays in this state, it means that there is no set baud rate. Insure that at least one device on the network has a set baud rate.
Solid Green	The device is operating in a normal condition and is communicating to another device on the network.	No action required.
Flashing Green	The device is operating in a normal condition, is online, but with no connection to another device. This is the typical state for new devices.	The device may need to be mapped to a master scanner, placed in a scanlist, or have another device communicate to it.
Flashing Red	Recoverable fault has occurred.	Check to make sure the PLC and scanner are operating correctly and that there are no media/cabling issues. Check to see if other networked devices are in similar state.
Solid Red	The device has detected a major error that has rendered it incapable of communicating on the network (Duplicate MAC ID, Bus-off, media issue)	Troubleshooting should be done to ensure that the network is correct (terminator, lengths, etc.) and there is not a duplicated node problem. If other device on the network appear to be operating fine and power cycling the device does not work, contact Technical Support.
Flashing Red and Green	The device is in a communication faulted state.	Power cycling the device may resolve the problem; however, if the problem continues, it may be necessary to contact Technical Support.

(Cont'd)

(Cont'd)

Controller Fault LED Definitions

Blink Pattern	Fault Definitions		Possible Causes or Remedies
	ArmorStart	Drive Controlled	
1	Short (140M)		The circuit breaker has tripped. Try to reset the breaker. If the condition continues, check the power wiring. This fault cannot be disabled.
2		Overload Fault (Drive Error Codes 7 and 64)	An excessive motor load exists. Reduce load so drive output current does not exceed the current set by Parameter 133 (Motor OL Current) and verify Parameter 184 (Boost Select) setting. Reduce load or extend Accel Time. This fault cannot be disabled.
3		Phase Short (Drive Error Codes 41…43)	The ArmorStart has detected a phase short. Excessive current has been detected between two of the output terminals. Check the motor for a shorted condition. Replace starter module if fault cannot be cleared. This fault cannot be disabled.
4		Ground Fault (Drive Error Codes 13, 38…40)	A current path to earth has been detected at or more of the drive output terminals or a phase ground fault has been detected between the drive and motor in this phase. Check the motor for a grounded condition. Replace starter module if fault cannot be cleared. This fault cannot be disabled.
5		Motor Stalled (Drive Error Code 6)	Drive is unable to accelerate motor. Increase Parameter 139 and/or 167 (Accel Time x) or reduce load so drive output current does not exceed the current by Parameter 189. This fault cannot be disabled.
6	Control Power		The ArmorStart has detected a loss of the control power voltage. Check control voltage, wiring, and proper polarity. Also check and replace control voltage fuse, if necessary. This fault can be disabled and is disabled by default.
7	I/O Fault		Depending on the types of modules in the configuration this error could be generated by a shorted sensor, shorted input device, wiring mistakes, or a blown output fuse. If this fault occurs, the offending problem should be isolated or removed prior to restarting the system. This fault can be disabled and is disabled by default.
8		Heatsink Overtemperature (Drive Error Code 8)	Heatsink temperature exceeds a predefined value. Verify that ambient temperature has not exceeded. This fault cannot be disabled. Replace internal fan.
9		Over-Current (Drive Error Codes 12 and 63)	The ArmorStart has detected a voltage imbalance. Check the power system and correct if necessary. This fault cannot be disabled.
10	DNet Power Loss		DeviceNet power has been lost or has dropped below the 12V threshold. Check the state of the network power supply and look for DeviceNet media problems. This fault can be disabled and is disabled by default.
11	Internal Comm		This fault occurs when communications between the main board and the drive is lost. This fault cannot be disabled.

Blink Pattern	Fault Definitions		Possible Causes or Remedies
	ArmorStart	Drive Controlled	
12		DC Bus Fault (Drive Error Codes 3, 4, and 5)	DC bus voltage remained below 85% of nominal. DC bus voltage fell below the minimum value. DC bus voltage exceeded maximum value. Monitor the incoming AC line for low voltage or line power interruption. Check input fuses. Monitor the AC line for high line voltage or transient conditions. Bus overvoltage can also be caused by motor regeneration. Extend the decel time or install a starter module with the dynamic brake option. This fault cannot be disabled.
13		EEPROM Fault / Internal Comm Fit (Drive Error Codes 81 and 100)	This is a major fault, which renders the ArmorStart inoperable. Possible causes of this fault are transients induced during EEprom storage routines. If the fault was initiated by a transient, power cycling should clear the problem. Otherwise, replacement of the starter module may be required. This fault cannot be disabled.
14		Hardware Fault (Drive Error Codes 2, 70, and 122)	This fault indicates that a serious hardware problem exists. Check for a base/starter module mismatch. Auxiliary input interlock is open. Failure has been detected in the drive power section. Failure has been detected in the Drive control and I/O section. Cycle power and replace drive if fault cannot be cleared. This fault cannot be disabled.
15		Auto Restart Tries (Drive Error Code 33)	Drive unsuccessfully attempted to reset a fault and resume running for the programmed number of Parameter 192 (Auto RstrtTries). Correct the cause of the fault. This fault cannot be disabled.
16		Miscellaneous Fault	This fault is actually the logical OR of the drive's Auxiliary Input fault (Fault Code 2), Heatsink Overtemperature fault (Fault Code 8), Parameter Defaulted fault (Fault Code 48), and SVC Autotune fault (Fault Code 80). This fault cannot be disabled.

(Cont'd)

(Cont'd)

Internal Drive Faults

A fault is a condition that stops the drive.

Fault Types, Descriptions, and Actions

No.	Fault	Description	Action
F2	Auxiliary Input	Auxiliary input interlock is open.	1. Check remote wiring. 2. Verify communications.
F3	Power Loss	DC bus voltage remained below 85% of normal.	1. Monitor the incoming AC line for low voltage or line power interruption. 2. Check input fuses.
F4	UnderVoltage	DC bus voltage fell below the minimum value.	Monitor the incoming AC line for low voltage or line power interruption.
F5	OverVoltage	DC bus voltage exceeded the maximum value.	Monitor the AC line for high line voltage or transient conditions. Bus overvoltage can also be caused by motor regeneration. Extend the decel time or install dynamic brake option.
F6	Motor Stalled	Drive is unable to accelerate motor.	Increase parameter 139...167 (Accel Time x) or reduce load so drive output current does not exceed the current set by Parameter 189 (Current Limit 1).
F7	Motor Overload	Internal electronic overload trip	1. An excessive motor load exists. Reduce load so drive output current does not exceed the current set by Parameter 133 (Motor OL Current). 2. Verify Parameter 184 (Boost Select) setting.
F8	Heatsink OvrTmp	Heatsink temperature exceeds a predefined value.	1. Check for blocked or dirty heat sink fins. Verify that ambient temperature has not exceeded 40° C. 2. Replace internal fan.
F12	HW OverCurrent	The drive output current has exceeded the hardware current limit.	Check programming. Check for excess load, improper programming of Parameter 184 (Boost select), DC brake volts set too high, or other causes of excess current.
F13	Ground Fault	A current path to earth ground has been detected at one of more of the drive output terminals.	Check the motor and external wiring to the drive output terminals for a grounded condition.
F33	Auto Rstrt Tries	Drive unsuccessfully attempted to reset a fault and resume running for the programmed number of Parameter 192 (Auto Rstrt Tries).	Correct the cause of the fault and manually clear.
F38 F39 F40	Phase U to Gnd Phase V to Gnd Phase W to Gnd	A phase to ground fault has been detected between the drive and motor in this phase.	1. Check the wiring between the drive and motor. 2. Check motor for grounded phase. 3. Replace starter module if fault cannot be cleared.
F41 F42 F43	Phase UV Short Phase UW Short Phase VW Short	Excessive current has been detected between these two output terminals.	1. Check the motor and drive output terminal wiring for a shorted condition. 2. Replace the starter module if fault cannot be cleared.

4.1.3.4 General DeviceNet Error

Machine Status	Power Supply Disconnector ON
SPC Reference	2948955-0200 (IEC) 2948956-0200 (CSA)

If an error occurs on the DeviceNet, the DEVICENET ERROR icon (1) and the DeviceNet error message are displayed on the TPOP.

To continue with troubleshooting, see 4.1.2.4-1 DeviceNet Scanner (Node 0) - Troubleshoot.

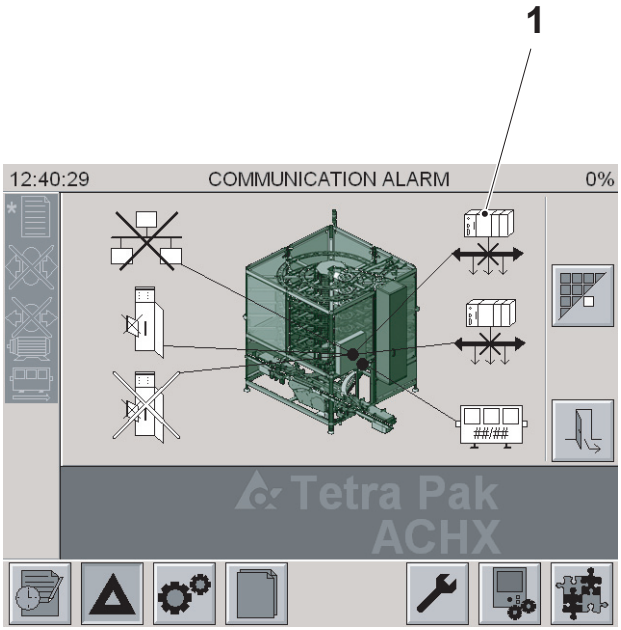

1 DEVICENET ERROR

4.1.4 SNP Module (option)

4.1.4-1 SNP Module - Select

Machine Status	Power Supply Disconnector ON
SPC Reference	90459-4235

From the Home Window, press the CONFIGURATION WINDOW button to display the Configuration Window.

Note! TP technician login is required to access this function.

a) Press the PLMS TYPE button (1).

b) Select SNP from the list.

c) Press the CONFIRM button.

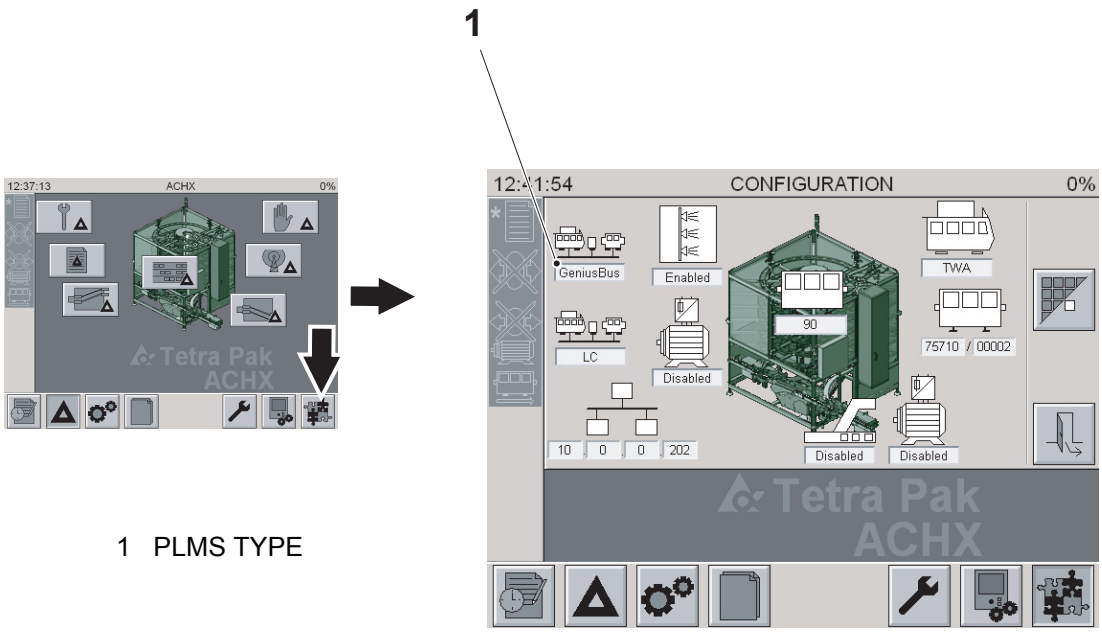

1 PLMS TYPE

4.1.4-2 SNP Module - Change

Machine Status	Power Supply Disconnector OFF
SPC Reference	90459-4235

Remove

a) Disconnect the cables to the SNP module

b) Use a screwdriver to push the button (1) while pulling the SNP module (2) in the lower part.

c) Lift the SNP module (2) up.

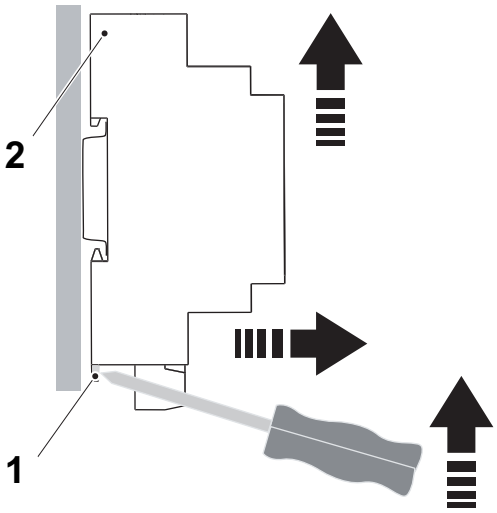

1 Button
2 SNP module

Fit

a) Attach the SNP module (2) to the hanger (3) and push the SNP module toward the electrical cabinet (4).

b) Connect the cables to the SNP module

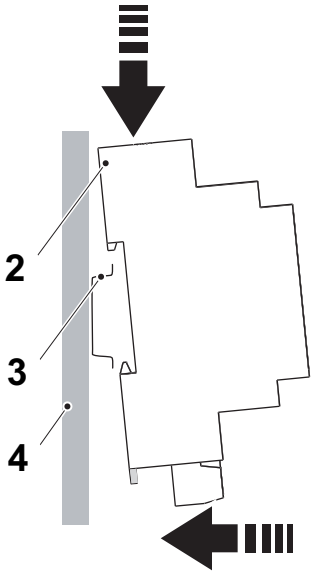

2 SNP module
3 Hanger
4 Electrical cabinet

4.1.4-3 SNP Module - Set

Machine Status	Power Supply Disconnector OFF
SPC Reference	90459-4235

Cable Connections

Wire the SNP module according to the illustrations below.

The illustration shows the SNP module from below.

The illustration shows the SNP module from above.

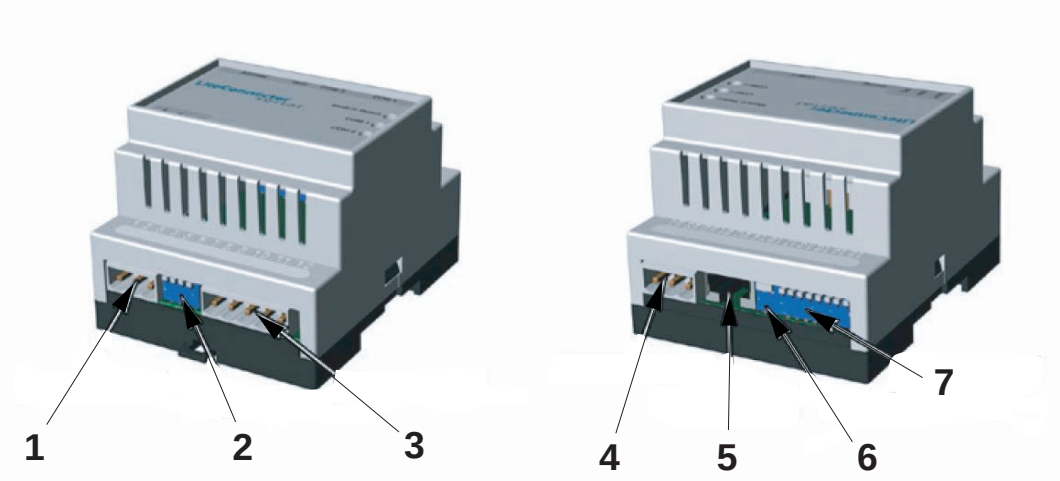

1 Power
2 Config switches (4-bits)
3 COM2 (RS-422)
4 COM1 (not used)
5 COM3 (RS-232)
6 Term Switch (COM1)
7 Config switches (8-bits)

(Cont'd)

(Cont'd)

Dipswitch

Set the 8-bit dipswitch (1) and the 4-bit dipswitch (2) according to the illustrations and tables below.

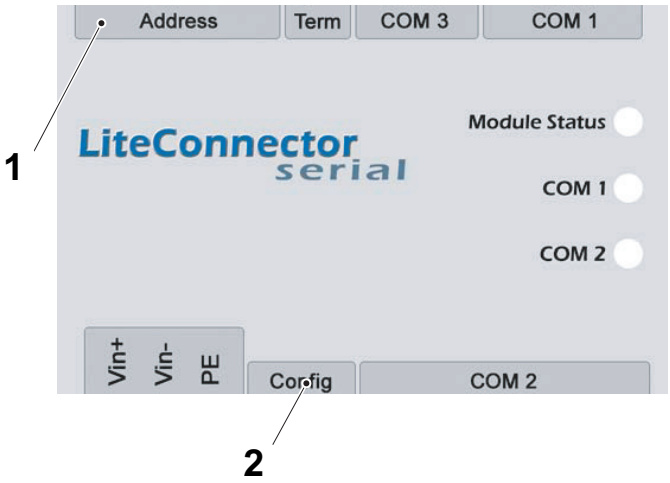

1 8-bit dipswitch
2 4-bit dipswitch

8-bit Dipswitch

Bit 1-8	Description	Correct dipswitch set
00101001	10 sec, odd parity	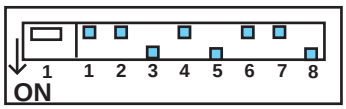

4-bit Dipswitch

Bit 1-4	Description	Correct dipswitch set
1100	19200 bps, 1 stop-bit	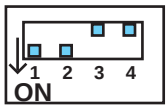

(Cont'd)

(Cont'd)

LED Description

The gateway is fitted with three LEDs to indicate the different states of the gateway. The LEDs are labelled `Module Status` (1), `DF1` (2) and `SNP` (3) The table below shows the different states of the LEDs.

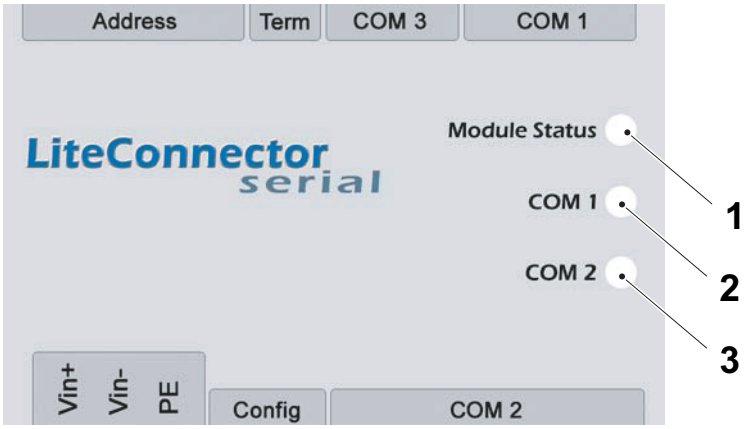

1 Module Status LED
2 DF1 (COM1) LED
3 SNP (COM2) LED

Module status LED (1)	Description
OFF	Module initializing
Green (ON)	Module initialized and running
Red (flashing)	Hardware error (RAM test fail or flash checksum fail)
Red (ON)	Module fatal error

DF1 (COM1) LED (2)	Description
OFF	Idle - no activity
Red (ON)	Network OFFLINE, no communication with PLC
Green (flashing)	Activity on serial channel

SNP (COM2) LED (3)	Description
OFF	Network OFFLINE, not connected to the master
Green (ON)	Network ONLINE, gateway attached to the master

4.1.5 Genius Module (option)

4.1.5-1 Genius Module - Set

Machine Status	Power Supply Disconnector ON
SPC Reference	3008990-0100

From any of the section Home Windows, press the CONFIGURATION WINDOW button to display the Configuration Window.

Note! TP technician login is required to access these functions.

PLMS Type

a) Press the PLMS TYPE button (1).

b) Select GeniusBus from the list.

c) Press the CONFIRM button.

Line Automation Type

a) Press the LINE AUTOMATION TYPE button (2).

b) Select Genius line type from the list.

c) Press the CONFIRM button.

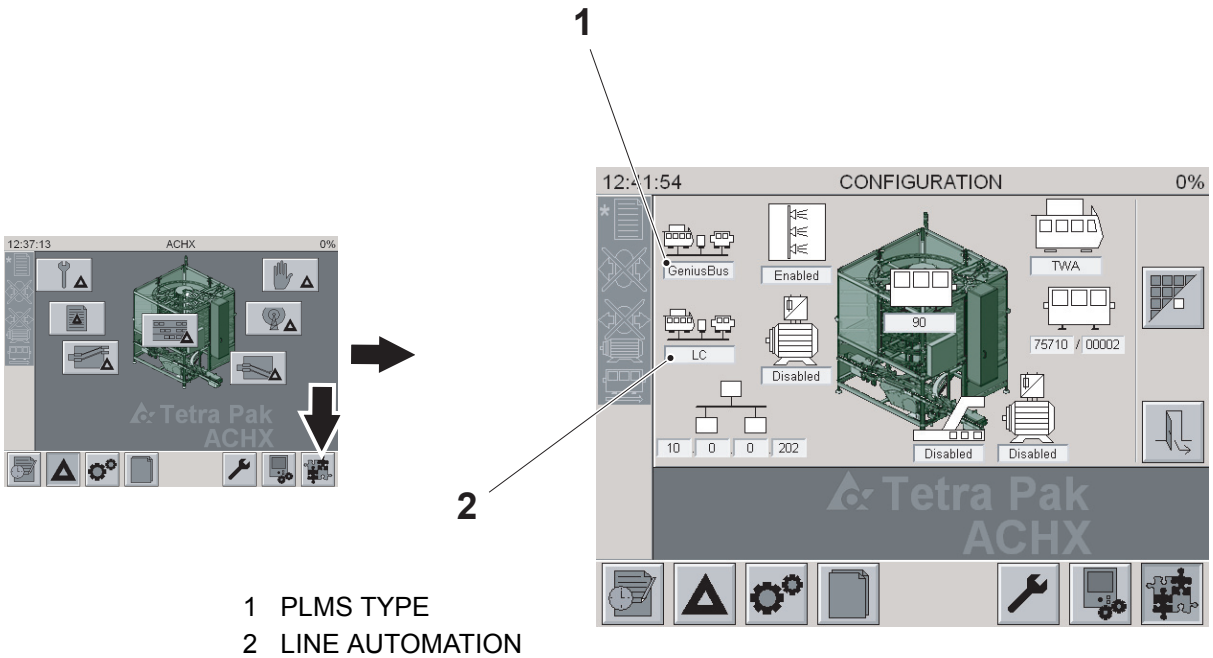

1 PLMS TYPE
2 LINE AUTOMATION TYPE

4.1.5-2 Genius Module Program - Install

Machine Status	Power Supply Disconnector ON
Special Equipment	Software CD 3039934-0001 Genius Program 3039938-1001
SPC Reference	3008990-0100

In the event of program loss or processor replacement, use Proficy Machine Edition version 5.50 or greater to download the program to the PLC.

4.1.5-3 Genius Module - Troubleshoot

Machine Status	Power Supply Disconnector ON
Special Equipment	Software CD 3039934-0001 Genius Program 3039938-1001
SPC Reference	3008990-0100

- Check that the Genius option is enabled. Refer to 4.1.5-1 Genius Module - Set.
- Check the electrical connections. Refer to the EM.
- Check that no DeviceNet alarms are displayed on the TPOP. If a DeviceNet alarm is displayed, refer to 4.1.2.4-1 DeviceNet Scanner (Node 0) - Troubleshoot.
- Refer to the EM for TBA 22 for more detailed information regarding Genius connection, communication, and configuration.

4.1.6 Overvoltage Protector

4.1.6-1 Overvoltage Protector - Change Fuse

Machine Status	Power Supply Disconnector OFF
SPC Reference	2948955-0200 (IEC) 2948956-0200 (CSA)

When one or more of the phases are subject to an overvoltage, the overvoltage protector (1) trips and the OVERVOLTAGE TRIPPED alarm (2) is displayed on the TPOP.

When a fuse trips, the colour in that indication window (3) changes from green to red.

Change all tripped fuses.

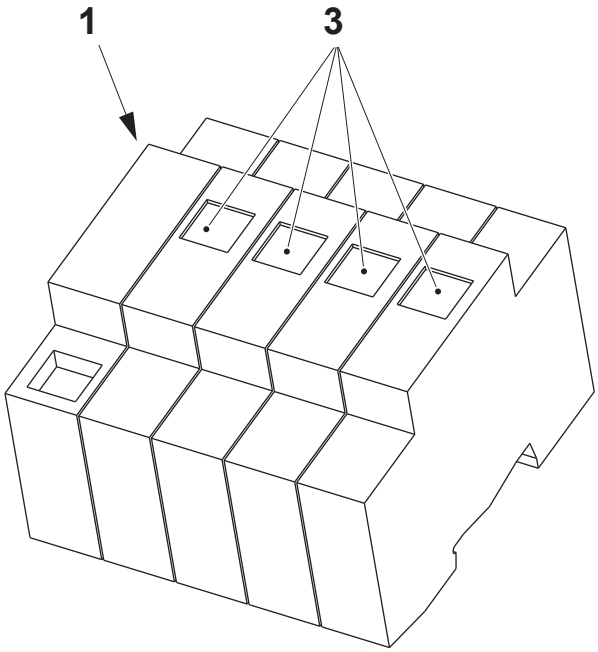

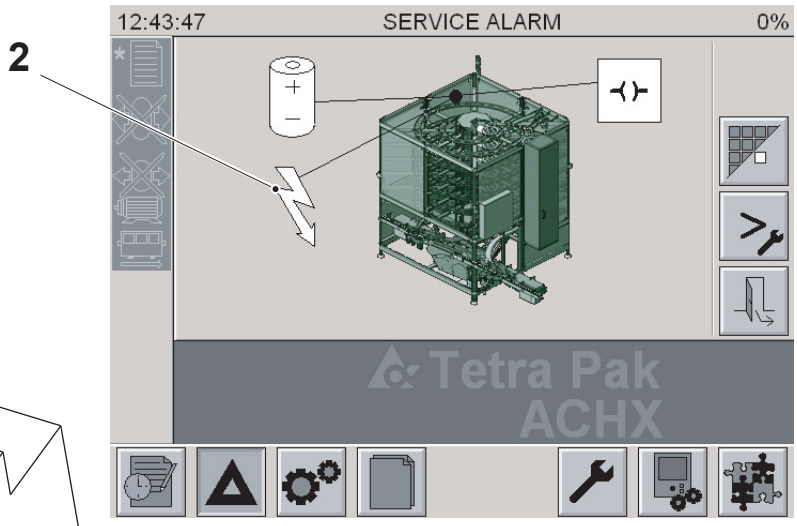

1 Overvoltage protector (A01F0000)
2 OVERVOLTAGE TRIPPED alarm
3 Indication window

4.1.7 Residual Current Device

4.1.7-1 Residual Current Device - Check

Machine Status	Power Supply Disconnector ON
SPC Reference	2948955-0200 (IEC) 2948956-0200 (CSA)

DANGER

Hazardous voltage

Electric shock will cause death or serious injury. Change the residual current device if it does not trip immediately.

Note! Test the function of the residual current device by using the test button monthly.

(Cont'd)

(Cont'd)

Before using the socket outlet (2), always test the residual current device (1).

a) Make sure the switch is ON (3).

b) Press the test button (4).

c) The residual current device must trip immediately; the switch will jump to OFF (5).

d) Turn the switch back to ON (3).

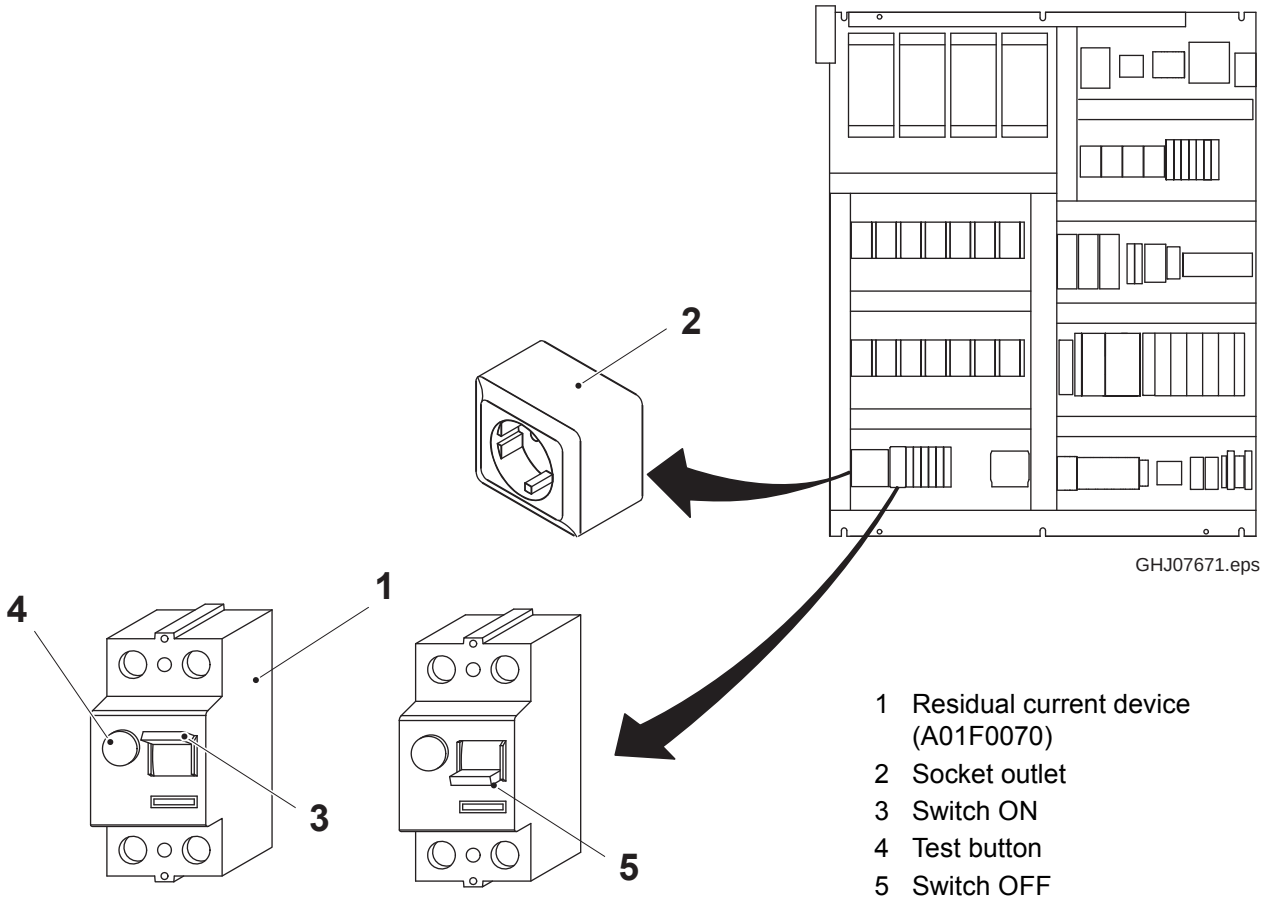

1 Residual current device (A01F0070)
2 Socket outlet
3 Switch ON
4 Test button
5 Switch OFF

4.1.8 Fuse

4.1.8-1 Fuse - Reset

Machine Status	Power Supply Disconnector ON
SPC Reference	2948955-0200 (IEC)

IEC Only

The fuse is tripped (1) when the switch is pointing downwards.

Turn back the switch to ON (2).

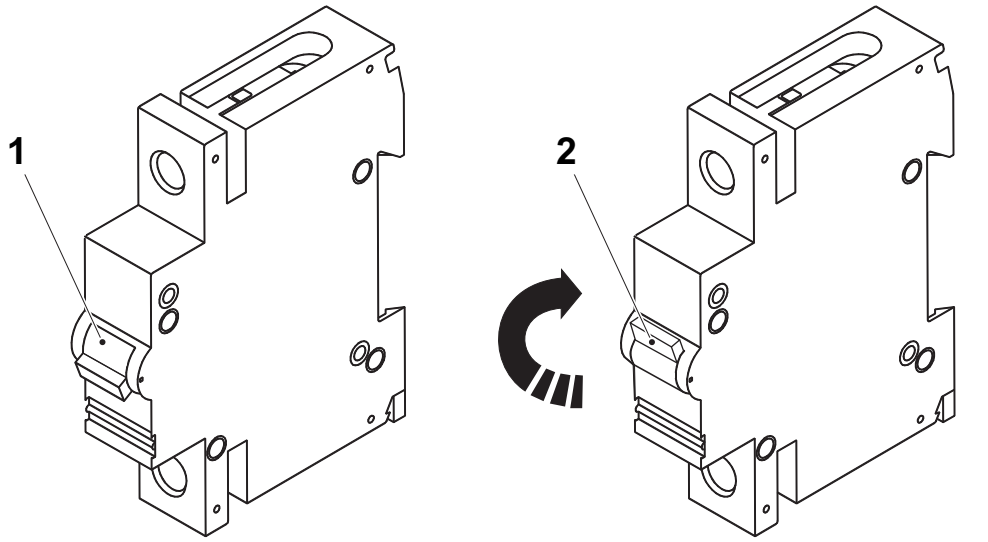

1 Switch OFF
2 Switch ON

4.1.8-2 Fuse - Replace

Machine Status	Power Supply Disconnector OFF
SPC Reference	2948956-0200 (CSA)

CSA Only

a) Pull down the lever and remove the fuse.

b) Use an ohmmeter to determine the continuity of the fuse.

c) If the fuse is blown, replace it with an appropriate rated fuse.

d) Lift the lever.

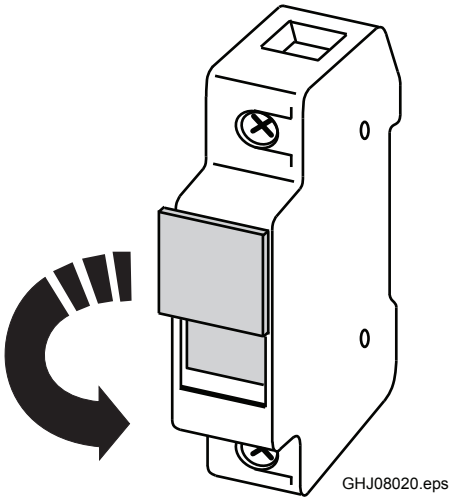

4.1.9 Safety System (Pluto)

Note! All safety components need to be replaced within 20 years.

4.1.9-1 Safety System (Pluto) - Description

a) Make sure the Plutos have the same or latest firmware.

b) Write IDFIX addresses for all Plutos.

c) Download the program.

- Pluto program files:
  - spe Encrypted file, gives no possibility to change
  - hps Hexadecimal file (compiled program for Pluto)
- Access and registration codes:

  Mute Service engineer, customer:
  - With the spe- and hps-files, it is possible to download and go online with Pluto.

  License Machine owner, line builder (required education):
  - Full access to create and change programs and compile to download the changed program

The machine owner has access to the safety software sps-file. If required, a line builder can get the program from the machine owner. The spe- and hps-files are delivered with the machine.

4.1.9-2 Pluto Manager - Install

a) Download the latest Pluto Manager from the web site and install.

b) Start the `Pluto Manager` (1).

c) Select `Register Key` (2).

d) Type `Mute` (3) and confirm with `OK`.

e) The software acknowledges the registration code. Select `OK` (4).

The software can now be used for downloads and online monitoring.

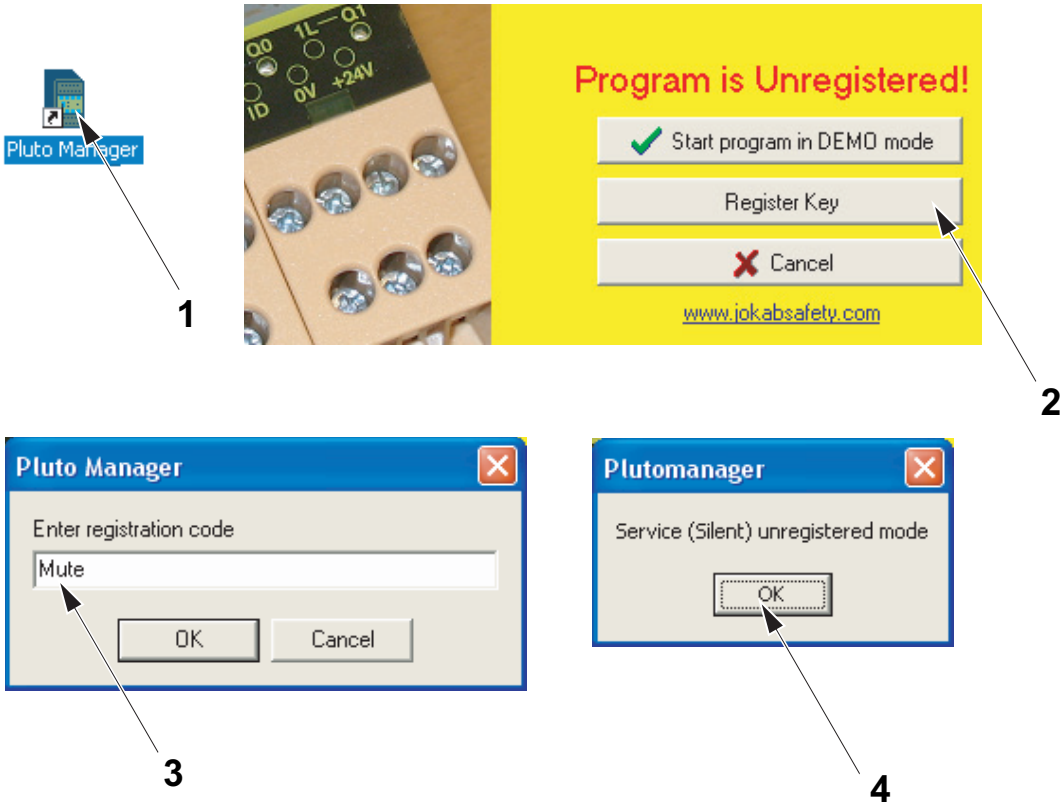

1 Pluto Manager
2 Register Key
3 Registration code
4 OK

4.1.9-3 Pluto Manager - Set Project

The Pluto project can be set in several ways. This is one example:

a) Start the `Pluto Manager` (1).

b) Select the file (2) and click `Open` (3).

c) Select the actual Pluto project (3039937-1001) (4).

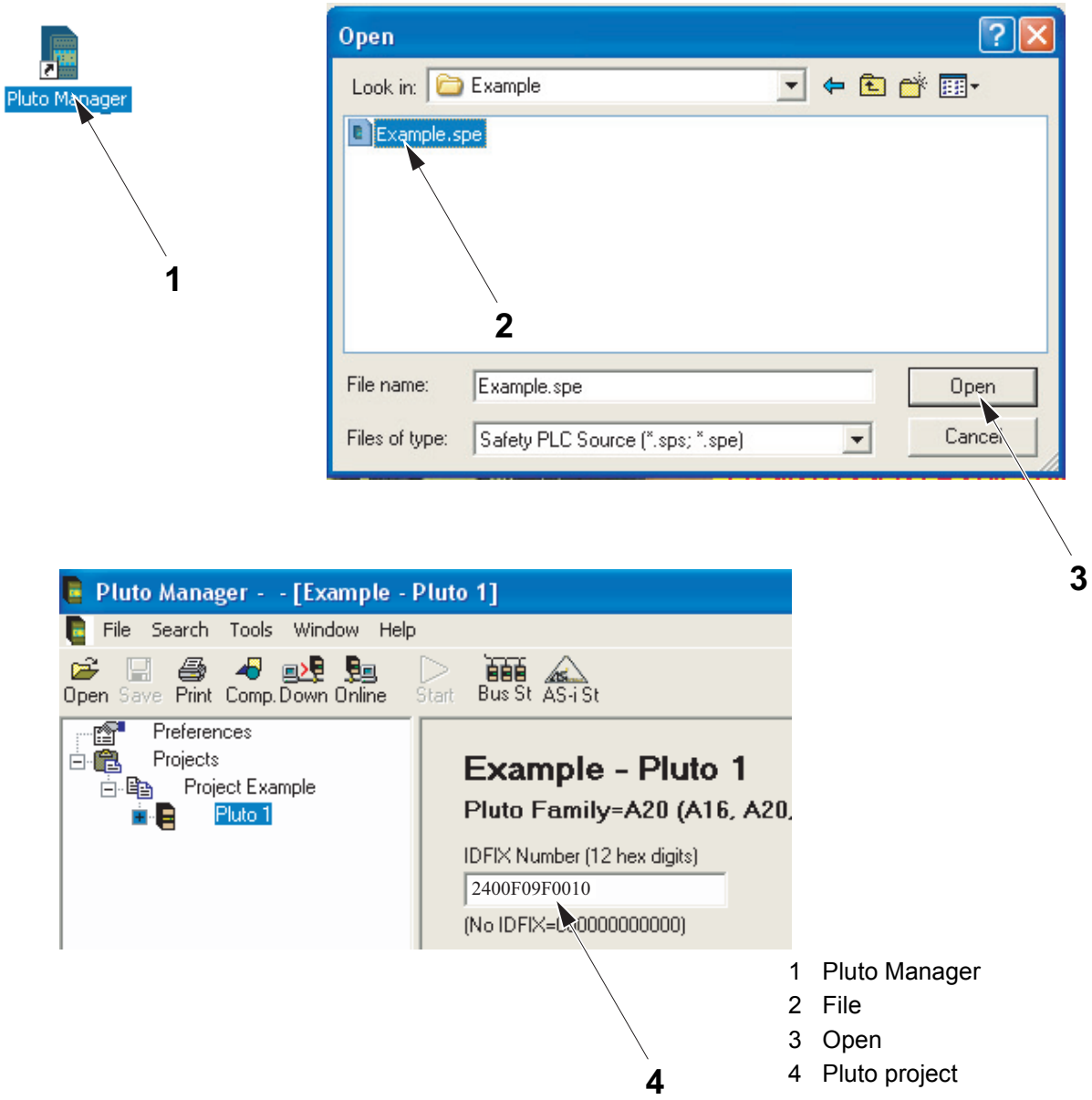

1 Pluto Manager
2 File
3 Open
4 Pluto project

4.1.9-4 Pluto Manager - Check Firmware and Software

This feature can be used to determine the software and firmware status of the Pluto unit.

a) Start the `Pluto Manager` (1).

b) Connect the programming cable between the PC and Pluto (2).

c) From the `Tools` menu, select `Onlineinfo` and then `Pluto/gateway Connected to PC` (3).

d) Read actual data for Pluto (4).

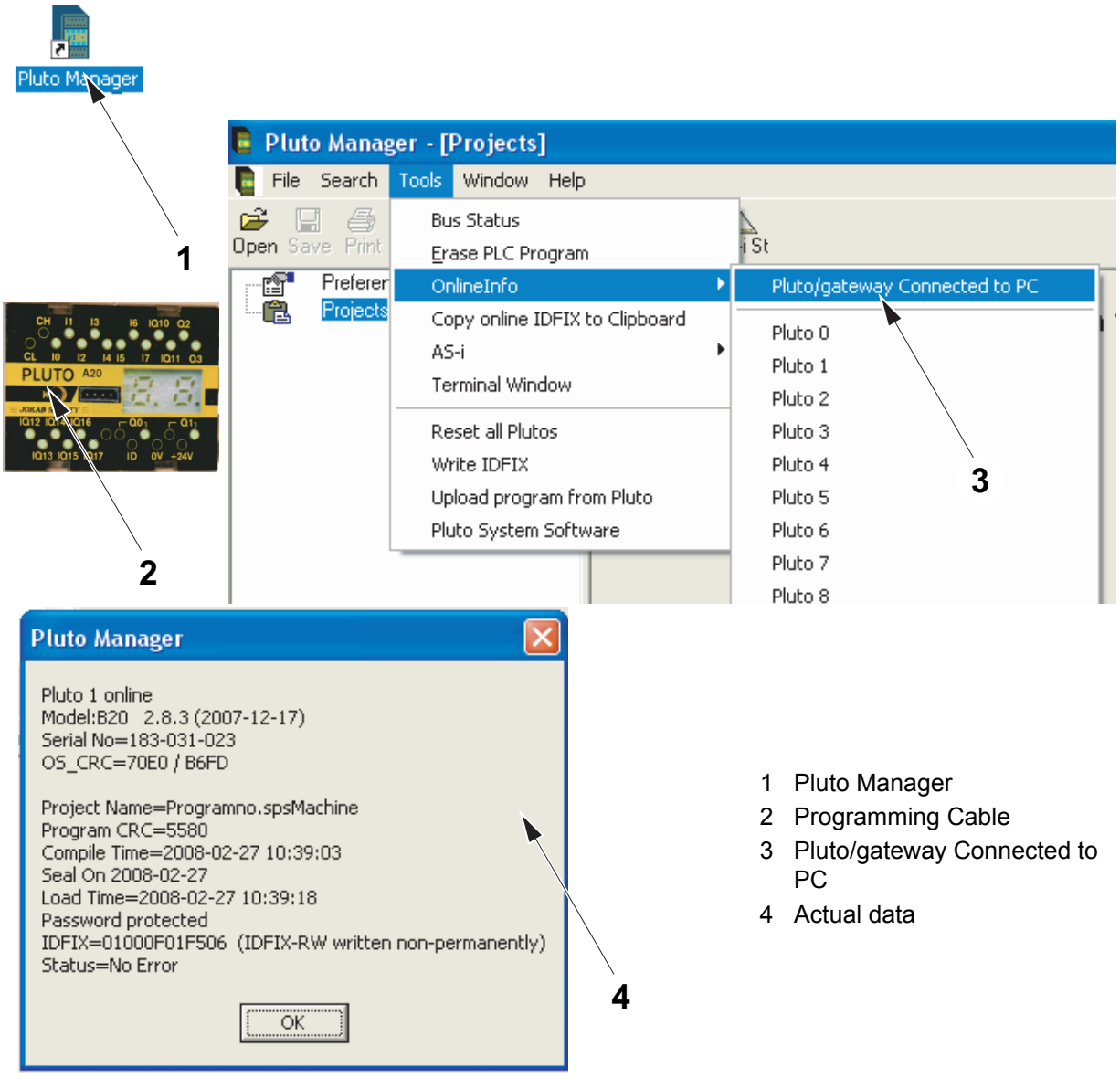

1 Pluto Manager
2 Programming Cable
3 Pluto/gateway Connected to PC
4 Actual data

4.1.9-5 Pluto Manager - Set an IDFIX Address

To set a new address, or to change an IDFIX address, use the function for programming identifier circuits. This function is fully accessible regardless of the registration code.

Note! The IDFIX for the Helix is 0800F01F0090.

a) Open the actual Pluto project according to procedure 4.1.9-3 Pluto Manager - Set Project.

b) Copy the IDFIX address (1).

c) From the `Tools` menu, select `Write IDFIX` (2).

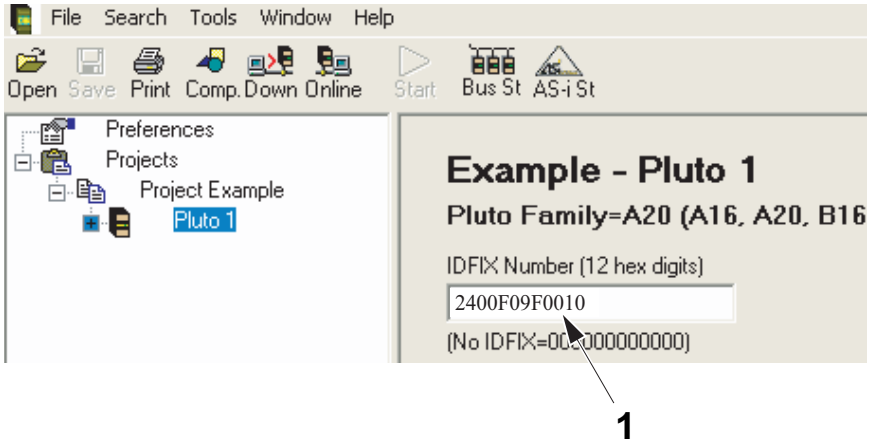

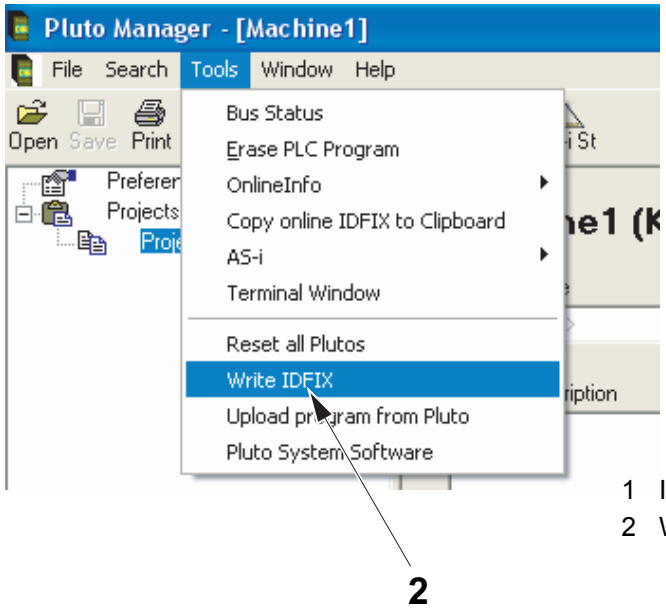

1 IDFIX address
2 Write IDFIX

(Cont'd)

(Cont'd)

d) Paste the IDFIX address (3) and click `Write ID circuit` (4).

Note! Never select `Erase Protect ID`. Selecting this option makes it impossible to reprogram the ID circuit.

e) Click `OK` (5) to confirm the IDFIX address has been written.

f) The Pluto sets an alarm because of the changed address. If you are going to download a program, continue. Otherwise, reboot. See 4.1.9-8 Pluto Manager - Remove Firmware Alarms.

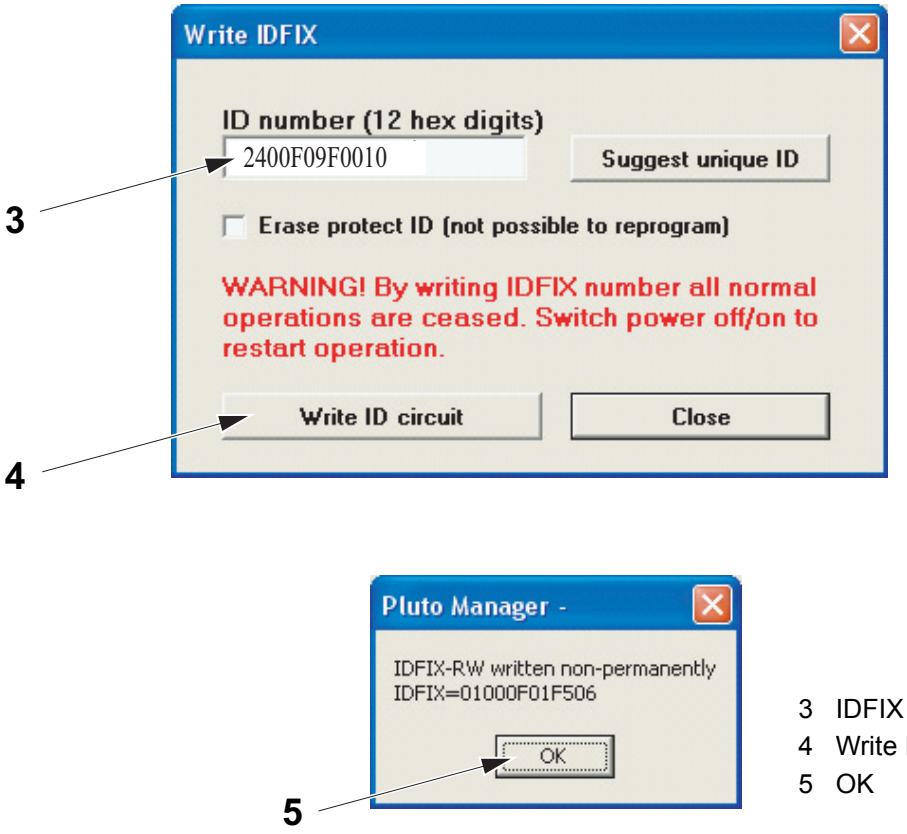

3 IDFIX address
4 Write ID circuit
5 OK

4.1.9-6 Pluto Manager - Install Pluto without PC

It is possible to download to a Pluto under the following conditions:

- A Pluto network with a minimum of 2 Plutos exists.
- IDFIX must have correct address.
- The new Pluto must be empty of a program. (The display indicates Er20.)

a) Press the `K-button` (1) until it flashes.

b) Release the button and confirm the program load by pressing the K-button (1) again. The Pluto indicates a constant.

c) When the station number appears on the display (2), the Pluto is loaded and running.

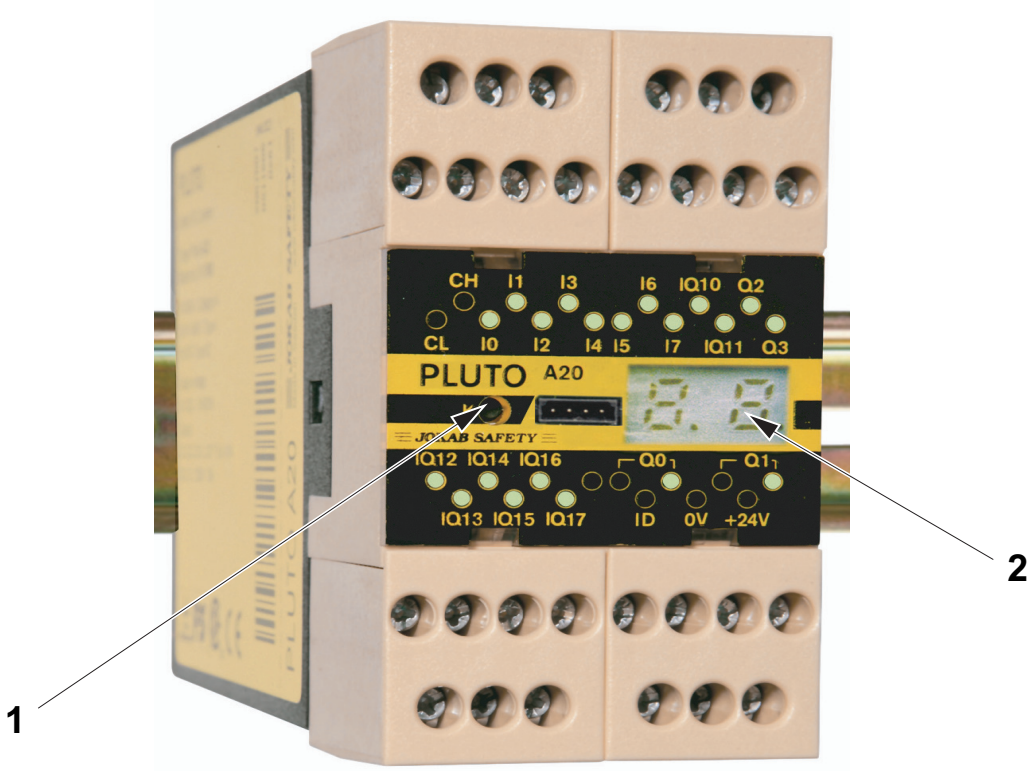

1 K-button
2 Display

4.1.9-7 Pluto Manager - Install Pluto from PC

Using the Pluto Manager registered as `Mute` requires spe- (or sps-) and hps-files for the application.

a) Open the actual Pluto project (3039937-1001) according to 4.1.9-3 Pluto Manager - Set Project.

b) Select `Down` (1) to download the program.

c) Enter the password “pluto”.

Note! Empty Plutos need password confirmation.

d) To start execution of the program, click `YES` (3).

Note! The first time a Pluto receives a program, an alarm is set. For resetting of alarms, see 4.1.9-8 Pluto Manager - Remove Firmware Alarms.

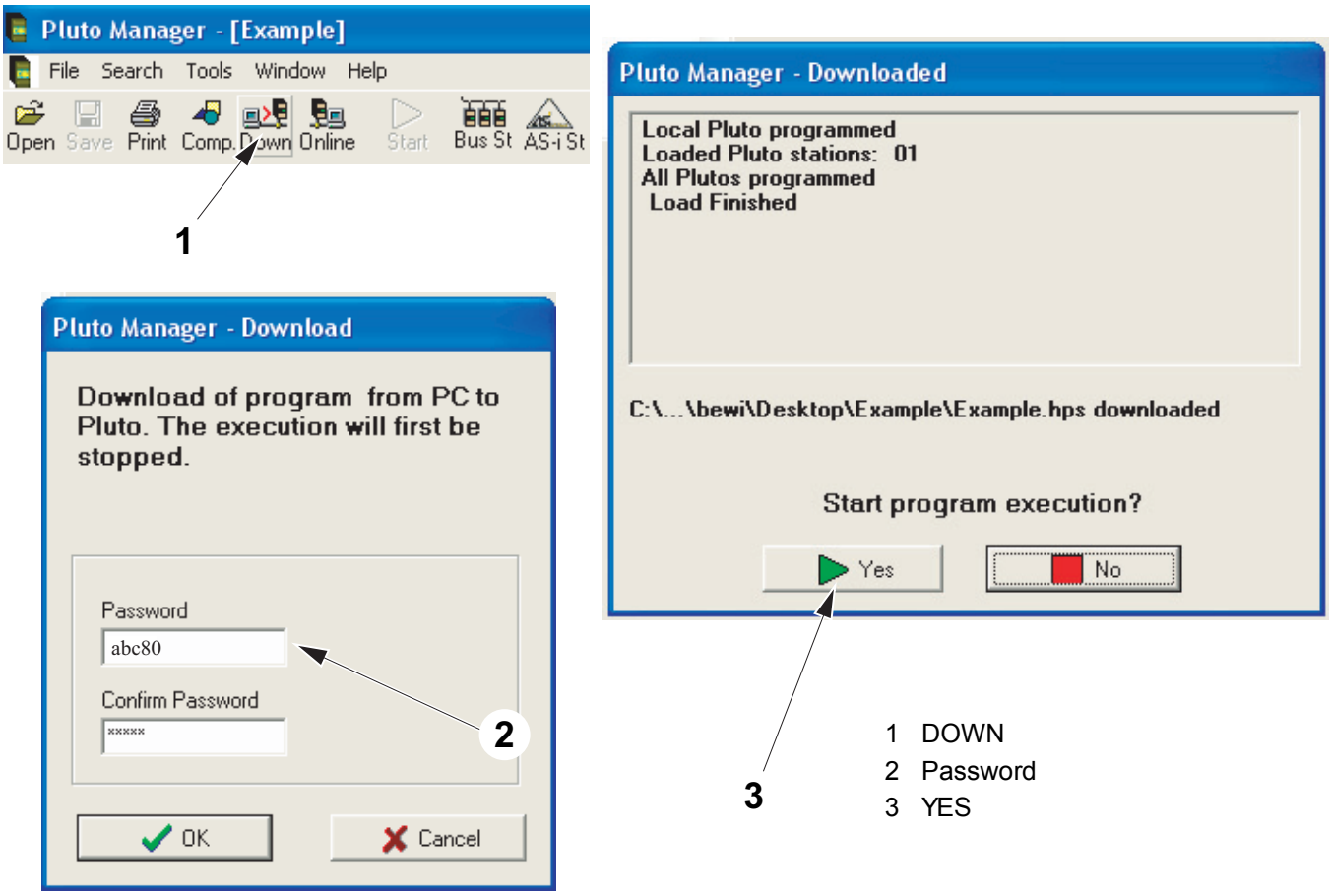

1 DOWN
2 Password
3 YES

4.1.9-8 Pluto Manager - Remove Firmware Alarms

The Pluto firmware has several status alarms (see Hardware manual). Many of those alarms can be reset via the Pluto Manager when the PC is connected to the Pluto.

a) Start the `Pluto Manager` and connect the communication cable between the PC and the Pluto.

b) From the `Tools` menu, select `Reset All Plutos` (1).

c) To reboot all Plutos, click `Yes` (2) to confirm.

Note! All Plutos connected on the bus will be rebooted during this function.

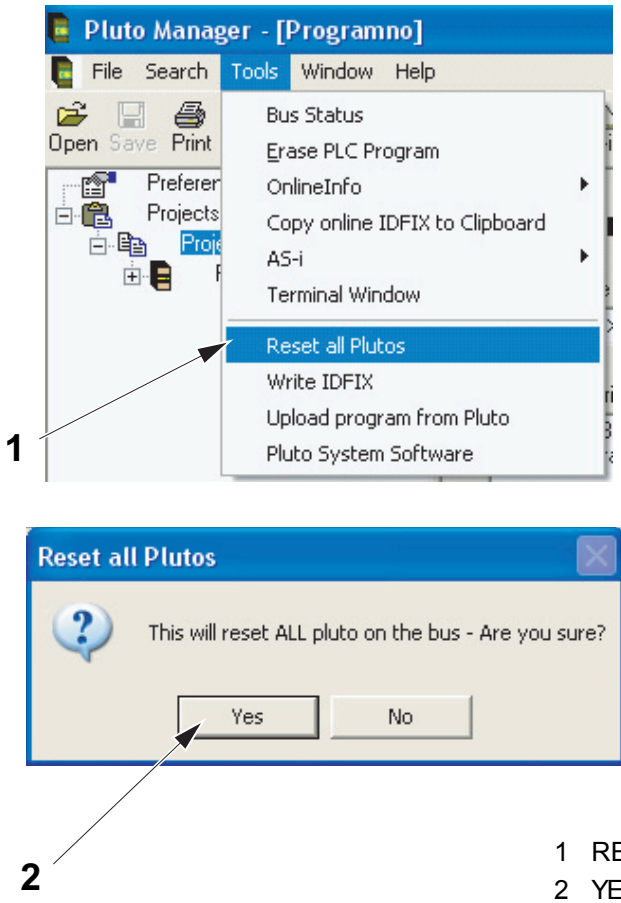

1 RESET ALL PLUTOS
2 YES

4.1.9-9 Pluto Manager - Change Firmware

Note! To update the firmware, a licence for Pluto Manager is required.

To check firmware version (1), use the online info function. See 4.1.9-4 Pluto Manager - Check Firmware and Software.

a) Turn off the power supply to Pluto.

b) Press the `K-button` (2) while power is turned on and release the K-button.

Note! The Pluto appears to be dead in this monitor mode.

c) Start the `Pluto Manager` and connect the communication cable between the PC and the Pluto.

d) From the `Tools` menu, select `Pluto System Software` (3).

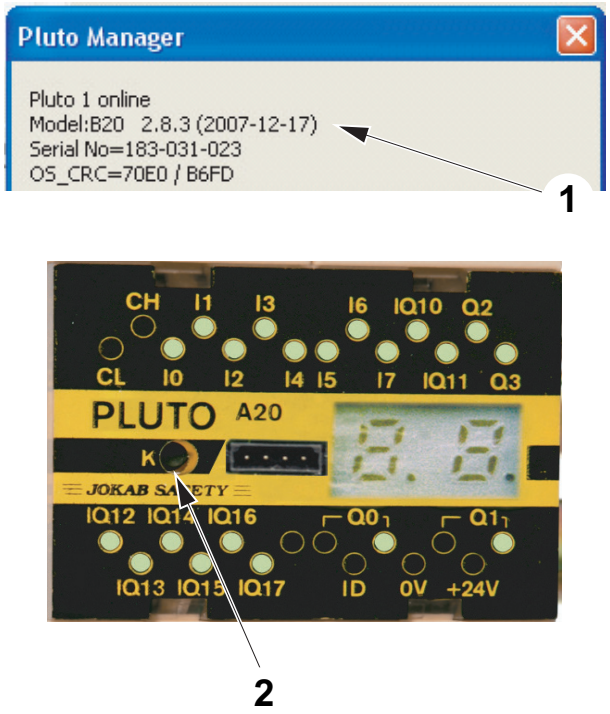

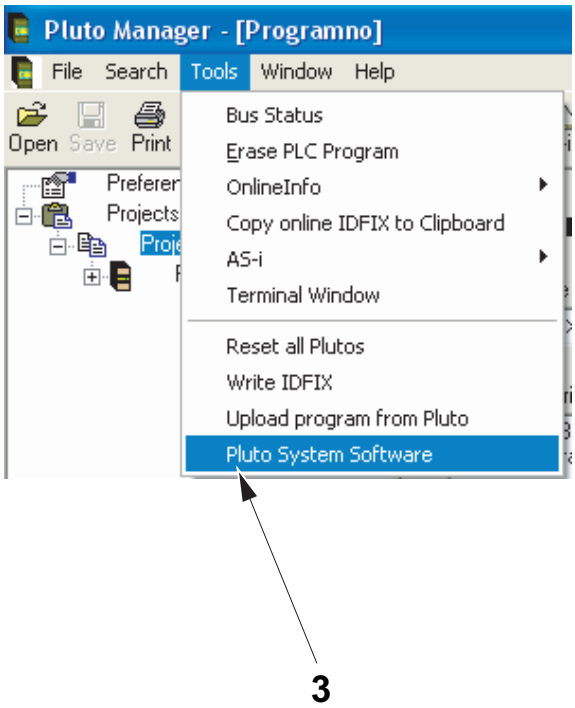

1 FIRMWARE
2 K-button
3 PLUTO SYSTEM SOFTWARE

(Cont'd)

(Cont'd)

e) Select software for processor A (4).

f) Select software for processor B (5).

g) Wait for download of software for processor A and B.

h) Select `Yes` or `No` (6) depending whether or not you are going to update more Plutos.

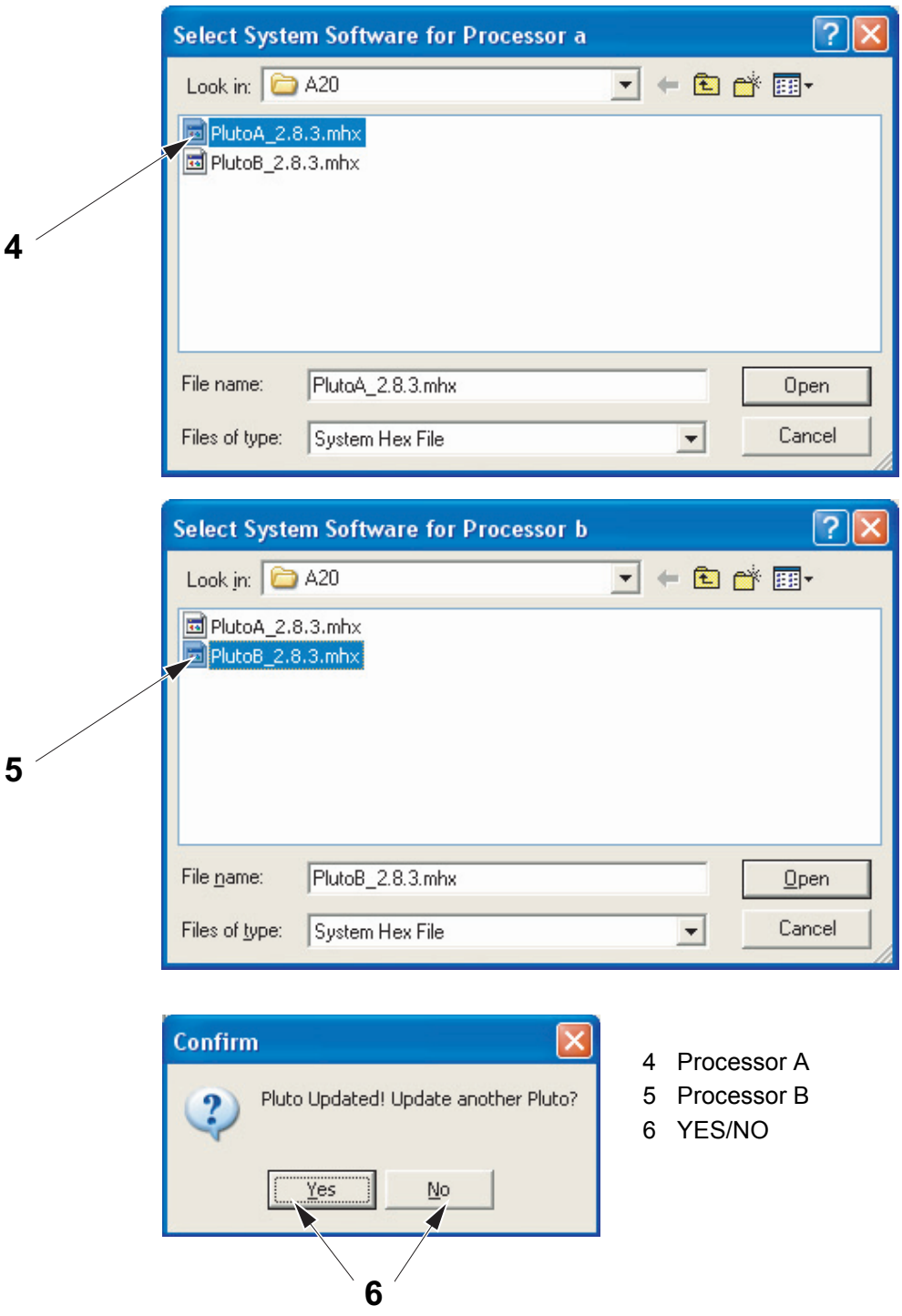

4 Processor A
5 Processor B
6 YES/NO

4.1.9-10 Pluto Manager - Troubleshoot Safety System

Machine status	Power Supply Disconnector ON
SPC Reference	2948955-0200 (IEC) 2948956-0200 (CSA)

Status Messages

No:	Description
- -	Power up
N n	Run mode (nn = station number)
Lo	Program load mode state. Flashing ‘Lo’, ready for self programming (program found in other unit)
HA	Program execution stopped from PC computer or not started after program download. Can be started either from PC or by power off-on.

User Fault

No:	Fault and possible reason.	Reset action
Er10	Dynamic output circuited to foreign voltage	Automatically reset
Er11	IQ_ for illuminated push button function. Missing diode	Automatically reset
Er12	Short circuit between two dynamic inputs	Automatically reset
Er13	Static output Q10..17 (Q20..27) short circuited to 0V or safety Q2, Q3 overloaded	Autom. 3 min or ”K” button
Er14	Static output Q10..17 (Q20..27) short circuited to 24V.	Automatically reset
Er15	Power supply below 18V	Autom. 3 min or ”K” button
Er16	Power supply above 30V	Autom. 3 min or ”K” button
Er17		
Er18	CAN-bus fault. (Short circuit, termination resistor, etc.)	Autom. 3 min or ”K” button
Er19	Other unit with same station number on Can-bus	
Er20	PLC-program not loaded	Load of PLC program
Er21	PLC-program CRC-error	Reload with valid PLC-program
Er22	Identifier problem. External identifier can not be read.	Reboot
Er23	Unmatched ID. Identifier doesn’t match declaration in program.	Exchange of identifiers or redeclaration of identifier in program.
Er24	Erroneous PLC-code. Invalid PLC-instructions.	Reload with valid code.
Er25	Reload with valid code.	
Er26	Baud rate conflict. Unit programmed for other baud rate than current bus baud rate. Note that Pluto must be rebooted after change of baudrate in the PLC program.	Reprogramming or reboot.
Er27	Wrong checksum for unit member in common program.	Reprogramming or reboot
Er28	PLC program does not match the Pluto family. Families: [A/B/S 20, B16], [B/S 46-6], [Pluto AS-i]	Change to other type of Pluto or change the program.
Er29	Unsupported program version. The program contains instructions only supported by later customer specific operating systems.	Update of operating system

I/O Faults

No:	Fault and possible reason.	Reset action
Er40	Error safety output Q0..5. / Q2,Q3 connected together or to other negative voltage. / Q2,Q3 has to high capacitive load.	“K” button.
Er41	Error output Q2 or Q3. Overload or connected to foreign positive voltage.	“K” button.
Er42	Error relay output. No answer from internal relay monitoring when output is off.	“K” button.
Er43	Error relay output. (Self test of transistors)	Reboot
Er44	Error relay output. Internal relay does not switch on.	“K” button.
Er45	Analogue functions not calibrated.	System must be calibrated
Er49	Error calibration values, analogue functions	Recalibration

Note! Reboot can either be made from PC computer or by power off-on.

CPU Faults

No:	Fault and possible reason.	Reset action
Er50	Input data difference between processor A and B Processor A and B reads an input differently. The fault is often caused by a bad sensor. Corresponding input LED flashes.	Reboot
Er51	Output data difference between processor A and B. Processor A and B sets a global variable different (Q0..Q3, GM0..11). (The problem can be caused by the PLC-program)	Reboot
Er58	AS-i safety code table CRC error	Reboot, Teach AS-i safety codes
Er59	Calibration analogue functions CRC fault	Reboot
Er60	Twin self test monitoring	Reboot
Er61	Timer IRQ monitoring	Reboot
Er62	Internal serial communication	Reboot
Er63	Boot-flash CRC	Reboot
Er64	OS-flash CRC	Reboot, Reload operating system (OS)
Er65	Plc-flash CRC	Reboot, Reload PLC program
Er66	5 volt under/over voltage monitoring	Reboot
Er67	CPU-test error	Reboot
Er68	Ram-test error	Reboot
Er69	Scan cycle time over run, PLC program to big	Reboot
Er70	System, sum of system and stack monitoring	Reboot
Er71	Pluto used for IDFIX writing. Normal operation ceased	Reboot
Er72	System error. No communication AS-i processor	Reboot
Er73	System error. CRC AS-i processor	Reboot
Er80	Undefined self-test error	Reboot

Note! Reboot can either be made from PC computer or by power OFF/ON.

AS-i

No:	Fault and possible reason.	Reset action
AE 01	ASi power missing	
AE 02	No connection with ASi master (By monitor mode)	
AE 03	Safety code missing by code teaching	
AE 04	Wrong code table	
AE 05	Global communication fault.	
AC [node no]	Channel fault in safety node	Switch off both channels
Ab [node no]	AS-i slave with bad or wrong safety code.	Routine “Single slave exchange” or teach safety codes (PC) or exchange defect slave.
An [node no]	Slave profile does not match.	Read AS-i slaves
CC [node no]	Code Change. Pluto prepared for exchange of safety slave, one slave is missing. (Acknowledge by “K” button)	
CC	Code Change. Pluto is prepared for connection of new safety slave.	
CF	Code Found. Code in new safety slave is available. (Acknowledge by “K” button.	

User Error Code (only valid for ACHX)

The Pluto Window alternately displays UE and the current error code.

	UE-code	Description	Remark
UE	00	One channel missing / one channel remaining	Emergency stop
UE	01	Two channel fault	Emergency stop
UE	03	Option error	No option chosen though doors are connected
UE	06	Missing feedback	Emergency stop
UE	07	Missing feedback	L13, Door circuit
UE	14	Constant reset	

4.1.9-11 Pluto Manager - Safety Switch Fault Codes

Note! See ii Safety Precautions for the locations of the safety switches on the machine.

The LED (1) on the sensor (2) indicates the status of the safety switch as follows:

LED	Description
Fixed green light	The reflector (3) is within the right range and the safety switch is closed.
Fixed red light	The reflector (3) is out of range or the safety switch is open.
Flashing green light	The current safety switch is OK, but another switch in the system is open or out of range.
Fast flashing red light	The reflector (3) is in the outer part of the proximity area. Move the reflector (1) and the sensor (2) closer to each other until the green light is fixed.

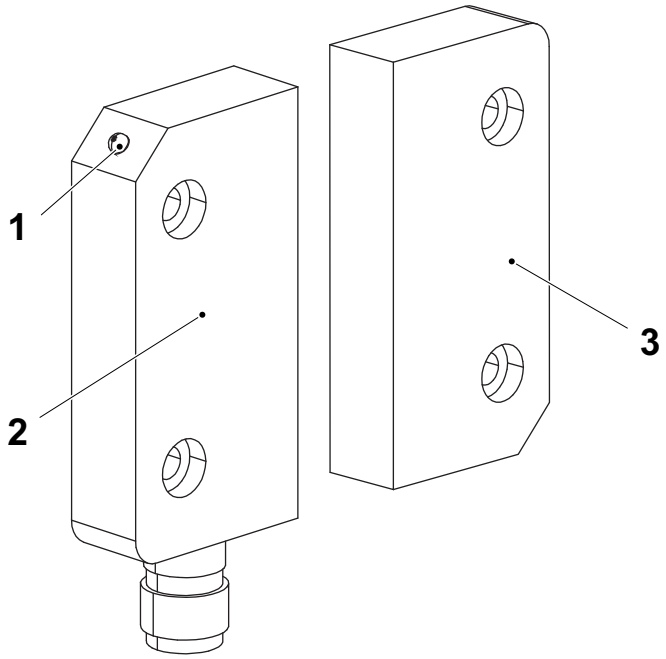

1 LED
2 Sensor
3 Reflector

4.1.9-12 Safety Relay - Proof Test

Interlocking Guards

Check on a monthly basis that the interlocking guards and other safeguarding means are in place and operational.

The location of each movable guard is shown by an arrow.

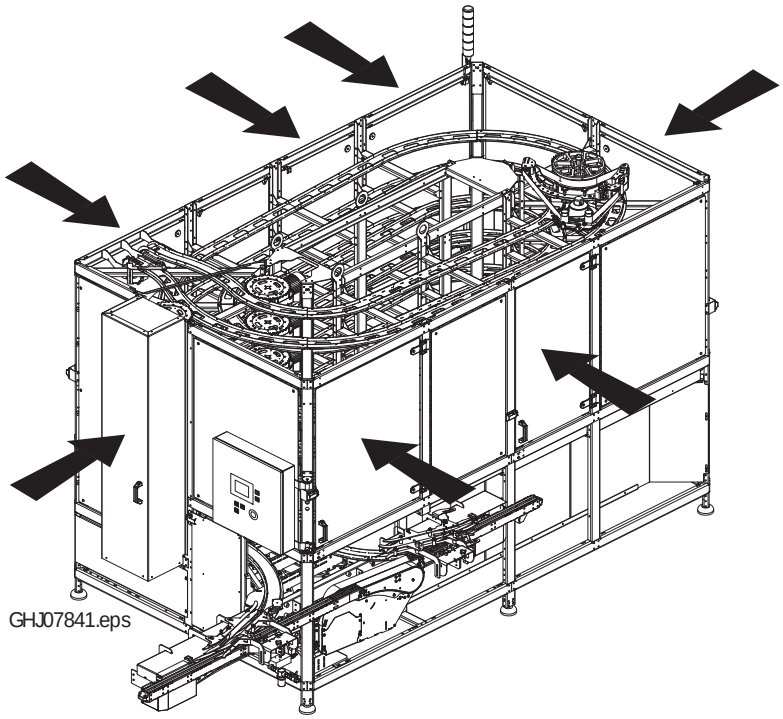

(Cont'd)

(Cont'd)

Each regular safeguarding test shall be accomplished by following the instructions below.

a) Identify the safety relay: F01K0090.

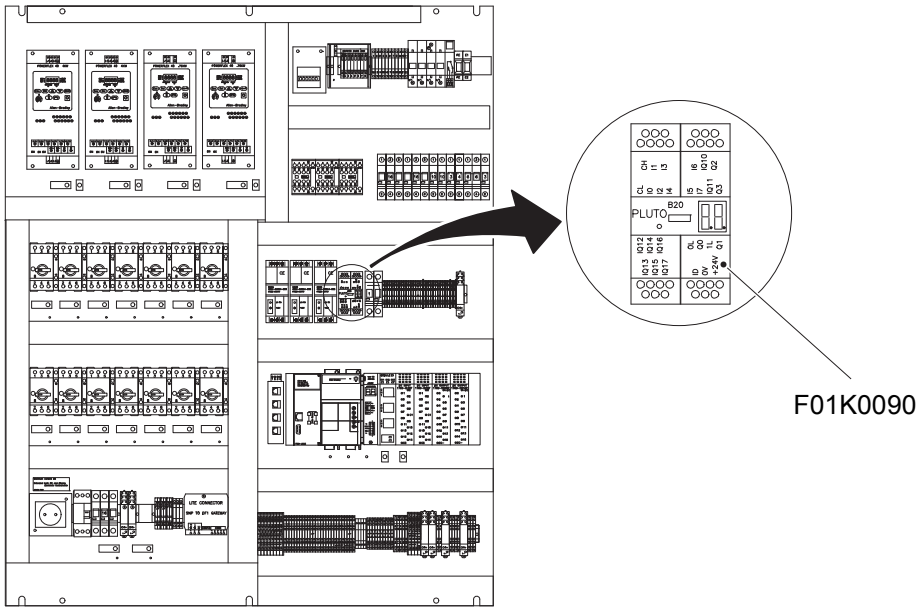

GHJ08003.eps

b) Make sure the machine is stopped in PREPARATION mode (and is not in BYPASS mode).

c) Open a door and make sure that F01K0090 is tripped (i.e. changes state from closed to open) as indicated by LEDs IQ16 and Q3 being switched off.

d) Try to start the machine with the safeguard tripped. Check that the machine does not start and the safety relay stays tripped.

e) Close the door and make sure that LEDs IQ11 and (IQ12 or I3) are switched on.

f) Reset the Door Open alarm. Step up the machine to PRODUCTION and make sure that LEDs IQ16 and Q3 are switched on.

g) Repeat steps c) through f) for each door.

Emergency Stop

Check on a monthly basis that the emergency stop devices shown below are in place and operational.

The location of each EMERGENCY STOP button is shown by an arrow.

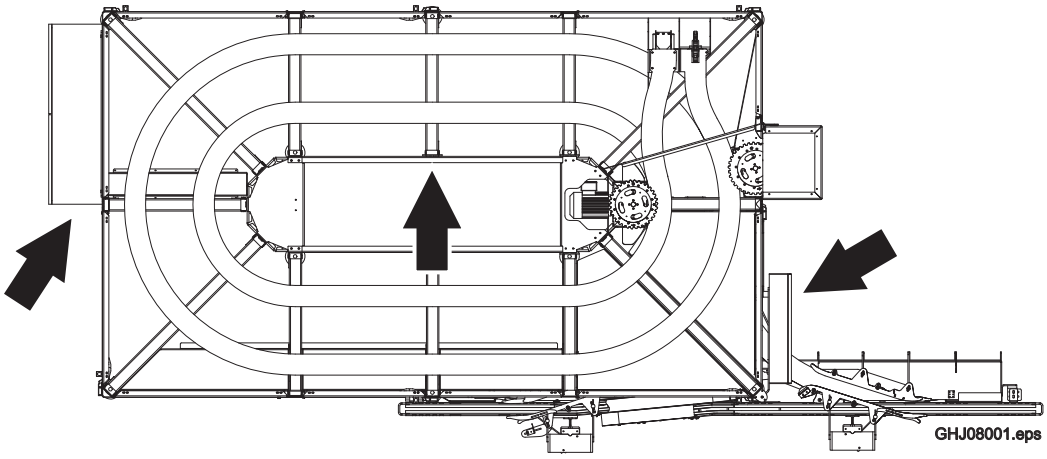

(Cont'd)

(Cont'd)

Each regular emergency stop test shall be accomplished by following the instructions below.

a) Identify the safety relay: F01K0090.

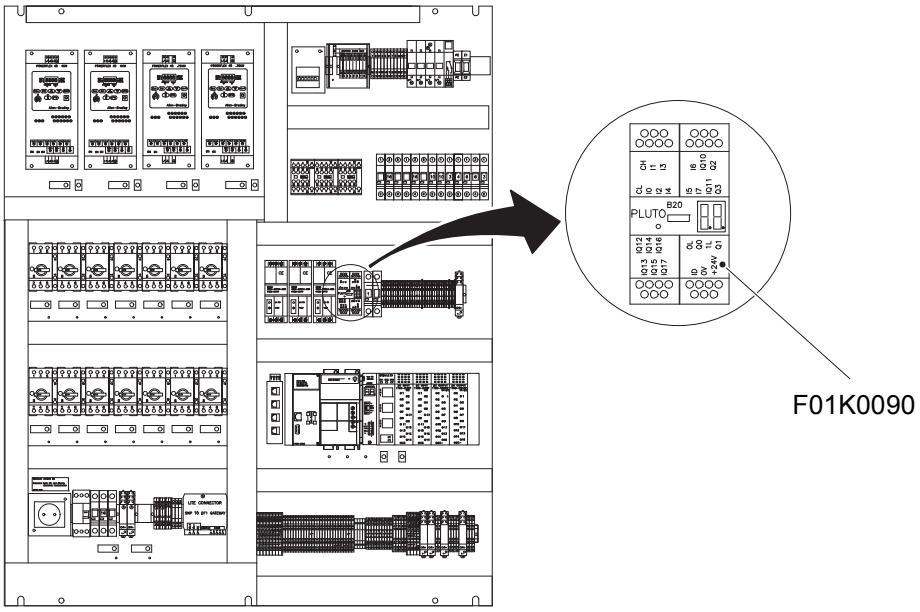

GHJ08003.eps

b) Press an EMERGENCY STOP button and make sure that F01K0090 is tripped (i.e. changes state from closed to open) as indicated by LEDs IQ15, Q0, and Q1 being switched off.

c) Try to start the machine with the EMERGENCY STOP button depressed. Check that the machine does not start and the safety relay stays tripped.

d) Release the EMERGENCY STOP button and make sure that LEDs I0 and I1 are switched on.

e) Reset the Emergency Stop alarm. Step up the machine to PRODUCTION and make sure that LEDs IQ15, Q0, and Q1 are switched on.

f) Repeat steps c) through f) for each EMERGENCY STOP button.

4.1.10 Infeed/Outfeed Frequency Converter

Machine Status	Power Supply Disconnector ON
SPC Reference	2948955-0200 (IEC) 2948956-0200 (CSA)

Reference Designations	Conveyors
W30T0010 & W30T0020	90459-3445 Internal Infeed and Outfeed Conveyors
W10T0010 & W90T0010	90459-3442 External Infeed and Outfeed Conveyors

Controls

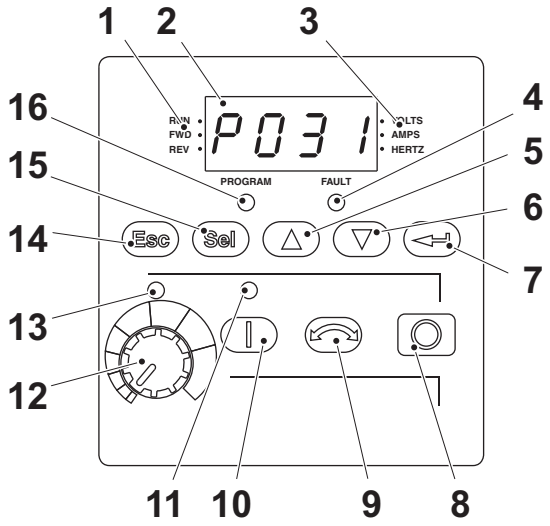

1 Running / Direction status LEDs
2 Display
3 Unit LEDs
4 Error status LED
5 Up / Increase frequency button
6 Down / Decrease frequency button
7 ENTER button
8 STOP / RESET button
9 REVERSE button
10 START button
11 Start button status LED
12 Potentiometer
13 Potentiometer status LED
14 ESCAPE button
15 SELECT button
16 Program status LED

4.1.10-1 Frequency Converter - Change

Machine Status	Power Supply Disconnector OFF
SPC Reference	2948955-0200 (IEC) 2948956-0200 (CSA)

DANGER

Risk of electrical shock!
After the power is turned OFF, residual voltage remains in the capacitor inside the converter. Do **not** touch the terminal immediately after turning the power OFF. Failure to observe this information will put **your life in danger!** Discharge time is at least one minute from the time all indicators on the digital operator go OFF.

a) Disconnect the cables.

b) Loosen the screws.

c) Replace the frequency converter and fasten the screws.

d) Connect the cables.

To set the frequency converter, see 4.1.10-2 Frequency Converter - Set.

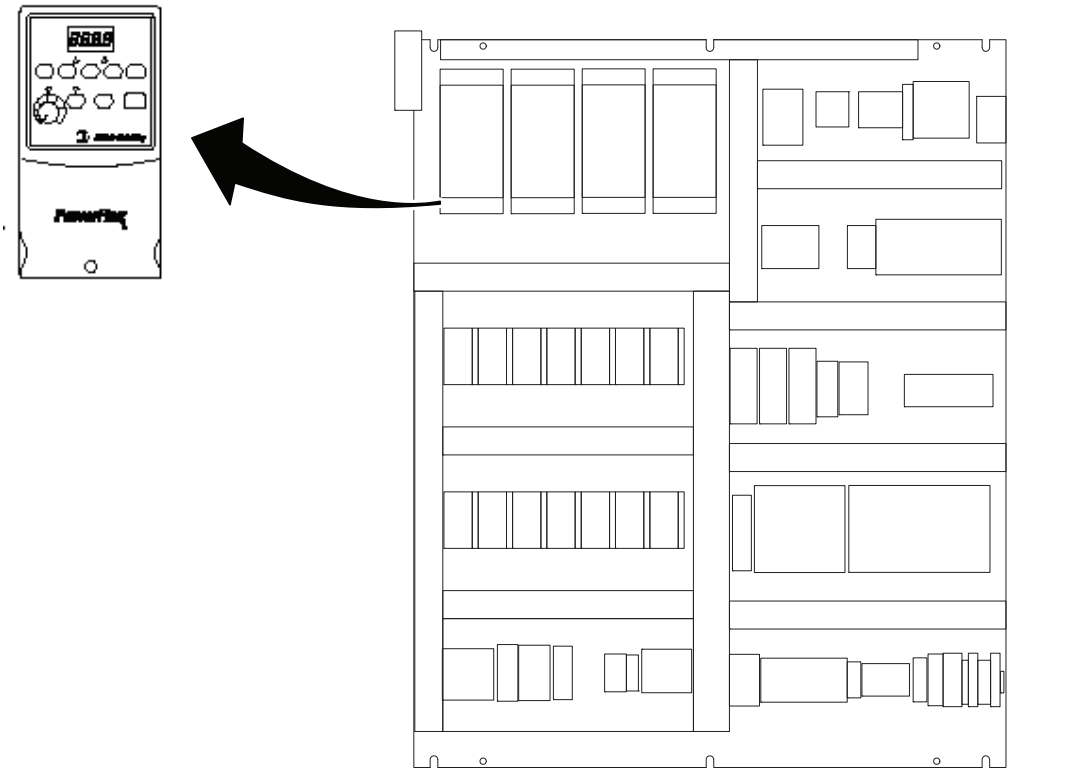

GHJ07706.eps

4.1.10-2 Frequency Converter - Set

Machine Status	Power Supply Disconnector ON
SPC Reference	2948955-0200 (IEC) 2948956-0200 (CSA)

The text and illustrations are from Rockwell Automation user manuals.

Opening the Cover

a) Press and hold in the tabs (1) on each side of the cover.

b) Pull the cover (2) out and up to release.

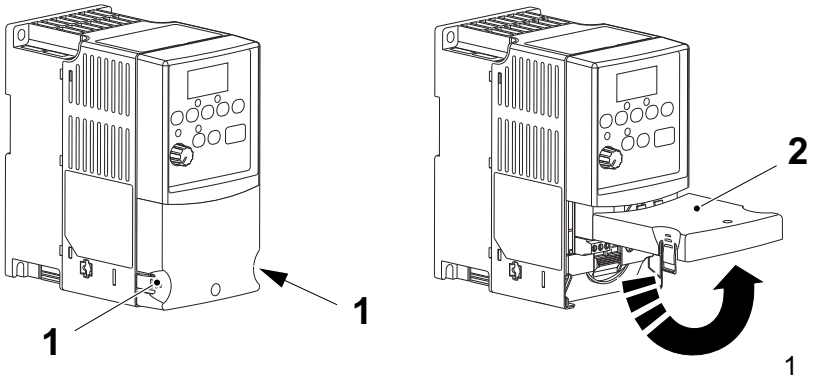

1 Tab
2 Cover

Power Terminal Block

The drive utilizes a finger guard (1) over the power wiring terminals. To remove, do as follows.

a) Press in and hold the locking tab (2).

b) Slide the finger guard (1) down and out.

c) Replace the finger guard (1) when wiring is complete.

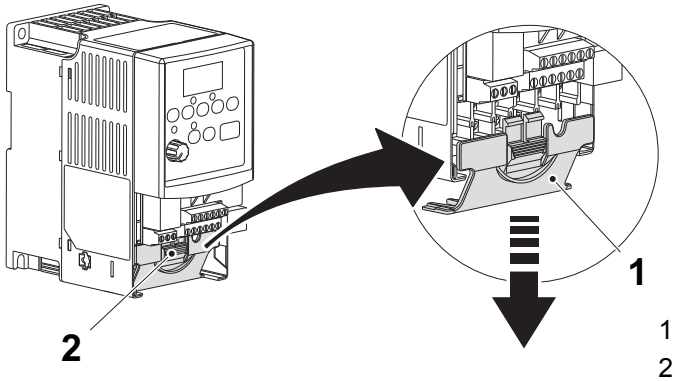

1 Finger guard
2 Locking tab

(Cont'd)

(Cont'd)

Switches - Set DIP

Set the DIP switches on the frequency converter according to the illustration below.

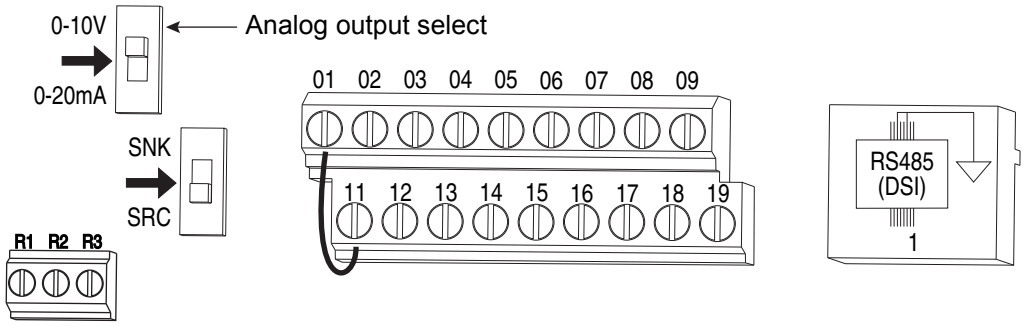

a) Step the machine to PREPARATION mode.

b) Only set the node address and baud rate according to the table below. The remainder is automatically downloaded.

Item on Display	**Function Name**	**Factory Settings**	**W10T0010** External Infeed	**W30T0010** Internal Infeed	**W30T0020** Internal Outfeed	**W90T0010** External Outfeed
A103	Comm Data Rate	3	4	4	4	4
A104	Comm Node Address	100	103	101	102	104

For instructions on setting the parameters, see the following page.

(Cont'd)

(Cont'd)

Quick guide to set the parameters

Step / Action	Button	Display
1. Apply mains power to the converter. The display shows the actual frequency for the display parameter last entered by the user.		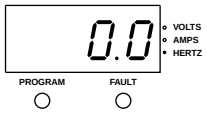
2. Press the escape button once to show the number of the display parameter. The parameter number flashes (for example, 1).	Esc	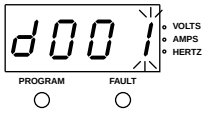
3. Press the escape button again to show the group menu. The group menu letter flashes (for example, d).	Esc	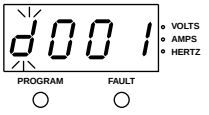
4. Press the up button or the down button to scroll through the group menu. The group menu consists of d (display group), P (program group) and A (advanced program group).	△ ▽	
5. Press the select button or the enter button to select a group.	Sel ↵	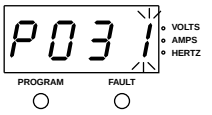
6. Press the up button or the down button to scroll through the parameters in the group.	△ ▽	
7. Press the select button or the enter button to show the value for a parameter. Press the escape button to go back in the menu system.	Sel ↵ Esc	
8. Press the select button or the enter button to go to program state. Use the select button to switch between the digits and change the value of each digit by pressing the up button or the down button.	Sel ↵ △ ▽	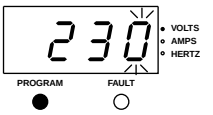
9. Press the escape button to cancel the changes or press the enter button to save the changes. Press the escape button to go back in the menu system.	Esc ↵	

(Cont'd)

(Cont'd)

Settings for Frequency Converters

W10T0010 & W90T0010 (90459-3442) and W30T0010 & W30T0020 (90459-3445)

Note! To reset to factory settings, set parameter P041 to 1. All settings, except for communication parameters, are automatically downloaded from the PLC.

Note! P033 is set according to machine variant.

Machine variant						
Item on display	**Function name**	Factory settings	W10T0010	W30T0010	W30T0020	W90T0010
P031	Motor NP Volts	Based on drive rating	230V	230V	230V	230V
P032	Motor NP Hertz	60 Hz	50Hz	50Hz	50Hz	50Hz
P033	Motor OL Current	Based on drive rating		3.8 A (47M) 7.5 A (75M) 8.7 A (90M) 7.5 A (100M) 8.7 A (120M)		Based on drive rating
P034	Minimum Freq	0.0 Hz				
P035	Maximum Freq	60 Hz	100 Hz	100 Hz	100 Hz	100 Hz
P036	Start Source	0	5	5	5	5
P037	Stop Mode	0				
P038	Speed Reference	0	5	5	5	5
P039	Accel Time 1	10 sec.	3.0 sec.	1.0 sec	2.0 sec.	2.0 sec.
P040	Decel Time 1	10 sec.	1.0 sec	1.0 sec	1.0 sec	1.0 sec
P041	Reset to Defaults	0	0	0	0	0
A051	Digital In1 Sel	4				
A052	Digital In2 Sel	4				
A053	Digital In3 Sel	5				
A054	Digital In4 Sel	11				
A055	Relay Out Sel	0				
A056	Relay Out Level	0				
A058	Opto Out1 Sel	2				
A061	Opto Out2 Sel	1				
A059	Opto Out1 Level	0.0				
A062	Opto Out2 Level	0.0				
A064	Opto Out Logic	0				
A065	Analog Out Sel	0				
A066	Analog Out High	100%				
A067	Accel Time 2	20.0 Secs			3.0	
A068	Decel Time 2	20.0 Secs			1.0	

Machine variant						
Item on display	**Function name**	Factory settings	W10T0010	W30T0010	W30T0020	W90T0010
A069	Internal Freq	60.0 Hz				
A070	Preset Freq 0	0.0 Hz				
A071	Preset Freq 1	5.0 Hz				
A072	Preset Freq 2	10.0 Hz				
A073	Preset Freq 3	20.0 Hz				
A074	Preset Freq 4	30.0 Hz				
A075	Preset Freq 5	40.0 Hz				
A076	Preset Freq 6	50.0 Hz				
A077	Preset Freq 7	60.0 Hz				
A078	Jog Frequency	10.0 Hz				
A079	Jog Accel/Decel	10.0 Secs				
A080	DC Brake Time	0.0 Secs				
A081	DC Brake Level	Amps x 0.05				
A082	DB Resistor Sel	0	2	2	2	2
A083	S Curve%	0%				
A084	Boost Select	8 (5.0, CT)				
A085	Start Boost	2.5%				
A086	Break Voltage	25.0%				
A087	Break Frequency	15.0 Hz				
A088	Maximum Voltage	Rated volts	230V	400V	400V	230V
A089	Current Limit 1	Amps x 1.5				
A090	Motor OL Select	0				
A100	Fault Clear	0				
A101	Program Lock	0				
A102	Testpoint Sel	400				
A103	Comm Data Rate	3	4	4	4	4
A104	Comm Node Addr	100	103	101	102	104
A105	Comm Loss Action	0				
A106	Comm Loss Time	5.0				
A107	Comm Format	0				
A108	Lanugage	1				
A110	Anlg In 0-10V Lo	0.0%				
A111	Anlg In 0-10V Hi	100.0%				
A112	Anlg In4-20mA Lo	0.0%				
A113	Anlg In4-20mA Hi	100.0%				
A114	Slip Hertz @ FLA	2.0 Hz				
A117	BUS REG MODE	1				
A118	Current Limit 2	Amps x 1.5				

Machine variant						
Item on display	**Function name**	Factory settings	W10T0010	W30T0010	W30T0020	W90T0010
A119	Skip Frequency	0 Hz				
A120	Skip Freq Band	0.0 Hz				
A121	Stall Fault Time	0				
A122	Analog in Loss	0				
A123	10V Bipolar Enbl	0				
A124	Var PWM Disable	0				
A125	Torque Pert Mode	1				
A126	Motor NP FLA	Rated Amps				
A127	Autotune	0				
A128	IR Voltage Drop	Rated Volts				
A129	Flux Current Ref	Rated Amps				
A130	PID Trim Hi	60.0				
A131	PID Feedback Sel	0				
A132	PID Ref Sel	0				
A133	PID Feedback Sel	0				
A134	PID Prop Gain	0.01				
A135	PID Integ Time	0.1				
A136	PID Diff Rate	0.01				
A137	PID Setpoint	0.0%				
A138	PID Deadband	0.0%				
A139	PID Preload	0.0 Hz				
A140 - A147	Stp Logic 0-7	00F1				
A150 - A157	Stp Logic Time 0-7	30.0 Secs				

4.1.10-3 Infeed/Outfeed Frequency Converter - Fault Codes

Machine Status	Power Supply Disconnector ON
SPC Reference	2948955-0200 (IEC) 2948956-0200 (CSA)

In the event of a fault, the converter switches off and a fault code appears on the display.

Fault Code	Cause	Description	Action
F2	Auxiliary input	Auxiliary input interlock is open.	Check remote wiring. Verify communications programming for intentional fault.
F3	Power Loss	DC bus voltage remained below 85% of nominal.	Check the incoming AC line for low voltage or line power interruption. Check input fuses.
F4	UnderVoltage	DC bus voltage fell below the minimum value.	Check the incoming AC line for low voltage or line power interruption.
F5	OverVoltage	DC bus voltage exceeded maximum value.	Check the AC line for high line voltage or transient conditions. Bus overvoltage can also be caused by motor regeneration. Extend the decel time or install dynamic brake option.
F6	Motor Stalled	Drive is unable to accelerate motor.	Increase P039 - A067 (Accel Time x) or reduce load so drive output current does not exceed the current set by parameter A089 (Current Limit 1).
F7	Motor Overload	Internal electronic overload trip.	An excessive motor load exists. Reduce load so drive output current does not exceed the current set by parameter P033 (Motor OL Current). Verify A084 (Boost Select) setting.
F8	Heatsink OvrTmp	Heatsink temperature exceeds a predefined value.	Check for blocked or dirty heat sink fins. Verify that ambient temperature has not exceeded 40°C (104°F) for IP 30/NEMA 1/UL Type 1 installations or 50°C (122°F) for IP20/Open type installations. Check the fan.
F12	HW OverCurrent	The drive output current has exceeded the hardware current limit.	Check programming. Check for excess load, improper A084 (Boost Select) setting, DC brake volts set too high or other causes of excess current.
F13	Ground Fault	A current path to earth ground has been detected at one or more of the drive output terminals.	Check the motor and external wiring to the drive output terminals for a grounded condition.
F29	Analog Input Loss	An analog input is configured to fault on signal loss. A signal loss has occurred. Configure with A122 (Analog In Loss).	Check parameters. Check for broken/loose connections at inputs.

Fault Code	Cause	Description	Action
F33	Auto Rstrt Tries	Drive unsuccessfully attempted to reset a fault and resume running for the programmed number of A092 (Auto Rstrt Tries).	Correct the cause of the fault and reset manually.
F38	Phase U to ground	A phase to ground fault has been detected between the drive and motor in this phase.	Check the wiring between the drive and motor. Check motor for grounded phase. Replace drive if fault can not be corrected.
F39	Phase V to ground		
F40	Phase W to ground		
F41	Phase UV Short	Excessive current has been detected between these two output terminals.	Check the motor and drive output terminal wiring for a shorted condition. Replace drive if fault can not be corrected.
F42	Phase UW Short		
F43	Phase VW Short		
F48	Params Defaulted	The drive was commanded to write default values to EEPROM.	Clear the fault or cycle power to the drive. Program the drive parameters as needed.
F63	SW OverCurrent	Programmed A098 (SW Current Trip) has been exceeded.	Check load requirements and A098 (SW Current Trip) setting.
F64	Drive Overload	Drive rating of 150% for 1 minute or 200% for 3 seconds has been exceeded.	Reduce load or extend Accel Time.
F70	Power Unit	Failure has been detected in the drive power section.	Cycle power. Replace drive if fault cannot be cleared.
F71	Net Loss	The communication network has faulted.	Cycle power. Check communications cabling. Check network adapter setting. Check external network status.
F80	SVC Autotune	The autotune function was either cancelled by the user or failed.	Restart procedure.
F81	Comm Loss	RS485 (DSI) port stopped communicating.	If adapter was not intentionally disconnected, check wiring to the port. Replace wiring, port expander, adapters or complete drive as required. Check connection. An adapter was intentionally disconnected. Turn off using A105 (Comm Loss Action).
F100	Parameter Checksum	The checksum read from the board does not match the checksum calculated.	Set P041 (Reset To Defaults) to option 1 “Reset Defaults”.
F122	I/O Board Fail	Failure has been detected in the drive control and I/O section.	Cycle power. Replace drive if fault cannot be cleared.

4.2 Control Panel - TPOP

SPC Reference	2727212-0300

4.2.1 General

The TPOP (Tetra Pak Operator's Panel) software communicates with the operator by flashing buttons or displaying message windows. See 4.2.2.1 Operator Functions for more information.

Settings and functions available to the technician through the TPOP are described in this section of the maintenance chapter.

Note! When the yellow key is present on TPOP buttons, a password is required to access the corresponding screens or functions. See Passwords on page 4-118.

4.2.2 Summary of TPOP Functions

4.2.2.1 Operator Functions

Function	Description
Choosing language	Control Panel chapter in OM
Identifying and resetting alarms	Control Panel chapter in OM
Changing package volume by changing recipe	Conversion chapter in OM
Jogging the machine	Preparation chapter in OM
Running Rinse procedure	Care & Cleaning chapter in OM
Running chain cleaner (option)	Care & Cleaning chapter in OM

4.2.2.2 Water System Settings

The water system settings can be changed any time.

Function	Description
Setting time between lubrication	Setting Lubrication Frequency on page 4-108.
Turning off lubrication function	Setting Lubrication Enable on page 4-108

(Cont'd)

(Cont'd)

4.2.2.3 Settings and Checks Before Start-up/Installation

Perform these settings and checks before start-up when installing the machine. Perform the settings in the order in which they are listed in the table below.

Function	Description / Reference
Calibrate the external outfeed conveyor.	Calibrating External Outfeed Conveyor on page 4-110
Set the external outfeed conveyor length.	Setting External Outfeed Conveyor Length on page 4-111
Set the external infeed conveyor length.	Setting External Infeed Conveyor Length on page 4-115
Calibrate the external infeed conveyor.	Calibrating External Infeed Conveyor on page 4-113
Calibrate the extra external infeed conveyor (if equipped).	Calibrating Extra External Infeed Conveyor on page 4-114
Calibrate the extra external outfeed conveyor (if equipped).	Calibrating Extra External Outfeed Conveyor on page 4-111
Calibrate the spider position.	Calibrating Spider Position on page 4-105
Configure the machine.	4.2.9.2 Shutdown Confirmation Window on page 4-119
Check that the correct recipe is chosen according to the package volume to be run. If not, select the correct recipe.	See the Conversion chapter in the OM

4.2.2.4 Settings When Running Continuous Production

The following settings can be changed, if necessary, after all mechanical settings are complete and the machine runs consistently.

Function	Reference
Set the Almost Full set point.	Setting Almost Full Setpoint on page 4-109
Set the internal infeed conveyor gain.	Setting Internal Infeed Gain on page 4-106
Set the external outfeed conveyor gain.	Setting External Outfeed Gain on page 4-111
Set the external infeed conveyor gain.	Setting External Infeed Gain on page 4-115
Set the outfeed VFD accel and decel rates.	Setting Outfeed VFD Accel / Decel Rates on page 4-109

(Cont'd)

(Cont'd)

4.2.2.5 User Management Settings

Function	Reference
Log In	4.2.9.1 User Management Window on page 4-117
Log Out	
Change passwords	

4.2.2.6 Other Functions

Function	Reference
Set the machine in BYPASS mode.	Machine Bypass on page 4-102
Test lamp.	Lamp Test on page 4-103
Set the spider in maintenance position.	Positioning Spider for Maintenance on page 4-104
Set up a new recipe.	4.2.7 Recipe Window on page 4-97

4.2.3 Alarm Home Window

The Alarm Home window is the default window displayed on the TPOP. Press the buttons described below to access the corresponding functions and settings.

Pos.	Feature	Description	Reference
1	Status Bar	Symbols on the status bar indicate machine status.	See 4.2.3.1 Status Bar.
2	PLMS	Press the PLMS button (2) to view the reason code for the last machine stop.	
3	ALARMS	Press the ALARMS button (3) to access the Alarms window.	See the Control Panel chapter in the OM
4	SETTINGS	Press the SETTINGS button (4) to access the Settings window.	See 4.2.6 Accumulator Settings.
		The following setting is described in the OM	
		Make a volume change on the machine by changing the recipe.	See the Conversion chapter in the OM.

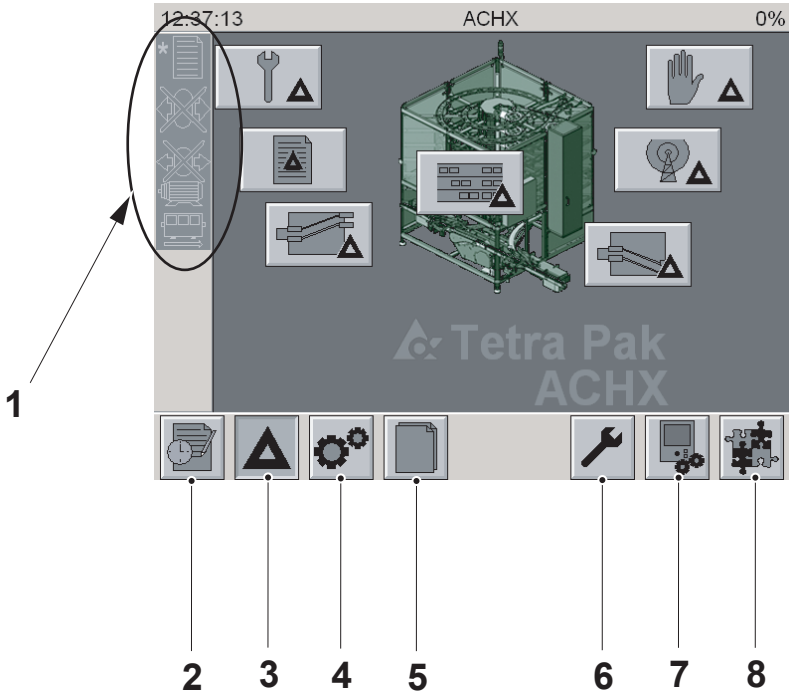

(Cont'd)

(Cont'd)

5	RECIPE	Press the RECIPE button (5) to access the Recipe window.	See 4.2.7 Recipe Window
6	MAINTENANCE	Press the MAINTENANCE button (6) to access the windows where technicians can change machine settings.	See 4.2.8 Maintenance Window.
7	SYSTEM	Press the SYSTEM button (7) to access security settings.	See 4.2.9 System Window
		The following setting is described in the OM	
		Select a new language.	See the Control Panel chapter in the OM.
8	CONFIGURATION	Press the CONFIGURATION button (8) to access the Configuration window.	See 4.2.10 Configuration Window

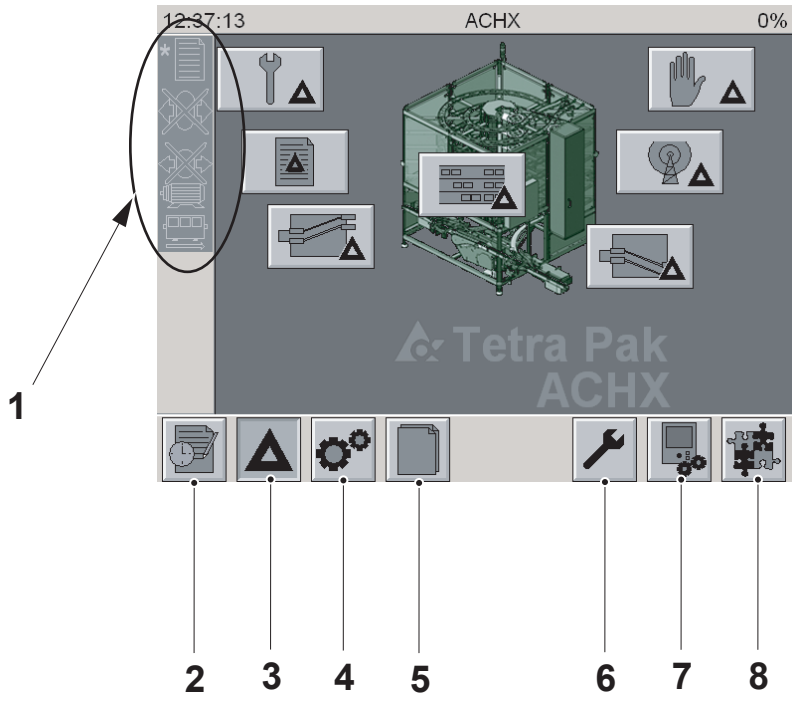

4.2.3.1 Status Bar

The status bar is displayed on all Alarm, Maintenance, and Setting windows. The status bar consists of the symbols described in the table below.

Pos.	Feature	Description
1	Recipe not saved	When highlighted, this symbol indicates a recipe parameter is not saved. Go to the Recipe Window and save the recipe parameters. See Saving Recipe on page 4-99.
2	Spider calibration not performed	When highlighted, this symbol indicates the spider is not calibrated. Go to the Maintenance Window and calibrate the spider. See Calibrating Spider Position on page 4-105.
3	Calibration of the external infeed or external outfeed conveyors not performed	When highlighted, this symbol indicates the external infeed or external outfeed conveyors have not been calibrated. If the extra external conveyors are installed and are not calibrated, this symbol will also be highlighted. Go to the External Infeed / External Outfeed Windows and calibrate the conveyors. See Calibrating External Infeed Conveyor on page 4-114 and Calibrating External Outfeed Conveyor on page 4-110.
4	BYPASS mode	When highlighted, this symbol indicates the ACHX30 is in BYPASS mode. To stop the bypass, go to the Service Maintenance window. See Machine Bypass on page 4-102.

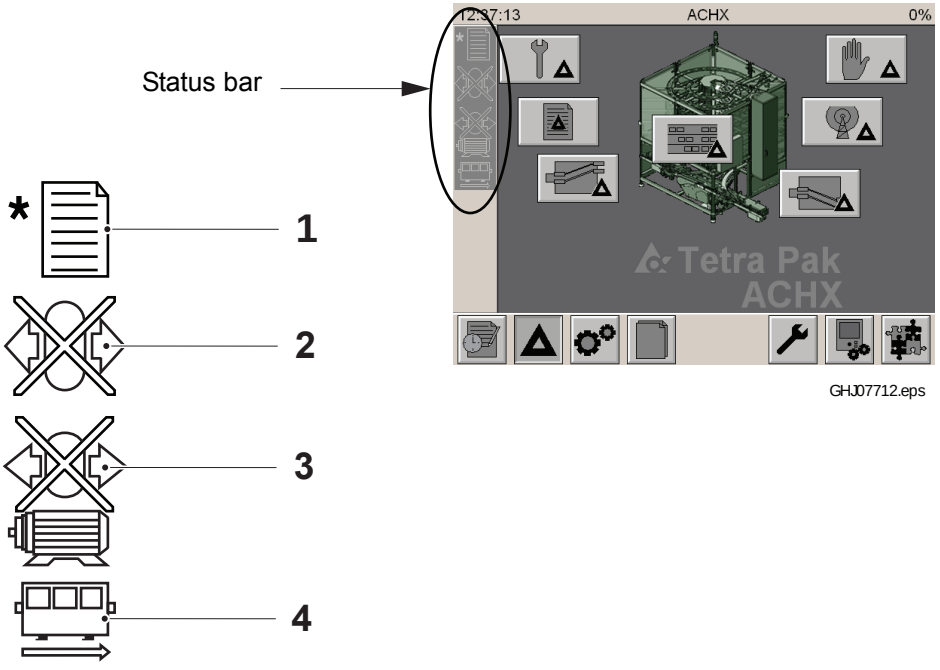

4.2.3.2 Title Bar

The title bar, displayed on all Alarm, Maintenance, and Setting windows, consists of the areas described in the table below.

Pos.	Feature	Description
1	Time	Displays the current time.
2	Window Title	Displays the current window title.
3	Fill Level	Displays the current fill level of the ACHX30 as a percentage of its total capacity. It is only displayed after the spider calibration has been completed.

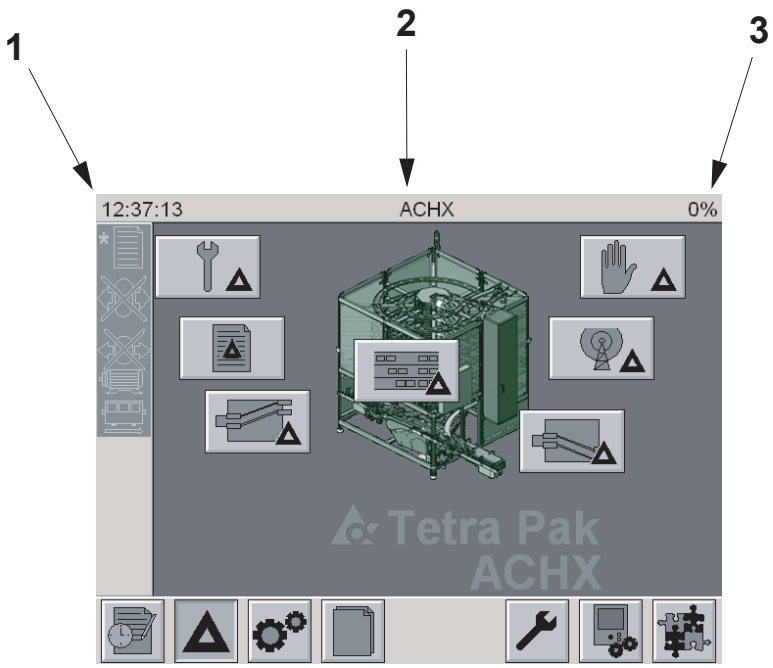

4.2.4 General Function and Setting Information

When a function or setting is accessed, the Console Window is displayed to allow user input.

4.2.4.1 General Function and Numeric Setting Panel

Note! Depending on the function or setting accessed, some of these features may not be displayed.

Pos.	Description
1	Starts a function
2	Stops a function that is running
3	Displays settings options (items 5 - 13)
4	Displays the current setting value
5	
6	Displays the edited setting value
7	Increments the setting value 10 times more than a minimum increment
8	Increments the setting value by the minimum amount
9	Decrements the setting value by the minimum amount
10	Decrements the setting value 10 times more than a minimum decrement
11	Displays the keypad for a numeric entry of the setting value (See 4.2.4.2 General Keypad Information.)
12	Displays the default value
13	Confirms the setting. Upon confirmation, the edited setting value becomes the current setting value.
14	Displays descriptive text of the current setting / function

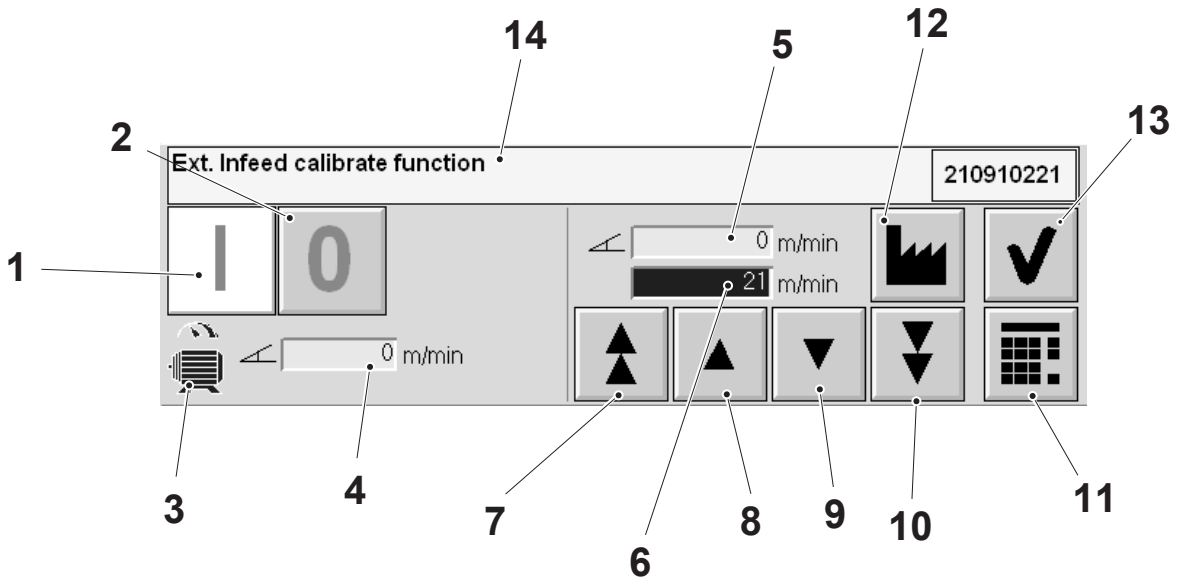

4.2.4.2 General Keypad Information

The keypad below is accessed from the screen on the previous page (item 11). It is displayed when a numeric setting needs to be entered.

Pos.	Description
1	Displays the minimum and maximum values for the setting
2	First displays the current setting value and then displays the edited value
3	Numeric entry keypad
4	Press the EXIT button to cancel the changes.
5	Press the CLEAR button to make 0 the setting value.
6	Press the ACCEPT CHANGES button to accept the changes.

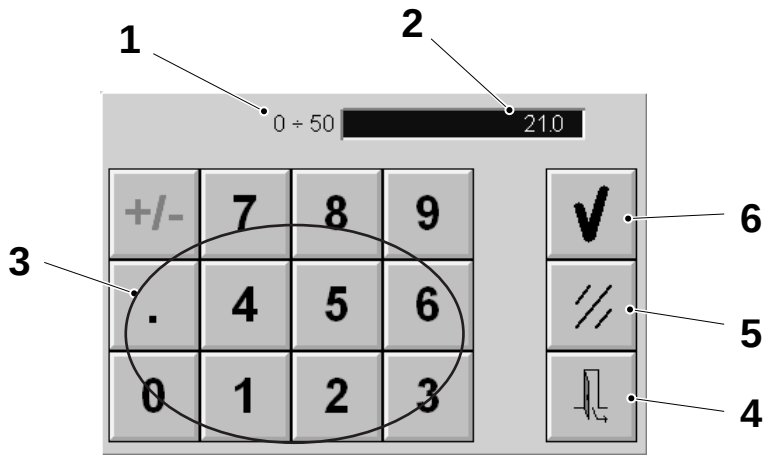

4.2.4.3 Binary Input Panel

This panel is used to enter an ON/OFF setting.

Pos.	Description
1	Turns ON a function
2	Turns OFF a function
3	Confirms the setting
4	Displays the default value

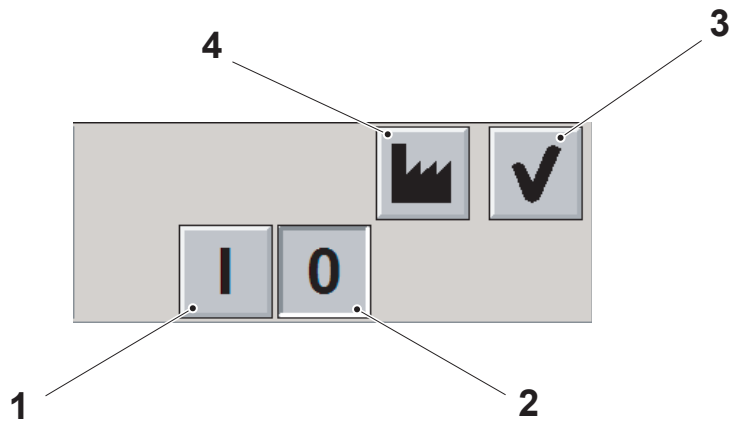

4.2.4.4 List Selection Panel

This panel is used to select a value from a list of pre-defined options.

Pos.	Description
1	List of pre-defined values
2	Scrolls up to the next value
3	Scrolls down to the next value
4	Resets to initial value
5	Confirms the setting

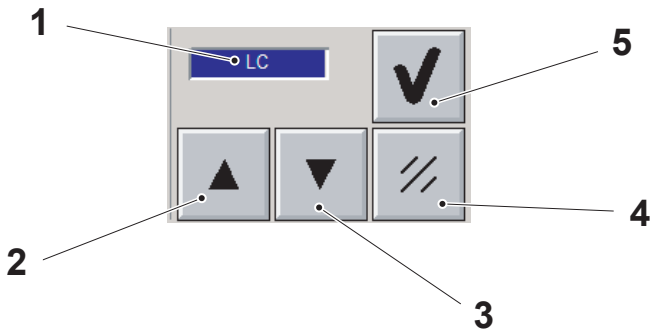

4.2.4.5 Multiple Numeric Input Panel

This panel is displayed to allow input for related numeric values. Press the icon of the value to be entered. The numeric input panel is displayed.

Pos.	Description
1	Displays the current setting value
2	Displays settings options (items 3 - 10)
3	Displays the edited setting value
4	Increments the setting value 10 times more than a minimum increment
5	Increments the setting value by the minimum amount
6	Decrements the setting value by the minimum amount
7	Decrements the setting value 10 times more than a minimum decrement
8	Displays the keypad for a numeric entry of the setting value (See 4.2.4.2 General Keypad Information.)
9	Displays the default value
10	Confirms the setting. Upon confirmation, the edited setting value becomes the current setting value.
11	Displays descriptive text of the current setting / function

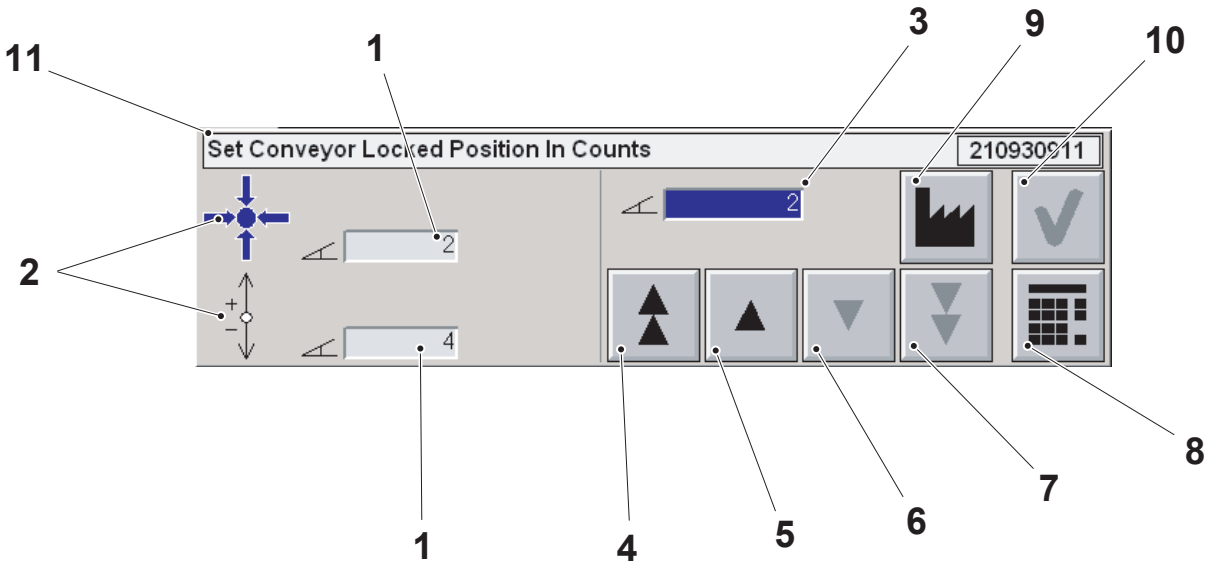

4.2.5 PLMS Window

From the Home Window, press the PLMS WINDOW button to display the reason why the Helix last stopped

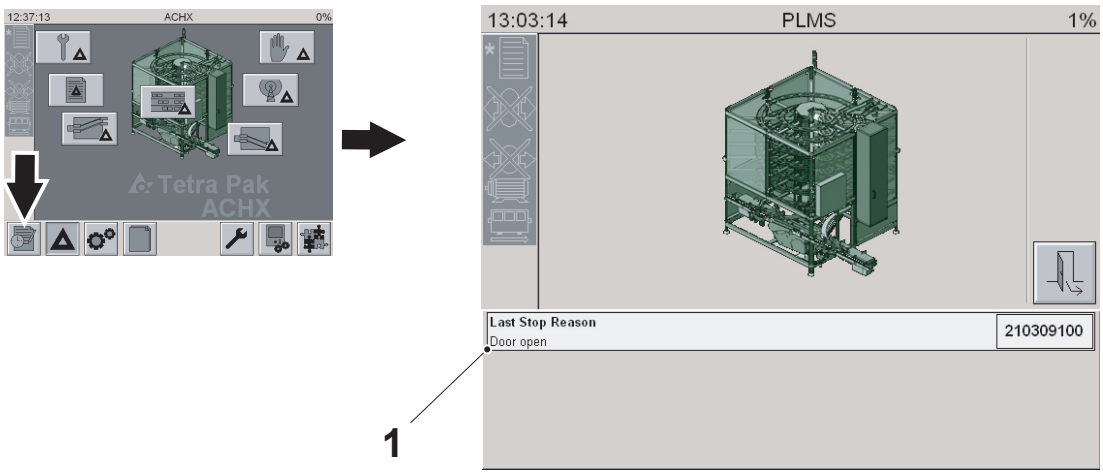

1 Last Stop Reason

4.2.6 Accumulator Settings

From the Home Window, press the SETTINGS WINDOW button to display the Settings Window.

Note! Before activating the functions, make sure the machine is in PREPARATION Step.

Jogging Internal Infeed Conveyor

Use the jog function to run the internal infeed conveyor manually.

a) Press the INTERNAL INFEED CONVEYOR JOG button (1).

b) Press the START button to jog the conveyor.

c) Press the STOP button to stop the conveyor.

The internal infeed conveyor jog function cannot be activated if the spider is at its top position (Machine Full sensor activated).

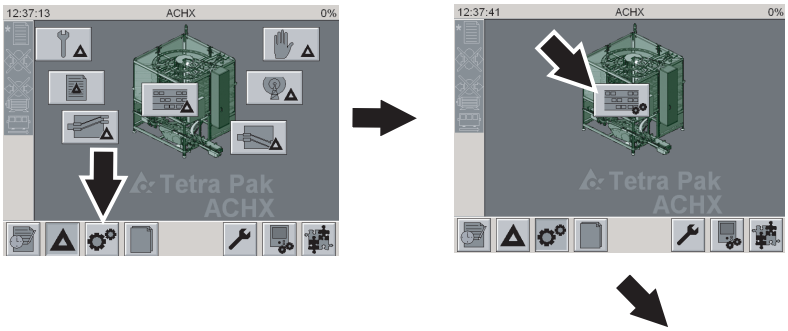

1 INTERNAL INFEED CONVEYOR JOG
2 INTERNAL OUTFEED CONVEYOR JOG
3 RINSE
4 CHAIN CLEANER

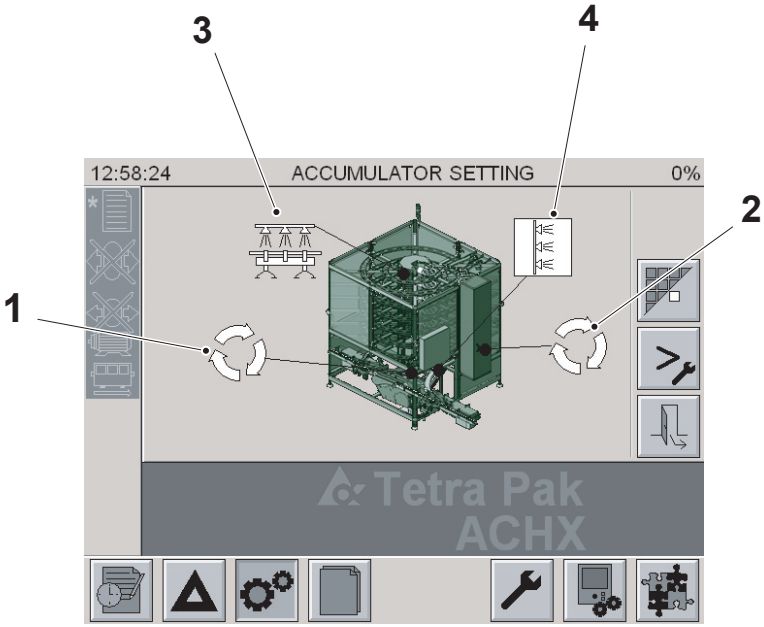

(Cont'd)

(Cont'd)

Jogging Internal Outfeed Conveyor

Use the jog function to run the internal outfeed conveyor manually.

a) Press the INTERNAL OUTFEED CONVEYOR JOG button (2).
b) Press the START button to jog the conveyor.
c) Press the STOP button to stop the conveyor.

Note! The internal outfeed conveyor jog function cannot be activated if the spider is at its bottom position (Machine Empty sensor activated).

Rinse

Use the rinse function to manually activate the rinse cycle.

a) Press the RINSE button (3).
b) Press the START button to activate the rinse cycle.
c) Press the STOP button to cancel the rinse cycle.

Chain Cleaner

Use the chain cleaner function to manually activate the chain cleaner.

a) Press the CHAIN CLEANER button (4).
b) Press the START button to activate the chain cleaner.
c) Press the STOP button to cancel the chain cleaner.

4.2.7 Recipe Window

From the Home Window, press the RECIPE WINDOW button to display the primary Recipe Window.

A recipe is a collection of settings specific for each package size. The machine is delivered from the factory programmed with at least one recipe. When necessary, new recipes can be created for different volumes. Switch from one recipe to another using the TPOP. (See Conversion chapter in the OM).

Note! If running in Line Controller or Recart Lines, recipes are selected automatically.

Note! You must be logged on with at least technician access to create or delete recipes.

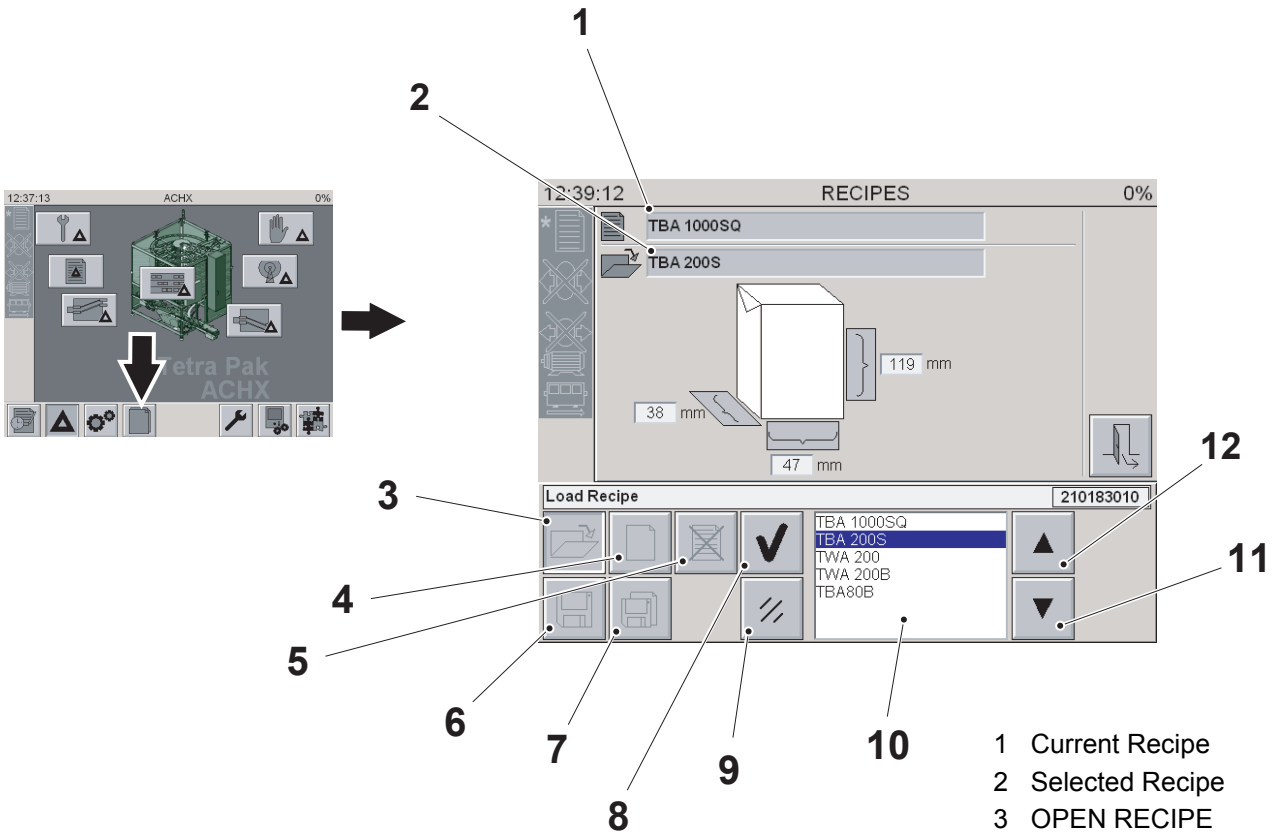

1 Current Recipe
2 Selected Recipe
3 OPEN RECIPE
4 NEW RECIPE
5 DELETE RECIPE
6 SAVE
7 SAVE AS
8 CONFIRM
9 CLEAR
10 RECIPE LIST
11 ARROW DOWN
12 ARROW UP

(Cont'd)

(Cont'd)

Viewing Current Recipe Name
The recipe name (1) for the package currently running is displayed.

Viewing Selected Recipe Name
The recipe name (2) for the package currently selected in the recipe list is displayed.

Opening Recipe
Press the OPEN RECIPE button (3).

Selecting Recipe
a) Using the ARROW buttons (11 and 12), scroll to the correct recipe in the recipe list (10).

b) Press the CONFIRM button (8).

Entering New Recipe
a) Press the NEW RECIPE button (4).

b) Modify the recipe parameters. (See Recipe Parameters on page 4-100.)

Note! This is the only opportunity to modify the recipe parameters.

c) Press the CONFIRM button (8).

d) When prompted, enter a recipe name. Name the recipe according to package type and volume. (TBA 1000SQ, for example.) A new recipe is created.

e) Press the SAVE button (6).

Deleting Recipe
Note! The active recipe (1) cannot be deleted.

a) Press the DELETE RECIPE button (5).

b) Using the ARROW buttons (11 and 12), scroll to the recipe to be deleted.

c) Press the CONFIRM button (8).

(Cont'd)

(Cont'd)

Saving Recipe

Note! If any recipe parameters are changed, the recipe must be saved. Otherwise, an unsaved recipe indication is given. (See 4.2.3.1 Status Bar.)

a) Press the SAVE button (6).

b) Press the CONFIRM button (8).

Note! If necessary, press the CANCEL button (9) to cancel different recipe functions.

Saving a Recipe with New Name

Note! If any recipe parameters are changed, the recipe must be saved. Otherwise, an unsaved recipe indication is given. (See 4.2.3.1 Status Bar.)

a) Press the SAVE AS button (7).

b) Press the CONFIRM button (8).

c) When prompted, enter a recipe name. Name the recipe according to package type and volume. (TBA 1000SQ, for example.) A new recipe is created.

1 Current Recipe
2 Selected Recipe
3 OPEN RECIPE
4 NEW RECIPE
5 DELETE
6 SAVE
7 SAVE AS
8 CONFIRM
9 CLEAR
10 RECIPE LIST
11 ARROW DOWN
12 ARROW UP

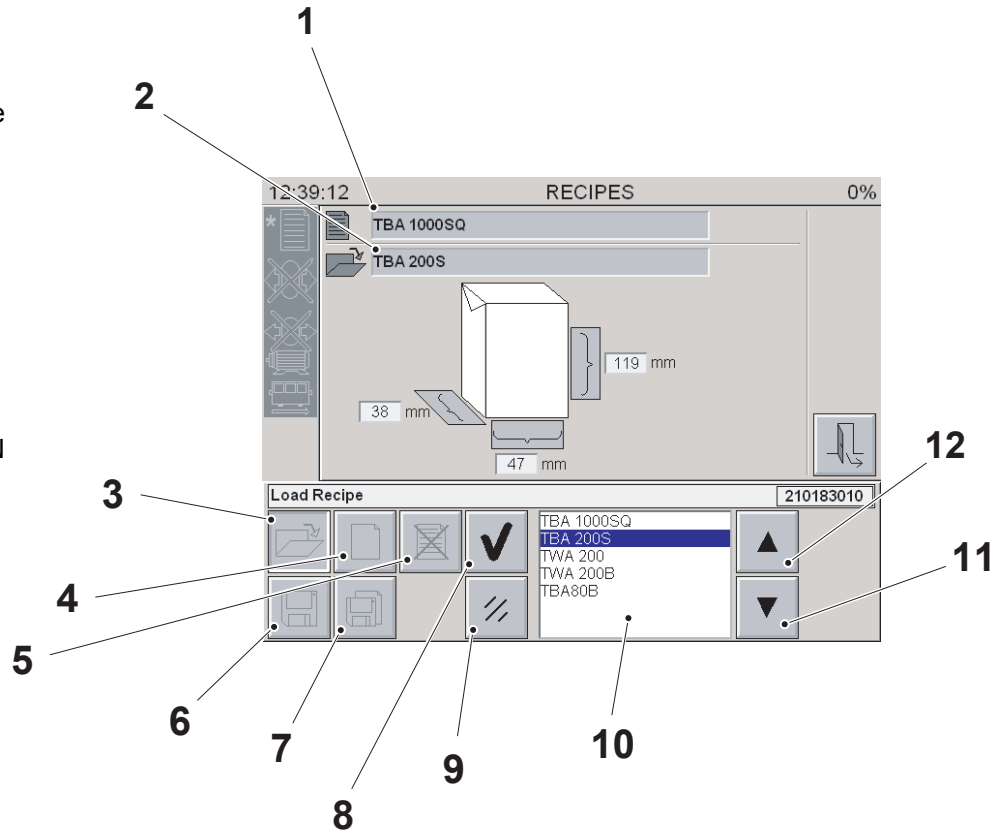

(Cont'd)

(Cont'd)

Recipe Parameters

Pos.	Item	Instructions
13	PACKAGE WIDTH	Enter the package width in millimeters.
14	PACKAGE DEPTH	Enter the package depth in millimeters.
15	PACKAGE HEIGHT	Enter the package height in millimeters.

a) Press the appropriate package dimension button (13-15).

b) Enter the new dimension value.

c) Press the CONFIRM button.

d) Repeat steps a) through c) for each dimension.

Note! Refer to Entering New Recipe on page 4-98 for further instruction.

Note! Refer to the Service Maintenance Window section for filling machine and distribution equipment capacities.

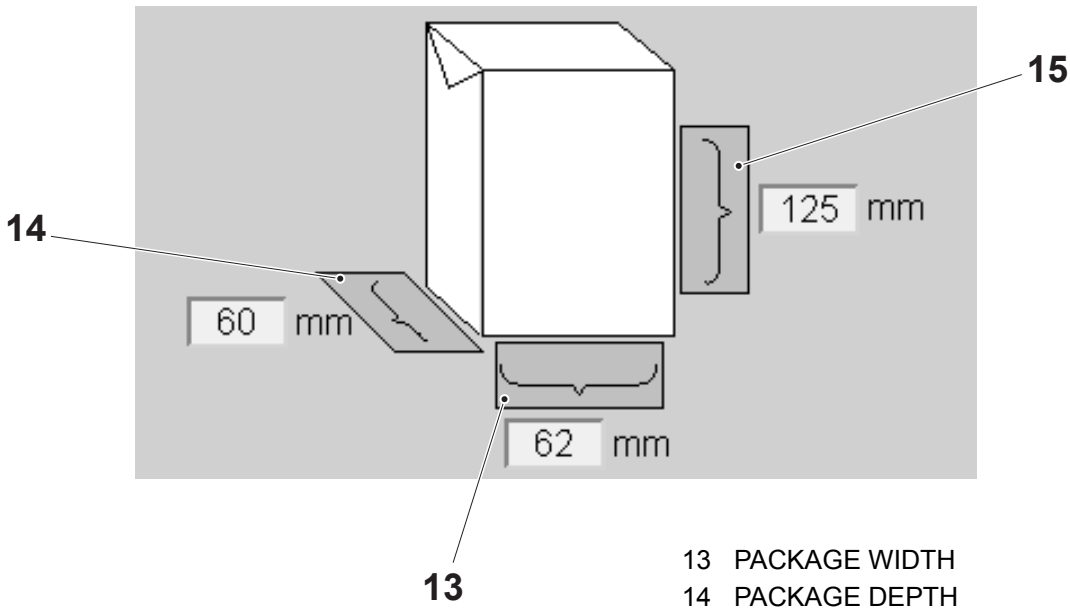

13 PACKAGE WIDTH
14 PACKAGE DEPTH
15 PACKAGE HEIGHT

4.2.8 Maintenance Window

From the Home window, press the MAINTENANCE WINDOW button to display the primary maintenance window. The Maintenance Sub-Window buttons are displayed.

The maintenance section consists of the following sub-windows.

Pos.	Item	Reference
1	SERVICE MAINTENANCE	4.2.8.1 Service Maintenance
2	EXTERNAL INFEED MAINTENANCE	4.2.8.4 External Infeed Maintenance
3	ACCUMULATOR MAINTENANCE	4.2.8.2 Accumulator Maintenance
4	EXTERNAL OUTFEED MAINTENANCE	4.2.8.3 External Outfeed Maintenance
5	MAINTENANCE / RETURN TO HOME	Press the MAINTENANCE WINDOW button again to return to the Home Window.

Note! When a green LED (6) is displayed, a function accessed by that button is active.

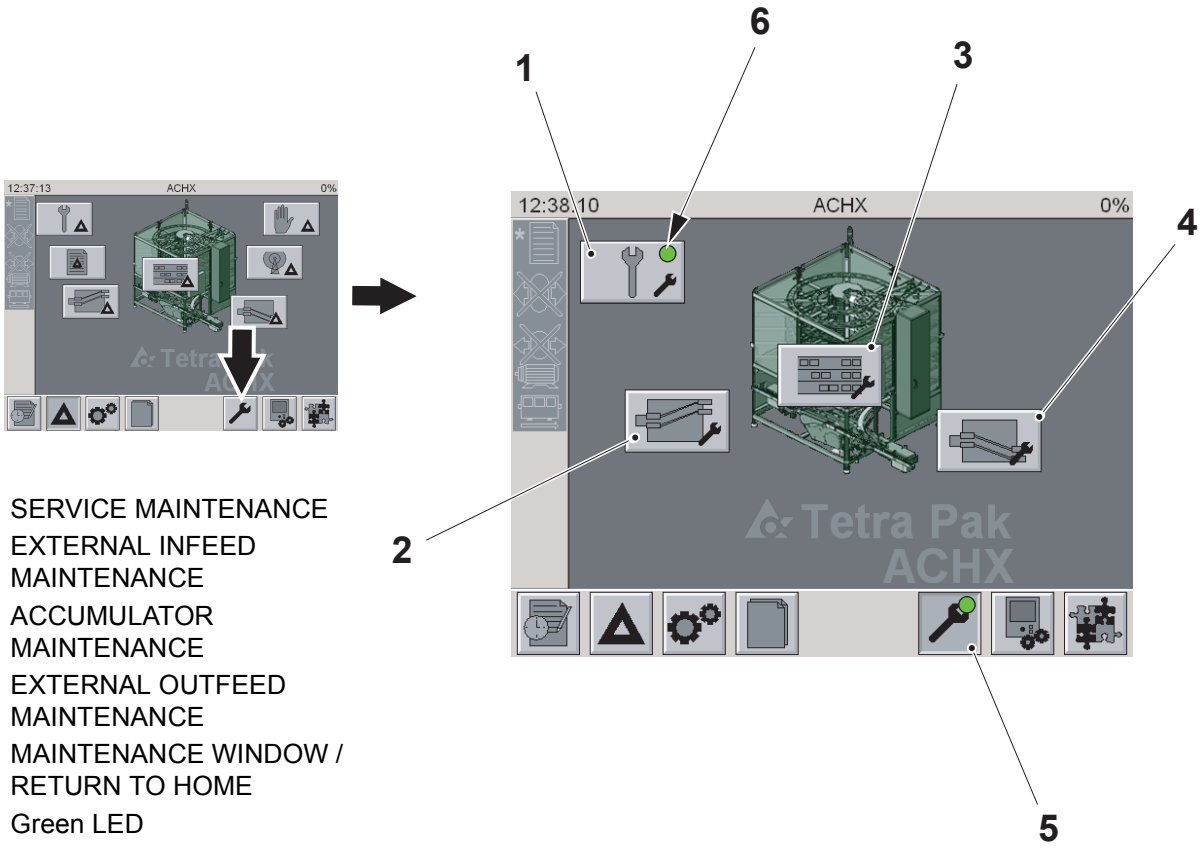

1 SERVICE MAINTENANCE
2 EXTERNAL INFEED MAINTENANCE
3 ACCUMULATOR MAINTENANCE
4 EXTERNAL OUTFEED MAINTENANCE
5 MAINTENANCE WINDOW / RETURN TO HOME
6 Green LED

4.2.8.1 Service Maintenance

Note! Before activating the functions, make sure the machine is in PREPARATION Step.

Machine Bypass

Note! Make sure the guides are mechanically set for BYPASS mode before pressing the BYPASS MACHINE button.

a) Slide and engage the tabs on the outside guide into the locked position.

b) Slide and pin the inside guide into place.

c) Press the BYPASS MACHINE button (1) to select the BYPASS function.

d) Press the START button to set the machine in BYPASS mode.

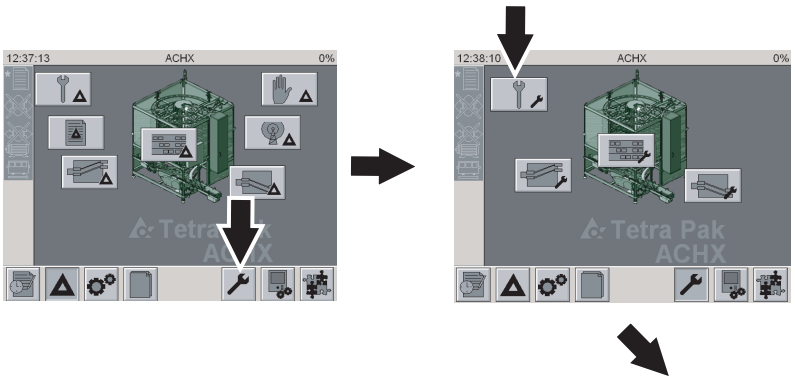

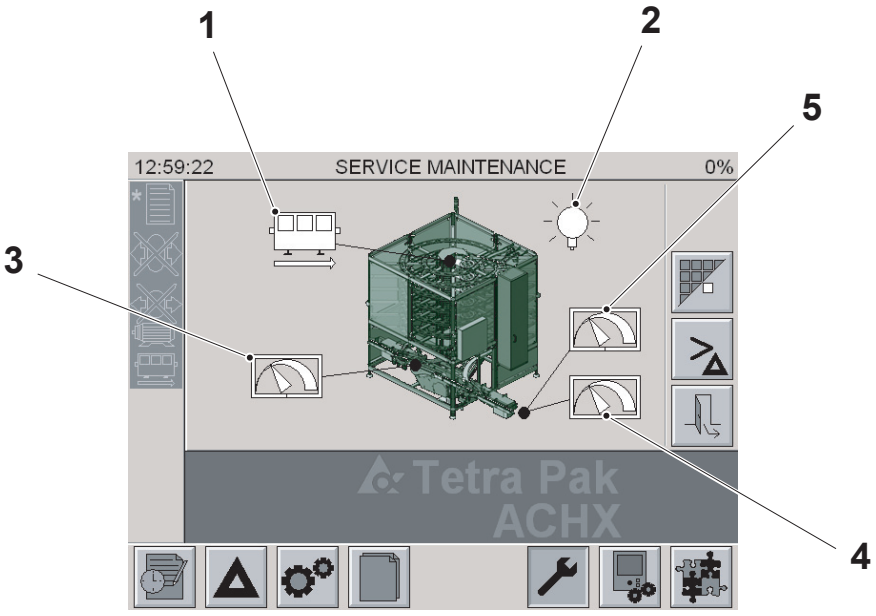

1 BYPASS MACHINE
2 LAMP TEST
3 FILLING MACHINE CAPACITY
4 DISTRIBUTION EQUIPMENT 1 CAPACITY
5 DISTRIBUTION EQUIPMENT 2 CAPACITY

(Cont'd)

(Cont'd)

Lamp Test

a) Press the LAMP TEST button (2).

b) Press the START button.

c) Check that all indicator lamps on the control panel illuminate.

d) Check that all bulbs in the warning lamp illuminate.

e) Press the STOP button.

Recipe-Dependent Parameters

Pos.	Item	Instructions
3	FILLING MACHINE CAPACITY	Press the FILLING MACHINE CAPACITY button. Enter the filling machine capacity in packages per hour.
4	DISTRIBUTION EQUIPMENT 1 CAPACITY	Press the DISTRIBUTION EQUIPMENT 1 CAPACITY button. Enter the distribution equipment capacity in packages per hour.
5	DISTRIBUTION EQUIPMENT 2 CAPACITY	Press the DISTRIBUTION EQUIPMENT 2 CAPACITY button. Enter the distribution equipment capacity in packages per hour. This is the distribution equipment capacity for the second piece of distribution equipment in the production line when using a 1-2 gate after the ACHX30.

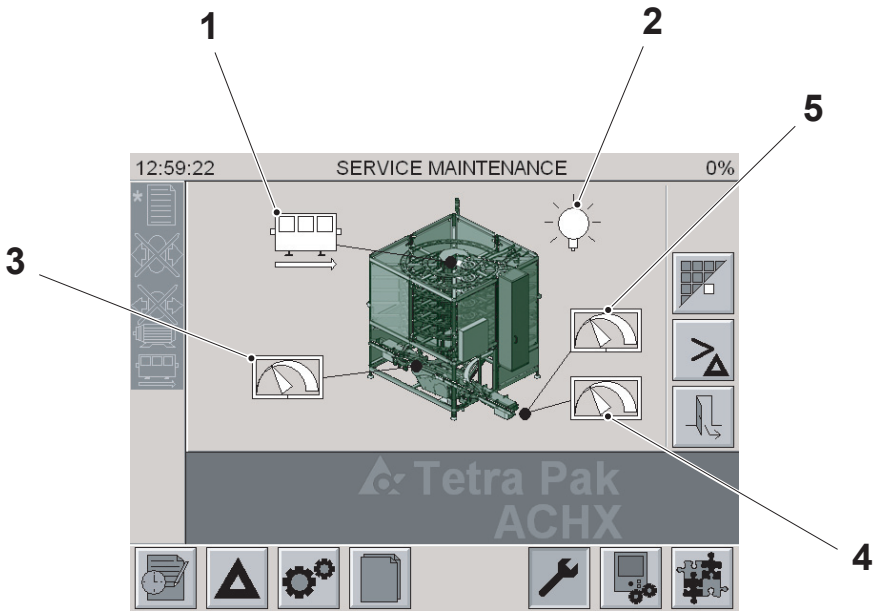

1 BYPASS MACHINE
2 LAMP TEST
3 FILLING MACHINE CAPACITY
4 DISTRIBUTION EQUIPMENT 1 CAPACITY
5 DISTRIBUTION EQUIPMENT 2 CAPACITY

4.2.8.2 Accumulator Maintenance

Positioning Spider for Maintenance

Press the SPIDER MAINTENANCE POSITION button (1) to position the spider for cleaning or maintenance.

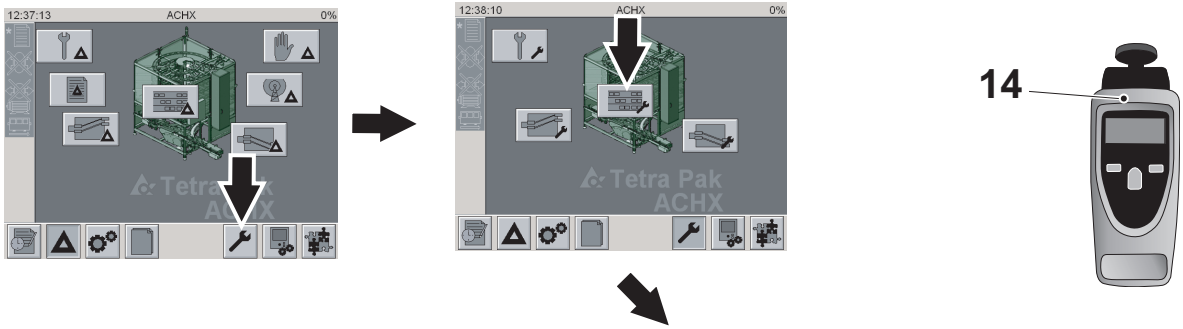

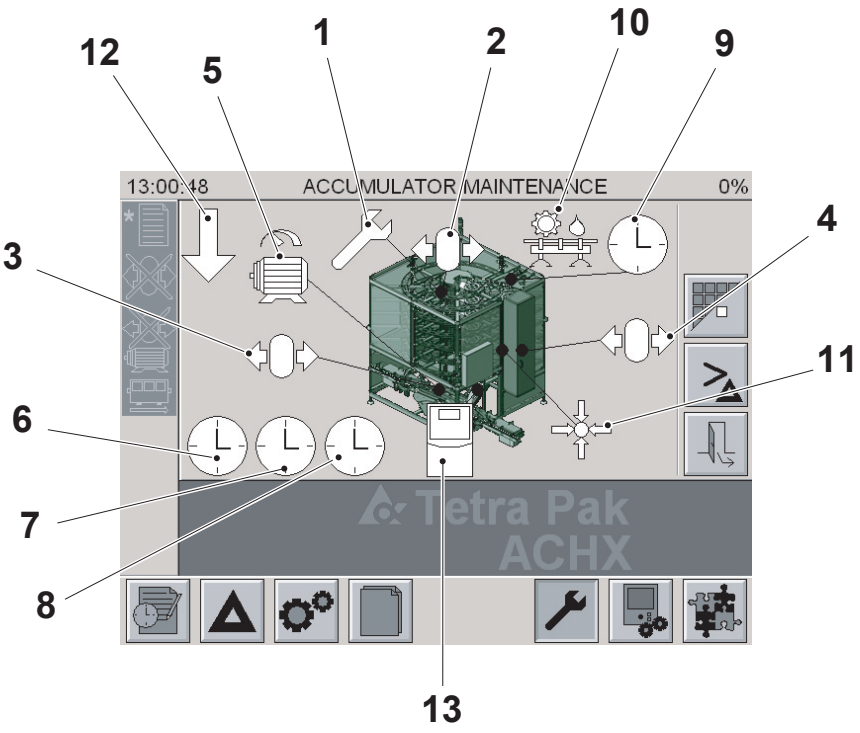

1 SPIDER MAINTENANCE POSITION
2 CALIBRATE SPIDER POSITION
3 INFEED MOTOR CALIBRATE
4 OUTFEED MOTOR CALIBRATE
5 INFEED MOTOR GAIN
6 INFEED TIME BASE
7 START SPEED REFERENCE
8 INFEED BIAS
9 SET LUBRICATION FREQUENCY
10 LUBRICATION ENABLE
11 LOCK CONVEYOR ENABLE
12 ALMOST FULL SETPOINT
13 OUTFEED VFD ACCEL / DECEL RATES
14 Tachometer

(Cont'd)

(Cont'd)

Calibrating Spider Position

Note! It is not possible to step up to Production until this function has been performed.

Calibrate the spider to communicate its position with the machine.

a) Press the CALIBRATE SPIDER POSITION button (2).

b) Press the START button to start the function.

The function stops automatically when calibration is complete.

Calibrating Infeed Motor

When this function is activated, the conveyor runs at 50 Hertz.

a) Press the INFEED MOTOR CALIBRATE button (3).

b) Press the START button to start the function.

c) Use a tachometer (13) to measure the speed of the infeed conveyor.

d) Enter the measured meters per minute value.

e) Press the CONFIRM button.

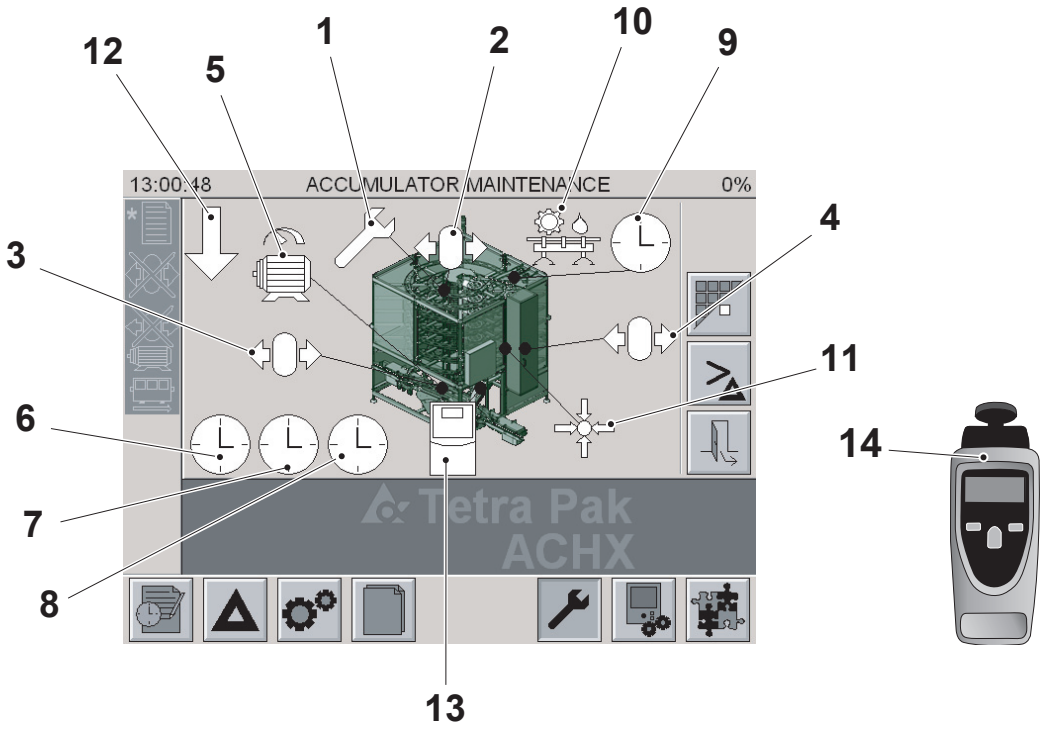

1 SPIDER MAINTENANCE POSITION
2 CALIBRATE SPIDER POSITION
3 INFEED MOTOR CALIBRATE
4 OUTFEED MOTOR CALIBRATE
5 INFEED MOTOR GAIN
6 INFEED TIME BASE
7 START SPEED REFERENCE
8 INFEED BIAS
9 SET LUBRICATION FREQUENCY
10 LUBRICATION ENABLE
11 LOCK CONVEYOR ENABLE
12 ALMOST FULL SETPOINT
13 OUTFEED VFD ACCEL / DECEL RATES
14 Tachometer

Calibrating Outfeed Motor

When this function is activated, the conveyor runs at 50 Hertz.

a) Press the OUTFEED MOTOR CALIBRATE button (4)

b) Press the START button to start the function.

c) Use a tachometer (13) to measure the speed of the outfeed conveyor.

d) Enter the measured meters per minute value.

e) Press the CONFIRM button.

Setting Internal Infeed Gain

The basic machine setup is established in the recipe. (See 4.2.7 Recipe Window.) If fine tuning is needed, adjust the corresponding gain.

Normally this value is 100. To increase or decrease the conveyor speed, modify this value. For example, 110 increases the speed and 90 decreases the speed.

a) Press the INFEED MOTOR GAIN button (5)

b) Enter the value.

c) Press the CONFIRM button.

Setting Infeed Time Base

Note! You must be logged in as tptechnician to access this setting.

This value specifies the number of 5 millisecond time slices used to control infeed conveyor speed. The default value is 100, which gives a time base of.5 seconds. In low-speed applications, this number can be increased.

a) Press the INFEED TIME BASE button (6).

b) Enter the value.

c) Press the CONFIRM button.

(Cont'd)

(Cont'd)

Setting Start Speed Reference

Note! You must be logged in as tptechnician to access this setting.

This value specifies the infeed conveyor starting speed for the first package in a queue. This value is expressed as a percentage of the maximum infeed conveyor speed.

a) Press the START SPEED REFERENCE button (7).

b) Enter the value.

c) Press the CONFIRM button.

Setting Infeed Bias

Note! You must be logged in as tptechnician to access this setting.

For the first package in a queue, this value specifies the starting point for the first time base rather than zero.

a) Press the INFEED BIAS button (8).

b) Enter the value.

c) Press the CONFIRM button.

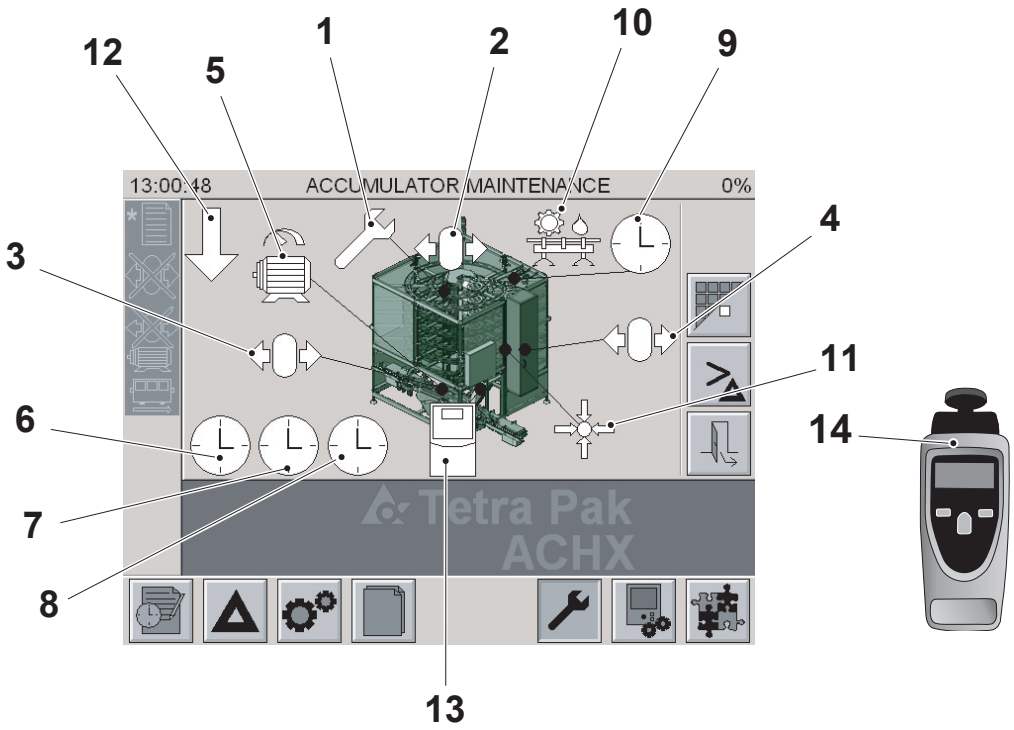

1 SPIDER MAINTENANCE POSITION
2 CALIBRATE SPIDER POSITION
3 INFEED MOTOR CALIBRATE
4 OUTFEED MOTOR CALIBRATE
5 INFEED MOTOR GAIN
6 INFEED TIME BASE
7 START SPEED REFERENCE
8 INFEED BIAS
9 SET LUBRICATION FREQUENCY
10 LUBRICATION ENABLE
11 LOCK CONVEYOR ENABLE
12 ALMOST FULL SETPOINT
13 OUTFEED VFD ACCEL / DECEL RATES
14 Tachometer

Setting Lubrication Frequency

This setting determines how often the lubrication runs.

Note! The recommended setting is 5 minutes.

a) Push the SET LUBRICATION FREQUENCY button (9) to display the input panel.

b) Enter the value.

c) Push the CONFIRM button.

Setting Lubrication Enable

This setting allows the lubrication system to operate.

a) Push the ENABLE LUBRICATION button (10).

b) Push the ON or OFF button.

c) Push the CONFIRM button.

Setting Lock Conveyor Enable

This setting determines how high in the ACHX30 the spider runs during normal operation.

a) Push the LOCK CONVEYOR button (11).

b) Push the icon in the input window to select the desired setting.

Spider Position Count

– Enter the spider position count value at which the lock conveyor mode is to be enabled.

Conveyor Lock Range

– Enter a range value, which is the number of counts that the conveyor lock is in effect.

c) Push the CONFIRM button.

d) Repeat the above procedure to change the other value.

(Cont'd)

(Cont'd)

Setting Almost Full Setpoint

The Almost Full Setpoint determines when the Short Stop signal is sent to the filling machine from the ACHX30. This should be set so that the filling machine can empty itself without the ACHX30 being 100% full. For example, if the value 75 is entered, the ACHX30 disables the Ready signal to the filling machine when it is 75% full.

a) Push the ALMOST FULL SETPOINT button (12).

b) Enter the value.

c) Press the CONFIRM button.

Setting Outfeed VFD Accel / Decel Rates

This setting changes the acceleration or deceleration rates of the outfeed conveyor.

a) Push the OUTFEED VFD ACCEL / DECEL RATES button (13).

b) Push the icon in the input window to select the desired setting.

Accel Rate

– Enter the desired VFD Acceleration Time.

Decel Rate

– Enter the desired VFD Deceleration Time.

c) Push the CONFIRM button.

d) Repeat the above procedure to change the other value.

4.2.8.3 External Outfeed Maintenance

Note! Before activating the functions, make sure the machine is in PREPARATION Step.

Calibrating External Outfeed Conveyor

Note! It is not possible to step up to PRODUCTION until this function has been performed.

When this function is activated, the conveyor runs at 50 Hertz.

a) Press the CALIBRATE EXTERNAL OUTFEED CONVEYOR button (1).

b) Press the START button to start the function.

c) Use a tachometer (8) to measure the speed of the external outfeed conveyor.

d) Enter the measured meters per minute value.

e) Press the CONFIRM button.

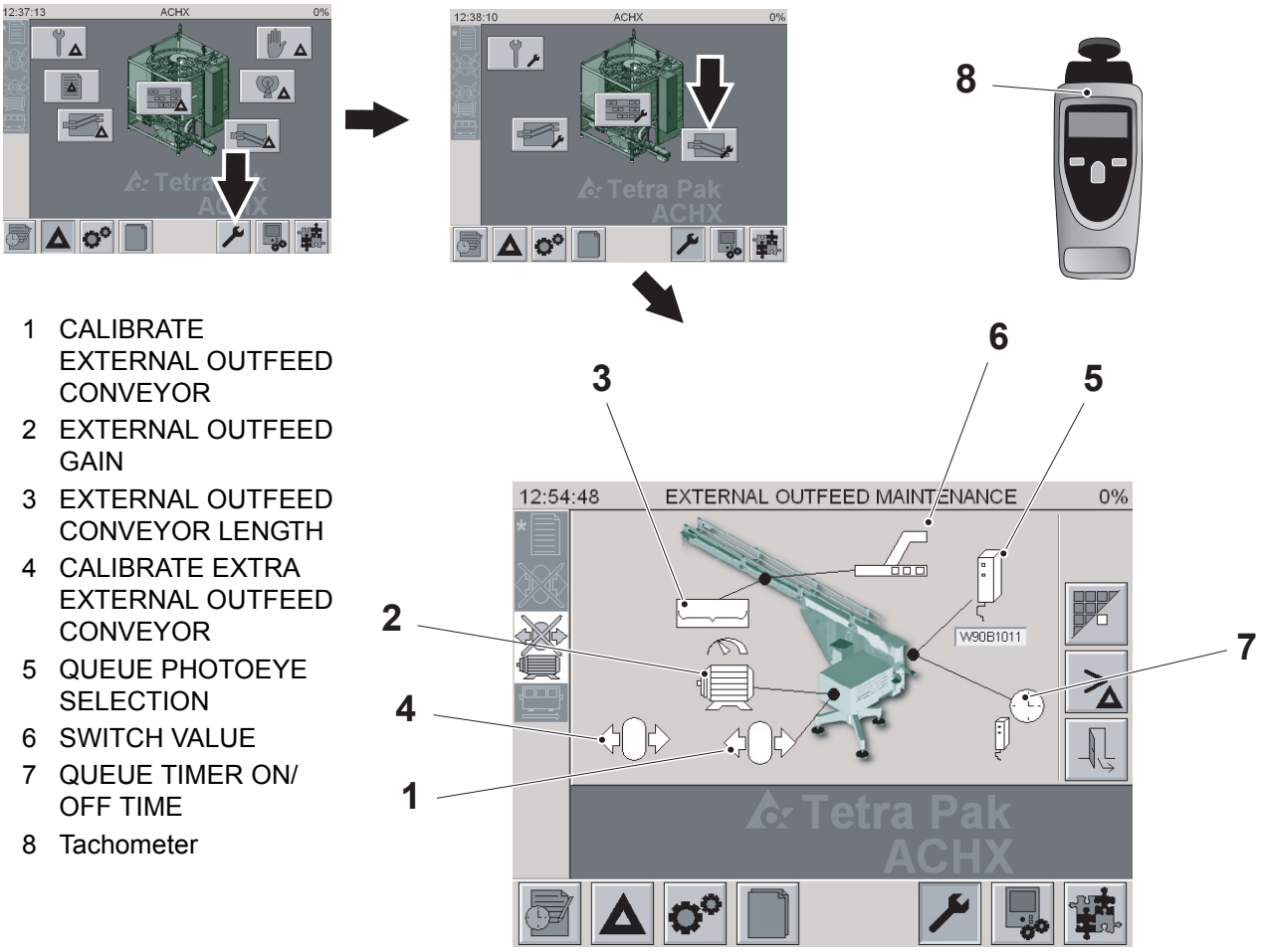

1 CALIBRATE EXTERNAL OUTFEED CONVEYOR
2 EXTERNAL OUTFEED GAIN
3 EXTERNAL OUTFEED CONVEYOR LENGTH
4 CALIBRATE EXTRA EXTERNAL OUTFEED CONVEYOR
5 QUEUE PHOTOEYE SELECTION
6 SWITCH VALUE
7 QUEUE TIMER ON/ OFF TIME
8 Tachometer

(Cont'd)

(Cont'd)

Setting External Outfeed Gain

The basic machine setup is established in the recipe. (See 4.2.7 Recipe Window.) If fine tuning is needed, adjust the corresponding gain.

Normally this value is 100. To increase or decrease the conveyor speed, modify this value. For example, 110 increases the speed and 90 decreases the speed.

a) Press the EXTERNAL OUTFEED GAIN button (2).

b) Enter the value.

c) Press the CONFIRM button.

Setting External Outfeed Conveyor Length

Purge time depends on conveyor speed and length. To set the length, follow the instructions below.

a) Press the EXTERNAL OUTFEED CONVEYOR LENGTH button (3).

b) Enter the value.

c) Press the CONFIRM button.

Calibrating Extra External Outfeed Conveyor

Note! It is not possible to step up to PRODUCTION until this function has been performed.

When this function is activated, the conveyor runs at 50 Hertz.

a) Press the CALIBRATE EXTRA EXTERNAL OUTFEED CONVEYOR button (1).

b) Press the START button to start the function.

c) Use a tachometer (8) to measure the speed of the extra external outfeed conveyor.

d) Enter the measured meters per minute value.

e) Press the CONFIRM button.

Queue Photoeye Selection

Each conveyor on a line with parallel DE interfaces is equipped with a queue photoeye. This setting selects the photoeye for the current recipe. This setting applies only with LC automation types.

a) Press the QUEUE PHOTOEYE SELECTION button (5).

b) Select the appropriate photoeye from the list.

c) Press the CONFIRM button.

(Cont'd)

(Cont'd)

Switch Value

Switch value denotes the binary (ON/OFF) value of the gate indicator switch for a given recipe. This button is only visible on LC automation types with a gate indicator switch connected.

a) Press the SWITCH VALUE button (6).

b) Select the required ON/OFF position.

c) Press the CONFIRM button.

Queue Timer ON/OFF Time

Press this button to select the length of time the queue photoeye must be ON or OFF to register a queue event. This setting is used to modify the preset values for the QUEUE ON DELAY timer or the QUEUE OFF DELAY timer.

a) Press the QUEUE TIMER ON/OFF button (7).

b) Push the icon in the input window for the value to be changed.

c) Enter the preset value.

d) Press the CONFIRM button.

e) Repeat the above procedure to change the next value.

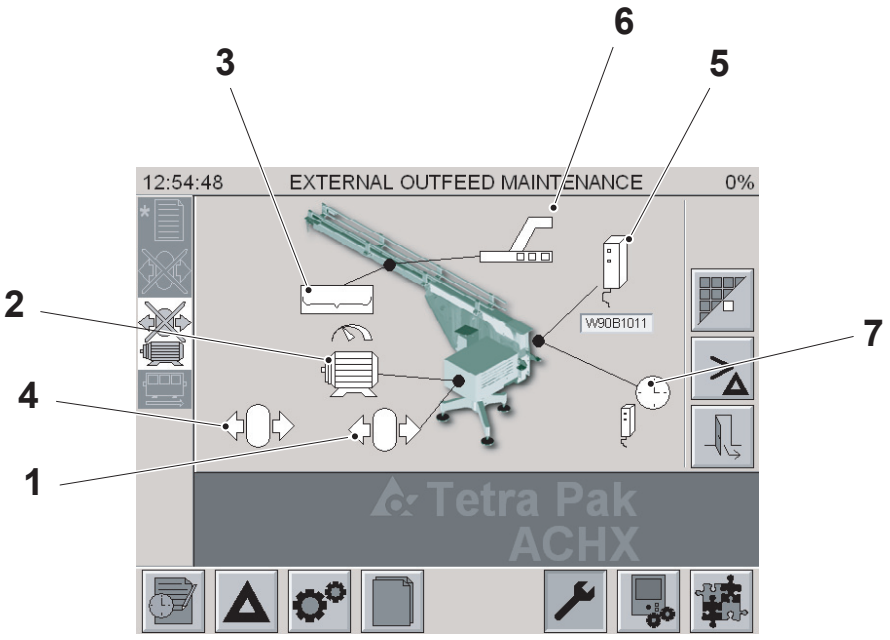

1 CALIBRATE EXTERNAL OUTFEED CONVEYOR
2 EXTERNAL OUTFEED GAIN
3 EXTERNAL OUTFEED CONVEYOR LENGTH
4 CALIBRATE EXTRA EXTERNAL OUTFEED CONVEYOR
5 QUEUE PHOTOEYE SELECTION
6 SWITCH VALUE
7 QUEUE TIMER ON/ OFF TIME

4.2.8.4 External Infeed Maintenance

Note! Before activating the functions, make sure the machine is in PREPARATION Step.

Calibrating External Infeed Conveyor

Note! It is not possible to step up to PRODUCTION until this function has been performed.

When this function is activated, the conveyor runs at 50 Hertz.

a) Press the CALIBRATE EXTERNAL INFEED CONVEYOR button (1).

b) Press the START button to start the function.

c) Use a tachometer (6) to measure the speed of the external infeed conveyor.

d) Enter the measured meters per minute value.

e) Press the CONFIRM button.

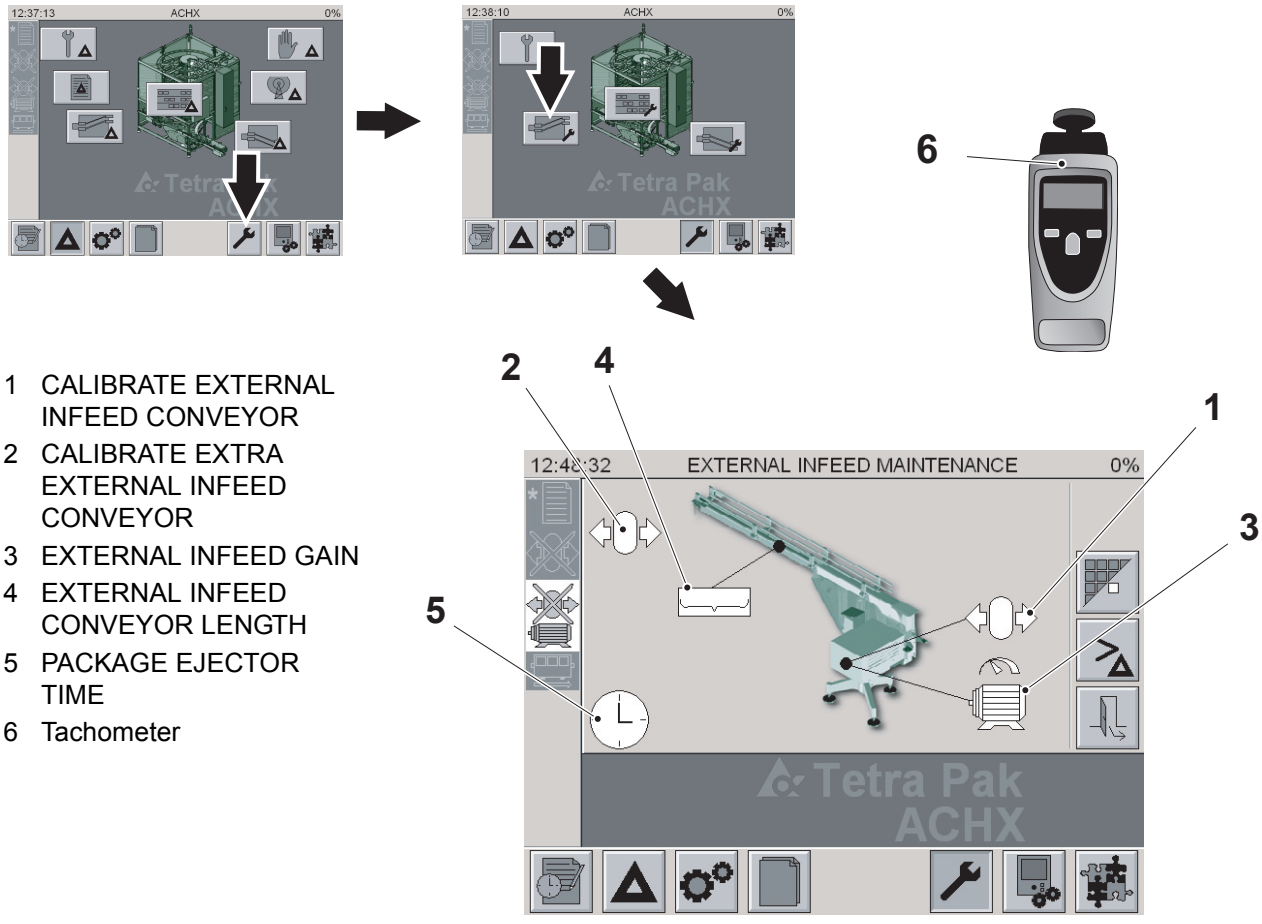

1 CALIBRATE EXTERNAL INFEED CONVEYOR
2 CALIBRATE EXTRA EXTERNAL INFEED CONVEYOR
3 EXTERNAL INFEED GAIN
4 EXTERNAL INFEED CONVEYOR LENGTH
5 PACKAGE EJECTOR TIME
6 Tachometer

(Cont'd)

(Cont'd)

Calibrating Extra External Infeed Conveyor

Note! It is not possible to step up to PRODUCTION until this function has been performed.

When this function is activated, the conveyor runs at 50 Hertz.

a) Press the CALIBRATE EXTRA EXTERNAL INFEED CONVEYOR button (1).

b) Press the START button to start the function.

c) Use a tachometer (6) to measure the speed of the extra external infeed conveyor.

d) Enter the measured meters per minute value.

e) Press the CONFIRM button.

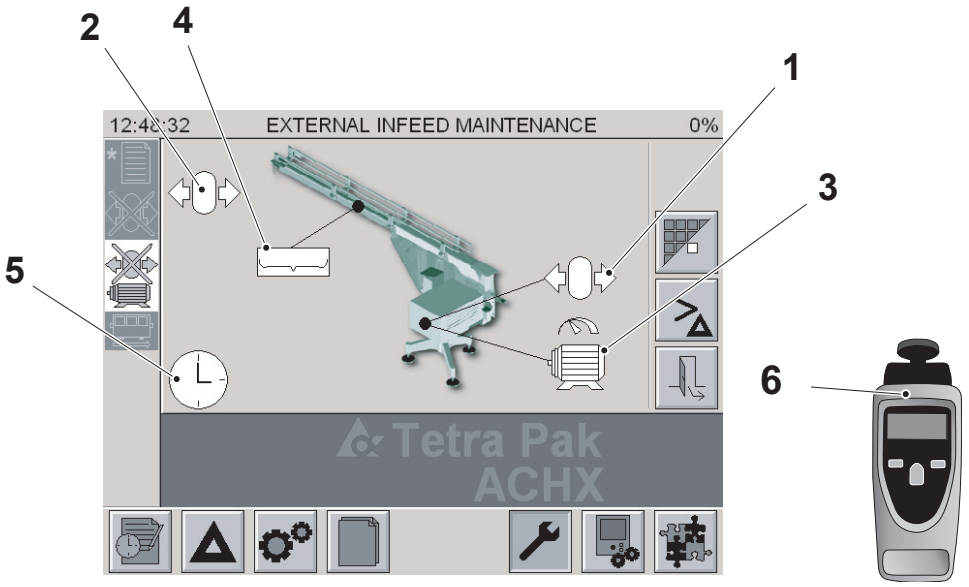

1 CALIBRATE EXTERNAL INFEED CONVEYOR
2 CALIBRATE EXTRA EXTERNAL INFEED CONVEYOR
3 EXTERNAL INFEED GAIN
4 EXTERNAL INFEED CONVEYOR LENGTH
5 PACKAGE EJECTOR TIME
6 Tachometer

Setting External Infeed Gain

The basic machine setup is established in the recipe. (See 4.2.7 Recipe Window.) If fine tuning is needed, adjust the corresponding gain.

Normally this value is 100. To increase or decrease the conveyor speed, modify this value. For example, 110 increases the speed and 90 decreases the speed.

a) Press the EXTERNAL INFEED GAIN button (3)

b) Enter the value.

c) Press the CONFIRM button.

Setting External Infeed Conveyor Length

Purge time depends on conveyor speed and length. To set the length, follow the instructions below.

a) Press the EXTERNAL INFEED CONVEYOR LENGTH button (4).

b) Enter the value.

c) Press the CONFIRM button.

Setting Package Ejector Time

On TWA lines, this setting determines the length of time the package ejector is energized after a condition occurs that causes the ACHX30 to leave the PRODUCTION step.

Set the time for how long it takes all packages to exit the filler conveyor.

a) Press the PACKAGE EJECTOR button (5)

b) Enter the value.

c) Press the CONFIRM button.

4.2.9 System Window

From any of the section Home Windows, press the SYSTEM WINDOW button to display the System Window. The System Sub-Window buttons are displayed.

Pos.	Item	Description	Reference
1	CHANGE LANGUAGE Window	Press this button to access the CHANGE LANGUAGE window.	Refer to the Control Panel section in the OM.
2	USER MANAGEMENT Window	Technicians can log in, log out, and manage passwords.	See 4.2.9.1 User Management Window
3	DIAGNOSTICS	Press this button to view the PanelView system messages.	
4	SHUTDOWN	Press this button to exit the TPOP program.	See 4.2.9.2 Shutdown Confirmation Window

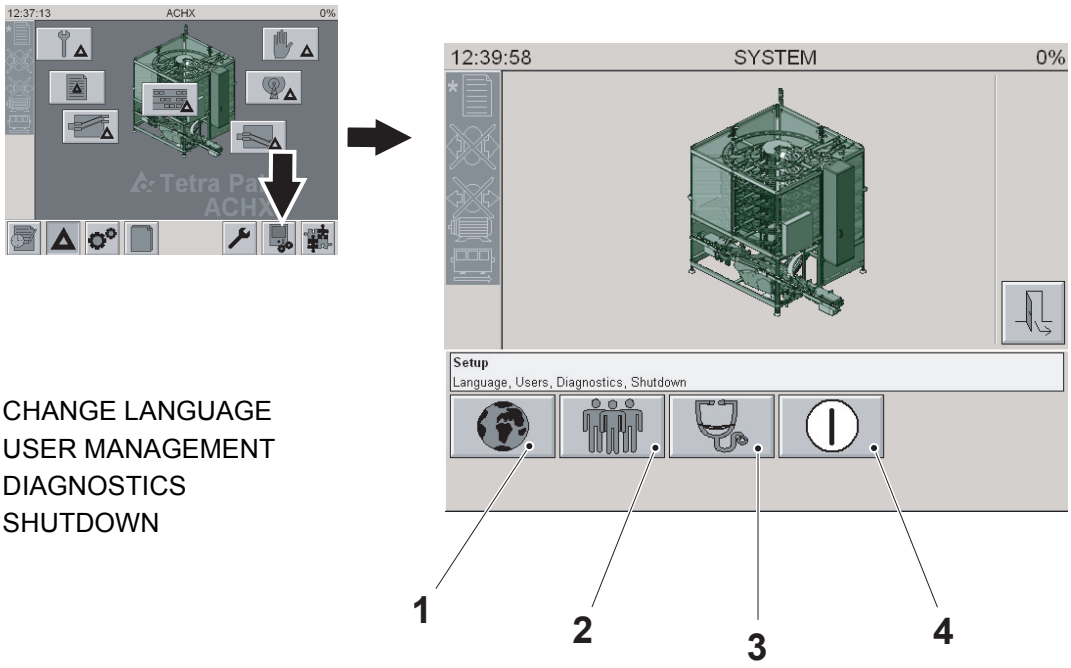

1 CHANGE LANGUAGE
2 USER MANAGEMENT
3 DIAGNOSTICS
4 SHUTDOWN

4.2.9.1 User Management Window

Technicians can log in, log out, and manage passwords from this window.

Pos.	Item	Description
1	LOG IN	Press this button to log in. When the keypad is displayed, type in user name and password.
2	LOG OUT	Press this button to log out to operator status.
3	MANAGE PASSWORDS	Press this button to manage passwords. See Passwords on page 4-118 below for user names and passwords.

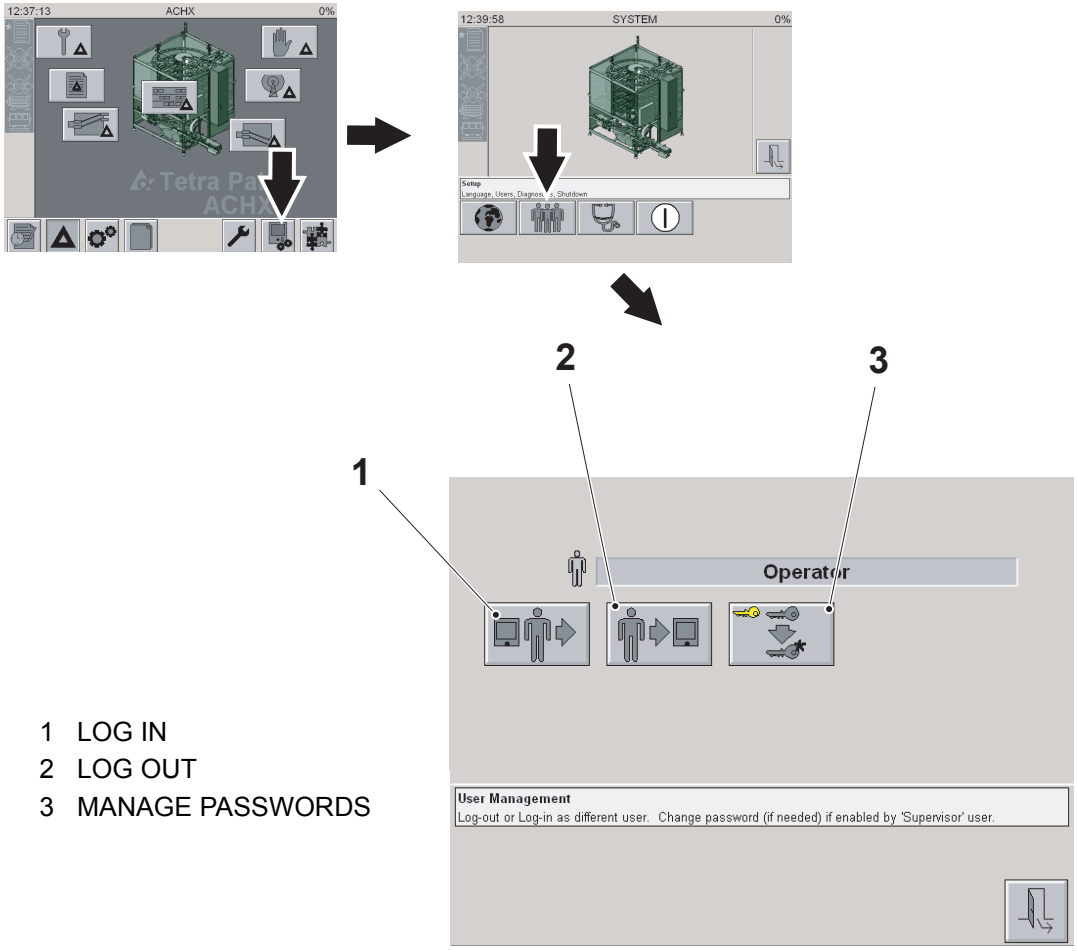

1 LOG IN
2 LOG OUT
3 MANAGE PASSWORDS

(Cont'd)

(Cont'd)

Passwords

When the yellow key (4) is present on TPOP buttons, a password is required to access the corresponding screens or functions.

Status	User Name	Functions	Password
Operator (default user with no log on)	-	-	-
Technician	technician	Delete recipes New recipes Specific settings Specific functions Configuration	custtech
TP Technician	tptechnician	Specific settings Specific functions HMI shutdown HMI diagnostics Specific configuration	not provided
Supervisor	supervisor	Users administration	not provided

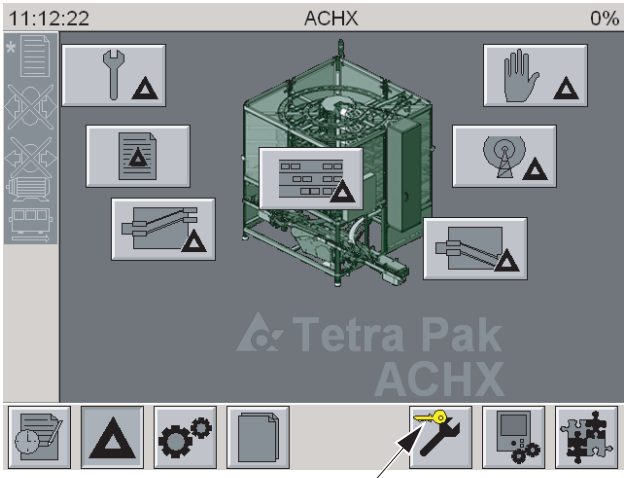

4 Password required notification

4.2.9.2 Shutdown Confirmation Window

The following window prompts the user to confirm (1) the selection to exit the TPOP program.

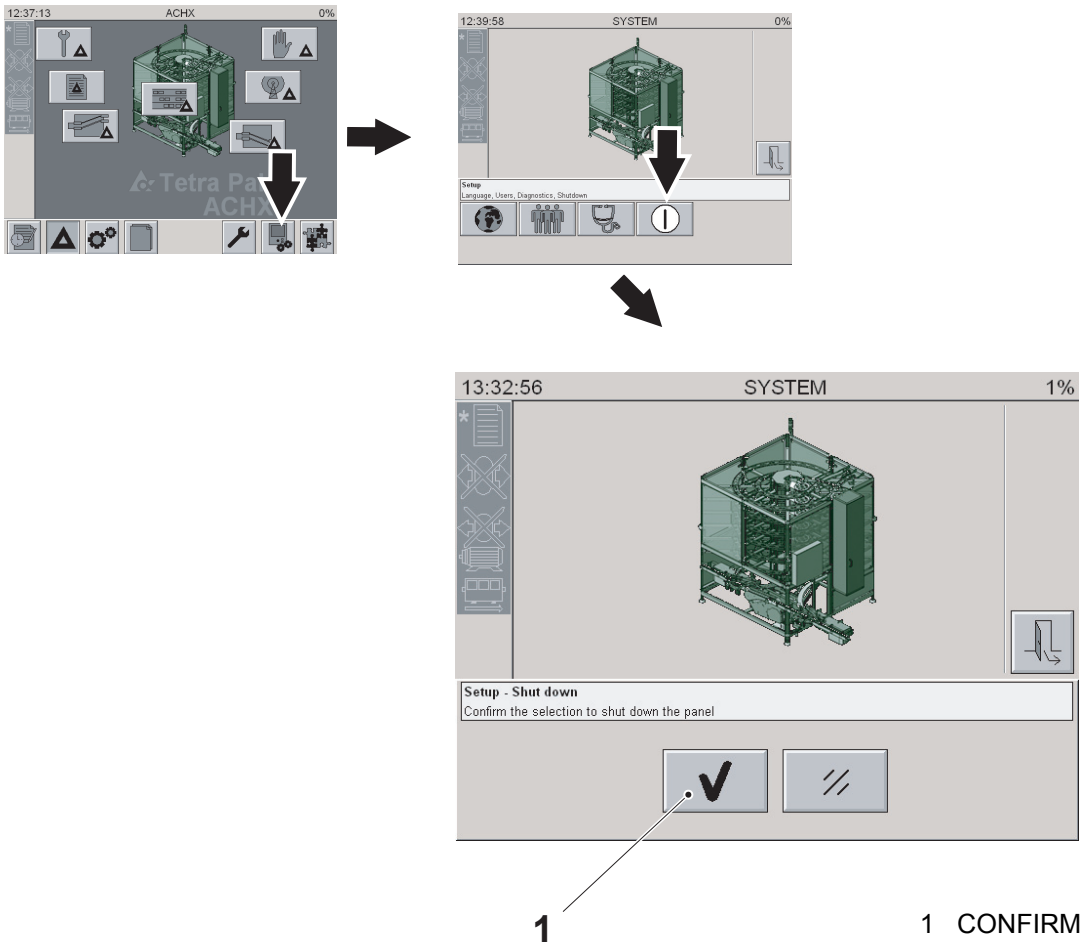

1 CONFIRM

4.2.10 Configuration Window

From any of the section Home Windows, press the CONFIGURATION WINDOW button to display the Configuration Window.

Technicians can enter and modify the machine's configuration parameters from this window.

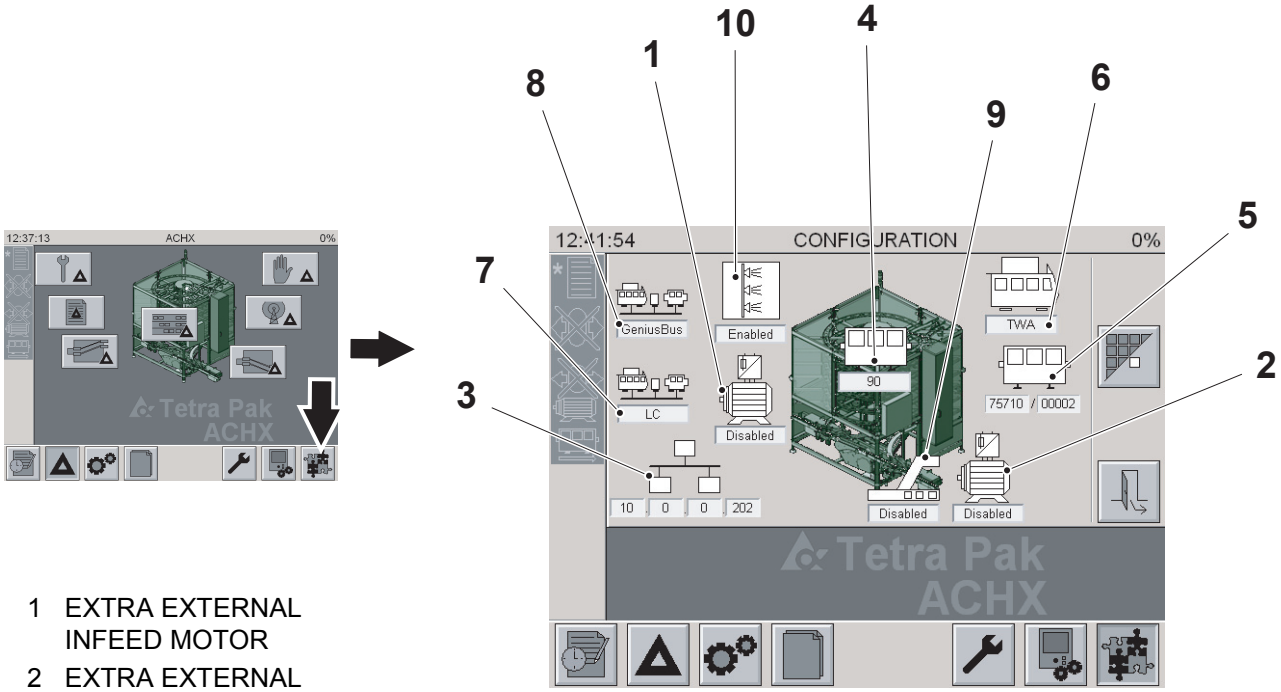

1 EXTRA EXTERNAL INFEED MOTOR
2 EXTRA EXTERNAL OUTFEED MOTOR
3 ETHERNET IP ADDRESS
4 MACHINE VARIANT
5 MACHINE SERIAL NUMBER
6 PACKAGE HANDLING
7 LINE AUTOMATION TYPE
8 PLMS TYPE
9 SWITCH CONNECTED
10 CHAIN CLEANER

(Cont'd)

(Cont'd)

Refer to 4.2.4 General Function and Setting Information for details on how to make selections and enter data.

Extra External Infeed Motor Enable

Press this button to indicate the presence of the optional extra external infeed motor.

a) Press the EXTRA EXTERNAL INFEED MOTOR button (1) to display the input screen.

b) Select the required ON/OFF position.

c) Press the CONFIRM button.

Extra External Outfeed Motor Enable

Press this button to indicate the presence of the optional extra external outfeed motor.

a) Press the EXTRA EXTERNAL OUTFEED MOTOR button (2) to display the input screen.

b) Select the required ON/OFF position.

c) Press the CONFIRM button.

1 EXTRA EXTERNAL INFEED MOTOR
2 EXTRA EXTERNAL OUTFEED MOTOR
3 ETHERNET IP ADDRESS
4 MACHINE VARIANT
5 MACHINE SERIAL NUMBER
6 PACKAGE HANDLING
7 LINE AUTOMATION TYPE
8 PLMS TYPE
9 SWITCH CONNECTED
10 CHAIN CLEANER

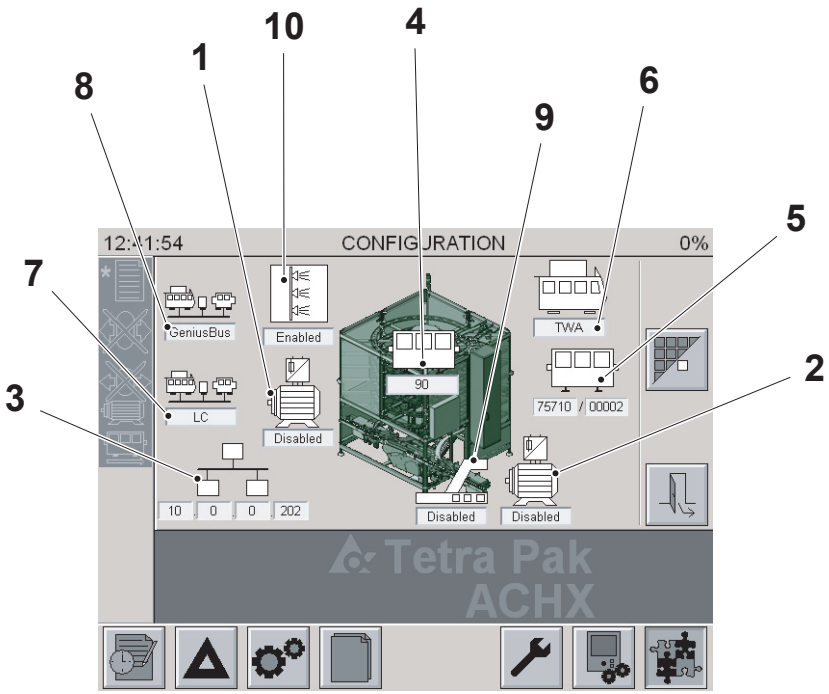

Ethernet IP Address

Note! TP technician login is required to access this function.

Press this button to change the Ethernet IP address of the PLC.

a) Press the ETHERNET IP ADDRESS button (3).
b) Push the icon in the input window for the value to be changed.
c) Enter the address value.
d) Press the CONFIRM button.
e) Repeat the above procedure to change the next value.

Machine Variant

Note! TP technician login is required to access this function.

Press this button to select the machine variant.

a) Press the MACHINE VARIANT button (4).
b) Select the appropriate variant from the list.
c) Press the CONFIRM button.

Machine Serial Number

Note! TP technician login is required to access this function.

Press this button to enter the machine type and serial number.

a) Press the MACHINE SERIAL NUMBER button (5).
b) Push the icon in the input window for the value to be changed.
c) Enter the appropriate value.
d) Press the CONFIRM button.
e) Repeat the above procedure to change the next value.

Package Handling

Note! TP technician login is required to access this function.

Press this button to select the package type.

a) Press the PACKAGE HANDLING button (6).
b) Select the appropriate package type from the list.
c) Press the CONFIRM button.

(Cont'd)

(Cont'd)

Line Automation Type

Note! TP technician login is required to access this function.

Press this button to select the method of line automation.

a) Press the LINE AUTOMATION TYPE button (7).
b) Select the appropriate automation line type from the list.
c) Press the CONFIRM button.

PLMS Type

Note! TP technician login is required to access this function.

Press this button to select the PLMS type.

a) Press the PLMS TYPE button (8).
b) Select the appropriate PLMS type from the list.
c) Press the CONFIRM button.

(Gate Indicator) Switch Connected

Press this button to select the presence of the gate indicator switch on the external outfeed conveyor.

Note! This selection is only visible If the LC Line Automation Type is selected.

a) Press the SWITCH CONNECTED button (9) to display the input screen.
b) Select the required ON/OFF position. (Select ON if the switch is present or OFF if the switch is not present.)
c) Press the CONFIRM button.

Chain Cleaner Enable (option)

Press this button to indicate the presence of the optional chain cleaner.

a) Press the CHAIN CLEANER button (9) to display the input screen.
b) Select the required ON/OFF position.
c) Press the CONFIRM button.

(Cont'd)

(Cont'd)

1 EXTRA EXTERNAL INFEED MOTOR
2 EXTRA EXTERNAL OUTFEED MOTOR
3 ETHERNET IP ADDRESS
4 MACHINE VARIANT
5 MACHINE SERIAL NUMBER
6 PACKAGE HANDLING
7 LINE AUTOMATION TYPE
8 PLMS TYPE
9 SWITCH CONNECTED
10 CHAIN CLEANER

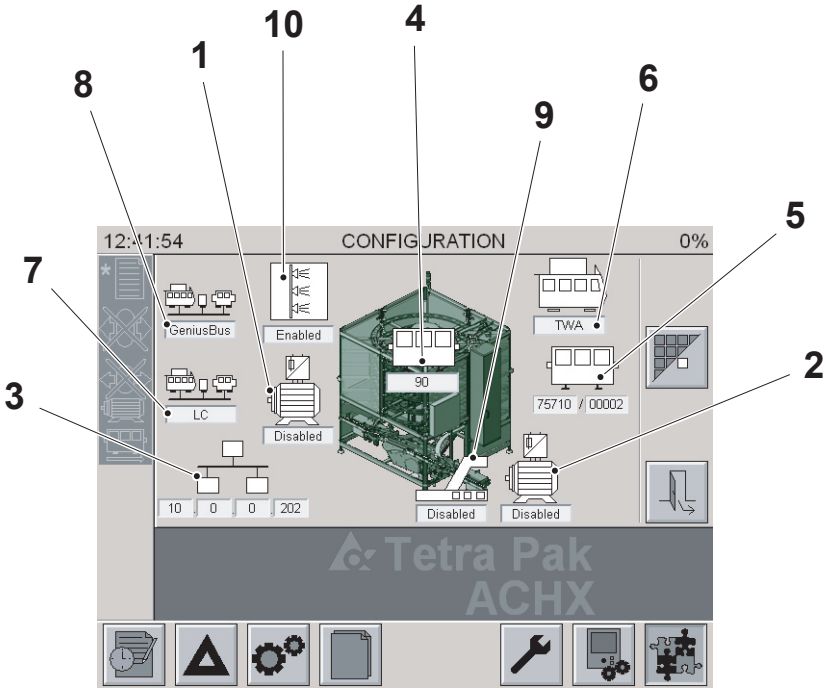

4.2.11 TPOP Communications Configuration

4.2.11.1 Default Settings

Software CD	3039934-0001
Program Name	3039942-1001 3039936_1001_A 3039936_1001_B 3039936_1001_C
IP Address	10.0.4.202
Subnet Mask	255.255.0.0

4.2.11.2 TPOP Preparation

Perform the following instructions only if the TPOP is being replaced.

a) Copy the contents of the HMI Preparation folder from the CD to an empty CompactFlash card.

b) With the power ON and the FactoryTalk View ME Station screen displayed, insert the CompactFlash card into the TPOP. The HMI Preparation program will run automatically.

c) When the program completes, remove the CompactFlash card, press the FILE menu, and press CLOSE. The TPOP will reset automatically.

(Cont'd)

(Cont'd)

4.2.11.3 Program Installation

Language Table

3039936_1001_A	3039936_1001_B	3039936_1001_C
Danish	Bosnian	Arabic
Dutch	Bulgarian	Simplified Chinese
English	Croatian	Traditional Chinese
Finnish	Czech	English
French	English	Farsi
German	Estonian	Japanese
Greek	Macedonian	Korean
Icelandic	Hungarian	Malay
Italian	Latvian	Thai
Norwegian	Lithuanian	Vietnamese
Polish	Romanian	
Portuguese	Russian	
Spanish	Serbian	
Swedish	Slovak	
Turkish	Slovenian	

There are two sources from which the program can be loaded into the TPOP.

CompactFlash Card

a) Remove the CompactFlash card from the CompactLogix PLC and insert the card into the TPOP.

b) Use the File Management function in the Terminal Settings to copy and load the program file.

OR

CD

a) Copy the program file from the CD to the PC desktop.

b) Make an Ethernet connection between the PC and the TPOP.

c) Use the FactoryTalk ME Transfer Utility to load the program into the TPOP.

(Cont'd)

(Cont'd)

4.2.11.4 Troubleshooting

Note! After the TPOP program begins execution, it can take several minutes for the TPOP-PLC communications to be established.

Problem	Possible Cause
There is no power at TPOP.	The main power disconnector is OFF.
	Either A01F0002 or A01F0005 is tripped.
The TPOP is not communicating with the PLC.	The RJ45 Ethernet connectors are not properly seated on the TPOP and the PLC.
	The PLC is not in RUN mode.
	The PLC is faulted.

4.3 Electrical Equipment

4.3.1 Electrical Components Overview

The illustrations below show the general location of all electrical components on the machine.

4.3.1.1 Electrical Components

Left Infeed (LINF)

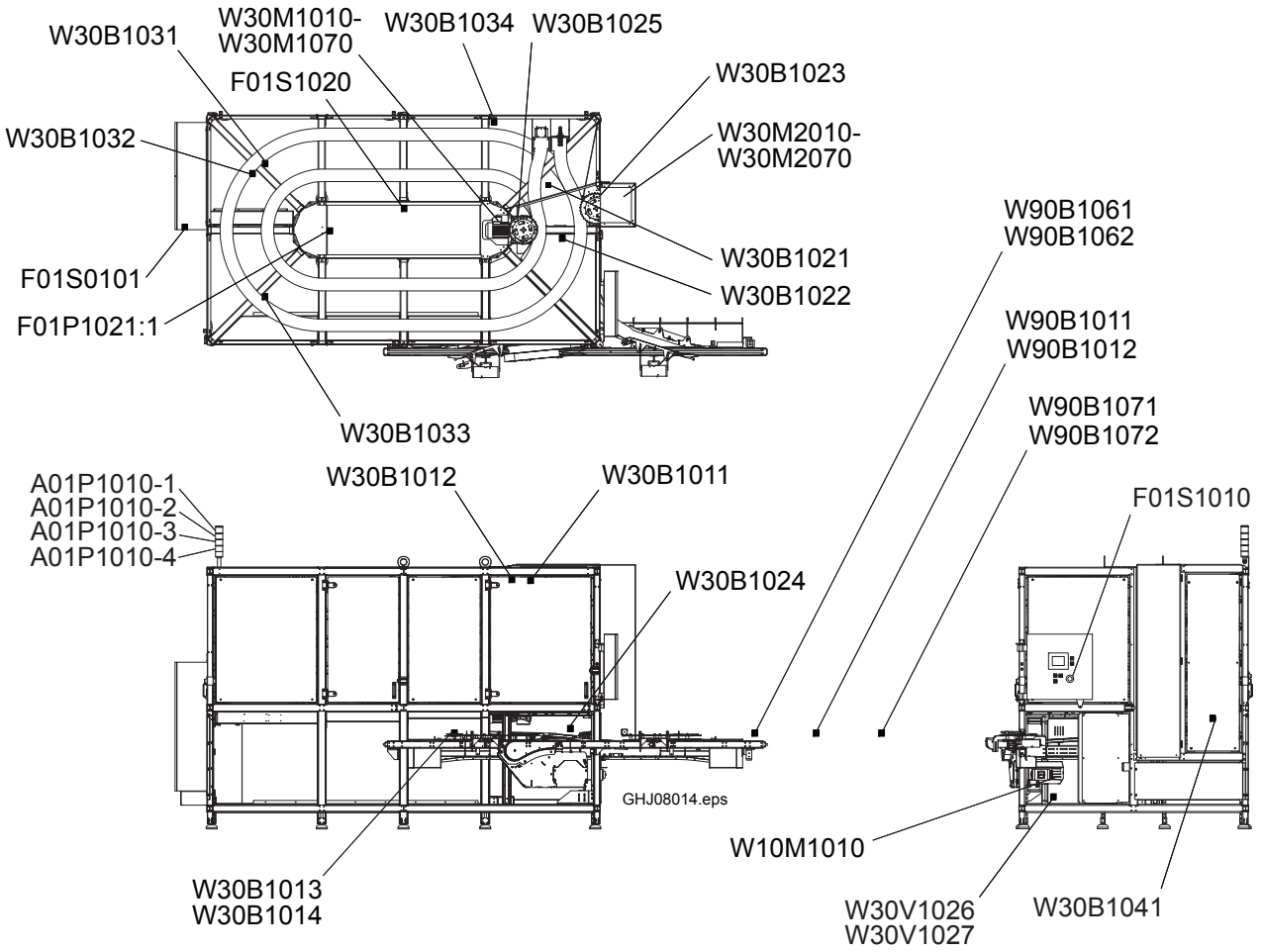

(Cont'd)

(Cont'd)

Right Infeed (RINF)

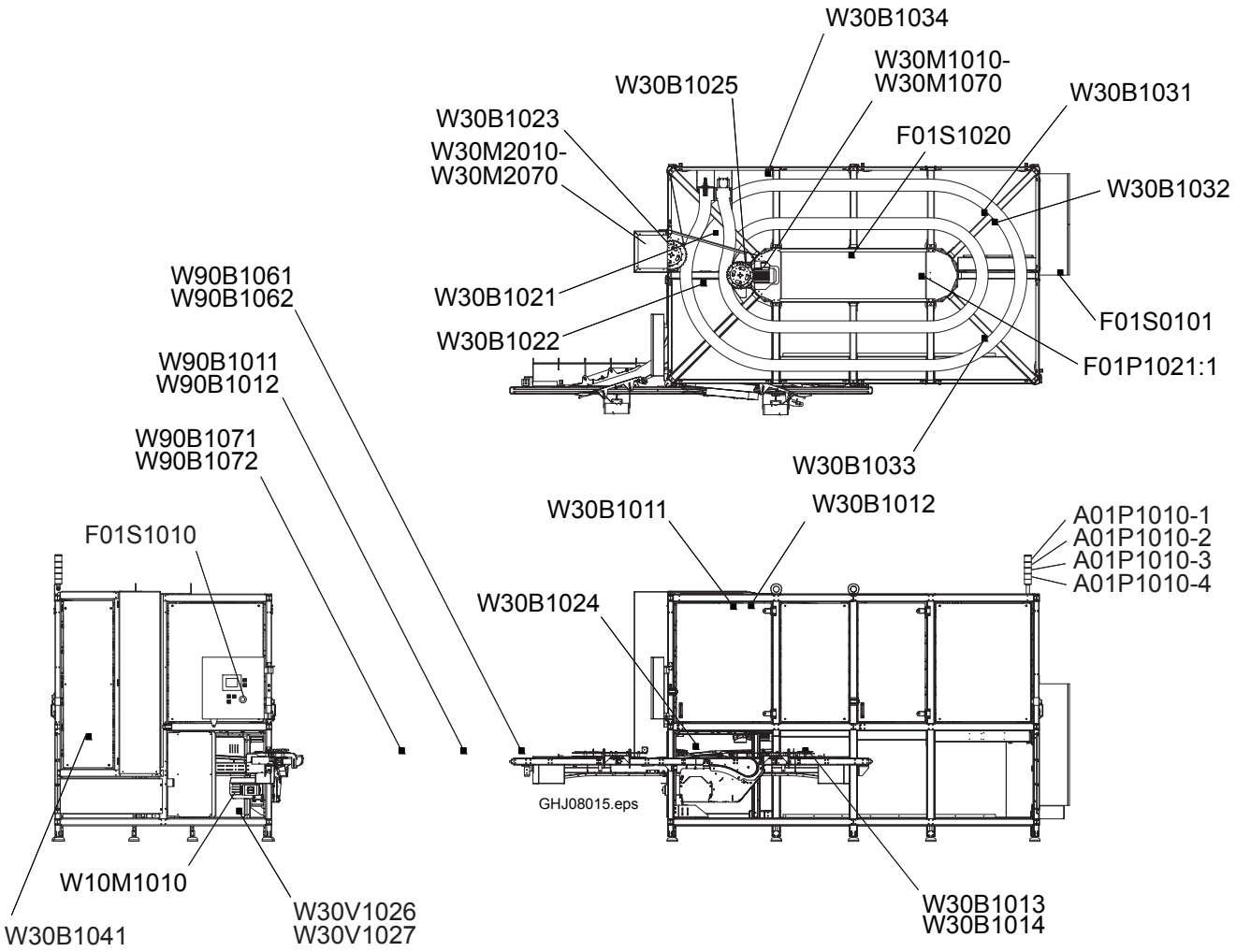

4.3.1.2 Door Switches

Left Infeed (LINF)

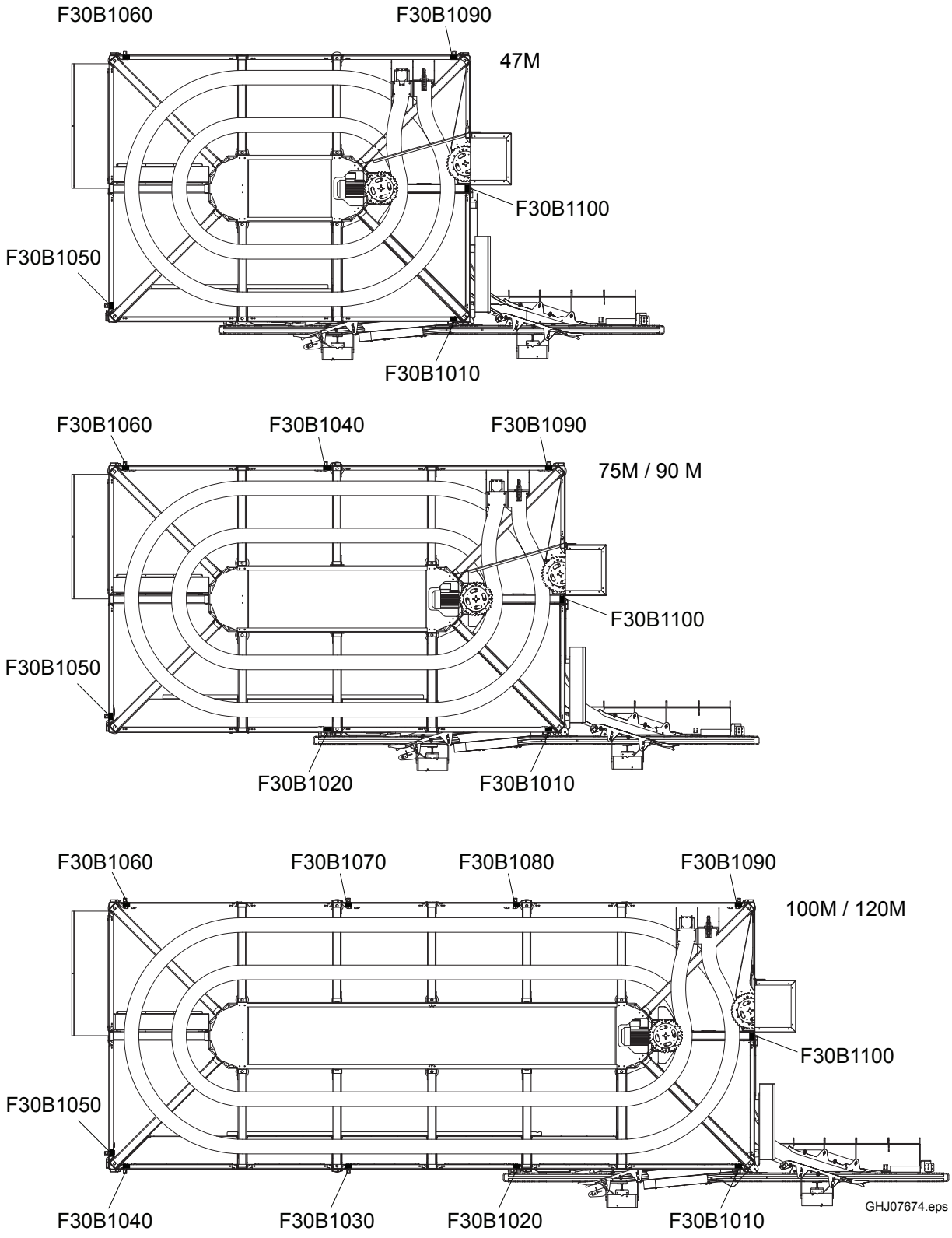

Right Infeed (RINF)

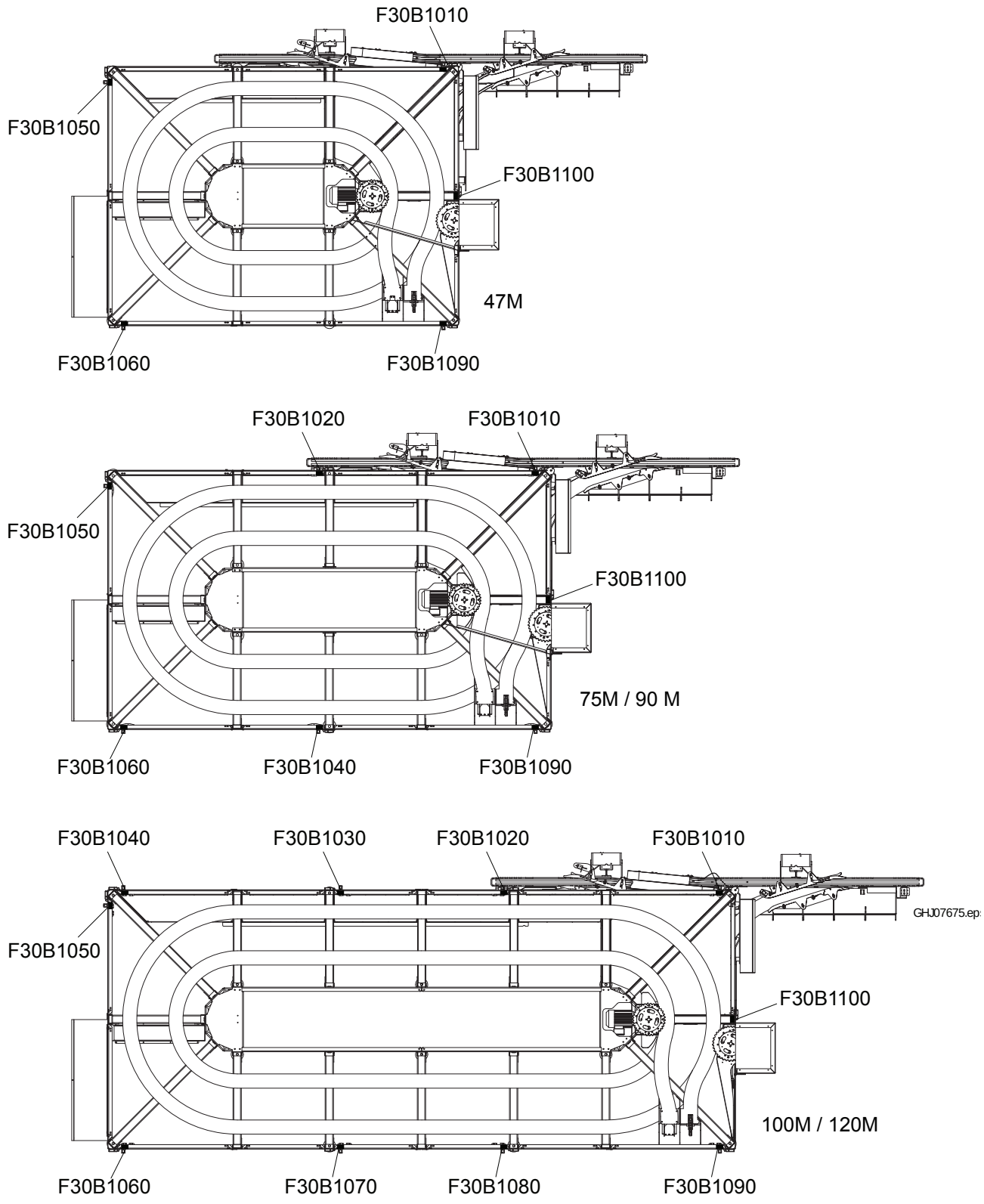

4.3.2 Photocells

There are two types of photocells on the ACHX30:

- Emitter-Receiver
- Reflecting

PHOTOCELL NUMBER(S)	PHOTOCELL DESCRIPTION	TYPE OF PHOTOCELL
W30B1014 / W30B1013	PRODUCT AT INFEED	Emitter-Receiver
W90B1012 / W90B1011	PRIMARY DOWNSTREAM QUEUE	
W90B1072 / W90B1071	PRIMARY DOWNSTREAM OVERFLOW	
W90B1042 / W90B1041	ALTERNATE DOWNSTREAM QUEUE	
W90B1052 / W90B1051	ALTERNATE DOWNSTREAM OVERFLOW	
W90B1062 / W90B1061	PACKAGE COUNTER	
W30B1024	OUTFEED JAM	Reflecting
W30B1031	FALLEN PACK #1	
W30B1032	FALLEN PACK #2	
W30B1033	FALLEN PACK #3	
W30B1034	FALLEN PACK #4	

4.3.2.1 Photocell - Emitter-Receiver Type

The function of each photocell is as follows:

Photocell	Numbers	Description	Note
Product at Infeed	W30B1014 (Emitter) W30B1013 (Receiver)	The package infeed conveyor runs at the speed required for accumulation as this photocell is blocked and unblocked by the product.	
Primary Downstream Queue	W90B1012 (Emitter) W90B1011 (Receiver)	When the package queue is backed up from downstream equipment, photocell W90B1011 is blocked and the package outfeed conveyor stops. The distance setting should ensure no backup into the outfeed conveyor of the machine.	These photocells apply when there is a single-outfeed line or if there is a dual-outfeed line and the Gate Indicator (W90B1030) proximity switch is off.
Primary Downstream Overflow	W90B1072 (Emitter) W90B1071 (Receiver)	When photocell W90B1071 is blocked and photocell W90B1011 is clear, the package outfeed conveyor runs at the designated low speed. If photocell W90B1071 is clear, the package outfeed conveyor runs at the designated high speed. The outfeed photocell distance is typically according to the position for required infeed queue at downstream DE equipment. When the distance for photocells W90B1011 and W90B1071 is set, all future adjustments of the photocells for line conditions should maintain the original distance between the photocells and DE equipment.	
Alternate Downstream Queue	W90B1042 (Emitter) W90B1041 (Receiver)	When the package queue is backed up from downstream equipment, photocell W90B1041 is blocked and the package outfeed conveyor stops. The distance setting should ensure no backup into the outfeed conveyor of the machine.	These photocells apply when there is a dual-outfeed line and the Gate Indicator (W90B1030) proximity switch is on.
Alternate Downstream Overflow	W90B1052 (Emitter) W90B1051 (Receiver)	When photocell W90B1051 is blocked and photocell W90B1041 is clear, the package outfeed conveyor runs at the designated low speed. If photocell W90B1051 is clear, the package outfeed conveyor runs at the designated high speed. The outfeed photocell distance is typically according to the position for required infeed queue at downstream DE equipment. When the distance for photocells W90B1041 and W90B1051 is set, all future adjustments of the photocells for line conditions should maintain the original distance between the photocells and DE equipment.	

(Cont'd)

(Cont'd)

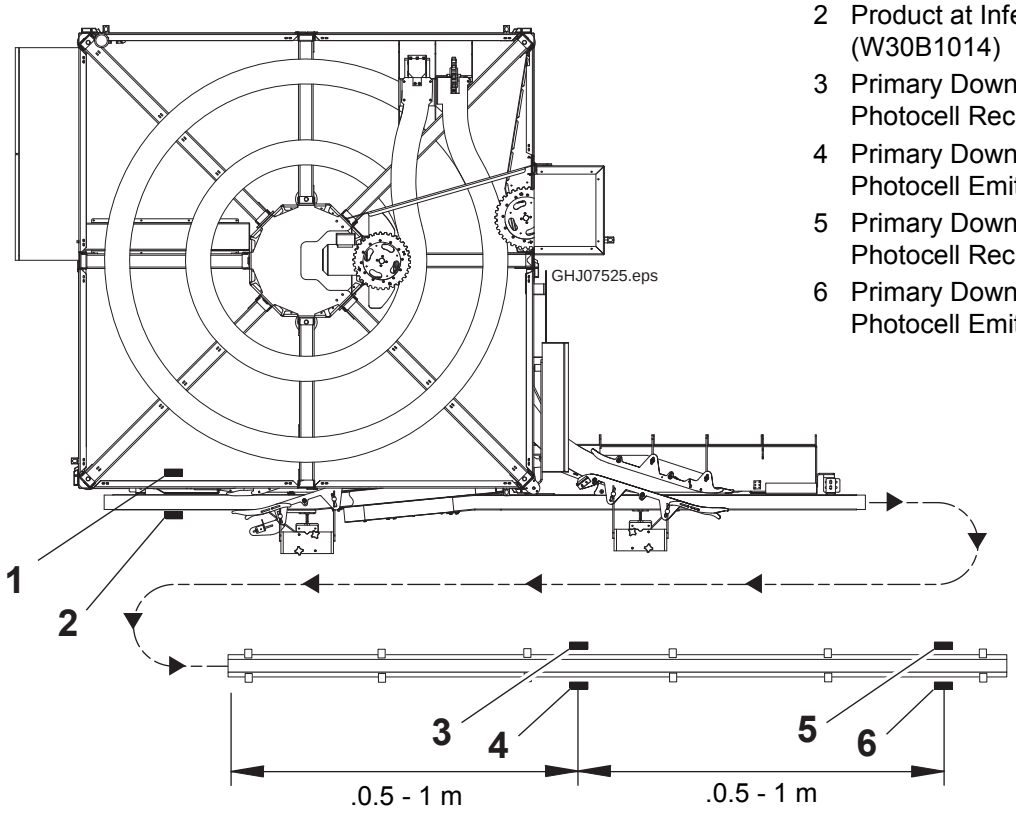

1 Product at Infeed Photocell Receiver (W30B1013)
2 Product at Infeed Photocell Emitter (W30B1014)
3 Primary Downstream Queue Photocell Receiver (W90B1011)
4 Primary Downstream Queue Photocell Emitter (W90B1012)
5 Primary Downstream Overflow Photocell Receiver (W90B1071)
6 Primary Downstream Overflow Photocell Emitter (W90B1072)

Note! Refer to the Installation Instructions for additional layout information.

(Cont'd)

(Cont'd)

4.3.2.1-1 Photocell - Emitter-Receiver Type - Check Sensitivity

See 4.3.2.2-4 Photocell - Emitter-Receiver and Reflecting Type - Check Sensitivity to check the sensitivity.

4.3.2.1-2 Photocell - Emitter-Receiver Type - Set Sensitivity

Machine Status	Power Supply Disconnector ON
SPC Reference	2948916-0100 2948909-0100

To adjust the sensitivity, perform the following steps:

a) Before adjusting the sensitivity, make sure the emitters and receivers are aligned.

b) Set the sensitivity adjuster (1) on the receiver to achieve a steady green light on the stability indicator (2).

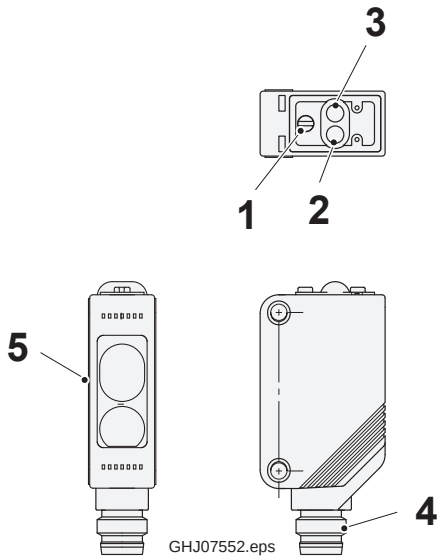

1 Sensitivity adjuster
2 Stability indicator (green)
3 Operation indicator (orange)
4 M8 connector
5 Receiver

4.3.2.2 Photocell - Reflecting Type

The function of each photocell is as follows:

PHOTOCELL NUMBER	PHOTOCELL NAME	PHOTOCELL DESCRIPTION
W30B1024	OUTFEED JAM PHOTOCELL	The outfeed jam photocell, located on the outfeed conveyor, detects outfeed package jams.
W30B1031	FALLEN PACK #1 PHOTOCELL	The ACHX30 is equipped with a fallen package system. If more than three packages fall off the conveyors within 20 seconds, the ACHX30 stops. Three pairs of photocells located on the machine frame sense if any package falls off the conveyors.
W30B1032	FALLEN PACK #2 PHOTOCELL	
W30B1033	FALLEN PACK #3 PHOTOCELL	
W30B1034	FALLEN PACK #4 PHOTOCELL	

Note! If a fallen package alarm occurs while the machine is not running or if the alarm cannot be reset, the photocells are misaligned.

4.3.2.2-1 Photocell - Reflecting Type - Check Alignment

Machine Status	Power Supply Disconnector ON
SPC Reference	3008985-0100 2948906-0100

Note! You only need to check the alignment on the Outfeed Jam photocell. If you should have a misalignment on the Fallen Pack photocells, you will get a Fallen Package alignment alarm when the machine is not running.

Check the alignment of the Outfeed Jam photocell and reflector:

a) Check that the Outfeed Jam photocell and reflector are aligned as indicated.

b) Check that the mounting screws in the mounting brackets are tightened.

4.3.2.2-2 Photocell - Reflecting Type - Adjust Alignment

Machine Status	Power Supply Disconnector ON
SPC Reference	3008985-0100 2948906-0100

If the fallen package system photocells or reflectors become misaligned, they can be adjusted as follows:

a) Loosen the screws in the photocell and reflector brackets. Align each photocell and reflector so that the **ON** LED on the photocell stays on.

b) Re-tighten the screws.

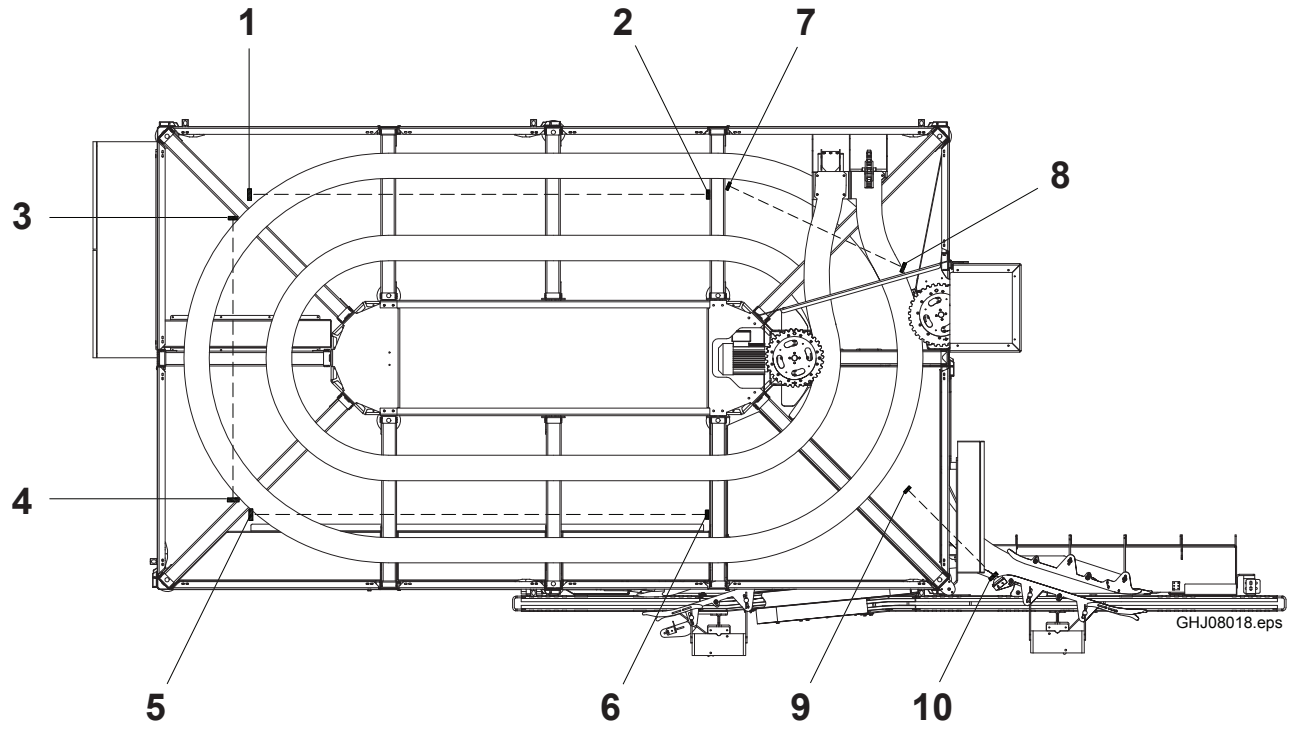

1 Photocell (W30B1031)
2 Reflector (W30B1031)
3 Photocell (W30B1032)
4 Reflector (W30B1032)
5 Photocell (W30B1033)
6 Reflector (W30B1033)
7 Photocell (W30B1034)
8 Reflector (W30B1034)
9 Photocell (W30B1024)
10 Reflector (W30B1024)

4.3.2.2-3 Photocell - Reflecting Type - Set Sensitivity

Machine Status	Power Supply Disconnector ON
SPC Reference	3008985-0100 2948906-0100

Outfeed Jam Photocell

To adjust the sensitivity, perform the following steps:

a) Make sure the operation selector (2) is set to D (dark-on mode).

b) Before setting the sensitivity, check that the alignment is correct according to 4.3.2.2-1 Photocell - Reflecting Type - Check Alignment.

c) Set the sensitivity adjuster to maximum (4).

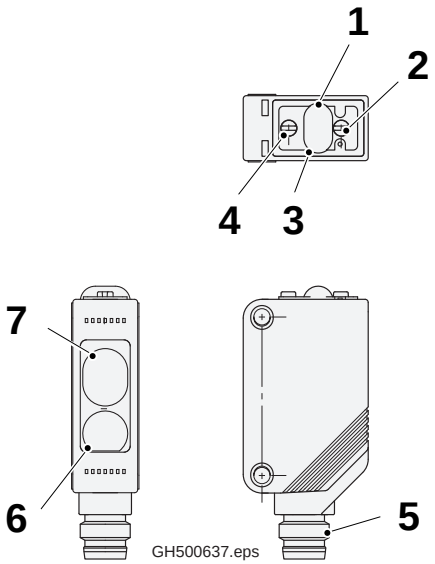

1 Operation indicator (orange)
2 Operation selector
3 Stability indicator (green)
4 Sensitivity adjuster
5 M8 connector
6 Emitter
7 Receiver

(Cont'd)

(Cont'd)

Fallen Pack Photocell

To adjust the sensitivity, perform the following steps:

a) Before setting the sensitivity, check that the alignment is correct according to 4.3.2.2-1 Photocell - Reflecting Type - Check Alignment.

b) Set the sensitivity adjuster (1) to maximum.

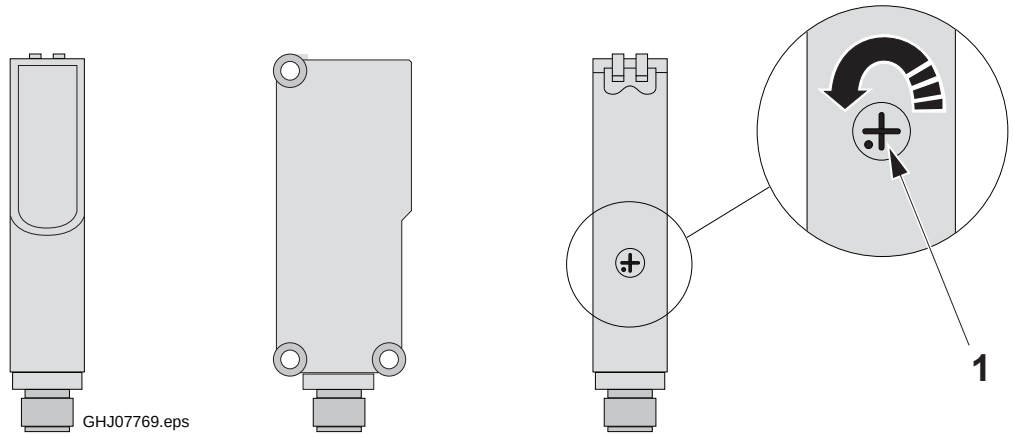

1 Sensitivity adjuster

4.3.2.2-4 Photocell - Emitter-Receiver and Reflecting Type - Check Sensitivity

Machine Status	Power Supply Disconnector ON
SPC Reference	3008985-0100 2948906-0100 2948916-0100 2948909-0100

Color	Indicator	Description
Orange	Operation	The operation indicator illuminates when the sensor receives the amount of light that the sensor is adjusted for. Output is ON.
Green	Stability	The stability indicator illuminates when a range of +/- 20% of the threshold is left. This allows a 20% safety margin in both ON and OFF conditions.

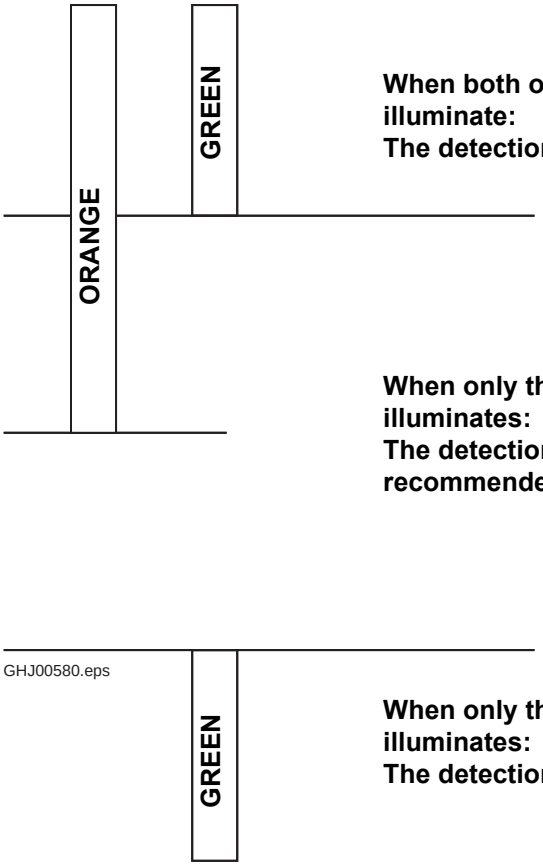

When both orange and green indicators illuminate:
The detection is stable ON.

When only the orange indicator illuminates:
The detection is unstable and it is recommended to adjust the sensor.

When only the green indicator illuminates:
The detection is stable OFF.

4.3.3 Proximity Switches

Number	Description
W30B1041	CHAIN TENSION CHECK
W30B1021	MACHINE EMPTY
W30B1011	MACHINE FULL
W30B1025	PROXIMITY ON INFEED SPROCKET
W30B1023	PROXIMITY ON OUTFEED SPROCKET
W90B1030	GATE INDICATOR

4.3.3-1 Proximity Switches - Set

Machine Status	Power Supply Disconnector ON
SPC Reference	2948915-0100 2948919-0100 2948926-0100 2948946-0100

WARNING

Risk of injuries!

Moving parts could cause serious injuries.

TP number 90600-0462

Set the gap A between the inductive transmitter and the metal surface to be sensed.

Note! If the nut (1) is less than 2 mm from the edge (2), the bracket must be adjusted to avoid a false signal.

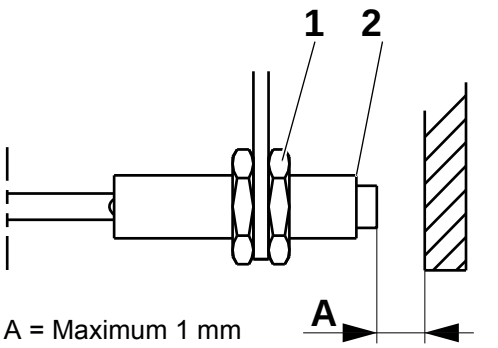

1 Nut
2 Edge

4.3.4 Motors

		Variants				
Number	**Description**	47M	75M	90M	100M	120M
A01M0010	COOLING FAN	X	X	X	X	X
A01M0011	COOLING FAN	X	X	X	X	X
W30M1010	INFEED MOTOR	X	X	X	X	X
W30M1020	INFEED MOTOR	X	X	X	X	X
W30M1030	INFEED MOTOR	X	X	X	X	X
W30M1040	INFEED MOTOR		X	X	X	X
W30M1050	INFEED MOTOR		X	X	X	X
W30M1060	INFEED MOTOR		X	X	X	X
W30M1070	INFEED MOTOR			X		X
W10M1010	EXTERNAL INFEED MOTOR	X	X	X	X	X
W30M2010	OUTFEED MOTOR	X	X	X	X	X
W30M2020	OUTFEED MOTOR	X	X	X	X	X
W30M2030	OUTFEED MOTOR	X	X	X	X	X
W30M2040	OUTFEED MOTOR		X	X	X	X
W30M2050	OUTFEED MOTOR		X	X	X	X
W30M2060	OUTFEED MOTOR		X	X	X	X
W30M2070	OUTFEED MOTOR			X		X
W30M3010	CHAIN CLEANER (OPTION)	X	X	X	X	X
W90M1010	EXTERNAL OUTFEED MOTOR (not included with machine)					
W10M1020	EXTRA EXTERNAL INFEED MOTOR (not included with machine)					
W90M1020	EXTRA EXTERNAL OUTFEED MOTOR (not included with machine)					

4.3.5 Switches

Number	Description
F01S0101	EMERGENCY STOP
F01S1010	EMERGENCY STOP
F01S1020	EMERGENCY STOP
F30B1010	DOOR
F30B1020	DOOR
F30B1030	DOOR
F30B1040	DOOR
F30B1050	DOOR
F30B1060	DOOR
F30B1070	DOOR
F30B1080	DOOR
F30B1090	DOOR
F30B1100	DOOR
W30B1012	SPIDER UPPER OVERTRAVEL
W30B1022	SPIDER LOWER OVERTRAVEL

4.3.6 Warnings

Number	Description
F01P1021	WARNING - ALARM
A01P1010:1	WARNING LAMP - RED
A01P1010:2	WARNING LAMP - YELLOW
A01P1010:3	WARNING LAMP - BLUE
A01P1010:4	WARNING LAMP - GREEN

4.3.7 Terminals

Number	Description
A01X0000	TERMINAL (GROUND)
A01X0020	TERMINAL (LUBE and GENIUS)
A01X0030	TERMINAL (NEUTRAL)
A01X0040	TERMINAL
A01X0050	TERMINAL (GROUND)
A01X0060	TERMINAL (DEVICENET)
A01X1101	TERMINAL (OPERATOR PANEL)
A01XL010	TERMINAL
A01XL011	TERMINAL
A01XL013	TERMINAL
F01X0090	TERMINAL (SAFETY)

4.3.8 Miscellaneous

Number	Description
W30V1026	RINSE
W30V1027	WATER MIST
W30V3014	BRUSH TRAY (OPTION)
W30V3015	SOAP (OPTION)
W30V3017	AIR KNIFE (OPTION)
W30V3023	SCRUBBER AIR (OPTION)
W10V1030	PACKAGE EJECTOR
A01K0010	CONVEYOR LUBE TO UPSTREAM CONVEYOR
A01K0011	CONVEYOR LUBE TO DOWNSTREAM CONVEYOR

This page intentionally left blank

5 Optional Equipment

Description

SPC Reference	663603-0200

Below is a list of optional equipment available for the ACHX30-0500:

- Caster Wheel Kit (No maintenance required)
- Genius (Refer to 4.1.5 Genius Module (option) and the EM.)
- SNP (Refer to 4.1.4 SNP Module (option) and the EM.)
- Chain Cleaner (Refer to 5.1 Chain Cleaner.)

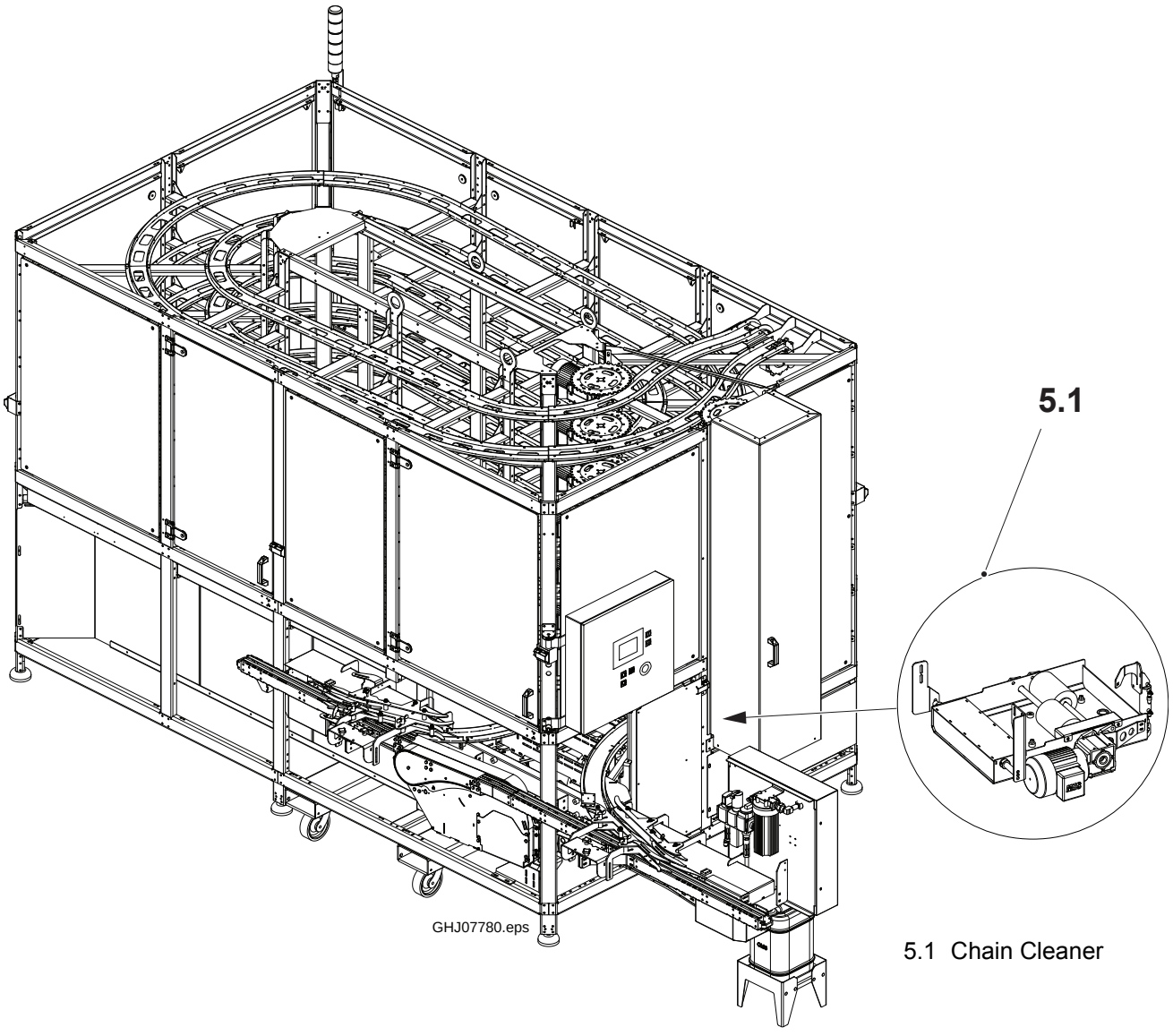

5.1 Chain Cleaner

Functional Description . . . . . 5 - 5

5.1 Chain Cleaner . . . . . 5 - 6

5.1.1 Valve Panel . . . . . 5 - 6

5.1.1-1 Filters - Check . . . . . 5 - 6
5.1.1-2 Air Filter - Change . . . . . 5 - 6
5.1.1-3 Water Filter - Change . . . . . 5 - 7
5.1.1-4 Dosing Unit - Set . . . . . 5 - 8

5.1.2 Scrubber Unit . . . . . 5 - 9

5.1.2-1 Bearings - Lubricate . . . . . 5 - 9
5.1.2-2 Bearings - Check . . . . . 5 - 10
5.1.2-3 Bearings - Change . . . . . 5 - 11
5.1.2-4 Brushes - Check . . . . . 5 - 13
5.1.2-5 Brushes - Set . . . . . 5 - 14
5.1.2-6 Brushes - Change . . . . . 5 - 15
5.1.2-7 Spur Gears - Check . . . . . 5 - 18
5.1.2-8 Spur Gears - Change . . . . . 5 - 19

This page intentionally left blank

Functional Description

The chain cleaner system is designed to clean the conveyor chains using soap, water, and air. This chapter describes the maintenance required for the chain cleaner.

5.1 Chain Cleaner

5.1.1 Valve Panel

5.1.1-1 Filters - Check

Machine Status	Power Supply Disconnector OFF Air Valve OFF
SPC Reference	3008908-0100

Check the air and water filters for excessive dirt and sediment.

5.1.1-2 Air Filter - Change

Machine Status	Power Supply Disconnector OFF Air Valve OFF
SPC Reference	3008908-0100

a) Turn the air supply control valve to OFF and follow lockout / tagout procedures.

b) Release the tab (2) on the air filter housing (3) and remove the housing.

c) Replace the filter (4) and reinstall the filter housing (3).

d) Remove the lockout / tagout equipment and turn the air supply control valve (1) to ON.

e) Check for leaks.

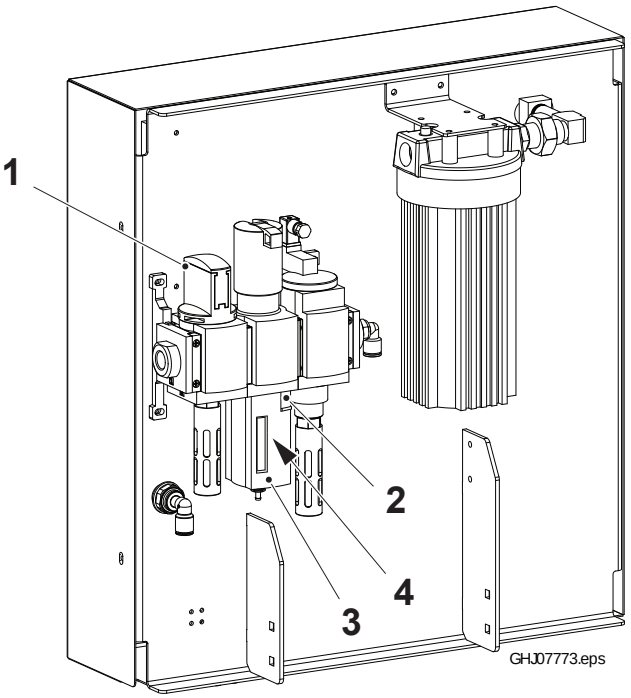

1 Valve
2 Tab
3 Housing
4 Filter

5.1.1-3 Water Filter - Change

Machine Status	Power Supply Disconnector OFF
SPC Reference	3008908-0100

a) Turn the water supply control valve to OFF and follow lockout / tagout procedures.

b) Press and hold the red pressure release button (1) on top of the water filter (2) until water flow stops, indicating it is safe to remove the filter housing (3).

c) Turn the filter housing (3) counter clockwise (as viewed from the bottom of the filter) and remove.

d) Replace the filter (2) and reinstall the filter housing (3).

e) Remove the lockout / tagout equipment and turn the water supply control valve to ON.

f) Check for leaks.

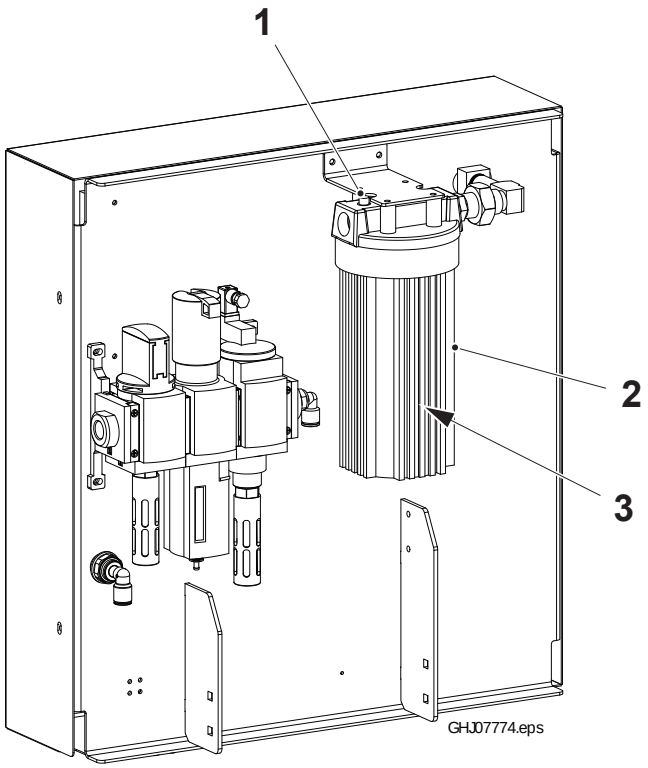

1 Button
2 Housing
3 Filter

5.1.1-4 Dosing Unit - Set

Machine Status	Power Supply Disconnector OFF
SPC Reference	3008908-0100

Set the dosing units to a percentage of 1.5% by rotating the adjustment sleeve (1) on the bottom of the unit. Rotate the sleeve (1) until the indicator (2) lines up with the desired percentage.

- The percentage can be adjusted up or down to achieve proper cleaning.
- The percentage of soap varies depending on product and machine conditions.

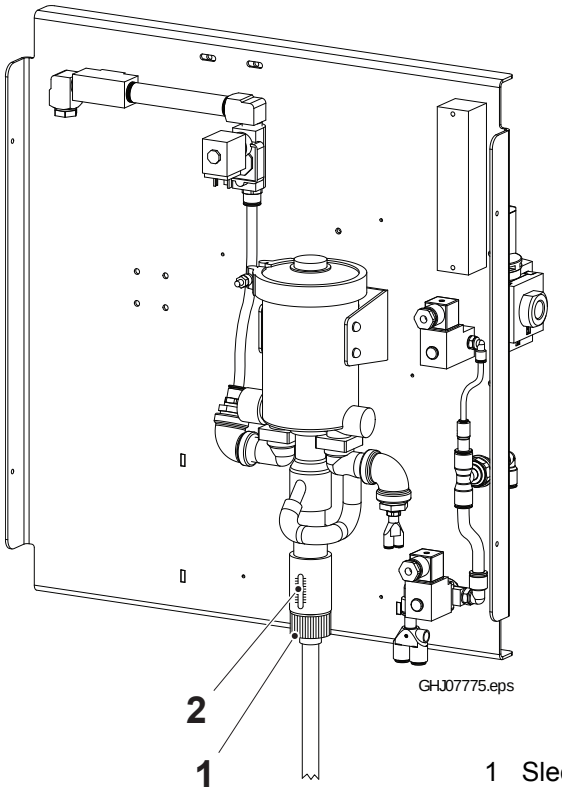

1 Sleeve
2 Indicator

5.1.2 Scrubber Unit

5.1.2-1 Bearings - Lubricate

Machine Status	Power Supply Disconnector OFF
SPC Reference	3008909-0100

a) Using a grease gun with food-grade grease, lubricate the bearings through the grease fittings (1).

b) Fill with approximately 0.1 cm³ of grease.

c) Dry off all lubricant that comes out of the grease fitting or bearing.

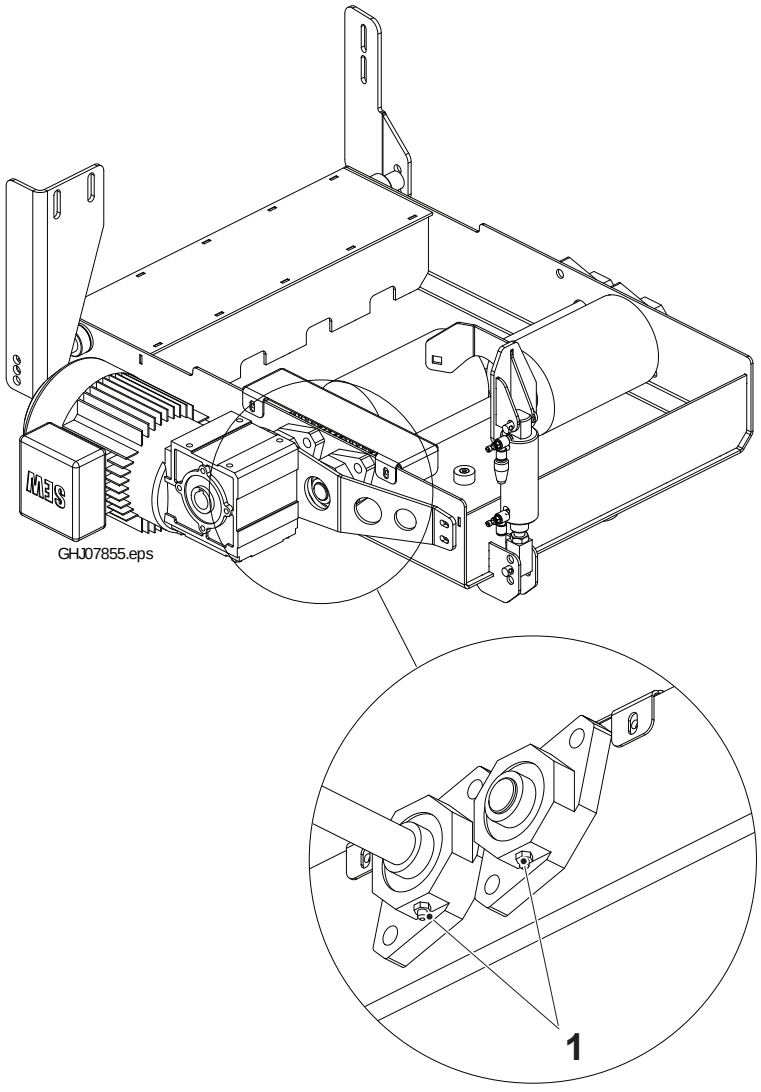

1 Grease fitting

5.1.2-2 Bearings - Check

Machine Status	Power Supply Disconnector OFF
SPC Reference	3008909-0100

a) Check the bearings (1,2,3,4) for wear.

b) Move each brush shaft (5,6) to check for radial play. If play is greater than 0.5 mm, replace the bearings.

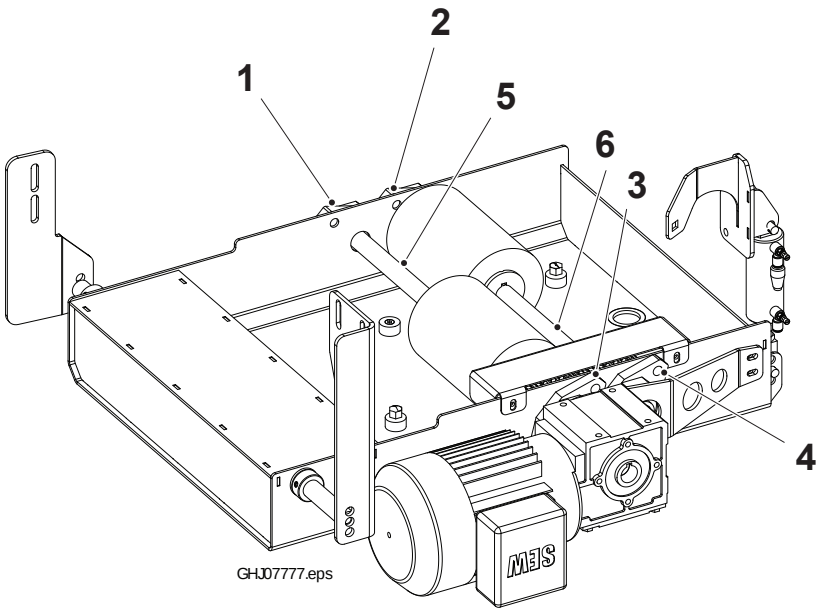

1 Bearing
2 Bearing
3 Bearing
4 Bearing
5 Shaft
6 Shaft

5.1.2-3 Bearings - Change

Machine Status	Power Supply Disconnector OFF
SPC Reference	3008909-0100

a) Remove the two mounting bolts (1) and cover (2).

b) Remove the cap (3) from the gearbox hollow shaft.

c) Remove the bolt (4) and washer (5) from the shaft end.

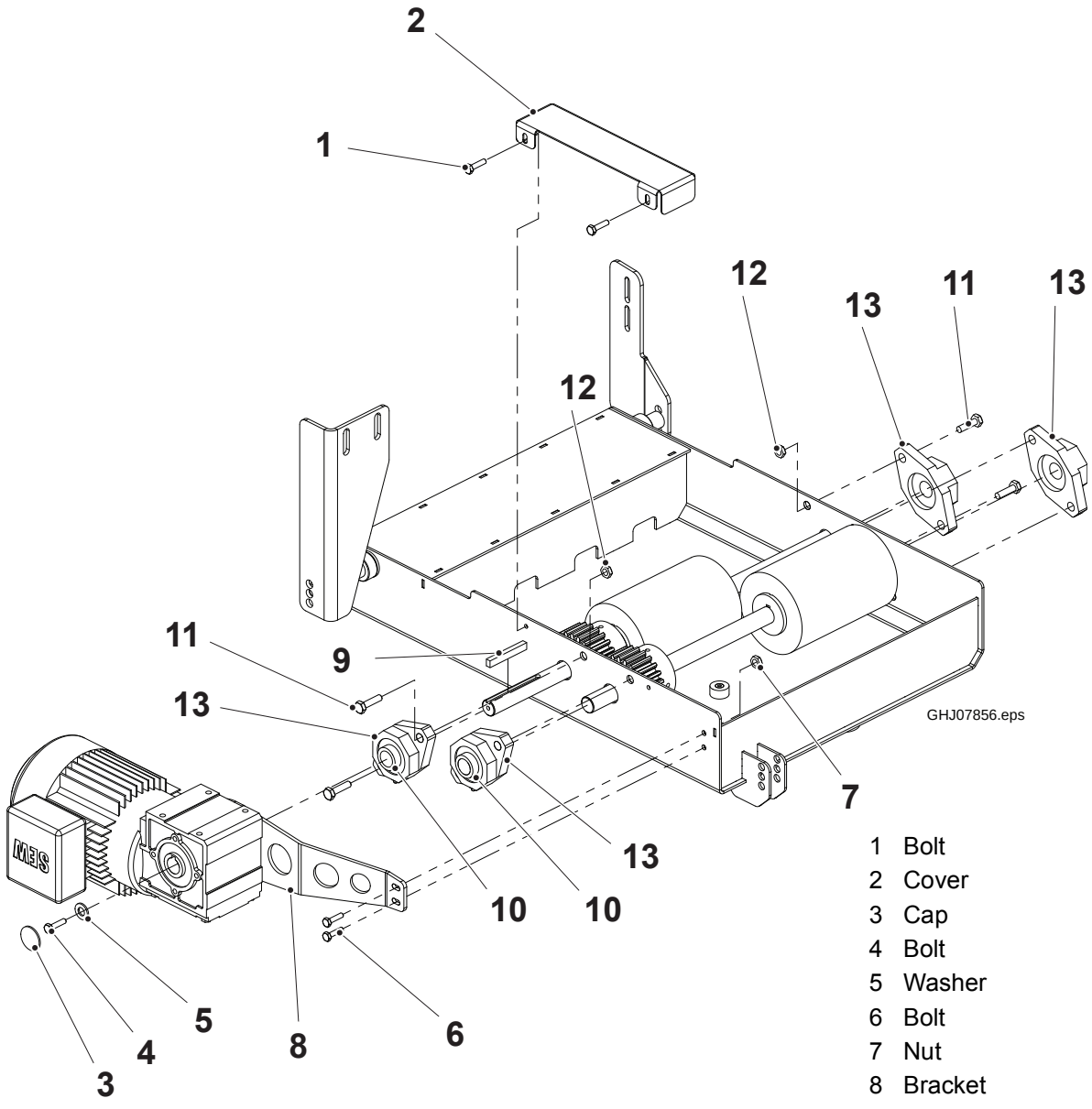

1 Bolt
2 Cover
3 Cap
4 Bolt
5 Washer
6 Bolt
7 Nut
8 Bracket
9 Key
10 Setscrew
11 Bolt
12 Nut
13 Bearing

(Cont'd)

(Cont'd)

d) Remove bolts (6) and nuts (7) to remove the motor mount bracket (8).

e) Slide the gearmotor and motor mount bracket off the main drive shaft. Be sure to support the gearmotor to prevent straining the electrical cable.

CAUTION
Retain the shaft key (9) as it will become free / loose as the shaft is removed from the gearbox.

f) Loosen the setscrew (10) in all four bearing rings.

g) Remove the bolts (11) and nuts (12) from the bearings (13).

h) Remove the bearings (13).

i) Change the bearings (13) and reassemble in reverse order.

5.1.2-4 Brushes - Check

Machine Status	Power Supply Disconnector OFF
SPC Reference	3008909-0100

Check that both brushes (1,2) contact the chain completely when the chain cleaner is in the up position. Recommended engagement is 1.5 mm - 3 mm. If brush positions need to be adjusted, refer to 5.1.2-5 Brushes - Set.

Note! If the pan is within 4mm of the chain and the recommended engagement is not achieved, the brushes are worn and need to be replaced.

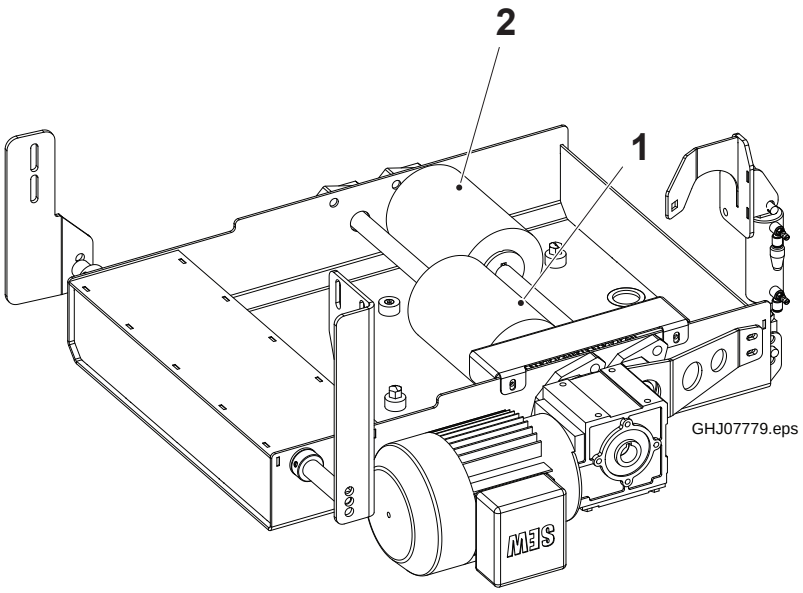

1 Brush
2 Brush

5.1.2-5 Brushes - Set

Machine Status	Power Supply Disconnector OFF
SPC Reference	3008909-0100

Both brushes (1,2) should contact the chain completely when the chain scrubber is in the up position. Recommended engagement is 1.5 mm - 3 mm (1/16” to 1/8”).

Adjust the rear hanger brackets (3,4) up or down on each side or adjust the air cylinder rod (5) to compensate for brush wear.

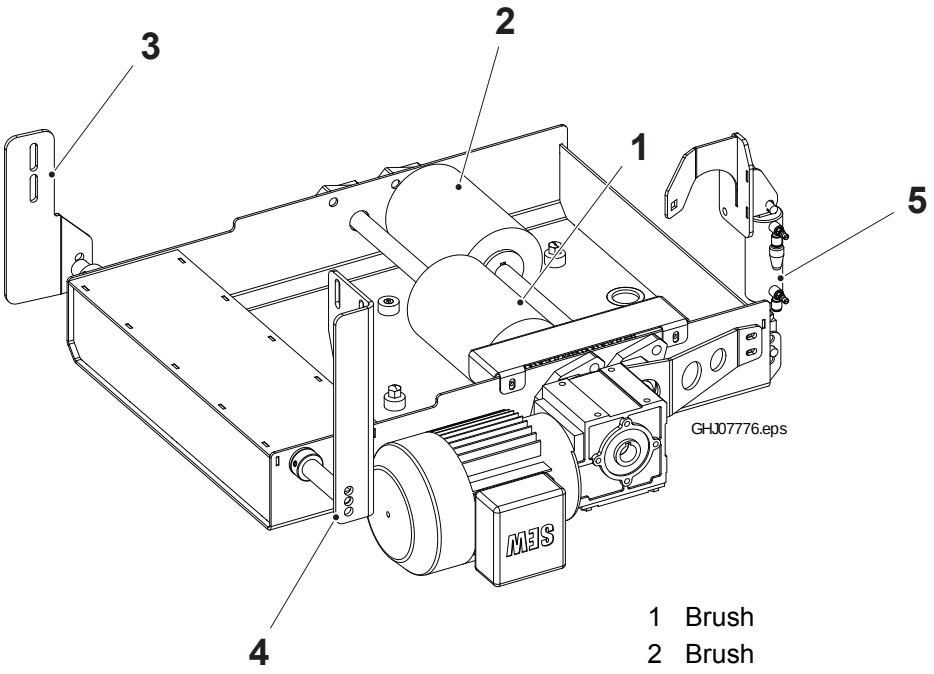

1 Brush
2 Brush
3 Bracket
4 Bracket
5 Cylinder rod

5.1.2-6 Brushes - Change

Machine Status	Power Supply Disconnector OFF
SPC Reference	3008909-0100

a) Remove the two mounting bolts (1) and cover (2).

b) Remove the cap (3) from the gearbox hollow shaft.

c) Remove the bolt (4) and washer (5) from the shaft end.

d) Loosen the setscrews (6) in all four bearing rings.

e) Loosen the setscrews (7) (four per brush) in the ends of the brushes (8,9).

f) Loosen the setscrews (10) (two per gear) in the hub of the gears (11,12).

g) Slide the main drive shaft (13) away from the gearbox to remove the gear (10) and brush (8) from the shaft.

CAUTION
Retain the shaft key (14), as it will become free / loose as the shaft is removed from the gearbox.

1 Bolt
2 Cover
3 Cap
4 Bolt
5 Washer
6 Setscrew
7 Setscrew
8 Brush
9 Brush
10 Setscrew
11 Gear
12 Gear
13 Shaft
14 Key
15 Shaft

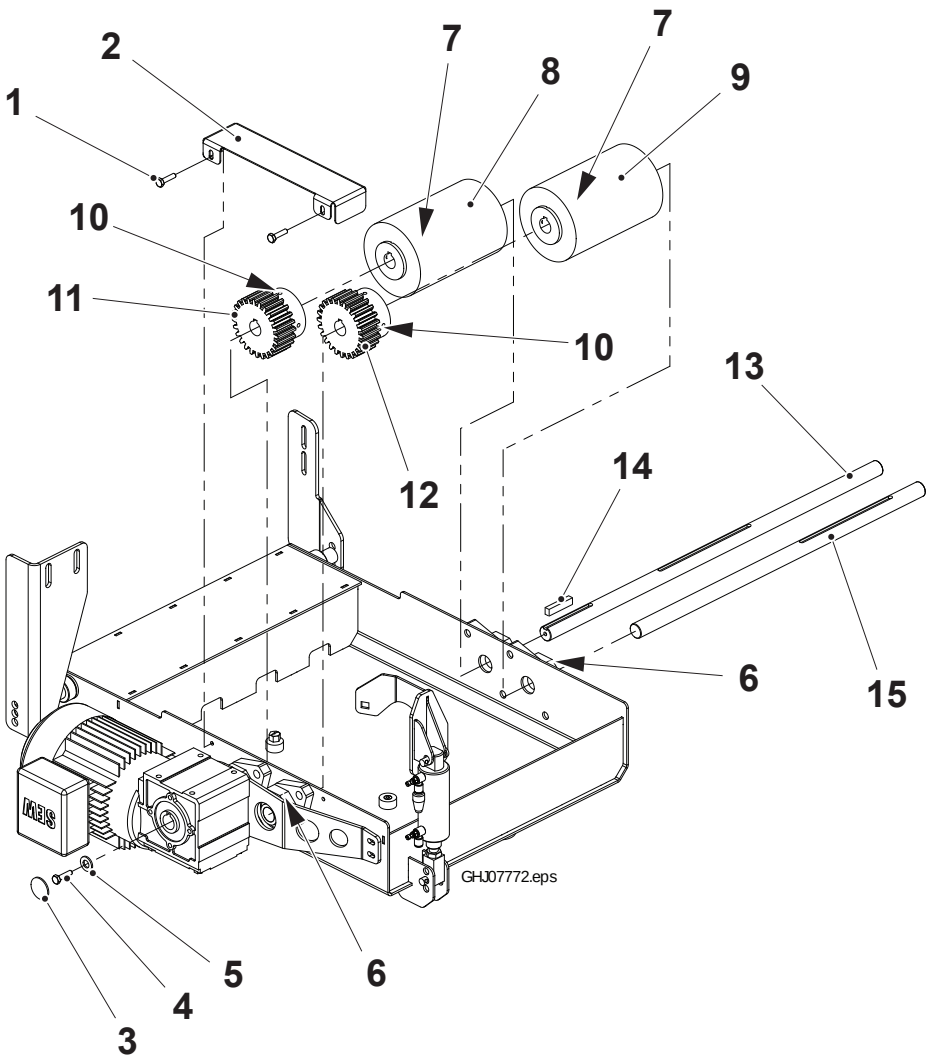

(Cont'd)

(Cont'd)

h) Slide the secondary shaft (15) away from the gearbox to remove the gear (12) and brush (9) from the shaft.

i) Discard the old brushes.

j) Install the new brush (9) on the secondary shaft (15) as it is slid toward the gearbox.

k) Reinstall the gear (12) on the secondary shaft (15) as it is slid toward the gearbox and into the bearing unit.

l) Install the new brush (8) on the main drive shaft (13) as it is slid toward the gearbox.

m) Reinstall the gear (11) on the main drive shaft (13) as it is slid toward the gear box and into the bearing unit.

n) Position the shaft key (14) inside the hollow shaft of the gearbox and continue sliding the main drive shaft (13) into the gearbox.

1 Bolt
2 Cover
3 Cap
4 Bolt
5 Washer
6 Setscrew
7 Setscrew
8 Brush
9 Brush
10 Setscrew
11 Gear
12 Gear
13 Shaft
14 Key
15 Shaft

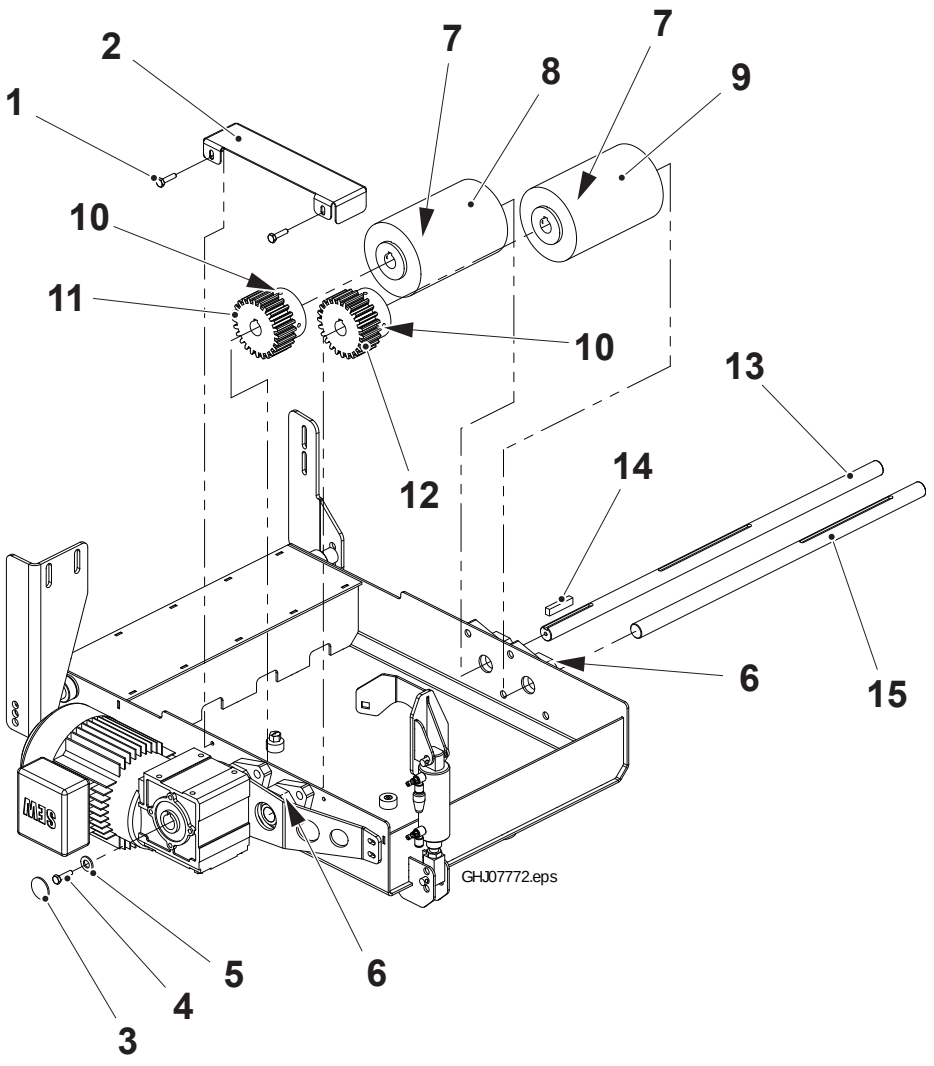

(Cont'd)

(Cont'd)

o) Install the washer (5) and bolt (4) into the end of the main drive shaft (13).

p) Install the cap (3) in the gearbox hollow shaft.

q) Tighten all setscrews (6,7,10) in the brushes, gears, and bearing rings.

r) Position the cover (2) and install the two mounting bolts (1).

s) Refer to 5.1.2-5 Brushes - Set to achieve proper engagement of the new brushes.

5.1.2-7 Spur Gears - Check

Machine Status	Power Supply Disconnector OFF
SPC Reference	3008909-0100

a) Remove bolts (1).

b) Remove cover (2).

c) Check that the setscrews (3) in the brushes (4) and spur gears (5) are secure but not over-tightened.

d) Check the spur gears (5) for wear. Replace if necessary.

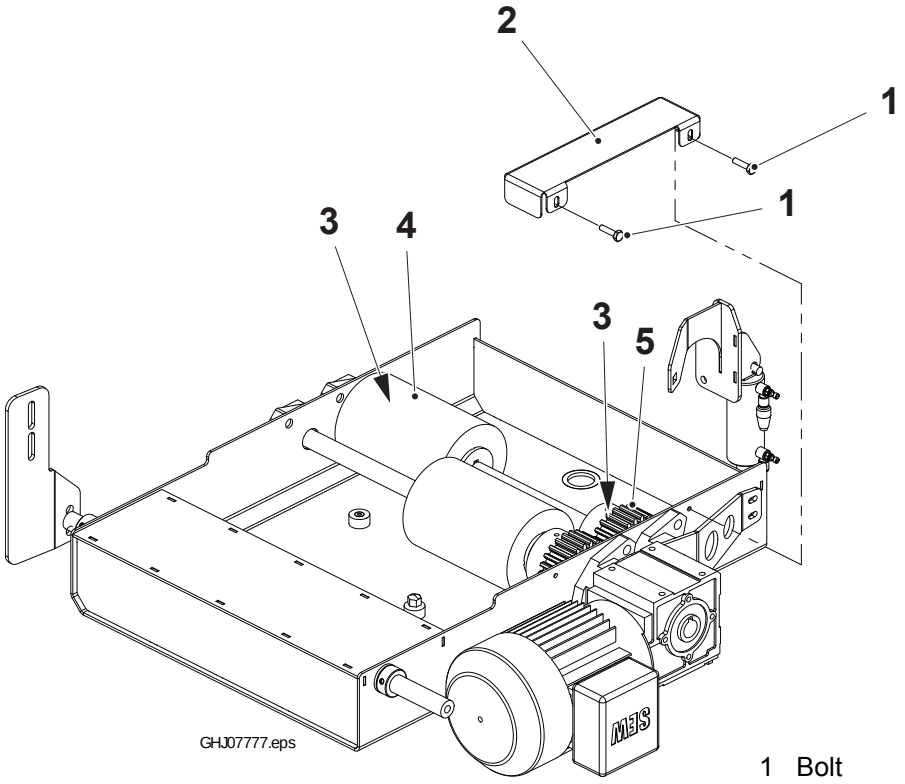

1 Bolt
2 Cover
3 Setscrew
4 Brush
5 Gear

5.1.2-8 Spur Gears - Change

Machine Status	Power Supply Disconnector OFF
SPC Reference	3008909-0100

a) Remove the two mounting bolts (1) and cover (2).

b) Remove the cap (3) from the gearbox hollow shaft.

c) Remove the bolt (4) and washer (5) from the shaft end.

d) Loosen the setscrews (6) in all four bearing rings.

e) Loosen the setscrews (7) (four per brush) in the ends of the brushes (8,9).

f) Loosen the setscrews (10) (two per gear) in the hub of the gears (11,12).

g) Slide the main drive shaft (13) away from the gearbox to remove the gear (11) from the shaft.

CAUTION
Retain the shaft key (14), as it will become free / loose as the shaft is removed from the gearbox.

1 Bolt
2 Cover
3 Cap
4 Bolt
5 Washer
6 Setscrew
7 Setscrew
8 Brush
9 Brush
10 Setscrew
11 Gear
12 Gear
13 Shaft
14 Key
15 Shaft

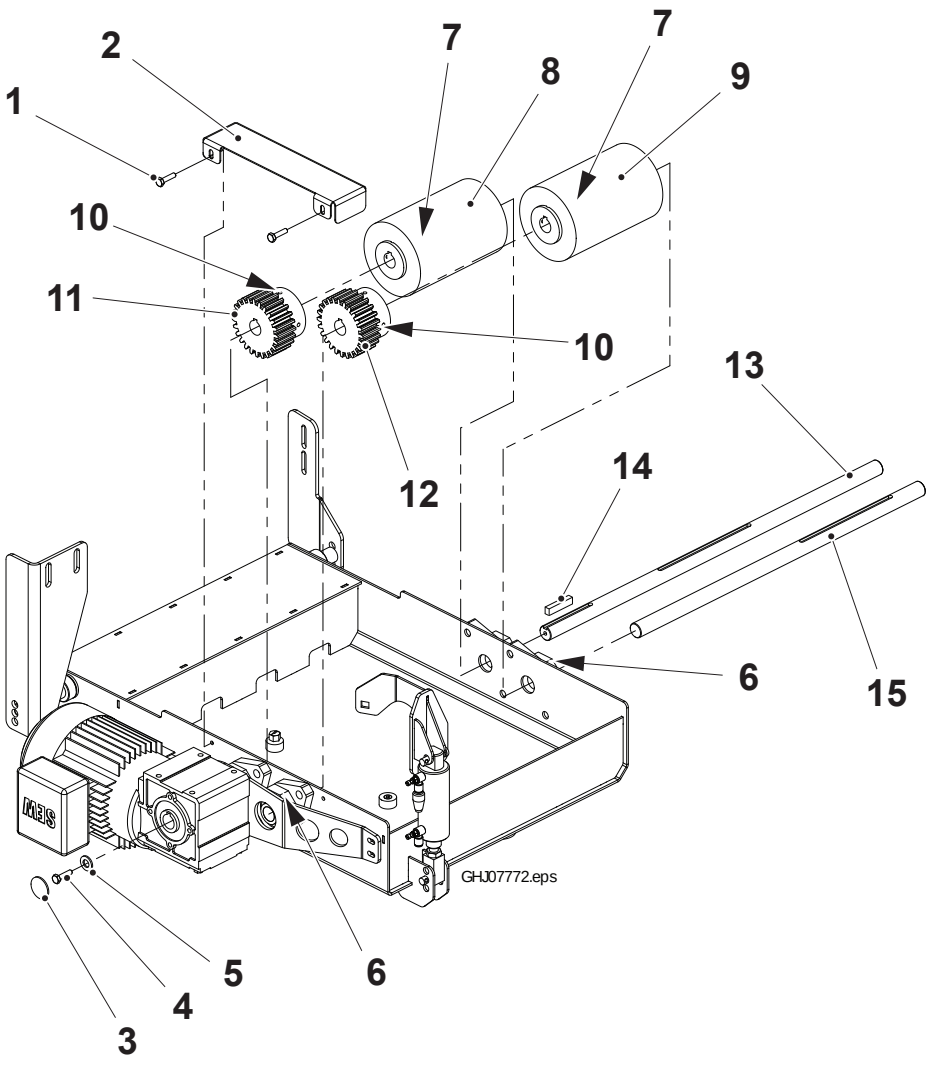

(Cont'd)

(Cont'd)

h) Slide the secondary shaft (15) away from the gearbox to remove the gear (12) from the shaft.

i) Install the new gear (12) on the secondary shaft (15) as it is slid toward the gearbox and into the bearing unit.

j) Install the new gear (11) on the main drive shaft (13) as it is slid toward the gear box and into the bearing unit.

k) Position the shaft key (14) inside the hollow shaft of the gearbox and continue sliding the main drive shaft (13) into the gearbox.

l) Install the washer (5) and bolt (4) into the end of the main drive shaft (13).

m) Install the cap (3) in the gearbox hollow shaft.

n) Tighten all setscrews (6,7,10) in the brushes, gears, and bearing rings.

o) Position the cover (2) and install the two mounting bolts (1).

1 Bolt
2 Cover
3 Cap
4 Bolt
5 Washer
6 Setscrew
7 Setscrew
8 Brush
9 Brush
10 Setscrew
11 Gear
12 Gear
13 Shaft
14 Key
15 Shaft

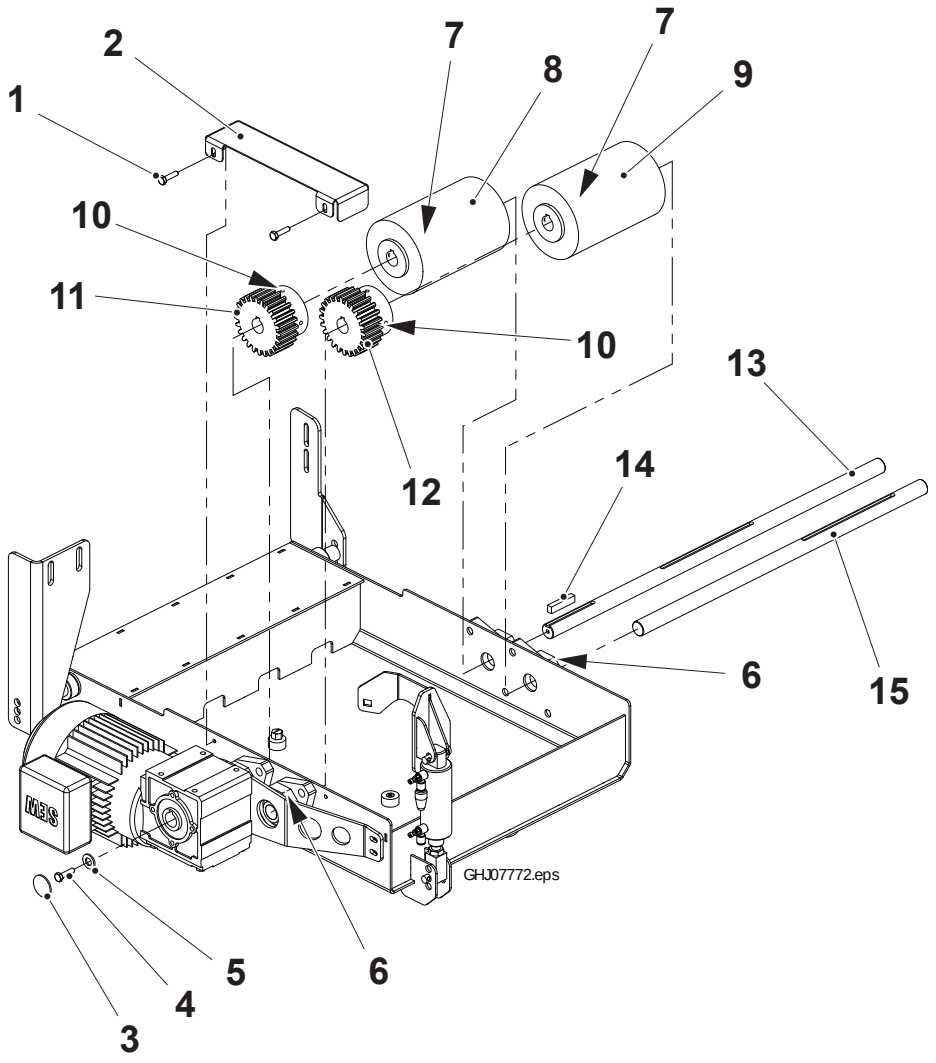

6 General

This page intentionally left blank

6.1 Troubleshooting . . . . . 6 - 5

6.1.1 General . . . . . 6 - 5

6.1.2 Package Setup . . . . . 6 - 7

This page intentionally left blank

6.1 Troubleshooting

Refer to the troubleshooting tables below to determine potential causes for machine issues and recommended actions to correct them.

6.1.1 General

Condition	Potential Cause(s)	Recommended Action
Spider travels too far and activates the top or lower limit.	Machine Full or Machine Empty proximity switch has failed.	Check Machine Full or Machine Empty proximity switch function and adjustment.
	Machine Full or Machine Empty proximity mounting bracket is bent.	
Long queue at infeed while machine is running causes jam.	Infeed guide too tight.	See Guide Rails Volume Change Table on page 2-37 Check the package settings.
	ACHX infeed high speed is too slow.	
	Correct package size not selected.	
Package spacing is too large inside the ACHX.	Infeed guides dirty or not properly set.	Check guides and check settings according to the Maintenance instructions. Check the infeed conveyor speed. Check package settings. See 2.2.3.1-2 Infeed Guide Rails - Set.
	Program not set for correct speed or product.	
Packages are backing into outfeed.	Downstream Queue and/or Downstream Overflow photocell has failed or is not positioned properly.	Check photocell function and alignment.
Outfeed begins to run too slowly.	Downstream Queue photocell is covered with soap or is dirty.	Check photocells for condition and function. Check the outfeed conveyor speed. Check the Machine Empty proximity switch. Re-calibrate the spider unit. Adjust guides.
	Downstream Queue photocell has failed.	
	Fill level sensors malfunctioned.	
	Guides set too tight.	
Tops are popping off chain.	Spider installed improperly or is too tight in the tracks.	Check according to the Maintenance instructions.
	Spider is dirty.	
	Conveyor chain is worn.	Check the drive sprockets for wear. See sections 2.2.5.2-1 Infeed Drive Sprocket - Check and 2.3.5.2-1 Outfeed Drive Sprocket - Check
Chain is jerking.	Chains needs to be cleaned.	Clean chain. See Maintenance instructions on chain returns. Check spider. Sprocket in wrong pocket, check sprocket timing. See sections 2.2.5.2-1 Infeed Drive Sprocket - Check and 2.3.5.2-1 Outfeed Drive Sprocket - Check.
	Rollers are missing.	
	Chain return is out of adjustment.	
	Chain drives malfunctioned.	
	Spider problem.	
Packages are jamming at spider.	Roller sticking, wheels sticking, dead plate needs adjusting, or packages entering the spider out of position.	Check belt rollers, check dead plate, adjust infeed guides to realign packages.

Condition	Potential Cause(s)	Recommended Action
Machine shuts off randomly during production.	Photocells for fallen package detection are not set, are loose, or misaligned.	Check the position of all sensors.
	A door switch is randomly disengaged.	
	An outfeed jam proximity switch is misaligned.	
Long queue at infeed when machine stops causes jam upon restart.	Customer infeed conveyor failed to stop.	Check integration of external infeed conveyor. It must stop immediately when the ACHX is full or stopped.
Packages jamming at the outfeed.	Chain is jerking.	Clean chain and spider.
	Outfeed guides not adjusted properly.	Adjust guides.
	Conveyor height is out of adjustment.	Adjust conveyor height.
Outfeed Jam photoeye continually tripping.	Photoeye and reflector not properly aligned for current package size.	Align photoeye and reflector to accommodate current package size.

6.1.2 Package Setup

If there are package handling issues upon start-up, or when the machine is in production, follow the package setup guides below to troubleshoot potential problems.

Refer to the illustrations on page 6-19 and for further clarification.

Condition	Reference
General Spider Issues	Page 6-8
The first package of a slug rotates in the direction of transfer wheel rotation.	Page 6-10
The first package of a slug rotates opposite the direction of transfer wheel rotation.	Page 6-11
The first package of a slug tips over at Spider discharge.	Page 6-12
Random packages rotate in the direction of transfer wheel rotation.	Page 6-15
Random packages rotate opposite the direction of transfer wheel rotation.	Page 6-15
Random packages tip while in the Spider.	Page 6-16
Packages crush or receive crease marks while in the Spider.	Page 6-17
Packages hesitate when passing through Infeed and/or Outfeed Guides.	Page 6-17
Packages jam at Outfeed Guides.	Page 6-18

Condition	Action	Sub-steps
1) General Spider Issues	a) Verify condition of packages.	• Ensure package weight is within specification. • Ensure package dimensions are within specification. • Ensure proper seam and bottom folds.
	b) Verify proper package spacing on the ACHX infeed conveyor.	The correct spacing between packages is 15% of package width. For example, when a package has a width equal to 50mm, there should be 7.5mm between packages.
	c) Remove all packages from within the Spider.	
	d) Verify that the proper Volume Kit is installed and that all components of the Volume Kit are properly installed.	• See 2.4.5 Volume Kit. • Some Volume Kits include an extra guide located beneath the transfer wheels to help control package rotation. **Note!** The guide is a very critical component on packages such as TPA and CBA.

Condition	Action	Sub-steps
(cont.) General Spider Issues	e) Clean the top surface of the dead plate using a citrus-based cleaner.	
	f) Remove the transfer belt.	• Clean the black surface using a citrus-based cleaner. • Clean the drive pulley belt using a citrus-based cleaner and remove any debris. • Clean the outside diameter of the transfer wheels using a citrus-based cleaner.
	g) Reinstall the transfer belt.	
	h) Check the guide block settings.	• Refer to 2.4.2.1-1 Spider Guide Blocks - Check for proper guide block adjustment. • Place a package on the infeed conveyor and a package on the outfeed conveyor. • With packages against the transfer wheels, verify the distance between the package and the infeed chain fence is approximately equal to the distance between the package and the outfeed chain fence.
	i) Test Spider performance.	
	If the Spider still does not perform satisfactorily, find the appropriate issue below and complete the suggested tasks.	
	Note! Before making any Spider adjustments, use a marker or scribe to mark original position(s) of each component to be adjusted. Make only one adjustment at a time so effect can be monitored. **Test Spider performance after each adjustment before proceeding to the next adjustment.**	

Condition	Action	Sub-steps
2) The first package of a slug rotates in the direction of transfer wheel rotation. – LINF = clockwise – RINF = counter clockwise	a) Remove all packages from the Spider.	
	b) Check the tension of the belt driving the transfer wheels. 2.4.4-1 Driven Wheel Assembly - Check.	• Turn the transfer wheels in the opposite direction they would turn during operation. • Resistance should be felt as the drive belt attempts to slip inside the nylon pulley. • If resistance is not felt or the resistance seems to be minimal, tension the drive belt as described in 2.4.4-2 Driven Wheel Assembly - Set.
	c) Inspect the transfer belt path at Spider Infeed.	• If the embossed infeed guide is influencing the transfer belt path, adjust the leading end of the guide away from the transfer wheels until the guide is not contacting the back side of the belt. See Detail A on page 6-19. This action delays contact of the package with the belt and reduces tendencies to rotate clockwise. • Use a single package positioned along the trailing end of the guide to ensure approximately 3mm clearance between the belt and the guide. See Detail D on page 6-19. The guide should not cause the belt to squeeze the package. • If the embossed infeed guide is not influencing the transfer belt path and the infeed belt roller is not fully adjusted toward the Spider transmission, move the infeed belt roller toward the transmission. See Detail B on page 6-19.

Condition	Action	Sub-steps
(cont.) The first package of a slug rotates in the direction of transfer wheel rotation.	If the actions taken in steps b and c do not correct the issue:	
	d) Adjust the inside infeed guide to position packages approximately 6mm from the infeed chain fence.	
	e) Adjust the outside infeed guide to the dimension provided in Guide Rails Volume Change Table on page 2-37.	This adjustment positions packages closer to the Spider transfer wheels to ensure packages make contact with the transfer wheels prior to making contact with the transfer belt.
3) The first package of a slug rotates opposite the direction of transfer wheel rotation. – LINF = counter clockwise – RINF = clockwise	a) Remove all packages from within the Spider.	
	b) Adjust the leading end of the embossed infeed guide toward the transfer wheels to push the transfer belt toward incoming packages.	• Ensure the guide does not cause the belt to squeeze the package. • Use a single package positioned along the trailing end of the guide to ensure approximately 3mm clearance between the belt and the guide. See Detail D on page 6-19. The guide should not cause the belt to squeeze the package.

Condition	Action	Sub-steps
4) The first package of a slug tips over at Spider discharge.	a) Check the operation of the lubrication system. See 2.6 Water System.	• Check that the water shut-off valve is turned on. • If the outfeed conveyor chain tops are dry, reduce the lubrication frequency timer. The timer should be set so that the chain tops do not dry out between lubrication cycles.
	b) Move the spider to the Maintenance position. c) Remove all packages from within the Spider.	
	d) Verify the top of the dead plate on the infeed side is approximately 1mm below the top of the infeed chain. e) Verify the top of the dead plate on the outfeed side is approximately 1mm above the top of the outfeed chain.	• See 2.4.2.3-1 Dead Plate - Check.
	f) Check the outfeed straightening guide setting.	• The straightening guide should be set such that the vertical 'working' surface of the straightening guide is tangent to the outside diameter of the transfer wheel. • Be sure the straightening guide pushes the product to within 3mm of the fence without pinching the package.
	Packages tipping at the Spider discharge can be a result of package rotation within the Spider:	
	g) Verify the packages are not rotating within the spider.	If packages are rotating within the spider, see the relevant sections above.
	If actions taken in steps a through g do not correct the issue, an adjustment to the outfeed belt roller may be required. See below.	

Condition	Action	Sub-steps
(cont.) The first package of a slug tips over at Spider discharge.	**Outfeed Belt Roller** Tipping can sometimes be caused by the transfer belt 'over-driving' the packages after they are placed on the outfeed chain. At other times, the tipping can be caused by light packages being 'dropped' onto the outfeed chain. The outfeed belt roller has three degrees of adjustment: height, radial, and tangential. See Detail C on page 6-19.	
	Outfeed Belt Roller: Height The height of the outfeed belt roller should be adjusted before attempting radial or tangential adjustments. See Detail C on page 6-19. In most cases, lowering the outfeed belt roller results in a more stable package being discharged from the Spider.	
	h) Loosen the two bolts in the clamping collar supporting the roller shaft. i) Lower the roller a small increment (1 - 2mm), tighten bolts, and check Spider performance. j) Repeat steps h) and i), if necessary, until either the bottom edge of the transfer belt is within 2mm above the outfeed chain fence or satisfactory performance is achieved.	
	Note! After making outfeed belt roller height adjustments, jog the Spider until it is near the closest outfeed drive. Then, very slowly jog the Spider over the outfeed drive to check for height clearance between the drive sprocket and the bottom of the outfeed belt roller **CAUTION** **Immediately stop Spider travel if an interference is apparent or questionable!** If performance is still not satisfactory: • Move the outfeed belt roller back to its original height. • Make adjustments to the outfeed belt roller location. The outfeed belt roller support is designed with adjustment in both the radial and tangential directions. Make adjustments in the radial direction first. See Detail C on page 6-19.	

Condition	Action	Sub-steps
(cont.) The first package of a slug tips over at Spider discharge.	**Outfeed Belt Roller: Radial** k) Loosen the two retaining bolts and move the outfeed belt roller support in the radial direction away from the transfer wheels. l) Tighten the bolts and check Spider performance.	
	If performance is still not satisfactory, repeat steps k) and l) until all radial adjustment slot length has been used. If performance is still not satisfactory: • Move the outfeed belt roller back to its original radial position. • Make adjustments to the tangential position of the outfeed belt roller. See Detail C on page 6-19.	
	Outfeed Belt Roller: Tangential The outfeed roller support can be positioned in four different locations using a combination of three slots and four tapped holes.	
	m) Remove the two retaining bolts. n) Move the outfeed roller support to the new location. o) Reinstall and re-tighten the retaining bolts.	
	In most cases, tipping is reduced by moving the outfeed roller toward the Spider transmission. This results in an earlier release of the package and allows the outfeed chain to freely transfer the packages out of the Spider.	
	In some cases, primarily small footprint packages with taller heights (i.e. TBA 200S) running at higher speeds, the package may benefit from extra control on the Spider discharge.	In these cases, experiment with moving the outfeed belt roller to a location further away from the transmission.

Condition	Action	Sub-steps
5) Random packages rotate in the direction of transfer wheel rotation. – LINF: Clockwise – RINF: Counter clockwise	a) Remove all packages from within the Spider.	
	b) Check the tension of the drive belt driving the transfer wheels. Refer to 2.4.4-1 Driven Wheel Assembly - Check.	• Turn the transfer wheels in the opposite direction they would turn during operation. • Resistance should be felt as the drive belt attempts to slip inside the nylon pulley. • If resistance is not felt or the resistance seems to be minimal, tension the drive belt as described in 2.4.4-2 Driven Wheel Assembly - Set.
	c) Verify the top of the dead plate on the infeed side is approximately 1mm below the top of the infeed chain. d) Verify the top of the dead plate on the outfeed side is approximately 1mm above the top of the outfeed chain.	• See 2.4.2.3-1 Dead Plate - Check.
6) Random packages rotate opposite the direction of transfer wheel rotation. – LINF: Counter clockwise – RINF: Clockwise	a) Remove all packages from within the Spider.	
	b) Verify the top of the dead plate on the infeed side is approximately 1mm below the top of the infeed chain. c) Verify the top of the dead plate on the outfeed side is approximately 1mm above the top of the outfeed chain.	• See 2.4.2.3-1 Dead Plate - Check.
	d) Verify the infeed guides are positioned to place the packages against the fence of the infeed chain tops.	• If there is a significant gap between the packages and the fence, adjust both inside and outside guide rails according to Guide Rails Volume Change Table on page 2-37.

Condition	Action	Sub-steps
7) Random packages tip while in the Spider.	a) Check the operation of the lubrication system. See 2.6 Water System.	• Check that the water shut-off valve is turned on. • If the infeed or outfeed conveyor chain tops are dry, reduce the lubrication frequency timer. The timer should be set so that the chain tops do not dry out between lubrication cycles.
	b) Remove all packages from within the Spider. c) Clean the dead plate with a citrus-based cleaner	
	d) Verify the top of the dead plate on the infeed side is approximately 1mm below the top of the infeed chain e) Verify the top of the dead plate on the outfeed side is approximately 1mm above the top of the outfeed chain	• See 2.4.2.3-1 Dead Plate - Check.
	f) Remove the transfer belt and clean the black surface using a citrus-based cleaner.	

Condition	Action	Sub-steps
8) Packages crush or receive crease marks while in the Spider.	a) Remove all packages from within the Spider.	
	b) Verify the bottom transfer wheel is set just above the top of the outfeed straightening guide.	• If there is more than 2-3mm between the highest point of the outfeed straightening guide and the bottom of the lower transfer wheel, loosen the setscrews and lower the transfer wheel until it is just above the outfeed straightening guide. • To check for clearance, remove the transfer belt and verify the transfer wheels spin freely in the direction of normal rotation.
	c) Use a single package positioned along the trailing end of the embossed infeed guide to ensure approximately 3mm clearance between the belt and the guide. See Detail D on page 6-19.	• The guide should not cause the belt to squeeze the package.
	d) Reduce transfer belt tension by moving the infeed belt roller toward the Spider transmission.	• Before moving the infeed belt roller, adjust the leading end of embossed infeed guide until it just touches the back side of the transfer belt. This adjustment maintains the same relative transfer belt position currently dictated by the infeed belt roller position. • Move in 5-6mm increments until desired results are achieved. • If the issue does not improve, move the infeed belt roller back to its original position.
9) Packages hesitate when passing through Infeed and/ or Outfeed Guides.	a) Remove all packages from within the guides.	
	b) Clean the package contact surfaces with a citrus-based cleaner.	• Test performance before proceeding to the next step.
	c) Adjust the outside infeed and/or outfeed guide rails to achieve dimensions specified in Guide Rails Volume Change Table on page 2-37.	• If the depth of the packages is known to be larger than specification, the guide rails can be adjusted to a dimension 2-3 mm larger than that specified in Guide Rails Volume Change Table.

Condition	Action	Sub-steps
10) Packages jam at Outfeed Guides.	a) Verify correct orientation of the packages on the outfeed conveyor. **Note!** If packages are oriented correctly, proceed to next step.	• If packages are not oriented correctly at the discharge of the Spider, observe Spider performance and refer to relevant sections above. • If package instability or movement over the outfeed drive motors is observed, refer to 2.3.5.1-2 Outfeed Drive Assembly - Adjust to verify proper settings.
	b) Verify the setting of the outfeed guides.	• Refer to Guide Rails Volume Change Table.

(Cont'd)

(Cont'd)

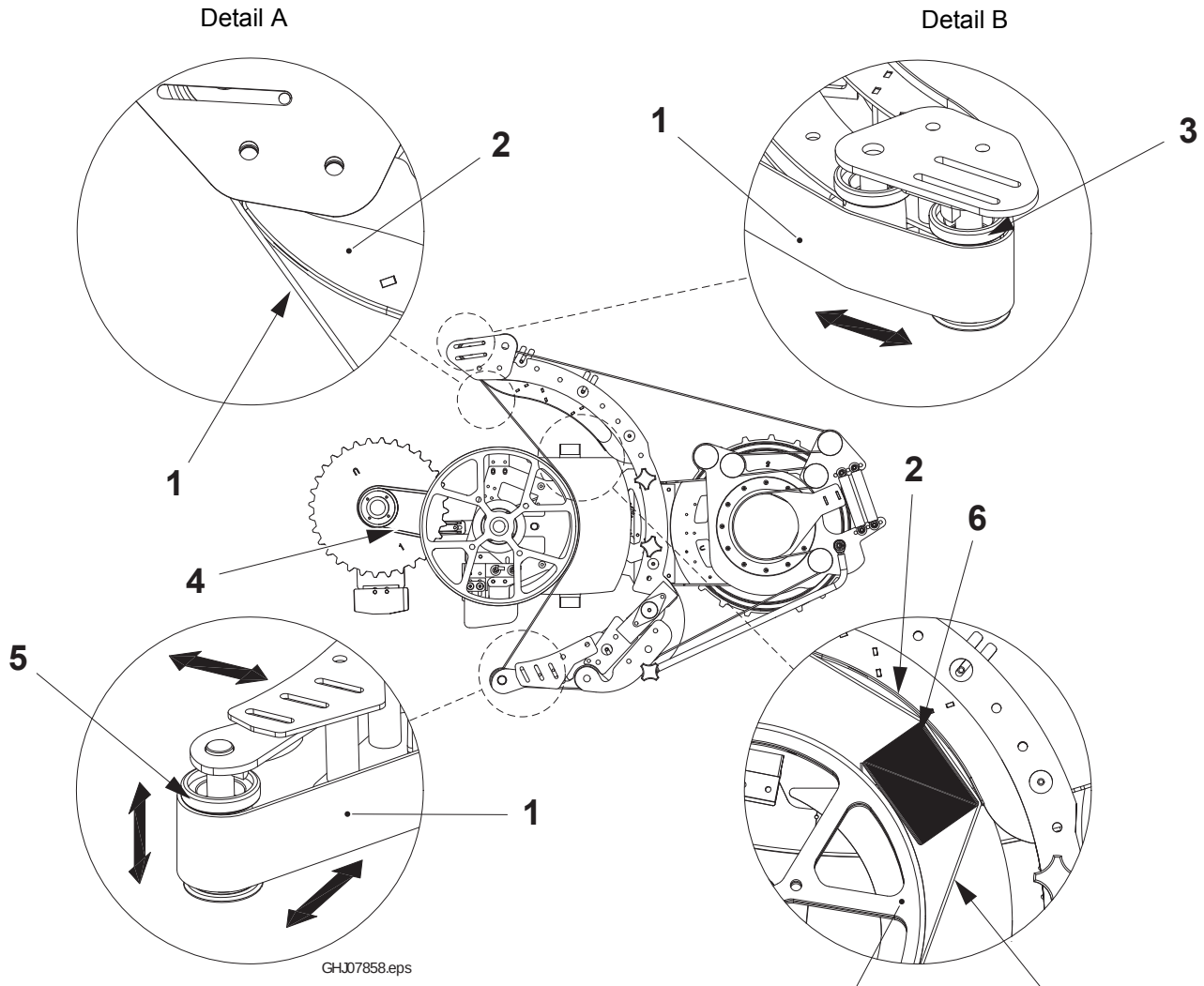

Detail C

Detail D

1 Transfer belt
2 Infeed guide
3 Infeed belt roller
4 Drive belt
5 Outfeed roller belt
6 Package
7 Transfer wheel

This page intentionally left blank

A

Air Filter - Change . . . . . 5 - 6
ArmorBlock I/O Modules - Set Node Address 4 - 30
ArmorBlock I/O Modules - Troubleshoot . . . . 4 - 31
ArmorStart I/O Modules - Set Node Address . 4 - 35
ArmorStart I/O Modules - Troubleshoot . . . . . 4 - 36

B

Base Chain - Check . . . . . 2 - 64
Bearings - Change . . . . . 5 - 11
Bearings - Check . . . . . 5 - 10
Bearings - Lubricate . . . . . 5 - 9
Belt Rollers - Check . . . . . 2 - 91
Belt Spider Unit - Overhaul . . . . . 2 - 78
Belt Spider Unit - Remove . . . . . 2 - 72
Belt Spider Unit - Set . . . . . 2 - 87
Brushes - Change . . . . . 5 - 15
Brushes - Check . . . . . 5 - 13
Brushes - Set . . . . . 5 - 14

C

Chain - Check . . . . . 2 - 41
Chain - Check Height and Length . . . . . 1 - 6
Chain - Set Height and Length . . . . . 1 - 7
Chain Top - Remove and Install . . . . .2 - 39, 2 - 64
CompactLogix Module - Install . . . . . 4 - 10
CompactLogix Module - Remove . . . . . 4 - 8

D

Dead Plate - Check . . . . . 2 - 92
Dead Plate - Set . . . . . 2 - 93
DeviceNet Scanner (Node 0) - Troubleshoot . 4 - 23
Dosing Unit - Set . . . . . 5 - 8
Driven Wheel Assembly - Check . . . . . 2 - 106
Driven Wheel Assembly - Set . . . . . 2 - 108

F

Fan - Check . . . . . 4 - 7
Filters - Check . . . . . 5 - 6
Frequency Converter - Change . . . . . 4 - 74
Frequency Converter - Set . . . . . 4 - 75
Functional Description . . . . . 1 - 4, 2 - 7, 3 - 5, 5 - 5
Fuse - Replace . . . . . 4 - 53
Fuse - Reset . . . . . 4 - 52

G

Genius Module - Set . . . . . 4 - 47
Genius Module - Troubleshoot . . . . . 4 - 48
Genius Module Program - Install . . . . . 4 - 48
Glass Panes - Install Panes at Doors . . . . . 2 - 24
Glass Panes - Install Panes at Fixed Panels . 2 - 22
Glass Panes - Remove Broken Glass . . . . . 2 - 21

I

Infeed Chain Tension Monitor - Set . . . . . 2 - 31
Infeed Chain Tensioner - Check . . . . . 2 - 29
Infeed Chain Tensioner - Set . . . . . 2 - 30
Infeed Drive Assembly - Adjust . . . . . 2 - 46
Infeed Drive Assembly - Check . . . . . 2 - 43
Infeed Drive Sprocket - Change . . . . . 2 - 51
Infeed Drive Sprocket - Check . . . . . 2 - 48
Infeed Drive Sprocket - Set . . . . . 2 - 49
Infeed Guide Rails - Check . . . . . 2 - 32
Infeed Guide Rails - Set . . . . . 2 - 34
Infeed/Outfeed Frequency Converter - Fault Codes . . . . . 4 - 81

O

Oil - Change . . . . . 1 - 15
Outfeed Chain Tensioner - Check . . . . . 2 - 54
Outfeed Conveyor Chain Tensioner - Set . . . . 2 - 56
Outfeed Drive Assembly - Adjust . . . . . 2 - 67
Outfeed Drive Assembly - Check . . . . . 2 - 66
Outfeed Drive Sprocket - Check . . . . . 2 - 70

Outfeed Drive Sprocket - Set . . . . . 2 - 71
Outfeed Guide Rails - Check . . . . . 2 - 57
Outfeed Guide Rails - Set . . . . . 2 - 59
Overvoltage Protector - Change Fuse . . . . . 4 - 49

P

Photocell - Emitter-Receiver and Reflecting Type - Check Sensitivity . . . . . 4 - 140
Photocell - Emitter-Receiver Type - Check Sensitivity . . . . . 4 - 135
Photocell - Emitter-Receiver Type - Set Sensitivity . . . . . 4 - 135
Photocell - Reflecting Type - Adjust Alignment . . . . . 4 - 137
Photocell - Reflecting Type - Check Alignment . . . . . 4 - 136
Photocell - Reflecting Type - Set Sensitivity 4 - 138
PLC - Change Battery . . . . . 4 - 15
PLC - CompactFlash Card - Restore Program 4 - 18
PLC - Configure . . . . . 4 - 12
PLC - PLC Status . . . . . 4 - 13
PLC Power Supply - Change Fuse . . . . . 4 - 16
PLC Power Supply - Change Module . . . . . 4 - 17
Pluto Manager - Change Firmware . . . . . 4 - 63
Pluto Manager - Check Firmware and Software . . . . . 4 - 57
Pluto Manager - Install . . . . . 4 - 55
Pluto Manager - Install Pluto from PC . . . . . 4 - 61
Pluto Manager - Install Pluto without PC . . . . 4 - 60
Pluto Manager - Remove Firmware Alarms . . 4 - 62
Pluto Manager - Safety Switch Fault Codes . 4 - 68
Pluto Manager - Set an IDFIX Address . . . . . 4 - 58
Pluto Manager - Set Project . . . . . 4 - 56
Pluto Manager - Troubleshoot Safety System 4 - 65
Proximity Switches - Set . . . . . 4 - 142

R

Residual Current Device - Check . . . . . 4 - 50

S

Safety Relay - Proof Test . . . . . 4 - 69
Safety System (Pluto) - Description . . . . . 4 - 54
Sliding Strips - Change . . . . . 1 - 10, 1 - 16
Sliding Strips - Check . . . . . 1 - 9, 1 - 16
SM2 - Check Status . . . . . 4 - 21
SM2 - Configure . . . . . 4 - 20
SNP Module - Change . . . . . 4 - 43
SNP Module - Select . . . . . 4 - 42
SNP Module - Set . . . . . 4 - 44
Spider Drive Gear - Set . . . . . 2 - 98
Spider Guide Blocks - Check . . . . . 2 - 89
Spider Guide Blocks - Set . . . . . 2 - 90
Spider Pulley Belt - Change . . . . . 2 - 104
Spider Pulley Belt - Check . . . . . 2 - 103
Spider Transfer Wheel - Check . . . . . 2 - 116
Spider Transfer Wheel - Set . . . . . 2 - 117
Sprockets, Wheels, and Bearings - Change . . 1 - 20
Sprockets, Wheels, and Bearings - Check . . . 1 - 17
Spur Gears - Change . . . . . 5 - 19
Spur Gears - Check . . . . . 5 - 18
Stainless Covering Panels - Remove and Install . . . . . 2 - 27

T

Transmission - Check . . . . . 2 - 95
Transmission - Lubricate . . . . . 2 - 97

V

Volume Kit - Change . . . . . 2 - 114

W

Warning Lamp - Check . . . . . 2 - 18
Water Filter - Change . . . . . 5 - 7
Water System - Check . . . . . 2 - 122

Tetra Pak

***Note!** This page is generated **automatically**.*
*using the **variable definitions** made in the **front page** file!*

Accumulator Helix 30
663651-0500
Issue 2009-08 Doc. No. MM-3030591-0101

Accumulator Helix 30 1(2)
663651-0500
Issue 2009-08 Doc. No. MM-3030591-0101

Accumulator Helix 30
663651-0500
Issue 2009-08 Doc. No. MM-3030591-0101

Accumulator Helix 30 1(2)
663651-0500
Issue 2009-08 Doc. No. MM-3030591-0101

Accumulator Helix 30
663651-0500
Issue 2009-08 Doc. No. MM-3030591-0101

Accumulator Helix 30 1(2)
663651-0500
Issue 2009-08 Doc. No. MM-3030591-0101

Accumulator Helix 30
663651-0500
Issue 2009-08 Doc. No. MM-3030591-0101

Accumulator Helix 30 1(2)
663651-0500
Issue 2009-08 Doc. No. MM-3030591-0101

Accumulator Helix 30
663651-0500
Issue 2009-08 Doc. No. MM-3030591-0101

Accumulator Helix 30 2(2)
663651-0500
Issue 2009-08 Doc. No. MM-3030591-0101

Accumulator Helix 30
663651-0500
Issue 2009-08 Doc. No. MM-3030591-0101

Accumulator Helix 30 2(2)
663651-0500
Issue 2009-08 Doc. No. MM-3030591-0101

Accumulator Helix 30
663651-0500
Issue 2009-08 Doc. No. MM-3030591-0101

Accumulator Helix 30 2(2)
663651-0500
Issue 2009-08 Doc. No. MM-3030591-0101

Accumulator Helix 30
663651-0500
Issue 2009-08 Doc. No. MM-3030591-0101

Accumulator Helix 30 2(2)
663651-0500
Issue 2009-08 Doc. No. MM-3030591-0101

40 mm Full width ***Note!*** *This page is generated* ***automatically****.*
using the ***variable definitions*** *made in the* ***front page*** *file!*

Accumulator Helix 30
663651-0500

Issue 2009-08 Doc. No. MM-3030591-0101

Accumulator Helix 30 1(2)
663651-0500

Issue 2009-08 Doc. No. MM-3030591-0101

Accumulator Helix 30
663651-0500

Issue 2009-08 Doc. No. MM-3030591-0101

Accumulator Helix 30 1(2)
663651-0500

Issue 2009-08 Doc. No. MM-3030591-0101

Accumulator Helix 30
663651-0500

Issue 2009-08 Doc. No. MM-3030591-0101

Accumulator Helix 30 1(2)
663651-0500

Issue 2009-08 Doc. No. MM-3030591-0101

Accumulator Helix 30
663651-0500

Issue 2009-08 Doc. No. MM-3030591-0101

Accumulator Helix 30 2(2)
663651-0500

Issue 2009-08 Doc. No. MM-3030591-0101

Accumulator Helix 30
663651-0500

Issue 2009-08 Doc. No. MM-3030591-0101

Accumulator Helix 30 2(2)
663651-0500

Issue 2009-08 Doc. No. MM-3030591-0101

Accumulator Helix 30
663651-0500

Issue 2009-08 Doc. No. MM-3030591-0101

Accumulator Helix 30 2(2)
663651-0500

Issue 2009-08 Doc. No. MM-3030591-0101