SPC

Spare Parts Catalogue

CAP 30/Flex

662950-0100

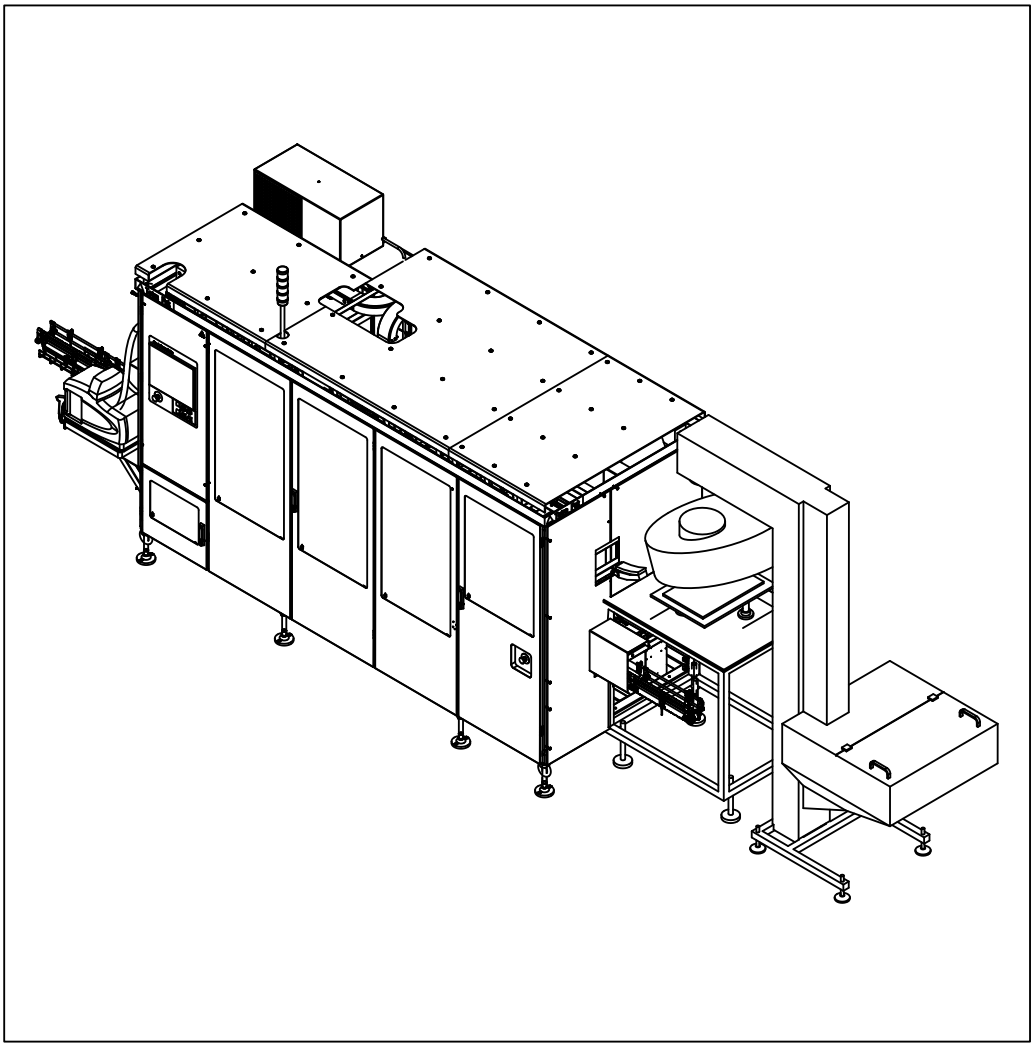

Tetra Pak

Doc. No: SPC-2852925-0104

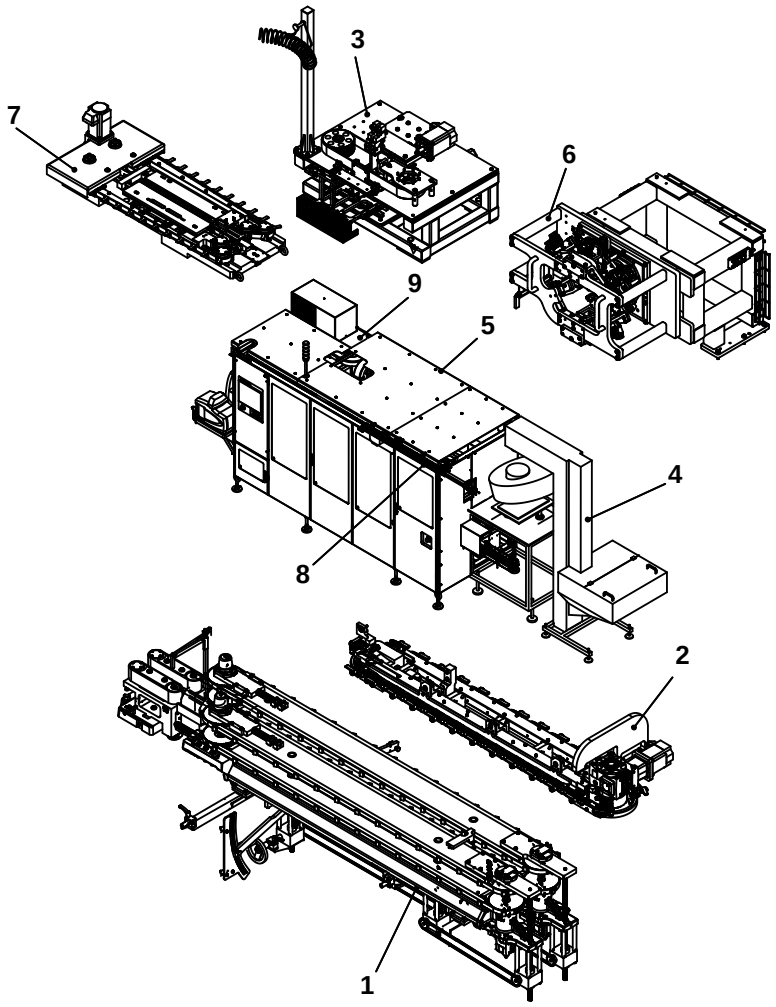

The position numbers in the illustration correspond with the chapter numbers listed on the next page.

Copyright © 2007 Tetra Pak Group

All rights reserved. No part of this document may be reproduced or copied in any form or by any means without written permission from Tetra Pak Packaging Solutions .

Tetra Pak and all Tetra Pak products are trademarks belonging to the Tetra Pak Group.

The content of this manual is in accordance with the design and construction of the machine or equipment at the time of publishing. Tetra Pak reserves the right to introduce design modifications without prior notice.

This document was produced by:

Tetra Pak Packaging Solutions
Via Delfini 1
411 00 Modena
ITALY

Additional copies can be ordered from Tetra Pak. When ordering additional copies, always provide the document number.

Doc. No. SPC-2852925-0104

Issue 2007-07

This document is valid from:

75692/00001

Series No/Machine No Sign.

SPC

Spare Parts Catalogue

CAP 30/Flex
662950-0100

Machine or equipment configurations that this catalogue is valid for are described on the next page.

i Introduction

1 Package Line

2 Push Down

3 Screw Cap Hot Melt Ap.

4 Cap Sorter

5 Machine Body

6 Applicator Unit

7 Cap Sequencer

8 Cap Conveyor

9 Electrical Cabinet

10 Regular Accessories

11 Electric Equipment

ii Part Number Index

iii Ref. Des. Parts Index

Doc. No: SPC-2852925-0104

Issue 2007-07

Tetra Pak

Tetra Pak Packaging Solutions

Valid for:

Name	Drawing Specification and Development Step	Additional Information
CAP 30/Flex	662950-0100	-

Update Log for Doc. No. SPC-2852925-0104

This table shows all changes made to this catalogue, including installed rebuilding kits, added or removed pages.

Date	Installed Kit	Added Pages (Doc. No.)	Removed Pages	Signature

Date	Installed Kit	Added Pages (Doc. No.)	Removed Pages	Signature

i Introduction

en About the Introduction Chapter
This chapter contains basic information about this catalogue and related Tetra Pak equipment.

bg За уводната глава
Тази глава съдържа основна информация за този каталог и приложимото Tetra Pak оборудване.

cs O kapitole Úvod
Tato kapitola obsahuje základní informace o této příručce a souvisejícím zařízení Tetra Pak.

da Om indledningen
Kapitlet indeholder grundlæggende oplysninger om dette katalog og tilhørende Tetra Pak-udstyr.

de Über das Einleitungskapitel
Diese Kapitel enthält grundlegende Informationen über diesen Katalog und die zugehörige Tetra Pak-Ausrüstung

el Σχετικά με το Κεφάλαιο 'Εισαγωγή'
Αυτό το κεφάλαιο περιέχει βασικές πληροφορίες για τον παρόντα κατάλογο και τον σχετικό εξοπλισμό της Tetra Pak.

es Acerca del capítulo Introducción
Este capítulo contiene información básica sobre este catálogo y el equipo Tetra Pak relacionado.

et Sissejuhatava peatüki kohta
See peatükk sisaldab teavet käesoleva kataloogi ja sellega seonduva Tetra Paki seadme kohta.

fi Tietoja Johdanto-luvusta
Tässä luvussa on perustietoja tästä luettelosta ja Tetra Pak -laitteesta.

fr À propos du chapitre Introduction
Ce chapitre contient les informations de base à propos de ce catalogue et de l'équipement Tetra Pak concerné.

hu A Bevezetés fejezetről
Ez a fejezet alapvető információkat tartalmaz a katalógusról és a hozzá tartozó Tetra Pak berendezésről.

is Um inngangskaflann
Þessi kafli inniheldur grundvallarupplýsingar um þennan vörulista og tengdan Tetra Pak búnað.

it Informazioni sul capitolo Introduzione
Questo capitolo contiene informazioni generali sul presente catalogo e sulla relativa macchina Tetra Pak.

lt Apie įvadinį skyrių
Šiame skyriuje pateikta pagrindinė informacija apie šį katalogą ir su juo susijusią "Tetra Pak" įrangą.

lv Par Ievada nodaļu
Šī nodaļa ietver galveno informāciju par šo katalogu un saistītajām Tetra Pak iekārtām.

nl Over de inleiding
Dit hoofdstuk bevat basisinformatie omtrent deze catalogus en aanverwante Tetra Pak-installatie.

no Om kapitlet Introduksjon
Dette kapitlet inneholder grunnleggende informasjon om denne katalogen og relatert Tetra Pak-utstyr.

pl Informacje na temat rozdziału wprowadzającego
Rozdział wprowadzający zawiera podstawowe informacje dotyczące niniejszego katalogu i związanej z nim maszyny Tetra Pak.

pt Acerca do Capítulo de Introdução
Este capítulo contém informações básicas sobre este catálogo e os equipamentos relacionados da Tetra Pak.

ro Despre capitolul introductiv
Acest capitol conține informații de bază despre acest catalog și despre echipamentul Tetra Pak corelat.

sk O kapitole Úvod
Táto kapitola obsahuje základné informácie o tomto návode a informácie súvisiace so zariadením Tetra Pak.

sl O uvodnem poglavju
To poglavje vsebuje osnovne informacije o tem katalogu in opremi Tetra Pak.

sv Om inledningskapitlet
Det här kapitlet innehåller grundläggande information om katalogen och Tetra Pak-utrustningen.

Introduction

Illustrations . . . . . i - 5
English Text . . . . . i - 7

Увод

Илюстрации . . . . . i - 5
Текст на български език . . . . . i -11

Úvod

Obrázky . . . . . i -5
Český text . . . . . i - 15

Indledning

Illustrationer . . . . . i - 5
Dansk tekst . . . . . i - 19

Einleitung

Abbildungen . . . . . i - 5
Deutscher Text . . . . . i - 23

Εισαγωγή

Εικόνες . . . . . i - 5
Ελληνικό Κείμενο . . . . . i - 27

Introducción

Ilustraciones . . . . . i - 5
Texto en español . . . . . i - 31

Sissejuhatus

Joonised . . . . . i - 5
Eestikeelne tekst . . . . . i - 35

Johdanto

Kuvat . . . . . i - 5
Suomenkielinen teksti . . . . . i - 39

Introduction

Illustrations . . . . . i - 5
Texte français . . . . . i - 43

Bevezetés

Ábrák . . . . . i - 5
Magyar szöveg . . . . . i - 47

Inngangur

Skýringarmyndir . . . . . i - 5
Íslenskur texti . . . . . i - 51

Introduzione

Figure . . . . . i - 5
Testo in italiano . . . . . i - 55

Įvadas

Paveikslėliai . . . . . i - 5
Lietuviškas tekstas . . . . . i - 59

Ievads

Ilustrācijas . . . . . i - 5
Teksts latviešu valodā . . . . . i - 63

Inleiding

Afbeeldingen . . . . . i - 5
Nederlands tekst . . . . . i - 67

Introduksjon

Illustrasjoner . . . . . i - 5
Norsk tekst . . . . . i - 71

Wprowadzenie

Rysunki . . . . . i - 5
Tekst polski . . . . . i - 75

Introdução

Ilustrações . . . . . i - 5
Texto em português . . . . . i - 79

Introducere

Ilustrații . . . . . i - 5
Text în limba română . . . . . i - 83

Úvod

Ilustrácie . . . . . i – 5
Slovenský text . . . . . i - 87

Uvod

Slike . . . . . i - 5
Slovensko besedilo . . . . . i - 91

Inledning

Bilder . . . . . i - 5
Svensk text . . . . . i - 95

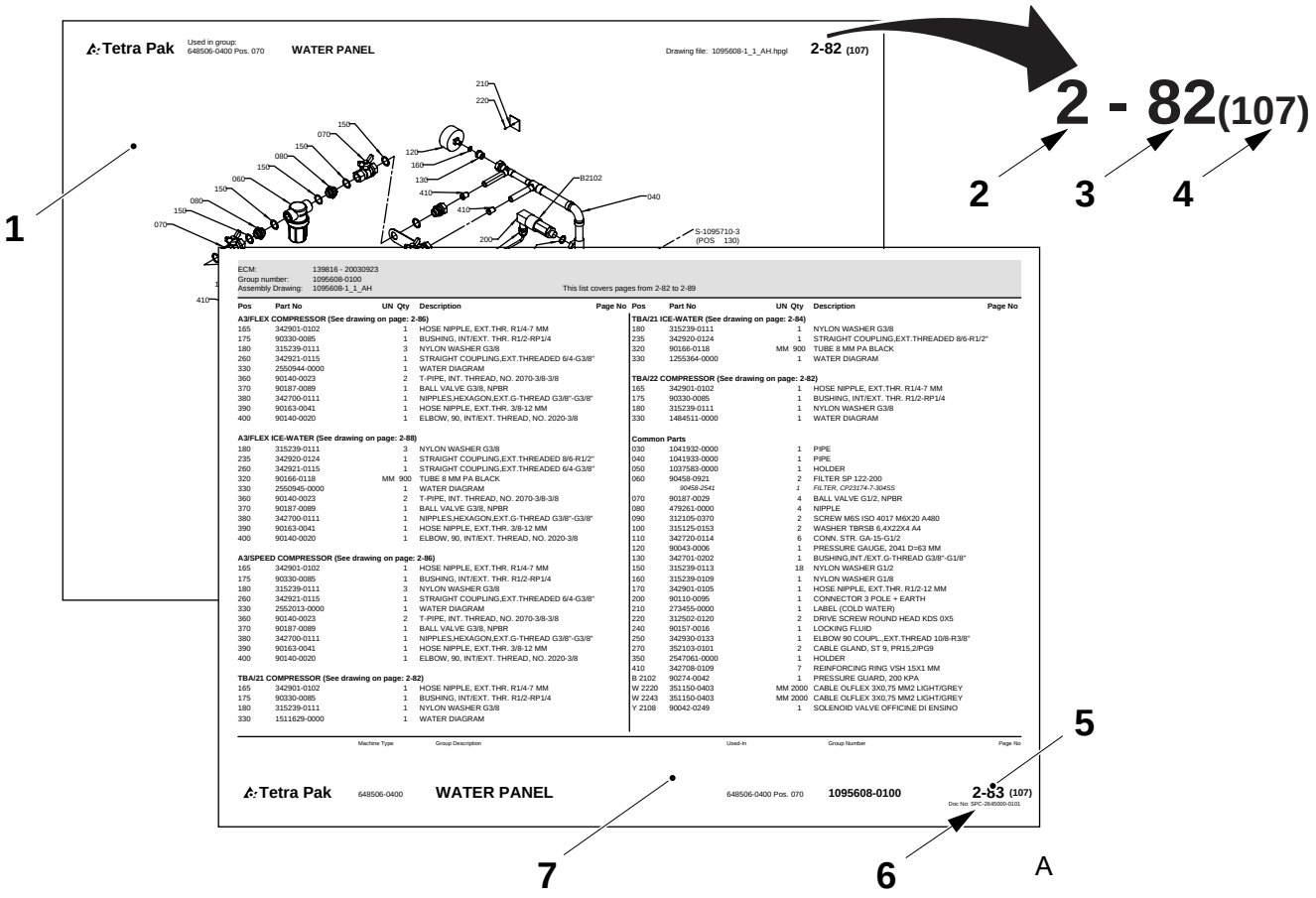
Tetra Pak
Used in group: 648506-0400 Pos. 070
WATER PANEL
Drawing file: 1095608-1_1_AH.hpgl
2-82 (107)
2 - 82(107)
1
2
3
4
5
6
7
A
ECM: 139816 - 20030923
Group number: 1095608-0100
Assembly Drawing: 1095608-1_1_AH
This list covers pages from 2-82 to 2-89
Tetra Pak
648506-0400
WATER PANEL
648506-0400 Pos. 070
1095608-0100
2-83 (107)

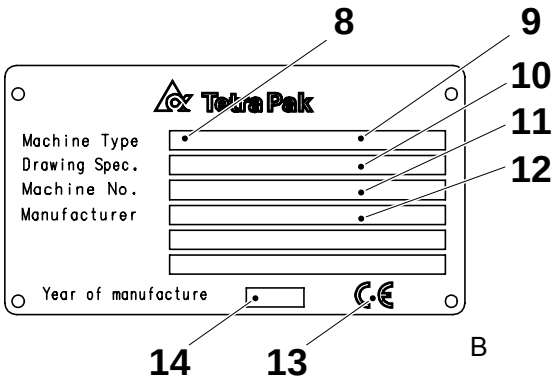
8
9
10
11
12
Tetra Pak
Machine Type
Drawing Spec.
Machine No.
Manufacturer
Year of manufacture
14
13
B

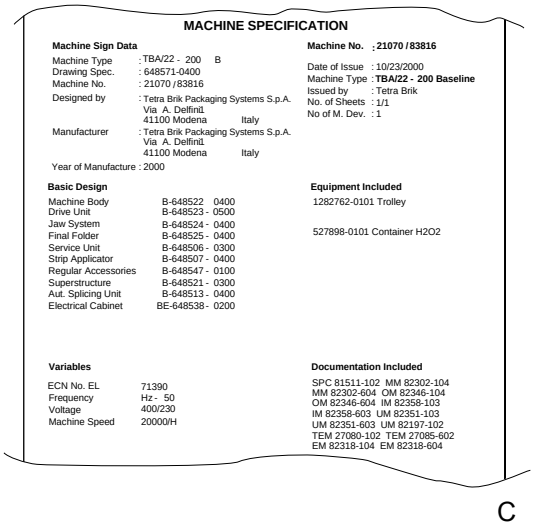
MACHINE SPECIFICATION
Machine Sign Data
Machine Type : TBA/22 - 200 B
Drawing Spec. : 648571-0400
Machine No. : 21070 / 83816
Designed by : Tetra Brik Packaging Systems S.p.A. Via A. Delfini1 41100 Modena Italy
Manufacturer : Tetra Brik Packaging Systems S.p.A. Via A. Delfini1 41100 Modena Italy
Year of Manufacture : 2000
Machine No. ; 21070 / 83816
Date of Issue : 10/23/2000
Machine Type : TBA/22 - 200 Baseline
Issued by : Tetra Brik
No. of Sheets : 1/1
No of M. Dev. : 1
Basic Design
Machine Body B-648522 0400
Drive Unit B-648523 - 0500
Jaw System B-648524 - 0400
Final Folder B-648525 - 0400
Service Unit B-648506 - 0300
Strip Applicator B-648507 - 0400
Regular Accessories B-648547 - 0100
Superstructure B-648521 - 0300
Aut. Splicing Unit B-648513 - 0400
Electrical Cabinet BE-648538 - 0200
Equipment Included
1282762-0101 Trolley
527898-0101 Container H2O2
Variables
ECN No. EL 71390
Frequency Hz - 50
Voltage 400/230
Machine Speed 20000/H
Documentation Included
SPC 81511-102 MM 82302-104
MM 82302-604 OM 82346-104
OM 82346-604 IM 82358-103
IM 82358-603 UM 82351-103
UM 82351-603 UM 82197-102
TEM 27080-102 TEM 27085-602
EM 82318-104 EM 82318-604
C

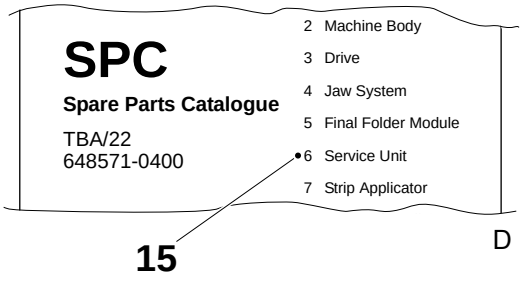
SPC
Spare Parts Catalogue
TBA/22
648571-0400
2 Machine Body
3 Drive
4 Jaw System
5 Final Folder Module
6 Service Unit
7 Strip Applicator
15
D

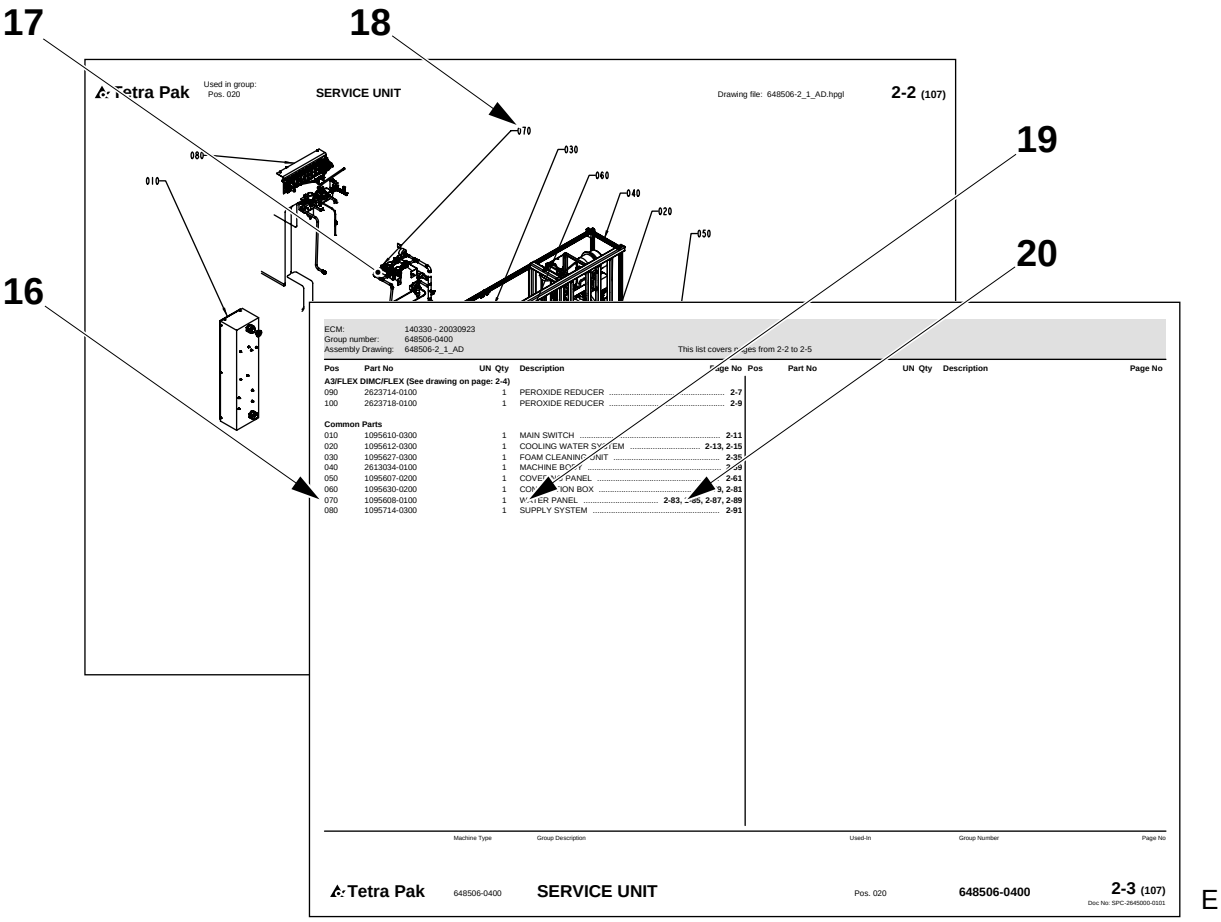
17
18
19
20
16
Tetra Pak
Used in group:
Pos. 020
SERVICE UNIT
Drawing file: 648506-2_1_AD.hpgl
2-2 (107)
070
030
080
060
010
040
020
050
ECM: 140330 - 20030923
Group number: 648506-0400
Assembly Drawing: 648506-2_1_AD
This list covers pages from 2-2 to 2-5
Pos Part No UN Qty Description Page No
A3/FLEX DIMC/FLEX (See drawing on page: 2-4)
090 2623714-0100 1 PEROXIDE REDUCER 2-7
100 2623718-0100 1 PEROXIDE REDUCER 2-9
Common Parts
010 1095610-0300 1 MAIN SWITCH 2-11
020 1095612-0300 1 COOLING WATER SYSTEM 2-13, 2-15
030 1095627-0300 1 FOAM CLEANING UNIT 2-35
040 2613034-0100 1 MACHINE BODY 2-39
050 1095607-0200 1 COVERING PANEL 2-61
060 1095630-0200 1 CONNECTION BOX 2-79, 2-81
070 1095608-0100 1 WATER PANEL 2-83, 2-85, 2-87, 2-89
080 1095714-0300 1 SUPPLY SYSTEM 2-91
Pos Part No UN Qty Description Page No
Machine Type Group Description Used-In Group Number Page No
Tetra Pak 648506-0400 SERVICE UNIT Pos. 020 648506-0400 2-3 (107)
Doc No: SPC-2645000-0101
E

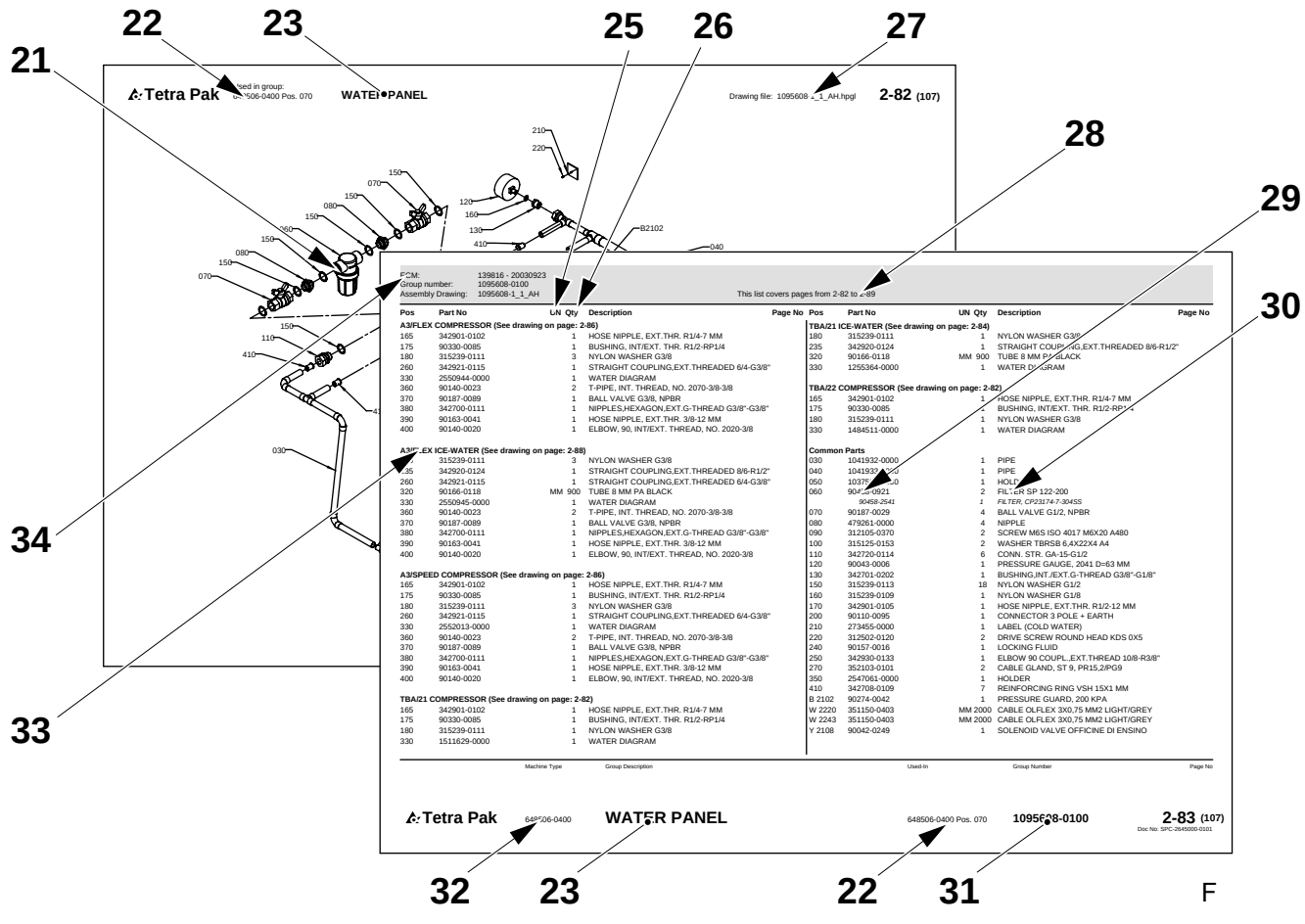
22
23
25
26
27
21
28
29
30
34
33
Tetra Pak
Used in group:
Pos. 070
WATER PANEL
Drawing file: 1095608-1_1_AH.hpgl
2-82 (107)
210
220
150
070
080
150
150
080
150
070
120
160
130
410
B2102
040
030
110
410
ECM: 139816 - 20030923
Group number: 1095608-0100
Assembly Drawing: 1095608-1_1_AH
This list covers pages from 2-82 to 2-89
Pos Part No UN Qty Description Page No
A3/FLEX COMPRESSOR (See drawing on page: 2-86)
165 342901-0102 1 HOSE NIPPLE, EXT.THR. R1/4-7 MM
175 90330-0085 1 BUSHING, INT/EXT. THR. R1/2-RP1/4
180 315239-0111 3 NYLON WASHER G3/8
260 342921-0115 1 STRAIGHT COUPLING,EXT.THREADED 6/4-G3/8"
330 2550944-0000 1 WATER DIAGRAM
360 90140-0023 2 T-PIPE, INT. THREAD, NO. 2070-3/8-3/8
370 90187-0089 1 BALL VALVE G3/8, NPBR
380 342700-0111 1 NIPPLES,HEXAGON,EXT.G-THREAD G3/8"-G3/8"
390 90163-0041 1 HOSE NIPPLE, EXT.THR. 3/8-12 MM
400 90140-0020 1 ELBOW, 90, INT/EXT. THREAD, NO. 2020-3/8
A3/FLEX ICE-WATER (See drawing on page: 2-88)
235 315239-0111 3 NYLON WASHER G3/8
235 342920-0124 1 STRAIGHT COUPLING,EXT.THREADED 8/6-R1/2"
260 342921-0115 1 STRAIGHT COUPLING,EXT.THREADED 6/4-G3/8"
320 90166-0118 MM 900 TUBE 8 MM PA BLACK
330 2550945-0000 1 WATER DIAGRAM
360 90140-0023 2 T-PIPE, INT. THREAD, NO. 2070-3/8-3/8
370 90187-0089 1 BALL VALVE G3/8, NPBR
380 342700-0111 1 NIPPLES,HEXAGON,EXT.G-THREAD G3/8"-G3/8"
390 90163-0041 1 HOSE NIPPLE, EXT.THR. 3/8-12 MM
400 90140-0020 1 ELBOW, 90, INT/EXT. THREAD, NO. 2020-3/8
A3/SPEED COMPRESSOR (See drawing on page: 2-86)
165 342901-0102 1 HOSE NIPPLE, EXT.THR. R1/4-7 MM
175 90330-0085 1 BUSHING, INT/EXT. THR. R1/2-RP1/4
180 315239-0111 3 NYLON WASHER G3/8
260 342921-0115 1 STRAIGHT COUPLING,EXT.THREADED 6/4-G3/8"
330 2552013-0000 1 WATER DIAGRAM
360 90140-0023 2 T-PIPE, INT. THREAD, NO. 2070-3/8-3/8
370 90187-0089 1 BALL VALVE G3/8, NPBR
380 342700-0111 1 NIPPLES,HEXAGON,EXT.G-THREAD G3/8"-G3/8"
390 90163-0041 1 HOSE NIPPLE, EXT.THR. 3/8-12 MM
400 90140-0020 1 ELBOW, 90, INT/EXT. THREAD, NO. 2020-3/8
TBA/21 COMPRESSOR (See drawing on page: 2-82)
165 342901-0102 1 HOSE NIPPLE, EXT.THR. R1/4-7 MM
175 90330-0085 1 BUSHING, INT/EXT. THR. R1/2-RP1/4
180 315239-0111 1 NYLON WASHER G3/8
330 1511629-0000 1 WATER DIAGRAM
TBA/21 ICE-WATER (See drawing on page: 2-84)
180 315239-0111 1 NYLON WASHER G3/8
235 342920-0124 1 STRAIGHT COUPLING,EXT.THREADED 8/6-R1/2"
320 90166-0118 MM 900 TUBE 8 MM PA BLACK
330 1255364-0000 1 WATER DIAGRAM
TBA/22 COMPRESSOR (See drawing on page: 2-82)
165 342901-0102 1 HOSE NIPPLE, EXT.THR. R1/4-7 MM
175 90330-0085 1 BUSHING, INT/EXT. THR. R1/2-RP1/4
180 315239-0111 1 NYLON WASHER G3/8
330 1484511-0000 1 WATER DIAGRAM
Common Parts
030 1041932-0000 1 PIPE
040 1041933-0000 1 PIPE
050 1037[illegible]-0000 1 HOLDER
060 90458-0921 2 FILTER SP 122-200
90458-2541 FILTER, CP23174-7-304SS
070 90187-0029 4 BALL VALVE G1/2, NPBR
080 479261-0000 4 NIPPLE
090 312105-0370 2 SCREW M6S ISO 4017 M6X20 A480
100 315125-0153 2 WASHER TBRSB 6,4X22X4 A4
110 342720-0114 6 CONN. STR. GA-15-G1/2
120 90043-0006 1 PRESSURE GAUGE, 2041 D=63 MM
130 342701-0202 1 BUSHING,INT./EXT.G-THREAD G3/8"-G1/8"
150 315239-0113 18 NYLON WASHER G1/2
160 315239-0109 1 NYLON WASHER G1/8
170 342901-0105 1 HOSE NIPPLE, EXT.THR. R1/2-12 MM
200 90110-0095 1 CONNECTOR 3 POLE + EARTH
210 273455-0000 1 LABEL (COLD WATER)
220 312502-0120 2 DRIVE SCREW ROUND HEAD KDS 0X5
240 90157-0016 1 LOCKING FLUID
250 342930-0133 1 ELBOW 90 COUPL.,EXT.THREAD 10/8-R3/8"
270 352103-0101 2 CABLE GLAND, ST 9, PR15,2/PG9
350 2547061-0000 1 HOLDER
410 342708-0109 7 REINFORCING RING VSH 15X1 MM
B 2102 90274-0042 1 PRESSURE GUARD, 200 KPA
W 2220 351150-0403 MM 2000 CABLE OLFLEX 3X0,75 MM2 LIGHT/GREY
W 2243 351150-0403 MM 2000 CABLE OLFLEX 3X0,75 MM2 LIGHT/GREY
Y 2108 90042-0249 1 SOLENOID VALVE OFFICINE DI ENSINO
Pos Part No UN Qty Description Page No
Machine Type Group Description Used-In Group Number Page No
Tetra Pak 648506-0400 WATER PANEL 648506-0400 Pos. 070 1095608-0100 2-83 (107)
Doc No: SPC-2645000-0101
32 23 22 31
F

Introduction

Manual Information

Tetra Pak recommends reading all delivered manuals carefully. Make sure that the delivered manuals are available to personnel who operate or maintain the equipment.

It is important to keep this catalogue for the lifetime of the equipment and to pass the catalogue on to any subsequent holder or user.

Tetra Pak will not be held responsible for any damage to the equipment caused by not following the instructions given in the manuals that accompany this equipment.

Delivered Manuals

Manuals delivered with this equipment may include

- CM
  The Conversion Manual provides technicians with information on converting the equipment between different production modes.
- EM
  The Electrical Manual provides technicians with information about the equipment's electrical system.
- IM
  The Installation Manual provides technicians with information required to safely install the equipment.
- MM
  The Maintenance Manual provides technicians with information on maintaining the equipment.
- OM
  The Operation Manual manual provides the operator with information on handling and operating the equipment before, during, and after production.
- SPC
  The Spare Parts Catalogue provides the information necessary to order spare parts from Tetra Pak
- TeM
  The Technical Manual
  - provides technicians with information required to safely install the equipment
  - provides technicians with information on maintaining the equipment
  - provides technicians with information about the machine's/ equipment's electrical system
  - provides the information necessary to order spare parts from Tetra Pak.

Page Layout

Refer to the illustration (A) on page i-5: The main pages in a Spare Parts Catalogue consist of an illustration page (1) and a corresponding list page (7). The page number (5) is shown in the header of an illustration page and in the footer of a list page. The document number (6) is shown in the footer of a list page.

Page Numbering

Refer to the illustration (A) on page i-5: A page number (5) has three parts:

- chapter number (2)
- consecutive page number within the chapter (3)
- total number of pages in the chapter (4)

Machine Introduction

Manufacturer

For the manufacturer's name and address, see the second page of this catalogue.

Service

To order spare parts for this machine, or to report problems associated with operating this machine, contact the nearest Tetra Pak office.

Contact the Liaison with other inquiries, comments, or suggestions for improvement regarding the equipment and its documentation.

Identification

CE Classification

This equipment complies with the basic health and safety regulations of the European Economic Area (EEA).

Machine Plate

The illustration (B) on page i-5 shows an example of a machine plate. An illustration of the valid machine plate and its location on the equipment is shown in the Introduction chapter of the manuals delivered with this equipment. The machine plate contains the data listed below, needed when contacting Tetra Pak concerning this specific equipment.

- Machine type (8)
- Volume (9)
- Drawing specifications (10)
- Machine serial number (11)
- Manufacturer (12)
- CE mark (13)
- Year of manufacture (14)

The illustration (C) on page i-5 shows an example of a machine specification. Make sure that the equipment data listed in the front pages of this manual corresponds to the machine plate data and the machine specification.

How to Use This Spare Parts Catalogue

Locate a Spare Part Number

a) Refer to the illustration (D) on page i-5: Go to the chapter number (15) indicated beside the main group that contains the part you want to locate.

Items b) and c) refer to the illustration (E) on page i-6.

b) On the main group illustration, look for the machine subgroup (17) that contains the part or subgroup you are looking for. Note the position number (18) and go to the list page that follows the illustration.

c) Look for the position number/reference designation (16) or the subgroup name (19). Go to the corresponding page number (20) listed in the right-hand column. Tetra Pak has chosen to always use the function oriented structure for reference designation. The prefix indicating function oriented structure (=) is not shown in the reference designation.

Items d) and e) refer to the illustration (F) on page i-6.

d) Locate the part (21) that you are looking for on the subgroup illustration and note the part's position number.

e) The part number (29) and part description (30) are listed beside the position number on the list page.

Information Listed in a Spare Parts Catalogue

The list below refers to the illustration (F) on page i-6. A Spare Parts Catalogue contains the following information about groups, subgroups, and spare parts for the equipment:

- Group structure reference (22). Indicates the next higher group in the equipment list structure.
- Group name (23)
- Unit of measure (25)
- Quantity (26)
- Assembly drawing number (27)
- List page range (28). Included if there are multiple pages in the group illustration or list.
- Part or subgroup number (29)
- Subgroup name or part description (30)
- Group number (31)
- Equipment number (32)
- Group information heading (33). Indicates if the section below the heading is for a specific machine variant or if it is a list of common parts. If a list has more than one variant and each variant has its own assembly drawing, a page reference to the variant's assembly drawing is shown.
- Internal information (34)

Увод

Информация за ръководството

Tetra Pak Ви препоръчва да прочетете внимателно всички доставени ръководства. Проверете дали доставените ръководства са достъпни за служителите, които поддържат или работят с оборудването.

Важно е да запазите този каталог през целия живот на оборудването и да го предадете на трети лица, които ще използват или съхраняват оборудването.

Tetra Pak не може да бъде държана под отговорност за щети върху оборудването, причинени от неспазване на даденте инструкции в ръководствата, които съпровождат оборудването.

Доставени ръководства

Ръководствата, доставени с това оборудване, могат да включват

- CM
  Ръководството за приспособяване осигурява на техническите лица информация за приспособяването на оборудване към различни производствени режими.
- EM
  Електрическото ръководство осигурява на техническите лица информация за електрическата система на оборудването.
- IM
  Ръководството за инсталиране предоставя на техническите лица информацията, която е необходима за безопасно инсталиране на оборудването.
- MM
  Ръководството за поддръжка предоставя на техническите лица информация относно поддържането на оборудването.
- OM
  Ръководството за операции предоставя на операторите информация за това, как да боравят и функционират с оборудването преди, по време на и след производство.
- SPC
  Каталогът с резервни части предоставя необходимата информация за поръчка на резервни части от Tetra Pak
- TeM
  Техническото ръководство
  - предоставя на техническите лица необходимата информация за безопасно инсталиране на оборудването
  - предоставя на техническите лица информация за поддръжка на оборудването
  - предоставя на техническите лица информация за електрическата система на машината/оборудването
  - предоставя необходимата информация за поръчка на резервни части от Tetra Pak.

Формат на страниците

Разгледайте илюстрация (A) на страница i-5: Главните страници в Каталога с резервни части се състоят от страница с илюстрация (1) и прилежаща страница със списък (7). Номерът на страницата (5) е посочен в горната част на страницата с илюстрация и в долната част на страницата със списъка. Номерът на документа (6) е показан в долната част на страницата със списъка.

Номериране на страници

Разгледайте илюстрация (A) на страница i-5: Един номер на страница (5) има три части:

- номер на глава (2)
- последователен номер на страница в една глава (3)
- общ брой страници в главата (4)

Машини Увод

Производител

Вижте втората страница на този каталог, за да проверите името и адреса на производителя.

Обслужване

За да поръчате резервни части за тази машина или да докладвате за проблеми, свързани с работата с тази машина, се свържете с най-близкия офис на Tetra Pak.

Свържете се с отдела за контакти с клиенти за други запитвания, коментари и предложения за подобрение по отношение на оборудването и прилежащата му документация.

Идентификация

Класификация на ЦЕ

Това оборудване отговаря на основните наредби, свързани с опазване на здравето и безопасността на Европейската Икономическа Общност (ЕИО).

Табелка на машина

Илюстрация (B) на страница i-5 показва пример с табелка на машина. В уводната глава на ръководствата, доставени с това оборудване, е показана илюстрация с валидната табелка на машината и нейното положение върху оборудването. Табелката на машината съдържа посочените по-долу данни, които Ви трябват, когато се свързвате с Tetra Pak относно това специфично оборудване.

- Тип машина (8)
- Обем (9)
- Спесификации за чертане (10)
- Сериен номер на машината (11)
- Производител (12)
- CE печат (13)
- Година на производство (14)

Илюстрация (C) на страница i-5 показва пример със спесификация за машина. Проверете дали данните за оборудването, изброени на предните страници в това ръководство отговарят на данните от табелката на машината и на спесификацията на машината.

Как да използвате този Каталог за резервни части

Намерете Номер на резервна част

a) Разгледайте илюстрация (D) на страница i-5: Отидете в глава номер (15) посочена до главната група, която съдържа частта, която искате да намерите.

Артикули b) и c) се отнасят до илюстрация (E) на страница i-6.

b) На главната обща илюстрация вижте подгрупата на машината (17), която съдържа частта или подгрупата, която търсите. Намерете номера на позицията (18) и отворете на страницата със списъка, която е след илюстрацията.

c) Намерете номера на позицията/референцията (16) или името на подгрупата (19). Отворете съответстващия номер на страница (20) в дясната колона. Tetra Pak е избрала да използва винаги функционално-ориентирана структура при обозначаване на референциите. Префиксът, който показва функционално-ориентирана структура (=) не е посочен в обозначаването на референциите.

Артикули d) и e) се отнасят до илюстрация (F) на страница i-6.

d) Намерете частта (21), която търсите в илюстрацията на подгрупата и запомнете номера на частта.

e) Номерът на частта (29) и описанието на частта (30) са изброени до номера на позицията на страницата със списъка.

Изброена информация в Каталога с резервни части

По-долу посоченият списък се отнася до илюстрация (F) на страница i-6. Каталогът с резервни части съдържа следната информация за групи, подгрупи и резервни части за оборудването:

- Референция за структурата (22). Показва следващата по-голяма група в структурата със списъка на оборудването.
- Име на група (23)
- Единица мярка (25)
- Количество (26)
- Номер за монтажен чертеж (27)
- Обхват на страницата със списък (28). Включен, ако има няколко страници в илюстрацията на групата или списъка.
- Номер на част или подгрупа (29)
- Име на подгрупа или описание на част (30)
- Номер на група (31)
- Номер на оборудване (32)
- Референция за информацията за групата (33). Показва дали частта под заглавието е за специфична версия на машината или е списък с общи части. Ако един списък има повече от един вариант и всеки вариант има собствен монтажен чертеж, се показва референцията на страницата към монтажния чертеж на варианта.
- Вътрешна информация (34)

Úvod

Informace o manuálu

Tetra Pak doporučuje, abyste si pozorně přečetli všechny dodané příručky. Přesvědčte se, že dodané manuály jsou k dispozici personálu, který obsluhuje nebo provádí údržbu zařízení.

Je důležité ponechat si tuto příručku po celou dobu životnosti zařízení a předat ho jakémukoliv následujícímu vlastníkovi nebo uživateli.

Tetra Pak nebude odpovídat za žádné škody zařízení, způsobené nedodržováním pokynů uvedených v této příručce.

Dodané příručky

Příručky dodané s tímto zařízením mohou obsahovat

- CM
  Konverzní manuál (CM) poskytuje technikům informace o konverzi zařízení mezi různými výrobními režimy.
- EM
  Elektrický manuál (EM) poskytuje technikům informace o elektrickém systému tohoto zařízení.
- IM
  Instalační manuál (IM) poskytuje technikům informace potřebné k bezpečné instalaci zařízení.
- MM
  Údržbový manuál (MM) poskytuje technikům informace o údržbě tohoto zařízení.
- OM
  Provozní manuál (OM) poskytuje operátorovi informace o manipulaci s tímto zařízením a provozu před, během a po výrobě.
- SPC
  Katalog náhradních dílů (SPC) poskytuje informace potřebné pro objednávání náhradních dílů od společnosti Tetra Pak
- TeM
  Technický manuál
  - poskytuje technikům informace potřebné k bezpečné instalaci tohoto zařízení
  - poskytuje technikům informace o údržbě tohoto zařízení
  - poskytuje technikům informace o elektrickém systému tohoto zařízení
  - poskytuje informace potřebné pro objednávání náhradních dílů od společnosti Tetra Pak

Rozvržení stránky

Viz obrázek (A) na straně i-5: Hlavní strany Katalogu náhradních dílů obsahují stranu s obrázky (1) a odpovídající stranu seznamu (7). Číslo strany (5) je uvedeno v záhlaví strany s obrázky a v zápatí strany seznamu. Číslo dokumentu (6) je uvedeno v zápatí strany seznamu.

Číslování stran

Viz obrázek (A) na straně i-5: Číslo strany (5) sestává ze tří částí:

- číslo kapitoly (2)
- pořadové číslo strany (3) v kapitole
- celkový počet stránek (4) v kapitole

Úvod ke stroji

Výrobce

Název a adresa výrobce je uvedena na druhé straně tohoto katalogu.

Servis

Chcete-li objednat náhradní díly nebo ohlásit problémy související s provozem tohoto stroje, kontaktujte nejbližší kancelář Tetra Pak.

S dalšími dotazy, připomínkami nebo náměty na vylepšení ohledně zařízení a této dokumentace se obracejte na kontaktní osobu.

Identifikace

Klasifikace CE

Toto zařízení splňuje základní zdravotní a bezpečnostní předpisy Evropského hospodářského prostoru (EEA).

Štítek na stroji

Obrázek (B) na straně i-5 znázorňuje příklad štítku na stroji. Obrázek platného štítku na stroji a jeho umístění na zařízení je uveden v příručkách dodaných s tímto strojem v kapitole Úvod. Na štítku jsou uvedeny údaje potřebné při kontaktování společnosti Tetra Pak, týkající se tohoto specifického zařízení.

- Typ stroje (8)
- Objem (9)
- Výkresové specifikace (10)
- Výrobní číslo stroje (11)
- Výrobce (12)
- Označení CE (13)
- Rok výroby (14)

Obrázek (C) na straně i-5 zobrazuje příklad specifikace stroje. Přesvědčte se, že údaje o zařízení uvedená v seznamu na předních stranách tohoto manuálu odpovídají údajům štítku na stroji a specifikaci stroje.

Jak používat tento Katalog náhradních dílů

Vyhledejte číslo náhradního dílu

a) Viz obrázek (D) na straně i-5: Přejděte na číslo kapitoly (15) uvedené vedle hlavní skupiny, která obsahuje hledaný díl.

Položky b) a c) odkazují na obrázek (E) na straně i-6.

b) Na vyobrazení hlavní skupiny vyhledejte strojní podskupinu (17), která obsahuje hledaný díl nebo podskupinu. Poznamenejte si číslo pozice (18) a přejděte na stranu seznamu vyplývající z obrázku.

c) Vyhledejte číslo pozice/označení odkazu (16) nebo název podskupiny (19). Přejděte na odpovídající číslo strany (20) v seznamu v pravém sloupci. Tetra Pak zvolil pro označování odkazu používat vždy uspořádání orientované na funkci. Prefix indikující uspořádání orientované na funkci (=) není uveden v označení odkazu.

Položky d) a e) odkazují na obrázek (F) na straně i-6.

d) Vyhledejte díl (21), který hledáte na vyobrazení podskupiny a poznamenejte si číslo pozice dílu.

e) Číslo dílu (29) a popis dílu (30) jsou uvedeny v seznamu vedle čísla pozice na straně seznamu.

Informace uvedené v seznamu v Katalogu náhradních dílů

Níže uvedený seznam odkazuje na obrázek (F) na straně i-6. Katalog náhradních dílů obsahuje následující informace o skupinách, podskupinách a náhradních dílech pro toto zařízení:

- Odkaz na uspořádání skupiny (22). Indikuje další vyšší skupinu v uspořádání seznamu zařízení.
- Název skupiny (23)
- Měrná jednotka (25)
- Množství (26)
- Číslo montážního výkresu (27)
- Rozsah stran seznamu (28). Včetně toho, zda existuje více stran v obrázku skupiny nebo seznamu.
- Díl nebo číslo podskupiny (29)
- Název podskupiny nebo popis dílu (30)
- Číslo skupiny (31)
- Číslo zařízení (32)
- Záhlaví informace o skupině (33). Indikuje, že oddíl pod záhlavím je pro specifickou variantu stroje nebo jde-li o seznam běžných dílů. Jestliže seznam obsahuje více než jednu variantu a každá varianta má svůj vlastní montážní výkres, pak je uveden odkaz na stranu montážního výkresu této varianty.
- Interní informace (34)

Indledning

Oplysninger om manualen

Tetra Pak anbefaler, at alle leverede manualer læses omhyggeligt. Sørg for, at de udleverede manualer er til rådighed for personale, som arbejder med eller vedligeholder udstyret.

Det er vigtigt at opbevare dette katalog hele udstyrets levetid og give kataloget videre til eventuelt kommende ejere eller brugere.

Tetra Pak kan ikke holdes ansvarlig for eventuel beskadigelse af udstyr, der opstår, fordi instruktionerne i manualerne til dette udstyr ikke følges.

Udleverede manualer

De manualer, der leveres sammen med dette udstyr, kan omfatte

- CM
  Denne konverteringsmanual forsyner teknikere med oplysninger om konvertering af udstyret mellem forskellige produktionstilstande.
- EM
  Denne elektriske manual forsyner teknikere med informationer om udstyrets elektriske system.
- IM
  Denne installationsmanual forsyner teknikere med nødvendig information i forbindelse med sikker installation af udstyret.
- MM
  Denne vedligeholdelsesmanual forsyner teknikere med information om vedligeholdelse af udstyret.
- OM
  Denne betjeningsmanual giver operatøren oplysninger om betjening af udstyret før, under og efter produktion.
- SPC
  Denne reservedelskatalog indeholder oplysninger, der er nødvendig for at bestille reservedele fra Tetra Pak
- TeM
  Den tekniske manual
  – forsyner teknikere med information, der er nødvendig for en sikker installation af udstyret.
  – forsyner teknikere med information om vedligeholdelse af udstyret.
  – forsyner teknikere med information om maskinens/udstyrets elektriske system.
  – indeholder de informationer, der er nødvendige for at kunne bestille reservedele fra Tetra Pak.

Sidelayout

Se illustration (A) på side i-5: Hovedsiderne i et reservedelskatalog består af en illustrationsside (1) og en tilsvarende listeside (7). Sidenummeret (5) vises i sidehovedet på en illlustrationsside og i sidefoden på en listeside. Dokumentnummeret (6) vises i sidefoden på en listeside.

Sidenummerering

Se illustrationen (A) på side i-5: Et sidenummer (5) har tre dele:

- kapitelnummer (2)
- fortløbende sidenummer i kapitlet (3)
- samlet sideantal i kapitlet (4)

Præsentation af maskinen

Producent

Producentens navn og adresse findes på side to i dette katalog.

Service

Kontakt nærmeste Tetra Pak-kontor for at bestille reservedele eller rapportere problemer i forbindelse med betjening af denne maskine.

Henvendelse til vores kontaktperson med andre forespørgsler, kommentarer eller forslag til forbedring angående udstyr og dokumentation.

Identificering

CE-klassificering

Dette udstyr lever op til de grundlæggende regulativer for sundhed og sikkerhed indenfor den Europæiske Økonomiske Samarbejdsområde (EØS).

Maskinskilt

Illustrationen (B) på side i-5 viser et eksempel på et maskinskilt.
En illustration af et gyldigt maskinskilt og dets placering på udstyret er vist i indledningskapitlet i de manualer, der leveres med dette udstyr. Maskinskiltet indeholder nedennævnte data. Disse er nødvendige ved kontakt med Tetra Pak vedrørende dette specifikke udstyr.

- Maskintype (8)
- Volumen (9)
- Tegningsspecifikationer (10)
- Maskinens serienummer (11)
- Producent (12)
- CE-mærke (13)
- Produktionsår (14)

Illustrationen (C) på side i-5 viser et eksempel på en maskinspecifikation. Kontroller, at de udstyrsdata, der er anført på de første sider i denne manual, svarer til maskinskiltsdataene og maskinspecifikationen.

Sådan bruges dette reservedelskatalog.

Find et reservedelsnummer

a) Se illustrationen (D) på side i-5: Gå til kapitelnummeret (15), der er angivet ved siden af hovedgruppen, der indeholder den del, der ønskes fundet.

Punkterne b) og c) refererer til illustrationen (E) på side i-6.

b) I hovedgruppeillustrationen skal man se efter maskinundergruppen (17), som indeholder den del eller undergruppe, der søges. Bemærk placeringsnummeret (18), og gå til listesiden, som følger illustrationen.

c) Se efter placeringsnummeret/henvisningsbetegnelse (16) eller undergruppens navn (19). Gå til det tilsvarende sidenummer (20) angivet i den højre kolonne. Tetra Pak har valgt altid at anvende den funktionsorienterede struktur til henvisningsbetegnelse. Præfikset angiver funktionsorienteret struktur (=) ikke vist i henvisningsbetegnelsen.

Punkterne d) og e) refererer til illustrationen (F) på side i-6.

d) Find den del (21), du søger i undergruppeillustrationen, og notér delens placeringsnummer.

e) Reservedelsnummeret (29) og -beskrivelsen (30) er angivet ved siden af placeringsnummeret på listesiden.

Informationer der er angivet i et reservedelskatalog

Listen nedenfor refererer til illustrationen (F) på side i-6. Et reservedelskatalog indeholder følgende informationer om grupper, undergrupper og reservedele til udstyret:

- Gruppestrukturreference (22). Angiver næste overordnede gruppe i udstyrslistestrukturen.
- Gruppenavn (23)
- Måleenhed (25)
- Antal (26)
- Samletegningsnummer (27)
- Listens sideområde (28). Er angivet, hvis gruppeillustrationen eller -listen inkluderer mange sider.
- Del- eller undergruppenummer (29)
- Undergruppens navn eller delsbeskrivelse (30)
- Gruppenummer (31)
- Udstyrsnummer (32)
- Overskrift for gruppeinformation (33). Angiver, om afsnittet under overskriften er for en specifik maskinvariant, eller om det er en liste over fælles dele. Hvis en liste har mere end én variant, og hver variant har sin egen samletegning, vises en sidereference til variantens samletegning.
- Intern information (34)

Einleitung

Informationen über das Handbuch

Tetra Pak empfiehlt, alle mitgelieferten Handbücher sorgfältig durchzulesen. Stellen Sie sicher, dass die Handbücher dem Personal, das die Ausrüstung betreibt oder wartet, zur Verfügung steht.

Es ist wichtig, dass Sie diesen Katalog für die gesamte Lebensdauer der Ausrüstung vorliegen haben und einem etwaigen Nachbesitzer oder -betreiber übergeben.

Tetra Pak haftet nicht für Schäden an der Ausrüstung, die aufgrund von Nichtbeachtung der Anweisungen aus den Handbüchern, die mit diesem Gerät geliefert werden, entstehen.

Gelieferte Handbücher

Die Handbücher, die mit dieser Ausrüstung geliefert wird, können Folgendes beinhalten

- CM
  Das Umbauhandbuch gibt den Technikern Informationen über den Umbau der Ausrüstung zwischen verschiedenen Produktionsweisen.
- EM
  Das Elektrohandbuch gibt den Technikern Informationen zum Elektrosystem der Ausrüstung.
- IM
  Das Installationshandbuch gibt den Technikern Informationen für die sichere Installation der Ausrüstung.
- MM
  Das Wartungshandbuch gibt den Technikern Informationen für die Wartung der Ausrüstung.
- OM
  Das Betriebshandbuch gibt dem Bediener Informationen über die Bedienung und den Betrieb der Ausrüstung vor, während und nach der Produktion.
- SPC
  Der Ersatzteilkatalog liefert die Informationen, die für die Bestellung von Ersatzteilen bei Tetra Pak erforderlich sind.
- TeM
  Das technische Handbuch
  - gibt den Technikern Informationen für die sichere Installation der Ausrüstung
  - gibt den Technikern Informationen für die Wartung der Ausrüstung
  - gibt den Techniker Informationen zum Elektrosystem der Ausrüstung/der Maschine
  - liefert die Informationen, die für die Bestellung von Ersatzteilen bei Tetra Pak erforderlich sind.

Seitenlayout

Bezugnahme auf Abbildung (A) auf Seite i-5: Die Hauptseiten in einem Ersatzteilkatalog bestehen aus einer Abbildungsseite (1) und einer entsprechenden Listenseite (7). Die Seitennummer (5) wird in der Kopfzeile einer Abbildungsseite und in der Fußzeile einer Listenseite aufgeführt. Die Dokumentennummer (6) wird in der Fußzeile einer Listenseite aufgeführt.

Seitennummerierung

Bezugnahme auf Abbildung (A) auf Seite i-5: Eine Seitennummer (5) besteht aus drei Teilen:

- Kapitelnummer (2)
- Fortlaufende Seitennummer innerhalb des Kapitels (3)
- Gesamtzahl der Seiten im Kapitel (4)

Einführung zur Maschine

Hersteller

Bitte entnehmen Sie den Namen und die Adresse des Herstellers der zweiten Seite dieses Katalogs.

Service

Zur Bestellung von Ersatzteilen für diese Maschine oder um Probleme im Zusammenhang mit dem Betrieb dieser Maschine zu melden, wenden Sie sich bitte an das nächstgelegene Büro von Tetra Pak.

Wenden Sie sich bei anderen Anfragen, Kommentaren oder Verbesserungsvorschlägen mit Bezug auf die Ausrüstung und seine Dokumentation an die Verbindungsstelle.

Identifizierung

CE-Klassifizierung

Diese Ausrüstung erfüllt die wesentlichen Anforderungen des Europäischen Wirtschaftsraum (EWR) für Gesundheitsschutz und die Sicherheit.

Maschinenschild

Die Abbildung (B) auf Seite i-5 zeigt ein Beispiel eines Maschinenschilds. Die Abbildung eines gültigen Maschinenschildes und seine Position auf der Ausrüstung wird im Einleitungskapitel der mit dieser Ausrüstung gelieferten Handbücher gezeigt. Das Maschinenschild enthält die Daten, die erforderlich sind, wenn Sie sich bezüglich dieser speziallen Ausrüstung an Tetra Pak wenden.

- Maschinentyp (8)
- Volumen (9)
- Zeichnungsspezifikationen (10)
- Seriennummer der Maschine (11)
- Hersteller (12)
- CE-Zeichen (13)
- Baujahr (14)

Die Abbildung (C) auf Seite i-5 zeigt ein Beispiel einer Maschinenspezifikation. Stellen Sie sicher, dass die Ausrüstungsdaten, die in den vorderen Seiten dieses Handbuchs aufgelistet sind, mit den Maschinenschilddaten und der Maschinenspezifikation übereinstimmen.

Benutzung dieses Ersatzteilkatalogs

Finden einer Ersatzteilnummer

a) Bezugnahme auf Abbildung (D) auf Seite i-5: Weiter zur Kapitel nummer (15), die neben der Hauptgruppe angegeben ist, die das entsprechende Teil enthält.

Die Positionen b) und c) beziehen sich auf die Abbildung (E) auf Seite i-6.

b) Suchen Sie auf der Hauptgruppenillustration nach der Maschinen-Untergruppe (17), die das gesuchte Teil oder die Untergruppe enthält. Notieren Sie die Positionsnummer (18) und gehen Sie dann zur Listenseite, die der Abbildung folgt.

c) Suchen Sie nach der Positionsnummer/Referenzbezeichnung (16) oder dem Namen der Untergruppe (19). Gehen Sie zur entsprechenden Seitennummer (20), die in der rechten Spalte aufgelistet ist. Tetra Pak hat sich dazu entschieden, stets eine funktionsorientierte Struktur für die Referenzbezeichnung zu verwenden. Die vorangestellte Kennzeichnung, welche die funktionsorientierte Struktur angibt (=), wird in der Referenzbezeichnung nicht angezeigt.

Die Positionen d) und e) beziehen sich auf die Abbildung (F) auf Seite i-6.

d) Finden Sie das gesuchte Teil (21) auf der Abbildung der Untergruppe und notieren Sie die Positionsnummer des Teils.

e) Die Teilenummer (29) und die Teilebeschreibung (30) werden neben der Positionsnummer auf der Listenseite aufgelistet.

In einem Ersatzteilkatalog aufgelistete Informationen

Die folgende Liste bezieht sich auf die Abbildung (F) auf Seite i-6. Ein Ersatzteilkatalog enthält folgende Informationen über Gruppen, Untergruppen und Ersatzteile für die Ausrüstung:

- Gruppenstrukturreferenz (22). Sie gibt die nächst höhere Gruppe in der Ausrüstungslistenstruktur an.
- Gruppenname (23)
- Maßeinheit (25)
- Menge (26)
- Nummer der Zusammenbauzeichnung (27)
- Listenseitenbereich (28). Enthalten, wenn es mehrere Seiten in der Gruppenabbildung oder Liste gibt.
- Teile- oder Untergruppennummer (29)
- Untergruppenname oder Teilebeschreibung (30)
- Gruppennummer (31)
- Ausrüstungsnummer (32)
- Gruppeninformationsüberschrift (33). Gibt an, ob sich der Abschnitt unter der Überschrift auf eine spezifische Maschinenvariante bezieht oder ob es sich um eine Liste der allgemeinen Teile handelt. Wenn eine Liste mehr als eine Variante hat und jede Variante über eine eigene Zusammenbauzeichnung verfügt, wird eine Seitenreferenz zur Zusammenbauzeichnung angezeigt.
- Interne Informationen (34)

Εισαγωγή

Πληροφορίες για το Εγχειρίδιο

Η Tetra Pak σάς συνιστά να διαβάζετε προσεκτικά όλα τα παρεχόμενα εγχειρίδια. Εξασφαλίζετε ότι όλα τα παρεχόμενα εγχειρίδια διατίθενται στο προσωπικό που χειρίζεται ή συντηρεί τον εξοπλισμό.

Είναι σημαντικό να διατηρείτε αυτό τον κατάλογο καθ' όλη τη διάρκεια ζωής του εξοπλισμού καθώς και να παραδίδετε τον κατάλογο στον τυχόν επόμενο ιδιοκτήτη ή χρήστη του εξοπλισμού.

Η Tetra Pak δεν πρόκειται να αναλάβει καμία ευθύνη για οποιαδήποτε ζημιά που μπορεί να προκληθεί στον εξοπλισμό εξαιτίας της μη τήρησης των οδηγιών οι οποίες παρέχονται στα εγχειρίδια που συνοδεύουν αυτό τον εξοπλισμό.

Παρεχόμενα Εγχειρίδια

Στα εγχειρίδια που παρέχονται μαζί μ' αυτό τον εξοπλισμό, μπορεί να περιλαμβάνονται τα εξής:

- CM
  Αυτό το Εγχειρίδιο Μετατροπής παρέχει στους τεχνικούς πληροφορίες για τη μετατροπή του εξοπλισμού μεταξύ των διάφορων λειτουργιών παραγωγής.
- EM
  Αυτό το Ηλεκτρικό Εγχειρίδιο παρέχει στους τεχνικούς πληροφορίες για το ηλεκτρικό σύστημα του εξοπλισμού.
- IM
  Αυτό το Εγχειρίδιο Εγκατάστασης παρέχει στους τεχνικούς τις απαιτούμενες πληροφορίες για την ασφαλή εγκατάσταση του εξοπλισμού.
- MM
  Αυτό το Εγχειρίδιο Συντήρησης παρέχει στους τεχνικούς πληροφορίες για τη συντήρηση του εξοπλισμού.
- OM
  Αυτό το Εγχειρίδιο Χειρισμού παρέχει στο χειριστή πληροφορίες για το χειρισμό και τη λειτουργία του εξοπλισμού πριν, κατά τη διάρκεια και μετά την παραγωγή.
- SPC
  Αυτός ο Κατάλογος Ανταλλακτικών παρέχει τις απαραίτητες πληροφορίες για την παραγγελία ανταλλακτικών από την Tetra Pak.
- TeM
  Το Τεχνικό Εγχειρίδιο
  - παρέχει στους τεχνικούς τις απαιτούμενες πληροφορίες για την ασφαλή εγκατάσταση του εξοπλισμού
  - παρέχει στους τεχνικούς πληροφορίες για τη συντήρηση του εξοπλισμού
  - παρέχει στους τεχνικούς πληροφορίες για το ηλεκτρικό σύστημα του εξοπλισμού/μηχανής
  - παρέχει τις απαραίτητες πληροφορίες για την παραγγελία ανταλλακτικών από την Tetra Pak.

Διάταξη Σελίδων

Ανατρέξτε στην εικόν (A) της σελίδας i-5: Οι κύριες σελίδες ενός Καταλόγου Ανταλλακτικών αποτελούνται από μία εικονογραφημένη σελίδα (1) και από μία αντίστοιχη σελίδα λίστας (7). Ο αριθμός σελίδας (5) εμφανίζεται στην κεφαλίδα μιας εικονογραφημένης σελίδας και στο υποσέλιδο μιας σελίδας λίστας. Ο αριθμός εγγράφου (6) εμφανίζεται στο υποσέλιδο μιας σελίδας λίστας.

Αρίθμηση Σελίδων

Ανατρέξτε στην εικόνα (A) της σελίδας i-5: Ένας αριθμός σελίδας (5) αποτελείται από τα εξής τρία μέρη:

- αριθμός κεφαλαίου (2)
- αύξων αριθμός σελίδας του κεφαλαίου (3)
- συνολικός αριθμός σελίδων του κεφαλαίου (4)

Παρουσίαση Μηχανής

Κατασκευαστής

Για το όνομα και τη διεύθυνση του κατασκευαστή, ανατρέξτε στη δεύτερη σελίδα αυτού του καταλόγου.

Τεχνική Εξυπηρέτηση

Για να παραγγείλετε ανταλλακτικά για τη συγκεκριμένη μηχανή ή για να αναφέρετε προβλήματα που σχετίζονται με τη λειτουργία αυτής της μηχανής, επικοινωνήστε με το πλησιέστερο γραφείο της Tetra Pak.

Εάν έχετε άλλου είδους ερωτήσεις, σχόλια ή προτάσεις βελτίωσης σχετικά με τον εξοπλισμό και την έγγραφη τεκμηρίωσή του, επικοινωνήστε με το Τμήμα Σχέσεων.

Στοιχεία Ταυτότητας

Σήμανση CE

Αυτός ο εξοπλισμός συμμορφώνεται με τους βασικούς κανονισμούς υγείας και ασφάλειας του Ευρωπαϊκού Οικονομικού Χώρου (ΕΟΧ).

Πινακίδα Αναγνώρισης Μηχανής

Η εικόνα (B) της σελίδας i-5 δείχνει ένα παράδειγμα μιας πινακίδας αναγνώρισης μηχανής.
Μια εικόνα που δείχνει την ενδεδειγμένη μορφή και θέση της πινακίδας αναγνώρισης μηχανής στον εξοπλισμό, παρουσιάζεται στο κεφάλαιο 'Εισαγωγή' των εγχειριδίων που παρέχονται μ' αυτόν τον εξοπλισμό.
Η πινακίδα αναγνώρισης μηχανής αναγράφει τα δεδομένα που παρατίθενται στη συνέχεια, τα οποία είναι απαραίτητα όταν επικοινωνείτε με την Tetra Pak για θέματα που αφορούν αυτό το συγκεκριμένο εξοπλισμό.

- Τύπος μηχανής (8)
- Χωρητικότητα (9)
- Στοιχεία σχεδίου (10)
- Αριθμός σειράς μηχανής (11)
- Κατασκευαστής (12)
- Σήμανση CE (13)
- Έτος κατασκευής (14)

Η εικόνα (Γ) της σελίδας i-5 δείχνει ένα παράδειγμα τεχνικών χαρακτηριστικών μηχανής. Βεβαιωθείτε ότι τα δεδομένα εξοπλισμού που παρατίθενται στις πρώτες σελίδες αυτού του εγχειριδίου συμφωνούν με τα δεδομένα της πινακίδας αναγνώρισης μηχανής και των τεχνικών χαρακτηριστικών μηχανής.

Πώς Χρησιμοποιείται Αυτός ο Κατάλογος Ανταλλακτικών

Εύρεση ενός Αριθμού Ανταλλακτικού

a) Ανατρέξτε στην εικόνα (Δ) της σελίδας i-5: Πηγαίνετε στον αριθμό κεφαλαίου (15) που υποδεικνύεται δίπλα από την κύρια ομάδα της μηχανής η οποία περιλαμβάνει το εξάρτημα που θέλετε να βρείτε.

Τα βήματα b) και c) αναφέρονται στην εικόνα (Ε) της σελίδας i-6.

b) Στην εικόνα της κύριας ομάδας μηχανής, αναζητήστε την υποομάδα μηχανής (17) η οποία περιλαμβάνει το εξάρτημα ή την υποομάδα που αναζητάτε. Σημειώστε τον αριθμό θέσης (18) και πηγαίνετε στη σελίδα λίστας που ακολουθεί την εικόνα.

c) Αναζητήστε τον αριθμό θέσης/ονομασία αναφοράς (16) ή το όνομα υποομάδας (19). Πηγαίνετε στον αντίστοιχο αριθμό σελίδας (20) που αναγράφεται στη δεξιά στήλη. Η Tetra Pak έχει επιλέξει να χρησιμοποιεί πάντα δομή ονομασίας αναφοράς με βάση τη λειτουργία. Το πρόθεμα που υποδεικνύει τη δομή με βάση τη λειτουργία (=) δε φαίνεται στο διάγραμμα αναφοράς.

Τα βήματα d) και e) αναφέρονται στην εικόνα (ΣΤ) της σελίδας i-6.

d) Βρείτε το εξάρτημα (21) που αναζητάτε στην εικόνα υποομάδας μηχανής και σημειώστε τον αριθμό θέσης του εξαρτήματος.

e) Ο αριθμός του εξαρτήματος (29) και η περιγραφή του εξαρτήματος (30) παρατίθενται δίπλα στον αριθμό θέσης στη σελίδα λίστας.

Πληροφορίες που Περιέχονται σε έναν Κατάλογο Ανταλλακτικών

Η λίστα που ακολουθεί αναφέρεται στην εικόνα (F) της σελίδας i-6. Ένας Κατάλογος Ανταλλακτικών περιέχει τις παρακάτω πληροφορίες σχετικά με τις ομάδες, τις υποομάδες και τα ανταλλακτικά του εξοπλισμού:

- Αναφορά δομής ομάδας (22). Υποδηλώνει την επόμενη μεγαλύτερη ομάδα στη δομή λίστας του εξοπλισμού.
- Όνομα ομάδας (23)
- Μονάδα μέτρησης (25)
- Ποσότητα (26)
- Αριθμός σχεδίου συγκροτήματος (27)
- Περιοχή σελίδων λίστας (28). Περιλαμβάνεται εφόσον η εικόνα ή η λίστα μιας ομάδας εκτίθεται σε περισσότερες από μία σελίδες.
- Αριθμός εξαρτήματος ή υποομάδας (29)
- Αριθμός υποομάδας ή περιγραφή εξαρτήματος (30)
- Αριθμός ομάδας (31)
- Αριθμός εξοπλισμού (32)
- Επικεφαλίδα πληροφοριών ομάδας (33). Υποδεικνύει εάν η ενότητα κάτω από την επικεφαλίδα αφορά μια συγκεκριμένη παραλλαγή μηχανής ή αποτελεί μια λίστα κοινών εξαρτημάτων. Σε περίπτωση που μια λίστα περιέχει περισσότερες από μία παραλλαγές και κάθε παραλλαγή έχει ξεχωριστό σχέδιο συγκροτήματος, εμφανίζεται μια παραπομπή προς τη σελίδα όπου βρίσκεται το σχέδιο συγκροτήματος της παραλλαγής.
- Εσωτερικές πληροφορίες (34)

Introducción

Información sobre el manual

Tetra Pak recomienda leer atentamente todos los manuales suministrados. Asegúrese de que los manuales están disponibles para el personal que opera o mantiene el equipo.

Es importante conservar este catálogo durante la vida útil del equipo, así como facilitárselo a cualquier propietario o usuario posterior.

Tetra Pak no se responsabilizará de daños en el equipo por no seguir las instrucciones proporcionadas en los manuales que acompañan este equipo.

Manuales entregados

Los manuales entregados con este equipo pueden incluir:

- CM
  El Manual de conversión proporciona a los técnicos información sobre cómo convertir el equipo a diferentes modos de producción.
- EM
  El Manual eléctrico proporciona a los técnicos información sobre el sistema eléctrico del equipo.
- IM
  El Manual de instalación proporciona a los técnicos la información necesaria para instalar el equipo de manera segura.
- MM
  El Manual de mantenimiento proporciona a los técnicos información sobre el mantenimiento del equipo.
- OM
  El Manual de funcionamiento proporciona al operador información sobre el manejo y el funcionamiento del equipo antes, durante y después de la producción.
- SPC
  El Catálogo de recambios proporciona la información necesaria para pedir las piezas de recambio a Tetra Pak.
- TeM
  El Manual técnico
  - proporciona a los técnicos la información necesaria para instalar de manera segura el equipo
  - proporciona a los técnicos información sobre el mantenimiento del equipo
  - proporciona a los técnicos información sobre el sistema eléctrico de la máquina/equipo
  - proporciona la información necesaria para pedir las piezas de recambio a Tetra Pak.

Organización de las páginas

Consultar la ilustración (A) en la página i-5: Las páginas principales en un Catálogo de recambios se componen de una página de ilustración (1) y una página de lista correspondiente (7). El número de la página (5) se muestra en el encabezado de una página de ilustración y en el pie de página de una página de lista. El número del documento (6) se muestra en el pie de página de una página de lista.

Numeración de las páginas

Consulte la ilustración (A) en la página i-5: Un número de página (5) consta de tres partes:

- número de capítulo (2)
- número de página consecutivo dentro del capítulo (3)
- número total de páginas del capítulo (4)

Introducción a la máquina

Fabricante

Para obtener el nombre y la dirección del fabricante, véase la segunda página de este catálogo.

Servicio

Para pedir recambios para esta máquina o informar de problemas asociados con el funcionamiento de la misma, póngase en contacto con la oficina de Tetra Pak más cercana.

Póngase en contacto con el representante para otras consultas, comentarios o consejos sobre mejoras referidos al equipo y su documentación.

Identificación

Clasificación de la CE

Este equipo cumple con la normativa básica sobre salud y seguridad del Espacio Económico Europeo (EEE).

Placa de máquina

La ilustración (B) en la página i-5 muestra un ejemplo de una placa de máquina.
En el capítulo Introducción de los manuales entregados con este equipo, se muestra una ilustración de la placa de máquina válida y su ubicación en el equipo. La placa de máquina contiene los datos que se enumeran a continuación, requeridos al ponerse en contacto con Tetra Pak en relación con este equipo específico.

- Tipo de máquina (8)
- Volumen (9)
- Especificaciones de plano (10)
- Número de serie de la máquina (11)
- Fabricante (12)
- Marca de la CE (13)
- Año de fabricación (14)

La ilustración (C) en la página i-5 muestra un ejemplo de especificación de la máquina. Asegúrese de que los datos de equipo que se enumeran en las páginas de la cubierta de este manual corresponden a los datos de la placa y las especificaciones de la máquina.

Cómo utilizar este Catálogo de recambios

Localizar un número de recambio

a) Consulte la ilustración (D) en la página i-5: Vaya al número de capítulo (15) indicado junto al grupo principal que contiene la pieza que desea localizar.

Los puntos b) y c) hacen referencia a la ilustración (E) en la página i-6.

b) En la ilustración del grupo principal, busque el subgrupo de la máquina (17) que contiene la pieza o el subgrupo que busca. Anote el número de posición (18) y vaya a la página de lista que sigue a la ilustración.

c) Busque el número de posición/denominación de referencia (16) o el nombre del subgrupo (19). Vaya al número de página correspondiente (20) que aparece en la columna de la derecha. Tetra Pak ha elegido utilizar siempre la estructura orientada a la función para la denominación de referencia. El prefijo que indica la estructura orientada a la función (=) no aparece en la denominación de referencia.

Los puntos d) y e) hacen referencia a la ilustración (F) en la página i-6.

d) Localice la pieza (21) que busca en la ilustración del subgrupo y anote el número de posición de la pieza.

e) El número de pieza (29) y la descripción de la misma (30) aparecen junto al número de posición en la página de lista.

Información que contiene un Catálogo de recambios

La lista que aparece a continuación hace referencia a la ilustración (F) en la página i-6. Un Catálogo de recambios contiene la siguiente información sobre grupos, subgrupos y recambios para el equipo:

- Referencia de estructura de grupo (22). Indica el siguiente grupo más alto en la estructura de lista del equipo.
- Nombre del grupo (23)
- Unidad de medida (25)
- Cantidad (26)
- Número de dibujo del conjunto (27)
- Intervalo de página de lista (28). Incluido si hay varias páginas en la ilustración o lista de grupo.
- Número de pieza o subgrupo (29)
- Nombre de subgrupo o descripción de pieza (30)
- Número de grupo (31)
- Número de equipo (32)
- Encabezado de información de grupo (33). Indica si la sección que aparece debajo del encabezado corresponde a una variante específica de la máquina o si es una lista de piezas comunes. Si la lista tiene más de una variante y cada variante tiene su propio dibujo de conjunto, se muestra una referencia de página al dibujo de conjunto de la variante.
- Información interna (34)

Sissejuhatus

Juhendi teave

Tetra Pak soovitab kõik juhendid hoolikalt läbi lugeda. Kontrollige, et juhendid oleksid seadmetega töötavatele ja neid hooldavatele isikutele kättesaadavad.

Kataloog tuleb seadme kasutusaja vältel alles hoida ning järgmisele omanikule või kasutajale edasi anda.

Tetra Pak ei vastuta seadme vigastuste eest, mis on tekkinud seadmega kaasnevate juhendite mittejärgimise tõttu.

Kaasaolevad juhendid

Seadmega kaasasolevad juhendid võivad sisaldada järgmist:

- CM
  Ümberseadistusjuhend annab tehnikutele teavet seadme ümber seadistamise kohta eri tootmisrežiimide korral.
- EM
  Elektrijuhend annab tehnikutele informatsiooni seadme elektrisüsteemi kohta.
- IM
  Paigaldusjuhend annab tehnikutele vajalikku teavet seadme ohutu paigaldamise kohta.
- MM
  Hooldusjuhend annab tehnikutele teavet seadme hoolduse kohta.
- OM
  Kasutusjuhend annab operaatorile teavet seadme käsitsemise ja kasutamise kohta enne tootmist, selle ajal ja pärast seda.
- SPC
  Varuosade kataloog annab vajalikku teavet Tetra Pakilt varuosade tellimiseks
- TeM
  Tehniline juhend
  - annab tehnikutele vajalikku teavet seadme ohutuks paigaldamiseks
  - annab tehnikutele teavet seadme hooldamise kohta
  - annab tehnikutele teavet masina/seadme elektrisüsteemi kohta
  - annab vajalikku teavet Tetra Pakilt varuosade tellimiseks.

Lehekülje kujundus

Vt joonist (A) lk i-5: Varuosade kataloogi põhilehtedeks on jooniste lehekülg (1) ja vastav loeteluleht (7). Lehekülje number (5) on toodud joonistelehe päises ja loetelulehe jaluses. Dokumendi number (6) on toodud loetelulehe jaluses.

Lehekülje nummerdus

Vt joonist (A) lk i-5: Lehekülje number (5) koosneb kolmest osast:

- peatüki number (2)
- järgneva lehekülje number (3) peatükis
- lehekülgede koguarv peatükis (4)

Sissejuhatus masina kohta

Tootja

Tootja nimi ja aadress on toodud kataloogi teisel lehel.

Teenindus

Masina varuosade tellimiseks või masina kasutamisega seonduvate probleemide teatamiseks võtke ühendust lähima Tetra Pak kontoriga.

Seadme ja dokumendiga seonduvate küsimuste, kommentaaride ja parandusettepanekute puhul võtke ühendust ettevõtte esindajaga.

Identifikatsioon

CE klassifikatsioon

Seade on kooskõlas Euroopa Majanduspiirkonna (EEA) tervishoiu- ja ohutusnõuetega.

Masina andmeplaat

Joonisel (B) leheküljel i-5 on kujutatud masina andmeplaati. Masina andmeplaadi joonis ja selle asukoht seadmel on toodud seadmega kaasasoleva juhendi sissejuhatavas peatükis. Masina andmeplaadil on toodud allpool loetletud andmed, mida vajate antud konkreetse seadmega seoses Tetra Paki poole pöördudes.

- Masina tüüp (8)
- Maht (9)
- Joonisspetsifikatsioonid (10)
- Masina seerianumber (11)
- Tootja (12)
- CE tähis (13)
- Tootmisaasta (14)

Joonisel (C) leheküljel i-5 on kujutatud näide masina spetsifikatsioonist. Veenduge, et juhendi esimestel lehekülgedel toodud andmed seadme kohta vastavad masina andmesildil olevatele andmetele ja masina spetsifikatsioonile.

Kuidas varuosade kataloogi kasutada

Leidke varuosa number

a) Vt joonist (D) lk i-5: Leidke peatükk, mille number (15) on toodud selle põhirühma juures, mis sisaldab otsitavat varuosa.

Punktid b) ja c) viitavad joonisele (E) lk i-6.

b) Põhirühma joonisel leidke masina alamrühm (17), mis sisaldab otsitavat osa või alamrühma. Leidke positsiooninumber (18) ja avage joonisele järgnev loeteluleht.

c) Leidke positsiooninumber/viite tähis (16) või alamgrupi nimetus (19). Avage parempoolses veerus loetletud vastav lehekülje number (20). Tetra Pak on valinud viite tähise puhul alatiseks kasutamiseks funktsioonile suunatud struktuuri. Funktsioonile suunatud struktuuri prefiks (=) pole viite tähises näidatud.

Punktid d) ja e) viitavad jooniselerefer (F) lk i-6.

d) Leidke otsitav osa (21) alamrühma joonisel ja seejärel osa positsioonnumber.

e) Osa number (29) ja osa kirjeldus (30) on toodud loetelulehel positsioonnumbri kõrval.

Varuosade kataloogis toodud teave

Allpool toodud loetelui viitab joonisele (F) lk i-6. Varuosade kataloog sisaldab järgmist teavet seadme rühmade, alamrühmade ja varuosade kohta:

- Rühmastruktuuri viide (22). Märgib seadme loetelu struktuuris järgmist kõrgemat rühma.
- Rühma nimetus (23)
- Mõõtühik (25)
- Kogus (26)
- Koostejoonise number (27)
- Loetelu lehekülgede vahemik (28). Kaasatud kui rühma joonised või loetelu on toodud mitmel lehel.
- Osa või alamrühma number (29)
- Alamrühma nimetus või osa kirjeldus (30)
- Rühma number (31)
- Seadme number (32)
- Rühma teabe pealkiri (33). Näitab, kas pealkirja all toodud jaotis on konkreetse masinavariandi kohta või on tegemist tavaliste varuosade loeteluga. Kui loetelus on toodud rohkem kui üks variant ja iga variandi jaoks on oma koostejoonis, esitatakse viide selle variandi koostejoonise leheküljele.
- Siseteave (34)

Johdanto

Tietoja käsikirjasta

Tetra Pak suosittelee kaikkien toimitettavien oppaiden lukemista huolellisesti. Varmista, että toimitetut oppaat ovat laitetta käyttävän tai huoltavan henkilökunnan saatavilla.

Tämä luettelo on säilytettävä laitteen käyttöiän ajan ja toimitettava edelleen mahdolliselle seuraavalle omistajalle tai käyttäjälle.

Tetra Pak ei vastaa laitevaurioista, jotka aiheutuvat laitteen mukana tulevissa oppaissa annettujen ohjeiden noudattamatta jättämisestä.

Toimitettavat ohjeet

Tämän laitteen mukana toimitettaviin ohjeisiin kuuluvat:

- CM
  Muunnoskirjassa on teknikoille tarkoitettuja ohjeita laitteiston muuttamisesta eri tuotantotiloihin.
- EM
  Sähkökirjassa on teknikoille tarkoitettuja tietoja laitteen sähköjärjestelmästä.
- IM
  Asennuskäsikirjassa on teknikoille tarkoitettuja tietoja, jotka tarvitaan laitteen turvallista asentamista varten.
- MM
  Huoltokäsikirjassa on teknikoille tarkoitettuja tietoja tämän laitteen huoltamisesta.
- OM
  Käyttäjän käsikirjassa on käyttäjälle tarkoitettuja tietoja laitteen käsittelystä ja käyttämisestä ennen tuotantoa, tuotannon aikana ja sen jälkeen.
- SPC
  Varaosaluettelossa on tietoja, joita tarvitaan varaosien tilaamiseen Tetra Pakilta.
- TeM
  Tekninen käsikirja
  - sisältää teknikoille tarkoitettuja tietoja, joita tarvitaan laitteen turvallista asentamista varten
  - sisältää teknikoille tarkoitettuja tietoja laitteen huoltamisesta
  - sisältää teknikoille tarkoitettuja tietoja koneen/laitteen sähköjärjestelmästä
  - sisältää tietoja, joita tarvitaan varaosien tilaamiseen Tetra Pakilta.

Sivujen asettelu

Katso kuva (A) sivulla i-5: Varaosaluettelon pääsivut koostuvat kuvasivusta (1) ja sitä vastaavasta luettelosivusta (7). Sivunumero (5) näytetään kuvasivun ylätunnisteessa ja luettelosivun alatunnisteessa. Asiakirjan numero (6) näytetään luettelosivun alatunnisteessa.

Sivunumerointi

Katso kuva (A) sivulla i-5: Sivunumerossa (5) on kolme osaa:

- luvun numero (2)
- perättäinen sivunumero (3) luvun sisällä
- luvun kokonaissivumäärä (4).

Koneen esittely

Valmistaja

Valmistajan nimi ja osoite on ilmoitettu tämän luettelon toisella sivulla.

Huolto

Jos haluat tilata tähän koneeseen varaosia tai jos tämän koneen käytössä ilmenee ongelmia, jotka haluat raportoida, ota yhteyttä lähimpään Tetra Pakin toimistoon.

Jos sinulla on muuta kysyttävää, huomautettavaa tai ehdotuksia ja sen asiakirjoja koskevista parannuksista, ota yhteys yhteyshenkilöön.

Tunnistetiedot

CE-luokitus

Tämä laite vastaa Euroopan talousalueen (ETA) terveyttä ja turvallisuutta koskevia perusvaatimuksia.

Koneen tyyppikilpi

Kuvassa (B) sivulla i-5 on esimerkki koneen tyyppikilvestä. Voimassa olevan tyyppikilven kuva ja sen sijainti koneessa käy ilmi laitteiston mukana tulleiden ohjeiden Johdanto-luvusta. Tyyppikilvessä on tarvitsemasi Tetra Pakin voimassa olevat yhteystiedot, kun on kyseessä tämä nimenomainen laite.

- Konetyyppi (8)
- Tilavuus (9)
- Piirustuserittely (10)
- Koneen sarjanumero (11)
- Valmistaja (12)
- CE-merkki (13)
- Valmistusvuosi (14)

Kuvassa (C) sivulla i-5 on esimerkki koneen erittelystä. Varmista, että tämän ohjeen etusivuilla ilmoitetut laitetiedot vastaavat tyyppikilven ja kone-erittelyn tietoja.

Tämän varaosaluettelon käyttäminen

Etsi varaosan numero

a) Katso kuva (D) sivulla i-5: Siirry lukuun (15), joka on ilmoitettu etsittävän osan pääryhmän vieressä.

Kohdat b) ja c) viittaavat kuvaan (E) sivulla i-6.

b) Etsi pääryhmän kuvasta koneen alaryhmä (17), joka sisältää etsimäsi osan tai alaryhmän. Merkitse muistiin paikkanumero (18) ja siirry luettelosivulle, joka seuraa kuvaa.

c) Etsi paikkanumero (16) tai alaryhmän nimi (19). Siirry vastaavalle sivunumerolle (20), joka on ilmoitettu oikeassa sarakkeessa. Tetra Pak on päättänyt aina noudattaa toimintoperusteista rakennetta viitemerkinnöissä. Viitemerkinnässä ei esitetä toimintoperusteisen rakenteen osoittavaa etuliitettä (=).

Kohdat d) ja e) viittaavat kuvaan (F) sivulla i-6.

d) Hae etsittävä osa (21) alaryhmän kuvasta ja merkitse osan paikkanumero muistiin.

e) Osanumero (29) ja osan kuvaus (30) on annettu paikkanumeron vieressä luettelosivulla.

Varaosaluettelossa olevat tiedot

Alla oleva luettelo viittaa kuvaan (F) sivulla i-6. Varaosaluettelo sisältää seuraavat tiedot ryhmistä, alaryhmistä ja laitteen varaosista:

- Ryhmärakenneviite (22). Osoittaa seuraavaksi ylemmän ryhmän laiteluettelorakenteessa.
- Ryhmän nimi (23)
- Mittayksikkö (25)
- Määrä (26)
- Kokoonpanopiirustuksen numero (27)
- Luettelon sivualue (28). Tämä on mukana, jos ryhmäkuvassa tai luettelossa on useita sivuja.
- Osan tai alaryhmän numero (29)
- Alaryhmän nimi tai osan kuvaus (30)
- Ryhmän numero (31)
- Laitteen numero (32)
- Ryhmätietojen otsikko (33). Osoittaa, koskeeko alla oleva osio tiettyä koneversiota vai onko kyseessä yhteisten osien luettelo. Jos luettelolla on useampi kuin yksi versio ja kullakin versiolla on oma kokoonpanopiirustuksensa, näytetään version kokoonpanopiirustuksen sivuviittaus.
- Sisäiset tiedot (34)

Introduction

Informations sur ce manuel

Tetra Pak recommande de lire attentivement tous les manuels remis. S'assurer que ceux-ci sont accessibles au personnel d'exploitation et de maintenance de l'équipement.

Il est important de conserver ce catalogue pendant la durée de vie de l'équipement et de le transmettre à tout détenteur ou à tout utilisateur ultérieur de l'équipement.

Tetra Pak ne pourra être tenu responsable d'aucun dommage causé à l'équipement suite au non respect des instructions fournies dans les manuels remis avec cet équipement.

Manuels remis

Les manuels remis avec cet équipement peuvent comprendre

- CM
  Le Manuel de Conversion contient les informations destinées aux techniciens pour la conversion de l'équipement en vue des différents modes de production.
- EM
  Le Manuel Electrique fournit aux techniciens des informations sur le système électrique de l'équipement.
- IM
  Le Manuel d'Installation fournit les informations nécessaires aux techniciens pour installer l'équipement en toute sécurité.
- MM
  Le Manuel d'Entretien contient les informations nécessaires aux techniciens pour la maintenance de l'équipement.
- OM
  Le Manuel d'Utilisation fournit à l'opérateur les informations nécessaires à la manutention et à l'exploitation de l'équipement, avant, pendant et après la production.
- SPC
  Le Catalogue des Pièces de Rechange contient les informations permettant de commander des pièces de rechange auprès de Tetra Pak
- TeM
  Le Manuel Technique
  - contient les informations nécessaires aux techniciens pour installer l'équipement en toute sécurité.
  - contient les informations nécessaires aux techniciens pour la maintenance de l'équipement.
  - fournit aux techniciens des informations sur le système électrique de la machine/de l'équipement.
  - fournit les informations permettant de commander des pièces de rechange auprès de Tetra Pak.

Mise en page

Reportez-vous au schéma (A) page i-5 : Dans un catalogue de Pièces de Rechange, les pages principales sont les pages de schémas (1) et les pages de listes correspondantes (7). Le numéro de page (5) est indiqué en en-tête sur une page de schéma et en bas de page sur une page de liste. Le numéro de document (6) est indiqué au bas d'une page de liste.

Numérotation des pages

Reportez-vous au schéma (A) page i-5 : Un numéro de page (5) se compose de trois éléments :

- numéro du chapitre (2)
- numéro de page séquentiel à l'intérieur du chapitre (3)
- nombre total de pages du chapitre (4)

Présentation de la machine

Fabricant

Les nom et adresse du fabricant sont donnés en deuxième page de ce catalogue.

Assistance technique

Pour commander des pièces de rechange pour cette machine ou signaler un problème lié à son fonctionnement, contactez l'agence Tetra Pak la plus proche.

Contactez le responsable de liaison pour tout autre renseignement, commentaire ou suggestion d'amélioration relatifs à l'équipement et à sa documentation.

Identification

Certification CE

Cet équipement est conforme aux réglementations essentielles en matière d'hygiène et de sécurité de l'Espace économique européen (EEE).

Plaque signalétique de la machine

Le schéma (B) de la page i-5 reproduit un exemple de plaque signalétique de la machine.
Le chapitre Introduction des manuels remis avec cet équipement comprend une reproduction de la plaque signalétique valide de la machine et indique son emplacement sur l'équipement. La plaque comporte les caractéristiques indiquées ci-dessous, nécessaires pour prendre contact avec Tetra Pak à propos de cet équipement spécifique.

- Type de la machine (8)
- Volume (9)
- Caractéristiques schéma (10)
- Numéro de série de la machine (11)
- Fabricant (12)
- Marquage CE (13)
- Année de fabrication (14)

Le schéma (C) de la page i-5 reproduit un exemple de plaque signalétique de la machine. Assurez-vous que les données relatives à l'équipement qui se trouvent au début de ce manuel correspondent bien aux données figurant sur la plaque signalétique de la machine et à ses spécifications.

Comment utiliser ce Catalogue des Pièces de Rechange

Trouver un numéro de pièce de rechange

a) Reportez-vous au schéma (D) page i-5 : Allez au numéro de chapitre (15) indiqué à côté du groupe principal contenant la pièce que vous recherchez.

Les éléments b) et c) se rapportent au schéma (E) de la page i-6.

b) Sur le schéma du groupe principal, recherchez le sous-groupe de la machine (17) contenant la pièce ou le sous-groupe que vous recherchez. Notez le numéro de position (18) et reportez-vous à la page de liste suivant le schéma.

c) Recherchez le numéro de position/la désignation de référence (16) ou le nom du sous-groupe (19). Allez au numéro de page correspondant (20) figurant dans la liste de la colonne de droite. Tetra Pak a pris le parti de toujours utiliser la structure de la fonction pour la désignation de la référence. Le préfixe indiquant la structure de la fonction (=) ne figure pas dans la désignation de la référence.

Les éléments d) et e) se rapportent au schéma (F) de la page i-6.

d) Repérez la pièce (21) que vous recherchez dans le schéma du sous-groupe et notez le numéro de position de la pièce.

e) Le numéro de la pièce (29) et sa description (30) figurent à côté du numéro de position sur la page de liste.

Informations données dans un Catalogue de Pièces de Rechange

La liste ci-dessous se rapporte au schéma (F) de la page i-6. Un Catalogue de Pièces de Rechange contient les informations suivantes concernant les groupes, sous-groupes et pièces de rechange de l'équipement :

- Référence de structure de groupe (22). Indique le groupe immédiatement supérieur dans la structure de liste de l'équipement.
- Nom du groupe (23)
- Unité de mesure (25)
- Quantité (26)
- Numéro de plan de montage (27)
- Groupe de pages de liste (28). Indiqué si la liste ou l'illustration du groupe comporte plusieurs pages.
- Numéro de pièce ou de sous-groupe (29)
- Nom du sous-groupe ou description de la pièce (30)
- Numéro de groupe (31)
- Numéro de l'équipement (32)
- Titre information du groupe (33) Indique si la section en-dessous du titre est destinée à une variante spécifique de la machine ou s'il s'agit d'une liste de pièces communes. Si une liste comprend plus d'une variante et que chaque variante a son propre plan de montage, une référence de page est donnée pour le plan de montage de la variante.
- Information interne (34)

Bevezetés

Kézikönyvre vonatkozó információk

A Tetra Pak javasolja, hogy az összes kapott kézikönyvet gondosan olvassa el. Gondoskodjon róla, hogy a kézikönyvek a berendezést üzemeltető és karbantartó személyzet számára elérhetők legyenek.

Fontos, hogy megőrizzék ezt a katalógust a berendezés élettartama alatt, és átadják a következő tulajdonosoknak és felhasználóknak.

A Tetra Pak nem vállal felelősséget a berendezés semmilyen megrongálódása esetén, ha nem követték a berendezéshez tartozó kézikönyvekben leírt utasításokat.

Szállított kézikönyvek

A berendezéssel szállított kézikönyvek az alábbiak lehetnek

- CM
  Az Átállási kézikönyv a műszaki szakemberek számára a berendezés különböző gyártási módjai közötti átállásra vonatkozó információkat tartalmaz.
- EM
  A Villamossági kézikönyv a berendezés elektronikai rendszerére vonatkozó információkat szolgáltat a műszaki szakemberek részére.
- IM
  Az Üzembe helyezési kézikönyv a berendezés biztonságos üzembe helyezésére vonatkozó információkat biztosít a technikai szakemberek részére.
- MM
  A Karbantartási kézikönyv a berendezés karbantartására vonatkozó információkat biztosít a technikai szakemberek részére.
- OM
  Az Üzemeltetési kézikönyv az üzemeltető személyzetnek szolgáltat a berendezés kezelésére és üzemeltetésére, a feldolgozás előtti, közbeni és utáni teendőkre vonatkozó információkat.
- SPC
  A Tartalékalkatrész-katalógus információt biztosít a pótalkatrészek Tetra Pak-tól történő megrendeléséhez.
- TeM
  A Technikai kézikönyv
  – a berendezés biztonságos üzembe helyezésére vonatkozó információkat biztosít a technikai szakemberek részére.
  – a berendezés karbantartására vonatkozó információkat biztosít a technikai szakemberek részére.
  – a gép/berendezés elektromos rendszerére vonatkotó információkat szolgáltat a technikai szakemberek számára.
  – információkat biztosít a pótalkatrészek Tetra Pak-tól történő megrendeléséhez.

Oldalelrendezés

Tekintse meg az i-5 oldalon lévő (A) ábrát: A Tartalékalkatrész-katalógus főoldalai egy rajzoldalból (1) és egy hozzá tartozó listaoldalból (7) állnak. Az oldalszám (5) a rajzoldal fejlécében és a listaoldal láblécében látható. A dokumentum száma (6) a listaoldal láblécében jelenik meg.

Oldalszámozás

Tekintse meg az i-5 oldalon lévő (A) ábrát: Az oldalszám (5) három részből áll:

- fejezetszám (2)
- folyamatos oldalszám (3) a fejezeten belül
- összes oldalszám (4) a fejezeten belül.

Bevezetés

Gyártó

A gyártó neve és címe a katalógus második oldalán található.

Szerviz

A gép valamely pótalkatrészének megrendelése vagy a berendezés működésével kapcsolatos zavarok bejelentése végett forduljon a legközelebbi Tetra Pak képviselethez.

Bármilyen más, a berendezésre illetve a dokumentációra vonatkozó kérdéseivel, megjegyzéseivel vagy javaslataival forduljon területi képviselőjéhez.

Azonosítás

CE besorolás

Ez a berendezés megfelel az Európai Gazdasági Régió (EEA) alapvető egészségügyi és biztonsági előírásainak.

Gépcímke

A(z) i-5 oldalon található (B) ábra a gépcímke egy példáját mutatja be. Egy érvényes gépcímkét és megfelelő elhelyezését ábrázoló rajz látható a berendezéssel szállított kézikönyv Bevezetés fejezetében. A gépcímke azokat az alább felsorolt adatokat tartalmazza, amelyek a Tetra Pak-kal történő, a berendezésre vonatkozó kommunikációhoz szükségesek.

- Géptípus (8)
- Térfogat (9)
- Tervrajzok (10)
- A gép sorozatszáma (11)
- Gyártó (12)
- CE jelzés (13)
- Gyártási év (14)

A(z) i-5 oldalon található (C) ábra a gép műszaki specifikációjának egy példáját mutatja be. Győződjön meg róla, hogy a kézikönyv első lapjain közölt berendezésadatok megegyeznek a gép adattábláján és a gép műszaki leírásában megjelenő információkkal.

A Tartalékalkatrész-katalógus használata

A tartalékalkatrész számának kikeresése

a) Tekintse meg a(z) i-5 oldalon lévő (D) ábrát: Lapozzon a keresett alkatrészt tartalmazó főcsoport mellett feltüntetett (15) számú fejezetre.

A b) és c) elemek az i-6 oldalon található ábrára vonatkoznak.

b) A főcsoport-ábrán keresse meg azt az alcsoportot (17), amelyik a keresett alkatrészt vagy alcsoportot tartalmazza. Jegyezze meg a pozíciószámot (18), majd lapozzon az ábrát követő listaoldalra.

c) Keresse meg a lejegyzett pozíciószámot/hivatkozási megjelölést (16) vagy a keresett alcsoport nevét (19). Lapozzon a jobb oldali oszlopban feltüntetett számú (20) oldalra. A Tetra Pak a hivatkozási jelöléseket mindig funkció-orientált struktúra alapján végzi el. Az előtaggal jelölt funkció-orientált struktúra (=) nem jelenik meg a hivatkozási jelölésben.

A d) és e) elemek az i-6 oldalon található (F) ábrára vonatkoznak.

d) Az alcsoport ábrán keresse meg a kívánt alkatrészt (21), és jegyezze meg az alkatrész pozíciószámát.

e) Az alkatrész száma (29) és leírása (30) a listaoldalon, a pozíciószám mellett látható.

A Tartalékalkatrész-katalógusban megtalálható információk

Az alábbi lista az i-6 oldalon található (F) ábrára vonatkozik.
A Tartalékalkatrész-katalógus a következő, csoportokra, alcsoportokra és pótalkatrészekre vonatkozó adatokat tartalmazza:

- Csoportstruktúra-hivatkozás (22). A berendezés listás struktúrájában közvetlenül az aktuális csoport fölött álló csoportot jelöli.
- Csoportnév (23)
- Mértékegység (25)
- Mennyiség (26)
- Összeszerelési rajzszám (27)
- Lista oldaltartománya (28). Abban az esetben jelenik meg, ha a csoport ábrája vagy listája többoldalas.
- Alkatrész vagy alcsoport száma (29)
- Alcsoport neve vagy alkatrész leírása (30)
- Csoportszám (31)
- Berendezésszám (32)
- Csoportinformáció fejléce (33). Azt mutatja, hogy a fejléc után következő rész egy speciális gépváltozatra vonatkozik vagy az általános pótalkatrészek listája. Ha a listának több változata van, és mindegyikhez saját összeszerelési rajz tartozik, az illető összeszerelési rajz oldalhivatkozása is megjelenik.
- Belső információ (34)

Inngangur

Upplýsingar um handbók

Tetra Pak mælir með því að allar handbækur sem afhentar eru séu lesnar vandlega. Gætið þess að afhentar handbækur séu tiltækar fyrir starfsfólk sem vinnur við eða viðheldur tækjabúnaðinum.

Það er mikilvægt að halda upp á þennan vörulista allan líftíma tækjabúnaðarins og að láta síðari eiganda eða notanda hafa vörulistann.

Ekki er hægt að gera Tetra Pak ábyrgt fyrir neinum skemmdum sem verða á tækjabúnaðinum vegna þess að ekki er farið eftir leiðbeiningunum í þeim handbókum sem fylgja tækjabúnaðinum.

Afhentar handbækur

Handbækur sem afhentar eru með þessum tækjabúnaði geta verið

- CM
  Breytingahandbók, sem veitir tæknimönnum upplýsingar um breytingar á tækjabúnaðinum milli mismunandi framleiðsluhama.
- EM
  Rafmagnshandbók, sem veitir tæknimönnum upplýsingar um rafkerfi tækjabúnaðarins.
- IM
  Uppsetningarhandbók, sem veitir tæknimönnum nauðsynlegar upplýsingar til að setja tækjabúnaðinn upp á öruggan hátt.
- MM
  Viðhaldshandbók, sem eitir tæknimönnum upplýsingar um viðhald tækjabúnaðarins.
- OM
  Notkunarhandbók, sem veitir stjórnandanum upplýsingar um meðhöndlun og notkun tækjabúnaðarins, fyrir, eftir og meðan á framleiðslu stendur.
- SPC
  Varahlutavörulisti, sem veitir nauðsynlegar upplýsingar til pöntunar varahluta frá Tetra Pak.
- TeM
  Tæknihandbók
  - sem veitir tæknimönnum nauðsynlegar upplýsingar til að setja tækjabúnaðinn upp á öruggan hátt
  - sem veitir tæknimönnum upplýsingar um viðhald tækjabúnaðarins
  - sem veitir tæknimönnum upplýsingar um rafkerfi vélarinnar/ tækjabúnaðarins
  - sem veitir nauðsynlegar upplýsingar til pöntunar varahluta frá Tetra Pak.

Umbrot

Sjá skýringarmynd (A) á síðu i-5: Aðalsíðurnar í Varahlutavörulistanum samanstanda af skýringarsíðu (1) og samsvarandi listasíðu (7). Síðunúmerið (5) er sýnt í haus síðunnar með skýringarmyndinni og í fæti listasíðunnar. Skjalnúmerið (6) er sýnt í fæti listasíðunnar.

Númerun síðu

Sjá skýringarmynd (A) á síðu i-5: Síðunúmer (5) er í þremur hlutum:

- kaflanúmer (2)
- samfellt síðunúmer innan kaflans (3)
- heildarfjölda blaðsíðna í kaflanum (4)

Kynning á vél

Framleiðandi

Fyrir nafn og heimilisfang framleiðanda, sjá síðu tvö í þessum vörulista.

Þjónusta

Til að panta varahluti fyrir þessa vél, eða til að tilkynna vandamál sem tengjast notkun þessarar vélar, skal hafa samband við næstu Tetra Pak skrifstofu.

Hafðu samband við Samskiptatengsl með aðrar fyrirspurnir, athugasemdir eða uppástungur varðandi tækjabúnaðinn og fylgiskjöl hans.

Kennsl

CE flokkun

Þessi tækjabúnaður er í samræmi við grundvallar heilbrigðis- og öryggisreglugerðir á Evrópska efnahags svæðinu (EES).

Nafnplata

Skýringarmynd (B) á síðu i-5 sýnir dæmi um nafnplötu.
Skýringarmynd af gildri nafnplötu og staðsetningu hennar á tækjabúnaðinum er sýnd í Inngangskafla handbókanna sem afhentar eru með þessum tækjabúnaði. Á nafnplötunni eru upplýsingarnar sem taldar eru upp hér að neðan, sem þörf er á þegar haft er samband við Tetra Pak varðandi þennan tiltekna tækjabúnað.

- Vélartegund (8)
- Fjöldi (9)
- Teikniupplýsingar (10)
- Raðnúmer vélar (11)
- Framleiðandi (12)
- CE merki (13)
- Framleiðsluár (14)

Skýringarmynd (C) á síðu i-5 sýnir dæmi um tæknilýsingu vélar. Gættu þess að upplýsingar um tækjabúnað sem talinn er upp á fremstu síðum þessarar handbóka samsvari upplýsingum á nafnplötu og tæknilýsingu vélar.

Hvernig nota á þennan Varahlutavörulista

Finndu varahlutarnúmer

a) Sjá skýringarmynd (D) á síðu i-5: Farðu í kaflanúmerið (15) sem gefið er til kynna við hlið aðalflokksins sem inniheldur hlutinn sem þú vilt finna.

Atriði b) og c) vísa til skýringarmyndar (E) á síðu i-6:

b) Á skýringarmynd aðalflokksins skaltu leita að undirflokki (17) vélarinnar, sem inniheldur hlutinn eða undirflokkinn sem þú ert að leita að. Taktu eftir stöðunúmerinu (18) og farðu á listasíðuna sem fylgir skýringarmyndinni.

c) Leitaðu að stöðunúmeri/tilvísunartitli (16) eða heiti undirflokksins (19). Farðu á samsvarandi síðunúmer (20) sem sýnt er í hægri dálkinum. Tetra Pak hefur kosið að nota alltaf sérhæfða skipan fyrir tilvísunartitla. Forskeytið sem gefur til kynna sérhæfða skipan (=) er ekki sýnt í tilvísunartitlinum.

Atriði d) og e) vísa til skýringarmyndar (F) á síðu i-6:

d) Finndu hlutinn (21) sem þú ert að leita að á undirflokksskýringarmyndinni og taktu eftir stöðunúmeri hlutarins.

e) Hlutarnúmerið (29) og lýsing hlutar (30) eru skráð hjá stöðunúmerinu á listasíðunni.

Upplýsingar skráðar í Varahlutavörulista

Listinn að neðan vísar til skýringarmyndar (F) á síðu i-6: Varahlutavörulisti inniheldur eftirfarandi upplýsingar um flokka, undirflokka og varahluti fyrir tækjabúnaðinn:

- Tilvísun flokkaskipunar (22). Gefur til kynna næsta flokk fyrir ofan í listaskipan tækjabúnaðarins.
- Heiti flokks (23)
- Mælieining (25)
- Magn (26)
- Númer samsetningarteikningar (27)
- Röð listasíðu (28). Fylgir með ef það eru margar blaðsíður í skýringarmynd eða lista flokksins.
- Númer hlutar eða undirflokks (29)
- Heiti undirflokks eða lýsing hlutar (30)
- Númer flokks (31)
- Númer tækjabúnaðar (32)
- Fyrirsögn flokkaskipunar (33). Gefur til kynna ef kaflinn fyrir neðan fyrirsögnina er fyrir sérstakt afbrigði vélar eða ef hann er listi yfir algenga hluti. Ef listi er með meira en eitt afbrigði og hvert afbrigði á sína eigin samsetningarteikningu, er sýnd blaðsíðutilvísun til samsetningarteikningar afbrigðisins.
- Innri upplýsingar (34)

Introduzione

Informazioni sul manuale

Tetra Pak consiglia di leggere con attenzione tutti i manuali forniti in dotazione. Assicurarsi che tutti i manuali in dotazione siano disponibili per il personale addetto al funzionamento o alla manutenzione della macchina.

È importante conservare il presente catalogo per tutta la durata della macchina e consegnarlo al successivo proprietario o utilizzatore.

Tetra Pak non sarà da ritenersi responsabile per eventuali danni alla macchina causati dal mancato rispetto delle istruzioni fornite nei manuali che accompagnano questa macchina.

Manuali in dotazione

I manuali consegnati con la presente macchina possono comprendere:

- CM (Manuale di conversione)
  Questo manuale fornisce ai tecnici le informazioni necessarie per la conversione della macchina da una modalità di produzione a un'altra.
- EM (Manuale elettrico)
  Questo manuale fornisce ai tecnici informazioni sull'impianto elettrico della macchina.
- IM (Manuale d'installazione)
  Questo manuale fornisce ai tecnici le informazioni necessarie per installare in sicurezza la macchina.
- MM (Manuale di manutenzione)
  Questo manuale fornisce ai tecnici le informazioni sulla manutenzione della macchina.
- OM (Manuale operativo)
  Questo manuale fornisce all'operatore le informazioni sull'utilizzo e il funzionamento della macchina prima, durante e dopo la produzione.
- SPC (Catalogo dei pezzi di ricambio)
  Questo catalogo fornisce le informazioni necessarie per ordinare i pezzi di ricambio a Tetra Pak.
- TeM (Manuale tecnico)
  Questo manuale:
  - fornisce ai tecnici le informazioni necessarie per installare in sicurezza la macchina
  - fornisce ai tecnici le informazioni sulla manutenzione della macchina
  - fornisce ai tecnici informazioni sull'impianto elettrico della macchina
  - fornisce le informazioni necessarie per ordinare i pezzi di ricambio a Tetra Pak.

Schema delle pagine

Consultare la figura (A) a pagina i-5: Le pagine principali di un Catalogo dei pezzi di ricambio sono costituite da una pagina con la figura (1) e una pagina elenco corrispondente (7). Il numero di pagina (5) è indicato nell'intestazione delle pagine con le figure e nel piè di pagina delle pagine elenco. Il codice del documento (6) è indicato nel piè di pagina delle pagine elenco.

Numerazione delle pagine

Consultare la figura (A) a pagina i-5: Il numero di pagina (5) è suddiviso in tre parti:

- numero del capitolo (2)
- numero progressivo di pagina all'interno del capitolo (3)
- numero totale di pagine nel capitolo (4)

Introduzione alla macchina

Fabbricante

Il nome e l'indirizzo del fabbricante sono riportati sulla seconda pagina del presente catalogo.

Assistenza

Per ordinare i pezzi di ricambio per questa macchina oppure per riferire problemi associati al funzionamento della macchina, contattare l'ufficio Tetra Pak più vicino.

Per tutte le altre richieste, commenti o suggerimenti per eventuali miglioramenti da apportare alla macchina e alla relativa documentazione, contattare il responsabile di collegamento.

Identificazione

Classificazione CE

Questa macchina è conforme alle principali norme sanitarie e di sicurezza dell'Area Economica Europea (EEA).

Targhetta della macchina

La figura (B) a pagina i-5 mostra un esempio di targhetta della macchina. Il capitolo Introduzione di tutti i manuali consegnati con la presente macchina contiene invece la figura della targhetta della macchina valida e la sua posizione sulla macchina. La targhetta riporta i dati elencati qui sotto, che sono necessari per contattare Tetra Pak in relazione a questa macchina specifica.

- Tipo di macchina (8)
- Volume (9)
- Specifiche disegno (10)
- Numero di matricola della macchina (11)
- Fabbricante (12)
- Marchio CE (13)
- Anno di fabbricazione (14)

La figura (C) a pagina i-5 mostra un esempio delle specifiche di una macchina. Verificare che i dati relativi alla macchina elencati nelle pagine iniziali del presente manuale corrispondano ai dati riportati sulla targhetta della macchina e nelle specifiche della macchina.

Come usare questo Catalogo dei pezzi di ricambio

Individuare il numero del pezzo di ricambio

a) Consultare la figura (D) a pagina i-5: andare al numero del capitolo (15) indicato accanto al gruppo principale che contiene il pezzo che si desidera individuare.

I punti b) e c) fanno riferimento alla figura (E) a pagina i-6.

b) Nella figura del gruppo principale, identificare il sottogruppo della macchina (17) che contiene il pezzo o il sottogruppo cercato. Annotare il numero di posizione (18) e andare alla pagina elenco che segue la figura.

c) Identificare il numero di posizione/l'indicazione di riferimento (16) o il nome del sottogruppo (19). Andare al numero di pagina corrispondente (20) indicato nella colonna di destra. Per le indicazioni di riferimento, Tetra Pak ha scelto di usare sempre la struttura "function-oriented". Il prefisso che indica la struttura "function-oriented" (=) non è mostrato nell'indicazione di riferimento.

I punti d) e e) fanno riferimento alla figura (F) a pagina i-6.

d) Individuare il pezzo (21) cercato sulla figura del sottogruppo e annotare il numero di posizione del pezzo.

e) Il numero del pezzo (29) e la descrizione del pezzo (30) sono indicati accanto al numero di posizione sulla pagina elenco.

Informazioni contenute nel Catalogo dei pezzi di ricambio

L'elenco seguente fa riferimento alla figura (F) a pagina i-6. Il Catalogo dei pezzi di ricambio contiene le seguenti informazioni sui gruppi, i sottogruppi e i pezzi di ricambio della macchina:

- Riferimento struttura gruppo (22). Indica il gruppo superiore successivo nella struttura elenco della macchina.
- Nome gruppo (23)
- Unità di misura (25)
- Quantità (26)
- Numero disegno di assemblaggio (27)
- Intervallo delle pagine elenco (28). Questa informazione è presente se la figura o l'elenco relativi al gruppo occupano più di una pagina del manuale.
- Numero pezzo o sottogruppo (29)
- Nome sottogruppo o descrizione pezzo (30)
- Numero gruppo (31)
- Numero macchina (32)
- Intestazione informazioni gruppo (33). Indica se la sezione che segue l'intestazione si riferisce a una variante di macchina specifica oppure se si tratta di un elenco di parti comuni. Se un elenco contiene più di una variante ed esiste un disegno di assemblaggio specifico per ogni variante, viene fornito il riferimento alla pagina in cui è mostrato il disegno di assemblaggio relativo alla variante.
- Informazioni interne (34)

Įvadas

Informacija apie instrukciją

"Tetra Pak" rekomenduoja atidžiai perskaityti visas pateiktas instrukcijas. Pasirūpinkite, kad instrukcijos būtų prieinamos darbuotojams, kurie eksploatuoja arba prižiūri įrangą.

Svarbu šį katalogą išsaugoti visą įrangos tarnavimo laiką ir perduoti jį kitam įrangos savininkui arba naudotojui.

"Tetra Pak" neprisiima atsakomybės už įrangos sugadinimą, jei nesilaikoma nurodymų, pateiktų prie šios įrangos pridedamuose kataloguose.

Pateikiamos instrukcijos

Su šia įranga pateikiamose instrukcijose gali būti

- CM
  Transformacijos instrukcija, suteikianti technikams informaciją apie įrangos transformavimą skirtingiems gamybos režimams.
- EM
  Elektrinės dalies instrukcija, suteikianti technikams informaciją apie įrangos elektros sistemą.
- IM
  Įrengimo instrukcija, suteikianti technikams informaciją, reikalingą norint saugiai sumontuoti įrangą.
- MM
  Techninės priežiūros instrukcija, suteikianti technikams informaciją apie įrangos priežiūrą.
- OM
  Eksploatavimo instrukcijos paskirtis yra suteikti informaciją operatoriui, kaip naudoti ir valdyti įrangą prieš gamybos procesą, jo metu ir po jo.
- SPC
  Atsarginių dalių katalogas, kuriame yra informacija, reikalinga atsarginėms dalims iš "Tetra Pak" užsakyti
- TeM
  Techninė instrukcija
  – suteikia technikams informaciją, reikalingą saugiai sumontuoti įrangą
  – suteikia technikams informaciją apie įrangos priežiūrą
  – suteikia technikams informaciją apie įrangos elektros sistemą
  – suteikia informaciją, reikalingą užsakyti iš "Tetra Pak" atsargines dalis

Puslapių išdėstymas

Žr. paveikslėlį (A) puslapyje i-5. Pagrindiniai atsarginių dalių katalogo puslapiai sudaryti iš paveikslėlio puslapio (1) ir atitinkamo sąrašo puslapio (7). Puslapio numeris (5) nurodomas paveikslėlio puslapio viršuje ir sąrašo puslapio apačioje. Dokumento numeris (6) nurodomas sąrašo puslapio apačioje.

Puslapių numeravimas

Žr. iliustraciją (A) puslapyje i-5. Puslapio numerį (5) sudaro trys dalys:

- skyriaus numeris (2)
- puslapio eilės numeris (3) skyriuje
- bendras puslapių skaičius (4) skyriuje

Įrenginio pristatymas

Gamintojas

Gamintojo pavadinimas ir adresas pateikti antrajame šio katalogo puslapyje.

Aptarnavimas

Jei reikia šiai įrangai užsakyti atsarginių dalių arba pranešti apie jos eksploatavimo nesklandumus, kreipkitės į artimiausią "Tetra Pak" biurą.

Su kitais klausimais, pastabomis ar įrangos ir jos dokumentacijos tobulinimo pasiūlymais kreipkitės į savo kontaktinį asmenį.

Identifikavimas

CE klasifikacija

Šis įrenginys atitinka esminius Europos ekonominės erdvės (EEE) sveikatos ir saugumo reikalavimus.

Vardinė plokštelė

Puslapyje i-5 pateiktame paveikslėlyje (B) parodytas įrangos vardinės plokštelės pavyzdys.
Atitinkamos įrangos vardinė plokštelė ir jos vieta ant įrangos parodoma su šia įranga pateikiamų instrukcijų įvade. Įrangos vardinėje plokštelėje pateikiami žemiau nurodyti duomenys, kurie reikalingi kreipiantis į "Tetra Pak" dėl konkretaus įrenginio.

- Mašinos tipas (8)
- Tomas (9)
- Brėžinių specifikacijos (10)
- Įrangos serijos numeris (11)
- Gamintojas (12)
- CE ženklas (13)
- Pagaminimo metai (14)

Paveikslėlyje (C) puslapyje i-5 parodytas įrangos specifikacijos pavyzdys. Patikrinkite, ar šios instrukcijos pirmuosiuose puslapiuose nurodyti duomenys atitinka duomenis vardinėje plokštelėje ir įrangos specifikaciją.

Kaip naudotis atsarginių dalių katalogu

Atsarginės dalies numerio suradimas

a) Žr. iliustraciją (D) puslapyje i-5. Atsiverskite skyrių (15), nurodytą šalia pagrindinio mazgo, kuriame yra jūsų ieškoma dalis.

Punktai b) ir c) atitinka paveikslėlį (E) puslapyje i-6.

b) Pagrindinio mazgo paveikslėlyje suraskite smulkesnį įrangos mazgą (17), kuriame yra jūsų ieškoma dalis arba mazgas. Pasižiūrėkite pozicijos numerį (18) ir suraskite jį toliau pateiktame sąraše.

c) Suraskite pozicijos numerį/pavadinimą (16) arba smulkesnio mazgo pavadinimą (19). Atsiverskite dešiniajame stulpelyje nurodytą puslapį (20). "Tetra Pak" nusprendė pavadinimuose visada naudoti paskirtį atitinkančią struktūrą. Pavadinimuose nepateikiamas paskirtį atitinkančios struktūros prefiksas (=).

Punktai d) ir e) atitinka paveikslėlį (F) puslapyje i-6.

d) Suraskite ieškomą dalį (21) smulkesnio mazgo paveikslėlyje ir pasižiūrėkite dalies pozicijos numerį.

e) Dalies numeris (29) ir dalies aprašymas (30) sąrašo puslapyje nurodyti šalia pozicijos numerio.

Atsarginių dalių kataloge pateikiama informacija

Žemiau pateiktas sąrašas atitinka paveikslėlį (F) puslapyje i-6. Atsarginių dalių kataloge apie įrangos mazgus, smulkesnius mazgus ir atsargines dalis pateikiama tokia informacija:

- Struktūrinė mazgo nuoroda (22). Nurodo stambesnį mazgą įrangos sąrašo struktūroje.
- Mazgo pavadinimas (23)
- Matavimo vienetai (25)
- Kiekis (26)
- Surinkimo brėžinio numeris (27)
- Sąrašo puslapių intervalas (28) Pateikiamas, jei mazgo paveikslėlis arba sąrašas užima kelis puslapius.
- Dalies arba smulkesnio mazgo numeris (29)
- Smulkesnio mazgo arba dalies aprašymas (30)
- Mazgo numeris (31)
- Įrangos numeris (32)
- Informacijos apie mazgą puslapio antraštė (33). Nurodo, ar po antrašte pateikta informacija yra specifinio įrangos varianto, ar tai paprastų dalių sąrašas. Jei yra daugiau kaip vienas sąrašo variantas ir kiekvienam variantui yra atskiras surinkimo brėžinys, nurodomas puslapis, kuriame pateiktas konkretaus varianto surinkimo brėžinys.
- Vidinė informacija (34)

Ievads

Informācija par rokasgrāmatu

Tetra Pak iesaka rūpīgi izlasīt visas piegādātās rokasgrāmatas. Jānodrošina, lai piegādātas rokasgrāmatas būtu pieejamas personālam, kas apkalpo iekārtas vai veic to apkopi.

Šo katalogu ir nepieciešams saglabāt visu laiku, kamēr iekārtas tiek izmantotas, un nodot katalogu nākamajam īpašniekam vai lietotājam.

Tetra Pak neatbild par jebkuriem iekārtas bojājumiem, kuri rodas līdz ar iekārtu piegādāto instrukciju neievērošanas rezultātā.

Piegādātas rokasgrāmatas

Līdz ar iekārtu var tikt piegādātas šādas rokasgrāmatas

- CM
  Pārslēgšanas rokasgrāmata sniedz tehniķiem informāciju par iekārtas pārslēgšanu dažādos atšķirīgos ražošanas režīmos.
- EM
  Elektriskās instalācijas rokasgrāmata sniedz tehniķiem informāciju par iekārtas elektriskās instalācijas sistēmu.
- IM
  Uzstādīšanas rokasgrāmata sniedz tehniķiem informāciju, kas nepieciešama drošai iekārtas uzstādīšanai.
- MM
  Apkopes rokasgrāmata sniedz tehniķiem informāciju par iekārtas apkopi.
- OM
  Ekspluatācijas rokasgrāmata sniedz apkalpojošajam personālam informāciju par iekārtas apkalpošanu un ekspluatēšanu pirms darba sākuma, darba laikā un pēc darba beigām.
- SPC
  Rezerves daļu katalogs sniedz informāciju, kas nepieciešama, lai pasūtītu rezerves daļas no Tetra Pak
- TeM
  Tehniskā rokasgrāmata
  - sniedz tehniķiem informāciju, kas nepieciešama drošai iekārtas uzstādīšanai
  - sniedz tehniķiem informāciju par iekārtas apkopi
  - sniedz tehniķiem informāciju par mašīnas/iekārtas elektrisko instalāciju
  - sniedz informāciju, kas nepieciešama, lai pasūtītu rezerves daļas no Tetra Pak.

Lappuses izkārtojums

Skatīt ilustrāciju (A) i-5 lappusē: Galvenās lappuses Rezerves daļu katalogā sastāv no ilustrāciju lapas (1) un atbilstīgās saraksta lapas (7). Lappuses numurs (5) ir norādīts ilustrāciju lapas galvenē un saraksta lapas kājenē. Dokumenta numurs (6) ir norādīts saraksta lapas kājenē.

Lappušu numerācija

Skatīt ilustrāciju (A) lappusē i-5: Lappuses numurs (5) sastāv no trim daļām:

- nodaļas numura (2)
- secīga lappuses numura nodaļas ietvaros (3)
- kopējā lappušu skaita nodaļā (3)

Iepazīstināšana ar iekārtu

Ražotājs

Ražotāja nosaukumu un adresi skatīt šī kataloga otrajā lappusē.

Serviss

Lai pasūtītu rezerves daļas šai mašīnai vai lai ziņotu par problēmām saistībā ar šīs mašīnas ekspluatāciju, sazinieties ar tuvāko Tetra Pak pārstāvniecību.

Ja Jums ir citi jautājumi, piezīmes vai ieteikumi par iekārtas un tās dokumentācijas uzlabošanu, tad lūdzam sazināties ar Sakaru biroju.

Identifikācija

EK klasifikācija

Šī iekārta atbilst galvenajām Eiropas Ekonomiskās Zonas (EEA) regulām, kuras attiecas uz veselību un drošību.

Mašīnas tipa plāksnīte

Ilustrācijā (B) i-5 lappusē ir redzams mašīnas tipa plāksnītes paraugs. Aktuālās mašīnas tipa plāksnīte un tās atrašanās vieta uz iekārtas ir parādīta līdz ar šo iekārtu piegādāto rokasgrāmatu Ievada nodaļā. Mašīnas tipa plāksnīte ietver turpmāk uzskaitīto informāciju, kura ir nepieciešama, sazinoties ar Tetra Pak par šo konkrēto iekārtu.

- Mašīnas tips (8)
- Daudzums (9)
- Rasējuma specifikācijas (10)
- Mašīnas sērijas numurs (11)
- Ražotājs (12)
- CE apzīmējums (13)
- Izgatavošanas gads (14)

Ilustrācijā (C) lappusē i-5 ir parādīts mašīnas specifikācijas paraugs. Pārliecinieties, ka šīs rokasgrāmatas titullapās minētā informācija par iekārtu atbilst tai, kas norādīta uz mašīnas tipa plāksnītes un mašīnas specifikācijā.

Rezerves daļu kataloga lietošana

Vajadzīgās rezerves daļas numura atrašana

a) Skatiet ilustrāciju (D) lappusē i-5: Atrodiet nodaļas numuru (15), kas norādīts līdzās galvenajai grupai, kurā ietilpst Jūsu meklētā rezerves daļa.

Pozīcijas b) un c) skatiet ilustrāciju (E) lappusē i-6.

b) Galvenās grupas ilustrācijā atrodiet mašīnas apakšgrupu (17), kurā ietilpst Jūsu meklētā detaļa vai apakšgrupa. Atzīmējiet pozīcijas numuru (18) un pievērsieties saraksta lappusei, kura seko šai ilustrācijai.

c) Sameklējiet atbilstīgo pozīcijas numuru (16) vai apakšgrupas nosaukumu (19). Pievērsieties atbilstīgajam lappuses numuram (20), kas norādīts ailē pa labi. Tetra Pak norādes apzīmēšanai ir izvēlējies vienmēr izmantot uz funkciju orientētu struktūru. Priedēklis, kas norāda uz funkciju orientētu struktūru (=), norādes apzīmējumā nav parādīts.

Pozīcijas d) un e) skatiet ilustrāciju (F) lappusē i-6.

d) Atrodiet vajadzīgo rezerves daļu (21) apakšgrupas ilustrācijā un atzīmējiet šīs detaļas pozīcijas numuru.

e) Šīs detaļas numurs (29) un apraksts (30) atrodas saraksta lapā līdzās pozīcijas numuram.

Rezerves daļu katalogā sniegtā informācija

Šis saraksts attiecas uz ilustrāciju (F) lappusē i-6. Rezerves daļu katalogs satur šādu informāciju par grupām, apakšgrupām un iekārtas rezerves daļām:

- Grupas struktūras norāde (22). Norāda nākamo augstāko grupu iekārtas saraksta struktūrā.
- Grupas nosaukums (23)
- Mērvienība (25)
- Skaits (26)
- Montāžas rasējuma numurs (27)
- Saraksta lappuses zona (28). Tiek izmantota tad, ja grupas ilustrācija vai saraksts ir uz vairākām lappusēm.
- Daļas vai apakšgrupas numurs (29)
- Apakšgrupas nosaukums vai daļas apraksts (30)
- Grupas numurs (31)
- Iekārtas numurs (32)
- Grupas informācijas iedaļas apzīmējums (33). Norāda, vai iedaļa zem šī apzīmējuma attiecas uz noteiktu mašīnas variantu, vai arī tas ir kopējo rezerves daļu saraksts. Ja sarakstam ir vairāk nekā viens variants un katram variantam ir savs montāžas rasējums, tad tiek dota atsauce uz lappusi, kur atrodams katra varianta montāžas rasējums.
- Iekšējā informācija (34)

Inleiding

Informatiehandboek

Tetra Pak adviseert alle meegeleverde handboeken zorgvuldig te lezen. Controleer of het bedienende of onderhoudspersoneel van de machine de beschikking heeft over de meegeleverde handboeken

Het is belangrijk deze catalogus tijdens de levensduur van de machine te bewaren en de catalogus door te geven aan iedere volgende eigenaar of gebruiker.

Tetra Pak stelt zich niet aansprakelijk voor eventuele schade aan de installatie als gevolg van het niet naleven van de instructies die in de meegeleverde handboeken worden gegeven.

Meegeleverde handboeken

De bij deze installatie meegeleverde handboeken omvatten

- CM
  Het conversiehandboek geeft technici informatie met betrekking tot de ombouw van de installatie tussen verschillende productiemodi.
- EM
  Het elektriciteitshandboek informeerttechnici omtrent het elektrischesysteem van de installatie.
- IM
  Het installatiehandboek informeert technici hoe men de installatie op veilige wijze installeert.
- MM
  Het onderhoudshandboek geeft technici informatie over het onderhoud van de installatie.
- OM
  Het bedieningshandboek informeert de operator betreffende het omgaan met en het bedienen van de installatie voor, tijdens en na de productie.
- SPC
  De reserveonderdelencatalogus geeft de nodige informatie omtrent het bestellen van reserveonderdelen bij Tetra Pak
- TeM
  Het technische handboek
  - informeert technici hoe men de installatie op veilige wijze installeert
  - informeert technici omtrent het onderhoud van de installatie
  - informeert technici omtrent het elektrische systeem van de machine/ installatie
  - informeert over welke informatie men nodig heeft om reserveonderdelen bij Tetra Pak te bestellen.

Pagina layout

Zie afbeelding (A) op pagina i-5: De belangrijkste bladzijden van een reserveonderdelencatalogus bestaan uit een bladzijde met afbeeldingen (1) en een bladzijde met een corresponderende lijst (7). Het bladzijde-nummer (5) is te vinden in de kop van een bladzijde met een afbeelding en in de voetnoot van een lijstbladzijde. Het documentennummer (6) is te vinden in de voetnoot van een lijstbladzijde.

Bladzijdenummering

Zie afbeelding (A) op pagina: i-5: Een bladzijdenummer (5) bestaat uit drie delen:

- hoofdstuknummer (2)
- opeenvolgend bladzijdenummer in het hoofdstuk (3)
- totaal aantal bladzijden in het hoofdstuk (4)

Introductie van de machine

Fabrikant

Zie de tweede bladzijde van deze catalogus voor naam en adres van de fabrikant.

Service

Neem voor het bestellen van reserveonderdelen voor deze machine, of om bedieningsproblemen met betrekking tot deze machine te melden, contact op met de dichtstbijzijnde Tetra Pak vestiging.

Neem contact op met de contactpersoon voor verdere informatie, opmerkingen of suggesties ter verbetering van de installatie en de bijbehorende documentatie.

Identificatie

CE-classificatie

Deze installatie voldoet aan de basisvoorschriften voor gezondheid en veiligheid voor het Europese Economische Gebied (EEG).

Machineplaatje

Afbeelding (B) op bladzijde i-5 toont een voorbeeld van een machineplaatje. Een afbeelding van het geldige machineplaatje en de plaatsing ervan worden getoond in de Inleiding van de handboeken, die bij deze installatie worden meegeleverd. Het machineplaatje bevat onderstaande gegevens, die men nodig heeft wanneer men omtrent de desbetreffende installatie contact opneemt met Tetra Pak.

- Machinetype (8)
- Volume (9)
- Specificatietekeningen (10)
- Serienummer van de machine (11)
- Fabrikant (12)
- CE-markering (13)
- Jaar van fabrikage (14)

Afbeelding (C) op pagina i-5 toont een voorbeeld van een machinespecificatie. Controleer of de gegevens betreffende de installatie op de eerste bladzijden van dit handboek overeenkomen met de gegevens op het machineplaatje en de machinespecificatie.

Gebruik van de reserveonderdelencatalogus

Vinden van het bestelnummer van een reserveonderdeel

a) Zie afbeelding (D) op pagina i-5: Ga naar het hoofdstuknummer (15) dat wordt aangeven naast de hoofdgroep waarin zich het door u gezochte onderdeel bevindt.

Items b) en c) verwijzen naar afbeelding (E) op pagina i-6.

b) Op de afbeelding van de hoofdgroep zoekt u de machinesubgroep (17), die het gezochte onderdeel of de gezochte subgroep bevat. Noteer het positienummer (18) en ga naar de lijstbladzijde die op de afbeelding volgt.

c) Zoek naar het positienummer/de referentie (16) of de subgroep-naam (19). Ga naar de corresponderende bladzijde (20) die in de rechterkolom staat vermeld. Tetra Pak heeft voor de benoeming van de referenties gekozen voor de functiegeoriënteerde structuur. De prefixaanduidende functiegeoriënteerde structuur (=) wordt niet in de referentie getoond.

Items d) en e) verwijzen naar afbeelding (F) op pagina i-6.

d) Zoek het gewenste deel (21) op de subgroepafbeelding en noteer het positienummer van het onderdeel.

e) Het bestelnummer (29) en de omschrijving (30) van het onderdeel staan naast het positienummer op de lijstbladzijde.

Informatie die in een reserveonderdelencatalogus wordt gegeven

De onderstaande lijst verwijst naar afbeelding (F) op bladzijde i-6. Een reserveonderdelencatalogus bevat de volgende informatie over groepen, subgroepen en reserveronderdelen voor de installatie:

- Referentie groepstructuur (22). Geeft de volgende hogere groep in de lijststructuur van de installatie aan.
- Groepsnaam (23)
- Meeteenheid (25)
- Hoeveelheid (26)
- Nummer montagetekening (27)
- Lijst bladzijdenreeks (28). Wordt vermeld wanneer er meerdere bladzijden in de groepsafbeelding of -lijst voorkomen.
- Deel- of subgroepnummer (29)
- Subgroepnaam of onderdeelbeschrijving (30)
- Groepsnummer (31)
- Machinenummer (32)
- Titel groepsinformatie (33). Geeft aan of het gedeelte onder de titel voor een specifieke machinesoort is of dat het een lijst met gebruikelijke onderdelen is. Indien een lijst meer dan één type bevat en ieder type zijn eigen montagetekening heeft, wordt een bladzijdereferentie getoond voor de montagetekening van het type.
- Interne informatie (34)

Introduksjon

Informasjon om manualen

Tetra Pak anbefaler at du leser nøye gjennom alle leverte manualer. Sørg for at manualene er tilgjengelige for alle som betjener eller vedlikeholder utstyret.

Det er viktig at du tar vare på denne katalogen under hele levetiden til utstyret og at du gir den videre til eventuelle nye eiere eller brukere.

Tetra Pak vil ikke være ansvarlig for skader på utstyret som oppstår fordi brukeren ikke følger instruksjonene i manualene som følger med utstyret.

Leverte manualer

Manualene som leveres med dette utstyret, kan inkludere

- CM
  Konverteringsmanualen gir teknikere informasjon om hvordan de konverterer utstyret mellom ulike produksjonsmodi.
- EM
  Den elektriske manualen gir teknikere informasjon om utstyrets elektriske system.
- IM
  Installasjonsmanualen gir teknikere informasjon som kreves for å kunne installere utstyret på en sikker måte.
- MM
  Vedlikeholdsmanualen gir teknikere informasjon om vedlikehold av utstyret.
- OM
  Driftsmanualen gir operatøren informasjon om hvordan han håndterer og bruker utstyret før, under og etter produksjon.
- SPC
  Reservedelskatalogen inneholder informasjon som du trenger for å bestille reservedeler fra Tetra Pak
- TeM
  Den tekniske manualen
  – gir teknikere informasjon om sikker installasjon av utstyret
  – gir teknikere informasjon om vedlikehold av utstyret
  – gir teknikere informasjon om maskinens/utstyrets elektriske system
  – inneholder informasjon som du trenger for å bestille reservedeler fra Tetra Pak.

Sideoppsett

Se illustrasjonen (A) på side i-5: Hovedsidene i reservedelskatalogen består av en illustrasjonsside (1) og en korresponderende listeside (7). Sidenummeret (5) vises i topteksten på illustrasjonssiden og i bunnteksten på listesiden. Dokumentnummeret (6) vises i bunnteksten på listesiden.

Sidenummerering

Se illustrasjonen (A) på side i-5: Et sidenummer (5) består av tre deler:

- kapittelnummer (2)
- etterfølgende sidenummer i kapitlet (3)
- det totale antall sider i kapitlet (4)

Introduksjon av maskinen

Produsent

Hvis du ønsker produsentens navn og adresse, kan du se side to i denne katalogen.

Service

Når du skal bestille reservedeler til denne maskinen eller rapportere problemer forbundet med driften av denne maskinen, må du kontakte ditt nærmeste Tetra Pak-kontor.

Når det gjelder andre forespørsler, kommentarer eller forslag til forbedringer av utstyret og dets dokumentasjon, kan du ta kontakt med din kontaktperson.

Identifisering

CE-klassifisering

Dette utstyret er i overensstemmelse med de grunnleggende helse- og sikkerhetsforskriftene i Det europeiske økonomiske samarbeidsområdet (EØS).

Maskinplate

Illustrasjonen (B) på side i-5 viser et eksempel på en maskinplate.
En illustrasjon av en gyldig maskinplate og hvor denne er plassert på utstyret, er vist i introduksjonskapitlet i manualene som følger med dette utstyret. Maskinplaten inneholder nedenstående data, som du trenger når du skal kontakte Tetra Pak angående dette bestemte utstyret.

- Maskintype (8)
- Volum (9)
- Tegningsspesifikasjoner (10)
- Maskin-serienummer (11)
- Produsent (12)
- CE-merke (13)
- Produksjonsår (14)

Illustrasjonen (C) på side i-5 viser et eksempel på en maskinspesifikasjon. Sørg for at utstyrsdataene som står oppført foran i denne manualen, samsvarer med dataene på maskinplaten og maskinspesifikasjonen.

Hvordan bruke denne reservedelskatalogen

Finn et reservedelsnummer

a) Se illustrasjonen (D) på side i-5: Gå til kapittelnummeret (15) som er angitt ved siden av hovedgruppen som inneholder delen du vil finne.

Punkt b) og c) viser til illustrasjonen (E) på side i-6.

b) På hovedgruppeillustrasjonen ser du etter maskinundergruppen (17) som inneholder delen eller undergruppen du ser etter. Merk deg posisjonsnummeret (18), og gå til listesiden som kommer etter illustrasjonen.

c) Se etter posisjonsnummeret/referansebetegnelsen (16) eller undergruppenavnet (19). Gå til det korresponderende sidenummeret (20) som står oppført i høyre kolonne. Tetra Pak har valgt å alltid bruke den funksjonsorienterte inndelingen for referansebetegnelse. Prefiksen som angir funksjonsorientert inndeling (=), er ikke vist i referansebetegnelsen.

Punkt d) og e) viser til illustrasjonen (F) på side i-6.

d) Finn delen (21) du ser etter på undergruppeillustrasjonen, og merk deg delens posisjonsnummer.

e) Delenummeret (29) og delebeskrivelsen (30) finner du ved siden av posisjonsnummeret på listesiden.

Informasjon i en reservedelskatalog

Listen nedenfor viser til illustrasjonen (F) på side i-6. En reservedelskatalog inneholder følgende informasjon om grupper, undergrupper og reservedeler for utstyret:

- Gruppeinndelingsreferanse (22). Angir den neste gruppen opp i inndelingen av utstyrslisten.
- Gruppenavn (23)
- Målenhet (25)
- Antall (26)
- Tegningsnummer (27)
- Listesideområde (28). Inkludert hvis det er flere sider i gruppe-illustrasjonen eller listen.
- Dele- eller undergruppenummer (29)
- Undergruppenavn eller delebeskrivelse (30)
- Gruppenummer (31)
- Utstyrsnummer (32)
- Gruppeinformasjonsoverskrift (33). Angir om avsnittet under overskriften er for en bestemt maskinvariant eller om det er en liste over vanlige deler. Hvis en liste har flere varianter og hver variant har sin egen sammenstillingstegning, vises det en sidereferanse til variantens sammenstillingstegning.
- Intern informasjon (34)

Wprowadzenie

Informacje na temat instrukcji

Firma Tetra Pak zaleca dokładne przeczytanie wszystkich dostarczonych instrukcji. Należy upewnić się, że dostarczone instrukcje są dostępne dla personelu, który obsługuje lub konserwuje maszynę.

Należy przechowywać ten katalog przez cały okres użytkowania maszyny i przekazać go kolejnemu właścicielowi lub użytkownikowi.

Firma Tetra Pak nie będzie ponosić odpowiedzialności za jakiekolwiek uszkodzenia maszyny spowodowane niestosowaniem się do zaleceń zawartych w instrukcjach dostarczonych z maszyną.

Dostarczone instrukcje

W skład dokumentacji dostarczonej z maszyną wchodzą:

- Instrukcja konwersji (CM)
  W tej instrukcji zawarte są informacje dotyczące dostosowania maszyny do różnych trybów produkcji.
- Instrukcja dotycząca wyposażenia elektrycznego (EM)
  W tej instrukcji zawarte są informacje dotyczące układu elektrycznego maszyny.
- Instrukcja instalacji (IM)
  W tej instrukcji zawarte są informacje niezbędne do bezpiecznego zainstalowania maszyny.
- Instrukcja konserwacji (MM)
  W tej instrukcji zawarte są informacje dotyczące konserwacji maszyny.
- Instrukcja obsługi (OM)
  W tej instrukcji zawarte są informacje dotyczące obsługi maszyny przed rozpoczęciem produkcji, w jej trakcie oraz po jej zakończeniu.
- Katalog części zamiennych (SPC)
  W katalogu zawarte są informacje dotyczące zamawiania części zamiennych w firmie Tetra Pak.
- Instrukcja techniczna (TeM)
  Instrukcja techniczna zawiera informacje:
  - dotyczące bezpiecznego instalowania maszyny,
  - dotyczące konserwacji maszyny,
  - dotyczące układu elektrycznego maszyny,
  - dotyczące zamawiania części zamiennych w firmie Tetra Pak.

Układ strony

Patrz rysunek (A) na stronie i-5: Główne strony w Katalogu części zamiennych składają się ze strony zawierającej rysunek (1) i odpowiadającej jej strony zawierającej listę (7). Numer strony (5) znajduje się w nagłówku strony zawierającej rysunek i w stopce strony zawierającej listę. Numer dokumentu (6) znajduje się w stopce strony zawierającej listę.

Numeracja stron

Patrz rysunek (A) na stronie i-5: Numer strony (5) składa się z trzech części:

- numeru rozdziału (2),
- kolejnego numeru strony w rozdziale (3),
- całkowitej liczby stron w rozdziale (4).

Ogólne informacje o maszynie

Producent

Nazwę i adres producenta można znaleźć na drugiej stronie niniejszego katalogu.

Serwis

Aby zamówić części zapasowe do tej maszyny lub zgłosić problemy związane z jej pracą, należy skontaktować się z najbliższym biurem Tetra Pak.

Można kontaktować się także w przypadku innych zapytań, uwag lub sugestii dotyczących udoskonalenia urządzenia i dokumentacji.

Identyfikacja

Klasyfikacja CE

Maszyna spełnia podstawowe wymogi z zakresu bezpieczeństwa i ochrony zdrowia obowiązujące w Europejskiej Strefie Ekonomicznej (EEA).

Tabliczka znamionowa

Na rysunku (B), znajdującym się na stronie i-5, pokazano przykładową tabliczkę znamionową.
Rysunek prawidłowej tabliczki znamionowej oraz jej umiejscowienie na maszynie pokazano w rozdziale Wprowadzenie zawartym w instrukcjach dostarczonych z maszyną. Tabliczka znamionowa zawiera następujące dane potrzebne w przypadku kontaktowania się z firmą Tetra Pak w sprawie dotyczącej danej maszyny:

- typ maszyny (8),
- objętość (9),
- specyfikacje rysunkowe (10),
- numer seryjny maszyny (11),
- nazwę producenta (12),
- oznaczenie CE (13),
- rok produkcji (14).

Na rysunku (C) zamieszczonym na stronie i-5 pokazano przykład specyfikacji maszyny. Należy sprawdzić, czy dane dotyczące maszyny przedstawione na pierwszej stronie tej instrukcji odpowiadają danym zawartym na tabliczce znamionowej maszyny oraz specyfikacji maszyny.

Jak korzystać z niniejszego Katalogu części zamiennych

Należy odnaleźć numer części zamiennej

a) Zapoznaj się z rysunkiem (D) na stronie i-5: przejdź do numeru rozdziału (15) pokazanego obok głównej grupy zawierającej część, którą chcesz odszukać.

Punkty b) i c) odnoszą się do rysunku (E) na stronie i-6.

b) Na rysunku grupy głównej odszukaj podgrupę maszyny (17), która zawiera odpowiednią część lub podgrupę, której szukasz. Zanotuj numer pozycji (18) i przejdź do strony z listą odpowiadającą rysunkowi.

c) Odszukaj numer pozycji/oznaczenie odnośnika (16) lub nazwę podgrupy (19). Przejdź do odpowiedniego numeru strony (20) podanego w kolumnie umieszczonej po prawej stronie. Firma Tetra Pak w przypadku oznaczenia odnośnika korzysta ze struktury ukierunkowanej na funkcję. Przedrostek wskazujący strukturę ukierunkowaną na funkcję (=) nie jest pokazany w oznaczeniu odnośnika.

Punkty d) i e) odnoszą się do rysunku (F) na stronie i-6.

d) Na rysunku podgrupyodszukaj odpowiednią część (21) i zanotuj numer pozycji części.

e) Numer części (29) oraz jej opis (30) podano na stronie zawierającej listę obok numeru pozycji.

Informacje zawarte w Katalogu części zamiennych

Poniższa lista odnosi się do rysunku (F), znajdującego się na stronie i-6. Katalog części zamiennych zawiera następujące informacje o grupach, podgrupach oraz częściach zamiennych maszyny:

- Odnośnik struktury grup (22). Wskazuje następną wyższą grupę zawartą w strukturze listy maszyny.
- Nazwa grupy (23).
- Jednostka miary (25).
- Liczba (26).
- Numer rysunku złożeniowego (27).
- Zakres stron zawierających listę (28). Podany w przypadku występowania wielu stron zawierających rysunek grupy lub listę.
- Numer części lub podgrupy (29).
- Nazwa podgrupy lub opis części (30).
- Numer grupy (31).
- Numer maszyny (32).
- Nagłówek informacyjny grupy (33). Wskazuje, czy sekcja umieszczona pod nagłówkiem dotyczy określonego wariantu maszyny, czy też jest to lista wspólna dla wszystkich wariantów. Jeśli lista występuje w wielu wariantach i dla każdego z nich dostępny jest osobny rysunek złożeniowy, podany jest odnośnik strony do rysunku złożeniowego dla danego wariantu.
- Informacje wewnętrzne (34).

Introdução

Informações sobre o Manual

A Tetra Pak recomenda que leia atentamente todos os manuais incluídos. Certifique-se de que os manuais incluídos estão disponíveis para o pessoal que utiliza ou faz a manutenção do equipamento.

É importante que mantenha este catálogo durante toda a vida útil do equipamento, devendo ainda ser fornecido a quaisquer proprietários e operadores subsequentes do mesmo.

A Tetra Pak não será responsável por quaisquer danos no equipamento provocados pelo não seguimento das instruções fornecidas nos manuais que acompanham este equipamento.

Manuais Fornecidos

Os manuais fornecidos com este equipamento podem incluir

- CM
  O Manual de Conversão (Conversion Manual) fornece aos técnicos informações sobre a conversão do equipamento entre modos de produção diferentes.
- EM
  O Manual Eléctrico (Electrical Manual) fornece aos técnicos informações sobre o sistema eléctrico do equipamento.
- IM
  O Manual de Instalação (Installation Manual) fornece aos técnicos as informações necessárias à instalação do equipamento em segurança.
- MM
  O Manual de Manutenção (Maintenance Manual) fornece aos técnicos informações sobre como realizar a manutenção do equipamento.
- OM
  O Manual de Funcionamento (Operation Manual) fornece ao operador informações sobre o manuseamento e funcionamento do equipamento antes, durante e após a produção.
- SPC
  O Spare Parts Catalogue (Catálogo das Peças Sobressalentes) fornece as informações necessárias para encomendar peças sobressalentes à Tetra Pak
- TeM
  O Manual Técnico (Technical Manual)
  - fornece aos técnicos as informações necessárias à instalação do equipamento em segurança
  - fornece aos técnicos informações sobre a manutenção do equipamento
  - fornece aos técnicos informações sobre o sistema eléctrico da máquina/equipamento
  - fornece as informações necessárias para encomendar peças sobressalentes à Tetra Pak.

Desenho da Página

Consulte a ilustração (A) na página i-5: As páginas principais num Catálogo de Peças Sobressalentes são constituídas por uma página de ilustração (1) e uma página de lista correspondente (7). O número de página (5) é apresentado no cabeçalho de uma página de ilustração e no rodapé de uma página de lista. O número do documento (6) é apresentado no rodapé de uma página de lista.

Numeração das Páginas

Consulte a ilustração (A) na página i-5: Um número de página (5) tem três partes:

- número do capítulo (2)
- número das páginas consecutivas dentro do capítulo (3)
- número de páginas total no capítulo (4)

Introdução da Máquina

Fabricante

Quanto ao nome e endereço do fabricante, consulte a segunda página deste catálogo.

Manutenção

Para encomendar peças sobressalentes para esta máquina ou para apresentar relatórios de problemas associados com o funcionamento desta máquina, contacte os escritórios mais próximos da Tetra Pak.

Contacte a Ligação com outras questões, comentários ou sugestões para melhoria referentes ao equipamento e à sua documentação.

Identificação

Classificação da CE

Este equipamento está em conformidade com as regulamentações básicas da saúde e segurança da Área Económica Europeia (AEE).

Chapa de Identificação da Máquina

A ilustração (B) na página i-5 mostra um exemplo de uma chapa de identificação da máquina.
No capítulo Introdução dos manuais entregues com este equipamento é apresentada uma ilustração da chapa de identificação válida da máquina e a sua localização no equipamento. A chapa de identificação da máquina contém os dados listados em baixo, necessários quando contactar a Tetra Pak em relação a este equipamento específico.

- Tipo de máquina (8)
- Volume (9)
- Especificações do desenho (10)
- Número de série da máquina (11)
- Fabricante (12)
- Marca da CE (13)
- Ano de fabricação (14)

A ilustração (C) na página i-5 mostra um exemplo de uma especificação da máquina. Certifique-se de que os dados do equipamento listados nas primeiras páginas deste manual correspondem aos dados indicados na chapa de identificação da máquina e às especificações da máquina.

Como utilizar este Catálogo de Peças Sobressalentes

Localize o Número da Peça Sobressalente

a) Consulte a ilustração (D) na página i-5: Vá para o número do capítulo (15) indicado no grupo principal que contém a peça que pretende localizar.

Os itens b) e c) referem-se à ilustração (E) na página i-6:

b) Na ilustração do grupo principal, procure o subgrupo da máquina (17) que contém a peça ou o subgrupo que procura. Tome nota do número de posição (18) e vá para a página de lista a seguir à ilustração.

c) Procure o número de posição/designação de referência (16) ou o nome do subgrupo (19). Vá para o número de página correspondente (20) indicado na coluna do lado direito. A Tetra Pak preferiu utilizar sempre a estrutura orientada para a função como designação de referência. O prefixo que inicia a estrutura orientada para a função (=) não está indicada na designação de referência.

Os itens d) e e) referem-se à ilustração (F) na página i-6:

d) Localize a peça (21) que procura na ilustração do subgrupo e tome nota do número de posição da peça.

e) O número de peça (29) e a descrição da peça (30) são apresentados ao lado do número da posição na página de lista.

Informações listadas num Catálogo de Peças Sobressalentes

A lista em baixo refere-se à ilustração (F) na página i-6: Um Catálogo de Peças Sobressalentes contém as seguintes informações sobre grupos, subgrupos e peças sobressalentes para o equipamento:

- Referência da estrutura do grupo (22). Indica o grupo mais elevado seguinte na estrutura da lista do equipamento.
- Nome do grupo (23)
- Unidade de medida (25)
- Quantidade (26)
- Número de série do conjunto (27)
- Intervalo de páginas da lista (28). Incluído se existirem várias páginas na ilustração ou na lista do grupo.
- Número de peça ou subgrupo (29)
- Nome do subgrupo ou descrição da peça (30)
- Número do grupo (31)
- Número do equipamento (32)
- Cabeçalho das informações do grupo (33). Indica se a secção em baixo do cabeçalho é de uma variante específica da máquina ou se é uma lista de peças comuns. Se uma lista tiver mais de uma variante e cada variante tiver o seu próprio desenho de conjunto, é apresentada uma referência de página ao desenho do conjunto da variante.
- Informações internas (34)

Introducere

Informații despre manual

Tetra Pak recomandă citirea cu atenție a tuturor manualelor livrate. Asigurați-vă că manualele livrate sunt puse la îndemâna personalului care exploatează sau întreține echipamentul.

Este important să păstrați acest catalog pe întreaga durată de viață a echipamentului și să transmiteți catalogul deținătorilor sau utilizatorilor ulteriori.

Tetra Pak nu va fi răspunzător pentru niciun defect al echipamentului cauzat prin nerespectarea instrucțiunilor date în manualele care însoțesc acest echipament.

Manuale livrate

Manualele livrate cu acest echipament pot include

- CM
  Manualul de conversie furnizează tehnicienilor informații despre conversia echipamentului între diferite moduri de producție.
- EM
  Manualul electric furnizează tehnicienilor informații despre sistemul electric al echipamentului.
- IM
  Manualul de instalare furnizează tehnicienilor informații necesare pentru instalarea în siguranță a echipamentului.
- MM
  Manualul de întreținere furnizează tehnicienilor informații cu privire la întreținerea echipamentului.
- OM
  Manualul de exploatare pune la dispoziție operatorilor informații despre manevrarea și exploatarea echipamentului înainte, în timpul și după producție.
- SPC
  Catalogul pieselor de schimb furnizează informații necesare pentru comandarea pieselor de schimb de la Tetra Pak.
- TeM
  Manualul tehnic
  – furnizează tehnicienilor informații necesare pentru instalarea în siguranță a echipamentului
  – furnizează tehnicienilor informații necesare cu privire la întreținerea echipamentului
  – furnizează tehnicienilor informații despre sistemul electric al mașinii/echipamentului
  – furnizează informații necesare pentru comandarea pieselor de schimb de la Tetra Pak.

Configurația paginilor

Examinați ilustrația (A) de pe pagina i-5: Paginile principale dintr-un catalog de piese de schimb constau dintr-o pagină de ilustrare (1) și o pagină de liste corespunzătoare (7). Numărul paginii (5) apare în antetul unei pagini de ilustrare și în subsolul unei pagini de liste. Numărul documentului (6) apare în subsolul unei pagini de liste.

Numerotarea paginilor

Examinați ilustrația (A) de la pagina i-5: Un număr de pagină (5) are trei părți:

- numărul capitolului (2)
- numărul paginii consecutive din cadrul capitolului (3)
- număr total de pagini din capitol (4)

Prezentare introductivă a mașinii

Producător

Pentru numele și adresa producătorului, consultați pagina a doua a acestui catalog.

Service

Pentru comandarea pieselor de schimb pentru această mașină sau pentru a raporta problemele asociate cu exploatarea acestei mașini, contactați cel mai apropiat birou Tetra Pak.

Contactați Liaison cu privire la alte întrebări, comentarii sau sugestii legate de îmbunătățirea echipamentului și a documentației acestuia.

Identificare

Clasificare CE

Acest echipament este fabricat în conformitate cu reglementările de bază cu privire la sănătate și siguranță din Zona economică europeană (EEA).

Plăcuța mașinii

Ilustrația (B) de la pagina i-5 arată un exemplu al unei plăcuțe de mașină. O ilustrație a plăcuței valide a mașinii și a poziției acesteia pe echipament este arătată în capitolul introductiv al manualelor livrate împreună cu acest echipament. Plăcuța mașinii conține datele listate mai jos, necesare în cazul în care contactați Tetra Pak în legătură cu acest echipament specific.

- Tip mașină (8)
- Volum (9)
- Specificații de desen (10)
- Număr de serie al mașinii (11)
- Producător (12)
- Marcaj CE (13)
- Anul fabricației (14)

Ilustrația (C) de la pagina i-5 arată un exemplu al unei specificații de mașină. Asigurați-vă că datele specifice echipamentului, listate în paginile din față ale acestui manual, corespund cu datele de pe plăcuța mașinii și cu specificațiile mașinii.

Cum se utilizează acest catalog de piese de schimb

Localizarea unui număr de piesă de schimb

a) Examinați ilustrația (D) de la pagina i-5: Treceți la numărul de capitol (15) indicat lângă grupa principală care conține piesa pe care doriți să o localizați.

Articolele b) și c) se referă la ilustrația (E) de la pagina i-6.

b) Pe ilustrația grupei principale, căutați subgrupa aferentă mașinii (17) care conține piesa sau subgrupa pe care o căutați. Notați numărul poziției (18) și treceți la pagina de liste care urmează după ilustrație.

c) Căutați numărul poziției/marcarea de referință (16) sau numele subgrupei (19). Treceți la numărul de pagină corespunzător (20) listat în coloana din partea dreaptă. Tetra Pak a optat ca întotdeauna să utilizeze structura orientată pe funcție pentru marcarea de referință. Prefixul care indică structura orientată pe funcție (=) nu este arătat în marcarea de referință.

Articolele d) și e) se referă la ilustrația (F) de la pagina i-6.

d) Localizați piesa (21) pe care o căutați pe ilustrația subgrupei și notați numărul de poziție al piesei.

e) Numărul piesei (29) și descrierea piesei (30) sunt listate lângă numărul de poziție de pe pagina de liste.

Informațiile listate într-un catalog de piese de schimb

Lista de mai jos se referă la ilustrația (F) de la pagina i-6. Un catalog de piese de schimb conține următoarele informații despre grupe, subgrupe și piese de schimb pentru echipament:

- Referința despre structura grupelor (22). Indică următoarea grupă superioară din structura de liste a echipamentului.
- Numele grupei (23)
- Unitatea de măsură (25)
- Cantitatea (26)
- Numărul de desen de ansamblu (27)
- Intervalul de pagini de liste (28). Inclus dacă există mai multe pagini în ilustrația sau lista grupei.
- Numărul piesei sau al subgrupei (29)
- Numele subgrupei sau descrierea piesei (30)
- Numărul grupei (31)
- Numărul echipamentului (32)
- Antet cu informații despre grupă (33). Indică dacă secțiunea de sub antet se referă la o anumită variantă de mașină sau este o listă de piese comune. Dacă o listă are mai multe variante și fiecare variantă are propriul său desen de ansamblu, este arătată o referință de pagină pentru desenul de ansamblu al variantei.
- Informații interne (34)

Úvod

Informácie o návode

Spoločnosť Tetra Pak odporúča, starostlivo si prečítať všetky dodané návody. Dbajte, aby pracovníci, obsluhujúci zariadenie alebo zabezpečujúci jeho údržbu, mali vždy dodané návody k dispozícii.

Je dôležité, aby bol tento katalóg k dispozícii počas celého času životnosti zariadenia, a aby sa katalóg dostal aj k jeho prípadnému ďalšiemu držiteľovi alebo používateľovi.

Spoločnosť Tetra Pak nepreberá zodpovednosť za akékoľvek poškodenie zariadenia spôsobené nedodržaním pokynov uvedených v návodoch dodávaných s týmto zariadením.

Dodané návody

S týmto zariadením vám mohli byť dodané nasledujúce návody:

- CM
  Návod na prestavovanie poskytuje technikom informácie o prestavovaní zariadenia do rôznych výrobných režimov.
- EM
  Elektrotechnický návod poskytujetechnikom informácie o elektrickom systéme zariadenia.
- IM
  Návod na inštaláciu poskytuje technikom informácie potrebné na bezpečnú inštaláciu zariadenia.
- MM
  Návod na údržbu poskytujetechnikom informácie o údržbe zariadenia.
- OM
  Návod na obsluhu poskytuje obsluhe informácie o zaobchádzaní a obsluhe zariadenia pred, počas a po prevádzke.
- SPC
  Katalóg náhradných dielcov poskytuje informácie potrebné na objednávanie náhradných dielcov od spoločnosti Tetra Pak
- TeM
  Technický návod
  - poskytuje technikom informácie potrebné na bezpečnú inštaláciu zariadenia
  - poskytuje technikom informácie o údržbe zariadenia
  - poskytuje technikom informácie o elektrickom systéme stroja/ zariadenia
  - poskytuje informácie potrebné na objednávanie náhradných dielcov od spoločnosti Tetra Pak.

Rozloženie strany

Pozri ilustráciu (A) na strane i-5: Hlavné strany Katalógu náhradných dielcov obsahujú stránku s ilustráciami (1) a príslušnú stranu so zoznamom (7). Číslo strany (5) sa uvádza v záhlaví na strane s ilustráciami a v päte strany so zoznamom. Číslo dokumentu (6) sa uvádza v päte strany so zoznamom.

Číslovanie strán

Pozri ilustráciu (A) na strane i-5: Číslo strany (5) má tri časti:

- číslo kapitoly (2)
- poradové číslo strany v rámci kapitoly (3)
- celkový počet strán v kapitole (4)

Základné informácie o stroji

Výrobca

Meno a adresa výrobcu sa uvádza na druhej strane tohto katalógu.

Servis

Pri objednávaní náhradných dielcov pre tento stroj alebo na nahlasovanie problémov súvisiacich s prevádzkou tohto stroja sa obráťte na najbližšie zastúpenie spoločnosti Tetra Pak.

S ostatnými otázkami, pripomienkami a podnetmi na vylepšenie stroja alebo zariadenia a jeho dokumentácie sa obracajte na kontaktnú osobu.

Identifikácia

Klasifikácia CE

Toto zariadenie spĺňa základné predpisy o ochrane zdravia a bezpečnosti Európskeho hospodárskeho priestoru (EEA).

Typový štítok stroja

Na ilustrácii (B) na strane i-5 uvádzame príklad typového štítku. Ilustrácia platného typového štítku stroja a jeho umiestnenia na zariadení sa uvádza v kapitole Úvod v návodoch, dodaných s týmto zariadením. Typový štítok obsahuje dolu údaje uvedené, potrebné pri kontaktoch so spoločnosťou Tetra Pak ohľadom tohto špecifického zariadenia.

- Typ stroja (8)
- Objem (9)
- Údaje o výkrese (10)
- Výrobné číslo stroja (11)
- Výrobca (12)
- Značka CE (13)
- Rok výroby (14)

Ilustrácia (C) na strane i-5 zobrazuje príklad špecifikácie stroja. Presvedčite sa, že údaje zariadenia uvedené na predných stranách tohto návodu zodpovedajú údajom na typovom štítku a v špecifikácii stroja.

Ako sa tento Katalóg náhradných dielcov používa

Vyhľadanie čísla náhradného dielca

a) Pozri ilustráciu (D) na strane i-5: Prejdite na číslo kapitoly (15) uvedené vedľa hlavnej skupiny obsahujúcej dielec, ktorý chcete vyhľadať.

Položky b) a c) odkazujú na ilustráciu (E) na strane i-6.

b) Na ilustrácii hlavnej skupiny hľadajte podskupinu stroja (17), ktorý obsahuje dielec alebo podskupinu, ktorú hľadáte. Poznamenajte si číslo položky (18) a prejdite stranu so zoznamom nasledujúcu po ilustrácii.

c) Vyhľadajte číslo položky/referenčné označenie (16) alebo názov podskupiny (19). Prejdite na príslušné číslo strany (20) uvedené v zozname v pravom stĺpci. Spoločnosť Tetra Pak sa rozhodla vždy používať funkčne zameranú štruktúru na referenčné označovanie. Predčíslie udávajúce funkčne orientovanú štruktúra (=) sa v referenčnom označení nezobrazuje.

Položky d) a e) odkazujú na ilustráciu (F) na strane i-6.

d) Nájdite dielec (21), ktorý hľadáte, na ilustrácii podskupiny a poznamenajte si číslo položky daného dielca.

e) Číslo dielca (29) a popis dielca (30) sa uvádza vedľa čísla položky na stránke so zoznamom.

Informácie uvádzané v Katalógu náhradných dielcov

Dolu uvedený zoznam odkazuje na ilustráciu (F) na strane i-6. Katalóg náhradných dielcov obsahuje nasledujúce informácia o skupinách, podskupinách a náhradných dielcov zariadenia:

- Referenčná štruktúrna skupina (22). Označuje najbližšiu vyššiu skupinu v štruktúre zoznamu zariadenia.
- Názobv skupiny (23)
- Jednotka merania (25)
- Množstvo (26)
- Číslo výkresu celkovej zostavy (27)
- Rozsah strán zoznamu (28). Uvádza sa, ak má ilustrácia alebo zoznam skupiny viac strán.
- Číslo dielca alebo podskupiny (29)
- Názov podskupiny alebo popis dielca (30)
- Číslo skupiny (31)
- Číslo zariadenia (32)
- Záhlavie informácií o skupine (33). Uvádza, či je časť nasledujúca pod záhlavím určená pre špecifický variant stroja, alebo či ide o zoznam spoločných dielcov. Ak má zoznam viac ako jeden variant a každý z variantov má vlastný výkres celkovej zostavy, uvádza sa odkaz na stranu s výkresom zostavy daného variantu.
- Interné informácie (34)

Uvod

Informacije o priročnikih

Tetra Pak priporoča, da natančno preberete vse priložene priročnike. Osebje, ki upravlja in vzdržuje opremo mora imeti dostop do priloženih priročnikov.

Katalog hranite v celotnem času uporabe opreme. V primeru, ko opremo pridobi drug imetnik ali uporabnik, mu obenem izročite tudi katalog.

Podjetje Tetra Pak ne prevzema odgovornosti za poškodbe na opremi, ki nastanejo zaradi neupoštevanja navodil iz priročnikov, ki so priloženi opremi.

Priloženi priročniki

Priročniki, ki so priloženi tej opremi, lahko vključujejo

- Priročnik za zamenjavo (CM)
  V tem priročniku so podatki, ki tehnikom omogočajo izvesti zamenjavo opreme med različnimi načini proizvodnje.
- Elektrotehnični priročnik (EM)
  Priročnik vsebuje podatke za tehnike o električnem sistemu opreme.
- Priročnik za montažo (IM)
  Priročnik vsebuje podatke, ki jih tehniki potrebujejo za varno montažo opreme.
- Priročnik za vzdrževanje (MM)
  Priročnik vsebuje podatke za tehnike o vzdrževanju opreme.
- Priročnik za obratovanje (OM)
  Priročnik je namenjen informiranju za pravilno rokovanje in upravljanje s strojem pred, med in po proizvodnem postopku.
- Katalog nadomestnih delov (SPC)
  Katalog vsebuje potrebne podatke za naročilo nadomestnih delov pri podjetju Tetra Pak.
- Tehnični priročnik (TeM)
  Priročnik
  - vsebuje podatke, ki jih tehniki potrebujejo za varno montažo opreme;
  - vsebuje podatke za tehnike o vzdrževanju opreme;
  - vsebuje podatke za tehnike o električnem sistemu stroja/opreme;
  - vsebuje potrebne podatke za naročilo nadomestnih delov pri podjetju Tetra Pak.

Postavitev strani

Poglejte sliko (A) na strani i-5: Glavne strani v Katalogu nadomestnih delov sestavljata stran s sliko (1) in ustrezna stran s seznamom (7). Številka strani (5) je prikazana na vrhu strani s sliko in na dnu strani s seznamom. Številka dokumenta (6) je prikazana na dnu strani s seznamom.

Številčenje strani

Oglejte si sliko (A) na strani i-5: Številka strani (5) ima tri dele:

- številko poglavja (2);
- zaporedno številko strani v poglavju (3);
- število vseh strani v poglavju (4).

Predstavitev stroja

Proizvajalec

Ime in naslov proizvajalca najdete na drugi strani kataloga.

Servisiranje

Za naročanje nadomestnih delov za stroj ter za sporočanje motenj pri delovanju stroja se obrnite na najbližjo servisno službo podjetja Tetra Pak.

V primeru drugih zahtev, komentarjev, predlogov za izboljšavo opreme ali dokumentacije se obrnite na odgovorno osebo.

Identifikacijska oznaka

CE-klasifikacija

Oprema je izdelana v skladu z osnovnimi zdravstvenimi in varnostnimi predpisi Evropskega gospodarskega prostora (EGS).

Napisna ploščica

Slika (B) na strani i-5 prikazuje primer napisne ploščice.
Sliko veljavne napisne ploščice in njeno mesto na opremi najdete v uvodnem poglavju priloženih priročnikov. Ploščica vsebuje spodaj navedene podatke, ki jih potrebujete, ko se v zvezi z določeno opremo obrnete na podjetje Tetra Pak:

- tip stroja (8);
- prostornino (9);
- specifikacije risbe (10);
- serijsko številko stroja (11);
- proizvajalca (12);
- oznako CE (13);
- leto izdelave (14).

Slika (C) na strani i-5 prikazuje primer specifikacije stroja. Podatki o opremi, navedeni na prvih straneh tega priročnika, se morajo ujemati s podatki o stroju, navedenimi na napisni ploščici in v specifikacijah.

Uporaba Kataloga nadomestnih delov

Iskanje številke nadomestnega dela

a) Oglejte si sliko (D) na strani i-5: Poiščite številko poglavja (15), navedeno poleg glavne skupine, ki vsebuje iskani del.

Točki b) in c) se nanašata na sliko (E) na strani i-6.

b) Na sliki glavne skupine poiščite podskupino stroja (17), ki vsebuje iskani del ali podskupino. Zapomnite si pozicijsko številko (18) in poiščite stran s seznamom, ki pripada sliki.

c) Poiščite pozicijsko številko/referenčno oznako (16) ali ime podskupine (19). Pojdite na stran (20), navedeno v desnem stolpcu. Tetra Pak za referenčno označevanje vedno uporablja funkcijsko strukturo. Predpona, ki označuje funkcijsko strukturo (=), ni prikazana v referenčni oznaki.

Točki d) in e) se nanašata na sliko (F) na strani i-6.

d) Na sliki podskupine poiščite del (21), ki ga iščete, in si zapomnite njegovo pozicijsko številko.

e) Številka (29) in opis dela (30) sta navedena poleg pozicijske številke na strani s seznamom.

Informacije v Katalogu nadomestnih delov

Spodnji seznam se nanaša na sliko (F) na strani i-6. Katalog nadomestnih delov vsebuje naslednje informacije o skupinah, podskupinah in nadomestnih delih za opremo:

- referenco strukture skupine (22); Označuje naslednjo višjo skupino v strukturi seznamov opreme.
- ime skupine (23);
- mersko enoto (25);
- količino (26);
- številko sestavne risbe (27);
- število strani seznama (28); Če je slika ali seznam skupine sestavljen iz več strani.
- številko dela ali podskupine (29);
- ime podskupine ali opis dela (30);
- številko skupine (31);
- številko opreme (32);
- naslov z informacijami o skupini (33). Označuje, ali je razdelek pod naslovom namenjen specifični izvedbi stroja ali gre za seznam skupnih delov. Če ima seznam več izvedb in če ima vsaka od njih svojo sestavno risbo, je ob vsaki izvedbi navedena referenčna stran s sestavno risbo.
- interne informacije (34).

Inledning

Information om manualen

Tetra Pak rekommenderar att alla manualer läses noggrant. Se till att manualerna är tillgängliga för personalen som använder eller underhåller utrustningen.

Det är viktigt att denna katalog behålls under utrustningens livslängd, och att den överlämnas till varje efterföljande innehavare eller användare av utrustningen.

Tetra Pak tar inte ansvar för någon skada på utrustningen som orsakats av att instruktionerna i medföljande manualer inte har följts.

Medföljande manualer

Följande manualer kan levereras tillsammans med utrustningen:

- CM
  Konverteringsmanualen (CM) innehåller information för tekniker om hur man konverterar utrustningen mellan olika produktionslägen.
- EM
  Den elektriska manualen (EM) innehåller information för tekniker om utrustningens elektriska system.
- IM
  Installationsmanualen (IM) innehåller information för tekniker om hur utrustningen installeras på ett säkert sätt.
- MM
  Underhållsmanualen (MM) innehåller information för tekniker om hur utrustningen underhålls.
- OM
  Driftsmanualen (OM) innehåller information för operatören om hur utrustningen ska hanteras före, under och efter produktion.
- SPC
  Reservdelskatalogen (SPC) innehåller den information som behövs för att beställa reservdelar från Tetra Pak.
- TeM
  Den tekniska manualen (TeM)
  - innehåller information för tekniker om hur utrustningen installeras på ett säkert sätt.
  - innehåller information för tekniker om hur utrustningen underhålls.
  - innehåller information för tekniker om maskinens/utrustningens elektriska system.
  - innehåller den information som behövs för att beställa reservdelar från Tetra Pak.

Sidlayout

Se bild (A) på sidan i-5: Huvudsidorna i reservdelskatalogen består av en bildsida (1) och en motsvarande listsida (7). Sidnumret (5) visas i sidhuvudet på bildsidan och i sidfoten på listsidan. Dokumentnumret (6) visas i sidfoten på listsidan.

Sidnumrering

Se bild (A) på sidan i-5: Ett sidnummer (5) består av tre delar:

- kapitlets nummer (2)
- löpande sidnummer inom kapitlet (3)
- totalt sidantal i kapitlet (4)

Introduktion till maskinen

Tillverkare

Tillverkarens namn och adress finns på sidan 2 i katalogen.

Service

För att beställa reservdelar till denna maskin eller för att rapportera problem som uppstått i samband med driften kontaktar du närmaste Tetra Pak-kontor.

Om du har andra frågor, kommentarer eller förslag till förbättringar av utrustningen och dokumentationen vänder du dig till din kontaktperson på Tetra Pak.

Identifiering

CE-märkning

Denna utrustning överensstämmer med den grundläggande hälso- och säkerhetslagstiftningen inom Europeiska ekonomiska samarbetsområdet (EES).

Maskinskylt

Bild (B) på sidan i-5 visar ett exempel på en maskinskylt.
En bild på giltig maskinskylt och dess placering på utrustningen visas i inledningskapitlet som medföljer utrustningen. Skylten innehåller de uppgifter som listas nedan och som behövs vid kontakt med Tetra Pak angående utrustningen.

- Maskintyp (8)
- Volym (9)
- Ritningsspecifikationer (10)
- Maskinnummer (11)
- Tillverkare (12)
- CE-märkning (13)
- Tillverkningsår (14)

Bild (C) på sidan i-5 visar ett exempel på en maskinspecifikation. Kontrollera att informationen om utrustningen som listas på de första sidorna i manualen motsvarar informationen på maskinskylten och i maskinspecifikationen.

Använda reservdelskatalogen

Hitta ett reservdelsnummer

a) Se bild (D) på sidan i-5: Gå till kapitelnumret (15) som står vid sidan om huvudgruppen som innehåller den del du vill hitta.

Punkt b) och c) hänvisar till bild (E) på sidan i-6.

b) På huvudgruppsbilden letar du efter den maskinundergrupp (17) som innehåller delen eller undergruppen du letar efter. Notera positionsnumret (18) och gå till listsidan som anges efter bilden.

c) Leta efter positionsnumret/referensbeteckningen (16) eller undergruppsnamnet (19). Gå till motsvarande sidnummer (20) som listas i den högra kolumnen. Tetra Pak har valt allt alltid använda en funktionsorienterad struktur för referensbeteckningarna. Prefixet för funktionsorienterad struktur (=) visas inte i referensbeteckningen.

Punkt d) och e) hänvisar till bild (F) på sidan i-6.

d) Leta reda på delen (21) i undergruppsbilden och notera delens positionsnummer.

e) Reservdelsnumret (29) och reservdelsbeskrivningen (30) står bredvid positionsnumret på listsidan.

Information i reservdelskatalogen

Listan nedan hänvisar till bild (F) på sidan i-6. Reservdelskatalogen innehåller följande information om grupper, undergrupper och reservdelar för utrustningen:

- Gruppstrukturreferens (22). Anger nästa högre grupp i utrustningslistans struktur.
- Gruppnamn (23)
- Måttenhet (25)
- Kvantitet (26)
- Monteringsritningsnummer (27)
- Listsideintervall (28). Anges om det finns flera sidor i gruppbilden eller grupplistan.
- Reservdels- eller undergruppsnummer (29)
- Undergruppsnamn eller reservdelsbeskrivning (30)
- Gruppnummer (31)
- Utrustningsnummer (32)
- Gruppinformationsrubrik (33). Anger om avsnittet under rubriken gäller en viss maskinvariant eller om det är en lista över allmänna delar. Om en lista har fler än en variant och varje variant har sin egen monteringsritning visas en sidhänvisning till variantens monteringsritning.
- Intern information (34)

SPC
Spare Parts Catalogue

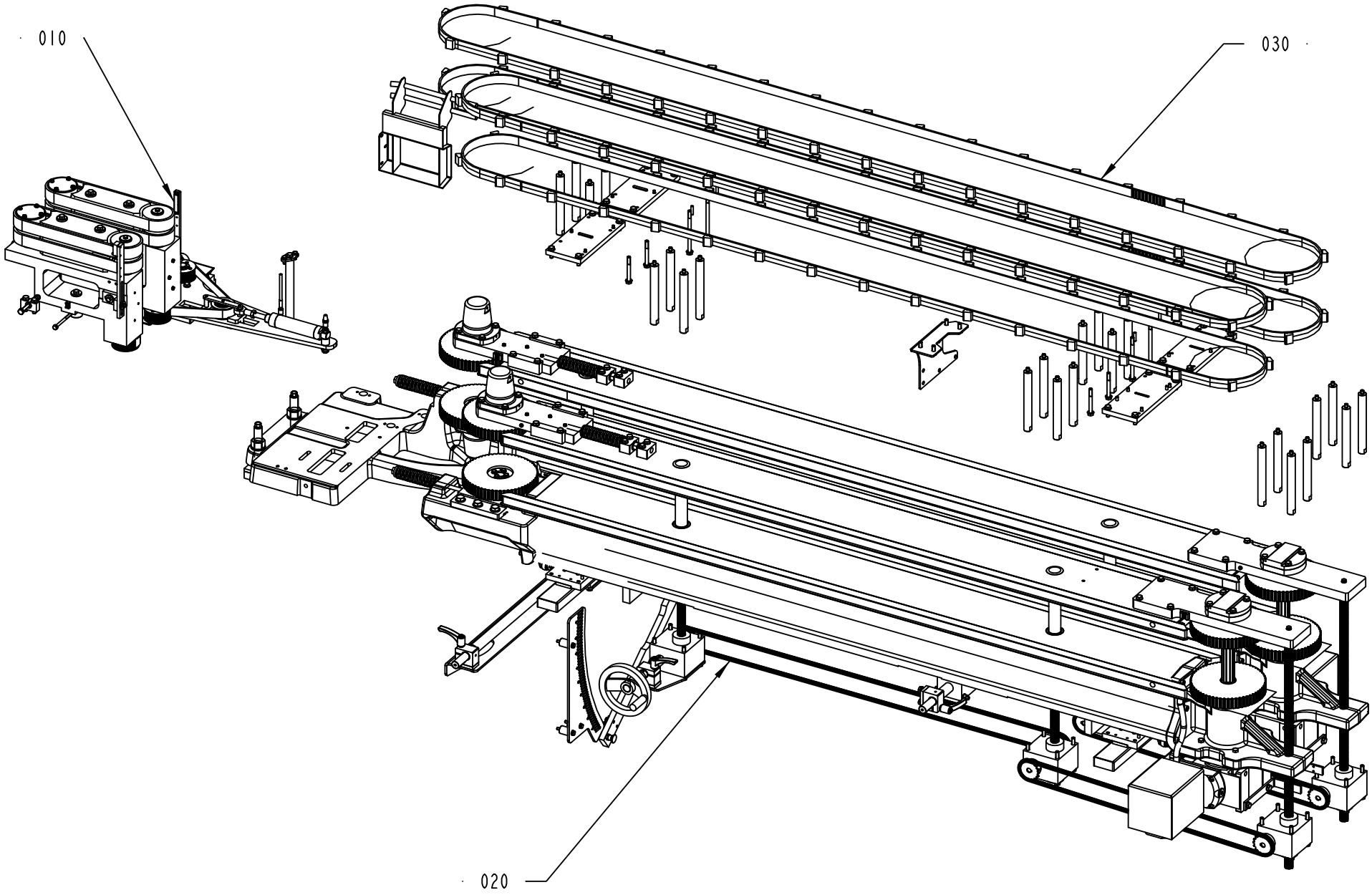
010
030
020
662901-1
273279

ECM: 308944 - 20070525
Group number: 662901-0100
Assembly Drawing: 662901-1_1_AA

Pos	Part No	UN	Qty	Description	Page No
-					
010	2838654-0100		1	BELT BRAKE	**1-5**
020	2838643-0100		1	PACKAGE POSITIONER	**1-17, 1-19**
030	2838633-0100		1	PACKAGE HANDLING	**1-67, 1-69, 1-71, 1-73**

Pos	Part No	UN	Qty	Description	Page No

BELT BRAKE

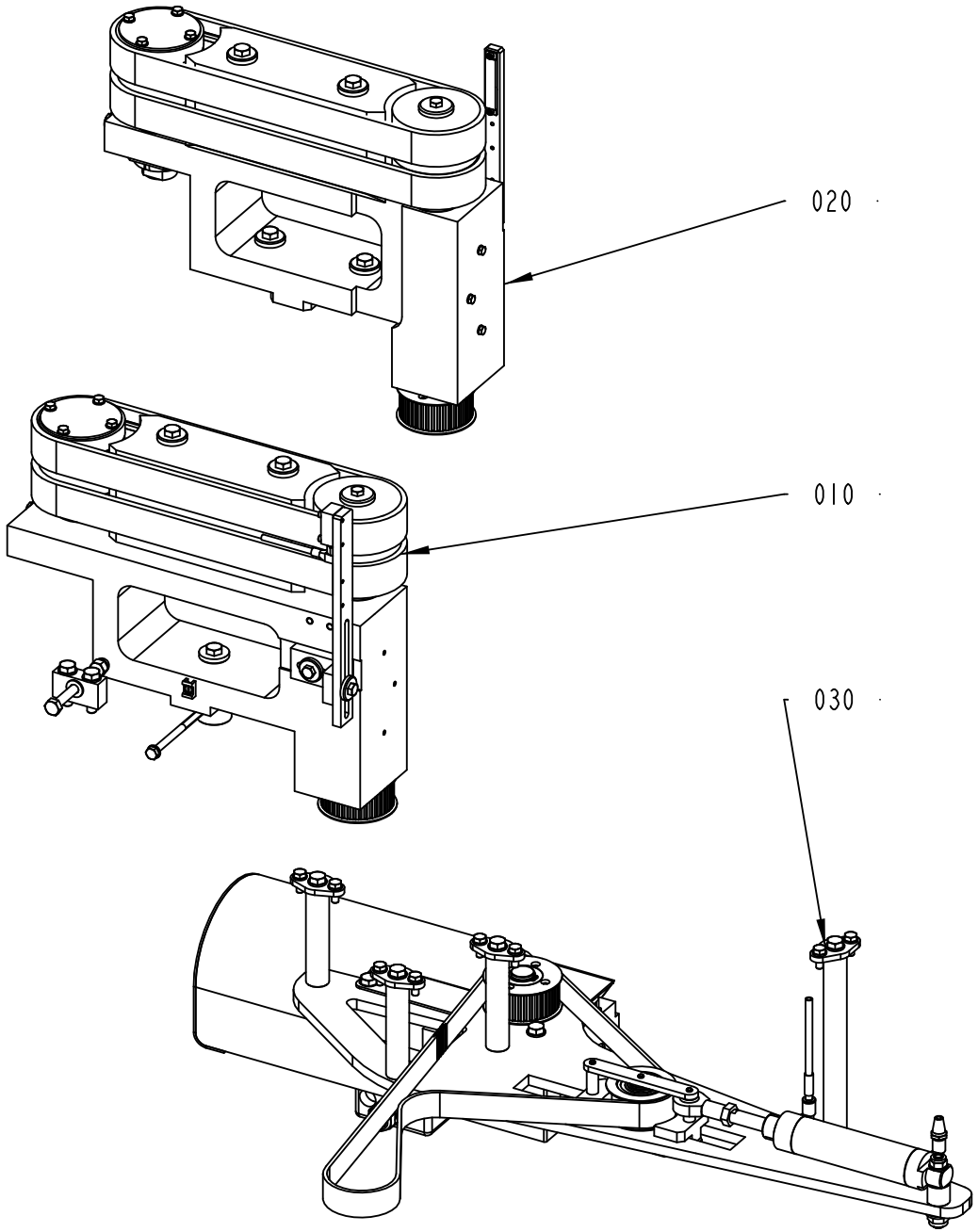

2838654-1
273279

ECM: 312252 - 20070525
Group number: 2838654-0100
Assembly Drawing: 2838654-1_1_AA

Pos	Part No	UN	Qty	Description	Page No
-					
010	2766990-0100		1	BRAKE UNIT	**1-7**
020	2766991-0100		1	BRAKE UNIT	**1-9**
030	2766994-0100		1	ACCELERATION PUSHER	**1-11**

Pos	Part No	UN	Qty	Description	Page No

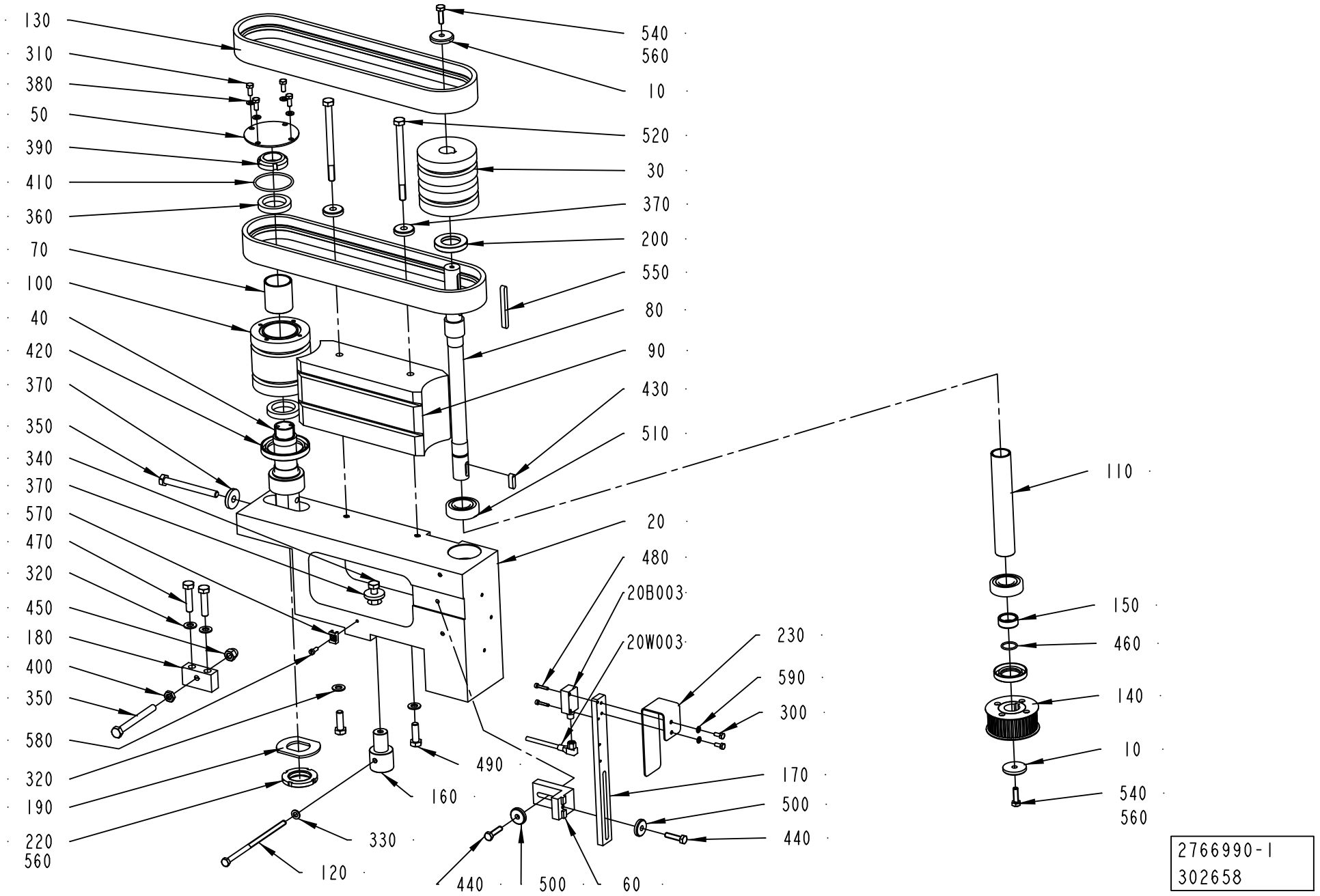
130
310
380
50
390
410
360
70
100
40
420
370
350
340
370
570
470
320
450
180
400
350
580
320
190
220
560
540
560
10
520
30
370
200
550
80
90
430
510
20
480
20B003
20W003
230
590
300
170
500
440
490
160
330
120
440
500
60
110
150
460
140
10
540
560
2766990-1
302658

ECM: 308657 - 20070525
Group number: 2766990-0100
Assembly Drawing: 2766990-1_1_AB

Pos	Part No	UN	Qty	Description	Page No
-					
010	290027-0000		2	WASHER	
020	2769688-0000		1	CANTILEVER	
030	2826728-0000		1	DRIVE PULLEY	
040	2769682-0000		1	SHAFT	
050	2769686-0000		1	COVER	
060	2826734-0000		1	BRACKET	
070	2769741-0000		1	SPACER	
080	2769679-0000		1	DRIVE SHAFT	
090	2826737-0000		1	GUIDE	
100	2826729-0000		1	PULLEY	
110	2830225-0000		1	SPACER	
120	2805468-0000		1	SCREW	
130	2693990-0000		2	TIMING BELT	
140	2769775-0000		1	TOOTHED PULLEY	
150	2773600-0000		1	SPACER	
160	2775418-0000		1	SHAFT	
170	2826735-0000		1	PLATE	
180	2775427-0000		1	BRACKET	
190	2778564-0000		1	WASHER	
200	90091-0322		2	RADIAL SEAL 25X42X7 MM DUST LIP	
20B003	90459-0779		1	LASER SENSOR, FR20RL	
20W003	351306-0100		1	ACTUATOR/SENSOR CABLE PRKMWV 4-07/10M	
220	90459-2644		1	NUT ROUND WITH SLOTS M30X1,5 SS	
230	2873934-0000		1	COVER	
300	312105-0289		2	SCREW M6S H4X10 A4 70 ISO4017/DIN933	
310	312105-0327		4	SCREW M6S ISO 4017 M5X12 A480	
320	315105-0165		4	WASHER BRB 8,4X16 RFR	
330	315105-0153		1	WASHER BRB 6,4X12 RFR	
340	312105-0455		1	SCREW M6S ISO 4017 M8X30 A480	
350	312109-0467		2	SCREW M6S ISO 4017 M8X80 A480	
360	90214-0186		2	BALL BEARING, 30X42X7 MM	
370	315125-0165		4	WASHER TBRSB 8,4X26X5 A4	
380	315105-0146		4	WASHER BRB 5,3X10 RFR	
390	90459-6280		1	NUT GUK 5 M25 X 1.5 FZB	
400	312625-0318		1	HEXAGON THIN NUT, EN 24035 ML6M M8 A4	
410	315202-0733		1	O-RING 45,69X2,62 MM	
420	315221-0192		1	RADIAL SEAL 45X62X8 MM	
430	315705-0232		1	PARALLEL KEY W. ROUND ENDS 6X6X20 MM	
440	312105-0372		2	SCREW M6S ISO 4017 M6X25 A480	
450	312705-0318		1	NUT HEX. DOMED CAP MHM-6 M8 A280	
460	315202-0705		1	O-RING 17,17X1,78 MM	
470	312105-0457		2	SCREW M6S ISO 4014 M8X35 A480	
480	312115-0228		2	SCREW ISO4762 M3X16 A4 80	
490	312105-0453		2	SCREW M6S ISO 4017 M8X25 A480	
500	315125-0153		2	WASHER TBRSB 6,4X22X4 A4	
510	321306-0104		2	BALL BEARING, 20X42X12 MM	
520	312105-0473		2	SCREW M6S ISO 4014 M8X110 A480	
540	312105-0370		2	SCREW M6S ISO 4017 M6X20 A480	
550	90458-0507		1	PARALLEL KEY W. ROUND ENDS 6X6X60 MM	
560	90157-0037	ML	1	THREAD SEALANT LOCTITE 542	
570	352113-0205		1	ANCHOR PLATES FOR STRIPS, TYPE TM2S8-C10	
580	312125-0289		1	SCREW ISO 1207 M4X10 A4	
590	315105-0136		2	WASHER BRB 4,3X8 RFR	

Machine Type	Group Description	Used-In	Group Number	Page No

BRAKE UNIT

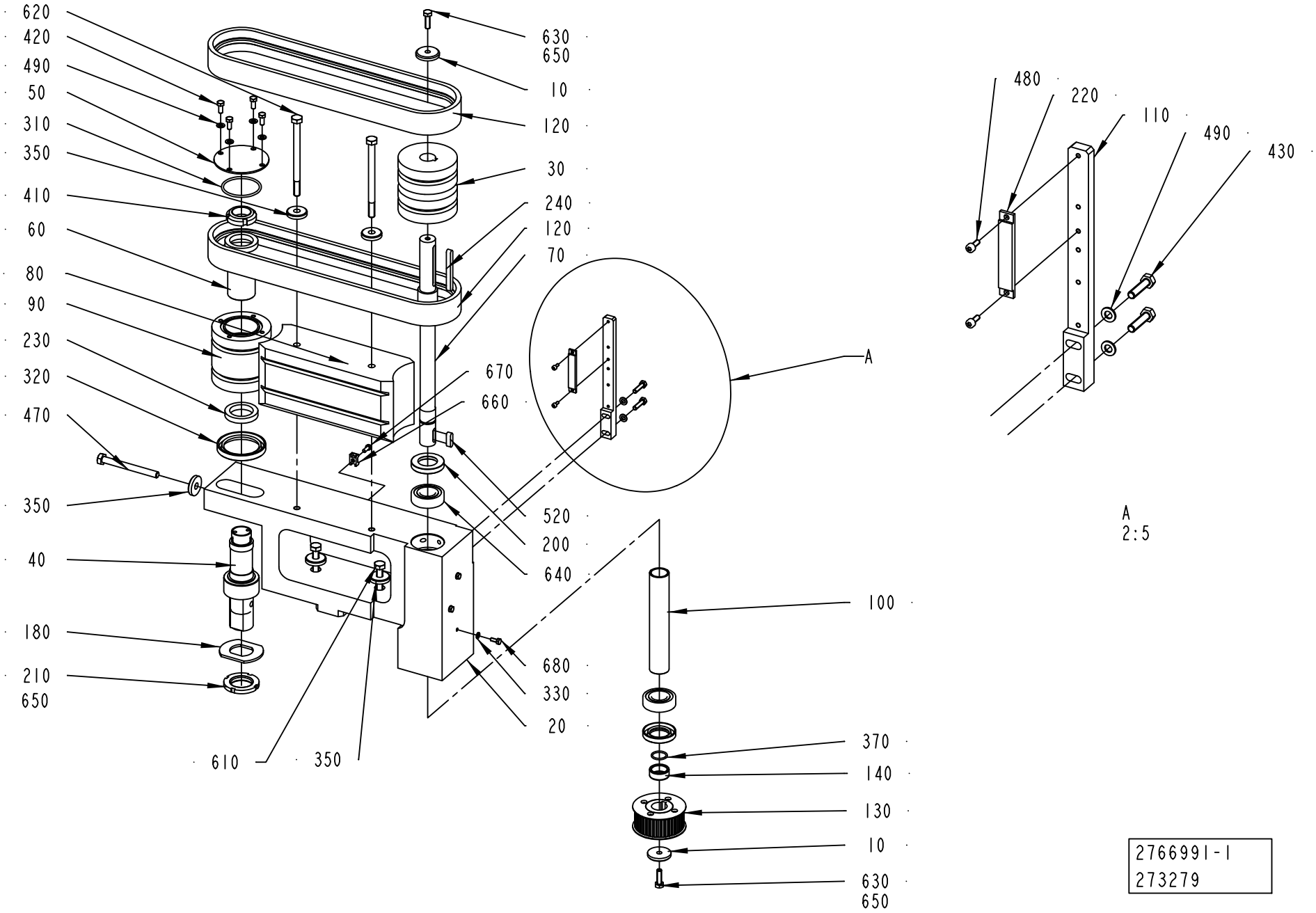
620
420
490
50
310
350
410
60
80
90
230
320
470
350
40
180
210
650
610
350
630
650
10
120
30
240
120
70
670
660
520
200
640
680
330
20
A
100
370
140
130
10
630
650
480
220
110
490
430
A
2:5
2766991-1
273279

ECM: 308658 - 20070525
Group number: 2766991-0100
Assembly Drawing: 2766991-1_1_AA

Pos	Part No	UN	Qty	Description	Page No
-					
010	290027-0000		2	WASHER	
020	2775413-0000		1	SUPPORT	
030	2826728-0000		1	DRIVE PULLEY	
040	2769682-0000		1	SHAFT	
050	2769686-0000		1	COVER	
060	2769741-0000		1	SPACER	
070	2769679-0000		1	DRIVE SHAFT	
080	2826737-0000		1	GUIDE	
090	2826729-0000		1	PULLEY	
100	2830225-0000		1	SPACER	
110	2826733-0000		1	BRACKET	
120	2693990-0000		2	TIMING BELT	
130	2769775-0000		1	TOOTHED PULLEY	
140	2773600-0000		1	SPACER	
180	2778564-0000		1	WASHER	
200	90091-0322		2	RADIAL SEAL 25X42X7 MM DUST LIP	
210	90459-2644		1	NUT ROUND WITH SLOTS M30X1,5 SS	
220	90459-0782		1	REFLECTOR, R1L	
230	90214-0186		2	BALL BEARING, 30X42X7 MM	
240	90458-0507		1	PARALLEL KEY W. ROUND ENDS 6X6X60 MM	
310	315202-0733		1	O-RING 45,69X2,62 MM	
320	315221-0192		1	RADIAL SEAL 45X62X8 MM	
330	315105-0136		3	WASHER BRB 4,3X8 RFR	
350	315125-0165		5	WASHER TBRSB 8,4X26X5 A4	
370	315202-0705		1	O-RING 17,17X1,78 MM	
410	90459-6280		1	NUT GUK 5 M25 X 1.5 FZB	
420	312105-0327		4	SCREW M6S ISO 4017 M5X12 A480	
430	312105-0331		2	SCREW M6S ISO 4017 M5X20 A480	
470	312109-0467		1	SCREW M6S ISO 4017 M8X80 A480	
480	312115-0222		2	SCREW ISO4762 M3X8 A4 80	
490	315105-0146		6	WASHER BRB 5,3X10 RFR	
520	315705-0232		1	PARALLEL KEY W. ROUND ENDS 6X6X20 MM	
610	312109-0459		2	SCREW M6S ISO 4017 M8X40 A480	
620	312105-0473		2	SCREW M6S ISO 4014 M8X110 A480	
630	312105-0370		2	SCREW M6S ISO 4017 M6X20 A480	
640	321306-0104		2	BALL BEARING, 20X42X12 MM	
650	90157-0037	ML	1	THREAD SEALANT LOCTITE 542	
660	352113-0205		1	ANCHOR PLATES FOR STRIPS, TYPE TM2S8-C10	
670	312125-0289		1	SCREW ISO 1207 M4X10 A4	
680	312105-0289		3	SCREW M6S H4X10 A4 70 ISO4017/DIN933	

Pos	Part No	UN	Qty	Description	Page No

Machine Type | Group Description | Used-In | Group Number | Page No

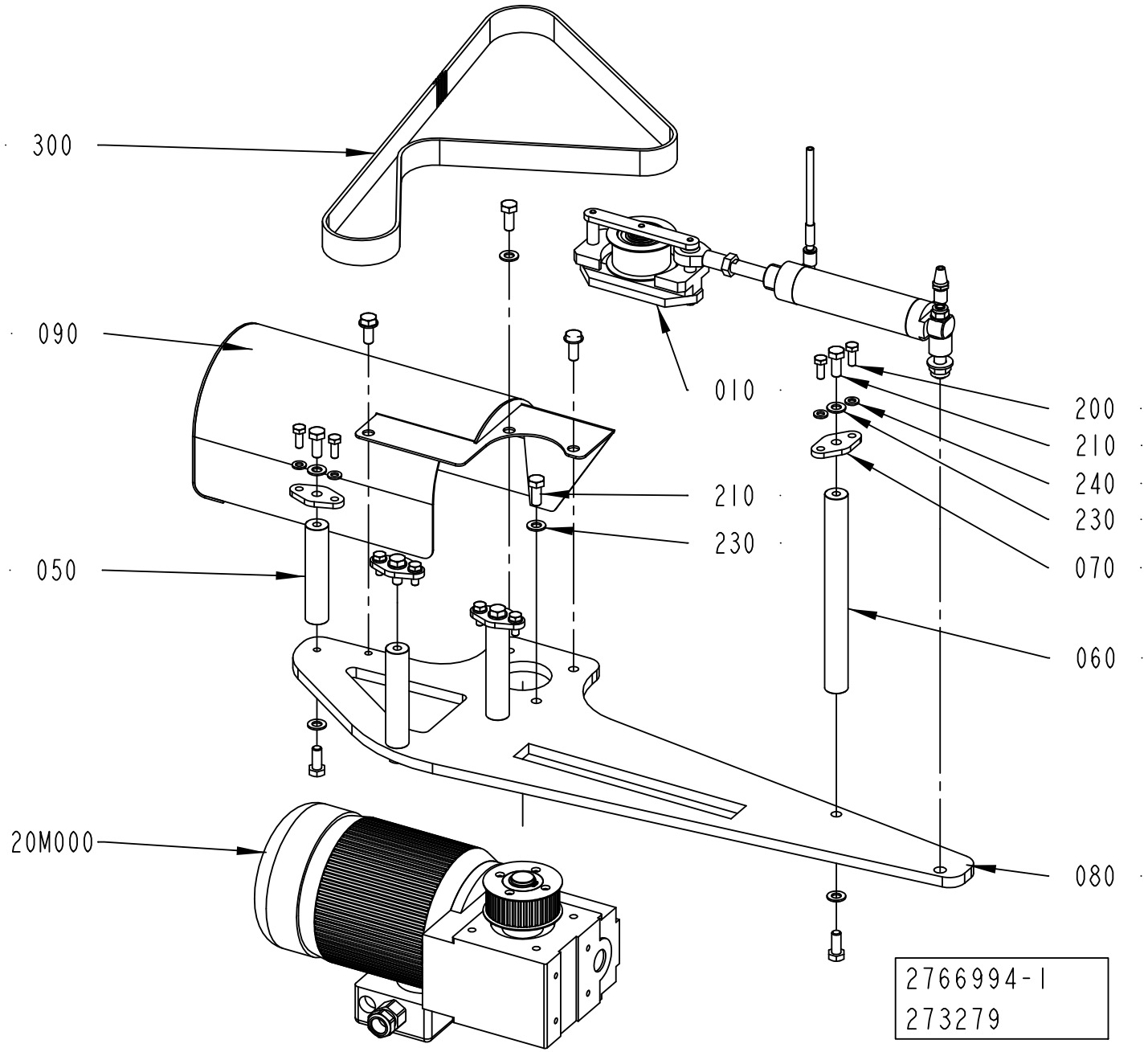
300
090
050
20M000
010
210
230
200
210
240
230
070
060
080
2766994-1
273279

ECM: 308659 - 20070525
Group number: 2766994-0100
Assembly Drawing: 2766994-1_1_AA

Pos	Part No	UN	Qty	Description	Page No
-					
010	2773636-0100		1	BELT STRETCHER	**1-13**
050	2769773-0000		3	SPACER	
060	2773601-0000		1	SPACER	
070	2775412-0000		4	PLATE	
080	2775435-0000		1	PLATE	
090	2838708-0000		1	COVER	
200	312105-0368		8	SCREW M6S ISO 4017 M6X16 A480	
20M000	2838710-0100		1	WORM GEAR MOTOR	**1-15**
210	312105-0451		12	SCREW M6S ISO 4017 M8X20 A480	
230	315105-0165		12	WASHER BRB 8,4X16 RFR	
240	315105-0153		8	WASHER BRB 6,4X12 RFR	
300	90600-0816		1	TIMING BELT T5-DL 1160X25 MM	

Pos	Part No	UN	Qty	Description	Page No

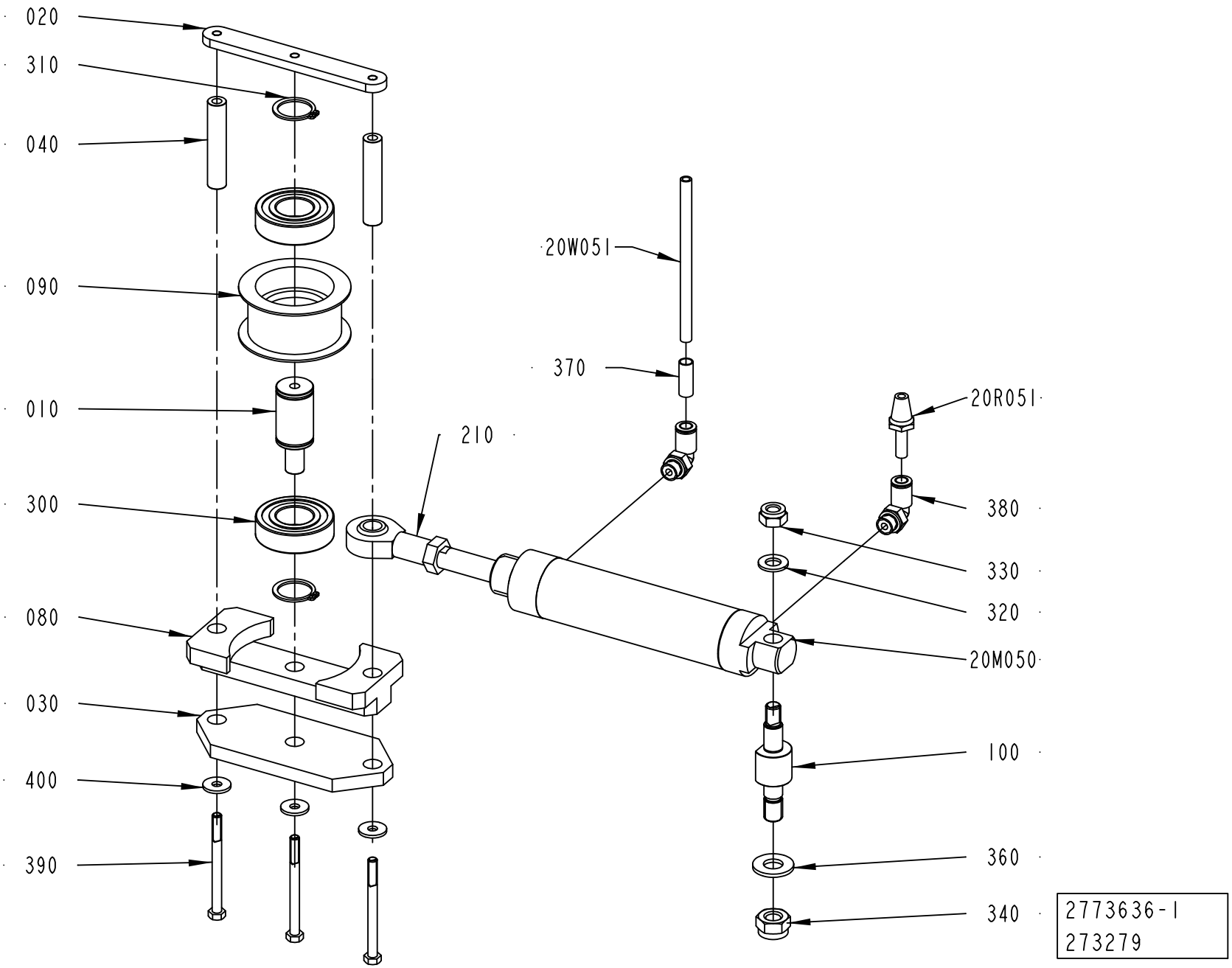
020
310
040
090
010
300
080
030
400
390
20W051
370
210
20R051
380
330
320
20M050
100
360
340
2773636-1
273279

ECM: 273309 - 20060921
Group number: 2773636-0100
Assembly Drawing: 2773636-1_1_AA

Pos	Part No	UN	Qty	Description	Page No
-					
010	2775398-0000		1	PIN	
020	2773604-0000		1	PLATE	
030	2773638-0000		1	PLATE	
040	2773639-0000		2	SHAFT	
080	2773637-0000		1	BRACKET	
090	2773615-0000		1	ROLLER	
100	2781292-0000		1	SHAFT	
20M050	90600-1080		1	DOUBLE ACTING, ROUND, CYL 32-80	
20R051	90328-0017		1	SILENCER, D=6 MM	
20W051	315400-0001	M	3	TUBE PUN-H-6X1-BL	
210	90115-0134		1	ROD END, ID=10 MM, M10X1,25	
300	321308-0204		2	BALL BEARING, 20X42X12 MM	
310	315751-0116		2	RETAINING RING FOR SHAFT DIN 471 20 A2	
320	315105-0165		1	WASHER BRB 8,4X16 RFR	
330	312812-0318		1	HEXAGON NUT, NY-LOCK M8 A480	
340	312812-0320		1	HEXAGON NUT, NY-LOCK M10 A480	
360	315105-0173		1	WASHER BRB 10,5X22 RFR	
370	90459-7369		1	MARKING FOR PNEUM. TUBING, PRZ06	
380	350002-0006		2	PUSH-IN L-FITTING QSL-F-G1/8-6	
390	312105-0343		3	SCREW M6S ISO 4014 M5X60 A480	
400	90005-0139		3	WASHER PLAIN ROUND 5,2(M5)/15, H=1,6	

Pos	Part No	UN	Qty	Description	Page No

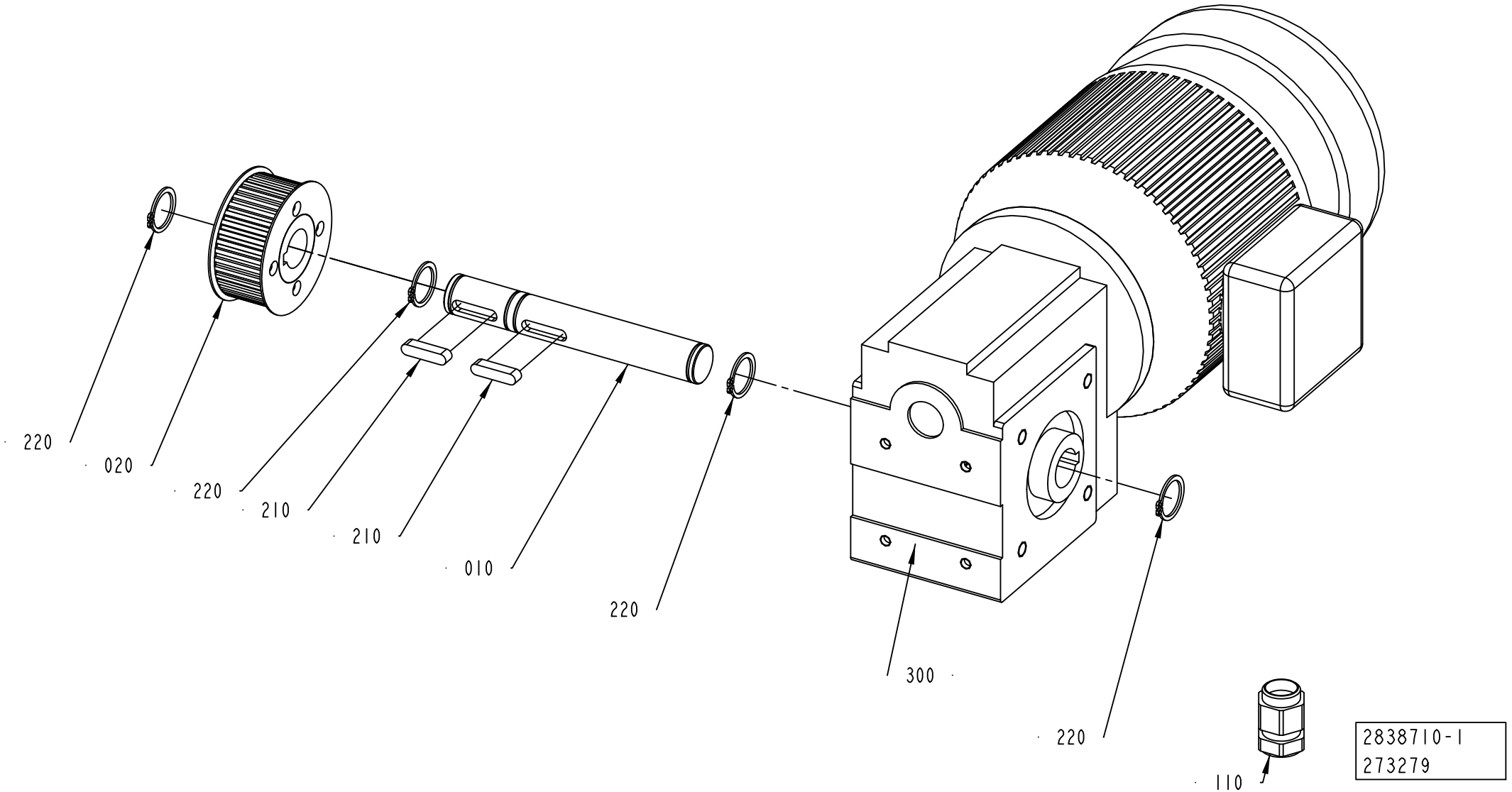
220
020
220
210
210
010
220
300
220
110
2838710-1
273279

ECM: 276903 - 20060921
Group number: 2838710-0100
Assembly Drawing: 2838710-1_1_AA

Pos	Part No	UN	Qty	Description	Page No
-					
010	2769749-0000		1	DRIVE SHAFT	
020	2769775-0000		1	TOOTHED PULLEY	
110	353245-0011		1	GLAND, EXTENDED WITH INSERT, PR18,6/PG11	
210	315705-0234		2	PARALLEL KEY W. ROUND ENDS 6X6X25 MM	
220	315751-0116		4	RETAINING RING FOR SHAFT DIN 471 20 A2	
300	2860997-0000		1	WORM GEAR MOTOR	

Pos	Part No	UN	Qty	Description	Page No

PACKAGE POSITIONER

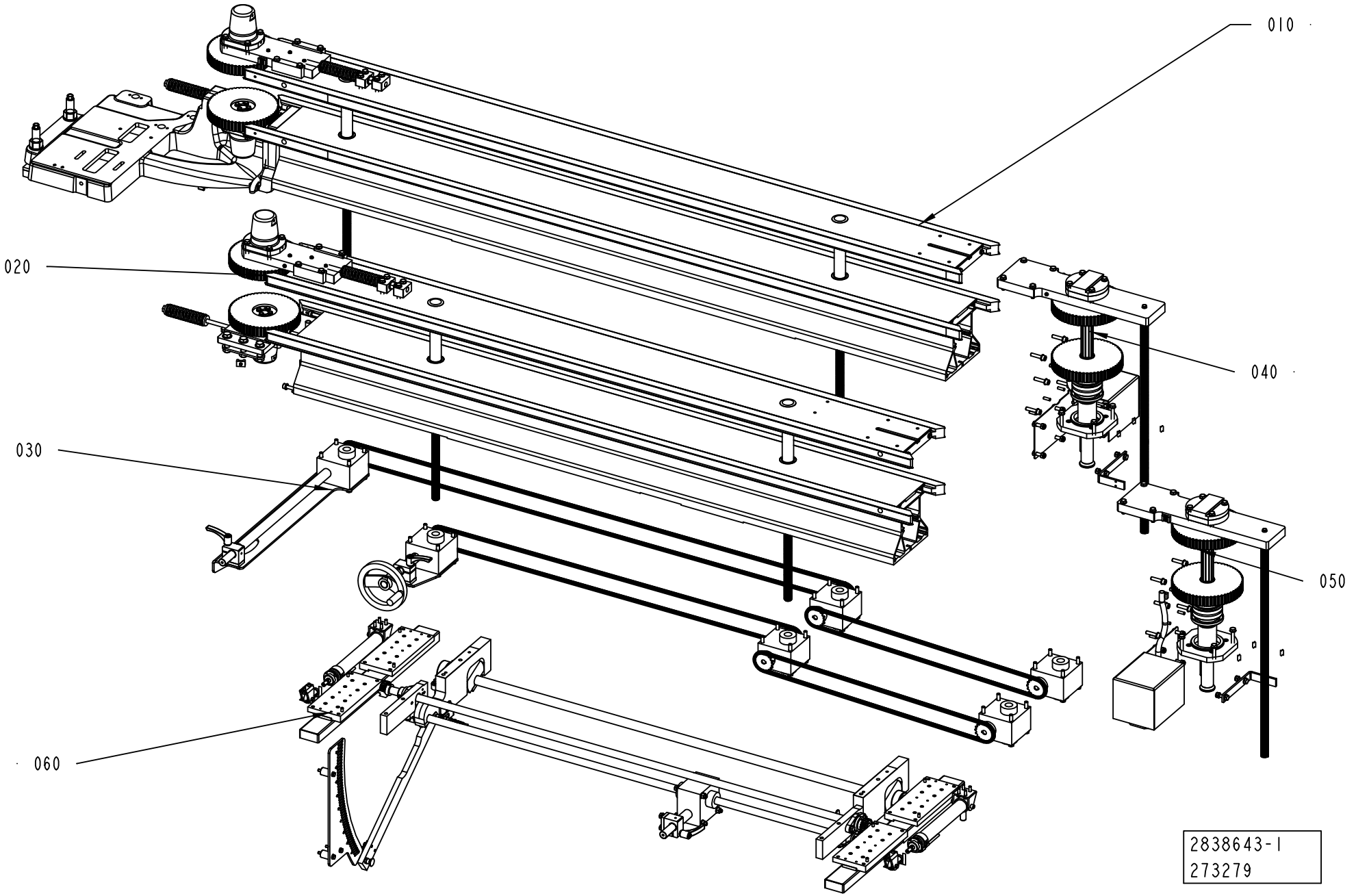

Pos	Part No	UN	Qty	Description	Page No
TBA 0500SQ, TBA 1000B, TBA 1000SQ, TBA 1000S, TBA 1500S, TPA, TBA 1890S, TBA 2000S, TGA (See drawing on pages: 1-16, 1-18)					
030	2838647-0100		1	SLIDING RACK	**1-21**
Common Parts					
010	2838639-0100		1	PACKAGE POSITIONER	**1-25, 1-27**
020	2838644-0100		1	PACKAGE POSITIONER	**1-37, 1-39**
040	2838648-0100		1	DRIVE	**1-49, 1-51**
050	2838649-0100		1	DRIVE	**1-53, 1-55**
060	2838650-0100		1	SLIDING RACK	**1-57**

PACKAGE POSITIONER

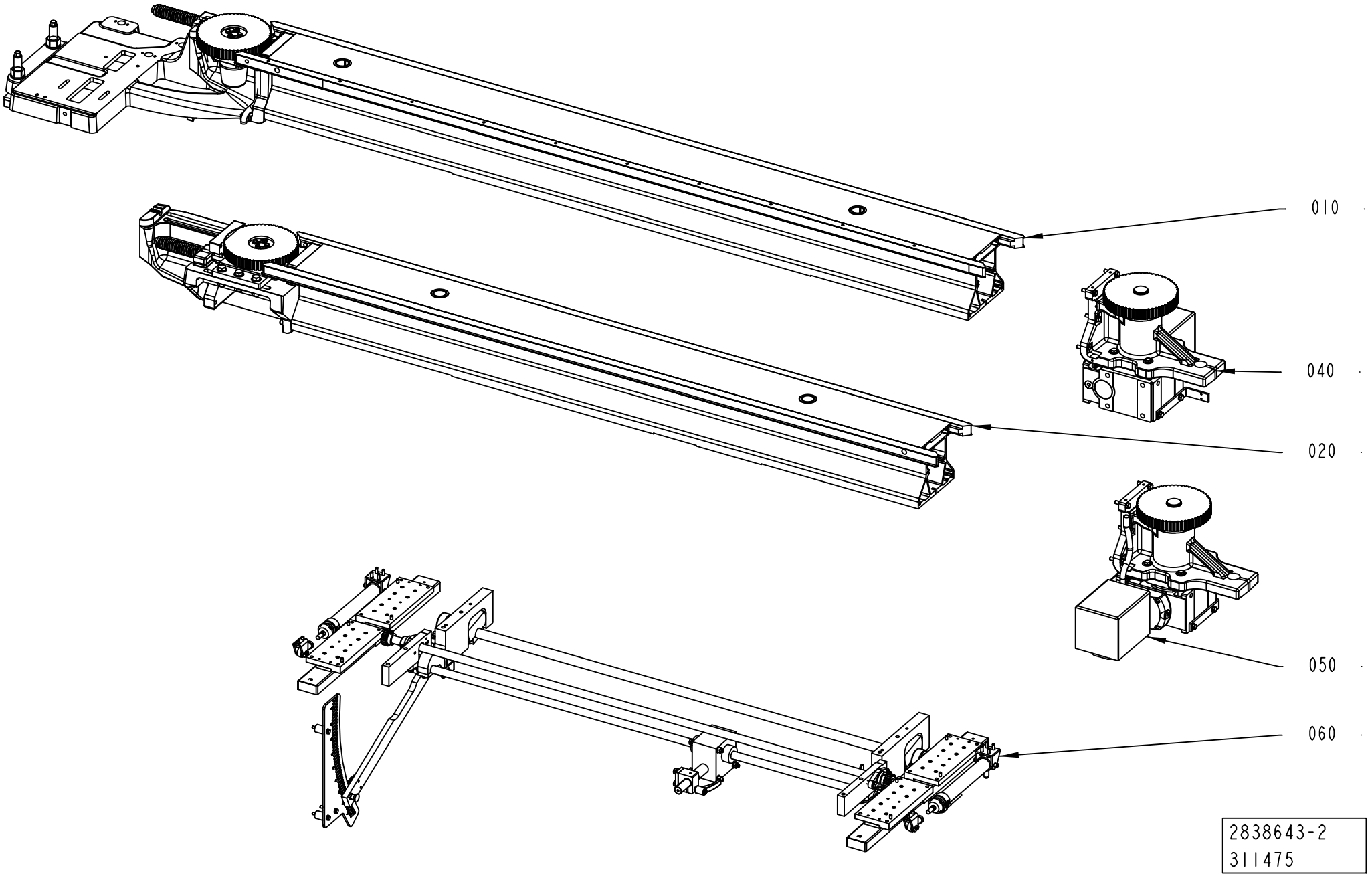

ECM: 312245 - 20070525
Group number: 2838643-0100
Assembly Drawing: 2838643-2_1_AA

This list covers pages from 1-16 to 1-19

Pos	Part No	UN	Qty	Description	Page No
TBA 0500SQ, TBA 1000B, TBA 1000SQ, TBA 1000S, TBA 1500S, TPA, TBA 1890S, TBA 2000S, TGA (See drawing on pages: 1-16, 1-18)					
030	2838647-0100		1	SLIDING RACK	**1-21**
Common Parts					
010	2838639-0100		1	PACKAGE POSITIONER	**1-25, 1-27**
020	2838644-0100		1	PACKAGE POSITIONER	**1-37, 1-39**
040	2838648-0100		1	DRIVE	**1-49, 1-51**
050	2838649-0100		1	DRIVE	**1-53, 1-55**
060	2838650-0100		1	SLIDING RACK	**1-57**

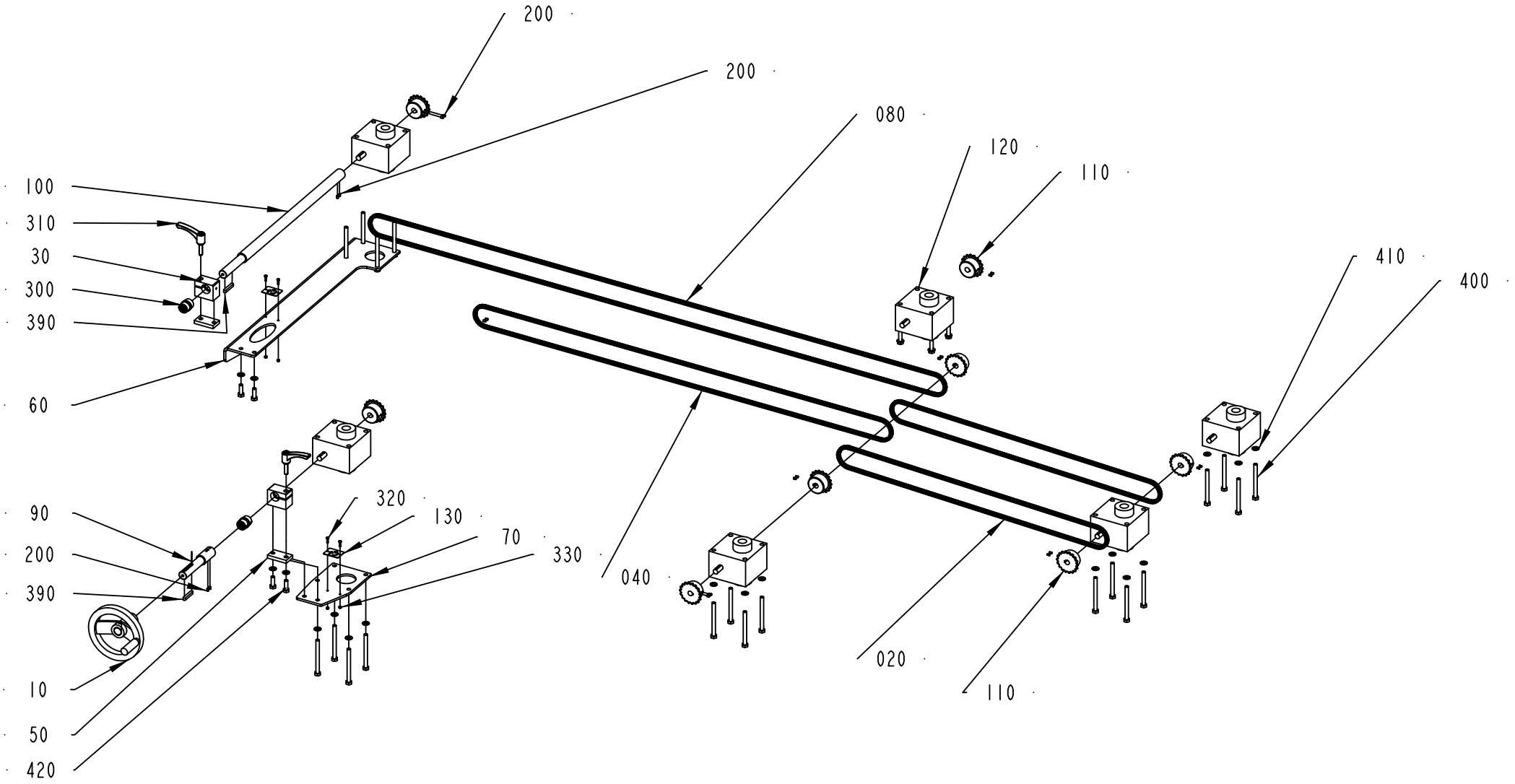

2838647-1
302279

ECM: 308667 - 20070525
Group number: 2838647-0100
Assembly Drawing: 2838647-1_1_AB

Pos	Part No	UN	Qty	Description	Page No
-					
010	2802404-0100		1	HANDLE	**1-23**
020	90600-0961		2	ROLLER CHAIN, SINGLE 3/8 -160	
030	2769726-0000		2	BRACKET	
040	90600-0962		1	ROLLER CHAIN, SINGLE 3/8 -245	
050	2778594-0000		2	PLATE	
060	2779063-0000		1	PLATE	
070	2779759-0000		1	PLATE	
080	90600-0964		1	ROLLER CHAIN, SINGLE 3/8 -335	
090	2769729-0000		1	SHAFT	
100	2779756-0000		1	SHAFT	
110	2779062-0000		8	SPROCKET	
120	90600-0812		6	GEAR BOX, TP00042000110	
130	2873941-0000		2	SIGN	
200	312318-0285		20	SCREW ISO4029 M4X6 A4	
300	90458-2932		2	PLAIN BEARING, JUM-02-20	
310	90017-0029		2	LOCKING LEVER, NO. KR8X30-SUS	
320	90287-0175		4	SCREW M6S M3X12 A480	
330	312605-0310		4	HEXAGON NUT, M6M M3 A280	
390	315705-0239		2	PARALLEL KEY W. ROUND ENDS 6X6X40 MM	
400	312105-0469		24	SCREW M6S ISO 4014 M8X90 A480	
410	315105-0165		28	WASHER BRB 8,4X16 RFR	
420	312105-0453		4	SCREW M6S ISO 4017 M8X25 A480	

Pos	Part No	UN	Qty	Description	Page No

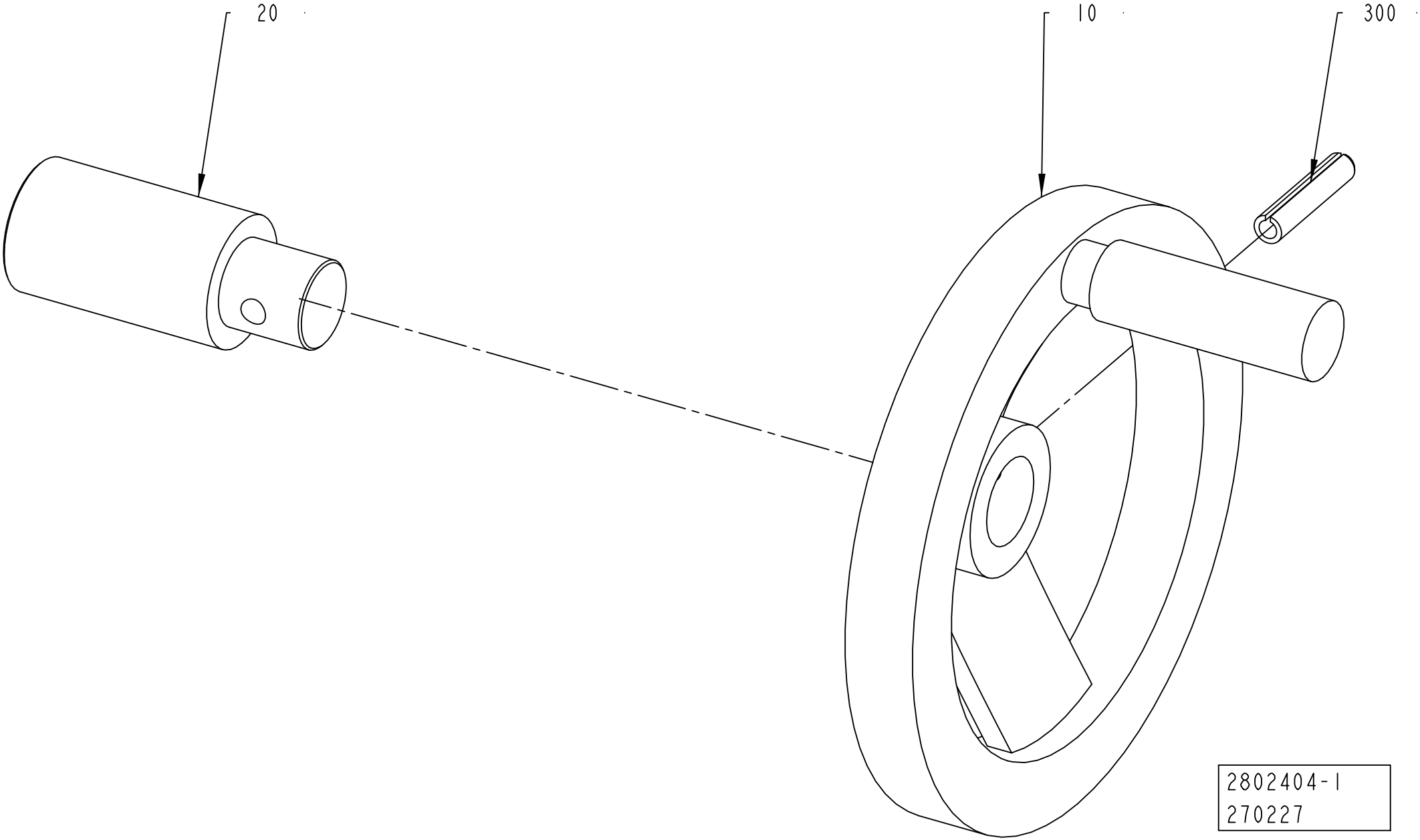
20
10
300
2802404-1
270227

ECM: 273295 - 20060921
Group number: 2802404-0100
Assembly Drawing: 2802404-1_1_AA

Pos	Part No	UN	Qty	Description	Page No
-					
010	2781286-0000		1	HAND WHEEL	
020	2788144-0000		1	SHAFT	
300	311112-0345		1	SPRING PIN, ISO 8752 6X32-C	

Pos	Part No	UN	Qty	Description	Page No

PACKAGE POSITIONER

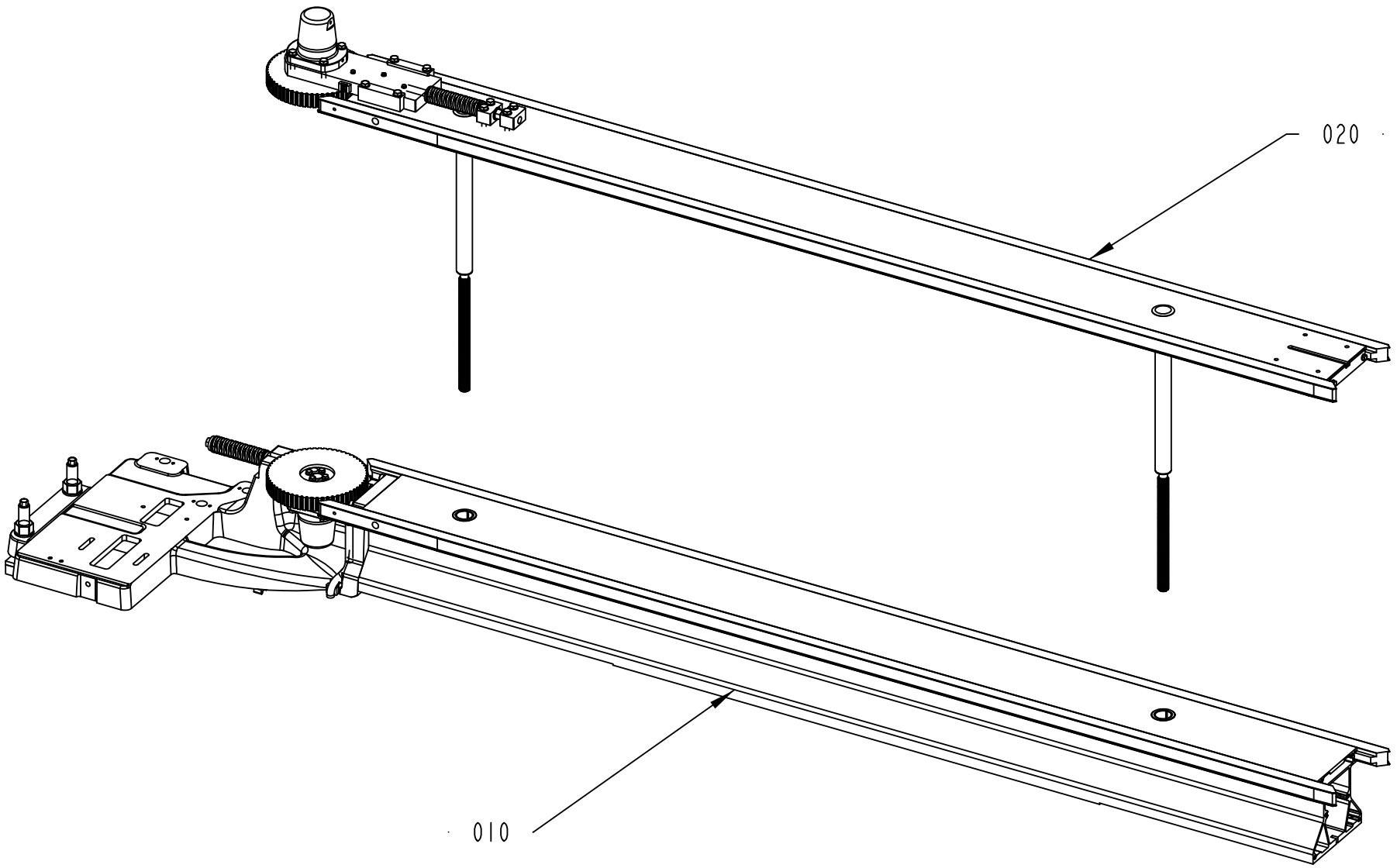

2838639-1
273279

Pos	Part No	UN	Qty	Description	Page No
TBA 0500SQ, TBA 1000B, TBA 1000SQ, TBA 1000S, TBA 1500S, TPA, TBA 1890S, TBA 2000S, TGA (See drawing on pages: 1-24, 1-26)					
020	2838641-0100		1	BELT	**1-29**
Common Parts					
010	2838640-0100		1	BELT UNIT	**1-33**

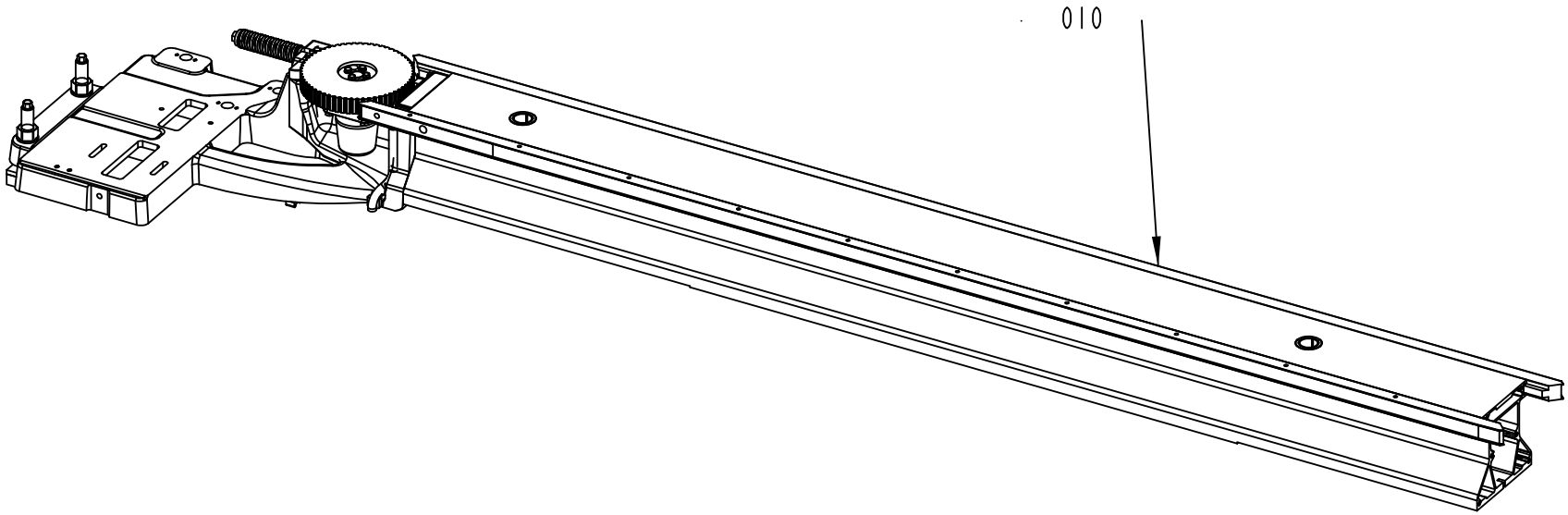

2838639-2
311475

Pos	Part No	UN	Qty	Description	Page No
TBA 0500SQ, TBA 1000B, TBA 1000SQ, TBA 1000S, TBA 1500S, TPA, TBA 1890S, TBA 2000S, TGA (See drawing on pages: 1-24, 1-26)					
020	2838641-0100		1	BELT	**1-29**
Common Parts					
010	2838640-0100		1	BELT UNIT	**1-33**

Pos	Part No	UN	Qty	Description	Page No

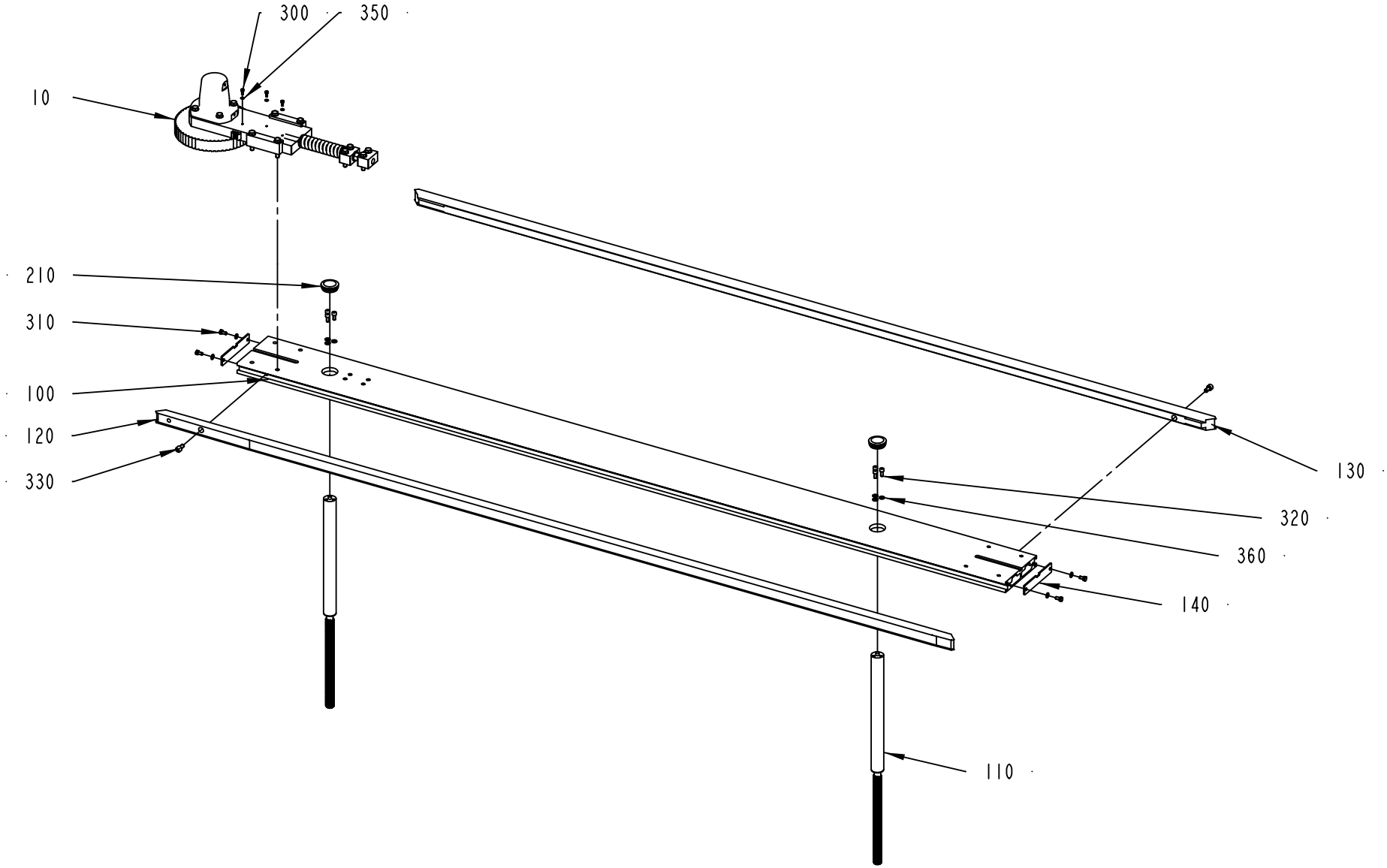

2838641-1
302279

ECM: 308664 - 20070525
Group number: 2838641-0100
Assembly Drawing: 2838641-1_1_AB

Pos	Part No	UN	Qty	Description	Page No
-					
010	2766954-0100		1	BELT STRETCHER	**1-31**
100	2766615-0000		1	FRAME	
110	2766927-0000		2	PILLAR	
120	2766611-0000		1	GUIDE	
130	2773616-0000		1	GUIDE	
140	2788134-0000		2	COVER	
210	90261-0064		2	PLUG, BLIND, PLASTIC, NO. SFL42	
300	312105-0289		3	SCREW M6S H4X10 A4 70 ISO4017/DIN933	
310	312105-0366		4	SCREW M6S ISO 4017 M6X12 A480	
320	312115-0367		6	SCREW ISO4762 M6X14 A4 80	
330	312115-0449		2	SCREW ISO4762 M8X16 A4 80	
350	315105-0136		3	WASHER BRB 4,3X8 RFR	
360	315105-0153		10	WASHER BRB 6,4X12 RFR	

Pos	Part No	UN	Qty	Description	Page No

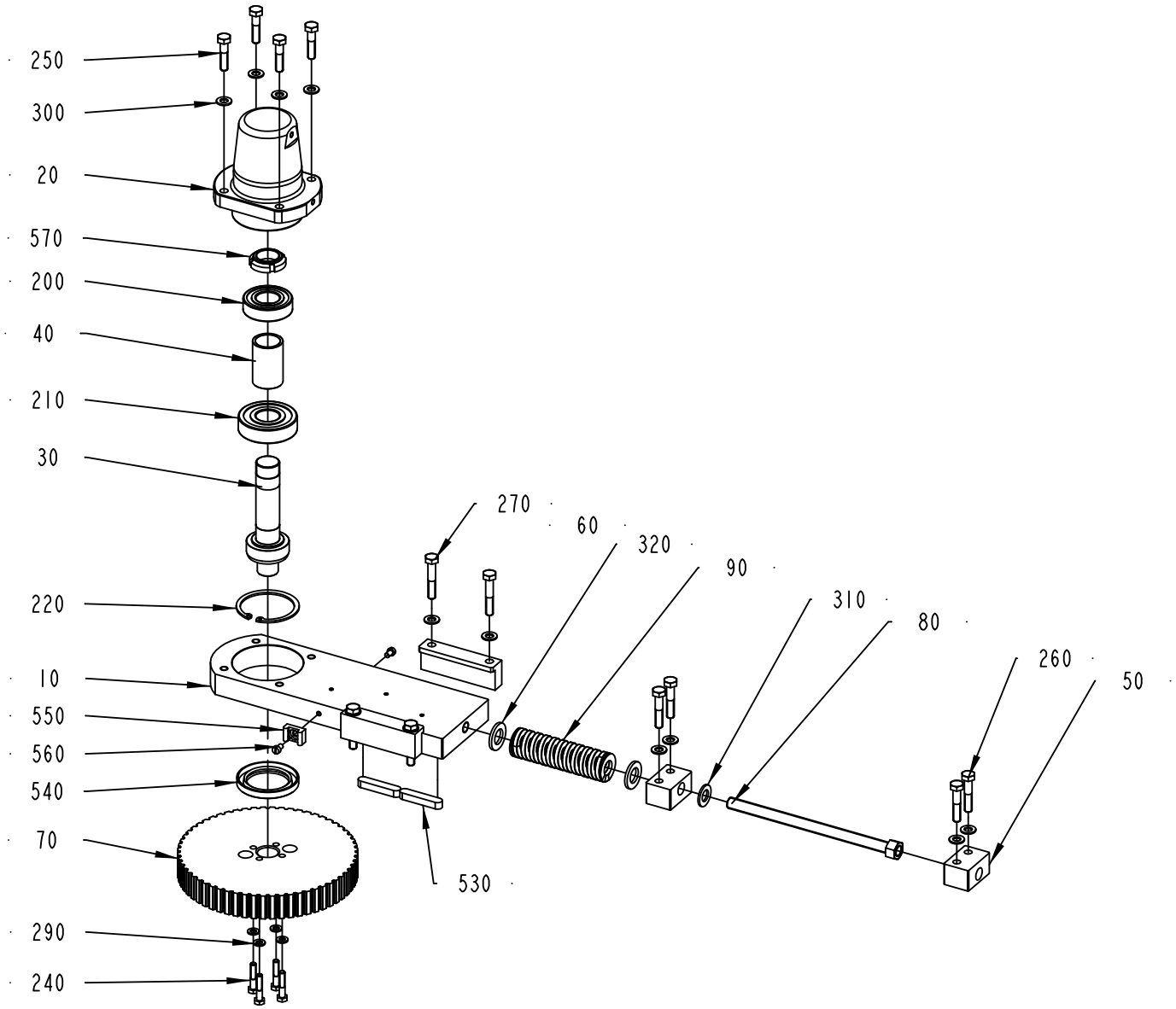

2766954-1
302658

ECM: 308655 - 20070525
Group number: 2766954-0100
Assembly Drawing: 2766954-1_1_AB

Pos	Part No	UN	Qty	Description	Page No
-					
010	2766953-0000		1	PLATE	
020	2766955-0000		1	BELLOWS	
030	2766958-0000		1	SHAFT	
040	2766959-0000		1	SPACER	
050	2766962-0000		2	BLOCK	
060	2766963-0000		2	BRACKET	
070	2766981-0000		1	TOOTHED PULLEY	
080	2817784-0000		1	SCREW	
090	2830224-0000		1	TENSION SPRING	
200	321309-0105		1	BALL BEARING, 25X52X15 MM	
210	321314-0105		1	BALL BEARING, 25X62X17 MM	
220	315752-0136		1	RETAINING RING FOR BORE DIN 472 62 ST	
240	312105-0374		4	SCREW M6S ISO 4014 M6X30 A480	
250	312105-0457		4	SCREW M6S ISO 4014 M8X35 A480	
260	312105-0459		4	SCREW M6S ISO 4014 M8X40 A480	
270	312105-0460		4	SCREW M6S ISO 4014 M8X45 A480	
290	315105-0153		4	WASHER BRB 6,4X12 RFR	
300	315105-0165		12	WASHER BRB 8,4X16 RFR	
310	315105-0178		1	WASHER BRB 13X24 RFR	
320	315105-0186		2	WASHER BRB 17X30 RFR	
530	315705-0303		2	PARALLEL KEY W. ROUND ENDS 10X8X50 MM	
540	90091-0304		1	RADIAL SEAL 45X65X8 MM DUST LIP	
550	352113-0204		1	ANCHOR PLATES FOR STRIPS, TYPE TM3S25-M	
560	312125-0323		2	SCREW ISO 1207 M5X8 A4	
570	90459-6280		1	NUT GUK 5 M25 X 1.5 FZB	

Pos	Part No	UN	Qty	Description	Page No

Machine Type | Group Description | Used-In | Group Number | Page No

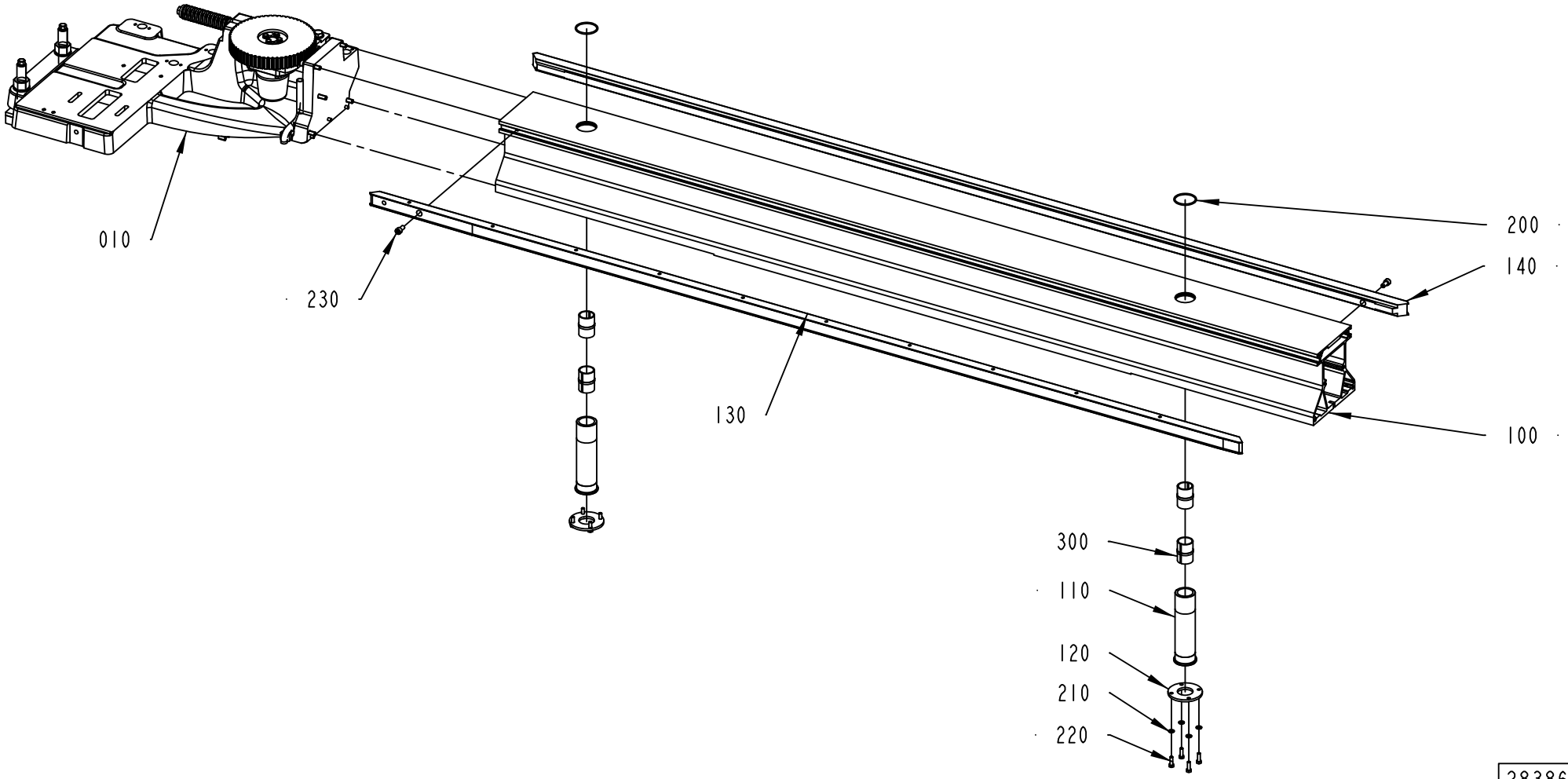

2838640-1
302279

ECM: 308663 - 20070525
Group number: 2838640-0100
Assembly Drawing: 2838640-1_1_AB

Pos	Part No	UN	Qty	Description	Page No
-					
010	2766980-0100		1	BELT STRETCHER	**1-35**
100	2766610-0000		1	FRAME	
110	2766974-0000		2	SLEEVE	
120	2766976-0000		2	FLANGE	
130	2873879-0000		1	GUIDE	
140	2773616-0000		1	GUIDE	
200	315202-0732		2	O-RING 44,12X2,62 MM	
210	315105-0153		8	WASHER BRB 6,4X12 RFR	
220	312105-0370		8	SCREW M6S ISO 4017 M6X20 A480	
230	312115-0449		2	SCREW ISO4762 M8X16 A4 80	
300	90600-0798		4	BUSHING INSERT, JUM-02-30	

Pos	Part No	UN	Qty	Description	Page No

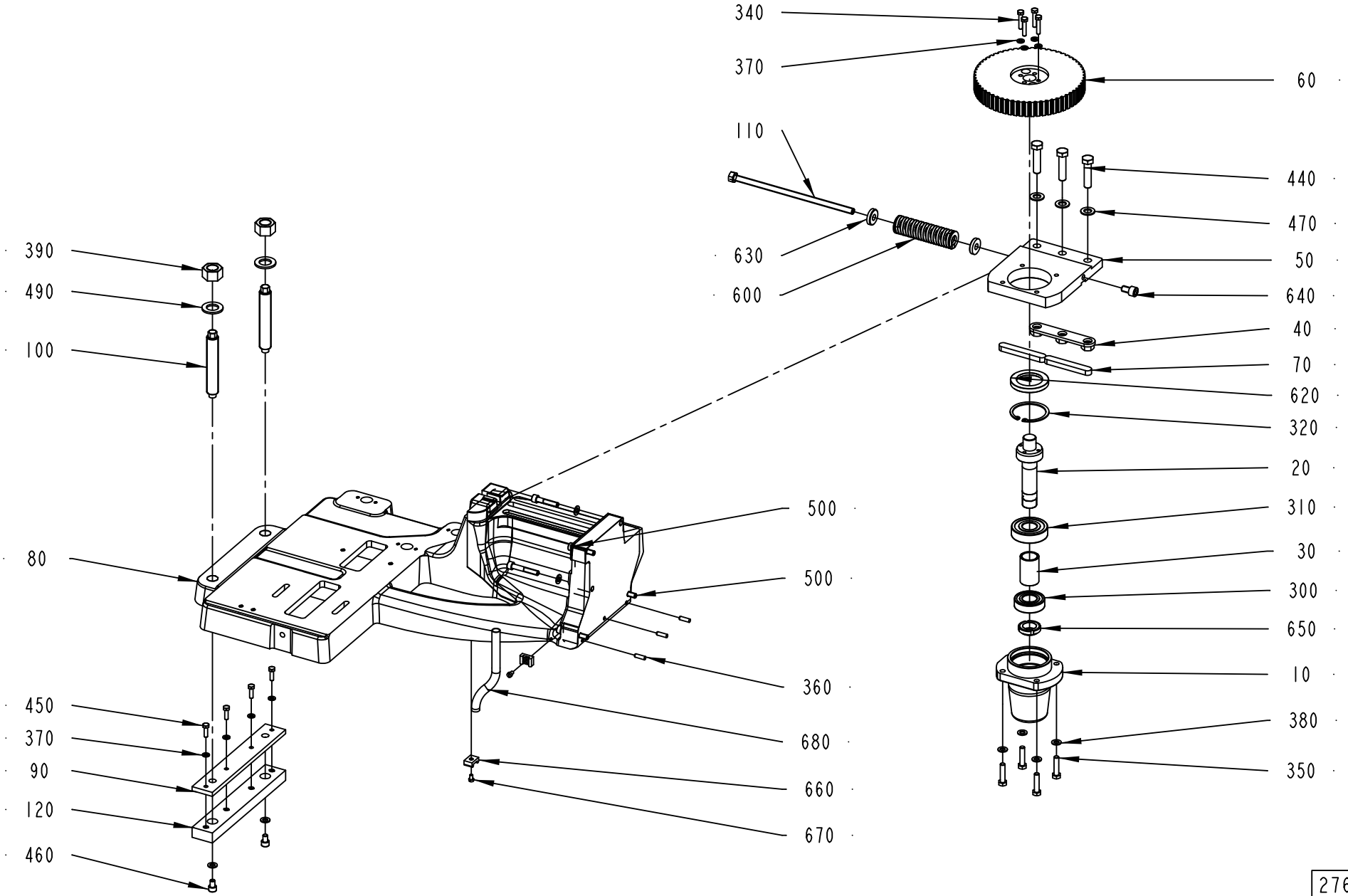

2766980-1
302658

ECM: 308656 - 20070525
Group number: 2766980-0100
Assembly Drawing: 2766980-1_1_AB

Pos	Part No	UN	Qty	Description	Page No
-					
010	2766955-0000		1	BELLOWS	
020	2766958-0000		1	SHAFT	
030	2766959-0000		1	SPACER	
040	2775417-0000		1	BRACKET	
050	2766989-0000		1	BRACKET	
060	2766981-0000		1	TOOTHED PULLEY	
070	315701-0371		2	PARALLEL KEY W. ROUND ENDS 14X9X90 MM	
080	2769746-0000		1	FRAME	
090	2775423-0000		1	PLATE	
100	2775421-0000		2	SCREW	
110	2805467-0000		1	SCREW	
120	2775420-0000		1	SLIDE	
300	321309-0105		1	BALL BEARING, 25X52X15 MM	
310	321314-0105		1	BALL BEARING, 25X62X17 MM	
320	315752-0136		1	RETAINING RING FOR BORE DIN 472 62 ST	
340	312105-0374		4	SCREW M6S ISO 4014 M6X30 A480	
350	312105-0457		4	SCREW M6S ISO 4014 M8X35 A480	
360	311103-0353		3	PARALLEL PIN ISO 2338 6M6X20 A1	
370	315105-0153		8	WASHER BRB 6,4X12 RFR	
380	315105-0165		11	WASHER BRB 8,4X16 RFR	
390	312607-0326		2	HEXAGON NUT, EN 24032 M6M M20 A480	
420	312115-0461		2	SCREW ISO4762 M8X50 A4 80	
440	312109-0542		3	SCREW M6S ISO 4017 M12X50 A280	
450	312105-0370		4	SCREW M6S ISO 4017 M6X20 A480	
460	312115-0447		2	SCREW ISO4762 M8X12 A4 80	
470	315105-0178		3	WASHER BRB 13X24 RFR	
490	315105-0192		2	WASHER BRB 21X36 RFR	
500	312115-0459		3	SCREW ISO4762 M8X40 A4 80	
600	2830224-0000		1	TENSION SPRING	
620	90091-0304		1	RADIAL SEAL 45X65X8 MM DUST LIP	
630	315125-0173		2	WASHER TBRSB 10,5X28X6 A4	
640	312115-0489		1	SCREW ISO4762 M10X16 A4 80	
650	90459-6280		1	NUT GUK 5 M25 X 1.5 FZB	
660	352113-0204		2	ANCHOR PLATES FOR STRIPS, TYPE TM3S25-M	
670	312125-0323		2	SCREW ISO 1207 M5X8 A4	
680	90166-0126	M	3	TUBE 12 MM PA,TRANSP.	

Pos	Part No	UN	Qty	Description	Page No

Machine Type | Group Description | Used-In | Group Number | Page No

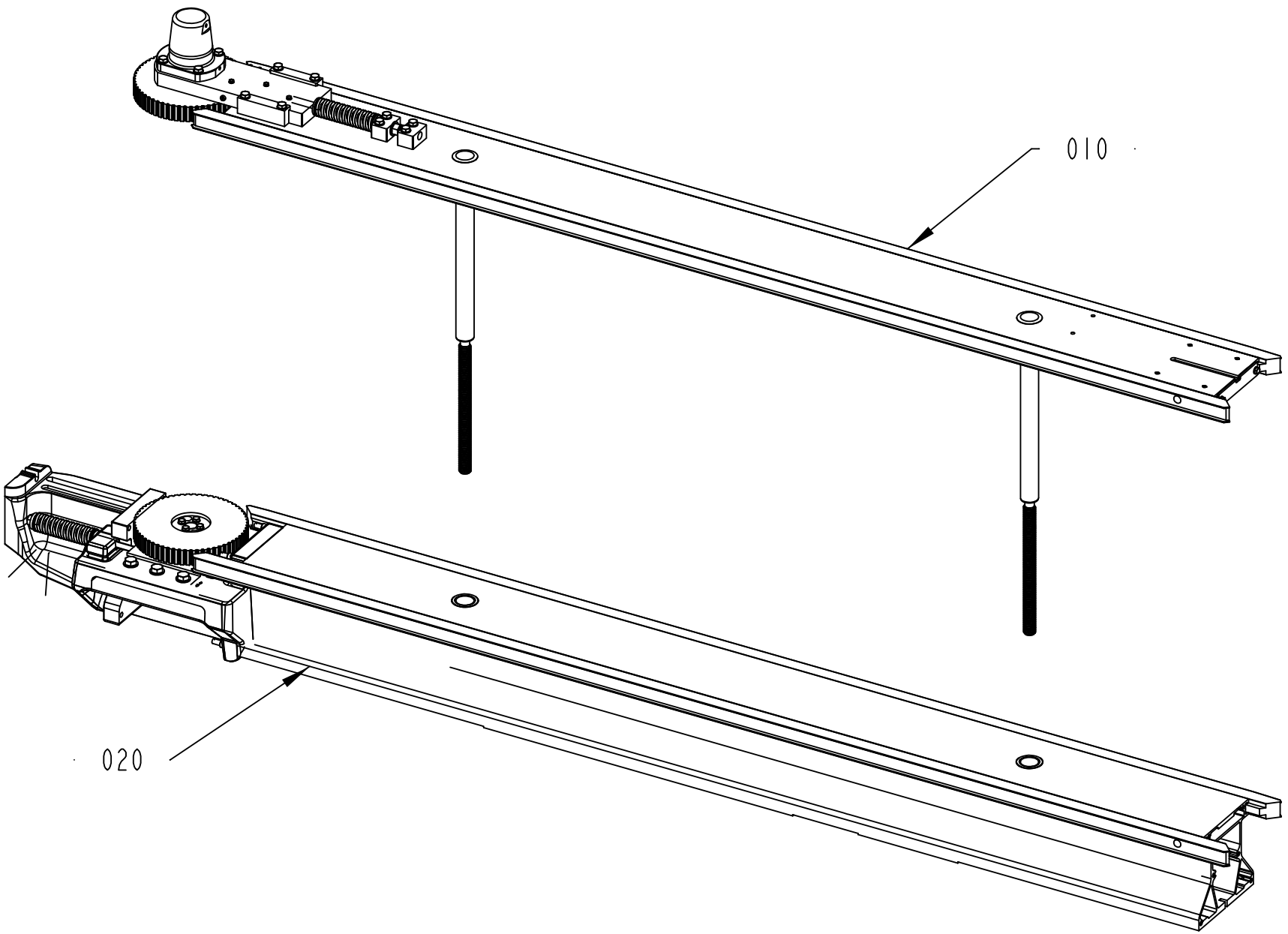

2838644-1
270227

Pos	Part No	UN	Qty	Description	Page No
TBA 0500SQ, TBA 1000B, TBA 1000SQ, TBA 1000S, TBA 1500S, TPA, TBA 1890S, TBA 2000S, TGA (See drawing on pages: 1-36, 1-38)					
010	2838645-0100		1	BELT	**1-41**
Common Parts					
020	2838646-0100		1	BELT UNIT	**1-45**

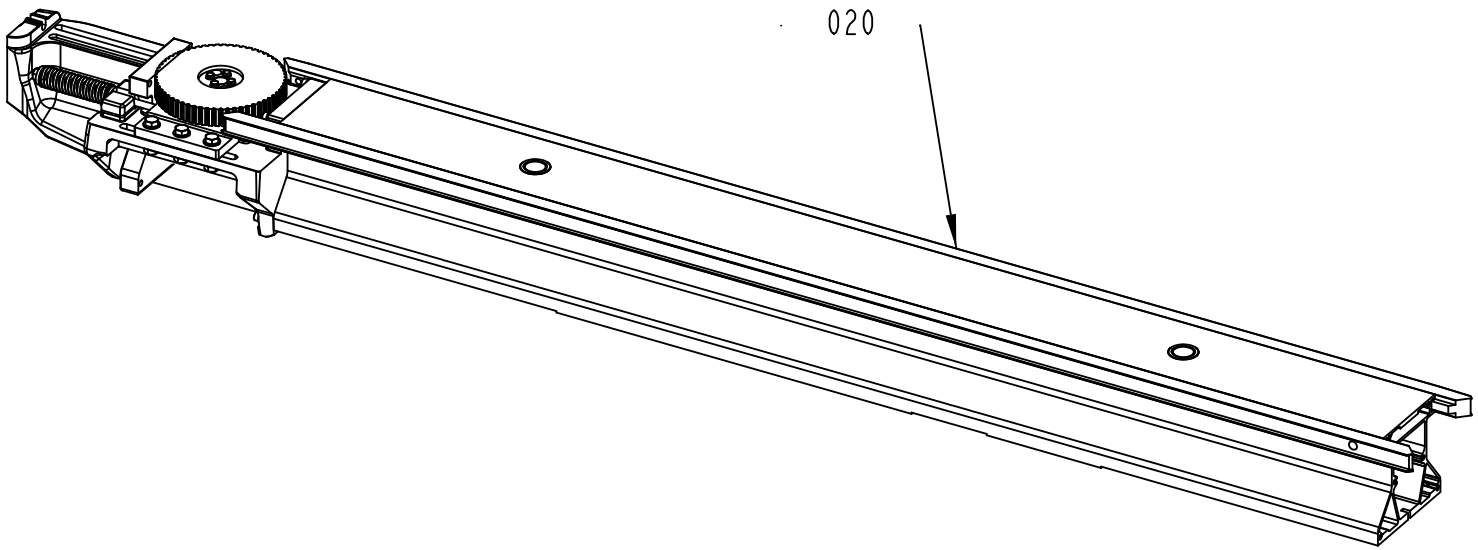

2838644-2
311475

Pos	Part No	UN	Qty	Description	Page No
TBA 0500SQ, TBA 1000B, TBA 1000SQ, TBA 1000S, TBA 1500S, TPA, TBA 1890S, TBA 2000S, TGA (See drawing on pages: 1-36, 1-38)					
010	2838645-0100		1	BELT	**1-41**
Common Parts					
020	2838646-0100		1	BELT UNIT	**1-45**

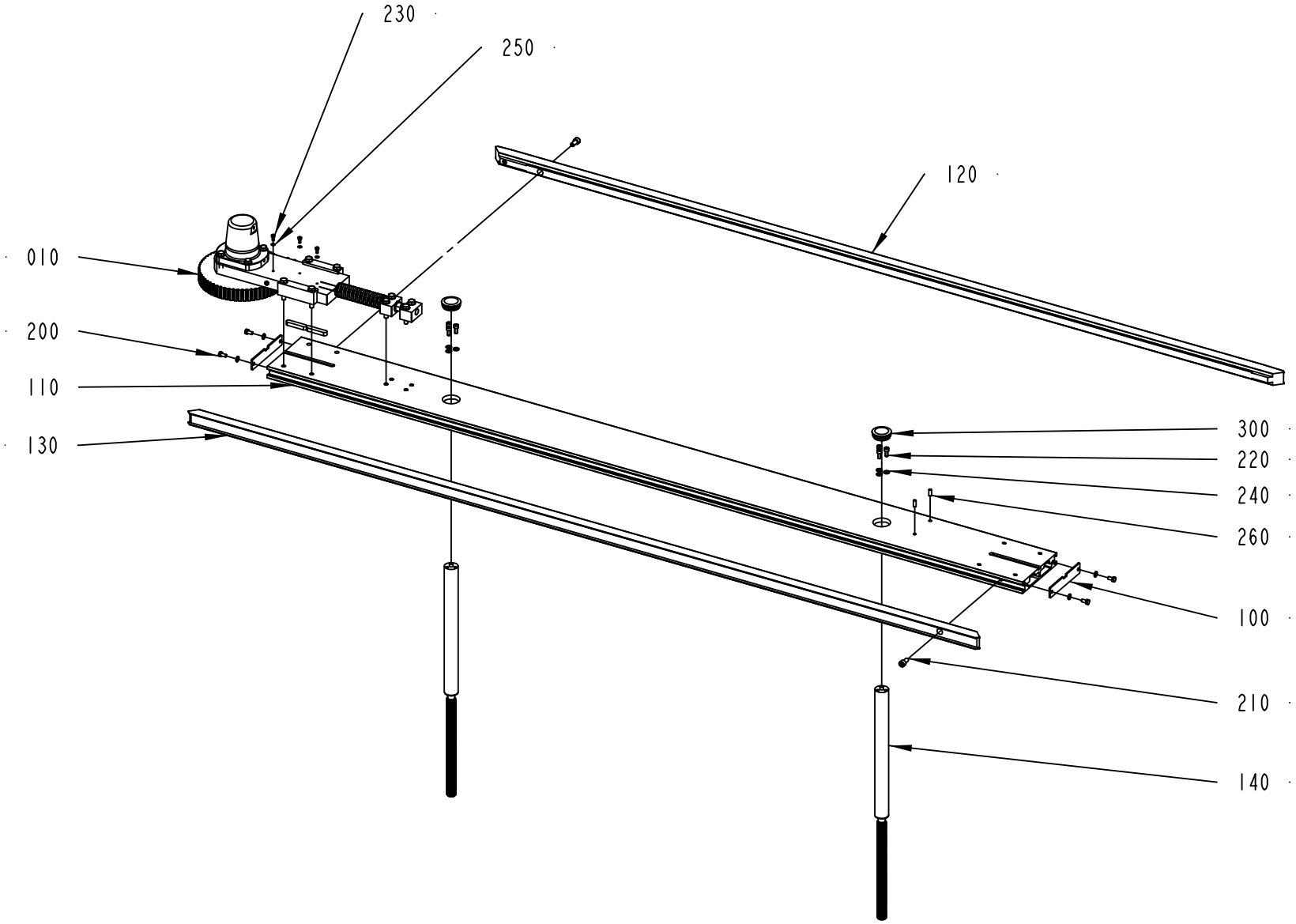

2838645-1
302279

ECM: 308665 - 20070525
Group number: 2838645-0100
Assembly Drawing: 2838645-1_1_AB

Pos	Part No	UN	Qty	Description	Page No
-					
010	2778572-0100		1	BELT STRETCHER	**1-43**
100	2788134-0000		2	COVER	
110	2778588-0000		1	FRAME	
120	2779774-0000		1	GUIDE	
130	2779775-0000		1	GUIDE	
140	2766927-0000		2	PILLAR	
200	312105-0366		4	SCREW M6S ISO 4017 M6X12 A480	
210	312115-0449		2	SCREW ISO4762 M8X16 A4 80	
220	312115-0367		6	SCREW ISO4762 M6X14 A4 80	
230	312105-0289		3	SCREW M6S H4X10 A4 70 ISO4017/DIN933	
240	315105-0153		10	WASHER BRB 6,4X12 RFR	
250	315105-0136		3	WASHER BRB 4,3X8 RFR	
260	311103-0351		2	PARALLEL PIN ISO 2338 6M6X16 A1	
300	90261-0064		2	PLUG, BLIND, PLASTIC, NO. SFL42	

Pos	Part No	UN	Qty	Description	Page No

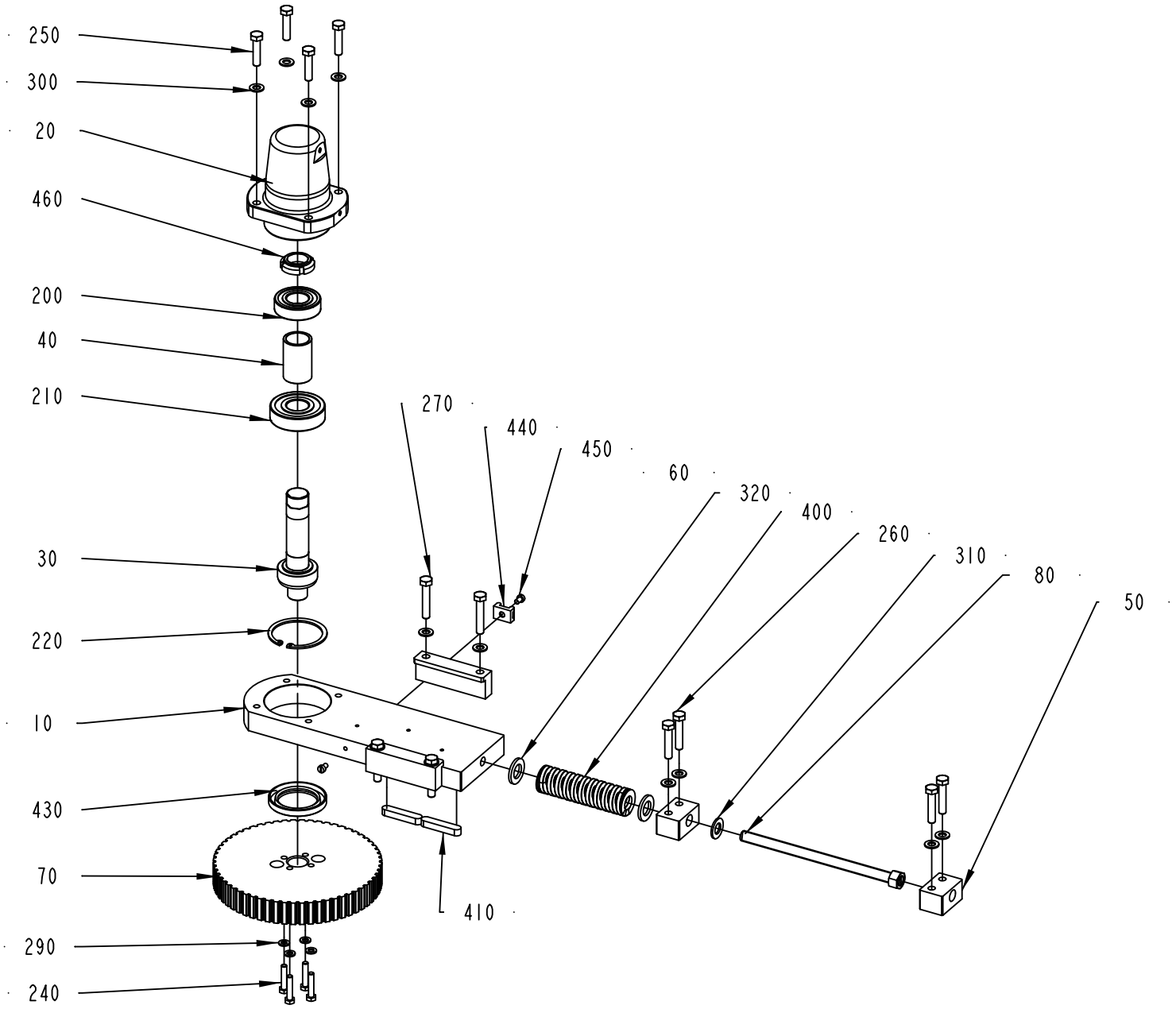

2778572-1
302658

ECM: 308661 - 20070525
Group number: 2778572-0100
Assembly Drawing: 2778572-1_1_AB

Pos	Part No	UN	Qty	Description	Page No
-					
010	2766953-0000		1	PLATE	
020	2766955-0000		1	BELLOWS	
030	2766958-0000		1	SHAFT	
040	2766959-0000		1	SPACER	
050	2766962-0000		2	BLOCK	
060	2766963-0000		2	BRACKET	
070	2766981-0000		1	TOOTHED PULLEY	
080	2817784-0000		1	SCREW	
200	321309-0105		1	BALL BEARING, 25X52X15 MM	
210	321314-0105		1	BALL BEARING, 25X62X17 MM	
220	315752-0136		1	RETAINING RING FOR BORE DIN 472 62 ST	
240	312105-0374		4	SCREW M6S ISO 4014 M6X30 A480	
250	312105-0457		4	SCREW M6S ISO 4014 M8X35 A480	
260	312105-0459		4	SCREW M6S ISO 4014 M8X40 A480	
270	312105-0460		4	SCREW M6S ISO 4014 M8X45 A480	
290	315105-0153		4	WASHER BRB 6,4X12 RFR	
300	315105-0165		12	WASHER BRB 8,4X16 RFR	
310	315105-0178		1	WASHER BRB 13X24 RFR	
320	315105-0186		2	WASHER BRB 17X30 RFR	
400	2830224-0000		1	TENSION SPRING	
410	315705-0303		2	PARALLEL KEY W. ROUND ENDS 10X8X50 MM	
430	90091-0304		1	RADIAL SEAL 45X65X8 MM DUST LIP	
440	352113-0204		1	ANCHOR PLATES FOR STRIPS, TYPE TM3S25-M	
450	312125-0323		2	SCREW ISO 1207 M5X8 A4	
460	90459-6280		1	NUT GUK 5 M25 X 1.5 FZB	

Pos	Part No	UN	Qty	Description	Page No

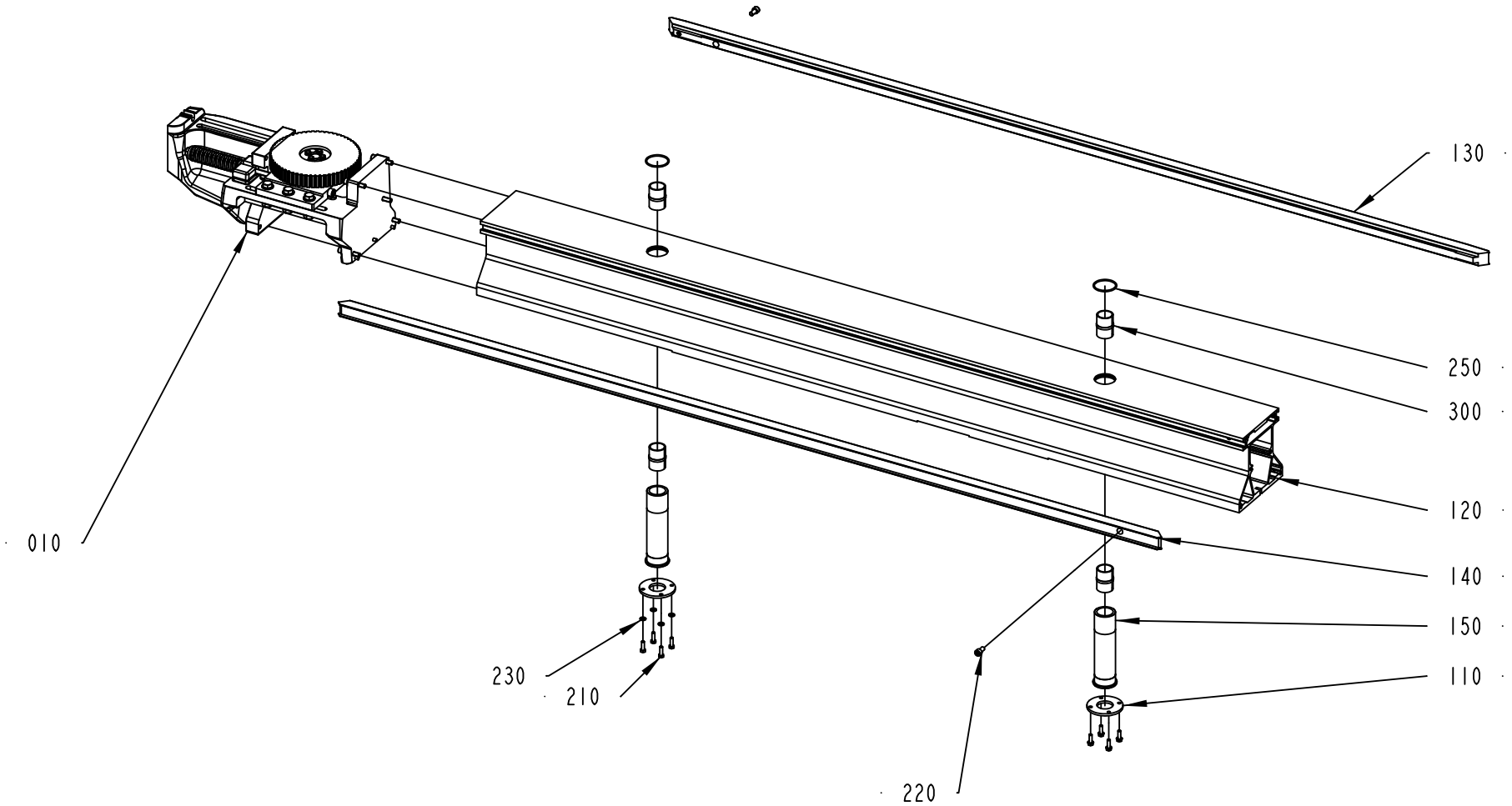

2838646-1
302279

ECM: 308666 - 20070525
Group number: 2838646-0100
Assembly Drawing: 2838646-1_1_AB

Pos	Part No	UN	Qty	Description	Page No
-					
010	2769743-0100		1	BELT STRETCHER	**1-47**
110	2766976-0000		2	FLANGE	
120	2778570-0000		1	FRAME	
130	2873878-0000		1	GUIDE	
140	2779775-0000		1	GUIDE	
150	2766974-0000		2	SLEEVE	
210	312105-0370		8	SCREW M6S ISO 4017 M6X20 A480	
220	312115-0449		2	SCREW ISO4762 M8X16 A4 80	
230	315105-0153		8	WASHER BRB 6,4X12 RFR	
250	315202-0732		2	O-RING 44,12X2,62 MM	
300	90600-0798		4	BUSHING INSERT, JUM-02-30	

Pos	Part No	UN	Qty	Description	Page No

BELT STRETCHER

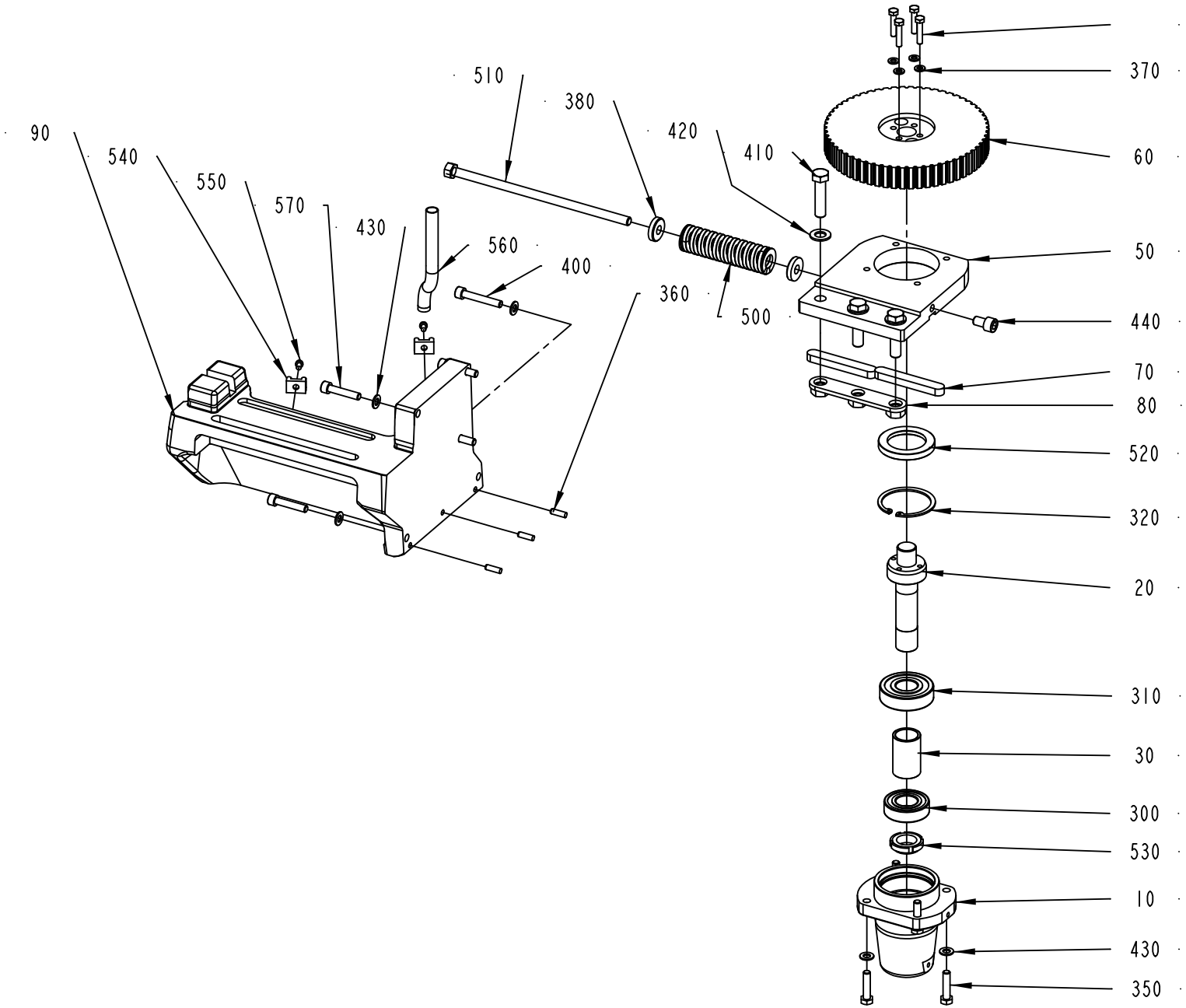

2769743-1
302658

ECM: 308660 - 20070525
Group number: 2769743-0100
Assembly Drawing: 2769743-1_1_AB

Pos	Part No	UN	Qty	Description	Page No
-					
010	2766955-0000		1	BELLOWS	
020	2766958-0000		1	SHAFT	
030	2766959-0000		1	SPACER	
050	2766989-0000		1	BRACKET	
060	2766981-0000		1	TOOTHED PULLEY	
070	315701-0371		2	PARALLEL KEY W. ROUND ENDS 14X9X90 MM	
080	2775417-0000		1	BRACKET	
090	2778571-0000		1	FRAME	
300	321309-0105		1	BALL BEARING, 25X52X15 MM	
310	321314-0105		1	BALL BEARING, 25X62X17 MM	
320	315752-0136		1	RETAINING RING FOR BORE DIN 472 62 ST	
340	312105-0374		4	SCREW M6S ISO 4014 M6X30 A480	
350	312105-0457		4	SCREW M6S ISO 4014 M8X35 A480	
360	311103-0353		3	PARALLEL PIN ISO 2338 6M6X20 A1	
370	315105-0153		4	WASHER BRB 6,4X12 RFR	
380	315125-0173		2	WASHER TBRSB 10,5X28X6 A4	
400	312115-0461		2	SCREW ISO4762 M8X50 A4 80	
410	312109-0542		3	SCREW M6S ISO 4017 M12X50 A280	
420	315105-0178		3	WASHER BRB 13X24 RFR	
430	315105-0165		9	WASHER BRB 8,4X16 RFR	
440	312115-0489		1	SCREW ISO4762 M10X16 A4 80	
500	2830224-0000		1	TENSION SPRING	
510	2805467-0000		1	SCREW	
520	90091-0304		1	RADIAL SEAL 45X65X8 MM DUST LIP	
530	90459-6280		1	NUT GUK 5 M25 X 1.5 FZB	
540	352113-0204		2	ANCHOR PLATES FOR STRIPS, TYPE TM3S25-M	
550	312125-0323		2	SCREW ISO 1207 M5X8 A4	
560	90166-0126	M	1	TUBE 12 MM PA,TRANSP.	
570	312115-0459		3	SCREW ISO4762 M8X40 A4 80	

Pos	Part No	UN	Qty	Description	Page No

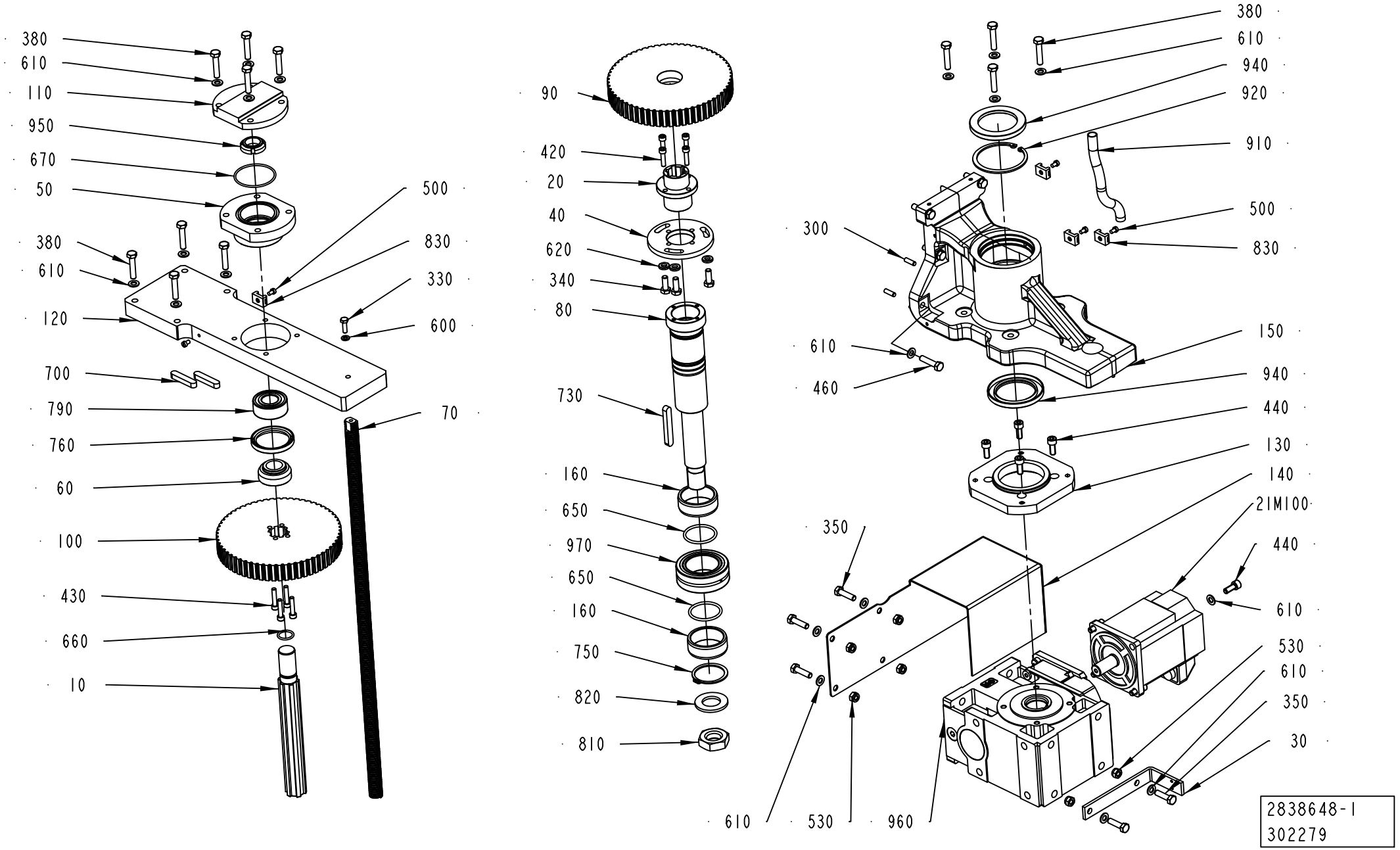
380
610
110
950
670
50
380
610
120
700
790
760
60
100
430
660
10
500
830
330
600
70
90
420
20
40
620
340
80
730
160
650
970
650
160
750
820
810
380
610
940
920
910
500
830
300
610
460
150
940
440
130
140
21M100
350
440
610
530
610
350
30
610
530
960
2838648-1
302279

ECM: 311475 - 20070525
Group number: 2838648-0100
Assembly Drawing: 2838648-1_1_AB

This list covers pages from 1-48 to 1-51

Pos	Part No	UN	Qty	Description	Page No
TBA 0200SQ, TBA 0250SQ (See drawing on page: 1-50)					
100	2907981-0000		1	NUT	
380	312105-0459		4	SCREW M6S ISO 4014 M8X40 A480	
500	312125-0323		3	SCREW ISO 1207 M5X8 A4	
610	315105-0165		20	WASHER BRB 8,4X16 RFR	
830	352113-0204		3	ANCHOR PLATES FOR STRIPS, TYPE TM3S25-M	
TBA 0500SQ, TBA 1000B, TBA 1000SQ, TBA 1000S, TBA 1500S, TPA, TBA 1890S, TBA 2000S, TGA (See drawing on page: 1-48)					
010	2775446-0000		1	SHAFT	
050	2775445-0000		1	SPACER	
060	2775443-0000		1	SPACER	
070	2802392-0000		1	PILLAR	
100	2775442-0000		1	TOOTHED PULLEY	
110	2778566-0000		1	BELLOWS	
120	2802393-0000		1	PLATE	
170	2837255-0000		1	WASHER	
330	312105-0370		3	SCREW M6S ISO 4017 M6X20 A480	
380	312105-0459		12	SCREW M6S ISO 4014 M8X40 A480	
430	312115-0374		4	SCREW ISO4762 M6X30 A4 80	
500	312125-0323		5	SCREW ISO 1207 M5X8 A4	
600	315105-0153		1	WASHER BRB 6,4X12 RFR	
610	315105-0165		28	WASHER BRB 8,4X16 RFR	
660	315202-0717		1	O-RING 20,29X2,62 MM	
670	315202-0741		1	O-RING 58,42X2,62 MM	
700	315705-0303		2	PARALLEL KEY W. ROUND ENDS 10X8X50 MM	
760	315221-0198		1	RADIAL SEAL 50X65X8 MM	
790	321330-0105		1	ANG. BALL BEAR, 25X52X20,6 MM	
830	352113-0204		4	ANCHOR PLATES FOR STRIPS, TYPE TM3S25-M	
950	90459-6280		1	NUT GUK 5 M25 X 1.5 FZB	
Common Parts					
020	2775439-0000		1	BUSHING	
030	2837626-0000		1	BRACKET	
040	2775438-0000		1	PLATE	
080	2837624-0000		1	SHAFT	
090	2775437-0000		1	TOOTHED PULLEY	
130	2837627-0000		1	FLANGE	
140	2837630-0000		1	COVER	
150	2837623-0000		1	BRACKET	
160	2837628-0000		2	SPACER	
21M100	90459-2583		1	SERVO MOTOR MPL-B420P-MK22AA	
300	311103-0353		3	PARALLEL PIN ISO 2338 6M6X20 A1	
340	312105-0452		3	SCREW M6S ISO 4017 M8X22 A4 80	
350	312105-0455		7	SCREW M6S ISO 4017 M8X30 A480	
420	312115-0372		4	SCREW ISO4762 M6X25 A4 80	
440	312115-0451		8	SCREW ISO4762 M8X20 A4 80	
460	312105-0457		6	SCREW M6S ISO 4014 M8X35 A480	
530	312812-0318		6	HEXAGON NUT, NY-LOCK M8 A480	
620	315115-0165		3	WASHER PLAIN, TBRB 8,4/16 H=3	
650	315202-0602		2	O-RING 44,04X3,53 MM	
730	315705-0307		1	PARALLEL KEY W. ROUND ENDS 10X8X70 MM	
750	315751-0130		1	RETAINING RING FOR SHAFT DIN 471 50 A2	
810	312625-0330		1	HEXAGON THIN NUT, EN 24035 ML6M M27 A4	
820	315103-0202		1	WASHER PLAIN, BRB, 28/50 H=4	
900	90157-0037	ML	1	THREAD SEALANT LOCTITE 542	
910	90166-0126	M	3	TUBE 12 MM PA,TRANSP.	
920	90458-0181		1	RETAINING RING FOR BORE DIN 472 80 A2	
940	90459-4588		2	RADIAL SEAL 60X85X8 MM DUST LIP	
960	90600-0803		1	WORM GEAR MR V 63 UO3A-80B4 … B5/35	
970	90600-0892		1	NEEDLE BEARING, 50X80X28 MM	

Machine Type | Group Description | Used-In | Group Number | Page No

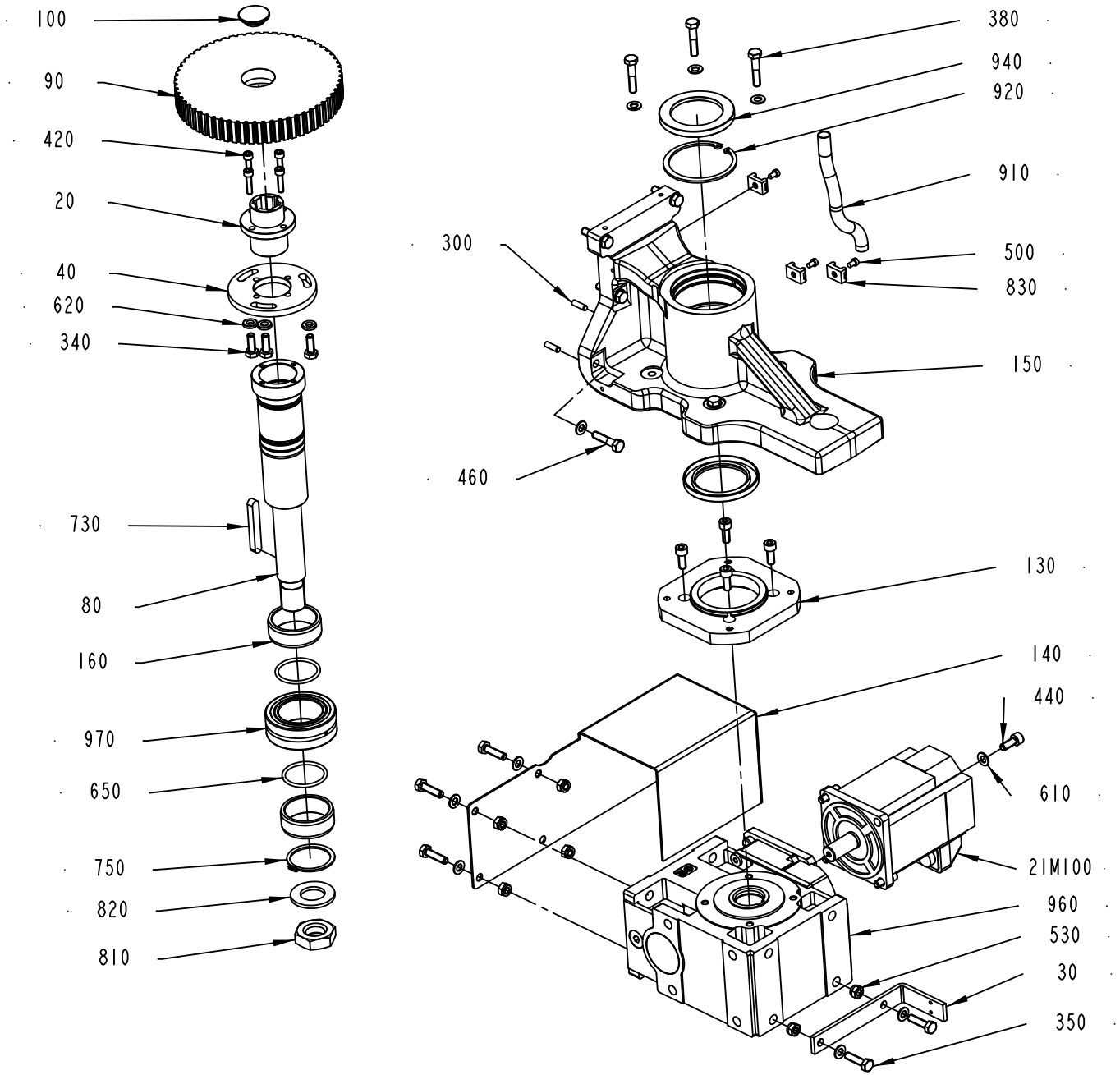

2838648-2
311475

ECM: 311475 - 20070525
Group number: 2838648-0100
Assembly Drawing: 2838648-2_1_AA

This list covers pages from 1-48 to 1-51

Pos	Part No	UN	Qty	Description	Page No
TBA 0200SQ, TBA 0250SQ (See drawing on page: 1-50)					
100	2907981-0000		1	NUT	
380	312105-0459		4	SCREW M6S ISO 4014 M8X40 A480	
500	312125-0323		3	SCREW ISO 1207 M5X8 A4	
610	315105-0165		20	WASHER BRB 8,4X16 RFR	
830	352113-0204		3	ANCHOR PLATES FOR STRIPS, TYPE TM3S25-M	
TBA 0500SQ, TBA 1000B, TBA 1000SQ, TBA 1000S, TBA 1500S, TPA, TBA 1890S, TBA 2000S, TGA (See drawing on page: 1-48)					
010	2775446-0000		1	SHAFT	
050	2775445-0000		1	SPACER	
060	2775443-0000		1	SPACER	
070	2802392-0000		1	PILLAR	
100	2775442-0000		1	TOOTHED PULLEY	
110	2778566-0000		1	BELLOWS	
120	2802393-0000		1	PLATE	
170	2837255-0000		1	WASHER	
330	312105-0370		3	SCREW M6S ISO 4017 M6X20 A480	
380	312105-0459		12	SCREW M6S ISO 4014 M8X40 A480	
430	312115-0374		4	SCREW ISO4762 M6X30 A4 80	
500	312125-0323		5	SCREW ISO 1207 M5X8 A4	
600	315105-0153		1	WASHER BRB 6,4X12 RFR	
610	315105-0165		28	WASHER BRB 8,4X16 RFR	
660	315202-0717		1	O-RING 20,29X2,62 MM	
670	315202-0741		1	O-RING 58,42X2,62 MM	
700	315705-0303		2	PARALLEL KEY W. ROUND ENDS 10X8X50 MM	
760	315221-0198		1	RADIAL SEAL 50X65X8 MM	
790	321330-0105		1	ANG. BALL BEAR, 25X52X20,6 MM	
830	352113-0204		4	ANCHOR PLATES FOR STRIPS, TYPE TM3S25-M	
950	90459-6280		1	NUT GUK 5 M25 X 1.5 FZB	
Common Parts					
020	2775439-0000		1	BUSHING	
030	2837626-0000		1	BRACKET	
040	2775438-0000		1	PLATE	
080	2837624-0000		1	SHAFT	
090	2775437-0000		1	TOOTHED PULLEY	
130	2837627-0000		1	FLANGE	
140	2837630-0000		1	COVER	
150	2837623-0000		1	BRACKET	
160	2837628-0000		2	SPACER	
21M100	90459-2583		1	SERVO MOTOR MPL-B420P-MK22AA	
300	311103-0353		3	PARALLEL PIN ISO 2338 6M6X20 A1	
340	312105-0452		3	SCREW M6S ISO 4017 M8X22 A4 80	
350	312105-0455		7	SCREW M6S ISO 4017 M8X30 A480	
420	312115-0372		4	SCREW ISO4762 M6X25 A4 80	
440	312115-0451		8	SCREW ISO4762 M8X20 A4 80	
460	312105-0457		6	SCREW M6S ISO 4014 M8X35 A480	
530	312812-0318		6	HEXAGON NUT, NY-LOCK M8 A480	
620	315115-0165		3	WASHER PLAIN, TBRB 8,4/16 H=3	
650	315202-0602		2	O-RING 44,04X3,53 MM	
730	315705-0307		1	PARALLEL KEY W. ROUND ENDS 10X8X70 MM	
750	315751-0130		1	RETAINING RING FOR SHAFT DIN 471 50 A2	
810	312625-0330		1	HEXAGON THIN NUT, EN 24035 ML6M M27 A4	
820	315103-0202		1	WASHER PLAIN, BRB, 28/50 H=4	
900	90157-0037	ML	1	THREAD SEALANT LOCTITE 542	
910	90166-0126	M	3	TUBE 12 MM PA,TRANSP.	
920	90458-0181		1	RETAINING RING FOR BORE DIN 472 80 A2	
940	90459-4588		2	RADIAL SEAL 60X85X8 MM DUST LIP	
960	90600-0803		1	WORM GEAR MR V 63 UO3A-80B4 … B5/35	
970	90600-0892		1	NEEDLE BEARING, 50X80X28 MM	

Machine Type | Group Description | Used-In | Group Number | Page No

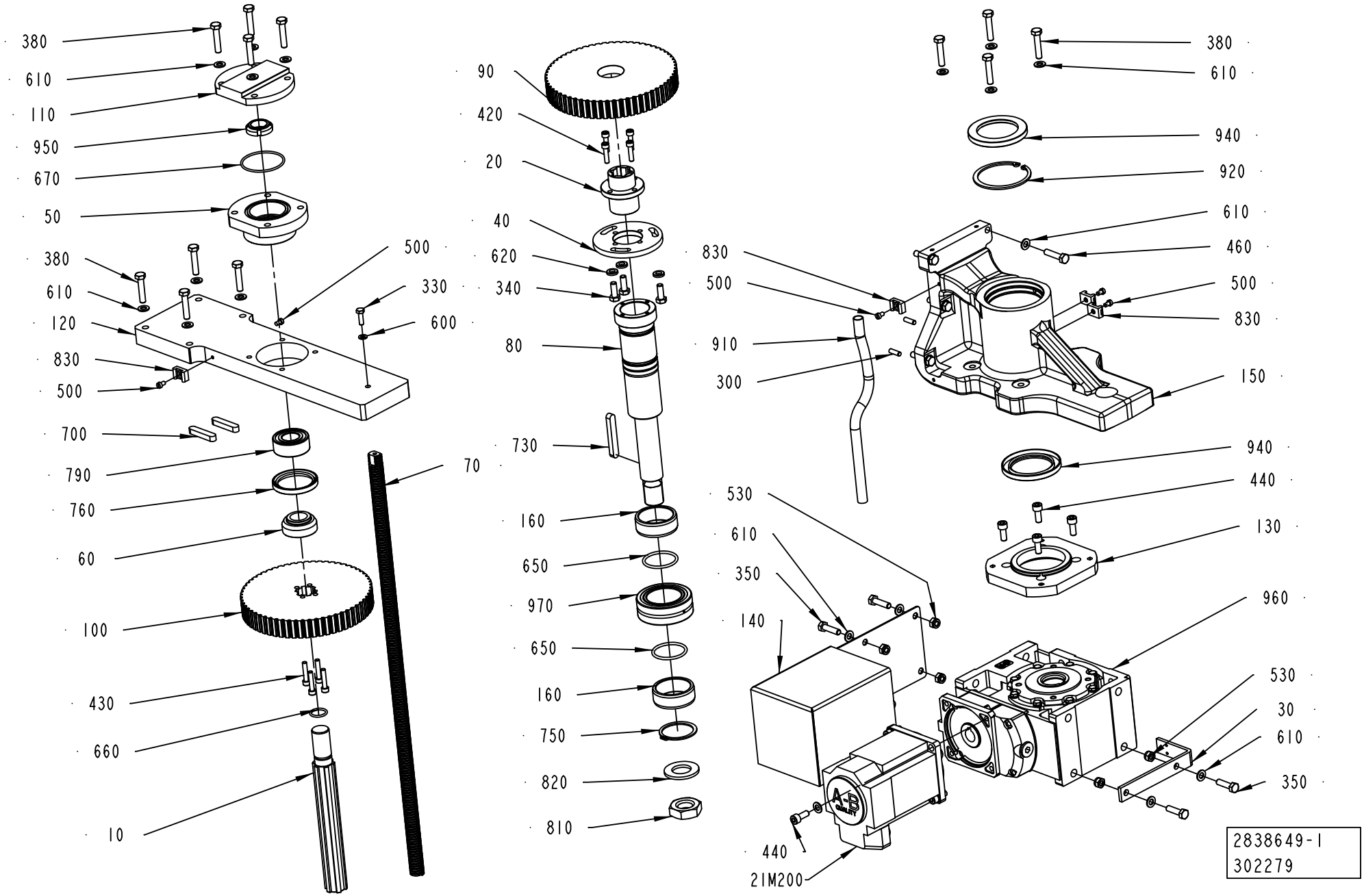
380
610
110
950
670
50
380
610
120
830
500
700
790
760
60
100
430
660
10
500
330
600
70
90
420
20
40
620
340
80
730
160
650
970
650
160
750
820
810
380
610
940
920
610
460
500
830
150
830
500
910
300
940
440
130
530
610
350
140
960
530
30
610
350
440
21M200
2838649-1
302279

ECM: 311475 - 20070525
Group number: 2838649-0100
Assembly Drawing: 2838649-1_1_AB

This list covers pages from 1-52 to 1-55

Pos	Part No	UN	Qty	Description	Page No
TBA 0200SQ, TBA 0250SQ (See drawing on page: 1-54)					
100	2907981-0000		1	NUT	
380	312105-0459		4	SCREW M6S ISO 4014 M8X40 A480	
500	312125-0323		3	SCREW ISO 1207 M5X8 A4	
610	315105-0165		20	WASHER BRB 8,4X16 RFR	
830	352113-0204		3	ANCHOR PLATES FOR STRIPS, TYPE TM3S25-M	
TBA 0500SQ, TBA 1000B, TBA 1000SQ, TBA 1000S, TBA 1500S, TPA, TBA 1890S, TBA 2000S, TGA (See drawing on page: 1-52)					
010	2775446-0000		1	SHAFT	
050	2775445-0000		1	SPACER	
060	2775443-0000		1	SPACER	
070	2802392-0000		1	PILLAR	
100	2775442-0000		1	TOOTHED PULLEY	
110	2778566-0000		1	BELLOWS	
120	2802393-0000		1	PLATE	
330	312105-0370		1	SCREW M6S ISO 4017 M6X20 A480	
380	312105-0459		12	SCREW M6S ISO 4014 M8X40 A480	
430	312115-0374		4	SCREW ISO4762 M6X30 A4 80	
500	312125-0323		5	SCREW ISO 1207 M5X8 A4	
600	315105-0153		1	WASHER BRB 6,4X12 RFR	
610	315105-0165		28	WASHER BRB 8,4X16 RFR	
660	315202-0717		1	O-RING 20,29X2,62 MM	
670	315202-0741		1	O-RING 58,42X2,62 MM	
700	315705-0303		2	PARALLEL KEY W. ROUND ENDS 10X8X50 MM	
760	315221-0198		1	RADIAL SEAL 50X65X8 MM	
790	321330-0105		1	ANG. BALL BEAR, 25X52X20,6 MM	
830	352113-0204		4	ANCHOR PLATES FOR STRIPS, TYPE TM3S25-M	
950	90459-6280		1	NUT GUK 5 M25 X 1.5 FZB	
Common Parts					
020	2775439-0000		1	BUSHING	
030	2837626-0000		1	BRACKET	
040	2775438-0000		1	PLATE	
080	2837624-0000		1	SHAFT	
090	2775437-0000		1	TOOTHED PULLEY	
130	2837627-0000		1	FLANGE	
140	2837625-0000		1	COVER	
150	2837623-0000		1	BRACKET	
160	2837628-0000		2	SPACER	
21M200	90459-2583		1	SERVO MOTOR MPL-B420P-MK22AA	
300	311103-0353		3	PARALLEL PIN ISO 2338 6M6X20 A1	
340	312105-0452		3	SCREW M6S ISO 4017 M8X22 A4 80	
350	312105-0455		6	SCREW M6S ISO 4017 M8X30 A480	
420	312115-0372		4	SCREW ISO4762 M6X25 A4 80	
440	312115-0451		8	SCREW ISO4762 M8X20 A4 80	
460	312105-0457		6	SCREW M6S ISO 4014 M8X35 A480	
530	312812-0318		6	HEXAGON NUT, NY-LOCK M8 A480	
620	315115-0165		3	WASHER PLAIN, TBRB 8,4/16 H=3	
650	315202-0602		2	O-RING 44,04X3,53 MM	
730	315705-0307		1	PARALLEL KEY W. ROUND ENDS 10X8X70 MM	
750	315751-0130		1	RETAINING RING FOR SHAFT DIN 471 50 A2	
810	312625-0330		1	HEXAGON THIN NUT, EN 24035 ML6M M27 A4	
820	315103-0202		1	WASHER PLAIN, BRB, 28/50 H=4	
900	90157-0037	ML	1	THREAD SEALANT LOCTITE 542	
910	90166-0126	M	3	TUBE 12 MM PA,TRANSP.	
920	90458-0181		1	RETAINING RING FOR BORE DIN 472 80 A2	
940	90459-4588		2	RADIAL SEAL 60X85X8 MM DUST LIP	
960	90600-0803		1	WORM GEAR MR V 63 UO3A-80B4 … B5/35	
970	90600-0892		1	NEEDLE BEARING, 50X80X28 MM	

Machine Type | Group Description | Used-In | Group Number | Page No

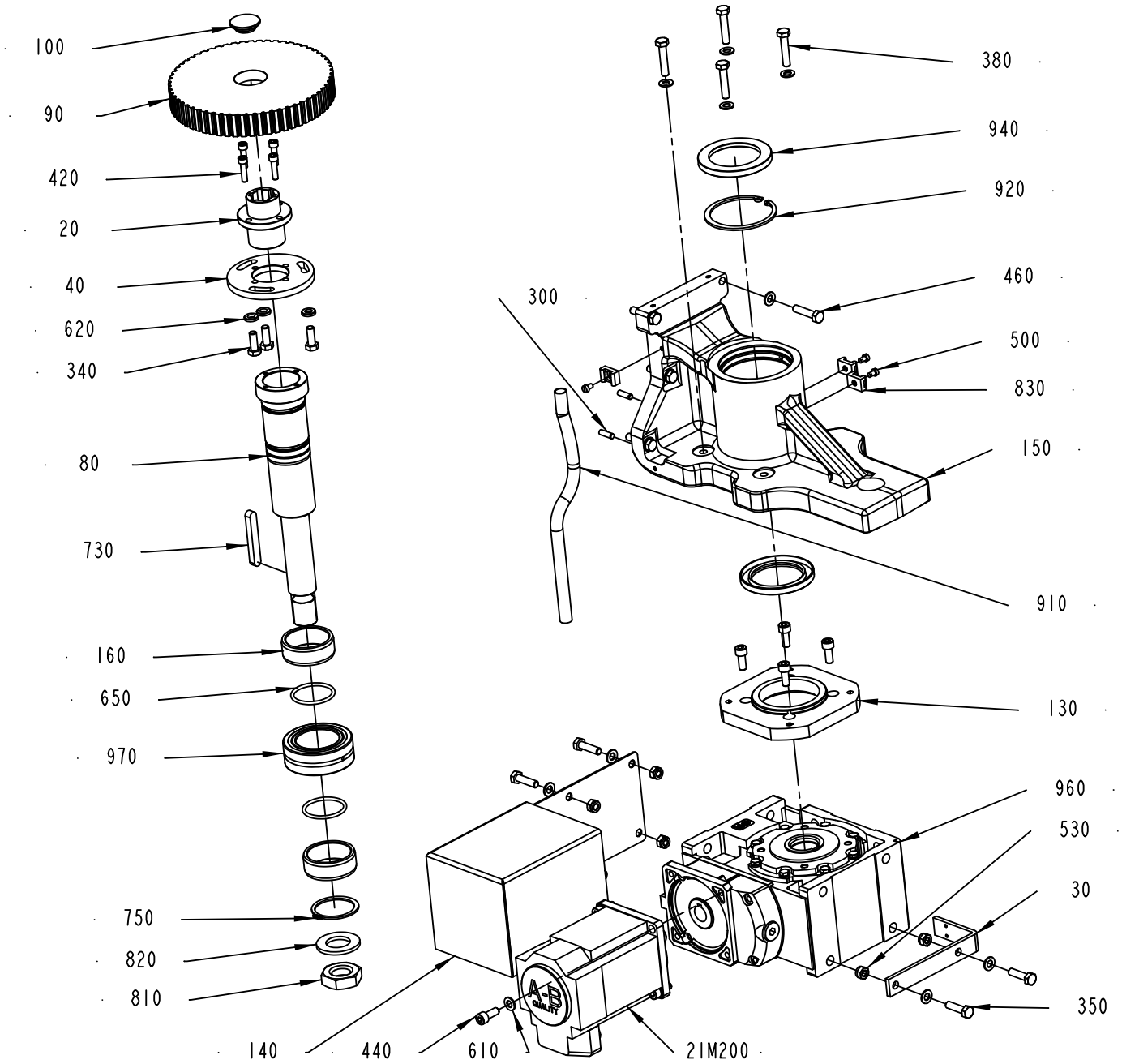

2838649-2
311475

ECM: 311475 - 20070525
Group number: 2838649-0100
Assembly Drawing: 2838649-2_1_AA

This list covers pages from 1-52 to 1-55

Pos	Part No	UN	Qty	Description	Page No
TBA 0200SQ, TBA 0250SQ (See drawing on page: 1-54)					
100	2907981-0000		1	NUT	
380	312105-0459		4	SCREW M6S ISO 4014 M8X40 A480	
500	312125-0323		3	SCREW ISO 1207 M5X8 A4	
610	315105-0165		20	WASHER BRB 8,4X16 RFR	
830	352113-0204		3	ANCHOR PLATES FOR STRIPS, TYPE TM3S25-M	
TBA 0500SQ, TBA 1000B, TBA 1000SQ, TBA 1000S, TBA 1500S, TPA, TBA 1890S, TBA 2000S, TGA (See drawing on page: 1-52)					
010	2775446-0000		1	SHAFT	
050	2775445-0000		1	SPACER	
060	2775443-0000		1	SPACER	
070	2802392-0000		1	PILLAR	
100	2775442-0000		1	TOOTHED PULLEY	
110	2778566-0000		1	BELLOWS	
120	2802393-0000		1	PLATE	
330	312105-0370		1	SCREW M6S ISO 4017 M6X20 A480	
380	312105-0459		12	SCREW M6S ISO 4014 M8X40 A480	
430	312115-0374		4	SCREW ISO4762 M6X30 A4 80	
500	312125-0323		5	SCREW ISO 1207 M5X8 A4	
600	315105-0153		1	WASHER BRB 6,4X12 RFR	
610	315105-0165		28	WASHER BRB 8,4X16 RFR	
660	315202-0717		1	O-RING 20,29X2,62 MM	
670	315202-0741		1	O-RING 58,42X2,62 MM	
700	315705-0303		2	PARALLEL KEY W. ROUND ENDS 10X8X50 MM	
760	315221-0198		1	RADIAL SEAL 50X65X8 MM	
790	321330-0105		1	ANG. BALL BEAR, 25X52X20,6 MM	
830	352113-0204		4	ANCHOR PLATES FOR STRIPS, TYPE TM3S25-M	
950	90459-6280		1	NUT GUK 5 M25 X 1.5 FZB	
Common Parts					
020	2775439-0000		1	BUSHING	
030	2837626-0000		1	BRACKET	
040	2775438-0000		1	PLATE	
080	2837624-0000		1	SHAFT	
090	2775437-0000		1	TOOTHED PULLEY	
130	2837627-0000		1	FLANGE	
140	2837625-0000		1	COVER	
150	2837623-0000		1	BRACKET	
160	2837628-0000		2	SPACER	
21M200	90459-2583		1	SERVO MOTOR MPL-B420P-MK22AA	
300	311103-0353		3	PARALLEL PIN ISO 2338 6M6X20 A1	
340	312105-0452		3	SCREW M6S ISO 4017 M8X22 A4 80	
350	312105-0455		6	SCREW M6S ISO 4017 M8X30 A480	
420	312115-0372		4	SCREW ISO4762 M6X25 A4 80	
440	312115-0451		8	SCREW ISO4762 M8X20 A4 80	
460	312105-0457		6	SCREW M6S ISO 4014 M8X35 A480	
530	312812-0318		6	HEXAGON NUT, NY-LOCK M8 A480	
620	315115-0165		3	WASHER PLAIN, TBRB 8,4/16 H=3	
650	315202-0602		2	O-RING 44,04X3,53 MM	
730	315705-0307		1	PARALLEL KEY W. ROUND ENDS 10X8X70 MM	
750	315751-0130		1	RETAINING RING FOR SHAFT DIN 471 50 A2	
810	312625-0330		1	HEXAGON THIN NUT, EN 24035 ML6M M27 A4	
820	315103-0202		1	WASHER PLAIN, BRB, 28/50 H=4	
900	90157-0037	ML	1	THREAD SEALANT LOCTITE 542	
910	90166-0126	M	3	TUBE 12 MM PA,TRANSP.	
920	90458-0181		1	RETAINING RING FOR BORE DIN 472 80 A2	
940	90459-4588		2	RADIAL SEAL 60X85X8 MM DUST LIP	
960	90600-0803		1	WORM GEAR MR V 63 UO3A-80B4 … B5/35	
970	90600-0892		1	NEEDLE BEARING, 50X80X28 MM	

Machine Type	Group Description	Used-In	Group Number	Page No

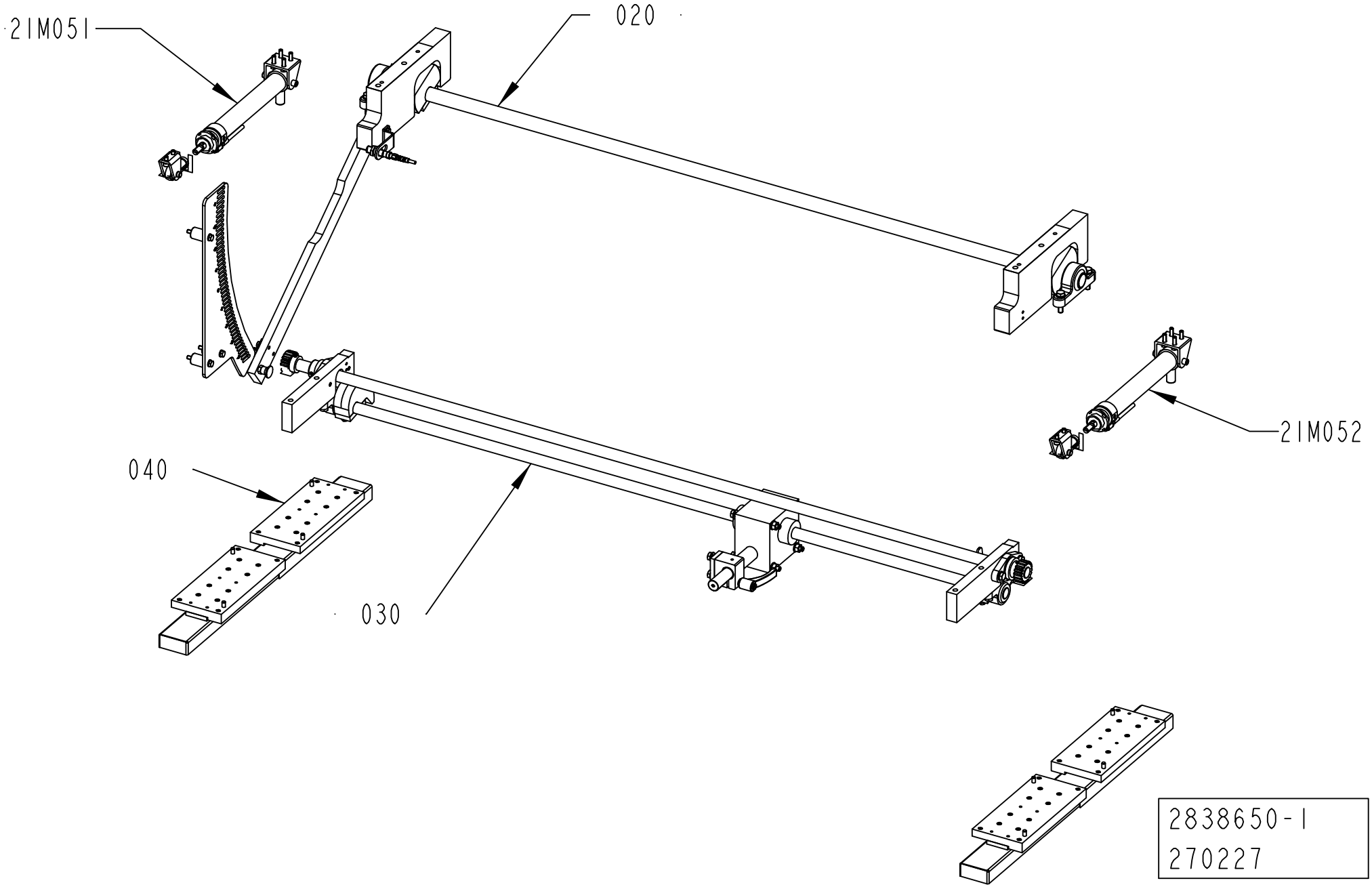
21M051
020
21M052
040
030
2838650-1
270227

ECM: 312421 - 20070525
Group number: 2838650-0100
Assembly Drawing: 2838650-1_1_AA

Pos	Part No	UN	Qty	Description	Page No
-					
020	2838669-0100		1	SETTING ARM	**1-59**
030	2838652-0100		1	SETTING ARM	**1-61**
040	2838653-0100		1	GUIDE RAIL	**1-63**
21M051	2769718-0100		1	PNEUMATIC CYLINDER	**1-65**
21M052	2769718-0100		1	PNEUMATIC CYLINDER	**1-65**

Pos	Part No	UN	Qty	Description	Page No

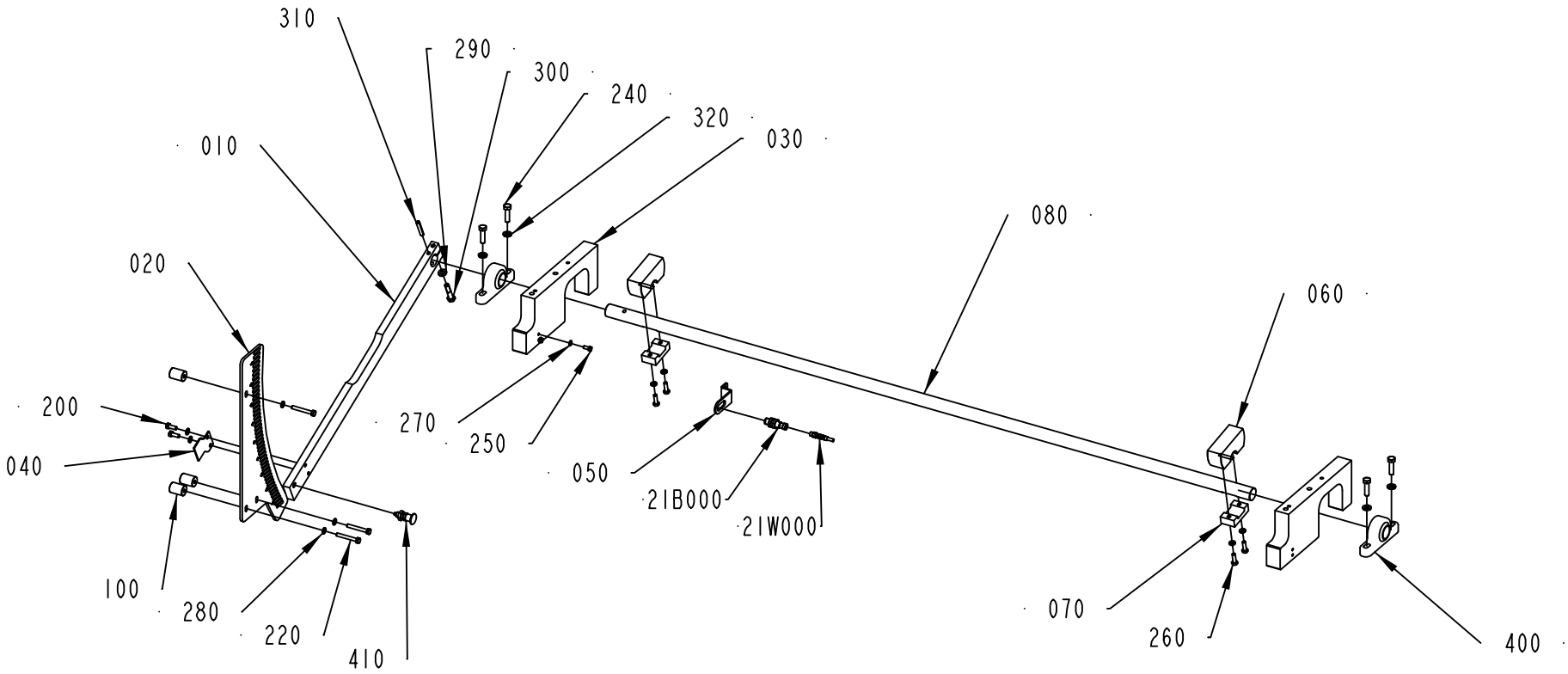

2838669-1
302279

ECM: 308943 - 20070525
Group number: 2838669-0100
Assembly Drawing: 2838669-1_1_AB

Pos	Part No	UN	Qty	Description	Page No
-					
010	2788174-0000		1	LEVER	
020	2766943-0000		1	PLATE	
030	2766944-0000		2	BRACKET	
040	2769695-0000		1	BRACKET	
050	2779057-0000		1	PLATE	
060	2838682-0000		2	CAM	
070	2838683-0000		2	PLATE	
080	2766941-0000		1	SHAFT	
100	2773632-0000		3	SPACER	
200	312105-0368		2	SCREW M6S ISO 4017 M6X16 A480	
21B000	90458-2907		1	PROX.SW. IFS204	
21W000	351401-0050		1	ACTU/SENS CABLE RSMVN 3-PRKMV 3-06/5,0M	
220	312105-0379		3	SCREW M6S ISO 4014 M6X45 A480	
240	312105-0455		4	SCREW M6S ISO 4017 M8X30 A480	
250	312105-0327		2	SCREW M6S ISO 4017 M5X12 A480	
260	312105-0370		4	SCREW M6S ISO 4017 M6X20 A480	
270	315105-0146		2	WASHER BRB 5,3X10 RFR	
280	315105-0153		9	WASHER BRB 6,4X12 RFR	
290	315105-0165		1	WASHER BRB 8,4X16 RFR	
300	312105-0459		1	SCREW M6S ISO 4014 M8X40 A480	
310	311112-0347		1	SPRING PIN, ISO 8752 6X40-C	
320	315115-0165		4	WASHER PLAIN, TBRB 8,4/16 H=3	
400	90600-0799		2	STANDING BEARING, KSTM-25	
410	90051-0112		1	LOCK KNOB, NO. GN 617 NIK5	

Pos	Part No	UN	Qty	Description	Page No

Machine Type | Group Description | Used-In | Group Number | Page No

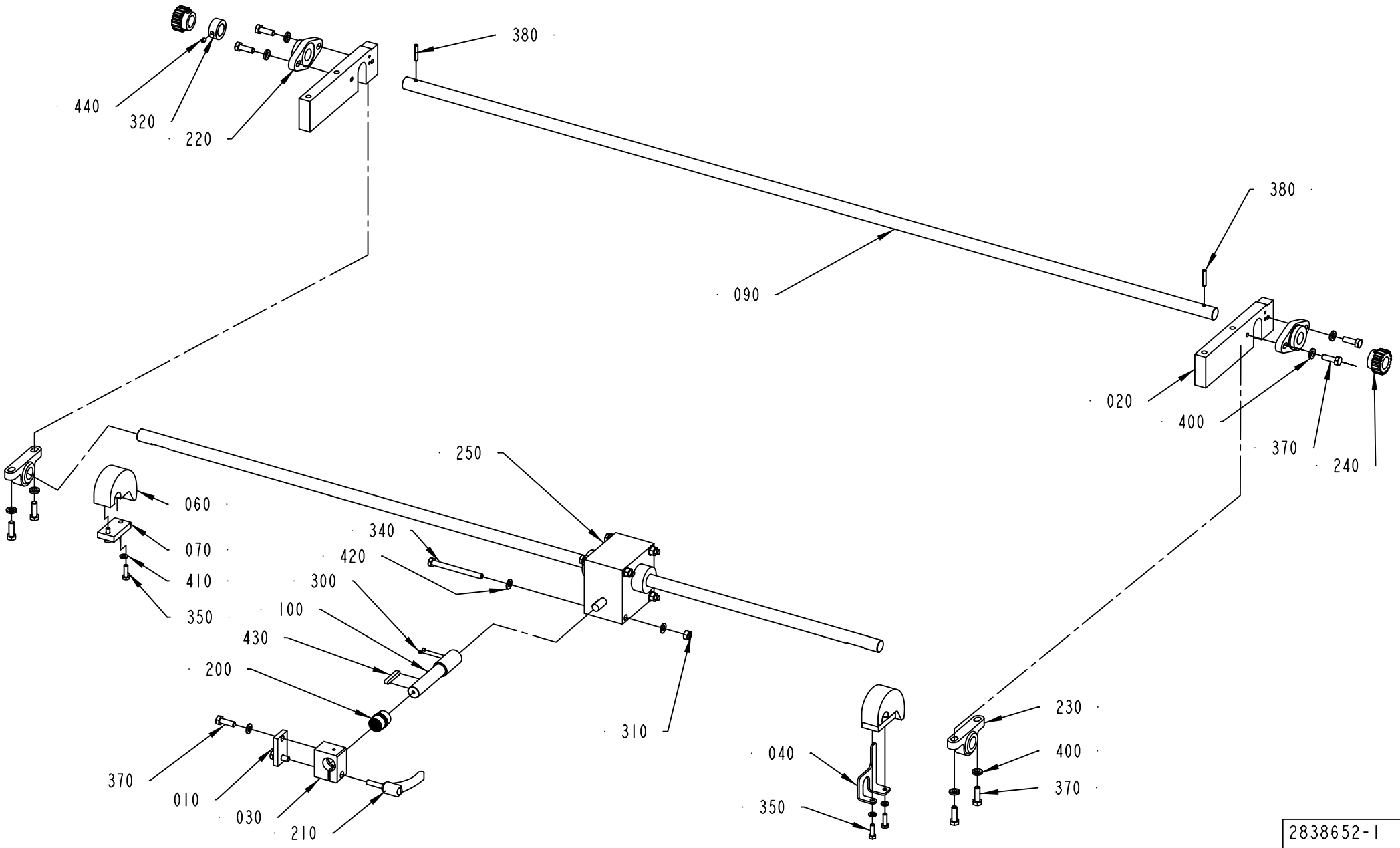
440
320
220
380
090
380
020
400
370
240
250
060
070
410
350
340
420
300
100
430
200
310
370
010
030
210
040
350
230
400
370
2838652-1
302279

ECM: 308941 - 20070525
Group number: 2838652-0100
Assembly Drawing: 2838652-1_1_AB

Pos	Part No	UN	Qty	Description	Page No
-					
010	2778594-0000		1	PLATE	
020	2779014-0000		2	PLATE	
030	2769726-0000		1	BRACKET	
040	2802405-0000		1	STOP ARM	
060	2779013-0000		2	CAM	
070	2712603-0000		2	PLATE	
090	2766950-0000		1	SHAFT	
100	2769729-0000		1	SHAFT	
200	90458-2932		1	PLAIN BEARING, JUM-02-20	
210	90017-0029		1	LOCKING LEVER, NO. KR8X30-SUS	
220	90600-0800		2	FLANGE BEARING 20X89X20 MM	
230	90459-4727		2	STANDING BEARING, KSTM-20	
250	90600-1005		1	WORM GEAR SCREW JACK, TR00042000130	
300	312318-0283		2	SCREW ISO4029 M4X4 A4	
310	312605-0318		4	HEXAGON NUT, M6M M8 A280	
320	315741-0216		1	RETAINING RING DIN 705 A4 20	
340	312105-0469		4	SCREW M6S ISO 4014 M8X90 A480	
350	312105-0370		4	SCREW M6S ISO 4017 M6X20 A480	
370	312105-0453		10	SCREW M6S ISO 4017 M8X25 A480	
380	311112-0312		2	SPRING PIN, ISO 8752 5X28-C	
400	315115-0165		8	WASHER PLAIN, TBRB 8,4/16 H=3	
410	315105-0153		4	WASHER BRB 6,4X12 RFR	
420	315105-0165		10	WASHER BRB 8,4X16 RFR	
430	315705-0239		1	PARALLEL KEY W. ROUND ENDS 6X6X40 MM	
440	312318-0360		1	SCREW ISO4029 M6X6 A4	

Pos	Part No	UN	Qty	Description	Page No

Machine Type | Group Description | Used-In | Group Number | Page No

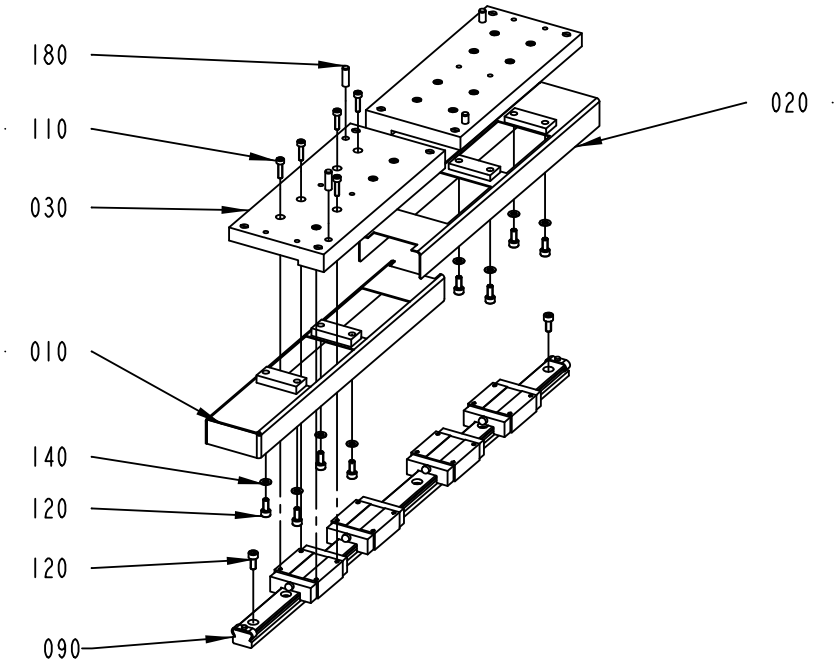

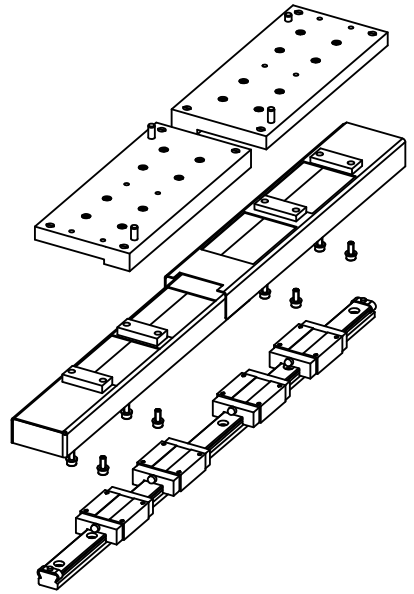

2838653-1
302279

ECM: 308942 - 20070525
Group number: 2838653-0100
Assembly Drawing: 2838653-1_1_AB

Pos	Part No	UN	Qty	Description	Page No
-					
010	2802375-0000		2	COVER	
020	2802376-0000		2	COVER	
030	2788168-0000		4	PLATE	
090	90600-0825		2	GUIDE BAR, 4 RSR20VMUU+580LM	
	90600-0826		*4*	*CARRIAGE, RSR20VMUU*	
110	312115-0293		32	SCREW ISO4762 M4X16 A4 80	
120	312115-0327		36	SCREW ISO4762 M5X12 A4 80	
140	315105-0146		16	WASHER BRB 5,3X10 RFR	
180	311103-0353		8	PARALLEL PIN ISO 2338 6M6X20 A1	

Pos	Part No	UN	Qty	Description	Page No

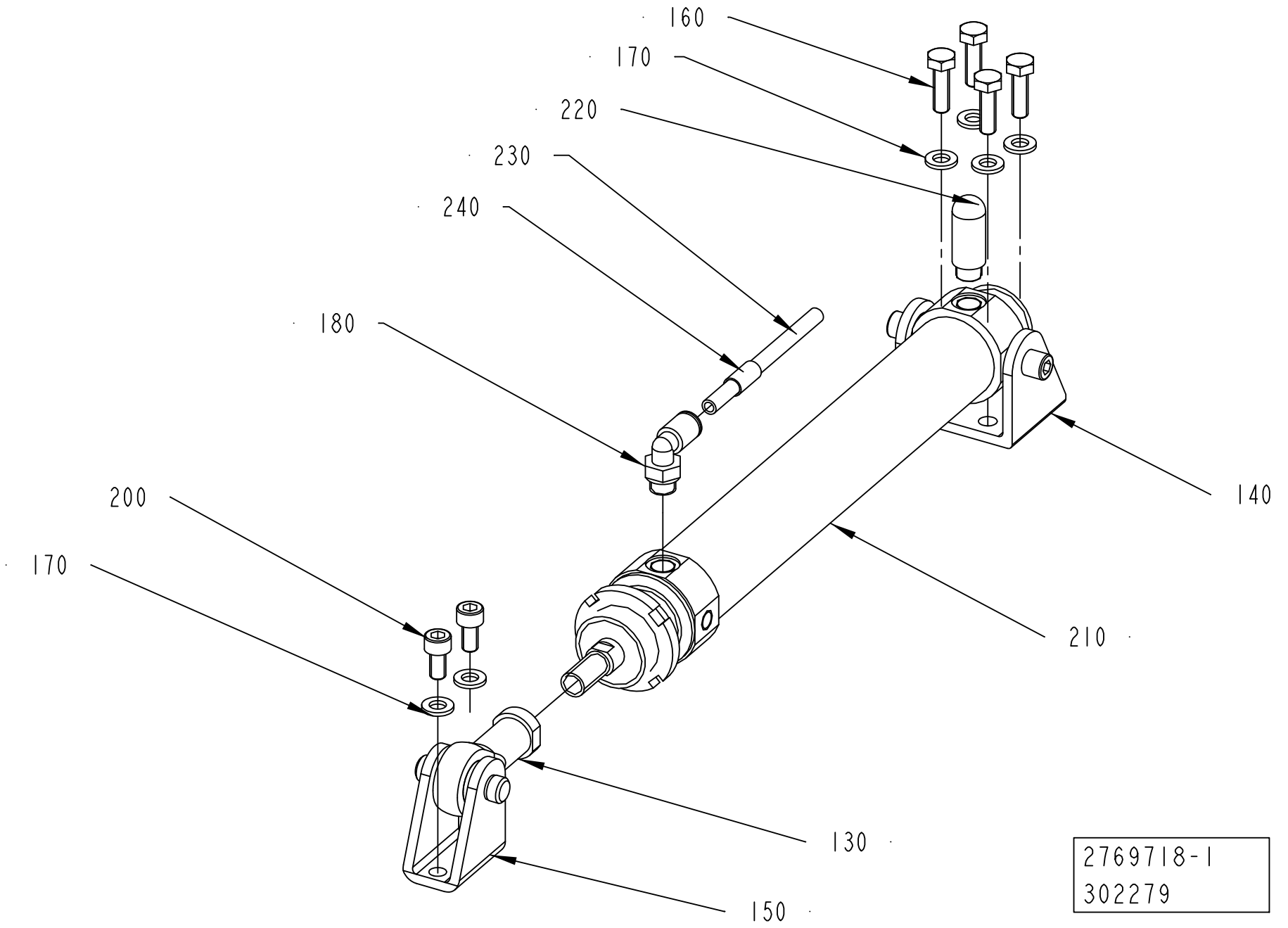
160
170
220
230
240
180
200
170
140
210
130
150
2769718-1
302279

ECM: 308945 - 20070525
Group number: 2769718-0100
Assembly Drawing: 2769718-1_1_AB

Pos	Part No	UN	Qty	Description	Page No
-					
130	90459-1018		1	ROD END,BALL JOINT EYE M10X1,25	
140	90459-3115		1	BRACKET, REAR, CLEVIS, ROUND, BORE 32	
150	90459-5949		1	REAR CLEVIS FOOT MOUNTING , CRLBN-32	
160	312105-0370		4	SCREW M6S ISO 4017 M6X20 A480	
170	315105-0153		6	WASHER BRB 6,4X12 RFR	
180	350002-0006		1	PUSH-IN L-FITTING QSL-F-G1/8-6	
200	312115-0366		2	SCREW ISO4762 M6X12 A4 80	
210	90458-2370		1	DOUBLE ACTING, ROUND, CYL 32-150	
220	90328-0047		1	SILENCER G1/8"	
230	315400-0001	MM	200	TUBE PUN-H-6X1-BL	
240	90459-7369		1	MARKING FOR PNEUM. TUBING, PRZ06	

Pos	Part No	UN	Qty	Description	Page No

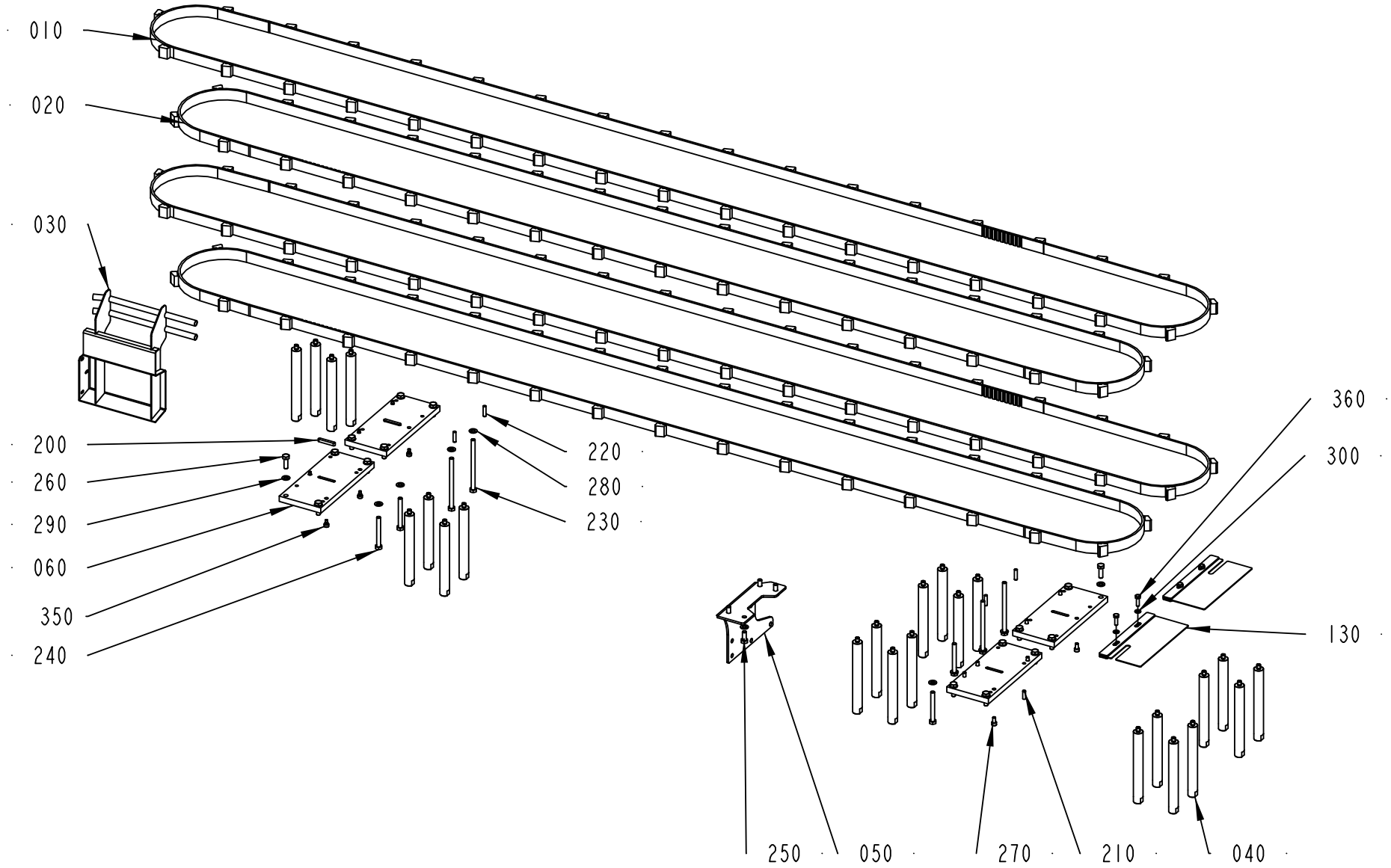

2838633-1
302279

ECM: 311475 - 20070525
Group number: 2838633-0100
Assembly Drawing: 2838633-1_1_AB

This list covers pages from 1-66 to 1-73

Pos	Part No	UN	Qty	Description	Page No
TBA 0200SQ, TBA 0250SQ (See drawing on page: 1-72)					
010	90600-0814		1	TIMING BELT AT10 5250X25 MM+35236050	
020	90600-0815		1	TIMING BELT 25AT10/4800 +32 2. 3.6.050	
030	2805461-0000		1	GUIDE	
050	2778592-0000		1	PLATE	
060	2788169-0000		4	PLATE	
130	2875028-0000		2	COVER	
210	311103-0353		2	PARALLEL PIN ISO 2338 6M6X20 A1	
220	311103-0355		4	PARALLEL PIN ISO 2338 6M6X25 A1	
230	312105-0475		4	SCREW M6S ISO 4014 M8X120 A480	
240	312105-0465		4	SCREW M6S ISO 4014 M8X70 A480	
250	312105-0451		4	SCREW M6S ISO 4017 M8X20 A480	
260	312105-0453		16	SCREW M6S ISO 4017 M8X25 A480	
280	315105-0165		12	WASHER BRB 8,4X16 RFR	
290	315106-0165		16	WASHER ISO 7089-8-200 HV A4	
300	315106-0153		4	WASHER ISO 7089-6-200 HV A4	
360	312105-0370		4	SCREW M6S ISO 4017 M6X20 A480	
TBA 0500SQ, TBA 1000B, TBA 1000SQ, TBA 1000S, TBA 1500S, TBA 1890S, TBA 2000S, TGA (See drawing on page: 1-66)					
010	90600-0814		2	TIMING BELT AT10 5250X25 MM+35236050	
020	90600-0815		2	TIMING BELT 25AT10/4800 +32 2. 3.6.050	
030	2805461-0000		1	GUIDE	
040	2778585-0000		24	PILLAR	
050	2778592-0000		1	PLATE	
060	2788169-0000		4	PLATE	
130	2875028-0000		2	COVER	
210	311103-0353		2	PARALLEL PIN ISO 2338 6M6X20 A1	
220	311103-0355		4	PARALLEL PIN ISO 2338 6M6X25 A1	
230	312105-0475		4	SCREW M6S ISO 4014 M8X120 A480	
240	312105-0465		4	SCREW M6S ISO 4014 M8X70 A480	
250	312105-0451		4	SCREW M6S ISO 4017 M8X20 A480	
260	312105-0453		16	SCREW M6S ISO 4017 M8X25 A480	
280	315105-0165		12	WASHER BRB 8,4X16 RFR	
290	315106-0165		16	WASHER ISO 7089-8-200 HV A4	
300	315106-0153		4	WASHER ISO 7089-6-200 HV A4	
360	312105-0370		4	SCREW M6S ISO 4017 M6X20 A480	
TPA 0330SQ (See drawing on page: 1-70)					
010	2873967-0000		2	BELT	
020	2873957-0000		2	BELT	
040	2873958-0000		24	PILLAR	
050	2873962-0000		1	PLATE	
060	2873961-0000		4	PLATE	
090	2873959-0000		2	BRACKET	
100	2873960-0000		2	PLATE	
120	2873952-0100		1	COVER	**1-75**
210	311103-0353		8	PARALLEL PIN ISO 2338 6M6X20 A1	
230	90287-0270		4	SCREW M6S M8X160 A280	
240	312105-0475		4	SCREW M6S ISO 4014 M8X120 A480	
260	312105-0464		17	SCREW M6S ISO 4014 M8X65 A480	
280	315105-0165		13	WASHER BRB 8,4X16 RFR	
290	315106-0165		18	WASHER ISO 7089-8-200 HV A4	
320	311103-0369		4	PARALLEL PIN ISO 2338 6M6X60 A1	
360	312105-0370		4	SCREW M6S ISO 4017 M6X20 A480	
TPA 1000SQ, TPA 0500SQ, TPA 0750SQ (See drawing on page: 1-68)					
010	2805501-0000		2	BELT	
020	2805503-0000		2	BELT	
040	2807090-0000		24	PILLAR	
050	2807089-0000		1	PLATE	
060	2807086-0000		4	PLATE	
090	2807087-0000		2	BRACKET	
100	2807088-0000		2	PLATE	
110	2880018-0100		1	PACKAGE ALIGNER	**1-77**
120	2873952-0100		1	COVER	**1-75**
130	2875028-0000		2	COVER	
210	311103-0353		8	PARALLEL PIN ISO 2338 6M6X20 A1	
230	90287-0270		4	SCREW M6S M8X160 A280	
240	312105-0475		4	SCREW M6S ISO 4014 M8X120 A480	
260	312105-0464		16	SCREW M6S ISO 4014 M8X65 A480	
280	315105-0165		12	WASHER BRB 8,4X16 RFR	
290	315106-0165		16	WASHER ISO 7089-8-200 HV A4	
300	315106-0153		4	WASHER ISO 7089-6-200 HV A4	
320	311103-0369		4	PARALLEL PIN ISO 2338 6M6X60 A1	
360	312105-0370		8	SCREW M6S ISO 4017 M6X20 A480	
Common Parts					
200	315705-0239		2	PARALLEL KEY W. ROUND ENDS 6X6X40 MM	
270	312115-0366		6	SCREW ISO4762 M6X12 A4 80	
350	90287-0230		6	SCREW, HEX.SOCK.HEAD SHOULD. M5X6	

Machine Type | Group Description | Used-In | Group Number | Page No

PACKAGE HANDLING

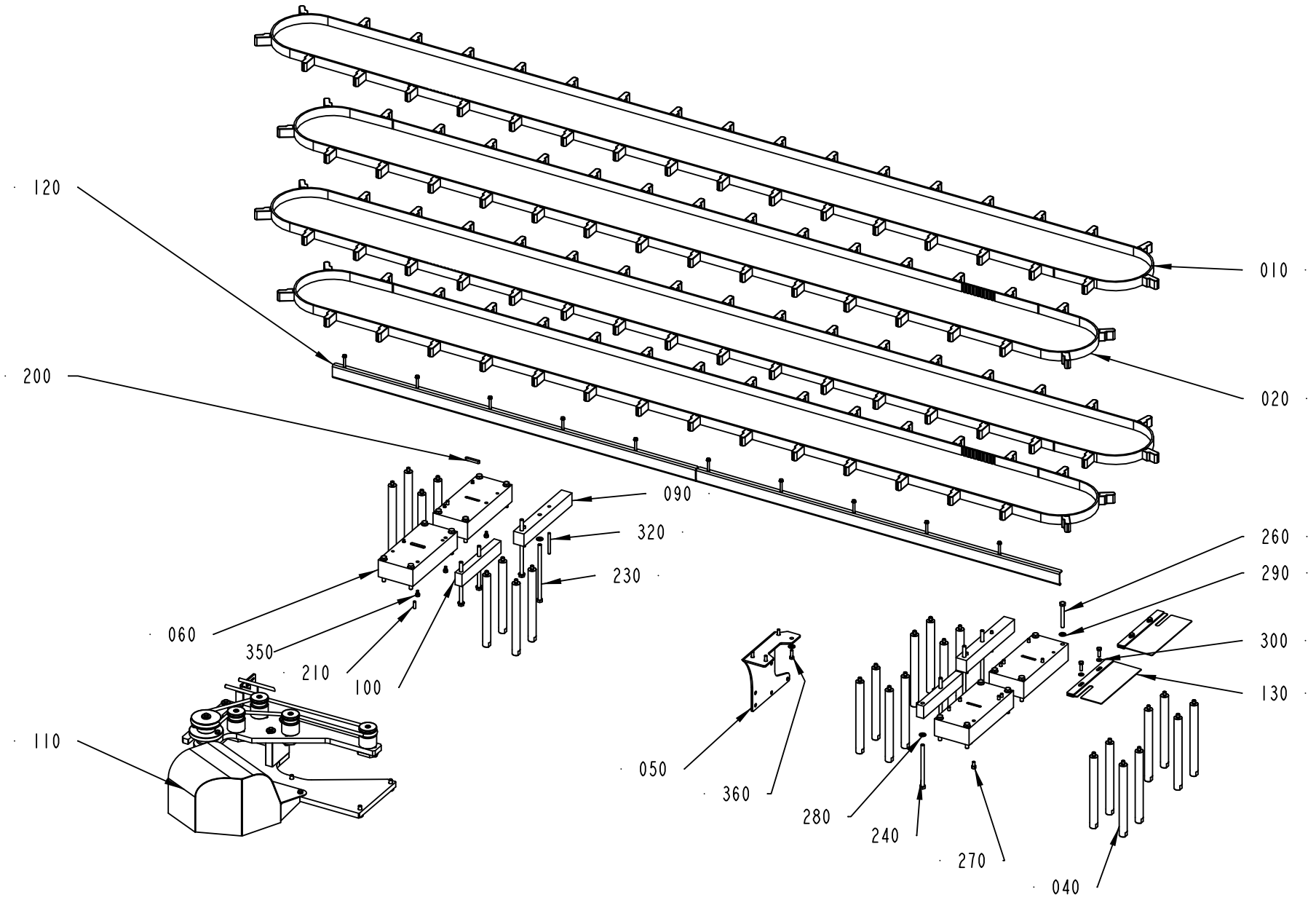

2838633-2
302279

Pos	Part No	UN	Qty	Description	Page No
TBA 0200SQ, TBA 0250SQ (See drawing on page: 1-72)					
010	90600-0814		1	TIMING BELT AT10 5250X25 MM+35236050	
020	90600-0815		1	TIMING BELT 25AT10/4800 +32 2. 3.6.050	
030	2805461-0000		1	GUIDE	
050	2778592-0000		1	PLATE	
060	2788169-0000		4	PLATE	
130	2875028-0000		2	COVER	
210	311103-0353		2	PARALLEL PIN ISO 2338 6M6X20 A1	
220	311103-0355		4	PARALLEL PIN ISO 2338 6M6X25 A1	
230	312105-0475		4	SCREW M6S ISO 4014 M8X120 A480	
240	312105-0465		4	SCREW M6S ISO 4014 M8X70 A480	
250	312105-0451		4	SCREW M6S ISO 4017 M8X20 A480	
260	312105-0453		16	SCREW M6S ISO 4017 M8X25 A480	
280	315105-0165		12	WASHER BRB 8,4X16 RFR	
290	315106-0165		16	WASHER ISO 7089-8-200 HV A4	
300	315106-0153		4	WASHER ISO 7089-6-200 HV A4	
360	312105-0370		4	SCREW M6S ISO 4017 M6X20 A480	
TBA 0500SQ, TBA 1000B, TBA 1000SQ, TBA 1000S, TBA 1500S, TBA 1890S, TBA 2000S, TGA (See drawing on page: 1-66)					
010	90600-0814		2	TIMING BELT AT10 5250X25 MM+35236050	
020	90600-0815		2	TIMING BELT 25AT10/4800 +32 2. 3.6.050	
030	2805461-0000		1	GUIDE	
040	2778585-0000		24	PILLAR	
050	2778592-0000		1	PLATE	
060	2788169-0000		4	PLATE	
130	2875028-0000		2	COVER	
210	311103-0353		2	PARALLEL PIN ISO 2338 6M6X20 A1	
220	311103-0355		4	PARALLEL PIN ISO 2338 6M6X25 A1	
230	312105-0475		4	SCREW M6S ISO 4014 M8X120 A480	
240	312105-0465		4	SCREW M6S ISO 4014 M8X70 A480	
250	312105-0451		4	SCREW M6S ISO 4017 M8X20 A480	
260	312105-0453		16	SCREW M6S ISO 4017 M8X25 A480	
280	315105-0165		12	WASHER BRB 8,4X16 RFR	
290	315106-0165		16	WASHER ISO 7089-8-200 HV A4	
300	315106-0153		4	WASHER ISO 7089-6-200 HV A4	
360	312105-0370		4	SCREW M6S ISO 4017 M6X20 A480	
TPA 0330SQ (See drawing on page: 1-70)					
010	2873967-0000		2	BELT	
020	2873957-0000		2	BELT	
040	2873958-0000		24	PILLAR	
050	2873962-0000		1	PLATE	
060	2873961-0000		4	PLATE	
090	2873959-0000		2	BRACKET	
100	2873960-0000		2	PLATE	
120	2873952-0100		1	COVER	**1-75**
210	311103-0353		8	PARALLEL PIN ISO 2338 6M6X20 A1	
230	90287-0270		4	SCREW M6S M8X160 A280	
240	312105-0475		4	SCREW M6S ISO 4014 M8X120 A480	
260	312105-0464		17	SCREW M6S ISO 4014 M8X65 A480	
280	315105-0165		13	WASHER BRB 8,4X16 RFR	
290	315106-0165		18	WASHER ISO 7089-8-200 HV A4	
320	311103-0369		4	PARALLEL PIN ISO 2338 6M6X60 A1	
360	312105-0370		4	SCREW M6S ISO 4017 M6X20 A480	
TPA 1000SQ, TPA 0500SQ, TPA 0750SQ (See drawing on page: 1-68)					
010	2805501-0000		2	BELT	
020	2805503-0000		2	BELT	
040	2807090-0000		24	PILLAR	
050	2807089-0000		1	PLATE	
060	2807086-0000		4	PLATE	
090	2807087-0000		2	BRACKET	
100	2807088-0000		2	PLATE	
110	2880018-0100		1	PACKAGE ALIGNER	**1-77**
120	2873952-0100		1	COVER	**1-75**
130	2875028-0000		2	COVER	
210	311103-0353		8	PARALLEL PIN ISO 2338 6M6X20 A1	
230	90287-0270		4	SCREW M6S M8X160 A280	
240	312105-0475		4	SCREW M6S ISO 4014 M8X120 A480	
260	312105-0464		16	SCREW M6S ISO 4014 M8X65 A480	
280	315105-0165		12	WASHER BRB 8,4X16 RFR	
290	315106-0165		16	WASHER ISO 7089-8-200 HV A4	
300	315106-0153		4	WASHER ISO 7089-6-200 HV A4	
320	311103-0369		4	PARALLEL PIN ISO 2338 6M6X60 A1	
360	312105-0370		8	SCREW M6S ISO 4017 M6X20 A480	
Common Parts					
200	315705-0239		2	PARALLEL KEY W. ROUND ENDS 6X6X40 MM	
270	312115-0366		6	SCREW ISO4762 M6X12 A4 80	
350	90287-0230		6	SCREW, HEX.SOCK.HEAD SHOULD. M5X6	

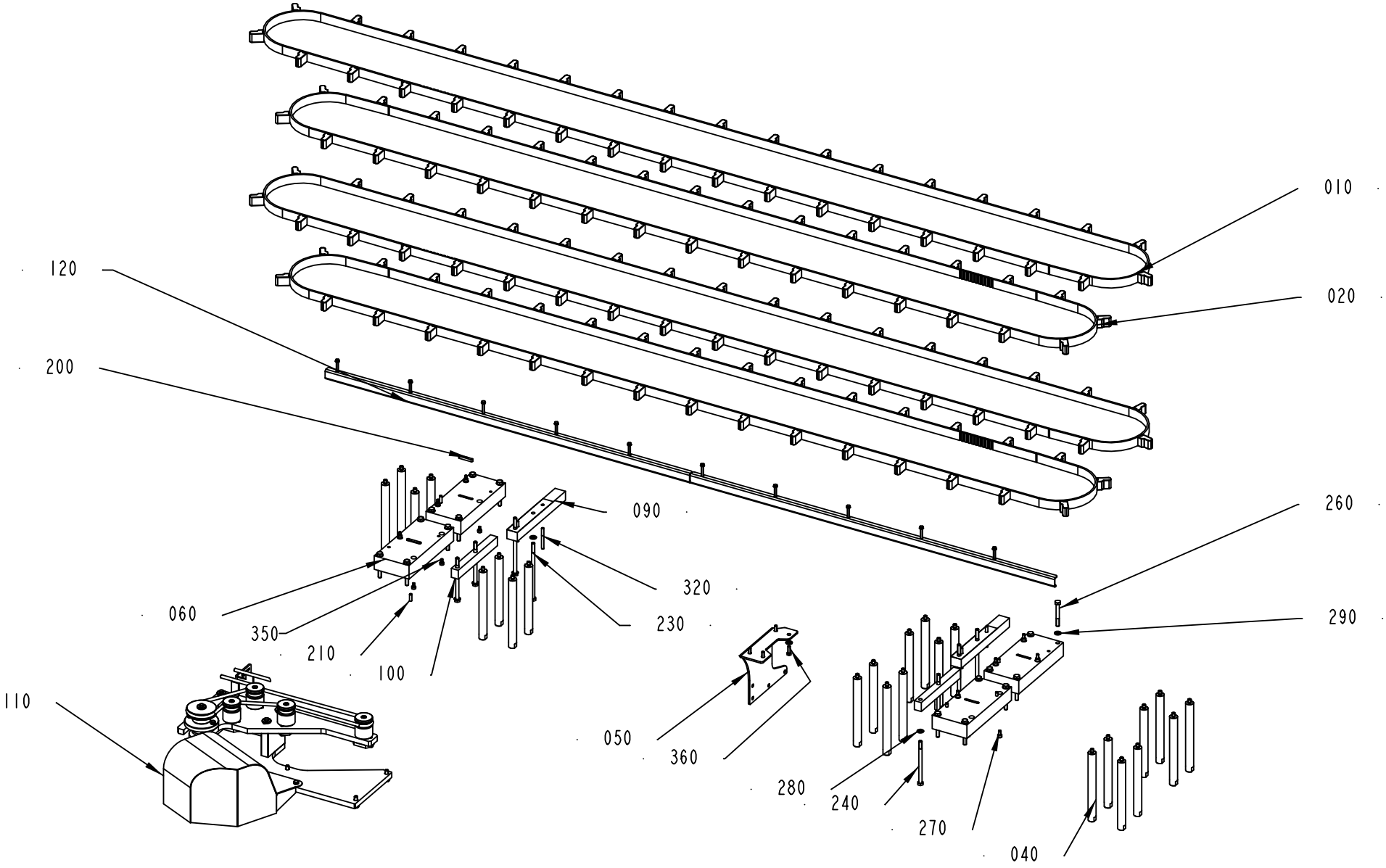

2838633-3
311475

Pos	Part No	UN	Qty	Description	Page No
TBA 0200SQ, TBA 0250SQ (See drawing on page: 1-72)					
010	90600-0814		1	TIMING BELT AT10 5250X25 MM+35236050	
020	90600-0815		1	TIMING BELT 25AT10/4800 +32 2. 3.6.050	
030	2805461-0000		1	GUIDE	
050	2778592-0000		1	PLATE	
060	2788169-0000		4	PLATE	
130	2875028-0000		2	COVER	
210	311103-0353		2	PARALLEL PIN ISO 2338 6M6X20 A1	
220	311103-0355		4	PARALLEL PIN ISO 2338 6M6X25 A1	
230	312105-0475		4	SCREW M6S ISO 4014 M8X120 A480	
240	312105-0465		4	SCREW M6S ISO 4014 M8X70 A480	
250	312105-0451		4	SCREW M6S ISO 4017 M8X20 A480	
260	312105-0453		16	SCREW M6S ISO 4017 M8X25 A480	
280	315105-0165		12	WASHER BRB 8,4X16 RFR	
290	315106-0165		16	WASHER ISO 7089-8-200 HV A4	
300	315106-0153		4	WASHER ISO 7089-6-200 HV A4	
360	312105-0370		4	SCREW M6S ISO 4017 M6X20 A480	
TBA 0500SQ, TBA 1000B, TBA 1000SQ, TBA 1000S, TBA 1500S, TBA 1890S, TBA 2000S, TGA (See drawing on page: 1-66)					
010	90600-0814		2	TIMING BELT AT10 5250X25 MM+35236050	
020	90600-0815		2	TIMING BELT 25AT10/4800 +32 2. 3.6.050	
030	2805461-0000		1	GUIDE	
040	2778585-0000		24	PILLAR	
050	2778592-0000		1	PLATE	
060	2788169-0000		4	PLATE	
130	2875028-0000		2	COVER	
210	311103-0353		2	PARALLEL PIN ISO 2338 6M6X20 A1	
220	311103-0355		4	PARALLEL PIN ISO 2338 6M6X25 A1	
230	312105-0475		4	SCREW M6S ISO 4014 M8X120 A480	
240	312105-0465		4	SCREW M6S ISO 4014 M8X70 A480	
250	312105-0451		4	SCREW M6S ISO 4017 M8X20 A480	
260	312105-0453		16	SCREW M6S ISO 4017 M8X25 A480	
280	315105-0165		12	WASHER BRB 8,4X16 RFR	
290	315106-0165		16	WASHER ISO 7089-8-200 HV A4	
300	315106-0153		4	WASHER ISO 7089-6-200 HV A4	
360	312105-0370		4	SCREW M6S ISO 4017 M6X20 A480	
TPA 0330SQ (See drawing on page: 1-70)					
010	2873967-0000		2	BELT	
020	2873957-0000		2	BELT	
040	2873958-0000		24	PILLAR	
050	2873962-0000		1	PLATE	
060	2873961-0000		4	PLATE	
090	2873959-0000		2	BRACKET	
100	2873960-0000		2	PLATE	
120	2873952-0100		1	COVER	**1-75**
210	311103-0353		8	PARALLEL PIN ISO 2338 6M6X20 A1	
230	90287-0270		4	SCREW M6S M8X160 A280	
240	312105-0475		4	SCREW M6S ISO 4014 M8X120 A480	
260	312105-0464		17	SCREW M6S ISO 4014 M8X65 A480	
280	315105-0165		13	WASHER BRB 8,4X16 RFR	
290	315106-0165		18	WASHER ISO 7089-8-200 HV A4	
320	311103-0369		4	PARALLEL PIN ISO 2338 6M6X60 A1	
360	312105-0370		4	SCREW M6S ISO 4017 M6X20 A480	
TPA 1000SQ, TPA 0500SQ, TPA 0750SQ (See drawing on page: 1-68)					
010	2805501-0000		2	BELT	
020	2805503-0000		2	BELT	
040	2807090-0000		24	PILLAR	
050	2807089-0000		1	PLATE	
060	2807086-0000		4	PLATE	
090	2807087-0000		2	BRACKET	
100	2807088-0000		2	PLATE	
110	2880018-0100		1	PACKAGE ALIGNER	**1-77**
120	2873952-0100		1	COVER	**1-75**
130	2875028-0000		2	COVER	
210	311103-0353		8	PARALLEL PIN ISO 2338 6M6X20 A1	
230	90287-0270		4	SCREW M6S M8X160 A280	
240	312105-0475		4	SCREW M6S ISO 4014 M8X120 A480	
260	312105-0464		16	SCREW M6S ISO 4014 M8X65 A480	
280	315105-0165		12	WASHER BRB 8,4X16 RFR	
290	315106-0165		16	WASHER ISO 7089-8-200 HV A4	
300	315106-0153		4	WASHER ISO 7089-6-200 HV A4	
320	311103-0369		4	PARALLEL PIN ISO 2338 6M6X60 A1	
360	312105-0370		8	SCREW M6S ISO 4017 M6X20 A480	
Common Parts					
200	315705-0239		2	PARALLEL KEY W. ROUND ENDS 6X6X40 MM	
270	312115-0366		6	SCREW ISO4762 M6X12 A4 80	
350	90287-0230		6	SCREW, HEX.SOCK.HEAD SHOULD. M5X6	

PACKAGE HANDLING

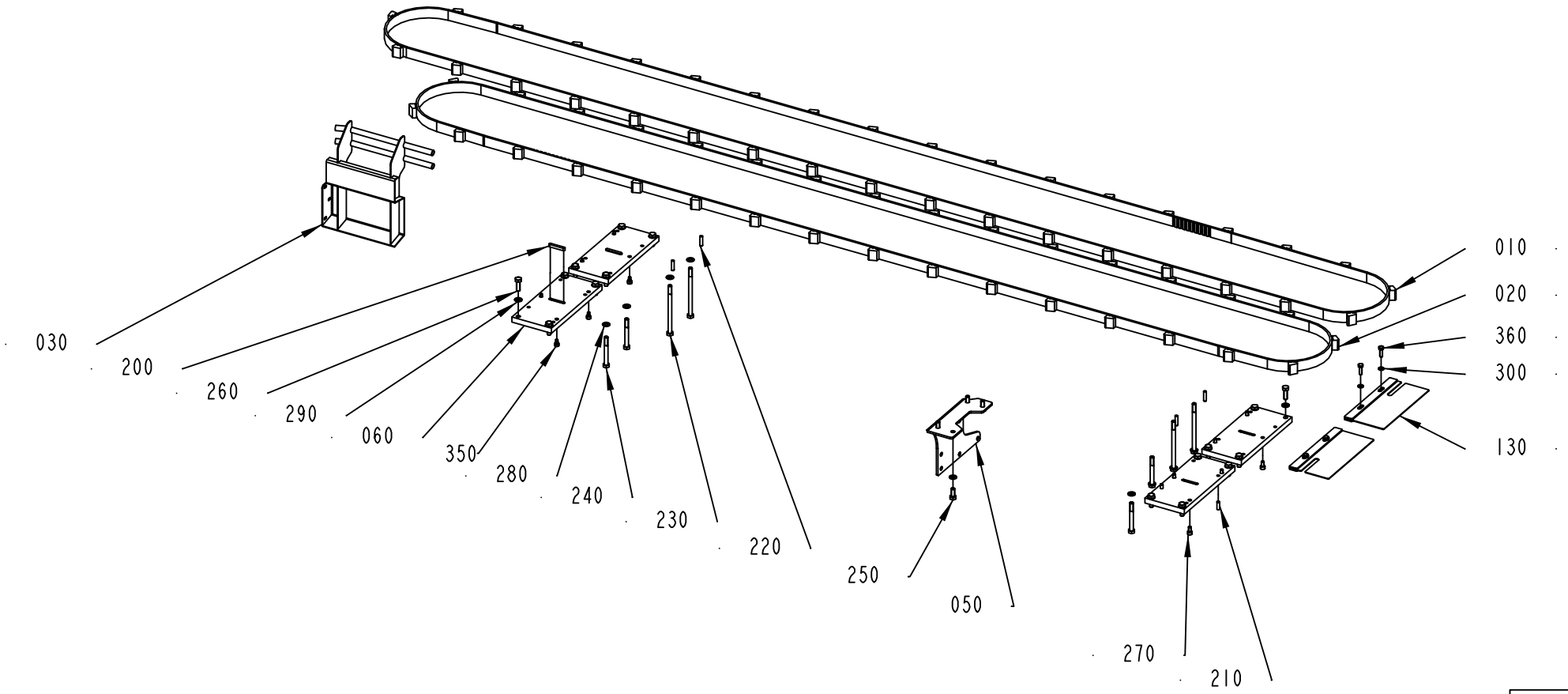

2838633-4
311475

Pos	Part No	UN	Qty	Description	Page No
TBA 0200SQ, TBA 0250SQ (See drawing on page: 1-72)					
010	90600-0814		1	TIMING BELT AT10 5250X25 MM+35236050	
020	90600-0815		1	TIMING BELT 25AT10/4800 +32 2. 3.6.050	
030	2805461-0000		1	GUIDE	
050	2778592-0000		1	PLATE	
060	2788169-0000		4	PLATE	
130	2875028-0000		2	COVER	
210	311103-0353		2	PARALLEL PIN ISO 2338 6M6X20 A1	
220	311103-0355		4	PARALLEL PIN ISO 2338 6M6X25 A1	
230	312105-0475		4	SCREW M6S ISO 4014 M8X120 A480	
240	312105-0465		4	SCREW M6S ISO 4014 M8X70 A480	
250	312105-0451		4	SCREW M6S ISO 4017 M8X20 A480	
260	312105-0453		16	SCREW M6S ISO 4017 M8X25 A480	
280	315105-0165		12	WASHER BRB 8,4X16 RFR	
290	315106-0165		16	WASHER ISO 7089-8-200 HV A4	
300	315106-0153		4	WASHER ISO 7089-6-200 HV A4	
360	312105-0370		4	SCREW M6S ISO 4017 M6X20 A480	
TBA 0500SQ, TBA 1000B, TBA 1000SQ, TBA 1000S, TBA 1500S, TBA 1890S, TBA 2000S, TGA (See drawing on page: 1-66)					
010	90600-0814		2	TIMING BELT AT10 5250X25 MM+35236050	
020	90600-0815		2	TIMING BELT 25AT10/4800 +32 2. 3.6.050	
030	2805461-0000		1	GUIDE	
040	2778585-0000		24	PILLAR	
050	2778592-0000		1	PLATE	
060	2788169-0000		4	PLATE	
130	2875028-0000		2	COVER	
210	311103-0353		2	PARALLEL PIN ISO 2338 6M6X20 A1	
220	311103-0355		4	PARALLEL PIN ISO 2338 6M6X25 A1	
230	312105-0475		4	SCREW M6S ISO 4014 M8X120 A480	
240	312105-0465		4	SCREW M6S ISO 4014 M8X70 A480	
250	312105-0451		4	SCREW M6S ISO 4017 M8X20 A480	
260	312105-0453		16	SCREW M6S ISO 4017 M8X25 A480	
280	315105-0165		12	WASHER BRB 8,4X16 RFR	
290	315106-0165		16	WASHER ISO 7089-8-200 HV A4	
300	315106-0153		4	WASHER ISO 7089-6-200 HV A4	
360	312105-0370		4	SCREW M6S ISO 4017 M6X20 A480	
TPA 0330SQ (See drawing on page: 1-70)					
010	2873967-0000		2	BELT	
020	2873957-0000		2	BELT	
040	2873958-0000		24	PILLAR	
050	2873962-0000		1	PLATE	
060	2873961-0000		4	PLATE	
090	2873959-0000		2	BRACKET	
100	2873960-0000		2	PLATE	
120	2873952-0100		1	COVER	**1-75**
210	311103-0353		8	PARALLEL PIN ISO 2338 6M6X20 A1	
230	90287-0270		4	SCREW M6S M8X160 A280	
240	312105-0475		4	SCREW M6S ISO 4014 M8X120 A480	
260	312105-0464		17	SCREW M6S ISO 4014 M8X65 A480	
280	315105-0165		13	WASHER BRB 8,4X16 RFR	
290	315106-0165		18	WASHER ISO 7089-8-200 HV A4	
320	311103-0369		4	PARALLEL PIN ISO 2338 6M6X60 A1	
360	312105-0370		4	SCREW M6S ISO 4017 M6X20 A480	
TPA 1000SQ, TPA 0500SQ, TPA 0750SQ (See drawing on page: 1-68)					
010	2805501-0000		2	BELT	
020	2805503-0000		2	BELT	
040	2807090-0000		24	PILLAR	
050	2807089-0000		1	PLATE	
060	2807086-0000		4	PLATE	
090	2807087-0000		2	BRACKET	
100	2807088-0000		2	PLATE	
110	2880018-0100		1	PACKAGE ALIGNER	**1-77**
120	2873952-0100		1	COVER	**1-75**
130	2875028-0000		2	COVER	
210	311103-0353		8	PARALLEL PIN ISO 2338 6M6X20 A1	
230	90287-0270		4	SCREW M6S M8X160 A280	
240	312105-0475		4	SCREW M6S ISO 4014 M8X120 A480	
260	312105-0464		16	SCREW M6S ISO 4014 M8X65 A480	
280	315105-0165		12	WASHER BRB 8,4X16 RFR	
290	315106-0165		16	WASHER ISO 7089-8-200 HV A4	
300	315106-0153		4	WASHER ISO 7089-6-200 HV A4	
320	311103-0369		4	PARALLEL PIN ISO 2338 6M6X60 A1	
360	312105-0370		8	SCREW M6S ISO 4017 M6X20 A480	
Common Parts					
200	315705-0239		2	PARALLEL KEY W. ROUND ENDS 6X6X40 MM	
270	312115-0366		6	SCREW ISO4762 M6X12 A4 80	
350	90287-0230		6	SCREW, HEX.SOCK.HEAD SHOULD. M5X6	

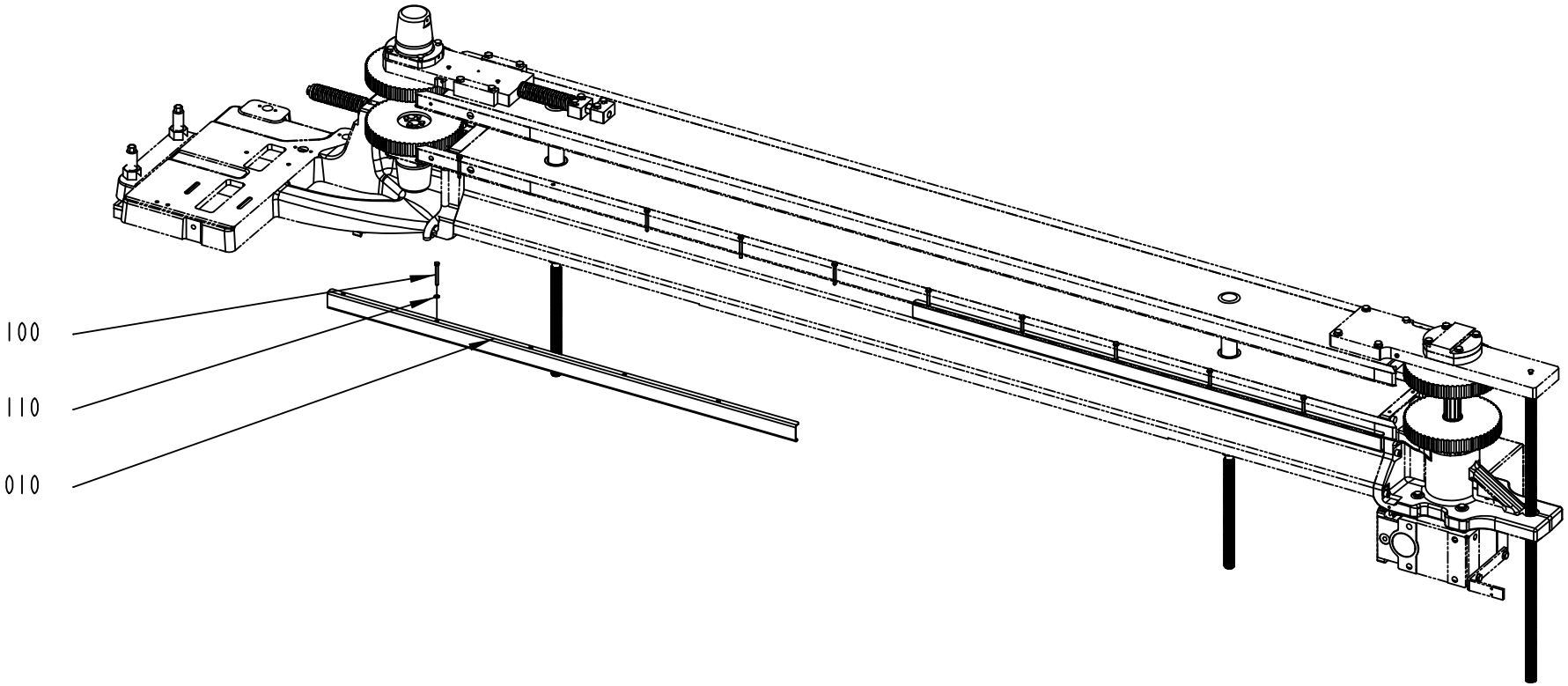

2873952-1
311475

ECM: 312253 - 20070525
Group number: 2873952-0100
Assembly Drawing: 2873952-1_1_AA

Pos	Part No	UN	Qty	Description	Page No
TPA 0330SQ					
010	2873966-0000		2	COVER	
TPA 1000SQ, TPA 0500SQ, TPA 0750SQ					
010	2873951-0000		2	COVER	
Common Parts					
100	312109-0340		10	SCREW M6S ISO 4017 M5X45 A480	
110	315106-0146		10	WASHER ISO 7089-5-200 HV A4	

Pos	Part No	UN	Qty	Description	Page No

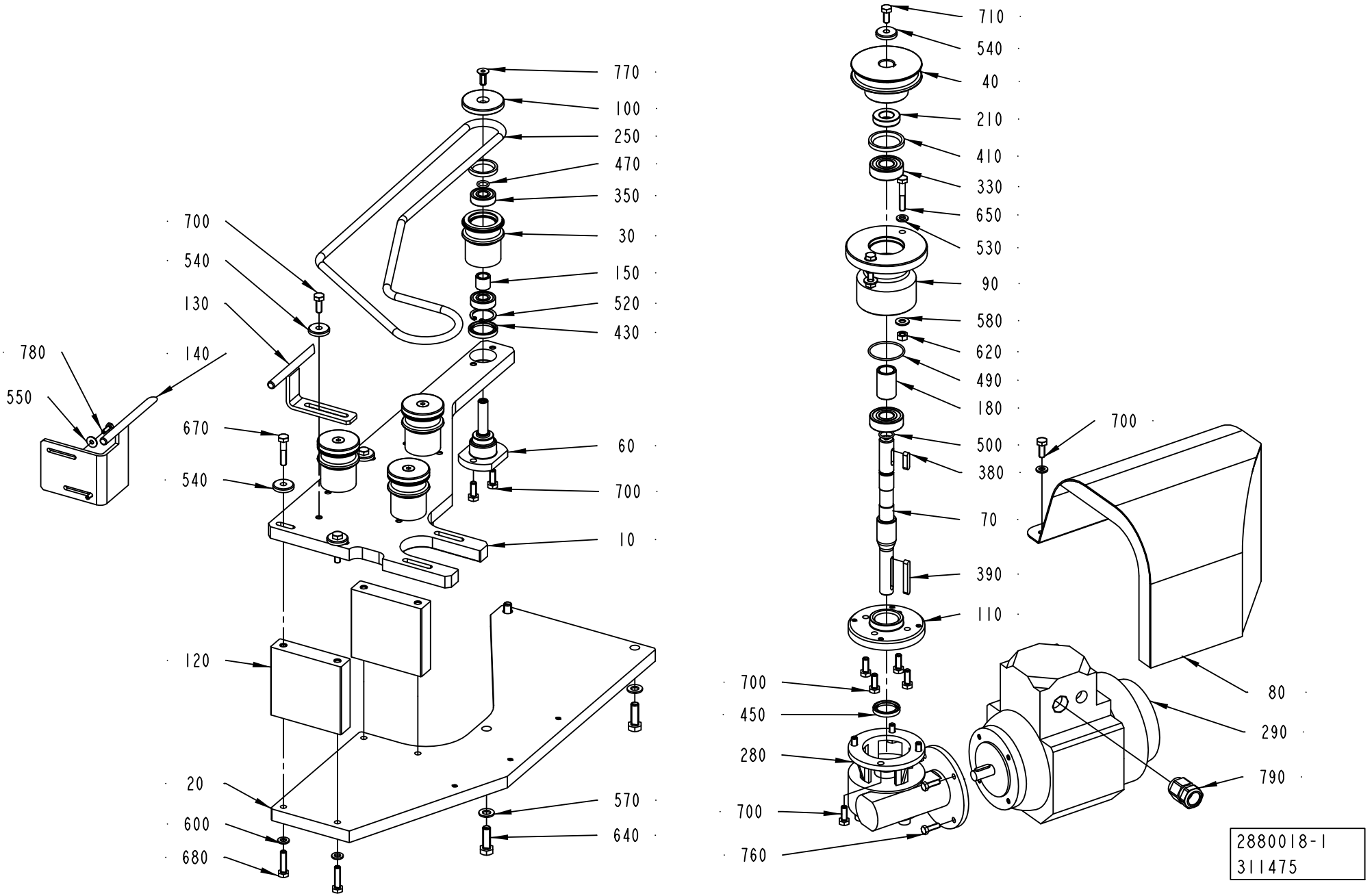
770
100
250
470
350
30
150
520
430
700
540
130
140
780
550
670
540
60
700
10
120
20
600
680
570
640
710
540
40
210
410
330
650
530
90
580
620
490
180
500
380
70
390
110
700
450
280
700
760
700
80
290
790
2880018-1
311475

ECM: 312254 - 20070525
Group number: 2880018-0100
Assembly Drawing: 2880018-1_1_AA

Pos	Part No	UN	Qty	Description	Page No
-					
010	2880029-0000		1	PLATE	
020	2880032-0000		1	PLATE	
030	2880020-0000		4	PULLEY	
040	2880026-0000		1	PULLEY	
060	2880022-0000		4	SHAFT	
070	2880023-0000		1	SHAFT	
080	2901693-0000		1	COVER	
090	2880028-0000		1	FLANGE	
100	2880019-0000		4	COVER	
110	2880027-0000		1	COVER	
120	2880031-0000		2	SPACER	
130	2880046-0000		1	GUIDE	
140	2901692-0000		1	GUIDE	
150	2880021-0000		4	SPACER	
180	2880024-0000		1	SPACER	
210	2880025-0000		1	SPACER	
250	2880033-0000		1	BELT	
280	90056-0177		1	WORM GEAR VF30 F1-7 P63 B14 B3	
290	2901694-0000		1	MOTOR	
330	321313-0102		2	BALL BEARING, 15X35X11 MM	
350	321308-0200		8	BALL BEARING, 10X26X8 MM	
380	315705-0201		1	PARALLEL KEY W. ROUND ENDS 5X5X20 MM	
390	315701-0208		1	PARALLEL KEY W. ROUND ENDS 5X5X40 MM	
410	315230-0330		1	BEARING SEAL G28X37X4 MM	
430	315230-0274		8	BEARING SEAL G22X30X4 MM	
450	315230-0252		1	BEARING SEAL G20X28X4 MM	
470	315205-0507		4	O-RING 9,25X1,78 MM	
490	315202-0716		1	O-RING 34,65X1,78 MM	
500	315202-0702		1	O-RING 12,42X1,78 MM	
520	90458-0506		4	RETAINING RING FOR BORE DIN 472 26 A2	
530	315106-0153		5	WASHER ISO 7089-6-200 HV A4	
540	315125-0153		6	WASHER TBRSB 6,4X22X4 A4	
550	90005-0082		2	WASHER PLAIN ROUND 4,3(M4)/12,H=1	
570	315105-0165		3	WASHER BRB 8,4X16 RFR	
580	315105-0156		2	WASHER BRB 6,7X14 RFR	
600	315105-0153		4	WASHER BRB 6,4X12 RFR	
620	312605-0316		2	HEXAGON NUT, M6M M6 A280	
640	312105-0453		3	SCREW M6S ISO 4017 M8X25 A480	
650	312105-0376		2	SCREW M6S ISO 4014 M6X35 A480	
670	312105-0374		4	SCREW M6S ISO 4014 M6X30 A480	
680	312105-0372		4	SCREW M6S ISO 4017 M6X25 A480	
700	312105-0368		20	SCREW M6S ISO 4017 M6X16 A480	
710	312105-0367		1	SCREW M6S ISO 4017 M6X14 A480	
760	312105-0329		4	SCREW M6S ISO 4017 M5X16 A480	
770	312155-0368		4	SCREW DIN 7991 MF6S M6X16 A4 70	
780	312105-0291		2	SCREW M6S ISO 4017 M4X12 A470	
790	90458-0438		1	GLAND, EXTENDED WITH INSERT, M20X1,5	
800	90296-0068	G	50	SHELL ALVANIA GREASE EP 2	

Machine Type	Group Description	Used-In	Group Number	Page No

Tetra Pak

SPC
Spare Parts Catalogue

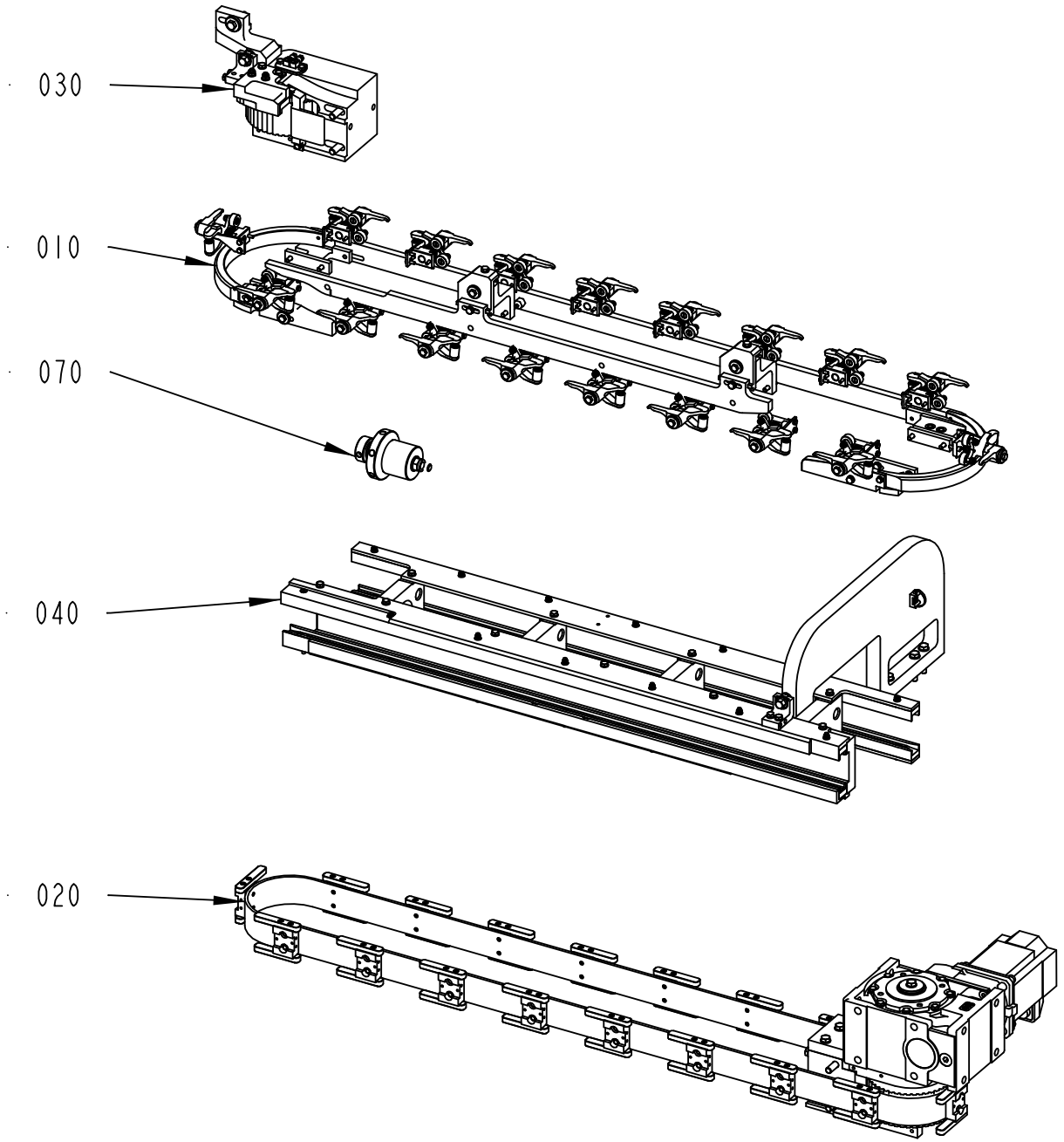

662902-1
287784

ECM: 298070 - 20070323
Group number: 662902-0100
Assembly Drawing: 662902-1_1_AB

This list covers pages from 2-2 to 2-5

Pos	Part No	UN	Qty	Description	Page No
TGA (See drawing on pages: 2-2, 2-4)					
080	2838718-0100		1	TRIGGER	**2-7**
Common Parts					
010	2802648-0100		1	CAP HOLDERS GROUP	**2-9, 2-11**
020	2802647-0100		1	DRIVE	**2-15**
030	2802645-0100		1	BELT STRETCHER	**2-17**
040	2802646-0100		1	FRAME SECTION	**2-19**
070	2843157-0100		1	CLAMPING ELEMENT	**2-21**

Pos	Part No	UN	Qty	Description	Page No

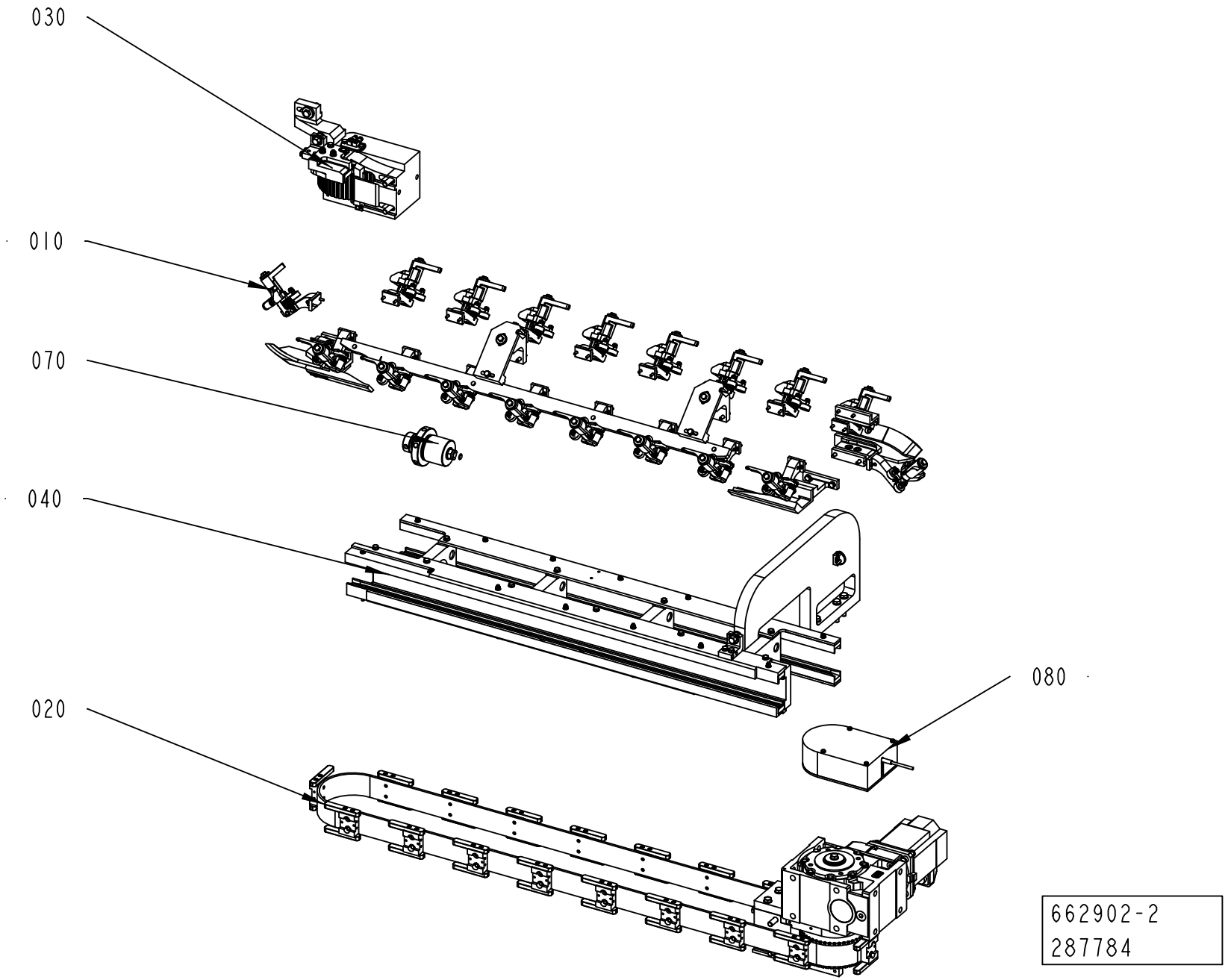
030
010
070
040
080
020
662902-2
287784

ECM: 298070 - 20070323
Group number: 662902-0100
Assembly Drawing: 662902-2_1_AA

This list covers pages from 2-2 to 2-5

Pos	Part No	UN	Qty	Description	Page No
TGA (See drawing on pages: 2-2, 2-4)					
080	2838718-0100		1	TRIGGER	**2-7**
Common Parts					
010	2802648-0100		1	CAP HOLDERS GROUP	**2-9, 2-11**
020	2802647-0100		1	DRIVE	**2-15**
030	2802645-0100		1	BELT STRETCHER	**2-17**
040	2802646-0100		1	FRAME SECTION	**2-19**
070	2843157-0100		1	CLAMPING ELEMENT	**2-21**

Pos	Part No	UN	Qty	Description	Page No

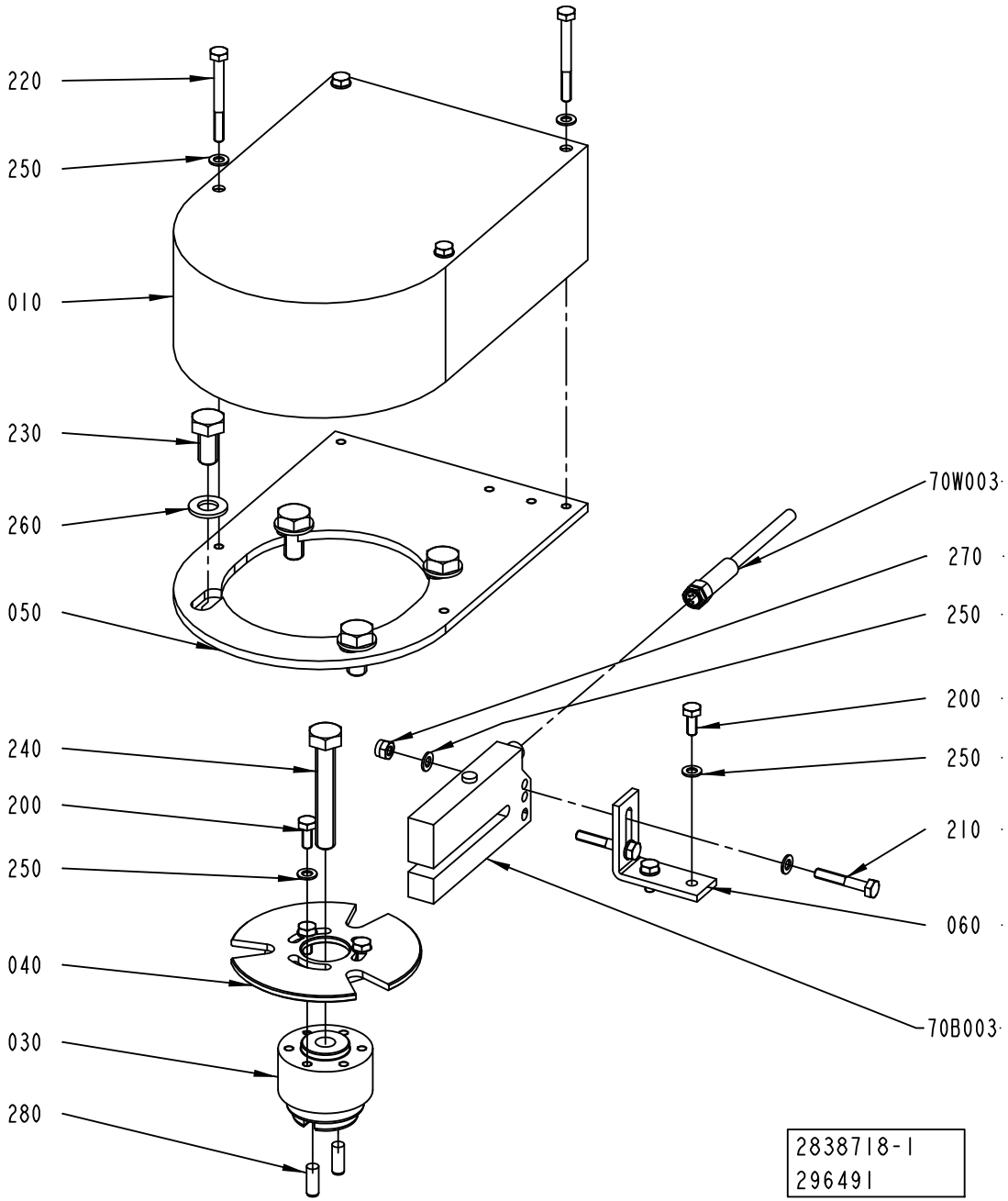
220
250
010
230
260
050
240
200
250
040
030
280
70W003
270
250
200
250
210
060
70B003
2838718-1
296491

ECM: 298069 - 20070323
Group number: 2838718-0100
Assembly Drawing: 2838718-1_1_AA

Pos	Part No	UN	Qty	Description	Page No
-					
010	2838719-0000		1	COVER	
030	2799864-0000		1	FLANGE	
040	2799865-0000		1	DISC	
050	2799866-0000		1	PLATE	
060	2799867-0000		1	ANGLE BRACKET	
200	312105-0289		5	SCREW M6S H4X10 A4 70 ISO4017/DIN933	
210	312105-0297		2	SCREW M6S ISO 4017 M4X25 A470	
220	312105-0303		4	SCREW M6S ISO 4017 M4X40 A470	
230	312105-0449		4	SCREW M6S ISO 4017 M8X16 A480	
240	312109-0461		1	SCREW M6S ISO 4017 M8X50 A480	
250	315105-0136		13	WASHER BRB 4,3X8 RFR	
260	315105-0165		4	WASHER BRB 8,4X16 RFR	
270	312812-0312		2	HEXAGON NUT, NY-LOCK M4 A480	
280	311103-0307		2	PARALLEL PIN ISO 2338 5M6X14 A1	
70B003	90600-2052		1	PHOTOCELL	
70W003	351305-0100		1	ACTUATOR/SENSOR CABLE PRKMV 4-07/10M	

Pos	Part No	UN	Qty	Description	Page No

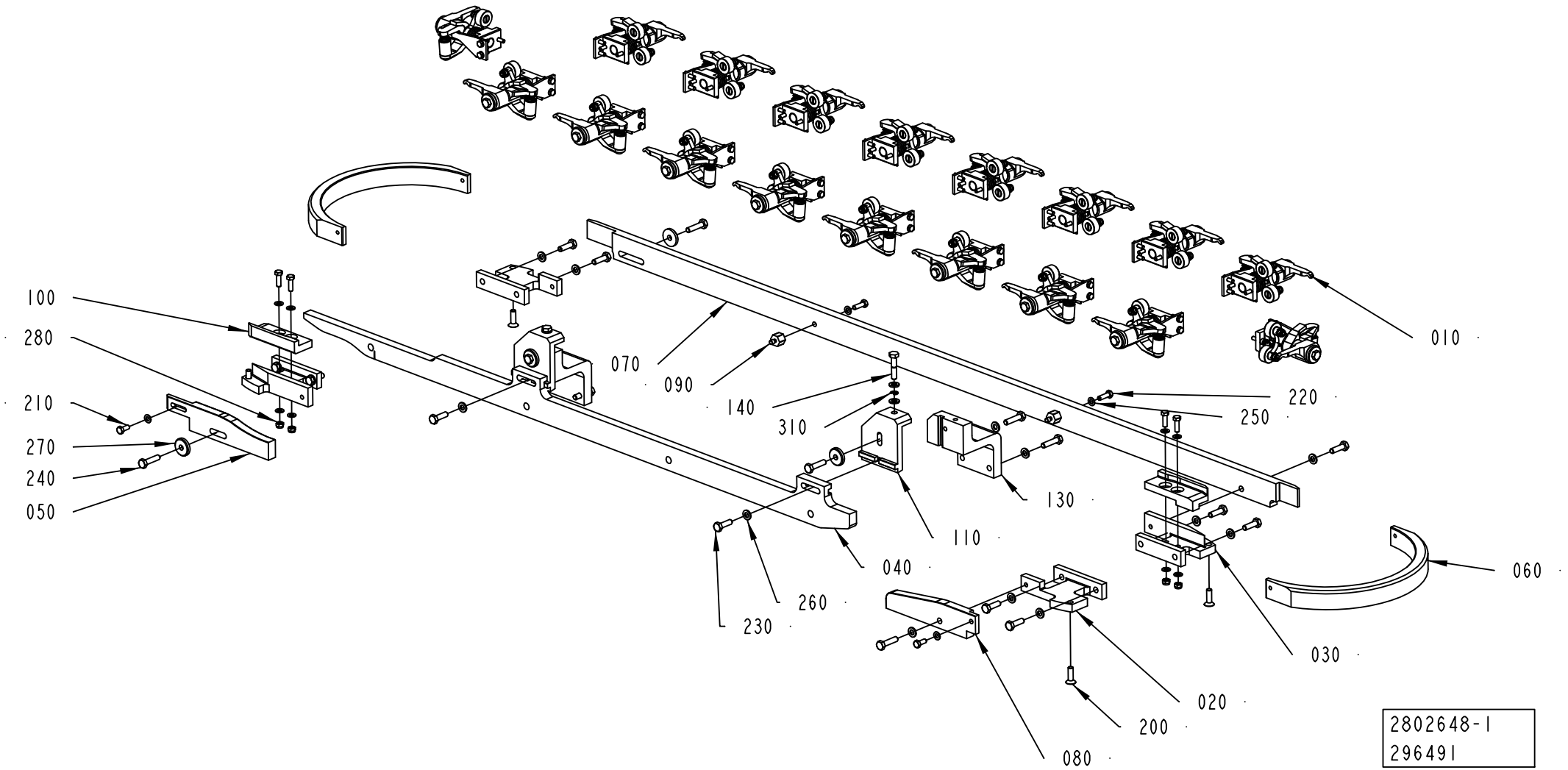
100
280
210
270
240
050
070
090
140
310
110
040
260
230
130
010
220
250
060
030
020
200
080
2802648-1
296491

ECM: 298068 - 20070323
Group number: 2802648-0100
Assembly Drawing: 2802648-1_1_AB

This list covers pages from 2-8 to 2-11

Pos	Part No	UN	Qty	Description	Page No
TBA SLIMCAP1000, TBA STREAMCAP1000, TBA SLIMCAP 2000 (See drawing on page: 2-8)					
020	2715666-0000		2	BRACKET	
030	2715671-0000		2	BRACKET	
040	2873895-0000		1	CURVE	
050	2838737-0000		1	CURVE	
060	2751708-0000		2	CURVE	
070	2751722-0000		1	CURVE	
080	2751733-0000		1	CURVE	
090	2751721-0000		2	SPACER	
110	2838728-0000		2	ADJUSTMENT BRACKET	
130	2751742-0000		2	BRACKET	
200	312155-0370		4	SCREW DIN 7991 MF6S M6X20 A4 70	
210	312105-0327		2	SCREW M6S ISO 4017 M5X12 A480	
220	312105-0329		6	SCREW M6S ISO 4017 M5X16 A480	
230	312105-0370		11	SCREW M6S ISO 4017 M6X20 A480	
240	312105-0372		9	SCREW M6S ISO 4017 M6X25 A480	
250	315105-0146		12	WASHER BRB 5,3X10 RFR	
260	315105-0153		20	WASHER BRB 6,4X12 RFR	
270	315125-0153		4	WASHER TBRSB 6,4X22X4 A4	
280	312812-0314		2	HEXAGON NUT, NY-LOCK M5 A480	
TGA (See drawing on page: 2-10)					
020	2873859-0000		2	BRACKET	
030	2873868-0000		1	BRACKET	
040	2873857-0000		1	CAM	
050	2873860-0000		1	CURVE	
060	2873864-0000		2	CAM	
080	2873869-0000		1	CURVE	
110	2873870-0000		2	ADJUSTMENT BRACKET	
130	2780469-0000		2	BRACKET	
150	2873871-0000		1	BRACKET	
160	2838781-0000		1	STEERING	
200	312155-0370		1	SCREW DIN 7991 MF6S M6X20 A4 70	
220	312105-0329		6	SCREW M6S ISO 4017 M5X16 A480	
230	312105-0370		10	SCREW M6S ISO 4017 M6X20 A480	
240	312105-0372		7	SCREW M6S ISO 4017 M6X25 A480	
250	315105-0146		10	WASHER BRB 5,3X10 RFR	
260	315105-0153		21	WASHER BRB 6,4X12 RFR	
270	315125-0153		2	WASHER TBRSB 6,4X22X4 A4	
280	312812-0314		4	HEXAGON NUT, NY-LOCK M5 A480	
290	312812-0316		1	HEXAGON NUT, NY-LOCK M6 A480	
300	312109-0376		2	SCREW M6S ISO 4017 M6X35 A480	
330	312155-0327		2	SCREW DIN 7991 MF6S M5X12 A4 70	

Pos	Part No	UN	Qty	Description	Page No
TPA STREAMCAP 1000, TPA STREAMCAP 500 (See drawing on page: 2-8)					
020	2780339-0000		2	BRACKET	
030	2780338-0000		2	BRACKET	
040	2838727-0000		1	CURVE	
050	2780341-0000		1	CURVE	
060	2780337-0000		2	CURVE	
070	2780343-0000		1	CURVE	
080	2780342-0000		1	CURVE	
090	2715807-0000		2	SPACER	
110	2838728-0000		2	ADJUSTMENT BRACKET	
130	2780344-0000		2	BRACKET	
200	312155-0370		4	SCREW DIN 7991 MF6S M6X20 A4 70	
210	312105-0327		2	SCREW M6S ISO 4017 M5X12 A480	
220	312105-0329		4	SCREW M6S ISO 4017 M5X16 A480	
230	312105-0370		11	SCREW M6S ISO 4017 M6X20 A480	
240	312105-0372		9	SCREW M6S ISO 4017 M6X25 A480	
250	315105-0146		12	WASHER BRB 5,3X10 RFR	
260	315105-0153		20	WASHER BRB 6,4X12 RFR	
270	315125-0153		4	WASHER TBRSB 6,4X22X4 A4	
280	312812-0314		2	HEXAGON NUT, NY-LOCK M5 A480	
320	312105-0331		2	SCREW M6S ISO 4017 M5X20 A480	
Common Parts					
010	2751667-0100		18	PRESSURE FINGER	**2-13**
100	2751695-0000		2	STEERING	
140	2715804-0000		2	SCREW	
310	315755-0106		2	RETAINING RING SHAFT DIN 6799 4 A2	

Machine Type | Group Description | Used-In | Group Number | Page No

CAP HOLDERS GROUP

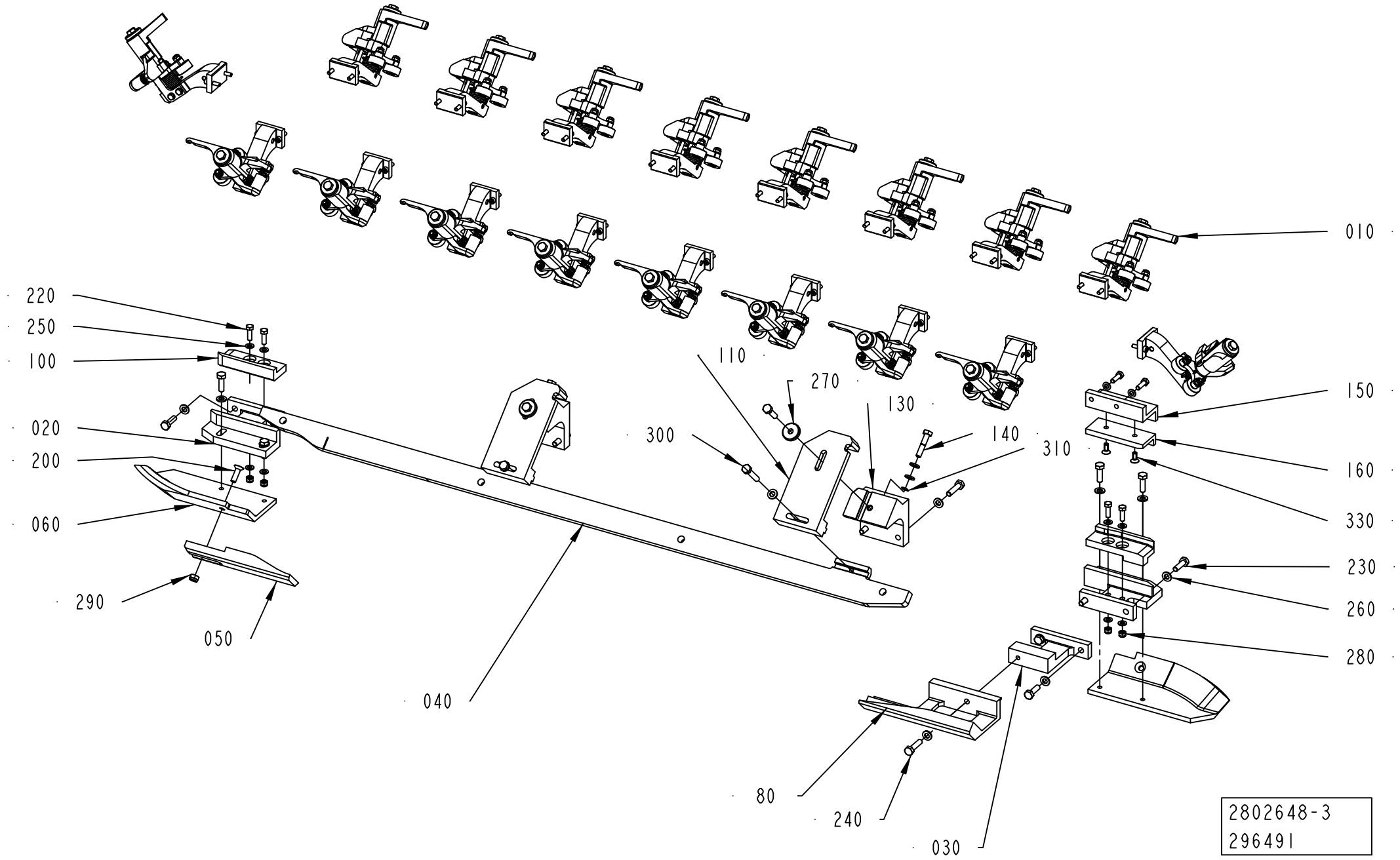

ECM: 298068 - 20070323
Group number: 2802648-0100
Assembly Drawing: 2802648-3_1_AA

This list covers pages from 2-8 to 2-11

Pos	Part No	UN	Qty	Description	Page No
TBA SLIMCAP1000, TBA STREAMCAP1000, TBA SLIMCAP 2000 (See drawing on page: 2-8)					
020	2715666-0000		2	BRACKET	
030	2715671-0000		2	BRACKET	
040	2873895-0000		1	CURVE	
050	2838737-0000		1	CURVE	
060	2751708-0000		2	CURVE	
070	2751722-0000		1	CURVE	
080	2751733-0000		1	CURVE	
090	2751721-0000		2	SPACER	
110	2838728-0000		2	ADJUSTMENT BRACKET	
130	2751742-0000		2	BRACKET	
200	312155-0370		4	SCREW DIN 7991 MF6S M6X20 A4 70	
210	312105-0327		2	SCREW M6S ISO 4017 M5X12 A480	
220	312105-0329		6	SCREW M6S ISO 4017 M5X16 A480	
230	312105-0370		11	SCREW M6S ISO 4017 M6X20 A480	
240	312105-0372		9	SCREW M6S ISO 4017 M6X25 A480	
250	315105-0146		12	WASHER BRB 5,3X10 RFR	
260	315105-0153		20	WASHER BRB 6,4X12 RFR	
270	315125-0153		4	WASHER TBRSB 6,4X22X4 A4	
280	312812-0314		2	HEXAGON NUT, NY-LOCK M5 A480	
TGA (See drawing on page: 2-10)					
020	2873859-0000		2	BRACKET	
030	2873868-0000		1	BRACKET	
040	2873857-0000		1	CAM	
050	2873860-0000		1	CURVE	
060	2873864-0000		2	CAM	
080	2873869-0000		1	CURVE	
110	2873870-0000		2	ADJUSTMENT BRACKET	
130	2780469-0000		2	BRACKET	
150	2873871-0000		1	BRACKET	
160	2838781-0000		1	STEERING	
200	312155-0370		1	SCREW DIN 7991 MF6S M6X20 A4 70	
220	312105-0329		6	SCREW M6S ISO 4017 M5X16 A480	
230	312105-0370		10	SCREW M6S ISO 4017 M6X20 A480	
240	312105-0372		7	SCREW M6S ISO 4017 M6X25 A480	
250	315105-0146		10	WASHER BRB 5,3X10 RFR	
260	315105-0153		21	WASHER BRB 6,4X12 RFR	
270	315125-0153		2	WASHER TBRSB 6,4X22X4 A4	
280	312812-0314		4	HEXAGON NUT, NY-LOCK M5 A480	
290	312812-0316		1	HEXAGON NUT, NY-LOCK M6 A480	
300	312109-0376		2	SCREW M6S ISO 4017 M6X35 A480	
330	312155-0327		2	SCREW DIN 7991 MF6S M5X12 A4 70	

Pos	Part No	UN	Qty	Description	Page No
TPA STREAMCAP 1000, TPA STREAMCAP 500 (See drawing on page: 2-8)					
020	2780339-0000		2	BRACKET	
030	2780338-0000		2	BRACKET	
040	2838727-0000		1	CURVE	
050	2780341-0000		1	CURVE	
060	2780337-0000		2	CURVE	
070	2780343-0000		1	CURVE	
080	2780342-0000		1	CURVE	
090	2715807-0000		2	SPACER	
110	2838728-0000		2	ADJUSTMENT BRACKET	
130	2780344-0000		2	BRACKET	
200	312155-0370		4	SCREW DIN 7991 MF6S M6X20 A4 70	
210	312105-0327		2	SCREW M6S ISO 4017 M5X12 A480	
220	312105-0329		4	SCREW M6S ISO 4017 M5X16 A480	
230	312105-0370		11	SCREW M6S ISO 4017 M6X20 A480	
240	312105-0372		9	SCREW M6S ISO 4017 M6X25 A480	
250	315105-0146		12	WASHER BRB 5,3X10 RFR	
260	315105-0153		20	WASHER BRB 6,4X12 RFR	
270	315125-0153		4	WASHER TBRSB 6,4X22X4 A4	
280	312812-0314		2	HEXAGON NUT, NY-LOCK M5 A480	
320	312105-0331		2	SCREW M6S ISO 4017 M5X20 A480	
Common Parts					
010	2751667-0100		18	PRESSURE FINGER	**2-13**
100	2751695-0000		2	STEERING	
140	2715804-0000		2	SCREW	
310	315755-0106		2	RETAINING RING SHAFT DIN 6799 4 A2	

Machine Type	Group Description	Used-In	Group Number	Page No

PRESSURE FINGER

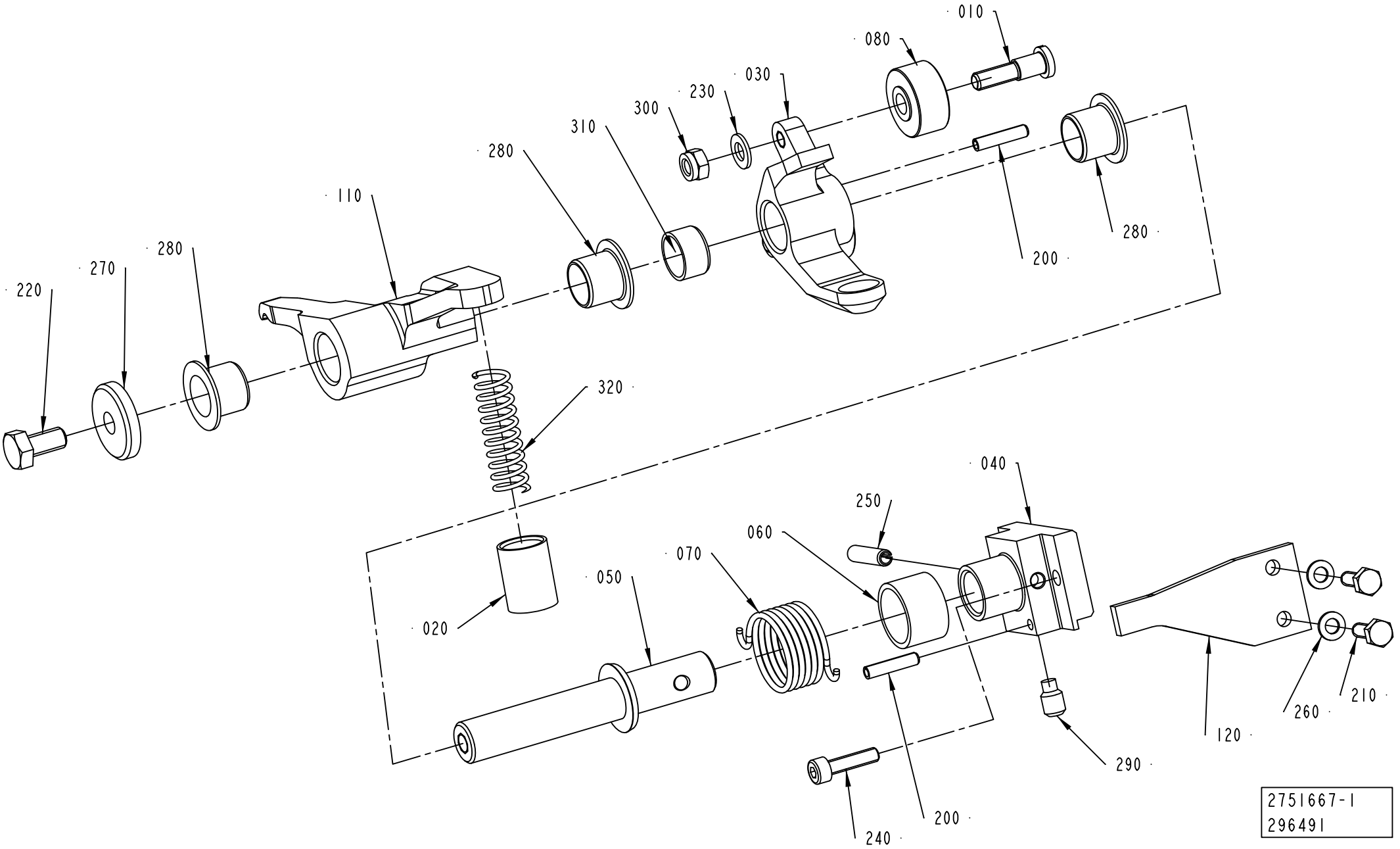

ECM: 298065 - 20070323
Group number: 2751667-0100
Assembly Drawing: 2751667-1_1_AB

Pos	Part No	UN	Qty	Description	Page No
TBA SLIMCAP1000, TBA STREAMCAP1000, TBA SLIMCAP 2000					
040	2703714-0000		1	HOLDER	
050	2703715-0000		1	SHAFT	
110	2716056-0000		1	ARM	
120	2751732-0000		1	BRACKET	
TGA					
040	2780391-0000		1	HOLDER	
050	2780393-0000		1	SHAFT	
110	2780394-0000		1	ARM	
120	2715813-0000		1	BRACKET	
TPA STREAMCAP 1000, TPA STREAMCAP 500					
040	2780352-0000		1	HOLDER	
050	2703715-0000		1	SHAFT	
110	2780346-0000		1	ARM	
120	2780353-0000		1	BRACKET	
Common Parts					
010	2684864-0000		2	SHAFT	
020	2715695-0000		1	SLEEVE	
030	2715794-0000		1	ARM	
060	2715797-0000		1	BUSHING	
070	2715798-0000		1	TURN SPRING	
080	2703725-0000		2	ROLLER	
200	311112-0208		2	SPRING PIN, ISO 8752 3X16-C	
210	312105-0291		2	SCREW M6S ISO 4017 M4X12 A470	
220	312105-0366		1	SCREW M6S ISO 4017 M6X12 A480	
230	315105-0146		2	WASHER BRB 5,3X10 RFR	
240	312115-0293		2	SCREW ISO4762 M4X16 A4 80	
250	311112-0256		1	SPRING PIN, ISO 8752 4X20-C	
260	315105-0136		2	WASHER BRB 4,3X8 RFR	
270	315125-0153		1	WASHER TBRSB 6,4X22X4 A4	
280	321154-0180		3	FLANGE BUSHING, 12X14X12 MM	
290	312311-0364		1	SCREW ISO4028 M6X10 FZB	
300	312812-0314		2	HEXAGON NUT, NY-LOCK M5 A480	
310	321134-0170		1	BUSHING, 12X14X8 MM	
320	90600-0683		1	COMP. SPRING 2496, 1,2X10,4X45	

Pos	Part No	UN	Qty	Description	Page No

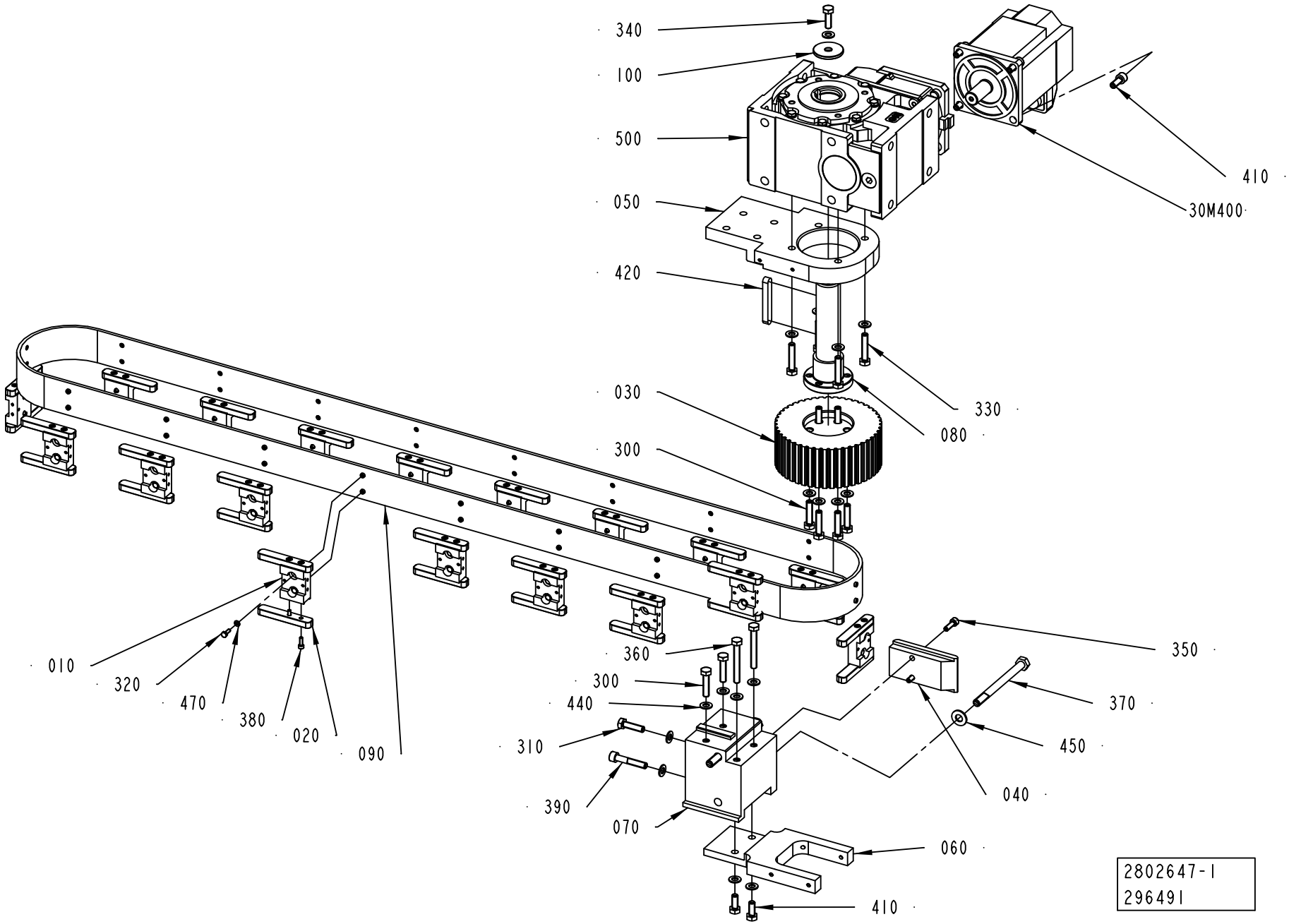
340
100
500
050
420
030
300
010
320
470
380
020
090
360
300
440
310
390
070
060
410
350
370
450
040
410
30M400
330
080
2802647-1
296491

ECM: 298067 - 20070323
Group number: 2802647-0100
Assembly Drawing: 2802647-1_1_AB

Pos	Part No	UN	Qty	Description	Page No
-					
010	2703711-0000		18	HOLDER	
020	2715837-0000		36	KEY	
030	2837191-0000		1	TOOTHED PULLEY	
040	2751710-0000		1	SUPPORT PLATE	
050	2837175-0000		1	BEARING HALF	
060	2716041-0000		1	BRACKET	
070	2751700-0000		1	BOW CLAMP	
080	2838721-0000		1	SHAFT	
090	2751709-0000		1	TIMING BELT	
100	2837255-0000		1	WASHER	
300	312109-0457		8	SCREW M6S ISO 4017 M8X35 A480	
30M400	90459-2583		1	SERVO MOTOR MPL-B420P-MK22AA	
310	312105-0455		1	SCREW M6S ISO 4017 M8X30 A480	
320	312105-0291		36	SCREW M6S ISO 4017 M4X12 A470	
330	312109-0459		4	SCREW M6S ISO 4017 M8X40 A480	
340	312105-0453		1	SCREW M6S ISO 4017 M8X25 A480	
350	312115-0370		2	SCREW ISO4762 M6X20 A4 80	
360	312109-0463		2	SCREW M6S ISO 4017 M8X60 A480	
370	312105-0515		2	SCREW M6S ISO 4014 M10X120 A480	
380	312115-0291		72	SCREW ISO4762 M4X12 A4 80	
390	312115-0460		1	SCREW ISO4762 M8X45 A4 80	
410	312105-0451		6	SCREW M6S ISO 4017 M8X20 A480	
420	315705-0307		1	PARALLEL KEY W. ROUND ENDS 10X8X70 MM	
440	315105-0165		19	WASHER BRB 8,4X16 RFR	
450	315105-0173		2	WASHER BRB 10,5X22 RFR	
470	315105-0136		36	WASHER BRB 4,3X8 RFR	
500	90600-0804		1	WORM GEAR MR V 63 UO3A-80B4 … B5/140	

Pos	Part No	UN	Qty	Description	Page No

Machine Type | Group Description | Used-In | Group Number | Page No

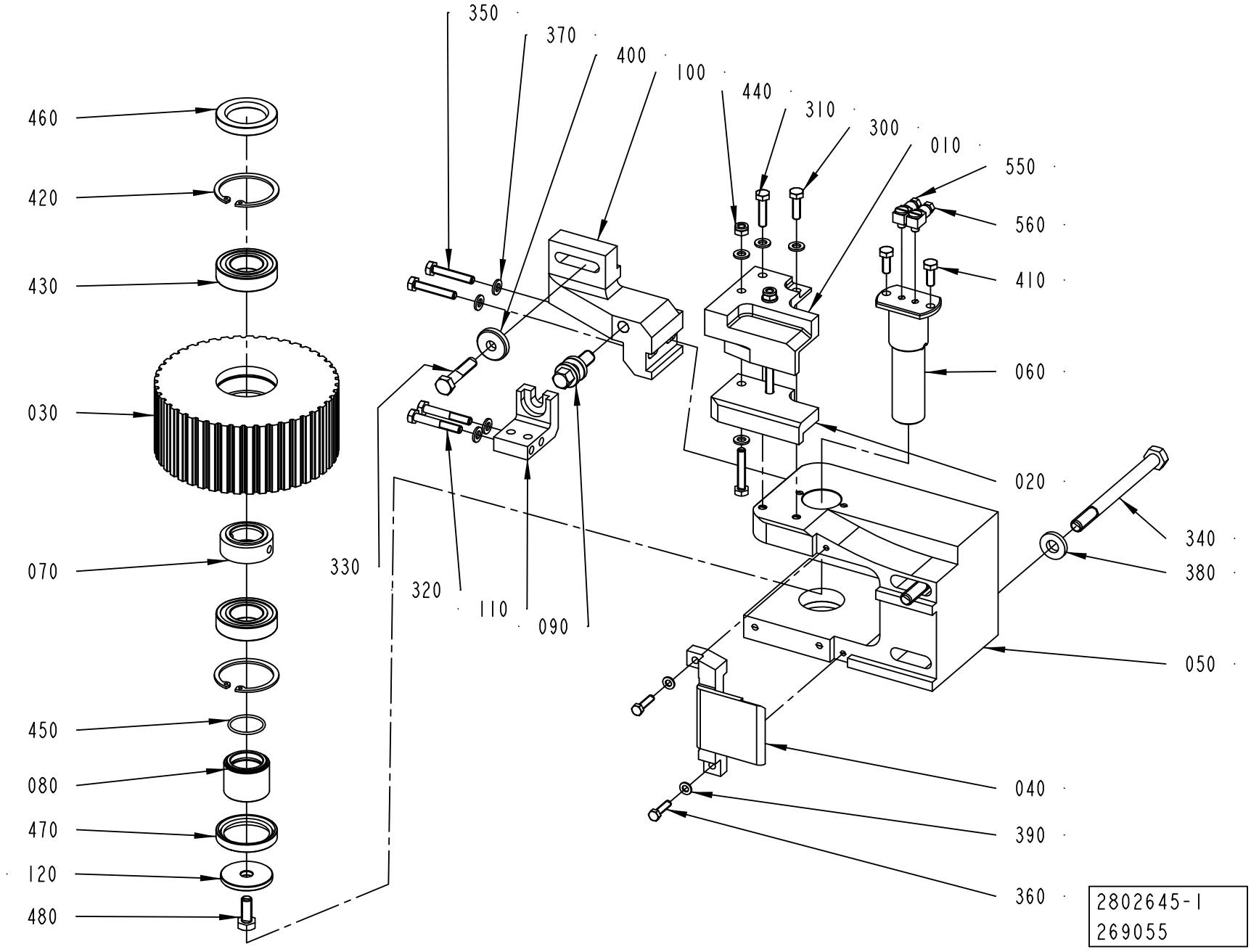
350
370
400
100
440
310
300
010
550
560
410
060
020
340
380
050
040
390
360
460
420
430
030
070
450
080
470
120
480
330
320
110
090
2802645-1
269055

ECM: 290201 - 20061221
Group number: 2802645-0100
Assembly Drawing: 2802645-1_1_AA

Pos	Part No	UN	Qty	Description	Page No
-					
010	2751692-0000		1	BRACKET	
020	2751693-0000		1	STEERING	
030	2751712-0000		1	TOOTHED PULLEY	
040	2751714-0000		1	SUPPORT PLATE	
050	2751725-0000		1	BOW CLAMP	
060	2838815-0000		1	SHAFT	
070	2751747-0000		1	SPACER	
080	2751748-0000		1	SLEEVE	
090	2703842-0000		1	ADJUSTING SCREW	
100	2802629-0000		1	BRACKET	
110	2802635-0000		1	SUPPORT	
120	2837255-0000		1	WASHER	
300	312105-0370		1	SCREW M6S ISO 4017 M6X20 A480	
310	312105-0372		1	SCREW M6S ISO 4017 M6X25 A480	
320	312105-0378		2	SCREW M6S ISO 4014 M6X40 A480	
330	312105-0459		1	SCREW M6S ISO 4014 M8X40 A480	
340	312105-0515		2	SCREW M6S ISO 4014 M10X120 A480	
350	312109-0376		4	SCREW M6S ISO 4017 M6X35 A480	
360	312105-0331		2	SCREW M6S ISO 4017 M5X20 A480	
370	315105-0153		10	WASHER BRB 6,4X12 RFR	
380	315115-0173		2	WASHER PLAIN, TBRB 10,5/22 H=4	
390	315105-0146		2	WASHER BRB 5,3X10 RFR	
400	315125-0165		1	WASHER TBRSB 8,4X26X5 A4	
410	312105-0368		2	SCREW M6S ISO 4017 M6X16 A480	
420	315753-0130		2	RETAINING RING FOR BORE DIN 472 47 A2	
430	321306-0105		2	BALL BEARING, 25X47X12 MM	
440	312812-0316		2	HEXAGON NUT, NY-LOCK M6 A480	
450	315202-0710		1	O-RING 25,12X1,78 MM	
460	315221-0169		1	RADIAL SEAL 30X47X7 MM	
470	315221-0175		1	RADIAL SEAL 35X47X7 MM	
480	312105-0451		1	SCREW M6S ISO 4017 M8X20 A480	
550	90134-0058		1	CONNECTION	
560	90134-0068		1	CONNECTION	

Pos	Part No	UN	Qty	Description	Page No

Machine Type	Group Description	Used-In	Group Number	Page No

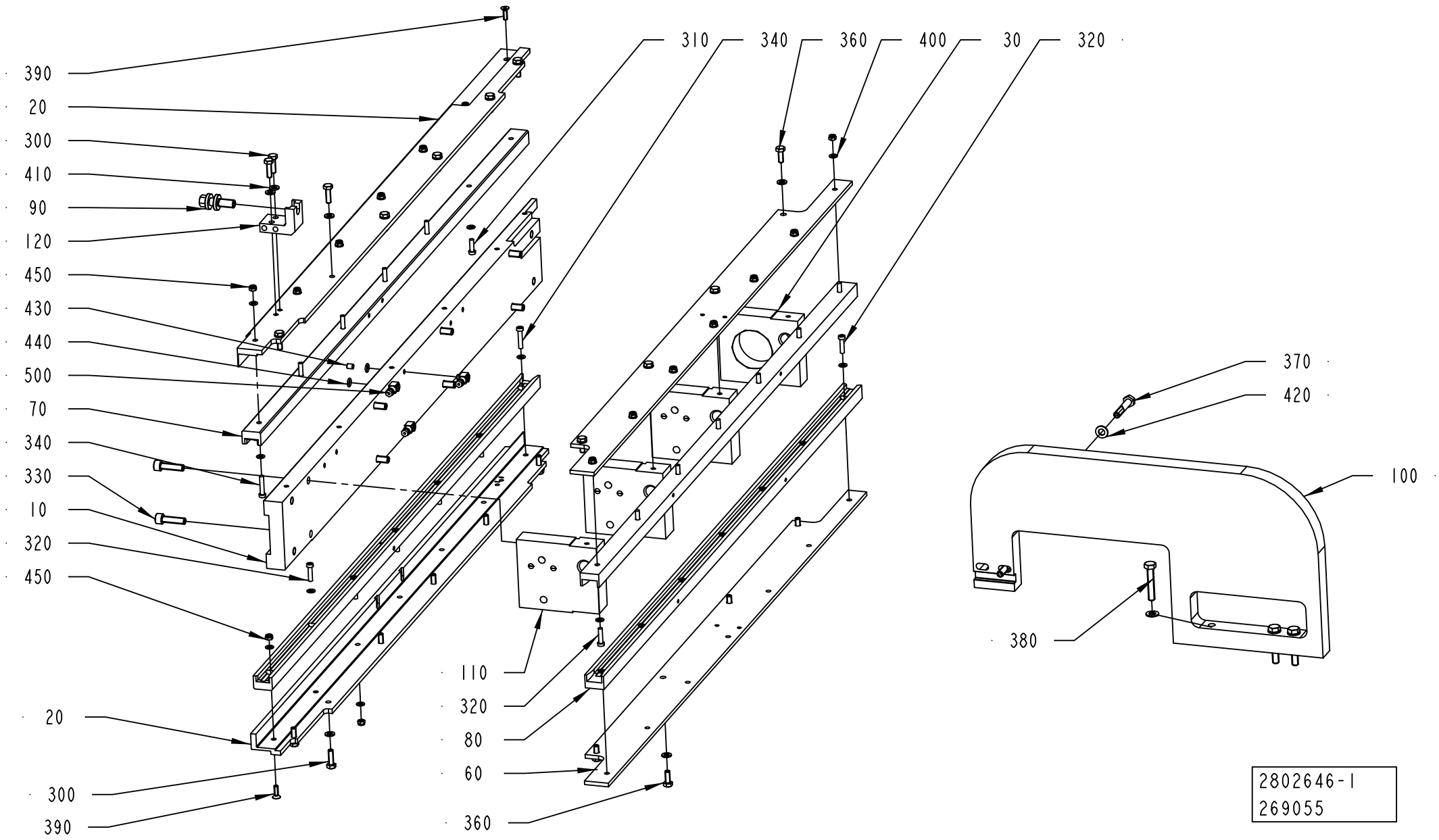
390
20
300
410
90
120
450
430
440
500
70
340
330
10
320
450
20
300
390
310
340
360
400
30
320
110
320
80
60
360
370
420
100
380
2802646-1
269055

ECM: 298066 - 20070323
Group number: 2802646-0100
Assembly Drawing: 2802646-1_1_AA

Pos	Part No	UN	Qty	Description	Page No
-					
010	2751716-0000		1	PLATE	
020	2751718-0000		2	ANGLE BRACKET	
030	2837631-0000		1	SPACER	
060	2838783-0000		2	PLATE	
070	2751734-0000		2	SLIDING STRIP	
080	2838784-0000		2	SLIDING STRIP	
090	2703842-0000		1	ADJUSTING SCREW	
100	2802637-0000		1	MOUNTING SHEET	
110	2802644-0000		3	SPACER	
120	2802635-0000		1	SUPPORT	
300	312105-0370		15	SCREW M6S ISO 4017 M6X20 A480	
310	312125-0329		1	SCREW ISO 1207 M5X16 A4	
320	312125-0331		15	SCREW ISO 1207 M5X20 A4	
330	312115-0455		8	SCREW ISO4762 M8X30 A4 80	
340	312125-0333		10	SCREW ISO 1207 M5X25 A4	
360	312105-0368		8	SCREW M6S ISO 4017 M6X16 A480	
370	312105-0460		2	SCREW M6S ISO 4014 M8X45 A480	
380	312109-0460		3	SCREW M6S ISO 4017 M8X45 A480	
390	312155-0327		2	SCREW DIN 7991 MF6S M5X12 A4 70	
400	315105-0146		55	WASHER BRB 5,3X10 RFR	
410	315105-0153		23	WASHER BRB 6,4X12 RFR	
420	315105-0165		5	WASHER BRB 8,4X16 RFR	
430	312318-0362		2	SCREW ISO4029 M6X8 A4	
440	315205-0506		3	O-RING 7,65X1,78 MM	
450	312812-0314		28	HEXAGON NUT, NY-LOCK M5 A480	
460	352113-0203		1	ANCHOR PLATES FOR STRIPS, TYPE TM3S8-M0	
470	352113-0104		1	CABLE TIE, BLACK 300X4,8 MM	
480	312125-0287		1	SCREW ISO 1207 M4X8 A4	
500	90134-0058		3	CONNECTION	

Pos	Part No	UN	Qty	Description	Page No

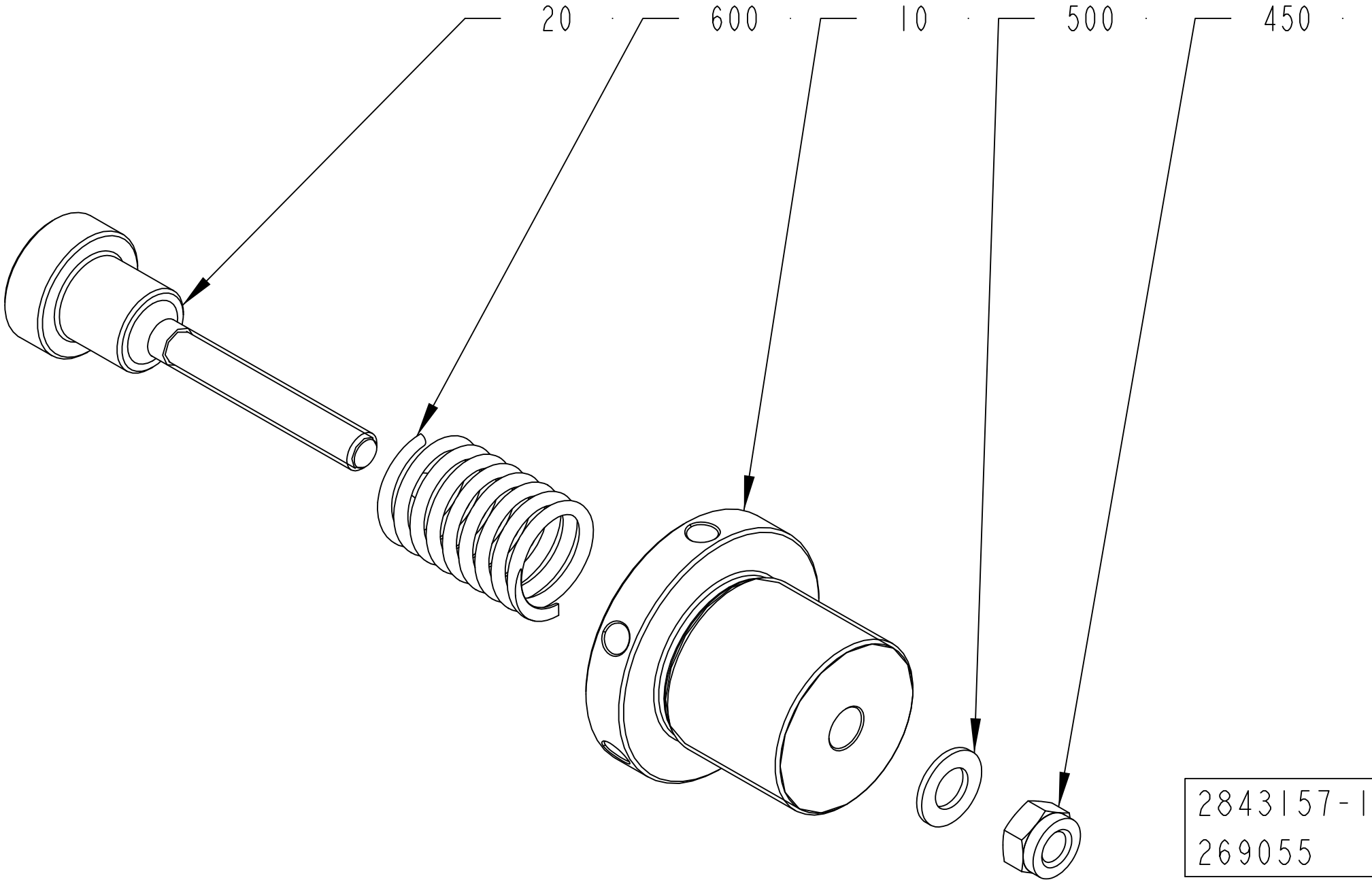

2843157-1
269055

ECM: 290204 - 20061221
Group number: 2843157-0100
Assembly Drawing: 2843157-1_1_AA

Pos	Part No	UN	Qty	Description	Page No
-					
010	2843158-0000		1	FLANGE	
020	2843159-0000		1	SHAFT	
450	312812-0322		1	HEXAGON NUT, NY-LOCK M12 A480	
500	315105-0178		1	WASHER BRB 13X24 RFR	
600	90600-0656		1	COMP. SPRING 6777, 4X36X55	

Pos	Part No	UN	Qty	Description	Page No

Tetra Pak

SPC
Spare Parts Catalogue

SCREW CAP HOT MELT APPLICATOR

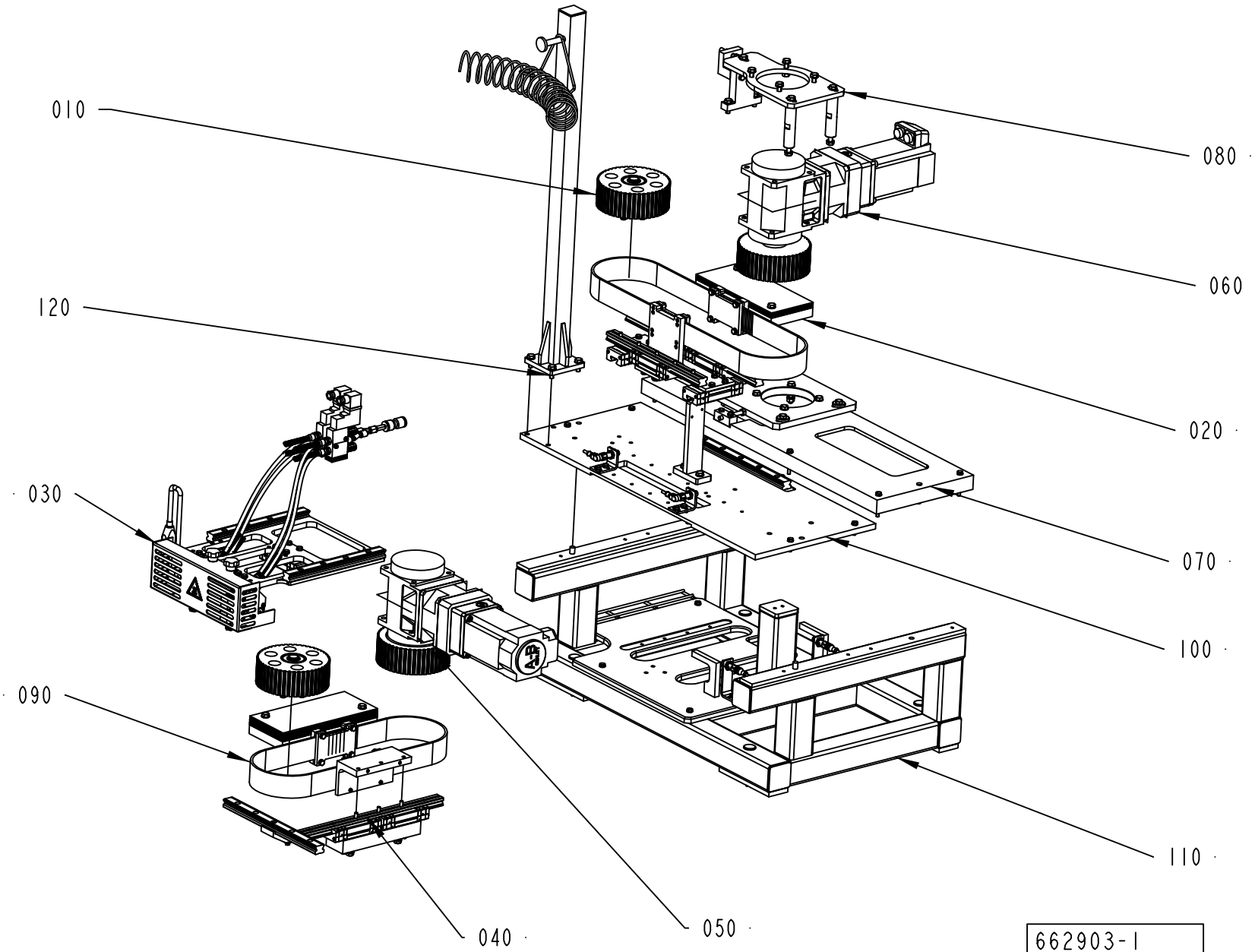

ECM: 271876 - 20060925
Group number: 662903-0100
Assembly Drawing: 662903-1_1_AA

Pos	Part No	UN	Qty	Description	Page No
-					
010	2695135-0100		2	PULLEY	3-5
020	2716090-0100		1	MOTION CONTROL	3-7
030	2716091-0100		1	HOTMELT GUN	3-9
040	2716092-0100		1	TRANSMISSION RAIL	3-11
050	2840143-0100		1	SERVO MOTOR	3-13
060	2840144-0100		1	SERVO MOTOR	3-15
070	2840145-0100		1	MOTOR BRACKET	3-17
080	2840146-0100		1	MOTOR BRACKET	3-19
090	2716097-0100		1	MOTION CONTROL	3-21
100	2840147-0100		1	FASTENING BRACKET	3-23
110	2841501-0100		1	FRAME	3-25
120	2797706-0100		1	SUPPORT	3-27

Pos	Part No	UN	Qty	Description	Page No

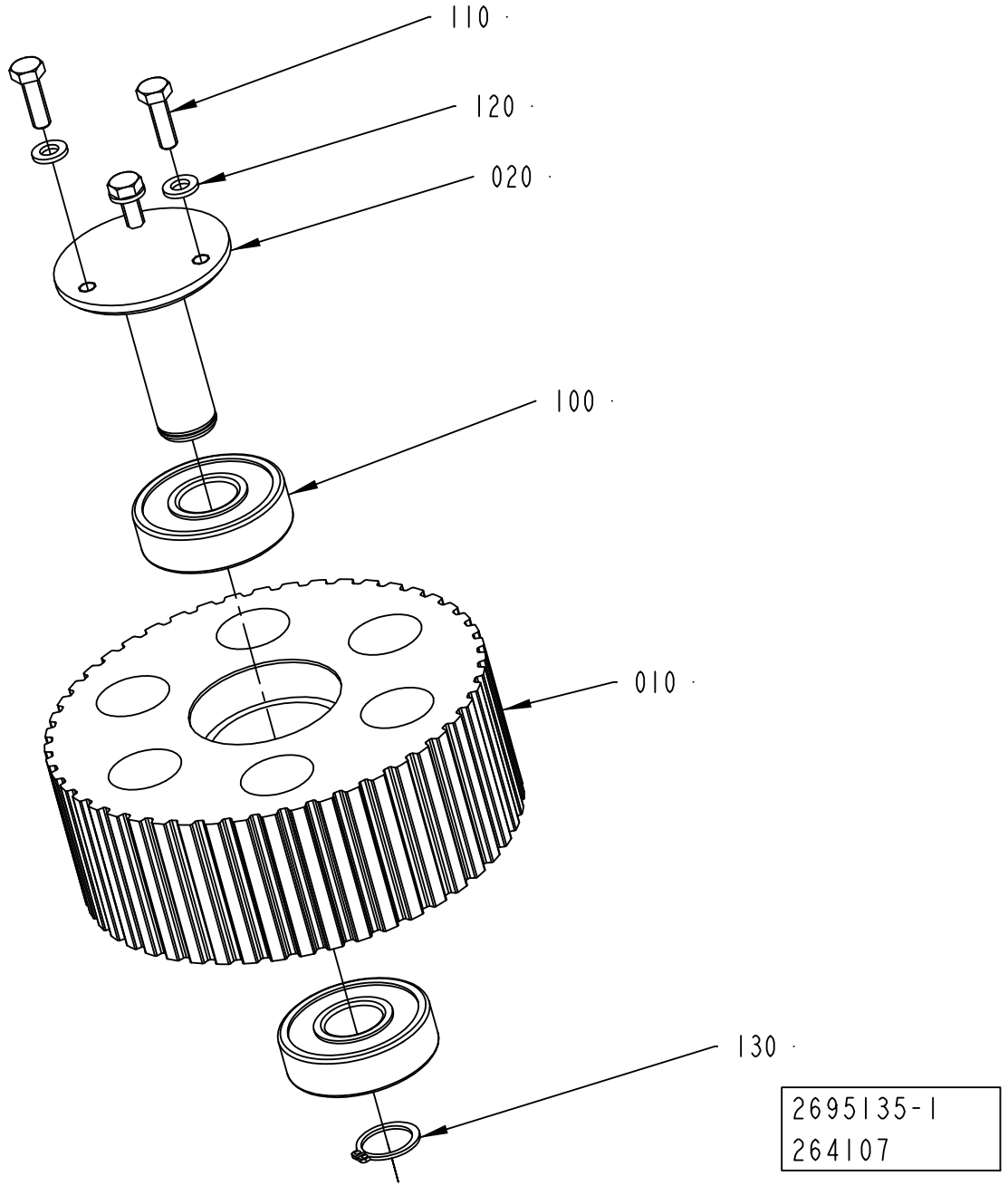
110
120
020
100
010
130
2695135-1
264107

ECM: 293730 - 20070323
Group number: 2695135-0100
Assembly Drawing: 2695135-1_1_AA

Pos	Part No	UN	Qty	Description	Page No
-					
010	2695133-0000		1	TOOTHED PULLEY	
020	2695134-0000		1	SHAFT	
100	90458-2170		2	BALL BEARING, 20X52X15 MM	
110	312105-0370		3	SCREW M6S ISO 4017 M6X20 A480	
120	315106-0153		3	WASHER ISO 7089-6-200 HV A4	
130	315751-0116		1	RETAINING RING FOR SHAFT DIN 471 20 A2	

Pos	Part No	UN	Qty	Description	Page No

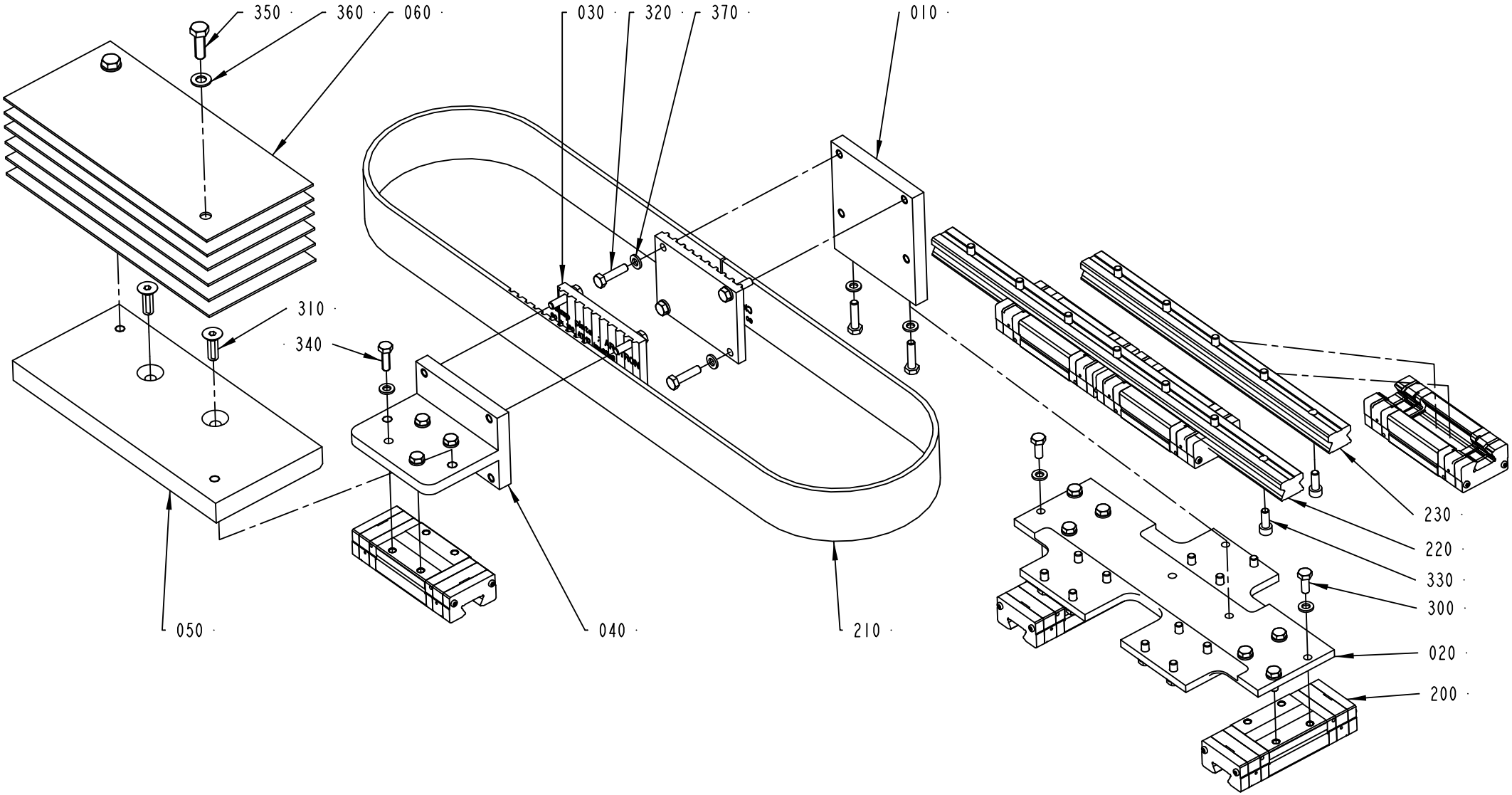
350
360
060
030
320
370
010
310
340
230
220
330
300
020
200
050
040
210
2716090-1
292549

ECM: 293233 - 20070323
Group number: 2716090-0100
Assembly Drawing: 2716090-1_1_AB

Pos	Part No	UN	Qty	Description	Page No
-					
010	2695610-0000		1	CLAMP BRACKET	
020	2716083-0000		1	BRACKET	
030	2716073-0000		2	BELT HOLDER	
040	2716074-0000		1	BRACKET	
050	2716085-0000		1	COUNTERWEIGHT	
060	2716075-0000		6	COUNTERWEIGHT	
200	90600-0344		6	CARRIAGE, SSR 25 XWYQZSSHH M	
210	90600-0487		1	TIMING BELT AT10 1410X50 MM	
220	90600-0483		1	GUIDE BAR, SSR 25-430LYM G35/35	
230	90600-0482		1	GUIDE BAR, SSR 25 305 LYM G32.5/32.5	
300	312105-0368		20	SCREW M6S ISO 4017 M6X16 A480	
310	312155-0453		2	SCREW DIN 7991 MF6S M8X25 A4 70	
320	312105-0372		10	SCREW M6S ISO 4017 M6X25 A480	
330	312115-0368		12	SCREW ISO4762 M6X16 A4 80	
340	312105-0370		4	SCREW M6S ISO 4017 M6X20 A480	
350	312105-0453		2	SCREW M6S ISO 4017 M8X25 A480	
360	315105-0165		2	WASHER BRB 8,4X16 RFR	
370	315106-0153		34	WASHER ISO 7089-6-200 HV A4	

Pos	Part No	UN	Qty	Description	Page No

Machine Type | Group Description | Used-In | Group Number | Page No

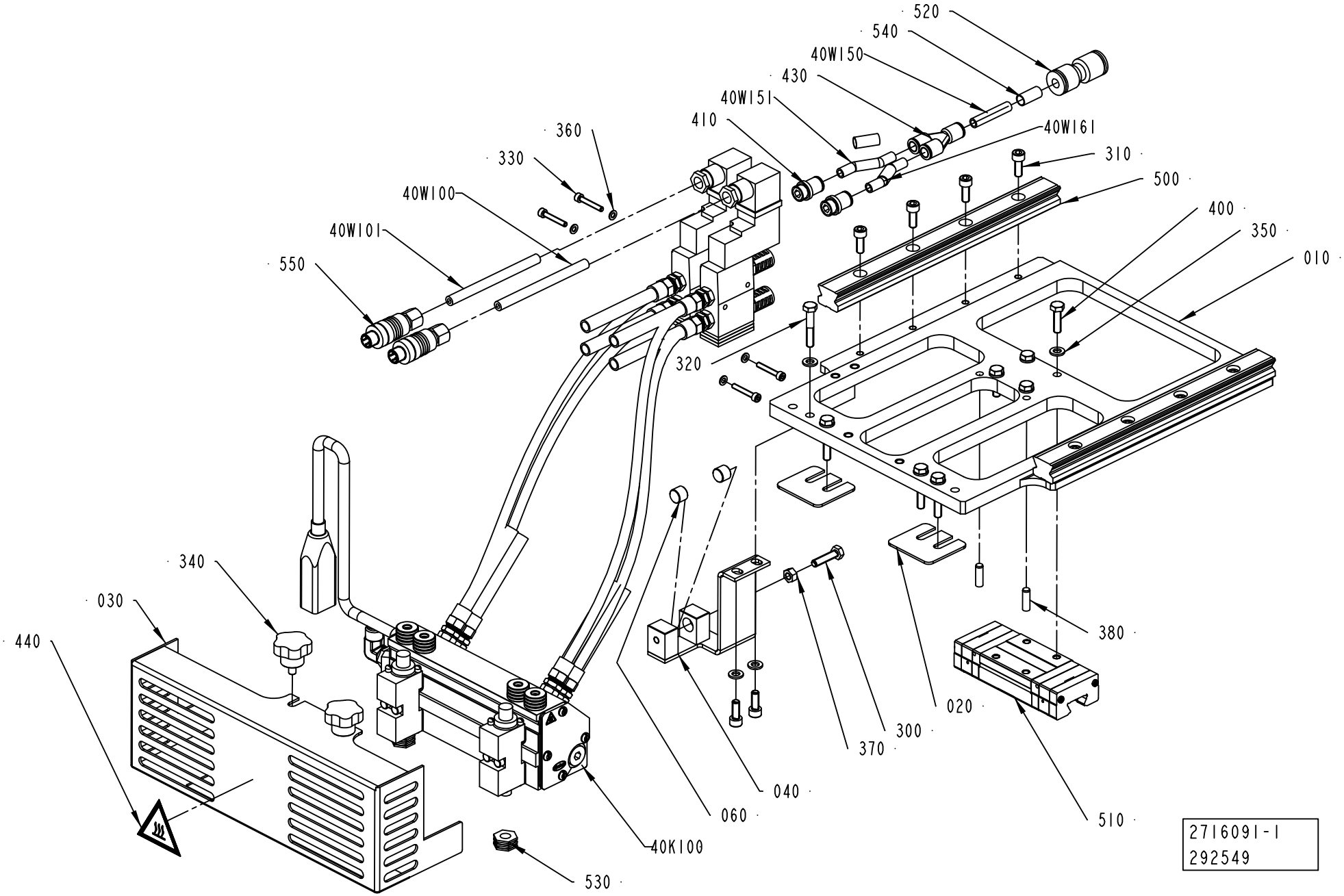
520
540
40W150
430
40W151
410
40W161
360
330
310
40W100
500
40W101
400
350
550
010
320
340
030
380
440
020
300
370
040
060
510
40K100
530
2716091-1
292549

ECM: 293731 - 20070323
Group number: 2716091-0100
Assembly Drawing: 2716091-1_1_AB

Pos	Part No	UN	Qty	Description	Page No
CAP 30/FLEX SLIMCAP1000 (See drawing on page: 3-8)					
030	2813426-0000		1	COVER	
040	2813438-0000		1	CLAMP	
330	312115-0297		4	SCREW ISO4762 M4X25 A4 80	
360	315105-0136		5	WASHER BRB 4,3X8 RFR	
40K100	2838702-0000		1	HOTMELT GUN	
010	*90459-6327*		*2*	*.SOLENOID VALVE, #1053894*	
	90042-0392		*1*	*CONTACT 2 POLE + EARTH*	
	90459-6332		*1*	*SILENCER, #1058058*	
020	*90600-0684*		*16*	*SPACER 75ODX.328IDX.12THK, #1028115*	
030	*90600-0550*		*4*	*STRAIGHT COUPLING,EXT.THREADED 8/6-R1/8"*	
040	*90600-0551*		*4*	*STRAIGHT COUPLING,EXT.THREADED 8/6-R1/4"*	
050	*342903-0121*		*8*	*NUT WITH SPRING, 1723 8/6-M12X1*	
060	*90600-0558*		*1*	*CERAMIC BLOCK CONNECTOR, #939586*	
070	*90458-2566*		*1*	*FILTER 90 DEGREES 100 MESH, 1007231*	
	90458-2567		*1*	*FILTER INSERT 100 MESH, 1007373*	
080	*90459-6329*		*2*	*GUN MODULE SOLIDBLUE A #1052927*	
090	*90600-0547*		*1*	*SATURN IN-LINE FILTER JACKET, #1056296*	
100	*90439-0206*		*1*	*CABLE*	
110	*90600-0561*		*1*	*HEATING CARTRIDGE 400W/240V, #1054659*	
120	*90600-0553*		*2*	*TUBE, 8X1 MM PTFE*	
410	350003-0007		2	PUSH-IN FITTING QS-F-G1/4-8-I	
430	350015-0003		1	Y-FITTING QSY-F-8	
530	90439-0155		2	PRECISION NOZZLE SATURN 322012	
540	90459-7370		3	MARKING FOR PNEUM. TUBING, PRZ08	
550	90459-1663		2	CONNECTOR, 405204 RSCN4/7	
CAP 30/FLEX STREAMCAP1000 (See drawing on page: 3-8)					
030	2813426-0000		1	COVER	
040	2813438-0000		1	CLAMP	
330	312115-0297		4	SCREW ISO4762 M4X25 A4 80	
360	315105-0136		5	WASHER BRB 4,3X8 RFR	
40K100	2838702-0000		1	HOTMELT GUN	
010	*90459-6327*		*2*	*.SOLENOID VALVE, #1053894*	
	90042-0392		*1*	*CONTACT 2 POLE + EARTH*	
	90459-6332		*1*	*SILENCER, #1058058*	
020	*90600-0684*		*16*	*SPACER 75ODX.328IDX.12THK, #1028115*	
030	*90600-0550*		*4*	*STRAIGHT COUPLING,EXT.THREADED 8/6-R1/8"*	
040	*90600-0551*		*4*	*STRAIGHT COUPLING,EXT.THREADED 8/6-R1/4"*	
050	*342903-0121*		*8*	*NUT WITH SPRING, 1723 8/6-M12X1*	
060	*90600-0558*		*1*	*CERAMIC BLOCK CONNECTOR, #939586*	
070	*90458-2566*		*1*	*FILTER 90 DEGREES 100 MESH, 1007231*	
	90458-2567		*1*	*FILTER INSERT 100 MESH, 1007373*	
080	*90459-6329*		*2*	*GUN MODULE SOLIDBLUE A #1052927*	
090	*90600-0547*		*1*	*SATURN IN-LINE FILTER JACKET, #1056296*	
100	*90439-0206*		*1*	*CABLE*	
110	*90600-0561*		*1*	*HEATING CARTRIDGE 400W/240V, #1054659*	
120	*90600-0553*		*2*	*TUBE, 8X1 MM PTFE*	
410	350003-0007		2	PUSH-IN FITTING QS-F-G1/4-8-I	
430	350015-0003		1	Y-FITTING QSY-F-8	
530	90459-3197		2	HOT MELT NOZZLE, SATURN 322014	
540	90459-7370		3	MARKING FOR PNEUM. TUBING, PRZ08	
550	90459-1663		2	CONNECTOR, 405204 RSCN4/7	
Common Parts					
010	2716086-0000		1	PLATE	
020	2812465-0000		2	SHIM	
060	2833340-0000		2	WASHER	
300	312105-0372		1	SCREW M6S ISO 4017 M6X25 A480	
310	312115-0368		10	SCREW ISO4762 M6X16 A4 80	
320	312105-0376		4	SCREW M6S ISO 4014 M6X35 A480	
340	90600-0763		2	KNOB CIRCULAR, EXT THREAD, 66231	
350	315105-0153		10	WASHER BRB 6,4X12 RFR	
370	312607-0316		1	HEXAGON NUT, EN 24032 M6M M6 A480	
380	311103-0353		2	PARALLEL PIN ISO 2338 6M6X20 A1	
400	312105-0371		4	SCREW M6S ISO 4017 M6X22 A480	
40W100	351150-0403	M	2	CABLE OLFLEX 3X0,75 MM2 LIGHT/GREY	
40W101	351150-0403	M	2	CABLE OLFLEX 3X0,75 MM2 LIGHT/GREY	
40W150	315400-0004	M	1	TUBE PUN-H-8X1,25-BL	
40W151	315400-0004	M	1	TUBE PUN-H-8X1,25-BL	
40W161	315400-0004	M	1	TUBE PUN-H-8X1,25-BL	
440	359710-0001		1	WARNING SIGN ISO, HOT SURFACE	
500	90600-0484		2	GUIDE BAR, SSR 25 253L-YM G36.5/36.5	
510	90600-0344		1	CARRIAGE, SSR 25 XWYQZSSHH M	
520	90459-5863		1	PUSH-IN FITTING QS-12-8	

Machine Type	Group Description	Used-In	Group Number	Page No

TRANSMISSION RAIL

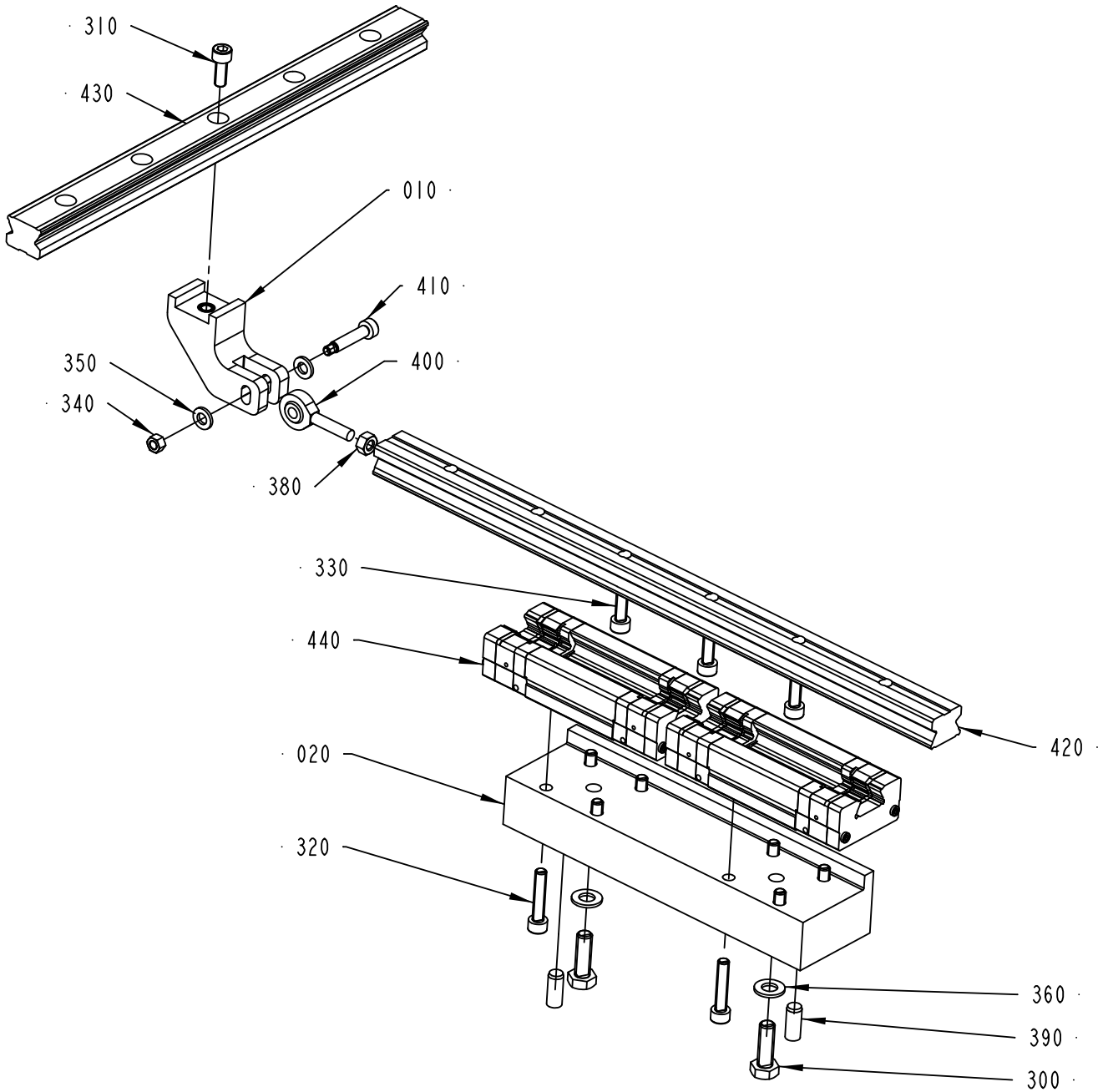

2716092-1
292549

ECM: 297201 - 20070323
Group number: 2716092-0100
Assembly Drawing: 2716092-1_1_AB

Pos	Part No	UN	Qty	Description	Page No
-					
010	2873918-0000		1	LINK ATTACHMENT	
020	2716089-0000		1	FASTENING BRACKET	
300	312105-0453		2	SCREW M6S ISO 4017 M8X25 A480	
310	312115-0368		1	SCREW ISO4762 M6X16 A4 80	
320	312115-0374		8	SCREW ISO4762 M6X30 A4 80	
330	312115-0370		3	SCREW ISO4762 M6X20 A4 80	
340	312607-0314		1	HEXAGON NUT, EN 24032 M6M M5 A480	
350	315106-0153		2	WASHER ISO 7089-6-200 HV A4	
360	315106-0165		2	WASHER ISO 7089-8-200 HV A4	
380	312605-0316		1	HEXAGON NUT, M6M M6 A280	
390	311103-0401		2	PARALLEL PIN ISO 2338 8M6X20 A1	
400	90115-0137		1	ROD END, ID=6 MM, M6X1	
410	90287-0238		1	SCREW, HEX.SOCK.HEAD SHOULD. M5X6	
420	90600-0485		1	GUIDE BAR, SSR25 385L YM G42.5/42.5	
430	90600-0482		1	GUIDE BAR, SSR 25 305 LYM G32.5/32.5	
440	90600-0344		2	CARRIAGE, SSR 25 XWYQZSSHH M	

Pos	Part No	UN	Qty	Description	Page No

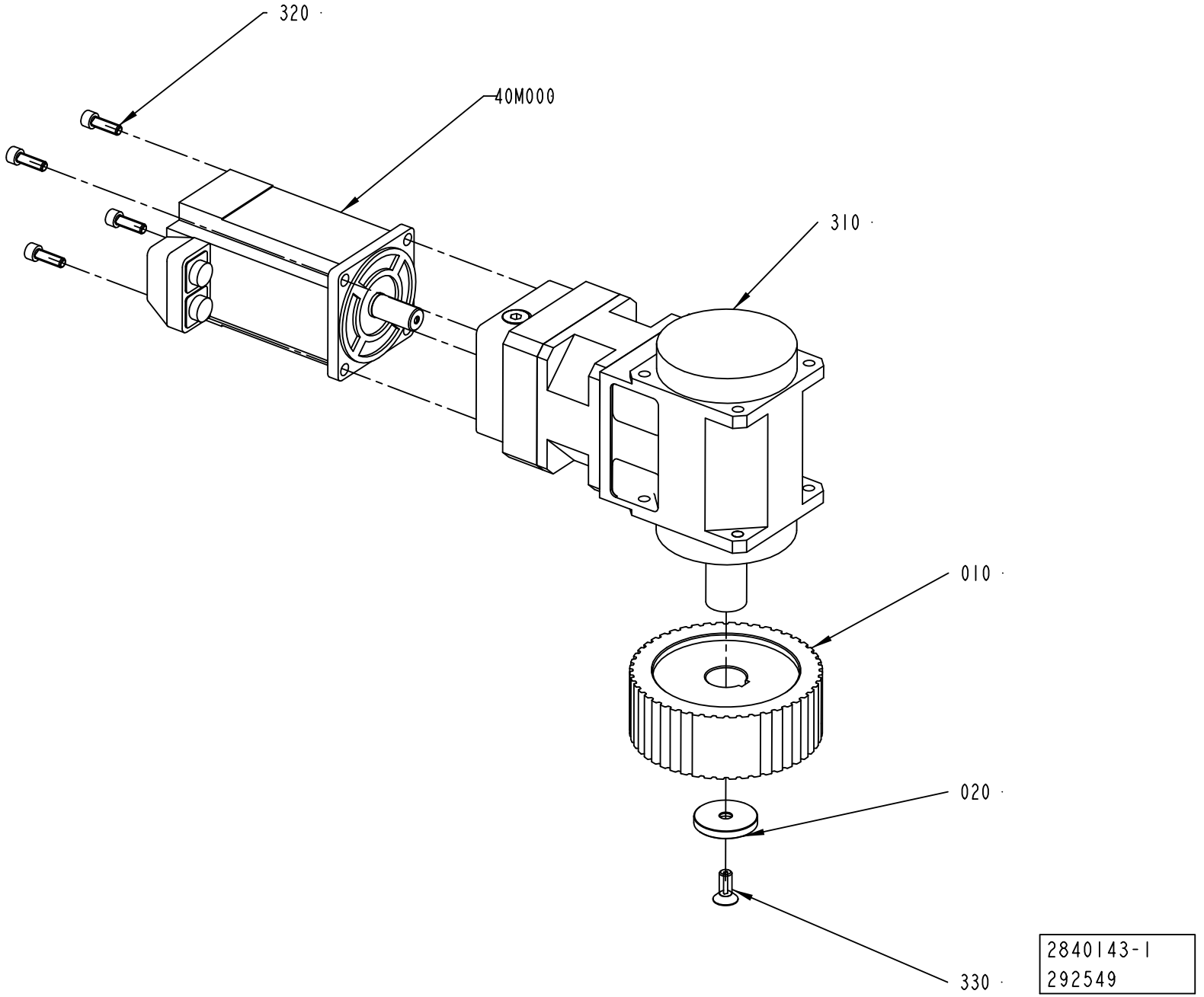
320
40M000
310
010
020
330
2840143-1
292549

ECM: 293231 - 20070323
Group number: 2840143-0100
Assembly Drawing: 2840143-1_1_AB

Pos	Part No	UN	Qty	Description	Page No
-					
010	2840148-0000		1	TOOTHED PULLEY	
020	2840693-0000		1	WASHER	
310	90600-0849		1	GEARS, PLANETARY MR 115 EC FO1C N / I =	
320	312115-0453		4	SCREW ISO4762 M8X25 A4 80	
330	312155-0493		1	SCREW DIN 7991 MF6S M10X25 A4 70	
40M000	90459-2589		1	SERVO MOTOR MPL-B430P-MK22AA	

Pos	Part No	UN	Qty	Description	Page No

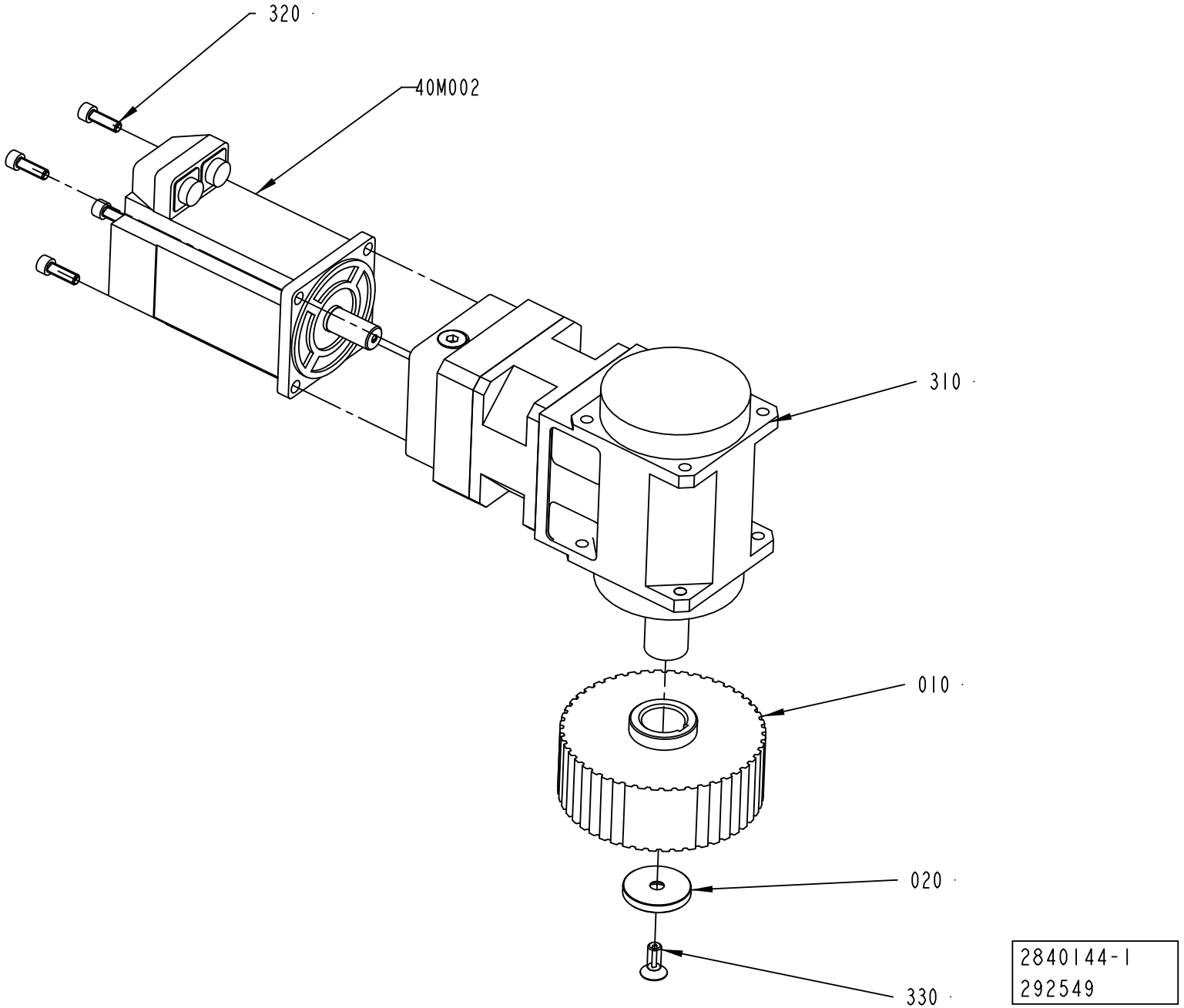
320
40M002
310
010
020
330
2840144-1
292549

ECM: 293229 - 20070323
Group number: 2840144-0100
Assembly Drawing: 2840144-1_1_AB

Pos	Part No	UN	Qty	Description	Page No
-					
010	2841285-0000		1	TOOTHED PULLEY	
020	2840693-0000		1	WASHER	
310	90600-0849		1	GEARS, PLANETARY MR 115 EC FO1C N / I =	
320	312115-0453		4	SCREW ISO4762 M8X25 A4 80	
330	312155-0493		1	SCREW DIN 7991 MF6S M10X25 A4 70	
40M002	90459-2589		1	SERVO MOTOR MPL-B430P-MK22AA	

Pos	Part No	UN	Qty	Description	Page No

MOTOR BRACKET

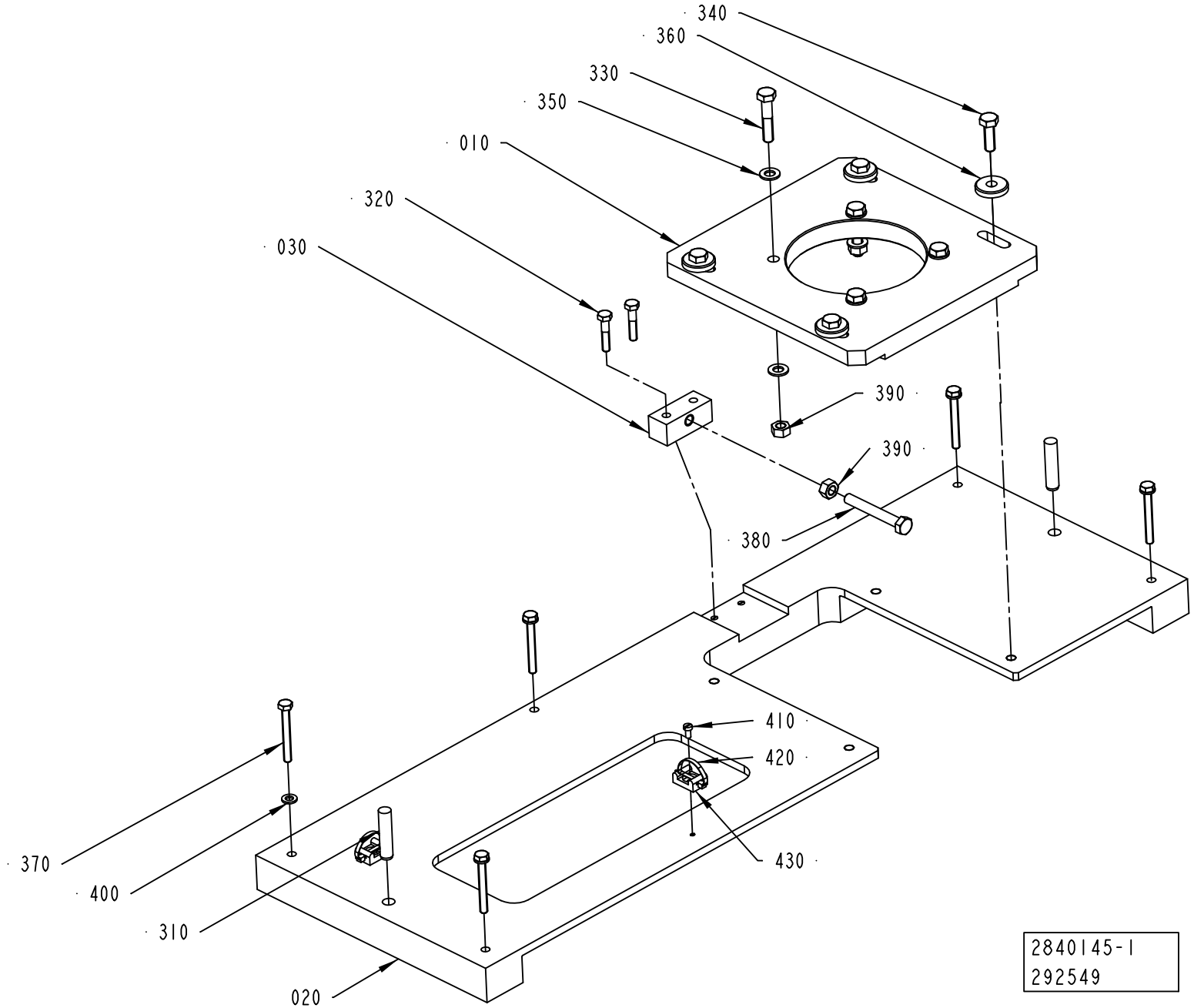

ECM: 293733 - 20070323
Group number: 2840145-0100
Assembly Drawing: 2840145-1_1_AB

Pos	Part No	UN	Qty	Description	Page No
-					
010	2840647-0000		1	FLANGE	
020	2840648-0000		1	PLATE	
030	2840851-0000		1	BLOCK	
310	311103-0464		2	PARALLEL PIN ISO 2338 10M6X45 A1	
320	312105-0374		2	SCREW M6S ISO 4014 M6X30 A480	
330	312105-0459		4	SCREW M6S ISO 4014 M8X40 A480	
340	312105-0453		4	SCREW M6S ISO 4017 M8X25 A480	
350	315105-0165		8	WASHER BRB 8,4X16 RFR	
360	315125-0165		4	WASHER TBRSB 8,4X26X5 A4	
370	312109-0380		5	SCREW M6S ISO 4017 M6X50 A480	
380	312109-0463		1	SCREW M6S ISO 4017 M8X60 A480	
390	312607-0318		5	HEXAGON NUT, EN 24032 M6M M8 A480	
400	315105-0178		5	WASHER BRB 13X24 RFR	
410	312125-0287		2	SCREW ISO 1207 M4X8 A4	
420	352113-0104		2	CABLE TIE, BLACK 300X4,8 MM	
430	352113-0203		2	ANCHOR PLATES FOR STRIPS, TYPE TM3S8-M0	

Pos	Part No	UN	Qty	Description	Page No

Machine Type | Group Description | Used-In | Group Number | Page No

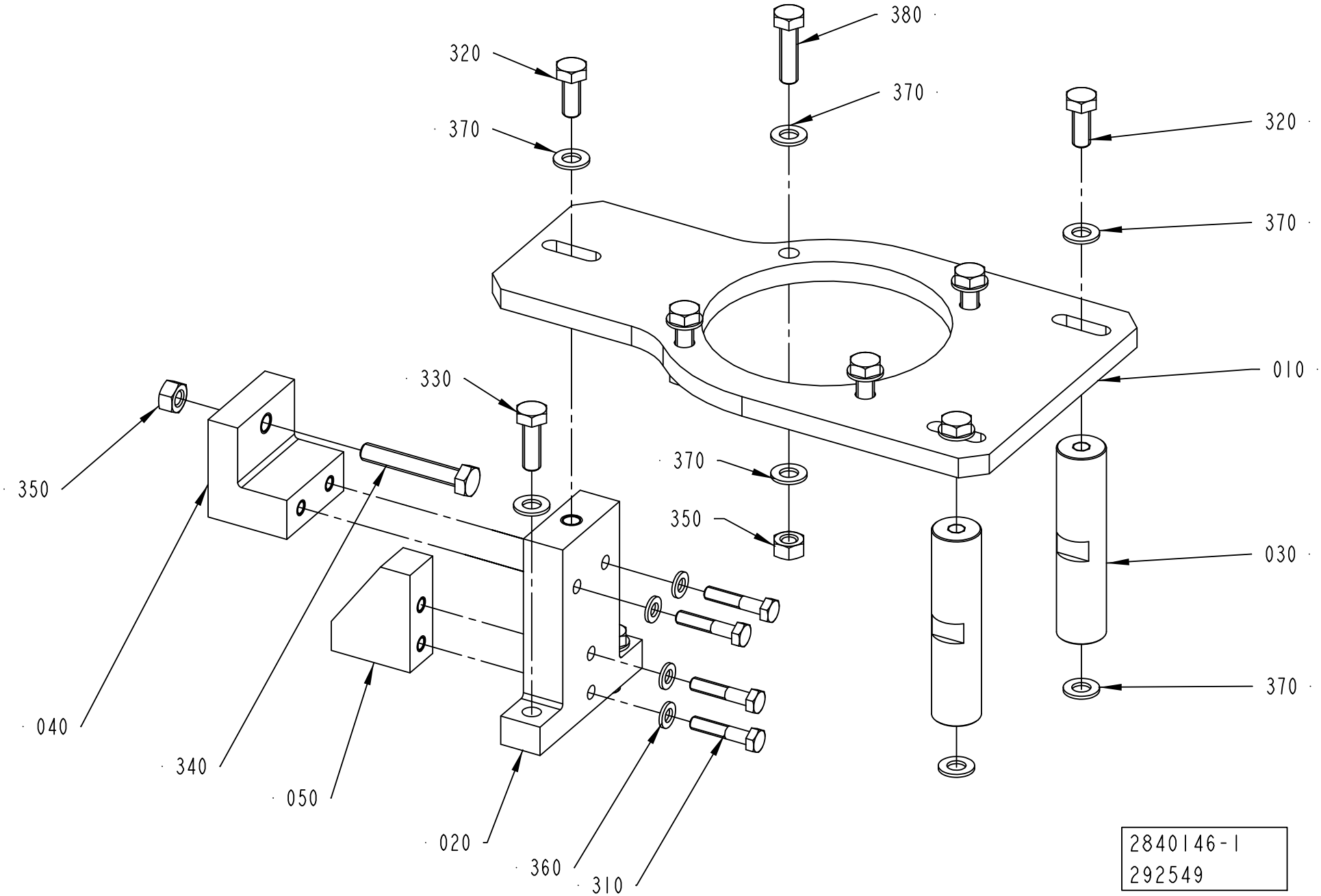
380
320
370
370
320
370
010
330
370
350
350
030
370
040
340
050
020
360
310
2840146-1
292549

ECM: 293232 - 20070323
Group number: 2840146-0100
Assembly Drawing: 2840146-1_1_AB

Pos	Part No	UN	Qty	Description	Page No
-					
010	2841344-0000		1	PLATE	
020	2841346-0000		1	BLOCK	
030	2841345-0000		2	COLUMN	
040	2696481-0000		1	BLOCK	
050	2873921-0000		1	BLOCK	
310	312105-0374		4	SCREW M6S ISO 4014 M6X30 A480	
320	312105-0451		3	SCREW M6S ISO 4017 M8X20 A480	
330	312105-0453		4	SCREW M6S ISO 4017 M8X25 A480	
340	312109-0461		1	SCREW M6S ISO 4017 M8X50 A480	
350	312605-0318		5	HEXAGON NUT, M6M M8 A280	
360	315105-0153		4	WASHER BRB 6,4X12 RFR	
370	315105-0165		15	WASHER BRB 8,4X16 RFR	
380	312105-0455		4	SCREW M6S ISO 4017 M8X30 A480	

Pos	Part No	UN	Qty	Description	Page No

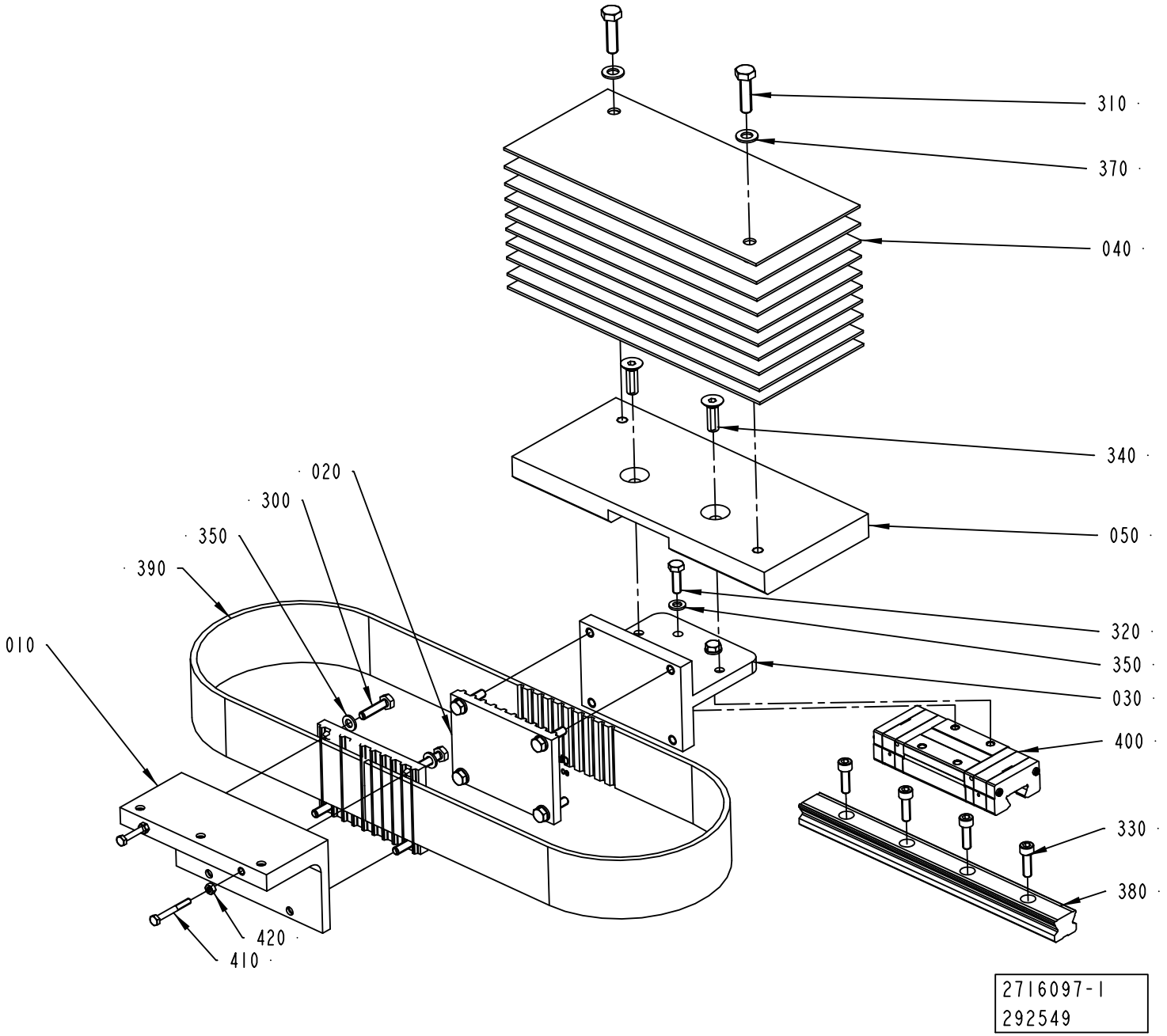
310
370
040
340
050
320
350
030
400
330
380
020
300
350
390
010
420
410
2716097-1
292549

ECM: 293734 - 20070323
Group number: 2716097-0100
Assembly Drawing: 2716097-1_1_AB

Pos	Part No	UN	Qty	Description	Page No
-					
010	2716072-0000		1	BRACKET	
020	2716073-0000		2	BELT HOLDER	
030	2716074-0000		1	BRACKET	
040	2716075-0000		10	COUNTERWEIGHT	
050	2716085-0000		1	COUNTERWEIGHT	
300	312105-0372		8	SCREW M6S ISO 4017 M6X25 A480	
310	312105-0455		2	SCREW M6S ISO 4017 M8X30 A480	
320	312105-0370		4	SCREW M6S ISO 4017 M6X20 A480	
330	312115-0370		4	SCREW ISO4762 M6X20 A4 80	
340	312155-0453		2	SCREW DIN 7991 MF6S M8X25 A4 70	
350	315105-0153		12	WASHER BRB 6,4X12 RFR	
370	315105-0165		2	WASHER BRB 8,4X16 RFR	
380	90600-0484		1	GUIDE BAR, SSR 25 253L-YM G36.5/36.5	
390	90600-0486		1	TIMING BELT AT10 1120X50 MM	
400	90600-0344		1	CARRIAGE, SSR 25 XWYQZSSHH M	
410	312105-0331		2	SCREW M6S ISO 4017 M5X20 A480	
420	312607-0314		2	HEXAGON NUT, EN 24032 M6M M5 A480	

Pos	Part No	UN	Qty	Description	Page No

Machine Type | Group Description | Used-In | Group Number | Page No

FASTENING BRACKET

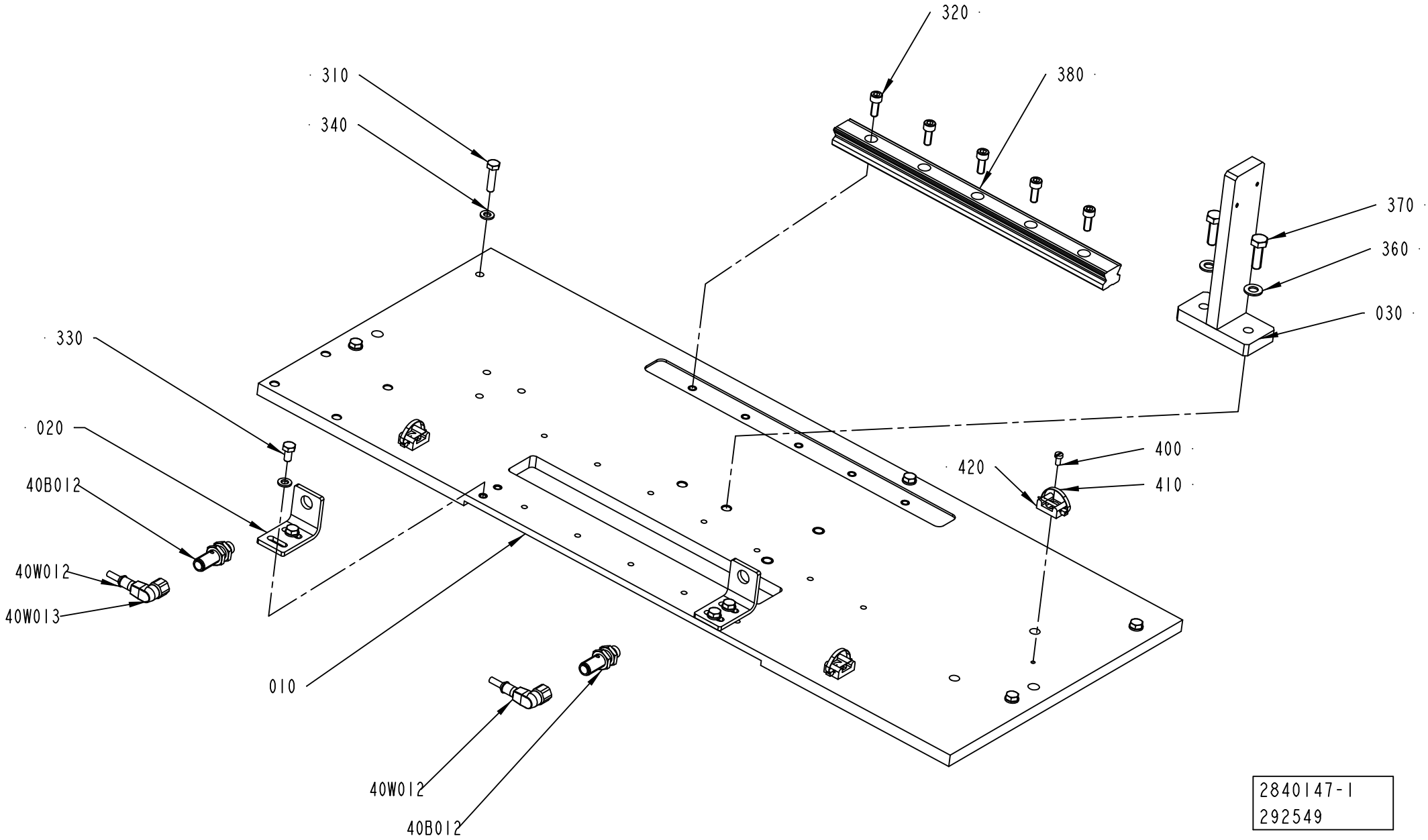

ECM: 293732 - 20070323
Group number: 2840147-0100
Assembly Drawing: 2840147-1_1_AB

Pos	Part No	UN	Qty	Description	Page No
-					
010	2840680-0000		1	ASSEMBLY PLATE	
020	2695629-0000		2	BRACKET	
030	2796055-0000		1	BRACKET	
310	312105-0372		5	SCREW M6S ISO 4017 M6X25 A480	
320	312115-0368		5	SCREW ISO4762 M6X16 A4 80	
330	312105-0366		4	SCREW M6S ISO 4017 M6X12 A480	
340	315105-0153		9	WASHER BRB 6,4X12 RFR	
360	315105-0165		2	WASHER BRB 8,4X16 RFR	
370	312105-0453		2	SCREW M6S ISO 4017 M8X25 A480	
380	90600-0482		1	GUIDE BAR, SSR 25 305 LYM G32.5/32.5	
400	312125-0287		3	SCREW ISO 1207 M4X8 A4	
40B012	90459-6948		1	PROX.SW. IFS206	
40B013	90459-6948		1	PROX.SW. IFS206	
40W012	351412-0015		1	ACTU/SENS. CABLE PRST 4-PRKWT 4-07/1,5M	
40W013	351412-0015		1	ACTU/SENS. CABLE PRST 4-PRKWT 4-07/1,5M	
410	352113-0104		3	CABLE TIE, BLACK 300X4,8 MM	
420	352113-0203		3	ANCHOR PLATES FOR STRIPS, TYPE TM3S8-M0	

Pos	Part No	UN	Qty	Description	Page No

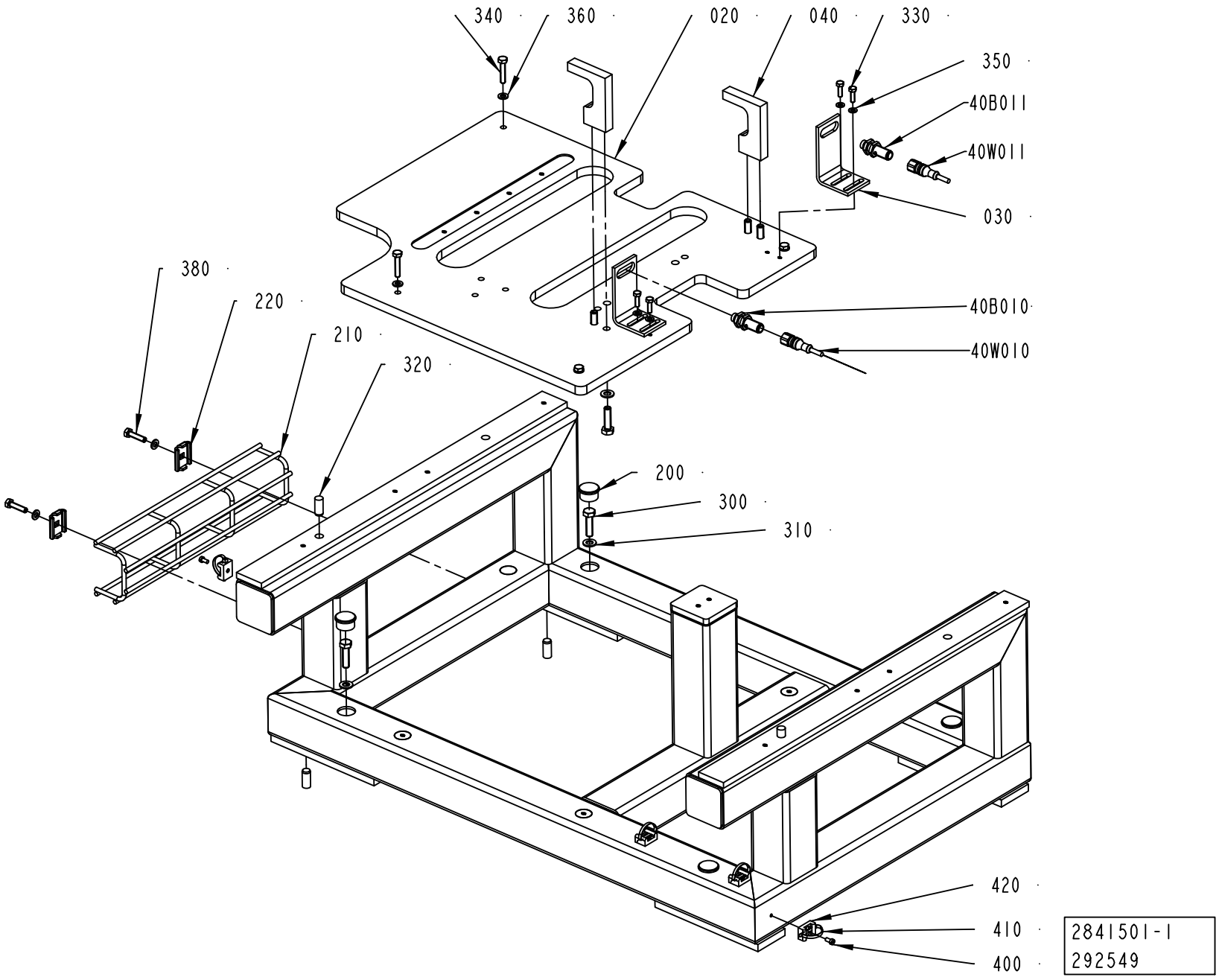
340
360
020
040
330
350
40B011
40W011
030
380
220
210
320
40B010
40W010
200
300
310
420
410
400
2841501-1
292549

ECM: 293230 - 20070323
Group number: 2841501-0100
Assembly Drawing: 2841501-1_1_AB

Pos	Part No	UN	Qty	Description	Page No
-					
010	2838753-0000		1	FRAME	
020	2841901-0000		1	PLATE	
030	2716112-0000		2	BRACKET	
040	2838749-0000		2	STOP BLOCK	
200	90261-0060		4	PLUG, BLIND, PLASTIC, NO. IKPK25X1, 5	
210	2873896-0000		1	CABLE TRAY	
220	90181-0183		2	JOINING FITTING	
300	312105-0455		8	SCREW M6S ISO 4017 M8X30 A480	
310	315105-0165		8	WASHER BRB 8,4X16 RFR	
320	311103-1456		4	PARALLEL PIN ISO 2338 10M6X24 A1	
330	312105-0329		4	SCREW M6S ISO 4017 M5X16 A480	
340	312109-0374		4	SCREW M6S ISO 4017 M6X30 A480	
350	315105-0146		4	WASHER BRB 5,3X10 RFR	
360	315105-0153		10	WASHER BRB 6,4X12 RFR	
380	312105-0372		2	SCREW M6S ISO 4017 M6X25 A480	
400	312125-0287		4	SCREW ISO 1207 M4X8 A4	
40B010	90459-6948		1	PROX.SW. IFS206	
40B011	90459-6948		1	PROX.SW. IFS206	
410	352113-0104		4	CABLE TIE, BLACK 300X4,8 MM	
420	352113-0203		4	ANCHOR PLATES FOR STRIPS, TYPE TM3S8-M0	

Pos	Part No	UN	Qty	Description	Page No

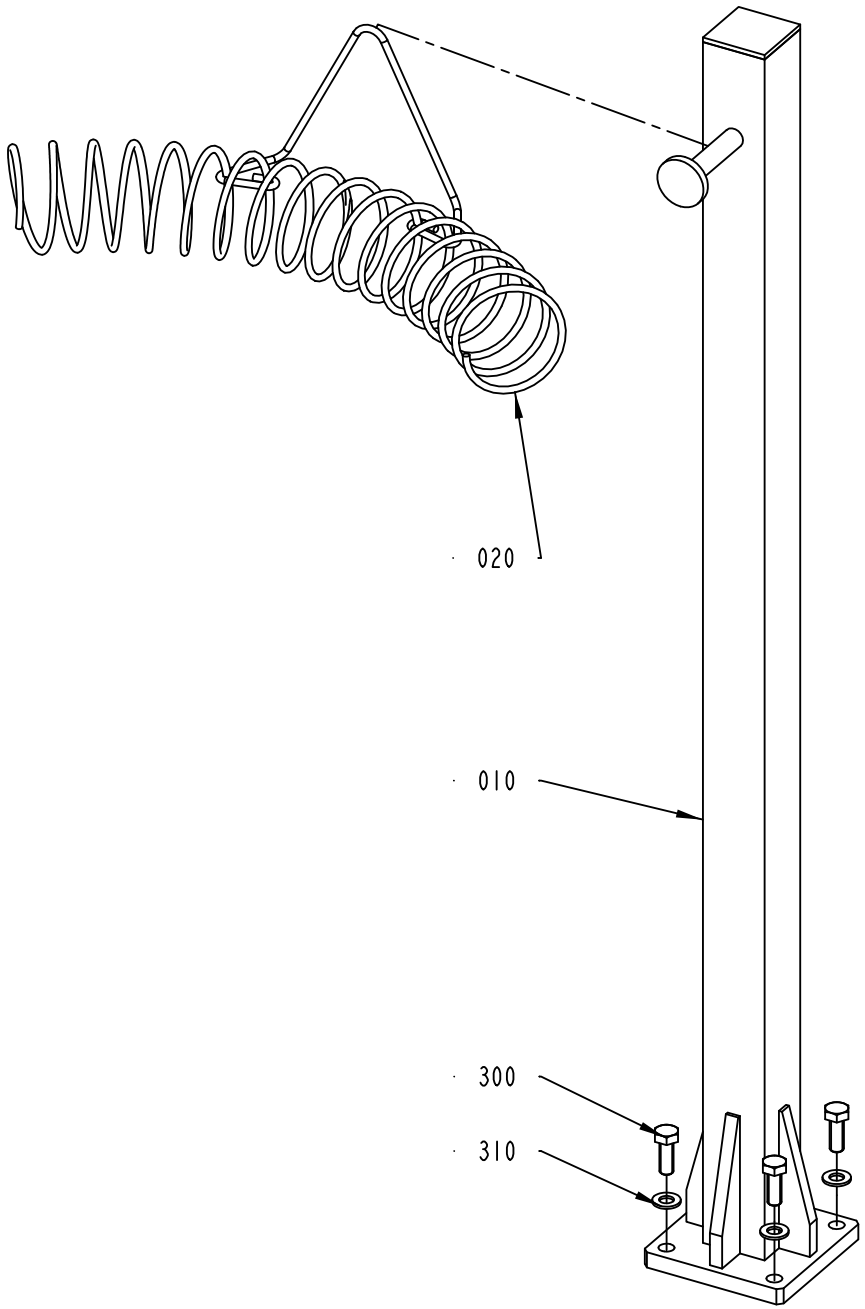

2797706-1
274023

ECM: 274023 - 20060925
Group number: 2797706-0100
Assembly Drawing: 2797706-1_1_AA

Pos	Part No	UN	Qty	Description	Page No
-					
010	2796054-0000		1	SUPPORT	
020	1258624-0000		1	HOSE HOLDER	
300	312105-0452		4	SCREW M6S ISO 4017 M8X22 A4 80	
310	315105-0165		4	WASHER BRB 8,4X16 RFR	

Pos	Part No	UN	Qty	Description	Page No

Tetra Pak

SPC
Spare Parts Catalogue

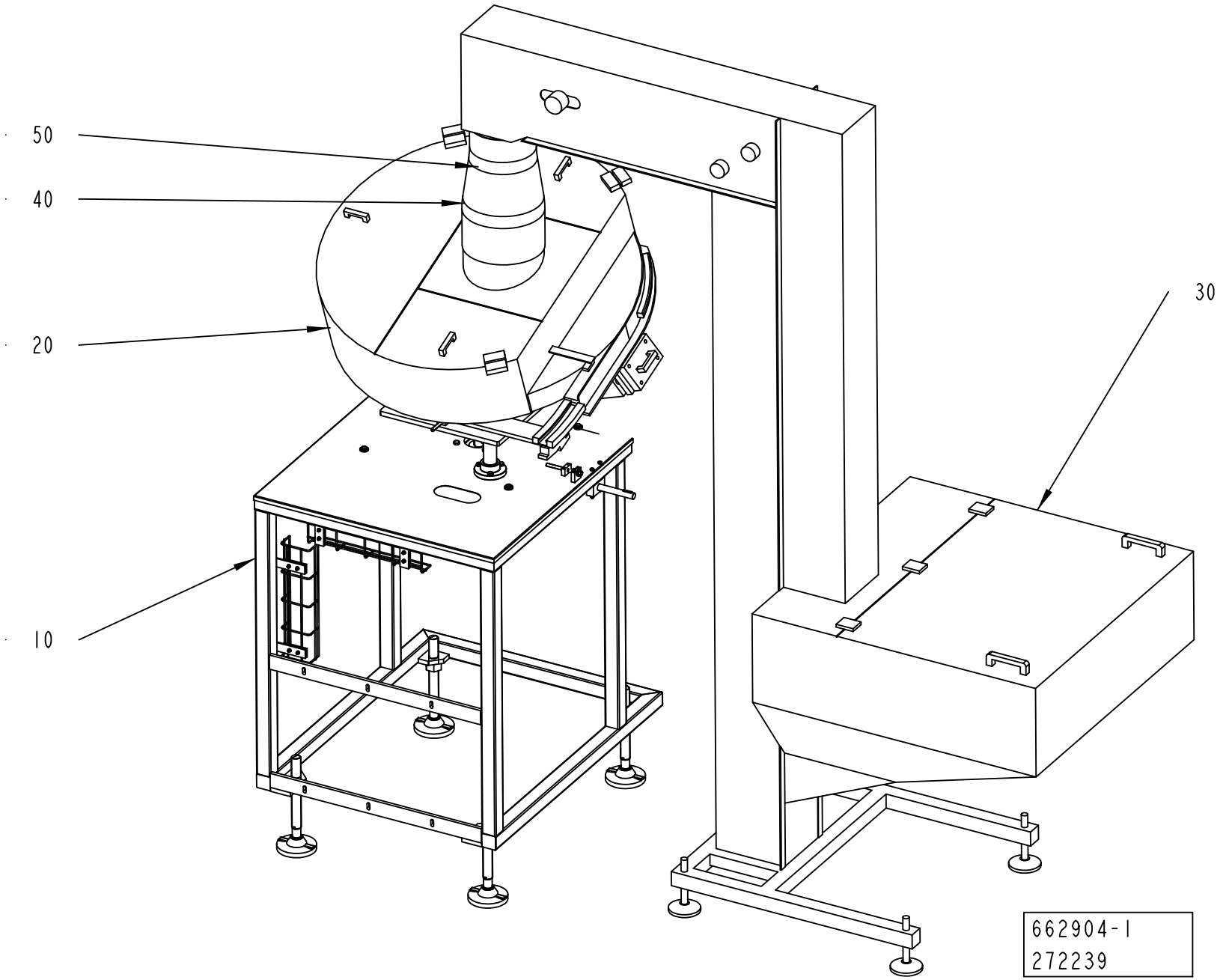
50
40
20
10
30
662904-1
272239

ECM: 313002 - 20070608
Group number: 662904-0100
Assembly Drawing: 662904-1_1_AA

Pos	Part No	UN	Qty	Description	Page No
-					
010	2842830-0100		1	SUPPORT	**4-5**
020	2846416-0100		1	FEEDER	**4-7**
030	2812005-0100		1	ELEVATOR	**4-23**
040	2852912-0000		1	CONNECTION PIPE	
050	2852913-0000		1	CONNECTION PIPE	

Pos	Part No	UN	Qty	Description	Page No

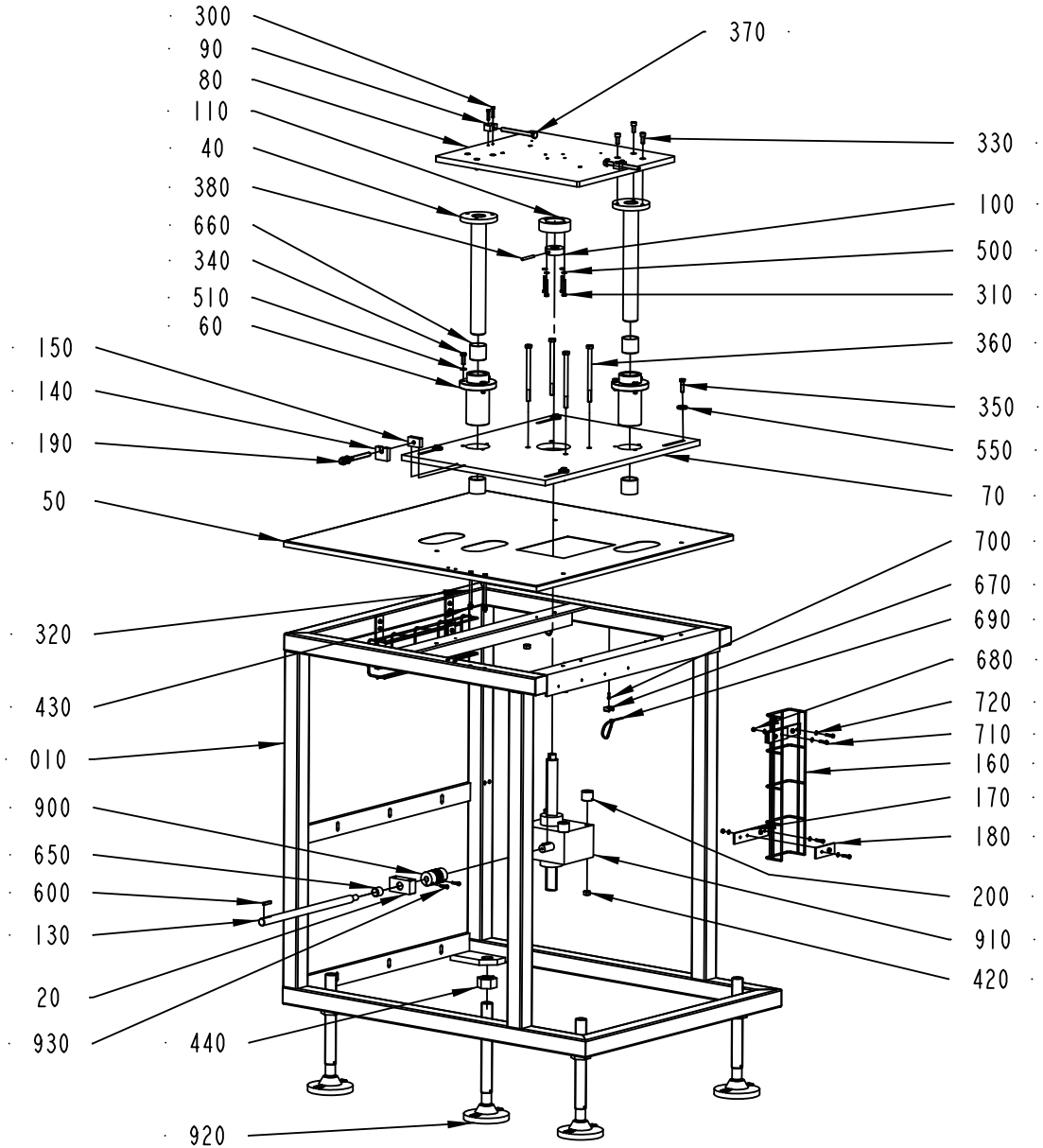

2842830-1
310936

ECM: 310951 - 20070517
Group number: 2842830-0100
Assembly Drawing: 2842830-1_1_AB

Pos	Part No	UN	Qty	Description	Page No
-					
10	2842839-0000		1	FRAME	
100	2769739-0000		1	DISC	
110	2766964-0000		1	FLANGE	
130	2842831-0000		1	ROD	
140	2844570-0000		1	BLOCK	
150	2844571-0000		1	BLOCK	
160	2844525-0000		2	CABLE DUCT	
170	2844526-0000		4	PLATE	
180	2844527-0000		4	PLATE	
190	2844569-0000		1	SCREW	
20	2842832-0000		1	BRACKET	
200	2845097-0000		4	SPACER	
300	312105-0333		4	SCREW M6S ISO 4017 M5X25 A480	
310	312109-0378		4	SCREW M6S ISO 4017 M6X40 A480	
320	312105-0390		2	SCREW M6S ISO 4014 M6X100 A480	
330	312115-0451		6	SCREW ISO4762 M8X20 A4 80	
340	312105-0453		6	SCREW M6S ISO 4017 M8X25 A480	
350	312105-0455		4	SCREW M6S ISO 4017 M8X30 A480	
360	312105-0519		4	SCREW M6S ISO 4014 M10X150 A480	
370	6-4000 0006 08		2	SCREW M6S 10 X 110	
380	311103-0365		1	PARALLEL PIN ISO 2338 6M6X50 A1	
40	2842835-0000		2	COLUMN	
420	312605-0320		4	HEXAGON NUT, M6M M10 A280	
430	312607-0316		2	HEXAGON NUT, EN 24032 M6M M6 A480	
440	312607-0332		4	HEXAGON NUT, EN 24032 M6M M30 A480	
50	2842833-0000		1	COVER	
500	315105-0153		6	WASHER BRB 6,4X12 RFR	
510	315105-0165		6	WASHER BRB 8,4X16 RFR	
550	315125-0165		4	WASHER TBRSB 8,4X26X5 A4	
60	2842834-0000		2	FLANGE	
600	315705-0237		1	PARALLEL KEY W. ROUND ENDS 6X6X32 MM	
650	321133-0260		1	BUSHING, 20X23X20 MM	
660	321133-0420		4	BUSHING, 40X44X40 MM	
670	352113-0203		5	ANCHOR PLATES FOR STRIPS, TYPE TM3S8-M0	
680	312605-0314		8	HEXAGON NUT, M6M M5 A280	
690	352113-0102		5	CABLE TIE, BLACK 188X4,8 MM	
70	2842836-0000		1	PLATE	
700	312125-0291		5	SCREW ISO 1207 M4X12 A4	
710	312105-0332		16	SCREW M6S ISO 4017 M5X22 A470	
720	315105-0146		24	WASHER BRB 5,3X10 RFR	
80	2842837-0000		1	PLATE	
90	2842838-0000		2	BLOCK	
900	90600-2560		1	COUPLING 14X20 MM, 727-38-4838	
910	90600-0658		1	WORM GEAR SCREW JACK, TP00063000130	
920	90600-1002		1	FOOT 45000N, 297/63399N	
930	312115-0331		2	SCREW ISO4762 M5X20 A4 80	

Machine Type	Group Description	Used-In	Group Number	Page No

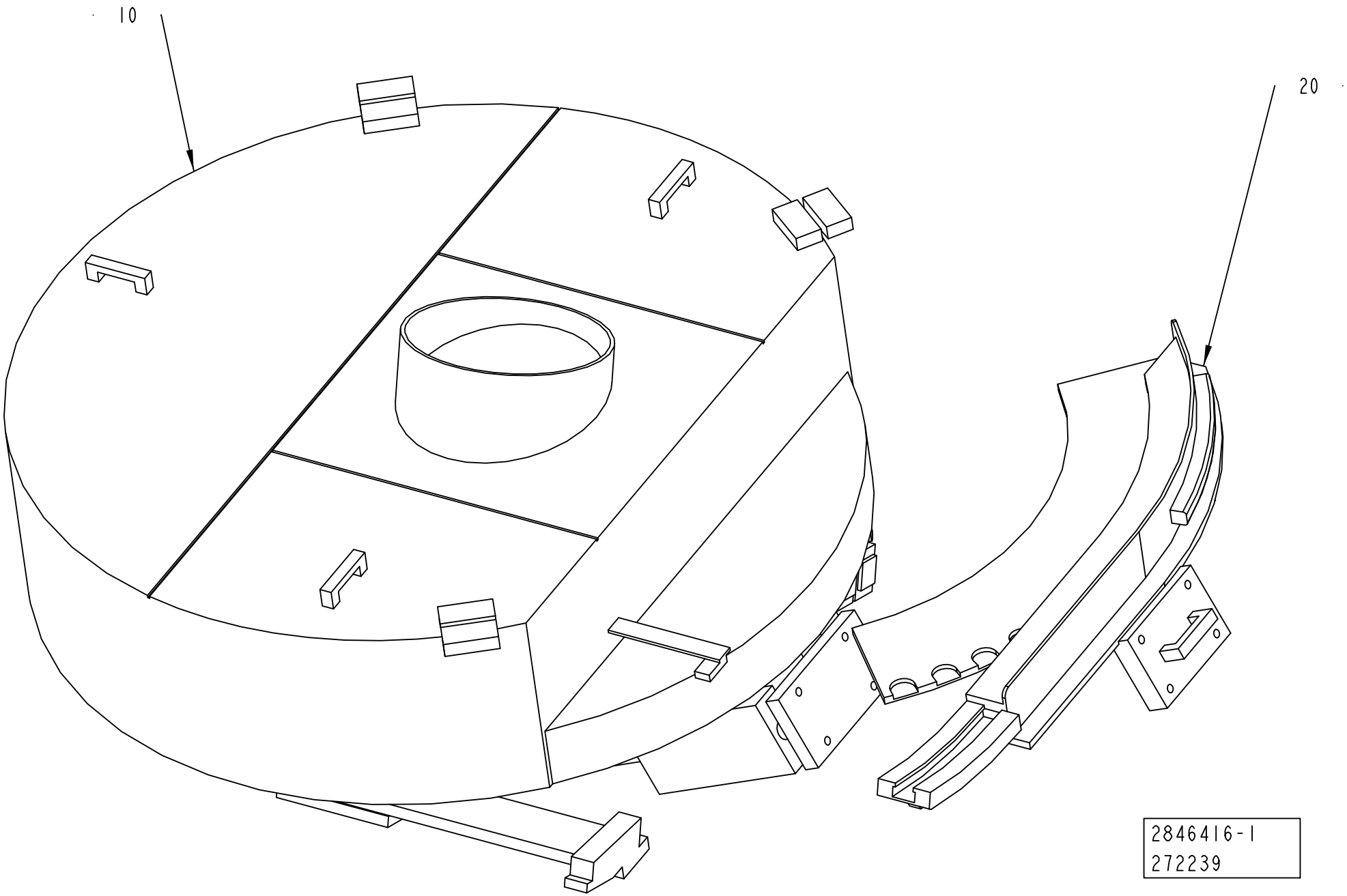
10
20
2846416-1
272239

ECM: 313003 - 20070608
Group number: 2846416-0100
Assembly Drawing: 2846416-1_1_AA

Pos	Part No	UN	Qty	Description	Page No
SLIMCAP 1000					
020	2846408-0100		1	VOLUME KIT	**4-9**
SLIMCAP 2000					
020	2873977-0100		1	VOLUME KIT	**4-11**
STREAMCAP1000					
020	2846407-0100		1	VOLUME KIT	**4-13**
STREAMCAP200					
020	2874001-0100		1	VOLUME KIT	**4-15**
STREAMCAP330					
020	2874002-0100		1	VOLUME KIT	**4-17**
STREAMCAP500					
020	2873978-0100		1	VOLUME KIT	**4-19**
Common Parts					
010	2846406-0100		1	CAP SORTER	**4-21**

Pos	Part No	UN	Qty	Description	Page No

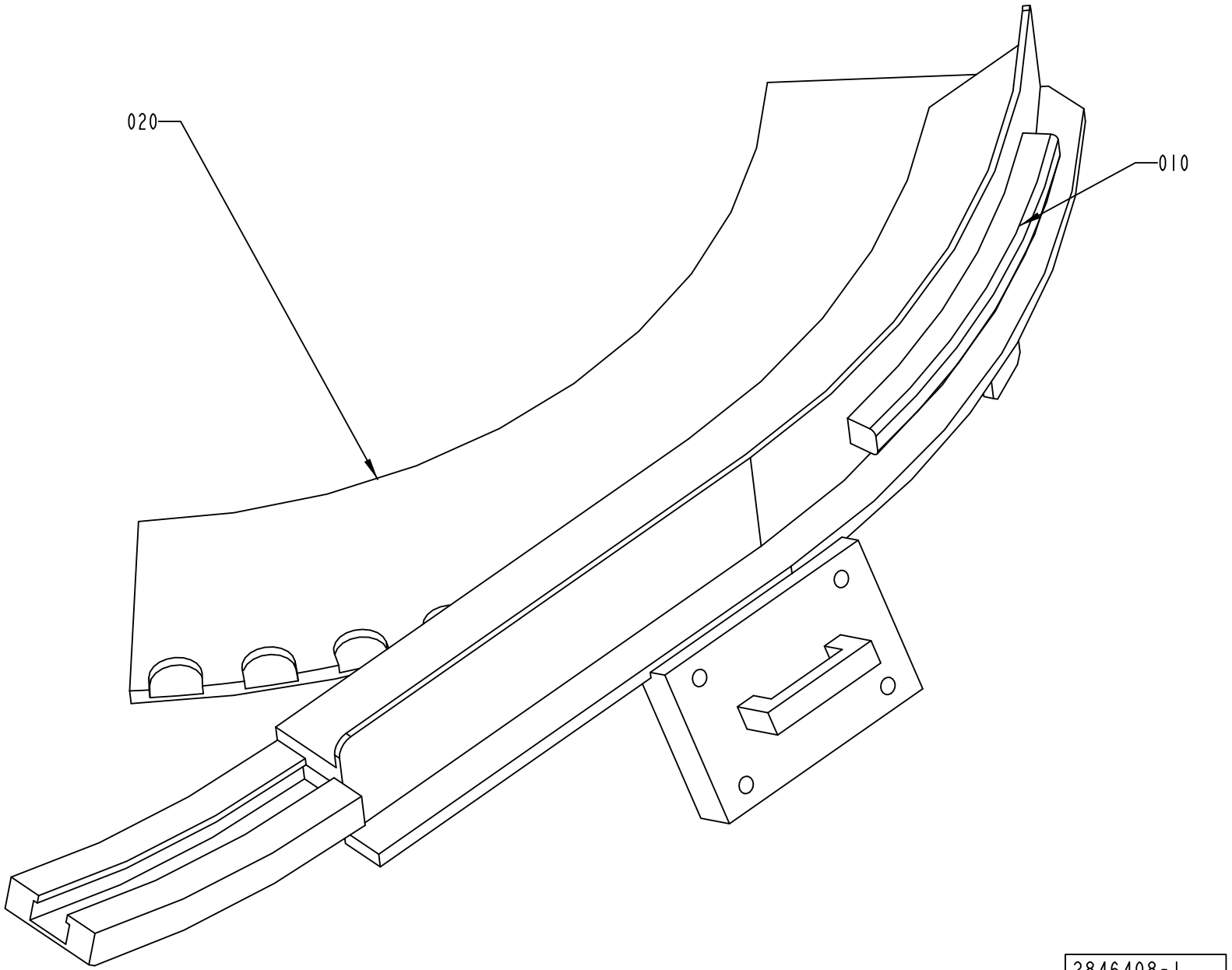
020
010
2846408-1
310936

ECM: 310943 - 20070517
Group number: 2846408-0100
Assembly Drawing: 2846408-1_1_AB

Pos	Part No	UN	Qty	Description	Page No
-					
010	2857743-0000		13	BRUSH	
020	2857744-0000		4	GUIDE	

Pos	Part No	UN	Qty	Description	Page No

Machine Type | Group Description | Used-In | Group Number | Page No

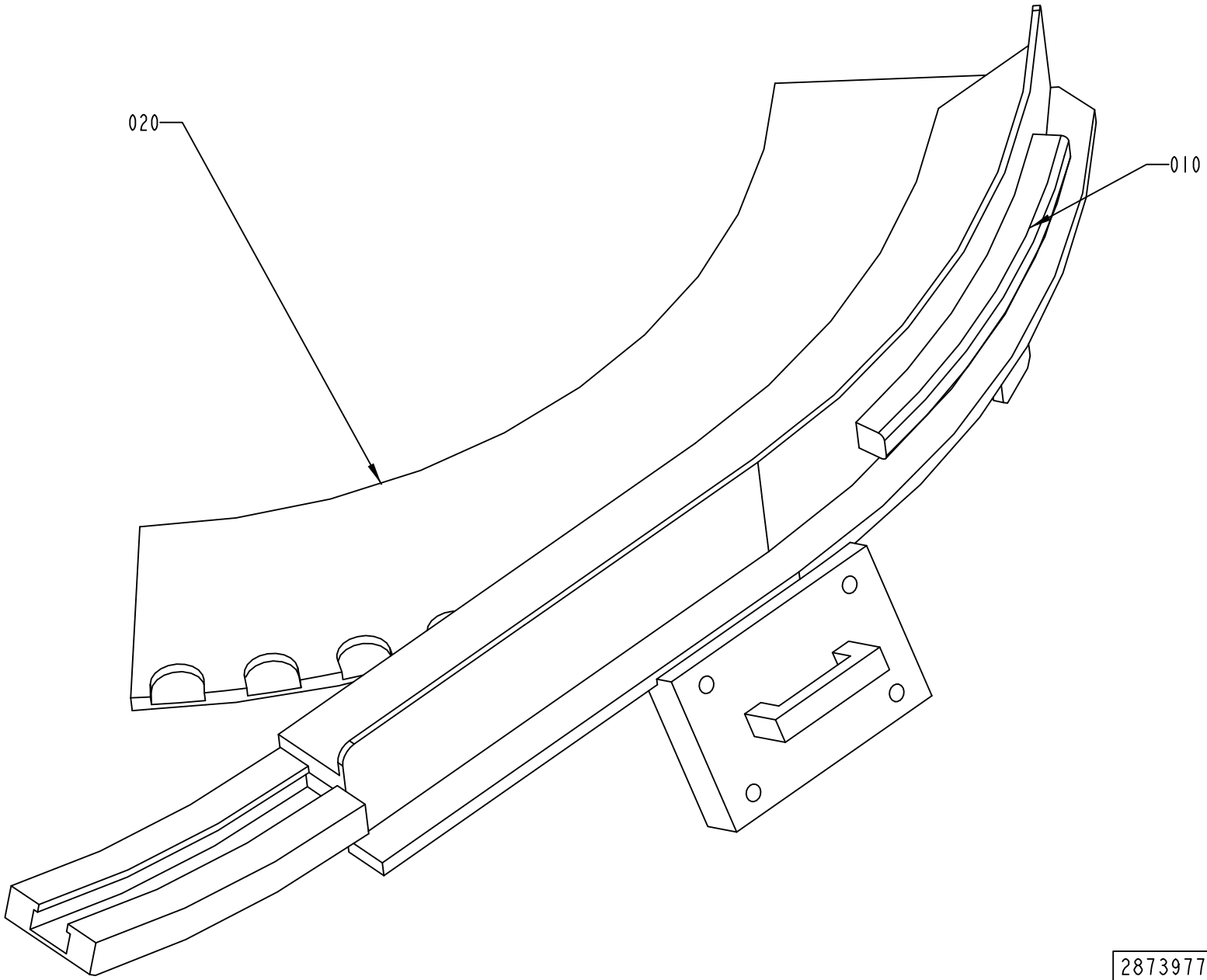

2873977-1
310936

ECM: 310953 - 20070517
Group number: 2873977-0100
Assembly Drawing: 2873977-1_1_AA

Pos	Part No	UN	Qty	Description	Page No
-					
010	2857743-0000		10	BRUSH	
020	2873979-0000		4	GUIDE	

Pos	Part No	UN	Qty	Description	Page No

Machine Type | Group Description | Used-In | Group Number | Page No

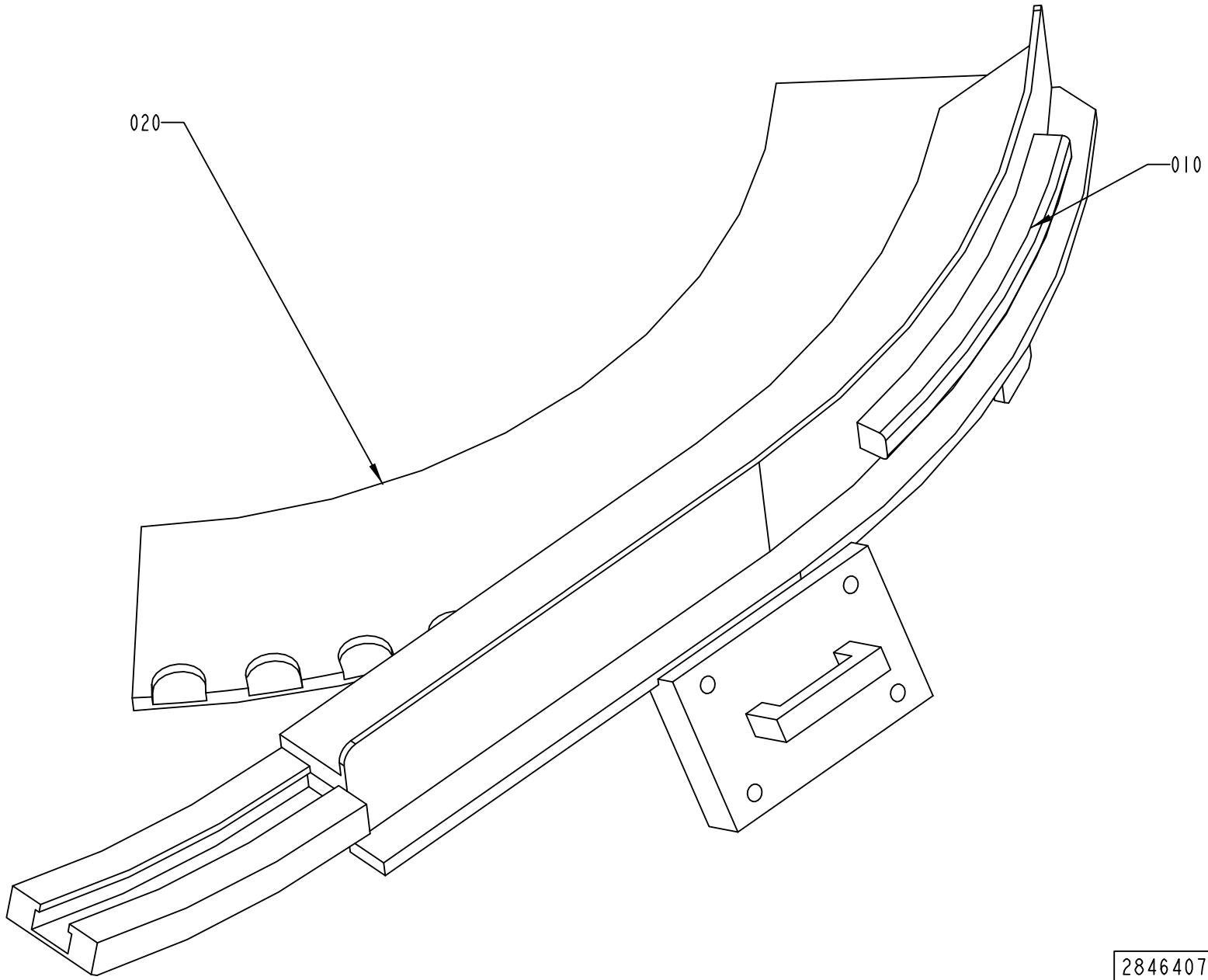
020
010
2846407-1
310936

ECM: 310942 - 20070517
Group number: 2846407-0100
Assembly Drawing: 2846407-1_1_AB

Pos	Part No	UN	Qty	Description	Page No
-					
010	2857743-0000		8	BRUSH	
020	2857745-0000		4	GUIDE	

Pos	Part No	UN	Qty	Description	Page No

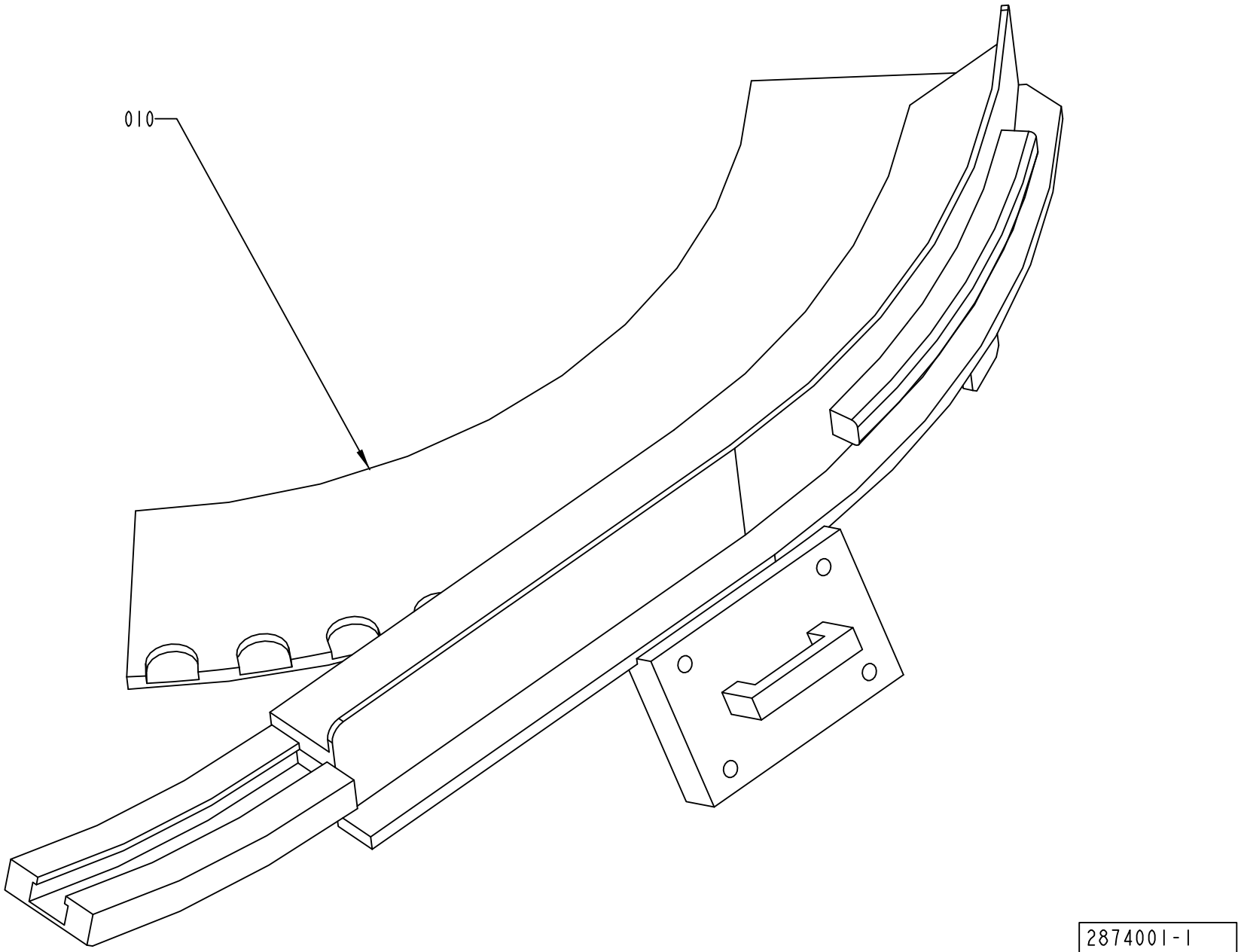
010
2874001-1
312981

ECM: 313004 - 20070608
Group number: 2874001-0100
Assembly Drawing: 2874001-1_1_AA

Pos	Part No	UN	Qty	Description	Page No	Pos	Part No	UN	Qty	Description	Page No
-											
010	2874003-0000		4	GUIDE							

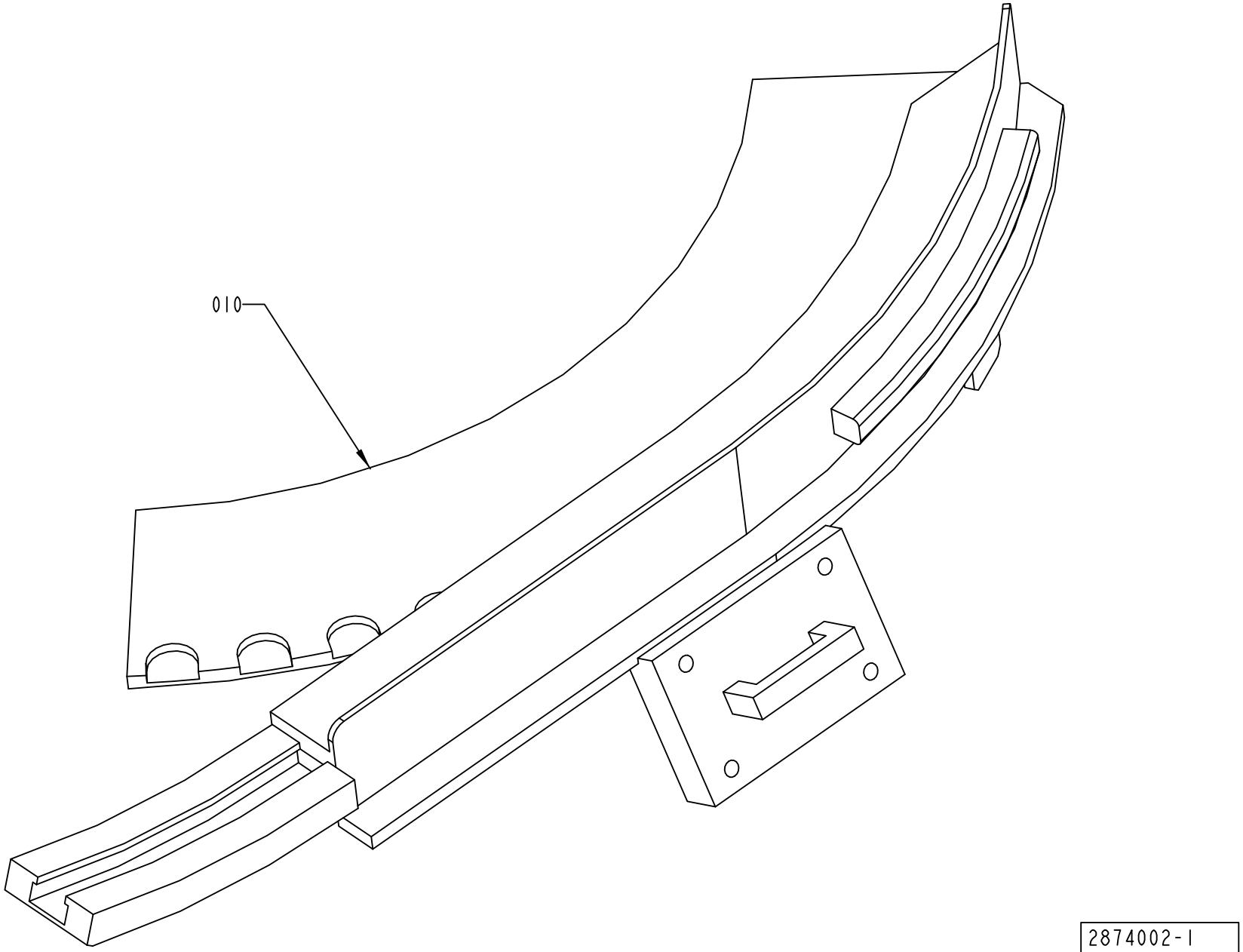
010
2874002-1
312981

ECM: 313005 - 20070608
Group number: 2874002-0100
Assembly Drawing: 2874002-1_1_AA

Pos	Part No	UN	Qty	Description	Page No
-					
010	2874004-0000		4	GUIDE	

Pos	Part No	UN	Qty	Description	Page No

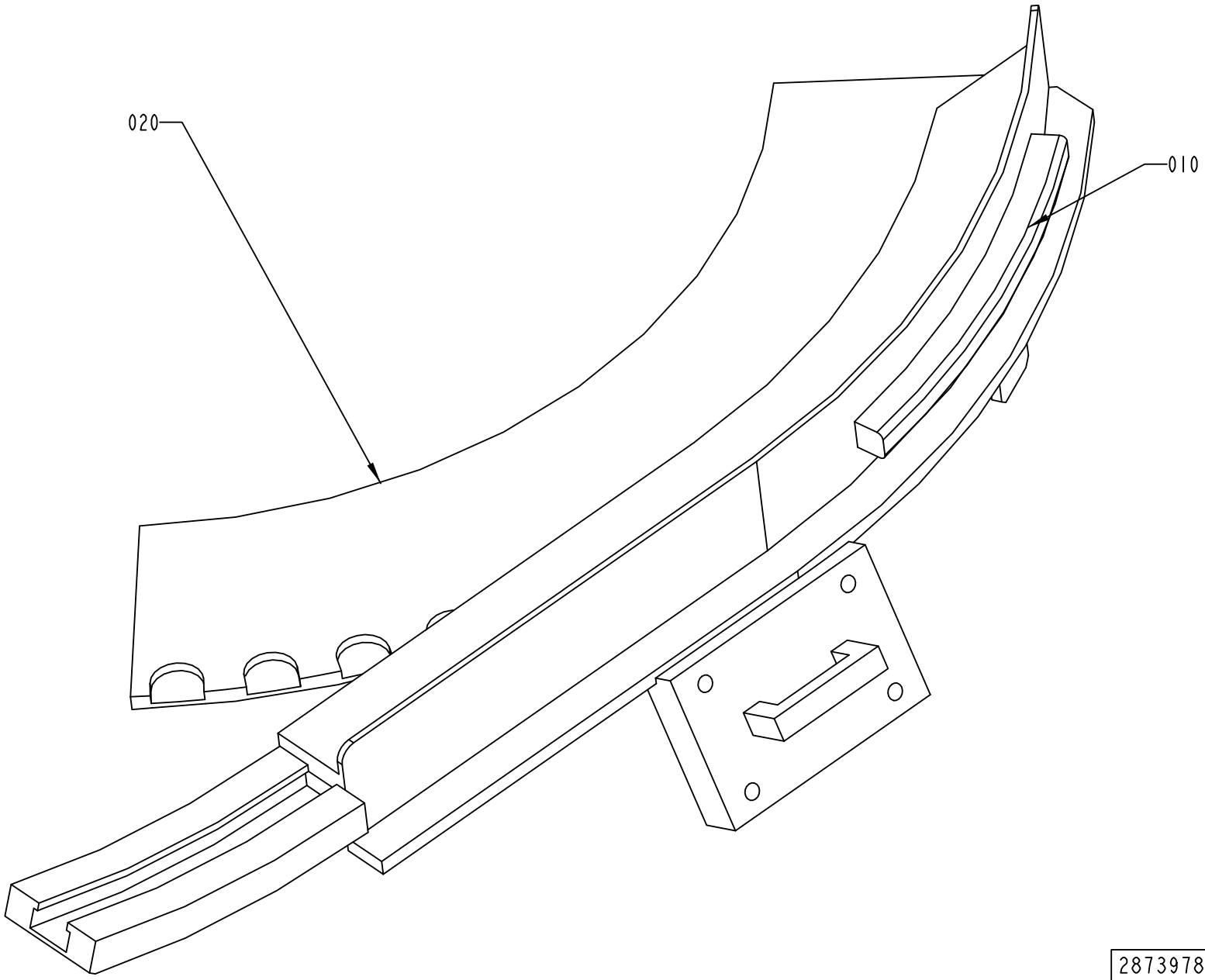

2873978-1
310936

ECM: 310992 - 20070517
Group number: 2873978-0100
Assembly Drawing: 2873978-1_1_AA

Pos	Part No	UN	Qty	Description	Page No
-					
010	2857743-0000		13	BRUSH	
020	2873980-0000		4	GUIDE	

Pos	Part No	UN	Qty	Description	Page No

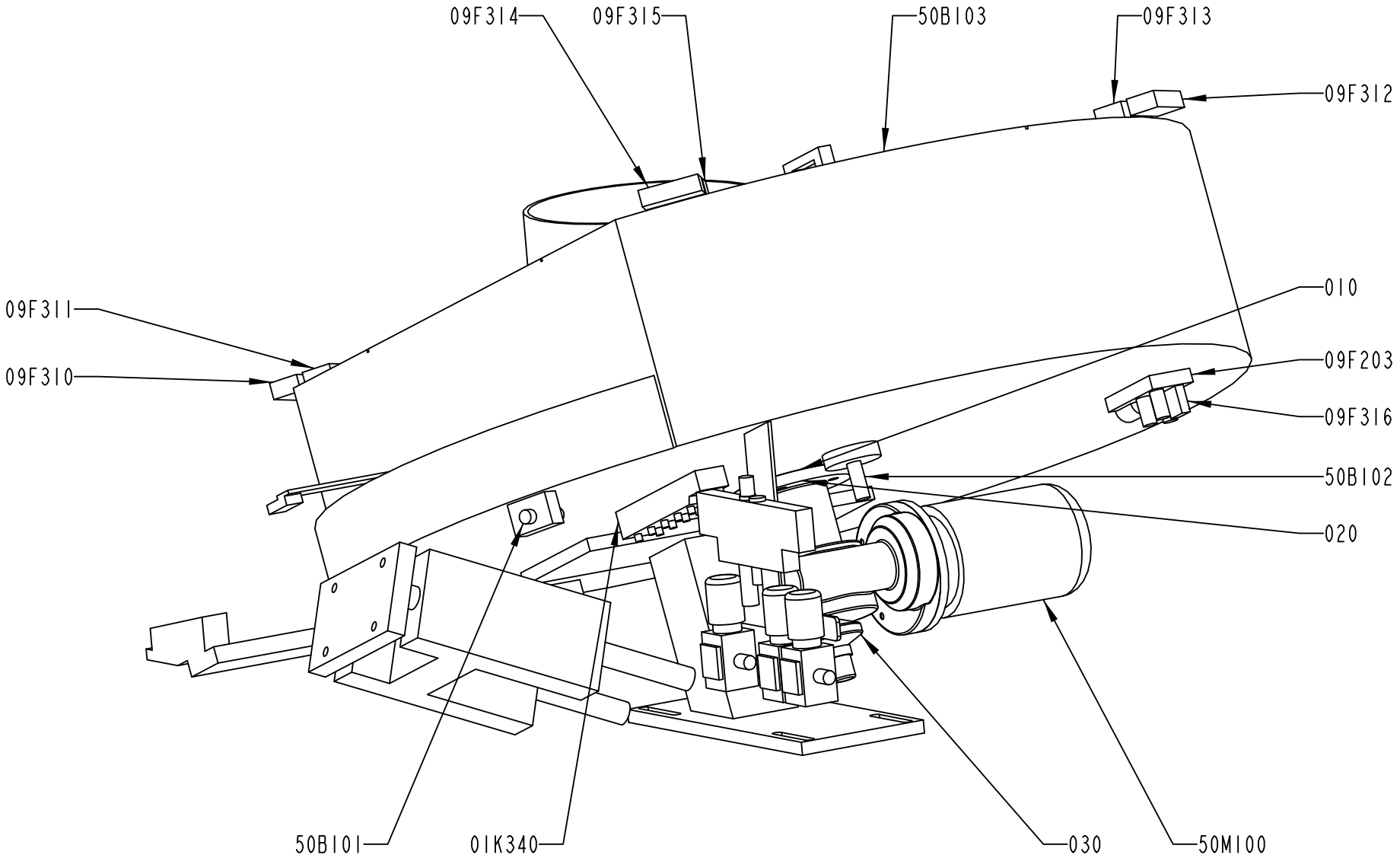

2846406-1
310936

ECM: 310940 - 20070517
Group number: 2846406-0100
Assembly Drawing: 2846406-1_1_AB

Pos	Part No	UN	Qty	Description	Page No
-					
010	321308-0206		1	BALL BEARING, 30X55X13 MM	
01K340	90459-6062		1	REMOTE I/O, IP67 8PTS IN/OUT SELF-CONFIG	
020	315751-0137		1	RETAINING RING FOR SHAFT DIN 471 65 A2	
030	2618350-0000		1	WORM GEAR	
09F203	90459-4254		1	CONNECTION BLOCK TINA 4A, 20-054-03	
09F310	90459-6961		1	SAFETY SENSOR, NON CONT. ADAM-E M12 0,5M	
09F311	90459-4089		1	SAFETY SENSOR NON-CONTACT EVA E	
09F312	90459-6961		1	SAFETY SENSOR, NON CONT. ADAM-E M12 0,5M	
09F313	90459-4089		1	SAFETY SENSOR NON-CONTACT EVA E	
09F314	90459-6961		1	SAFETY SENSOR, NON CONT. ADAM-E M12 0,5M	
09F315	90459-4089		1	SAFETY SENSOR NON-CONTACT EVA E	
09F316	90459-5627		1	CONNECTION TINA 1A 20-054-00	
50B101	90458-2907		1	PROX.SW. IFS204	
50B102	90458-2907		1	PROX.SW. IFS204	
50B103	90458-2907		1	PROX.SW. IFS204	
50M100	90458-1706		1	MOTOR 3GVA062002-CSB M2VA63B4	

Pos	Part No	UN	Qty	Description	Page No

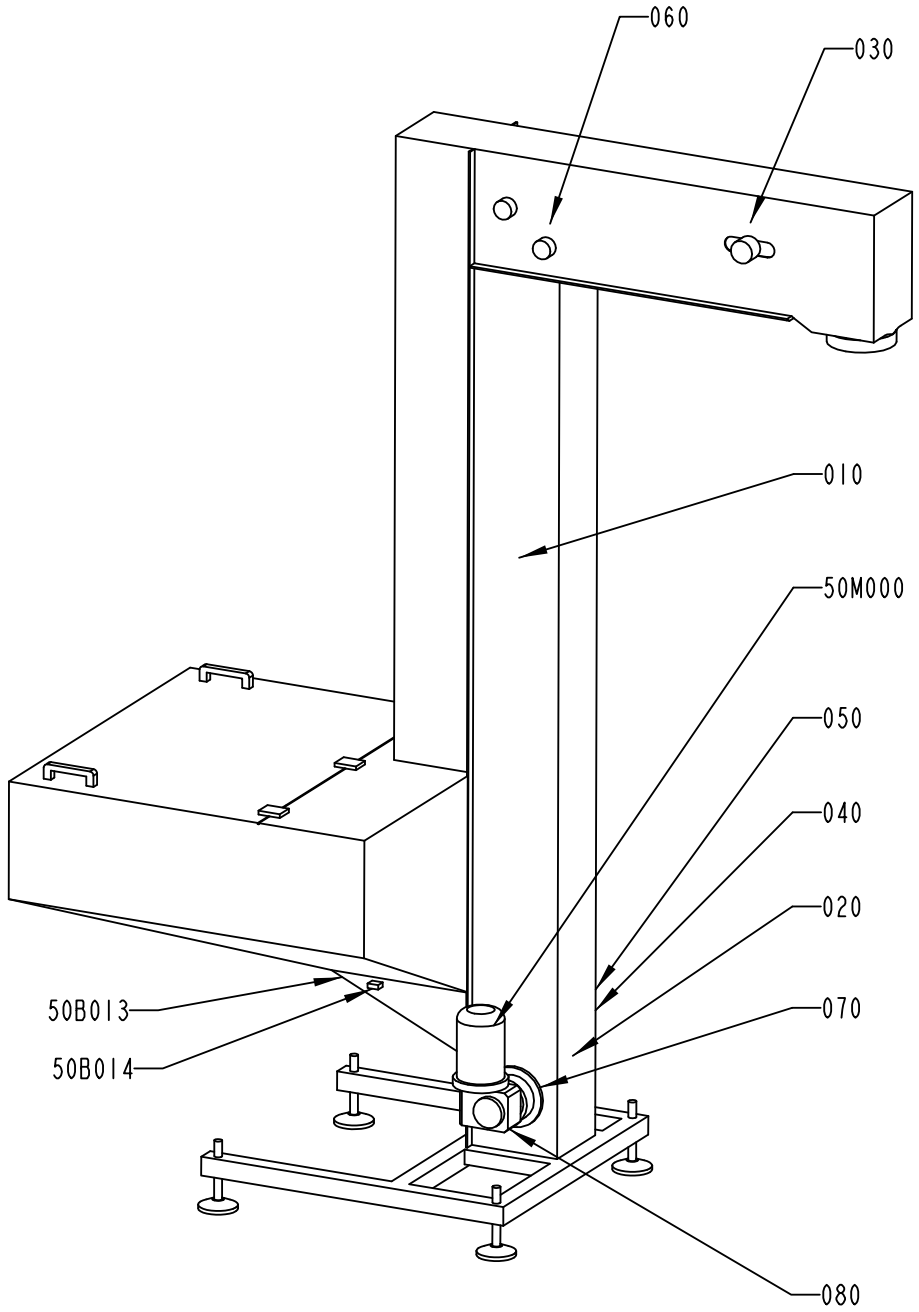

2812005-1
272239

ECM: 274958 - 20060921
Group number: 2812005-0100
Assembly Drawing: 2812005-1_1_AA

Pos	Part No	UN	Qty	Description	Page No
-					
010	2852914-0000		1	CONVEYOR BELT	
020	90014-0059		1	ROLLER, RPS/94 20R8	
030	90014-0058		2	ROLLER, PS/20R8	
040	90458-1559		1	FLANGE BEARING 17X98X32,1 MM	
050	321308-0204		1	BALL BEARING, 20X42X12 MM	
060	321308-0202		2	BALL BEARING, 15X32X9 MM	
070	90458-1560		1	SHAFT COUPLING, 15X15 MM	
080	90056-0178		1	WORM GEAR VF 44 F1-70 P63 B5 B3	
50B013	90459-5529		1	PH.CELL E3Z-T86A, SENDER+RECIEVER	
50M000	90458-2483		1	MOTOR	

Pos	Part No	UN	Qty	Description	Page No

Tetra Pak

SPC
Spare Parts Catalogue

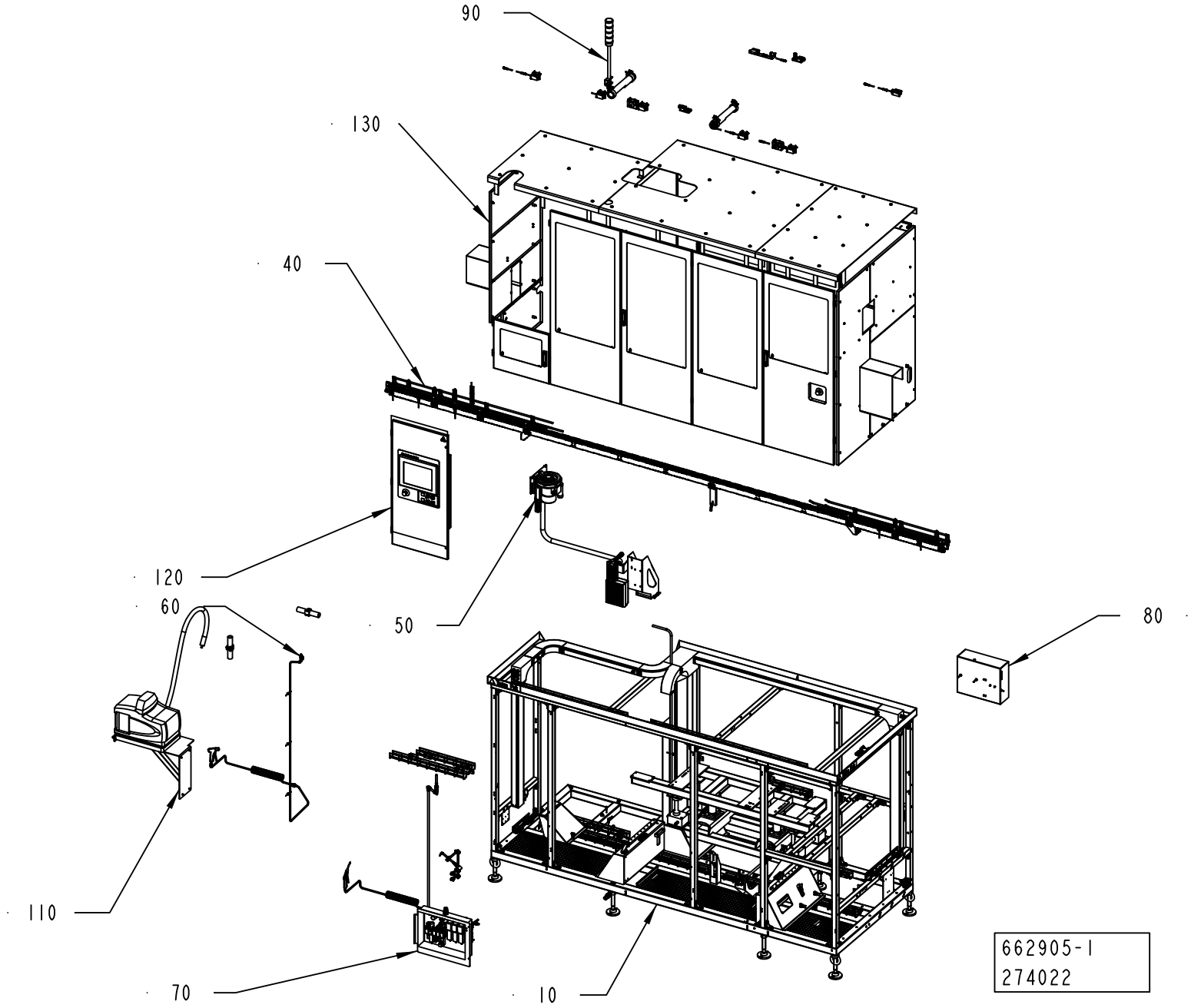
90
130
40
120
60
50
80
110
70
10
662905-1
274022

ECM: 305572 - 20070517
Group number: 662905-0100
Assembly Drawing: 662905-1_1_AA

Pos	Part No	UN	Qty	Description	Page No
-					
010	2758505-0100		1	MACHINE BODY	**5-5**
040	2758507-0100		1	PACKAGE CONVEYOR	**5-21, 5-23**
050	2773622-0100		1	LINE HEATER	**5-43, 5-45**
060	2758514-0100		1	WATER CONNECTION	**5-57**
070	2758513-0100		1	AIR SUPPLY	**5-59**
080	2758522-0100		1	LUBRICATION UNIT	**5-75**
090	2769754-0100		1	ELECTRIC EQUIPMENT	**5-85**
110	2758511-0100		1	HOTMELT UNIT	**5-99**
120	2779070-0100		1	OPERATOR INTERFACE	**5-101**
130	2826741-0100		1	DOORS AND COVERS	**5-109**

Pos	Part No	UN	Qty	Description	Page No

Machine Type | Group Description | Used-In | Group Number | Page No

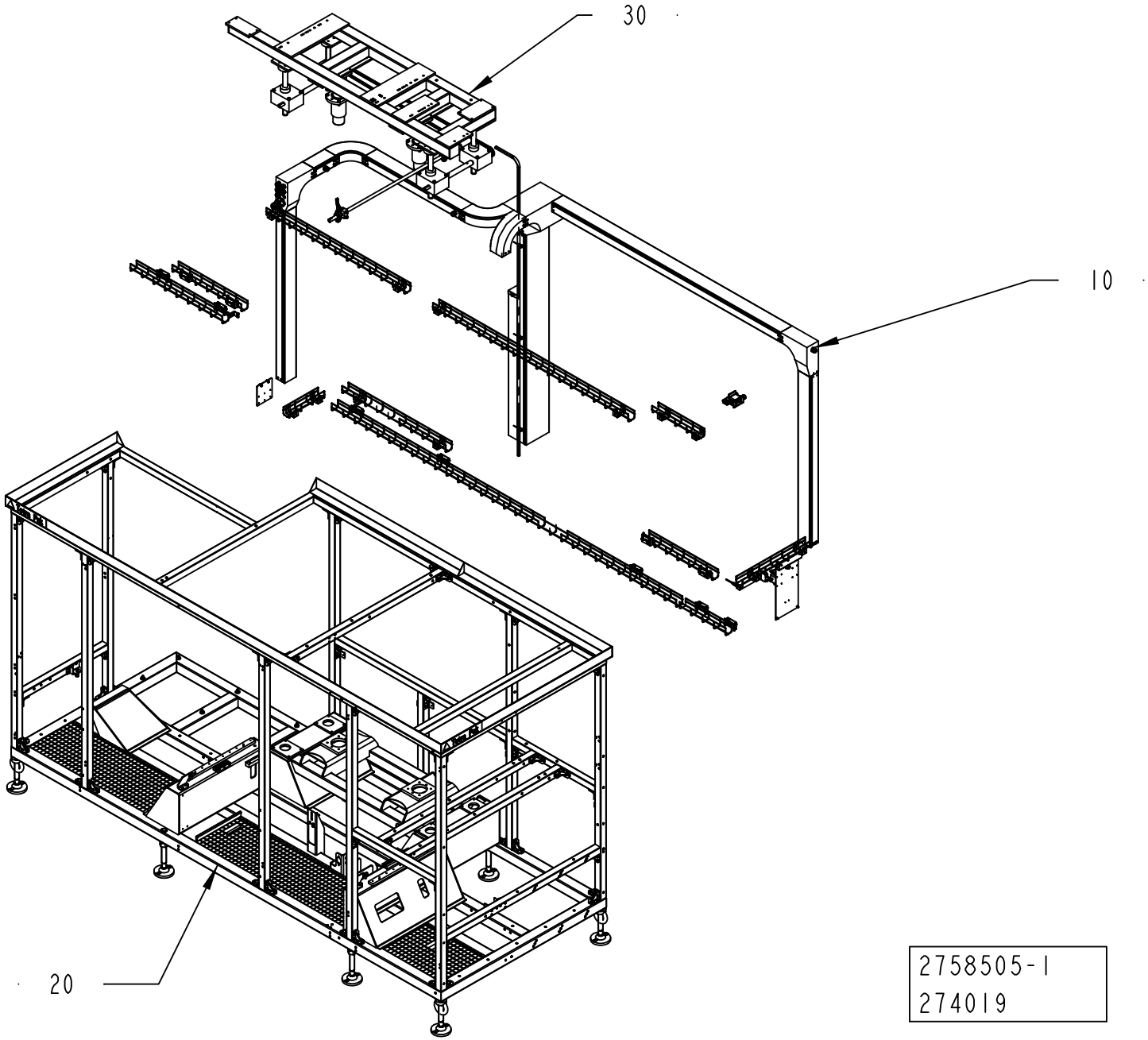

2758505-1
274019

ECM: 303505 - 20070517
Group number: 2758505-0100
Assembly Drawing: 2758505-1_1_AA

Pos	Part No	UN	Qty	Description	Page No
-					
010	2758515-0100		1	CABLE DUCT	**5-7, 5-9**
020	2769761-0100		1	MACHINE BODY	**5-11, 5-13**
030	2769738-0100		1	HEIGHT ADJUSTMENT	**5-17**

Pos	Part No	UN	Qty	Description	Page No

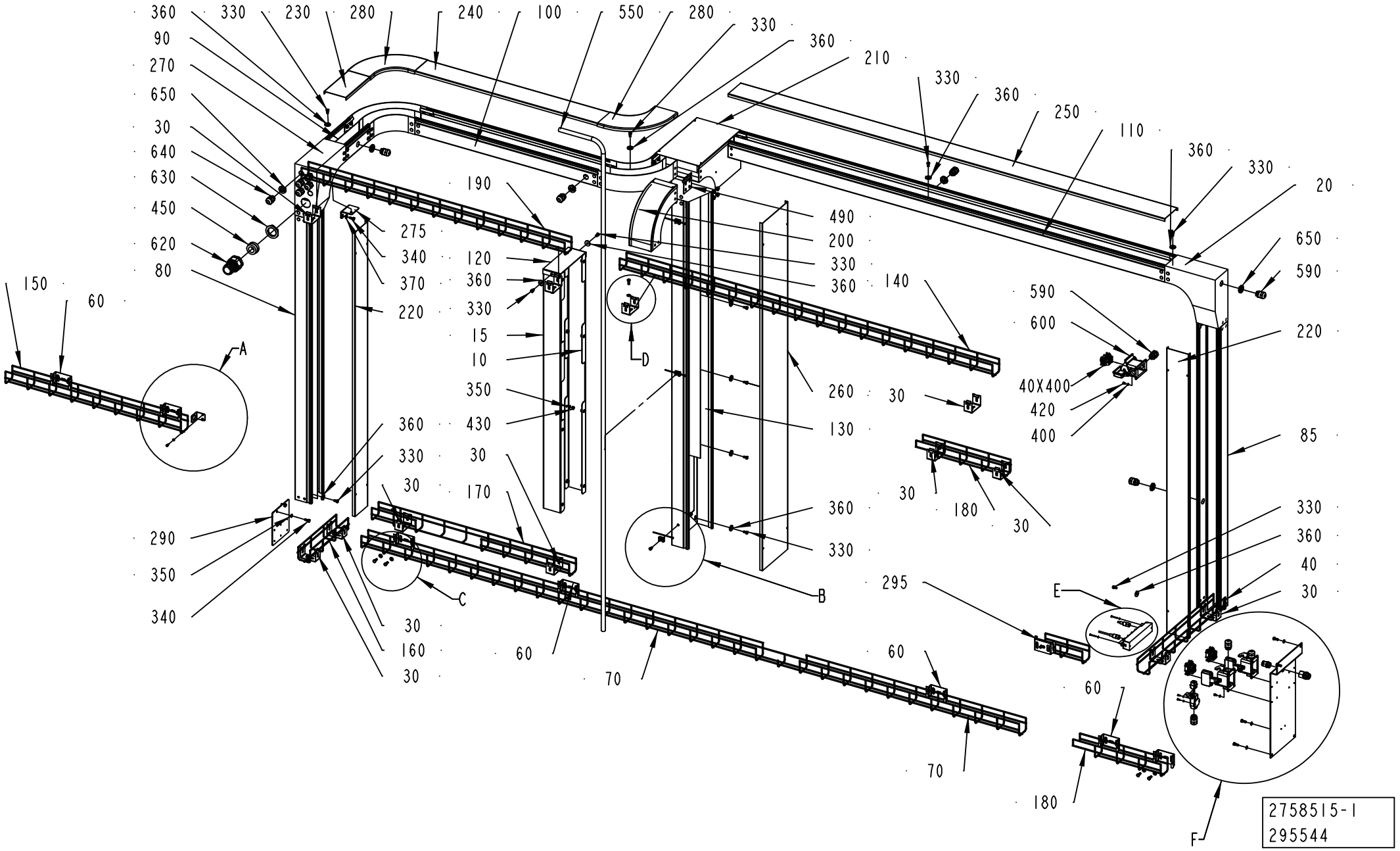
360
330
230
280
240
100
550
280
330
360
210
330
360
250
110
360
330
20
90
270
650
30
640
630
450
620
80
150
60
190
275
340
370
220
120
360
330
15
10
350
430
30
170
490
200
330
360
140
590
600
40X400
420
400
650
590
220
85
260
30
130
360
330
30
180
30
330
360
40
30
295
E
60
70
180
F
A
B
C
D
2758515-1
295544

ECM: 303508 - 20070517
Group number: 2758515-0100
Assembly Drawing: 2758515-1_1_AB

This list covers pages from 5-6 to 5-9

Pos	Part No	UN	Qty	Description	Page No
STREAMCAP500, STREAMCAP1000, SLIMCAP 2000, SLIMCAP 1000 (See drawing on pages: 5-6, 5-8)					
040	2802407-0000		1	CABLE DUCT	
060	2802414-0000		8	BRACKET	
160	2802409-0000		1	CABLE DUCT	
320	312125-0232		2	SCREW ISO 1207 M3X25 A4	
340	312105-0368		28	SCREW M6S ISO 4017 M6X16 A480	
345	312105-0447		5	SCREW M6S ISO 4017 M8X12 A480	
370	315105-0156		22	WASHER BRB 6,7X14 RFR	
380	315105-0165		5	WASHER BRB 8,4X16 RFR	
390	315105-0124		4	WASHER BRB 3,2X6 RFR	
Common Parts					
010	2746903-0000		1	CABLE DUCT	
015	2873928-0000		1	CABLE DUCT	
01K420	90459-6062		1	REMOTE I/O, IP67 8PTS IN/OUT SELF-CONFIG	
020	2802389-0000		1	CABLE DUCT	
030	2802402-0000		12	BRACKET	
050	2805455-0000		1	ANGLE BRACKET	
070	2802403-0000		1	CABLE DUCT	
080	2788159-0000		1	CABLE DUCT	
085	2838687-0000		1	CABLE DUCT	
090	2802380-0000		1	CABLE DUCT	
100	2802385-0000		1	CABLE DUCT	
110	2802388-0000		1	CABLE DUCT	
120	2779800-0000		1	PLATE	
130	2802391-0000		1	CABLE DUCT	
140	2802406-0000		1	CABLE DUCT	
150	2802408-0000		1	CABLE DUCT	
170	2802410-0000		1	CABLE DUCT	
180	2802412-0000		2	CABLE DUCT	
190	2802413-0000		1	CABLE DUCT	
200	2802390-0000		1	CABLE DUCT	
210	2802387-0000		1	CABLE DUCT	
220	2805456-0000		2	COVER	
230	2805457-0000		1	COVER	
240	2805458-0000		1	COVER	
250	2805459-0000		1	COVER	
260	2805460-0000		1	COVER	
270	2802379-0000		1	CABLE DUCT	
275	2830227-0000		1	BRACKET	
280	2802381-0000		2	CURVE	
285	2802417-0000		1	PLATE	
290	2802423-0000		1	PLATE	
295	2868792-0000		1	CABLE DUCT	
300	312125-0364		3	SCREW ISO 1207 M6X10 A4	
310	312115-0289		2	SCREW ISO4762 M4X10 A4 80	
330	312105-0366		16	SCREW M6S ISO 4017 M6X12 A480	
350	315105-0153		14	WASHER BRB 6,4X12 RFR	
360	315125-0153		16	WASHER TBRSB 6,4X22X4 A4	
400	315105-0136		14	WASHER BRB 4,3X8 RFR	
40X400	90110-0053		1	FEMALE INSERT HAN 6 E 09 33 006 2701	
410	312125-0222		2	SCREW ISO 1207 M3X8 A4	
420	312125-0287		12	SCREW ISO 1207 M4X8 A4	
430	312605-0316		11	HEXAGON NUT, M6M M6 A280	
440	312605-0318		4	HEXAGON NUT, M6M M8 A280	
450	353249-0054		1	INSERT, SINGLE HOLE, EK 156/25	
470	352113-0204		3	ANCHOR PLATES FOR STRIPS, TYPE TM3S25-M	
480	352113-0101		3	CABLE TIE, BLACK 92X2,5 MM	
490	2838700-0000		19	BRACKET	
50X000	90110-0053		1	FEMALE INSERT HAN 6 E 09 33 006 2701	
50X001	90459-6820		1	FEMALE INSERT HAN 4 A, 09 20 004 2711	
50X110	90110-0053		1	FEMALE INSERT HAN 6 E 09 33 006 2701	
550	90166-0113	MM	2500	HOSE	
570	90459-2133		1	PUSH-IN FITTING QSSF-1/2-12-B	
580	350001-0016		1	PUSH-IN FITTING QS-F-G1/2-12	
590	90458-0307		9	CABLE GLAND, M20X1,5, NO.5311 1020	
600	90459-1461		3	HOUSING HAN 6 E 19 30 006 1255	
610	90459-3081		1	HOUSING HAN A 19 20 003 1250	
620	90458-0434		1	HOSE GLAND W/O INSERT M40 EXTENDED	
630	90458-0326		1	NUT, M40X1,5	
640	90458-0315		5	CABLE GLAND, M20X1,5, NO.5311 1120	
650	90458-0323		10	NUT, M20X1,5	
81W404	351415-0100		1	DEVICENET CONN. CABLE, 0935 361 105/10M	
81W420	351309-0100		1	ACTUATOR/SENSOR CABLE PRKT 4-07/10M	

Machine Type	Group Description	Used-In	Group Number	Page No

DETAIL: A
SCALE: 33:100

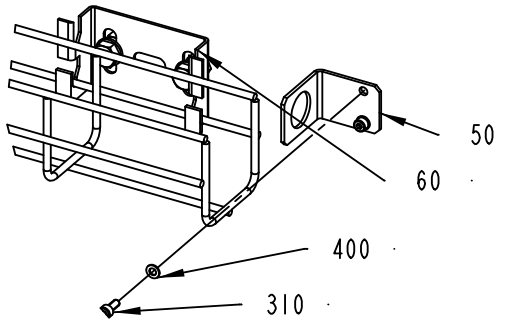

DETAIL: B
SCALE: 33:100

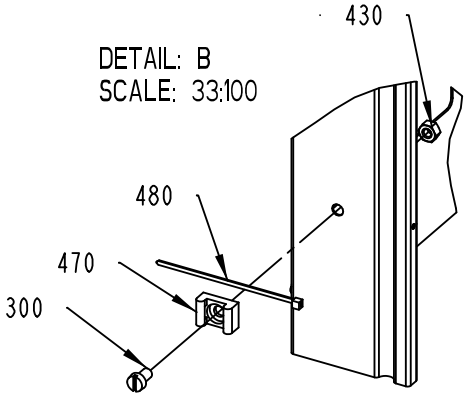

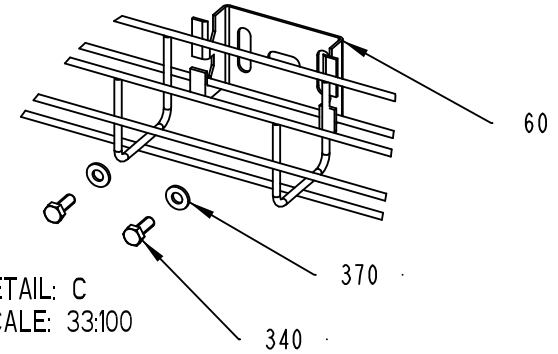

DETAIL: C
SCALE: 33:100

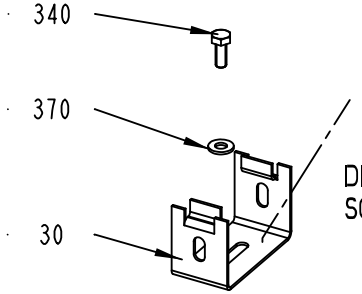

DETAIL: D
SCALE: 33:100

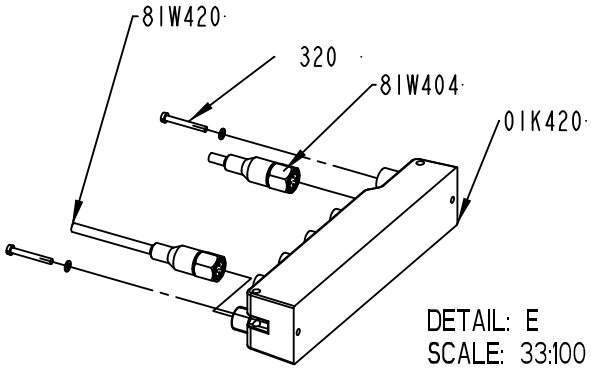

DETAIL: E
SCALE: 33:100

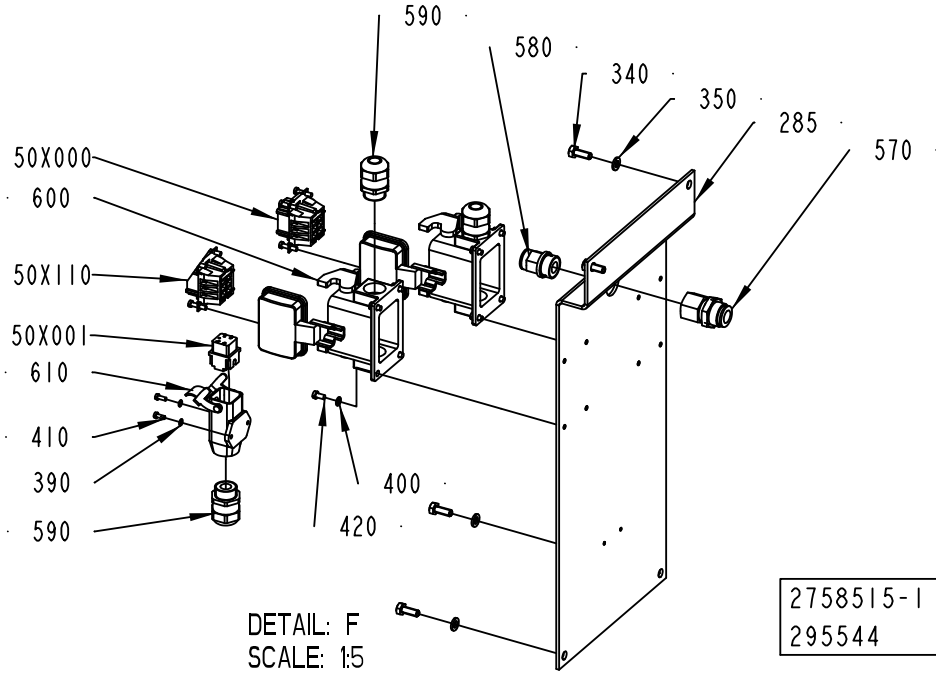

DETAIL: F
SCALE: 1:5

2758515-1
295544

ECM: 303508 - 20070517
Group number: 2758515-0100
Assembly Drawing: 2758515-1_2_AB

This list covers pages from 5-6 to 5-9

Pos	Part No	UN	Qty	Description	Page No
STREAMCAP500, STREAMCAP1000, SLIMCAP 2000, SLIMCAP 1000 (See drawing on pages: 5-6, 5-8)					
040	2802407-0000		1	CABLE DUCT	
060	2802414-0000		8	BRACKET	
160	2802409-0000		1	CABLE DUCT	
320	312125-0232		2	SCREW ISO 1207 M3X25 A4	
340	312105-0368		28	SCREW M6S ISO 4017 M6X16 A480	
345	312105-0447		5	SCREW M6S ISO 4017 M8X12 A480	
370	315105-0156		22	WASHER BRB 6,7X14 RFR	
380	315105-0165		5	WASHER BRB 8,4X16 RFR	
390	315105-0124		4	WASHER BRB 3,2X6 RFR	
Common Parts					
010	2746903-0000		1	CABLE DUCT	
015	2873928-0000		1	CABLE DUCT	
01K420	90459-6062		1	REMOTE I/O, IP67 8PTS IN/OUT SELF-CONFIG	
020	2802389-0000		1	CABLE DUCT	
030	2802402-0000		12	BRACKET	
050	2805455-0000		1	ANGLE BRACKET	
070	2802403-0000		1	CABLE DUCT	
080	2788159-0000		1	CABLE DUCT	
085	2838687-0000		1	CABLE DUCT	
090	2802380-0000		1	CABLE DUCT	
100	2802385-0000		1	CABLE DUCT	
110	2802388-0000		1	CABLE DUCT	
120	2779800-0000		1	PLATE	
130	2802391-0000		1	CABLE DUCT	
140	2802406-0000		1	CABLE DUCT	
150	2802408-0000		1	CABLE DUCT	
170	2802410-0000		1	CABLE DUCT	
180	2802412-0000		2	CABLE DUCT	
190	2802413-0000		1	CABLE DUCT	
200	2802390-0000		1	CABLE DUCT	
210	2802387-0000		1	CABLE DUCT	
220	2805456-0000		2	COVER	
230	2805457-0000		1	COVER	
240	2805458-0000		1	COVER	
250	2805459-0000		1	COVER	
260	2805460-0000		1	COVER	
270	2802379-0000		1	CABLE DUCT	
275	2830227-0000		1	BRACKET	
280	2802381-0000		2	CURVE	
285	2802417-0000		1	PLATE	
290	2802423-0000		1	PLATE	
295	2868792-0000		1	CABLE DUCT	
300	312125-0364		3	SCREW ISO 1207 M6X10 A4	
310	312115-0289		2	SCREW ISO4762 M4X10 A4 80	
330	312105-0366		16	SCREW M6S ISO 4017 M6X12 A480	
350	315105-0153		14	WASHER BRB 6,4X12 RFR	
360	315125-0153		16	WASHER TBRSB 6,4X22X4 A4	
400	315105-0136		14	WASHER BRB 4,3X8 RFR	
40X400	90110-0053		1	FEMALE INSERT HAN 6 E 09 33 006 2701	
410	312125-0222		2	SCREW ISO 1207 M3X8 A4	
420	312125-0287		12	SCREW ISO 1207 M4X8 A4	
430	312605-0316		11	HEXAGON NUT, M6M M6 A280	
440	312605-0318		4	HEXAGON NUT, M6M M8 A280	
450	353249-0054		1	INSERT, SINGLE HOLE, EK 156/25	
470	352113-0204		3	ANCHOR PLATES FOR STRIPS, TYPE TM3S25-M	
480	352113-0101		3	CABLE TIE, BLACK 92X2,5 MM	
490	2838700-0000		19	BRACKET	
50X000	90110-0053		1	FEMALE INSERT HAN 6 E 09 33 006 2701	
50X001	90459-6820		1	FEMALE INSERT HAN 4 A, 09 20 004 2711	
50X110	90110-0053		1	FEMALE INSERT HAN 6 E 09 33 006 2701	
550	90166-0113	MM	2500	HOSE	
570	90459-2133		1	PUSH-IN FITTING QSSF-1/2-12-B	
580	350001-0016		1	PUSH-IN FITTING QS-F-G1/2-12	
590	90458-0307		9	CABLE GLAND, M20X1,5, NO.5311 1020	
600	90459-1461		3	HOUSING HAN 6 E 19 30 006 1255	
610	90459-3081		1	HOUSING HAN A 19 20 003 1250	
620	90458-0434		1	HOSE GLAND W/O INSERT M40 EXTENDED	
630	90458-0326		1	NUT, M40X1,5	
640	90458-0315		5	CABLE GLAND, M20X1,5, NO.5311 1120	
650	90458-0323		10	NUT, M20X1,5	
81W404	351415-0100		1	DEVICENET CONN. CABLE, 0935 361 105/10M	
81W420	351309-0100		1	ACTUATOR/SENSOR CABLE PRKT 4-07/10M	

Machine Type | Group Description | Used-In | Group Number | Page No

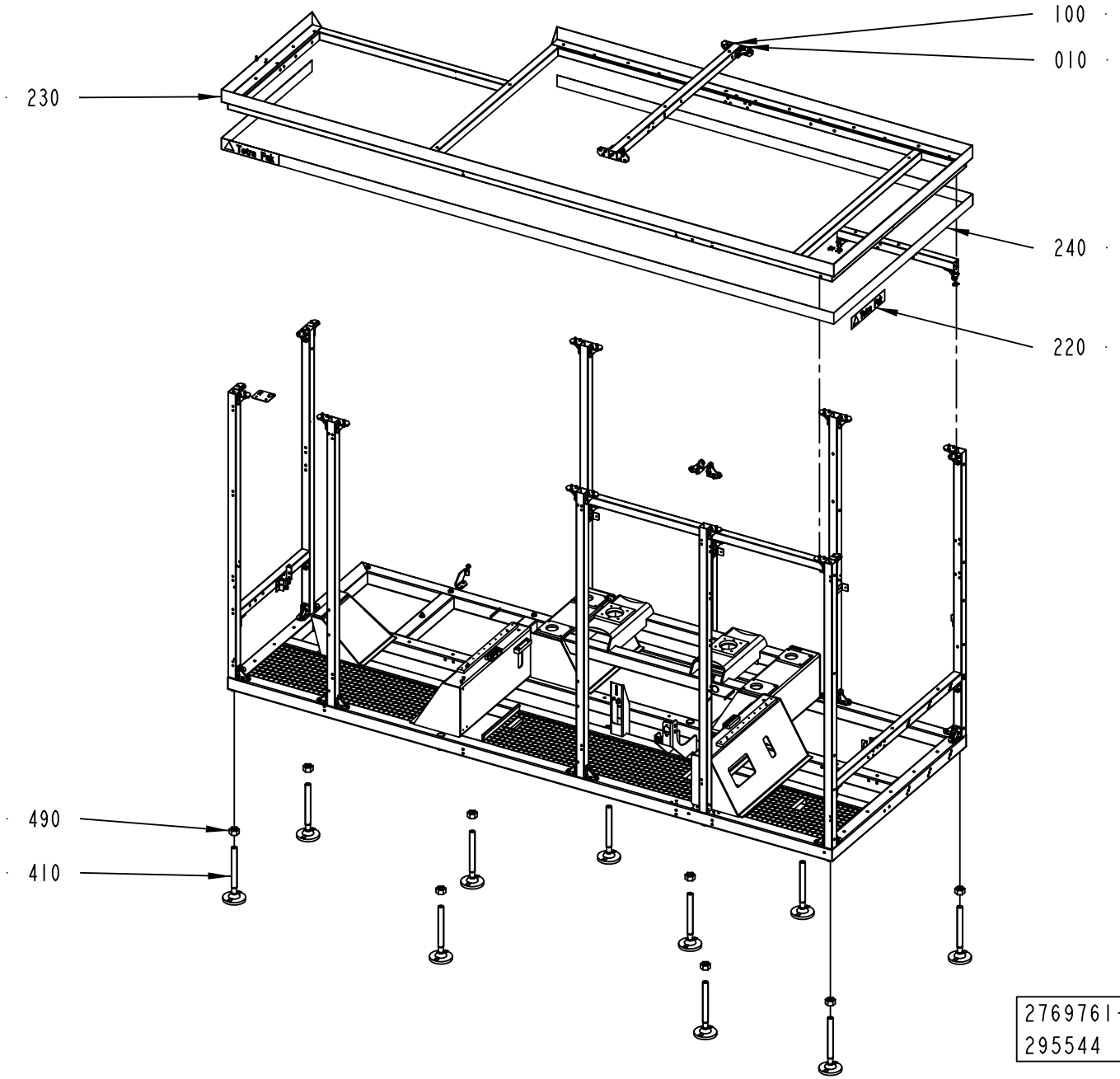
100
010
230
240
220
490
410
2769761-1
295544

ECM: 303513 - 20070517
Group number: 2769761-0100
Assembly Drawing: 2769761-1_1_AB

This list covers pages from 5-10 to 5-13

Pos	Part No	UN	Qty	Description	Page No
STREAMCAP500, STREAMCAP1000, SLIMCAP 2000, SLIMCAP 1000 (See drawing on pages: 5-10, 5-12)					
010	2778595-0100		49	ANGLE	**5-15**
280	2805697-0000		6	SUPPORT	
290	2805696-0000		6	SUPPORT	
520	312105-0367		8	SCREW M6S ISO 4017 M6X14 A480	
530	312105-0368		6	SCREW M6S ISO 4017 M6X16 A480	
540	312105-0370		18	SCREW M6S ISO 4017 M6X20 A480	
560	315105-0153		34	WASHER BRB 6,4X12 RFR	
Common Parts					
030	2807095-0000		1	BEAM	
040	2778576-0000		1	BEAM	
050	2778577-0000		1	BEAM	
060	2778569-0000		1	BEAM	
070	2779009-0000		2	BEAM	
080	2779011-0000		1	BEAM	
090	2779012-0000		1	BEAM	
100	2830220-0000		1	BEAM	
110	2779811-0000		1	BEAM	
130	2778567-0000		1	BEAM	
150	2766975-0000		1	FRAME	
190	2775447-0000		2	BRACKET	
200	2779776-0000		2	PLATE	
210	2779786-0000		1	PLATE	
220	1021990-0000		4	SIGN 356X70MM HOUSE MARK TEXT TETRA PAK	
230	2778568-0000		1	FRAME UPPER	
240	1021991-0000		1	STRIPE TETRA PAK BLUE B=70MM, ROLL L=25M	
250	2805686-0000		1	BEAM	
260	2805698-0000		1	BEAM	
270	2807093-0000		1	BEAM	
300	2807104-0000		1	BEAM	
320	2788155-0000		4	ANGLE	
330	2788154-0000		1	BLOCK	
340	2778591-0000		2	PLATE	
380	2873941-0000		1	SIGN	
400	90347-0011		2	VIBRATION DAMPER MEGI 781056	
410	90600-1002		10	FOOT 45000N, 297/63399N	
420	312812-0318		6	HEXAGON NUT, NY-LOCK M8 A480	
430	312115-0455		6	SCREW ISO4762 M8X30 A4 80	
440	315125-0165		12	WASHER TBRSB 8,4X26X5 A4	
480	90287-0154		6	SCREW, SOCK.SET DOGPOINT M6X10	
490	312607-0332		10	HEXAGON NUT, EN 24032 M6M M30 A480	
500	311103-0351		4	PARALLEL PIN ISO 2338 6M6X16 A1	
510	312105-0366		2	SCREW M6S ISO 4017 M6X12 A480	
550	312115-0540		3	SCREW ISO4762 M12X40 A4 80	
570	352113-0204		6	ANCHOR PLATES FOR STRIPS, TYPE TM3S25-M	
580	312125-0323		6	SCREW ISO 1207 M5X8 A4	
600	90600-0971		2	RACK, ZRR2-100	
630	90287-0175		2	SCREW M6S M3X12 A480	
640	312605-0310		2	HEXAGON NUT, M6M M3 A280	

Machine Type | Group Description | Used-In | Group Number | Page No

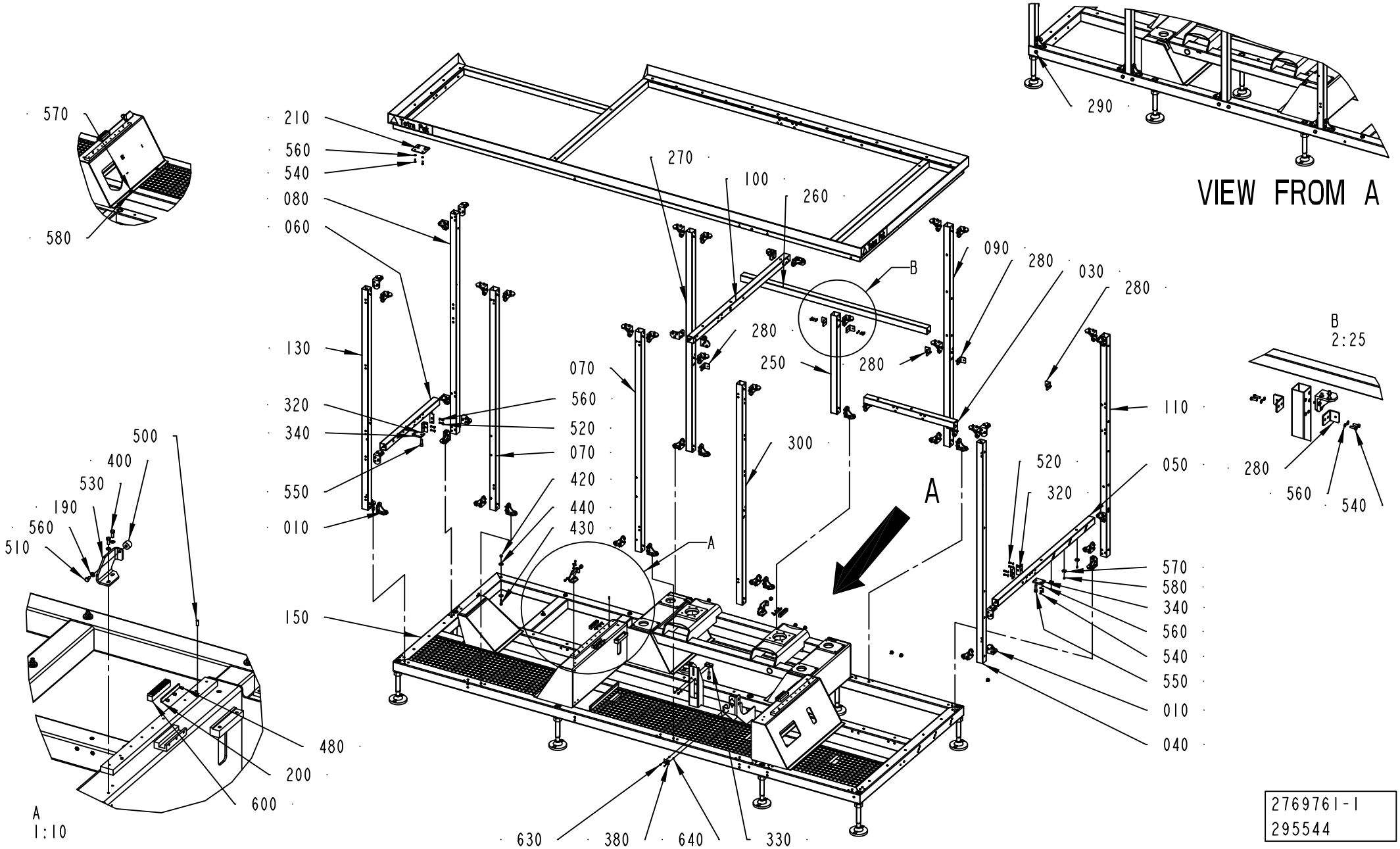

2769761-1
295544

ECM: 303513 - 20070517
Group number: 2769761-0100
Assembly Drawing: 2769761-1_2_AB

This list covers pages from 5-10 to 5-13

Pos	Part No	UN	Qty	Description	Page No
STREAMCAP500, STREAMCAP1000, SLIMCAP 2000, SLIMCAP 1000 (See drawing on pages: 5-10, 5-12)					
010	2778595-0100		49	ANGLE	**5-15**
280	2805697-0000		6	SUPPORT	
290	2805696-0000		6	SUPPORT	
520	312105-0367		8	SCREW M6S ISO 4017 M6X14 A480	
530	312105-0368		6	SCREW M6S ISO 4017 M6X16 A480	
540	312105-0370		18	SCREW M6S ISO 4017 M6X20 A480	
560	315105-0153		34	WASHER BRB 6,4X12 RFR	
Common Parts					
030	2807095-0000		1	BEAM	
040	2778576-0000		1	BEAM	
050	2778577-0000		1	BEAM	
060	2778569-0000		1	BEAM	
070	2779009-0000		2	BEAM	
080	2779011-0000		1	BEAM	
090	2779012-0000		1	BEAM	
100	2830220-0000		1	BEAM	
110	2779811-0000		1	BEAM	
130	2778567-0000		1	BEAM	
150	2766975-0000		1	FRAME	
190	2775447-0000		2	BRACKET	
200	2779776-0000		2	PLATE	
210	2779786-0000		1	PLATE	
220	1021990-0000		4	SIGN 356X70MM HOUSE MARK TEXT TETRA PAK	
230	2778568-0000		1	FRAME UPPER	
240	1021991-0000		1	STRIPE TETRA PAK BLUE B=70MM, ROLL L=25M	
250	2805686-0000		1	BEAM	
260	2805698-0000		1	BEAM	
270	2807093-0000		1	BEAM	
300	2807104-0000		1	BEAM	
320	2788155-0000		4	ANGLE	
330	2788154-0000		1	BLOCK	
340	2778591-0000		2	PLATE	
380	2873941-0000		1	SIGN	
400	90347-0011		2	VIBRATION DAMPER MEGI 781056	
410	90600-1002		10	FOOT 45000N, 297/63399N	
420	312812-0318		6	HEXAGON NUT, NY-LOCK M8 A480	
430	312115-0455		6	SCREW ISO4762 M8X30 A4 80	
440	315125-0165		12	WASHER TBRSB 8,4X26X5 A4	
480	90287-0154		6	SCREW, SOCK.SET DOGPOINT M6X10	
490	312607-0332		10	HEXAGON NUT, EN 24032 M6M M30 A480	
500	311103-0351		4	PARALLEL PIN ISO 2338 6M6X16 A1	
510	312105-0366		2	SCREW M6S ISO 4017 M6X12 A480	
550	312115-0540		3	SCREW ISO4762 M12X40 A4 80	
570	352113-0204		6	ANCHOR PLATES FOR STRIPS, TYPE TM3S25-M	
580	312125-0323		6	SCREW ISO 1207 M5X8 A4	
600	90600-0971		2	RACK, ZRR2-100	
630	90287-0175		2	SCREW M6S M3X12 A480	
640	312605-0310		2	HEXAGON NUT, M6M M3 A280	

Machine Type | Group Description | Used-In | Group Number | Page No

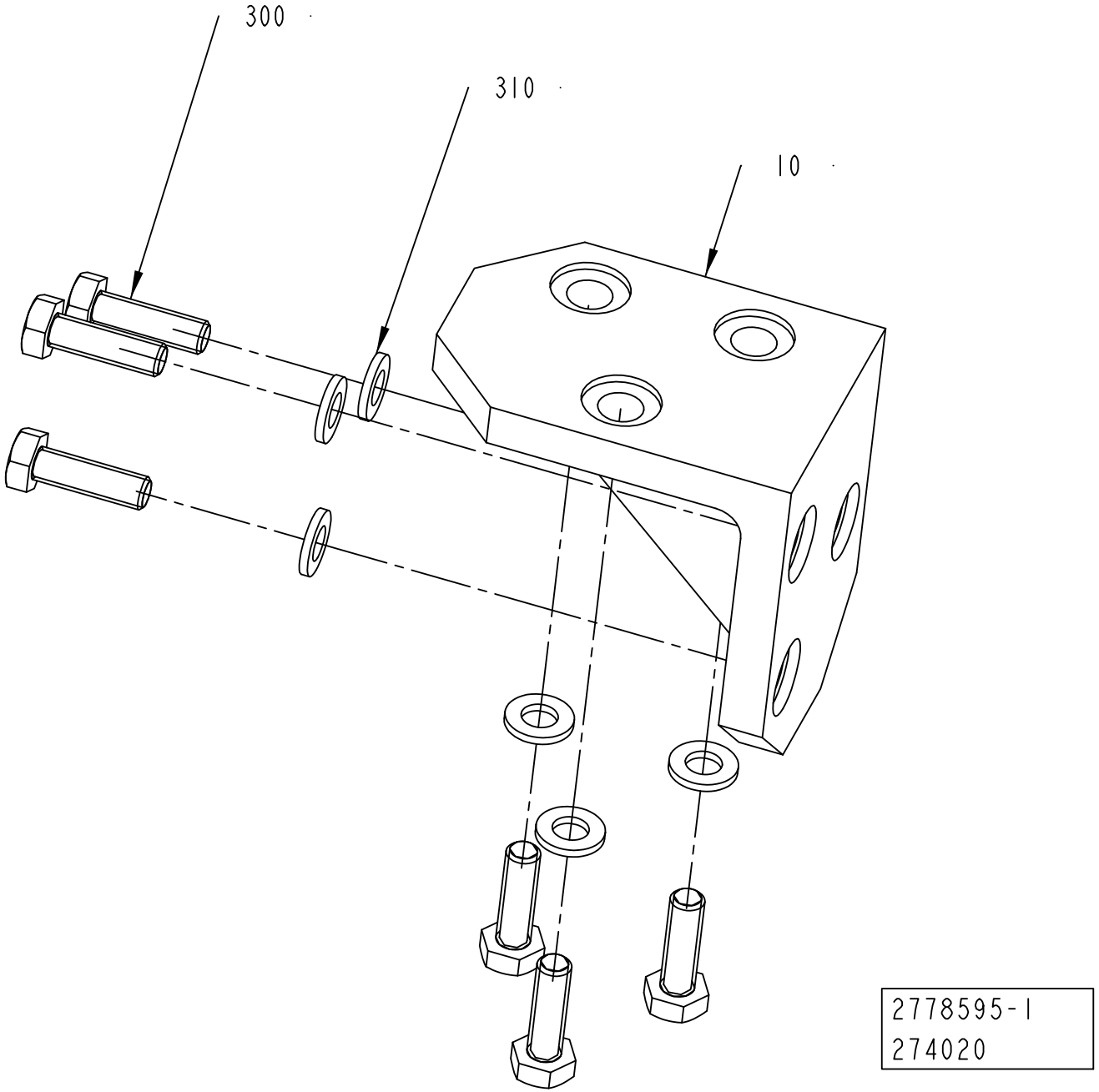
300
310
10
2778595-1
274020

ECM: 274440 - 20060921
Group number: 2778595-0100
Assembly Drawing: 2778595-1_1_AA

Pos	Part No	UN	Qty	Description	Page No
-					
010	2779008-0000		1	BRACKET	
300	312105-0370		6	SCREW M6S ISO 4017 M6X20 A480	
310	315105-0153		6	WASHER BRB 6,4X12 RFR	

Pos	Part No	UN	Qty	Description	Page No

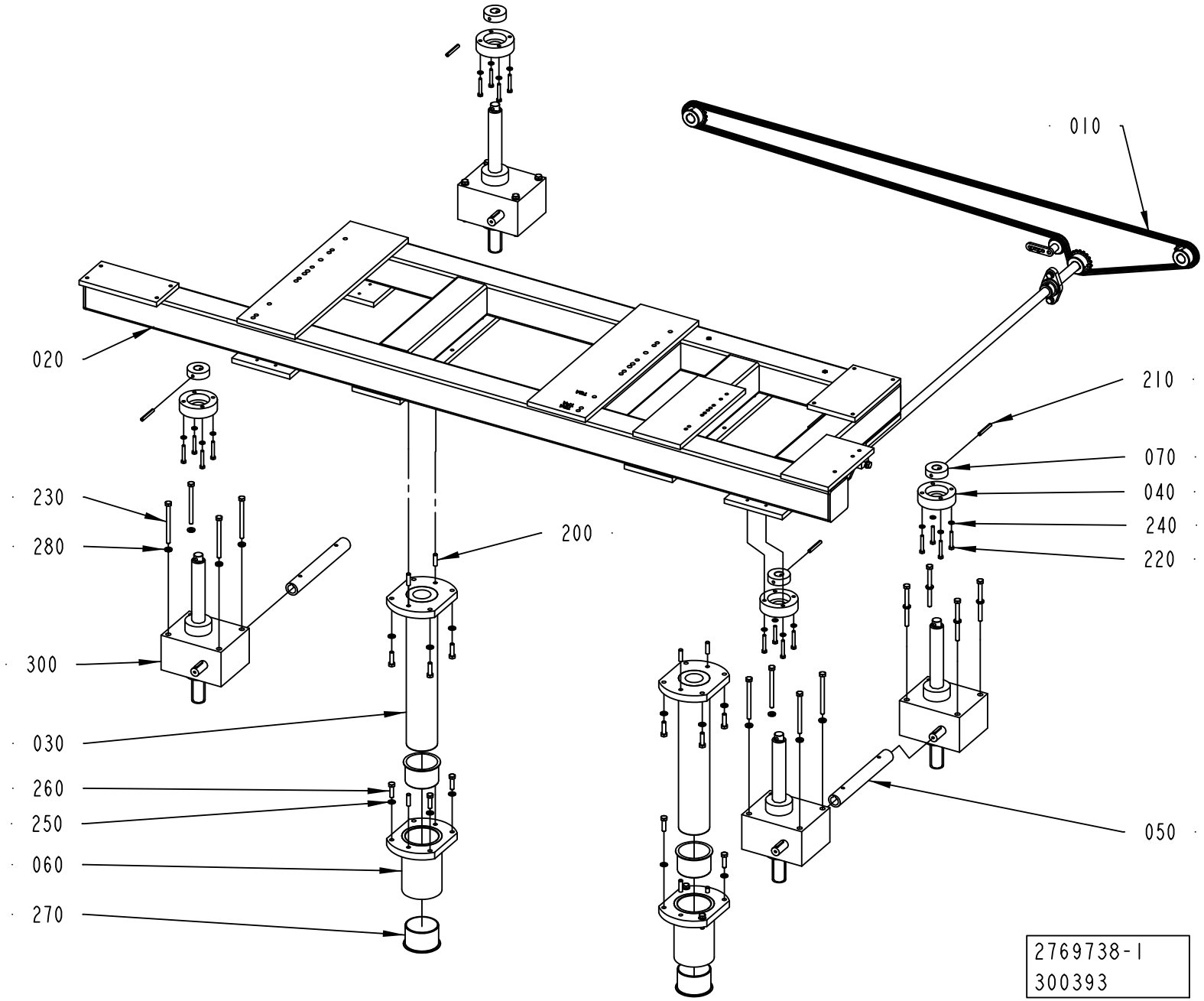
010
020
210
070
040
240
220
230
280
200
300
030
260
250
060
270
050
2769738-1
300393

ECM: 303510 - 20070517
Group number: 2769738-0100
Assembly Drawing: 2769738-1_1_AB

Pos	Part No	UN	Qty	Description	Page No
-					
010	2766973-0100		1	TRANSMISSION	**5-19**
020	2769709-0000		1	FRAME	
030	2769713-0000		2	CYLINDRICAL PIN	
040	2766964-0000		4	FLANGE	
050	2766968-0000		2	SHAFT	
060	2769717-0000		2	FLANGE	
070	2769739-0000		4	DISC	
200	311103-0405		8	PARALLEL PIN ISO 2338 8M6X30 A1	
210	311112-0349		4	SPRING PIN, ISO 8752 6X50-C	
220	312105-0378		16	SCREW M6S ISO 4014 M6X40 A480	
230	312105-0471		16	SCREW M6S ISO 4014 M8X100 A480	
240	315105-0153		16	WASHER BRB 6,4X12 RFR	
250	315105-0165		16	WASHER BRB 8,4X16 RFR	
260	312105-0455		16	SCREW M6S ISO 4017 M8X30 A480	
270	321153-0500		4	FLANGE BUSHING, 70X75X50 MM	
280	315115-0165		16	WASHER PLAIN, TBRB 8,4/16 H=3	
300	90600-0658		4	WORM GEAR SCREW JACK, TP00063000130	

Pos	Part No	UN	Qty	Description	Page No

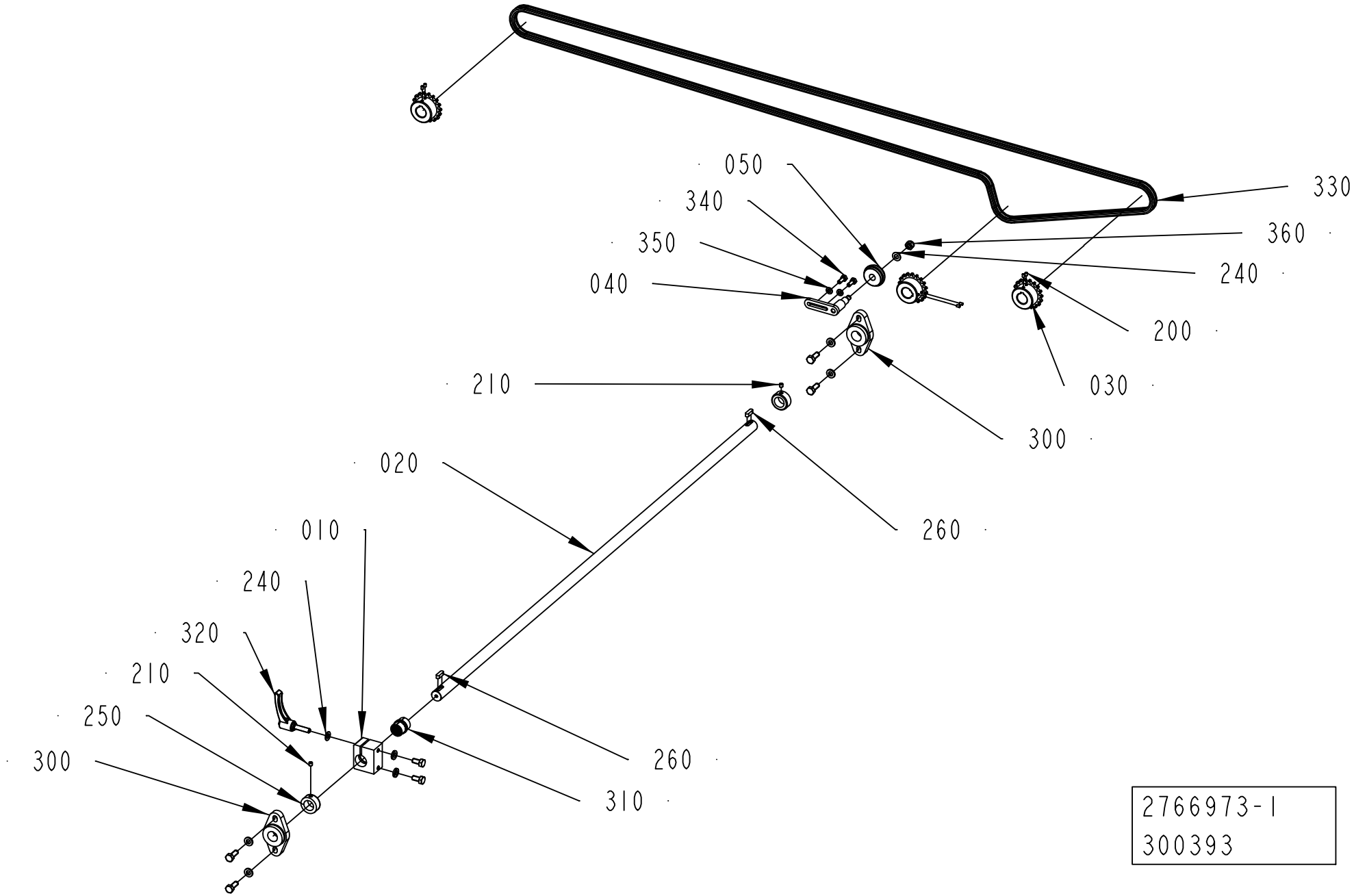
050
340
350
040
330
360
240
200
030
210
300
020
260
010
240
320
210
250
300
260
310
2766973-1
300393

ECM: 303509 - 20070517
Group number: 2766973-0100
Assembly Drawing: 2766973-1_1_AB

Pos	Part No	UN	Qty	Description	Page No
-					
010	2769726-0000		1	BRACKET	
020	2766972-0000		1	SHAFT	
030	2779769-0000		3	SPROCKET	
040	2846405-0000		1	PIVOT ARM	
050	2846403-0000		1	ROLLER	
200	312318-0285		6	SCREW ISO4029 M4X6 A4	
210	312318-0360		2	SCREW ISO4029 M6X6 A4	
220	312105-0452		4	SCREW M6S ISO 4017 M8X22 A4 80	
230	312105-0449		2	SCREW M6S ISO 4017 M8X16 A480	
240	315105-0165		2	WASHER BRB 8,4X16 RFR	
250	315741-0216		2	RETAINING RING DIN 705 A4 20	
260	315705-0232		2	PARALLEL KEY W. ROUND ENDS 6X6X20 MM	
270	315115-0165		6	WASHER PLAIN, TBRB 8,4/16 H=3	
300	90600-0800		2	FLANGE BEARING 20X89X20 MM	
310	90458-2932		1	PLAIN BEARING, JUM-02-20	
320	90017-0029		1	LOCKING LEVER, NO. KR8X30-SUS	
330	90600-1159		1	ROLLER CHAIN, SINGLE 3/8 -290	
340	312105-0368		2	SCREW M6S ISO 4017 M6X16 A480	
350	315105-0153		2	WASHER BRB 6,4X12 RFR	
360	312812-0318		1	HEXAGON NUT, NY-LOCK M8 A480	

Pos	Part No	UN	Qty	Description	Page No

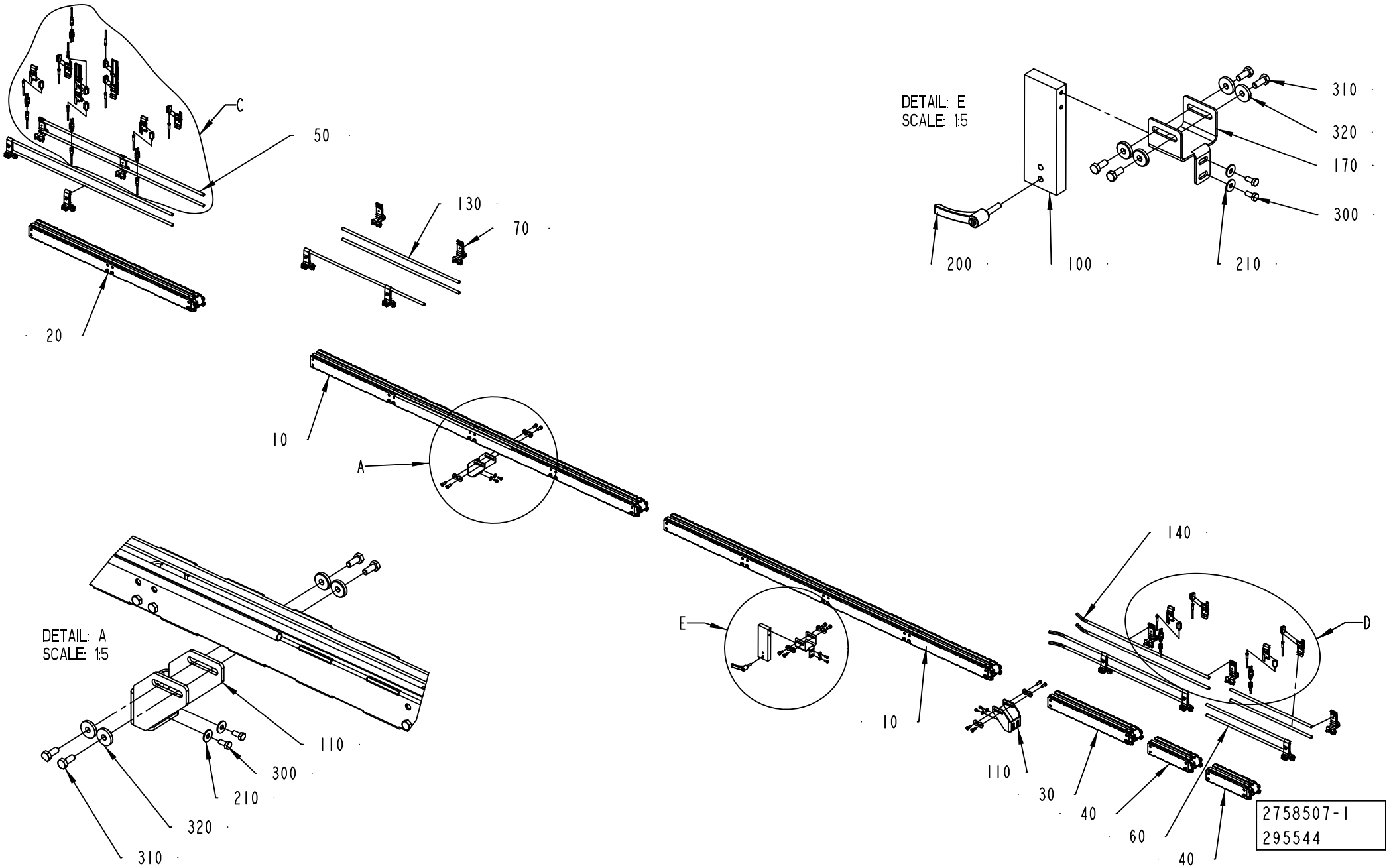
C
50
20
130
70
10
A
DETAIL: E
SCALE: 1:5
310
320
170
300
200
100
210
DETAIL: A
SCALE: 1:5
110
300
210
320
310
E
10
140
D
110
30
40
60
40
2758507-1
295544

ECM: 303506 - 20070517
Group number: 2758507-0100
Assembly Drawing: 2758507-1_1_AB

This list covers pages from 5-20 to 5-23

Pos	Part No	UN	Qty	Description	Page No
-					
010	2561273-0104		2	CONVEYOR BODY	**5-25**
020	2561273-0103		1	CONVEYOR BODY	**5-27**
030	2561273-0102		1	CONVEYOR BODY	**5-29**
040	2561273-0101		2	CONVEYOR BODY	**5-31**
050	2561274-0103		1	RAILING	**5-33**
060	2561274-0102		1	RAILING	**5-37**
070	1550743-0200		8	RAIL HOLDER	**5-35**
080	2778586-0100		4	SENSOR	**5-39**
090	2778587-0100		1	SENSOR	**5-41**
100	2838755-0000		1	PLATE	
110	2778590-0000		2	SUPPORT	
130	2779831-0000		4	PIPE	
140	2836266-0000		4	PIPE	
170	2838754-0000		1	PLATE	
200	90017-0029		1	LOCKING LEVER, NO. KR8X30-SUS	
210	90457-0192		6	WASHER PLAIN ROUND, 6,5/18, H=1,5	
21B402	90459-5529		1	PH.CELL E3Z-T86A, SENDER+RECIEVER	
21B404	90459-5529		1	PH.CELL E3Z-T86A, SENDER+RECIEVER	
21B406	90459-5529		1	PH.CELL E3Z-T86A, SENDER+RECIEVER	
21B408	90459-5529		1	PH.CELL E3Z-T86A, SENDER+RECIEVER	
21B424	90459-5529		1	PH.CELL E3Z-T86A, SENDER+RECIEVER	
21B602	90459-5529		1	PH.CELL E3Z-T86A, SENDER+RECIEVER	
21W402	90459-6586		1	ACT/SENS.Y-CABLE, ASBN 2-PRKMV 4-07/0,6M	
21W404	90459-6586		1	ACT/SENS.Y-CABLE, ASBN 2-PRKMV 4-07/0,6M	
21W406	90459-6586		1	ACT/SENS.Y-CABLE, ASBN 2-PRKMV 4-07/0,6M	
21W408	90459-6586		1	ACT/SENS.Y-CABLE, ASBN 2-PRKMV 4-07/0,6M	
21W412	351309-0050		1	ACTUATOR/SENSOR CABLE PRKT 4-07/5M	
21W414	351309-0050		1	ACTUATOR/SENSOR CABLE PRKT 4-07/5M	
21W416	351309-0050		1	ACTUATOR/SENSOR CABLE PRKT 4-07/5M	
21W418	351309-0100		1	ACTUATOR/SENSOR CABLE PRKT 4-07/10M	
21W422	351405-0006		1	ACT/SENS. CABLE RSMVN 3-PRKT 4-3-06/0,6M	
21W424	90459-6586		1	ACT/SENS.Y-CABLE, ASBN 2-PRKMV 4-07/0,6M	
21W602	90459-6586		1	ACT/SENS.Y-CABLE, ASBN 2-PRKMV 4-07/0,6M	
21W612	351405-0050		1	ACT/SENS. CABLE RSMVN 3-PRKT 4-3-06/5,0M	
300	312105-0367		6	SCREW M6S ISO 4017 M6X14 A480	
310	312105-0451		12	SCREW M6S ISO 4017 M8X20 A480	
320	315125-0165		12	WASHER TBRSB 8,4X26X5 A4	

Pos	Part No	UN	Qty	Description	Page No

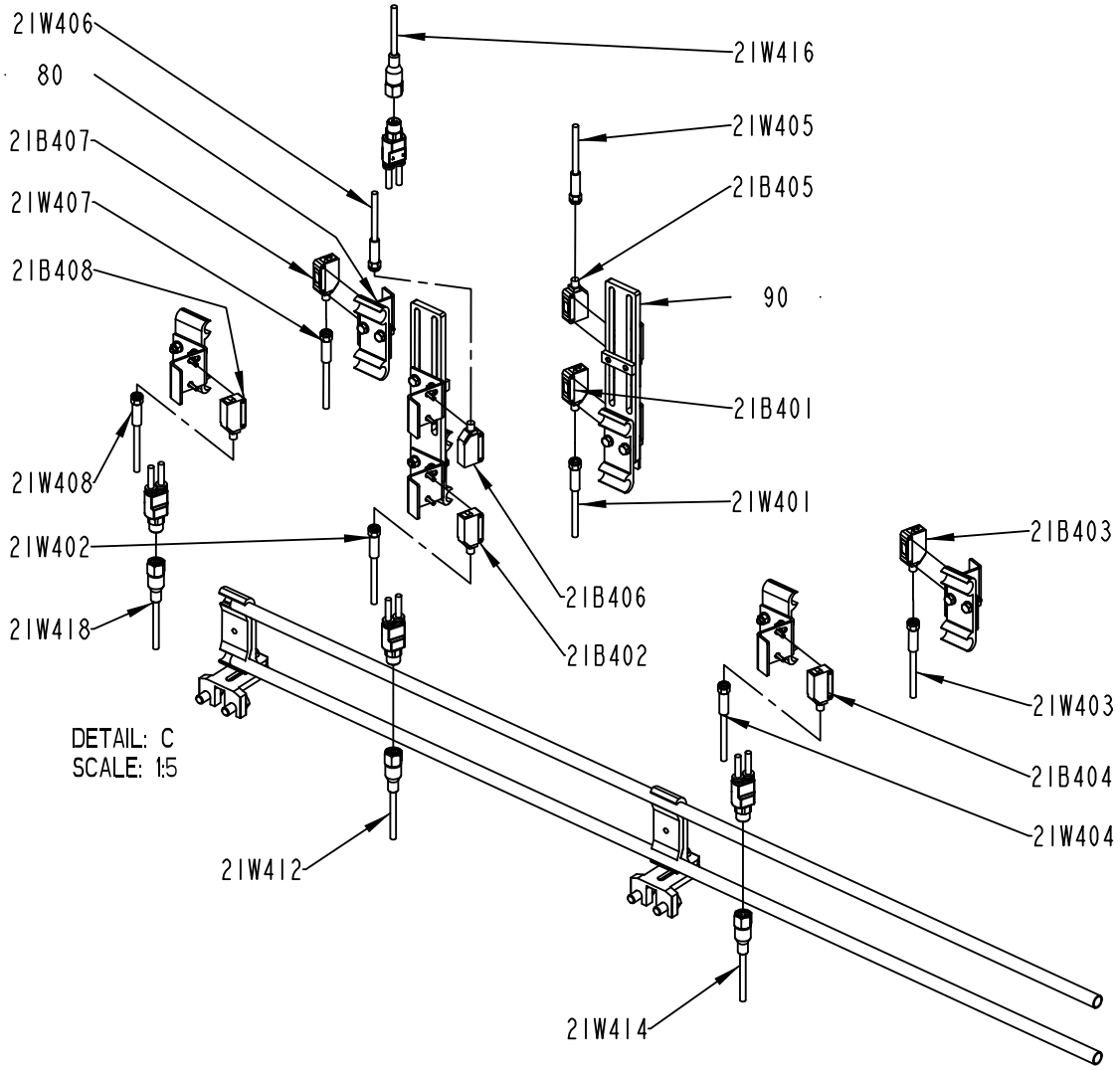

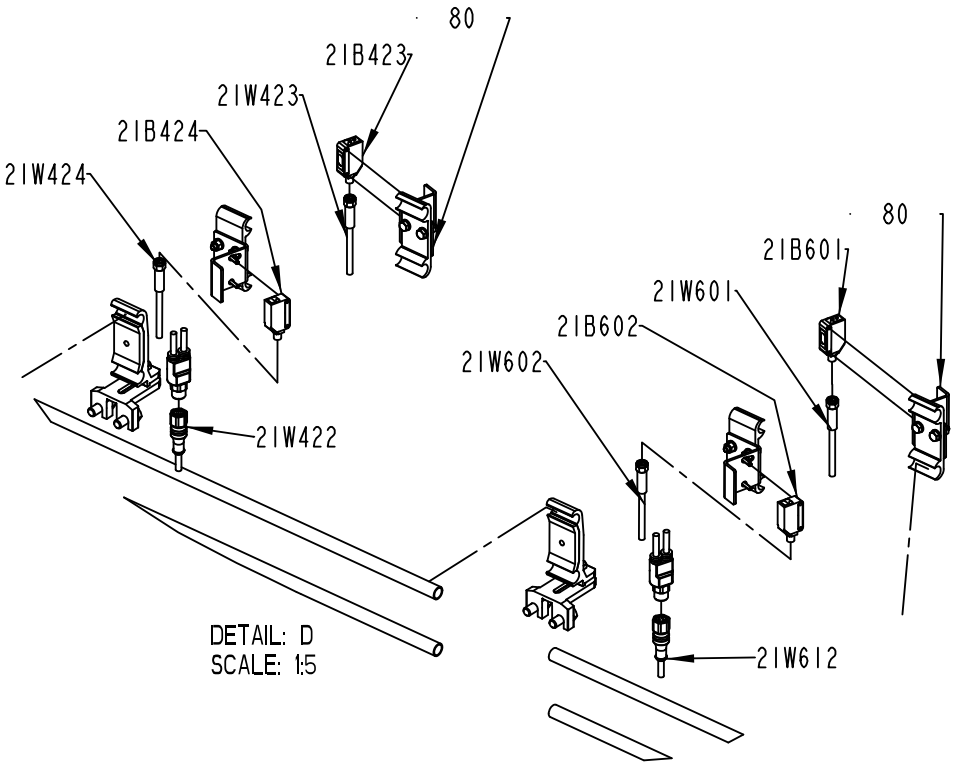

2758507-1
295544

ECM: 303506 - 20070517
Group number: 2758507-0100
Assembly Drawing: 2758507-1_2_AB

This list covers pages from 5-20 to 5-23

Pos	Part No	UN	Qty	Description	Page No
-					
010	2561273-0104		2	CONVEYOR BODY	**5-25**
020	2561273-0103		1	CONVEYOR BODY	**5-27**
030	2561273-0102		1	CONVEYOR BODY	**5-29**
040	2561273-0101		2	CONVEYOR BODY	**5-31**
050	2561274-0103		1	RAILING	**5-33**
060	2561274-0102		1	RAILING	**5-37**
070	1550743-0200		8	RAIL HOLDER	**5-35**
080	2778586-0100		4	SENSOR	**5-39**
090	2778587-0100		1	SENSOR	**5-41**
100	2838755-0000		1	PLATE	
110	2778590-0000		2	SUPPORT	
130	2779831-0000		4	PIPE	
140	2836266-0000		4	PIPE	
170	2838754-0000		1	PLATE	
200	90017-0029		1	LOCKING LEVER, NO. KR8X30-SUS	
210	90457-0192		6	WASHER PLAIN ROUND, 6,5/18, H=1,5	
21B402	90459-5529		1	PH.CELL E3Z-T86A, SENDER+RECIEVER	
21B404	90459-5529		1	PH.CELL E3Z-T86A, SENDER+RECIEVER	
21B406	90459-5529		1	PH.CELL E3Z-T86A, SENDER+RECIEVER	
21B408	90459-5529		1	PH.CELL E3Z-T86A, SENDER+RECIEVER	
21B424	90459-5529		1	PH.CELL E3Z-T86A, SENDER+RECIEVER	
21B602	90459-5529		1	PH.CELL E3Z-T86A, SENDER+RECIEVER	
21W402	90459-6586		1	ACT/SENS.Y-CABLE, ASBN 2-PRKMV 4-07/0,6M	
21W404	90459-6586		1	ACT/SENS.Y-CABLE, ASBN 2-PRKMV 4-07/0,6M	
21W406	90459-6586		1	ACT/SENS.Y-CABLE, ASBN 2-PRKMV 4-07/0,6M	
21W408	90459-6586		1	ACT/SENS.Y-CABLE, ASBN 2-PRKMV 4-07/0,6M	
21W412	351309-0050		1	ACTUATOR/SENSOR CABLE PRKT 4-07/5M	
21W414	351309-0050		1	ACTUATOR/SENSOR CABLE PRKT 4-07/5M	
21W416	351309-0050		1	ACTUATOR/SENSOR CABLE PRKT 4-07/5M	
21W418	351309-0100		1	ACTUATOR/SENSOR CABLE PRKT 4-07/10M	
21W422	351405-0006		1	ACT/SENS. CABLE RSMVN 3-PRKT 4-3-06/0,6M	
21W424	90459-6586		1	ACT/SENS.Y-CABLE, ASBN 2-PRKMV 4-07/0,6M	
21W602	90459-6586		1	ACT/SENS.Y-CABLE, ASBN 2-PRKMV 4-07/0,6M	
21W612	351405-0050		1	ACT/SENS. CABLE RSMVN 3-PRKT 4-3-06/5,0M	
300	312105-0367		6	SCREW M6S ISO 4017 M6X14 A480	
310	312105-0451		12	SCREW M6S ISO 4017 M8X20 A480	
320	315125-0165		12	WASHER TBRSB 8,4X26X5 A4	

Pos	Part No	UN	Qty	Description	Page No

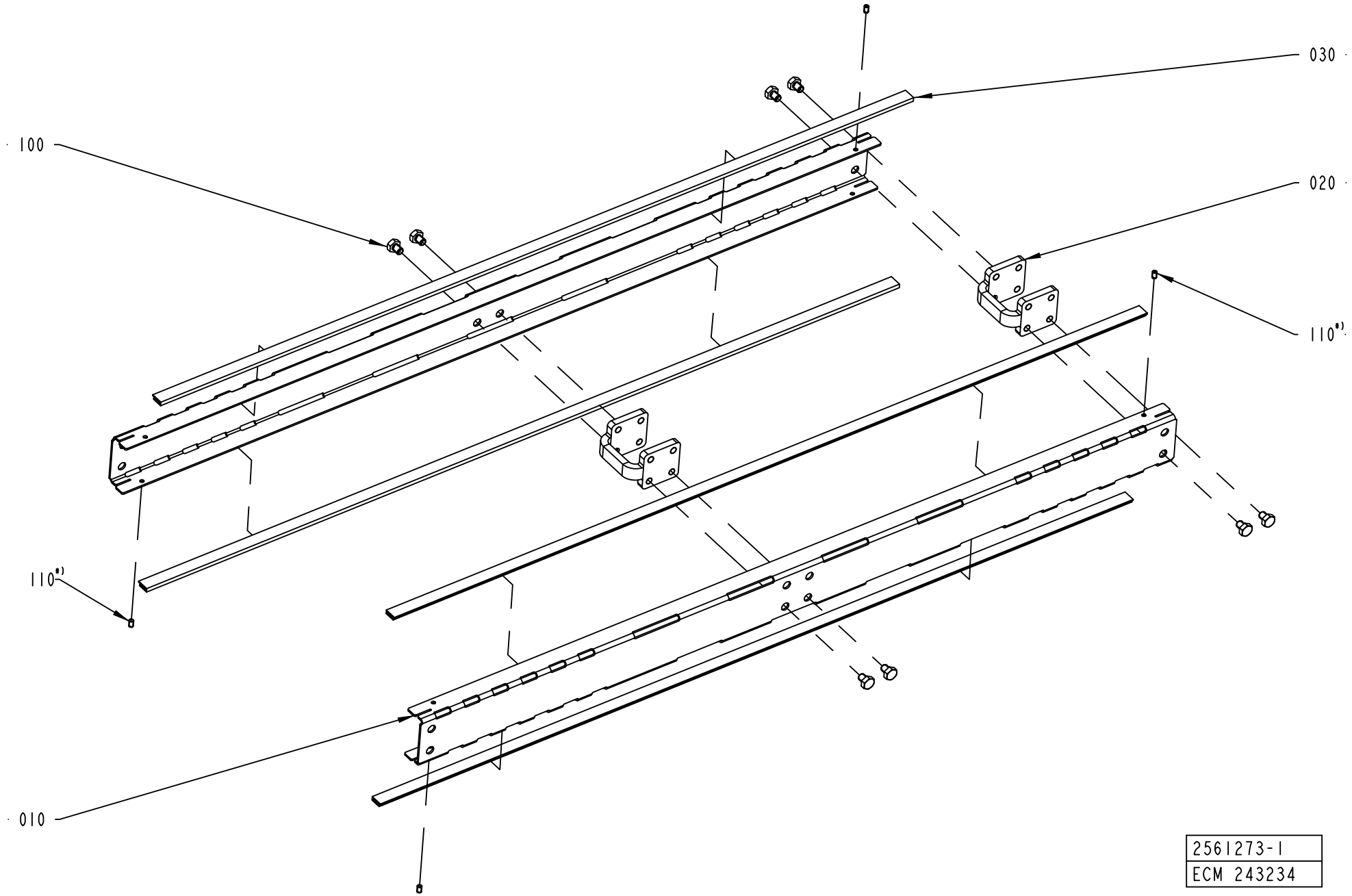
030
100
020
110*)
110*)
010
2561273-1
ECM 243234

ECM: 243234 -
Group number: 2561273-0104
Assembly Drawing: 2561273-1_1_AE

Pos	Part No	UN	Qty	Description	Page No
L 2000					
010	1550695-0004		2	SIDE PLATE	
020	2561206-0000		4	SPACER	
030	2699305-1996		4	SLIDING STRIP	
100	90459-4735		16	SCREW M6S ISO 4017 M8X10 A480	
Common Parts					
010	1550695-0003		2	SIDE PLATE	
010	1550695-0002		2	SIDE PLATE	
010	1550695-0001		2	SIDE PLATE	
020	2561206-0000		1	SPACER	
030	1550595-9960		4	SLIDING STRIP	
030	1550595-4960		4	SLIDING STRIP	
030	1550595-2460		4	SLIDING STRIP	
100	90459-4735		8	SCREW M6S ISO 4017 M8X10 A480	
110	90459-7293		6	SET SCREW DIN 551M5X8 PA66	

Pos	Part No	UN	Qty	Description	Page No

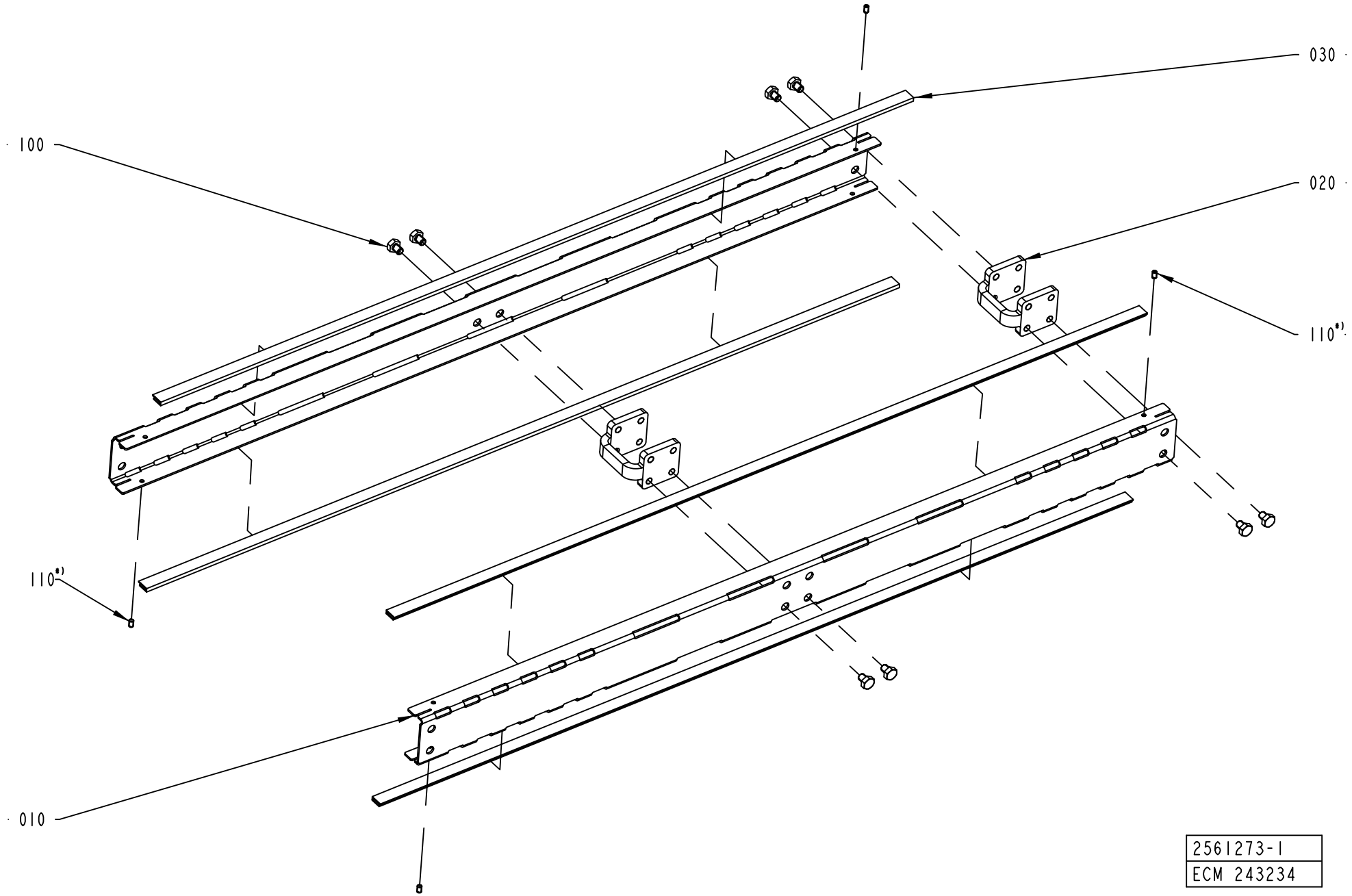
030
100
020
110*)
110*)
010
2561273-1
ECM 243234

ECM: 243234 -
Group number: 2561273-0103
Assembly Drawing: 2561273-1_1_AE

Pos	Part No	UN	Qty	Description	Page No
L 1000					
010	1550695-0003		2	SIDE PLATE	
020	2561206-0000		2	SPACER	
030	1550595-9960		4	SLIDING STRIP	
100	90459-4735		8	SCREW M6S ISO 4017 M8X10 A480	
Common Parts					
010	1550695-0001		2	SIDE PLATE	
010	1550695-0002		2	SIDE PLATE	
010	1550695-0004		2	SIDE PLATE	
020	2561206-0000		4	SPACER	
030	1550595-2460		4	SLIDING STRIP	
030	1550595-4960		4	SLIDING STRIP	
030	2699305-1996		4	SLIDING STRIP	
100	90459-4735		16	SCREW M6S ISO 4017 M8X10 A480	
110	90459-7293		6	SET SCREW DIN 551M5X8 PA66	

Pos	Part No	UN	Qty	Description	Page No

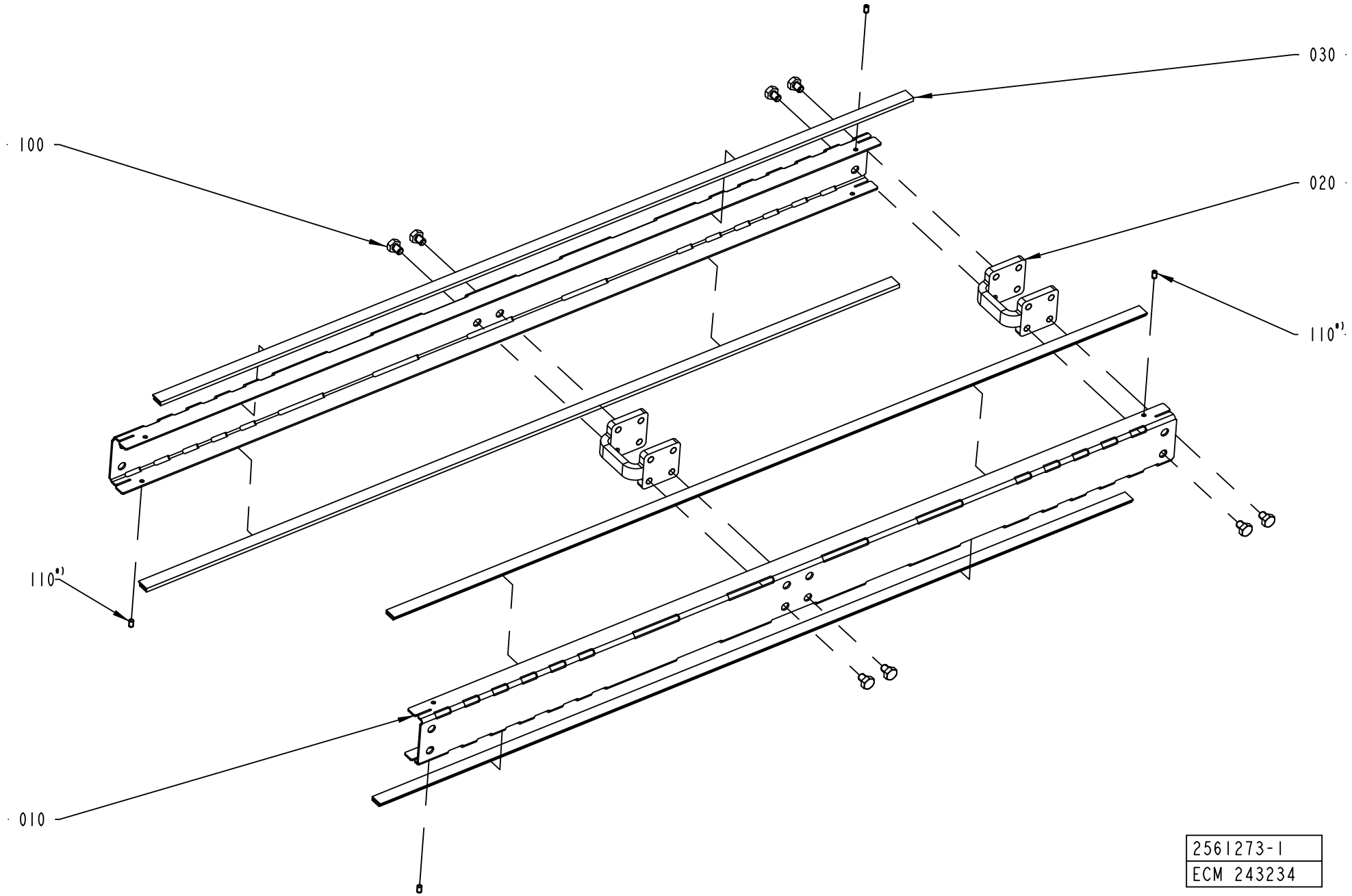
030
100
020
110*)
110*)
010
2561273-1
ECM 243234

ECM: 243234 -
Group number: 2561273-0102
Assembly Drawing: 2561273-1_1_AE

Pos	Part No	UN	Qty	Description	Page No
L 0250					
010	1550695-0001		2	SIDE PLATE	
020	2561206-0000		1	SPACER	
030	1550595-2460		4	SLIDING STRIP	
100	90459-4735		4	SCREW M6S ISO 4017 M8X10 A480	
L 0500					
010	1550695-0002		2	SIDE PLATE	
020	2561206-0000		1	SPACER	
030	1550595-4960		4	SLIDING STRIP	
100	90459-4735		4	SCREW M6S ISO 4017 M8X10 A480	
Common Parts					
010	1550695-0003		2	SIDE PLATE	
010	1550695-0004		2	SIDE PLATE	
020	2561206-0000		4	SPACER	
030	1550595-9960		4	SLIDING STRIP	
030	2699305-1996		4	SLIDING STRIP	
100	90459-4735		8	SCREW M6S ISO 4017 M8X10 A480	
110	90459-7293		6	SET SCREW DIN 551M5X8 PA66	

Pos	Part No	UN	Qty	Description	Page No

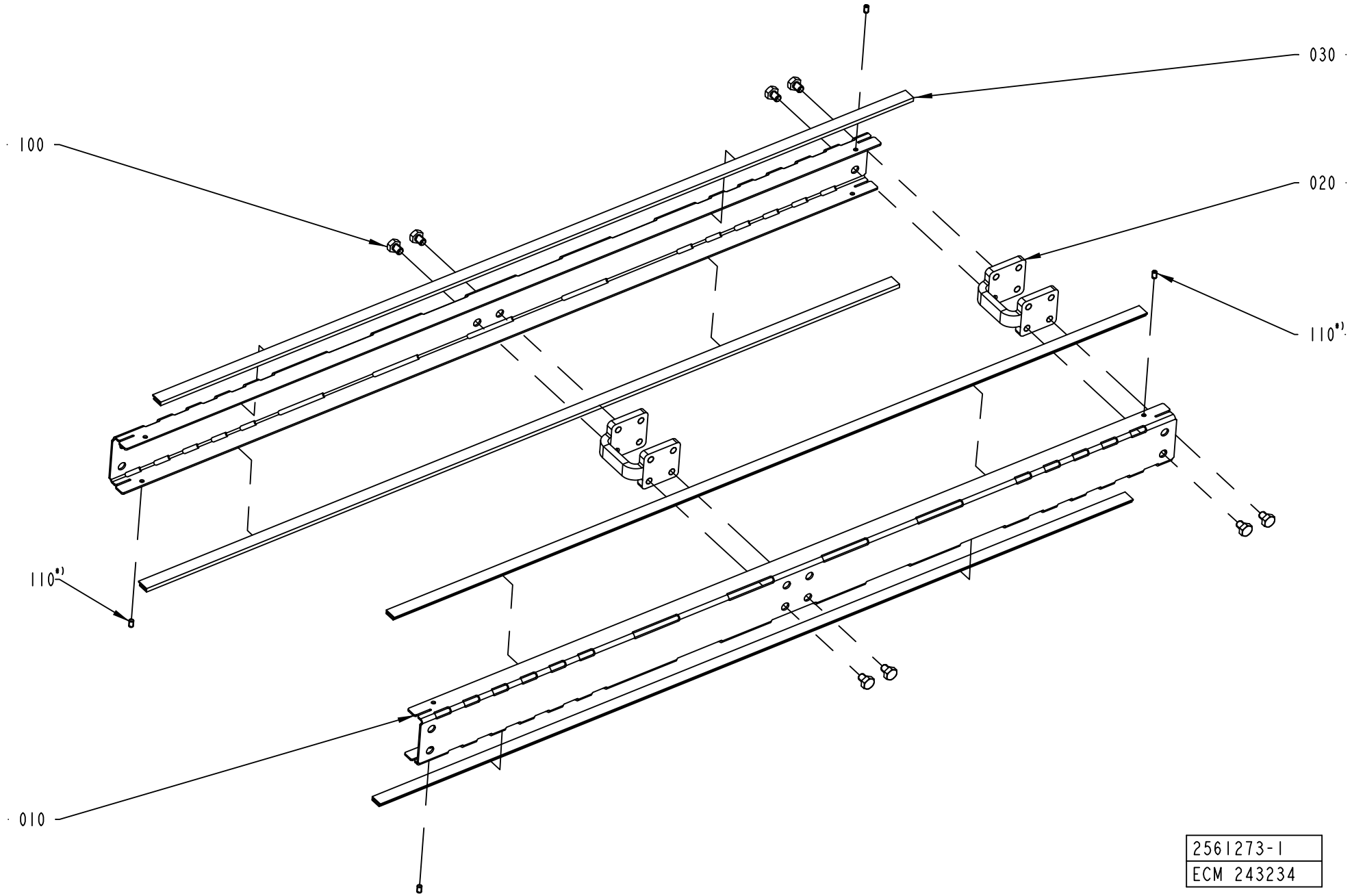
030
100
020
110*)
110*)
010
2561273-1
ECM 243234

ECM: 243234 -
Group number: 2561273-0101
Assembly Drawing: 2561273-1_1_AE

Pos	Part No	UN	Qty	Description	Page No
L 0250					
010	1550695-0001		2	SIDE PLATE	
020	2561206-0000		1	SPACER	
030	1550595-2460		4	SLIDING STRIP	
100	90459-4735		4	SCREW M6S ISO 4017 M8X10 A480	
L 0500					
010	1550695-0002		2	SIDE PLATE	
020	2561206-0000		1	SPACER	
030	1550595-4960		4	SLIDING STRIP	
100	90459-4735		4	SCREW M6S ISO 4017 M8X10 A480	
Common Parts					
010	1550695-0003		2	SIDE PLATE	
010	1550695-0004		2	SIDE PLATE	
020	2561206-0000		4	SPACER	
030	2699305-1996		4	SLIDING STRIP	
030	1550595-9960		4	SLIDING STRIP	
100	90459-4735		16	SCREW M6S ISO 4017 M8X10 A480	
110	90459-7293		6	SET SCREW DIN 551M5X8 PA66	

Pos	Part No	UN	Qty	Description	Page No

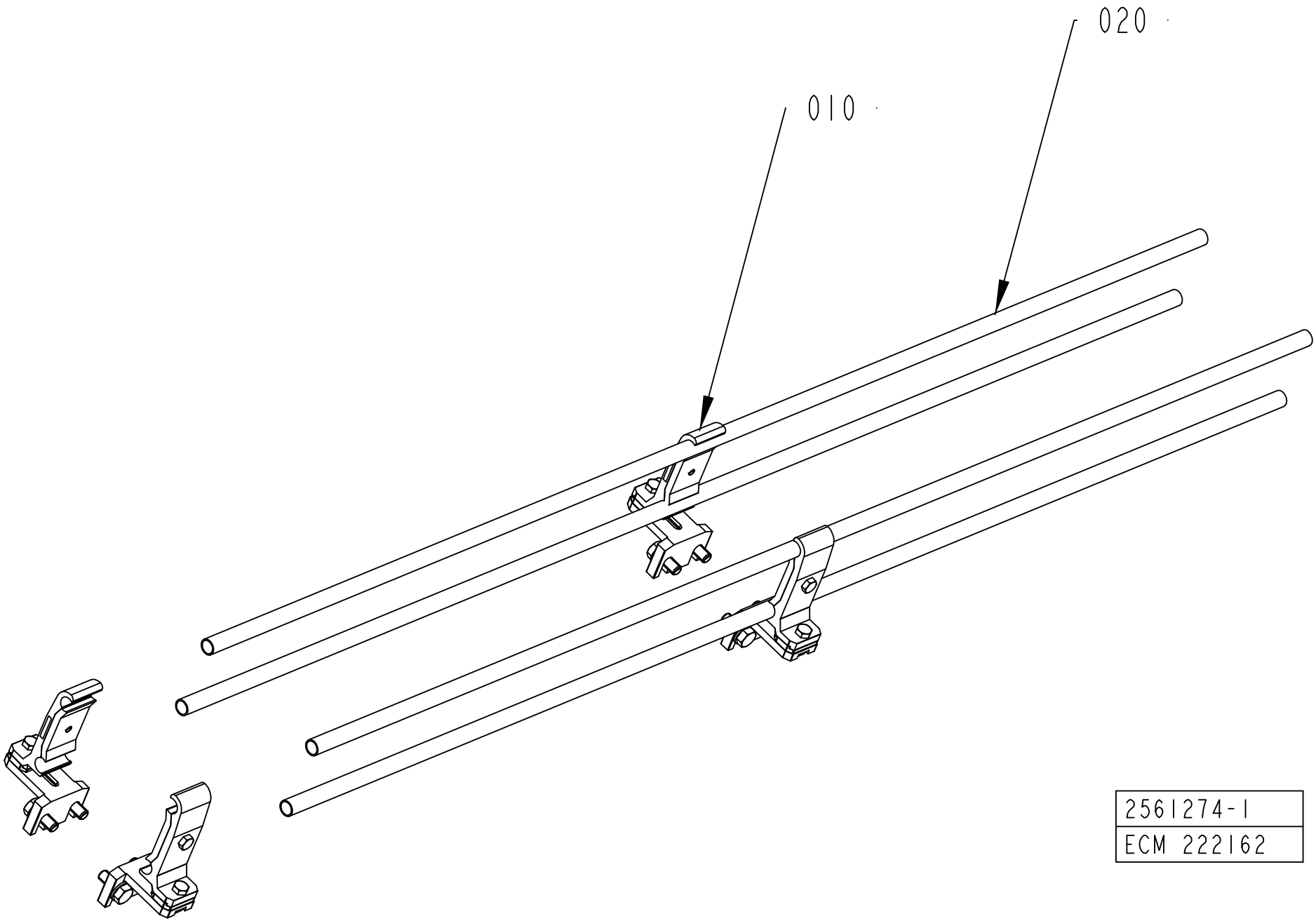
020
010
2561274-1
ECM 222162

ECM: 222162 -
Group number: 2561274-0103
Assembly Drawing: 2561274-1_1_AB

Pos	Part No	UN	Qty	Description	Page No
L 1000					
010	1550743-0200		4	RAIL HOLDER	**5-35**
020	476221-0003		4	PIPE	
Common Parts					
010	1550743-0200		2	RAIL HOLDER	**5-35**
020	476221-0002		4	PIPE	

Pos	Part No	UN	Qty	Description	Page No

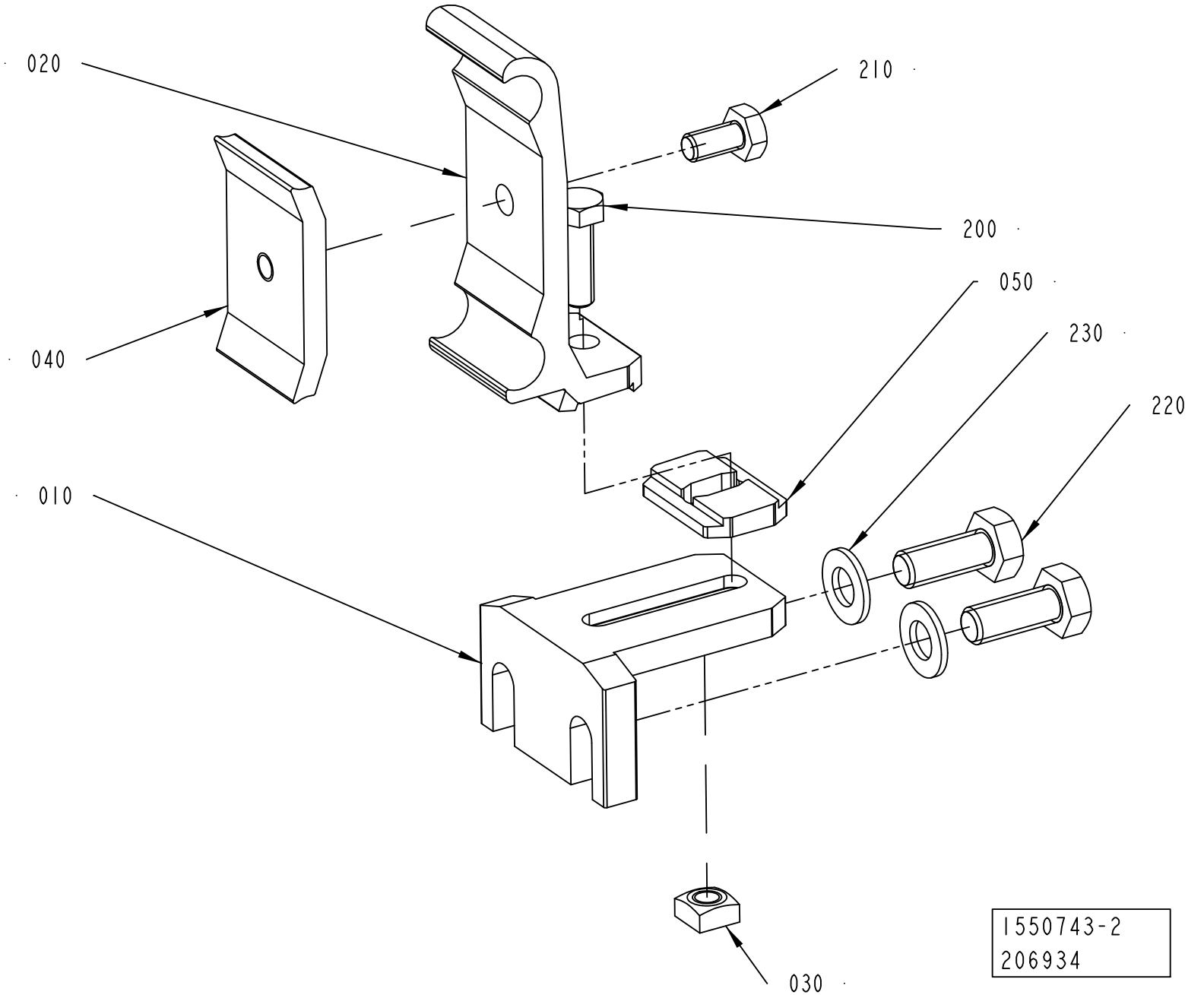
020
210
200
050
230
220
040
010
030
1550743-2
206934

ECM: 206965 - 20050602
Group number: 1550743-0200
Assembly Drawing: 1550743-2_1_AA

Pos	Part No	UN	Qty	Description	Page No
-					
010	1550772-0000		1	HOLDER	
020	2699437-0000		1	RAIL HOLDER	
030	1359565-0000		1	NUT	
040	1366727-0000		1	CLAMP	
050	2699436-0000		1	SPACER	
200	312105-0370		1	SCREW M6S ISO 4017 M6X20 A480	
210	312105-0366		1	SCREW M6S ISO 4017 M6X12 A480	
220	312105-0451		2	SCREW M6S ISO 4017 M8X20 A480	
230	315105-0165		2	WASHER BRB 8,4X16 RFR	

Pos	Part No	UN	Qty	Description	Page No

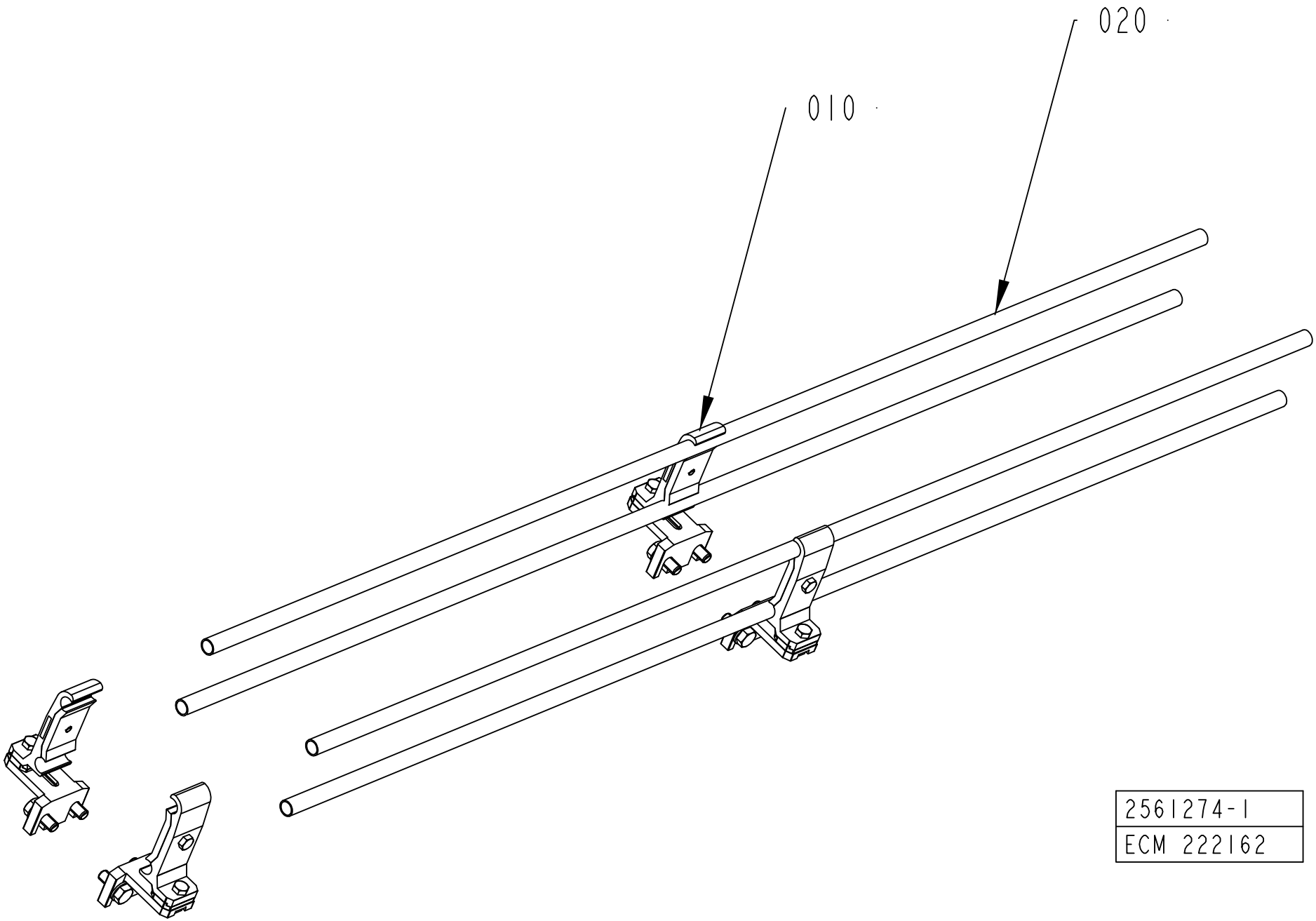
020
010
2561274-1
ECM 222162

ECM: 222162 -
Group number: 2561274-0102
Assembly Drawing: 2561274-1_1_AB

Pos	Part No	UN	Qty	Description	Page No
L 0250					
010	1550743-0200		2	RAIL HOLDER	**5-35**
L 0500					
010	1550743-0200		2	RAIL HOLDER	**5-35**
020	476221-0002		4	PIPE	
Common Parts					
010	1550743-0200		4	RAIL HOLDER	**5-35**
020	476221-0003		4	PIPE	

Pos	Part No	UN	Qty	Description	Page No

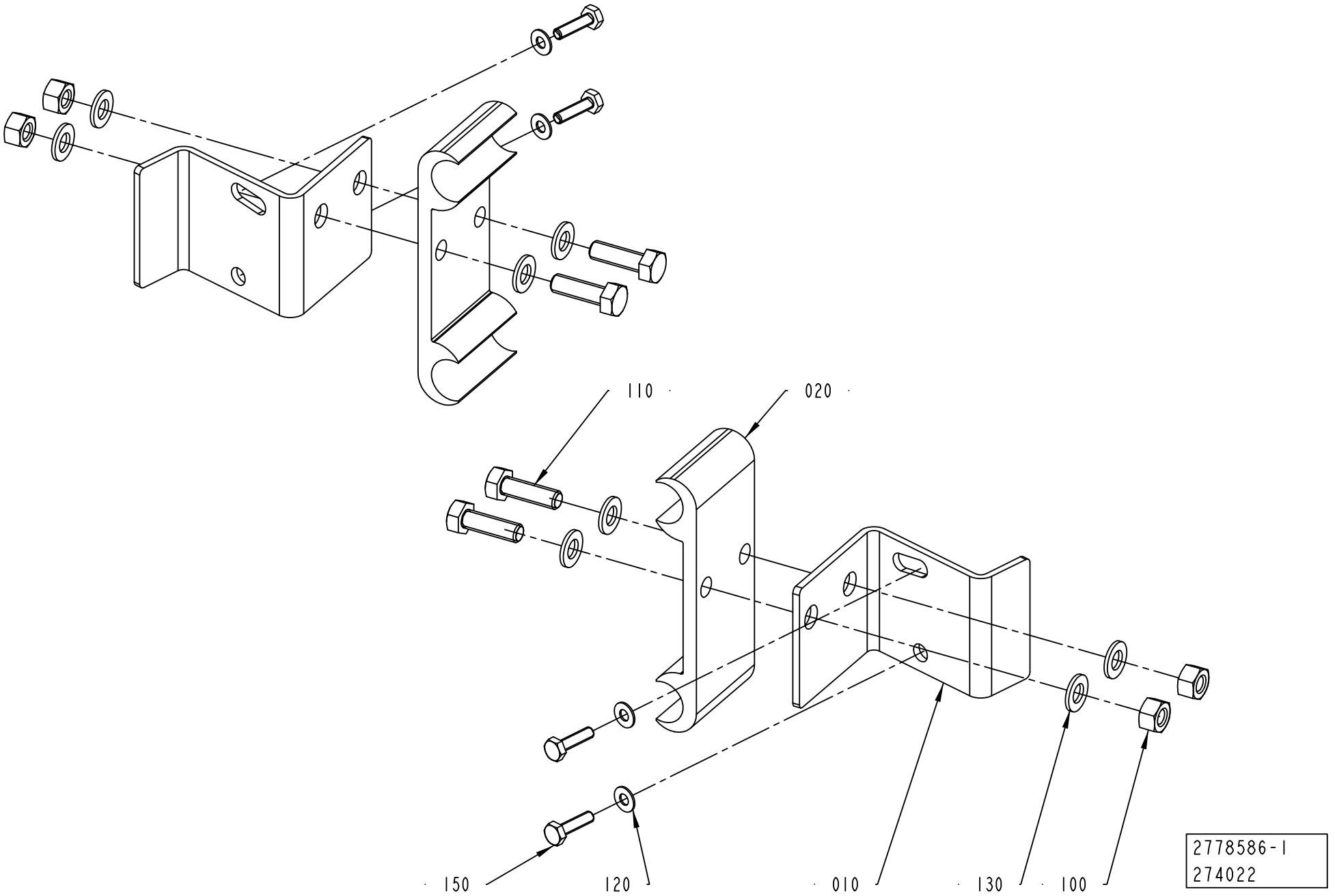
110
020
150
120
010
130
100
2778586-1
274022

ECM: 274546 - 20060921
Group number: 2778586-0100
Assembly Drawing: 2778586-1_1_AA

Pos	Part No	UN	Qty	Description	Page No
-					
010	2778580-0000		2	BRACKET	
020	1020637-0000		2	HOLDER	
100	312605-0314		4	HEXAGON NUT, M6M M5 A280	
110	312105-0329		4	SCREW M6S ISO 4017 M5X16 A480	
120	315106-0124		4	WASHER ISO 7089-3-200 HV A4	
130	315105-0146		8	WASHER BRB 5,3X10 RFR	
150	90287-0175		4	SCREW M6S M3X12 A480	

Pos	Part No	UN	Qty	Description	Page No

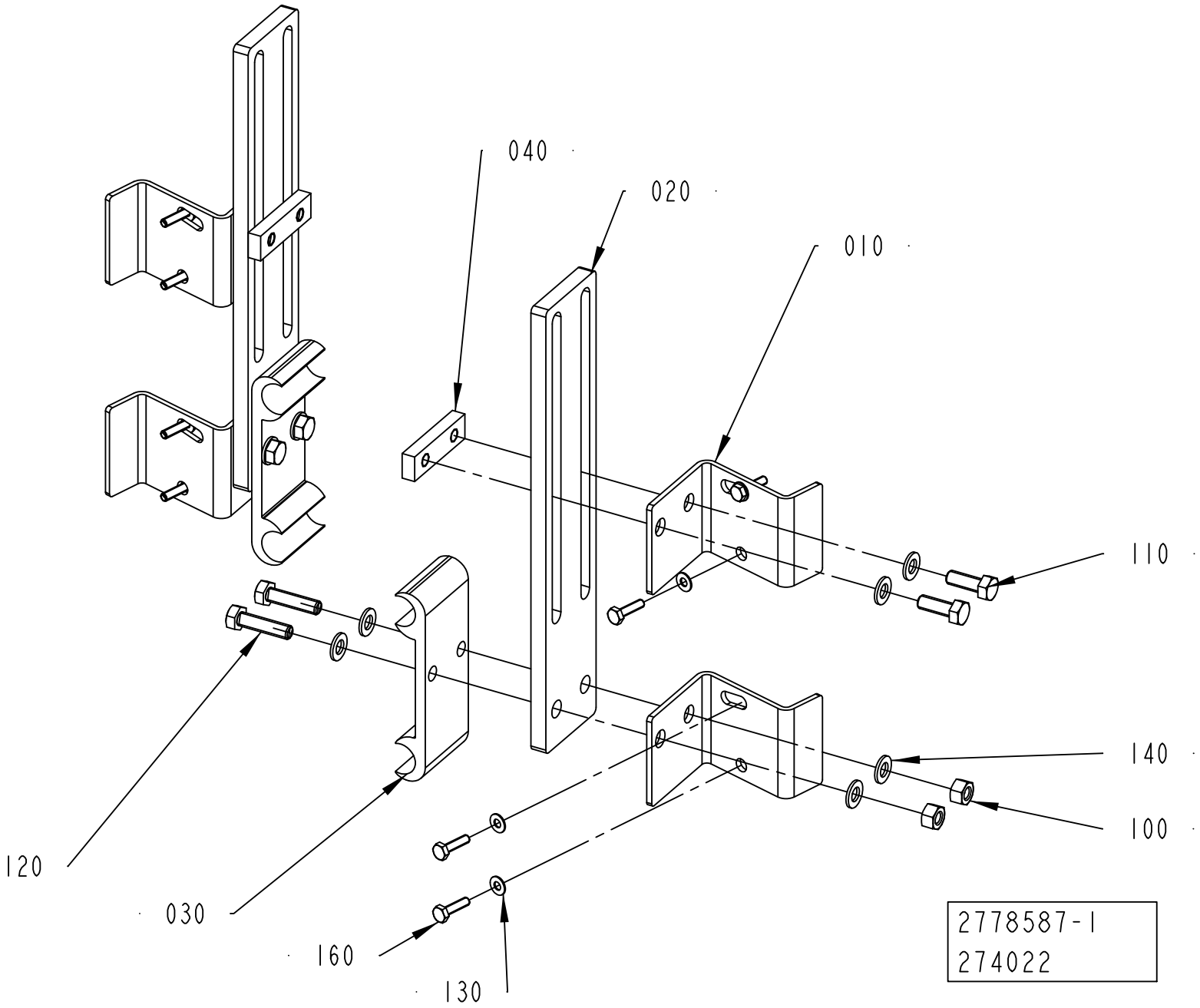
040
020
010
110
140
100
120
030
160
130
2778587-1
274022

ECM: 274547 - 20060921
Group number: 2778587-0100
Assembly Drawing: 2778587-1_1_AA

Pos	Part No	UN	Qty	Description	Page No
-					
010	2778580-0000		4	BRACKET	
020	2778584-0000		2	BRACKET	
030	1020637-0000		2	HOLDER	
040	2504290-0000		2	PLATE	
100	312605-0314		4	HEXAGON NUT, M6M M5 A280	
110	312105-0328		4	SCREW M6S ISO 4017 M5X14 A480	
120	312105-0331		4	SCREW M6S ISO 4017 M5X20 A480	
130	315106-0124		8	WASHER ISO 7089-3-200 HV A4	
140	315105-0146		12	WASHER BRB 5,3X10 RFR	
160	90287-0175		8	SCREW M6S M3X12 A480	

Pos	Part No	UN	Qty	Description	Page No

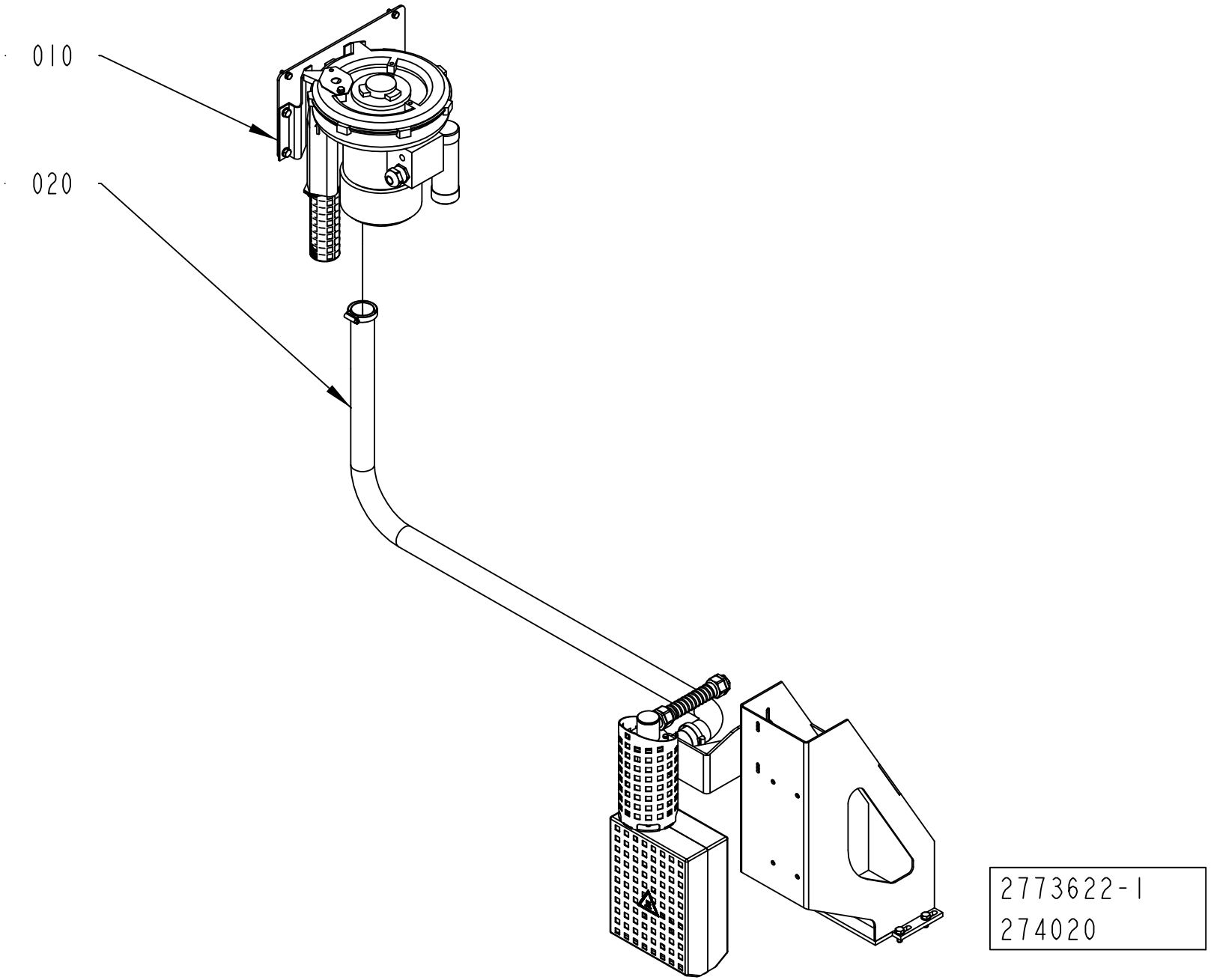
010
020
2773622-1
274020

ECM: 303491 - 20070517
Group number: 2773622-0100
Assembly Drawing: 2773622-1_1_AA

This list covers pages from 5-42 to 5-45

Pos	Part No	UN	Qty	Description	Page No
CAP 30/FLEX SLIMCAP1000, CAP 30/FLEX SLIMCAP2000 (See drawing on page: 5-42)					
020	2873862-0100		1	HEATING ELEMENT	**5-47**
CAP 30/FLEX STREAMCAP500, CAP 30/FLEX TBA STREAMCAP1000, CAP 30/FLEX TPA STREAMCAP1000 (See drawing on page: 5-42)					
020	2873862-0100		1	HEATING ELEMENT	**5-47**
CAP 30/FLEX TGA STREAMCAP1000 (See drawing on page: 5-44)					
020	2780551-0100		1	HEATING ELEMENT	**5-49**
030	2873873-0100		1	VISION SYSTEM	**5-51, 5-53**
Common Parts					
010	2773623-0100		1	FAN SYSTEM	**5-55**

Pos	Part No	UN	Qty	Description	Page No

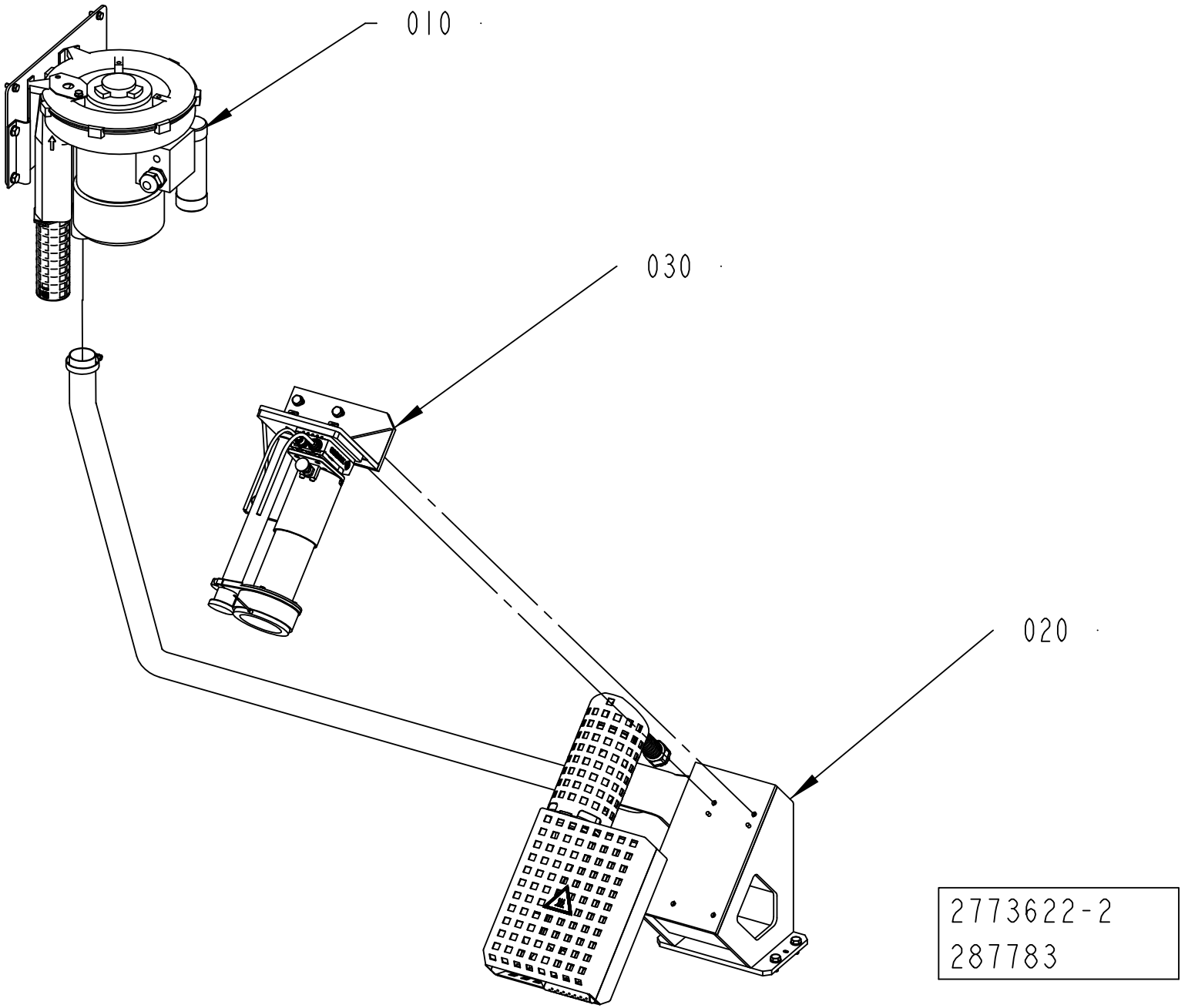
010
030
020
2773622-2
287783

ECM: 303491 - 20070517
Group number: 2773622-0100
Assembly Drawing: 2773622-2_1_AA

This list covers pages from 5-42 to 5-45

Pos	Part No	UN	Qty	Description	Page No
CAP 30/FLEX SLIMCAP1000, CAP 30/FLEX SLIMCAP2000 (See drawing on page: 5-42)					
020	2873862-0100		1	HEATING ELEMENT	**5-47**
CAP 30/FLEX STREAMCAP500, CAP 30/FLEX TBA STREAMCAP1000, CAP 30/FLEX TPA STREAMCAP1000 (See drawing on page: 5-42)					
020	2873862-0100		1	HEATING ELEMENT	**5-47**
CAP 30/FLEX TGA STREAMCAP1000 (See drawing on page: 5-44)					
020	2780551-0100		1	HEATING ELEMENT	**5-49**
030	2873873-0100		1	VISION SYSTEM	**5-51, 5-53**
Common Parts					
010	2773623-0100		1	FAN SYSTEM	**5-55**

Pos	Part No	UN	Qty	Description	Page No

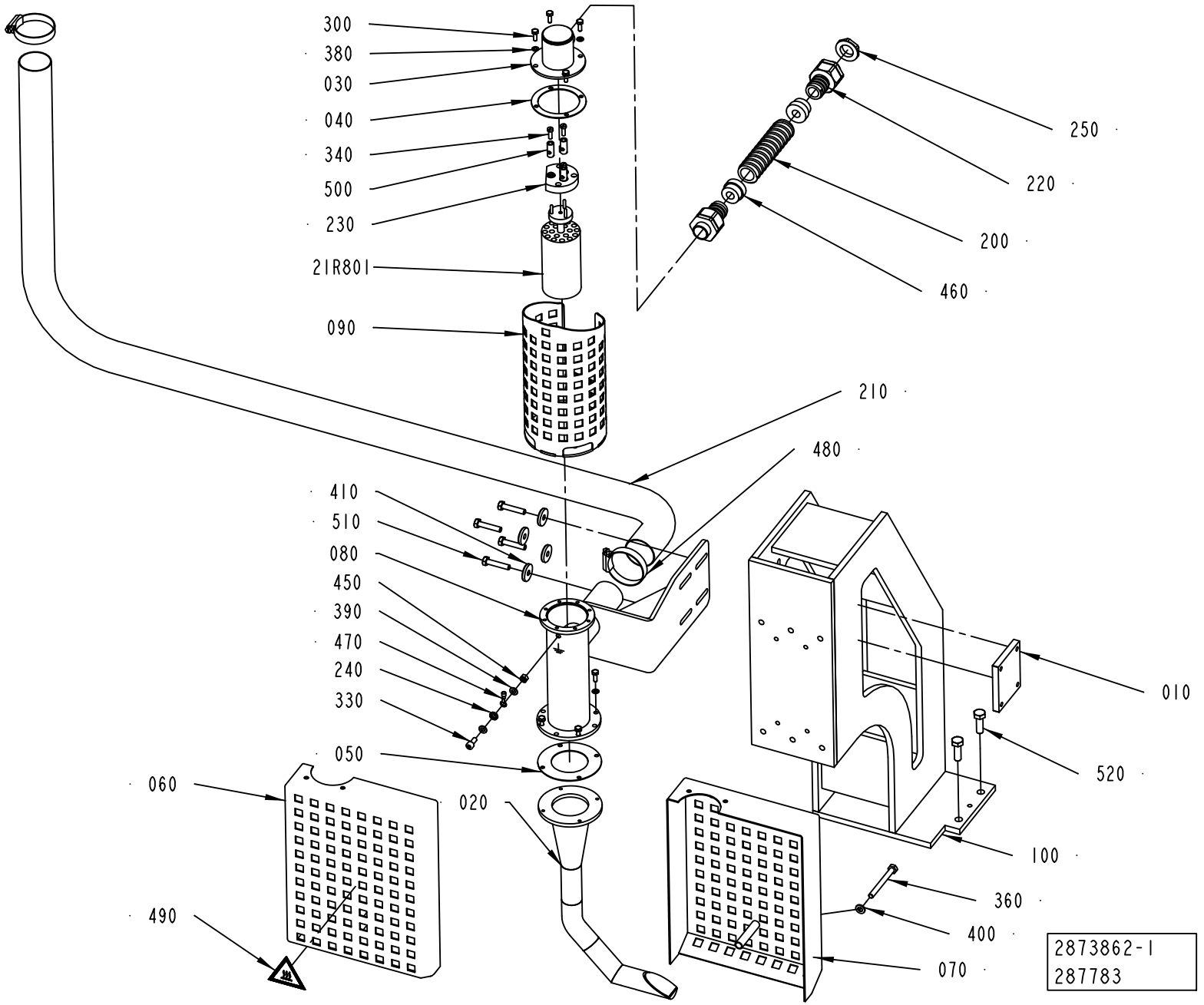
300
380
030
040
340
500
230
21R801
090
250
220
200
460
210
480
410
510
080
450
390
470
240
330
050
060
020
490
010
520
100
360
400
070
2873862-1
287783

ECM: 303492 - 20070517
Group number: 2873862-0100
Assembly Drawing: 2873862-1_1_AA

Pos	Part No	UN	Qty	Description	Page No
CAP 30/FLEX SLIMCAP1000, CAP 30/FLEX SLIMCAP2000					
020	2547915-0000		1	HEATING CHAMBER	
CAP 30/FLEX STREAMCAP500, CAP 30/FLEX TBA STREAMCAP1000, CAP 30/FLEX TPA STREAMCAP1000					
020	2662760-0000		1	HEATING CHAMBER	
Common Parts					
010	2873867-0000		1	PLATE	
030	2710819-0000		1	LID	
040	1188609-0000		1	FLANGE SEAL	
050	1188610-0000		1	FLANGE SEAL	
060	2773627-0000		1	HEAT GUARD	
070	2773630-0000		1	HEAT GUARD	
080	2873865-0000		1	PRE-HEATER	
090	2836263-0000		1	HEAT GUARD	
100	2873863-0000		1	SUPPORT	
200	90152-0051	M	1	SPIRAL CONDUIT, 25X18, UL 1816	
210	90152-0075	M	2350	HOSE	
21R801	90206-0124		1	HEATING ELEMENT 2X1500W 230V	
220	90458-0430		2	HOSE GLAND W/O INSERT M20 EXTENDED	
230	90125-0020		1	PLATE COMPLETE	
	270926-0000		*6*	*NUT*	
	270927-0000		*3*	*SCREW*	
	294464-0000		*1*	*BASE PLATE*	
240	90062-0060		1	LOCK WASHER 5,3/10 H=0,6 FZB	
250	90458-0323		1	NUT, M20X1,5	
300	312105-0291		8	SCREW M6S ISO 4017 M4X12 A470	
330	312115-0327		1	SCREW ISO4762 M5X12 A4 80	
340	312122-0291		3	SCREW ISO 1207 M4X12 NI PL BRASS	
360	312105-0382		1	SCREW M6S ISO 4014 M6X60 A480	
380	315105-0136		8	WASHER BRB 4,3X8 RFR	
390	315105-0146		2	WASHER BRB 5,3X10 RFR	
400	315105-0153		1	WASHER BRB 6,4X12 RFR	
410	315125-0153		4	WASHER TBRSB 6,4X22X4 A4	
450	312605-0314		1	HEXAGON NUT, M6M M5 A280	
460	353249-0012		2	INSERT, SINGLE HOLE, EK 154/11	
470	353101-0122		1	CABLE SHOE 0,5-1,5MM2 M5 RED	
480	342991-0108		2	HOSE CLIP 38-50MMRFR	
490	359710-0001		1	WARNING SIGN ISO, HOT SURFACE	
500	205438-0000		3	CABLE GLAND	
510	312105-0374		4	SCREW M6S ISO 4014 M6X30 A480	
520	312105-0453		4	SCREW M6S ISO 4017 M8X25 A480	

Pos	Part No	UN	Qty	Description	Page No

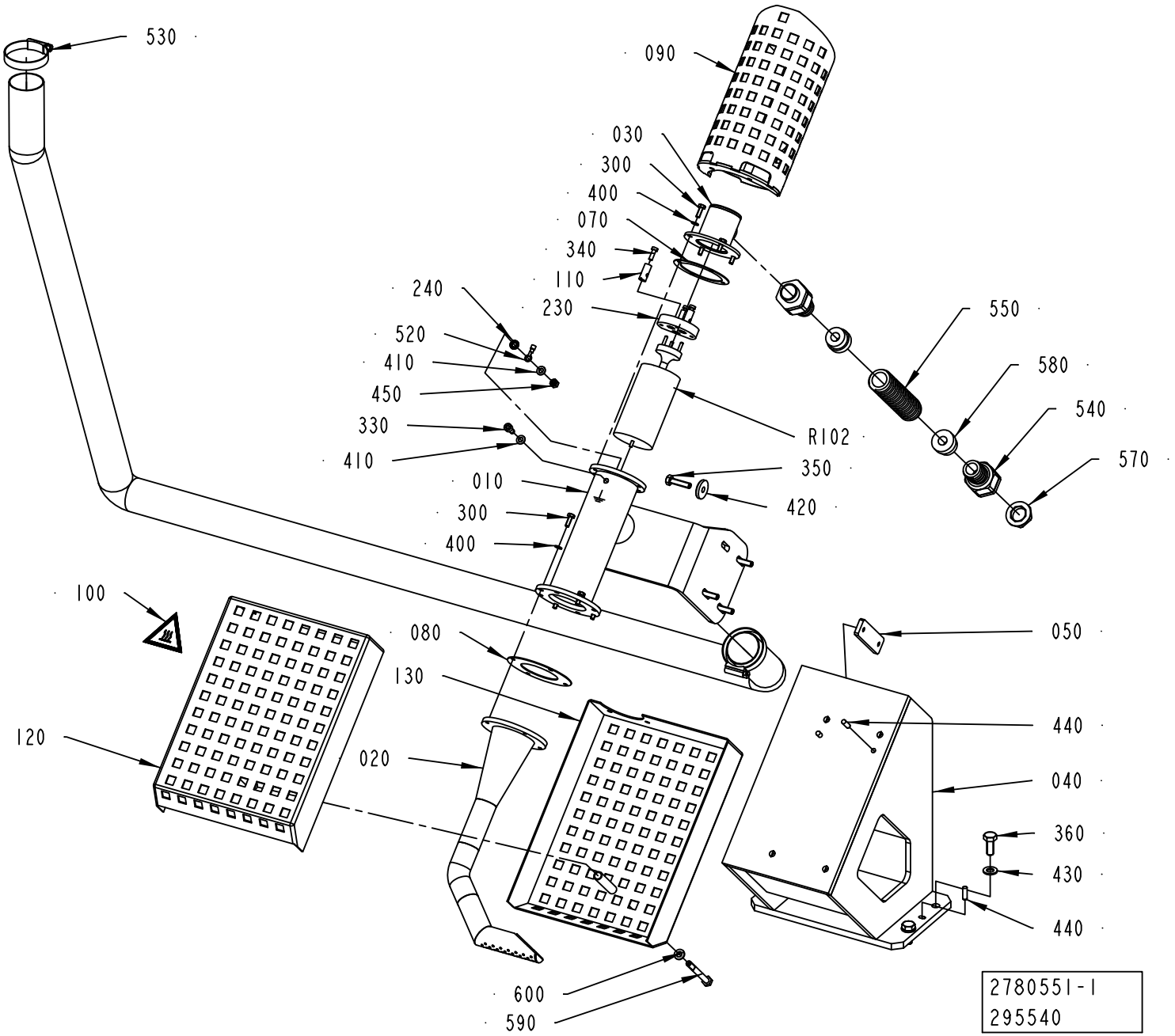
530
090
030
300
400
070
340
110
240
230
520
410
450
330
410
R102
550
580
540
570
350
420
010
300
400
100
080
130
120
020
050
440
040
360
430
440
600
590
2780551-1
295540

ECM: 303504 - 20070517
Group number: 2780551-0100
Assembly Drawing: 2780551-1_1_AA

Pos	Part No	UN	Qty	Description	Page No
-					
010	2780489-0000		1	PRE-HEATER	
020	2662760-0000		1	HEATING CHAMBER	
030	2710819-0000		1	LID	
040	2780488-0000		1	BRACKET	
050	2780487-0000		2	NUT PLATE	
070	1188609-0000		1	FLANGE SEAL	
080	1188610-0000		1	FLANGE SEAL	
090	2836263-0000		1	HEAT GUARD	
100	359710-0001		1	WARNING SIGN ISO, HOT SURFACE	
110	205438-0000		3	CABLE GLAND	
120	2773627-0000		1	HEAT GUARD	
130	2773630-0000		1	HEAT GUARD	
210	90152-0075	MM	2350	HOSE	
230	90125-0020		1	PLATE COMPLETE	
	270926-0000		*6*	*NUT*	
	270927-0000		*3*	*SCREW*	
	294464-0000		*1*	*BASE PLATE*	
240	90062-0060		1	LOCK WASHER 5,3/10 H=0,6 FZB	
300	312105-0291		8	SCREW M6S ISO 4017 M4X12 A470	
330	312115-0327		1	SCREW ISO4762 M5X12 A4 80	
340	312122-0291		3	SCREW ISO 1207 M4X12 NI PL BRASS	
350	312105-0372		4	SCREW M6S ISO 4017 M6X25 A480	
360	312105-0451		4	SCREW M6S ISO 4017 M8X20 A480	
400	315105-0136		8	WASHER BRB 4,3X8 RFR	
410	315105-0146		2	WASHER BRB 5,3X10 RFR	
420	315125-0153		4	WASHER TBRSB 6,4X22X4 A4	
430	315106-0165		4	WASHER ISO 7089-8-200 HV A4	
440	311103-0308		4	PARALLEL PIN ISO 2338 5M6X16 A1	
450	312605-0314		1	HEXAGON NUT, M6M M5 A280	
520	353101-0122		1	CABLE SHOE 0,5-1,5MM2 M5 RED	
530	342991-0108		2	HOSE CLIP 38-50MMRFR	
540	90458-0430		2	HOSE GLAND W/O INSERT M20 EXTENDED	
550	90152-0051	M	1	SPIRAL CONDUIT, 25X18, UL 1816	
570	90458-0323		1	NUT, M20X1,5	
580	353249-0012		2	INSERT, SINGLE HOLE, EK 154/11	
590	312105-0382		1	SCREW M6S ISO 4014 M6X60 A480	
600	315105-0153		1	WASHER BRB 6,4X12 RFR	
R102	90206-0124		1	HEATING ELEMENT 2X1500W 230V	

Pos	Part No	UN	Qty	Description	Page No

Machine Type | Group Description | Used-In | Group Number | Page No

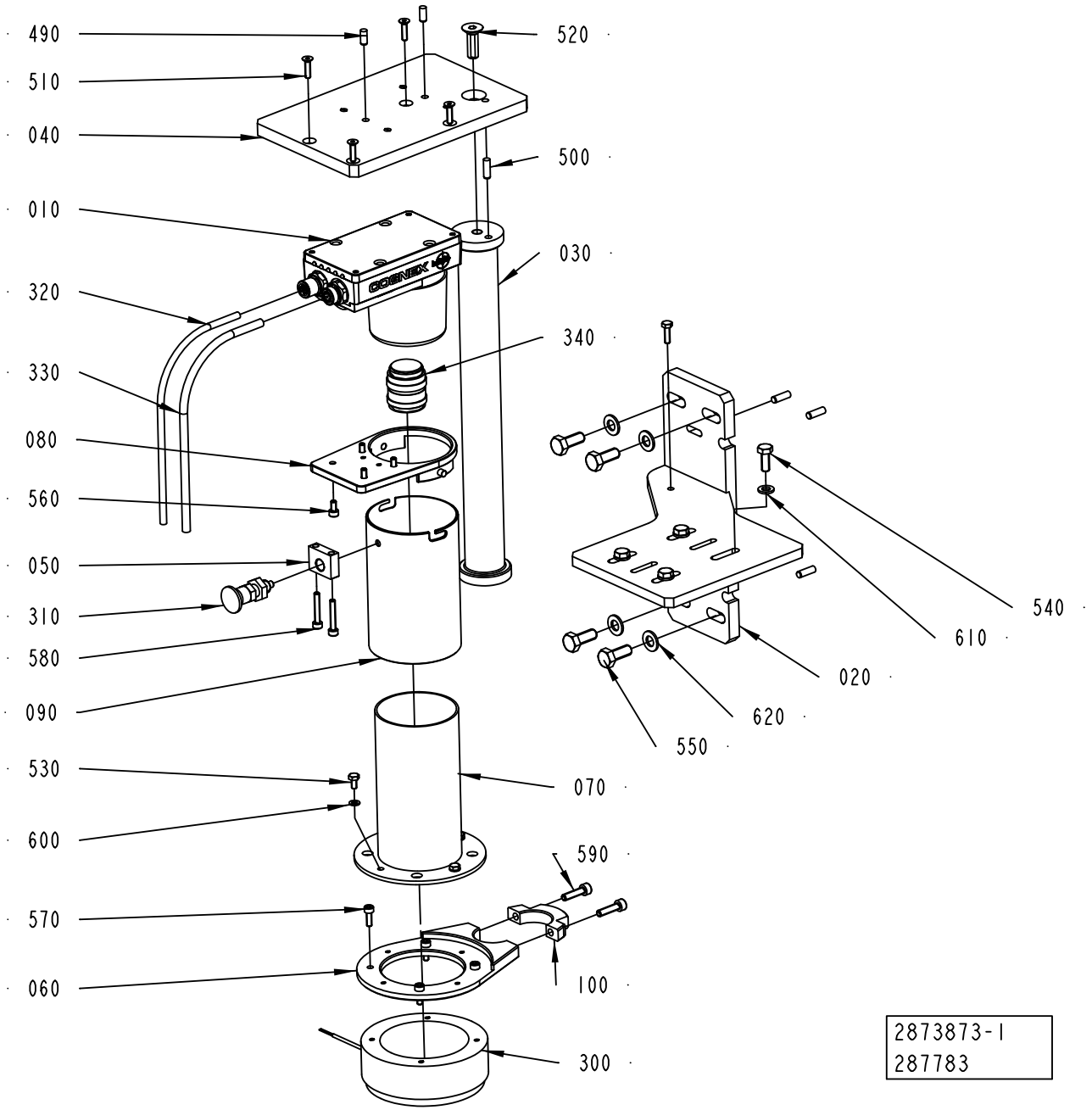
490
520
510
040
500
010
030
320
340
330
080
560
050
310
580
090
530
070
600
590
570
060
100
300
540
610
020
620
550
2873873-1
287783

ECM: 305571 - 20070517
Group number: 2873873-0100
Assembly Drawing: 2873873-1_1_AA

This list covers pages from 5-50 to 5-53

Pos	Part No	UN	Qty	Description	Page No
TBA, TPA (See drawing on page: 5-50)					
020	2792664-0000		1	BRACKET	
040	2873893-0000		1	BRACKET	
490	311103-0306		2	PARALLEL PIN ISO 2338 5M6X12 A1	
500	311103-0308		5	PARALLEL PIN ISO 2338 5M6X16 A1	
TGA (See drawing on page: 5-52)					
020	2780491-0000		1	BRACKET	
040	2780493-0000		1	PLATE	
500	311103-0308		3	PARALLEL PIN ISO 2338 5M6X16 A1	
Common Parts					
010	2873898-0000		1	CAMERA	
030	2780492-0000		1	COLUMN	
050	2794721-0000		1	BLOCK	
060	2794790-0000		1	CLAMP	
070	2557544-0000		1	PROTECTION	
080	2792848-0000		1	SUPPORT	
090	2792879-0000		1	TUBE	
100	2873943-0000		1	CLAMP	
300	90459-2454		1	RING LIGHT ILLUMINATOR, CLK-003630-00	
310	90051-0112		1	LOCK KNOB, NO. GN 617 NIK5	
320	2873899-0000		1	CABLE	
330	2873900-0000		1	CABLE	
340	90459-1180		1	LENS 16MM IN-SIGHT 4100, HF16HA-1B	
510	312155-0293		4	SCREW DIN 7991 MF6S M4X16 A4 70	
520	312155-0453		1	SCREW DIN 7991 MF6S M8X25 A4 70	
530	312105-0287		4	SCREW M6S ISO 4017 M4X8 A470	
540	312105-0368		4	SCREW M6S ISO 4017 M6X16 A480	
550	312105-0451		4	SCREW M6S ISO 4017 M8X20 A480	
560	312115-0287		4	SCREW ISO4762 M4X8 A4 80	
570	312115-0291		4	SCREW ISO4762 M4X12 A4 80	
580	312115-0297		2	SCREW ISO4762 M4X25 A4 80	
590	312115-0331		2	SCREW ISO4762 M5X20 A4 80	
600	315105-0136		4	WASHER BRB 4,3X8 RFR	
610	315105-0153		4	WASHER BRB 6,4X12 RFR	
620	315105-0165		4	WASHER BRB 8,4X16 RFR	

Pos	Part No	UN	Qty	Description	Page No

Machine Type | Group Description | Used-In | Group Number | Page No

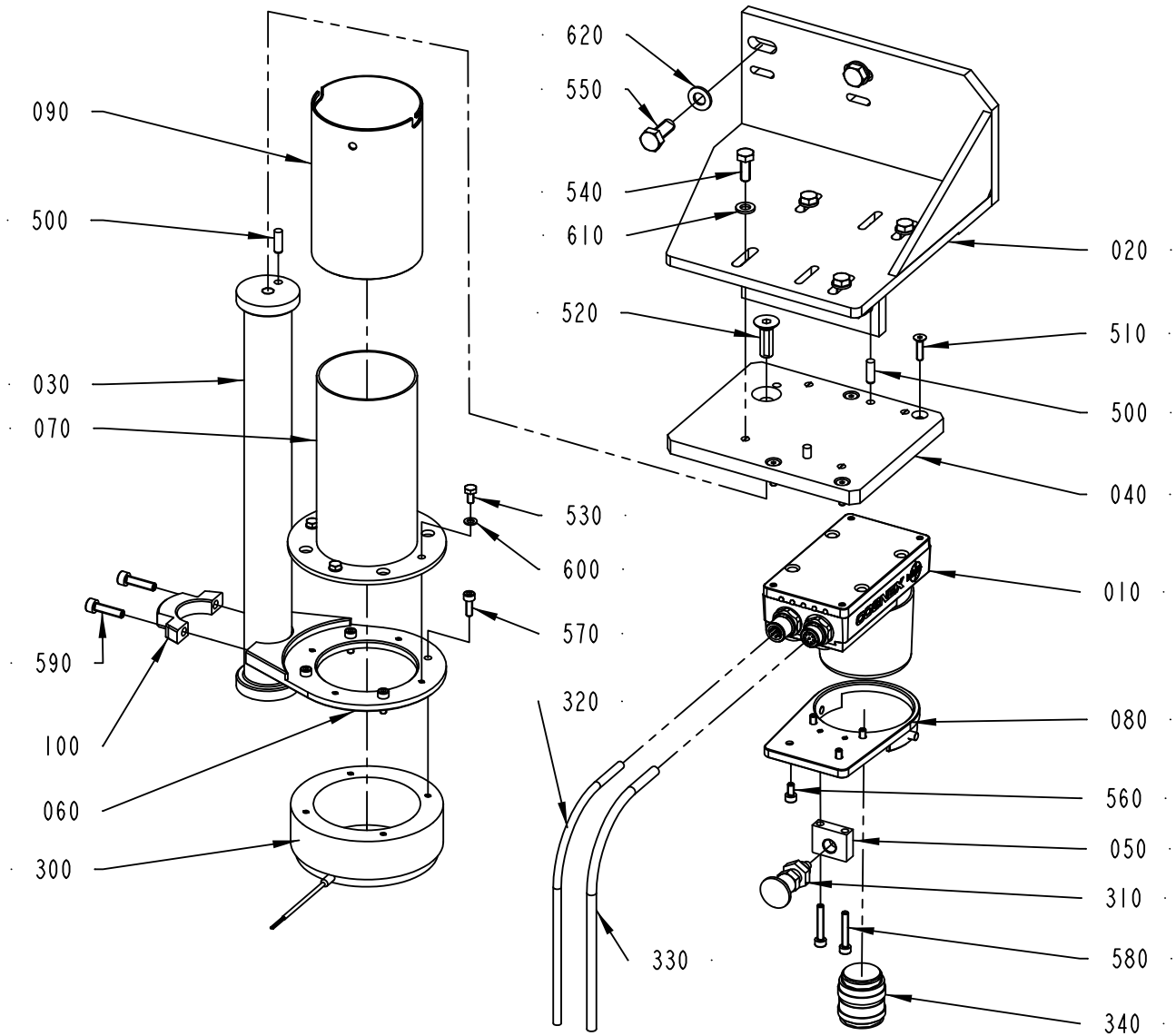
620
550
540
610
020
520
510
500
030
070
040
530
600
010
570
590
320
080
100
560
060
050
300
310
330
580
340
2873873-2
287783

ECM: 305571 - 20070517
Group number: 2873873-0100
Assembly Drawing: 2873873-2_1_AA

This list covers pages from 5-50 to 5-53

Pos	Part No	UN	Qty	Description	Page No
TBA, TPA (See drawing on page: 5-50)					
020	2792664-0000		1	BRACKET	
040	2873893-0000		1	BRACKET	
490	311103-0306		2	PARALLEL PIN ISO 2338 5M6X12 A1	
500	311103-0308		5	PARALLEL PIN ISO 2338 5M6X16 A1	
TGA (See drawing on page: 5-52)					
020	2780491-0000		1	BRACKET	
040	2780493-0000		1	PLATE	
500	311103-0308		3	PARALLEL PIN ISO 2338 5M6X16 A1	
Common Parts					
010	2873898-0000		1	CAMERA	
030	2780492-0000		1	COLUMN	
050	2794721-0000		1	BLOCK	
060	2794790-0000		1	CLAMP	
070	2557544-0000		1	PROTECTION	
080	2792848-0000		1	SUPPORT	
090	2792879-0000		1	TUBE	
100	2873943-0000		1	CLAMP	
300	90459-2454		1	RING LIGHT ILLUMINATOR, CLK-003630-00	
310	90051-0112		1	LOCK KNOB, NO. GN 617 NIK5	
320	2873899-0000		1	CABLE	
330	2873900-0000		1	CABLE	
340	90459-1180		1	LENS 16MM IN-SIGHT 4100, HF16HA-1B	
510	312155-0293		4	SCREW DIN 7991 MF6S M4X16 A4 70	
520	312155-0453		1	SCREW DIN 7991 MF6S M8X25 A4 70	
530	312105-0287		4	SCREW M6S ISO 4017 M4X8 A470	
540	312105-0368		4	SCREW M6S ISO 4017 M6X16 A480	
550	312105-0451		4	SCREW M6S ISO 4017 M8X20 A480	
560	312115-0287		4	SCREW ISO4762 M4X8 A4 80	
570	312115-0291		4	SCREW ISO4762 M4X12 A4 80	
580	312115-0297		2	SCREW ISO4762 M4X25 A4 80	
590	312115-0331		2	SCREW ISO4762 M5X20 A4 80	
600	315105-0136		4	WASHER BRB 4,3X8 RFR	
610	315105-0153		4	WASHER BRB 6,4X12 RFR	
620	315105-0165		4	WASHER BRB 8,4X16 RFR	

Pos	Part No	UN	Qty	Description	Page No

Machine Type | Group Description | Used-In | Group Number | Page No

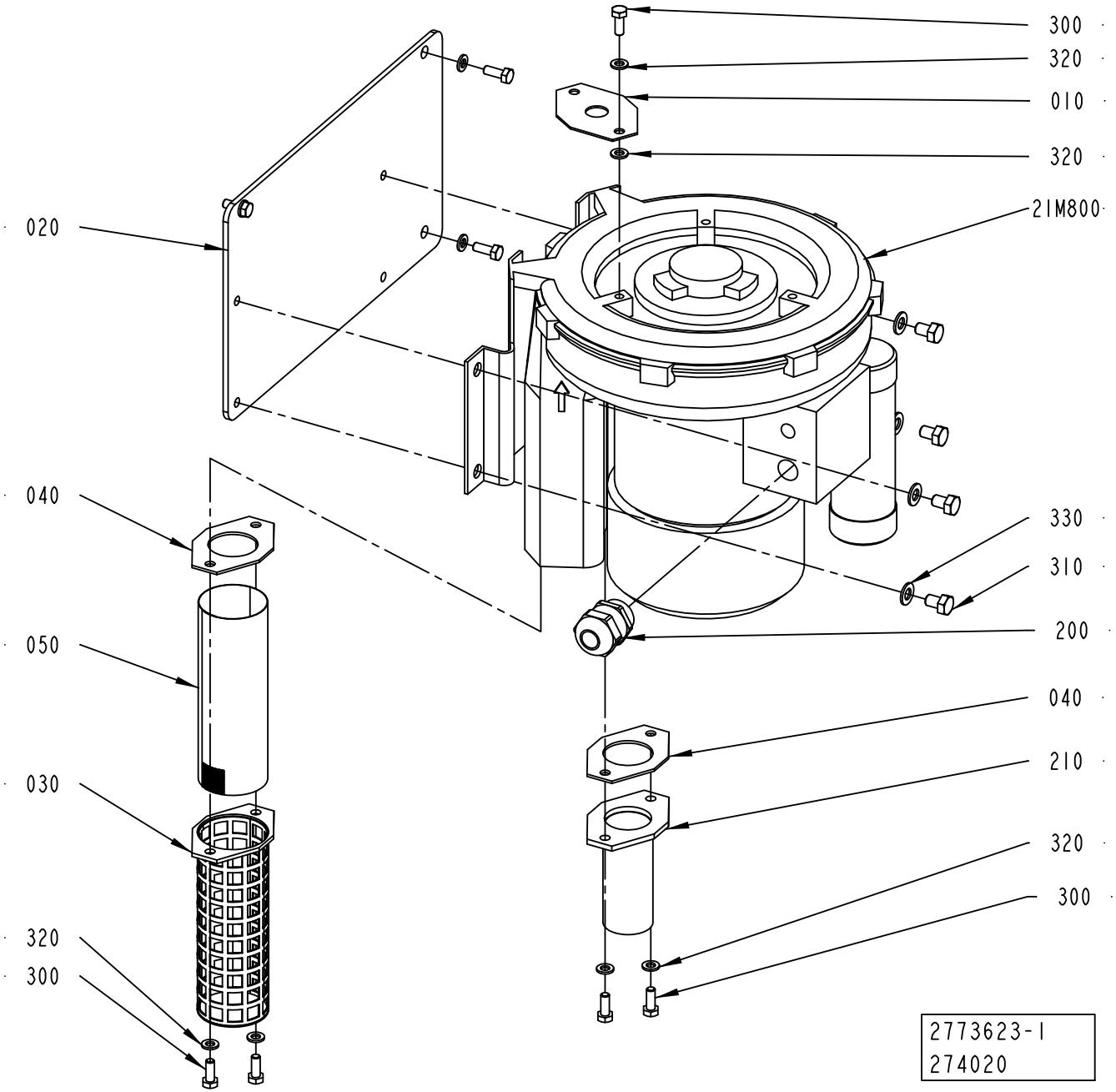
300
320
010
320
21M800
020
040
330
310
050
200
040
030
210
320
320
300
300
2773623-1
274020

ECM: 274443 - 20060921
Group number: 2773623-0100
Assembly Drawing: 2773623-1_1_AA

Pos	Part No	UN	Qty	Description	Page No
-					
010	1030874-0000		1	THROTTLE WASHER	
020	2779772-0000		1	BRACKET	
030	1030335-0000		1	FILTER HOLDER	
040	1030878-0000		2	GASKET	
050	1030338-0000		1	NET	
200	90458-0316		1	CABLE GLAND, M25X1,5, NO.5311 1130	
210	90264-0319		1	FLANGE	
21M800	90459-6768		1	FAN 2BH1300-7AV15	
300	312105-0368		8	SCREW M6S ISO 4017 M6X16 A480	
310	312105-0447		4	SCREW M6S ISO 4017 M8X12 A480	
320	315105-0153		9	WASHER BRB 6,4X12 RFR	
330	315105-0165		4	WASHER BRB 8,4X16 RFR	

Pos	Part No	UN	Qty	Description	Page No

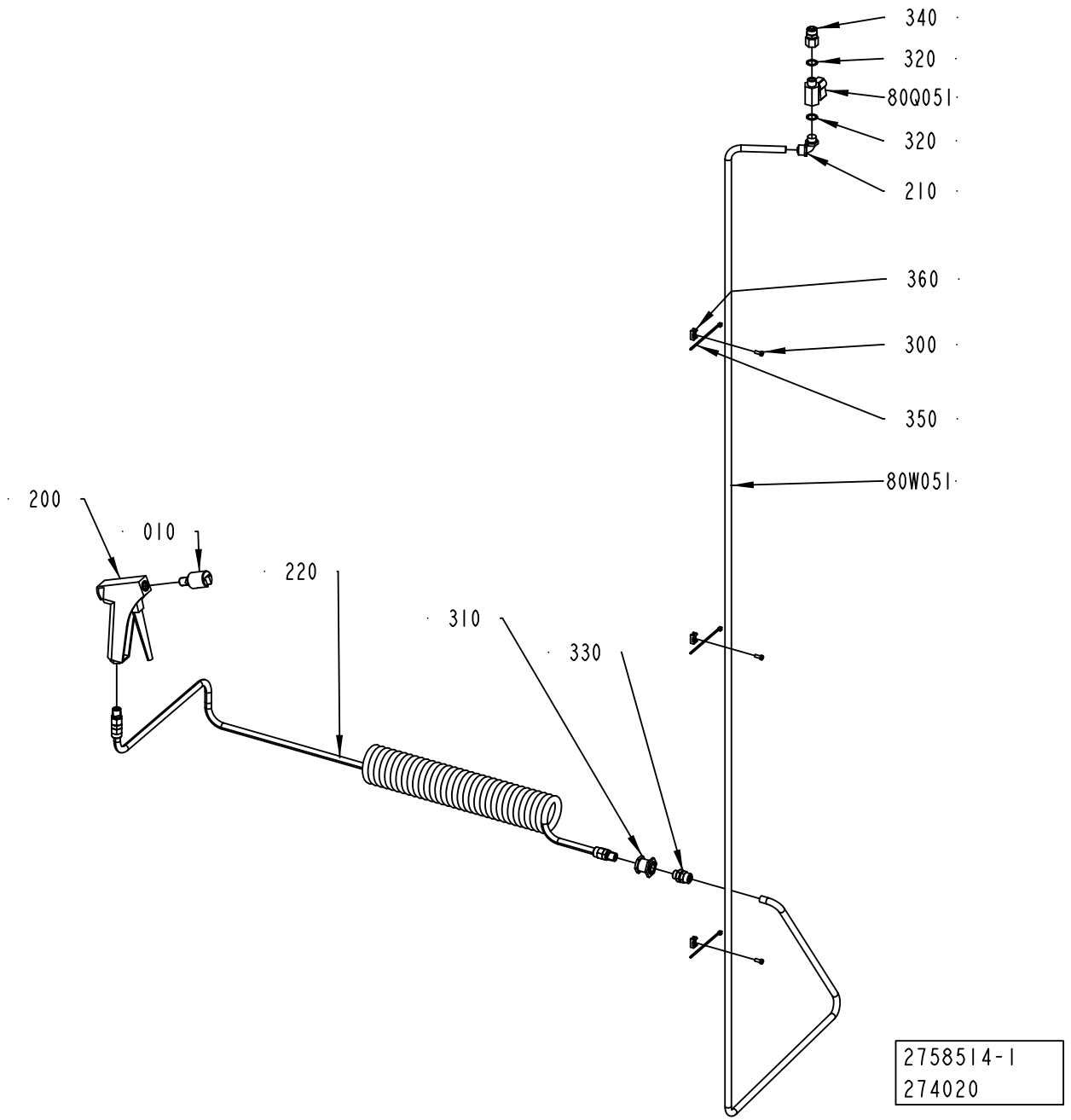
340
320
80Q051
320
210
360
300
350
80W051
200
010
220
310
330
2758514-1
274020

ECM: 274446 - 20060921
Group number: 2758514-0100
Assembly Drawing: 2758514-1_1_AA

Pos	Part No	UN	Qty	Description	Page No
-					
010	2506940-0000		1	NOZZLE	
200	90458-1483		1	SPRAY GUN WATER G1/4	
210	90224-0325		1	ELBOW 90 COUPL.,EXT.THREAD 10/8-G1/4"	
220	90458-1741		1	HOSE ASSEMBLY, CEJN 19 958 9669	
300	312125-0289		3	SCREW ISO 1207 M4X10 A4	
310	342767-0104		1	CONN. BULKHEAD G1/4	
320	315239-0110		2	NYLON WASHER G1/4	
330	342921-0132		1	STRAIGHT COUPL.,EXT.THREADED 10/8-G1/4"	
340	342923-0132		1	STRAIGHT COUPL.,INT.THREADED 10/8-G1/4"	
350	352113-0101		3	CABLE TIE, BLACK 92X2,5 MM	
360	352113-0205		3	ANCHOR PLATES FOR STRIPS, TYPE TM2S8-C10	
80Q051	90187-0045		1	BALL VALVE G1/4 CR PL	
80W051	315400-0009	MM	2800	TUBE PUN-H-10X1,5-SW	

Pos	Part No	UN	Qty	Description	Page No

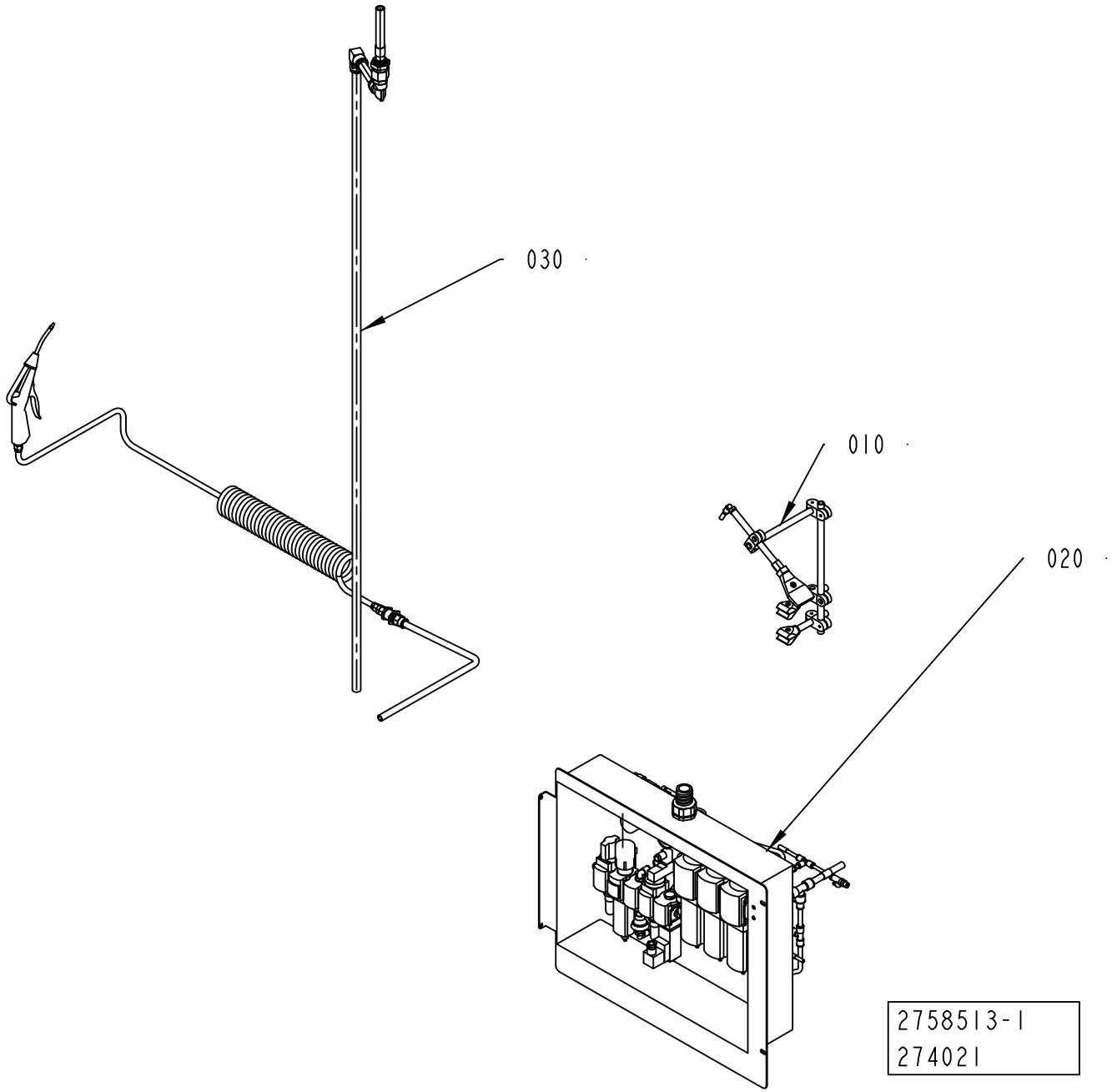
030
010
020
2758513-1
274021

ECM: 274471 - 20060921
Group number: 2758513-0100
Assembly Drawing: 2758513-1_1_AA

Pos	Part No	UN	Qty	Description	Page No
-					
010	2758512-0100		1	BLOWING SYSTEM	**5-61**
020	2838672-0100		1	PNEUMATIC PANEL	**5-63, 5-65, 5-67**
030	2838686-0100		1	AIR JET GUN	**5-73**

Pos	Part No	UN	Qty	Description	Page No

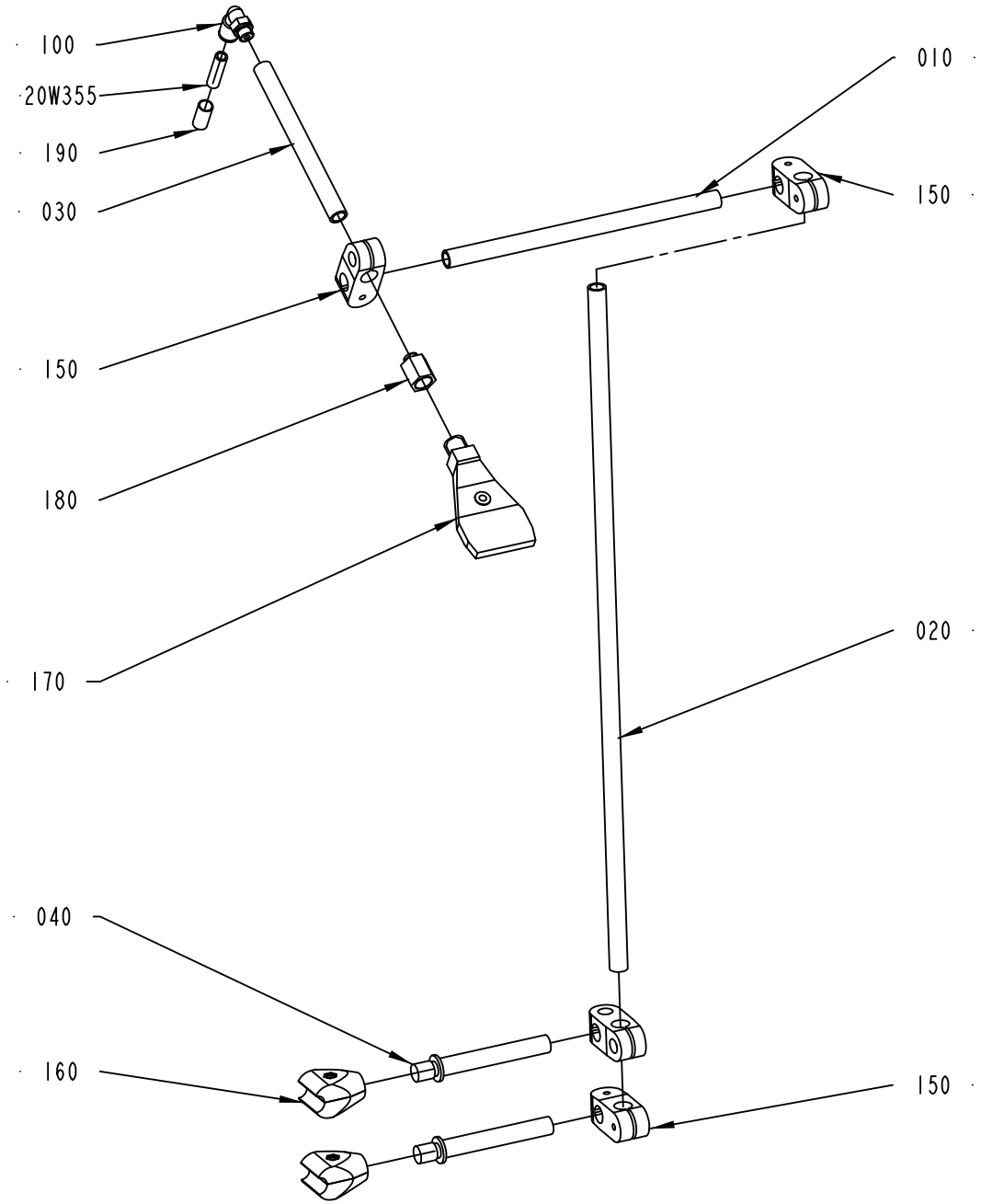
100
20W355
190
030
150
180
170
040
160
010
150
020
150
2758512-1
300393

ECM: 303456 - 20070517
Group number: 2758512-0100
Assembly Drawing: 2758512-1_1_AB

Pos	Part No	UN	Qty	Description	Page No
-					
010	2775403-0000		1	PIPE	
020	2775404-0000		1	PIPE	
030	2788176-0000		1	PIPE	
040	2838679-0000		2	SHAFT	
100	350002-0007		1	PUSH-IN L-FITTING QSL-F-G1/8-8	
150	90600-1001		4	CROSS CLAMP, 340/68385	
160	90458-0499		2	HOLDER 12 MM NO. 82 66861	
170	90424-0089		1	AIR NOZZLE, BSPT1/4, AAB727-1/4-15	
180	90330-0134		1	NIPPLES,REDUCING,INT THREAD, G1/4-G1/8	
190	90459-7370		1	MARKING FOR PNEUM. TUBING, PRZ08	
20W355	315400-0004	MM	3000	TUBE PUN-H-8X1,25-BL	

Pos	Part No	UN	Qty	Description	Page No

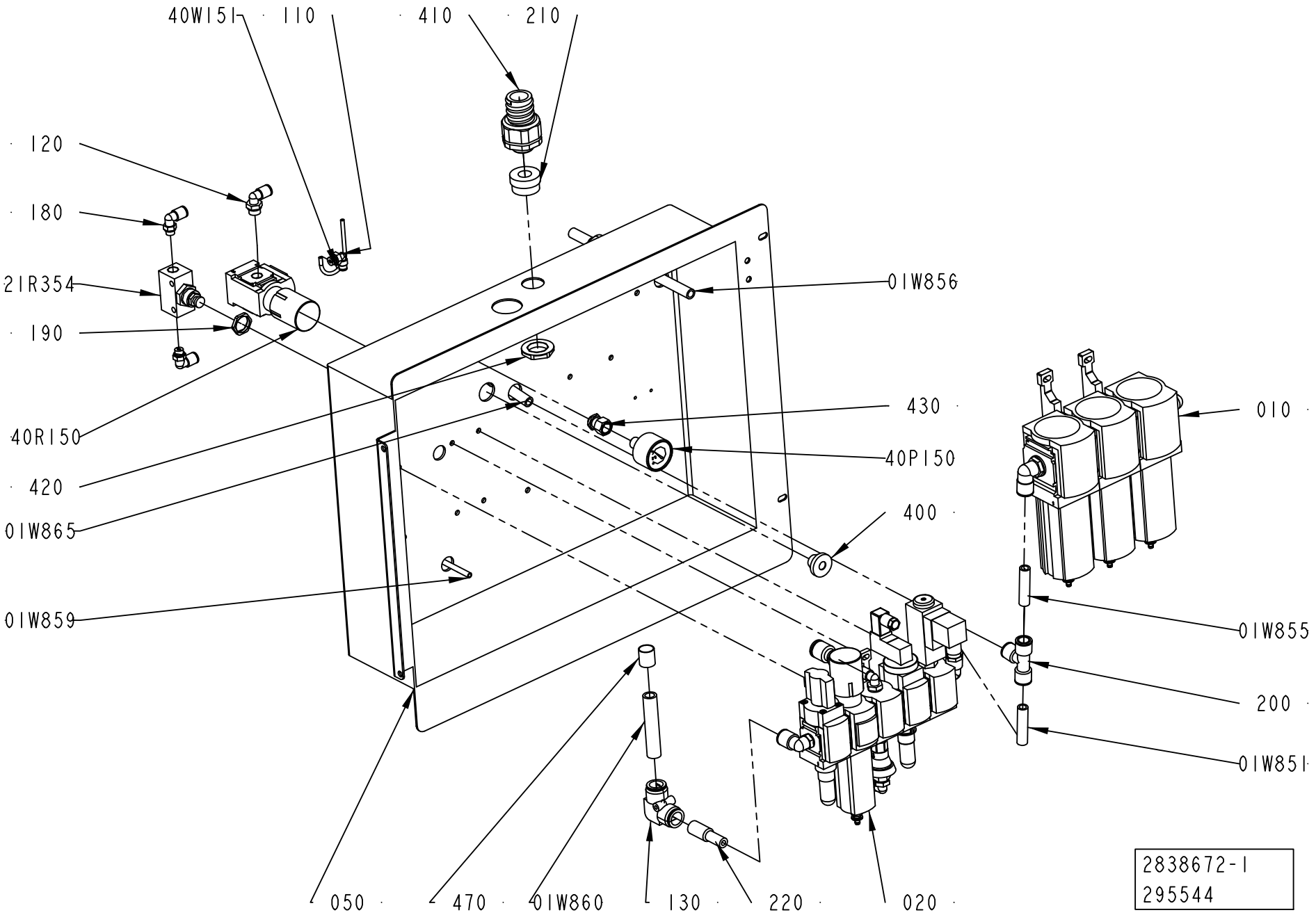
40W151
110
410
210
120
180
21R354
190
40R150
420
01W865
01W859
01W856
430
40P150
400
010
01W855
200
01W851
050
470
01W860
130
220
020
2838672-1
295544

ECM: 303485 - 20070517
Group number: 2838672-0100
Assembly Drawing: 2838672-1_1_AB

This list covers pages from 5-62 to 5-67

Pos	Part No	UN	Qty	Description	Page No
-					
010	2838673-0100		1	SERVICE UNIT	5-69
01R951	90328-0047		1	SILENCER G1/8"	
01R953	90328-0047		1	SILENCER G1/8"	
01R954	90328-0029		1	SILENCER M5	
01R955	90328-0029		1	SILENCER M5	
01U950	90459-2591		1	SINGLE VALVE SUB-BASE CDSV5.0-AS-1/8	
01W851	315400-0010	MM	300	TUBE PUN-H-12X2-BL	
01W853	315400-0001	MM	300	TUBE PUN-H-6X1-BL	
01W854	315400-0010	MM	300	TUBE PUN-H-12X2-BL	
01W855	315400-0010	MM	300	TUBE PUN-H-12X2-BL	
01W856	315400-0010	MM	300	TUBE PUN-H-12X2-BL	
01W857	315400-0004	MM	300	TUBE PUN-H-8X1,25-BL	
01W858	315400-0004	MM	300	TUBE PUN-H-8X1,25-BL	
01W859	315400-0001	MM	300	TUBE PUN-H-6X1-BL	
01W860	315400-0010	MM	300	TUBE PUN-H-12X2-BL	
01W861	315400-0004	MM	300	TUBE PUN-H-8X1,25-BL	
01W862	315400-0010	MM	300	TUBE PUN-H-12X2-BL	
01W863	315400-0010	MM	300	TUBE PUN-H-12X2-BL	
01W865	315400-0010	MM	300	TUBE PUN-H-12X2-BL	
01W868	315400-0001	MM	300	TUBE PUN-H-6X1-BL	
01W954	315400-0001	MM	300	TUBE PUN-H-6X1-BL	
01W956	315400-0001	MM	300	TUBE PUN-H-6X1-BL	
020	2838674-0100		1	SERVICE UNIT	5-71
050	2838676-0000		1	BRACKET	
110	350002-0005		1	PUSH-IN L-FITTING QSL-F-G1/8-4	
120	350002-0009		1	PUSH-IN L-FITTING QSL-F-G1/4-8	
130	90459-2553		1	ELBOW PIPE JOINT 16 MM	
140	350005-0002		3	PUSH-IN T-FITTING QST-F-6	
150	350006-0008		2	PUSH-IN FITTING QS-F-12H-8	
160	350005-0003		1	PUSH-IN T-FITTING QST-F-8	
170	350001-0011		1	PUSH-IN FITTING QS-F-G1/4-12	
180	350002-0007		2	PUSH-IN L-FITTING QSL-F-G1/8-8	
190	353250-0020		1	GLAND, LOCK NUT M20X1,5	
200	350005-0005		4	PUSH-IN T-FITTING QST-F-12	
20Q051	90459-0290		1	NON-RETURN VALVE, PUSH-IN 6 MM	
20Q052	90187-0191		1	BALL VALVE R1/8, 6 MM	
20R352	90328-0047		1	SILENCER G1/8"	
20R353	90328-0047		1	SILENCER G1/8"	
20R354	90328-0029		1	SILENCER M5	
20R355	90328-0029		1	SILENCER M5	
20U350	90459-2591		1	SINGLE VALVE SUB-BASE CDSV5.0-AS-1/8	
20W050	315400-0001	MM	300	TUBE PUN-H-6X1-BL	
20W051	315400-0001	MM	300	TUBE PUN-H-6X1-BL	
20W052	315400-0001	MM	300	TUBE PUN-H-6X1-BL	
20W053	315400-0001	MM	300	TUBE PUN-H-6X1-BL	
20W354	315400-0001	MM	300	TUBE PUN-H-6X1-BL	
20W355	315400-0001	MM	300	TUBE PUN-H-6X1-BL	
20W356	315400-0001	MM	300	TUBE PUN-H-6X1-BL	
210	353249-0015		1	INSERT, SINGLE HOLE, EK 155/16	
21K000	90458-1202		1	VALVES 2X3/2, CLOSED	
21R054	90459-3604		1	FLOW CONTROL VALVE, GR-QS-6	
21R354	90235-0748		1	THROTTLE CHECK VALVE	
21W051	315400-0004	MM	300	TUBE PUN-H-8X1,25-BL	
21W054	315400-0004	MM	300	TUBE PUN-H-8X1,25-BL	
21W351	315400-0004	MM	300	TUBE PUN-H-8X1,25-BL	
21W355	315400-0004	MM	300	TUBE PUN-H-8X1,25-BL	
220	90459-7107		1	SLEEVE QSH-16-12	
230	350001-0007		4	PUSH-IN FITTING QS-F-G1/8-8	
240	350001-0002		2	PUSH-IN FITTING QS-F-M5-6	
250	350001-0006		2	PUSH-IN FITTING QS-F-G1/8-6	
260	350011-0002		1	PUSH-IN T-FITTING QS-F-8-6	
400	90015-0021		1	LEAD-IN, TET10-14, E-1458023	
40K203	90458-1202		1	VALVES 2X3/2, CLOSED	
40P150	90459-7344		1	PRESSURE GAUGE, MA-40-6-R1/4-EN	
40R150	90459-5817		1	REGULATOR, MS4-LR-1/4-D6-A8-AS	
40W150	315400-0010	MM	300	TUBE PUN-H-12X2-BL	
40W151	315400-0016	MM	300	TUBE PUN-H-4X0,75-BL	
40W152	315400-0004	MM	300	TUBE PUN-H-8X1,25-BL	
40W254	315400-0004	MM	300	TUBE PUN-H-8X1,25-BL	
410	90458-0432		1	HOSE GLAND W/O INSERT M25 EXTENDED	
420	90458-0324		1	NUT, M25X1,5	
430	90459-7333		1	PUSH-IN FITTING QSSF-1/4-4-B	
440	90459-7369		4	MARKING FOR PNEUM. TUBING, PRZ06	
450	90459-7370		4	MARKING FOR PNEUM. TUBING, PRZ08	
460	90459-7372		2	MARKING FOR PNEUM. TUBING, PRZ12	
470	90459-7373		1	MARKING FOR PNEUM. TUBING, PRZ16	

Machine Type | Group Description | Used-In | Group Number | Page No

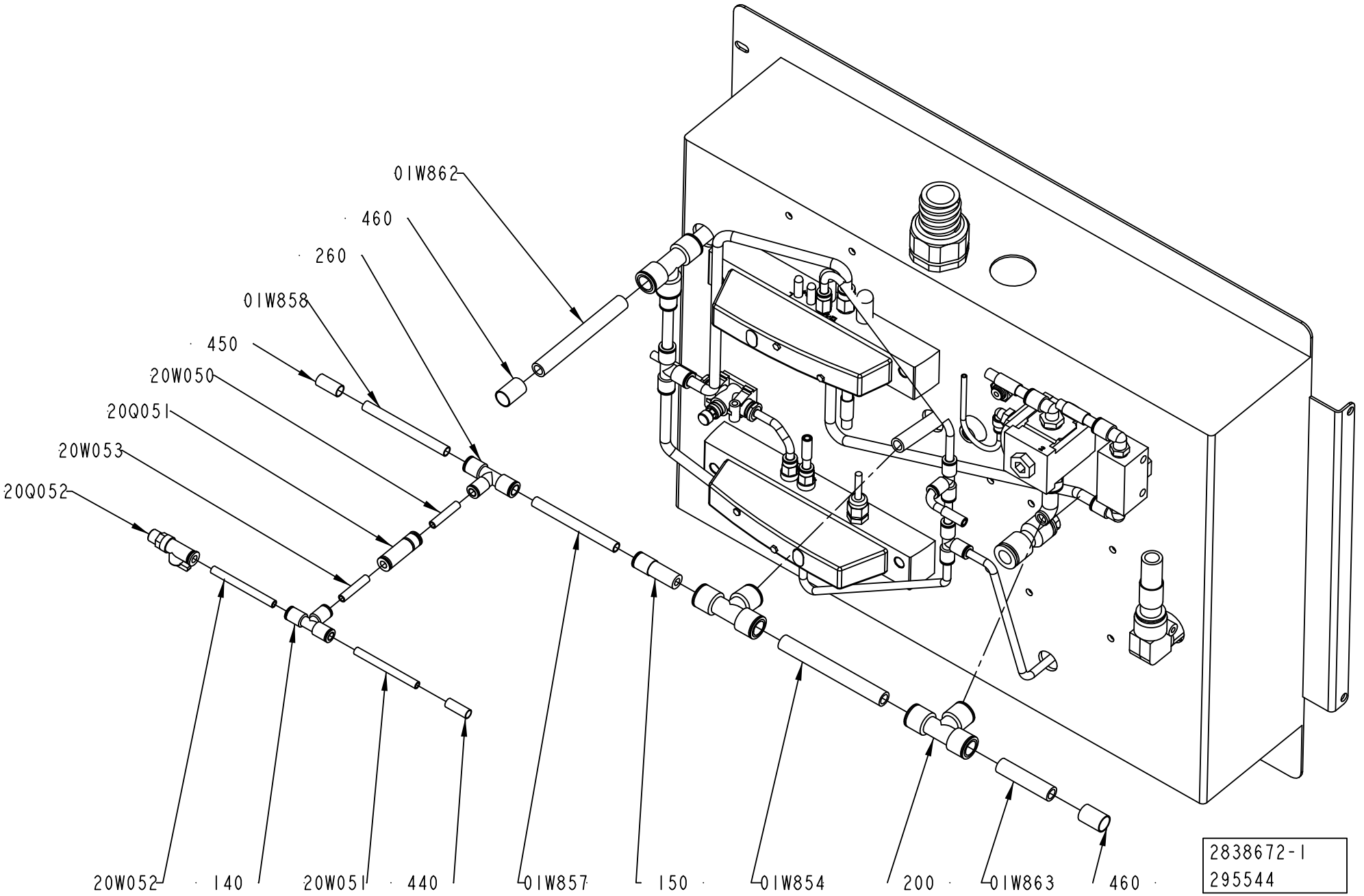
01W862
460
260
01W858
450
20W050
20Q051
20W053
20Q052
20W052
140
20W051
440
01W857
150
01W854
200
01W863
460
2838672-1
295544

ECM: 303485 - 20070517
Group number: 2838672-0100
Assembly Drawing: 2838672-1_2_AB

This list covers pages from 5-62 to 5-67

Pos	Part No	UN	Qty	Description	Page No
-					
010	2838673-0100		1	SERVICE UNIT	**5-69**
01R951	90328-0047		1	SILENCER G1/8"	
01R953	90328-0047		1	SILENCER G1/8"	
01R954	90328-0029		1	SILENCER M5	
01R955	90328-0029		1	SILENCER M5	
01U950	90459-2591		1	SINGLE VALVE SUB-BASE CDSV5.0-AS-1/8	
01W851	315400-0010	MM	300	TUBE PUN-H-12X2-BL	
01W853	315400-0001	MM	300	TUBE PUN-H-6X1-BL	
01W854	315400-0010	MM	300	TUBE PUN-H-12X2-BL	
01W855	315400-0010	MM	300	TUBE PUN-H-12X2-BL	
01W856	315400-0010	MM	300	TUBE PUN-H-12X2-BL	
01W857	315400-0004	MM	300	TUBE PUN-H-8X1,25-BL	
01W858	315400-0004	MM	300	TUBE PUN-H-8X1,25-BL	
01W859	315400-0001	MM	300	TUBE PUN-H-6X1-BL	
01W860	315400-0010	MM	300	TUBE PUN-H-12X2-BL	
01W861	315400-0004	MM	300	TUBE PUN-H-8X1,25-BL	
01W862	315400-0010	MM	300	TUBE PUN-H-12X2-BL	
01W863	315400-0010	MM	300	TUBE PUN-H-12X2-BL	
01W865	315400-0010	MM	300	TUBE PUN-H-12X2-BL	
01W868	315400-0001	MM	300	TUBE PUN-H-6X1-BL	
01W954	315400-0001	MM	300	TUBE PUN-H-6X1-BL	
01W956	315400-0001	MM	300	TUBE PUN-H-6X1-BL	
020	2838674-0100		1	SERVICE UNIT	**5-71**
050	2838676-0000		1	BRACKET	
110	350002-0005		1	PUSH-IN L-FITTING QSL-F-G1/8-4	
120	350002-0009		1	PUSH-IN L-FITTING QSL-F-G1/4-8	
130	90459-2553		1	ELBOW PIPE JOINT 16 MM	
140	350005-0002		3	PUSH-IN T-FITTING QST-F-6	
150	350006-0008		2	PUSH-IN FITTING QS-F-12H-8	
160	350005-0003		1	PUSH-IN T-FITTING QST-F-8	
170	350001-0011		1	PUSH-IN FITTING QS-F-G1/4-12	
180	350002-0007		2	PUSH-IN L-FITTING QSL-F-G1/8-8	
190	353250-0020		1	GLAND, LOCK NUT M20X1,5	
200	350005-0005		4	PUSH-IN T-FITTING QST-F-12	
20Q051	90459-0290		1	NON-RETURN VALVE, PUSH-IN 6 MM	
20Q052	90187-0191		1	BALL VALVE R1/8, 6 MM	
20R352	90328-0047		1	SILENCER G1/8"	
20R353	90328-0047		1	SILENCER G1/8"	
20R354	90328-0029		1	SILENCER M5	
20R355	90328-0029		1	SILENCER M5	
20U350	90459-2591		1	SINGLE VALVE SUB-BASE CDSV5.0-AS-1/8	
20W050	315400-0001	MM	300	TUBE PUN-H-6X1-BL	
20W051	315400-0001	MM	300	TUBE PUN-H-6X1-BL	
20W052	315400-0001	MM	300	TUBE PUN-H-6X1-BL	
20W053	315400-0001	MM	300	TUBE PUN-H-6X1-BL	
20W354	315400-0001	MM	300	TUBE PUN-H-6X1-BL	
20W355	315400-0001	MM	300	TUBE PUN-H-6X1-BL	
20W356	315400-0001	MM	300	TUBE PUN-H-6X1-BL	
210	353249-0015		1	INSERT, SINGLE HOLE, EK 155/16	
21K000	90458-1202		1	VALVES 2X3/2, CLOSED	
21R054	90459-3604		1	FLOW CONTROL VALVE, GR-QS-6	
21R354	90235-0748		1	THROTTLE CHECK VALVE	
21W051	315400-0004	MM	300	TUBE PUN-H-8X1,25-BL	
21W054	315400-0004	MM	300	TUBE PUN-H-8X1,25-BL	
21W351	315400-0004	MM	300	TUBE PUN-H-8X1,25-BL	
21W355	315400-0004	MM	300	TUBE PUN-H-8X1,25-BL	
220	90459-7107		1	SLEEVE QSH-16-12	
230	350001-0007		4	PUSH-IN FITTING QS-F-G1/8-8	
240	350001-0002		2	PUSH-IN FITTING QS-F-M5-6	
250	350001-0006		2	PUSH-IN FITTING QS-F-G1/8-6	
260	350011-0002		1	PUSH-IN T-FITTING QS-F-8-6	
400	90015-0021		1	LEAD-IN, TET10-14, E-1458023	
40K203	90458-1202		1	VALVES 2X3/2, CLOSED	
40P150	90459-7344		1	PRESSURE GAUGE, MA-40-6-R1/4-EN	
40R150	90459-5817		1	REGULATOR, MS4-LR-1/4-D6-A8-AS	
40W150	315400-0010	MM	300	TUBE PUN-H-12X2-BL	
40W151	315400-0016	MM	300	TUBE PUN-H-4X0,75-BL	
40W152	315400-0004	MM	300	TUBE PUN-H-8X1,25-BL	
40W254	315400-0004	MM	300	TUBE PUN-H-8X1,25-BL	
410	90458-0432		1	HOSE GLAND W/O INSERT M25 EXTENDED	
420	90458-0324		1	NUT, M25X1,5	
430	90459-7333		1	PUSH-IN FITTING QSSF-1/4-4-B	
440	90459-7369		4	MARKING FOR PNEUM. TUBING, PRZ06	
450	90459-7370		4	MARKING FOR PNEUM. TUBING, PRZ08	
460	90459-7372		2	MARKING FOR PNEUM. TUBING, PRZ12	
470	90459-7373		1	MARKING FOR PNEUM. TUBING, PRZ16	

Machine Type | Group Description | Used-In | Group Number | Page No

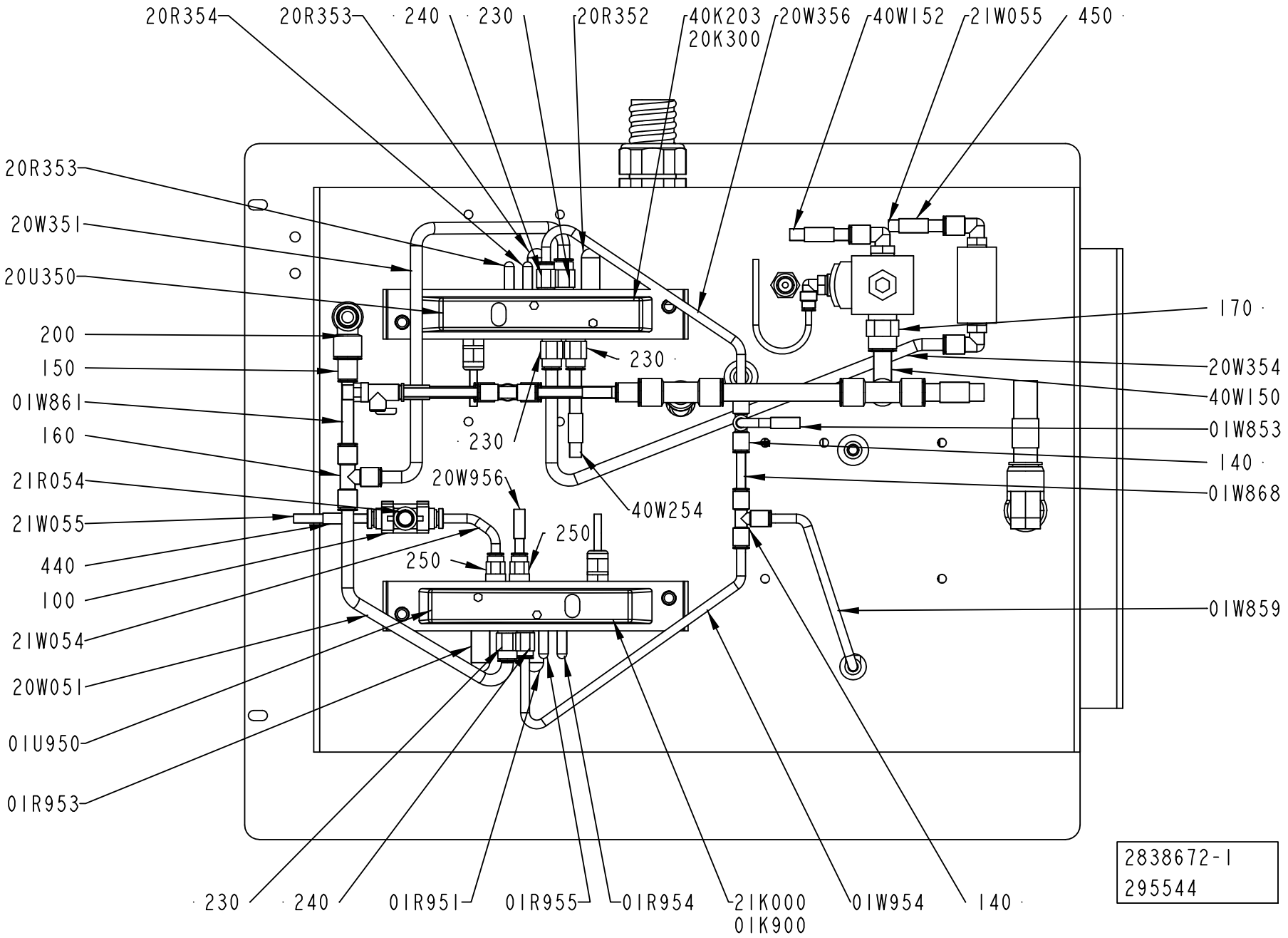
20R354
20R353
240
230
20R352
40K203
20K300
20W356
40W152
21W055
450
20R353
20W351
20U350
200
150
01W861
160
21R054
21W055
440
100
21W054
20W051
01U950
01R953
170
230
20W354
40W150
01W853
230
140
20W956
40W254
01W868
250
250
01W859
230
240
01R951
01R955
01R954
21K000
01K900
01W954
140
2838672-1
295544

ECM: 303485 - 20070517
Group number: 2838672-0100
Assembly Drawing: 2838672-1_3_AB

This list covers pages from 5-62 to 5-67

Pos	Part No	UN	Qty	Description	Page No
-					
010	2838673-0100		1	SERVICE UNIT	**5-69**
01R951	90328-0047		1	SILENCER G1/8"	
01R953	90328-0047		1	SILENCER G1/8"	
01R954	90328-0029		1	SILENCER M5	
01R955	90328-0029		1	SILENCER M5	
01U950	90459-2591		1	SINGLE VALVE SUB-BASE CDSV5.0-AS-1/8	
01W851	315400-0010	MM	300	TUBE PUN-H-12X2-BL	
01W853	315400-0001	MM	300	TUBE PUN-H-6X1-BL	
01W854	315400-0010	MM	300	TUBE PUN-H-12X2-BL	
01W855	315400-0010	MM	300	TUBE PUN-H-12X2-BL	
01W856	315400-0010	MM	300	TUBE PUN-H-12X2-BL	
01W857	315400-0004	MM	300	TUBE PUN-H-8X1,25-BL	
01W858	315400-0004	MM	300	TUBE PUN-H-8X1,25-BL	
01W859	315400-0001	MM	300	TUBE PUN-H-6X1-BL	
01W860	315400-0010	MM	300	TUBE PUN-H-12X2-BL	
01W861	315400-0004	MM	300	TUBE PUN-H-8X1,25-BL	
01W862	315400-0010	MM	300	TUBE PUN-H-12X2-BL	
01W863	315400-0010	MM	300	TUBE PUN-H-12X2-BL	
01W865	315400-0010	MM	300	TUBE PUN-H-12X2-BL	
01W868	315400-0001	MM	300	TUBE PUN-H-6X1-BL	
01W954	315400-0001	MM	300	TUBE PUN-H-6X1-BL	
01W956	315400-0001	MM	300	TUBE PUN-H-6X1-BL	
020	2838674-0100		1	SERVICE UNIT	**5-71**
050	2838676-0000		1	BRACKET	
110	350002-0005		1	PUSH-IN L-FITTING QSL-F-G1/8-4	
120	350002-0009		1	PUSH-IN L-FITTING QSL-F-G1/4-8	
130	90459-2553		1	ELBOW PIPE JOINT 16 MM	
140	350005-0002		3	PUSH-IN T-FITTING QST-F-6	
150	350006-0008		2	PUSH-IN FITTING QS-F-12H-8	
160	350005-0003		1	PUSH-IN T-FITTING QST-F-8	
170	350001-0011		1	PUSH-IN FITTING QS-F-G1/4-12	
180	350002-0007		2	PUSH-IN L-FITTING QSL-F-G1/8-8	
190	353250-0020		1	GLAND, LOCK NUT M20X1,5	
200	350005-0005		4	PUSH-IN T-FITTING QST-F-12	
20Q051	90459-0290		1	NON-RETURN VALVE, PUSH-IN 6 MM	
20Q052	90187-0191		1	BALL VALVE R1/8, 6 MM	
20R352	90328-0047		1	SILENCER G1/8"	
20R353	90328-0047		1	SILENCER G1/8"	
20R354	90328-0029		1	SILENCER M5	
20R355	90328-0029		1	SILENCER M5	
20U350	90459-2591		1	SINGLE VALVE SUB-BASE CDSV5.0-AS-1/8	
20W050	315400-0001	MM	300	TUBE PUN-H-6X1-BL	
20W051	315400-0001	MM	300	TUBE PUN-H-6X1-BL	
20W052	315400-0001	MM	300	TUBE PUN-H-6X1-BL	
20W053	315400-0001	MM	300	TUBE PUN-H-6X1-BL	
20W354	315400-0001	MM	300	TUBE PUN-H-6X1-BL	
20W355	315400-0001	MM	300	TUBE PUN-H-6X1-BL	
20W356	315400-0001	MM	300	TUBE PUN-H-6X1-BL	
210	353249-0015		1	INSERT, SINGLE HOLE, EK 155/16	
21K000	90458-1202		1	VALVES 2X3/2, CLOSED	
21R054	90459-3604		1	FLOW CONTROL VALVE, GR-QS-6	
21R354	90235-0748		1	THROTTLE CHECK VALVE	
21W051	315400-0004	MM	300	TUBE PUN-H-8X1,25-BL	
21W054	315400-0004	MM	300	TUBE PUN-H-8X1,25-BL	
21W351	315400-0004	MM	300	TUBE PUN-H-8X1,25-BL	
21W355	315400-0004	MM	300	TUBE PUN-H-8X1,25-BL	
220	90459-7107		1	SLEEVE QSH-16-12	
230	350001-0007		4	PUSH-IN FITTING QS-F-G1/8-8	
240	350001-0002		2	PUSH-IN FITTING QS-F-M5-6	
250	350001-0006		2	PUSH-IN FITTING QS-F-G1/8-6	
260	350011-0002		1	PUSH-IN T-FITTING QS-F-8-6	
400	90015-0021		1	LEAD-IN, TET10-14, E-1458023	
40K203	90458-1202		1	VALVES 2X3/2, CLOSED	
40P150	90459-7344		1	PRESSURE GAUGE, MA-40-6-R1/4-EN	
40R150	90459-5817		1	REGULATOR, MS4-LR-1/4-D6-A8-AS	
40W150	315400-0010	MM	300	TUBE PUN-H-12X2-BL	
40W151	315400-0016	MM	300	TUBE PUN-H-4X0,75-BL	
40W152	315400-0004	MM	300	TUBE PUN-H-8X1,25-BL	
40W254	315400-0004	MM	300	TUBE PUN-H-8X1,25-BL	
410	90458-0432		1	HOSE GLAND W/O INSERT M25 EXTENDED	
420	90458-0324		1	NUT, M25X1,5	
430	90459-7333		1	PUSH-IN FITTING QSSF-1/4-4-B	
440	90459-7369		4	MARKING FOR PNEUM. TUBING, PRZ06	
450	90459-7370		4	MARKING FOR PNEUM. TUBING, PRZ08	
460	90459-7372		2	MARKING FOR PNEUM. TUBING, PRZ12	
470	90459-7373		1	MARKING FOR PNEUM. TUBING, PRZ16	

Machine Type | Group Description | Used-In | Group Number | Page No

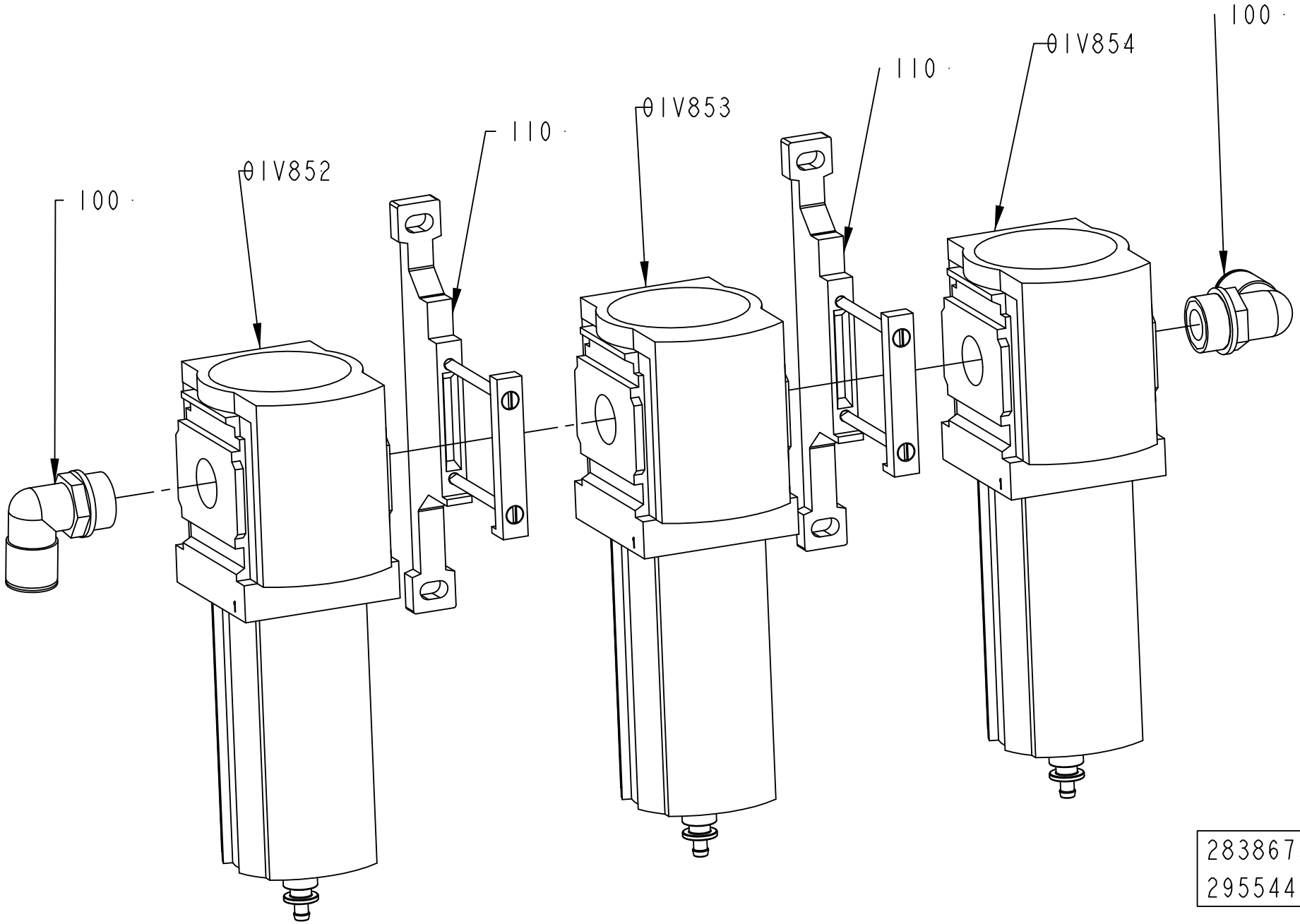
100
01V852
110
01V853
110
01V854
100
2838673-1
295544

ECM: 303486 - 20070517
Group number: 2838673-0100
Assembly Drawing: 2838673-1_1_AB

Pos	Part No	UN	Qty	Description	Page No
-					
01V852	90459-2773		1	FILTER, MS6-LFM-1/2-BRV	
	90459-3812		*1*	*FILTER CARTRIDGE, MS6-LFM-B*	
01V853	90459-2772		1	FILTER, MS6-LFM-1/2-ARV	
	90459-3811		*1*	*FILTER CARTRIDGE MS6-LFM-A*	
01V854	90459-2771		1	FILTER, MS6-LFX-1/2-R	
	90459-3810		*1*	*FILTER CARTRIDGE, MS6-LFX*	
100	350002-0016		2	PUSH-IN L-FITTING QSL-F-G1/2-12	
110	90459-1858		2	BRACKET, MS6-WP	

Pos	Part No	UN	Qty	Description	Page No

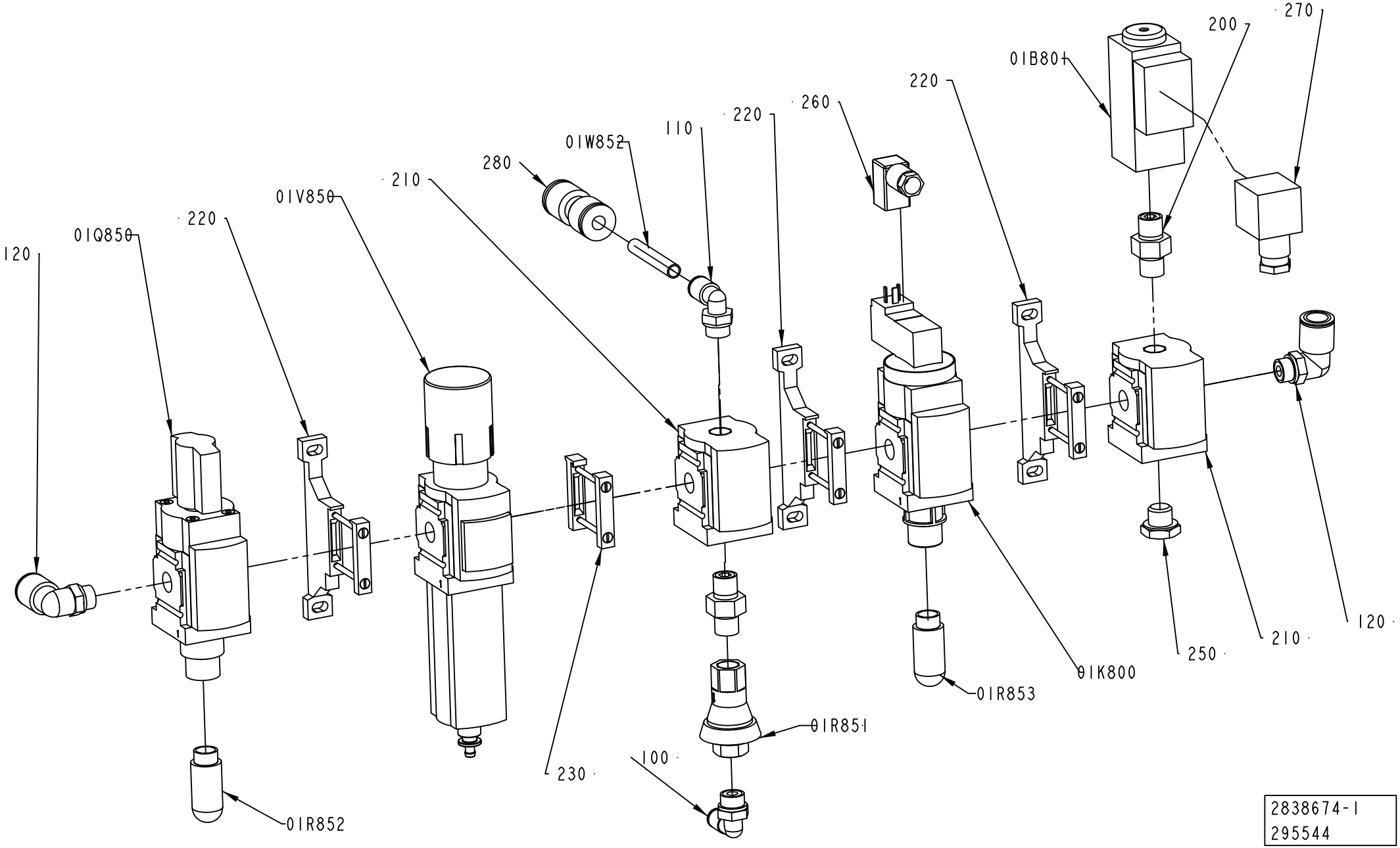

2838674-1
295544

ECM: 303487 - 20070517
Group number: 2838674-0100
Assembly Drawing: 2838674-1_1_AB

Pos	Part No	UN	Qty	Description	Page No
-					
01B801	90459-6426		1	PRESSURE GUARD PEV-1/4-B-OD	
01K800	90459-2243		1	SHUT OFF VALVE, MS4-EE-1/4-10V24	
01Q850	90459-2337		1	SHUT OFF VALVE, MS4-EM1-1/4	
01R851	90459-2425		1	PRESSURE REGULATOR IN-LINE, BSP-1/4	
01R852	90328-0026		1	SILENCER G1/4"	
01R853	90328-0026		1	SILENCER G1/4"	
01V850	90459-2339		1	FILTER REGULATOR, MS4-LFR-1/4-D7-ERV-AS	
	90459-3814		*1*	*FILTER CARTRIDGE, MS4-LFP-E*	
01W852	315400-0004	MM	1000	TUBE PUN-H-8X1,25-BL	
100	350002-0008		1	PUSH-IN L-FITTING QSL-F-G1/4-6	
110	350002-0009		1	PUSH-IN L-FITTING QSL-F-G1/4-8	
120	350002-0011		2	PUSH-IN L-FITTING QSL-F-G1/4-12	
200	90224-0372		1	CONN. STRAIGHT ESK-1/4-1/4 151521	
210	90459-2245		2	DISTRIBUTOR, MS4-FRM-1/4	
220	90459-2247		3	BRACKET, MS4-WP	
230	90459-2248		1	BRACKET, MS4-MV	
240	90224-0372		1	CONN. STRAIGHT ESK-1/4-1/4 151521	
250	90330-0026		1	PLUG, EXT. G-THREAD, G1/4	
260	90458-2837		1	PLUG SOCKET, KMEB-1-24-5-LED	
270	90110-0095		1	CONNECTOR 3 POLE + EARTH	
280	90459-5863		1	PUSH-IN FITTING QS-12-8	

Pos	Part No	UN	Qty	Description	Page No

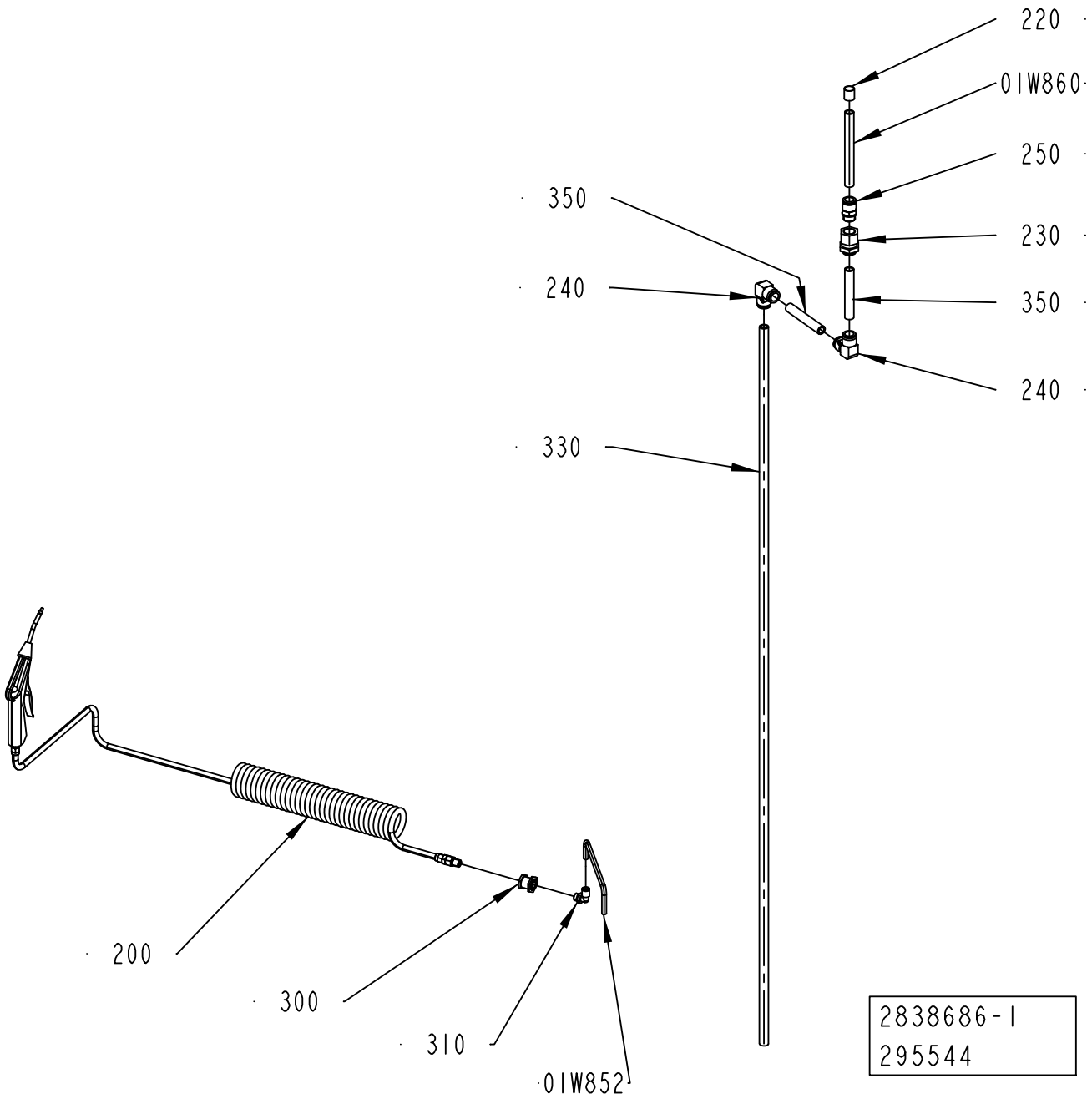
220
01W860
250
350
230
240
350
240
330
200
300
310
01W852
2838686-1
295544

ECM: 303489 - 20070517
Group number: 2838686-0100
Assembly Drawing: 2838686-1_1_AB

Pos	Part No	UN	Qty	Description	Page No
-					
01W852	315400-0004	MM	1800	TUBE PUN-H-8X1,25-BL	
01W860	315400-0013	MM	500	TUBE PUN-H-16-2,5-BL	
200	90458-1740		1	AIR GUN ASSEMBLY, CEJN 199589668	
210	90459-1826		1	ELBOW PIPE JOINT, EXT.THREAD,D=16MM-G1/2	
220	90459-7373		1	MARKING FOR PNEUM. TUBING, PRZ16	
230	90459-0864		1	BULKHEAD CONNECTOR, 12 MM/M27X1,5	
240	90459-2553		2	ELBOW PIPE JOINT 16 MM	
250	90459-2215		1	STRAIGHT COUPLING, D=16 MM - G1/2"	
300	342767-0104		1	CONN. BULKHEAD G1/4	
310	350002-0009		1	PUSH-IN L-FITTING QSL-F-G1/4-8	
330	315400-0013	MM	2000	TUBE PUN-H-16-2,5-BL	
340	315400-0013	MM	200	TUBE PUN-H-16-2,5-BL	
350	315400-0013	MM	500	TUBE PUN-H-16-2,5-BL	

Pos	Part No	UN	Qty	Description	Page No

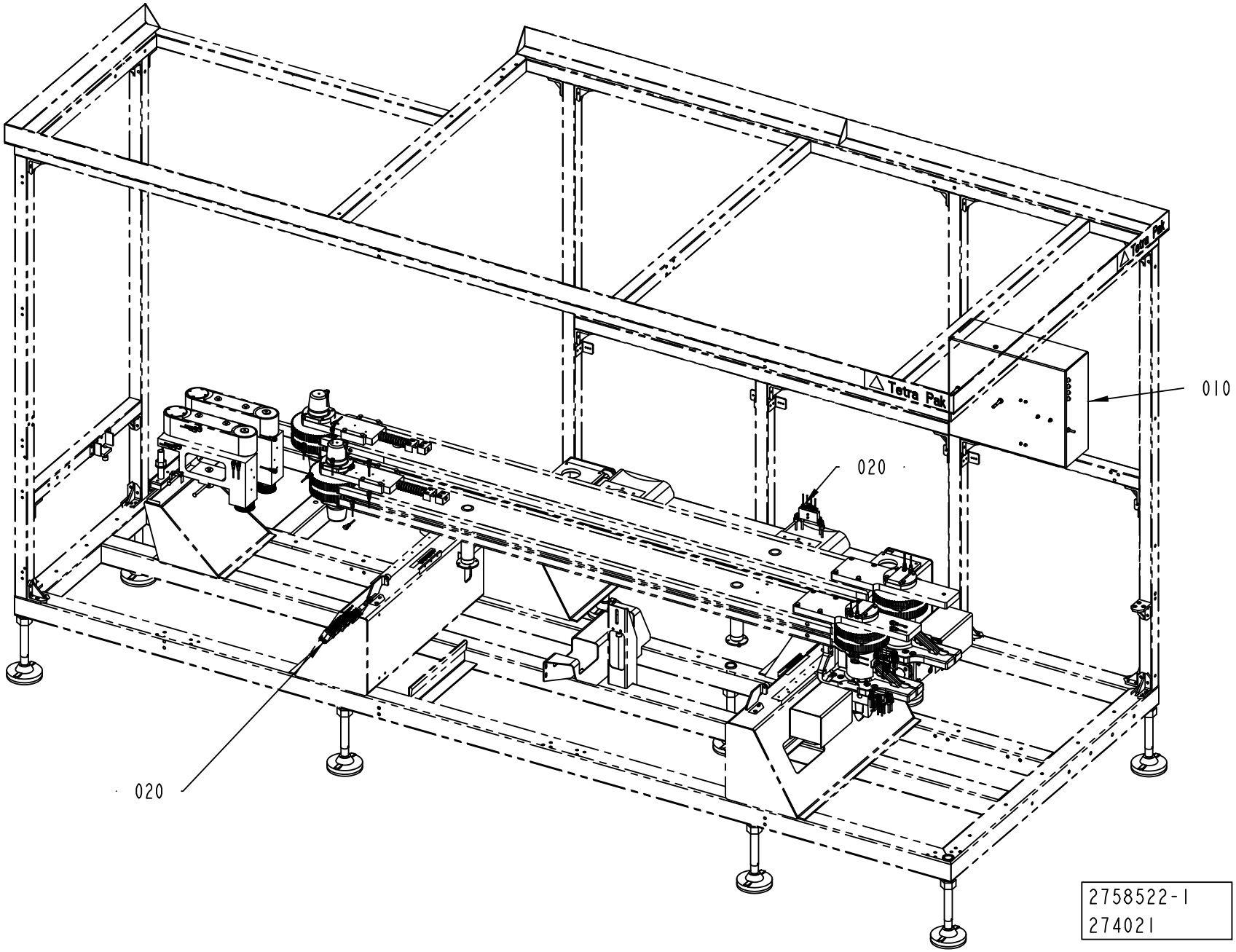
010
020
020
2758522-1
274021

ECM: 274475 - 20060921
Group number: 2758522-0100
Assembly Drawing: 2758522-1_1_AA

Pos	Part No	UN	Qty	Description	Page No
-					
010	2838677-0100		1	CENTRAL LUBRICATION	**5-77**
020	2769763-0100		1	OIL PIPE	**5-79, 5-81, 5-83**

Pos	Part No	UN	Qty	Description	Page No

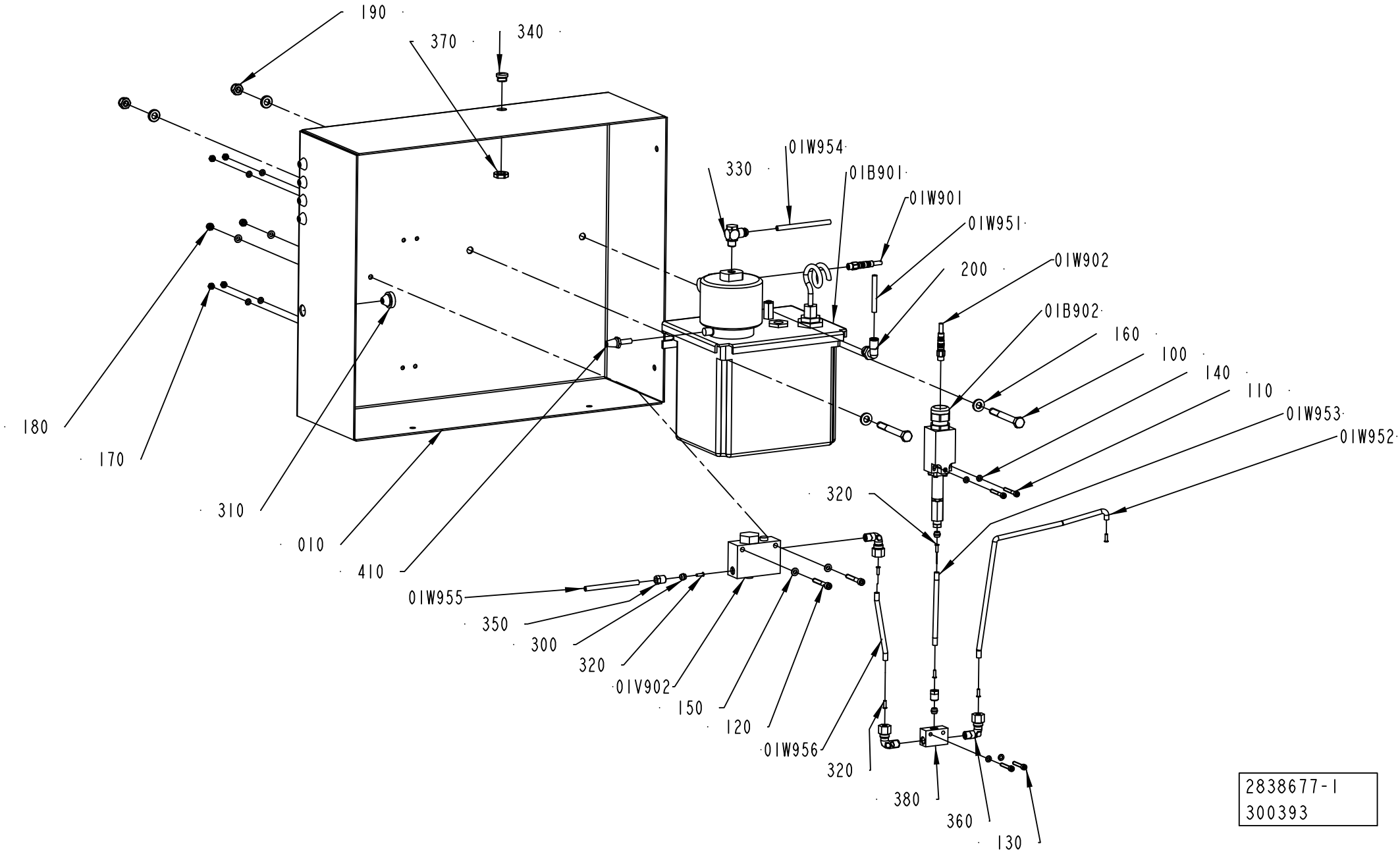
190
370
340
01W954
330
01B901
01W901
01W951
200
01W902
01B902
160
100
140
110
01W953
01W952
180
170
310
010
410
320
01W955
350
300
320
01V902
150
120
01W956
320
380
360
130
2838677-1
300393

ECM: 303488 - 20070517
Group number: 2838677-0100
Assembly Drawing: 2838677-1_1_AB

Pos	Part No	UN	Qty	Description	Page No
-					
010	2838678-0000		1	BRACKET	
01B901	90459-5481		1	OIL PUMP 3L, 10P-P3	
	90048-0450		*1*	*SPARE PARTS KIT*	
	90274-0052		*1*	*LEVEL GUARD, 10VA/250VDC/0,5A*	
01B902	90274-0084		1	PRESSURE GUARD, 1800 KPA	
01V902	90415-0030		1	OIL FILTER PN 100 ORD.NO 2.77 10 70.1	
	90415-0326		*1*	*FILTER INSERT*	
01W901	351401-0050		1	ACTU/SENS CABLE RSMVN 3-PRKMV 3-06/5,0M	
01W902	351401-0050		1	ACTU/SENS CABLE RSMVN 3-PRKMV 3-06/5,0M	
01W951	90166-0132	MM	1000	TUBE 6 MM PA,TRANSP.	
01W952	90166-0108	MM	200	TUBE 6 MM PA TRANSP.	
01W953	90166-0108	MM	200	TUBE 6 MM PA TRANSP.	
01W954	315400-0001	MM	1000	TUBE PUN-H-6X1-BL	
01W955	90166-0108	MM	1000	TUBE 6 MM PA TRANSP.	
01W956	90166-0108	MM	200	TUBE 6 MM PA TRANSP.	
100	312105-0465		2	SCREW M6S ISO 4014 M8X70 A480	
110	312115-0299		2	SCREW ISO4762 M4X30 A4 80	
120	312115-0337		2	SCREW ISO4762 M5X35 A4 80	
130	312115-0297		2	SCREW ISO4762 M4X25 A4 80	
140	315105-0136		8	WASHER BRB 4,3X8 RFR	
150	315105-0146		4	WASHER BRB 5,3X10 RFR	
160	315115-0165		4	WASHER PLAIN, TBRB 8,4/16 H=3	
170	312605-0312		4	HEXAGON NUT, M6M M4 A280	
180	312812-0314		2	HEXAGON NUT, NY-LOCK M5 A480	
190	312812-0318		2	HEXAGON NUT, NY-LOCK M8 A480	
200	350002-0008		1	PUSH-IN L-FITTING QSL-F-G1/4-6	
300	90028-0022		3	CONE TUBE 6 MM	
310	90015-0020		5	LEAD-IN, TET5-7, E-1458016	
320	90134-0030		1	SLEEVE FOR PLASTIC TUBE	
330	90459-5522		1	CONN. BANJO, COR8PB6M10	
340	90458-1306		1	BLIND PLUG CIRCULAR, M12X1,5 514GFK/212	
350	90134-0055		2	BUSHING/NUT INLET/OUTLET 6 MM	
360	90030-0200		3	CONN. ELBOW, 6-M10X1, EXT.THREAD	
370	90458-0321		1	NUT, M12X1,5	
380	90032-0043		1	DISTRIBUTION BLOCK 3 WAYS	
390	90134-0030		6	SLEEVE FOR PLASTIC TUBE	
400	90296-0075	L	4	SHELL OMALA OIL 320, DRUM 208 LITRES	
410	90328-0017		1	SILENCER, D=6 MM	

Pos	Part No	UN	Qty	Description	Page No

Machine Type | Group Description | Used-In | Group Number | Page No

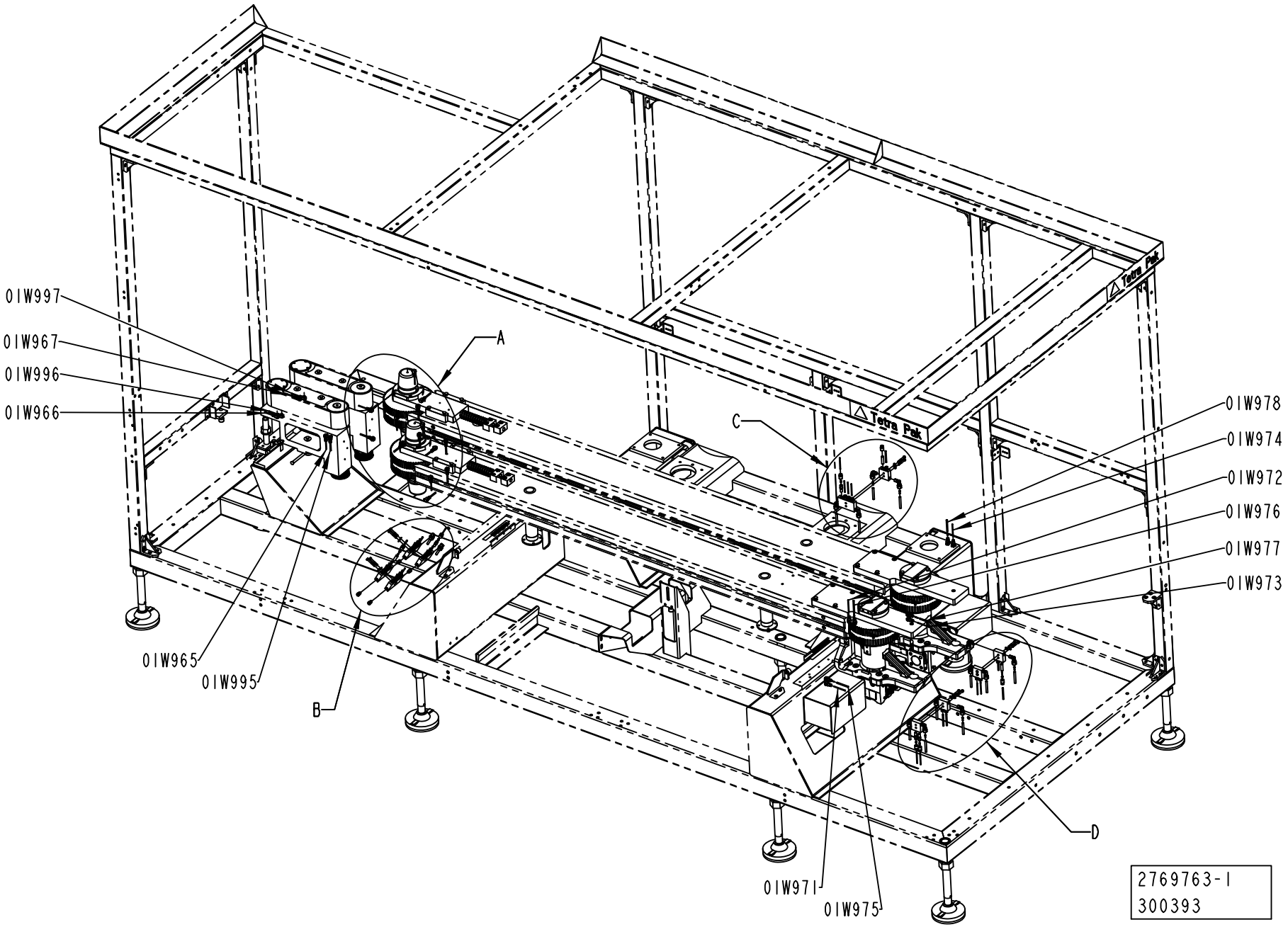
0IW997
0IW967
0IW996
0IW966
0IW965
0IW995
A
B
C
D
0IW978
0IW974
0IW972
0IW976
0IW977
0IW973
0IW971
0IW975
2769763-1
300393

ECM: 303482 - 20070517
Group number: 2769763-0100
Assembly Drawing: 2769763-1_1_AB

This list covers pages from 5-78 to 5-83

Pos	Part No	UN	Qty	Description	Page No
CAP 30/FLEX (See drawing on pages: 5-78, 5-80, 5-82)					
110	312105-0337		10	SCREW M6S ISO 4014 M5X35 A480	
120	315105-0146		10	WASHER BRB 5,3X10 RFR	
200	90134-0058		12	CONNECTION	
210	90134-0068		16	CONNECTION	
220	90134-0039		17	BUSHING VALVE CONNECTION 2,5 MM	
230	90028-0020		16	CONE TUBE 2,5MM	
240	90134-0040		13	BUSHING VALVE CONNECTION 4 MM	
250	90028-0021		13	CONE TUBE 4 MM	
260	90134-0054		2	BLOCK CONNECTION M10X1	
290	90030-0200		14	CONN. ELBOW, 6-M10X1, EXT.THREAD	
320	90134-0051		13	SPACING COLLAR DOSING BLOCK	
330	90092-0054		13	METERING VALVE 50 MM3	
340	90134-0031		29	SLEEVE FOR PLASTIC TUBE	
Common Parts					
01U951	90032-0038		1	BLOCK 2 WAYS	
01U952	90032-0038		1	BLOCK 2 WAYS	
01U953	90032-0038		1	BLOCK 2 WAYS	
01U954	90032-0039		1	BLOCK 4 WAYS	
01U955	90032-0039		1	BLOCK 4 WAYS	
01U956	90032-0039		1	BLOCK 4 WAYS	
01U957	90032-0039		1	BLOCK 4 WAYS	
01U958	90032-0039		1	BLOCK 4 WAYS	
01U959	90032-0038		1	BLOCK 2 WAYS	
01U960	90032-0038		1	BLOCK 2 WAYS	
01W951	90166-0132	MM	3000	TUBE 6 MM PA,TRANSP.	
01W955	90166-0108	MM	3000	TUBE 6 MM PA TRANSP.	
01W956	90166-0108	MM	3000	TUBE 6 MM PA TRANSP.	
01W958	90166-0108	MM	3000	TUBE 6 MM PA TRANSP.	
01W960	90166-0108	MM	3000	TUBE 6 MM PA TRANSP.	
01W961	90166-0108	MM	3000	TUBE 6 MM PA TRANSP.	
01W962	90166-0132	MM	3000	TUBE 6 MM PA,TRANSP.	
01W963	90166-0109	MM	3000	TUBE 4 MM PA TRANSP.	
01W964	90166-0109	MM	3000	TUBE 4 MM PA TRANSP.	
01W965	90166-0109	MM	3000	TUBE 4 MM PA TRANSP.	
01W966	90166-0109	MM	3000	TUBE 4 MM PA TRANSP.	
01W967	90166-0109	MM	3000	TUBE 4 MM PA TRANSP.	
01W968	90166-0109	MM	3000	TUBE 4 MM PA TRANSP.	
01W969	90166-0143	MM	3000	TUBE 2,5 MM PA TRANSP.	
01W971	90166-0143	MM	3000	TUBE 2,5 MM PA TRANSP.	
01W972	90166-0143	MM	3000	TUBE 2,5 MM PA TRANSP.	
01W973	90166-0143	MM	3000	TUBE 2,5 MM PA TRANSP.	
01W974	90166-0143	MM	3000	TUBE 2,5 MM PA TRANSP.	
01W975	90166-0109	MM	3000	TUBE 4 MM PA TRANSP.	
01W976	90166-0109	MM	3000	TUBE 4 MM PA TRANSP.	
01W977	90166-0132	MM	3000	TUBE 6 MM PA,TRANSP.	
01W978	90166-0109	MM	3000	TUBE 4 MM PA TRANSP.	
01W979	90166-0109	MM	3000	TUBE 4 MM PA TRANSP.	
01W980	90166-0143	MM	3000	TUBE 2,5 MM PA TRANSP.	
01W981	90166-0143	MM	3000	TUBE 2,5 MM PA TRANSP.	
01W982	90166-0143	MM	3000	TUBE 2,5 MM PA TRANSP.	
01W983	90166-0143	MM	3000	TUBE 2,5 MM PA TRANSP.	
01W984	90166-0109	MM	3000	TUBE 4 MM PA TRANSP.	
01W990	90166-0143	MM	3000	TUBE 2,5 MM PA TRANSP.	
01W991	90166-0143	MM	3000	TUBE 2,5 MM PA TRANSP.	
01W992	90166-0143	MM	3000	TUBE 2,5 MM PA TRANSP.	
01W993	90166-0143	MM	3000	TUBE 2,5 MM PA TRANSP.	
01W994	90166-0143	MM	3000	TUBE 2,5 MM PA TRANSP.	
01W995	90166-0143	MM	3000	TUBE 2,5 MM PA TRANSP.	
01W996	90166-0143	MM	3000	TUBE 2,5 MM PA TRANSP.	
01W997	90166-0143	MM	3000	TUBE 2,5 MM PA TRANSP.	
01W998	90166-0109	MM	3000	TUBE 4 MM PA TRANSP.	
130	342706-0130		7	ACCESSORIES, INSERT SLEEVE 6 MM	
270	90134-0030		7	SLEEVE FOR PLASTIC TUBE	
280	90092-0052		3	METERING VALVE 10 MM3	
300	90087-0019		2	PLUG M10X1 STAINLESS	
310	90134-0052		1	PLUG DOSING BLOCK	

Machine Type | Group Description | Used-In | Group Number | Page No

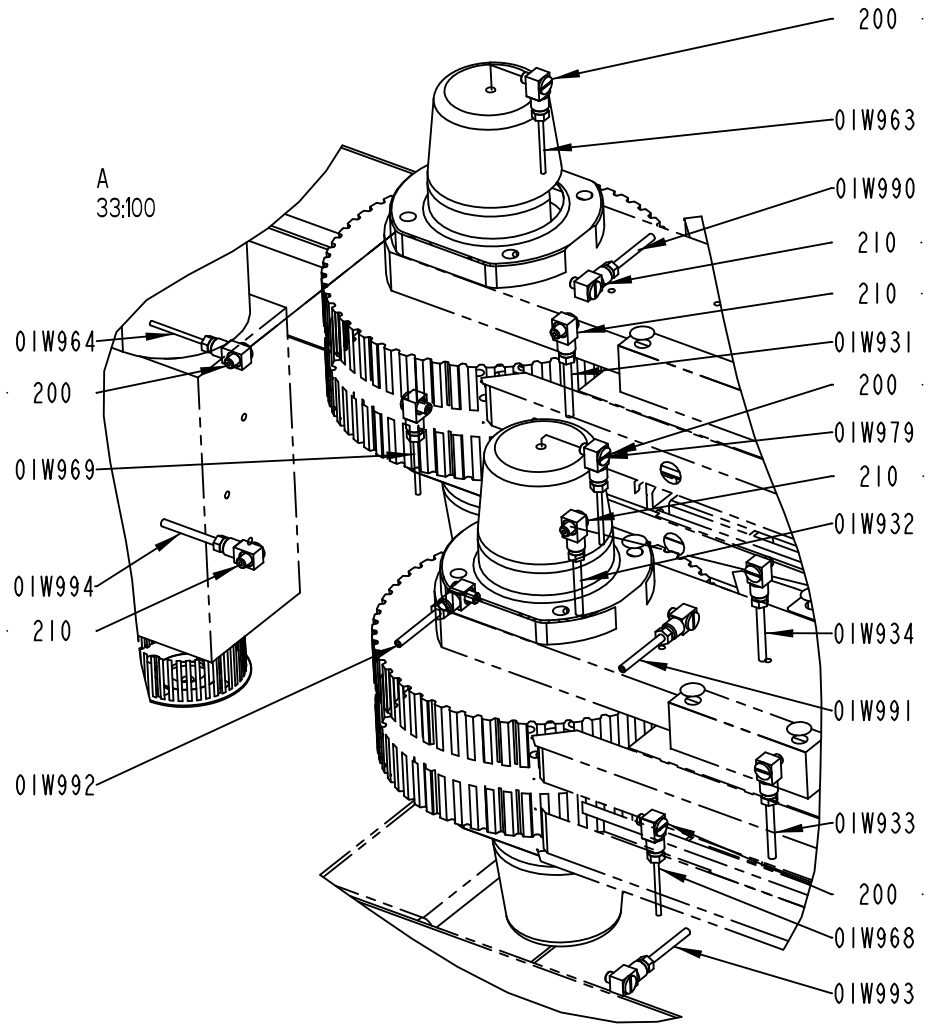
A
33:100
200
01W963
01W990
210
210
01W931
200
01W979
210
01W932
01W934
01W991
01W933
200
01W968
01W993
01W964
200
01W969
01W994
210
01W992

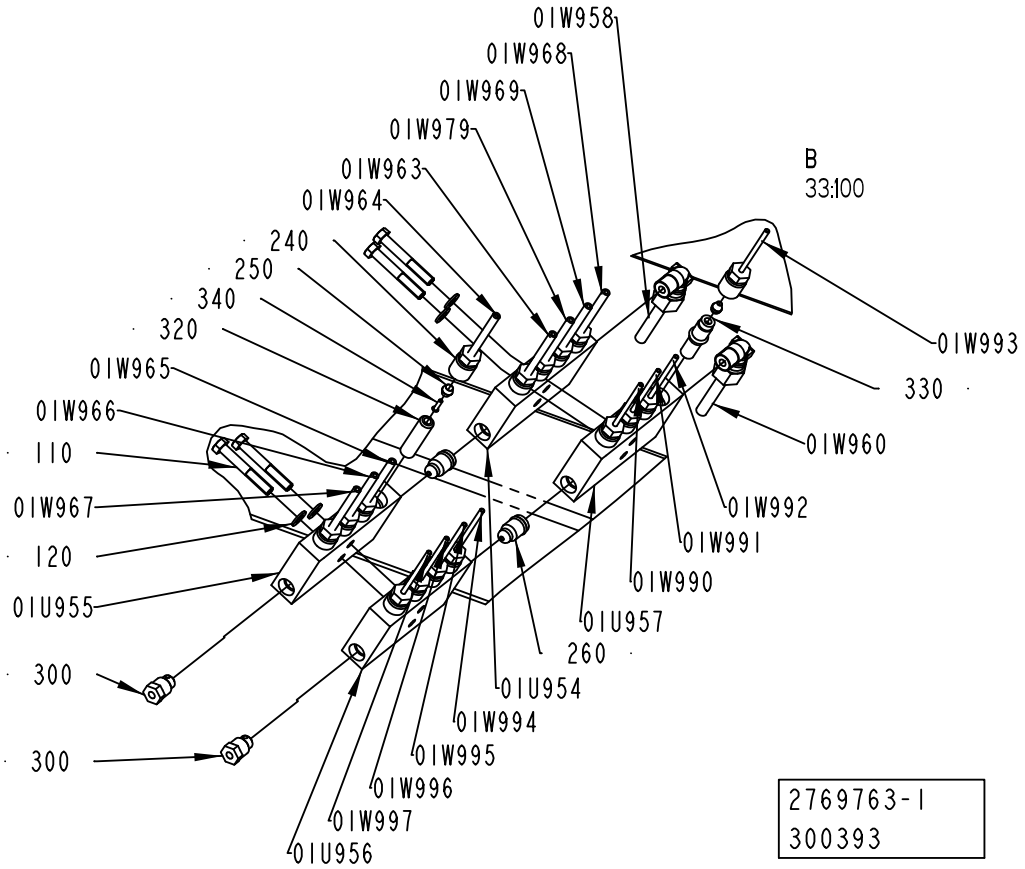
01W958
01W968
01W969
01W979
01W963
01W964
240
250
340
320
01W965
01W966
110
01W967
120
01U955
300
300
B
33:100
01W993
330
01W960
01W992
01W991
01W990
01U957
260
01U954
01W994
01W995
01W996
01W997
01U956
2769763-1
300393

ECM: 303482 - 20070517
Group number: 2769763-0100
Assembly Drawing: 2769763-1_2_AB

This list covers pages from 5-78 to 5-83

Pos	Part No	UN	Qty	Description	Page No
CAP 30/FLEX (See drawing on pages: 5-78, 5-80, 5-82)					
110	312105-0337		10	SCREW M6S ISO 4014 M5X35 A480	
120	315105-0146		10	WASHER BRB 5,3X10 RFR	
200	90134-0058		12	CONNECTION	
210	90134-0068		16	CONNECTION	
220	90134-0039		17	BUSHING VALVE CONNECTION 2,5 MM	
230	90028-0020		16	CONE TUBE 2,5MM	
240	90134-0040		13	BUSHING VALVE CONNECTION 4 MM	
250	90028-0021		13	CONE TUBE 4 MM	
260	90134-0054		2	BLOCK CONNECTION M10X1	
290	90030-0200		14	CONN. ELBOW, 6-M10X1, EXT.THREAD	
320	90134-0051		13	SPACING COLLAR DOSING BLOCK	
330	90092-0054		13	METERING VALVE 50 MM3	
340	90134-0031		29	SLEEVE FOR PLASTIC TUBE	
Common Parts					
01U951	90032-0038		1	BLOCK 2 WAYS	
01U952	90032-0038		1	BLOCK 2 WAYS	
01U953	90032-0038		1	BLOCK 2 WAYS	
01U954	90032-0039		1	BLOCK 4 WAYS	
01U955	90032-0039		1	BLOCK 4 WAYS	
01U956	90032-0039		1	BLOCK 4 WAYS	
01U957	90032-0039		1	BLOCK 4 WAYS	
01U958	90032-0039		1	BLOCK 4 WAYS	
01U959	90032-0038		1	BLOCK 2 WAYS	
01U960	90032-0038		1	BLOCK 2 WAYS	
01W951	90166-0132	MM	3000	TUBE 6 MM PA,TRANSP.	
01W955	90166-0108	MM	3000	TUBE 6 MM PA TRANSP.	
01W956	90166-0108	MM	3000	TUBE 6 MM PA TRANSP.	
01W958	90166-0108	MM	3000	TUBE 6 MM PA TRANSP.	
01W960	90166-0108	MM	3000	TUBE 6 MM PA TRANSP.	
01W961	90166-0108	MM	3000	TUBE 6 MM PA TRANSP.	
01W962	90166-0132	MM	3000	TUBE 6 MM PA,TRANSP.	
01W963	90166-0109	MM	3000	TUBE 4 MM PA TRANSP.	
01W964	90166-0109	MM	3000	TUBE 4 MM PA TRANSP.	
01W965	90166-0109	MM	3000	TUBE 4 MM PA TRANSP.	
01W966	90166-0109	MM	3000	TUBE 4 MM PA TRANSP.	
01W967	90166-0109	MM	3000	TUBE 4 MM PA TRANSP.	
01W968	90166-0109	MM	3000	TUBE 4 MM PA TRANSP.	
01W969	90166-0143	MM	3000	TUBE 2,5 MM PA TRANSP.	
01W971	90166-0143	MM	3000	TUBE 2,5 MM PA TRANSP.	
01W972	90166-0143	MM	3000	TUBE 2,5 MM PA TRANSP.	
01W973	90166-0143	MM	3000	TUBE 2,5 MM PA TRANSP.	
01W974	90166-0143	MM	3000	TUBE 2,5 MM PA TRANSP.	
01W975	90166-0109	MM	3000	TUBE 4 MM PA TRANSP.	
01W976	90166-0109	MM	3000	TUBE 4 MM PA TRANSP.	
01W977	90166-0132	MM	3000	TUBE 6 MM PA,TRANSP.	
01W978	90166-0109	MM	3000	TUBE 4 MM PA TRANSP.	
01W979	90166-0109	MM	3000	TUBE 4 MM PA TRANSP.	
01W980	90166-0143	MM	3000	TUBE 2,5 MM PA TRANSP.	
01W981	90166-0143	MM	3000	TUBE 2,5 MM PA TRANSP.	
01W982	90166-0143	MM	3000	TUBE 2,5 MM PA TRANSP.	
01W983	90166-0143	MM	3000	TUBE 2,5 MM PA TRANSP.	
01W984	90166-0109	MM	3000	TUBE 4 MM PA TRANSP.	
01W990	90166-0143	MM	3000	TUBE 2,5 MM PA TRANSP.	
01W991	90166-0143	MM	3000	TUBE 2,5 MM PA TRANSP.	
01W992	90166-0143	MM	3000	TUBE 2,5 MM PA TRANSP.	
01W993	90166-0143	MM	3000	TUBE 2,5 MM PA TRANSP.	
01W994	90166-0143	MM	3000	TUBE 2,5 MM PA TRANSP.	
01W995	90166-0143	MM	3000	TUBE 2,5 MM PA TRANSP.	
01W996	90166-0143	MM	3000	TUBE 2,5 MM PA TRANSP.	
01W997	90166-0143	MM	3000	TUBE 2,5 MM PA TRANSP.	
01W998	90166-0109	MM	3000	TUBE 4 MM PA TRANSP.	
130	342706-0130		7	ACCESSORIES, INSERT SLEEVE 6 MM	
270	90134-0030		7	SLEEVE FOR PLASTIC TUBE	
280	90092-0052		3	METERING VALVE 10 MM3	
300	90087-0019		2	PLUG M10X1 STAINLESS	
310	90134-0052		1	PLUG DOSING BLOCK	

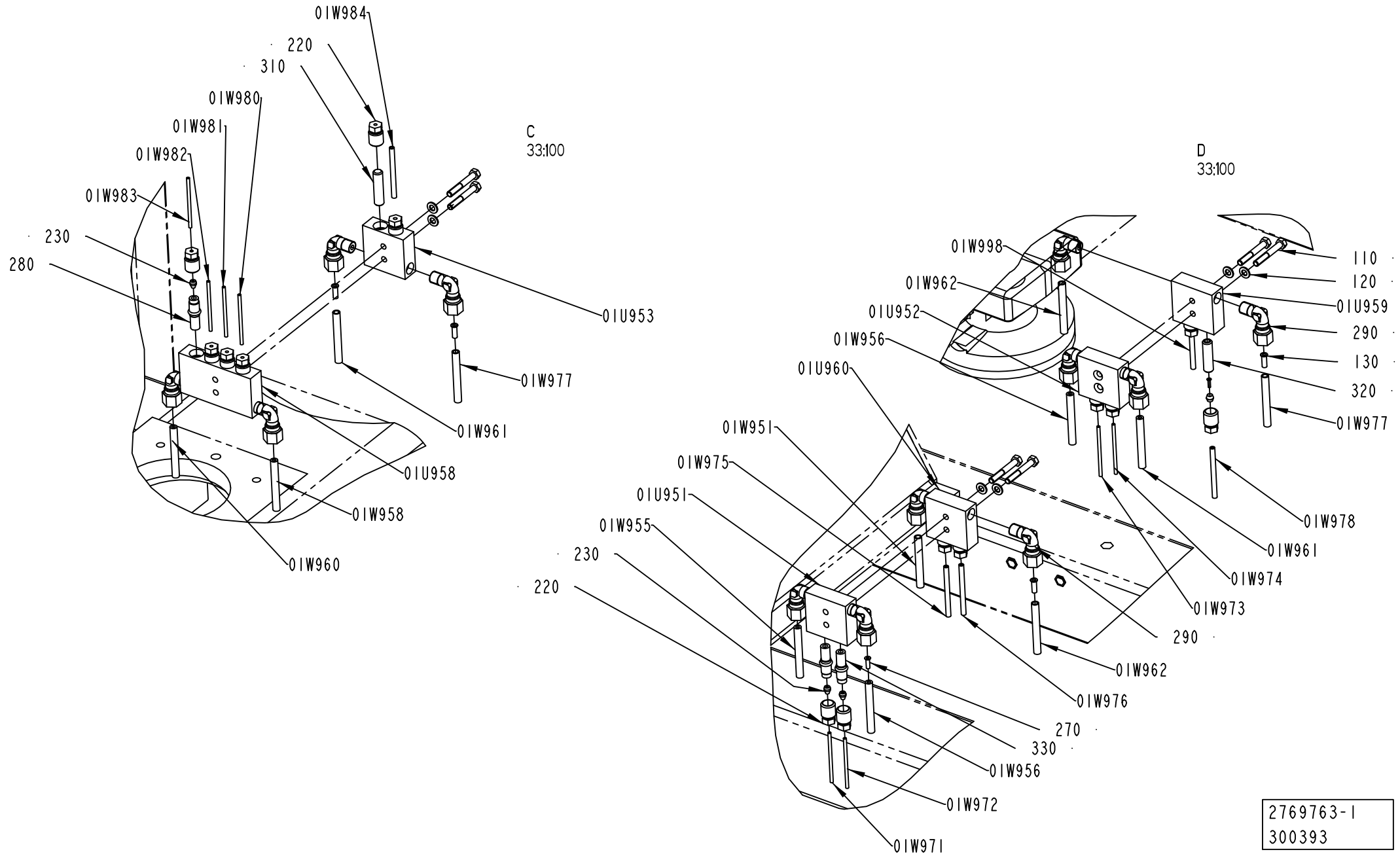
01W984
220
310
01W980
01W981
01W982
01W983
230
280
C
33:100
01U953
01W977
01W961
01U958
01W958
01W960
D
33:100
01W998
01W962
01U952
01W956
01U960
01W951
01W975
01U951
01W955
230
220
110
120
01U959
290
130
320
01W977
01W978
01W961
01W974
01W973
290
01W962
01W976
270
330
01W956
01W972
01W971
2769763-1
300393

ECM: 303482 - 20070517
Group number: 2769763-0100
Assembly Drawing: 2769763-1_3_AB

This list covers pages from 5-78 to 5-83

Pos	Part No	UN	Qty	Description	Page No
CAP 30/FLEX (See drawing on pages: 5-78, 5-80, 5-82)					
110	312105-0337		10	SCREW M6S ISO 4014 M5X35 A480	
120	315105-0146		10	WASHER BRB 5,3X10 RFR	
200	90134-0058		12	CONNECTION	
210	90134-0068		16	CONNECTION	
220	90134-0039		17	BUSHING VALVE CONNECTION 2,5 MM	
230	90028-0020		16	CONE TUBE 2,5MM	
240	90134-0040		13	BUSHING VALVE CONNECTION 4 MM	
250	90028-0021		13	CONE TUBE 4 MM	
260	90134-0054		2	BLOCK CONNECTION M10X1	
290	90030-0200		14	CONN. ELBOW, 6-M10X1, EXT.THREAD	
320	90134-0051		13	SPACING COLLAR DOSING BLOCK	
330	90092-0054		13	METERING VALVE 50 MM3	
340	90134-0031		29	SLEEVE FOR PLASTIC TUBE	
Common Parts					
01U951	90032-0038		1	BLOCK 2 WAYS	
01U952	90032-0038		1	BLOCK 2 WAYS	
01U953	90032-0038		1	BLOCK 2 WAYS	
01U954	90032-0039		1	BLOCK 4 WAYS	
01U955	90032-0039		1	BLOCK 4 WAYS	
01U956	90032-0039		1	BLOCK 4 WAYS	
01U957	90032-0039		1	BLOCK 4 WAYS	
01U958	90032-0039		1	BLOCK 4 WAYS	
01U959	90032-0038		1	BLOCK 2 WAYS	
01U960	90032-0038		1	BLOCK 2 WAYS	
01W951	90166-0132	MM	3000	TUBE 6 MM PA,TRANSP.	
01W955	90166-0108	MM	3000	TUBE 6 MM PA TRANSP.	
01W956	90166-0108	MM	3000	TUBE 6 MM PA TRANSP.	
01W958	90166-0108	MM	3000	TUBE 6 MM PA TRANSP.	
01W960	90166-0108	MM	3000	TUBE 6 MM PA TRANSP.	
01W961	90166-0108	MM	3000	TUBE 6 MM PA TRANSP.	
01W962	90166-0132	MM	3000	TUBE 6 MM PA,TRANSP.	
01W963	90166-0109	MM	3000	TUBE 4 MM PA TRANSP.	
01W964	90166-0109	MM	3000	TUBE 4 MM PA TRANSP.	
01W965	90166-0109	MM	3000	TUBE 4 MM PA TRANSP.	
01W966	90166-0109	MM	3000	TUBE 4 MM PA TRANSP.	
01W967	90166-0109	MM	3000	TUBE 4 MM PA TRANSP.	
01W968	90166-0109	MM	3000	TUBE 4 MM PA TRANSP.	
01W969	90166-0143	MM	3000	TUBE 2,5 MM PA TRANSP.	
01W971	90166-0143	MM	3000	TUBE 2,5 MM PA TRANSP.	
01W972	90166-0143	MM	3000	TUBE 2,5 MM PA TRANSP.	
01W973	90166-0143	MM	3000	TUBE 2,5 MM PA TRANSP.	
01W974	90166-0143	MM	3000	TUBE 2,5 MM PA TRANSP.	
01W975	90166-0109	MM	3000	TUBE 4 MM PA TRANSP.	
01W976	90166-0109	MM	3000	TUBE 4 MM PA TRANSP.	
01W977	90166-0132	MM	3000	TUBE 6 MM PA,TRANSP.	
01W978	90166-0109	MM	3000	TUBE 4 MM PA TRANSP.	
01W979	90166-0109	MM	3000	TUBE 4 MM PA TRANSP.	
01W980	90166-0143	MM	3000	TUBE 2,5 MM PA TRANSP.	
01W981	90166-0143	MM	3000	TUBE 2,5 MM PA TRANSP.	
01W982	90166-0143	MM	3000	TUBE 2,5 MM PA TRANSP.	
01W983	90166-0143	MM	3000	TUBE 2,5 MM PA TRANSP.	
01W984	90166-0109	MM	3000	TUBE 4 MM PA TRANSP.	
01W990	90166-0143	MM	3000	TUBE 2,5 MM PA TRANSP.	
01W991	90166-0143	MM	3000	TUBE 2,5 MM PA TRANSP.	
01W992	90166-0143	MM	3000	TUBE 2,5 MM PA TRANSP.	
01W993	90166-0143	MM	3000	TUBE 2,5 MM PA TRANSP.	
01W994	90166-0143	MM	3000	TUBE 2,5 MM PA TRANSP.	
01W995	90166-0143	MM	3000	TUBE 2,5 MM PA TRANSP.	
01W996	90166-0143	MM	3000	TUBE 2,5 MM PA TRANSP.	
01W997	90166-0143	MM	3000	TUBE 2,5 MM PA TRANSP.	
01W998	90166-0109	MM	3000	TUBE 4 MM PA TRANSP.	
130	342706-0130		7	ACCESSORIES, INSERT SLEEVE 6 MM	
270	90134-0030		7	SLEEVE FOR PLASTIC TUBE	
280	90092-0052		3	METERING VALVE 10 MM3	
300	90087-0019		2	PLUG M10X1 STAINLESS	
310	90134-0052		1	PLUG DOSING BLOCK	

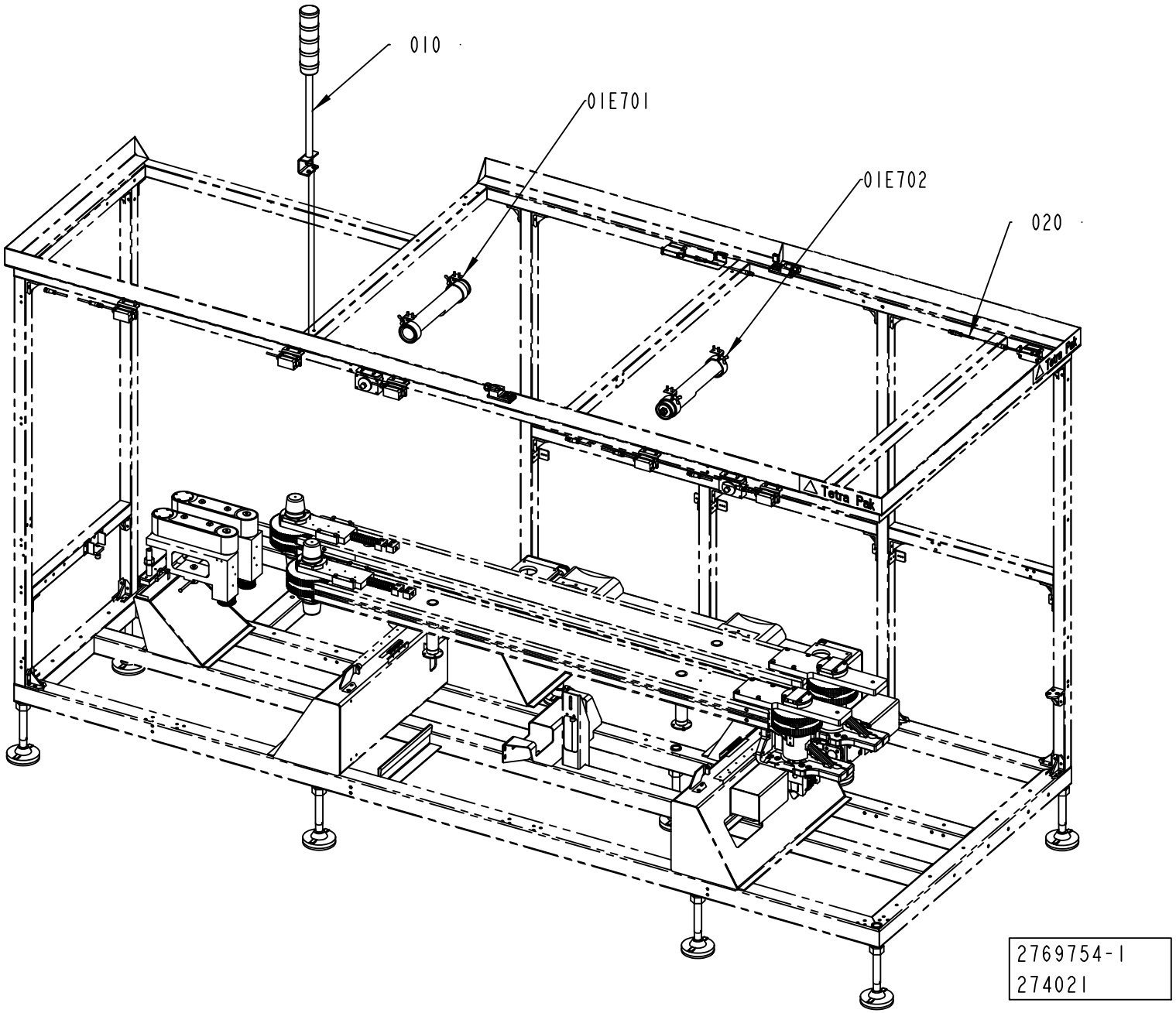
010
01E701
01E702
020
Tetra Pak
2769754-1
274021

ECM: 303512 - 20070517
Group number: 2769754-0100
Assembly Drawing: 2769754-1_1_AA

Pos	Part No	UN	Qty	Description	Page No
TGA					
040	2873922-0100		1	CABLE	**5-87**
Common Parts					
010	2779764-0100		1	WARNING LAMP	**5-89**
01E701	2769757-0100		1	LAMP	**5-91**
01E702	2769757-0100		1	LAMP	**5-91**
020	2805700-0100		1	DOOR SAFETY SWITCH	**5-93, 5-95**
030	2873950-0100		1	CABLE SET	**5-97**

Pos	Part No	UN	Qty	Description	Page No

This page is intentionally left blank.

ECM: 303511 - 20070517
Group number: 2873922-0100
Assembly Drawing:

Pos	Part No	UN	Qty	Description	Page No
-					
70W100	90459-2565		1	MOTOR CABLE 16 AWG 2090-XXNPMP-16S09	
70W101	90459-7207		1	MOTOR FEEDBACK CABLE 2090-XXNFMP-S09/C	
70X101	90459-2551		1	CONNECTOR, MOTOR FEEDBACK 15 PIN MALE	

Pos	Part No	UN	Qty	Description	Page No

WARNING LAMP

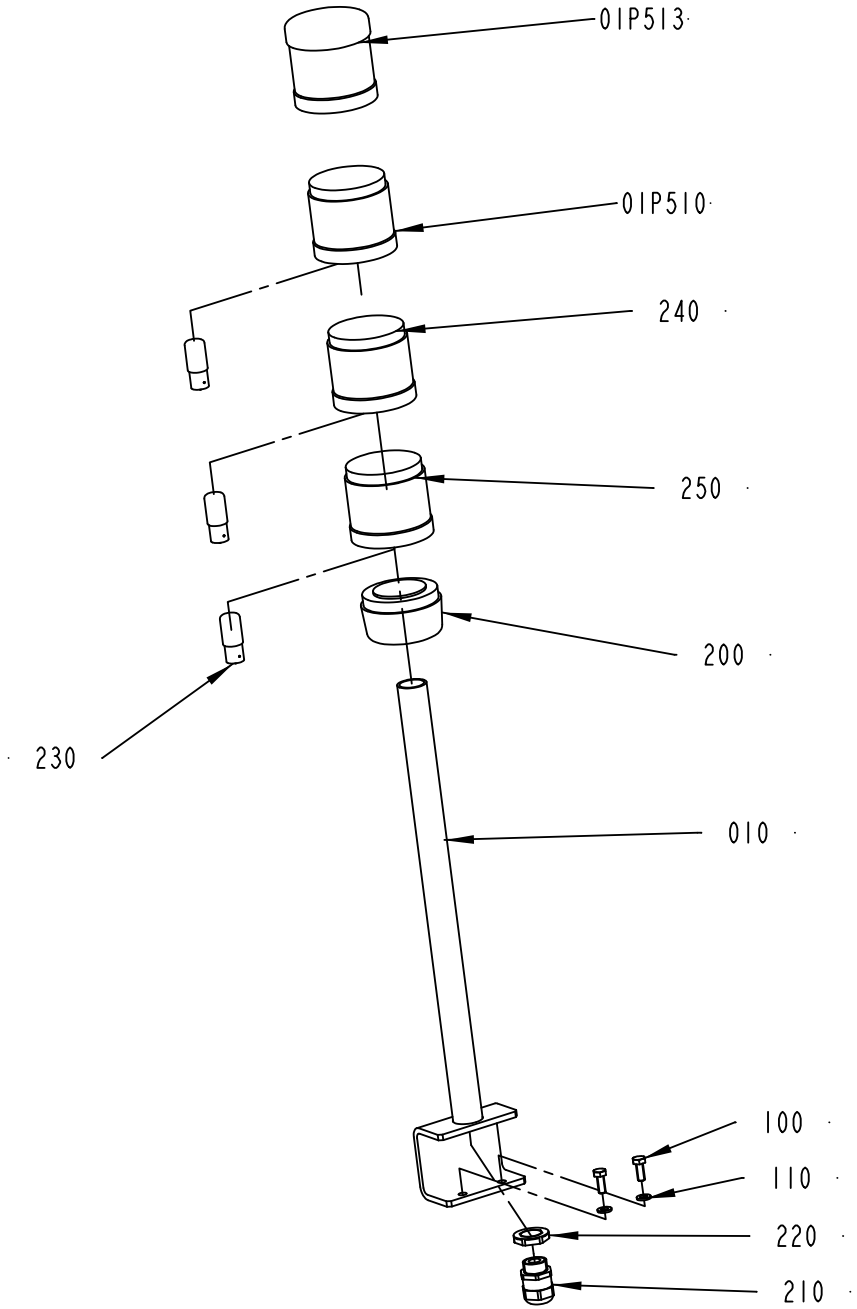

2779764-1
274021

ECM: 274502 - 20060921
Group number: 2779764-0100
Assembly Drawing: 2779764-1_1_AA

Pos	Part No	UN	Qty	Description	Page No
-					
010	2779765-0000		1	BRACKET	
01P510	90458-0293		1	LIGHT ELEMENT, RED, KL70-401R	
01P513	90458-0302		1	SIREN WITH ADJUSTABLE VOLUME KS 70-3004	
100	312105-0368		2	SCREW M6S ISO 4017 M6X16 A480	
110	315105-0153		2	WASHER BRB 6,4X12 RFR	
200	90458-0292		1	BASE, KT70-1001	
210	90458-0307		1	CABLE GLAND, M20X1,5, NO.5311 1020	
220	90458-0323		1	NUT, M20X1,5	
230	90036-0068		3	BULB 6.5W 24V	
240	90458-0294		1	LIGHT ELEMENT, YELLOW, KL70-401Y	
250	90458-0295		1	LIGHT ELEMENT, BLUE, KL70-401L	

Pos	Part No	UN	Qty	Description	Page No

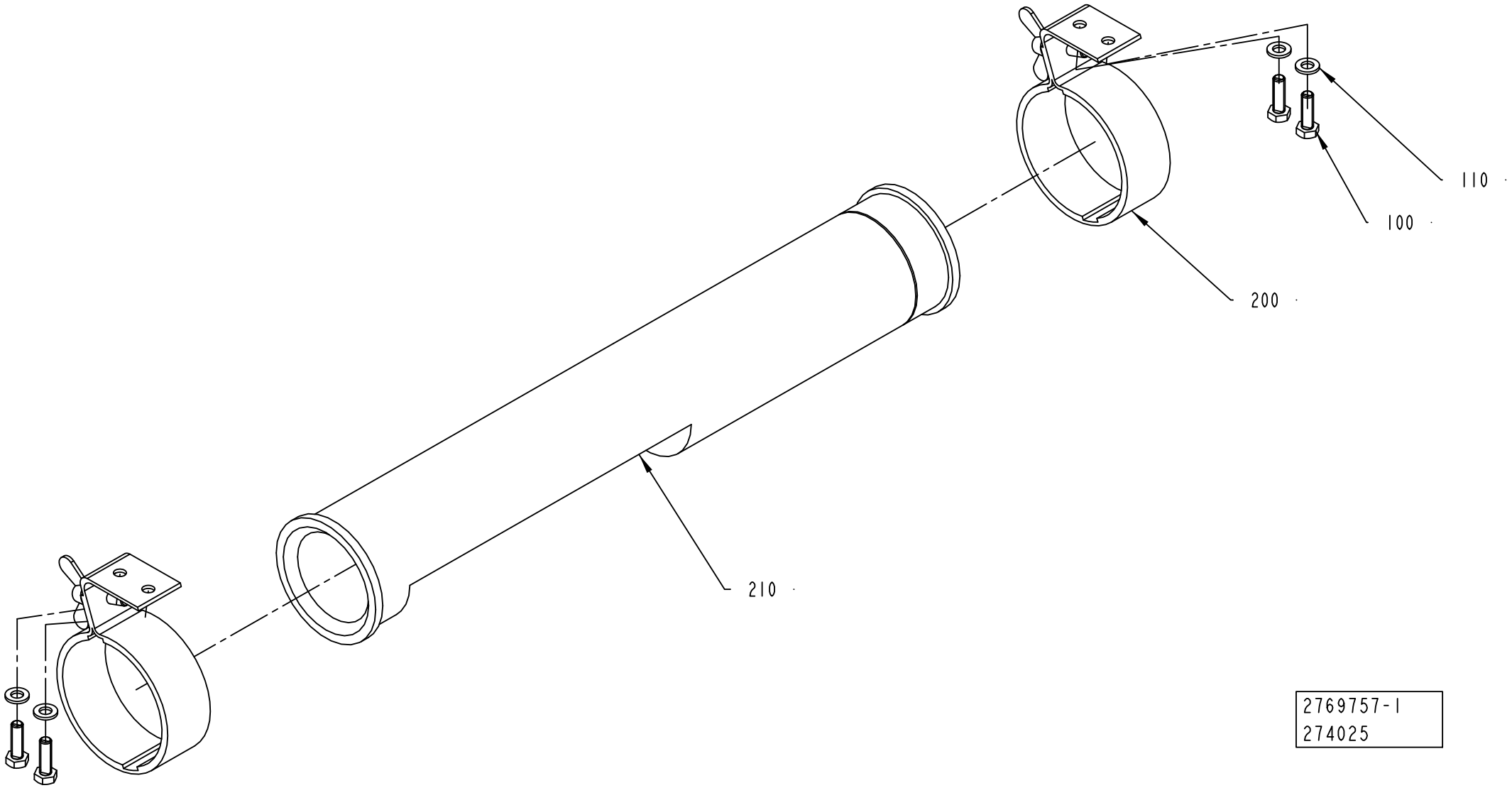
110
100
200
210
2769757-1
274025

ECM: 274503 - 20060921
Group number: 2769757-0100
Assembly Drawing: 2769757-1_1_AA

Pos	Part No	UN	Qty	Description	Page No
-					
100	312105-0370		4	SCREW M6S ISO 4017 M6X20 A480	
110	315105-0153		4	WASHER BRB 6,4X12 RFR	
200	90164-0303		2	LIGHT FIXTURE, BRACKET 70MM	
210	90164-0015		1	LIGHT FIXTURE, RL70CV-111 / 230V 50HZ	
	92297-0301		*1*	*STARTER 4-65W S10, E 8219023*	
	90297-0007		*1*	*FLUORESCENT TUBE, PLS 11*	

Pos	Part No	UN	Qty	Description	Page No

DOOR SAFETY SWITCH

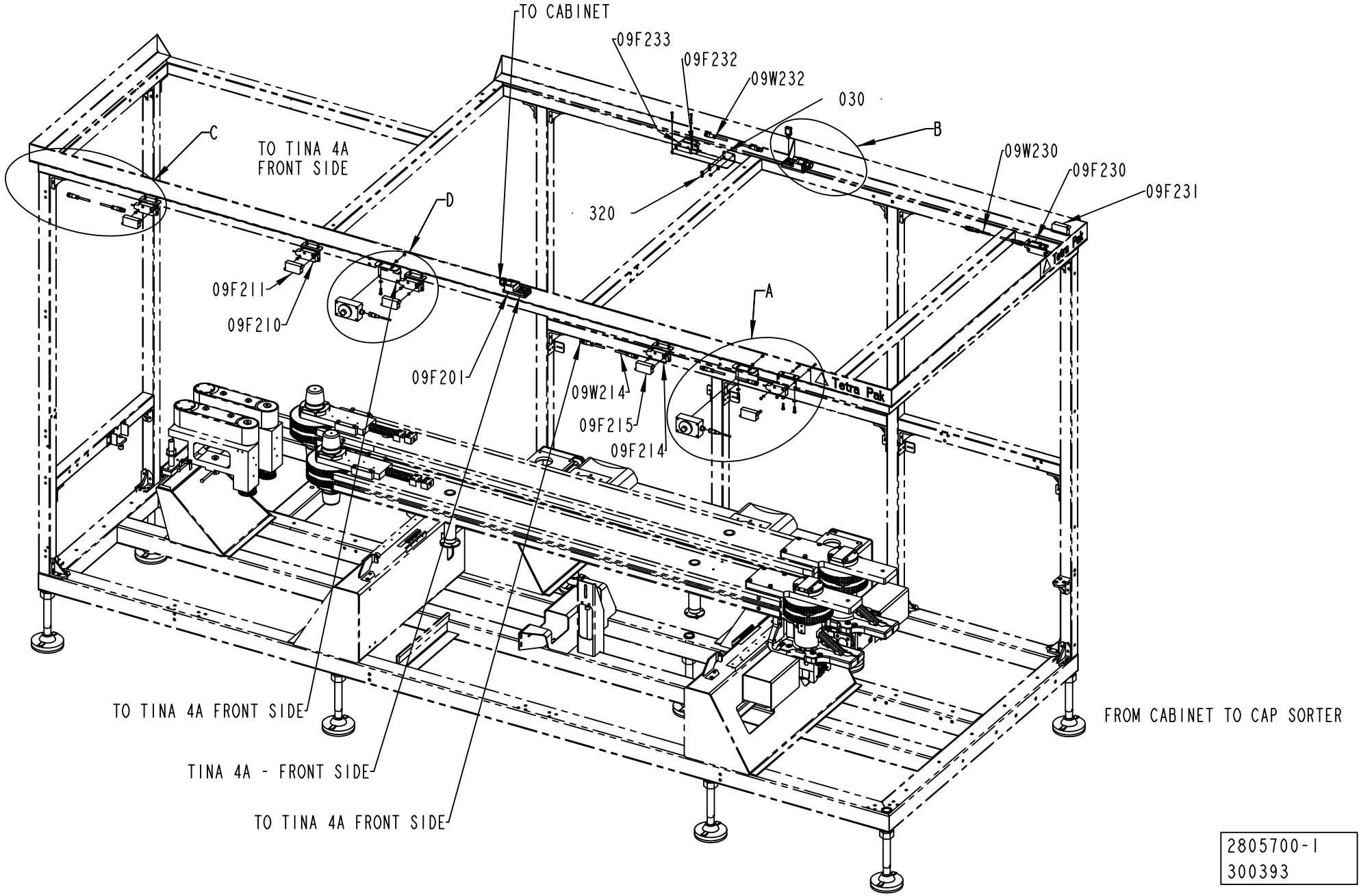

2805700-1
300393

ECM: 305566 - 20070517
Group number: 2805700-0100
Assembly Drawing: 2805700-1_1_AB

This list covers pages from 5-92 to 5-95

Pos	Part No	UN	Qty	Description	Page No
STREAMCAP500, STREAMCAP1000, SLIMCAP 2000, SLIMCAP 1000 (See drawing on pages: 5-92, 5-94)					
020	2817774-0000		6	SUPPORT	
09F234	90459-6961		1	SAFETY SENSOR, NON CONT. ADAM-E M12 0,5M	
09F235	90459-4089		1	SAFETY SENSOR NON-CONTACT EVA E	
09W234	90459-4876		1	FOCUS JUMPER CABLE M12 5P 3M, 20-056-21	
310	312105-0297		14	SCREW M6S ISO 4017 M4X25 A470	
330	312105-0370		16	SCREW M6S ISO 4017 M6X20 A480	
340	315105-0136		38	WASHER BRB 4,3X8 RFR	
350	315105-0153		16	WASHER BRB 6,4X12 RFR	
Common Parts					
010	2781283-0000		2	BRACKET	
030	2817775-0000		1	SUPPORT	
09F201	90459-4254		1	CONNECTION BLOCK TINA 4A, 20-054-03	
09F202	90459-4254		1	CONNECTION BLOCK TINA 4A, 20-054-03	
09F210	90459-6961		1	SAFETY SENSOR, NON CONT. ADAM-E M12 0,5M	
09F211	90459-4089		1	SAFETY SENSOR NON-CONTACT EVA E	
09F212	90459-6961		1	SAFETY SENSOR, NON CONT. ADAM-E M12 0,5M	
09F213	90459-4089		1	SAFETY SENSOR NON-CONTACT EVA E	
09F214	90459-6961		1	SAFETY SENSOR, NON CONT. ADAM-E M12 0,5M	
09F215	90459-4089		1	SAFETY SENSOR NON-CONTACT EVA E	
09F230	90459-6961		1	SAFETY SENSOR, NON CONT. ADAM-E M12 0,5M	
09F231	90459-4089		1	SAFETY SENSOR NON-CONTACT EVA E	
09F232	90459-6961		1	SAFETY SENSOR, NON CONT. ADAM-E M12 0,5M	
09F233	90459-4089		1	SAFETY SENSOR NON-CONTACT EVA E	
09F236	90459-5627		1	CONNECTION TINA 1A 20-054-00	
09K241	90459-6913		1	ELECTROMAG. DOOR LOCK. DEV.,JSD-ZH-EM1-K	
09K242	90459-6913		1	ELECTROMAG. DOOR LOCK. DEV.,JSD-ZH-EM1-K	
09W214	90459-4876		1	FOCUS JUMPER CABLE M12 5P 3M, 20-056-21	
09W216	90459-4876		1	FOCUS JUMPER CABLE M12 5P 3M, 20-056-21	
09W230	90459-4876		1	FOCUS JUMPER CABLE M12 5P 3M, 20-056-21	
09W232	90459-4876		1	FOCUS JUMPER CABLE M12 5P 3M, 20-056-21	
09W241	351309-0100		1	ACTUATOR/SENSOR CABLE PRKT 4-07/10M	
09W242	351309-0100		1	ACTUATOR/SENSOR CABLE PRKT 4-07/10M	
300	312605-0312		20	HEXAGON NUT, M6M M4 A280	
320	312605-0314		7	HEXAGON NUT, M6M M5 A280	
360	315105-0146		7	WASHER BRB 5,3X10 RFR	

Pos	Part No	UN	Qty	Description	Page No

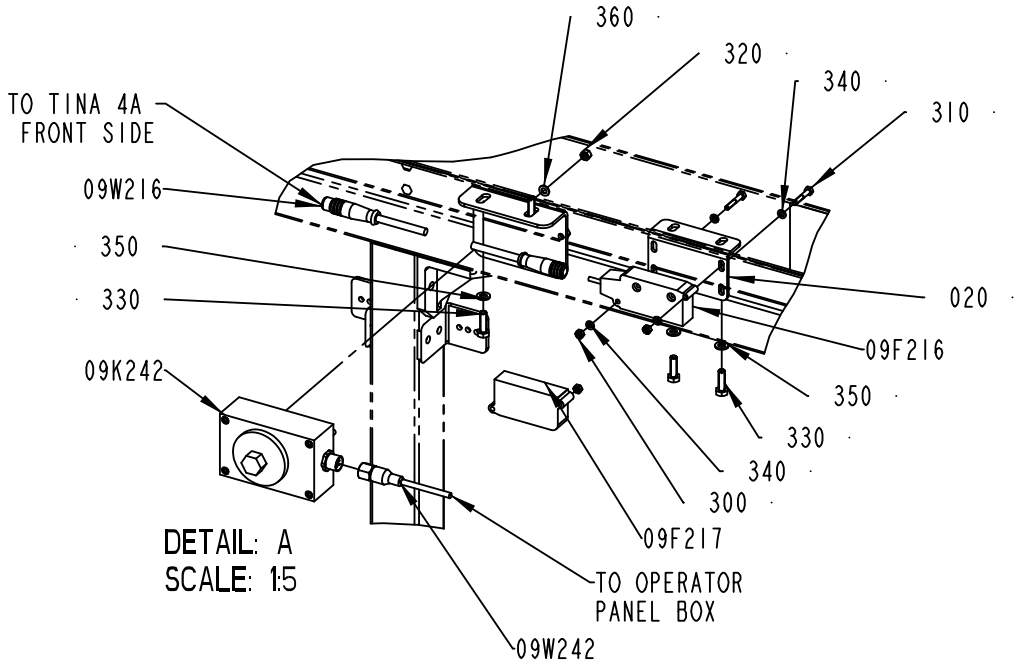

DETAIL: A
SCALE: 1:5

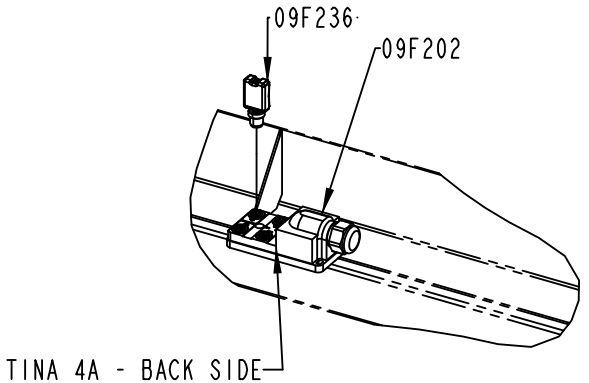

DETAIL: B
SCALE: 1:5

TO CABLE DUCT (BACK SIDE)

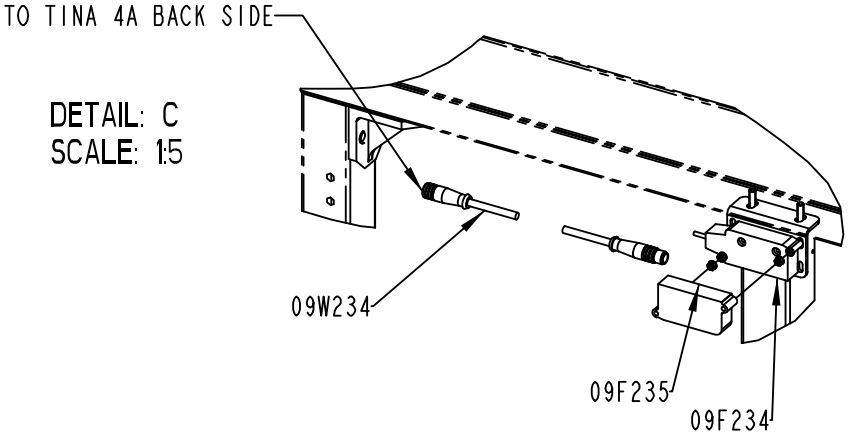

DETAIL: C
SCALE: 1:5

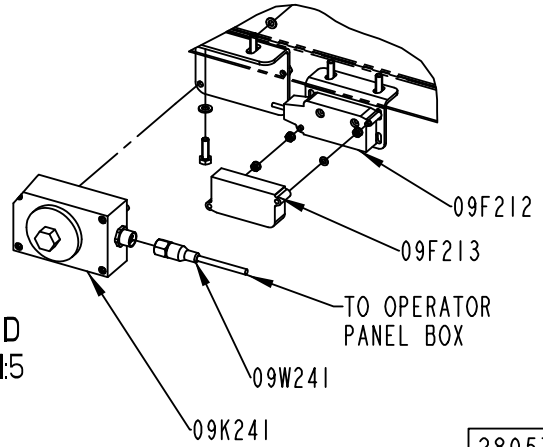

DETAIL: D
SCALE: 1:5

2805700-1
300393

ECM: 305566 - 20070517
Group number: 2805700-0100
Assembly Drawing: 2805700-1_2_AB

This list covers pages from 5-92 to 5-95

Pos	Part No	UN	Qty	Description	Page No
STREAMCAP500, STREAMCAP1000, SLIMCAP 2000, SLIMCAP 1000 (See drawing on pages: 5-92, 5-94)					
020	2817774-0000		6	SUPPORT	
09F234	90459-6961		1	SAFETY SENSOR, NON CONT. ADAM-E M12 0,5M	
09F235	90459-4089		1	SAFETY SENSOR NON-CONTACT EVA E	
09W234	90459-4876		1	FOCUS JUMPER CABLE M12 5P 3M, 20-056-21	
310	312105-0297		14	SCREW M6S ISO 4017 M4X25 A470	
330	312105-0370		16	SCREW M6S ISO 4017 M6X20 A480	
340	315105-0136		38	WASHER BRB 4,3X8 RFR	
350	315105-0153		16	WASHER BRB 6,4X12 RFR	
Common Parts					
010	2781283-0000		2	BRACKET	
030	2817775-0000		1	SUPPORT	
09F201	90459-4254		1	CONNECTION BLOCK TINA 4A, 20-054-03	
09F202	90459-4254		1	CONNECTION BLOCK TINA 4A, 20-054-03	
09F210	90459-6961		1	SAFETY SENSOR, NON CONT. ADAM-E M12 0,5M	
09F211	90459-4089		1	SAFETY SENSOR NON-CONTACT EVA E	
09F212	90459-6961		1	SAFETY SENSOR, NON CONT. ADAM-E M12 0,5M	
09F213	90459-4089		1	SAFETY SENSOR NON-CONTACT EVA E	
09F214	90459-6961		1	SAFETY SENSOR, NON CONT. ADAM-E M12 0,5M	
09F215	90459-4089		1	SAFETY SENSOR NON-CONTACT EVA E	
09F230	90459-6961		1	SAFETY SENSOR, NON CONT. ADAM-E M12 0,5M	
09F231	90459-4089		1	SAFETY SENSOR NON-CONTACT EVA E	
09F232	90459-6961		1	SAFETY SENSOR, NON CONT. ADAM-E M12 0,5M	
09F233	90459-4089		1	SAFETY SENSOR NON-CONTACT EVA E	
09F236	90459-5627		1	CONNECTION TINA 1A 20-054-00	
09K241	90459-6913		1	ELECTROMAG. DOOR LOCK. DEV.,JSD-ZH-EM1-K	
09K242	90459-6913		1	ELECTROMAG. DOOR LOCK. DEV.,JSD-ZH-EM1-K	
09W214	90459-4876		1	FOCUS JUMPER CABLE M12 5P 3M, 20-056-21	
09W216	90459-4876		1	FOCUS JUMPER CABLE M12 5P 3M, 20-056-21	
09W230	90459-4876		1	FOCUS JUMPER CABLE M12 5P 3M, 20-056-21	
09W232	90459-4876		1	FOCUS JUMPER CABLE M12 5P 3M, 20-056-21	
09W241	351309-0100		1	ACTUATOR/SENSOR CABLE PRKT 4-07/10M	
09W242	351309-0100		1	ACTUATOR/SENSOR CABLE PRKT 4-07/10M	
300	312605-0312		20	HEXAGON NUT, M6M M4 A280	
320	312605-0314		7	HEXAGON NUT, M6M M5 A280	
360	315105-0146		7	WASHER BRB 5,3X10 RFR	

Pos	Part No	UN	Qty	Description	Page No

This page is intentionally left blank.

ECM: 305573 - 20070517
Group number: 2873950-0100
Assembly Drawing:

Pos	Part No	UN	Qty	Description	Page No
TGA, TBA SLIMCAP1000, TBA STREAMCAP1000, TBA SLIMCAP 2000					
09W203	90459-4252		1	CABLE M12-C101, 20-056-10	
40W000	90459-2565		1	MOTOR CABLE 16 AWG 2090-XXNPMP-16S09	
40W001	90459-7207		1	MOTOR FEEDBACK CABLE 2090-XXNFMP-S09/C	
40W002	90459-2565		1	MOTOR CABLE 16 AWG 2090-XXNPMP-16S09	
40W003	90459-7207		1	MOTOR FEEDBACK CABLE 2090-XXNFMP-S09/C	
40W300	90459-2565		1	MOTOR CABLE 16 AWG 2090-XXNPMP-16S09	
40W301	90459-7207		1	MOTOR FEEDBACK CABLE 2090-XXNFMP-S09/C	
40W410	351150-0413	M	7	CABLE OLFLEX 4X1,5 MM2 LIGHT/GREY	
40X001	90459-2551		1	CONNECTOR, MOTOR FEEDBACK 15 PIN MALE	
40X003	90459-2551		1	CONNECTOR, MOTOR FEEDBACK 15 PIN MALE	
40X301	90459-2551		1	CONNECTOR, MOTOR FEEDBACK 15 PIN MALE	
50W004	351150-0405	M	10	CABLE OLFLEX 5X0,75 MM2 LIGHT/GREY	
50W010	351150-0413	M	9	CABLE OLFLEX 4X1,5 MM2 LIGHT/GREY	
50W110	90220-0104	M	9	SCR. CABLE 4X1,5MM2	
TPA					
09W203	90459-4252		1	CABLE M12-C101, 20-056-10	
21W410	90220-0104	M	11	SCR. CABLE 4X1,5MM2	
40W000	90459-2565		1	MOTOR CABLE 16 AWG 2090-XXNPMP-16S09	
40W001	90459-7207		1	MOTOR FEEDBACK CABLE 2090-XXNFMP-S09/C	
40W002	90459-2565		1	MOTOR CABLE 16 AWG 2090-XXNPMP-16S09	
40W003	90459-7207		1	MOTOR FEEDBACK CABLE 2090-XXNFMP-S09/C	
40W300	90459-2565		1	MOTOR CABLE 16 AWG 2090-XXNPMP-16S09	
40W301	90459-7207		1	MOTOR FEEDBACK CABLE 2090-XXNFMP-S09/C	
40W410	351150-0413	M	7	CABLE OLFLEX 4X1,5 MM2 LIGHT/GREY	
40X001	90459-2551		1	CONNECTOR, MOTOR FEEDBACK 15 PIN MALE	
40X003	90459-2551		1	CONNECTOR, MOTOR FEEDBACK 15 PIN MALE	
40X301	90459-2551		1	CONNECTOR, MOTOR FEEDBACK 15 PIN MALE	
50W004	351150-0405	M	10	CABLE OLFLEX 5X0,75 MM2 LIGHT/GREY	
50W010	351150-0413	M	9	CABLE OLFLEX 4X1,5 MM2 LIGHT/GREY	
50W110	90220-0104	M	9	SCR. CABLE 4X1,5MM2	
Common Parts					
01W400	351150-0403	M	8	CABLE OLFLEX 3X0,75 MM2 LIGHT/GREY	
01W401	351150-0407	M	8	CABLE OLFLEX 12X0,75 MM2 LIGHT/GREY	
01W500	351150-0187	M	8	CABLE OLFLEX 5X6 MM2 LIGHT/GREY	
01W510	351150-0406	M	5.5	CABLE OLFLEX 7X0,75 MM2 LIGHT/GREY	
01W701	351150-0403	M	5	CABLE OLFLEX 3X0,75 MM2 LIGHT/GREY	
01W702	351150-0403	M	9	CABLE OLFLEX 3X0,75 MM2 LIGHT/GREY	
01W800	351150-0403	M	2	CABLE OLFLEX 3X0,75 MM2 LIGHT/GREY	
01W801	351150-0403	M	2	CABLE OLFLEX 3X0,75 MM2 LIGHT/GREY	
09W103	351150-0405	M	11	CABLE OLFLEX 5X0,75 MM2 LIGHT/GREY	
09W201	90220-0165	M	8	SCR. CABLE 5X0,34MM2	
09W202	90220-0165	M	5	SCR. CABLE 5X0,34MM2	
20W000	90220-0104	M	10	SCR. CABLE 4X1,5MM2	
21W100	90459-2565		1	MOTOR CABLE 16 AWG 2090-XXNPMP-16S09	
21W101	90459-7207		1	MOTOR FEEDBACK CABLE 2090-XXNFMP-S09/C	
21W200	90459-2565		1	MOTOR CABLE 16 AWG 2090-XXNPMP-16S09	
21W201	90459-7207		1	MOTOR FEEDBACK CABLE 2090-XXNFMP-S09/C	
21W400	90220-0104	M	15	SCR. CABLE 4X1,5MM2	
21W800	351150-0412	M	6	CABLE OLFLEX 3X1,5 MM2 LIGHT/GREY	
21W801	351120-0266	M	5	CABLE SILFLEX SIHF 4X4 00460273	
21X101	90459-2551		1	CONNECTOR, MOTOR FEEDBACK 15 PIN MALE	
21X201	90459-2551		1	CONNECTOR, MOTOR FEEDBACK 15 PIN MALE	
30W000	90459-2565		1	MOTOR CABLE 16 AWG 2090-XXNPMP-16S09	
30W001	90459-7207		1	MOTOR FEEDBACK CABLE 2090-XXNFMP-S09/C	
30W400	90459-2565		1	MOTOR CABLE 16 AWG 2090-XXNPMP-16S09	
30W401	90459-7207		1	MOTOR FEEDBACK CABLE 2090-XXNFMP-S09/C	
30X001	90459-2551		1	CONNECTOR, MOTOR FEEDBACK 15 PIN MALE	
30X401	90459-2551		1	CONNECTOR, MOTOR FEEDBACK 15 PIN MALE	

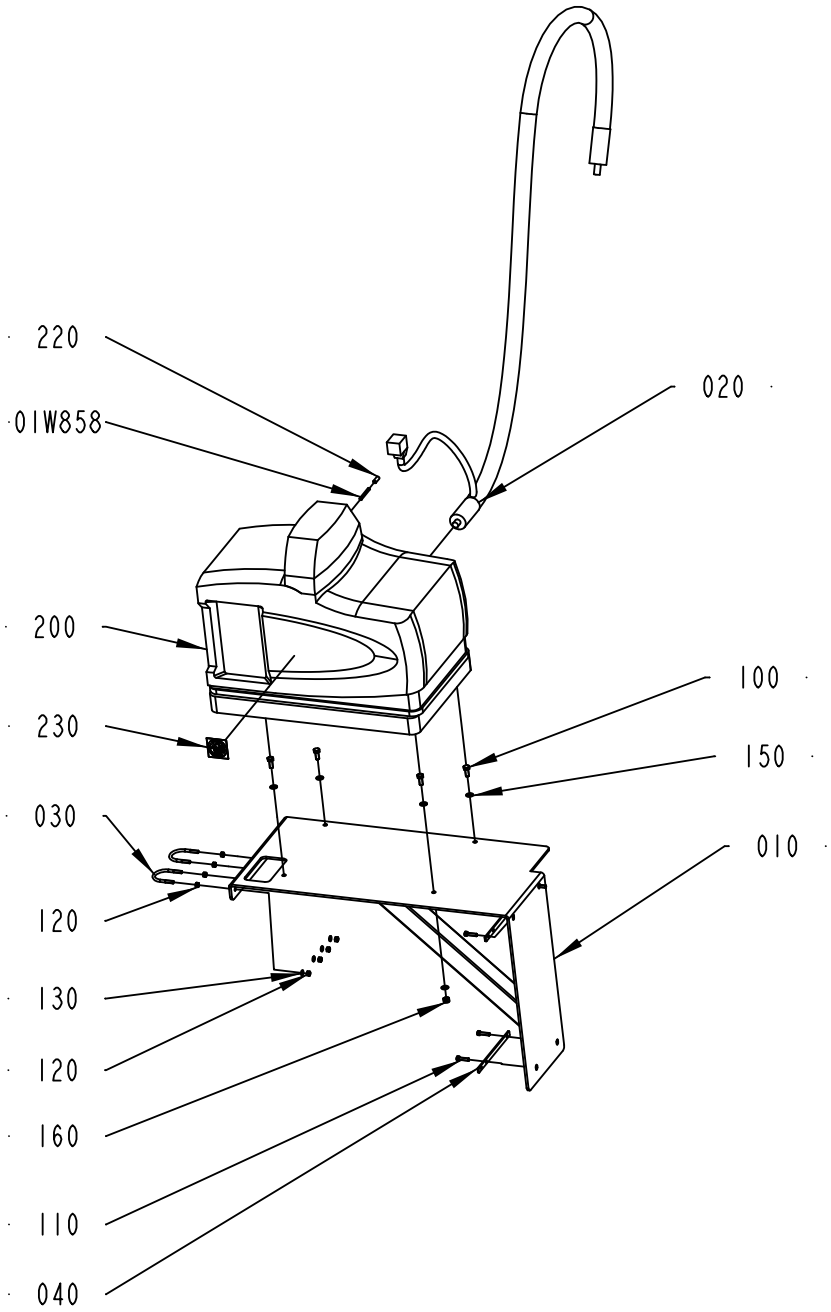
220
01W858
020
200
100
230
150
030
010
120
130
120
160
110
040

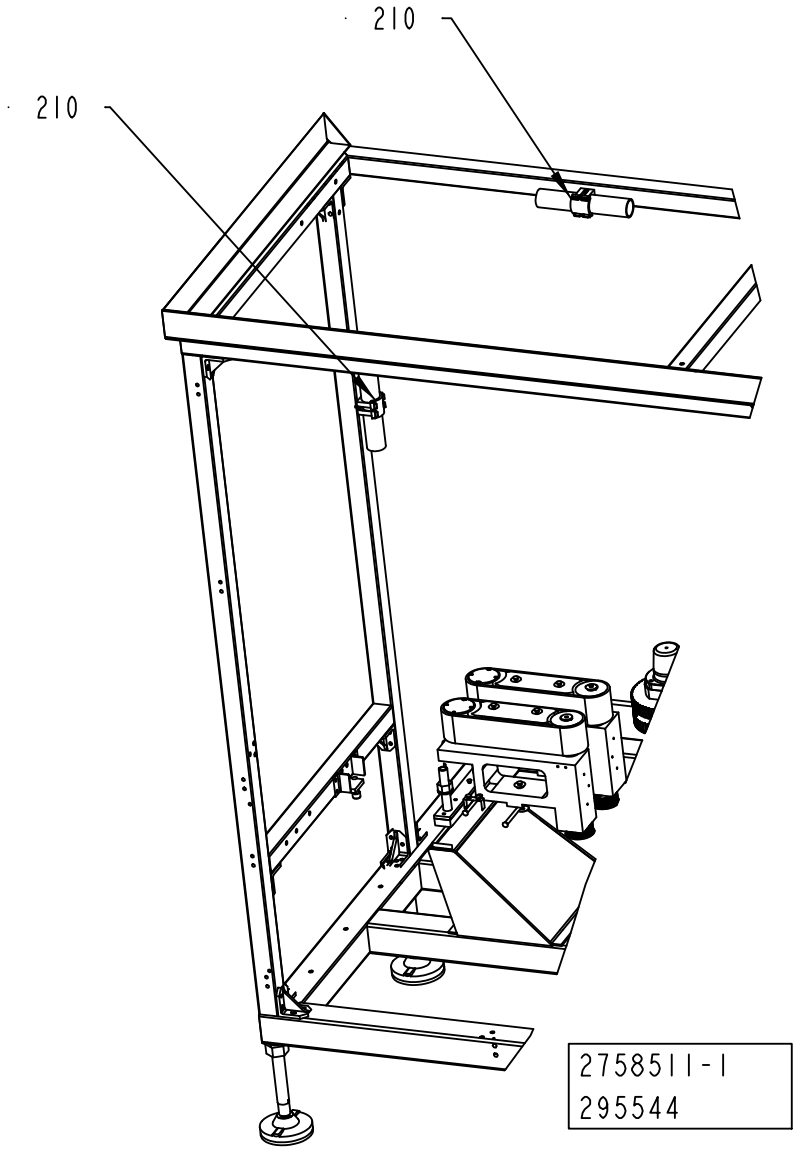
210
210
2758511-1
295544

ECM: 303507 - 20070517
Group number: 2758511-0100
Assembly Drawing: 2758511-1_1_AB

Pos	Part No	UN	Qty	Description	Page No
-					
010	2766939-0000		1	SUPPORT	
01W858	315400-0001	MM	3000	TUBE PUN-H-6X1-BL	
020	90600-0773		1	AUTOMATIC GUN HOSE, #104008	
030	531616-0000		2	HOLDER	
040	2874024-0000		2	BRACKET	
100	312105-0451		4	SCREW M6S ISO 4017 M8X20 A480	
110	312105-0372		4	SCREW M6S ISO 4017 M6X25 A480	
120	312605-0316		8	HEXAGON NUT, M6M M6 A280	
130	315105-0153		4	WASHER BRB 6,4X12 RFR	
150	315105-0165		8	WASHER BRB 8,4X16 RFR	
160	312812-0318		4	HEXAGON NUT, NY-LOCK M8 A480	
200	90459-1991		1	HOT MELT UNIT, #1022230	
	90459-1980		*1*	*MANIFOLD ASSEMBLY, 4-HOSE #1064651*	
	90459-1981		*1*	*MANIFOLD SERVICE KIT (P4,P7,P10)#1028309*	
	90459-1982		*1*	*AUTO. PR. DIS. VALVE (P4/7/10)#1028308*	
	90459-1983		*1*	*HEATER-BLOCK KIT, #1064649*	
	90459-1984		*1*	*PUMP ASS. SERV. KIT (P4/7/10) #1028303*	
	90459-1985		*1*	*PUMP SERVICE KIT (P4,P7,P10) #1028304*	
	90459-1986		*1*	*REPL. SATURN® FILTER, 100 MESH #1028305*	
	90459-1987		*1*	*PNEUM. PANEL ASS. (P4/7/10) #1028307*	
	90459-1988		*1*	*COV.,FRAME,SUBBASE MOUNT.PL.(P4)#1021661*	
	90459-1989		*1*	*COVERS,FRAME,CHASSIS, P4 #1021660*	
	90439-0241		*1*	*ANGLE NIPPLE*	
	90459-1971		*1*	*HOSE/GUN MODULE KIT(P4,P7,P10),#1028328*	
	90459-1972		*1*	*FUSE KIT,HOSE/GUN (P4,P7,P10)),#1028331*	
	90459-1973		*1*	*MAIN CIRC.BOARD SERV.KIT(P4,P7),#1028322*	
	90459-1974		*1*	*FUSE KIT,MAIN CIRC.B.(P4/7/10),#1028329*	
	90459-1975		*1*	*CPU CONT.BOARD SERV.KIT(P4/7/10)#1028325*	
	90459-1976		*1*	*OPER. PANEL/ENCL.SERV.KIT(P4/7)#1028326*	
	90459-1977		*1*	*WELDMENT, TANK, P4 #1051033*	
	90459-1978		*1*	*RTD SERVICE KIT (P4,P7,P10) #1028320*	
	90459-1979		*1*	*THERMOSTAT SERV. KIT(P4,P7,P10) #1028321*	
210	90439-0295		2	SERVICE KIT, NO. 111940	
220	90459-7369		1	MARKING FOR PNEUM. TUBING, PRZ06	
230	90459-2265		1	PROHIBITION SIGN ISO, DO NOT WASH	

Pos	Part No	UN	Qty	Description	Page No

Machine Type	Group Description	Used-In	Group Number	Page No

OPERATOR INTERFACE

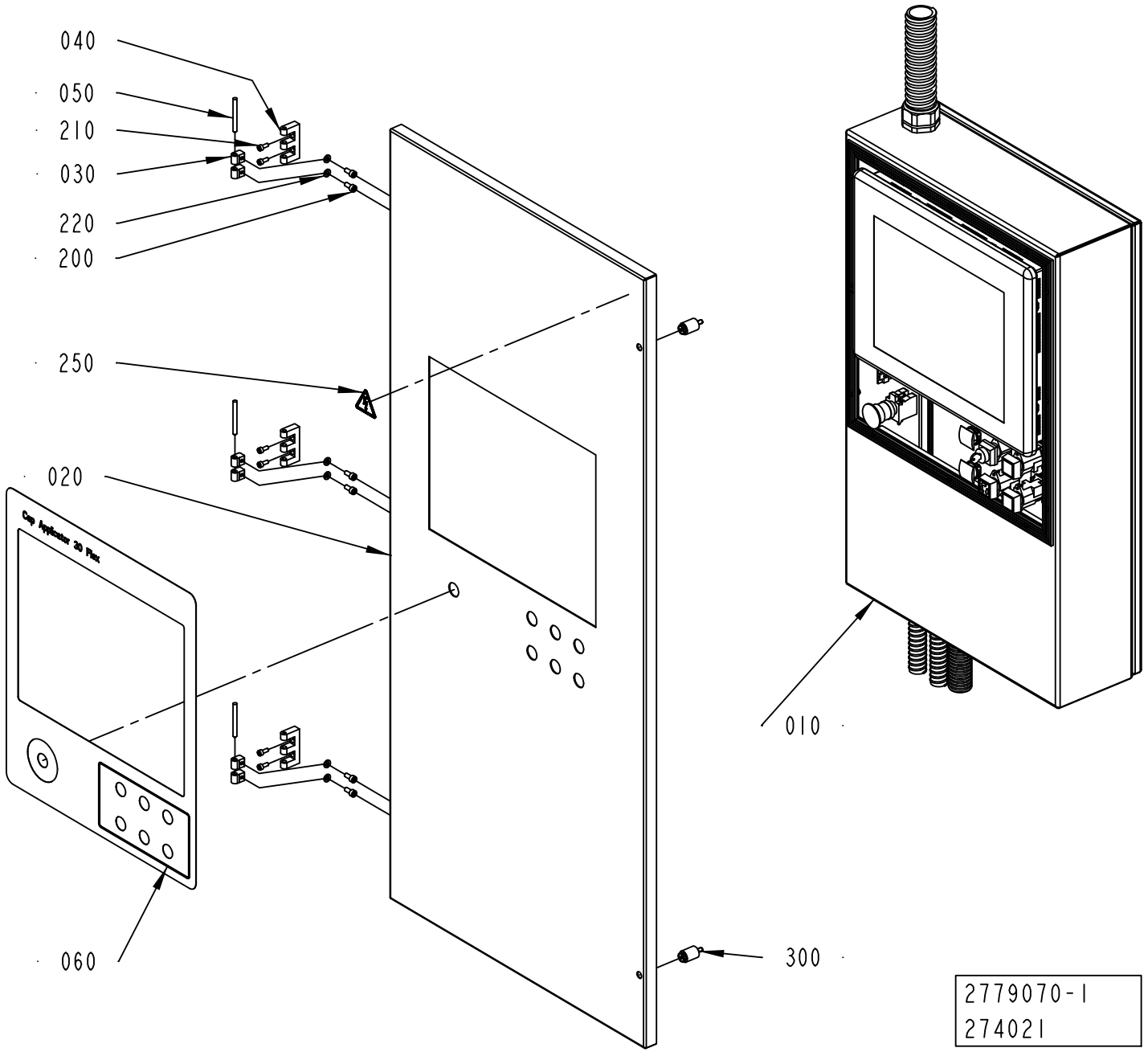

ECM: 274479 - 20060921
Group number: 2779070-0100
Assembly Drawing: 2779070-1_1_AA

Pos	Part No	UN	Qty	Description	Page No
CAP 30/FLEX					
060	2746920-0000		1	FOIL	
Common Parts					
010	2802386-0100		1	OPERATOR INTERFACE	**5-103**
020	2779768-0000		1	DOOR	
030	1129770-0000		6	BLOCKING PIECE	
040	1035792-0000		3	E-HINGE	
050	988685-0000		3	PIN	
200	312115-0367		6	SCREW ISO4762 M6X14 A4 80	
210	312115-0327		6	SCREW ISO4762 M5X12 A4 80	
220	315105-0153		6	WASHER BRB 6,4X12 RFR	
250	359705-0015		1	WARNING SIGN ISO, RISK OF ELECTRIC SHOCK	
300	90226-0458		2	MOUNTING SCREW	

Pos	Part No	UN	Qty	Description	Page No

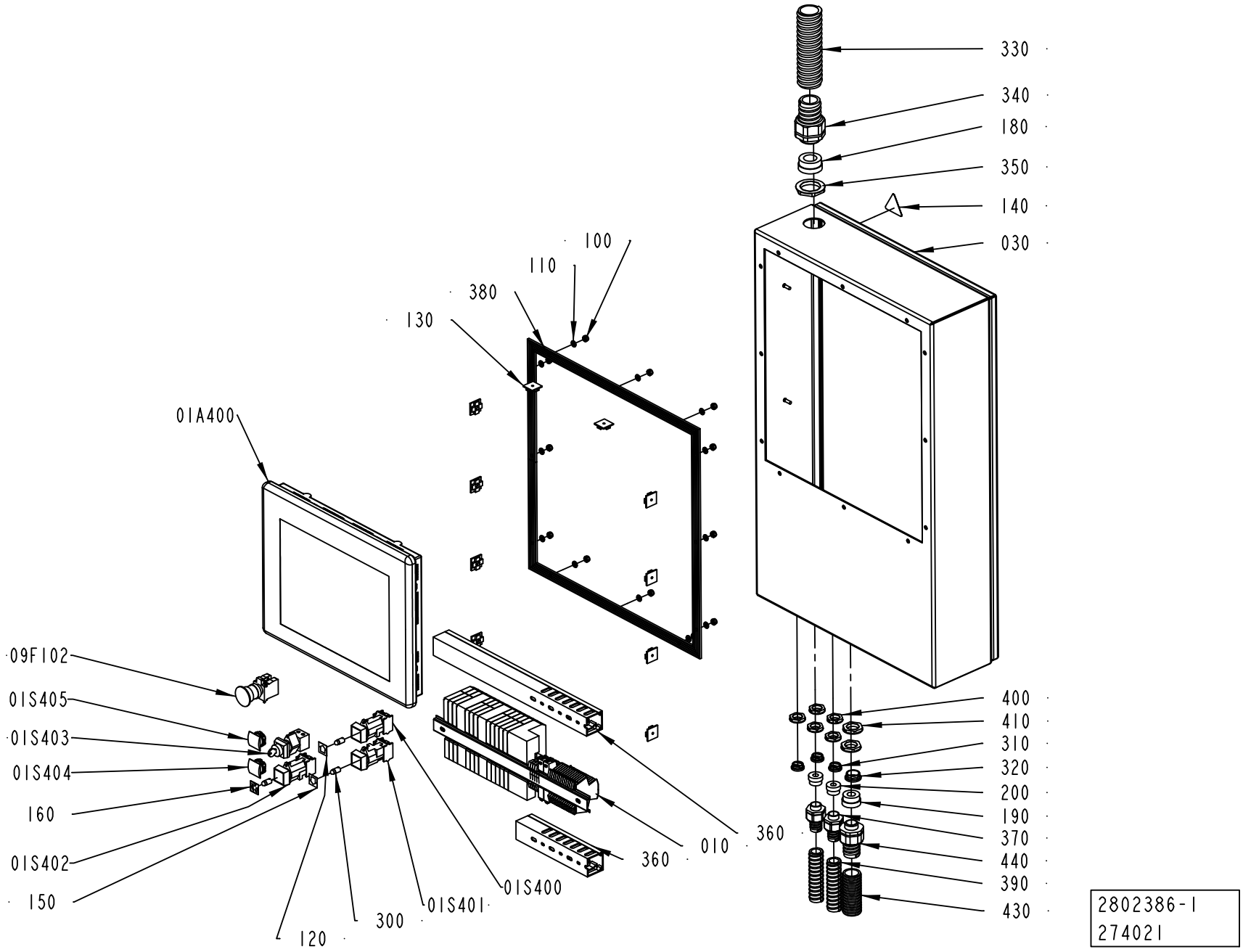
330
340
180
350
140
030
100
110
380
130
01A400
09F102
01S405
01S403
01S404
160
01S402
150
120
300
01S401
01S400
360
010
360
400
410
310
320
200
190
370
440
390
430
2802386-1
274021

ECM: 303483 - 20070517
Group number: 2802386-0100
Assembly Drawing: 2802386-1_1_AA

Pos	Part No	UN	Qty	Description	Page No
-					
010	2817783-0100		1	PLINTH	**5-105, 5-107**
01A400	90600-0980		1	OPERATOR PANEL 15"+, 2711P-T15C4D2-TP	
01S400	90064-0093		1	PUSH BUTTON, GREEN	
	90036-0057		*1*	*LIGHT BULB, BA9S 28V*	
01S401	90064-0082		1	PUSH BUTTON, WHITE	
	90036-0057		*1*	*LIGHT BULB, BA9S 28V*	
01S402	90064-0093		1	PUSH BUTTON, GREEN	
	90036-0057		*1*	*LIGHT BULB, BA9S 28V*	
01S403	90111-0122		1	KEY SWITCH, 2 NO CONTACTS	
01S404	90459-3279		1	BLANK PLUG BLACK, SQUARE, PLASTIC ZB5SZ5	
01S405	90459-3279		1	BLANK PLUG BLACK, SQUARE, PLASTIC ZB5SZ5	
030	2746904-0000		1	BOX	
09F102	90458-1651		1	EMERGENCY STOP, ZB4-BS-844 ZB4-BZ-104	
100	312812-0316		12	HEXAGON NUT, NY-LOCK M6 A480	
110	315105-0153		12	WASHER BRB 6,4X12 RFR	
120	359301-0001		1	BUTTON SIGN, UP	
130	352113-0206		10	ANCHOR PLATES FOR STRIPS, TYPE ABM100-AT	
140	359705-0015		1	WARNING SIGN ISO, RISK OF ELECTRIC SHOCK	
150	359301-0005		1	BUTTON SIGN, DOWN	
160	359301-0090		1	BUTTON SIGN, INCHING	
180	353249-0054		1	INSERT, SINGLE HOLE, EK 156/25	
190	353249-0015		1	INSERT, SINGLE HOLE, EK 155/16	
200	353249-0012		2	INSERT, SINGLE HOLE, EK 154/11	
300	90036-0057		3	LIGHT BULB, BA9S 28V	
310	90458-1308		3	BLIND PLUG CIRCULAR, M20X1,5 514GFK/220	
320	90458-1309		1	BLIND PLUG CIRCULAR, M25X1,5 514GFK/225	
330	90152-0060	MM	1000	SPIRAL CONDUIT, 42X35, UL3529	
340	90458-0434		1	HOSE GLAND W/O INSERT M40 EXTENDED	
350	90458-0326		1	NUT, M40X1,5	
360	90181-0038	MM	1100	CABLE DUCT 40X40MM	
370	90458-0430		2	HOSE GLAND W/O INSERT M20 EXTENDED	
380	90143-0071	MM	2000	RUBBER STRIP 4X20MM	
390	90152-0051	MM	1800	SPIRAL CONDUIT, 25X18, UL 1816	
400	90458-0323		5	NUT, M20X1,5	
410	90458-0324		2	NUT, M25X1,5	
420	90152-0051	MM	1500	SPIRAL CONDUIT, 25X18, UL 1816	
430	90152-0070	MM	700	METAL HOSE, 32,5X26, UL 2621	
440	90458-0432		1	HOSE GLAND W/O INSERT M25 EXTENDED	

Pos	Part No	UN	Qty	Description	Page No

Machine Type | Group Description | Used-In | Group Number | Page No

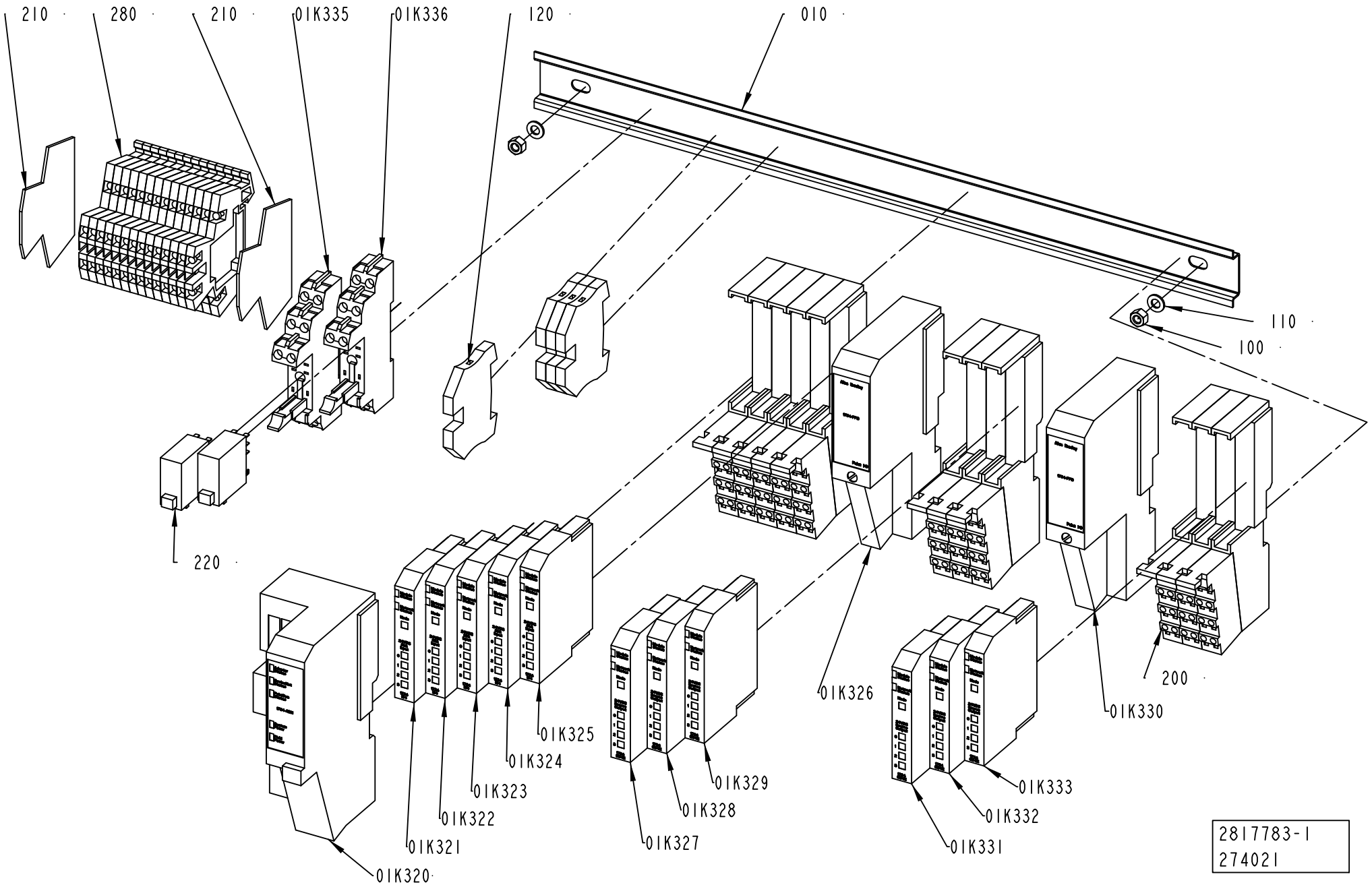
210
280
210
01K335
01K336
120
010
110
100
220
200
01K320
01K321
01K322
01K323
01K324
01K325
01K326
01K327
01K328
01K329
01K330
01K331
01K332
01K333
2817783-1
274021

ECM: 274500 - 20060921
Group number: 2817783-0100
Assembly Drawing: 2817783-1_1_AA

This list covers pages from 5-104 to 5-107

Pos	Part No	UN	Qty	Description	Page No
-					
010	2746909-0000		1	RAIL	
01K320	90459-2494		1	DEVICENET I/O ADAPTER MODULE, 1734-ADN	
01K321	90459-2503		1	DIGITAL INPUT 4 PTS SINK, 1734-IB4	
01K322	90459-2503		1	DIGITAL INPUT 4 PTS SINK, 1734-IB4	
01K323	90459-2503		1	DIGITAL INPUT 4 PTS SINK, 1734-IB4	
01K324	90459-2503		1	DIGITAL INPUT 4 PTS SINK, 1734-IB4	
01K325	90459-2503		1	DIGITAL INPUT 4 PTS SINK, 1734-IB4	
01K326	90459-2501		1	FIELD POWER DISTRIBUTOR, 1734-FPD	
01K327	90459-2505		1	DIGITAL OUTPUT 4 PTS, 1734-OB4E	
01K328	90459-2505		1	DIGITAL OUTPUT 4 PTS, 1734-OB4E	
01K329	90459-2505		1	DIGITAL OUTPUT 4 PTS, 1734-OB4E	
01K330	90459-2501		1	FIELD POWER DISTRIBUTOR, 1734-FPD	
01K331	90459-2505		1	DIGITAL OUTPUT 4 PTS, 1734-OB4E	
01K332	90459-2505		1	DIGITAL OUTPUT 4 PTS, 1734-OB4E	
01K333	90459-2505		1	DIGITAL OUTPUT 4 PTS, 1734-OB4E	
01K335	90129-0018		1	BASE OMRON P2RF-08-E	
01K336	90129-0018		1	BASE OMRON P2RF-08-E	
100	312605-0314		2	HEXAGON NUT, M6M M5 A280	
110	315105-0146		2	WASHER BRB 5,3X10 RFR	
120	353024-0205		4	EARTH TERMINAL, 1010.1	
200	90459-2526		11	REMOTE I/O BASE MODULE 8 POINTS, 1734-TB	
210	90077-0114		2	END PLATE, WAP/WDK 2,5	
220	90119-0108		2	RELAY OMRON G2R-2-SNI-24DC	
	90129-0018		*1*	*BASE OMRON P2RF-08-E*	
280	90077-0113		14	FEED THROUGH TERMINAL, 10-00102150-1	

Pos	Part No	UN	Qty	Description	Page No

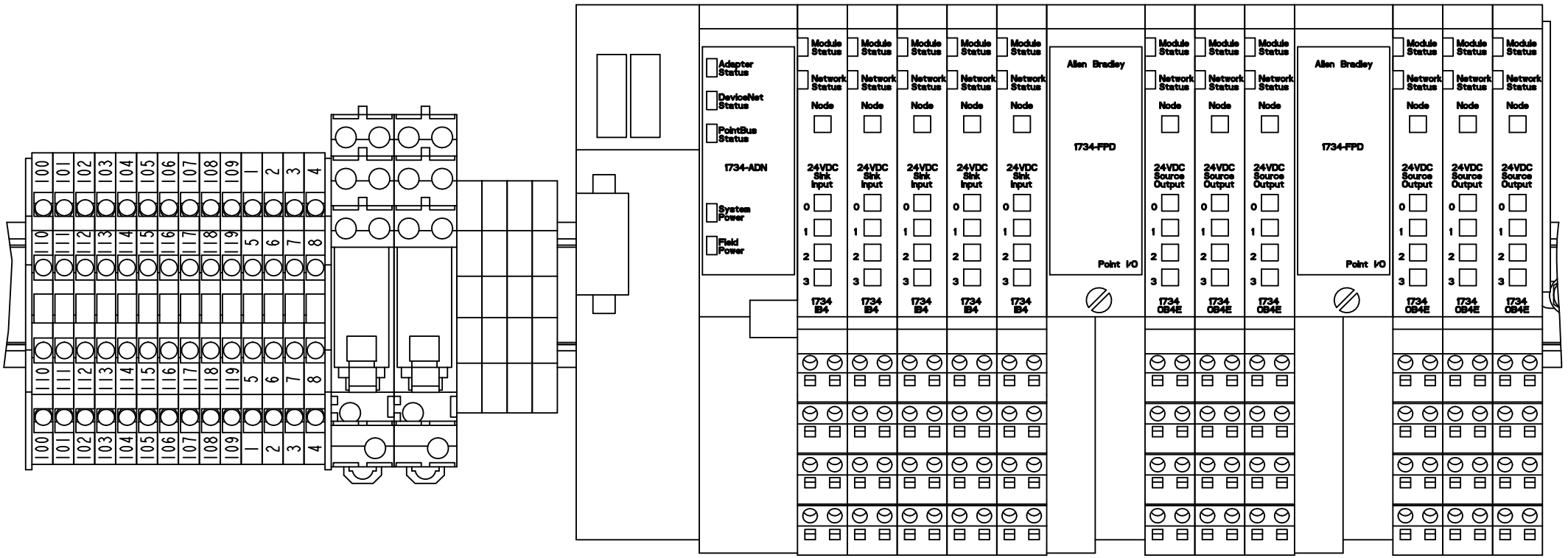

SCALE: 1:1

2817783-1
274021

ECM: 274500 - 20060921
Group number: 2817783-0100
Assembly Drawing: 2817783-1_2_AA

This list covers pages from 5-104 to 5-107

Pos	Part No	UN	Qty	Description	Page No
-					
010	2746909-0000		1	RAIL	
01K320	90459-2494		1	DEVICENET I/O ADAPTER MODULE, 1734-ADN	
01K321	90459-2503		1	DIGITAL INPUT 4 PTS SINK, 1734-IB4	
01K322	90459-2503		1	DIGITAL INPUT 4 PTS SINK, 1734-IB4	
01K323	90459-2503		1	DIGITAL INPUT 4 PTS SINK, 1734-IB4	
01K324	90459-2503		1	DIGITAL INPUT 4 PTS SINK, 1734-IB4	
01K325	90459-2503		1	DIGITAL INPUT 4 PTS SINK, 1734-IB4	
01K326	90459-2501		1	FIELD POWER DISTRIBUTOR, 1734-FPD	
01K327	90459-2505		1	DIGITAL OUTPUT 4 PTS, 1734-OB4E	
01K328	90459-2505		1	DIGITAL OUTPUT 4 PTS, 1734-OB4E	
01K329	90459-2505		1	DIGITAL OUTPUT 4 PTS, 1734-OB4E	
01K330	90459-2501		1	FIELD POWER DISTRIBUTOR, 1734-FPD	
01K331	90459-2505		1	DIGITAL OUTPUT 4 PTS, 1734-OB4E	
01K332	90459-2505		1	DIGITAL OUTPUT 4 PTS, 1734-OB4E	
01K333	90459-2505		1	DIGITAL OUTPUT 4 PTS, 1734-OB4E	
01K335	90129-0018		1	BASE OMRON P2RF-08-E	
01K336	90129-0018		1	BASE OMRON P2RF-08-E	
100	312605-0314		2	HEXAGON NUT, M6M M5 A280	
110	315105-0146		2	WASHER BRB 5,3X10 RFR	
120	353024-0205		4	EARTH TERMINAL, 1010.1	
200	90459-2526		11	REMOTE I/O BASE MODULE 8 POINTS, 1734-TB	
210	90077-0114		2	END PLATE, WAP/WDK 2,5	
220	90119-0108		2	RELAY OMRON G2R-2-SNI-24DC	
	90129-0018		*1*	*BASE OMRON P2RF-08-E*	
280	90077-0113		14	FEED THROUGH TERMINAL, 10-00102150-1	

Pos	Part No	UN	Qty	Description	Page No

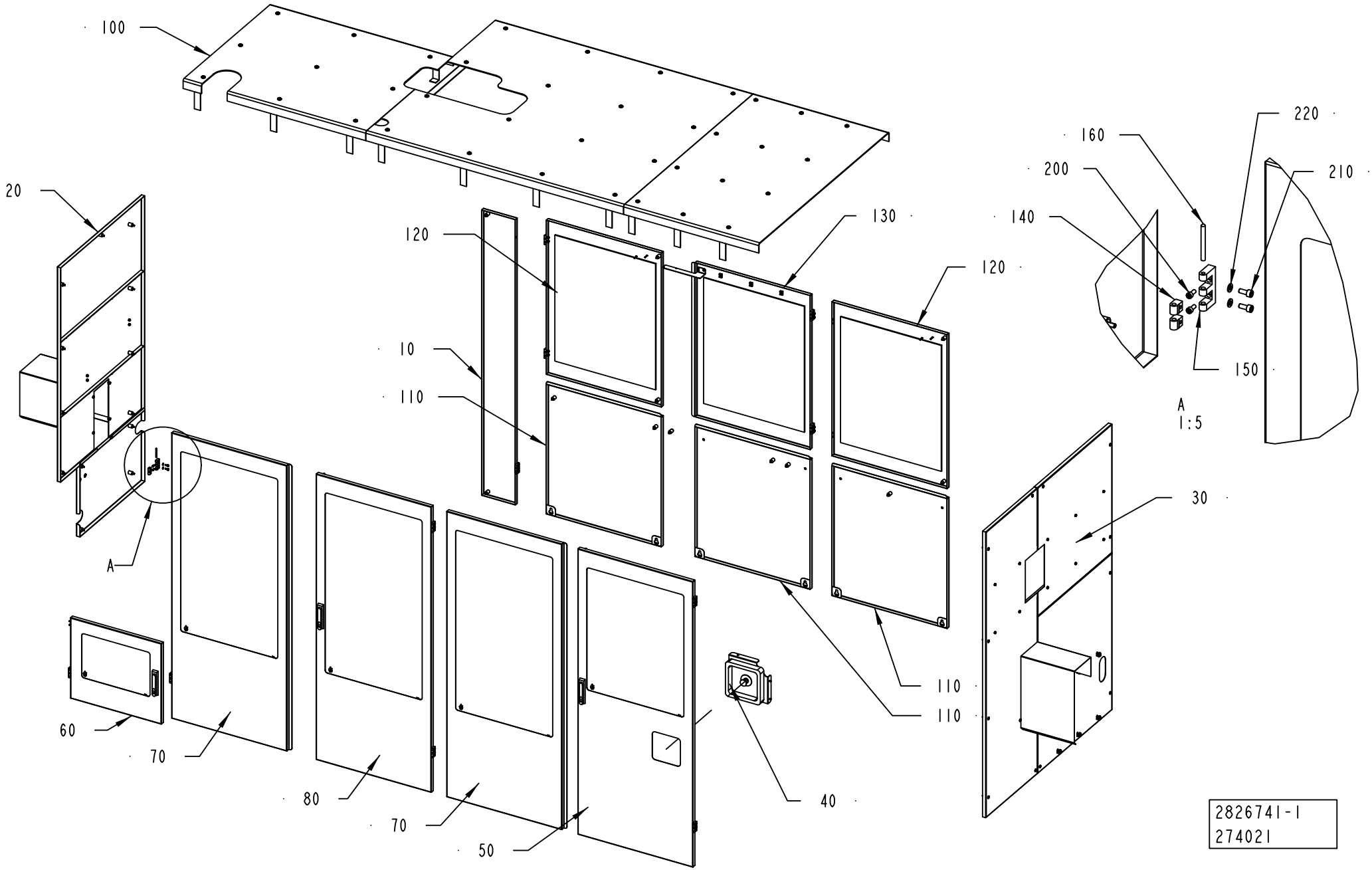
100
20
120
130
120
10
110
160
200
140
220
210
150
A
1:5
A
30
110
110
60
70
80
70
50
40
2826741-1
274021

ECM: 305568 - 20070517
Group number: 2826741-0100
Assembly Drawing: 2826741-1_1_AA

Pos	Part No	UN	Qty	Description	Page No
STREAMCAP500, STREAMCAP1000, SLIMCAP 2000, SLIMCAP 1000					
030	2826743-0100		1	COVER	**5-111**
050	2779748-0100		1	GLASS DOOR	**5-121**
140	1129770-0000		26	BLOCKING PIECE	
150	1035792-0000		13	E-HINGE	
160	988685-0000		13	PIN	
200	312115-0327		26	SCREW ISO4762 M5X12 A4 80	
210	312115-0367		26	SCREW ISO4762 M6X14 A4 80	
220	315105-0153		26	WASHER BRB 6,4X12 RFR	
Common Parts					
010	2779835-0100		1	DOOR	**5-123**
020	2826742-0100		1	COVER	**5-125**
040	2769760-0100		1	EMERGENCY STOP	**5-133**
060	2779832-0100		1	GLASS DOOR	**5-135**
070	2779833-0100		2	GLASS DOOR	**5-137**
080	2779834-0100		1	GLASS DOOR	**5-139**
100	2787230-0100		1	TOP SECTION	**5-141**
110	2805693-0100		3	DOOR	**5-143**
120	2805687-0100		2	GLASS DOOR	**5-145**
130	2805694-0100		1	GLASS DOOR	**5-147**

Pos	Part No	UN	Qty	Description	Page No

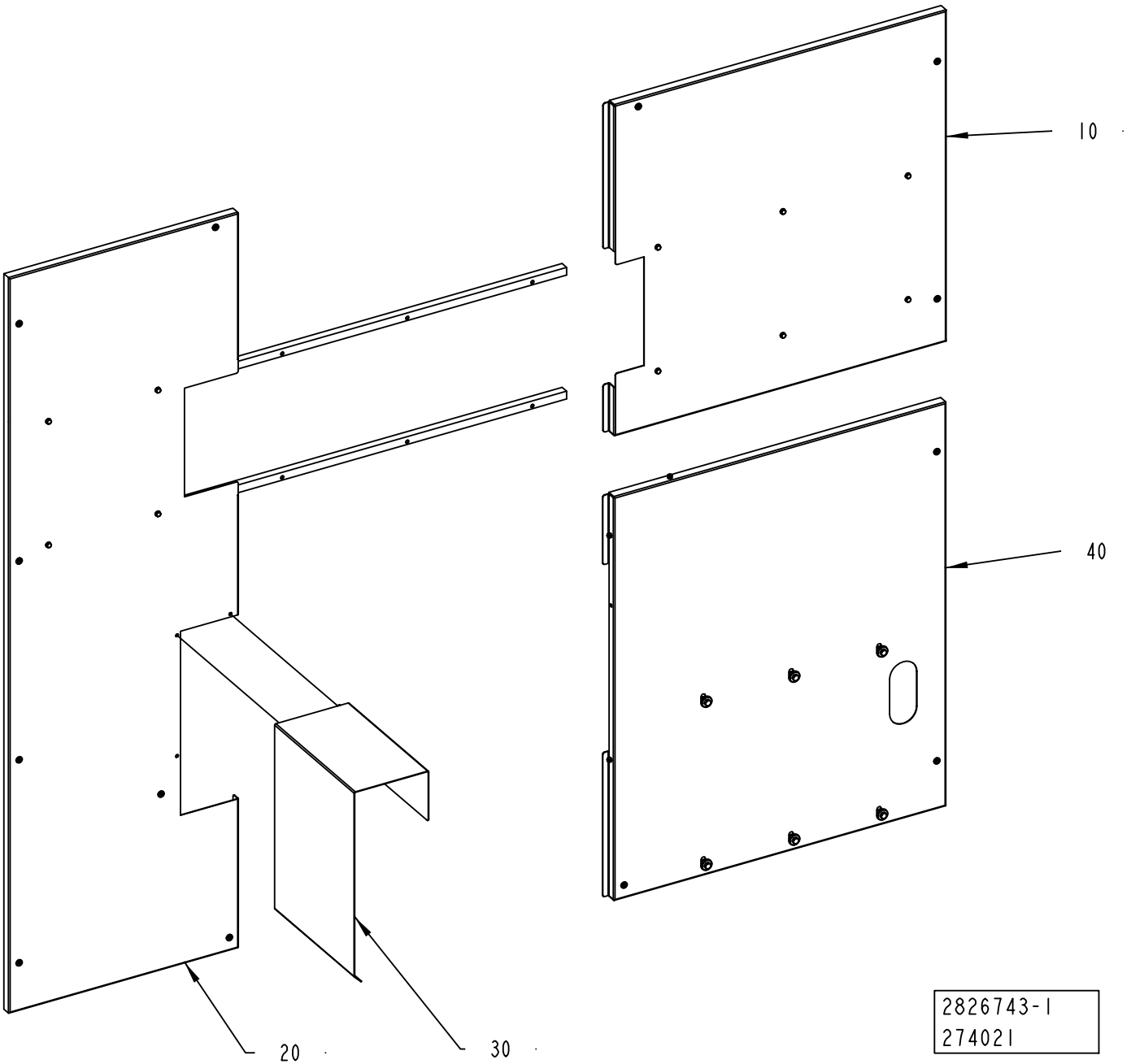
10
40
20
30
2826743-1
274021

ECM: 274515 - 20060921
Group number: 2826743-0100
Assembly Drawing: 2826743-1_1_AA

Pos	Part No	UN	Qty	Description	Page No
-					
010	2842795-0100		1	COVER	**5-113**
020	2842794-0100		1	COVER	**5-115**
030	2846399-0100		1	TUNNEL	**5-117**
040	2842807-0100		1	COVER	**5-119**

Pos	Part No	UN	Qty	Description	Page No

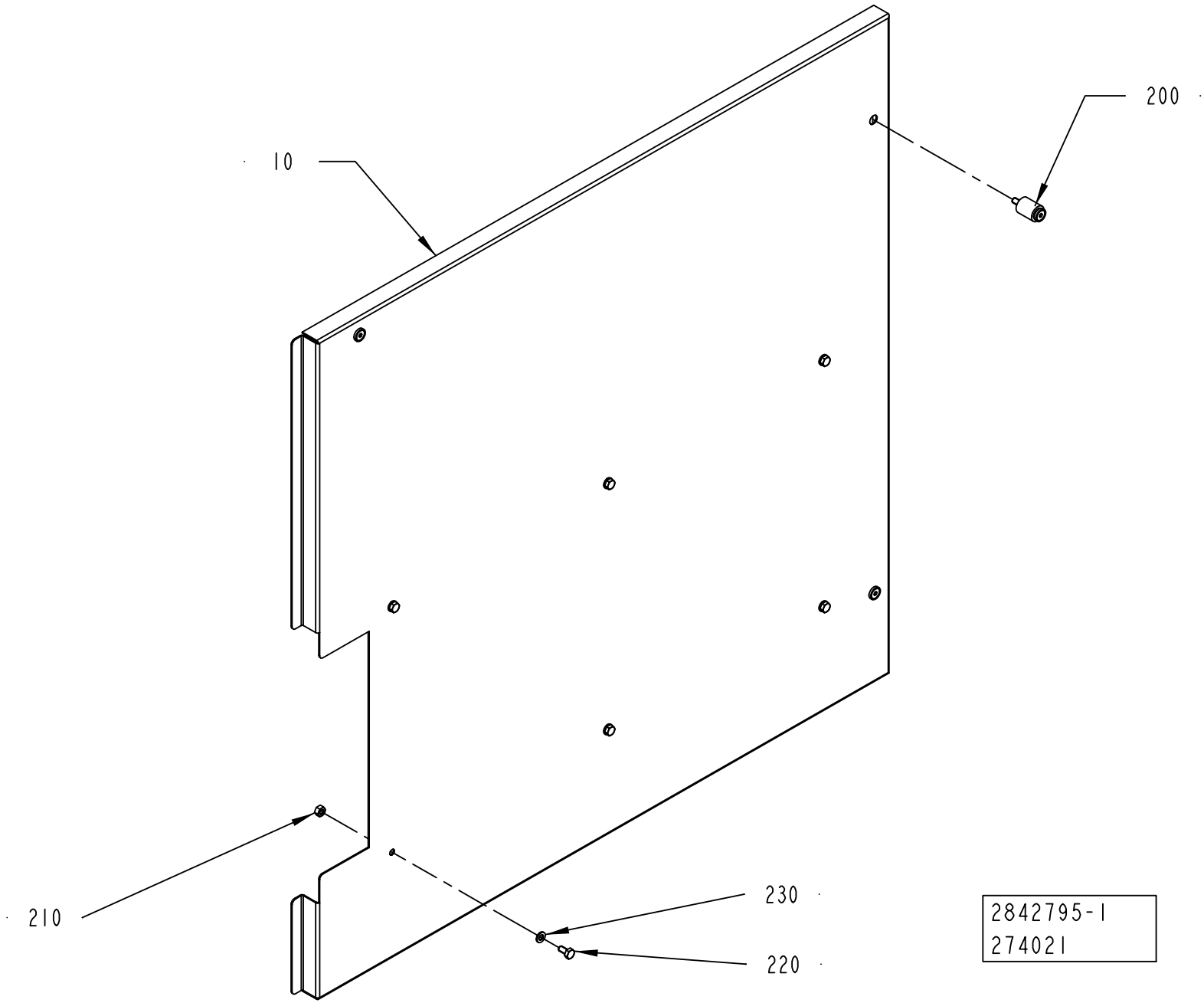
10
200
210
230
220
2842795-1
274021

ECM: 274516 - 20060921
Group number: 2842795-0100
Assembly Drawing: 2842795-1_1_AA

Pos	Part No	UN	Qty	Description	Page No
-					
010	2842799-0000		1	COVER	
200	90226-0458		3	MOUNTING SCREW	
210	312605-0316		6	HEXAGON NUT, M6M M6 A280	
220	312105-0366		6	SCREW M6S ISO 4017 M6X12 A480	
230	315105-0153		6	WASHER BRB 6,4X12 RFR	

Pos	Part No	UN	Qty	Description	Page No

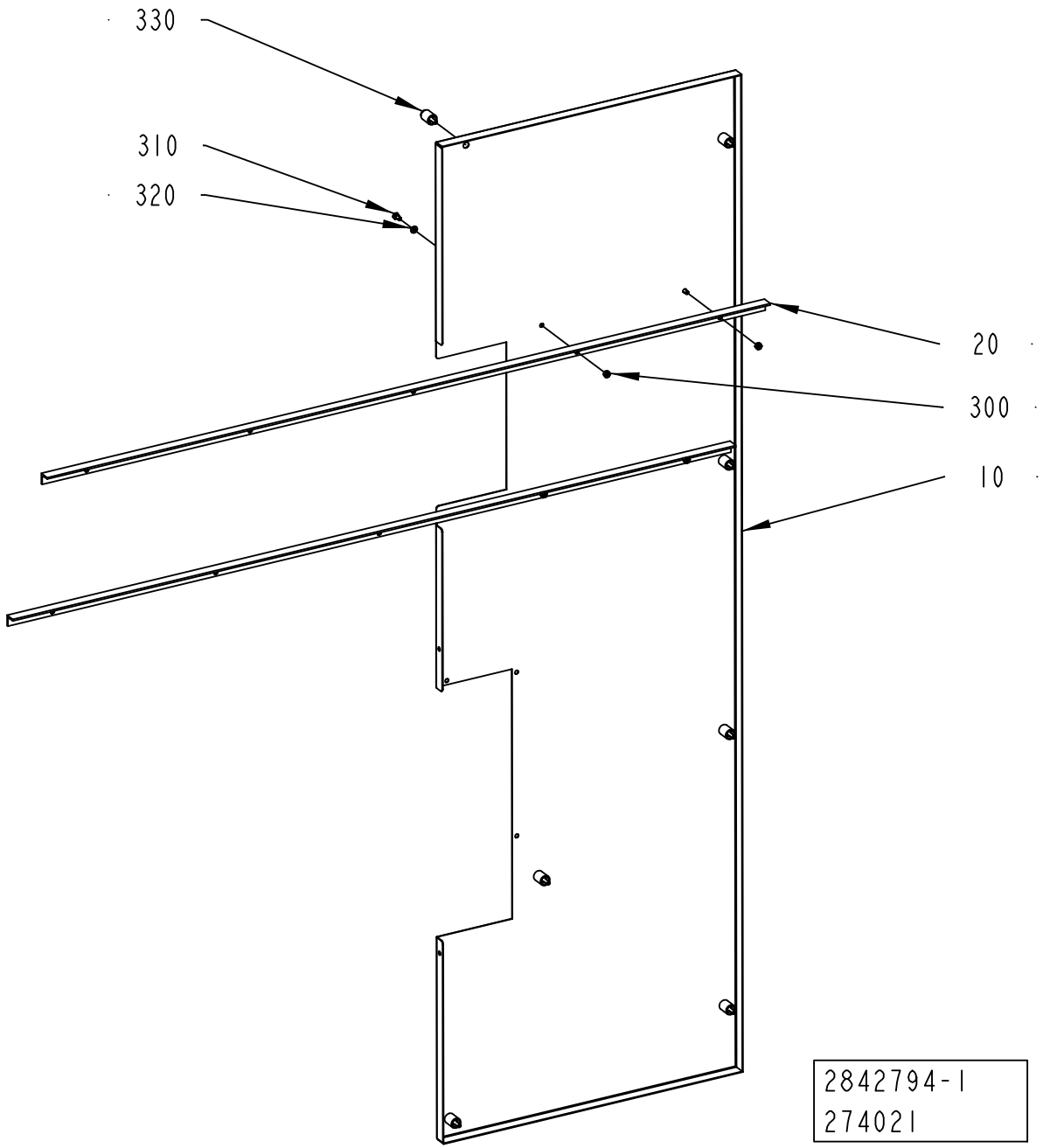
330
310
320
20
300
10
2842794-1
274021

ECM: 305569 - 20070517
Group number: 2842794-0100
Assembly Drawing: 2842794-1_1_AA

Pos	Part No	UN	Qty	Description	Page No
-					
010	2873889-0000		1	COVER	
020	2844501-0000		2	PROFILE	
300	312605-0316		4	HEXAGON NUT, M6M M6 A280	
310	312105-0366		4	SCREW M6S ISO 4017 M6X12 A480	
320	315105-0153		4	WASHER BRB 6,4X12 RFR	
330	90226-0458		7	MOUNTING SCREW	

Pos	Part No	UN	Qty	Description	Page No

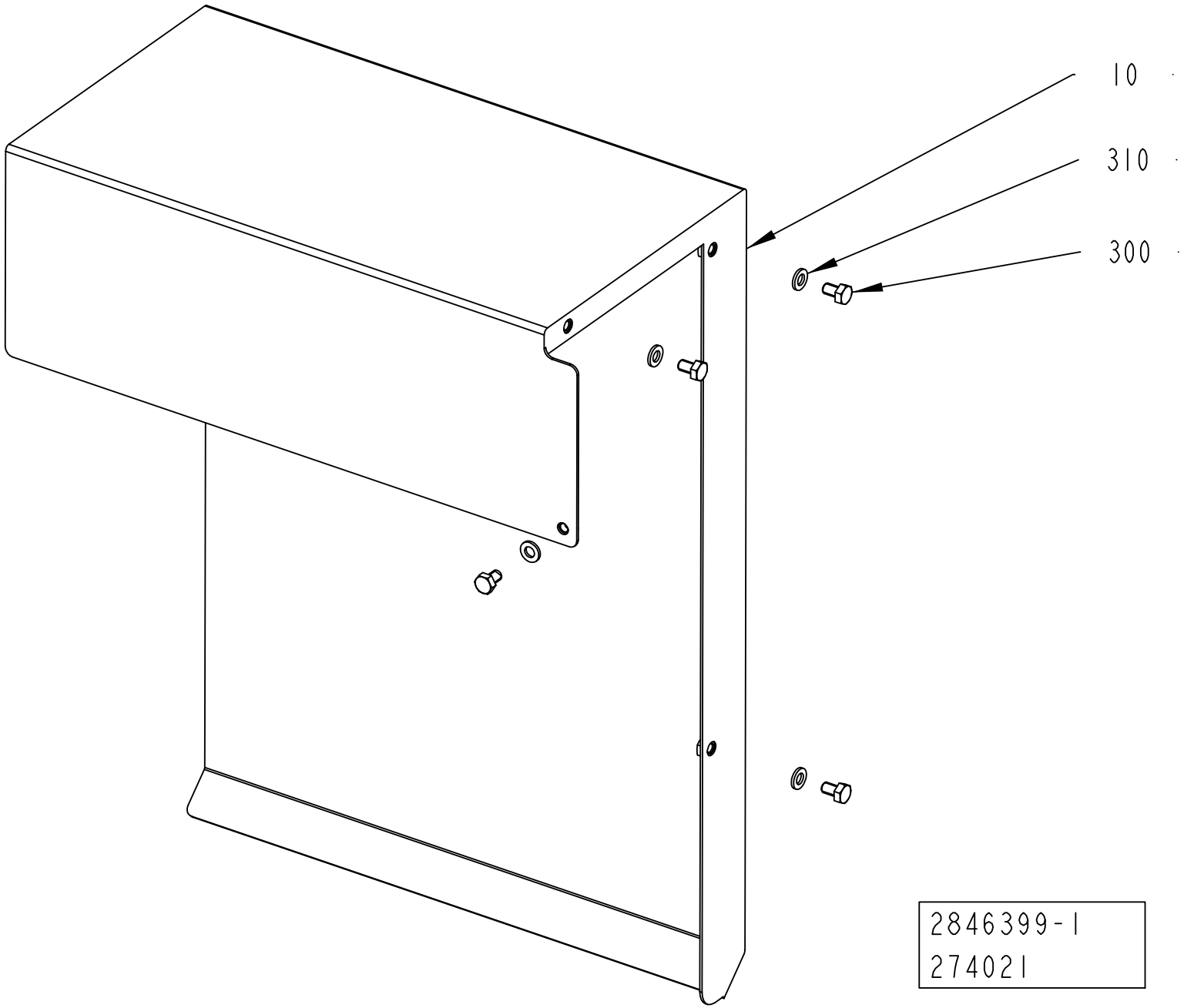
10
310
300
2846399-1
274021

ECM: 305570 - 20070517
Group number: 2846399-0100
Assembly Drawing: 2846399-1_1_AA

Pos	Part No	UN	Qty	Description	Page No
-					
010	2873888-0000		1	TUNNEL	
300	312105-0364		4	SCREW M6S ISO 4017 M6X10 A480	
310	315105-0153		4	WASHER BRB 6,4X12 RFR	

Pos	Part No	UN	Qty	Description	Page No

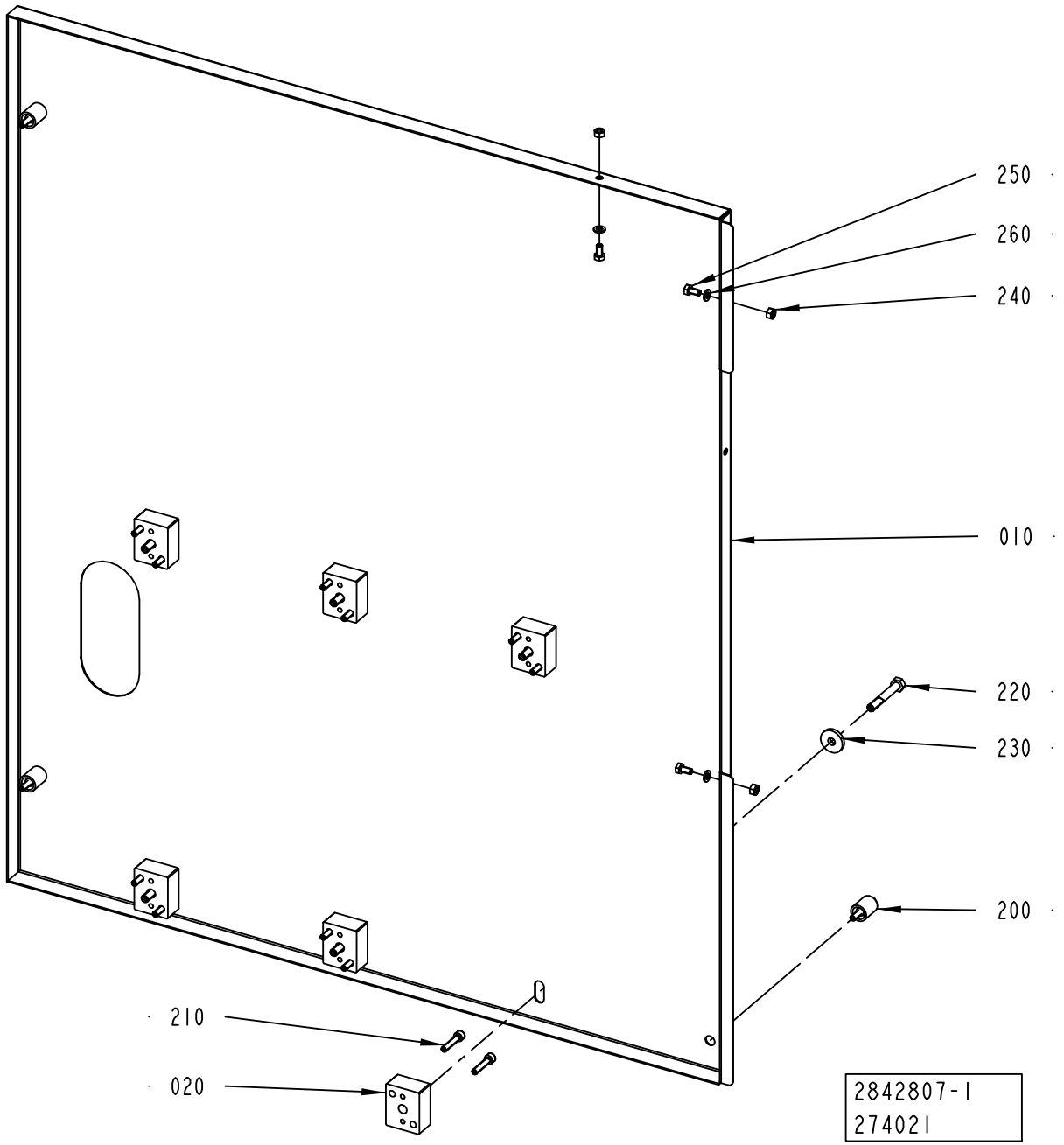
250
260
240
010
220
230
200
210
020
2842807-1
274021

ECM: 274519 - 20060921
Group number: 2842807-0100
Assembly Drawing: 2842807-1_1_AA

Pos	Part No	UN	Qty	Description	Page No
-					
010	2842808-0000		1	COVER	
020	2842805-0000		6	SPACER	
200	90226-0458		3	MOUNTING SCREW	
210	312115-0374		12	SCREW ISO4762 M6X30 A4 80	
220	312105-0462		6	SCREW M6S ISO 4014 M8X55 A480	
230	315125-0165		1	WASHER TBRSB 8,4X26X5 A4	
240	312605-0316		3	HEXAGON NUT, M6M M6 A280	
250	312105-0366		3	SCREW M6S ISO 4017 M6X12 A480	
260	315105-0153		3	WASHER BRB 6,4X12 RFR	
270	315125-0165		5	WASHER TBRSB 8,4X26X5 A4	

Pos	Part No	UN	Qty	Description	Page No

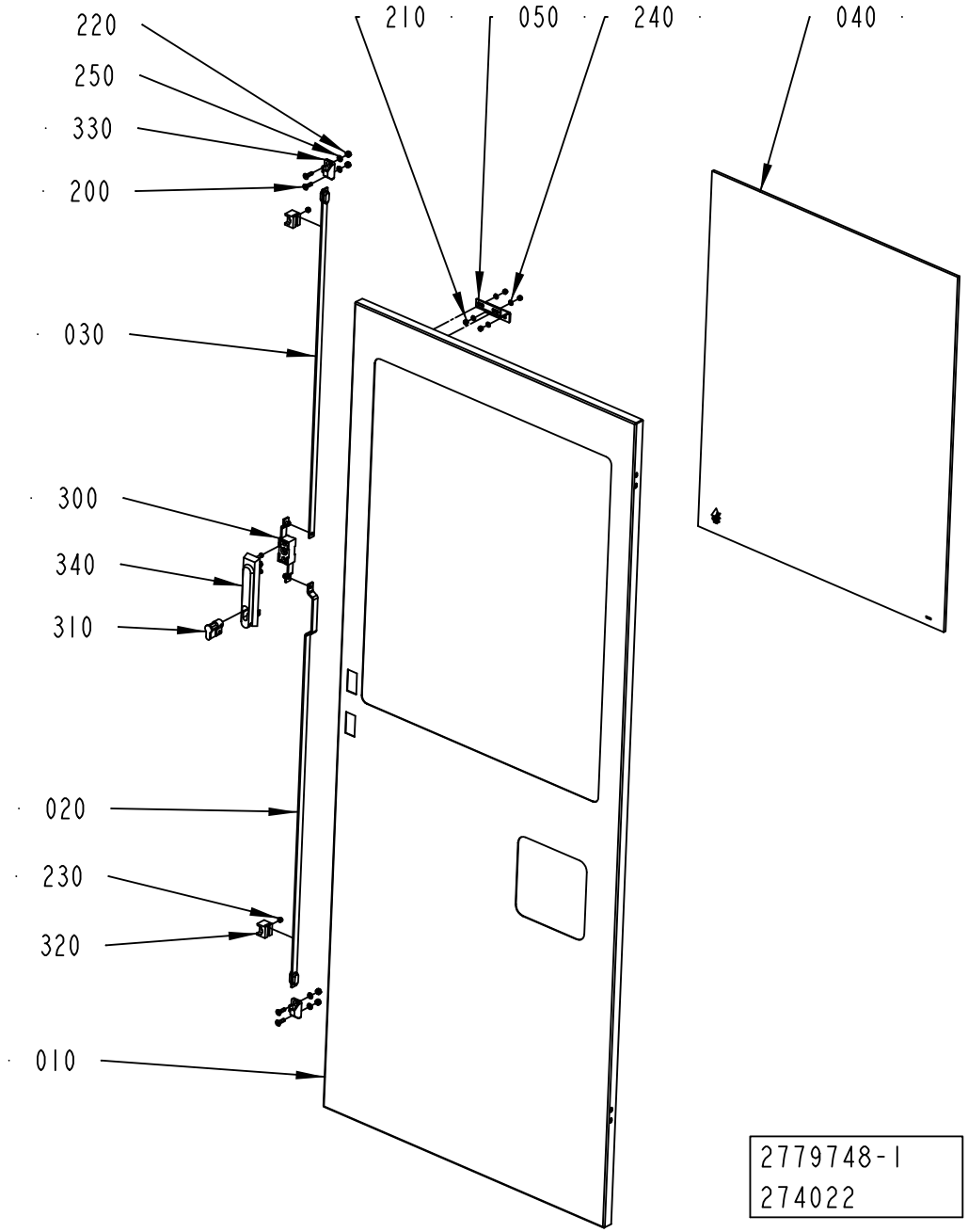
220
250
330
200
030
300
340
310
020
230
320
010
210
050
240
040
2779748-1
274022

ECM: 274521 - 20060921
Group number: 2779748-0100
Assembly Drawing: 2779748-1_1_AA

Pos	Part No	UN	Qty	Description	Page No
-					
010	2779749-0000		1	DOOR	
020	2551030-0000		1	STRUT	
030	2551031-0000		1	STRUT	
040	2805691-0000		1	GLASS	
050	2595618-0000		1	BRACKET	
200	312155-0370		4	SCREW DIN 7991 MF6S M6X20 A4 70	
210	312605-0314		2	HEXAGON NUT, M6M M5 A280	
220	312605-0316		4	HEXAGON NUT, M6M M6 A280	
230	312812-0314		4	HEXAGON NUT, NY-LOCK M5 A480	
240	315105-0146		4	WASHER BRB 5,3X10 RFR	
250	315105-0153		4	WASHER BRB 6,4X12 RFR	
300	90237-0123		1	LOCK, 1121-U10C	
310	90237-0128		1	LOCK CYLINDER, 1109-U3	
320	90237-0144		2	GUIDE, 1121-SU540	
330	90237-0147		2	LOCKING LUG, NO. 1121-53-0P	
340	90237-0175		1	TURNING HANDLE, 1125-U185-0A	
360	90157-0041		1	SEALING COMPOUND, RHODORSEAL 5651	

Pos	Part No	UN	Qty	Description	Page No

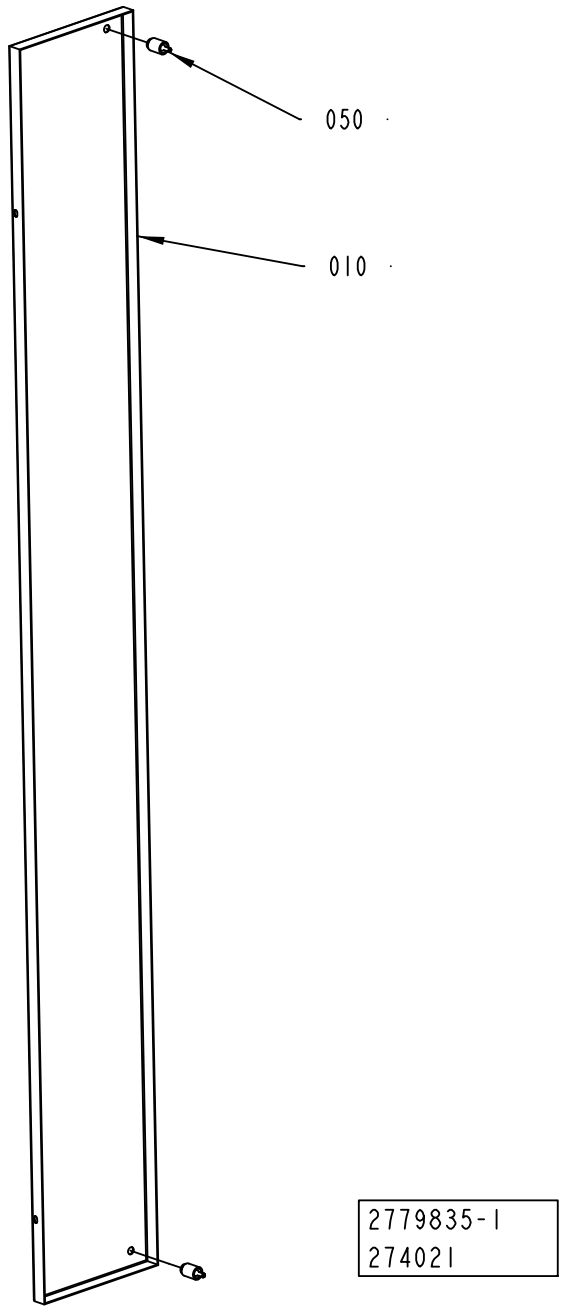
050
010
2779835-1
274021

ECM: 274506 - 20060921
Group number: 2779835-0100
Assembly Drawing: 2779835-1_1_AA

Pos	Part No	UN	Qty	Description	Page No
-					
010	2781281-0000		1	DOOR	
050	90226-0458		2	MOUNTING SCREW	

Pos	Part No	UN	Qty	Description	Page No

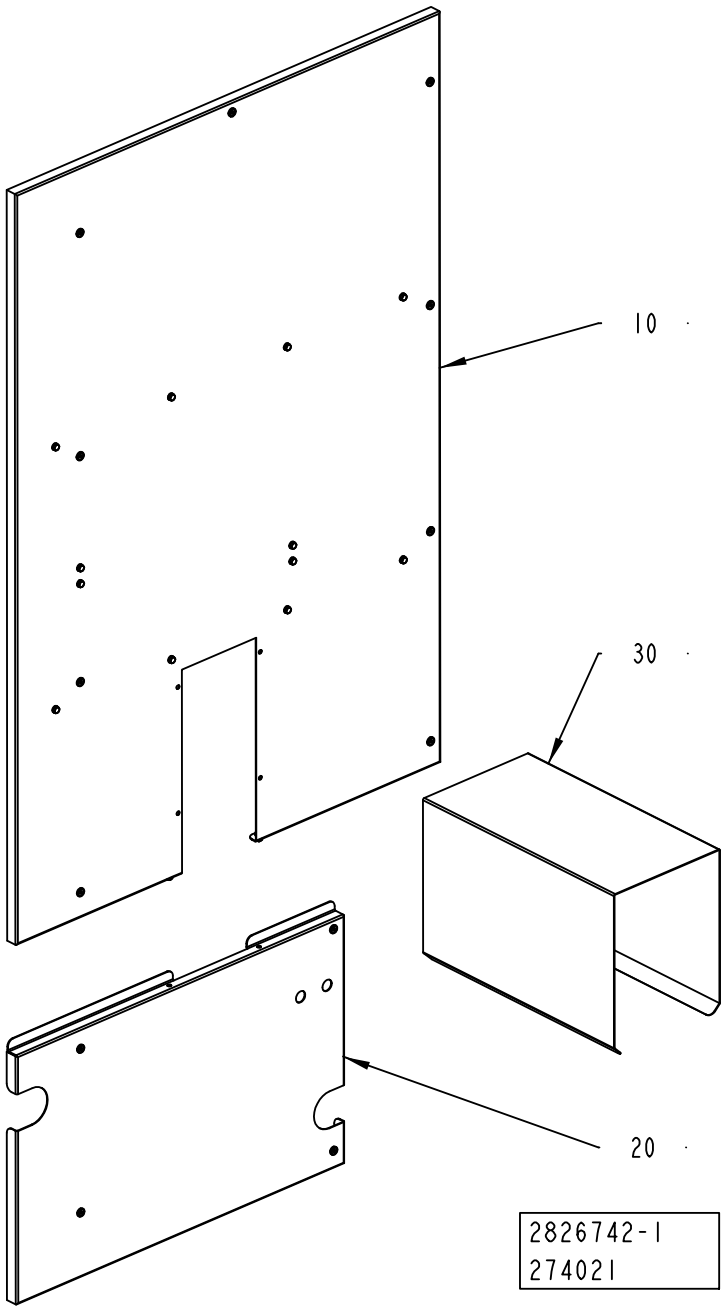
10
30
20
2826742-1
274021

ECM: 274507 - 20060921
Group number: 2826742-0100
Assembly Drawing: 2826742-1_1_AA

Pos	Part No	UN	Qty	Description	Page No
-					
010	2826744-0100		1	COVER	**5-127**
020	2842793-0100		1	DOOR	**5-129**
030	2805493-0100		1	TUNNEL	**5-131**

Pos	Part No	UN	Qty	Description	Page No

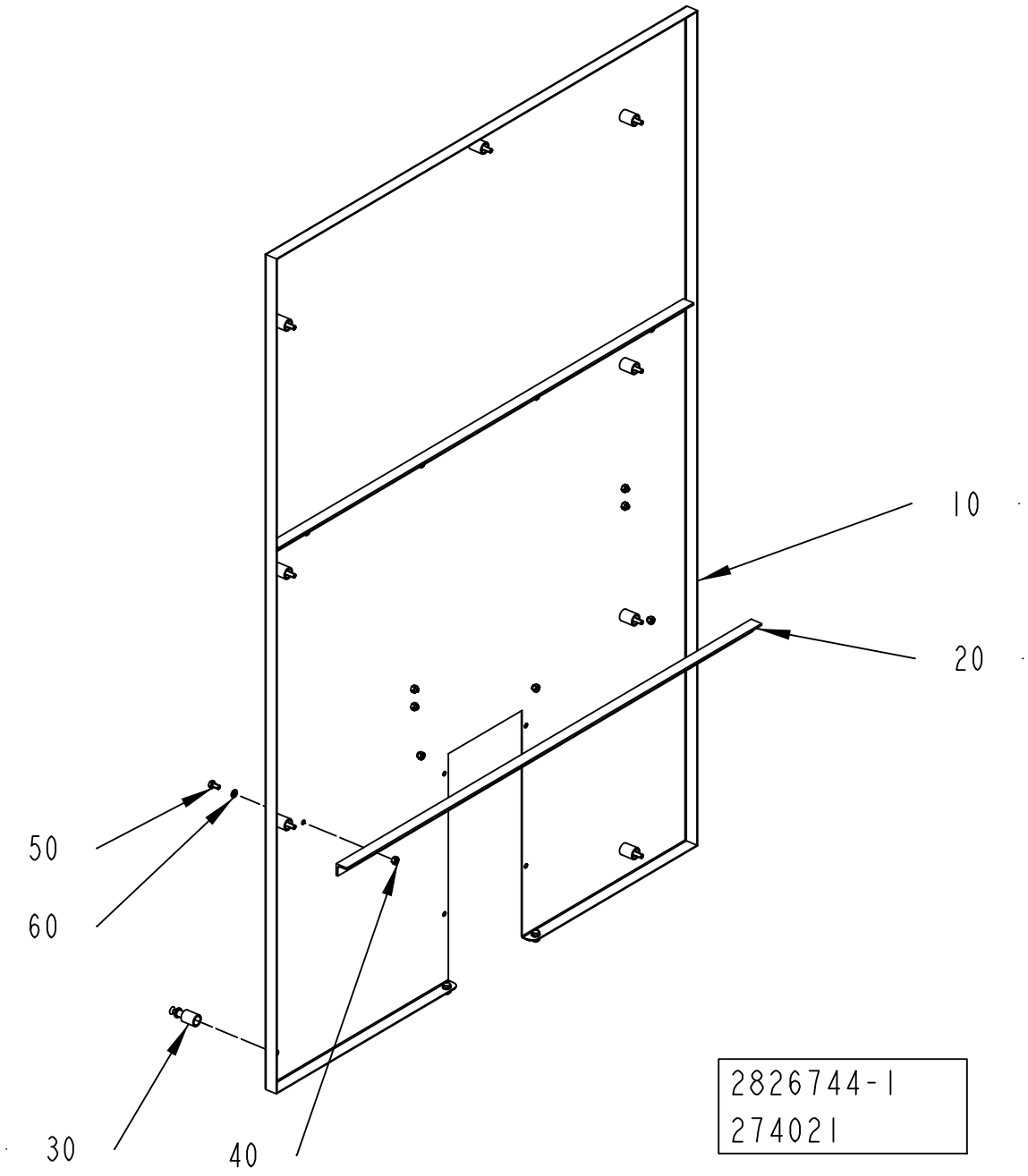
10
20
50
60
30
40
2826744-1
274021

ECM: 274508 - 20060921
Group number: 2826744-0100
Assembly Drawing: 2826744-1_1_AA

Pos	Part No	UN	Qty	Description	Page No
-					
010	2842796-0000		1	COVER	
020	2842801-0000		2	COVER	
030	90226-0458		9	MOUNTING SCREW	
040	312605-0316		14	HEXAGON NUT, M6M M6 A280	
050	312105-0366		14	SCREW M6S ISO 4017 M6X12 A480	
060	315105-0153		14	WASHER BRB 6,4X12 RFR	

Pos	Part No	UN	Qty	Description	Page No

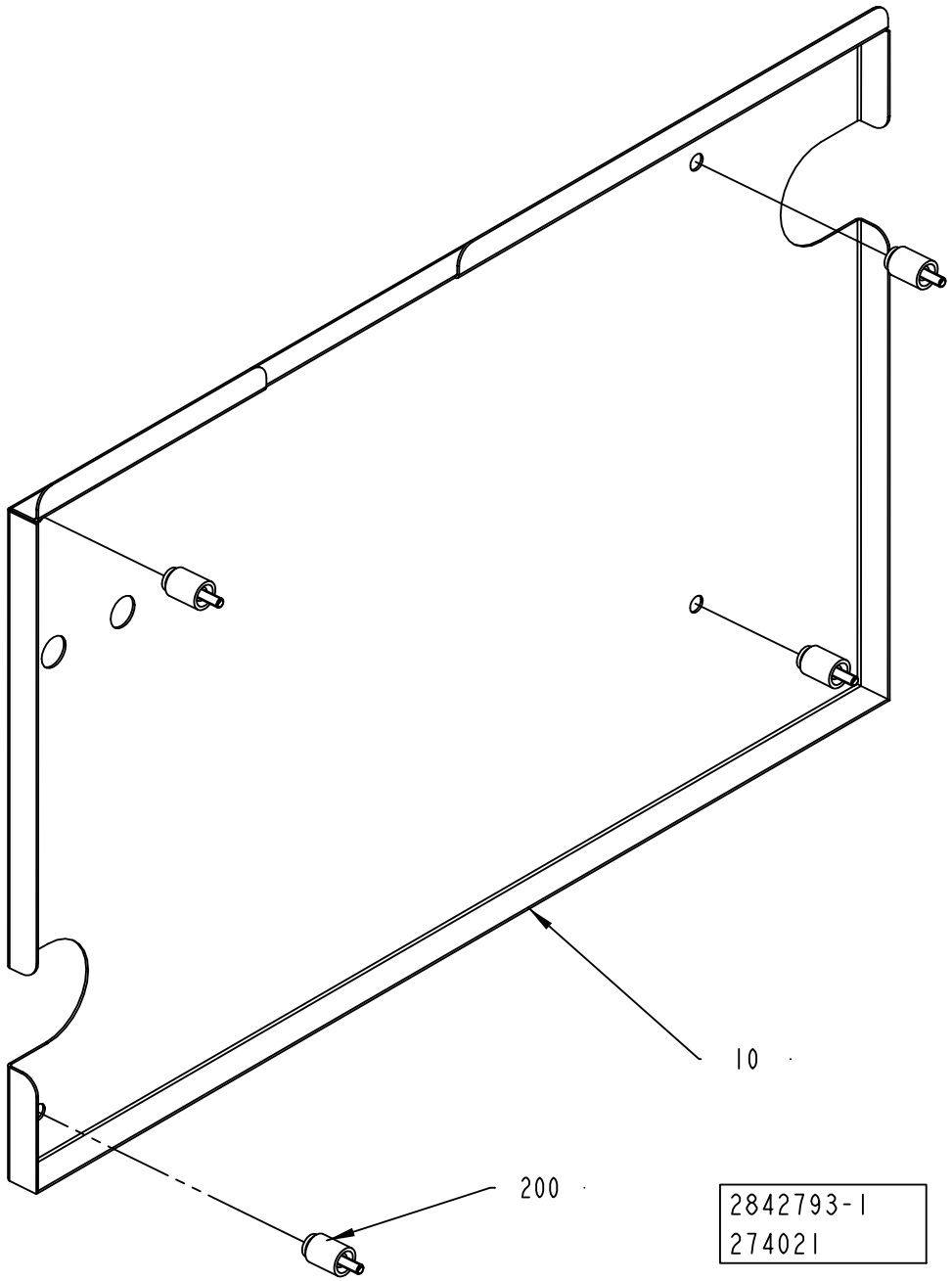
10
200
2842793-1
274021

ECM: 274509 - 20060921
Group number: 2842793-0100
Assembly Drawing: 2842793-1_1_AA

Pos	Part No	UN	Qty	Description	Page No
-					
010	2842797-0000		1	COVER	
200	90226-0458		4	MOUNTING SCREW	

Pos	Part No	UN	Qty	Description	Page No

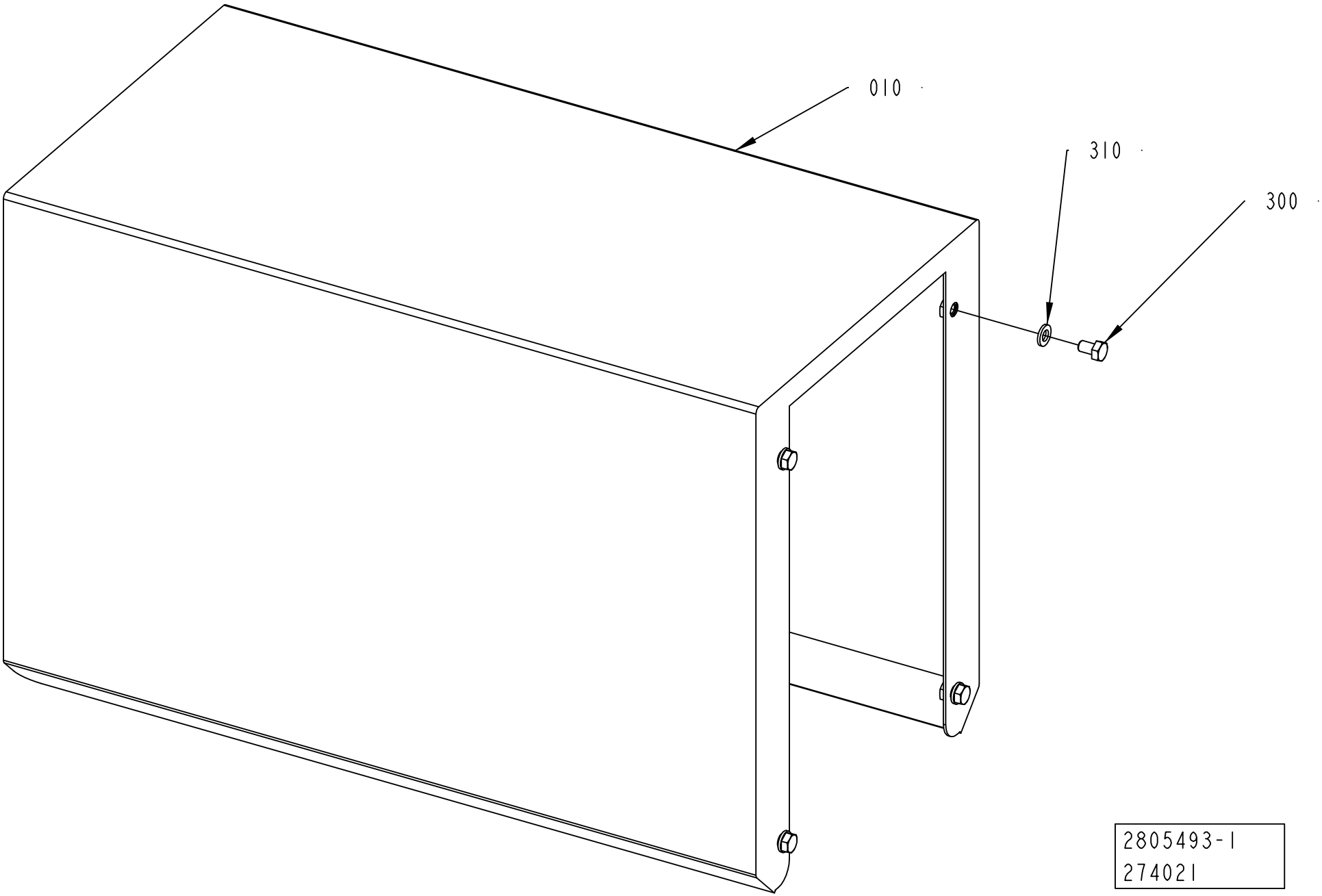
010
310
300
2805493-1
274021

ECM: 274514 - 20060921
Group number: 2805493-0100
Assembly Drawing: 2805493-1_1_AA

Pos	Part No	UN	Qty	Description	Page No
-					
010	2805492-0000		1	TUNNEL	
300	312105-0364		4	SCREW M6S ISO 4017 M6X10 A480	
310	315105-0153		4	WASHER BRB 6,4X12 RFR	

Pos	Part No	UN	Qty	Description	Page No

Machine Type | Group Description | Used-In | Group Number | Page No

EMERGENCY STOP

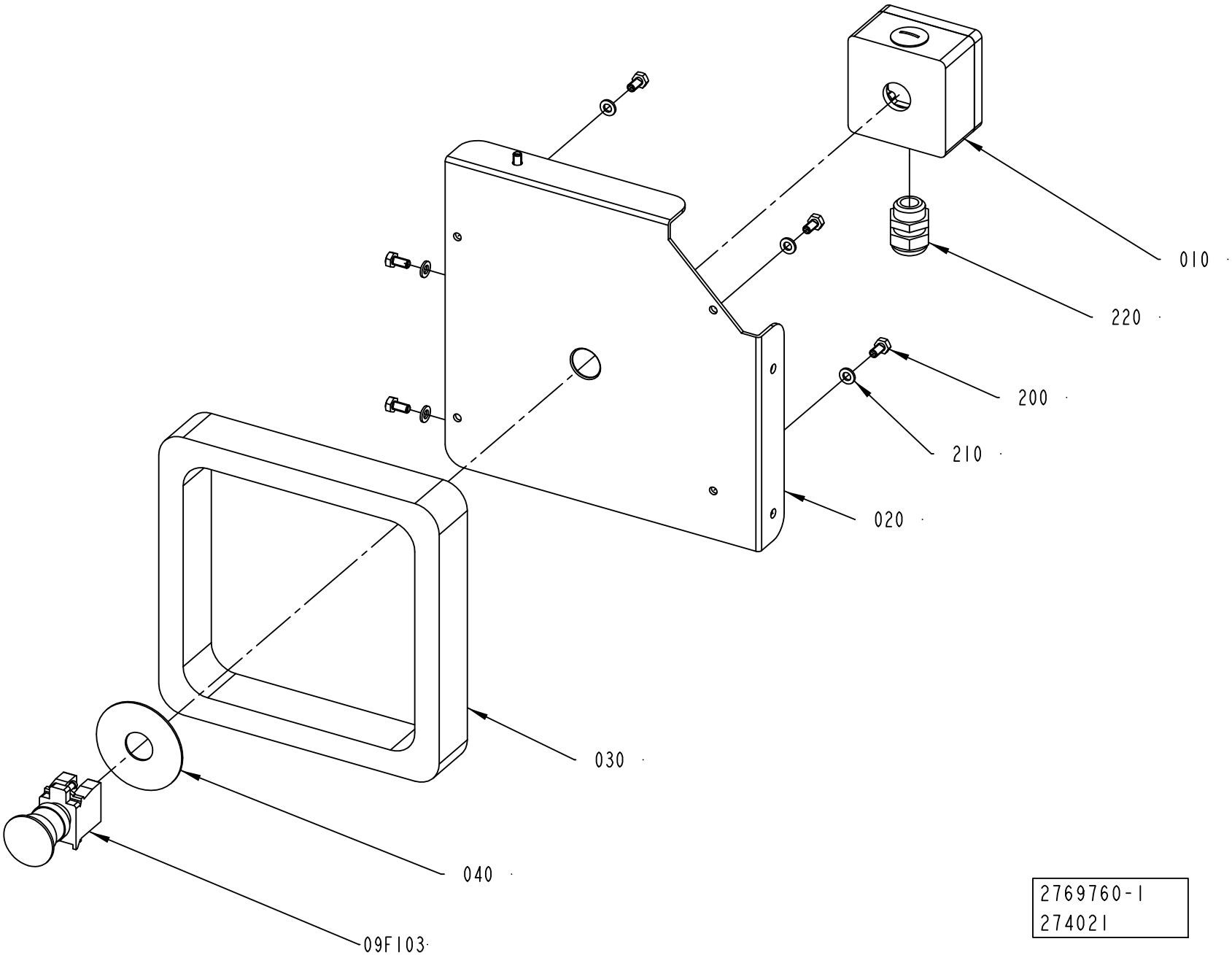

2769760-1
274021

ECM: 274520 - 20060921
Group number: 2769760-0100
Assembly Drawing: 2769760-1_1_AA

Pos	Part No	UN	Qty	Description	Page No
-					
010	1037130-0000		1	CONNECTION BOX	
020	2779763-0000		1	COVER	
030	2779771-0000		1	SPACER	
040	486826-0001		1	SIGN "EMERGENCY STOP"	
09F103	90458-1651		1	EMERGENCY STOP, ZB4-BS-844 ZB4-BZ-104	
200	312105-0366		7	SCREW M6S ISO 4017 M6X12 A480	
210	315105-0153		7	WASHER BRB 6,4X12 RFR	
220	352103-0110		1	CABLE GLAND, STR 16, PR22,5/PG16	

Pos	Part No	UN	Qty	Description	Page No

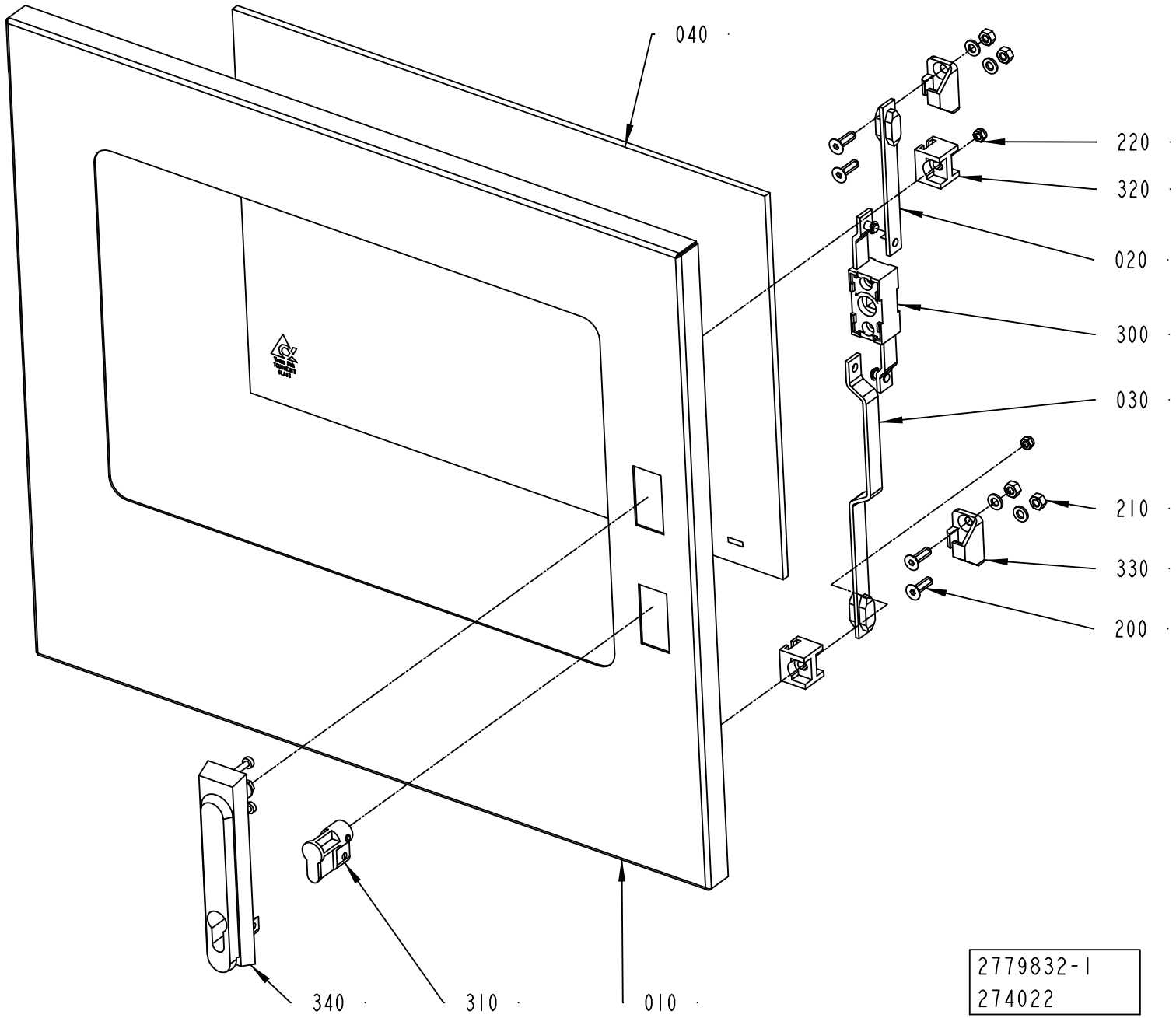
040
220
320
020
300
030
210
330
200
340
310
010
2779832-1
274022

ECM: 274522 - 20060921
Group number: 2779832-0100
Assembly Drawing: 2779832-1_1_AA

Pos	Part No	UN	Qty	Description	Page No
-					
010	2779838-0000		1	DOOR	
020	2563891-0000		1	STRUT	
030	2563892-0000		1	STRUT	
040	2779839-0000		1	GLASS	
200	312155-0370		4	SCREW DIN 7991 MF6S M6X20 A4 70	
210	312605-0316		4	HEXAGON NUT, M6M M6 A280	
220	312812-0314		2	HEXAGON NUT, NY-LOCK M5 A480	
230	315105-0153		4	WASHER BRB 6,4X12 RFR	
300	90237-0123		1	LOCK, 1121-U10C	
310	90237-0128		1	LOCK CYLINDER, 1109-U3	
320	90237-0144		2	GUIDE, 1121-SU540	
330	90237-0147		2	LOCKING LUG, NO. 1121-53-0P	
340	90237-0175		1	TURNING HANDLE, 1125-U185-0A	
360	90157-0041		1	SEALING COMPOUND, RHODORSEAL 5651	

Pos	Part No	UN	Qty	Description	Page No

GLASS DOOR

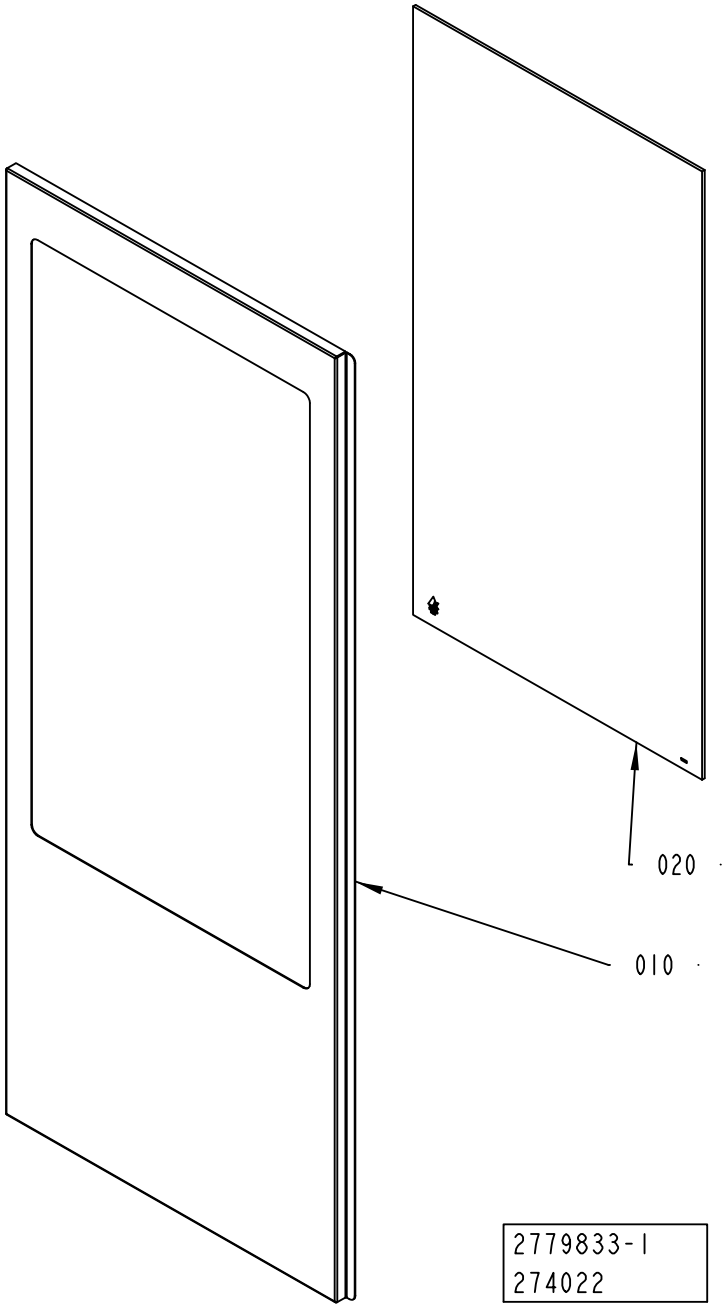

ECM: 305564 - 20070517
Group number: 2779833-0100
Assembly Drawing: 2779833-1_1_AA

Pos	Part No	UN	Qty	Description	Page No
-					
010	2779840-0000		1	DOOR	
020	2781278-0000		1	GLASS	
110	90157-0041		1	SEALING COMPOUND, RHODORSEAL 5651	

Pos	Part No	UN	Qty	Description	Page No

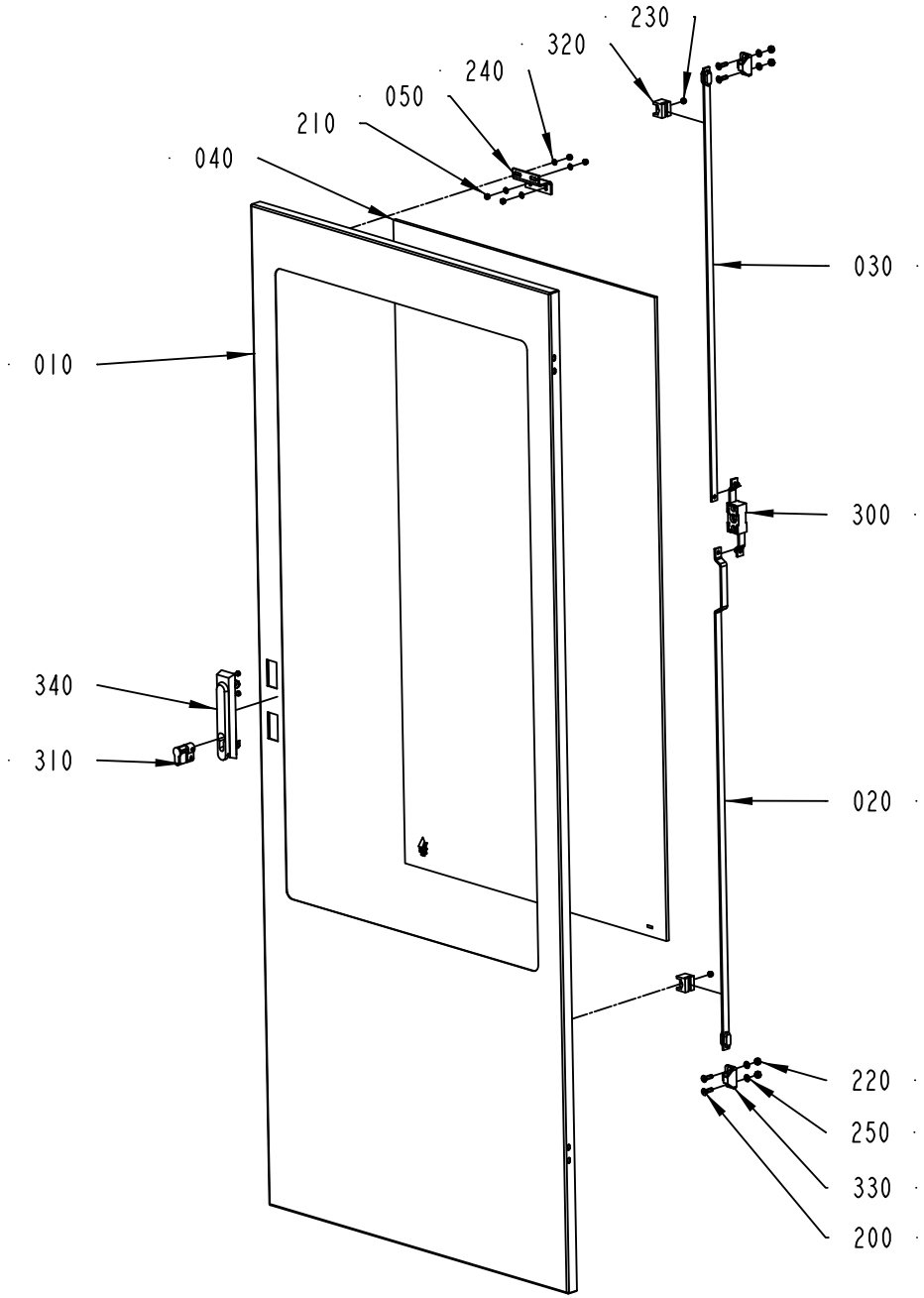
230
320
240
050
210
040
030
010
300
340
310
020
220
250
330
200
2779834-1
274022

ECM: 274540 - 20060921
Group number: 2779834-0100
Assembly Drawing: 2779834-1_1_AA

Pos	Part No	UN	Qty	Description	Page No
-					
010	2781279-0000		1	DOOR	
020	2551030-0000		1	STRUT	
030	2781285-0000		1	STRUT	
040	2781278-0000		1	GLASS	
050	2781280-0000		1	BRACKET	
200	312155-0370		4	SCREW DIN 7991 MF6S M6X20 A4 70	
210	312605-0314		2	HEXAGON NUT, M6M M5 A280	
220	312605-0316		4	HEXAGON NUT, M6M M6 A280	
230	312812-0314		4	HEXAGON NUT, NY-LOCK M5 A480	
240	315105-0146		4	WASHER BRB 5,3X10 RFR	
250	315105-0153		4	WASHER BRB 6,4X12 RFR	
300	90237-0123		1	LOCK, 1121-U10C	
310	90237-0128		1	LOCK CYLINDER, 1109-U3	
320	90237-0144		2	GUIDE, 1121-SU540	
330	90237-0147		2	LOCKING LUG, NO. 1121-53-0P	
340	90237-0175		1	TURNING HANDLE, 1125-U185-0A	
360	90157-0041		1	SEALING COMPOUND, RHODORSEAL 5651	

Pos	Part No	UN	Qty	Description	Page No

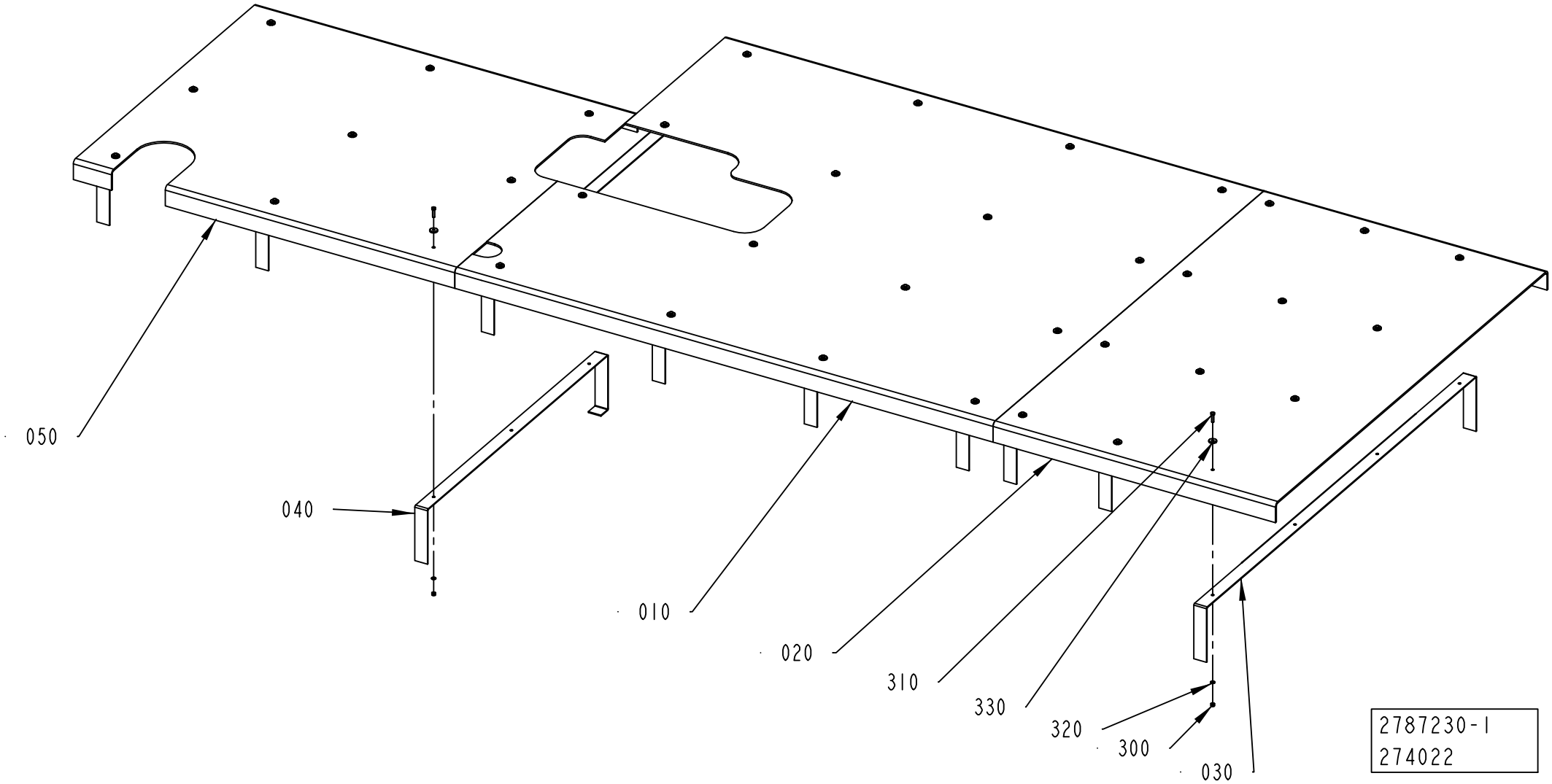
050
040
010
020
310
330
320
300
030
2787230-1
274022

ECM: 305565 - 20070517
Group number: 2787230-0100
Assembly Drawing: 2787230-1_1_AA

Pos	Part No	UN	Qty	Description	Page No
STREAMCAP500, STREAMCAP1000, SLIMCAP 2000, SLIMCAP 1000					
010	2779821-0000		1	PLATE	
020	2787232-0000		1	PLATE	
300	312812-0316		37	HEXAGON NUT, NY-LOCK M6 A480	
310	312105-0372		37	SCREW M6S ISO 4017 M6X25 A480	
320	315105-0153		37	WASHER BRB 6,4X12 RFR	
330	315125-0153		37	WASHER TBRSB 6,4X22X4 A4	
Common Parts					
030	2779823-0000		7	BRACKET	
040	2779824-0000		3	BRACKET	
050	2779825-0000		1	PLATE	

Pos	Part No	UN	Qty	Description	Page No

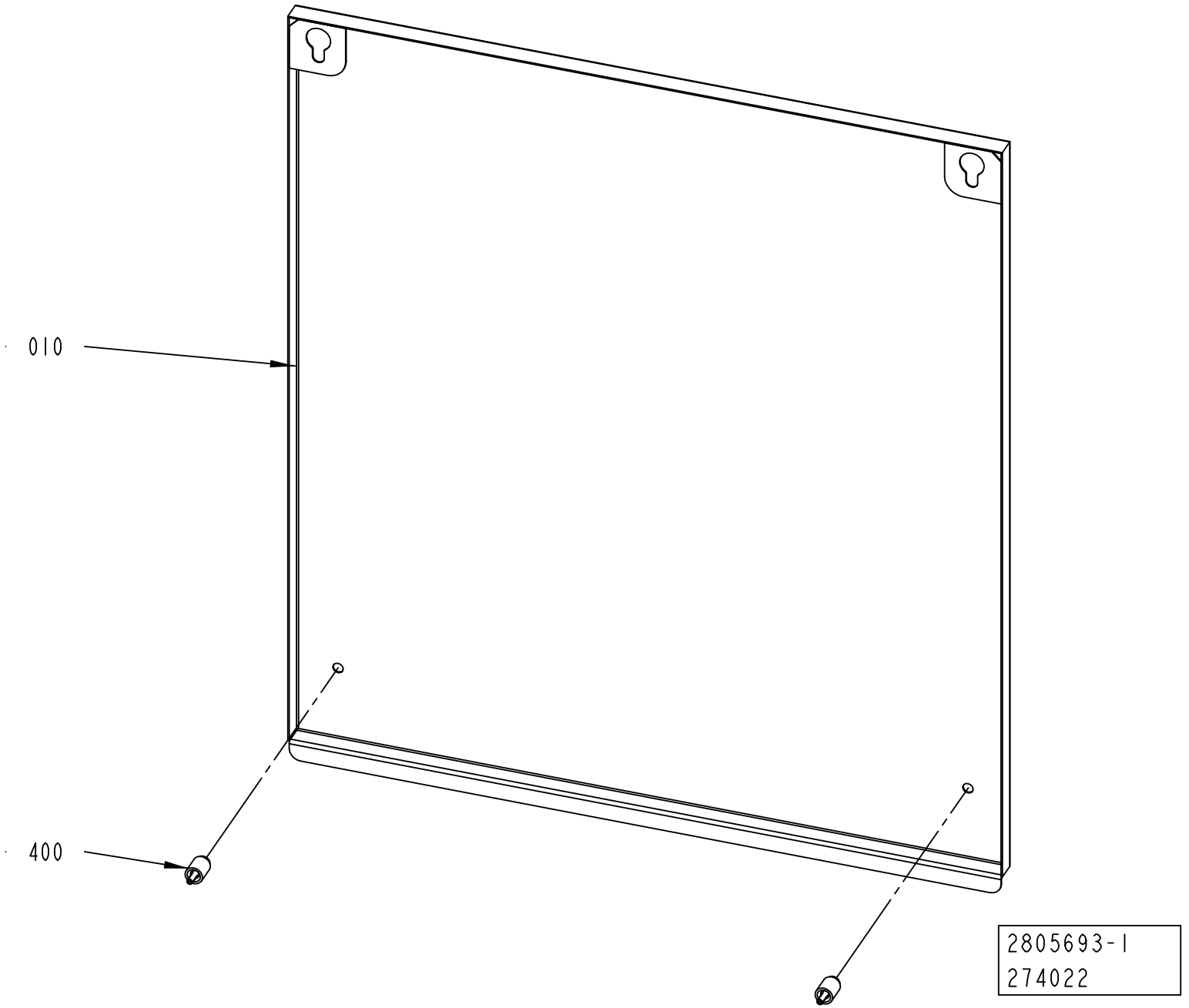
010
400
2805693-1
274022

ECM: 274542 - 20060921
Group number: 2805693-0100
Assembly Drawing: 2805693-1_1_AA

Pos	Part No	UN	Qty	Description	Page No
-					
010	2805692-0000		1	COVER	
400	90226-0458		2	MOUNTING SCREW	

Pos	Part No	UN	Qty	Description	Page No

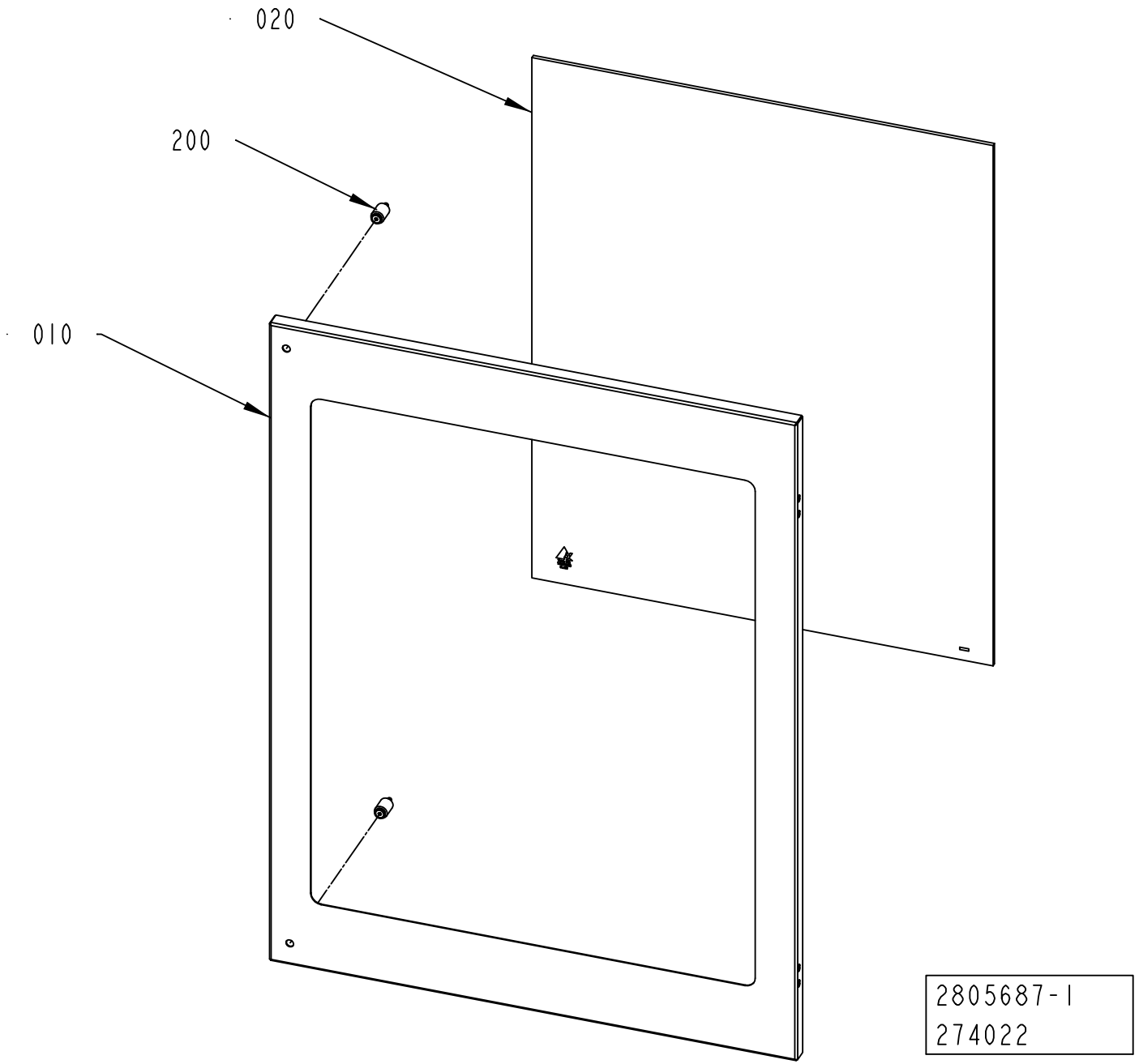
020
200
010
2805687-1
274022

ECM: 274543 - 20060921
Group number: 2805687-0100
Assembly Drawing: 2805687-1_1_AA

Pos	Part No	UN	Qty	Description	Page No
-					
010	2805688-0000		1	DOOR	
020	2805691-0000		1	GLASS	
200	90226-0458		2	MOUNTING SCREW	
220	90157-0041		1	SEALING COMPOUND, RHODORSEAL 5651	

Pos	Part No	UN	Qty	Description	Page No

GLASS DOOR

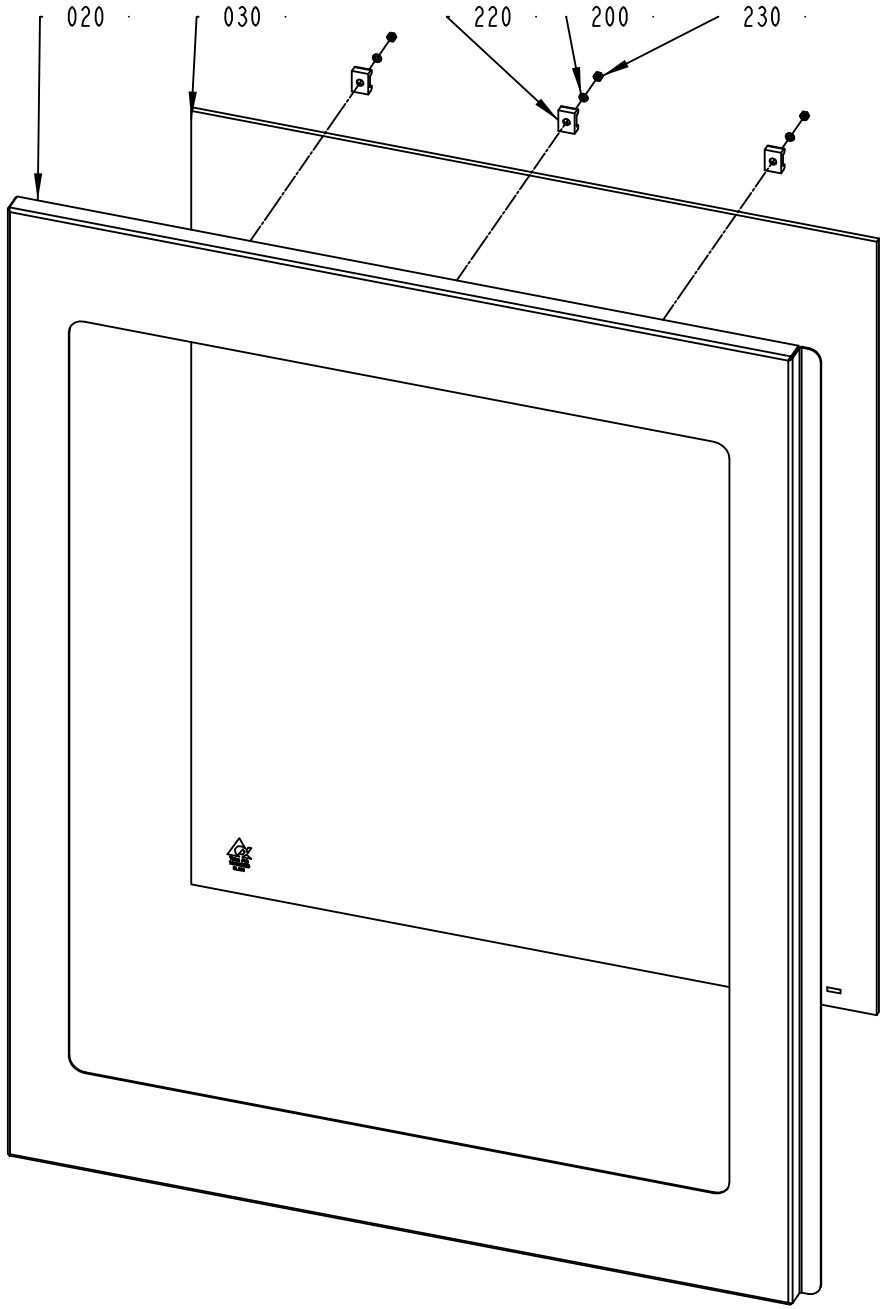

ECM: 303484 - 20070517
Group number: 2805694-0100
Assembly Drawing: 2805694-1_1_AB

Pos	Part No	UN	Qty	Description	Page No
-					
020	2805695-0000		1	DOOR	
030	2805691-0000		1	GLASS	
110	90157-0041		1	SEALING COMPOUND, RHODORSEAL 5651	
200	315105-0136		3	WASHER BRB 4,3X8 RFR	
220	352113-0204		3	ANCHOR PLATES FOR STRIPS, TYPE TM3S25-M	
230	312605-0312		3	HEXAGON NUT, M6M M4 A280	

Pos	Part No	UN	Qty	Description	Page No

Tetra Pak

SPC
Spare Parts Catalogue

APPLICATOR UNIT

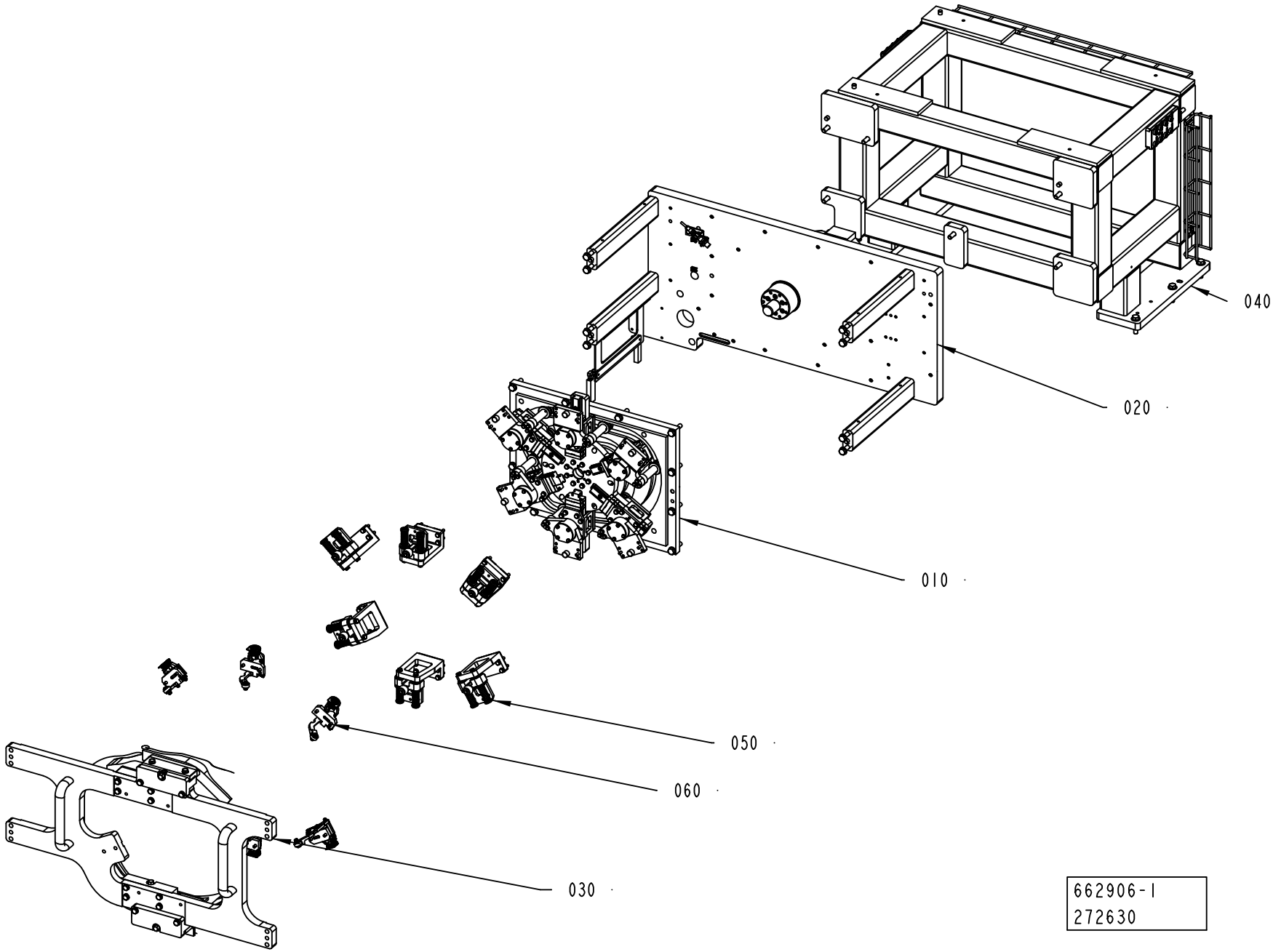

ECM: 300468 - 20070323
Group number: 662906-0100
Assembly Drawing: 662906-1_1_AA

Pos	Part No	UN	Qty	Description	Page No
-					
010	2746938-0100		1	TRANSFER UNIT	**6-5**
020	2837072-0100		1	DRIVE UNIT	**6-15**
030	2839315-0100		1	CAMMODULE	**6-21, 6-23, 6-25, 6-27, 6-29**
040	2751664-0100		1	FRAME	**6-65**
050	2746939-0100		1	CAP	**6-67, 6-69**
060	2746941-0100		1	CAP HOLDERS GROUP	**6-79**

Pos	Part No	UN	Qty	Description	Page No

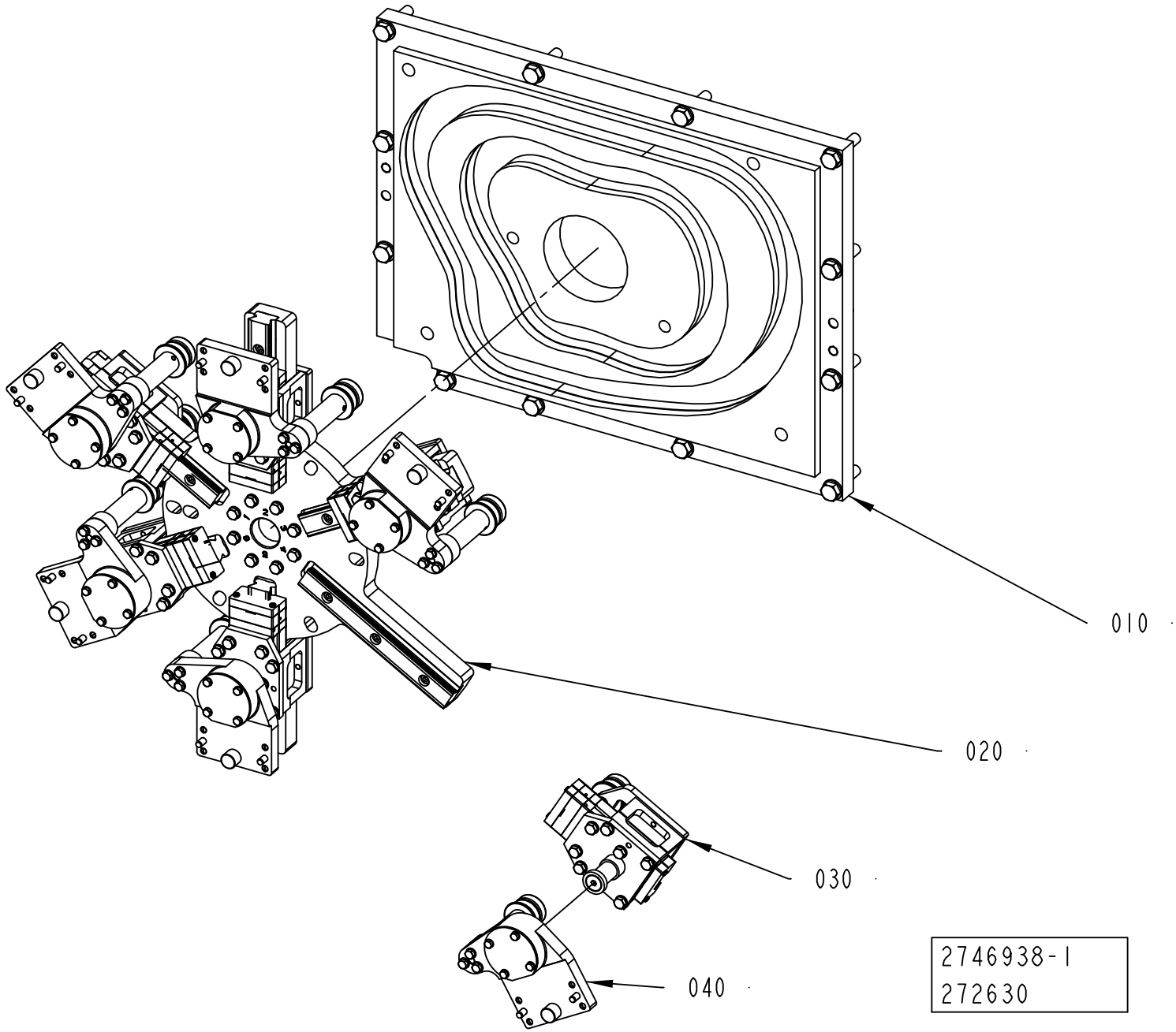
010
020
030
040
2746938-1
272630

ECM: 272707 - 20060921
Group number: 2746938-0100
Assembly Drawing: 2746938-1_1_AA

Pos	Part No	UN	Qty	Description	Page No
-					
010	2751655-0100		1	CAM	**6-7**
020	2751656-0100		1	STAR WHEEL	**6-9**
030	2751657-0100		6	SLIDER	**6-11**
040	2751658-0100		6	FOLLOWER CAM	**6-13**

Pos	Part No	UN	Qty	Description	Page No

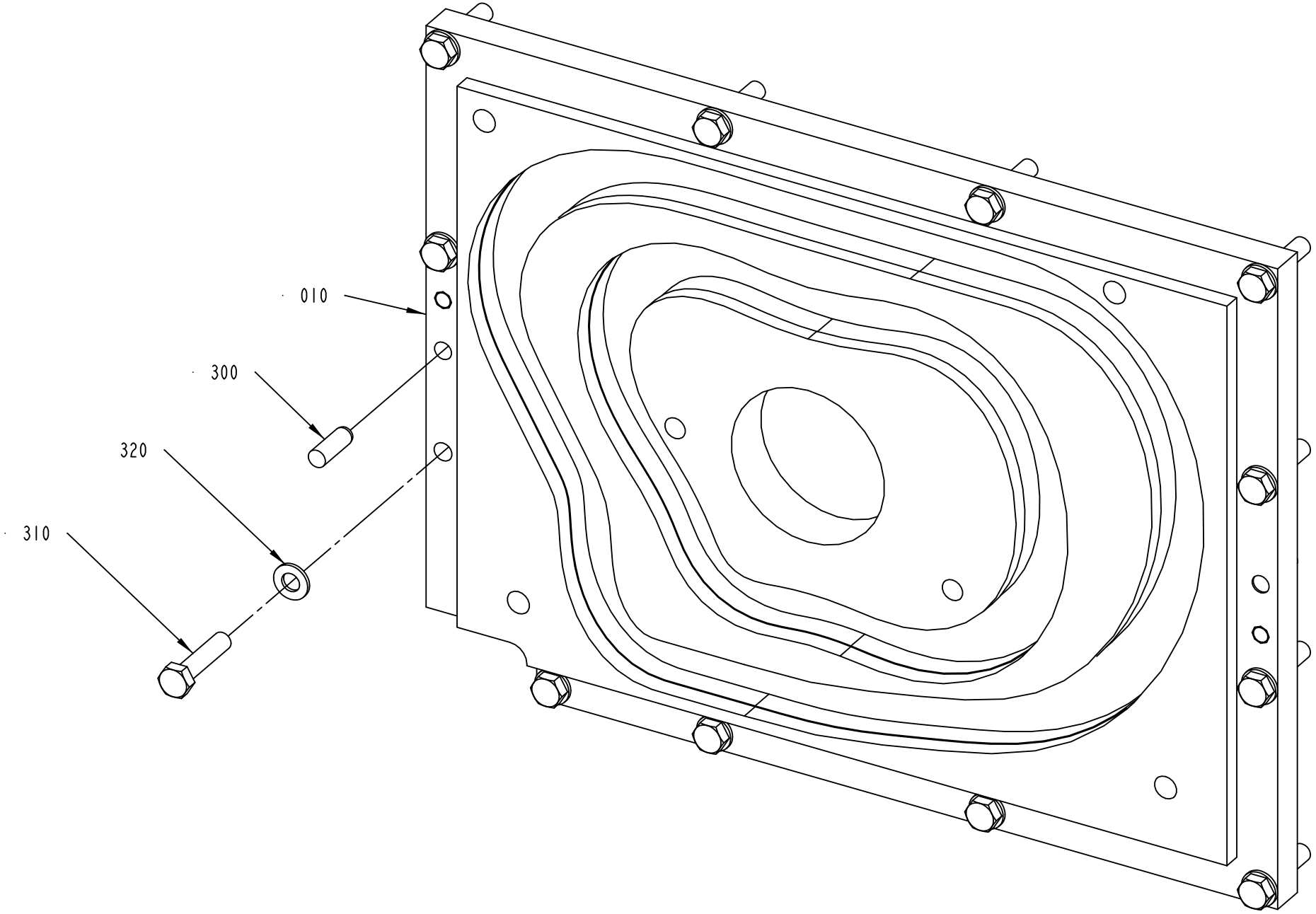

2751655-1
272630

ECM: 272706 - 20060921
Group number: 2751655-0100
Assembly Drawing: 2751655-1_1_AA

Pos	Part No	UN	Qty	Description	Page No
-					
010	2716116-0000		1	CAM	
300	311103-0458		2	PARALLEL PIN ISO 2338 10M6X30 A1	
310	312105-0500		12	SCREW M6S ISO 4014 M10X45 A480	
320	315106-0173		12	WASHER ISO 7089-10-200 HV A4	

Pos	Part No	UN	Qty	Description	Page No

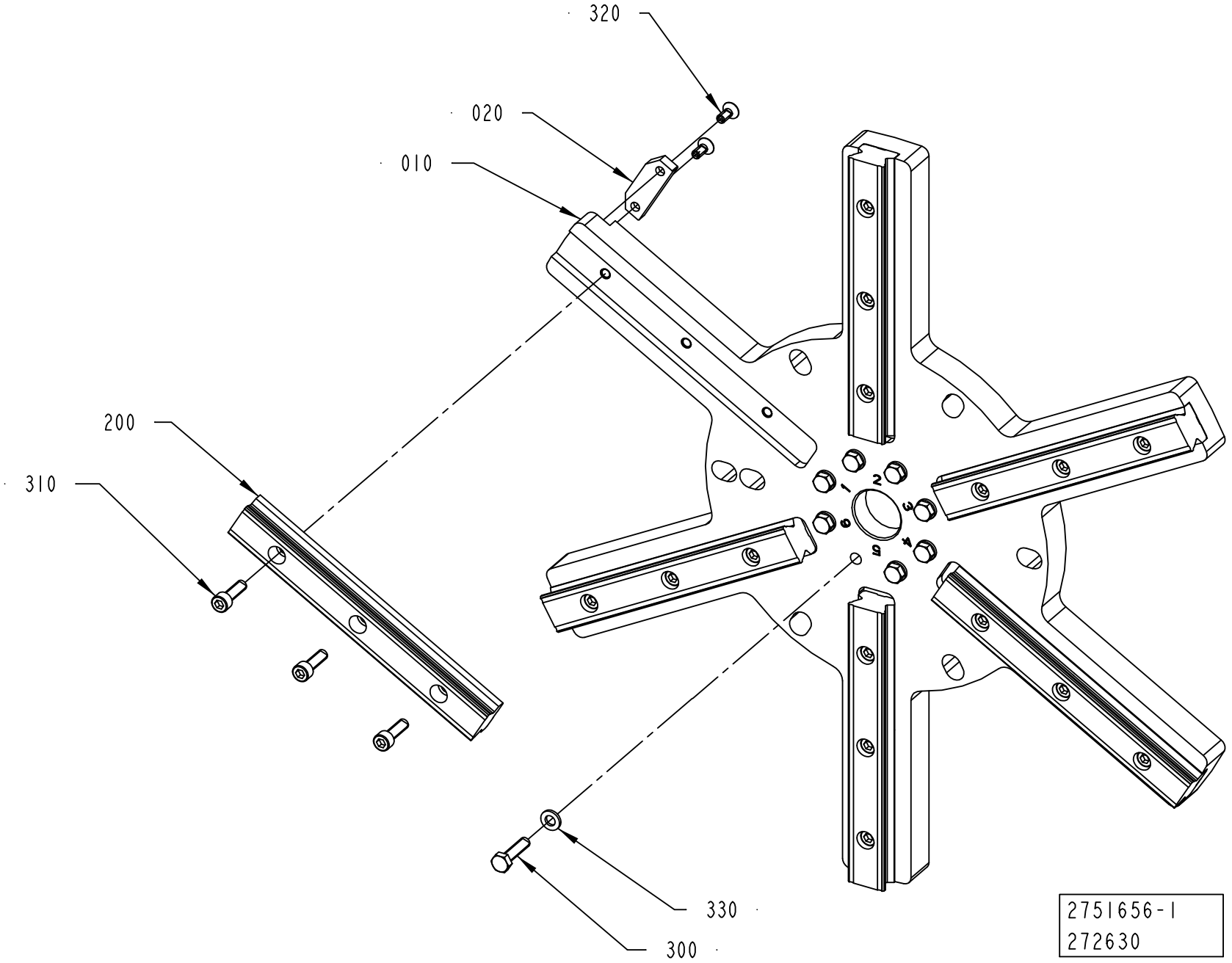
320
020
010
200
310
330
300
2751656-1
272630

ECM: 290152 - 20061221
Group number: 2751656-0100
Assembly Drawing: 2751656-1_1_AA

Pos	Part No	UN	Qty	Description	Page No
-					
010	2751702-0000		1	STAR WHEEL	
020	2751706-0000		1	FLAG	
200	90600-0434		6	GUIDE BAR, SSR25-180L-YM G30/30	
300	312105-0372		8	SCREW M6S ISO 4017 M6X25 A480	
310	312115-0370		18	SCREW ISO4762 M6X20 A4 80	
320	312155-0327		2	SCREW DIN 7991 MF6S M5X12 A4 70	
330	315106-0153		8	WASHER ISO 7089-6-200 HV A4	

Pos	Part No	UN	Qty	Description	Page No

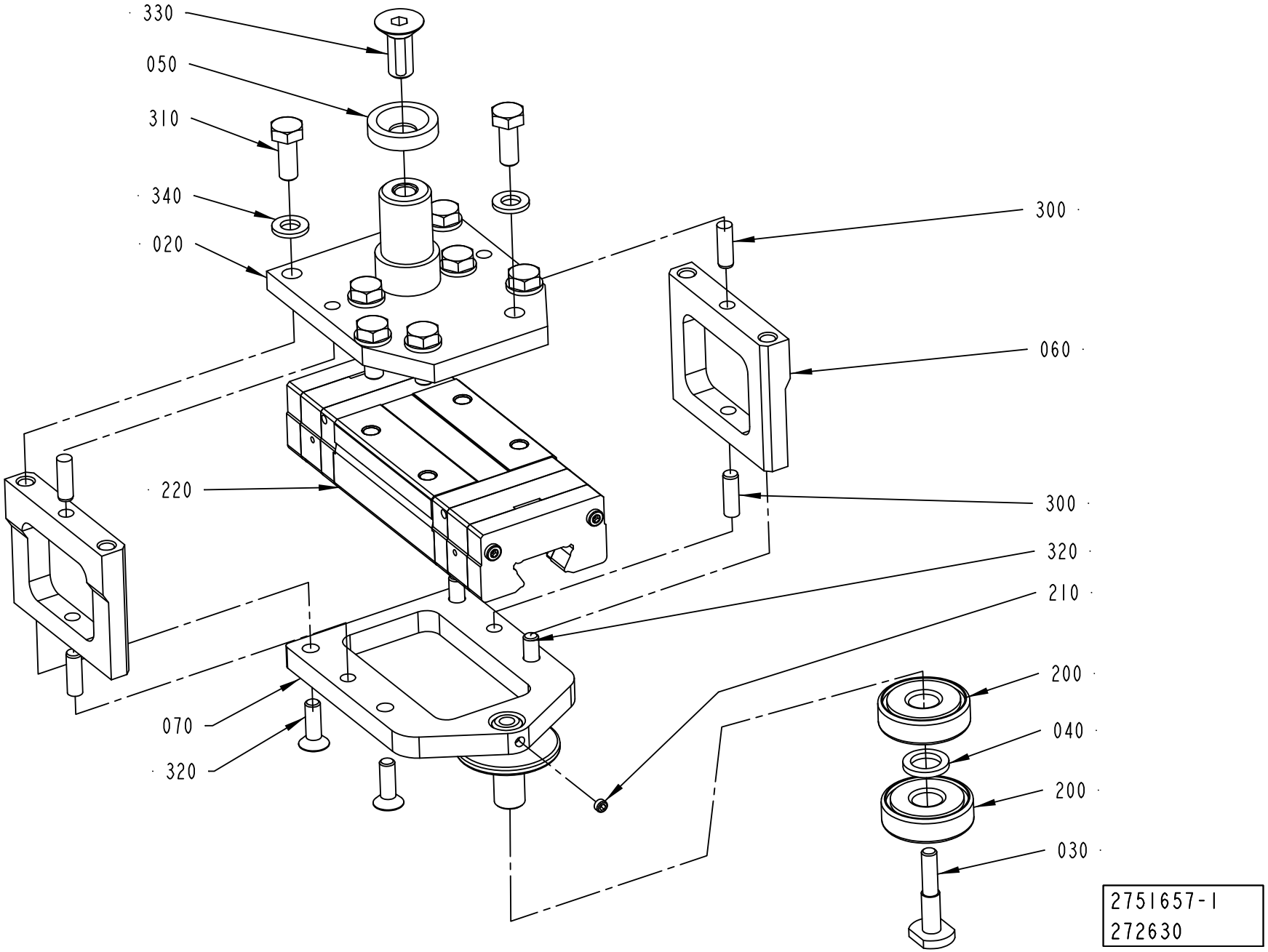
330
050
310
340
020
300
060
220
300
320
210
200
040
200
030
070
320
2751657-1
272630

ECM: 272704 - 20060921
Group number: 2751657-0100
Assembly Drawing: 2751657-1_1_AA

Pos	Part No	UN	Qty	Description	Page No
-					
020	2751739-0000		1	BRACKET	
030	2699680-0000		1	SCREW	
040	2699681-0000		1	SPACER	
050	2699683-0000		1	WASHER	
060	2703697-0000		2	SIDE	
070	2751703-0000		1	BRACKET	
200	90214-0123		2	BALL BEARING, 10X30X9 MM	
210	90459-1395		1	SCREW HEX.SOCK.SET CONEPT.MS6SS M4X4 A2	
220	90600-0344		1	CARRIAGE, SSR 25 XWYQZSSHH M	
300	311103-0308		4	PARALLEL PIN ISO 2338 5M6X16 A1	
310	312105-0368		8	SCREW M6S ISO 4017 M6X16 A480	
320	312155-0329		4	SCREW DIN 7991 MF6S M5X16 A4 70	
330	312155-0451		1	SCREW DIN 7991 MF6S M8X20 A4 70	
340	315105-0153		8	WASHER BRB 6,4X12 RFR	

Pos	Part No	UN	Qty	Description	Page No

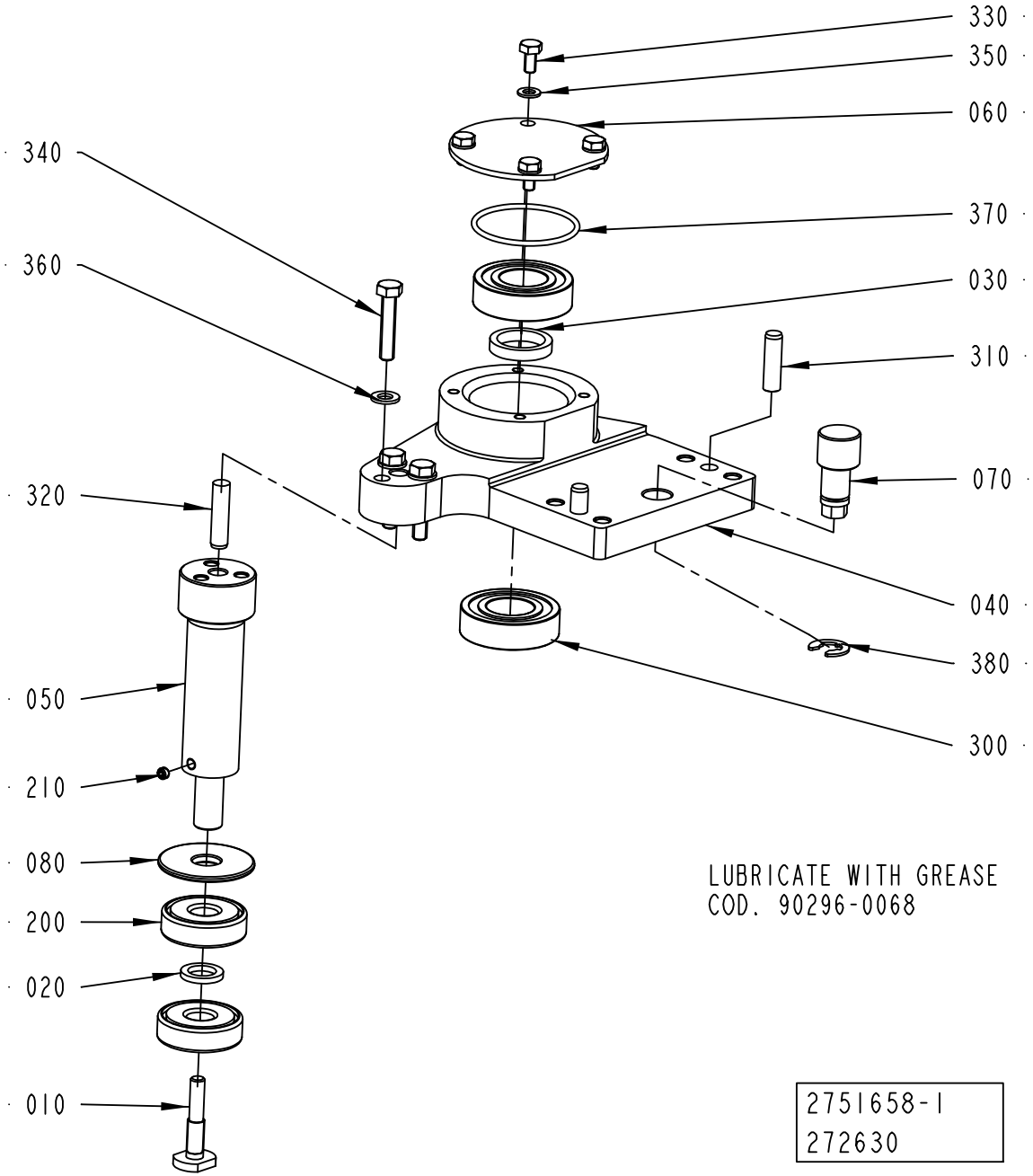
330
350
060
340
370
360
030
310
070
320
040
380
050
300
210
080
200
020
010
LUBRICATE WITH GREASE
COD. 90296-0068
2751658-1
272630

ECM: 290153 - 20061221
Group number: 2751658-0100
Assembly Drawing: 2751658-1_1_AA

Pos	Part No	UN	Qty	Description	Page No
-					
010	2699680-0000		1	SCREW	
020	2699681-0000		1	SPACER	
030	2699682-0000		1	SPACER	
040	2751704-0000		1	PIVOT BRACKET	
050	2751705-0000		1	SHAFT	
060	2703696-0000		1	PROTECTIVE COVER	
070	2751698-0000		1	ECCENTRIC SHAFT	
080	2751699-0000		1	WASHER	
200	90214-0123		2	BALL BEARING, 10X30X9 MM	
210	90459-1395		1	SCREW HEX.SOCK.SET CONEPT.MS6SS M4X4 A2	
300	321308-0203		2	BALL BEARING, 17X35X10 MM	
310	311103-0354		2	PARALLEL PIN ISO 2338 6M6X22 A1	
320	311103-0355		1	PARALLEL PIN ISO 2338 6M6X25 A1	
330	312105-0287		4	SCREW M6S ISO 4017 M4X8 A470	
340	312105-0333		3	SCREW M6S ISO 4017 M5X25 A480	
350	315105-0136		4	WASHER BRB 4,3X8 RFR	
360	315105-0146		3	WASHER BRB 5,3X10 RFR	
370	315202-0716		1	O-RING 34,65X1,78 MM	
380	315755-0109		1	RETAINING RING SHAFT DIN 6799 7 A2	
390	90296-0068		1	SHELL ALVANIA GREASE EP 2	

Pos	Part No	UN	Qty	Description	Page No

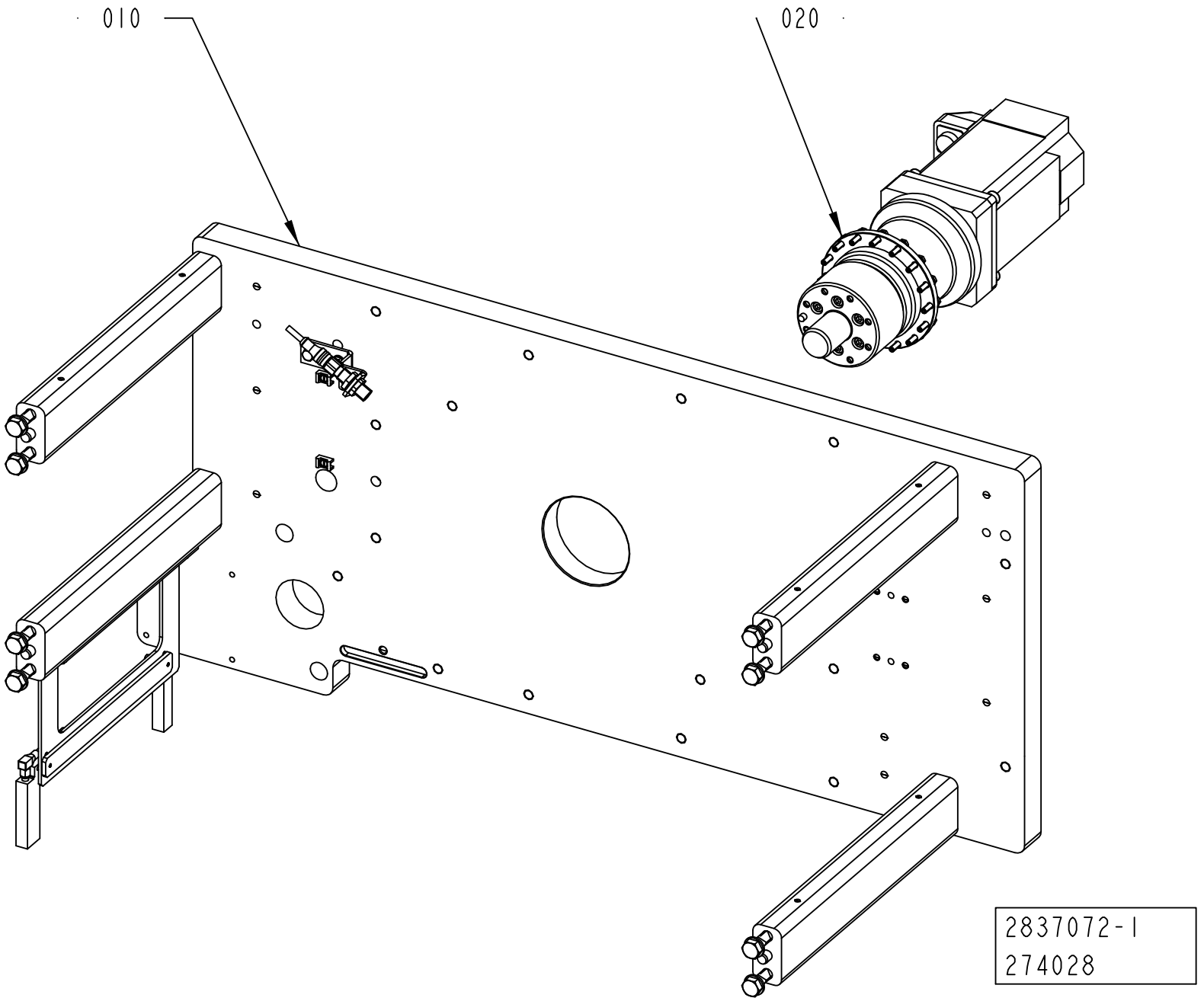
010
020
2837072-1
274028

ECM: 274028 - 20060921
Group number: 2837072-0100
Assembly Drawing: 2837072-1_1_AA

Pos	Part No	UN	Qty	Description	Page No
-					
010	2837073-0100		1	PLATE	**6-17**
020	2836507-0100		1	DRIVE MOTOR	**6-19**

Pos	Part No	UN	Qty	Description	Page No

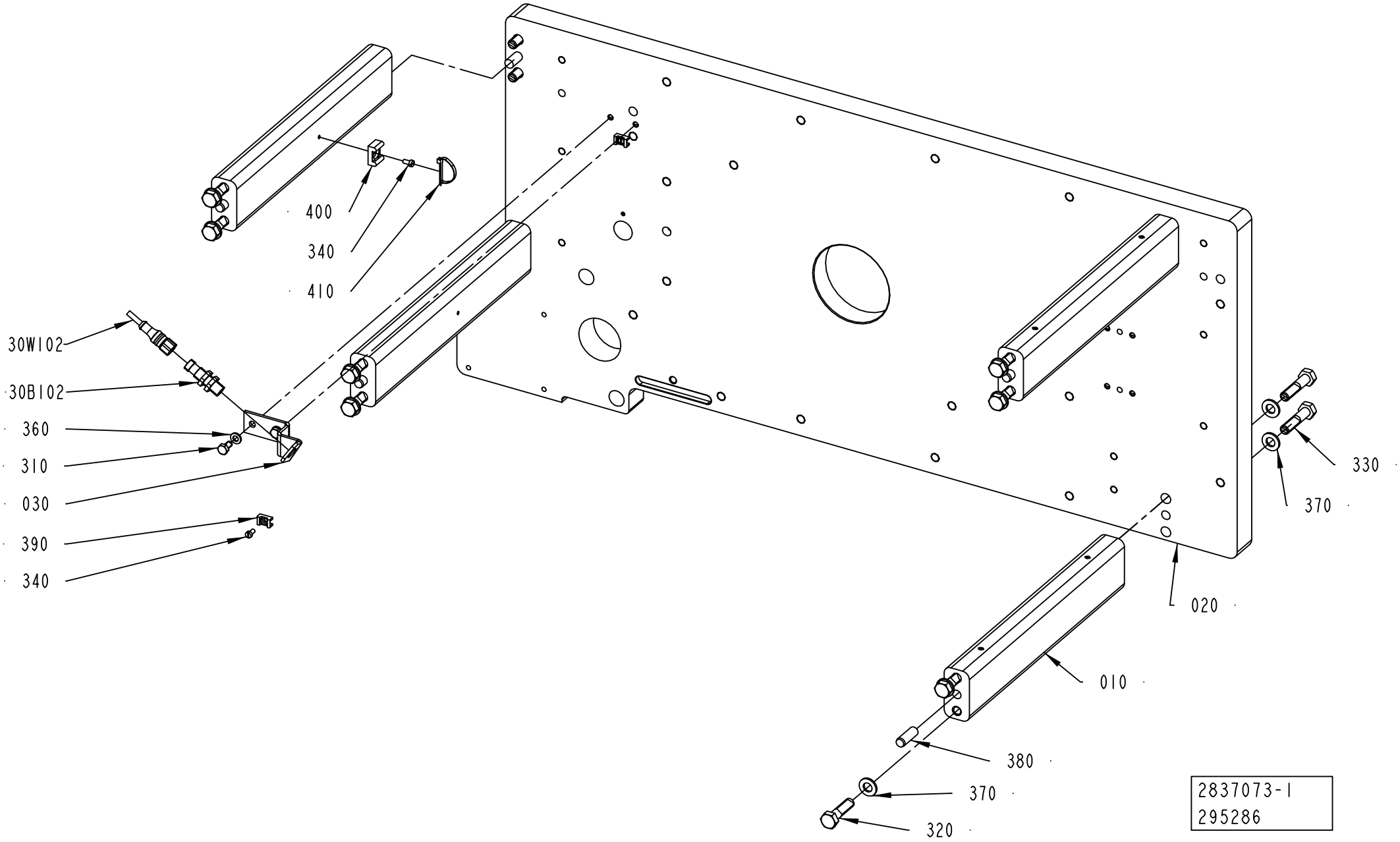
400
340
410
30W102
30B102
360
310
030
390
340
330
370
020
010
380
370
320
2837073-1
295286

ECM: 298769 - 20070323
Group number: 2837073-0100
Assembly Drawing: 2837073-1_1_AB

Pos	Part No	UN	Qty	Description	Page No
-					
010	2703704-0000		4	SPACER STRUT	
020	2835939-0000		1	PLATE	
030	2751741-0000		1	BRACKET	
30B102	90458-2907		1	PROX.SW. IFS204	
30W102	351411-0010		1	ACTU/SENS. CABLE PRST 4-PRKT 4-07/1,0M	
310	312105-0366		2	SCREW M6S ISO 4017 M6X12 A480	
320	312105-0499		8	SCREW M6S ISO 4014 M10X40 A480	
330	312105-0500		8	SCREW M6S ISO 4014 M10X45 A480	
340	312125-0287		3	SCREW ISO 1207 M4X8 A4	
360	315105-0153		2	WASHER BRB 6,4X12 RFR	
370	315106-0173		16	WASHER ISO 7089-10-200 HV A4	
380	311103-0458		8	PARALLEL PIN ISO 2338 10M6X30 A1	
390	352113-0205		2	ANCHOR PLATES FOR STRIPS, TYPE TM2S8-C10	
400	352113-0203		1	ANCHOR PLATES FOR STRIPS, TYPE TM3S8-M0	
410	352113-0104		1	CABLE TIE, BLACK 300X4,8 MM	

Pos	Part No	UN	Qty	Description	Page No

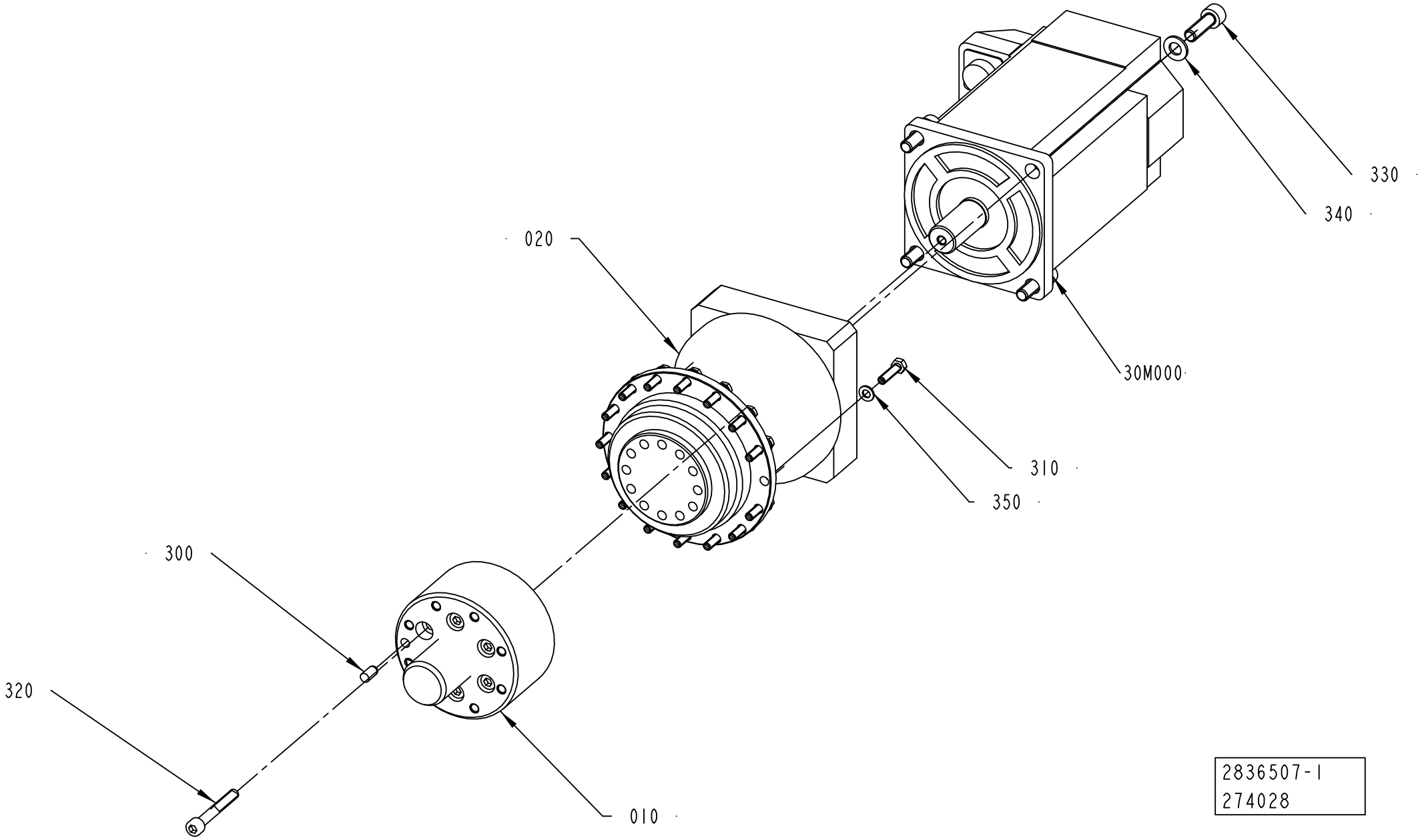
330
340
020
30M000
310
350
300
320
010
2836507-1
274028

ECM: 274028 - 20060921
Group number: 2836507-0100
Assembly Drawing: 2836507-1_1_AA

Pos	Part No	UN	Qty	Description	Page No
-					
010	2834311-0000		1	HUB	
020	90600-0761		1	GEARS,PLANETARY TP010MA 3 66 021/MPLB430	
300	311103-0349		1	PARALLEL PIN ISO 2338 6M6X12 A1	
30M000	90459-2589		1	SERVO MOTOR MPL-B430P-MK22AA	
310	312105-0331		16	SCREW M6S ISO 4017 M5X20 A480	
320	312115-0379		6	SCREW ISO4762 M6X45 A4 80	
330	312115-0453		4	SCREW ISO4762 M8X25 A4 80	
340	315106-0165		4	WASHER ISO 7089-8-200 HV A4	
350	315105-0146		16	WASHER BRB 5,3X10 RFR	

Pos	Part No	UN	Qty	Description	Page No

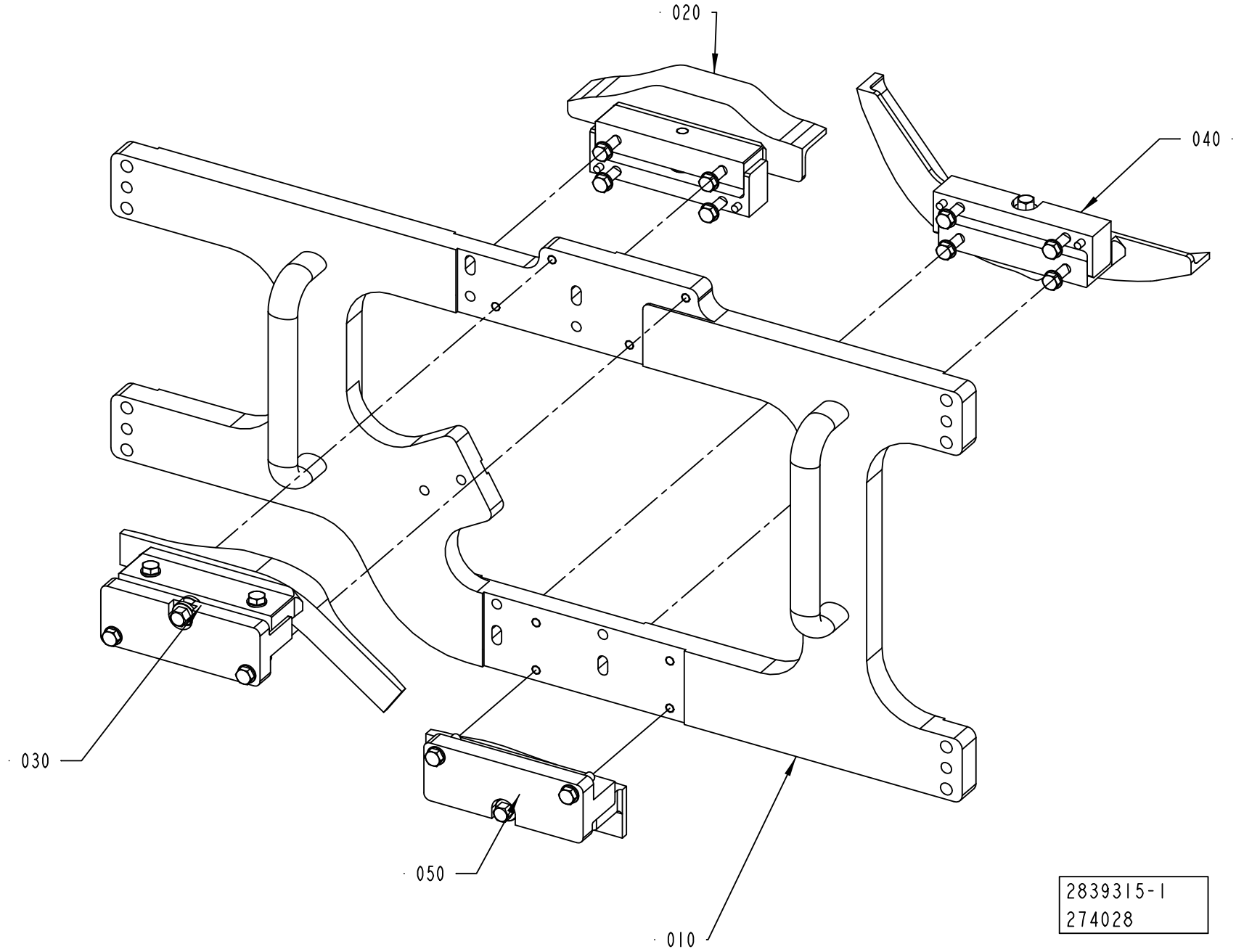
020
040
030
050
010
2839315-1
274028

ECM: 298776 - 20070323
Group number: 2839315-0100
Assembly Drawing: 2839315-1_1_AA

This list covers pages from 6-20 to 6-29

Pos	Part No	UN	Qty	Description	Page No
TBA SLIMCAP 1000 POSITIONING DEVICE, TBA SLIMCAP 2000 POSITIONING DEVICE, TBA STREAMCAP 1000 POSITIONING DEVICE (See drawing on page: 6-28)					
110	2780425-0100		1	CAM	**6-31**
120	2780560-0100		1	DRIVE	**6-33, 6-35, 6-37**
TBA STREAMCAP 1000 NO POSITIONING DEVICE, TBA SLIMCAP 1000 NO POSITIONING DEVICE, TBA SLIMCAP 2000 NO POSITIONING DEVICE (See drawing on page: 6-20)					
040	2839385-0100		1	CAM	**6-39**
050	2839386-0100		1	CAM	**6-41**
TGA (See drawing on page: 6-24)					
070	2873914-0100		1	CAMMODULE	**6-43, 6-45**
080	2873915-0100		1	CAMMODULE	**6-47, 6-49**
090	2873916-0100		1	CAMMODULE	**6-51, 6-53**
100	2873917-0100		1	CAMMODULE	**6-55**
110	2780425-0100		1	CAM	**6-31**
120	2780560-0100		1	DRIVE	**6-33, 6-35, 6-37**
TPA STREAMCAP 1000 NO POSITIONING DEVICE, TPA STREAMCAP 500 NO POSITIONING DEVICE (See drawing on page: 6-22)					
040	2746962-0100		1	CAMMODULE	**6-57**
070	2873914-0100		1	CAMMODULE	**6-43, 6-45**
080	2873915-0100		1	CAMMODULE	**6-47, 6-49**
090	2873916-0100		1	CAMMODULE	**6-51, 6-53**
100	2873917-0100		1	CAMMODULE	**6-55**
TPA STREAMCAP 1000 POSITIONING DEVICE, TPA STREAMCAP 500 POSITIONING DEVICE (See drawing on page: 6-26)					
070	2873914-0100		1	CAMMODULE	**6-43, 6-45**
080	2873915-0100		1	CAMMODULE	**6-47, 6-49**
090	2873916-0100		1	CAMMODULE	**6-51, 6-53**
100	2873917-0100		1	CAMMODULE	**6-55**
110	2780425-0100		1	CAM	**6-31**
120	2780560-0100		1	DRIVE	**6-33, 6-35, 6-37**
Common Parts					
010	2839382-0100		1	MOUNTING PLATE	**6-59**
020	2839383-0100		1	CAM	**6-61**
030	2839384-0100		1	CAM	**6-63**

Pos	Part No	UN	Qty	Description	Page No

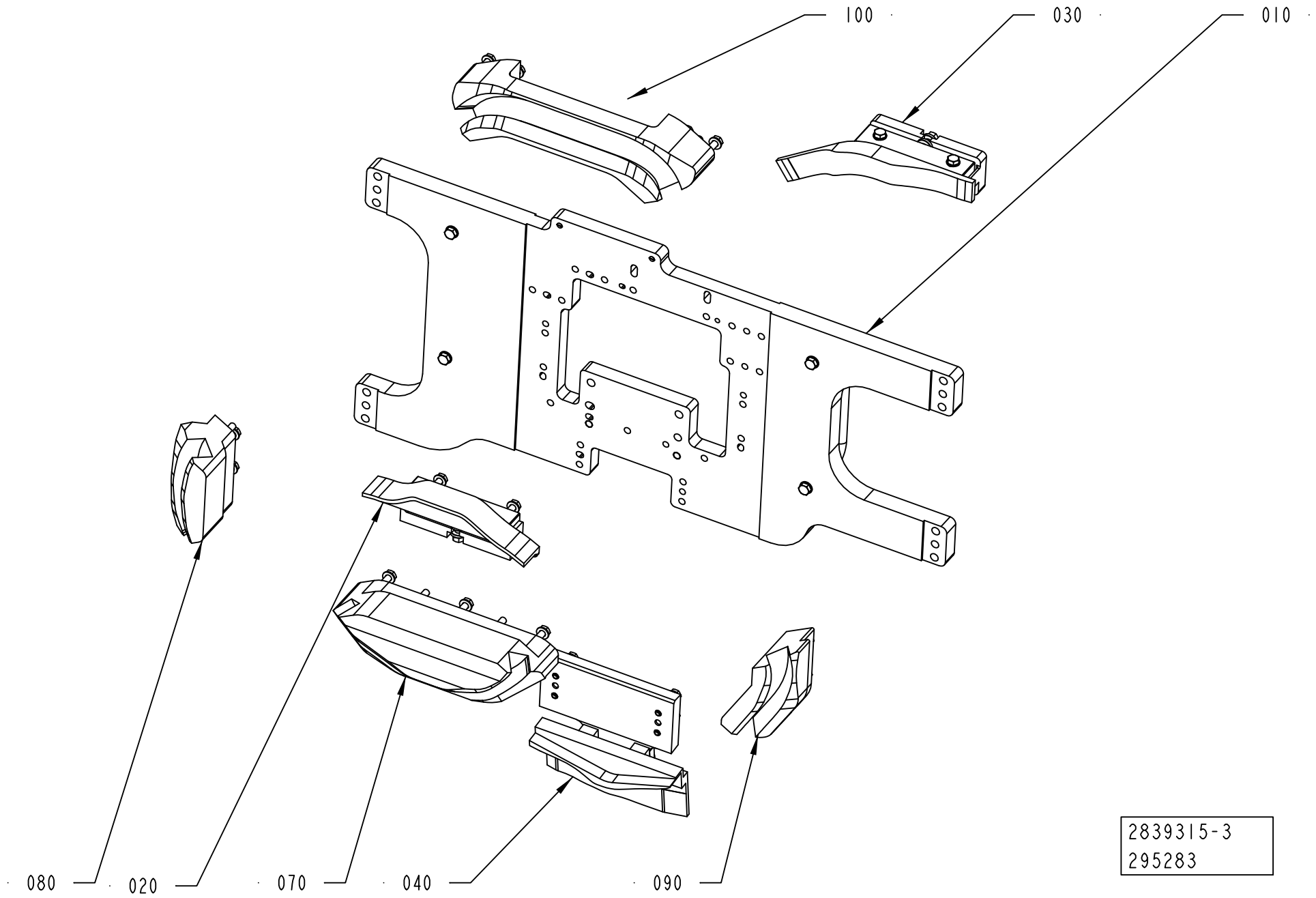
100
030
010
080
020
070
040
090
2839315-3
295283

Pos	Part No	UN	Qty	Description	Page No
TBA SLIMCAP 1000 POSITIONING DEVICE, TBA SLIMCAP 2000 POSITIONING DEVICE, TBA STREAMCAP 1000 POSITIONING DEVICE (See drawing on page: 6-28)					
110	2780425-0100		1	CAM	**6-31**
120	2780560-0100		1	DRIVE	**6-33, 6-35, 6-37**
TBA STREAMCAP 1000 NO POSITIONING DEVICE, TBA SLIMCAP 1000 NO POSITIONING DEVICE, TBA SLIMCAP 2000 NO POSITIONING DEVICE (See drawing on page: 6-20)					
040	2839385-0100		1	CAM	**6-39**
050	2839386-0100		1	CAM	**6-41**
TGA (See drawing on page: 6-24)					
070	2873914-0100		1	CAMMODULE	**6-43, 6-45**
080	2873915-0100		1	CAMMODULE	**6-47, 6-49**
090	2873916-0100		1	CAMMODULE	**6-51, 6-53**
100	2873917-0100		1	CAMMODULE	**6-55**
110	2780425-0100		1	CAM	**6-31**
120	2780560-0100		1	DRIVE	**6-33, 6-35, 6-37**
TPA STREAMCAP 1000 NO POSITIONING DEVICE, TPA STREAMCAP 500 NO POSITIONING DEVICE (See drawing on page: 6-22)					
040	2746962-0100		1	CAMMODULE	**6-57**
070	2873914-0100		1	CAMMODULE	**6-43, 6-45**
080	2873915-0100		1	CAMMODULE	**6-47, 6-49**
090	2873916-0100		1	CAMMODULE	**6-51, 6-53**
100	2873917-0100		1	CAMMODULE	**6-55**
TPA STREAMCAP 1000 POSITIONING DEVICE, TPA STREAMCAP 500 POSITIONING DEVICE (See drawing on page: 6-26)					
070	2873914-0100		1	CAMMODULE	**6-43, 6-45**
080	2873915-0100		1	CAMMODULE	**6-47, 6-49**
090	2873916-0100		1	CAMMODULE	**6-51, 6-53**
100	2873917-0100		1	CAMMODULE	**6-55**
110	2780425-0100		1	CAM	**6-31**
120	2780560-0100		1	DRIVE	**6-33, 6-35, 6-37**
Common Parts					
010	2839382-0100		1	MOUNTING PLATE	**6-59**
020	2839383-0100		1	CAM	**6-61**
030	2839384-0100		1	CAM	**6-63**

Pos	Part No	UN	Qty	Description	Page No

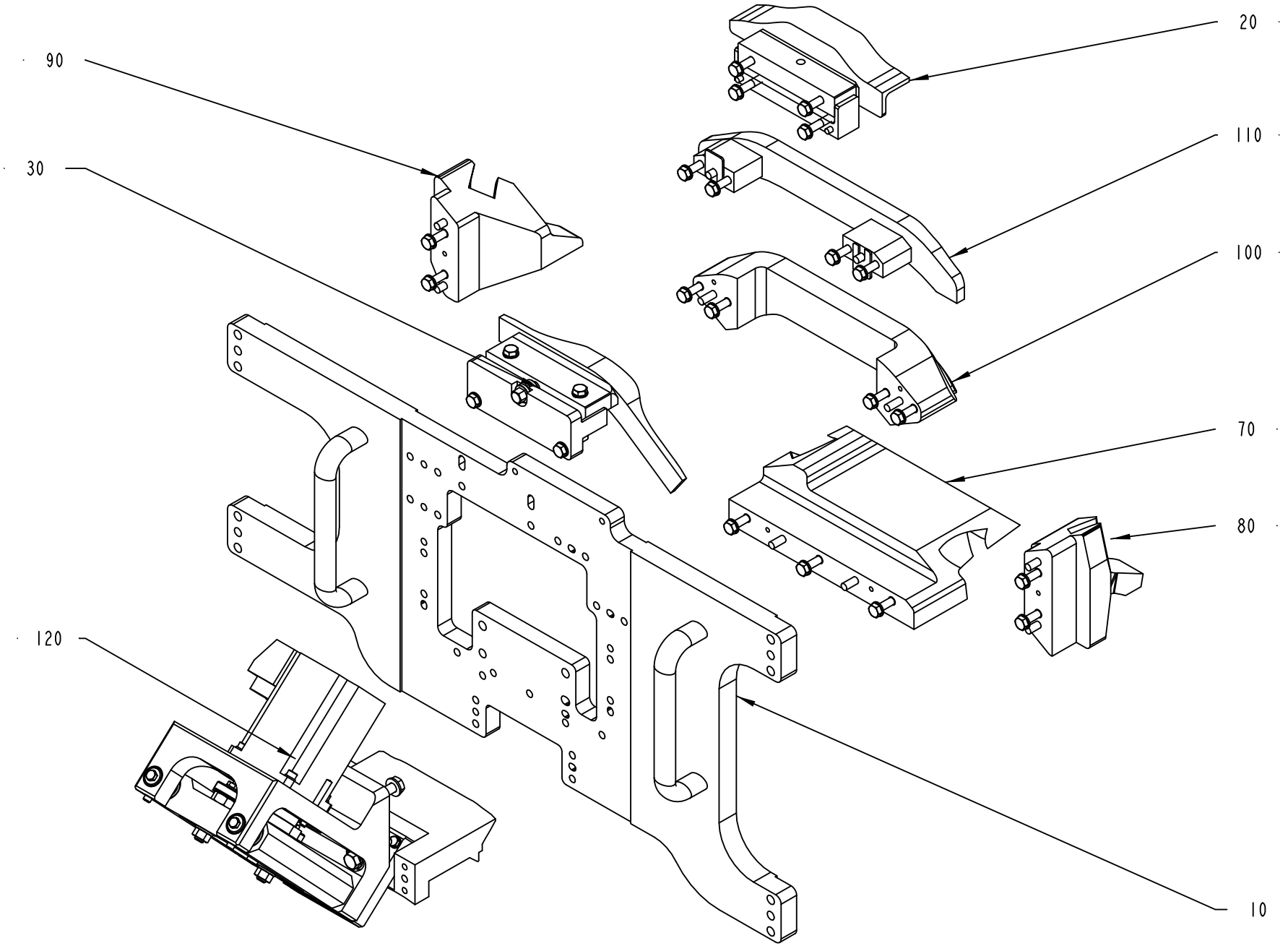

2839315-5
295283

Pos	Part No	UN	Qty	Description	Page No
TBA SLIMCAP 1000 POSITIONING DEVICE, TBA SLIMCAP 2000 POSITIONING DEVICE, TBA STREAMCAP 1000 POSITIONING DEVICE (See drawing on page: 6-28)					
110	2780425-0100		1	CAM	**6-31**
120	2780560-0100		1	DRIVE	**6-33, 6-35, 6-37**
TBA STREAMCAP 1000 NO POSITIONING DEVICE, TBA SLIMCAP 1000 NO POSITIONING DEVICE, TBA SLIMCAP 2000 NO POSITIONING DEVICE (See drawing on page: 6-20)					
040	2839385-0100		1	CAM	**6-39**
050	2839386-0100		1	CAM	**6-41**
TGA (See drawing on page: 6-24)					
070	2873914-0100		1	CAMMODULE	**6-43, 6-45**
080	2873915-0100		1	CAMMODULE	**6-47, 6-49**
090	2873916-0100		1	CAMMODULE	**6-51, 6-53**
100	2873917-0100		1	CAMMODULE	**6-55**
110	2780425-0100		1	CAM	**6-31**
120	2780560-0100		1	DRIVE	**6-33, 6-35, 6-37**
TPA STREAMCAP 1000 NO POSITIONING DEVICE, TPA STREAMCAP 500 NO POSITIONING DEVICE (See drawing on page: 6-22)					
040	2746962-0100		1	CAMMODULE	**6-57**
070	2873914-0100		1	CAMMODULE	**6-43, 6-45**
080	2873915-0100		1	CAMMODULE	**6-47, 6-49**
090	2873916-0100		1	CAMMODULE	**6-51, 6-53**
100	2873917-0100		1	CAMMODULE	**6-55**
TPA STREAMCAP 1000 POSITIONING DEVICE, TPA STREAMCAP 500 POSITIONING DEVICE (See drawing on page: 6-26)					
070	2873914-0100		1	CAMMODULE	**6-43, 6-45**
080	2873915-0100		1	CAMMODULE	**6-47, 6-49**
090	2873916-0100		1	CAMMODULE	**6-51, 6-53**
100	2873917-0100		1	CAMMODULE	**6-55**
110	2780425-0100		1	CAM	**6-31**
120	2780560-0100		1	DRIVE	**6-33, 6-35, 6-37**
Common Parts					
010	2839382-0100		1	MOUNTING PLATE	**6-59**
020	2839383-0100		1	CAM	**6-61**
030	2839384-0100		1	CAM	**6-63**

Pos	Part No	UN	Qty	Description	Page No

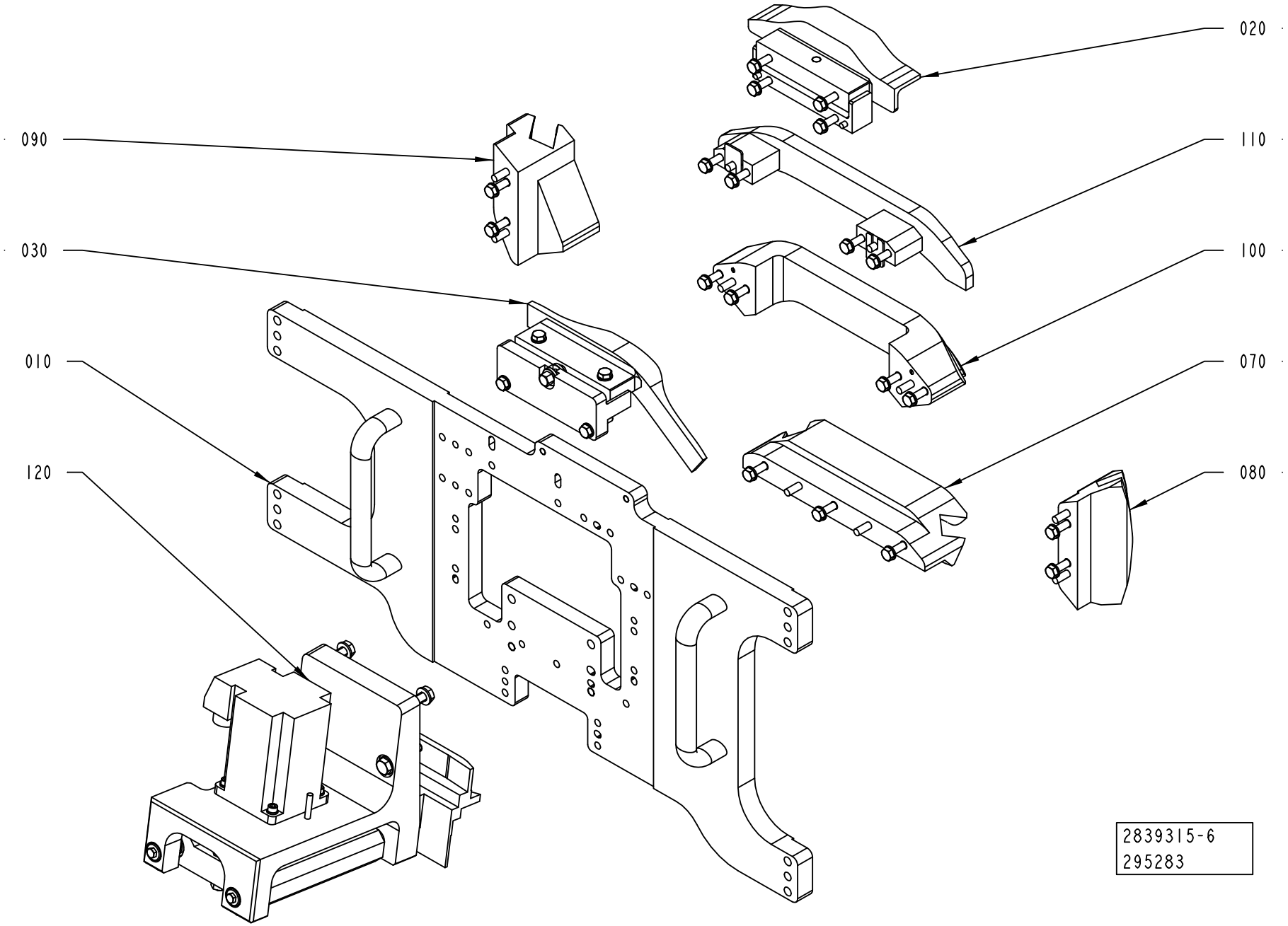
020
090
110
030
100
010
070
120
080
2839315-6
295283

Pos	Part No	UN	Qty	Description	Page No
TBA SLIMCAP 1000 POSITIONING DEVICE, TBA SLIMCAP 2000 POSITIONING DEVICE, TBA STREAMCAP 1000 POSITIONING DEVICE (See drawing on page: 6-28)					
110	2780425-0100		1	CAM	**6-31**
120	2780560-0100		1	DRIVE	**6-33, 6-35, 6-37**
TBA STREAMCAP 1000 NO POSITIONING DEVICE, TBA SLIMCAP 1000 NO POSITIONING DEVICE, TBA SLIMCAP 2000 NO POSITIONING DEVICE (See drawing on page: 6-20)					
040	2839385-0100		1	CAM	**6-39**
050	2839386-0100		1	CAM	**6-41**
TGA (See drawing on page: 6-24)					
070	2873914-0100		1	CAMMODULE	**6-43, 6-45**
080	2873915-0100		1	CAMMODULE	**6-47, 6-49**
090	2873916-0100		1	CAMMODULE	**6-51, 6-53**
100	2873917-0100		1	CAMMODULE	**6-55**
110	2780425-0100		1	CAM	**6-31**
120	2780560-0100		1	DRIVE	**6-33, 6-35, 6-37**
TPA STREAMCAP 1000 NO POSITIONING DEVICE, TPA STREAMCAP 500 NO POSITIONING DEVICE (See drawing on page: 6-22)					
040	2746962-0100		1	CAMMODULE	**6-57**
070	2873914-0100		1	CAMMODULE	**6-43, 6-45**
080	2873915-0100		1	CAMMODULE	**6-47, 6-49**
090	2873916-0100		1	CAMMODULE	**6-51, 6-53**
100	2873917-0100		1	CAMMODULE	**6-55**
TPA STREAMCAP 1000 POSITIONING DEVICE, TPA STREAMCAP 500 POSITIONING DEVICE (See drawing on page: 6-26)					
070	2873914-0100		1	CAMMODULE	**6-43, 6-45**
080	2873915-0100		1	CAMMODULE	**6-47, 6-49**
090	2873916-0100		1	CAMMODULE	**6-51, 6-53**
100	2873917-0100		1	CAMMODULE	**6-55**
110	2780425-0100		1	CAM	**6-31**
120	2780560-0100		1	DRIVE	**6-33, 6-35, 6-37**
Common Parts					
010	2839382-0100		1	MOUNTING PLATE	**6-59**
020	2839383-0100		1	CAM	**6-61**
030	2839384-0100		1	CAM	**6-63**

Pos	Part No	UN	Qty	Description	Page No

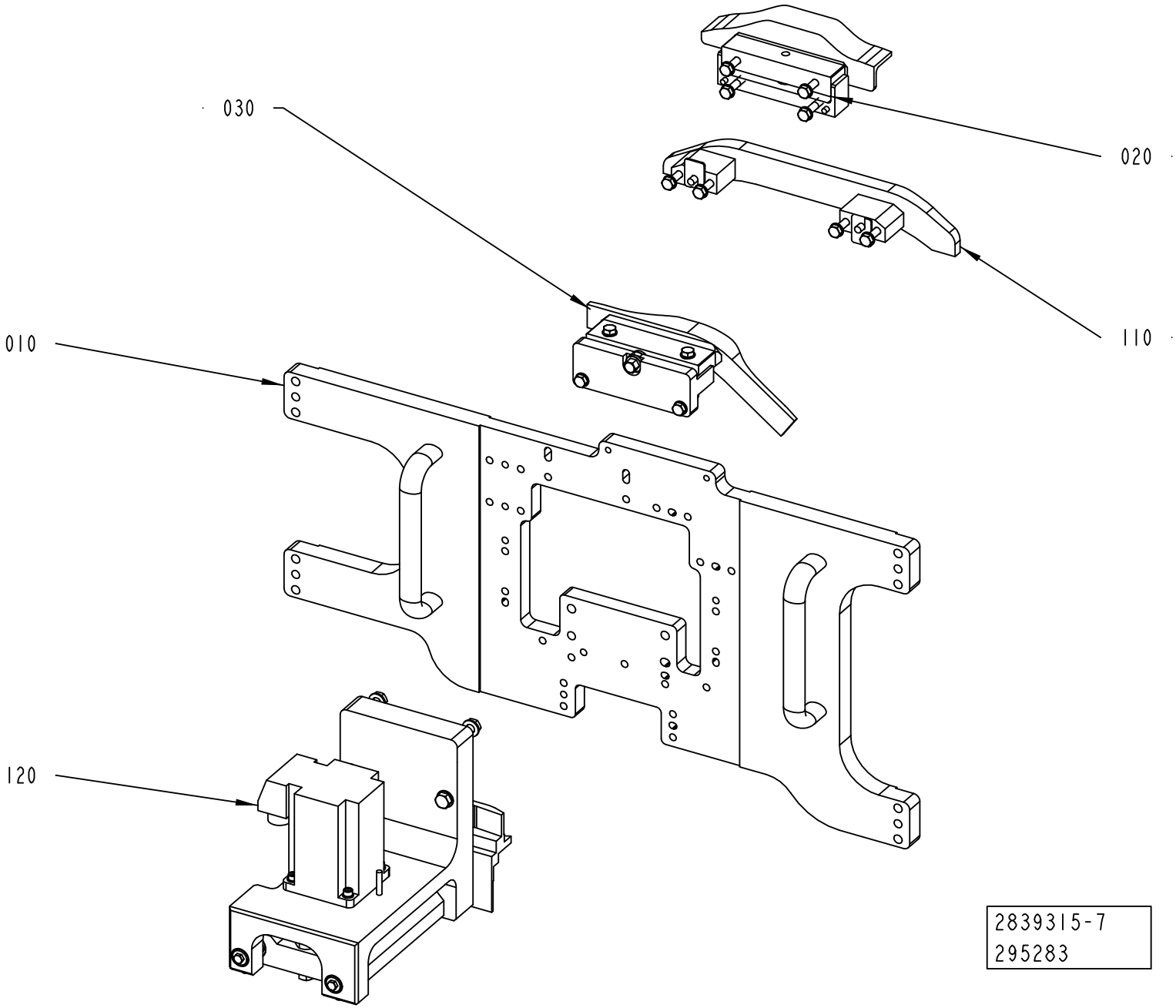
030
020
110
010
120
2839315-7
295283

Pos	Part No	UN	Qty	Description	Page No
TBA SLIMCAP 1000 POSITIONING DEVICE, TBA SLIMCAP 2000 POSITIONING DEVICE, TBA STREAMCAP 1000 POSITIONING DEVICE (See drawing on page: 6-28)					
110	2780425-0100		1	CAM	**6-31**
120	2780560-0100		1	DRIVE	**6-33, 6-35, 6-37**
TBA STREAMCAP 1000 NO POSITIONING DEVICE, TBA SLIMCAP 1000 NO POSITIONING DEVICE, TBA SLIMCAP 2000 NO POSITIONING DEVICE (See drawing on page: 6-20)					
040	2839385-0100		1	CAM	**6-39**
050	2839386-0100		1	CAM	**6-41**
TGA (See drawing on page: 6-24)					
070	2873914-0100		1	CAMMODULE	**6-43, 6-45**
080	2873915-0100		1	CAMMODULE	**6-47, 6-49**
090	2873916-0100		1	CAMMODULE	**6-51, 6-53**
100	2873917-0100		1	CAMMODULE	**6-55**
110	2780425-0100		1	CAM	**6-31**
120	2780560-0100		1	DRIVE	**6-33, 6-35, 6-37**
TPA STREAMCAP 1000 NO POSITIONING DEVICE, TPA STREAMCAP 500 NO POSITIONING DEVICE (See drawing on page: 6-22)					
040	2746962-0100		1	CAMMODULE	**6-57**
070	2873914-0100		1	CAMMODULE	**6-43, 6-45**
080	2873915-0100		1	CAMMODULE	**6-47, 6-49**
090	2873916-0100		1	CAMMODULE	**6-51, 6-53**
100	2873917-0100		1	CAMMODULE	**6-55**
TPA STREAMCAP 1000 POSITIONING DEVICE, TPA STREAMCAP 500 POSITIONING DEVICE (See drawing on page: 6-26)					
070	2873914-0100		1	CAMMODULE	**6-43, 6-45**
080	2873915-0100		1	CAMMODULE	**6-47, 6-49**
090	2873916-0100		1	CAMMODULE	**6-51, 6-53**
100	2873917-0100		1	CAMMODULE	**6-55**
110	2780425-0100		1	CAM	**6-31**
120	2780560-0100		1	DRIVE	**6-33, 6-35, 6-37**
Common Parts					
010	2839382-0100		1	MOUNTING PLATE	**6-59**
020	2839383-0100		1	CAM	**6-61**
030	2839384-0100		1	CAM	**6-63**

Pos	Part No	UN	Qty	Description	Page No

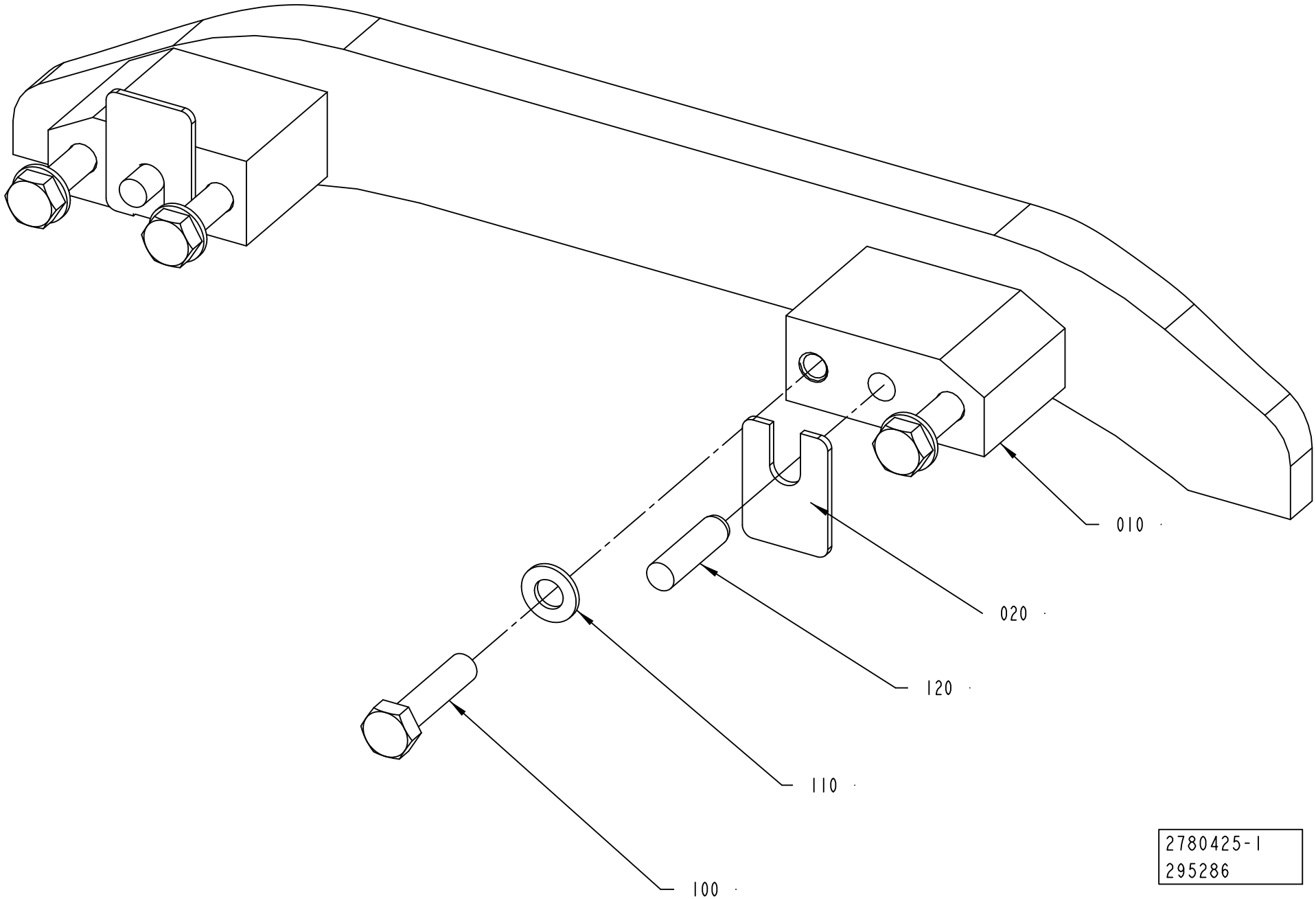
010
020
120
110
100
2780425-1
295286

ECM: 298774 - 20070323
Group number: 2780425-0100
Assembly Drawing: 2780425-1_1_AA

Pos	Part No	UN	Qty	Description	Page No
-					
010	2801048-0000		1	CAM	
020	2873892-0000		2	SHIM	
100	312105-0457		4	SCREW M6S ISO 4014 M8X35 A480	
110	315106-0165		4	WASHER ISO 7089-8-200 HV A4	
120	311103-0405		2	PARALLEL PIN ISO 2338 8M6X30 A1	

Pos	Part No	UN	Qty	Description	Page No

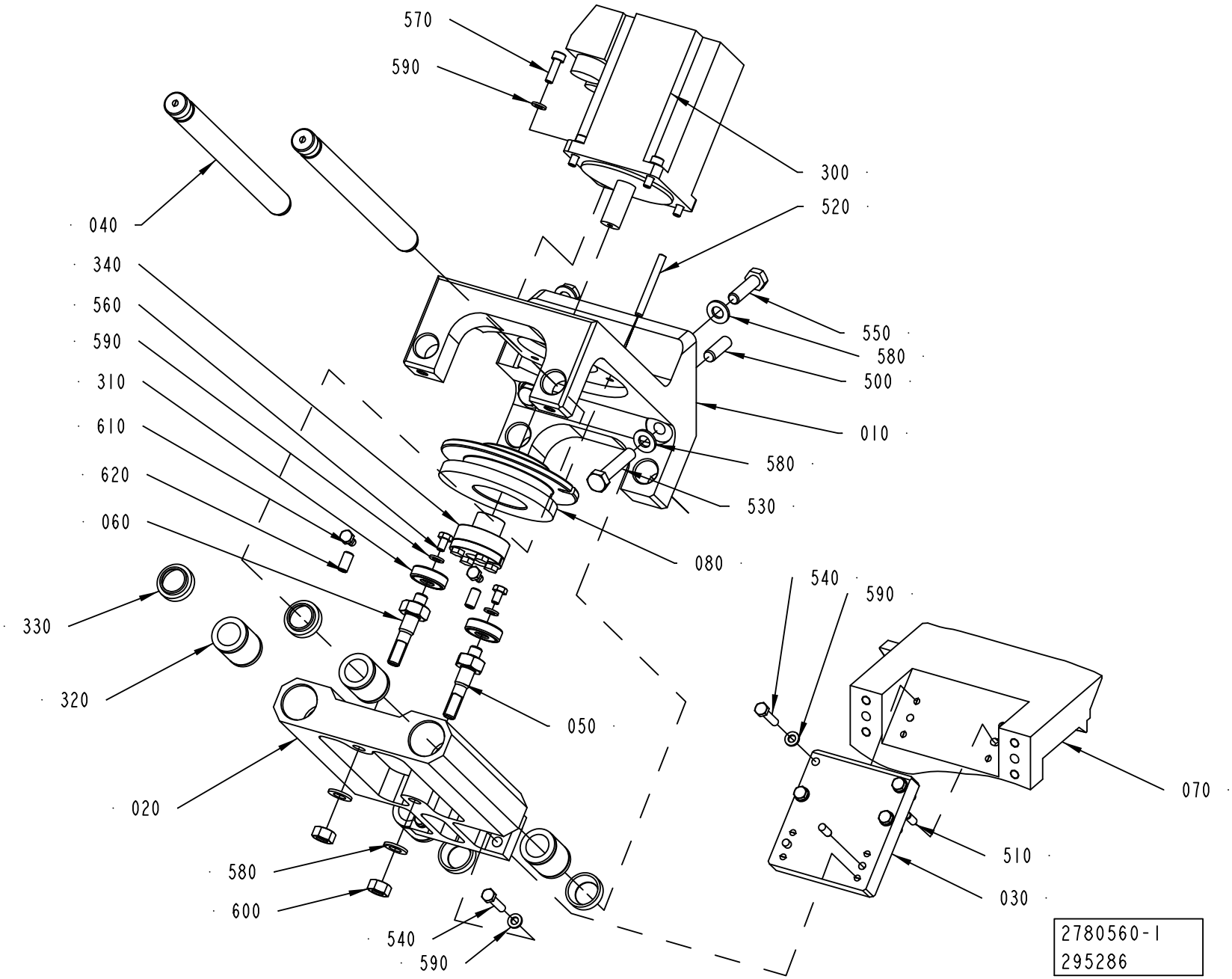
570
590
300
520
040
340
560
590
310
610
620
060
550
580
500
010
580
530
080
540
590
330
320
050
070
020
510
580
600
030
540
590
2780560-1
295286

ECM: 298773 - 20070323
Group number: 2780560-0100
Assembly Drawing: 2780560-1_1_AA

This list covers pages from 6-32 to 6-37

Pos	Part No	UN	Qty	Description	Page No
TBA (See drawing on page: 6-36)					
010	2838722-0000		1	BRACKET	
070	2783479-0000		1	CAM	
510	311103-0351		2	PARALLEL PIN ISO 2338 6M6X16 A1	
540	312105-0374		4	SCREW M6S ISO 4014 M6X30 A480	
590	315106-0153		10	WASHER ISO 7089-6-200 HV A4	
TGA (See drawing on page: 6-32)					
010	2780526-0000		1	BRACKET	
030	2780529-0000		1	BRACKET	
070	2780521-0000		1	CAM	
510	311103-0351		4	PARALLEL PIN ISO 2338 6M6X16 A1	
540	312105-0374		8	SCREW M6S ISO 4014 M6X30 A480	
590	315106-0153		14	WASHER ISO 7089-6-200 HV A4	
TPA (See drawing on page: 6-34)					
010	2859960-0000		1	BRACKET	
070	2783479-0000		1	CAM	
510	311103-0351		2	PARALLEL PIN ISO 2338 6M6X16 A1	
540	312105-0374		4	SCREW M6S ISO 4014 M6X30 A480	
590	315106-0153		10	WASHER ISO 7089-6-200 HV A4	
Common Parts					
020	2780527-0000		1	CARRIAGE	
040	2783477-0000		2	GUIDE SHAFT	
050	2780531-0000		1	AXLE PIN	
060	2780532-0000		1	AXLE PIN	
080	2780533-0000		1	CAM	
300	90459-6010		1	SERVO MOTOR MPL-B310P-MK22AA	
310	90214-0123		2	BALL BEARING, 10X30X9 MM	
320	90189-0019		4	BALL BUSHING, 20X30X30 MM	
330	90091-0038		4	SCRAPER 20X30X10 MM	
340	90600-0454		1	CLAMPING ELEMENT WITH SLEEVE, 16X24 MM	
500	311103-0458		2	PARALLEL PIN ISO 2338 10M6X30 A1	
520	311103-0367		1	PARALLEL PIN ISO 2338 6M6X55 A1	
530	312105-0501		2	SCREW M6S ISO 4014 M10X50 A480	
550	312105-0497		2	SCREW M6S ISO 4017 M10X35 A480	
560	312105-0364		2	SCREW M6S ISO 4017 M6X10 A480	
570	312115-0370		4	SCREW ISO4762 M6X20 A4 80	
580	315106-0173		6	WASHER ISO 7089-10-200 HV A4	
600	312605-0320		2	HEXAGON NUT, M6M M10 A280	
610	312105-0366		2	SCREW M6S ISO 4017 M6X12 A480	
620	312318-0449		2	SCREW ISO4029 M8X16 A4	

Pos	Part No	UN	Qty	Description	Page No

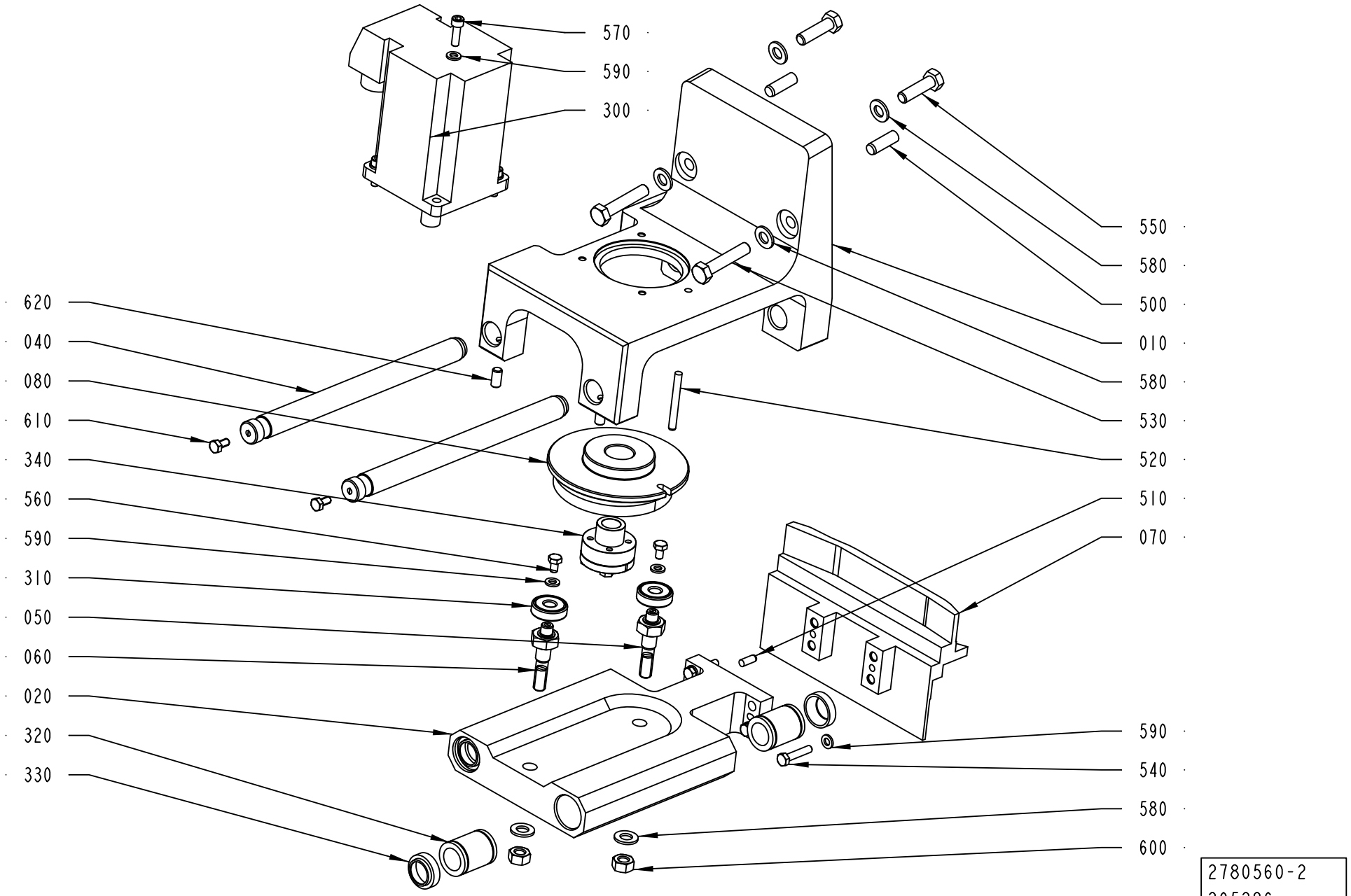
570
590
300
550
580
500
010
580
530
520
510
070
620
040
080
610
340
560
590
310
050
060
020
320
330
590
540
580
600
2780560-2
295286

ECM: 298773 - 20070323
Group number: 2780560-0100
Assembly Drawing: 2780560-2_1_AA

This list covers pages from 6-32 to 6-37

Pos	Part No	UN	Qty	Description	Page No
TBA (See drawing on page: 6-36)					
010	2838722-0000		1	BRACKET	
070	2783479-0000		1	CAM	
510	311103-0351		2	PARALLEL PIN ISO 2338 6M6X16 A1	
540	312105-0374		4	SCREW M6S ISO 4014 M6X30 A480	
590	315106-0153		10	WASHER ISO 7089-6-200 HV A4	
TGA (See drawing on page: 6-32)					
010	2780526-0000		1	BRACKET	
030	2780529-0000		1	BRACKET	
070	2780521-0000		1	CAM	
510	311103-0351		4	PARALLEL PIN ISO 2338 6M6X16 A1	
540	312105-0374		8	SCREW M6S ISO 4014 M6X30 A480	
590	315106-0153		14	WASHER ISO 7089-6-200 HV A4	
TPA (See drawing on page: 6-34)					
010	2859960-0000		1	BRACKET	
070	2783479-0000		1	CAM	
510	311103-0351		2	PARALLEL PIN ISO 2338 6M6X16 A1	
540	312105-0374		4	SCREW M6S ISO 4014 M6X30 A480	
590	315106-0153		10	WASHER ISO 7089-6-200 HV A4	
Common Parts					
020	2780527-0000		1	CARRIAGE	
040	2783477-0000		2	GUIDE SHAFT	
050	2780531-0000		1	AXLE PIN	
060	2780532-0000		1	AXLE PIN	
080	2780533-0000		1	CAM	
300	90459-6010		1	SERVO MOTOR MPL-B310P-MK22AA	
310	90214-0123		2	BALL BEARING, 10X30X9 MM	
320	90189-0019		4	BALL BUSHING, 20X30X30 MM	
330	90091-0038		4	SCRAPER 20X30X10 MM	
340	90600-0454		1	CLAMPING ELEMENT WITH SLEEVE, 16X24 MM	
500	311103-0458		2	PARALLEL PIN ISO 2338 10M6X30 A1	
520	311103-0367		1	PARALLEL PIN ISO 2338 6M6X55 A1	
530	312105-0501		2	SCREW M6S ISO 4014 M10X50 A480	
550	312105-0497		2	SCREW M6S ISO 4017 M10X35 A480	
560	312105-0364		2	SCREW M6S ISO 4017 M6X10 A480	
570	312115-0370		4	SCREW ISO4762 M6X20 A4 80	
580	315106-0173		6	WASHER ISO 7089-10-200 HV A4	
600	312605-0320		2	HEXAGON NUT, M6M M10 A280	
610	312105-0366		2	SCREW M6S ISO 4017 M6X12 A480	
620	312318-0449		2	SCREW ISO4029 M8X16 A4	

Pos	Part No	UN	Qty	Description	Page No

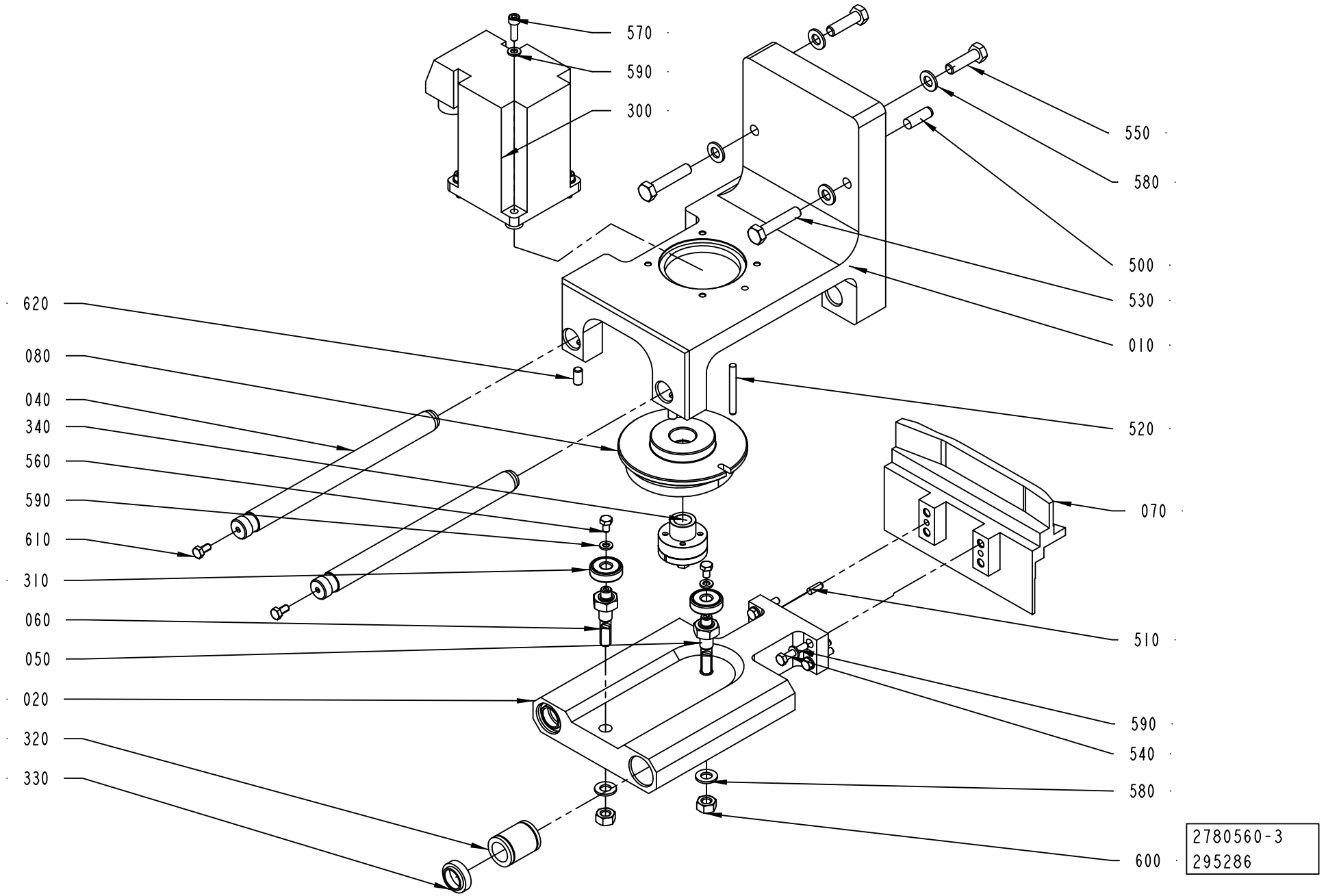
570
590
300
550
580
500
530
010
620
080
040
340
560
590
610
310
060
050
020
320
330
520
070
510
590
540
580
600
2780560-3
295286

Pos	Part No	UN	Qty	Description	Page No
TBA (See drawing on page: 6-36)					
010	2838722-0000		1	BRACKET	
070	2783479-0000		1	CAM	
510	311103-0351		2	PARALLEL PIN ISO 2338 6M6X16 A1	
540	312105-0374		4	SCREW M6S ISO 4014 M6X30 A480	
590	315106-0153		10	WASHER ISO 7089-6-200 HV A4	
TGA (See drawing on page: 6-32)					
010	2780526-0000		1	BRACKET	
030	2780529-0000		1	BRACKET	
070	2780521-0000		1	CAM	
510	311103-0351		4	PARALLEL PIN ISO 2338 6M6X16 A1	
540	312105-0374		8	SCREW M6S ISO 4014 M6X30 A480	
590	315106-0153		14	WASHER ISO 7089-6-200 HV A4	
TPA (See drawing on page: 6-34)					
010	2859960-0000		1	BRACKET	
070	2783479-0000		1	CAM	
510	311103-0351		2	PARALLEL PIN ISO 2338 6M6X16 A1	
540	312105-0374		4	SCREW M6S ISO 4014 M6X30 A480	
590	315106-0153		10	WASHER ISO 7089-6-200 HV A4	
Common Parts					
020	2780527-0000		1	CARRIAGE	
040	2783477-0000		2	GUIDE SHAFT	
050	2780531-0000		1	AXLE PIN	
060	2780532-0000		1	AXLE PIN	
080	2780533-0000		1	CAM	
300	90459-6010		1	SERVO MOTOR MPL-B310P-MK22AA	
310	90214-0123		2	BALL BEARING, 10X30X9 MM	
320	90189-0019		4	BALL BUSHING, 20X30X30 MM	
330	90091-0038		4	SCRAPER 20X30X10 MM	
340	90600-0454		1	CLAMPING ELEMENT WITH SLEEVE, 16X24 MM	
500	311103-0458		2	PARALLEL PIN ISO 2338 10M6X30 A1	
520	311103-0367		1	PARALLEL PIN ISO 2338 6M6X55 A1	
530	312105-0501		2	SCREW M6S ISO 4014 M10X50 A480	
550	312105-0497		2	SCREW M6S ISO 4017 M10X35 A480	
560	312105-0364		2	SCREW M6S ISO 4017 M6X10 A480	
570	312115-0370		4	SCREW ISO4762 M6X20 A4 80	
580	315106-0173		6	WASHER ISO 7089-10-200 HV A4	
600	312605-0320		2	HEXAGON NUT, M6M M10 A280	
610	312105-0366		2	SCREW M6S ISO 4017 M6X12 A480	
620	312318-0449		2	SCREW ISO4029 M8X16 A4	

Pos	Part No	UN	Qty	Description	Page No

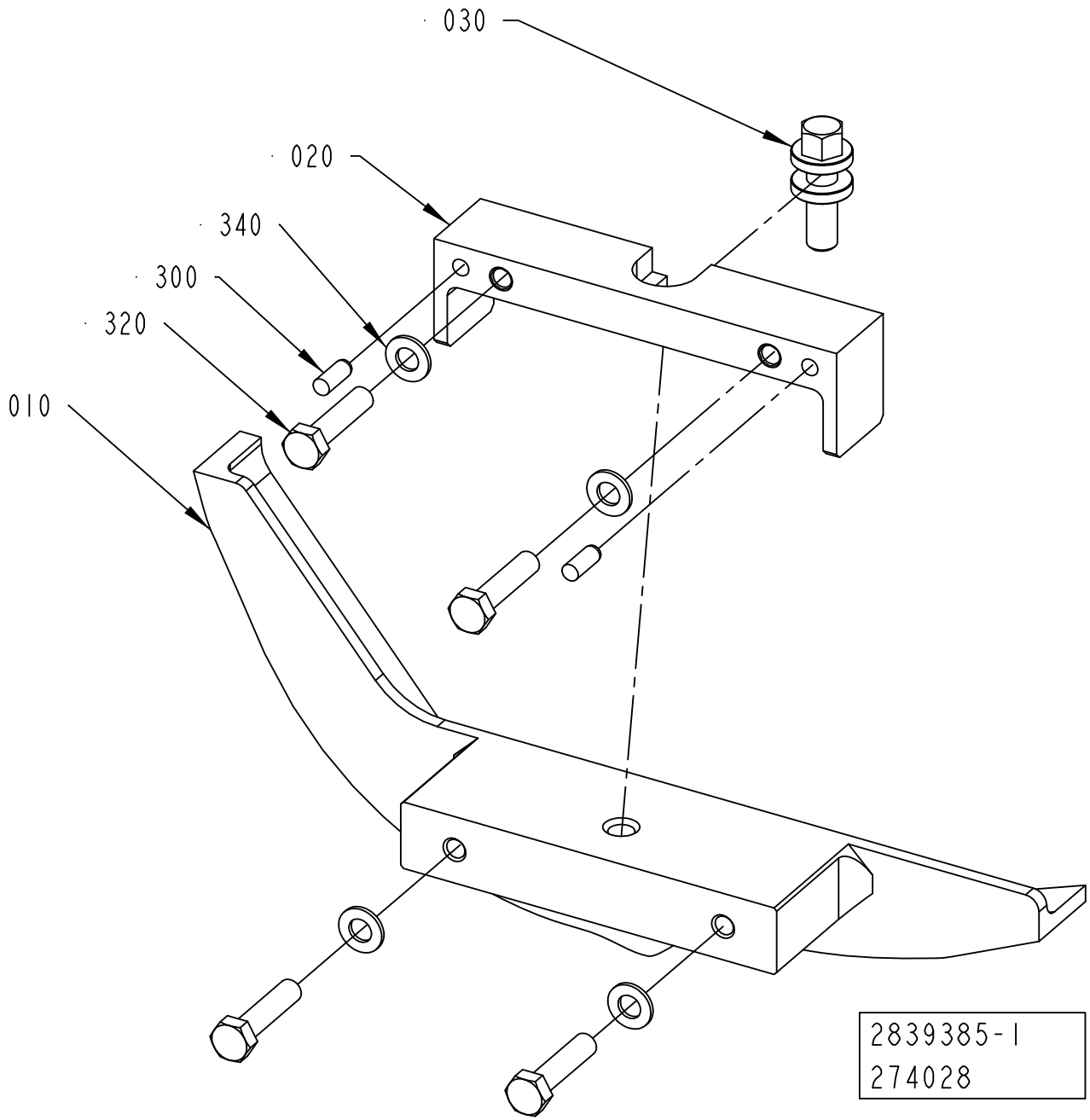
030
020
340
300
320
010
2839385-1
274028

ECM: 298778 - 20070323
Group number: 2839385-0100
Assembly Drawing: 2839385-1_1_AA

Pos	Part No	UN	Qty	Description	Page No
STREAMCAP500, STREAMCAP1000, SLIMCAP 2000, SLIMCAP 1000					
010	2839393-0000		1	CAM	
Common Parts					
020	2838277-0000		1	BRACKET	
030	2703842-0000		1	ADJUSTING SCREW	
300	311103-0351		2	PARALLEL PIN ISO 2338 6M6X16 A1	
320	312105-0457		4	SCREW M6S ISO 4014 M8X35 A480	
340	315105-0165		4	WASHER BRB 8,4X16 RFR	

Pos	Part No	UN	Qty	Description	Page No

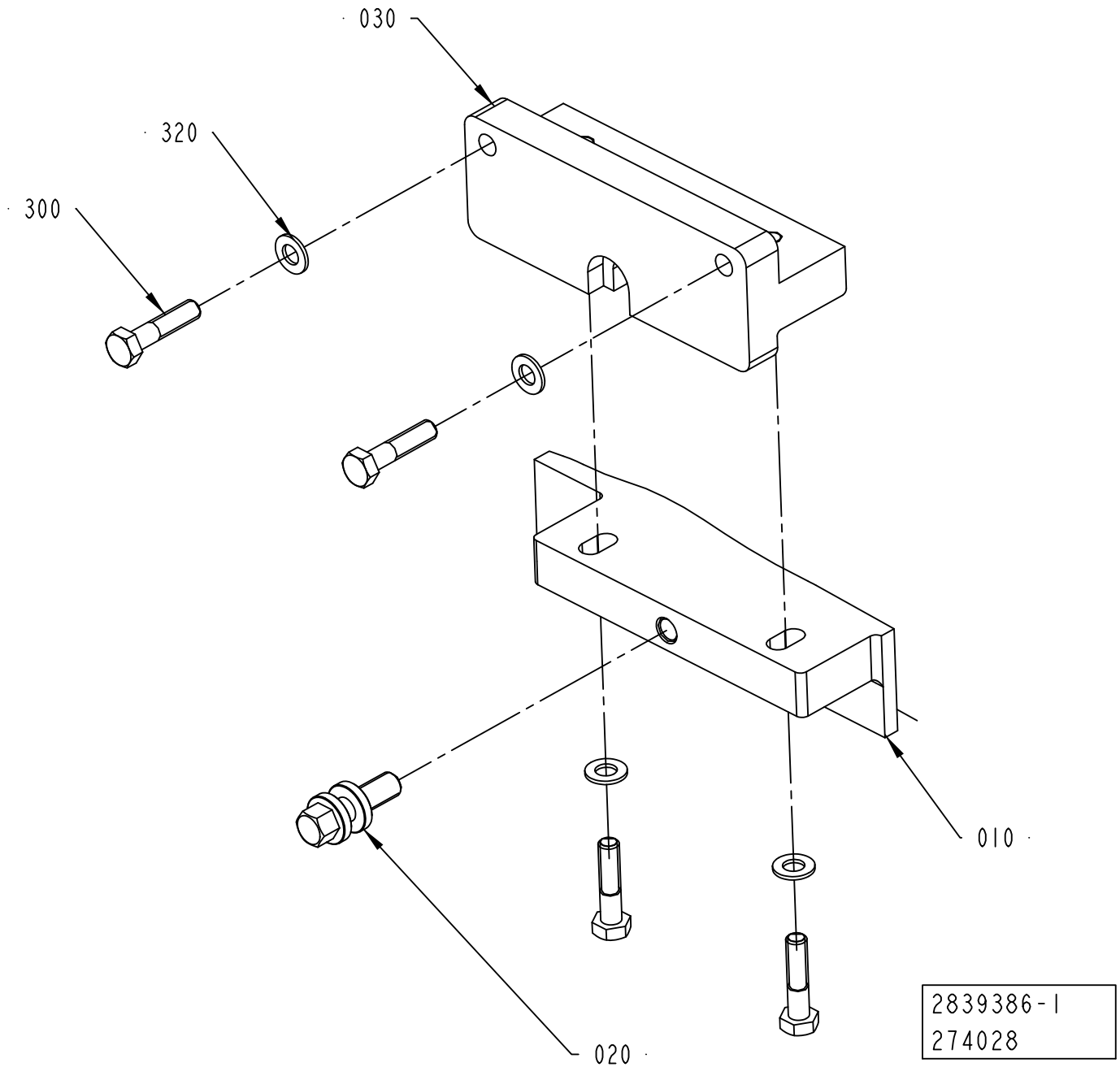
030
320
300
010
020
2839386-1
274028

ECM: 298779 - 20070323
Group number: 2839386-0100
Assembly Drawing: 2839386-1_1_AA

Pos	Part No	UN	Qty	Description	Page No
STREAMCAP500, STREAMCAP1000, SLIMCAP 2000, SLIMCAP 1000					
010	2839409-0000		1	CAM	
030	2838156-0000		1	BRACKET	
Common Parts					
020	2703842-0000		1	ADJUSTING SCREW	
300	312105-0457		4	SCREW M6S ISO 4014 M8X35 A480	
320	315105-0165		4	WASHER BRB 8,4X16 RFR	

Pos	Part No	UN	Qty	Description	Page No

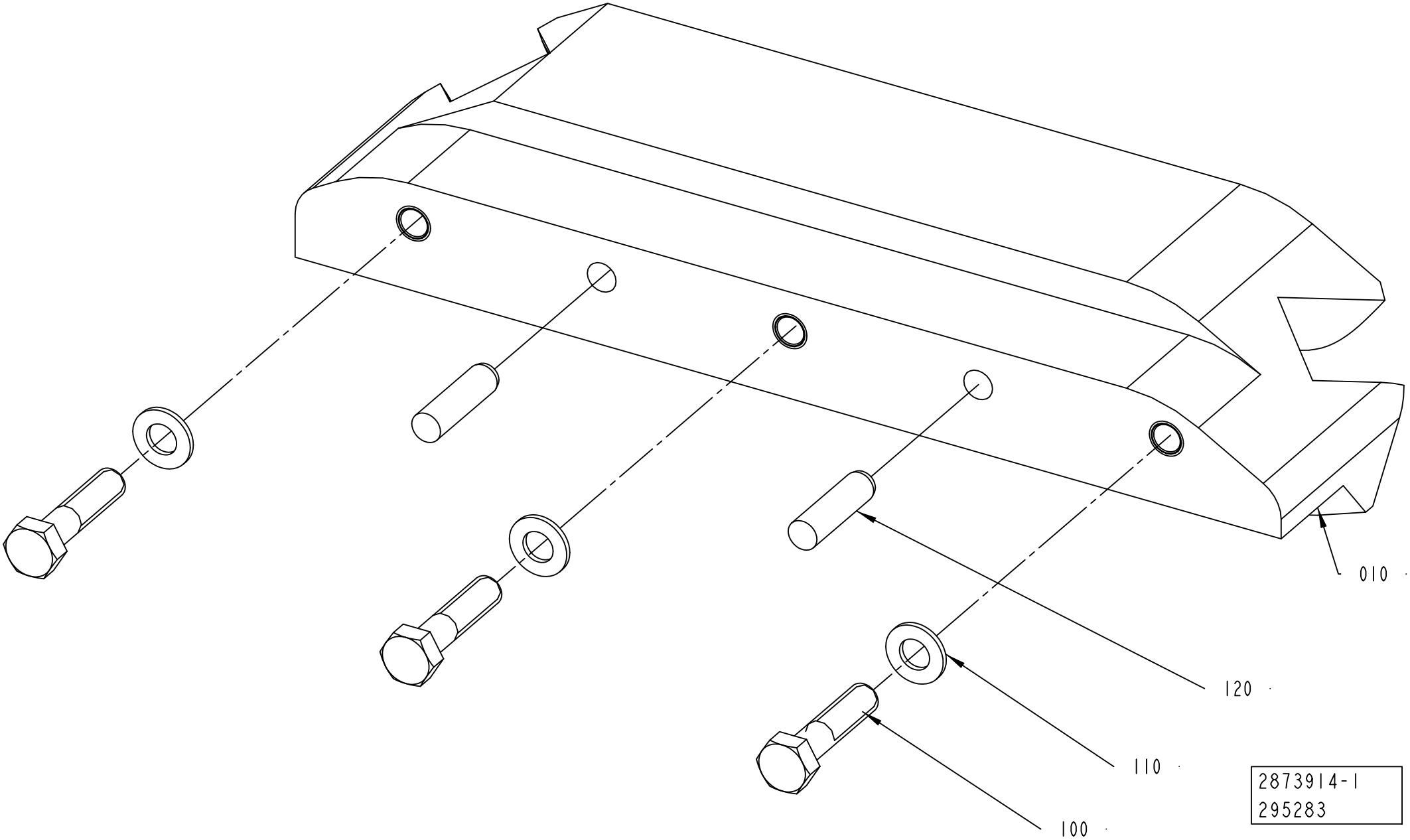
010
120
110
100
2873914-1
295283

ECM: 298781 - 20070323
Group number: 2873914-0100
Assembly Drawing: 2873914-1_1_AA

This list covers pages from 6-42 to 6-45

Pos	Part No	UN	Qty	Description	Page No
TGA (See drawing on page: 6-44)					
010	2746982-0000		1	CAM	
TPA STREAMCAP 1000, TPA STREAMCAP 500 (See drawing on page: 6-42)					
010	2746950-0000		1	CAM	
Common Parts					
100	312105-0457		3	SCREW M6S ISO 4014 M8X35 A480	
110	315106-0165		3	WASHER ISO 7089-8-200 HV A4	
120	311103-0405		2	PARALLEL PIN ISO 2338 8M6X30 A1	

Pos	Part No	UN	Qty	Description	Page No

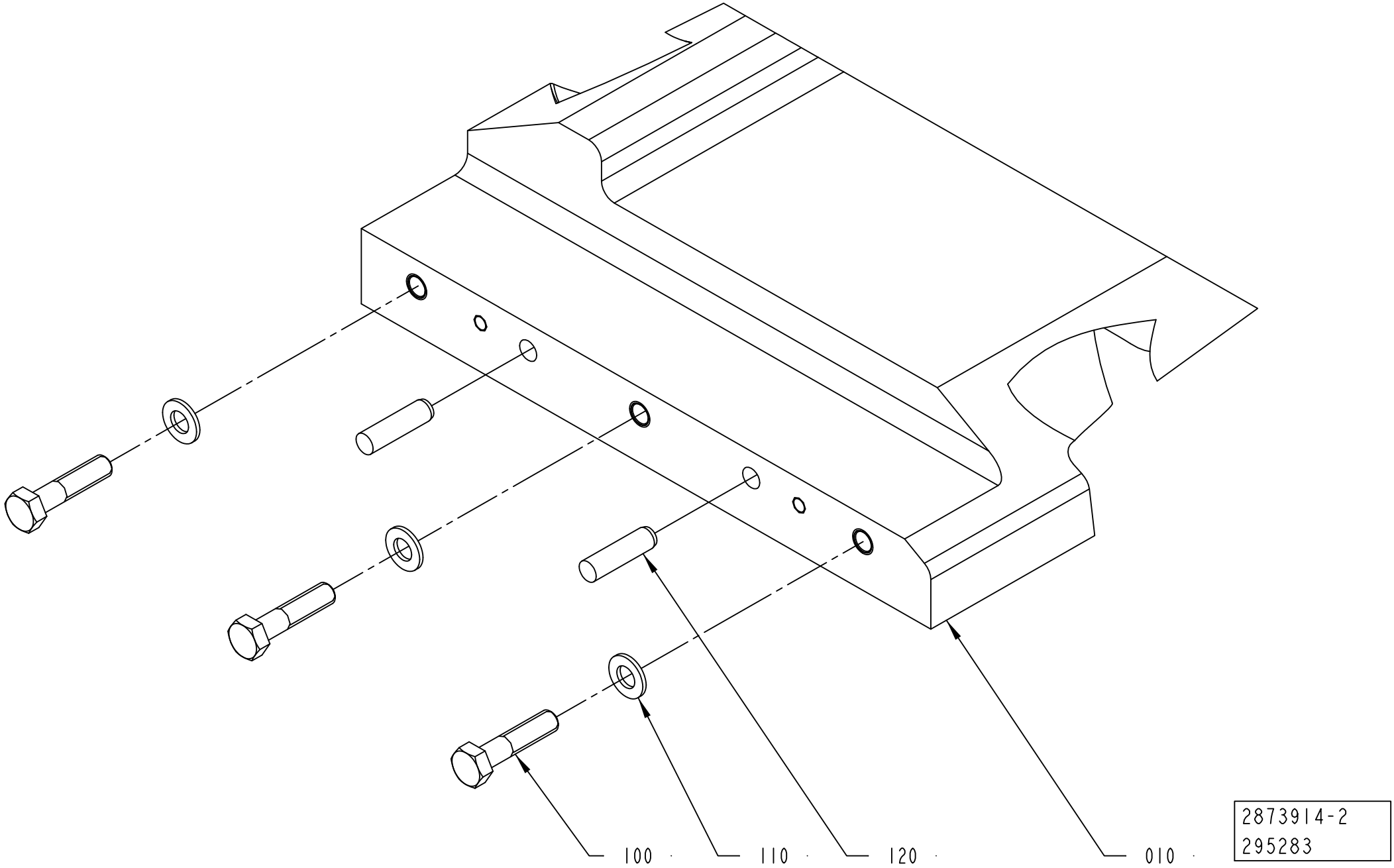
100
110
120
010
2873914-2
295283

ECM: 298781 - 20070323
Group number: 2873914-0100
Assembly Drawing: 2873914-2_1_AA

This list covers pages from 6-42 to 6-45

Pos	Part No	UN	Qty	Description	Page No
TGA (See drawing on page: 6-44)					
010	2746982-0000		1	CAM	
TPA STREAMCAP 1000, TPA STREAMCAP 500 (See drawing on page: 6-42)					
010	2746950-0000		1	CAM	
Common Parts					
100	312105-0457		3	SCREW M6S ISO 4014 M8X35 A480	
110	315106-0165		3	WASHER ISO 7089-8-200 HV A4	
120	311103-0405		2	PARALLEL PIN ISO 2338 8M6X30 A1	

Pos	Part No	UN	Qty	Description	Page No

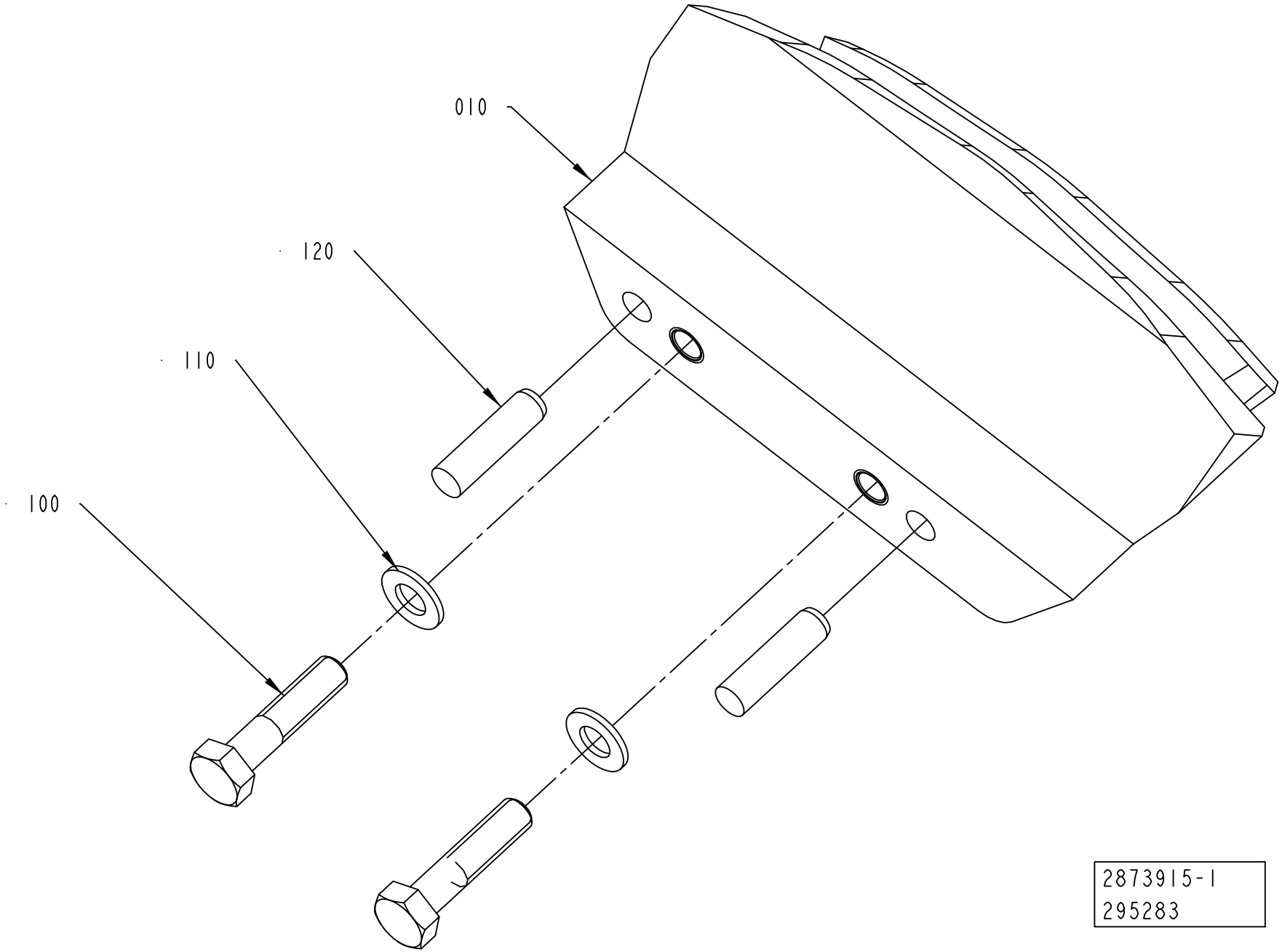
010
120
110
100
2873915-1
295283

ECM: 298782 - 20070323
Group number: 2873915-0100
Assembly Drawing: 2873915-1_1_AA

This list covers pages from 6-46 to 6-49

Pos	Part No	UN	Qty	Description	Page No
TGA (See drawing on page: 6-48)					
010	2746985-0000		1	CAM	
TPA STREAMCAP 1000, TPA STREAMCAP 500 (See drawing on page: 6-46)					
010	2746951-0000		1	CAM	
Common Parts					
100	312105-0457		2	SCREW M6S ISO 4014 M8X35 A480	
110	315106-0165		2	WASHER ISO 7089-8-200 HV A4	
120	311103-0405		2	PARALLEL PIN ISO 2338 8M6X30 A1	

Pos	Part No	UN	Qty	Description	Page No

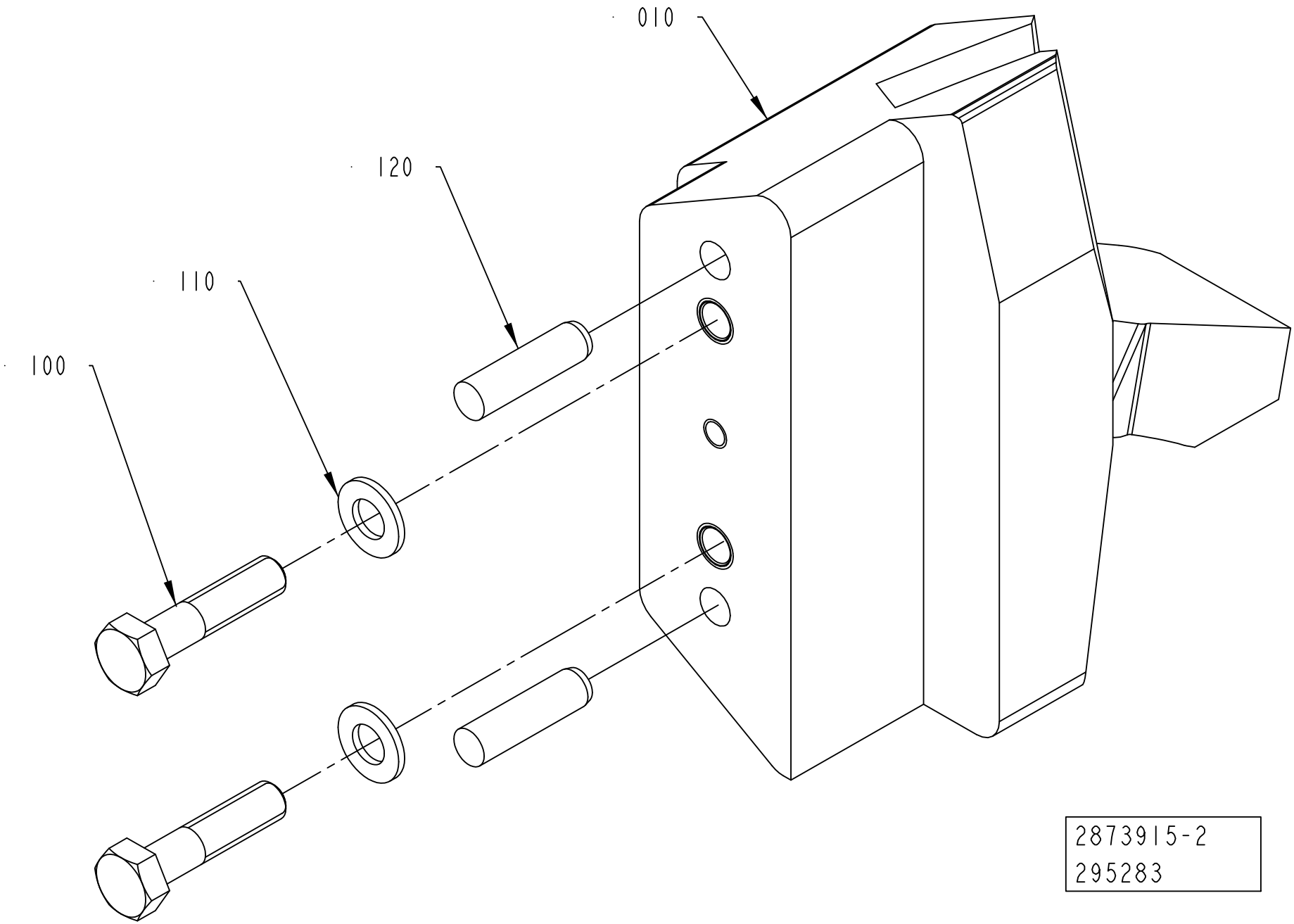
010
120
110
100
2873915-2
295283

ECM: 298782 - 20070323
Group number: 2873915-0100
Assembly Drawing: 2873915-2_1_AA

This list covers pages from 6-46 to 6-49

Pos	Part No	UN	Qty	Description	Page No
TGA (See drawing on page: 6-48)					
010	2746985-0000		1	CAM	
TPA STREAMCAP 1000, TPA STREAMCAP 500 (See drawing on page: 6-46)					
010	2746951-0000		1	CAM	
Common Parts					
100	312105-0457		2	SCREW M6S ISO 4014 M8X35 A480	
110	315106-0165		2	WASHER ISO 7089-8-200 HV A4	
120	311103-0405		2	PARALLEL PIN ISO 2338 8M6X30 A1	

Pos	Part No	UN	Qty	Description	Page No

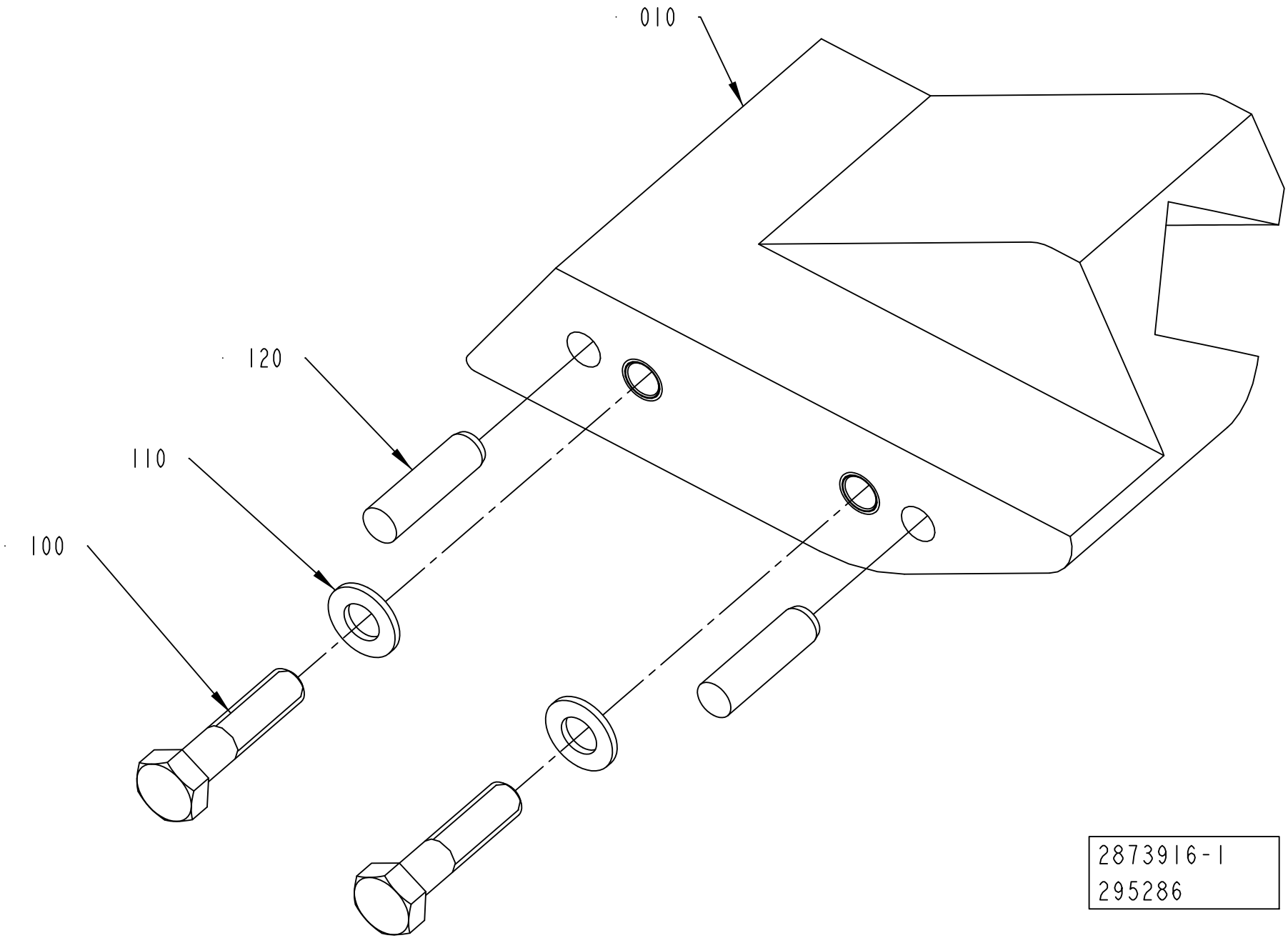
010
120
110
100
2873916-1
295286

ECM: 298772 - 20070323
Group number: 2873916-0100
Assembly Drawing: 2873916-1_1_AA

This list covers pages from 6-50 to 6-53

Pos	Part No	UN	Qty	Description	Page No
TGA (See drawing on page: 6-52)					
010	2746987-0000		1	CAM	
TPA STREAMCAP 1000, TPA STREAMCAP 500 (See drawing on page: 6-50)					
010	2746953-0000		1	CAM	
Common Parts					
100	312105-0457		2	SCREW M6S ISO 4014 M8X35 A480	
110	315106-0165		2	WASHER ISO 7089-8-200 HV A4	
120	311103-0405		2	PARALLEL PIN ISO 2338 8M6X30 A1	

Pos	Part No	UN	Qty	Description	Page No

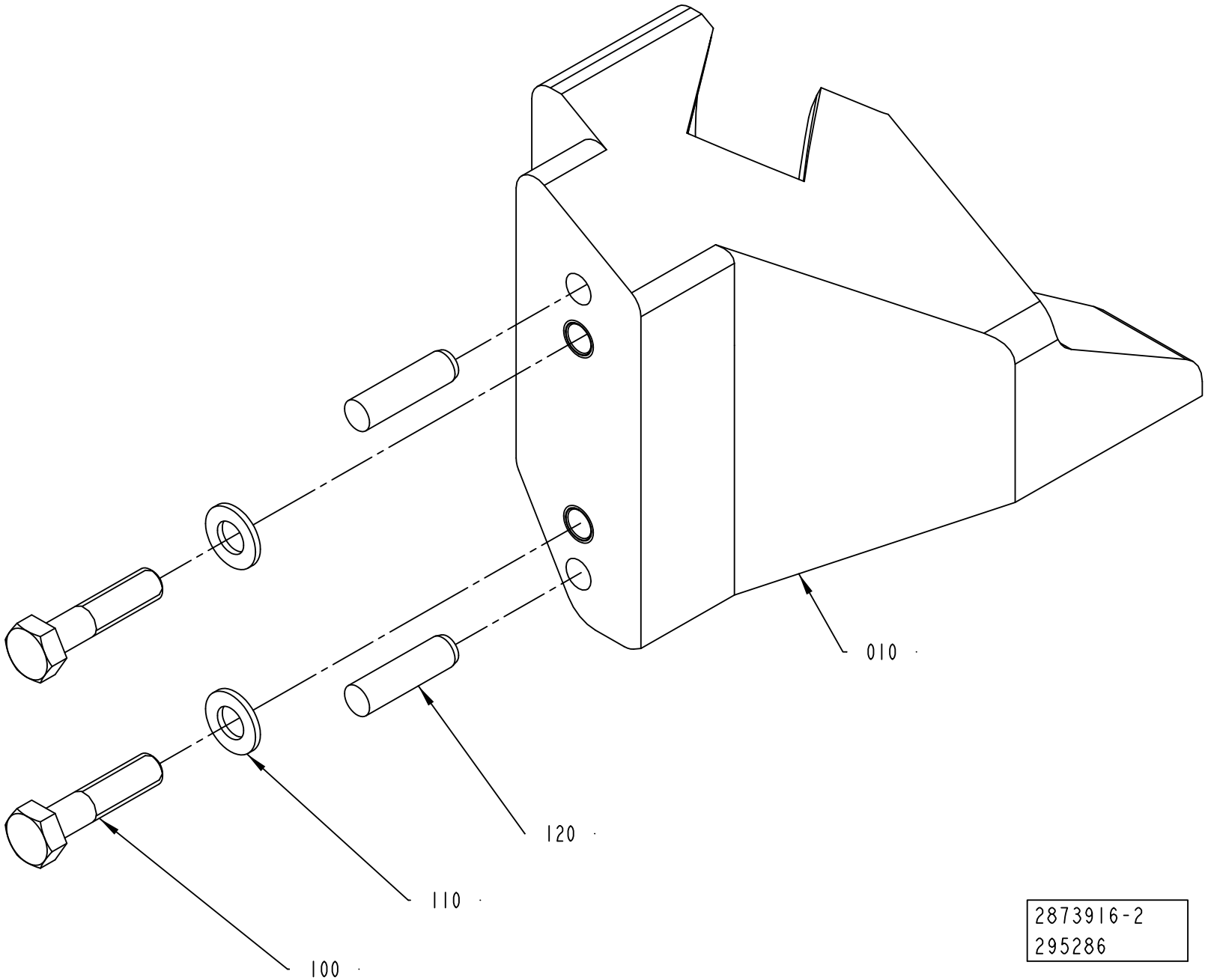
010
120
110
100
2873916-2
295286

ECM: 298772 - 20070323
Group number: 2873916-0100
Assembly Drawing: 2873916-2_1_AA

This list covers pages from 6-50 to 6-53

Pos	Part No	UN	Qty	Description	Page No
TGA (See drawing on page: 6-52)					
010	2746987-0000		1	CAM	
TPA STREAMCAP 1000, TPA STREAMCAP 500 (See drawing on page: 6-50)					
010	2746953-0000		1	CAM	
Common Parts					
100	312105-0457		2	SCREW M6S ISO 4014 M8X35 A480	
110	315106-0165		2	WASHER ISO 7089-8-200 HV A4	
120	311103-0405		2	PARALLEL PIN ISO 2338 8M6X30 A1	

Pos	Part No	UN	Qty	Description	Page No

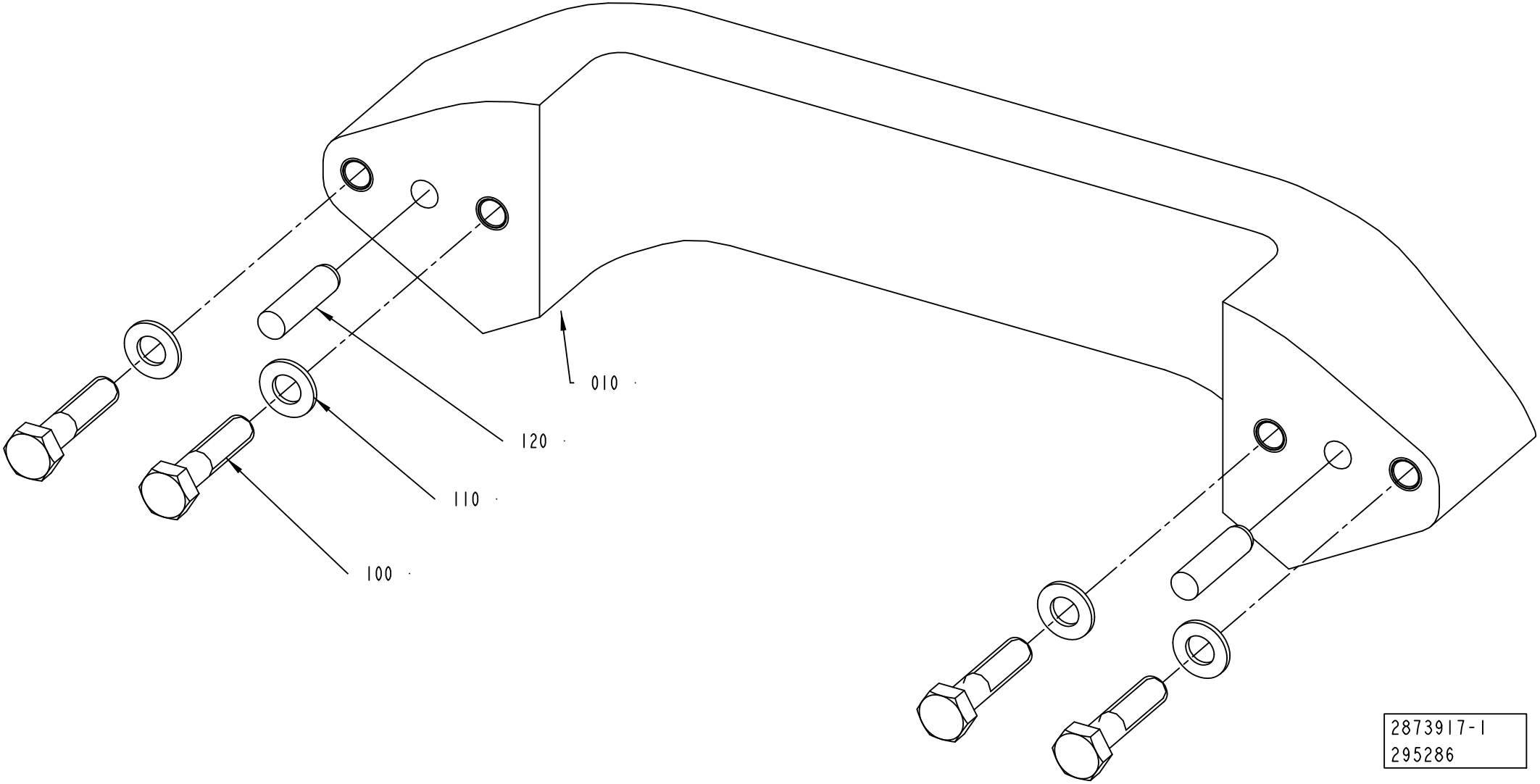
010
120
110
100
2873917-1
295286

ECM: 298771 - 20070323
Group number: 2873917-0100
Assembly Drawing: 2873917-1_1_AA

Pos	Part No	UN	Qty	Description	Page No
-					
010	2746952-0000		1	CAM	
100	312105-0457		4	SCREW M6S ISO 4014 M8X35 A480	
110	315106-0165		4	WASHER ISO 7089-8-200 HV A4	
120	311103-0405		2	PARALLEL PIN ISO 2338 8M6X30 A1	

Pos	Part No	UN	Qty	Description	Page No

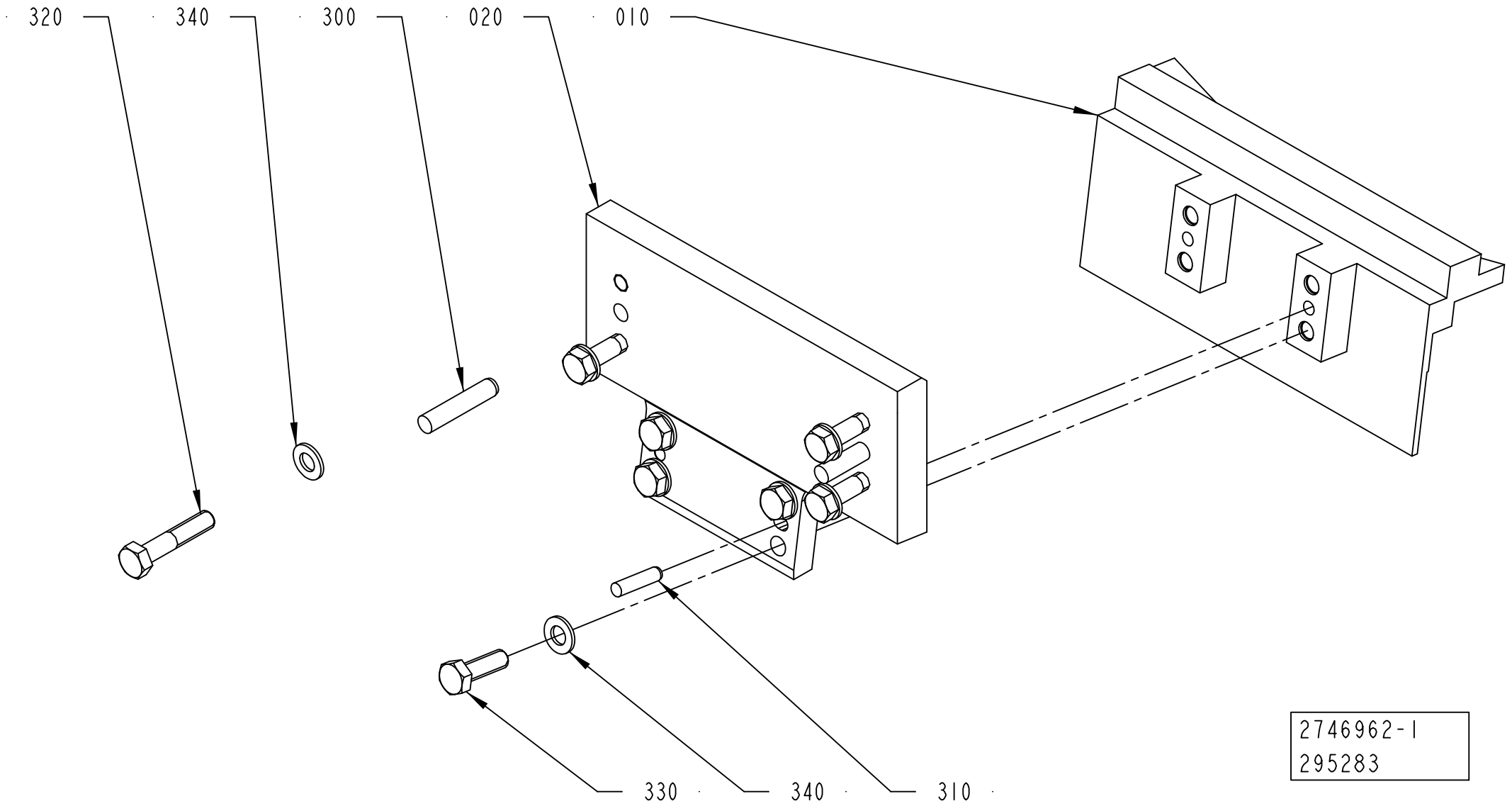
320
340
300
020
010
330
340
310
2746962-1
295283

ECM: 300172 - 20070323
Group number: 2746962-0100
Assembly Drawing: 2746962-1_1_AA

Pos	Part No	UN	Qty	Description	Page No
-					
010	2746963-0000		1	CAM	
020	2780417-0000		1	BRACKET	
300	311103-0409		2	PARALLEL PIN ISO 2338 8M6X40 A1	
310	311103-0355		2	PARALLEL PIN ISO 2338 6M6X25 A1	
320	312105-0459		4	SCREW M6S ISO 4014 M8X40 A480	
330	312105-0453		4	SCREW M6S ISO 4017 M8X25 A480	
340	315106-0165		8	WASHER ISO 7089-8-200 HV A4	

Pos	Part No	UN	Qty	Description	Page No

MOUNTING PLATE

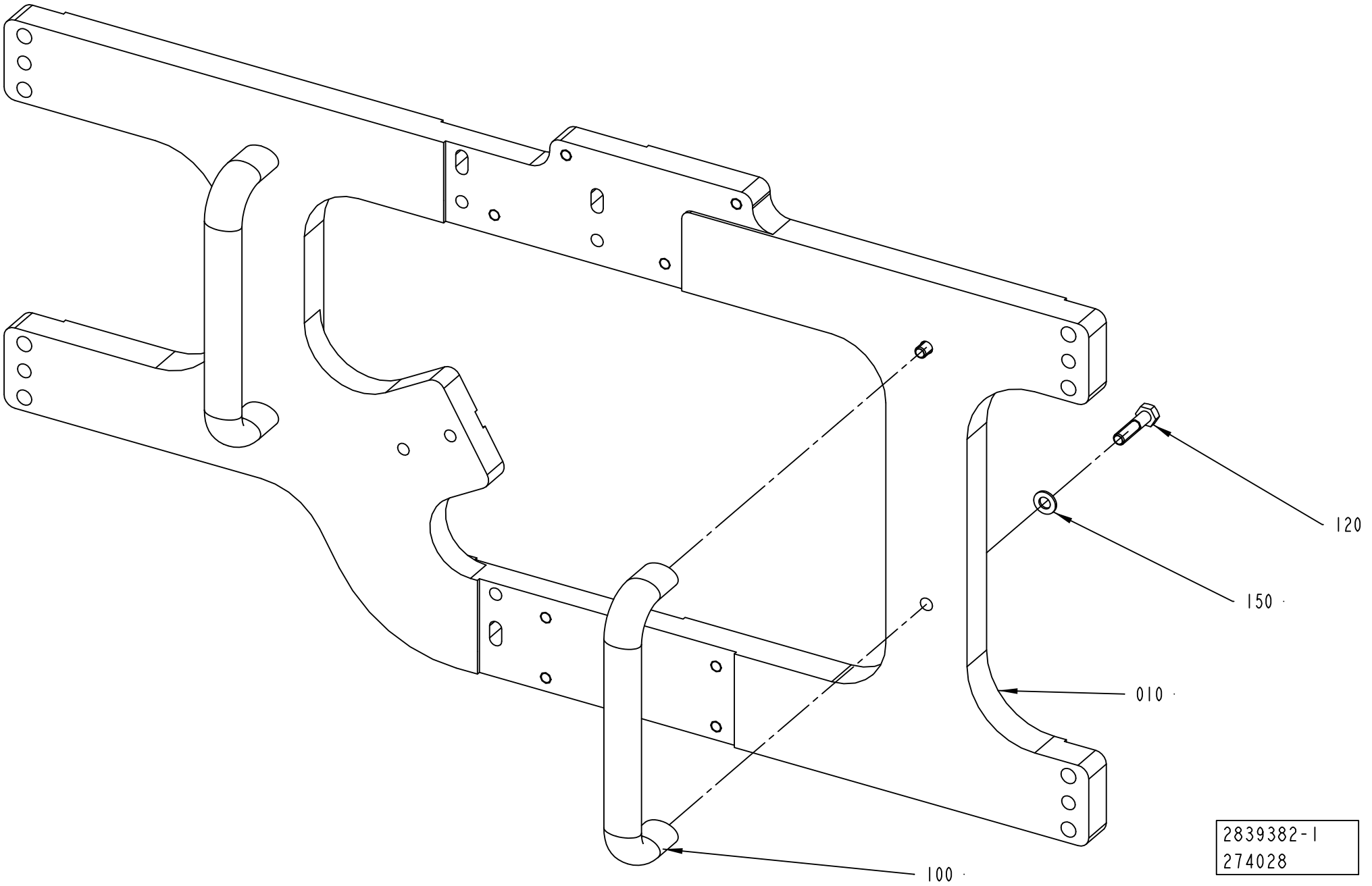

ECM: 298780 - 20070323
Group number: 2839382-0100
Assembly Drawing: 2839382-1_1_AA

Pos	Part No	UN	Qty	Description	Page No
TBA STREAMCAP 1000 NO POSITIONING DEVICE, TBA SLIMCAP 1000 NO POSITIONING DEVICE, TBA SLIMCAP 2000 NO POSITIONING DEVICE					
010	2780379-0000		1	PLATE	
TPA, TGA, TBA SLIMCAP 1000 POSITIONING DEVICE, TBA SLIMCAP 2000 POSITIONING DEVICE, TBA STREAMCAP 1000 POSITIONING DEVICE					
010	2780523-0000		1	PLATE	
Common Parts					
100	90459-3779		2	HANDLE, GN565 SW 192-M8	
120	312105-0457		4	SCREW M6S ISO 4014 M8X35 A480	
150	315105-0165		4	WASHER BRB 8,4X16 RFR	

Pos	Part No	UN	Qty	Description	Page No

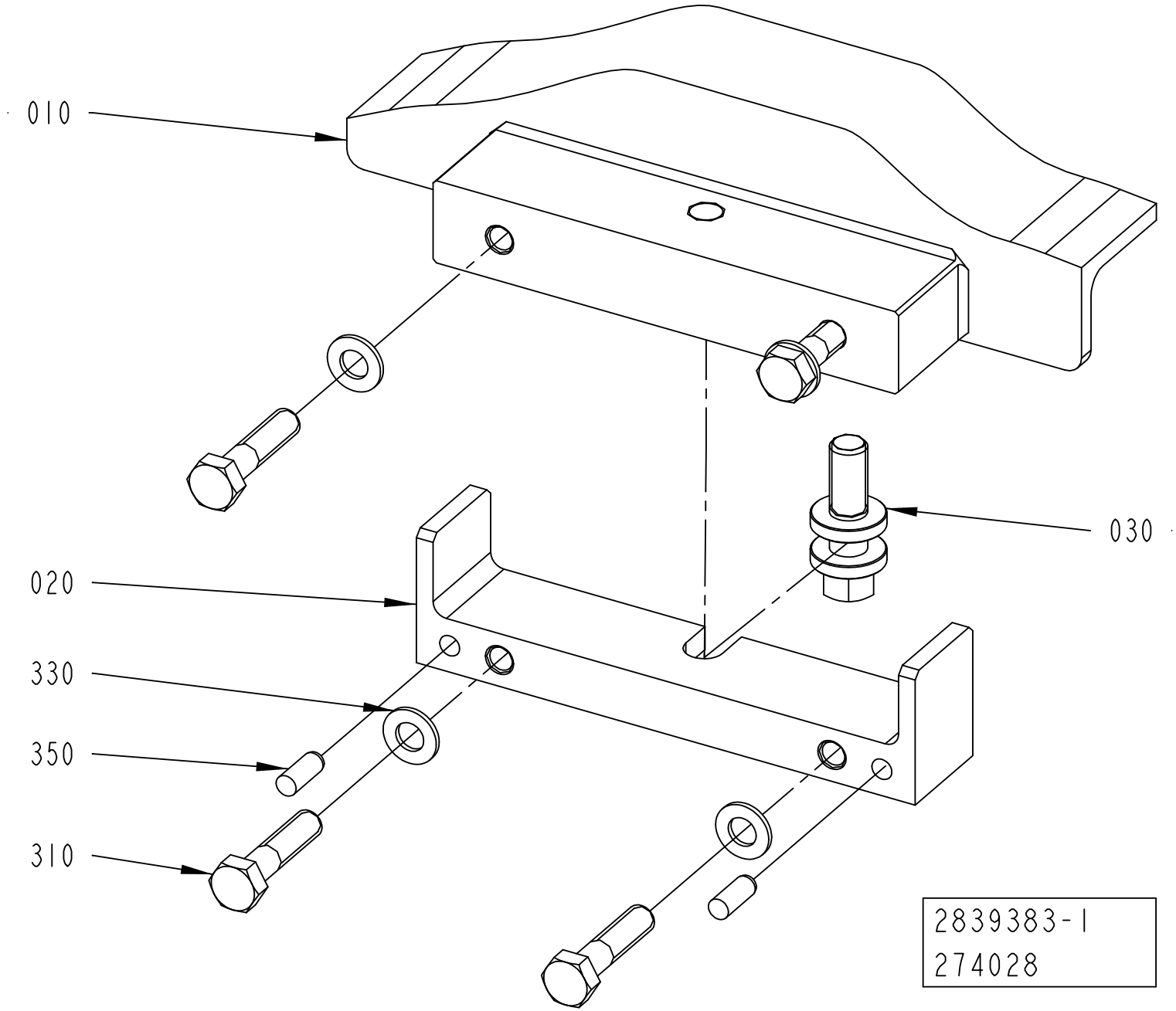
010
020
030
330
350
310
2839383-1
274028

ECM: 274028 - 20060921
Group number: 2839383-0100
Assembly Drawing: 2839383-1_1_AA

Pos	Part No	UN	Qty	Description	Page No
-					
010	2839392-0000		1	CAM	
020	2838277-0000		1	BRACKET	
030	2703842-0000		1	ADJUSTING SCREW	
310	312105-0457		4	SCREW M6S ISO 4014 M8X35 A480	
330	315105-0165		4	WASHER BRB 8,4X16 RFR	
350	311103-0351		2	PARALLEL PIN ISO 2338 6M6X16 A1	

Pos	Part No	UN	Qty	Description	Page No

Machine Type	Group Description	Used-In	Group Number	Page No

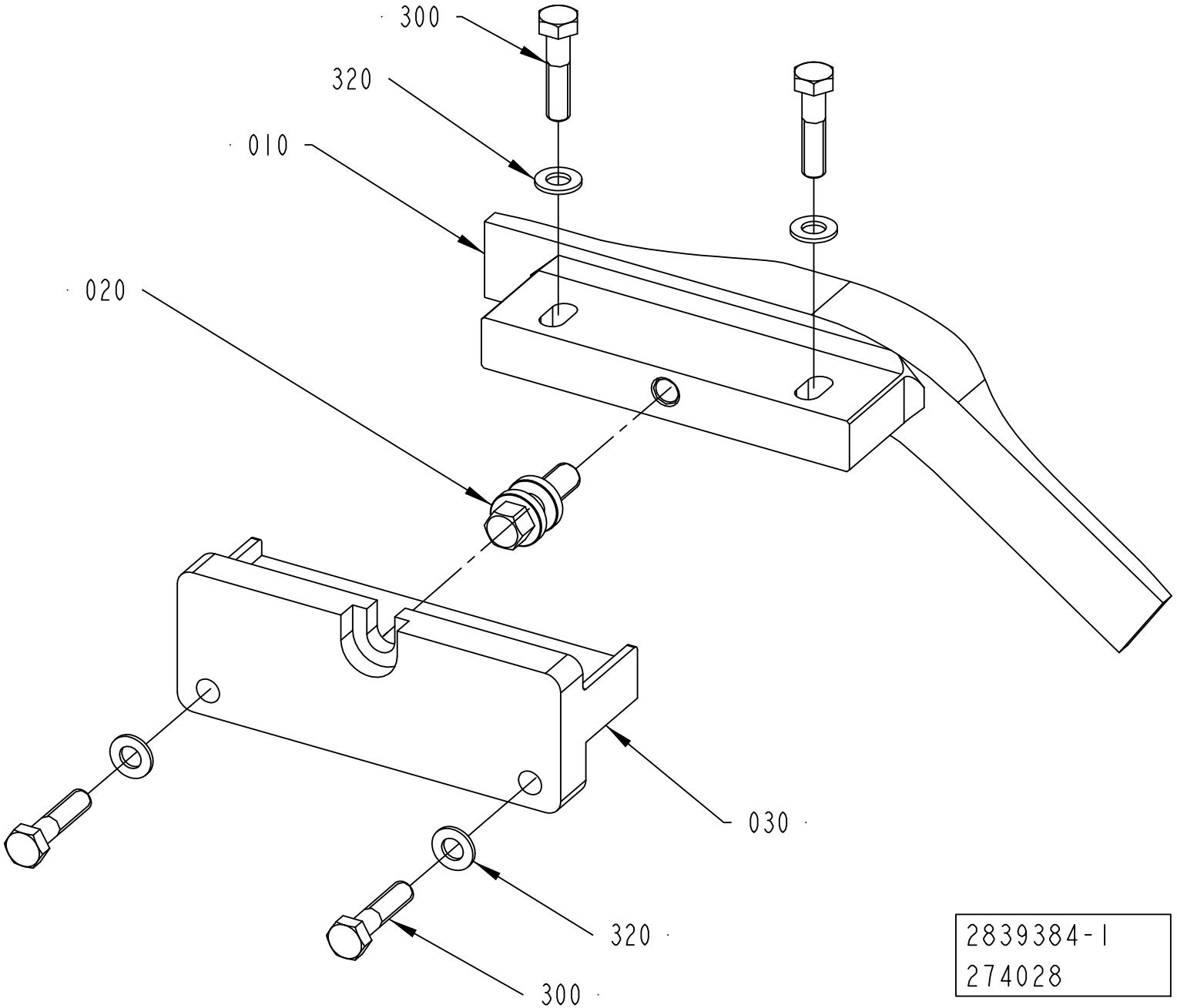
300
320
010
020
030
320
300
2839384-1
274028

ECM: 298777 - 20070323
Group number: 2839384-0100
Assembly Drawing: 2839384-1_1_AA

Pos	Part No	UN	Qty	Description	Page No
STREAMCAP500, STREAMCAP1000, SLIMCAP 2000, SLIMCAP 1000					
010	2839412-0000		1	CAM	
030	2838156-0000		1	BRACKET	
Common Parts					
020	2703842-0000		1	ADJUSTING SCREW	
300	312105-0457		4	SCREW M6S ISO 4014 M8X35 A480	
320	315105-0165		4	WASHER BRB 8,4X16 RFR	

Pos	Part No	UN	Qty	Description	Page No

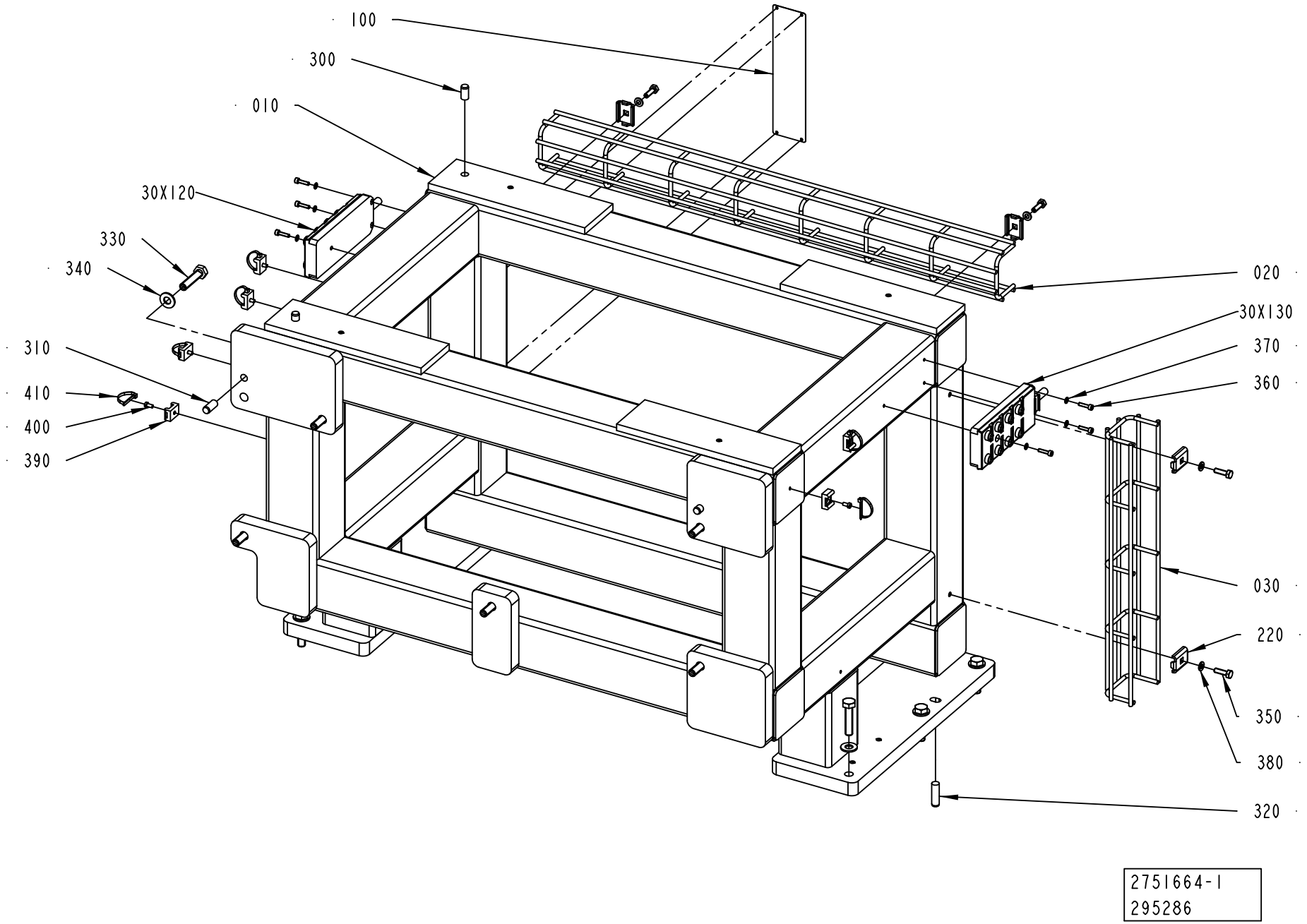
100
300
010
30X120
330
340
310
410
400
390
020
30X130
370
360
030
220
350
380
320
2751664-1
295286

ECM: 298770 - 20070323
Group number: 2751664-0100
Assembly Drawing: 2751664-1_1_AB

Pos	Part No	UN	Qty	Description	Page No
-					
010	2716134-0000		1	FRAME	
020	2838731-0000		1	CABLE	
030	2838732-0000		1	CABLE	
100	580923-0000		1	MACHINE SIGN CE	
220	90181-0183		4	JOINING FITTING	
300	311103-0454		2	PARALLEL PIN ISO 2338 10M6X20 A1	
30X120	90459-0839		1	DISTRIBUTION FRAME, ASBV 8 5-135/10M	
30X130	90459-0839		1	DISTRIBUTION FRAME, ASBV 8 5-135/10M	
310	311103-1456		2	PARALLEL PIN ISO 2338 10M6X24 A1	
320	311103-0460		2	PARALLEL PIN ISO 2338 10M6X35 A1	
330	312109-0500		12	SCREW M6S ISO 4017 M10X45 A480	
340	315105-0173		12	WASHER BRB 10,5X22 RFR	
350	312105-0370		4	SCREW M6S ISO 4017 M6X20 A480	
360	312115-0293		6	SCREW ISO4762 M4X16 A4 80	
370	315105-0136		6	WASHER BRB 4,3X8 RFR	
380	315105-0153		4	WASHER BRB 6,4X12 RFR	
390	352113-0203		6	ANCHOR PLATES FOR STRIPS, TYPE TM3S8-M0	
400	312125-0287		6	SCREW ISO 1207 M4X8 A4	
410	352113-0104		6	CABLE TIE, BLACK 300X4,8 MM	

Pos	Part No	UN	Qty	Description	Page No

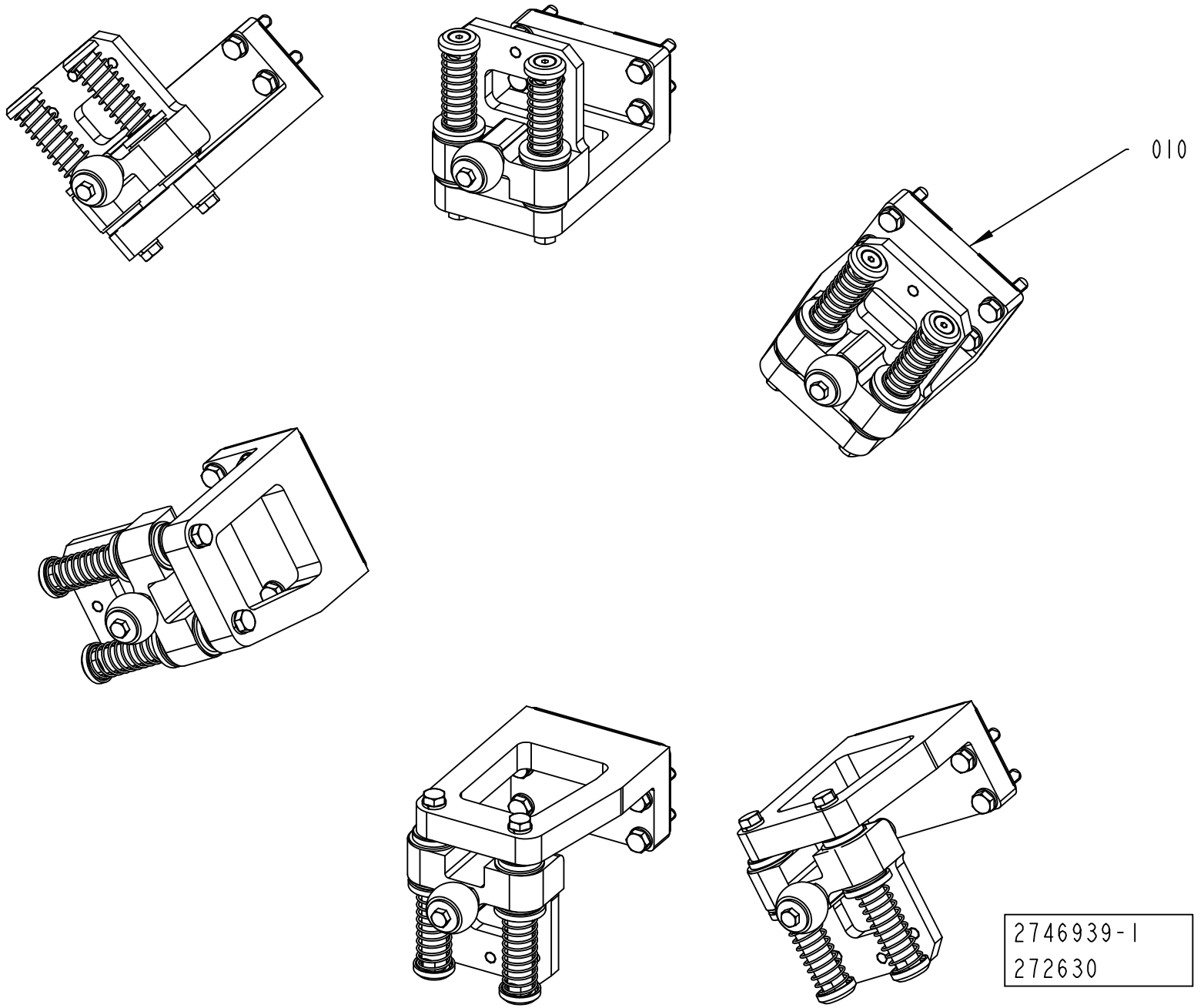
010
2746939-1
272630

ECM: 298775 - 20070323
Group number: 2746939-0100
Assembly Drawing: 2746939-1_1_AA

This list covers pages from 6-66 to 6-69

Pos	Part No	UN	Qty	Description	Page No
-					
010	2703700-0100		6	GUIDE BRACKET	**6-71, 6-73, 6-75, 6-77**

Pos	Part No	UN	Qty	Description	Page No

Machine Type | Group Description | Used-In | Group Number | Page No

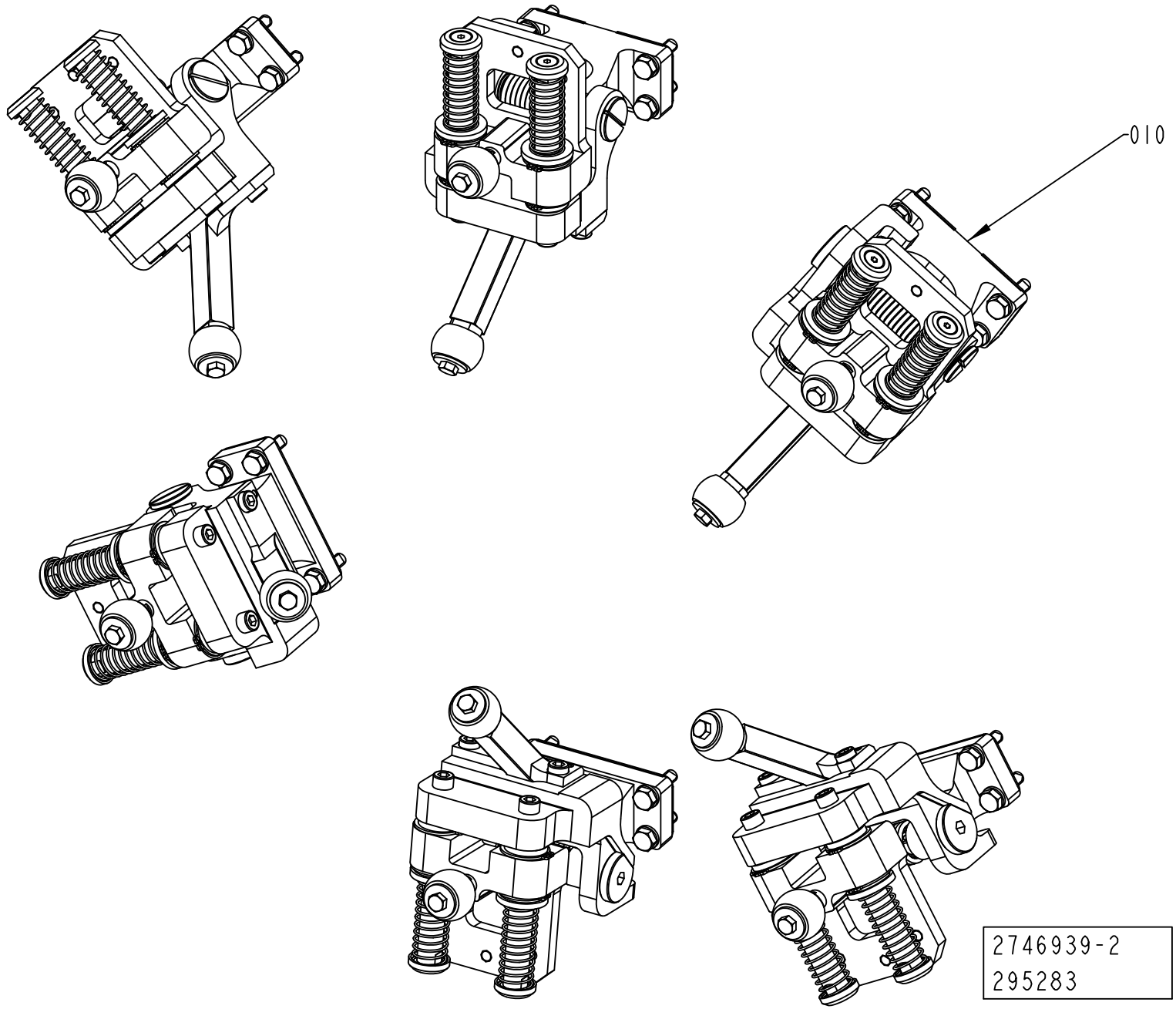
010
2746939-2
295283

ECM: 298775 - 20070323
Group number: 2746939-0100
Assembly Drawing: 2746939-2_1_AA

This list covers pages from 6-66 to 6-69

Pos	Part No	UN	Qty	Description	Page No
-					
010	2703700-0100		6	GUIDE BRACKET	**6-71, 6-73, 6-75, 6-77**

Pos	Part No	UN	Qty	Description	Page No

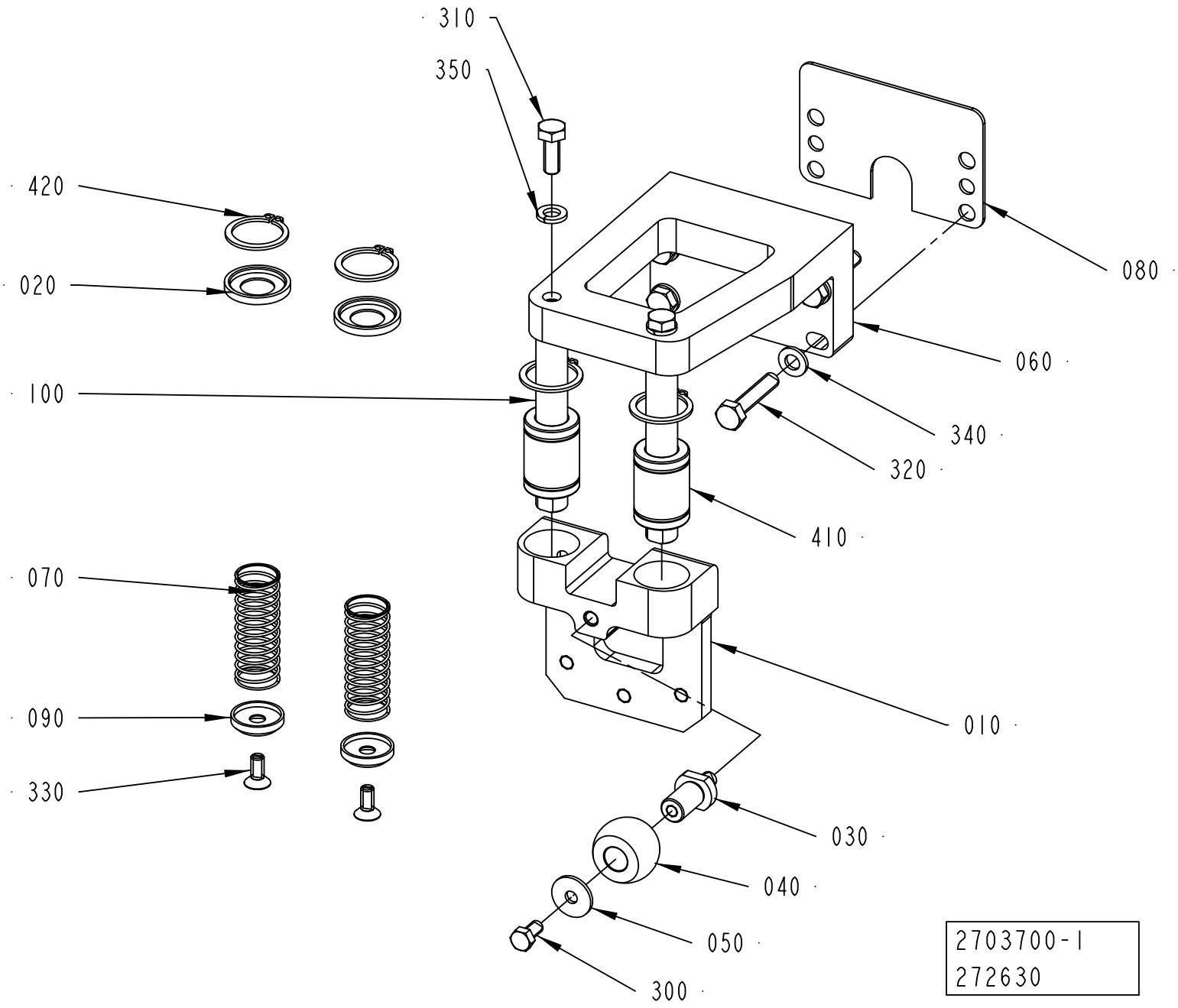
310
350
420
020
100
070
090
330
080
060
340
320
410
010
030
040
050
300
2703700-1
272630

Pos	Part No	UN	Qty	Description	Page No
TBA SLIMCAP 1000 POSITIONING DEVICE, TBA SLIMCAP 2000 POSITIONING DEVICE, TBA STREAMCAP 1000 POSITIONING DEVICE (See drawing on page: 6-76)					
020	2751686-0000		4	WASHER	
040	1556630-0000		2	WHEEL	
050	1556643-0000		1	WASHER	
060	2838723-0000		1	HOLDER	
080	2780431-0000		1	SHIM	
120	2783461-0000		1	BRACKET	
170	2783465-0000		2	SHAFT	
180	2783466-0000		2	COMPRESSION SPRING	
200	2613995-0000		1	SPACER	
220	2746978-0000		1	SHAFT	
230	2811453-0000		2	SCREW	
300	312105-0325		1	SCREW M6S ISO 4017 M5X10 A480	
310	312115-0367		2	SCREW ISO4762 M6X14 A4 80	
320	312105-0372		4	SCREW M6S ISO 4017 M6X25 A480	
360	312105-0335		1	SCREW M6S ISO 4014 M5X30 A480	
370	312115-0366		2	SCREW ISO4762 M6X12 A4 80	
400	315105-0146		1	WASHER BRB 5,3X10 RFR	
410	90600-0375		4	BALL BUSHING, 12X21X30 MM	
420	90600-0373		4	RETAINING RING FOR SHAFT DIN 471 21 A2	
TBA STREAMCAP 1000 NO POSITIONING DEVICE, TBA SLIMCAP 1000 NO POSITIONING DEVICE, TBA SLIMCAP 2000 NO POSITIONING DEVICE (See drawing on page: 6-70)					
020	2751686-0000		2	WASHER	
030	2703683-0000		1	SHAFT	
040	1556630-0000		1	WHEEL	
050	1556643-0000		1	WASHER	
060	2703692-0000		1	HOLDER	
080	2703702-0000		1	SHIM	
300	312105-0325		1	SCREW M6S ISO 4017 M5X10 A480	
310	312105-0368		2	SCREW M6S ISO 4017 M6X16 A480	
320	312109-0374		4	SCREW M6S ISO 4017 M6X30 A480	
350	315402-0156		2	LOCK WASHER FBB 6,5	
410	90600-0375		2	BALL BUSHING, 12X21X30 MM	
420	90600-0373		4	RETAINING RING FOR SHAFT DIN 471 21 A2	
TGA, TPA STREAMCAP 1000 POSITIONING DEVICE, TPA STREAMCAP 500 POSITIONING DEVICE (See drawing on page: 6-72)					
020	2751686-0000		4	WASHER	
030	2703683-0000		1	SHAFT	
040	1556630-0000		3	WHEEL	
050	1556643-0000		2	WASHER	
060	2715699-0000		1	HOLDER	
080	2780431-0000		1	SHIM	
110	2783460-0000		1	GUIDE BRACKET	
120	2783461-0000		1	BRACKET	
130	2783462-0000		1	AXLE PIN	
140	2715701-0000		1	AXLE PIN	
150	2715704-0000		1	SLEEVE	
160	2715885-0000		1	TORSION SPRING	
170	2783465-0000		2	SHAFT	
180	2783466-0000		2	COMPRESSION SPRING	
190	2715826-0000		1	DAMPER	
200	2613995-0000		1	SPACER	
210	2783463-0000		1	ROLLER BRACKET	
220	2746978-0000		1	SHAFT	
230	2811453-0000		2	SCREW	
300	312105-0325		2	SCREW M6S ISO 4017 M5X10 A480	
310	312115-0367		2	SCREW ISO4762 M6X14 A4 80	
320	312105-0372		4	SCREW M6S ISO 4017 M6X25 A480	
360	312105-0335		1	SCREW M6S ISO 4014 M5X30 A480	
370	312115-0366		4	SCREW ISO4762 M6X12 A4 80	
380	312318-0285		2	SCREW ISO4029 M4X6 A4	
390	311103-0268		2	PARALLEL PIN ISO 2338 4M6X12 A1	
400	315105-0146		1	WASHER BRB 5,3X10 RFR	
410	90600-0375		4	BALL BUSHING, 12X21X30 MM	
420	90600-0373		8	RETAINING RING FOR SHAFT DIN 471 21 A2	
430	321154-0180		2	FLANGE BUSHING, 12X14X12 MM	
440	311112-0255		1	SPRING PIN, ISO 8752 4X18-C	
450	90153-0023		1	ADHESIVE, SILICON 251470 TUB 90CC	
TPA STREAMCAP 1000 NO POSITIONING DEVICE, TPA STREAMCAP 500 NO POSITIONING DEVICE (See drawing on page: 6-74)					
020	2751686-0000		2	WASHER	
030	2703683-0000		1	SHAFT	
040	1556630-0000		2	WHEEL	
050	1556643-0000		2	WASHER	
060	2715699-0000		1	HOLDER	
080	2780431-0000		1	SHIM	
110	2811989-0000		1	GUIDE BRACKET	
130	2783462-0000		1	AXLE PIN	
140	2715701-0000		1	AXLE PIN	
150	2715704-0000		1	SLEEVE	
160	2715885-0000		1	TORSION SPRING	
190	2715826-0000		1	DAMPER	
210	2783463-0000		1	ROLLER BRACKET	

GUIDE BRACKET

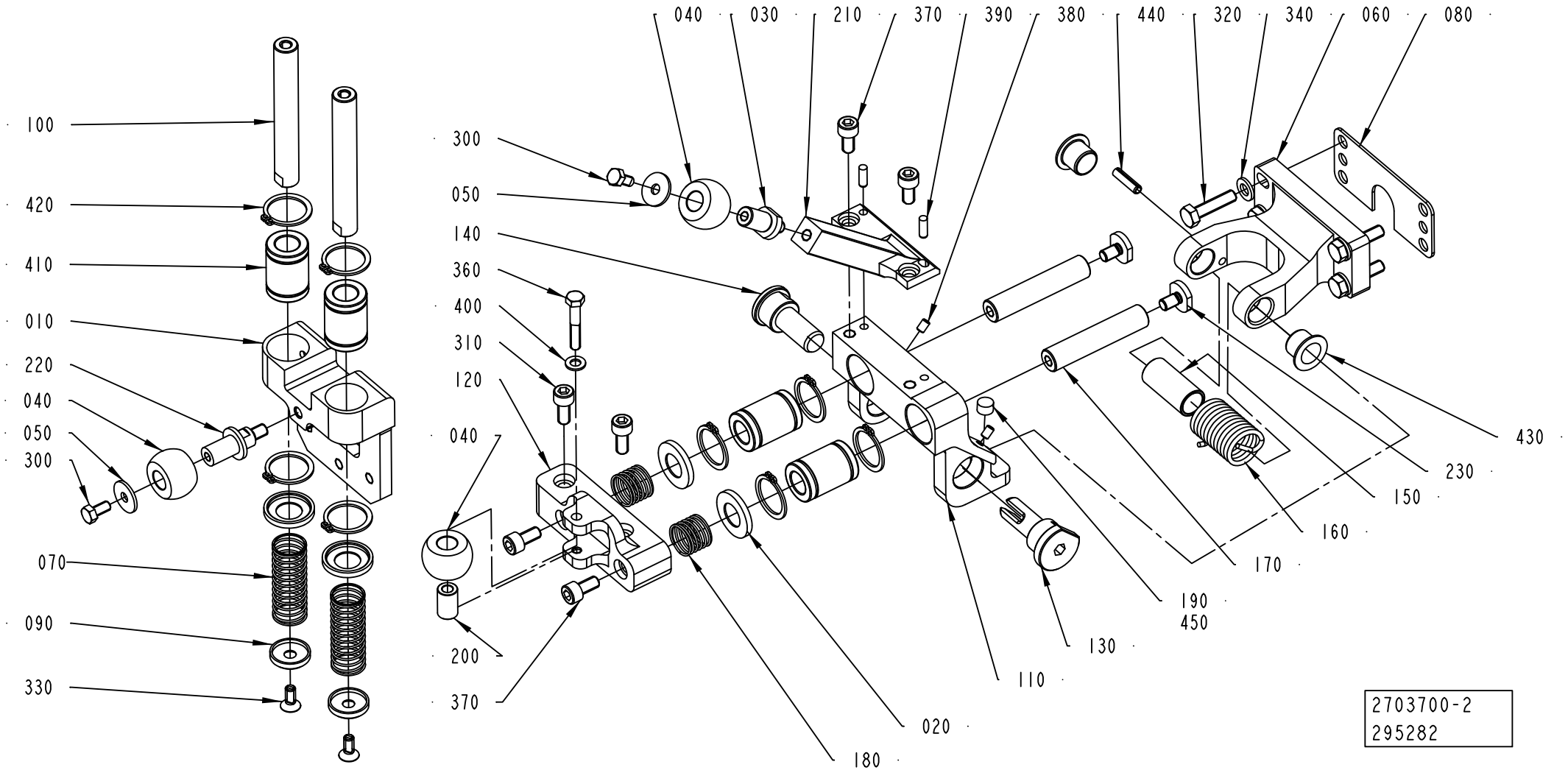

Pos	Part No	UN	Qty	Description	Page No
TPA STREAMCAP 1000 NO POSITIONING DEVICE, TPA STREAMCAP 500 NO POSITIONING DEVICE (Cont'd)					
(See drawing on page: 6-74)					
370	312115-0366		2	SCREW ISO4762 M6X12 A4 80	
380	312318-0285		2	SCREW ISO4029 M4X6 A4	
390	311103-0268		2	PARALLEL PIN ISO 2338 4M6X12 A1	
410	90600-0375		2	BALL BUSHING, 12X21X30 MM	
420	90600-0373		4	RETAINING RING FOR SHAFT DIN 471 21 A2	
430	321154-0180		2	FLANGE BUSHING, 12X14X12 MM	
440	311112-0255		1	SPRING PIN, ISO 8752 4X18-C	
450	90153-0023		1	ADHESIVE, SILICON 251470 TUB 90CC	
Common Parts					
010	2716127-0000		1	SLIDER	
070	2703708-0000		2	SPRING	
090	2751687-0000		2	WASHER	
100	2703679-0000		2	SHAFT	
330	312155-0327		2	SCREW DIN 7991 MF6S M5X12 A4 70	
340	315105-0153		4	WASHER BRB 6,4X12 RFR	

Pos	Part No	UN	Qty	Description	Page No

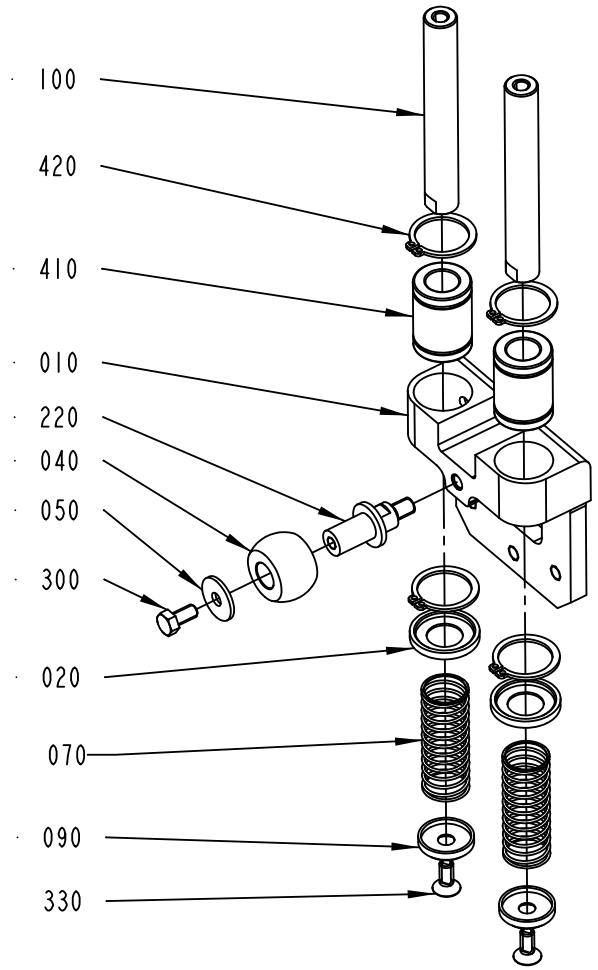

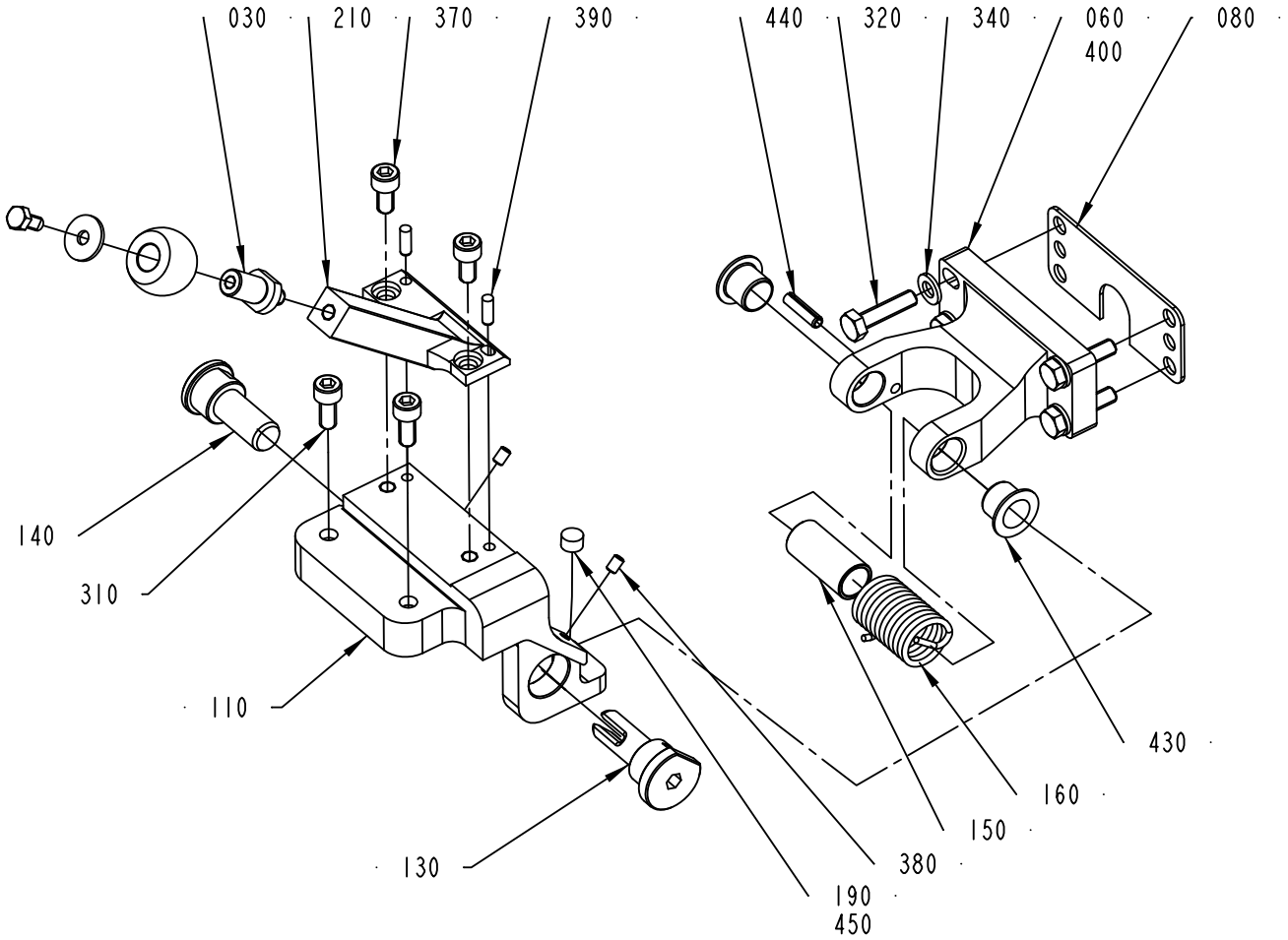

2703700-3
295282

Pos	Part No	UN	Qty	Description	Page No	Pos	Part No	UN	Qty	Description	Page No

SEE PREVIOUS LISTS PAGES: 6-71, 6-73.

GUIDE BRACKET

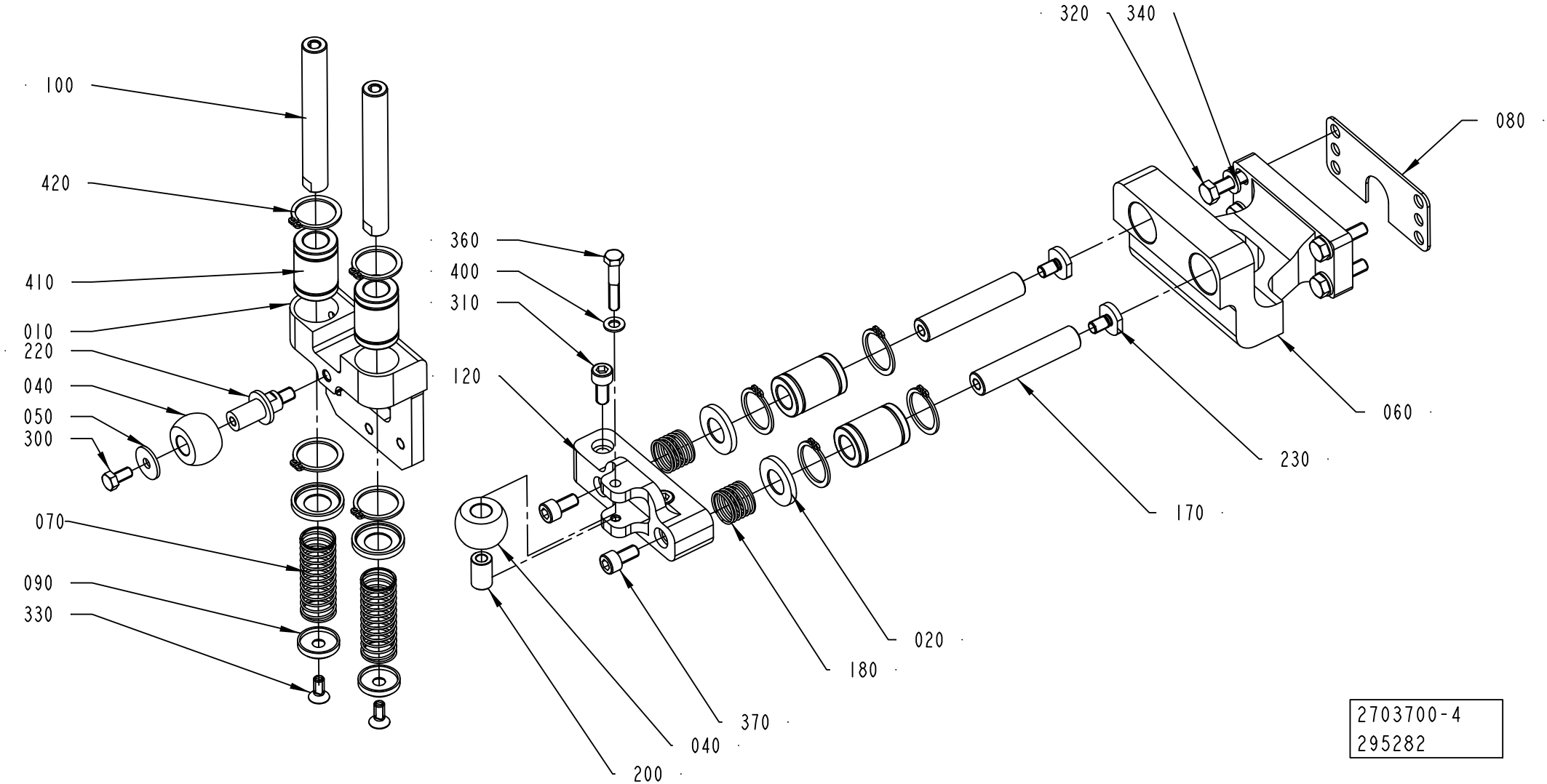

ECM: 299263 - 20070323
Group number: 2703700-0100
Assembly Drawing: 2703700-4_1_AA

This list covers pages from 6-70 to 6-77

Pos	Part No	UN	Qty	Description	Page No
SEE PREVIOUS LISTS PAGES: 6-71, 6-73.					

Pos	Part No	UN	Qty	Description	Page No

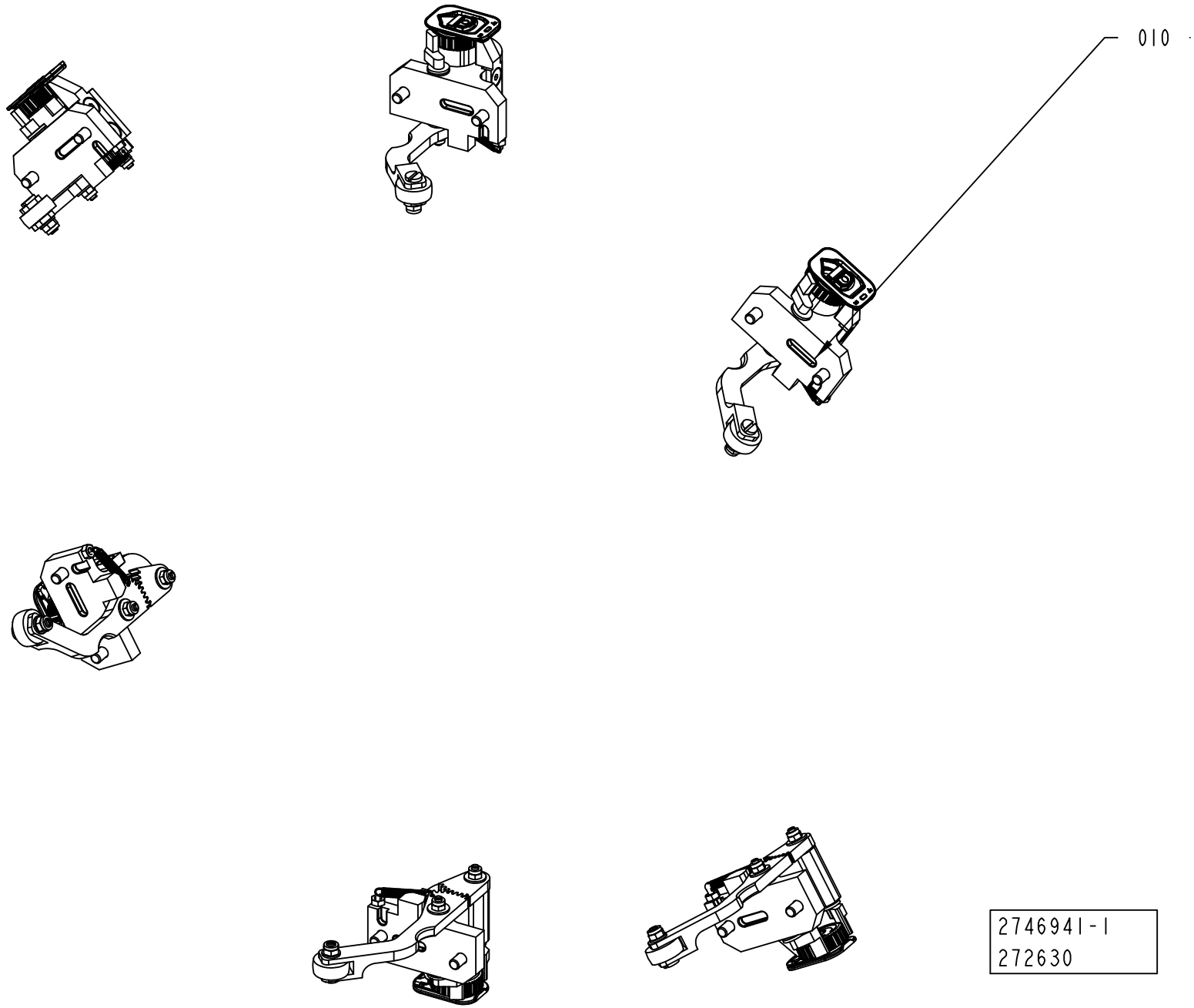

2746941-1
272630

ECM: 299262 - 20070323
Group number: 2746941-0100
Assembly Drawing: 2746941-1_1_AA

Pos	Part No	UN	Qty	Description	Page No
STREAMCAP500, STREAMCAP1000, SLIMCAP 2000, SLIMCAP 1000					
010	2703670-0100		6	CAP HOLDERS GROUP	**6-81, 6-83, 6-85, 6-87**

Pos	Part No	UN	Qty	Description	Page No

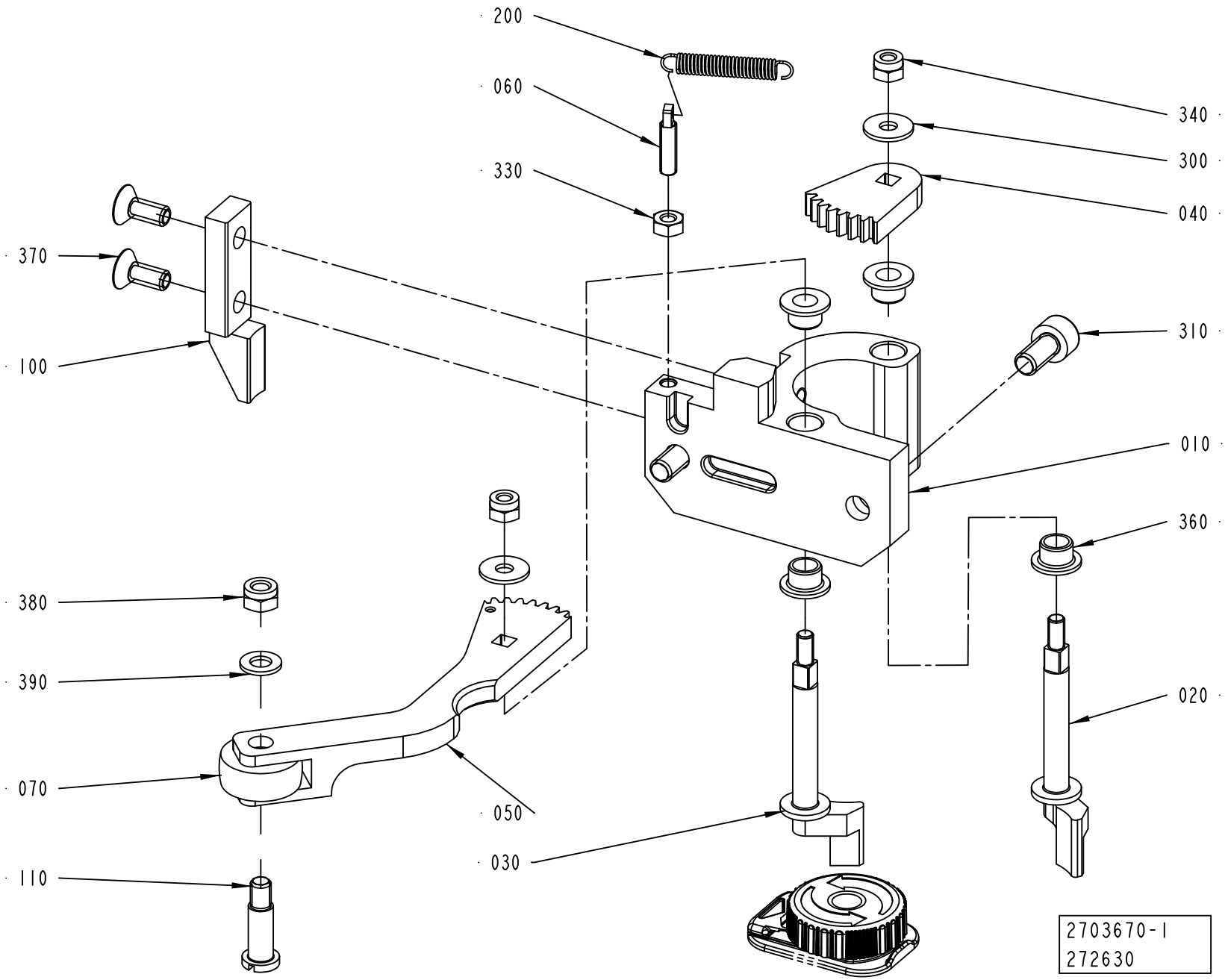
200
060
330
370
100
340
300
040
310
010
360
020
380
390
070
110
050
030
2703670-1
272630

ECM: 299264 - 20070323
Group number: 2703670-0100
Assembly Drawing: 2703670-1_1_AA

This list covers pages from 6-80 to 6-87

Pos	Part No	UN	Qty	Description	Page No
SLIMCAP 1000 (See drawing on page: 6-80)					
020	2703671-0000		1	CLAW	
030	2703672-0000		1	CLAW	
100	2715887-0000		1	PULLER	
SLIMCAP 2000 (See drawing on page: 6-84)					
020	2838711-0000		1	CLAW	
030	2838712-0000		1	CLAW	
100	2838713-0000		1	PULLER	
STREAMCAP1000 (See drawing on page: 6-82)					
020	2715828-0000		1	CLAW	
030	2715829-0000		1	CLAW	
100	2768157-0000		1	PULLER	
STREAMCAP500 (See drawing on page: 6-86)					
020	2838715-0000		1	CLAW	
030	2838714-0000		1	CLAW	
100	2838716-0000		1	PULLER	
Common Parts					
010	2715827-0000		1	HOLDER	
040	2703673-0000		1	TOOTHED DISC	
050	2703674-0000		1	FOLLOWER ARM	
060	1258990-0000		1	SPRING BRACKET	
070	1556626-0000		1	WHEEL	
110	2746922-0000		1	SHAFT	
200	90600-0364		1	TENSION SPRING 3727, 0,6X5X27	
300	90005-0082		2	WASHER PLAIN ROUND 4,3(M4)/12,H=1	
310	312115-0366		2	SCREW ISO4762 M6X12 A4 80	
330	312605-0312		1	HEXAGON NUT, M6M M4 A280	
340	312812-0312		2	HEXAGON NUT, NY-LOCK M4 A480	
360	321154-0060		4	FLANGE BUSHING, 6X8X6 MM	
370	312155-0327		2	SCREW DIN 7991 MF6S M5X12 A4 70	
380	312812-0314		1	HEXAGON NUT, NY-LOCK M5 A480	
390	315105-0146		1	WASHER BRB 5,3X10 RFR	

Pos	Part No	UN	Qty	Description	Page No

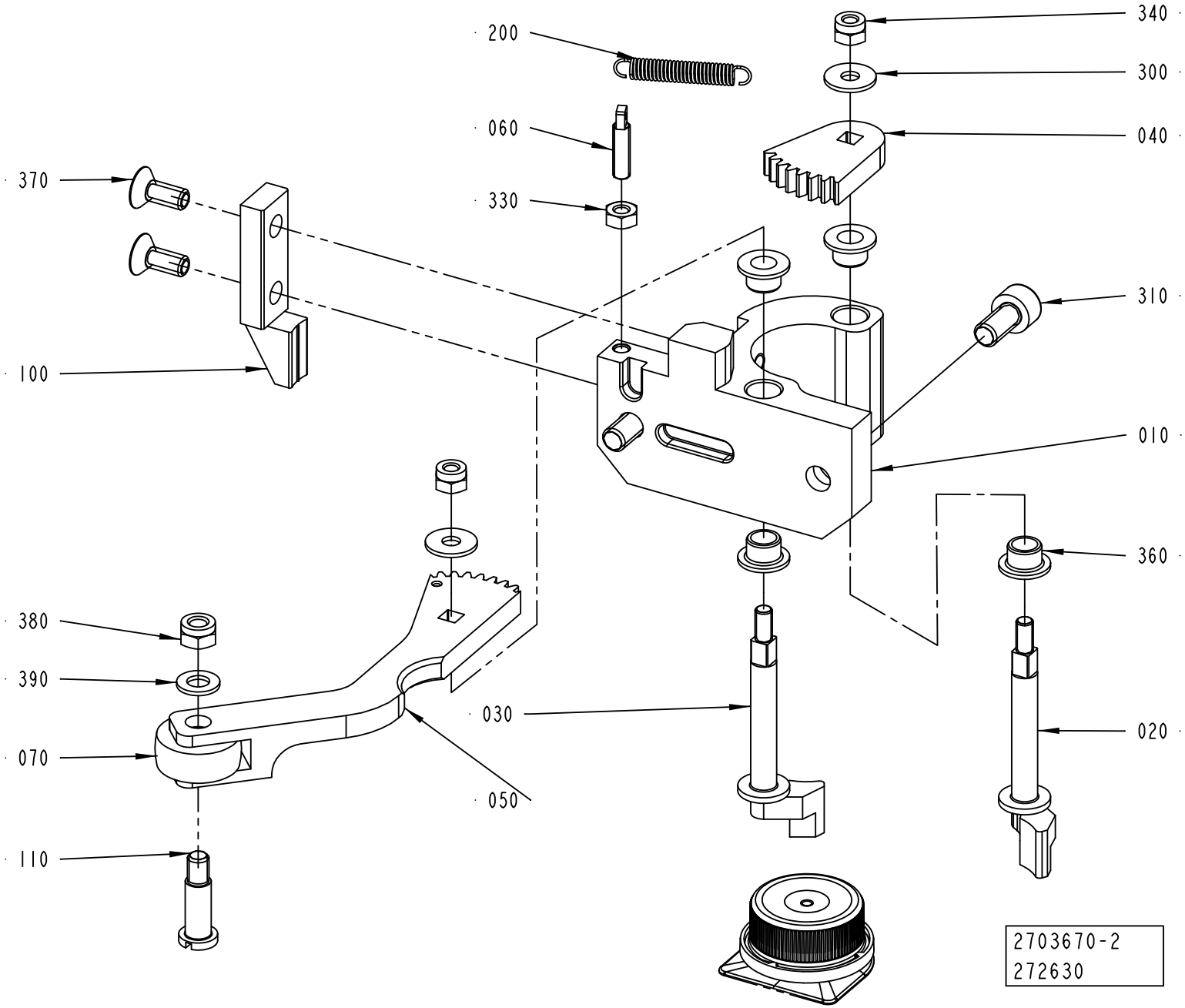
200
340
300
060
040
370
330
310
100
010
360
380
390
030
020
070
050
110
2703670-2
272630

ECM: 299264 - 20070323
Group number: 2703670-0100
Assembly Drawing: 2703670-2_1_AA

This list covers pages from 6-80 to 6-87

Pos	Part No	UN	Qty	Description	Page No
SLIMCAP 1000 (See drawing on page: 6-80)					
020	2703671-0000		1	CLAW	
030	2703672-0000		1	CLAW	
100	2715887-0000		1	PULLER	
SLIMCAP 2000 (See drawing on page: 6-84)					
020	2838711-0000		1	CLAW	
030	2838712-0000		1	CLAW	
100	2838713-0000		1	PULLER	
STREAMCAP1000 (See drawing on page: 6-82)					
020	2715828-0000		1	CLAW	
030	2715829-0000		1	CLAW	
100	2768157-0000		1	PULLER	
STREAMCAP500 (See drawing on page: 6-86)					
020	2838715-0000		1	CLAW	
030	2838714-0000		1	CLAW	
100	2838716-0000		1	PULLER	
Common Parts					
010	2715827-0000		1	HOLDER	
040	2703673-0000		1	TOOTHED DISC	
050	2703674-0000		1	FOLLOWER ARM	
060	1258990-0000		1	SPRING BRACKET	
070	1556626-0000		1	WHEEL	
110	2746922-0000		1	SHAFT	
200	90600-0364		1	TENSION SPRING 3727, 0,6X5X27	
300	90005-0082		2	WASHER PLAIN ROUND 4,3(M4)/12,H=1	
310	312115-0366		2	SCREW ISO4762 M6X12 A4 80	
330	312605-0312		1	HEXAGON NUT, M6M M4 A280	
340	312812-0312		2	HEXAGON NUT, NY-LOCK M4 A480	
360	321154-0060		4	FLANGE BUSHING, 6X8X6 MM	
370	312155-0327		2	SCREW DIN 7991 MF6S M5X12 A4 70	
380	312812-0314		1	HEXAGON NUT, NY-LOCK M5 A480	
390	315105-0146		1	WASHER BRB 5,3X10 RFR	

Pos	Part No	UN	Qty	Description	Page No

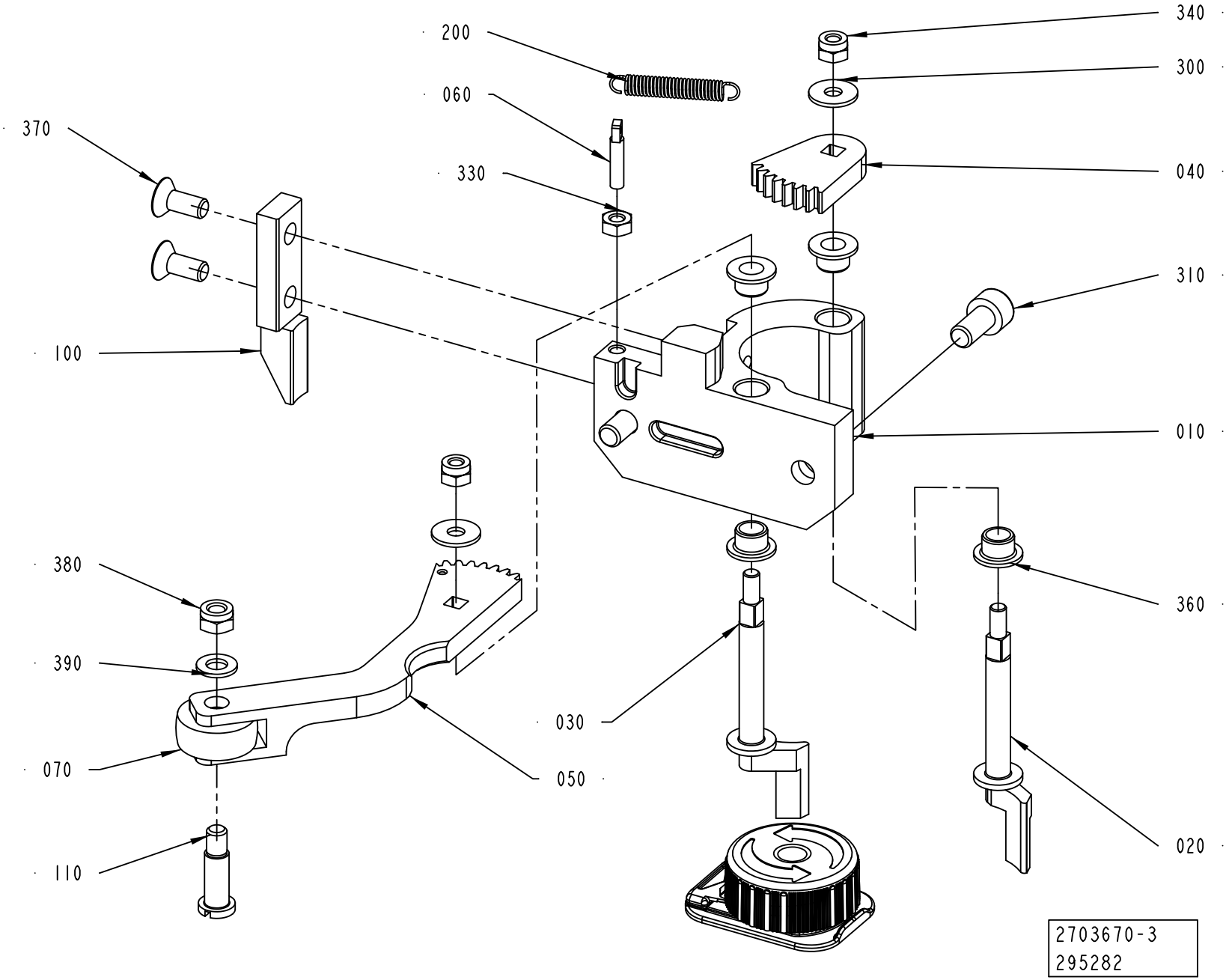
200
060
330
370
100
340
300
040
310
010
360
020
030
050
380
390
070
110
2703670-3
295282

ECM: 299264 - 20070323
Group number: 2703670-0100
Assembly Drawing: 2703670-3_1_AA

This list covers pages from 6-80 to 6-87

Pos	Part No	UN	Qty	Description	Page No
SLIMCAP 1000 (See drawing on page: 6-80)					
020	2703671-0000		1	CLAW	
030	2703672-0000		1	CLAW	
100	2715887-0000		1	PULLER	
SLIMCAP 2000 (See drawing on page: 6-84)					
020	2838711-0000		1	CLAW	
030	2838712-0000		1	CLAW	
100	2838713-0000		1	PULLER	
STREAMCAP1000 (See drawing on page: 6-82)					
020	2715828-0000		1	CLAW	
030	2715829-0000		1	CLAW	
100	2768157-0000		1	PULLER	
STREAMCAP500 (See drawing on page: 6-86)					
020	2838715-0000		1	CLAW	
030	2838714-0000		1	CLAW	
100	2838716-0000		1	PULLER	
Common Parts					
010	2715827-0000		1	HOLDER	
040	2703673-0000		1	TOOTHED DISC	
050	2703674-0000		1	FOLLOWER ARM	
060	1258990-0000		1	SPRING BRACKET	
070	1556626-0000		1	WHEEL	
110	2746922-0000		1	SHAFT	
200	90600-0364		1	TENSION SPRING 3727, 0,6X5X27	
300	90005-0082		2	WASHER PLAIN ROUND 4,3(M4)/12,H=1	
310	312115-0366		2	SCREW ISO4762 M6X12 A4 80	
330	312605-0312		1	HEXAGON NUT, M6M M4 A280	
340	312812-0312		2	HEXAGON NUT, NY-LOCK M4 A480	
360	321154-0060		4	FLANGE BUSHING, 6X8X6 MM	
370	312155-0327		2	SCREW DIN 7991 MF6S M5X12 A4 70	
380	312812-0314		1	HEXAGON NUT, NY-LOCK M5 A480	
390	315105-0146		1	WASHER BRB 5,3X10 RFR	

Pos	Part No	UN	Qty	Description	Page No

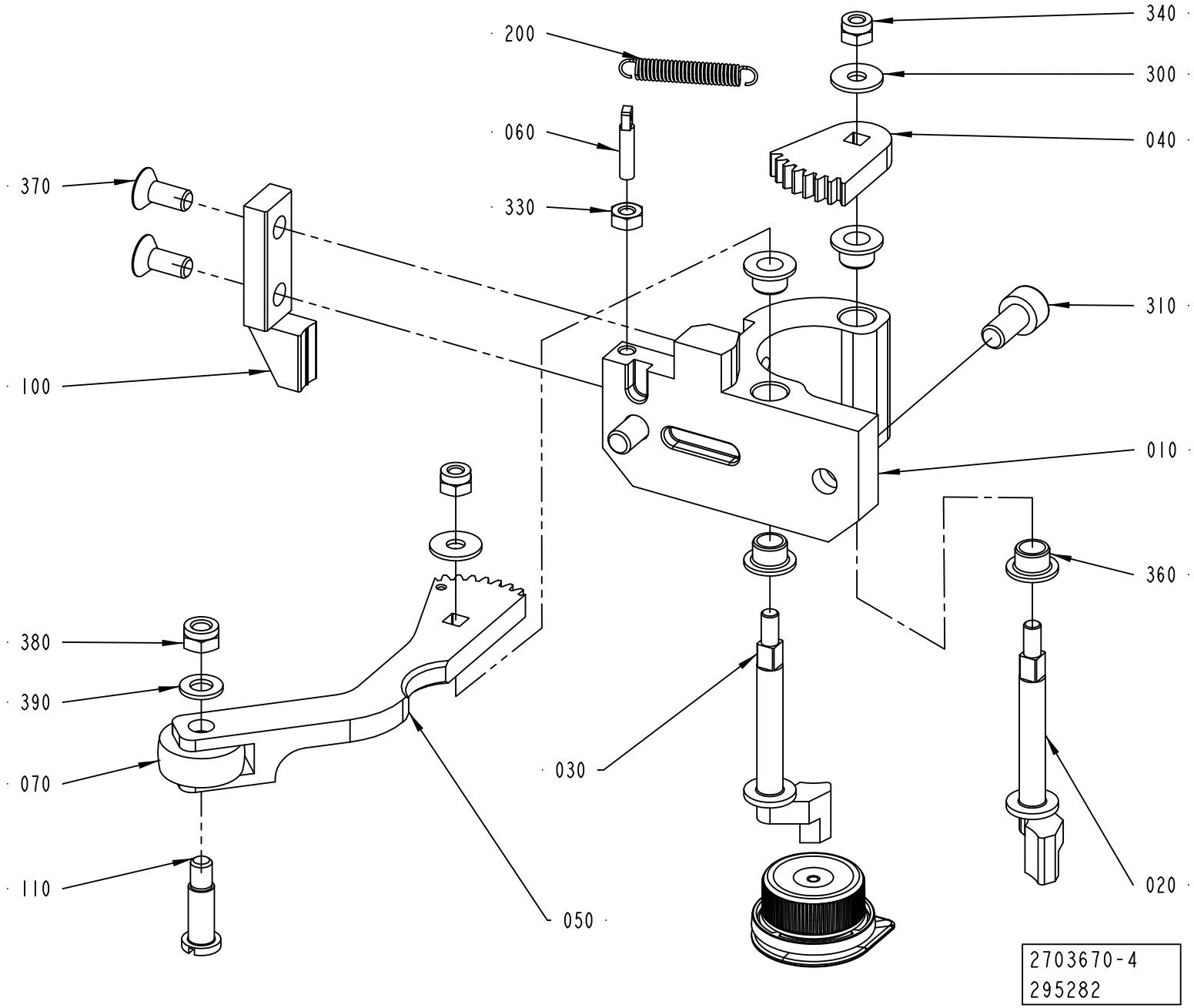
200
340
300
060
040
370
330
310
100
010
360
380
390
070
030
110
050
020
2703670-4
295282

ECM: 299264 - 20070323
Group number: 2703670-0100
Assembly Drawing: 2703670-4_1_AA

This list covers pages from 6-80 to 6-87

Pos	Part No	UN	Qty	Description	Page No
SLIMCAP 1000 (See drawing on page: 6-80)					
020	2703671-0000		1	CLAW	
030	2703672-0000		1	CLAW	
100	2715887-0000		1	PULLER	
SLIMCAP 2000 (See drawing on page: 6-84)					
020	2838711-0000		1	CLAW	
030	2838712-0000		1	CLAW	
100	2838713-0000		1	PULLER	
STREAMCAP1000 (See drawing on page: 6-82)					
020	2715828-0000		1	CLAW	
030	2715829-0000		1	CLAW	
100	2768157-0000		1	PULLER	
STREAMCAP500 (See drawing on page: 6-86)					
020	2838715-0000		1	CLAW	
030	2838714-0000		1	CLAW	
100	2838716-0000		1	PULLER	
Common Parts					
010	2715827-0000		1	HOLDER	
040	2703673-0000		1	TOOTHED DISC	
050	2703674-0000		1	FOLLOWER ARM	
060	1258990-0000		1	SPRING BRACKET	
070	1556626-0000		1	WHEEL	
110	2746922-0000		1	SHAFT	
200	90600-0364		1	TENSION SPRING 3727, 0,6X5X27	
300	90005-0082		2	WASHER PLAIN ROUND 4,3(M4)/12,H=1	
310	312115-0366		2	SCREW ISO4762 M6X12 A4 80	
330	312605-0312		1	HEXAGON NUT, M6M M4 A280	
340	312812-0312		2	HEXAGON NUT, NY-LOCK M4 A480	
360	321154-0060		4	FLANGE BUSHING, 6X8X6 MM	
370	312155-0327		2	SCREW DIN 7991 MF6S M5X12 A4 70	
380	312812-0314		1	HEXAGON NUT, NY-LOCK M5 A480	
390	315105-0146		1	WASHER BRB 5,3X10 RFR	

Pos	Part No	UN	Qty	Description	Page No

Tetra Pak

SPC
Spare Parts Catalogue

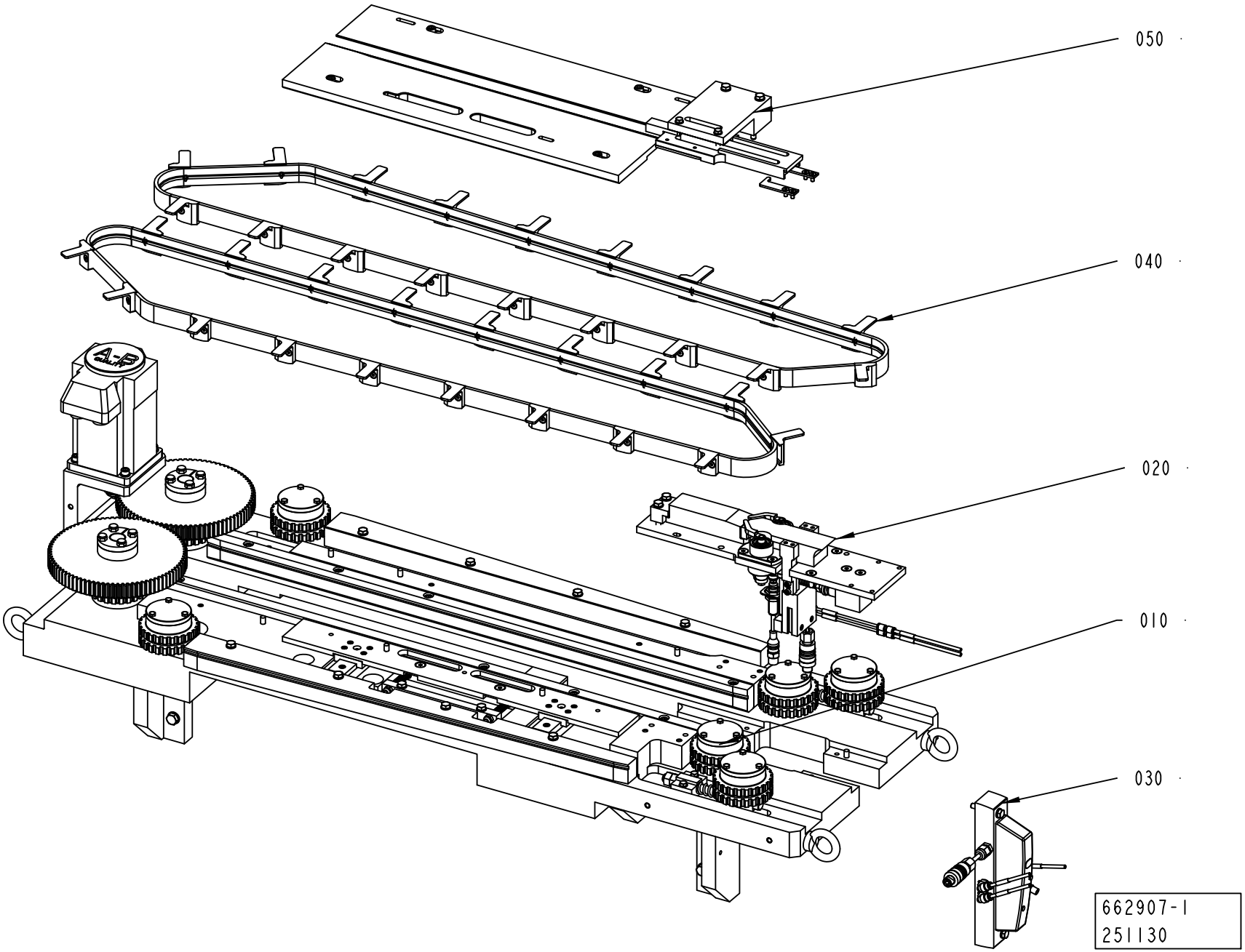
050
040
020
010
030
662907-1
251130

ECM: 271604 - 20060920
Group number: 662907-0100
Assembly Drawing: 662907-1_1_AA

Pos	Part No	UN	Qty	Description	Page No
-					
010	2746933-0100		1	BASE UNIT	**7-5**
020	2746934-0100		1	FEED UNIT	**7-19**
030	2746932-0100		1	PNEUMATIC UNIT	**7-29**
040	2746929-0100		1	CARRIER BELT	**7-31**
050	2746928-0100		1	CAP LINE	**7-37, 7-39**

Pos	Part No	UN	Qty	Description	Page No

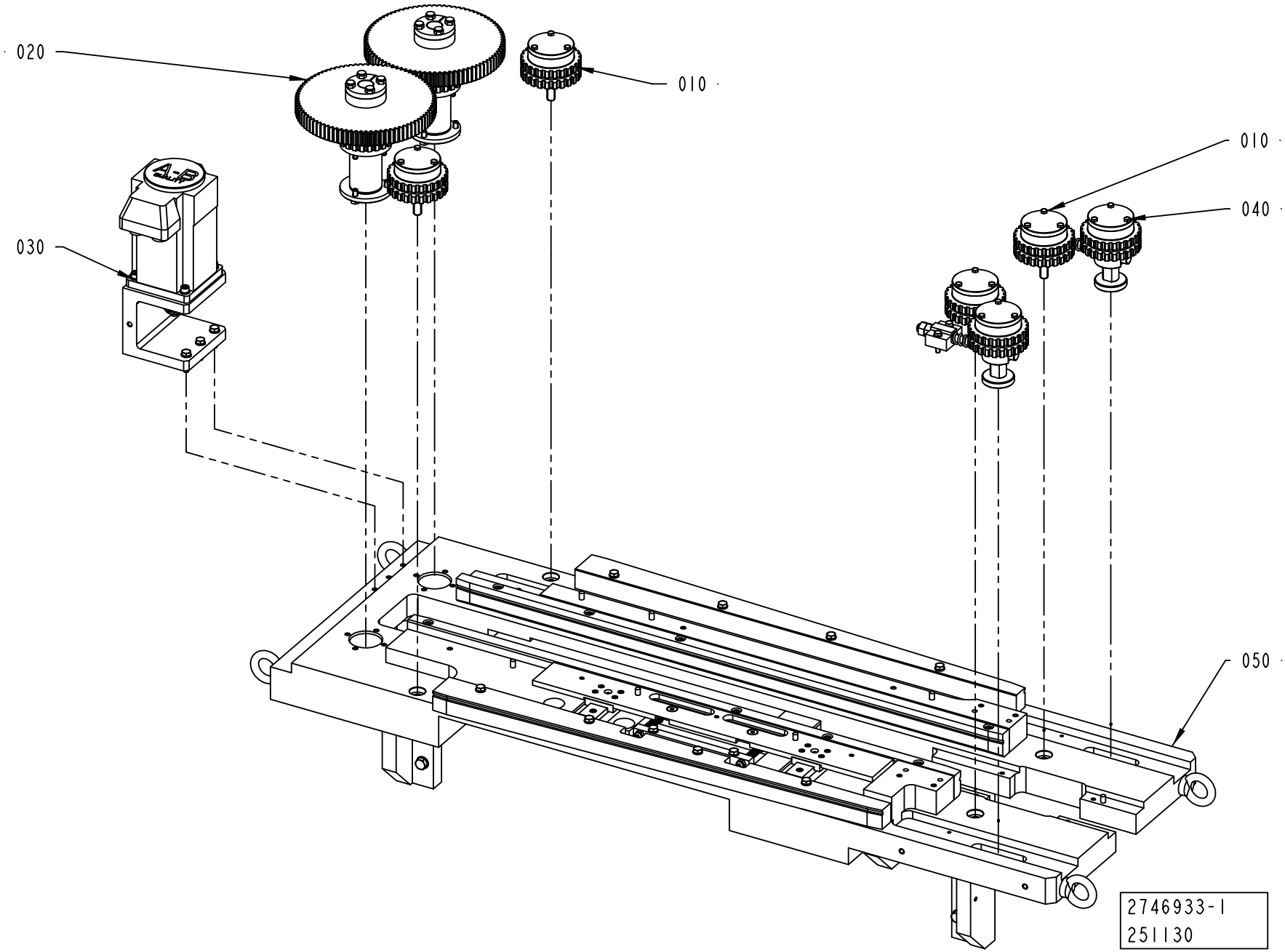
020
010
010
040
030
050
2746933-1
251130

ECM: 263058 - 20060920
Group number: 2746933-0100
Assembly Drawing: 2746933-1_1_AA

Pos	Part No	UN	Qty	Description	Page No
-					
010	2715669-0100		4	TOOTHED PULLEY	**7-7**
020	2715976-0100		2	TOOTHED PULLEY	**7-9**
030	2727407-0100		1	DRIVE PULLEY	**7-11**
040	2716018-0100		2	TOOTHED PULLEY	**7-13**
050	2716049-0200		1	CAP LINE	**7-15**

Pos	Part No	UN	Qty	Description	Page No

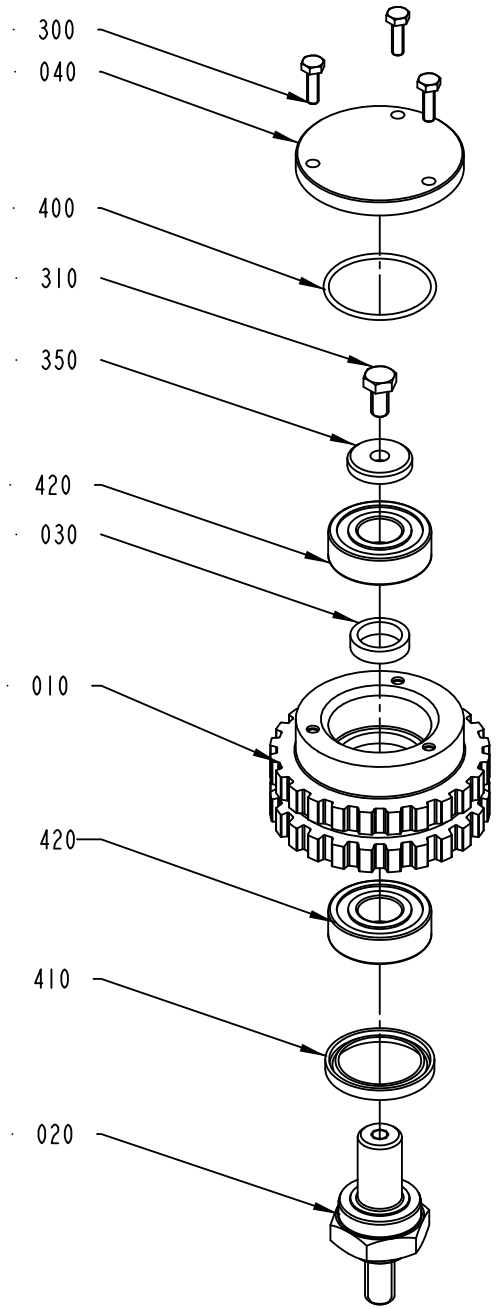

2715669-1
251129

ECM: 290142 - 20061221
Group number: 2715669-0100
Assembly Drawing: 2715669-1_1_AA

Pos	Part No	UN	Qty	Description	Page No
-					
010	2780452-0000		1	TOOTHED PULLEY	
020	2715978-0000		1	SHAFT	
030	2736447-0000		1	SPACER	
040	2736449-0000		1	COVER	
300	312105-0292		3	SCREW M6S ISO 4017 M4X14 A470	
310	312105-0366		1	SCREW M6S ISO 4017 M6X12 A480	
350	315125-0153		1	WASHER TBRSB 6,4X22X4 A4	
400	315202-0716		1	O-RING 34,65X1,78 MM	
410	315230-0330		1	BEARING SEAL G28X37X4 MM	
420	321309-0102		2	BALL BEARING, 15X35X11 MM	
430	90296-0068	G	50	SHELL ALVANIA GREASE EP 2	

Pos	Part No	UN	Qty	Description	Page No

TOOTHED PULLEY

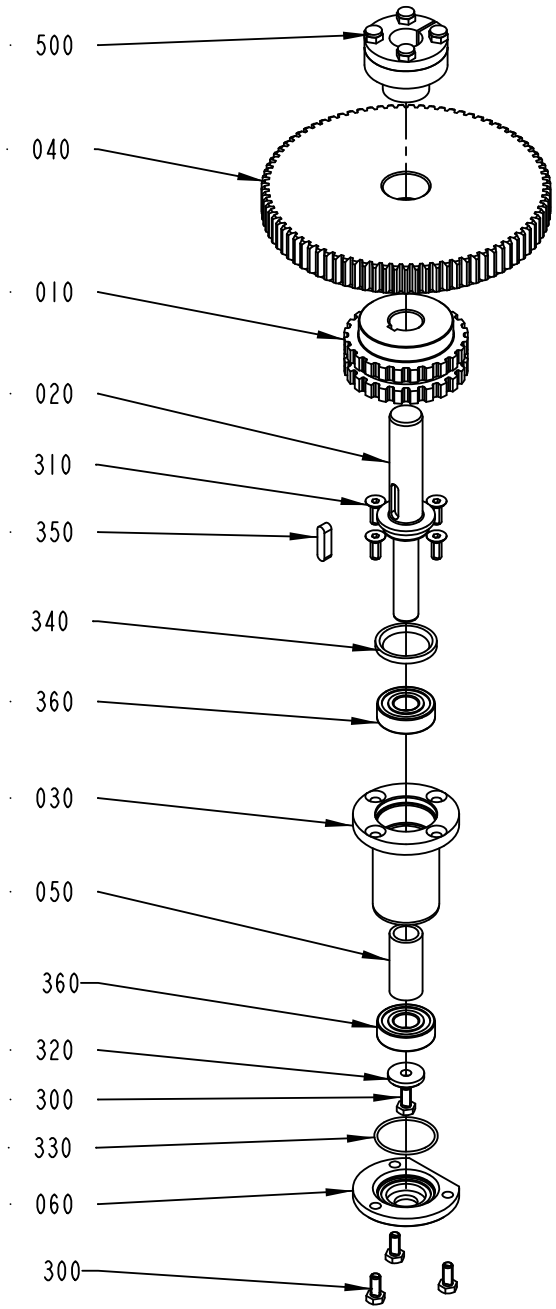

2715976-1
251129

ECM: 290143 - 20061221
Group number: 2715976-0100
Assembly Drawing: 2715976-1_1_AA

Pos	Part No	UN	Qty	Description	Page No
-					
010	2780453-0000		1	TOOTHED PULLEY	
020	2727414-0000		1	SHAFT	
030	2715977-0000		1	LOCKING HUB	
040	2727426-0000		1	GEAR WHEEL	
050	2736446-0000		1	SPACER	
060	2736448-0000		1	COVER	
070	2856622-0000		1	BUSHING	
300	312105-0367		4	SCREW M6S ISO 4017 M6X14 A480	
310	312155-0368		4	SCREW DIN 7991 MF6S M6X16 A4 70	
320	315125-0153		1	WASHER TBRSB 6,4X22X4 A4	
330	315202-0716		1	O-RING 34,65X1,78 MM	
340	315230-0330		1	BEARING SEAL G28X37X4 MM	
350	315705-0234		1	PARALLEL KEY W. ROUND ENDS 6X6X25 MM	
360	321309-0102		2	BALL BEARING, 15X35X11 MM	
370	312155-0329		6	SCREW DIN 7991 MF6S M5X16 A4 70	
500	90208-0078		1	CLAMPING ELEMENT WITH SLEEVE, 20X28 MM	

Pos	Part No	UN	Qty	Description	Page No

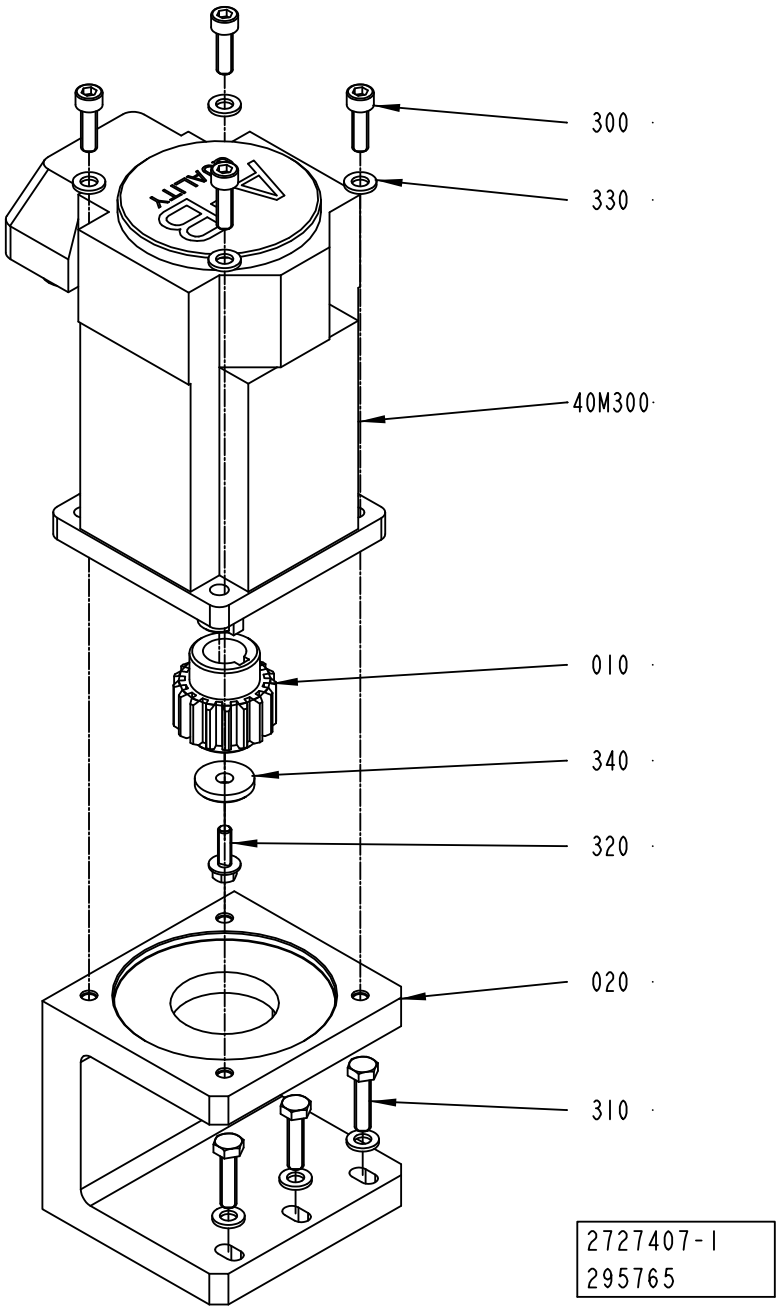
300
330
40M300
010
340
320
020
310
2727407-1
295765

ECM: 297332 - 20070323
Group number: 2727407-0100
Assembly Drawing: 2727407-1_1_AB

Pos	Part No	UN	Qty	Description	Page No
-					
010	2727427-0000		1	GEAR WHEEL	
020	2727408-0000		1	MOTOR BRACKET	
300	312115-0370		4	SCREW ISO4762 M6X20 A4 80	
310	312105-0372		3	SCREW M6S ISO 4017 M6X25 A480	
320	312108-0329		1	SCREW EN 1665 TYPE F M5X16 A270	
330	315105-0153		7	WASHER BRB 6,4X12 RFR	
340	315125-0153		1	WASHER TBRSB 6,4X22X4 A4	
40M300	90459-7177		1	SERVO MOTOR MPL-B320P-MJ22AA	

Pos	Part No	UN	Qty	Description	Page No

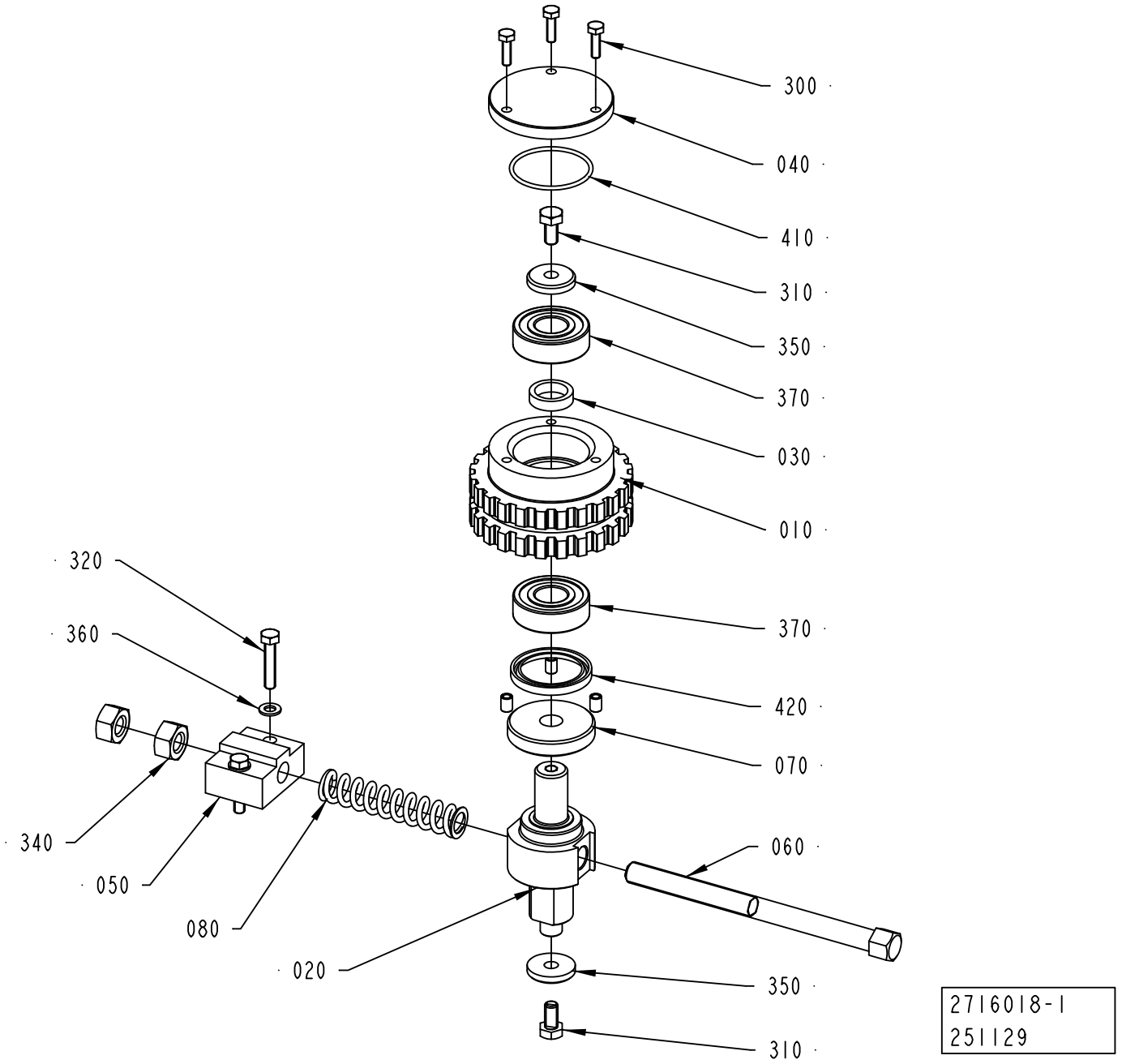
300
040
410
310
350
370
030
010
370
420
070
060
350
310
320
360
340
050
080
020
2716018-1
251129

ECM: 262943 - 20060920
Group number: 2716018-0100
Assembly Drawing: 2716018-1_1_AA

Pos	Part No	UN	Qty	Description	Page No
-					
010	2780452-0000		1	TOOTHED PULLEY	
020	2716019-0000		1	SHAFT	
030	2736447-0000		1	SPACER	
040	2736449-0000		1	COVER	
050	2716022-0000		1	NUT	
060	2716023-0000		1	SCREW	
070	2716024-0000		1	WASHER	
080	2716021-0000		1	SPRING	
300	312105-0292		3	SCREW M6S ISO 4017 M4X14 A470	
310	312105-0366		2	SCREW M6S ISO 4017 M6X12 A480	
320	312105-0333		2	SCREW M6S ISO 4017 M5X25 A480	
340	312605-0320		2	HEXAGON NUT, M6M M10 A280	
350	315125-0153		2	WASHER TBRSB 6,4X22X4 A4	
360	315105-0146		2	WASHER BRB 5,3X10 RFR	
370	321309-0102		2	BALL BEARING, 15X35X11 MM	
410	315202-0716		1	O-RING 34,65X1,78 MM	
420	315230-0330		1	BEARING SEAL G28X37X4 MM	

Pos	Part No	UN	Qty	Description	Page No

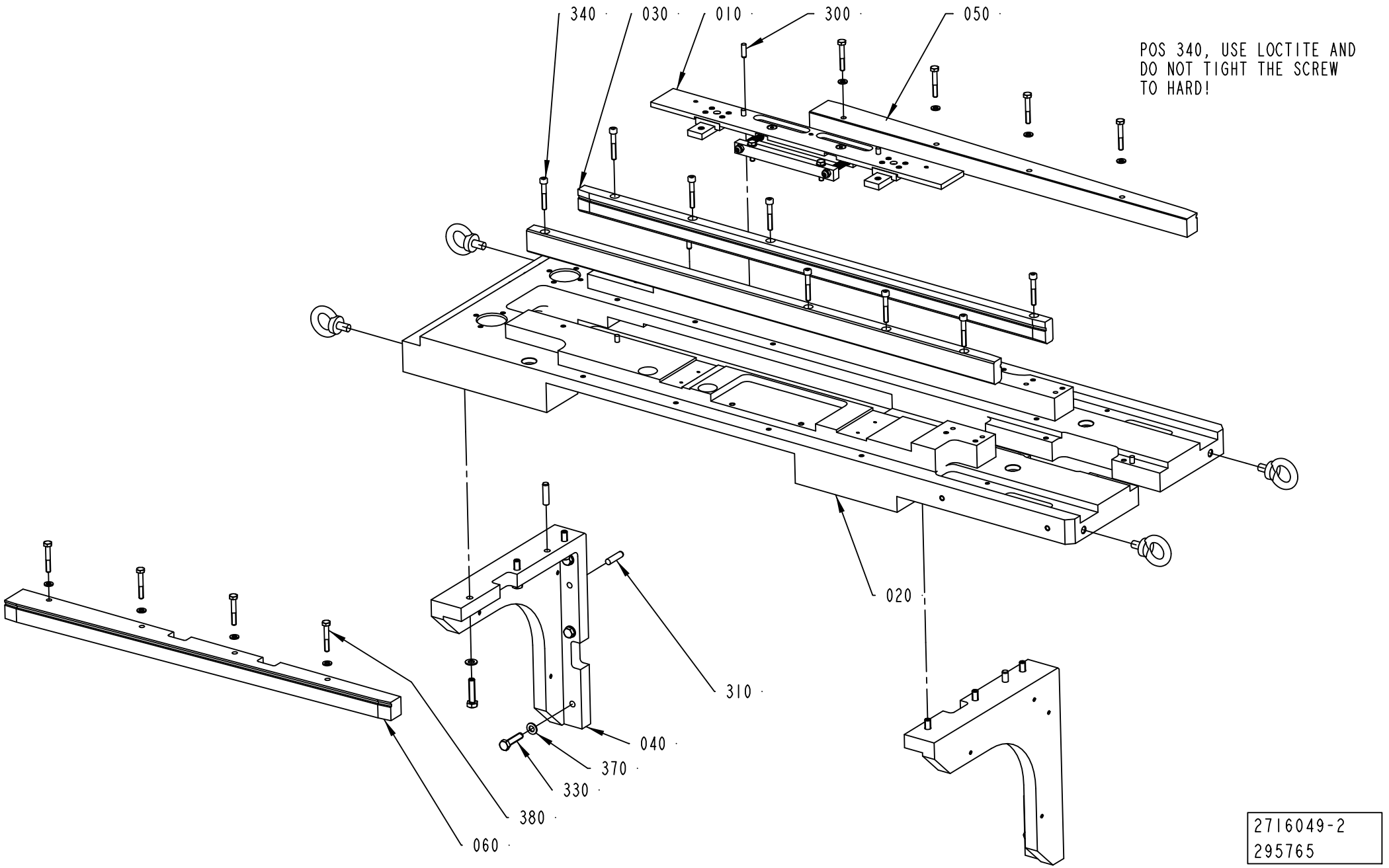
340
030
010
300
050
POS 340, USE LOCTITE AND
DO NOT TIGHT THE SCREW
TO HARD!
020
310
040
370
330
380
060
2716049-2
295765

ECM: 297331 - 20070323
Group number: 2716049-0200
Assembly Drawing: 2716049-2_1_AB

Pos	Part No	UN	Qty	Description	Page No
-					
010	2716149-0200		1	STEERING DEVICE	**7-17**
020	2716015-0000		1	BRACKET	
030	2780454-0000		2	SLIDE RAIL	
040	2727420-0000		2	BRACKET	
050	2780455-0000		1	SLIDE RAIL	
060	2780456-0000		1	SLIDE RAIL	
300	311103-0353		6	PARALLEL PIN ISO 2338 6M6X20 A1	
310	311103-0406		4	PARALLEL PIN ISO 2338 8M6X32 A1	
330	312109-0457		12	SCREW M6S ISO 4017 M8X35 A480	
340	312115-0378		8	SCREW ISO4762 M6X40 A4 80	
360	315105-0153		8	WASHER BRB 6,4X12 RFR	
370	315105-0165		12	WASHER BRB 8,4X16 RFR	
380	312105-0378		8	SCREW M6S ISO 4014 M6X40 A480	

Pos	Part No	UN	Qty	Description	Page No

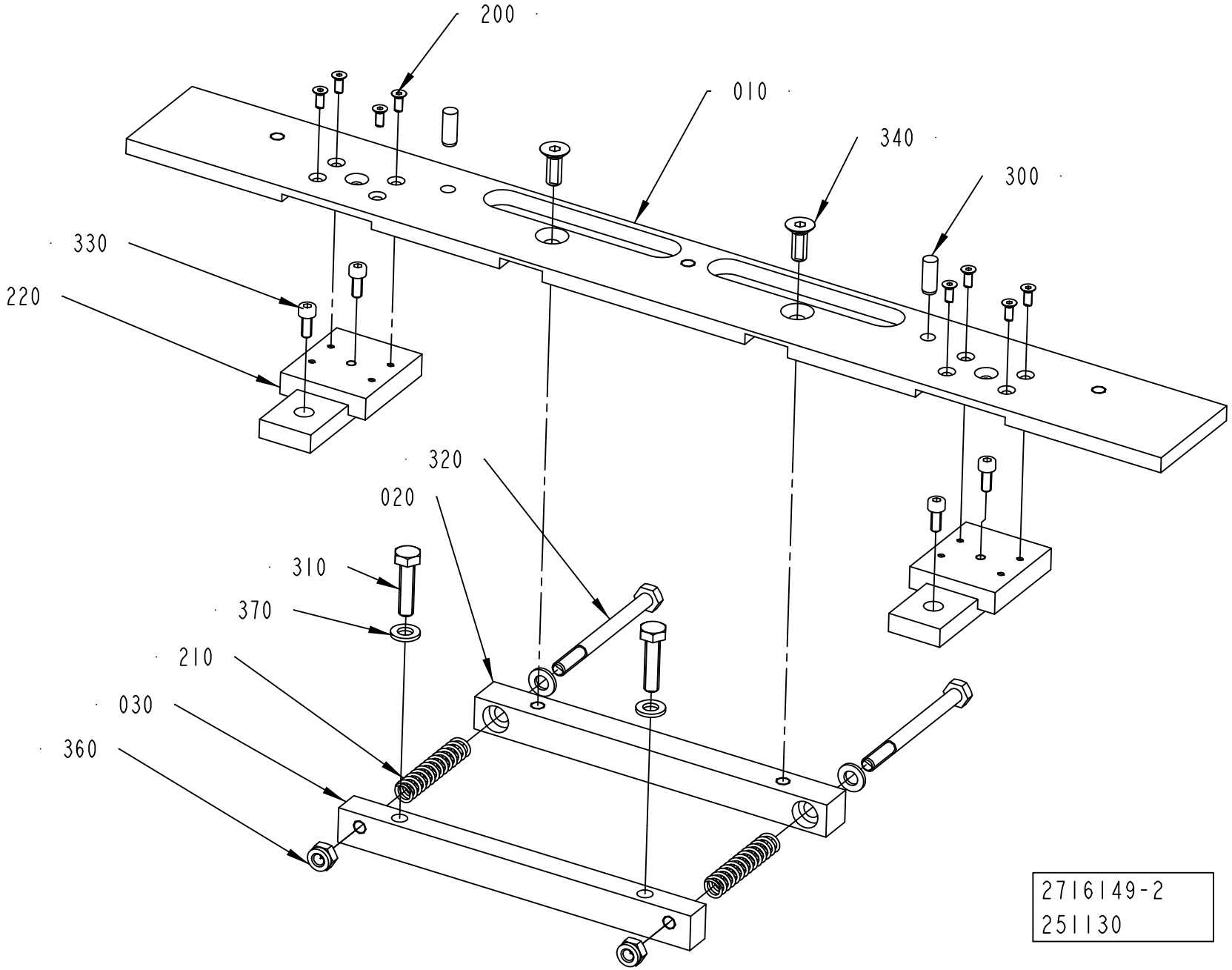
200
010
340
300
330
220
320
020
310
370
210
030
360
2716149-2
251130

ECM: 290145 - 20061221
Group number: 2716149-0200
Assembly Drawing: 2716149-2_1_AA

Pos	Part No	UN	Qty	Description	Page No
-					
010	2716152-0000		1	PLATE	
020	2716156-0000		1	BRACKET	
030	2716157-0000		1	BRACKET	
200	90287-0295		8	SCREW HEX.SOCK.COUNT.MF6S M3X8 A280	
210	90335-0082		2	COMP. SPRING 22180, 1,25X9,25X47,5	
220	90600-0350		2	LINEAR GUIDE, RSR12WVMUU+80LM G15/G25	
300	311103-0351		2	PARALLEL PIN ISO 2338 6M6X16 A1	
310	312105-0372		2	SCREW M6S ISO 4017 M6X25 A480	
320	312105-0384		2	SCREW M6S ISO 4014 M6X70 A480	
330	312115-0289		4	SCREW ISO4762 M4X10 A4 80	
340	312155-0368		2	SCREW DIN 7991 MF6S M6X16 A4 70	
360	312812-0316		2	HEXAGON NUT, NY-LOCK M6 A480	
370	315105-0153		4	WASHER BRB 6,4X12 RFR	

Pos	Part No	UN	Qty	Description	Page No

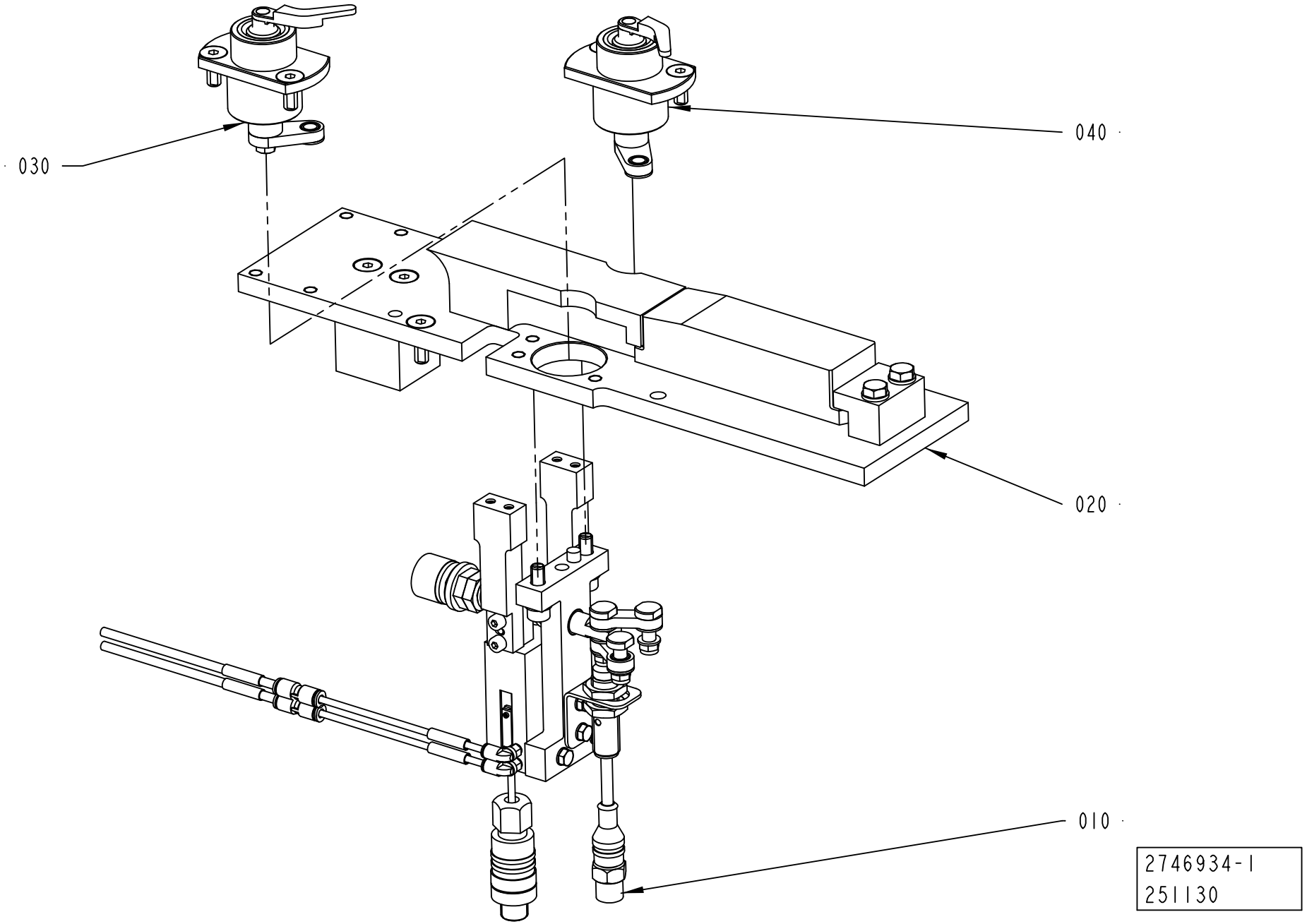
030
040
020
010
2746934-1
251130

ECM: 262938 - 20060920
Group number: 2746934-0100
Assembly Drawing: 2746934-1_1_AA

Pos	Part No	UN	Qty	Description	Page No
-					
010	2716046-0100		1	CLAMP UNIT	**7-21**
020	2716047-0100		1	HEIGHT ADJUSTMENT	**7-23**
030	2740299-0100		1	FINGER	**7-25**
040	2740371-0100		1	FINGER	**7-27**

Pos	Part No	UN	Qty	Description	Page No

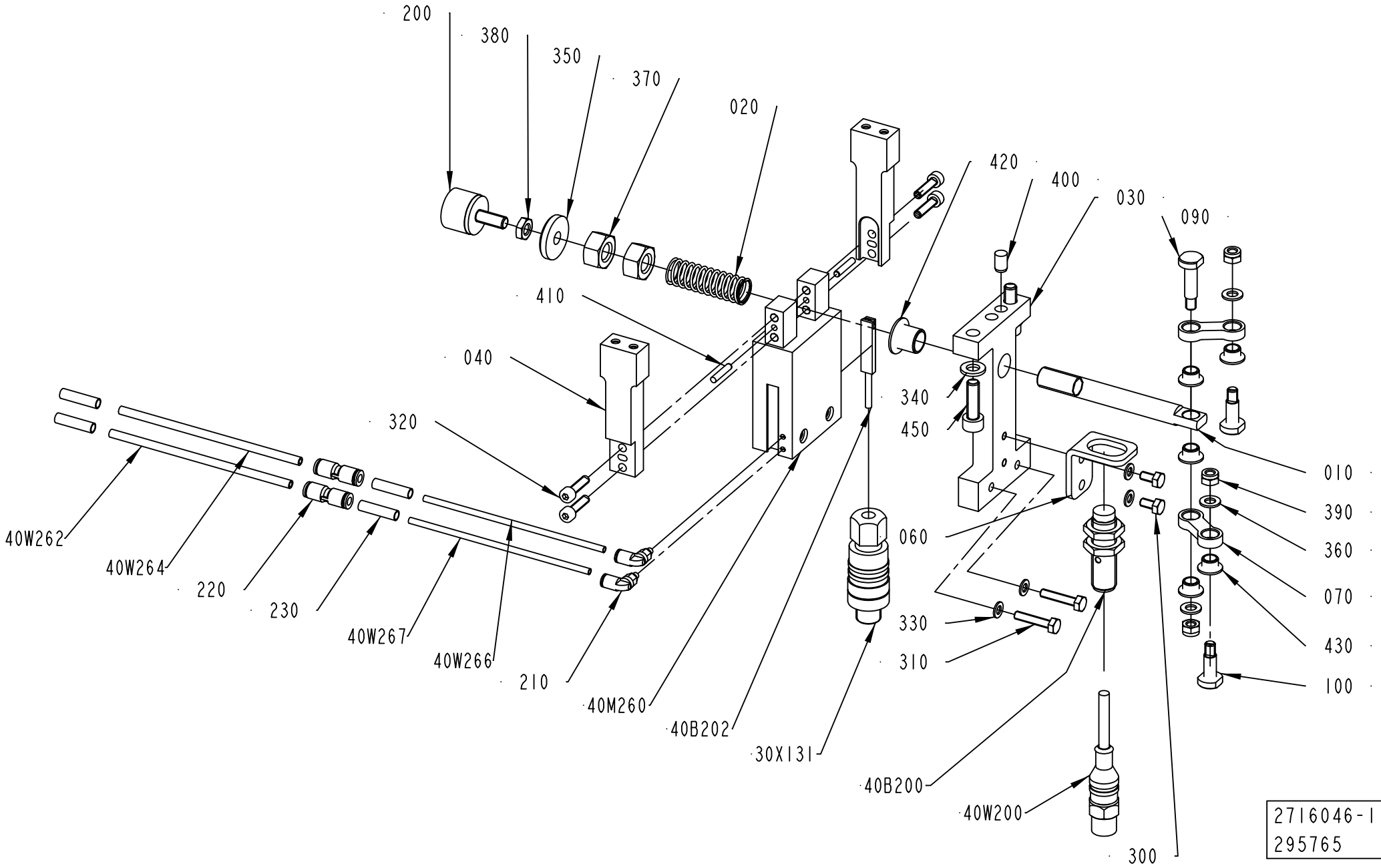
200
380
350
370
020
420
400
030
090
410
040
320
340
450
010
390
360
070
430
100
060
330
310
40W262
40W264
220
230
40W267
40W266
210
40M260
40B202
30X131
40B200
40W200
300
2716046-1
295765

ECM: 297329 - 20070323
Group number: 2716046-0100
Assembly Drawing: 2716046-1_1_AB

Pos	Part No	UN	Qty	Description	Page No
-					
010	2838763-0000		1	SHAFT	
020	2736870-0000		1	SPRING	
030	2740373-0000		1	BRACKET	
040	2740375-0000		2	BRACKET	
060	2716048-0000		1	BRACKET	
070	2730989-0000		2	LEVER	
090	2780361-0000		1	PIN	
100	2780362-0000		2	PIN	
200	90459-2726		1	RUBBER BUFFER, 20-00484-01	
210	90459-7426		2	PUSH-IN L-FITTING QSML-M3-3	
220	90459-7427		2	PUSH-IN FITTING QSM-4-3	
230	90459-7368		4	MARKING FOR PNEUM. TUBING, PRZ04	
300	312105-0287		2	SCREW M6S ISO 4017 M4X8 A470	
30X131	90459-1663		1	CONNECTOR, 405204 RSCN4/7	
310	312105-0295		2	SCREW M6S ISO 4017 M4X20 A470	
320	312115-0293		4	SCREW ISO4762 M4X16 A4 80	
330	315105-0136		4	WASHER BRB 4,3X8 RFR	
340	315105-0153		2	WASHER BRB 6,4X12 RFR	
350	315125-0153		1	WASHER TBRSB 6,4X22X4 A4	
360	315106-0146		3	WASHER ISO 7089-5-200 HV A4	
370	312635-0320		2	NUT M6M 10X1 STAINLESS A2 80	
380	312625-0316		1	HEXAGON THIN NUT, EN 24035 ML6M M6 A4	
390	312812-0314		3	HEXAGON NUT, NY-LOCK M5 A480	
400	311103-0348		1	PARALLEL PIN ISO 2338 6M6X10 A1	
40B200	90459-6948		1	PROX.SW. IFS206	
40B202	90458-2775		1	PROXIMITY SENSOR, SMT-8-PS-K5-LED-24-B	
40M260	90459-7429		1	CYLINDER, GRIPPER HGP-16-A-B	
40W200	351411-0010		1	ACTU/SENS. CABLE PRST 4-PRKT 4-07/1,0M	
40W262	315400-0016	M	10	TUBE PUN-H-4X0,75-BL	
40W264	315400-0016	M	10	TUBE PUN-H-4X0,75-BL	
40W266	90459-7428	M	1	TUBE PUN-H-3X0,5-BL	
40W267	90459-7428	M	1	TUBE PUN-H-3X0,5-BL	
410	311103-0236		2	PARALLEL PIN ISO 2338 3M6X16 A1	
420	321158-0142		1	FLANGE BUSHING, 10X12X12 MM	
430	321158-0060		5	FLANGE BUSHING, 6X8X6 MM	
450	312115-0370		2	SCREW ISO4762 M6X20 A4 80	

Pos	Part No	UN	Qty	Description	Page No

Machine Type | Group Description | Used-In | Group Number | Page No

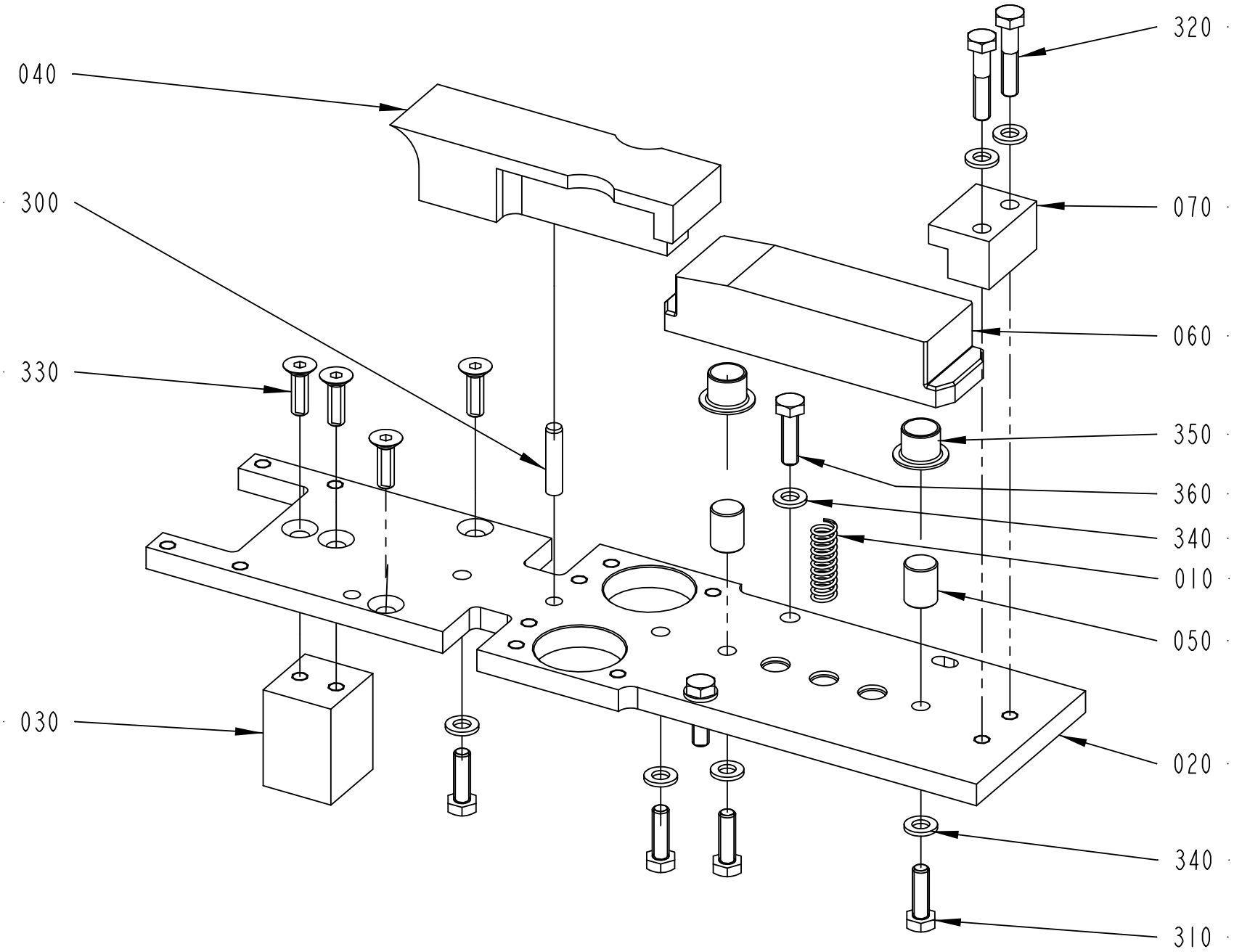
040
300
330
030
320
070
060
350
360
340
010
050
020
340
310
2716047-1
295765

ECM: 297330 - 20070323
Group number: 2716047-0100
Assembly Drawing: 2716047-1_1_AB

Pos	Part No	UN	Qty	Description	Page No
-					
010	90600-0351		1	COMP. SPRING 2489, 1,2X9,4X30	
020	2838765-0000		1	PLATE	
030	2838764-0000		1	BLOCK	
040	2727431-0000		1	SLIDE PLATE	
050	2727432-0000		2	SHAFT	
060	2727434-0000		1	SLIDE PLATE	
070	2727440-0000		1	END SUPPORT	
300	311103-0356		1	PARALLEL PIN ISO 2338 6M6X28 A1	
310	312105-0370		4	SCREW M6S ISO 4017 M6X20 A480	
320	312105-0374		2	SCREW M6S ISO 4014 M6X30 A480	
330	312155-0370		2	SCREW DIN 7991 MF6S M6X20 A4 70	
340	315105-0153		8	WASHER BRB 6,4X12 RFR	
350	321158-0180		2	FLANGE BUSHING, 12X14X12 MM	
360	312105-0371		2	SCREW M6S ISO 4017 M6X22 A480	

Pos	Part No	UN	Qty	Description	Page No

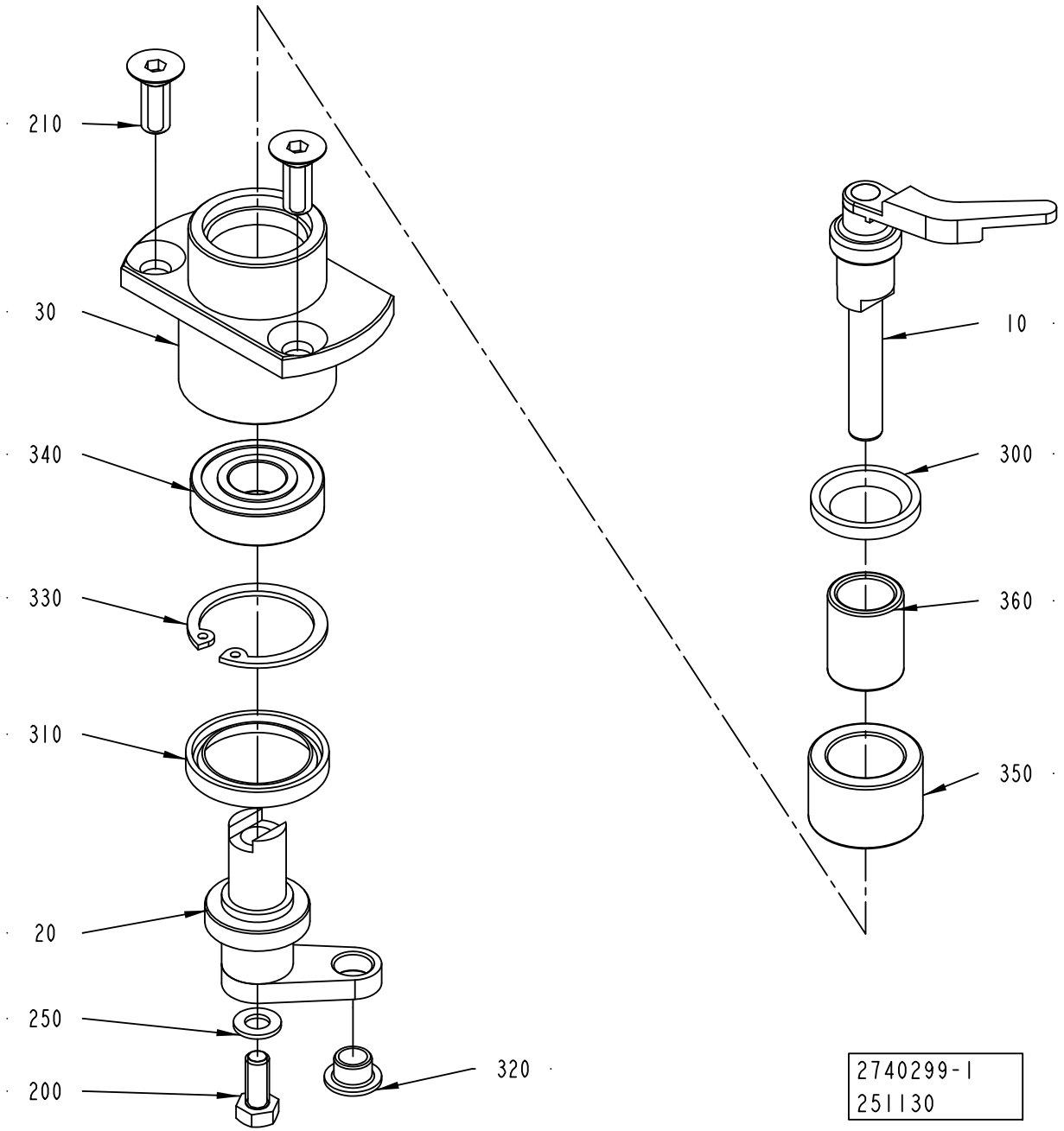
210
30
340
330
310
20
250
200
320
10
300
360
350
2740299-1
251130

ECM: 290146 - 20061221
Group number: 2740299-0100
Assembly Drawing: 2740299-1_1_AA

Pos	Part No	UN	Qty	Description	Page No
-					
010	2740300-0000		1	FINGER	
020	2470301-0000		1	LEVER	
030	2470302-0000		1	HUB	
200	312105-0327		1	SCREW M6S ISO 4017 M5X12 A480	
210	312155-0368		2	SCREW DIN 7991 MF6S M6X16 A4 70	
250	315105-0146		1	WASHER BRB 5,3X10 RFR	
300	315230-0193		1	BEARING SEAL G15X23X3 MM	
310	315230-0274		1	BEARING SEAL G22X30X4 MM	
320	321158-0060		1	FLANGE BUSHING, 6X8X6 MM	
330	315753-0121		1	RETAINING RING FOR BORE DIN 472 28 A2	
340	321308-0101		1	BALL BEARING, 12X28X8 MM	
350	90600-0347		1	NEEDLE BEARING W/O CONE, 16X24X16MM	
360	90600-0349		1	INNER RING, 12X16X20	

Pos	Part No	UN	Qty	Description	Page No

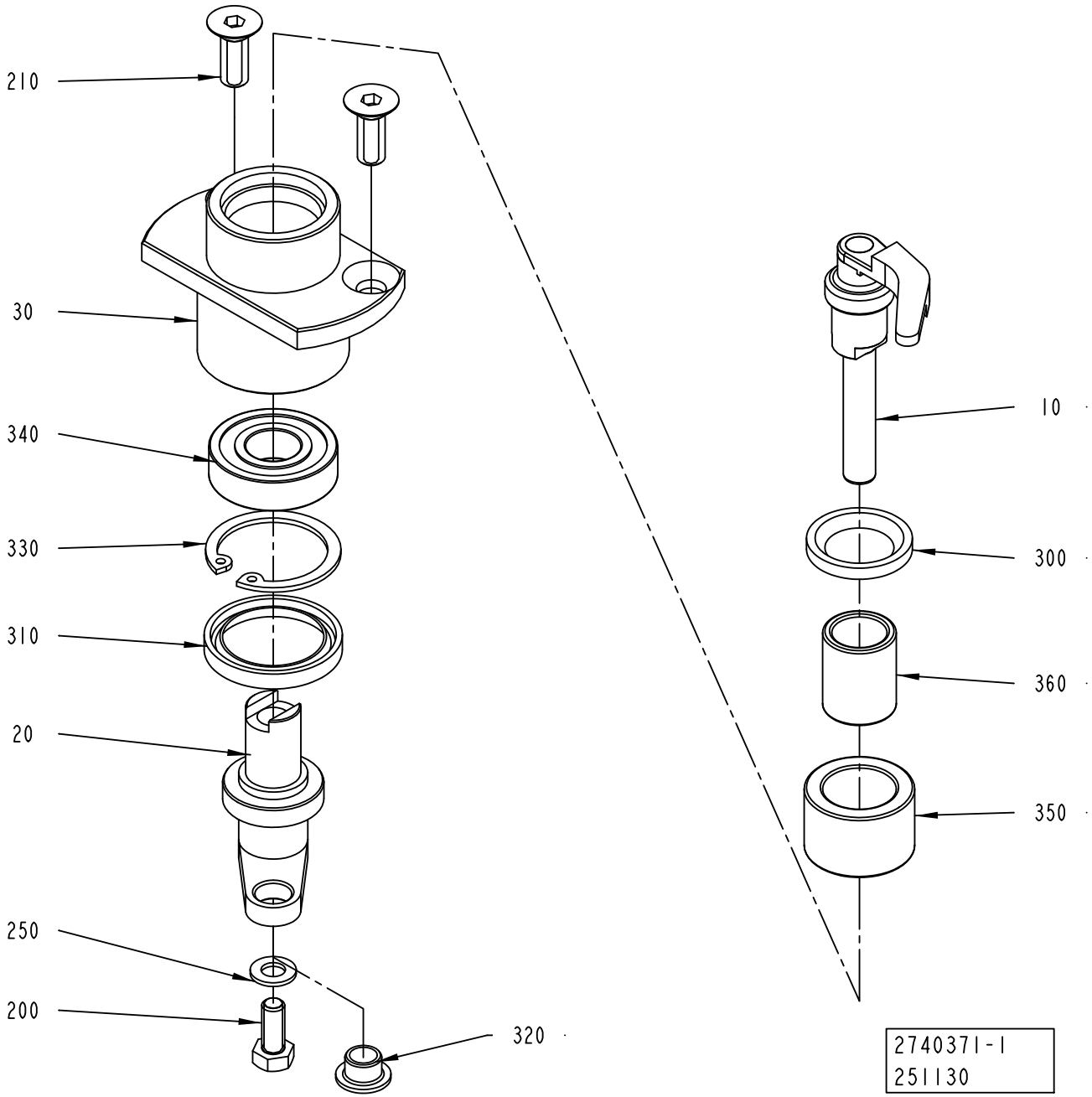
210
30
340
330
310
20
250
200
320
10
300
360
350
2740371-1
251130

ECM: 290147 - 20061221
Group number: 2740371-0100
Assembly Drawing: 2740371-1_1_AA

Pos	Part No	UN	Qty	Description	Page No
-					
010	2740372-0000		1	FINGER	
020	2470373-0000		1	LEVER	
030	2470302-0000		1	HUB	
200	312105-0327		1	SCREW M6S ISO 4017 M5X12 A480	
210	312155-0368		2	SCREW DIN 7991 MF6S M6X16 A4 70	
250	315105-0146		1	WASHER BRB 5,3X10 RFR	
300	315230-0193		1	BEARING SEAL G15X23X3 MM	
310	315230-0274		1	BEARING SEAL G22X30X4 MM	
320	321158-0060		1	FLANGE BUSHING, 6X8X6 MM	
330	315753-0121		1	RETAINING RING FOR BORE DIN 472 28 A2	
340	321308-0101		1	BALL BEARING, 12X28X8 MM	
350	90600-0347		1	NEEDLE BEARING W/O CONE, 16X24X16MM	
360	90600-0349		1	INNER RING, 12X16X20	

Pos	Part No	UN	Qty	Description	Page No

PNEUMATIC UNIT

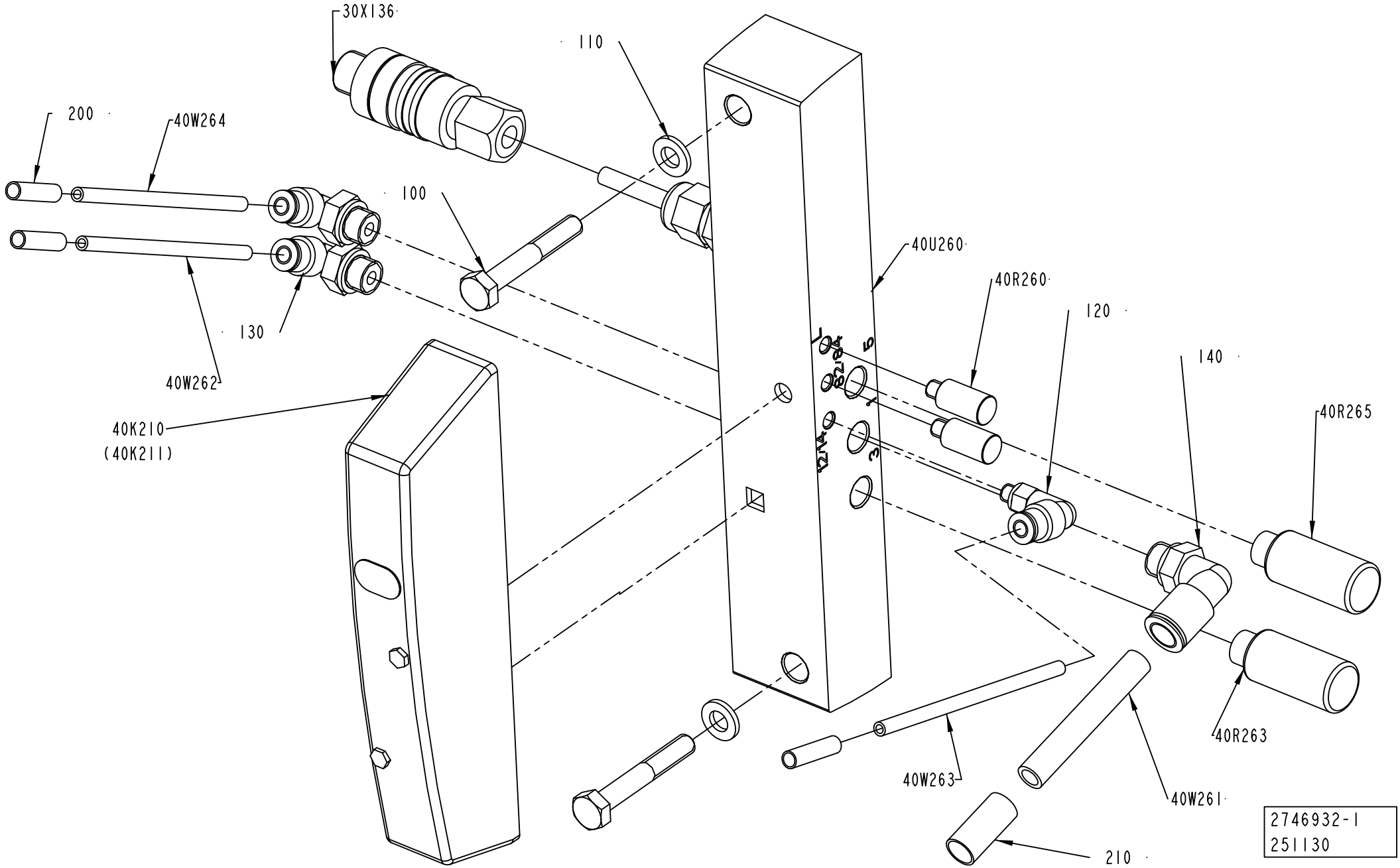

ECM: 290148 - 20061221
Group number: 2746932-0100
Assembly Drawing: 2746932-1_1_AA

Pos	Part No	UN	Qty	Description	Page No
-					
100	312105-0378		2	SCREW M6S ISO 4014 M6X40 A480	
110	315106-0153		2	WASHER ISO 7089-6-200 HV A4	
120	350002-0001		1	PUSH-IN L-FITTING QSL-F-M5-4	
130	350002-0005		2	PUSH-IN L-FITTING QSL-F-G1/8-4	
140	350002-0007		1	PUSH-IN L-FITTING QSL-F-G1/8-8	
200	90459-7368		3	MARKING FOR PNEUM. TUBING, PRZ04	
210	90459-7370		1	MARKING FOR PNEUM. TUBING, PRZ08	
30X136	90459-1663		1	CONNECTOR, 405204 RSCN4/7	
40K210	90458-1197		1	BISTABLE VALVE 5/2	
40R260	90328-0020		2	SILENCER U-M5,	
40R263	90328-0012		1	SILENCER	
40R265	90328-0012		1	SILENCER	
40U260	90459-2591		1	SINGLE VALVE SUB-BASE CDSV5.0-AS-1/8	
40W261	315400-0004	M	1	TUBE PUN-H-8X1,25-BL	
40W262	315400-0016	M	10	TUBE PUN-H-4X0,75-BL	
40W263	315400-0016	M	10	TUBE PUN-H-4X0,75-BL	
40W264	315400-0016	M	10	TUBE PUN-H-4X0,75-BL	

Pos	Part No	UN	Qty	Description	Page No

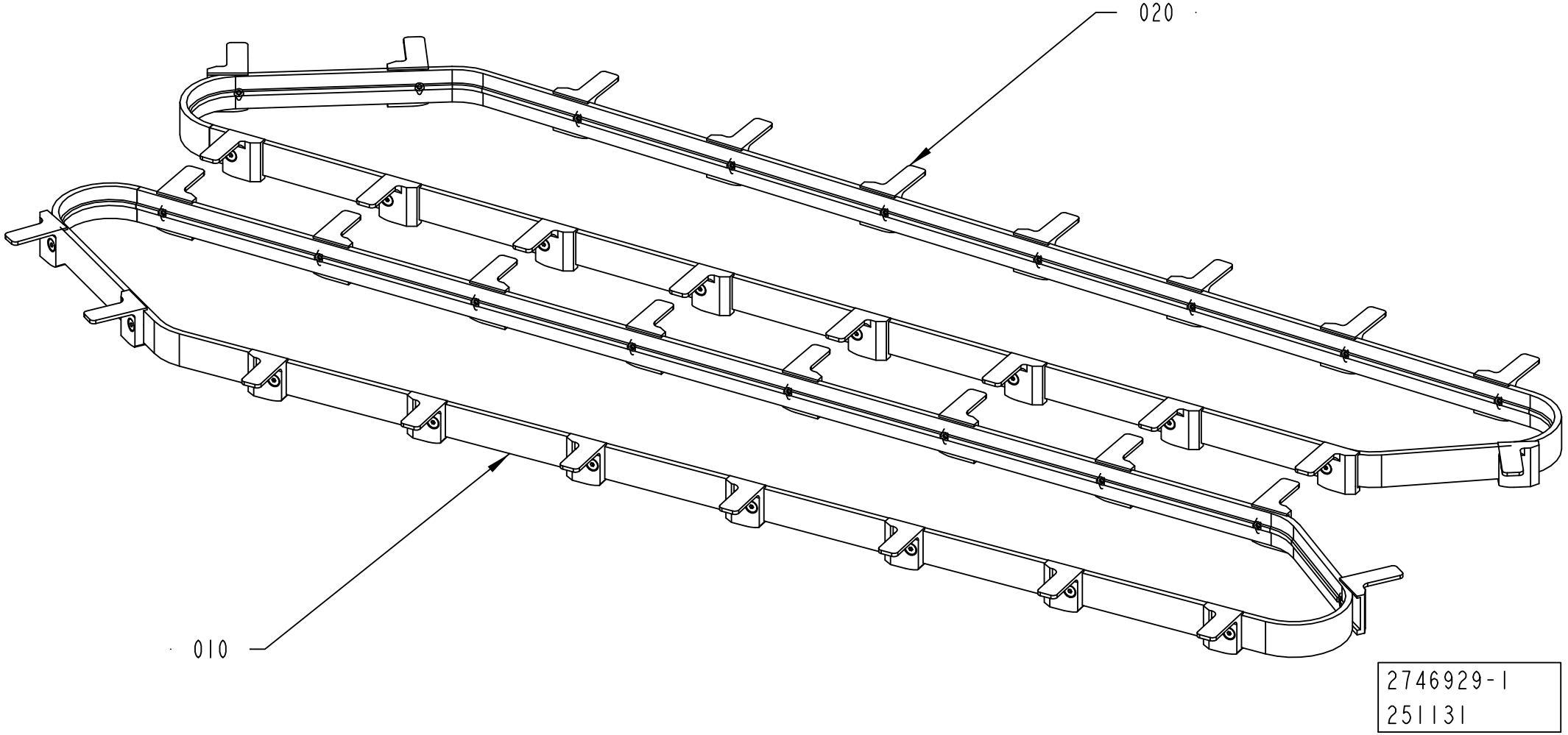
020
010
2746929-1
251131

ECM: 297333 - 20070323
Group number: 2746929-0100
Assembly Drawing: 2746929-1_1_AA

Pos	Part No	UN	Qty	Description	Page No
-					
010	2780509-0100		1	TIMING BELT	**7-33**
020	2780497-0100		1	TIMING BELT	**7-35**

Pos	Part No	UN	Qty	Description	Page No

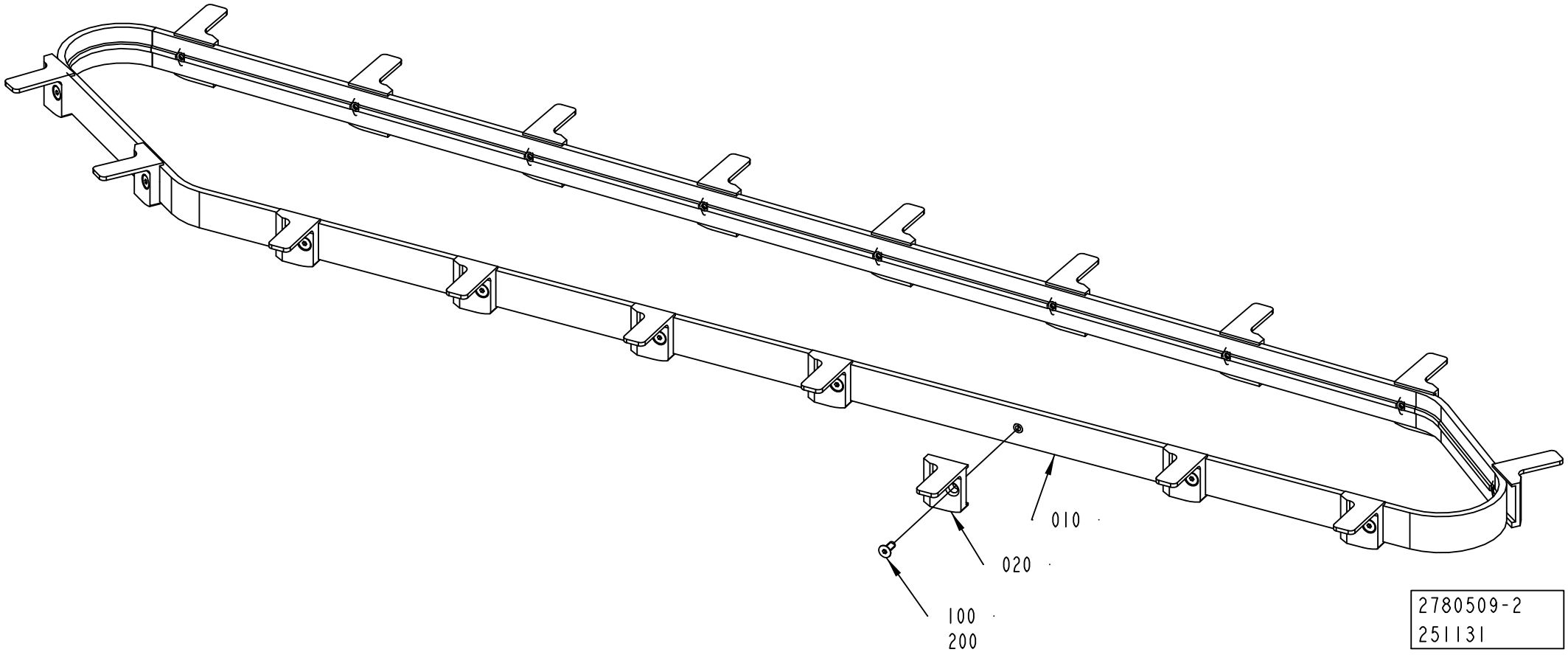
010
020
100
200
2780509-2
251131

ECM: 263060 - 20060920
Group number: 2780509-0100
Assembly Drawing: 2780509-2_1_AA

Pos	Part No	UN	Qty	Description	Page No
CAP 30/FLEX					
010	2780501-0000		1	BELT	
020	2715975-0000		18	FINGER	
100	312155-0289		18	SCREW DIN 7991 MF6S M4X10 A4 70	
Common Parts					
200	90600-0685		1	THREAD LOCKING, LOCTITE 2701 50 ML	

Pos	Part No	UN	Qty	Description	Page No

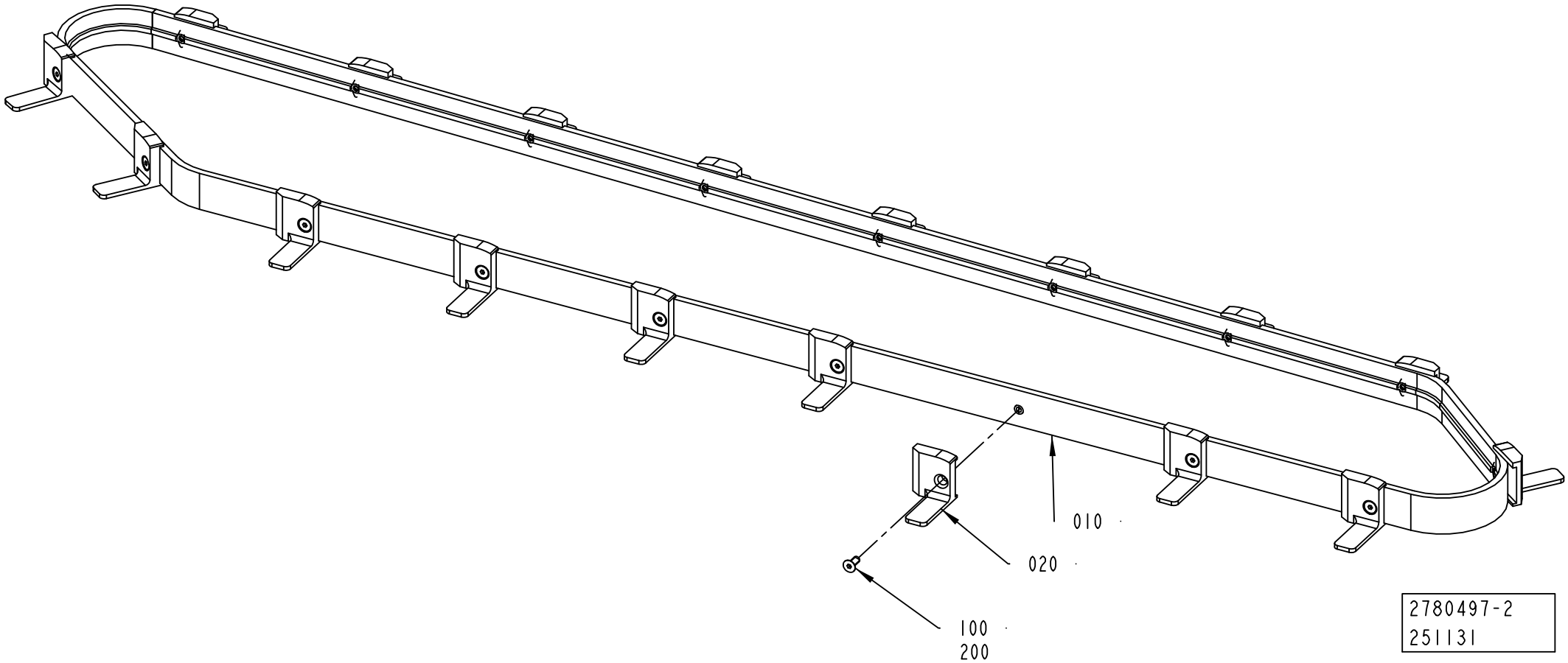
010
020
100
200
2780497-2
251131

ECM: 263061 - 20060920
Group number: 2780497-0100
Assembly Drawing: 2780497-2_1_AA

Pos	Part No	UN	Qty	Description	Page No
CAP 30/FLEX					
010	2780501-0000		1	BELT	
020	2715889-0000		18	FINGER	
100	312155-0289		18	SCREW DIN 7991 MF6S M4X10 A4 70	
Common Parts					
200	90600-0685		1	THREAD LOCKING, LOCTITE 2701 50 ML	

Pos	Part No	UN	Qty	Description	Page No

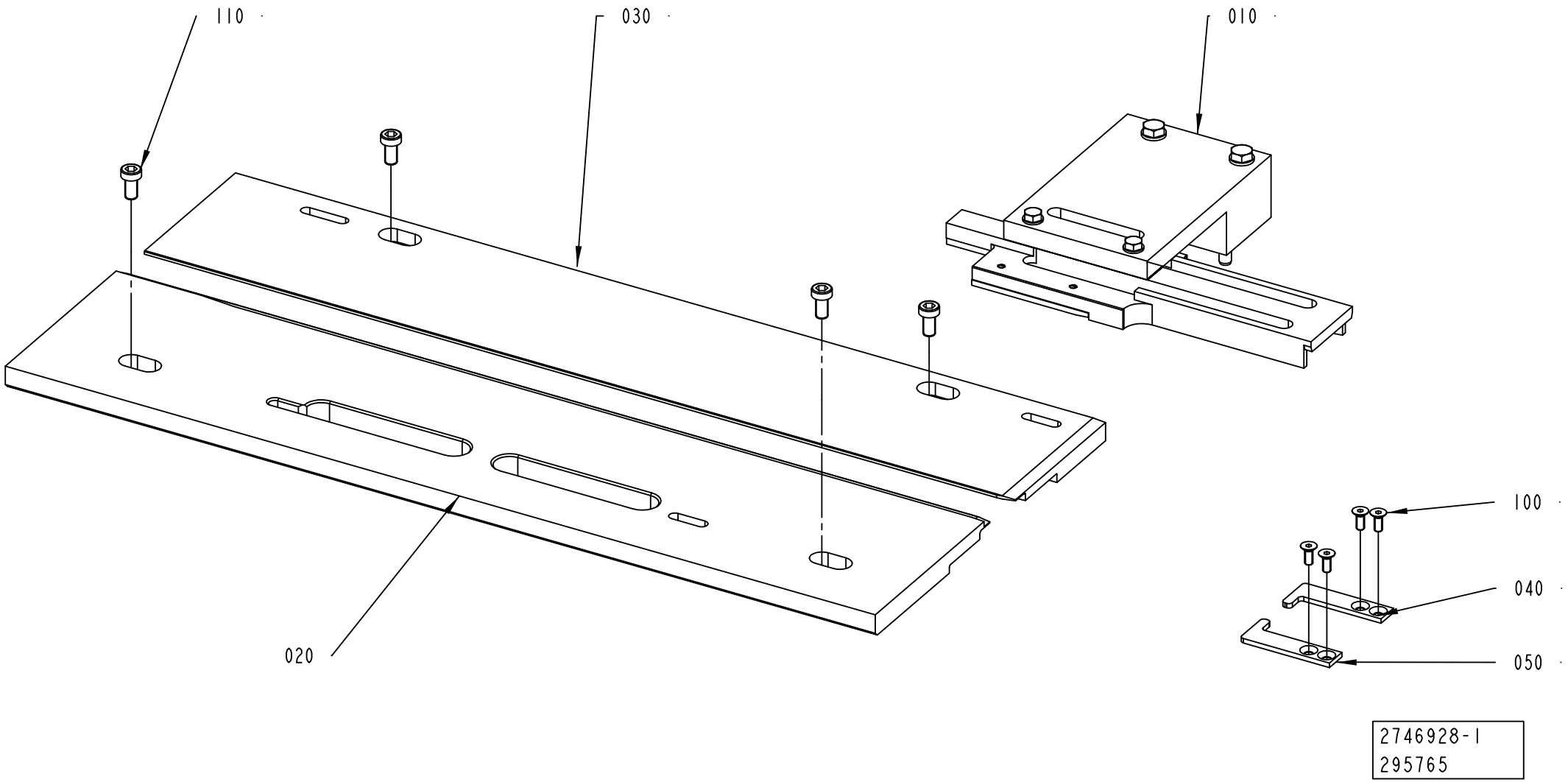

2746928-1
295765

Pos	Part No	UN	Qty	Description	Page No
SLIMCAP 1000 (See drawing on page: 7-38)					
020	2716139-0000		1	GUIDE	
030	2716138-0000		1	GUIDE	
040	2727447-0000		1	CLAMPING PART	
050	2727446-0000		1	CLAMPING PART	
SLIMCAP 2000 (See drawing on page: 7-38)					
020	2867644-0000		1	GUIDE	
030	2867645-0000		1	GUIDE	
040	2727447-0000		1	CLAMPING PART	
050	2727446-0000		1	CLAMPING PART	
STREAMCAP1000 (See drawing on page: 7-36)					
020	2716067-0000		1	GUIDE	
030	2716068-0000		1	GUIDE	
040	2752107-0000		1	CLAMPING PART	
050	2752108-0000		1	CLAMPING PART	
STREAMCAP500 (See drawing on page: 7-36)					
020	2875596-0000		1	GUIDE	
030	2875597-0000		1	GUIDE	
040	2752107-0000		1	CLAMPING PART	
050	2752108-0000		1	CLAMPING PART	
Common Parts					
010	2716069-0100		1	GUIDE RAIL	**7-41, 7-43**
100	312155-0289		4	SCREW DIN 7991 MF6S M4X10 A4 70	
110	90600-1772		4	SCREW DIN7984 M6X12 AISI 304	

Pos	Part No	UN	Qty	Description	Page No

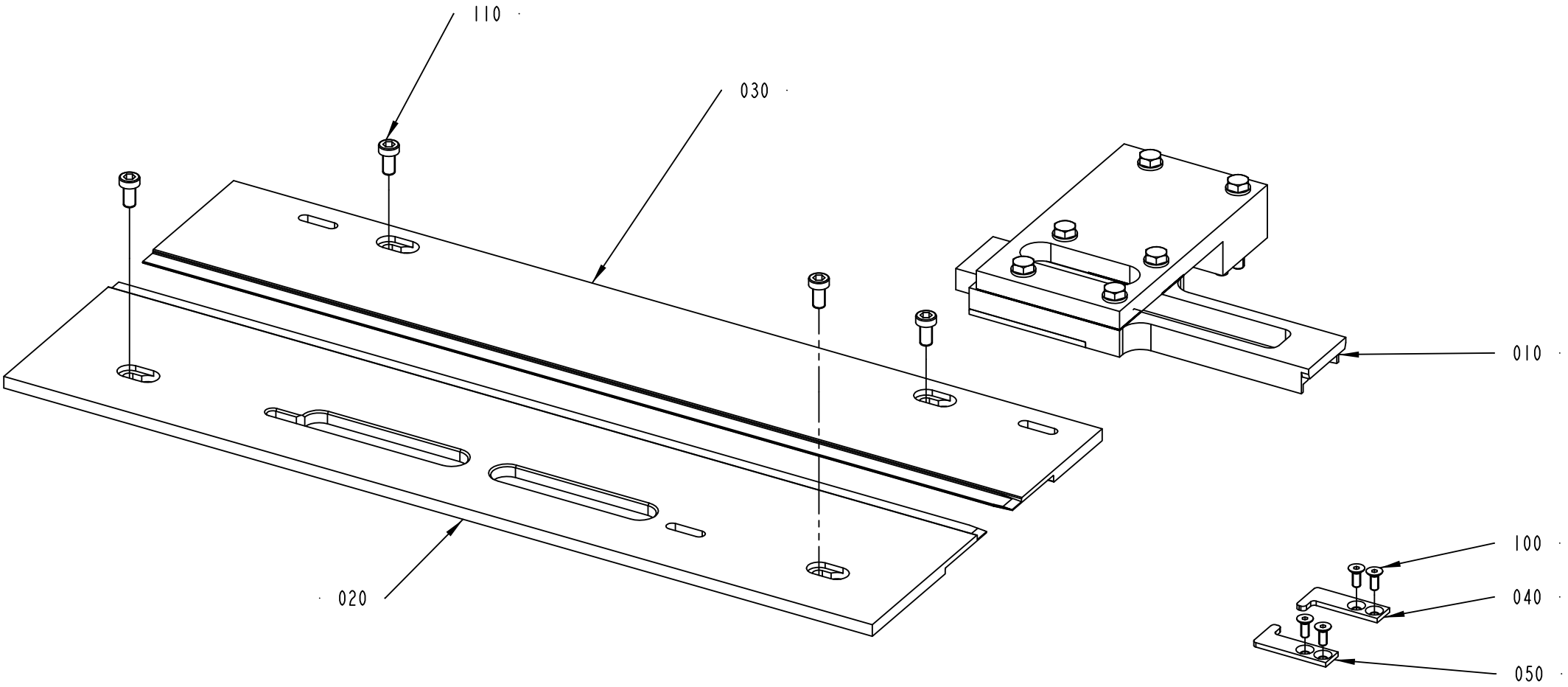

2746928-2
295765

Pos	Part No	UN	Qty	Description	Page No
SLIMCAP 1000 (See drawing on page: 7-38)					
020	2716139-0000		1	GUIDE	
030	2716138-0000		1	GUIDE	
040	2727447-0000		1	CLAMPING PART	
050	2727446-0000		1	CLAMPING PART	
SLIMCAP 2000 (See drawing on page: 7-38)					
020	2867644-0000		1	GUIDE	
030	2867645-0000		1	GUIDE	
040	2727447-0000		1	CLAMPING PART	
050	2727446-0000		1	CLAMPING PART	
STREAMCAP1000 (See drawing on page: 7-36)					
020	2716067-0000		1	GUIDE	
030	2716068-0000		1	GUIDE	
040	2752107-0000		1	CLAMPING PART	
050	2752108-0000		1	CLAMPING PART	
STREAMCAP500 (See drawing on page: 7-36)					
020	2875596-0000		1	GUIDE	
030	2875597-0000		1	GUIDE	
040	2752107-0000		1	CLAMPING PART	
050	2752108-0000		1	CLAMPING PART	
Common Parts					
010	2716069-0100		1	GUIDE RAIL	**7-41, 7-43**
100	312155-0289		4	SCREW DIN 7991 MF6S M4X10 A4 70	
110	90600-1772		4	SCREW DIN7984 M6X12 AISI 304	

Pos	Part No	UN	Qty	Description	Page No

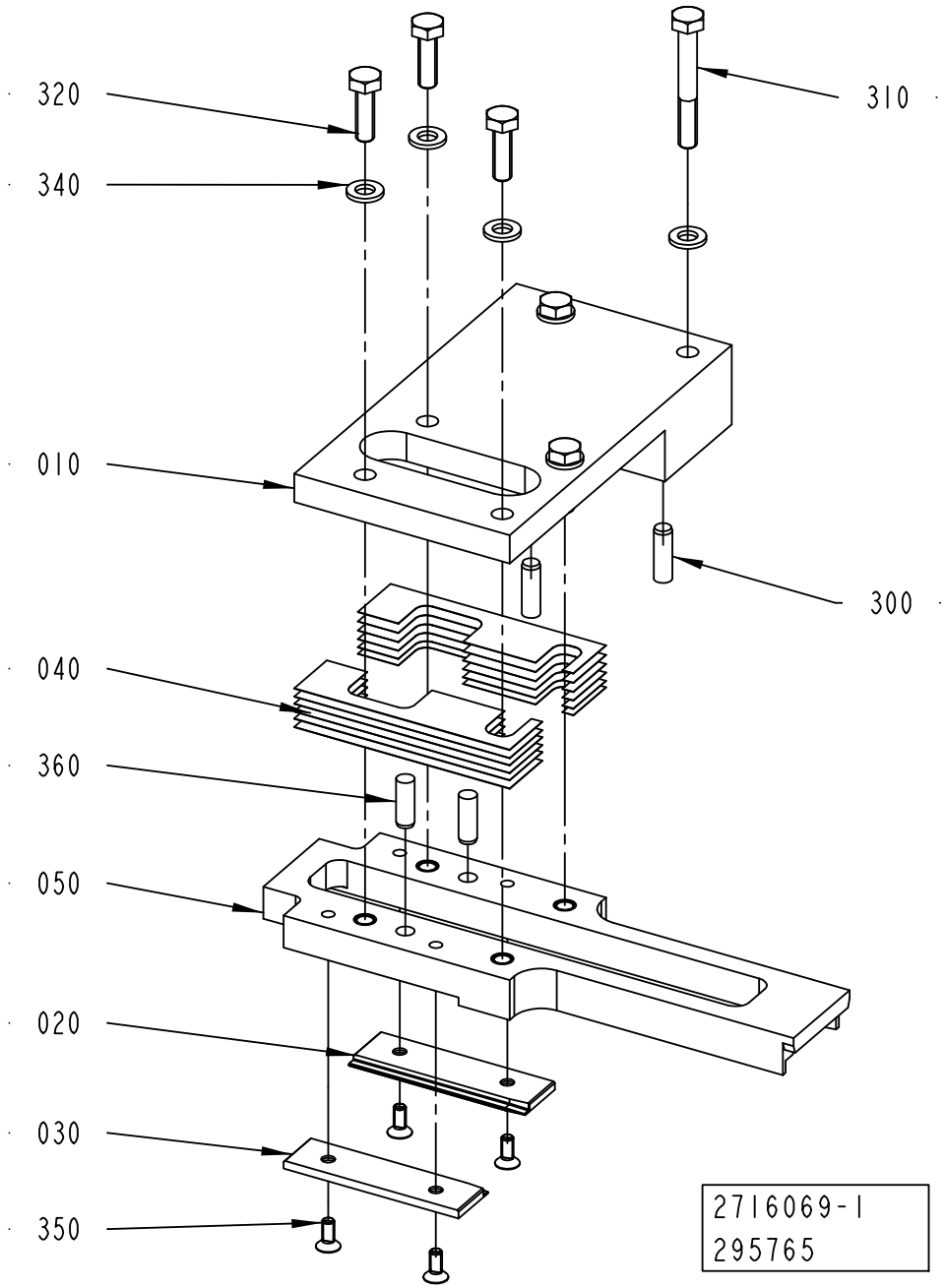
320
340
010
040
360
050
020
030
350
310
300
2716069-1
295765

ECM: 297327 - 20070323
Group number: 2716069-0100
Assembly Drawing: 2716069-1_1_AB

This list covers pages from 7-40 to 7-43

Pos	Part No	UN	Qty	Description	Page No
SLIMCAP 1000 (See drawing on page: 7-40)					
010	2780458-0000		1	BRACKET	
020	2727448-0000		1	GUIDE	
030	2727442-0000		1	GUIDE	
040	2780459-0000		12	SHIM	
050	2727438-0000		1	STEERING RAIL	
320	312105-0370		4	SCREW M6S ISO 4017 M6X20 A480	
340	315105-0153		6	WASHER BRB 6,4X12 RFR	
360	311103-0352		2	PARALLEL PIN ISO 2338 6M6X18 A1	
SLIMCAP 2000 (See drawing on page: 7-40)					
010	2867648-0000		1	BRACKET	
020	2867647-0000		1	GUIDE	
030	2867649-0000		1	GUIDE	
040	2864281-0000		4	SHIM	
050	2867646-0000		1	STEERING RAIL	
320	312105-0370		4	SCREW M6S ISO 4017 M6X20 A480	
340	315105-0153		6	WASHER BRB 6,4X12 RFR	
360	311103-0352		2	PARALLEL PIN ISO 2338 6M6X18 A1	
STREAMCAP1000 (See drawing on page: 7-42)					
010	2751685-0000		1	BRACKET	
020	2752105-0000		1	GUIDE	
030	2752106-0000		1	GUIDE	
040	2751690-0000		6	SHIM	
050	2797440-0000		1	STEERING RAIL	
320	312105-0331		2	SCREW M6S ISO 4017 M5X20 A480	
330	315105-0146		2	WASHER BRB 5,3X10 RFR	
340	315105-0153		2	WASHER BRB 6,4X12 RFR	
360	311103-0349		2	PARALLEL PIN ISO 2338 6M6X12 A1	
STREAMCAP500 (See drawing on page: 7-42)					
010	2751685-0000		1	BRACKET	
020	2875598-0000		1	GUIDE	
030	2875599-0000		1	GUIDE	
040	2751690-0000		6	SHIM	
050	2875600-0000		1	STEERING RAIL	
320	312105-0331		2	SCREW M6S ISO 4017 M5X20 A480	
330	315105-0146		2	WASHER BRB 5,3X10 RFR	
340	315105-0153		2	WASHER BRB 6,4X12 RFR	
360	311103-0349		2	PARALLEL PIN ISO 2338 6M6X12 A1	
Common Parts					
300	311103-0353		2	PARALLEL PIN ISO 2338 6M6X20 A1	
310	312105-0379		2	SCREW M6S ISO 4014 M6X45 A480	
350	312155-0289		4	SCREW DIN 7991 MF6S M4X10 A4 70	

Pos	Part No	UN	Qty	Description	Page No

Machine Type | Group Description | Used-In | Group Number | Page No

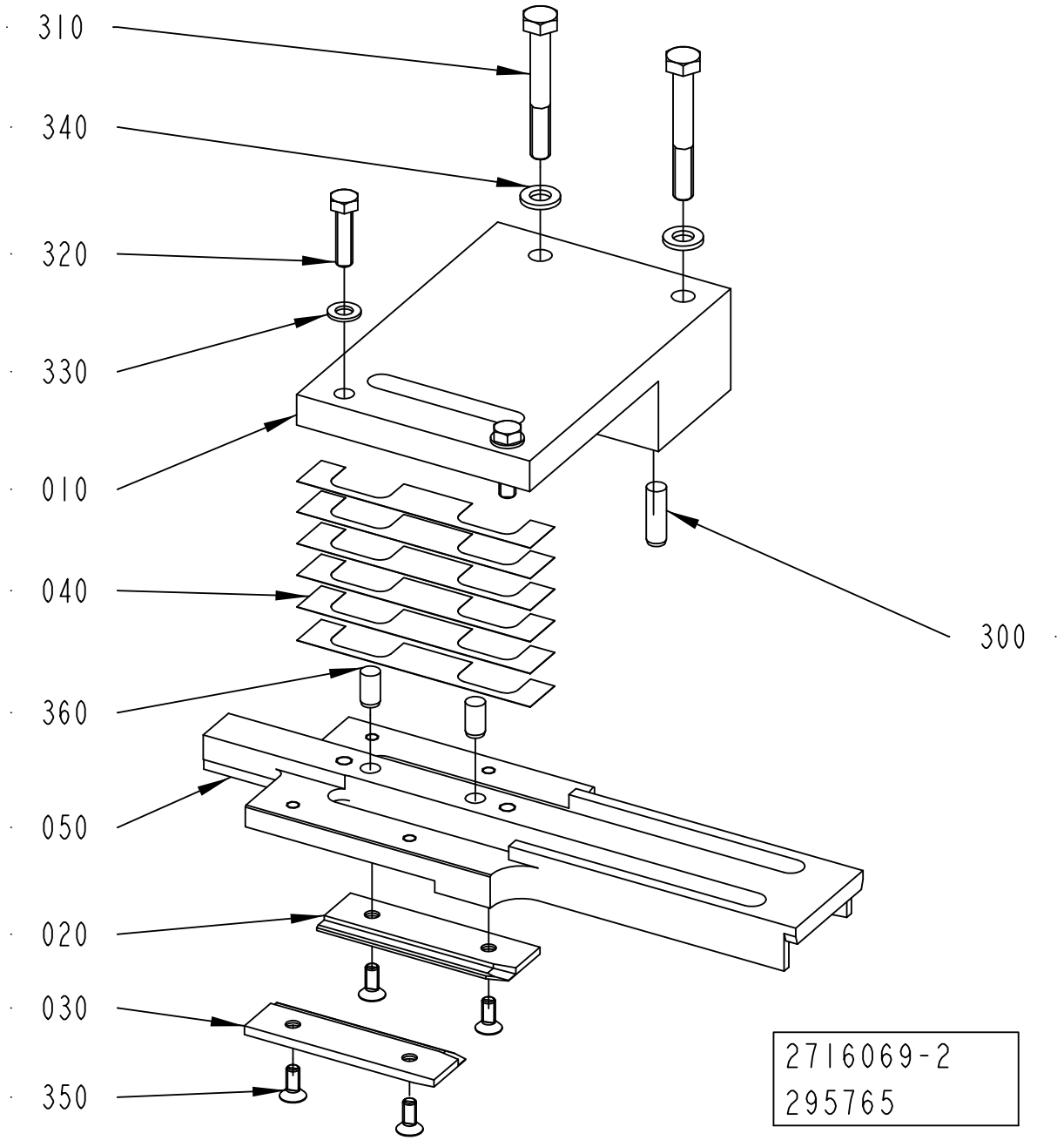
310
340
320
330
010
040
360
050
020
030
350
300
2716069-2
295765

ECM: 297327 - 20070323
Group number: 2716069-0100
Assembly Drawing: 2716069-2_1_AB

This list covers pages from 7-40 to 7-43

Pos	Part No	UN	Qty	Description	Page No
SLIMCAP 1000 (See drawing on page: 7-40)					
010	2780458-0000		1	BRACKET	
020	2727448-0000		1	GUIDE	
030	2727442-0000		1	GUIDE	
040	2780459-0000		12	SHIM	
050	2727438-0000		1	STEERING RAIL	
320	312105-0370		4	SCREW M6S ISO 4017 M6X20 A480	
340	315105-0153		6	WASHER BRB 6,4X12 RFR	
360	311103-0352		2	PARALLEL PIN ISO 2338 6M6X18 A1	
SLIMCAP 2000 (See drawing on page: 7-40)					
010	2867648-0000		1	BRACKET	
020	2867647-0000		1	GUIDE	
030	2867649-0000		1	GUIDE	
040	2864281-0000		4	SHIM	
050	2867646-0000		1	STEERING RAIL	
320	312105-0370		4	SCREW M6S ISO 4017 M6X20 A480	
340	315105-0153		6	WASHER BRB 6,4X12 RFR	
360	311103-0352		2	PARALLEL PIN ISO 2338 6M6X18 A1	
STREAMCAP1000 (See drawing on page: 7-42)					
010	2751685-0000		1	BRACKET	
020	2752105-0000		1	GUIDE	
030	2752106-0000		1	GUIDE	
040	2751690-0000		6	SHIM	
050	2797440-0000		1	STEERING RAIL	
320	312105-0331		2	SCREW M6S ISO 4017 M5X20 A480	
330	315105-0146		2	WASHER BRB 5,3X10 RFR	
340	315105-0153		2	WASHER BRB 6,4X12 RFR	
360	311103-0349		2	PARALLEL PIN ISO 2338 6M6X12 A1	
STREAMCAP500 (See drawing on page: 7-42)					
010	2751685-0000		1	BRACKET	
020	2875598-0000		1	GUIDE	
030	2875599-0000		1	GUIDE	
040	2751690-0000		6	SHIM	
050	2875600-0000		1	STEERING RAIL	
320	312105-0331		2	SCREW M6S ISO 4017 M5X20 A480	
330	315105-0146		2	WASHER BRB 5,3X10 RFR	
340	315105-0153		2	WASHER BRB 6,4X12 RFR	
360	311103-0349		2	PARALLEL PIN ISO 2338 6M6X12 A1	
Common Parts					
300	311103-0353		2	PARALLEL PIN ISO 2338 6M6X20 A1	
310	312105-0379		2	SCREW M6S ISO 4014 M6X45 A480	
350	312155-0289		4	SCREW DIN 7991 MF6S M4X10 A4 70	

Pos	Part No	UN	Qty	Description	Page No

Machine Type | Group Description | Used-In | Group Number | Page No

Tetra Pak

SPC
Spare Parts Catalogue

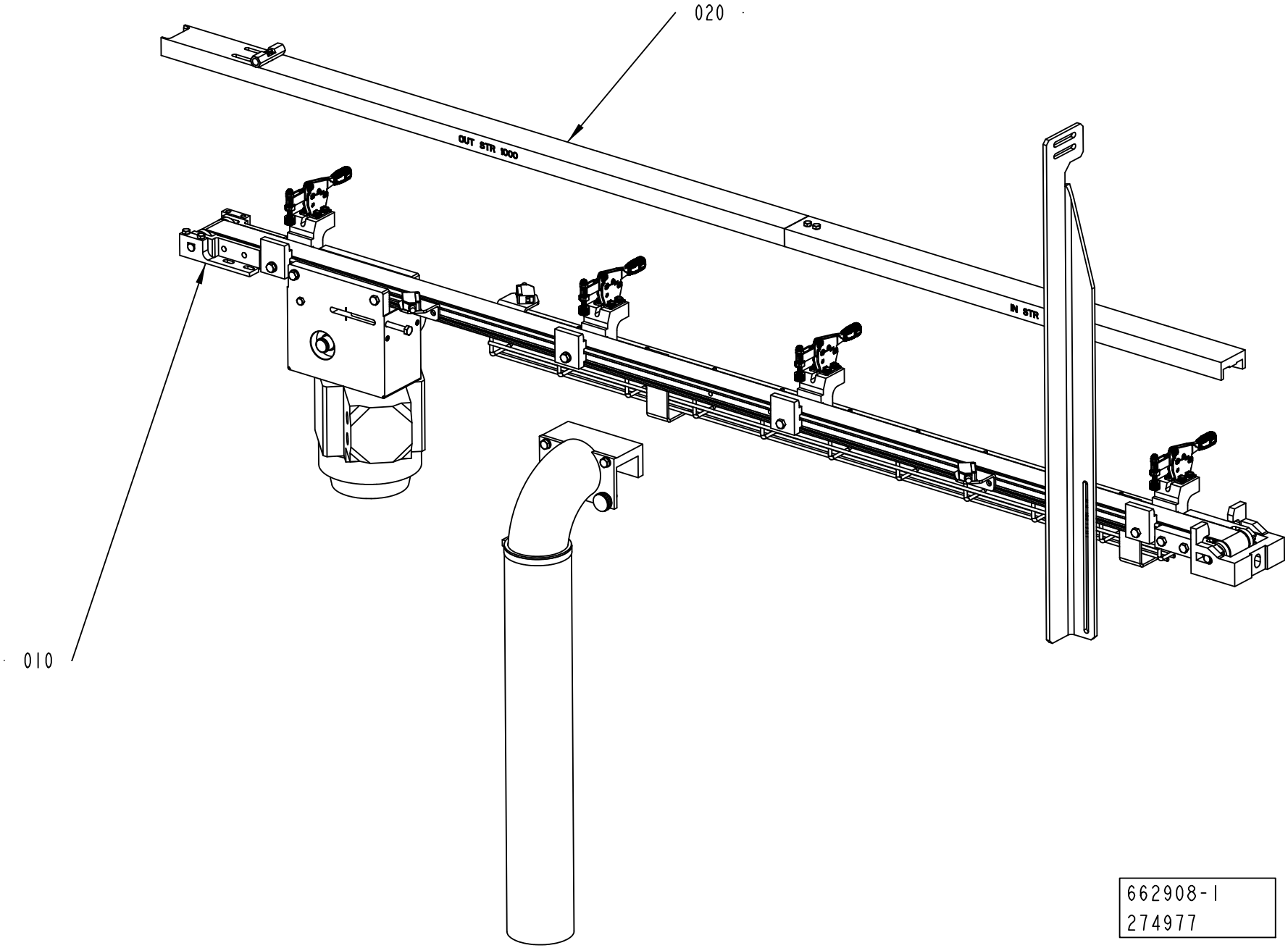
020
OUT STR 1000
IN STR
010
662908-1
274977

ECM: 313006 - 20070608
Group number: 662908-0100
Assembly Drawing: 662908-1_1_AA

Pos	Part No	UN	Qty	Description	Page No
SLIMCAP 1000					
020	2852916-0000		1	GUIDE RAIL	
SLIMCAP 2000					
020	2873969-0000		1	GUIDE RAIL	
STREAMCAP1000					
020	2852915-0000		1	GUIDE RAIL	
STREAMCAP200					
020	2873999-0000		1	GUIDE RAIL	
STREAMCAP330					
020	2874000-0000		1	GUIDE RAIL	
STREAMCAP500					
020	2873968-0000		1	GUIDE RAIL	
Common Parts					
010	2846413-0100		1	CONVEYOR BELT	**8-5**

Pos	Part No	UN	Qty	Description	Page No

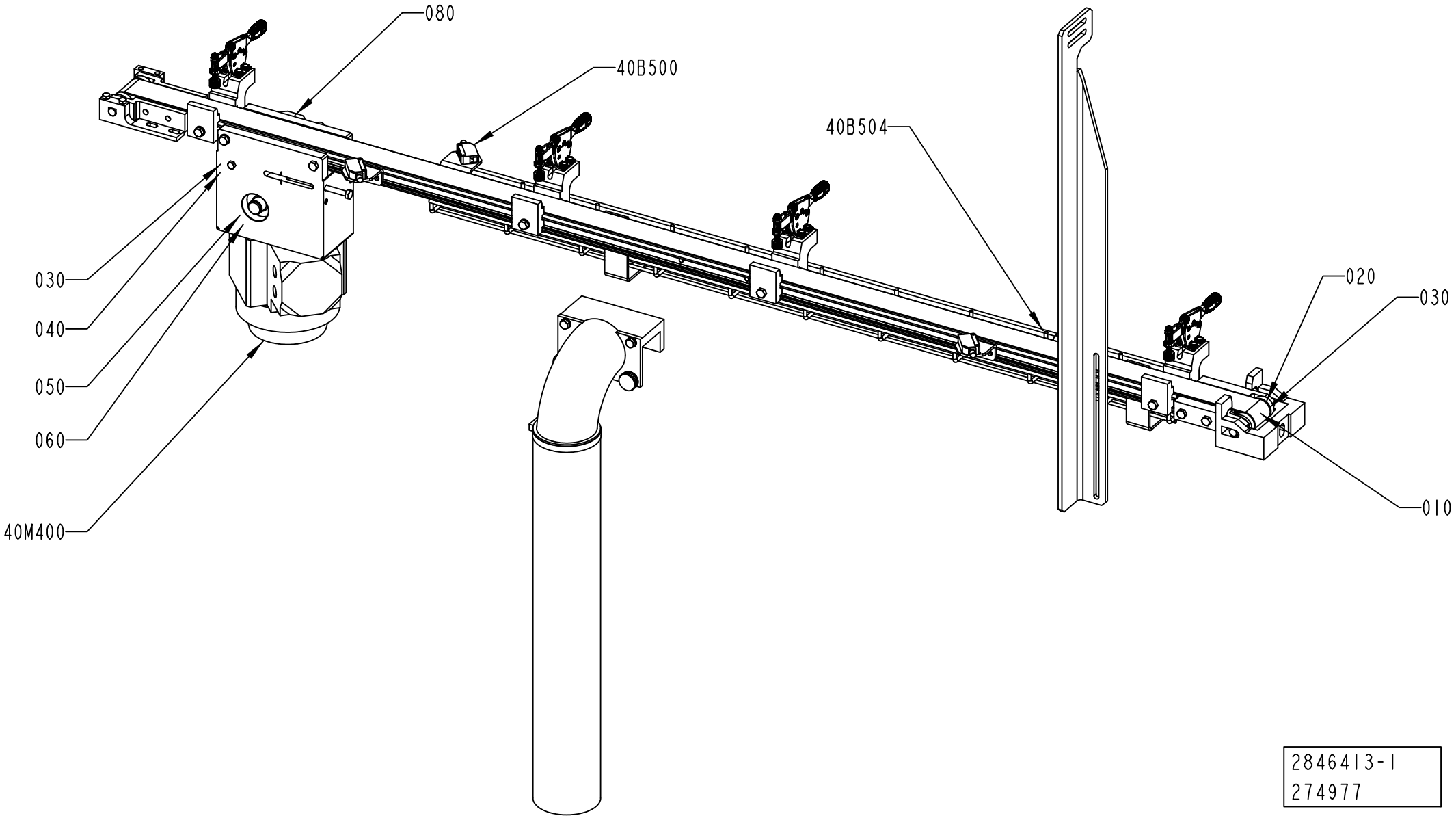
080
40B500
40B504
030
040
050
060
40M400
020
030
010
2846413-1
274977

ECM: 290218 - 20061221
Group number: 2846413-0100
Assembly Drawing: 2846413-1_1_AA

Pos	Part No	UN	Qty	Description	Page No
-					
010	2852917-0000		1	BELT	
020	90458-1438		4	BALL BEARING, 10X19X5 MM	
030	90141-0016		8	RETAINING RING FOR SHAFT DIN 471 10 A2	
040	321308-0200		4	BALL BEARING, 10X26X8 MM	
050	321308-0203		1	BALL BEARING, 17X35X10 MM	
060	90141-0017		1	RETAINING RING FOR SHAFT DIN 471 17 A2	
080	2856578-0000		1	WORM GEAR	
40B500	90459-5529		1	PH.CELL E3Z-T86A, SENDER+RECIEVER	
40B504	90459-5529		1	PH.CELL E3Z-T86A, SENDER+RECIEVER	
40M400	2856579-0000		1	MOTOR	

Pos	Part No	UN	Qty	Description	Page No

Tetra Pak

SPC
Spare Parts Catalogue

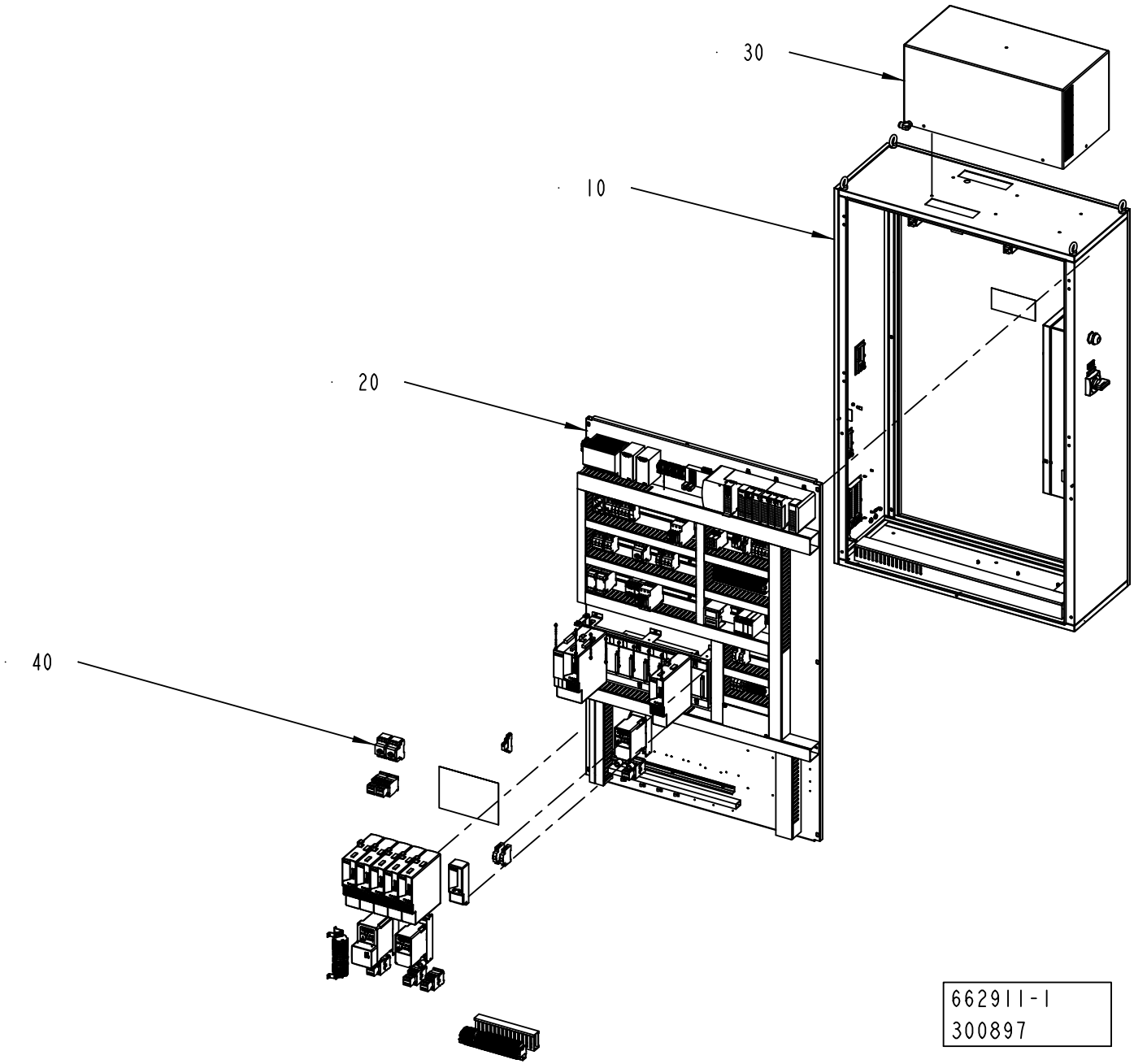
30
10
20
40
662911-1
300897

ECM: 308182 - 20070528
Group number: 662911-0100
Assembly Drawing: 662911-1_1_AB

Pos	Part No	UN	Qty	Description	Page No
-					
010	2833406-0100		1	CABINET	**9-5**
020	2833407-0100		1	CONTROL BOARD	**9-9**
030	2833408-0100		1	COOLING UNIT	**9-53**
040	2841404-0100		1	ELECTRICAL CONVERSION	**9-55, 9-57, 9-59**
050	2833409-0100		1	CABLE SET	**9-69**
060	2861166-0100		1	SOFTWARE	**9-71, 11-5**

Pos	Part No	UN	Qty	Description	Page No

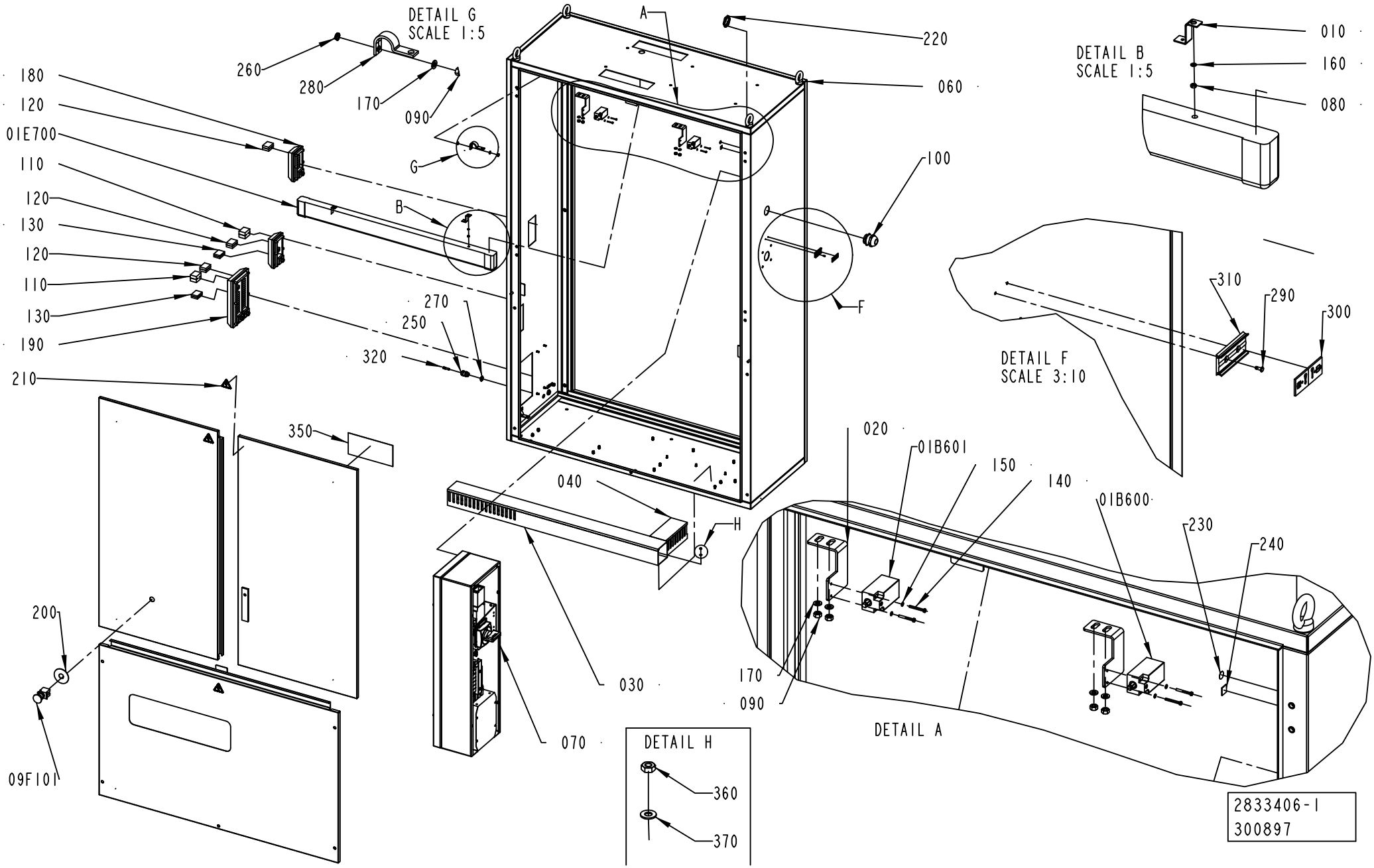
DETAIL G
SCALE 1:5
DETAIL B
SCALE 1:5
DETAIL F
SCALE 3:10
DETAIL A
DETAIL H
A
B
F
G
H
010
160
080
220
060
100
180
120
01E700
110
120
130
120
110
130
190
210
260
280
170
090
270
250
320
310
290
300
350
040
020
01B601
150
140
01B600
230
240
200
09F101
030
070
170
090
360
370
2833406-1
300897

ECM: 302777 - 20070528
Group number: 2833406-0100
Assembly Drawing: 2833406-1_1_AB

Pos	Part No	UN	Qty	Description	Page No
-					
010	2675516-0000		2	BRACKET	
01B600	90044-0192		1	LIMIT SW. SZ2586.000	
01B601	90044-0192		1	LIMIT SW. SZ2586.000	
01E700	90459-2560		1	LIGHT FIXTURE, TMS121 1XTL-D30W/830 IP	
020	2839225-0000		2	BRACKET	
030	2838459-0000		1	CABLE DUCT	
040	2838460-0000		1	CABLE DUCT	
060	2833403-0000		1	WELDED CABINET	
070	2833410-0100		1	BOX	**9-7**
080	312605-0312		2	HEXAGON NUT, M6M M4 A280	
090	312605-0316		24	HEXAGON NUT, M6M M6 A280	
09F101	90458-1651		1	EMERGENCY STOP, ZB4-BS-844 ZB4-BZ-104	
100	90458-0310		1	CABLE GLAND, M40X1,5, NO.5311 1050	
110	90458-1173		2	MULTI DIAMETER MODULE, CM 30W40	
120	90458-1174		18	MULTI DIAMETER MODULE, CM 20W40	
130	90458-1175		4	MULTI DIAMETER MODULE, CM 15W40	
140	312125-0232		4	SCREW ISO 1207 M3X25 A4	
150	315105-0124		4	WASHER BRB 3,2X6 RFR	
160	315105-0136		2	WASHER BRB 4,3X8 RFR	
170	315105-0153		24	WASHER BRB 6,4X12 RFR	
180	90458-1178		2	FRAME CF 8	
190	90458-1179		1	FRAME CF 32	
200	486826-0001		1	SIGN "EMERGENCY STOP"	
210	359705-0015		3	WARNING SIGN ISO, RISK OF ELECTRIC SHOCK	
220	353250-0040		1	GLAND, LOCK NUT M40X1,5	
230	2608177-0000		20	SIGN	
240	90194-0152		20	SIGN, EARTH	
250	90458-0314		2	CABLE GLAND, M16X1,5, NO.5311 1110	
260	90062-0015		20	LOCK WASHER SERRAT.EXT.GEAR,6,4/11 H=0,7	
270	353250-0016		2	GLAND, LOCK NUT M16X1,5	
280	90135-0035		11	EARTH WIRE, L=250 MM 16 MM2	
290	311520-0320		2	RIVET, BLANK 2,4X6	
300	359241-0124		1	SIGN: " MAIN SWITCH"	
310	359240-0100		1	SIGN HOLDER FOR 359240-0001	
320	342715-0102		2	BLIND PLUG 6 MM	
350	90194-0080		1	SIGN, IDENTIFICATION OF WIRING	
360	90099-0191		46	HEXAGON NYLON NUT, M4X0,7	
370	90005-0064		15	WASHER PL.RND.NYL.4,3/9, H=0,8	

Pos	Part No	UN	Qty	Description	Page No

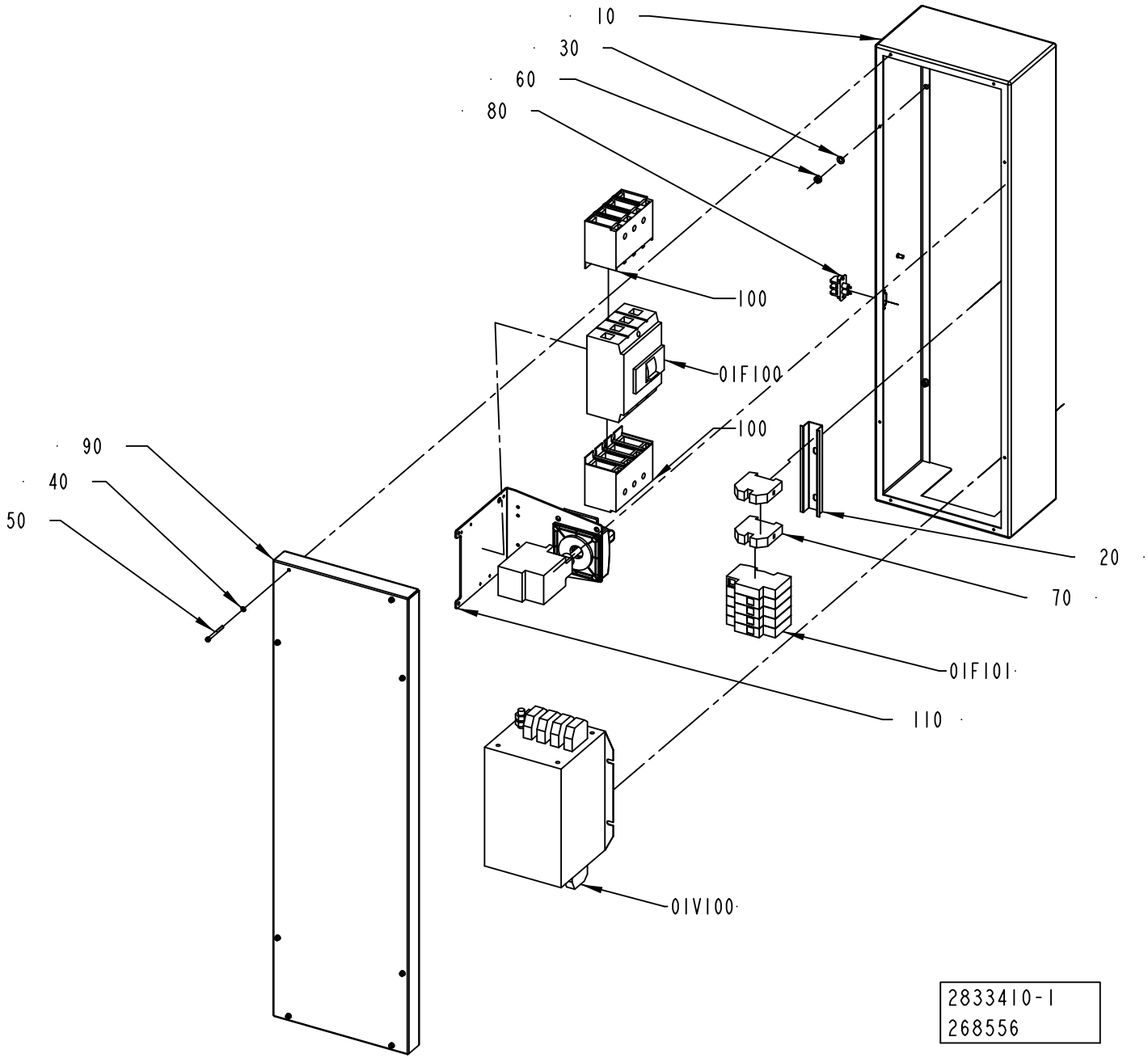
10
30
60
80
100
01F100
100
90
40
50
20
70
01F101
110
01V100
2833410-1
268556

ECM: 272039 - 20060925
Group number: 2833410-0100
Assembly Drawing: 2833410-1_1_AA

Pos	Part No	UN	Qty	Description	Page No
-					
010	2833411-0000		1	BOX	
01F100	90459-4181		1	CURR. LIM. CIRC. BREAKER, NZMB1-4-A40	
01F101	90082-0013		1	OVER VOLT. PROTECT. PU 4C-R 230 VAC	
	90082-0301		*3*	*OVER VOLT. PROTECT. PU 0 C 833951*	
01V100	90024-0060		1	POWER LINE FILTER, 80 A 250/440 VAC	
020	2835456-0000		1	RAIL	
030	315105-0153		6	WASHER BRB 6,4X12 RFR	
040	315105-0136		8	WASHER BRB 4,3X8 RFR	
050	312115-0304		8	SCREW ISO4762 M4X45 A4 80	
060	312605-0316		6	HEXAGON NUT, M6M M6 A280	
070	353024-0209		2	EARTH TERMINAL, 1010.5	
080	90024-0036		1	FILTERED TERMINAL BLOCK	
090	2835450-0000		1	COVER	
100	90459-6617		2	COVER 4-POLE, NZM1-4-XKSA	
110	90600-1198		1	HANDLE, MZM1-XSM-R	

Pos	Part No	UN	Qty	Description	Page No

CONTROL BOARD

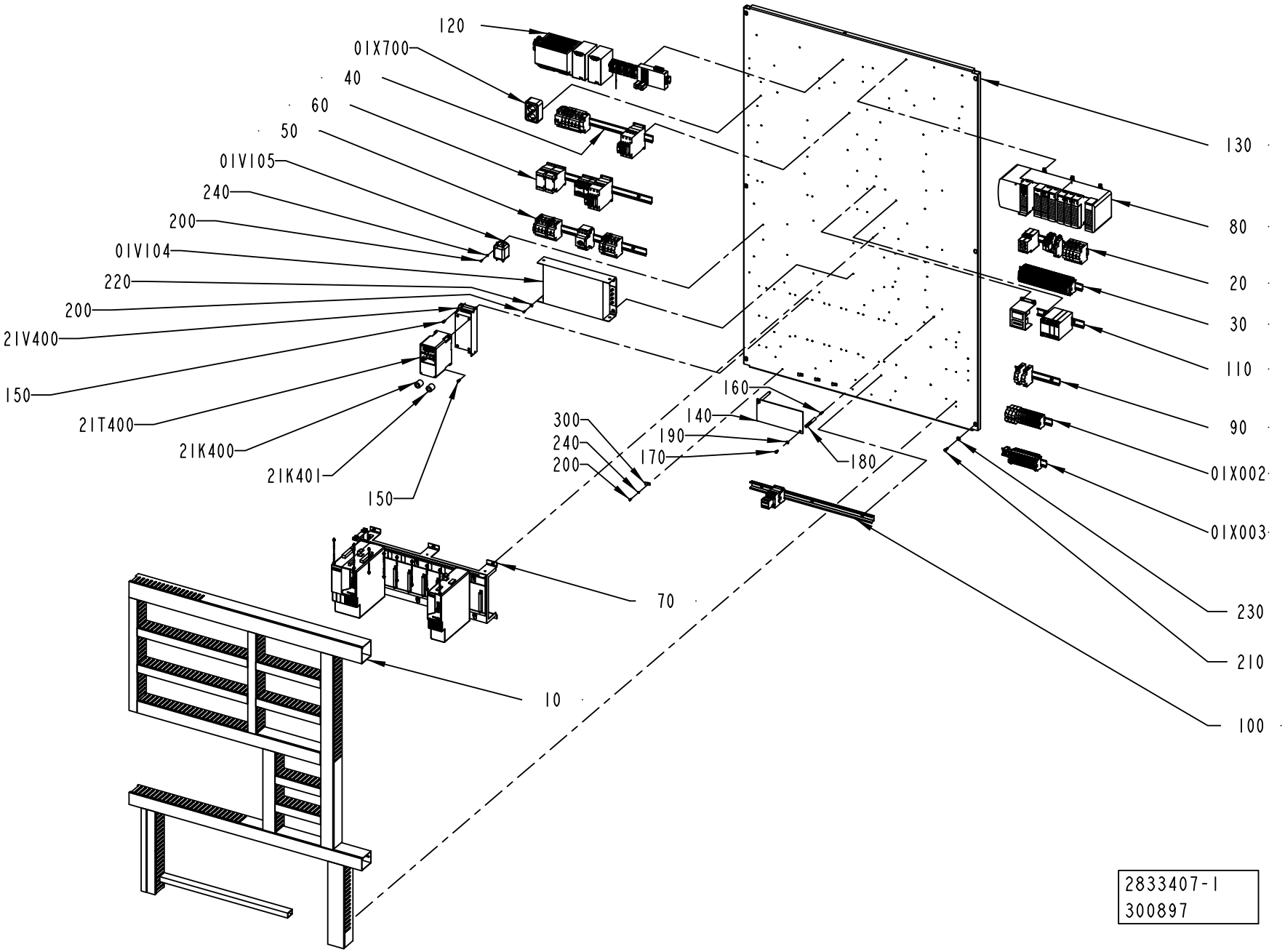

ECM: 302051 - 20070528
Group number: 2833407-0100
Assembly Drawing: 2833407-1_1_AB

Pos	Part No	UN	Qty	Description	Page No
-					
010	2833412-0100		1	CABLE DUCT	**9-11**
01V104	90459-2549		1	AC LINE FILTER 3-PHASE 30A, 2090-XXLF-X3	
01V105	90459-3931		1	POWER LINE FILTER, 3 A 120/250 VAC	
01X002	2839223-0100		1	PLINTH	**9-13**
01X003	2839224-0100		1	PLINTH	**9-15**
01X700	90001-0033		1	WALL SOCKET OUTLET	
020	2835464-0100		1	DISTRIBUTION TERMINAL	**9-17**
030	2839229-0100		1	DISTRIBUTION TERMINAL	**9-19**
040	2835459-0100		1	FUSE BOARD 1	**9-33**
050	2835460-0100		1	FUSE BOARD 2	**9-35**
060	2835461-0100		1	FUSE BOARD 3	**9-37**
070	2835462-0100		1	MOTOR DRIVE CONTROL	**9-39**
080	2835458-0100		1	PLC	**9-41**
090	2839222-0100		1	PLINTH	**9-43**
100	2835463-0100		1	PLINTH	**9-45**
110	2839221-0100		1	PLINTH	**9-47**
120	2835457-0100		1	POWER SUPPLY UNIT	**9-49**
130	2833404-0000		1	MOUNTING PLATE	
140	2845320-0000		1	PROTECTION	
150	312111-0327		8	SCREW HEX.SOCK.HD.MC6S-TT 5X12 88 FZB	
160	312318-0370		2	SCREW ISO4029 M6X20 A4	
170	312125-0366		2	SCREW ISO 1207 M6X12 A4	
180	1038275-0012		2	SPACER	
190	315105-0153		2	WASHER BRB 6,4X12 RFR	
200	312125-0289		10	SCREW ISO 1207 M4X10 A4	
210	312115-0368		6	SCREW ISO4762 M6X16 A4 80	
21K400	90458-1140		1	FERRITE, RI-26-28-13	
21K401	90458-1140		1	FERRITE, RI-26-28-13	
21T400	90459-3450		1	VARIABLE FREQUENCY DRIVE 22A-A4P5N104	
21V400	90459-3460		1	FOOTPRINT FILTER 22-RF010-AL	
220	90005-0082		4	WASHER PLAIN ROUND 4,3(M4)/12,H=1	
230	315105-0165		6	WASHER BRB 8,4X16 RFR	
240	315105-0136		6	WASHER BRB 4,3X8 RFR	
300	90165-0007		4	PIPE CLIP FOR TUBE D=8 MM	

Pos	Part No	UN	Qty	Description	Page No

Machine Type | Group Description | Used-In | Group Number | Page No

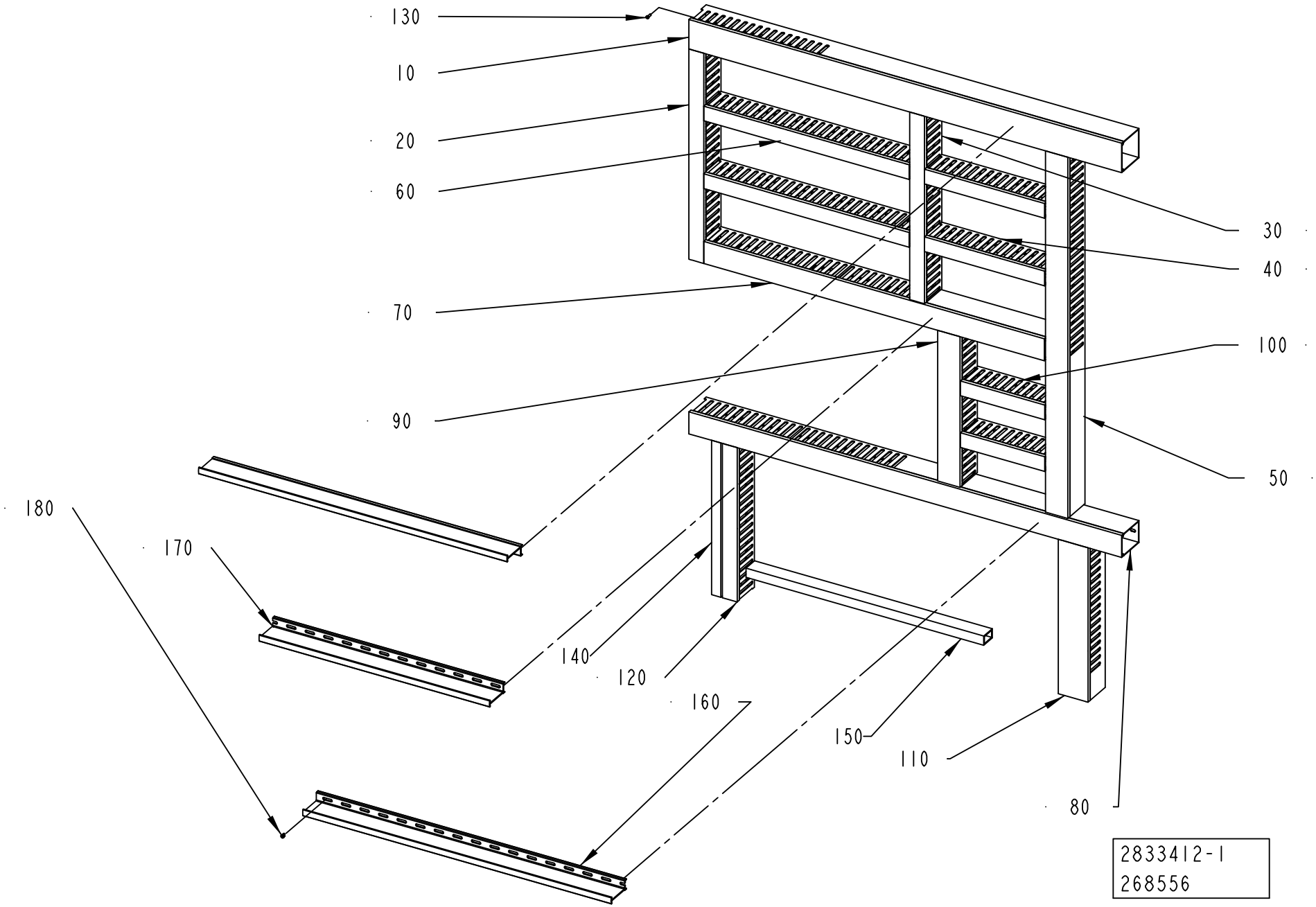
130
10
20
60
70
90
180
170
140
120
160
150
110
80
30
40
100
50
2833412-1
268556

ECM: 272040 - 20060925
Group number: 2833412-0100
Assembly Drawing: 2833412-1_1_AA

Pos	Part No	UN	Qty	Description	Page No
-					
010	2838462-0000		1	CABLE DUCT	
020	2838463-0000		1	CABLE DUCT	
030	2838464-0000		1	CABLE DUCT	
040	2838465-0000		2	CABLE DUCT	
050	2838466-0000		1	CABLE DUCT	
060	2838467-0000		2	CABLE DUCT	
070	2838468-0000		1	CABLE DUCT	
080	2838469-0000		1	CABLE DUCT	
090	2838470-0000		1	CABLE DUCT	
100	2838471-0000		2	CABLE DUCT	
110	2838472-0000		1	CABLE DUCT	
120	2838473-0000		1	CABLE DUCT	
130	90287-0124		59	SCREW PAN HEAD MSCS M4X12 NYLON	
140	2838474-0000		1	CABLE DUCT	
150	2838475-0000		1	CABLE DUCT	
160	2841405-0000		2	DIVIDER	
170	2841406-0000		1	DIVIDER	
180	90181-0064		12	LOCK ZP1 FOR CHANNEL T1	

Pos	Part No	UN	Qty	Description	Page No

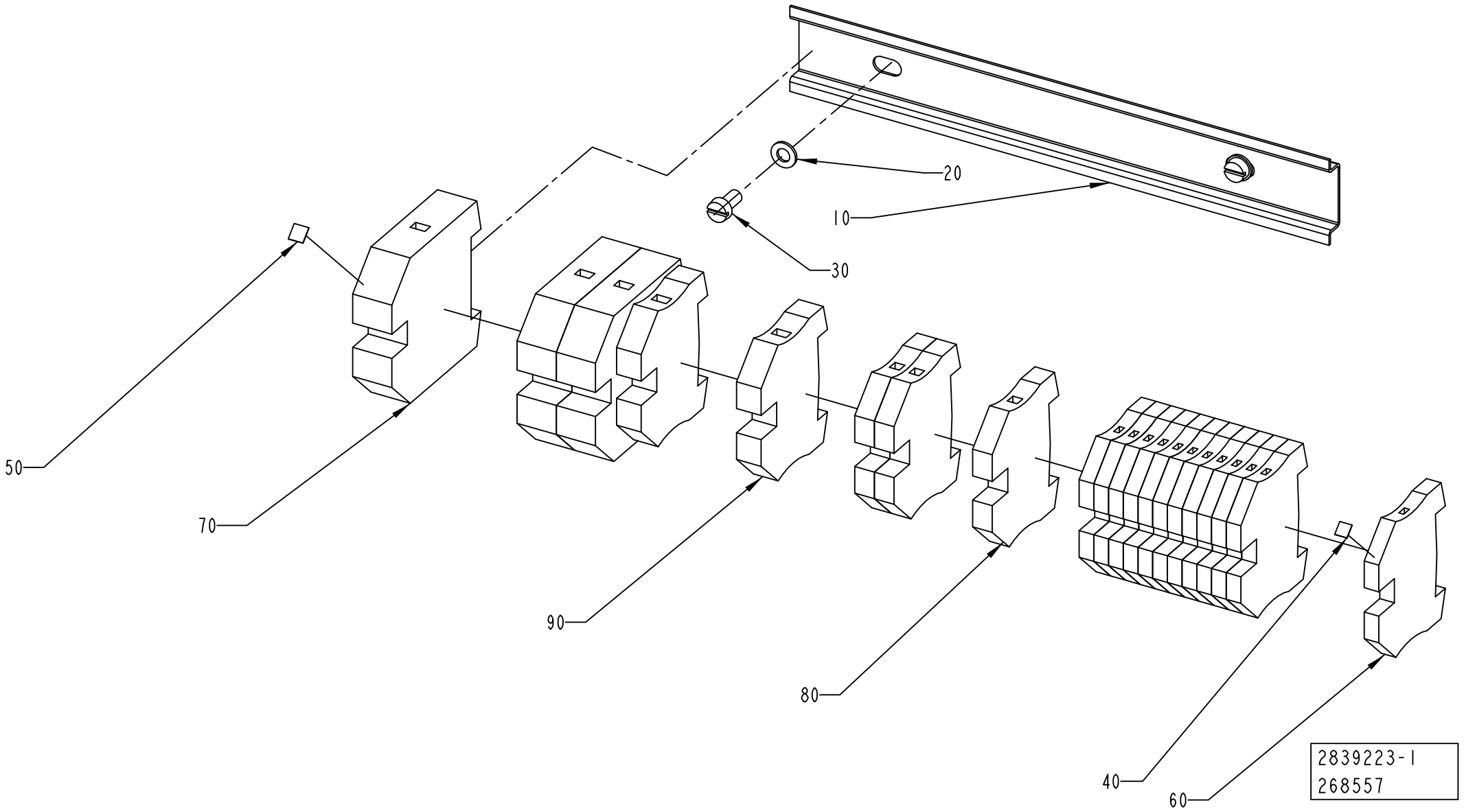
20
10
30
50
70
90
80
40
60
2839223-1
268557

ECM: 272051 - 20060925
Group number: 2839223-0100
Assembly Drawing: 2839223-1_1_AA

Pos	Part No	UN	Qty	Description	Page No
-					
010	2835454-0000		1	RAIL	
020	315105-0146		2	WASHER BRB 5,3X10 RFR	
030	312125-0325		2	SCREW ISO 1207 M5X10 A4	
040	359011-0807		1	MARKING PLATES 5-FW 1-50	
050	359011-0821		1	SET OF SIGNS 6-FW 1-50	
060	353024-0205		12	EARTH TERMINAL, 1010.1	
070	353024-0209		3	EARTH TERMINAL, 1010.5	
080	353024-0206		3	EARTH TERMINAL, 1010.2	
090	353024-0207		2	EARTH TERMINAL, 1010.3	

Pos	Part No	UN	Qty	Description	Page No

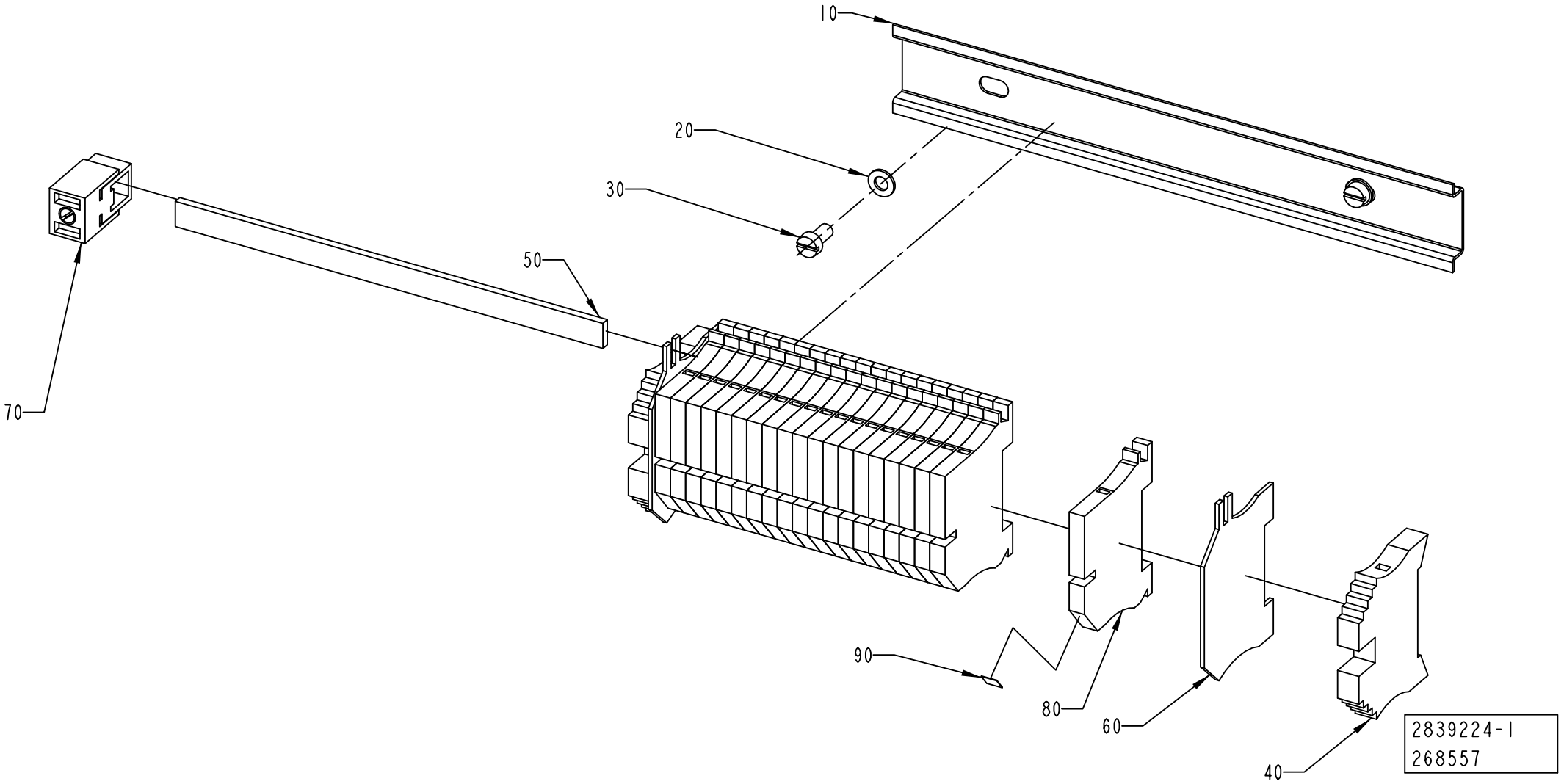
10
20
30
50
70
90
80
60
40
2839224-1
268557

ECM: 272050 - 20060925
Group number: 2839224-0100
Assembly Drawing: 2839224-1_1_AA

Pos	Part No	UN	Qty	Description	Page No
-					
010	2835454-0000		1	RAIL	
020	315105-0146		2	WASHER BRB 5,3X10 RFR	
030	312125-0325		2	SCREW ISO 1207 M5X10 A4	
040	353031-0203		2	END SUPPORT, WEW 35/2	
050	353041-0001	MM	165	BUS BAR RAIL 10X3MM SSCH	
060	353033-0104		2	END PLATE, 10502.8	
070	353041-0106		1	HOLDER ZB35 K 5026.8	
080	353022-0002		20	NEUTRAL TERMINAL, 10107.8	
090	359011-0821		1	SET OF SIGNS 6-FW 1-50	

Pos	Part No	UN	Qty	Description	Page No

DISTRIBUTION TERMINAL

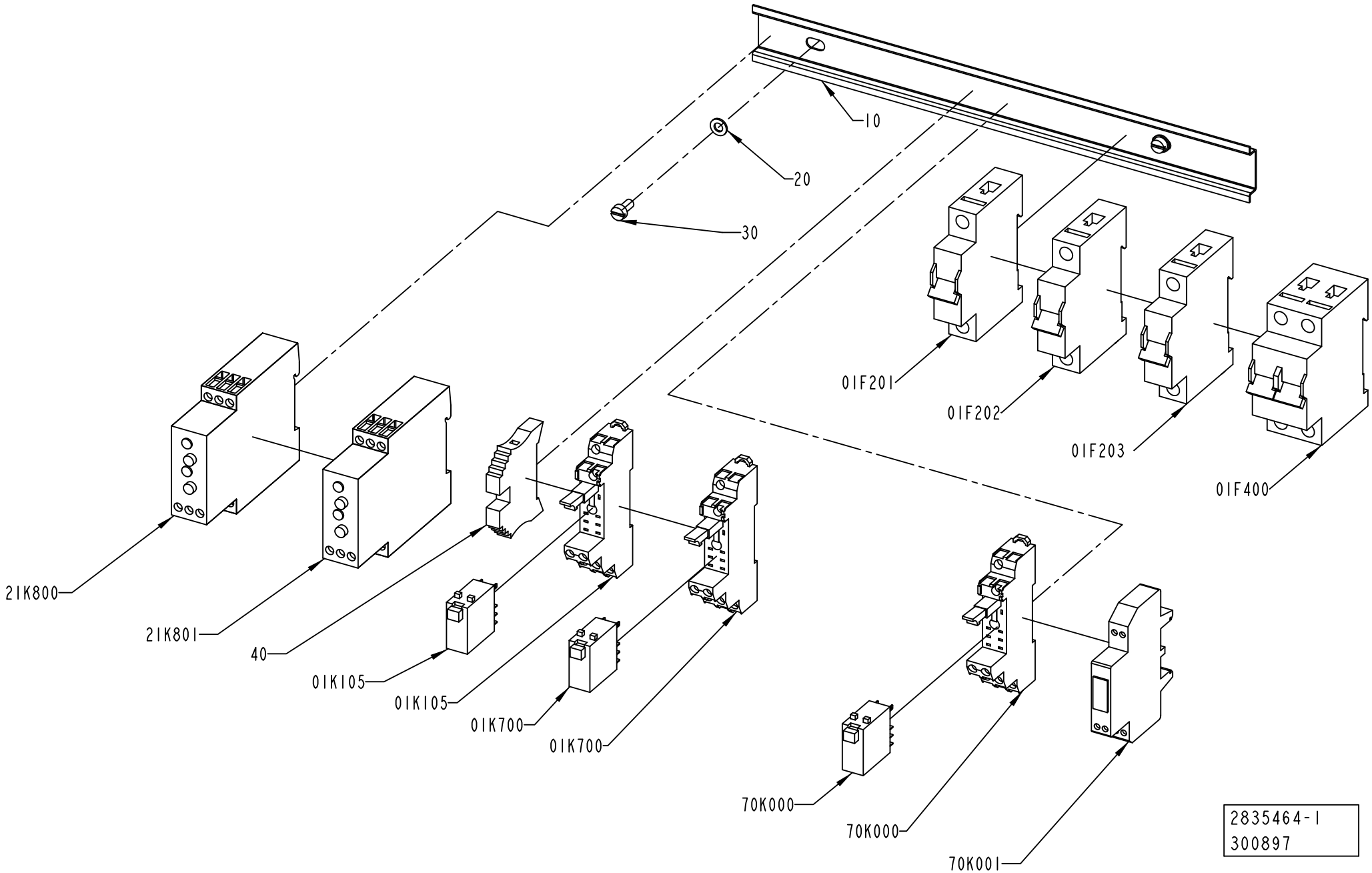

ECM: 309362 - 20070528
Group number: 2835464-0100
Assembly Drawing: 2835464-1_1_AB

Pos	Part No	UN	Qty	Description	Page No
-					
010	2838478-0000		1	RAIL	
01F201	354000-0040		1	MINIATURE CIRCUIT BREAKER, FAZ-C4/1	
01F202	354000-0060		1	MINIATURE CIRCUIT BREAKER, FAZ-C6/1	
01F203	354000-0040		1	MINIATURE CIRCUIT BREAKER, FAZ-C4/1	
01F400	354001-0040		1	MINIATURE CIRCUIT BREAKER, FAZ-C4/2	
01K105	90119-0108		1	RELAY OMRON G2R-2-SNI-24DC	
	90129-0018		*1*	*BASE OMRON P2RF-08-E*	
01K105	90129-0018		1	BASE OMRON P2RF-08-E	
01K700	90119-0108		1	RELAY OMRON G2R-2-SNI-24DC	
	90129-0018		*1*	*BASE OMRON P2RF-08-E*	
01K700	90129-0018		1	BASE OMRON P2RF-08-E	
020	315105-0146		2	WASHER BRB 5,3X10 RFR	
030	312125-0325		2	SCREW ISO 1207 M5X10 A4	
040	353031-0203		1	END SUPPORT, WEW 35/2	
21K800	90459-0690		1	CURRENT CONTROL RELAY, 84 871 034	
21K801	90459-0690		1	CURRENT CONTROL RELAY, 84 871 034	
70K000	90119-0108		1	RELAY OMRON G2R-2-SNI-24DC	
	90129-0018		*1*	*BASE OMRON P2RF-08-E*	
70K000	90129-0018		1	BASE OMRON P2RF-08-E	
70K001	90459-2739		1	OPTO-RELAY 50085, IN / OUT 4-53VDC 1A	

Pos	Part No	UN	Qty	Description	Page No

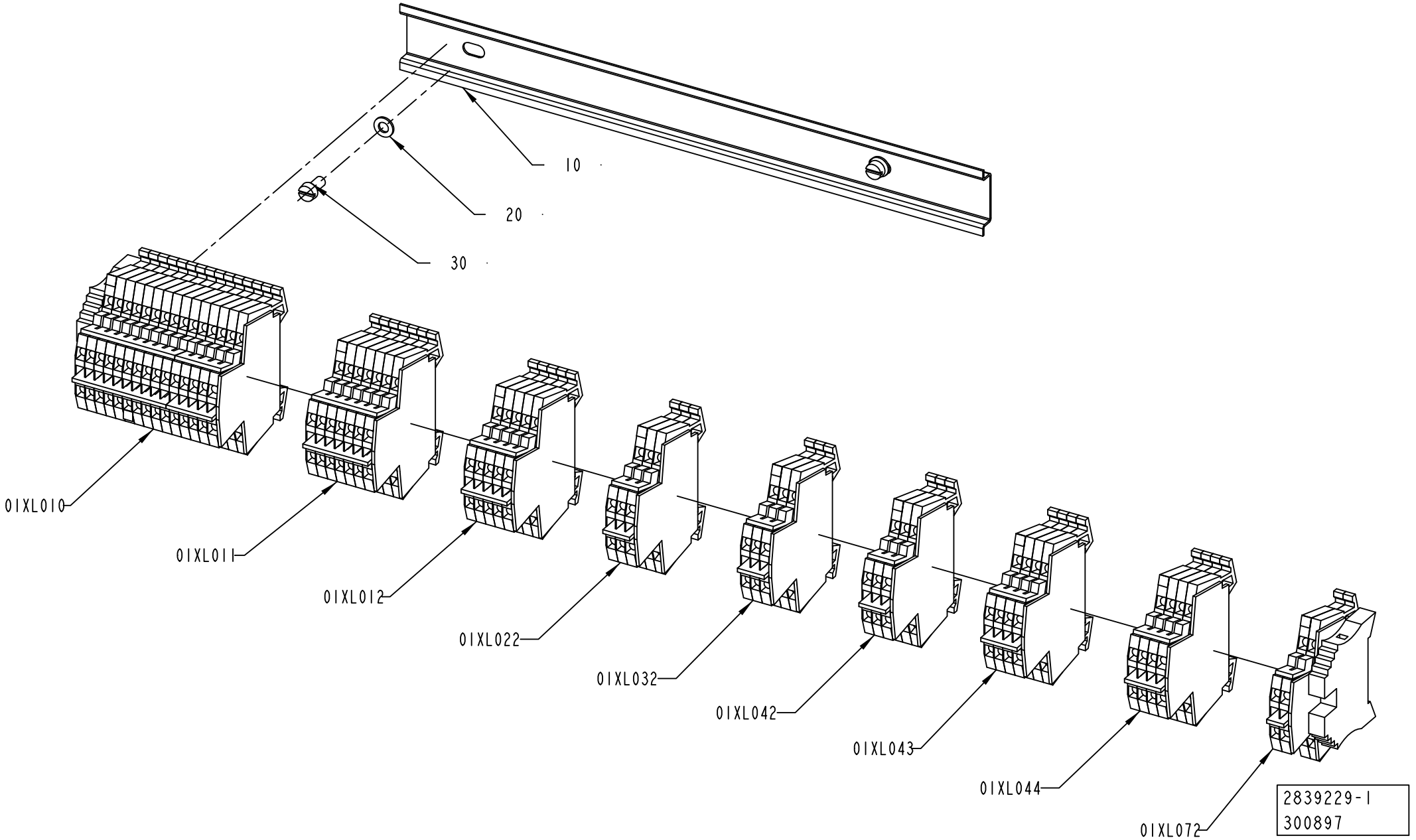
10
20
30
01XL010
01XL011
01XL012
01XL022
01XL032
01XL042
01XL043
01XL044
01XL072
2839229-1
300897

ECM: 302049 - 20070528
Group number: 2839229-0100
Assembly Drawing: 2839229-1_1_AB

Pos	Part No	UN	Qty	Description	Page No
-					
010	2838478-0000		1	RAIL	
01XL010	2839230-0100		1	PLINTH	**9-21**
01XL011	2840909-0100		1	PLINTH	**9-23**
01XL012	2840910-0100		1	PLINTH	**9-25**
01XL022	2840911-0100		1	PLINTH	**9-27**
01XL032	2840911-0100		1	PLINTH	**9-27**
01XL042	2840911-0100		1	PLINTH	**9-27**
01XL043	2840915-0100		1	PLINTH	**9-29**
01XL044	2840915-0100		1	PLINTH	**9-29**
01XL072	2840917-0100		1	PLINTH	**9-31**
020	315105-0146		2	WASHER BRB 5,3X10 RFR	
030	312125-0325		2	SCREW ISO 1207 M5X10 A4	

Pos	Part No	UN	Qty	Description	Page No

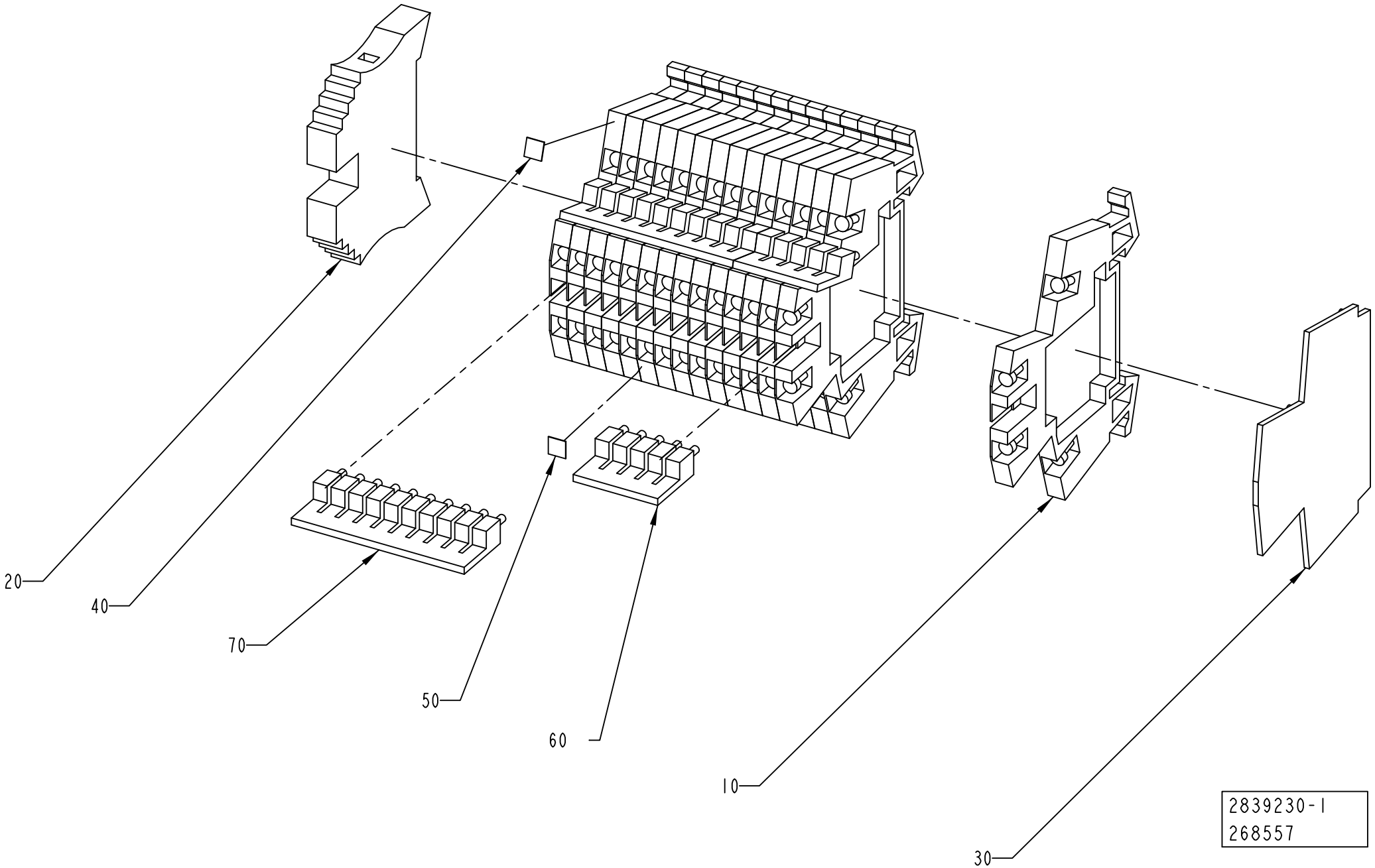
20
40
70
50
60
10
30
2839230-1
268557

ECM: 272043 - 20060925
Group number: 2839230-0100
Assembly Drawing: 2839230-1_1_AA

Pos	Part No	UN	Qty	Description	Page No
-					
010	90077-0113		15	FEED THROUGH TERMINAL, 10-00102150-1	
020	353031-0203		1	END SUPPORT, WEW 35/2	
030	353032-0009		1	END PLATE, WAP FOR WDK	
040	359011-0807		1	MARKING PLATES 5-FW 1-50	
050	359011-0808		1	MARKING PLATES 5-FW 51-100	
060	353034-0030		2	BRIDGE CONNECTOR WQV 2,5/10, 10544.6	
070	353034-0030		2	BRIDGE CONNECTOR WQV 2,5/10, 10544.6	

Pos	Part No	UN	Qty	Description	Page No

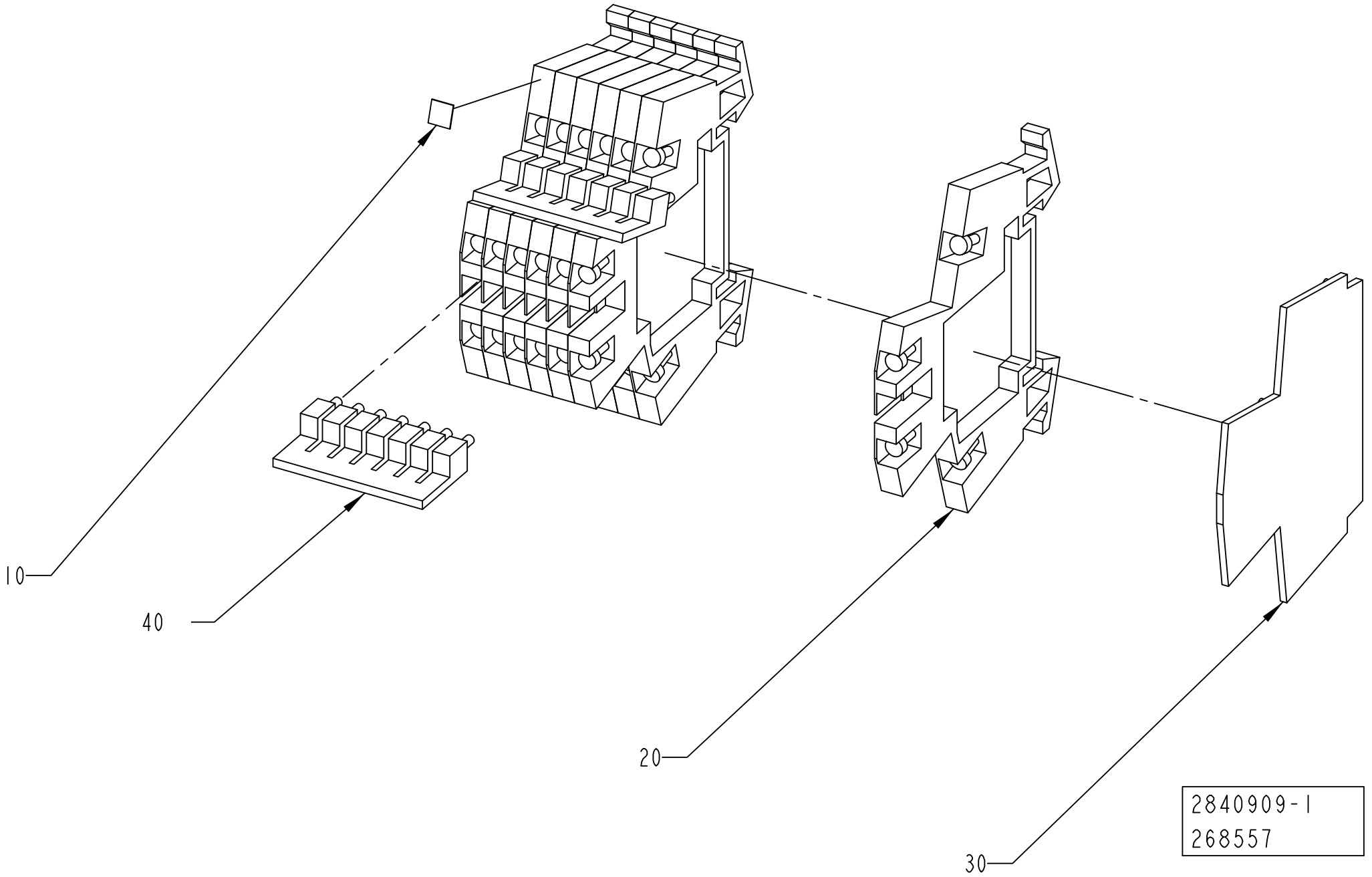
10
40
20
30
2840909-1
268557

ECM: 272044 - 20060925
Group number: 2840909-0100
Assembly Drawing: 2840909-1_1_AA

Pos	Part No	UN	Qty	Description	Page No
-					
010	359011-0807		1	MARKING PLATES 5-FW 1-50	
020	90077-0113		7	FEED THROUGH TERMINAL, 10-00102150-1	
030	353032-0009		1	END PLATE, WAP FOR WDK	
040	353034-0030		2	BRIDGE CONNECTOR WQV 2,5/10, 10544.6	

Pos	Part No	UN	Qty	Description	Page No

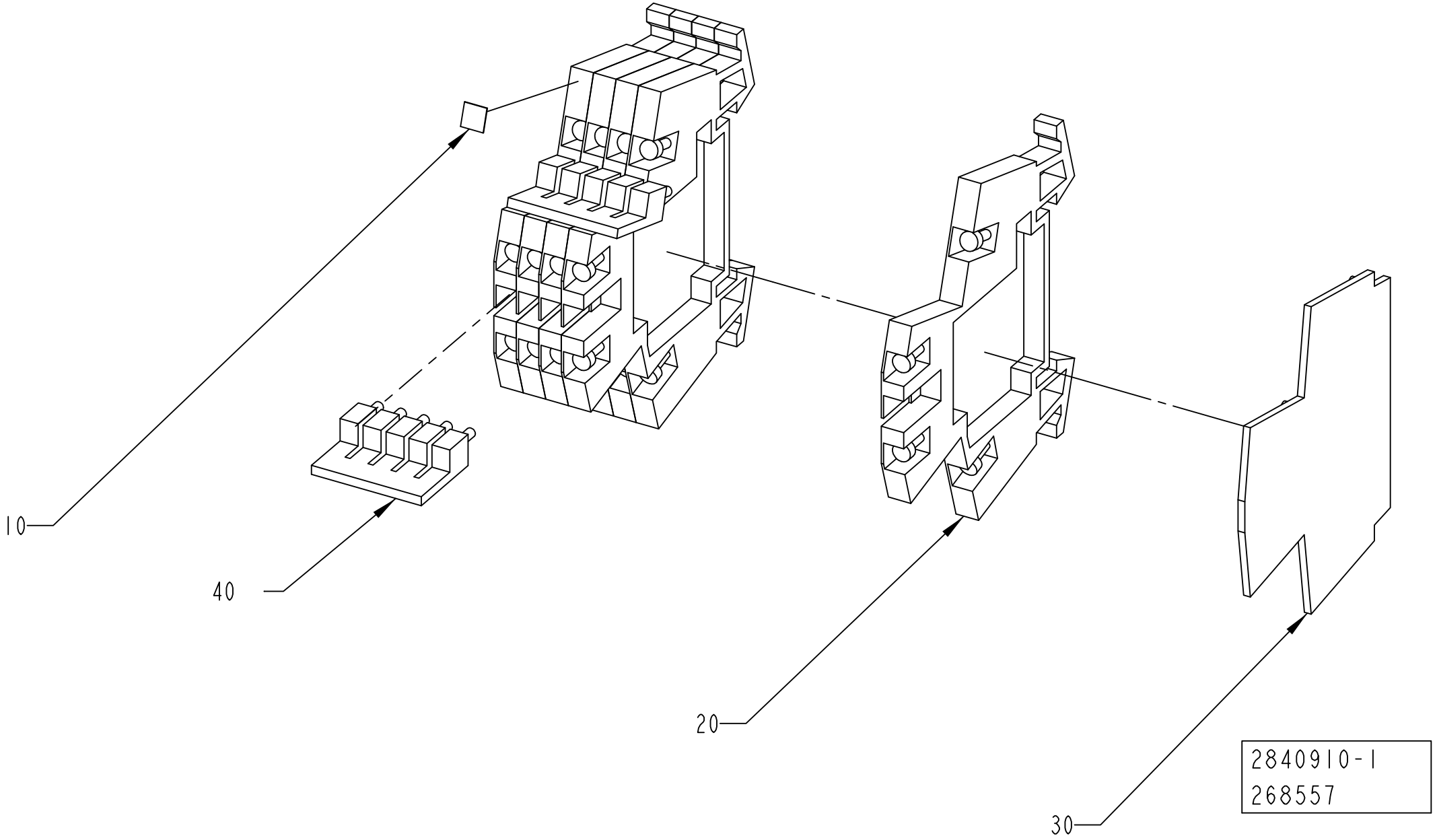
10
40
20
30
2840910-1
268557

ECM: 272045 - 20060925
Group number: 2840910-0100
Assembly Drawing: 2840910-1_1_AA

Pos	Part No	UN	Qty	Description	Page No
-					
010	359011-0807		1	MARKING PLATES 5-FW 1-50	
020	90077-0113		5	FEED THROUGH TERMINAL, 10-00102150-1	
030	353032-0009		1	END PLATE, WAP FOR WDK	
040	353034-0030		2	BRIDGE CONNECTOR WQV 2,5/10, 10544.6	

Pos	Part No	UN	Qty	Description	Page No

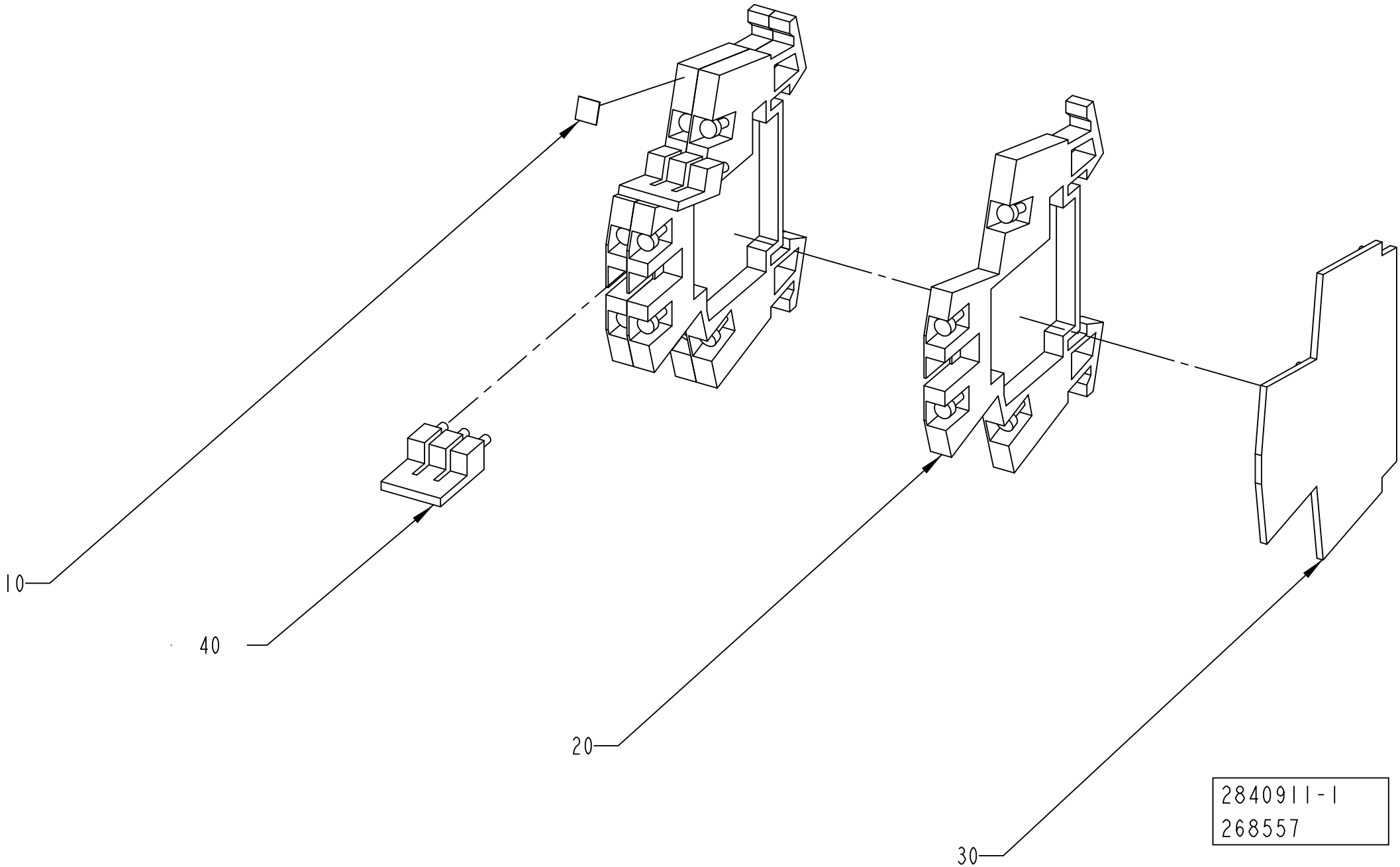
10
40
20
30
2840911-1
268557

ECM: 272046 - 20060925
Group number: 2840911-0100
Assembly Drawing: 2840911-1_1_AA

Pos	Part No	UN	Qty	Description	Page No
-					
010	359011-0807		1	MARKING PLATES 5-FW 1-50	
020	90077-0113		3	FEED THROUGH TERMINAL, 10-00102150-1	
030	353032-0009		1	END PLATE, WAP FOR WDK	
040	353034-0030		2	BRIDGE CONNECTOR WQV 2,5/10, 10544.6	

Pos	Part No	UN	Qty	Description	Page No

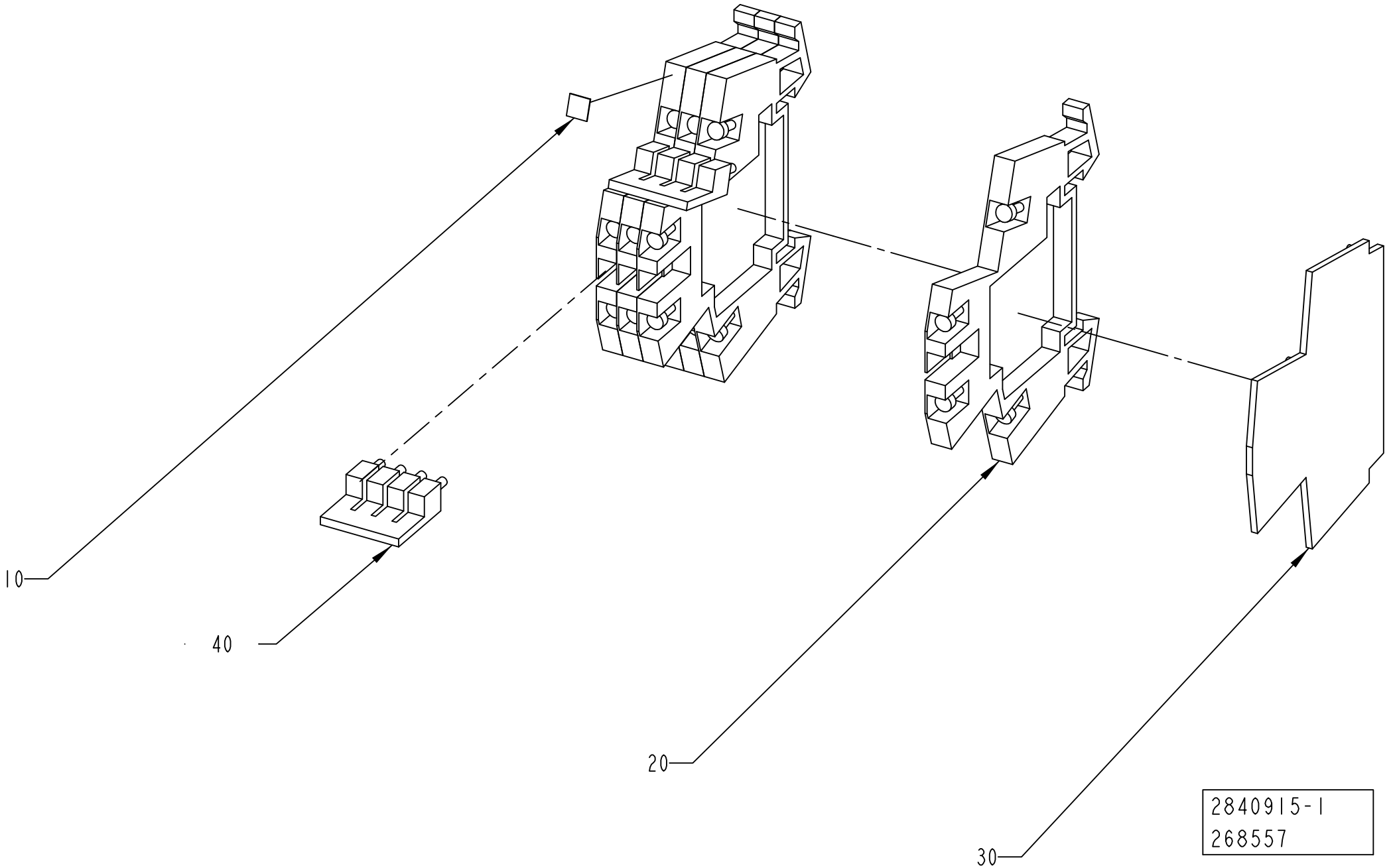
10
40
20
30
2840915-1
268557

ECM: 272047 - 20060925
Group number: 2840915-0100
Assembly Drawing: 2840915-1_1_AA

Pos	Part No	UN	Qty	Description	Page No
-					
010	359011-0807		1	MARKING PLATES 5-FW 1-50	
020	90077-0113		4	FEED THROUGH TERMINAL, 10-00102150-1	
030	353032-0009		1	END PLATE, WAP FOR WDK	
040	353034-0030		2	BRIDGE CONNECTOR WQV 2,5/10, 10544.6	

Pos	Part No	UN	Qty	Description	Page No

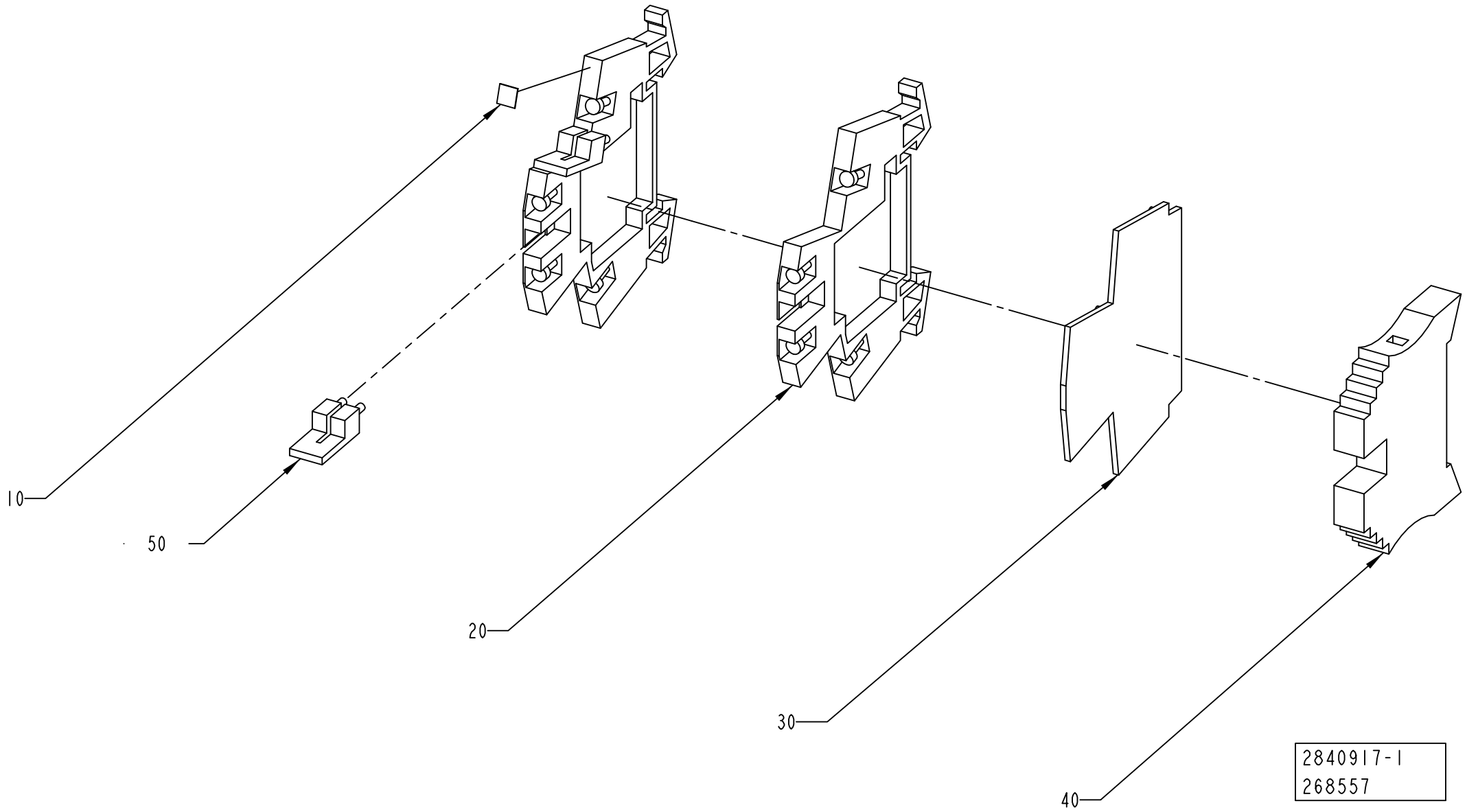
10
50
20
30
40
2840917-1
268557

ECM: 272048 - 20060925
Group number: 2840917-0100
Assembly Drawing: 2840917-1_1_AA

Pos	Part No	UN	Qty	Description	Page No
-					
010	359011-0807		1	MARKING PLATES 5-FW 1-50	
020	90077-0113		2	FEED THROUGH TERMINAL, 10-00102150-1	
030	353032-0009		1	END PLATE, WAP FOR WDK	
040	353031-0203		1	END SUPPORT, WEW 35/2	
050	353034-0030		2	BRIDGE CONNECTOR WQV 2,5/10, 10544.6	

Pos	Part No	UN	Qty	Description	Page No

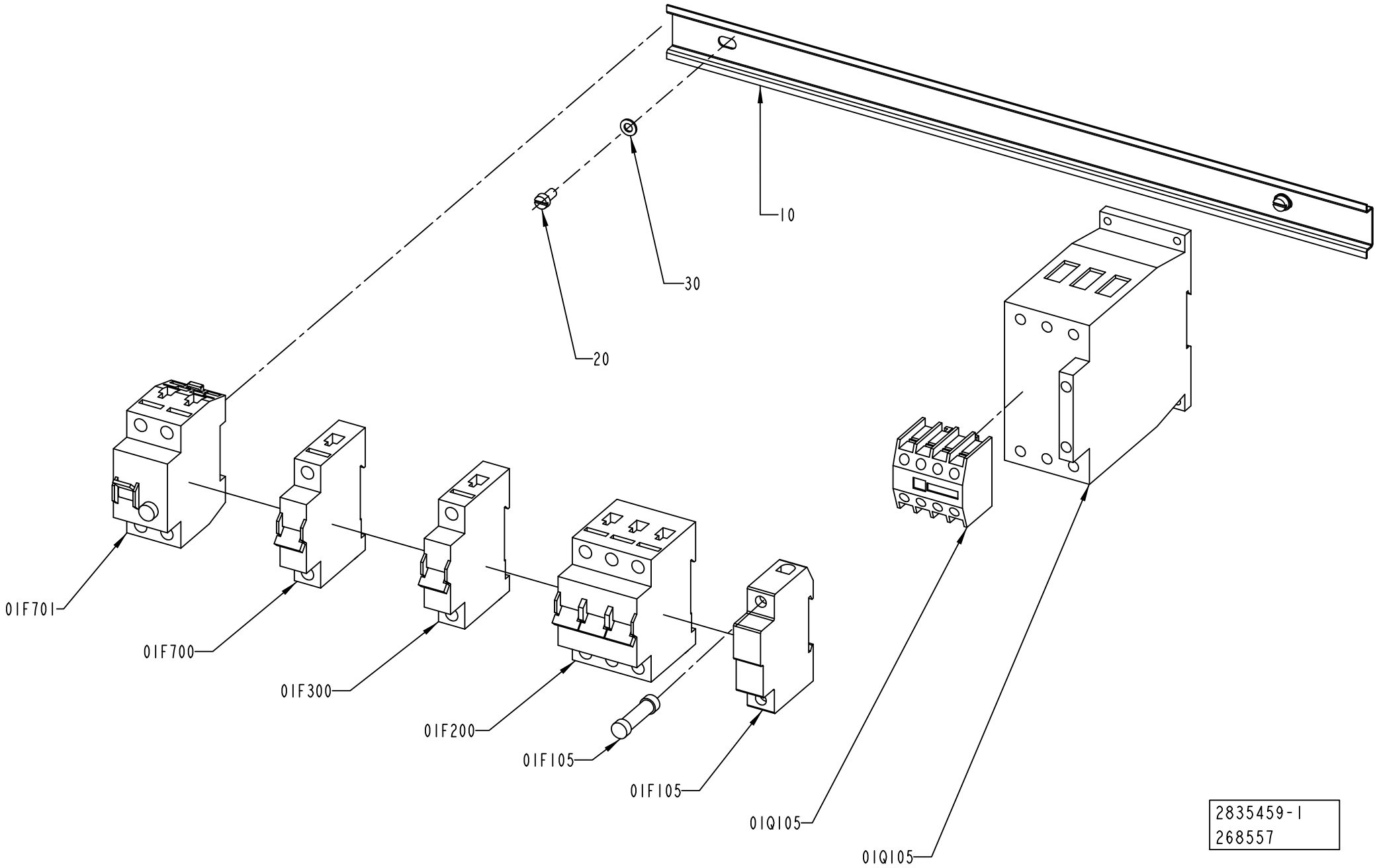
10
20
30
01F701
01F700
01F300
01F200
01F105
01F105
01Q105
01Q105
2835459-1
268557

ECM: 272439 - 20060925
Group number: 2835459-0100
Assembly Drawing: 2835459-1_1_AA

Pos	Part No	UN	Qty	Description	Page No
-					
010	2838477-0000		1	RAIL	
01F105	90458-2507		1	FUSE HOLDER, USCC1 1-POLE ULTRASAFE	
01F105	90458-2510		1	FUSE, ATDR-6	
01F200	354002-0060		1	MINIATURE CIRCUIT BREAKER, FAZ-C6/3	
01F300	354000-0040		1	MINIATURE CIRCUIT BREAKER, FAZ-C4/1	
01F700	354000-0100		1	MINIATURE CIRCUIT BREAKER, FAZ-C10/1	
01F701	90459-5811		1	RESIDUAL CURRENT DEVICE, FI-25/2/003-A	
01Q105	90459-5312		1	CONTACTOR 22KW 24VDC, DILM50	
01Q105	90459-5418		1	AUXILARY CONTACTS, DILM150-XHI22 2NO;2NC	
020	312125-0325		2	SCREW ISO 1207 M5X10 A4	
030	315105-0146		2	WASHER BRB 5,3X10 RFR	

Pos	Part No	UN	Qty	Description	Page No

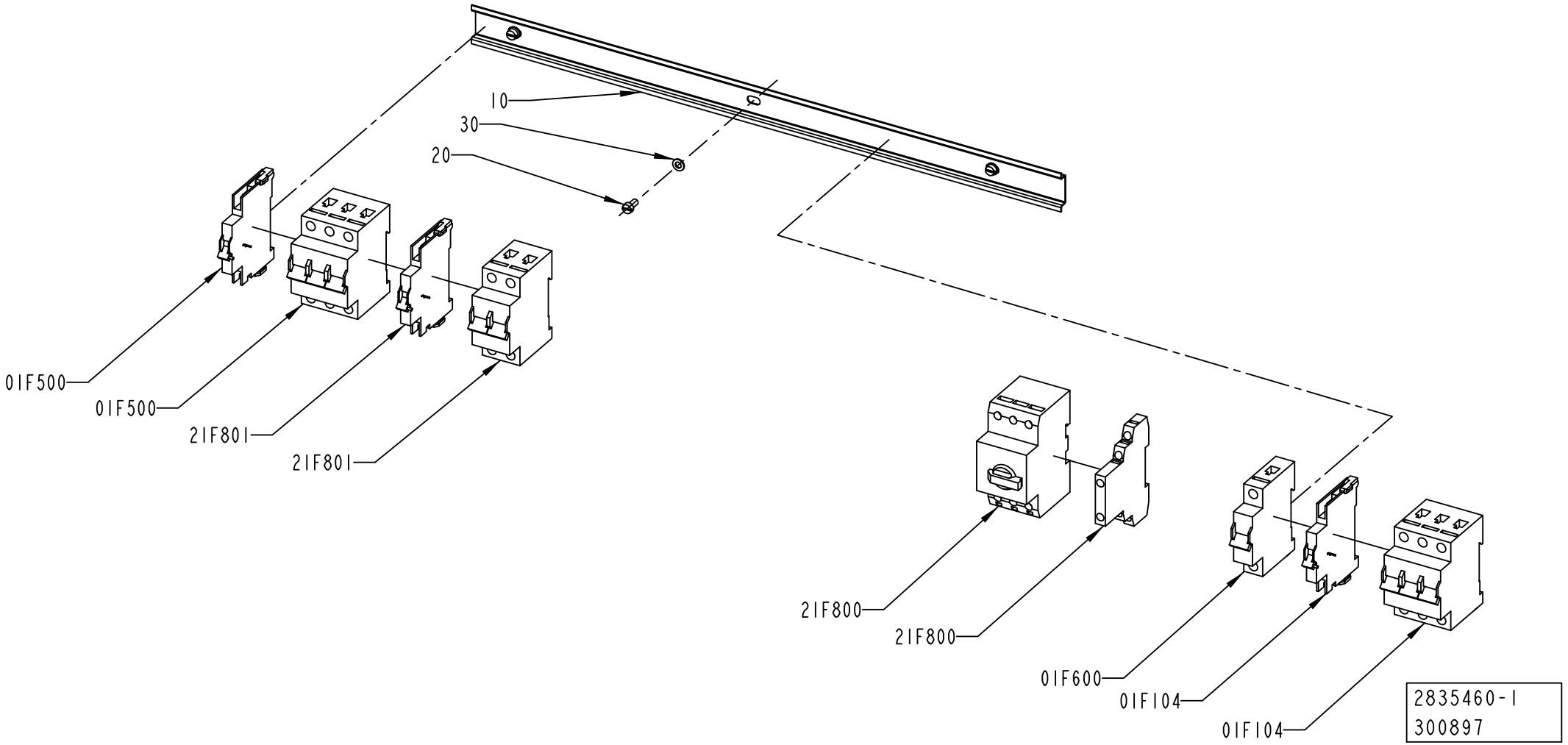
10
30
20
01F500
01F500
21F801
21F801
21F800
21F800
01F600
01F104
01F104
2835460-1
300897

ECM: 302046 - 20070528
Group number: 2835460-0100
Assembly Drawing: 2835460-1_1_AB

Pos	Part No	UN	Qty	Description	Page No
-					
010	2835452-0000		1	RAIL	
01F104	354002-0250		1	MINIATURE CIRCUIT BREAKER, FAZ-C25/3	
01F104	90459-5813		1	AUXILARY CONTACT, FAZ-XHI11	
01F500	354002-0200		1	MINIATURE CIRCUIT BREAKER, FAZ-C20/3	
01F500	90459-5813		1	AUXILARY CONTACT, FAZ-XHI11	
01F600	354000-0060		1	MINIATURE CIRCUIT BREAKER, FAZ-C6/1	
020	312125-0325		3	SCREW ISO 1207 M5X10 A4	
030	315105-0146		3	WASHER BRB 5,3X10 RFR	
21F800	90459-5326		1	OVERLOAD PROTECTION, PKZM0-4	
21F800	90259-0313		1	AUX. CONTACT K&M NHI21-PKZM0	
21F801	354001-0100		1	MINIATURE CIRCUIT BREAKER, FAZ-C10/2	
21F801	90459-5813		1	AUXILARY CONTACT, FAZ-XHI11	

Pos	Part No	UN	Qty	Description	Page No

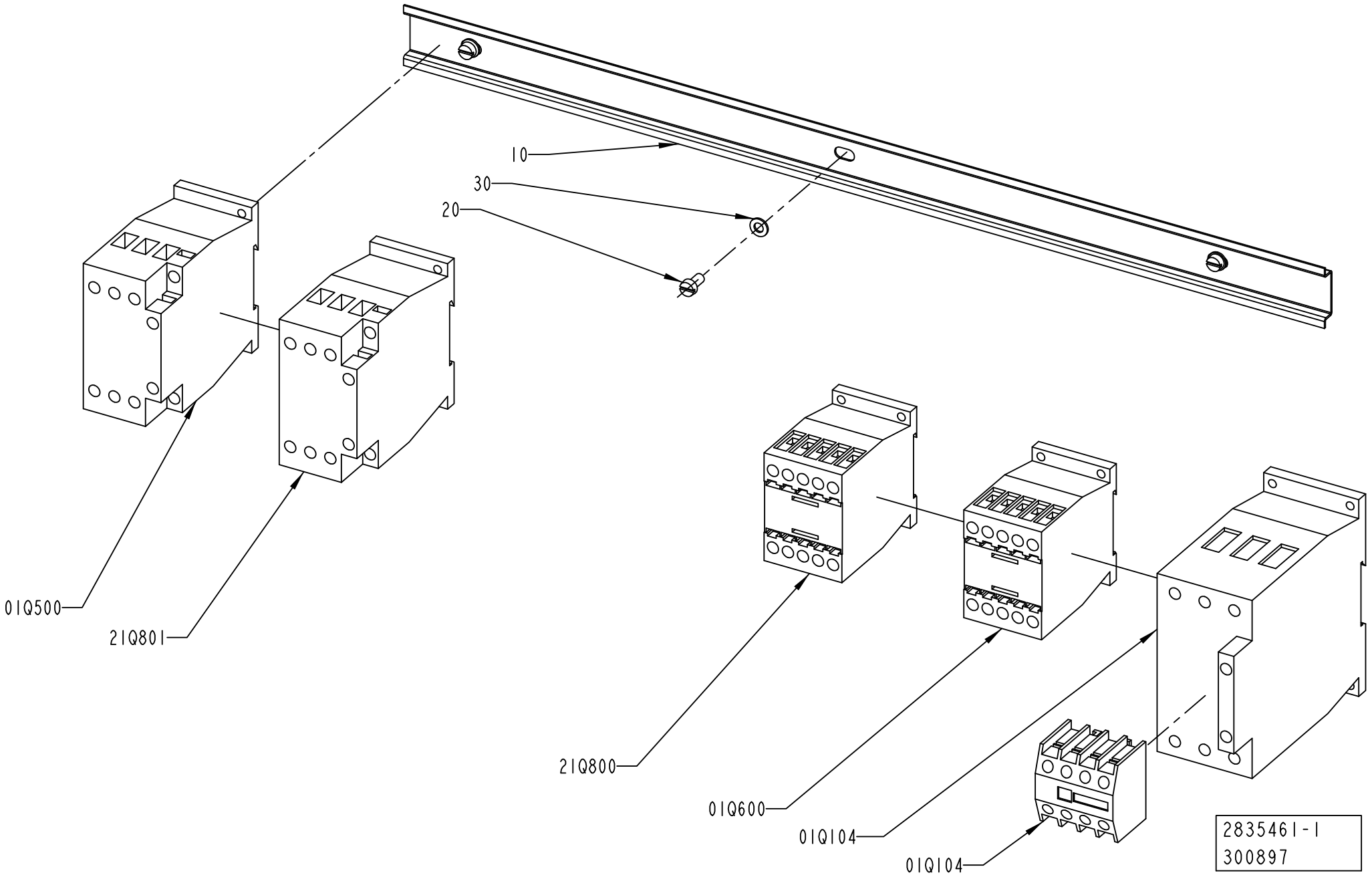
10
30
20
01Q500
21Q801
21Q800
01Q600
01Q104
01Q104
2835461-1
300897

ECM: 302045 - 20070528
Group number: 2835461-0100
Assembly Drawing: 2835461-1_1_AB

Pos	Part No	UN	Qty	Description	Page No
-					
010	2835452-0000		1	RAIL	
01Q104	90459-5418		1	AUXILARY CONTACTS, DILM150-XHI22 2NO;2NC	
01Q104	90459-5312		1	CONTACTOR 22KW 24VDC, DILM50	
01Q500	90459-5311		1	CONTACTOR 15KW 24VDC, DILM32-10	
01Q600	90459-5308		1	CONTACTOR 4KW 24VDC, DILM9-10	
020	312125-0325		3	SCREW ISO 1207 M5X10 A4	
030	315105-0146		3	WASHER BRB 5,3X10 RFR	
21Q800	90459-5308		1	CONTACTOR 4KW 24VDC, DILM9-10	
21Q801	90459-5309		1	CONTACTOR 7,5KW 24VDC, DILM17-10	

Pos	Part No	UN	Qty	Description	Page No

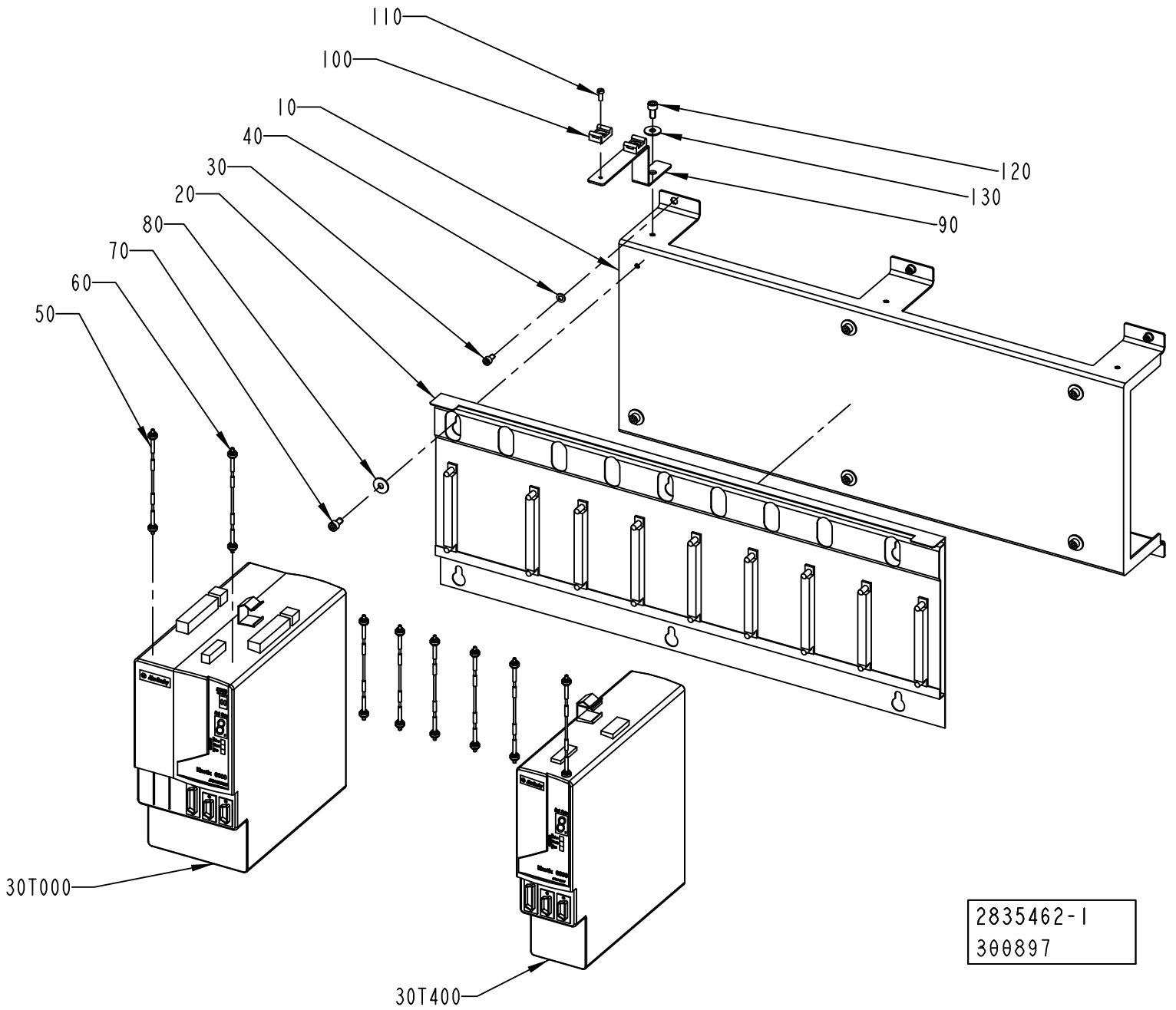
110
100
10
40
30
20
80
70
60
50
120
130
90
30T000
30T400
2835462-1
300897

ECM: 302047 - 20070528
Group number: 2835462-0100
Assembly Drawing: 2835462-1_1_AB

Pos	Part No	UN	Qty	Description	Page No
-					
010	2790710-0000		1	BRACKET	
020	90459-5195		1	SLIM POWER RAIL,KINETIX,8 AXIS,2094-PRS8	
030	312115-0325		6	SCREW ISO4762 M5X10 A4 80	
040	315105-0146		6	WASHER BRB 5,3X10 RFR	
050	90459-2540		2	SERCOS CABLE 3.0M, 2090-SCEP3-0	
060	90459-2536		6	SERCOS CABLE 0.1M, 2090-SCEP0-1	
070	312115-0366		6	SCREW ISO4762 M6X12 A4 80	
080	90005-0060		6	WASHER PLAIN, RBS 6,4/M6)/18,H=1,5	
090	2839226-0000		1	FLANGE	
100	352113-0203		2	ANCHOR PLATES FOR STRIPS, TYPE TM3S8-M0	
110	312125-0289		2	SCREW ISO 1207 M4X10 A4	
120	312115-0366		1	SCREW ISO4762 M6X12 A4 80	
130	90005-0060		1	WASHER PLAIN, RBS 6,4/M6)/18,H=1,5	
30T000	90459-7211		1	SERVO AXIS MODULE W/PS 15A 400/460V	
30T400	90459-7214		1	AXIS MODULE 650V, 6,1A, 2094-BM01-S	

Pos	Part No	UN	Qty	Description	Page No

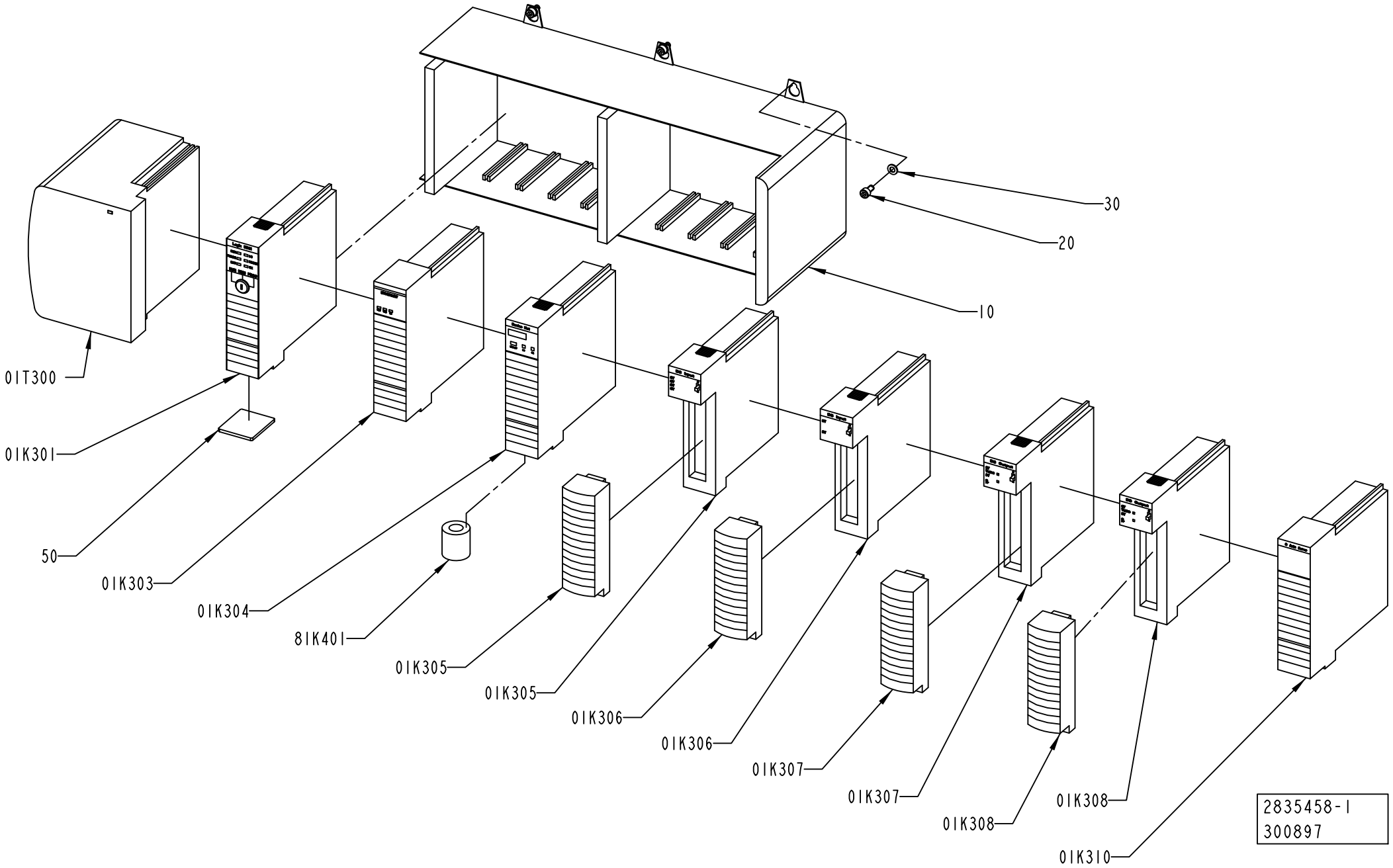
30
20
10
01T300
01K301
50
01K303
01K304
81K401
01K305
01K305
01K306
01K306
01K307
01K307
01K308
01K308
01K310
2835458-1
300897

ECM: 302050 - 20070528
Group number: 2835458-0100
Assembly Drawing: 2835458-1_1_AB

Pos	Part No	UN	Qty	Description	Page No
-					
010	90459-2458		1	BASEPLATE, 10 SLOT CONTROLLOGIX CHASSIS	
01K301	90459-3142		1	PROCESSOR L61/A, 1756-L61/A	
	90459-2489		*1*	*SPARE BATTERY FOR CONTROLLOGIX, 1756-BA1*	
01K303	90459-2477		1	ETHERNET I/P BRIDGE MODULE, 1756-ENBT	
01K304	90459-2479		1	PLC DEVICENET BRIDGE/SCANNER MODULE	
01K305	90459-6556		1	PLC DIGITAL INPUT 32PTS, 1756-IB32/B	
01K305	90459-2488		1	REMOVABLE TERMINAL BLOCK 36 POINTS	
01K306	90459-2413		1	PLC DIGITAL INPUT MODULE16 POINTS	
01K306	90459-2487		1	REMOVABLE TERMINAL BLOCK 20 POINTS	
01K307	90459-2487		1	REMOVABLE TERMINAL BLOCK 20 POINTS	
01K307	90459-2474		1	PLC,DIGIT. OUTPUT MODULE 16 PTS 10-31VDC	
01K308	90459-2487		1	REMOVABLE TERMINAL BLOCK 20 POINTS	
01K308	90459-2474		1	PLC,DIGIT. OUTPUT MODULE 16 PTS 10-31VDC	
01K310	90459-2480		1	8-AXIS SERCOS MOTION MODULE	
01T300	90459-7267		1	POWER SUPPLY 24VDC, 1756-PB75/B	
020	312115-0325		6	SCREW ISO4762 M5X10 A4 80	
030	315105-0146		6	WASHER BRB 5,3X10 RFR	
050	90459-3145		1	853710999FLASH MEMORY 64MBYTE, 1784-CF64	
81K401	90458-1140		1	FERRITE, RI-26-28-13	

Pos	Part No	UN	Qty	Description	Page No

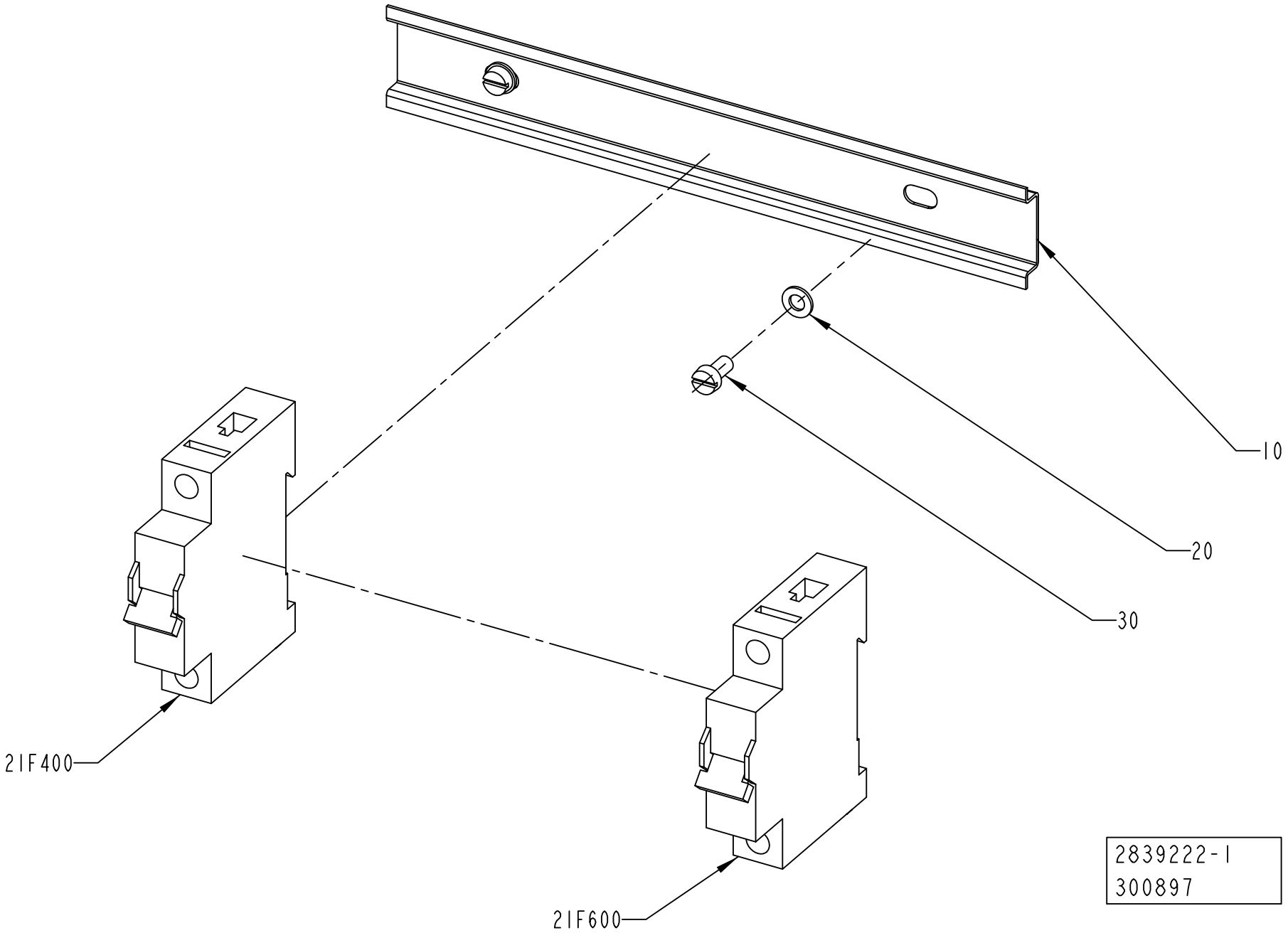
10
20
30
21F400
21F600
2839222-1
300897

ECM: 302048 - 20070528
Group number: 2839222-0100
Assembly Drawing: 2839222-1_1_AB

Pos	Part No	UN	Qty	Description	Page No
-					
010	2835454-0000		1	RAIL	
020	315105-0146		2	WASHER BRB 5,3X10 RFR	
030	312125-0325		2	SCREW ISO 1207 M5X10 A4	
21F400	354000-0100		1	MINIATURE CIRCUIT BREAKER, FAZ-C10/1	
21F600	354000-0100		1	MINIATURE CIRCUIT BREAKER, FAZ-C10/1	

Pos	Part No	UN	Qty	Description	Page No

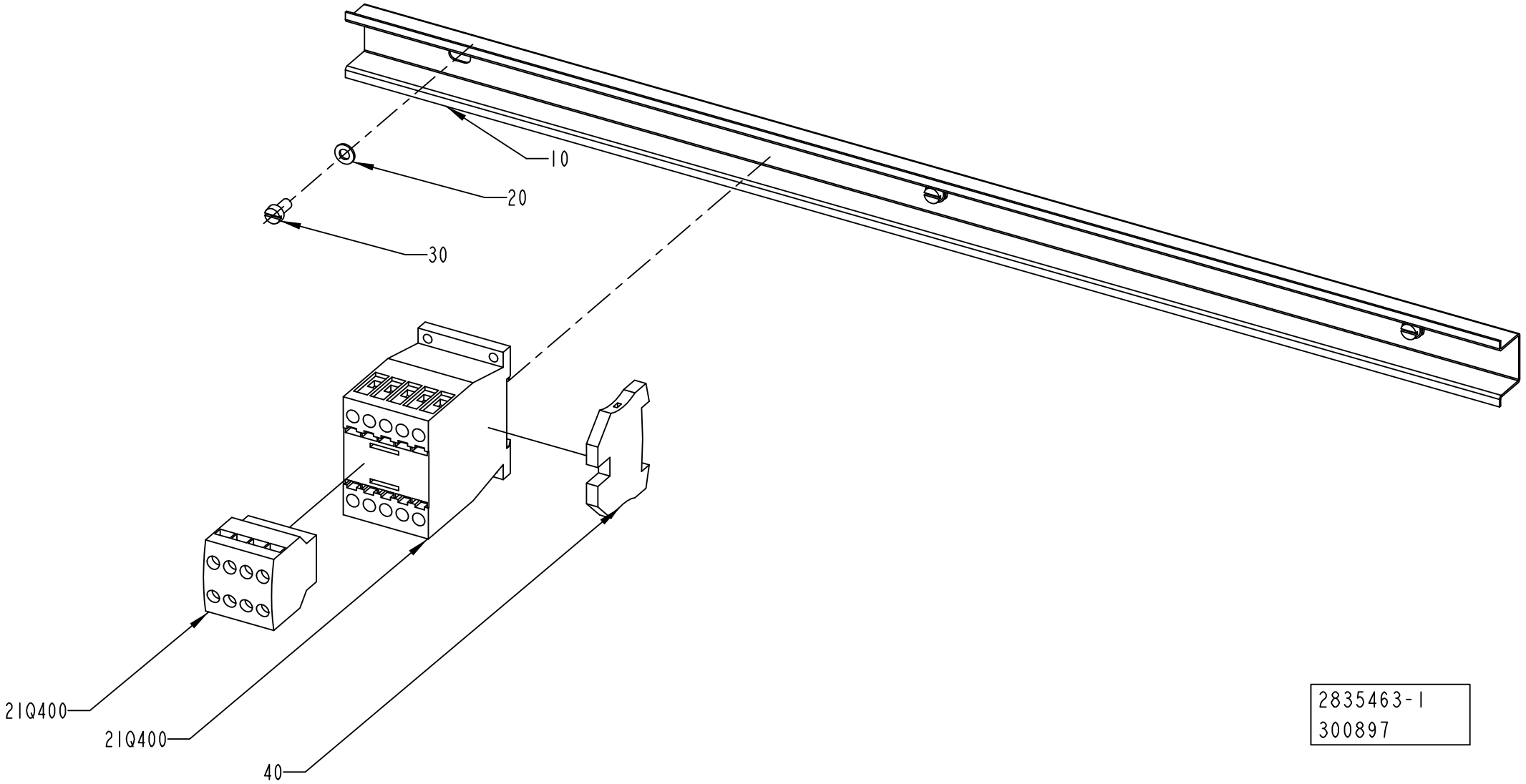
10
20
30
21Q400
21Q400
40
2835463-1
300897

ECM: 302044 - 20070528
Group number: 2835463-0100
Assembly Drawing: 2835463-1_1_AB

Pos	Part No	UN	Qty	Description	Page No
-					
010	2835455-0000		1	RAIL	
020	315105-0146		3	WASHER BRB 5,3X10 RFR	
030	312125-0325		3	SCREW ISO 1207 M5X10 A4	
040	353024-0205		1	EARTH TERMINAL, 1010.1	
21Q400	90459-6852		1	AUXILIARY CONTACT, DILA-XHI22	
21Q400	90459-5308		1	CONTACTOR 4KW 24VDC, DILM9-10	

Pos	Part No	UN	Qty	Description	Page No

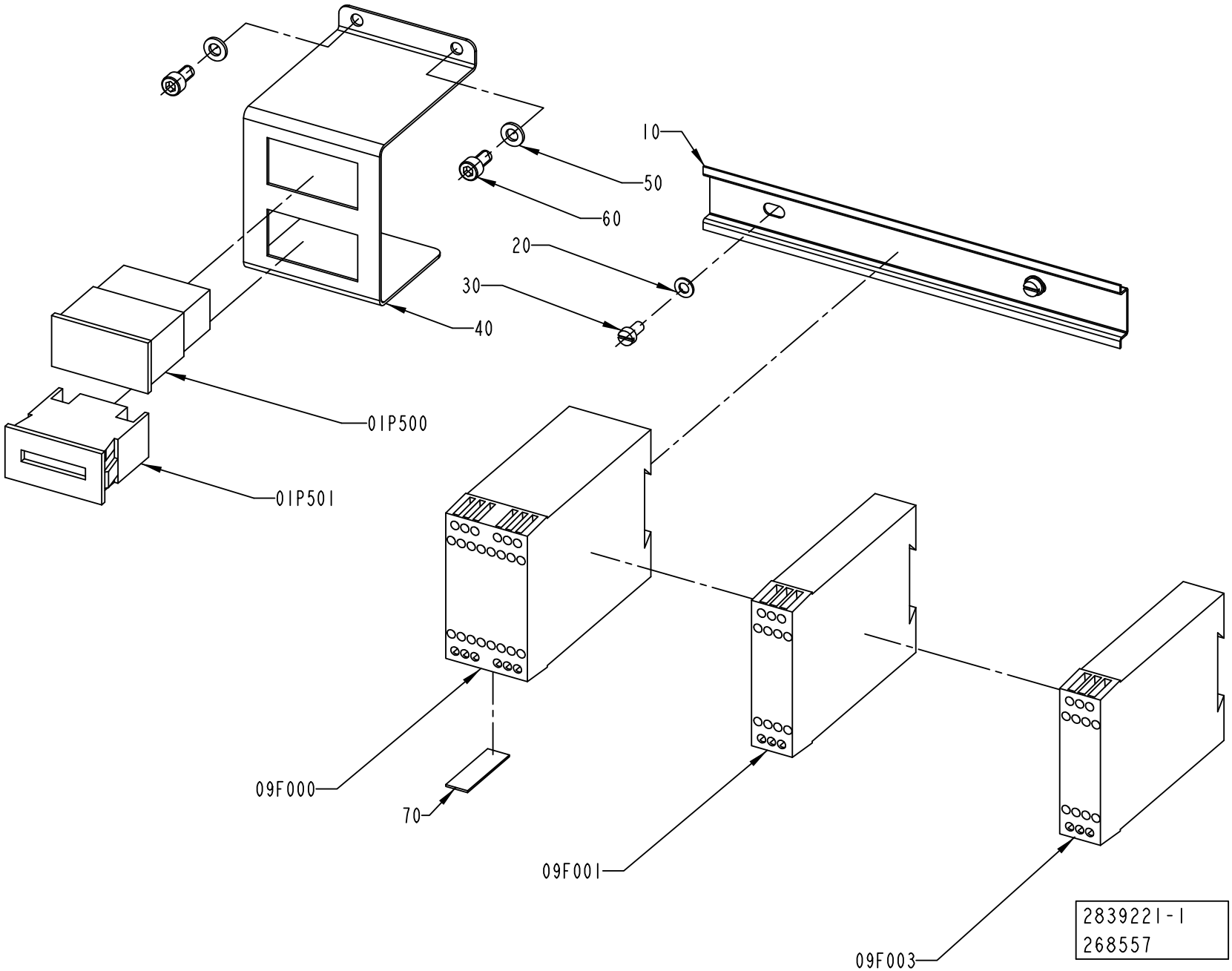
10
50
60
20
30
40
01P500
01P501
09F000
70
09F001
09F003
2839221-1
268557

ECM: 272434 - 20060925
Group number: 2839221-0100
Assembly Drawing: 2839221-1_1_AA

Pos	Part No	UN	Qty	Description	Page No
-					
010	2835453-0000		1	RAIL	
01P500	90053-0029		1	COUNTER, F524.800FA3C 24VDC	
01P501	90053-0031		1	HOUR COUNTER, B 609.10 10-50VDC	
020	315105-0146		2	WASHER BRB 5,3X10 RFR	
030	312125-0325		2	SCREW ISO 1207 M5X10 A4	
040	2839227-0000		1	SUPPORT	
050	315105-0153		2	WASHER BRB 6,4X12 RFR	
060	312115-0366		2	SCREW ISO4762 M6X12 A4 80	
070	90459-4891		1	PROGR. IDENTIFIER ID-FIX RW, 20-070-21	
09F000	90459-6692		1	SAFETY PLC, PLUTO B20 20-070-06	
09F001	90459-2291		1	SAFETY TIME RELAY, E1T-0.5S-24VDC	
09F003	90459-2291		1	SAFETY TIME RELAY, E1T-0.5S-24VDC	

Pos	Part No	UN	Qty	Description	Page No

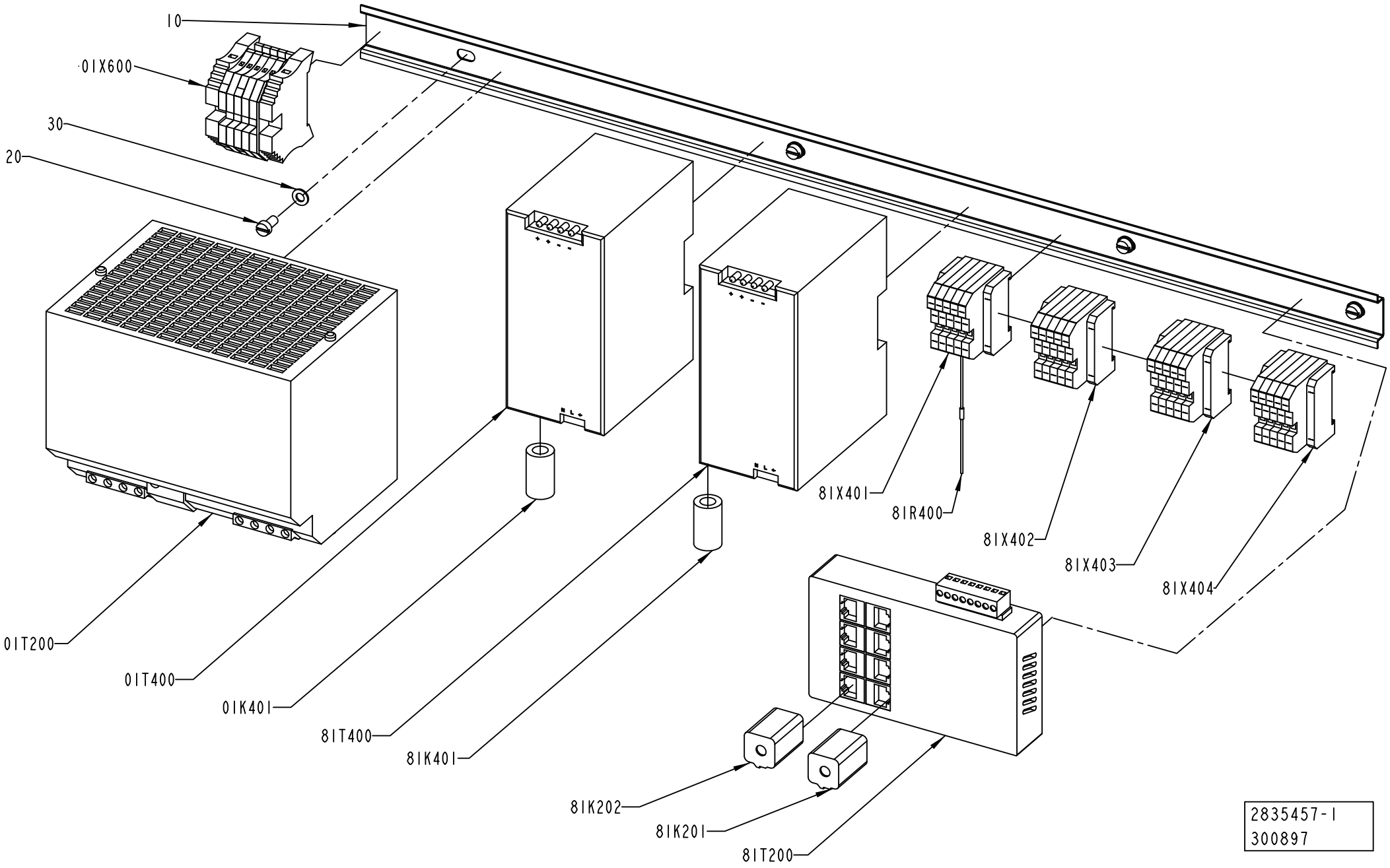
10
01X600
30
20
81X401
81R400
81X402
81X403
81X404
01T200
01T400
01K401
81T400
81K401
81K202
81K201
81T200
2835457-1
300897

ECM: 302776 - 20070528
Group number: 2835457-0100
Assembly Drawing: 2835457-1_1_AB

Pos	Part No	UN	Qty	Description	Page No
-					
010	2838476-0000		1	RAIL	
01K401	90458-1141		1	FERRITE, RI-16-28-9	
01T200	90459-4133		1	POWER SUPPLY UNIT 6EP1 436-3BA00	
01T400	90459-5886		1	POWER SUPPLY UNIT 115-230 VAC/24VDC100W	
01X600	2890591-0100		1	PLINTH	**9-51**
020	312125-0325		4	SCREW ISO 1207 M5X10 A4	
030	315105-0146		4	WASHER BRB 5,3X10 RFR	
81K201	90458-1170		1	FERRITE, SFC-6	
81K202	90458-1170		1	FERRITE, SFC-6	
81K401	90458-1141		1	FERRITE, RI-16-28-9	
81R400	90459-2523		1	OPEN STYLE TERMINATOR, 1485A-C2	
81T200	90459-6858		1	ETHERNET SW, FL SWITCH SF 8TX FROM V 14	
81T400	90459-5886		1	POWER SUPPLY UNIT 115-230 VAC/24VDC100W	
81X401	90459-2519		1	OPEN STYLE TAP	
81X402	90459-2519		1	OPEN STYLE TAP	
81X403	90459-2519		1	OPEN STYLE TAP	
81X404	90459-2519		1	OPEN STYLE TAP	

Pos	Part No	UN	Qty	Description	Page No

Machine Type | Group Description | Used-In | Group Number | Page No

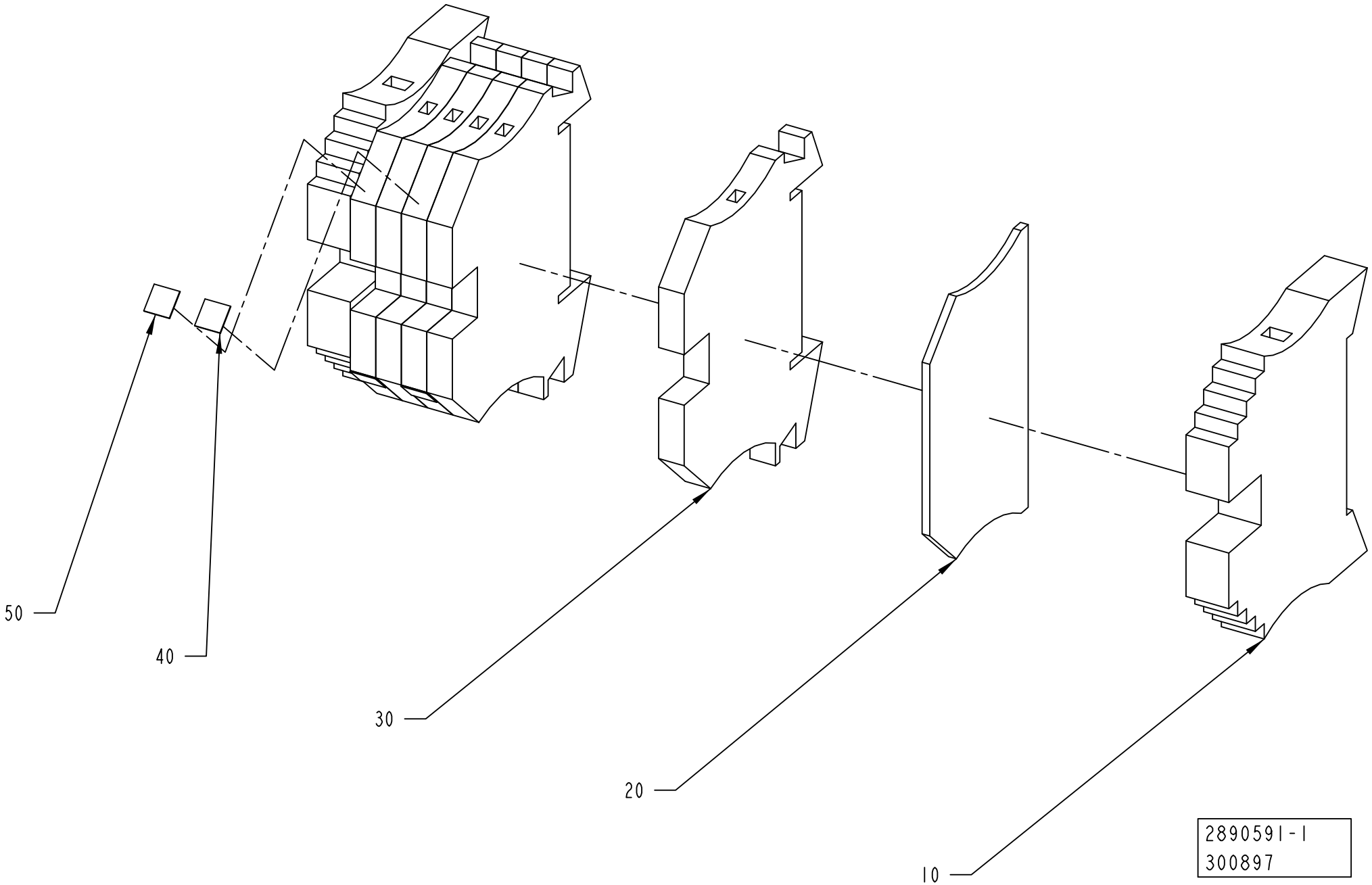
50
40
30
20
10
2890591-1
300897

ECM: 302775 - 20070528
Group number: 2890591-0100
Assembly Drawing: 2890591-1_1_AA

Pos	Part No	UN	Qty	Description	Page No
-					
010	353031-0203		2	END SUPPORT, WEW 35/2	
020	353032-0004		1	END PLATE WAP 2,5-10 BEIGE	
030	353021-0212		5	FEED THROUGH TERMINAL, 10200.0	
040	359011-0819		2	MARKING PLATES 5-GW (EARTH)	
050	359011-0807		2	MARKING PLATES 5-FW 1-50	

Pos	Part No	UN	Qty	Description	Page No

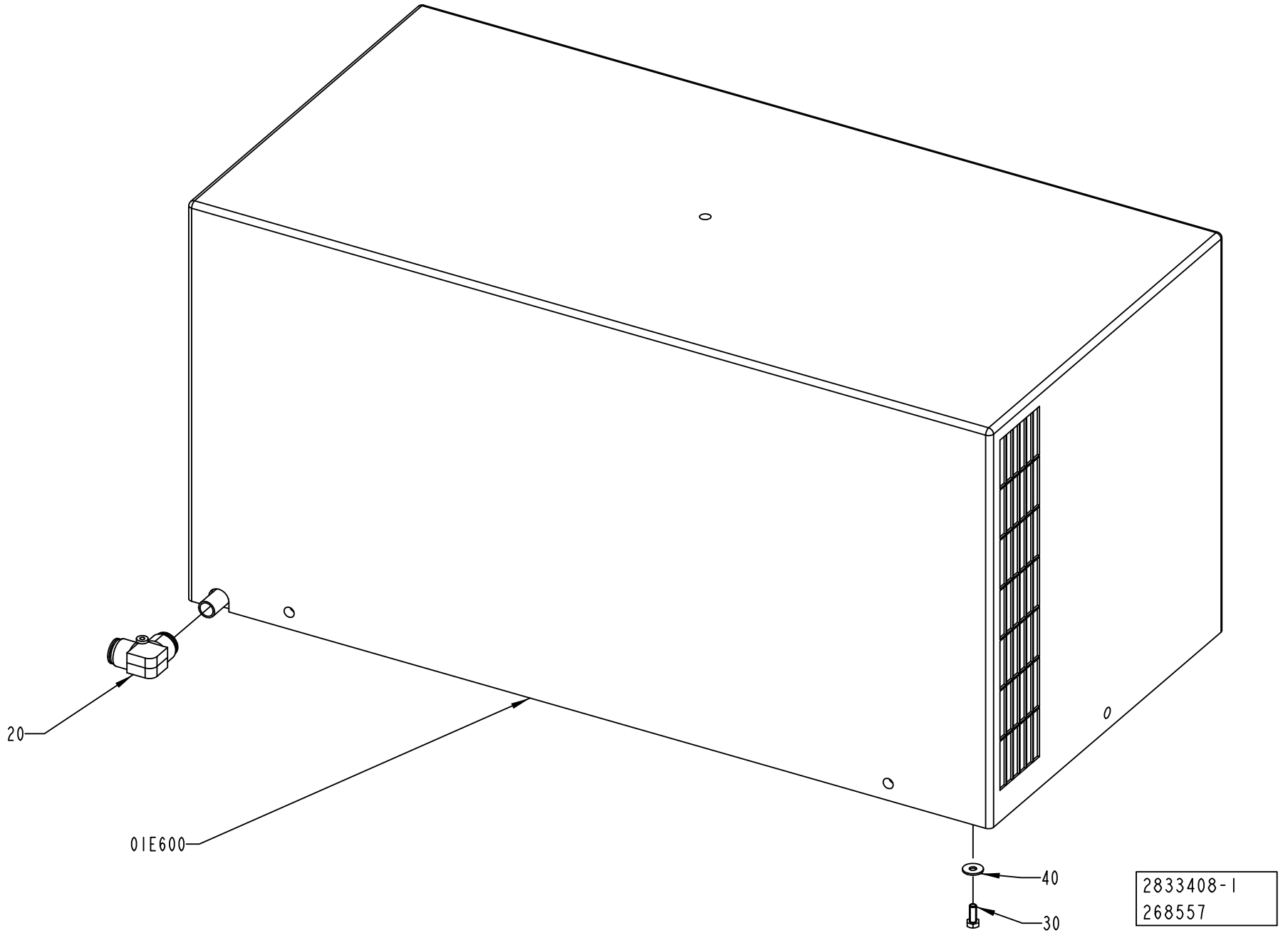
20
01E600
40
30
2833408-1
268557

ECM: 272447 - 20060925
Group number: 2833408-0100
Assembly Drawing: 2833408-1_1_AA

Pos	Part No	UN	Qty	Description	Page No
-					
01E600	90459-0813		1	COOLING UNIT, KB20A619.01	
	90459-0364		*1*	*FILTER KB20/30/40 POLYURETH. FILTER 2001*	
	90600-0672		*2*	*FAN, VBA0001499 , 50HZ_3UF , 60HZ_2UF*	
	90600-0673		*2*	*THERMOSTAT, KELVIN TMI0000218*	
	90600-0675		*1*	*GASKET, A6411AA*	
	90600-0676		*1*	*GRID, DISA1880AA*	
020	90459-2553		1	ELBOW PIPE JOINT 16 MM	
030	312105-0368		6	SCREW M6S ISO 4017 M6X16 A480	
040	90005-0060		6	WASHER PLAIN, RBS 6,4/M6)/18,H=1,5	

Pos	Part No	UN	Qty	Description	Page No

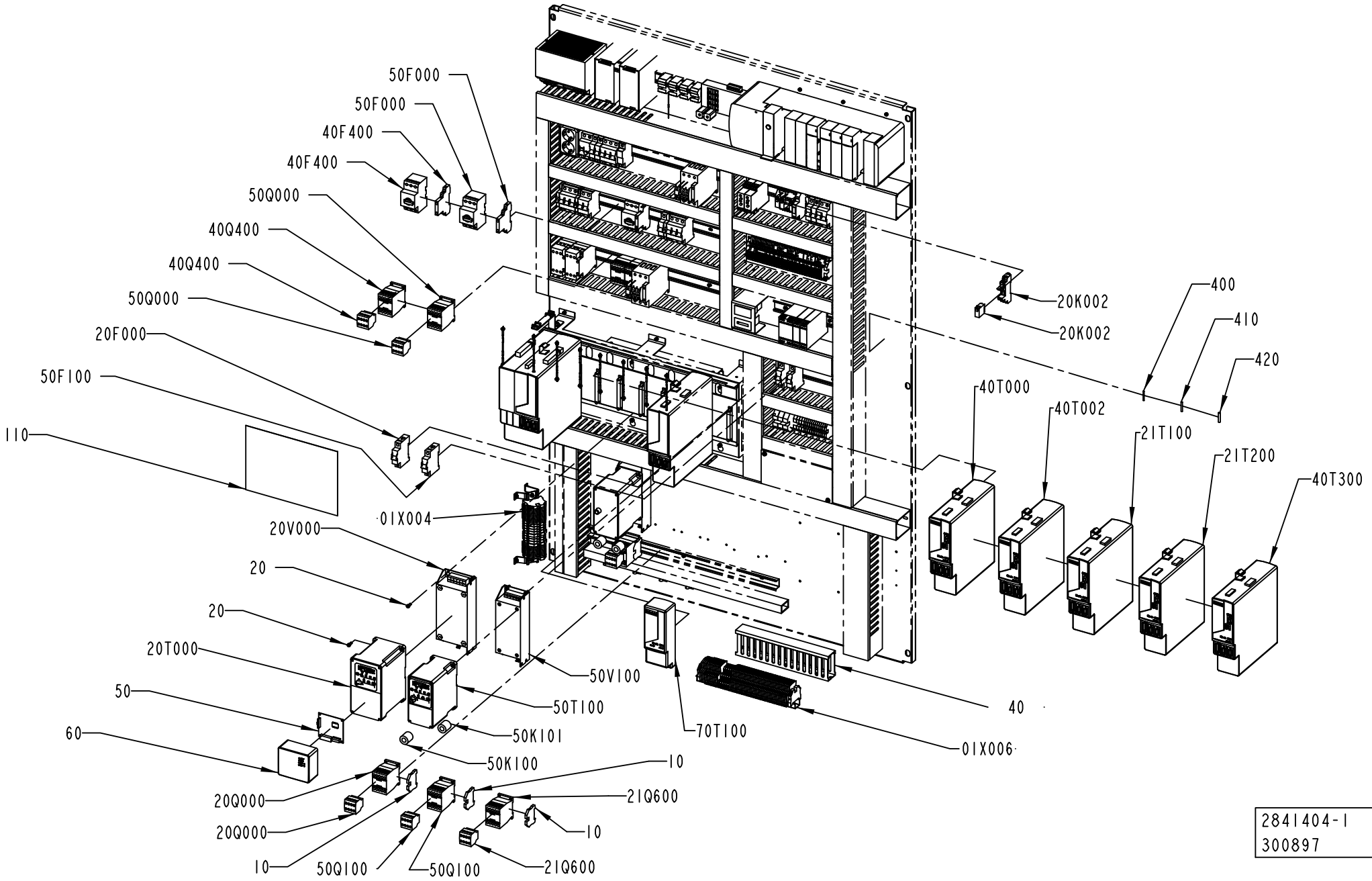
50F000
50F000
40F400
40F400
50Q000
40Q400
40Q400
50Q000
20F000
50F100
110
01X004
20V000
20
20
20T000
50
60
20Q000
20Q000
10
50Q100
50Q100
50V100
50T100
50K101
50K100
70T100
10
21Q600
10
21Q600
20K002
20K002
400
410
420
40T000
40T002
21T100
21T200
40T300
40
01X006
2841404-1
300897

Pos	Part No	UN	Qty	Description	Page No
CAP 30/FLEX TBA STREAMCAP1000, CAP 30/FLEX TBA SLIMCAP1000, CAP 30/FLEX TBA SLIMCAP2000					
(See drawing on page: 9-54)					
010	353024-0205		3	EARTH TERMINAL, 1010.1	
020	312115-0327		16	SCREW ISO4762 M5X12 A4 80	
040	2838461-0000		1	CABLE DUCT	
110	2861863-0000		1	FUSE PANEL LABEL	
20F000	354000-0060		1	MINIATURE CIRCUIT BREAKER, FAZ-C6/1	
20K002	90119-0108		1	RELAY OMRON G2R-2-SNI-24DC	
	90129-0018		*1*	*BASE OMRON P2RF-08-E*	
20K002	90129-0018		1	BASE OMRON P2RF-08-E	
20Q000	90459-6852		1	AUXILIARY CONTACT, DILA-XHI22	
20Q000	90459-5308		1	CONTACTOR 4KW 24VDC, DILM9-10	
20T000	90459-3441		1	FREQUENCY CONVERTER 0,37 KW	
20V000	90459-3454		1	FOOTPRINT FILTER, 22-RF018-BL	
400	351160-0102	M	430	CABLE (1UNIT = 100M)	
40F400	90259-0313		1	AUX. CONTACT K&M NHI21-PKZM0	
40F400	90459-5323		1	OVERLOAD PROTECTION, PKZM0-1	
40Q400	90459-5308		1	CONTACTOR 4KW 24VDC, DILM9-10	
40Q400	90459-6852		1	AUXILIARY CONTACT, DILA-XHI22	
40T000	90459-7215		1	AXIS MODULE 650V, 10,3A, 2094-BM02-S	
40T002	90459-7215		1	AXIS MODULE 650V, 10,3A, 2094-BM02-S	
40T300	90459-7214		1	AXIS MODULE 650V, 6,1A, 2094-BM01-S	
410	351164-0105	M	52	CABLE (1UNIT = 100M)	
420	351164-0107	M	26	CABLE AWM 1X6 MM2 BLACK	
50F000	90459-5323		1	OVERLOAD PROTECTION, PKZM0-1	
50F000	90259-0313		1	AUX. CONTACT K&M NHI21-PKZM0	
50F100	354000-0060		1	MINIATURE CIRCUIT BREAKER, FAZ-C6/1	
50K100	90458-1140		1	FERRITE, RI-26-28-13	
50K101	90458-1140		1	FERRITE, RI-26-28-13	
50Q000	90459-5308		1	CONTACTOR 4KW 24VDC, DILM9-10	
50Q000	90459-6852		1	AUXILIARY CONTACT, DILA-XHI22	
50Q100	90459-6852		1	AUXILIARY CONTACT, DILA-XHI22	
50Q100	90459-5308		1	CONTACTOR 4KW 24VDC, DILM9-10	
50T100	90459-3449		1	VARIABLE FREQUENCY DRIVE 22A-A2P3N104	
50V100	90459-3460		1	FOOTPRINT FILTER 22-RF010-AL	
70T100	90459-2547		1	POWER RAIL SLOT FILLER MODULE, 2094-PRF	
CAP 30/FLEX TGA (See drawing on page: 9-58)					
010	353024-0205		3	EARTH TERMINAL, 1010.1	
020	312115-0327		16	SCREW ISO4762 M5X12 A4 80	
040	2838461-0000		1	CABLE DUCT	
110	2861863-0000		1	FUSE PANEL LABEL	
20F000	354000-0060		1	MINIATURE CIRCUIT BREAKER, FAZ-C6/1	
20K002	90129-0018		1	BASE OMRON P2RF-08-E	
20K002	90119-0108		1	RELAY OMRON G2R-2-SNI-24DC	
	90129-0018		*1*	*BASE OMRON P2RF-08-E*	
20Q000	90459-6852		1	AUXILIARY CONTACT, DILA-XHI22	
20Q000	90459-5308		1	CONTACTOR 4KW 24VDC, DILM9-10	
20T000	90459-3441		1	FREQUENCY CONVERTER 0,37 KW	
20V000	90459-3454		1	FOOTPRINT FILTER, 22-RF018-BL	
300	2890014-0100		1	POSITIONING UNIT	**9-61**
400	351160-0102	M	430	CABLE (1UNIT = 100M)	
40F400	90259-0313		1	AUX. CONTACT K&M NHI21-PKZM0	
40F400	90459-5323		1	OVERLOAD PROTECTION, PKZM0-1	
40Q400	90459-5308		1	CONTACTOR 4KW 24VDC, DILM9-10	
40Q400	90459-6852		1	AUXILIARY CONTACT, DILA-XHI22	
40T000	90459-7215		1	AXIS MODULE 650V, 10,3A, 2094-BM02-S	
40T002	90459-7215		1	AXIS MODULE 650V, 10,3A, 2094-BM02-S	
40T300	90459-7214		1	AXIS MODULE 650V, 6,1A, 2094-BM01-S	
410	351164-0105	M	52	CABLE (1UNIT = 100M)	
420	351164-0107	M	26	CABLE AWM 1X6 MM2 BLACK	
50F000	90259-0313		1	AUX. CONTACT K&M NHI21-PKZM0	
50F000	90459-5323		1	OVERLOAD PROTECTION, PKZM0-1	
50F100	354000-0060		1	MINIATURE CIRCUIT BREAKER, FAZ-C6/1	
50K100	90458-1140		1	FERRITE, RI-26-28-13	
50K101	90458-1140		1	FERRITE, RI-26-28-13	
50Q000	90459-5308		1	CONTACTOR 4KW 24VDC, DILM9-10	
50Q000	90459-6852		1	AUXILIARY CONTACT, DILA-XHI22	
50Q100	90459-6852		1	AUXILIARY CONTACT, DILA-XHI22	
50Q100	90459-5308		1	CONTACTOR 4KW 24VDC, DILM9-10	
50T100	90459-3449		1	VARIABLE FREQUENCY DRIVE 22A-A2P3N104	
50V100	90459-3460		1	FOOTPRINT FILTER 22-RF010-AL	
CAP 30/FLEX TPA (See drawing on page: 9-56)					
010	353024-0205		3	EARTH TERMINAL, 1010.1	
020	312115-0327		16	SCREW ISO4762 M5X12 A4 80	
040	2838461-0000		1	CABLE DUCT	
110	2895148-0000		1	FUSE PANEL LABEL	
200	2895147-0100		1	PACKAGE ALIGNER	**9-63**
20F000	354000-0060		1	MINIATURE CIRCUIT BREAKER, FAZ-C6/1	
20K002	90129-0018		1	BASE OMRON P2RF-08-E	
20K002	90119-0108		1	RELAY OMRON G2R-2-SNI-24DC	
	90129-0018		*1*	*BASE OMRON P2RF-08-E*	
20Q000	90459-6852		1	AUXILIARY CONTACT, DILA-XHI22	
20Q000	90459-5308		1	CONTACTOR 4KW 24VDC, DILM9-10	
20T000	90459-3441		1	FREQUENCY CONVERTER 0,37 KW	

Machine Type | Group Description | Used-In | Group Number | Page No

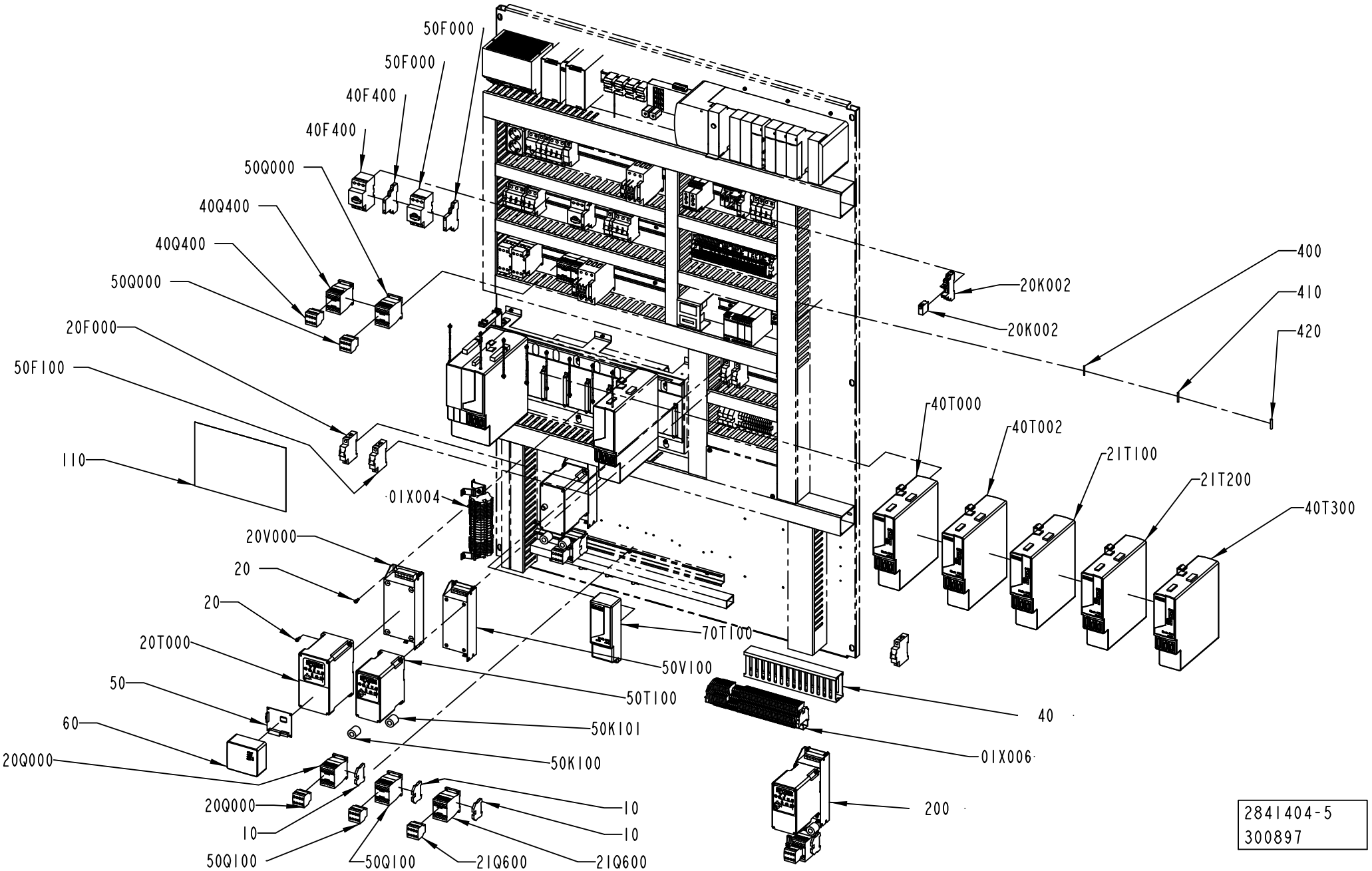
50F000
50F000
40F400
40F400
50Q000
40Q400
40Q400
50Q000
20F000
50F100
110
01X004
20V000
20
20
20T000
50
60
20Q000
20Q000
10
50Q100
50Q100
21Q600
10
10
21Q600
70T100
50V100
50T100
50K101
50K100
20K002
20K002
400
410
420
40T000
40T002
21T100
21T200
40T300
40
01X006
200
2841404-5
300897

Pos	Part No	UN	Qty	Description	Page No
CAP 30/FLEX TPA (Cont'd) (See drawing on page: 9-56)					
400	351160-0102	M	430	CABLE (1UNIT = 100M)	
40F400	90259-0313		1	AUX. CONTACT K&M NHI21-PKZM0	
40F400	90459-5323		1	OVERLOAD PROTECTION, PKZM0-1	
40Q400	90459-6852		1	AUXILIARY CONTACT, DILA-XHI22	
40Q400	90459-5308		1	CONTACTOR 4KW 24VDC, DILM9-10	
40T000	90459-7215		1	AXIS MODULE 650V, 10,3A, 2094-BM02-S	
40T002	90459-7215		1	AXIS MODULE 650V, 10,3A, 2094-BM02-S	
40T300	90459-7214		1	AXIS MODULE 650V, 6,1A, 2094-BM01-S	
410	351164-0105	M	52	CABLE (1UNIT = 100M)	
420	351164-0107	M	26	CABLE AWM 1X6 MM2 BLACK	
50F000	90459-5323		1	OVERLOAD PROTECTION, PKZM0-1	
50F000	90259-0313		1	AUX. CONTACT K&M NHI21-PKZM0	
50F100	354000-0060		1	MINIATURE CIRCUIT BREAKER, FAZ-C6/1	
50K100	90458-1140		1	FERRITE, RI-26-28-13	
50K101	90458-1140		1	FERRITE, RI-26-28-13	
50Q000	90459-5308		1	CONTACTOR 4KW 24VDC, DILM9-10	
50Q000	90459-6852		1	AUXILIARY CONTACT, DILA-XHI22	
50Q100	90459-5308		1	CONTACTOR 4KW 24VDC, DILM9-10	
50Q100	90459-6852		1	AUXILIARY CONTACT, DILA-XHI22	
50T100	90459-3449		1	VARIABLE FREQUENCY DRIVE 22A-A2P3N104	
50V100	90459-3460		1	FOOTPRINT FILTER 22-RF010-AL	
70T100	90459-2547		1	POWER RAIL SLOT FILLER MODULE, 2094-PRF	
Common Parts					
01X004	2840918-0100		1	PLINTH	**9-65**
01X006	2841403-0100		1	PLINTH	**9-67**
050	90459-2614		1	DEVICENET ADAPTER POWERFLEX 40 22-COMM-D	
060	90459-2795		1	FRONT LID FOR POWERFLEX 40, 22B-CCB	
21Q600	90459-5308		1	CONTACTOR 4KW 24VDC, DILM9-10	
21Q600	90459-6852		1	AUXILIARY CONTACT, DILA-XHI22	
21T100	90459-7215		1	AXIS MODULE 650V, 10,3A, 2094-BM02-S	
21T200	90459-7215		1	AXIS MODULE 650V, 10,3A, 2094-BM02-S	

Pos	Part No	UN	Qty	Description	Page No

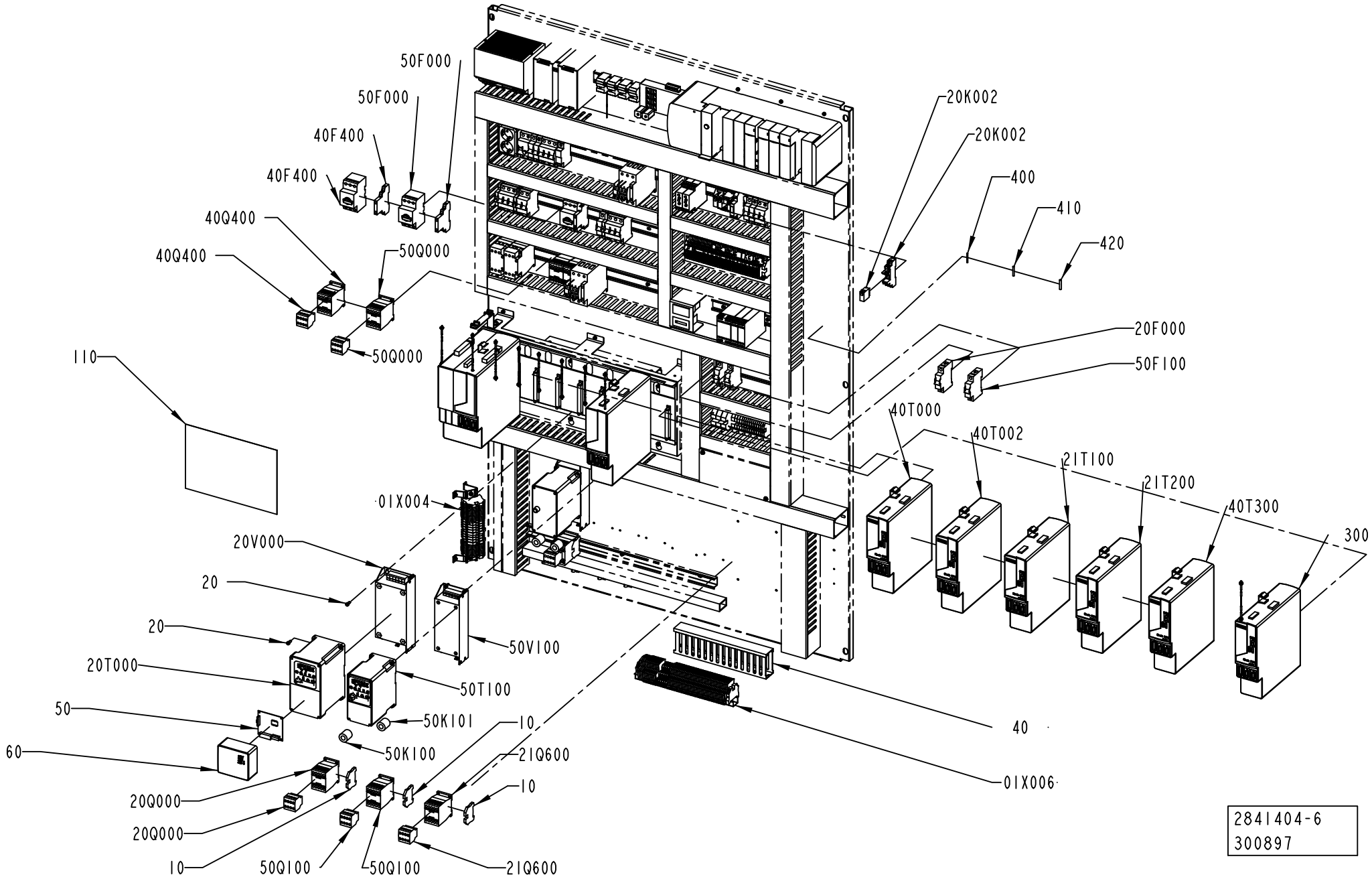
50F000
50F000
40F400
40F400
40Q400
40Q400
50Q000
50Q000
110
01X004
20V000
20
20
20T000
50
60
20Q000
20Q000
10
50Q100
50Q100
21Q600
10
10
50V100
50T100
50K101
50K100
21Q600
01X006
40
20K002
20K002
400
410
420
20F000
50F100
40T000
40T002
21T100
21T200
40T300
300
2841404-6
300897

Pos	Part No	UN	Qty	Description	Page No	Pos	Part No	UN	Qty	Description	Page No

SEE PREVIOUS LISTS PAGES: 9-55, 9-57.

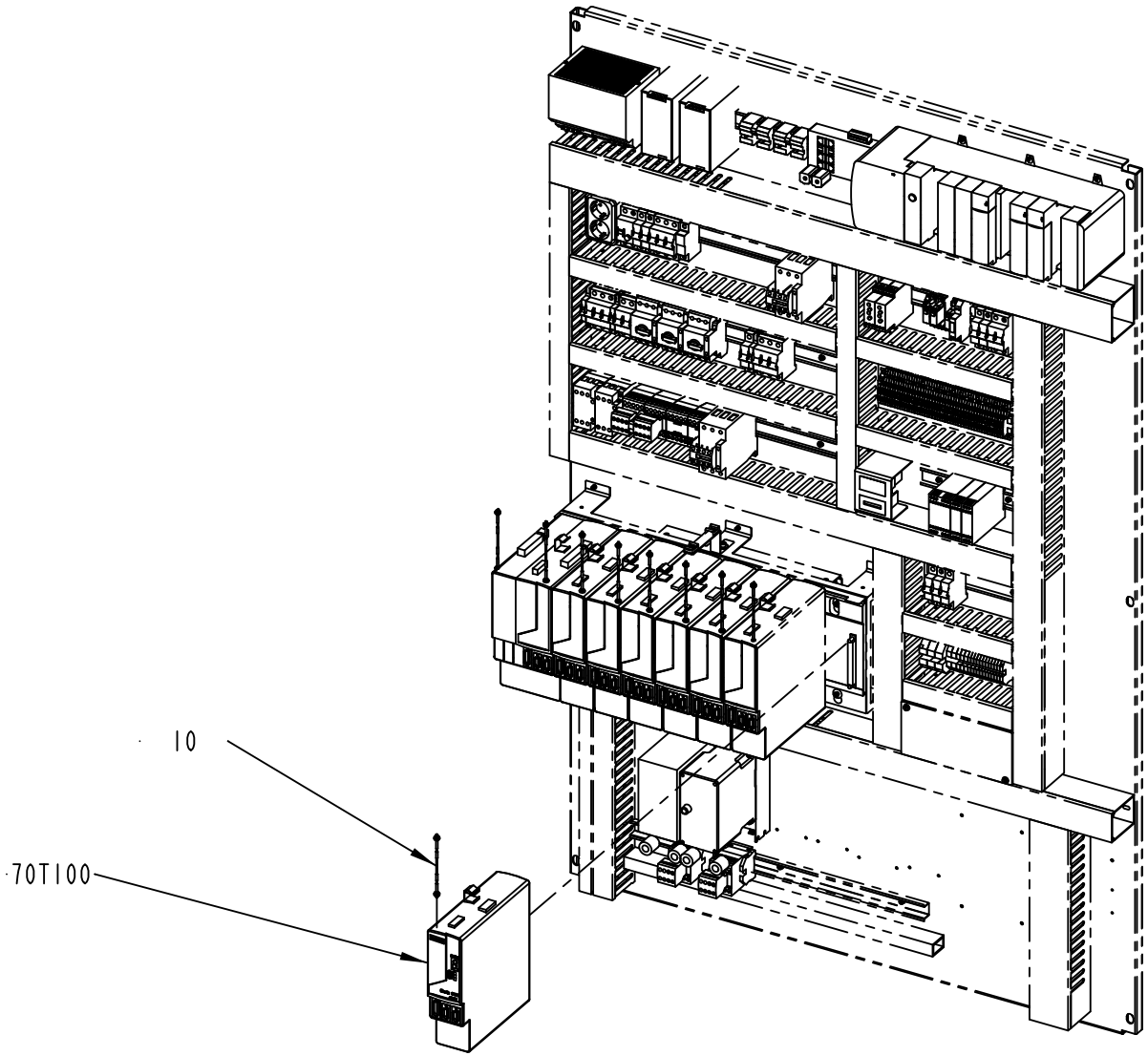

2890014-1
299829

ECM: 302221 - 20070528
Group number: 2890014-0100
Assembly Drawing: 2890014-1_1_AA

Pos	Part No	UN	Qty	Description	Page No
-					
010	90459-2536		1	SERCOS CABLE 0.1M, 2090-SCEP0-1	
70T100	90459-7214		1	AXIS MODULE 650V, 6,1A, 2094-BM01-S	

Pos	Part No	UN	Qty	Description	Page No

Machine Type | Group Description | Used-In | Group Number | Page No

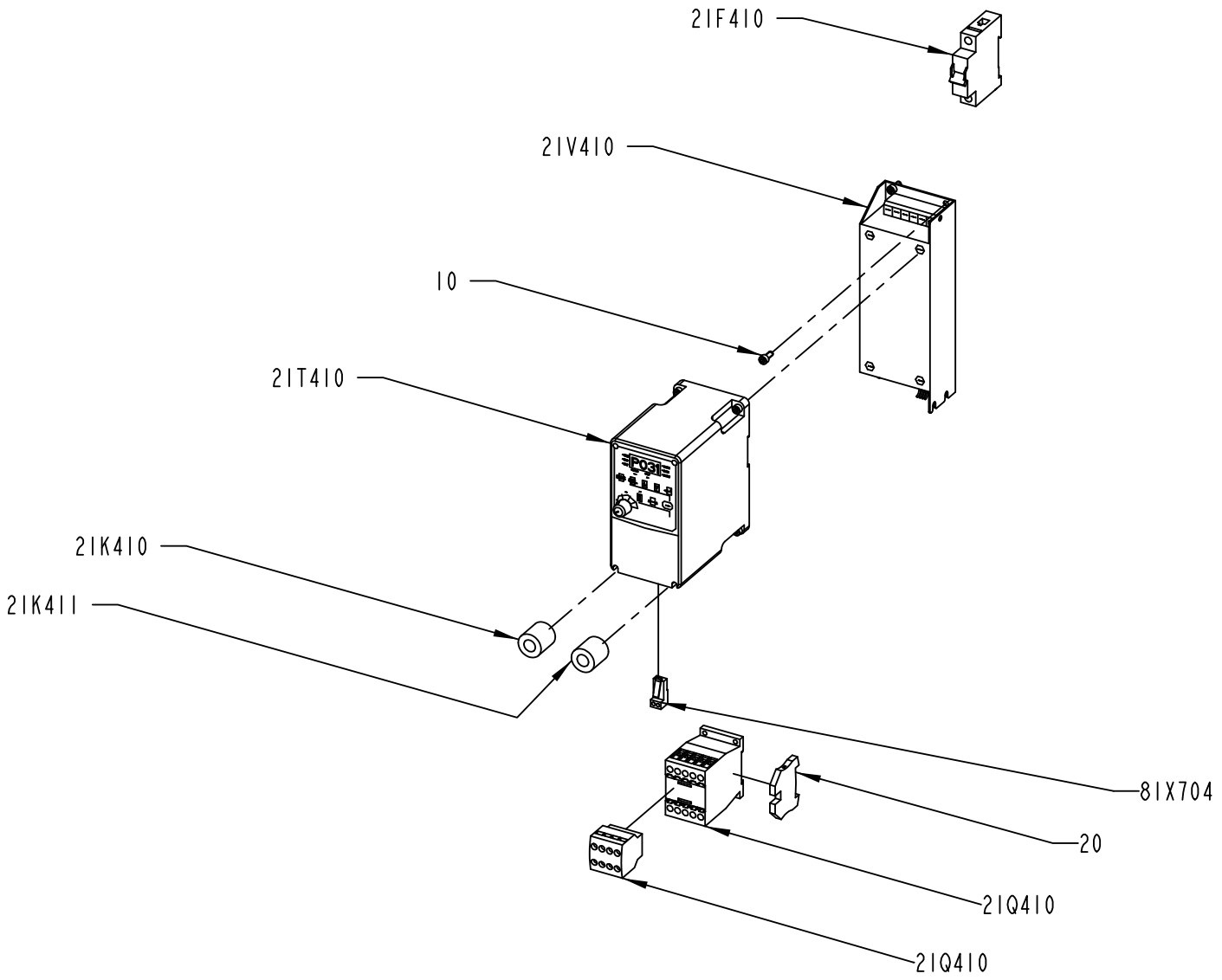

2895147-1
300897

ECM: 302778 - 20070528
Group number: 2895147-0100
Assembly Drawing: 2895147-1_1_AA

Pos	Part No	UN	Qty	Description	Page No
-					
010	312115-0327		8	SCREW ISO4762 M5X12 A4 80	
020	353024-0205		1	EARTH TERMINAL, 1010.1	
21F410	354000-0060		1	MINIATURE CIRCUIT BREAKER, FAZ-C6/1	
21K410	90458-1140		1	FERRITE, RI-26-28-13	
21K411	90458-1140		1	FERRITE, RI-26-28-13	
21Q410	90459-5308		1	CONTACTOR 4KW 24VDC, DILM9-10	
21Q410	90459-6852		1	AUXILIARY CONTACT, DILA-XHI22	
21T410	90459-3449		1	VARIABLE FREQUENCY DRIVE 22A-A2P3N104	
21V410	90459-3460		1	FOOTPRINT FILTER 22-RF010-AL	
81X704	90459-6470		1	CONNECTOR RJ45 TER. BL., AK-U0-RJ45-TB2P	

Pos	Part No	UN	Qty	Description	Page No

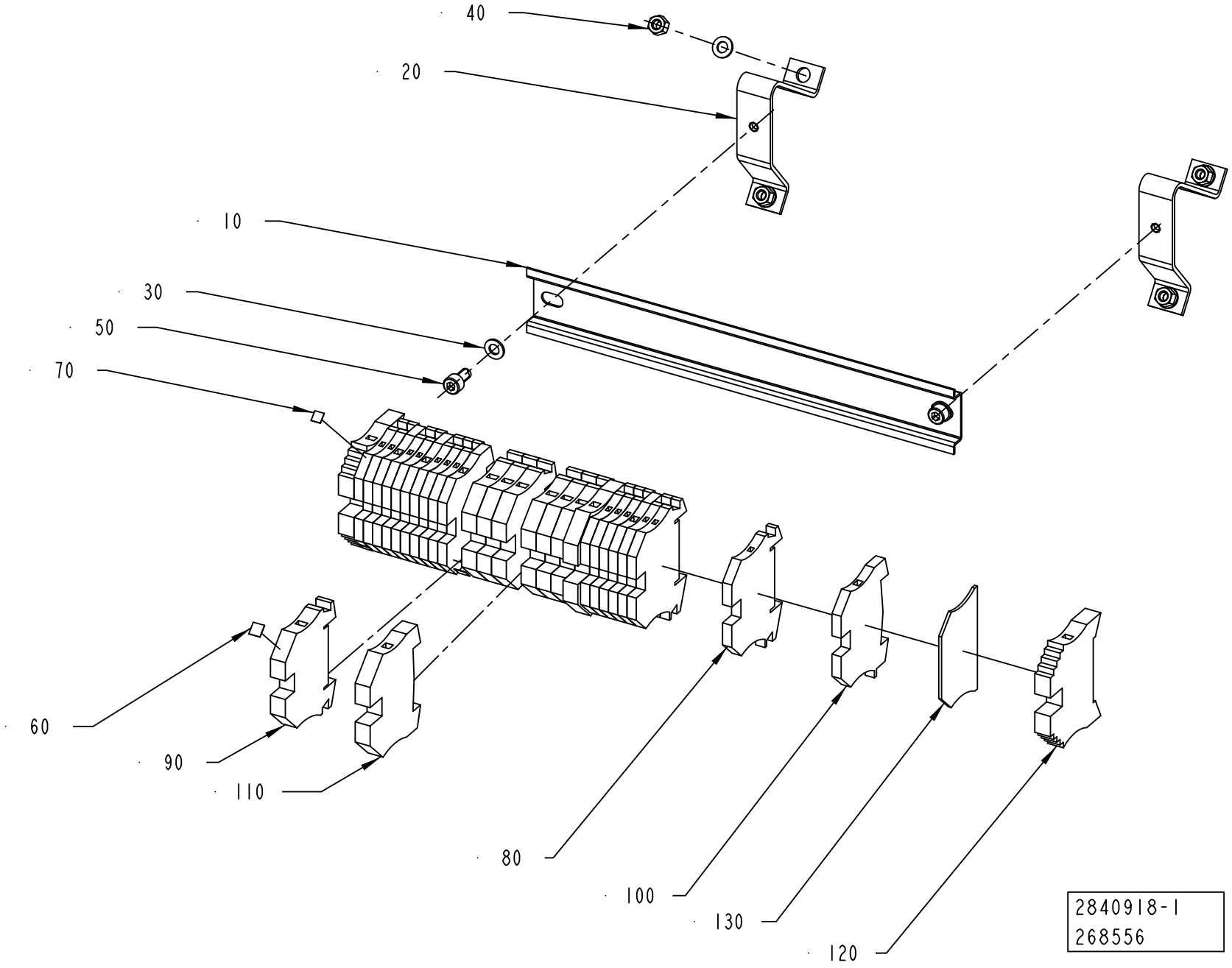
40
20
10
30
50
70
60
90
110
80
100
130
120
2840918-1
268556

ECM: 302780 - 20070528
Group number: 2840918-0100
Assembly Drawing: 2840918-1_1_AA

Pos	Part No	UN	Qty	Description	Page No
STREAMCAP500, STREAMCAP1000, SLIMCAP 2000, SLIMCAP 1000, STREAMCAP200, STREAMCAP330					
080	353021-0212		13	FEED THROUGH TERMINAL, 10200.0	
100	353024-0204		5	EARTH TERMINAL WPE 2,5	
Common Parts					
010	2841402-0000		1	RAIL	
020	90099-0005		2	MOUNTING RAIL SUPPORT, ANGLED, TSTW 5/M5	
030	315105-0146		6	WASHER BRB 5,3X10 RFR	
040	312605-0314		4	HEXAGON NUT, M6M M5 A280	
050	312115-0325		2	SCREW ISO4762 M5X10 A4 80	
060	359011-0821		2	SET OF SIGNS 6-FW 1-50	
070	359011-0807		2	MARKING PLATES 5-FW 1-50	
090	353021-0214		7	FEED THROUGH TERMINAL, 10202.0	
110	353024-0206		2	EARTH TERMINAL, 1010.2	
120	353031-0203		2	END SUPPORT, WEW 35/2	
130	353032-0004		1	END PLATE WAP 2,5-10 BEIGE	

Pos	Part No	UN	Qty	Description	Page No

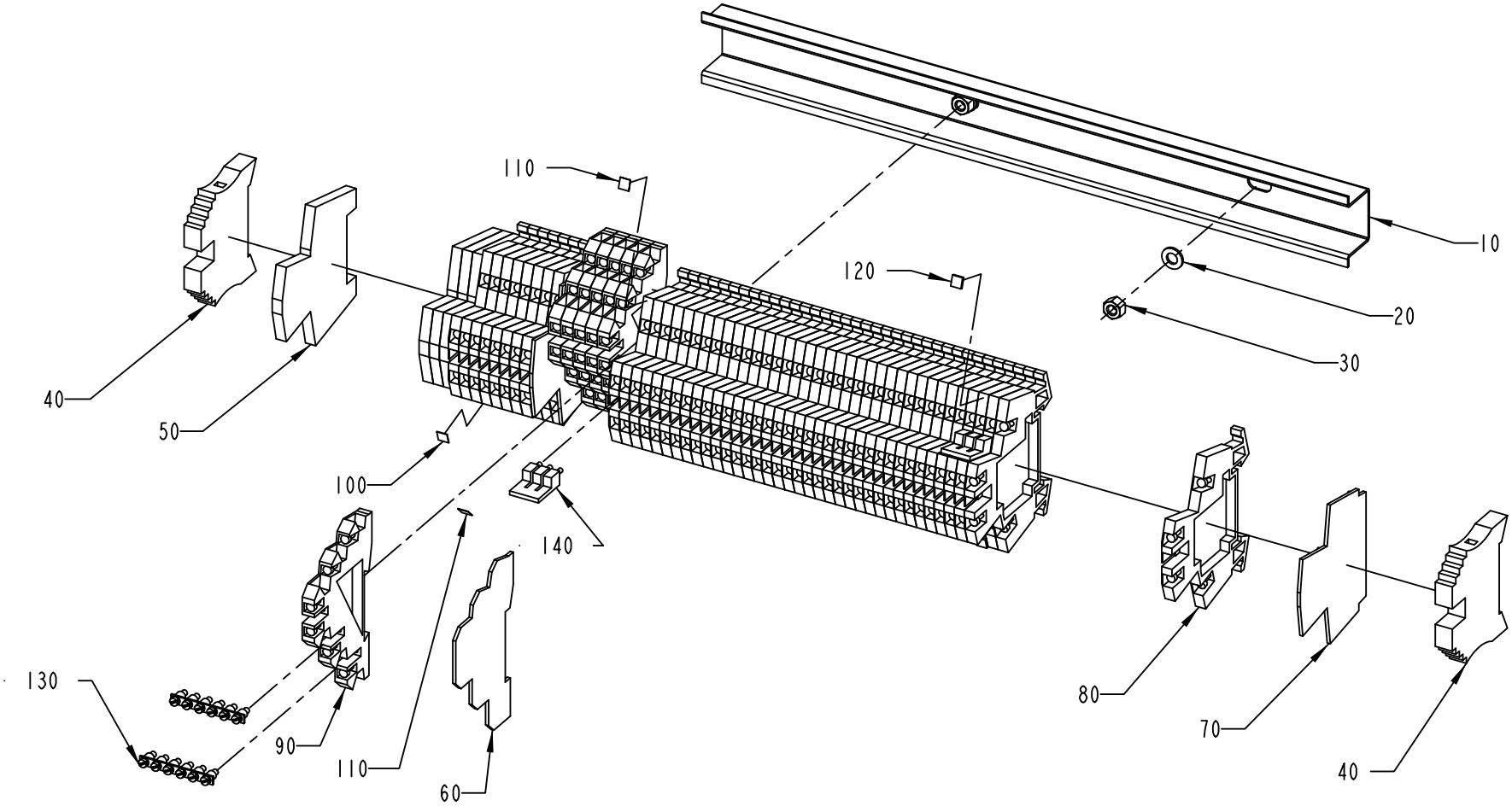

2841403-1
300897

ECM: 302779 - 20070528
Group number: 2841403-0100
Assembly Drawing: 2841403-1_1_AB

Pos	Part No	UN	Qty	Description	Page No
STREAMCAP500, STREAMCAP1000, SLIMCAP 2000, SLIMCAP 1000, STREAMCAP200, STREAMCAP330					
010	2839228-0000		1	RAIL	
020	315105-0146		2	WASHER BRB 5,3X10 RFR	
030	312605-0314		2	HEXAGON NUT, M6M M5 A280	
080	90077-0113		45	FEED THROUGH TERMINAL, 10-00102150-1	
Common Parts					
040	353031-0203		2	END SUPPORT, WEW 35/2	
050	353024-0212		4	EARTH TERMINAL, 10363.0	
060	353032-0302		1	END PLATE WAP, 13176.6	
070	353032-0009		2	END PLATE, WAP FOR WDK	
090	353021-0302		6	TERMINALS,TRIPLE-LEVEL, DLD 2,5/35 PA	
100	359011-0807		1	MARKING PLATES 5-FW 1-50	
110	359011-0809		1	MARKING PLATES 5-FW 101-150	
120	359011-0806		2	MARKING LABEL KIT, 5-FW 1-200	
130	353034-0404		2	BRIDGE CONNECTOR Q10, 13131.0	
140	353034-0030		3	BRIDGE CONNECTOR WQV 2,5/10, 10544.6	

Pos	Part No	UN	Qty	Description	Page No

This page is intentionally left blank.

ECM: 309363 - 20070528
Group number: 2833409-0100
Assembly Drawing:

Pos	Part No	UN	Qty	Description	Page No
-					
010	351160-0105	M	4	CABLE AWM 1X2,5 MM2 DARKBLUE	
020	351160-0106	M	5	CABLE AWM 1X4 MM2 DARKBLUE	
030	351161-0104	M	13	CABLE AWM LIGHTBLUE 1,5MM2	
040	351161-0105	M	20	CABLE AWM 1X2,5 MM2 LIGHTBLUE	
050	351161-0106	M	2.6	CABLE AWM 1X4 MM2 LIGHTBLUE	
060	351161-0107	M	2.6	CABLE AWM 1X6 MM2 LIGHTBLUE	
070	351161-0109	M	2.6	CABLE AWM 1X16 MM2 LIGHTBLUE	
080	351162-0102	M	26	CABLE AWM 1X0,75 MM2 YELLOW-GREEN	
090	351162-0104	M	13	CABLE AWM 1X1,5 MM2 YELLOW-GREEN	
100	351162-0105	M	29	CABLE AWM 1X2,5 MM2 YELLOW-GREEN	
110	351162-0106	M	6.5	CABLE AWM 1X4 MM2 YELLOW-GREEN	
120	351162-0107	M	2.6	CABLE AWM 1X6 MM2 YELLOW-GREEN	
130	351162-0108	M	3.9	CABLE AWM 1X10 MM2 YELLOW-GREEN	
140	351162-0109	M	3.9	CABLE AWM 1X16 MM2 YELLOW-GREEN	
150	351164-0104	M	32	CABLE AWM 1X1,5 MM2 BLACK	
160	351164-0106	M	13	CABLE AWM 1X4 MM2 BLACK	
170	351164-0108	M	29	CABLE AWM 1X10 MM2 BLACK	
180	351164-0109	M	4	CABLE AWM 1X16 MM2 BLACK	
81W200	90459-1621		1	CABLE, ETHERNET RJ 45 CONNECT. 1 M	
81W201	90459-6395		1	CABLE, ETHERNET RJ 45 STRAIGHT.10M	
81W400	90459-2530	MM	325	DEVICENET CABLE THIN	
81W401	90459-2530	M	1.3	DEVICENET CABLE THIN	
81W402	90459-2530	M	4.5	DEVICENET CABLE THIN	
81W403	90459-2530	M	13	DEVICENET CABLE THIN	
81W405	90459-2530	MM	260	DEVICENET CABLE THIN	
81W406	90459-2530	MM	260	DEVICENET CABLE THIN	
81W407	90459-2530	MM	260	DEVICENET CABLE THIN	
81W700	90220-0183	MM	325	SCR. CABLE 2X0,34MM2	
81W701	90220-0183	MM	325	SCR. CABLE 2X0,34MM2	
81W702	90220-0183	MM	325	SCR. CABLE 2X0,34MM2	

Pos	Part No	UN	Qty	Description	Page No

Machine Type | Group Description | Used-In | Group Number | Page No

This page is intentionally left blank.

ECM: 314599 - 20070712
Group number: 2861166-0100
Assembly Drawing:

Pos	Part No	UN	Qty	Description	Page No
CAP 30/FLEX					
0010	2861167-0002		1	SOFTWARE CD FLEX	
STREAMCAP500, STREAMCAP1000, SLIMCAP 2000, SLIMCAP 1000, STREAMCAP200, STREAMCAP330					
0010	2861167-0002		1	SOFTWARE CD FLEX	
0020	2861168-0002		1	SOFTWARE CD SPEED	
Common Parts					
0030	2869128-0002		1	SOFTWARE FIRMWARE CD	

Pos	Part No	UN	Qty	Description	Page No

Tetra Pak

SPC
Spare Parts Catalogue

This page is intentionally left blank.

ECM: 301269 - 20070528
Group number: 662913-0100
Assembly Drawing:

Pos	Part No	UN	Qty	Description	Page No
-					
010	2853706-0100		1	SETTING TOOL	**10-5**
020	2838693-0100		1	START-UP KIT	**10-13**
030	2815689-0100		1	CAP DETECTOR	**10-15, 10-17**
040	2838634-0000		1	PNEUMATIC DIAGRAM	
050	2838680-0000		1	DIAGRAM	
060	2838684-0000		1	WATER DIAGRAM	
070	2873923-0100		1	POSITION TEMPLATE	**10-25**
080	2873953-0100		1	CAP	**10-27**

Pos	Part No	UN	Qty	Description	Page No

Machine Type | Group Description | Used-In | Group Number | Page No

This page is intentionally left blank.

ECM: 310670 - 20070528
Group number: 2853706-0100
Assembly Drawing:

Pos	Part No	UN	Qty	Description	Page No
-					
010	2715750-0100		1	TEMPLATE	**10-7**
020	2716125-0100		1	SETTING TOOL	**10-9**
030	2788138-0100		1	TEMPLATE	**10-11**
040	2736458-0000		1	TEMPLATE	

Pos	Part No	UN	Qty	Description	Page No

This page is intentionally left blank.

ECM: 274816 - 20060925
Group number: 2715750-0100
Assembly Drawing:

Pos	Part No	UN	Qty	Description	Page No	Pos	Part No	UN	Qty	Description	Page No
-											
010	2715751-0000		1	SHAFT							
300	90051-0054		1	STELLAR KNOB, INT. THREAD, NO. 8306-0340							

Machine Type | Group Description | Used-In | Group Number | Page No

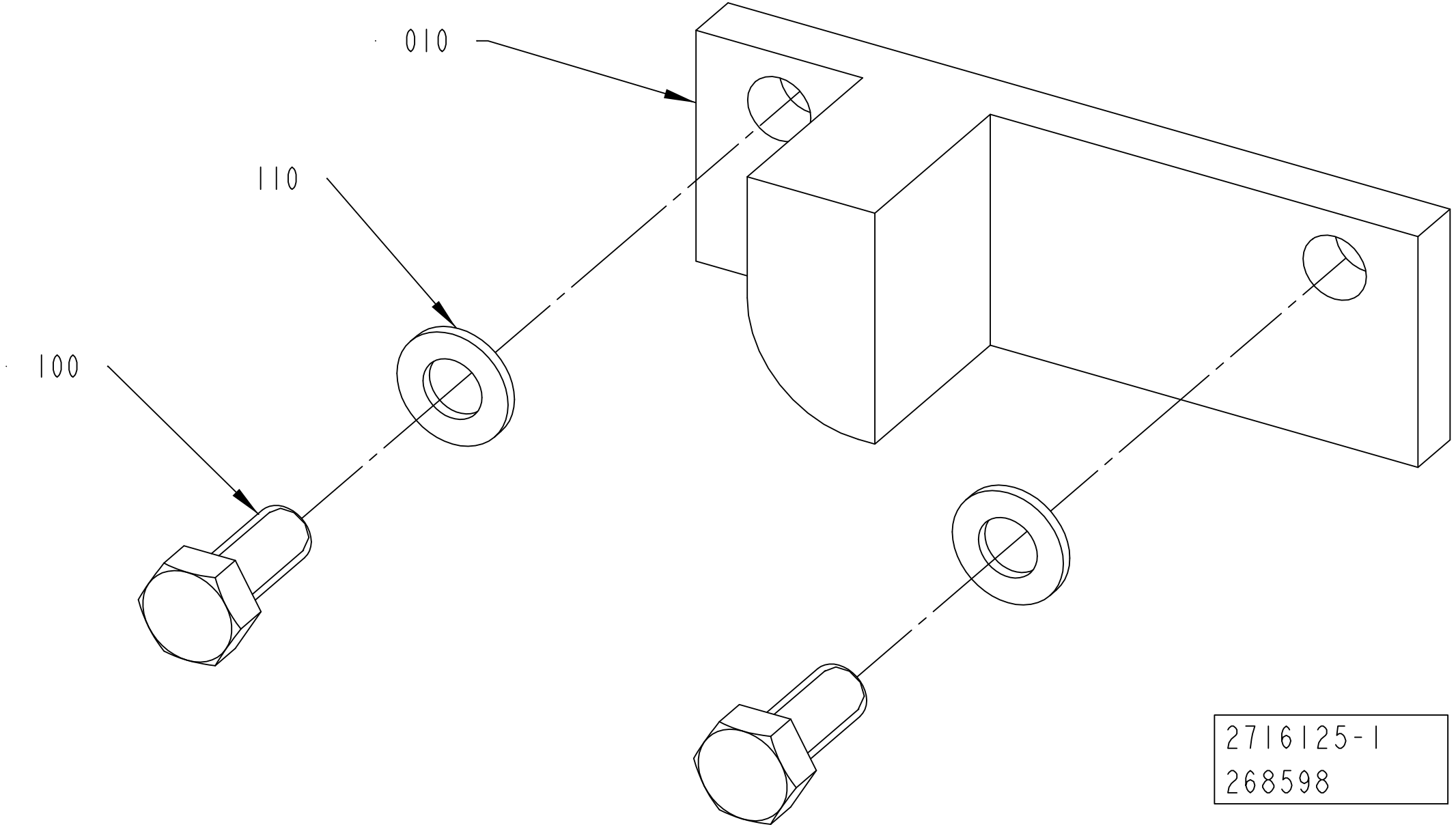
010
110
100
2716125-1
268598

ECM: 269065 - 20060920
Group number: 2716125-0100
Assembly Drawing: 2716125-1_1_AA

Pos	Part No	UN	Qty	Description	Page No
-					
010	2716154-0000		1	SETTING TEMPLATE	
100	312105-0327		2	SCREW M6S ISO 4017 M5X12 A480	
110	315105-0146		2	WASHER BRB 5,3X10 RFR	

Pos	Part No	UN	Qty	Description	Page No

This page is intentionally left blank.

ECM: 290196 - 20061221
Group number: 2788138-0100
Assembly Drawing:

Pos	Part No	UN	Qty	Description	Page No	Pos	Part No	UN	Qty	Description	Page No
-											
010	2788137-0000		1	TEMPLATE							
020	2788136-0000		2	TEMPLATE							

This page is intentionally left blank.

ECM: 301193 - 20070528
Group number: 2838693-0100
Assembly Drawing:

Pos	Part No	UN	Qty	Description	Page No
CAP 30/FLEX SLIMCAP1000, CAP 30/FLEX SLIMCAP2000					
020	90459-4083	KG	1	ADHESIVE, NATIONAL 134-135B	
030	90439-0155		4	PRECISION NOZZLE SATURN 322012	
CAP 30/FLEX STREAMCAP1000, CAP 30/FLEX STREAMCAP500					
020	90153-0059	KG	1	250.00 ADHESIVE, HOTMELT RECAP 12 KG	
030	90459-3197		4	HOT MELT NOZZLE, SATURN 322014	
Common Parts					
040	90600-0364		20	TENSION SPRING 3727, 0,6X5X27	

Pos	Part No	UN	Qty	Description	Page No

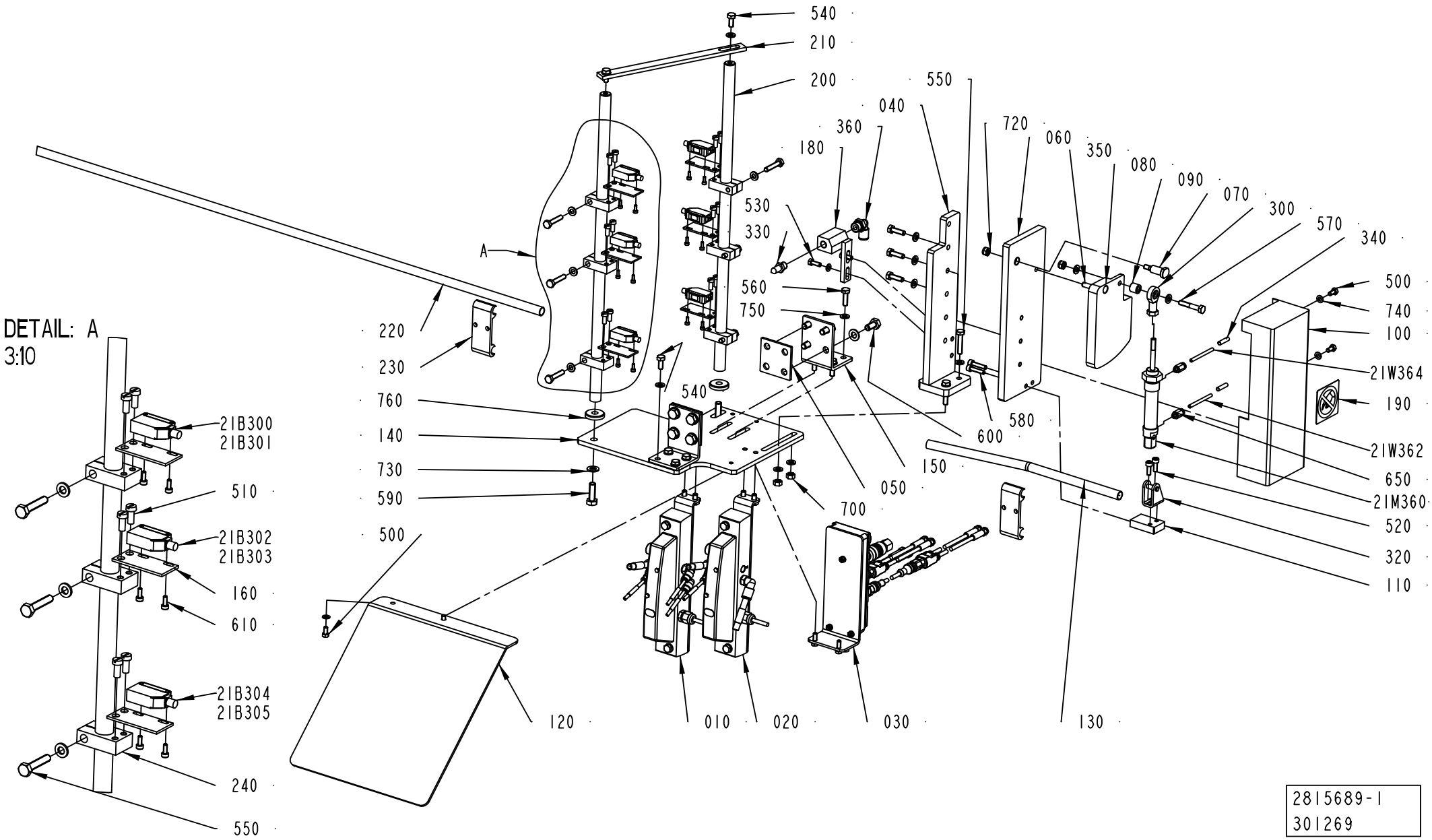

2815689-1
301269

ECM: 301269 - 20070528
Group number: 2815689-0100
Assembly Drawing: 2815689-1_1_AB

This list covers pages from 10-14 to 10-17

Pos	Part No	UN	Qty	Description	Page No
TBA, TPA (See drawing on page: 10-14)					
160	2826483-0000		6	BRACKET	
350	311103-0352		1	PARALLEL PIN ISO 2338 6M6X18 A1	
TGA (See drawing on page: 10-16)					
160	2826483-0000		4	BRACKET	
250	2859718-0000		1	PLATE	
260	2859719-0000		1	PLATE	
350	311103-0352		1	PARALLEL PIN ISO 2338 6M6X18 A1	
Common Parts					
010	2839074-0100		1	PNEUMATIC UNIT	**10-19**
020	2839194-0100		1	PNEUMATIC UNIT	**10-21**
030	2839195-0100		1	DISTRIBUTOR	**10-23**
040	2873872-0000		1	BRACKET	
050	2815585-0000		2	SPACER	
060	2873876-0000		1	PLATE	
070	2817525-0000		1	SHAFT	
080	2817527-0000		1	PUSHER	
090	2817573-0000		1	SPACER	
100	2817578-0000		1	COVER	
110	2818204-0000		1	SUPPORT	
120	2818427-0000		1	SLIDE PLATE	
130	2818738-0000		1	RAILING	
140	2814678-0000		1	PLATE	
150	2814679-0000		2	BRACKET	
180	2873866-0000		1	SUPPORT	
190	1128856-0000		1	PROHIBITION SIGN	
200	2859678-0000		2	SHAFT	
210	1380038-0000		1	BRACKET	
21B300	90459-5529		1	PH.CELL E3Z-T86A, SENDER+RECIEVER	
21B302	90459-5529		1	PH.CELL E3Z-T86A, SENDER+RECIEVER	
21B304	90459-5529		1	PH.CELL E3Z-T86A, SENDER+RECIEVER	
21M360	90457-0871		1	DOUBLE ACTING, MINI-ISO, CYL. 16-25	
21W362	315400-0016	MM	500	TUBE PUN-H-4X0,75-BL	
21W364	315400-0016	MM	500	TUBE PUN-H-4X0,75-BL	
220	476221-0013		1	PIPE	
230	1020637-0000		2	HOLDER	
240	1189007-0000		6	CLAMP BLOCK	
300	90115-0163		1	ROD END, ID=6 MM, M6X1	
320	90459-3655		1	REAR CLEVIS FOOT MOUNTING, LBN-12/16	
330	90424-0087		1	AIR NOZZLE	
340	90459-7368		2	MARKING FOR PNEUM. TUBING, PRZ04	
360	350002-0009		1	PUSH-IN L-FITTING QSL-F-G1/4-8	

Pos	Part No	UN	Qty	Description	Page No
500	312105-0325		5	SCREW M6S ISO 4017 M5X10 A480	
520	312115-0328		2	SCREW ISO4762 M5X14 A4	
530	312105-0328		2	SCREW M6S ISO 4017 M5X14 A480	
540	312105-0367		6	SCREW M6S ISO 4017 M6X14 A480	
550	312109-0374		8	SCREW M6S ISO 4017 M6X30 A480	
560	312105-0370		7	SCREW M6S ISO 4017 M6X20 A480	
570	312105-0376		1	SCREW M6S ISO 4014 M6X35 A480	
580	312115-0332		2	SCREW ISO4762 M5X22 A4	
590	312105-0453		2	SCREW M6S ISO 4017 M8X25 A480	
600	312105-0449		8	SCREW M6S ISO 4017 M8X16 A480	
610	312115-0222		12	SCREW ISO4762 M3X8 A4 80	
650	350001-0001		2	PUSH-IN FITTING QS-F-M5-4	
700	312607-0316		6	HEXAGON NUT, EN 24032 M6M M6 A480	
720	312812-0316		2	HEXAGON NUT, NY-LOCK M6 A480	
730	315105-0165		10	WASHER BRB 8,4X16 RFR	
740	315105-0146		7	WASHER BRB 5,3X10 RFR	
750	315105-0153		29	WASHER BRB 6,4X12 RFR	
760	315125-0165		2	WASHER TBRSB 8,4X26X5 A4	

Machine Type | Group Description | Used-In | Group Number | Page No

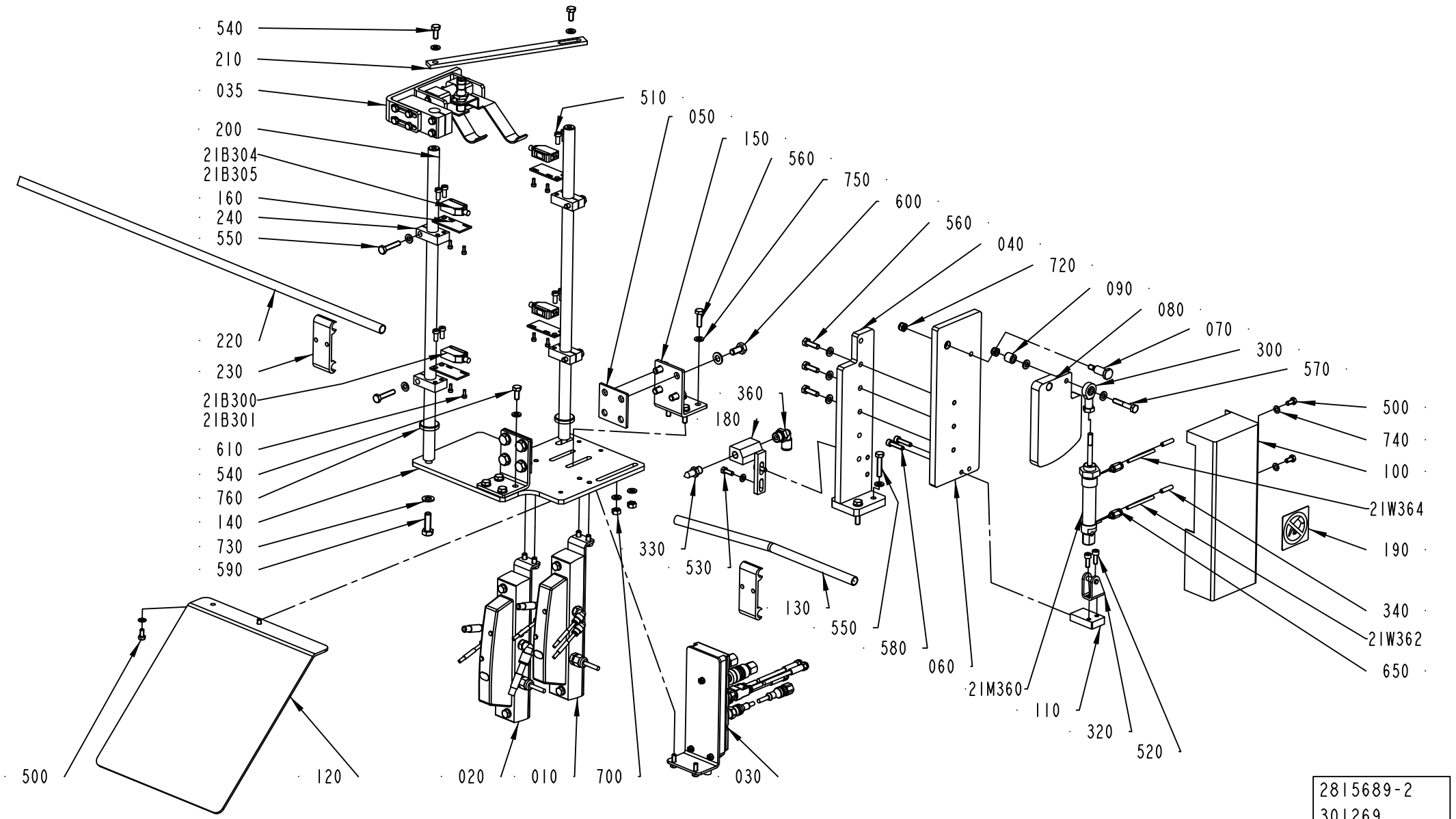

2815689-2
301269

ECM: 301269 - 20070528
Group number: 2815689-0100
Assembly Drawing: 2815689-2_1_AA

This list covers pages from 10-14 to 10-17

Pos	Part No	UN	Qty	Description	Page No
TBA, TPA (See drawing on page: 10-14)					
160	2826483-0000		6	BRACKET	
350	311103-0352		1	PARALLEL PIN ISO 2338 6M6X18 A1	
TGA (See drawing on page: 10-16)					
160	2826483-0000		4	BRACKET	
250	2859718-0000		1	PLATE	
260	2859719-0000		1	PLATE	
350	311103-0352		1	PARALLEL PIN ISO 2338 6M6X18 A1	
Common Parts					
010	2839074-0100		1	PNEUMATIC UNIT	**10-19**
020	2839194-0100		1	PNEUMATIC UNIT	**10-21**
030	2839195-0100		1	DISTRIBUTOR	**10-23**
040	2873872-0000		1	BRACKET	
050	2815585-0000		2	SPACER	
060	2873876-0000		1	PLATE	
070	2817525-0000		1	SHAFT	
080	2817527-0000		1	PUSHER	
090	2817573-0000		1	SPACER	
100	2817578-0000		1	COVER	
110	2818204-0000		1	SUPPORT	
120	2818427-0000		1	SLIDE PLATE	
130	2818738-0000		1	RAILING	
140	2814678-0000		1	PLATE	
150	2814679-0000		2	BRACKET	
180	2873866-0000		1	SUPPORT	
190	1128856-0000		1	PROHIBITION SIGN	
200	2859678-0000		2	SHAFT	
210	1380038-0000		1	BRACKET	
21B300	90459-5529		1	PH.CELL E3Z-T86A, SENDER+RECIEVER	
21B302	90459-5529		1	PH.CELL E3Z-T86A, SENDER+RECIEVER	
21B304	90459-5529		1	PH.CELL E3Z-T86A, SENDER+RECIEVER	
21M360	90457-0871		1	DOUBLE ACTING, MINI-ISO, CYL. 16-25	
21W362	315400-0016	MM	500	TUBE PUN-H-4X0,75-BL	
21W364	315400-0016	MM	500	TUBE PUN-H-4X0,75-BL	
220	476221-0013		1	PIPE	
230	1020637-0000		2	HOLDER	
240	1189007-0000		6	CLAMP BLOCK	
300	90115-0163		1	ROD END, ID=6 MM, M6X1	
320	90459-3655		1	REAR CLEVIS FOOT MOUNTING, LBN-12/16	
330	90424-0087		1	AIR NOZZLE	
340	90459-7368		2	MARKING FOR PNEUM. TUBING, PRZ04	
360	350002-0009		1	PUSH-IN L-FITTING QSL-F-G1/4-8	

Pos	Part No	UN	Qty	Description	Page No
500	312105-0325		5	SCREW M6S ISO 4017 M5X10 A480	
520	312115-0328		2	SCREW ISO4762 M5X14 A4	
530	312105-0328		2	SCREW M6S ISO 4017 M5X14 A480	
540	312105-0367		6	SCREW M6S ISO 4017 M6X14 A480	
550	312109-0374		8	SCREW M6S ISO 4017 M6X30 A480	
560	312105-0370		7	SCREW M6S ISO 4017 M6X20 A480	
570	312105-0376		1	SCREW M6S ISO 4014 M6X35 A480	
580	312115-0332		2	SCREW ISO4762 M5X22 A4	
590	312105-0453		2	SCREW M6S ISO 4017 M8X25 A480	
600	312105-0449		8	SCREW M6S ISO 4017 M8X16 A480	
610	312115-0222		12	SCREW ISO4762 M3X8 A4 80	
650	350001-0001		2	PUSH-IN FITTING QS-F-M5-4	
700	312607-0316		6	HEXAGON NUT, EN 24032 M6M M6 A480	
720	312812-0316		2	HEXAGON NUT, NY-LOCK M6 A480	
730	315105-0165		10	WASHER BRB 8,4X16 RFR	
740	315105-0146		7	WASHER BRB 5,3X10 RFR	
750	315105-0153		29	WASHER BRB 6,4X12 RFR	
760	315125-0165		2	WASHER TBRSB 8,4X26X5 A4	

Machine Type | Group Description | Used-In | Group Number | Page No

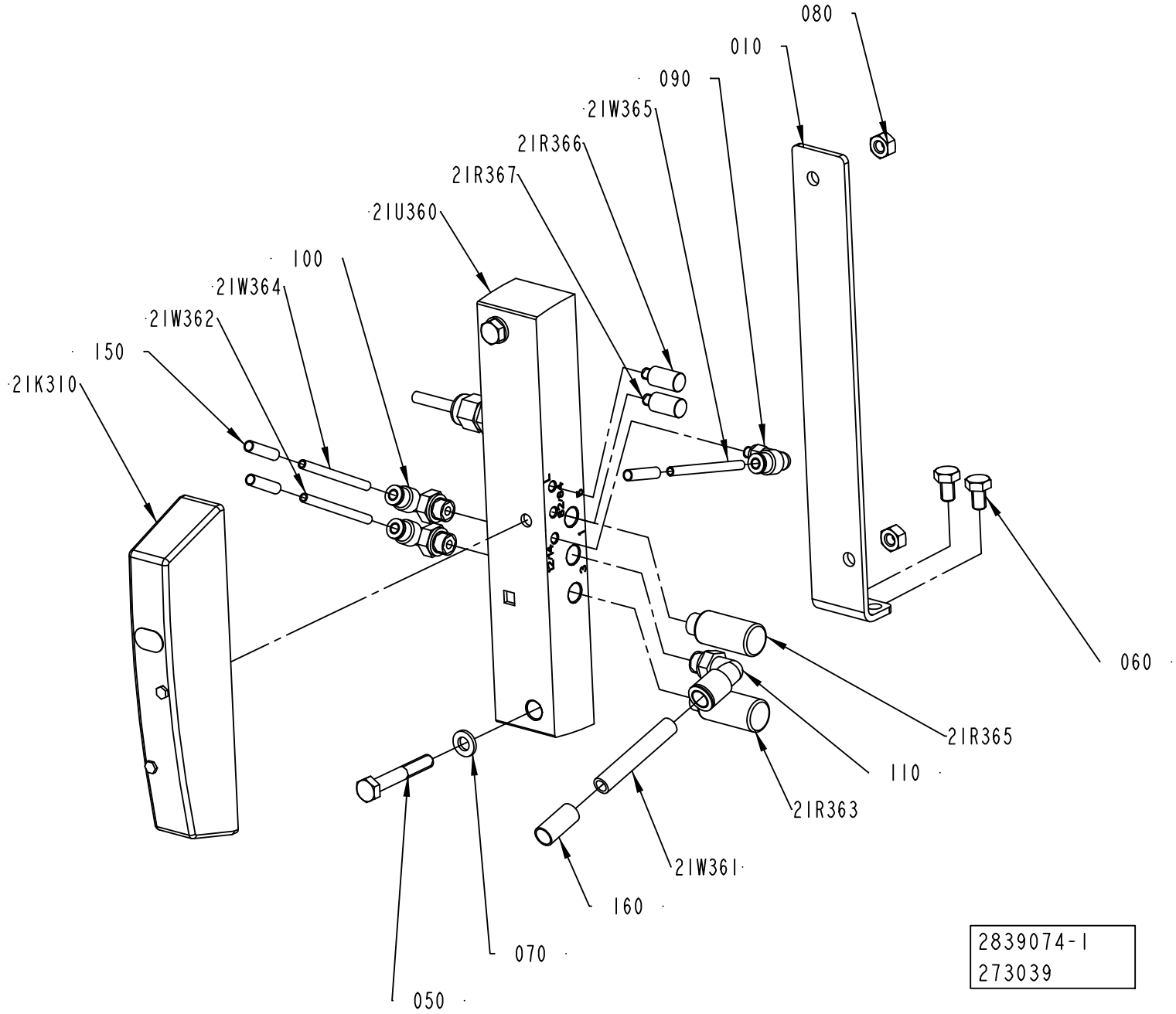
080
010
090
21W365
21R366
21R367
21U360
100
21W364
21W362
150
21K310
060
21R365
110
21R363
21W361
160
070
050
2839074-1
273039

ECM: 273595 - 20060925
Group number: 2839074-0100
Assembly Drawing: 2839074-1_1_AA

Pos	Part No	UN	Qty	Description	Page No
-					
10	2839073-0000		1	BRACKET	
100	350002-0005		2	PUSH-IN L-FITTING QSL-F-G1/8-4	
110	350002-0007		1	PUSH-IN L-FITTING QSL-F-G1/8-8	
150	90459-7368		3	MARKING FOR PNEUM. TUBING, PRZ04	
160	90459-7370		1	MARKING FOR PNEUM. TUBING, PRZ08	
21K310	90458-1197		1	BISTABLE VALVE 5/2	
21R363	90328-0012		1	SILENCER	
21R365	90328-0012		1	SILENCER	
21R366	90328-0020		1	SILENCER U-M5,	
21R367	90328-0020		1	SILENCER U-M5,	
21U360	90459-2591		1	SINGLE VALVE SUB-BASE CDSV5.0-AS-1/8	
21W361	315400-0004	M	4	TUBE PUN-H-8X1,25-BL	
21W362	315400-0016	M	0.5	TUBE PUN-H-4X0,75-BL	
21W364	315400-0016	M	0.5	TUBE PUN-H-4X0,75-BL	
21W365	315400-0016	M	0.5	TUBE PUN-H-4X0,75-BL	
50	312105-0378		2	SCREW M6S ISO 4014 M6X40 A480	
60	312105-0364		2	SCREW M6S ISO 4017 M6X10 A480	
70	315106-0153		2	WASHER ISO 7089-6-200 HV A4	
80	312605-0316		2	HEXAGON NUT, M6M M6 A280	
90	350002-0001		1	PUSH-IN L-FITTING QSL-F-M5-4	

Pos	Part No	UN	Qty	Description	Page No

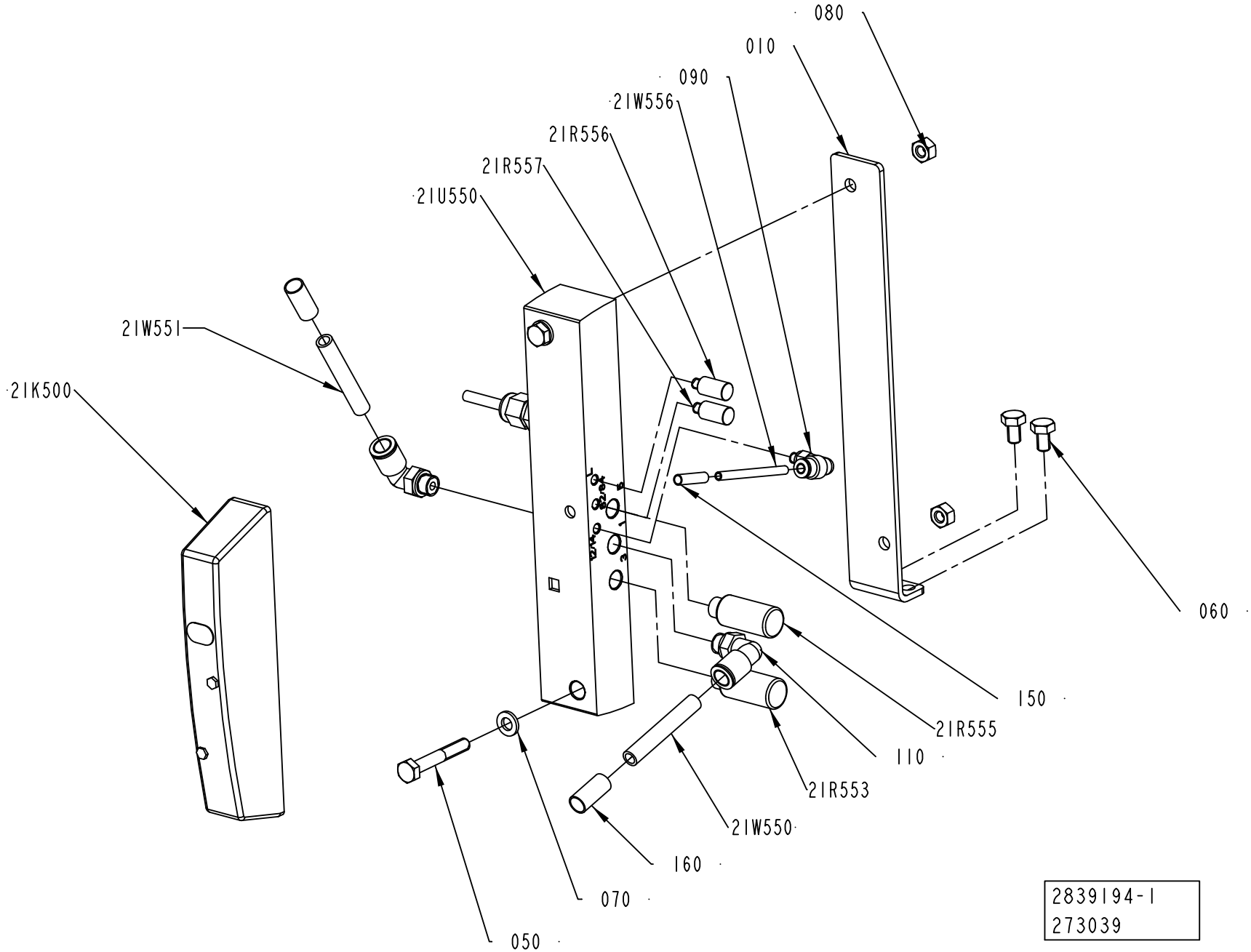
080
010
090
21W556
21R556
21R557
21U550
21W551
21K500
060
150
21R555
110
21R553
21W550
160
070
050
2839194-1
273039

ECM: 273594 - 20060925
Group number: 2839194-0100
Assembly Drawing: 2839194-1_1_AA

Pos	Part No	UN	Qty	Description	Page No
-					
10	2839073-0000		1	BRACKET	
110	350002-0007		2	PUSH-IN L-FITTING QSL-F-G1/8-8	
150	90459-7368		1	MARKING FOR PNEUM. TUBING, PRZ04	
160	90459-7370		2	MARKING FOR PNEUM. TUBING, PRZ08	
21K500	90458-1203		1	VALVE 2X3/2 1X OPEN 1X CLOSED	
21R553	90328-0012		1	SILENCER	
21R555	90328-0012		1	SILENCER	
21R556	90328-0020		1	SILENCER U-M5,	
21R557	90328-0020		1	SILENCER U-M5,	
21U550	90459-2591		1	SINGLE VALVE SUB-BASE CDSV5.0-AS-1/8	
21W550	315400-0004	M	4	TUBE PUN-H-8X1,25-BL	
21W551	315400-0004	M	4	TUBE PUN-H-8X1,25-BL	
21W556	315400-0016	M	0.5	TUBE PUN-H-4X0,75-BL	
50	312105-0378		2	SCREW M6S ISO 4014 M6X40 A480	
60	312105-0364		2	SCREW M6S ISO 4017 M6X10 A480	
70	315106-0153		2	WASHER ISO 7089-6-200 HV A4	
80	312605-0316		2	HEXAGON NUT, M6M M6 A280	
90	350002-0001		1	PUSH-IN L-FITTING QSL-F-M5-4	

Pos	Part No	UN	Qty	Description	Page No

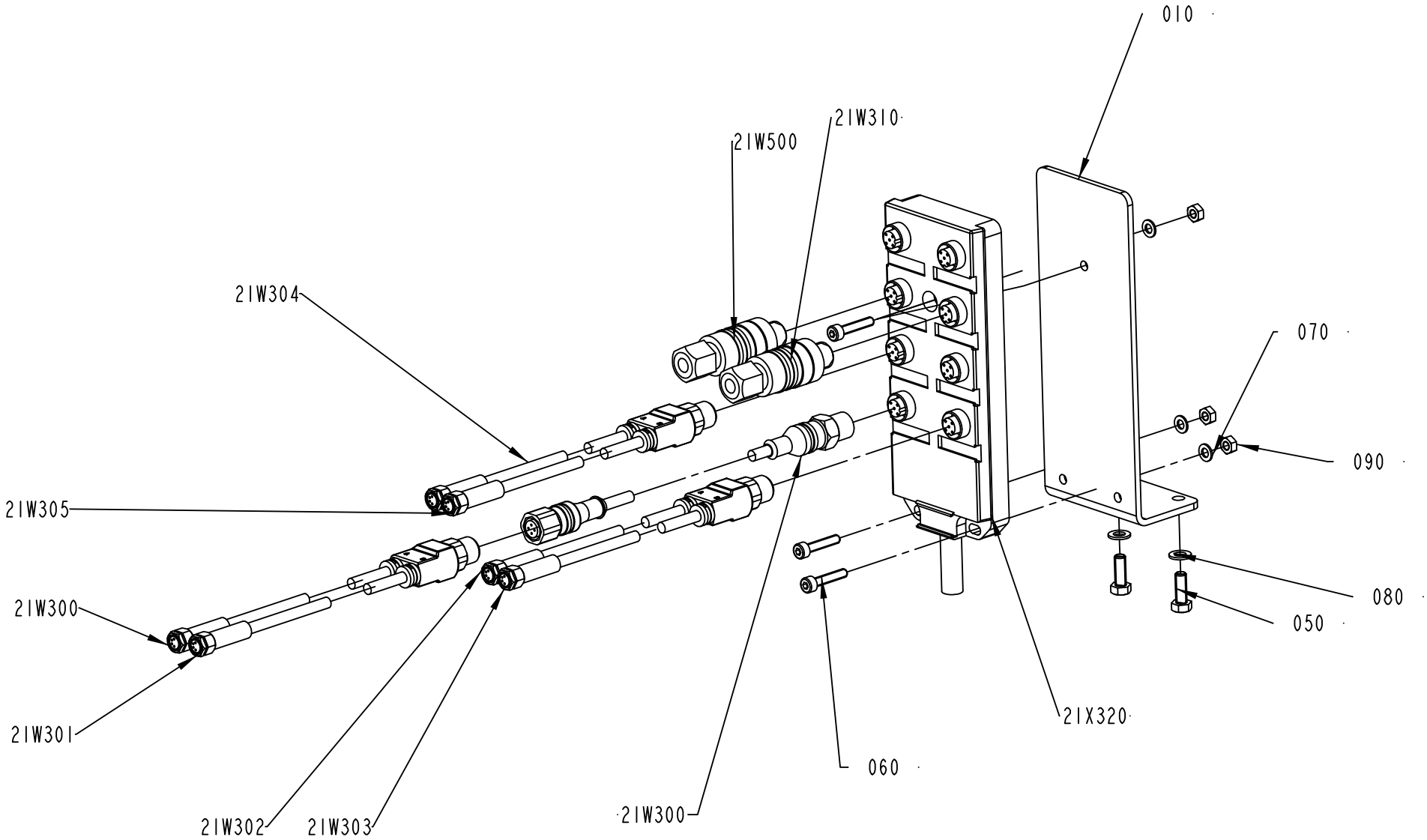

2839195-1
273039

ECM: 301269 - 20070528
Group number: 2839195-0100
Assembly Drawing: 2839195-1_1_AA

Pos	Part No	UN	Qty	Description	Page No
TBA, TPA, TGA					
21W300	351411-0006		1	ACTU/SENS. CABLE PRST 4-PRKT 4-07/0,6M	
21W300	90459-6586		1	ACT/SENS.Y-CABLE, ASBN 2-PRKMV 4-07/0,6M	
Common Parts					
010	2827671-0000		1	BRACKET	
050	312105-0328		2	SCREW M6S ISO 4017 M5X14 A480	
060	312115-0295		3	SCREW ISO4762 M4X20 A4 80	
070	315105-0136		3	WASHER BRB 4,3X8 RFR	
080	315105-0146		2	WASHER BRB 5,3X10 RFR	
090	312607-0312		3	HEXAGON NUT, EN 24032 M6M M4 A480	
21W302	90459-6586		1	ACT/SENS.Y-CABLE, ASBN 2-PRKMV 4-07/0,6M	
21W304	90459-6586		1	ACT/SENS.Y-CABLE, ASBN 2-PRKMV 4-07/0,6M	
21W310	90459-1663		1	CONNECTOR, 405204 RSCN4/7	
21W500	90459-1663		1	CONNECTOR, 405204 RSCN4/7	
21X320	90459-0839		1	DISTRIBUTION FRAME, ASBV 8 5-135/10M	

Pos	Part No	UN	Qty	Description	Page No

This page is intentionally left blank.

ECM: 301194 - 20070528
Group number: 2873923-0100
Assembly Drawing:

Pos	Part No	UN	Qty	Description	Page No
TBA SLIMCAP1000					
010	2547954-0000		1	TEMPLATE	
TBA STREAMCAP1000					
010	2506887-0000		1	TEMPLATE	
TBA SLIMCAP 2000					
010	2612679-0000		1	TEMPLATE	
TGA					
020	2873932-0000		1	TEMPLATE	
TPA STREAMCAP 1000					
010	2562134-0000		1	TEMPLATE	
020	2579622-0000		1	TEMPLATE	
TPA STREAMCAP 500					
010	2579623-0000		1	TEMPLATE	
020	2579624-0000		1	TEMPLATE	

Pos	Part No	UN	Qty	Description	Page No

This page is intentionally left blank.

ECM: 298073 - 20070528
Group number: 2873953-0100
Assembly Drawing:

Pos	Part No	UN	Qty	Description	Page No
SLIMCAP 1000					
010	A894400101	KPC	3.6	SLIMCAP1 A1 WHITE	
020	2529719-0005		1	BOX	
030	2529720-0037		4	LABEL	
040	2594996-0000		1	PLASTIC BAG	
SLIMCAP 2000					
010	A894400201	KPC	2	SLIMCAP1 A2 WHITE	
020	2529719-0006		1	BOX	
030	2529720-0044		4	LABEL	
040	2594996-0000		1	PLASTIC BAG	
STREAMCAP1000					
010	A895800101	KPC	3	STREAMCAP 1W A1 WHITE 1000	
020	2529719-0004		1	BOX	
030	2529720-0024		4	LABEL	
040	2594996-0000		1	PLASTIC BAG	
STREAMCAP500					
010	A895900201	KPC	3.5	STREAMCAP4M A2 WHITE	
020	2529719-0003		1	BOX	
030	2529720-0016		4	LABEL	
040	2594996-0000		1	PLASTIC BAG	

Pos	Part No	UN	Qty	Description	Page No

Tetra Pak

SPC
Spare Parts Catalogue

This page is intentionally left blank.

ECM: 293145 - 20070215
Group number: 662914-0100
Assembly Drawing:

Pos	Part No	UN	Qty	Description	Page No
-					
0010	2861166-0100		1	SOFTWARE	**9-71, 11-5**
0020	2879015-0100		1	ELECTRICAL DOCUMENT	**11-7**

Pos	Part No	UN	Qty	Description	Page No

This page is intentionally left blank.

ECM: 314599 - 20070712
Group number: 2861166-0100
Assembly Drawing:

Pos	Part No	UN	Qty	Description	Page No
CAP 30/FLEX					
0010	2861167-0002		1	SOFTWARE CD FLEX	
STREAMCAP500, STREAMCAP1000, SLIMCAP 2000, SLIMCAP 1000, STREAMCAP200, STREAMCAP330					
0010	2861167-0002		1	SOFTWARE CD FLEX	
0020	2861168-0002		1	SOFTWARE CD SPEED	
Common Parts					
0030	2869128-0002		1	SOFTWARE FIRMWARE CD	

Pos	Part No	UN	Qty	Description	Page No

This page is intentionally left blank.

ECM: 314600 - 20070712
Group number: 2879015-0100
Assembly Drawing:

Pos	Part No	UN	Qty	Description	Page No
CAP 30/FLEX					
0010	2861169-0100		1	ELECTRICAL DOCUMENT	
STREAMCAP500, STREAMCAP1000, SLIMCAP 2000, SLIMCAP 1000, STREAMCAP200, STREAMCAP330					
0010	2861169-0100		1	ELECTRICAL DOCUMENT	
0020	2861170-0100		1	ELECTRICAL DOCUMENT	

Pos	Part No	UN	Qty	Description	Page No

Tetra Pak

SPC
Spare Parts Catalogue

Part No	Description	Page No
A894400101	SLIMCAP1 A1 WHITE	10-27
6-4000 0006 08	SCREW M6S 10 X 110	4-5
90001-0033	WALL SOCKET OUTLET	9-9
90005-0060	WASHER PLAIN, RBS 6,4/M6)/18,H=1,5	9-39, 9-53
90005-0064	WASHER PL.RND.NYL.4,3/9, H=0,8	9-5
90005-0082	WASHER PLAIN ROUND 4,3(M4)/12,H=1	1-77, 6-81, 6-83, 6-85, 6-87, 9-9
90005-0139	WASHER PLAIN ROUND 5,2(M5)/15, H=1,6	1-13
90014-0058	ROLLER, PS/20R8	4-23
90014-0059	ROLLER, RPS/94 20R8	4-23
90015-0020	LEAD-IN, TET5-7, E-1458016	5-77
90015-0021	LEAD-IN, TET10-14, E-1458023	5-63, 5-65, 5-67
90017-0029	LOCKING LEVER, NO. KR8X30-SUS	1-21, 1-61, 5-19, 5-21, 5-23
90024-0036	FILTERED TERMINAL BLOCK	9-7
90024-0060	POWER LINE FILTER, 80 A 250/440 VAC	9-7
90028-0020	CONE TUBE 2,5MM	5-79, 5-81, 5-83
90028-0021	CONE TUBE 4 MM	5-79, 5-81, 5-83
90028-0022	CONE TUBE 6 MM	5-77
90030-0200	CONN. ELBOW, 6-M10X1, EXT.THREAD	5-77, 5-79, 5-81, 5-83
90032-0038	BLOCK 2 WAYS	5-79, 5-81, 5-83
90032-0039	BLOCK 4 WAYS	5-79, 5-81, 5-83
90032-0043	DISTRIBUTION BLOCK 3 WAYS	5-77
90036-0057	LIGHT BULB, BA9S 28V	5-103
90036-0068	BULB 6.5W 24V	5-89
90044-0192	LIMIT SW. SZ2586.000	9-5
90051-0054	STELLAR KNOB, INT. THREAD, NO. 8306-0340	10-7
90051-0112	LOCK KNOB, NO. GN 617 NIK5	1-59, 5-51, 5-53
90053-0029	COUNTER, F524.800FA3C 24VDC	9-47
90053-0031	HOUR COUNTER, B 609.10 10-50VDC	9-47
90056-0177	WORM GEAR VF30 F1-7 P63 B14 B3	1-77
90056-0178	WORM GEAR VF 44 F1-70 P63 B5 B3	4-23
90062-0015	LOCK WASHER SERRAT.EXT.GEAR,6,4/11 H=0,7	9-5
90062-0060	LOCK WASHER 5,3/10 H=0,6 FZB	5-47, 5-49
90064-0082	PUSH BUTTON, WHITE	5-103
90064-0093	PUSH BUTTON, GREEN	5-103
90077-0113	FEED THROUGH TERMINAL, 10-00102150-1	5-105, 5-107, 9-21, 9-23, 9-25, 9-27, 9-29, 9-31, 9-67
90077-0114	END PLATE, WAP/WDK 2,5	5-105, 5-107
90082-0013	OVER VOLT. PROTECT. PU 4C-R 230 VAC	9-7
90087-0019	PLUG M10X1 STAINLESS	5-79, 5-81, 5-83
90091-0038	SCRAPER 20X30X10 MM	6-33, 6-35, 6-37
90091-0304	RADIAL SEAL 45X65X8 MM DUST LIP	1-31, 1-35, 1-43, 1-47
90091-0322	RADIAL SEAL 25X42X7 MM DUST LIP	1-7, 1-9
90092-0052	METERING VALVE 10 MM3	5-79, 5-81, 5-83
90092-0054	METERING VALVE 50 MM3	5-79, 5-81, 5-83
90099-0005	MOUNTING RAIL SUPPORT, ANGLED, TSTW 5/M5	9-65
90099-0191	HEXAGON NYLON NUT, M4X0,7	9-5
90110-0053	FEMALE INSERT HAN 6 E 09 33 006 2701	5-7, 5-9
90110-0095	CONNECTOR 3 POLE + EARTH	5-71
90111-0122	KEY SWITCH, 2 NO CONTACTS	5-103
90115-0134	ROD END, ID=10 MM, M10X1,25	1-13
90115-0137	ROD END, ID=6 MM, M6X1	3-11
90115-0163	ROD END, ID=6 MM, M6X1	10-15, 10-17
90119-0108	RELAY OMRON G2R-2-SNI-24DC	5-105, 5-107, 9-17, 9-55, 9-57
90125-0020	PLATE COMPLETE	5-47, 5-49
90129-0018	BASE OMRON P2RF-08-E	5-105, 5-107, 9-17, 9-55, 9-57
90134-0030	SLEEVE FOR PLASTIC TUBE	5-77, 5-79, 5-81, 5-83
90134-0031	SLEEVE FOR PLASTIC TUBE	5-79, 5-81, 5-83
90134-0039	BUSHING VALVE CONNECTION 2,5 MM	5-79, 5-81, 5-83
90134-0040	BUSHING VALVE CONNECTION 4 MM	5-79, 5-81, 5-83
90134-0051	SPACING COLLAR DOSING BLOCK	5-79, 5-81, 5-83
90134-0052	PLUG DOSING BLOCK	5-79, 5-81, 5-83
90134-0054	BLOCK CONNECTION M10X1	5-79, 5-81, 5-83
90134-0055	BUSHING/NUT INLET/OUTLET 6 MM	5-77
90134-0058	CONNECTION	2-17, 2-19, 5-79, 5-81, 5-83
90134-0068	CONNECTION	2-17, 5-79, 5-81, 5-83
90135-0035	EARTH WIRE, L=250 MM 16 MM2	9-5
90141-0016	RETAINING RING FOR SHAFT DIN 471 10 A2	8-5
90141-0017	RETAINING RING FOR SHAFT DIN 471 17 A2	8-5
90143-0071	RUBBER STRIP 4X20MM	5-103
90152-0051	SPIRAL CONDUIT, 25X18, UL 1816	5-47, 5-49, 5-103
90152-0060	SPIRAL CONDUIT, 42X35, UL3529	5-103
90152-0070	METAL HOSE, 32,5X26, UL 2621	5-103
90152-0075	HOSE	5-47, 5-49
90153-0023	ADHESIVE, SILICON 251470 TUB 90CC	6-71, 6-73
90153-0059	250.00 ADHESIVE, HOTMELT RECAP 12 KG	10-13
90157-0037	THREAD SEALANT LOCTITE 542	1-7, 1-9, 1-49, 1-51, 1-53, 1-55
90157-0041	SEALING COMPOUND, RHODORSEAL 5651	5-121, 5-135, 5-137, 5-139, 5-145, 5-147
90164-0015	LIGHT FIXTURE, RL70CV-111 / 230V 50HZ	5-91
90164-0303	LIGHT FIXTURE, BRACKET 70MM	5-91
90165-0007	PIPE CLIP FOR TUBE D=8 MM	9-9
90166-0108	TUBE 6 MM PA TRANSP.	5-77, 5-79, 5-81, 5-83
90166-0109	TUBE 4 MM PA TRANSP.	5-79, 5-81, 5-83
90166-0113	HOSE	5-7, 5-9
90166-0126	TUBE 12 MM PA,TRANSP.	1-35, 1-47, 1-49, 1-51, 1-53, 1-55
90166-0132	TUBE 6 MM PA,TRANSP.	5-77, 5-79, 5-81, 5-83

Part No	Description	Page No
90166-0143	TUBE 2,5 MM PA TRANSP.	5-79, 5-81, 5-83
90181-0038	CABLE DUCT 40X40MM	5-103
90181-0064	LOCK ZP1 FOR CHANNEL T1	9-11
90181-0183	JOINING FITTING	3-25, 6-65
90187-0045	BALL VALVE G1/4 CR PL	5-57
90187-0191	BALL VALVE R1/8, 6 MM	5-63, 5-65, 5-67
90189-0019	BALL BUSHING, 20X30X30 MM	6-33, 6-35, 6-37
90194-0080	SIGN, IDENTIFICATION OF WIRING	9-5
90194-0152	SIGN, EARTH	9-5
90206-0124	HEATING ELEMENT 2X1500W 230V	5-47, 5-49
90208-0078	CLAMPING ELEMENT WITH SLEEVE, 20X28 MM	7-9
90214-0123	BALL BEARING, 10X30X9 MM	6-11, 6-13, 6-33, 6-35, 6-37
90214-0186	BALL BEARING, 30X42X7 MM	1-7, 1-9
90220-0104	SCR. CABLE 4X1,5MM2	5-97
90220-0165	SCR. CABLE 5X0,34MM2	5-97
90220-0183	SCR. CABLE 2X0,34MM2	9-69
90224-0325	ELBOW 90 COUPL.,EXT.THREAD 10/8-G1/4"	5-57
90224-0372	CONN. STRAIGHT ESK-1/4-1/4 151521	5-71
90226-0458	MOUNTING SCREW	5-101, 5-113, 5-115, 5-119, 5-123, 5-127, 5-129, 5-143, 5-145
90235-0748	THROTTLE CHECK VALVE	5-63, 5-65, 5-67
90237-0123	LOCK, 1121-U10C	5-121, 5-135, 5-139
90237-0128	LOCK CYLINDER, 1109-U3	5-121, 5-135, 5-139
90237-0144	GUIDE, 1121-SU540	5-121, 5-135, 5-139
90237-0147	LOCKING LUG, NO. 1121-53-0P	5-121, 5-135, 5-139
90237-0175	TURNING HANDLE, 1125-U185-0A	5-121, 5-135, 5-139
90259-0313	AUX. CONTACT K&M NHI21-PKZM0	9-35, 9-55, 9-57
90261-0060	PLUG, BLIND, PLASTIC, NO. IKPK25X1, 5	3-25
90261-0064	PLUG, BLIND, PLASTIC, NO. SFL42	1-29, 1-41
90264-0319	FLANGE	5-55
90274-0084	PRESSURE GUARD, 1800 KPA	5-77
90287-0124	SCREW PAN HEAD MSCS M4X12 NYLON	9-11
90287-0154	SCREW, SOCK.SET DOGPOINT M6X10	5-11, 5-13
90287-0175	SCREW M6S M3X12 A480	1-21, 5-11, 5-13, 5-39, 5-41
90287-0230	SCREW, HEX.SOCK.HEAD SHOULD. M5X6	1-67, 1-69, 1-71, 1-73
90287-0238	SCREW, HEX.SOCK.HEAD SHOULD. M5X6	3-11
90287-0270	SCREW M6S M8X160 A280	1-67, 1-69, 1-71, 1-73
90287-0295	SCREW HEX.SOCK.COUNT.MF6S M3X8 A280	7-17
90296-0068	SHELL ALVANIA GREASE EP 2	1-77, 6-13, 7-7
90296-0075	SHELL OMALA OIL 320, DRUM 208 LITRES	5-77
90328-0012	SILENCER	7-29, 10-19, 10-21
90328-0017	SILENCER, D=6 MM	1-13, 5-77
90328-0020	SILENCER U-M5,	7-29, 10-19, 10-21
90328-0026	SILENCER G1/4"	5-71
90328-0029	SILENCER M5	5-63, 5-65, 5-67
90328-0047	SILENCER G1/8"	1-65, 5-63, 5-65, 5-67
90330-0026	PLUG, EXT. G-THREAD, G1/4	5-71
90330-0134	NIPPLES,REDUCING,INT THREAD, G1/4-G1/8	5-61
90335-0082	COMP. SPRING 22180, 1,25X9,25X47,5	7-17
90347-0011	VIBRATION DAMPER MEGI 781056	5-11, 5-13
90415-0030	OIL FILTER PN 100 ORD.NO 2.77 10 70.1	5-77
90424-0087	AIR NOZZLE	10-15, 10-17
90424-0089	AIR NOZZLE, BSPT1/4, AAB727-1/4-15	5-61
90439-0155	PRECISION NOZZLE SATURN 322012	3-9, 10-13
90439-0295	SERVICE KIT, NO. 111940	5-99
90457-0192	WASHER PLAIN ROUND, 6,5/18, H=1,5	5-21, 5-23
90457-0871	DOUBLE ACTING, MINI-ISO, CYL. 16-25	10-15, 10-17
90458-0181	RETAINING RING FOR BORE DIN 472 80 A2	1-49, 1-51, 1-53, 1-55
90458-0292	BASE, KT70-1001	5-89
90458-0293	LIGHT ELEMENT, RED, KL70-401R	5-89
90458-0294	LIGHT ELEMENT, YELLOW, KL70-401Y	5-89
90458-0295	LIGHT ELEMENT, BLUE, KL70-401L	5-89
90458-0302	SIREN WITH ADJUSTABLE VOLUME KS 70-3004	5-89
90458-0307	CABLE GLAND, M20X1,5, NO.5311 1020	5-7, 5-9, 5-89
90458-0310	CABLE GLAND, M40X1,5, NO.5311 1050	9-5
90458-0314	CABLE GLAND, M16X1,5, NO.5311 1110	9-5
90458-0315	CABLE GLAND, M20X1,5, NO.5311 1120	5-7, 5-9
90458-0316	CABLE GLAND, M25X1,5, NO.5311 1130	5-55
90458-0321	NUT, M12X1,5	5-77
90458-0323	NUT, M20X1,5	5-7, 5-9, 5-47, 5-49, 5-89, 5-103
90458-0324	NUT, M25X1,5	5-63, 5-65, 5-67, 5-103
90458-0326	NUT, M40X1,5	5-7, 5-9, 5-103
90458-0430	HOSE GLAND W/O INSERT M20 EXTENDED	5-47, 5-49, 5-103
90458-0432	HOSE GLAND W/O INSERT M25 EXTENDED	5-63, 5-65, 5-67, 5-103
90458-0434	HOSE GLAND W/O INSERT M40 EXTENDED	5-7, 5-9, 5-103
90458-0438	GLAND, EXTENDED WITH INSERT, M20X1,5	1-77
90458-0499	HOLDER 12 MM NO. 82 66861	5-61
90458-0506	RETAINING RING FOR BORE DIN 472 26 A2	1-77
90458-0507	PARALLEL KEY W. ROUND ENDS 6X6X60 MM	1-7, 1-9
90458-1140	FERRITE, RI-26-28-13	9-9, 9-41, 9-55, 9-57, 9-63
90458-1141	FERRITE, RI-16-28-9	9-49
90458-1170	FERRITE, SFC-6	9-49
90458-1173	MULTI DIAMETER MODULE, CM 30W40	9-5
90458-1174	MULTI DIAMETER MODULE, CM 20W40	9-5
90458-1175	MULTI DIAMETER MODULE, CM 15W40	9-5

Part No	Description	Page No
90458-1178	FRAME CF 8	9-5
90458-1179	FRAME CF 32	9-5
90458-1197	BISTABLE VALVE 5/2	7-29, 10-19
90458-1202	VALVES 2X3/2, CLOSED	5-63, 5-65, 5-67
90458-1203	VALVE 2X3/2 1X OPEN 1X CLOSED	10-21
90458-1306	BLIND PLUG CIRCULAR, M12X1,5 514GFK/212	5-77
90458-1308	BLIND PLUG CIRCULAR, M20X1,5 514GFK/220	5-103
90458-1309	BLIND PLUG CIRCULAR, M25X1,5 514GFK/225	5-103
90458-1438	BALL BEARING, 10X19X5 MM	8-5
90458-1483	SPRAY GUN WATER G1/4	5-57
90458-1559	FLANGE BEARING 17X98X32,1 MM	4-23
90458-1560	SHAFT COUPLING, 15X15 MM	4-23
90458-1651	EMERGENCY STOP, ZB4-BS-844 ZB4-BZ-104	5-103, 5-133, 9-5
90458-1706	MOTOR 3GVA062002-CSB M2VA63B4	4-21
90458-1740	AIR GUN ASSEMBLY, CEJN 199589668	5-73
90458-1741	HOSE ASSEMBLY, CEJN 19 958 9669	5-57
90458-2170	BALL BEARING, 20X52X15 MM	3-5
90458-2370	DOUBLE ACTING, ROUND, CYL 32-150	1-65
90458-2483	MOTOR	4-23
90458-2507	FUSE HOLDER, USCC1 1-POLE ULTRASAFE	9-33
90458-2510	FUSE, ATDR-6	9-33
90458-2775	PROXIMITY SENSOR, SMT-8-PS-K5-LED-24-B	7-21
90458-2837	PLUG SOCKET, KMEB-1-24-5-LED	5-71
90458-2907	PROX.SW. IFS204	1-59, 4-21, 6-17
90458-2932	PLAIN BEARING, JUM-02-20	1-21, 1-61, 5-19
90459-0290	NON-RETURN VALVE, PUSH-IN 6 MM	5-63, 5-65, 5-67
90459-0690	CURRENT CONTROL RELAY, 84 871 034	9-17
90459-0779	LASER SENSOR, FR20RL	1-7
90459-0782	REFLECTOR, R1L	1-9
90459-0813	COOLING UNIT, KB20A619.01	9-53
90459-0839	DISTRIBUTION FRAME, ASBV 8 5-135/10M	6-65, 10-23
90459-0864	BULKHEAD CONNECTOR, 12 MM/M27X1,5	5-73
90459-1018	ROD END,BALL JOINT EYE M10X1,25	1-65
90459-1180	LENS 16MM IN-SIGHT 4100, HF16HA-1B	5-51, 5-53
90459-1395	SCREW HEX.SOCK.SET CONEPT.MS6SS M4X4 A2	6-11, 6-13
90459-1461	HOUSING HAN 6 E 19 30 006 1255	5-7, 5-9
90459-1621	CABLE, ETHERNET RJ 45 CONNECT. 1 M	9-69
90459-1663	CONNECTOR, 405204 RSCN4/7	3-9, 7-21, 7-29, 10-23
90459-1826	ELBOW PIPE JOINT, EXT.THREAD,D=16MM-G1/2	5-73
90459-1858	BRACKET, MS6-WP	5-69
90459-1991	HOT MELT UNIT, #1022230	5-99
90459-2133	PUSH-IN FITTING QSSF-1/2-12-B	5-7, 5-9
90459-2215	STRAIGHT COUPLING, D=16 MM - G1/2"	5-73
90459-2243	SHUT OFF VALVE, MS4-EE-1/4-10V24	5-71
90459-2245	DISTRIBUTOR, MS4-FRM-1/4	5-71
90459-2247	BRACKET, MS4-WP	5-71
90459-2248	BRACKET, MS4-MV	5-71
90459-2265	PROHIBITION SIGN ISO, DO NOT WASH	5-99
90459-2291	SAFETY TIME RELAY, E1T-0.5S-24VDC	9-47
90459-2337	SHUT OFF VALVE, MS4-EM1-1/4	5-71
90459-2339	FILTER REGULATOR, MS4-LFR-1/4-D7-ERV-AS	5-71
90459-2413	PLC DIGITAL INPUT MODULE16 POINTS	9-41
90459-2425	PRESSURE REGULATOR IN-LINE, BSP-1/4	5-71
90459-2454	RING LIGHT ILLUMINATOR, CLK-003630-00	5-51, 5-53
90459-2458	BASEPLATE, 10 SLOT CONTROLLOGIX CHASSIS	9-41
90459-2474	PLC,DIGIT. OUTPUT MODULE 16 PTS 10-31VDC	9-41
90459-2477	ETHERNET I/P BRIDGE MODULE, 1756-ENBT	9-41
90459-2479	PLC DEVICENET BRIDGE/SCANNER MODULE	9-41
90459-2480	8-AXIS SERCOS MOTION MODULE	9-41
90459-2487	REMOVABLE TERMINAL BLOCK 20 POINTS	9-41
90459-2488	REMOVABLE TERMINAL BLOCK 36 POINTS	9-41
90459-2494	DEVICENET I/O ADAPTER MODULE, 1734-ADN	5-105, 5-107
90459-2501	FIELD POWER DISTRIBUTOR, 1734-FPD	5-105, 5-107
90459-2503	DIGITAL INPUT 4 PTS SINK, 1734-IB4	5-105, 5-107
90459-2505	DIGITAL OUTPUT 4 PTS, 1734-OB4E	5-105, 5-107
90459-2519	OPEN STYLE TAP	9-49
90459-2523	OPEN STYLE TERMINATOR, 1485A-C2	9-49
90459-2526	REMOTE I/O BASE MODULE 8 POINTS, 1734-TB	5-105, 5-107
90459-2530	DEVICENET CABLE THIN	9-69
90459-2536	SERCOS CABLE 0.1M, 2090-SCEP0-1	9-39, 9-61
90459-2540	SERCOS CABLE 3.0M, 2090-SCEP3-0	9-39
90459-2547	POWER RAIL SLOT FILLER MODULE, 2094-PRF	9-55, 9-57
90459-2549	AC LINE FILTER 3-PHASE 30A, 2090-XXLF-X3	9-9
90459-2551	CONNECTOR, MOTOR FEEDBACK 15 PIN MALE	5-87, 5-97
90459-2553	ELBOW PIPE JOINT 16 MM	5-63, 5-65, 5-67, 5-73, 9-53
90459-2560	LIGHT FIXTURE, TMS121 1XTL-D30W/830 IP	9-5
90459-2565	MOTOR CABLE 16 AWG 2090-XXNPMP-16S09	5-87, 5-97
90459-2583	SERVO MOTOR MPL-B420P-MK22AA	1-49, 1-51, 1-53, 1-55, 2-15
90459-2589	SERVO MOTOR MPL-B430P-MK22AA	3-13, 3-15, 6-19
90459-2591	SINGLE VALVE SUB-BASE CDSV5.0-AS-1/8	5-63, 5-65, 5-67, 7-29, 10-19, 10-21
90459-2614	DEVICENET ADAPTER POWERFLEX 40 22-COMM-D	9-55, 9-57
90459-2644	NUT ROUND WITH SLOTS M30X1,5 SS	1-7, 1-9
90459-2726	RUBBER BUFFER, 20-00484-01	7-21
90459-2739	OPTO-RELAY 50085, IN / OUT 4-53VDC 1A	9-17

Part No	Description	Page No
90459-2771	FILTER, MS6-LFX-1/2-R	5-69
90459-2772	FILTER, MS6-LFM-1/2-ARV	5-69
90459-2773	FILTER, MS6-LFM-1/2-BRV	5-69
90459-2795	FRONT LID FOR POWERFLEX 40, 22B-CCB	9-55, 9-57
90459-3081	HOUSING HAN A 19 20 003 1250	5-7, 5-9
90459-3115	BRACKET, REAR, CLEVIS, ROUND, BORE 32	1-65
90459-3142	PROCESSOR L61/A, 1756-L61/A	9-41
90459-3145	853710999FLASH MEMORY 64MBYTE, 1784-CF64	9-41
90459-3197	HOT MELT NOZZLE, SATURN 322014	3-9, 10-13
90459-3279	BLANK PLUG BLACK, SQUARE, PLASTIC ZB5SZ5	5-103
90459-3441	FREQUENCY CONVERTER 0,37 KW	9-55, 9-57
90459-3449	VARIABLE FREQUENCY DRIVE 22A-A2P3N104	9-55, 9-57, 9-63
90459-3450	VARIABLE FREQUENCY DRIVE 22A-A4P5N104	9-9
90459-3454	FOOTPRINT FILTER, 22-RF018-BL	9-55, 9-57
90459-3460	FOOTPRINT FILTER 22-RF010-AL	9-9, 9-55, 9-57, 9-63
90459-3604	FLOW CONTROL VALVE, GR-QS-6	5-63, 5-65, 5-67
90459-3655	REAR CLEVIS FOOT MOUNTING, LBN-12/16	10-15, 10-17
90459-3779	HANDLE, GN565 SW 192-M8	6-59
90459-3931	POWER LINE FILTER, 3 A 120/250 VAC	9-9
90459-4083	ADHESIVE, NATIONAL 134-135B	10-13
90459-4089	SAFETY SENSOR NON-CONTACT EVA E	4-21, 5-93, 5-95
90459-4133	POWER SUPPLY UNIT 6EP1 436-3BA00	9-49
90459-4181	CURR. LIM. CIRC. BREAKER, NZMB1-4-A40	9-7
90459-4252	CABLE M12-C101, 20-056-10	5-97
90459-4254	CONNECTION BLOCK TINA 4A, 20-054-03	4-21, 5-93, 5-95
90459-4588	RADIAL SEAL 60X85X8 MM DUST LIP	1-49, 1-51, 1-53, 1-55
90459-4727	STANDING BEARING, KSTM-20	1-61
90459-4735	SCREW M6S ISO 4017 M8X10 A480	5-25, 5-27, 5-29, 5-31
90459-4876	FOCUS JUMPER CABLE M12 5P 3M, 20-056-21	5-93, 5-95
90459-4891	PROGR. IDENTIFIER ID-FIX RW, 20-070-21	9-47
90459-5195	SLIM POWER RAIL,KINETIX,8 AXIS,2094-PRS8	9-39
90459-5308	CONTACTOR 4KW 24VDC, DILM9-10	9-37, 9-45, 9-55, 9-57, 9-63
90459-5309	CONTACTOR 7,5KW 24VDC, DILM17-10	9-37
90459-5311	CONTACTOR 15KW 24VDC, DILM32-10	9-37
90459-5312	CONTACTOR 22KW 24VDC, DILM50	9-33, 9-37
90459-5323	OVERLOAD PROTECTION, PKZM0-1	9-55, 9-57
90459-5326	OVERLOAD PROTECTION, PKZM0-4	9-35
90459-5418	AUXILARY CONTACTS, DILM150-XHI22 2NO;2NC	9-33, 9-37
90459-5481	OIL PUMP 3L, 10P-P3	5-77
90459-5522	CONN. BANJO, COR8PB6M10	5-77
90459-5529	PH.CELL E3Z-T86A, SENDER+RECIEVER	4-23, 5-21, 5-23, 8-5, 10-15, 10-17
90459-5627	CONNECTION TINA 1A 20-054-00	4-21, 5-93, 5-95
90459-5811	RESIDUAL CURRENT DEVICE, FI-25/2/003-A	9-33
90459-5813	AUXILARY CONTACT, FAZ-XHI11	9-35
90459-5817	REGULATOR, MS4-LR-1/4-D6-A8-AS	5-63, 5-65, 5-67
90459-5863	PUSH-IN FITTING QS-12-8	3-9, 5-71
90459-5886	POWER SUPPLY UNIT 115-230 VAC/24VDC100W	9-49
90459-5949	REAR CLEVIS FOOT MOUNTING , CRLBN-32	1-65
90459-6010	SERVO MOTOR MPL-B310P-MK22AA	6-33, 6-35, 6-37
90459-6062	REMOTE I/O, IP67 8PTS IN/OUT SELF-CONFIG	4-21, 5-7, 5-9
90459-6280	NUT GUK 5 M25 X 1.5 FZB	1-7, 1-9, 1-31, 1-35, 1-43, 1-47, 1-49, 1-51, 1-53, 1-55
90459-6395	CABLE, ETHERNET RJ 45 STRAIGHT.10M	9-69
90459-6426	PRESSURE GUARD PEV-1/4-B-OD	5-71
90459-6470	CONNECTOR RJ45 TER. BL., AK-U0-RJ45-TB2P	9-63
90459-6556	PLC DIGITAL INPUT 32PTS, 1756-IB32/B	9-41
90459-6586	ACT/SENS.Y-CABLE, ASBN 2-PRKMV 4-07/0,6M	5-21, 5-23, 10-23
90459-6617	COVER 4-POLE, NZM1-4-XKSA	9-7
90459-6692	SAFETY PLC, PLUTO B20 20-070-06	9-47
90459-6768	FAN 2BH1300-7AV15	5-55
90459-6820	FEMALE INSERT HAN 4 A, 09 20 004 2711	5-7, 5-9
90459-6852	AUXILIARY CONTACT, DILA-XHI22	9-45, 9-55, 9-57, 9-63
90459-6858	ETHERNET SW, FL SWITCH SF 8TX FROM V 14	9-49
90459-6913	ELECTROMAG. DOOR LOCK. DEV.,JSD-ZH-EM1-K	5-93, 5-95
90459-6948	PROX.SW. IFS206	3-23, 3-25, 7-21
90459-6961	SAFETY SENSOR, NON CONT. ADAM-E M12 0,5M	4-21, 5-93, 5-95
90459-7107	SLEEVE QSH-16-12	5-63, 5-65, 5-67
90459-7177	SERVO MOTOR MPL-B320P-MJ22AA	7-11
90459-7207	MOTOR FEEDBACK CABLE 2090-XXNFMP-S09/C	5-87, 5-97
90459-7211	SERVO AXIS MODULE W/PS 15A 400/460V	9-39
90459-7214	AXIS MODULE 650V, 6,1A, 2094-BM01-S	9-39, 9-55, 9-57, 9-61
90459-7215	AXIS MODULE 650V, 10,3A, 2094-BM02-S	9-55, 9-57
90459-7267	POWER SUPPLY 24VDC, 1756-PB75/B	9-41
90459-7293	SET SCREW DIN 551M5X8 PA66	5-25, 5-27, 5-29, 5-31
90459-7333	PUSH-IN FITTING QSSF-1/4-4-B	5-63, 5-65, 5-67
90459-7344	PRESSURE GAUGE, MA-40-6-R1/4-EN	5-63, 5-65, 5-67
90459-7368	MARKING FOR PNEUM. TUBING, PRZ04	7-21, 7-29, 10-15, 10-17, 10-19, 10-21
90459-7369	MARKING FOR PNEUM. TUBING, PRZ06	1-13, 1-65, 5-63, 5-65, 5-67, 5-99
90459-7370	MARKING FOR PNEUM. TUBING, PRZ08	3-9, 5-61, 5-63, 5-65, 5-67, 7-29, 10-19, 10-21
90459-7372	MARKING FOR PNEUM. TUBING, PRZ12	5-63, 5-65, 5-67
90459-7373	MARKING FOR PNEUM. TUBING, PRZ16	5-63, 5-65, 5-67, 5-73
90459-7426	PUSH-IN L-FITTING QSML-M3-3	7-21
90459-7427	PUSH-IN FITTING QSM-4-3	7-21
90459-7428	TUBE PUN-H-3X0,5-BL	7-21
90459-7429	CYLINDER, GRIPPER HGP-16-A-B	7-21

Part No	Description	Page No
90600-0344	CARRIAGE, SSR 25 XWYQZSSHH M	3-7, 3-9, 3-11, 3-21, 6-11
90600-0347	NEEDLE BEARING W/O CONE, 16X24X16MM	7-25, 7-27
90600-0349	INNER RING, 12X16X20	7-25, 7-27
90600-0350	LINEAR GUIDE, RSR12WVMUU+80LM G15/G25	7-17
90600-0351	COMP. SPRING 2489, 1,2X9,4X30	7-23
90600-0364	TENSION SPRING 3727, 0,6X5X27	6-81, 6-83, 6-85, 6-87, 10-13
90600-0373	RETAINING RING FOR SHAFT DIN 471 21 A2	6-71, 6-73
90600-0375	BALL BUSHING, 12X21X30 MM	6-71, 6-73
90600-0434	GUIDE BAR, SSR25-180L-YM G30/30	6-9
90600-0454	CLAMPING ELEMENT WITH SLEEVE, 16X24 MM	6-33, 6-35, 6-37
90600-0482	GUIDE BAR, SSR 25 305 LYM G32.5/32.5	3-7, 3-11, 3-23
90600-0483	GUIDE BAR, SSR 25-430LYM G35/35	3-7
90600-0484	GUIDE BAR, SSR 25 253L-YM G36.5/36.5	3-9, 3-21
90600-0485	GUIDE BAR, SSR25 385L YM G42.5/42.5	3-11
90600-0486	TIMING BELT AT10 1120X50 MM	3-21
90600-0487	TIMING BELT AT10 1410X50 MM	3-7
90600-0656	COMP. SPRING 6777, 4X36X55	2-21
90600-0658	WORM GEAR SCREW JACK, TP00063000130	4-5, 5-17
90600-0683	COMP. SPRING 2496, 1,2X10,4X45	2-13
90600-0685	THREAD LOCKING, LOCTITE 2701 50 ML	7-33, 7-35
90600-0761	GEARS,PLANETARY TP010MA 3 66 021/MPLB430	6-19
90600-0763	KNOB CIRCULAR, EXT THREAD, 66231	3-9
90600-0773	AUTOMATIC GUN HOSE, #104008	5-99
90600-0798	BUSHING INSERT, JUM-02-30	1-33, 1-45
90600-0799	STANDING BEARING, KSTM-25	1-59
90600-0800	FLANGE BEARING 20X89X20 MM	1-61, 5-19
90600-0803	WORM GEAR MR V 63 UO3A-80B4 … B5/35	1-49, 1-51, 1-53, 1-55
90600-0804	WORM GEAR MR V 63 UO3A-80B4 … B5/140	2-15
90600-0812	GEAR BOX, TP00042000110	1-21
90600-0814	TIMING BELT AT10 5250X25 MM+35236050	1-67, 1-69, 1-71, 1-73
90600-0815	TIMING BELT 25AT10/4800 +32 2. 3.6.050	1-67, 1-69, 1-71, 1-73
90600-0816	TIMING BELT T5-DL 1160X25 MM	1-11
90600-0825	GUIDE BAR, 4 RSR20VMUU+580LM	1-63
90600-0849	GEARS, PLANETARY MR 115 EC FO1C N / I =	3-13, 3-15
90600-0892	NEEDLE BEARING, 50X80X28 MM	1-49, 1-51, 1-53, 1-55
90600-0961	ROLLER CHAIN, SINGLE 3/8 -160	1-21
90600-0962	ROLLER CHAIN, SINGLE 3/8 -245	1-21
90600-0964	ROLLER CHAIN, SINGLE 3/8 -335	1-21
90600-0971	RACK, ZRR2-100	5-11, 5-13
90600-0980	OPERATOR PANEL 15"+, 2711P-T15C4D2-TP	5-103
90600-1001	CROSS CLAMP, 340/68385	5-61
90600-1002	FOOT 45000N, 297/63399N	4-5, 5-11, 5-13
90600-1005	WORM GEAR SCREW JACK, TR00042000130	1-61
90600-1080	DOUBLE ACTING, ROUND, CYL 32-80	1-13
90600-1159	ROLLER CHAIN, SINGLE 3/8 -290	5-19
90600-1198	HANDLE, MZM1-XSM-R	9-7
90600-1772	SCREW DIN7984 M6X12 AISI 304	7-37, 7-39
90600-2052	PHOTOCELL	2-7
90600-2560	COUPLING 14X20 MM, 727-38-4838	4-5
205438-0000	CABLE GLAND	5-47, 5-49
290027-0000	WASHER	1-7, 1-9
311103-0236	PARALLEL PIN ISO 2338 3M6X16 A1	7-21
311103-0268	PARALLEL PIN ISO 2338 4M6X12 A1	6-71, 6-73
311103-0306	PARALLEL PIN ISO 2338 5M6X12 A1	5-51, 5-53
311103-0307	PARALLEL PIN ISO 2338 5M6X14 A1	2-7
311103-0308	PARALLEL PIN ISO 2338 5M6X16 A1	5-49, 5-51, 5-53, 6-11
311103-0348	PARALLEL PIN ISO 2338 6M6X10 A1	7-21
311103-0349	PARALLEL PIN ISO 2338 6M6X12 A1	6-19, 7-41, 7-43
311103-0351	PARALLEL PIN ISO 2338 6M6X16 A1	1-41, 5-11, 5-13, 6-33, 6-35, 6-37, 6-39, 6-61, 7-17
311103-0352	PARALLEL PIN ISO 2338 6M6X18 A1	7-41, 7-43, 10-15, 10-17
311103-0353	PARALLEL PIN ISO 2338 6M6X20 A1	1-35, 1-47, 1-49, 1-51, 1-53, 1-55, 1-63, 1-67, 1-69, 1-71, 1-73, 3-9, 7-15, 7-41, 7-43
311103-0354	PARALLEL PIN ISO 2338 6M6X22 A1	6-13
311103-0355	PARALLEL PIN ISO 2338 6M6X25 A1	1-67, 1-69, 1-71, 1-73, 6-13, 6-57
311103-0356	PARALLEL PIN ISO 2338 6M6X28 A1	7-23
311103-0365	PARALLEL PIN ISO 2338 6M6X50 A1	4-5
311103-0367	PARALLEL PIN ISO 2338 6M6X55 A1	6-33, 6-35, 6-37
311103-0369	PARALLEL PIN ISO 2338 6M6X60 A1	1-67, 1-69, 1-71, 1-73
311103-0401	PARALLEL PIN ISO 2338 8M6X20 A1	3-11
311103-0405	PARALLEL PIN ISO 2338 8M6X30 A1	5-17, 6-31, 6-43, 6-45, 6-47, 6-49, 6-51, 6-53, 6-55
311103-0406	PARALLEL PIN ISO 2338 8M6X32 A1	7-15
311103-0409	PARALLEL PIN ISO 2338 8M6X40 A1	6-57
311103-0454	PARALLEL PIN ISO 2338 10M6X20 A1	6-65
311103-0458	PARALLEL PIN ISO 2338 10M6X30 A1	6-7, 6-17, 6-33, 6-35, 6-37
311103-0460	PARALLEL PIN ISO 2338 10M6X35 A1	6-65
311103-0464	PARALLEL PIN ISO 2338 10M6X45 A1	3-17
311103-1456	PARALLEL PIN ISO 2338 10M6X24 A1	3-25, 6-65
311112-0208	SPRING PIN, ISO 8752 3X16-C	2-13
311112-0255	SPRING PIN, ISO 8752 4X18-C	6-71, 6-73
311112-0256	SPRING PIN, ISO 8752 4X20-C	2-13
311112-0312	SPRING PIN, ISO 8752 5X28-C	1-61
311112-0345	SPRING PIN, ISO 8752 6X32-C	1-23
311112-0347	SPRING PIN, ISO 8752 6X40-C	1-59
311112-0349	SPRING PIN, ISO 8752 6X50-C	5-17

Part No	Description	Page No
311520-0320 ..	RIVET, BLANK 2,4X6	9-5
312105-0287 ..	SCREW M6S ISO 4017 M4X8 A470	5-51, 5-53, 6-13, 7-21
312105-0289 ..	SCREW M6S H4X10 A4 70 ISO4017/DIN933	1-7, 1-9, 1-29, 1-41, 2-7
312105-0291 ..	SCREW M6S ISO 4017 M4X12 A470	1-77, 2-13, 2-15, 5-47, 5-49
312105-0292 ..	SCREW M6S ISO 4017 M4X14 A470	7-7, 7-13
312105-0295 ..	SCREW M6S ISO 4017 M4X20 A470	7-21
312105-0297 ..	SCREW M6S ISO 4017 M4X25 A470	2-7, 5-93, 5-95
312105-0303 ..	SCREW M6S ISO 4017 M4X40 A470	2-7
312105-0325 ..	SCREW M6S ISO 4017 M5X10 A480	6-71, 6-73, 10-15, 10-17
312105-0327 ..	SCREW M6S ISO 4017 M5X12 A480	1-7, 1-9, 1-59, 2-9, 2-11, 7-25, 7-27, 10-9
312105-0328 ..	SCREW M6S ISO 4017 M5X14 A480	5-41, 10-15, 10-17, 10-23
312105-0329 ..	SCREW M6S ISO 4017 M5X16 A480	1-77, 2-9, 2-11, 3-25, 5-39
312105-0331 ..	SCREW M6S ISO 4017 M5X20 A480	1-9, 2-9, 2-11, 2-17, 3-21, 5-41, 6-19, 7-41, 7-43
312105-0332 ..	SCREW M6S ISO 4017 M5X22 A470	4-5
312105-0333 ..	SCREW M6S ISO 4017 M5X25 A480	4-5, 6-13, 7-13
312105-0335 ..	SCREW M6S ISO 4014 M5X30 A480	6-71, 6-73
312105-0337 ..	SCREW M6S ISO 4014 M5X35 A480	5-79, 5-81, 5-83
312105-0343 ..	SCREW M6S ISO 4014 M5X60 A480	1-13
312105-0364 ..	SCREW M6S ISO 4017 M6X10 A480	5-117, 5-131, 6-33, 6-35, 6-37, 10-19, 10-21
312105-0366 ..	SCREW M6S ISO 4017 M6X12 A480	1-29, 1-41, 2-13, 3-23, 5-7, 5-9, 5-11, 5-13, 5-35, 5-113, 5-115, 5-119, 5-127, 5-133, 6-17, 6-33, 6-35, 6-37, 7-7, 7-13
312105-0367 ..	SCREW M6S ISO 4017 M6X14 A480	1-77, 5-11, 5-13, 5-21, 5-23, 7-9, 10-15, 10-17
312105-0368 ..	SCREW M6S ISO 4017 M6X16 A480	1-11, 1-59, 1-77, 2-17, 2-19, 3-7, 5-7, 5-9, 5-11, 5-13, 5-19, 5-51, 5-53, 5-55, 5-89, 6-11, 6-71, 6-73, 9-53
312105-0370 ..	SCREW M6S ISO 4017 M6X20 A480	1-7, 1-9, 1-33, 1-35, 1-45, 1-49, 1-51, 1-53, 1-55, 1-59, 1-61, 1-65, 1-67, 1-69, 1-71, 1-73, 2-9, 2-11, 2-17, 2-19, 3-5, 3-7, 3-21, 5-11, 5-13, 5-15, 5-35, 5-91, 5-93, 5-95, 6-65, 7-23, 7-41, 7-43, 10-15, 10-17
312105-0371 ..	SCREW M6S ISO 4017 M6X22 A480	3-9, 7-23
312105-0372 ..	SCREW M6S ISO 4017 M6X25 A480	1-7, 1-77, 2-9, 2-11, 2-17, 3-7, 3-9, 3-21, 3-23, 3-25, 5-49, 5-99, 5-141, 6-9, 6-71, 6-73, 7-11, 7-17
312105-0374 ..	SCREW M6S ISO 4014 M6X30 A480	1-31, 1-35, 1-43, 1-47, 1-77, 3-17, 3-19, 5-47, 6-33, 6-35, 6-37, 7-23
312105-0376 ..	SCREW M6S ISO 4014 M6X35 A480	1-77, 3-9, 10-15, 10-17
312105-0378 ..	SCREW M6S ISO 4014 M6X40 A480	2-17, 5-17, 7-15, 7-29, 10-19, 10-21
312105-0379 ..	SCREW M6S ISO 4014 M6X45 A480	1-59, 7-41, 7-43
312105-0382 ..	SCREW M6S ISO 4014 M6X60 A480	5-47, 5-49
312105-0384 ..	SCREW M6S ISO 4014 M6X70 A480	7-17
312105-0390 ..	SCREW M6S ISO 4014 M6X100 A480	4-5
312105-0447 ..	SCREW M6S ISO 4017 M8X12 A480	5-7, 5-9, 5-55
312105-0449 ..	SCREW M6S ISO 4017 M8X16 A480	2-7, 5-19, 10-15, 10-17
312105-0451 ..	SCREW M6S ISO 4017 M8X20 A480	1-11, 1-67, 1-69, 1-71, 1-73, 2-15, 2-17, 3-19, 5-21, 5-23, 5-35, 5-49, 5-51, 5-53, 5-99
312105-0452 ..	SCREW M6S ISO 4017 M8X22 A4 80	1-49, 1-51, 1-53, 1-55, 3-27, 5-19
312105-0453 ..	SCREW M6S ISO 4017 M8X25 A480	1-7, 1-21, 1-61, 1-67, 1-69, 1-71, 1-73, 1-77, 2-15, 3-7, 3-11, 3-17, 3-19, 3-23, 4-5, 5-47, 6-57, 10-15, 10-17
312105-0455 ..	SCREW M6S ISO 4017 M8X30 A480	1-7, 1-49, 1-51, 1-53, 1-55, 1-59, 2-15, 3-19, 3-21, 3-25, 4-5, 5-17
312105-0457 ..	SCREW M6S ISO 4014 M8X35 A480	1-7, 1-31, 1-35, 1-43, 1-47, 1-49, 1-51, 1-53, 1-55, 6-31, 6-39, 6-41, 6-43, 6-45, 6-47, 6-49, 6-51, 6-53, 6-55, 6-59, 6-61, 6-63
312105-0459 ..	SCREW M6S ISO 4014 M8X40 A480	1-31, 1-43, 1-49, 1-51, 1-53, 1-55, 1-59, 2-17, 3-17, 6-57
312105-0460 ..	SCREW M6S ISO 4014 M8X45 A480	1-31, 1-43, 2-19
312105-0462 ..	SCREW M6S ISO 4014 M8X55 A480	5-119
312105-0464 ..	SCREW M6S ISO 4014 M8X65 A480	1-67, 1-69, 1-71, 1-73
312105-0465 ..	SCREW M6S ISO 4014 M8X70 A480	1-67, 1-69, 1-71, 1-73, 5-77
312105-0469 ..	SCREW M6S ISO 4014 M8X90 A480	1-21, 1-61
312105-0471 ..	SCREW M6S ISO 4014 M8X100 A480	5-17
312105-0473 ..	SCREW M6S ISO 4014 M8X110 A480	1-7, 1-9
312105-0475 ..	SCREW M6S ISO 4014 M8X120 A480	1-67, 1-69, 1-71, 1-73
312105-0497 ..	SCREW M6S ISO 4017 M10X35 A480	6-33, 6-35, 6-37
312105-0499 ..	SCREW M6S ISO 4014 M10X40 A480	6-17
312105-0500 ..	SCREW M6S ISO 4014 M10X45 A480	6-7, 6-17
312105-0501 ..	SCREW M6S ISO 4014 M10X50 A480	6-33, 6-35, 6-37
312105-0515 ..	SCREW M6S ISO 4014 M10X120 A480	2-15, 2-17
312105-0519 ..	SCREW M6S ISO 4014 M10X150 A480	4-5
312108-0329 ..	SCREW EN 1665 TYPE F M5X16 A270	7-11
312109-0340 ..	SCREW M6S ISO 4017 M5X45 A480	1-75
312109-0374 ..	SCREW M6S ISO 4017 M6X30 A480	3-25, 6-71, 6-73, 10-15, 10-17
312109-0376 ..	SCREW M6S ISO 4017 M6X35 A480	2-9, 2-11, 2-17
312109-0378 ..	SCREW M6S ISO 4017 M6X40 A480	4-5
312109-0380 ..	SCREW M6S ISO 4017 M6X50 A480	3-17
312109-0457 ..	SCREW M6S ISO 4017 M8X35 A480	2-15, 7-15
312109-0459 ..	SCREW M6S ISO 4017 M8X40 A480	1-9, 2-15
312109-0460 ..	SCREW M6S ISO 4017 M8X45 A480	2-19
312109-0461 ..	SCREW M6S ISO 4017 M8X50 A480	2-7, 3-19
312109-0463 ..	SCREW M6S ISO 4017 M8X60 A480	2-15, 3-17
312109-0467 ..	SCREW M6S ISO 4017 M8X80 A480	1-7, 1-9
312109-0500 ..	SCREW M6S ISO 4017 M10X45 A480	6-65
312109-0542 ..	SCREW M6S ISO 4017 M12X50 A280	1-35, 1-47
312111-0327 ..	SCREW HEX.SOCK.HD.MC6S-TT 5X12 88 FZB	9-9
312115-0222 ..	SCREW ISO4762 M3X8 A4 80	1-9, 10-15, 10-17
312115-0228 ..	SCREW ISO4762 M3X16 A4 80	1-7
312115-0287 ..	SCREW ISO4762 M4X8 A4 80	5-51, 5-53
312115-0289 ..	SCREW ISO4762 M4X10 A4 80	5-7, 5-9, 7-17
312115-0291 ..	SCREW ISO4762 M4X12 A4 80	2-15, 5-51, 5-53

Part No	Description	Page No
312115-0293 ..	SCREW ISO4762 M4X16 A4 80	1-63, 2-13, 6-65, 7-21
312115-0295 ..	SCREW ISO4762 M4X20 A4 80	10-23
312115-0297 ..	SCREW ISO4762 M4X25 A4 80	3-9, 5-51, 5-53, 5-77
312115-0299 ..	SCREW ISO4762 M4X30 A4 80	5-77
312115-0304 ..	SCREW ISO4762 M4X45 A4 80	9-7
312115-0325 ..	SCREW ISO4762 M5X10 A4 80	9-39, 9-41, 9-65
312115-0327 ..	SCREW ISO4762 M5X12 A4 80	1-63, 5-47, 5-49, 5-101, 5-109, 9-55, 9-57, 9-63
312115-0328 ..	SCREW ISO4762 M5X14 A4	10-15, 10-17
312115-0331 ..	SCREW ISO4762 M5X20 A4 80	4-5, 5-51, 5-53
312115-0332 ..	SCREW ISO4762 M5X22 A4	10-15, 10-17
312115-0337 ..	SCREW ISO4762 M5X35 A4 80	5-77
312115-0366 ..	SCREW ISO4762 M6X12 A4 80	1-65, 1-67, 1-69, 1-71, 1-73, 6-71, 6-73, 6-81, 6-83, 6-85, 6-87, 9-39, 9-47
312115-0367 ..	SCREW ISO4762 M6X14 A4 80	1-29, 1-41, 5-101, 5-109, 6-71, 6-73
312115-0368 ..	SCREW ISO4762 M6X16 A4 80	3-7, 3-9, 3-11, 3-23, 9-9
312115-0370 ..	SCREW ISO4762 M6X20 A4 80	2-15, 3-11, 3-21, 6-9, 6-33, 6-35, 6-37, 7-11, 7-21
312115-0372 ..	SCREW ISO4762 M6X25 A4 80	1-49, 1-51, 1-53, 1-55
312115-0374 ..	SCREW ISO4762 M6X30 A4 80	1-49, 1-51, 1-53, 1-55, 3-11, 5-119
312115-0378 ..	SCREW ISO4762 M6X40 A4 80	7-15
312115-0379 ..	SCREW ISO4762 M6X45 A4 80	6-19
312115-0447 ..	SCREW ISO4762 M8X12 A4 80	1-35
312115-0449 ..	SCREW ISO4762 M8X16 A4 80	1-29, 1-33, 1-41, 1-45
312115-0451 ..	SCREW ISO4762 M8X20 A4 80	1-49, 1-51, 1-53, 1-55, 4-5
312115-0453 ..	SCREW ISO4762 M8X25 A4 80	3-13, 3-15, 6-19
312115-0455 ..	SCREW ISO4762 M8X30 A4 80	2-19, 5-11, 5-13
312115-0459 ..	SCREW ISO4762 M8X40 A4 80	1-35, 1-47
312115-0460 ..	SCREW ISO4762 M8X45 A4 80	2-15
312115-0461 ..	SCREW ISO4762 M8X50 A4 80	1-35, 1-47
312115-0489 ..	SCREW ISO4762 M10X16 A4 80	1-35, 1-47
312115-0540 ..	SCREW ISO4762 M12X40 A4 80	5-11, 5-13
312122-0291 ..	SCREW ISO 1207 M4X12 NI PL BRASS	5-47, 5-49
312125-0222 ..	SCREW ISO 1207 M3X8 A4	5-7, 5-9
312125-0232 ..	SCREW ISO 1207 M3X25 A4	5-7, 5-9, 9-5
312125-0287 ..	SCREW ISO 1207 M4X8 A4	2-19, 3-17, 3-23, 3-25, 5-7, 5-9, 6-17, 6-65
312125-0289 ..	SCREW ISO 1207 M4X10 A4	1-7, 1-9, 5-57, 9-9, 9-39
312125-0291 ..	SCREW ISO 1207 M4X12 A4	4-5
312125-0323 ..	SCREW ISO 1207 M5X8 A4	1-31, 1-35, 1-43, 1-47, 1-49, 1-51, 1-53, 1-55, 5-11, 5-13
312125-0325 ..	SCREW ISO 1207 M5X10 A4	9-13, 9-15, 9-17, 9-19, 9-33, 9-35, 9-37, 9-43, 9-45, 9-47, 9-49
312125-0329 ..	SCREW ISO 1207 M5X16 A4	2-19
312125-0331 ..	SCREW ISO 1207 M5X20 A4	2-19
312125-0333 ..	SCREW ISO 1207 M5X25 A4	2-19
312125-0364 ..	SCREW ISO 1207 M6X10 A4	5-7, 5-9
312125-0366 ..	SCREW ISO 1207 M6X12 A4	9-9
312155-0289 ..	SCREW DIN 7991 MF6S M4X10 A4 70	7-33, 7-35, 7-37, 7-39, 7-41, 7-43
312155-0293 ..	SCREW DIN 7991 MF6S M4X16 A4 70	5-51, 5-53
312155-0327 ..	SCREW DIN 7991 MF6S M5X12 A4 70	2-9, 2-11, 2-19, 6-9, 6-71, 6-73, 6-81, 6-83, 6-85, 6-87
312155-0329 ..	SCREW DIN 7991 MF6S M5X16 A4 70	6-11, 7-9
312155-0368 ..	SCREW DIN 7991 MF6S M6X16 A4 70	1-77, 7-9, 7-17, 7-25, 7-27
312155-0370 ..	SCREW DIN 7991 MF6S M6X20 A4 70	2-9, 2-11, 5-121, 5-135, 5-139, 7-23
312155-0451 ..	SCREW DIN 7991 MF6S M8X20 A4 70	6-11
312155-0453 ..	SCREW DIN 7991 MF6S M8X25 A4 70	3-7, 3-21, 5-51, 5-53
312155-0493 ..	SCREW DIN 7991 MF6S M10X25 A4 70	3-13, 3-15
312311-0364 ..	SCREW ISO4028 M6X10 FZB	2-13
312318-0283 ..	SCREW ISO4029 M4X4 A4	1-61
312318-0285 ..	SCREW ISO4029 M4X6 A4	1-21, 5-19, 6-71, 6-73
312318-0360 ..	SCREW ISO4029 M6X6 A4	1-61, 5-19
312318-0362 ..	SCREW ISO4029 M6X8 A4	2-19
312318-0370 ..	SCREW ISO4029 M6X20 A4	9-9
312318-0449 ..	SCREW ISO4029 M8X16 A4	6-33, 6-35, 6-37
312605-0310 ..	HEXAGON NUT, M6M M3 A280	1-21, 5-11, 5-13
312605-0312 ..	HEXAGON NUT, M6M M4 A280	5-77, 5-93, 5-95, 5-147, 6-81, 6-83, 6-85, 6-87, 9-5
312605-0314 ..	HEXAGON NUT, M6M M5 A280	4-5, 5-39, 5-41, 5-47, 5-49, 5-93, 5-95, 5-105, 5-107, 5-121, 5-139, 9-65, 9-67
312605-0316 ..	HEXAGON NUT, M6M M6 A280	1-77, 3-11, 5-7, 5-9, 5-99, 5-113, 5-115, 5-119, 5-121, 5-127, 5-135, 5-139, 9-5, 9-7, 10-19, 10-21
312605-0318 ..	HEXAGON NUT, M6M M8 A280	1-61, 3-19, 5-7, 5-9
312605-0320 ..	HEXAGON NUT, M6M M10 A280	4-5, 6-33, 6-35, 6-37, 7-13
312607-0312 ..	HEXAGON NUT, EN 24032 M6M M4 A480	10-23
312607-0314 ..	HEXAGON NUT, EN 24032 M6M M5 A480	3-11, 3-21
312607-0316 ..	HEXAGON NUT, EN 24032 M6M M6 A480	3-9, 4-5, 10-15, 10-17
312607-0318 ..	HEXAGON NUT, EN 24032 M6M M8 A480	3-17
312607-0326 ..	HEXAGON NUT, EN 24032 M6M M20 A480	1-35
312607-0332 ..	HEXAGON NUT, EN 24032 M6M M30 A480	4-5, 5-11, 5-13
312625-0316 ..	HEXAGON THIN NUT, EN 24035 ML6M M6 A4	7-21
312625-0318 ..	HEXAGON THIN NUT, EN 24035 ML6M M8 A4	1-7
312625-0330 ..	HEXAGON THIN NUT, EN 24035 ML6M M27 A4	1-49, 1-51, 1-53, 1-55
312635-0320 ..	NUT M6M 10X1 STAINLESS A2 80	7-21
312705-0318 ..	NUT HEX. DOMED CAP MHM-6 M8 A280	1-7
312812-0312 ..	HEXAGON NUT, NY-LOCK M4 A480	2-7, 6-81, 6-83, 6-85, 6-87
312812-0314 ..	HEXAGON NUT, NY-LOCK M5 A480	2-9, 2-11, 2-13, 2-19, 5-77, 5-121, 5-135, 5-139, 6-81, 6-83, 6-85, 6-87, 7-21
312812-0316 ..	HEXAGON NUT, NY-LOCK M6 A480	2-9, 2-11, 2-17, 5-103, 5-141, 7-17, 10-15, 10-17
312812-0318 ..	HEXAGON NUT, NY-LOCK M8 A480	1-13, 1-49, 1-51, 1-53, 1-55, 5-11, 5-13, 5-19, 5-77, 5-99
312812-0320 ..	HEXAGON NUT, NY-LOCK M10 A480	1-13

Part No	Description	Page No
312812-0322	HEXAGON NUT, NY-LOCK M12 A480	2-21
315103-0202	WASHER PLAIN, BRB, 28/50 H=4	1-49, 1-51, 1-53, 1-55
315105-0124	WASHER BRB 3,2X6 RFR	5-7, 5-9, 9-5
315105-0136	WASHER BRB 4,3X8 RFR	1-7, 1-9, 1-29, 1-41, 2-7, 2-13, 2-15, 3-9, 5-7, 5-9, 5-47, 5-49, 5-51, 5-53, 5-77, 5-93, 5-95, 5-147, 6-13, 6-65, 7-21, 9-5, 9-7, 9-9, 10-23
315105-0146	WASHER BRB 5,3X10 RFR	1-7, 1-9, 1-59, 1-63, 2-9, 2-11, 2-13, 2-17, 2-19, 3-25, 4-5, 5-39, 5-41, 5-47, 5-49, 5-77, 5-79, 5-81, 5-83, 5-93, 5-95, 5-105, 5-107, 5-121, 5-139, 6-13, 6-19, 6-71, 6-73, 6-81, 6-83, 6-85, 6-87, 7-13, 7-25, 7-27, 7-41, 7-43, 9-13, 9-15, 9-17, 9-19, 9-33, 9-35, 9-37, 9-39, 9-41, 9-43, 9-45, 9-47, 9-49, 9-65, 9-67, 10-9, 10-15, 10-17, 10-23
315105-0153	WASHER BRB 6,4X12 RFR	1-7, 1-11, 1-29, 1-31, 1-33, 1-35, 1-41, 1-43, 1-45, 1-47, 1-49, 1-51, 1-53, 1-55, 1-59, 1-61, 1-65, 1-77, 2-9, 2-11, 2-17, 2-19, 3-9, 3-19, 3-21, 3-23, 3-25, 4-5, 5-7, 5-9, 5-11, 5-13, 5-15, 5-17, 5-19, 5-47, 5-49, 5-51, 5-53, 5-55, 5-89, 5-91, 5-93, 5-95, 5-99, 5-101, 5-103, 5-109, 5-113, 5-115, 5-117, 5-119, 5-121, 5-127, 5-131, 5-133, 5-135, 5-139, 5-141, 6-11, 6-17, 6-65, 6-71, 6-73, 7-11, 7-15, 7-17, 7-21, 7-23, 7-41, 7-43, 9-5, 9-7, 9-9, 9-47, 10-15, 10-17
315105-0156	WASHER BRB 6,7X14 RFR	1-77, 5-7, 5-9
315105-0165	WASHER BRB 8,4X16 RFR	1-7, 1-11, 1-13, 1-21, 1-31, 1-35, 1-43, 1-47, 1-49, 1-51, 1-53, 1-55, 1-59, 1-61, 1-67, 1-69, 1-71, 1-73, 1-77, 2-7, 2-15, 2-19, 3-7, 3-17, 3-19, 3-21, 3-23, 3-25, 3-27, 4-5, 5-7, 5-9, 5-17, 5-19, 5-35, 5-51, 5-53, 5-55, 5-99, 6-39, 6-41, 6-59, 6-61, 6-63, 7-15, 9-9, 10-15, 10-17
315105-0173	WASHER BRB 10,5X22 RFR	1-13, 2-15, 6-65
315105-0178	WASHER BRB 13X24 RFR	1-31, 1-35, 1-43, 1-47, 2-21, 3-17
315105-0186	WASHER BRB 17X30 RFR	1-31, 1-43
315105-0192	WASHER BRB 21X36 RFR	1-35
315106-0124	WASHER ISO 7089-3-200 HV A4	5-39, 5-41
315106-0146	WASHER ISO 7089-5-200 HV A4	1-75, 7-21
315106-0153	WASHER ISO 7089-6-200 HV A4	1-67, 1-69, 1-71, 1-73, 1-77, 3-5, 3-7, 3-11, 6-9, 6-33, 6-35, 6-37, 7-29, 10-19, 10-21
315106-0165	WASHER ISO 7089-8-200 HV A4	1-67, 1-69, 1-71, 1-73, 3-11, 5-49, 6-19, 6-31, 6-43, 6-45, 6-47, 6-49, 6-51, 6-53, 6-55, 6-57
315106-0173	WASHER ISO 7089-10-200 HV A4	6-7, 6-17, 6-33, 6-35, 6-37
315115-0165	WASHER PLAIN, TBRB 8,4/16 H=3	1-49, 1-51, 1-53, 1-55, 1-59, 1-61, 5-17, 5-19, 5-77
315115-0173	WASHER PLAIN, TBRB 10,5/22 H=4	2-17
315125-0153	WASHER TBRSB 6,4X22X4 A4	1-7, 1-77, 2-9, 2-11, 2-13, 5-7, 5-9, 5-47, 5-49, 5-141, 7-7, 7-9, 7-11, 7-13, 7-21
315125-0165	WASHER TBRSB 8,4X26X5 A4	1-7, 1-9, 2-17, 3-17, 4-5, 5-11, 5-13, 5-21, 5-23, 5-119, 10-15, 10-17
315125-0173	WASHER TBRSB 10,5X28X6 A4	1-35, 1-47
315202-0602	O-RING 44,04X3,53 MM	1-49, 1-51, 1-53, 1-55
315202-0702	O-RING 12,42X1,78 MM	1-77
315202-0705	O-RING 17,17X1,78 MM	1-7, 1-9
315202-0710	O-RING 25,12X1,78 MM	2-17
315202-0716	O-RING 34,65X1,78 MM	1-77, 6-13, 7-7, 7-9, 7-13
315202-0717	O-RING 20,29X2,62 MM	1-49, 1-51, 1-53, 1-55
315202-0732	O-RING 44,12X2,62 MM	1-33, 1-45
315202-0733	O-RING 45,69X2,62 MM	1-7, 1-9
315202-0741	O-RING 58,42X2,62 MM	1-49, 1-51, 1-53, 1-55
315205-0506	O-RING 7,65X1,78 MM	2-19
315205-0507	O-RING 9,25X1,78 MM	1-77
315221-0169	RADIAL SEAL 30X47X7 MM	2-17
315221-0175	RADIAL SEAL 35X47X7 MM	2-17
315221-0192	RADIAL SEAL 45X62X8 MM	1-7, 1-9
315221-0198	RADIAL SEAL 50X65X8 MM	1-49, 1-51, 1-53, 1-55
315230-0193	BEARING SEAL G15X23X3 MM	7-25, 7-27
315230-0252	BEARING SEAL G20X28X4 MM	1-77
315230-0274	BEARING SEAL G22X30X4 MM	1-77, 7-25, 7-27
315230-0330	BEARING SEAL G28X37X4 MM	1-77, 7-7, 7-9, 7-13
315239-0110	NYLON WASHER G1/4	5-57
315400-0001	TUBE PUN-H-6X1-BL	1-13, 1-65, 5-63, 5-65, 5-67, 5-77, 5-99
315400-0004	TUBE PUN-H-8X1,25-BL	3-9, 5-61, 5-63, 5-65, 5-67, 5-71, 5-73, 7-29, 10-19, 10-21
315400-0009	TUBE PUN-H-10X1,5-SW	5-57
315400-0010	TUBE PUN-H-12X2-BL	5-63, 5-65, 5-67
315400-0013	TUBE PUN-H-16-2,5-BL	5-73
315400-0016	TUBE PUN-H-4X0,75-BL	5-63, 5-65, 5-67, 7-21, 7-29, 10-15, 10-17, 10-19, 10-21
315402-0156	LOCK WASHER FBB 6,5	6-71, 6-73
315701-0208	PARALLEL KEY W. ROUND ENDS 5X5X40 MM	1-77
315701-0371	PARALLEL KEY W. ROUND ENDS 14X9X90 MM	1-35, 1-47
315705-0201	PARALLEL KEY W. ROUND ENDS 5X5X20 MM	1-77
315705-0232	PARALLEL KEY W. ROUND ENDS 6X6X20 MM	1-7, 1-9, 5-19
315705-0234	PARALLEL KEY W. ROUND ENDS 6X6X25 MM	1-15, 7-9
315705-0237	PARALLEL KEY W. ROUND ENDS 6X6X32 MM	4-5
315705-0239	PARALLEL KEY W. ROUND ENDS 6X6X40 MM	1-21, 1-61, 1-67, 1-69, 1-71, 1-73
315705-0303	PARALLEL KEY W. ROUND ENDS 10X8X50 MM	1-31, 1-43, 1-49, 1-51, 1-53, 1-55
315705-0307	PARALLEL KEY W. ROUND ENDS 10X8X70 MM	1-49, 1-51, 1-53, 1-55, 2-15
315741-0216	RETAINING RING DIN 705 A4 20	1-61, 5-19
315751-0116	RETAINING RING FOR SHAFT DIN 471 20 A2	1-13, 1-15, 3-5
315751-0130	RETAINING RING FOR SHAFT DIN 471 50 A2	1-49, 1-51, 1-53, 1-55
315751-0137	RETAINING RING FOR SHAFT DIN 471 65 A2	4-21
315752-0136	RETAINING RING FOR BORE DIN 472 62 ST	1-31, 1-35, 1-43, 1-47
315753-0121	RETAINING RING FOR BORE DIN 472 28 A2	7-25, 7-27
315753-0130	RETAINING RING FOR BORE DIN 472 47 A2	2-17
315755-0106	RETAINING RING SHAFT DIN 6799 4 A2	2-9, 2-11
315755-0109	RETAINING RING SHAFT DIN 6799 7 A2	6-13
321133-0260	BUSHING, 20X23X20 MM	4-5
321133-0420	BUSHING, 40X44X40 MM	4-5
321134-0170	BUSHING, 12X14X8 MM	2-13
321153-0500	FLANGE BUSHING, 70X75X50 MM	5-17

Part No	Description	Page No
321154-0060 ..	FLANGE BUSHING, 6X8X6 MM	6-81, 6-83, 6-85, 6-87
321154-0180 ..	FLANGE BUSHING, 12X14X12 MM	2-13, 6-71, 6-73
321158-0060 ..	FLANGE BUSHING, 6X8X6 MM	7-21, 7-25, 7-27
321158-0142 ..	FLANGE BUSHING, 10X12X12 MM	7-21
321158-0180 ..	FLANGE BUSHING, 12X14X12 MM	7-23
321306-0104 ..	BALL BEARING, 20X42X12 MM	1-7, 1-9
321306-0105 ..	BALL BEARING, 25X47X12 MM	2-17
321308-0101 ..	BALL BEARING, 12X28X8 MM	7-25, 7-27
321308-0200 ..	BALL BEARING, 10X26X8 MM	1-77, 8-5
321308-0202 ..	BALL BEARING, 15X32X9 MM	4-23
321308-0203 ..	BALL BEARING, 17X35X10 MM	6-13, 8-5
321308-0204 ..	BALL BEARING, 20X42X12 MM	1-13, 4-23
321308-0206 ..	BALL BEARING, 30X55X13 MM	4-21
321309-0102 ..	BALL BEARING, 15X35X11 MM	7-7, 7-9, 7-13
321309-0105 ..	BALL BEARING, 25X52X15 MM	1-31, 1-35, 1-43, 1-47
321313-0102 ..	BALL BEARING, 15X35X11 MM	1-77
321314-0105 ..	BALL BEARING, 25X62X17 MM	1-31, 1-35, 1-43, 1-47
321330-0105 ..	ANG. BALL BEAR, 25X52X20,6 MM	1-49, 1-51, 1-53, 1-55
342706-0130 ..	ACCESSORIES, INSERT SLEEVE 6 MM	5-79, 5-81, 5-83
342715-0102 ..	BLIND PLUG 6 MM	9-5
342767-0104 ..	CONN. BULKHEAD G1/4	5-57, 5-73
342921-0132 ..	STRAIGHT COUPL.,EXT.THREADED 10/8-G1/4"	5-57
342923-0132 ..	STRAIGHT COUPL.,INT.THREADED 10/8-G1/4"	5-57
342991-0108 ..	HOSE CLIP 38-50MMRFR	5-47, 5-49
350001-0001 ..	PUSH-IN FITTING QS-F-M5-4	10-15, 10-17
350001-0002 ..	PUSH-IN FITTING QS-F-M5-6	5-63, 5-65, 5-67
350001-0006 ..	PUSH-IN FITTING QS-F-G1/8-6	5-63, 5-65, 5-67
350001-0007 ..	PUSH-IN FITTING QS-F-G1/8-8	5-63, 5-65, 5-67
350001-0011 ..	PUSH-IN FITTING QS-F-G1/4-12	5-63, 5-65, 5-67
350001-0016 ..	PUSH-IN FITTING QS-F-G1/2-12	5-7, 5-9
350002-0001 ..	PUSH-IN L-FITTING QSL-F-M5-4	7-29, 10-19, 10-21
350002-0005 ..	PUSH-IN L-FITTING QSL-F-G1/8-4	5-63, 5-65, 5-67, 7-29, 10-19
350002-0006 ..	PUSH-IN L-FITTING QSL-F-G1/8-6	1-13, 1-65
350002-0007 ..	PUSH-IN L-FITTING QSL-F-G1/8-8	5-61, 5-63, 5-65, 5-67, 7-29, 10-19, 10-21
350002-0008 ..	PUSH-IN L-FITTING QSL-F-G1/4-6	5-71, 5-77
350002-0009 ..	PUSH-IN L-FITTING QSL-F-G1/4-8	5-63, 5-65, 5-67, 5-71, 5-73, 10-15, 10-17
350002-0011 ..	PUSH-IN L-FITTING QSL-F-G1/4-12	5-71
350002-0016 ..	PUSH-IN L-FITTING QSL-F-G1/2-12	5-69
350003-0007 ..	PUSH-IN FITTING QS-F-G1/4-8-I	3-9
350005-0002 ..	PUSH-IN T-FITTING QST-F-6	5-63, 5-65, 5-67
350005-0003 ..	PUSH-IN T-FITTING QST-F-8	5-63, 5-65, 5-67
350005-0005 ..	PUSH-IN T-FITTING QST-F-12	5-63, 5-65, 5-67
350006-0008 ..	PUSH-IN FITTING QS-F-12H-8	5-63, 5-65, 5-67
350011-0002 ..	PUSH-IN T-FITTING QS-F-8-6	5-63, 5-65, 5-67
350015-0003 ..	Y-FITTING QSY-F-8	3-9
351120-0266 ..	CABLE SILFLEX SIHF 4X4 00460273	5-97
351150-0187 ..	CABLE OLFLEX 5X6 MM2 LIGHT/GREY	5-97
351150-0403 ..	CABLE OLFLEX 3X0,75 MM2 LIGHT/GREY	3-9, 5-97
351150-0405 ..	CABLE OLFLEX 5X0,75 MM2 LIGHT/GREY	5-97
351150-0406 ..	CABLE OLFLEX 7X0,75 MM2 LIGHT/GREY	5-97
351150-0407 ..	CABLE OLFLEX 12X0,75 MM2 LIGHT/GREY	5-97
351150-0412 ..	CABLE OLFLEX 3X1,5 MM2 LIGHT/GREY	5-97
351150-0413 ..	CABLE OLFLEX 4X1,5 MM2 LIGHT/GREY	5-97
351160-0102 ..	CABLE (1UNIT = 100M)	9-55, 9-57
351160-0105 ..	CABLE AWM 1X2,5 MM2 DARKBLUE	9-69
351160-0106 ..	CABLE AWM 1X4 MM2 DARKBLUE	9-69
351161-0104 ..	CABLE AWM LIGHTBLUE 1,5MM2	9-69
351161-0105 ..	CABLE AWM 1X2,5 MM2 LIGHTBLUE	9-69
351161-0106 ..	CABLE AWM 1X4 MM2 LIGHTBLUE	9-69
351161-0107 ..	CABLE AWM 1X6 MM2 LIGHTBLUE	9-69
351161-0109 ..	CABLE AWM 1X16 MM2 LIGHTBLUE	9-69
351162-0102 ..	CABLE AWM 1X0,75 MM2 YELLOW-GREEN	9-69
351162-0104 ..	CABLE AWM 1X1,5 MM2 YELLOW-GREEN	9-69
351162-0105 ..	CABLE AWM 1X2,5 MM2 YELLOW-GREEN	9-69
351162-0106 ..	CABLE AWM 1X4 MM2 YELLOW-GREEN	9-69
351162-0107 ..	CABLE AWM 1X6 MM2 YELLOW-GREEN	9-69
351162-0108 ..	CABLE AWM 1X10 MM2 YELLOW-GREEN	9-69
351162-0109 ..	CABLE AWM 1X16 MM2 YELLOW-GREEN	9-69
351164-0104 ..	CABLE AWM 1X1,5 MM2 BLACK	9-69
351164-0105 ..	CABLE (1UNIT = 100M)	9-55, 9-57
351164-0106 ..	CABLE AWM 1X4 MM2 BLACK	9-69
351164-0107 ..	CABLE AWM 1X6 MM2 BLACK	9-55, 9-57
351164-0108 ..	CABLE AWM 1X10 MM2 BLACK	9-69
351164-0109 ..	CABLE AWM 1X16 MM2 BLACK	9-69
351305-0100 ..	ACTUATOR/SENSOR CABLE PRKMV 4-07/10M	2-7
351306-0100 ..	ACTUATOR/SENSOR CABLE PRKMWV 4-07/10M	1-7
351309-0050 ..	ACTUATOR/SENSOR CABLE PRKT 4-07/5M	5-21, 5-23
351309-0100 ..	ACTUATOR/SENSOR CABLE PRKT 4-07/10M	5-7, 5-9, 5-21, 5-23, 5-93, 5-95
351401-0050 ..	ACTU/SENS CABLE RSMVN 3-PRKMV 3-06/5,0M	1-59, 5-77
351405-0006 ..	ACT/SENS. CABLE RSMVN 3-PRKT 4-3-06/0,6M	5-21, 5-23
351405-0050 ..	ACT/SENS. CABLE RSMVN 3-PRKT 4-3-06/5,0M	5-21, 5-23
351411-0006 ..	ACTU/SENS. CABLE PRST 4-PRKT 4-07/0,6M	10-23
351411-0010 ..	ACTU/SENS. CABLE PRST 4-PRKT 4-07/1,0M	6-17, 7-21
351412-0015 ..	ACTU/SENS. CABLE PRST 4-PRKWT 4-07/1,5M	3-23

Part No	Description	Page No
351415-0100 ..	DEVICENET CONN. CABLE, 0935 361 105/10M	5-7, 5-9
352103-0110 ..	CABLE GLAND, STR 16, PR22,5/PG16	5-133
352113-0101 ..	CABLE TIE, BLACK 92X2,5 MM	5-7, 5-9, 5-57
352113-0102 ..	CABLE TIE, BLACK 188X4,8 MM	4-5
352113-0104 ..	CABLE TIE, BLACK 300X4,8 MM	2-19, 3-17, 3-23, 3-25, 6-17, 6-65
352113-0203 ..	ANCHOR PLATES FOR STRIPS, TYPE TM3S8-M0	2-19, 3-17, 3-23, 3-25, 4-5, 6-17, 6-65, 9-39
352113-0204 ..	ANCHOR PLATES FOR STRIPS, TYPE TM3S25-M	1-31, 1-35, 1-43, 1-47, 1-49, 1-51, 1-53 1-55, 5-7, 5-9, 5-11, 5-13, 5-147
352113-0205 ..	ANCHOR PLATES FOR STRIPS, TYPE TM2S8-C10	1-7, 1-9, 5-57, 6-17
352113-0206 ..	ANCHOR PLATES FOR STRIPS, TYPE ABM100-AT	5-103
353021-0212 ..	FEED THROUGH TERMINAL, 10200.0	9-51, 9-65
353021-0214 ..	FEED THROUGH TERMINAL, 10202.0	9-65
353021-0302 ..	TERMINALS,TRIPLE-LEVEL, DLD 2,5/35 PA	9-67
353022-0002 ..	NEUTRAL TERMINAL, 10107.8	9-15
353024-0204 ..	EARTH TERMINAL WPE 2,5	9-65
353024-0205 ..	EARTH TERMINAL, 1010.1	5-105, 5-107, 9-13, 9-45, 9-55, 9-57, 9-63
353024-0206 ..	EARTH TERMINAL, 1010.2	9-13, 9-65
353024-0207 ..	EARTH TERMINAL, 1010.3	9-13
353024-0209 ..	EARTH TERMINAL, 1010.5	9-7, 9-13
353024-0212 ..	EARTH TERMINAL, 10363.0	9-67
353031-0203 ..	END SUPPORT, WEW 35/2	9-15, 9-17, 9-21, 9-31, 9-51, 9-65, 9-67
353032-0004 ..	END PLATE WAP 2,5-10 BEIGE	9-51, 9-65
353032-0009 ..	END PLATE, WAP FOR WDK	9-21, 9-23, 9-25, 9-27, 9-29, 9-31, 9-67
353032-0302 ..	END PLATE WAP, 13176.6	9-67
353033-0104 ..	END PLATE, 10502.8	9-15
353034-0030 ..	BRIDGE CONNECTOR WQV 2,5/10, 10544.6	9-21, 9-23, 9-25, 9-27, 9-29, 9-31, 9-67
353034-0404 ..	BRIDGE CONNECTOR Q10, 13131.0	9-67
353041-0001 ..	BUS BAR RAIL 10X3MM SSCH	9-15
353041-0106 ..	HOLDER ZB35 K 5026.8	9-15
353101-0122 ..	CABLE SHOE 0,5-1,5MM2 M5 RED	5-47, 5-49
353245-0011 ..	GLAND, EXTENDED WITH INSERT, PR18,6/PG11	1-15
353249-0012 ..	INSERT, SINGLE HOLE, EK 154/11	5-47, 5-49, 5-103
353249-0015 ..	INSERT, SINGLE HOLE, EK 155/16	5-63, 5-65, 5-67, 5-103
353249-0054 ..	INSERT, SINGLE HOLE, EK 156/25	5-7, 5-9, 5-103
353250-0016 ..	GLAND, LOCK NUT M16X1,5	9-5
353250-0020 ..	GLAND, LOCK NUT M20X1,5	5-63, 5-65, 5-67
353250-0040 ..	GLAND, LOCK NUT M40X1,5	9-5
354000-0040 ..	MINIATURE CIRCUIT BREAKER, FAZ-C4/1	9-17, 9-33
354000-0060 ..	MINIATURE CIRCUIT BREAKER, FAZ-C6/1	9-17, 9-35, 9-55, 9-57, 9-63
354000-0100 ..	MINIATURE CIRCUIT BREAKER, FAZ-C10/1	9-33, 9-43
354001-0040 ..	MINIATURE CIRCUIT BREAKER, FAZ-C4/2	9-17
354001-0100 ..	MINIATURE CIRCUIT BREAKER, FAZ-C10/2	9-35
354002-0060 ..	MINIATURE CIRCUIT BREAKER, FAZ-C6/3	9-33
354002-0200 ..	MINIATURE CIRCUIT BREAKER, FAZ-C20/3	9-35
354002-0250 ..	MINIATURE CIRCUIT BREAKER, FAZ-C25/3	9-35
359011-0806 ..	MARKING LABEL KIT, 5-FW 1-200	9-67
359011-0807 ..	MARKING PLATES 5-FW 1-50	9-13, 9-21, 9-23, 9-25, 9-27, 9-29, 9-31, 9-51, 9-65, 9-67
359011-0808 ..	MARKING PLATES 5-FW 51-100	9-21
359011-0809 ..	MARKING PLATES 5-FW 101-150	9-67
359011-0819 ..	MARKING PLATES 5-GW (EARTH)	9-51
359011-0821 ..	SET OF SIGNS 6-FW 1-50	9-13, 9-15, 9-65
359240-0100 ..	SIGN HOLDER FOR 359240-0001	9-5
359241-0124 ..	SIGN: " MAIN SWITCH"	9-5
359301-0001 ..	BUTTON SIGN, UP	5-103
359301-0005 ..	BUTTON SIGN, DOWN	5-103
359301-0090 ..	BUTTON SIGN, INCHING	5-103
359705-0015 ..	WARNING SIGN ISO, RISK OF ELECTRIC SHOCK	5-101, 5-103, 9-5
359710-0001 ..	WARNING SIGN ISO, HOT SURFACE	3-9, 5-47, 5-49
476221-0002 ..	PIPE	5-33, 5-37
476221-0003 ..	PIPE	5-33, 5-37
476221-0013 ..	PIPE	10-15, 10-17
486826-0001 ..	SIGN "EMERGENCY STOP"	5-133, 9-5
531616-0000 ..	HOLDER	5-99
580923-0000 ..	MACHINE SIGN CE	6-65
988685-0000 ..	PIN	5-101, 5-109
1020637-0000 .	HOLDER	5-39, 5-41, 10-15, 10-17
1021990-0000 .	SIGN 356X70MM HOUSE MARK TEXT TETRA PAK	5-11, 5-13
1021991-0000 .	STRIPE TETRA PAK BLUE B=70MM, ROLL L=25M	5-11, 5-13
1030335-0000 .	FILTER HOLDER	5-55
1030338-0000 .	NET	5-55
1030874-0000 .	THROTTLE WASHER	5-55
1030878-0000 .	GASKET	5-55
1035792-0000 .	E-HINGE	5-101, 5-109
1037130-0000 .	CONNECTION BOX	5-133
1038275-0012 .	SPACER	9-9
1128856-0000 .	PROHIBITION SIGN	10-15, 10-17
1129770-0000 .	BLOCKING PIECE	5-101, 5-109
1188609-0000 .	FLANGE SEAL	5-47, 5-49
1188610-0000 .	FLANGE SEAL	5-47, 5-49
1189007-0000 .	CLAMP BLOCK	10-15, 10-17
1258624-0000 .	HOSE HOLDER	3-27
1258990-0000 .	SPRING BRACKET	6-81, 6-83, 6-85, 6-87
1359565-0000 .	NUT	5-35
1366727-0000 .	CLAMP	5-35

Part No	Description	Page No
1380038-0000	.BRACKET	10-15, 10-17
1550595-2460	.SLIDING STRIP	5-25, 5-27, 5-29, 5-31
1550595-4960	.SLIDING STRIP	5-25, 5-27, 5-29, 5-31
1550595-9960	.SLIDING STRIP	5-25, 5-27, 5-29, 5-31
1550695-0001	.SIDE PLATE	5-25, 5-27, 5-29, 5-31
1550695-0002	.SIDE PLATE	5-25, 5-27, 5-29, 5-31
1550695-0003	.SIDE PLATE	5-25, 5-27, 5-29, 5-31
1550695-0004	.SIDE PLATE	5-25, 5-27, 5-29, 5-31
1550743-0200	.RAIL HOLDER	5-21, 5-23, 5-33, 5-37
1550772-0000	.HOLDER	5-35
1556626-0000	.WHEEL	6-81, 6-83, 6-85, 6-87
1556630-0000	.WHEEL	6-71, 6-73
1556643-0000	.WASHER	6-71, 6-73
2470301-0000	.LEVER	7-25
2470302-0000	.HUB	7-25, 7-27
2470373-0000	.LEVER	7-27
2504290-0000	.PLATE	5-41
2506887-0000	.TEMPLATE	10-25
2506940-0000	.NOZZLE	5-57
2529719-0003	.BOX	10-27
2529719-0004	.BOX	10-27
2529719-0005	.BOX	10-27
2529719-0006	.BOX	10-27
2529720-0016	.LABEL	10-27
2529720-0024	.LABEL	10-27
2529720-0037	.LABEL	10-27
2529720-0044	.LABEL	10-27
2547915-0000	.HEATING CHAMBER	5-47
2547954-0000	.TEMPLATE	10-25
2551030-0000	.STRUT	5-121, 5-139
2551031-0000	.STRUT	5-121
2557544-0000	.PROTECTION	5-51, 5-53
2561206-0000	.SPACER	5-25, 5-27, 5-29, 5-31
2561273-0101	.CONVEYOR BODY	5-21, 5-23
2561273-0102	.CONVEYOR BODY	5-21, 5-23
2561273-0103	.CONVEYOR BODY	5-21, 5-23
2561273-0104	.CONVEYOR BODY	5-21, 5-23
2561274-0102	.RAILING	5-21, 5-23
2561274-0103	.RAILING	5-21, 5-23
2562134-0000	.TEMPLATE	10-25
2563891-0000	.STRUT	5-135
2563892-0000	.STRUT	5-135
2579622-0000	.TEMPLATE	10-25
2579623-0000	.TEMPLATE	10-25
2579624-0000	.TEMPLATE	10-25
2594996-0000	.PLASTIC BAG	10-27
2595618-0000	.BRACKET	5-121
2608177-0000	.SIGN	9-5
2612679-0000	.TEMPLATE	10-25
2613995-0000	.SPACER	6-71, 6-73
2618350-0000	.WORM GEAR	4-21
2662760-0000	.HEATING CHAMBER	5-47, 5-49
2675516-0000	.BRACKET	9-5
2684864-0000	.SHAFT	2-13
2693990-0000	.TIMING BELT	1-7, 1-9
2695133-0000	.TOOTHED PULLEY	3-5
2695134-0000	.SHAFT	3-5
2695135-0100	.PULLEY	3-3
2695610-0000	.CLAMP BRACKET	3-7
2695629-0000	.BRACKET	3-23
2696481-0000	.BLOCK	3-19
2699305-1996	.SLIDING STRIP	5-25, 5-27, 5-29, 5-31
2699436-0000	.SPACER	5-35
2699437-0000	.RAIL HOLDER	5-35
2699680-0000	.SCREW	6-11, 6-13
2699681-0000	.SPACER	6-11, 6-13
2699682-0000	.SPACER	6-13
2699683-0000	.WASHER	6-11
2703670-0100	.CAP HOLDERS GROUP	6-79
2703671-0000	.CLAW	6-81, 6-83, 6-85, 6-87
2703672-0000	.CLAW	6-81, 6-83, 6-85, 6-87
2703673-0000	.TOOTHED DISC	6-81, 6-83, 6-85, 6-87
2703674-0000	.FOLLOWER ARM	6-81, 6-83, 6-85, 6-87
2703679-0000	.SHAFT	6-71, 6-73
2703683-0000	.SHAFT	6-71, 6-73
2703692-0000	.HOLDER	6-71, 6-73
2703696-0000	.PROTECTIVE COVER	6-13
2703697-0000	.SIDE	6-11
2703700-0100	.GUIDE BRACKET	6-67, 6-69
2703702-0000	.SHIM	6-71, 6-73
2703704-0000	.SPACER STRUT	6-17
2703708-0000	.SPRING	6-71, 6-73
2703711-0000	.HOLDER	2-15
2703714-0000	.HOLDER	2-13

Part No	Description	Page No
2703715-0000	.SHAFT	2-13
2703725-0000	.ROLLER	2-13
2703842-0000	.ADJUSTING SCREW	2-17, 2-19, 6-39, 6-41, 6-61, 6-63
2710819-0000	.LID	5-47, 5-49
2712603-0000	.PLATE	1-61
2715666-0000	.BRACKET	2-9, 2-11
2715669-0100	.TOOTHED PULLEY	7-5
2715671-0000	.BRACKET	2-9, 2-11
2715695-0000	.SLEEVE	2-13
2715699-0000	.HOLDER	6-71, 6-73
2715701-0000	.AXLE PIN	6-71, 6-73
2715704-0000	.SLEEVE	6-71, 6-73
2715750-0100	.TEMPLATE	10-5
2715751-0000	.SHAFT	10-7
2715794-0000	.ARM	2-13
2715797-0000	.BUSHING	2-13
2715798-0000	.TURN SPRING	2-13
2715804-0000	.SCREW	2-9, 2-11
2715807-0000	.SPACER	2-9, 2-11
2715813-0000	.BRACKET	2-13
2715826-0000	.DAMPER	6-71, 6-73
2715827-0000	.HOLDER	6-81, 6-83, 6-85, 6-87
2715828-0000	.CLAW	6-81, 6-83, 6-85, 6-87
2715829-0000	.CLAW	6-81, 6-83, 6-85, 6-87
2715837-0000	.KEY	2-15
2715885-0000	.TORSION SPRING	6-71, 6-73
2715887-0000	.PULLER	6-81, 6-83, 6-85, 6-87
2715889-0000	.FINGER	7-35
2715975-0000	.FINGER	7-33
2715976-0100	.TOOTHED PULLEY	7-5
2715977-0000	.LOCKING HUB	7-9
2715978-0000	.SHAFT	7-7
2716015-0000	.BRACKET	7-15
2716018-0100	.TOOTHED PULLEY	7-5
2716019-0000	.SHAFT	7-13
2716021-0000	.SPRING	7-13
2716022-0000	.NUT	7-13
2716023-0000	.SCREW	7-13
2716024-0000	.WASHER	7-13
2716041-0000	.BRACKET	2-15
2716046-0100	.CLAMP UNIT	7-19
2716047-0100	.HEIGHT ADJUSTMENT	7-19
2716048-0000	.BRACKET	7-21
2716049-0200	.CAP LINE	7-5
2716056-0000	.ARM	2-13
2716067-0000	.GUIDE	7-37, 7-39
2716068-0000	.GUIDE	7-37, 7-39
2716069-0100	.GUIDE RAIL	7-37, 7-39
2716072-0000	.BRACKET	3-21
2716073-0000	.BELT HOLDER	3-7, 3-21
2716074-0000	.BRACKET	3-7, 3-21
2716075-0000	.COUNTERWEIGHT	3-7, 3-21
2716083-0000	.BRACKET	3-7
2716085-0000	.COUNTERWEIGHT	3-7, 3-21
2716086-0000	.PLATE	3-9
2716089-0000	.FASTENING BRACKET	3-11
2716090-0100	.MOTION CONTROL	3-3
2716091-0100	.HOTMELT GUN	3-3
2716092-0100	.TRANSMISSION RAIL	3-3
2716097-0100	.MOTION CONTROL	3-3
2716112-0000	.BRACKET	3-25
2716116-0000	.CAM	6-7
2716125-0100	.SETTING TOOL	10-5
2716127-0000	.SLIDER	6-71, 6-73
2716134-0000	.FRAME	6-65
2716138-0000	.GUIDE	7-37, 7-39
2716139-0000	.GUIDE	7-37, 7-39
2716149-0200	.STEERING DEVICE	7-15
2716152-0000	.PLATE	7-17
2716154-0000	.SETTING TEMPLATE	10-9
2716156-0000	.BRACKET	7-17
2716157-0000	.BRACKET	7-17
2727407-0100	.DRIVE PULLEY	7-5
2727408-0000	.MOTOR BRACKET	7-11
2727414-0000	.SHAFT	7-9
2727420-0000	.BRACKET	7-15
2727426-0000	.GEAR WHEEL	7-9
2727427-0000	.GEAR WHEEL	7-11
2727431-0000	.SLIDE PLATE	7-23
2727432-0000	.SHAFT	7-23
2727434-0000	.SLIDE PLATE	7-23
2727438-0000	.STEERING RAIL	7-41, 7-43
2727440-0000	.END SUPPORT	7-23
2727442-0000	.GUIDE	7-41, 7-43

Part No	Description	Page No
2727446-0000	.CLAMPING PART	7-37, 7-39
2727447-0000	.CLAMPING PART	7-37, 7-39
2727448-0000	.GUIDE	7-41, 7-43
2730989-0000	.LEVER	7-21
2736446-0000	.SPACER	7-9
2736447-0000	.SPACER	7-7, 7-13
2736448-0000	.COVER	7-9
2736449-0000	.COVER	7-7, 7-13
2736458-0000	.TEMPLATE	10-5
2736870-0000	.SPRING	7-21
2740299-0100	.FINGER	7-19
2740300-0000	.FINGER	7-25
2740371-0100	.FINGER	7-19
2740372-0000	.FINGER	7-27
2740373-0000	.BRACKET	7-21
2740375-0000	.BRACKET	7-21
2746903-0000	.CABLE DUCT	5-7, 5-9
2746904-0000	.BOX	5-103
2746909-0000	.RAIL	5-105, 5-107
2746920-0000	.FOIL	5-101
2746922-0000	.SHAFT	6-81, 6-83, 6-85, 6-87
2746928-0100	.CAP LINE	7-3
2746929-0100	.CARRIER BELT	7-3
2746932-0100	.PNEUMATIC UNIT	7-3
2746933-0100	.BASE UNIT	7-3
2746934-0100	.FEED UNIT	7-3
2746938-0100	.TRANSFER UNIT	6-3
2746939-0100	.CAP	6-3
2746941-0100	.CAP HOLDERS GROUP	6-3
2746950-0000	.CAM	6-43, 6-45
2746951-0000	.CAM	6-47, 6-49
2746952-0000	.CAM	6-55
2746953-0000	.CAM	6-51, 6-53
2746962-0100	.CAMMODULE	6-21, 6-23, 6-25, 6-27, 6-29
2746963-0000	.CAM	6-57
2746978-0000	.SHAFT	6-71, 6-73
2746982-0000	.CAM	6-43, 6-45
2746985-0000	.CAM	6-47, 6-49
2746987-0000	.CAM	6-51, 6-53
2751655-0100	.CAM	6-5
2751656-0100	.STAR WHEEL	6-5
2751657-0100	.SLIDER	6-5
2751658-0100	.FOLLOWER CAM	6-5
2751664-0100	.FRAME	6-3
2751667-0100	.PRESSURE FINGER	2-9, 2-11
2751685-0000	.BRACKET	7-41, 7-43
2751686-0000	.WASHER	6-71, 6-73
2751687-0000	.WASHER	6-71, 6-73
2751690-0000	.SHIM	7-41, 7-43
2751692-0000	.BRACKET	2-17
2751693-0000	.STEERING	2-17
2751695-0000	.STEERING	2-9, 2-11
2751698-0000	.ECCENTRIC SHAFT	6-13
2751699-0000	.WASHER	6-13
2751700-0000	.BOW CLAMP	2-15
2751702-0000	.STAR WHEEL	6-9
2751703-0000	.BRACKET	6-11
2751704-0000	.PIVOT BRACKET	6-13
2751705-0000	.SHAFT	6-13
2751706-0000	.FLAG	6-9
2751708-0000	.CURVE	2-9, 2-11
2751709-0000	.TIMING BELT	2-15
2751710-0000	.SUPPORT PLATE	2-15
2751712-0000	.TOOTHED PULLEY	2-17
2751714-0000	.SUPPORT PLATE	2-17
2751716-0000	.PLATE	2-19
2751718-0000	.ANGLE BRACKET	2-19
2751721-0000	.SPACER	2-9, 2-11
2751722-0000	.CURVE	2-9, 2-11
2751725-0000	.BOW CLAMP	2-17
2751732-0000	.BRACKET	2-13
2751733-0000	.CURVE	2-9, 2-11
2751734-0000	.SLIDING STRIP	2-19
2751739-0000	.BRACKET	6-11
2751741-0000	.BRACKET	6-17
2751742-0000	.BRACKET	2-9, 2-11
2751747-0000	.SPACER	2-17
2751748-0000	.SLEEVE	2-17
2752105-0000	.GUIDE	7-41, 7-43
2752106-0000	.GUIDE	7-41, 7-43
2752107-0000	.CLAMPING PART	7-37, 7-39
2752108-0000	.CLAMPING PART	7-37, 7-39
2758505-0100	.MACHINE BODY	5-3
2758507-0100	.PACKAGE CONVEYOR	5-3

Part No	Description	Page No
2758511-0100	.HOTMELT UNIT	5-3
2758512-0100	.BLOWING SYSTEM	5-59
2758513-0100	.AIR SUPPLY	5-3
2758514-0100	.WATER CONNECTION	5-3
2758515-0100	.CABLE DUCT	5-5
2758522-0100	.LUBRICATION UNIT	5-3
2766610-0000	.FRAME	1-33
2766611-0000	.GUIDE	1-29
2766615-0000	.FRAME	1-29
2766927-0000	.PILLAR	1-29, 1-41
2766939-0000	.SUPPORT	5-99
2766941-0000	.SHAFT	1-59
2766943-0000	.PLATE	1-59
2766944-0000	.BRACKET	1-59
2766950-0000	.SHAFT	1-61
2766953-0000	.PLATE	1-31, 1-43
2766954-0100	.BELT STRETCHER	1-29
2766955-0000	.BELLOWS	1-31, 1-35, 1-43, 1-47
2766958-0000	.SHAFT	1-31, 1-35, 1-43, 1-47
2766959-0000	.SPACER	1-31, 1-35, 1-43, 1-47
2766962-0000	.BLOCK	1-31, 1-43
2766963-0000	.BRACKET	1-31, 1-43
2766964-0000	.FLANGE	4-5, 5-17
2766968-0000	.SHAFT	5-17
2766972-0000	.SHAFT	5-19
2766973-0100	.TRANSMISSION	5-17
2766974-0000	.SLEEVE	1-33, 1-45
2766975-0000	.FRAME	5-11, 5-13
2766976-0000	.FLANGE	1-33, 1-45
2766980-0100	.BELT STRETCHER	1-33
2766981-0000	.TOOTHED PULLEY	1-31, 1-35, 1-43, 1-47
2766989-0000	.BRACKET	1-35, 1-47
2766990-0100	.BRAKE UNIT	1-5
2766991-0100	.BRAKE UNIT	1-5
2766994-0100	.ACCELERATION PUSHER	1-5
2768157-0000	.PULLER	6-81, 6-83, 6-85, 6-87
2769679-0000	.DRIVE SHAFT	1-7, 1-9
2769682-0000	.SHAFT	1-7, 1-9
2769686-0000	.COVER	1-7, 1-9
2769688-0000	.CANTILEVER	1-7
2769695-0000	.BRACKET	1-59
2769709-0000	.FRAME	5-17
2769713-0000	.CYLINDRICAL PIN	5-17
2769717-0000	.FLANGE	5-17
2769718-0100	.PNEUMATIC CYLINDER	1-57
2769726-0000	.BRACKET	1-21, 1-61, 5-19
2769729-0000	.SHAFT	1-21, 1-61
2769738-0100	.HEIGHT ADJUSTMENT	5-5
2769739-0000	.DISC	4-5, 5-17
2769741-0000	.SPACER	1-7, 1-9
2769743-0100	.BELT STRETCHER	1-45
2769746-0000	.FRAME	1-35
2769749-0000	.DRIVE SHAFT	1-15
2769754-0100	.ELECTRIC EQUIPMENT	5-3
2769757-0100	.LAMP	5-85
2769760-0100	.EMERGENCY STOP	5-109
2769761-0100	.MACHINE BODY	5-5
2769763-0100	.OIL PIPE	5-75
2769773-0000	.SPACER	1-11
2769775-0000	.TOOTHED PULLEY	1-7, 1-9, 1-15
2773600-0000	.SPACER	1-7, 1-9
2773601-0000	.SPACER	1-11
2773604-0000	.PLATE	1-13
2773615-0000	.ROLLER	1-13
2773616-0000	.GUIDE	1-29, 1-33
2773622-0100	.LINE HEATER	5-3
2773623-0100	.FAN SYSTEM	5-43, 5-45
2773627-0000	.HEAT GUARD	5-47, 5-49
2773630-0000	.HEAT GUARD	5-47, 5-49
2773632-0000	.SPACER	1-59
2773636-0100	.BELT STRETCHER	1-11
2773637-0000	.BRACKET	1-13
2773638-0000	.PLATE	1-13
2773639-0000	.SHAFT	1-13
2775398-0000	.PIN	1-13
2775403-0000	.PIPE	5-61
2775404-0000	.PIPE	5-61
2775412-0000	.PLATE	1-11
2775413-0000	.SUPPORT	1-9
2775417-0000	.BRACKET	1-35, 1-47
2775418-0000	.SHAFT	1-7
2775420-0000	.SLIDE	1-35
2775421-0000	.SCREW	1-35
2775423-0000	.PLATE	1-35

Part No	Description	Page No
2775427-0000	.BRACKET	1-7
2775435-0000	.PLATE	1-11
2775437-0000	.TOOTHED PULLEY	1-49, 1-51, 1-53, 1-55
2775438-0000	.PLATE	1-49, 1-51, 1-53, 1-55
2775439-0000	.BUSHING	1-49, 1-51, 1-53, 1-55
2775442-0000	.TOOTHED PULLEY	1-49, 1-51, 1-53, 1-55
2775443-0000	.SPACER	1-49, 1-51, 1-53, 1-55
2775445-0000	.SPACER	1-49, 1-51, 1-53, 1-55
2775446-0000	.SHAFT	1-49, 1-51, 1-53, 1-55
2775447-0000	.BRACKET	5-11, 5-13
2778564-0000	.WASHER	1-7, 1-9
2778566-0000	.BELLOWS	1-49, 1-51, 1-53, 1-55
2778567-0000	.BEAM	5-11, 5-13
2778568-0000	.FRAME UPPER	5-11, 5-13
2778569-0000	.BEAM	5-11, 5-13
2778570-0000	.FRAME	1-45
2778571-0000	.FRAME	1-47
2778572-0100	.BELT STRETCHER	1-41
2778576-0000	.BEAM	5-11, 5-13
2778577-0000	.BEAM	5-11, 5-13
2778580-0000	.BRACKET	5-39, 5-41
2778584-0000	.BRACKET	5-41
2778585-0000	.PILLAR	1-67, 1-69, 1-71, 1-73
2778586-0100	.SENSOR	5-21, 5-23
2778587-0100	.SENSOR	5-21, 5-23
2778588-0000	.FRAME	1-41
2778590-0000	.SUPPORT	5-21, 5-23
2778591-0000	.PLATE	5-11, 5-13
2778592-0000	.PLATE	1-67, 1-69, 1-71, 1-73
2778594-0000	.PLATE	1-21, 1-61
2778595-0100	.ANGLE	5-11, 5-13
2779008-0000	.BRACKET	5-15
2779009-0000	.BEAM	5-11, 5-13
2779011-0000	.BEAM	5-11, 5-13
2779012-0000	.BEAM	5-11, 5-13
2779013-0000	.CAM	1-61
2779014-0000	.PLATE	1-61
2779057-0000	.PLATE	1-59
2779062-0000	.SPROCKET	1-21
2779063-0000	.PLATE	1-21
2779070-0100	.OPERATOR INTERFACE	5-3
2779748-0100	.GLASS DOOR	5-109
2779749-0000	.DOOR	5-121
2779756-0000	.SHAFT	1-21
2779759-0000	.PLATE	1-21
2779763-0000	.COVER	5-133
2779764-0100	.WARNING LAMP	5-85
2779765-0000	.BRACKET	5-89
2779768-0000	.DOOR	5-101
2779769-0000	.SPROCKET	5-19
2779771-0000	.SPACER	5-133
2779772-0000	.BRACKET	5-55
2779774-0000	.GUIDE	1-41
2779775-0000	.GUIDE	1-41, 1-45
2779776-0000	.PLATE	5-11, 5-13
2779786-0000	.PLATE	5-11, 5-13
2779800-0000	.PLATE	5-7, 5-9
2779811-0000	.BEAM	5-11, 5-13
2779821-0000	.PLATE	5-141
2779823-0000	.BRACKET	5-141
2779824-0000	.BRACKET	5-141
2779825-0000	.PLATE	5-141
2779831-0000	.PIPE	5-21, 5-23
2779832-0100	.GLASS DOOR	5-109
2779833-0100	.GLASS DOOR	5-109
2779834-0100	.GLASS DOOR	5-109
2779835-0100	.DOOR	5-109
2779838-0000	.DOOR	5-135
2779839-0000	.GLASS	5-135
2779840-0000	.DOOR	5-137
2780337-0000	.CURVE	2-9, 2-11
2780338-0000	.BRACKET	2-9, 2-11
2780339-0000	.BRACKET	2-9, 2-11
2780341-0000	.CURVE	2-9, 2-11
2780342-0000	.CURVE	2-9, 2-11
2780343-0000	.CURVE	2-9, 2-11
2780344-0000	.BRACKET	2-9, 2-11
2780346-0000	.ARM	2-13
2780352-0000	.HOLDER	2-13
2780353-0000	.BRACKET	2-13
2780361-0000	.PIN	7-21
2780362-0000	.PIN	7-21
2780379-0000	.PLATE	6-59
2780391-0000	.HOLDER	2-13

Part No	Description	Page No
2780393-0000	.SHAFT	2-13
2780394-0000	.ARM	2-13
2780417-0000	.BRACKET	6-57
2780425-0100	.CAM	6-21, 6-23, 6-25, 6-27, 6-29
2780431-0000	.SHIM	6-71, 6-73
2780452-0000	.TOOTHED PULLEY	7-7, 7-13
2780453-0000	.TOOTHED PULLEY	7-9
2780454-0000	.SLIDE RAIL	7-15
2780455-0000	.SLIDE RAIL	7-15
2780456-0000	.SLIDE RAIL	7-15
2780458-0000	.BRACKET	7-41, 7-43
2780459-0000	.SHIM	7-41, 7-43
2780469-0000	.BRACKET	2-9, 2-11
2780487-0000	.NUT PLATE	5-49
2780488-0000	.BRACKET	5-49
2780489-0000	.PRE-HEATER	5-49
2780491-0000	.BRACKET	5-51, 5-53
2780492-0000	.COLUMN	5-51, 5-53
2780493-0000	.PLATE	5-51, 5-53
2780497-0100	.TIMING BELT	7-31
2780501-0000	.BELT	7-33, 7-35
2780509-0100	.TIMING BELT	7-31
2780521-0000	.CAM	6-33, 6-35, 6-37
2780523-0000	.PLATE	6-59
2780526-0000	.BRACKET	6-33, 6-35, 6-37
2780527-0000	.CARRIAGE	6-33, 6-35, 6-37
2780529-0000	.BRACKET	6-33, 6-35, 6-37
2780531-0000	.AXLE PIN	6-33, 6-35, 6-37
2780532-0000	.AXLE PIN	6-33, 6-35, 6-37
2780533-0000	.CAM	6-33, 6-35, 6-37
2780551-0100	.HEATING ELEMENT	5-43, 5-45
2780560-0100	.DRIVE	6-21, 6-23, 6-25, 6-27, 6-29
2781278-0000	.GLASS	5-137, 5-139
2781279-0000	.DOOR	5-139
2781280-0000	.BRACKET	5-139
2781281-0000	.DOOR	5-123
2781283-0000	.BRACKET	5-93, 5-95
2781285-0000	.STRUT	5-139
2781286-0000	.HAND WHEEL	1-23
2781292-0000	.SHAFT	1-13
2783460-0000	.GUIDE BRACKET	6-71, 6-73
2783461-0000	.BRACKET	6-71, 6-73
2783462-0000	.AXLE PIN	6-71, 6-73
2783463-0000	.ROLLER BRACKET	6-71, 6-73
2783465-0000	.SHAFT	6-71, 6-73
2783466-0000	.COMPRESSION SPRING	6-71, 6-73
2783477-0000	.GUIDE SHAFT	6-33, 6-35, 6-37
2783479-0000	.CAM	6-33, 6-35, 6-37
2787230-0100	.TOP SECTION	5-109
2787232-0000	.PLATE	5-141
2788134-0000	.COVER	1-29, 1-41
2788136-0000	.TEMPLATE	10-11
2788137-0000	.TEMPLATE	10-11
2788138-0100	.TEMPLATE	10-5
2788144-0000	.SHAFT	1-23
2788154-0000	.BLOCK	5-11, 5-13
2788155-0000	.ANGLE	5-11, 5-13
2788159-0000	.CABLE DUCT	5-7, 5-9
2788168-0000	.PLATE	1-63
2788169-0000	.PLATE	1-67, 1-69, 1-71, 1-73
2788174-0000	.LEVER	1-59
2788176-0000	.PIPE	5-61
2790710-0000	.BRACKET	9-39
2792664-0000	.BRACKET	5-51, 5-53
2792848-0000	.SUPPORT	5-51, 5-53
2792879-0000	.TUBE	5-51, 5-53
2794721-0000	.BLOCK	5-51, 5-53
2794790-0000	.CLAMP	5-51, 5-53
2796054-0000	.SUPPORT	3-27
2796055-0000	.BRACKET	3-23
2797440-0000	.STEERING RAIL	7-41, 7-43
2797706-0100	.SUPPORT	3-3
2799864-0000	.FLANGE	2-7
2799865-0000	.DISC	2-7
2799866-0000	.PLATE	2-7
2799867-0000	.ANGLE BRACKET	2-7
2801048-0000	.CAM	6-31
2802375-0000	.COVER	1-63
2802376-0000	.COVER	1-63
2802379-0000	.CABLE DUCT	5-7, 5-9
2802380-0000	.CABLE DUCT	5-7, 5-9
2802381-0000	.CURVE	5-7, 5-9
2802385-0000	.CABLE DUCT	5-7, 5-9
2802386-0100	.OPERATOR INTERFACE	5-101

Part No	Description	Page No
2802387-0000	.CABLE DUCT	5-7, 5-9
2802388-0000	.CABLE DUCT	5-7, 5-9
2802389-0000	.CABLE DUCT	5-7, 5-9
2802390-0000	.CABLE DUCT	5-7, 5-9
2802391-0000	.CABLE DUCT	5-7, 5-9
2802392-0000	.PILLAR	1-49, 1-51, 1-53, 1-55
2802393-0000	.PLATE	1-49, 1-51, 1-53, 1-55
2802402-0000	.BRACKET	5-7, 5-9
2802403-0000	.CABLE DUCT	5-7, 5-9
2802404-0100	.HANDLE	1-21
2802405-0000	.STOP ARM	1-61
2802406-0000	.CABLE DUCT	5-7, 5-9
2802407-0000	.CABLE DUCT	5-7, 5-9
2802408-0000	.CABLE DUCT	5-7, 5-9
2802409-0000	.CABLE DUCT	5-7, 5-9
2802410-0000	.CABLE DUCT	5-7, 5-9
2802412-0000	.CABLE DUCT	5-7, 5-9
2802413-0000	.CABLE DUCT	5-7, 5-9
2802414-0000	.BRACKET	5-7, 5-9
2802417-0000	.PLATE	5-7, 5-9
2802423-0000	.PLATE	5-7, 5-9
2802629-0000	.BRACKET	2-17
2802635-0000	.SUPPORT	2-17, 2-19
2802637-0000	.MOUNTING SHEET	2-19
2802644-0000	.SPACER	2-19
2802645-0100	.BELT STRETCHER	2-3, 2-5
2802646-0100	.FRAME SECTION	2-3, 2-5
2802647-0100	.DRIVE	2-3, 2-5
2802648-0100	.CAP HOLDERS GROUP	2-3, 2-5
2805455-0000	.ANGLE BRACKET	5-7, 5-9
2805456-0000	.COVER	5-7, 5-9
2805457-0000	.COVER	5-7, 5-9
2805458-0000	.COVER	5-7, 5-9
2805459-0000	.COVER	5-7, 5-9
2805460-0000	.COVER	5-7, 5-9
2805461-0000	.GUIDE	1-67, 1-69, 1-71, 1-73
2805467-0000	.SCREW	1-35, 1-47
2805468-0000	.SCREW	1-7
2805492-0000	.TUNNEL	5-131
2805493-0100	.TUNNEL	5-125
2805501-0000	.BELT	1-67, 1-69, 1-71, 1-73
2805503-0000	.BELT	1-67, 1-69, 1-71, 1-73
2805686-0000	.BEAM	5-11, 5-13
2805687-0100	.GLASS DOOR	5-109
2805688-0000	.DOOR	5-145
2805691-0000	.GLASS	5-121, 5-145, 5-147
2805692-0000	.COVER	5-143
2805693-0100	.DOOR	5-109
2805694-0100	.GLASS DOOR	5-109
2805695-0000	.DOOR	5-147
2805696-0000	.SUPPORT	5-11, 5-13
2805697-0000	.SUPPORT	5-11, 5-13
2805698-0000	.BEAM	5-11, 5-13
2805700-0100	.DOOR SAFETY SWITCH	5-85
2807086-0000	.PLATE	1-67, 1-69, 1-71, 1-73
2807087-0000	.BRACKET	1-67, 1-69, 1-71, 1-73
2807088-0000	.PLATE	1-67, 1-69, 1-71, 1-73
2807089-0000	.PLATE	1-67, 1-69, 1-71, 1-73
2807090-0000	.PILLAR	1-67, 1-69, 1-71, 1-73
2807093-0000	.BEAM	5-11, 5-13
2807095-0000	.BEAM	5-11, 5-13
2807104-0000	.BEAM	5-11, 5-13
2811453-0000	.SCREW	6-71, 6-73
2811989-0000	.GUIDE BRACKET	6-71, 6-73
2812005-0100	.ELEVATOR	4-3
2812465-0000	.SHIM	3-9
2813426-0000	.COVER	3-9
2813438-0000	.CLAMP	3-9
2814678-0000	.PLATE	10-15, 10-17
2814679-0000	.BRACKET	10-15, 10-17
2815585-0000	.SPACER	10-15, 10-17
2815689-0100	.CAP DETECTOR	10-3
2817525-0000	.SHAFT	10-15, 10-17
2817527-0000	.PUSHER	10-15, 10-17
2817573-0000	.SPACER	10-15, 10-17
2817578-0000	.COVER	10-15, 10-17
2817774-0000	.SUPPORT	5-93, 5-95
2817775-0000	.SUPPORT	5-93, 5-95
2817783-0100	.PLINTH	5-103
2817784-0000	.SCREW	1-31, 1-43
2818204-0000	.SUPPORT	10-15, 10-17
2818427-0000	.SLIDE PLATE	10-15, 10-17
2818738-0000	.RAILING	10-15, 10-17
2826483-0000	.BRACKET	10-15, 10-17

Part No	Description	Page No
2826728-0000	.DRIVE PULLEY	1-7, 1-9
2826729-0000	.PULLEY	1-7, 1-9
2826733-0000	.BRACKET	1-9
2826734-0000	.BRACKET	1-7
2826735-0000	.PLATE	1-7
2826737-0000	.GUIDE	1-7, 1-9
2826741-0100	.DOORS AND COVERS	5-3
2826742-0100	.COVER	5-109
2826743-0100	.COVER	5-109
2826744-0100	.COVER	5-125
2827671-0000	.BRACKET	10-23
2830220-0000	.BEAM	5-11, 5-13
2830224-0000	.TENSION SPRING	1-31, 1-35, 1-43, 1-47
2830225-0000	.SPACER	1-7, 1-9
2830227-0000	.BRACKET	5-7, 5-9
2833340-0000	.WASHER	3-9
2833403-0000	.WELDED CABINET	9-5
2833404-0000	.MOUNTING PLATE	9-9
2833406-0100	.CABINET	9-3
2833407-0100	.CONTROL BOARD	9-3
2833408-0100	.COOLING UNIT	9-3
2833409-0100	.CABLE SET	9-3
2833410-0100	.BOX	9-5
2833411-0000	.BOX	9-7
2833412-0100	.CABLE DUCT	9-9
2834311-0000	.HUB	6-19
2835450-0000	.COVER	9-7
2835452-0000	.RAIL	9-35, 9-37
2835453-0000	.RAIL	9-47
2835454-0000	.RAIL	9-13, 9-15, 9-43
2835455-0000	.RAIL	9-45
2835456-0000	.RAIL	9-7
2835457-0100	.POWER SUPPLY UNIT	9-9
2835458-0100	.PLC	9-9
2835459-0100	.FUSE BOARD 1	9-9
2835460-0100	.FUSE BOARD 2	9-9
2835461-0100	.FUSE BOARD 3	9-9
2835462-0100	.MOTOR DRIVE CONTROL	9-9
2835463-0100	.PLINTH	9-9
2835464-0100	.DISTRIBUTION TERMINAL	9-9
2835939-0000	.PLATE	6-17
2836263-0000	.HEAT GUARD	5-47, 5-49
2836266-0000	.PIPE	5-21, 5-23
2836507-0100	.DRIVE MOTOR	6-15
2837072-0100	.DRIVE UNIT	6-3
2837073-0100	.PLATE	6-15
2837175-0000	.BEARING HALF	2-15
2837191-0000	.TOOTHED PULLEY	2-15
2837255-0000	.WASHER	1-49, 1-51, 2-15, 2-17
2837623-0000	.BRACKET	1-49, 1-51, 1-53, 1-55
2837624-0000	.SHAFT	1-49, 1-51, 1-53, 1-55
2837625-0000	.COVER	1-53, 1-55
2837626-0000	.BRACKET	1-49, 1-51, 1-53, 1-55
2837627-0000	.FLANGE	1-49, 1-51, 1-53, 1-55
2837628-0000	.SPACER	1-49, 1-51, 1-53, 1-55
2837630-0000	.COVER	1-49, 1-51
2837631-0000	.SPACER	2-19
2838156-0000	.BRACKET	6-41, 6-63
2838277-0000	.BRACKET	6-39, 6-61
2838459-0000	.CABLE DUCT	9-5
2838460-0000	.CABLE DUCT	9-5
2838461-0000	.CABLE DUCT	9-55, 9-57
2838462-0000	.CABLE DUCT	9-11
2838463-0000	.CABLE DUCT	9-11
2838464-0000	.CABLE DUCT	9-11
2838465-0000	.CABLE DUCT	9-11
2838466-0000	.CABLE DUCT	9-11
2838467-0000	.CABLE DUCT	9-11
2838468-0000	.CABLE DUCT	9-11
2838469-0000	.CABLE DUCT	9-11
2838470-0000	.CABLE DUCT	9-11
2838471-0000	.CABLE DUCT	9-11
2838472-0000	.CABLE DUCT	9-11
2838473-0000	.CABLE DUCT	9-11
2838474-0000	.CABLE DUCT	9-11
2838475-0000	.CABLE DUCT	9-11
2838476-0000	.RAIL	9-49
2838477-0000	.RAIL	9-33
2838478-0000	.RAIL	9-17, 9-19
2838633-0100	.PACKAGE HANDLING	1-3
2838634-0000	.PNEUMATIC DIAGRAM	10-3
2838639-0100	.PACKAGE POSITIONER	1-17, 1-19
2838640-0100	.BELT UNIT	1-25, 1-27
2838641-0100	.BELT	1-25, 1-27

Part No	Description	Page No
2838643-0100	.PACKAGE POSITIONER	1-3
2838644-0100	.PACKAGE POSITIONER	1-17, 1-19
2838645-0100	.BELT	1-37, 1-39
2838646-0100	.BELT UNIT	1-37, 1-39
2838647-0100	.SLIDING RACK	1-17, 1-19
2838648-0100	.DRIVE	1-17, 1-19
2838649-0100	.DRIVE	1-17, 1-19
2838650-0100	.SLIDING RACK	1-17, 1-19
2838652-0100	.SETTING ARM	1-57
2838653-0100	.GUIDE RAIL	1-57
2838654-0100	.BELT BRAKE	1-3
2838669-0100	.SETTING ARM	1-57
2838672-0100	.PNEUMATIC PANEL	5-59
2838673-0100	.SERVICE UNIT	5-63, 5-65, 5-67
2838674-0100	.SERVICE UNIT	5-63, 5-65, 5-67
2838676-0000	.BRACKET	5-63, 5-65, 5-67
2838677-0100	.CENTRAL LUBRICATION	5-75
2838678-0000	.BRACKET	5-77
2838679-0000	.SHAFT	5-61
2838680-0000	.DIAGRAM	10-3
2838682-0000	.CAM	1-59
2838683-0000	.PLATE	1-59
2838684-0000	.WATER DIAGRAM	10-3
2838686-0100	.AIR JET GUN	5-59
2838687-0000	.CABLE DUCT	5-7, 5-9
2838693-0100	.START-UP KIT	10-3
2838700-0000	.BRACKET	5-7, 5-9
2838702-0000	.HOTMELT GUN	3-9
2838708-0000	.COVER	1-11
2838710-0100	.WORM GEAR MOTOR	1-11
2838711-0000	.CLAW	6-81, 6-83, 6-85, 6-87
2838712-0000	.CLAW	6-81, 6-83, 6-85, 6-87
2838713-0000	.PULLER	6-81, 6-83, 6-85, 6-87
2838714-0000	.CLAW	6-81, 6-83, 6-85, 6-87
2838715-0000	.CLAW	6-81, 6-83, 6-85, 6-87
2838716-0000	.PULLER	6-81, 6-83, 6-85, 6-87
2838718-0100	.TRIGGER	2-3, 2-5
2838719-0000	.COVER	2-7
2838721-0000	.SHAFT	2-15
2838722-0000	.BRACKET	6-33, 6-35, 6-37
2838723-0000	.HOLDER	6-71, 6-73
2838727-0000	.CURVE	2-9, 2-11
2838728-0000	.ADJUSTMENT BRACKET	2-9, 2-11
2838731-0000	.CABLE	6-65
2838732-0000	.CABLE	6-65
2838737-0000	.CURVE	2-9, 2-11
2838749-0000	.STOP BLOCK	3-25
2838753-0000	.FRAME	3-25
2838754-0000	.PLATE	5-21, 5-23
2838755-0000	.PLATE	5-21, 5-23
2838763-0000	.SHAFT	7-21
2838764-0000	.BLOCK	7-23
2838765-0000	.PLATE	7-23
2838781-0000	.STEERING	2-9, 2-11
2838783-0000	.PLATE	2-19
2838784-0000	.SLIDING STRIP	2-19
2838815-0000	.SHAFT	2-17
2839073-0000	.BRACKET	10-19, 10-21
2839074-0100	.PNEUMATIC UNIT	10-15, 10-17
2839194-0100	.PNEUMATIC UNIT	10-15, 10-17
2839195-0100	.DISTRIBUTOR	10-15, 10-17
2839221-0100	.PLINTH	9-9
2839222-0100	.PLINTH	9-9
2839223-0100	.PLINTH	9-9
2839224-0100	.PLINTH	9-9
2839225-0000	.BRACKET	9-5
2839226-0000	.FLANGE	9-39
2839227-0000	.SUPPORT	9-47
2839228-0000	.RAIL	9-67
2839229-0100	.DISTRIBUTION TERMINAL	9-9
2839230-0100	.PLINTH	9-19
2839315-0100	.CAMMODULE	6-3
2839382-0100	.MOUNTING PLATE	6-21, 6-23, 6-25, 6-27, 6-29
2839383-0100	.CAM	6-21, 6-23, 6-25, 6-27, 6-29
2839384-0100	.CAM	6-21, 6-23, 6-25, 6-27, 6-29
2839385-0100	.CAM	6-21, 6-23, 6-25, 6-27, 6-29
2839386-0100	.CAM	6-21, 6-23, 6-25, 6-27, 6-29
2839392-0000	.CAM	6-61
2839393-0000	.CAM	6-39
2839409-0000	.CAM	6-41
2839412-0000	.CAM	6-63
2840143-0100	.SERVO MOTOR	3-3
2840144-0100	.SERVO MOTOR	3-3
2840145-0100	.MOTOR BRACKET	3-3

Part No	Description	Page No
2840146-0100	.MOTOR BRACKET	3-3
2840147-0100	.FASTENING BRACKET	3-3
2840148-0000	.TOOTHED PULLEY	3-13
2840647-0000	.FLANGE	3-17
2840648-0000	.PLATE	3-17
2840680-0000	.ASSEMBLY PLATE	3-23
2840693-0000	.WASHER	3-13, 3-15
2840851-0000	.BLOCK	3-17
2840909-0100	.PLINTH	9-19
2840910-0100	.PLINTH	9-19
2840911-0100	.PLINTH	9-19
2840915-0100	.PLINTH	9-19
2840917-0100	.PLINTH	9-19
2840918-0100	.PLINTH	9-55, 9-57
2841285-0000	.TOOTHED PULLEY	3-15
2841344-0000	.PLATE	3-19
2841345-0000	.COLUMN	3-19
2841346-0000	.BLOCK	3-19
2841402-0000	.RAIL	9-65
2841403-0100	.PLINTH	9-55, 9-57
2841404-0100	.ELECTRICAL CONVERSION	9-3
2841405-0000	.DIVIDER	9-11
2841406-0000	.DIVIDER	9-11
2841501-0100	.FRAME	3-3
2841901-0000	.PLATE	3-25
2842793-0100	.DOOR	5-125
2842794-0100	.COVER	5-111
2842795-0100	.COVER	5-111
2842796-0000	.COVER	5-127
2842797-0000	.COVER	5-129
2842799-0000	.COVER	5-113
2842801-0000	.COVER	5-127
2842805-0000	.SPACER	5-119
2842807-0100	.COVER	5-111
2842808-0000	.COVER	5-119
2842830-0100	.SUPPORT	4-3
2842831-0000	.ROD	4-5
2842832-0000	.BRACKET	4-5
2842833-0000	.COVER	4-5
2842834-0000	.FLANGE	4-5
2842835-0000	.COLUMN	4-5
2842836-0000	.PLATE	4-5
2842837-0000	.PLATE	4-5
2842838-0000	.BLOCK	4-5
2842839-0000	.FRAME	4-5
2843157-0100	.CLAMPING ELEMENT	2-3, 2-5
2843158-0000	.FLANGE	2-21
2843159-0000	.SHAFT	2-21
2844501-0000	.PROFILE	5-115
2844525-0000	.CABLE DUCT	4-5
2844526-0000	.PLATE	4-5
2844527-0000	.PLATE	4-5
2844569-0000	.SCREW	4-5
2844570-0000	.BLOCK	4-5
2844571-0000	.BLOCK	4-5
2845097-0000	.SPACER	4-5
2845320-0000	.PROTECTION	9-9
2846399-0100	.TUNNEL	5-111
2846403-0000	.ROLLER	5-19
2846405-0000	.PIVOT ARM	5-19
2846406-0100	.CAP SORTER	4-7
2846407-0100	.VOLUME KIT	4-7
2846408-0100	.VOLUME KIT	4-7
2846413-0100	.CONVEYOR BELT	8-3
2846416-0100	.FEEDER	4-3
2852912-0000	.CONNECTION PIPE	4-3
2852913-0000	.CONNECTION PIPE	4-3
2852914-0000	.CONVEYOR BELT	4-23
2852915-0000	.GUIDE RAIL	8-3
2852916-0000	.GUIDE RAIL	8-3
2852917-0000	.BELT	8-5
2853706-0100	.SETTING TOOL	10-3
2856578-0000	.WORM GEAR	8-5
2856579-0000	.MOTOR	8-5
2856622-0000	.BUSHING	7-9
2857743-0000	.BRUSH	4-9, 4-11, 4-13, 4-19
2857744-0000	.GUIDE	4-9
2857745-0000	.GUIDE	4-13
2859678-0000	.SHAFT	10-15, 10-17
2859718-0000	.PLATE	10-15, 10-17
2859719-0000	.PLATE	10-15, 10-17
2859960-0000	.BRACKET	6-33, 6-35, 6-37
2860997-0000	.WORM GEAR MOTOR	1-15
2861166-0100	.SOFTWARE	9-3, 11-3

Part No	Description	Page No
2861167-0002	.SOFTWARE CD FLEX	9-71, 11-5
2861168-0002	.SOFTWARE CD SPEED	9-71, 11-5
2861169-0100	.ELECTRICAL DOCUMENT	11-7
2861170-0100	.ELECTRICAL DOCUMENT	11-7
2861863-0000	.FUSE PANEL LABEL	9-55, 9-57
2864281-0000	.SHIM	7-41, 7-43
2867644-0000	.GUIDE	7-37, 7-39
2867645-0000	.GUIDE	7-37, 7-39
2867646-0000	.STEERING RAIL	7-41, 7-43
2867647-0000	.GUIDE	7-41, 7-43
2867648-0000	.BRACKET	7-41, 7-43
2867649-0000	.GUIDE	7-41, 7-43
2868792-0000	.CABLE DUCT	5-7, 5-9
2869128-0002	.SOFTWARE FIRMWARE CD	9-71, 11-5
2873857-0000	.CAM	2-9, 2-11
2873859-0000	.BRACKET	2-9, 2-11
2873860-0000	.CURVE	2-9, 2-11
2873862-0100	.HEATING ELEMENT	5-43, 5-45
2873863-0000	.SUPPORT	5-47
2873864-0000	.CAM	2-9, 2-11
2873865-0000	.PRE-HEATER	5-47
2873866-0000	.SUPPORT	10-15, 10-17
2873867-0000	.PLATE	5-47
2873868-0000	.BRACKET	2-9, 2-11
2873869-0000	.CURVE	2-9, 2-11
2873870-0000	.ADJUSTMENT BRACKET	2-9, 2-11
2873871-0000	.BRACKET	2-9, 2-11
2873872-0000	.BRACKET	10-15, 10-17
2873873-0100	.VISION SYSTEM	5-43, 5-45
2873876-0000	.PLATE	10-15, 10-17
2873878-0000	.GUIDE	1-45
2873879-0000	.GUIDE	1-33
2873888-0000	.TUNNEL	5-117
2873889-0000	.COVER	5-115
2873892-0000	.SHIM	6-31
2873893-0000	.BRACKET	5-51, 5-53
2873895-0000	.CURVE	2-9, 2-11
2873896-0000	.CABLE TRAY	3-25
2873898-0000	.CAMERA	5-51, 5-53
2873899-0000	.CABLE	5-51, 5-53
2873900-0000	.CABLE	5-51, 5-53
2873914-0100	.CAMMODULE	6-21, 6-23, 6-25, 6-27, 6-29
2873915-0100	.CAMMODULE	6-21, 6-23, 6-25, 6-27, 6-29
2873916-0100	.CAMMODULE	6-21, 6-23, 6-25, 6-27, 6-29
2873917-0100	.CAMMODULE	6-21, 6-23, 6-25, 6-27, 6-29
2873918-0000	.LINK ATTACHMENT	3-11
2873921-0000	.BLOCK	3-19
2873922-0100	.CABLE	5-85
2873923-0100	.POSITION TEMPLATE	10-3
2873928-0000	.CABLE DUCT	5-7, 5-9
2873932-0000	.TEMPLATE	10-25
2873934-0000	.COVER	1-7
2873941-0000	.SIGN	1-21, 5-11, 5-13
2873943-0000	.CLAMP	5-51, 5-53
2873950-0100	.CABLE SET	5-85
2873951-0000	.COVER	1-75
2873952-0100	.COVER	1-67, 1-69, 1-71, 1-73
2873953-0100	.CAP	10-3
2873957-0000	.BELT	1-67, 1-69, 1-71, 1-73
2873958-0000	.PILLAR	1-67, 1-69, 1-71, 1-73
2873959-0000	.BRACKET	1-67, 1-69, 1-71, 1-73
2873960-0000	.PLATE	1-67, 1-69, 1-71, 1-73
2873961-0000	.PLATE	1-67, 1-69, 1-71, 1-73
2873962-0000	.PLATE	1-67, 1-69, 1-71, 1-73
2873966-0000	.COVER	1-75
2873967-0000	.BELT	1-67, 1-69, 1-71, 1-73
2873968-0000	.GUIDE RAIL	8-3
2873969-0000	.GUIDE RAIL	8-3
2873977-0100	.VOLUME KIT	4-7
2873978-0100	.VOLUME KIT	4-7
2873979-0000	.GUIDE	4-11
2873980-0000	.GUIDE	4-19
2873999-0000	.GUIDE RAIL	8-3
2874000-0000	.GUIDE RAIL	8-3
2874001-0100	.VOLUME KIT	4-7
2874002-0100	.VOLUME KIT	4-7
2874003-0000	.GUIDE	4-15
2874004-0000	.GUIDE	4-17
2874024-0000	.BRACKET	5-99
2875028-0000	.COVER	1-67, 1-69, 1-71, 1-73
2875596-0000	.GUIDE	7-37, 7-39
2875597-0000	.GUIDE	7-37, 7-39
2875598-0000	.GUIDE	7-41, 7-43
2875599-0000	.GUIDE	7-41, 7-43

Part No	Description	Page No
2875600-0000	.STEERING RAIL	7-41, 7-43
2879015-0100	.ELECTRICAL DOCUMENT	11-3
2880018-0100	.PACKAGE ALIGNER	1-67, 1-69, 1-71, 1-73
2880019-0000	.COVER	1-77
2880020-0000	.PULLEY	1-77
2880021-0000	.SPACER	1-77
2880022-0000	.SHAFT	1-77
2880023-0000	.SHAFT	1-77
2880024-0000	.SPACER	1-77
2880025-0000	.SPACER	1-77
2880026-0000	.PULLEY	1-77
2880027-0000	.COVER	1-77
2880028-0000	.FLANGE	1-77
2880029-0000	.PLATE	1-77
2880031-0000	.SPACER	1-77
2880032-0000	.PLATE	1-77
2880033-0000	.BELT	1-77
2880046-0000	.GUIDE	1-77
2890014-0100	.POSITIONING UNIT	9-55, 9-57
2890591-0100	.PLINTH	9-49
2895147-0100	.PACKAGE ALIGNER	9-55, 9-57
2895148-0000	.FUSE PANEL LABEL	9-55, 9-57
2901692-0000	.GUIDE	1-77
2901693-0000	.COVER	1-77
2901694-0000	.MOTOR	1-77
2907981-0000	.NUT	1-49, 1-51, 1-53, 1-55

Part No	Description	Page No

Tetra Pak

SPC
Spare Parts Catalogue

Pos	Part No	Description	Page No
0			
01XL010	2839230-0100 ..	PLINTH	9-19
01XL011	2840909-0100 ..	PLINTH	9-19
01XL012	2840910-0100 ..	PLINTH	9-19
01XL022	2840911-0100 ..	PLINTH	9-19
01XL032	2840911-0100 ..	PLINTH	9-19
01XL042	2840911-0100 ..	PLINTH	9-19
01XL043	2840915-0100 ..	PLINTH	9-19
01XL044	2840915-0100 ..	PLINTH	9-19
01XL072	2840917-0100 ..	PLINTH	9-19
A			
01A400	90600-0980	OPERATOR PANEL 15"+, 2711P-T15C4D2-TP	5-103
B			
01B600	90044-0192	LIMIT SW. SZ2586.000	9-5
01B601	90044-0192	LIMIT SW. SZ2586.000	9-5
01B801	90459-6426	PRESSURE GUARD PEV-1/4-B-OD	5-71
01B901	90459-5481	OIL PUMP 3L, 10P-P3	5-77
01B902	90274-0084	PRESSURE GUARD, 1800 KPA	5-77
20B003	90459-0779	LASER SENSOR, FR20RL	1-7
21B000	90458-2907	PROX.SW. IFS204	1-59
21B300	90459-5529	PH.CELL E3Z-T86A, SENDER+RECIEVER	10-15, 10-17
21B302	90459-5529	PH.CELL E3Z-T86A, SENDER+RECIEVER	10-15, 10-17
21B304	90459-5529	PH.CELL E3Z-T86A, SENDER+RECIEVER	10-15, 10-17
21B402	90459-5529	PH.CELL E3Z-T86A, SENDER+RECIEVER	5-21, 5-23
21B404	90459-5529	PH.CELL E3Z-T86A, SENDER+RECIEVER	5-21, 5-23
21B406	90459-5529	PH.CELL E3Z-T86A, SENDER+RECIEVER	5-21, 5-23
21B408	90459-5529	PH.CELL E3Z-T86A, SENDER+RECIEVER	5-21, 5-23
21B424	90459-5529	PH.CELL E3Z-T86A, SENDER+RECIEVER	5-21, 5-23
21B602	90459-5529	PH.CELL E3Z-T86A, SENDER+RECIEVER	5-21, 5-23
30B102	90458-2907	PROX.SW. IFS204	6-17
40B010	90459-6948	PROX.SW. IFS206	3-25
40B011	90459-6948	PROX.SW. IFS206	3-25
40B012	90459-6948	PROX.SW. IFS206	3-23
40B013	90459-6948	PROX.SW. IFS206	3-23
40B200	90459-6948	PROX.SW. IFS206	7-21
40B202	90458-2775	PROXIMITY SENSOR, SMT-8-PS-K5-LED-24-B	7-21
40B500	90459-5529	PH.CELL E3Z-T86A, SENDER+RECIEVER	8-5
40B504	90459-5529	PH.CELL E3Z-T86A, SENDER+RECIEVER	8-5
50B013	90459-5529	PH.CELL E3Z-T86A, SENDER+RECIEVER	4-23
50B101	90458-2907	PROX.SW. IFS204	4-21
50B102	90458-2907	PROX.SW. IFS204	4-21
50B103	90458-2907	PROX.SW. IFS204	4-21
70B003	90600-2052	PHOTOCELL	2-7
E			
01E600	90459-0813	COOLING UNIT, KB20A619.01	9-53
01E700	90459-2560	LIGHT FIXTURE, TMS121 1XTL-D30W/830 IP	9-5
01E701	2769757-0100 ..	LAMP	5-85
01E702	2769757-0100 ..	LAMP	5-85
F			
01F100	90459-4181	CURR. LIM. CIRC. BREAKER, NZMB1-4-A40	9-7
01F101	90082-0013	OVER VOLT. PROTECT. PU 4C-R 230 VAC	9-7
01F104	90459-5813	AUXILARY CONTACT, FAZ-XHI11	9-35
01F104	354002-0250	MINIATURE CIRCUIT BREAKER, FAZ-C25/3	9-35
01F105	90458-2507	FUSE HOLDER, USCC1 1-POLE ULTRASAFE	9-33
01F105	90458-2510	FUSE, ATDR-6	9-33
01F200	354002-0060	MINIATURE CIRCUIT BREAKER, FAZ-C6/3	9-33
01F201	354000-0040	MINIATURE CIRCUIT BREAKER, FAZ-C4/1	9-17
01F202	354000-0060	MINIATURE CIRCUIT BREAKER, FAZ-C6/1	9-17
01F203	354000-0040	MINIATURE CIRCUIT BREAKER, FAZ-C4/1	9-17
01F300	354000-0040	MINIATURE CIRCUIT BREAKER, FAZ-C4/1	9-33
01F400	354001-0040	MINIATURE CIRCUIT BREAKER, FAZ-C4/2	9-17
01F500	90459-5813	AUXILARY CONTACT, FAZ-XHI11	9-35
01F500	354002-0200	MINIATURE CIRCUIT BREAKER, FAZ-C20/3	9-35
01F600	354000-0060	MINIATURE CIRCUIT BREAKER, FAZ-C6/1	9-35
01F700	354000-0100	MINIATURE CIRCUIT BREAKER, FAZ-C10/1	9-33
01F701	90459-5811	RESIDUAL CURRENT DEVICE, FI-25/2/003-A	9-33
09F000	90459-6692	SAFETY PLC, PLUTO B20 20-070-06	9-47
09F001	90459-2291	SAFETY TIME RELAY, E1T-0.5S-24VDC	9-47
09F003	90459-2291	SAFETY TIME RELAY, E1T-0.5S-24VDC	9-47
09F101	90458-1651	EMERGENCY STOP, ZB4-BS-844 ZB4-BZ-104	9-5
09F102	90458-1651	EMERGENCY STOP, ZB4-BS-844 ZB4-BZ-104	5-103
09F103	90458-1651	EMERGENCY STOP, ZB4-BS-844 ZB4-BZ-104	5-133
09F201	90459-4254	CONNECTION BLOCK TINA 4A, 20-054-03	5-93, 5-95
09F202	90459-4254	CONNECTION BLOCK TINA 4A, 20-054-03	5-93, 5-95
09F203	90459-4254	CONNECTION BLOCK TINA 4A, 20-054-03	4-21
09F210	90459-6961	SAFETY SENSOR, NON CONT. ADAM-E M12 0,5M	5-93, 5-95
09F211	90459-4089	SAFETY SENSOR NON-CONTACT EVA E	5-93, 5-95
09F212	90459-6961	SAFETY SENSOR, NON CONT. ADAM-E M12 0,5M	5-93, 5-95
09F213	90459-4089	SAFETY SENSOR NON-CONTACT EVA E	5-93, 5-95
09F214	90459-6961	SAFETY SENSOR, NON CONT. ADAM-E M12 0,5M	5-93, 5-95
09F215	90459-4089	SAFETY SENSOR NON-CONTACT EVA E	5-93, 5-95
09F230	90459-6961	SAFETY SENSOR, NON CONT. ADAM-E M12 0,5M	5-93, 5-95
09F231	90459-4089	SAFETY SENSOR NON-CONTACT EVA E	5-93, 5-95

Pos	Part No	Description	Page No
F			
09F232	90459-6961	SAFETY SENSOR, NON CONT. ADAM-E M12 0,5M	5-93, 5-95
09F233	90459-4089	SAFETY SENSOR NON-CONTACT EVA E	5-93, 5-95
09F234	90459-6961	SAFETY SENSOR, NON CONT. ADAM-E M12 0,5M	5-93, 5-95
09F235	90459-4089	SAFETY SENSOR NON-CONTACT EVA E	5-93, 5-95
09F236	90459-5627	CONNECTION TINA 1A 20-054-00	5-93, 5-95
09F310	90459-6961	SAFETY SENSOR, NON CONT. ADAM-E M12 0,5M	4-21
09F311	90459-4089	SAFETY SENSOR NON-CONTACT EVA E	4-21
09F312	90459-6961	SAFETY SENSOR, NON CONT. ADAM-E M12 0,5M	4-21
09F313	90459-4089	SAFETY SENSOR NON-CONTACT EVA E	4-21
09F314	90459-6961	SAFETY SENSOR, NON CONT. ADAM-E M12 0,5M	4-21
09F315	90459-4089	SAFETY SENSOR NON-CONTACT EVA E	4-21
09F316	90459-5627	CONNECTION TINA 1A 20-054-00	4-21
20F000	354000-0060	MINIATURE CIRCUIT BREAKER, FAZ-C6/1	9-55, 9-57
21F400	354000-0100	MINIATURE CIRCUIT BREAKER, FAZ-C10/1	9-43
21F410	354000-0060	MINIATURE CIRCUIT BREAKER, FAZ-C6/1	9-63
21F600	354000-0100	MINIATURE CIRCUIT BREAKER, FAZ-C10/1	9-43
21F800	90259-0313	AUX. CONTACT K&M NHI21-PKZM0	9-35
21F800	90459-5326	OVERLOAD PROTECTION, PKZM0-4	9-35
21F801	90459-5813	AUXILARY CONTACT, FAZ-XHI11	9-35
21F801	354001-0100	MINIATURE CIRCUIT BREAKER, FAZ-C10/2	9-35
40F400	90259-0313	AUX. CONTACT K&M NHI21-PKZM0	9-55, 9-57
40F400	90459-5323	OVERLOAD PROTECTION, PKZM0-1	9-55, 9-57
50F000	90259-0313	AUX. CONTACT K&M NHI21-PKZM0	9-55, 9-57
50F000	90459-5323	OVERLOAD PROTECTION, PKZM0-1	9-55, 9-57
50F100	354000-0060	MINIATURE CIRCUIT BREAKER, FAZ-C6/1	9-55, 9-57
K			
01K105	90119-0108	RELAY OMRON G2R-2-SNI-24DC	9-17
01K105	90129-0018	BASE OMRON P2RF-08-E	9-17
01K301	90459-3142	PROCESSOR L61/A, 1756-L61/A	9-41
01K303	90459-2477	ETHERNET I/P BRIDGE MODULE, 1756-ENBT	9-41
01K304	90459-2479	PLC DEVICENET BRIDGE/SCANNER MODULE	9-41
01K305	90459-2488	REMOVABLE TERMINAL BLOCK 36 POINTS	9-41
01K305	90459-6556	PLC DIGITAL INPUT 32PTS, 1756-IB32/B	9-41
01K306	90459-2413	PLC DIGITAL INPUT MODULE16 POINTS	9-41
01K306	90459-2487	REMOVABLE TERMINAL BLOCK 20 POINTS	9-41
01K307	90459-2474	PLC,DIGIT. OUTPUT MODULE 16 PTS 10-31VDC	9-41
01K307	90459-2487	REMOVABLE TERMINAL BLOCK 20 POINTS	9-41
01K308	90459-2474	PLC,DIGIT. OUTPUT MODULE 16 PTS 10-31VDC	9-41
01K308	90459-2487	REMOVABLE TERMINAL BLOCK 20 POINTS	9-41
01K310	90459-2480	8-AXIS SERCOS MOTION MODULE	9-41
01K320	90459-2494	DEVICENET I/O ADAPTER MODULE, 1734-ADN	5-105, 5-107
01K321	90459-2503	DIGITAL INPUT 4 PTS SINK, 1734-IB4	5-105, 5-107
01K322	90459-2503	DIGITAL INPUT 4 PTS SINK, 1734-IB4	5-105, 5-107
01K323	90459-2503	DIGITAL INPUT 4 PTS SINK, 1734-IB4	5-105, 5-107
01K324	90459-2503	DIGITAL INPUT 4 PTS SINK, 1734-IB4	5-105, 5-107
01K325	90459-2503	DIGITAL INPUT 4 PTS SINK, 1734-IB4	5-105, 5-107
01K326	90459-2501	FIELD POWER DISTRIBUTOR, 1734-FPD	5-105, 5-107
01K327	90459-2505	DIGITAL OUTPUT 4 PTS, 1734-OB4E	5-105, 5-107
01K328	90459-2505	DIGITAL OUTPUT 4 PTS, 1734-OB4E	5-105, 5-107
01K329	90459-2505	DIGITAL OUTPUT 4 PTS, 1734-OB4E	5-105, 5-107
01K330	90459-2501	FIELD POWER DISTRIBUTOR, 1734-FPD	5-105, 5-107
01K331	90459-2505	DIGITAL OUTPUT 4 PTS, 1734-OB4E	5-105, 5-107
01K332	90459-2505	DIGITAL OUTPUT 4 PTS, 1734-OB4E	5-105, 5-107
01K333	90459-2505	DIGITAL OUTPUT 4 PTS, 1734-OB4E	5-105, 5-107
01K335	90129-0018	BASE OMRON P2RF-08-E	5-105, 5-107
01K336	90129-0018	BASE OMRON P2RF-08-E	5-105, 5-107
01K340	90459-6062	REMOTE I/O, IP67 8PTS IN/OUT SELF-CONFIG	4-21
01K401	90458-1141	FERRITE, RI-16-28-9	9-49
01K420	90459-6062	REMOTE I/O, IP67 8PTS IN/OUT SELF-CONFIG	5-7, 5-9
01K700	90119-0108	RELAY OMRON G2R-2-SNI-24DC	9-17
01K700	90129-0018	BASE OMRON P2RF-08-E	9-17
01K800	90459-2243	SHUT OFF VALVE, MS4-EE-1/4-10V24	5-71
09K241	90459-6913	ELECTROMAG. DOOR LOCK. DEV.,JSD-ZH-EM1-K	5-93, 5-95
09K242	90459-6913	ELECTROMAG. DOOR LOCK. DEV.,JSD-ZH-EM1-K	5-93, 5-95
20K002	90119-0108	RELAY OMRON G2R-2-SNI-24DC	9-55, 9-57
20K002	90129-0018	BASE OMRON P2RF-08-E	9-55, 9-57
21K000	90458-1202	VALVES 2X3/2, CLOSED	5-63, 5-65, 5-67
21K310	90458-1197	BISTABLE VALVE 5/2	10-19
21K400	90458-1140	FERRITE, RI-26-28-13	9-9
21K401	90458-1140	FERRITE, RI-26-28-13	9-9
21K410	90458-1140	FERRITE, RI-26-28-13	9-63
21K411	90458-1140	FERRITE, RI-26-28-13	9-63
21K500	90458-1203	VALVE 2X3/2 1X OPEN 1X CLOSED	10-21
21K800	90459-0690	CURRENT CONTROL RELAY, 84 871 034	9-17
21K801	90459-0690	CURRENT CONTROL RELAY, 84 871 034	9-17
40K100	2838702-0000	HOTMELT GUN	3-9
40K203	90458-1202	VALVES 2X3/2, CLOSED	5-63, 5-65, 5-67
40K210	90458-1197	BISTABLE VALVE 5/2	7-29
50K100	90458-1140	FERRITE, RI-26-28-13	9-55, 9-57
50K101	90458-1140	FERRITE, RI-26-28-13	9-55, 9-57
70K000	90119-0108	RELAY OMRON G2R-2-SNI-24DC	9-17
70K000	90129-0018	BASE OMRON P2RF-08-E	9-17

Machine Type Group Description Page No

Pos	Part No	Description	Page No
K			
70K001	90459-2739	OPTO-RELAY 50085, IN / OUT 4-53VDC 1A	9-17
81K201	90458-1170	FERRITE, SFC-6	9-49
81K202	90458-1170	FERRITE, SFC-6	9-49
81K401	90458-1140	FERRITE, RI-26-28-13	9-41
81K401	90458-1141	FERRITE, RI-16-28-9	9-49
M			
20M000	2838710-0100	WORM GEAR MOTOR	1-11
20M050	90600-1080	DOUBLE ACTING, ROUND, CYL 32-80	1-13
21M051	2769718-0100	PNEUMATIC CYLINDER	1-57
21M052	2769718-0100	PNEUMATIC CYLINDER	1-57
21M100	90459-2583	SERVO MOTOR MPL-B420P-MK22AA	1-49, 1-51
21M200	90459-2583	SERVO MOTOR MPL-B420P-MK22AA	1-53, 1-55
21M360	90457-0871	DOUBLE ACTING, MINI-ISO, CYL. 16-25	10-15, 10-17
21M800	90459-6768	FAN 2BH1300-7AV15	5-55
30M000	90459-2589	SERVO MOTOR MPL-B430P-MK22AA	6-19
30M400	90459-2583	SERVO MOTOR MPL-B420P-MK22AA	2-15
40M000	90459-2589	SERVO MOTOR MPL-B430P-MK22AA	3-13
40M002	90459-2589	SERVO MOTOR MPL-B430P-MK22AA	3-15
40M260	90459-7429	CYLINDER, GRIPPER HGP-16-A-B	7-21
40M300	90459-7177	SERVO MOTOR MPL-B320P-MJ22AA	7-11
40M400	2856579-0000	MOTOR	8-5
50M000	90458-2483	MOTOR	4-23
50M100	90458-1706	MOTOR 3GVA062002-CSB M2VA63B4	4-21
P			
01P500	90053-0029	COUNTER, F524.800FA3C 24VDC	9-47
01P501	90053-0031	HOUR COUNTER, B 609.10 10-50VDC	9-47
01P510	90458-0293	LIGHT ELEMENT, RED, KL70-401R	5-89
01P513	90458-0302	SIREN WITH ADJUSTABLE VOLUME KS 70-3004	5-89
40P150	90459-7344	PRESSURE GAUGE, MA-40-6-R1/4-EN	5-63, 5-65, 5-67
Q			
01Q104	90459-5312	CONTACTOR 22KW 24VDC, DILM50	9-37
01Q104	90459-5418	AUXILARY CONTACTS, DILM150-XHI22 2NO;2NC	9-37
01Q105	90459-5312	CONTACTOR 22KW 24VDC, DILM50	9-33
01Q105	90459-5418	AUXILARY CONTACTS, DILM150-XHI22 2NO;2NC	9-33
01Q500	90459-5311	CONTACTOR 15KW 24VDC, DILM32-10	9-37
01Q600	90459-5308	CONTACTOR 4KW 24VDC, DILM9-10	9-37
01Q850	90459-2337	SHUT OFF VALVE, MS4-EM1-1/4	5-71
20Q000	90459-5308	CONTACTOR 4KW 24VDC, DILM9-10	9-55, 9-57
20Q000	90459-6852	AUXILIARY CONTACT, DILA-XHI22	9-55, 9-57
20Q051	90459-0290	NON-RETURN VALVE, PUSH-IN 6 MM	5-63, 5-65, 5-67
20Q052	90187-0191	BALL VALVE R1/8, 6 MM	5-63, 5-65, 5-67
21Q400	90459-5308	CONTACTOR 4KW 24VDC, DILM9-10	9-45
21Q400	90459-6852	AUXILIARY CONTACT, DILA-XHI22	9-45
21Q410	90459-5308	CONTACTOR 4KW 24VDC, DILM9-10	9-63
21Q410	90459-6852	AUXILIARY CONTACT, DILA-XHI22	9-63
21Q600	90459-5308	CONTACTOR 4KW 24VDC, DILM9-10	9-55, 9-57
21Q600	90459-6852	AUXILIARY CONTACT, DILA-XHI22	9-55, 9-57
21Q800	90459-5308	CONTACTOR 4KW 24VDC, DILM9-10	9-37
21Q801	90459-5309	CONTACTOR 7,5KW 24VDC, DILM17-10	9-37
40Q400	90459-5308	CONTACTOR 4KW 24VDC, DILM9-10	9-55, 9-57
40Q400	90459-6852	AUXILIARY CONTACT, DILA-XHI22	9-55, 9-57
50Q000	90459-5308	CONTACTOR 4KW 24VDC, DILM9-10	9-55, 9-57
50Q000	90459-6852	AUXILIARY CONTACT, DILA-XHI22	9-55, 9-57
50Q100	90459-5308	CONTACTOR 4KW 24VDC, DILM9-10	9-55, 9-57
50Q100	90459-6852	AUXILIARY CONTACT, DILA-XHI22	9-55, 9-57
80Q051	90187-0045	BALL VALVE G1/4 CR PL	5-57
R			
01R851	90459-2425	PRESSURE REGULATOR IN-LINE, BSP-1/4	5-71
01R852	90328-0026	SILENCER G1/4"	5-71
01R853	90328-0026	SILENCER G1/4"	5-71
01R951	90328-0047	SILENCER G1/8"	5-63, 5-65, 5-67
01R953	90328-0047	SILENCER G1/8"	5-63, 5-65, 5-67
01R954	90328-0029	SILENCER M5	5-63, 5-65, 5-67
01R955	90328-0029	SILENCER M5	5-63, 5-65, 5-67
20R051	90328-0017	SILENCER, D=6 MM	1-13
20R352	90328-0047	SILENCER G1/8"	5-63, 5-65, 5-67
20R353	90328-0047	SILENCER G1/8"	5-63, 5-65, 5-67
20R354	90328-0029	SILENCER M5	5-63, 5-65, 5-67
20R355	90328-0029	SILENCER M5	5-63, 5-65, 5-67
21R054	90459-3604	FLOW CONTROL VALVE, GR-QS-6	5-63, 5-65, 5-67
21R354	90235-0748	THROTTLE CHECK VALVE	5-63, 5-65, 5-67
21R363	90328-0012	SILENCER	10-19
21R365	90328-0012	SILENCER	10-19
21R366	90328-0020	SILENCER U-M5,	10-19
21R367	90328-0020	SILENCER U-M5,	10-19
21R553	90328-0012	SILENCER	10-21
21R555	90328-0012	SILENCER	10-21
21R556	90328-0020	SILENCER U-M5,	10-21
21R557	90328-0020	SILENCER U-M5,	10-21
21R801	90206-0124	HEATING ELEMENT 2X1500W 230V	5-47
40R150	90459-5817	REGULATOR, MS4-LR-1/4-D6-A8-AS	5-63, 5-65, 5-67
40R260	90328-0020	SILENCER U-M5,	7-29

Pos	Part No	Description	Page No
R			
40R263	90328-0012	SILENCER	7-29
40R265	90328-0012	SILENCER	7-29
81R400	90459-2523	OPEN STYLE TERMINATOR, 1485A-C2	9-49
R102	90206-0124	HEATING ELEMENT 2X1500W 230V	5-49
S			
01S400	90064-0093	PUSH BUTTON, GREEN	5-103
01S401	90064-0082	PUSH BUTTON, WHITE	5-103
01S402	90064-0093	PUSH BUTTON, GREEN	5-103
01S403	90111-0122	KEY SWITCH, 2 NO CONTACTS	5-103
01S404	90459-3279	BLANK PLUG BLACK, SQUARE, PLASTIC ZB5SZ5	5-103
01S405	90459-3279	BLANK PLUG BLACK, SQUARE, PLASTIC ZB5SZ5	5-103
T			
01T200	90459-4133	POWER SUPPLY UNIT 6EP1 436-3BA00	9-49
01T300	90459-7267	POWER SUPPLY 24VDC, 1756-PB75/B	9-41
01T400	90459-5886	POWER SUPPLY UNIT 115-230 VAC/24VDC100W	9-49
20T000	90459-3441	FREQUENCY CONVERTER 0,37 KW	9-55, 9-57
21T100	90459-7215	AXIS MODULE 650V, 10,3A, 2094-BM02-S	9-55, 9-57
21T200	90459-7215	AXIS MODULE 650V, 10,3A, 2094-BM02-S	9-55, 9-57
21T400	90459-3450	VARIABLE FREQUENCY DRIVE 22A-A4P5N104	9-9
21T410	90459-3449	VARIABLE FREQUENCY DRIVE 22A-A2P3N104	9-63
30T000	90459-7211	SERVO AXIS MODULE W/PS 15A 400/460V	9-39
30T400	90459-7214	AXIS MODULE 650V, 6,1A, 2094-BM01-S	9-39
40T000	90459-7215	AXIS MODULE 650V, 10,3A, 2094-BM02-S	9-55, 9-57
40T002	90459-7215	AXIS MODULE 650V, 10,3A, 2094-BM02-S	9-55, 9-57
40T300	90459-7214	AXIS MODULE 650V, 6,1A, 2094-BM01-S	9-55, 9-57
50T100	90459-3449	VARIABLE FREQUENCY DRIVE 22A-A2P3N104	9-55, 9-57
70T100	90459-2547	POWER RAIL SLOT FILLER MODULE, 2094-PRF	9-55, 9-57
70T100	90459-7214	AXIS MODULE 650V, 6,1A, 2094-BM01-S	9-61
81T200	90459-6858	ETHERNET SW, FL SWITCH SF 8TX FROM V 14	9-49
81T400	90459-5886	POWER SUPPLY UNIT 115-230 VAC/24VDC100W	9-49
U			
01U950	90459-2591	SINGLE VALVE SUB-BASE CDSV5.0-AS-1/8	5-63, 5-65, 5-67
01U951	90032-0038	BLOCK 2 WAYS	5-79, 5-81, 5-83
01U952	90032-0038	BLOCK 2 WAYS	5-79, 5-81, 5-83
01U953	90032-0038	BLOCK 2 WAYS	5-79, 5-81, 5-83
01U954	90032-0039	BLOCK 4 WAYS	5-79, 5-81, 5-83
01U955	90032-0039	BLOCK 4 WAYS	5-79, 5-81, 5-83
01U956	90032-0039	BLOCK 4 WAYS	5-79, 5-81, 5-83
01U957	90032-0039	BLOCK 4 WAYS	5-79, 5-81, 5-83
01U958	90032-0039	BLOCK 4 WAYS	5-79, 5-81, 5-83
01U959	90032-0038	BLOCK 2 WAYS	5-79, 5-81, 5-83
01U960	90032-0038	BLOCK 2 WAYS	5-79, 5-81, 5-83
20U350	90459-2591	SINGLE VALVE SUB-BASE CDSV5.0-AS-1/8	5-63, 5-65, 5-67
21U360	90459-2591	SINGLE VALVE SUB-BASE CDSV5.0-AS-1/8	10-19
21U550	90459-2591	SINGLE VALVE SUB-BASE CDSV5.0-AS-1/8	10-21
40U260	90459-2591	SINGLE VALVE SUB-BASE CDSV5.0-AS-1/8	7-29
V			
01V100	90024-0060	POWER LINE FILTER, 80 A 250/440 VAC	9-7
01V104	90459-2549	AC LINE FILTER 3-PHASE 30A, 2090-XXLF-X3	9-9
01V105	90459-3931	POWER LINE FILTER, 3 A 120/250 VAC	9-9
01V850	90459-2339	FILTER REGULATOR, MS4-LFR-1/4-D7-ERV-AS	5-71
01V852	90459-2773	FILTER, MS6-LFM-1/2-BRV	5-69
01V853	90459-2772	FILTER, MS6-LFM-1/2-ARV	5-69
01V854	90459-2771	FILTER, MS6-LFX-1/2-R	5-69
01V902	90415-0030	OIL FILTER PN 100 ORD.NO 2.77 10 70.1	5-77
20V000	90459-3454	FOOTPRINT FILTER, 22-RF018-BL	9-55, 9-57
21V400	90459-3460	FOOTPRINT FILTER 22-RF010-AL	9-9
21V410	90459-3460	FOOTPRINT FILTER 22-RF010-AL	9-63
50V100	90459-3460	FOOTPRINT FILTER 22-RF010-AL	9-55, 9-57
W			
01W400	351150-0403	CABLE OLFLEX 3X0,75 MM2 LIGHT/GREY	5-97
01W401	351150-0407	CABLE OLFLEX 12X0,75 MM2 LIGHT/GREY	5-97
01W500	351150-0187	CABLE OLFLEX 5X6 MM2 LIGHT/GREY	5-97
01W510	351150-0406	CABLE OLFLEX 7X0,75 MM2 LIGHT/GREY	5-97
01W701	351150-0403	CABLE OLFLEX 3X0,75 MM2 LIGHT/GREY	5-97
01W702	351150-0403	CABLE OLFLEX 3X0,75 MM2 LIGHT/GREY	5-97
01W800	351150-0403	CABLE OLFLEX 3X0,75 MM2 LIGHT/GREY	5-97
01W801	351150-0403	CABLE OLFLEX 3X0,75 MM2 LIGHT/GREY	5-97
01W851	315400-0010	TUBE PUN-H-12X2-BL	5-63, 5-65, 5-67
01W852	315400-0004	TUBE PUN-H-8X1,25-BL	5-71, 5-73
01W853	315400-0001	TUBE PUN-H-6X1-BL	5-63, 5-65, 5-67
01W854	315400-0010	TUBE PUN-H-12X2-BL	5-63, 5-65, 5-67
01W855	315400-0010	TUBE PUN-H-12X2-BL	5-63, 5-65, 5-67
01W856	315400-0010	TUBE PUN-H-12X2-BL	5-63, 5-65, 5-67
01W857	315400-0004	TUBE PUN-H-8X1,25-BL	5-63, 5-65, 5-67
01W858	315400-0001	TUBE PUN-H-6X1-BL	5-99
01W858	315400-0004	TUBE PUN-H-8X1,25-BL	5-63, 5-65, 5-67
01W859	315400-0001	TUBE PUN-H-6X1-BL	5-63, 5-65, 5-67
01W860	315400-0010	TUBE PUN-H-12X2-BL	5-63, 5-65, 5-67
01W860	315400-0013	TUBE PUN-H-16-2,5-BL	5-73
01W861	315400-0004	TUBE PUN-H-8X1,25-BL	5-63, 5-65, 5-67
01W862	315400-0010	TUBE PUN-H-12X2-BL	5-63, 5-65, 5-67

Pos	Part No	Description	Page No
W			
01W863	315400-0010	TUBE PUN-H-12X2-BL	5-63, 5-65, 5-67
01W865	315400-0010	TUBE PUN-H-12X2-BL	5-63, 5-65, 5-67
01W868	315400-0001	TUBE PUN-H-6X1-BL	5-63, 5-65, 5-67
01W901	351401-0050	ACTU/SENS CABLE RSMVN 3-PRKMV 3-06/5,0M	5-77
01W902	351401-0050	ACTU/SENS CABLE RSMVN 3-PRKMV 3-06/5,0M	5-77
01W951	90166-0132	TUBE 6 MM PA,TRANSP.	5-77, 5-79, 5-81, 5-83
01W952	90166-0108	TUBE 6 MM PA TRANSP.	5-77
01W953	90166-0108	TUBE 6 MM PA TRANSP.	5-77
01W954	315400-0001	TUBE PUN-H-6X1-BL	5-63, 5-65, 5-67, 5-77
01W955	90166-0108	TUBE 6 MM PA TRANSP.	5-77, 5-79, 5-81, 5-83
01W956	90166-0108	TUBE 6 MM PA TRANSP.	5-77, 5-79, 5-81, 5-83
01W956	315400-0001	TUBE PUN-H-6X1-BL	5-63, 5-65, 5-67
01W958	90166-0108	TUBE 6 MM PA TRANSP.	5-79, 5-81, 5-83
01W960	90166-0108	TUBE 6 MM PA TRANSP.	5-79, 5-81, 5-83
01W961	90166-0108	TUBE 6 MM PA TRANSP.	5-79, 5-81, 5-83
01W962	90166-0132	TUBE 6 MM PA,TRANSP.	5-79, 5-81, 5-83
01W963	90166-0109	TUBE 4 MM PA TRANSP.	5-79, 5-81, 5-83
01W964	90166-0109	TUBE 4 MM PA TRANSP.	5-79, 5-81, 5-83
01W965	90166-0109	TUBE 4 MM PA TRANSP.	5-79, 5-81, 5-83
01W966	90166-0109	TUBE 4 MM PA TRANSP.	5-79, 5-81, 5-83
01W967	90166-0109	TUBE 4 MM PA TRANSP.	5-79, 5-81, 5-83
01W968	90166-0109	TUBE 4 MM PA TRANSP.	5-79, 5-81, 5-83
01W969	90166-0143	TUBE 2,5 MM PA TRANSP.	5-79, 5-81, 5-83
01W971	90166-0143	TUBE 2,5 MM PA TRANSP.	5-79, 5-81, 5-83
01W972	90166-0143	TUBE 2,5 MM PA TRANSP.	5-79, 5-81, 5-83
01W973	90166-0143	TUBE 2,5 MM PA TRANSP.	5-79, 5-81, 5-83
01W974	90166-0143	TUBE 2,5 MM PA TRANSP.	5-79, 5-81, 5-83
01W975	90166-0109	TUBE 4 MM PA TRANSP.	5-79, 5-81, 5-83
01W976	90166-0109	TUBE 4 MM PA TRANSP.	5-79, 5-81, 5-83
01W977	90166-0132	TUBE 6 MM PA,TRANSP.	5-79, 5-81, 5-83
01W978	90166-0109	TUBE 4 MM PA TRANSP.	5-79, 5-81, 5-83
01W979	90166-0109	TUBE 4 MM PA TRANSP.	5-79, 5-81, 5-83
01W980	90166-0143	TUBE 2,5 MM PA TRANSP.	5-79, 5-81, 5-83
01W981	90166-0143	TUBE 2,5 MM PA TRANSP.	5-79, 5-81, 5-83
01W982	90166-0143	TUBE 2,5 MM PA TRANSP.	5-79, 5-81, 5-83
01W983	90166-0143	TUBE 2,5 MM PA TRANSP.	5-79, 5-81, 5-83
01W984	90166-0109	TUBE 4 MM PA TRANSP.	5-79, 5-81, 5-83
01W990	90166-0143	TUBE 2,5 MM PA TRANSP.	5-79, 5-81, 5-83
01W991	90166-0143	TUBE 2,5 MM PA TRANSP.	5-79, 5-81, 5-83
01W992	90166-0143	TUBE 2,5 MM PA TRANSP.	5-79, 5-81, 5-83
01W993	90166-0143	TUBE 2,5 MM PA TRANSP.	5-79, 5-81, 5-83
01W994	90166-0143	TUBE 2,5 MM PA TRANSP.	5-79, 5-81, 5-83
01W995	90166-0143	TUBE 2,5 MM PA TRANSP.	5-79, 5-81, 5-83
01W996	90166-0143	TUBE 2,5 MM PA TRANSP.	5-79, 5-81, 5-83
01W997	90166-0143	TUBE 2,5 MM PA TRANSP.	5-79, 5-81, 5-83
01W998	90166-0109	TUBE 4 MM PA TRANSP.	5-79, 5-81, 5-83
09W103	351150-0405	CABLE OLFLEX 5X0,75 MM2 LIGHT/GREY	5-97
09W201	90220-0165	SCR. CABLE 5X0,34MM2	5-97
09W202	90220-0165	SCR. CABLE 5X0,34MM2	5-97
09W203	90459-4252	CABLE M12-C101, 20-056-10	5-97
09W214	90459-4876	FOCUS JUMPER CABLE M12 5P 3M, 20-056-21	5-93, 5-95
09W216	90459-4876	FOCUS JUMPER CABLE M12 5P 3M, 20-056-21	5-93, 5-95
09W230	90459-4876	FOCUS JUMPER CABLE M12 5P 3M, 20-056-21	5-93, 5-95
09W232	90459-4876	FOCUS JUMPER CABLE M12 5P 3M, 20-056-21	5-93, 5-95
09W234	90459-4876	FOCUS JUMPER CABLE M12 5P 3M, 20-056-21	5-93, 5-95
09W241	351309-0100	ACTUATOR/SENSOR CABLE PRKT 4-07/10M	5-93, 5-95
09W242	351309-0100	ACTUATOR/SENSOR CABLE PRKT 4-07/10M	5-93, 5-95
20W000	90220-0104	SCR. CABLE 4X1,5MM2	5-97
20W003	351306-0100	ACTUATOR/SENSOR CABLE PRKMWV 4-07/10M	1-7
20W050	315400-0001	TUBE PUN-H-6X1-BL	5-63, 5-65, 5-67
20W051	315400-0001	TUBE PUN-H-6X1-BL	1-13, 5-63, 5-65, 5-67
20W052	315400-0001	TUBE PUN-H-6X1-BL	5-63, 5-65, 5-67
20W053	315400-0001	TUBE PUN-H-6X1-BL	5-63, 5-65, 5-67
20W354	315400-0001	TUBE PUN-H-6X1-BL	5-63, 5-65, 5-67
20W355	315400-0001	TUBE PUN-H-6X1-BL	5-63, 5-65, 5-67
20W355	315400-0004	TUBE PUN-H-8X1,25-BL	5-61
20W356	315400-0001	TUBE PUN-H-6X1-BL	5-63, 5-65, 5-67
21W000	351401-0050	ACTU/SENS CABLE RSMVN 3-PRKMV 3-06/5,0M	1-59
21W051	315400-0004	TUBE PUN-H-8X1,25-BL	5-63, 5-65, 5-67
21W054	315400-0004	TUBE PUN-H-8X1,25-BL	5-63, 5-65, 5-67
21W100	90459-2565	MOTOR CABLE 16 AWG 2090-XXNPMP-16S09	5-97
21W101	90459-7207	MOTOR FEEDBACK CABLE 2090-XXNFMP-S09/C	5-97
21W200	90459-2565	MOTOR CABLE 16 AWG 2090-XXNPMP-16S09	5-97
21W201	90459-7207	MOTOR FEEDBACK CABLE 2090-XXNFMP-S09/C	5-97
21W300	90459-6586	ACT/SENS.Y-CABLE, ASBN 2-PRKMV 4-07/0,6M	10-23
21W300	351411-0006	ACTU/SENS. CABLE PRST 4-PRKT 4-07/0,6M	10-23
21W302	90459-6586	ACT/SENS.Y-CABLE, ASBN 2-PRKMV 4-07/0,6M	10-23
21W304	90459-6586	ACT/SENS.Y-CABLE, ASBN 2-PRKMV 4-07/0,6M	10-23
21W310	90459-1663	CONNECTOR, 405204 RSCN4/7	10-23
21W351	315400-0004	TUBE PUN-H-8X1,25-BL	5-63, 5-65, 5-67
21W355	315400-0004	TUBE PUN-H-8X1,25-BL	5-63, 5-65, 5-67
21W361	315400-0004	TUBE PUN-H-8X1,25-BL	10-19

Pos	Part No	Description	Page No
W			
21W362	315400-0016	TUBE PUN-H-4X0,75-BL	10-15, 10-17, 10-19
21W364	315400-0016	TUBE PUN-H-4X0,75-BL	10-15, 10-17, 10-19
21W365	315400-0016	TUBE PUN-H-4X0,75-BL	10-19
21W400	90220-0104	SCR. CABLE 4X1,5MM2	5-97
21W402	90459-6586	ACT/SENS.Y-CABLE, ASBN 2-PRKMV 4-07/0,6M	5-21, 5-23
21W404	90459-6586	ACT/SENS.Y-CABLE, ASBN 2-PRKMV 4-07/0,6M	5-21, 5-23
21W406	90459-6586	ACT/SENS.Y-CABLE, ASBN 2-PRKMV 4-07/0,6M	5-21, 5-23
21W408	90459-6586	ACT/SENS.Y-CABLE, ASBN 2-PRKMV 4-07/0,6M	5-21, 5-23
21W410	90220-0104	SCR. CABLE 4X1,5MM2	5-97
21W412	351309-0050	ACTUATOR/SENSOR CABLE PRKT 4-07/5M	5-21, 5-23
21W414	351309-0050	ACTUATOR/SENSOR CABLE PRKT 4-07/5M	5-21, 5-23
21W416	351309-0050	ACTUATOR/SENSOR CABLE PRKT 4-07/5M	5-21, 5-23
21W418	351309-0100	ACTUATOR/SENSOR CABLE PRKT 4-07/10M	5-21, 5-23
21W422	351405-0006	ACT/SENS. CABLE RSMVN 3-PRKT 4-3-06/0,6M	5-21, 5-23
21W424	90459-6586	ACT/SENS.Y-CABLE, ASBN 2-PRKMV 4-07/0,6M	5-21, 5-23
21W500	90459-1663	CONNECTOR, 405204 RSCN4/7	10-23
21W550	315400-0004	TUBE PUN-H-8X1,25-BL	10-21
21W551	315400-0004	TUBE PUN-H-8X1,25-BL	10-21
21W556	315400-0016	TUBE PUN-H-4X0,75-BL	10-21
21W602	90459-6586	ACT/SENS.Y-CABLE, ASBN 2-PRKMV 4-07/0,6M	5-21, 5-23
21W612	351405-0050	ACT/SENS. CABLE RSMVN 3-PRKT 4-3-06/5,0M	5-21, 5-23
21W800	351150-0412	CABLE OLFLEX 3X1,5 MM2 LIGHT/GREY	5-97
21W801	351120-0266	CABLE SILFLEX SIHF 4X4 00460273	5-97
30W000	90459-2565	MOTOR CABLE 16 AWG 2090-XXNPMP-16S09	5-97
30W001	90459-7207	MOTOR FEEDBACK CABLE 2090-XXNFMP-S09/C	5-97
30W102	351411-0010	ACTU/SENS. CABLE PRST 4-PRKT 4-07/1,0M	6-17
30W400	90459-2565	MOTOR CABLE 16 AWG 2090-XXNPMP-16S09	5-97
30W401	90459-7207	MOTOR FEEDBACK CABLE 2090-XXNFMP-S09/C	5-97
40W000	90459-2565	MOTOR CABLE 16 AWG 2090-XXNPMP-16S09	5-97
40W001	90459-7207	MOTOR FEEDBACK CABLE 2090-XXNFMP-S09/C	5-97
40W002	90459-2565	MOTOR CABLE 16 AWG 2090-XXNPMP-16S09	5-97
40W003	90459-7207	MOTOR FEEDBACK CABLE 2090-XXNFMP-S09/C	5-97
40W012	351412-0015	ACTU/SENS. CABLE PRST 4-PRKWT 4-07/1,5M	3-23
40W013	351412-0015	ACTU/SENS. CABLE PRST 4-PRKWT 4-07/1,5M	3-23
40W100	351150-0403	CABLE OLFLEX 3X0,75 MM2 LIGHT/GREY	3-9
40W101	351150-0403	CABLE OLFLEX 3X0,75 MM2 LIGHT/GREY	3-9
40W150	315400-0004	TUBE PUN-H-8X1,25-BL	3-9
40W150	315400-0010	TUBE PUN-H-12X2-BL	5-63, 5-65, 5-67
40W151	315400-0004	TUBE PUN-H-8X1,25-BL	3-9
40W151	315400-0016	TUBE PUN-H-4X0,75-BL	5-63, 5-65, 5-67
40W152	315400-0004	TUBE PUN-H-8X1,25-BL	5-63, 5-65, 5-67
40W161	315400-0004	TUBE PUN-H-8X1,25-BL	3-9
40W200	351411-0010	ACTU/SENS. CABLE PRST 4-PRKT 4-07/1,0M	7-21
40W254	315400-0004	TUBE PUN-H-8X1,25-BL	5-63, 5-65, 5-67
40W261	315400-0004	TUBE PUN-H-8X1,25-BL	7-29
40W262	315400-0016	TUBE PUN-H-4X0,75-BL	7-21, 7-29
40W263	315400-0016	TUBE PUN-H-4X0,75-BL	7-29
40W264	315400-0016	TUBE PUN-H-4X0,75-BL	7-21, 7-29
40W266	90459-7428	TUBE PUN-H-3X0,5-BL	7-21
40W267	90459-7428	TUBE PUN-H-3X0,5-BL	7-21
40W300	90459-2565	MOTOR CABLE 16 AWG 2090-XXNPMP-16S09	5-97
40W301	90459-7207	MOTOR FEEDBACK CABLE 2090-XXNFMP-S09/C	5-97
40W410	351150-0413	CABLE OLFLEX 4X1,5 MM2 LIGHT/GREY	5-97
50W004	351150-0405	CABLE OLFLEX 5X0,75 MM2 LIGHT/GREY	5-97
50W010	351150-0413	CABLE OLFLEX 4X1,5 MM2 LIGHT/GREY	5-97
50W110	90220-0104	SCR. CABLE 4X1,5MM2	5-97
70W003	351305-0100	ACTUATOR/SENSOR CABLE PRKMV 4-07/10M	2-7
70W100	90459-2565	MOTOR CABLE 16 AWG 2090-XXNPMP-16S09	5-87
70W101	90459-7207	MOTOR FEEDBACK CABLE 2090-XXNFMP-S09/C	5-87
80W051	315400-0009	TUBE PUN-H-10X1,5-SW	5-57
81W200	90459-1621	CABLE, ETHERNET RJ 45 CONNECT. 1 M	9-69
81W201	90459-6395	CABLE, ETHERNET RJ 45 STRAIGHT.10M	9-69
81W400	90459-2530	DEVICENET CABLE THIN	9-69
81W401	90459-2530	DEVICENET CABLE THIN	9-69
81W402	90459-2530	DEVICENET CABLE THIN	9-69
81W403	90459-2530	DEVICENET CABLE THIN	9-69
81W404	351415-0100	DEVICENET CONN. CABLE, 0935 361 105/10M	5-7, 5-9
81W405	90459-2530	DEVICENET CABLE THIN	9-69
81W406	90459-2530	DEVICENET CABLE THIN	9-69
81W407	90459-2530	DEVICENET CABLE THIN	9-69
81W420	351309-0100	ACTUATOR/SENSOR CABLE PRKT 4-07/10M	5-7, 5-9
81W700	90220-0183	SCR. CABLE 2X0,34MM2	9-69
81W701	90220-0183	SCR. CABLE 2X0,34MM2	9-69
81W702	90220-0183	SCR. CABLE 2X0,34MM2	9-69
X			
01X002	2839223-0100	PLINTH	9-9
01X003	2839224-0100	PLINTH	9-9
01X004	2840918-0100	PLINTH	9-55, 9-57
01X006	2841403-0100	PLINTH	9-55, 9-57
01X600	2890591-0100	PLINTH	9-49
01X700	90001-0033	WALL SOCKET OUTLET	9-9
21X101	90459-2551	CONNECTOR, MOTOR FEEDBACK 15 PIN MALE	5-97

Pos	Part No	Description	Page No
X			
21X201	90459-2551	CONNECTOR, MOTOR FEEDBACK 15 PIN MALE	5-97
21X320	90459-0839	DISTRIBUTION FRAME, ASBV 8 5-135/10M	10-23
30X001	90459-2551	CONNECTOR, MOTOR FEEDBACK 15 PIN MALE	5-97
30X120	90459-0839	DISTRIBUTION FRAME, ASBV 8 5-135/10M	6-65
30X130	90459-0839	DISTRIBUTION FRAME, ASBV 8 5-135/10M	6-65
30X131	90459-1663	CONNECTOR, 405204 RSCN4/7	7-21
30X136	90459-1663	CONNECTOR, 405204 RSCN4/7	7-29
30X401	90459-2551	CONNECTOR, MOTOR FEEDBACK 15 PIN MALE	5-97
40X001	90459-2551	CONNECTOR, MOTOR FEEDBACK 15 PIN MALE	5-97
40X003	90459-2551	CONNECTOR, MOTOR FEEDBACK 15 PIN MALE	5-97
40X301	90459-2551	CONNECTOR, MOTOR FEEDBACK 15 PIN MALE	5-97
40X400	90110-0053	FEMALE INSERT HAN 6 E 09 33 006 2701	5-7, 5-9
50X000	90110-0053	FEMALE INSERT HAN 6 E 09 33 006 2701	5-9
50X001	90459-6820	FEMALE INSERT HAN 4 A, 09 20 004 2711	5-7, 5-9
50X110	90110-0053	FEMALE INSERT HAN 6 E 09 33 006 2701	5-7, 5-9
70X101	90459-2551	CONNECTOR, MOTOR FEEDBACK 15 PIN MALE	5-87
81X401	90459-2519	OPEN STYLE TAP	9-49
81X704	90459-6470	CONNECTOR RJ45 TER. BL., AK-U0-RJ45-TB2P	9-63

Pos	Part No	Description	Page No

Pos	Part No	Description	Page No	Pos	Part No	Description	Page No

Machine Type	Group Description	Page No

Tetra Pak

SPC binder labels. 40 mm Full width *Note! This page is generated* **automatically.**
using the **variable definitions** *made in the* **front page** *file!!*

CAP 30/Flex
662950-0100
Issue: 2007-07 Doc No: SPC-2852925-0104

CAP 30/Flex
662950-0100
Issue: 2007-07 Doc No: SPC-2852925-0104

CAP 30/Flex
662950-0100
Issue: 2007-07 Doc No: SPC-2852925-0104

CAP 30/Flex
662950-0100
Issue: 2007-07 Doc No: SPC-2852925-0104

CAP 30/Flex
662950-0100
Issue: 2007-07 Doc No: SPC-2852925-0104

CAP 30/Flex
662950-0100
Issue: 2007-07 Doc No: SPC-2852925-0104

CAP 30/Flex
662950-0100
Issue: 2007-07 Doc No: SPC-2852925-0104

CAP 30/Flex
662950-0100
Issue: 2007-07 Doc No: SPC-2852925-0104

CAP 30/Flex
662950-0100
Issue: 2007-07 Doc No: SPC-2852925-0104

CAP 30/Flex
662950-0100
Issue: 2007-07 Doc No: SPC-2852925-0104

CAP 30/Flex
662950-0100
Issue: 2007-07 Doc No: SPC-2852925-0104