EM

Electrical Manual

CAP 30/Flex

662950-0200

ReCap

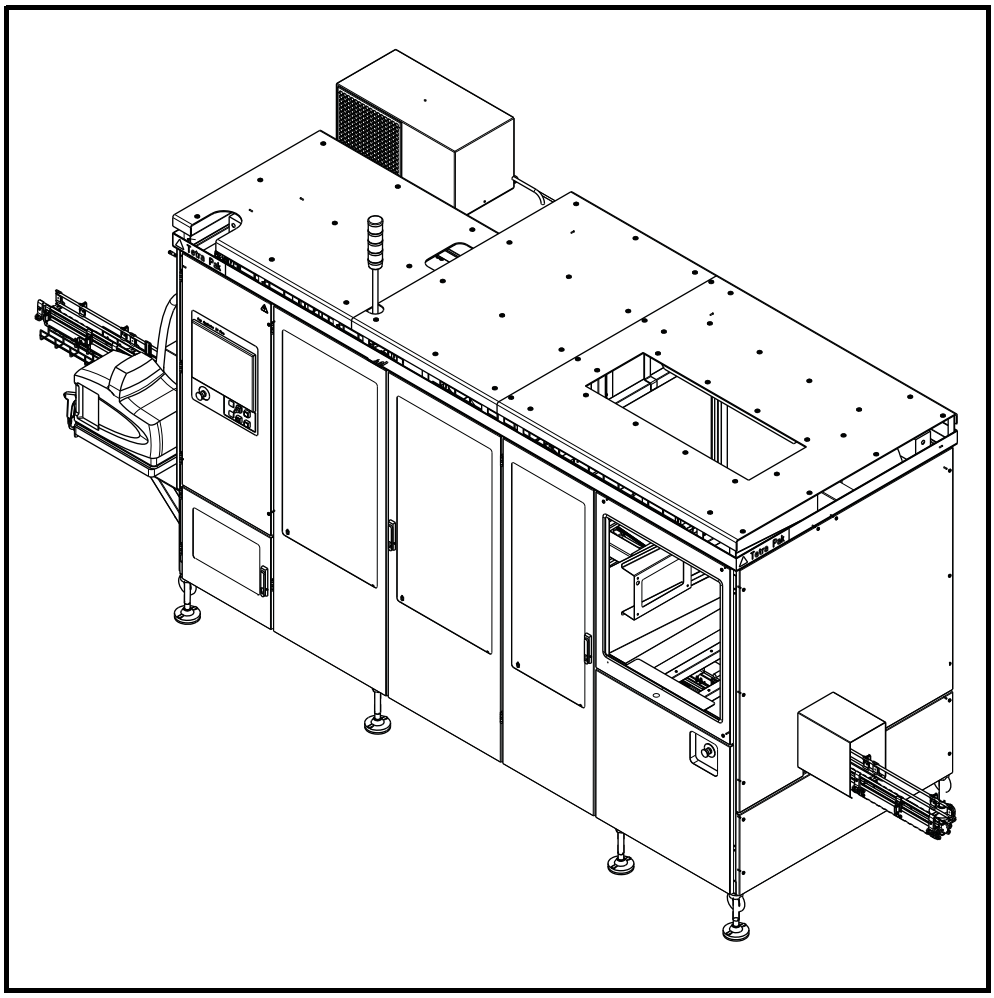

TechPub_2614345_0107 - EM_3047190_0101_fro.fm

WARNING

Read and follow all safety precaution instructions throughout this manual and on safety signs attached to this equipment.

Failure to follow all safety precaution instructions could result in death or serious injury.

Tetra Pak

Doc. No. EM-3047190-0101

Copyright © 2009 Tetra Pak Group

All rights reserved. No part of this document may be reproduced or copied in any form or by any means without written permission from Tetra Pak Packaging Solutions.

Tetra Pak and all Tetra Pak products are trademarks belonging to the Tetra Pak Group.

The content of this manual is in accordance with the design and construction of the machine or equipment at the time of publishing. Tetra Pak reserves the right to introduce design modifications without prior notice.

The English language version of this document contains the original instructions. All other language versions are translations of the original instructions.

This document was produced by:

Tetra Pak Packaging Solutions
Via Delfini 1
41100 Modena
Italy

Additional copies can be ordered from Tetra Pak. When ordering additional copies, always provide the document number.

Doc. No. EM-3047190-0101

Issue 2009-10

TechPub_2614345_0107 - EM_3047190_0101_fro.fm

This manual is valid for:

Series No./ Machine No. Sign.

EM

Electrical Manual

CAP 30/Flex
ReCap

TechPub_2614345_0107 - EM_3047190_0101_fro.fm

Machine or equipment configurations that this manual is valid for are described on the next page.

Doc. No. EM-3047190-0101

Issue 2009-10

Tetra Pak

Tetra Pak Packaging Solutions

i Introduction

ii Safety Precautions

1 Electrical System Description

2 Document List

3 Position Summary

4 Circuit Diagrams

5 Line Summary

6 Cabinet Terminal Summary

7 Terminal Strip Overview

8 Cable Connection List

9 Mains Connection

10 Drawing Remarks

11 Engineering Change Description

12 Component Location

13 Other Information

14 Program Documents

Valid for:

Name	Drawing Specification and Development Step	Additional Information
CAP 30/Flex ReCap	662950-0200	Volume and package shape: TBA 500 S ReCap 2 A3 TBA 1000 S ReCap 3 TBA 1000 B ReCap 3 TBA 1000 Sq ReCap 3 TBA 1500 S ReCap 3 TBA 1890 S ReCap 3 TBA 2000 S ReCap 3

TechPub_2614345_0107 - EM_3047190_0101_fro.fm

i Introduction

TechPub_2614345_0107 - in01_3050419_01.fm

This chapter contains basic information about this manual and the related Tetra Pak equipment.

TechPub_2614345_0107 - in01_3050419_01.fm

Manual Information . . . . . i - 5

Delivered Manuals . . . . . i - 5

Page Layout . . . . . i - 6

Page Numbering. . . . . i - 7

Typographical Conventions . . . . . i - 7

Symbols . . . . . i - 7

Machine Introduction . . . . . i - 8

Intended Use of the Equipment . . . . . i - 8

Manufacturer . . . . . i - 8

Support and Feedback . . . . . i - 8

Identification . . . . . i - 9

CE Classification . . . . . i - 9

Machine Plate . . . . . i - 9

Orientation . . . . . i - 10

Hygiene. . . . . i - 11

Packaging Material. . . . . i - 11

Abbreviations and Terminology . . . . . i - 12

How to Use This Electrical Manual . . . . . i - 13

General . . . . . i - 13

Reference Designation . . . . . i - 15

List of Function Codes . . . . . i - 16

Optional Equipment . . . . . i - 17

How to Trace an Electrical Component . . . . . i - 18

Example 1: How to Trace a Line . . . . . i - 18

Example 2: How to Trace a Contactor . . . . . i - 20

Example 3: How to Trace a Terminal in the Electrical Cabinet . . . . . i - 21

Example 4: How to Trace a Terminal

TechPub_2614345_0107 - in01_3050419_01.fm

Outside the Electrical Cabinet . . . . . i - 22

Example 5: How to Find Electrical Components Using the SPC. . . . . i - 23

TechPub_2614345_0107 - in01_3050419_01.fm

Manual Information

Tetra Pak recommends reading all delivered manuals carefully. Make sure that the delivered manuals are available to personnel who operate or maintain the equipment.

It is important to keep this manual for the lifetime of the equipment and to pass the manual on to any subsequent holder or user.

Tetra Pak will not be held responsible for any damage to the equipment caused by not following the instructions given in this manual.

Delivered Manuals

Manuals delivered with this equipment:

- The Conversion Manual (CM) provides technicians with information on converting the equipment between different production modes.
- The Electrical Manual (EM) provides technicians with information about the equipment's electrical system.
- The Installation Manual (IM) provides technicians with information required to safely install the equipment.
- The Maintenance Manual (MM) provides technicians with information on maintaining the equipment.
- The Operation Manual (OM) manual provides the operator with information on handling and operating the equipment before, during, and after production.
- The Spare Parts Catalogue (SPC) provides the information necessary to order spare parts from Tetra Pak
- The Technical Manual (TeM)
  - provides technicians with information required to safely install the equipment
  - provides technicians with information on maintaining the equipment
  - provides technicians with information about the machine's/ equipment's electrical system
- provides the information necessary to order spare parts from Tetra Pak.

TechPub_2614345_0107 - in01_3050419_01.fm

Page Layout

Every main page in a manual contains a header and a footer. The page header contains the chapter name (1) and the section name (2). The page footer contains the page number (3), and the document number (4). See also the Page Numbering section

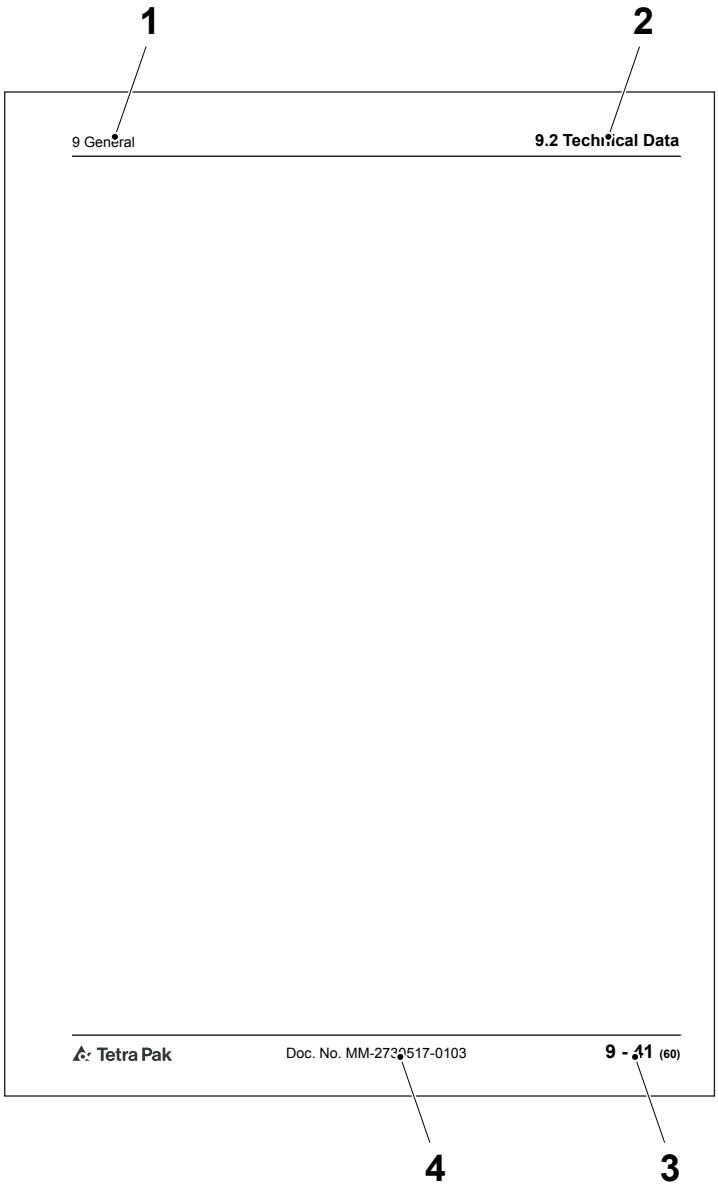

1 Chapter name
2 Section name
3 Page number
4 Document number

TechPub_2614345_0107 - in01_3050419_01.fm

Page Numbering

A page number has three parts:

- chapter number (1)
- consecutive page number (2) within the chapter
- total number of pages (3) in the chapter.

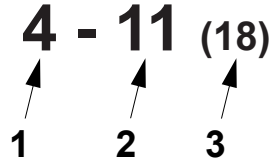

1 Chapter number
2 Consecutive page number
3 Total number of pages

Typographical Conventions

Controls on the operator panel, emergency stop devices, and program steps are printed in CAPITAL LETTERS.

Cross-references are underlined.

Symbols

Symbols used in illustrations.

	A pointer arrow indicates the position of an object.
	A zoom arrow indicates that an object view is enlarged. The arrow points towards the enlarged view of the object.
	A rotation movement arrow indicates rotational movement of an object. The arrow points in the direction of rotation.
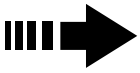	A straight movement arrow indicates movement of an object. The arrow points in the direction of movement.

TechPub_2614345_0107 - in01_3050419_01.fm

Machine Introduction

Intended Use of the Equipment

The intended use of this Tetra Pak equipment is to apply a closure onto a package.

Tetra Brik Aseptic packages with ReCaps must have opening tabs. The opening tabs are applied by a PullTab unit which is incorporated in to the filling machine.

All other use is prohibited. Tetra Pak will not be held responsible for injury or damage if the equipment is used for any other purpose.

Manufacturer

This Tetra Pak equipment has been manufactured by:

Tetra Pak Packaging Solutions
Via Delfini 1
41100 Modena
Italy

Support and Feedback

If you encounter problems when operating this equipment or have other inquiries, comments, or suggestions for improvement, contact Tetra Pak.

TechPub_2614345_0107 - in01_3050419_01.fm

Identification

CE Classification

This equipment complies with the basic health and safety regulations of the European Economic Area (EEA).

Machine Plate

The illustration below shows an example of the machine plate and its location on the equipment. The machine plate carries data needed when contacting Tetra Pak concerning this specific equipment.

Make sure that the equipment data in the front pages of this manual corresponds to the machine plate data and the machine specification.

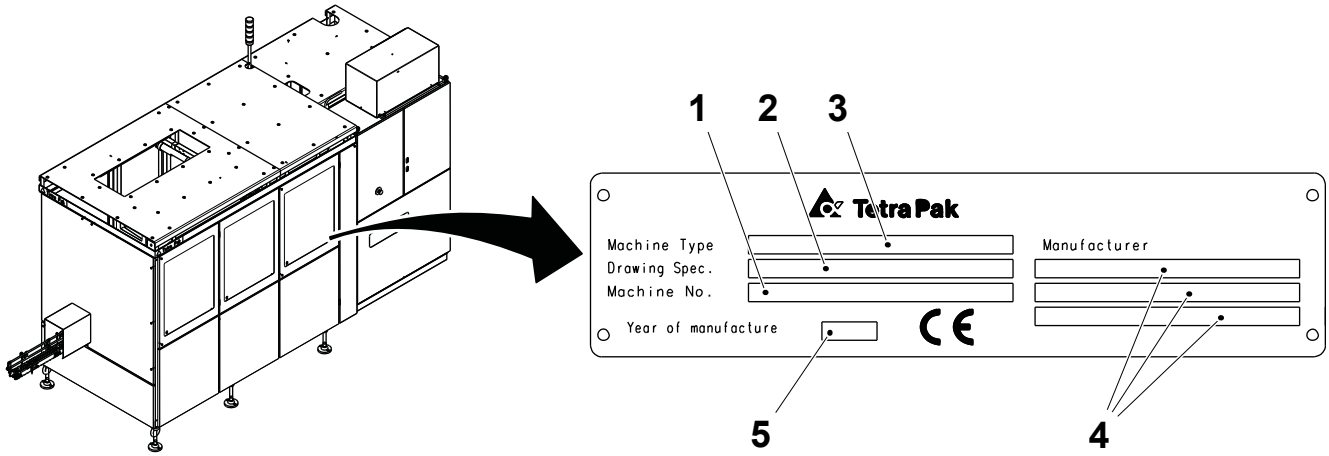

1 Machine Number
2 Drawing Specification
3 Machine Type
4 Manufacture
5 Year of Manufacture

TechPub_2614345_0107 - in01_3050419_01.fm

Orientation

The illustration below shows the orientation of the equipment. This orientation information will be used throughout this manual. The arrows indicate the flow of material.

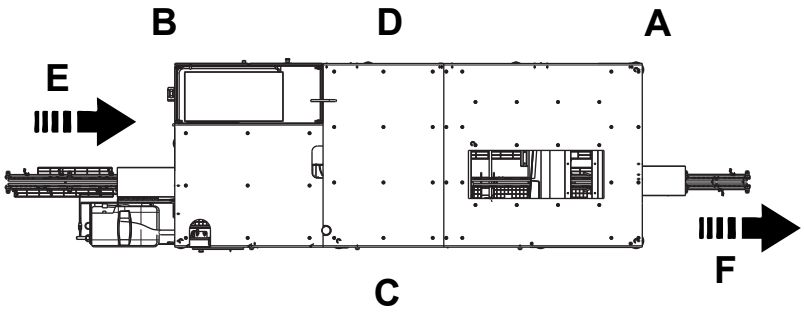

A Front
B Back
C Left
D Right
E Infeed
F Outfeed

TechPub_2614345_0107 - in01_3050419_01.fm

Hygiene

Packaging Material

Avoid microbiological contamination of the packaging material:

- Always protect your packaging material against contamination. Do not let the caps come into contact with contaminated areas. Only use caps direct from their packaging material.
- Except when filling the cap sorter with caps, always keep the cap-sorter magazine door closed. Keep the transparent door panels clean.
- Always keep the doors to the applicator room (area) closed. To prevent contamination via air streams, never open a window when the machine is in production.
- Never clean the floors or the machine in the applicator room (area) when the machine is in production.
- Compressed air used for cleaning purposes is to be used only for cleaning filters and should only be used outside of the applicator room (area).
- Disinfect your hands before touching anything that may come into contact with the product. Use code H disinfectant. See the Technical Data chapter in the Maintenance Manual.
- Keep your hands clean.
- Always wear some type of hair protection (cap or hairnet) and clean clothes (preferably white).
- Do not wear a watch, ring, necklace, earrings, or any other exposed jewellery.

TechPub_2614345_0107 - in01_3050419_01.fm

Abbreviations and Terminology

Abbreviation/ Terminology	Meaning	Translation
ANSI	American National Standards Institute	
APU	Applicator Unit	
CAP	Cap Applicator	
CE	Conformité Européene	
COMMs	Communications	
Cont'd	Continued	
CSU	Cap Sorter Unit	
Doc.	Document	
EEA	European Economic Area	
EM	Electrical Manual	
HMGU	Hotmelt Gun Unit	
IM	Installation Manual	
IPU	Infeed Package Unit	
ISO	International Organization for Standardization	
MM	Maintenance Manual	
No.	Number	
OE	Optional Equipment	
OM	Operation Manual	
PE	Protective Earth	
Pos	Position	
psi	Pound per square inch	
PP	Package Positioner	
PVC	Polyvinyl chloride	
S	Slim (package shape)	
SPC	Spare Parts Catalogue	
TP	Tetra Pak	
V	Volt	

TechPub_2614345_0107 - in01_3050419_01.fm

How to Use This Electrical Manual

General

The chapters following Introduction and Safety Precautions are divided as follows.

Chapter	Name	Drawing No.
1	Electrical Systems Description	--
2	Document List	xxxxxxx-0001
3	Position Summary	xxxxxxx-0002
4	Circuit Diagrams	xxxxxxx-0003
5	Line Summary	xxxxxxx-0004
6	Cabinet Terminal Summary	xxxxxxx-0005
7	Terminal Strip Overview	xxxxxxx-0006
8	Cable Connection List	xxxxxxx-0007
9	Mains Connection	xxxxxxx-0008
10	Drawing Remarks	xxxxxxx-0098
11	Engineering Change Description	xxxxxxx-0099
12	Component Location	xxxxxxx-0000
13	Other Information, for example - Bill of Materials - Fuse Panel	-
14	Program Documents	-

The Document List chapter is a table of contents for the chapters 3 to 9, listing all drawings included.

In the Circuit Diagrams, the first pages are reserved for distribution terminals and the last pages can be used for pre-connected cables. Pre-connected cables are connected to spare terminals and are reserved for future use.

The diagrams in the Mains Connection chapter shows how the machine should be connected to the local supply, the dimensions of the connection cable, and the connection of the matching transformer, when used.

(Cont'd)

TechPub_2614345_0107 - in01_3050419_01.fm

(Cont'd)

The Drawing Remarks chapter lists the drawing remarks indicated with a number in the drawing.

The Program Documents chapter contains the PLC programs for this equipment.

The documents and drawings are identified by drawing number (1), version code (2), and page number (3). The page number is the consecutive numbering of the pages that belong to the main number and is used as a reference in the diagrams.

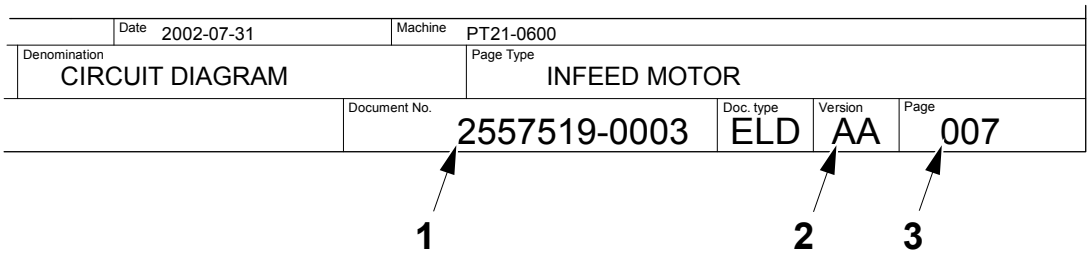

1 Drawing number
2 Version code
3 Page number

TechPub_2614345_0107 - in01_3050419_01.fm

Reference Designation

Components are identified by the reference designation, defined by a function code (1), and a component code (2). For function codes, see List of Function Codes section.

The object code for the component level (3) refers to the purpose or task of the current object. The letter is in accordance with international standards. Examples: Code P for components that present information, such as an alarm lamp, a clock, or a volt meter. Code M for components that provide mechanical energy such as an actuator, or an electric motor.

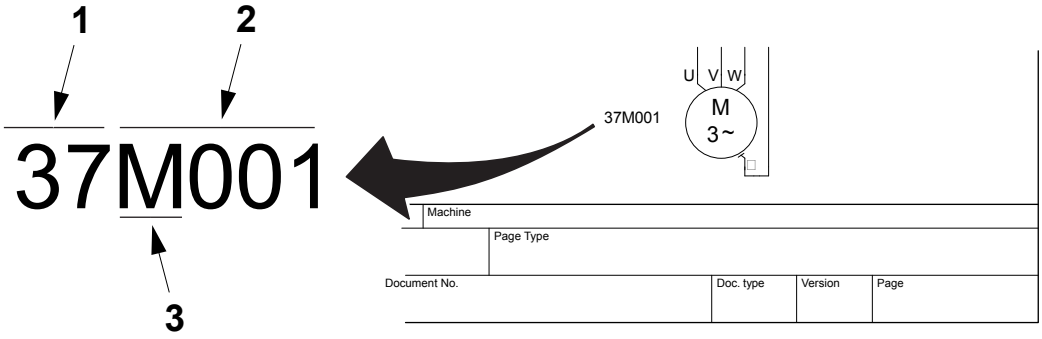

1 Function code
2 Component code
3 Object code, component level

TechPub_2614345_0107 - in01_3050419_01.fm

List of Function Codes

Function codes for this equipment.

Function Code	Identification
1	SERVICE AND SUPPLY
9	SAFETY
20	INFEED PACKAGE
21	PACKAGE POSITIONER
30	APPLICATOR UNIT
40	HOT MELT GUNS APPLICATOR
50	CAP SORTER
60	RECAP CUT AND FEEDING
70	CAP POSITIONING SYSTEM
81	COMMUNICATION

TechPub_2614345_0107 - in01_3050419_01.fm

Optional Equipment

An optional equipment designation indicates that the component belongs to specific optional equipment. The designation numbers for this equipment are explained in the Drawing Remarks chapter.

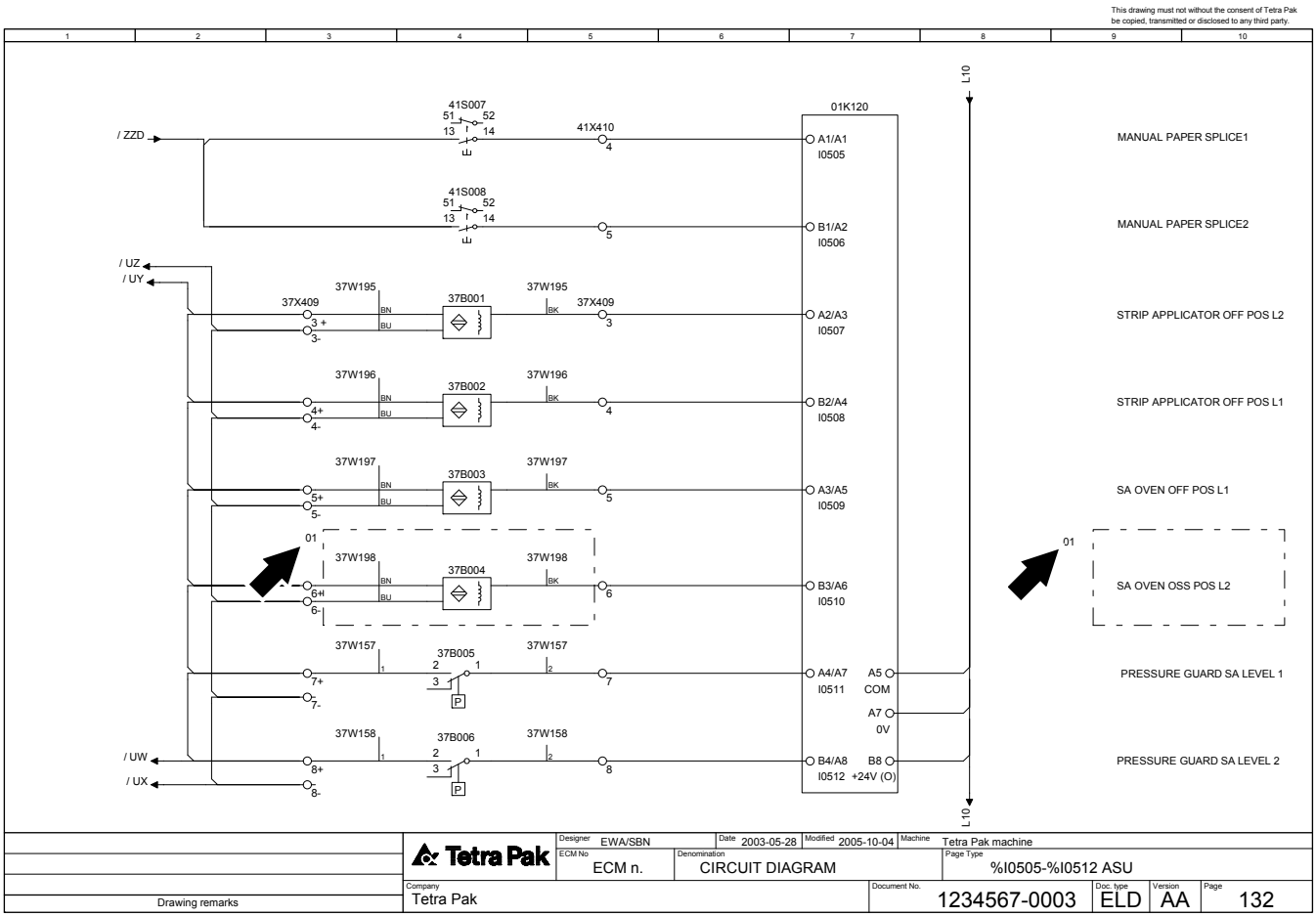

TechPub_2614345_0107 - in01_3050419_01.fm

How to Trace an Electrical Component

Start tracing an electrical component by finding the correct list with page and column references to the Circuit Diagram.

Example 1 on pages i-18 to i-19 illustrates how to trace a Line. Use the Line Summary.

Example 2 on page i-20 illustrates how to trace a contactor. Find page references in the Position Summary. The procedure is identical when tracing sensors or other components. For cables, the page references are in the Cable Connection List. The number of spare cores is shown in the cable connection list.

Examples 3 and 4 on pages i-21 to i-22 illustrate how to trace a terminal. Find page references for terminals *in* the electrical cabinet in the Cabinet Terminal Summary, and page references for terminals *outside* the electrical cabinet in the Terminal Strip Overview.

Example 5 on page i-23 illustrates how to locate a component in the Spare Parts Catalogue, SPC.

Example 1: How to Trace a Line

Supply Voltage and Line Connection Order

The supply voltage in the electrical cabinet has power voltage and control voltage designations.

- Power voltage: lines with designations ending with 01 to 09, for example, L03 and L803
- Control voltage: lines with designations ending with 10 to 99, for example, L12 and L812

The line connection order is shown in the Line Summary.

(Cont'd)

TechPub_2614345_0107 - in01_3050419_01.fm

(Cont'd)

How to Trace a Line

The illustration below shows how to trace line connection L10 from the component terminal 57X001:24 to 57X001:23.

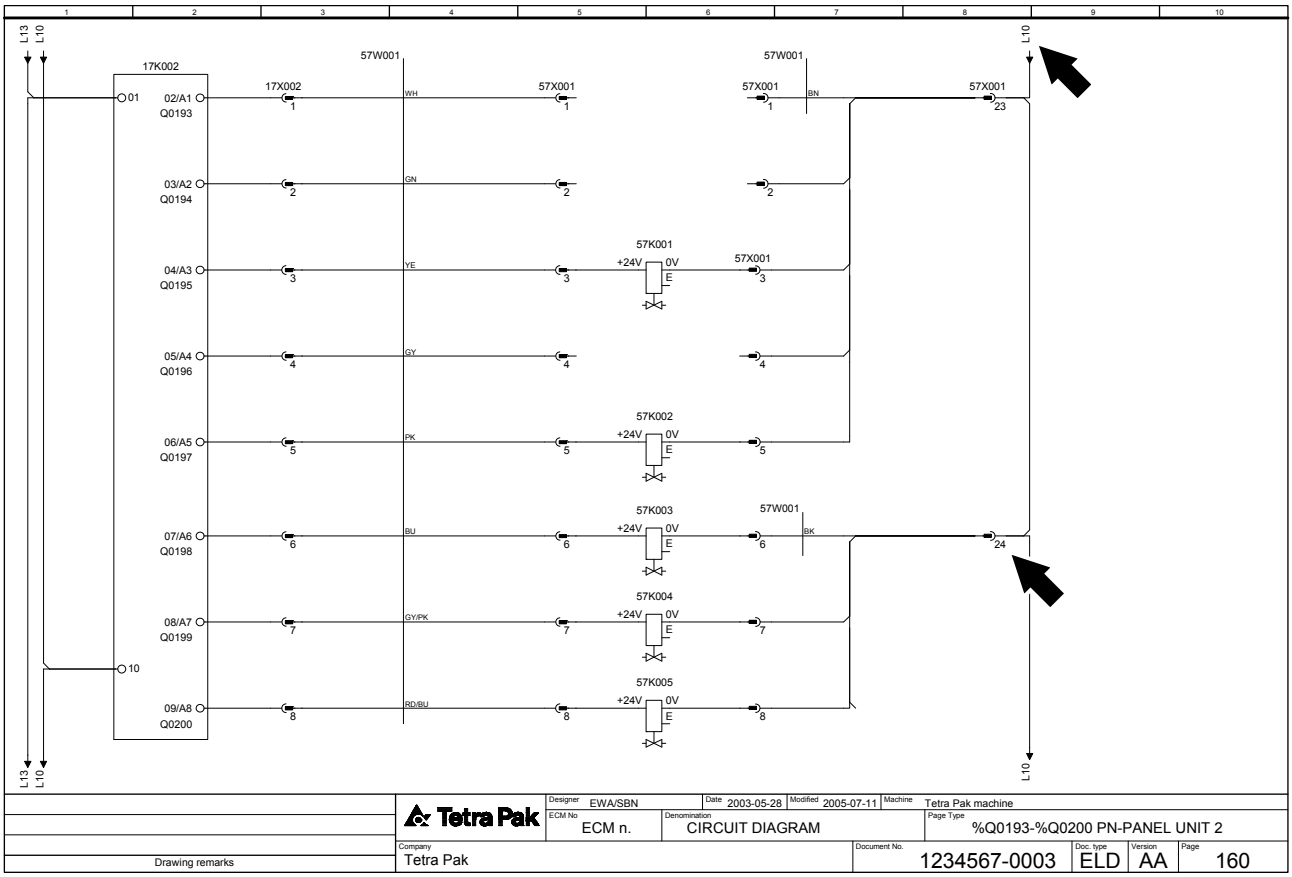

Line summary of 1234567-0003

Line	From	Page.Col.	To	Page.Col.	Area/Color	Opt.
L10	XL010:3	001 .1	17K001:B8	132 .7	0,75/BU	
L10	XL010:4	001 .2	17K002:10	160 .1	0,75/BU	
L10	17K002:10	160 .1	17K004:20	143 .1	0,75/BU	
L10	XL010:5	001 .2	17Q003:A2	143 .7	0,75/BU	
L10	17Q003:A2	143 .7	37Q002:A2	143 .7	0,75/BU	
L10	37Q002:A2	143 .7	57Q001:A2	143 .7	0,75/BU	
L10	XL010:6	001 .2	57X001:23	160 .8	0,75/BU	
L10	57X001:23	160 .8	57X001:24	160 .8	0,75/BU	
L13	XL013:1	002 .6	17K002:01	160 .1	0,75/BU	

TechPub_2614345_0107 - in01_3050419_01.fm

Example 2: How to Trace a Contactor

The illustration below shows how to trace contactor 37Q210 to page 143, column 7 in the Circuit diagram.

Related contacts are traced with a cross reference to page 005, column 8.

Note! For master and slave components, such as coils and contacts, only the master is reported in the Position Summary. The slave shows the page and column references of the master.

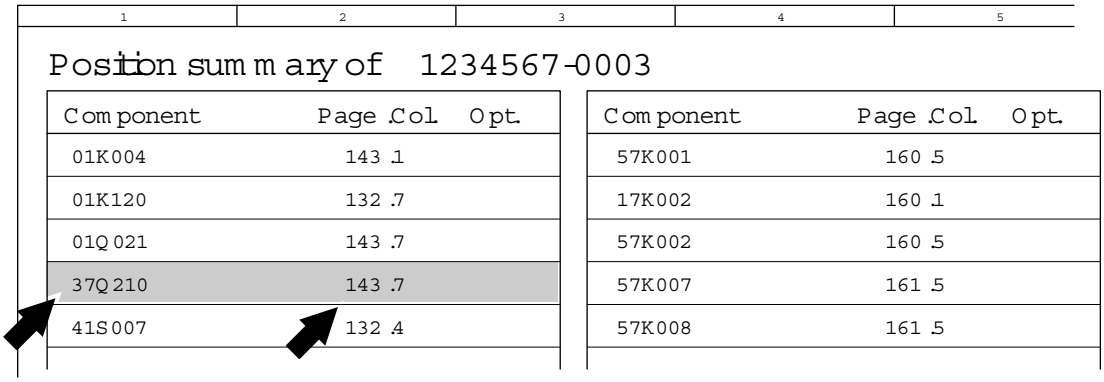

Position summary of 1234567-0003

Component	Page	Col.	Opt.
01K004	143	1	
01K120	132	7	
01Q021	143	7	
37Q210	143	7	
41S007	132	4	

Component	Page	Col.	Opt.
57K001	160	5	
17K002	160	1	
57K002	160	5	
57K007	161	5	
57K008	161	5	

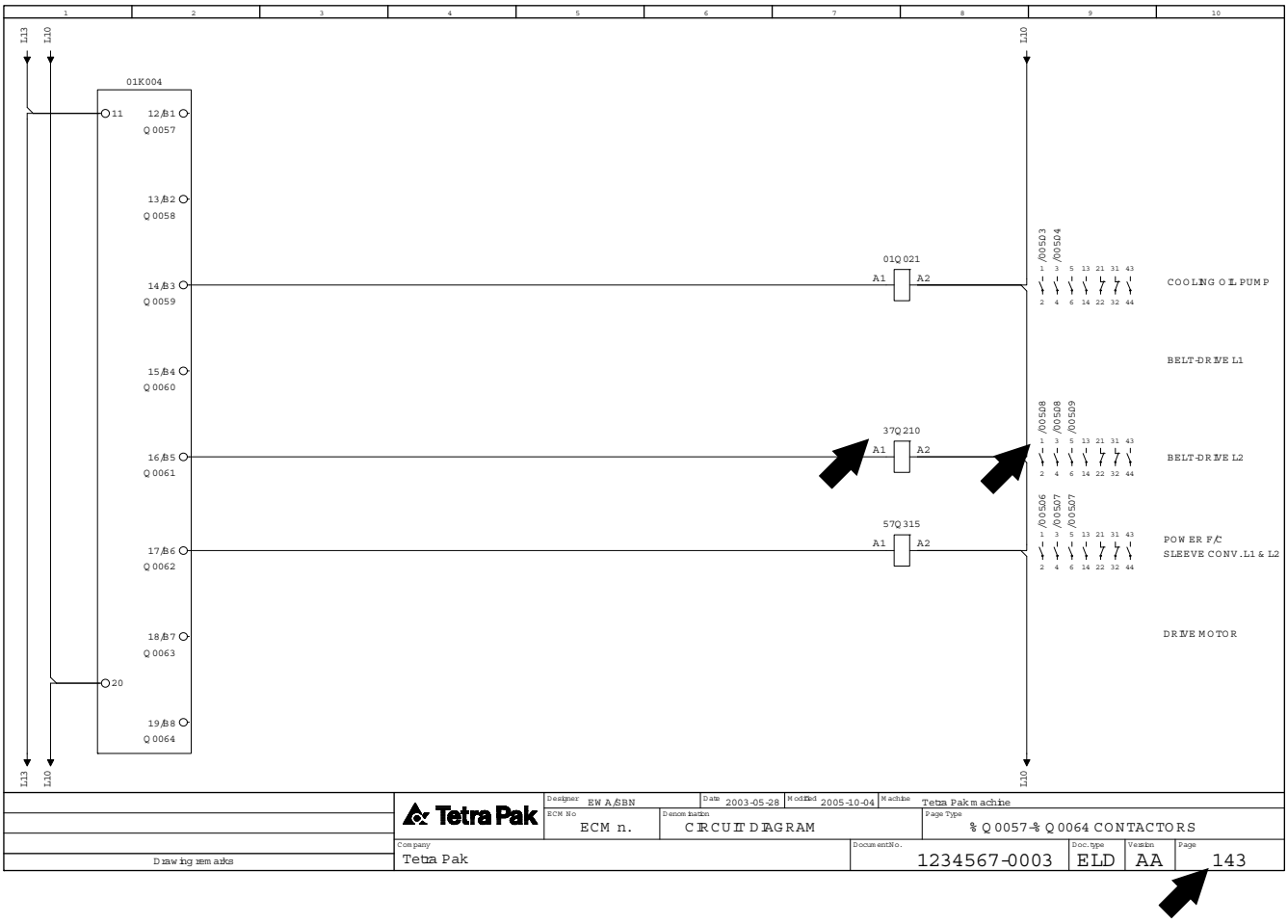

TechPub_2614345_0107 - in01_3050419_01.fm

Example 3: How to Trace a Terminal in the Electrical Cabinet

The Cabinet Terminal Summary refers to the page and column where the relevant terminal is to be found.

The illustration below shows how to trace terminal 17X002:1 to page 160, column 3 in the Circuit diagram.

Cabinet terminal summary of 1234567-0003

Terminal	Page .Col.	Opt.	Terminal	Page .Col.	Opt.
17X001:1	132 .6				
17X001:2	132 .6				
17X001:3	132 .6				
17X001:4	132 .6				
17X001:5	132 .6				
17X001:6	132 .6				
17X001:7	132 .6				
17X001:8	132 .6				
17X002:1	160 .3				
17X002:2	160 .3				

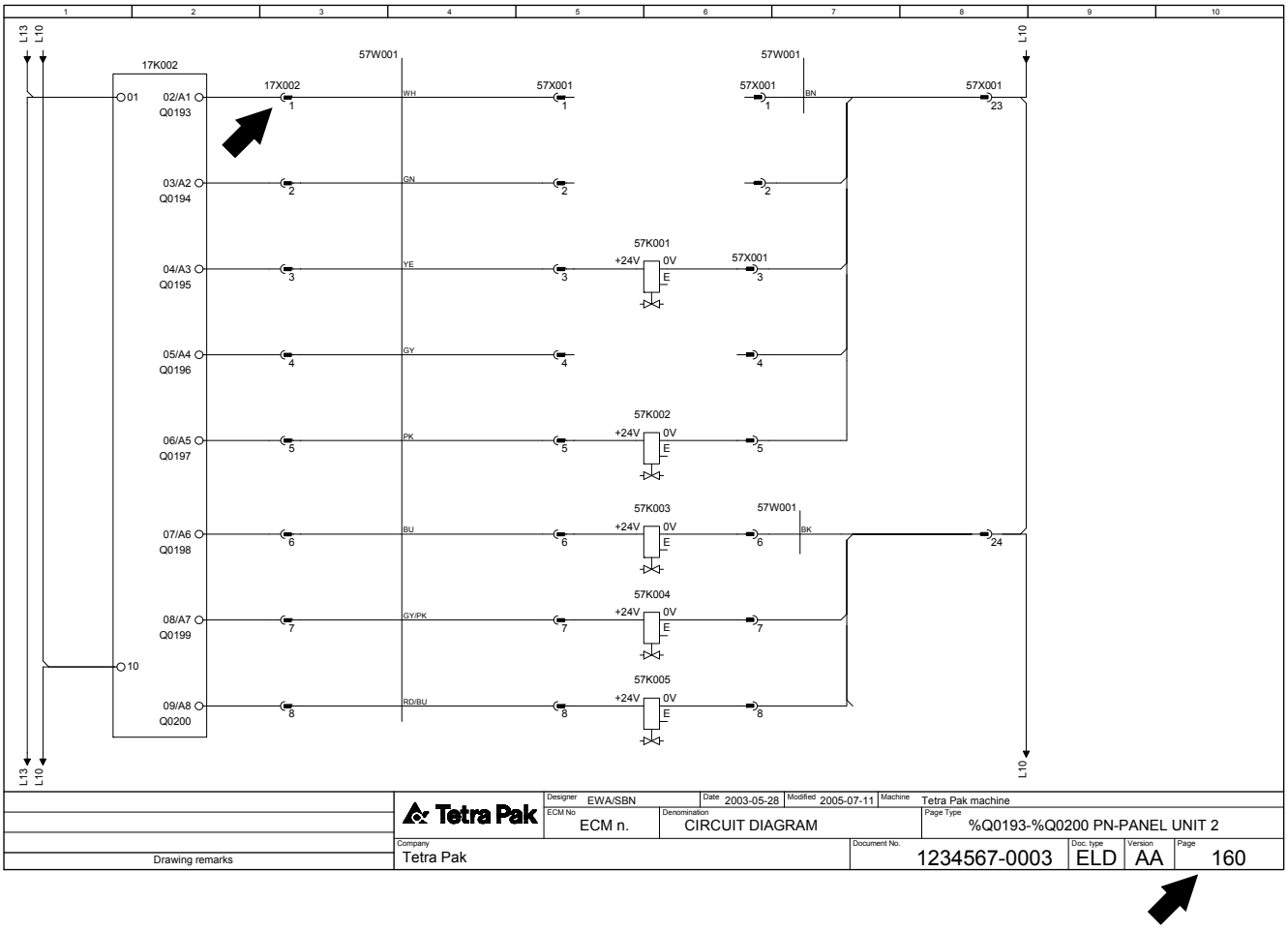

TechPub_2614345_0107 - in01_3050419_01.fm

Example 4: How to Trace a Terminal Outside the Electrical Cabinet

The Terminal Strip Overview refer to the page and column where the relevant terminal is to be found.

The illustration below shows how to trace terminal 37X409:3 to page 132, column 3 in the Circuit diagram. Note the connected component, 37B001.

Terminal strip of 1234567-0003

37X409

From	Cable	Terminal	External Jumper	Cable	To	Page.Col.	Option	Function text
		1						
		1+						
		1-						
		2						
		2+						
		2-						
A01K120:I0507	:3	3		37W195:BK	37B001:	132 .5		STRIP APPLICATOR OFF POS L2
		3 +		37W195:BN	37B001:	132 .3		STRIP APPLICATOR OFF POS L2
		3-		37W195:BU	37B001:	132 .3		STRIP APPLICATOR OFF POS L2
		4+		37W196:BN	37B002:	132 .3		STRIP APPLICATOR OFF POS L1
		4-		37W196:BU	37B002:	132 .3		STRIP APPLICATOR OFF POS L1
A01K120:I0508	:4	4		37W196:BK	37B002:	132 .5		STRIP APPLICATOR OFF POS L1
A01K120:I0509	:5	5		37W197:BK	37B003:	132 .5		SA OVEN OFF POS L1
		5+		37W197:BN	37B003:	132 .3		SA OVEN OFF POS L1
		5-		37W197:BU	37B003:	132 .3		SA OVEN OFF POS L1
		6-		37W198:BU	37B004:	132 .3		SA OVEN OSS POS L2

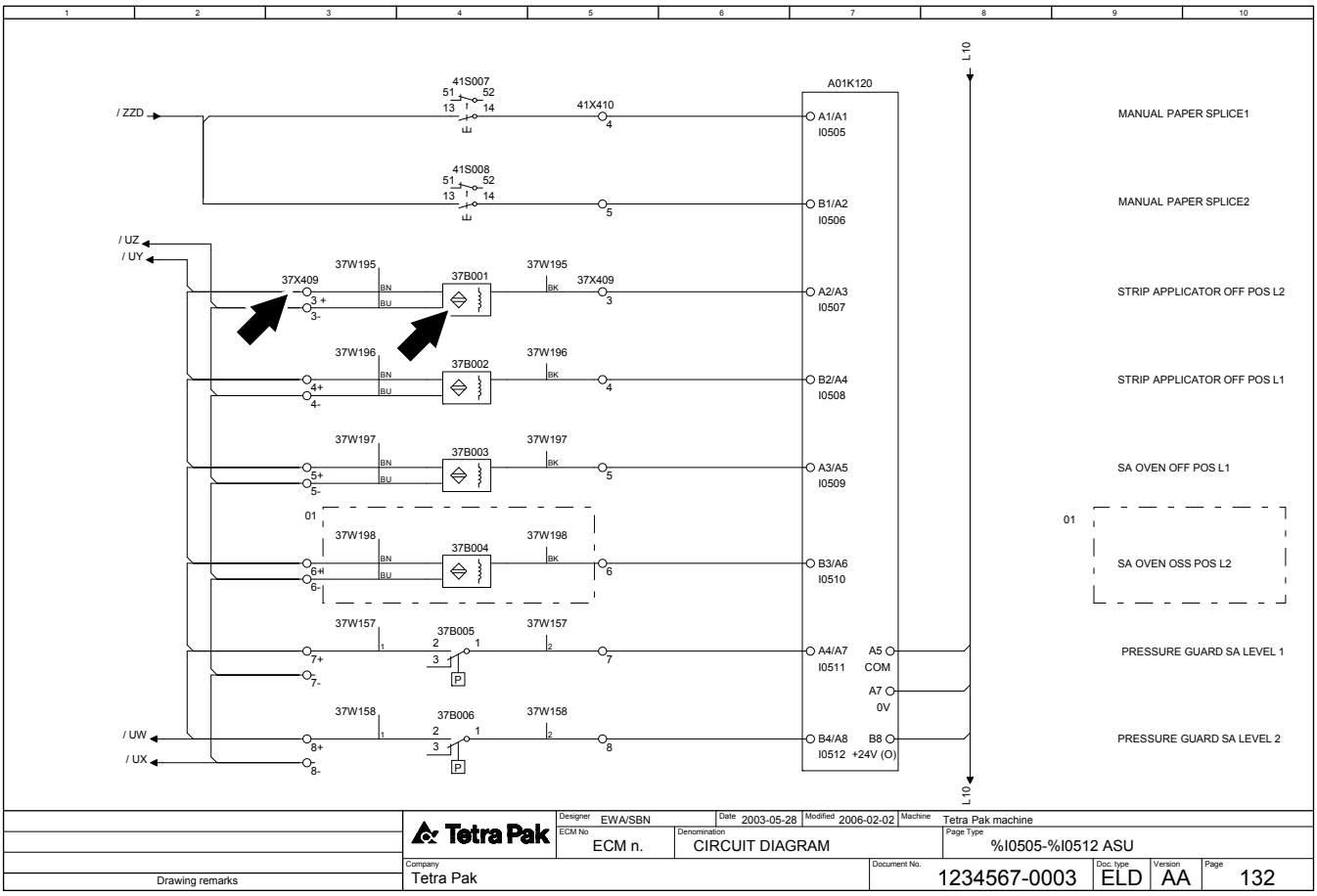

Drawing remarks	Tetra Pak	Designer EWA/SBN	Date 2003-05-28	Modified 2006-02-02	Machine Tetra Pak machine	
		ECM No ECM n.	Denomination CIRCUIT DIAGRAM		Page Type %I0505-%I0512 ASU	
	Company Tetra Pak		Document No. 1234567-0003		Doc. type ELD	Version AA	Page 132

TechPub_2614345_0107 - in01_3050419_01.fm

Example 5: How to Find Electrical Components Using the SPC

The Reference Designation Parts Index in the Spare Parts Catalogue, SPC, is used to locate electrical parts. For SPCs without an Electrical Parts Index, see the Component Location chapter in this manual.

The illustration below shows how to find component A04B041 in the SPC. The Reference Designation Parts Index refers to page 2-5. In the drawing on page 2-4, the position number is the same as the reference designation for the component.

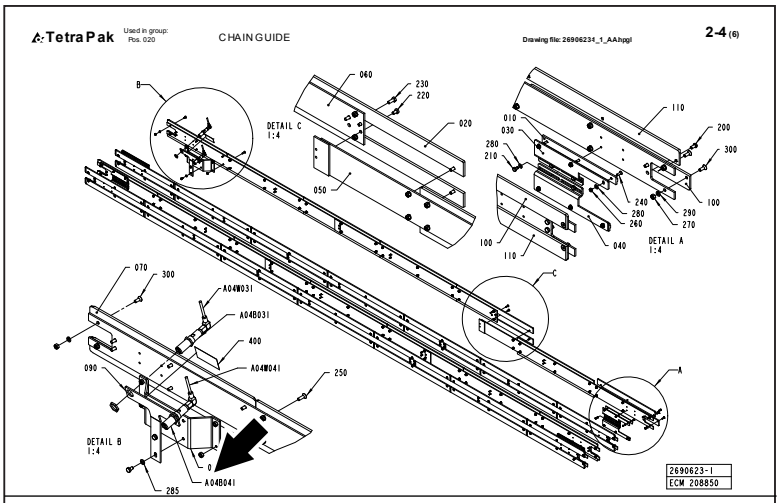

ECM: 209071 - 50001231
Group number: 2690623-0100
Assembly Drawing: 2690623-1_1_AA
This list covers pages from 2-2 to 2-5

Pos	Part No	UN	Qty	Description	Page No
-					
010	2597877-0000		8	CHAIN GUIDE	
020	2653358-0000		40	CHAIN GUIDE	
030	2653365-0000		4	SUPPORT	
040	2653366-0000		4	SUPPORT	
050	2653367-0000		8	PLATE	
060	2653368-0000		4	PLATE	
070	2653369-0000		8	CHAIN GUIDE	
080	2690632-0000		1	HOLDER	
090	2690633-0000		1	HOLDER	
100	2730969-0000		4	CHAIN GUIDE	
110	2730970-0000		4	CHAIN GUIDE	
200	90458-0072		8	SCREW ISO 7380 S M6X12 A2	
210	312105-0287		16	SCREW M6S ISO4017 M4X8 A470	
220	312105-0364		18	SCREW M6S ISO 4017 M6X10 A480	
230	312105-0368		40	SCREW M6S ISO 4017 M6X16 A480	
240	312155-0291		24	SCREW DIN 7991 M6S M4X12 A4 70	
250	312155-0370		4	SCREW DIN 7991 M6S M6X20 A4 70	
260	312605-0312		24	HEXAGON NUT, M6M M4 A280	
270	312605-0316		168	HEXAGON NUT, M6M M6 A280	
280	31510[illegible]146		40	WASHER BRB5,3X10RFR	
285	315[illegible]53		2	WASHER BRB6,4X12RFR	
290	[illegible]		164	LOCK WASHER FBB 6,5	
300	[illegible]68		164	SCREW DIN 7991 M6S M6X16 A4 70	
400	[illegible]698		1	WARNING SIGN ISO_LASER RADIATION	
A04W041	[illegible]-0050		1	ACTUATOR/SENSOR CABLE RKWTN 4-225/5M	
A04W031	51312-0050		1	ACTUATOR/SENSOR CABLE RKWTN 4-225/5M	
A04B041	90459-5012		1	LASER SENSOR, YD24PA3	
C05C041	2690632-0000		1	HOLDER	
C05C031	2653367-0000		8	PLATE	
T04B031	90459-5012		1	LASER SENSOR, YD24PA3	
T05C041	2653369-0000		8	CHAIN GUIDE	
T05C031	2653368-0000		4	PLATE	

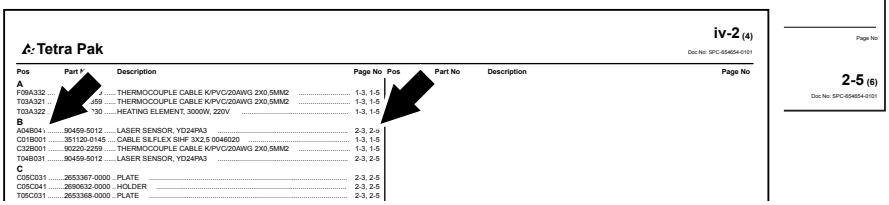

Pos	Part No	Description	Page No
A			
F09A332	[illegible]2	THERMOCOUPLE CABLE K/PVC/20AWG 2X0,5MM2	1-3, 1-5
T03A321	[illegible]59	THERMOCOUPLE CABLE K/PVC/20AWG 2X0,5MM2	1-3, 1-5
T03A322	[illegible]30	HEATING ELEMENT, 3000W, 220V	1-3, 1-5
B			
A04B041	90459-5012	LASER SENSOR, YD24PA3	2-3, 2-5
C01B001	351120-0145	CABLE SILFLEX SHF 3X2,5 0046020	1-3, 1-5
C32B001	90220-2259	THERMOCOUPLE CABLE K/PVC/20AWG 2X0,5MM2	1-3, 1-5
T04B031	90459-5012	LASER SENSOR, YD24PA3	2-3, 2-5
C			
C05C031	2653367-0000	PLATE	2-3, 2-5
C05C041	2690632-0000	HOLDER	2-3, 2-5
T05C031	2653368-0000	PLATE	2-3, 2-5

TechPub_2614345_0107 - in01_3050419_01.fm

This page intentionally left blank

TechPub_2614345_0107 - in01_3050419_01.fm

ii Safety Precautions

TechPub_2614345_0107 - sp01_3050420_01.fm

Safety Precaution Instructions

WARNING

Read all safety precaution instructions throughout this manual and on safety signs attached to this equipment.
Failure to follow all safety precaution instructions could result in death or serious injury.

Definition of Lockout Procedure

A lockout procedure is a procedure to put each necessary energy isolating device in its safe position to prevent the energisation of the equipment, such as when a maintenance procedure should be carried out.

A lockout is the use of a device, for example, a padlock, to make sure that an energy isolating device cannot be operated.

An energy isolating device is a mechanical device that physically prevents transmission or release of energy, such as a power supply disconnector.

TechPub_2614345_0107 - sp01_3050420_01.fm

Safety Messages Description . . . . . ii - 5

Personnel Requirements . . . . . ii - 6

Skilled Person . . . . . ii - 6

Instructed Person. . . . . ii - 6

Safety Signs . . . . . ii - 7

Location of Safety Signs . . . . . ii - 9

Protective Devices. . . . . ii - 12

Emergency Stop. . . . . ii - 12

Emergency Stop Push-Buttons . . . . . ii - 13

Safeguards . . . . . ii - 14

Warning Lamp . . . . . ii - 16

Audible Alarm. . . . . ii - 16

Personal Protection. . . . . ii - 17

Noise Hazard . . . . . ii - 17

Entanglement Hazard . . . . . ii - 17

Ergonomic Hazard . . . . . ii - 17

Hazardous Substances . . . . . ii - 18

Determelt 3 . . . . . ii - 19

Emergency Procedures. . . . . ii - 20

Handling . . . . . ii - 21

Storage . . . . . ii - 21

Disposal of Chemical Substances . . . . . ii - 22

Personal Protective Equipment . . . . . ii - 22

Supply Systems. . . . . ii - 23

Power Supply . . . . . ii - 23

Residual Voltage . . . . . ii - 24

Electrical Cabinet. . . . . ii - 25

Socket Outlet . . . . . ii - 26

TechPub_2614345_0107 - sp01_3050420_01.fm

Air Supply . . . . . ii - 27
Hotmelt Equipment . . . . . ii - 28
General . . . . . ii - 28
Hotmelt Unit . . . . . ii - 30
Hotmelt Wheel . . . . . ii - 31
Additional Information. . . . . ii - 32
Package Heater . . . . . ii - 32
Cap Detector . . . . . ii - 33
Equipment for Lifting and Moving Loads . . . . ii - 34

TechPub_2614345_0107 - sp01_3050420_01.fm

Safety Messages Description

A safety message is always accompanied by a safety alert symbol and a signal word.

The safety alert symbol is used to alert about potential personal injury hazards. To avoid hazards, obey all safety messages that follow this symbol.

The following safety alert symbols and signal words are used in this manual to inform the user of hazards.

DANGER	Danger indicates an imminently hazardous situation which, if not avoided, will result in death or serious injury.
WARNING	Warning indicates a potentially hazardous situation which, if not avoided, could result in death or serious injury.
CAUTION	Caution indicates a potentially hazardous situation which, if not avoided, may result in minor or moderate injury. It may also be used to alert against unsafe practices.
CAUTION	Caution without the safety alert symbol indicates a potentially hazardous situation which, if not avoided, may result in property damage.

TechPub_2614345_0107 - sp01_3050420_01.fm

Personnel Requirements

Note! Personnel includes all persons working on or near this equipment.

Only skilled or instructed persons are allowed to work with this equipment.

Skilled Person

A skilled person must have relevant education and experience to enable him or her to identify hazards, analyse risks, and avoid hazards which electricity, machinery, chemicals, other energies, and supply systems on this equipment can create.

Skilled persons must meet local regulations, such as certifications and qualifications for working with these energies and systems.

Instructed Person

An instructed person must be adequately advised or supervised by a skilled person. The skilled person enables the instructed person to identify hazards, analyse risks, and avoid hazards which electricity, machinery, chemicals, other energies, and supply systems on this equipment can create.

TechPub_2614345_0107 - sp01_3050420_01.fm

Safety Signs

WARNING

Damaged or missing safety signs increase the risk of death or serious injury.

Replace all missing or damaged safety signs immediately.

Safety signs are attached to the equipment. The table below lists all the signs that are used, and illustrations show their locations on the equipment. Each position number refers to two variants of a safety sign in the table, but only one is used on the equipment.

- Make sure that each safety sign is legible and in its correct position after installation and maintenance.
- Replace all missing or damaged safety signs immediately.

Pos.	ISO sign	ANSI sign
1		
	Hazardous voltage. Will shock, burn, or cause death. Follow lockout procedure before maintenance.	
2		
	Risk of equipment damage. Do not let water into this area.	
3		
	Hot surface. Do not touch. Follow lockout procedure before maintenance.	
4		
	Blade hazard. **Do not touch the sharp knife.**	

TechPub_2614345_0107 - sp01_3050420_01.fm

Pos.	ISO sign	ANSI sign
5		

Trapped pneumatic energy.
Moving parts could cause serious injury.
Follow lockout procedure before maintenance.

TechPub_2614345_0107 - sp01_3050420_01.fm

Location of Safety Signs

The illustration shows where the safety signs are located. The position numbers refer to the table in the Safety Signs section.

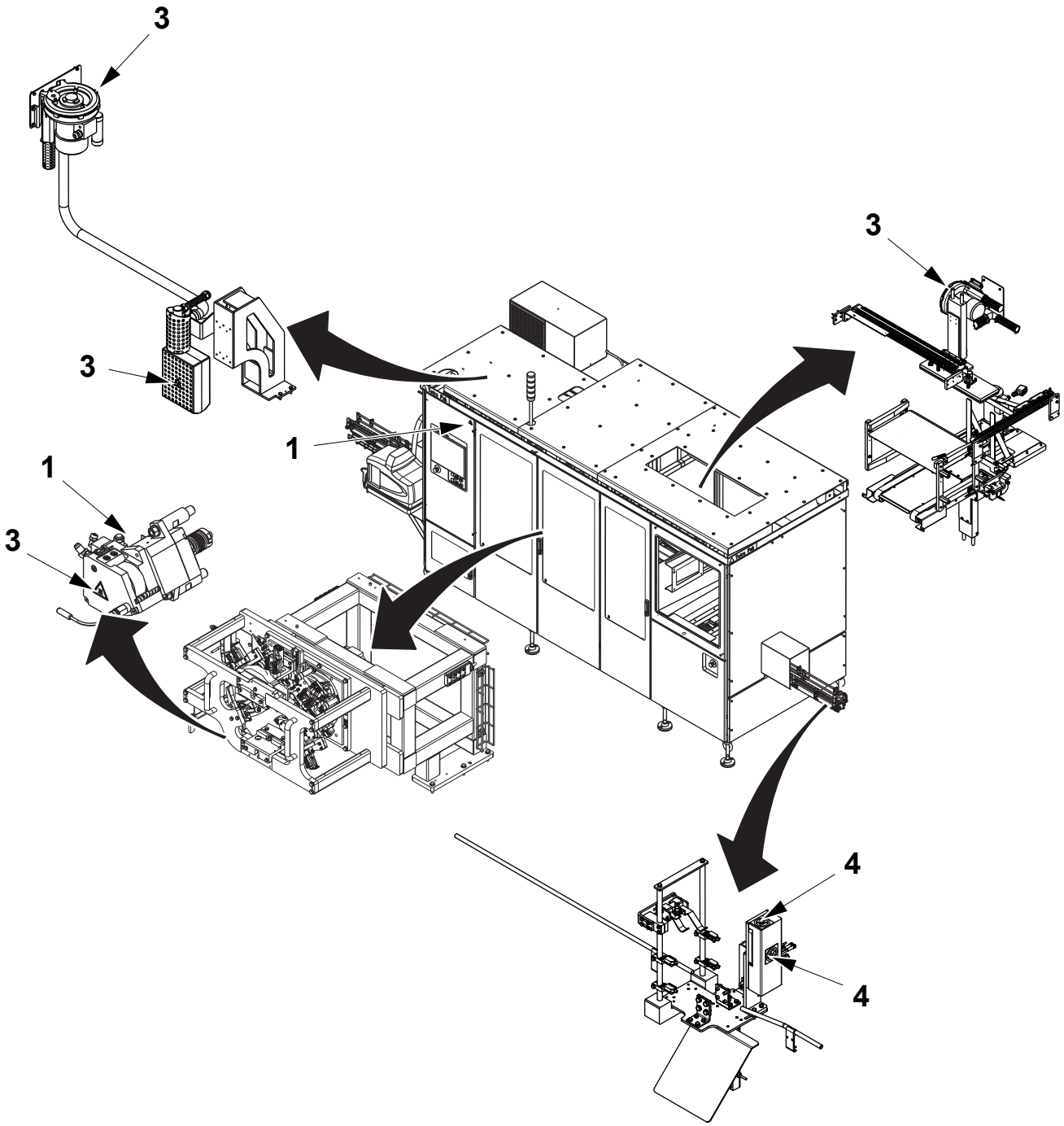

TechPub_2614345_0107 - sp01_3050420_01.fm

(Cont'd)

(Cont'd)

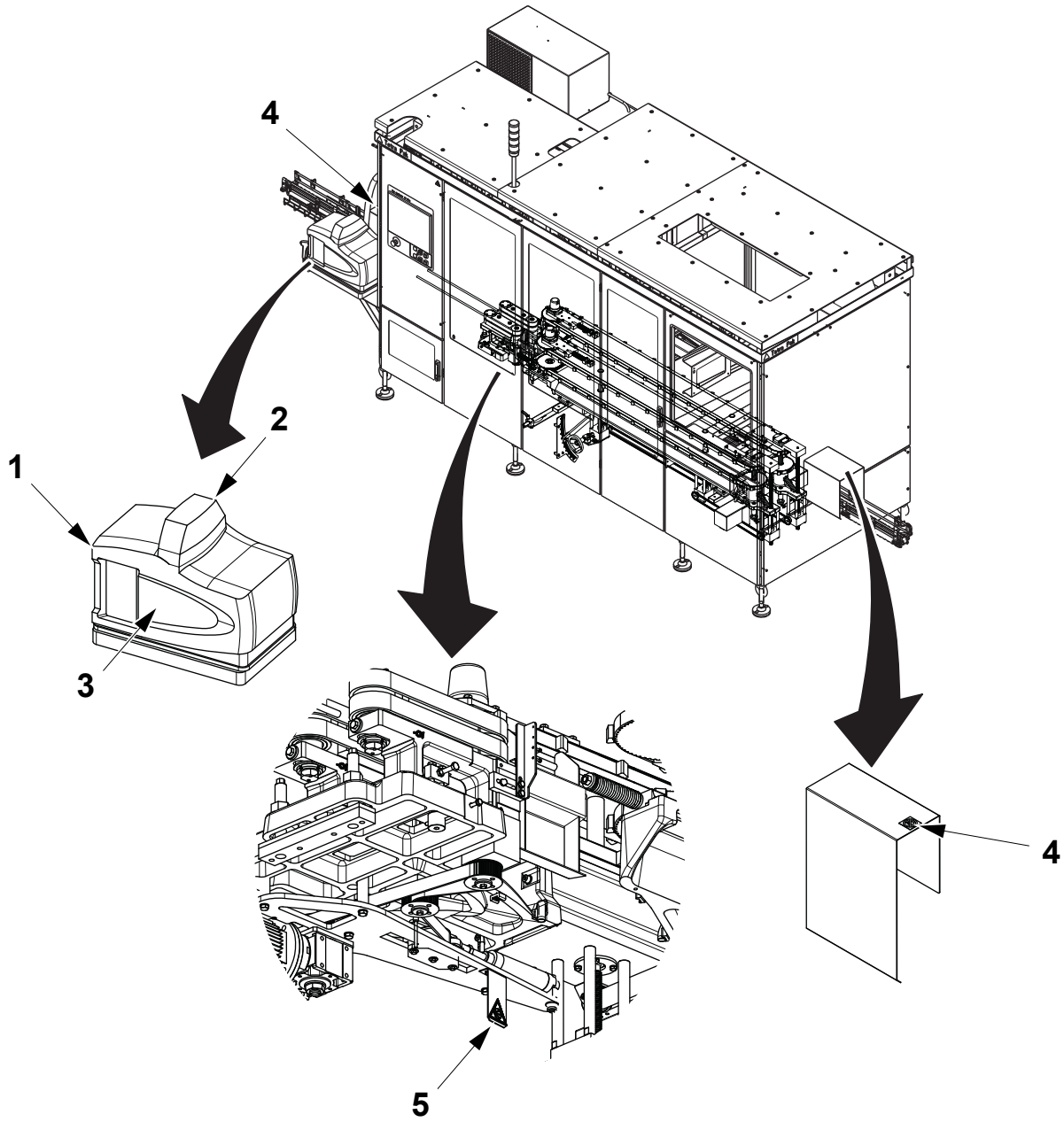

(Cont'd)

TechPub_2614345_0107 - sp01_3050420_01.fm

(Cont'd)

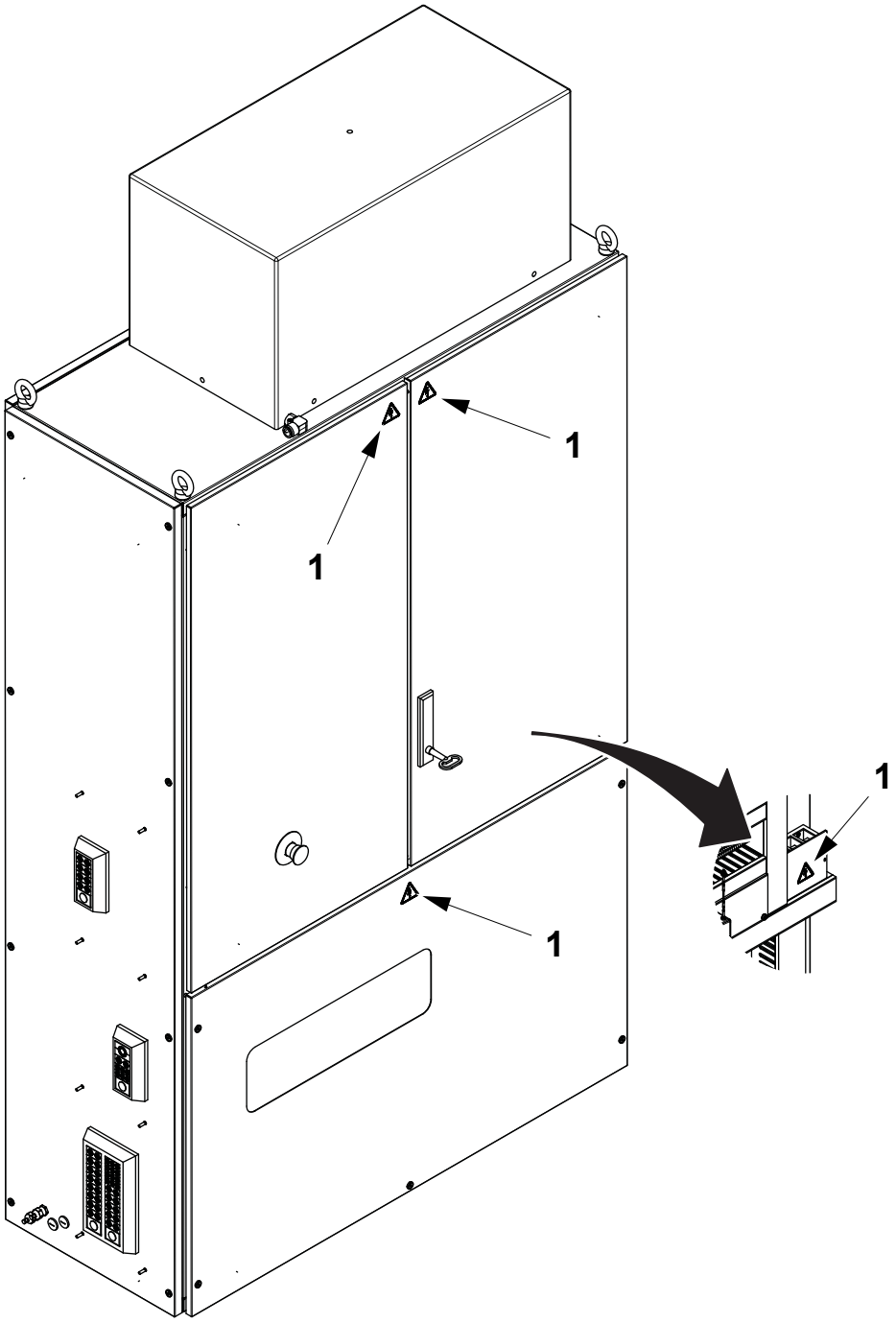

TechPub_2614345_0107 - sp01_3050420_01.fm

Protective Devices

WARNING

Hazardous zones.

Hazardous zones are safeguarded and provided with protective devices. Do not inch or run this equipment if any protective device is inoperative.

Change inoperative components of the safety system immediately.

WARNING

Hazardous voltage.

Hazardous voltage remains on this equipment after activating an EMERGENCY STOP or an interlocking device.

Emergency Stop

Emergency stop devices are used to stop this equipment immediately in an hazardous situation. Learn the positions of all emergency stop devices and how to use them.

Instructions for a normal production stop are included in the Stop chapter of the Operation Manual.

TechPub_2614345_0107 - sp01_3050420_01.fm

Emergency Stop Push-Buttons

Press one of the EMERGENCY STOP push-buttons to stop this equipment immediately.

The location of each EMERGENCY STOP push-button is shown by an arrow.

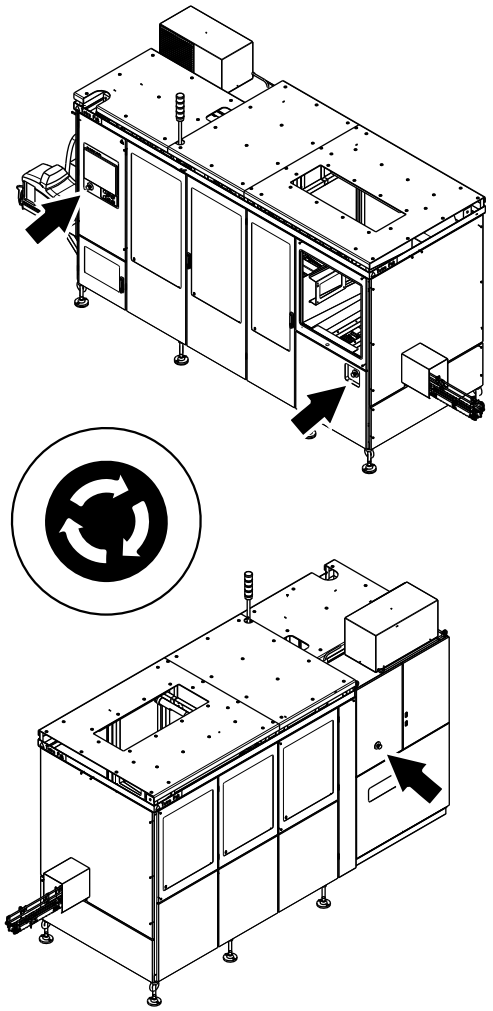

TechPub_2614345_0107 - sp01_3050420_01.fm

Safeguards

WARNING
Moving machinery.
Never defeat or bypass the interlocking devices.

Movable guards, for example, doors and covers leading to hazardous zones, are fitted with interlock devices where required. These devices are usually electric safety switches that are part of the safety system and must never be defeated, bypassed, or otherwise made inoperative.

Where a movable door is not allowed to be opened and must remain locked when the machine is in production, an electromagnetic door lock is installed or the safety switches have a locking device incorporated. The movable guards can only open when the machine is in a safe condition.

WARNING
Corners and edges.
To prevent injury from corners and edges of open doors and covers, close them unless they must be open during such work. Be careful when working under an open door, cover or elsewhere below parts of the equipment with corners and edges.

CAUTION
Burn hazard.
Parts of this equipment may be hot after operation.

After installation and maintenance, and before this equipment is inched or run, check that all safeguards are in place and that they operate correctly.

(Cont'd)

TechPub_2614345_0107 - sp01_3050420_01.fm

(Cont'd)

CAUTION
Equipment damage.
Never stop this equipment by opening a movable guard with an interlock device installed.

Movable guards with safety switches installed are shown by an arrow.

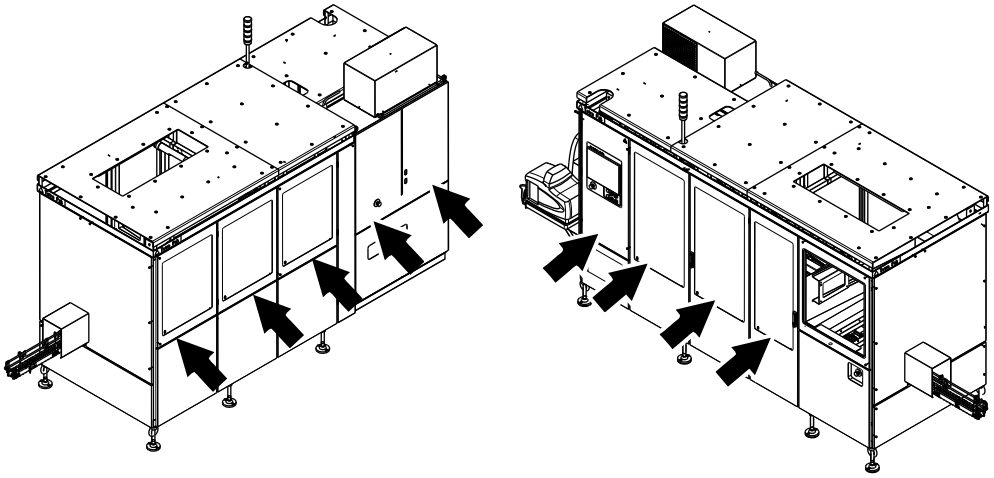

Movable guards with an electromagnetic door lock installed are shown by an arrow.

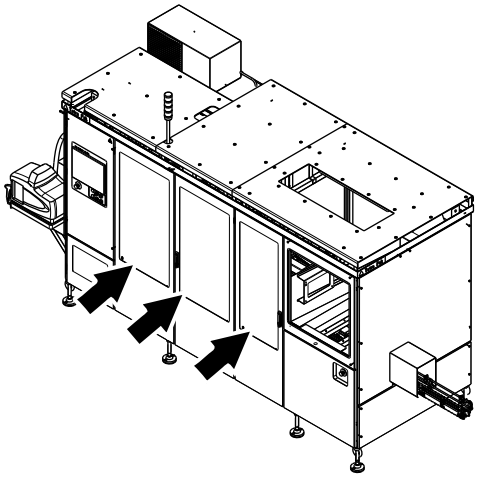

TechPub_2614345_0107 - sp01_3050420_01.fm

Warning Lamp

A warning lamp is a column of warning lights:

- A red light (1) indicates a hazardous condition. This is a situation that requires immediate action.
- A yellow light (2) indicates an abnormal or impending critical condition. This is a condition calling for action by the operator.
- A blue light (3) indicates information or that operator action is required.
- A green light (4) indicates that the machine restarts automatically. This situation requires no action.

Audible Alarm

The audible alarm (5) produces a warning signal every time this equipment is about to start. The warning signal sounds for approximately three seconds prior to starting to alert personnel.

The audible alarm (5) of the warning signal is placed on the top of the warning lamp.

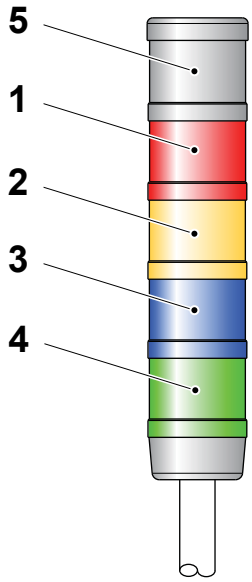

1 Red
2 Yellow
3 Blue
4 Green
5 Audible alarm

TechPub_2614345_0107 - sp01_3050420_01.fm

Personal Protection

This section applies to all personnel at all times when this equipment is in operation. For special personal protection required when handling hazardous substances, see the Hazardous Substances section.

Noise Hazard

WARNING

Hazardous noise.

Risk of impaired hearing. Wear hearing protection whenever this equipment is in operation.

Entanglement Hazard

WARNING

Risk of entanglement.

Do not wear jewellery or loose clothing when working on or near this equipment. Long hair may not be loose.

Ergonomic Hazard

WARNING

Ergonomic hazard.

Handling materials and supplies, for the machine, can be repetitive manual work and involve ergonomic hazards with risk for personal injury. Materials and supplies should be located. e.g. layout design, to avoid twisting the body or bending the back when placing them into the machine. It is recommended to use aids such as a lifting table or lifting device for these tasks.

Follow instructions for safe work practices.

TechPub_2614345_0107 - sp01_3050420_01.fm

Hazardous Substances

WARNING

Contact with chemicals can cause death, serious injury, or illness.
Always read and follow the instructions in the safety data sheet supplied by the manufacturer or local supplier, when handling chemicals.

Make sure that

- The safety data sheet is available
- The showers work
- An eyewash device, movable or wall-mounted, is available and operational
- Additional washing facilities are nearby.

Note! Learn the locations of all washing facilities in order to act immediately in case of an accident.



TechPub_2614345_0107 - sp01_3050420_01.fm

Determelt 3

WARNING
Risk of personal injury.
Wear personal protective equipment.

Determelt 3 is a blend of orange oils, mineral spirits and antioxidant. Determelt 3 is used to remove hotmelt from metal machine parts, such as, the cap holders and should only be used neat.

Contact with eyes will cause redness and discomfort. Repeated or prolonged contact may cause the skin to become dry, cracking and dermatitis. In case of accident, immediately call for medical attention.

Although classified as non-dangerous, always wear personal protective equipment when using chemicals, see Personal Protection.

Before use, always read the manufacture’s instructions on the label of the tank or container.

(Cont'd)

TechPub_2614345_0107 - sp01_3050420_01.fm

(Cont'd)

Emergency Procedures

If there is an accident involving Determelt 3, rinse the affected area as soon as possible with large amounts of water.

If Determelt 3 is swallowed:

- Do not attempt to cause vomiting
- Drink large amounts of lukewarm water
- Call for medical attention immediately.

If splashes or vapour from Determelt 3 comes in contact with the eyes:

- Wash the eyes thoroughly with clean water until the pain is relieved
- Call for medical attention immediately.

If Determelt 3 comes into contact with skin and clothes:

- Wash immediately with soap and water
- Call for medical attention immediately if skin burns appear
- Thoroughly wash the clothes before wearing them again.

If irritation or pain is experienced due to having inhaled Determelt vapour:

- Leave the affected area and get some fresh air
- Call for medical attention if the symptoms get worse.

(Cont'd)

TechPub_2614345_0107 - sp01_3050420_01.fm

(Cont'd)

Handling

WARNING

Risk of Self-ignition.

Self-ignition can occur at temperature more than 200°C (392°F).

Determelt 3 can only be used neat and used cold. Never pour on hot surfaces or turn on hotmelt applications.

Ensure that equipment to be cleaned is cool and all supplies to the equipment are OFF.

If Determelt 3 is spilled, use sand, earth or any absorbent material. Put waste into a container ready for disposal.

Storage

Keep the container upright and fitted with its proper seal. Determelt 3 must be stored in the original container delivered by the supplier. Make sure that the container is always properly closed.

Make sure that the area used for storage of Determelt 3 is:

- At room temperature, clean, and well ventilated
- Free from frost
- Shielded from direct sunlight
- Kept from open sources of ignition.

Shelf life is one year.

TechPub_2614345_0107 - sp01_3050420_01.fm

Disposal of Chemical Substances

Always read and follow the disposal instructions in the safety data sheet supplied by the manufacturer or local supplier.

It is strongly recommended that used chemical containers are

- Disposed of according to the instructions immediately after use
- Not used as disposal containers for other chemicals in order to avoid uncontrolled chemical reactions within the container.

Personal Protective Equipment

Wear personal protective equipment when working with this equipment. The following equipment is required:

- Protective goggles (TP No. 90303-11)
- Heat protective gloves
- Protective apron (TP No. 90303-13)
- Protective shoes made of PVC or rubber.

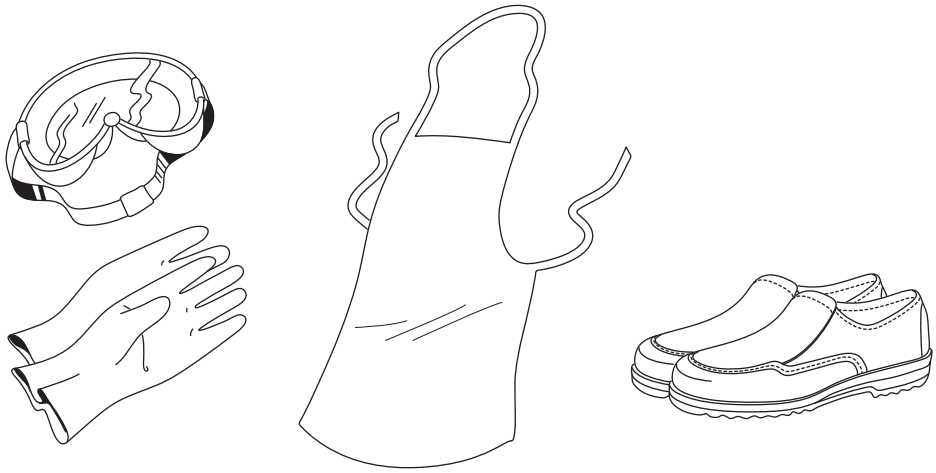

TechPub_2614345_0107 - sp01_3050420_01.fm

Supply Systems

Power Supply

DANGER

Hazardous voltage and moving machinery.
The power supply disconnector must be turned off and secured with a lock before any maintenance.

Note! The key to the lock must be removed by the technician and retained in his/her possession until all work is completed.

Certain maintenance procedures may require power supply systems to be on. These exceptions are clearly stated in the Maintenance Manual.

The illustration shows the power supply disconnector (1) and its location.

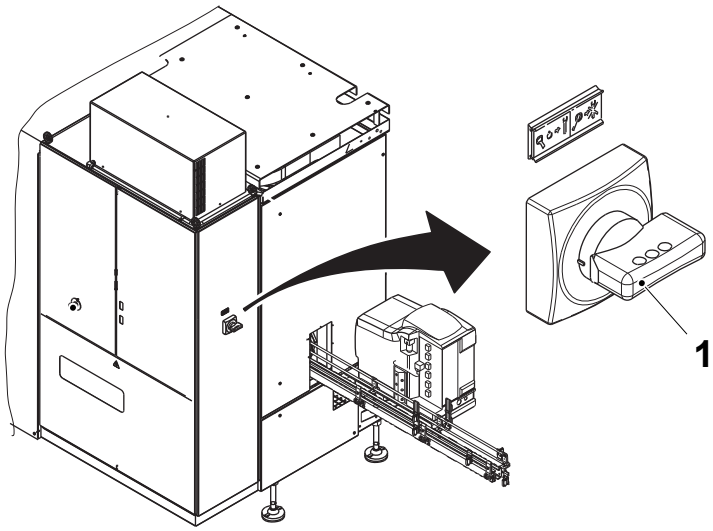

1 Power supply disconnector

(Cont'd)

TechPub_2614345_0107 - sp01_3050420_01.fm

(Cont'd)

Residual Voltage

DANGER

Hazardous voltage.
Do not touch any terminals immediately after the power supply disconnector is turned off. Ensure that no residual voltage remains on the capacitors before touching. Wait five minutes. Failure to observe this information will cause death or serious injury.

After the power supply disconnector is turned off, residual voltage remains in the capacitor circuits.

TechPub_2614345_0107 - sp01_3050420_01.fm

Electrical Cabinet

DANGER

Hazardous voltage.
Will shock, burn, or cause death. The power supply disconnector must be turned off and secured with a lock before maintenance inside the electrical cabinet.

Note! The key to the lock must be removed by the technician and retained in his/her possession until all work is completed.

Make sure that the electrical cabinet doors are closed after working inside the electrical cabinet. Doors with a lock must be locked.

The location of the electrical cabinet is shown by an arrow.

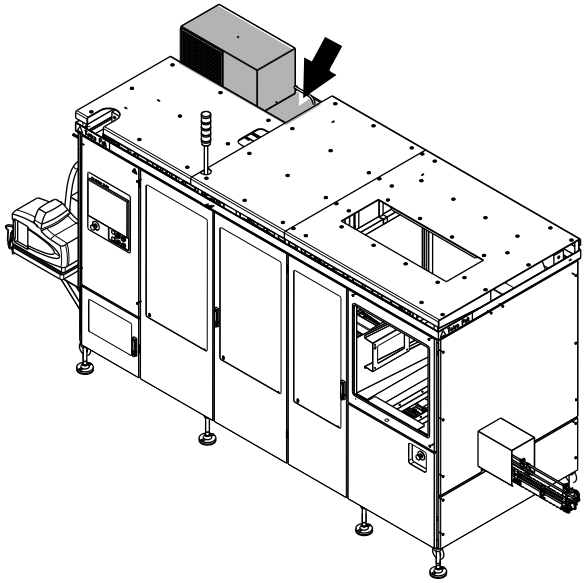

TechPub_2614345_0107 - sp01_3050420_01.fm

Socket Outlet

WARNING

Hazardous voltage.

Can shock, burn, or cause death. Read the Maintenance Manual before using this socket outlet.

The socket outlet (1) is connected to a residual current device (2) to protect users against electrical shock if there is an earth fault in the connected equipment. The residual current device shall be tested each time before the socket outlet is being used. See the MM for test procedure.

The illustration shows the socket outlet (1), the residual current device (2), and their location.

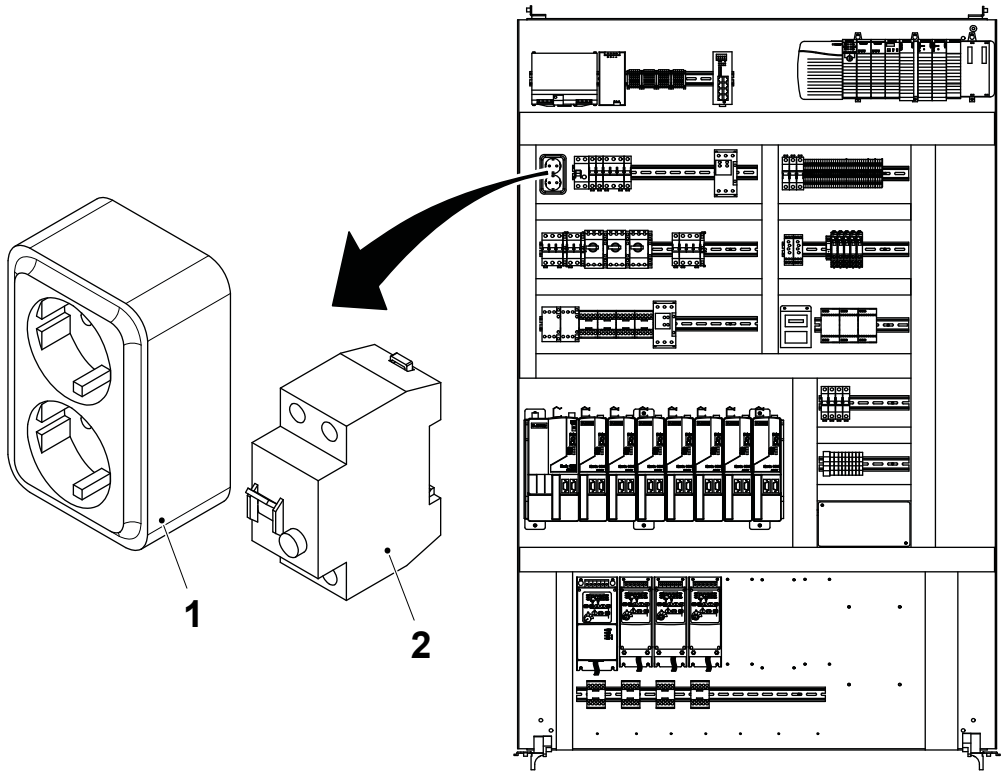

1 Socket outlet
2 Residual current device

TechPub_2614345_0107 - sp01_3050420_01.fm

Air Supply

WARNING

Compressed air and moving machinery.
Close the main air valve and secure it with a lock before any maintenance.

Note! The key to the lock must be removed by the technician and retained in his/her possession until all work is completed.

Certain maintenance procedures may require air supply systems to be ON. These exceptions are clearly stated in the Maintenance Manual.

The illustration shows the shut-off valve (1). The shut-off handle (2) is used to close the air supply.

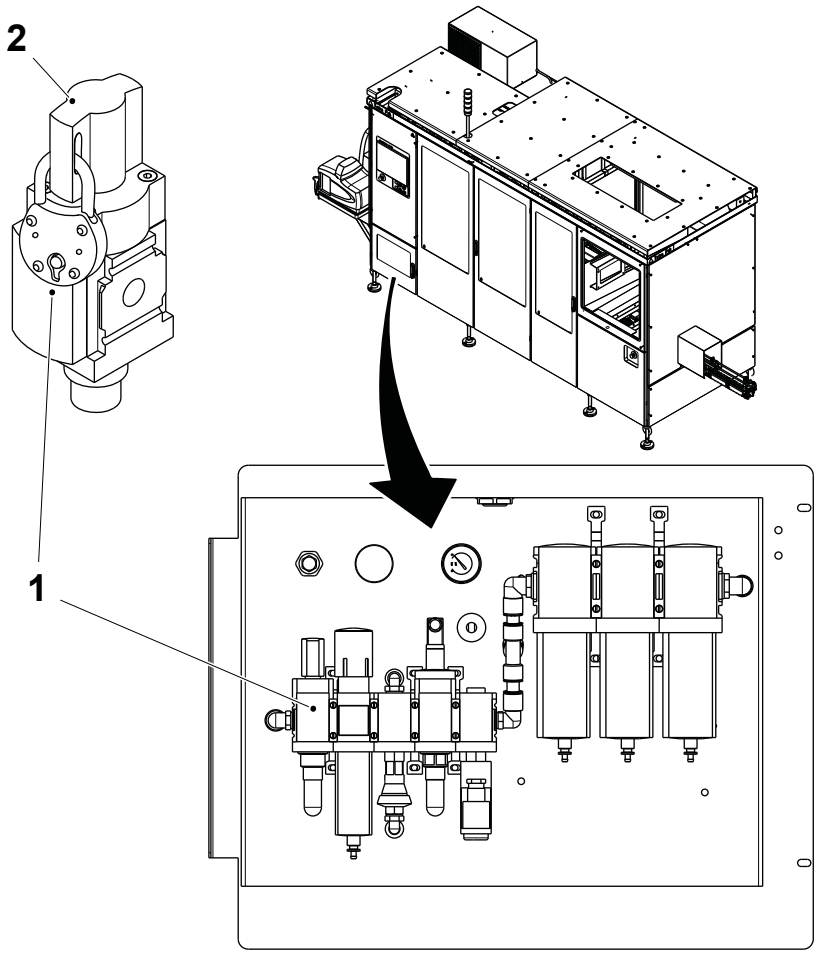

1 Shut-off valve
2 Shut-off handle

TechPub_2614345_0107 - sp01_3050420_01.fm

Hotmelt Equipment

General

DANGER

Risk of electrical shock.
The voltage is 400V inside the hotmelt unit. Risk of immediate danger to life from electrical shock.

WARNING

Risk of personal injury.
All service work on the hotmelt unit must be carried out by authorized personnel. Always wear safety glasses, protective gloves, and other protective clothing to avoid injuries caused by splashing hotmelt material.

Failure to relieve any air or adhesive pressure could cause serious injuries from burning when the hotmelt filter is detached or flushed.

Never remove any part or component until the air and the electrical supply to the machine have been disconnected and the pressure of the hotmelt in the system has been relieved.

(Cont'd)

TechPub_2614345_0107 - sp01_3050420_01.fm

(Cont'd)

WARNING

Risk of hotmelt vapours.

When the tank lid is open, hotmelt vapours could be released. Vent the application area or wear a respirator.

Note! Always refer to the documentation provided from Nordson Corporation before doing any kind of work on the hotmelt equipment. The Nordson hotmelt manual is included with the delivery from Tetra Pak. The information in this manual only deals with what is specific for this machine.

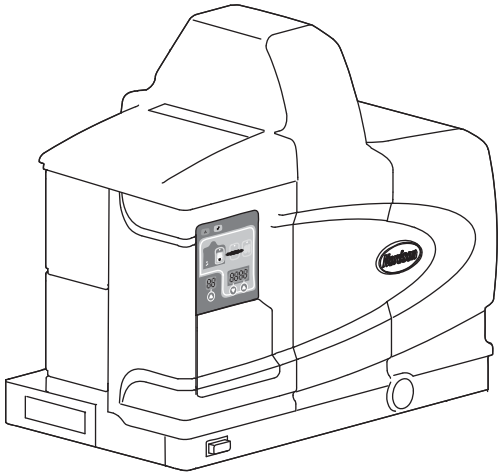

TechPub_2614345_0107 - sp01_3050420_01.fm

Hotmelt Unit

CAUTION

Risk of damage to the equipment.

Never flush water or any other liquid towards the hotmelt unit when cleaning the machine. Failure to obey could result in damage to equipment.

WARNING

Risk of burns.

During PREHEATING and PREPARTION the hotmelt unit becomes hot. Do not touch the hotmelt unit and beware of the entrapped heat inside the unit when service is performed.

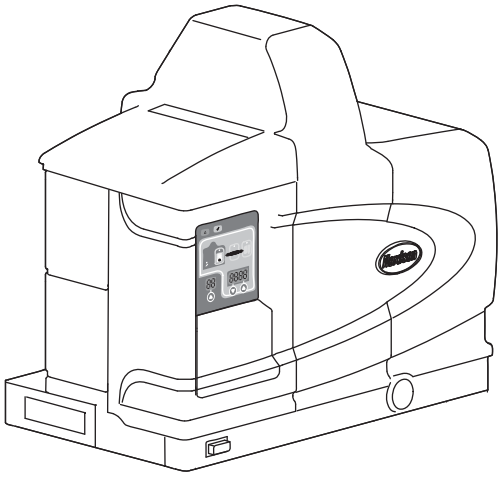

TechPub_2614345_0107 - sp01_3050420_01.fm

Hotmelt Wheel

WARNING

Risk of burns.

During PREHEATING, PREPARTION and PRODUCTION the hotmelt wheel (1) is hot. There is risk of severe burns. Do not touch the hotmelt wheel and beware of the entrapped heat when service is performed.

CAUTION

Risk of damage to the equipment.

Never flush water or any other liquid towards the hotmelt wheel when cleaning the machine. Failure to obey could result in damage to equipment.

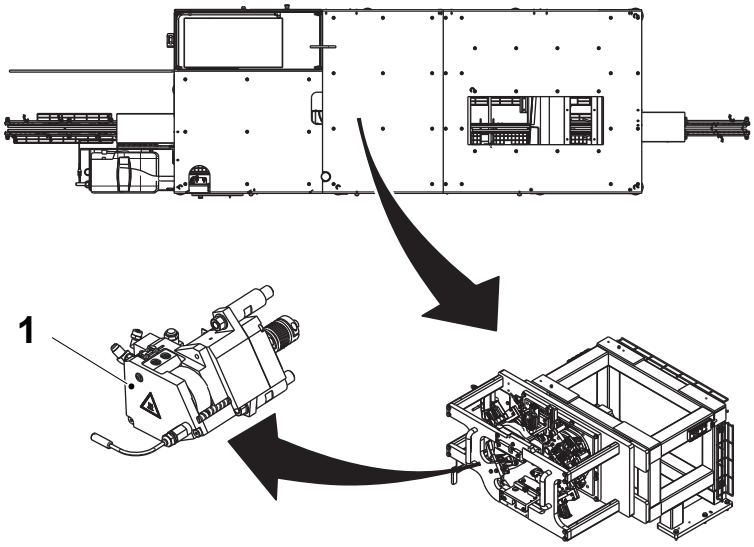

1 Hotmelt wheel

TechPub_2614345_0107 - sp01_3050420_01.fm

Additional Information

Package Heater

WARNING

Risk of burns.

The package heater is very hot and there is risk of severe burns. Never touch the package heater.

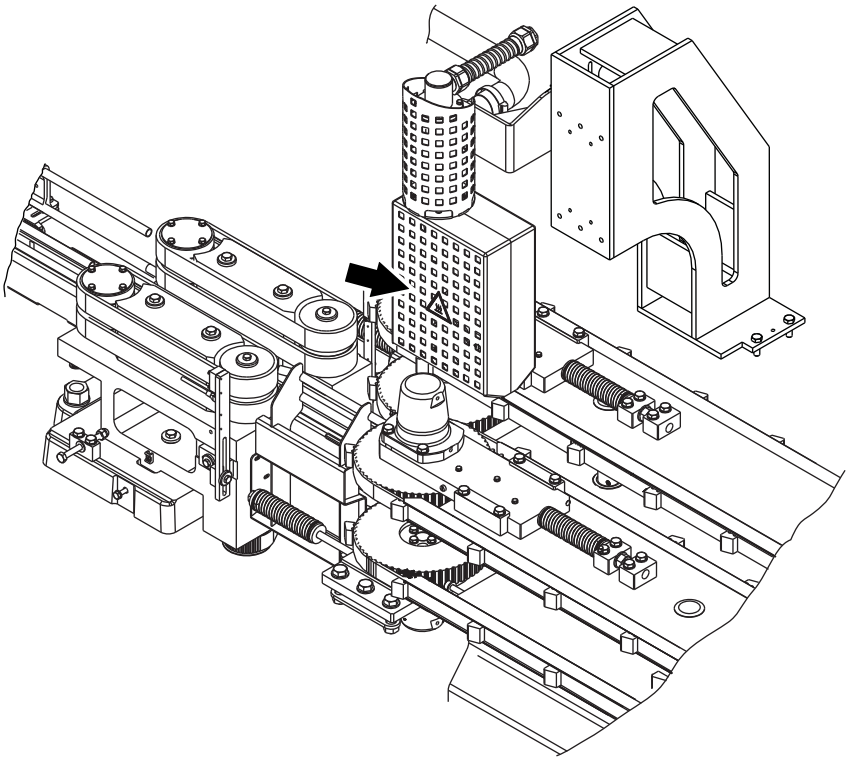

TechPub_2614345_0107 - sp01_3050420_01.fm

Cap Detector

WARNING

Risk of personal injury.

Never put any part of the body, such as a hand, near the cap detector when the machine is working. There is a risk of injury caused by the movable pusher.

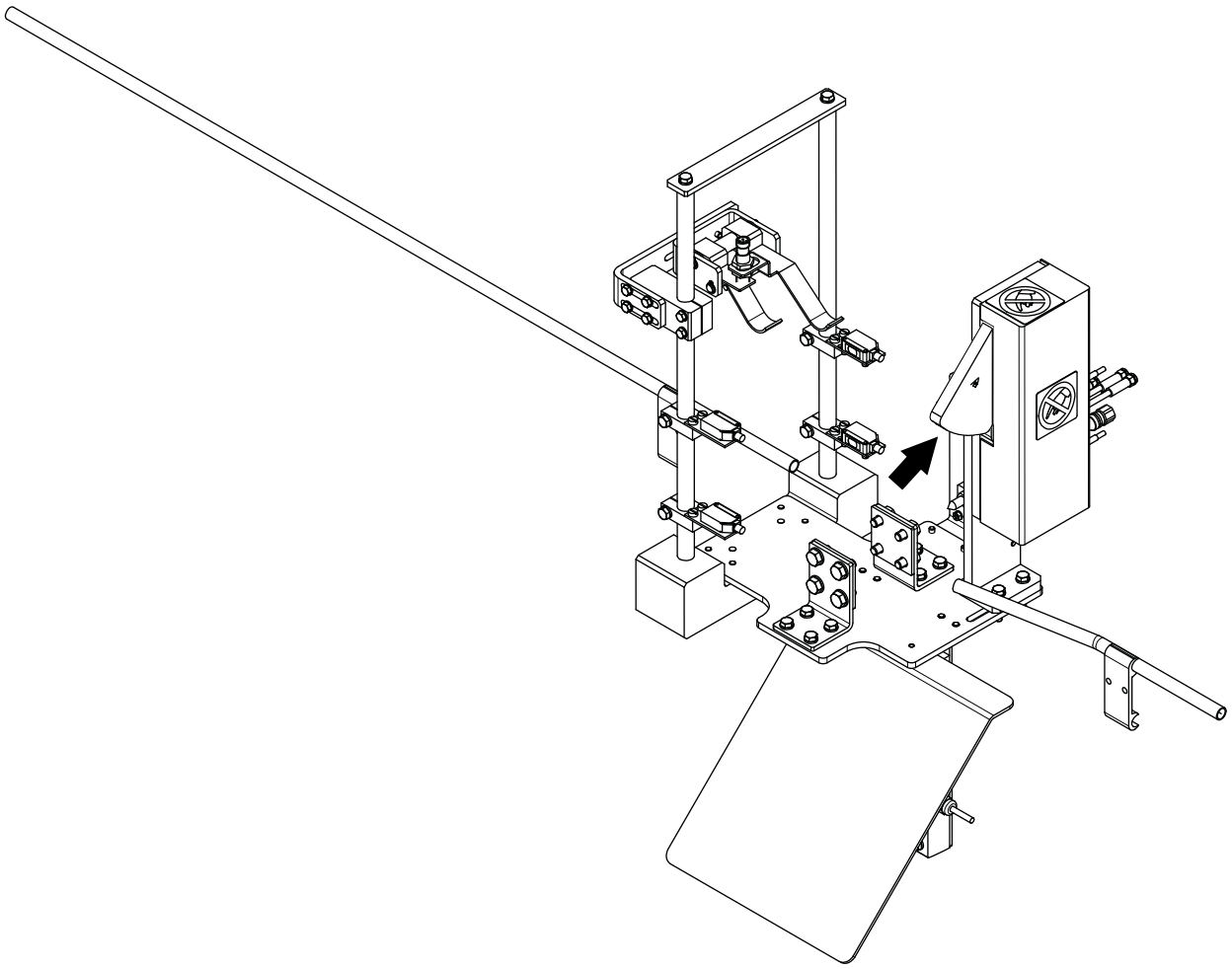

TechPub_2614345_0107 - sp01_3050420_01.fm

Equipment for Lifting and Moving Loads

WARNING

Risk of crushing injury.

Make sure that the capacity of the lifting equipment is adequate and that the equipment itself is in good working order.

If lifting tackle has to be joined to make up the necessary length, make sure that the joints are secure and have the same lifting capacity as the rest of the lifting tackle.

Always engage safety clips fitted to lifting hooks to prevent the lifting tackle from slipping off.

Use ropes or poles to steady and manoeuvre suspended loads. Do not use hands or feet.

Make sure that the route and destination are free from obstacles before moving a suspended load. It must be possible to quickly and safely lower the load to the floor in an emergency.

When depositing loads, keep lifting tackle in place until the stability of the load has been substantiated.

TechPub_2614345_0107 - sp01_3050420_01.fm

1 Electrical System Description

TechPub_2614345_0107 - 0101_3050421_01.fm

Description

This chapter contains a description of the electrical safety system.

TechPub_2614345_0107 - 0101_3050421_01.fm

1.1 Safety System . . . . . 1 - 5

Safety System - Description . . . . . 1 - 5

Safety Relay (Pluto) - Applicator Doors . . . . . 1 - 6

Emergency Stop Buttons . . . . . 1 - 7

Door Monitor (Operator Side) . . . . . 1 - 8

Door Monitor and Covers . . . . . 1 - 9

TechPub_2614345_0107 - 0101_3050421_01.fm

This page intentionally left blank

TechPub_2614345_0107 - 0101_3050421_01.fm

1.1 Safety System

Safety System - Description

All the safety lines are managed from the PLUTO B20 device which is a safety PLC with customized I/O and programmable software inside.

The main relays are as follows:

- Safety relay: PLUTO B20 Jokab
- Expansion relay: E1T0,5s Jokab

The safety lines are summarized in the following illustration:

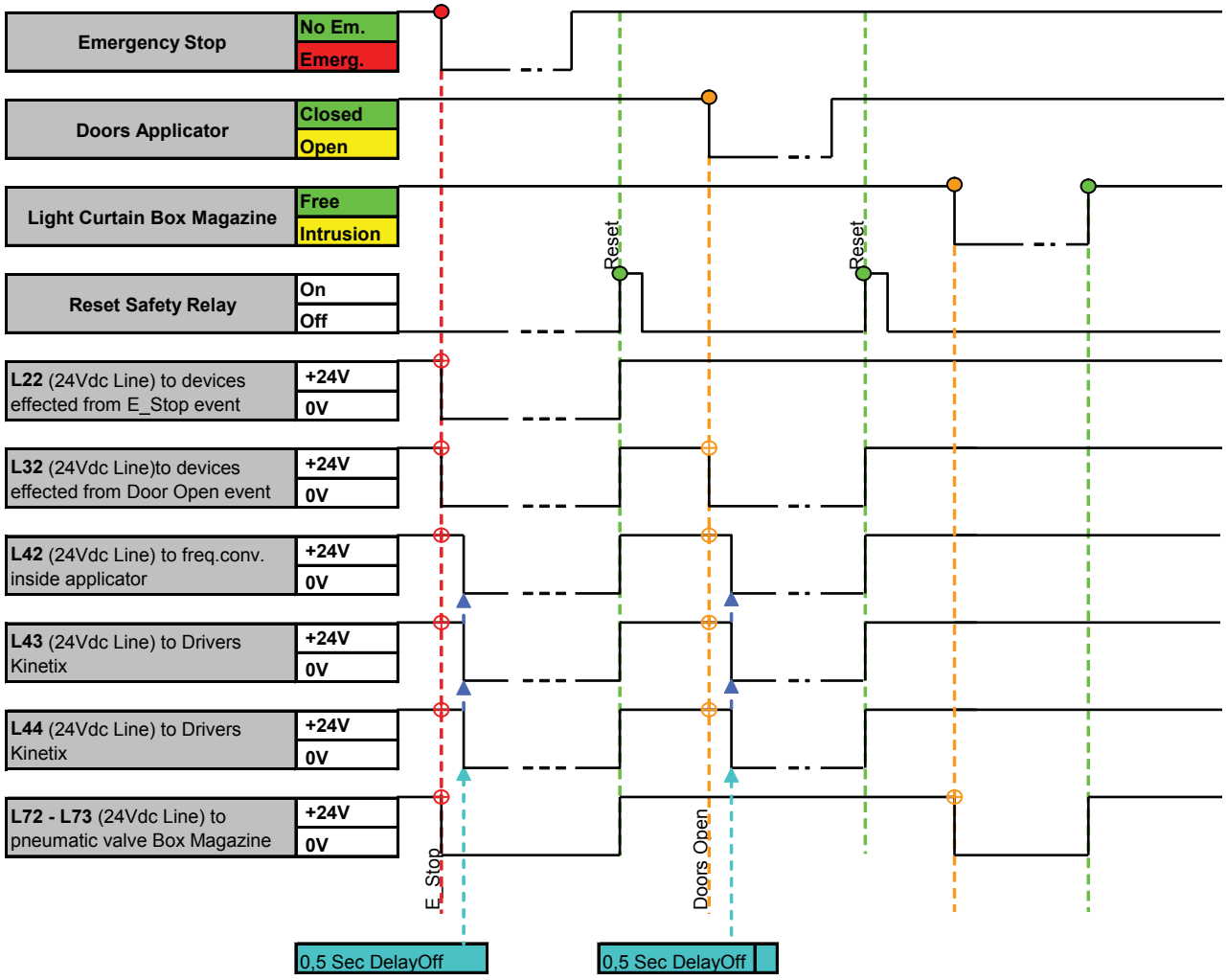

TechPub_2614345_0107 - 0101_3050421_01.fm

Safety Relay (Pluto) - Applicator Doors

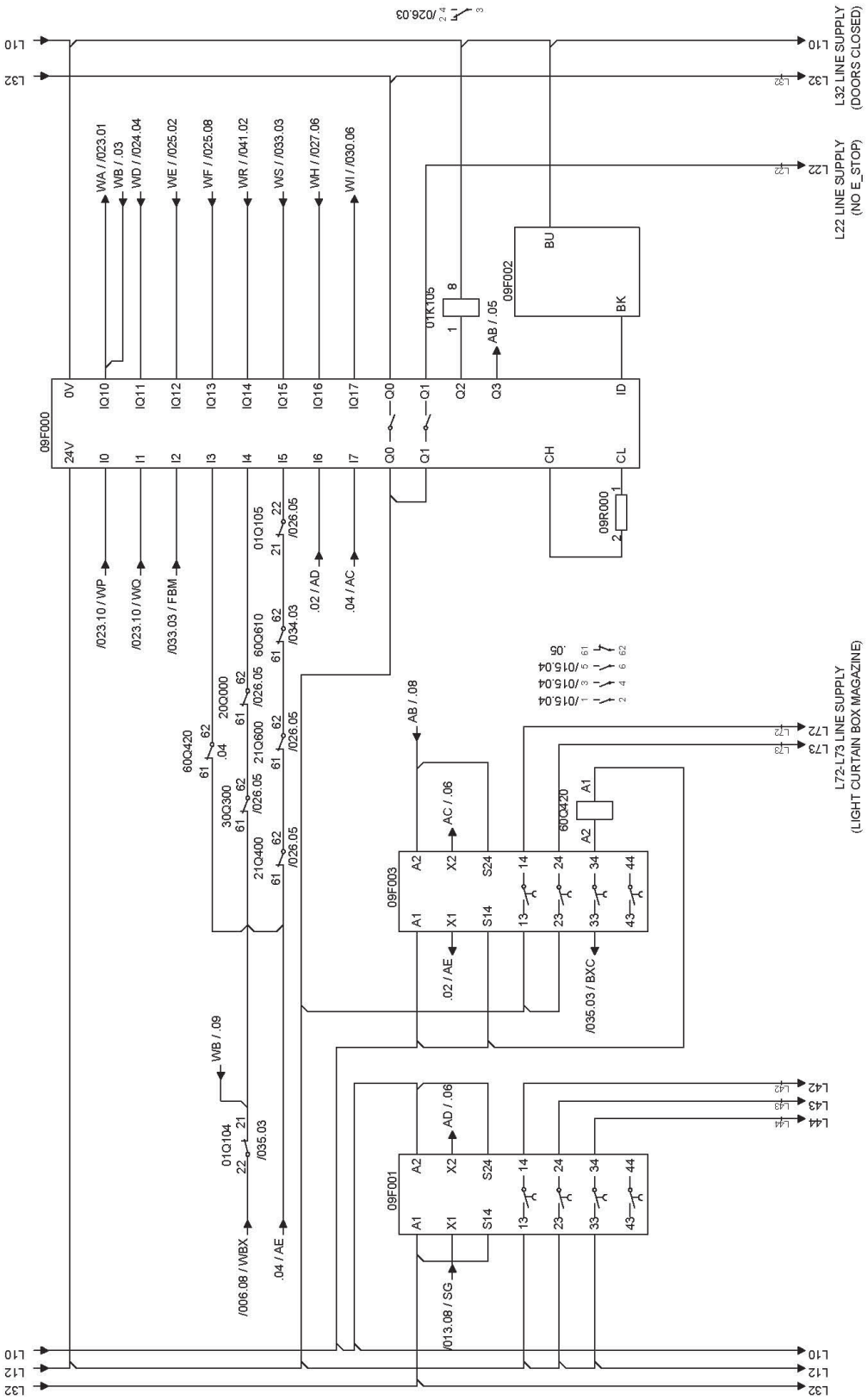

TechPub_2614345_0107 - 0101_3050421_01.fm

Emergency Stop Buttons

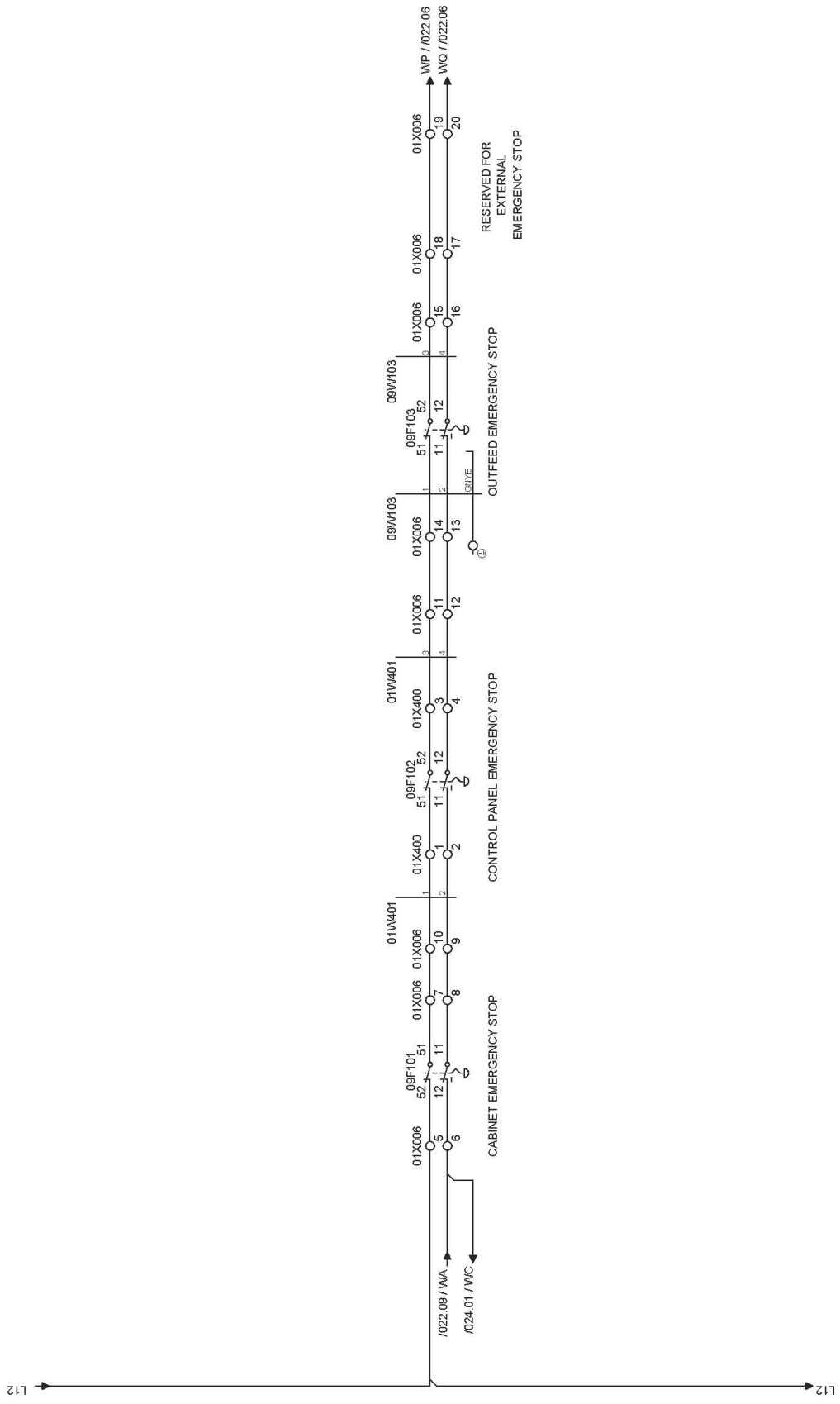

TechPub_2614345_0107 - 0101_3050421_01.fm

Door Monitor (Operator Side)

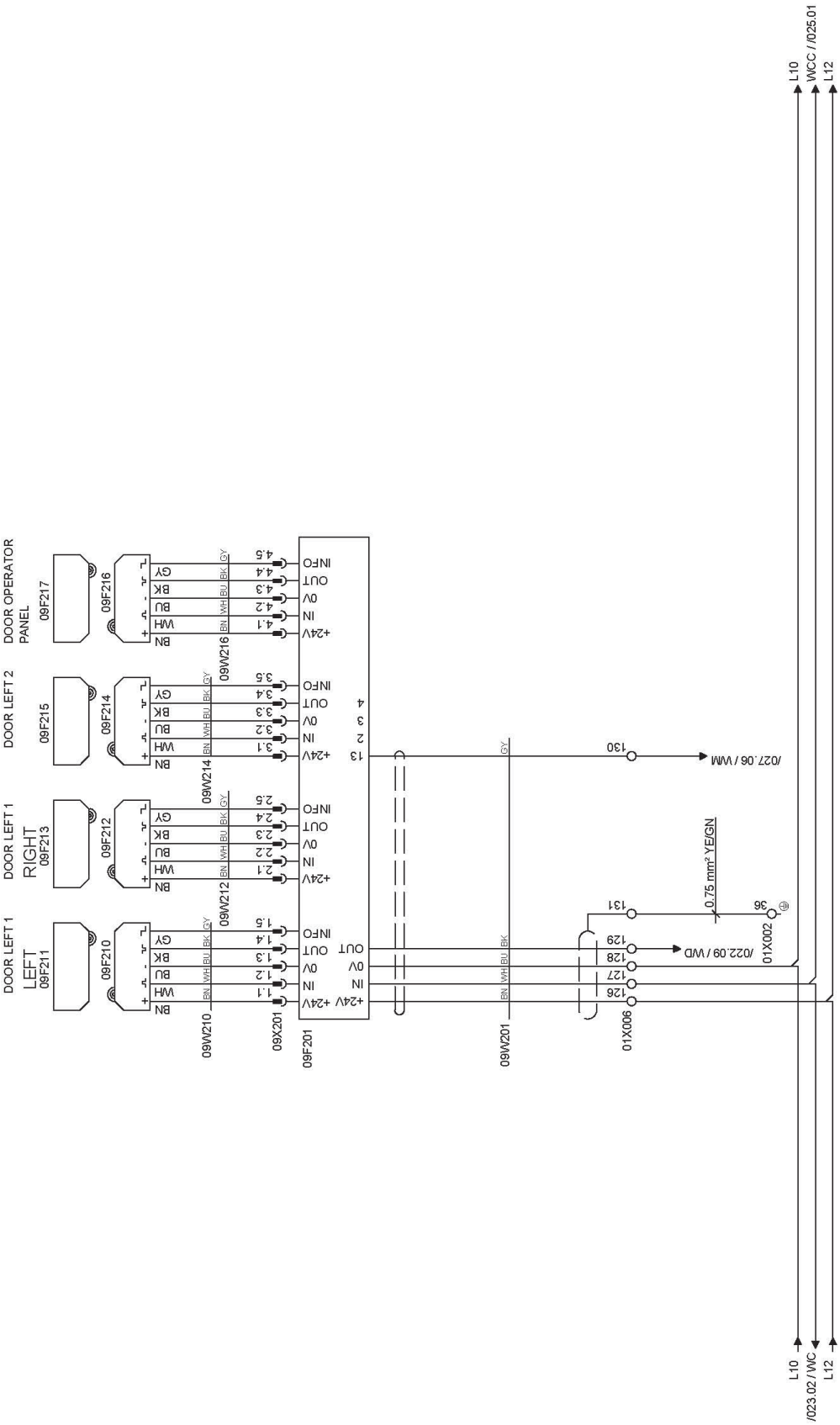

TechPub_2614345_0107 - 0101_3050421_01.fm

Door Monitor and Covers

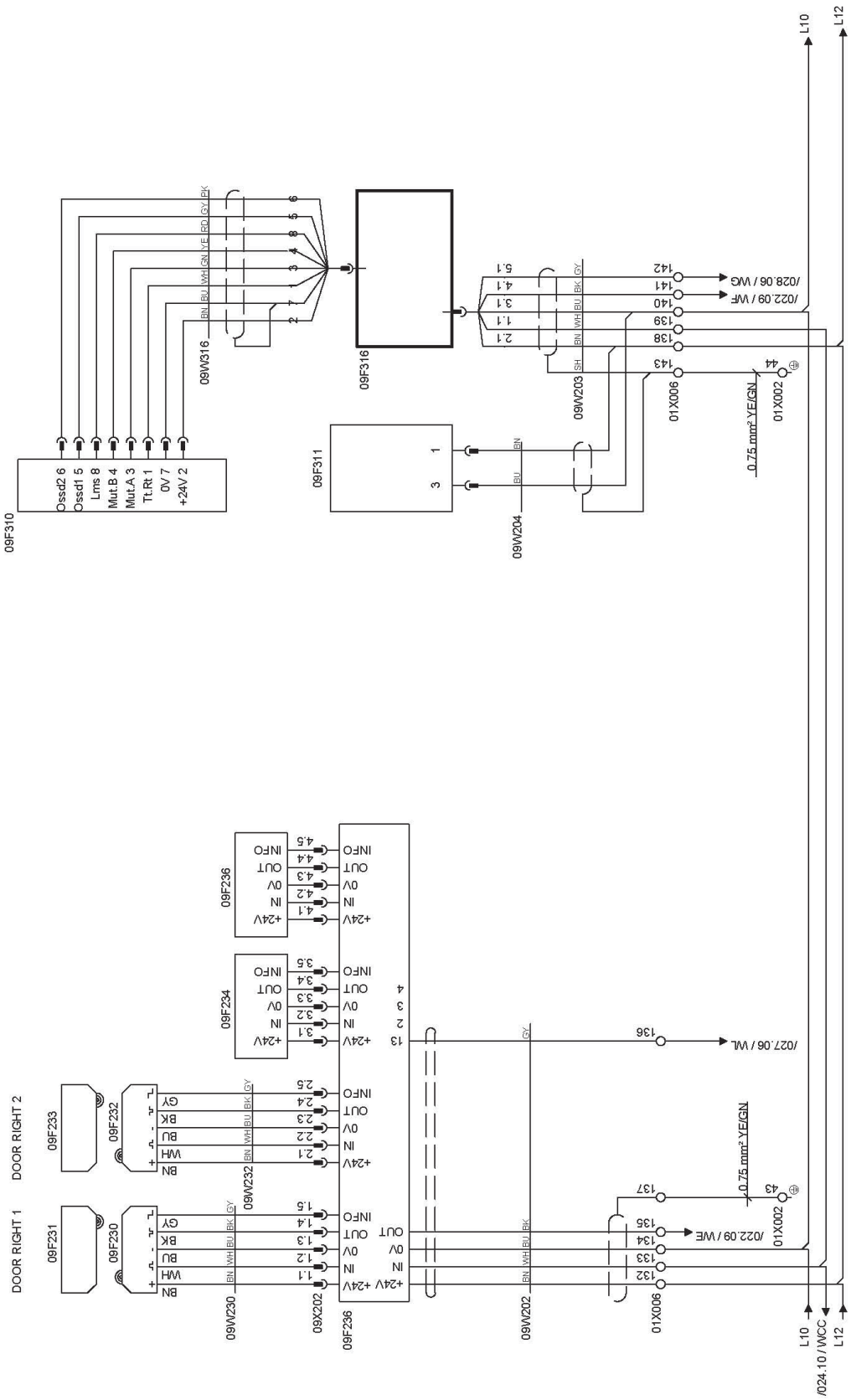

TechPub_2614345_0107 - 0101_3050421_01.fm

This page intentionally left blank

TechPub_2614345_0107 - 0101_3050421_01.fm

2 Document List

TechPub_2614345_0107 - 0201_3050422_01.fm

Description

This chapter is a table of contents that includes the drawing specification for each electrical document valid for the equipment.

TechPub_2614345_0107 - 0201_3050422_01.fm

This drawing must not without the consent of Tetra Pak be copied, transmitted or disclosed to any third party.

RELEASED

Documents list

Drawing No	Page	Denomination	Page type	Version
3039165-0001	001	DOCUMENTS LIST	DOCUMENTS LIST	AB
3039165-0001	002	DOCUMENTS LIST	DOCUMENTS LIST	AB
3039165-0001	003	DOCUMENTS LIST	DOCUMENTS LIST	AB
3039165-0002	001	POSITION SUMMARY	POSITION SUMMARY	AB
3039165-0002	002	POSITION SUMMARY	POSITION SUMMARY	AB
3039165-0002	003	POSITION SUMMARY	POSITION SUMMARY	AB
3039165-0003	001	CIRCUIT DIAGRAM	0V_24V TERMINAL	AB
3039165-0003	002	CIRCUIT DIAGRAM	MAINS	AB
3039165-0003	003	CIRCUIT DIAGRAM	CONTROL VOLTAGE	AB
3039165-0003	004	CIRCUIT DIAGRAM	LIGHT FIXTURES	AB
3039165-0003	005	CIRCUIT DIAGRAM	COOLING UNIT	AB
3039165-0003	006	CIRCUIT DIAGRAM	SERVO MOTOR 1 (APPLICATOR WHEEL)	AB
3039165-0003	007	CIRCUIT DIAGRAM	SERVO MOTOR 2 (ROW CAP CUTTER)	AB
3039165-0003	008	CIRCUIT DIAGRAM	SERVO MOTOR 3 (PACK.TRASFER INNER)	AB
3039165-0003	009	CIRCUIT DIAGRAM	SERVO MOTOR 2 (PACK.TRANSFER OUTER)	AB
3039165-0003	010	CIRCUIT DIAGRAM	SERVO MOTOR 5 (CAP FEEDER SCREW)	AB
3039165-0003	011	CIRCUIT DIAGRAM	SERVO MOTOR 6 (SINGLE CAP CUTTER)	AB
3039165-0003	012	CIRCUIT DIAGRAM	SERVO MOTOR 7 (PUSH DOWN)	AB
3039165-0003	013	CIRCUIT DIAGRAM	SERVO MOTOR 8 (AXIS X POSITION. SYS.)	AB
3039165-0003	014	CIRCUIT DIAGRAM	MOTORS	AB
3039165-0003	015	CIRCUIT DIAGRAM	MOTORS	AB
3039165-0003	016	CIRCUIT DIAGRAM	MOTORS	AB
3039165-0003	017	CIRCUIT DIAGRAM	MOTORS	AB
3039165-0003	018	CIRCUIT DIAGRAM	PLC RACK	AB
3039165-0003	019	CIRCUIT DIAGRAM	POWER SUPPLY DEVICE NET	AB
3039165-0003	020	CIRCUIT DIAGRAM	CURRENT CONTROL RELAY	AB
3039165-0003	021	CIRCUIT DIAGRAM	ETHERNET SWITCH / CONTROL PANEL	AB
3039165-0003	022	CIRCUIT DIAGRAM	SAFETY RELAY	AB
3039165-0003	023	CIRCUIT DIAGRAM	EMERGENCY STOP	AB
3039165-0003	024	CIRCUIT DIAGRAM	DOORS MONITOR (OPERATOR SIDE)	AB
3039165-0003	025	CIRCUIT DIAGRAM	DOORS AND COVERS MONITOR	AB
3039165-0003	026	CIRCUIT DIAGRAM	POWER ON TO THE MOTORS	AB
3039165-0003	027	CIRCUIT DIAGRAM	PLC IN	AB
3039165-0003	028	CIRCUIT DIAGRAM	PLC IN	AB
3039165-0003	029	CIRCUIT DIAGRAM	PLC IN	AB
3039165-0003	030	CIRCUIT DIAGRAM	PLC IN	AB
3039165-0003	031	CIRCUIT DIAGRAM	PLC IN	AB
3039165-0003	032	CIRCUIT DIAGRAM	PLC IN	AB
3039165-0003	033	CIRCUIT DIAGRAM	PLC OUT	AB
3039165-0003	034	CIRCUIT DIAGRAM	PLC OUT	AB
3039165-0003	035	CIRCUIT DIAGRAM	PLC OUT	AB
3039165-0003	036	CIRCUIT DIAGRAM	PLC OUT	AB
3039165-0003	037	CIRCUIT DIAGRAM	PLC OUT	AB
3039165-0003	038	CIRCUIT DIAGRAM	PLC OUT	AB
3039165-0003	039	CIRCUIT DIAGRAM	REMOTE I/O ADAPTER O.P. BOX	AB
3039165-0003	040	CIRCUIT DIAGRAM	REMOTE I/O ADAPTER O.P. BOX	AB

Machine: CAP30 Flex ReCap3 0200
Page Type: DOCUMENTS LIST
Document No.: 3039165-0001
Doc. type: ELD
Version: AB
Page: 001
Date: 01/10/2009
Denomination: DOCUMENTS LIST
Designer: ACH
ECM No: 417049
Company: Tetra Pak (Italy)
Drawing remarks

This drawing must not without the consent of Tetra Pak be copied, transmitted or disclosed to any third party.

RELEASED

Documents list

Drawing No	Page	Denomination	Page type	Version
3039165-0003	041	CIRCUIT DIAGRAM	REMOTE I/O ADAPTER O.P. BOX	AB
3039165-0003	042	CIRCUIT DIAGRAM	REMOTE I/O ADAPTER O.P. BOX	AB
3039165-0003	043	CIRCUIT DIAGRAM	REMOTE I/O ADAPTER O.P. BOX	AB
3039165-0003	044	CIRCUIT DIAGRAM	REMOTE I/O ADAPTER O.P. BOX	AB
3039165-0003	045	CIRCUIT DIAGRAM	FIELD POWER DISTR. O.P. BOX	AB
3039165-0003	046	CIRCUIT DIAGRAM	REMOTE OUTPUT O.P. BOX	AB
3039165-0003	047	CIRCUIT DIAGRAM	REMOTE OUTPUT O.P. BOX	AB
3039165-0003	048	CIRCUIT DIAGRAM	REMOTE OUTPUT O.P. BOX	AB
3039165-0003	049	CIRCUIT DIAGRAM	FIELD POWER DISTR. O.P. BOX	AB
3039165-0003	050	CIRCUIT DIAGRAM	REMOTE OUTPUT O.P. BOX	AB
3039165-0003	051	CIRCUIT DIAGRAM	REMOTE OUTPUT O.P. BOX	AB
3039165-0003	052	CIRCUIT DIAGRAM	ARMOR BLOCK (MACHINE BODY)	AB
3039165-0003	053	CIRCUIT DIAGRAM	ARMOR BLOCK (PICK AND PLACE)	AB
3039165-0003	054	CIRCUIT DIAGRAM	ARMOR BLOCK (BOX MAGAZINE)	AB
3039165-0003	055	CIRCUIT DIAGRAM	ARMOR BLOCK (BOX MAGAZINE)	AB
3039165-0003	056	CIRCUIT DIAGRAM	VISION SYSTEM DEVICE	AB
3039165-0003	057	CIRCUIT DIAGRAM	ETHERNET COMMUNICATION	AB
3039165-0003	058	CIRCUIT DIAGRAM	NETWORK LAYOUT DEVICENET	AB
3039165-0003	059	CIRCUIT DIAGRAM	FIGURE DRAWING	AB
3039165-0004	001	LINE SUMMARY	LINE SUMMARY	AB
3039165-0004	002	LINE SUMMARY	LINE SUMMARY	AB
3039165-0004	003	LINE SUMMARY	LINE SUMMARY	AB
3039165-0004	004	LINE SUMMARY	LINE SUMMARY	AB
3039165-0004	005	LINE SUMMARY	LINE SUMMARY	AB
3039165-0004	006	LINE SUMMARY	LINE SUMMARY	AB
3039165-0004	007	LINE SUMMARY	LINE SUMMARY	AB
3039165-0005	001	CABINET TERMINAL SUMMARY	CABINET TERMINAL SUMMARY	AB
3039165-0005	002	CABINET TERMINAL SUMMARY	CABINET TERMINAL SUMMARY	AB
3039165-0005	003	CABINET TERMINAL SUMMARY	CABINET TERMINAL SUMMARY	AB
3039165-0006	001	TERMINAL STRIP OVERVIEW	TERMINAL STRIP OVERVIEW	AB
3039165-0006	002	TERMINAL STRIP OVERVIEW	TERMINAL STRIP OVERVIEW	AB
3039165-0006	003	TERMINAL STRIP OVERVIEW	TERMINAL STRIP OVERVIEW	AB
3039165-0006	004	TERMINAL STRIP OVERVIEW	TERMINAL STRIP OVERVIEW	AB
3039165-0006	005	TERMINAL STRIP OVERVIEW	TERMINAL STRIP OVERVIEW	AB
3039165-0006	006	TERMINAL STRIP OVERVIEW	TERMINAL STRIP OVERVIEW	AB
3039165-0006	007	TERMINAL STRIP OVERVIEW	TERMINAL STRIP OVERVIEW	AB
3039165-0006	008	TERMINAL STRIP OVERVIEW	TERMINAL STRIP OVERVIEW	AB
3039165-0006	009	TERMINAL STRIP OVERVIEW	TERMINAL STRIP OVERVIEW	AB
3039165-0006	010	TERMINAL STRIP OVERVIEW	TERMINAL STRIP OVERVIEW	AB
3039165-0006	011	TERMINAL STRIP OVERVIEW	TERMINAL STRIP OVERVIEW	AB
3039165-0006	012	TERMINAL STRIP OVERVIEW	TERMINAL STRIP OVERVIEW	AB
3039165-0006	013	TERMINAL STRIP OVERVIEW	TERMINAL STRIP OVERVIEW	AB
3039165-0006	014	TERMINAL STRIP OVERVIEW	TERMINAL STRIP OVERVIEW	AB
3039165-0006	015	TERMINAL STRIP OVERVIEW	TERMINAL STRIP OVERVIEW	AB
3039165-0006	016	TERMINAL STRIP OVERVIEW	TERMINAL STRIP OVERVIEW	AB
3039165-0006	017	TERMINAL STRIP OVERVIEW	TERMINAL STRIP OVERVIEW	AB

Machine: CAP30 Flex ReCap3 0200
Page Type: DOCUMENTS LIST
Document No.: 3039165-0001
Doc. type: ELD
Version: AB
Page: 002
Date: 01/10/2009
Denomination: DOCUMENTS LIST
Designer: ACH
ECM No: 417049
Company: Tetra Pak (Italy)
Drawing remarks

This drawing must not without the consent of Tetra Pak be copied, transmitted or disclosed to any third party.

RELEASED

Documents list

Drawing No	Page	Denomination	Page type	Version
3039165-0006	018	TERMINAL STRIP OVERVIEW	TERMINAL STRIP OVERVIEW	AB
3039165-0006	019	TERMINAL STRIP OVERVIEW	TERMINAL STRIP OVERVIEW	AB
3039165-0006	020	TERMINAL STRIP OVERVIEW	TERMINAL STRIP OVERVIEW	AB
3039165-0006	021	TERMINAL STRIP OVERVIEW	TERMINAL STRIP OVERVIEW	AB
3039165-0006	022	TERMINAL STRIP OVERVIEW	TERMINAL STRIP OVERVIEW	AB
3039165-0006	023	TERMINAL STRIP OVERVIEW	TERMINAL STRIP OVERVIEW	AB
3039165-0006	024	TERMINAL STRIP OVERVIEW	TERMINAL STRIP OVERVIEW	AB
3039165-0006	025	TERMINAL STRIP OVERVIEW	TERMINAL STRIP OVERVIEW	AB
3039165-0007	001	CABLE CONNECTION LIST	CABLE CONNECTION LIST	AB
3039165-0007	002	CABLE CONNECTION LIST	CABLE CONNECTION LIST	AB
3039165-0007	003	CABLE CONNECTION LIST	CABLE CONNECTION LIST	AB
3039165-0007	004	CABLE CONNECTION LIST	CABLE CONNECTION LIST	AB
3039165-0007	005	CABLE CONNECTION LIST	CABLE CONNECTION LIST	AB
3039165-0007	006	CABLE CONNECTION LIST	CABLE CONNECTION LIST	AB
3039165-0007	007	CABLE CONNECTION LIST	CABLE CONNECTION LIST	AB
3039165-0007	008	CABLE CONNECTION LIST	CABLE CONNECTION LIST	AB
3039165-0007	009	CABLE CONNECTION LIST	CABLE CONNECTION LIST	AB
3039165-0007	010	CABLE CONNECTION LIST	CABLE CONNECTION LIST	AB
3039165-0007	011	CABLE CONNECTION LIST	CABLE CONNECTION LIST	AB
3039165-0007	012	CABLE CONNECTION LIST	CABLE CONNECTION LIST	AB
3039165-0007	013	CABLE CONNECTION LIST	CABLE CONNECTION LIST	AB
3039165-0007	014	CABLE CONNECTION LIST	CABLE CONNECTION LIST	AB
3039165-0007	015	CABLE CONNECTION LIST	CABLE CONNECTION LIST	AB
3039165-0007	016	CABLE CONNECTION LIST	CABLE CONNECTION LIST	AB
3039165-0008	001	MAINS CONNECTION	MAINS CONNECTION	AB
3039165-0008	002	MAINS CONNECTION	MAINS CONNECTION	AB

Designer ACH
ECM No 417049
Date 01/10/2009
Denomination DOCUMENTS LIST
Machine CAP30 Flex ReCap3 0200
Page Type DOCUMENTS LIST
Document No. 3039165-0001
Doc. type ELD
Version AB
Page 003
Company Tetra Pak (Italy)
Drawing remarks

This page intentionally left blank

3 Position Summary

TechPub_2614345_0107 - 0301_3050423_01.fm

Description

This chapter is a list of all electrical components that are shown in the electrical drawings, with page references to the drawings where they are located.

TechPub_2614345_0107 - 0301_3050423_01.fm

This drawing must not without the consent of Tetra Pak be copied, transmitted or disclosed to any third party.

Position summary of 3039165-0003

Component	Page .Col.	Opt.
01A400	021 .6	
01B600	027 .5	
01B601	027 .6	
01B801	043 .5	
01B901	052 .3	
01B902	052 .3	
01E600	005 .5	
01E700	004 .4	
01E701	004 .5	
01E702	004 .6	
01F100	002 .2	
01F101	002 .5	
01F104	006 .1	
01F105	006 .3	
01F200	003 .3	
01F201	003 .3	
01F202	003 .4	
01F203	003 .5	
01F300	003 .6	
01F400	021 .8	
01F500	014 .6	
01F600	005 .5	
01F700	004 .3	
01F701	004 .9	
01F702	004 .8	
01K100	002 .6	
01K105	022 .8	
01K300	051 .4	

Component	Page .Col.	Opt.
01K301	018 .3	
01K0302	018 .3	
01K303	018 .3	
01K304	018 .3	
01K305	027 .7	
01K306	032 .7	
01K307	033 .1	
01K308	035 .1	
01K309	037 .1	
01K310	018 .3	
01K0320	039 .6	
01K0321	040 .7	
01K0322	041 .7	
01K0323	042 .7	
01K0324	043 .7	
01K0325	044 .7	
01K0326	045 .7	
01K0327	046 .1	
01K0328	047 .1	
01K0329	048 .1	
01K0330	049 .7	
01K0331	050 .1	
01K0332	051 .1	
01K335	051 .3	
01K336	051 .3	
01K340	053 .6	
01K350	054 .6	
01K360	055 .6	

Component	Page .Col.	Opt.
01K700	033 .3	
01K800	050 .5	
01K900	050 .5	
01P400	046 .4	
01P401	046 .4	
01P402	046 .4	
01P404	046 .4	
01P500	034 .3	
01P501	034 .3	
01P510	047 .4	
01P513	047 .4	
01Q104	035 .3	
01Q105	026 .5	
01Q500	033 .3	
01Q600	033 .3	
01R360	055 .9	
01S400	040 .5	
01S401	040 .5	
01S402	040 .5	
01S404	041 .5	
01T200	003 .3	
01T201	003 .6	PWR. SUP.
01T300	018 .3	
01T400	021 .7	
01V100	002 .6	
01V104	006 .1	
01V105	006 .3	
01V500	014 .5	

Component	Page .Col.	Opt.
09F000	022 .7	
09F001	022 .2	
09F002	022 .8	
09F003	022 .4	
09F101	023 .3	
09F102	023 .5	
09F103	023 .7	
09F201	024 .3	
09F210	024 .3	
09F211	024 .4	
09F212	024 .4	
09F213	024 .5	
09F214	024 .5	
09F215	024 .6	
09F216	024 .6	
09F217	024 .7	
09F230	025 .1	
09F231	025 .2	
09F232	025 .2	
09F233	025 .3	
09F234	025 .3	
09F236	025 .1	
09F310	025 .7	
09F311	025 .7	
09F316	025 .8	
09K241	048 .4	
09K242	048 .4	
09R000	022 .6	

Drawing remarks

Tetra Pak

Designer ACH	Date 01/10/2009	Machine CAP30 Flex ReCap3 0200	
ECM No 417049	Denomination POSITION SUMMARY	Page Type POSITION SUMMARY	
Company Tetra Pak (Italy)	Document No. 3039165-0002	Doc. type ELD	Version AB	Page 001

This drawing must not without the consent of Tetra Pak be copied, transmitted or disclosed to any third party.

Position summary of 3039165-0003

Component	Page .Col.	Opt.
20B002	029 .4	
20B003	029 .5	
20F000	016 .2	
20K002	034 .3	
20M000	016 .5	
20Q000	026 .5	
20T000	016 .2	
20V000	016 .2	
21B000	052 .3	
21B300	031 .4	
21B302	031 .3	
21B303	031 .3	
21B304	031 .5	
21B305	031 .5	
21B401	042 .4	
21B402	042 .5	
21B403	042 .4	
21B404	042 .5	
21B405	042 .4	
21B406	042 .5	
21B407	042 .4	
21B408	042 .5	
21B423	052 .3	
21B424	052 .4	
21B601	052 .3	
21B602	052 .4	
21B603	052 .3	
21B604	052 .4	

Component	Page .Col.	Opt.
21B605	052 .3	
21F400	016 .7	
21F600	017 .7	OUT.P. CONV.
21F800	014 .1	
21F801	014 .8	
21K000	050 .5	
21K310	036 .5	
21K311	036 .5	
21K400	016 .7	
21K401	016 .8	
21K500	036 .5	
21K600	017 .7	OUT.P. CONV.
21K601	017 .8	OUT.P. CONV.
21K800	020 .4	
21K801	020 .7	
21M100	008 .2	
21M200	009 .2	
21M400	016 .9	
21M600	017 .9	OUT.P. CONV.
21M800	014 .1	
21Q400	026 .5	
21Q600	026 .5	OUT.P. CONV.
21Q800	033 .3	
21Q801	033 .3	
21R801	014 .8	
21T100	008 .1	
21T200	009 .1	
21T400	016 .7	

Component	Page .Col.	Opt.
21T600	017 .7	OUT.P. CONV.
21V400	016 .7	
21V600	017 .7	OUT.P. CONV.
30B102	029 .4	
30B201	029 .4	
30B303	032 .4	
30F300	017 .2	
30K200	038 .5	
30K300	017 .2	
30K301	017 .3	
30K302	038 .5	
30K303	032 .3	
30M000	006 .2	
30M300	017 .4	
30M400	012 .2	
30Q300	026 .5	
30T000	006 .1	
30T300	017 .2	
30T400	012 .1	
30V300	017 .2	
60B000	030 .4	
60B001	030 .4	
60B003	055 .2	
60B100	029 .4	
60B101	029 .5	
60B103	030 .4	
60B104	029 .4	
60B300	030 .4	

Component	Page .Col.	Opt.
60B301	032 .3	
60B402	054 .2	
60B403	054 .2	
60B404	054 .2	
60B405	054 .2	
60B406	054 .3	
60B407	054 .3	
60B408	055 .3	
60B409	055 .3	
60B410	055 .2	
60B411	055 .2	
60B423	053 .2	
60B424	053 .2	
60B425	054 .2	
60B426	054 .2	
60B600	053 .2	
60B601	053 .2	
60B602	053 .2	
60B603	053 .2	
60B604	053 .2	
60B605	053 .2	
60B606	055 .2	
60F010	015 .6	
60F120	015 .9	
60F420	015 .4	
60F610	015 .2	
60K000	038 .5	
60K010	038 .5	

Drawing remarks

Tetra Pak

Designer: ACH	Date: 01/10/2009	Machine: CAP30 Flex ReCap3 0200	
ECM No: 417049	Denomination: POSITION SUMMARY	Page Type: POSITION SUMMARY	
Company: Tetra Pak (Italy)	Document No.: 3039165-0002	Doc. type: ELD	Version: AB	Page: 002

This drawing must not without the consent of Tetra Pak be copied, transmitted or disclosed to any third party.

Position summary of 3039165-0003

Component	Page .Col.	Opt.
60K100	038 .5	
60K400	037 .5	
60K401	037 .5	
60K402	037 .5	
60K403	037 .5	
60K600	037 .5	
60K601	037 .5	
60K602	037 .5	
60K603	038 .5	
60K604	038 .5	
60K605	037 .5	
60K612	026 .4	
60M010	015 .6	
60M110	007 .2	
60M210	010 .2	
60M310	011 .2	
60M420	015 .4	
60M610	015 .2	
60Q010	015 .6	
60Q120	034 .3	
60Q420	022 .4	
60Q610	034 .3	
60T110	007 .1	
60T210	010 .1	
60T310	011 .1	
70K000	034 .3	
70K001	056 .2	
70M100	013 .2	POS.SYS.

Component	Page .Col.	Opt.
70T100	013 .1	POS.SYS.
81K200	021 .6	
81K201	021 .5	
81K401	018 .2	
81K402	019 .9	
81K420	052 .6	
81K500	018 .9	COM.UNIT
81R400	019 .8	
81R700	016 .1	
81R704	017 .7	
81T200	021 .2	
81T400	019 .9	

Component	Page .Col.	Opt.

Component	Page .Col.	Opt.

Drawing remarks

Tetra Pak

Designer ACH	Date 01/10/2009	Machine CAP30 Flex ReCap3 0200	
ECM No 417049	Denomination POSITION SUMMARY	Page Type POSITION SUMMARY	
Company Tetra Pak (Italy)	Document No. 3039165-0002	Doc. type ELD	Version AB	Page 003

This page intentionally left blank

4 Circuit Diagrams

TechPub_2614345_0107 - 0401_3050424_01.fm

Description

This chapter contains all component drawings, such as programmable logic controller (PLC) modules, terminals, and cables.

TechPub_2614345_0107 - 0401_3050424_01.fm

RELEASED

This drawing must not without the consent of Tetra Pak be copied, transmitted or disclosed to any third party.

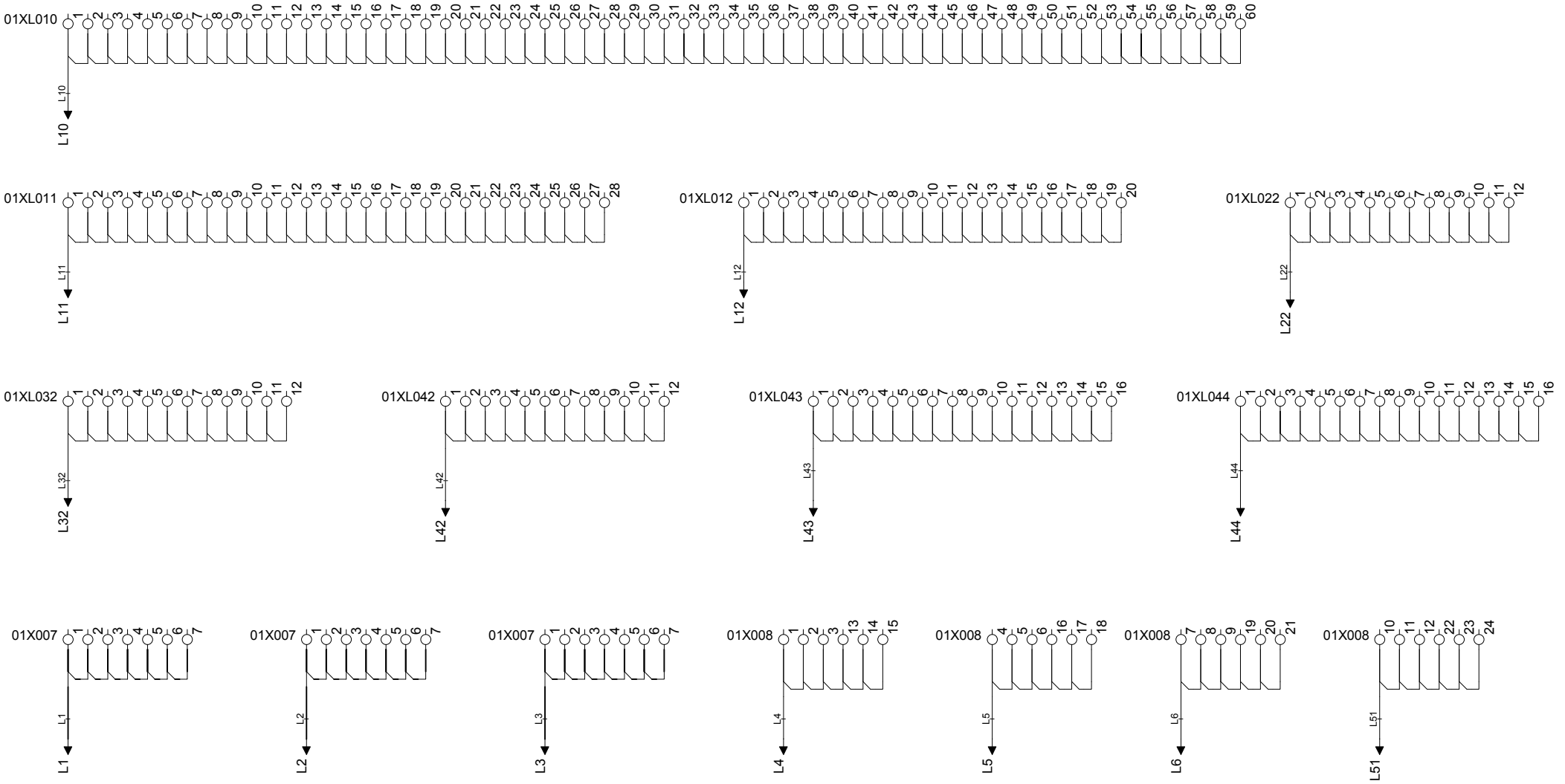

Drawing remarks	Tetra Pak	Designer ACH	Date 01/10/2009	Machine CAP30 Flex ReCap3 0200	
		ECM No 417049	Denomination CIRCUIT DIAGRAM	Page Type 0V_24V TERMINAL	
	Company Tetra Pak (Italy)	Document No. 3039165-0003	Doc. type ELD	Version AB	Page 001

RELEASED

This drawing must not without the consent of Tetra Pak be copied, transmitted or disclosed to any third party.

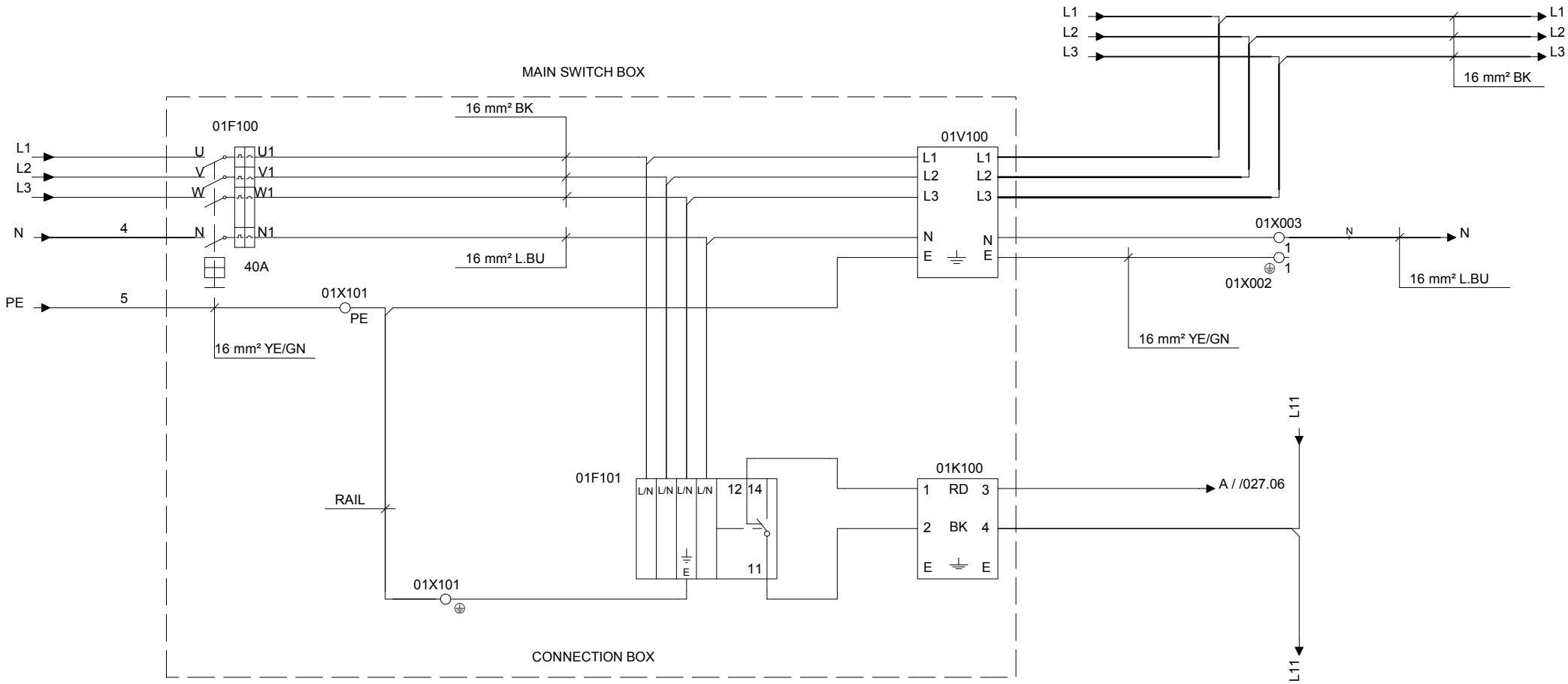

FOR TYPE OF WIRING, INSTRUCTION ETC.
SEE SPECIFICATION FOR SUBSUPPLIERS TPUS 3502.22

WHERE NOTHING ELSE IS SAID
OR LINE SUMMARY IS VALID : 0,75 mm2 BU

mm²	AWG
10.00	8
6.00	10
4.00	12
2.50	14
1.50	16
1.00	18
0.75	20

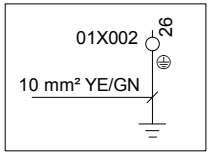

STIRRUP KINETIX

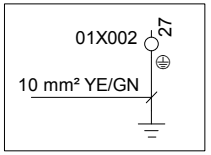

EARTH PLATE

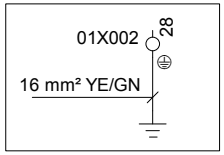

EARTH CUPBOARD

Drawing remarks

Tetra Pak

Designer ACH	Date 01/10/2009	Machine CAP30 Flex ReCap3 0200	
ECM No 417049	Denomination CIRCUIT DIAGRAM	Page Type MAINS	
Company Tetra Pak (Italy)	Document No. 3039165-0003	Doc. type ELD	Version AB	Page 002

RELEASED

This drawing must not without the consent of Tetra Pak be copied, transmitted or disclosed to any third party.

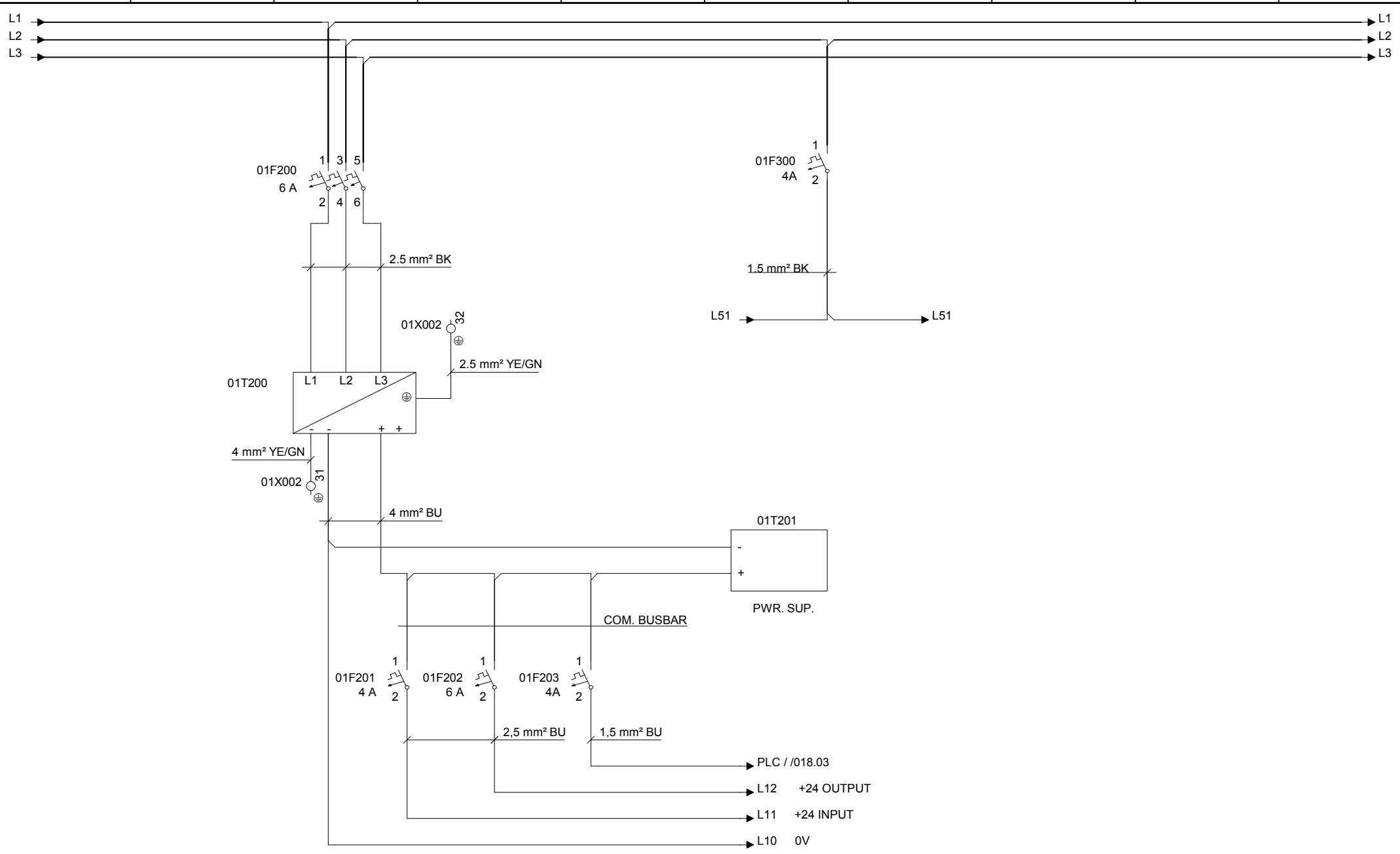

Drawing remarks	Tetra Pak	Designer ACH	Date 01/10/2009	Machine CAP30 Flex ReCap3 0200	
		ECM No 417049	Denomination CIRCUIT DIAGRAM	Page Type CONTROL VOLTAGE	
		Company Tetra Pak (Italy)	Document No. 3039165-0003	Doc. type ELD	Version AB	Page 003

RELEASED

This drawing must not without the consent of Tetra Pak be copied, transmitted or disclosed to any third party.

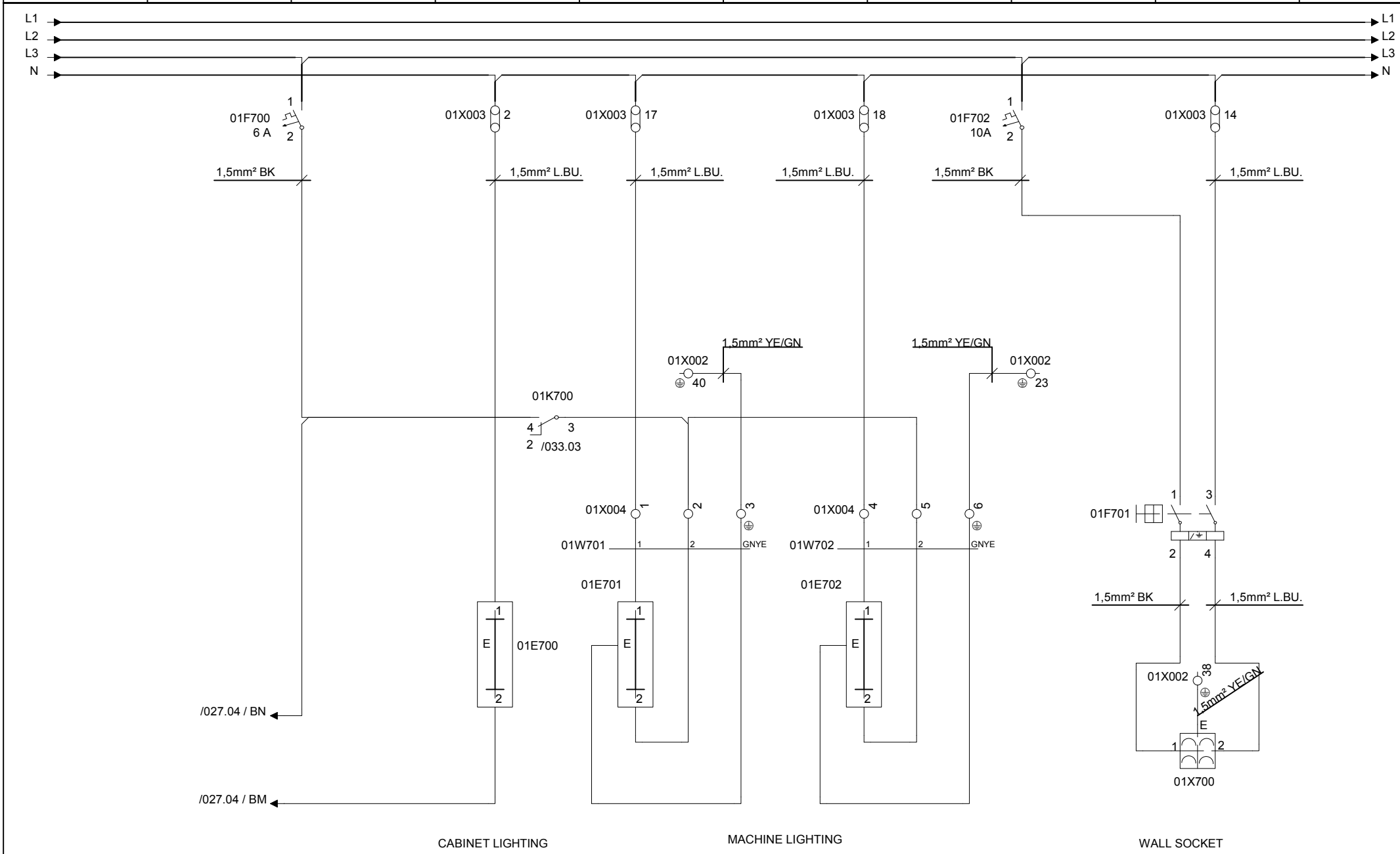

Drawing remarks	Tetra Pak	Designer ACH	Date 01/10/2009	Machine CAP30 Flex ReCap3 0200	
		ECM No 417049	Denomination CIRCUIT DIAGRAM	Page Type LIGHT FIXTURES	
	Company Tetra Pak (Italy)	Document No. 3039165-0003	Doc. type ELD	Version AB	Page 004

RELEASED

This drawing must not without the consent of Tetra Pak
be copied, transmitted or disclosed to any third party.

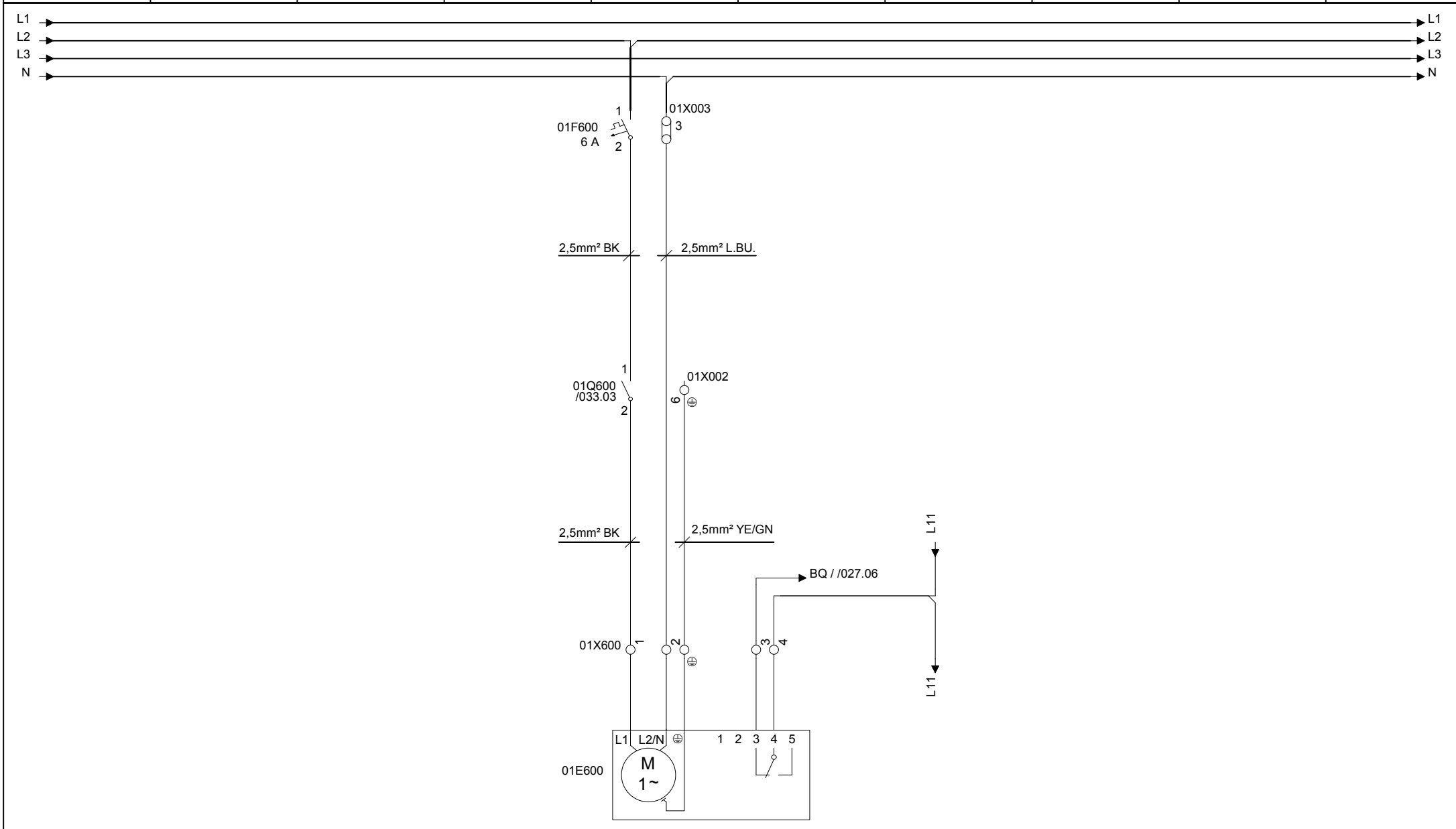

COOLING UNIT

	Tetra Pak	Designer ACH	Date 01/10/2009	Machine CAP30 Flex ReCap3 0200			
		ECM No 417049	Denomination CIRCUIT DIAGRAM	Page Type COOLING UNIT			
Drawing remarks		Company Tetra Pak (Italy)		Document No. 3039165-0003	Doc. type ELD	Version AB	Page 005

RELEASED

This drawing must not without the consent of Tetra Pak be copied, transmitted or disclosed to any third party.

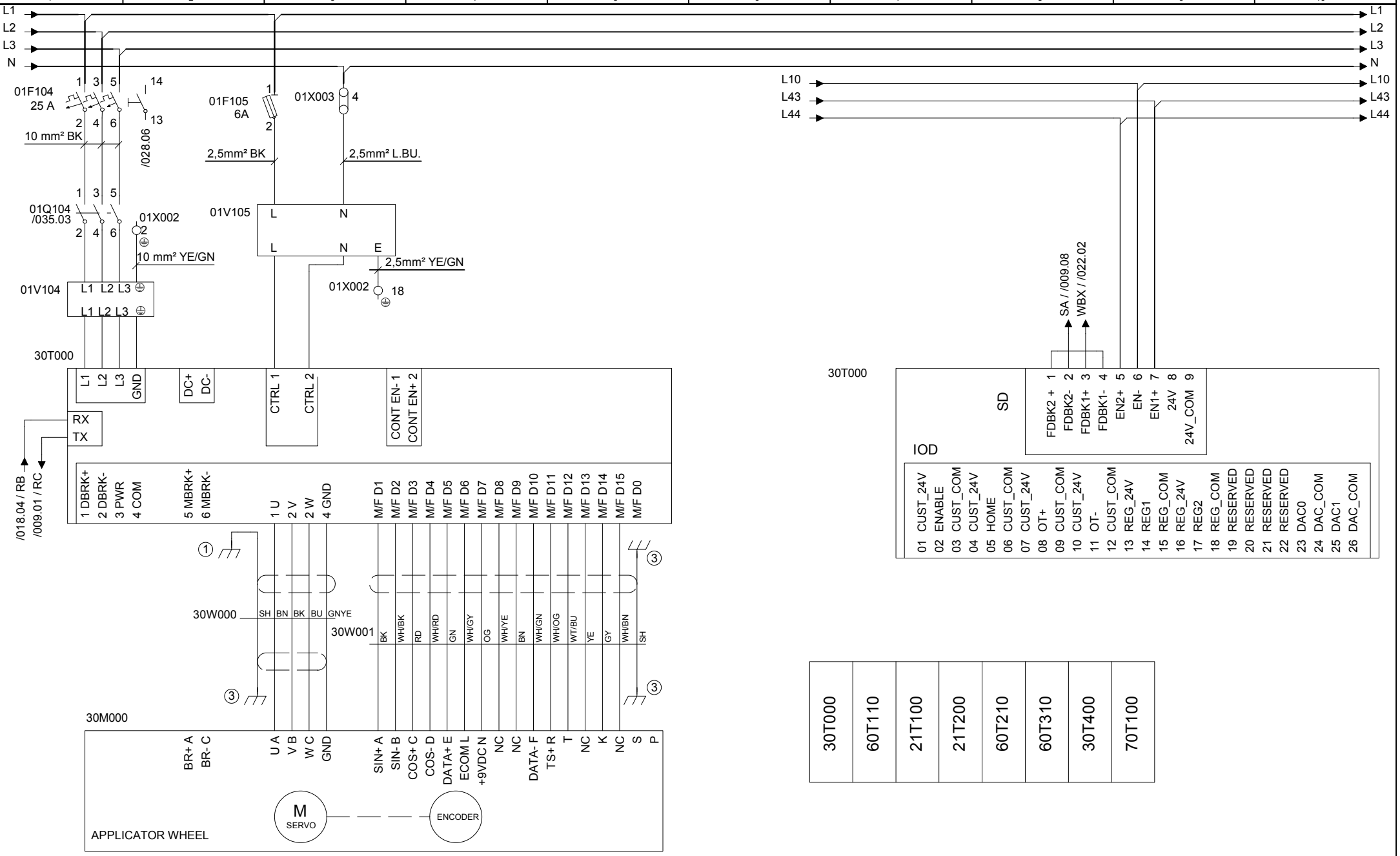

30T000	60T110	21T100	21T200	60T210	60T310	30T400	70T100

Drawing remarks

Tetra Pak

Designer ACH	Date 01/10/2009	Machine	CAP30 Flex ReCap3 0200
ECM No 417049	Denomination CIRCUIT DIAGRAM	Page Type	SERVO MOTOR 1 (APPLICATOR WHEEL)
Company Tetra Pak (Italy)	Document No. 3039165-0003	Doc. type ELD	Version AB / Page 006

RELEASED

This drawing must not without the consent of Tetra Pak be copied, transmitted or disclosed to any third party.

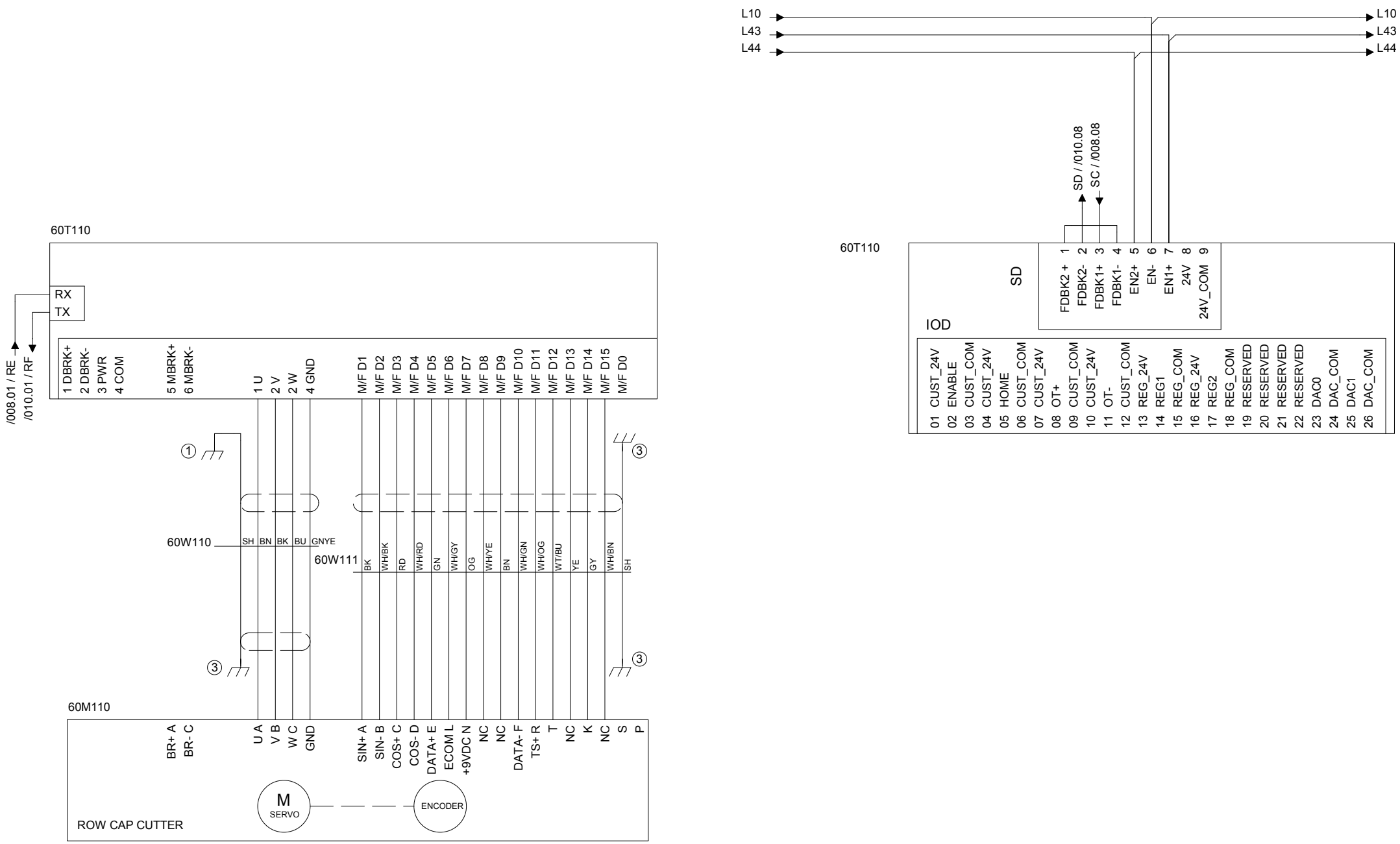

Drawing remarks	Tetra Pak	Designer ACH	Date 01/10/2009	Machine CAP30 Flex ReCap3 0200	
		ECM No 417049	Denomination CIRCUIT DIAGRAM	Page Type SERVO MOTOR 2 (ROW CAP CUTTER)	
		Company Tetra Pak (Italy)	Document No. 3039165-0003	Doc. type ELD	Version AB	Page 007

RELEASED

This drawing must not without the consent of Tetra Pak
be copied, transmitted or disclosed to any third party.

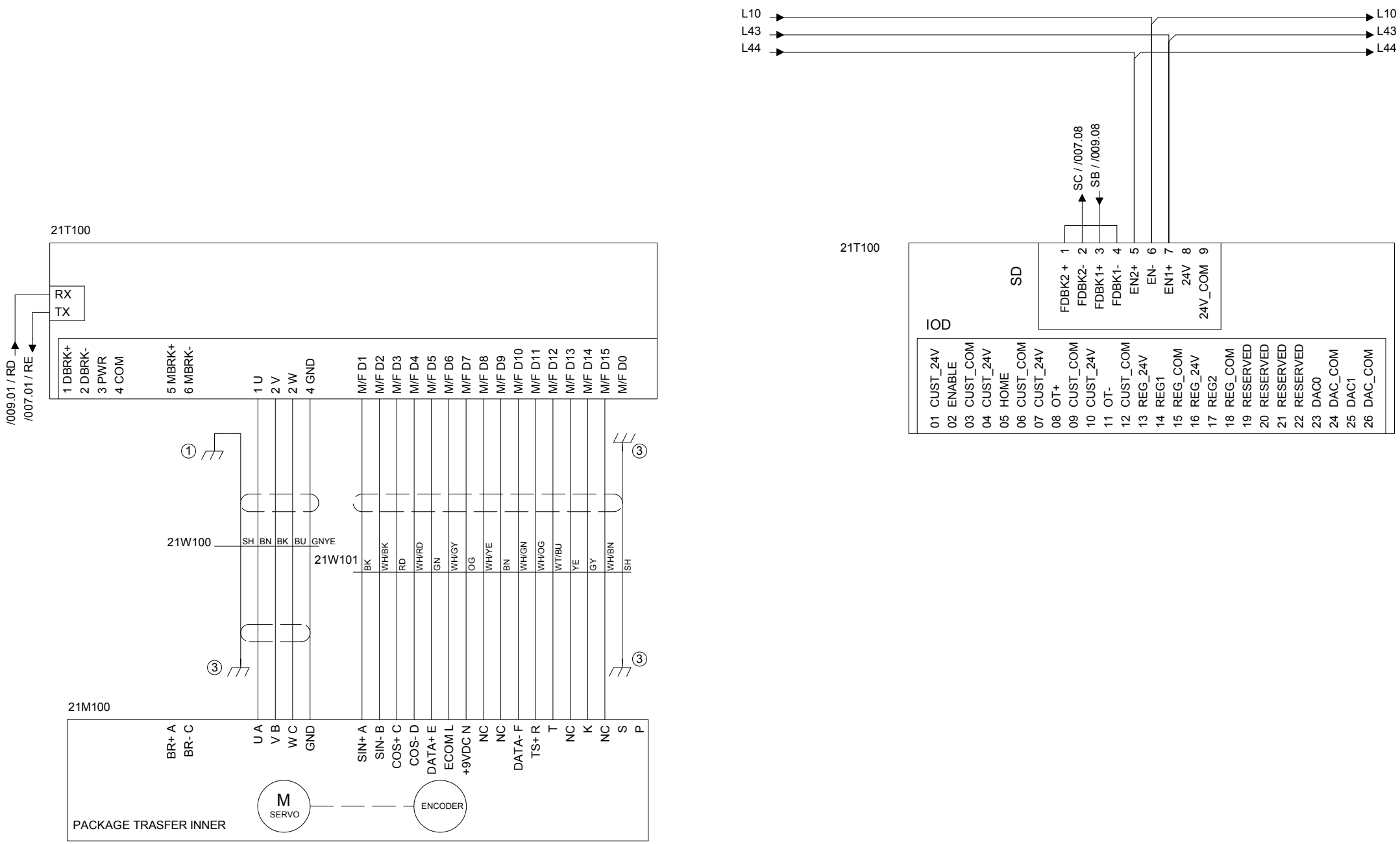

Drawing remarks	Tetra Pak	Designer ACH	Date 01/10/2009	Machine CAP30 Flex ReCap3 0200	
		ECM No 417049	Denomination CIRCUIT DIAGRAM	Page Type SERVO MOTOR 3 (PACK.TRASFER INNER)	
		Company Tetra Pak (Italy)	Document No. 3039165-0003	Doc. type ELD	Version AB	Page 008

RELEASED

This drawing must not without the consent of Tetra Pak
be copied, transmitted or disclosed to any third party.

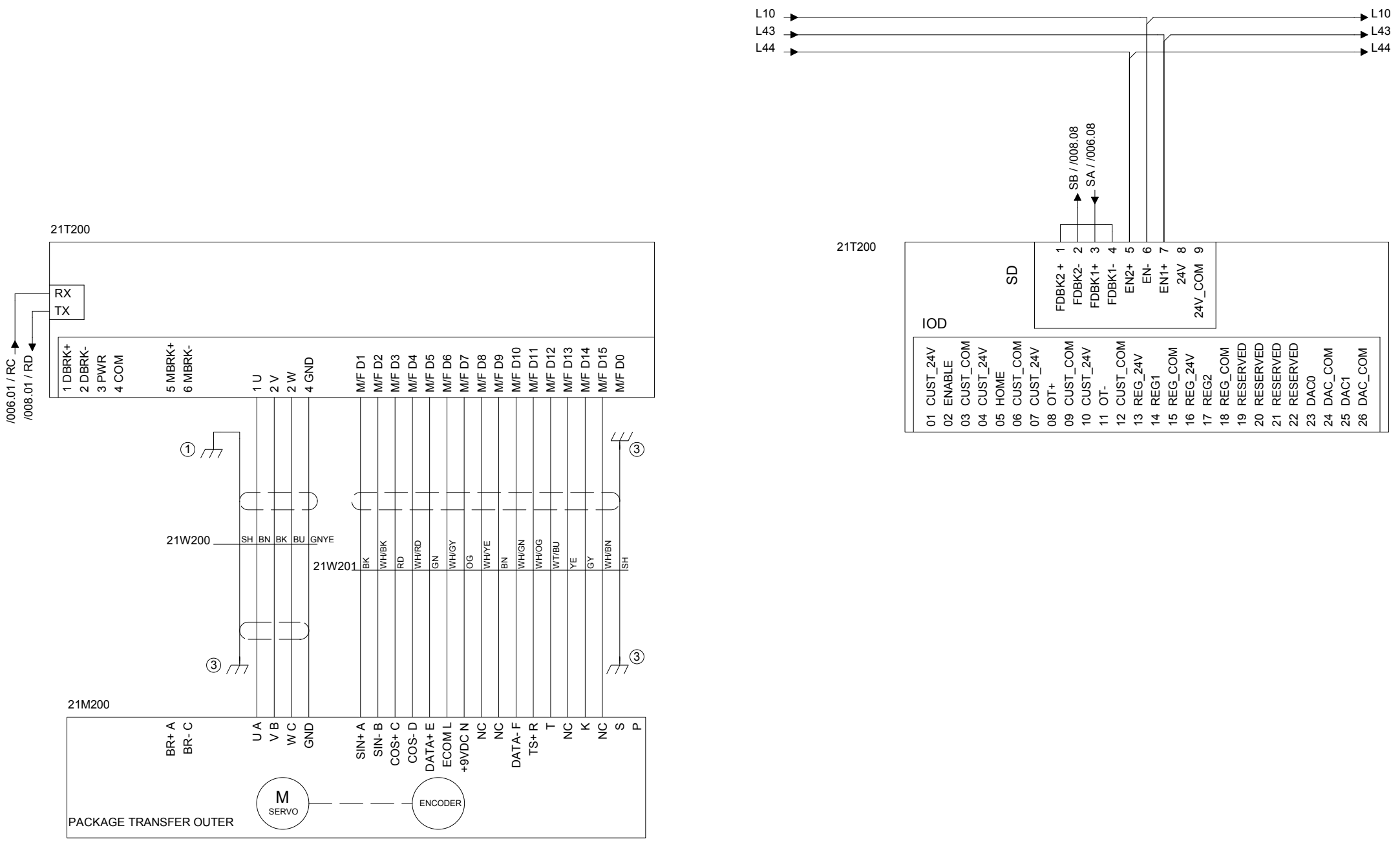

Drawing remarks	Tetra Pak	Designer ACH	Date 01/10/2009	Machine CAP30 Flex ReCap3 0200	
		ECM No 417049	Denomination CIRCUIT DIAGRAM	Page Type SERVO MOTOR 2 (PACK.TRANSFER OUTER)	
		Company Tetra Pak (Italy)	Document No. 3039165-0003	Doc. type ELD	Version AB	Page 009

RELEASED

This drawing must not without the consent of Tetra Pak be copied, transmitted or disclosed to any third party.

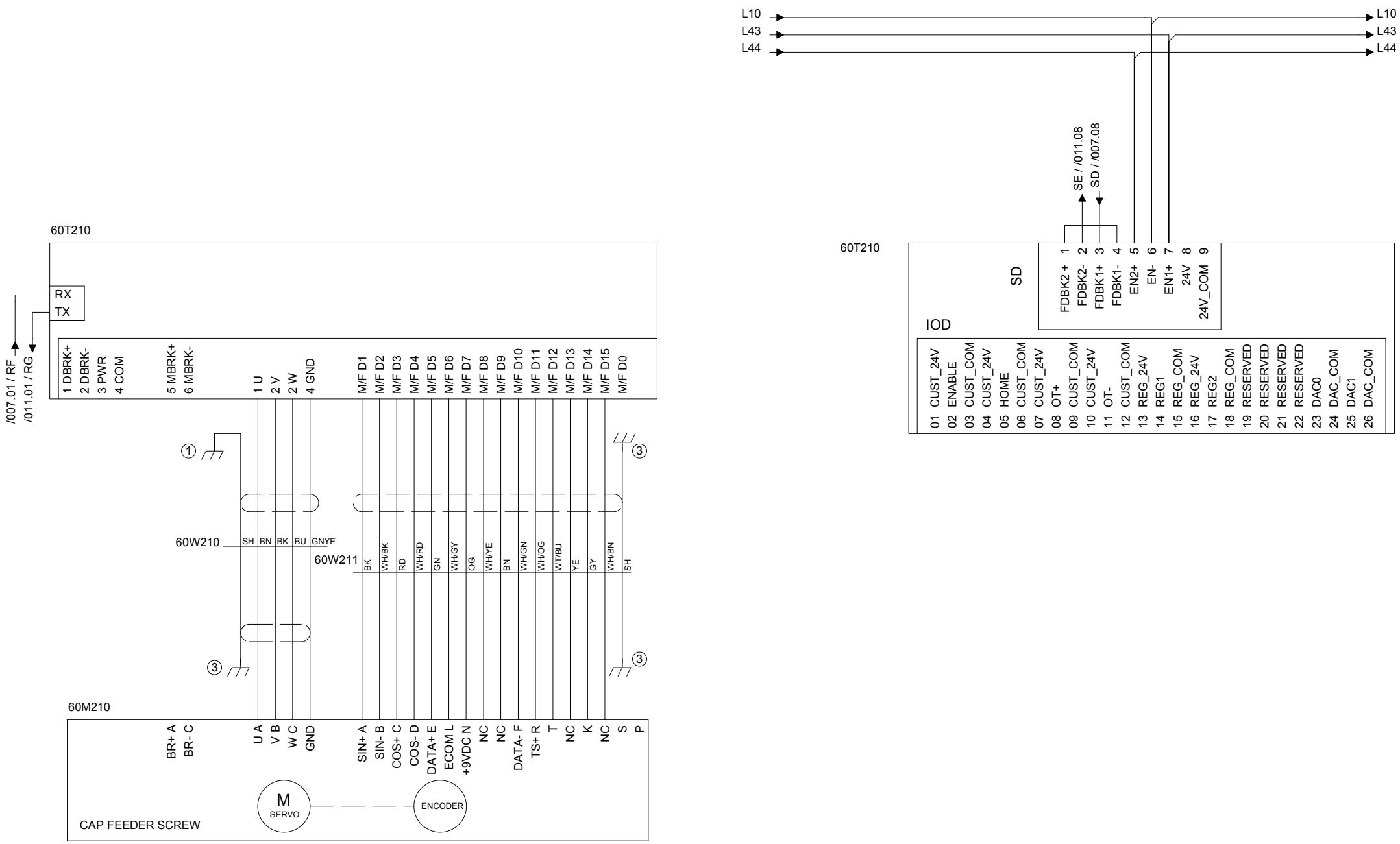

Drawing remarks	Tetra Pak	Designer ACH	Date 01/10/2009	Machine CAP30 Flex ReCap3 0200	
		ECM No 417049	Denomination CIRCUIT DIAGRAM	Page Type SERVO MOTOR 5 (CAP FEEDER SCREW)	
		Company Tetra Pak (Italy)	Document No. 3039165-0003	Doc. type ELD	Version AB	Page 010

RELEASED

This drawing must not without the consent of Tetra Pak be copied, transmitted or disclosed to any third party.

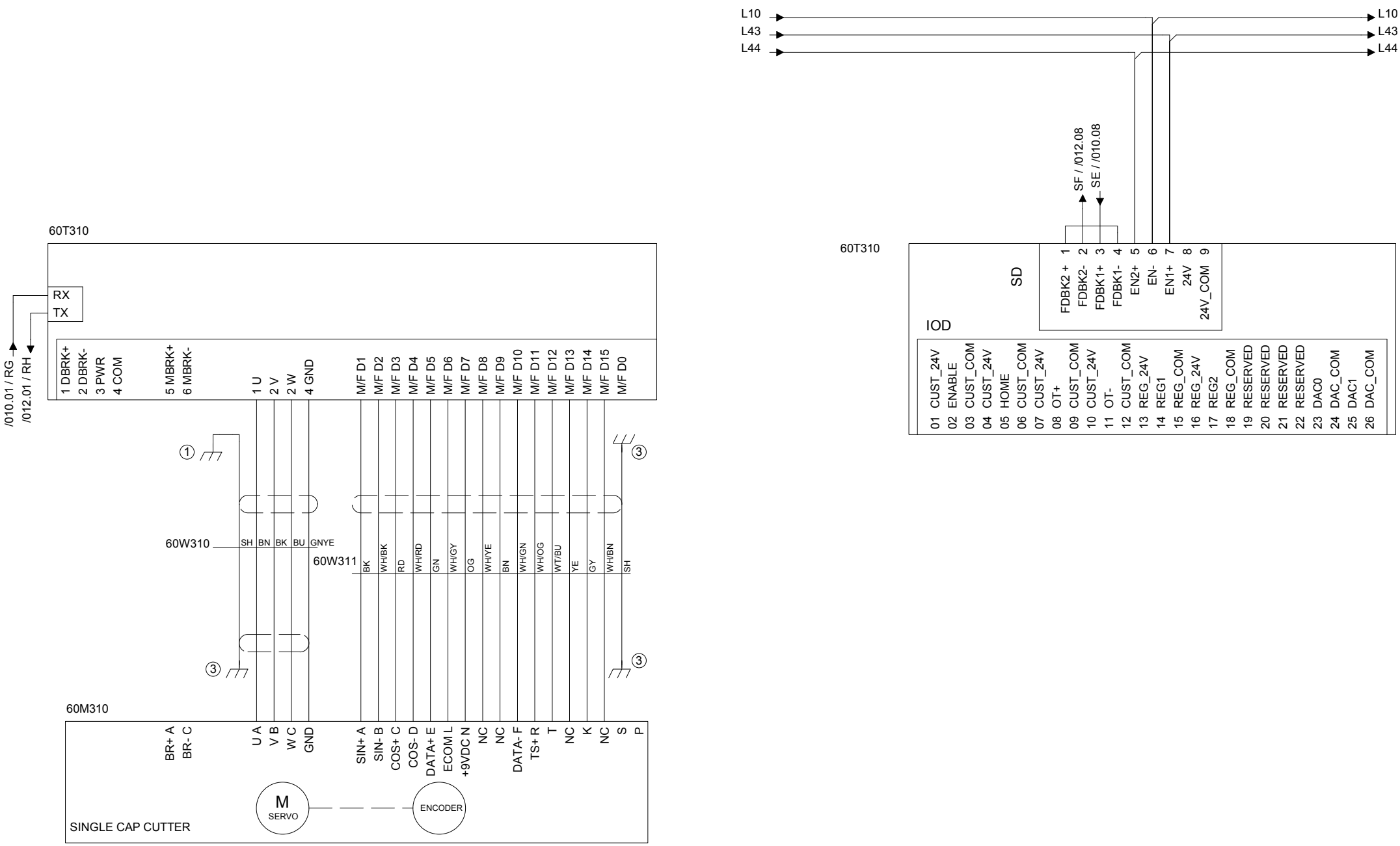

Drawing remarks	Tetra Pak	Designer ACH	Date 01/10/2009	Machine CAP30 Flex ReCap3 0200	
		ECM No 417049	Denomination CIRCUIT DIAGRAM	Page Type SERVO MOTOR 6 (SINGLE CAP CUTTER)	
		Company Tetra Pak (Italy)	Document No. 3039165-0003	Doc. type ELD	Version AB	Page 011

RELEASED

This drawing must not without the consent of Tetra Pak be copied, transmitted or disclosed to any third party.

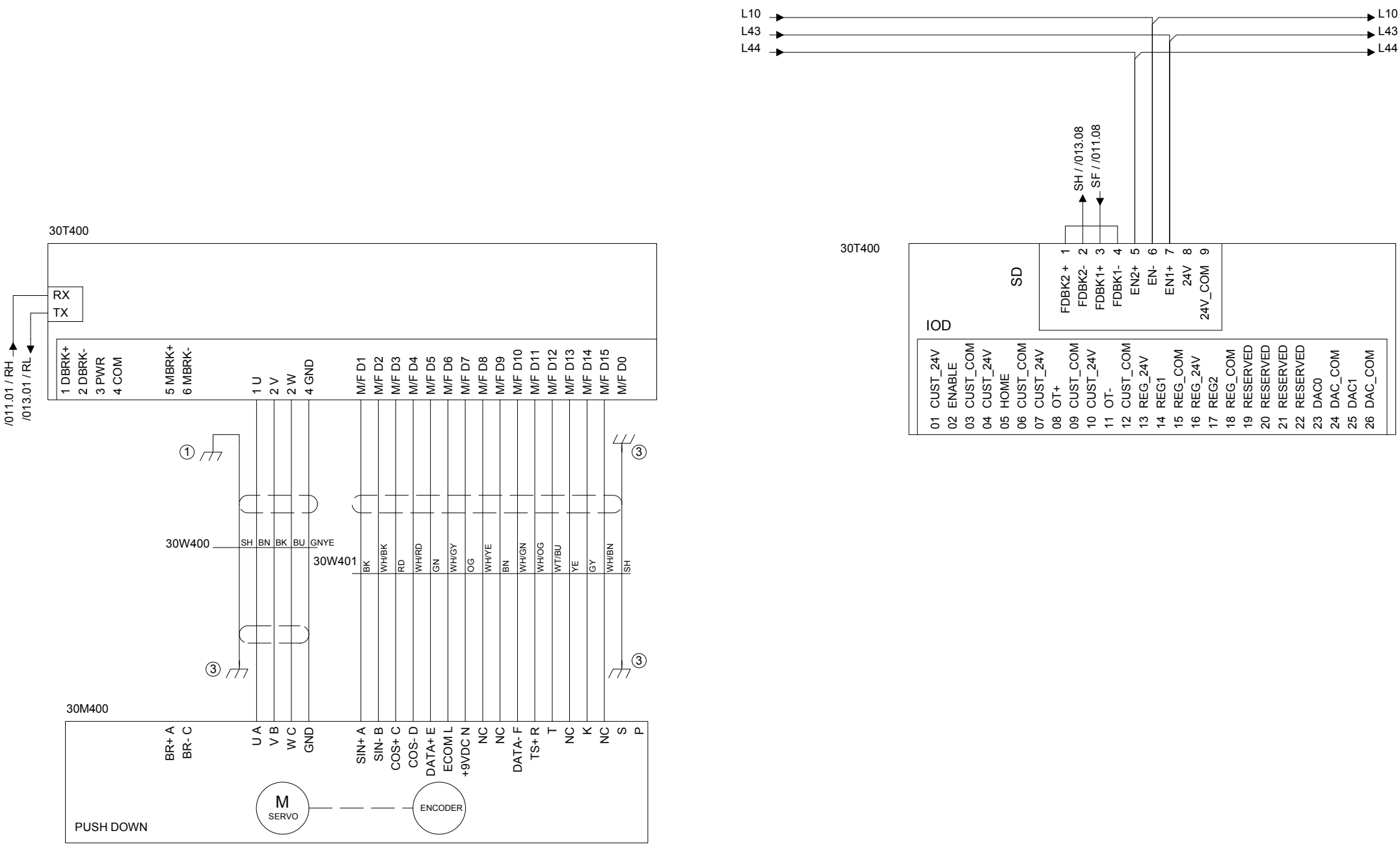

Drawing remarks	Tetra Pak	Designer ACH	Date 01/10/2009	Machine CAP30 Flex ReCap3 0200	
		ECM No 417049	Denomination CIRCUIT DIAGRAM	Page Type SERVO MOTOR 7 (PUSH DOWN)	
		Company Tetra Pak (Italy)	Document No. 3039165-0003	Doc. type ELD	Version AB	Page 012

This drawing must not without the consent of Tetra Pak
be copied, transmitted or disclosed to any third party.

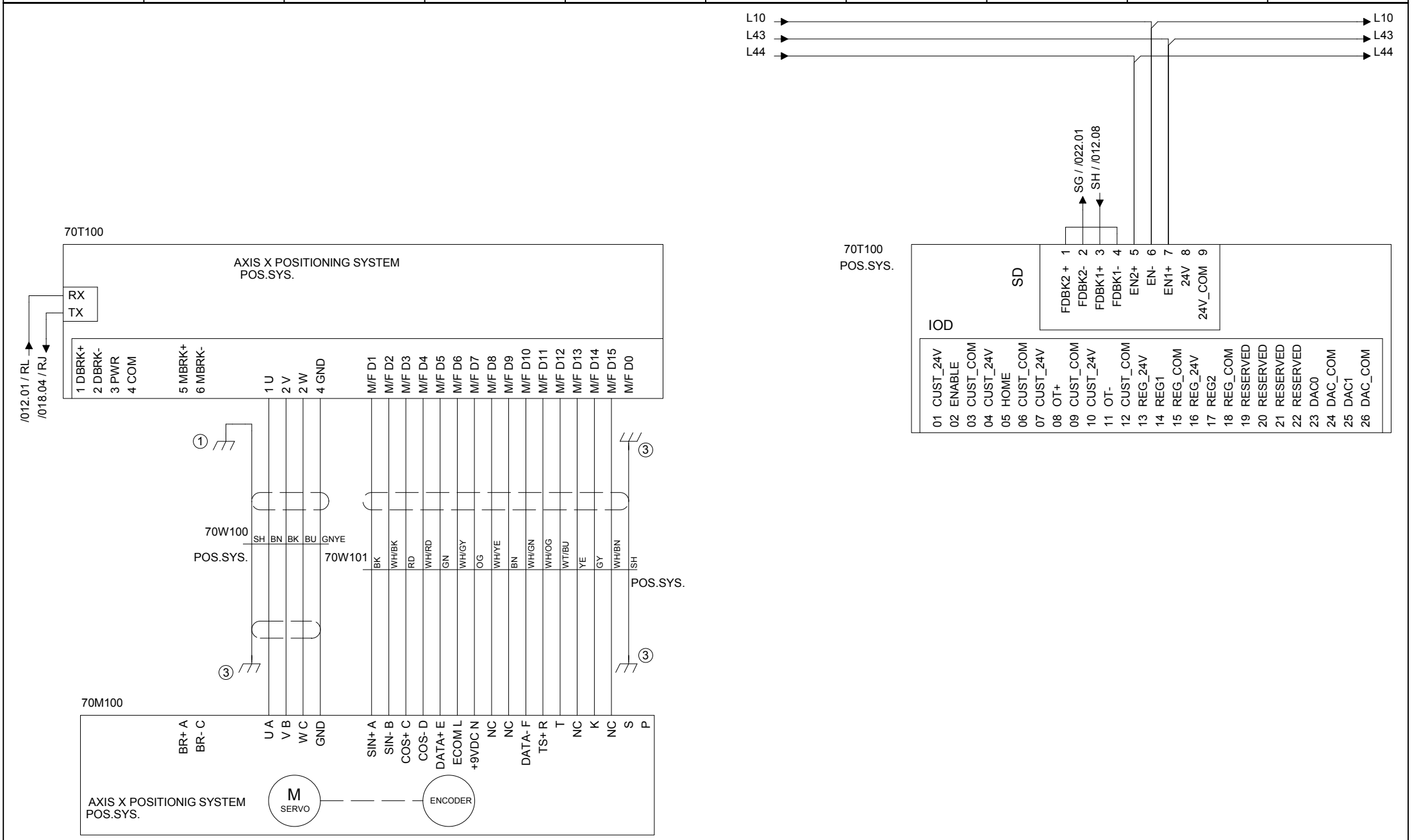

Drawing remarks	Tetra Pak	Designer ACH	Date 01/10/2009	Machine CAP30 Flex ReCap3 0200	
		ECM No 417049	Denomination CIRCUIT DIAGRAM	Page Type SERVO MOTOR 8 (AXIS X POSITION. SYS.)	
		Company Tetra Pak (Italy)	Document No. 3039165-0003	Doc. type ELD	Version AB	Page 013

RELEASED

This drawing must not without the consent of Tetra Pak be copied, transmitted or disclosed to any third party.

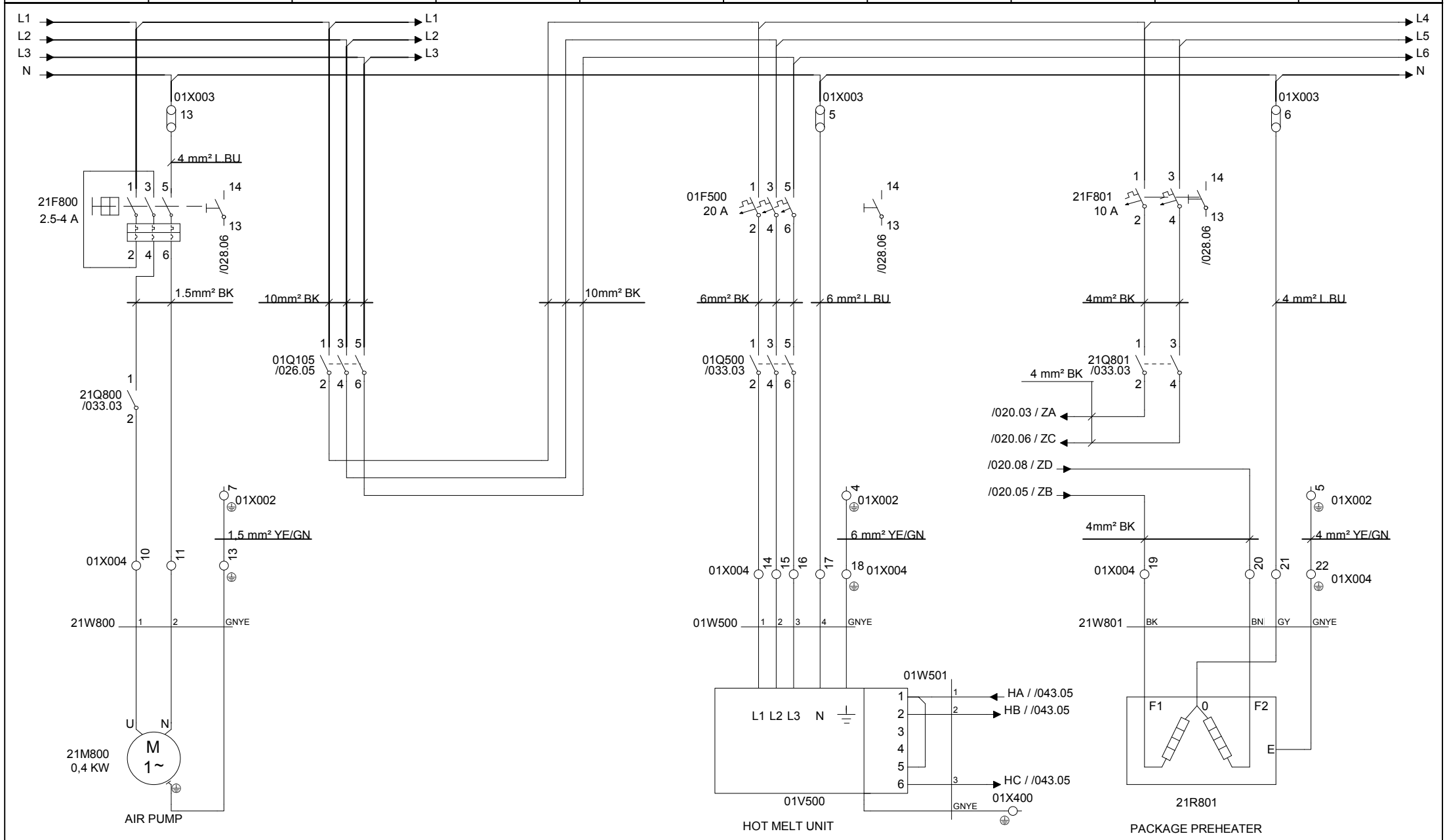

Drawing remarks	Tetra Pak	Designer ACH	Date 01/10/2009	Machine CAP30 Flex ReCap3 0200	
		ECM No 417049	Denomination CIRCUIT DIAGRAM	Page Type MOTORS	
		Company Tetra Pak (Italy)	Document No. 3039165-0003	Doc. type ELD	Version AB	Page 014

RELEASED

This drawing must not without the consent of Tetra Pak be copied, transmitted or disclosed to any third party.

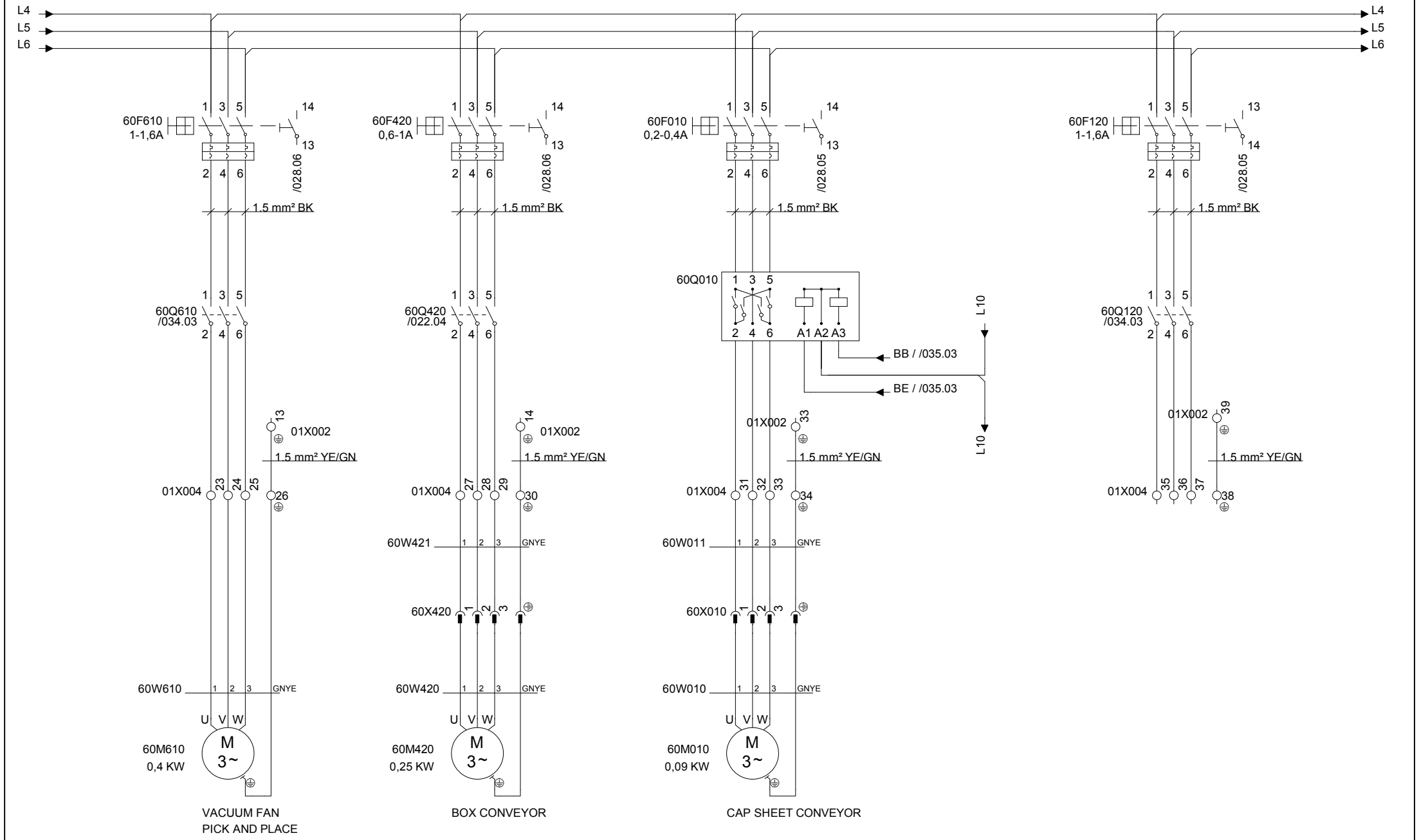

Drawing remarks	Tetra Pak	Designer: ACH	Date: 01/10/2009	Machine: CAP30 Flex ReCap3 0200	
		ECM No: 417049	Denomination: CIRCUIT DIAGRAM	Page Type: MOTORS	
	Company: Tetra Pak (Italy)	Document No.: 3039165-0003	Doc. type: ELD	Version: AB	Page: 015

RELEASED

This drawing must not without the consent of Tetra Pak be copied, transmitted or disclosed to any third party.

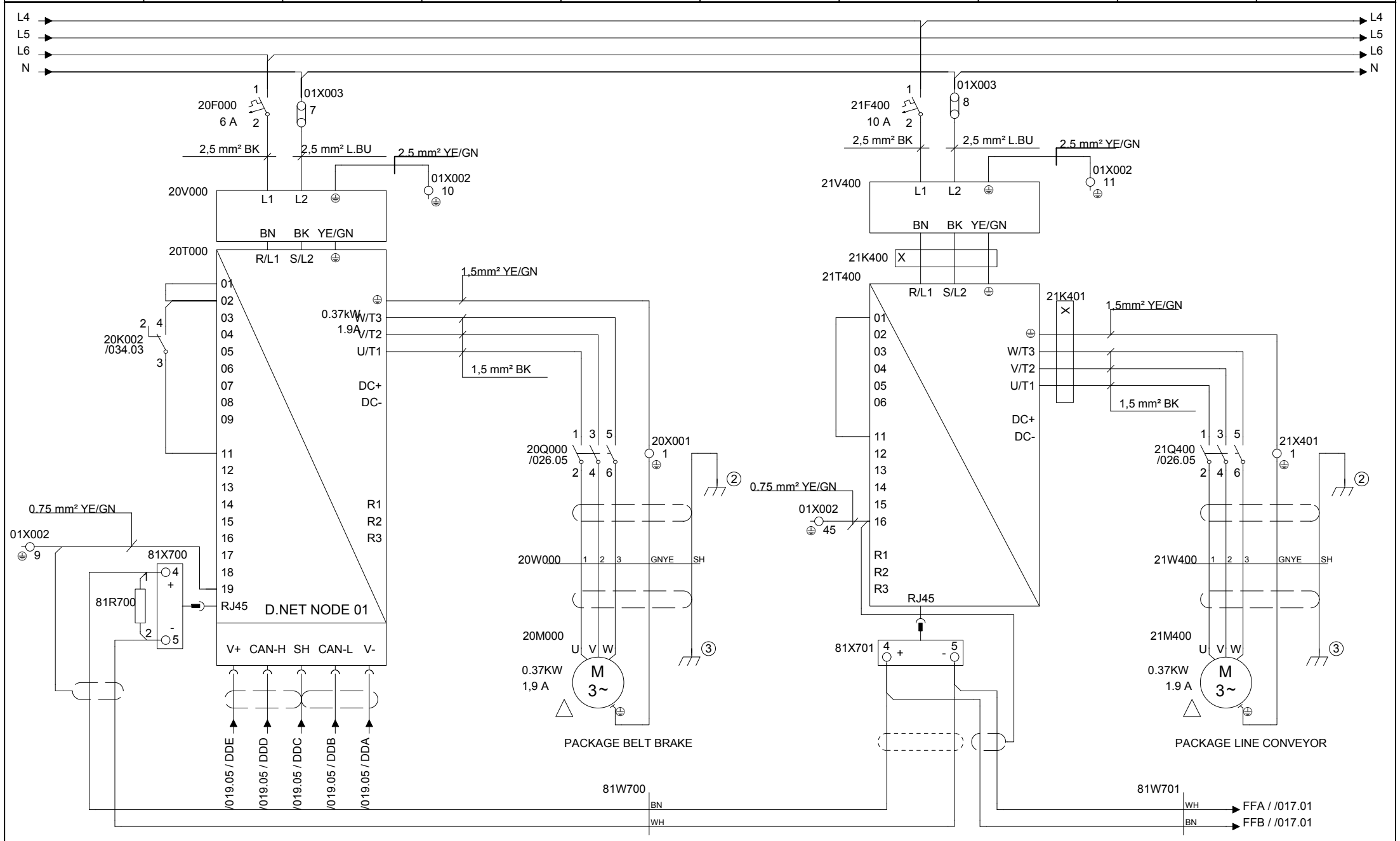

Drawing remarks	Tetra Pak	Designer: ACH	Date: 01/10/2009	Machine: CAP30 Flex ReCap3 0200
		ECM No: 417049	Denomination: CIRCUIT DIAGRAM	Page Type: MOTORS
		Company: Tetra Pak (Italy)	Document No.: 3039165-0003	Doc. type: ELD / Version: AB / Page: 016

RELEASED

This drawing must not without the consent of Tetra Pak be copied, transmitted or disclosed to any third party.

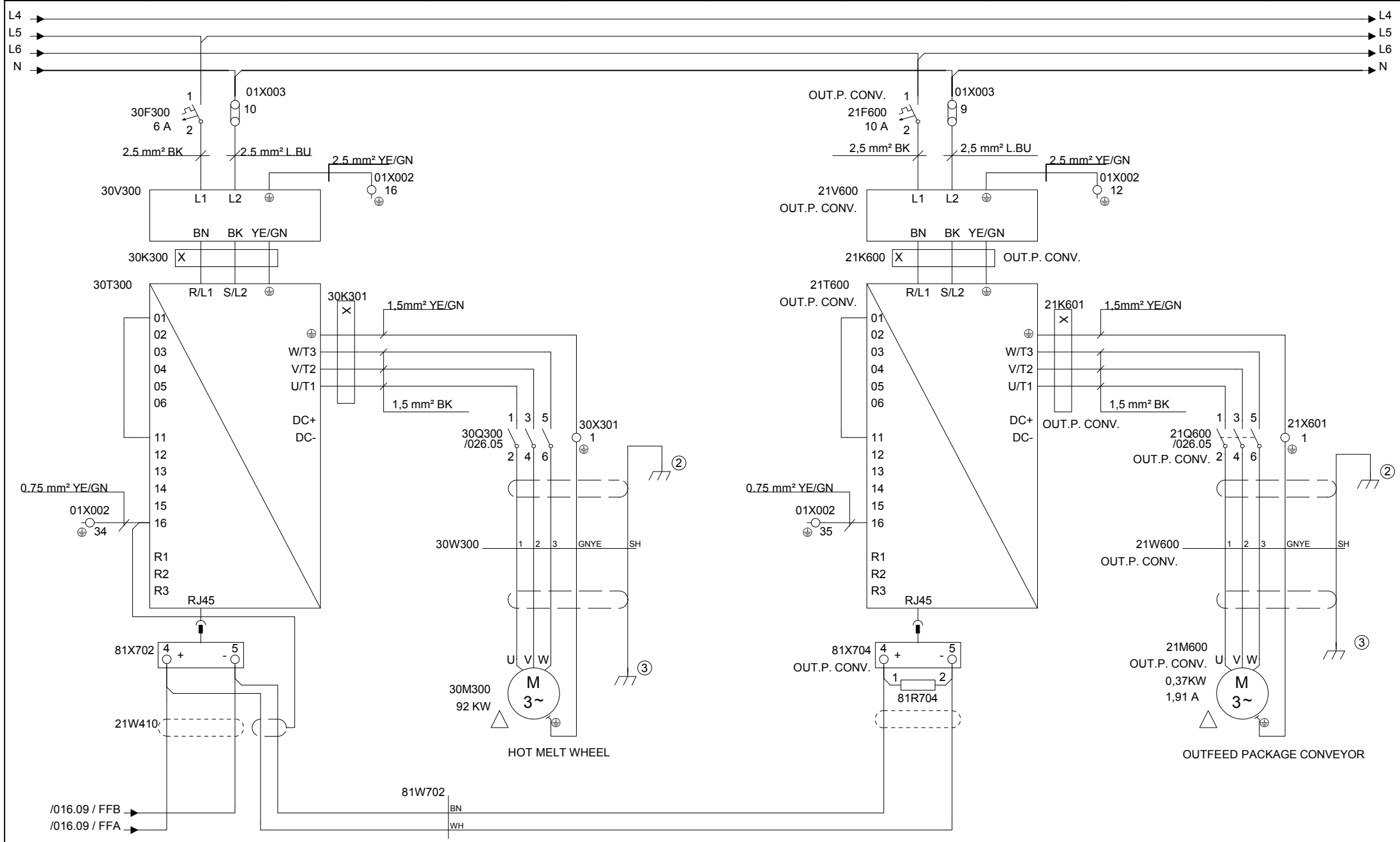

Drawing remarks	Tetra Pak	Designer ACH	Date 01/10/2009	Machine CAP30 Flex ReCap3 0200	
		ECM No 417049	Denomination CIRCUIT DIAGRAM	Page Type MOTORS	
	Company Tetra Pak (Italy)	Document No. 3039165-0003	Doc. type ELD	Version AB	Page 017

RELEASED

This drawing must not without the consent of Tetra Pak be copied, transmitted or disclosed to any third party.

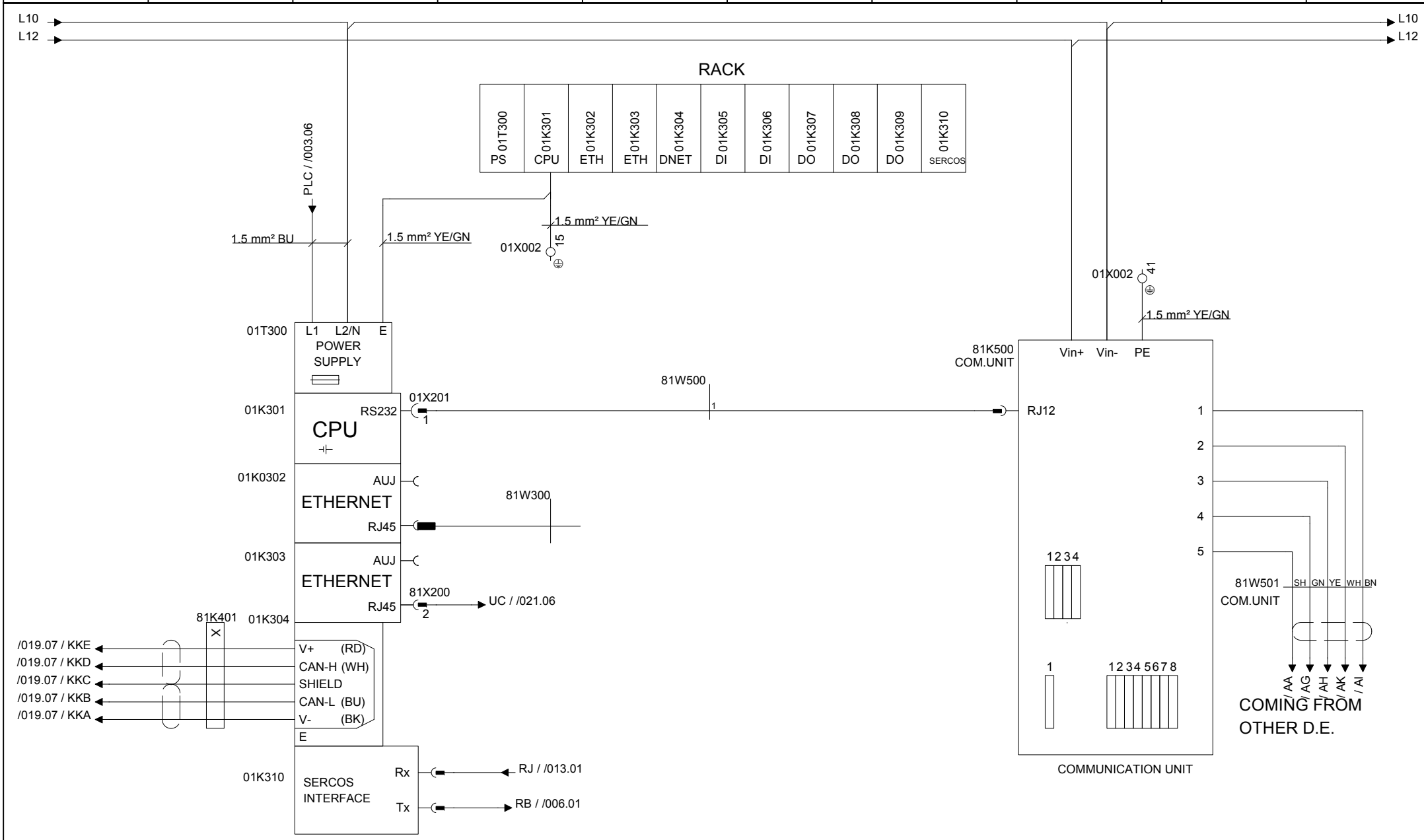

Drawing remarks	Tetra Pak	Designer ACH	Date 01/10/2009	Machine CAP30 Flex ReCap3 0200	
		ECM No 417049	Denomination CIRCUIT DIAGRAM	Page Type PLC RACK	
		Company Tetra Pak (Italy)	Document No. 3039165-0003	Doc. type ELD	Version AB	Page 018

This drawing must not without the consent of Tetra Pak
be copied, transmitted or disclosed to any third party.

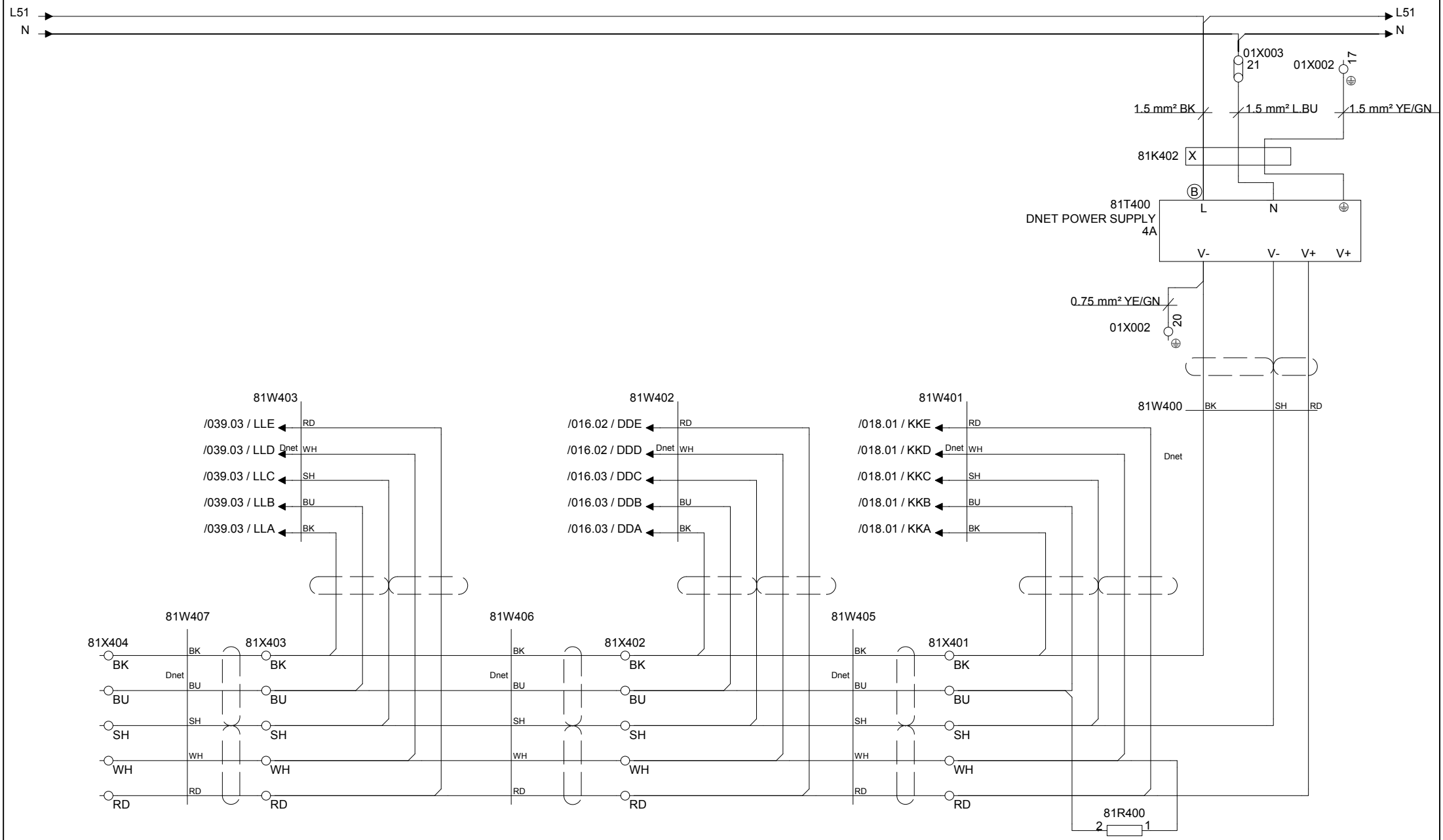

Drawing remarks	Tetra Pak	Designer ACH	Date 01/10/2009	Machine CAP30 Flex ReCap3 0200	
		ECM No 417049	Denomination CIRCUIT DIAGRAM	Page Type POWER SUPPLY DEVICE NET	
	Company Tetra Pak (Italy)	Document No. 3039165-0003	Doc. type ELD	Version AB	Page 019

RELEASED

This drawing must not without the consent of Tetra Pak be copied, transmitted or disclosed to any third party.

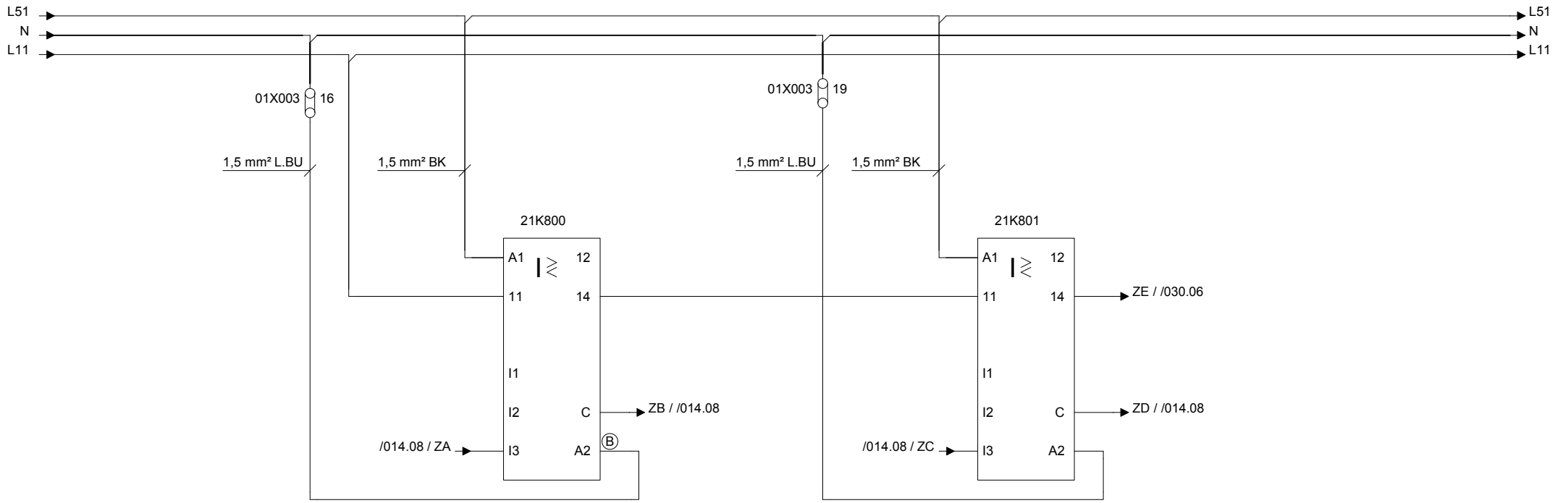

Drawing remarks	Tetra Pak	Designer ACH	Date 01/10/2009	Machine CAP30 Flex ReCap3 0200	
		ECM No 417049	Denomination CIRCUIT DIAGRAM	Page Type CURRENT CONTROL RELAY	
		Company Tetra Pak (Italy)	Document No. 3039165-0003	Doc. type ELD	Version AB	Page 020

RELEASED

This drawing must not without the consent of Tetra Pak be copied, transmitted or disclosed to any third party.

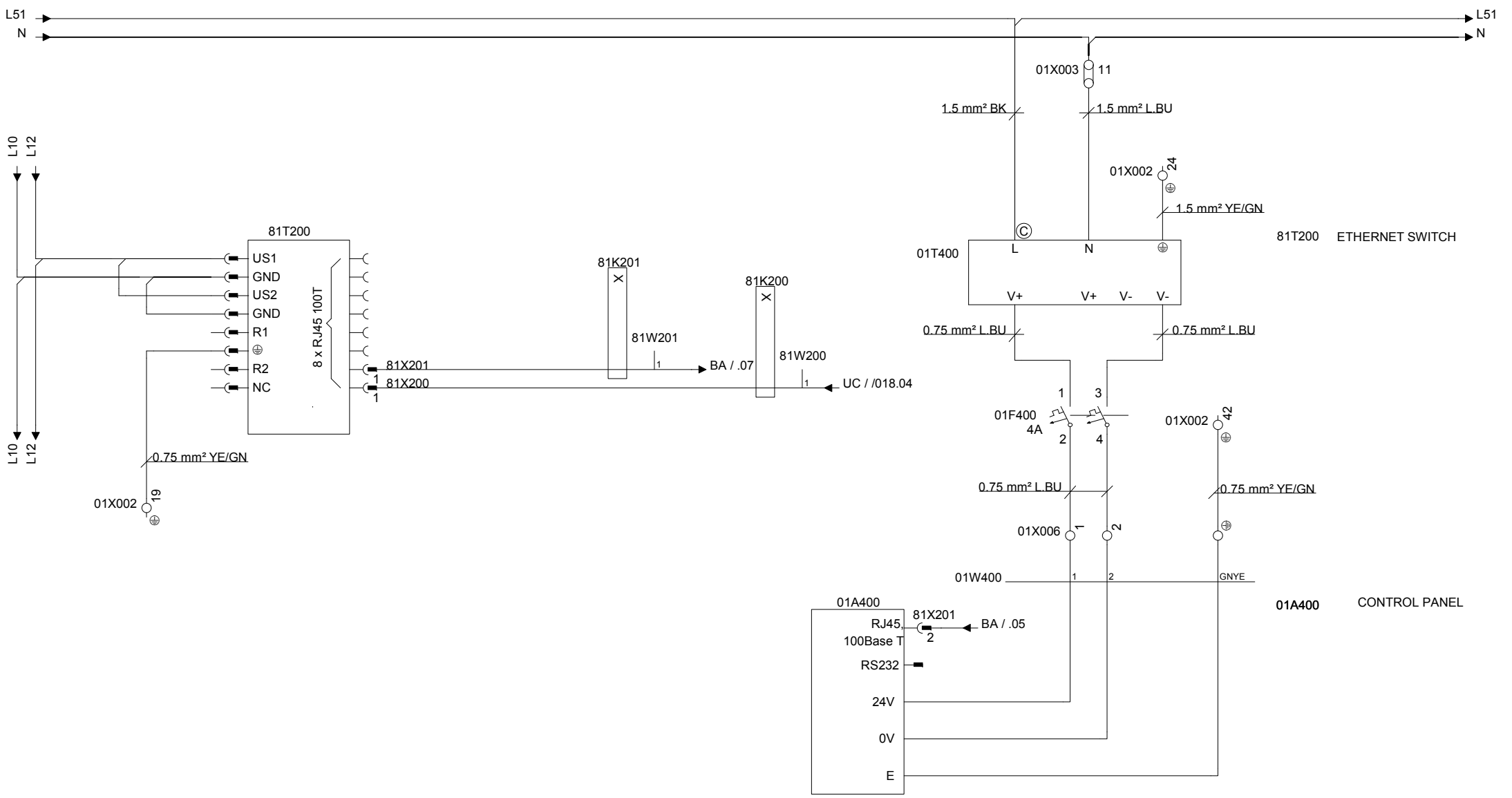

	Tetra Pak	Designer ACH	Date 01/10/2009	Machine CAP30 Flex ReCap3 0200	
		ECM No 417049	Denomination CIRCUIT DIAGRAM	Page Type ETHERNET SWITCH / CONTROL PANEL	
Drawing remarks		Company Tetra Pak (Italy)	Document No. 3039165-0003	Doc. type ELD	Version AB	Page 021

RELEASED

This drawing must not without the consent of Tetra Pak be copied, transmitted or disclosed to any third party.

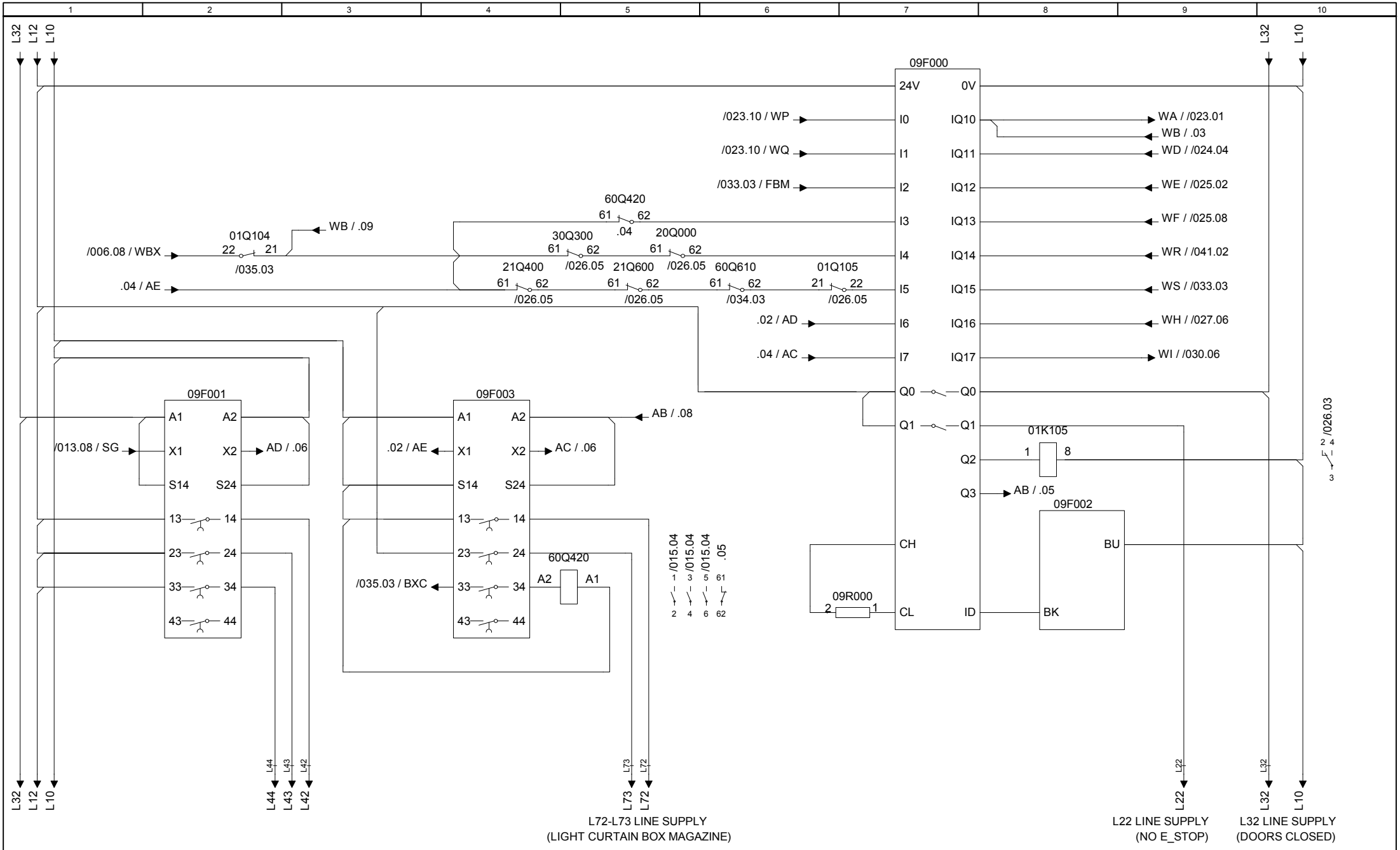

Drawing remarks	Tetra Pak	Designer ACH	Date 01/10/2009	Machine CAP30 Flex ReCap3 0200	
		ECM No 417049	Denomination CIRCUIT DIAGRAM	Page Type SAFETY RELAY	
	Company Tetra Pak (Italy)	Document No. 3039165-0003	Doc. type ELD	Version AB	Page 022

RELEASED

This drawing must not without the consent of Tetra Pak be copied, transmitted or disclosed to any third party.

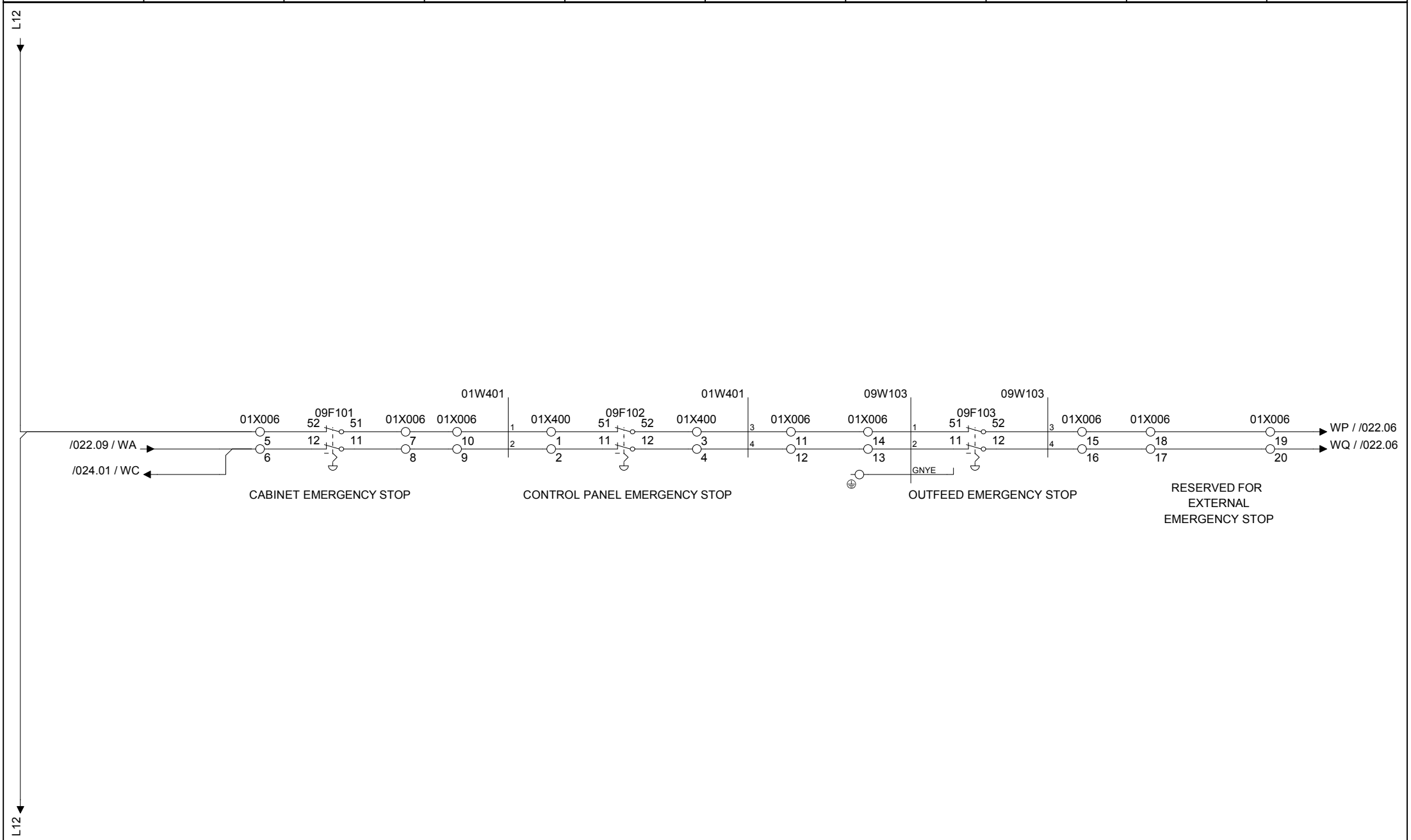

Drawing remarks	Tetra Pak	Designer ACH	Date 01/10/2009	Machine CAP30 Flex ReCap3 0200	
		ECM No 417049	Denomination CIRCUIT DIAGRAM	Page Type EMERGENCY STOP	
	Company Tetra Pak (Italy)	Document No. 3039165-0003	Doc. type ELD	Version AB	Page 023

RELEASED

This drawing must not without the consent of Tetra Pak be copied, transmitted or disclosed to any third party.

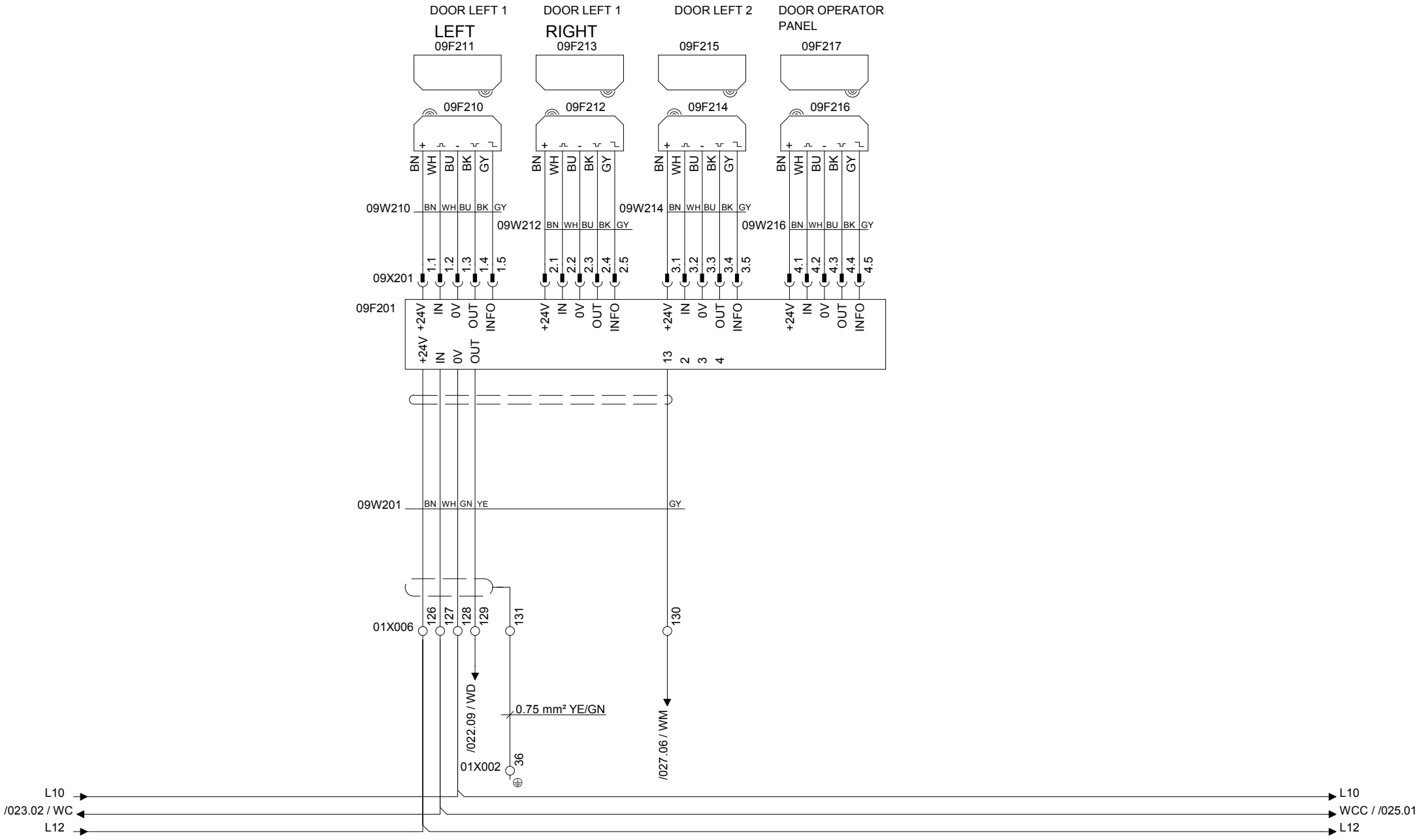

Drawing remarks	Tetra Pak	Designer ACH	Date 01/10/2009	Machine CAP30 Flex ReCap3 0200	
		ECM No 417049	Denomination CIRCUIT DIAGRAM	Page Type DOORS MONITOR (OPERATOR SIDE)	
		Company Tetra Pak (Italy)	Document No. 3039165-0003	Doc. type ELD	Version AB	Page 024

RELEASED

This drawing must not without the consent of Tetra Pak be copied, transmitted or disclosed to any third party.

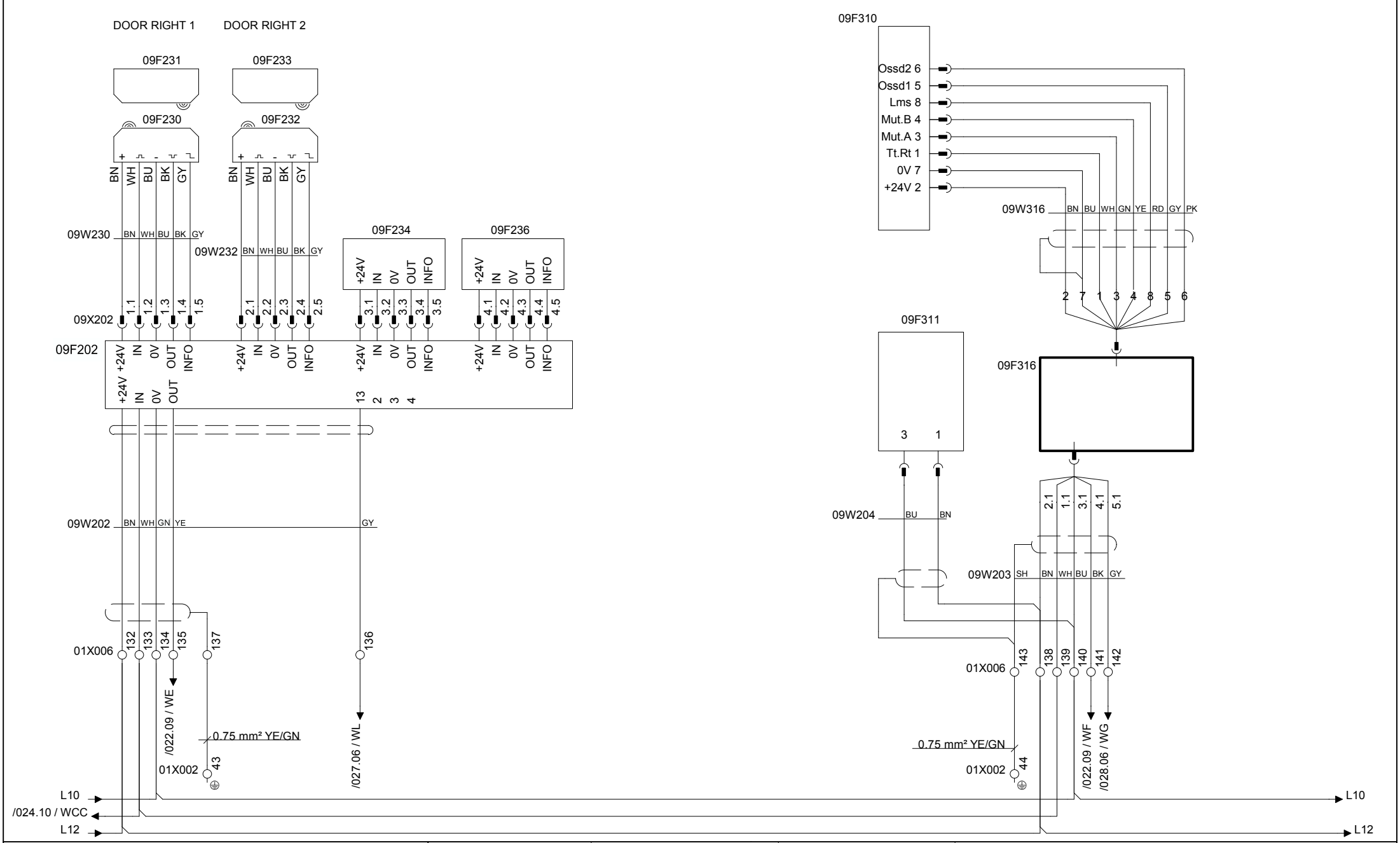

Drawing remarks	Tetra Pak	Designer ACH	Date 01/10/2009	Machine CAP30 Flex ReCap3 0200	
		ECM No 417049	Denomination CIRCUIT DIAGRAM	Page Type DOORS AND COVERS MONITOR	
		Company Tetra Pak (Italy)	Document No. 3039165-0003	Doc. type ELD	Version AB	Page 025

RELEASED

This drawing must not without the consent of Tetra Pak be copied, transmitted or disclosed to any third party.

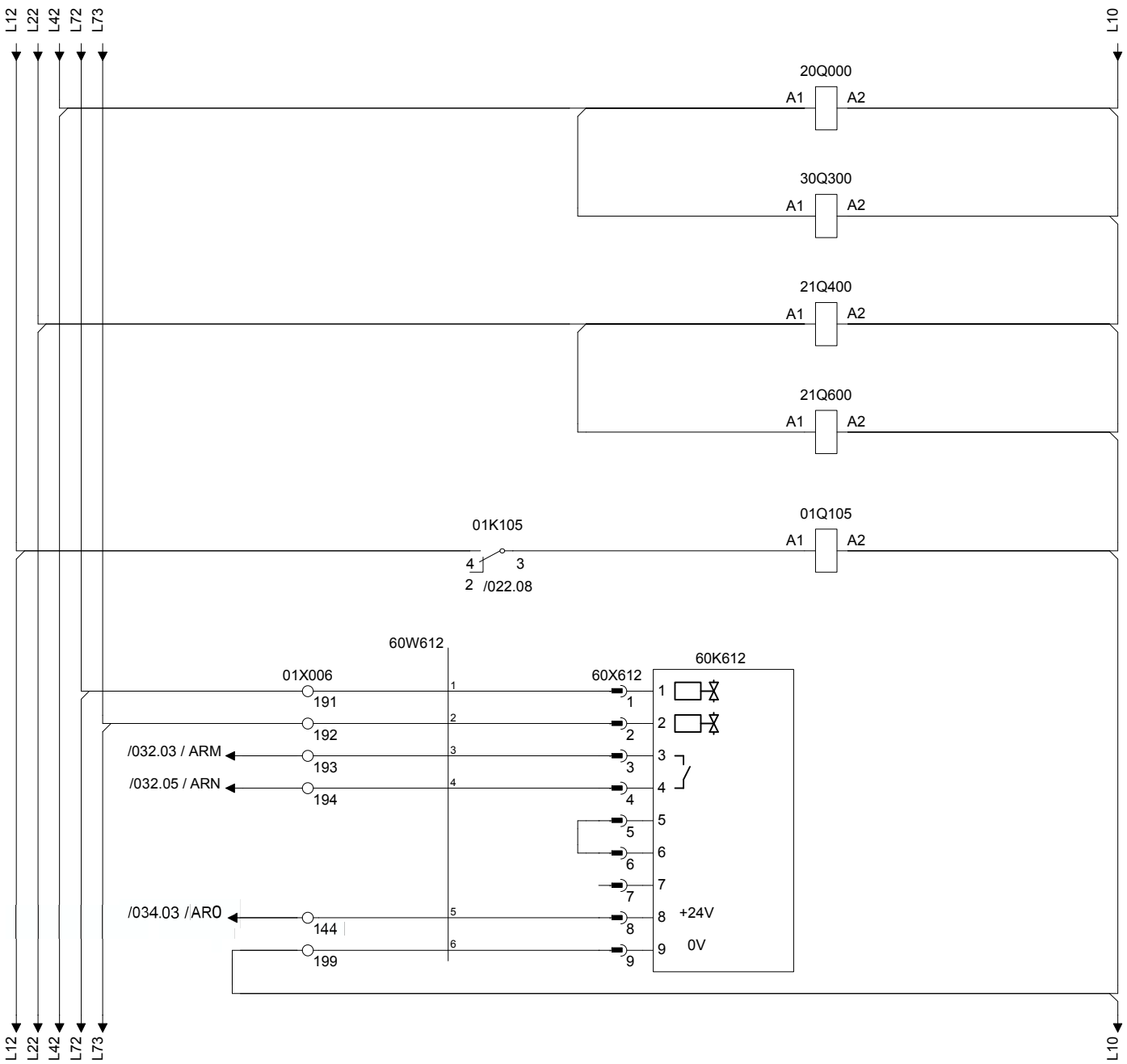

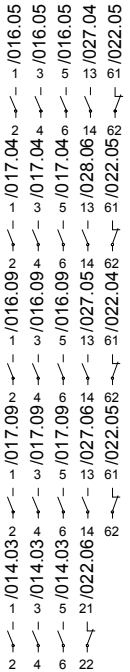

20Q000	PACKAGE BELT BRAKE
30Q300	HOT MELT WHEEL
21Q400	PACKAGE LINE CONVEYOR
21Q600	OUTFEED PACKAGE CONVEYOR
21Q105	MAIN POWER A.C. USERS
60K612	MAIN AIR VALVE BOX MAGAZINE

Drawing remarks

Tetra Pak

Designer ACH	Date 01/10/2009	Machine CAP30 Flex ReCap3 0200			
ECM No 417049	Denomination CIRCUIT DIAGRAM	Page Type POWER ON TO THE MOTORS			
Company Tetra Pak (Italy)	Document No. 3039165-0003	Doc. type ELD	Version AB	Page 026	

This drawing must not without the consent of Tetra Pak be copied, transmitted or disclosed to any third party.

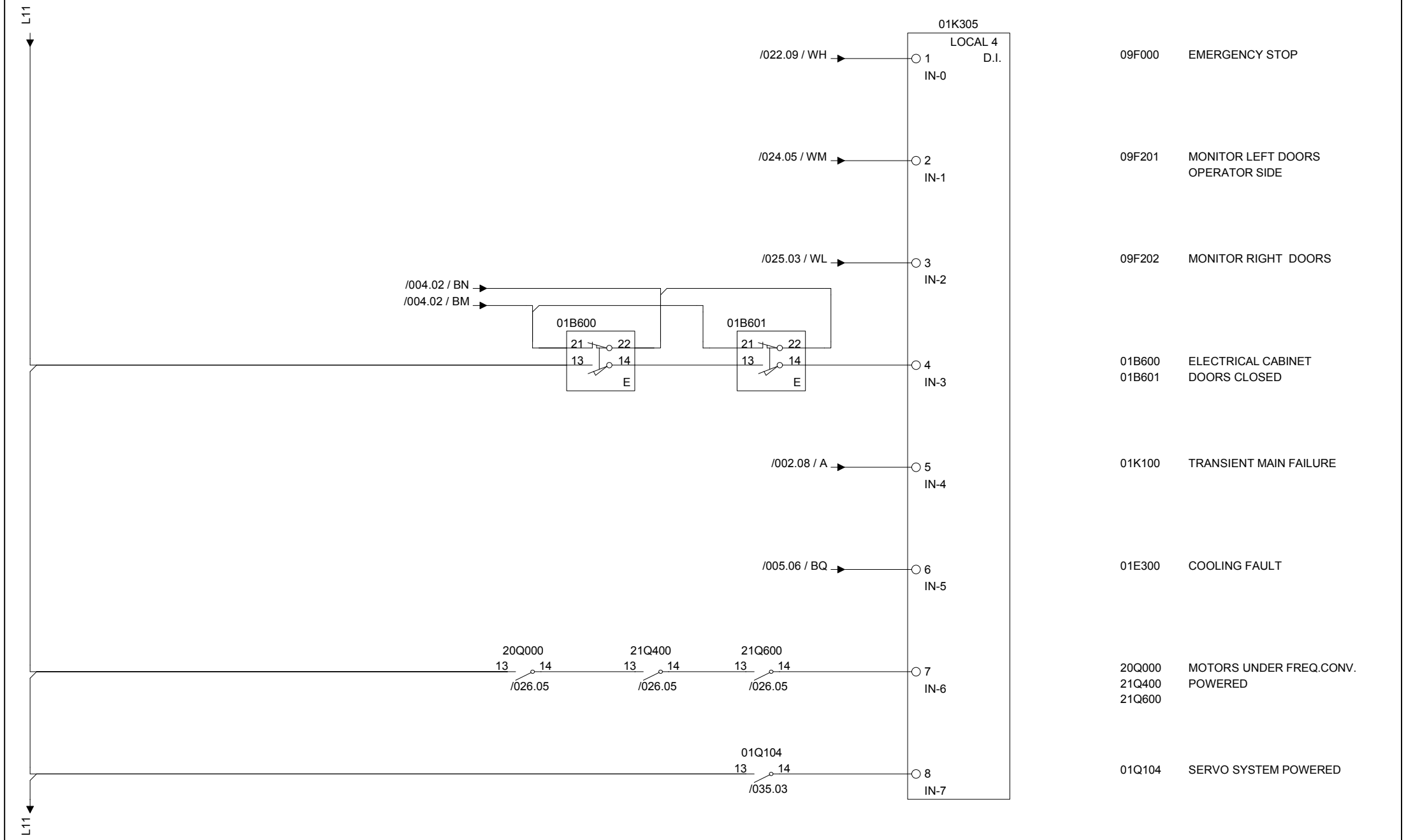

Drawing remarks	Tetra Pak	Designer ACH	Date 01/10/2009	Machine CAP30 Flex ReCap3 0200	
		ECM No 417049	Denomination CIRCUIT DIAGRAM	Page Type PLC IN	
	Company Tetra Pak (Italy)	Document No. 3039165-0003	Doc. type ELD	Version AB	Page 027

RELEASED

This drawing must not without the consent of Tetra Pak be copied, transmitted or disclosed to any third party.

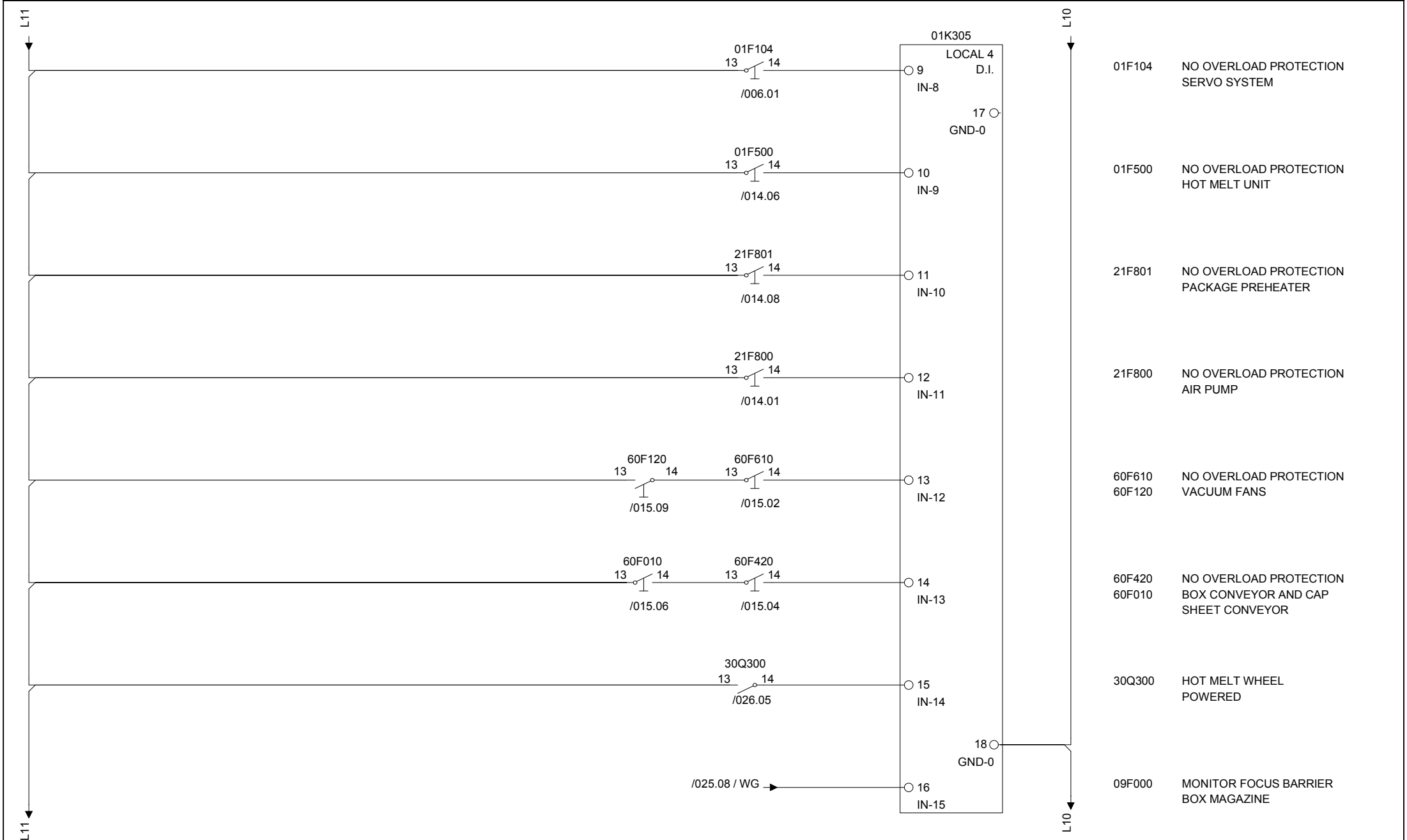

Drawing remarks	Tetra Pak	Designer ACH	Date 01/10/2009	Machine CAP30 Flex ReCap3 0200	
		ECM No 417049	Denomination CIRCUIT DIAGRAM	Page Type PLC IN	
	Company Tetra Pak (Italy)	Document No. 3039165-0003	Doc. type ELD	Version AB	Page 028

RELEASED

This drawing must not without the consent of Tetra Pak be copied, transmitted or disclosed to any third party.

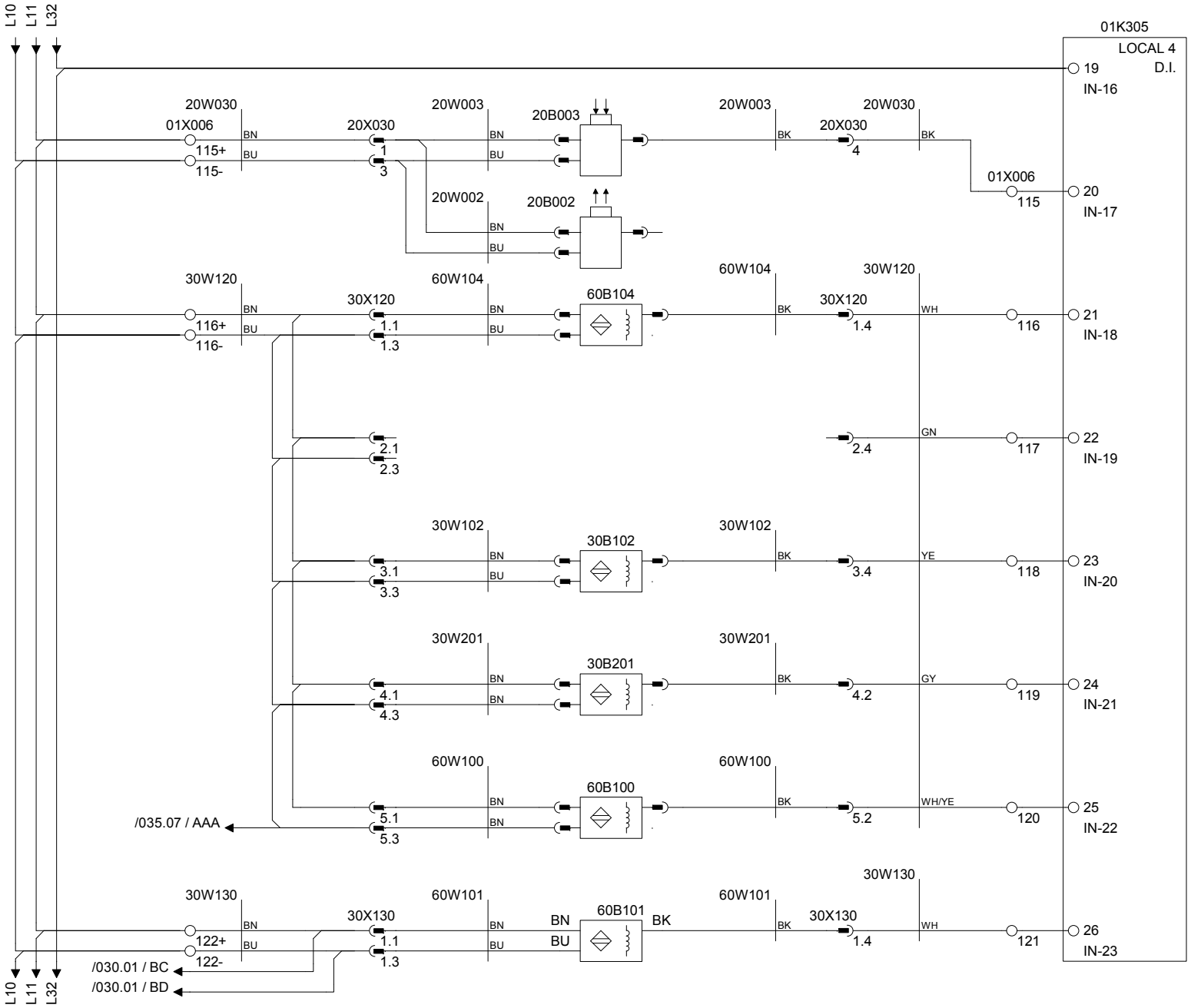

Drawing remarks	Tetra Pak	Designer ACH	Date 01/10/2009	Machine CAP30 Flex ReCap3 0200
		ECM No 417049	Denomination CIRCUIT DIAGRAM	Page Type PLC IN
		Company Tetra Pak (Italy)	Document No. 3039165-0003	Doc. type ELD / Version AB / Page 029

RELEASED

This drawing must not without the consent of Tetra Pak be copied, transmitted or disclosed to any third party.

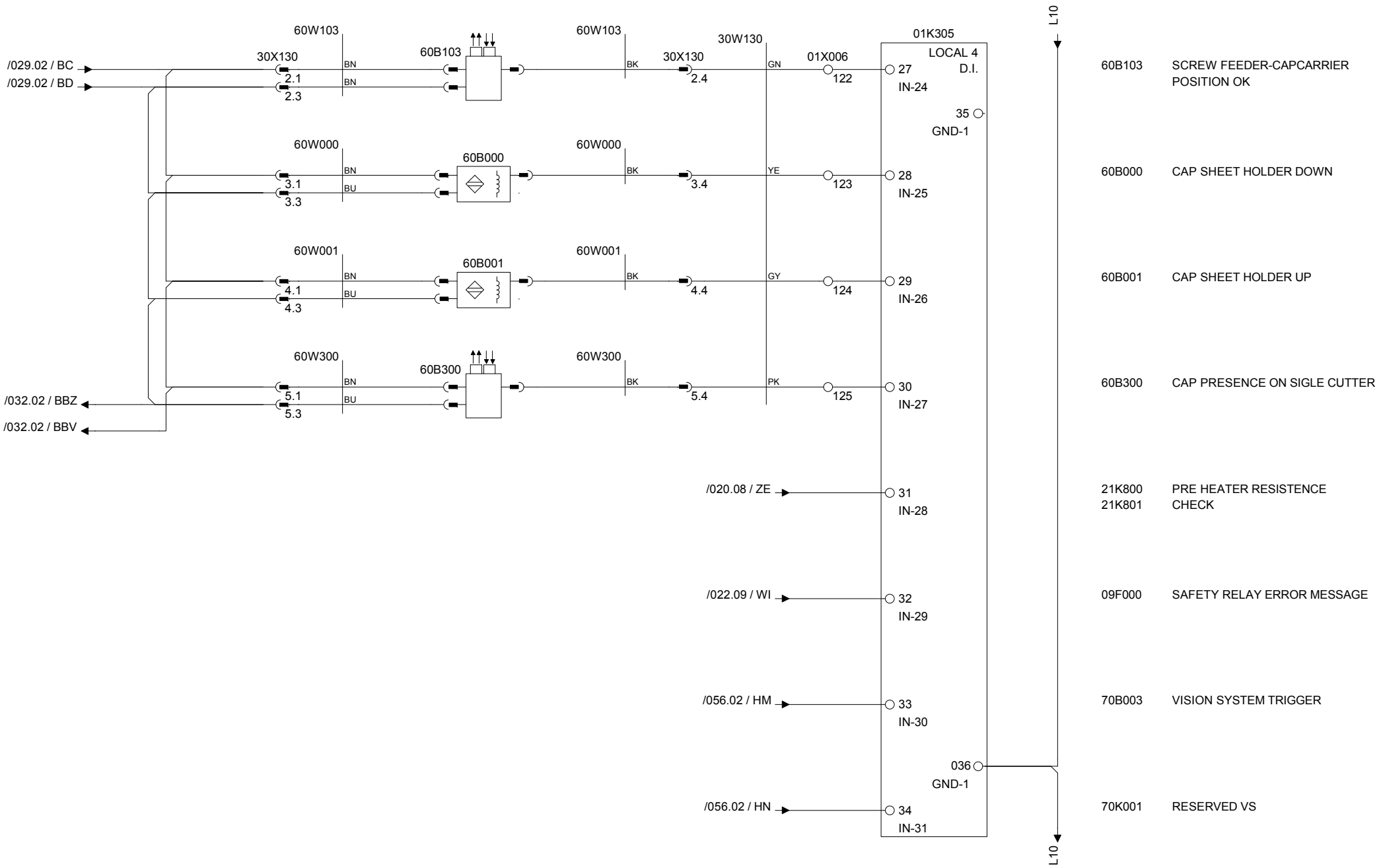

Drawing remarks	Tetra Pak	Designer ACH	Date 01/10/2009	Machine CAP30 Flex ReCap3 0200	
		ECM No 417049	Denomination CIRCUIT DIAGRAM	Page Type PLC IN	
	Company Tetra Pak (Italy)	Document No. 3039165-0003	Doc. type ELD	Version AB	Page 030

RELEASED

This drawing must not without the consent of Tetra Pak be copied, transmitted or disclosed to any third party.

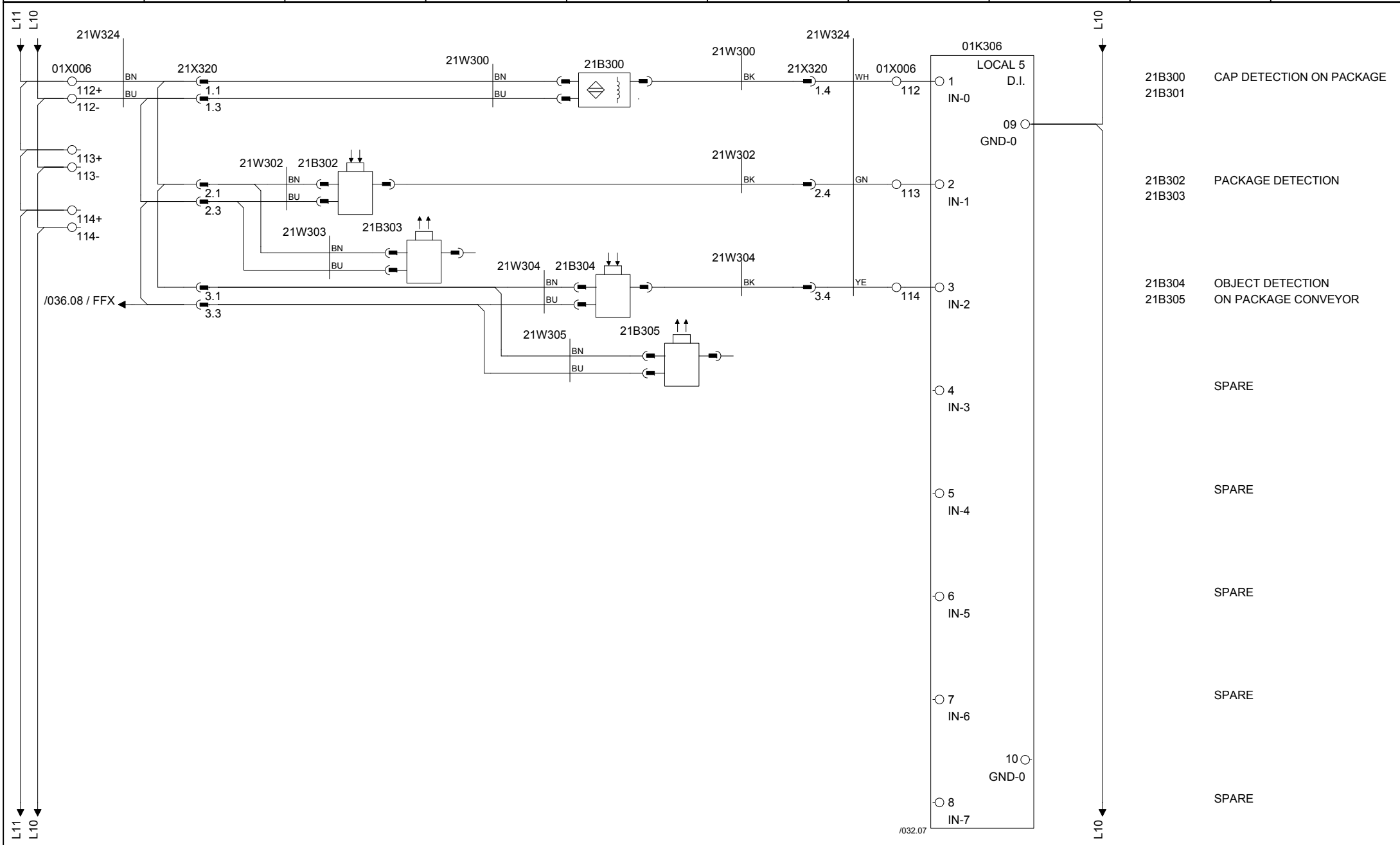

Drawing remarks	Tetra Pak	Designer ACH	Date 01/10/2009	Machine CAP30 Flex ReCap3 0200
		ECM No 417049	Denomination CIRCUIT DIAGRAM	Page Type PLC IN
	Company Tetra Pak (Italy)	Document No. 3039165-0003	Doc. type ELD	Version AB / Page 031

RELEASED

This drawing must not without the consent of Tetra Pak be copied, transmitted or disclosed to any third party.

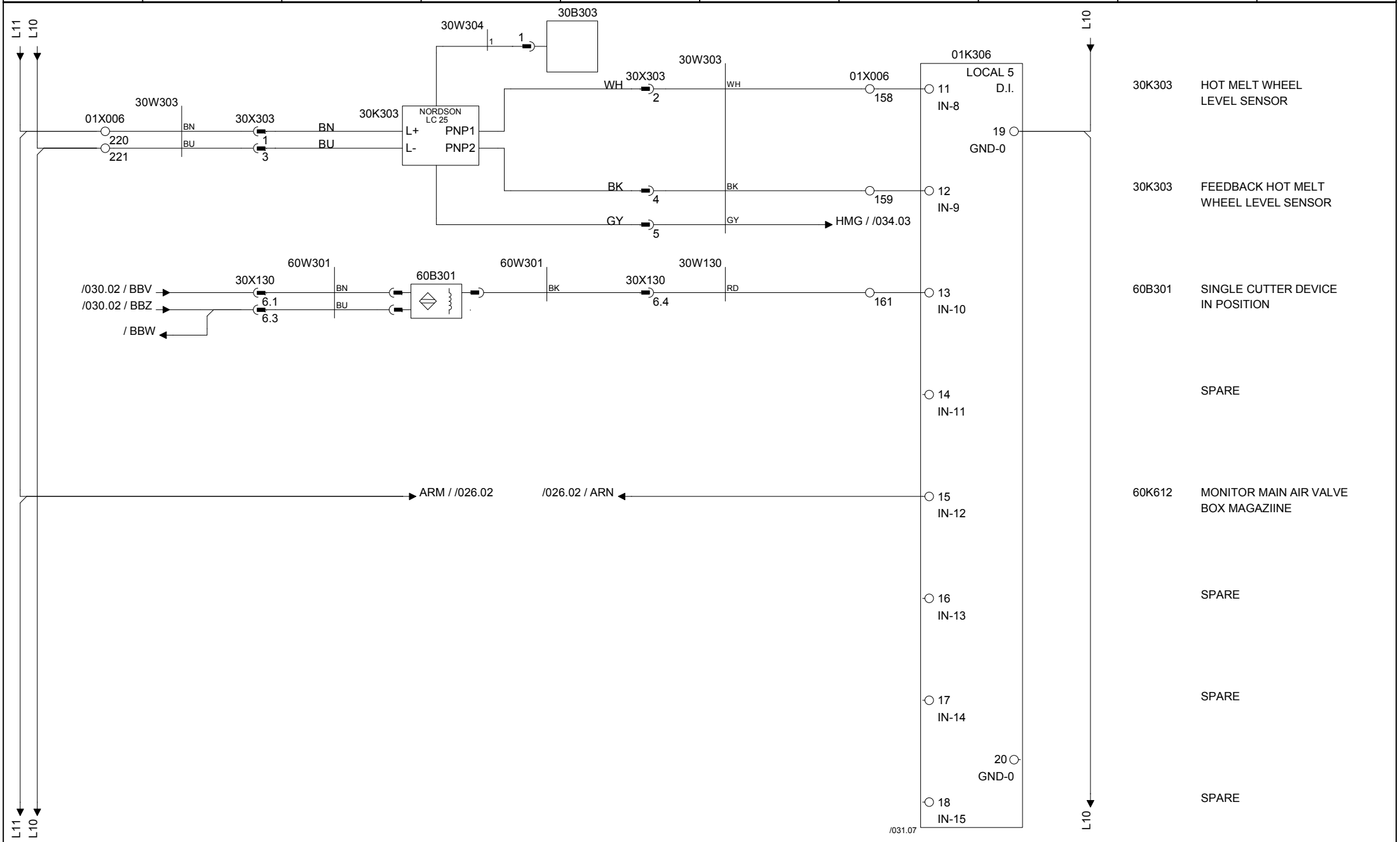

Drawing remarks	Tetra Pak	Designer ACH	Date 01/10/2009	Machine CAP30 Flex ReCap3 0200			
		ECM No 417049	Denomination CIRCUIT DIAGRAM	Page Type PLC IN			
	Company Tetra Pak (Italy)		Document No. 3039165-0003	Doc. type ELD	Version AB	Page 032	

This drawing must not without the consent of Tetra Pak be copied, transmitted or disclosed to any third party.

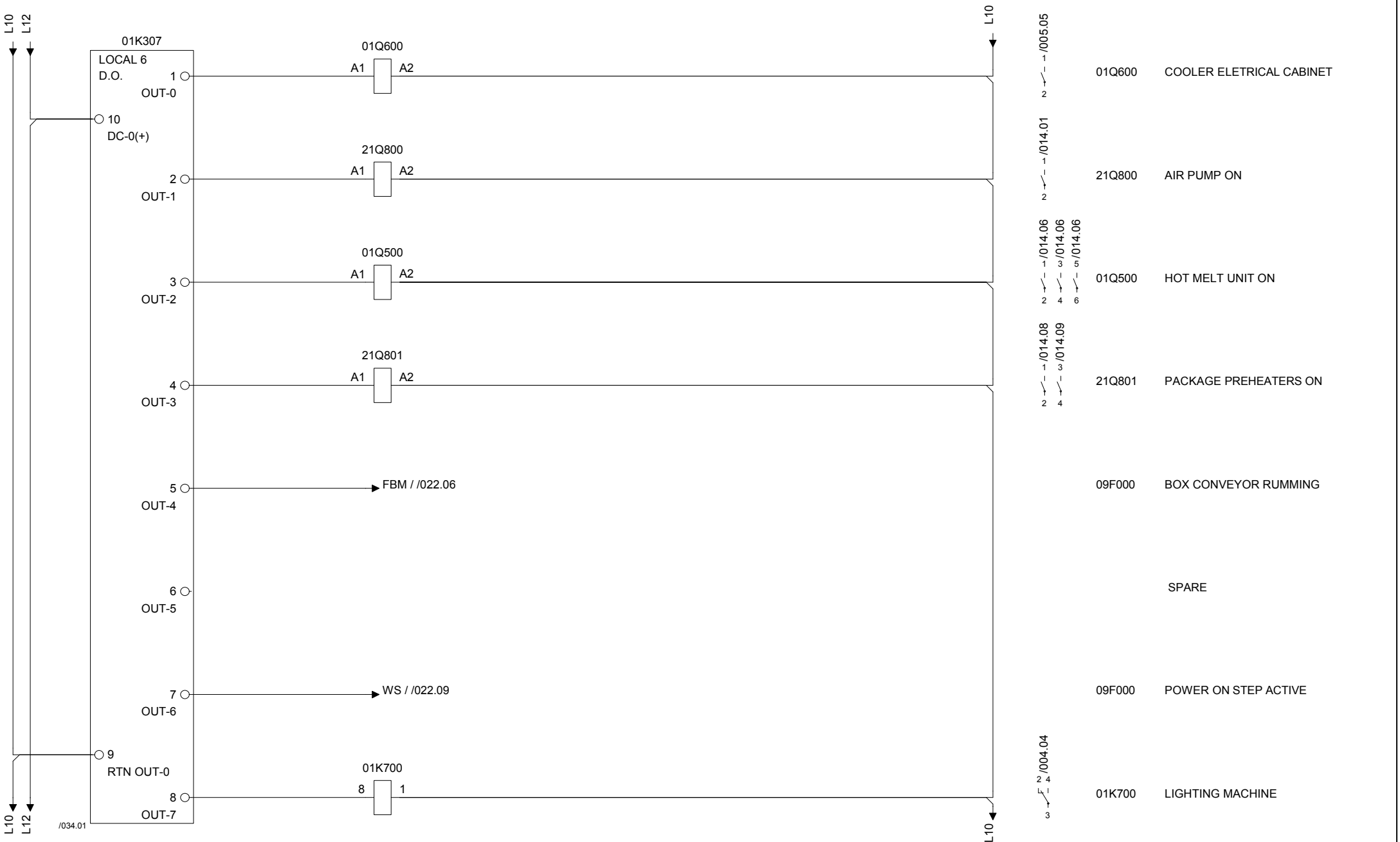

Drawing remarks	Tetra Pak	Designer ACH	Date 01/10/2009	Machine CAP30 Flex ReCap3 0200	
		ECM No 417049	Denomination CIRCUIT DIAGRAM	Page Type PLC OUT	
		Company Tetra Pak (Italy)	Document No. 3039165-0003	Doc. type ELD	Version AB	Page 033

RELEASED

This drawing must not without the consent of Tetra Pak be copied, transmitted or disclosed to any third party.

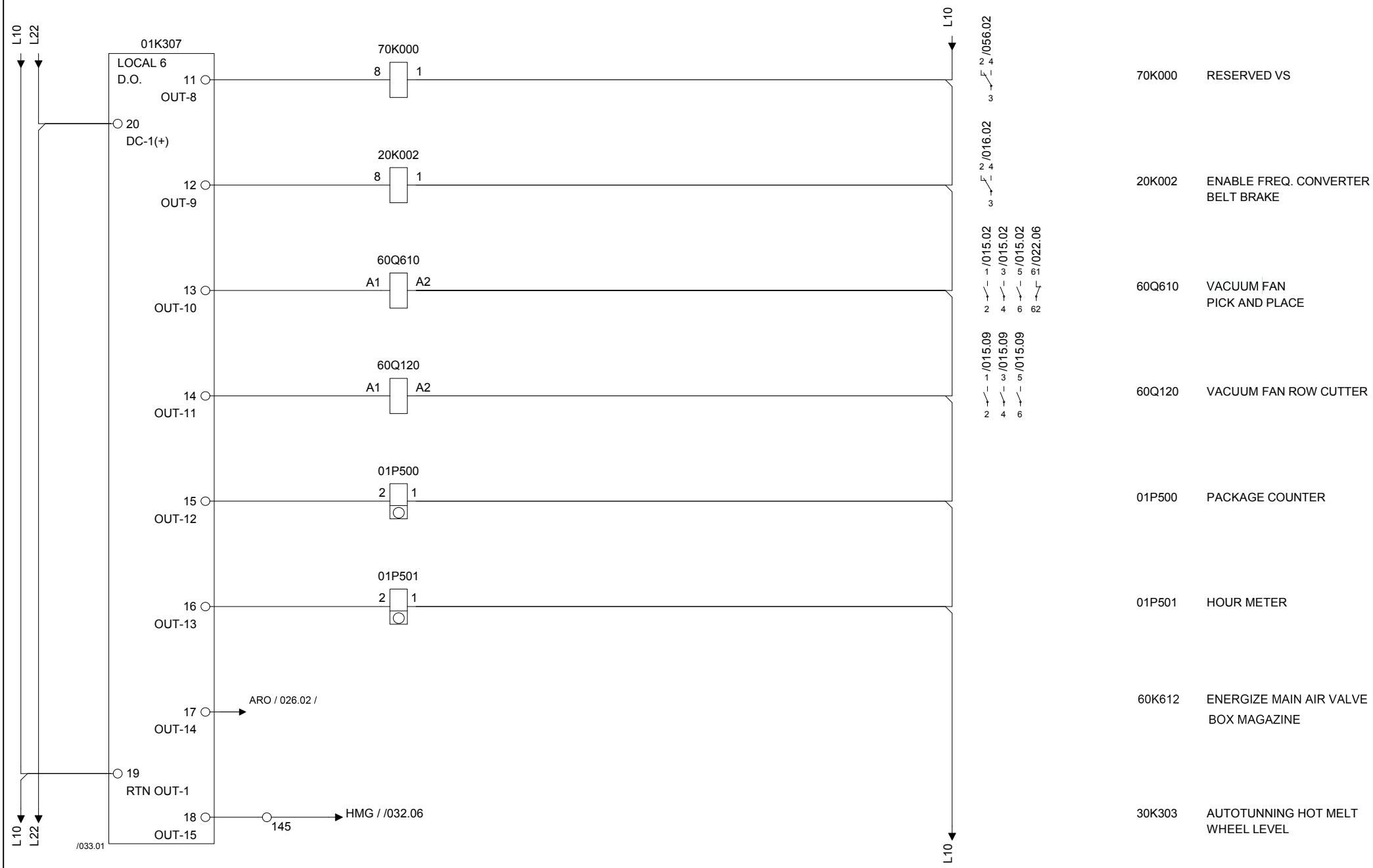

Drawing remarks	Tetra Pak	Designer ACH	Date 01/10/2009	Machine CAP30 Flex ReCap3 0200	
		ECM No 417049	Denomination CIRCUIT DIAGRAM	Page Type PLC OUT	
	Company Tetra Pak (Italy)	Document No. 3039165-0003	Doc. type ELD	Version AB	Page 034

RELEASED

This drawing must not without the consent of Tetra Pak be copied, transmitted or disclosed to any third party.

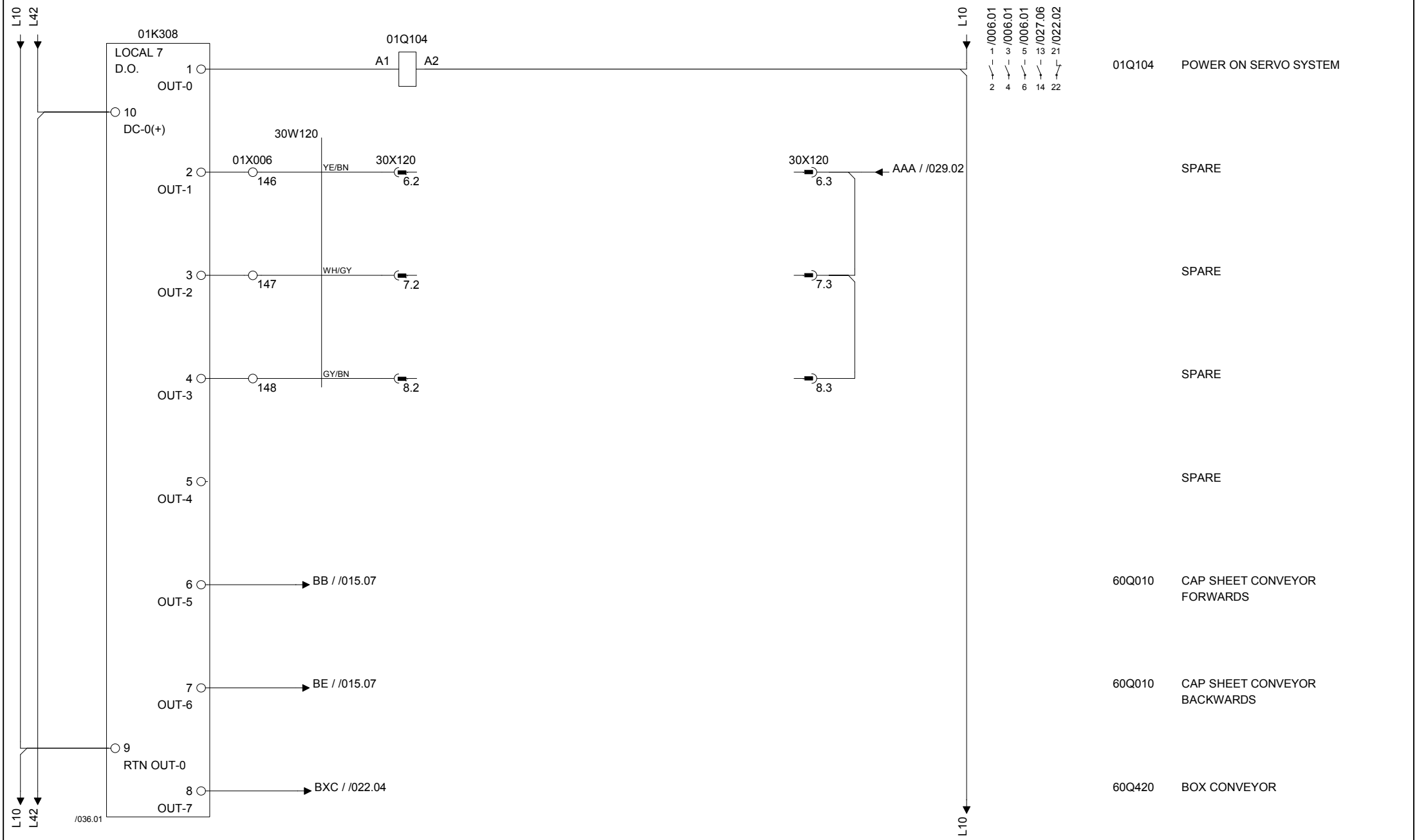

Drawing remarks	Tetra Pak	Designer ACH	Date 01/10/2009	Machine CAP30 Flex ReCap3 0200	
		ECM No 417049	Denomination CIRCUIT DIAGRAM	Page Type PLC OUT	
		Company Tetra Pak (Italy)	Document No. 3039165-0003	Doc. type ELD	Version AB	Page 035

This drawing must not without the consent of Tetra Pak be copied, transmitted or disclosed to any third party.

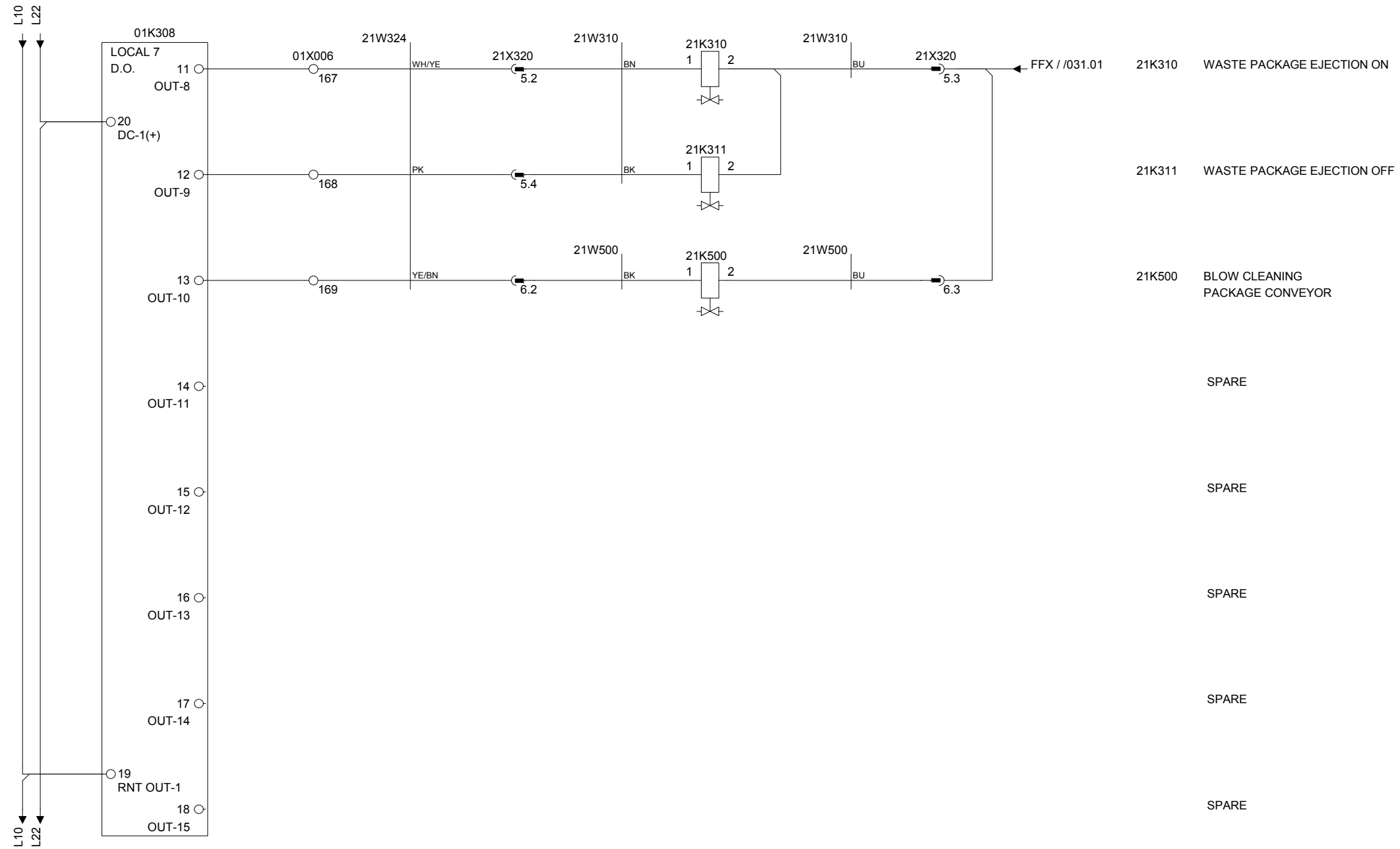

Drawing remarks	Tetra Pak	Designer ACH	Date 01/10/2009	Machine CAP30 Flex ReCap3 0200	
		ECM No 417049	Denomination CIRCUIT DIAGRAM	Page Type PLC OUT	
		Company Tetra Pak (Italy)	Document No. 3039165-0003	Doc. type ELD	Version AB	Page 036

This drawing must not without the consent of Tetra Pak be copied, transmitted or disclosed to any third party.

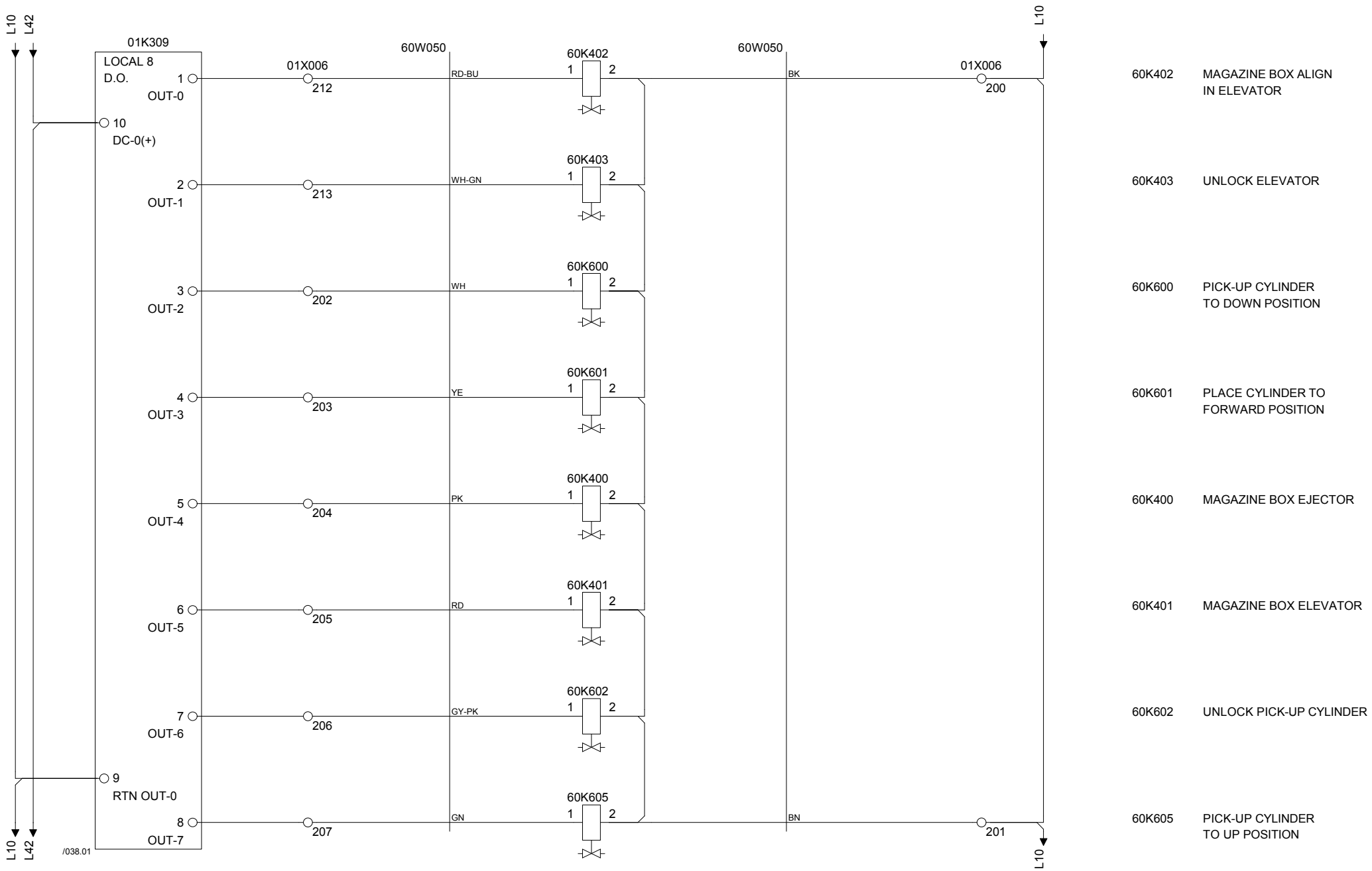

60K402	MAGAZINE BOX ALIGN IN ELEVATOR
60K403	UNLOCK ELEVATOR
60K600	PICK-UP CYLINDER TO DOWN POSITION
60K601	PLACE CYLINDER TO FORWARD POSITION
60K400	MAGAZINE BOX EJECTOR
60K401	MAGAZINE BOX ELEVATOR
60K602	UNLOCK PICK-UP CYLINDER
60K605	PICK-UP CYLINDER TO UP POSITION

Drawing remarks

Tetra Pak

Designer: ACH	Date: 01/10/2009	Machine: CAP30 Flex ReCap3 0200	
ECM No: 417049	Denomination: CIRCUIT DIAGRAM	Page Type: PLC OUT	
Company: Tetra Pak (Italy)	Document No.: 3039165-0003	Doc. type: ELD	Version: AB	Page: 037

RELEASED

This drawing must not without the consent of Tetra Pak be copied, transmitted or disclosed to any third party.

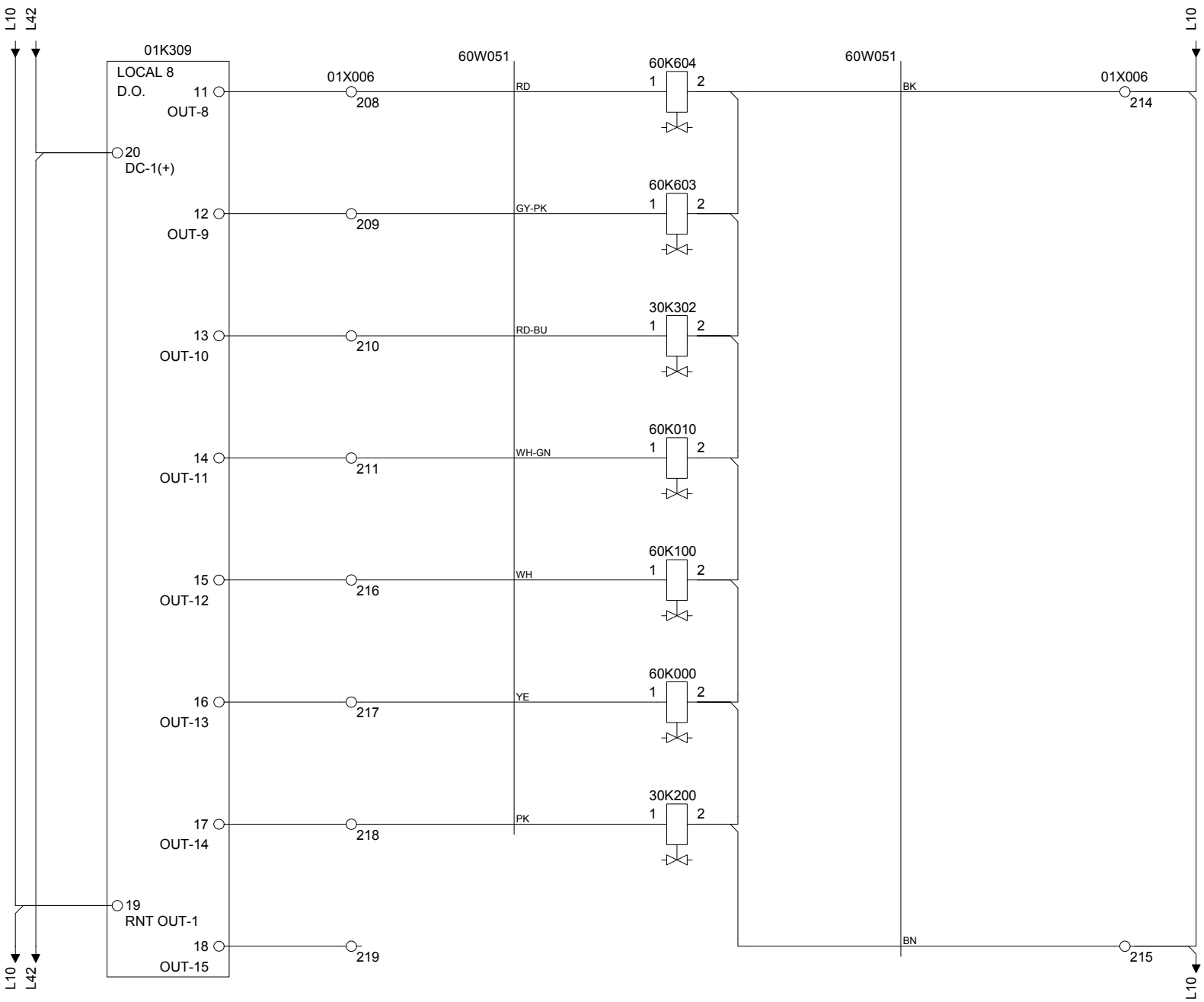

60K604	QUICK VACCUM SHEET RELEASE
60K603	AIR BLOW TO RELEASE CAP SHEET
30K302	HOT MELT WHEEL FILLING
60K010	AIR BLOW CAP SHEET CONVEYOR
60K100	SCREW FEEDER-RETURN CARRIER CYLINDER
60K000	CAP SHEET HOLDER
30K200	GLUE WHEEL CAM
	SPARE

Drawing remarks

Tetra Pak

Designer: ACH	Date: 01/10/2009	Machine: CAP30 Flex ReCap3 0200	
ECM No: 417049	Denomination: CIRCUIT DIAGRAM	Page Type: PLC OUT	
Company: Tetra Pak (Italy)	Document No.: 3039165-0003	Doc. type: ELD	Version: AB	Page: 038

RELEASED

This drawing must not without the consent of Tetra Pak
be copied, transmitted or disclosed to any third party.

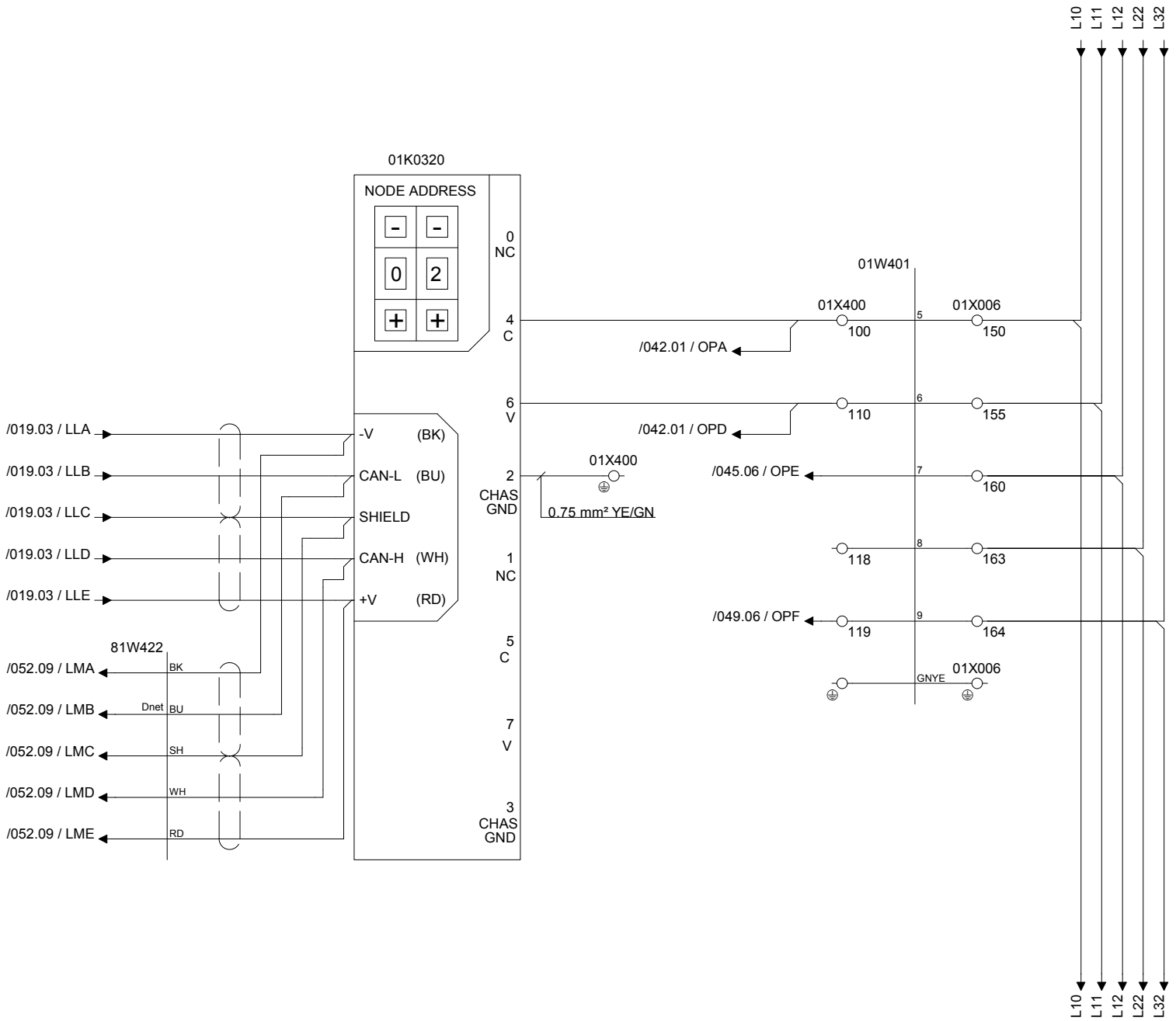

Drawing remarks	Tetra Pak	Designer ACH	Date 01/10/2009	Machine CAP30 Flex ReCap3 0200	
		ECM No 417049	Denomination CIRCUIT DIAGRAM	Page Type REMOTE I/O ADAPTER O.P. BOX	
		Company Tetra Pak (Italy)	Document No. 3039165-0003	Doc. type ELD	Version AB	Page 039

This drawing must not without the consent of Tetra Pak be copied, transmitted or disclosed to any third party.

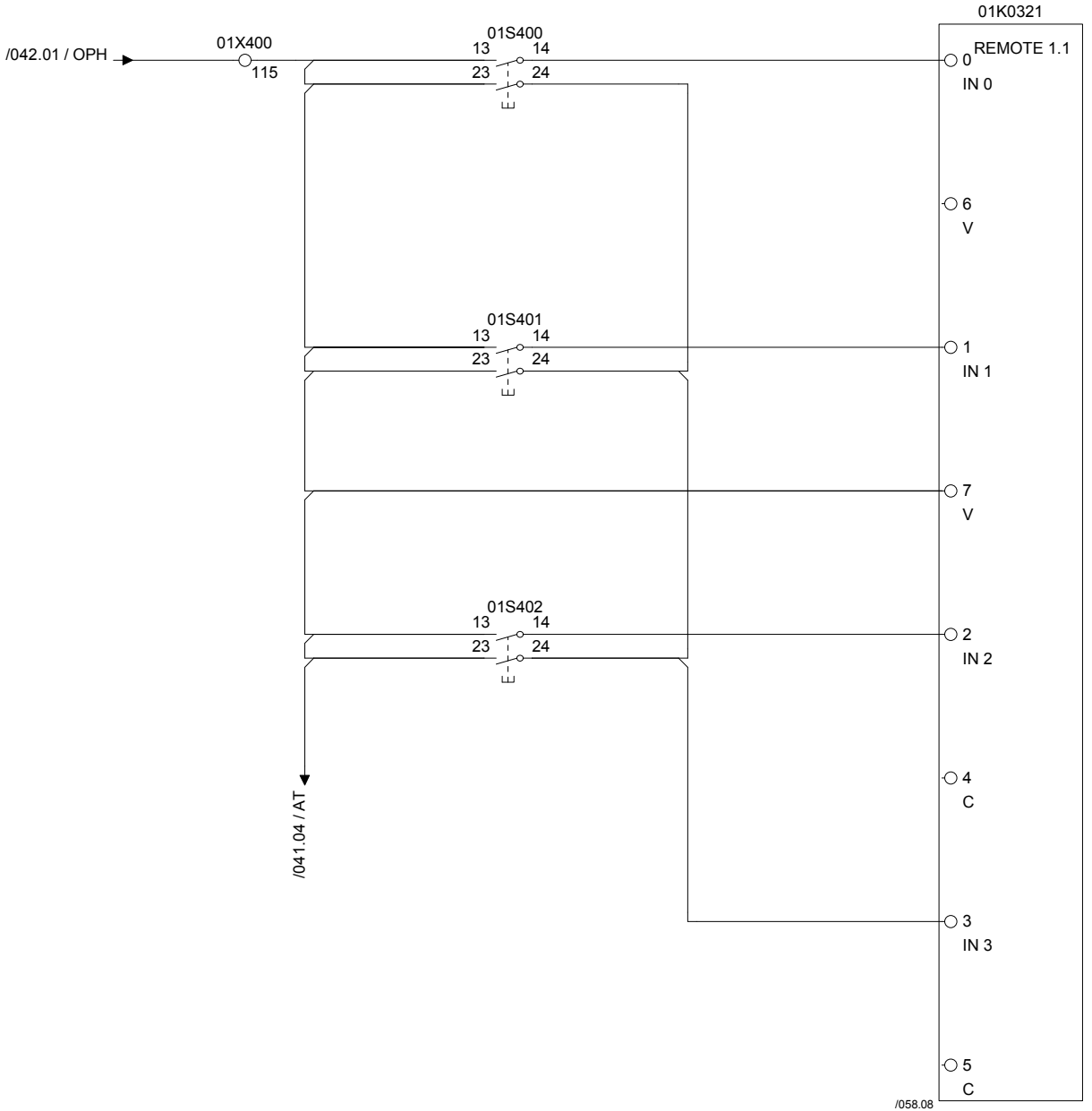

Drawing remarks	Tetra Pak	Designer ACH	Date 01/10/2009	Machine CAP30 Flex ReCap3 0200	
		ECM No 417049	Denomination CIRCUIT DIAGRAM	Page Type REMOTE I/O ADAPTER O.P. BOX	
		Company Tetra Pak (Italy)	Document No. 3039165-0003	Doc. type ELD	Version AB	Page 040

RELEASED

This drawing must not without the consent of Tetra Pak be copied, transmitted or disclosed to any third party.

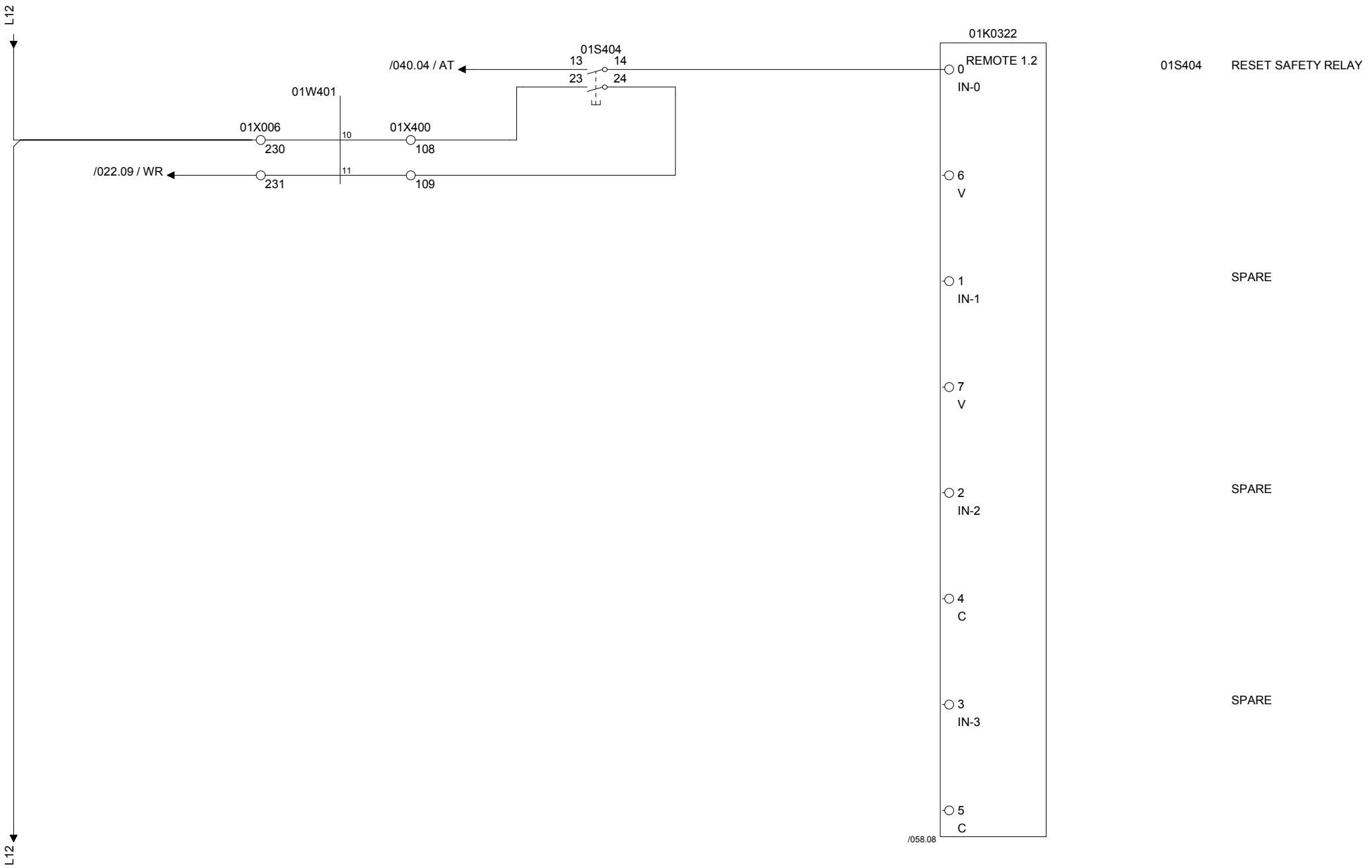

Drawing remarks	Tetra Pak	Designer ACH	Date 01/10/2009	Machine CAP30 Flex ReCap3 0200	
		ECM No 417049	Denomination CIRCUIT DIAGRAM	Page Type REMOTE I/O ADAPTER O.P. BOX	
		Company Tetra Pak (Italy)	Document No. 3039165-0003	Doc. type ELD	Version AB	Page 041

RELEASED

This drawing must not without the consent of Tetra Pak be copied, transmitted or disclosed to any third party.

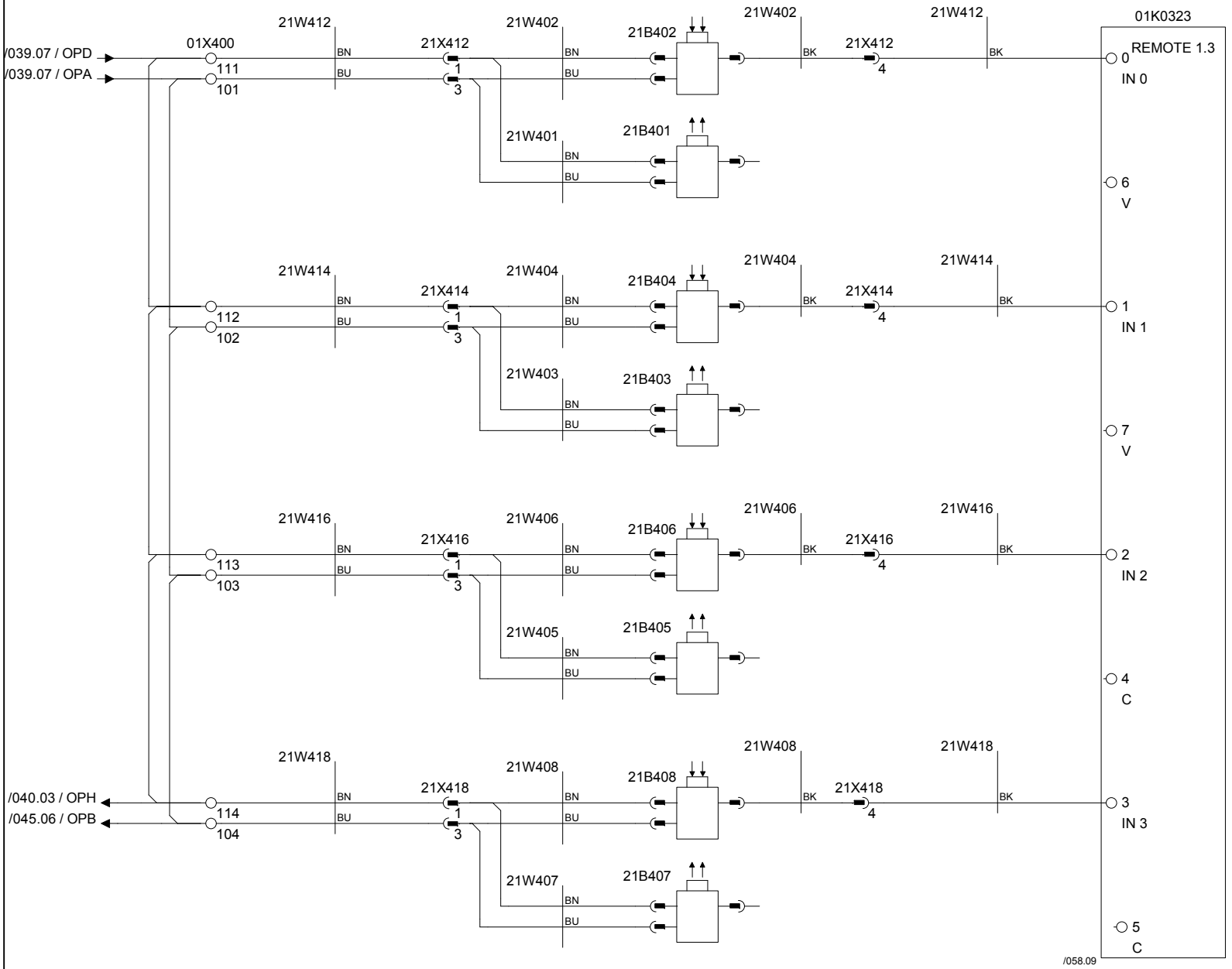

21B402	LONG PACKAGE QUEUE
21B401	
21B404	SHORT PACKAGE QUEUE
21B403	
21B406	VERIFIES PACKAGE STANDING
21B405	
21B408	PACKAGE OVERFLOW
21B407	

Drawing remarks

Tetra Pak

Designer ACH	Date 01/10/2009	Machine CAP30 Flex ReCap3 0200			
ECM No 417049	Denomination CIRCUIT DIAGRAM	Page Type REMOTE I/O ADAPTER O.P. BOX			
Company Tetra Pak (Italy)	Document No. 3039165-0003	Doc. type ELD	Version AB	Page 042	

RELEASED

This drawing must not without the consent of Tetra Pak be copied, transmitted or disclosed to any third party.

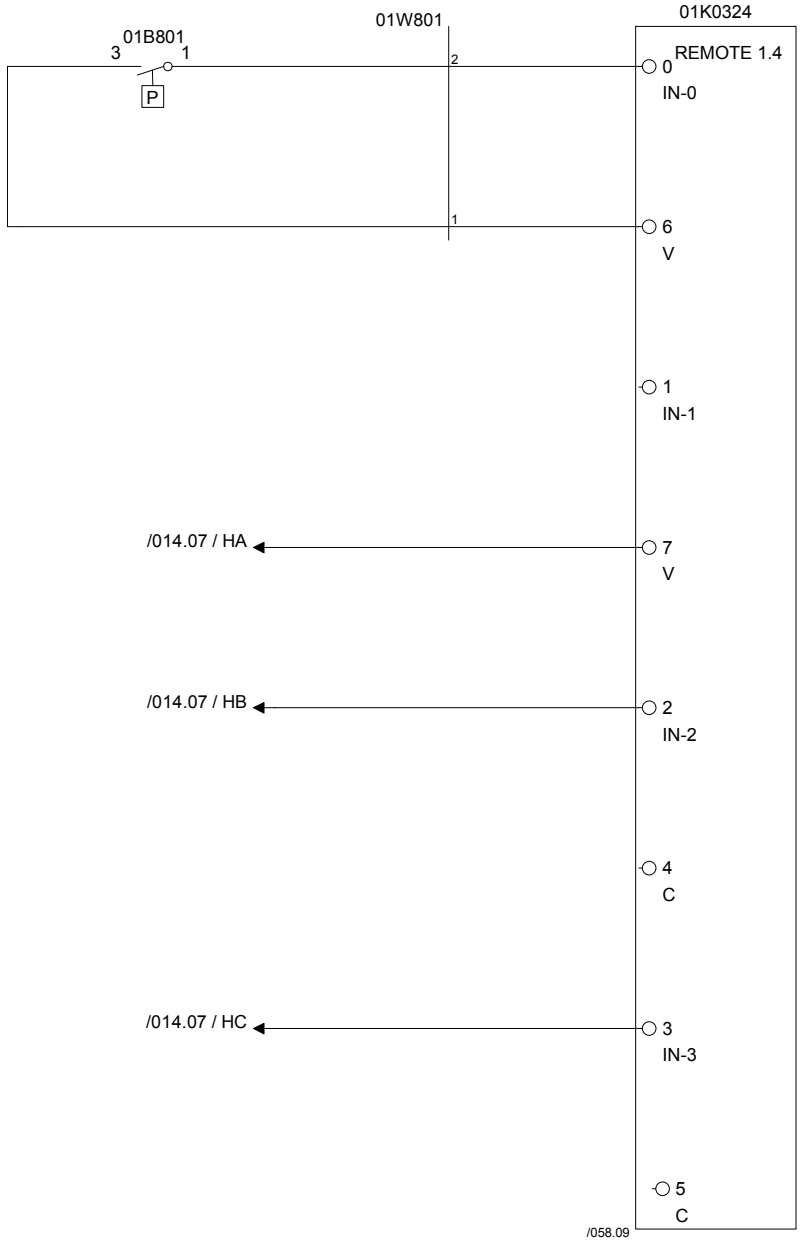

01B801	AIR PRESSURE GUARD
01V500	HOT MELT UNIT
01V500	HOT MELT UNIT READY
01V500	LOW LEVEL HOT MELT TANK

Drawing remarks

Tetra Pak

Designer: ACH	Date: 01/10/2009	Machine: CAP30 Flex ReCap3 0200	
ECM No: 417049	Denomination: CIRCUIT DIAGRAM	Page Type: REMOTE I/O ADAPTER O.P. BOX	
Company: Tetra Pak (Italy)	Document No.: 3039165-0003	Doc. type: ELD	Version: AB / Page: 043

This drawing must not without the consent of Tetra Pak be copied, transmitted or disclosed to any third party.

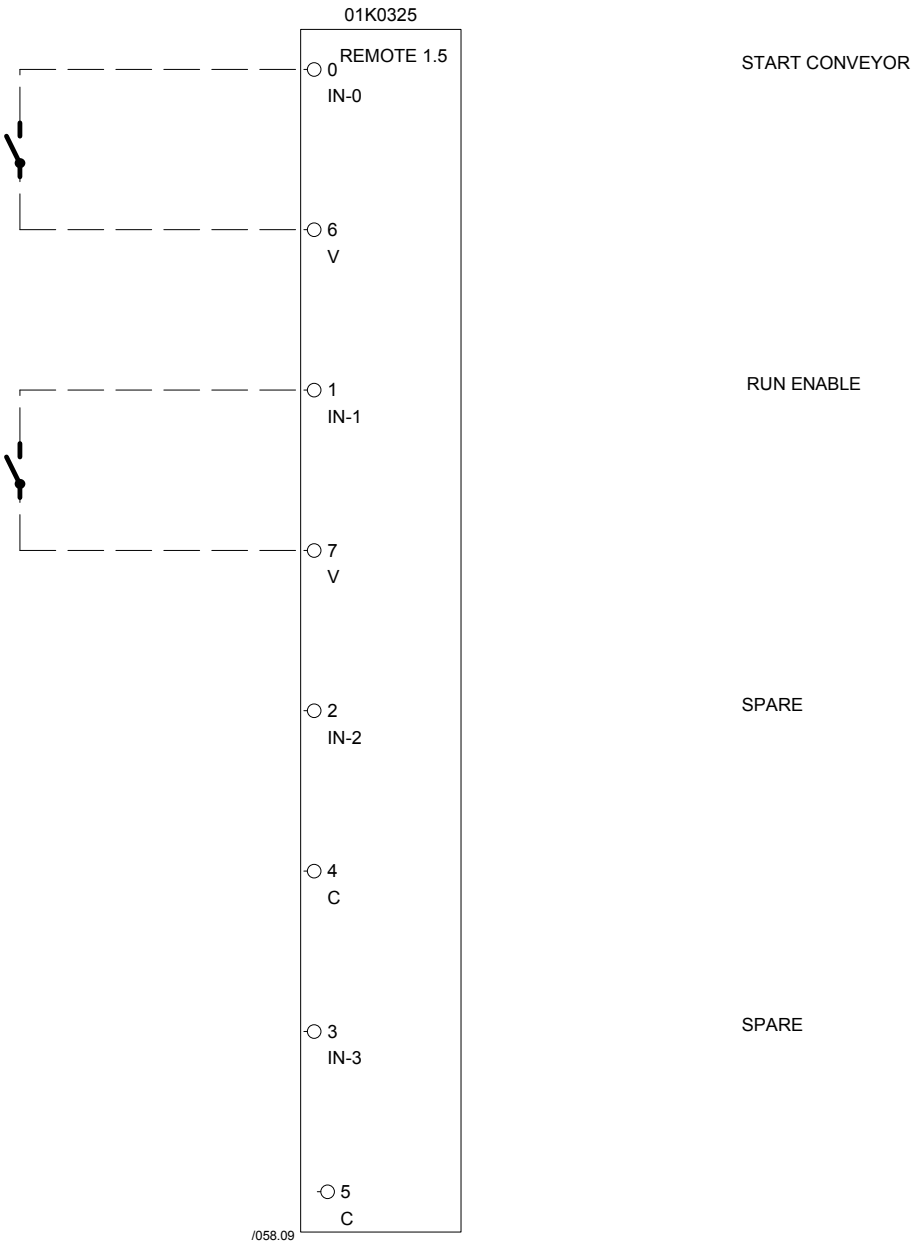

Drawing remarks	Tetra Pak	Designer ACH	Date 01/10/2009	Machine CAP30 Flex ReCap3 0200			
		ECM No 417049	Denomination CIRCUIT DIAGRAM	Page Type REMOTE I/O ADAPTER O.P. BOX			
	Company Tetra Pak (Italy)		Document No. 3039165-0003	Doc. type ELD	Version AB	Page 044	

This drawing must not without the consent of Tetra Pak
be copied, transmitted or disclosed to any third party.

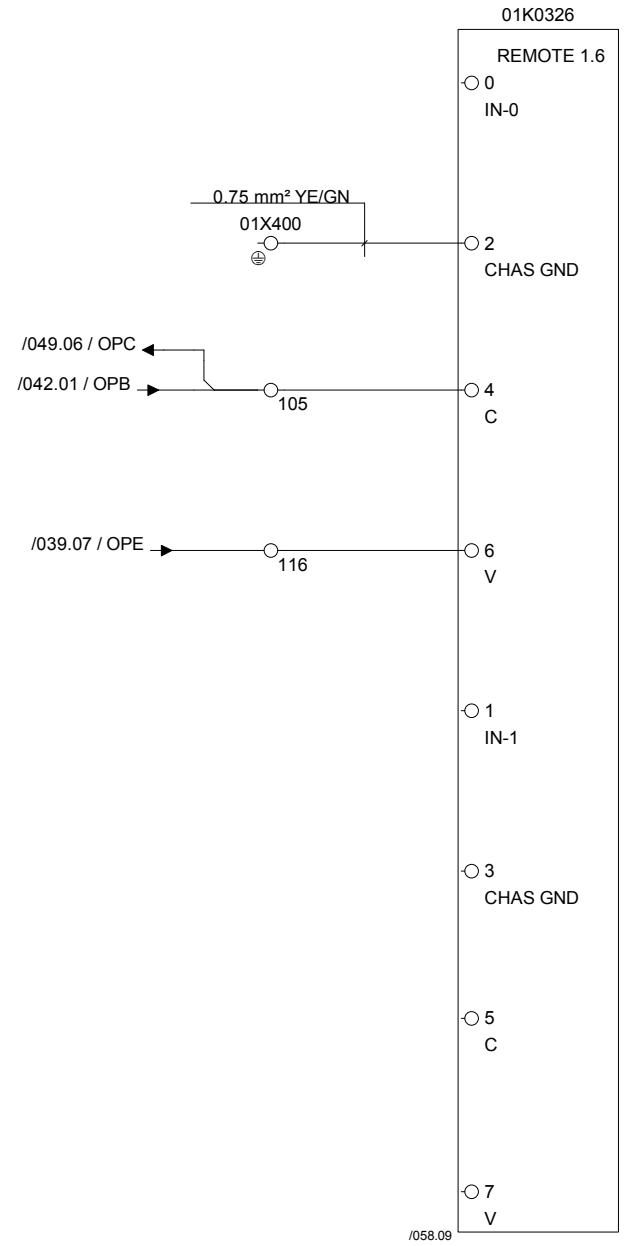

	Tetra Pak	Designer ACH	Date 01/10/2009	Machine CAP30 Flex ReCap3 0200	
		ECM No 417049	Denomination CIRCUIT DIAGRAM	Page Type FIELD POWER DISTR. O.P. BOX	
Drawing remarks		Company Tetra Pak (Italy)	Document No. 3039165-0003	Doc. type ELD	Version AB	Page 045

This drawing must not without the consent of Tetra Pak be copied, transmitted or disclosed to any third party.

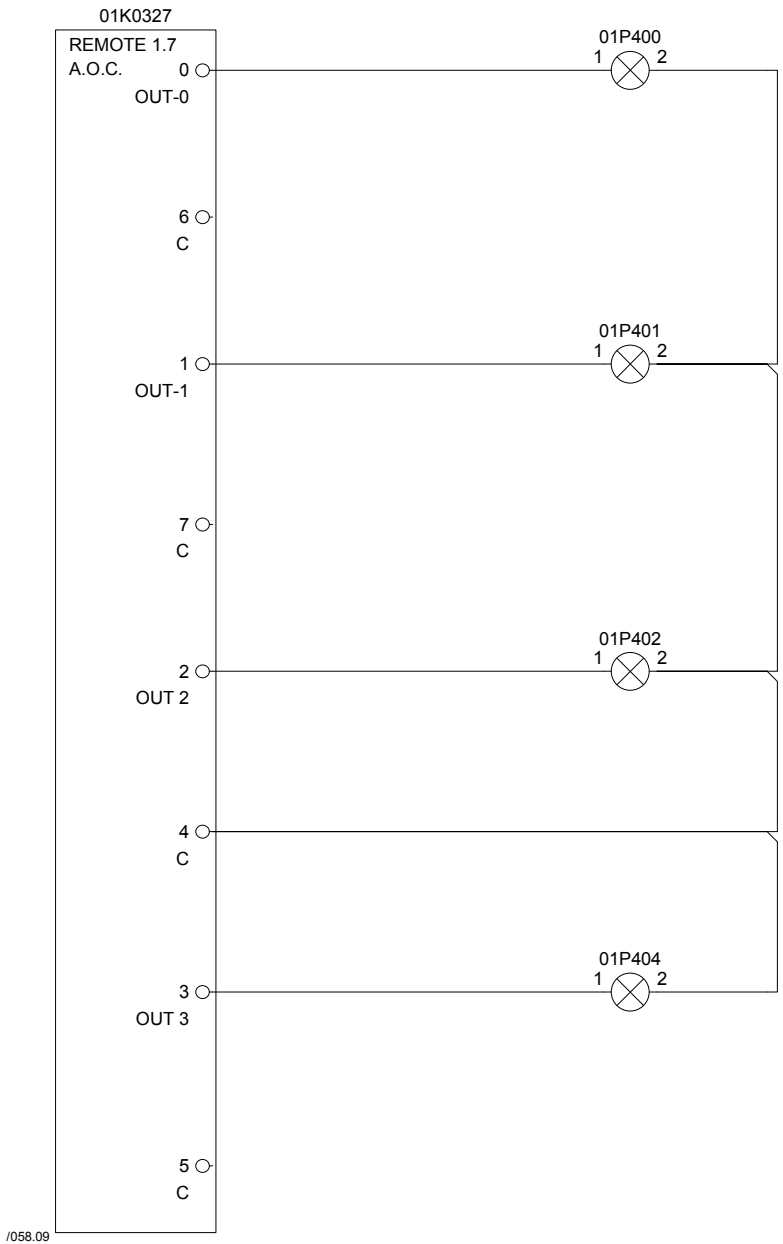

01P400	STEP UP LAMP
01P401	STEP DOWN LAMP
01P402	INCHING LAMP
01P404	RESET LAMP

Drawing remarks

Tetra Pak

Designer ACH	Date 01/10/2009	Machine CAP30 Flex ReCap3 0200					
ECM No 417049	Denomination CIRCUIT DIAGRAM	Page Type REMOTE OUTPUT O.P. BOX					
Company Tetra Pak (Italy)		Document No. 3039165-0003	Doc. type ELD	Version AB	Page 046		

This drawing must not without the consent of Tetra Pak be copied, transmitted or disclosed to any third party.

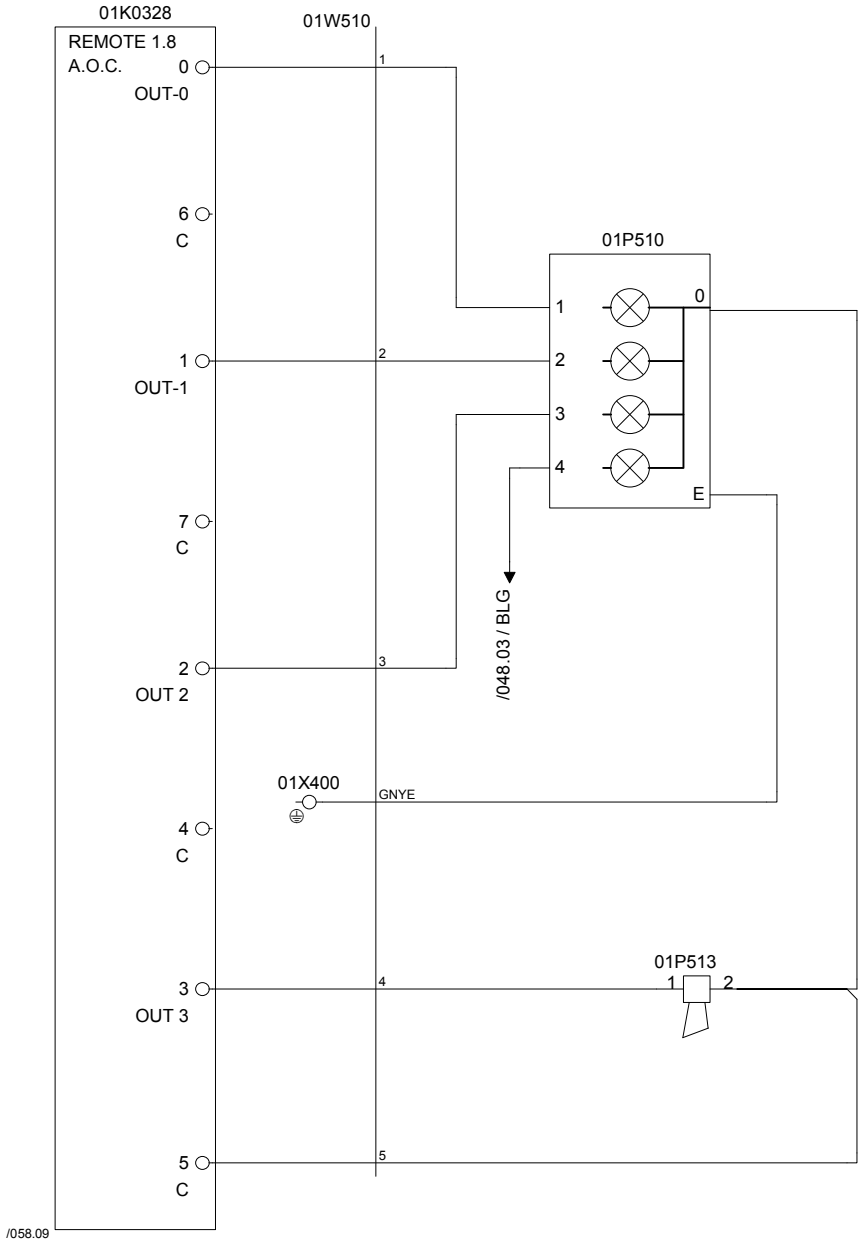

01P515	ALARM BEACON GREEN
01P514	ALARM BEACON BLUE
01P512	ALARM BEACON YELLOW
01P513	HOOTER

Drawing remarks

Tetra Pak

Designer ACH	Date 01/10/2009	Machine CAP30 Flex ReCap3 0200			
ECM No 417049	Denomination CIRCUIT DIAGRAM	Page Type REMOTE OUTPUT O.P. BOX			
Company Tetra Pak (Italy)	Document No. 3039165-0003	Doc. type ELD	Version AB	Page 047	

This drawing must not without the consent of Tetra Pak be copied, transmitted or disclosed to any third party.

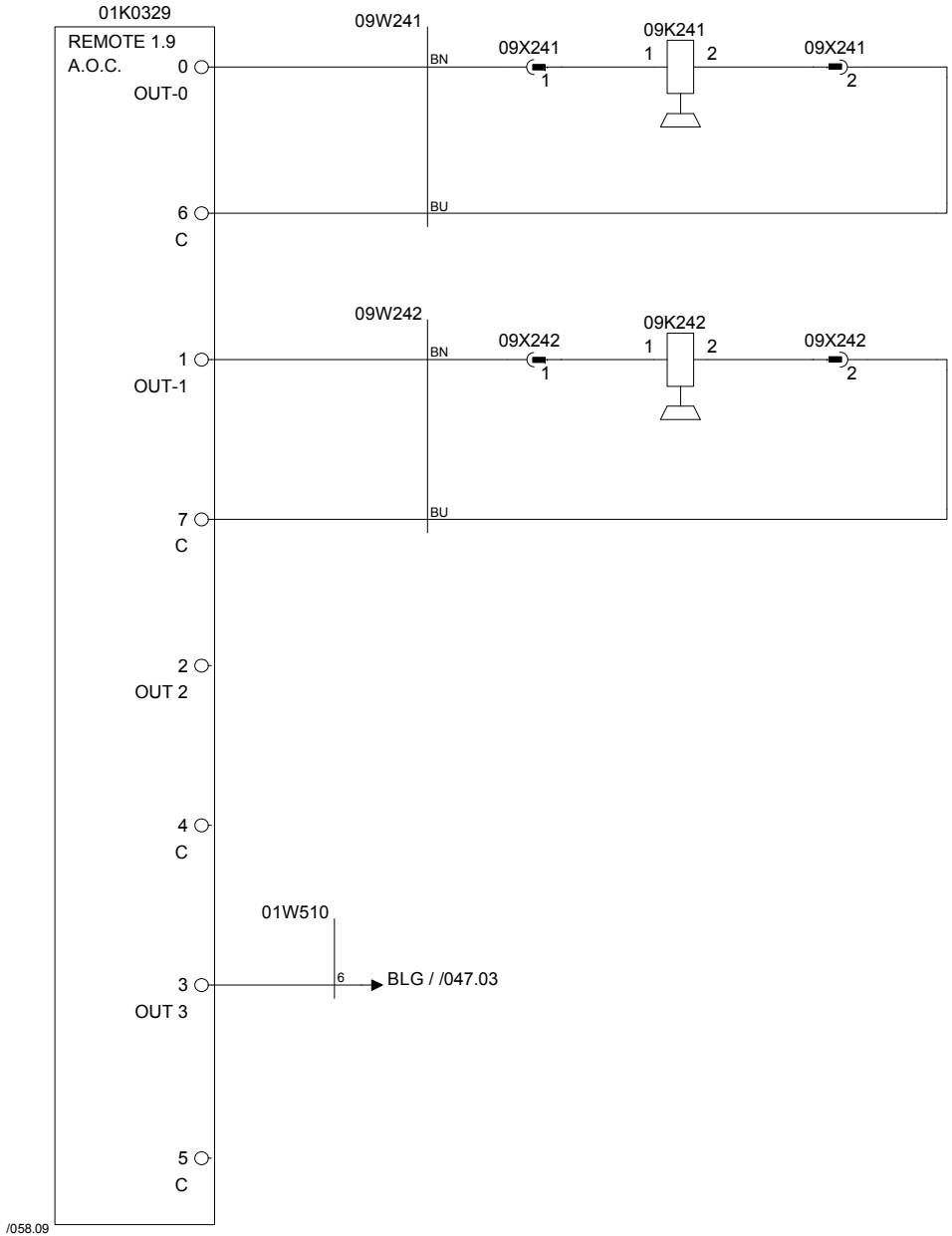

09K241	LOCKER DOOR FRONT 1
09K242	LOCKER DOOR FRONT 2
	SPARE
01P511	BEACON LAMP RED

Drawing remarks	Tetra Pak	Designer ACH	Date 01/10/2009	Machine CAP30 Flex ReCap3 0200
		ECM No 417049	Denomination CIRCUIT DIAGRAM	Page Type REMOTE OUTPUT O.P. BOX
		Company Tetra Pak (Italy)	Document No. 3039165-0003	Doc. type ELD / Version AB / Page 048

This drawing must not without the consent of Tetra Pak
be copied, transmitted or disclosed to any third party.

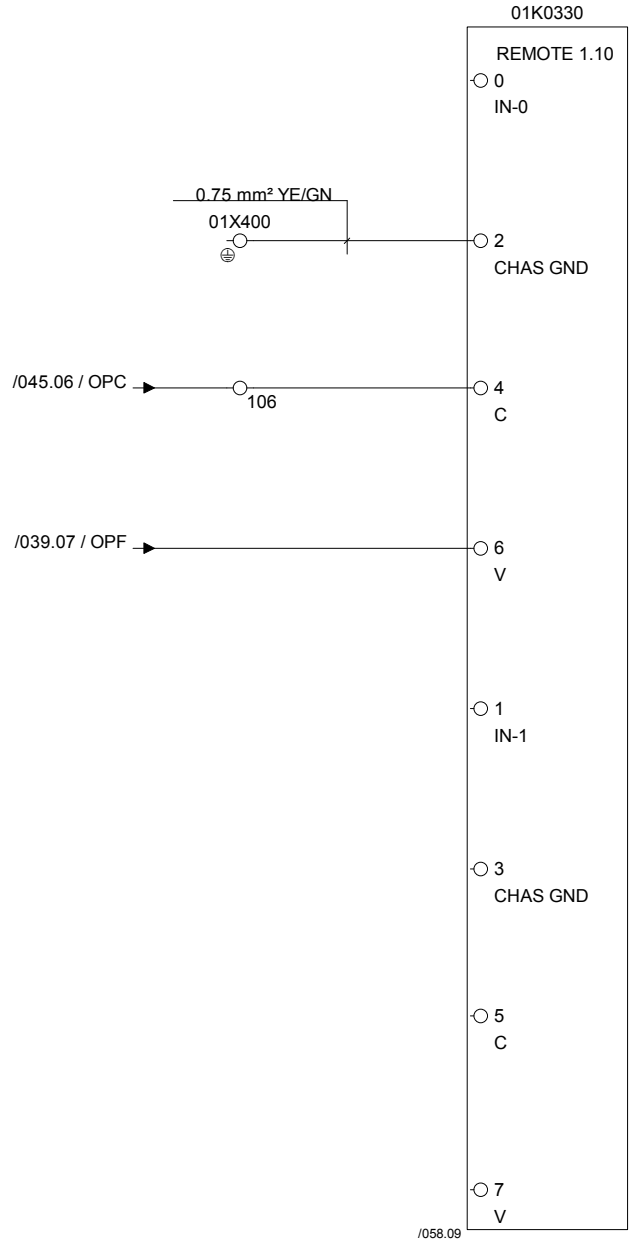

Drawing remarks	Tetra Pak	Designer ACH	Date 01/10/2009	Machine CAP30 Flex ReCap3 0200
		ECM No 417049	Denomination CIRCUIT DIAGRAM	Page Type FIELD POWER DISTR. O.P. BOX
		Company Tetra Pak (Italy)	Document No. 3039165-0003	Doc. type ELD / Version AB / Page 049

This drawing must not without the consent of Tetra Pak be copied, transmitted or disclosed to any third party.

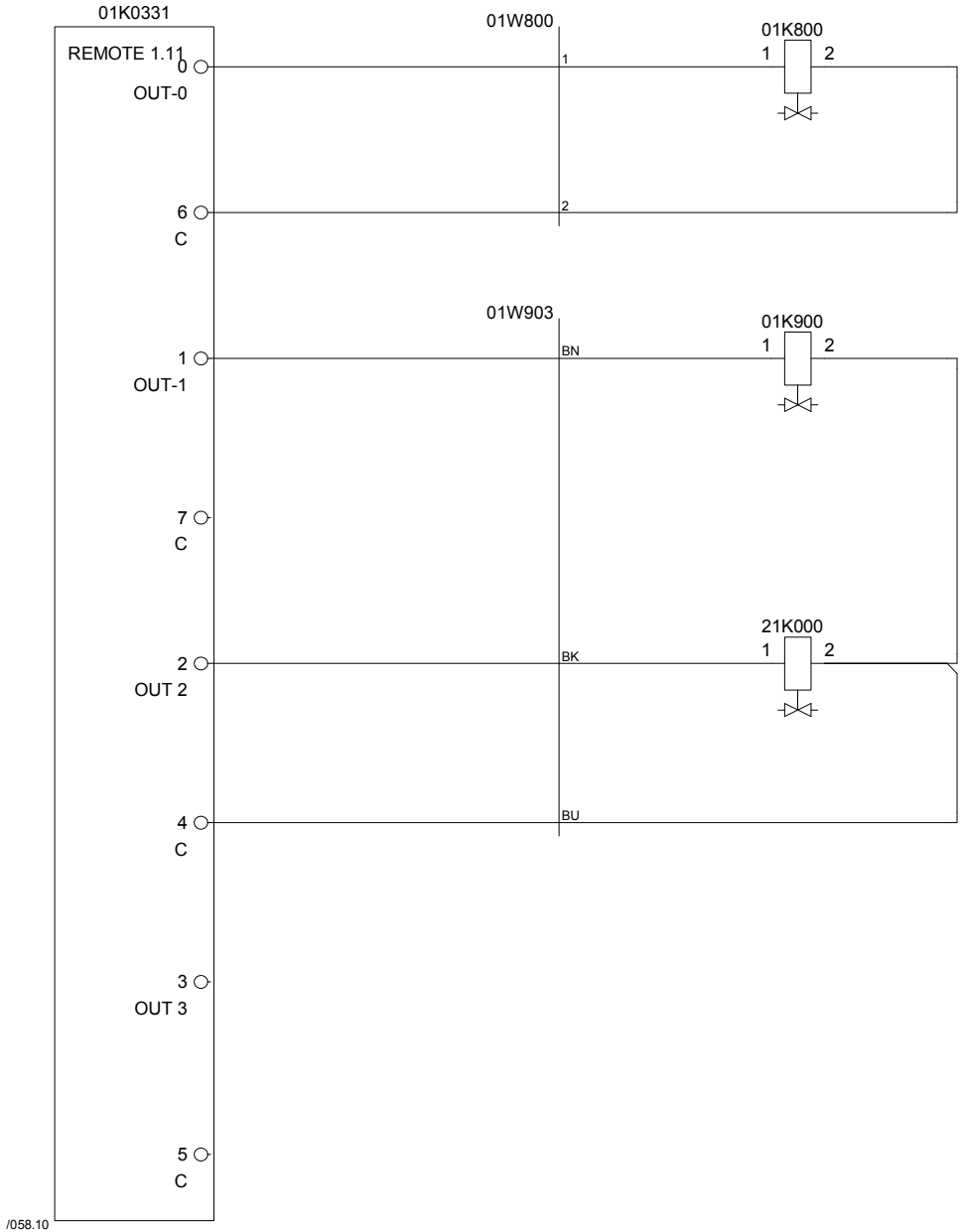

01K800	MAIN AIR VALVE
01K900	CENTRAL LUBRIFICATION
21K000	LOCK PACHAGE TRANSFER
	SPARE

Drawing remarks	Tetra Pak	Designer ACH	Date 01/10/2009	Machine CAP30 Flex ReCap3 0200
		ECM No 417049	Denomination CIRCUIT DIAGRAM	Page Type REMOTE OUTPUT O.P. BOX
		Company Tetra Pak (Italy)	Document No. 3039165-0003	Doc. type ELD / Version AB / Page 050

This drawing must not without the consent of Tetra Pak be copied, transmitted or disclosed to any third party.

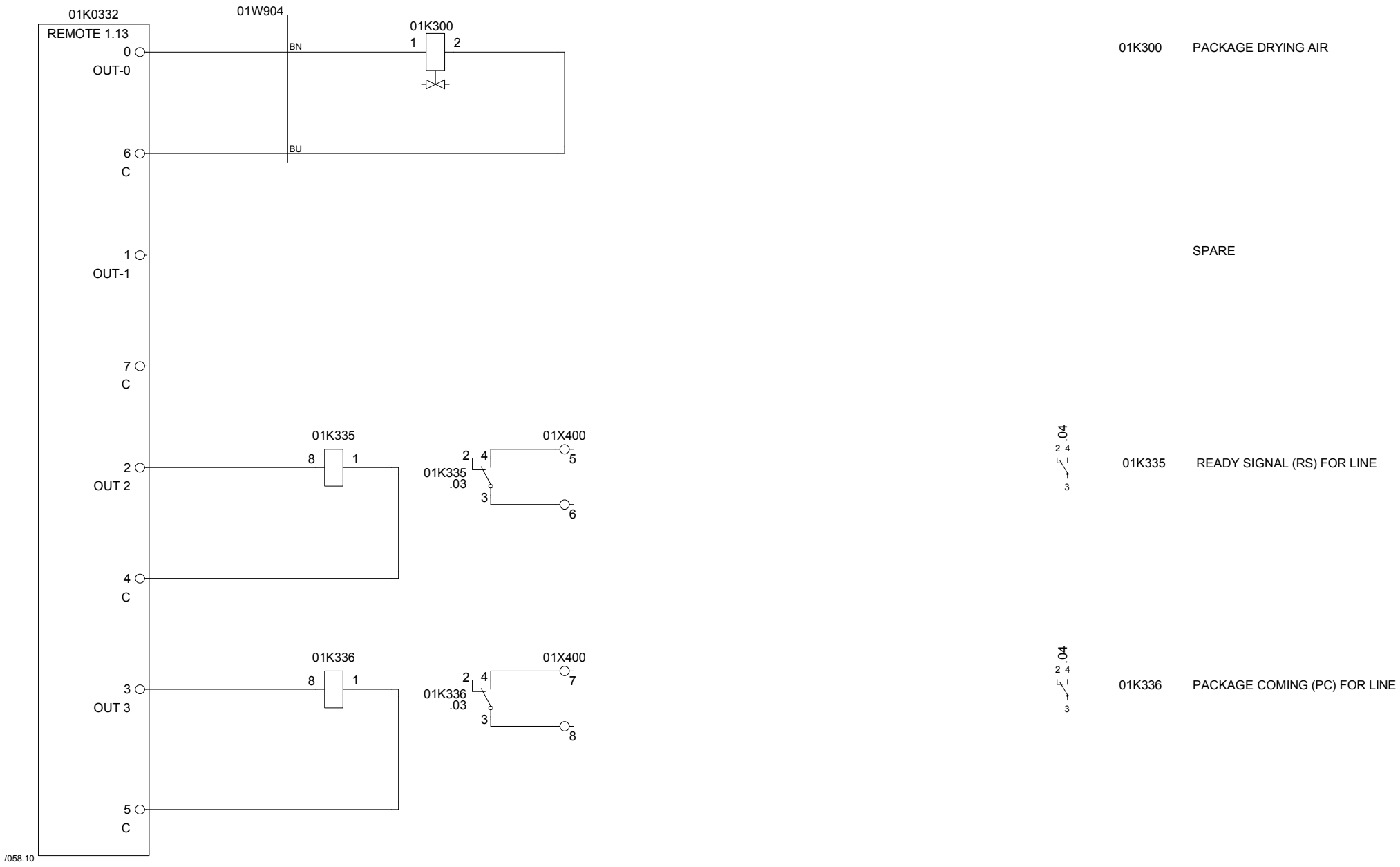

01K300	PACKAGE DRYING AIR	
	SPARE	
01K335	READY SIGNAL (RS) FOR LINE	.04
01K336	PACKAGE COMING (PC) FOR LINE	.04

Drawing remarks	Tetra Pak	Designer ACH	Date 01/10/2009	Machine CAP30 Flex ReCap3 0200
		ECM No 417049	Denomination CIRCUIT DIAGRAM	Page Type REMOTE OUTPUT O.P. BOX
		Company Tetra Pak (Italy)	Document No. 3039165-0003	Doc. type ELD / Version AB / Page 051

RELEASED

This drawing must not without the consent of Tetra Pak be copied, transmitted or disclosed to any third party.

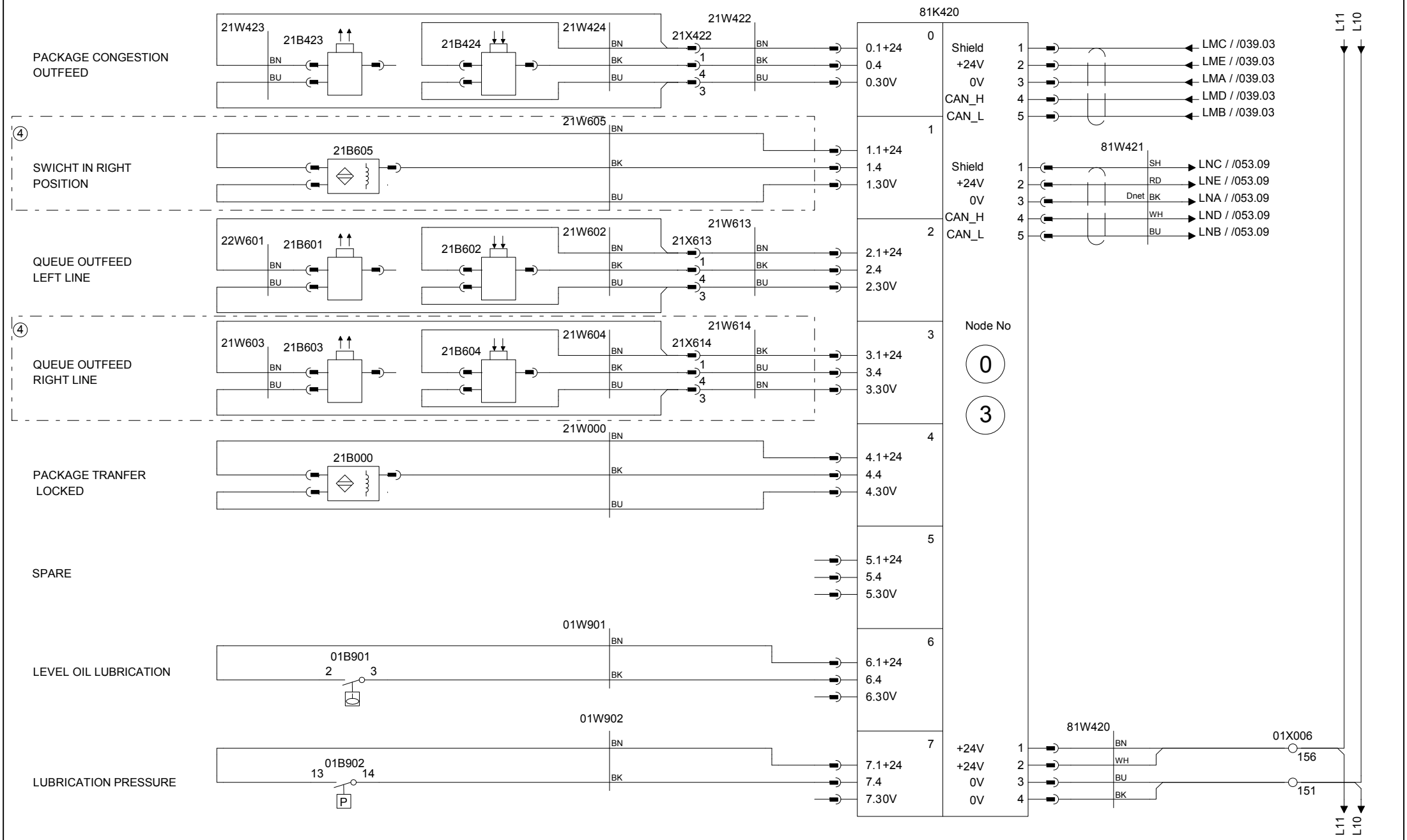

Drawing remarks	Tetra Pak	Designer ACH	Date 01/10/2009	Machine CAP30 Flex ReCap3 0200	
		ECM No 417049	Denomination CIRCUIT DIAGRAM	Page Type ARMOR BLOCK (MACHINE BODY)	
		Company Tetra Pak (Italy)	Document No. 3039165-0003	Doc. type ELD	Version AB	Page 052

RELEASED

This drawing must not without the consent of Tetra Pak be copied, transmitted or disclosed to any third party.

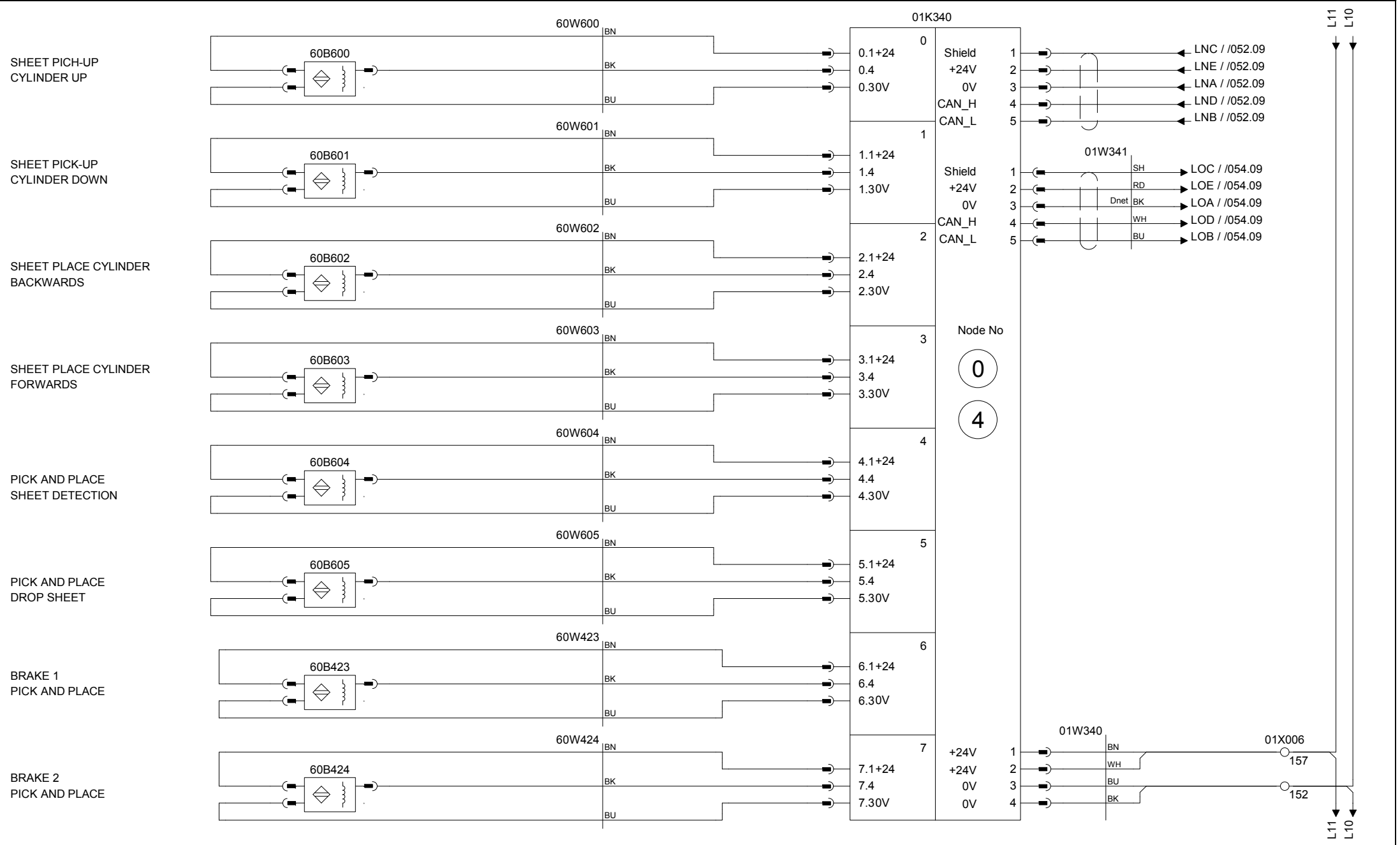

Drawing remarks	Tetra Pak	Designer ACH	Date 01/10/2009	Machine CAP30 Flex ReCap3 0200	
		ECM No 417049	Denomination CIRCUIT DIAGRAM	Page Type ARMOR BLOCK (PICK AND PLACE)	
	Company Tetra Pak (Italy)	Document No. 3039165-0003	Doc. type ELD	Version AB	Page 053

RELEASED

This drawing must not without the consent of Tetra Pak be copied, transmitted or disclosed to any third party.

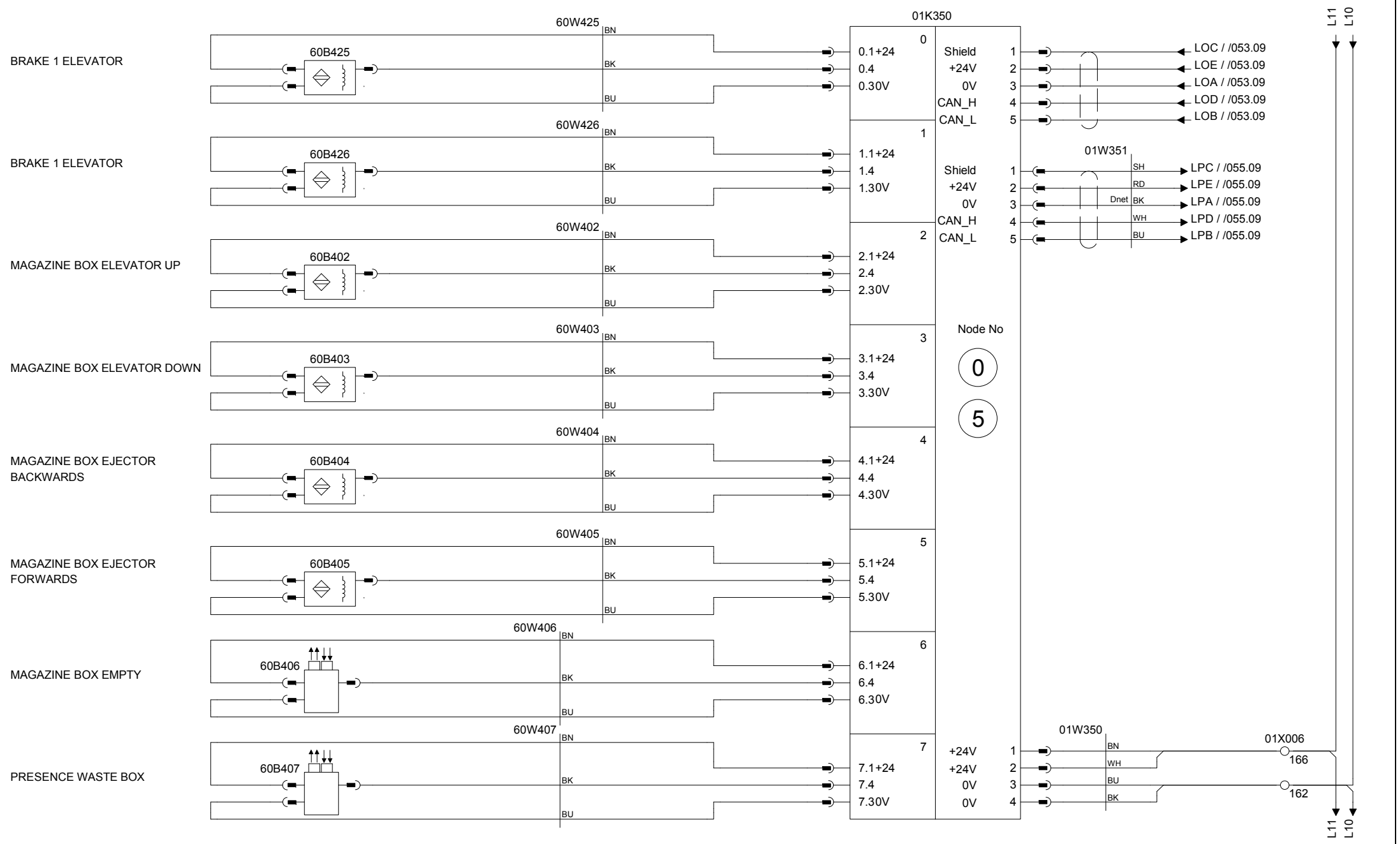

Drawing remarks	Tetra Pak	Designer ACH	Date 01/10/2009	Machine CAP30 Flex ReCap3 0200	
		ECM No 417049	Denomination CIRCUIT DIAGRAM	Page Type ARMOR BLOCK (BOX MAGAZINE)	
	Company Tetra Pak (Italy)	Document No. 3039165-0003	Doc. type ELD	Version AB	Page 054

RELEASED

This drawing must not without the consent of Tetra Pak be copied, transmitted or disclosed to any third party.

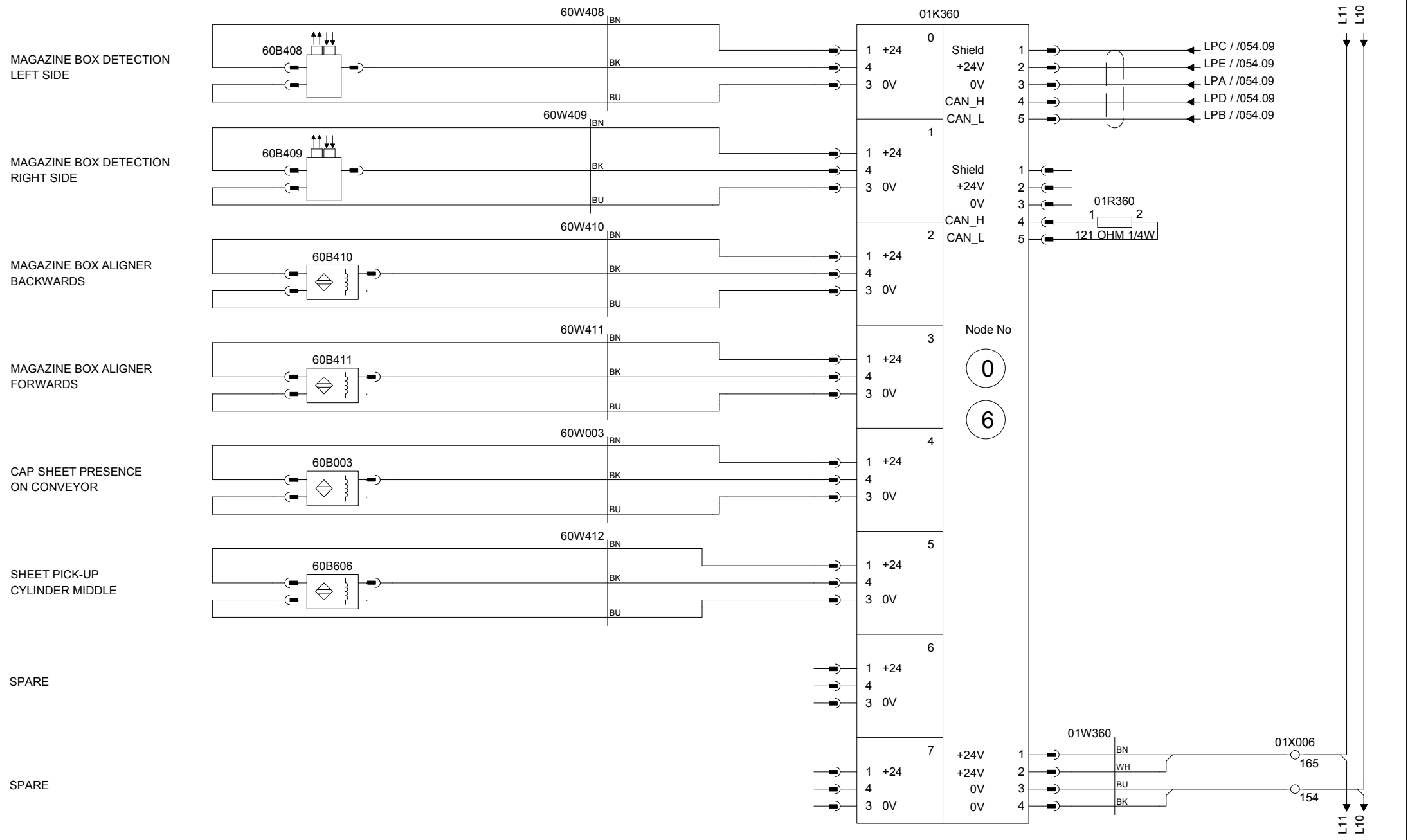

Drawing remarks	Tetra Pak	Designer ACH	Date 01/10/2009	Machine CAP30 Flex ReCap3 0200	
		ECM No 417049	Denomination CIRCUIT DIAGRAM	Page Type ARMOR BLOCK (BOX MAGAZINE)	
		Company Tetra Pak (Italy)	Document No. 3039165-0003	Doc. type ELD	Version AB	Page 055

RELEASED

This drawing must not without the consent of Tetra Pak be copied, transmitted or disclosed to any third party.

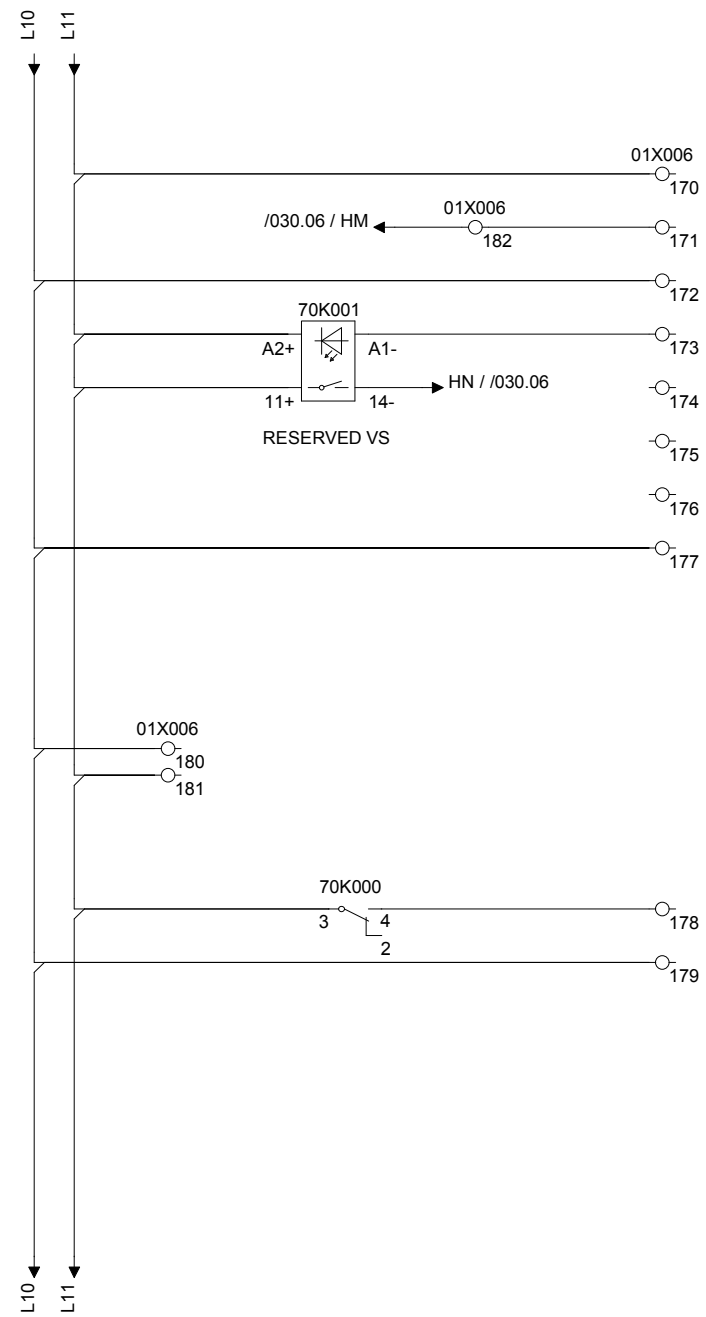

Drawing remarks	Tetra Pak	Designer ACH	Date 01/10/2009	Machine CAP30 Flex ReCap3 0200	
		ECM No 417049	Denomination CIRCUIT DIAGRAM	Page Type VISION SYSTEM DEVICE	
		Company Tetra Pak (Italy)	Document No. 3039165-0003	Doc. type ELD	Version AB	Page 056

RELEASED

This drawing must not without the consent of Tetra Pak be copied, transmitted or disclosed to any third party.

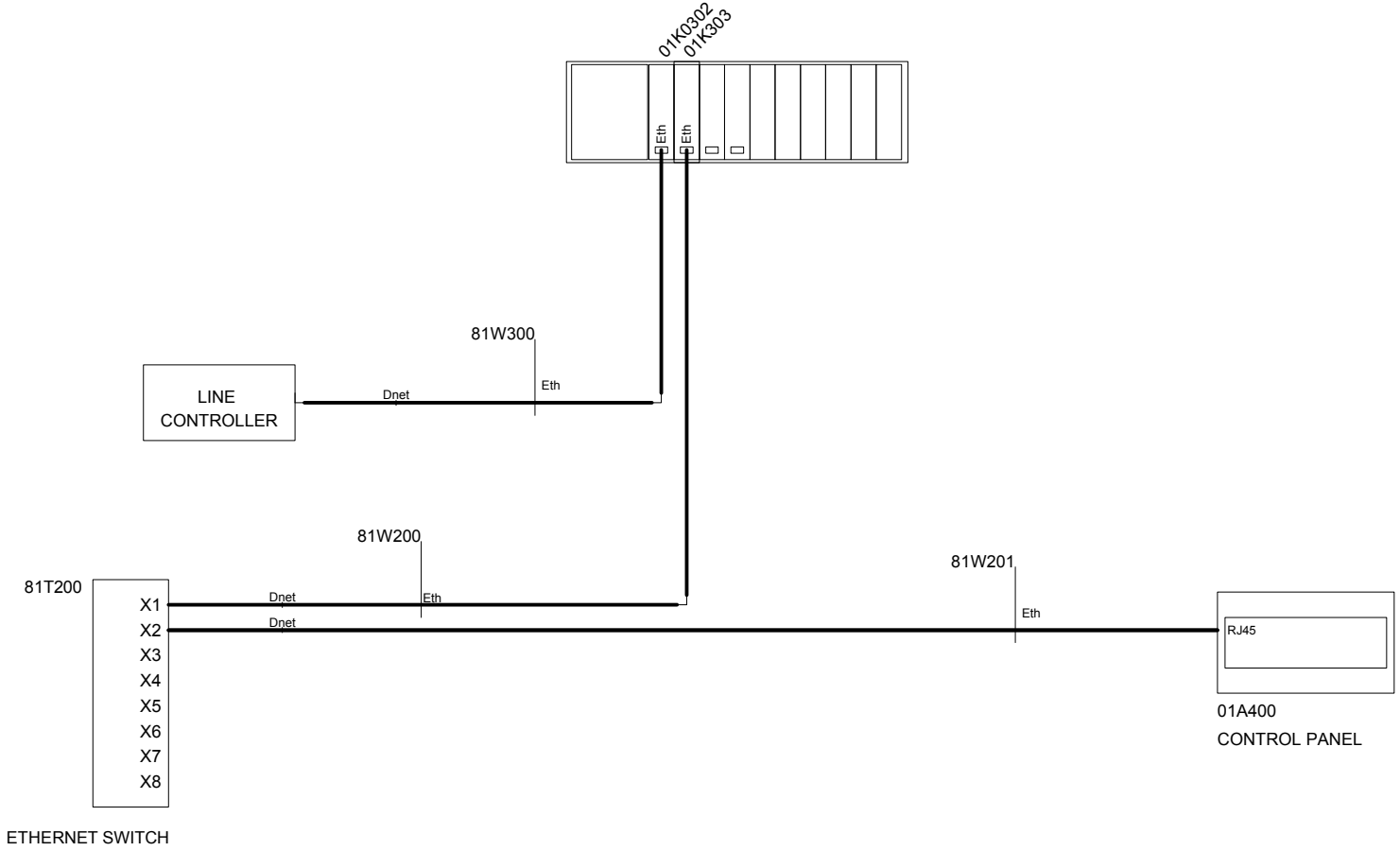

Drawing remarks	Tetra Pak	Designer ACH	Date 01/10/2009	Machine CAP30 Flex ReCap3 0200	
		ECM No 417049	Denomination CIRCUIT DIAGRAM	Page Type ETHERNET COMMUNICATION	
	Company Tetra Pak (Italy)	Document No. 3039165-0003	Doc. type ELD	Version AB	Page 057

This drawing must not without the consent of Tetra Pak
be copied, transmitted or disclosed to any third party.

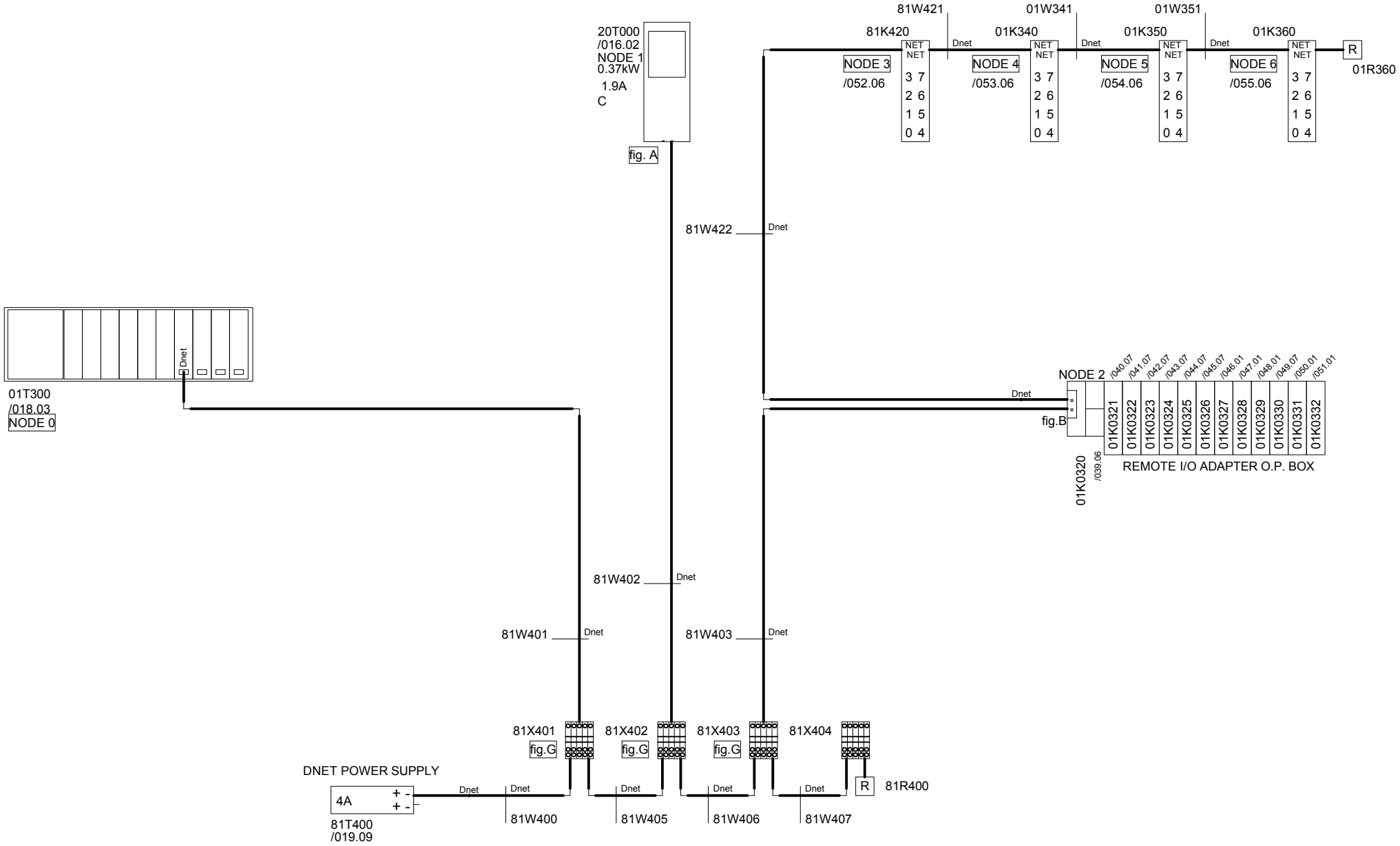

Drawing remarks	Tetra Pak	Designer ACH	Date 01/10/2009	Machine CAP30 Flex ReCap3 0200	
		ECM No 417049	Denomination CIRCUIT DIAGRAM	Page Type NETWORK LAYOUT DEVICENET	
	Company Tetra Pak (Italy)	Document No. 3039165-0003	Doc. type ELD	Version AB	Page 058

This drawing must not without the consent of Tetra Pak be copied, transmitted or disclosed to any third party.

Dnet single cable connect

FIGURE A

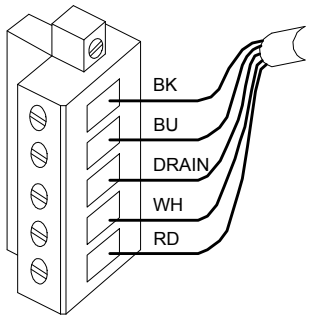

Dnet double cable connect

FIGURE B

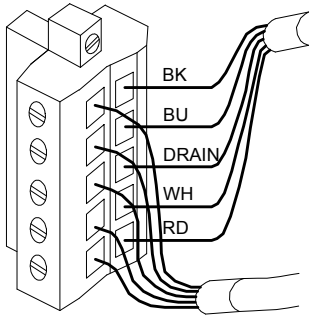

Dnet single cable w termination resistor

FIGURE C

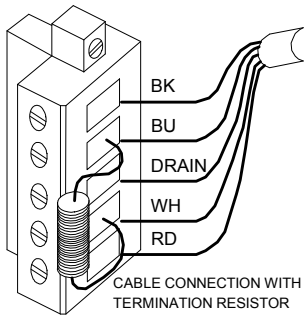

Dnet plc card w power / terminator

FIGURE D

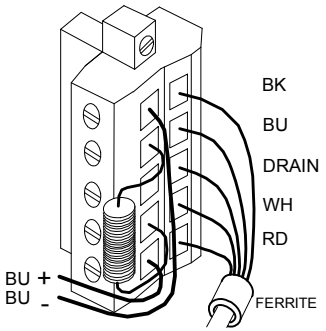

FIGURE E

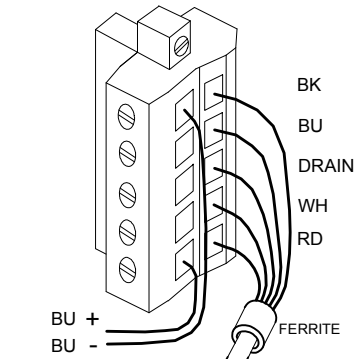

ARMOSTART external connections

FIGURE L

INPUT CONNECTOR	OUTPUT CONNECTOR	DEVICENET CONNECTOR	MOTOR CONNECTOR
SOCKET	PIN	SOCKET	SOCKET
Pin 1 +V Out Pin 2 Input 1 or 3 Pin 3 Comm Pin 4 Input 0 or 2 Pin 5 NC (No Connection)	Pin 1 PE Pin 2 Return Pin 3 Relay Out	Pin 1 Drain (NC) Pin 2 +VDNet Pin 3 -VDNet Pin 4 CAN_H	Pin 1 T1 Black Pin 2 T2 White Pin 3 T3 Red Pin 4 GND Green

FIGURE G

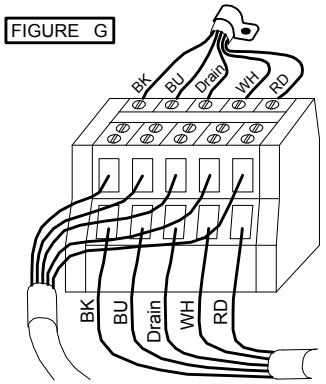

Dnet plc card w ferrite

FIGURE I

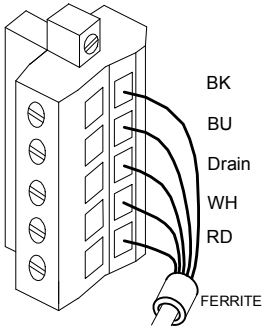

FIGURE F

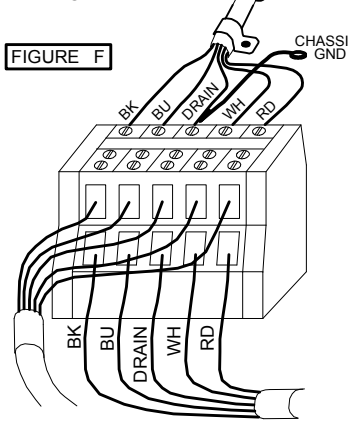

Dnet Festo valve bank M12 connections

FIGURE H

BUS OUT	BUS IN	PWR IN
SOCKET	PIN	SOCKET
Pin 1 Drain Pin 2 V+ Pin 3 V- Pin 4 CAN_H Pin 5 CAN_L	Pin 1 Drain Pin 2 V+ Pin 3 V- Pin 4 CAN_H	

RS232 to RS485 adapter

FIGURE W2

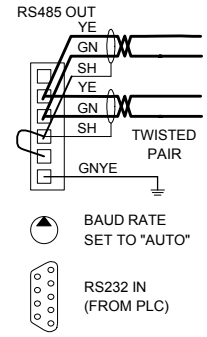

RS232 to RS485 adapter

FIGURE W

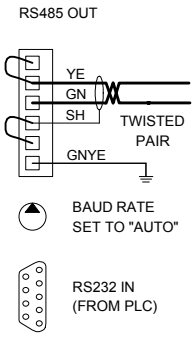

RS485 RJ45 adapter daisy chain

FIGURE X

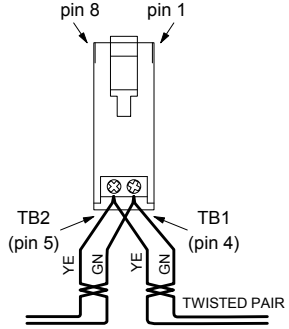

RS485 RJ45 adapter w termination

FIGURE Z

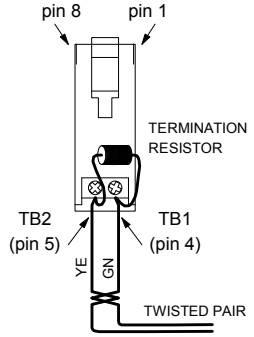

Drawing remarks

Tetra Pak

Designer ACH	Date 01/10/2009	Machine CAP30 Flex ReCap3 0200	
ECM No 417049	Denomination CIRCUIT DIAGRAM	Page Type FIGURE DRAWING	
Company Tetra Pak (Italy)	Document No. 3039165-0003	Doc. type ELD	Version AB	Page 059

This page intentionally left blank

5 Line Summary

TechPub_2614345_0107 - 0501_3050425_01.fm

Description

All connections inside the electrical cabinet are listed in this chapter.

TechPub_2614345_0107 - 0501_3050425_01.fm

This drawing must not without the consent of Tetra Pak be copied, transmitted or disclosed to any third party.

Line summary of 3039165-0003

Line	From	Page.Col.	Opt.	Area/Color
L1				
	01X007:1	001 .1		16mm² BK
	01V100:L1	002 .6		
L1				
	01X007:2	001 .1		6mm² BK
	01F200:1	003 .3		
L1				
	01X007:3	001 .1		10mm² BK
	01F104:1	006 .1		
L1				
	01X007:4	001 .1		10mm² BK
	01Q105:1	014 .3		
L1				
	01X007:5	001 .2		6mm² BK
	01F105:1	006 .3		
L1				
	01X007:6	001 .2		6mm² BK
	21F800:1	014 .1		
L2				
	01X007:1	001 .3		16mm² BK
	01V100:L2	002 .6		
L2				
	01X007:2	001 .3		6mm² BK
	01F200:3	003 .3		
L2				
	01X007:3	001 .3		10mm² BK
	01F104:3	006 .1		

Line	From	Page.Col.	Opt.	Area/Color
L2				
	01X007:4	001 .3		10mm² BK
	01Q105:3	014 .3		
L2				
	01X007:5	001 .3		6mm² BK
	01F600:1	005 .5		
L2				
	01X007:6	001 .3		6mm² BK
	01F300:1	003 .6		
L3				
	01X007:1	001 .4		16mm² BK
	01V100:L3	002 .6		
L3				
	01X007:2	001 .4		6mm² BK
	01F200:5	003 .3		
L3				
	01X007:3	001 .4		10mm² BK
	01F104:5	006 .1		
L3				
	01X007:4	001 .4		10mm² BK
	01Q105:5	014 .3		
L3				
	01X007:5	001 .4		6mm² BK
	01F702:1	004 .8		
L3				
	01X007:6	001 .5		6mm² BK
	01F700:1	004 .3		

Line	From	Page.Col.	Opt.	Area/Color
L4				
	01X008:1	001 .5		6mm² BK
	01Q105:2	**014 .3**		10mm² BK
	01F500:1	014 .6		
L4				
	01X008:2	001 .6		6mm² BK
	21F801:1	014 .8		
L4				
	01X008:3	001 .6		6mm² BK
	60F420:1	**015 .4**		
	60F610:1	015 .2		
L4				
	01X008:13	001 .6		6mm² BK
	21F400:1	016 .7		
L4				
	01X008:15	001 .6		6mm² BK
	60F120:1	**015 .9**		
	60F010:1	015 .6		
L5				
	01X008:4	001 .7		6mm² BK
	01Q105:4	**014 .3**		10mm² BK
	01F500:3	014 .6		
L5				
	01X008:5	001 .7		6mm² BK
	21F801:3	014 .8		

Drawing remarks

Tetra Pak

Designer ACH | Date 01/10/2009 | Machine CAP30 Flex ReCap3 0200

ECM No 417049 | Denomination LINE SUMMARY | Page Type LINE SUMMARY

Company Tetra Pak (Italy) | Document No. 3039165-0004 | Doc. type ELD | Version AB | Page 001

This drawing must not without the consent of Tetra Pak be copied, transmitted or disclosed to any third party.

Line summary of 3039165-0003

Line	From	Page.Col.	Opt.	Area/Color
L5				
	01X008:6	001 .7		6mm² BK
	60F420:3	**015 .4**		
	60F610:3	015 .2		
L5				
	01X008:16	001 .7		6mm² BK
	30F300:1	017 .2		
L5				
	01X008:17	001 .7		6mm² BK
	60F120:3	**015 .9**		
	60F010:3	015 .6		
L6				
	01X008:7	001 .8		6mm² BK
	01Q105:6	**014 .3**		10mm² BK
	01F500:5	014 .6		
L6				
	01X008:8	001 .8		6mm² BK
	60F420:5	**015 .4**		
	60F610:5	015 .2		
L6				
	01X008:9	001 .8		6mm² BK
	20F000:1	016 .2		
L6				
	01X008:19	001 .8		6mm² BK
	21F600:1	017 .7	OUT.P. CONV.	
L6				
	01X008:20	001 .8		6mm² BK
	60F120:5	**015 .9**		
	60F010:5	015 .6		
L10				
	01XL010:1	001 .1		4mm² BU
	01T200:-	003 .3		
L10				
	01XL010:2	001 .1		2.5mm² BU
	01XL010:16	001 .3		
L10				
	01XL010:3	001 .1		0.75mm² BU
	01K305:18	028 .8		
L10				
	01XL010:4	001 .1		0.75mm² BU
	01K305:036	030 .8		
L10				
	01XL010:5	001 .2		0.75mm² BU
	01K306:09	**031 .8**		
	01K306:19	032 .8		
L10				
	01XL010:6	001 .2		0.75mm² BU
	01K307:9	033 .1		
L10				
	01XL010:7	001 .2		0.75mm² BU
	01K307:19	034 .1		
L10				
	01XL010:8	001 .2		0.75mm² BU
	01K308:9	035 .1		
L10				
	01XL010:9	001 .2		0.75mm² BU
	01K308:19	036 .1		
L10				
	01XL010:10	001 .2		0.75mm² BU
	20Q000:A2	**026 .5**		
	21Q400:A2	**026 .5**		
	21Q600:A2	**026 .5**	OUT.P. CONV.	
	30Q300:A2	**026 .5**		
	60Q420:A1	022 .4		
L10				
	01XL010:11	001 .2		0.75mm² BU
	01Q500:A2	**033 .3**		
	21Q801:A2	**033 .3**		
	21Q800:A2	**033 .3**		
	60Q610:A2	**034 .3**		
	01Q600:A2	033 .3		
L10				
	01XL010:12	001 .2		0.75mm² BU
	01K105:8	**022 .8**		
	01Q104:A2	**035 .3**		
	01Q105:A2	026 .5		
L10				
	01XL010:13	001 .3		0.75mm² BU
	09F001:S24	**022 .2**		
	09F002:BU	022 .8		

Drawing remarks

Tetra Pak

Designer ACH	Date 01/10/2009	Machine CAP30 Flex ReCap3 0200	
ECM No 417049	Denomination LINE SUMMARY	Page Type LINE SUMMARY	
Company Tetra Pak (Italy)	Document No. 3039165-0004	Doc. type ELD	Version AB	Page 002

This drawing must not without the consent of Tetra Pak be copied, transmitted or disclosed to any third party.

Line summary of 3039165-0003

Line	From	Page.Col.	Opt.	Area/Color
L10				
	01XL010:14	001 .3		2.5mm² BU
	01XL010:60	001 .8		
L10				
	01XL010:15	001 .3		0.75mm² BU
	81T200:GND	021 .2		
	81T200:GND	021 .2		
L10				
	01XL010:17	001 .3		0.75mm² BU
	01K309:9	037 .1		
L10				
	01XL010:18	001 .3		0.75mm² BU
	01K309:19	038 .1		
L10				
	01XL010:19	001 .3		0.75mm² BU
	09F000:0V	022 .7		
L10				
	01XL010:20	001 .3		1.5mm² BU
	01T300:L2/N	018 .3		
L10				
	01XL010:21	001 .3		0.75mm² BU
	60Q120:A2	034 .3		
L10				
	01XL010:22	001 .4		0.75mm² BU
	01X006:152	053 .10		
L10				

Line	From	Page.Col.	Opt.	Area/Color
	01XL010:23	001 .4		0.75mm² BU
	01X006:112-	031 .1		
	01X006:113-	031 .1		
	01X006:134	025 .2		
	01X006:114-	031 .1		
	01X006:140	025 .8		
	01X006:115-	029 .2		
	01X006:150	039 .8		
	01X006:116-	029 .2		
	01X006:151	052 .10		
	01X006:122-	029 .2		
L10				
	01XL010:25	001 .4		0.75mm² BU
	01X006:154	055 .10		
L10				
	01XL010:28	001 .4		0.75mm² BU
	01X006:162	054 .10		
L10				
	01XL010:29	001 .4		0.75mm² BU
	01X006:172	056 .4		
L10				
	01XL010:30	001 .5		0.75mm² BU
	01X006:177	056 .4		
L10				
	01XL010:31	001 .5		0.75mm² BU
	01X006:179	056 .4		
L10				

Line	From	Page.Col.	Opt.	Area/Color
	01XL010:32	001 .5		0.75mm² BU
	01K700:1	033 .3		
	70K000:1	034 .3		
L10				
	01XL010:33	001 .5		0.75mm² BU
	01P500:1	034 .3		
L10				
	01XL010:34	001 .5		0.75mm² BU
	30T000:6	006 .8		
L10				
	01XL010:35	001 .5		0.75mm² BU
	60T110:6	007 .8		
L10				
	01XL010:36	001 .5		0.75mm² BU
	21T100:6	008 .8		
L10				
	01XL010:37	001 .5		0.75mm² BU
	21T200:6	009 .8		
L10				
	01XL010:38	001 .6		0.75mm² BU
	60T210:6	010 .8		
L10				
	01XL010:39	001 .6		0.75mm² BU
	60T310:6	011 .8		
L10				
	01XL010:40	001 .6		0.75mm² BU
	30T400:6	012 .8		

Drawing remarks

Tetra Pak

Designer ACH | Date 01/10/2009 | Machine CAP30 Flex ReCap3 0200

ECM No 417049 | Denomination LINE SUMMARY | Page Type LINE SUMMARY

Company Tetra Pak (Italy) | Document No. 3039165-0004 | Doc. type ELD | Version AB | Page 003

This drawing must not without the consent of Tetra Pak be copied, transmitted or disclosed to any third party.

Line summary of 3039165-0003

Line	From	Page.Col.	Opt.	Area/Color
L10				
	01XL010:41	001 .6		0.75mm² BU
	70T100:6	013 .8	POS.SYS.	
L10				
	01XL010:42	001 .6		0.75mm² BU
	20K002:1	034 .3		
L10				
	01XL010:43	001 .6		0.75mm² BU
	09F003:A1	022 .4		
L10				
	01XL010:44	001 .6		0.75mm² BU
	81K500:Vin-	018 .9	COM.UNIT	
L10				
	01XL010:45	001 .6		0.75mm² BU
	01X006:180	056 .1		
L10				
	01XL010:46	001 .7		0.75mm² BU
	01X006:200	037 .7		
L10				
	01XL010:47	001 .7		0.75mm² BU
	01X006:201	037 .7		
L10				
	01XL010:48	001 .7		0.75mm² BU
	01X006:214	038 .7		
L10				
	01XL010:49	001 .7		0.75mm² BU
	01X006:221	032 .1		

Line	From	Page.Col.	Opt.	Area/Color
L10				
	01XL010:50	001 .7		0.75mm² BU
	01X006:199	026 .2		
L10				
	01XL010:51	001 .7		0.75mm² BU
	09F003:S14	022 .4		
L10				
	01XL010:52	001 .7		0.75mm² BU
	01P501:1	034 .3		
L10				
	01XL010:53	001 .7		0.75mm² BU
	09F001:A2	022 .2		
L10				
	01XL010:55	001 .8		2.5mm² BU
	01XL010:56	001 .8		
L11				
	01XL011:1	001 .1		2.5mm² BU
	01F201:2	003 .3		
L11				
	01XL011:2	001 .1		0.75mm² BU
	01X600:4	005 .6		
L11				
	01XL011:3	001 .1		0.75mm² BU
	21K800:11	020 .4		
L11				
	01XL011:4	001 .1		0.75mm² BU
	01B600:13	027 .5		

Line	From	Page.Col.	Opt.	Area/Color
L11				
	01XL011:5	001 .2		0.75mm² BU
	20Q000:13	027 .4		
	30Q300:13	028 .6		
	60F010:13	028 .5		
	60F120:13	028 .5		
L11				
	01XL011:6	001 .2		0.75mm² BU
	01F500:13	028 .6		
	21F800:13	028 .6		
	21F801:13	028 .6		
	01F104:13	028 .6		
	01Q104:13	027 .6		
L11				
	01XL011:7	001 .2		0.75mm² BU
	70K001:A2+	056 .2		
	70K000:3	056 .2		
L11				
	01XL011:8	001 .2		0.75mm² BU
	70K001:11+	056 .2		
L11				
	01XL011:9	001 .2		0.75mm² BU
	01X006:155	039 .8		
L11				
	01XL011:10	001 .2		0.75mm² BU
	01X006:156	052 .10		

Drawing remarks

Tetra Pak

Designer ACH	Date 01/10/2009	Machine CAP30 Flex ReCap3 0200	
ECM No 417049	Denomination LINE SUMMARY	Page Type LINE SUMMARY	
Company Tetra Pak (Italy)	Document No. 3039165-0004	Doc. type ELD	Version AB	Page 004

This drawing must not without the consent of Tetra Pak
be copied, transmitted or disclosed to any third party.

Line summary of 3039165-0003

Line	From	Page.Col.	Opt.	Area/Color
L11				
	01XL011:11	001 .2		0.75mm² BU
	01X006:112+	031 .1		
	01X006:113+	031 .1		
	01X006:193	026 .2		
	01X006:114+	031 .1		
	01X006:220	032 .1		
	01X006:115+	029 .2		
	01X006:181	056 .1		
	01X006:116+	029 .2		
	01X006:170	056 .4		
	01X006:122+	029 .2		
L11				
	01XL011:12	001 .2		0.75mm² BU
	01K100:4	002 .6		
L11				
	01XL011:13	001 .3		0.75mm² BU
	01X006:157	053 .10		
L11				
	01XL011:14	001 .3		0.75mm² BU
	01X006:165	055 .10		
L11				
	01XL011:15	001 .3		0.75mm² BU
	01X006:166	054 .10		
L11				
	01XL011:21	001 .3		2.5mm² BU
	01XL011:28	001 .4		

Line	From	Page.Col.	Opt.	Area/Color
L12				
	01XL012:1	001 .5		2.5mm² BU
	01F202:2	003 .4		
L12				
	01XL012:2	001 .5		0.75mm² BU
	81T200:US1	021 .2		
	81T200:US2	021 .2		
	09F000:24V	022 .7		
L12				
	01XL012:3	001 .5		0.75mm² BU
	09F000:Q0	022 .7		
	09F000:Q1	022 .7		
L12				
	01XL012:4	001 .6		0.75mm² BU
	09F001:13	022 .2		
L12				
	01XL012:5	001 .6		0.75mm² BU
	09F003:13	022 .4		
L12				
	01XL012:6	001 .6		0.75mm² BU
	01X006:5	023 .2		
L12				
	01XL012:7	001 .6		0.75mm² BU
	01X006:126	024 .3		
L12				
	01XL012:8	001 .6		0.75mm² BU
	01X006:132	025 .1		

Line	From	Page.Col.	Opt.	Area/Color
L12				
	01XL012:9	001 .6		0.75mm² BU
	01X006:138	025 .8		
L12				
	01XL012:10	001 .6		0.75mm² BU
	01X006:160	039 .8		
L12				
	01XL012:11	001 .6		0.75mm² BU
	01K105:4	026 .3		
L12				
	01XL012:12	001 .7		0.75mm² BU
	01K307:10	033 .1		
L12				
	01XL012:13	001 .7		0.75mm² BU
	81K500:Vin+	018 .9	COM.UNIT	
L12				
	01XL012:14	001 .7		0.75mm² BU
	01X006:198	026 .2		
L12				
	01XL012:15	001 .7		2.5mm² BU
	01XL012:20	001 .8		
L12				
	01XL012:16	001 .7		0.75mm² BU
	01X006:230	041 .2		
L12				
	01XL012:17	001 .7		0.75mm² BU
	09F001:23	022 .2		

Drawing remarks

Tetra Pak

Designer ACH	Date 01/10/2009	Machine CAP30 Flex ReCap3 0200	
ECM No 417049	Denomination LINE SUMMARY	Page Type LINE SUMMARY	
Company Tetra Pak (Italy)	Document No. 3039165-0004	Doc. type ELD	Version AB	Page 005

This drawing must not without the consent of Tetra Pak be copied, transmitted or disclosed to any third party.

Line summary of 3039165-0003

Line	From	Page.Col.	Opt.	Area/Color
L12				
	01XL012:18	001 .7		0.75mm² BU
	09F001:33	022 .2		
L12				
	01XL012:19	001 .7		0.75mm² BU
	09F003:23	022 .4		
L22				
	01XL022:1	001 .9		0.75mm² BU
	09F000:Q1	022 .7		
L22				
	01XL022:2	001 .9		0.75mm² BU
	01K307:20	034 .1		
L22				
	01XL022:3	001 .9		0.75mm² BU
	01K308:20	036 .1		
L22				
	01XL022:4	001 .9		0.75mm² BU
	01X006:163	039 .8		
L22				
	01XL022:5	001 .9		0.75mm² BU
	21Q400:A1	026 .5		
	21Q600:A1	026 .5	OUT.P. CONV.	
L22				
	01XL022:9	001 .10		2.5mm² BU
	01XL022:12	001 .10		
L32				
	01XL032:1	001 .1		0.75mm² BU
	09F000:Q0	022 .7		
L32				
	01XL032:2	001 .1		0.75mm² BU
	09F001:S14	022 .2		
L32				
	01XL032:3	001 .1		0.75mm² BU
	01X006:164	039 .8		
L32				
	01XL032:4	001 .1		0.75mm² BU
	01K305:19	029 .7		
L32				
	01XL032:5	001 .2		0.75mm² BU
	09F001:A1	022 .2		
L32				
	01XL032:9	001 .2		2.5mm² BU
	01XL032:12	001 .2		
L42				
	01XL042:1	001 .3		0.75mm² BU
	09F001:14	022 .2		
L42				
	01XL042:2	001 .3		0.75mm² BU
	01K308:10	035 .1		
L42				
	01XL042:3	001 .4		0.75mm² BU
	01K309:10	037 .1		
L42				
	01XL042:4	001 .4		0.75mm² BU
	01K309:20	038 .1		
L42				
	01XL042:5	001 .4		0.75mm² BU
	20Q000:A1	026 .5		
L42				
	01XL042:6	001 .4		0.75mm² BU
	30Q300:A1	026 .5		
L42				
	01XL042:9	001 .4		2.5mm² BU
	01XL042:12	001 .5		
L43				
	01XL043:1	001 .6		0.75mm² BU
	09F001:24	022 .2		
L43				
	01XL043:2	001 .6		0.75mm² BU
	30T000:7	006 .8		
L43				
	01XL043:3	001 .6		0.75mm² BU
	60T110:7	007 .8		
L43				
	01XL043:4	001 .6		0.75mm² BU
	21T100:7	008 .8		
L43				
	01XL043:5	001 .6		0.75mm² BU
	21T200:7	009 .8		

Drawing remarks

Tetra Pak

Designer ACH	Date 01/10/2009	Machine CAP30 Flex ReCap3 0200	
ECM No 417049	Denomination LINE SUMMARY	Page Type LINE SUMMARY	
Company Tetra Pak (Italy)	Document No. 3039165-0004	Doc. type ELD	Version AB	Page 006

This drawing must not without the consent of Tetra Pak be copied, transmitted or disclosed to any third party.

Line summary of 3039165-0003

Line	From	Page.Col.	Opt.	Area/Color
L43				
	01XL043:6	001 .6		0.75mm² BU
	60T210:7	010 .8		
L43				
	01XL043:7	001 .6		0.75mm² BU
	60T310:7	011 .8		
L43				
	01XL043:8	001 .6		0.75mm² BU
	30T400:7	012 .8		
L43				
	01XL043:9	001 .7		0.75mm² BU
	70T100:7	013 .8	POS.SYS.	
L43				
	01XL043:12	001 .7		2.5mm² BU
	01XL043:16	001 .7		
L44				
	01XL044:1	001 .8		0.75mm² BU
	09F001:34	022 .2		
L44				
	01XL044:2	001 .8		0.75mm² BU
	30T000:5	006 .8		
L44				
	01XL044:3	001 .8		0.75mm² BU
	60T110:5	007 .8		
L44				
	01XL044:4	001 .9		0.75mm² BU
	21T100:5	008 .8		

Line	From	Page.Col.	Opt.	Area/Color
L44				
	01XL044:5	001 .9		0.75mm² BU
	21T200:5	009 .8		
L44				
	01XL044:6	001 .9		0.75mm² BU
	60T210:5	010 .8		
L44				
	01XL044:7	001 .9		0.75mm² BU
	60T310:5	011 .8		
L44				
	01XL044:8	001 .9		0.75mm² BU
	30T400:5	012 .8		
L44				
	01XL044:9	001 .9		0.75mm² BU
	70T100:5	013 .8	POS.SYS.	
L44				
	01XL044:12	001 .10		2.5mm² BU
	01XL044:16	001 .10		
L51				
	01X008:10	001 .9		2.5mm² BK
	01F300:2	003 .6		
L51				
	01X008:11	001 .9		1.5mm² BK
	81T400:L	019 .9		
L51				
	01X008:12	001 .9		1.5mm² BK
	21K800:A1	020 .4		

Line	From	Page.Col.	Opt.	Area/Color
L51				
	01X008:22	001 .9		1.5mm² BK
	21K801:A1	020 .7		
L51				
	01X008:23	001 .10		1.5mm² BK
	01T400:L	021 .7		
L72				
	09F003:14	022 .4		0.75mm² BU
	01X006:191	026 .2		
L73				
	09F003:24	022 .4		0.75mm² BU
	01X006:192	026 .2		

Drawing remarks

Tetra Pak

Designer ACH	Date 01/10/2009	Machine CAP30 Flex ReCap3 0200	
ECM No 417049	Denomination LINE SUMMARY	Page Type LINE SUMMARY	
Company Tetra Pak (Italy)	Document No. 3039165-0004	Doc. type ELD	Version AB	Page 007

This page intentionally left blank

6 Cabinet Terminal Summary

TechPub_2614345_0107 - 0601_3050426_01.fm

Description

All terminals inside the electrical cabinet are listed in this chapter. The field *Opt.* specifies if the terminal is reserved for an option.

TechPub_2614345_0107 - 0601_3050426_01.fm

This drawing must not without the consent of Tetra Pak be copied, transmitted or disclosed to any third party.

Cabinet terminal summary of 3039165-0003

Terminal	Page .Col.	Opt.
01X002:1	002 .9	
01X002:2	006 .2	
01X002:3		
01X002:4	014 .6	
01X002:5	014 .10	
01X002:6	005 .5	
01X002:7	014 .2	
01X002:8		
01X002:9	016 .1	
01X002:10	016 .4	
01X002:11	016 .8	
01X002:12	017 .8	OUT.P. CONV.
01X002:13	015 .2	
01X002:14	015 .4	
01X002:15	018 .4	
01X002:16	017 .3	
01X002:17	019 .10	
01X002:18	006 .3	
01X002:19	021 .1	
01X002:20	019 .9	
01X002:21		
01X002:22		
01X002:23	004 .8	
01X002:24	021 .8	
01X002:25		
01X002:26	002 .8	
01X002:27	002 .9	
01X002:28	002 .10	

Terminal	Page .Col.	Opt.
01X002:29		
01X002:30		
01X002:31	003 .3	
01X002:32	003 .4	
01X002:33	015 .6	
01X002:34	017 .1	
01X002:35	017 .6	OUT.P.CONV.
01X002:36	024 .4	
01X002:37		
01X002:38	004 .9	
01X002:39	015 .9	
01X002:40	004 .5	
01X002:41	018 .8	
01X002:42	021 .9	
01X002:43	025 .2	
01X002:44	025 .8	
01X002:45	016 .6	
01X002:46		
01X002:47		
01X002:48		
01X002:49		
01X002:50		
01X003:1	002 .9	
01X003:2	004 .4	
01X003:3	005 .5	
01X003:4	006 .3	
01X003:5	014 .6	
01X003:6	014 .9	

Terminal	Page .Col.	Opt.
01X003:7	016 .3	
01X003:8	016 .7	
01X003:9	017 .7	OUT.P. CONV.
01X003:10	017 .2	
01X003:11	021 .8	
01X003:12		
01X003:13	014 .2	
01X003:14	004 .9	
01X003:15		
01X003:16	020 .3	
01X003:17	004 .5	
01X003:18	004 .6	
01X003:19	020 .6	
01X003:21	019 .9	
01X004:1	004 .5	
01X004:2	004 .5	
01X004:3	004 .6	
01X004:4	004 .6	
01X004:5	004 .7	
01X004:6	004 .7	
01X004:10	014 .1	
01X004:11	014 .2	
01X004:13	014 .2	
01X004:14	014 .6	
01X004:15	014 .6	
01X004:16	014 .6	
01X004:17	014 .6	
01X004:18	014 .6	

Terminal	Page .Col.	Opt.
01X004:19	014 .8	
01X004:20	014 .9	
01X004:21	014 .9	
01X004:22	014 .10	
01X004:23	015 .2	
01X004:24	015 .2	
01X004:25	015 .2	
01X004:26	015 .2	
01X004:27	015 .4	
01X004:28	015 .4	
01X004:29	015 .4	
01X004:30	015 .4	
01X004:31	015 .6	
01X004:32	015 .6	
01X004:33	015 .6	
01X004:34	015 .6	
01X004:35	015 .9	
01X004:36	015 .9	
01X004:37	015 .9	
01X004:38	015 .9	
01X006:1	021 .8	
01X006:2	021 .8	
01X006:5	023 .2	
01X006:6	023 .2	
01X006:7	023 .3	
01X006:8	023 .3	
01X006:9	023 .4	
01X006:10	023 .4	

Drawing remarks

Tetra Pak

Designer ACH	Date 01/10/2009	Machine CAP30 Flex ReCap3 0200	
ECM No 417049	Denomination CABINET TERMINAL SUMMARY	Page Type CABINET TERMINAL SUMMARY	
Company Tetra Pak (Italy)	Document No. 3039165-0005	Doc. type ELD	Version AB	Page 001

This drawing must not without the consent of Tetra Pak be copied, transmitted or disclosed to any third party.

Cabinet terminal summary of 3039165-0003

Terminal	Page .Col.	Opt.
01X006:11	023 .6	
01X006:12	023 .6	
01X006:13	023 .7	
01X006:14	023 .7	
01X006:15	023 .8	
01X006:16	023 .8	
01X006:17	023 .9	
01X006:18	023 .9	
01X006:19	023 .10	
01X006:20	023 .10	
01X006:112	031 .7	
01X006:112+	031 .1	
01X006:112-	031 .1	
01X006:113	031 .7	
01X006:113+	031 .1	
01X006:113-	031 .1	
01X006:114	031 .7	
01X006:114+	031 .1	
01X006:114-	031 .1	
01X006:115	029 .7	
01X006:115+	029 .2	
01X006:115-	029 .2	
01X006:116	029 .7	
01X006:116+	029 .2	
01X006:116-	029 .2	
01X006:117	029 .7	
01X006:118	029 .7	
01X006:119	029 .7	

Terminal	Page .Col.	Opt.
01X006:120	029 .7	
01X006:121	029 .7	
01X006:122	030 .7	
01X006:122+	029 .2	
01X006:122-	029 .2	
01X006:123	030 .7	
01X006:124	030 .7	
01X006:125	030 .7	
01X006:126	024 .3	
01X006:127	024 .4	
01X006:128	024 .4	
01X006:129	024 .4	
01X006:130	024 .5	
01X006:131	024 .4	
01X006:132	025 .1	
01X006:133	025 .1	
01X006:134	025 .2	
01X006:135	025 .2	
01X006:136	025 .3	
01X006:137	025 .2	
01X006:138	025 .8	
01X006:139	025 .8	
01X006:140	025 .8	
01X006:141	025 .8	
01X006:142	025 .8	
01X006:143	025 .8	
01X006:144	034 .2	
01X006:145	034 .2	

Terminal	Page .Col.	Opt.
01X006:146	035 .2	
01X006:147	035 .2	
01X006:148	035 .2	
01X006:150	039 .8	
01X006:151	052 .10	
01X006:152	053 .10	
01X006:154	055 .10	
01X006:155	039 .8	
01X006:156	052 .10	
01X006:157	053 .10	
01X006:158	032 .7	
01X006:159	032 .7	
01X006:160	039 .8	
01X006:161	032 .7	
01X006:162	054 .10	
01X006:163	039 .8	
01X006:164	039 .8	
01X006:165	055 .10	
01X006:166	054 .10	
01X006:167	036 .3	
01X006:168	036 .3	
01X006:169	036 .3	
01X006:170	056 .4	
01X006:171	056 .4	
01X006:172	056 .4	
01X006:173	056 .4	
01X006:174	056 .4	
01X006:175	056 .4	

Terminal	Page .Col.	Opt.
01X006:176	056 .4	
01X006:177	056 .4	
01X006:178	056 .4	
01X006:179	056 .4	
01X006:180	056 .1	
01X006:181	056 .1	
01X006:182	056 .3	
01X006:191	026 .2	
01X006:192	026 .2	
01X006:193	026 .2	
01X006:194	026 .2	
01X006:195		
01X006:196		
01X006:197		
01X006:198	026 .2	
01X006:199	026 .2	
01X006:200	037 .7	
01X006:201	037 .7	
01X006:202	037 .3	
01X006:203	037 .3	
01X006:204	037 .3	
01X006:205	037 .3	
01X006:206	037 .3	
01X006:207	037 .3	
01X006:208	038 .3	
01X006:209	038 .3	
01X006:210	038 .3	
01X006:211	038 .3	

Drawing remarks

Tetra Pak

Designer ACH | Date 01/10/2009 | Machine CAP30 Flex ReCap3 0200

ECM No 417049 | Denomination CABINET TERMINAL SUMMARY | Page Type CABINET TERMINAL SUMMARY

Company Tetra Pak (Italy) | Document No. 3039165-0005 | Doc. type ELD | Version AB | Page 002

This drawing must not without the consent of Tetra Pak be copied, transmitted or disclosed to any third party.

Cabinet terminal summary of 3039165-0003

Terminal	Page .Col.	Opt.
01X006:212	037 .3	
01X006:213	037 .3	
01X006:214	038 .7	
01X006:215	038 .7	
01X006:216	038 .3	
01X006:217	038 .3	
01X006:218	038 .3	
01X006:219	038 .3	
01X006:220	032 .1	
01X006:221	032 .1	
01X006:222		
01X006:223		
01X006:224		
01X006:225		
01X006:226		
01X006:227		
01X006:228		
01X006:229		
01X006:230	041 .2	
01X006:231	041 .2	
01X006:⏚	023 .7	
01X006:⏚	039 .8	
01X006:⏚	021 .9	
01X006:⏚		
01X101: ⏚	002 .3	
01X101:PE	002 .3	
20X001:1	016 .5	
21X401:1	016 .10	

Terminal	Page .Col.	Opt.
21X601: 1	017 .10	OUT. P.CONV.
30X301:1	017 .5	
81X401:BK	019 .7	
81X401:BU	019 .7	
81X401:RD	019 .7	
81X401:SH	019 .7	
81X401:WH	019 .7	
81X402:BK	019 .5	
81X402:BU	019 .5	
81X402:RD	019 .5	
81X402:SH	019 .5	
81X402:WH	019 .5	
81X403:BK	019 .2	
81X403:BU	019 .2	
81X403:RD	019 .2	
81X403:SH	019 .2	
81X403:WH	019 .2	
81X404:BK	019 .1	
81X404:BU	019 .1	
81X404:RD	019 .1	
81X404:SH	019 .1	
81X404:WH	019 .1	

Terminal	Page .Col.	Opt.

Terminal	Page .Col.	Opt.

Drawing remarks

Tetra Pak

Designer ACH	Date 01/10/2009	Machine CAP30 Flex ReCap3 0200	
ECM No 417049	Denomination CABINET TERMINAL SUMMARY	Page Type CABINET TERMINAL SUMMARY	
Company Tetra Pak (Italy)	Document No. 3039165-0005	Doc. type ELD	Version AB	Page 003

This page intentionally left blank

7 Terminal Strip Overview

TechPub_2614345_0107 - 0701_3050427_01.fm

Description

All terminals used in the equipment except for those in the electrical cabinet are listed in this chapter.

TechPub_2614345_0107 - 0701_3050427_01.fm

This drawing must not without the consent of Tetra Pak be copied, transmitted or disclosed to any third party.

1 2 3 4 5 6 7 8 9 10

Terminal strip of 3039165-0003

01X201

From	Cable	Internal Jumper	Terminal	External Jumper	Cable	To	Page.Col.	Option	Function text
			1		81W500 :1	81K500:RJ12	018 .3		COMMUNICATION UNIT

Drawing remarks

Tetra Pak

Designer ACH	Date 01/10/2009	Machine CAP30 Flex ReCap3 0200		
ECM No 417049	Denomination TERMINAL STRIP OVERVIEW	Page Type TERMINAL STRIP OVERVIEW		
Company Tetra Pak (Italy)	Document No. 3039165-0006	Doc. type ELD	Version AB	Page 001

This drawing must not without the consent of Tetra Pak
be copied, transmitted or disclosed to any third party.

1 2 3 4 5 6 7 8 9 10

Terminal strip of 3039165-0003

01X400

From	Cable	Internal Jumper	Terminal	External Jumper	Cable	To	Page.Col.	Option	Function text
01X006:10	01W401 :1		1			09F102:51	023 .4		CONTROL PANEL EMERGENCY STOP
01X006:9	01W401 :2		2			09F102:11	023 .4		CONTROL PANEL EMERGENCY STOP
01X006:11	01W401 :3		3			09F102:52	023 .5		CONTROL PANEL EMERGENCY STOP
01X006:12	01W401 :4		4			09F102:12	023 .5		CONTROL PANEL EMERGENCY STOP
			5			01K335:4	051 .5		READY SIGNAL (RS) FOR LINE
			6			01K335:3	051 .5		READY SIGNAL (RS) FOR LINE
			7			01K336:4	051 .5		PACKAGE COMING (PC) FOR LINE
			8			01K336:3	051 .5		PACKAGE COMING (PC) FOR LINE
01X006:150	01W401 :5		100			01K320:4	039 .8		REMOTE I/O ADAPTER O.P. BOX
			101		21W412 :BU	21X412:3	042 .2		LONG PACKAGE QUEUE
			102		21W414 :BU	21X414:3	042 .2		SHORT PACKAGE QUEUE
			103		21W416 :BU	21X416:3	042 .2		VERIFIES PACKAGE STANDING
			104		21W418 :BU	21X418:3	042 .2		TOO LONG PACKAGE QUEUE
			105			01K326:C	045 .6		
			106			01K330:C	049 .6		
01X006:230	01W401 :10		108			01S404:23	041 .3		RESET SAFETY RELAY
01X006:231	01W401 :11		109			01S404:24	041 .3		RESET SAFETY RELAY
01X006:155	01W401 :6		110			01K320:6	039 .8		REMOTE I/O ADAPTER O.P. BOX
			111		21W412 :BN	21X412:1	042 .2		LONG PACKAGE QUEUE
			112		21W414 :BN	21X414:1	042 .2		SHORT PACKAGE QUEUE
			113		21W416 :BN	21X416:1	042 .2		VERIFIES PACKAGE STANDING
			114		21W418 :BN	21X418:1	042 .2		TOO LONG PACKAGE QUEUE
			115			01S400:13	040 .3		STEP UP
01X006:160	01W401 :7		116			01K326:V	045 .6		
01X006:163	01W401 :8		118				039 .8		
01K330:V			119				039 .8		
01X006:164	01W401 :9								
			⏚			01K320:2	039 .6		REMOTE I/O ADAPTER O.P. BOX
			⏚			01K326:CHAS GND	045 .6		
			⏚		01W510 :GNYE	01P510:E	047 .3		

Drawing remarks

Tetra Pak

Designer ACH	Date 01/10/2009	Machine CAP30 Flex ReCap3 0200	
ECM No 417049	Denomination TERMINAL STRIP OVERVIEW	Page Type TERMINAL STRIP OVERVIEW	
Company Tetra Pak (Italy)	Document No. 3039165-0006	Doc. type ELD	Version AB	Page 002

This drawing must not without the consent of Tetra Pak
be copied, transmitted or disclosed to any third party.

1 | 2 | 3 | 4 | 5 | 6 | 7 | 8 | 9 | 10

Terminal strip of 3039165-0003

01X400

From	Cable	Internal Jumper	Terminal	External Jumper	Cable	To	Page.Col.	Option	Function text
			⏚			01K330:CHAS GND	049 .6		
01X006:⏚	01W401 :GNYE		⏚				039 .8		
			⏚				014 .8		

Drawing remarks

Tetra Pak

Designer ACH	Date 01/10/2009	Machine CAP30 Flex ReCap3 0200	
ECM No 417049	Denomination TERMINAL STRIP OVERVIEW	Page Type TERMINAL STRIP OVERVIEW	
Company Tetra Pak (Italy)	Document No. 3039165-0006	Doc. type ELD	Version AB	Page 003

This drawing must not without the consent of Tetra Pak
be copied, transmitted or disclosed to any third party.

1 2 3 4 5 6 7 8 9 10

Terminal strip of 3039165-0003

01X600

From	Cable	Internal Jumper	Terminal	External Jumper	Cable	To	Page.Col.	Option	Function text
01Q600:2			1			01E600:L1	005 .5		COOLING UNIT
01X003:3			2			01E600:L2/N	005 .5		COOLING UNIT
01K305:IN-5			3			01E600:3	005 .6		COOLING UNIT
01K100:4			4			01E600:4	005 .6		COOLING UNIT
21K800:11									
01X002:6						01E600:⏚	005 .5		COOLING UNIT

Drawing remarks

Tetra Pak

Designer ACH	Date 01/10/2009	Machine CAP30 Flex ReCap3 0200	
ECM No 417049	Denomination TERMINAL STRIP OVERVIEW	Page Type TERMINAL STRIP OVERVIEW	
Company Tetra Pak (Italy)	Document No. 3039165-0006	Doc. type ELD	Version AB	Page 004

This drawing must not without the consent of Tetra Pak
be copied, transmitted or disclosed to any third party.

1 2 3 4 5 6 7 8 9 10

Terminal strip of 3039165-0003

09X201

From	Cable	Internal Jumper	Terminal	External Jumper	Cable	To	Page.Col.	Option	Function text
			1.1		09W210 :BN	09F210:BN	024 .3		DOOR FRONT 1
			1.2		09W210 :WH	09F210:WH	024 .4		DOOR FRONT 1
			1.3		09W210 :BU	09F210:BU	024 .4		DOOR FRONT 1
			1.4		09W210 :BK	09F210:BK	024 .4		DOOR FRONT 1
			1.5		09W210 :GY	09F210:GY	024 .4		DOOR FRONT 1
			2.1		09W212 :BN	09F212:BN	024 .4		DOOR FRONT 1
			2.2		09W212 :WH	09F212:WH	024 .4		DOOR FRONT 1
			2.3		09W212 :BU	09F212:BU	024 .5		DOOR FRONT 1
			2.4		09W212 :BK	09F212:BK	024 .5		DOOR FRONT 1
			2.5		09W212 :GY	09F212:GY	024 .5		DOOR FRONT 1
			3.1		09W214 :BN	09F214:BN	024 .5		DOOR FRONT 2
			3.2		09W214 :WH	09F214:WH	024 .5		DOOR FRONT 2
			3.3		09W214 :BU	09F214:BU	024 .5		DOOR FRONT 2
			3.4		09W214 :BK	09F214:BK	024 .6		DOOR FRONT 2
			3.5		09W214 :GY	09F214:GY	024 .6		DOOR FRONT 2
			4.1		09W216 :BN	09F216:BN	024 .6		DOOR FRONT 2
			4.2		09W216 :WH	09F216:WH	024 .6		DOOR FRONT 2
			4.3		09W216 :BU	09F216:BU	024 .6		DOOR FRONT 2
			4.4		09W216 :BK	09F216:BK	024 .6		DOOR FRONT 2
			4.5		09W216 :GY	09F216:GY	024 .7		DOOR FRONT 2

Drawing remarks

Tetra Pak

Designer ACH	Date 01/10/2009	Machine CAP30 Flex ReCap3 0200	
ECM No 417049	Denomination TERMINAL STRIP OVERVIEW	Page Type TERMINAL STRIP OVERVIEW	
Company Tetra Pak (Italy)	Document No. 3039165-0006	Doc. type ELD	Version AB	Page 005

This drawing must not without the consent of Tetra Pak
be copied, transmitted or disclosed to any third party.

1 2 3 4 5 6 7 8 9 10

Terminal strip of 3039165-0003

09X202

From	Cable	Internal Jumper	Terminal	External Jumper	Cable	To	Page.Col.	Option	Function text
			1.1		09W230 :BN	09F230:BN	025 .1		DOOR REAR 1
			1.2		09W230 :WH	09F230:WH	025 .1		DOOR REAR 1
			1.3		09W230 :BU	09F230:BU	025 .2		DOOR REAR 1
			1.4		09W230 :BK	09F230:BK	025 .2		DOOR REAR 1
			1.5		09W230 :GY	09F230:GY	025 .2		DOOR REAR 1
			2.1		09W232 :BN	09F232:BN	025 .2		DOOR REAR 2
			2.2		09W232 :WH	09F232:WH	025 .2		DOOR REAR 2
			2.3		09W232 :BU	09F232:BU	025 .2		DOOR REAR 2
			2.4		09W232 :BK	09F232:BK	025 .3		DOOR REAR 2
			2.5		09W232 :GY	09F232:GY	025 .3		DOOR REAR 2
			3.1			09F234:+24V	025 .3		TINA 2 PLUG
			3.2			09F234:IN	025 .3		TINA 2 PLUG
			3.3			09F234:0V	025 .3		TINA 2 PLUG
			3.4			09F234:OUT	025 .3		TINA 2 PLUG
			3.5			09F234:INFO	025 .4		TINA 2 PLUG
			4.1			09F236:+24V	025 .4		TINA 2 PLUG
			4.2			09F236:IN	025 .4		TINA 2 PLUG
			4.3			09F236:0V	025 .4		TINA 2 PLUG
			4.4			09F236:OUT	025 .4		TINA 2 PLUG
			4.5			09F236:INFO	025 .4		TINA 2 PLUG

Drawing remarks

Tetra Pak

Designer ACH	Date 01/10/2009	Machine CAP30 Flex ReCap3 0200	
ECM No 417049	Denomination TERMINAL STRIP OVERVIEW	Page Type TERMINAL STRIP OVERVIEW	
Company Tetra Pak (Italy)	Document No. 3039165-0006	Doc. type ELD	Version AB	Page 006

This drawing must not without the consent of Tetra Pak
be copied, transmitted or disclosed to any third party.

1 2 3 4 5 6 7 8 9 10

Terminal strip of 3039165-0003

09X241

From	Cable	Internal Jumper	Terminal	External Jumper	Cable	To	Page.Col.	Option	Function text
01K329:OUT-0	09W241 :BN		1			09K241:1	048 .4		LOCKER DOOR FRONT 1
01K329:C	09W241 :BU		2			09K241:2	048 .5		LOCKER DOOR FRONT 1

Drawing remarks

Tetra Pak

Designer ACH	Date 01/10/2009	Machine CAP30 Flex ReCap3 0200	
ECM No 417049	Denomination TERMINAL STRIP OVERVIEW	Page Type TERMINAL STRIP OVERVIEW	
Company Tetra Pak (Italy)	Document No. 3039165-0006	Doc. type ELD	Version AB	Page 007

This drawing must not without the consent of Tetra Pak
be copied, transmitted or disclosed to any third party.

1 2 3 4 5 6 7 8 9 10

Terminal strip of 3039165-0003

09X242

From	Cable	Internal Jumper	Terminal	External Jumper	Cable	To	Page.Col.	Option	Function text
01K329:OUT-1	09W242 :BN		1			09K242:1	048 .4		LOCKER DOOR FRONT 2
01K329:C	09W242 :BU		2			09K242:2	048 .5		LOCKER DOOR FRONT 2

Drawing remarks

Tetra Pak

Designer ACH	Date 01/10/2009	Machine CAP30 Flex ReCap3 0200	
ECM No 417049	Denomination TERMINAL STRIP OVERVIEW	Page Type TERMINAL STRIP OVERVIEW	
Company Tetra Pak (Italy)	Document No. 3039165-0006	Doc. type ELD	Version AB	Page 008

This drawing must not without the consent of Tetra Pak be copied, transmitted or disclosed to any third party.

1 2 3 4 5 6 7 8 9 10

Terminal strip of 3039165-0003

20X030

From	Cable	Internal Jumper	Terminal	External Jumper	Cable	To	Page.Col.	Option	Function text
01X006:115+	20W030 :BN		1		20W003 :BN	20B003:	029 .3		PACKAGE PRESENCEON BELT BRAKE
					20W002 :BN	20B002:			PACKAGE PRESENCEON BELT BRAKE
01X006:115-	20W030 :BU		3		20W003 :BU	20B003:	029 .3		PACKAGE PRESENCEON BELT BRAKE
					20W002 :BU	20B002:			PACKAGE PRESENCEON BELT BRAKE
01X006:115	20W030 :BK		4		20W003 :BK	20B003:	029 .6		PACKAGE PRESENCEON BELT BRAKE

Drawing remarks

Tetra Pak

Designer ACH	Date 01/10/2009	Machine CAP30 Flex ReCap3 0200		
ECM No 417049	Denomination TERMINAL STRIP OVERVIEW	Page Type TERMINAL STRIP OVERVIEW		
Company Tetra Pak (Italy)	Document No. 3039165-0006	Doc. type ELD	Version AB	Page 009

RELEASED

This drawing must not without the consent of Tetra Pak be copied, transmitted or disclosed to any third party.

Terminal strip of 3039165-0003

21X320

From	Cable	Internal Jumper	Terminal	External Jumper	Cable	To	Page.Col.	Option	Function text
01X006:112+	21W324 :BN		1.1		21W300 :BN	21B300:	031 .2		CAP DETECTION ON PACKAGE
01X006:112-	21W324 :BU		1.3		21W300 :BU	21B300:	031 .2		CAP DETECTION ON PACKAGE
01X006:112	21W324 :WH		1.4		21W300 :BK	21B300:	031 .6		CAP DETECTION ON PACKAGE
			2.1		21W302 :BN	21B302:	031 .2		PACKAGE DETECTION
					21W303 :BN	21B303:			PACKAGE DETECTION
			2.3		21W302 :BU	21B302:	031 .2		PACKAGE DETECTION
					21W303 :BU	21B303:			PACKAGE DETECTION
01X006:113	21W324 :GN		2.4		21W302 :BK	21B302:	031 .6		PACKAGE DETECTION
			3.1		21W304 :BN	21B304:	031 .2		OBJECT DETECTIONON PACKAGE CONVEYOR
					21W305 :BN	21B305:			OBJECT DETECTIONON PACKAGE CONVEYOR
			3.3		21W304 :BU	21B304:	031 .2		OBJECT DETECTIONON PACKAGE CONVEYOR
					21W305 :BU	21B305:			OBJECT DETECTIONON PACKAGE CONVEYOR
01X006:114	21W324 :YE		3.4		21W304 :BK	21B304:	031 .6		OBJECT DETECTIONON PACKAGE CONVEYOR
01X006:167	21W324 :WH/YE		5.2		21W310 :BN	21K310:1	036 .4		WASTE PACKAGE EJECTION ON
			5.3		21W310 :BU	21K310:2	036 .7		WASTE PACKAGE EJECTION ON
01X006:168	21W324 :PK		5.4		21W310 :BK	21K311:1	036 .4		WASTE PACKAGE EJECTION OFF
01X006:169	21W324 :YE/BN		6.2		21W500 :BK	21K500:1	036 .4		BLOW CLEANINGPACKAGE CONVEYOR
			6.3		21W500 :BU	21K500:2	036 .7		BLOW CLEANINGPACKAGE CONVEYOR

Drawing remarks

Tetra Pak

Designer ACH	Date 01/10/2009	Machine CAP30 Flex ReCap3 0200	
ECM No 417049	Denomination TERMINAL STRIP OVERVIEW	Page Type TERMINAL STRIP OVERVIEW	
Company Tetra Pak (Italy)	Document No. 3039165-0006	Doc. type ELD	Version AB	Page 010

This drawing must not without the consent of Tetra Pak be copied, transmitted or disclosed to any third party.

Terminal strip of 3039165-0003

21X412

From	Cable	Internal Jumper	Terminal	External Jumper	Cable	To	Page.Col.	Option	Function text
01X400:111	21W412 :BN		1		21W402 :BN	21B402:	042 .3		PACKAGE PRESENCEON BELT BRAKE
					21W401 :BN	21B401:			PACKAGE PRESENCEON BELT BRAKE
01X400:101	21W412 :BU		3		21W402 :BU	21B402:	042 .3		PACKAGE PRESENCEON BELT BRAKE
					21W401 :BU	21B401:			PACKAGE PRESENCEON BELT BRAKE
01K323:IN 0	21W412 :BK		4		21W402 :BK	21B402:	042 .6		PACKAGE PRESENCEON BELT BRAKE

Drawing remarks

Tetra Pak

Designer ACH	Date 01/10/2009	Machine CAP30 Flex ReCap3 0200	
ECM No 417049	Denomination TERMINAL STRIP OVERVIEW	Page Type TERMINAL STRIP OVERVIEW	
Company Tetra Pak (Italy)	Document No. 3039165-0006	Doc. type ELD	Version AB	Page 011

This drawing must not without the consent of Tetra Pak be copied, transmitted or disclosed to any third party.

1 2 3 4 5 6 7 8 9 10

Terminal strip of 3039165-0003

21X414

From	Cable	Internal Jumper	Terminal	External Jumper	Cable	To	Page.Col.	Option	Function text
01X400:112	21W414 :BN		1		21W404 :BN	21B404:	042 .3		SHORT PACKAGE QUEUE
					21W403 :BN	21B403:			SHORT PACKAGE QUEUE
01X400:102	21W414 :BU		3		21W404 :BU	21B404:	042 .3		SHORT PACKAGE QUEUE
					21W403 :BU	21B403:			SHORT PACKAGE QUEUE
01K323:IN 1	21W414 :BK		4		21W404 :BK	21B404:	042 .6		SHORT PACKAGE QUEUE

Drawing remarks

Tetra Pak

Designer ACH	Date 01/10/2009	Machine CAP30 Flex ReCap3 0200	
ECM No 417049	Denomination TERMINAL STRIP OVERVIEW	Page Type TERMINAL STRIP OVERVIEW	
Company Tetra Pak (Italy)	Document No. 3039165-0006	Doc. type ELD	Version AB	Page 012

This drawing must not without the consent of Tetra Pak be copied, transmitted or disclosed to any third party.

1 2 3 4 5 6 7 8 9 10

Terminal strip of 3039165-0003

21X416

From	Cable	Internal Jumper	Terminal	External Jumper	Cable	To	Page.Col.	Option	Function text
01X400:113	21W416 :BN		1		21W406 :BN	21B406:	042 .3		VERIFIES PACKAGE STANDING
					21W405 :BN	21B405:			VERIFIES PACKAGE STANDING
01X400:103	21W416 :BU		3		21W406 :BU	21B406:	042 .3		VERIFIES PACKAGE STANDING
					21W405 :BU	21B405:			VERIFIES PACKAGE STANDING
01K323:IN 2	21W416 :BK		4		21W406 :BK	21B406:	042 .6		VERIFIES PACKAGE STANDING

Drawing remarks

Tetra Pak

Designer ACH	Date 01/10/2009	Machine CAP30 Flex ReCap3 0200	
ECM No 417049	Denomination TERMINAL STRIP OVERVIEW	Page Type TERMINAL STRIP OVERVIEW	
Company Tetra Pak (Italy)	Document No. 3039165-0006	Doc. type ELD	Version AB	Page 013

This drawing must not without the consent of Tetra Pak
be copied, transmitted or disclosed to any third party.

1 2 3 4 5 6 7 8 9 10

Terminal strip of 3039165-0003

21X418

From	Cable	Internal Jumper	Terminal	External Jumper	Cable	To	Page.Col.	Option	Function text
01X400:114	21W418 :BN		1		21W408 :BN	21B408:	042 .3		TOO LONG PACKAGE QUEUE
					21W407 :BN	21B407:			TOO LONG PACKAGE QUEUE
01X400:104	21W418 :BU		3		21W408 :BU	21B408:	042 .3		TOO LONG PACKAGE QUEUE
					21W407 :BU	21B407:			TOO LONG PACKAGE QUEUE
01K323:IN 3	21W418 :BK		4		21W408 :BK	21B408:	042 .6		TOO LONG PACKAGE QUEUE

Drawing remarks

Tetra Pak

Designer ACH	Date 01/10/2009	Machine CAP30 Flex ReCap3 0200	
ECM No 417049	Denomination TERMINAL STRIP OVERVIEW	Page Type TERMINAL STRIP OVERVIEW	
Company Tetra Pak (Italy)	Document No. 3039165-0006	Doc. type ELD	Version AB	Page 014

This drawing must not without the consent of Tetra Pak be copied, transmitted or disclosed to any third party.

1 2 3 4 5 6 7 8 9 10

Terminal strip of 3039165-0003

21X422

From	Cable	Internal Jumper	Terminal	External Jumper	Cable	To	Page.Col.	Option	Function text
81K420:0.1	21W422 :BN		1		21W424 :BN	21B424:	052 .5		PACKAGE CONGESTIONOUTFEED
					21W423 :BN	21B423:			PACKAGE CONGESTIONOUTFEED
81K420:0.3	21W422 :BU		3		21W424 :BU	21B424:	052 .5		PACKAGE CONGESTIONOUTFEED
					21W423 :BU	21B423:			PACKAGE CONGESTIONOUTFEED
81K420:0.4	21W422 :BK		4		21W424 :BK	21B424:	052 .5		PACKAGE CONGESTIONOUTFEED

Drawing remarks

Tetra Pak

Designer ACH	Date 01/10/2009	Machine CAP30 Flex ReCap3 0200	
ECM No 417049	Denomination TERMINAL STRIP OVERVIEW	Page Type TERMINAL STRIP OVERVIEW	
Company Tetra Pak (Italy)	Document No. 3039165-0006	Doc. type ELD	Version AB	Page 015

RELEASED

This drawing must not without the consent of Tetra Pak be copied, transmitted or disclosed to any third party.

Terminal strip of 3039165-0003

21X613

From	Cable	Internal Jumper	Terminal	External Jumper	Cable	To	Page.Col.	Option	Function text
81K420:2.1	21W613 :BN		1		21W602 :BN	21B602:	052 .5		QUEUE OUTFEEDLEFT LINE
					22W601 :BN	21B601:			QUEUE OUTFEEDLEFT LINE
81K420:2.3	21W613 :BU		3		21W602 :BU	21B602:	052 .5		QUEUE OUTFEEDLEFT LINE
					22W601 :BU	21B601:			QUEUE OUTFEEDLEFT LINE
81K420:2.4	21W613 :BK		4		21W602 :BK	21B602:	052 .5		QUEUE OUTFEEDLEFT LINE

Drawing remarks

Tetra Pak

Designer ACH	Date 01/10/2009	Machine CAP30 Flex ReCap3 0200	
ECM No 417049	Denomination TERMINAL STRIP OVERVIEW	Page Type TERMINAL STRIP OVERVIEW	
Company Tetra Pak (Italy)	Document No. 3039165-0006	Doc. type ELD	Version AB	Page 016

This drawing must not without the consent of Tetra Pak
be copied, transmitted or disclosed to any third party.

1 2 3 4 5 6 7 8 9 10

Terminal strip of 3039165-0003

21X614

From	Cable	Internal Jumper	Terminal	External Jumper	Cable	To	Page.Col.	Option	Function text
81K420:3.1	21W614 :BK		1		21W604 :BN	21B604:	052 .5		QUEUE OUTFEEDRIGHT LINE
					21W603 :BN	21B603:			QUEUE OUTFEEDRIGHT LINE
81K420:3.3	21W614 :BN		3		21W604 :BU	21B604:	052 .5		QUEUE OUTFEEDRIGHT LINE
					21W603 :BU	21B603:			QUEUE OUTFEEDRIGHT LINE
81K420:3.4	21W614 :BU		4		21W604 :BK	21B604:	052 .5		QUEUE OUTFEEDRIGHT LINE

Drawing remarks

Tetra Pak

Designer ACH	Date 01/10/2009	Machine CAP30 Flex ReCap3 0200	
ECM No 417049	Denomination TERMINAL STRIP OVERVIEW	Page Type TERMINAL STRIP OVERVIEW	
Company Tetra Pak (Italy)	Document No. 3039165-0006	Doc. type ELD	Version AB	Page 017

This drawing must not without the consent of Tetra Pak
be copied, transmitted or disclosed to any third party.

1 2 3 4 5 6 7 8 9 10

Terminal strip of 3039165-0003

30X120

From	Cable	Internal Jumper	Terminal	External Jumper	Cable	To	Page.Col.	Option	Function text
01X006:116+	30W120 :BN		1.1		60W104 :BN	60B104:	029 .3		DETECTION 1 INSIDEROW CUTTER
01X006:116-	30W120 :BU		1.3		60W104 :BU	60B104:	029 .3		DETECTION 1 INSIDEROW CUTTER
01X006:116	30W120 :WH		1.4		60W104 :BK	60B104:	029 .6		DETECTION 1 INSIDEROW CUTTER
			2.1				029 .3		
			2.3				029 .3		
01X006:117	30W120 :GN		2.4				029 .6		
			3.1		30W102 :BN	30B102:	029 .3		CAP HOLDER 1 APPLICATOR WHEEL
			3.3		30W102 :BU	30B102:	029 .3		CAP HOLDER 1 APPLICATOR WHEEL
01X006:118	30W120 :YE		3.4		30W102 :BK	30B102:	029 .6		CAP HOLDER 1 APPLICATOR WHEEL
			4.1		30W201 :BN	30B201:	029 .3		CAP HOLDER CAM ONHOT MELT WHEEL
			4.3		30W201 :BN	30B201:	029 .3		CAP HOLDER CAM ONHOT MELT WHEEL
01X006:119	30W120 :GY		4.2		30W201 :BK	30B201:	029 .6		CAP HOLDER CAM ONHOT MELT WHEEL
			5.1		60W100 :BN	60B100:	029 .3		DETECTION 2 INSIDEROW CUTTER
			5.3		60W100 :BN	60B100:	029 .3		DETECTION 2 INSIDEROW CUTTER
01X006:120	30W120 :WH/YE		5.2		60W100 :BK	60B100:	029 .6		DETECTION 2 INSIDEROW CUTTER
			6.3				035 .6		
01X006:146	30W120 :YE/BN		6.2				035 .3		
			7.3				035 .6		
01X006:147	30W120 :WH/GY		7.2				035 .3		
			8.3				035 .6		
01X006:148	30W120 :GY/BN		8.2				035 .3		

Drawing remarks

Tetra Pak

Designer ACH	Date 01/10/2009	Machine CAP30 Flex ReCap3 0200	
ECM No 417049	Denomination TERMINAL STRIP OVERVIEW	Page Type TERMINAL STRIP OVERVIEW	
Company Tetra Pak (Italy)	Document No. 3039165-0006	Doc. type ELD	Version AB	Page 018

This drawing must not without the consent of Tetra Pak
be copied, transmitted or disclosed to any third party.

1 2 3 4 5 6 7 8 9 10

Terminal strip of 3039165-0003

30X130

From	Cable	Internal Jumper	Terminal	External Jumper	Cable	To	Page.Col.	Option	Function text
01X006:122+	30W130 :BN		1.1		60W101 :BN	60B101:BN	029 .3		SCREW FEEDER-CAP CARRIERCYLINDER BACKW
01X006:122-	30W130 :BU		1.3		60W101 :BU	60B101:BU	029 .3		SCREW FEEDER-CAP CARRIERCYLINDER BACKW
01X006:121	30W130 :WH		1.4		60W101 :BK	60B101:BK	029 .6		SCREW FEEDER-CAP CARRIERCYLINDER BACKW
			2.1		60W103 :BN	60B103:	030 .3		
			2.3		60W103 :BN	60B103:	030 .3		
01X006:122	30W130 :GN		2.4				030 .6		
60B103:	60W103 :BK								
			3.1		60W000 :BN	60B000:	030 .3		CAP SHEET HOLDER DOWN
			3.3		60W000 :BU	60B000:	030 .3		CAP SHEET HOLDER DOWN
01X006:123	30W130 :YE		3.4		60W000 :BK	60B000:	030 .6		CAP SHEET HOLDER DOWN
01X006:124	30W130 :GY		4.4		60W001 :BK	60B001:	030 .6		CAP SHEET HOLDER UP
			4.3		60W001 :BU	60B001:	030 .3		CAP SHEET HOLDER UP
			4.1		60W001 :BN	60B001:	030 .3		CAP SHEET HOLDER UP
			5.1		60W300 :BN	60B300:	030 .3		CAP PRESENCE ON SIGLE CUTTER
			5.3		60W300 :BU	60B300:	030 .3		CAP PRESENCE ON SIGLE CUTTER
01X006:125	30W130 :PK		5.4		60W300 :BK	60B300:	030 .6		CAP PRESENCE ON SIGLE CUTTER
			6.1		60W301 :BN	60B301:	032 .2		SINGLE CUTTER DEVICEIN POSITION
			6.3		60W301 :BU	60B301:	032 .2		SINGLE CUTTER DEVICEIN POSITION
01X006:161	30W130 :RD		6.4		60W301 :BK	60B301:	032 .5		SINGLE CUTTER DEVICEIN POSITION

Drawing remarks

Tetra Pak

Designer ACH	Date 01/10/2009	Machine CAP30 Flex ReCap3 0200	
ECM No 417049	Denomination TERMINAL STRIP OVERVIEW	Page Type TERMINAL STRIP OVERVIEW	
Company Tetra Pak (Italy)	Document No. 3039165-0006	Doc. type ELD	Version AB	Page 019

This drawing must not without the consent of Tetra Pak be copied, transmitted or disclosed to any third party.

1 2 3 4 5 6 7 8 9 10

Terminal strip of 3039165-0003

30X303

From	Cable	Internal Jumper	Terminal	External Jumper	Cable	To	Page.Col.	Option	Function text
01X006:220	30W303 :BN		1			30K303:L+	032 .2		HOT MELT WHEELLEVEL
01X006:158	30W303 :WH		2			30K303:PNP1	032 .5		HOT MELT WHEELLEVEL
01X006:221	30W303 :BU		3			30K303:L-	032 .2		HOT MELT WHEELLEVEL
01X006:159	30W303 :BK		4			30K303:PNP2	032 .5		HOT MELT WHEELLEVEL
			5		30W303 :GY	01X006:145	032 .5		
						30K303:			HOT MELT WHEELLEVEL

Drawing remarks

Tetra Pak

Designer ACH	Date 01/10/2009	Machine CAP30 Flex ReCap3 0200	
ECM No 417049	Denomination TERMINAL STRIP OVERVIEW	Page Type TERMINAL STRIP OVERVIEW	
Company Tetra Pak (Italy)	Document No. 3039165-0006	Doc. type ELD	Version AB	Page 020

This drawing must not without the consent of Tetra Pak
be copied, transmitted or disclosed to any third party.

1 | 2 | 3 | 4 | 5 | 6 | 7 | 8 | 9 | 10

Terminal strip of 3039165-0003

60X010

From	Cable	Internal Jumper	Terminal	External Jumper	Cable	To	Page.Col.	Option	Function text
01X004:31	60W011 :1		1		60W010 :1	60M010:U	015 .6		CAP SHEET CONVEYOR
01X004:32	60W011 :2		2		60W010 :2	60M010:V	015 .6		CAP SHEET CONVEYOR
01X004:33	60W011 :3		3		60W010 :3	60M010:W	015 .6		CAP SHEET CONVEYOR
01X004:34	60W011 :GNYE		⏚		60W010 :GNYE	60M010:⏚	015 .6		CAP SHEET CONVEYOR

Drawing remarks

Tetra Pak

Designer ACH	Date 01/10/2009	Machine CAP30 Flex ReCap3 0200	
ECM No 417049	Denomination TERMINAL STRIP OVERVIEW	Page Type TERMINAL STRIP OVERVIEW	
Company Tetra Pak (Italy)	Document No. 3039165-0006	Doc. type ELD	Version AB	Page 021

This drawing must not without the consent of Tetra Pak
be copied, transmitted or disclosed to any third party.

1 2 3 4 5 6 7 8 9 10

Terminal strip of 3039165-0003

60X420

From	Cable	Internal Jumper	Terminal	External Jumper	Cable	To	Page.Col.	Option	Function text
01X004:27	60W421 :1		1		60W420 :1	60M420:U	015 .4		BOX CONVEYOR
01X004:28	60W421 :2		2		60W420 :2	60M420:V	015 .4		BOX CONVEYOR
01X004:29	60W421 :3		3		60W420 :3	60M420:W	015 .4		BOX CONVEYOR
01X004:30	60W421 :GNYE		⏚		60W420 :GNYE	60M420:⏚	015 .4		BOX CONVEYOR

Drawing remarks

Tetra Pak

Designer ACH	Date 01/10/2009	Machine CAP30 Flex ReCap3 0200	
ECM No 417049	Denomination TERMINAL STRIP OVERVIEW	Page Type TERMINAL STRIP OVERVIEW	
Company Tetra Pak (Italy)	Document No. 3039165-0006	Doc. type ELD	Version AB	Page 022

This drawing must not without the consent of Tetra Pak
be copied, transmitted or disclosed to any third party.

1 2 3 4 5 6 7 8 9 10

Terminal strip of 3039165-0003

60X612

From	Cable	Internal Jumper	Terminal	External Jumper	Cable	To	Page.Col.	Option	Function text
01X006:191	60W612 :1		1			60K612:1	026 .4		MAIN AIR VALVE BOX MAGAZINE
01X006:192	60W612 :2		2			60K612:2	026 .4		MAIN AIR VALVE BOX MAGAZINE
01X006:193	60W612 :3		3			60K612:3	026 .4		MAIN AIR VALVE BOX MAGAZINE
01X006:194	60W612 :4		4			60K612:4	026 .4		MAIN AIR VALVE BOX MAGAZINE
			5			60K612:5	026 .4		MAIN AIR VALVE BOX MAGAZINE
			6			60K612:6	026 .4		MAIN AIR VALVE BOX MAGAZINE
			7			60K612:7	026 .4		MAIN AIR VALVE BOX MAGAZINE
01X006:198	60W612 :5		8			60K612:8	026 .4		MAIN AIR VALVE BOX MAGAZINE
01X006:199	60W612 :6		9			60K612:9	026 .4		MAIN AIR VALVE BOX MAGAZINE

Drawing remarks

Tetra Pak

Designer ACH	Date 01/10/2009	Machine CAP30 Flex ReCap3 0200	
ECM No 417049	Denomination TERMINAL STRIP OVERVIEW	Page Type TERMINAL STRIP OVERVIEW	
Company Tetra Pak (Italy)	Document No. 3039165-0006	Doc. type ELD	Version AB	Page 023

RELEASED

This drawing must not without the consent of Tetra Pak be copied, transmitted or disclosed to any third party.

1 2 3 4 5 6 7 8 9 10

Terminal strip of 3039165-0003

81X200

From	Cable	Internal Jumper	Terminal	External Jumper	Cable	To	Page.Col.	Option	Function text
			1				021 .3		PLC RACK
			2				018 .3		ETHERNET SWITCH

Drawing remarks

Tetra Pak

Designer ACH	Date 01/10/2009	Machine CAP30 Flex ReCap3 0200		
ECM No 417049	Denomination TERMINAL STRIP OVERVIEW	Page Type TERMINAL STRIP OVERVIEW		
Company Tetra Pak (Italy)	Document No. 3039165-0006	Doc. type ELD	Version AB	Page 024

This drawing must not without the consent of Tetra Pak
be copied, transmitted or disclosed to any third party.

1 | 2 | 3 | 4 | 5 | 6 | 7 | 8 | 9 | 10

Terminal strip of 3039165-0003

81X201

From	Cable	Internal Jumper	Terminal	External Jumper	Cable	To	Page.Col.	Option	Function text
			1				021 .3		CONTROL PANEL
			2				021 .7		ETHERNET SWITCH

Drawing remarks

Tetra Pak

Designer ACH	Date 01/10/2009	Machine CAP30 Flex ReCap3 0200	
ECM No 417049	Denomination TERMINAL STRIP OVERVIEW	Page Type TERMINAL STRIP OVERVIEW	
Company Tetra Pak (Italy)	Document No. 3039165-0006	Doc. type ELD	Version AB	Page 025

This page intentionally left blank

8 Cable Connection List

TechPub_2614345_0107 - 0801_3050428_01.fm

Description

All cable connections used in the equipment are listed in this chapter.

TechPub_2614345_0107 - 0801_3050428_01.fm

RELEASED

This drawing must not without the consent of Tetra Pak be copied, transmitted or disclosed to any third party.

Cable Connection List of 3039165-0003

From	Cable	To	Page.Col.	Option
	01W340			
01X006:157	BN	01K340:1	+C/053.08	
01X006:152	BU	01K340:3	+C/053.08	
01X006:157	WH	01K340:2	+C/053.08	
01X006:152	BK	01K340:4	+C/053.08	
	01W341			
01K340:2	RD	01K350:2	+C/053.09	
01K340:4	WH	01K350:4	+C/053.09	
01K340:3	BK	01K350:3	+C/053.09	
01K340:5	BU	01K350:5	+C/053.09	
01K340:1	SH	01K350:1	+C/053.09	
01K340:NET		01K350:NET	+C/058.08	
	01W350			
01X006:166	BN	01K350:1	+C/054.08	
01X006:162	BU	01K350:3	+C/054.08	
01X006:166	WH	01K350:2	+C/054.08	
01X006:162	BK	01K350:4	+C/054.08	
	01W351			
01K350:2	RD	01K360:2	+C/054.09	
01K350:4	WH	01K360:4	+C/054.09	
01K350:3	BK	01K360:3	+C/054.09	
01K350:5	BU	01K360:5	+C/054.09	
01K350:1	SH	01K360:1	+C/054.09	
01K350:NET		01K360:NET	+C/058.09	
	01W360			
01X006:165	BN	01K360:1	+C/055.08	
01X006:154	BU	01K360:3	+C/055.08	
01X006:165	WH	01K360:2	+C/055.08	
01X006:154	BK	01K360:4	+C/055.08	

From	Cable	To	Page.Col.	Option
	01W400			
01X006:1	1	01A400:24V	+C/021.07	
01X006:2	2	01A400:0V	+C/021.07	
01X006:⏚	GNYE	01A400:E	+C/021.07	
	01W401			
01X006:10	1	01X400:1	+C/023.04	
01X006:9	2	01X400:2	+C/023.04	
01X006:11	3	01X400:3	+C/023.06	
01X006:12	4	01X400:4	+C/023.06	
01X006:150	5	01X400:100	+C/039.08	
01X006:155	6	01X400:110	+C/039.08	
01X006:160	7	01X400:116	+C/039.08	
01X006:163	8	01X400:118	+C/039.08	
01X006:164	9	01X400:119	+C/039.08	
01X006:230	10	01X400:108	+C/041.03	
01X006:231	11	01X400:109	+C/041.03	
01X006:⏚	GNYE	01X400:⏚	+C/039.08	
	01W500			
01X004:14	1	01V500:L1	+C/014.06	
01X004:15	2	01V500:L2	+C/014.06	
01X004:16	3	01V500:L3	+C/014.06	
01X004:17	4	01V500:N	+C/014.06	
01X004:18	GNYE	01V500:	+C/014.06	
	01W501			
01V500:1	1	01K0324:V	+C/014.07	
01V500:2	2	01K0324:IN-2	+C/014.07	
01V500:6	3	01K0324:IN-3	+C/014.07	
	GNYE	01X400:⏚	+C/014.07	

Drawing remarks

Tetra Pak

Designer ACH	Date 01/10/2009	Machine CAP30 Flex ReCap3 0200	
ECM No 417049	Denomination CABLE CONNECTION LIST	Page Type CABLE CONNECTION LIST	
Company Tetra Pak (Italy)	Document No. 3039165-0007	Doc. type ELD	Version AB	Page 001

This drawing must not without the consent of Tetra Pak be copied, transmitted or disclosed to any third party.

Cable Connection List of 3039165-0003

From	Cable	To	Page.Col.	Option
	01W510			
01K0328:OUT-0	1	01P510:1	+C/047.03	
01K0328:OUT-1	2	01P510:2	+C/047.03	
01K0328:OUT 2	3	01P510:3	+C/047.03	
01K0328:OUT 3	4	01P513:1	+C/047.03	
01K0328:C	5	01P513:2	+C/047.03	
01K0329:OUT 3	6	01P510:4	+C/048.03	
01X400:⏚	GNYE	01P510:E	+C/047.03	
	01W701			
01X004:1	1	01E701:1	+C/004.05	
01X004:2	2	01E701:2	+C/004.05	
01X004:3	GNYE	01E701:E	+C/004.05	
	01W702			
01X004:4	1	01E702:1	+C/004.06	
01X004:5	2	01E702:2	+C/004.06	
01X004:6	GNYE	01E702:E	+C/004.06	
	01W800			
01K0331:OUT-0	1	01K800:1	+C/050.04	
01K0331:C	2	01K800:2	+C/050.04	
	01W801			
01B801:3	1	01K0324:V	+C/043.06	
01B801:1	2	01K0324:IN-0	+C/043.06	
	01W901			
01B901:2	BN	81K420:6.1	+C/052.05	
	BU			
01B901:3	BK	81K420:6.4	+C/052.05	
	01W902			
01B902:13	BN	81K420:7.1	+C/052.05	
	BU			
01B902:14	BK	81K420:7.4	+C/052.05	
	01W903			
01K0331:OUT-1	BN	01K900:1	+C/050.04	
01K0331:C	BU	21K000:2	+C/050.04	
01K0331:OUT 2	BK	21K000:1	+C/050.04	
	01W904			
01K0332:OUT-0	BN	01K300:1	+C/051.03	
01K0332:C	BU	01K300:2	+C/051.03	
	09W103			
01X006:14	1	09F103:51	+C/023.07	
01X006:13	2	09F103:11	+C/023.07	
01X006:15	3	09F103:52	+C/023.08	
01X006:16	4	09F103:12	+C/023.08	
01X006:⏚	GNYE		+C/023.07	
	09W201			
01X006:126	BN	09F201:+24V	+C/024.03	
01X006:127	WH	09F201:IN	+C/024.03	
01X006:128	BU	09F201:0V	+C/024.03	
01X006:129	BK	09F201:OUT	+C/024.03	
01X006:130	GY	09F201:13	+C/024.03	
01X006:131	SH	09W201:	+C/024.04	
	09W202			
01X006:132	BN	09F236:+24V	+C/025.01	
01X006:133	WH	09F236:IN	+C/025.01	
01X006:134	BU	09F236:0V	+C/025.01	
01X006:135	BK	09F236:OUT	+C/025.01	
01X006:136	GY	09F236:13	+C/025.01	

Drawing remarks

Tetra Pak

Designer ACH	Date 01/10/2009	Machine CAP30 Flex ReCap3 0200	
ECM No 417049	Denomination CABLE CONNECTION LIST	Page Type CABLE CONNECTION LIST	
Company Tetra Pak (Italy)	Document No. 3039165-0007	Doc. type ELD	Version AB	Page 002

This drawing must not without the consent of Tetra Pak be copied, transmitted or disclosed to any third party.

Cable Connection List of 3039165-0003

From	Cable	To	Page.Col.	Option
01X006:137	SH	09W202:	+C/025.02	
	09W203			
01X006:138	BN	09F316:2.1	+C/025.08	
01X006:139	WH	09F316:1.1	+C/025.08	
01X006:140	BU	09F316:3.1	+C/025.08	
01X006:141	BK	09F316:4.1	+C/025.08	
01X006:142	GY	09F316:5.1	+C/025.08	
01X006:143	SH	09W203:	+C/025.08	
	09W204			
01X006:138	BN	09F311:1	+C/025.07	
01X006:140	BU	09F311:3	+C/025.07	
01X006:143		09W204:	+C/025.07	
	09W210			
09X201:1.1	BN	09F210:BN	+C/024.03	
09X201:1.3	BU	09F210:BU	+C/024.03	
09X201:1.5	GY	09F210:GY	+C/024.03	
09X201:1.4	BK	09F210:BK	+C/024.03	
09X201:1.2	WH	09F210:WH	+C/024.03	
	09W212			
09X201:2.1	BN	09F212:BN	+C/024.04	
09X201:2.3	BU	09F212:BU	+C/024.04	
09X201:2.5	GY	09F212:GY	+C/024.04	
09X201:2.4	BK	09F212:BK	+C/024.04	
09X201:2.2	WH	09F212:WH	+C/024.04	
	09W214			
09X201:3.1	BN	09F214:BN	+C/024.05	
09X201:3.2	WH	09F214:WH	+C/024.05	
09X201:3.3	BU	09F214:BU	+C/024.05	
09X201:3.4	BK	09F214:BK	+C/024.05	

From	Cable	To	Page.Col.	Option
09X201:3.5	GY	09F214:GY	+C/024.05	
	09W216			
09X201:4.1	BN	09F216:BN	+C/024.06	
09X201:4.2	WH	09F216:WH	+C/024.06	
09X201:4.3	BU	09F216:BU	+C/024.06	
09X201:4.4	BK	09F216:BK	+C/024.06	
09X201:4.5	GY	09F216:GY	+C/024.06	
	09W230			
09X202:1.1	BN	09F230:BN	+C/025.01	
09X202:1.2	WH	09F230:WH	+C/025.01	
09X202:1.3	BU	09F230:BU	+C/025.01	
09X202:1.4	BK	09F230:BK	+C/025.01	
09X202:1.5	GY	09F230:GY	+C/025.01	
	09W232			
09X202:2.1	BN	09F232:BN	+C/025.02	
09X202:2.2	WH	09F232:WH	+C/025.02	
09X202:2.3	BU	09F232:BU	+C/025.02	
09X202:2.4	BK	09F232:BK	+C/025.02	
09X202:2.5	GY	09F232:GY	+C/025.02	
	09W241			
09X241:1	BN	01K0329:OUT-0	+C/048.03	
09X241:2	BU	01K0329:C	+C/048.03	
	09W242			
09X242:1	BN	01K0329:OUT-1	+C/048.03	
09X242:2	BU	01K0329:C	+C/048.03	
	09W316			
09F310:Tt.Rt 1	WH	09F316:Test/Rese	+C/025.08	
09F310:+24V 2	BN	09F316:+24V	+C/025.08	

Drawing remarks

Tetra Pak

Designer ACH	Date 01/10/2009	Machine CAP30 Flex ReCap3 0200	
ECM No 417049	Denomination CABLE CONNECTION LIST	Page Type CABLE CONNECTION LIST	
Company Tetra Pak (Italy)	Document No. 3039165-0007	Doc. type ELD	Version AB	Page 003

RELEASED

This drawing must not without the consent of Tetra Pak be copied, transmitted or disclosed to any third party.

Cable Connection List of 3039165-0003

From	Cable	To	Page.Col.	Option
09F310:Mut.A 3	GN	09F316:Muting A	+C/025.08	
09F310:Mut.B 4	YE	09F316:Muting B	+C/025.08	
09F310:Ossd1 5	GY	09F316:OSSD1	+C/025.08	
09F310:Ossd2 6	PK	09F316:OSSD2	+C/025.08	
09F310:Lms 8	RD	09F316:LMS	+C/025.08	
09F310:0V 7	BU	09F316:0V	+C/025.08	
09W316:	SH	09F316:0V	+C/025.08	
20W000				
20Q000:2	1	20M000:U	+C/016.04	
20Q000:4	2	20M000:V	+C/016.04	
20Q000:6	3	20M000:W	+C/016.04	
20X001:1	GNYE	20M000:⏚	+C/016.04	
PE:	SH	PE:	+C/016.04	
20W002				
20X030:3	BU	20B002:	+C/029.03	
20X030:1	BN	20B002:	+C/029.03	
20W003				
20X030:1	BN	20B003:	+C/029.03	
20X030:3	BU	20B003:	+C/029.03	
20X030:4	BK	20B003:	+C/029.05	
20W030				
01X006:115+	BN	20X030:1	+C/029.02	
01X006:115-	BU	20X030:3	+C/029.02	
01X006:115	BK	20X030:4	+C/029.06	
21W000				
21B000:	BN	81K420:4.1	+C/052.05	
21B000:	BU	81K420:4.3	+C/052.05	
21B000:	BK	81K420:4.4	+C/052.05	
21W100				

From	Cable	To	Page.Col.	Option
21T100:1 U	BN	21M100:U A	+C/008.02	
21T100:2 V	BK	21M100:V B	+C/008.02	
21T100:2 W	BU	21M100: W C	+C/008.02	
21T100:4 GND	GNYE	21M100:GND	+C/008.02	
PE:	SH	PE:	+C/008.02	
21W101				
21T100:M/F D1	BK	21M100:SIN+ A	+C/008.03	
21T100:M/F D2	WH/BK	21M100:SIN- B	+C/008.03	
21T100:M/F D3	RD	21M100:COS+ C	+C/008.03	
21T100:M/F D4	WH/RD	21M100:COS- D	+C/008.03	
21T100:M/F D5	GN	21M100:DATA+ E	+C/008.03	
21T100:M/F D10	WH/GN	21M100:DATA- F	+C/008.03	
21T100:M/F D14	GY	21M100:K	+C/008.03	
21T100:M/F D6	WH/GY	21M100:ECOM L	+C/008.03	
21T100:M/F D7	OG	21M100:+9VDC N	+C/008.03	
21T100:M/F D11	WH/OG	21M100:TS+ R	+C/008.03	
	BU			
21T100:M/F D12	WT/BU	21M100:T	+C/008.03	
21T100:M/F D13	YE	21M100:NC	+C/008.03	
21T100:M/F D8	WH/YE	21M100:NC	+C/008.03	
21T100:M/F D9	BN	21M100:NC	+C/008.03	
21T100:M/F D15	WH/BN	21M100:NC	+C/008.03	
PE:	SH	PE:	+C/008.03	
21W200				
21T200:1 U	BN	21M200:U A	+C/009.02	
21T200:2 V	BK	21M200:V B	+C/009.02	
21T200:2 W	BU	21M200: W C	+C/009.02	
21T200:4 GND	GNYE	21M200:GND	+C/009.02	
PE:	SH	PE:	+C/009.02	

Drawing remarks

Tetra Pak

Designer ACH	Date 01/10/2009	Machine CAP30 Flex ReCap3 0200	
ECM No 417049	Denomination CABLE CONNECTION LIST	Page Type CABLE CONNECTION LIST	
Company Tetra Pak (Italy)	Document No. 3039165-0007	Doc. type ELD	Version AB	Page 004

This drawing must not without the consent of Tetra Pak be copied, transmitted or disclosed to any third party.

Cable Connection List of 3039165-0003

From	Cable	To	Page.Col.	Option
	21W201			
21T200:M/F D1	BK	21M200:SIN+ A	+C/009.03	
21T200:M/F D2	WH/BK	21M200:SIN- B	+C/009.03	
21T200:M/F D3	RD	21M200:COS+ C	+C/009.03	
21T200:M/F D4	WH/RD	21M200:COS- D	+C/009.03	
21T200:M/F D5	GN	21M200:DATA+ E	+C/009.03	
21T200:M/F D10	WH/GN	21M200:DATA- F	+C/009.03	
21T200:M/F D14	GY	21M200:K	+C/009.03	
21T200:M/F D6	WH/GY	21M200:ECOM L	+C/009.03	
21T200:M/F D7	OG	21M200:+9VDC N	+C/009.03	
21T200:M/F D11	WH/OG	21M200:TS+ R	+C/009.03	
	BU			
21T200:M/F D12	WT/BU	21M200:T	+C/009.03	
21T200:M/F D13	YE	21M200:NC	+C/009.03	
21T200:M/F D8	WH/YE	21M200:NC	+C/009.03	
21T200:M/F D9	BN	21M200:NC	+C/009.03	
21T200:M/F D15	WH/BN	21M200:NC	+C/009.03	
PE:	SH	PE:	+C/009.05	
	21W300			
21X320:1.1	BN	21B300:	+C/031.04	
21X320:1.3	BU	21B300:	+C/031.04	
21X320:1.4	BK	21B300:	+C/031.06	
	21W302			
21X320:2.1	BN	21B302:	+C/031.03	
21X320:2.3	BU	21B302:	+C/031.03	
21X320:2.4	BK	21B302:	+C/031.06	
	21W303			
21X320:2.1	BN	21B303:	+C/031.03	
21X320:2.3	BU	21B303:	+C/031.03	
	21W304			

From	Cable	To	Page.Col.	Option
21X320:3.1	BN	21B304:	+C/031.04	
21X320:3.3	BU	21B304:	+C/031.04	
21X320:3.4	BK	21B304:	+C/031.06	
	21W305			
21X320:3.1	BN	21B305:	+C/031.05	
21X320:3.3	BU	21B305:	+C/031.05	
	21W310			
21X320:5.2	BN	21K310:1	+C/036.05	
21X320:5.3	BU	21K310:2	+C/036.06	
21X320:5.4	BK	21K311:1	+C/036.05	
	21W324			
01X006:112+	BN	21X320:1.1	+C/031.01	
01X006:112-	BU	21X320:1.3	+C/031.01	
	GY/PK			
	RD/BU			
	WH/GN			
	BN/GN			
01X006:167	WH/YE	21X320:5.2	+C/036.03	
01X006:169	YE/BN	21X320:6.2	+C/036.03	
	WH/GY			
	GY/BN			
01X006:112	WH	21X320:1.4	+C/031.07	
01X006:113	GN	21X320:2.4	+C/031.07	
01X006:114	YE	21X320:3.4	+C/031.07	
	GY			
01X006:168	PK	21X320:5.4	+C/036.03	
	RD			
	BK			
	VT			
	GNYE			

Drawing remarks

Tetra Pak

Designer ACH	Date 01/10/2009	Machine CAP30 Flex ReCap3 0200	
ECM No 417049	Denomination CABLE CONNECTION LIST	Page Type CABLE CONNECTION LIST	
Company Tetra Pak (Italy)	Document No. 3039165-0007	Doc. type ELD	Version AB	Page 005

This drawing must not without the consent of Tetra Pak be copied, transmitted or disclosed to any third party.

Cable Connection List of 3039165-0003

From	Cable	To	Page.Col.	Option
	21W400			
21Q400:2	1	21M400:U	+C/016.09	
21Q400:4	2	21M400:V	+C/016.09	
21Q400:6	3	21M400:W	+C/016.09	
21X401:1	GNYE	21M400:⏚	+C/016.09	
PE:	SH	PE:	+C/016.09	
	21W401			
21X412:1	BN	21B401:	+C/042.04	
21X412:3	BU	21B401:	+C/042.04	
	21W402			
21X412:1	BN	21B402:	+C/042.04	
21X412:3	BU	21B402:	+C/042.04	
21X412:4	BK	21B402:	+C/042.05	
	21W403			
21X414:1	BN	21B403:	+C/042.04	
21X414:3	BU	21B403:	+C/042.04	
	21W404			
21X414:1	BN	21B404:	+C/042.04	
21X414:3	BU	21B404:	+C/042.04	
21X414:4	BK	21B404:	+C/042.05	
	21W405			
21X416:1	BN	21B405:	+C/042.04	
21X416:3	BU	21B405:	+C/042.04	
	21W406			
21X416:1	BN	21B406:	+C/042.04	
21X416:3	BU	21B406:	+C/042.04	
21X416:4	BK	21B406:	+C/042.05	

From	Cable	To	Page.Col.	Option
	21W407			
21X418:1	BN	21B407:	+C/042.04	
21X418:3	BU	21B407:	+C/042.04	
	21W408			
21X418:1	BN	21B408:	+C/042.04	
21X418:3	BU	21B408:	+C/042.04	
21X418:4	BK	21B408:	+C/042.05	
	21W412			
21X412:1	BN	01X400:111	+C/042.02	
21X412:3	BU	01X400:101	+C/042.02	
21X412:4	BK	01K0323:IN 0	+C/042.06	
	21W414			
21X414:1	BN	01X400:112	+C/042.02	
21X414:3	BU	01X400:102	+C/042.02	
21X414:4	BK	01K0323:IN 1	+C/042.06	
	21W416			
21X416:1	BN	01X400:113	+C/042.02	
21X416:3	BU	01X400:103	+C/042.02	
21X416:4	BK	01K0323:IN 2	+C/042.06	
	21W418			
21X418:1	BN	01X400:114	+C/042.02	
21X418:3	BU	01X400:104	+C/042.02	
21X418:4	BK	01K0323:IN 3	+C/042.06	
	21W422			
21X422:1	BN	81K420:0.1	+C/052.06	
21X422:3	BU	81K420:0.3	+C/052.06	
21X422:4	BK	81K420:0.4	+C/052.06	

Drawing remarks

Tetra Pak

Designer: ACH	Date: 01/10/2009	Machine: CAP30 Flex ReCap3 0200	
ECM No: 417049	Denomination: CABLE CONNECTION LIST	Page Type: CABLE CONNECTION LIST	
Company: Tetra Pak (Italy)	Document No.: 3039165-0007	Doc. type: ELD	Version: AB / Page: 006

This drawing must not without the consent of Tetra Pak be copied, transmitted or disclosed to any third party.

Cable Connection List of 3039165-0003

From	Cable	To	Page.Col.	Option
	21W423			
21X422:1	BN	21B423:	+C/052.02	
21X422:3	BU	21B423:	+C/052.02	
	21W424			
21X422:1	BN	21B424:	+C/052.05	
21X422:3	BU	21B424:	+C/052.05	
21X422:4	BK	21B424:	+C/052.05	
	21W500			
	BN			
21X320:6.3	BU	21K500:2	+C/036.06	
21X320:6.2	BK	21K500:1	+C/036.05	
	21W600			
21Q600:2	1	21M600:U	+C/017.10	
21Q600:4	2	21M600:V	+C/017.10	
21Q600:6	3	21M600:W	+C/017.10	
21X601: 1	GNYE	21M600:⏚	+C/017.10	
PE:	SH	PE:	+C/017.10	
	21W602			
21X613:1	BN	21B602:	+C/052.05	
21X613:3	BU	21B602:	+C/052.05	
21X613:4	BK	21B602:	+C/052.05	
	21W603			
21X614:1	BN	21B603:	+C/052.02	
21X614:3	BU	21B603:	+C/052.02	
	21W604			
21X614:1	BN	21B604:	+C/052.05	
21X614:3	BU	21B604:	+C/052.05	

From	Cable	To	Page.Col.	Option
21X614:4	BK	21B604:	+C/052.05	
	21W605			
21B605:	BN	81K420:1.1	+C/052.05	
21B605:	BU	81K420:1.3	+C/052.05	
21B605:	BK	81K420:1.4	+C/052.05	
	21W613			
21X613:1	BN	81K420:2.1	+C/052.06	
21X613:3	BU	81K420:2.3	+C/052.06	
21X613:4	BK	81K420:2.4	+C/052.06	
	21W614			
21X614:3	BN	81K420:3.3	+C/052.06	
21X614:4	BU	81K420:3.4	+C/052.06	
21X614:1	BK	81K420:3.1	+C/052.06	
	21W800			
01X004:10	1	21M800:U	+C/014.01	
01X004:11	2	21M800:N	+C/014.01	
01X004:13	GNYE	21M800:⏚	+C/014.01	
	21W801			
01X004:19	BK	21R801:F1	+C/014.08	
01X004:20	BK	21R801:F2	+C/014.08	
01X004:21	GY	21R801:0	+C/014.08	
01X004:22	GNYE	21R801:E	+C/014.08	
	22W601			
21X613:1	BN	21B601:	+C/052.02	
21X613:3	BU	21B601:	+C/052.02	
	30W000			
30T000:1 U	BN	30M000:U A	+C/006.02	

Drawing remarks

Tetra Pak

Designer ACH	Date 01/10/2009	Machine CAP30 Flex ReCap3 0200	
ECM No 417049	Denomination CABLE CONNECTION LIST	Page Type CABLE CONNECTION LIST	
Company Tetra Pak (Italy)	Document No. 3039165-0007	Doc. type ELD	Version AB	Page 007

This drawing must not without the consent of Tetra Pak be copied, transmitted or disclosed to any third party.

Cable Connection List of 3039165-0003

From	Cable	To	Page.Col.	Option
30T000:2 V	BK	30M000:V B	+C/006.02	
30T000:2 W	BU	30M000: W C	+C/006.02	
30T000:4 GND	GNYE	30M000:GND	+C/006.02	
PE:	SH	PE:	+C/006.02	
30W001				
30T000:M/F D1	BK	30M000:SIN+ A	+C/006.03	
30T000:M/F D2	WH/BK	30M000:SIN- B	+C/006.03	
30T000:M/F D3	RD	30M000:COS+ C	+C/006.03	
30T000:M/F D4	WH/RD	30M000:COS- D	+C/006.03	
30T000:M/F D5	GN	30M000:DATA+ E	+C/006.03	
30T000:M/F D10	WH/GN	30M000:DATA- F	+C/006.03	
30T000:M/F D14	GY	30M000:K	+C/006.03	
30T000:M/F D6	WH/GY	30M000:ECOM L	+C/006.03	
30T000:M/F D7	OG	30M000:+9VDC N	+C/006.03	
30T000:M/F D11	WH/OG	30M000:TS+ R	+C/006.03	
	BU			
30T000:M/F D12	WT/BU	30M000:T	+C/006.03	
30T000:M/F D13	YE	30M000:NC	+C/006.03	
30T000:M/F D8	WH/YE	30M000:NC	+C/006.03	
30T000:M/F D9	BN	30M000:NC	+C/006.03	
30T000:M/F D15	WH/BN	30M000:NC	+C/006.03	
PE:	SH	PE:	+C/006.03	
30W102				
30X120:3.1	BN	30B102:	+C/029.03	
30X120:3.3	BU	30B102:	+C/029.03	
30X120:3.4	BK	30B102:	+C/029.05	
30W120				
01X006:116+	BN	30X120:1.1	+C/029.02	
01X006:116-	BU	30X120:1.3	+C/029.02	
	GY/PK			
	RD/BU			

From	Cable	To	Page.Col.	Option
	WH/GN			
	BN/GN			
01X006:120	WH/YE	30X120:5.2	+C/029.06	
01X006:146	YE/BN	30X120:6.2	+C/035.03	
01X006:147	WH/GY	30X120:7.2	+C/035.03	
01X006:148	GY/BN	30X120:8.2	+C/035.03	
01X006:116	WH	30X120:1.4	+C/029.06	
01X006:117	GN	30X120:2.4	+C/029.06	
01X006:118	YE	30X120:3.4	+C/029.06	
01X006:119	GY	30X120:4.2	+C/029.06	
	PK			
	RD			
	BK			
	VT			
	GNYE			
30W130				
01X006:122+	BN	30X130:1.1	+C/029.02	
01X006:122-	BU	30X130:1.3	+C/029.02	
	GY/PK			
	RD/BU			
	WH/GN			
	BN/GN			
	WH/YE			
	YE/BN			
	WH/GY			
	GY/BN			
01X006:121	WH	30X130:1.4	+C/029.06	
01X006:122	GN	30X130:2.4	+C/030.06	
01X006:123	YE	30X130:3.4	+C/030.06	
01X006:124	GY	30X130:4.4	+C/030.06	
01X006:125	PK	30X130:5.4	+C/030.06	
01X006:161	RD	30X130:6.4	+C/032.06	
	BK			

Drawing remarks

Tetra Pak

Designer ACH	Date 01/10/2009	Machine CAP30 Flex ReCap3 0200	
ECM No 417049	Denomination CABLE CONNECTION LIST	Page Type CABLE CONNECTION LIST	
Company Tetra Pak (Italy)	Document No. 3039165-0007	Doc. type ELD	Version AB	Page 008

This drawing must not without the consent of Tetra Pak be copied, transmitted or disclosed to any third party.

Cable Connection List of 3039165-0003

From	Cable	To	Page.Col.	Option
	VT			
	GNYE			
	30W201			
30X120:4.3	BN	30B201:	+C/029.03	
30X120:4.1	BN	30B201:	+C/029.03	
30X120:4.2	BK	30B201:	+C/029.05	
	30W300			
30Q300:2	1	30M300:U	+C/017.04	
30Q300:4	2	30M300:V	+C/017.04	
30Q300:6	3	30M300:W	+C/017.04	
30X301:1	GNYE	30M300:⏚	+C/017.04	
PE:	SH	PE:	+C/017.04	
	30W303			
01X006:220	BN	30X303:1	+C/032.02	
01X006:158	WH	30X303:2	+C/032.06	
01X006:221	BU	30X303:3	+C/032.02	
01X006:159	BK	30X303:4	+C/032.06	
01X006:145	GY	30X303:5	+C/032.06	
	SH			
	30W304			
30K303:0	1	30B303:1	+C/032.04	
	30W400			
30T400:1 U	BN	30M400:U A	+C/012.02	
30T400:2 V	BK	30M400:V B	+C/012.02	
30T400:2 W	BU	30M400: W C	+C/012.02	
30T400:4 GND	GNYE	30M400:GND	+C/012.02	
PE:	SH	PE:	+C/012.02	
	30W401			

From	Cable	To	Page.Col.	Option
30T400:M/F D1	BK	30M400:SIN+ A	+C/012.03	
30T400:M/F D2	WH/BK	30M400:SIN- B	+C/012.03	
30T400:M/F D3	RD	30M400:COS+ C	+C/012.03	
30T400:M/F D4	WH/RD	30M400:COS- D	+C/012.03	
30T400:M/F D5	GN	30M400:DATA+ E	+C/012.03	
30T400:M/F D10	WH/GN	30M400:DATA- F	+C/012.03	
30T400:M/F D14	GY	30M400:K	+C/012.03	
30T400:M/F D6	WH/GY	30M400:ECOM L	+C/012.03	
30T400:M/F D7	OG	30M400:+9VDC N	+C/012.03	
30T400:M/F D11	WH/OG	30M400:TS+ R	+C/012.03	
	BU			
30T400:M/F D12	WT/BU	30M400:T	+C/012.03	
30T400:M/F D13	YE	30M400:NC	+C/012.03	
30T400:M/F D8	WH/YE	30M400:NC	+C/012.03	
30T400:M/F D9	BN	30M400:NC	+C/012.03	
30T400:M/F D15	WH/BN	30M400:NC	+C/012.03	
PE:	SH	PE:	+C/012.03	
	60W000			
30X130:3.1	BN	60B000:	+C/030.03	
30X130:3.3	BU	60B000:	+C/030.03	
30X130:3.4	BK	60B000:	+C/030.05	
	60W001			
30X130:4.1	BN	60B001:	+C/030.03	
30X130:4.3	BU	60B001:	+C/030.03	
30X130:4.4	BK	60B001:	+C/030.05	
	60W003			
60B003:	BN	01K360:1	+C/055.05	
60B003:	BU	01K360:3	+C/055.05	
60B003:	BK	01K360:4	+C/055.05	

Drawing remarks

Tetra Pak

Designer ACH	Date 01/10/2009	Machine CAP30 Flex ReCap3 0200	
ECM No 417049	Denomination CABLE CONNECTION LIST	Page Type CABLE CONNECTION LIST	
Company Tetra Pak (Italy)	Document No. 3039165-0007	Doc. type ELD	Version AB	Page 009

This drawing must not without the consent of Tetra Pak be copied, transmitted or disclosed to any third party.

Cable Connection List of 3039165-0003

From	Cable	To	Page.Col.	Option
	60W010			
60X010:1	1	60M010:U	+C/015.06	
60X010:2	2	60M010:V	+C/015.06	
60X010:3	3	60M010:W	+C/015.06	
60X010:⏚	GNYE	60M010:⏚	+C/015.06	
	60W011			
01X004:31	1	60X010:1	+C/015.06	
01X004:32	2	60X010:2	+C/015.06	
01X004:33	3	60X010:3	+C/015.06	
01X004:34	GNYE	60X010:⏚	+C/015.06	
	60W050			
01X006:202	WH	60K600:1	+C/037.04	
01X006:207	GN	60K605:1	+C/037.04	
01X006:203	YE	60K601:1	+C/037.04	
	GY			
01X006:204	PK	60K400:1	+C/037.04	
	BU			
01X006:205	RD	60K401:1	+C/037.04	
	VT			
01X006:206	GY-PK	60K602:1	+C/037.04	
01X006:212	RD-BU	60K402:1	+C/037.04	
01X006:213	WH-GN	60K403:1	+C/037.04	
	BN-GN			
	WH-YE			
	YE-BN			
	WH-GY			
	GY-BN			
	WH-PK			
	PK-BN			
	WH-BU			
	BN-BU			

From	Cable	To	Page.Col.	Option
	WH-RD			
	BN-RD			
	WH-BK			
	BN-BK			
01X006:201	BN	60K605:2	+C/037.06	
01X006:200	BK	60K402:2	+C/037.06	
	60W051			
01X006:216	WH	60K100:1	+C/038.04	
	GN			
01X006:217	YE	60K000:1	+C/038.04	
	GY			
01X006:218	PK	30K200:1	+C/038.04	
	BU			
01X006:208	RD	60K604:1	+C/038.04	
	VT			
01X006:209	GY-PK	60K603:1	+C/038.04	
01X006:210	RD-BU	30K302:1	+C/038.04	
01X006:211	WH-GN	60K010:1	+C/038.04	
	BN-GN			
	WH-YE			
	YE-BN			
	WH-GY			
	GY-BN			
	WH-PK			
	PK-BN			
	WH-BU			
	BN-BU			
	WH-RD			
	BN-RD			
	WH-BK			
	BN-BK			
01X006:215	BN	30K200:2	+C/038.06	
01X006:214	BK	60K604:2	+C/038.06	

Drawing remarks

Tetra Pak

Designer ACH	Date 01/10/2009	Machine CAP30 Flex ReCap3 0200	
ECM No 417049	Denomination CABLE CONNECTION LIST	Page Type CABLE CONNECTION LIST	
Company Tetra Pak (Italy)	Document No. 3039165-0007	Doc. type ELD	Version AB	Page 010

This drawing must not without the consent of Tetra Pak be copied, transmitted or disclosed to any third party.

Cable Connection List of 3039165-0003

From	Cable	To	Page.Col.	Option
	60W100			
30X120:5.3	BN	60B100:	+C/029.03	
30X120:5.1	BN	60B100:	+C/029.03	
30X120:5.2	BK	60B100:	+C/029.05	
	60W101			
30X130:1.1	BN	60B101:BN	+C/029.03	
30X130:1.3	BU	60B101:BU	+C/029.03	
30X130:1.4	BK	60B101:BK	+C/029.05	
	60W103			
30X130:2.3	BN	60B103:	+C/030.03	
30X130:2.1	BN	60B103:	+C/030.03	
30X130:2.4	BK	60B103:	+C/030.05	
	60W104			
30X120:1.1	BN	60B104:	+C/029.03	
30X120:1.3	BU	60B104:	+C/029.03	
30X120:1.4	BK	60B104:	+C/029.05	
	60W110			
60T110:1 U	BN	60M110:U A	+C/007.02	
60T110:2 V	BK	60M110:V B	+C/007.02	
60T110:2 W	BU	60M110: W C	+C/007.02	
60T110:4 GND	GNYE	60M110:GND	+C/007.02	
PE:	SH	PE:	+C/007.02	
	60W111			
60T110:M/F D1	BK	60M110:SIN+ A	+C/007.03	
60T110:M/F D2	WH/BK	60M110:SIN- B	+C/007.03	
60T110:M/F D3	RD	60M110:COS+ C	+C/007.03	
60T110:M/F D4	WH/RD	60M110:COS- D	+C/007.03	
60T110:M/F D5	GN	60M110:DATA+ E	+C/007.03	

From	Cable	To	Page.Col.	Option
60T110:M/F D10	WH/GN	60M110:DATA- F	+C/007.03	
60T110:M/F D14	GY	60M110:K	+C/007.03	
60T110:M/F D6	WH/GY	60M110:ECOM L	+C/007.03	
60T110:M/F D7	OG	60M110:+9VDC N	+C/007.03	
60T110:M/F D11	WH/OG	60M110:TS+ R	+C/007.03	
	BU			
60T110:M/F D12	WT/BU	60M110:T	+C/007.03	
60T110:M/F D13	YE	60M110:NC	+C/007.03	
60T110:M/F D8	WH/YE	60M110:NC	+C/007.03	
60T110:M/F D9	BN	60M110:NC	+C/007.03	
60T110:M/F D15	WH/BN	60M110:NC	+C/007.03	
PE:	SH	PE:	+C/007.03	
	60W210			
60T210:1 U	BN	60M210:U A	+C/010.02	
60T210:2 V	BK	60M210:V B	+C/010.02	
60T210:2 W	BU	60M210: W C	+C/010.02	
60T210:4 GND	GNYE	60M210:GND	+C/010.02	
PE:	SH	PE:	+C/010.02	
	60W211			
60T210:M/F D1	BK	60M210:SIN+ A	+C/010.03	
60T210:M/F D2	WH/BK	60M210:SIN- B	+C/010.03	
60T210:M/F D3	RD	60M210:COS+ C	+C/010.03	
60T210:M/F D4	WH/RD	60M210:COS- D	+C/010.03	
60T210:M/F D5	GN	60M210:DATA+ E	+C/010.03	
60T210:M/F D10	WH/GN	60M210:DATA- F	+C/010.03	
60T210:M/F D14	GY	60M210:K	+C/010.03	
60T210:M/F D6	WH/GY	60M210:ECOM L	+C/010.03	
60T210:M/F D7	OG	60M210:+9VDC N	+C/010.03	
60T210:M/F D11	WH/OG	60M210:TS+ R	+C/010.03	
	BU			
60T210:M/F D12	WT/BU	60M210:T	+C/010.03	
60T210:M/F D13	YE	60M210:NC	+C/010.03	

Drawing remarks

Tetra Pak

Designer ACH	Date 01/10/2009	Machine CAP30 Flex ReCap3 0200	
ECM No 417049	Denomination CABLE CONNECTION LIST	Page Type CABLE CONNECTION LIST	
Company Tetra Pak (Italy)	Document No. 3039165-0007	Doc. type ELD	Version AB	Page 011

This drawing must not without the consent of Tetra Pak be copied, transmitted or disclosed to any third party.

Cable Connection List of 3039165-0003

From	Cable	To	Page.Col.	Option
60T210:M/F D8	WH/YE	60M210:NC	+C/010.03	
60T210:M/F D9	BN	60M210:NC	+C/010.03	
60T210:M/F D15	WH/BN	60M210:NC	+C/010.03	
PE:	SH	PE:	+C/010.03	
	60W300			
30X130:5.1	BN	60B300:	+C/030.03	
30X130:5.3	BU	60B300:	+C/030.03	
30X130:5.4	BK	60B300:	+C/030.05	
	60W301			
30X130:6.1	BN	60B301:	+C/032.03	
30X130:6.3	BU	60B301:	+C/032.03	
30X130:6.4	BK	60B301:	+C/032.04	
	60W310			
60T310:1 U	BN	60M310:U A	+C/011.02	
60T310:2 V	BK	60M310:V B	+C/011.02	
60T310:2 W	BU	60M310: W C	+C/011.02	
60T310:4 GND	GNYE	60M310:GND	+C/011.02	
PE:	SH	PE:	+C/011.02	
	60W311			
60T310:M/F D1	BK	60M310:SIN+ A	+C/011.03	
60T310:M/F D2	WH/BK	60M310:SIN- B	+C/011.03	
60T310:M/F D3	RD	60M310:COS+ C	+C/011.03	
60T310:M/F D4	WH/RD	60M310:COS- D	+C/011.03	
60T310:M/F D5	GN	60M310:DATA+ E	+C/011.03	
60T310:M/F D10	WH/GN	60M310:DATA- F	+C/011.03	
60T310:M/F D14	GY	60M310:K	+C/011.03	
60T310:M/F D6	WH/GY	60M310:ECOM L	+C/011.03	
60T310:M/F D7	OG	60M310:+9VDC N	+C/011.03	
60T310:M/F D11	WH/OG	60M310:TS+ R	+C/011.03	
	BU			

From	Cable	To	Page.Col.	Option
60T310:M/F D12	WT/BU	60M310:T	+C/011.03	
60T310:M/F D13	YE	60M310:NC	+C/011.03	
60T310:M/F D8	WH/YE	60M310:NC	+C/011.03	
60T310:M/F D9	BN	60M310:NC	+C/011.03	
60T310:M/F D15	WH/BN	60M310:NC	+C/011.03	
PE:	SH	PE:	+C/011.03	
	60W402			
60B402:	BN	01K350:2.1	+C/054.05	
60B402:	BU	01K350:2.3	+C/054.05	
60B402:	BK	01K350:2.4	+C/054.05	
	60W403			
60B403:	BN	01K350:3.1	+C/054.05	
60B403:	BU	01K350:3.3	+C/054.05	
60B403:	BK	01K350:3.4	+C/054.05	
	60W404			
60B404:	BN	01K350:4.1	+C/054.05	
60B404:	BU	01K350:4.3	+C/054.05	
60B404:	BK	01K350:4.4	+C/054.05	
	60W405			
60B405:	BN	01K350:5.1	+C/054.05	
60B405:	BU	01K350:5.3	+C/054.05	
60B405:	BK	01K350:5.4	+C/054.05	
	60W406			
60B406:	BN	01K350:6.1	+C/054.05	
60B406:	BU	01K350:6.3	+C/054.05	
60B406:	BK	01K350:6.4	+C/054.05	
	60W407			
60B407:	BN	01K350:7.1	+C/054.05	

Drawing remarks

Tetra Pak

Designer ACH	Date 01/10/2009	Machine CAP30 Flex ReCap3 0200	
ECM No 417049	Denomination CABLE CONNECTION LIST	Page Type CABLE CONNECTION LIST	
Company Tetra Pak (Italy)	Document No. 3039165-0007	Doc. type ELD	Version AB	Page 012

RELEASED

This drawing must not without the consent of Tetra Pak be copied, transmitted or disclosed to any third party.

Cable Connection List of 3039165-0003

From	Cable	To	Page.Col.	Option
60B407:	BU	01K350:7.3	+C/054.05	
60B407:	BK	01K350:7.4	+C/054.05	
60W408				
60B408:	BN	01K360:1	+C/055.05	
60B408:	BU	01K360:3	+C/055.05	
60B408:	BK	01K360:4	+C/055.05	
60W409				
60B409:	BN	01K360:1	+C/055.05	
60B409:	BU	01K360:3	+C/055.05	
60B409:	BK	01K360:4	+C/055.05	
60W410				
60B410:	BN	01K360:1	+C/055.05	
60B410:	BU	01K360:3	+C/055.05	
60B410:	BK	01K360:4	+C/055.05	
60W411				
60B411:	BN	01K360:1	+C/055.05	
60B411:	BU	01K360:3	+C/055.05	
60B411:	BK	01K360:4	+C/055.05	
60W412				
60B606:	BN	01K360:1	+C/055.05	
60B606:	BU	01K360:3	+C/055.05	
60B606:	BK	01K360:4	+C/055.05	
60W420				
60X420:1	1	60M420:U	+C/015.04	
60X420:2	2	60M420:V	+C/015.04	
60X420:3	3	60M420:W	+C/015.04	
60X420:⏚	GNYE	60M420:⏚	+C/015.04	
60W421				

From	Cable	To	Page.Col.	Option
01X004:27	1	60X420:1	+C/015.04	
01X004:28	2	60X420:2	+C/015.04	
01X004:29	3	60X420:3	+C/015.04	
01X004:30	GNYE	60X420:⏚	+C/015.04	
60W423				
60B423:	BN	01K340:6.1	+C/053.05	
60B423:	BU	01K340:6.3	+C/053.05	
60B423:	BK	01K340:6.4	+C/053.05	
60W424				
60B424:	BN	01K340:7.1	+C/053.05	
60B424:	BU	01K340:7.3	+C/053.05	
60B424:	BK	01K340:7.4	+C/053.05	
60W425				
60B425:	BN	01K350:0.1	+C/054.05	
60B425:	BU	01K350:0.3	+C/054.05	
60B425:	BK	01K350:0.4	+C/054.05	
60W426				
60B426:	BN	01K350:1.1	+C/054.05	
60B426:	BU	01K350:1.3	+C/054.05	
60B426:	BK	01K350:1.4	+C/054.05	
60W600				
60B600:	BN	01K340:0.1	+C/053.05	
60B600:	BU	01K340:0.3	+C/053.05	
60B600:	BK	01K340:0.4	+C/053.05	
60W601				
60B601:	BN	01K340:1.1	+C/053.05	
60B601:	BU	01K340:1.3	+C/053.05	

Drawing remarks

Tetra Pak

Designer: ACH	Date: 01/10/2009	Machine: CAP30 Flex ReCap3 0200	
ECM No: 417049	Denomination: CABLE CONNECTION LIST	Page Type: CABLE CONNECTION LIST	
Company: Tetra Pak (Italy)	Document No.: 3039165-0007	Doc. type: ELD	Version: AB	Page: 013

This drawing must not without the consent of Tetra Pak be copied, transmitted or disclosed to any third party.

Cable Connection List of 3039165-0003

From	Cable	To	Page.Col.	Option
60B601:	BK	01K340:1.4	+C/053.05	
60W602				
60B602:	BN	01K340:2.1	+C/053.05	
60B602:	BU	01K340:2.3	+C/053.05	
60B602:	BK	01K340:2.4	+C/053.05	
60W603				
60B603:	BN	01K340:3.1	+C/053.05	
60B603:	BU	01K340:3.3	+C/053.05	
60B603:	BK	01K340:3.4	+C/053.05	
60W604				
60B604:	BN	01K340:4.1	+C/053.05	
60B604:	BU	01K340:4.3	+C/053.05	
60B604:	BK	01K340:4.4	+C/053.05	
60W605				
60B605:	BN	01K340:5.1	+C/053.05	
60B605:	BU	01K340:5.3	+C/053.05	
60B605:	BK	01K340:5.4	+C/053.05	
60W610				
01X004:23	1	60M610:U	+C/015.02	
01X004:24	2	60M610:V	+C/015.02	
01X004:25	3	60M610:W	+C/015.02	
01X004:26	GNYE	60M610:⏚	+C/015.02	
60W612				
01X006:199	6	60X612:9	+C/026.03	
01X006:198	5	60X612:8	+C/026.03	
01X006:194	4	60X612:4	+C/026.03	
01X006:193	3	60X612:3	+C/026.03	
01X006:192	2	60X612:2	+C/026.03	

From	Cable	To	Page.Col.	Option
01X006:191	1	60X612:1	+C/026.03	
70W100				
70T100:1 U	BN	70M100:U A	+C/013.02	
70T100:2 V	BK	70M100:V B	+C/013.02	
70T100:2 W	BU	70M100: W C	+C/013.02	
70T100:4 GND	GNYE	70M100:GND	+C/013.02	
PE:	SH	PE:	+C/013.02	
70W101				
70T100:M/F D1	BK	70M100:SIN+ A	+C/013.03	
70T100:M/F D2	WH/BK	70M100:SIN- B	+C/013.03	
70T100:M/F D3	RD	70M100:COS+ C	+C/013.03	
70T100:M/F D4	WH/RD	70M100:COS- D	+C/013.03	
70T100:M/F D5	GN	70M100:DATA+ E	+C/013.03	
70T100:M/F D10	WH/GN	70M100:DATA- F	+C/013.03	
70T100:M/F D14	GY	70M100:K	+C/013.03	
70T100:M/F D6	WH/GY	70M100:ECOM L	+C/013.03	
70T100:M/F D7	OG	70M100:+9VDC N	+C/013.03	
70T100:M/F D11	WH/OG	70M100:TS+ R	+C/013.03	
	BU			
70T100:M/F D12	WT/BU	70M100:T	+C/013.03	
70T100:M/F D13	YE	70M100:NC	+C/013.03	
70T100:M/F D8	WH/YE	70M100:NC	+C/013.03	
70T100:M/F D9	BN	70M100:NC	+C/013.03	
70T100:M/F D15	WH/BN	70M100:NC	+C/013.03	
PE:	SH	PE:	+C/013.03	
81W200				
81X200:2	1	81X200:1	+C/021.06	
81W201				
81X201:1	1	81X201:2	+C/021.05	

Drawing remarks

Tetra Pak

Designer ACH	Date 01/10/2009	Machine CAP30 Flex ReCap3 0200	
ECM No 417049	Denomination CABLE CONNECTION LIST	Page Type CABLE CONNECTION LIST	
Company Tetra Pak (Italy)	Document No. 3039165-0007	Doc. type ELD	Version AB	Page 014

This drawing must not without the consent of Tetra Pak be copied, transmitted or disclosed to any third party.

Cable Connection List of 3039165-0003

From	Cable	To	Page.Col.	Option
	81W400			
81X401:RD	RD	81T400:V+	+C/019.09	
81X401:BK	BK	81T400:V-	+C/019.09	
81X401:SH	SH	81T400:V-	+C/019.09	
81X401:		81T400:+ -	+C/058.04	
	81W401			
81X401:RD	RD	01K304:V+	+C/018.02	
81X401:WH	WH	01K304:CAN-H	+C/018.02	
81X401:BK	BK	01K304:V-	+C/019.07	
81X401:BU	BU	01K304:CAN-L	+C/019.07	
81X401:SH	SH	01K304:SHIELD	+C/018.02	
81X401:		01T300:Dnet	+C/058.05	
	81W402			
81X402:RD	RD	20T000:V+	+C/019.05	
81X402:WH	WH	20T000:CAN-H	+C/019.05	
81X402:BK	BK	20T000:V-	+C/019.05	
81X402:BU	BU	20T000:CAN-L	+C/019.05	
81X402:SH		20T000:SH	+C/019.05	
81X402:		20T000:Dnet In	+C/058.05	
	81W403			
81X403:RD	RD	01K0320:+V	+C/019.03	
81X403:WH	WH	01K0320:CAN-H	+C/019.03	
81X403:BK	BK	01K0320:-V	+C/019.03	
81X403:BU	BU	01K0320:CAN-L	+C/019.03	
81X403:SH	SH	01K0320:SHIELD	+C/019.03	
81X403:		01K0320:	+C/058.06	
	81W405			
81X402:RD	RD	81X401:RD	+C/019.06	
81X402:WH	WH	81X401:WH	+C/019.06	

From	Cable	To	Page.Col.	Option
81X402:BK	BK	81X401:BK	+C/019.06	
81X402:BU	BU	81X401:BU	+C/019.06	
81X402:SH	SH	81X401:SH	+C/019.06	
81X402:		81X401:	+C/058.05	
	81W406			
81X403:RD	RD	81X402:RD	+C/019.04	
81X403:WH	WH	81X402:WH	+C/019.04	
81X403:BK	BK	81X402:BK	+C/019.04	
81X403:BU	BU	81X402:BU	+C/019.04	
81X403:SH	SH	81X402:SH	+C/019.04	
81X403:		81X402:	+C/058.06	
	81W407			
81X404:RD	RD	81X403:RD	+C/019.02	
81X404:WH	WH	81X403:WH	+C/019.02	
81X404:BK	BK	81X403:BK	+C/019.02	
81X404:BU	BU	81X403:BU	+C/019.02	
81X404:SH	SH	81X403:SH	+C/019.02	
81X404:		81X403:	+C/058.06	
	81W420			
01X006:156	BN	81K420:1	+C/052.08	
01X006:151	BU	81K420:3	+C/052.08	
01X006:156	WH	81K420:2	+C/052.08	
01X006:151	BK	81K420:4	+C/052.08	
	81W421			
81K420:2	RD	01K340:2	+C/052.09	
81K420:4	WH	01K340:4	+C/052.09	
81K420:3	BK	01K340:3	+C/052.09	
81K420:5	BU	01K340:5	+C/052.09	
81K420:1	SH	01K340:1	+C/052.09	
81K420:NET		01K340:NET	+C/058.07	

Drawing remarks

Tetra Pak

Designer ACH	Date 01/10/2009	Machine CAP30 Flex ReCap3 0200	
ECM No 417049	Denomination CABLE CONNECTION LIST	Page Type CABLE CONNECTION LIST	
Company Tetra Pak (Italy)	Document No. 3039165-0007	Doc. type ELD	Version AB	Page 015

This drawing must not without the consent of Tetra Pak be copied, transmitted or disclosed to any third party.

Cable Connection List of 3039165-0003

From	Cable	To	Page.Col.	Option
	81W422			
01K0320:+V	RD	81K420:2	+C/039.04	
01K0320:CAN-H	WH	81K420:4	+C/039.04	
01K0320:-V	BK	81K420:3	+C/039.04	
01K0320:CAN-L	BU	81K420:5	+C/039.04	
01K0320:SHIELD	SH	81K420:1	+C/039.04	
01K0320:		81K420:NET	+C/058.06	
	81W500			
01X201:1	1	81K500:RJ12	+C/018.05	
	81W501			
81K500:4	GN		+C/018.09	
81K500:1	BN		+C/018.09	
81K500:3	YE		+C/018.09	
81K500:2	WH		+C/018.09	
81K500:5	SH		+C/018.09	
	81W700			
81X700:5	WH	81X701:5	+C/016.05	
81X700:4	BN	81X701:4	+C/016.05	
81W700:	SH	20T000:19	+C/016.01	
	81W701			
81X702:4	WH	81X701:5	+C/016.09	
81X702:5	BN	81X701:4	+C/016.09	
81W701:	SH	21T400:16	+C/016.08	
	81W702			
81X702:4	WH	81X704:5	+C/017.04	
81X702:5	BN	81X704:4	+C/017.04	
81W702:	SH	30T300:16	+C/017.03	
	81W703			

From	Cable	To	Page.Col.	Option
	RD			
	WH			
	BK			
	BU			
	SH			
	C35W8010			
	BK			
	BU			
	WH			
	RD			
	DRAIN			
	C35W8610			
	BK			
	BU			
	WH			
	RD			
	DRAIN			
	W30W8610			
	BK			
	BU			
	WH			
	RD			
	DRAIN			

Drawing remarks

Tetra Pak

Designer: ACH	Date: 01/10/2009	Machine: CAP30 Flex ReCap3 0200	
ECM No: 417049	Denomination: CABLE CONNECTION LIST	Page Type: CABLE CONNECTION LIST	
Company: Tetra Pak (Italy)	Document No.: 3039165-0007	Doc. type: ELD	Version: AB / Page: 016

9 Mains Connection

TechPub_2614345_0107 - 0901_3050429_01.fm

Description

The drawings that show the connection from the mains power to the electrical cabinet are included in this chapter.

TechPub_2614345_0107 - 0901_3050429_01.fm

This drawing must not without the consent of Tetra Pak
be copied, transmitted or disclosed to any third party.

MAIN VOLTAGE 200-600V EXCEPT 400/230V

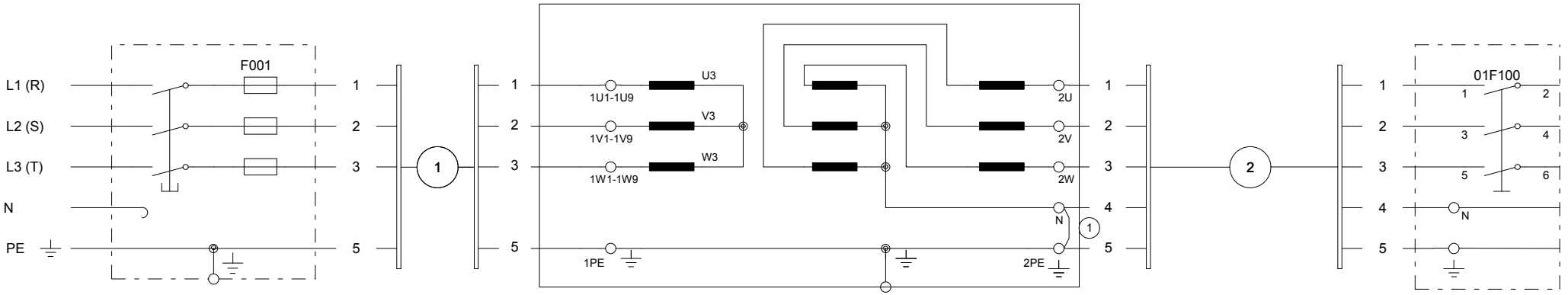

MAINS CUSTOMER'S FUSE BOX

MATCHING TRANSFORMER CONNECTION
ACCORDING TO DIAGRAM XXXXXXX-0007:002

CAP30 CONNECTION ACCORDING
TO DIAGRAM "MAINS"

MAIN VOLTAGE 400/230V

AREA TO CABLE 4x6/4mm² AND SETTING VALUE
OF 01F100= 32/400 - SIZE OF F001=20A. (slow)

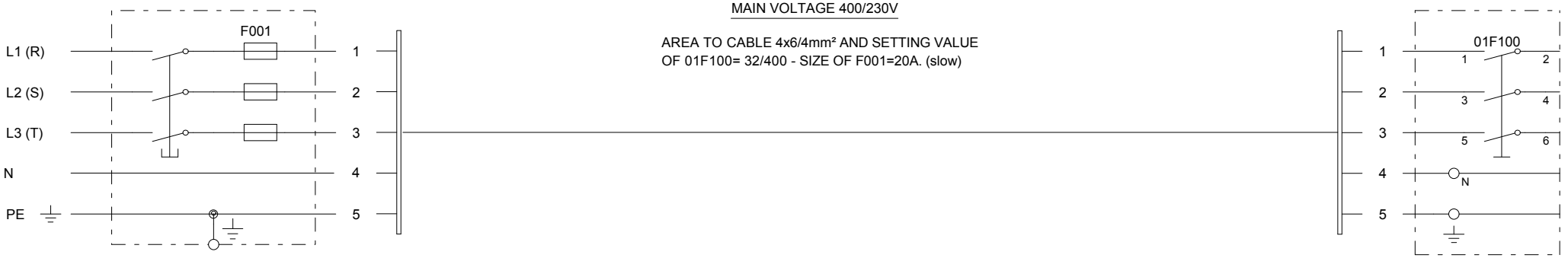

MAINS CUSTOMER'S FUSE BOX

ATTENTION: THIS IS A RECOMMANDATION TO ACHIEVE SELECTIVITY;
THE DIMENSIONING OF THE MAIN CABLE AND PROTECTIVE GROUNDING
HAS TO BE CARRIED OUT ACCORDING TO CURRENT LOCAL REGULATIONS.

CAP 30 CONNECTION ACCORDING
TO DIAGRAM "MAINS"

Drawing remarks	Tetra Pak	Designer ACH	Date 01/10/2009	Machine CAP30 Flex ReCap3 0200			
		ECM No 417049	Denomination MAINS CONNECTION	Page Type MAINS CONNECTION			
	Company Tetra Pak (Italy)		Document No. 3039165-0008	Doc. type ELD	Version AB	Page 001	

This drawing must not without the consent of Tetra Pak be copied, transmitted or disclosed to any third party.

1	2	3	4	5	6	7	8	9	10

MAIN VOLTAGE	FUSES (SLOW) ① F001	AREA TO CU CABLES NO. 1	AREA TO CU CABLES NO. 2	SETTING VALUE 01F100	CONNECTIONS ON MATCHING TRANSFORMER			
V	A	mm²	mm²	A	MAINS	TAP	CONNECT	
600/347 3x600	20	3x6/4	4x6/4	32/400	PHASE L1 PHASE L2 PHASE L3 N N GROUND PE	1U9 1V9 1W9 N ⏚	1U3 - U4 1V3 - V4 1W3 - W4	
550/318 3x550	20	3x6/4	4x6/4	32/400	PHASE L1 PHASE L2 PHASE L3 N N GROUND PE	1U8 1V8 1W8 N ⏚	1U3 - U4 1V3 - V4 1W3 - W4	
500/289 3x500	25	3x10/6	4x6/4	32/400	PHASE L1 PHASE L2 PHASE L3 N N GROUND PE	1U7 1V7 1W7 N ⏚	1U3 - U4 1V3 - V4 1W3 - W4	
480/277 3x480	25	3x10/6	4x6/4	32/400	PHASE L1 PHASE L2 PHASE L3 N N GROUND PE	1U6 1V6 1W6 N ⏚	1U3 - U4 1V3 - V4 1W3 - W4	
440/254 3x440	25	3x10/6	4x6/4	32/400	PHASE L1 PHASE L2 PHASE L3 N N GROUND PE	1U5 1V5 1W5 N ⏚	1U2 - U4 1V2 - V4 1W2 - W4	
415/240 3x415	25	3x10/6	4x6/4	32/400	PHASE L1 PHASE L2 PHASE L3 N N GROUND PE	1U5 1V5 1W5 N ⏚	1U1 - U4 1V1 - V4 1W1 - W4	
3x400 [3×380]	35	3x10/6	4x6/4	32/400	PHASE L1 PHASE L2 PHASE L3 N N GROUND PE	1U4 1V4 1W4 N ⏚	1U1 - U4 1V1 - V4 1W1 - W4	
240/140 3x240	50	3x16/10	4x6/4	32/400	PHASE L1 PHASE L2 PHASE L3 N N GROUND PE	1U3 1V3 1W3 N ⏚	U3 - U4 V3 - V4 W3 - W4	1U3-1U6 1V3-1V6 1W3-1W6
220/127 3x220	50	3x16/10	4x6/4	32/400	PHASE L1 PHASE L2 PHASE L3 N N GROUND PE	1U2 1V2 1W2 N ⏚	U3 - U4 V3 - V4 W3 - W4	1U2-1U5 1V2-1V5 1W2-1W5
200/115 3x200	63	3x25/16	4x6/4	32/400	PHASE L1 PHASE L2 PHASE L3 N N GROUND PE	1U1 1V1 1W1 N ⏚	U3 - U4 V3 - V4 W3 - W4	1U1-1U4 1V1-1V4 1W1-1W4

MATCHING TRANSFORMER
90245-0022

Y/Z II-WIRED

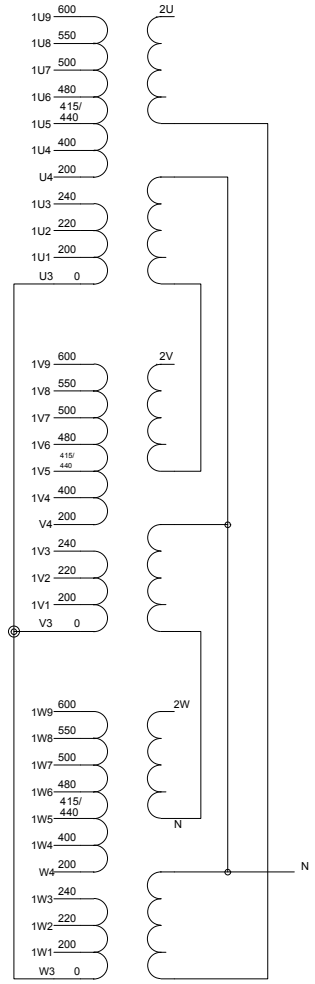

Drawing remarks

Tetra Pak

Designer	Date	Machine
ACH	01/10/2009	CAP30 Flex ReCap3 0200

ECM No	Denomination	Page Type
417049	MAINS CONNECTION	MAINS CONNECTION

Company	Document No.	Doc. type	Version	Page
Tetra Pak (Italy)	3039165-0008	ELD	AB	002

10 Drawing Remarks

TechPub_2614345_0107 - 1001_3050430_01.fm

Description

The following pages contain the drawing remarks that are referenced in chapter 4 Circuit Diagrams.

TechPub_2614345_0107 - 1001_3050430_01.fm

Drawing No.	Page	Note	Remark
3039165-0003	6	1	Connected to the driver.
		3	Connected to cable gland.
	7	1	Connected to the driver.
		3	Connected to cable gland.
	8	1	Connected to the driver.
		3	Connected to cable gland.
	9	1	Connected to the driver.
		3	Connected to cable gland.
	10	1	Connected to the driver.
		3	Connected to cable gland.
	11	1	Connected to the driver.
		3	Connected to cable gland.
	12	1	Connected to the driver.
		3	Connected to cable gland.
	13	1	Connected to the driver.
		3	Connected to cable gland.
	16	2	Connected to shield clamp.
		3	Connected to cable gland.
	17	2	Connected to shield clamp.
		3	Connected to cable gland.
	52	4	Reserved for switch device after outfeed conveyor.
3039165-0008	001	1	MAKE THE BRIDGE USING A CONNECTION AREA NOT SMALLER THEN 16mm
	002	1	RECOMMENDED MAIN FUSE TO ACHIEVE SELECTIVITY

This drawing must not without the consent of Tetra Pak be copied, transmitted or disclosed to any third party.

This page intentionally left blank

11 Engineering Change Description

TechPub_2614345_0107 - 1101_3050431_01.fm

Description

This chapter describes the changes introduced by the ECM.

TechPub_2614345_0107 - 1101_3050431_01.fm

ECM No.	Drawing No.	Alteration
417049		FOR CHANGES ON LISTS SEE ECM APPENDIX.
	3039165-0001:AB	DOCUMENT LIST: CHANGED ACCORDING TO UPDATE NEW AB VERSION.
	3039165-0002:AB	POSITION SUMMARY: CHANGED ACCORDING TO UPDATE CIRCUIT DIAGRAM.
	3039165-0003:AB	**SH.032:** IN-14 AND IN-15 BECOME SPARE. **SH.047:** TEXT DESCRIPTIONS OF LAMP ARE CHANGED. **SH.048:** TEXT DESCRIPTIONS OF LAMP ARE CHANGED. WIRE 01W510:6 IS ADDED.
	3039165-0004:AB	LINE SUMMARY: CHANGED ACCORDING TO UPDATE CIRCUIT DIAGRAM.
	3039165-0005:AB	CABINET TERMINAL SUMMARY: CHANGED ACCORDING TO UPDATE CIRCUIT DIAGRAM.
	3039165-0006:AB	TERMINAL STRIP OVERVIEW: CHANGED ACCORDING TO UPDATE CIRCUIT DIAGRAM.
	3039165-0007:AB	CABLE CONNECTION LIST: CHANGED ACCORDING TO UPDATE CIRCUIT DIAGRAM.
	3039165-0008:AB	MAINS CONNECTION: CHANGED ACCORDING TO UPDATE CIRCUIT DIAGRAM.
	3039165-0098:AB	DRAWING REMARKS: CHANGED ACCORDING TO UPDATE CIRCUIT DIAGRAM.
	3039165-0099:AB	EC DESCRIPTION: CHANGED ACCORDING TO UPDATE CIRCUIT DIAGRAM.
401556		DOCUMENTATION INTRODUCED.

This drawing must not without the consent of Tetra Pak be copied, transmitted or disclosed to any third party.

This page intentionally left blank

12 Component Location

TechPub_2614345_0107 - 1201_3050432_01.fm

Description

For component location, refer to the Electrical Parts Index in the SPC.

TechPub_2614345_0107 - 1201_3050432_01.fm

13 Other Information

TechPub_2614345_0107 - 1301_3050433_01.fm

Description

This chapter gives other information, when applicable; such as, a Bill of Materials, fuse panel label etc.

TechPub_2614345_0107 - 1301_3050433_01.fm

13.1 Bills of Material . . . . . 13 - 5

13.2 Fuse Panel Label . . . . . 13 - 7

TechPub_2614345_0107 - 1301_3050433_01.fm

This page intentionally left blank

TechPub_2614345_0107 - 1301_3050433_01.fm

13.1 Bills of Material

This chapter includes the lists of the documents and programs.

TechPub_2614345_0107 - 1301_3050433_01.fm

This page intentionally left blank

TechPub_2614345_0107 - 1301_3050433_01.fm

ECM P407044(L401557) P417227(L417050)
Release date 2009.10.01 2009.10.02

Chg	Position	Sp	SH	Description	As	Cr	Identity	DTp	Prt	Vs	Unit	Column quantity All
I	0010			DOCUMENTS LIST			3039165-0001	ELD	000	AB		x
I	0020			POSITION SUMMARY			3039165-0002	ELD	000	AB		x
I	0030			CIRCUIT DIAGRAM			3039165-0003	ELD	000	AB		x
I	0040			LINE SUMMARY			3039165-0004	ELD	000	AB		x
I	0050			CABINET TERMINAL SUMMARY			3039165-0005	ELD	000	AB		x
I	0060			TERMINAL STRIP OVERVIEW			3039165-0006	ELD	000	AB		x
I	0070			CABLE CONNECTION LIST			3039165-0007	ELD	000	AB		x
I	0080			MAINS CONNECTION			3039165-0008	ELD	000	AB		x
I	0098			DRAWING REMARKS			3039165-0098	ELD	000	AB		x
I	0099			ENGINEERING CHANGE DESCRIPTION			3039165-0099	ELD	000	AB		x

This page intentionally left blank

13.2 Fuse Panel Label

This chapter shows the location and the setting of the fuses.

TechPub_2614345_0107 - 1301_3050433_01.fm

This page intentionally left blank

TechPub_2614345_0107 - 1301_3050433_01.fm

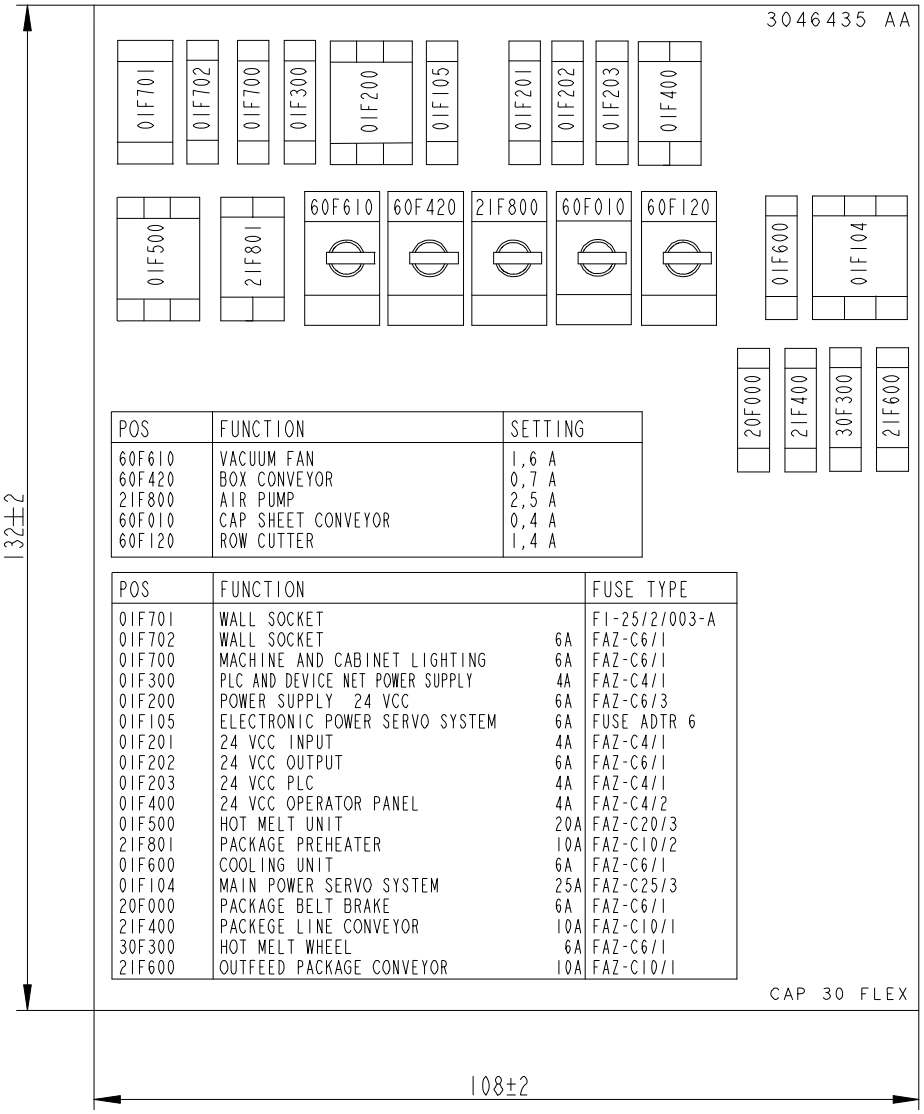

POS	FUNCTION	SETTING
60F610	VACUUM FAN	1,6 A
60F420	BOX CONVEYOR	0,7 A
21F800	AIR PUMP	2,5 A
60F010	CAP SHEET CONVEYOR	0,4 A
60F120	ROW CUTTER	1,4 A

POS	FUNCTION		FUSE TYPE
01F701	WALL SOCKET		FI-25/2/003-A
01F702	WALL SOCKET	6A	FAZ-C6/1
01F700	MACHINE AND CABINET LIGHTING	6A	FAZ-C6/1
01F300	PLC AND DEVICE NET POWER SUPPLY	4A	FAZ-C4/1
01F200	POWER SUPPLY 24 VCC	6A	FAZ-C6/3
01F105	ELECTRONIC POWER SERVO SYSTEM	6A	FUSE ADTR 6
01F201	24 VCC INPUT	4A	FAZ-C4/1
01F202	24 VCC OUTPUT	6A	FAZ-C6/1
01F203	24 VCC PLC	4A	FAZ-C4/1
01F400	24 VCC OPERATOR PANEL	4A	FAZ-C4/2
01F500	HOT MELT UNIT	20A	FAZ-C20/3
21F801	PACKAGE PREHEATER	10A	FAZ-C10/2
01F600	COOLING UNIT	6A	FAZ-C6/1
01F104	MAIN POWER SERVO SYSTEM	25A	FAZ-C25/3
20F000	PACKAGE BELT BRAKE	6A	FAZ-C6/1
21F400	PACKEGE LINE CONVEYOR	10A	FAZ-C10/1
30F300	HOT MELT WHEEL	6A	FAZ-C6/1
21F600	OUTFEED PACKAGE CONVEYOR	10A	FAZ-C10/1

BLACK PRINTING ON WHITE PAPER
PLASTIC EMBEDDED
SHINY SURFACE

Release Level: Released		ECM No: 406826	PDM Version Drawing 1.1 Model 1.0
Marked according to standard B 2103.10 Method/Size: NO/-		Unless otherwise stated SHARP EDGES BROKEN; Scale 1:1	Surface Roughness
Material: ---			Surface Treatment: ---
Designer: MOGI	Date: 2009-07-07	Denomination: FUSE PANEL LABEL ---	
Company: Tetra Pak (Italy)			
Hygienic demands: NC			
Tetra Pak	Drawing No: 3046435	Document Type: DRA	R3 Version: AA / Page: 1(1)

©Tetra Pak. All rights reserved; any copying, transmittal or disclosure subject to Tetra Pak's written approval.

Pro/ENGINEER - A3

This page intentionally left blank

14 Program Documents

TechPub_2614345_0107 - 1401_3050434_01.fm

Description

The program document used for this machine is contained on a CDROM. For installation instructions, see the MM.

TechPub_2614345_0107 - 1401_3050434_01.fm

14.1 CDROM Contents. . . . . 14 - 5

TechPub_2614345_0107 - 1401_3050434_01.fm

This page intentionally left blank

TechPub_2614345_0107 - 1401_3050434_01.fm

14.1 CDROM Contents

The two CDROMs contain the machine programs. One CD has the firmware (for initial setup) and the second CD contains the applications.

The application programs are as follows:

- PLC program (Rockwell)
- Safety PLC program (Jokab)
- Networks configuration (Device-Net, Rockwell)
- Operator Panel program (Rockwell)

TechPub_2614345_0107 - 1401_3050434_01.fm

This page intentionally left blank

TechPub_2614345_0107 - 1401_3050434_01.fm

Tetra Pak

Note! *This page is generated* ***automatically****.*
using the ***variable definitions*** *made in the* ***front page*** *file!*

CAP 30/Flex ReCap
662950-0200
Issue 2009-10 Doc. No. EM-3047190-0101

CAP 30/Flex ReCap
662950-0200
Issue 2009-10 Doc. No. EM-3047190-0101

CAP 30/Flex ReCap
662950-0200
Issue 2009-10 Doc. No. EM-3047190-0101

CAP 30/Flex ReCap
662950-0200
Issue 2009-10 Doc. No. EM-3047190-0101

CAP 30/Flex ReCap
662950-0200
Issue 2009-10 Doc. No. EM-3047190-0101

CAP 30/Flex ReCap
662950-0200
Issue 2009-10 Doc. No. EM-3047190-0101

CAP 30/Flex ReCap
662950-0200
Issue 2009-10 Doc. No. EM-3047190-0101

CAP 30/Flex ReCap
662950-0200
Issue 2009-10 Doc. No. EM-3047190-0101

CAP 30/Flex ReCap
662950-0200
Issue 2009-10 Doc. No. EM-3047190-0101

CAP 30/Flex ReCap
662950-0200
Issue 2009-10 Doc. No. EM-3047190-0101

CAP 30/Flex ReCap
662950-0200
Issue 2009-10 Doc. No. EM-3047190-0101

CAP 30/Flex ReCap
662950-0200
Issue 2009-10 Doc. No. EM-3047190-0101

40 mm Full width ***Note!*** *This page is generated* ***automatically****.*
using the ***variable definitions*** *made in the* ***front page*** *file!*

CAP 30/Flex ReCap 1(2)
662950-0200
Issue 2009-10 Doc. No. EM-3047190-0101

CAP 30/Flex ReCap 1(2)
662950-0200
Issue 2009-10 Doc. No. EM-3047190-0101

CAP 30/Flex ReCap 1(2)
662950-0200
Issue 2009-10 Doc. No. EM-3047190-0101

CAP 30/Flex ReCap 1(2)
662950-0200
Issue 2009-10 Doc. No. EM-3047190-0101

CAP 30/Flex ReCap 1(2)
662950-0200
Issue 2009-10 Doc. No. EM-3047190-0101

CAP 30/Flex ReCap 1(2)
662950-0200
Issue 2009-10 Doc. No. EM-3047190-0101

CAP 30/Flex ReCap 1(2)
662950-0200
Issue 2009-10 Doc. No. EM-3047190-0101

CAP 30/Flex ReCap 1(2)
662950-0200
Issue 2009-10 Doc. No. EM-3047190-0101

CAP 30/Flex ReCap 1(2)
662950-0200
Issue 2009-10 Doc. No. EM-3047190-0101