MM

Maintenance Manual

CAP 30/Flex

662950-0200

ReCap

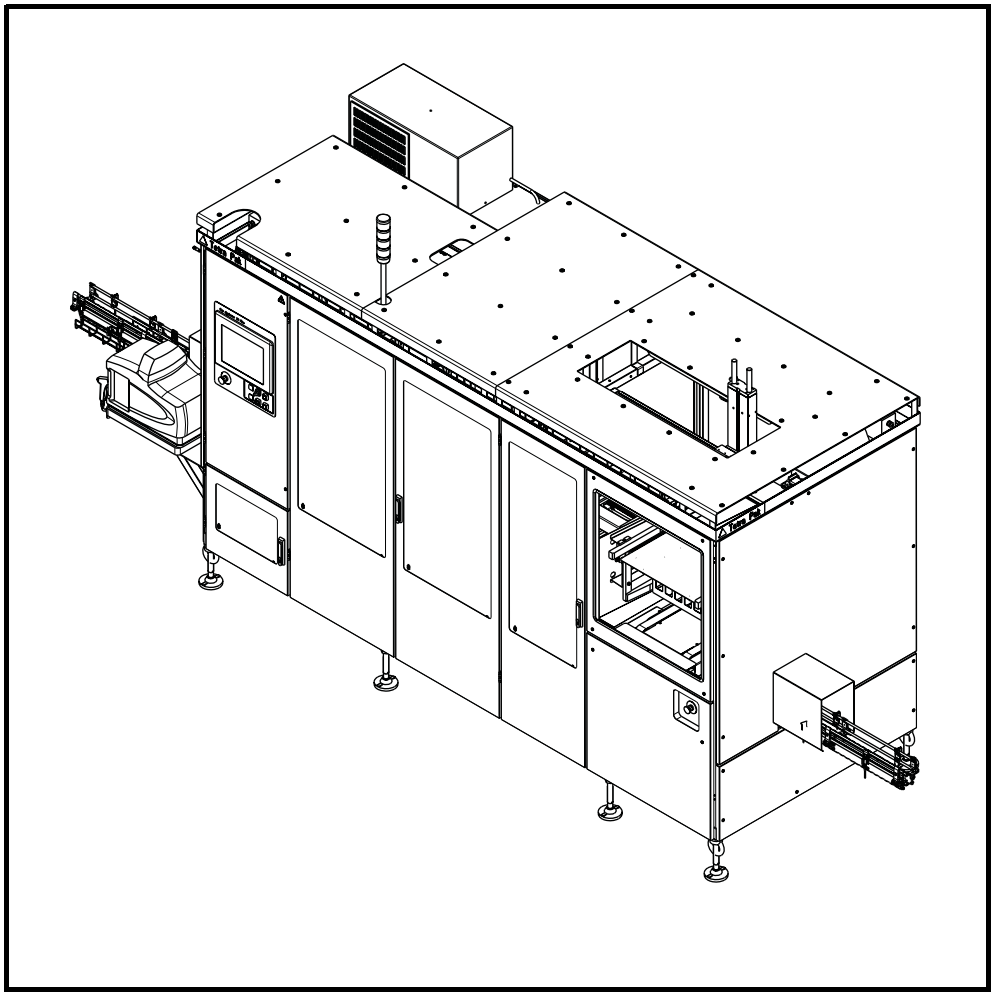

TechPub_2614345_0106 - MM_3047192_0103fro.fm

WARNING

Read and follow all safety precaution instructions throughout this manual and on safety signs attached to this equipment.

Failure to follow all safety precaution instructions could result in death or serious injury.

Tetra Pak

Doc. No. MM-3047192-0103

Copyright © 2010 Tetra Pak Group

All rights reserved. No part of this document may be reproduced or copied in any form or by any means without written permission from Tetra Pak Packaging Solutions.

Tetra Pak and all Tetra Pak products are trademarks belonging to the Tetra Pak Group.

The content of this manual is in accordance with the design and construction of the machine or equipment at the time of publishing. Tetra Pak reserves the right to introduce design modifications without prior notice.

The English version of this document is the original language version.

This document was produced by:

Tetra Pak Packaging Solutions
Via Delfini 1
41123 MODENA
Italy

Additional copies can be ordered from Tetra Pak. When ordering additional copies, always provide the document number.

Doc. No. MM-3047192-0103

Issue 2010-03

TechPub_2614345_0106 - MM_3047192_0103fro.fm

This manual is valid for:

Series No./ Machine No. Sign.

MM

Maintenance Manual

CAP 30/Flex
662950-0200

TechPub_2614345_0106 - MM_3047192_0103fro.fm

Machine or equipment configurations that this manual is valid for are described on the next page.

i Introduction

ii Safety Precautions

1 Machine Synchronisation

2 Package Line

3 Push Down

4 Machine Body

5 Applicator Unit

6 ReCap Cutting and Feeding

7 ReCap Magazine

8 Electrical System

9 Regular Accessories

10 Optional Equipment

11 General

iii Index

Doc. No. MM-3047192-0103

Issue 2010-03

Tetra Pak

Tetra Pak Packaging Solutions

Valid for:

Name	Drawing Specification and Development Step	Additional Information
CAP 30/Flex	662950-0200	Volume and Package Shape: - TBA 500 S ReCap 2 A3 - TBA 1000 B ReCap 3 - TBA 1000 S ReCap 3 - TBA 1000 Sq ReCap 3 - TBA 1500 S ReCap 3

TechPub_2614345_0106 - MM_3047192_0103fro.fm

Update Log for Doc. No. MM-3047192-0103

This table shows all changes made to this manual, including installed rebuilding kits, added or removed pages. Page numbering on added pages begins with UP.

Date	Installed Kit	Added Pages (Doc. No.)	Removed Pages	Signature

TechPub_2614345_0106 - MM_3047192_0103fro.fm

Date	Installed Kit	Added Pages (Doc. No.)	Removed Pages	Signature

TechPub_2614345_0106 - MM_3047192_0103fro.fm

i Introduction

TechPub_2614345_0106 - in02_3047100_01.fm

About the Introduction Chapter

This chapter contains basic information about this manual and the related Tetra Pak equipment.

TechPub_2614345_0106 - in02_3047100_01.fm

Abbreviations and Terminology . . . . . i - 5
Manual Information . . . . . i - 6
Delivered Manuals . . . . . i - 6
Page Layout . . . . . i - 7
Page Numbering. . . . . i - 8
Typographical Conventions . . . . . i - 8
Symbols . . . . . i - 8
Machine Introduction . . . . . i - 9
Intended Use of the Equipment . . . . . i - 9
Manufacturer . . . . . i - 9
Support and Feedback . . . . . i - 9
Identification . . . . . i - 10
CE Classification . . . . . i - 10
Machine Plate . . . . . i - 10
Orientation . . . . . i - 11
Hygiene. . . . . i - 12
Microbiological Pollution . . . . . i - 12
How to Use This MM . . . . . i - 13
Procedures . . . . . i - 13
Procedure Start Table . . . . . i - 13
Tetra Pak Maintenance System. . . . . i - 14
Planned Maintenance Program . . . . . i - 14
Checklists and Spare Parts Recommendations . . i - 14

TechPub_2614345_0106 - in02_3047100_01.fm

This page intentionally left blank

TechPub_2614345_0106 - in02_3047100_01.fm

Abbreviations and Terminology

ANSI	American National Standards Institute	
APU	Applicator Unit	
CAP	Cap Applicator	
CE	Communautés Européennes/European Communities	
COM	Communications	
Cont'd	Continued	
CPS	Cap Positioning System	
Deg.	Degree	
Doc.	Document	
EEA	European Economic Area	
EM	Electrical Manual	
IM	Installation Manual	
IPU	Infeed Package Unit	
ISO	International Organisation for Standardisation	
MM	Maintenance Manual	
ms	milli-second	
No.	Number	
O.E.	Optional Equipment	
OM	Operation Manual	
Pos	Position	
psi	Pound per square inch	
PTU	Package Transfer Unit	
PVC	Polyvinyl chloride	
S	Slim (package shape)	
SPC	Spare Parts Catalogue	
Sq	Square (package shape)	
TBA	Tetra Brik Aseptic	
TGA	Tetra Gemina Aseptic	
TP	Tetra Pak	
TPA	Tetra Prisma Aseptic	
V	Volt	

TechPub_2614345_0106 - in02_3047100_01.fm

Manual Information

Tetra Pak recommends reading all delivered manuals carefully. Make sure that the delivered manuals are available to personnel who operate or maintain the equipment.

It is important to keep this manual for the lifetime of the equipment and to pass the manual on to any subsequent holder or user.

Tetra Pak will not be held responsible for any damage to the equipment caused by not following the instructions given in this manual.

Delivered Manuals

Manuals delivered with this equipment:

- The Conversion Manual (CM) provides technicians with information on converting the equipment between different production modes.
- The Electrical Manual (EM) provides technicians with information about the equipment's electrical system.
- The Installation Manual (IM) provides technicians with information required to safely install the equipment.
- The Maintenance Manual (MM) provides technicians with information on maintaining the equipment.
- The Operation Manual (OM) manual provides the operator with information on handling and operating the equipment before, during, and after production.
- The Spare Parts Catalogue (SPC) provides the information necessary to order spare parts from Tetra Pak.
- The Technical Manual (TEM)
  - provides technicians with information required to safely install the equipment
  - provides technicians with information on maintaining the equipment
  - provides technicians with information about the machine's/ equipment's electrical system
  - provides the information necessary to order spare parts from Tetra Pak.

TechPub_2614345_0106 - in02_3047100_01.fm

Page Layout

Every main page in a manual contains a header and a footer. The page header contains the chapter name (1) and the section name (2). The page footer contains the page number (3), and the document number (4). See also the Page Numbering section.

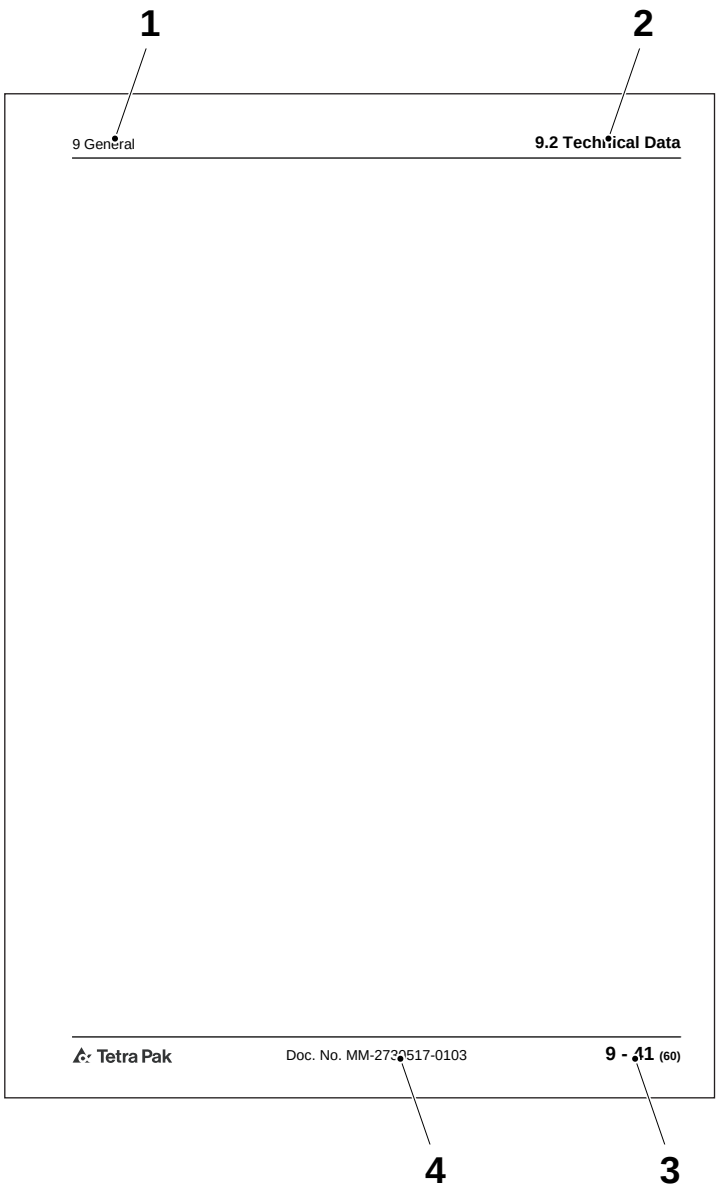

1 Chapter name
2 Section name
3 Page number
4 Document number

TechPub_2614345_0106 - in02_3047100_01.fm

Page Numbering

A page number has three parts:

- chapter number (1)
- consecutive page number (2) within the chapter
- total number of pages (3) in the chapter.

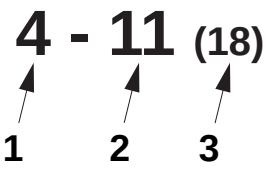

1 Chapter number
2 Consecutive page number
3 Total number of pages

Typographical Conventions

Controls on the operator panel, emergency stop devices, and program steps are printed in CAPITAL LETTERS.

Cross-references are underlined.

Symbols

Symbols used in illustrations.

	A pointer arrow indicates the position of an object.
	A zoom arrow indicates that an object view is enlarged. The arrow points towards the enlarged view of the object.
	A rotation movement arrow indicates rotational movement of an object. The arrow points in the direction of rotation.
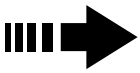	A straight movement arrow indicates movement of an object. The arrow points in the direction of movement.

TechPub_2614345_0106 - in02_3047100_01.fm

Machine Introduction

Intended Use of the Equipment

The intended use of this Tetra Pak equipment is to apply a closure onto a package.

Tetra Brik Aseptic Slim packages must have opening tabs. The opening tabs are applied by a PullTab unit which is incorporated in to the filling machine. All other packages must have pre-laminated holes.

All other use is prohibited. Tetra Pak will not be held responsible for injury or damage if the equipment is used for any other purpose.

Manufacturer

This Tetra Pak equipment has been manufactured by:

Tetra Pak Packaging Solutions
Via Delfini 1
41123 MODENA
Italy

Support and Feedback

If you encounter problems when operating this equipment or have other inquiries, comments, or suggestions for improvement, contact Tetra Pak.

TechPub_2614345_0106 - in02_3047100_01.fm

Identification

CE Classification

This equipment complies with the basic health and safety regulations of the European Economic Area (EEA).

Machine Plate

The illustration below shows an example of the machine plate and its location on the equipment. The machine plate carries data needed when contacting Tetra Pak concerning this specific equipment.

Make sure that the equipment data in the front pages of this manual corresponds to the machine plate data and the machine specification.

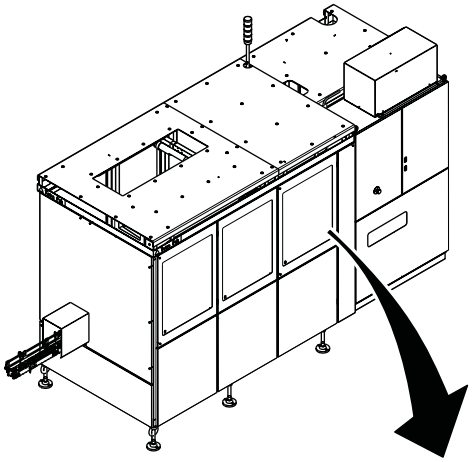

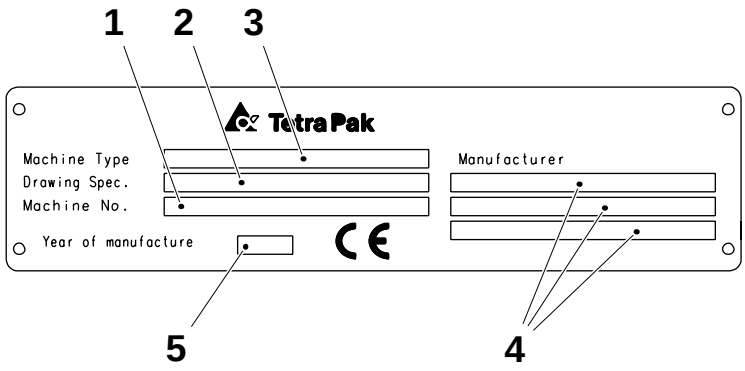

1 Machine number
2 Drawing specifications
3 Machine type
4 Manufactured by
5 Year of manufacture

TechPub_2614345_0106 - in02_3047100_01.fm

Orientation

The illustration below shows the orientation of the equipment. This orientation information will be used throughout this manual.

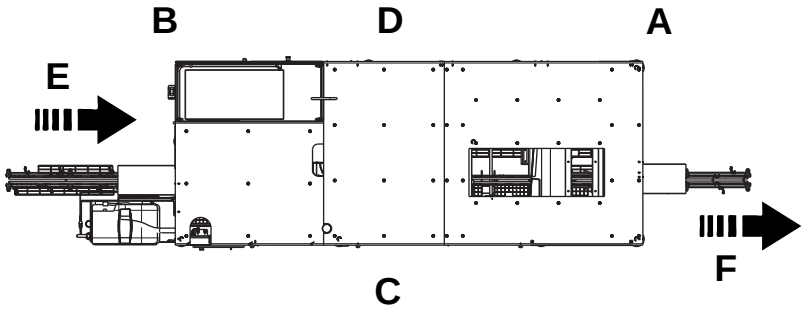

A Front
B Back
C Left
D Right
E Infeed
F Outfeed

TechPub_2614345_0106 - in02_3047100_01.fm

Hygiene

Microbiological Pollution

To avoid microbiological pollution of the packaging material:

- Never clean the floors or the equipment when the equipment is in production
- Compressed air used for cleaning purposes is to be used only for cleaning filters and should only be used outside of the filling room (area) or in the final folder compartment of the filling machine
- Disinfect your hands before touching anything that may come into contact with the product. Use disinfectant code H. See the Technical Data chapter
- Keep your hands and gloves clean
- Always wear some type of hair protection (cap or hairnet) and clean clothes (preferably white)
- Do not wear a watch, ring, necklace, earrings, or any other exposed jewellery.

TechPub_2614345_0106 - in02_3047100_01.fm

How to Use This MM

Procedures

The name of the chapters and sections in the MM correspond to the groups in the structure of the equipment. Procedures correspond to a chapter or a section:

- The dashes indicate that it is a procedure heading. The example below shows a heading for Procedure number 3 in Section 1.5.
- The text after the second dash tells what type of procedure it is. Check, Change and Set are common procedure types.

1.5-3 Outfeed Servo - Change Bearings

Maintenance procedures in this manual are connected to the Tetra Pak Maintenance System, TPMS. See the Tetra Pak Maintenance System section.

Procedure Start Table

Procedures in this manual begin with a table providing information needed to begin the procedure.

- Machine Status (1) shows actuator status, program step, and any other machine status necessary to begin the procedure.
- Special Equipment (2) shows a list of personal protective equipment and special tools that are not normally carried by a service technician, but are needed in the procedure.
- Consumables (3) shows items, such as lubricants, that are required to perform the procedure. Consumables do not include replacement parts.
- SPC Reference (4) shows the assembly number, found in the index of the SPC.

Machine Status	Power supply disconnector OFF Air valve OFF Water valve OFF
Special Equipment	Hook spanner TP No. 777170-0105 Dial indicator
Consumables	Grease code F
SPC Reference	2501234-0100

1 Machine Status
2 Special Equipment
3 Consumables
4 SPC Reference

TechPub_2614345_0106 - in02_3047100_01.fm

Tetra Pak Maintenance System

To ensure uninterrupted production, all machines and equipment must be maintained on a regular basis.

Tetra Pak has developed a planned maintenance system to keep pace with the ongoing development of new and existing machines and equipment from Tetra Pak, and to meet the demands set by customers for higher efficiency and better economy.

Planned Maintenance Program

The Tetra Pak planned maintenance system reduces unplanned downtime and maintenance time for complete production lines, as well as for individual machines and equipment.

With the Tetra Pak planned maintenance system, preventive maintenance can be performed before production is affected. The system is continually updated based on experience with Tetra Pak machines and equipment worldwide.

The Tetra Pak planned maintenance system maintains records of when maintenance is performed, when parts are changed, whether alterations are made, and so on. These records, combined with usage statistics, enable reliable predictions of the service life of all machine and equipment parts.

Checklists and Spare Parts Recommendations

Customers using the Tetra Pak planned maintenance system receive checklists from their local Tetra Pak office whenever planned maintenance is due. These checklists are individualised for each customer, according to the type of machine, equipment usage, and maintenance occasion. In addition, the system recommends spare parts, rotation units, tools, and templates according to the statistics collected.

Note! Contact the local Tetra Pak office for additional information about the Tetra Pak Maintenance System and its planned maintenance program.

TechPub_2614345_0106 - in02_3047100_01.fm

ii Safety Precautions

TechPub_2614345_0106 - sp02_3047101_01.fm

Safety Precaution Instructions

WARNING

Read all safety precaution instructions throughout this manual and on safety signs attached to this equipment.

Failure to follow all safety precaution instructions could result in death or serious injury.

Definition of Lockout Procedure

A lockout procedure is a procedure to put each necessary energy isolating device in its safe position to prevent the energisation of the equipment, such as when a maintenance procedure should be carried out.

A lockout is the use of a device, for example, a padlock, to make sure that an energy isolating device cannot be operated.

An energy isolating device is a mechanical device that physically prevents transmission or release of energy, such as a power supply disconnector.

TechPub_2614345_0106 - sp02_3047101_01.fm

Safety Messages Description . . . . . ii - 5

Personnel Requirements . . . . . ii - 6

Skilled Person . . . . . ii - 6

Instructed Person. . . . . ii - 6

Safety Signs . . . . . ii - 7

Location of Safety Signs. . . . . ii - 9

Protective Devices. . . . . ii - 10

Emergency Stop. . . . . ii - 10

Emergency Stop Push-Buttons . . . . . ii - 11

Safeguards . . . . . ii - 12

Warning Lamp . . . . . ii - 14

Audible Alarm. . . . . ii - 14

Personal Protection. . . . . ii - 15

Noise Hazard . . . . . ii - 15

Entanglement Hazard . . . . . ii - 15

Hazardous Substances . . . . . ii - 16

Determelt 3 . . . . . ii - 17

Emergency Procedures. . . . . ii - 17

Handling . . . . . ii - 18

Storage . . . . . ii - 18

Disposal of Chemical Substances . . . . . ii - 19

Personal Protective Equipment . . . . . ii - 19

Supply Systems. . . . . ii - 20

Power Supply . . . . . ii - 20

Residual Voltage . . . . . ii - 20

Electrical Cabinet. . . . . ii - 21

Socket Outlet . . . . . ii - 22

Air Supply . . . . . ii - 23

TechPub_2614345_0106 - sp02_3047101_01.fm

Hotmelt Equipment . . . . . ii - 24

General . . . . . ii - 24

Hotmelt Unit . . . . . ii - 25

Hotmelt Wheel . . . . . ii - 26

Additional Information. . . . . ii - 27

Package Heater . . . . . ii - 27

Waste Device . . . . . ii - 28

Equipment for Lifting and Moving Loads . . . . ii - 29

TechPub_2614345_0106 - sp02_3047101_01.fm

Safety Messages Description

A safety message is always accompanied by a safety alert symbol and a signal word.

The safety alert symbol is used to alert about potential personal injury hazards. To avoid hazards, obey all safety messages that follow this symbol.

The following safety alert symbols and signal words are used in this manual to inform the user of hazards.

DANGER	Danger indicates an imminently hazardous situation which, if not avoided, will result in death or serious injury.
WARNING	Warning indicates a potentially hazardous situation which, if not avoided, **could** result in **death or serious injury**.
CAUTION	Caution indicates a potentially hazardous situation which, if not avoided, **may** result in **minor or moderate injury.** It may also be used to alert against unsafe practices.
CAUTION	Caution without the safety alert symbol indicates a potentially hazardous situation which, if not avoided, **may** result in **property damage**.

TechPub_2614345_0106 - sp02_3047101_01.fm

Personnel Requirements

Note! Personnel includes all persons working on or near this equipment.

Only skilled or instructed persons are allowed to work with this equipment.

Skilled Person

A skilled person must have relevant education and experience to enable him or her to identify hazards, analyse risks, and avoid hazards which electricity, machinery, chemicals, other energies, and supply systems on this equipment can create.

Skilled persons must meet local regulations, such as certifications and qualifications for working with these energies and systems.

Instructed Person

An instructed person must be adequately advised or supervised by a skilled person. The skilled person enables the instructed person to identify hazards, analyse risks, and avoid hazards which electricity, machinery, chemicals, other energies, and supply systems on this equipment can create.

TechPub_2614345_0106 - sp02_3047101_01.fm

Safety Signs

WARNING

Damaged or missing safety signs increase the risk of death or serious injury.

Replace all missing or damaged safety signs immediately.

Safety signs are attached to the equipment. The table on the following page lists all the signs that are used, and illustrations show their locations on the equipment. Each position number refers to two variants of a safety sign in the table, but only one is used on the equipment.

- Make sure that each safety sign is legible and in its correct position after installation and maintenance.
- Replace all missing or damaged safety signs immediately.

(Cont'd)

TechPub_2614345_0106 - sp02_3047101_01.fm

(Cont'd)

Pos.	ISO sign	ANSI sign
1	 **Hazardous voltage.** Will shock, burn, or cause death. Follow lockout procedure before maintenance.	
2	 **Risk of equipment damage.** Do not let water into this area.	
3	 **Hot surface.** Do not touch. Follow lockout procedure before maintenance.	
4	 **Blade hazard.** **Do not touch the sharp knife.**	

(Cont'd)

TechPub_2614345_0106 - sp02_3047101_01.fm

(Cont'd)

Location of Safety Signs

The illustration shows where the safety signs are located. The position numbers refer to the table in the Safety Signs section.

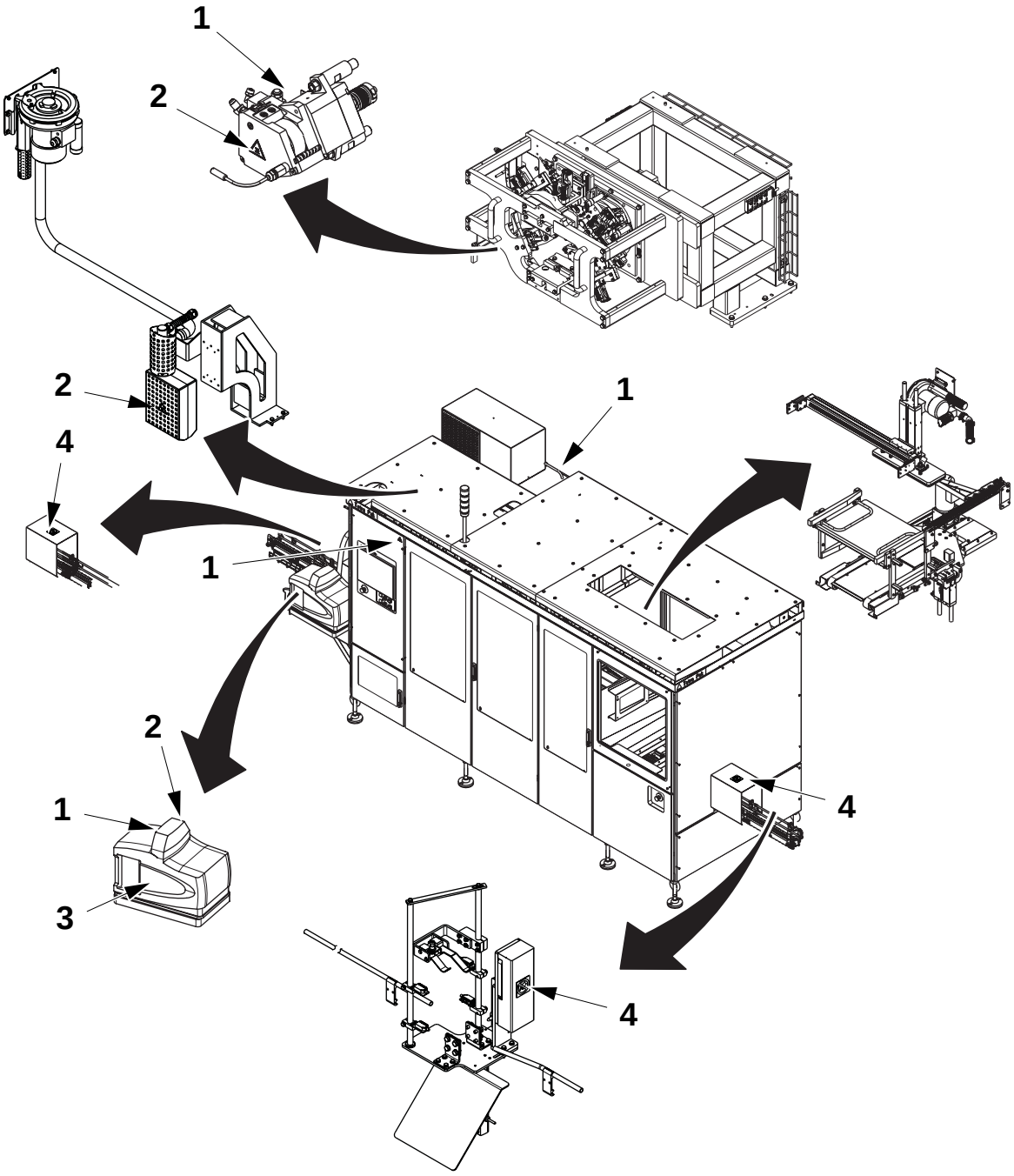

TechPub_2614345_0106 - sp02_3047101_01.fm

Protective Devices

WARNING

Hazardous zones.

Hazardous zones are safeguarded and provided with protective devices. Do not inch or run this equipment if any protective device is inoperative.

Change inoperative components of the safety system immediately.

WARNING

Hazardous voltage.

Hazardous voltage remains on this equipment after activating an EMERGENCY STOP or an interlocking device.

Emergency Stop

Emergency stop devices are used to stop this equipment immediately in an hazardous situation. Learn the positions of all emergency stop devices and how to use them.

Instructions for a normal production stop are included in the Stop chapter of the Operation Manual.

TechPub_2614345_0106 - sp02_3047101_01.fm

Emergency Stop Push-Buttons

Press one of the EMERGENCY STOP push-buttons to stop this equipment immediately.

The location of each EMERGENCY STOP push-button is shown by an arrow.

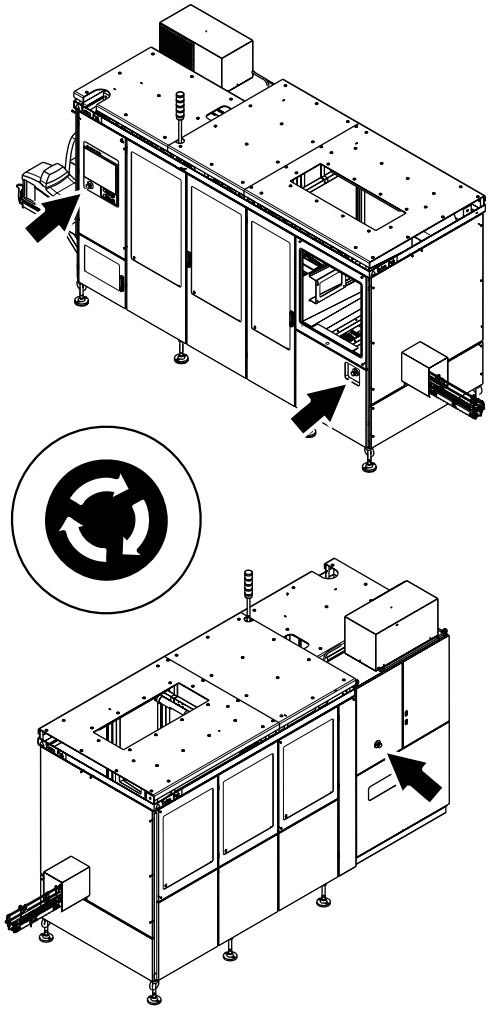

TechPub_2614345_0106 - sp02_3047101_01.fm

Safeguards

WARNING
Moving machinery.
Never defeat or bypass the interlocking devices.

Movable guards, for example, doors and covers leading to hazardous zones, are fitted with interlock devices where required. These devices are usually electric safety switches that are part of the safety system and must never be defeated, bypassed, or otherwise made inoperative.

Where a movable door is not allowed to be opened and must remain locked when the machine is in production, an electromagnetic door lock is installed or the safety switches have a locking device incorporated. The movable guards can only open when the machine is in a safe condition.

WARNING
Corners and edges.
To prevent injury from corners and edges of open doors and covers, close them unless they must be open during such work. Be careful when working under an open door, cover or elsewhere below parts of the equipment with corners and edges.

CAUTION
Burn hazard.
Parts of this equipment may be hot after operation.

After installation and maintenance, and before this equipment is inched or run, check that all safeguards are in place and that they operate correctly.

(Cont'd)

TechPub_2614345_0106 - sp02_3047101_01.fm

(Cont'd)

CAUTION
Equipment damage.
Never stop this equipment by opening a movable guard with an interlock device installed.

Movable guards with safety switches installed are shown by an arrow.

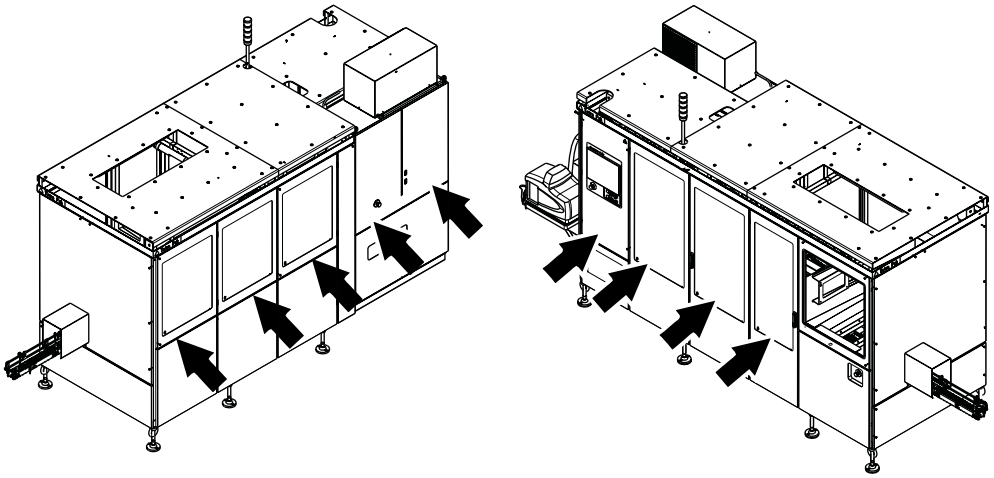

Movable guards with an electromagnetic door lock installed are shown by an arrow.

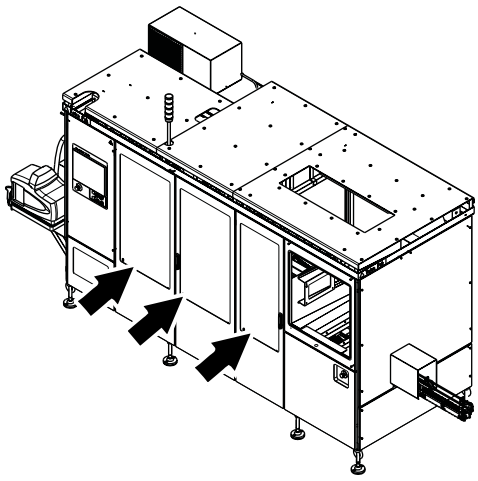

TechPub_2614345_0106 - sp02_3047101_01.fm

Warning Lamp

A warning lamp is a column of warning lights:

- A red light (1) indicates a hazardous condition. This is a situation that requires immediate action.
- A yellow light (2) indicates an abnormal or impending critical condition. This is a condition calling for action by the operator.
- A blue light (3) indicates information or that operator action is required.

Audible Alarm

The audible alarm (4) produces a warning signal every time this equipment is about to start. The warning signal sounds for approximately three seconds prior to starting to alert personnel.

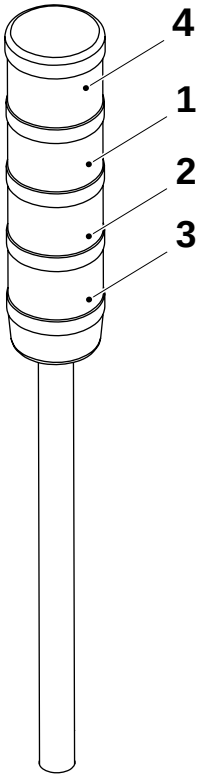

1 Red
2 Yellow
3 Blue
4 Audible alarm

TechPub_2614345_0106 - sp02_3047101_01.fm

Personal Protection

This section applies to all personnel at all times when this equipment is in operation. For special personal protection required when handling hazardous substances, see the Hazardous Substances section.

Noise Hazard

WARNING

Hazardous noise.

Risk of impaired hearing. Wear hearing protection whenever this equipment is in operation.

Entanglement Hazard

WARNING

Risk of entanglement.

Do not wear jewellery or loose clothing when working on or near this equipment. Long hair may not be loose.

TechPub_2614345_0106 - sp02_3047101_01.fm

Hazardous Substances

WARNING

Contact with chemicals can cause death, serious injury, or illness.
Always read and follow the instructions in the safety data sheet supplied by the manufacturer or local supplier, when handling chemicals.

Make sure that

- The safety data sheet is available
- The showers work
- An eyewash device, movable or wall-mounted, is available and operational
- Additional washing facilities are nearby.

Note! Learn the locations of all washing facilities in order to act immediately in case of an accident



TechPub_2614345_0106 - sp02_3047101_01.fm

Determelt 3

WARNING
Risk of personal injury.
Wear personal protective equipment.

Determelt 3 is a blend of orange oils, mineral spirits and antioxidant. Determelt 3 is used to remove hotmelt from metal machine parts, such as, the cap holders and should only be used neat.

Contact with eyes will cause redness and discomfort. Repeated or prolonged contact may cause the skin to become dry, cracking and dermatitis. In case of an accident, immediately call for medical attention.

Although classified as non-dangerous, always wear personal protective equipment when using chemicals, see Personal Protection.

Before use, always read the manufacture's instructions on the label of the tank or container.

Emergency Procedures

If there is an accident involving Determelt 3, rinse the affected area as soon as possible with large amounts of water.

If Determelt 3 is swallowed:

- Do not attempt to cause vomiting
- Drink large amounts of lukewarm water
- Call for medical attention immediately.

If splashes or vapour from Determelt 3 comes in contact with the eyes:

- Wash the eyes thoroughly with clean water until the pain is relieved
- Call for medical attention immediately.

If Determelt 3 comes into contact with skin and clothes:

- Wash immediately with soap and water
- Call for medical attention immediately if skin burns appear
- Thoroughly wash the clothes before wearing them again.

If irritation or pain is experienced due to having inhaled Determelt vapour:

- Leave the affected area and get some fresh air
- Call for medical attention if the symptoms get worse.

(Cont'd)

TechPub_2614345_0106 - sp02_3047101_01.fm

(Cont'd)

Handling

WARNING

Risk of Self-ignition.

Self-ignition can occur at a temperature more than 200°C (392°F).

Determelt 3 can only be used neat and used cold. Never pour on hot surfaces or turn on hotmelt applications.

Ensure that equipment to be cleaned is cool and all supplies to the equipment are OFF.

If Determelt 3 is spilled, use sand, earth or any absorbent material. Put waste into a container ready for disposal.

Storage

Keep the container upright and fitted with its proper seal. Determelt 3 must be stored in the original container delivered by the supplier. Make sure that the container is always properly closed.

Make sure that the area used for storage of Determelt 3 is:

- At room temperature, clean, and well ventilated
- Free from frost
- Shielded from direct sunlight
- Kept from open sources of ignition.

Shelf life is one year.

TechPub_2614345_0106 - sp02_3047101_01.fm

Disposal of Chemical Substances

Always read and follow the disposal instructions in the safety data sheet supplied by the manufacturer or local supplier.

It is strongly recommended that used chemical containers are

- Disposed of according to the instructions immediately after use
- Not used as disposal containers for other chemicals in order to avoid uncontrolled chemical reactions within the container.

Personal Protective Equipment

Wear personal protective equipment when working with this equipment. The following equipment is required:

- Protective goggles (TP No. 90303-11)
- Heat protective gloves
- Protective apron (TP No. 90303-13)
- Protective shoes made of PVC or rubber.

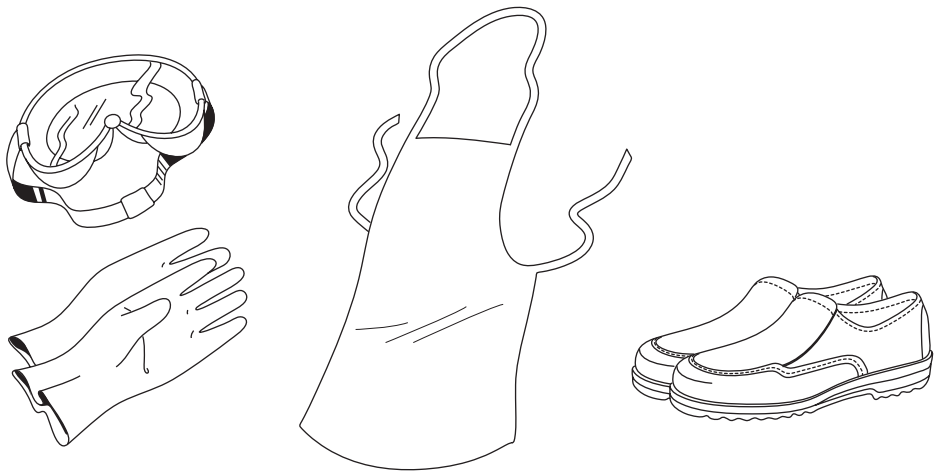

TechPub_2614345_0106 - sp02_3047101_01.fm

Supply Systems

Power Supply

DANGER

Hazardous voltage and moving machinery.
The power supply disconnector must be turned off and secured with a lock before any maintenance.

Note! The key to the lock must be removed by the technician and retained in his/her possession until all work is completed.

Certain maintenance procedures may require power supply systems to be on. These exceptions are clearly stated in the Maintenance Manual.

The illustration shows the power supply disconnector (1) and its location.

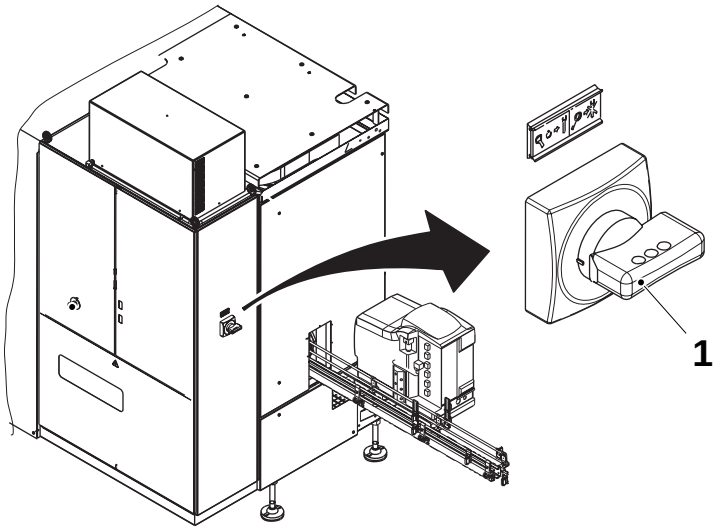

1 Power supply disconnector

Residual Voltage

DANGER

Hazardous voltage.
Do not touch any terminals immediately after the power supply disconnector is turned off. Ensure that no residual voltage remains on the capacitors before touching. Wait five minutes. Failure to observe this information can cause death or serious injury.

After the power supply disconnector is turned off, residual voltage remains in the capacitor circuits.

TechPub_2614345_0106 - sp02_3047101_01.fm

Electrical Cabinet

DANGER

Hazardous voltage.
Will shock, burn, or cause death. The power supply disconnector must be turned off and secured with a lock before maintenance inside the electrical cabinet.

Note! The key to the lock must be removed by the technician and retained in his/her possession until all work is completed.

Make sure that the electrical cabinet doors are closed after working inside the electrical cabinet. Doors with a lock must be locked.

The location of the electrical cabinet is shown by an arrow.

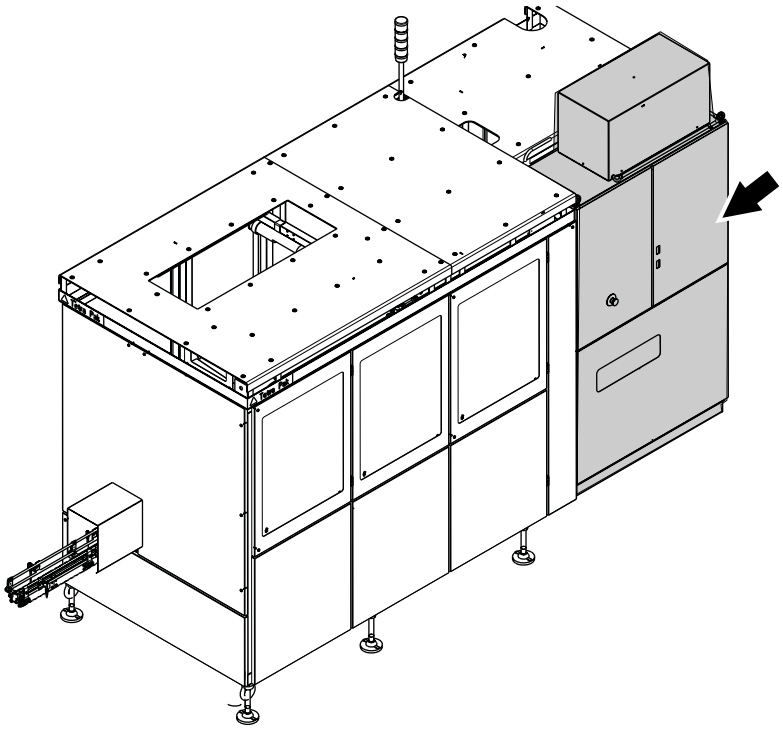

TechPub_2614345_0106 - sp02_3047101_01.fm

Socket Outlet

WARNING

Hazardous voltage.

Can shock, burn, or cause death. Read the Maintenance Manual before using this socket outlet (1).

The socket outlet (1) is connected to a residual current device (2) to protect users against electrical shock if there is an earth fault in the connected equipment. The residual current device (2) should be tested each time before the socket outlet (1) is used. See the MM for the test procedures.

The illustration shows the socket outlet (1), the residual current device (2), and their location.

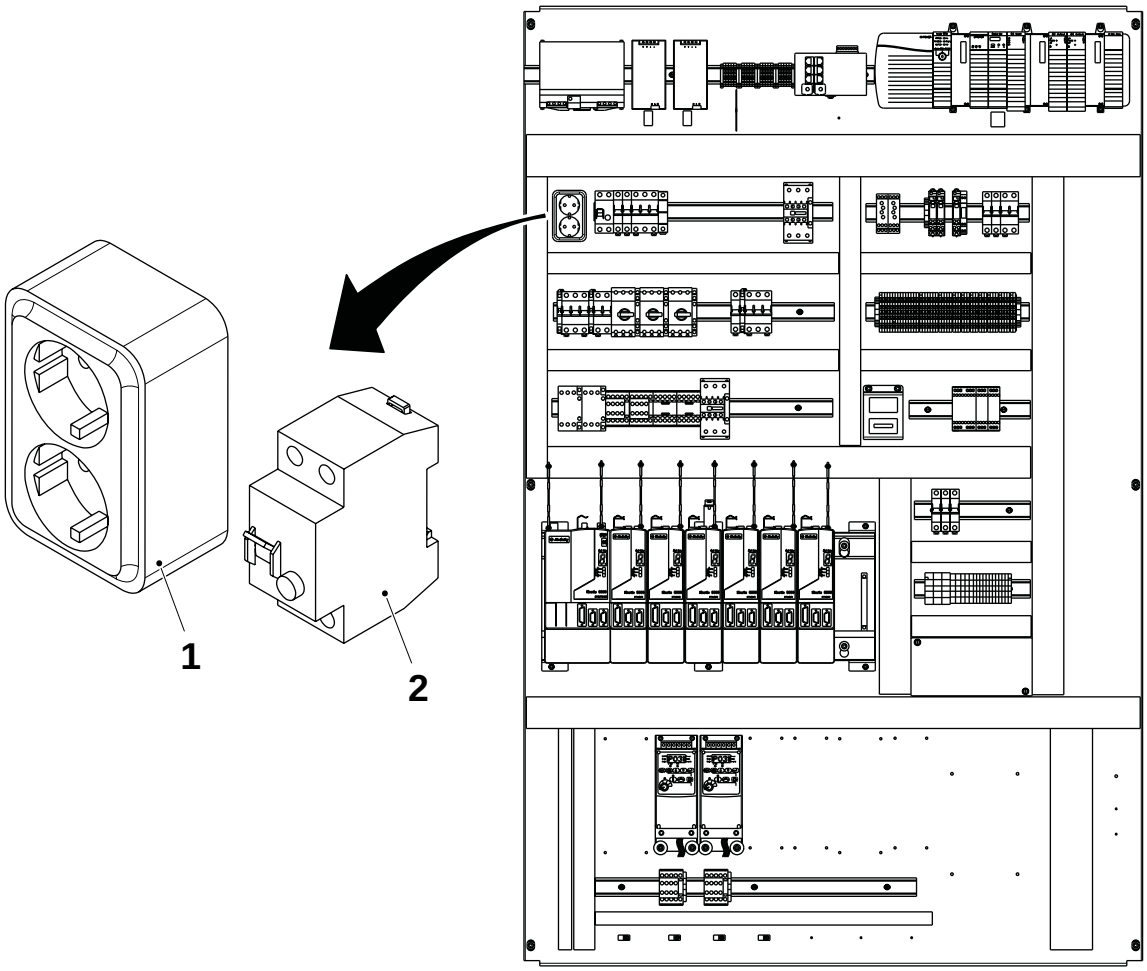

1 Socket outlet
2 Residual current device

TechPub_2614345_0106 - sp02_3047101_01.fm

Air Supply

WARNING

Compressed air and moving machinery.
Close the main air valve and secure it with a lock before any maintenance.

Note! The key to the lock must be removed by the technician and retained in his/her possession until all work is completed.

Certain maintenance procedures may require air supply systems to be ON. These exceptions are clearly stated in the Maintenance Manual.

The illustration shows the shut-off valve (1). The shut-off handle (2) is used to close the air supply.

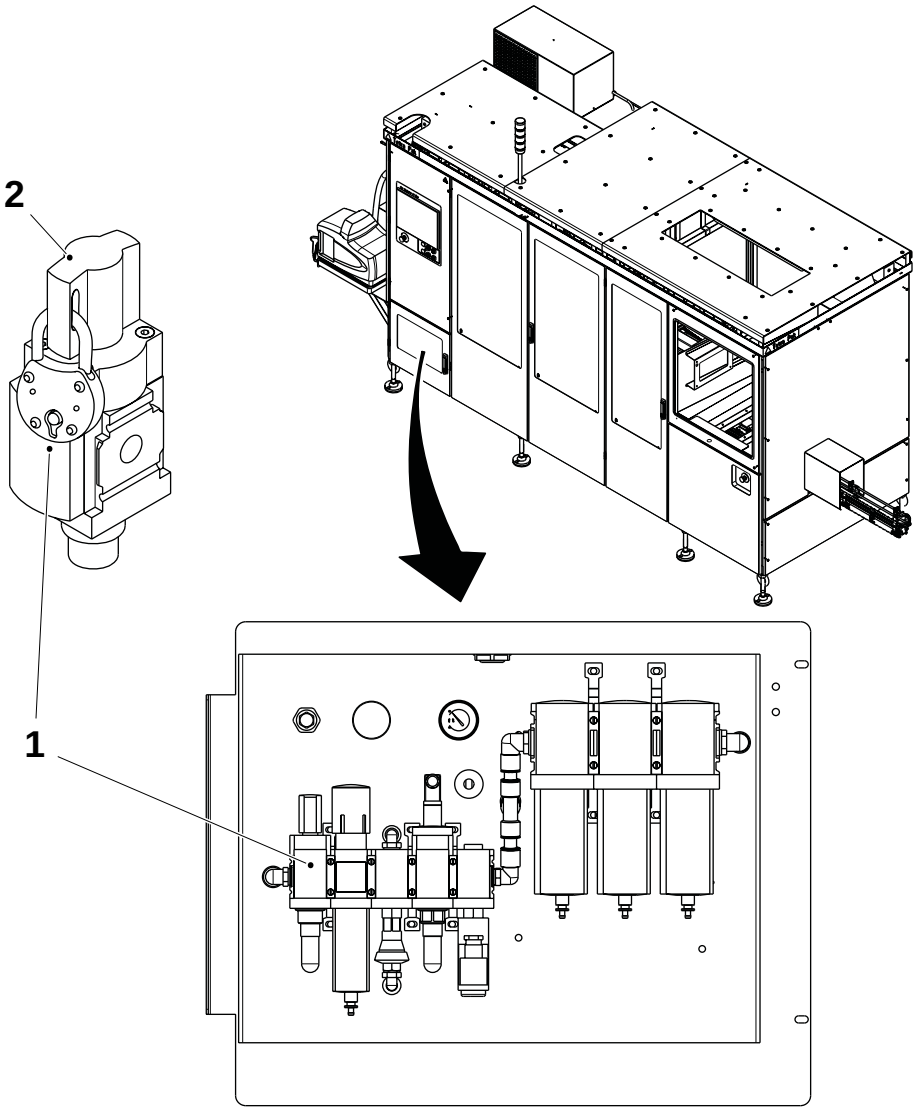

1 Shut-off valve
2 Shut-off handle

TechPub_2614345_0106 - sp02_3047101_01.fm

Hotmelt Equipment

General

DANGER

Risk of electrical shock.
The voltage is 400V inside the hotmelt unit. Risk of immediate danger to life from electrical shock.

WARNING

Risk of personal injury.
All service work on the hotmelt unit must be carried out by authorised personnel. Always wear safety glasses, protective gloves, and other protective clothing to avoid injuries caused by splashing hotmelt material.

Failure to relieve any air or adhesive pressure could cause serious injuries from burning when the hotmelt filter is detached or flushed.

Never remove any part or component until the air and the electrical supply to the machine have been disconnected and the pressure of the hotmelt in the system has been relieved.

WARNING

Risk of hotmelt vapours.
When the tank lid is open, hotmelt vapours could be released. Vent the application area or wear a respirator.

Note! Always refer to the documentation provided from the Nordson Corporation before doing any kind of work on the hotmelt equipment. The Nordson hotmelt manual is included with the delivery from Tetra Pak. The information in this manual only deals with what is specific for this machine.

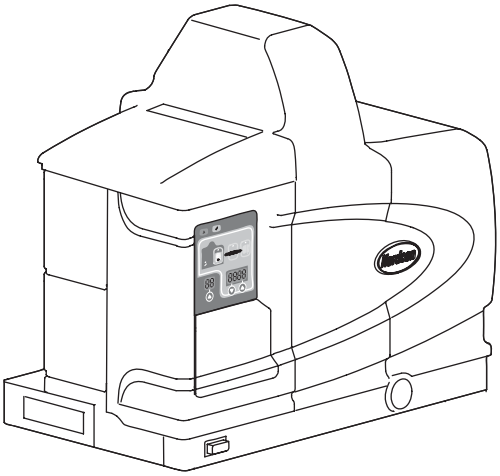

TechPub_2614345_0106 - sp02_3047101_01.fm

Hotmelt Unit

CAUTION

Risk of damage to the equipment.

Never flush water or any other liquid towards the hotmelt unit when cleaning the machine. Failure to obey could result in damage to equipment.

WARNING

Risk of burns.

During PREHEATING and PREPARTION the hotmelt unit becomes hot. Do not touch the hotmelt unit and beware of the entrapped heat inside the unit when service is performed.

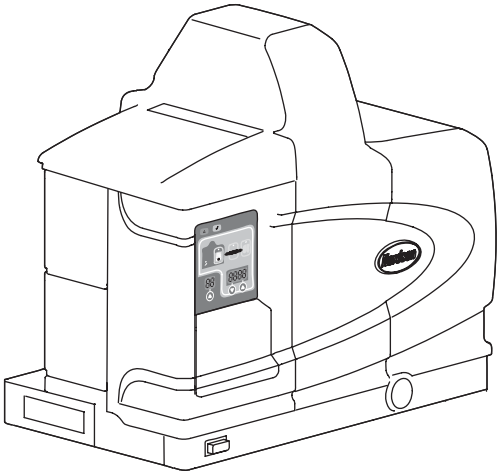

TechPub_2614345_0106 - sp02_3047101_01.fm

Hotmelt Wheel

WARNING

Risk of burns.

During PREHEATING, PREPARTION and PRODUCTION the hotmelt wheel (1) is hot. There is risk of severe burns. Do not touch the hotmelt wheel (1) and beware of the entrapped heat when service is performed.

CAUTION

Risk of damage to the equipment.

Never flush water or any other liquid towards the hotmelt wheel (1) when cleaning the machine. Failure to obey could result in damage to equipment.

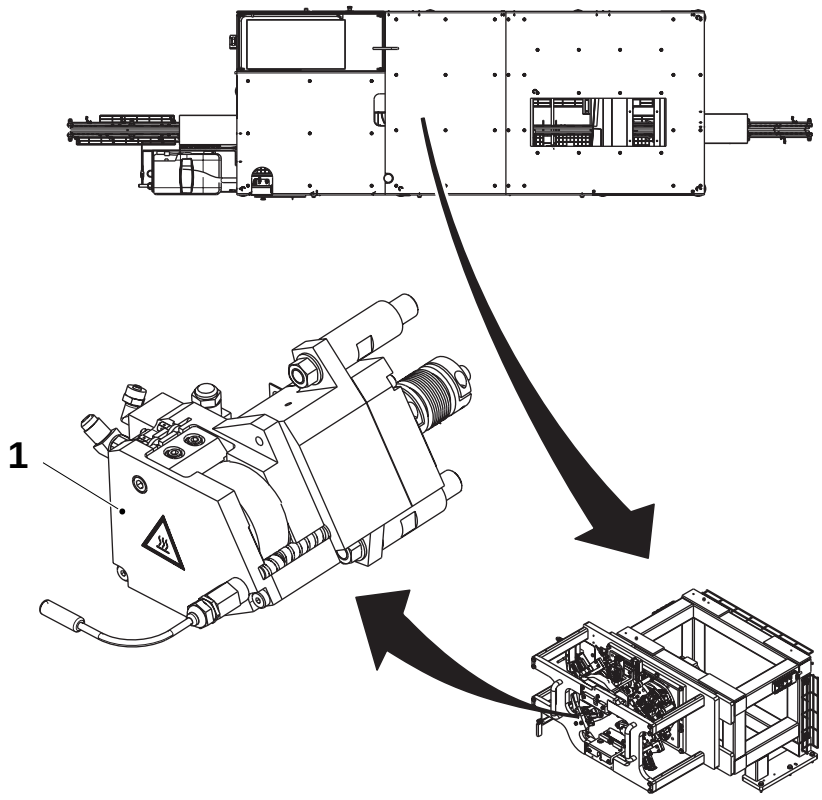

1 Hotmelt wheel

TechPub_2614345_0106 - sp02_3047101_01.fm

Additional Information

Package Heater

WARNING

Risk of burns.

The package heater is very hot and there is risk of severe burns. Never touch the package heater.

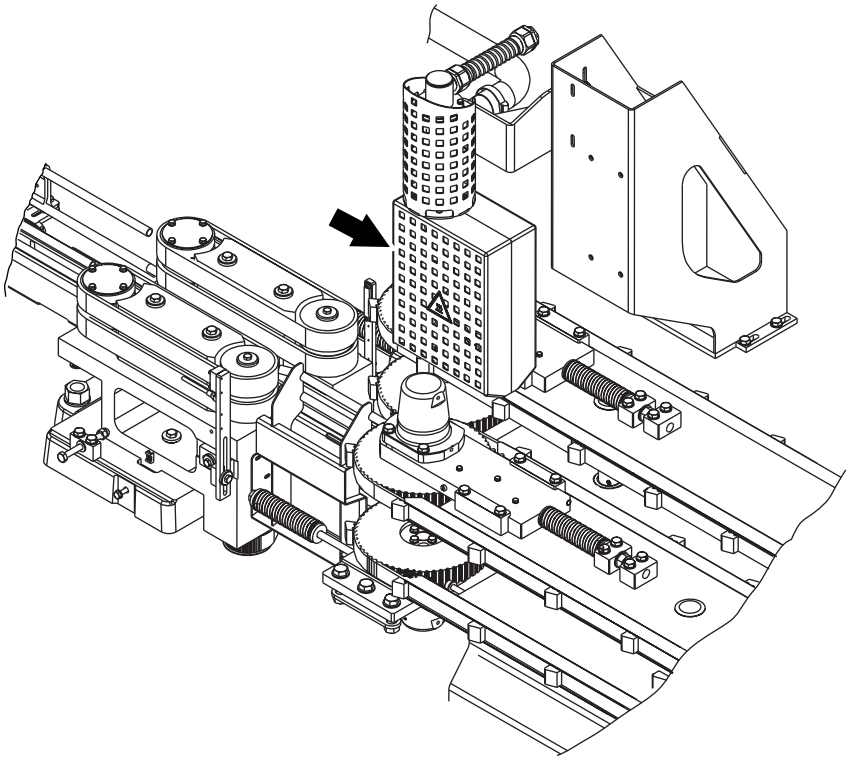

TechPub_2614345_0106 - sp02_3047101_01.fm

Waste Device

WARNING

Risk of personal injury.

Never put any part of the body, such as a hand, near the waste device when the machine is working. There is a risk of injury caused by the movable pusher.

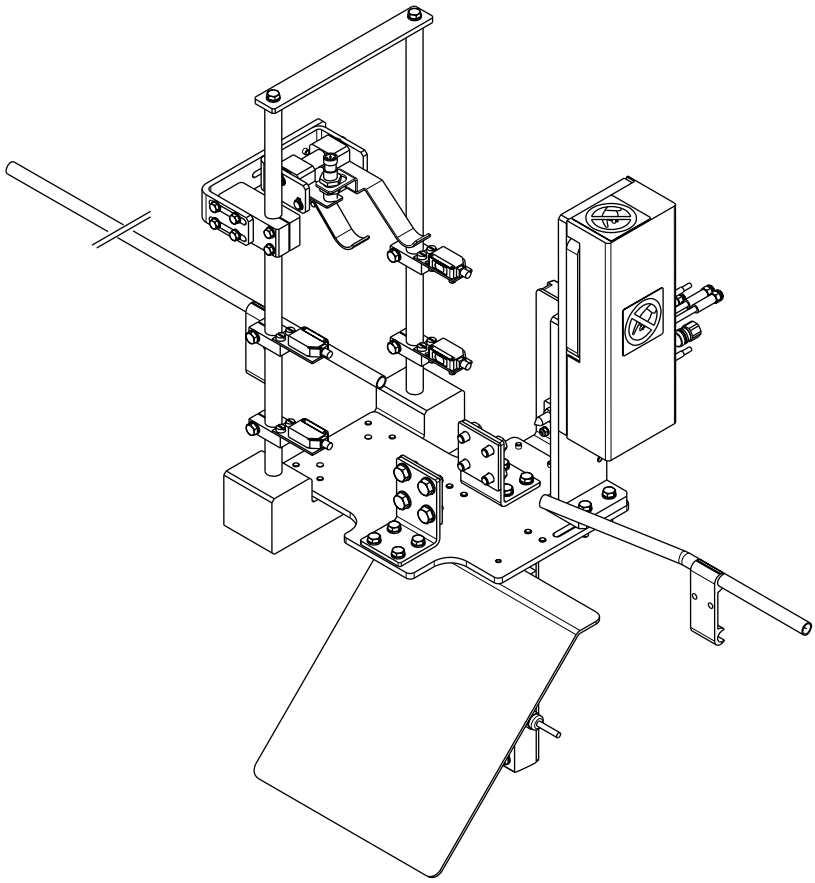

TechPub_2614345_0106 - sp02_3047101_01.fm

Equipment for Lifting and Moving Loads

WARNING

Risk of crushing injury.

Make sure that the capacity of the lifting equipment is adequate and that the equipment itself is in good working order.

If lifting tackle has to be joined to make up the necessary length, make sure that the joints are secure and have the same lifting capacity as the rest of the lifting tackle.

Always engage safety clips fitted to lifting hooks to prevent the lifting tackle from slipping off.

Use ropes or poles to steady and manoeuvre suspended loads. Do not use hands or feet.

Make sure that the route and destination are free from obstacles before moving a suspended load. It must be possible to quickly and safely lower the load to the floor in an emergency.

When depositing loads, keep lifting tackle in place until the stability of the load has been substantiated.

TechPub_2614345_0106 - sp02_3047101_01.fm

This page intentionally left blank

TechPub_2614345_0106 - sp02_3047101_01.fm

1 Machine Synchronisation

TechPub_2614345_0106 - 0102_3047102_01.fm

Machine Synchronisation - Description

SPC Reference	662950-0200

This section lists the machine settings in the order they should be carried out on the machine.

Note! The package production speed of the Cap30 should be equal to the filling machine plus 20 percent unless the down stream equipment is slower. In this case the Cap30 should match the down stream equipment speed.

TechPub_2614345_0106 - 0102_3047102_01.fm

1.1 Machine Synchronisation . . . . . 1 - 5

1.1-1 Settings . . . . . 1 - 5

1.1-1-1 Basic Setting Sequence . . . . . 1 - 16

1.1-1-2 Zero Setting Sequence (with no mechanical adjustment). . . . . 1 - 24

1.1-1-3 Package Infeed - Performance Settings . . . . . 1 - 25

TechPub_2614345_0106 - 0102_3047102_01.fm

This page intentionally left blank

TechPub_2614345_0106 - 0102_3047102_01.fm

1.1 Machine Synchronisation

SPC Reference	662950-0200

1.1-1 Settings

Password

The table below shows the user name and passwords in the machine as it leaves production. The machine defaults to the operator profile which has no password.

To logon as a user see, HMI User Management - Log On as a User on page 1-6.

To change these settings see HMI User Management - Change User Password on page 1-10.

User Profile	User Name	Password	Access Description
Supervisor	supervisor	shiftsup	Access to: - user administration - production control settings and functions - maintenance control settings and functions - create and delete recipes - software installation and configuration - Shutdown - diagnostic - partial access to the configuration window
Service technician	technician	custtech	Access to: - production control settings and functions - maintenance control settings and functions - create and delete recipes - software installation and configuration - partial access to the configuration window
Pwroperator	pwroperator	Not Used	Not Used on the Cap30
Operator (default user with logon)			Access to: - production control settings and functions - Alarm management - basic alarm management

(Cont'd)

TechPub_2614345_0106 - 0102_3047103_01.fm

(Cont'd)

HMI User Management - Log On as a User

This procedure describes how to logon to the HMI and how to access the restricted password protected sections of the HMI. The level of access permitted is defined by the user profile, see 1.1-1 Settings on page 1-5.

Note! After 15 minutes of HMI inactivity the user is automatically logged out, but it is always recommended to log out using the LOGOUT button, at the end of the operation.

The machine defaults to the operator profile which has no password.

The technician or supervisor requires a password to access the setting screens as follows:

a) To login touch the SYSTEM SETUP button (1).

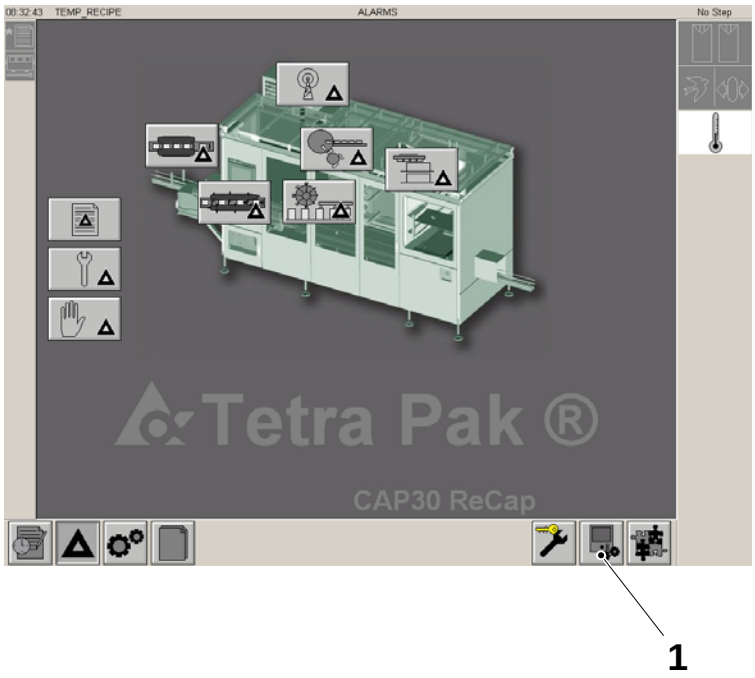

1 System Setup button

(Cont'd)

TechPub_2614345_0106 - 0102_3047103_01.fm

(Cont'd)

On the setup window the following buttons are displayed:

- Language (2)
- User Management (3)
- Diagnostic (4)
- Shut Down (5).

The diagnostic button (4) and the Shut Down button (5) are not available to the operator.

b) Touch the User Management button (3).

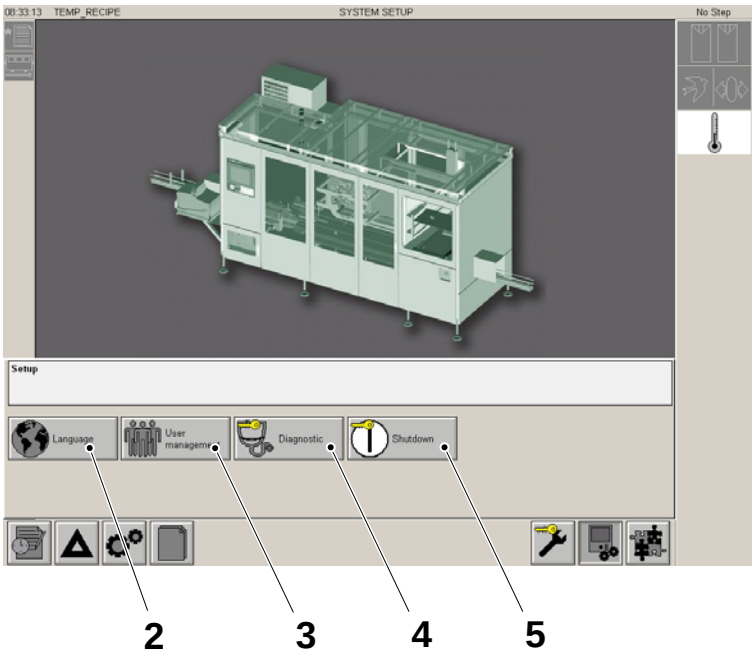

2 Language button
3 User Management button
4 Diagnostic button
5 Shut Down button

(Cont'd)

TechPub_2614345_0106 - 0102_3047103_01.fm

(Cont'd)

On the User Management window the following buttons are displayed:

- Logout button (6)
- Login button (7)
- Locked CHANGE PASSWORD button (8).

Note! The change password button (8) is not enabled until logged on by the supervisor, see HMI User Management - Change User Password on page 1-10.

The actual user is shown in the window (9).

c) Touch the login button (7).

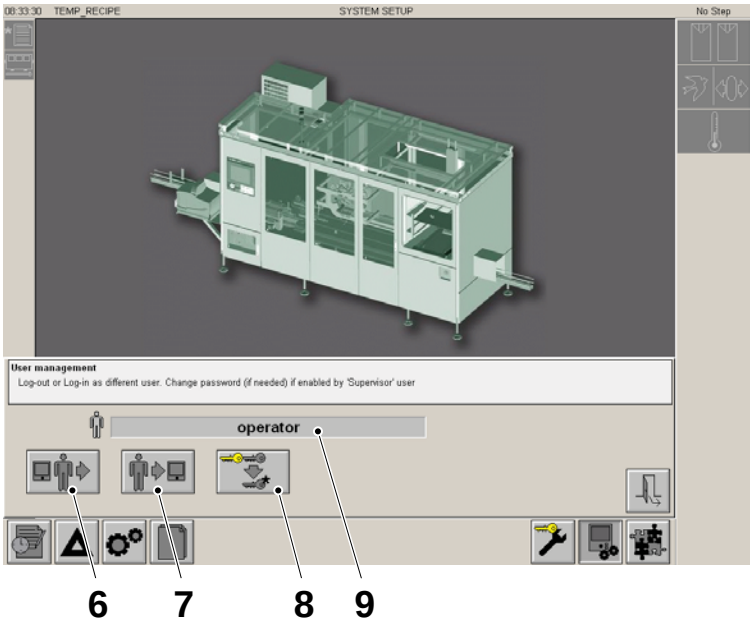

6 LOGOUT button
7 LOGIN button
8 Locked CHANGE PASSWORD button
9 Actual User

(Cont'd)

TechPub_2614345_0106 - 0102_3047103_01.fm

(Cont'd)

d) On the login display (10) touch the USER button (11) and then type the user name and enter.

e) On the login display (10) touch the PASSWORD button (12) to display the key board, then type the password and enter.

f) Touch the ENTER button (13) to confirm the password or the ESC button (14) to close the login window (10).

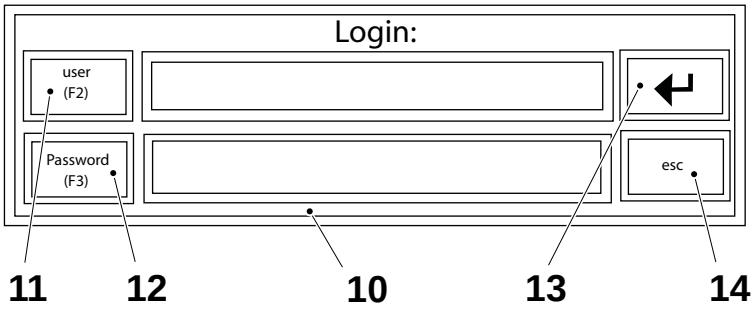

10 Login window
11 USER button
12 PASSWORD button
13 ENTER button
14 ESC

TechPub_2614345_0106 - 0102_3047103_01.fm

HMI User Management - Change User Password

CAUTION
Risk of unplanned machine stoppage.
If the default passwords are changed and subsequently forgotten, the HMI software must be reinstalled. Perform 8.8.1-3 Touch Screen - New Application Software Installation see on page 8-273, in order to restore the default passwords and have the access to the restricted sections of the HMI.

The user with the profile “supervisor” has the authority to set and change the passwords for the user profiles of “technician” and “pwroperator”. To change the password of either the user profiles proceed as follows:

a) Log on to the HMI as the user profile “supervisor”, see HMI User Management - Log On as a User on page 1-6.

b) In the USER MANAGEMENT window, touch the:
   – ENABLE TECHNICIAN CHANGE PASSWORD button (1) for the user profile “technician”.

Note! The Pwroperator button (2) is not used on the CAP30 Machine.

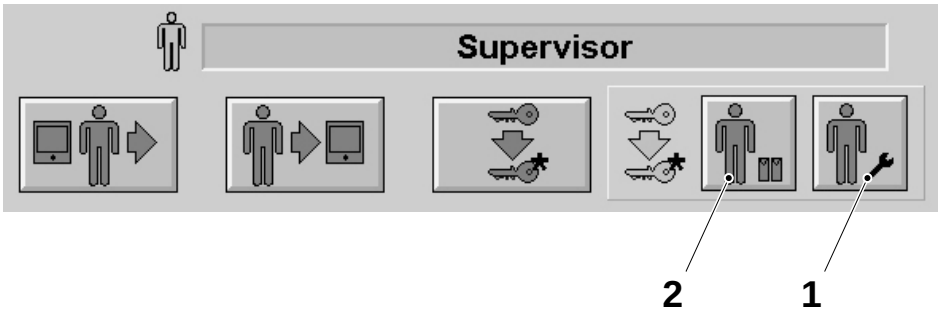

1 Enable technician change password button
2 Pwroperator change password button Not Used on Cap30

TechPub_2614345_0106 - 0102_3047103_01.fm

(Cont'd)

(Cont'd)

c) Touch the LOG OFF button (3).

d) Log on to the HMI using the user profile chosen in item b), see HMI User Management - Log On as a User on page 1-6.

e) The CHANGE PASSWORD button (4) is now enabled in the USER MANAGEMENT window, touch the CHANGE PASSWORD button (4) to display the CHANGE PASSWORD window (5).

Note! An old password, can be reused only if the password has been changed at least 5 times, or if the HMI software has been reinstalled.

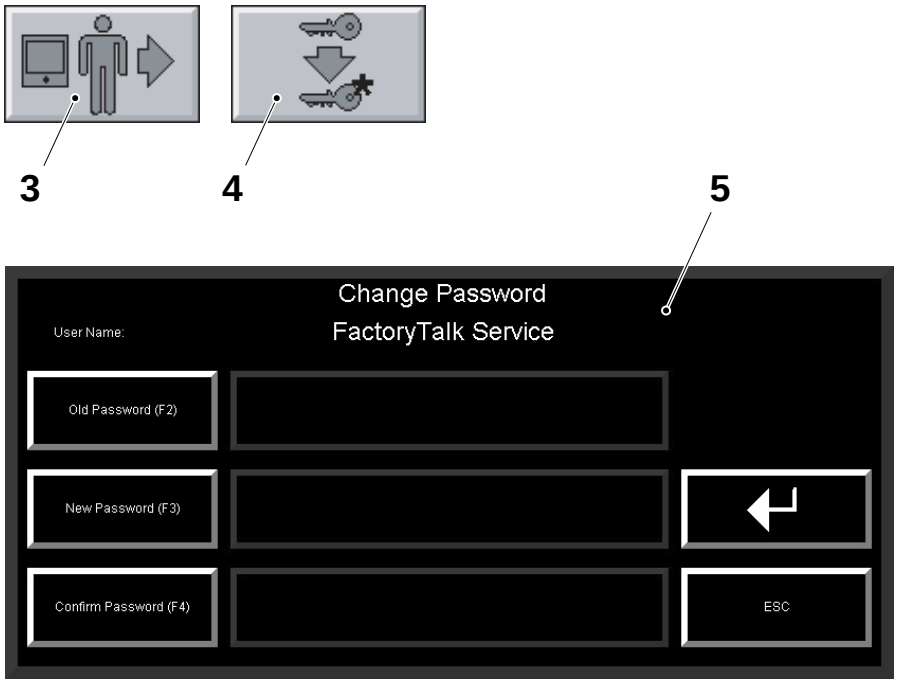

3 Log off button
4 Change password button
5 Change password window

(Cont'd)

TechPub_2614345_0106 - 0102_3047103_01.fm

(Cont'd)

f) Touch the OLD PASSWORD button (6) to display the keyboard (7).

g) Use the keyboard (7) to type the current password, then touch the ENTER button (8).

h) Touch the NEW PASSWORD button (9) to display the keyboard (7).

i) Use the keyboard (7) to type the new password, then touch the ENTER button (8).

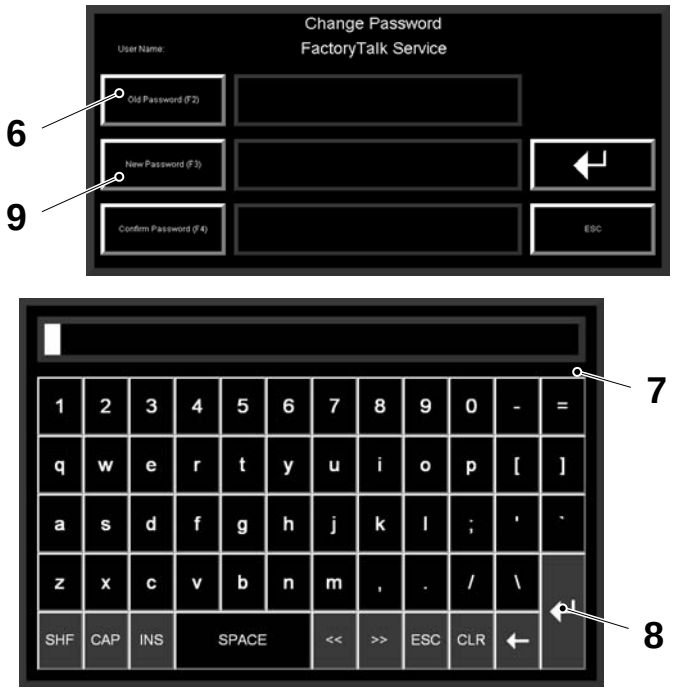

6 Old password button
7 Keyboard
8 Enter button
9 New password button

(Cont'd)

TechPub_2614345_0106 - 0102_3047103_01.fm

(Cont'd)

j) Touch the CONFIRM PASSWORD button (10) to display the keyboard (7).

k) Use the keyboard (7) to type and repeat the new password, then touch the ENTER button (8).

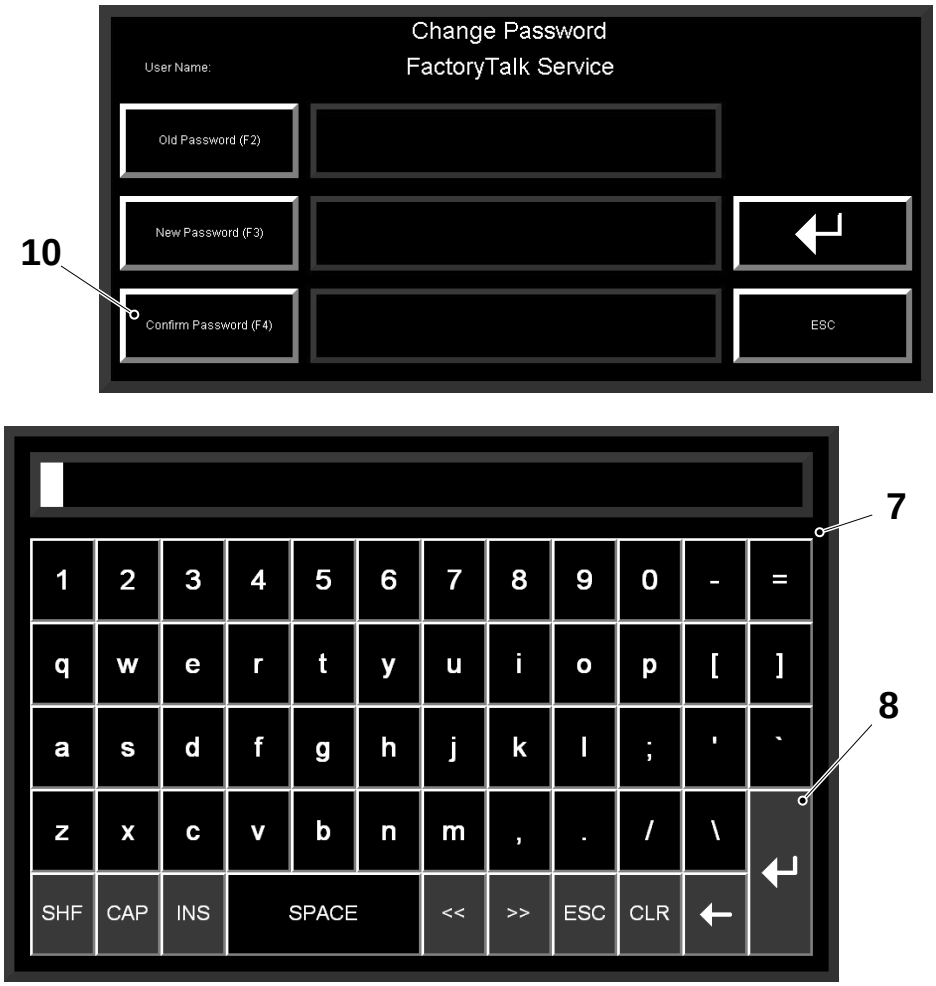

7 Keyboard
8 Enter button
10 Confirm password button

(Cont'd)

TechPub_2614345_0106 - 0102_3047103_01.fm

(Cont'd)

l) Touch the ENTER button (11) to finalise the password change procedure.

If necessary repeat the procedure to change the password for the other user profile. The password for the user profile “supervisor” can be changed by logging on as the “supervisor” and selecting the CHANGE PASSWORD button in the USER MANAGEMENT window.

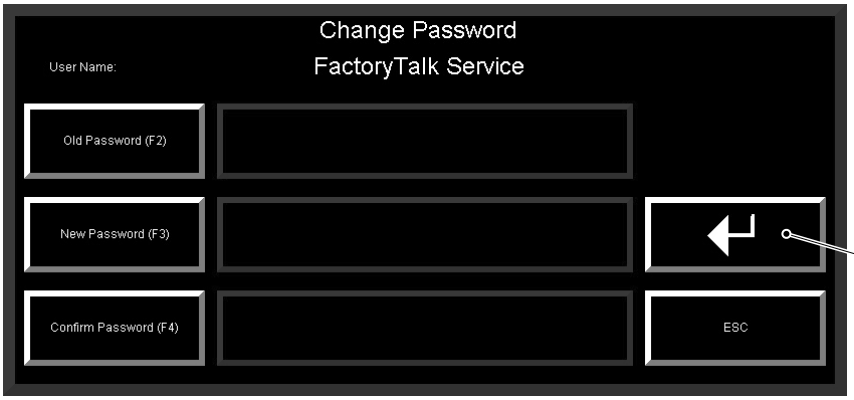

11 Enter button

(Cont'd)

TechPub_2614345_0106 - 0102_3047103_01.fm

(Cont'd)

Note! If the ENABLE CHANGE PASSWORD buttons are not deselected by the “supervisor” profile, the CHANGE PASSWORD button remains visible and accessible in the profiles for the “pwroperator” and “technician”.

m) Touch the LOG OFF button (3).

n) Log on to the HMI using the user profile “supervisor”, see HMI User Management - Change User Password on page 1-10.

o) In the USER MANAGEMENT window, depending on which button was selected in item b) on page 1-10, deselect the:

– ENABLE TECHNICIAN CHANGE PASSWORD button (1) for the user profile “technician”.

If necessary repeat the procedure to change the password for the other user profile. The password for the user profile “supervisor” can be changed by logging on as the “supervisor” and selecting the CHANGE PASSWORD button in the USER MANAGEMENT window.



1 Enable technician change password button
2 Pwroperator Not Used on Cap30
3 Log off button

TechPub_2614345_0106 - 0102_3047103_01.fm

1.1-1-1 Basic Setting Sequence

Note! The package production speed of the Cap30 should be equal to the filling machine plus 20 percent unless the down stream equipment is slower. In this case the Cap30 should match the down stream equipment speed.

Machine synchronisation settings must be performed in sequence according to the flowchart below. These settings are performed before the first start-up or commissioning of the cap applicator.

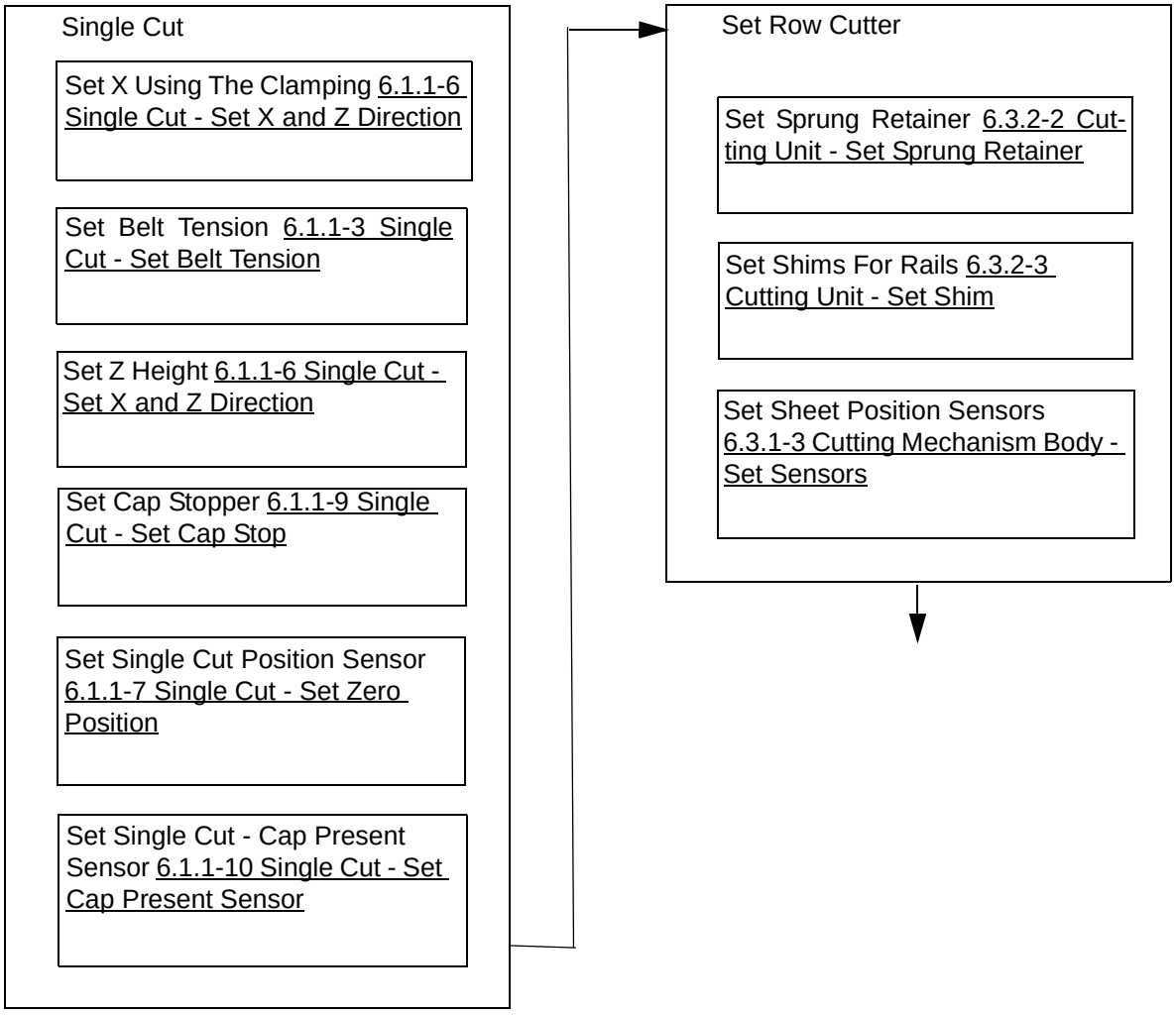

(Cont'd)

TechPub_2614345_0106 - 0102_3047103_01.fm

(Cont'd)

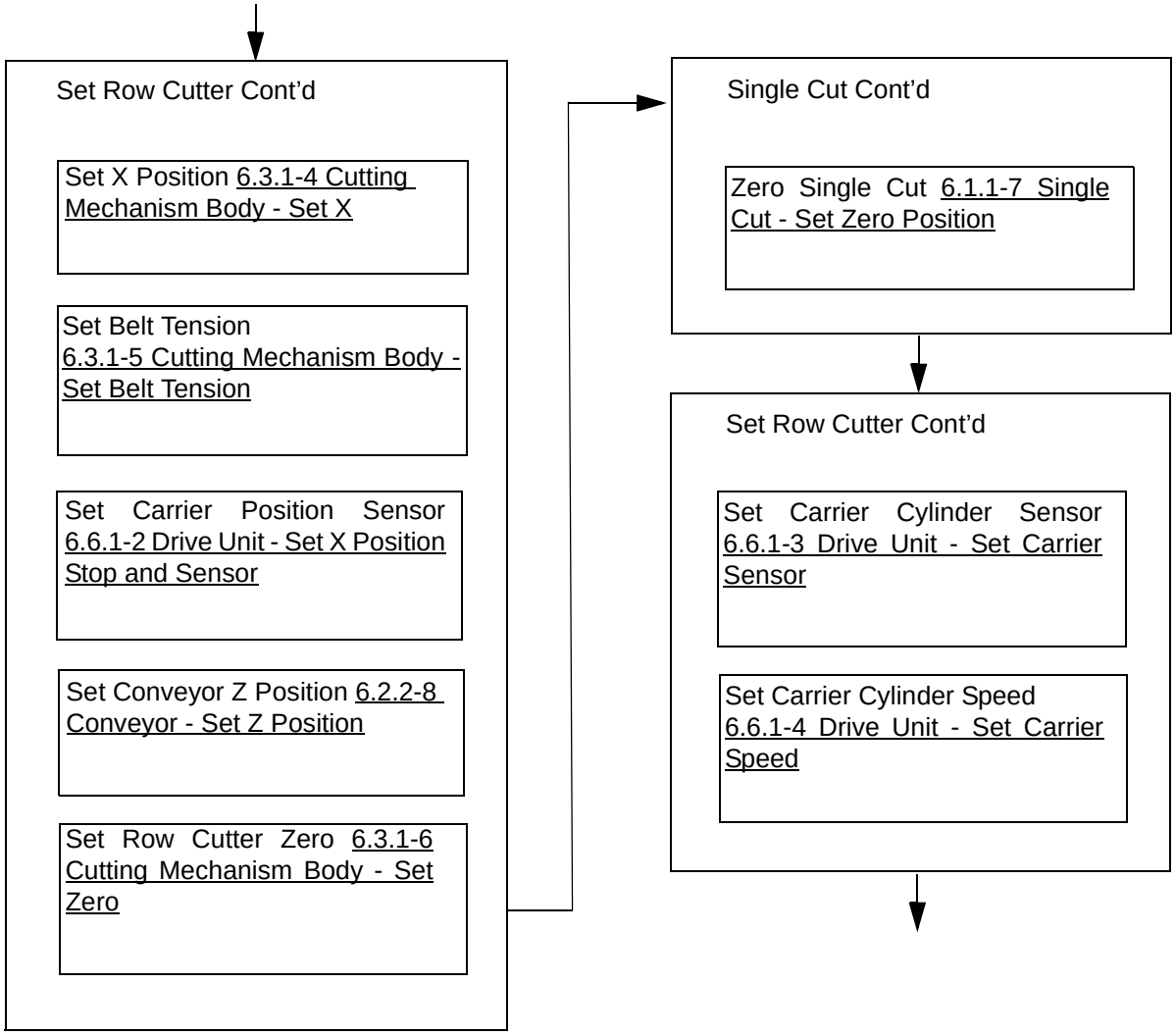

(Cont'd)

TechPub_2614345_0106 - 0102_3047103_01.fm

(Cont'd)

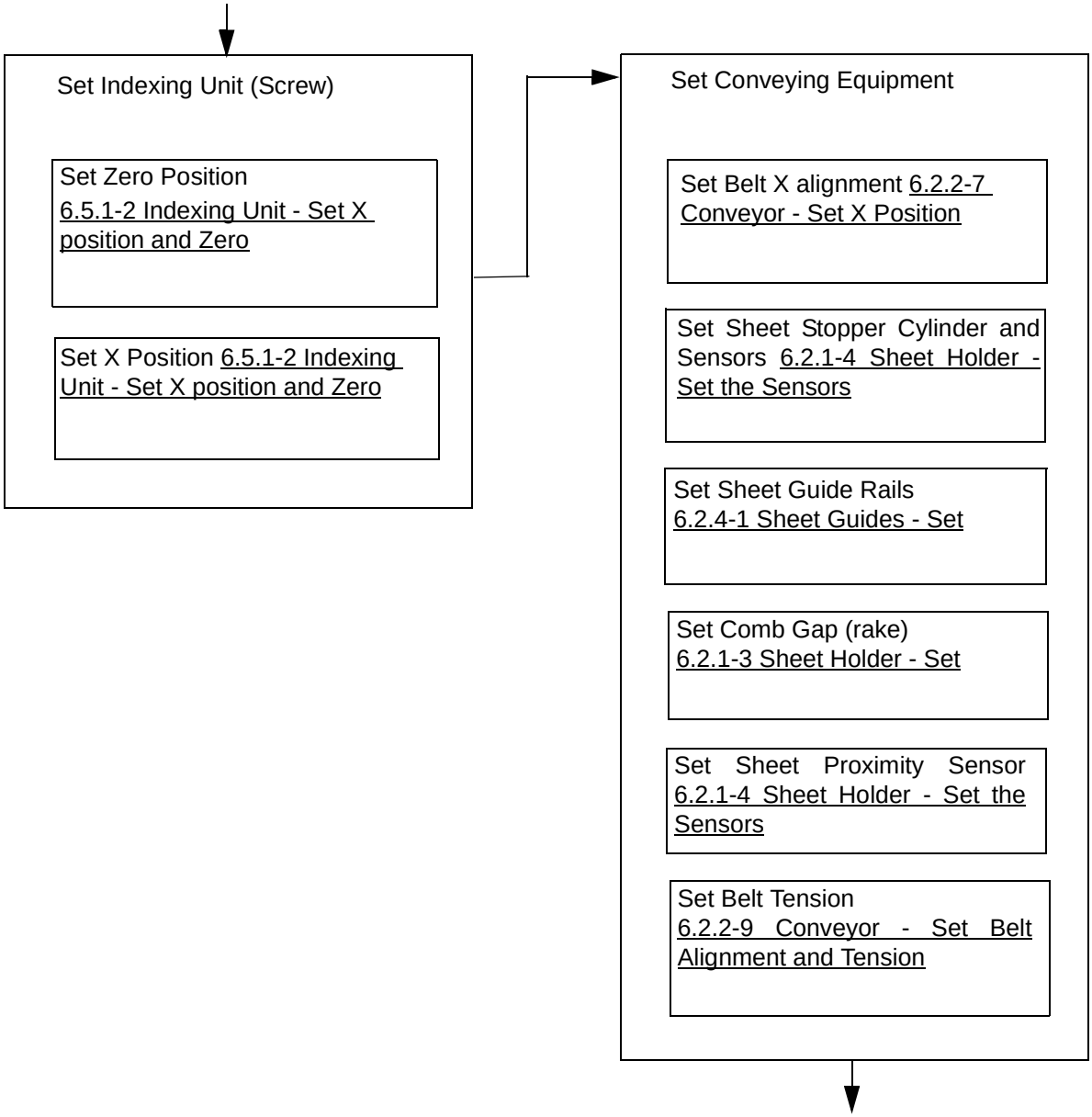

(Cont'd)

TechPub_2614345_0106 - 0102_3047103_01.fm

(Cont'd)

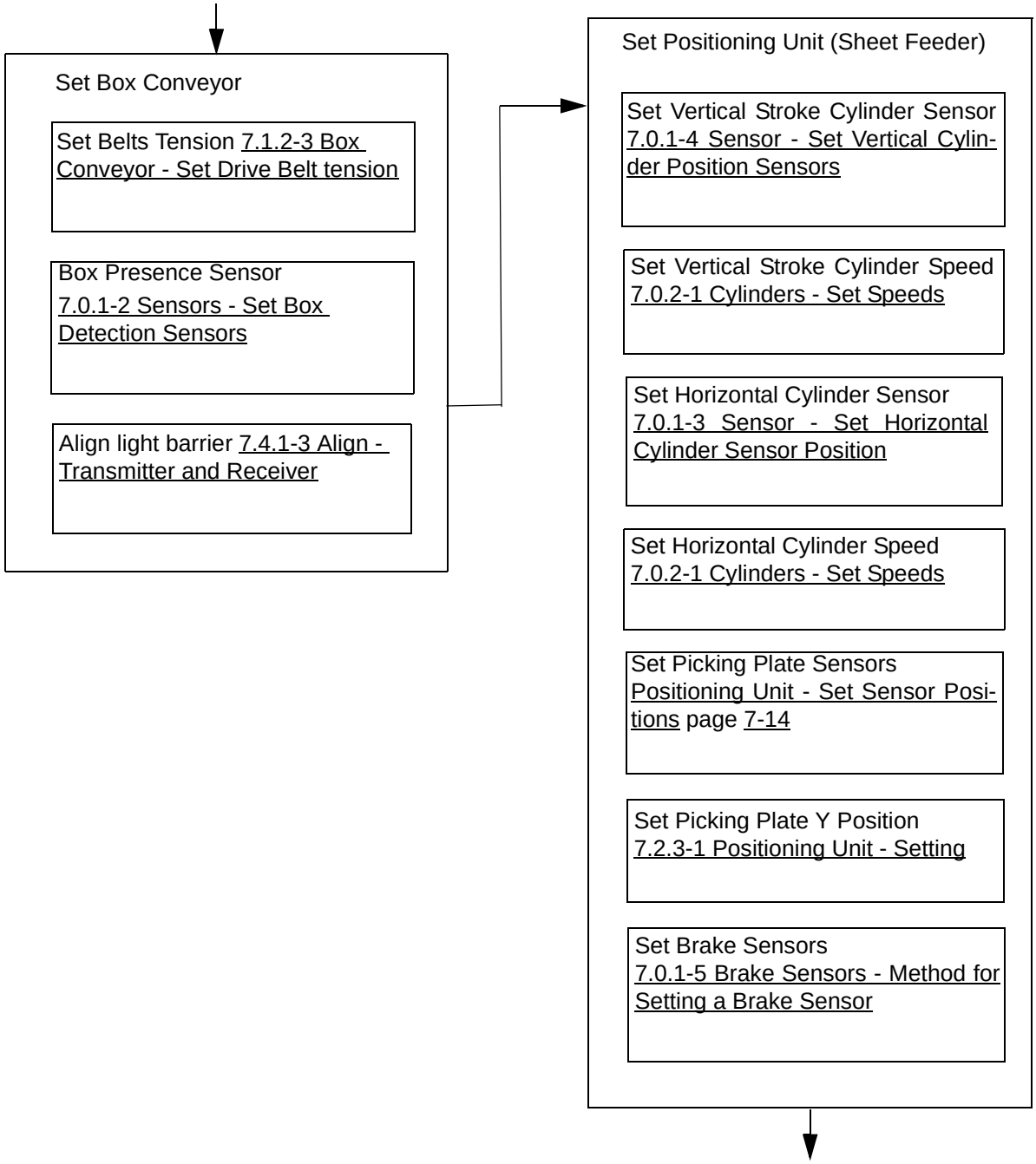

(Cont'd)

TechPub_2614345_0106 - 0102_3047103_01.fm

(Cont'd)

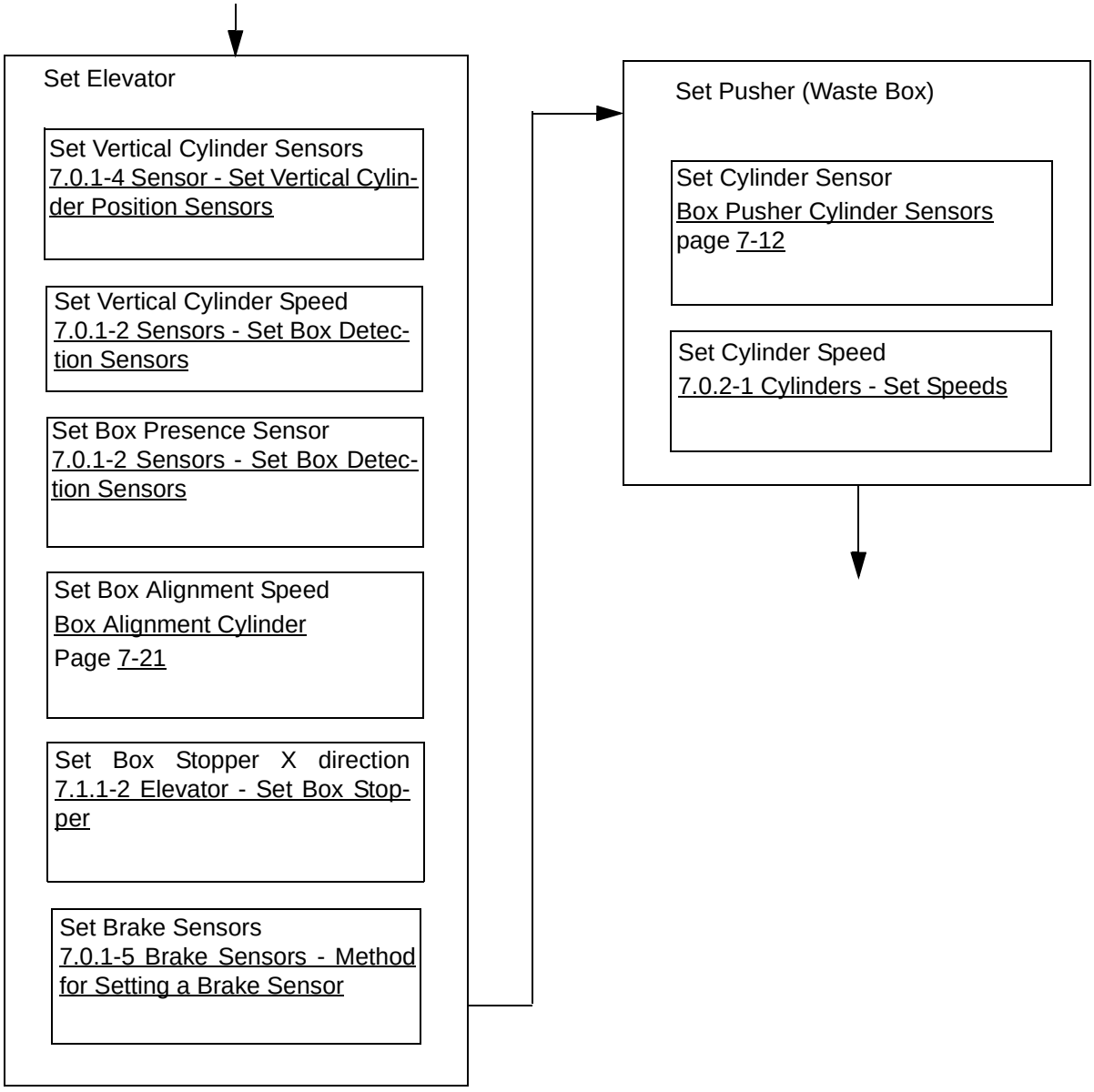

TechPub_2614345_0106 - 0102_3047103_01.fm

(Cont'd)

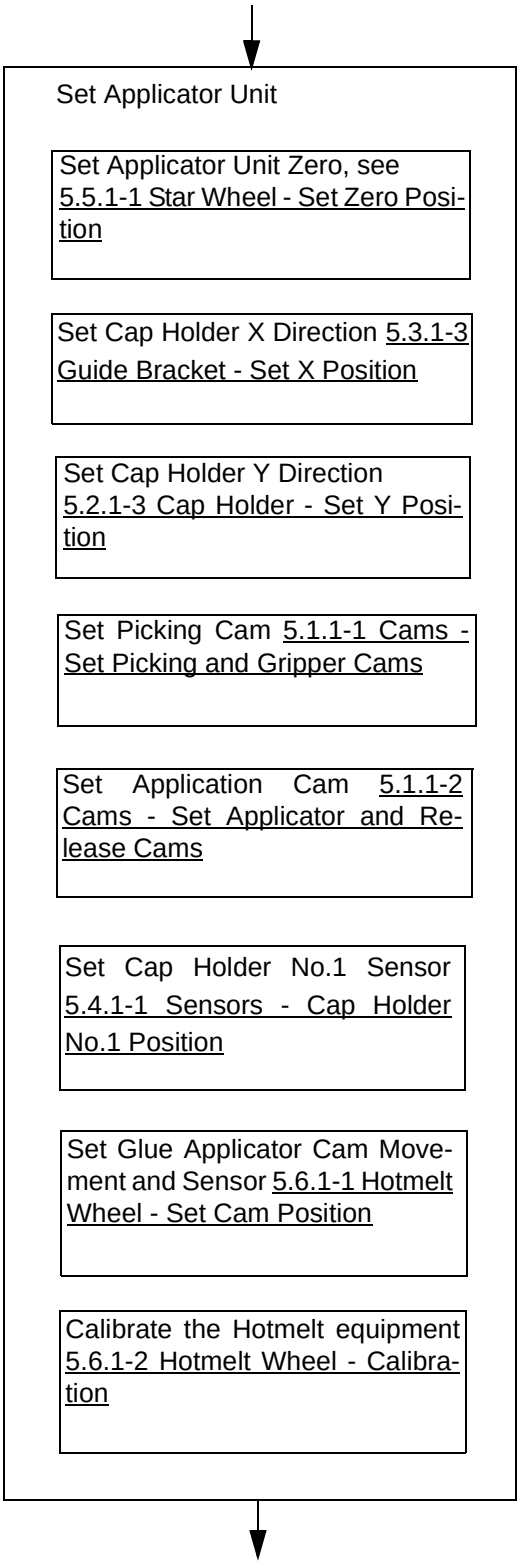

(Cont'd)

TechPub_2614345_0106 - 0102_3047103_01.fm

(Cont'd)

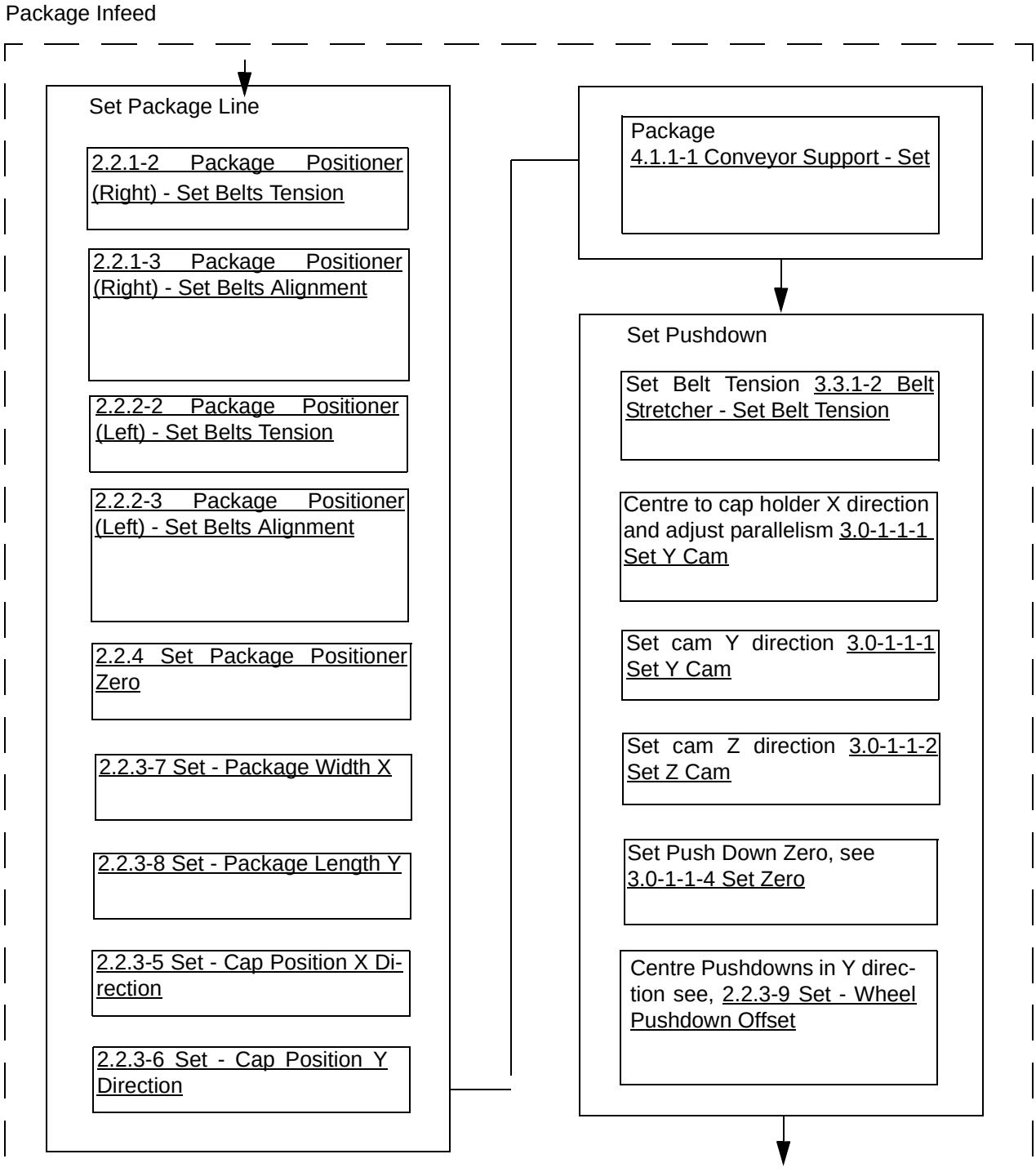

(Cont'd)

TechPub_2614345_0106 - 0102_3047103_01.fm

(Cont'd)

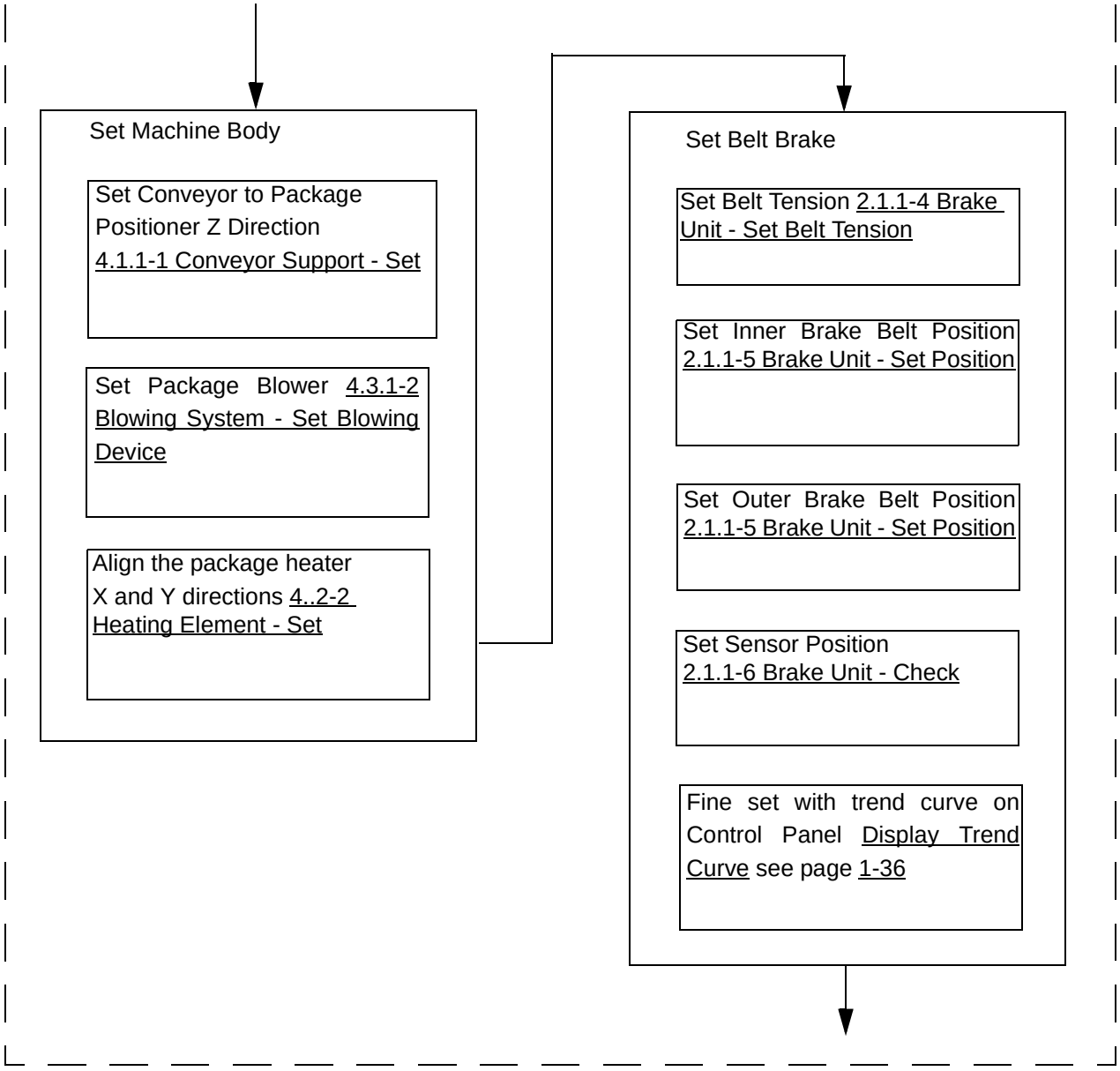

TechPub_2614345_0106 - 0102_3047103_01.fm

1.1-1-2 Zero Setting Sequence (with no mechanical adjustment).

Machine synchronisation settings must be performed in sequence according to the flowchart below. These settings are performed before the first start-up or commissioning of the cap applicator.

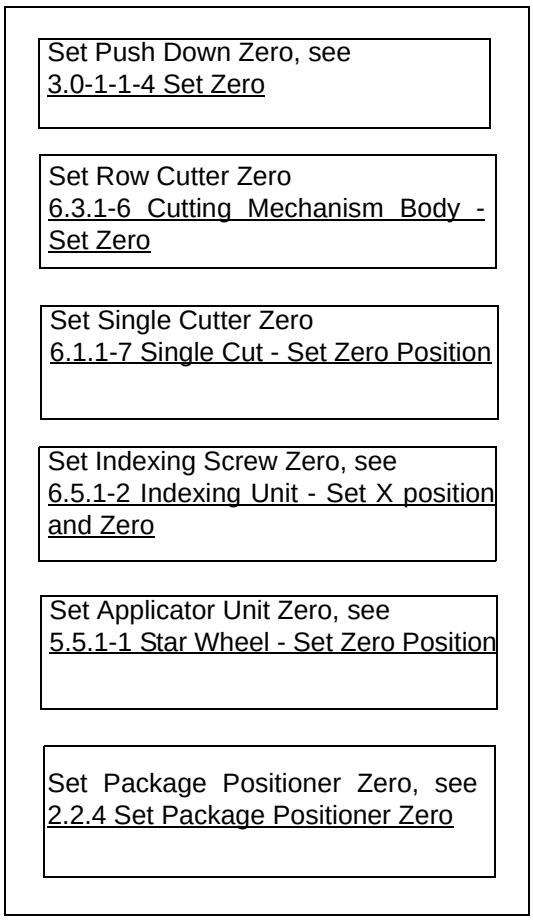

TechPub_2614345_0106 - 0102_3047103_01.fm

1.1-1-3 Package Infeed - Performance Settings

Machine Status	Mains Power OFF Air OFF
SPC Reference	2838654-0200

Package infeed performance settings must be performed in sequence according to the flowchart below.

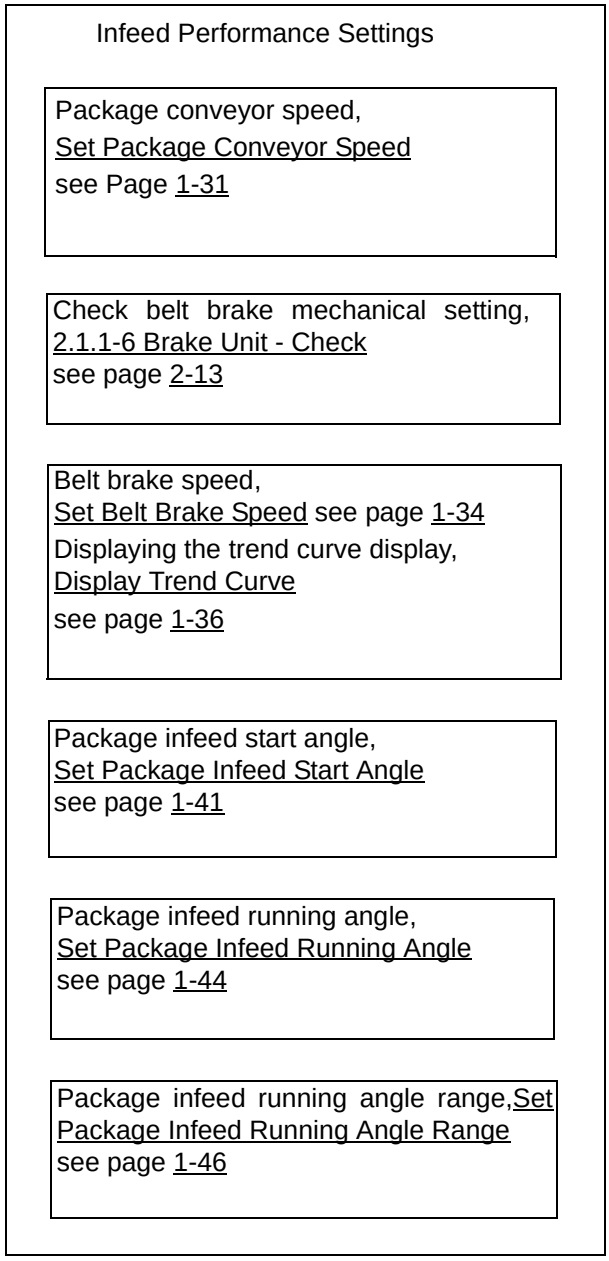

TechPub_2614345_0106 - 0102_3047103_01.fm

Package Transfer Unit Setting Screen

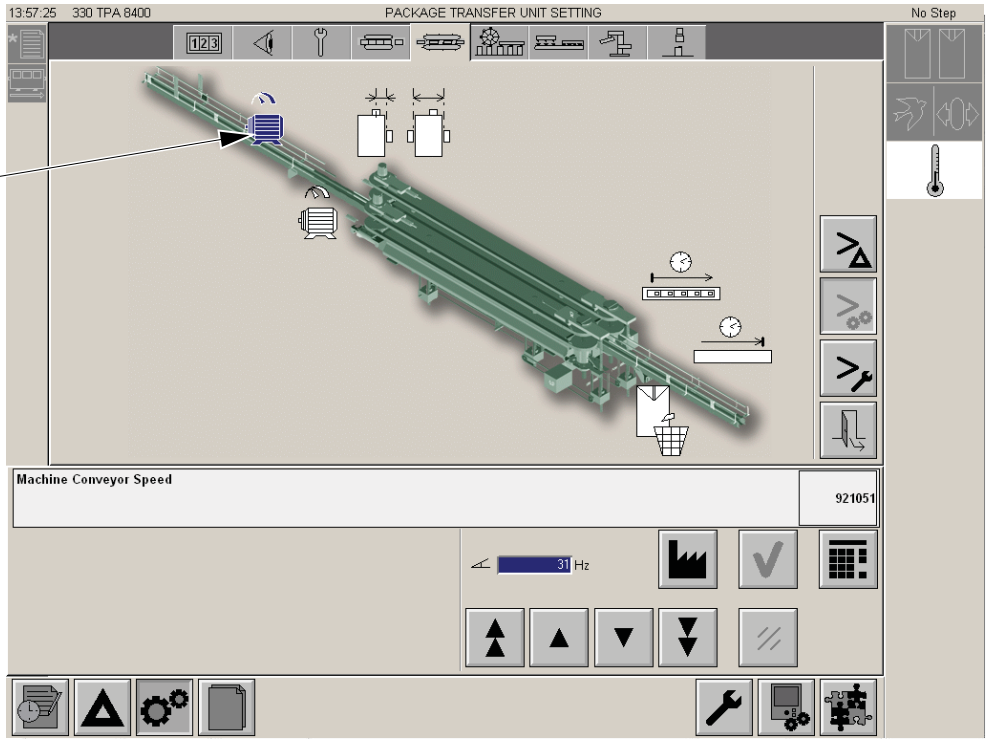

1 Package Conveyor Speed button

(Cont'd)

TechPub_2614345_0106 - 0102_3047103_01.fm

(Cont'd)

Introduction

A number of settings can be made at the control panel to ensure that the packages leaving the belt unit are fed into the package positioner at the correct speed and are correctly spaced.

The setting that can be made from the PACKAGE TRANSFER UNIT SETTING screen is:

- The Package Conveyor Speed (1). This setting is needed to ensure the positive location of a package in the package positioner. The conveyor speed must be 15% higher than that of the package positioner.

(Cont'd)

TechPub_2614345_0106 - 0102_3047103_01.fm

(Cont'd)

Infeed Package Setting Screen

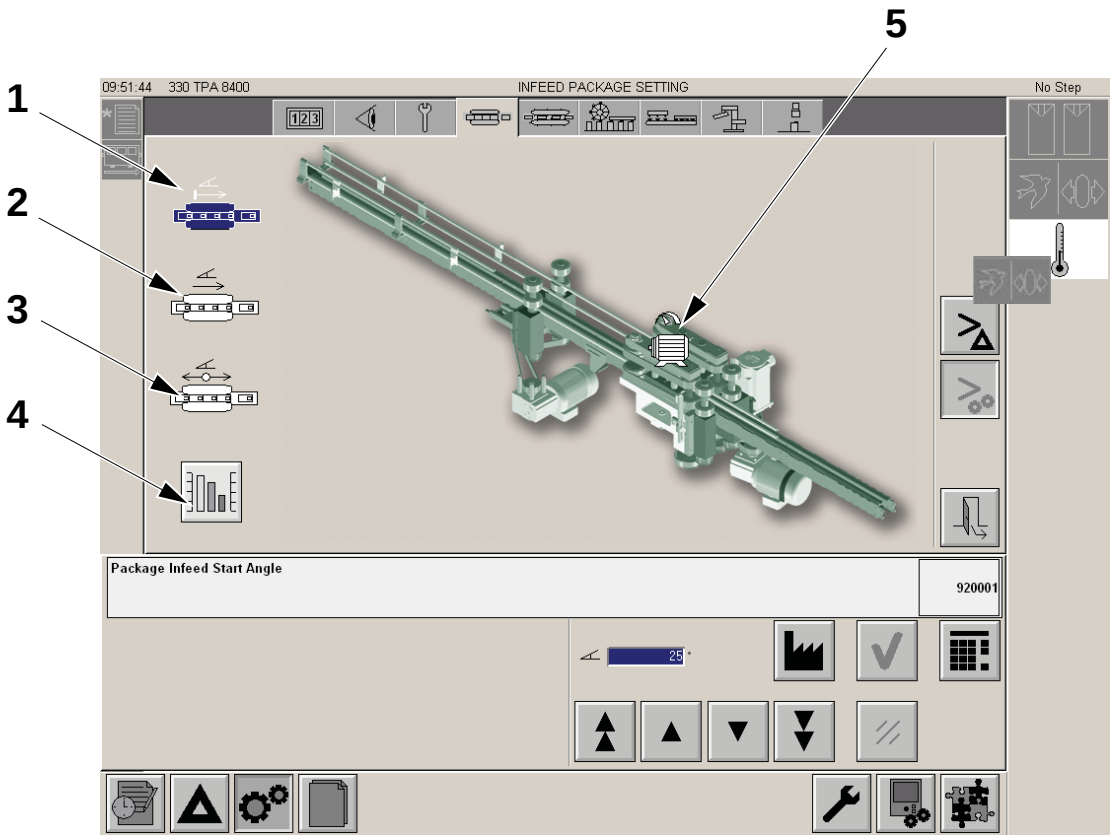

1 Package Infeed Start Angle button
2 Package Infeed Running Angle button
3 Package Infeed Range Angle button
4 Trend button
5 Belt Brake Speed button

(Cont'd)

TechPub_2614345_0106 - 0102_3047103_01.fm

(Cont'd)

The settings that can be made from the INFEED PACKAGE SETTING screen are:

- The Package Infeed Start Angle (1). At this angle, the belt brake drive motor receives a start command and the first package is released by the belt brake. The angle value is related to the inner package transfer axis.
- The Package Infeed Running Angle (2). At this angle, the following package should reach the photocell at the outlet of the belt brake. The photocell is connected to a regulator that controls the belt brake motor speed. To prevent self oscillation, a limit is applied to the output of the regulator.
- The Package Infeed Running Angle Range (3). These settings are used to define the maximum and minimum allowable belt brake running angles. When a package arrives at an angle that is out of the range, the package is stopped and held by the belt brake and a restart is then made.
- The Package Infeed Trend (4). This is a graph that shows the actual running angle of the packages compared with the desired running angle and the maximum and minimum allowable running angles.
- The Belt Brake Speed (5). This setting is used to adjust the belt brake speed.

Note! All default angles and speeds are defined in the table on the following page.

(Cont'd)

TechPub_2614345_0106 - 0102_3047103_01.fm

(Cont'd)

Infeed Speeds and Angles

The following table defines the correct default values for the infeed motor speeds and angles.

1) This is using the drive unit (25 m/min at 50Hz). Using proportion it is possible to calculate the speed in m/min.
2) The first angle is the start angle, the second is the running angle. They are adjustable between ±30 deg.
3) The belt brake speed should be fine set using the infeed graph.

Package Volume	Package Speed	Package Conveyor Drive (Hz) (1)	Infeed Angles (2)	Infeed Angle Range	Belt Brake Drive (Hz) (3)
TBA 500 S	8400 9600	45 52	65° - 55°	$\pm 40^o$	27 31
TBA 1000 Sq	8400 9600	44 50	355° - 340°	$\pm 40^o$	27 31
TBA 1000 B	8400 9600	41 47	345° - 350°	$\pm 40^o$	35 40
TBA 1000 S	8400 9600	45 52	65° - 45°	$\pm 40^o$	33.5 38.2
TBA 1500 S	6600 7200	38 43	65° - 45°	$\pm 40^o$	28.5 30

(Cont'd)

TechPub_2614345_0106 - 0102_3047103_01.fm

(Cont'd)

Set Package Conveyor Speed

Note! The correct package conveyor speed is the package transfer speed +15%.

Note! The default value for the package conveyor speed is defined in the table on page.1-30 (Select the correct drive unit speed).

Note! The package transfer speed is pre-defined and cannot be changed but it can be used as a reference to set the package conveyor speed.

a) To change the package conveyor speed, touch the SETTING button (1) and then the PACKAGE POSITIONER button (2).

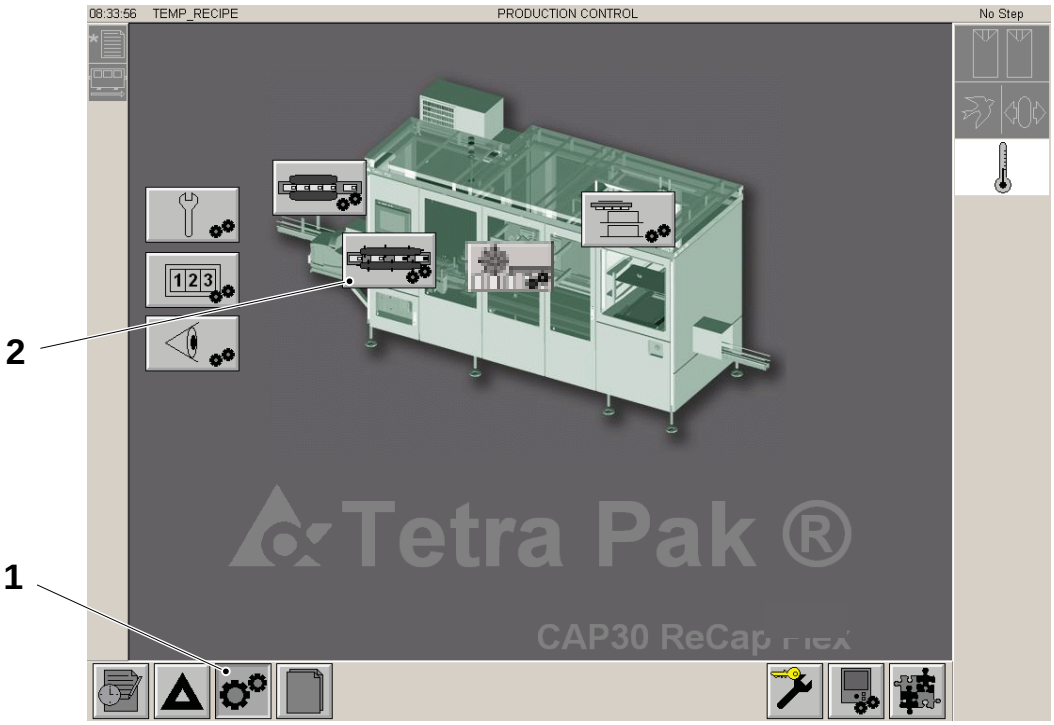

1 SETTING button
2 PACKAGE POSITIONER button

(Cont'd)

TechPub_2614345_0106 - 0102_3047103_01.fm

(Cont'd)

b) Touch the CONVEYOR SPEED icon (3).

c) To change the speed value (Hz) (4), use the ARROW keys (5) or the keyboard which is accessible via the KEYBOARD button (6).

d) Introduce the value by clicking the OK button (7).

e) Repeat steps c) and d) until the conveyor and the package transfer are running at the same speed.

f) The indicated speed value (Hz) (4) is the present running speed of the package conveyor and the package positioner.

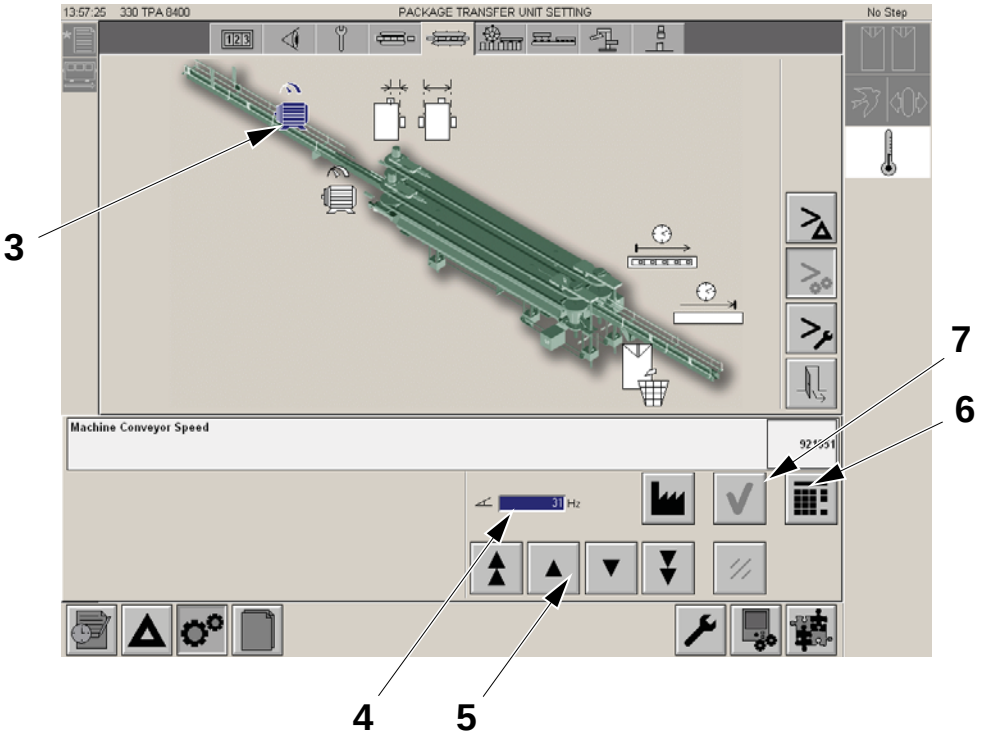

3 CONVEYOR SPEED icon
4 Speed value (Hz)
5 ARROW keys
6 KEYBOARD button
7 OK button

(Cont'd)

TechPub_2614345_0106 - 0102_3047103_01.fm

(Cont'd)

g) Increase the indicated speed value (Hz) (4) by +15% to set the correct package conveyor speed.

h) Touch the EXIT button (8).

i) When the correct speed is obtained, store the corrected value in the appropriate recipe, see 8.8.1-12 Touch Screen - Saving Recipe Settings.

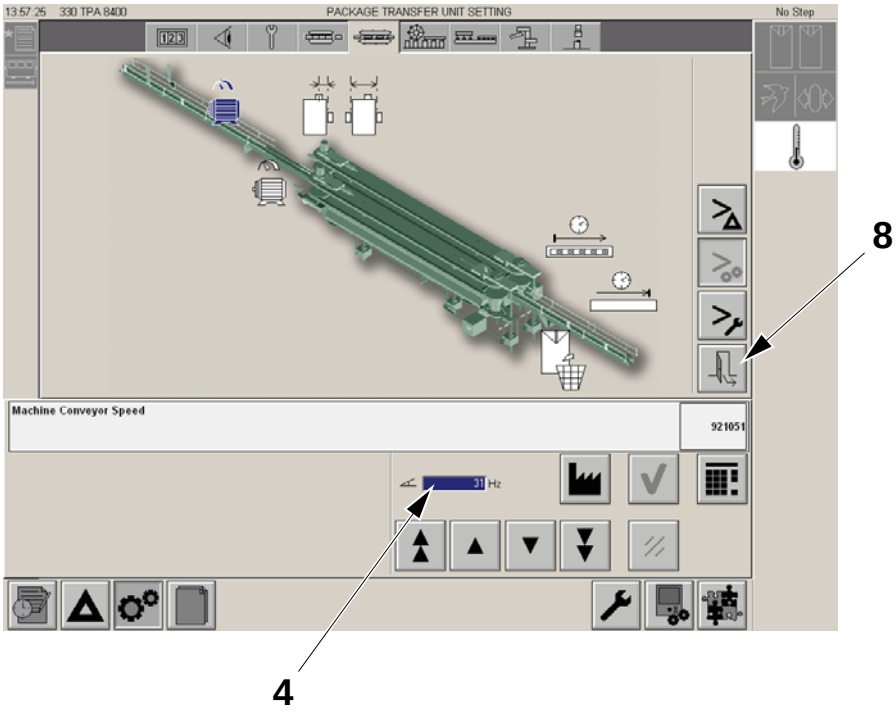

4 Speed value (Hz)
8 EXIT button

(Cont'd)

TechPub_2614345_0106 - 0102_3047103_01.fm

(Cont'd)

Set Belt Brake Speed

Note! The default value for the belt brake speed is defined in the table on page 1-30.

a) To set the belt brake speed, touch the SETTING button (1) and then the INFEED PACKAGE UNIT button (2).

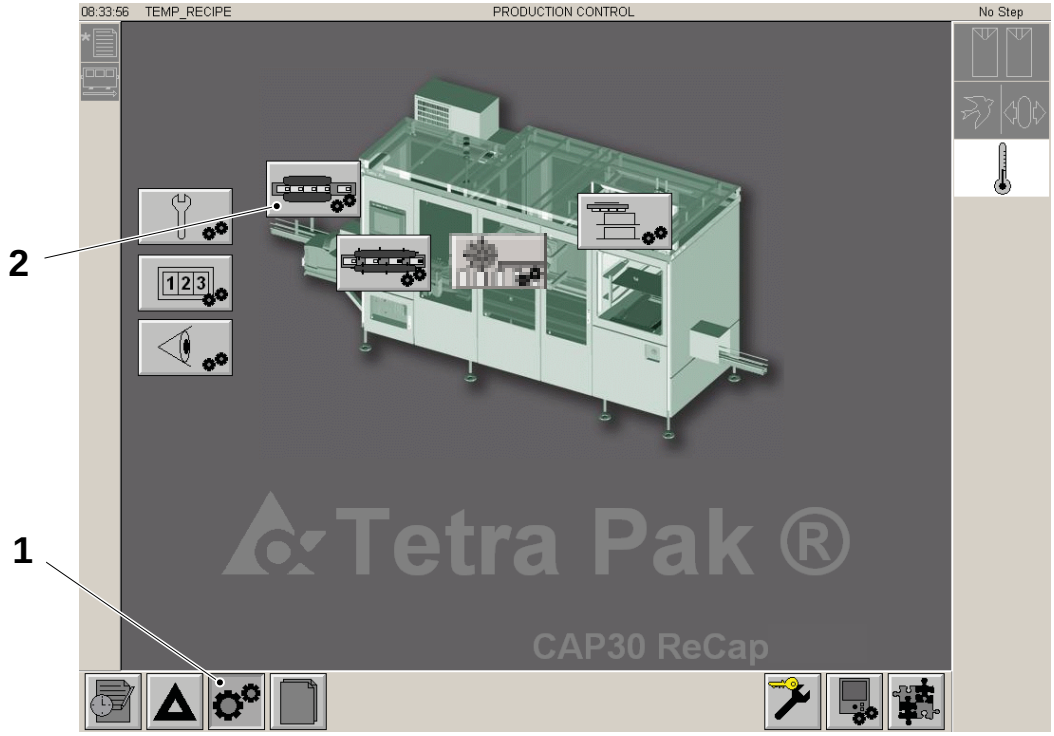

1 SETTING button
2 INFEED PACKAGE UNIT button

(Cont'd)

TechPub_2614345_0106 - 0102_3047103_01.fm

(Cont'd)

b) Touch the BELT BRAKE SPEED icon (3).

c) To increase or decrease the speed value (4), use the ARROW keys (5) or the keyboard which is accessible via the KEYBOARD button (6).

d) Introduce the value by clicking the OK button (7).

e) Touch the EXIT button (8).

f) To set the correct speed, use the trend curve, see Using the Trend Curve to Correct Belt Brake Speed. on page 1-39.

g) When the correct result is obtained store the corrected values in the appropriate recipe, see 8.8.1-12 Touch Screen - Saving Recipe Settings.

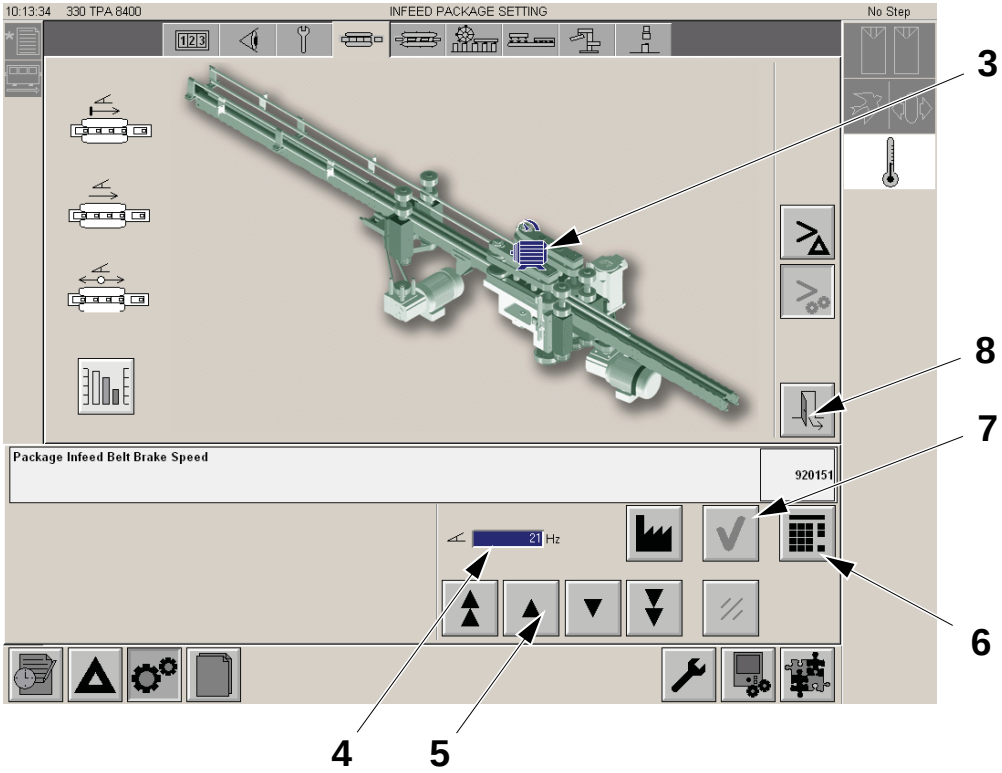

3 BELT BRAKE SPEED button
4 Speed value
5 ARROW keys
6 KEYBOARD button
7 OK button
8 EXIT button

(Cont'd)

TechPub_2614345_0106 - 0102_3047103_01.fm

(Cont'd)

Display Trend Curve

a) To open the trend curve graph, touch the SETTING button (1) and then the INFEED PACKAGE UNIT button (2).

b) Touch the PACKAGE INFEED TREND button (3).

c) To use the trend curve, refer to Using the Trend Curve to Correct Belt Brake Speed. on page 1-39.

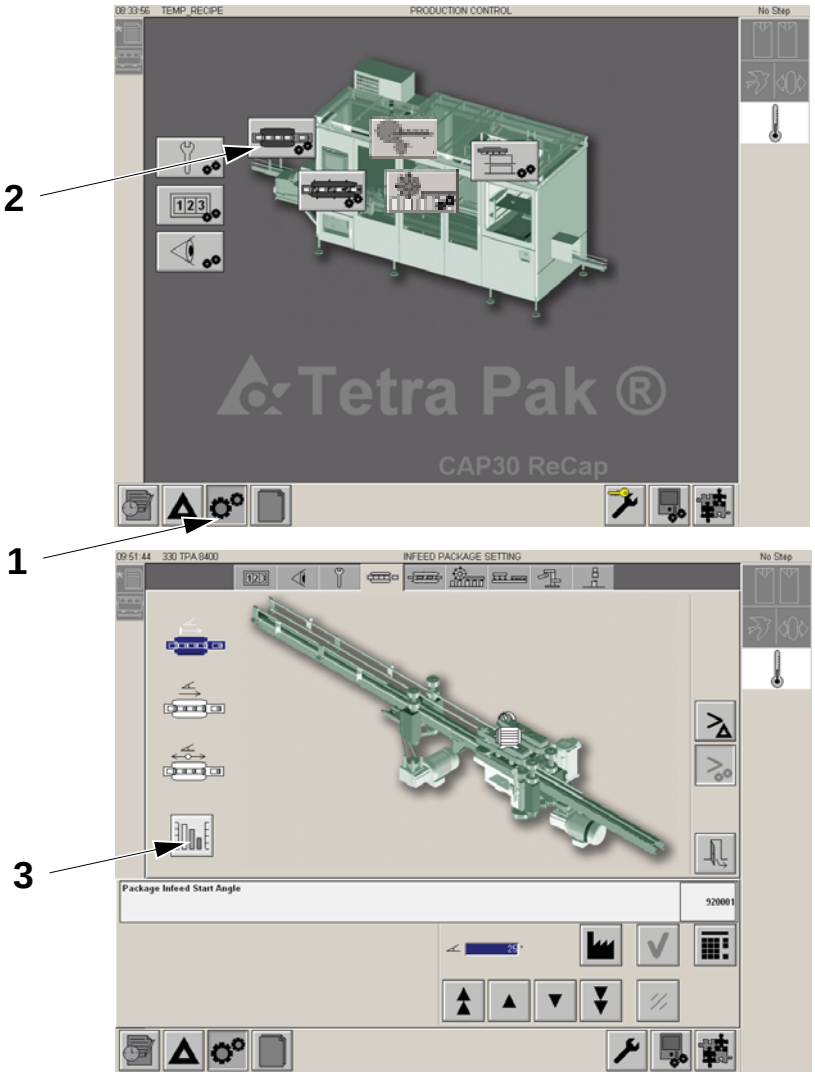

1 SETTING button
2 INFEED PACKAGE UNIT button
3 PACKAGE INFEED TREND button

(Cont'd)

TechPub_2614345_0106 - 0102_3047103_01.fm

(Cont'd)

Normal Presentation

The following illustration is an example of the Trend Screen.

Note! The desired running angle (1) is the BLUE line and the actual running angle (4) is the GREEN line.

The illustration shows the desired running angle (1), the maximum allowable running angle (2), the minimum allowable running angle (3) the actual running angle (4) of the packages leaving the belt unit.

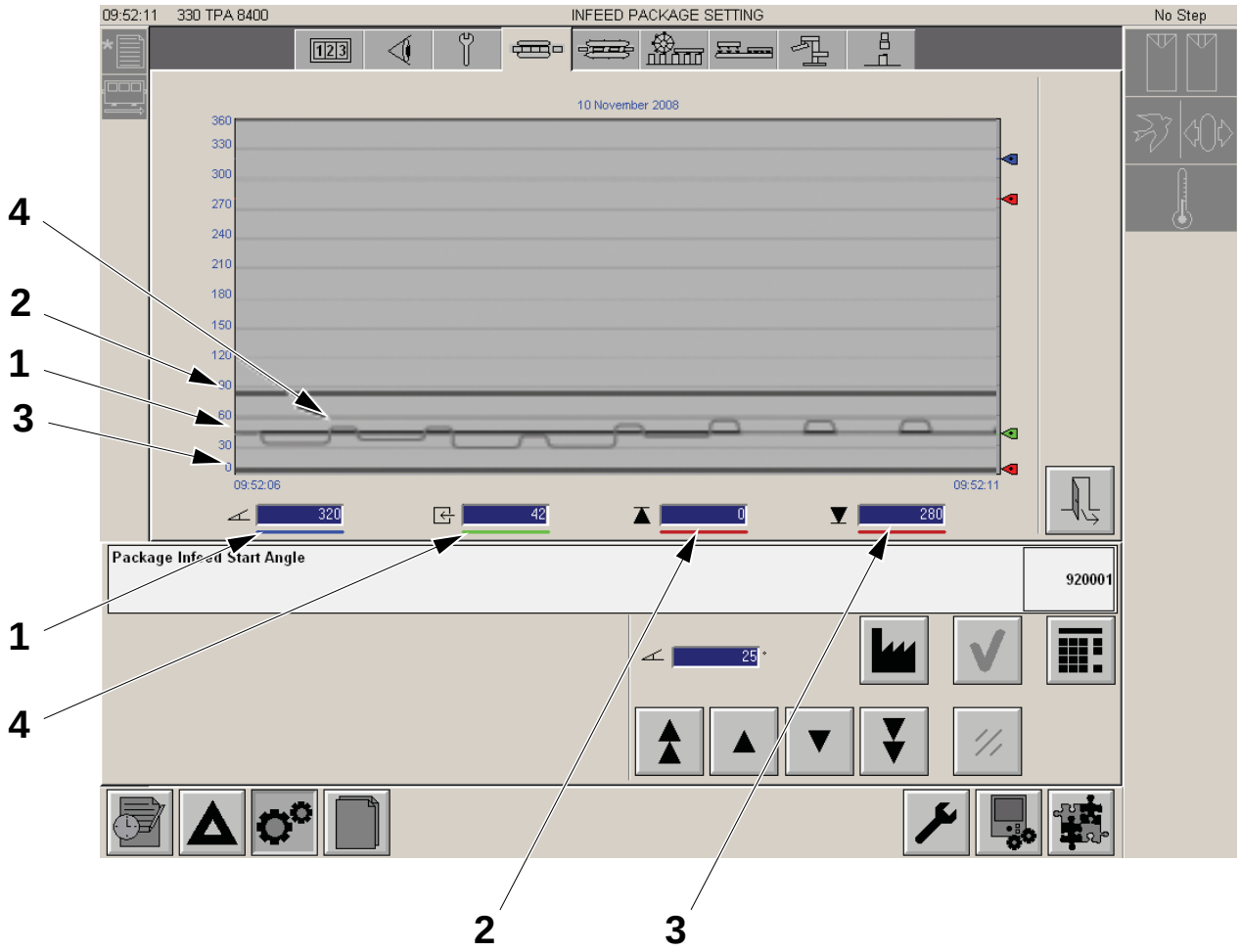

1 Desired running angle
2 Maximum allowable running angle
3 Minimum allowable running angle
4 Running angle of last package

(Cont'd)

TechPub_2614345_0106 - 0102_3047103_01.fm

(Cont'd)

The following example of the Trend Screen shows what can happen when the desired running angle (1) is near to 360 degrees. The maximum allowable running angle (2) will appear at the bottom of the screen and the minimum allowable running angle (3) will be at the top of the screen. The actual running angle (4) of the package that has just left the belt unit is at the left hand end. This may be at the top of the screen as shown below or the bottom of the screen. The actual running angle (4) of the packages that have recently left the belt unit will appear split as shown.

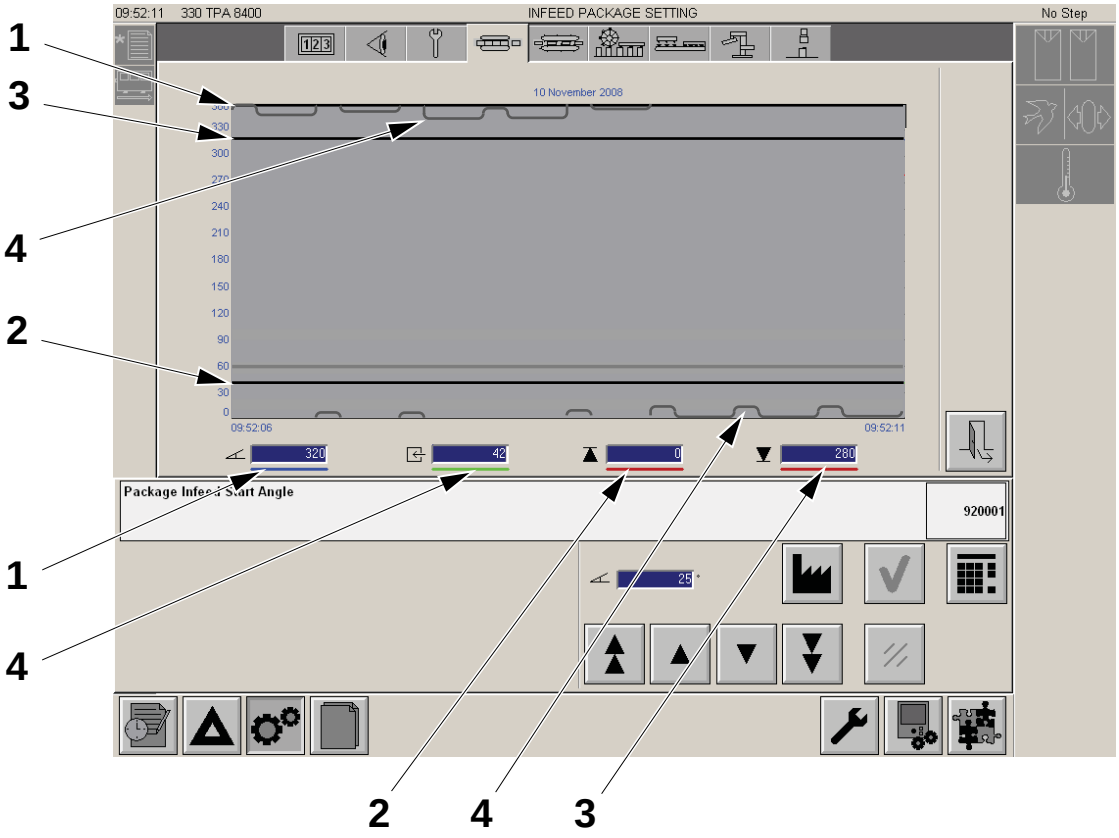

1 Desired running angle
2 Maximum allowable running angle
3 Minimum allowable running angle
4 Running angle of last package

(Cont'd)

TechPub_2614345_0106 - 0102_3047103_01.fm

(Cont'd)

Using the Trend Curve to Correct Belt Brake Speed.

Note! The machine must be in PRODUCTION to use the TREND curve.

The illustrations below shows three examples A, B and C of a trend curve.

In the example **A**, the running angle (1) straddles the desired running angle (2) indicating optimum belt brake speed.

In example **B**, the running angle (1) is consistently between the desired running angle (2) and the maximum allowable running angle (3). This indicates that the packages are arriving **too late**. This error should be corrected by **increasing** the belt brake speed. See Set Belt Brake Speed on page 1-34.

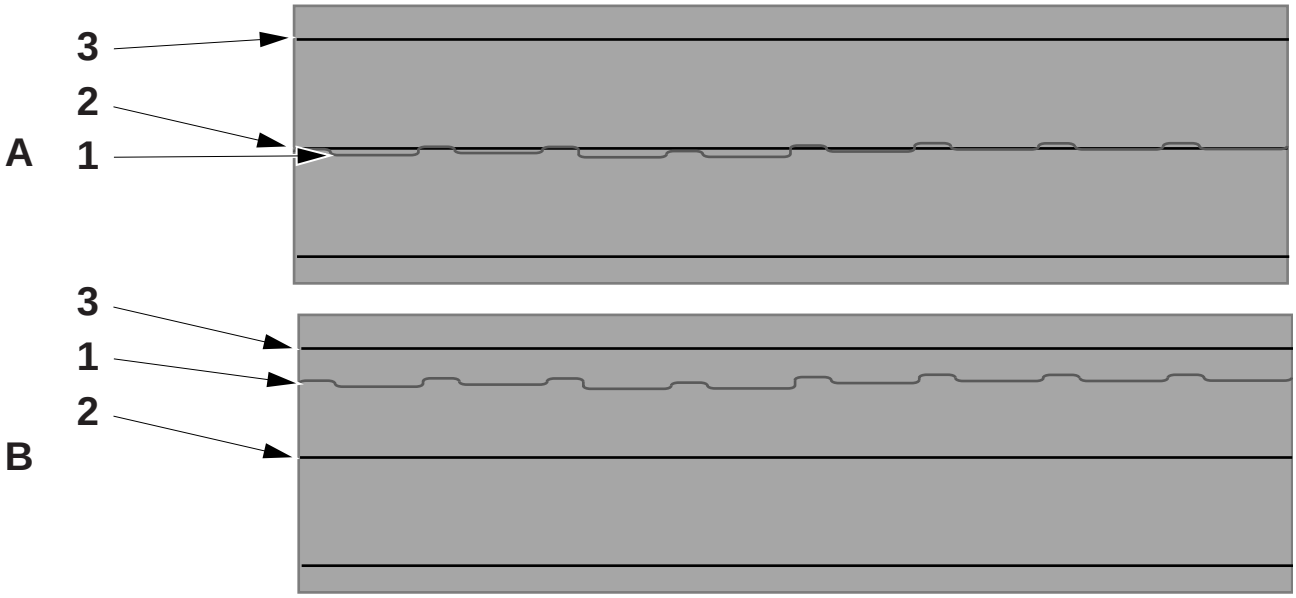

1 Running angle
2 Desired running angle
3 Maximum allowable running angle

(Cont'd)

TechPub_2614345_0106 - 0102_3047103_01.fm

(Cont'd)

In example **C**, the running angle (1) is consistently between the desired running angle (2) and the minimum allowable running angle (4). This indicates that the packages are arriving **too early**. This error should be corrected by **reducing** the belt brake speed. See Set Belt Brake Speed on page 1-34.

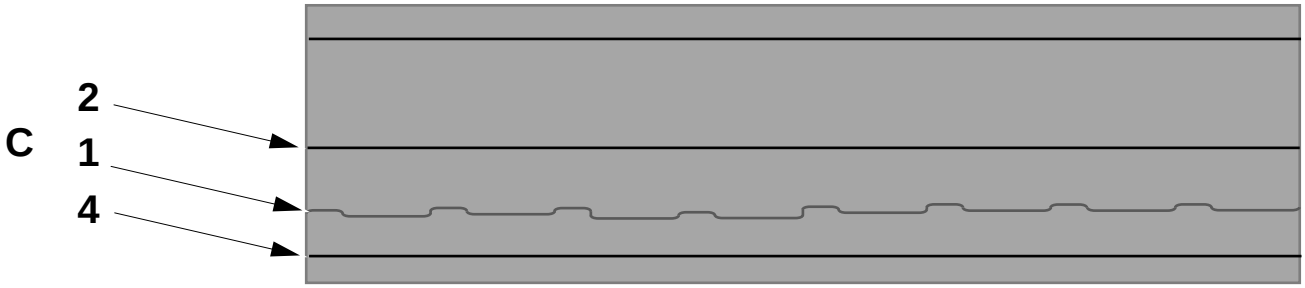

1 Running angle
2 Desired running angle
4 Minimum allowable running angle

(Cont'd)

TechPub_2614345_0106 - 0102_3047103_01.fm

(Cont'd)

Set Package Infeed Start Angle

Note! The default value for the package infeed start angle is defined in the table on page 1-30.

a) To set the Package Infeed Start Angle, touch the SETTING button (1) and then the INFEED PACKAGE UNIT button (2).

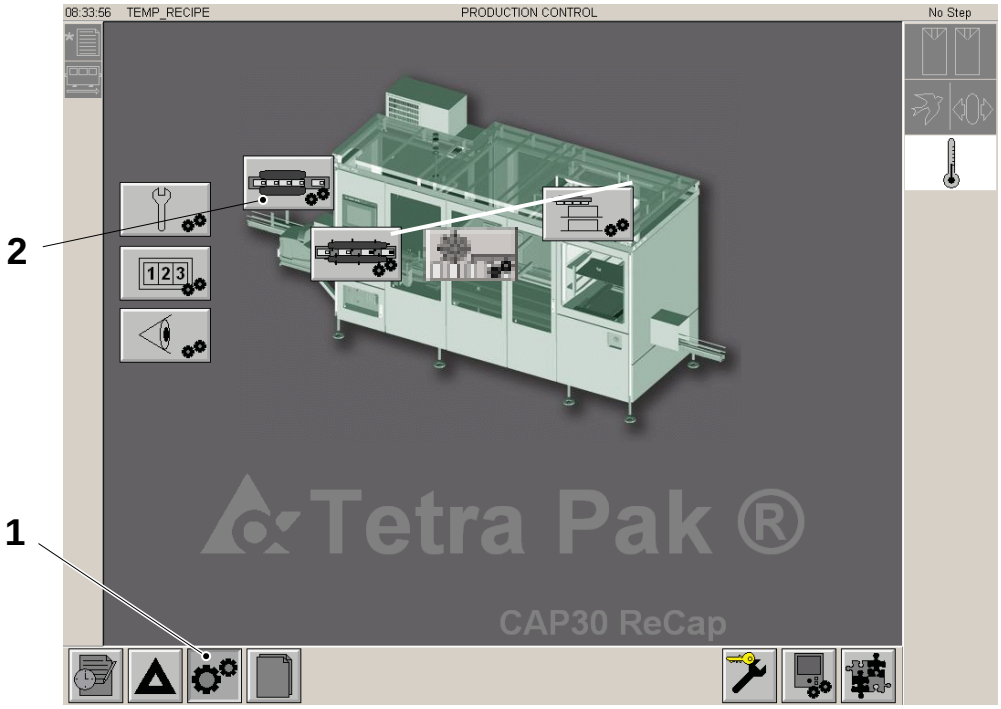

1 SETTING button
2 INFEED PACKAGE UNIT button

(Cont'd)

TechPub_2614345_0106 - 0102_3047103_01.fm

(Cont'd)

b) Touch the PACKAGE INFEED START ANGLE button (3).

c) To increase or decrease the start angle (4), use the ARROW keys (5) or the keyboard which is accessible via the KEYBOARD button (6).

d) Introduce the value by clicking the OK button (7).

e) Touch the EXIT button (8).

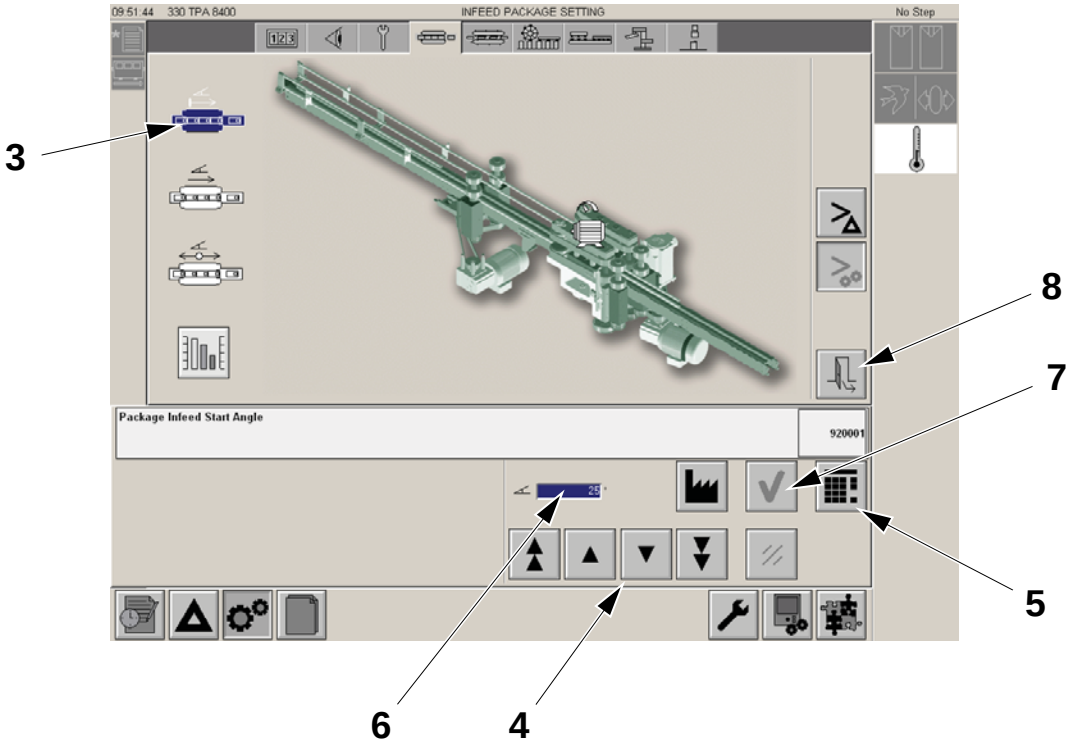

3 PACKAGE INFEED START ANGLE button
4 Start value
5 ARROW keys
6 KEYBOARD button
7 OK button
8 EXIT button

(Cont'd)

TechPub_2614345_0106 - 0102_3047103_01.fm

(Cont'd)

Note! When the correct infeed start angle is obtained, the package (9) should be in firm contact with the belt tooth (10) before the belt tooth (10) is aligned with the front of the pulley (11).

f) When the correct result is obtained store the corrected values in the appropriate recipe, see 8.8.1-12 Touch Screen - Saving Recipe Settings.

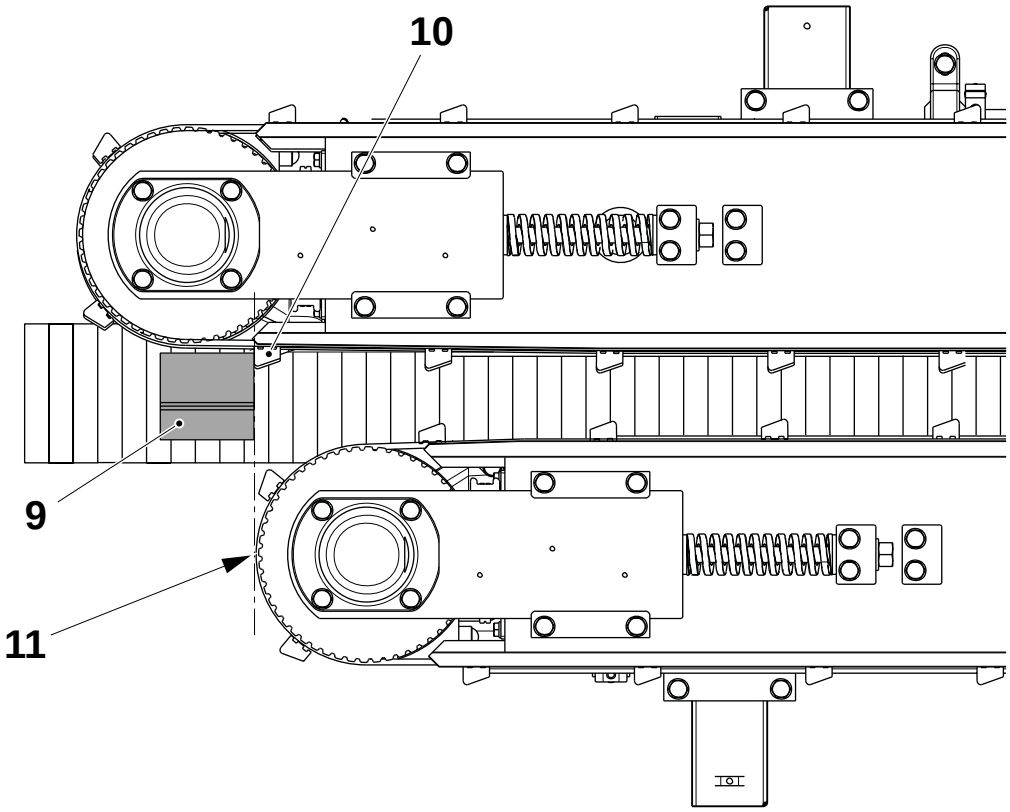

9 Package
10 Belt tooth
11 Pulley

(Cont'd)

TechPub_2614345_0106 - 0102_3047103_01.fm

(Cont'd)

Set Package Infeed Running Angle

Note! The default value for the package infeed running angle is defined in the table on page 1-30.

a) To set the package infeed running angle, touch the SETTING button (1) and then the INFEED PACKAGE UNIT button (2).

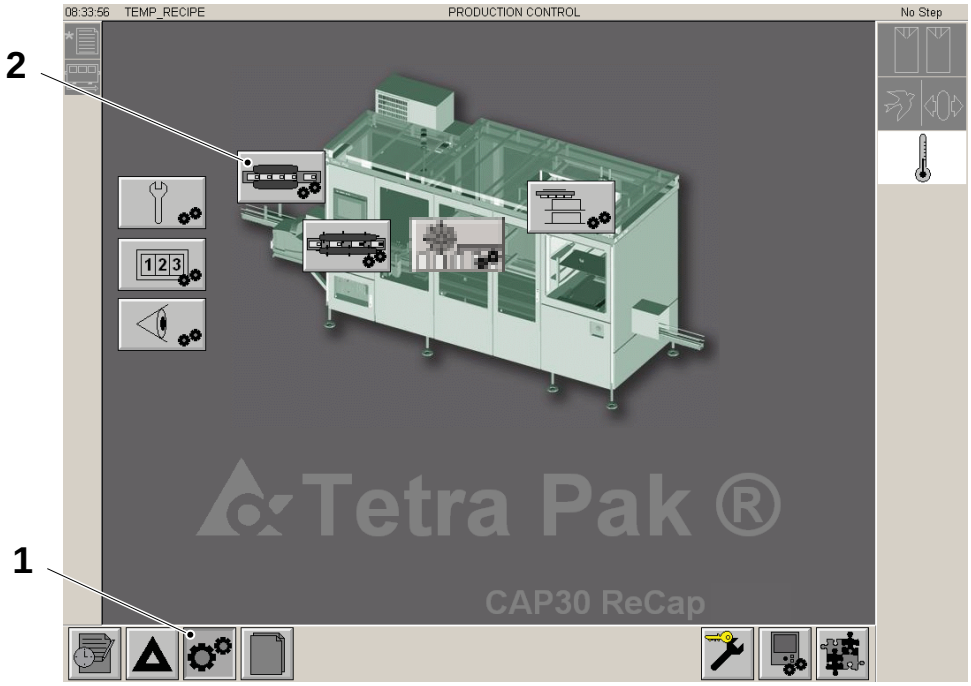

1 SETTING button
2 INFEED PACKAGE UNIT button

(Cont'd)

TechPub_2614345_0106 - 0102_3047103_01.fm

(Cont'd)

b) Touch the PACKAGE INFEED RUNNING ANGLE button (3).

c) To increase or decrease the running angle (4), use the ARROW keys (5) or the keyboard which is accessible via the KEYBOARD button (6).

d) Introduce the value by clicking the OK button (7).

e) Touch the EXIT button (8).

f) When the correct result is obtained store the corrected values in the appropriate recipe, see 8.8.1-12 Touch Screen - Saving Recipe Settings.

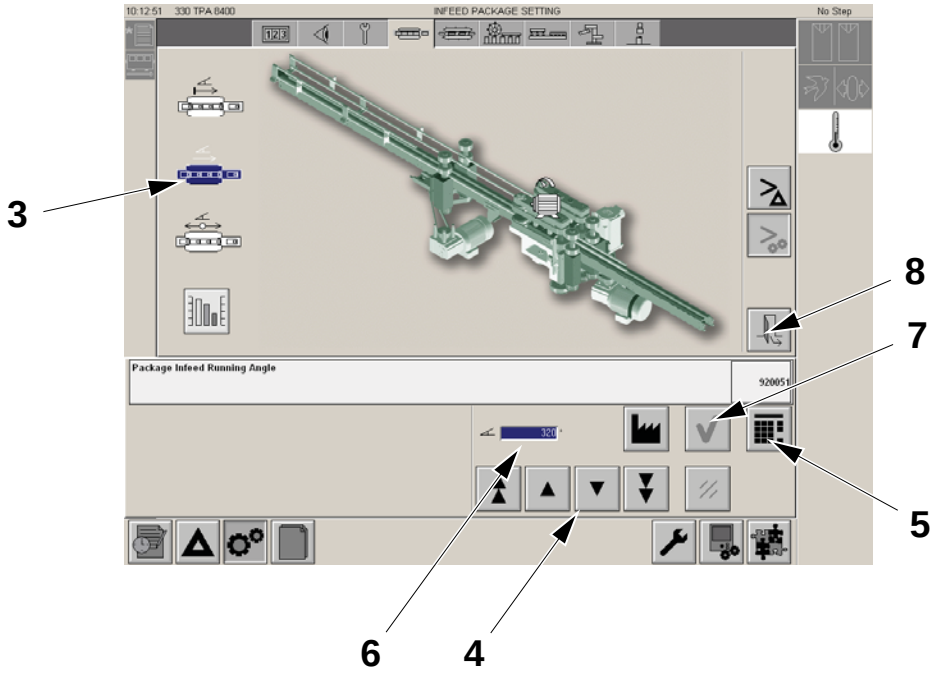

3 PACKAGE INFEED RUNNING ANGLE button
4 Running Angle
5 ARROW keys
6 KEYBOARD button
7 OK button
8 EXIT button

(Cont'd)

TechPub_2614345_0106 - 0102_3047103_01.fm

(Cont'd)

Set Package Infeed Running Angle Range

Note! The default value for the package infeed running angle and the ±XX° range is defined in the table on page 1-30.

The value set for the Package Infeed Running Angle Range will have a positive and negative component centred around the desired running angle. For example, if the desired running angle is 60 degrees and the running angle range is 40 degrees. The maximum allowable running angle will be 100 degrees and the minimum allowable running angle will be 20 degrees.

a) To set the belt brake range, touch the SETTING button (1) and then the INFEED PACKAGE UNIT button (2).

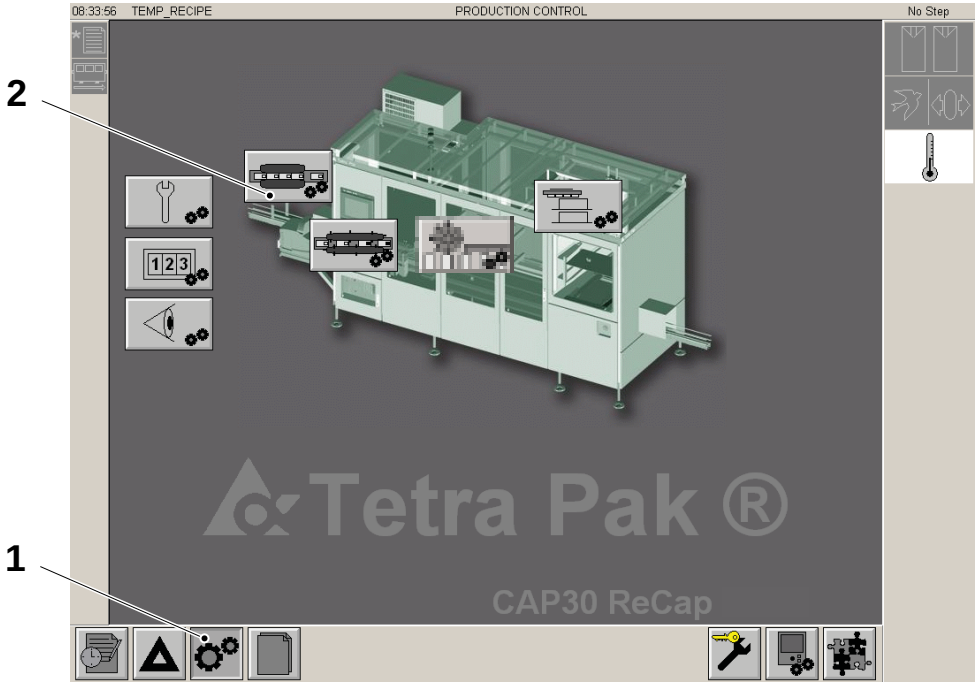

1 SETTING button
2 INFEED PACKAGE UNIT button

(Cont'd)

TechPub_2614345_0106 - 0102_3047103_01.fm

(Cont'd)

b) Touch the PACKAGE INFEED RUNNING ANGLE RANGE button (3).

c) To increase or decrease the range value (4), use the ARROW keys (5) or the keyboard which is accessible via the KEYBOARD button (6).

d) Introduce the value by clicking the OK button (7).

e) Touch the EXIT button (8).

f) When the correct result is obtained store the corrected values in the appropriate recipe, see 8.8.1-12 Touch Screen - Saving Recipe Settings.

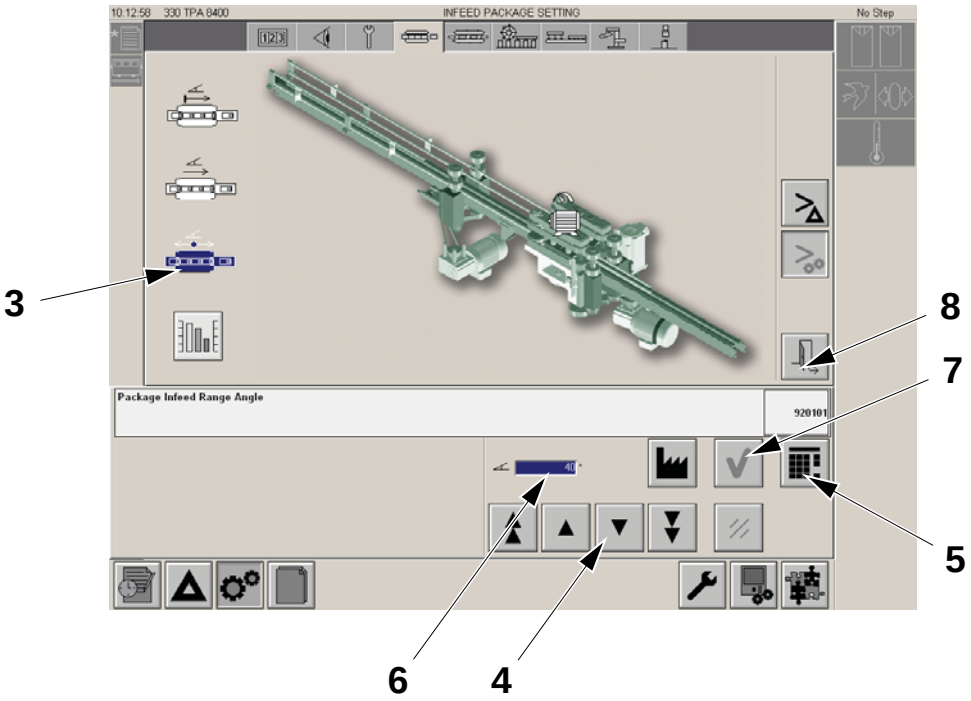

3 PACKAGE INFEED RUNNING ANGLE RANGE button
4 Angle value
5 ARROW keys
6 KEYBOARD button
7 OK button
8 EXIT button

TechPub_2614345_0106 - 0102_3047103_01.fm

This page intentionally left blank

TechPub_2614345_0106 - 0102_3047103_01.fm

2 Package Line

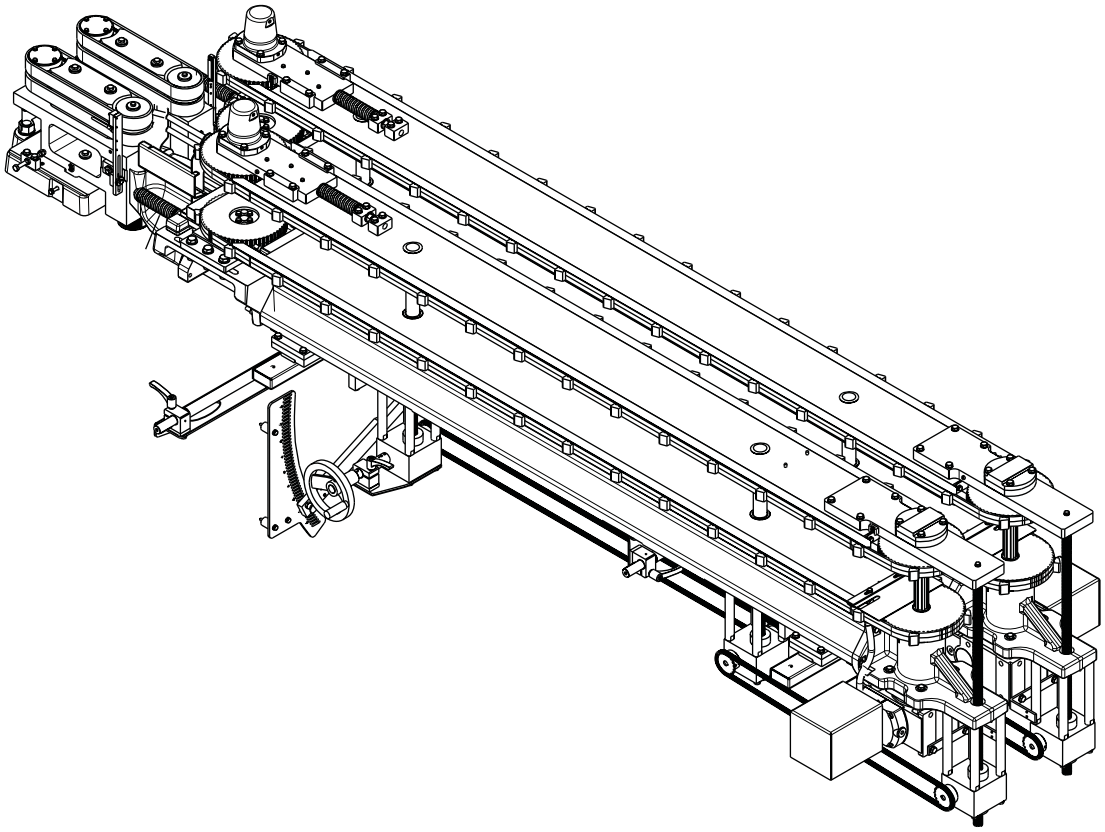

TechPub_2614345_0106 - 0202_3047104_01.fm

Package Line - Description

SPC Reference	662950-0200

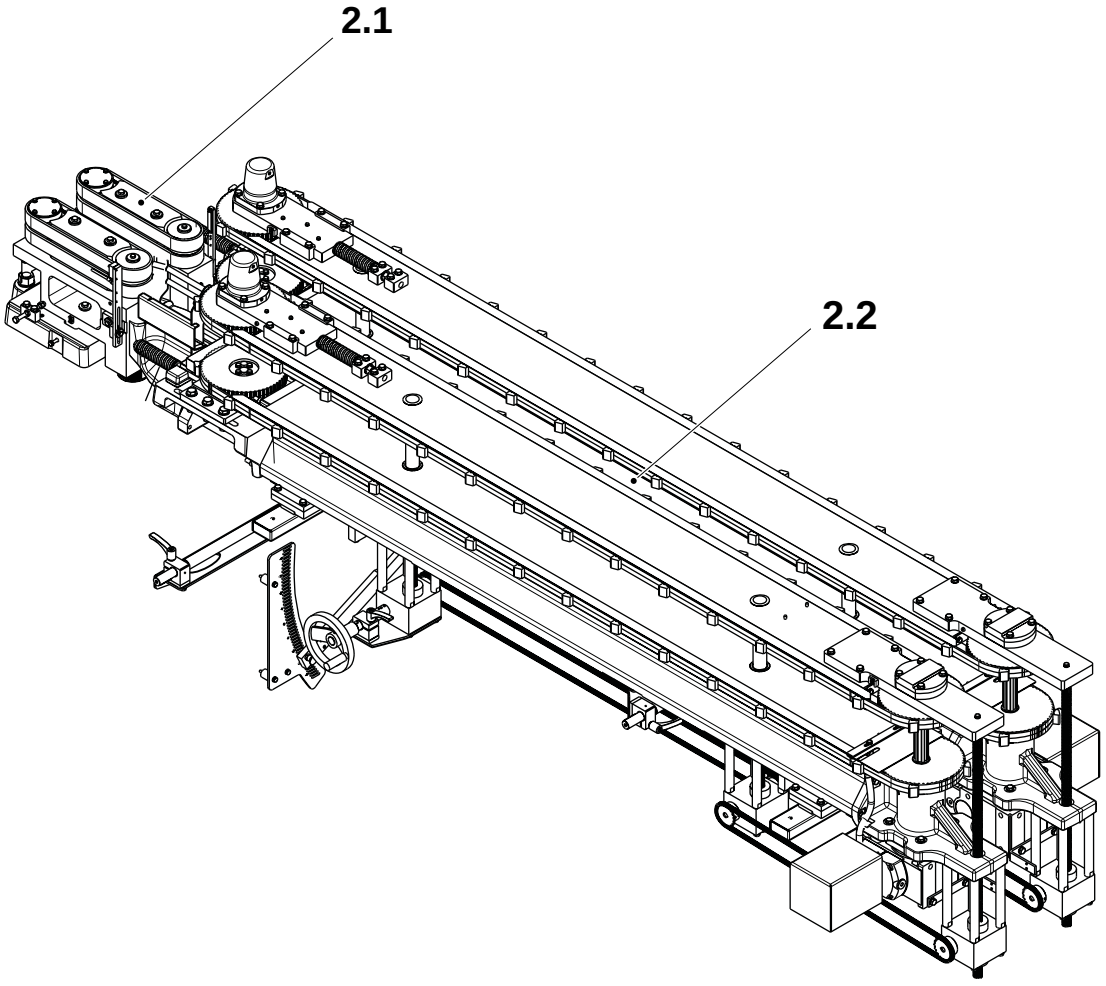

2.1 Belt Brake
2.2 Package Positioner

TechPub_2614345_0106 - 0202_3047104_01.fm

2.0 Functional Description . . . . . 2 - 5

2.1 Belt Brake . . . . . 2 - 6

2.1.1 Brake Unit . . . . . 2 - 6

2.1.1-1 Brake Unit - Check Belt Tension . . . . . 2 - 6

2.1.1-2 Brake Unit - Check Belts . . . . . 2 - 7

2.1.1-3 Brake Unit - Change Belt . . . . . 2 - 8

2.1.1-4 Brake Unit - Set Belt Tension . . . . . 2 - 9

2.1.1-5 Brake Unit - Set Position . . . . . 2 - 11

2.1.1-6 Brake Unit - Check . . . . . 2 - 13

2.1.1-7 Brake Unit - Set Sensor . . . . . 2 - 14

2.1.1-8 Set Belt Brake Speed . . . . . 2 - 15

2.1.2 Drive . . . . . 2 - 16

2.1.2-1 Drive - Check Belt . . . . . 2 - 16

2.1.2-2 Drive - Change Belt . . . . . 2 - 17

2.1.2-3 Drive - Change Bearings . . . . . 2 - 19

2.2 Package Positioner . . . . . 2 - 21

2.2.1 Package Positioner (Right) . . . . . 2 - 21

2.2.1-1 Package Positioner (Right) - Change Belts . . . . 2 - 21

2.2.1-2 Package Positioner (Right) - Set Belts Tension . . . . . 2 - 28

2.2.1-3 Package Positioner (Right) - Set Belts Alignment . . . . . 2 - 29

2.2.2 Package Positioner (Left) . . . . . 2 - 30

2.2.2-1 Package Positioner (Left) - Change Belts . . . . . 2 - 30

2.2.2-2 Package Positioner (Left) - Set Belts Tension . . . . . 2 - 36

2.2.2-3 Package Positioner (Left) - Set Belts Alignment . . . . . 2 - 37

2.2.3 Drive . . . . . 2 - 38

2.2.3-1 Drive - Change Bearings . . . . . 2 - 38

2.2.3-2 Drive - Motor and Gearbox . . . . . 2 - 49

2.2.3-3 Belt Stretcher - Change Bearings . . . . . 2 - 52

2.2.3-4 Cylinder Speed - Set Regulator Valve . . . . . 2 - 57

TechPub_2614345_0106 - 0202_3047104_01.fm

2.2.3-5 Set - Cap Position X Direction . . . . . 2 - 58
2.2.3-6 Set - Cap Position Y Direction . . . . . 2 - 59
2.2.3-7 Set - Package Width X . . . . . 2 - 62
2.2.3-8 Set - Package Length Y . . . . . 2 - 63
2.2.3-9 Set - Wheel Pushdown Offset . . . . . 2 - 65
2.2.4 Set Package Positioner Zero . . . . . 2 - 68
2.2.4-1 Set Package Positioner Zero Setting . . . . . 2 - 68

TechPub_2614345_0106 - 0202_3047104_01.fm

2.0 Functional Description

The Package Line has the following main components:

- Belt Brake
- Package positioner.

Packages arriving at the infeed end of the machine form a queue at the entrance of the belt brake.

The belt brake slows the packages as they pass and then releases them individually into the package positioner. The space between consecutive packages is such that synchronisation is achieved at the cap applicator unit.

The package positioner collects the correctly spaced packages and moves them at a constant speed, first, to a position below the cap applicator unit where the cap is applied and then to the outfeed end of the machine where the packages are transferred to the outfeed conveyor.

TechPub_2614345_0106 - 0202_3047105_01.fm

2.1 Belt Brake

SPC Reference	2838654-0200

2.1.1 Brake Unit

2.1.1-1 Brake Unit - Check Belt Tension

Machine Status	Mains Power OFF Air OFF
SPC Reference	2766990-0100 2766991-0100

Check the tension of the belts (1). It should be possible to move each belt the distance **A**, at the centre.

If necessary, adjust the tension, see 2.1.1-4 Brake Unit - Set Belt Tension.

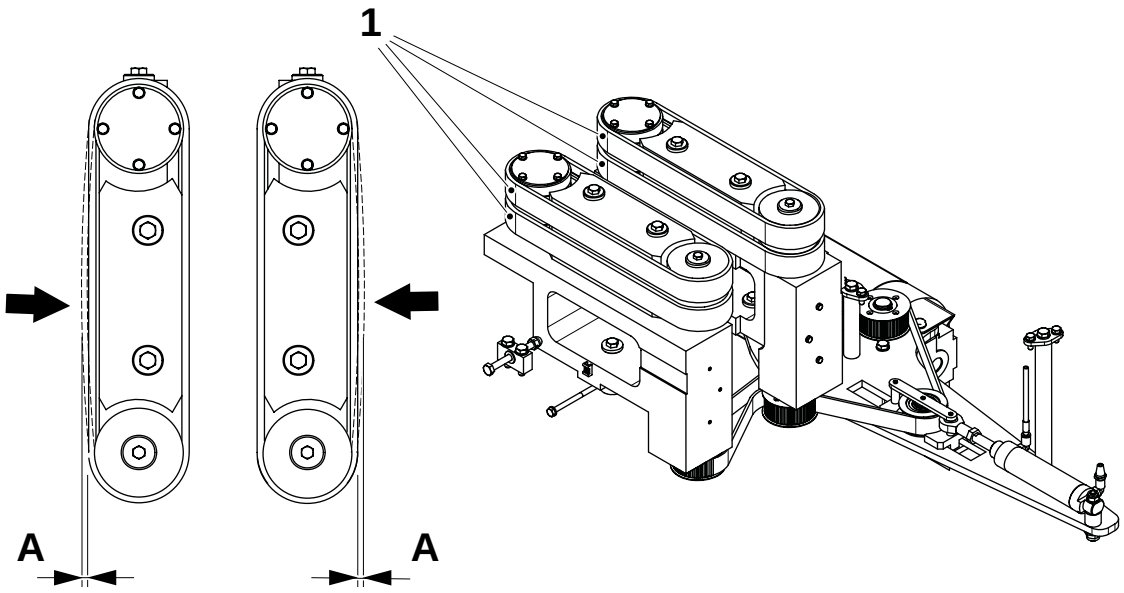

A = 5 ±1 mm

1 Belt

TechPub_2614345_0106 - 0202_3047105_01.fm

2.1.1-2 Brake Unit - Check Belts

Machine Status	Mains Power OFF Air OFF
SPC Reference	2766990-0100 2766991-0100

Check the belts (1) for wear or damage. If necessary, change the belts, see 2.1.1-3 Brake Unit - Change Belt.

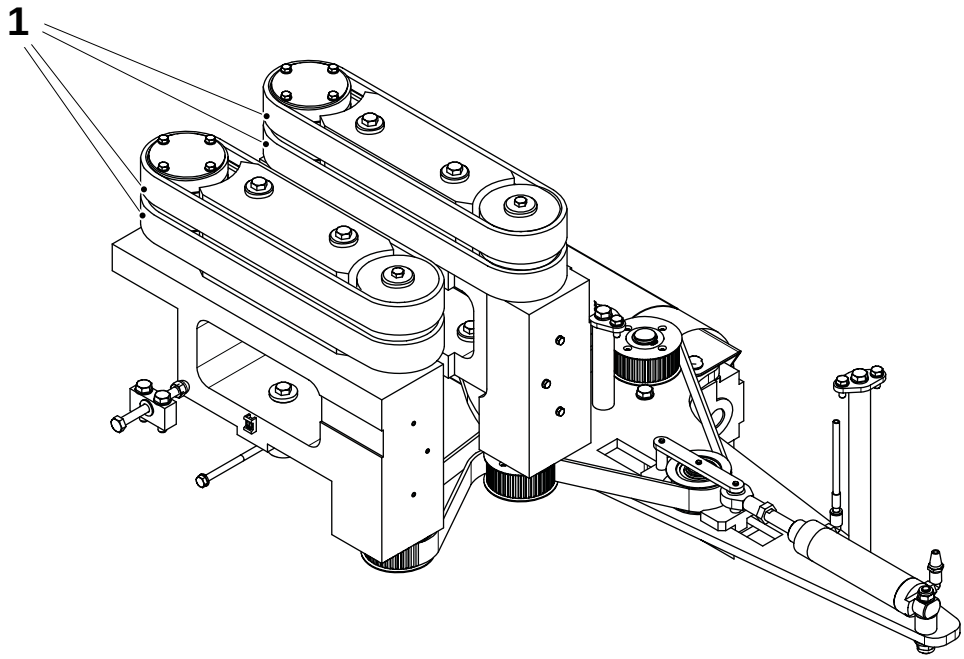

1 Belt

TechPub_2614345_0106 - 0202_3047105_01.fm

2.1.1-3 Brake Unit - Change Belt

Machine Status	Mains Power OFF Air OFF
SPC Reference	2766990-0100 2766991-0100

a) Loosen the nut (1) and loosen the screw (2) to release the belt tension.
b) Remove the belts (3).
c) Install the new belts and assemble in the reverse order.
d) Repeat the procedure for the other belts.
e) Tension the belts, see 2.1.1-4 Brake Unit - Set Belt Tension.

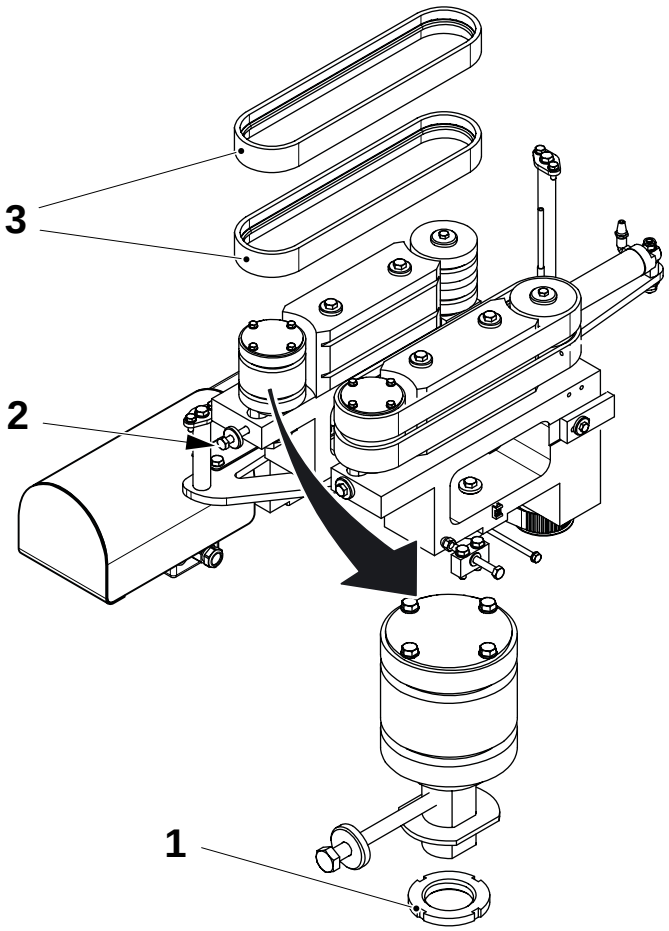

1 Nut
2 Screw
3 Belt

TechPub_2614345_0106 - 0202_3047105_01.fm

2.1.1-4 Brake Unit - Set Belt Tension

Machine Status	Mains Power OFF Air OFF
SPC Reference	2766990-0100 2766991-0100
Tools	TP No. 90600-3415 TP No. 90459-2181

a) Loosen the nut (1).

b) Use the screw (2) adjust the tension of the belts (3). The tension should be set to 250N (80 Hz) using the tool TP No.90600-3415 or TP No. 90459-2181.

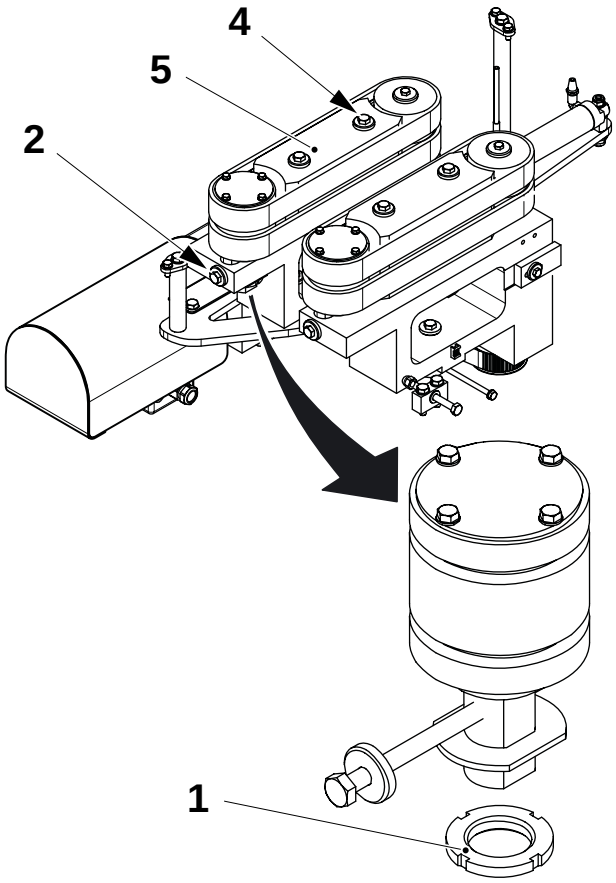

1 Nut
2 Screw
3 Belt

(Cont'd)

TechPub_2614345_0106 - 0202_3047105_01.fm

(Cont'd)

Note! The screws (4) and the support block (5) should be removed while the setting is made.

c) Without moving the screw (2) tighten the nut (1).

d) Repeat the procedure for the other belts.

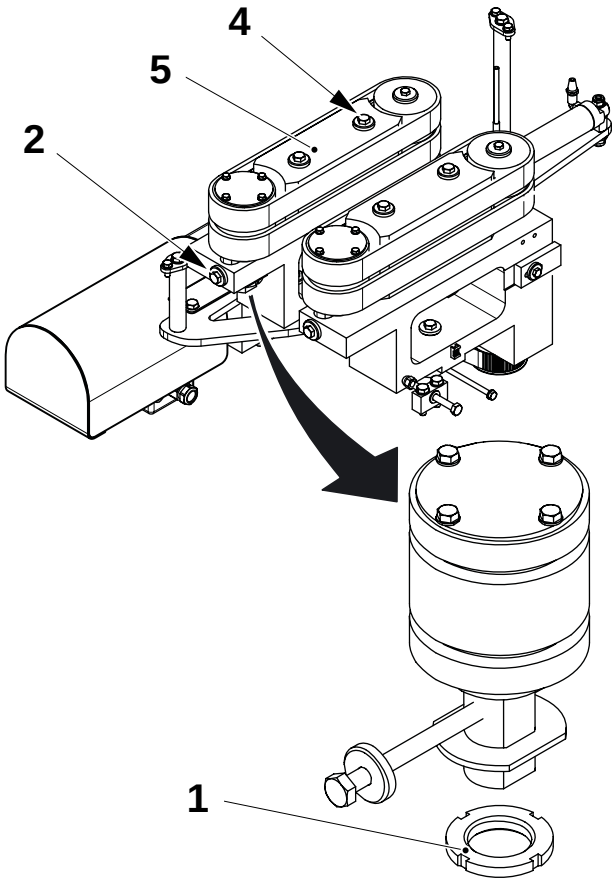

1 Nut
2 Screw
4 Screw
5 Block

TechPub_2614345_0106 - 0202_3047105_01.fm

2.1.1-5 Brake Unit - Set Position

Machine Status	Mains Power OFF Air OFF
SPC Reference	2766990-0100 2766991-0100

Inner Brake Position

a) Make sure that the main air supply is turned OFF and release the air pressure from the cylinder see, 2.1.2-2 Drive - Change Belt the first page only.

b) Loosen the screws (1).

c) Slide the inner brake (2) until the distance **A** from the surface of the transfer belt (3) is obtained.

d) Without moving the brake (2), tighten the screws (1).

A = 1 mm

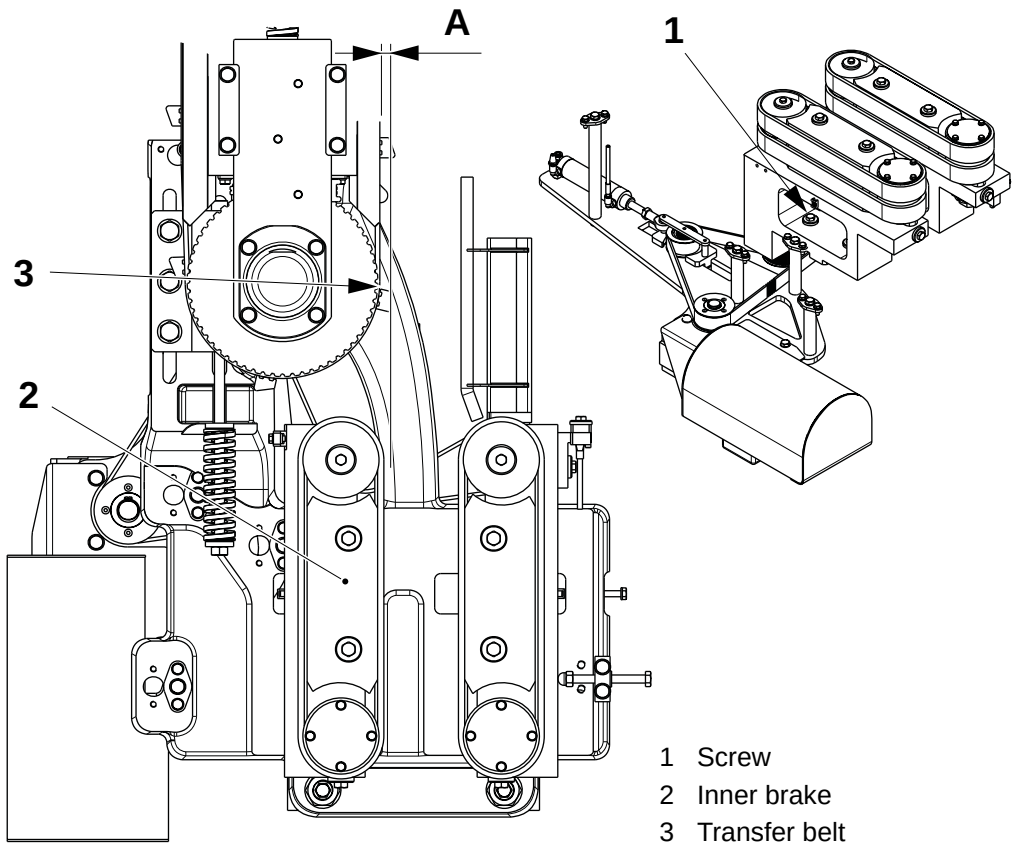

1 Screw
2 Inner brake
3 Transfer belt

(Cont'd)

TechPub_2614345_0106 - 0202_3047105_01.fm

(Cont'd)

Outer Brake Position

a) Loosen the screws (1) and release the outer brake (2).

b) Use the screw (3) and the screw (4) to adjust the position of the outer brake (2) until parallel and the distance **A** is obtained.

c) Without moving the brake (2), tighten the screws (1).

d) Check that the belts are located correctly and turn the main air supply ON.

Note! Check in production that the first package is always stopped in the correct position, see 2.1.1-6 Brake Unit - Check.

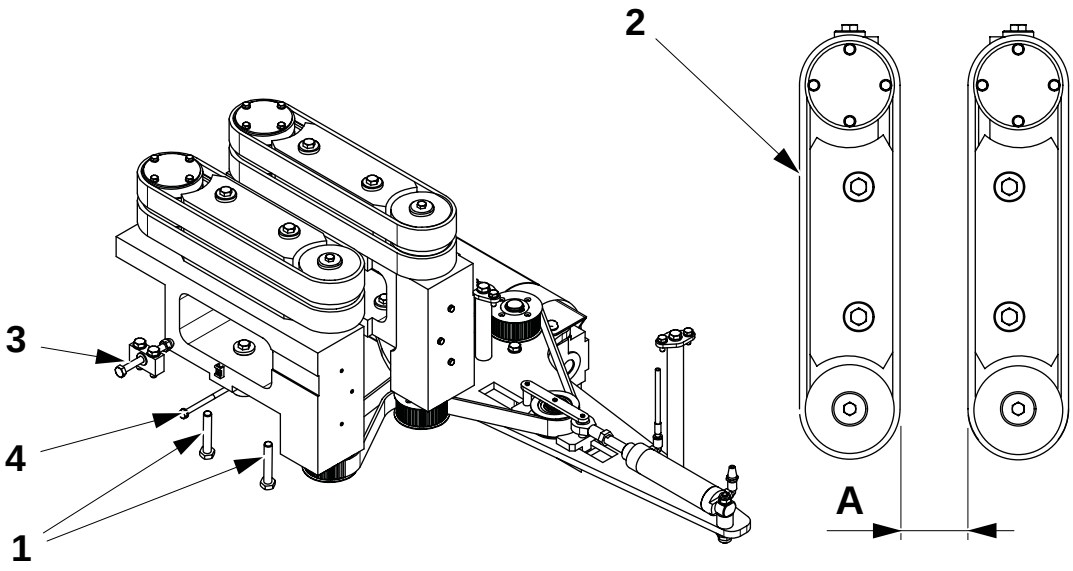

A = Package size -1mm

1 Screw
2 Outer brake
3 Screw
4 Screw

TechPub_2614345_0106 - 0202_3047105_01.fm

2.1.1-6 Brake Unit - Check

Machine Status	Mains Power OFF Air OFF
SPC Reference	2766990-0100 2766991-0100

Check that the belt brake stops and holds a package in the position (1) shown. If not adjust the sensor until the correct position is obtained, see 2.1.1-7 Brake Unit - Set Sensor.

Check that the belt brake holds the package when there is a queue. If not adjust the belt brake until the front package is held in the position (1) shown.

Note! 5 mm before the position (1) and 15 mm after is OK if sustainable.

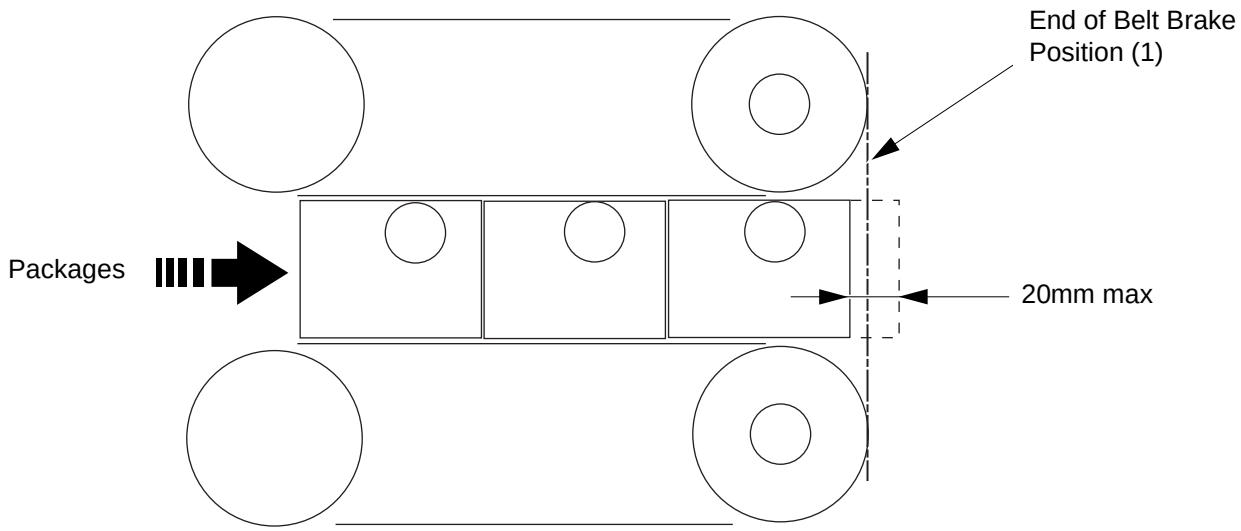

1 Position

TechPub_2614345_0106 - 0202_3047105_01.fm

2.1.1-7 Brake Unit - Set Sensor

Machine Status	Mains Power OFF Air OFF
SPC Reference	2766990-0100 2766991-0100

a) Loosen the screws (1) and (2) as required.

b) Move the brackets (3), (4) and (5) holding the sensors (6) so that the beam (7) passes through the gap without striking the shafts (8).

Note! The holes (9) may be used to position the sensors (6) for different package types.

c) Tighten the screws (1) and (2).

d) The sensors (6) should be the distance **A** from the front of the belts (10).

e) To set the sensors (6) electrically see 8.7.3 General Purpose Sensor.

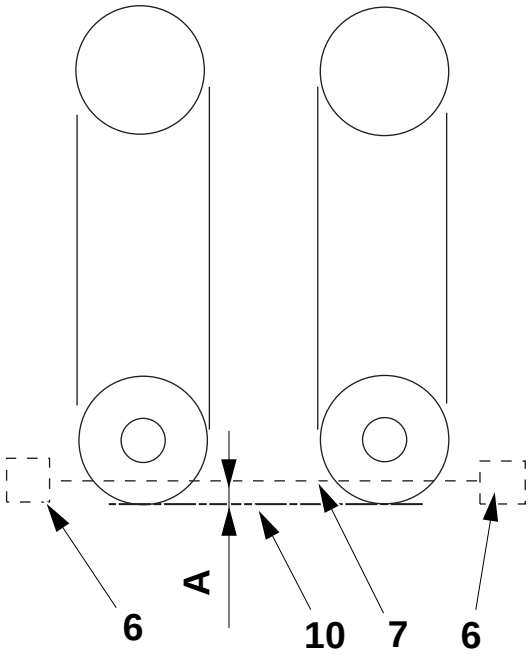

A = 20 mm

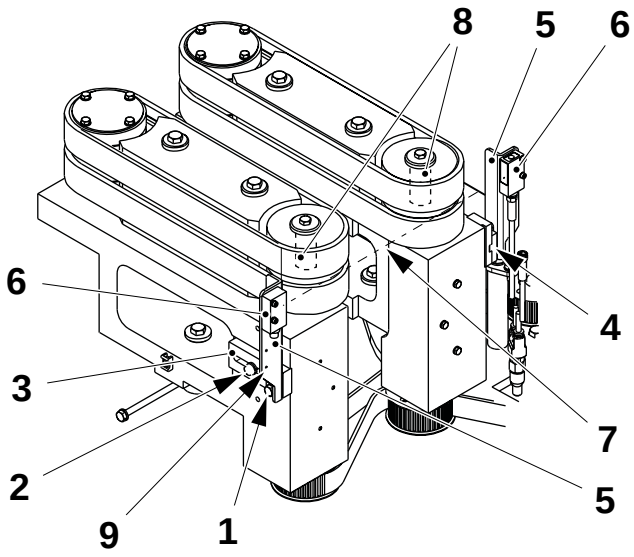

1 Screw
2 Screw
3 Bracket
4 Bracket
5 Bracket
6 Sensor
7 Beam
8 Shaft
9 Holes
10 Belt

TechPub_2614345_0106 - 0202_3047105_01.fm

2.1.1-8 Set Belt Brake Speed

Machine Status	Mains Power ON Air OFF
SPC Reference	2766990-0100 2766991-0100

To set the Belt Brake speed, see 1.1-1-3 Package Infeed - Performance Settings, Set Belt Brake Speed.

TechPub_2614345_0106 - 0202_3047105_01.fm

2.1.2 Drive

2.1.2-1 Drive - Check Belt

Machine Status	Mains Power OFF Air OFF
SPC Reference	2766994-0200

Check the drive belt (1) for wear or damage. If necessary, change the belt, see 2.1.2-2 Drive - Change Belt.

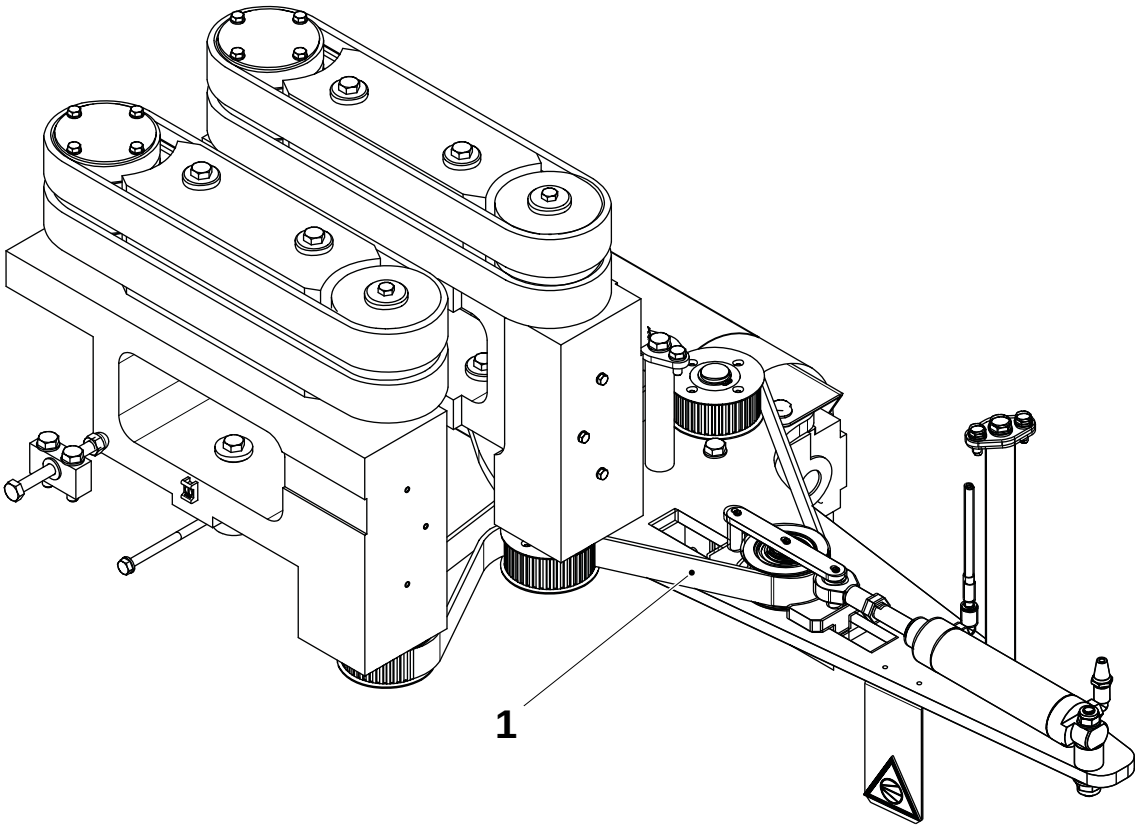

1 Belt

TechPub_2614345_0106 - 0202_3047105_01.fm

2.1.2-2 Drive - Change Belt

Machine Status	Mains Power OFF Air OFF
SPC Reference	2766994-0200

a) Make sure that the main air supply is turned OFF.

b) Release the air from the cylinders by opening the valve (1).

c) Close the valve (1) when the air has been expelled.

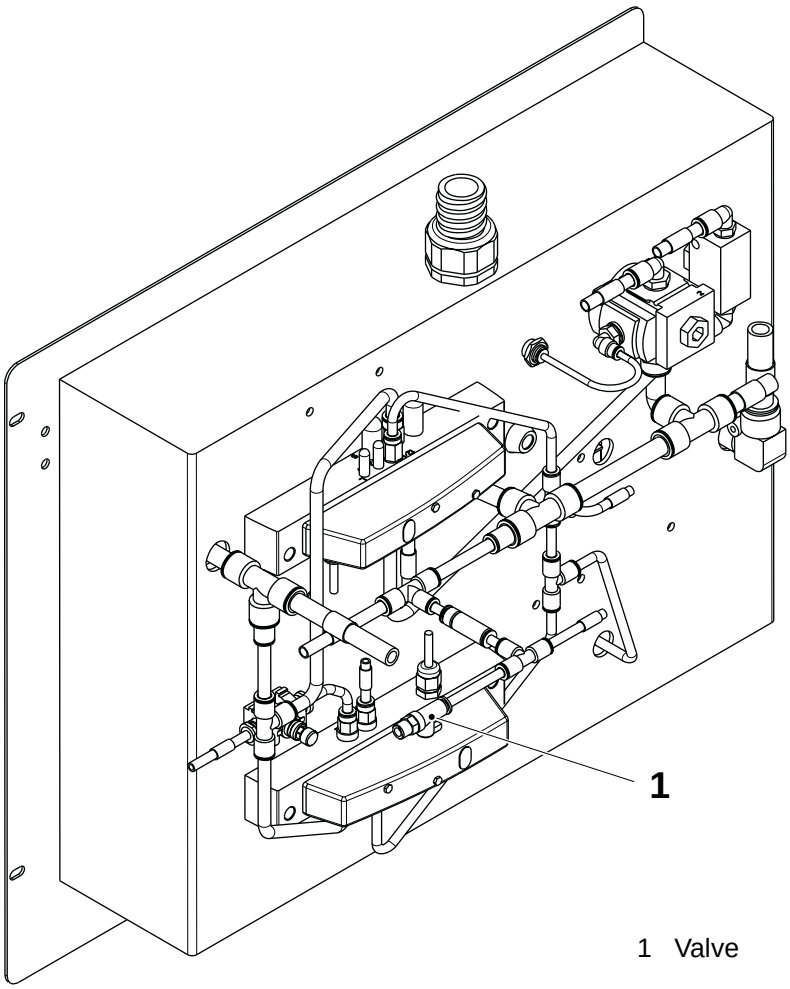

1 Valve

(Cont'd)

TechPub_2614345_0106 - 0202_3047105_01.fm

(Cont'd)

Note! When changing the drive belt, **do not** remove the screw (2).

d) Remove the screws (3) and (4).

e) Move the plate (5) out of the way and remove the belt (6).

f) Install a new belt and assemble in the reverse order.

g) Check that the belts are correctly located and switch the main air supply ON.

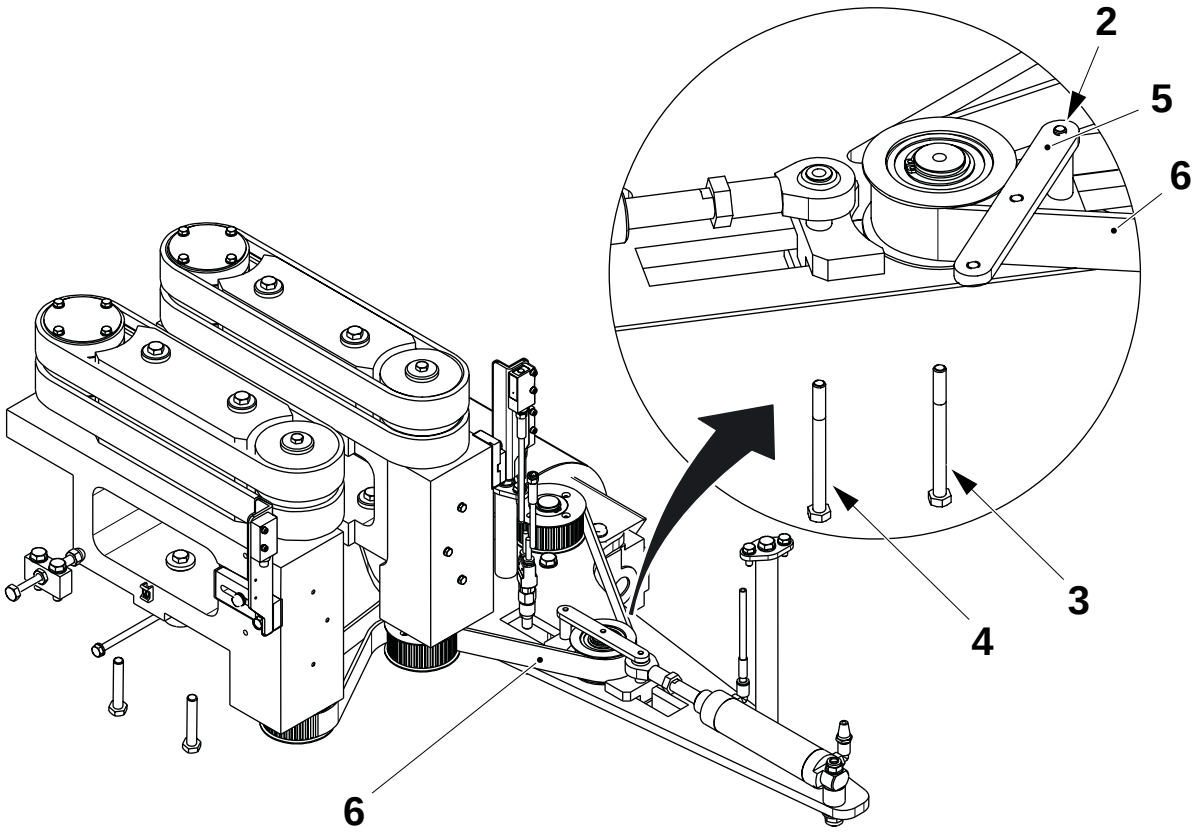

2 Screw
3 Screw
4 Screw
5 Plate
6 Belt

TechPub_2614345_0106 - 0202_3047105_01.fm

2.1.2-3 Drive - Change Bearings

Machine Status	Mains Power OFF Air OFF
SPC Reference	2766994-0200

a) Make sure that system air is turned OFF and the pressure has been released, see 2.1.2-2 Drive - Change Belt.

b) Remove the belt (1), see 2.1.2-2 Drive - Change Belt steps d) and e).

c) Remove the roller (2).

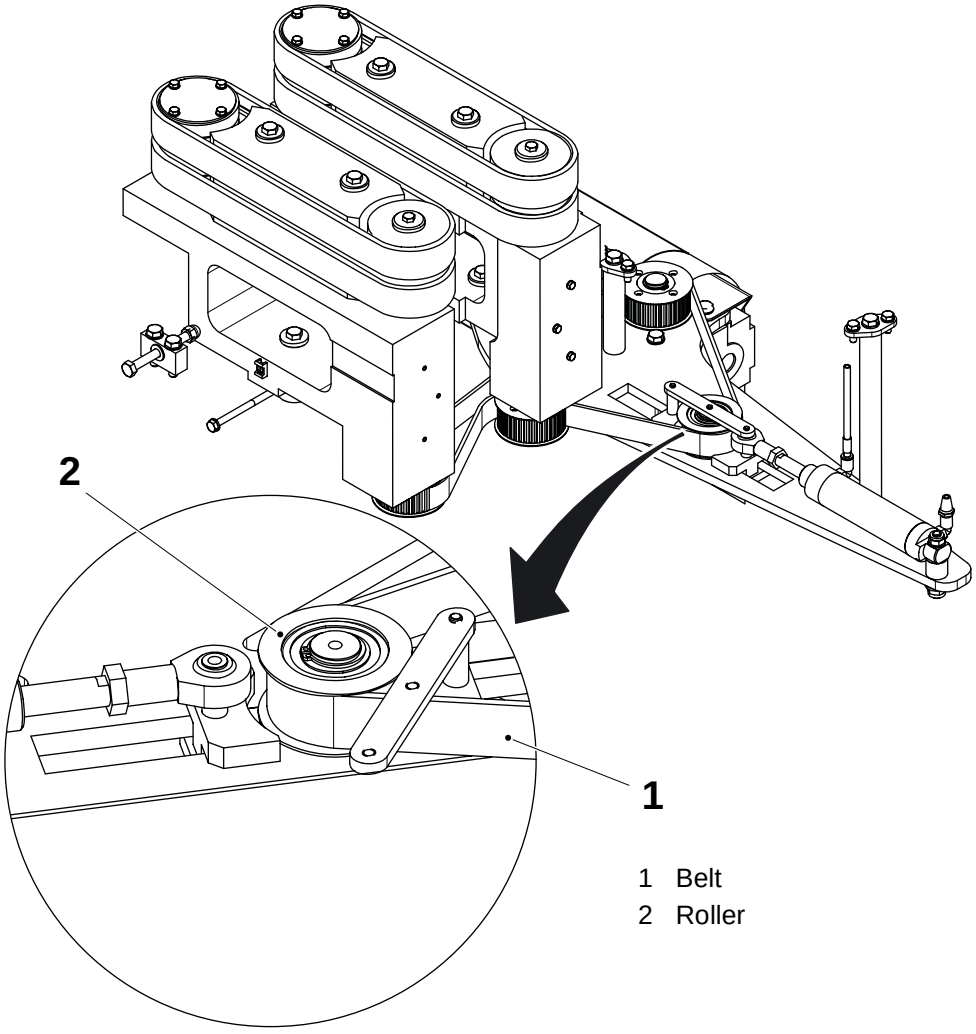

1 Belt
2 Roller

(Cont'd)

TechPub_2614345_0106 - 0202_3047105_01.fm

(Cont'd)

d) Remove the retaining rings (3) and push out the pin (4).

e) Extract the ball bearings (5) from the roller (2). Change the ball bearings.

f) Assemble in the reverse order.

Note! Always check that the belts are located correctly before Stepping Up.

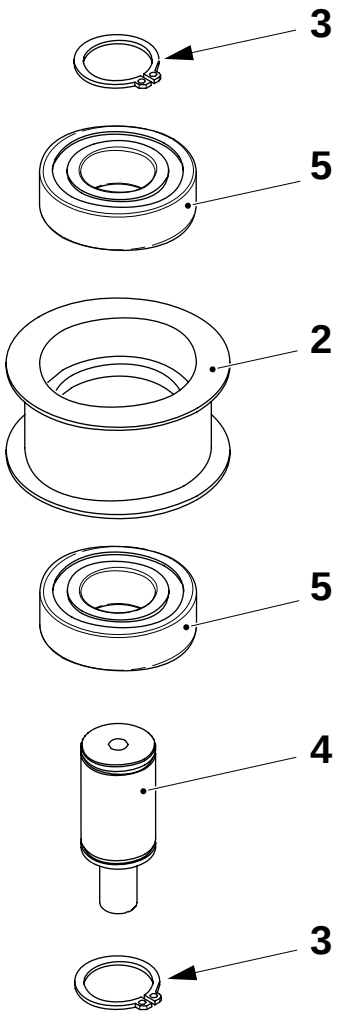

2 Roller
3 Retaining ring
4 Pin
5 Ball bearing

TechPub_2614345_0106 - 0202_3047105_01.fm

2.2 Package Positioner

2.2.1 Package Positioner (Right)

2.2.1-1 Package Positioner (Right) - Change Belts

Machine Status	Mains Power OFF Air OFF
SPC Reference	2838639-0200

Preparation

a) Before removing the gearbox (1), record the initial setting by measuring the distance **A**.

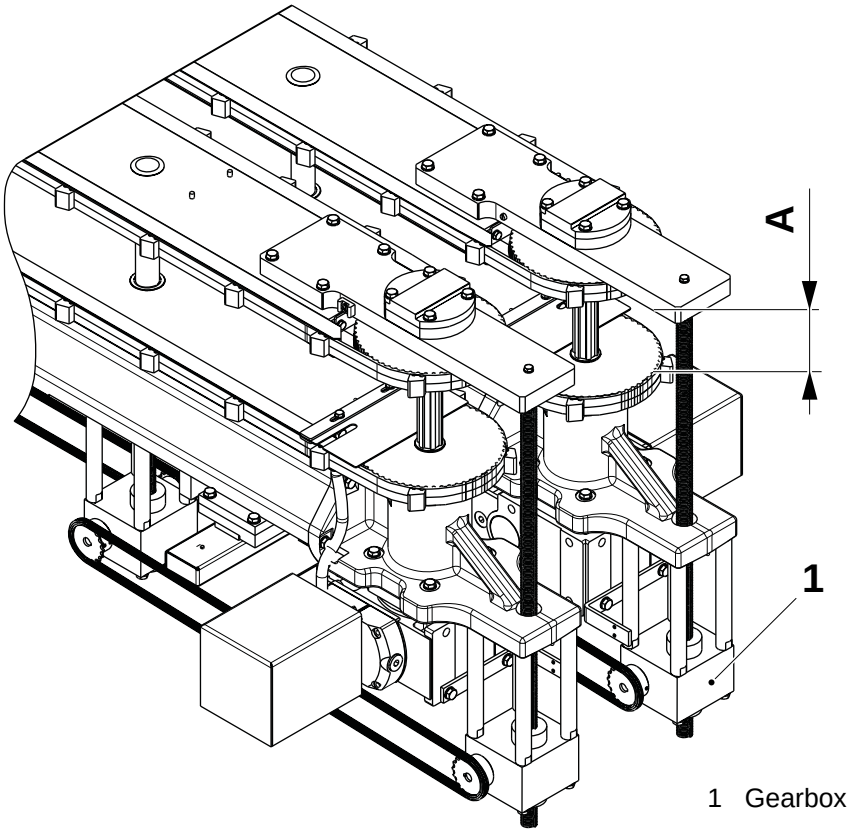

1 Gearbox

(Cont'd)

TechPub_2614345_0106 - 0203_3047106_01.fm

(Cont'd)

Note! The relative position of the chain (2) and the sprockets (3) and (4) must be kept to prevent the package line being distorted when it is moved up or down.

b) At both ends of the chain (2), feed cable ties (5) through the links of the chain (2) and tighten them to prevent the chain (2) moving with respect to the sprockets (3) and (4).

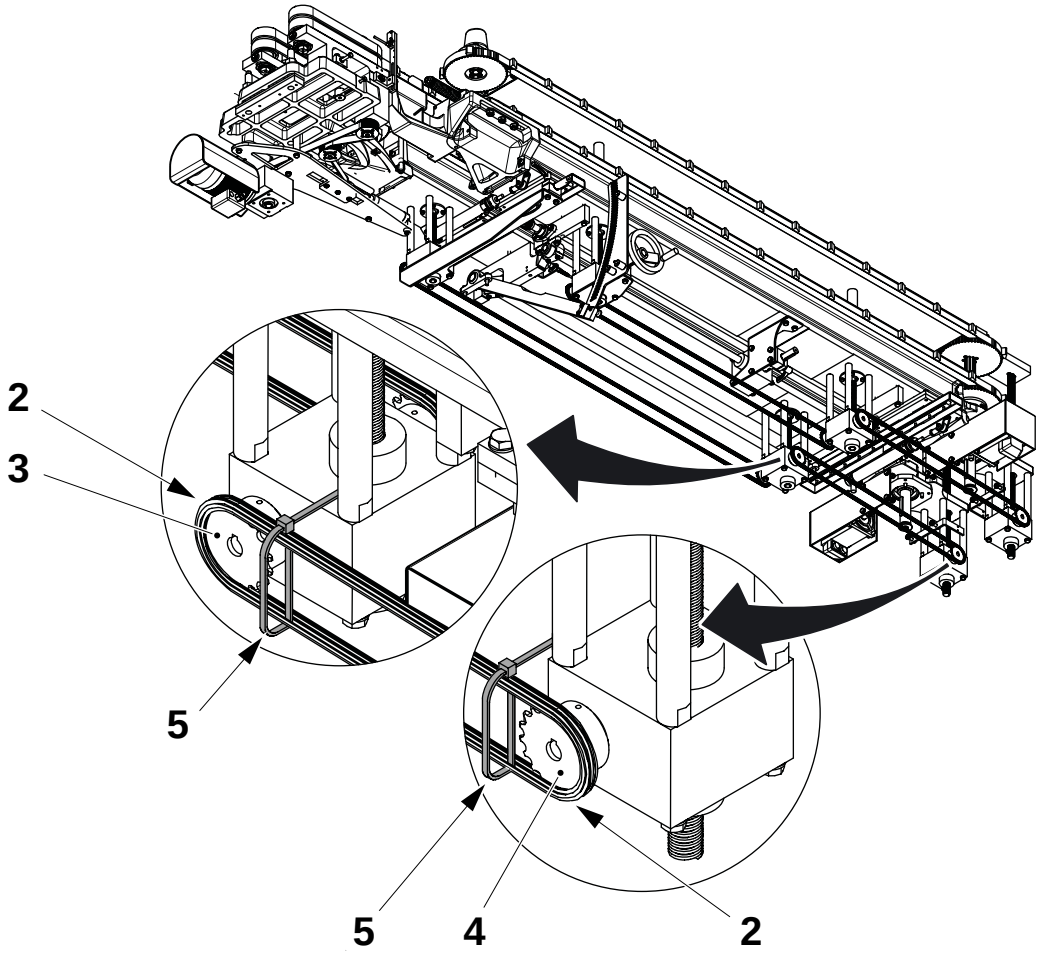

2 Chain
3 Sprocket
4 Sprocket
5 Cable tie

(Cont'd)

TechPub_2614345_0106 - 0203_3047106_01.fm

(Cont'd)

c) Place a beam (6) beneath the gearbox (1) to prevent it dropping when the screws (7) and (8) are removed.

d) Remove the screws (7) and (8) and separate the gearbox (1) from the shafts (9).

e) Rest the gearbox (1) on the beam (6).

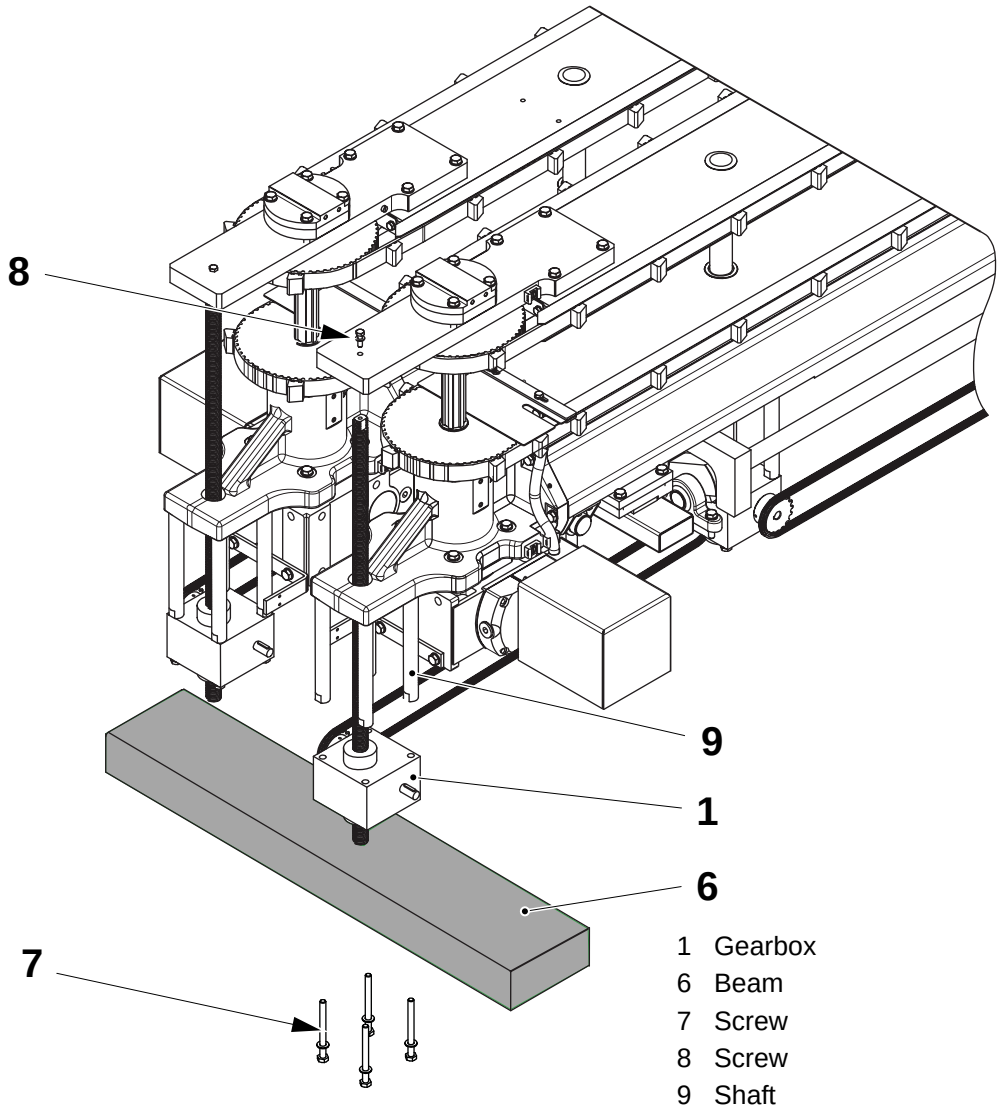

(Cont'd)

TechPub_2614345_0106 - 0203_3047106_01.fm

(Cont'd)

Change the Upper Belt

a) Prepare the belt for removal, see Preparation.
b) Loosen the screws (1).
c) Compress the spring (2) with its screw to reduce the belt tension.
d) Remove and change the belt (3).
e) Install the new belt.
f) Loosen the screw in the spring (2) to put the belt under tension.
g) Tighten the screws (1).
h) To complete the task, see Completion.

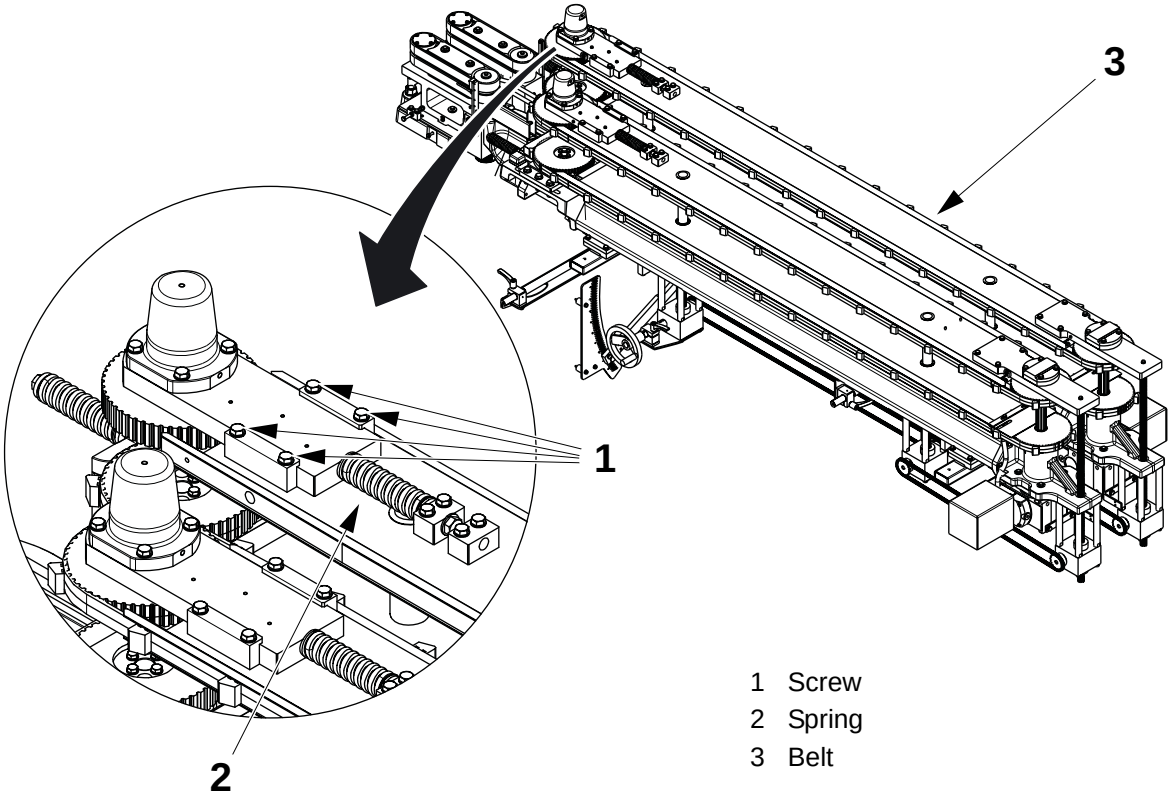

1 Screw
2 Spring
3 Belt

TechPub_2614345_0106 - 0203_3047106_01.fm

(Cont'd)

(Cont'd)

Change the Lower Belt

Note! The distance **A** is the length of the spring (1) in its compressed state.

a) Measure and record the length **A** of the spring (1).

b) Loosen the three screws (2).

c) Decompress the spring (1) with its screw to reduce the belt tension.

d) Remove the old belt and install the new belt (3).

e) Compress the spring (1) to set the distance **A** recorded in step a).

f) Tighten the three screws (2).

g) To complete the task, see Completion.

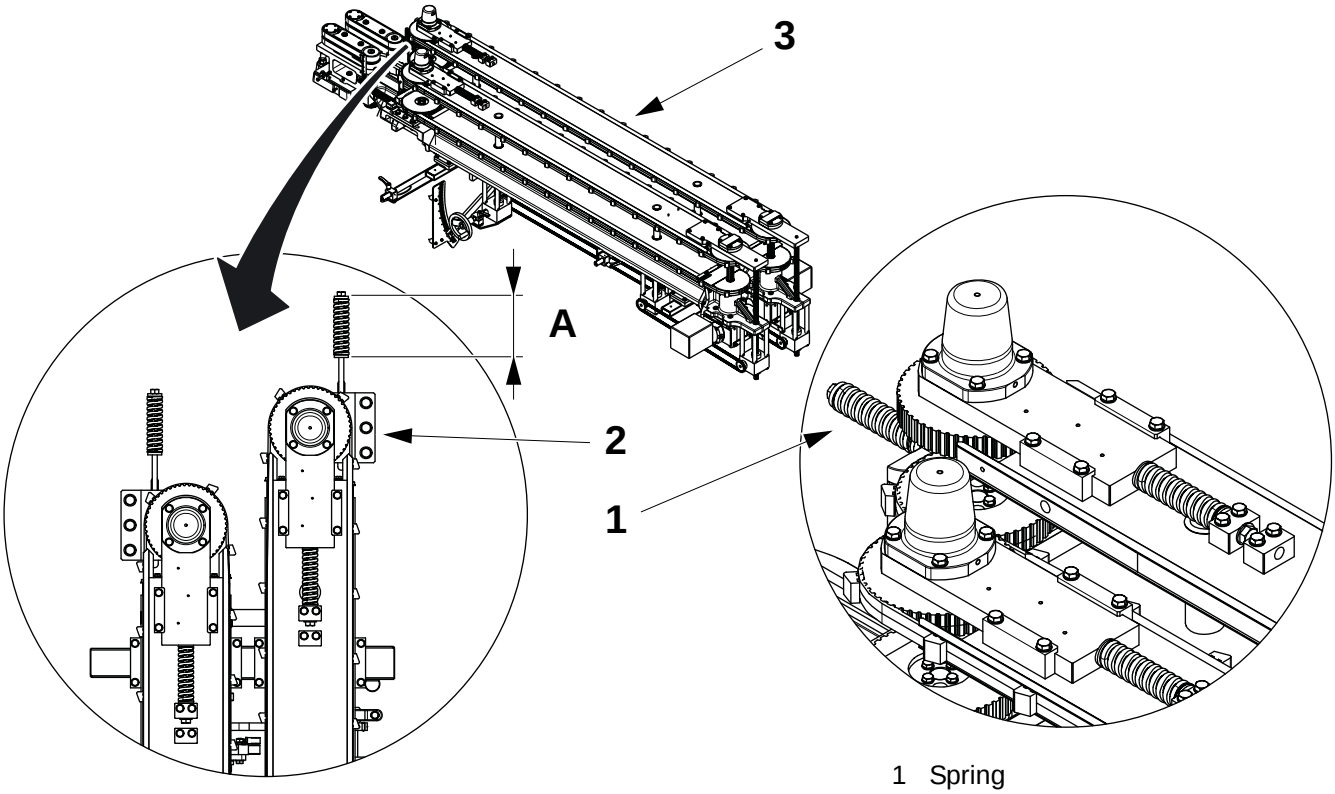

1 Spring
2 Screw
3 Belt

(Cont'd)

TechPub_2614345_0106 - 0203_3047106_01.fm

(Cont'd)

Completion

a) Lift the gearbox (1) into position beneath the shafts (2).

b) Insert the screw (3) and tighten it a little.

c) Insert and tighten the screws (4).

d) Remove the beam (5).

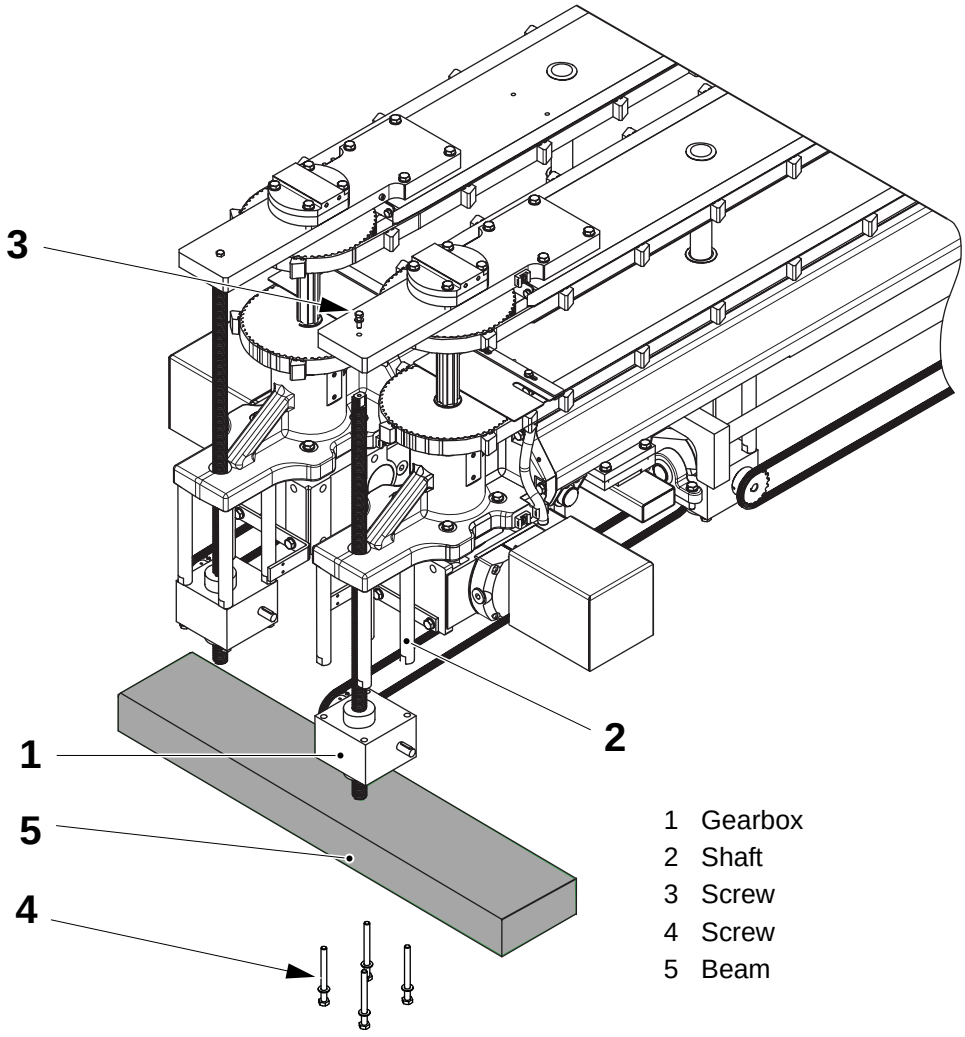

(Cont'd)

TechPub_2614345_0106 - 0203_3047106_01.fm

(Cont'd)

e) Remove the cable ties (6).

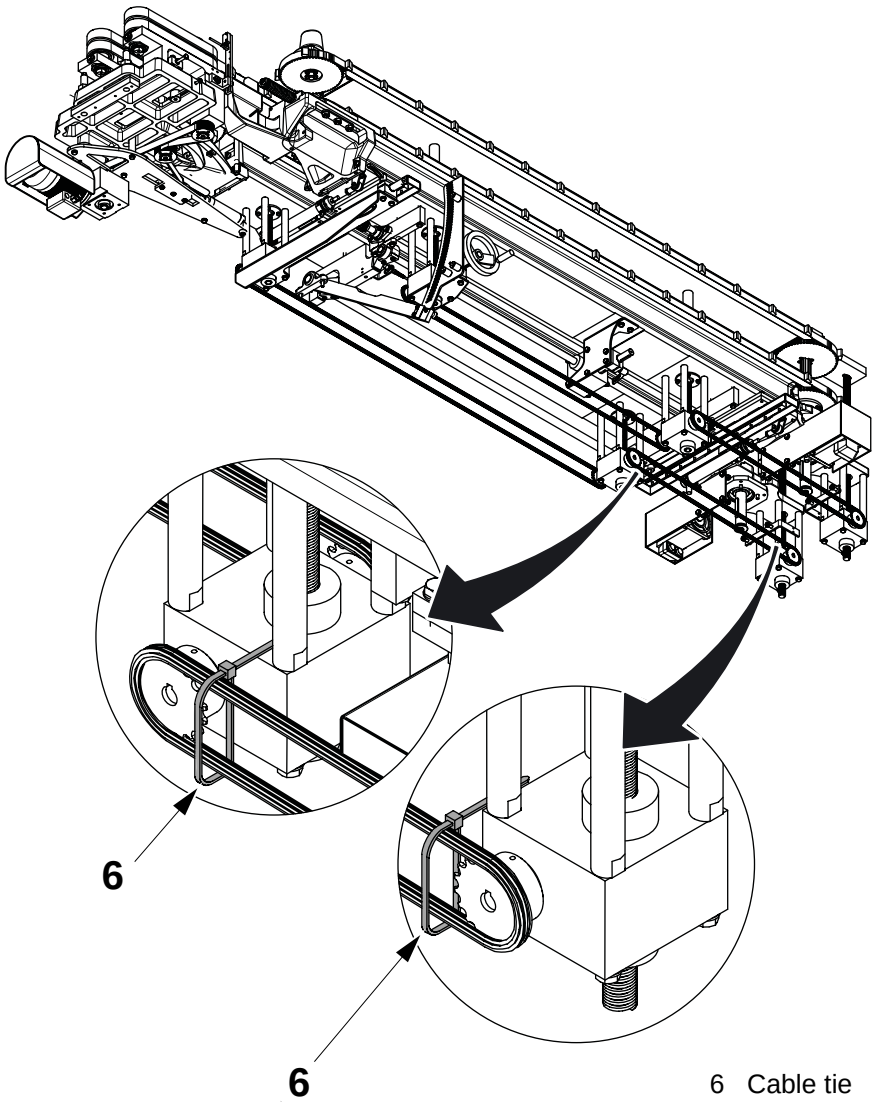

6 Cable tie

TechPub_2614345_0106 - 0203_3047106_01.fm

2.2.1-2 Package Positioner (Right) - Set Belts Tension

Machine Status	Mains Power OFF Air OFF
SPC Reference	2838639-0200

Note! The distance **A** is the length of the spring (3) in its released state.

a) Loosen the four screws (1).

b) Release the screw (2) and the spring (3) to apply pressure on the plate (4) and the belt.

c) Tighten the screws (1).

d) Measure the distance **A** on the spring (3).

e) Loosen the three screws (5).

f) Release the screw (6) and adjust until the distance **B** on the spring (7) is the same as the distance **A** on the spring (3).

g) Tighten the screws (5).

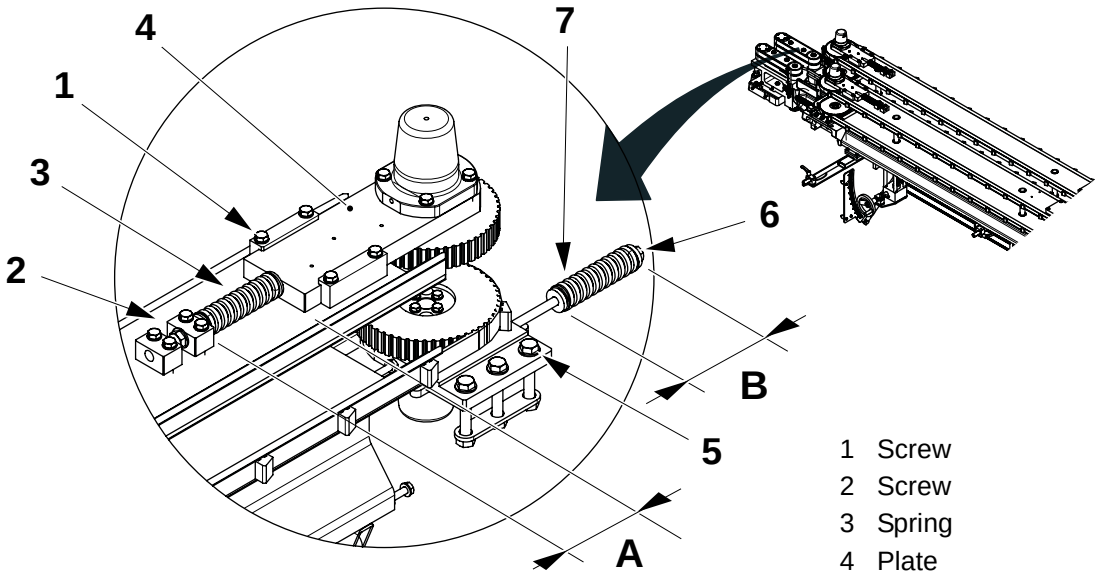

1 Screw
2 Screw
3 Spring
4 Plate
5 Screw
6 Screw
7 Spring

TechPub_2614345_0106 - 0203_3047106_01.fm

2.2.1-3 Package Positioner (Right) - Set Belts Alignment

Machine Status	Mains Power OFF Air OFF
SPC Reference	2838644-0200

a) Release the three screws (1) at the bottom of the drive.

b) Rotate the pulley (2) to set the lower belt carriers (3) the distance **A** behind the upper belt carriers (4).

c) Without moving the pulley (2), tighten the screws (1).

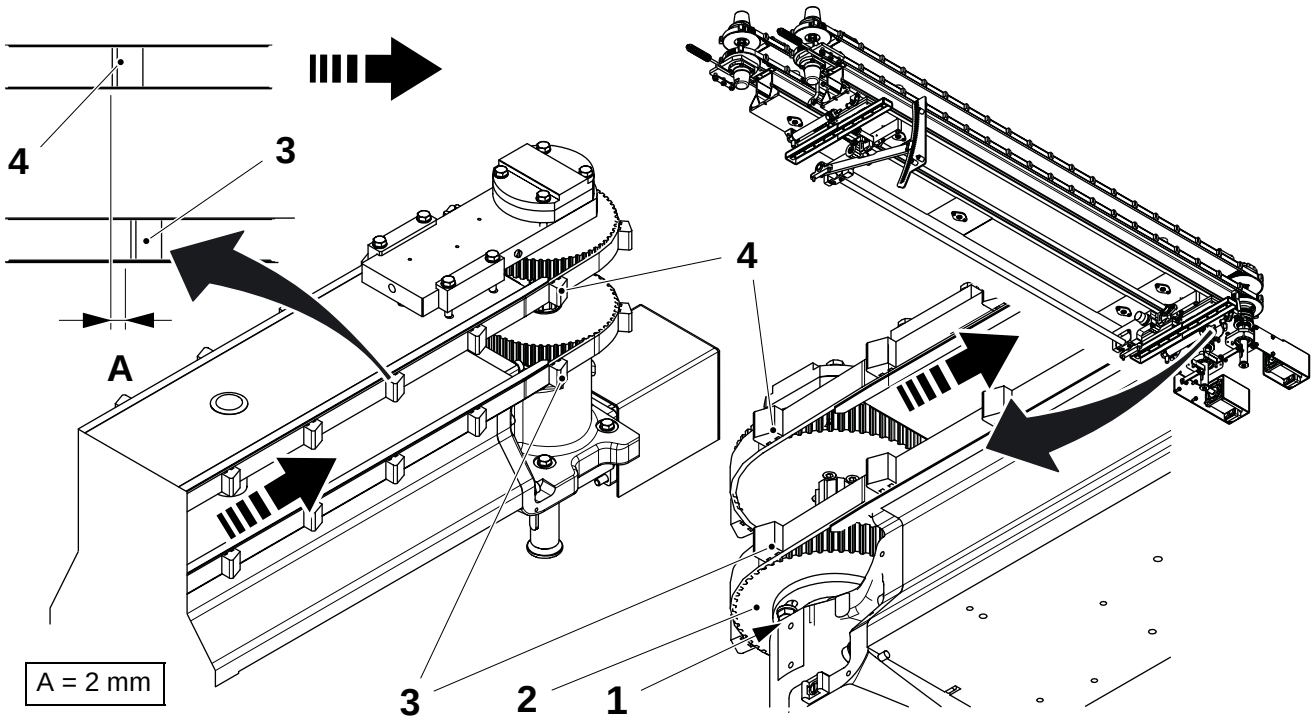

1 Screw
2 Pulley
3 Lower belt carrier
4 Upper belt carrier

TechPub_2614345_0106 - 0203_3047106_01.fm

2.2.2 Package Positioner (Left)

2.2.2-1 Package Positioner (Left) - Change Belts

Machine Status	Mains Power OFF Air OFF
SPC Reference	2838644-0200

Preparation

a) Before removing the gearbox (1), record the initial setting by measuring the distance **A**.

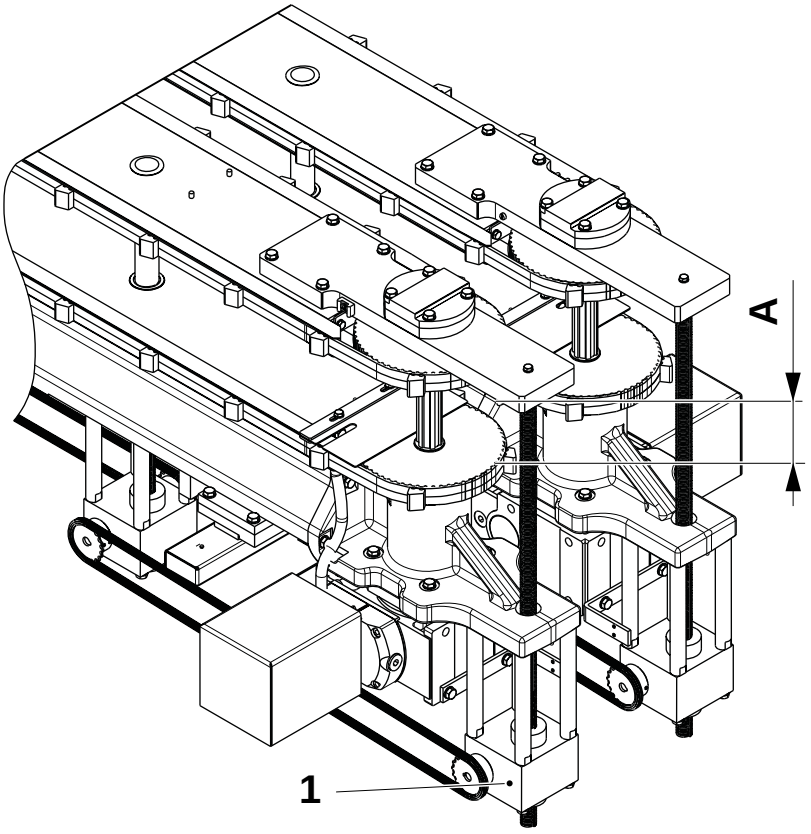

1 Gearbox

(Cont'd)

TechPub_2614345_0106 - 0203_3047106_01.fm

(Cont'd)

Note! The relative position of the chain (2) and the sprockets (3) and (4) must be kept to prevent the package line being distorted when it is moved up or down.

b) At both ends of the chain (2), feed cable ties (5) through the links of the chain (2) and tighten them to prevent the chain (2) moving with respect to the sprockets (3) and (4).

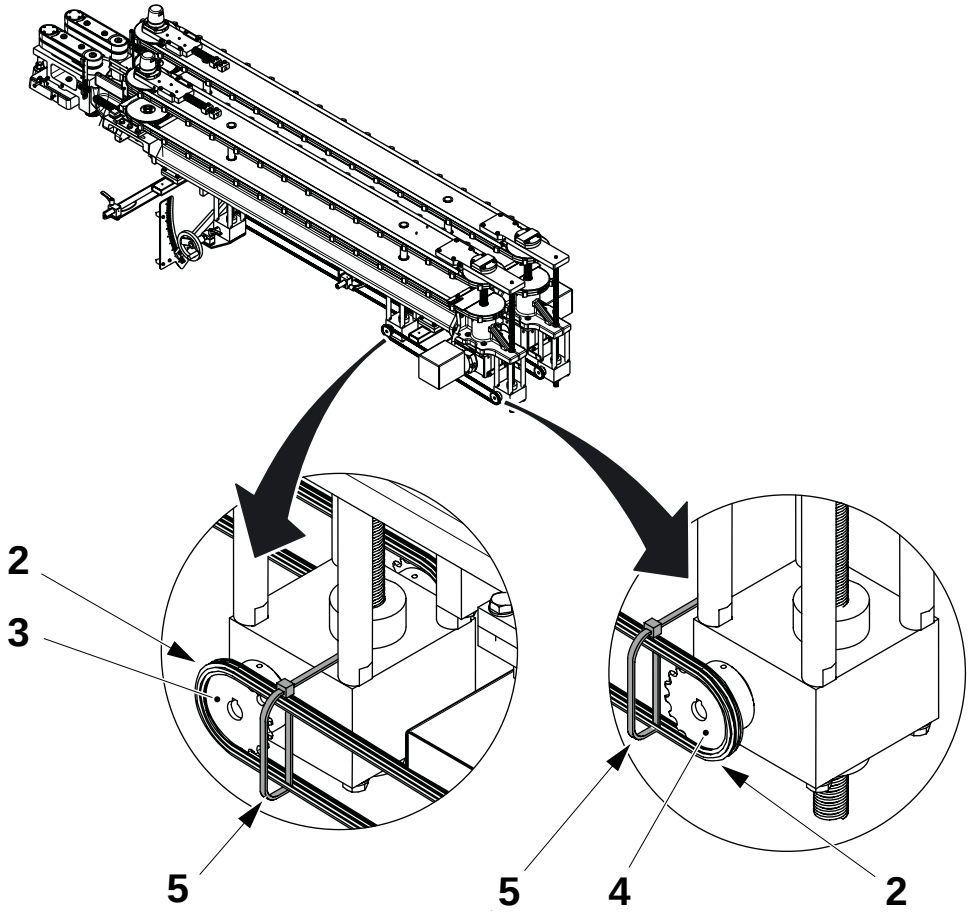

2 Chain
3 Sprocket
4 Sprocket
5 Cable Tie

(Cont'd)

TechPub_2614345_0106 - 0203_3047106_01.fm

(Cont'd)

c) Place a beam (6) beneath the gearbox (1) to prevent it dropping when the screws (7) and (8) are removed.

d) Remove the screws (7) and (8) and separate the gearbox (1) from the shafts (9).

e) Rest the gearbox (1) on the beam (6).

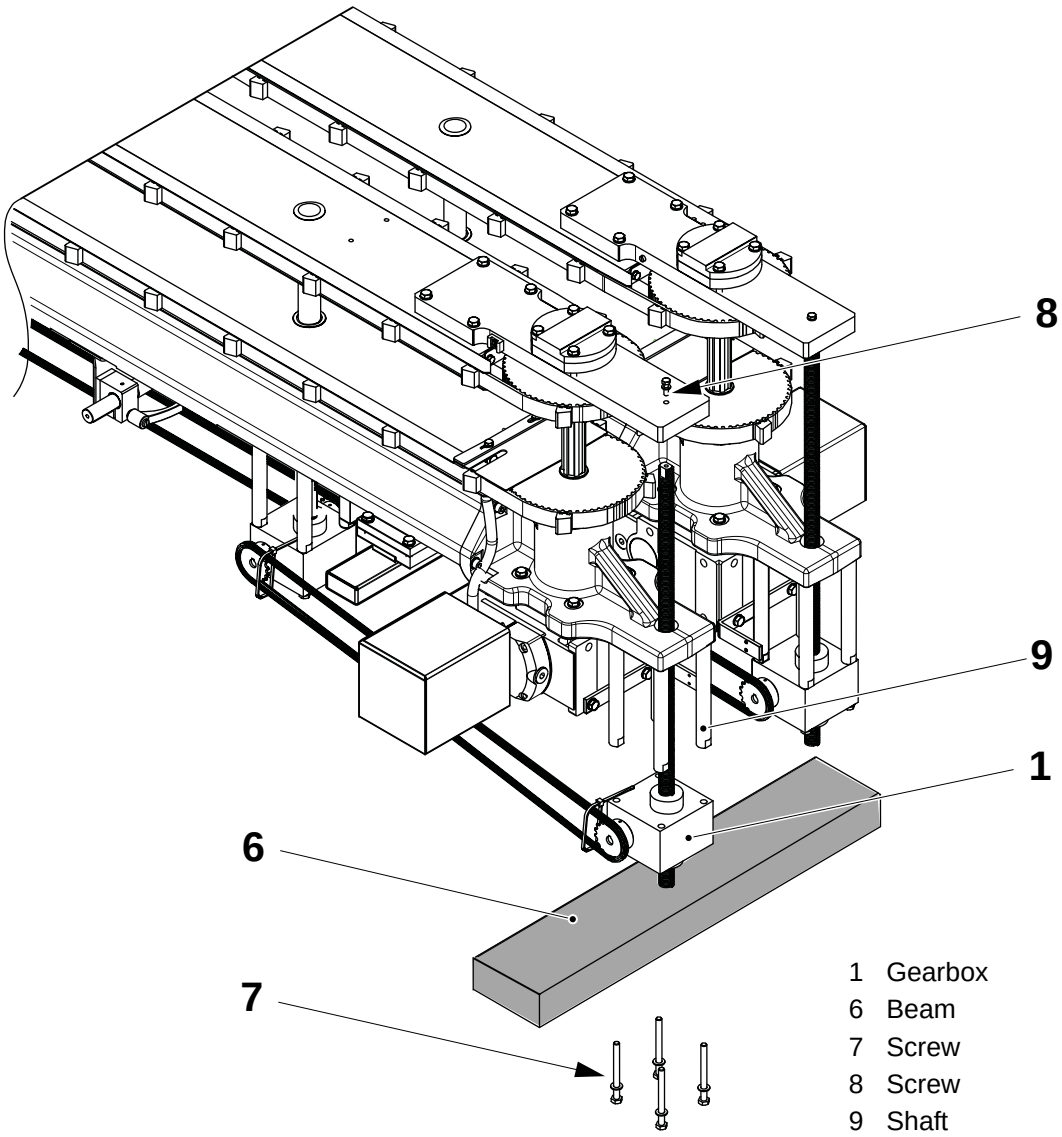

TechPub_2614345_0106 - 0203_3047106_01.fm

(Cont'd)

(Cont'd)

Change the Upper Belt

a) Prepare for removal, see Preparation.
b) Loosen the screws (1).
c) Compress the spring (2) with its screw to reduce the belt tension.
d) Remove and change the belt (3).
e) Install the new belt.
f) Loosen the screw in the spring (2) to put the belt (3) under tension.
g) Tighten the screws (1).
h) To complete the task, see Completion.

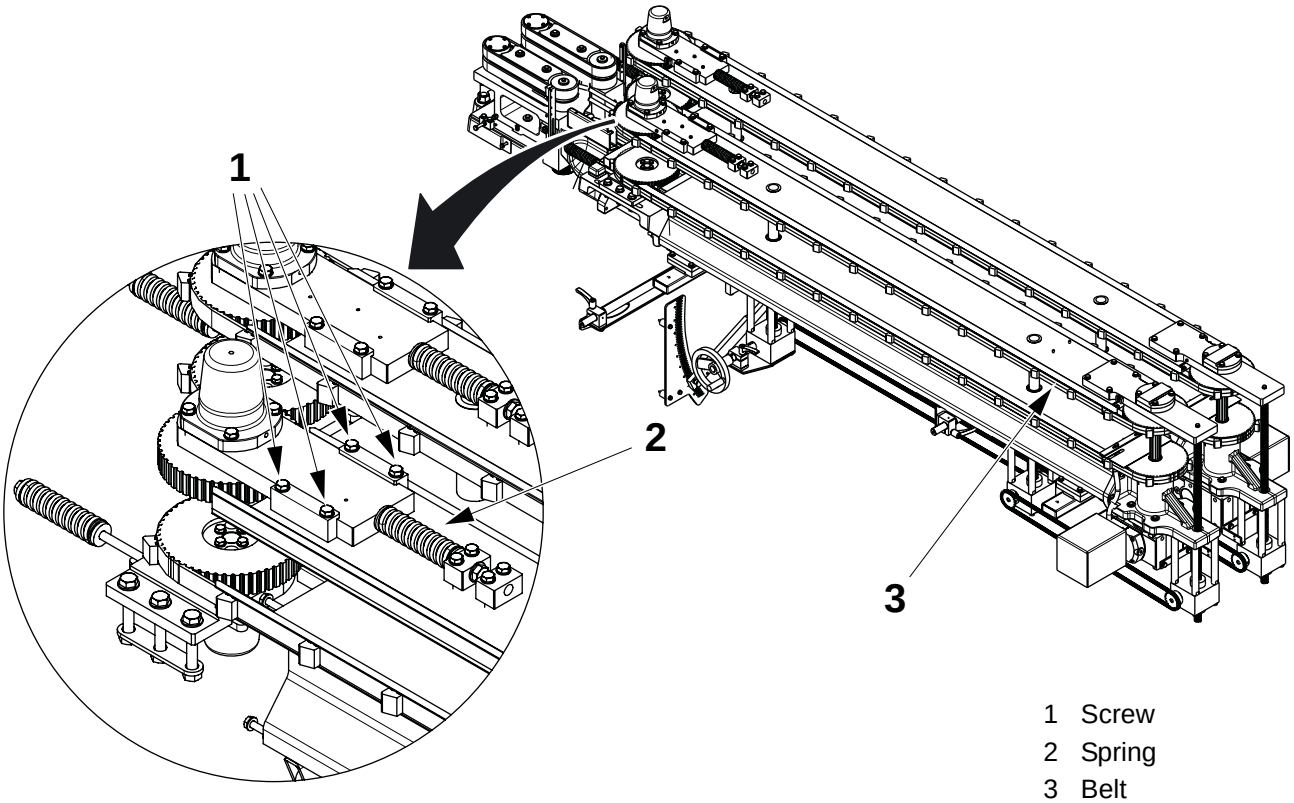

1 Screw
2 Spring
3 Belt

(Cont'd)

TechPub_2614345_0106 - 0203_3047106_01.fm

(Cont'd)

Change the Lower Belt

Note! The distance **A** is the length of the spring (1) in its compressed state.

a) Prepare for removal, see Preparation.

b) Before removing the gearbox (1) record the initial setting by measuring the distance **A**.

c) Measure and record the length **A** of the spring (1).

d) Loosen the three screws (2).

e) Decompress the spring (1) with its screw to reduce the belt tension.

f) Remove and change the belt (3).

g) Install the new belt.

h) Compress the spring (1) to set the distance **A** recorded in step c).

i) Tighten the three screws (2).

j) To complete the task, see Completion.

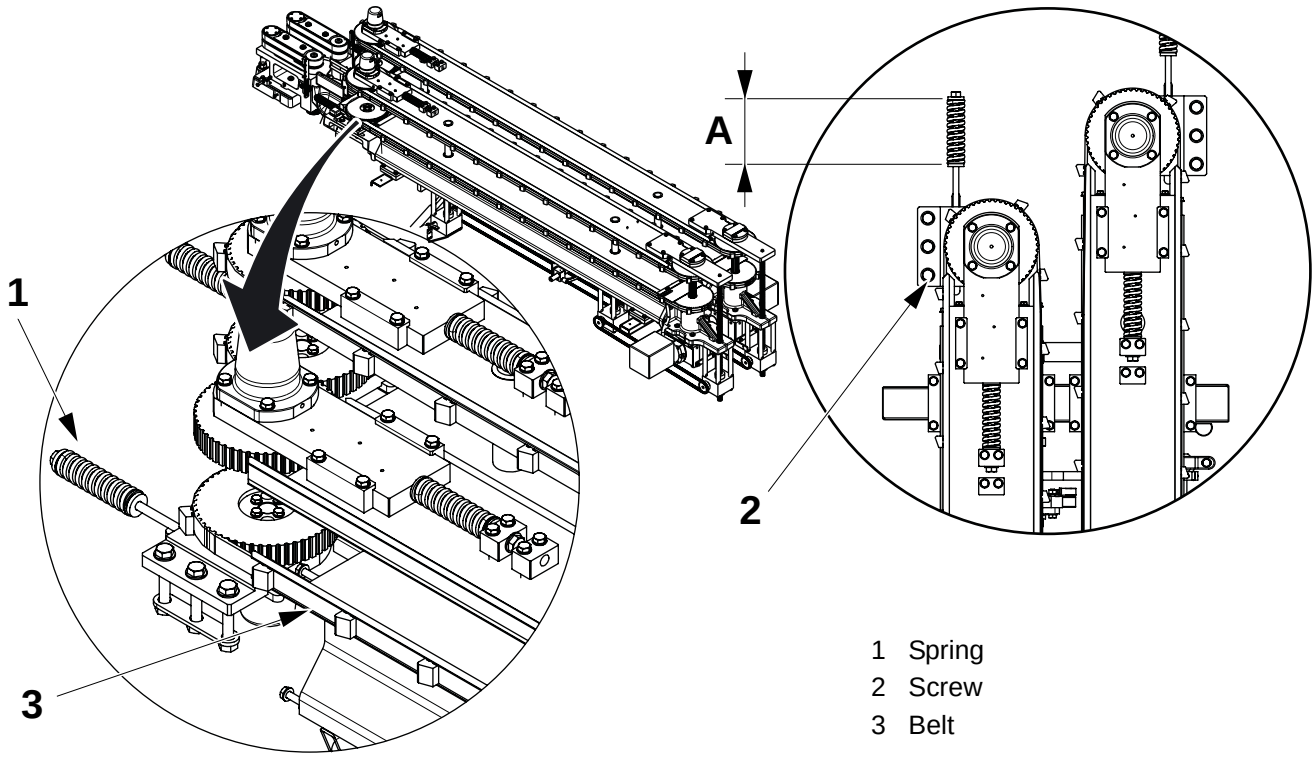

1 Spring
2 Screw
3 Belt

(Cont'd)

TechPub_2614345_0106 - 0203_3047106_01.fm

(Cont'd)

Completion

a) Lift the gearbox (1) into position beneath the shafts (2).

b) Insert the screw (3) and tighten it a little.

c) Insert and tighten the screws (4).

d) Tighten the screw (3) completely.

e) Remove the beam (5) and the cable ties (6).

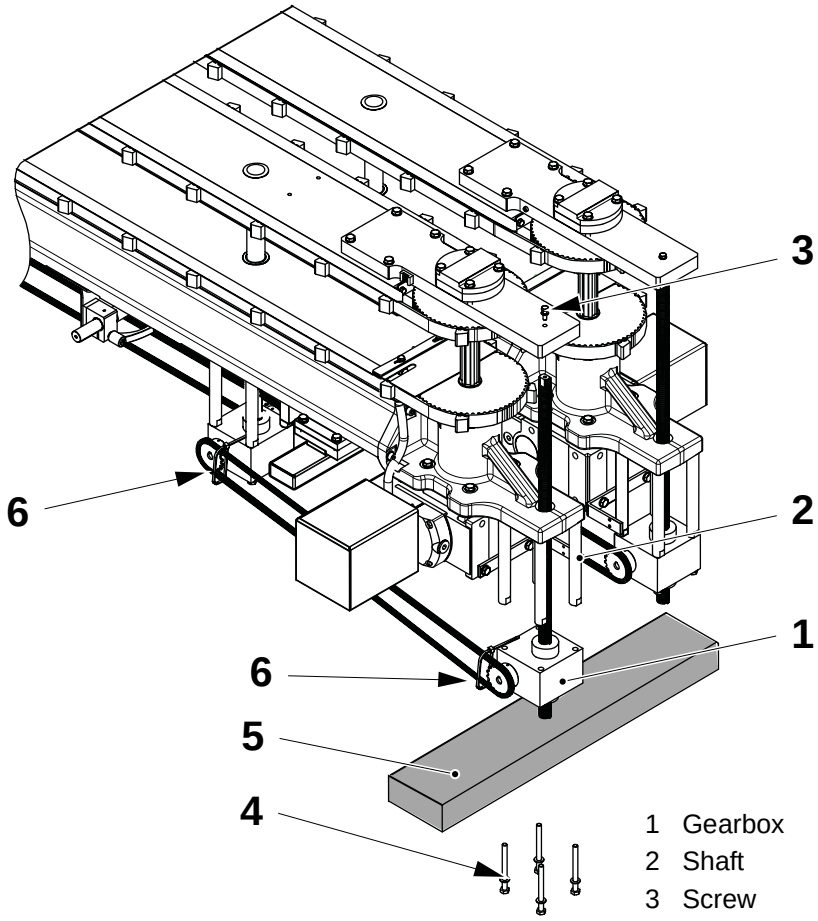

1 Gearbox
2 Shaft
3 Screw
4 Screw
5 Beam
6 Cable tie

TechPub_2614345_0106 - 0203_3047106_01.fm

2.2.2-2 Package Positioner (Left) - Set Belts Tension

Machine Status	Mains Power OFF Air OFF
SPC Reference	2838644-0200

Note! The distance **A** is the length of the spring (3) in its released state.

a) Loosen the four screws (1).

b) Release the screw (2) and the spring (3) to apply pressure on the plate (4) and the belt.

c) Tighten the screws (1).

d) Measure the distance **A** on the spring (3).

e) Loosen the three screws (5).

f) Release the screw (6) and adjust until the distance **B** on the spring (7) is the same as the distance **A** on the spring (3).

g) Tighten the screws (5).

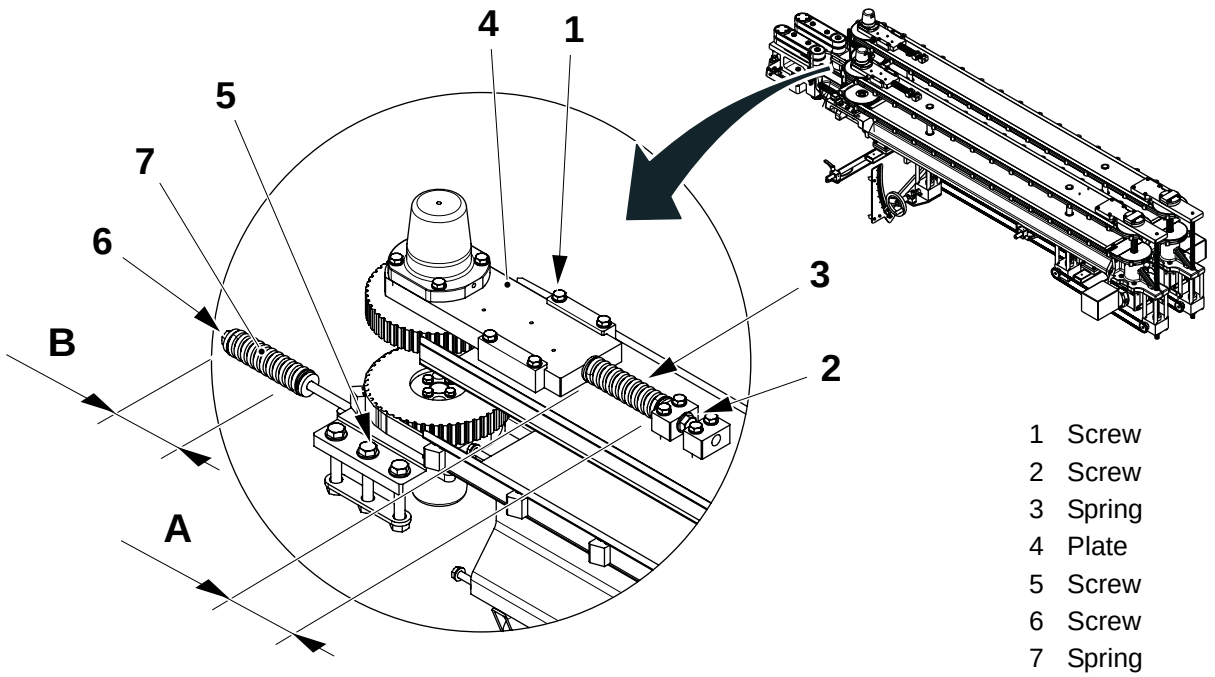

1 Screw
2 Screw
3 Spring
4 Plate
5 Screw
6 Screw
7 Spring

TechPub_2614345_0106 - 0203_3047106_01.fm

2.2.2-3 Package Positioner (Left) - Set Belts Alignment

Machine Status	Mains Power OFF Air OFF
SPC Reference	2838643-0200

a) Release the three screws (1) at the bottom of the drive.

b) Rotate the pulley (2) to set the lower belt carriers (3) the distance **A** behind the upper belt carriers (4).

c) Without moving the pulley (2), tighten the screws (1).

A = 2mm

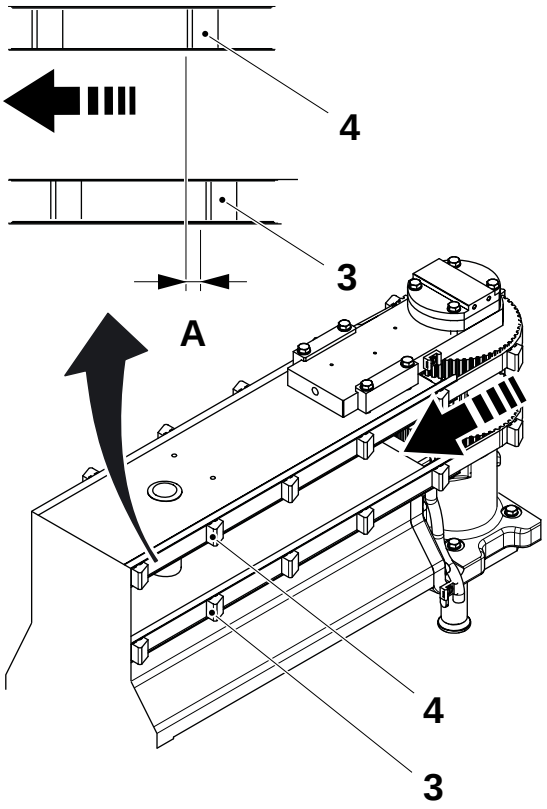

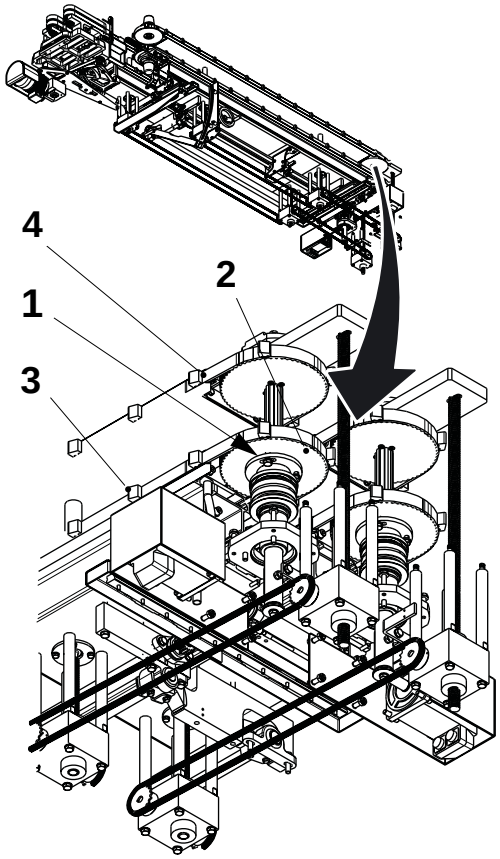

1 Screw
2 Pulley
3 Lower belt carrier
4 Upper belt carrier

TechPub_2614345_0106 - 0203_3047106_01.fm

2.2.3 Drive

2.2.3-1 Drive - Change Bearings

Machine Status	Mains Power OFF Air OFF
SPC Reference	2838648-0200 2838649-0200

Preparation

a) Disconnect the oil pipes from the bellows (1).

b) Disconnect the oil pipes from the housing (2)

c) Release the belt tension, see 2.2.1-1 Package Positioner (Right) - Change Belts and 2.2.2-1 Package Positioner (Left) - Change Belts.

d) Before releasing the gearbox (3) record the distance **A**.

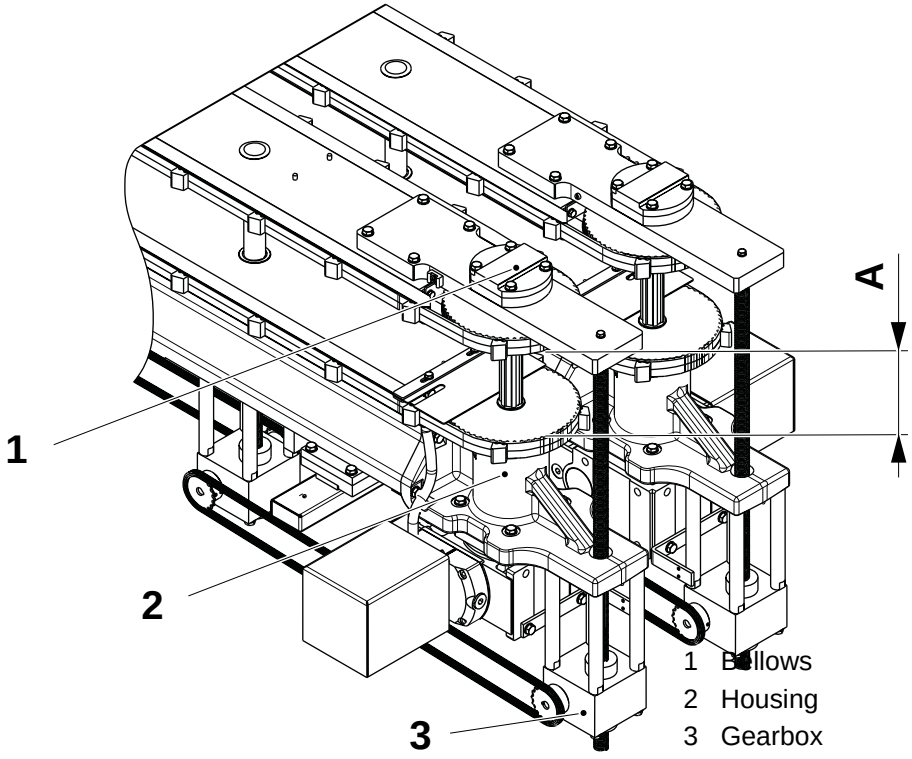

(Cont'd)

TechPub_2614345_0106 - 0203_3047106_01.fm

(Cont'd)

Note! The relative position of the chain (4) and the sprockets (5) and (6) must be kept to prevent the package line being distorted when it is moved up or down.

e) At both ends of the chain (4), feed cable ties (7) through the links of the chain (4) and tighten them to prevent the chain (4) moving with respect to the sprockets (5) and (6).

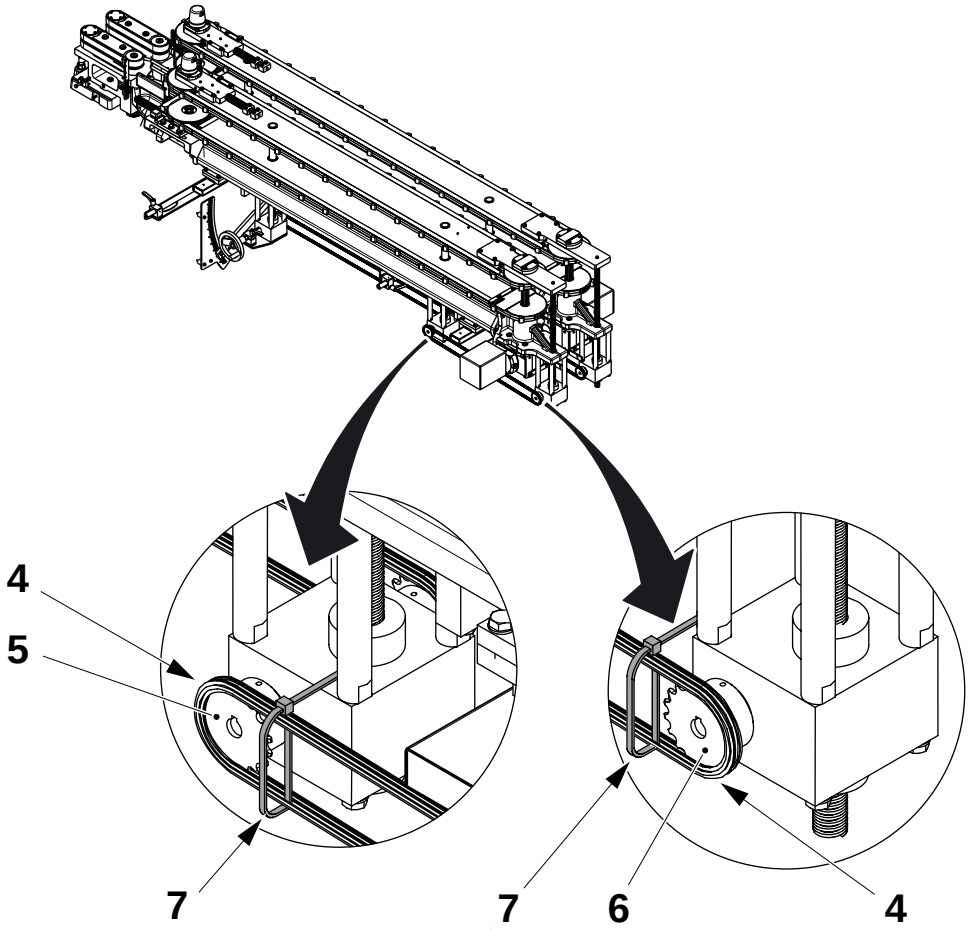

4 Chain
5 Sprocket
6 Sprocket
7 Cable Tie

(Cont'd)

TechPub_2614345_0106 - 0203_3047106_01.fm

(Cont'd)

f) Place a beam (8) beneath the gearbox (3) to prevent it dropping when the screws (9) and (10) are removed.

g) Remove the screws (9) and (10) and separate the gearbox (3) from the shafts (11).

h) Rest the gearbox (3) on the beam (8).

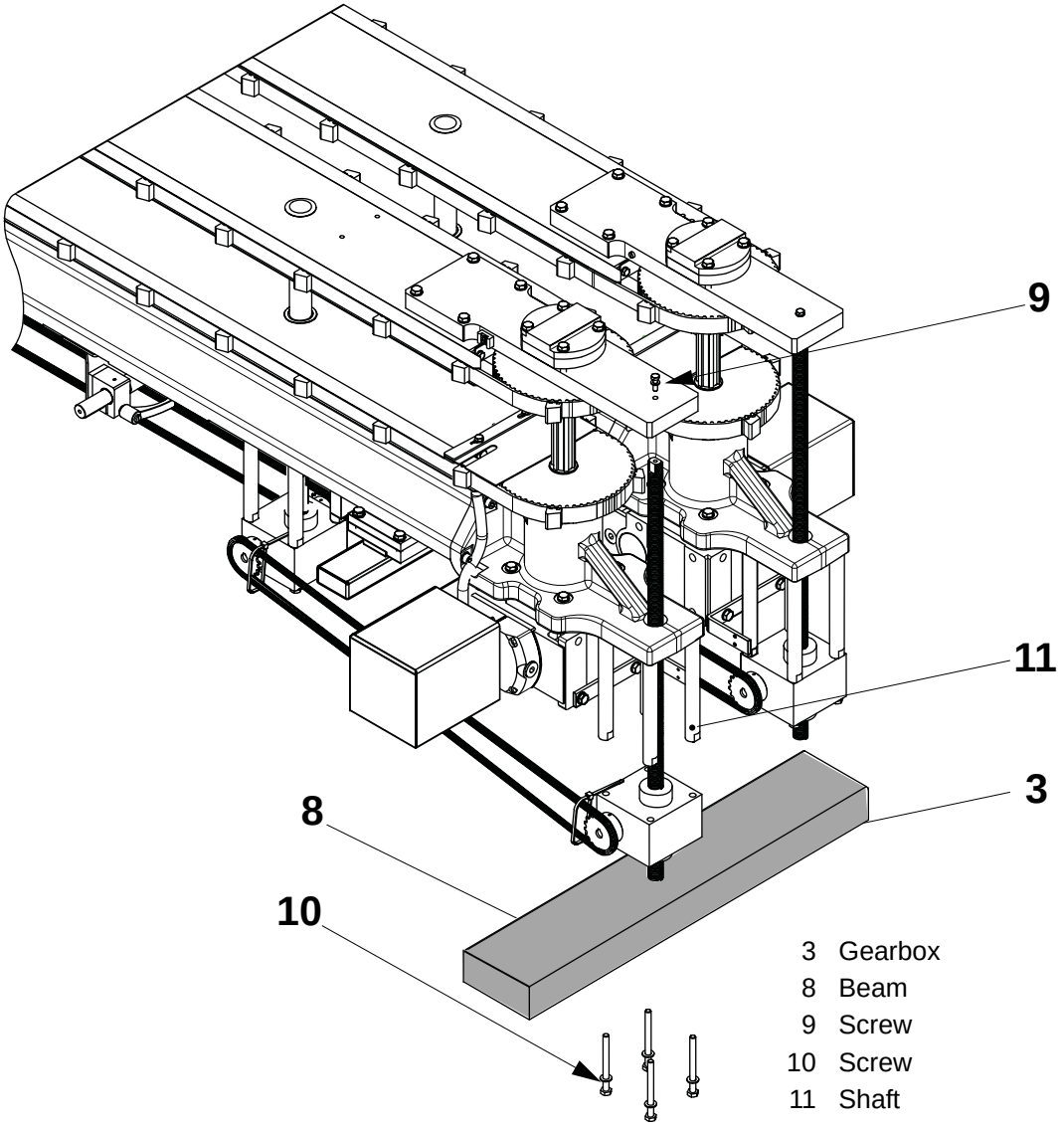

(Cont'd)

TechPub_2614345_0106 - 0203_3047106_01.fm

(Cont'd)

Procedure

a) Remove the screws (1) and (2) and the bellows (3).

b) Remove the nut (4).

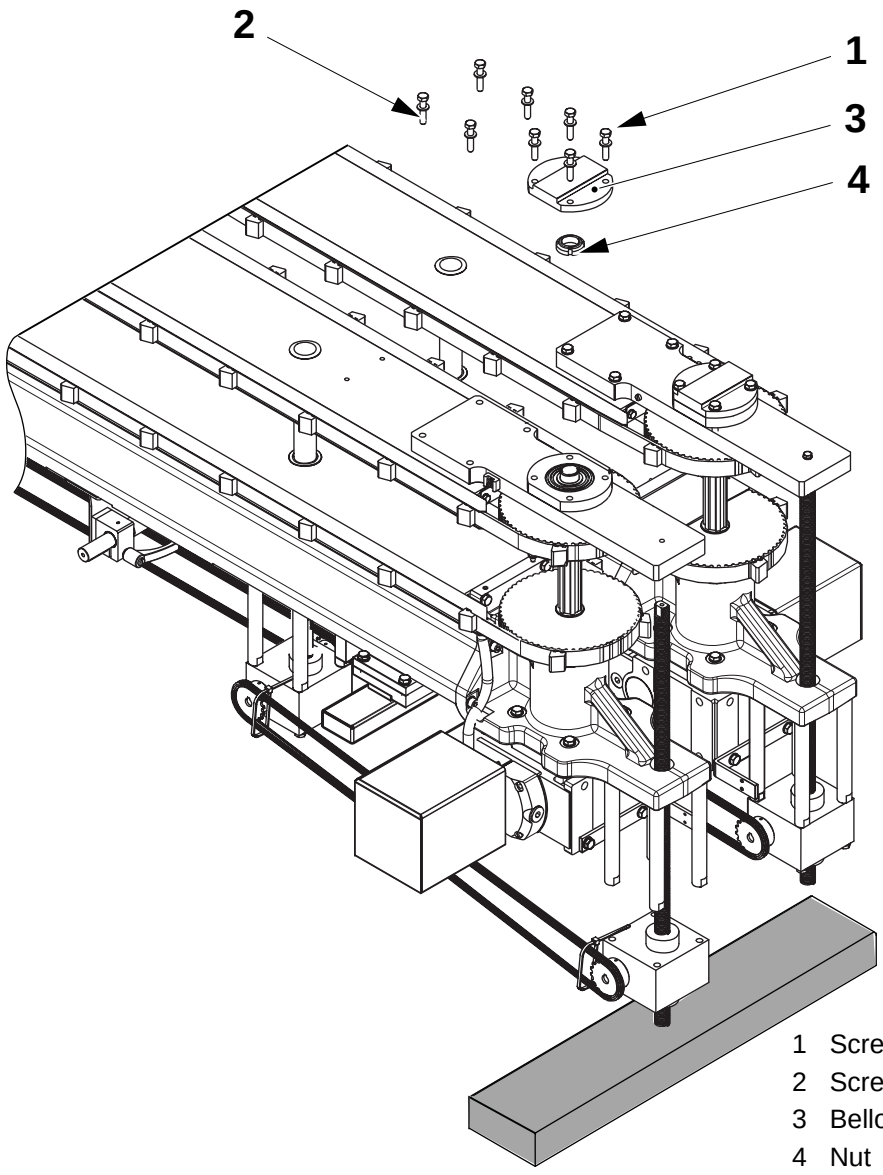

1 Screw
2 Screw
3 Bellows
4 Nut

(Cont'd)

TechPub_2614345_0106 - 0203_3047106_01.fm

(Cont'd)

c) Remove the plate (5).
d) Remove the spacer (6).
e) Extract and change the bearing (7).
f) Change the O-ring (8) and the seal ring (9).
g) Remove the belt (10) (not applicable to TBA 200 and 250 Sq).
h) Remove the belt (11).
i) Remove the shaft and pulley (12).

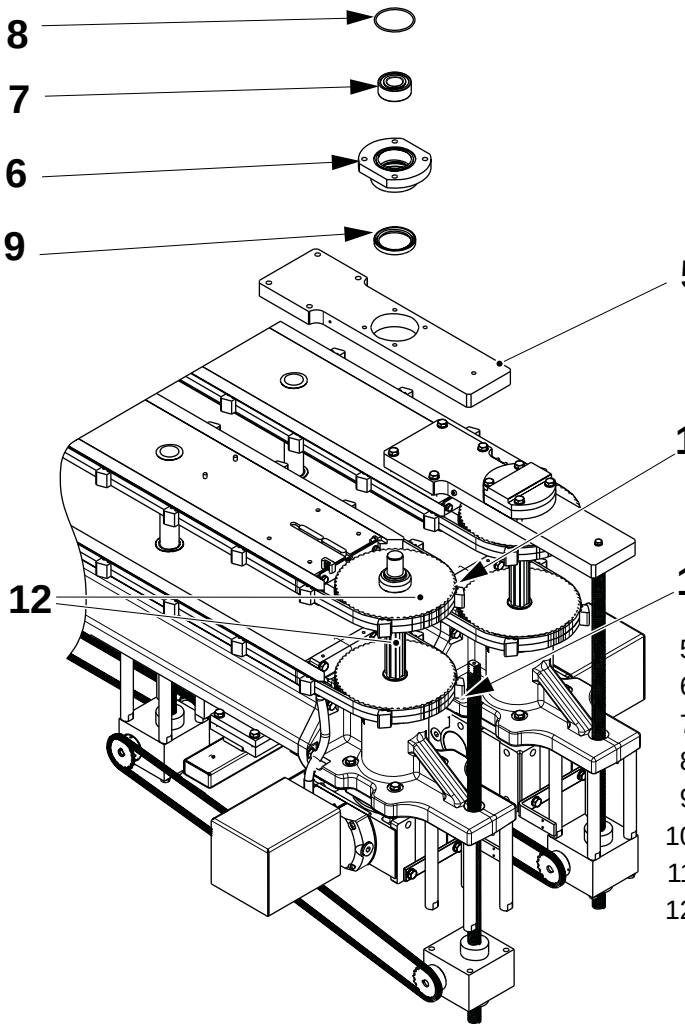

(Cont'd)

TechPub_2614345_0106 - 0203_3047106_01.fm

(Cont'd)

Note! Before removing the drive/gearbox assembly (13), make sure that all hose and cable fixings are disconnected from it.

j) Remove the six screws (14), the two covers (15) and the drive assembly (13) from the frame (16).

Note! The two covers (15) introduced from T Order: T75721/00046.

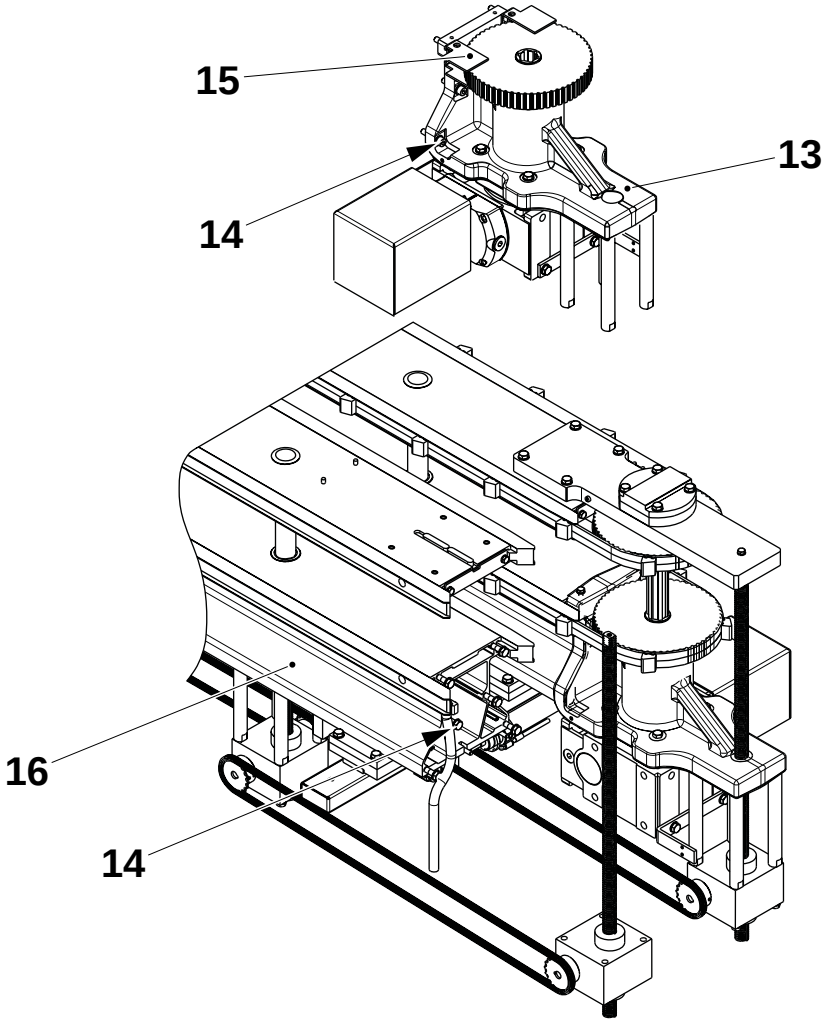

13 Drive assembly
14 Screw
15 Cover
16 Frame

(Cont'd)

TechPub_2614345_0106 - 0203_3047106_01.fm

(Cont'd)

k) Remove the screw/nut (17) and the washer (18) from the end of the shaft assembly (19).

Note! The screw (17), the washer (18) and the shaft (19) are valid for T order: T75721/00001 to T75721/00045. The nut (17), the washer (18) and the shaft (19) are valid from T Order T75721/00046..

l) Remove the four screws (20) and separate the bracket (21) from the gearbox (22). Retain the key (23) for the assembly.

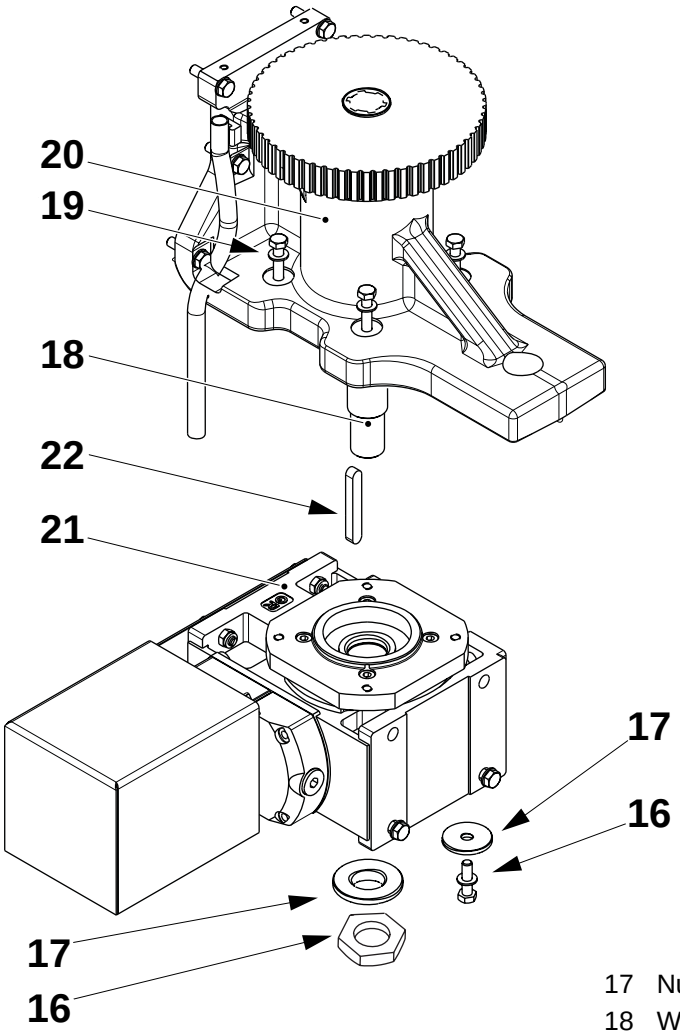

17 Nut
18 Washer
19 Shaft assembly
20 Screw
21 Bracket
22 Gearbox
23 Key

(Cont'd)

TechPub_2614345_0106 - 0203_3047106_01.fm

(Cont'd)

m) Remove the screws (24) and the toothed pulley (25).

n) Remove the screws (26), the bushing (27) and the plate (28)

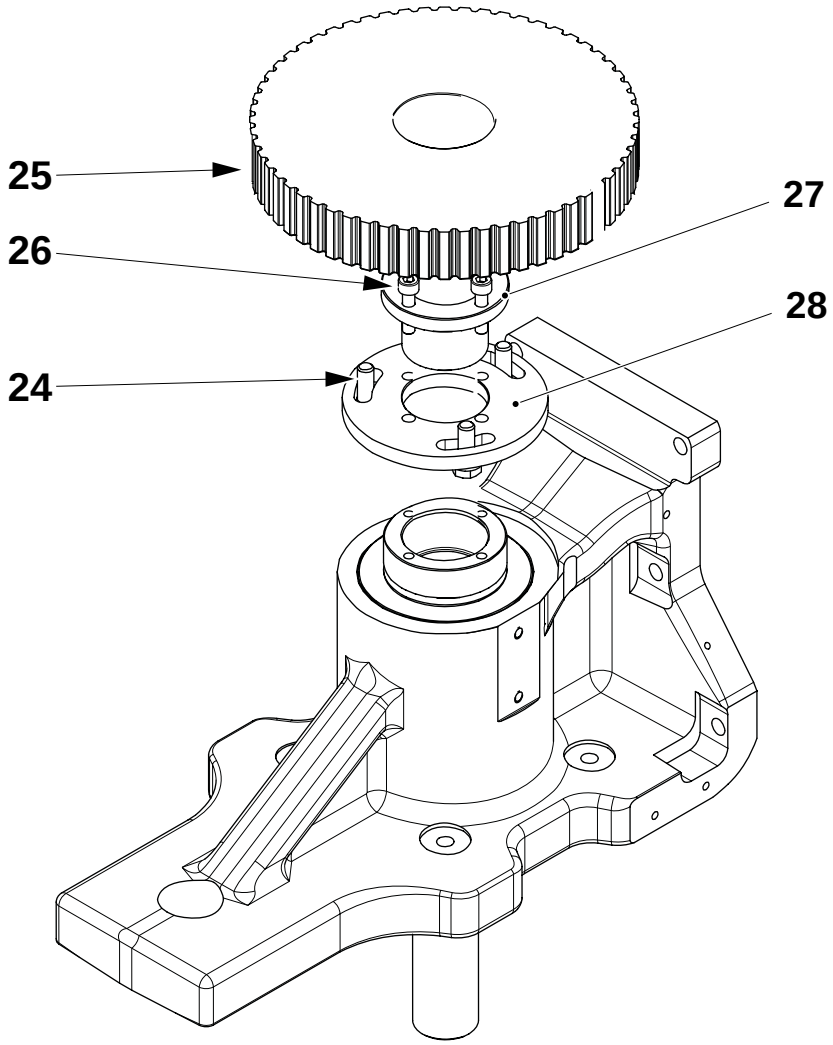

24 Screw
25 Toothed pulley
26 Screw
27 Bushing
28 Plate

(Cont'd)

TechPub_2614345_0106 - 0203_3047106_01.fm

(Cont'd)

o) Remove the seal rings (29) and (30) from the housing (31).

p) Remove the retaining ring (32) from the housing (31) and pull out the lower shaft assembly (19).

Note! Shaft (19) latest shown.

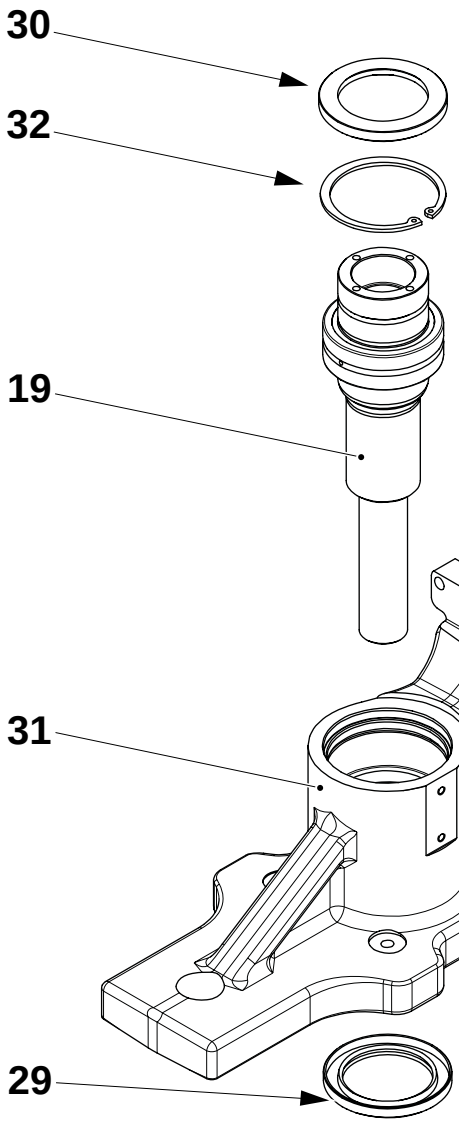

19 Shaft assembly
29 Seal ring
30 Seal ring
31 Housing
32 Retaining ring

(Cont'd)

TechPub_2614345_0106 - 0203_3047106_01.fm

(Cont'd)

q) Remove the retaining ring (33) from the shaft assembly (19).

r) Remove the spacer (34) and the O-ring (35).

s) Remove the bearing (36).

t) Remove the spacer (37) and the O-ring (38).

Note! Shaft (19) latest shown.

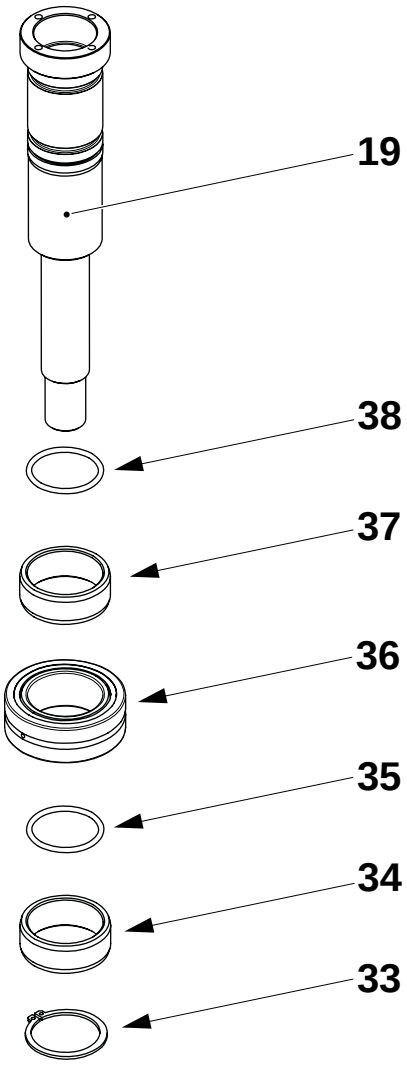

19 Shaft assembly
33 Retaining ring
34 Spacer
35 O-ring
36 Bearing
37 Spacer
38 O-ring

(Cont'd)

TechPub_2614345_0106 - 0203_3047106_01.fm

(Cont'd)

u) Assemble in the reverse order.

v) Install the belts, see 2.2.1-1 Package Positioner (Right) - Change Belts.

w) Repeat steps a) to v) for the other drive (39).

Note! The servo motors should now be set to zero, see 2.2.4 Set Package Positioner Zero

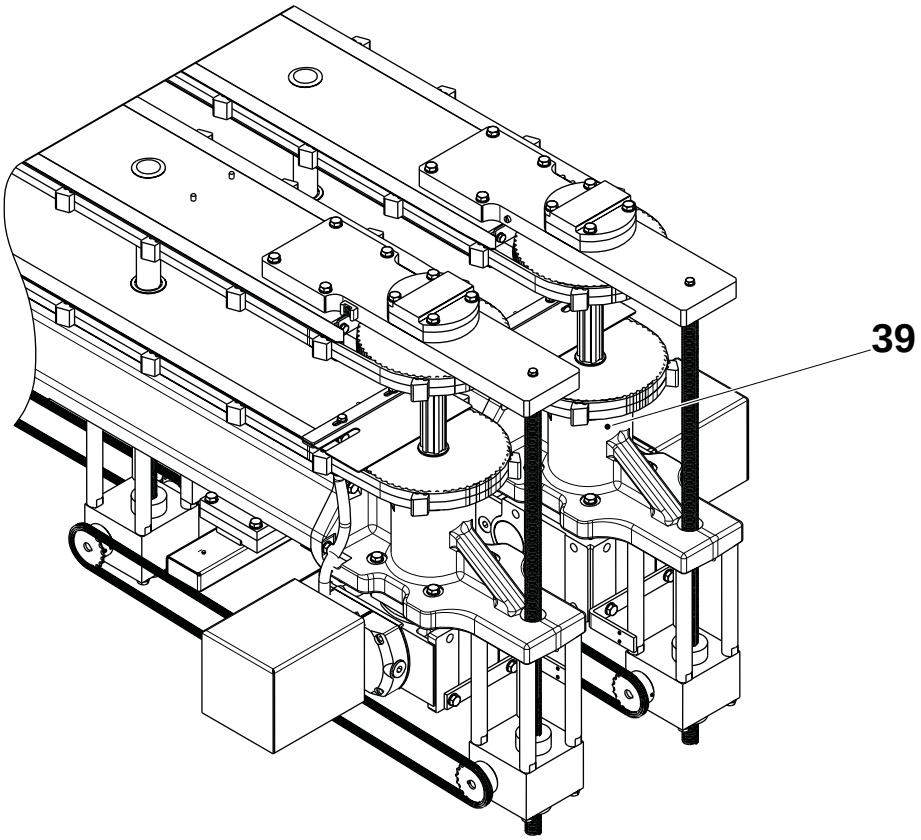

39 Drive

TechPub_2614345_0106 - 0203_3047106_01.fm

2.2.3-2 Drive - Motor and Gearbox

Machine Status	Mains Power OFF Air OFF
SPC Reference	2838644-0200

Separation

There may or may not be a plug (1).

The access hole (2) may be in a different location.

There is one screw (3) in the clamp (4).

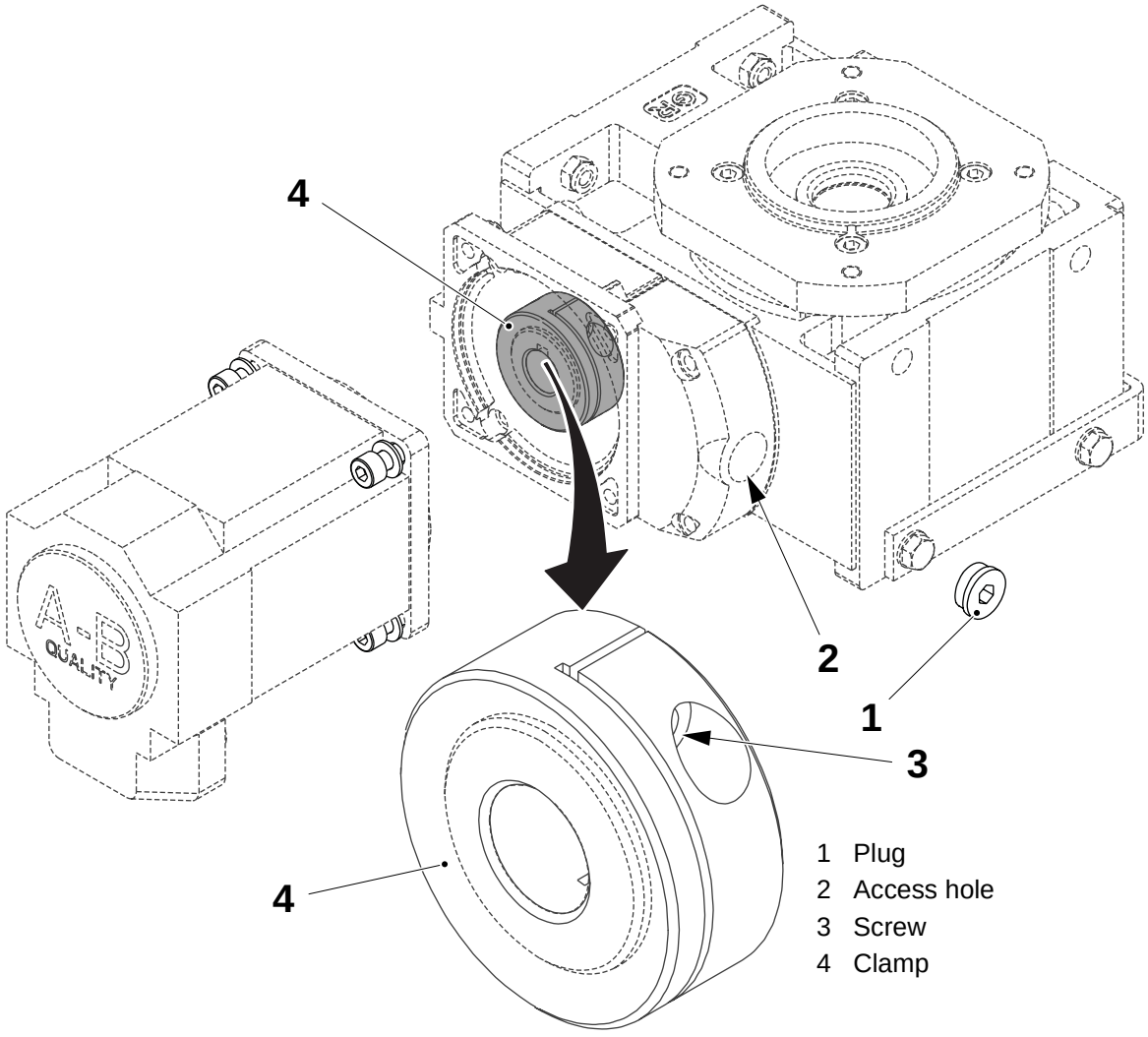

(Cont'd)

TechPub_2614345_0106 - 0203_3047106_01.fm

(Cont'd)

a) If fitted, remove the plug (1).

b) Using the access hole (2), locate the screw (3) in the clamp (4) with a 5 mm allen key and loosen the screw (3).

c) Remove the screws (5) and separate the motor (6) from the gearbox (7).

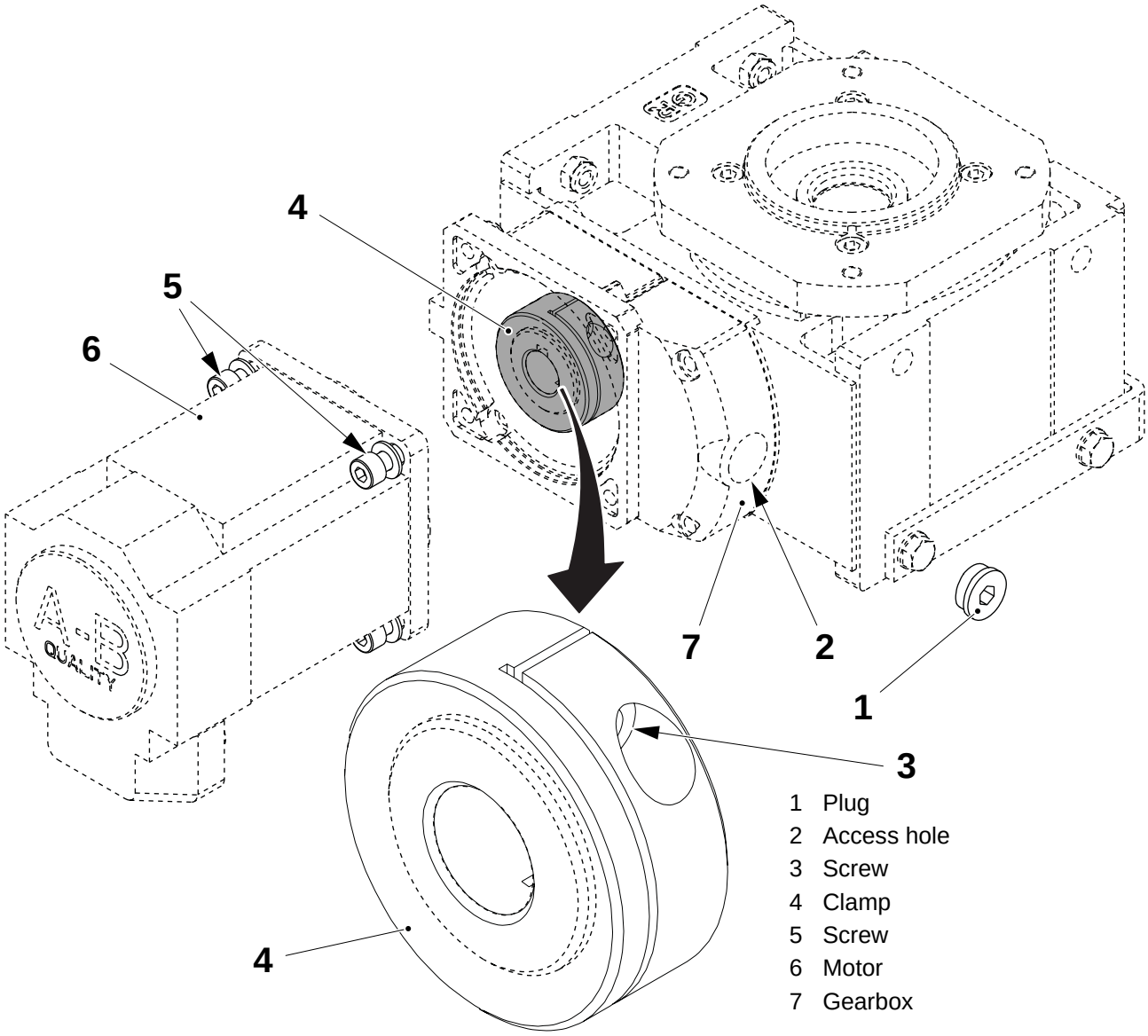

TechPub_2614345_0106 - 0203_3047106_01.fm

(Cont'd)

(Cont'd)

Assembly

a) Install the motor (1) so that the screws (2) loosely hold it.

b) Tighten the screw (3) ensuring that the clamp (4) is at the end of the drive gearbox shaft (5) so that it clamps securely onto the drive motor shaft (6).

c) Tighten completely the screws (2) that hold the motor (1).

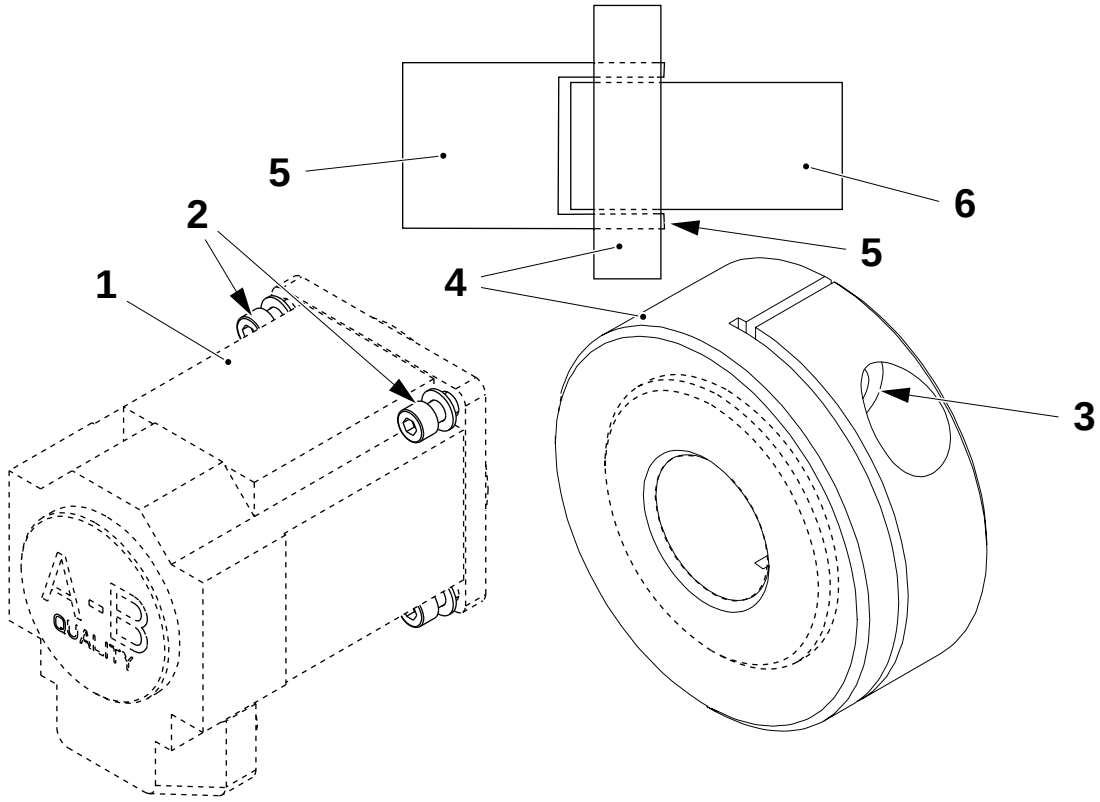

1 Motor
2 Screw
3 Screw
4 Clamp
5 Gearbox shaft
6 Drive motor shaft

TechPub_2614345_0106 - 0203_3047106_01.fm

2.2.3-3 Belt Stretcher - Change Bearings

Machine Status	Mains Power OFF Air OFF
SPC Reference	2766954-0100 2769743-0100

Upper Assemblies

a) Remove the belts, see 2.2.1-1 Package Positioner (Right) - Change Belts and 2.2.2-1 Package Positioner (Left) - Change Belts.

b) Remove the screws (1) and the brackets (2).

c) Remove the screws (3) and the bellows assembly (4).

d) Repeat steps b) and c) for the other bellows assembly (5).

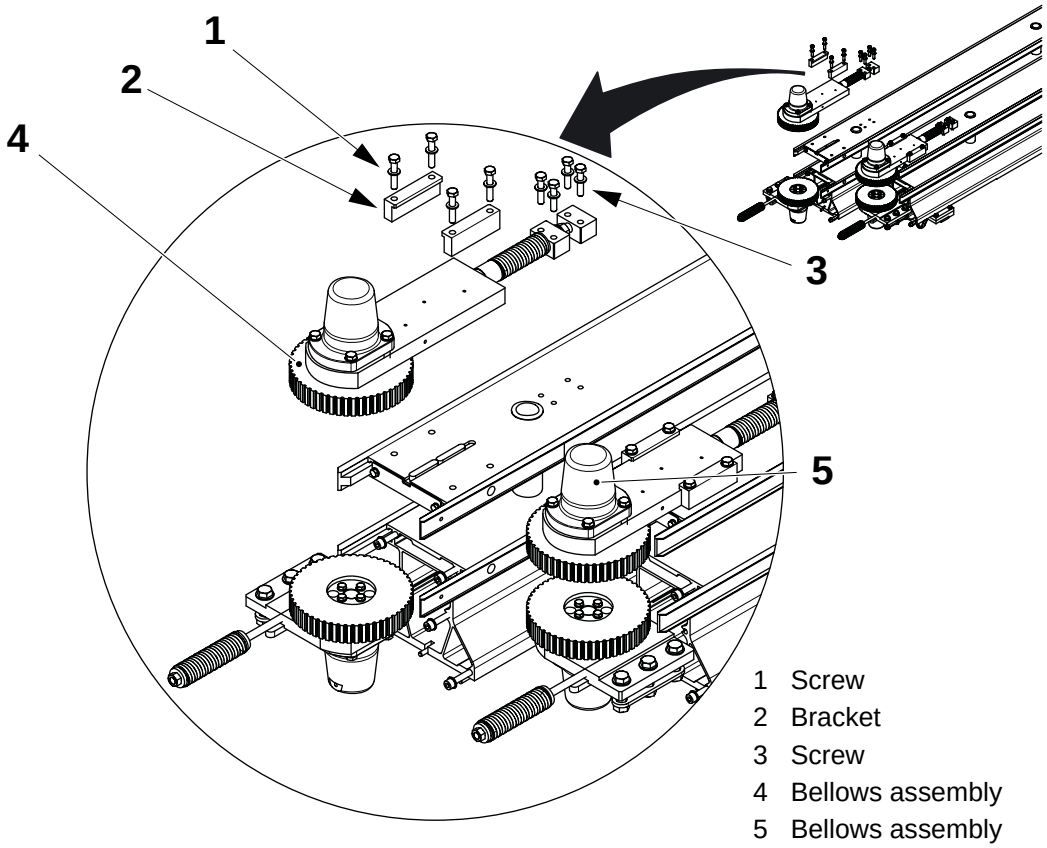

1 Screw
2 Bracket
3 Screw
4 Bellows assembly
5 Bellows assembly

(Cont'd)

TechPub_2614345_0106 - 0203_3047106_01.fm

(Cont'd)

e) Remove the screws (6) and the toothed pulley (7) from the shaft (8).

f) Remove the screws (9) from the bellows (10).

g) Remove the seal ring (11) from the bellows (10).

h) Remove the retaining ring (12) and pull out the shaft (8).

i) Remove the nut (13), the bearing (14), the spacer (15) and the bearing (16) from the shaft (8).

j) Change the seal ring (11), the retaining ring (12) and the bearings (14) and (16).

k) Assemble in the reverse order.

l) Install the belts, see 2.2.1-1 Package Positioner (Right) - Change Belts and 2.2.2-1 Package Positioner (Left) - Change Belts.

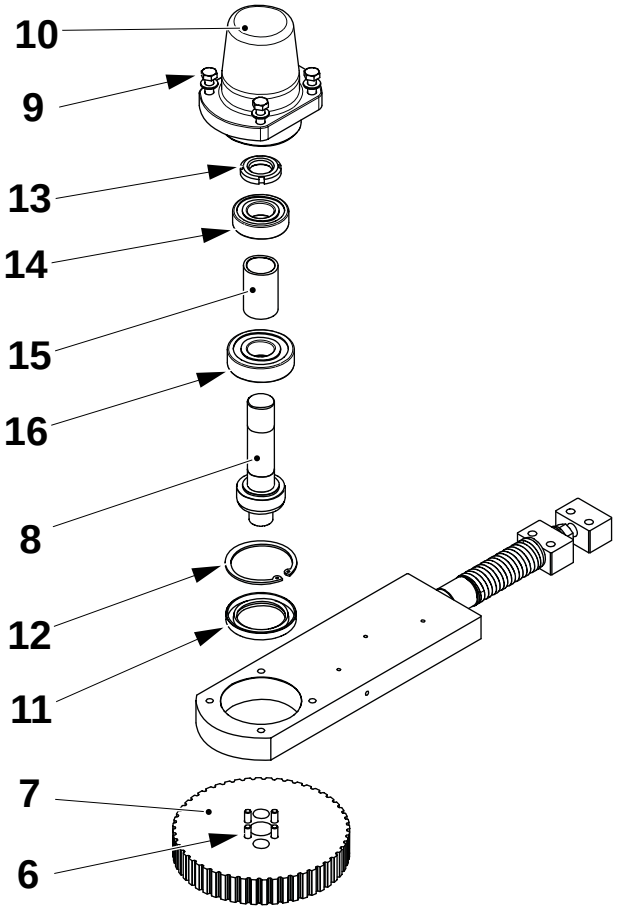

6 Screw
7 Toothed pulley
8 Shaft
9 Screw
10 Bellows
11 Seal ring
12 Retaining ring
13 Nut
14 Bearing
15 Spacer
16 Bearing

(Cont'd)

TechPub_2614345_0106 - 0203_3047106_01.fm

(Cont'd)

Lower Assemblies

a) Remove the belts, see 2.2.1-1 Package Positioner (Right) - Change Belts and 2.2.2-1 Package Positioner (Left) - Change Belts.

b) Remove the screws (1) and the bellows assembly (2).

c) Repeat step b) for the other bellows assembly (3).

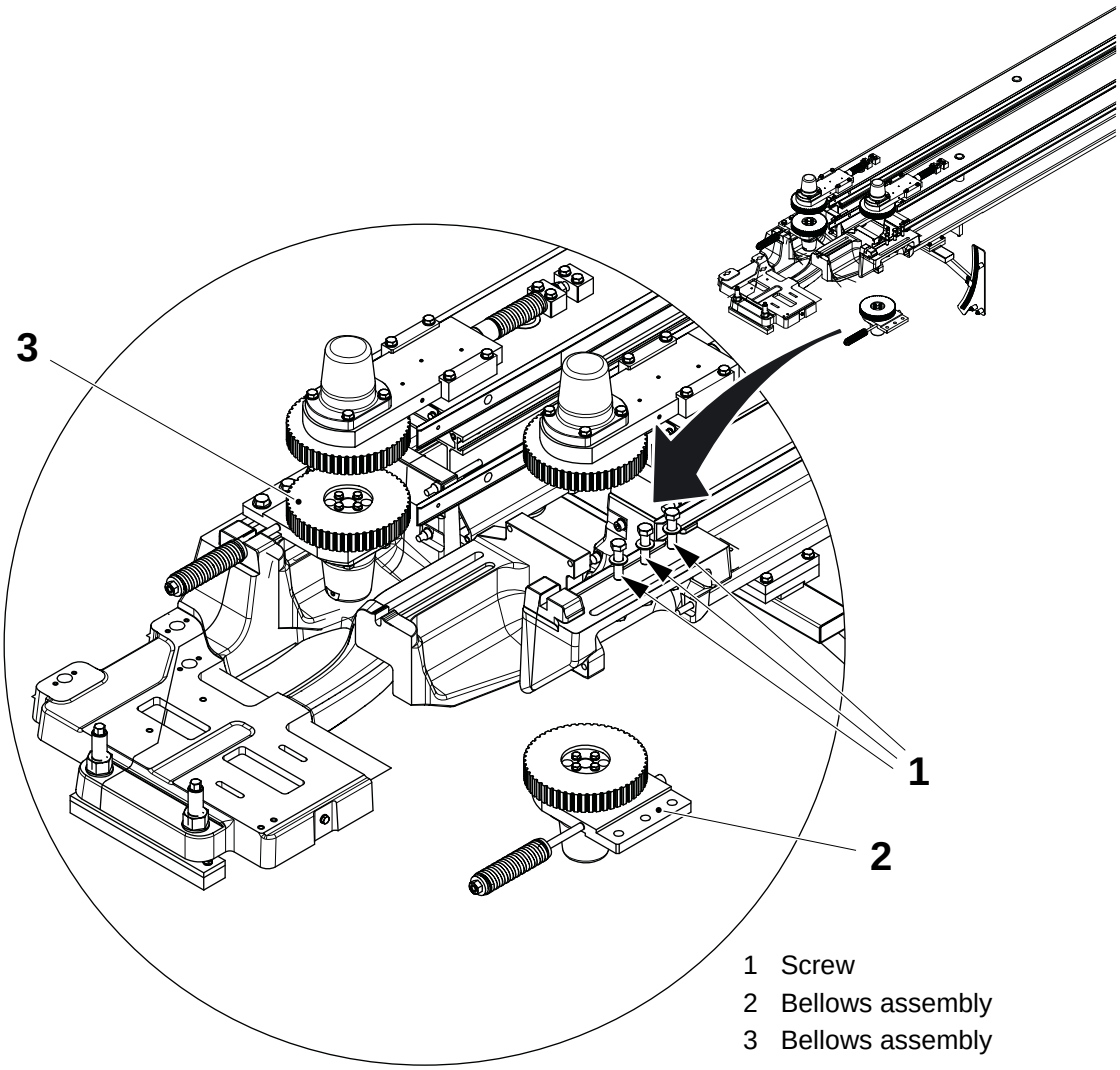

1 Screw
2 Bellows assembly
3 Bellows assembly

(Cont'd)

TechPub_2614345_0106 - 0203_3047106_01.fm

(Cont'd)

d) Remove the screws (4) and the toothed pulley (5) from the shaft (6).
e) Remove the screws (7) from the bellows (8).
f) Remove the seal ring (9) from the bellows (8).
g) Remove the retaining ring (10) and pull out the shaft (6).

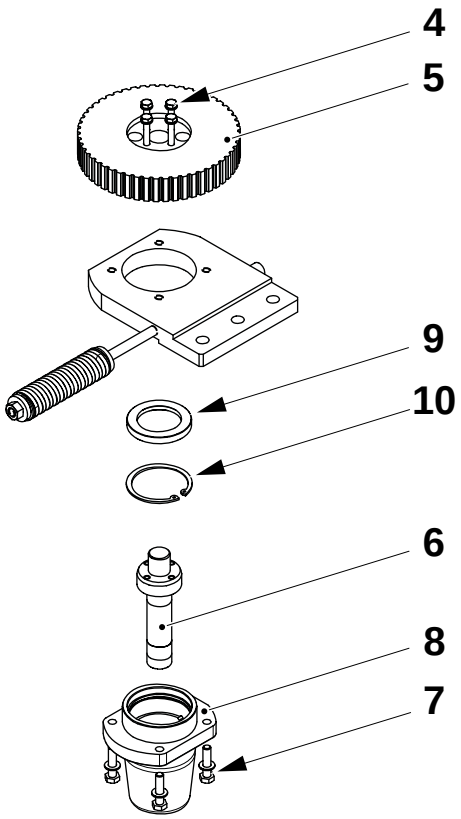

4 Screw
5 Toothed pulley
6 Shaft
7 Screw
8 Bellows
9 Seal ring
10 Retaining ring

(Cont'd)

TechPub_2614345_0106 - 0203_3047106_01.fm

(Cont'd)

h) Remove the nut (11), the bearing (12), the spacer (13) and the bearing (14) from the shaft (6).

i) Change the seal ring (9), the retaining ring (10) and the bearings (12) and (14).

j) Assemble in the reverse order.

k) Install the belts, see 2.2.1-1 Package Positioner (Right) - Change Belts and 2.2.2-1 Package Positioner (Left) - Change Belts.

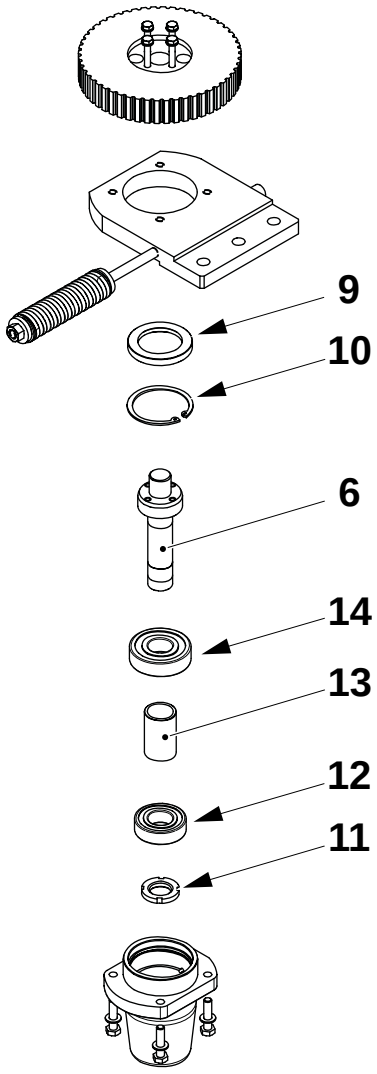

6 Shaft
9 Seal ring
10 Retaining ring
11 Nut
12 Bearing
13 Spacer
14 Bearing

TechPub_2614345_0106 - 0203_3047106_01.fm

2.2.3-4 Cylinder Speed - Set Regulator Valve

Machine Status	Mains Power OFF Air OFF
SPC Reference	2838643-0200

a) Turn the regulator valve (1) to increase or decrease the speed so that the cylinders (2) returns the left hand package positioner (3).

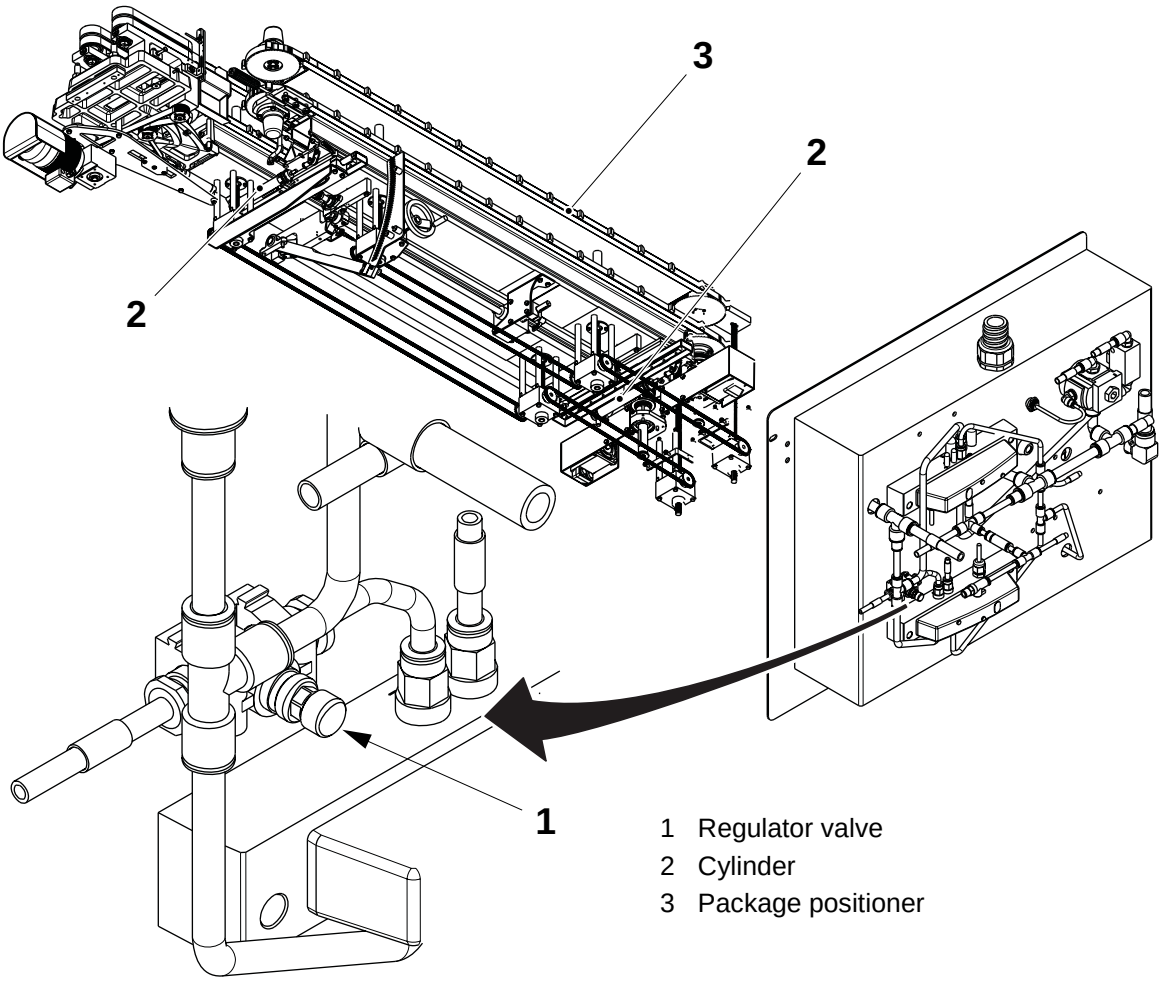

1 Regulator valve
2 Cylinder
3 Package positioner

TechPub_2614345_0106 - 0203_3047106_01.fm

2.2.3-5 Set - Cap Position X Direction

Machine Status	Mains Power OFF Air OFF
SPC Reference	2838643-0200

a) Pull the knob (1) out and move the lever (2) in the direction of the arrow **A** this will move the positioner in the direction of the arrow **B**.

b) Pull the knob (1) out and move the lever (2) in the direction of the arrow **C** this will move the positioner in the direction of the arrow **D.**

c) Each hole (3) on the plate is a movement of 0.2 mm.

Note! After any positional change the packages will require testing, see OM chapter 5 for details.

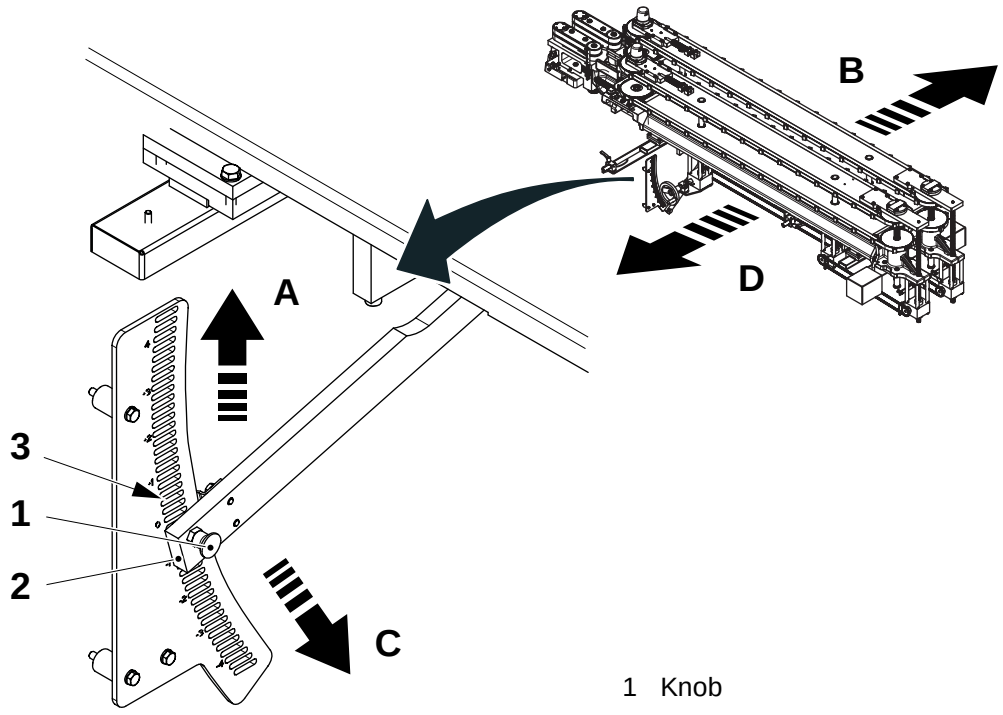

1 Knob
2 Lever
3 Hole

TechPub_2614345_0106 - 0203_3047106_01.fm

2.2.3-6 Set - Cap Position Y Direction

Machine Status	Mains Power OFF Air OFF
SPC Reference	2838643-0200

a) Touch the SETTINGS button (1) and then the PACKAGE POSITIONER button (2).

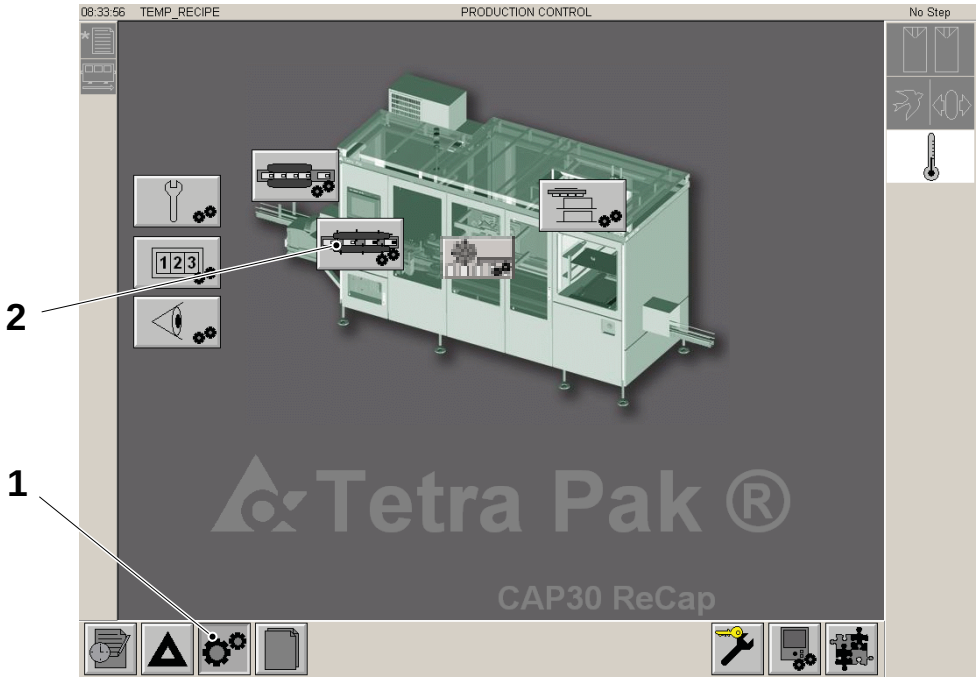

1 SETTING button
2 PACKAGE POSITIONER button

(Cont'd)

TechPub_2614345_0106 - 0203_3047106_01.fm

(Cont'd)

b) Touch the CAP POSITION icon (3).

c) To increase or decrease the cap position value (4), use the ARROW keys (5) or the keyboard which is accessible via the KEYBOARD button (6).

d) Introduce the value by clicking the OK button (7).

e) Touch the EXIT button (8).

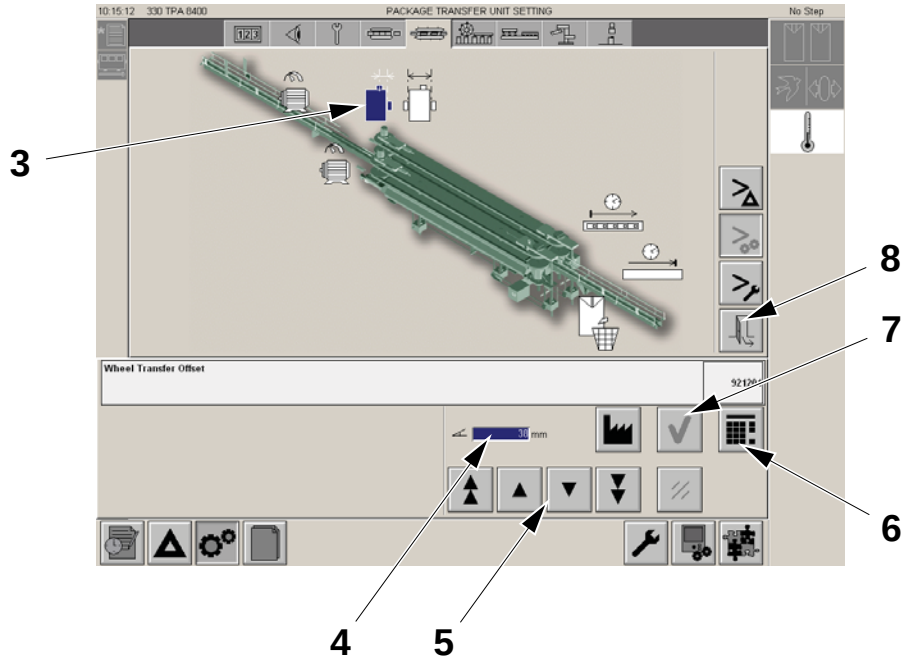

3 CAP POSITION icon
4 ARROW keys
5 KEYBOARD button
6 Cap position value
7 OK button
8 EXIT button

(Cont'd)

TechPub_2614345_0106 - 0203_3047106_01.fm

(Cont'd)

f) Step the machine down to PRE-HEATING and then back up to PREPARATION to apply the new cap position value.

g) When the correct result is obtained store the corrected values in the appropriate recipe, see 8.8.1-12 Touch Screen - Saving Recipe Settings.

Note! After any positional change the packages will require testing, see OM chapter 5 for details.

TechPub_2614345_0106 - 0203_3047106_01.fm

2.2.3-7 Set - Package Width X

Machine Status	Mains Power OFF Air OFF
SPC Reference	2838643-0200

Basic Setting

a) Measure the package in the X direction.

b) Turn the handle (1) to increase or decrease the distance **A** of the left hand package positioner (2).

Note! The package must not be squeezed.

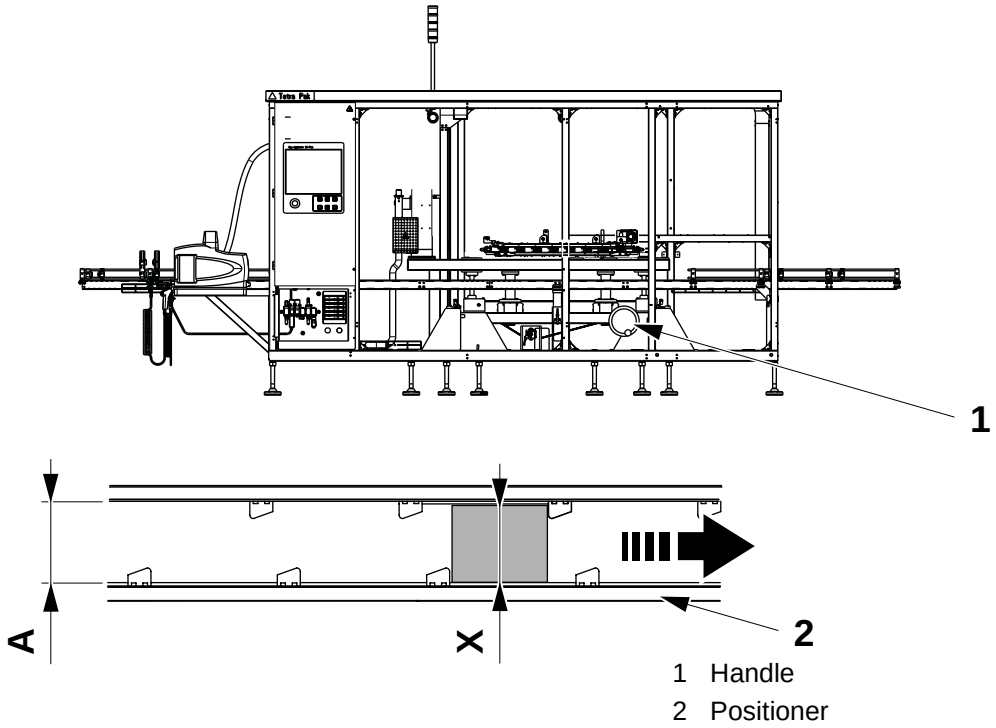

1 Handle
2 Positioner

TechPub_2614345_0106 - 0203_3047106_01.fm

2.2.3-8 Set - Package Length Y

Machine Status	Mains Power OFF Air OFF
SPC Reference	2838643-0200

a) Measure the package in the **Y** direction.

b) To set the dimension **A**, touch the SETTING button (1) and then the PACKAGE POSITIONER button (2).

Note! The package must not be squeezed.

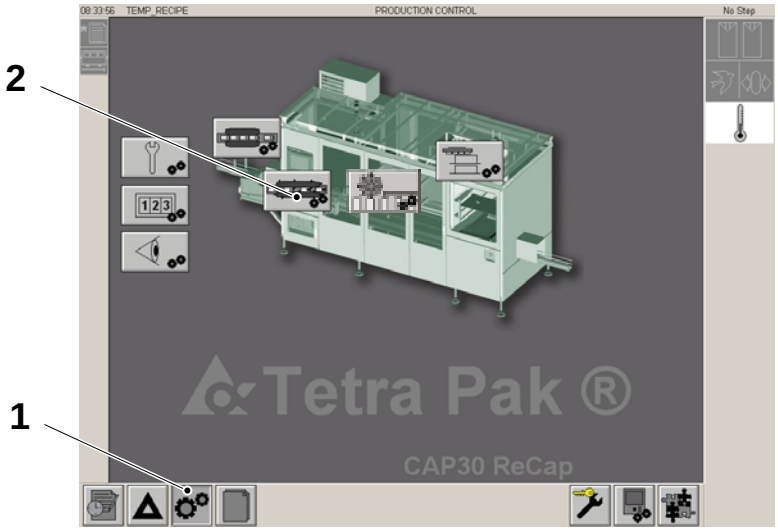

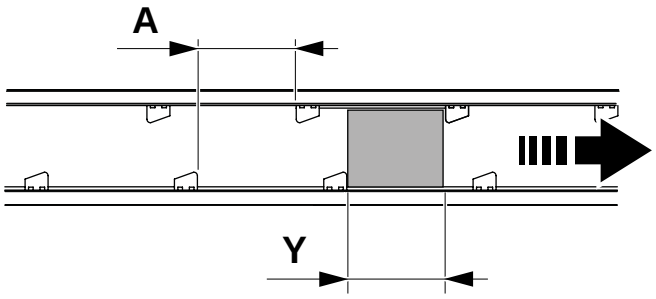

1 SETTING button
2 PACKAGE POSITIONER button

(Cont'd)

TechPub_2614345_0106 - 0203_3047106_01.fm

(Cont'd)

c) Touch the PACKAGE TRANSFER OFFSET icon (3).

d) To increase or decrease the package width value (4), use the ARROW keys (5) or the keyboard which is accessible via the KEYBOARD button (6).

e) Introduce the value by clicking the OK button (7).

f) Touch the EXIT button (8).

g) Step the machine down to PRE-HEATING and then back up to PREPARATION to apply the new package width value.

h) When the correct result is obtained store the corrected values in the appropriate recipe, see 8.8.1-12 Touch Screen - Saving Recipe Settings.

Note! The correct setting is when the package is held but not squeezed.

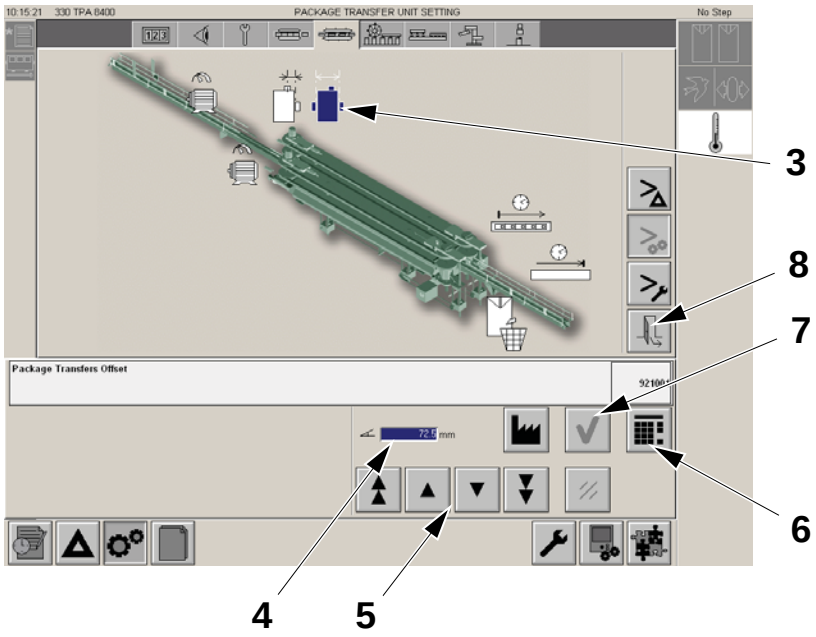

3 PACKAGE WIDTH icon
4 Package width value
5 ARROW keys
6 KEYBOARD button
7 OK button
8 EXIT button

TechPub_2614345_0106 - 0203_3047106_01.fm

2.2.3-9 Set - Wheel Pushdown Offset

Machine Status	Mains Power OFF Air OFF
SPC Reference	2838643-0200

a) To move the pushdown into the centre of the cap touch the SETTING button (1) and then the PACKAGE POSITIONER button (2).

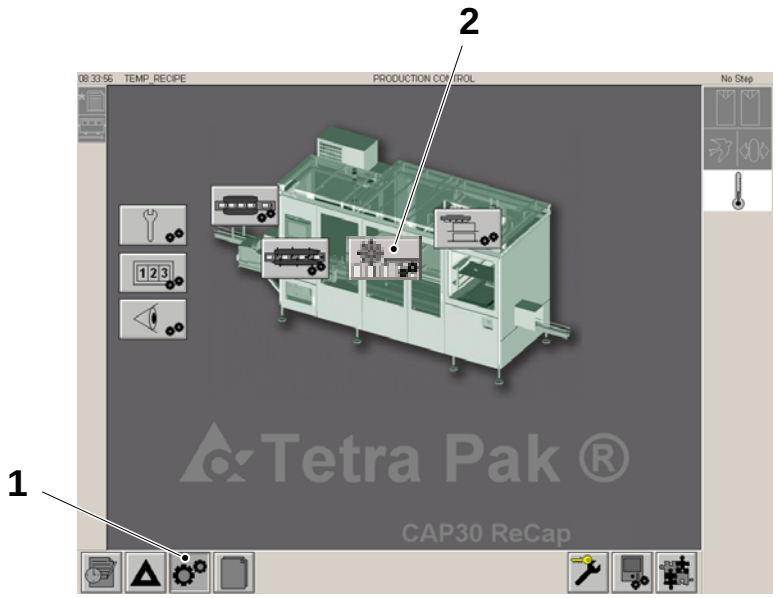

1 SETTING button
2 PACKAGE POSITIONER button

(Cont'd)

TechPub_2614345_0106 - 0203_3047106_01.fm

(Cont'd)

b) Touch the WHEEL TRANSFER OFFSET icon (3).

c) To increase or decrease the Y position of the pushdown (±2 mm maximum), change the value (4) using the ARROW keys (5) or the keyboard which is accessible via the KEYBOARD button (6).

d) Introduce the value by clicking the OK button (7).

e) Touch the EXIT button (8).

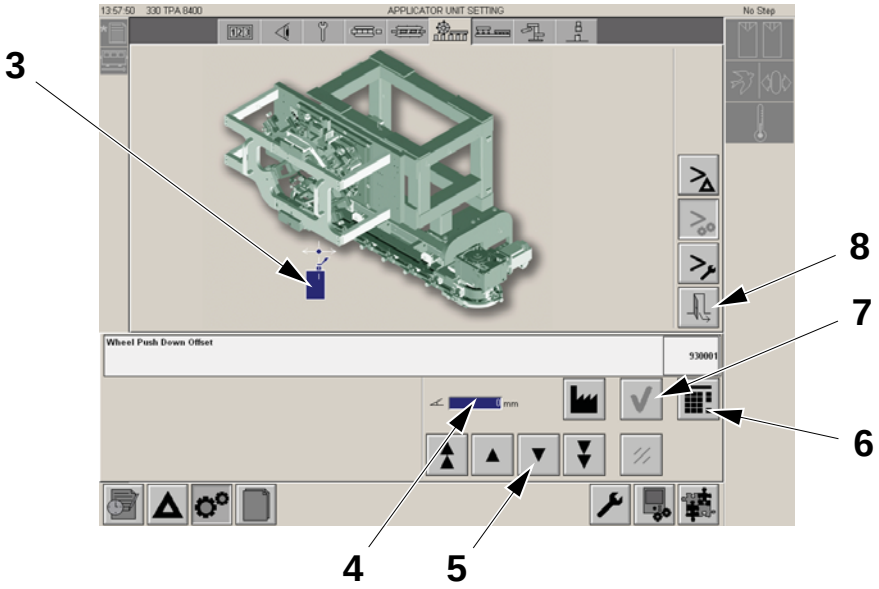

3 WHEEL PUSHDOWN OFFSET icon
4 Package width value
5 ARROW keys
6 KEYBOARD button
7 OK button
8 EXIT button

(Cont'd)

TechPub_2614345_0106 - 0203_3047106_01.fm

(Cont'd)

f) Step the machine down to PRE-HEATING and then back up to PREPARATION to apply the new value.

g) When the correct result is obtained (pushdown centred on the cap) store the corrected values in the appropriate recipe, see 8.8.1-12 Touch Screen - Saving Recipe Settings.

Note! After any positional change the packages will require testing, see OM chapter 5 for details.

TechPub_2614345_0106 - 0203_3047106_01.fm

2.2.4 Set Package Positioner Zero

2.2.4-1 Set Package Positioner Zero Setting

Machine Status	Mains Power OFF Air OFF
SPC Reference	662950-0200

Coarse Setting Inner Package Positioner Zero

a) Place the template (1) on the package positioner (2).

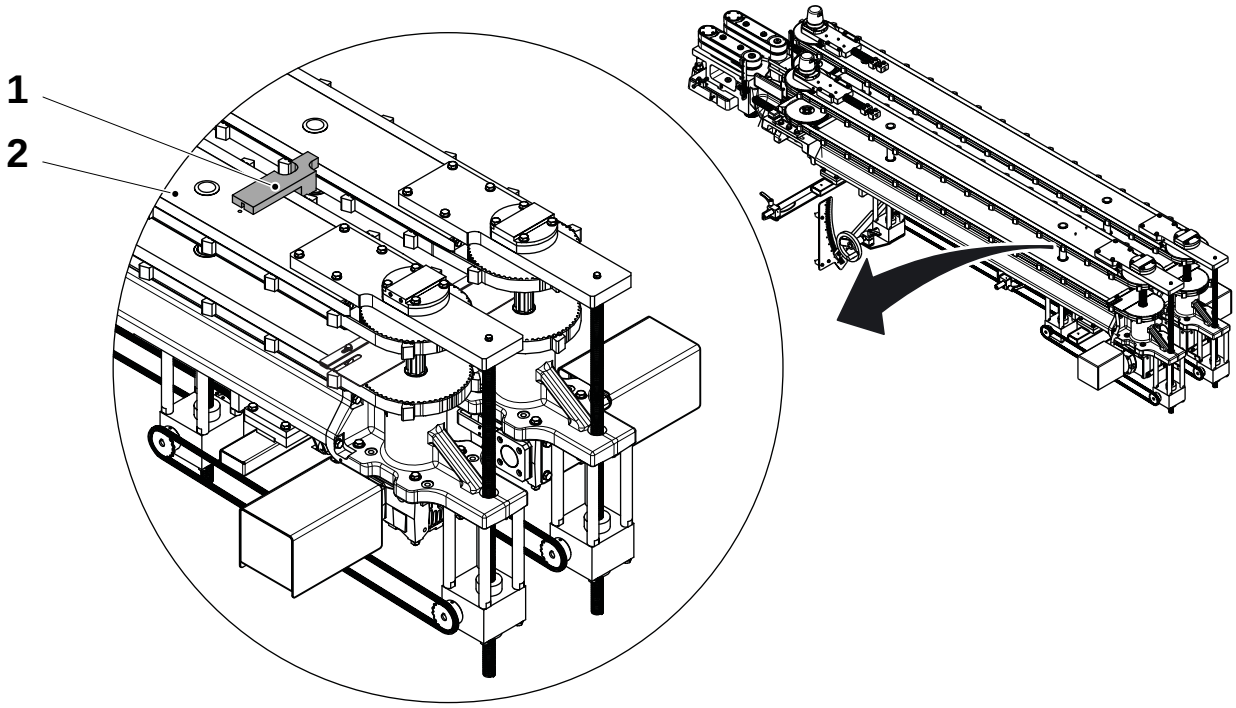

1 Template
2 Package positioner

TechPub_2614345_0106 - 0203_3047106_01.fm

(Cont'd)

(Cont'd)

b) Attach a piece of paper (3) to the surface of the inner package positioner (4) so that it is in line with the template (1) as shown.

Note! The line (5) is the centre-line of the pins the templates locate on.

c) Draw a line (5) on the paper that is in line with the part of the template (6) indicated below. This is the mechanical zero position for the inner package positioner.

d) Remove the template (1).

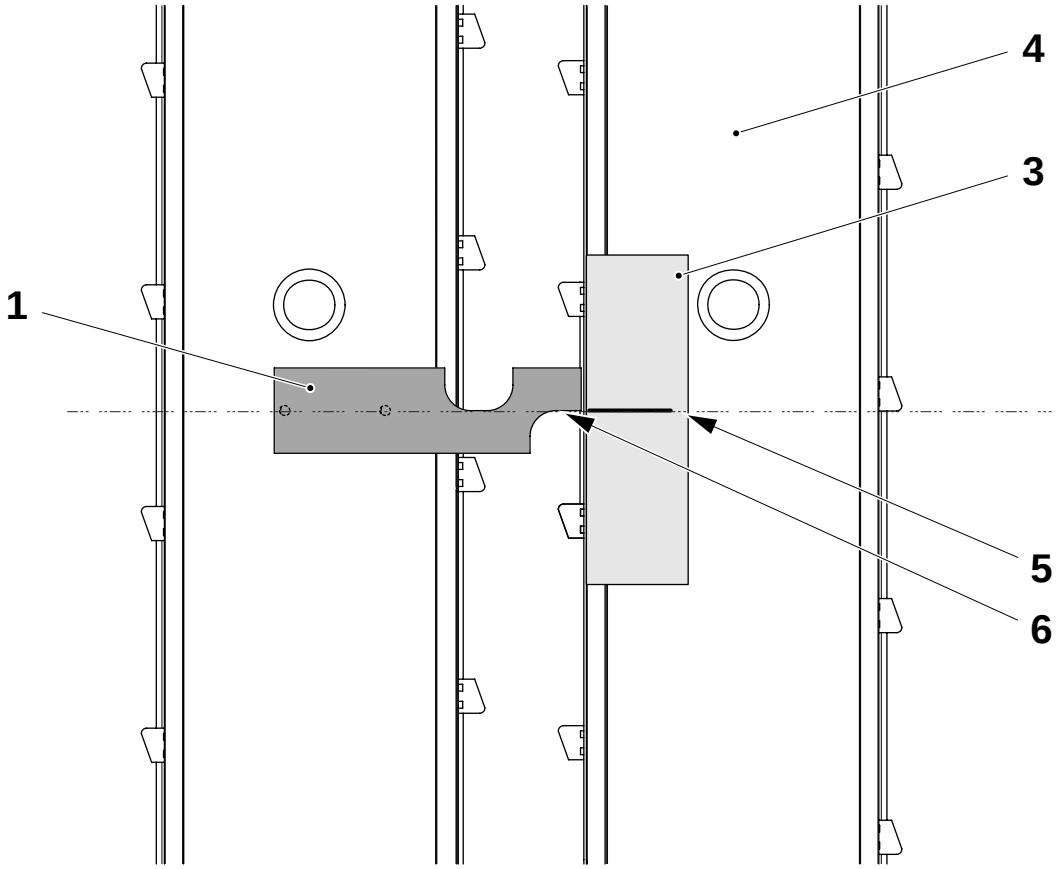

1 Template
3 Paper
4 Inner package positioner
5 Line
6 Part of template

(Cont'd)

TechPub_2614345_0106 - 0203_3047106_01.fm

(Cont'd)

Note! The arrow indicates the direction of movement of the belts (7) and (8) relative to the position of the line (5) on the paper.

e) Using the INCH button (9) on the control panel, inch the nearest tooth (10) on the belt (7) toward the line (5) on the paper (3).

Note! The INCHING button (9) on the control panel allows the package positioner to be inched in increments of approximately 0.4 mm.

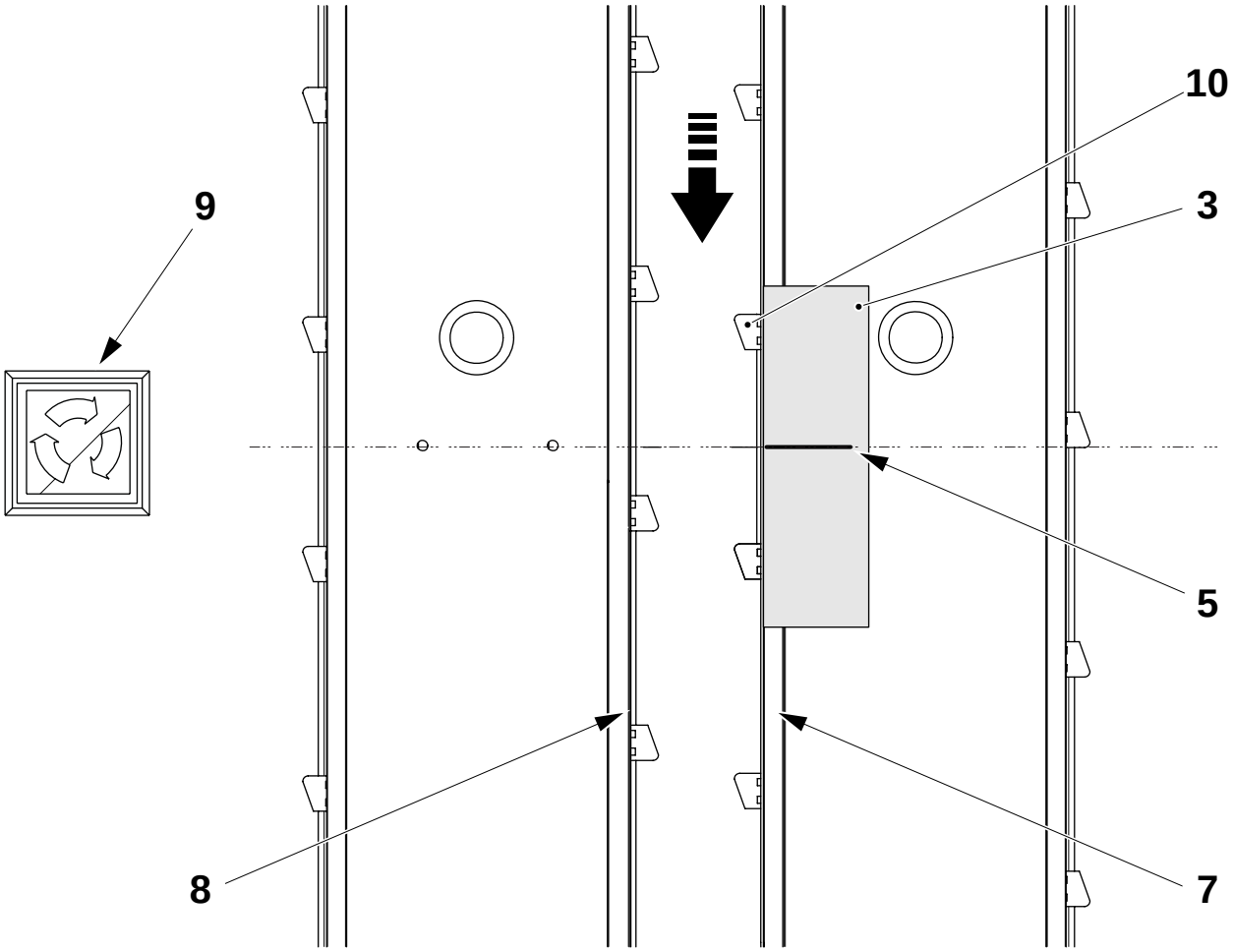

3 Paper
5 Line
7 Belt
8 Belt
9 INCH button
10 Tooth

(Cont'd)

TechPub_2614345_0106 - 0203_3047106_01.fm

(Cont'd)

f) Stop inching when the working surface (11) of the tooth (10) is near to the line (5) but has not reached it.

g) Measure the distance between the working surface (11) of the tooth (10) and the line (5). Note the distance **A** for use in the fine setting.

h) Continue with the fine setting if necessary, see Fine Setting Inner Package Positioner Zero.

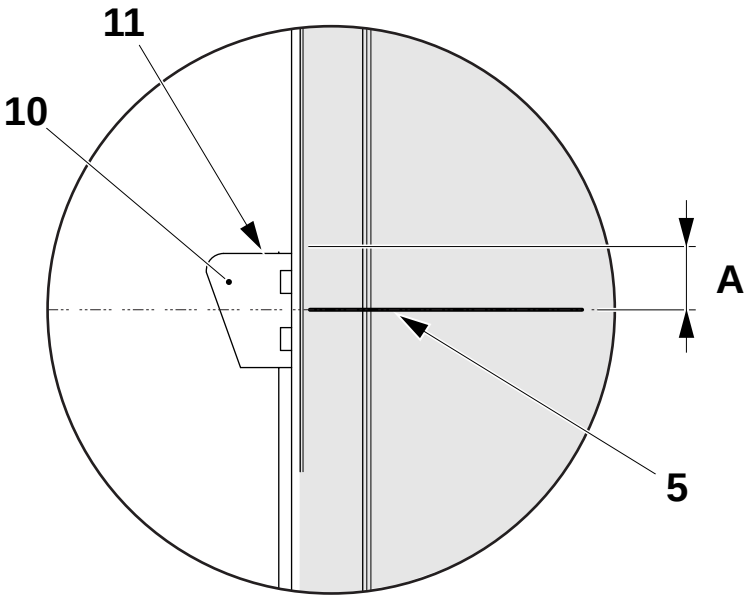

5 Line
10 Tooth
11 Working surface

(Cont'd)

TechPub_2614345_0106 - 0203_3047106_01.fm

(Cont'd)

Fine Setting Inner Package Positioner Zero

a) Touch the SETTINGS button (1).

b) Touch the OVERVIEW button (2) to display the OVERVIEW window.

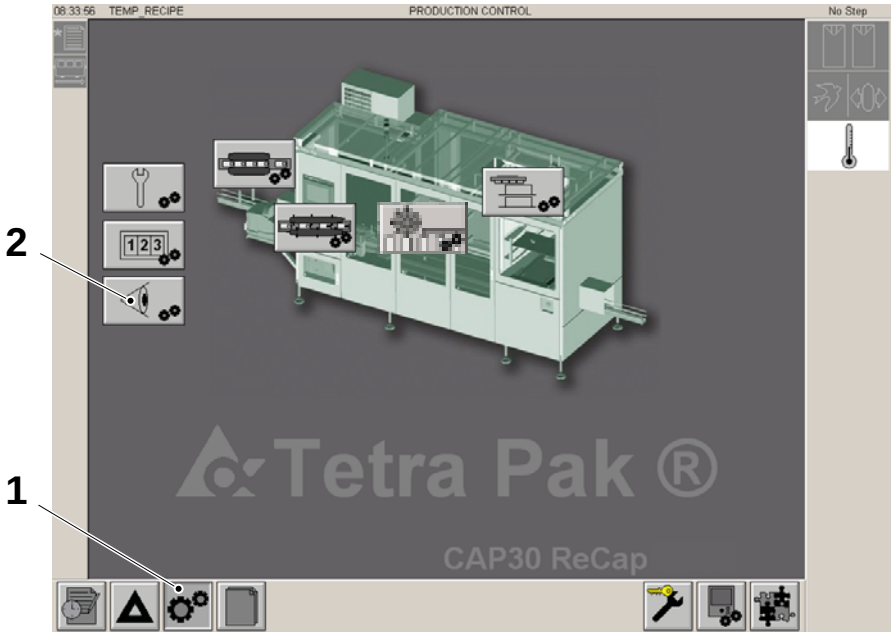

1 SETTINGS button
2 OVERVIEW button

(Cont'd)

TechPub_2614345_0106 - 0203_3047106_01.fm

(Cont'd)

c) On the Overview window (3) touch the VIRTUAL MASTER AXIS ACTUAL POSITION window (4) and read the value in the angle value window (5). This value is the theoretical virtual axis value of the machine to which all motors are aligned. Note this value for use in step h).

d) Touch the EXIT button (6).

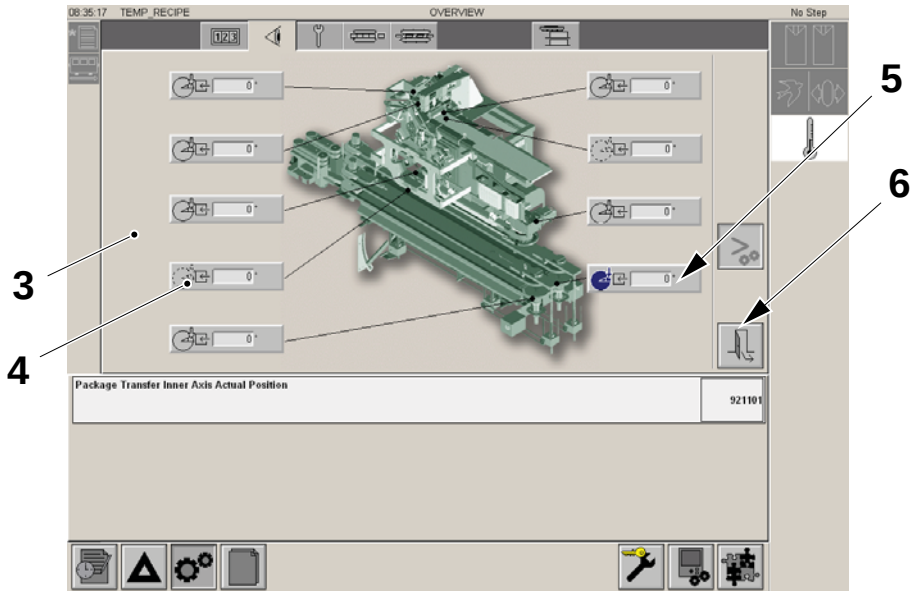

3 OVERVIEW window
4 VIRTUAL MASTER AXIS ACTUAL POSITION window
5 Value window
6 EXIT button

(Cont'd)

TechPub_2614345_0106 - 0203_3047106_01.fm

(Cont'd)

e) Step up the machine to STEP 2.

f) Touch the MAINTENANCE button (1) and then the SERVICE button (7).

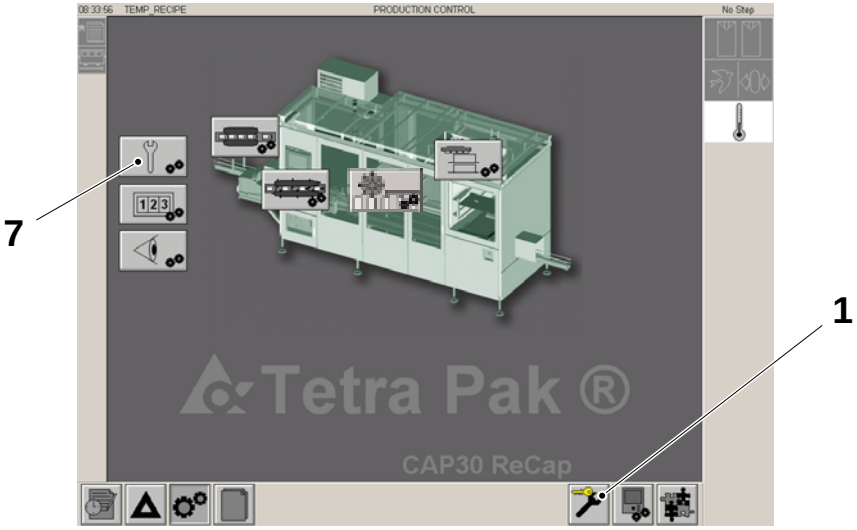

1 MAINTENANCE button
7 SERVICE button

(Cont'd)

TechPub_2614345_0106 - 0203_3047106_01.fm

(Cont'd)

Note! The INCHING window (8) allows the package positioner to be inched in increments of approximately 0.4 mm.

g) Touch the INCHING button (9) to display the INCHING window (8).

Note! The angle value displayed in the window (10) is the value to be changed to move the package positioner to the zero position.

The value should be increased to inch the package positioner with a conversion factor of 1° to 0.4 mm.

Note! Do not try to inch to the zero position in one go. It is better to repeat steps i) to m) until the zero position is obtained.

h) From the value measured in the Coarse Setting Inner Package Positioner Zero step g), calculate the value to be entered in the window (10) to move the package positioner nearer to the zero position.

i) Touch the SETTING button (11) to modify the value in the window (10).

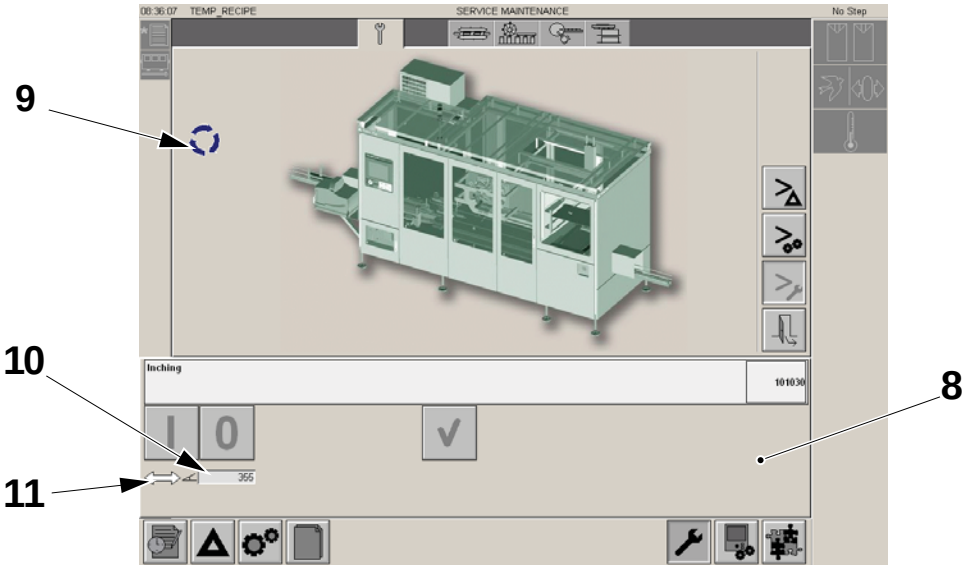

8 INCHING button
9 INCHING window
10 Window
11 SETTING button

(Cont'd)

TechPub_2614345_0106 - 0203_3047106_01.fm

(Cont'd)

j) Using the up and down buttons (12) set the number in the degrees window (13) to indicate the desired value.Touch the OK button (14).

k) Touch the ON button (15).

l) Touch the OK button (16). The background of the ON button (15) will go green and the package positioner will inch to the new position.

m) Touch the EXIT button (17) to leave.

n) Repeat the procedure from step f) of the Coarse Setting Inner Package Positioner Zero to step m) above until the working surface (18) of the belt tooth (19) is aligned with the line (20) on the paper. When it is, save the inner package positioner zero position in the memory, see Memorizing Inner Package Positioner Zero Position.

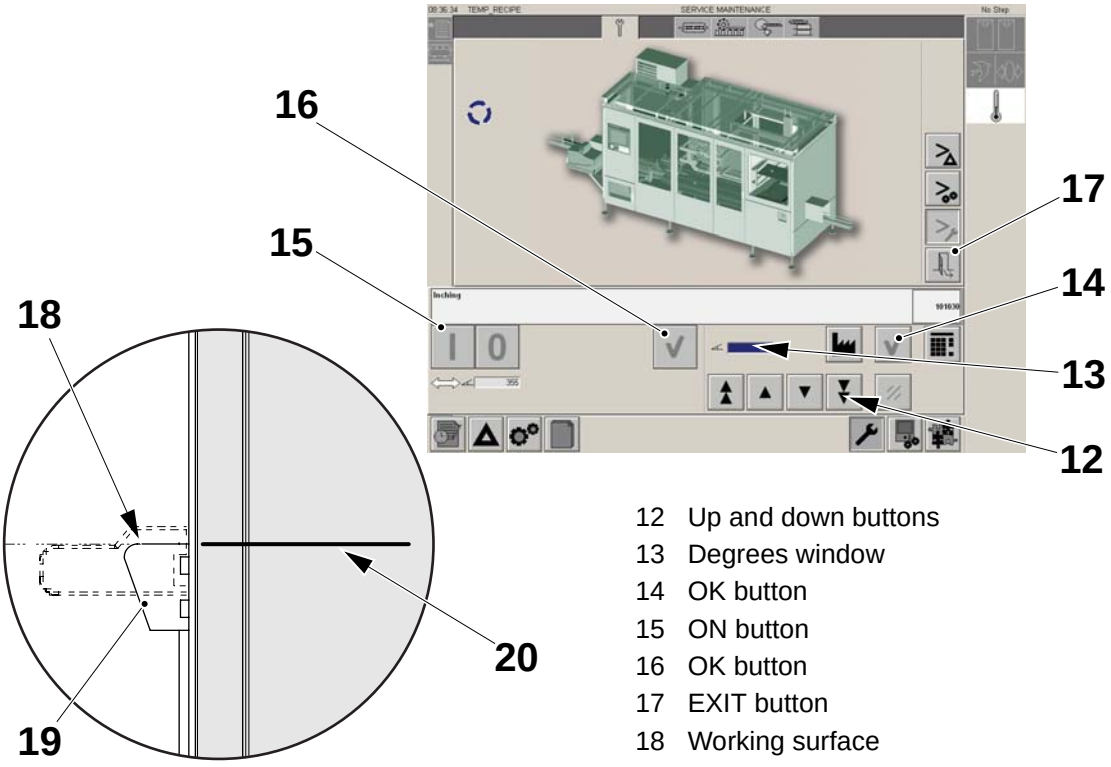

12 Up and down buttons
13 Degrees window
14 OK button
15 ON button
16 OK button
17 EXIT button
18 Working surface
19 Belt tooth
20 Line

(Cont'd)

TechPub_2614345_0106 - 0203_3047106_01.fm

(Cont'd)

Memorizing Inner Package Positioner Zero Position

This procedure stores to memory the zero position of the Inner Package Positioner that has been located with the Coarse Setting Outer Package Positioner Zero and the Fine Setting Inner Package Positioner Zero procedures.

Note! On completion of this procedure, the package positioner will remain at the zero position until the machine is stepped up. When the machine is stepped up to STEP 2 or higher the package positioner will move to an offset position determined by the values entered for the Y-axis package dimension and Y-axis cap position, see 2.2.3-8 Set - Package Length Y and 2.2.3-6 Set - Cap Position Y Direction.

a) Make sure the machine is at STEP 0.

b) Touch the SYSTEM SETUP button (1) and follow the login procedure see, HMI User Management - Log On as a User on page 1-6.

c) Touch the PACKAGE POSITIONER button (2).

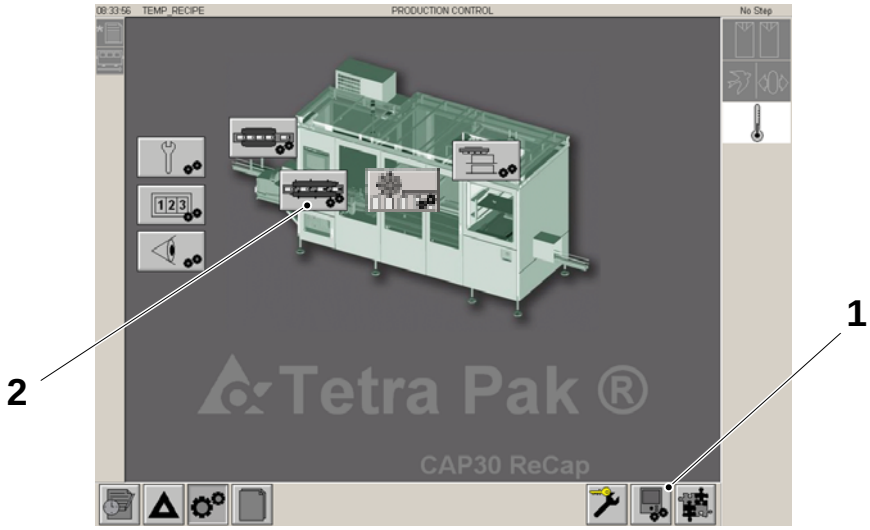

1 SYSTEM SETUP button
2 PACKAGE POSITIONER button

(Cont'd)

TechPub_2614345_0106 - 0203_3047106_01.fm

(Cont'd)

d) Touch the ZERO button (3) for the inner positioner.

e) Touch the ON button (4).

f) Touch the OK button (5) for at least three seconds. The background of the ON button (4) will go green and the zero value for inner package positioner will be stored to memory.

g) Touch the EXIT button (6).

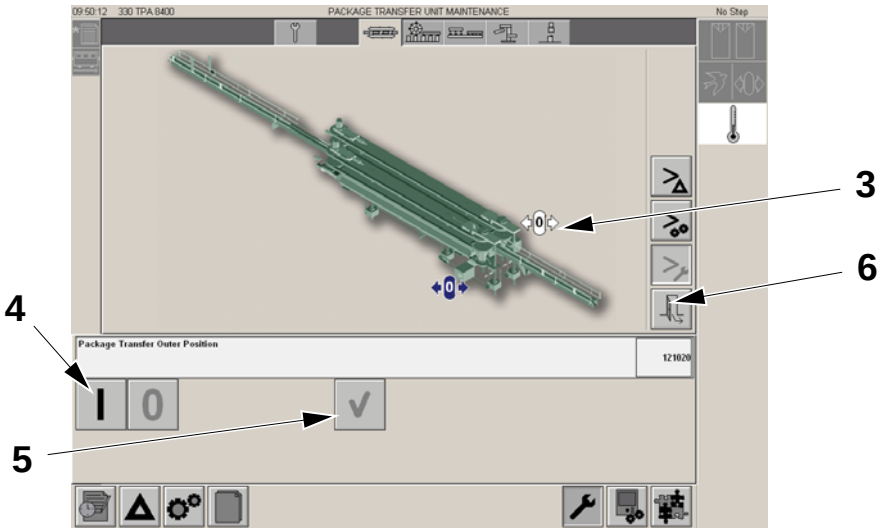

3 ZERO button
4 ON button
5 OK button
6 EXIT button

TechPub_2614345_0106 - 0203_3047106_01.fm

(Cont'd)

(Cont'd)

Coarse Setting Outer Package Positioner Zero

a) Set the inner package positioner (1) to zero see, Coarse Setting Inner Package Positioner Zero on page 2-68.

b) Attach a piece of paper (2) to the surface of the outer package positioner (3) so that it is opposite the paper (4) on the inner package positioner (1).

c) Draw a line (5) on the piece paper (2) so that it is in line with the line (6) already drawn on the inner package positioner. The new line is the mechanical zero position for the outer package positioner (3).

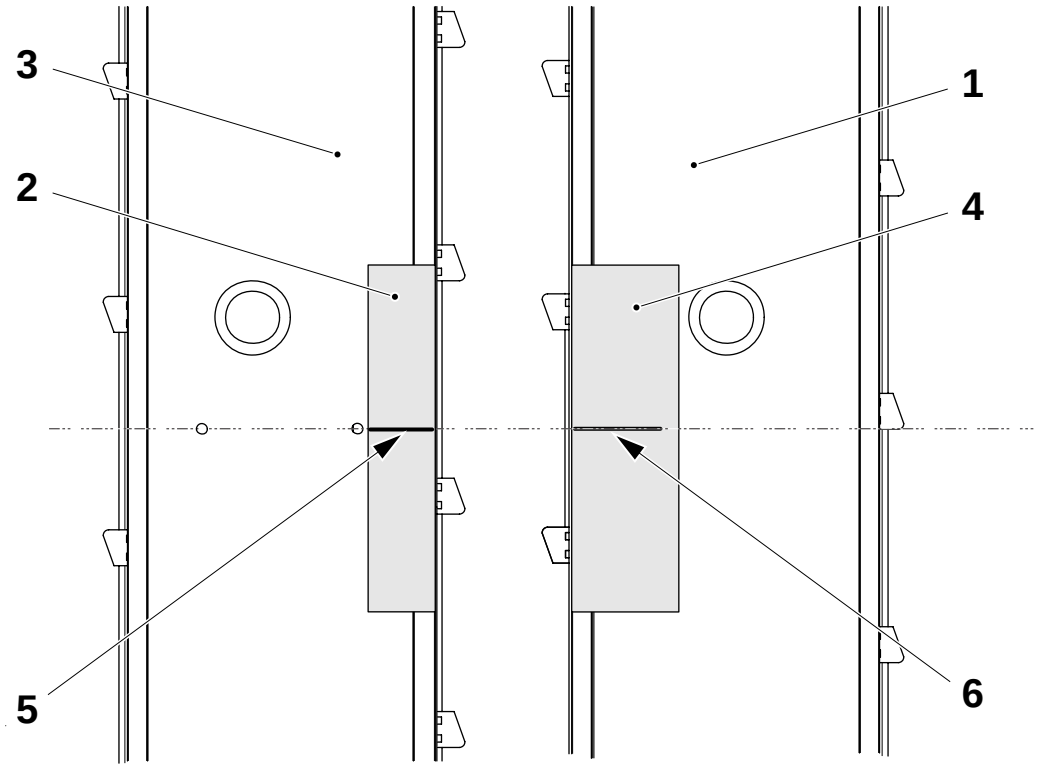

1 Inner package positioner
2 Paper
3 Outer package positioner
4 Paper
5 Line
6 Line

(Cont'd)

TechPub_2614345_0106 - 0203_3047106_01.fm

(Cont'd)

Note! The arrow indicates the direction of movement of the belts (7) and (8) relative to the position of the line (5) on the paper (2).

d) Using the INCH button (9) on the control panel, inch the nearest tooth (10) on the belt (7) toward the line (5) on the paper (2).

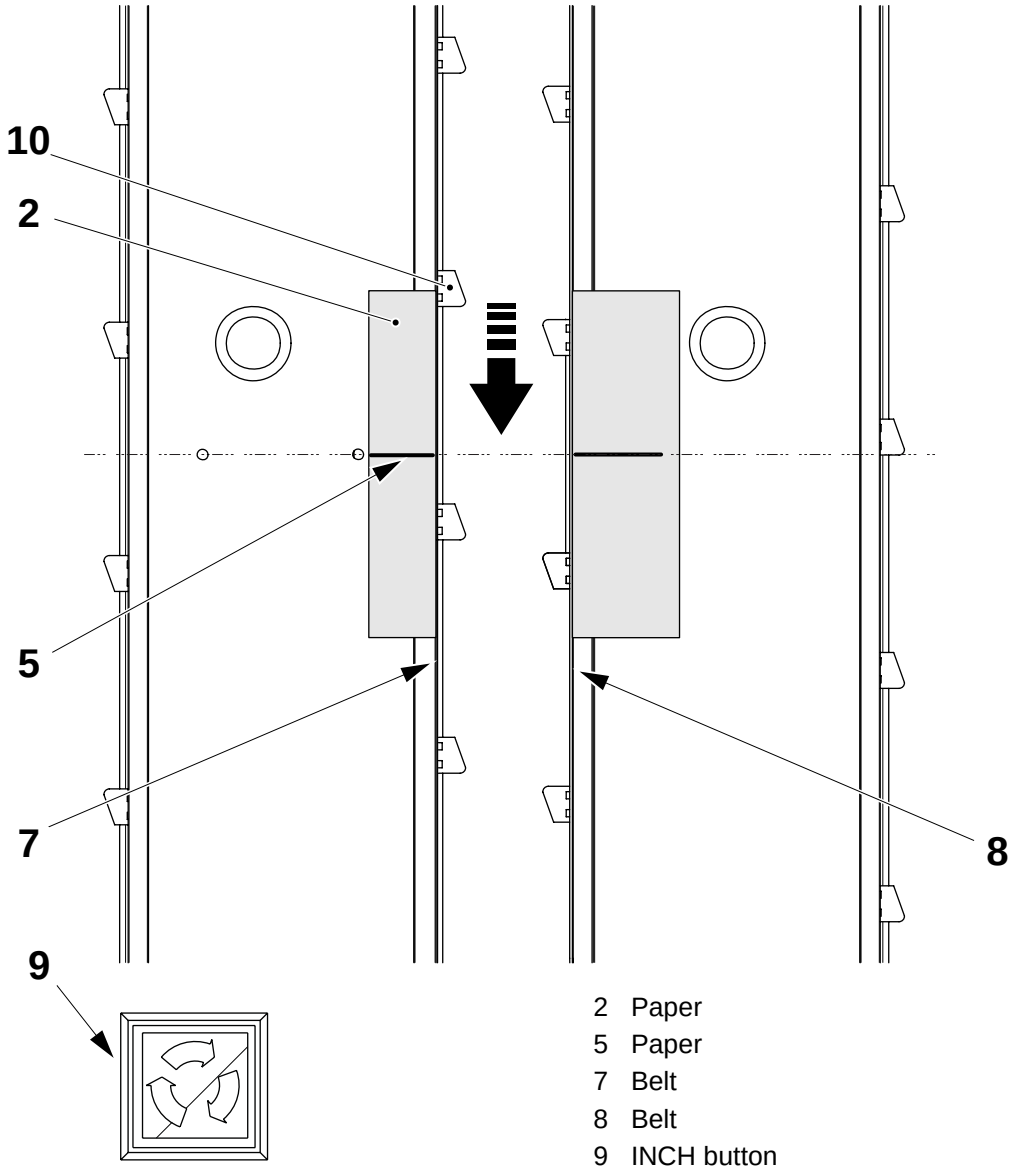

2 Paper
5 Paper
7 Belt
8 Belt
9 INCH button
10 Tooth

(Cont'd)

TechPub_2614345_0106 - 0203_3047106_01.fm

(Cont'd)

e) Stop inching when the working surface (11) of the tooth (10) is near to the line (5) but has not reached it.

f) Measure the distance **A** between the working surface (11) of the tooth (10) and the line (5). Note the distance **A** for use in the fine setting.

g) Continue with the fine setting, see Fine Setting Outer Package Positioner Zero.

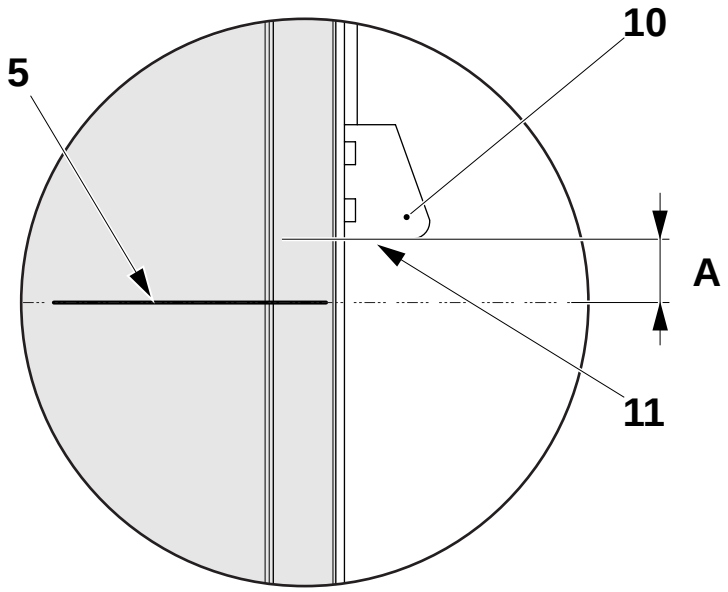

5 Line
10 Tooth
11 Working surface

TechPub_2614345_0106 - 0203_3047106_01.fm

(Cont'd)

(Cont'd)

Fine Setting Outer Package Positioner Zero

a) Touch the SETTINGS button (1).

b) Touch the OVERVIEW button (2) to display the OVERVIEW window.



1 SETTING button
2 OVERVIEW button

(Cont'd)

TechPub_2614345_0106 - 0203_3047106_01.fm

(Cont'd)

c) On the OVERVIEW window (3) touch the VIRTUAL MASTER AXIS ACTUAL POSITION window (4) and read the value in the angle value window (5). This value is the theoretical virtual axis value of the machine to which all motors are aligned. Note this value for use in step h).

d) Touch the EXIT button (6).

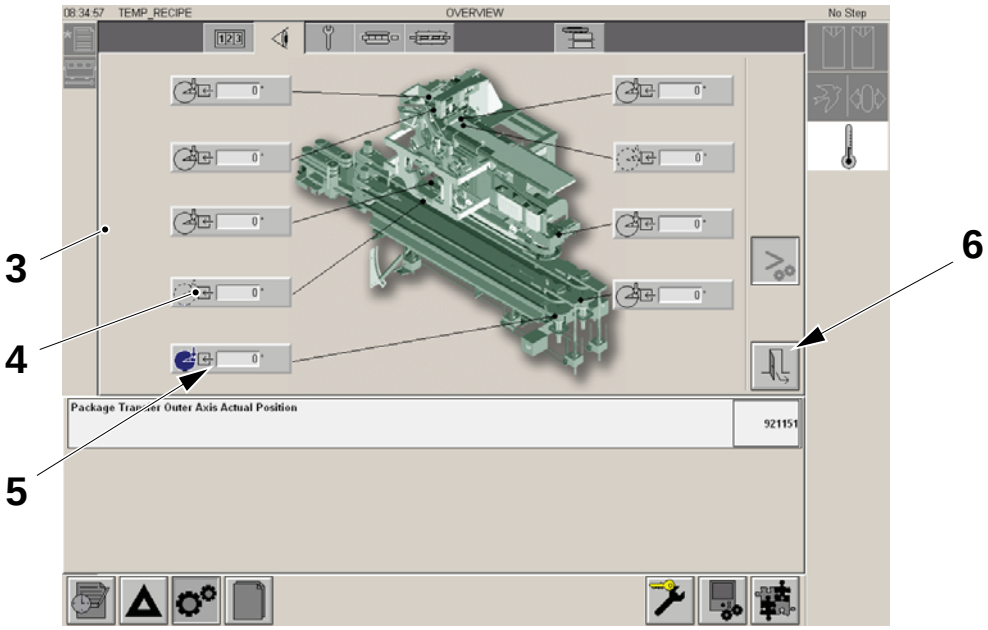

3 OVERVIEW window
4 VIRTUAL MASTER AXIS ACTUAL POSITION window
5 Angle value window
6 EXIT button

(Cont'd)

TechPub_2614345_0106 - 0203_3047106_01.fm

(Cont'd)

e) Step up the machine to STEP 2.

f) Touch the MAINTENANCE button (7) and then the SERVICE button (8).

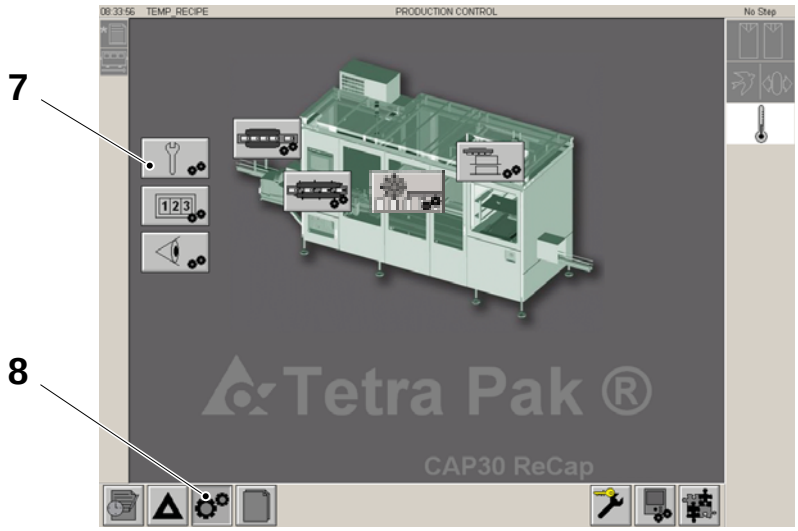

7 MAINTENANCE button
8 SERVICE button

(Cont'd)

TechPub_2614345_0106 - 0203_3047106_01.fm

(Cont'd)

Note! The INCHING window (9) allows the package positioner to be inched in increments of approximately 0.4 mm.

g) Touch the INCHING button (10) to display the INCHING window (9).

Note! The angle value displayed in the window (11) is the value to be changed to move the package positioner to the zero position.

The value should be increased to inch the package positioner with a conversion factor of 1° to 0.4 mm.

Note! Do not try to inch to the zero position in one go. It is better to repeat steps repeat steps i) to m) until the zero position is obtained.

h) From the value measured in the Coarse Setting Outer Package Positioner Zero step f), calculate the value to be entered in the window (11) to move the package positioner nearer to the zero position.

i) Touch the SETTING button (12) to modify the value in the window (11).

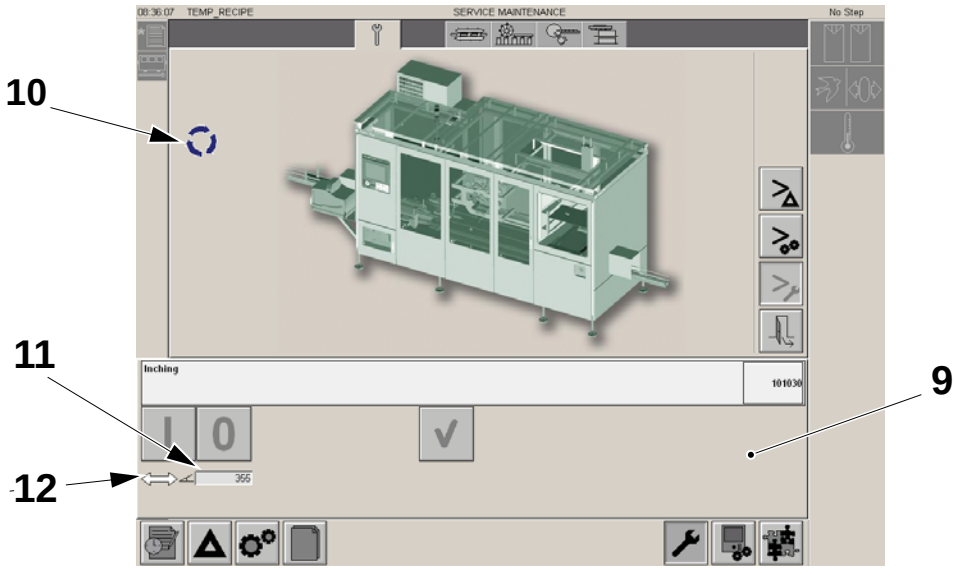

9 INCHING button
10 INCHING window
11 Window
12 SETTING button

(Cont'd)

TechPub_2614345_0106 - 0203_3047106_01.fm

(Cont'd)

j) Using the up and down buttons (13) set the number in the degrees window (14) to indicate the desired value.Touch the OK button (15).

k) Touch the ON button (16).

l) Touch the OK button (17) for at least three seconds. The background of the ON button (15) will go green and the package positioner will inch to the new position.

m) Touch the EXIT button (18) to leave.

n) Repeat the procedure from step f) of the Coarse Setting Outer Package Positioner Zero to step m) above until the working surface (19) of the belt tooth (20) is aligned with the line (21) on the paper. When it is, save the outer package positioner zero position in the memory, see Memorizing the Outer Package Positioner Zero Position.

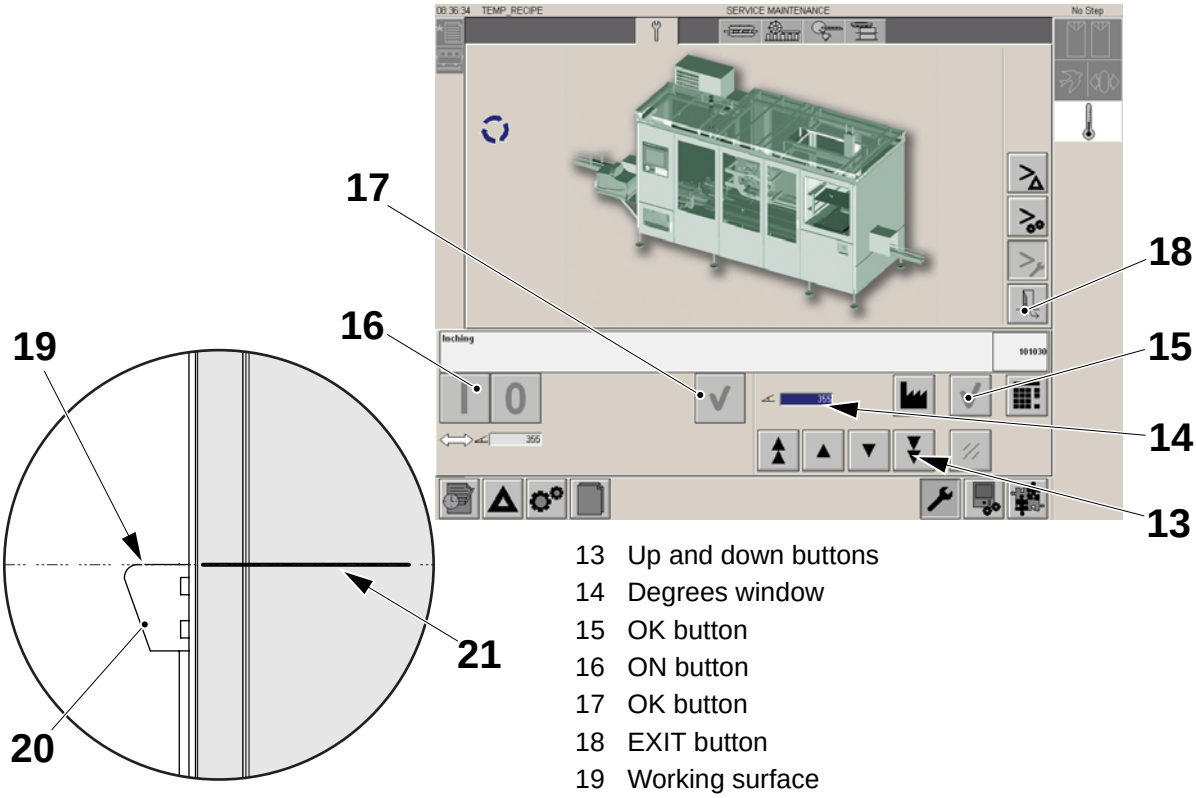

13 Up and down buttons
14 Degrees window
15 OK button
16 ON button
17 OK button
18 EXIT button
19 Working surface
20 Tooth
21 Line

(Cont'd)

TechPub_2614345_0106 - 0203_3047106_01.fm

(Cont'd)

Memorizing the Outer Package Positioner Zero Position

This procedure stores to memory the zero position of the Outer Package Positioner that has been located with the Coarse Setting Outer Package Positioner Zero and the Fine Setting Outer Package Positioner Zero procedures.

Note! On completion of this procedure, the package positioner will remain at the zero position until the machine is stepped up. When the machine is stepped up to STEP 2 or higher the package positioner will move to an offset position determined by the values entered for the Y-axis package dimension and Y-axis cap position, see 2.2.3-8 Set - Package Length Y and 2.2.3-6 Set - Cap Position Y Direction.

Note! Make sure the machine is at STEP 0.

a) Touch the SYSTEM SETUP button (1) to enter your login, see HMI User Management - Log On as a User.

b) Touch the MAINTENANCE button (2).

c) Touch the PACKAGE POSITIONER button (3).

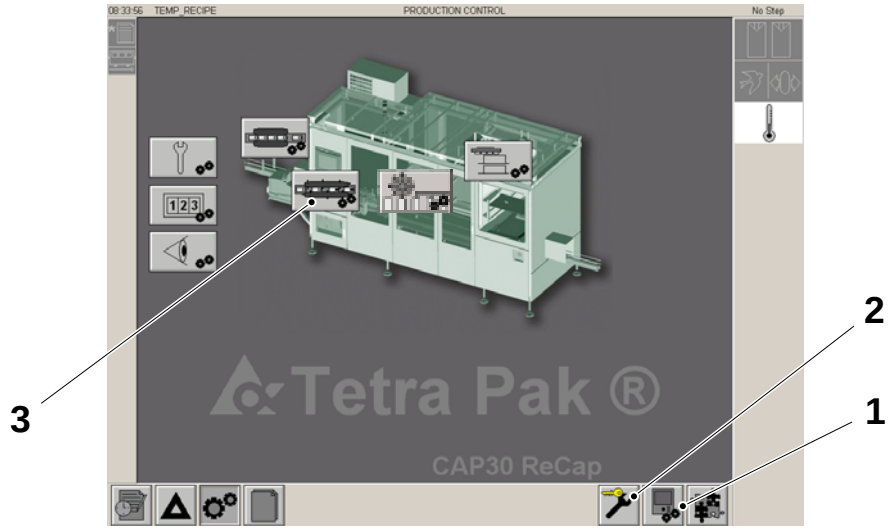

1 SYSTEM SETUP button
2 MAINTENANCE button
3 PACKAGE POSITIONER button

(Cont'd)

TechPub_2614345_0106 - 0203_3047106_01.fm

(Cont'd)

d) Touch the ZERO button (4) for the outer package positioner.

e) Touch the ON button (5).

f) Touch the OK button (6) for at least three seconds. The background of the ON button (5) will go green and the zero value for inner package positioner will be stored to memory.

g) Touch the EXIT button (7).

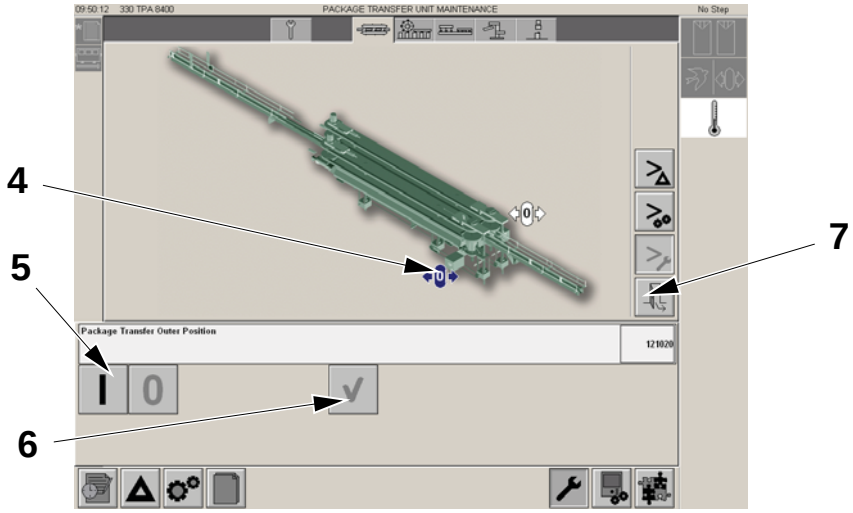

4 ZERO button
5 ON button
6 OK button
7 EXIT button

TechPub_2614345_0106 - 0203_3047106_01.fm

3 Push Down

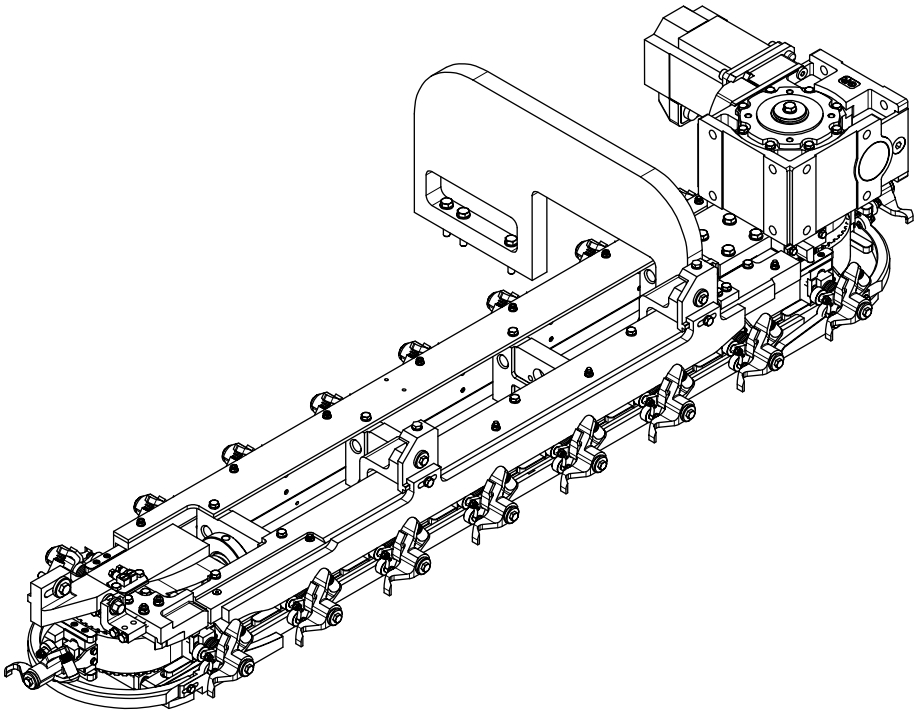

TechPub_2614345_0106 - 0302_3047109_01.fm

Push Down - Description

SPC Reference	662902-0100

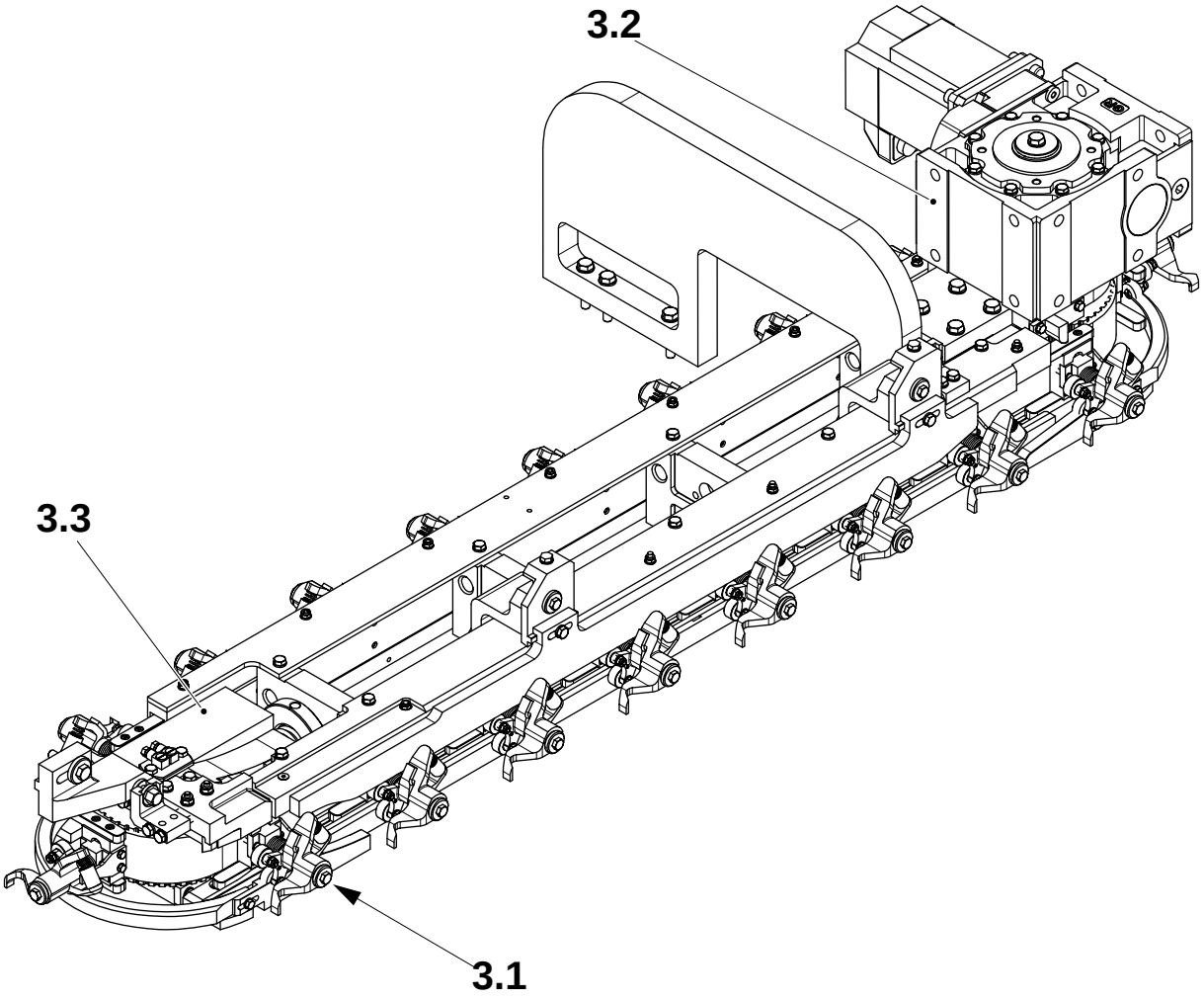

3.1 Cap Holders Group
3.2 Drive
3.3 Belt Stretcher

TechPub_2614345_0106 - 0302_3047109_01.fm

3.0 Functional Description . . . . . 3 - 5

3.0-1 Push Down . . . . . 3 - 6

3.0-1-1 Set X, Y, Z and Zero . . . . . 3 - 6

3.0-1-1-1 Set Y Cam . . . . . 3 - 6

3.0-1-1-2 Set Z Cam . . . . . 3 - 8

3.0-1-1-3 Set X Cam . . . . . 3 - 10

3.0-1-1-4 Set Zero . . . . . 3 - 12

3.1 Cap Holders Group . . . . . 3 - 15

3.1.1 Cap Holder . . . . . 3 - 15

3.1.1-1 Pressure Finger - Check Bushings and Rollers . . . . . 3 - 15

3.1.1-2 Pressure Finger - Change Bushings and Rollers . . . . . 3 - 16

3.2 Drive . . . . . 3 - 19

3.2.1 Timing Belt . . . . . 3 - 19

3.2.1-1 Timing Belt - Check . . . . . 3 - 19

3.2.1-2 Timing Belt - Change . . . . . 3 - 20

3.2.1-3 Timing Belt - Change Guides . . . . . 3 - 25

3.2.1-4 Drive Unit - Change Motor . . . . . 3 - 27

3.3 Belt Stretcher . . . . . 3 - 30

3.3.1 Belt Stretcher . . . . . 3 - 30

3.3.1-1 Belt Stretcher - Change Bearings . . . . . 3 - 30

3.3.1-2 Belt Stretcher - Set Belt Tension . . . . . 3 - 32

TechPub_2614345_0106 - 0302_3047109_01.fm

This page intentionally left blank

TechPub_2614345_0106 - 0302_3047109_01.fm

3.0 Functional Description

SPC Reference	662902-0100

The push down, located below the applicator unit, applies pressure to the top of each cap as it is applied to the top of a package and maintains that pressure until the package reaches the end of the package positioner.

To perform this action the cap holders (1), spaced equally around a moving belt, are moved into the holding position as they pass beneath a cam (2) and allowed to drop back into the free position at the end of the cam (2).

The belt is kept at the correct tension by the belt stretcher (3) and moved by the drive unit (4).

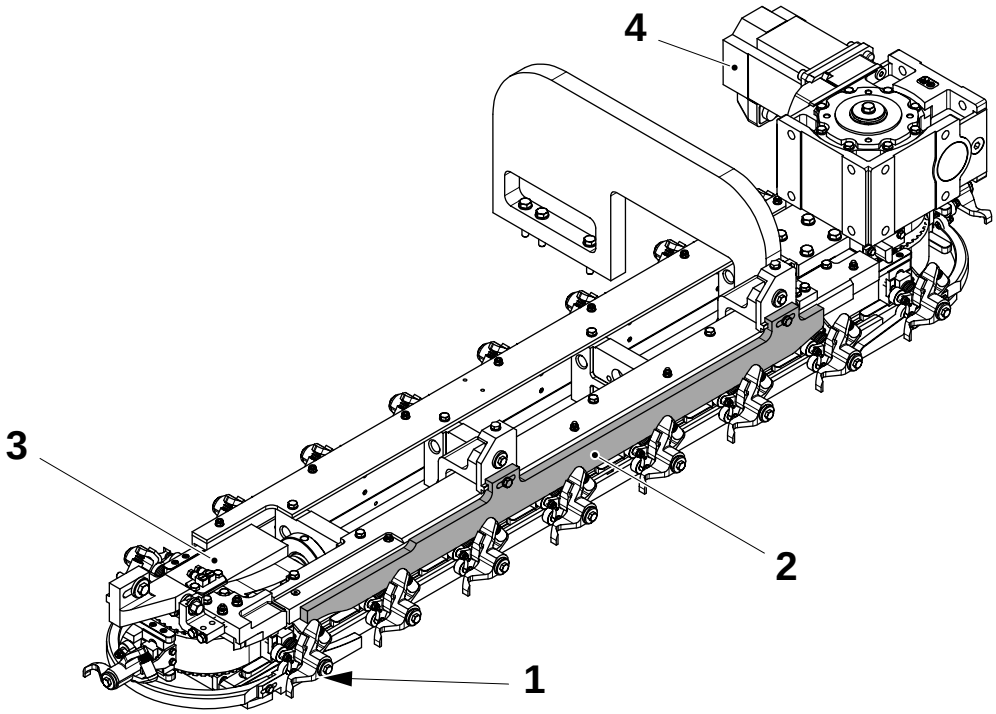

1 Cap holder
2 Cam
3 Belt stretcher
4 Drive unit

TechPub_2614345_0106 - 0303_3047110_01.fm

3.0-1 Push Down

SPC Reference	662902-0100

3.0-1-1 Set X, Y, Z and Zero

3.0-1-1-1 Set Y Cam

Machine Status	Mains Power OFF Air OFF
SPC Reference	662902-0100

a) Inch the machine to 350 degrees and check that the pushdown (1) in the cap holder is at its reference mark (2) on the cam (3).

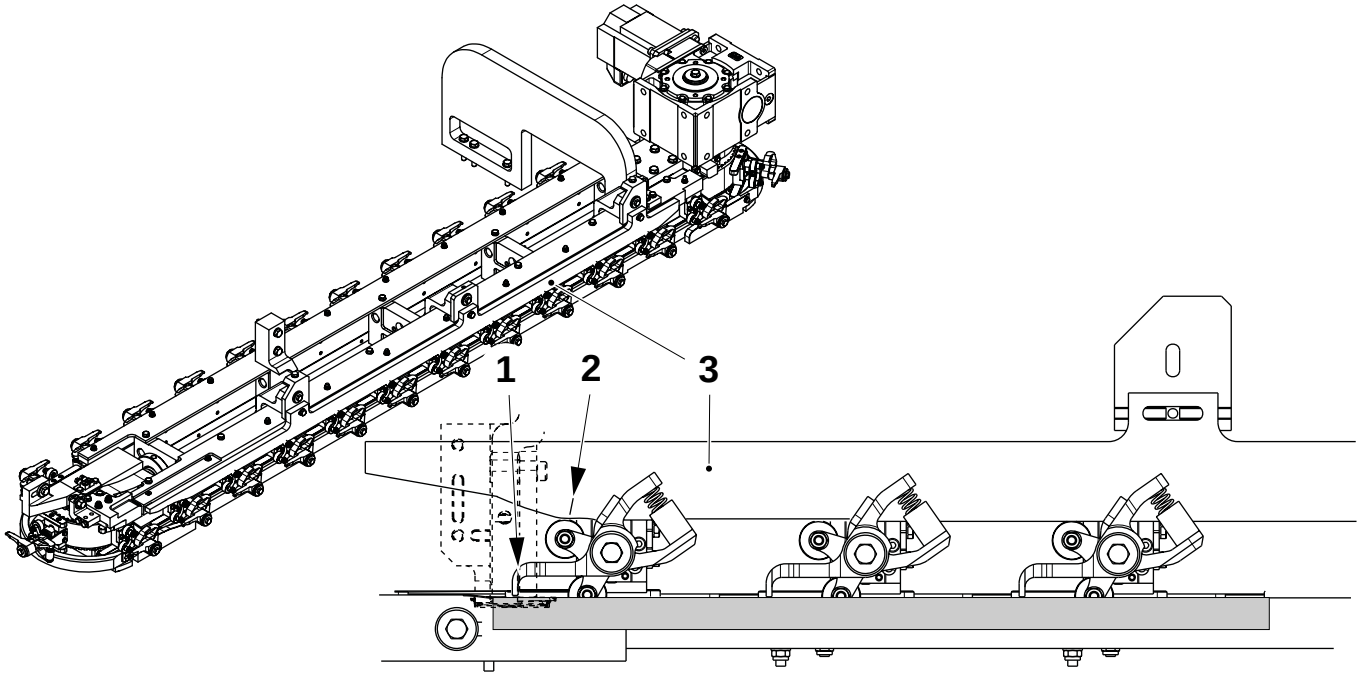

1 Pushdown
2 Reference mark
3 Cam

(Cont'd)

TechPub_2614345_0106 - 0303_3047110_01.fm

(Cont'd)

b) Place a straight edge (4) under the pushdowns (5), release the screws (6) and move the cam (3) until the pushdown (1) in the cap holder starts to touch the straight edge (4). Tighten the screws (6).

Note! Removing the cap holder (7) will help during this setting.

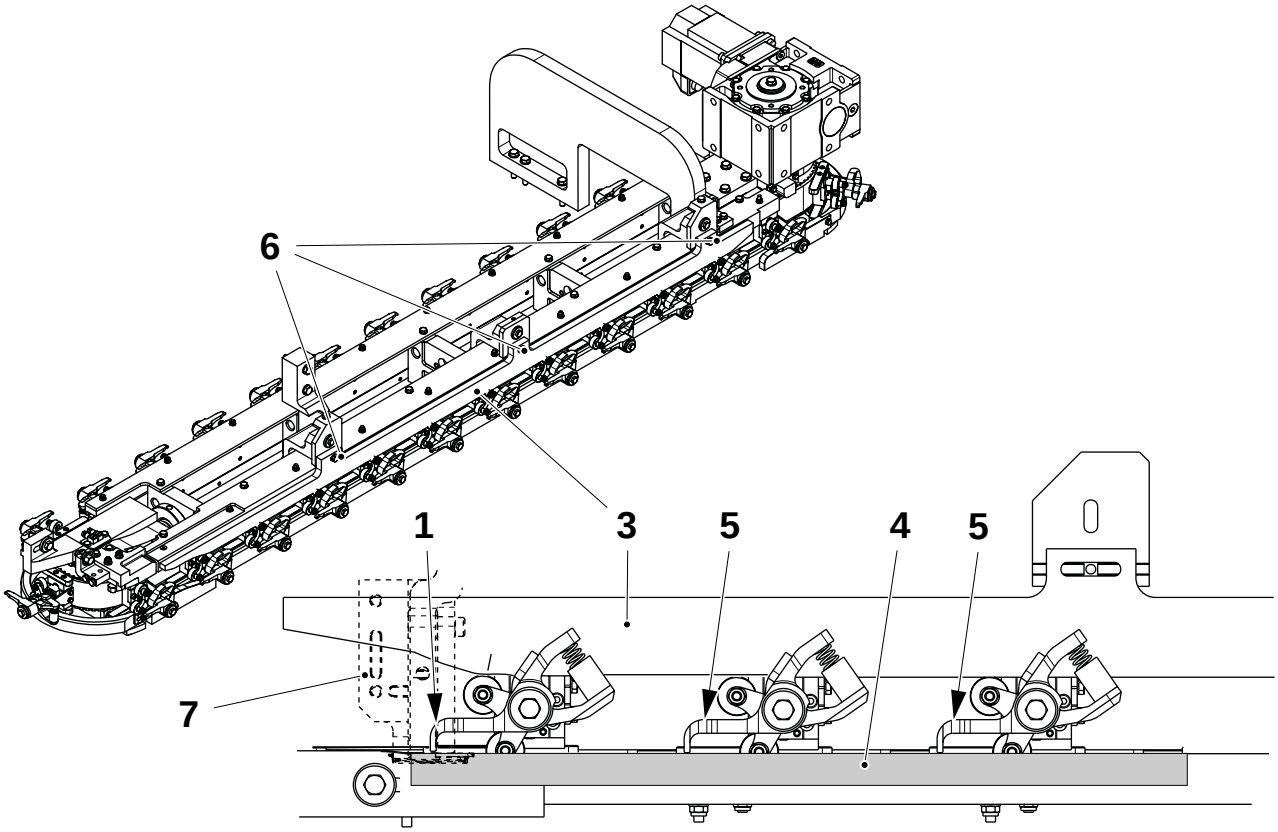

1 Pushdown
3 Cam
4 Straight edge
5 Pushdown
6 Screw
7 Cap holder

TechPub_2614345_0106 - 0303_3047110_01.fm

3.0-1-1-2 Set Z Cam

Machine Status	Mains Power OFF Air OFF
SPC Reference	662902-0100

Note! This adjustment is for the pushdown fingers to the applicator only.

CAUTION

Application pressure

Do not adjust the pushdown pressure here, see 4.1.1-1 Conveyor Support - Set.

(Cont'd)

TechPub_2614345_0106 - 0303_3047110_01.fm

(Cont'd)

a) Inch the machine to 350 degrees and check that the bottom of the cap holder puller (1) is the distance **A** from the bottom of the pushdown (2).

b) Release the screws (3) and turn the screws (4) to raise or lower the height of the push down (2).

Note! Keep the distance **B** equal at both ends of the pushdown.

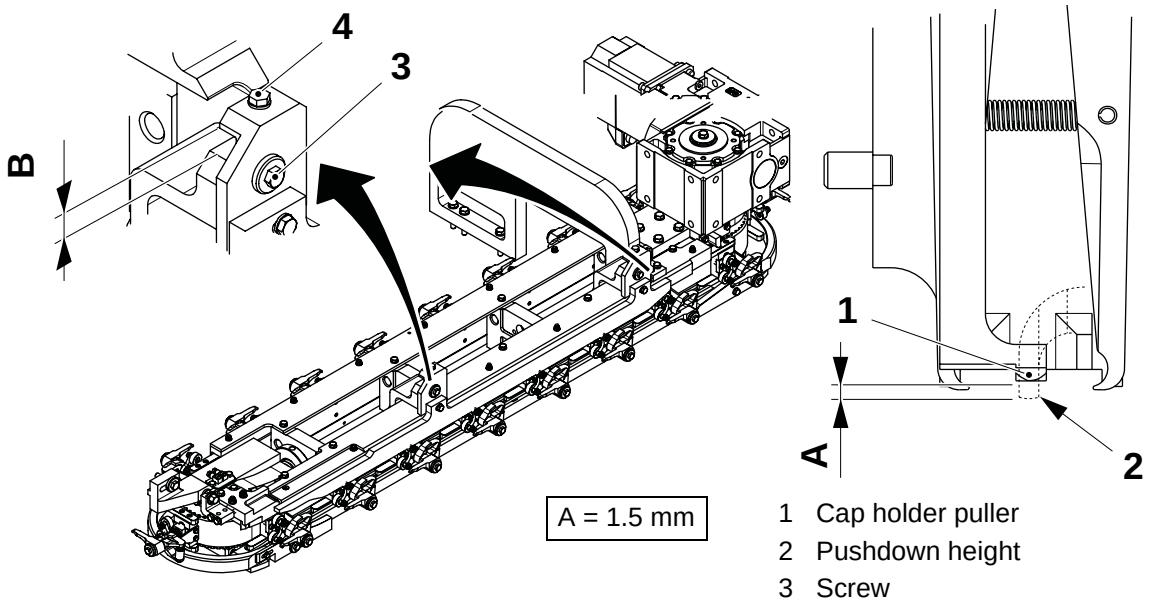

A = 1.5 mm

1 Cap holder puller
2 Pushdown height
3 Screw
4 Screw

TechPub_2614345_0106 - 0303_3047110_01.fm

3.0-1-1-3 Set X Cam

Machine Status	Mains Power OFF Air OFF
SPC Reference	662902-0100

a) Release the screws (1).

Note! Verify that the push down is in the middle of the cap. If not adjust the distance **A**, see next page.

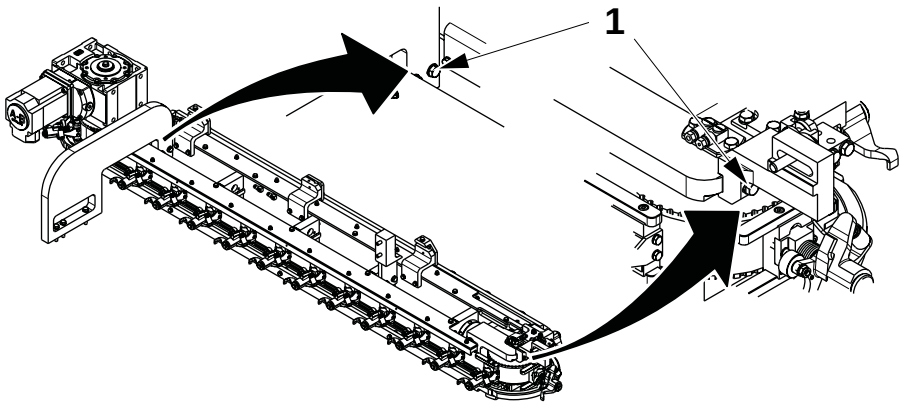

1 Screw

TechPub_2614345_0106 - 0303_3047110_01.fm

(Cont'd)

(Cont'd)

b) Turn the two screws (2) to move the pushdown (3) and set the distance **A**. Tighten the screws (1).

c) Check that the distance **B** is equal between the cam (4) and the belt (5) at both ends.

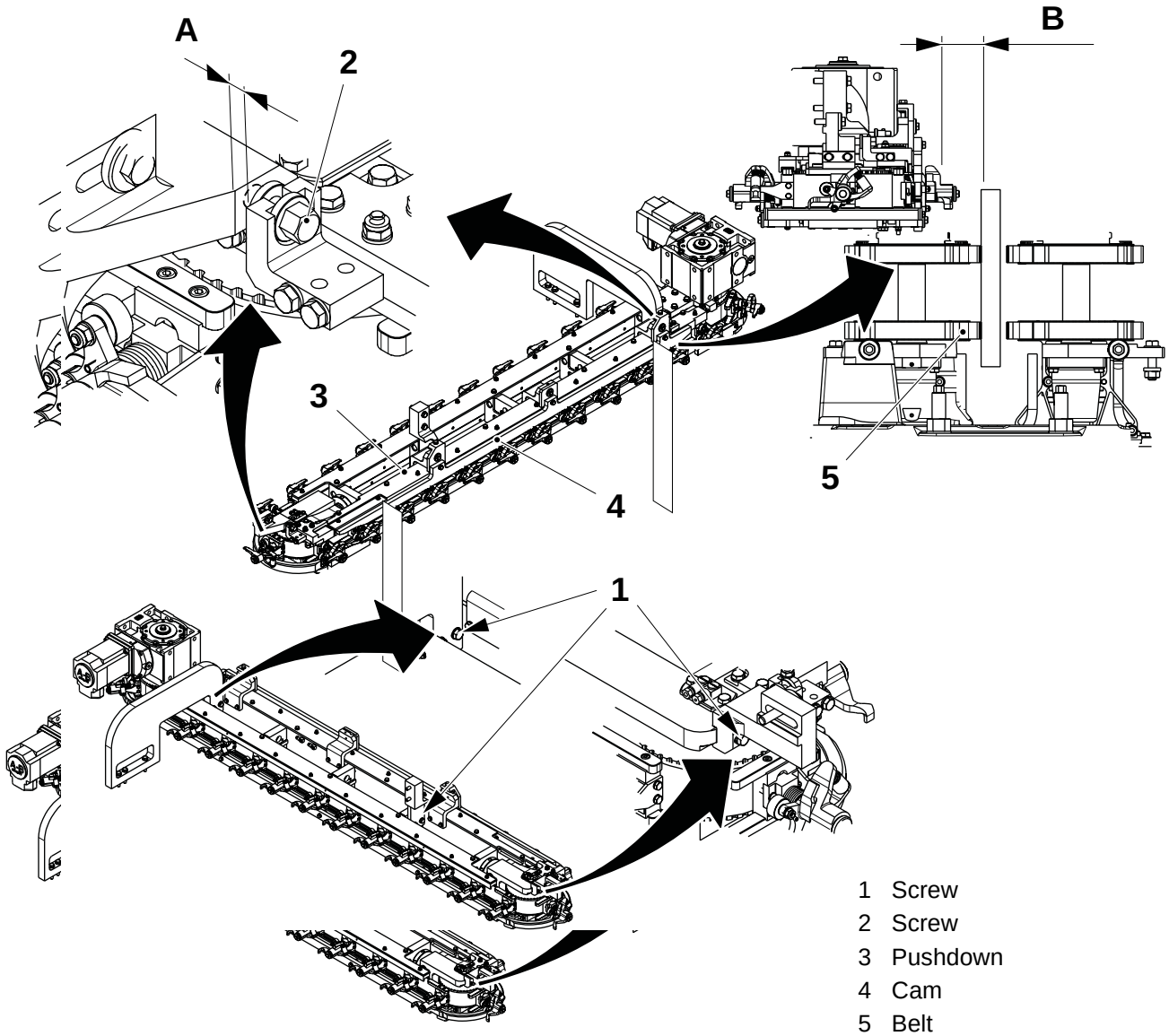

1 Screw
2 Screw
3 Pushdown
4 Cam
5 Belt

TechPub_2614345_0106 - 0303_3047110_01.fm

3.0-1-1-4 Set Zero

Machine Status	Mains Power OFF Air OFF
SPC Reference	662902-0100

a) Using a straight edge (1), align the leading edge of a pushdown holder (2) with the front surface of the zero tool (3).

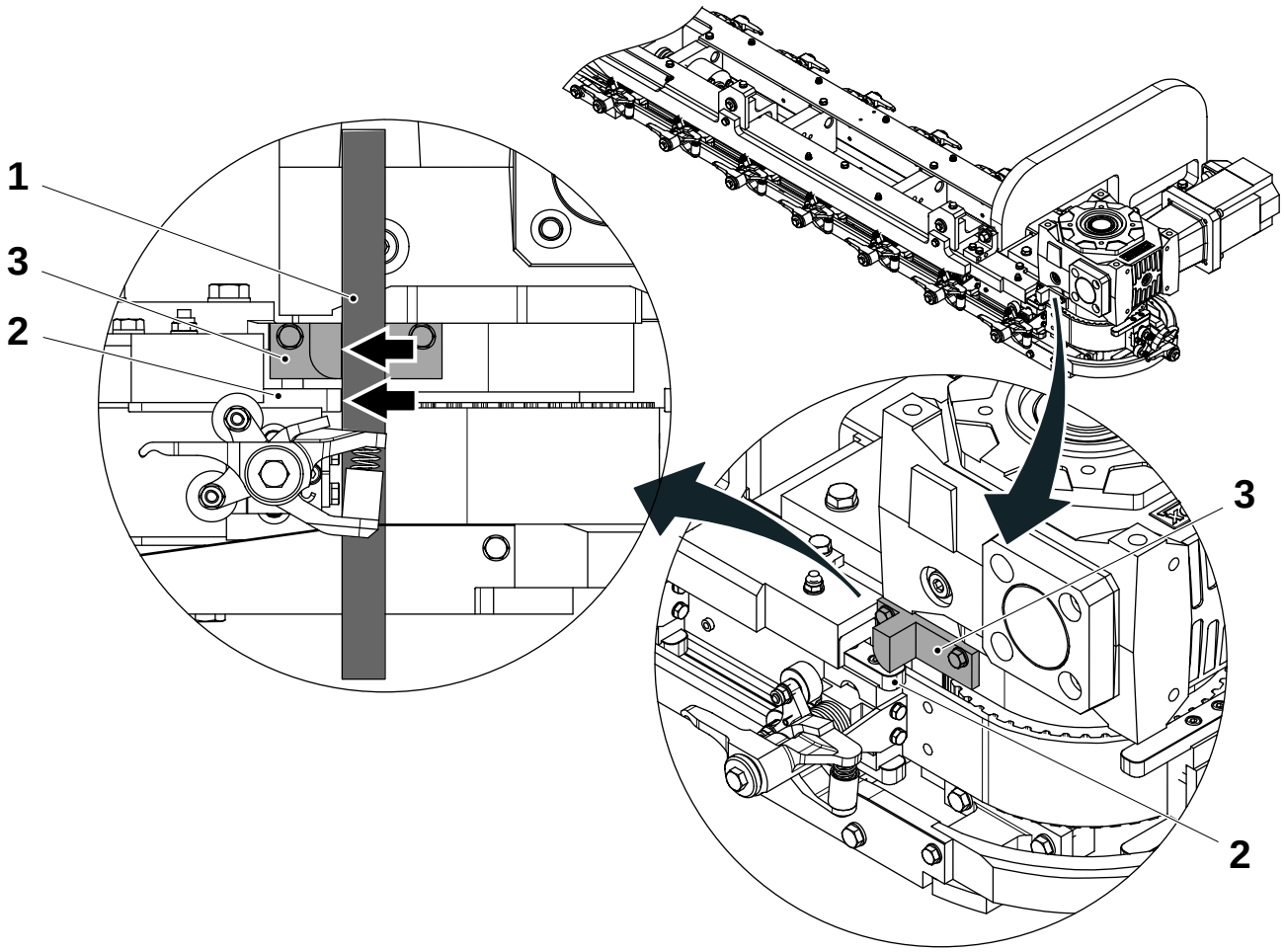

1 Straight edge
2 Pushdown holder
3 Zero tool

(Cont'd)

TechPub_2614345_0106 - 0303_3047110_01.fm

(Cont'd)

b) Turn the main power on.

c) Touch the SYSTEM SETUP button (4) and login see, HMI User Management - Log On as a User.

d) Touch the MAINTENANCE button (5).

e) Touch the APPLICATOR UNIT button (6).

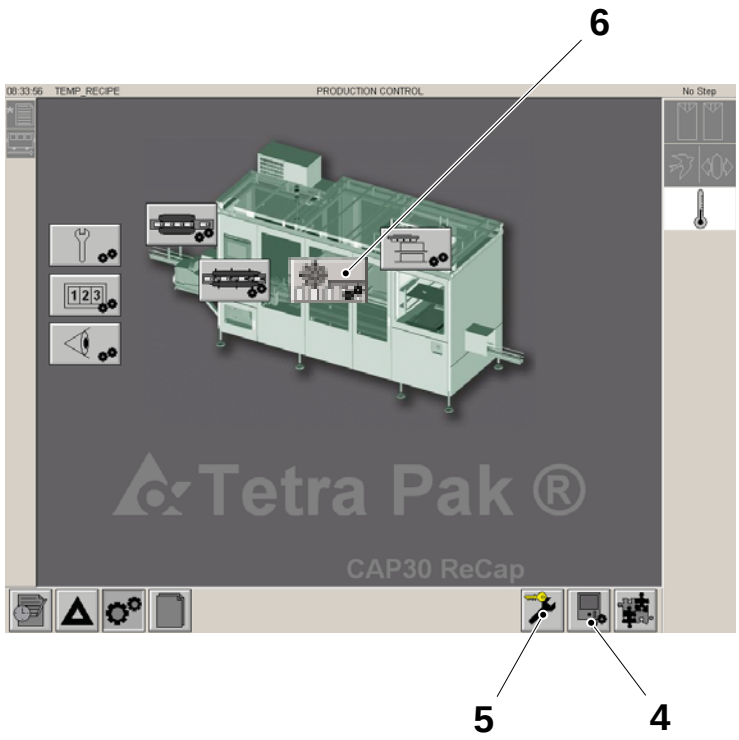

4 SYSTEM SETUP button
5 MAINTENANCE button
6 APPLICATOR UNIT button

(Cont'd)

TechPub_2614345_0106 - 0303_3047110_01.fm

(Cont'd)

f) Touch the ZERO button (7)

g) Touch the ON button (8).

h) Touch the OK button (9) for three seconds. The background of the ON button (8) should go green.

i) Touch the EXIT button (10).

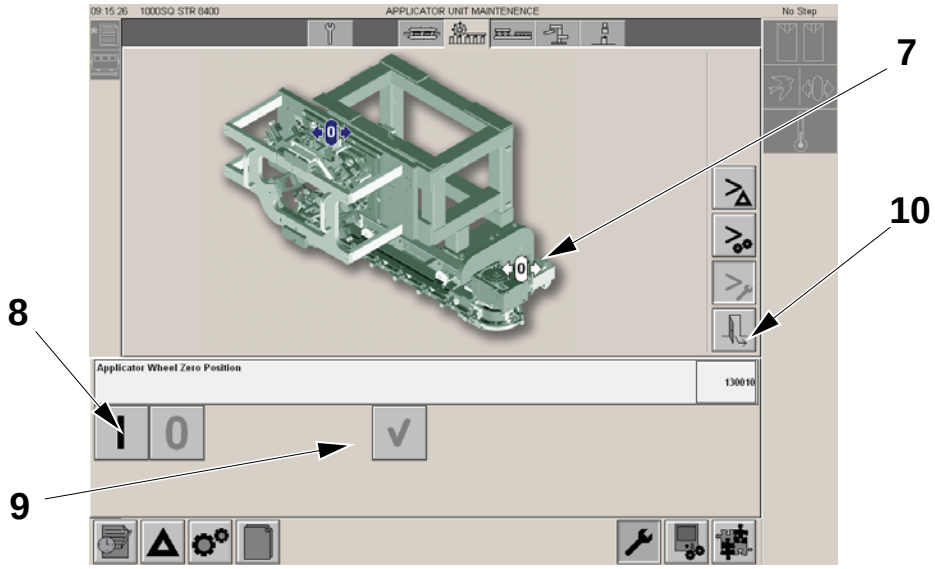

7 ZERO button
8 ON button
9 OK button
10 EXIT button

TechPub_2614345_0106 - 0303_3047110_01.fm

3.1 Cap Holders Group

SPC Reference	2802648-0100

3.1.1 Cap Holder

3.1.1-1 Pressure Finger - Check Bushings and Rollers

Machine Status	Mains Power OFF
SPC Reference	2751667-0100

WARNING
Risk of burns.
Nearby components may be hot.

a) Check the bushings (1) and the rollers (2) of the cap holder for signs of wear or damage, see 3.1.1-2 Pressure Finger - Change Bushings and Rollers.

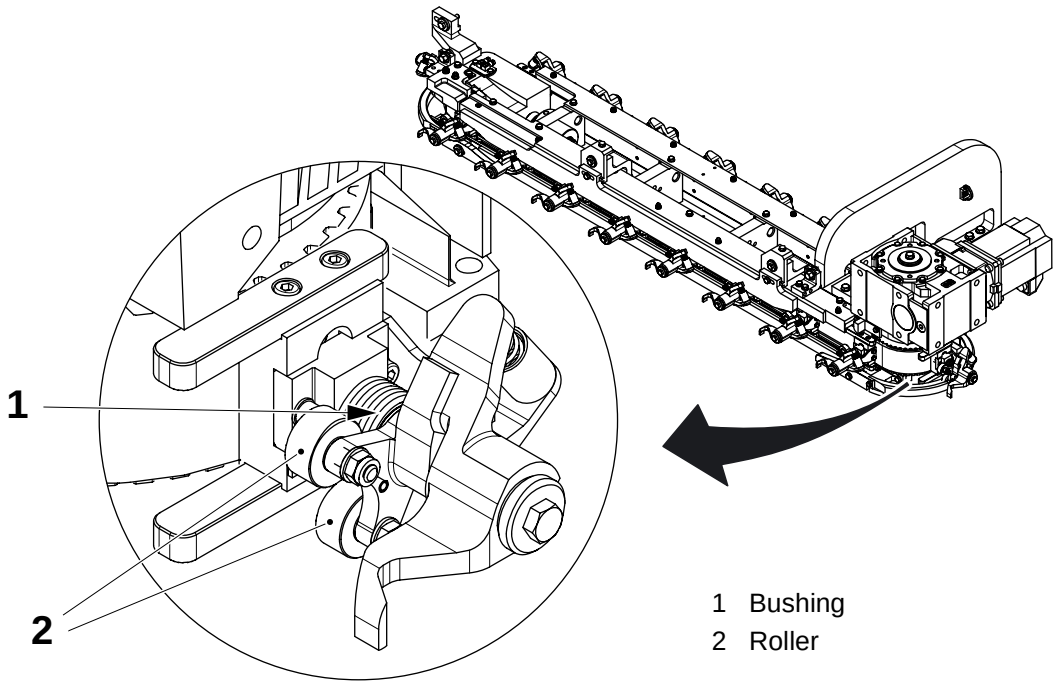

1 Bushing
2 Roller

TechPub_2614345_0106 - 0303_3047110_01.fm

3.1.1-2 Pressure Finger - Change Bushings and Rollers

Machine Status	Mains Power OFF
SPC Reference	2751667-0100

WARNING

Risk of burns.

Nearby components may be hot.

a) Remove the screw (1).

b) Remove the arms (2) and (3).

c) Change the bushings (4) and (5).

d) Change the rollers (6).

e) Assemble in the reverse order.

f) Repeat the procedure for the other cap holders.

Note! Valid for machines from T Order; T75721/00001 to T75721/00045.

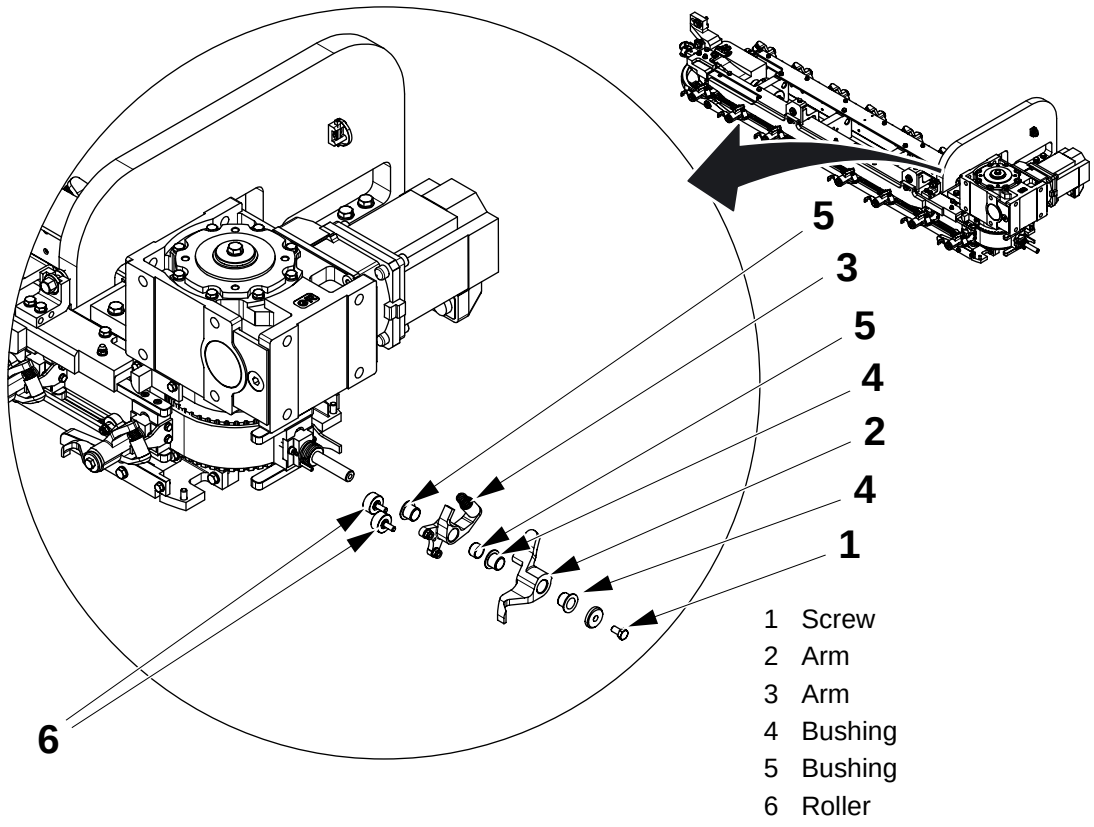

TechPub_2614345_0106 - 0303_3047110_01.fm

(Cont'd)

(Cont'd)

Note! Valid for machines from T Order; T75721/00045.

WARNING

Risk of burns.
Nearby components may be hot.

a) Remove the screw (1), the washer (2) and the arm (3), collecting the sleeve (4) and the spring (5).

b) Change the bushings (6).

c) Remove the arm (7), the bushing (8) and the busing (9).

Note! Items (3), (5) and (7) and cap dependant.

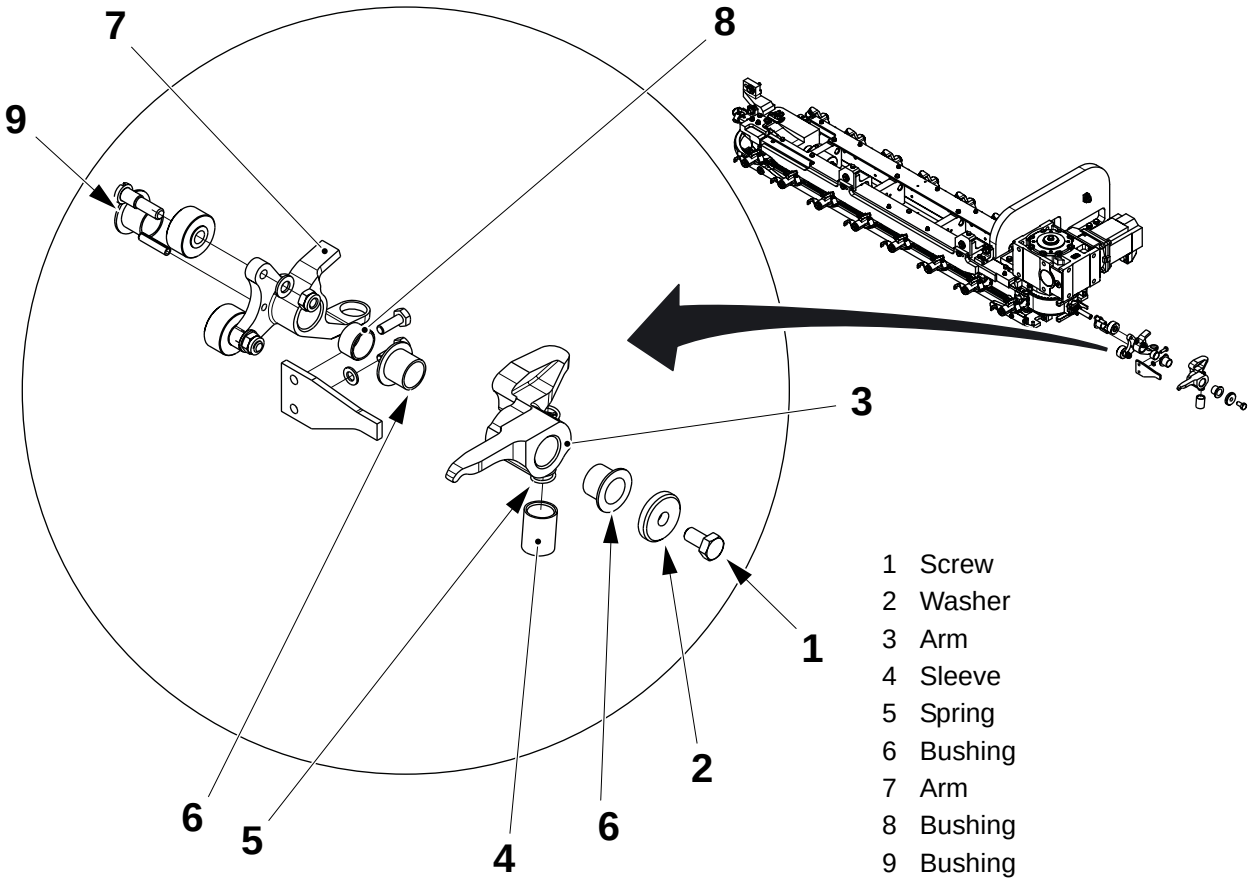

1 Screw
2 Washer
3 Arm
4 Sleeve
5 Spring
6 Bushing
7 Arm
8 Bushing
9 Bushing

(Cont'd)

TechPub_2614345_0106 - 0303_3047110_01.fm

(Cont'd)

d) Remove the nut (10), the washer (11), the shaft (12) and the rollers (13).

e) Only remove the spring retaining pin (14), the screw (15), the washer (16) and the bracket (17) if necessary.

Note! The bracket (17) mounts onto the belt.

f) Assemble in the reverse order.

g) Repeat the procedure for the other cap holders.

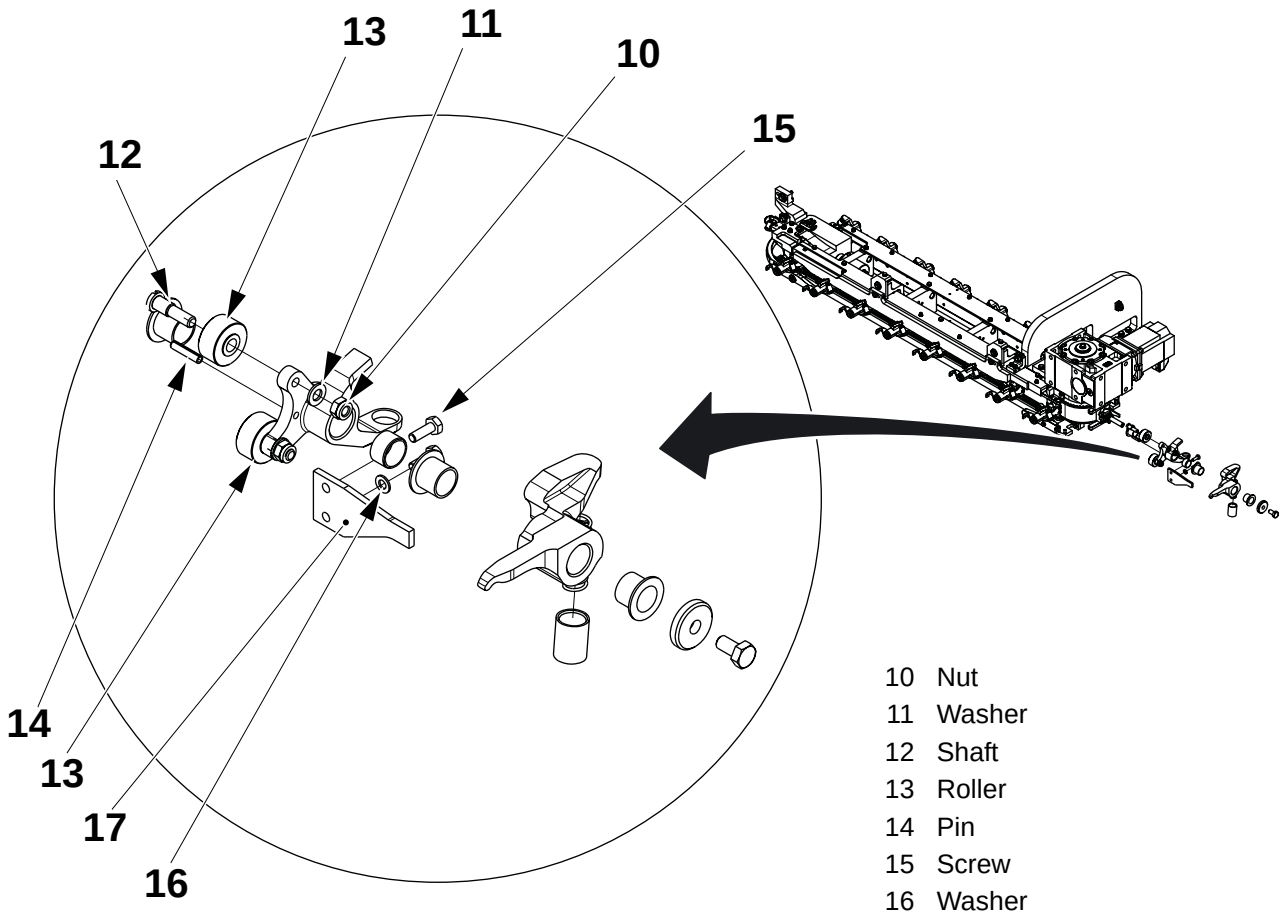

10 Nut
11 Washer
12 Shaft
13 Roller
14 Pin
15 Screw
16 Washer
17 Bracket

TechPub_2614345_0106 - 0303_3047110_01.fm

3.2 Drive

SPC Reference	2802647-0100

3.2.1 Timing Belt

3.2.1-1 Timing Belt - Check

Machine Status	Mains Power OFF
SPC Reference	2802647-0100

WARNING
Risk of burns.
Nearby components may be hot.

Check the belt (1) for signs of wear or damage. If necessary, change the belt, see 3.2.1-2 Timing Belt - Change.

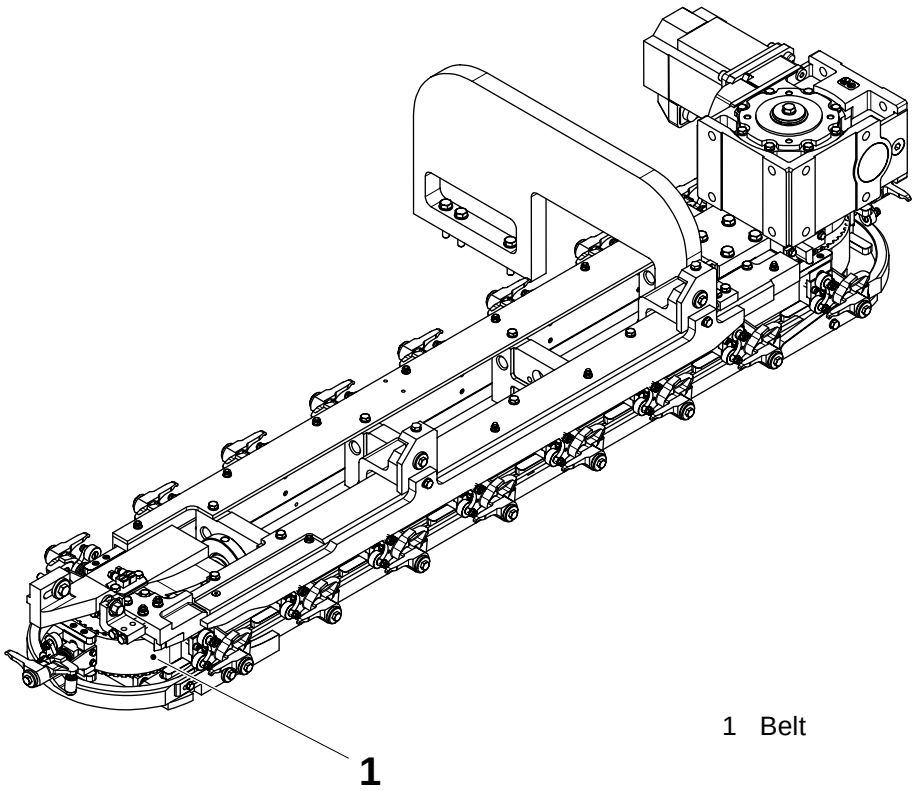

1 Belt

TechPub_2614345_0106 - 0302_3047111_01.fm

3.2.1-2 Timing Belt - Change

Machine Status	Mains Power OFF
SPC Reference	2802647-0100

WARNING

Risk of burns.

Nearby components may be hot.

a) Disconnect the oil pipes (1) and (2) at the positions shown.

Note! Protect the surface of the package transfer with packaging material.

b) Disconnect the electrical connectors from the motor connector block (3).

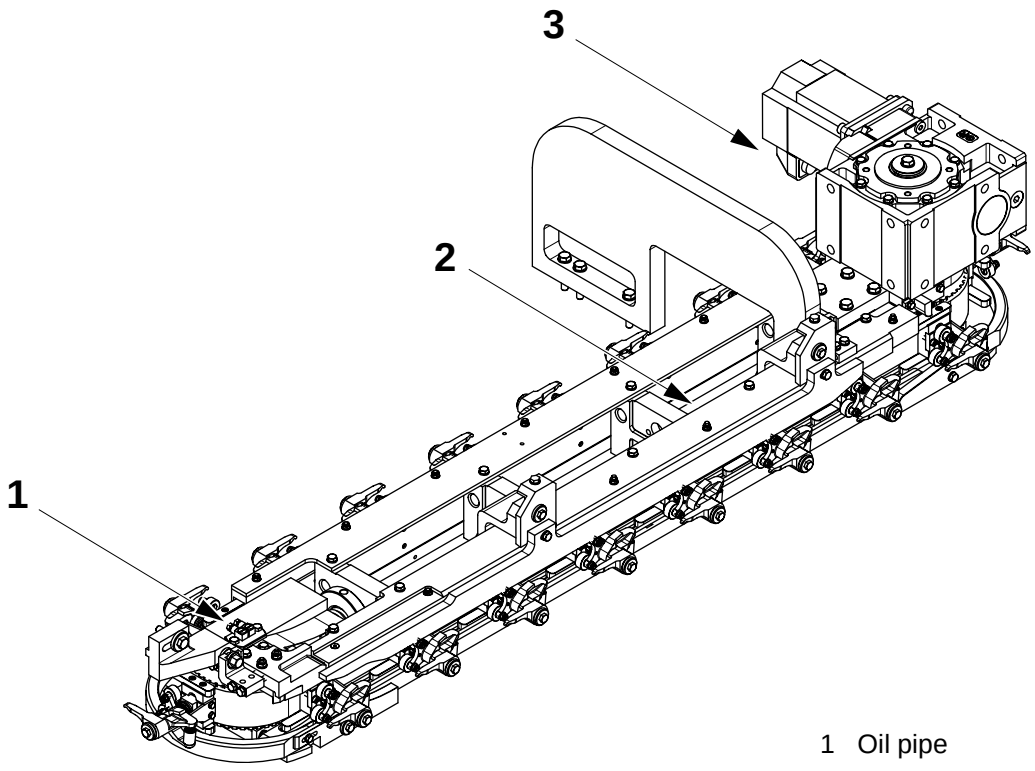

1 Oil pipe
2 Oil pipe
3 Connector block

TechPub_2614345_0106 - 0302_3047111_01.fm

(Cont'd)

(Cont'd)

c) Remove the screws (4) and (5).

d) Remove the push down (6) from below the cap applicator unit (7).

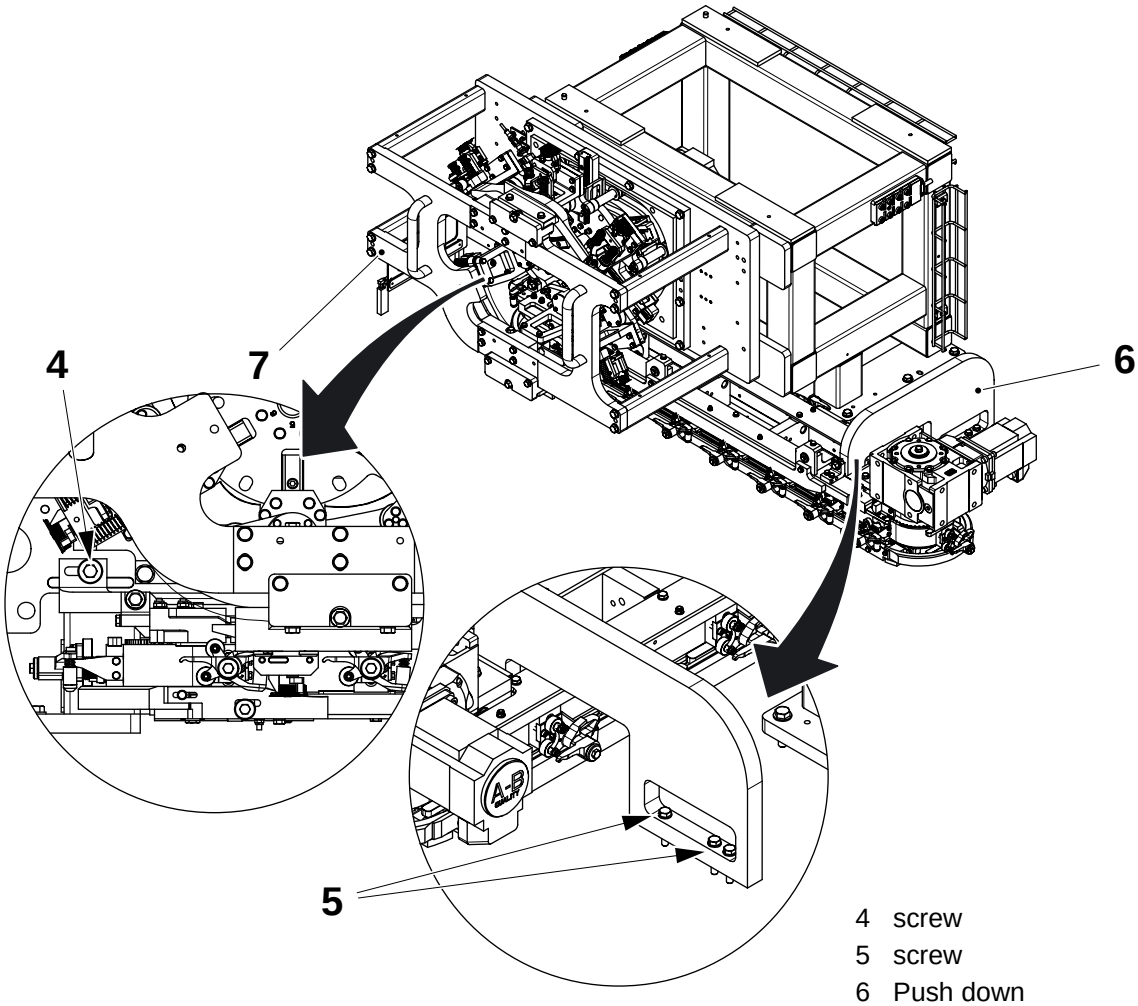

4 screw
5 screw
6 Push down
7 Cap applicator unit

(Cont'd)

TechPub_2614345_0106 - 0302_3047111_01.fm

(Cont'd)

e) At the end of the push down, loosen the nut (8), the screws (9) and turn the flange (10) to reduce the tension applied by the belt stretcher (11).

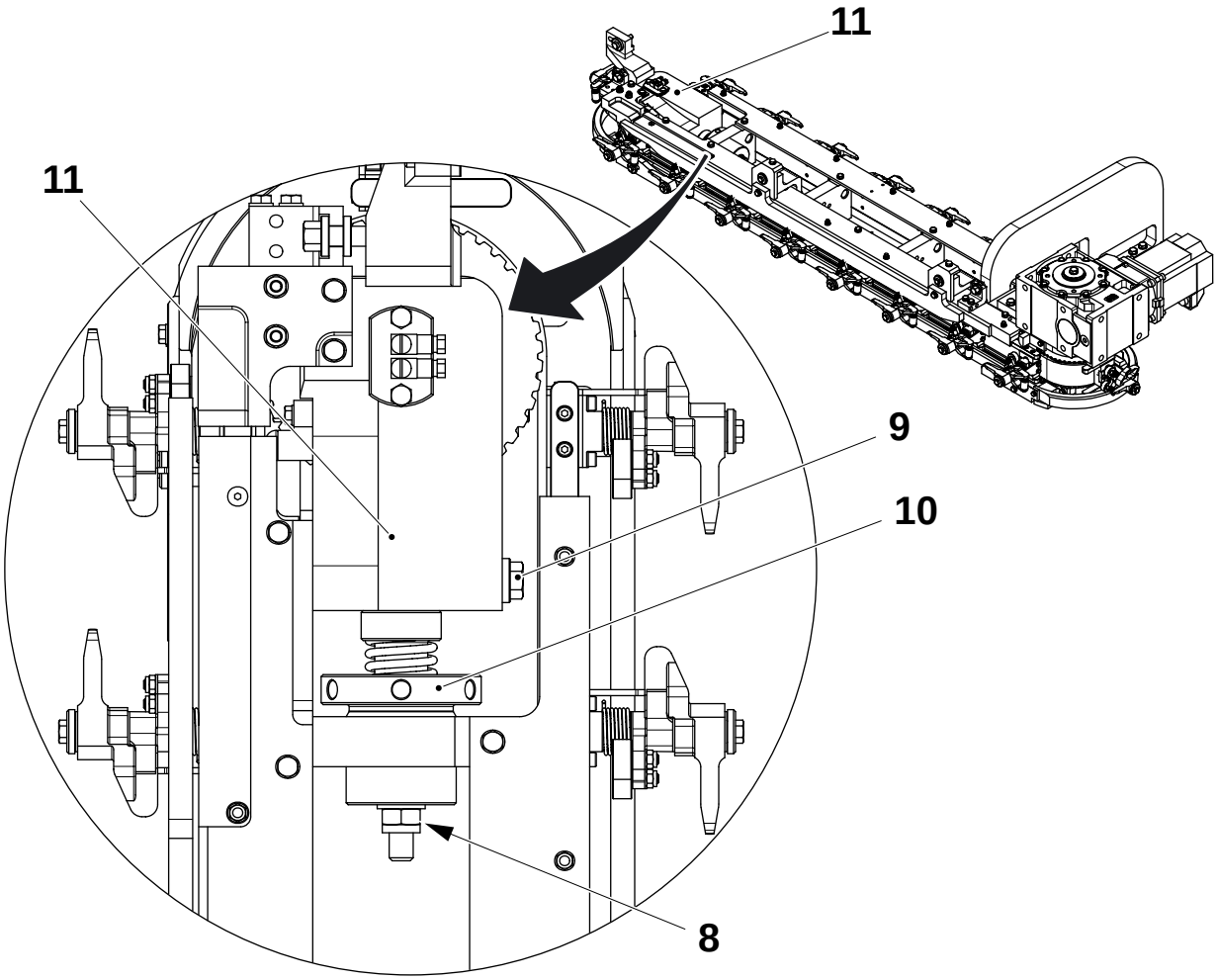

8 Nut
9 Screw
10 Flange
11 Belt stretcher

(Cont'd)

TechPub_2614345_0106 - 0302_3047111_01.fm

(Cont'd)

f) At the four corners of the unit, remove the screws (12) from the brackets (13).

g) Remove the two rows of screws (14) and (15) and separate the belt section of the unit (16) from the drive unit/frame section (17).

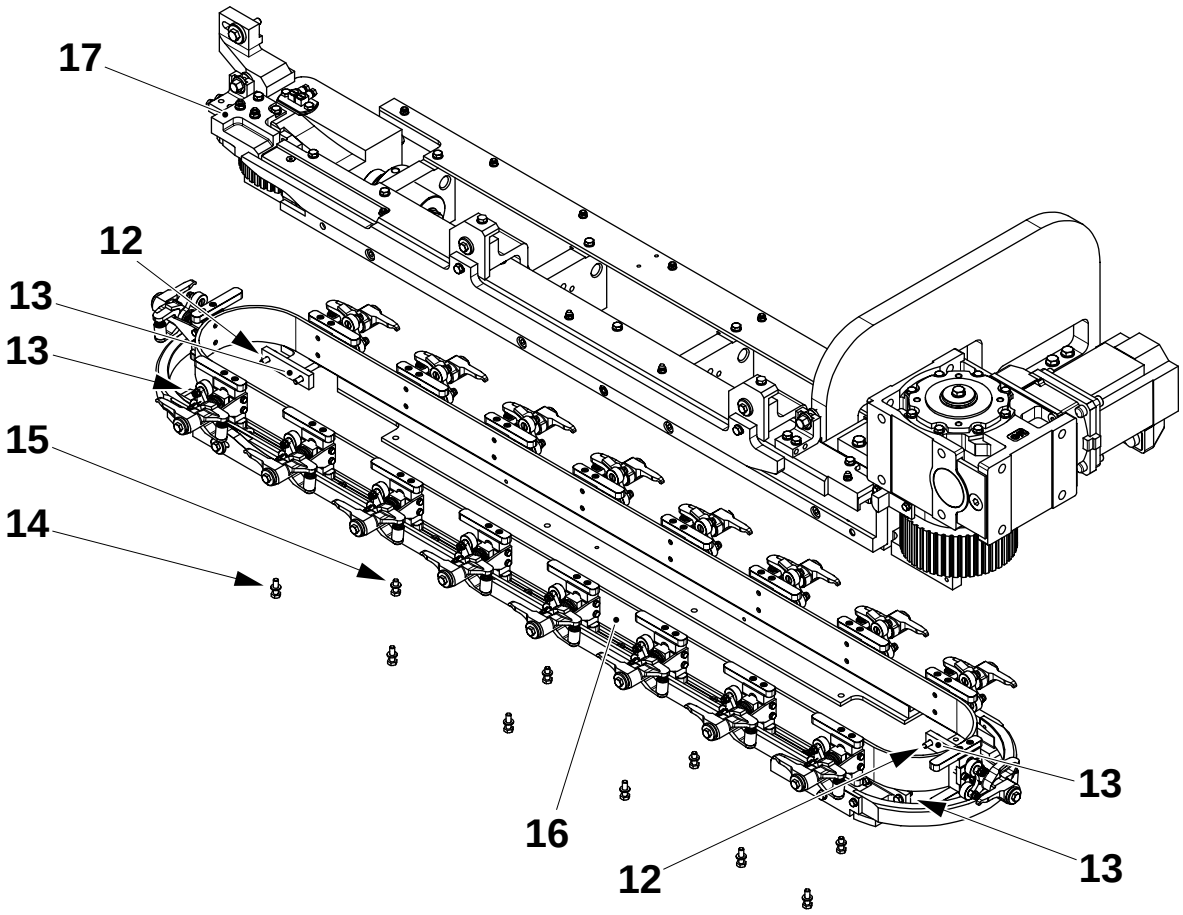

12 Screw
13 Bracket
14 Row of screws
15 Row of screws
16 Belt section
17 Drive unit/frame section

(Cont'd)

TechPub_2614345_0106 - 0302_3047111_01.fm

(Cont'd)

h) Remove the belt (18) from the guide section (19). Change the belt.

i) Assemble in the reverse order.

j) Set the belt tension see, 3.3.1-2 Belt Stretcher - Set Belt Tension.

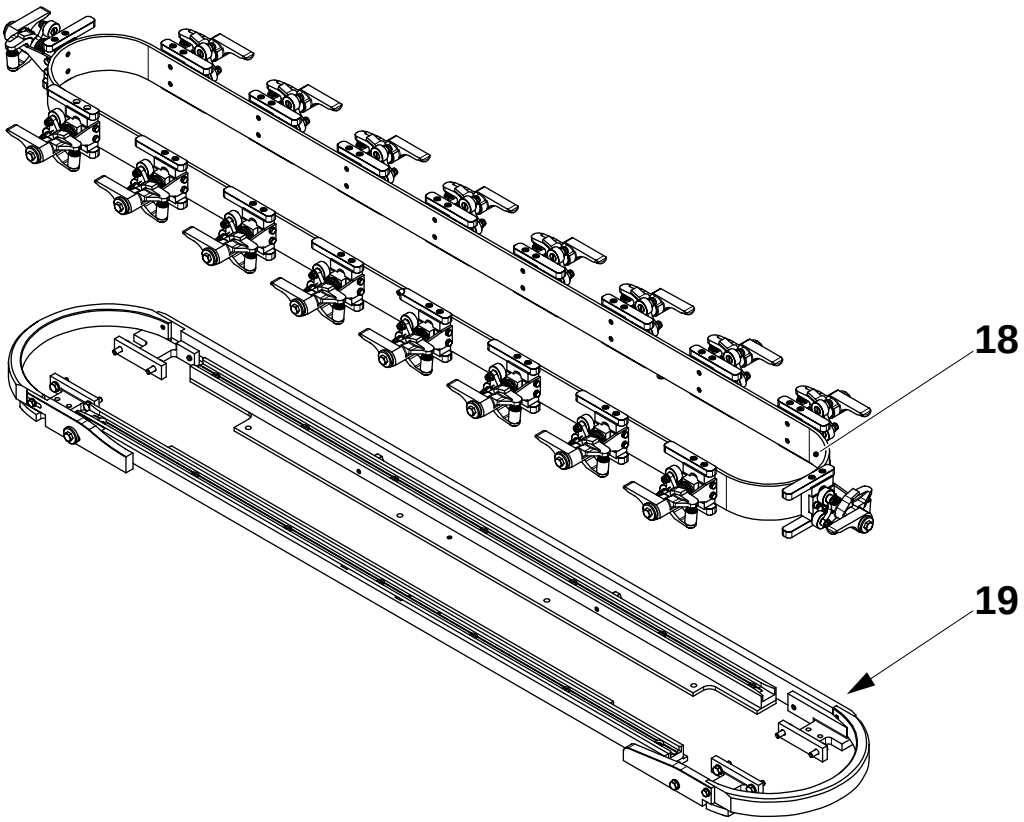

18 Belt
19 Guide section

TechPub_2614345_0106 - 0302_3047111_01.fm

3.2.1-3 Timing Belt - Change Guides

Machine Status	Mains Power OFF
SPC Reference	2802647-0100

WARNING

Risk of burns.

Nearby components may be hot.

a) Remove the belts, see 3.2.1-2 Timing Belt - Change.

b) For the lower front guide (1), remove the row of screws (2) and change the guide (1).

c) For the lower rear guide (3), remove the row of screws (4) and the cam (5).

d) Remove the row of screws (6) and change the guide (3).

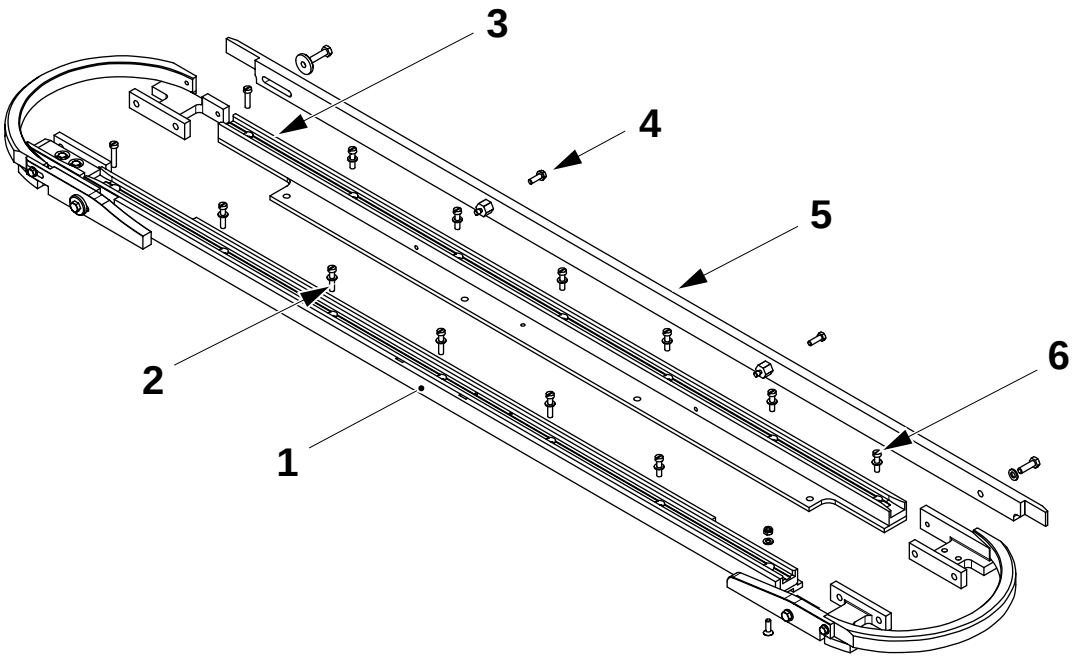

1 Lower front guide
2 Row of screws
3 Lower rear guide
4 Row of screws
5 Cam
6 Row of screws

(Cont'd)

TechPub_2614345_0106 - 0302_3047111_01.fm

(Cont'd)

e) For the upper front guide (7), remove the row of screws (8) and change the guide (7).

f) For the upper rear guide (9), remove the row of screws (10) and change the guide (9).

g) Assemble in the reverse order.

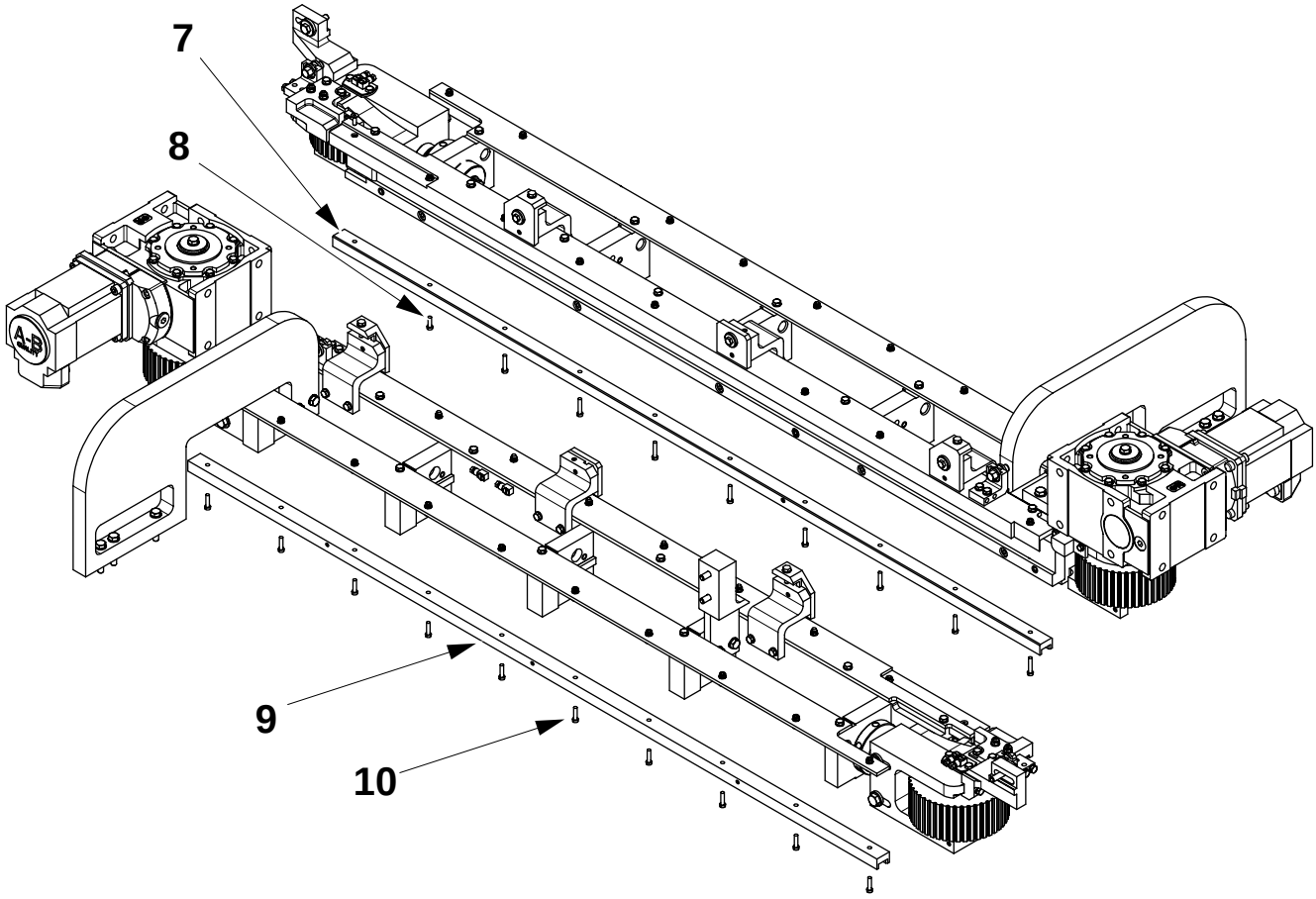

7 Upper front guide
8 Row of screws
9 Upper rear guide
10 Row of screws

TechPub_2614345_0106 - 0302_3047111_01.fm

3.2.1-4 Drive Unit - Change Motor

Machine Status	Mains Power OFF
SPC Reference	2802647-0100

Separation

There may or may not be a plug (1).

The access hole (2) may be in a different location or more than one.

There is one screw (3) in the clamp (4).

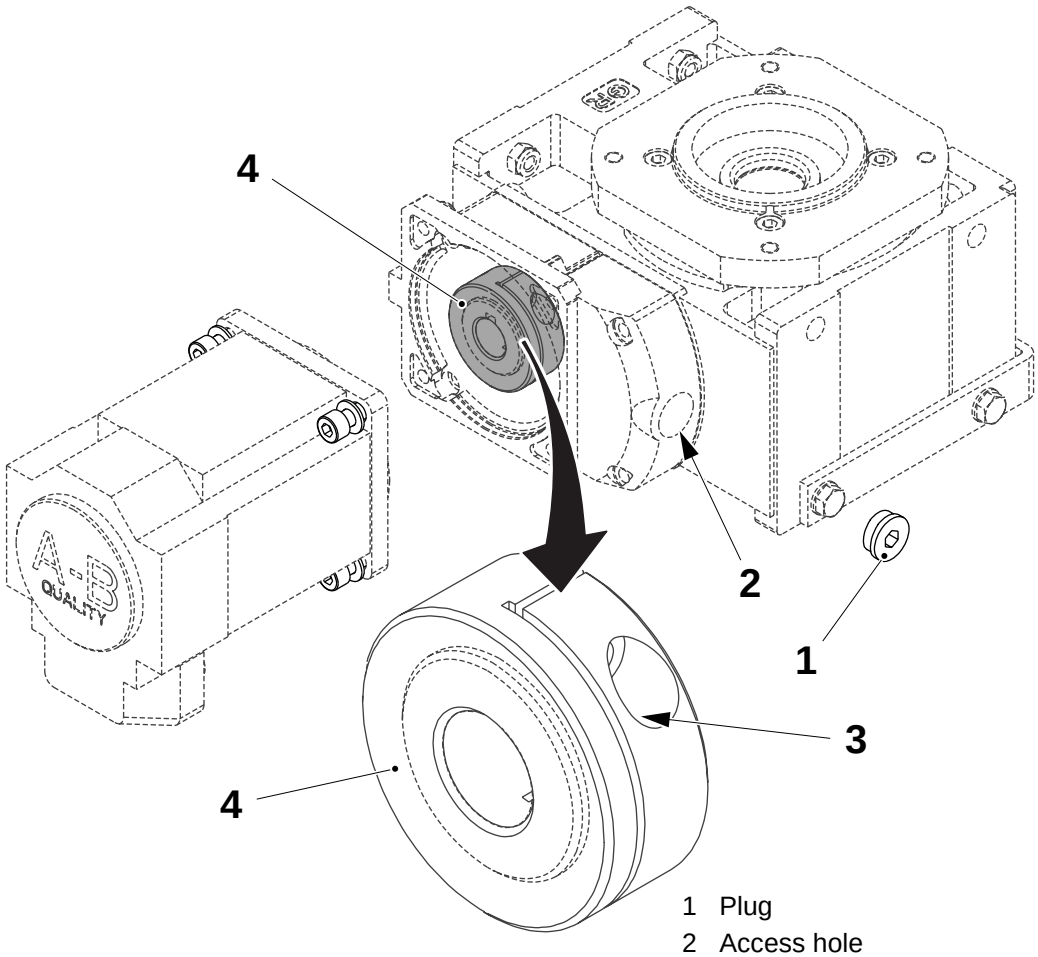

1 Plug
2 Access hole
3 Screw
4 Clamp

(Cont'd)

TechPub_2614345_0106 - 0302_3047111_01.fm

(Cont'd)

a) If fitted, remove the plug (1).

b) Using the access hole (2), locate the screw (3) in the clamp (4) with a 5 mm allen key and loosen the screw (3).

c) Remove the screws (5) and separate the motor (6) from the gearbox (7).

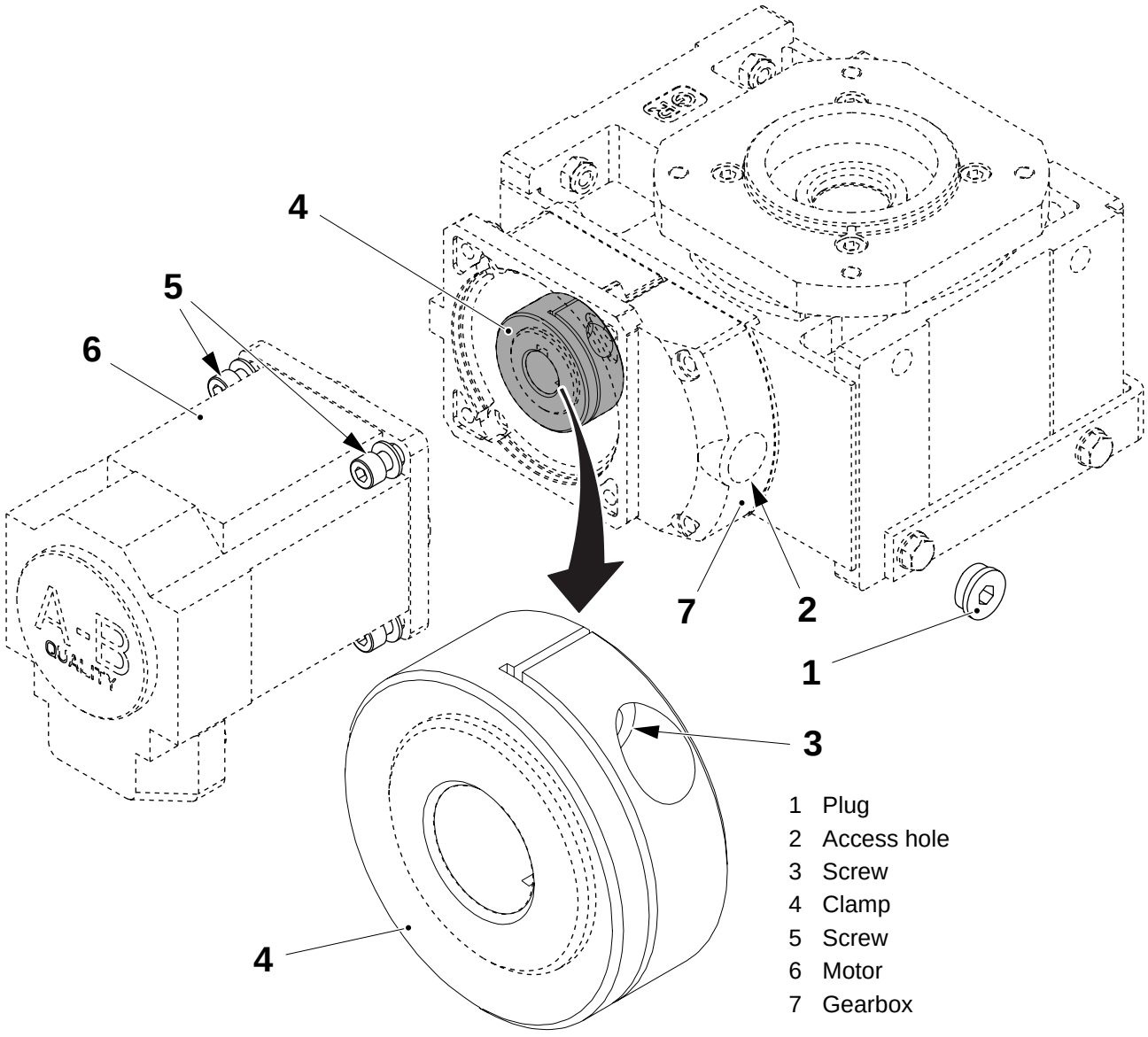

TechPub_2614345_0106 - 0302_3047111_01.fm

(Cont'd)

(Cont'd)

Assembly

a) Install the motor (1) so that the screws (2) loosely hold it.

b) Tighten the screw (3) ensuring that the clamp (4) is at the end of the drive gearbox shaft (5) so that it clamps securely onto the drive motor shaft (6).

c) Tighten completely the screws (2) that hold the motor (1).

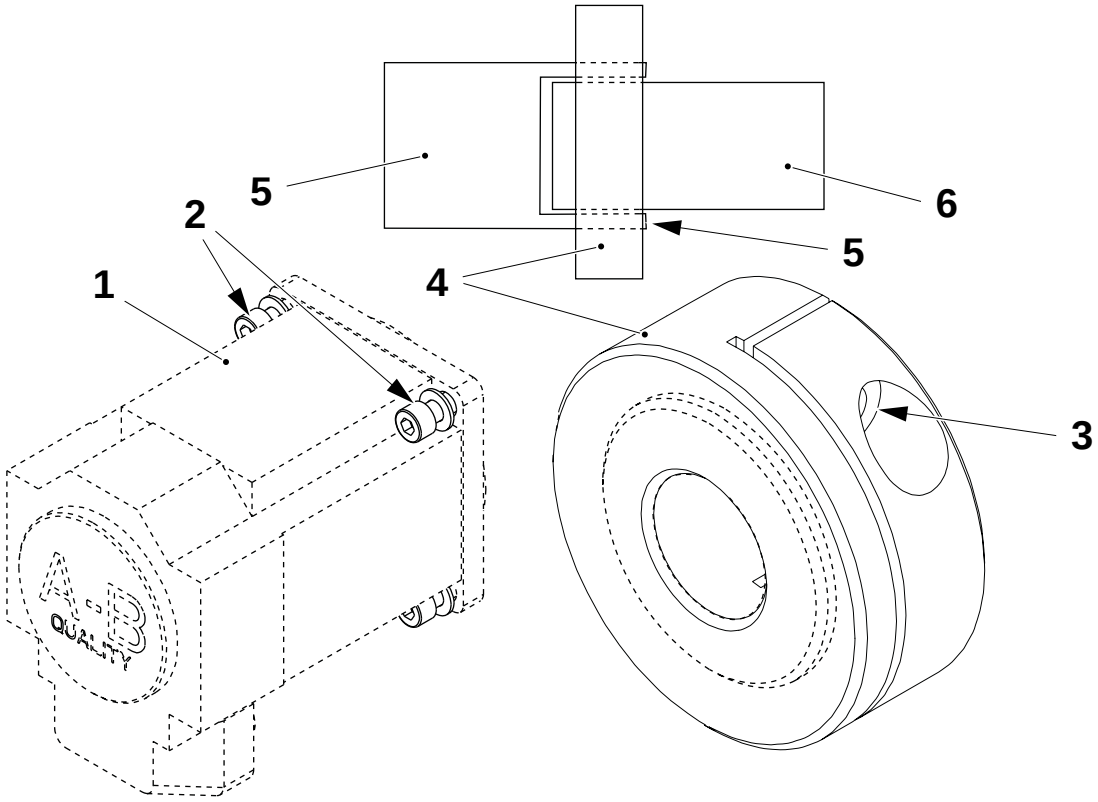

1 Motor
2 Screw
3 Screw
4 Clamp
5 Gearbox shaft
6 Drive motor shaft

TechPub_2614345_0106 - 0302_3047111_01.fm

3.3 Belt Stretcher

SPC Reference	2802645-0100

3.3.1 Belt Stretcher

3.3.1-1 Belt Stretcher - Change Bearings

Machine Status	Mains Power OFF
SPC Reference	2802645-0100

CAUTION
Risk of burns.
Nearby components may be hot.

a) Remove the pushdown (1), see 3.2.1-2 Timing Belt - Change steps a) to i). Do not remove the belt.

b) Remove the connectors (2) from the shaft (3).

c) Remove the screws (4) and (5) and the washer (6).

d) Pull out the shaft (3).

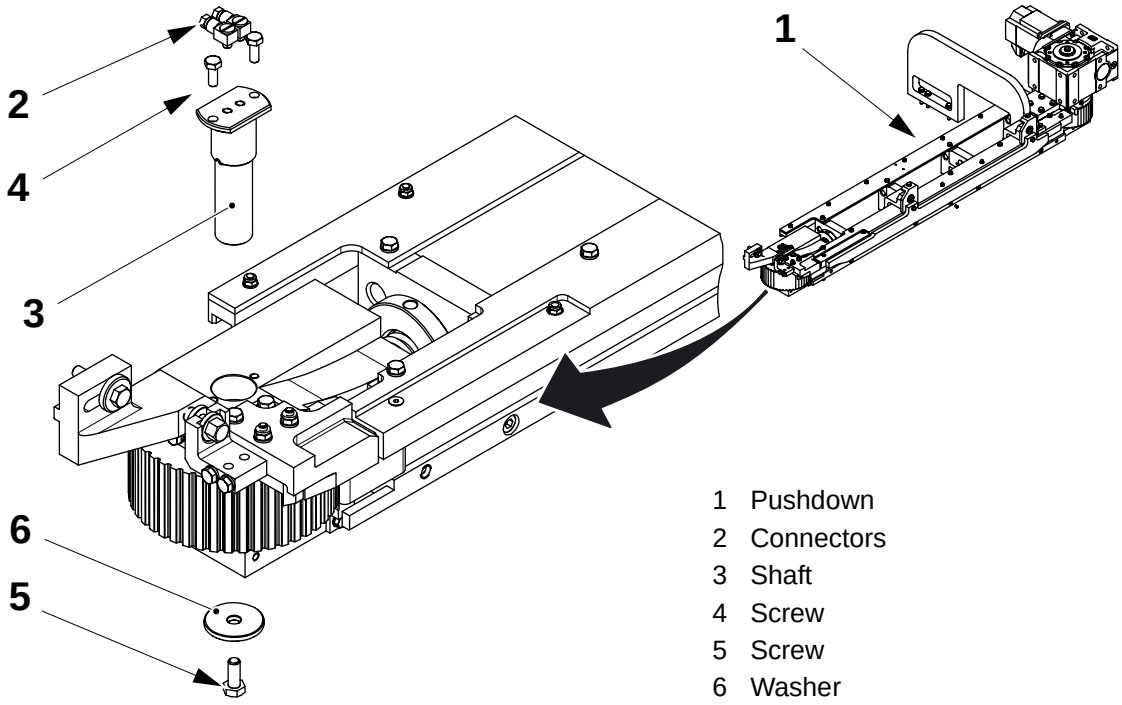

1 Pushdown
2 Connectors
3 Shaft
4 Screw
5 Screw
6 Washer

(Cont'd)

TechPub_2614345_0106 - 0302_3047112_01.fm

(Cont'd)

e) Remove the sleeve (7).
f) Remove the seal rings (8) and (9).
g) Remove the retaining rings (10) and (11).
h) Change the bearings (12) and (13).
i) If necessary, change the spacer (14) or the toothed pulley (15).
j) Assemble in the reverse order.

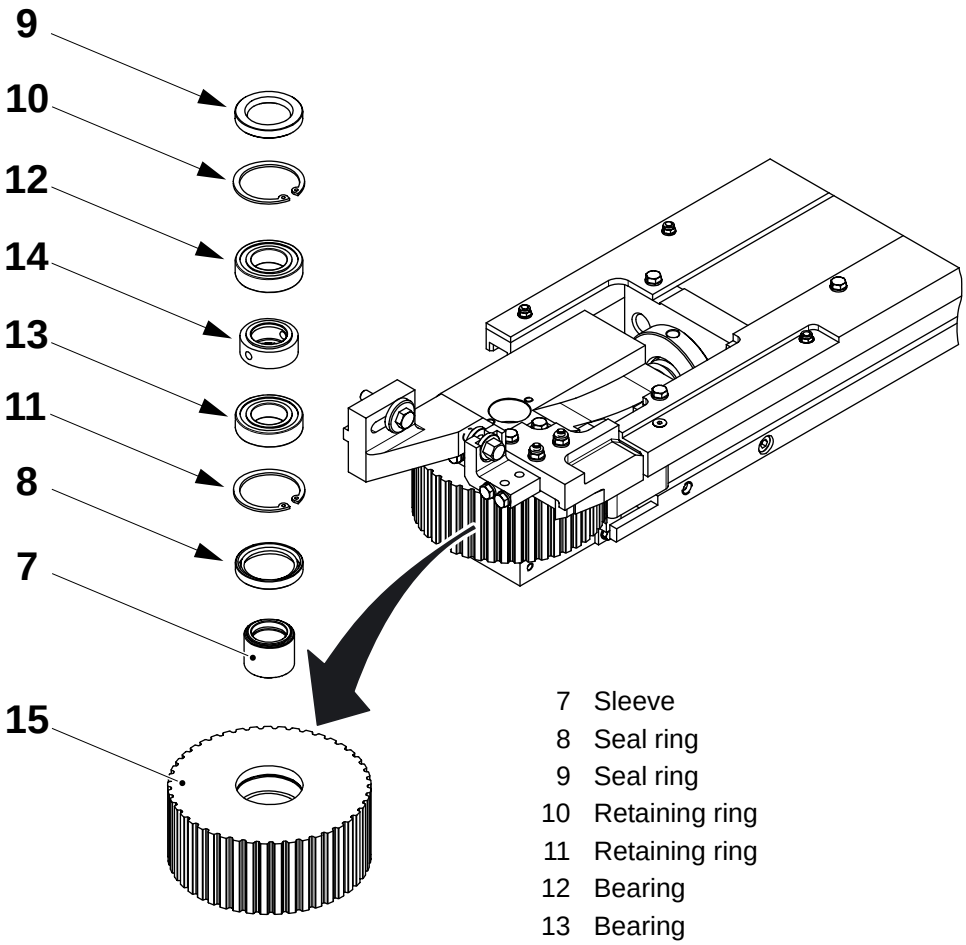

7 Sleeve
8 Seal ring
9 Seal ring
10 Retaining ring
11 Retaining ring
12 Bearing
13 Bearing
14 Spacer
15 Toothed pulley

TechPub_2614345_0106 - 0302_3047112_01.fm

3.3.1-2 Belt Stretcher - Set Belt Tension

Machine Status	Mains Power OFF
SPC Reference	2802645-0100

a) Release the two screws (1).
b) Release the nut (2).
c) Turn the flange (3) until the distance A is obtained.
d) Tighten the nut (2) until the washer (4) is trapped and cannot move.
e) Turn the flange (3) until the washer (4) can move.

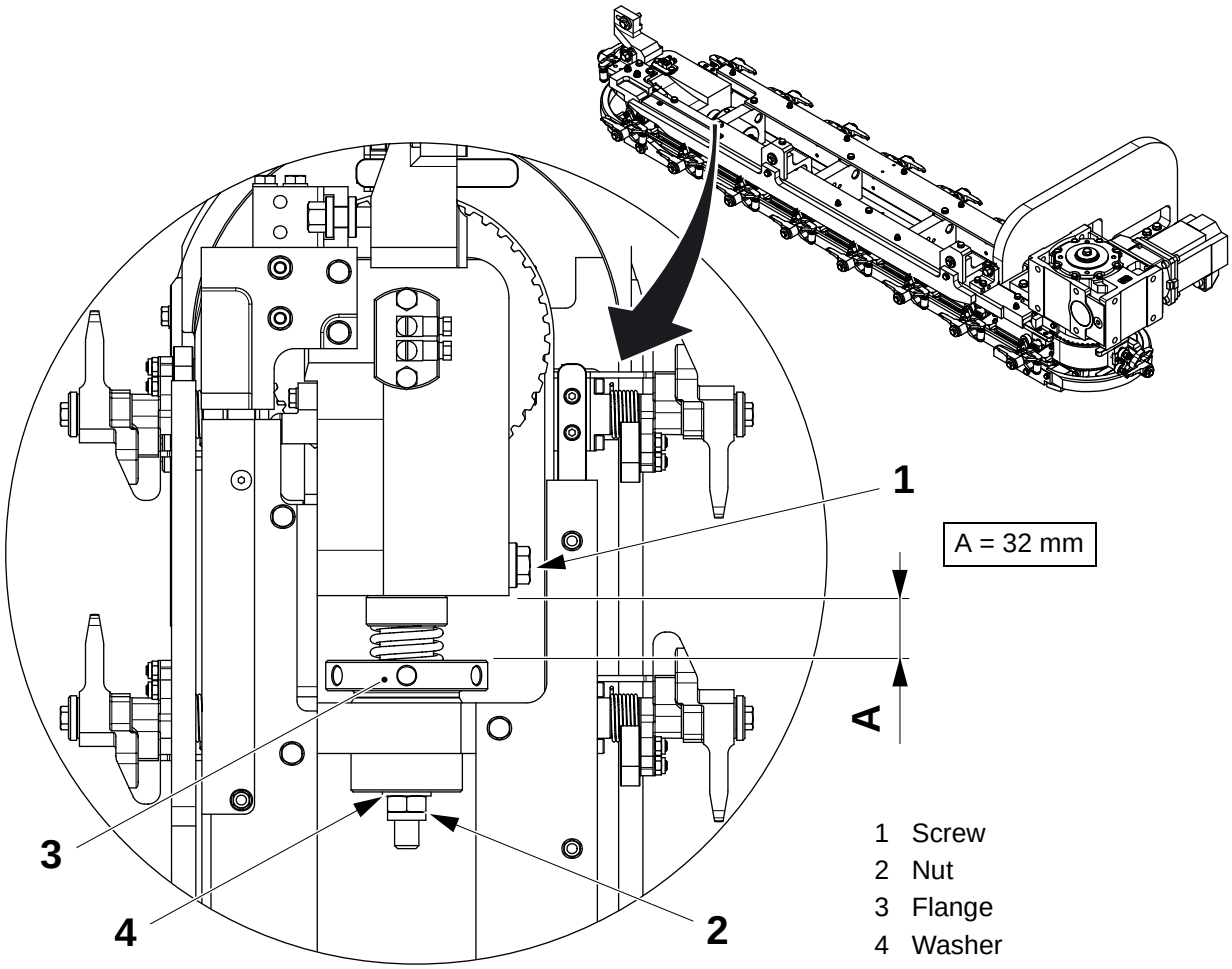

TechPub_2614345_0106 - 0302_3047112_01.fm

4 Machine Body

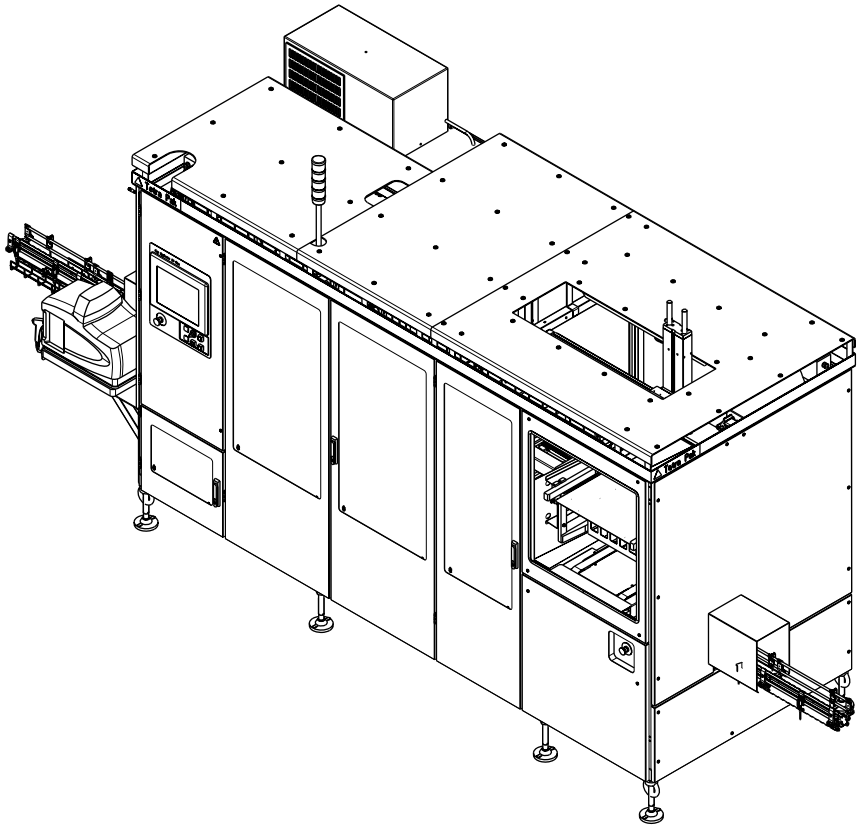

TechPub_2614345_0106 - 0603_3047124_01.fm

Machine Body - Description

SPC Reference	662905-0200

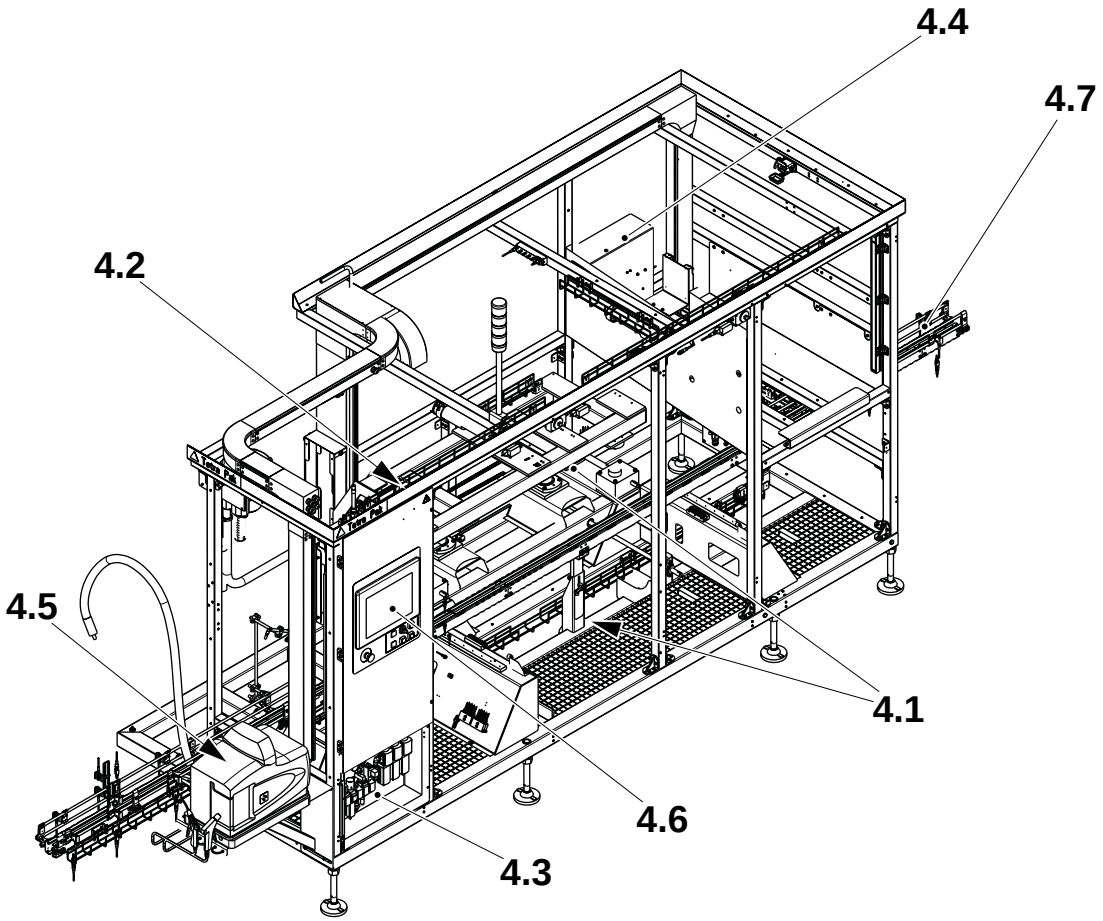

TechPub_2614345_0106 - 0603_3047124_01.fm

4.1 Package
4.2 Line Heater
4.3 Air Supply
4.4 Lubrication Unit
4.5 Hotmelt Unit
4.6 Operator Interface
4.7 Machine Body

4.0 Functional Description . . . . . 4 - 5

4.1 Package . . . . . 4 - 6

4.1.1 Height Adjustment . . . . . 4 - 6

4.1.1-1 Conveyor Support - Set . . . . . 4 - 6

4.2 Line Heater . . . . . 4 - 9

4.2.1 Fan System . . . . . 4 - 9

4.2.1-1 Fan System - Check . . . . . 4 - 9

4.2.1-2 Fan System - Clean Fan Filter . . . . . 4 - 10

4.2.2 Heating Element . . . . . 4 - 11

4.2.2-1 Heating Element - Change . . . . . 4 - 11

4..2-2 Heating Element - Set . . . . . 4 - 13

4.3 Air Supply . . . . . 4 - 15

4.3.1 Blowing System . . . . . 4 - 15

4.3.1-1 Blowing System - Check . . . . . 4 - 15

4.3.1-2 Blowing System - Set Blowing Device . . . . . 4 - 16

4.3.2 Pneumatic Panel . . . . . 4 - 17

4.3.2-1 Pneumatic Panel - Check . . . . . 4 - 19

4.3.2-2 Pneumatic Panel - Set Pressure Switch . . . . . 4 - 21

4.3.2-3 Pneumatic Panel - Clean Filter Regulator . . . . . 4 - 23

4.3.2-4 Pneumatic Panel - Set Filter Regulator . . . . . 4 - 25

4.4 Lubrication Unit . . . . . 4 - 26

4.4-1 Central Lubrication . . . . . 4 - 26

4.4.1 Central Lubrication . . . . . 4 - 30

4.4.1-1 Central Lubrication - Check Level Switch . . . . . 4 - 30

4.4.1-2 Central Lubrication - Check Pressure Switch . . . . . 4 - 31

4.4.1-3 Central Lubrication - Clean Oil Tank . . . . . 4 - 32

4.4.1-4 Central Lubrication - Fault Finding . . . . . 4 - 33

4.5 Hotmelt Unit . . . . . 4 - 34

TechPub_2614345_0106 - 0603_3047124_01.fm

4.5-1 Functional Description . . . . . 4 - 34

4.5.1-1 Hotmelt Equipment - Check . . . . . 4 - 35

4.5.1-2 Hotmelt Equipment - Empty Tank . . . . . 4 - 37

4.5.1-3 Hotmelt Equipment - Change Filter . . . . . 4 - 40

4.5.1-4 Hotmelt Equipment - Set Parameters . . . . . 4 - 44

4.5.1-5 Hotmelt Equipment - F2 Alarm . . . . . 4 - 48

4.6 Operator Interface . . . . . 4 - 49

4.6.1 Operator Interface - TPOP . . . . . 4 - 49

4.6.1-1 TPOP - Change . . . . . 4 - 49

4.7 Machine Body. . . . . 4 - 51

4.7.1 Conveyor - Height Adustment . . . . . 4 - 51

4.7.1-1 Height Adjustment - Check . . . . . 4 - 51

4.7.1-2 Height Adjustment - Set . . . . . 4 - 52

TechPub_2614345_0106 - 0603_3047124_01.fm

4.0 Functional Description

SPC Reference	662905-0200

The machine body consists of the following;

- The package conveyor complete with sensors for moving and regulating the packages.
- The package heater which preheats the PE layer of the package to make the hotmelt bond of the cap stronger. The heat is delivered to the package by a fan.
- The air supply which is regulated by the pneumatic panel.
- The lubrication unit for the continuous lubrication of the bearings.
- The hotmelt unit which preheats the hotmelt and supplies it to the hotmelt wheel via a hose.
- The TPOP replacement procedure.
- The height adjustment via the windmill adjust. This gives the height flexibility required for the different package sizes.

TechPub_2614345_0106 - 0602_3047125_01.fm

4.1 Package

SPC Reference	2769738-0100

4.1.1 Height Adjustment

4.1.1-1 Conveyor Support - Set

Machine Status	Mains Power OFF Air OFF
SPC Reference	2769738-0100

a) Release the two screws (1) that hold each of the end brackets (2) and the locking lever (3).

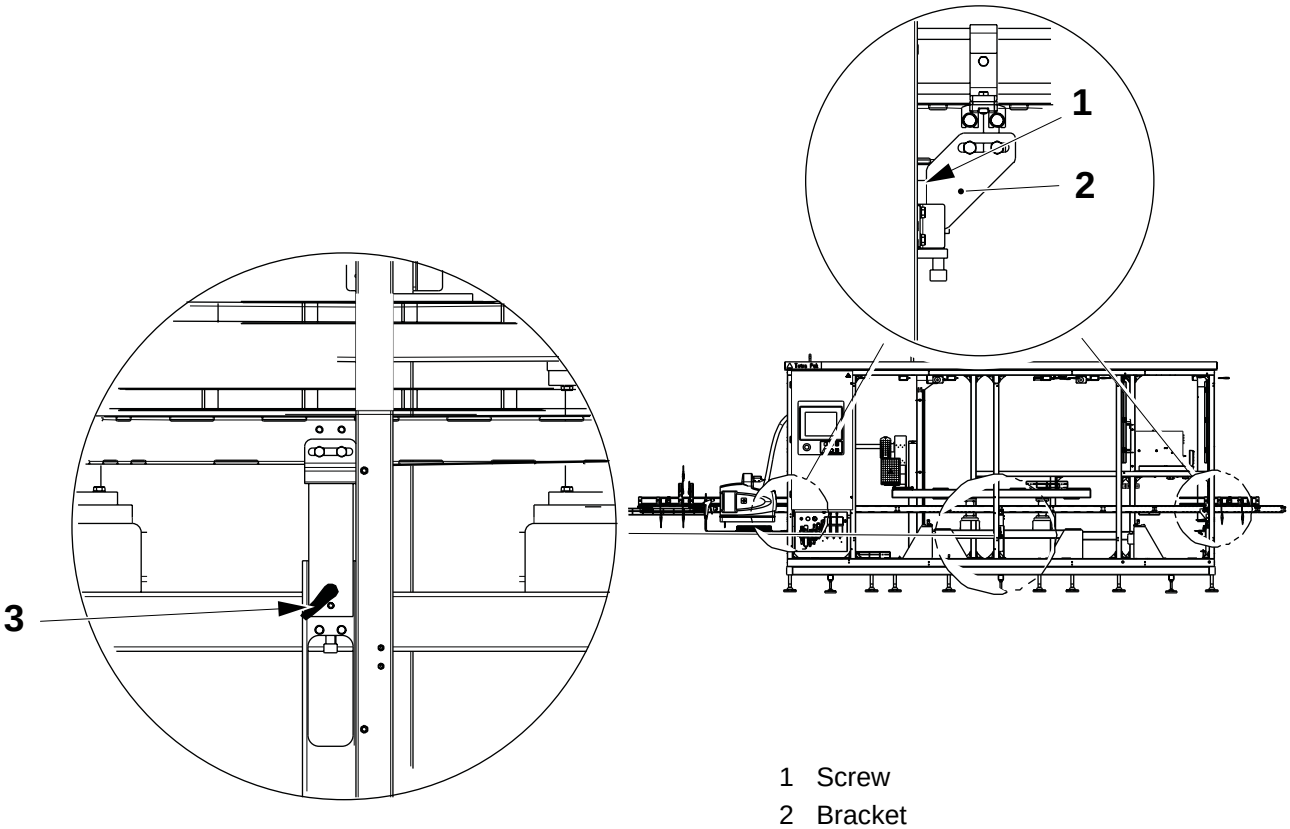

1 Screw
2 Bracket
3 Locking lever

TechPub_2614345_0106 - 0602_3047125_01.fm

(Cont'd)

(Cont'd)

b) Raise or lower the conveyor to obtain distance **A** (the distance between the top of the conveyor belt (4) and the bottom of the belt tooth (5)) by the adjusting screws (6).

Package Type	Distance A (mm)
TBA/TGA Family	5
TPA Family	41
TBA Portion	20
TPA Portion	31

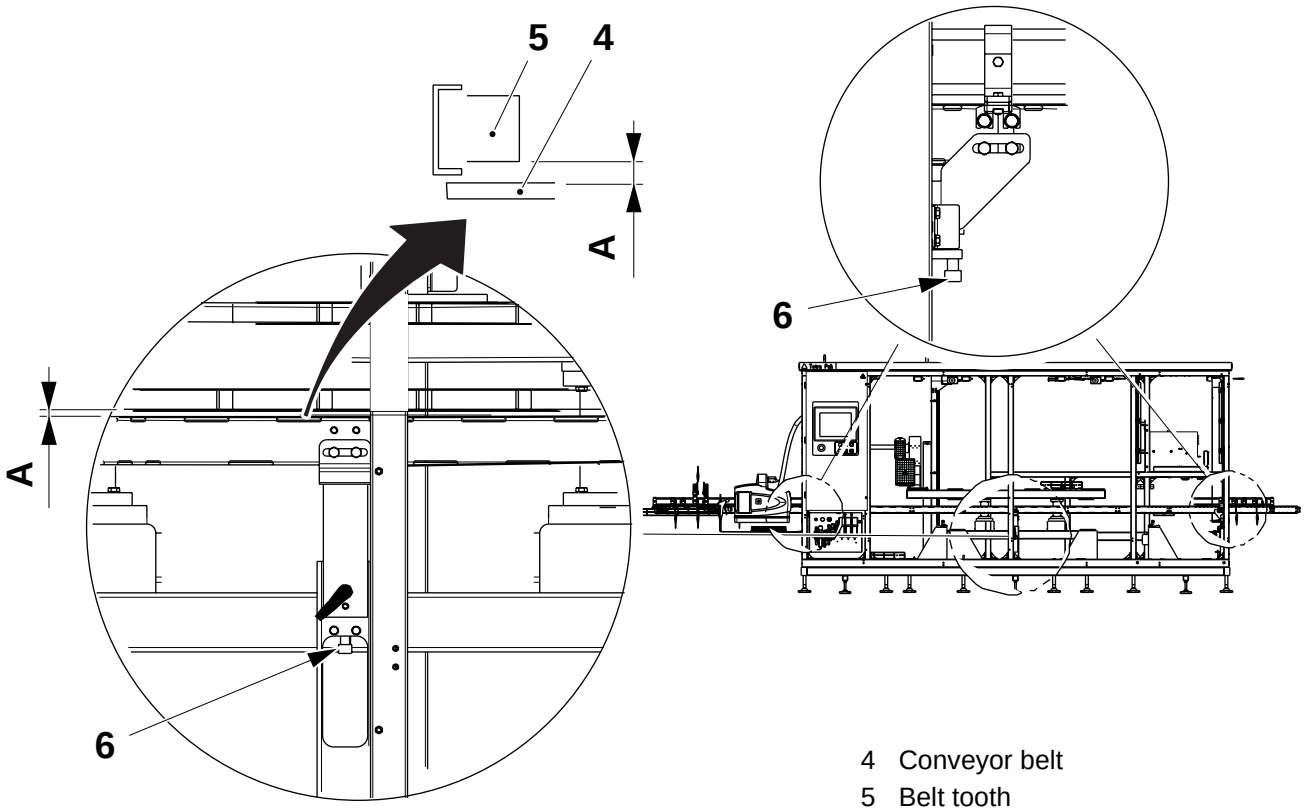

4 Conveyor belt
5 Belt tooth
6 Adjusting screw

(Cont'd)

TechPub_2614345_0106 - 0602_3047125_01.fm

(Cont'd)

c) Tighten the locking lever (3) and the screws (1).

Note! Make sure that the conveyor is level in the (Y) direction and square in the (X) direction, also check the packages for squareness.

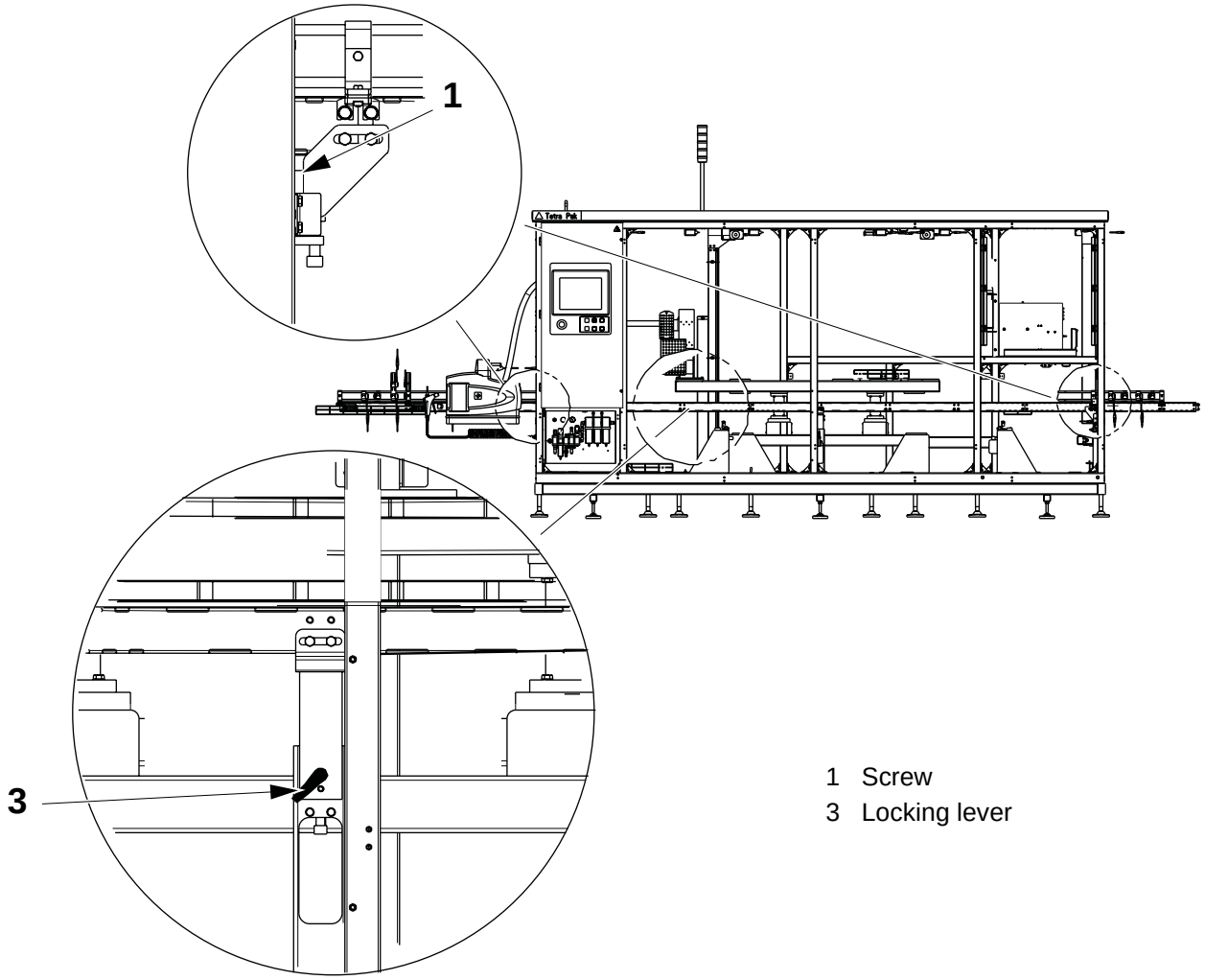

1 Screw
3 Locking lever

TechPub_2614345_0106 - 0602_3047125_01.fm

4.2 Line Heater

SPC Reference	2758507-0100

4.2.1 Fan System

4.2.1-1 Fan System - Check

Machine Status	Mains Power ON Air ON
SPC Reference	2758507-0100

WARNING

Risk of burns.

The preheating equipment is very hot. Failure to observe this information could result in severe burns.

a) The heating element (1) and the fan (2) are alarmed for malfunction.

b) Check that the filter (3) is clean.

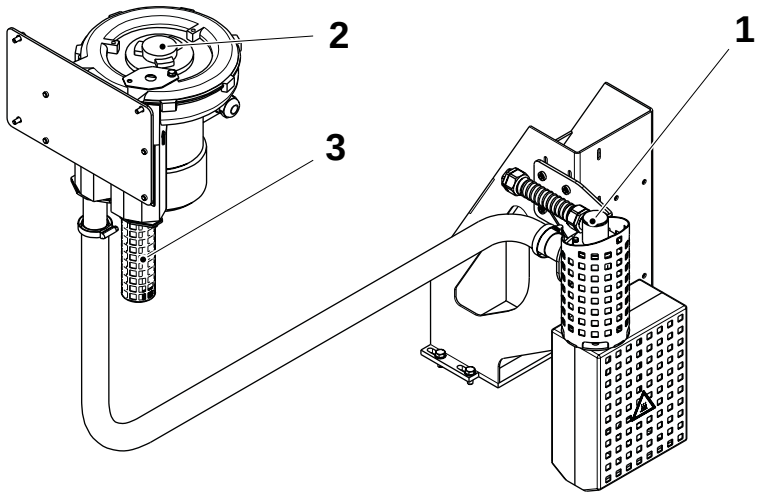

1 Heating Element
2 Fan
3 Filter

TechPub_2614345_0106 - 0602_3047126_01.fm

4.2.1-2 Fan System - Clean Fan Filter

Machine Status	Mains Power OFF Air ON
SPC Reference	2773623-0100

a) Remove the screws (1), the cover (2) and the gasket (3).

b) Clean the filter (4).

c) Assemble in the reverse order.

Note! A restrictor (5) must be fitted when running at 60Hz.

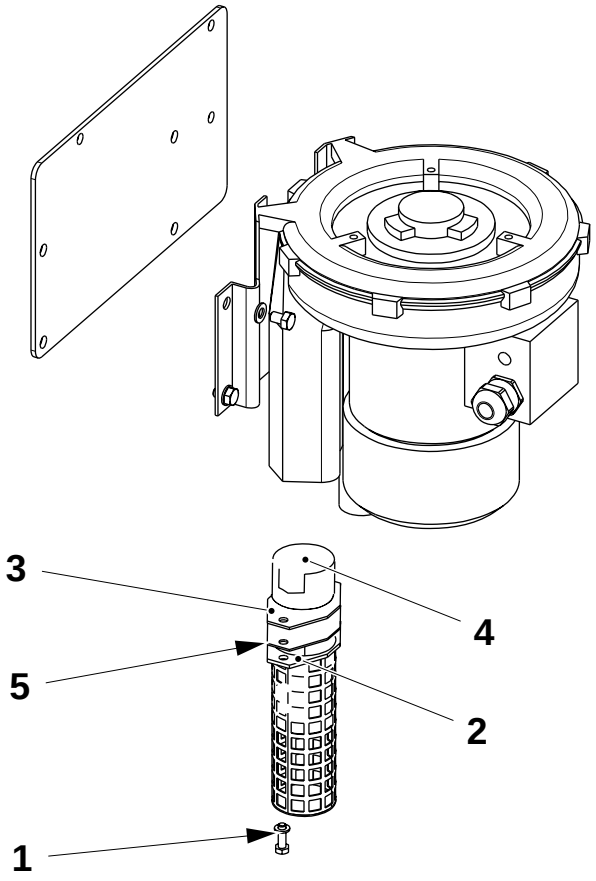

1 Screw
2 Cover
3 Gasket
4 Filter
5 Restrictor

TechPub_2614345_0106 - 0602_3047126_01.fm

4.2.2 Heating Element

4.2.2-1 Heating Element - Change

Machine Status	Mains Power OFF Air OFF
SPC Reference	2758510-0100

WARNING

Risk of burns.

The preheating equipment is very hot. Failure to observe this information could result in severe burns.

a) Change the heating element (1) by removing the four screws (2), the pipe bend (3), and the flange seal (4).

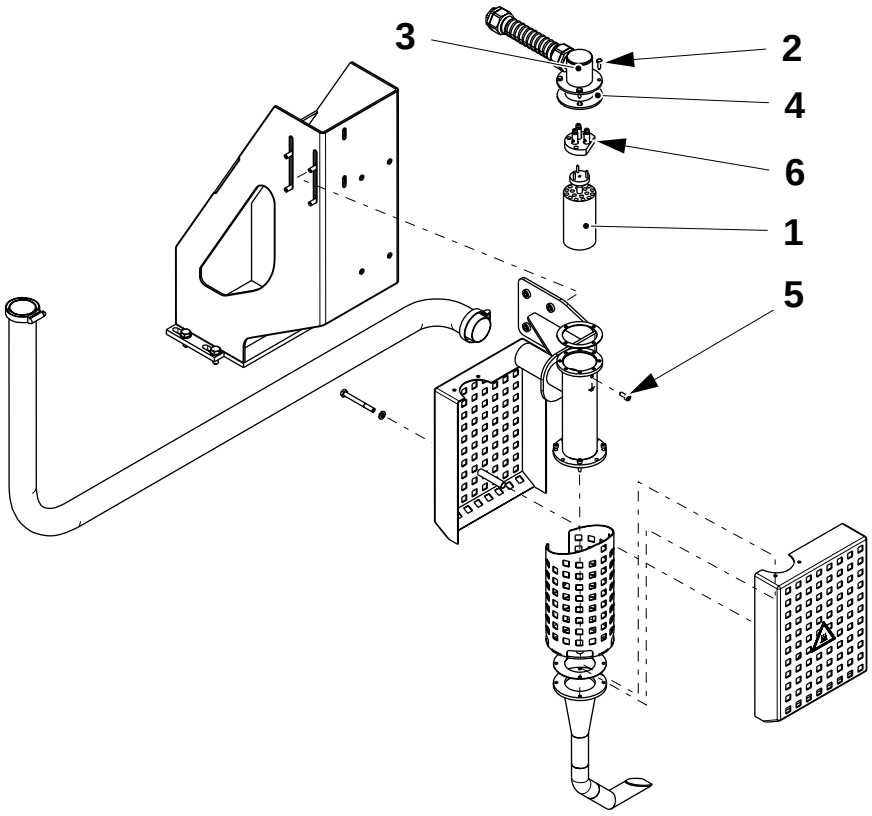

1 Heating element
2 Screw
3 Pipe bend
4 Flange seal

(Cont'd)

TechPub_2614345_0106 - 0602_3047126_01.fm

(Cont'd)

b) Release the earth cable screw (5) making sure not to drop the nut.

c) Disconnect the element (1) from the female plug (6).

d) Assemble in the reverse order replacing the flange seal (4).

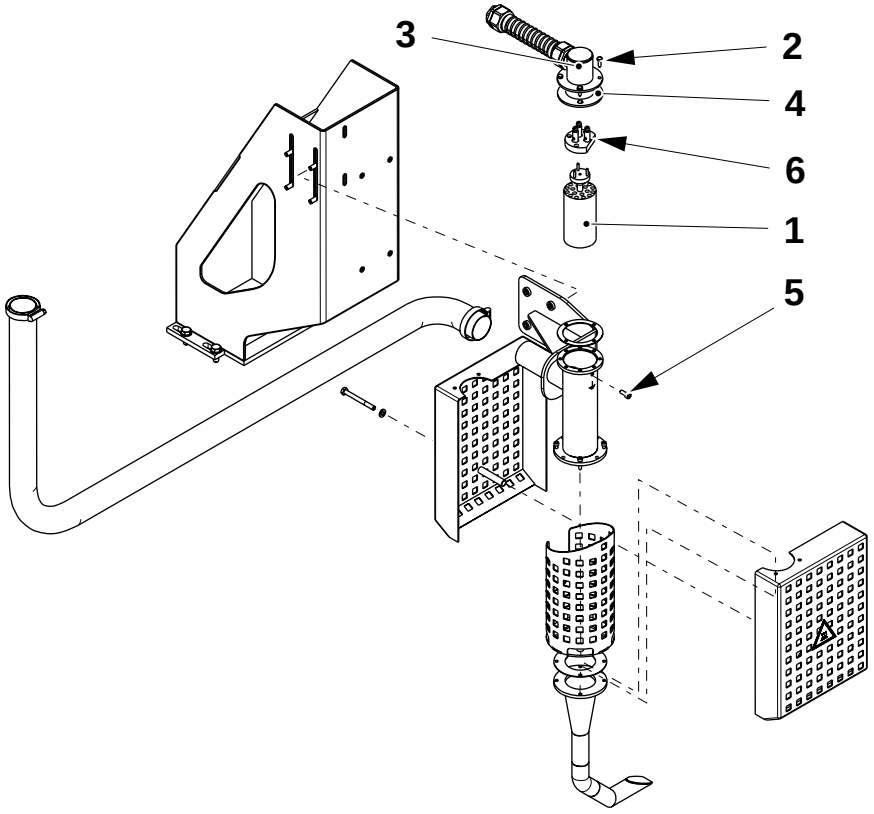

1 Heating element
4 Flange seal
5 Screw
6 Female plug

TechPub_2614345_0106 - 0602_3047126_01.fm

4..2-2 Heating Element - Set

Machine Status	Mains Power OFF Air OFF
SPC Reference	2758510-0100

WARNING

Risk of burns.

The preheating equipment is very hot. Failure to observe this information could result in severe burns.

Note! It is very important that the preheating system is correctly set and that the element is working properly, otherwise there will be problems when lifting the PullTab strip.

a) Release the four screws (1) and set the distance **A** between the heating element nozzle (2) and the package top (3).

Note! The nozzle (2) is volume/cap dependent. See latest SPC.

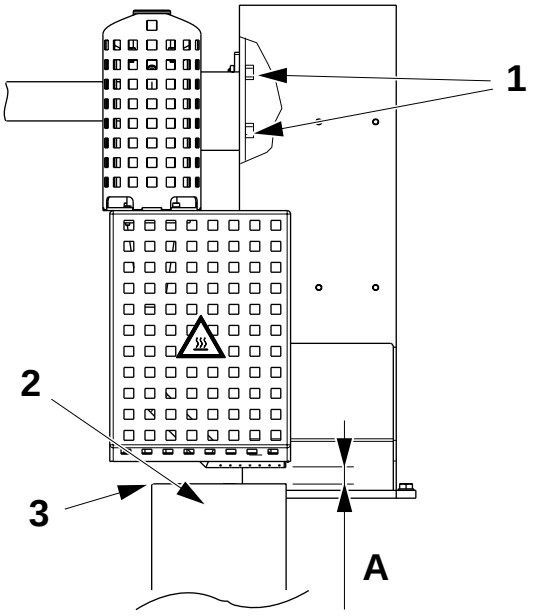

A = 8 ± 1 mm

1 Screw
2 Nozzle
3 Package top

(Cont'd)

TechPub_2614345_0106 - 0602_3047126_01.fm

(Cont'd)

b) Tighten the screws (1).

c) Release the screws (4) and centre the nozzle over the laminated hole (5) or pulltab (6).

d) Tighten the screws (4).

Note! The nozzle (2) is volume/cap dependent. See latest SPC.

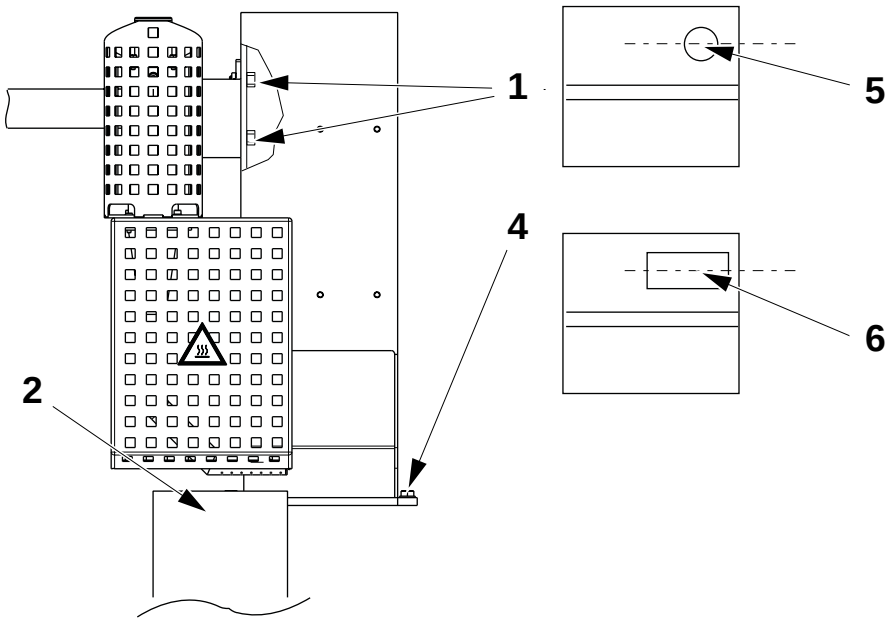

1 Screw
2 Nozzle
4 Screw
5 Hole
6 Pulltab

TechPub_2614345_0106 - 0602_3047126_01.fm

4.3 Air Supply

SPC Reference	2758513-0100

4.3.1 Blowing System

4.3.1-1 Blowing System - Check

Machine Status	Mains Power ON Air ON
SPC Reference	2758512-0100

a) Make sure that the packages are under the air nozzle (1) which should remove moisture from that part of the package where the cap is to be applied.

b) Check that the pull tab strips are not being raised by the air jet.

c) See 4.3.2 Pneumatic Panel for pneumatic panel (2) settings.

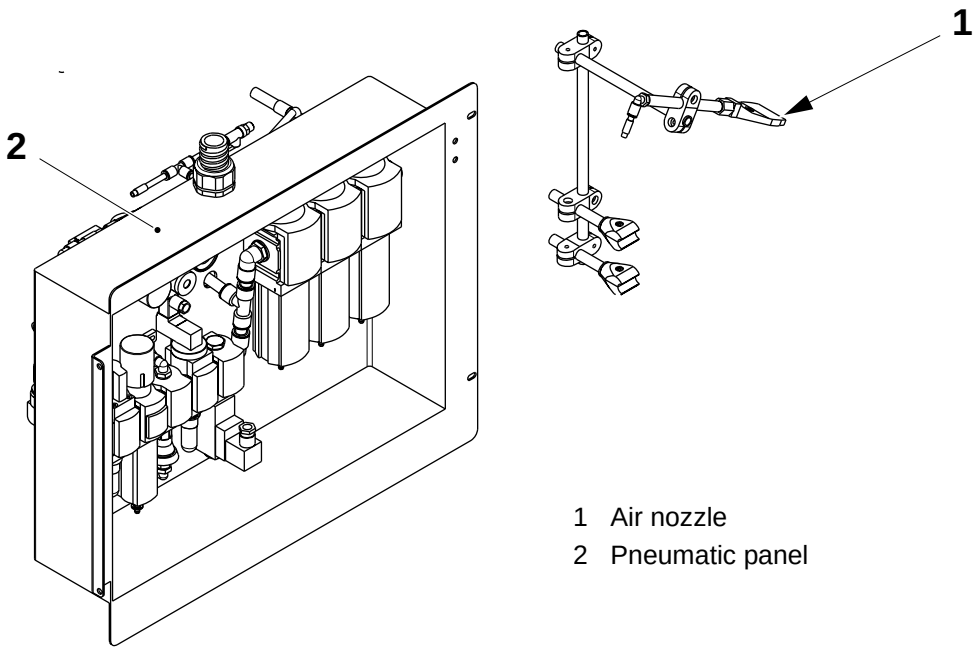

1 Air nozzle
2 Pneumatic panel

TechPub_2614345_0106 - 0602_3047127_01.fm

4.3.1-2 Blowing System - Set Blowing Device

Machine Status	Mains Power ON Air ON
SPC Reference	2758512-0100

a) Release the screws (1) and set the nozzle (2) to the distance **A** above the package.

b) Centre the nozzle (2) between the edge of the package and the transversal seal (3) at 45 degrees so that the moisture is blown away from the packages. Make sure that the pulltab is not lifted by the air.

Note! The above setting is package dependent.

c) Tighten the screws (1).

d) The force of the air blown is controlled by the throttle check valve (4).

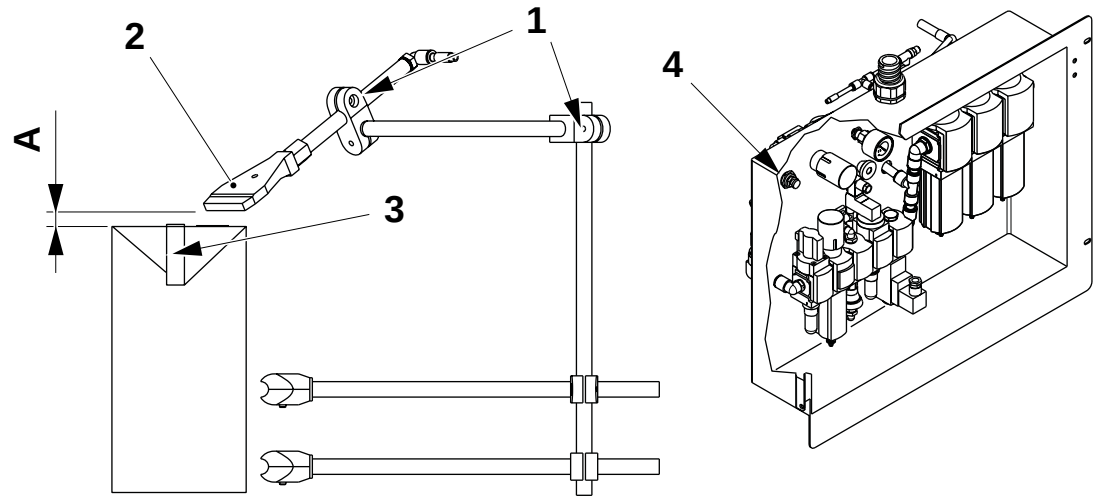

A = 5 - 10 mm

1 Screw
2 Nozzle
3 Transversal seal
4 Throttle check valve

TechPub_2614345_0106 - 0602_3047127_01.fm

4.3.2 Pneumatic Panel

Pneumatic Panel Front

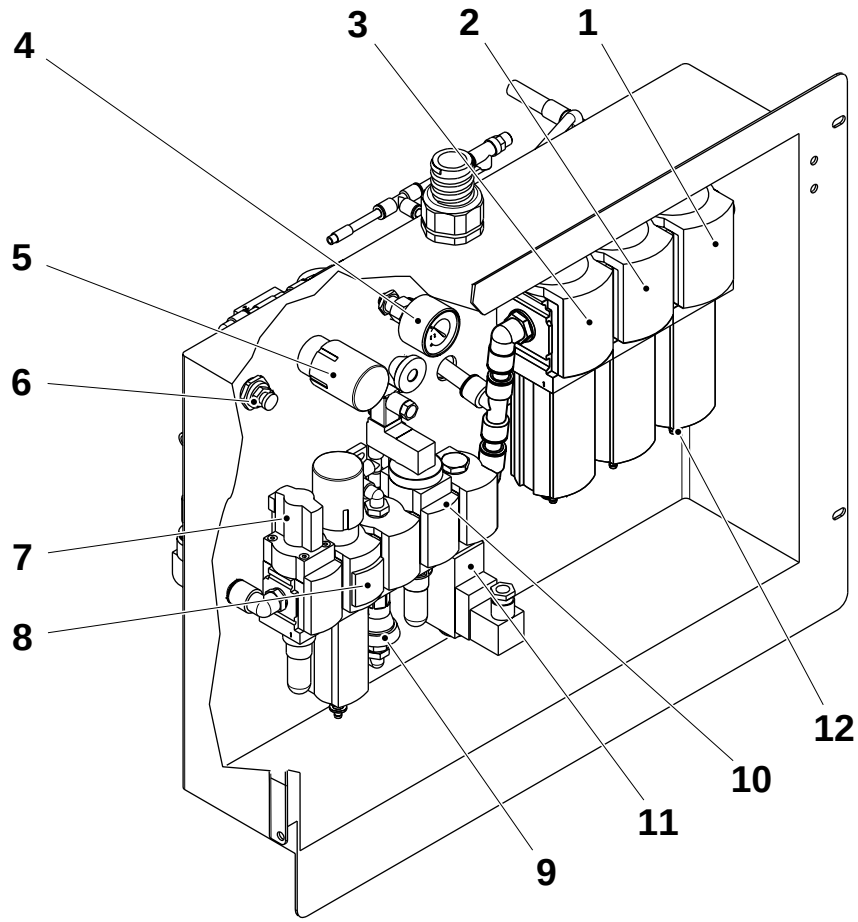

1 Filter (Oil) 01V851
2 Filter (Air) 01V852
3 Filter (Air) 01V853
4 Pressure gauge 40P150
5 Pressure regulator 40R150 (2.0 Bar)
6 Throttle check valve 21R354
7 Shutoff valve 01Q850
8 Filter regulator 01V850
9 Pressure regulator 01R851
10 Shutoff valve 01K800
11 Pressure guard 01B801
12 Drain valve

TechPub_2614345_0106 - 0602_3047127_01.fm

Pneumatic Panel Rear

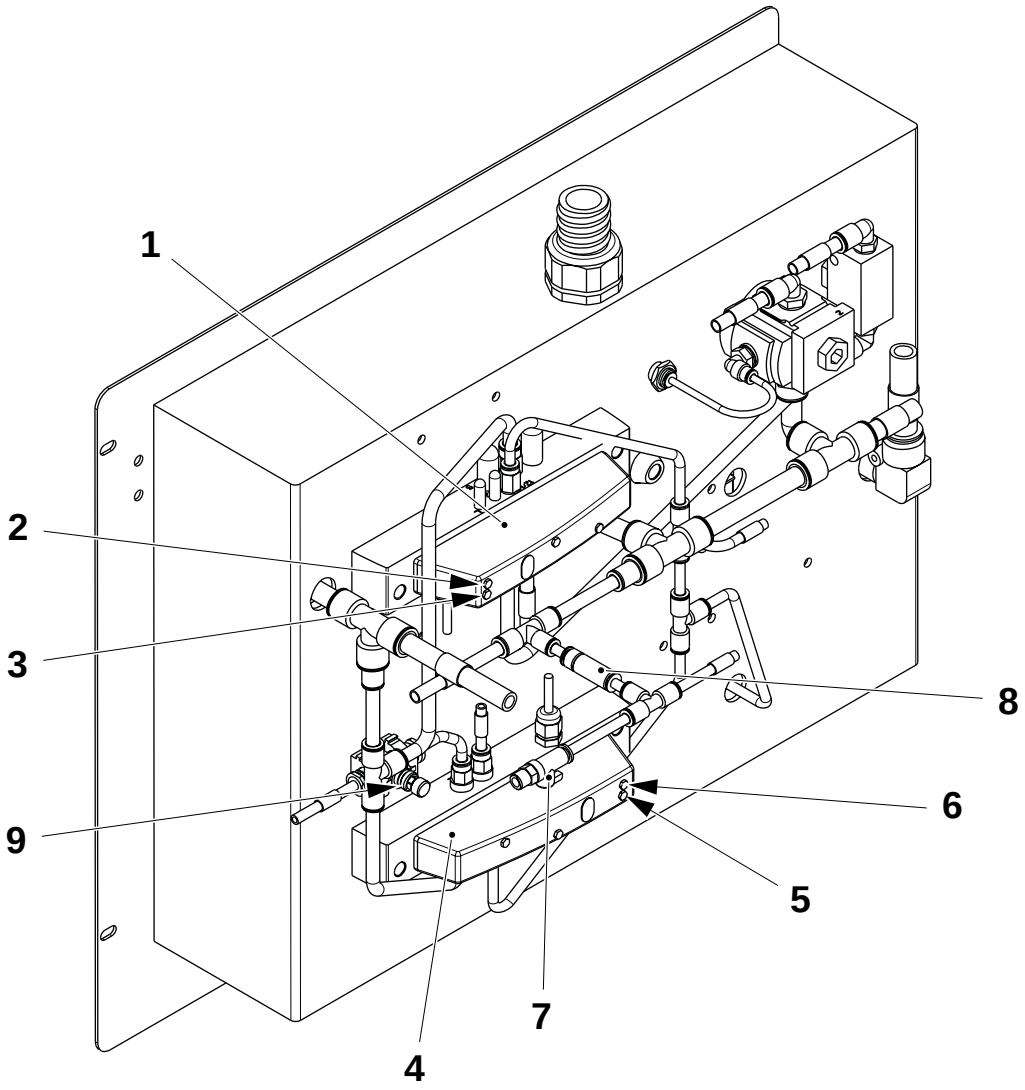

1 Sub base 20U350
2 LED 14 40k203
3 LED 12 40k203
4 Sub base 01U950
5 LED 14 40k203
6 LED 12 40k203
7 Release valve
8 Non return valve
9 Flow control valve

TechPub_2614345_0106 - 0602_3047127_01.fm

4.3.2-1 Pneumatic Panel - Check

Machine Status	Mains Power ON Air ON
SPC Reference	2758512-0100

Check that the working pressure is 6.0 Bar.

If the pressure switch (1) is actuated too often, the air filter (2) may be clogged. If necessary, clean or replace the filter.

Note! The pressure switch (1) can also be activated by variations of the incoming air pressure.

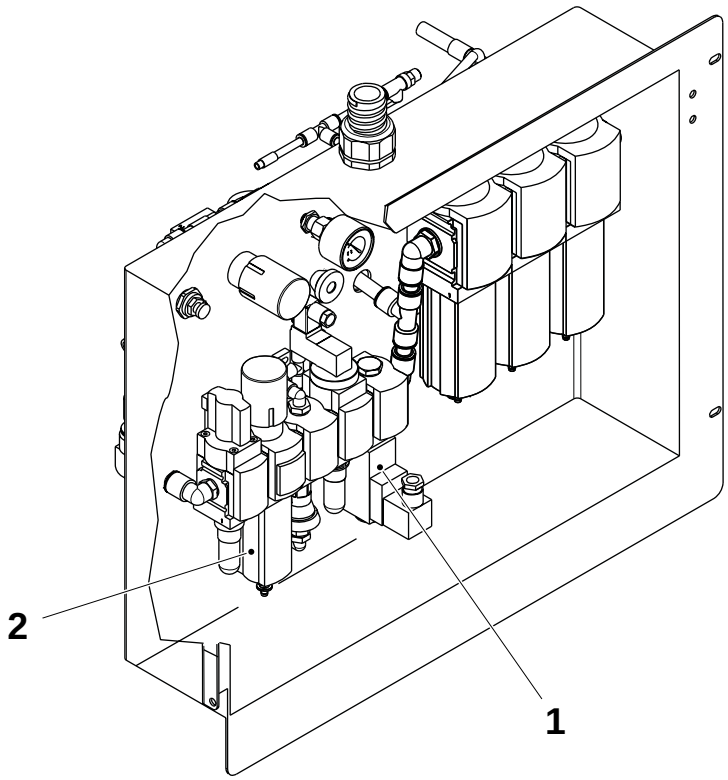

1 Pressure switch
2 Air filter

(Cont'd)

TechPub_2614345_0106 - 0602_3047127_01.fm

(Cont'd)

The air filters (2), (3) and (4) are bled automatically. The oil filter (5) requires manual bleeding from the valve (6) when the level has reached a maximum value.

Note! The pressure switch (1) can also be activated by variations of the incoming air pressure.

The pressure switch (1) is activated when the air pressure drops below 0.38 MPa (3.8 Bar).

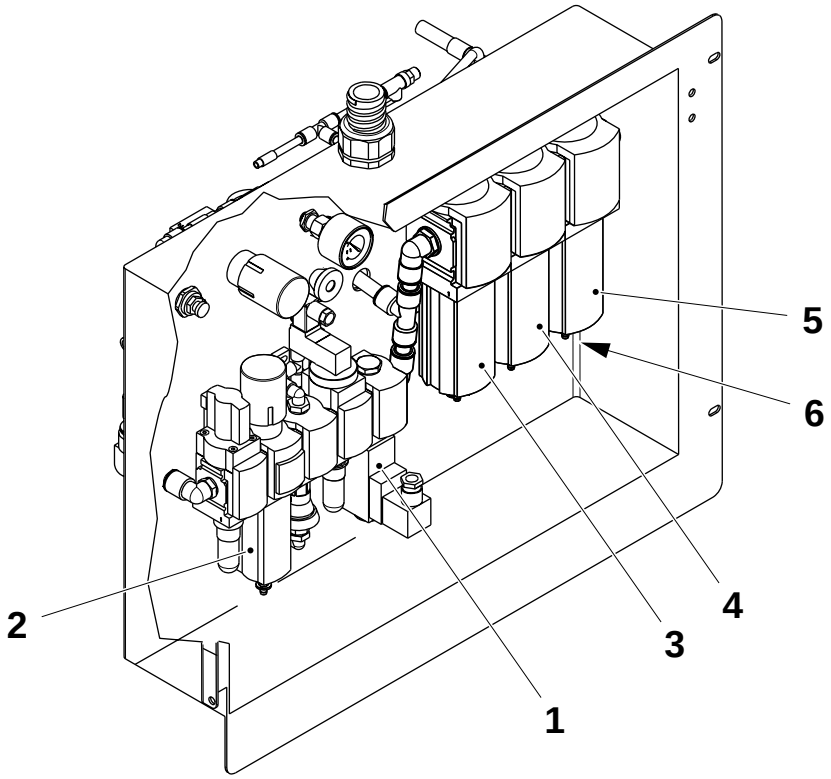

1 Pressure switch
2 Air filter
3 Air filter
4 Air filter
5 Oil filter
6 Bleed valve

TechPub_2614345_0106 - 0602_3047127_01.fm

4.3.2-2 Pneumatic Panel - Set Pressure Switch

Machine Status	Mains Power ON Air ON
SPC Reference	2758512-0100

a) Using a short screw driver, locate the setting screw (1) at the bottom of the pressure switch (2).

b) Reduce the working pressure to 3.8 Bar.

c) Turn the screw (1) fully counter clockwise and step up the machine to STEP 2.

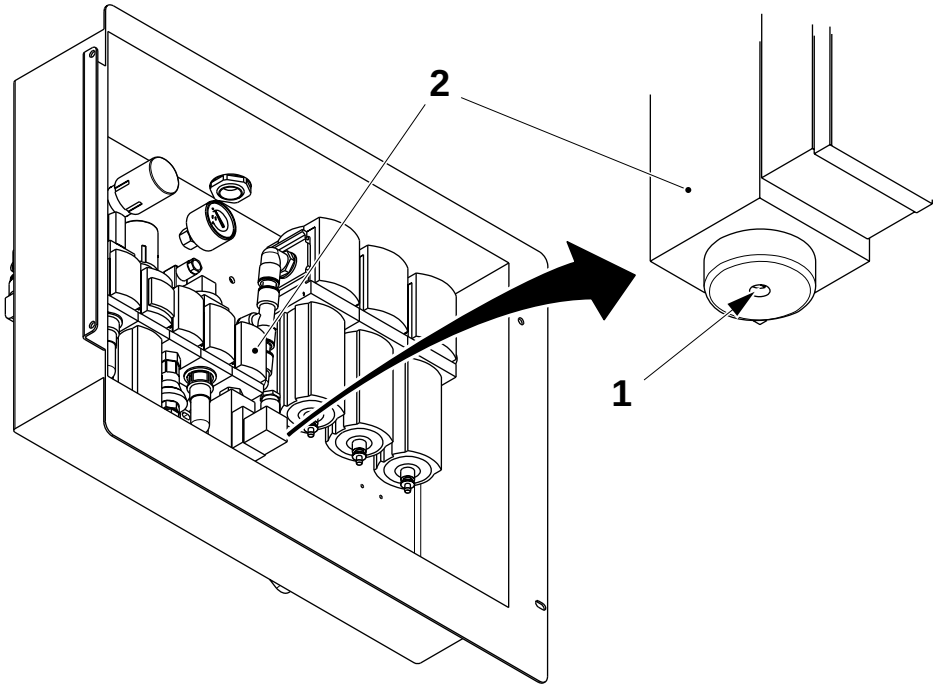

1 Setting screw
2 Pressure switch

(Cont'd)

TechPub_2614345_0106 - 0602_3047127_01.fm

(Cont'd)

d) Slowly turn the setting screw (1) clockwise until the LED (3) (inside the operator interface (4)) on the I/01K324 goes out.

e) Slowly turn the setting screw (1) counter clockwise until the LED (3) comes back on.

f) Set the working pressure to 6.0 Bar.

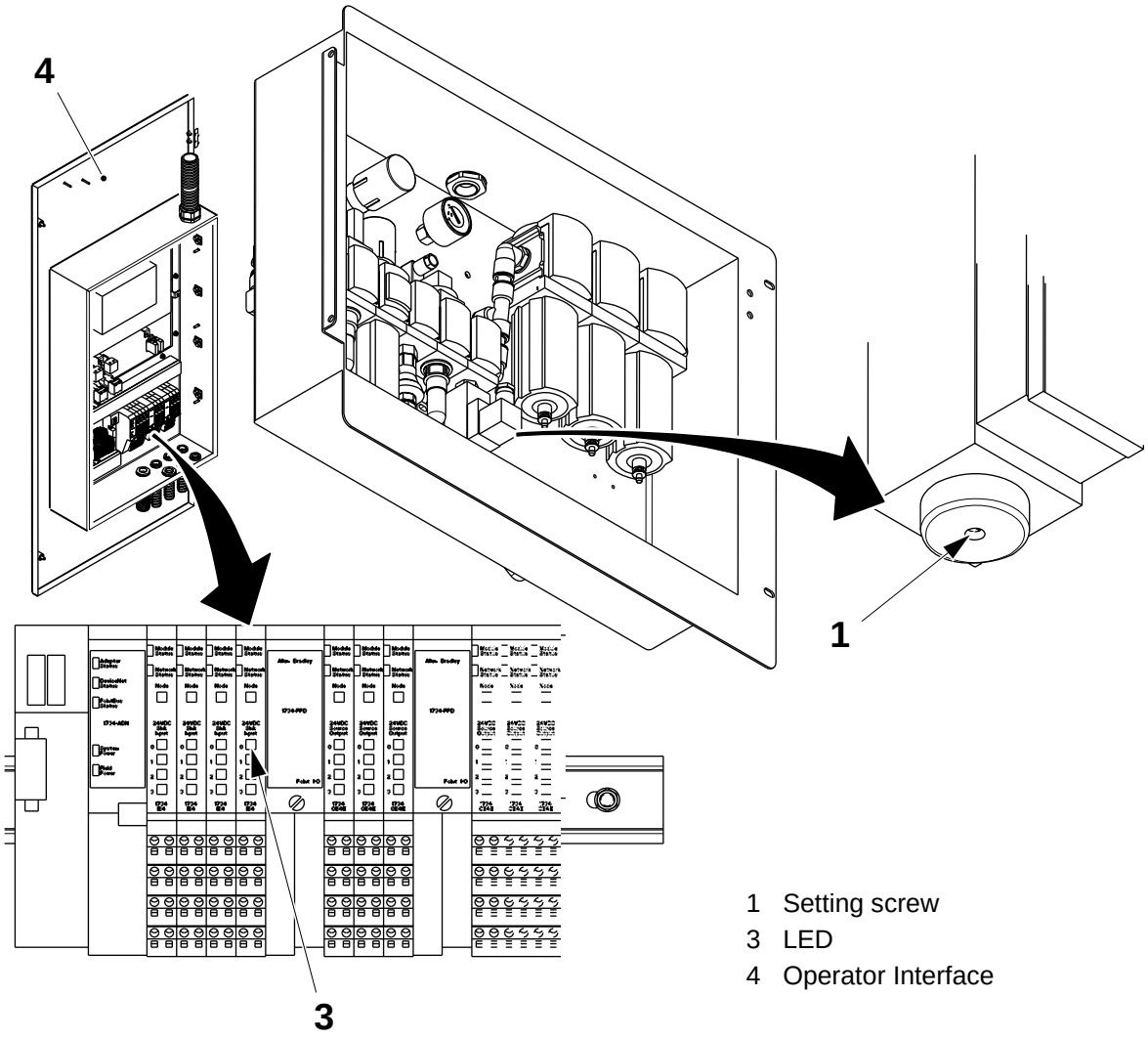

1 Setting screw
3 LED
4 Operator Interface

TechPub_2614345_0106 - 0602_3047127_01.fm

4.3.2-3 Pneumatic Panel - Clean Filter Regulator

Machine Status	Mains Power ON Air ON
SPC Reference	2758512-0100

Air Filters

a) Press down and rotate the shut off valve (1) clockwise.

Note! The position shown in the illustration is OFF.

b) Press down the blue button (2) in the direction of the arrow and hold while rotating the filter housing (3).

c) Clean the internal filter by blowing air through it. If necessary replace the internal filter.

d) Assemble in the reverse order.

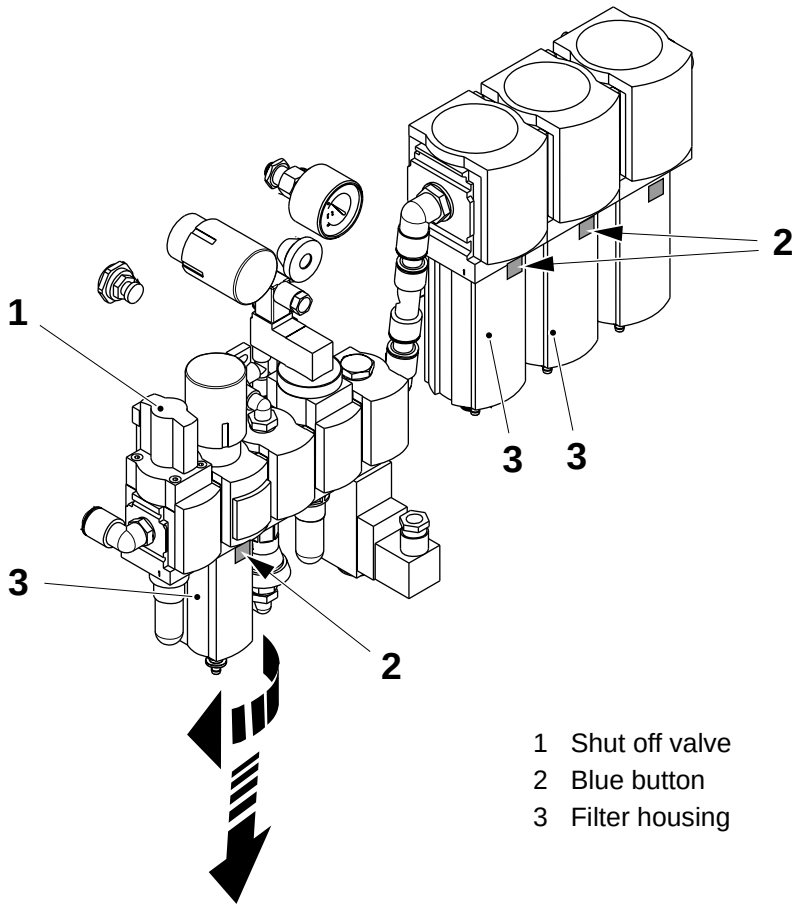

1 Shut off valve
2 Blue button
3 Filter housing

(Cont'd)

TechPub_2614345_0106 - 0602_3047127_01.fm

(Cont'd)

Oil Filter

a) Press down and rotate the shut off valve (1) clockwise.

b) Using the drain valve (2) empty any contents of the filter housing (3).

c) Press down the blue button (4) in the direction of the arrow and hold while rotating the filter housing (3).

d) Assemble in the reverse order.

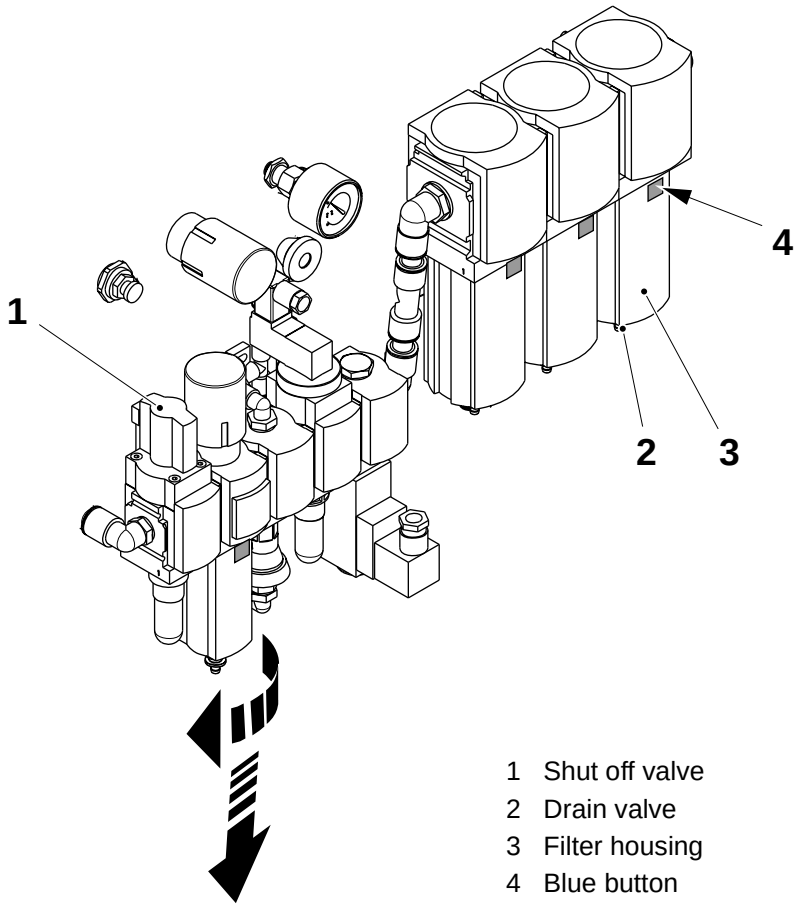

1 Shut off valve
2 Drain valve
3 Filter housing
4 Blue button

TechPub_2614345_0106 - 0602_3047127_01.fm

4.3.2-4 Pneumatic Panel - Set Filter Regulator

Machine Status	Mains Power ON Air ON
SPC Reference	2758512-0100

a) Press down and rotate the shut off valve (1) to switch the air on.

b) Rotate the pressure regulator knob (2) until the gauge (3) indicates 6.0 Bar / 0.6 MPa.

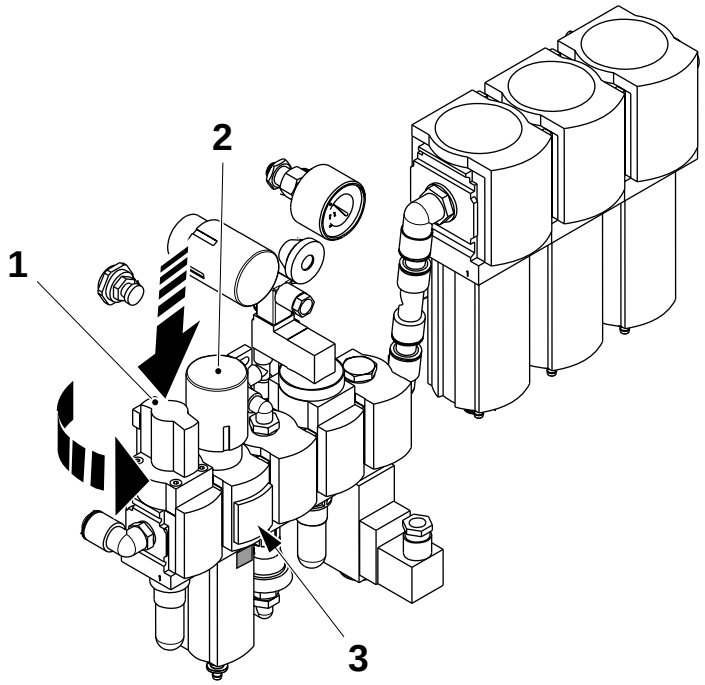

1 Shut off valve
2 Pressure regulator knob
3 Gauge

TechPub_2614345_0106 - 0602_3047127_01.fm

4.4 Lubrication Unit

SPC Reference	2758522-0100

4.4-1 Central Lubrication

System Functional Description

Central lubrication system is both a one-way and a return system. This means that the one way system to the pushdown must be bled to achieve functionality where the rest of the system is automatic.

Note! There is no manual lubrication button as to do so will force oil through the seals on the pushdown.

Oil is fed from the central lubrication pump through the main line, distribution block and into the non return valves.

- The pump keeps the oil under pressure for a short while then the system is decompressed to a pressure of approximately 0.1 - 0.3 MPa.
- If the remaining pressure is to low air might enter the system.

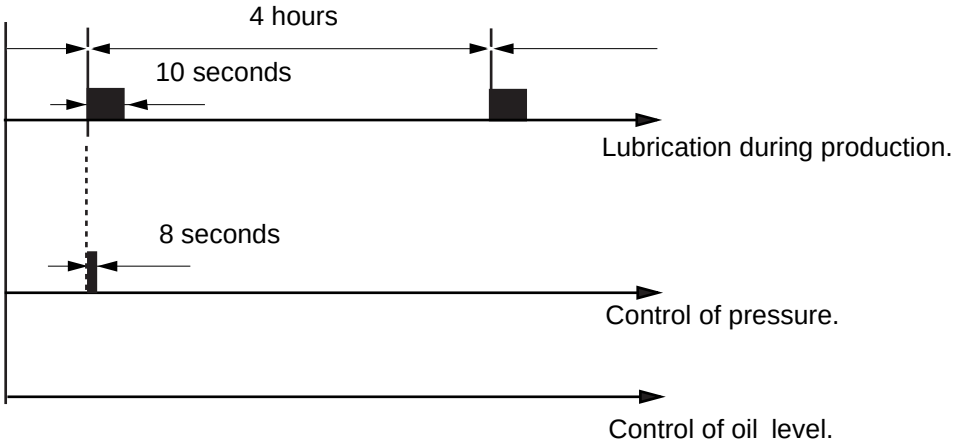

TechPub_2614345_0106 - 0602_3047128_01.fm

(Cont'd)

(Cont'd)

The time needed for the compression, depends on the viscosity of the lubricant, running temperature and the size of the system.

The lubrication sequences is:

- Automatic lubrication during production = one lubrication pulse every fourth hour

During production (drive motor on) the lubrication sequence “lubrication during running” is activated.

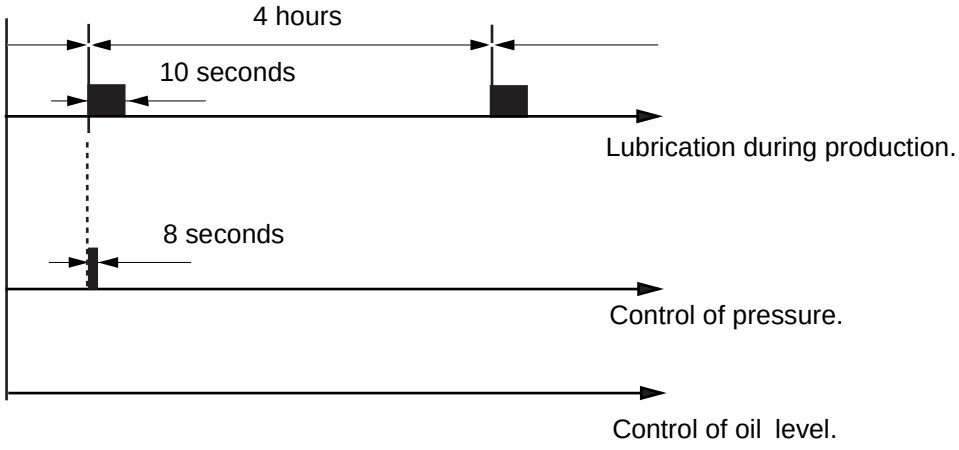

TechPub_2614345_0106 - 0602_3047128_01.fm

Lubrication Unit - Functional Description

The central lubrication unit consists of the level guard (1) and the pneumatic oil pump (2) which is built into the oil reservoir (3). The oil reservoir (3) is equipped with the air inlet pipe (4), the air exhaust (5), the air breather (6), the main oil pipe (7) and the oil return pipe (8). There is also a low pressure switch (9) and an oil filter (10).

Note! The air breather (6) can vary in shape.

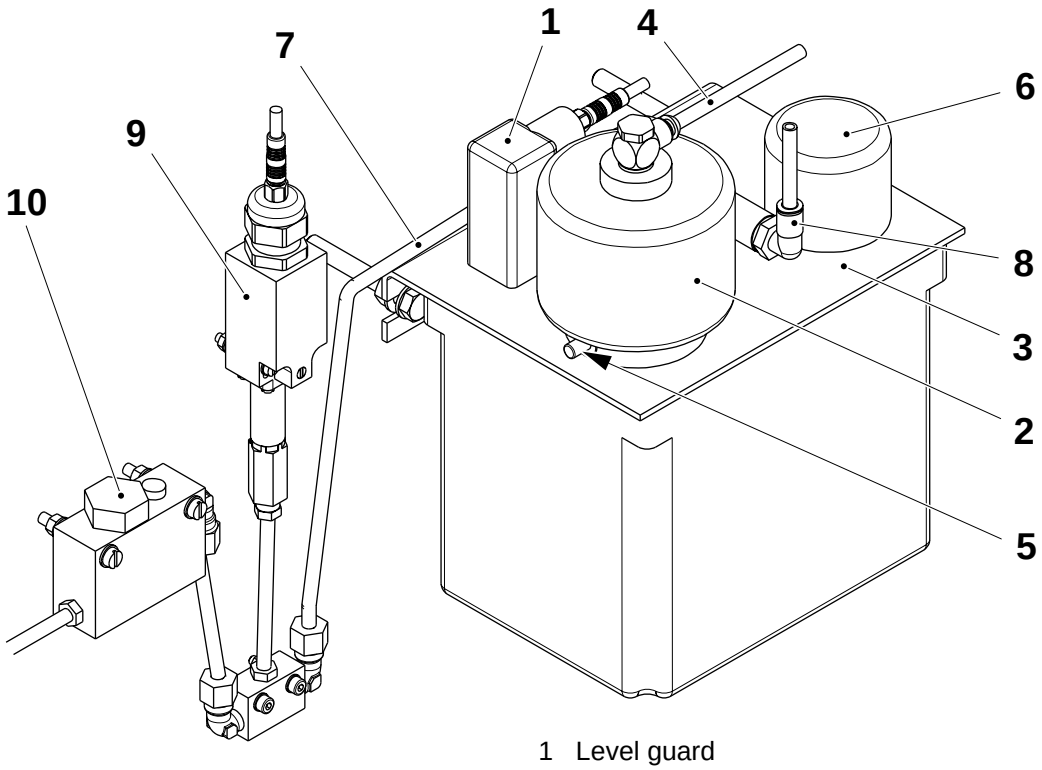

1 Level guard
2 Pneumatic oil pump
3 Oil reservoir
4 Air inlet pipe
5 Air exhaust
6 Air breather
7 Main oil pipe
8 Oil return pipe
9 Low pressure switch
10 Oil filter

TechPub_2614345_0106 - 0602_3047128_01.fm

Level Guard - Functional Description

The oil pump is equipped with a level guard. A warning light is activated at minimum level and a timer which counts 60 minutes starts. If the central lubrication oil reservoir is not refilled within this time limit, the machine stops.

The minimum level is set at a level which prevents the suction pipe from sucking in from the surface level of the oil, where there might be dirt which is lighter than the oil.

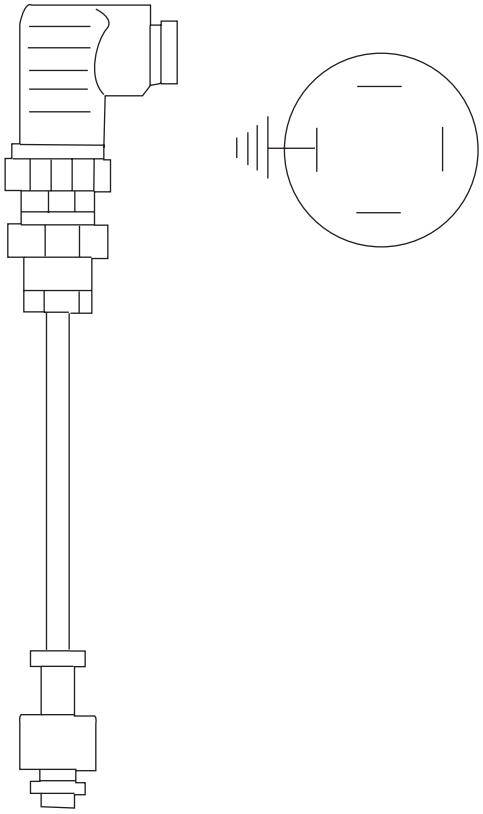

TechPub_2614345_0106 - 0602_3047128_01.fm

4.4.1 Central Lubrication

4.4.1-1 Central Lubrication - Check Level Switch

Machine Status	PRODUCTION
SPC Reference	2838677-0100

Level Switch 01B901

a) Check the level switch 01B901 (1) by pushing up the level switch magnetic float (2) to its top position. Make sure the recessed section is uppermost.

b) With a wiring tester check continuity between contacts (3) and (4), if there is no continuity change the level switch (1).

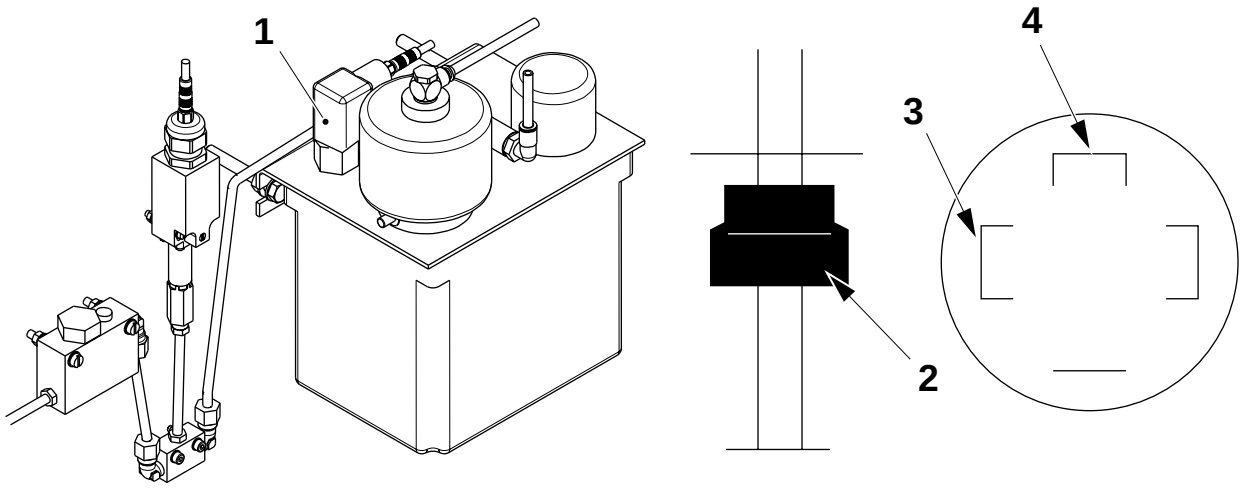

1 Level switch
2 Magnetic float
3 Contact
4 Contact

TechPub_2614345_0106 - 0602_3047128_01.fm

4.4.1-2 Central Lubrication - Check Pressure Switch

Machine Status	PRODUCTION
SPC Reference	2838677-0100

Pressure Switch 01B902

Remove the cap and check that the pin (1) moves when the solenoid valve for the lubrication pump is actuated and the connection of the switch (2) is closed.

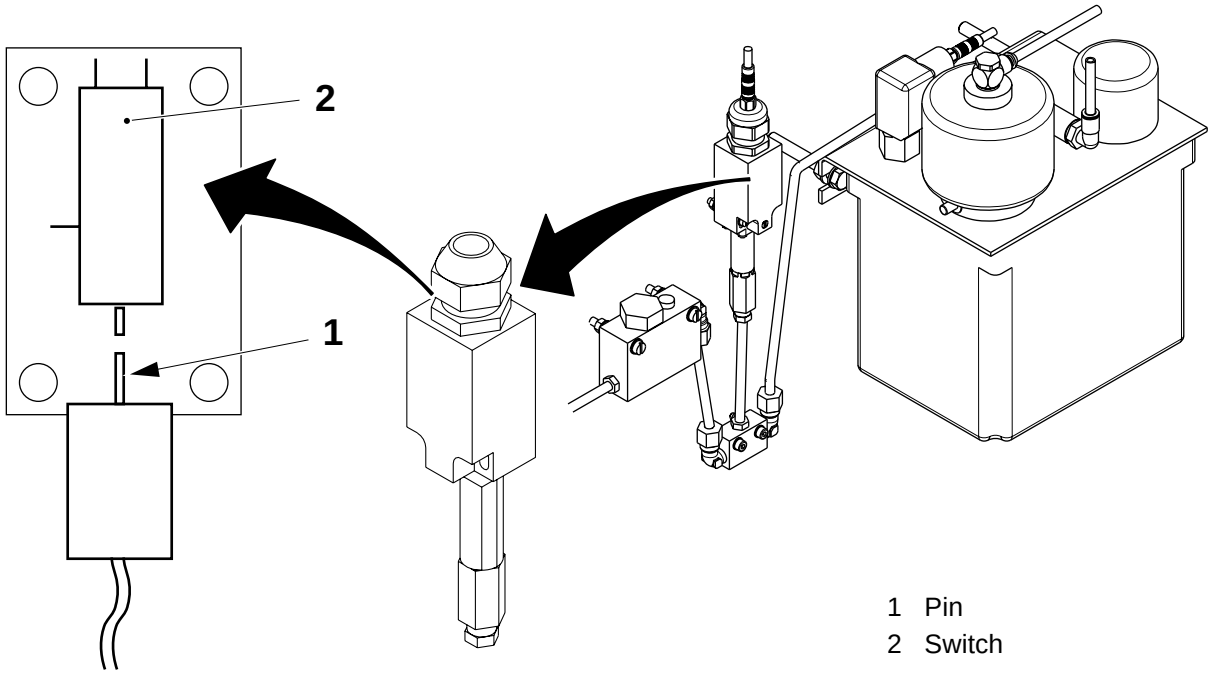

1 Pin
2 Switch

TechPub_2614345_0106 - 0602_3047128_01.fm

4.4.1-3 Central Lubrication - Clean Oil Tank

Machine Status	Mains Power OFF Air OFF
SPC Reference	2838677-0100 Shell Omala 320: 90296-0100

a) Remove the screws (1) and drain any pollutants from the reservoir (2).

b) Clean the reservoir (2) and refill with new oil.

c) Install the reservoir (2) and tighten the screws (1).

The oil should be Shell Omala 320.

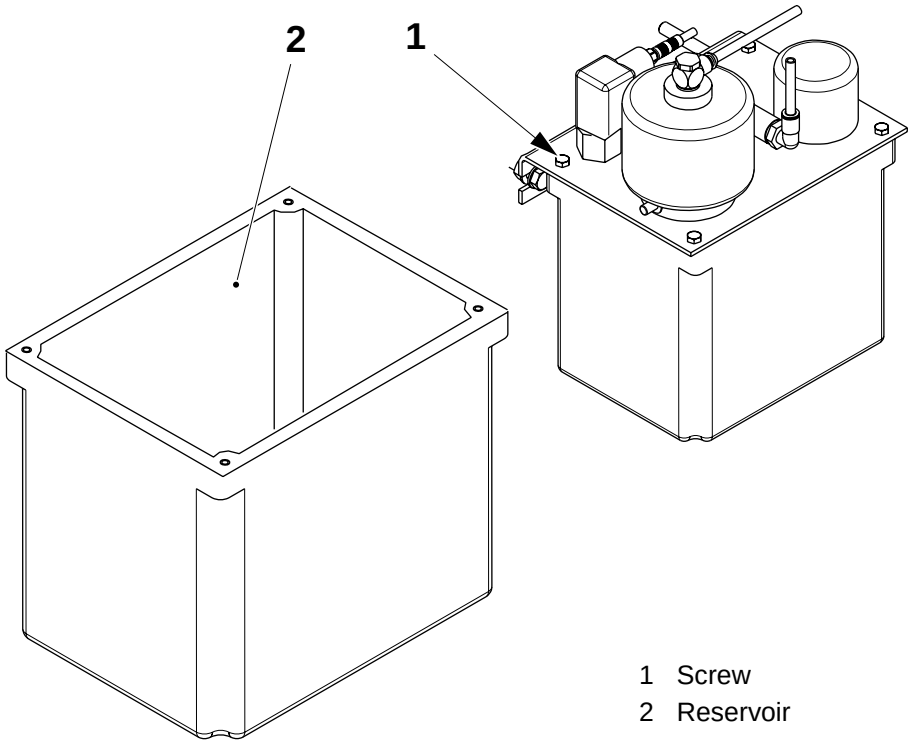

1 Screw
2 Reservoir

TechPub_2614345_0106 - 0602_3047128_01.fm

4.4.1-4 Central Lubrication - Fault Finding

Machine Status	PRODUCTION
SPC Reference	2838677-0100

If No Pressure Builds Up In System

To find the fault, do the following:

a) Check the oil level.

b) Disconnect one oil hose and check if there is oil pressure in the hose when the solenoid valve is opened.

c) If there is still no pressure, disconnect the air hose at the pump and check if there is air pressure in the hose when the solenoid valve is opened. Use a pressure gauge (range 0 - 10 bar) to check that the air pressure to the pump is approximately 6 bar.

d) Check all pressure lines and manifolds (distribution blocks) for leakage.

e) If all these checks have been carried out without finding any fault, replace the pump. Check the lubrication system after replacing the pump.

If Oil Is Not Delivered To One Or More Of The Lubrication Points

To find the fault, do the following:

a) Check the main oil line concerned is clear of obstructions.

b) Check the capacity of the pump with the aid of a pressure gauge in accordance with the directives on periodical maintenance.

TechPub_2614345_0106 - 0602_3047128_01.fm

4.5 Hotmelt Unit

SPC Reference	1188076-0400

4.5-1 Functional Description

DANGER

Risk of immediate danger to life.
The voltage is 400V inside the hotmelt unit. There is risk of immediate danger to life through electrical shock if the warning signs are ignored.

WARNING

Risk of personal injury.
Carefully follow the safety instructions in the ii Safety Precautions Chapter and the Nordson manual.

Note! The hotmelt wheel is part of the Cap Applicator and are described further in Chapter 5.6 Hotmelt Wheel.

TechPub_2614345_0106 - 0602_3047129_01.fm

4.5.1-1 Hotmelt Equipment - Check

WARNING

Risk of burns.

Hot adhesive. Wear safety glasses, protective gloves and other protective clothing to avoid injuries from hot adhesive.

Note! The hotmelt equipment must be at operating temperature.

a) Remove the screws (1) and the cover (2).

b) Check the hose (3) and the connections (4) for wear, damage and leaks. Change parts if necessary.

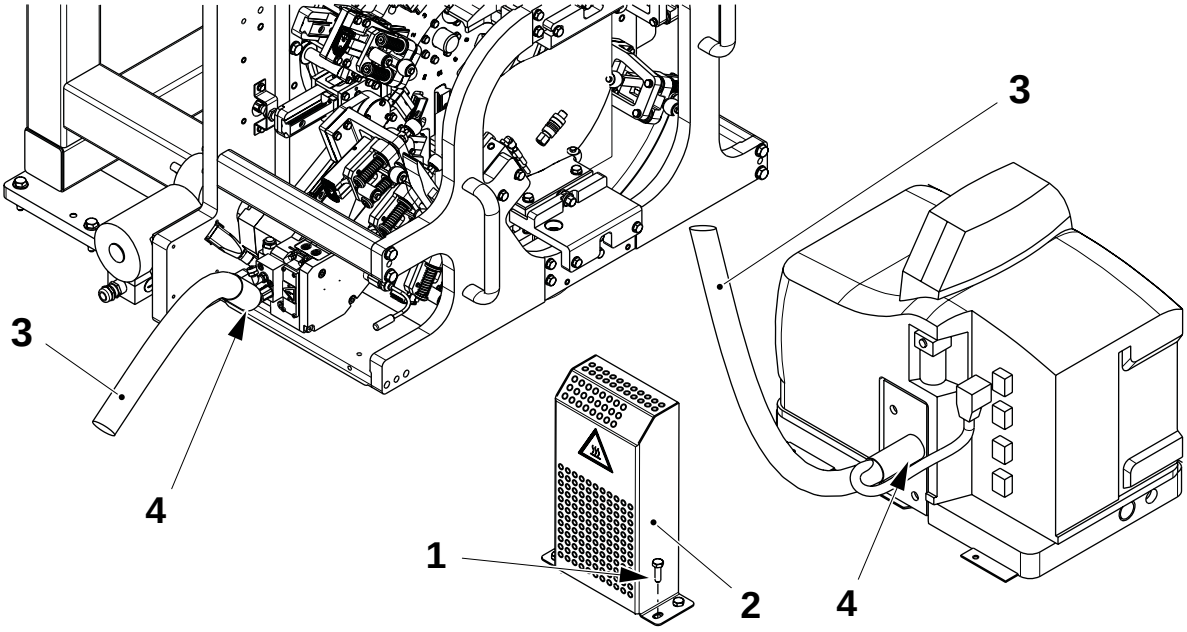

1 Screw
2 Cover
3 Hose
4 Connection

(Cont'd)

TechPub_2614345_0106 - 0602_3047129_01.fm

(Cont'd)

c) Look at the colour of the hotmelt in the tank. The colour should be light yellow. If the hotmelt material has become brown, empty the tank and fill with new hotmelt. To empty the tank, see 4.5.1-2 Hotmelt Equipment - Empty Tank.

TechPub_2614345_0106 - 0602_3047129_01.fm

4.5.1-2 Hotmelt Equipment - Empty Tank

Machine Status	STEP 2 Air ON
SPC Reference	1188076-0400

a) Make sure that the main air supply is turned ON.

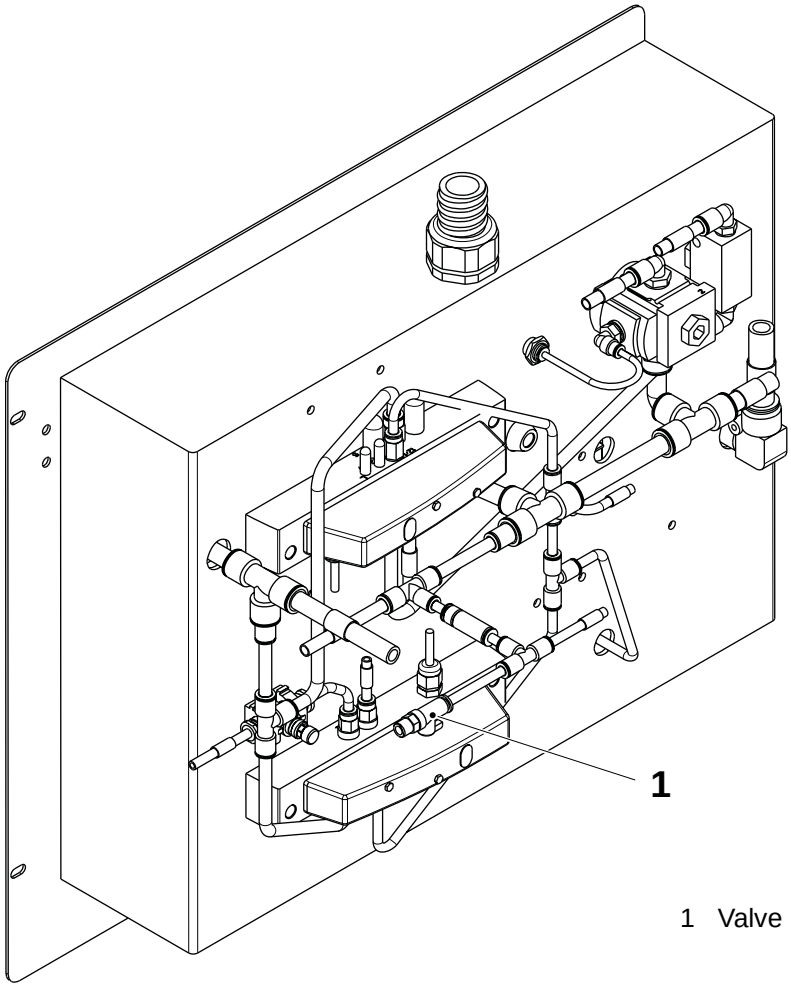

1 Valve

(Cont'd)

TechPub_2614345_0106 - 0602_3047129_01.fm

(Cont'd)

WARNING

Risk of burns.

Hot adhesive. Wear safety glasses, protective gloves and other protective clothing to avoid injuries from hot adhesive.

Note! The hotmelt equipment must be at operating temperature.

Note! Do not let hotmelt adhesive go onto machine parts.

b) Turn the pressure regulator screw (2) in a counter clockwise direction to reduce the operating air pressure to 1.4 bar (0.14 MPa). The pressure is shown on the gauge (3).

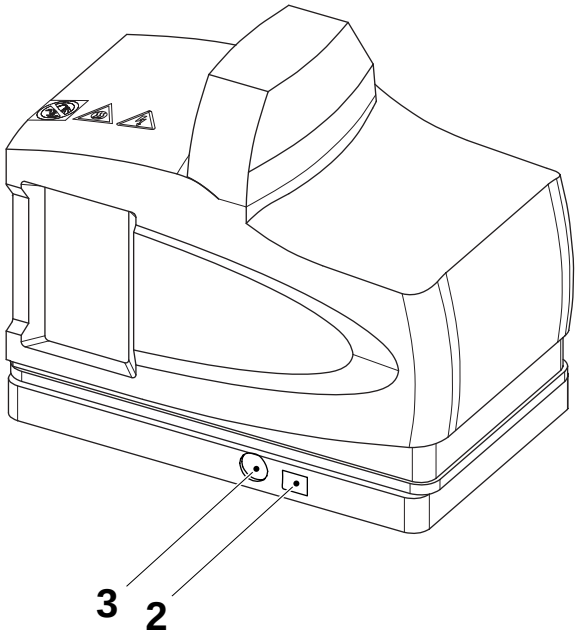

2 Pressure regulator screw
3 Gauge

TechPub_2614345_0106 - 0602_3047129_01.fm

(Cont'd)

(Cont'd)

c) Pull down the drain chute (4) and put a container under the drain chute.

d) Slowly turn the drain valve (5) counterclockwise until the adhesive begins to flow.

e) Empty the tank (6).

f) Close the drain valve (5) in a clockwise direction and push up the drain chute (4).

g) If required, fill the tank (6) with adhesive. For recommended type of hotmelt material, see 11.1-3 Hotmelt Specification.

h) Set the air pressure regulator, see Hotmelt Unit - Set Air Pressure in the chapter 4.5.1-4 Hotmelt Equipment - Set Parameters.

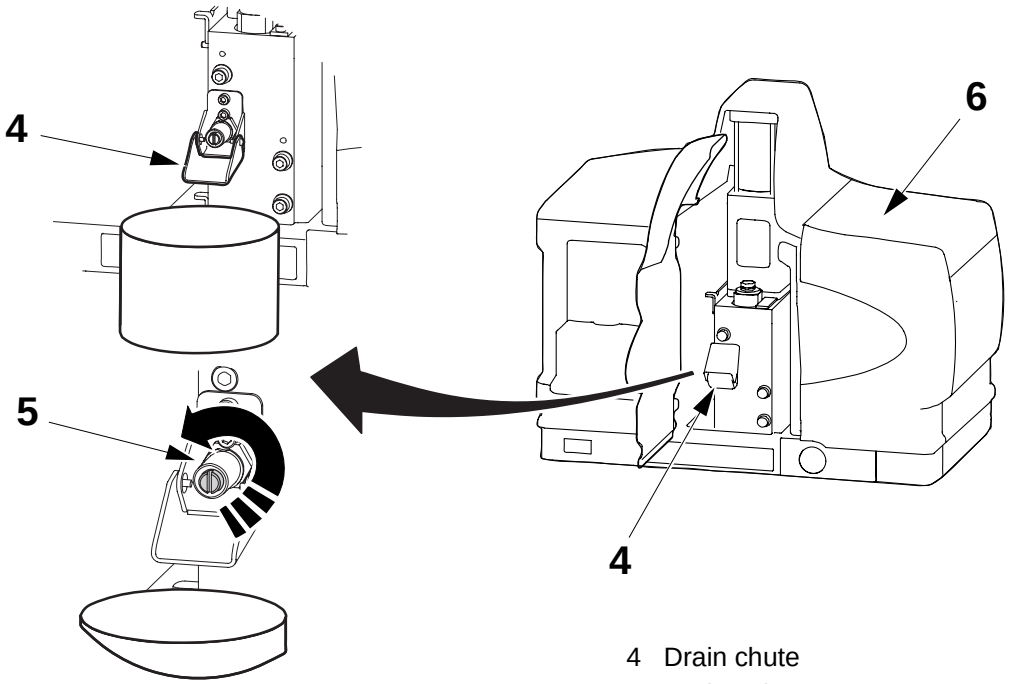

4 Drain chute
5 Drain valve
6 Tank

TechPub_2614345_0106 - 0602_3047129_01.fm

4.5.1-3 Hotmelt Equipment - Change Filter

Machine Status	Mains Power OFF Air OFF
SPC Reference	1188076-0400

WARNING

Risk of burns.

Hot adhesive. Wear safety glasses, protective gloves and other protective clothing to avoid injuries from hot adhesive.

Note! The hotmelt equipment must be at operating temperature.

Note! Do not let hotmelt adhesive go onto machine parts.

a) Release the air pressure see, 4.5.1-2 Hotmelt Equipment - Empty Tank.

b) Put a container below the drain chute (1) and slowly open the drain valve (2) to relieve system pressure.

c) Remove the filter (3).

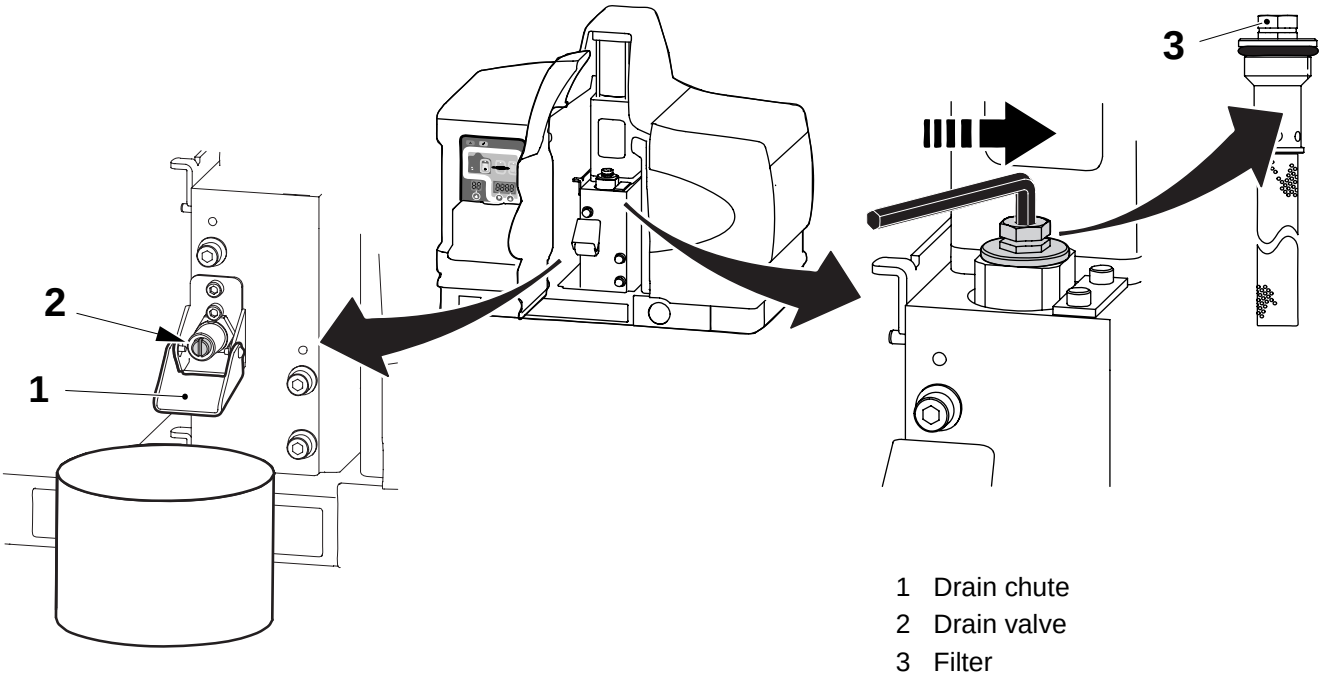

1 Drain chute
2 Drain valve
3 Filter

TechPub_2614345_0106 - 0602_3047129_01.fm

(Cont'd)

(Cont'd)

d) Before the new filter is installed, check that the O-ring (4) is in good condition and if necessary replace the O-ring (4).

e) Install the filter (3) and tighten to 4.5 Nm (40 in.lb.).

f) Close the drain valve (2).

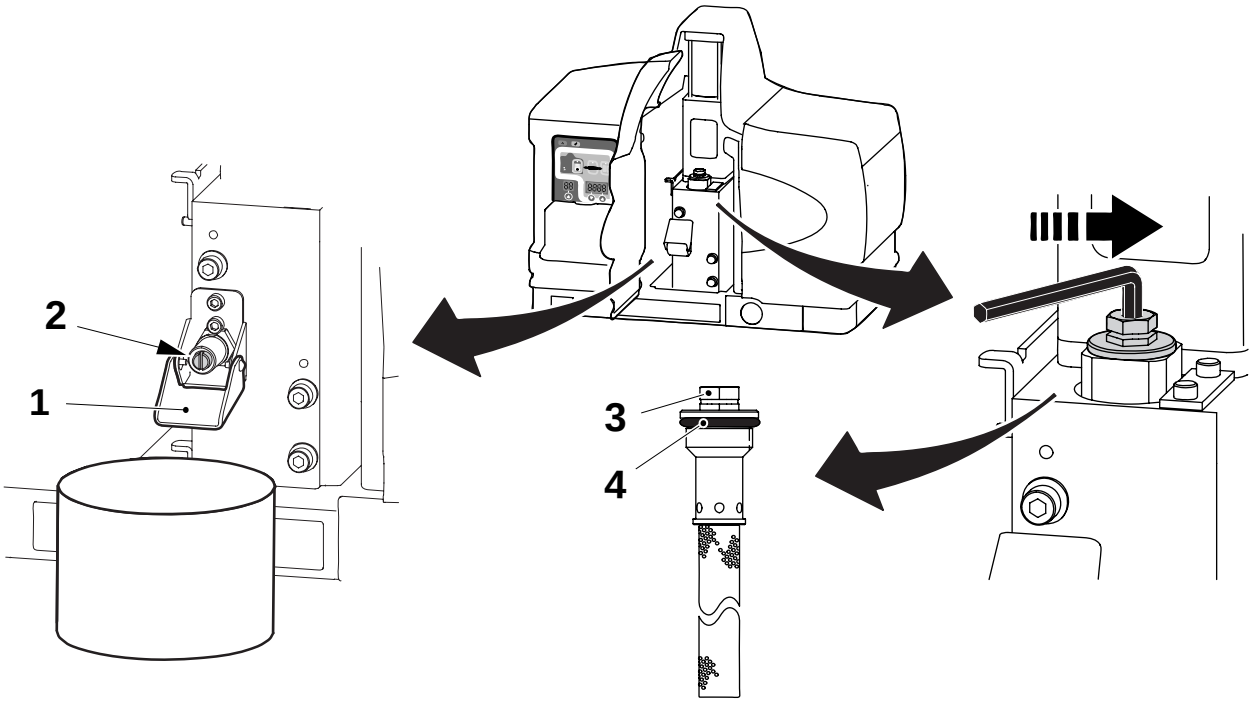

2 Drain valve
3 Filter
4 O-ring

TechPub_2614345_0106 - 0602_3047129_01.fm

Panel Overview

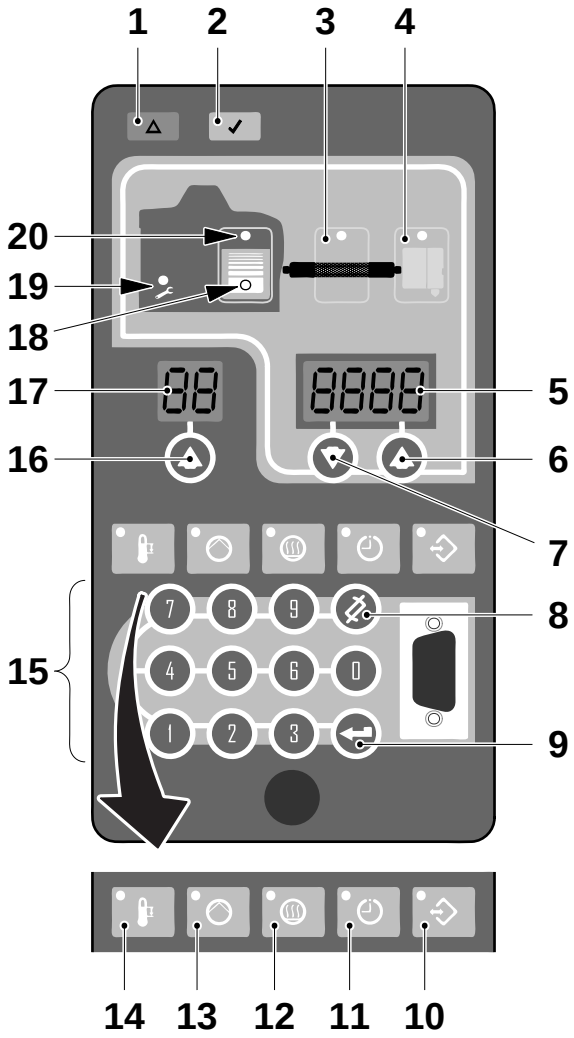

1 Fault LED
2 Ready LED
3 HOSE-key
4 Wheel-key
5 Multipurpose display
6 UP-key for multipurpose display
7 DOWN-key for multipurpose display
8 CLEAR/RESET-key
9 ENTER-key
10 SETUP-key
11 SEVEN DAY CLOCK-key
12 HEATER-key
13 PUMP-key
14 STANDBY-key
15 Keypad
16 UP-key for selector display
17 Selector display
18 Low level LED (not used)
19 Service LED
20 TANK-key

(Cont'd)

TechPub_2614345_0106 - 0602_3047129_01.fm

(Cont'd)

Parameter Description

Parameter	Parameter Name	Purpose	Setting
4	Ready Time Delay	A timer that delays the activation of the Ready LED after the tank, hose and wheel are at the set point temperature. This allows additional time for the hotmelt material to melt.	10 minutes
20	Temperature Units	Sets the display temperature units to Celsius or Fahrenheit. 0 = Celsius, 1 = Fahrenheit	Celsius
21	Over Temperature Delta Value	Sets the number of degrees (delta value) that any heated component can exceed above its assigned set point before an over temperature fault occurs	5°C
22	Under temperature Delta Value	Sets the number of degrees (delta value) that any heated component can drop below its assigned setpoint before an under temperature fault occurs	5°C
30	Standard Input 1	Hose/wheel Enable/Disable	6
31	Standard Input 2	Standby NO/OFF	1
40 (or 8)	Standard Output 1	Ready and Pump is ON	2

TechPub_2614345_0106 - 0602_3047129_01.fm

4.5.1-4 Hotmelt Equipment - Set Parameters

Machine Status	Mains Power ON Air ON
SPC Reference	1188076-0400

WARNING

Risk of burns.

Hot adhesive. Wear safety glasses, protective gloves and other protective clothing to avoid injuries from hot adhesive.

Note! For detailed information, see the Nordson Pro Blue Adhesive Melters Manual.

a) Make sure that there is hotmelt material in the tank (1).

Note! For recommended type of hotmelt material see 11.1-3 Hotmelt Specification.

b) Make sure the hotmelt unit power switch (2) is ON.

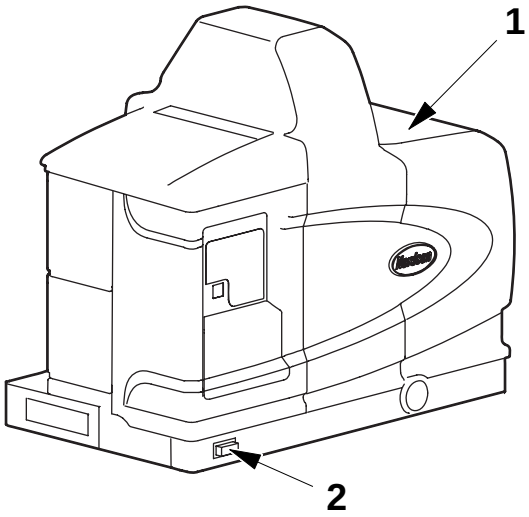

1 Tank
2 Power switch

(Cont'd)

TechPub_2614345_0106 - 0602_3047129_01.fm

(Cont'd)

Set Parameters

a) Press the SETUP-key (1). The selector display (2) starts to flash.

b) Use the UP-key (3) or the keypad (4) to select a parameter.

c) Press the ENTER-key (5) to confirm the selected parameter. The multipurpose display (6) starts to flash.

d) Use the UP-key (7), the DOWN-key (8) or the keypad (4) to enter the required value.

e) Press the ENTER-key (5) to confirm the required value. The next parameter is displayed in the selector display (2).

f) Either continue to set the next parameter or press the SETUP-key (1) twice to exit the setup procedure.

Note! If the current setting can not be changed, the display is password protected. For further information read Nordson Pro Blue Adhesive Melters Manual, Chapter 4, “Enter the Melter Password”.

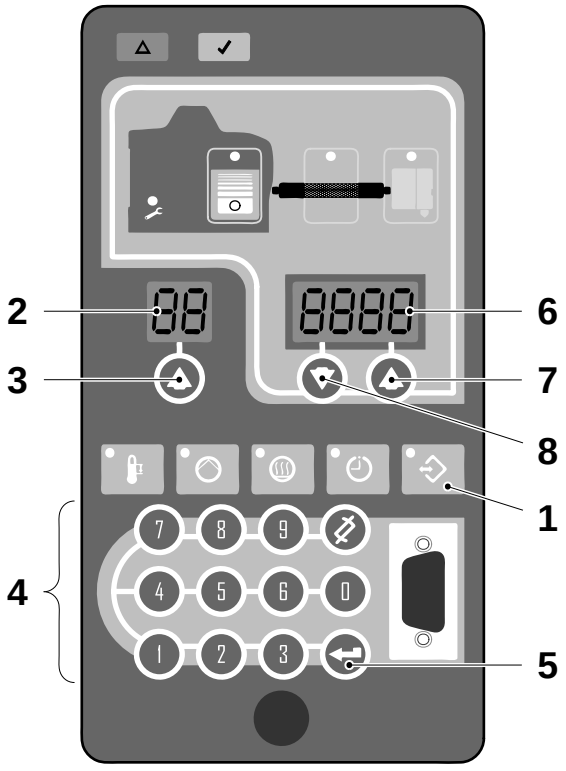

1 SETUP-key
2 Selector display
3 UP-key
4 Keypad
5 ENTER-key
6 Multipurpose display
7 UP-key
8 DOWN-key

(Cont'd)

TechPub_2614345_0106 - 0602_3047129_01.fm

(Cont'd)

Set Tank, Hose and Wheel Temperatures

Note! See 11.1 Technical Data chapter for temperature values.

a) Press the TANK-key (1), the HOSE-key (2) or the wheel-key (3) for 3 seconds.
The digit “1” appears in the selector display (4).

b) Use the UP-key (5) or the keypad (6) to change the digit in the selector display (4).

c) Press the ENTER-key (7) to confirm the selected digit.
The multipurpose display (8) starts to flash.

d) Press the DOWN-key (9), the UP-key (10), or the keypad (6) to enter the required value.

e) Press the ENTER-key (7) to confirm the required value.

f) Either continue to set more temperature values or press the SETUP-key (11) twice to exit the setup procedure.

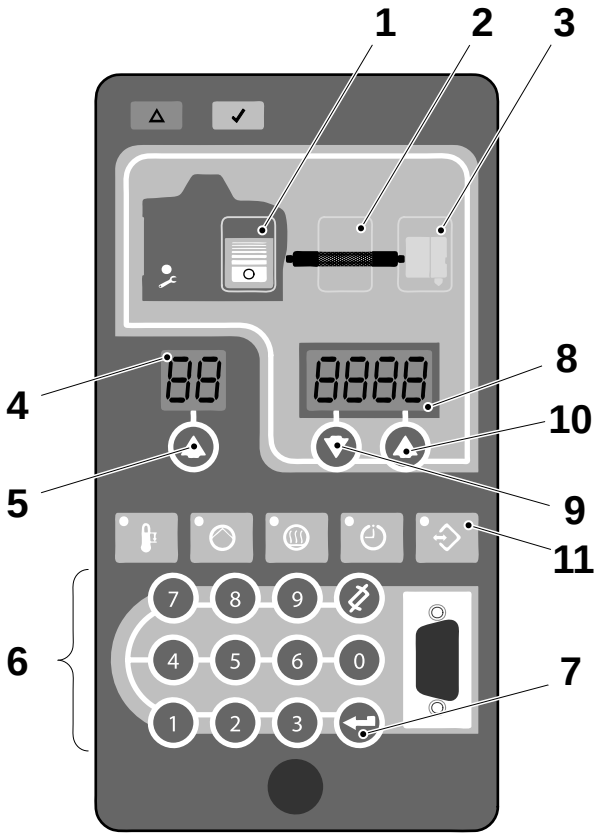

1 TANK-key
2 HOSE-key
3 Wheel-key
4 Selector display
5 UP-key
6 Keypad
7 ENTER-key
8 Multipurpose display
9 DOWN-key
10 UP-key
11 SETUP-key

(Cont'd)

TechPub_2614345_0106 - 0602_3047129_01.fm

(Cont'd)

Hotmelt Unit - Set Air Pressure

Adjust the pressure regulator screw (1) to set the operating air pressure at 1.4.bar for the hotmelt unit. The pressure is shown on the gauge (2). See 11.1-1 Pressures for air pressure values.

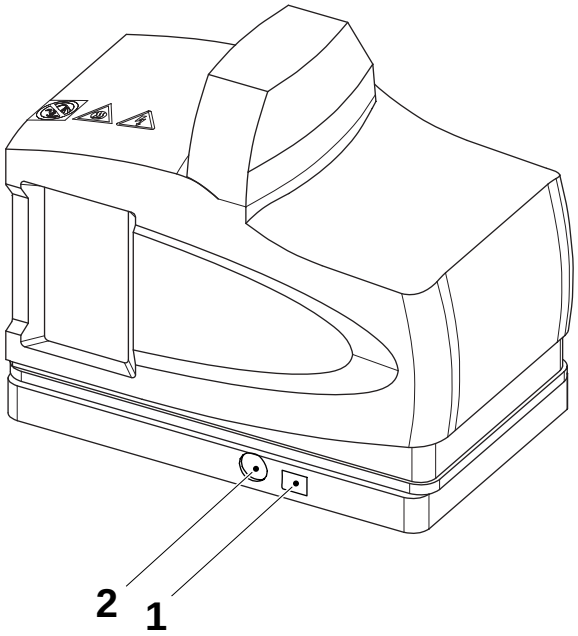

1 Pressure regulator screw
2 Gauge

TechPub_2614345_0106 - 0602_3047129_01.fm

4.5.1-5 Hotmelt Equipment - F2 Alarm

Machine Status	Mains Power ON Air ON
SPC Reference	1188076-0400

Note! If the wheel has cooled down, an alarm “F2” locks the hotmelt unit. The hotmelt unit needs to be reset and reheated.

a) Press the CLEAR/RESET-key (1).

b) Press the HEATER-key (2).

c) The hotmelt unit starts to heat up.

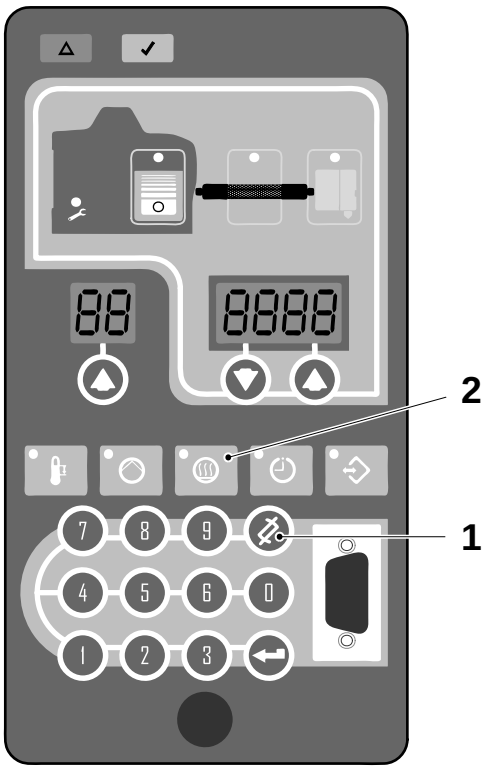

1 CLEAR/RESET-key
2 HEATER-key

TechPub_2614345_0106 - 0602_3047129_01.fm

4.6 Operator Interface

SPC Reference	662905-0200

4.6.1 Operator Interface - TPOP

4.6.1-1 TPOP - Change

Machine Status	Mains Power OFF Air OFF
SPC Reference	2769738-0100

DANGER

Hazardous voltage and moving machinery.
The power supply disconnector must be turned off and secured with a lock before any maintenance.

Note! The key to the lock must be removed by the technician and retained in his/her possession until all work is completed.

a) Release the two screws (1) and open the door (2).

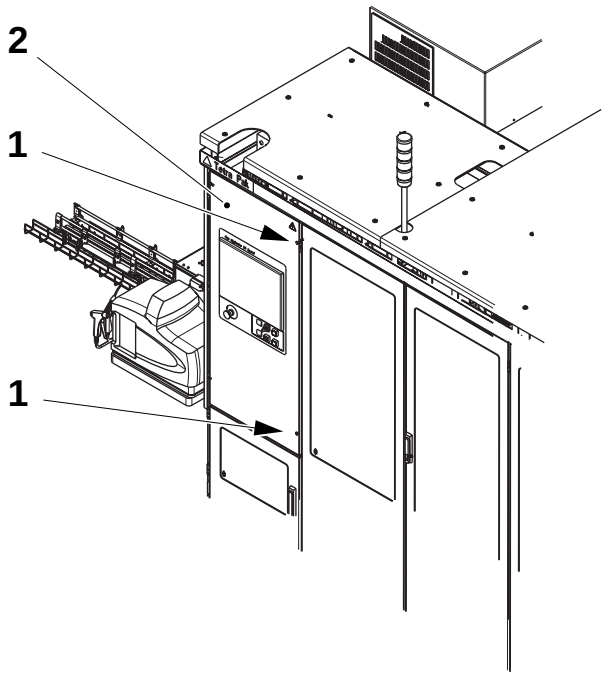

1 Screw
2 Door

(Cont'd)

TechPub_2614345_0106 - 0603_3047180_01.fm

(Cont'd)

b) Release the door (3) by turning the locks (4) with the key supplied.

c) Disconnect the electrical connections from the TPOP making a note from where.

d) Tape or hold the panel (5), release the eight screws (6) and remove the panel (5) from the front of the door (2).

e) Assemble in the reverse order. For the control panels firmware ect., see, 8.8-1-2 Control Panel - Touch Screen.

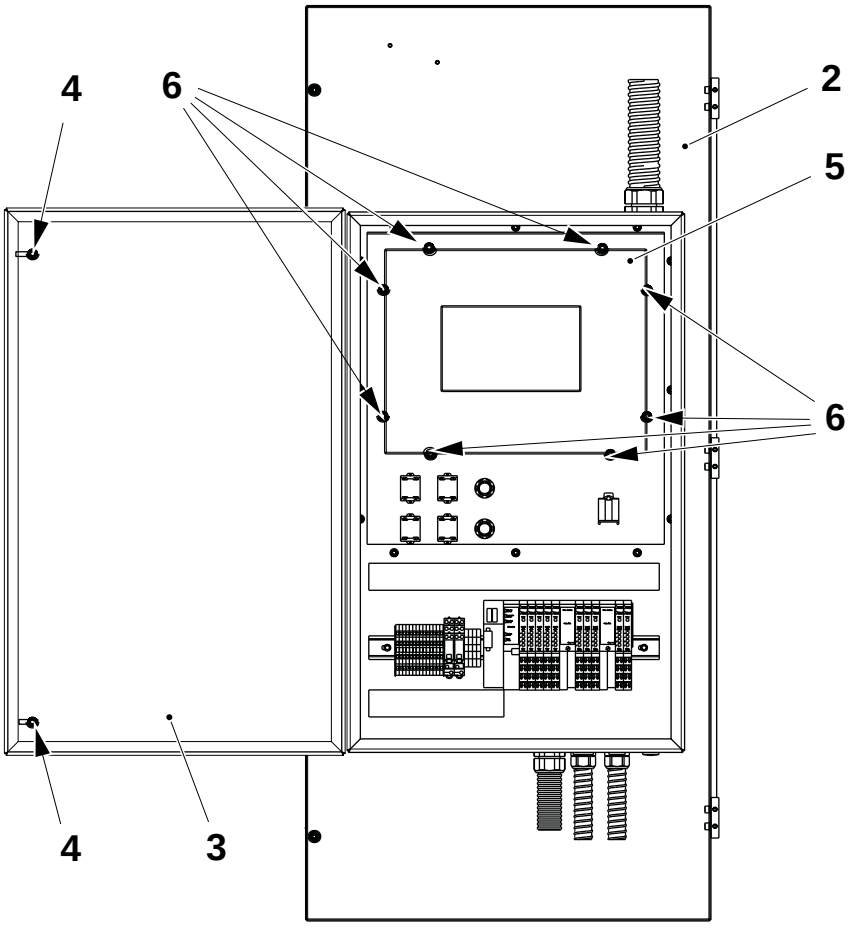

2 Door
3 Door
4 Lock
5 Panel
6 Screw

TechPub_2614345_0106 - 0603_3047180_01.fm

4.7 Machine Body

SPC Reference	2769738-0100

4.7.1 Conveyor - Height Adustment

4.7.1-1 Height Adjustment - Check

Machine Status	Mains Power OFF Air OFF
SPC Reference	2769738-0100

a) Make sure that all parts are free from dirt.

b) When it is necessary to adjust the height make sure that the lock (1) is released.

c) Make sure that the machine body (2) moves freely when the handle (3) is turned.

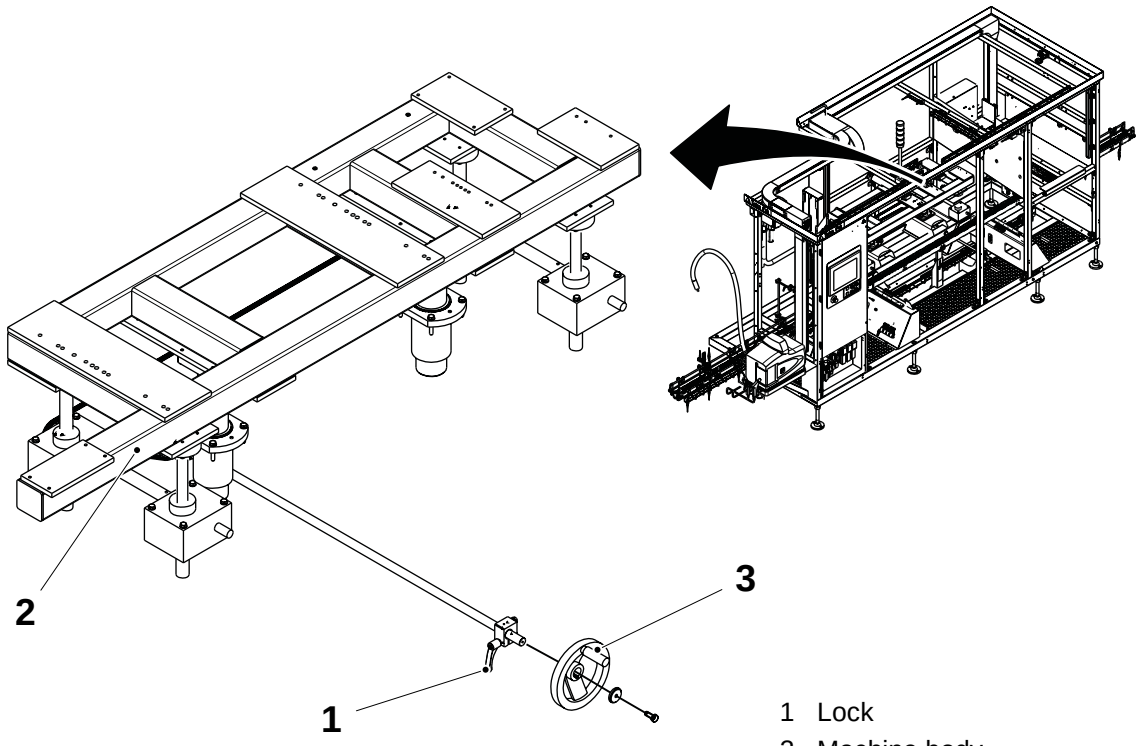

1 Lock
2 Machine body
3 Handle

TechPub_2614345_0106 - 0603_3047181_01.fm

4.7.1-2 Height Adjustment - Set

Machine Status	Mains Power OFF Air OFF
SPC Reference	2769738-0100

Set the distance **A** from the top of the conveyor belt (1) to the bottom of the pushdown finger (2) by turning the handle (3).

Note! Make sure that the conveyor is level (Y) and square (X), also check the packages for squareness.

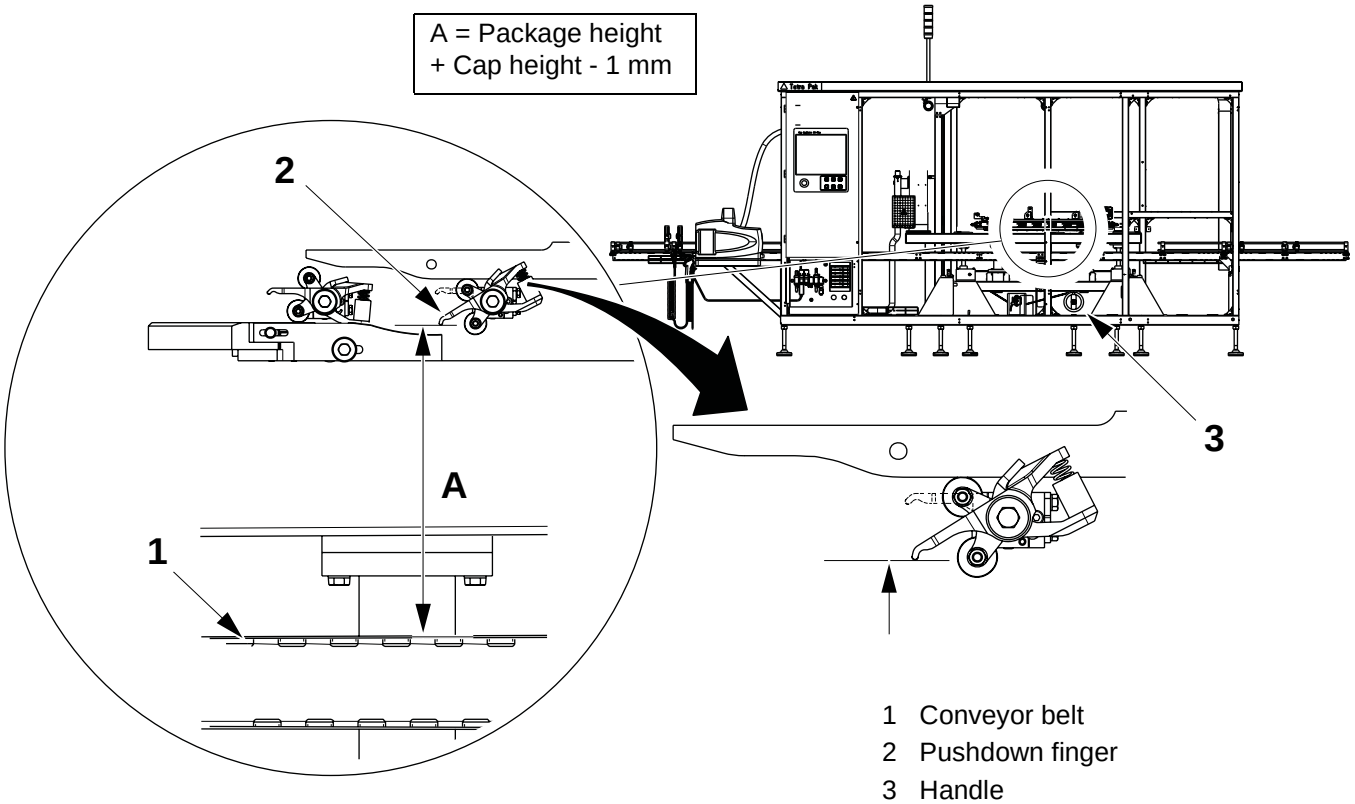

1 Conveyor belt
2 Pushdown finger
3 Handle

TechPub_2614345_0106 - 0603_3047181_01.fm

5 Applicator Unit

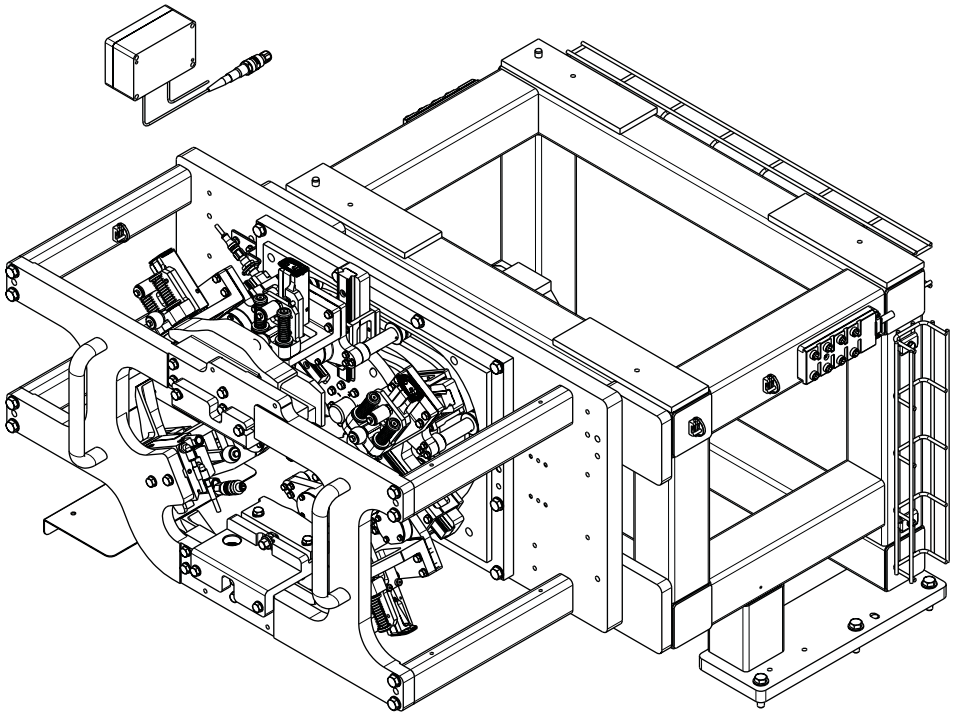

TechPub_2614345_0106 - 0702_3047130_01.fm

Applicator Unit - Description

SPC Reference	662906-0200

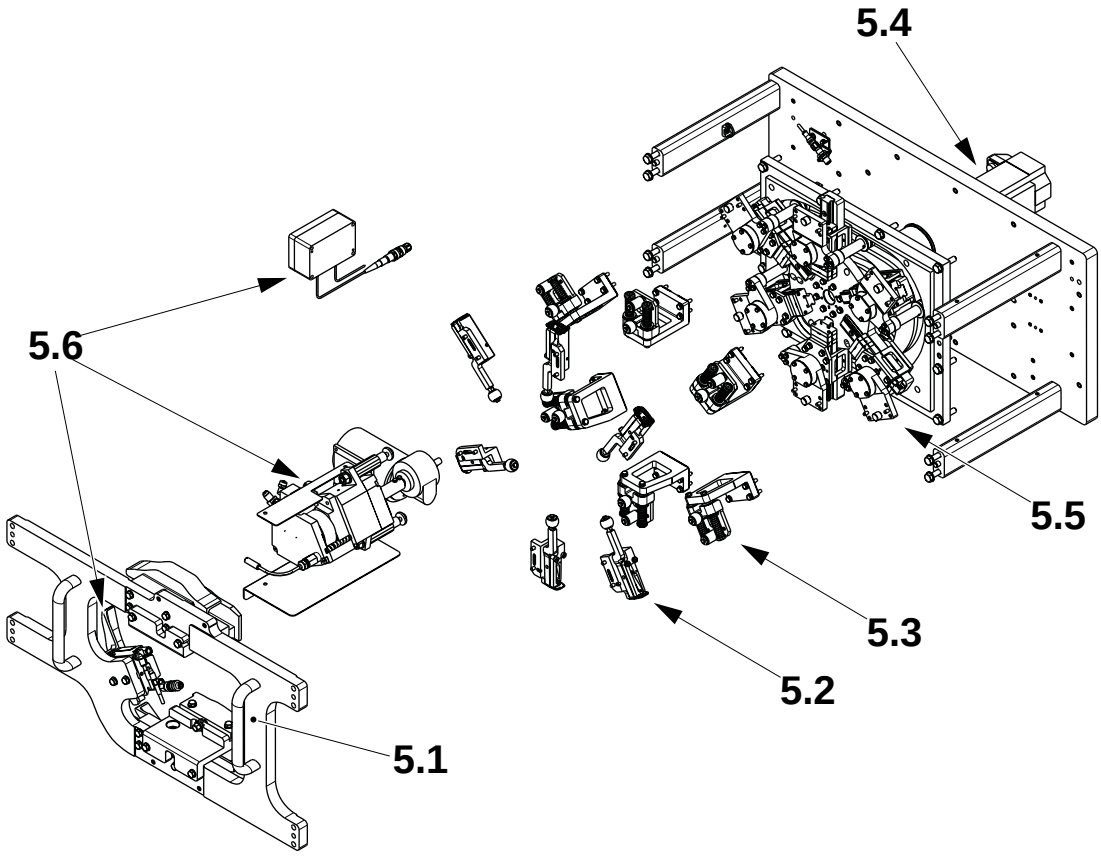

5.1 Cam Module
5.2 Cap Holders Group
5.3 Cap Carrier
5.4 Drive Unit
5.5 Transfer Unit
5.6 Hotmelt Wheel

TechPub_2614345_0106 - 0702_3047130_01.fm

5.0 Applicator Unit - Functional Description. . . . . 5 - 5

5.1 Cam Module . . . . . 5 - 6

5.1.1 Cams - Settings . . . . . 5 - 6

5.1.1-1 Cams - Set Picking and Gripper Cams . . . . . 5 - 6

5.1.1-2 Cams - Set Applicator and Release Cams . . . . . 5 - 11

5.1.2 Cam Module - Change . . . . . 5 - 13

5.1.2-1 Cam Module - Removal . . . . . 5 - 13

5.2 Cap Holders Group . . . . . 5 - 14

5.2.1 Cap Holder . . . . . 5 - 14

5.2.1-1 Cap Holder - Check . . . . . 5 - 14

5.2.1-2 Cap Holder - Change Roller and Bushings . . . . 5 - 15

5.2.1-3 Cap Holder - Set Y Position . . . . . 5 - 16

5.3 Cap Carrier . . . . . 5 - 25

5.3.1 Guide Bracket. . . . . 5 - 25

5.3.1-1 Guide Bracket - Check . . . . . 5 - 25

5.3.1-2 Guide Bracket - Change Roller and Bushings . . . . . 5 - 26

5.3.1-3 Guide Bracket - Set X Position . . . . . 5 - 27

5.4 Drive Unit . . . . . 5 - 28

5.4.1 Sensors. . . . . 5 - 28

5.4.1-1 Sensors - Cap Holder No.1 Position . . . . . 5 - 28

5.5 Transfer Unit . . . . . 5 - 29

5.5.1 Star Wheel. . . . . 5 - 29

5.5.1-1 Star Wheel - Set Zero Position . . . . . 5 - 29

5.5.1-2 Star Wheel - Change Outer Cam Follower Bearings . . . . . 5 - 32

5.5.1-3 Star Wheel - Change . . . . . 5 - 33

5.5.1-4 Star Wheel - Change Inner Cam Follower Bearings . . . . . 5 - 34

5.6 Hotmelt Wheel . . . . . 5 - 35

TechPub_2614345_0106 - 0702_3047130_01.fm

5.6-1 Functional Description . . . . . 5 - 35

5.6.1-1 Hotmelt Wheel - Set Cam Position . . . . . 5 - 37

5.6.1-2 Hotmelt Wheel - Calibration . . . . . 5 - 42

TechPub_2614345_0106 - 0702_3047130_01.fm

5.0 Applicator Unit - Functional Description

SPC Reference	2839315-0100

The applicator unit is made up from the following:

- Cam module
- Cap holder group
- Cap carrier
- Drive unit
- Transfer unit

Each of the cap holders collects a cap before the adhesive has been applied and is rotated via the star wheel on the transfer unit (which is driven by the drive unit) until it has passed the hotmelt applicator wheel and is in a position to place the cap on a package.

Cams on the cam module determine how, when and where the cap holder (mounted on the cap carrier group) collects and releases the cap.

TechPub_2614345_0106 - 0702_3047131_01.fm

5.1 Cam Module

SPC Reference	2839315-0100

5.1.1 Cams - Settings

5.1.1-1 Cams - Set Picking and Gripper Cams

Machine Status	Mains Power OFF Air OFF
SPC Reference	2839315-0100

Picking Cam - Z Adjustment

Note! Before setting the cams set the cap holder group see 5.3.1-3 Guide Bracket - Set X Position.

Coarse Setting

a) Inch the machine to 360 degrees.

b) Release the screws (1) and use the screw (2) to set the position of the picking cam (3) so that the stroke at the springs is the distance **A**.

c) Tighten the screws (1).

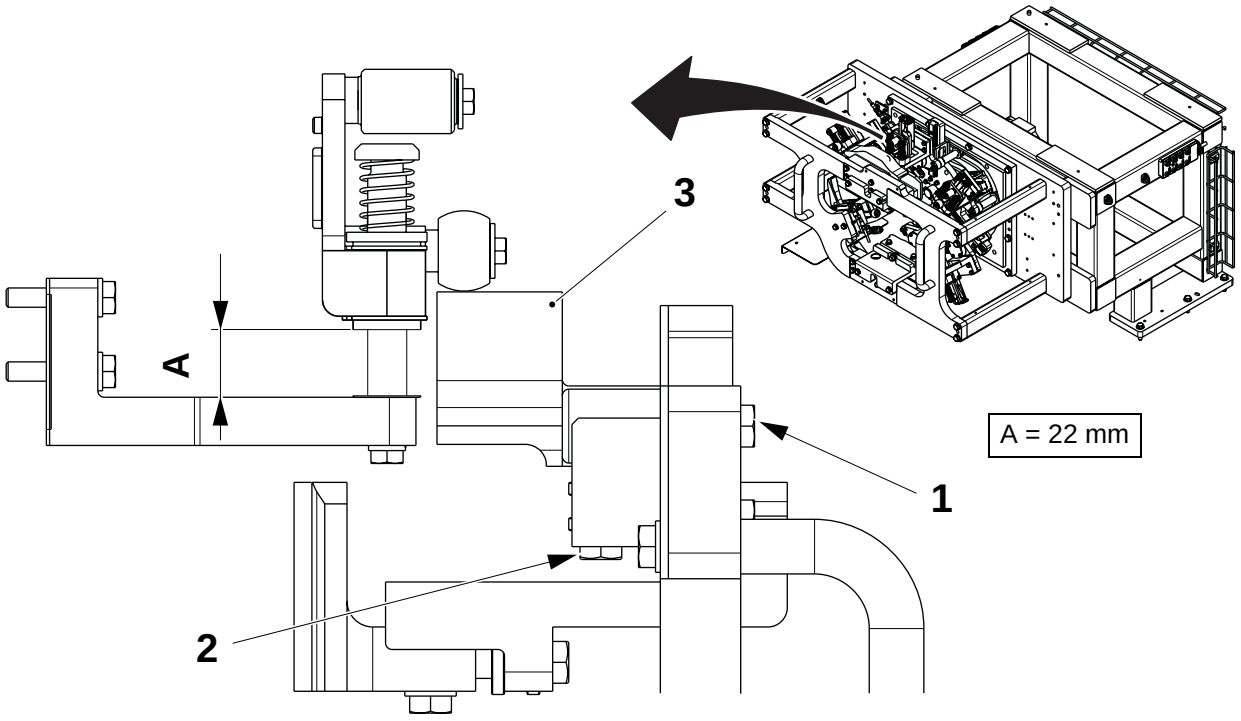

1 Screw
2 Screw
3 Picking cam

(Cont'd)

TechPub_2614345_0106 - 0702_3047131_01.fm

(Cont'd)

Fine Setting

a) Perform the coarse setting, see Coarse Setting.

b) Release the screws (1) and place a cap in the single cut. Inch the machine until the cap holder (2) starts to collect the cap (3).

c) Use the screw (4) to raise the part of the cap holder (2) to the position where the cap (3) moves upward very slightly and then stop.

d) Tighten the screws (1).

e) Inch the machine further and make sure that:

- the cap (3) **does not** lift any higher
- the part of the cap holder (2) makes contact with the cap (3) at the point where the upper surface of the cap (5) meets the curved surface of the cap (6).

Note! Repeat from step b) until correct.

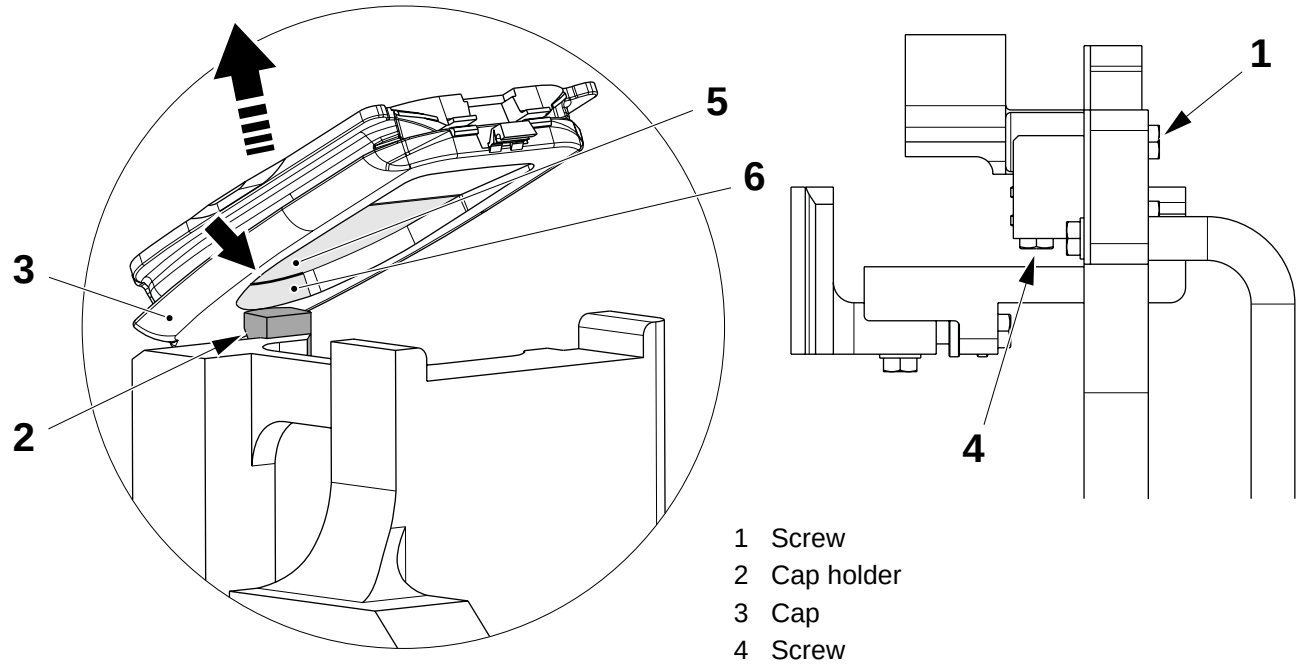

1 Screw
2 Cap holder
3 Cap
4 Screw
5 Upper surface of the cap
6 Curved surface of the cap

(Cont'd)

TechPub_2614345_0106 - 0702_3047131_01.fm

(Cont'd)

Gripper Cam - X and Y Adjustment

Note! Before setting the cams (1), set the cap holder group see 5.3.1-3 Guide Bracket - Set X Position.

The gripper cam has two settings, the X direction that determines the distance that the grippers open and the Y direction that determines when the grippers close.

Opening Distance

a) Release the screws (2).

b) Using the screw (3), adjust the gripper cam (1) to change the distance **A**.

c) Tighten the screws (2).

d) Check that the distance **A** is equal at each end of the cam (1).

Note! Check that the grippers (4) clear the cap (5) when they are open.

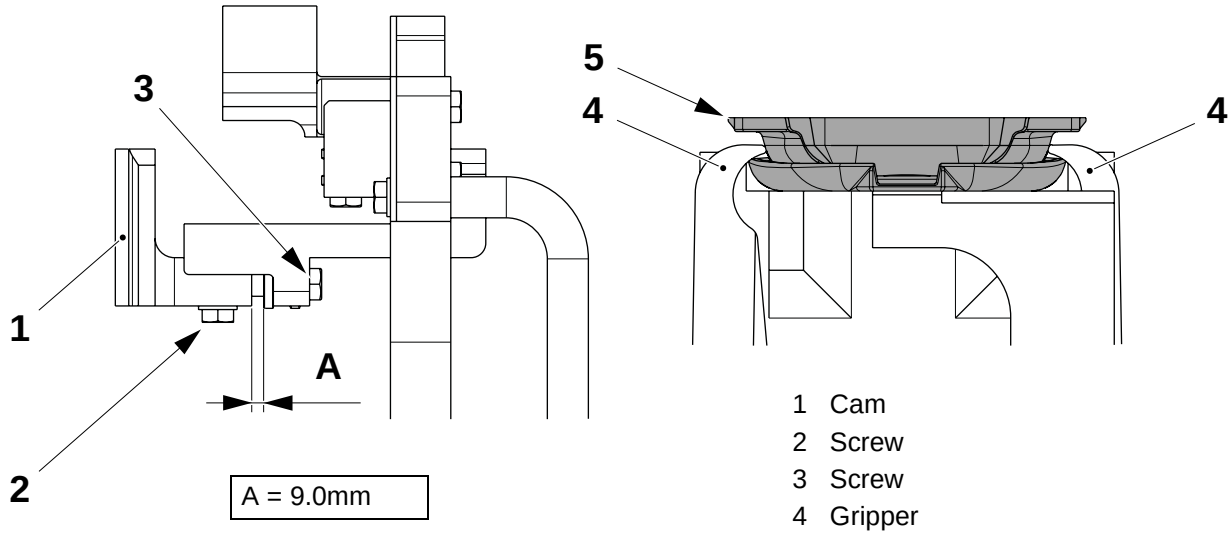

1 Cam
2 Screw
3 Screw
4 Gripper
5 Cap

TechPub_2614345_0106 - 0702_3047131_01.fm

(Cont'd)

(Cont'd)

Gripper Timing

Information

After a cap (1) has been placed on the cap holder by the single cutter it should be gripped by the grippers (2) at the correct moment.

The correct moment is when the cap (1) has been taken by the carrier (3) and comes into contact with the surface (4). The grippers (2) should close immediately. Example **A**.

If the grippers (2) close too early, the cap has a tendency to fly off the front of the cap holder. Example **B**.

If the grippers (2) close to late, the front of the cap has a tendency to lift and cause a jam. Example **C**.

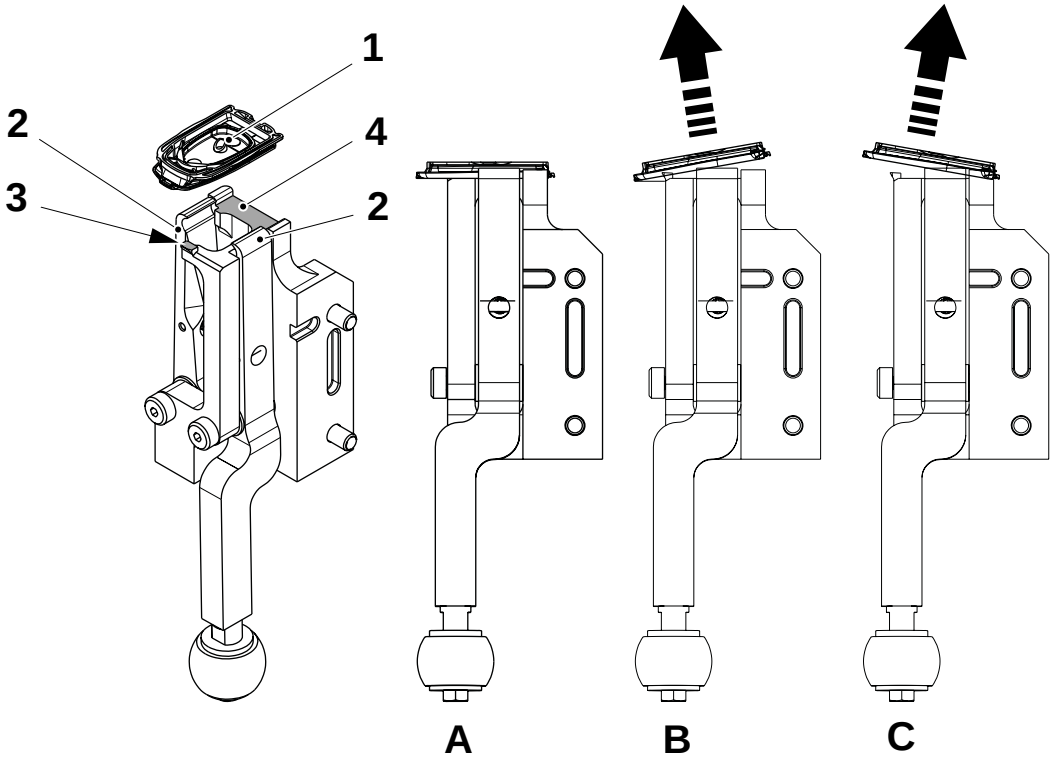

1 Cap
2 Gripper
3 Carrier
4 Surface

(Cont'd)

TechPub_2614345_0106 - 0702_3047131_01.fm

(Cont'd)

Procedure

a) Loosen the screws (1).

b) Move the bracket (2) as shown to move the cam (3) relative to the position of the guide bracket (4).

c) Tighten the screws (1).

d) Step up the machine to STEP 2.

e) Place a cap into the single cutter and close the doors.

f) Inch the machine and check the gripper timing.

g) Repeat the procedure until the correct timing is obtained.

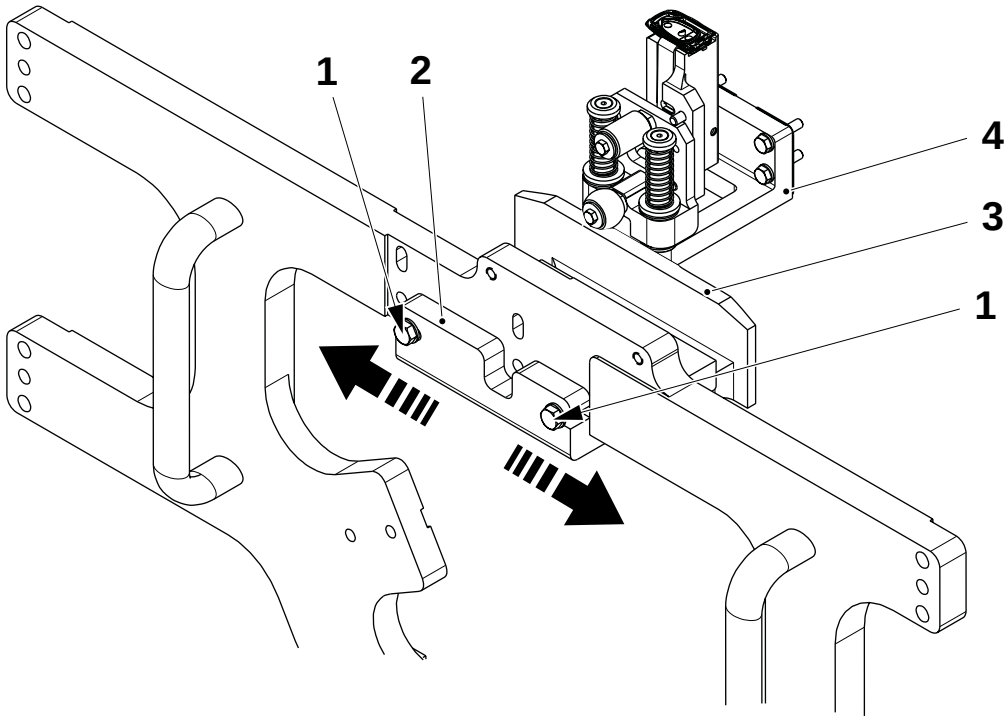

1 Screw
2 Bracket
3 Cam
4 Guide bracket

TechPub_2614345_0106 - 0702_3047131_01.fm

5.1.1-2 Cams - Set Applicator and Release Cams

Machine Status	Mains Power OFF Air OFF
SPC Reference	2839315-0100

Release Cam

Note! Before setting the cams, set the cap holder group see 5.2.1-3 Cap Holder - Set Y Position.

a) Place a cap in the cap holder and then inch the machine to 330 degrees.

b) Release the screws (1) and then use the screw (2) to adjust the release cam (3) to set the distance **A** making sure that the cap is still being gripped.

c) Tighten the screws (1).

d) Check that at 20 degrees the cap is released, if not adjust by loosening the screws (4) and moving in the Y direction.

Note! Make sure that the distance **A** is equal at both ends of the cam (3).

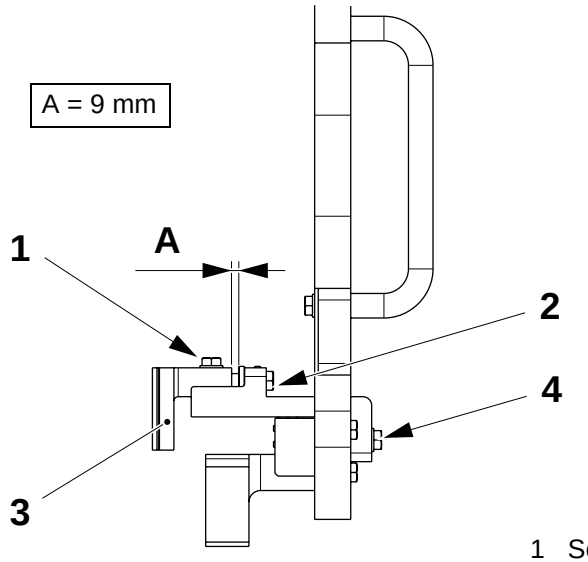

1 Screw
2 Screw
3 Release cam
4 Screw

(Cont'd)

TechPub_2614345_0106 - 0702_3047131_01.fm

(Cont'd)

Application Cam

a) Inch the machine to 360 degrees.

b) Release the screws (1) and then use the screw (2) to adjust the position of the applicator cam (3) until the stroke at the spring is the distance **A**.

c) Tighten the screws (1).

d) Check that the cap starts touching the package at approximately 290 degrees, if not adjust the height of the conveyor.

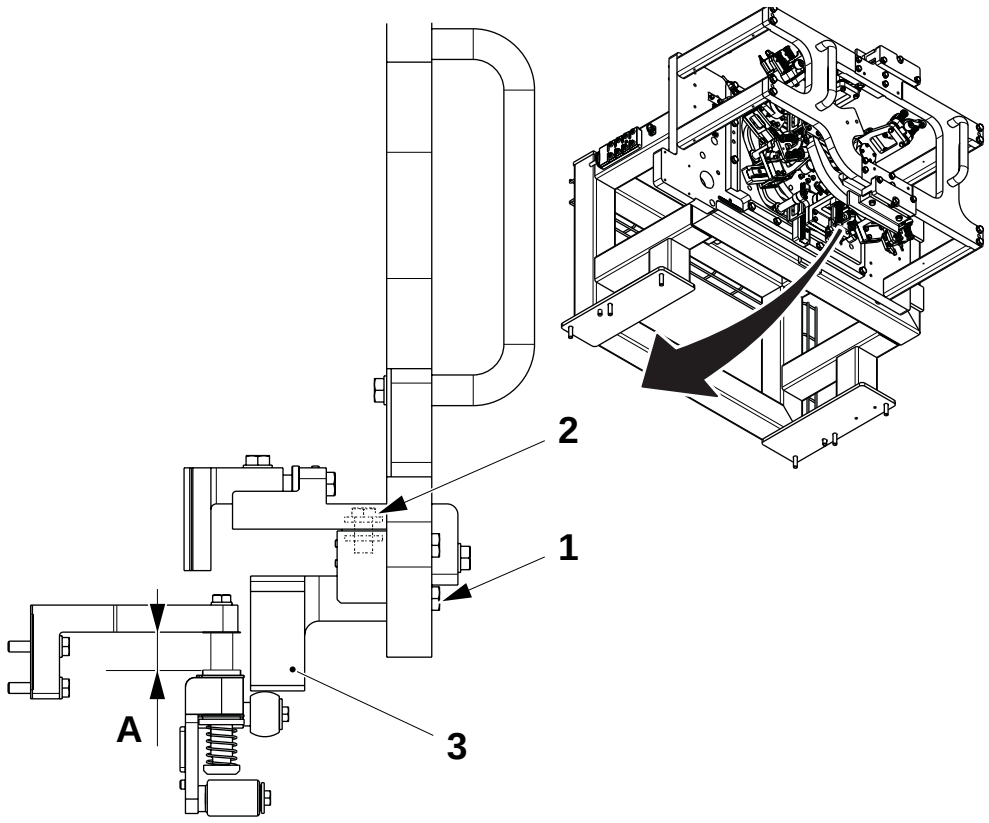

1 Screw
2 Screw
3 Applicator cam

TechPub_2614345_0106 - 0702_3047131_01.fm

5.1.2 Cam Module - Change

5.1.2-1 Cam Module - Removal

Machine Status	Mains Power OFF Air OFF
SPC Reference	2839315-0100

a) Remove the eight screws (1) and the cam module unit (2).

Note! Before assembly remove the screws (3) and the cap holders (4).

b) Assemble in the reverse order.

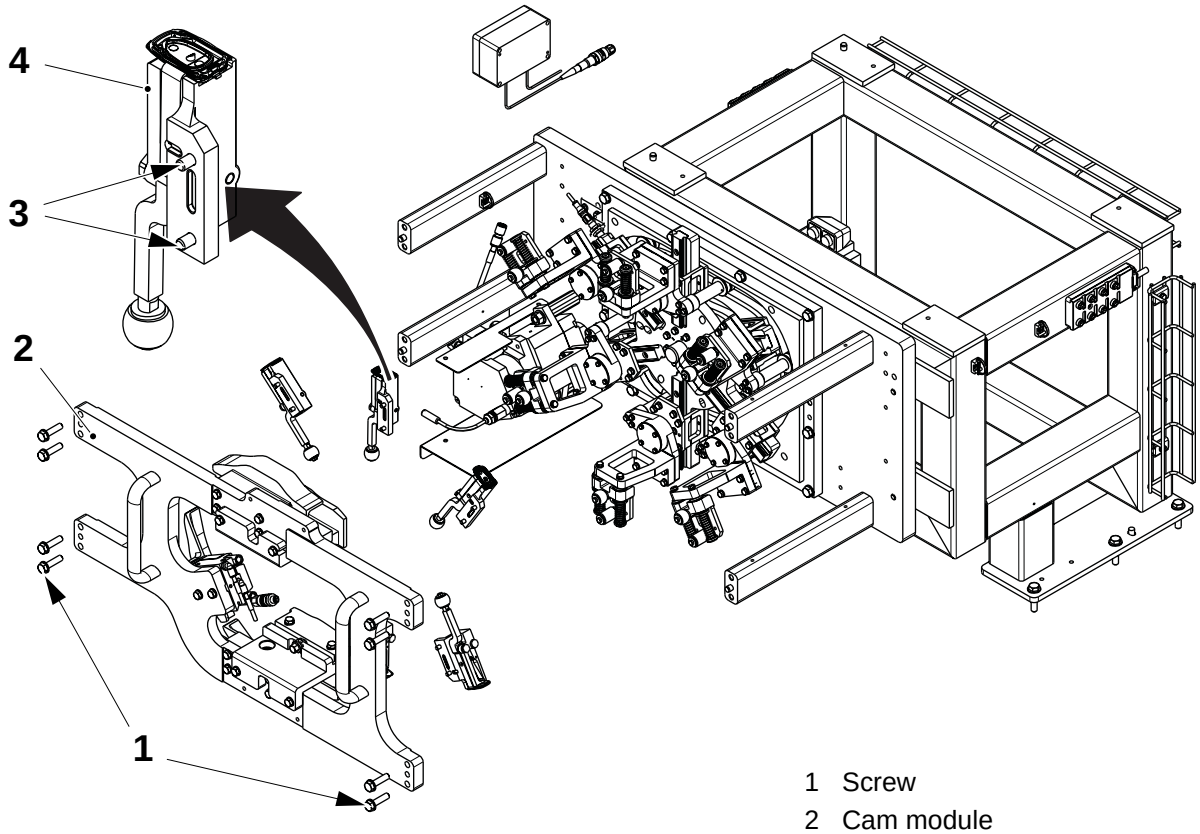

1 Screw
2 Cam module
3 Screw
4 Cap holder

TechPub_2614345_0106 - 0702_3047131_01.fm

5.2 Cap Holders Group

SPC Reference	2746941-0200

5.2.1 Cap Holder

5.2.1-1 Cap Holder - Check

Machine Status	Mains Power OFF Air OFF
SPC Reference	2895163-0200

a) Check that the roller (1) is not damaged or worn and that it rotates freely.
b) Check that the spring (2) still returns the arm (3).
c) Replace if necessary.

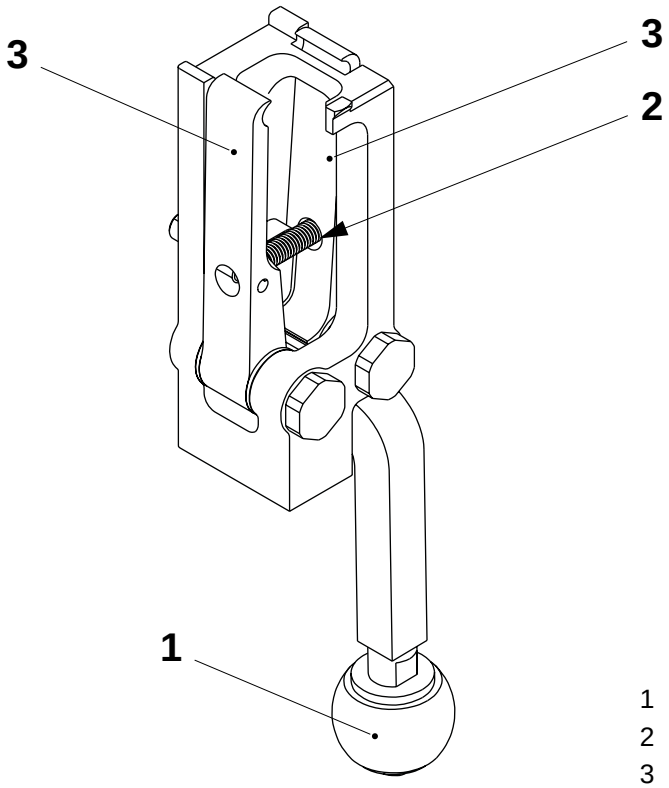

1 Roller
2 Spring
3 Arm

TechPub_2614345_0106 - 0702_3047132_01.fm

5.2.1-2 Cap Holder - Change Roller and Bushings

Machine Status	Mains Power OFF Air OFF
SPC Reference	2895163-0200

a) Remove the cam module see, 5.3.1-3 Guide Bracket - Set X Position.
b) Remove the two screws (1) and the cap holder (2).
c) Remove the two screws (3).
d) Remove the screw (4) and change the roller (5).
e) Change the bushings (6).
f) Remove the pins (7) and change the spring (8).
g) Assemble in the reverse order.

Note! Components in this assembly are cap dependent, see the latest SPC.

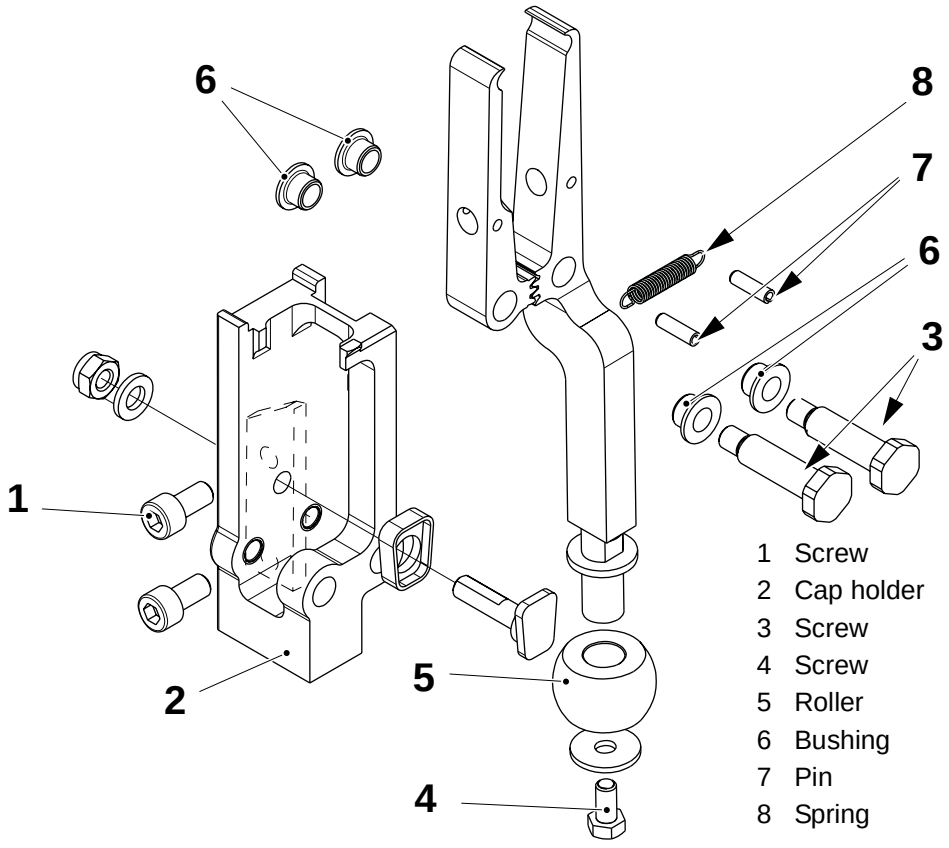

TechPub_2614345_0106 - 0702_3047132_01.fm

5.2.1-3 Cap Holder - Set Y Position

Machine Status	Mains Power OFF Air OFF
SPC Reference	2895163-0200

Set Y Position at Control Panel

Note! Before setting the Y position of the cap holders, set the X position of the individual guide brackets, see 5.3.1-3 Guide Bracket - Set X Position.

a) Touch the SYSTEM SETUP button (1) to login see, HMI User Management - Log On as a User.

b) Touch the MAINTENANCE button (2).

c) Touch the SERVICE button (3).

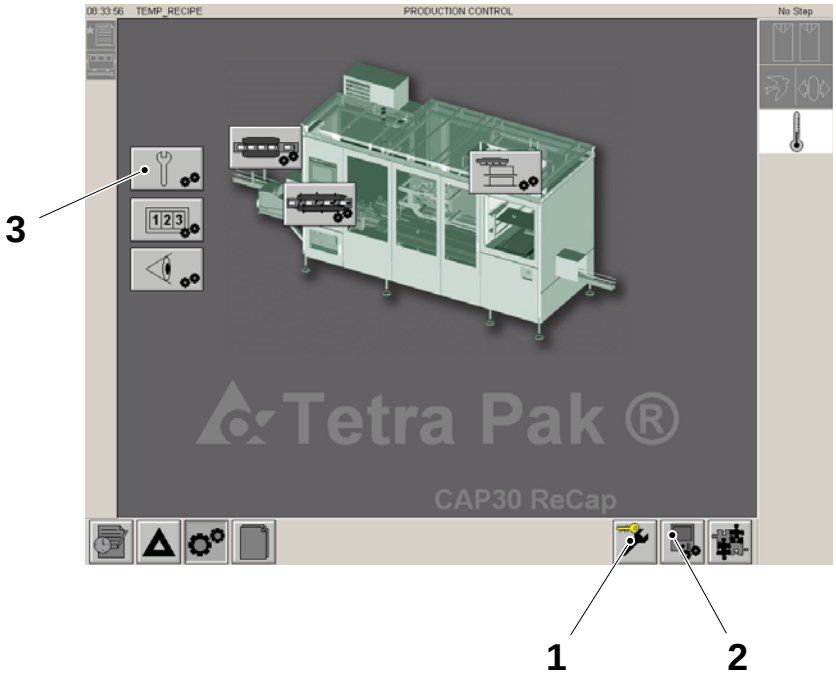

1 SYSTEM SETUP button
2 MAINTENANCE button
3 SERVICE button

(Cont'd)

TechPub_2614345_0106 - 0702_3047132_01.fm

(Cont'd)

d) Touch the INCHING button (4).

Note! The value in the window (5) should be 180 degrees.

e) If the value in the window (5) is correct go to step j). If the value is incorrect continue with step f).

f) Touch the SETTING button (6) to modify the value in the window (5).

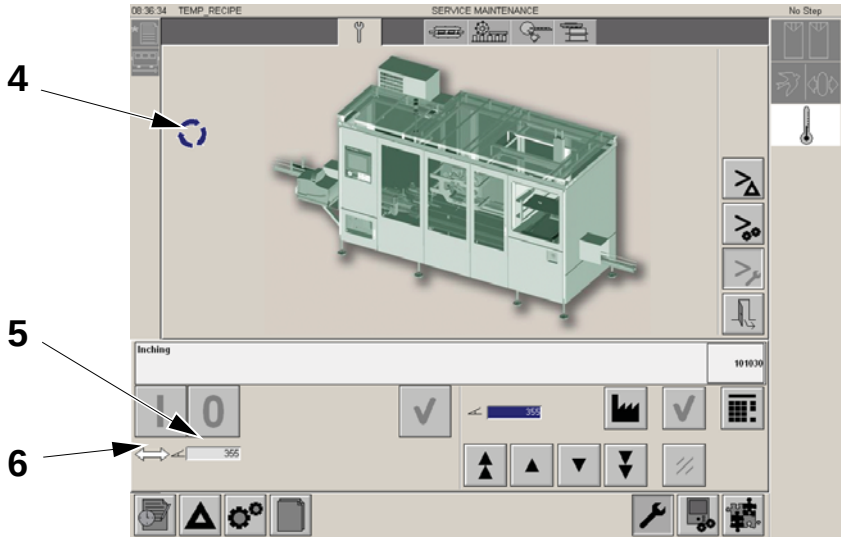

4 SERVICE button
5 INCHING button
6 Window

(Cont'd)

TechPub_2614345_0106 - 0702_3047132_01.fm

(Cont'd)

g) Using the up and down buttons (7) set the number in the degrees window (8) to read 180 Degrees.

h) Touch the OK button (9).

i) Check that the value set in step g) appears in the window (5).

j) Touch the ON button (10).

k) Touch the OK button (11).

l) Touch the EXIT button (12) to leave.

Note! After any positional change the packages will require testing, see OM chapter 5 for details.

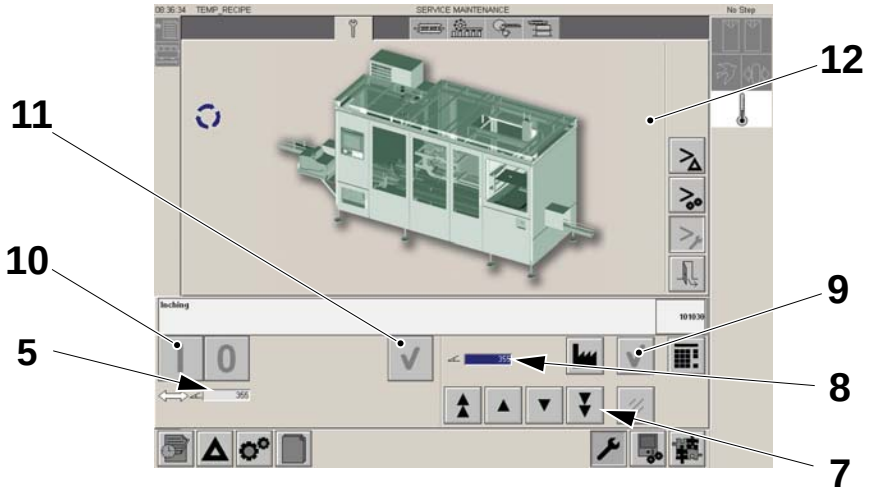

5 Window
7 Up and down buttons
8 Degrees window
9 OK button
10 ON button
11 OK button
12 EXIT button

(Cont'd)

TechPub_2614345_0106 - 0702_3047132_01.fm

(Cont'd)

Set Y Position at Transfer Unit

a) Open the doors and make sure that the hole (1) lines up with the hole in the plate (2) and insert the pin (3).

b) If problems are encountered inserting the pin (3), the machine zero settings should be done again.

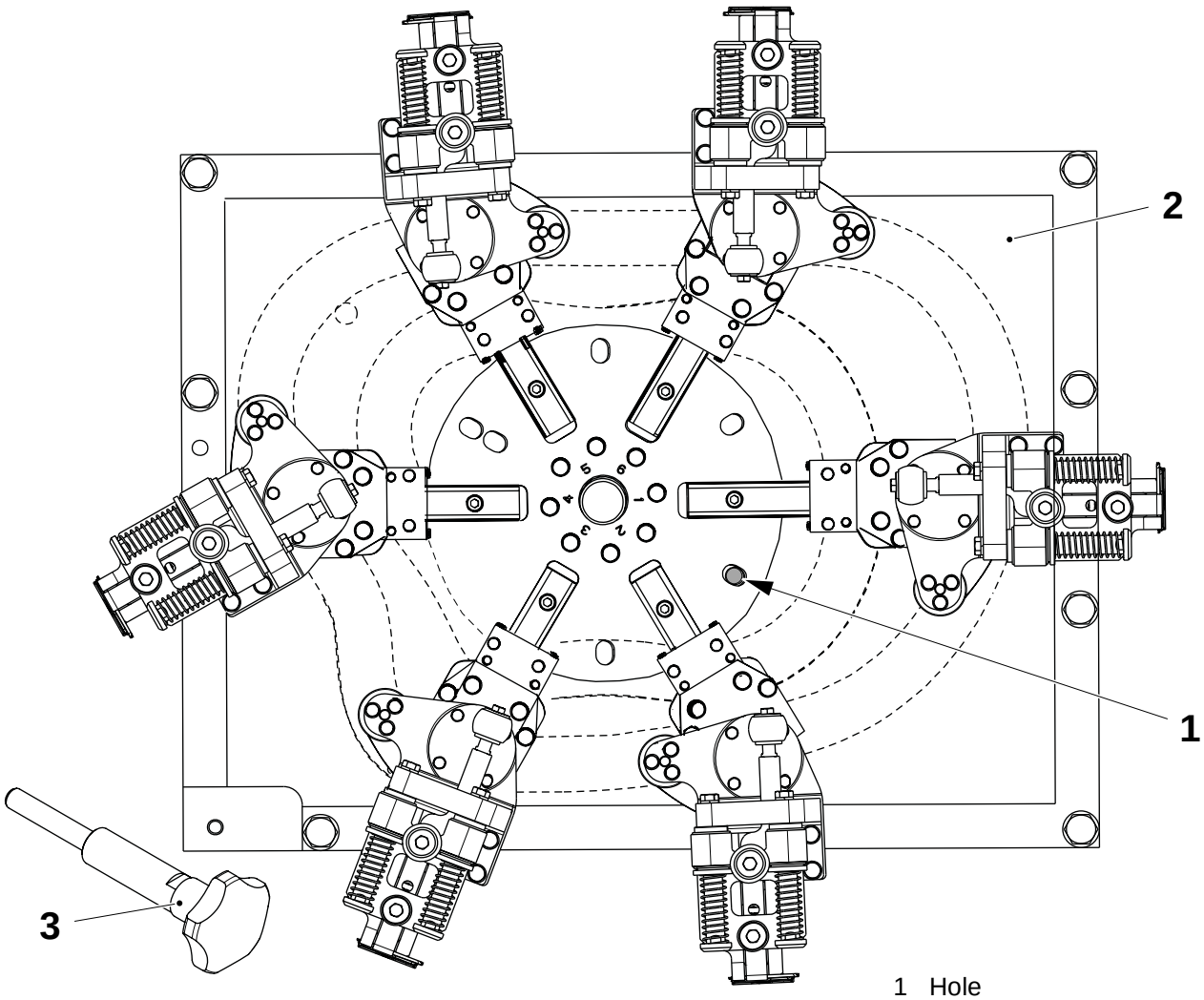

1 Hole
2 Plate
3 Pin

(Cont'd)

TechPub_2614345_0106 - 0702_3047132_01.fm

(Cont'd)

Set Y Position at Cap Carrier

a) At cap holder No1 (1), centralise the guide bracket (2) relative to the cam follower (3). To do this loosen the four screws (4) and align the edges with the cam follower (3) or turn the eccentric cam (5) for fine adjustment. When the guide bracket (2) and the cam follower (3) are aligned, tighten the screws (4). Repeat for all positions.

b) Measure the distance **A** between the top surface of the cap holder (1) and the lower surface of the support (6) for all positions and average the distance **A**.

c) Set the average of distance **A** at all positions.

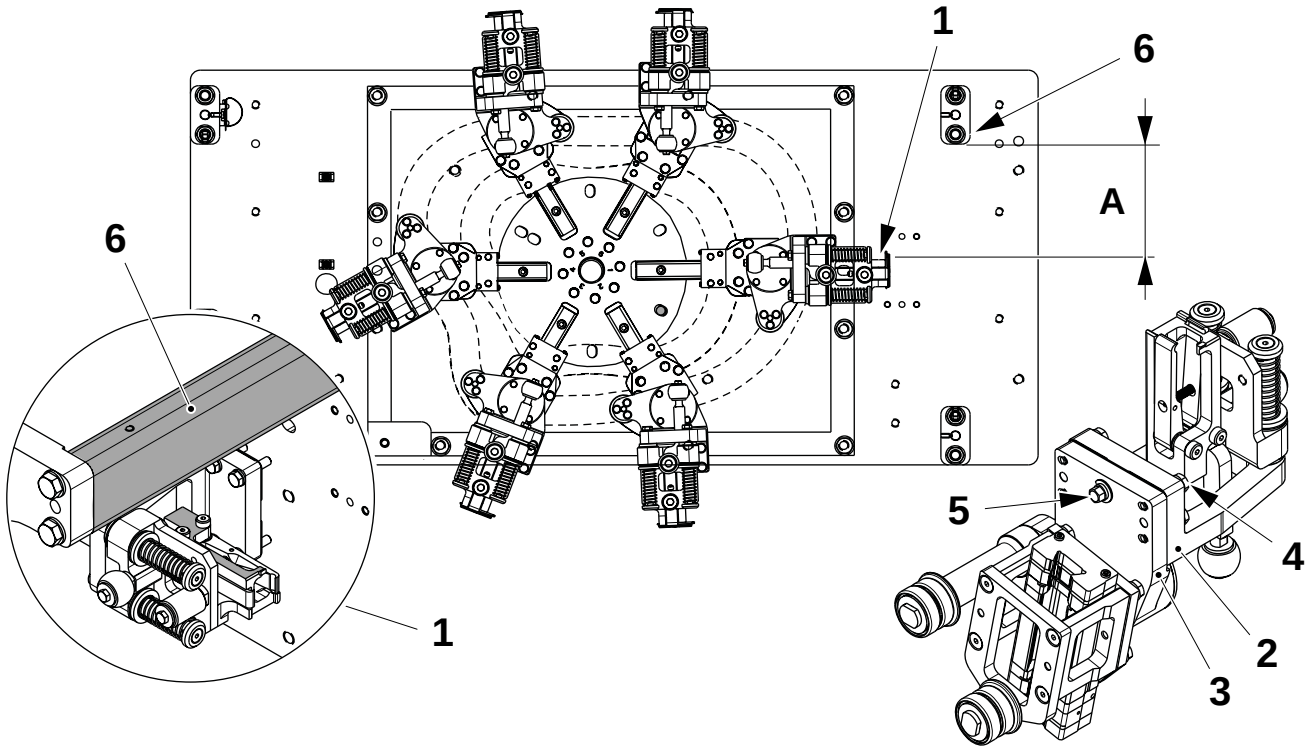

1 Cap Holder No 1
2 Guide bracket
3 Cam follower
4 Screw
5 Eccentric cam
6 Support

(Cont'd)

TechPub_2614345_0106 - 0702_3047132_01.fm

(Cont'd)

d) Remove the pin (7).

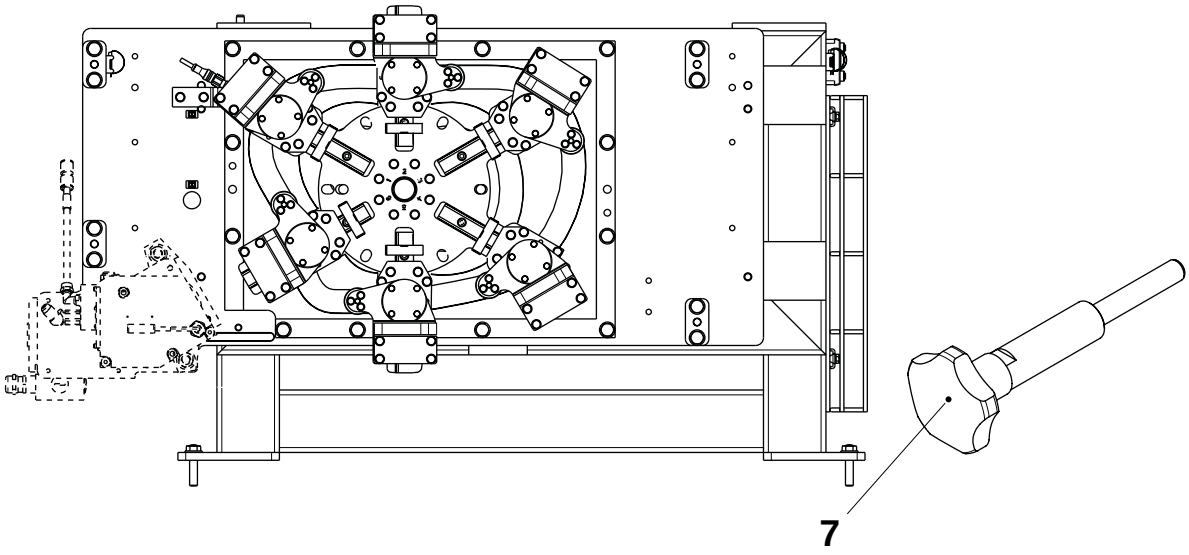

7 Pin

TechPub_2614345_0106 - 0702_3047132_01.fm

e) Touch the MAINTENANCE button (8).

f) Touch the SERVICE button (9).

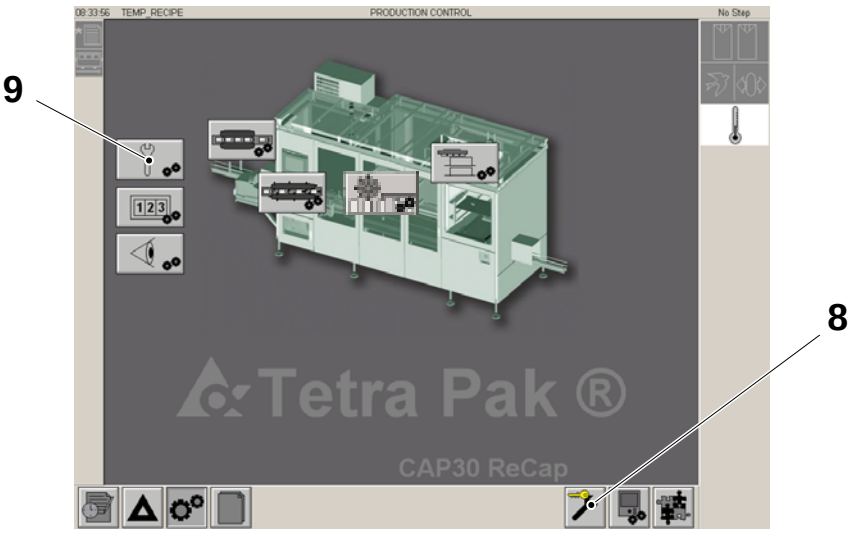

8 MAINTENANCE button
9 SERVICE button

(Cont'd)

(Cont'd)

g) Touch the INCHING button (10).

h) Touch the SETTING button (11) to modify the value in the window (12).

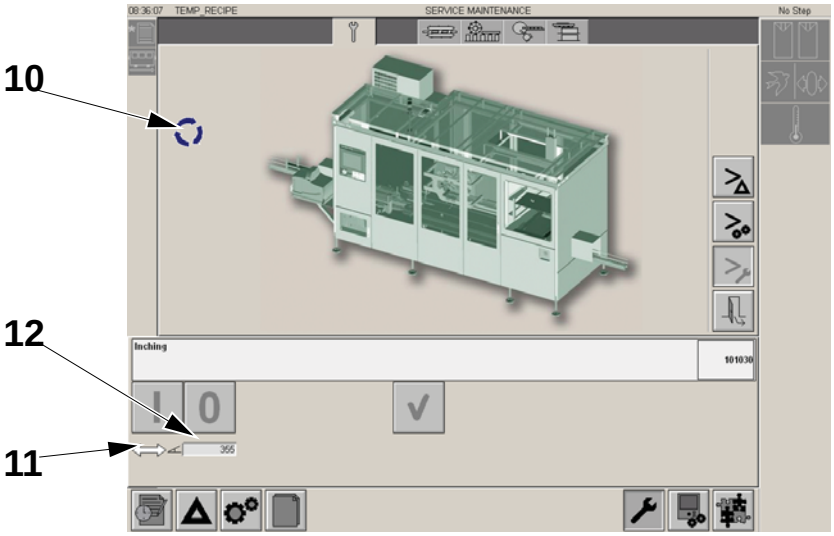

10 INCHING button
11 SETTING button
12 Window

(Cont'd)

TechPub_2614345_0106 - 0702_3047132_01.fm

(Cont'd)

i) Use the keyboard, accessible via the KEYBOARD button (13) to change the angle value in the window (14) to 180 degrees.

j) Touch the OK button (15).

k) Check that the value set in step h) appears in the window (12).

l) Touch the ON button (16).

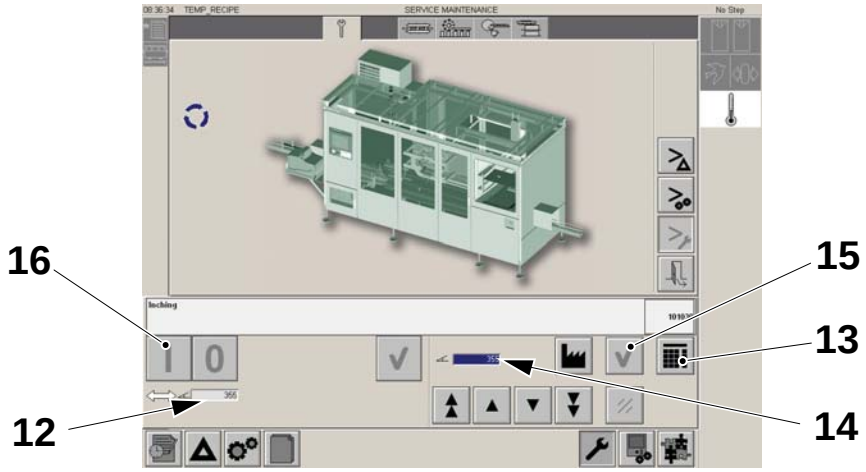

12 WINDOW
13 KEYBOARD button
14 Window
15 OK button
16 ON button

(Cont'd)

TechPub_2614345_0106 - 0702_3047132_01.fm

(Cont'd)

Note! Do not touch the EXIT button (18) until all cap carriers have been set.

m) Touch the OK button (17) to move the next cap carrier to the horizontal position.

n) Insert the pin (8) again.

o) Adjust the horizontal cap carrier, if necessary refer to step a) on page 5-20 until the distance **A** is obtained again.

p) Remove the pin (8).

q) Repeat items m) to p) for the other cap carriers, see 5.2.1-3 Cap Holder - Set Y Position item g) to l) to position the rest of the cap holders.

Note! After any positional change the packages will require testing, see OM chapter 5 for details.

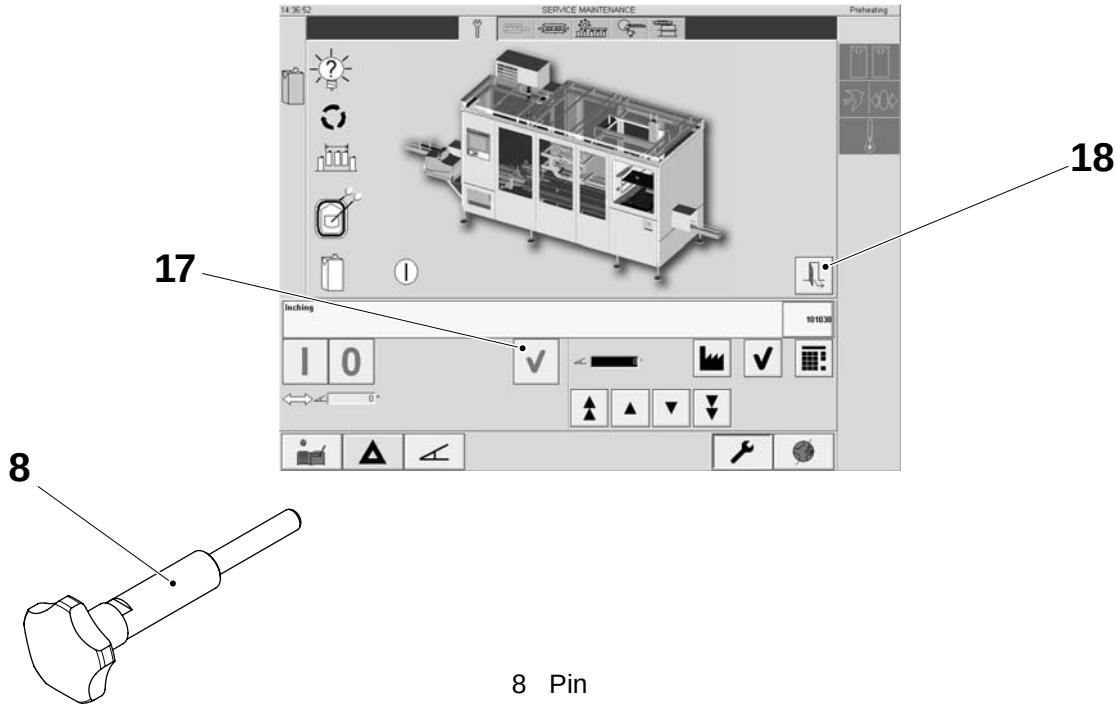

8 Pin
17 OK button
18 EXIT button

TechPub_2614345_0106 - 0702_3047132_01.fm

5.3 Cap Carrier

SPC Reference	2746939-0200

5.3.1 Guide Bracket

5.3.1-1 Guide Bracket - Check

Machine Status	Mains Power OFF Air OFF
SPC Reference	2895163-0200

a) Check that the rollers (1) and (2) are not damaged or worn and rotate freely.

b) Check that the springs (3) return the roller carrier.

c) Replace if necessary.

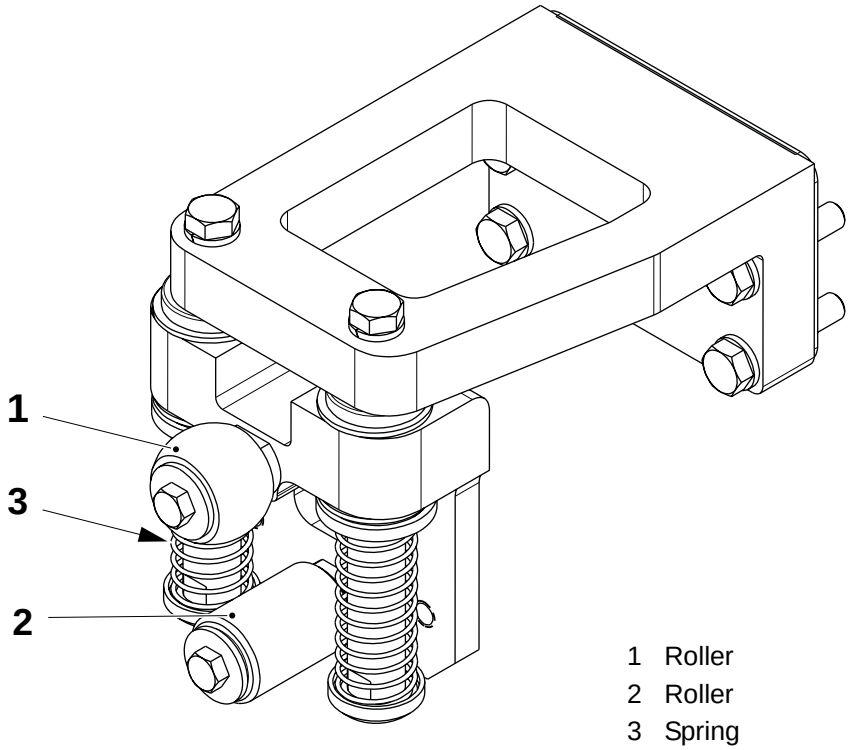

1 Roller
2 Roller
3 Spring

(Cont'd)

TechPub_2614345_0106 - 0702_3047133_01.fm

5.3.1-2 Guide Bracket - Change Roller and Bushings

Machine Status	Mains Power OFF Air OFF
SPC Reference	2895163-0200

a) Remove the screws (1) and the shafts (2).

b) Remove the washers (3) and the springs (4).

c) Remove the retaining rings (5) and the bushings (6).

d) Remove the screw (7), the washer (8) and the roller (9).

e) Remove the screw (10), the washer (11) and the roller (12).

f) Assemble in the reverse and check the setting, see 5.3.1-3 Guide Bracket - Set X Position and Set Y Position at Cap Carrier.

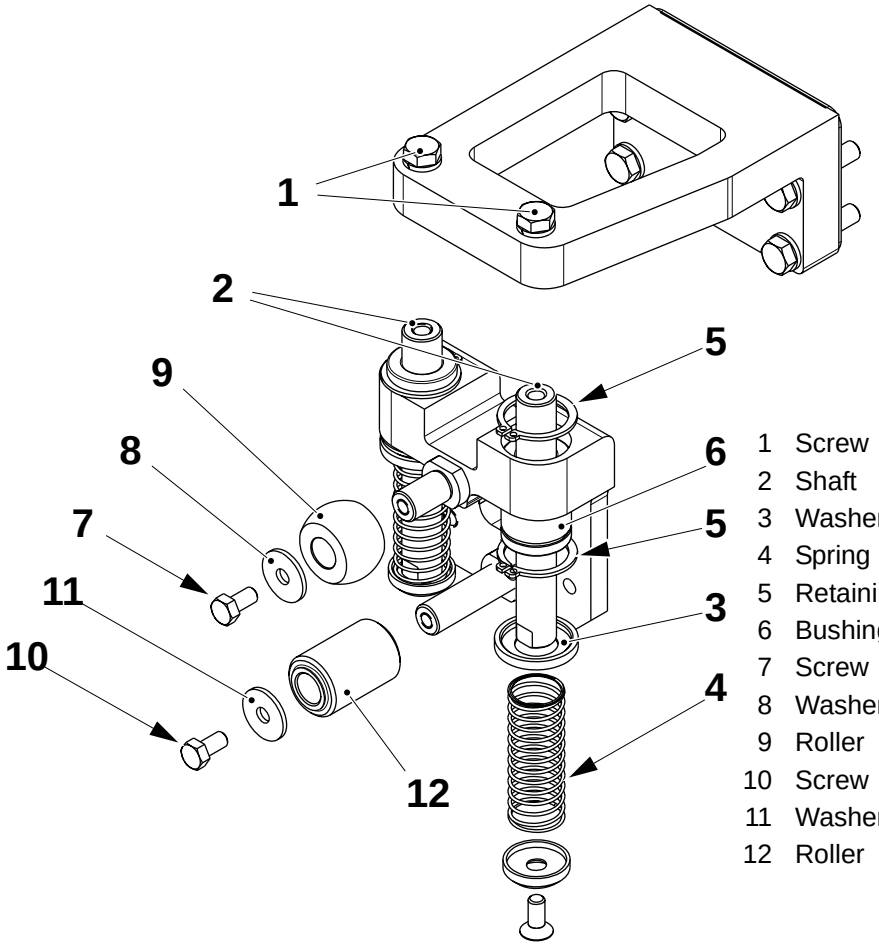

(Cont'd)

TechPub_2614345_0106 - 0702_3047133_01.fm

5.3.1-3 Guide Bracket - Set X Position

Machine Status	Mains Power ON Air OFF
SPC Reference	2895163-0200

Inch the machine to 0 degrees and centre the cap carrier (1) with the single cutter (2) by increasing or decreasing the number of shims (3) behind the guide bracket (4).

Repeat for all cap carriers.

Note! Be sure the single cutter is closed and the single cutter X position has been adjusted before.

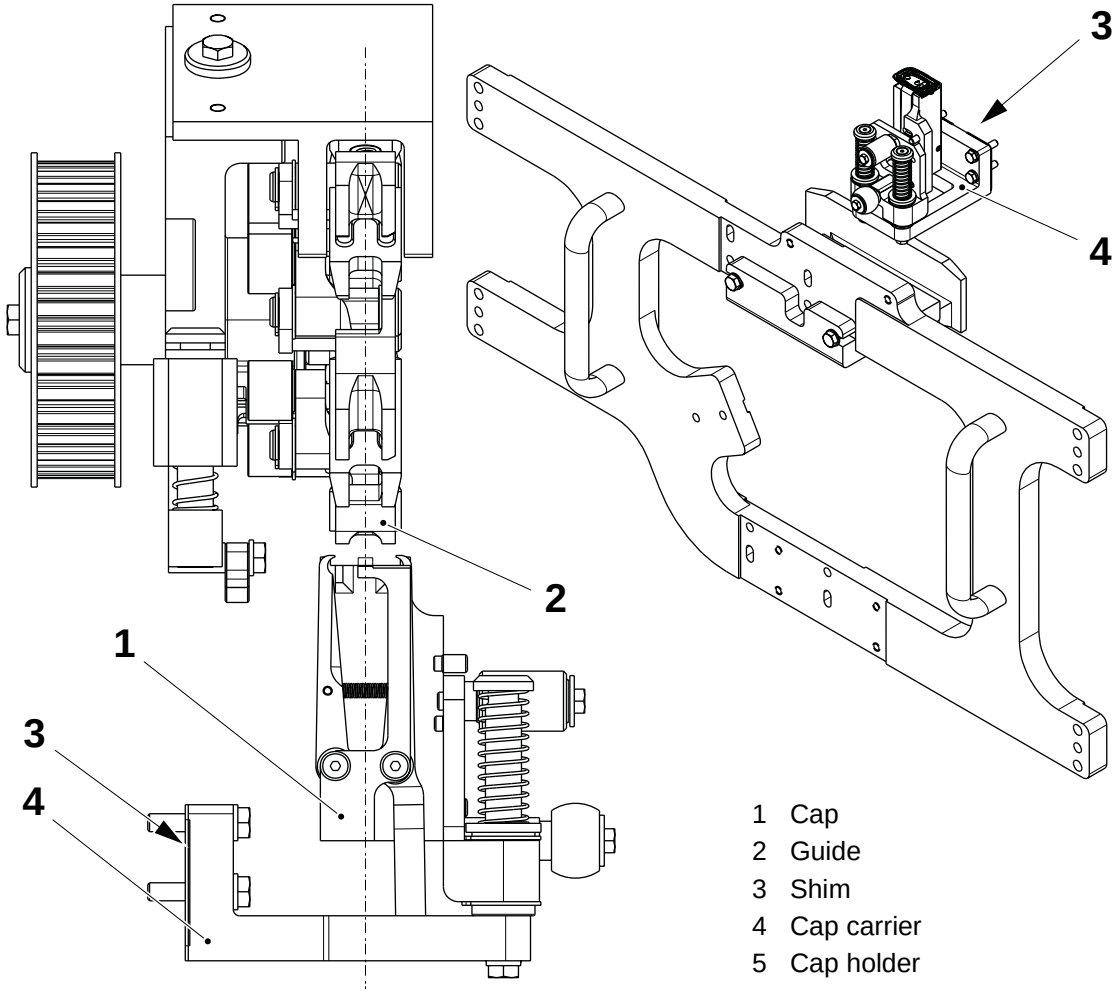

1 Cap
2 Guide
3 Shim
4 Cap carrier
5 Cap holder

TechPub_2614345_0106 - 0702_3047133_01.fm

5.4 Drive Unit

SPC Reference	2837072-0100

5.4.1 Sensors

5.4.1-1 Sensors - Cap Holder No.1 Position

Machine Status	Mains Power OFF Air OFF
SPC Reference	2837072-0100

Set the sensor (1) to the distance **A**.

Note! Check that only cap holder number 1 activates the sensor.

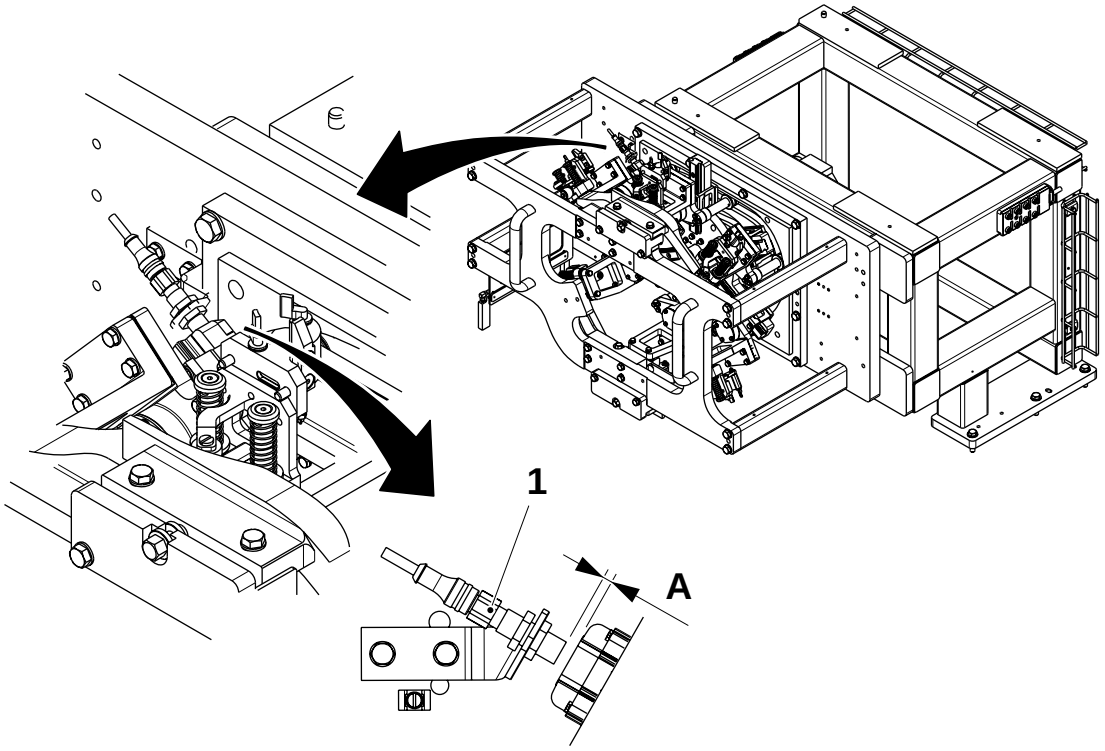

TechPub_2614345_0106 - 0702_3047134_01.fm

A = 2 mm

1 Sensor

5.5 Transfer Unit

SPC Reference	2746938-0100

5.5.1 Star Wheel

5.5.1-1 Star Wheel - Set Zero Position

Machine Status	Mains Power OFF Air OFF
SPC Reference	2746938-0100

a) Manually turn the star wheel until the hole (1) can be aligned with the hole in the plate (2).

b) Insert the pin (3).

c) Close all doors and guards.

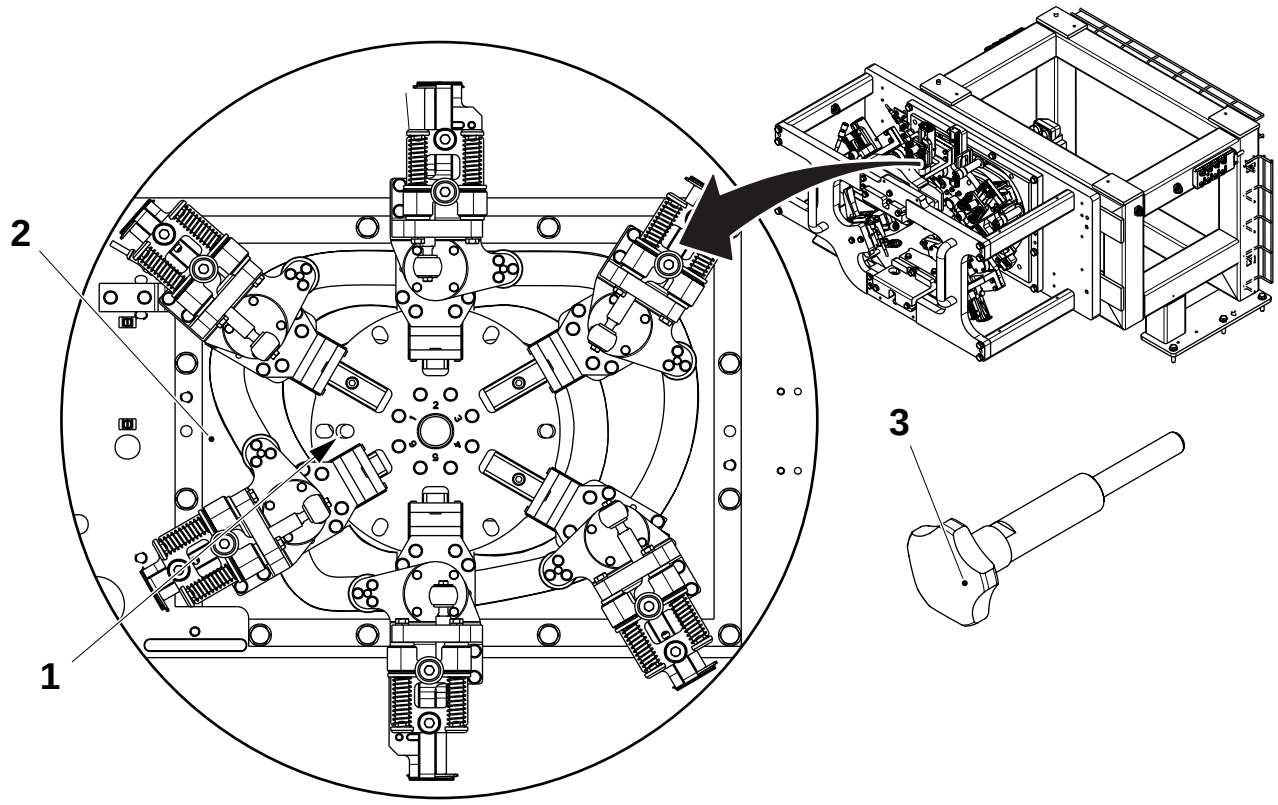

1 Hole
2 Plate
3 Pin

(Cont'd)

TechPub_2614345_0106 - 0702_3047135_01.fm

(Cont'd)

d) Turn the main power on and login see, HMI User Management - Log On as a User on page 1-6.

e) Touch the MAINTENANCE button (4).

f) Touch the SERVICE button (5).

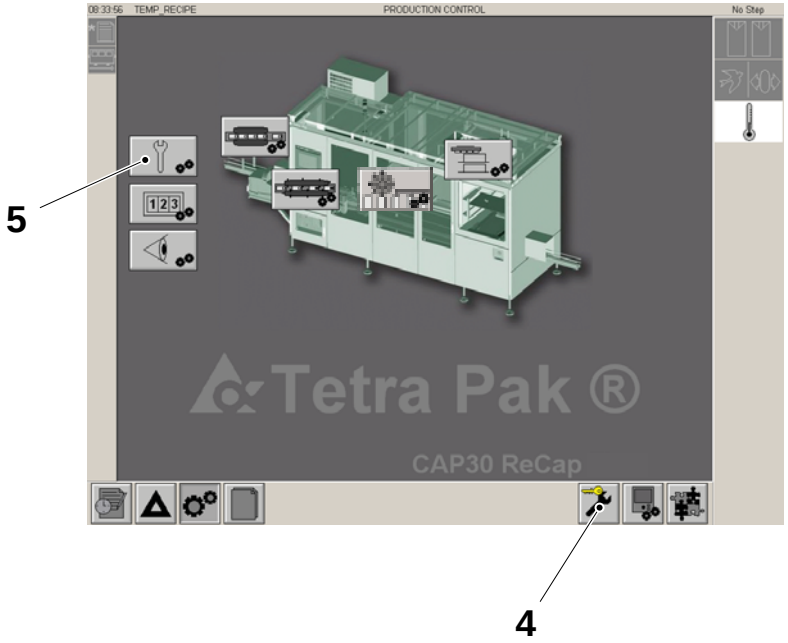

4 Service key
5 MAINTENANCE button

(Cont'd)

TechPub_2614345_0106 - 0702_3047135_01.fm

(Cont'd)

g) Touch the APPLICATOR UNIT button (6).

h) Touch the ZERO button (7).

i) Touch the ON button (8).

j) Touch the OK button (9) for three seconds. The background of the ON button (8) should go green.

k) Touch the EXIT button (10).

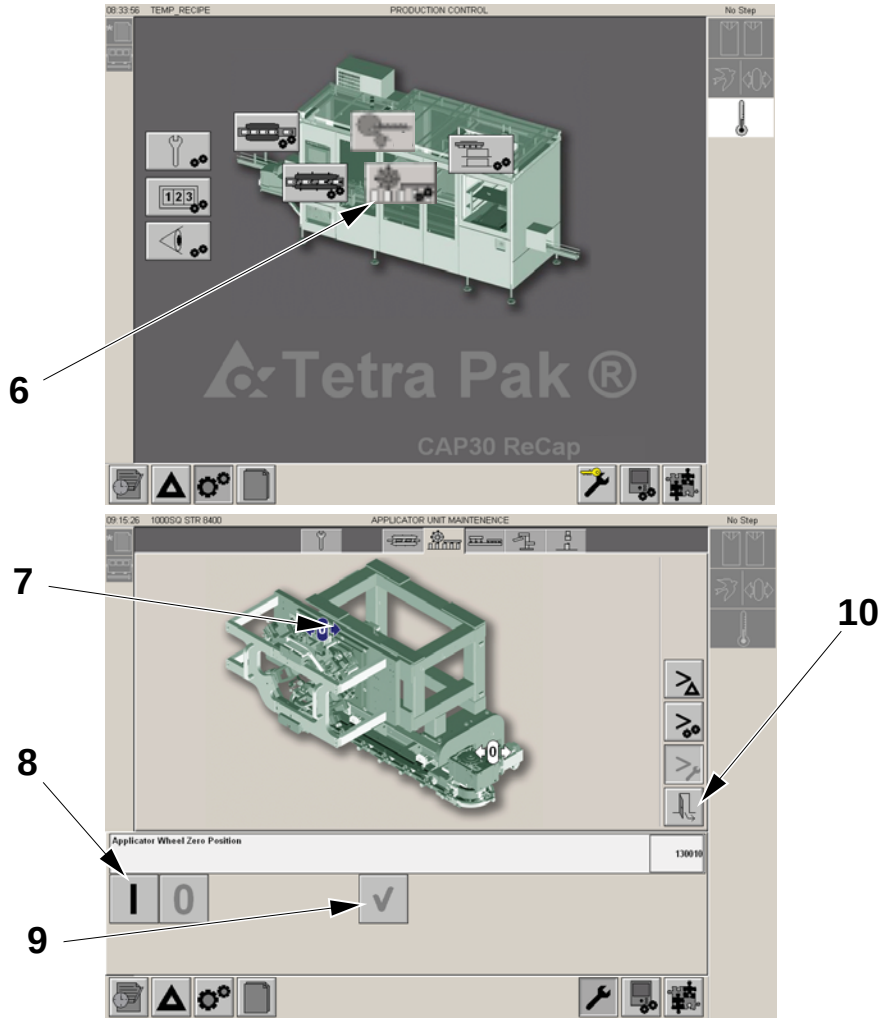

6 APPLICATOR UNIT button
7 ZERO button
8 ON button
9 OK button
10 EXIT button

TechPub_2614345_0106 - 0702_3047135_01.fm

5.5.1-2 Star Wheel - Change Outer Cam Follower Bearings

Machine Status	Mains Power OFF Air OFF
SPC Reference	2746938-0100

a) Remove the screws (1) and the cover (2).

b) Release the outer cam follower (3) from the inner cam follower by removing the screw (4) and the washer (5).

c) Remove the seal (6), the bearings (7) and the spacer (8).

d) Remove the screws (9) and the shaft (10) only if necessary.

e) Remove the screw (11), the bearings (12) and the spacer (13).

f) Assemble in the reverse order.

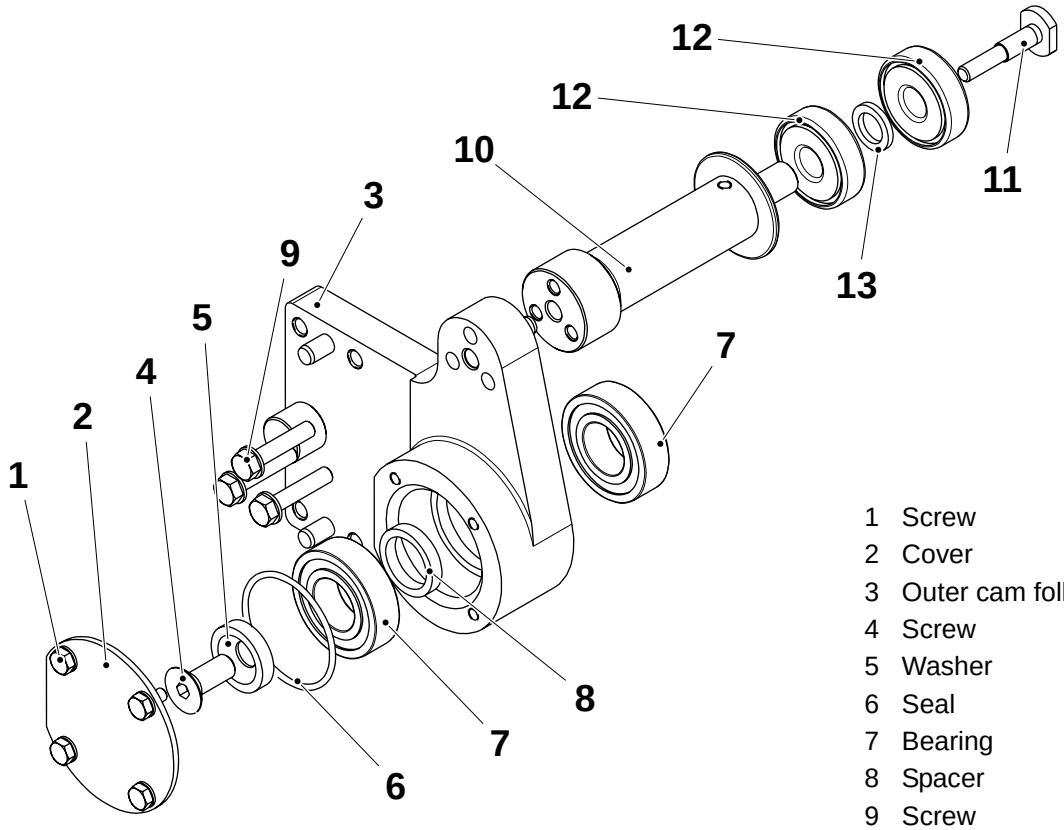

1 Screw
2 Cover
3 Outer cam follower
4 Screw
5 Washer
6 Seal
7 Bearing
8 Spacer
9 Screw
10 Shaft
11 Screw
12 Bearing
13 Spacer

TechPub_2614345_0106 - 0702_3047135_01.fm

5.5.1-3 Star Wheel - Change

Machine Status	Mains Power OFF Air OFF
SPC Reference	2746938-0100

a) Remove the cam module and the cap holder see, 5.2.1-2 Cap Holder - Change Roller and Bushings.

b) Remove the screws (1) and the star wheel (2).

c) Assemble in the reverse order.

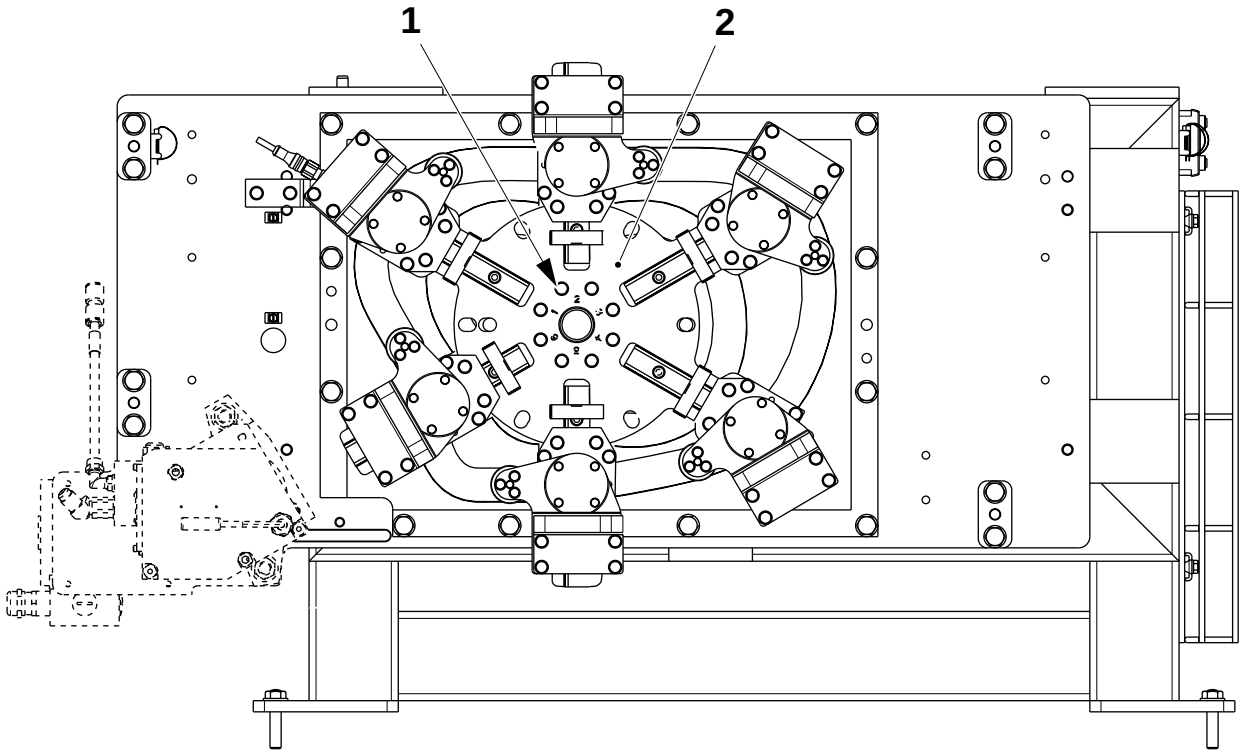

1 Screw
2 Star wheel

TechPub_2614345_0106 - 0702_3047135_01.fm

5.5.1-4 Star Wheel - Change Inner Cam Follower Bearings

Machine Status	Mains Power OFF Air OFF
SPC Reference	2746938-0100

a) Remove the cam module, the cap holder see, 5.1.2-1 Cam Module - Removal, the outer cam follower see, 5.5.1-2 Star Wheel - Change Outer Cam Follower Bearings steps a) and b) and the star wheel see, 5.5.1-3 Star Wheel - Change.

b) Remove the screw (1), the bearings (2) and the spacer (3).

c) Remove the screw (4) and the shaft (5).

d) Remove the screws (6) and the plate (7).

e) Remove the screws (8) and the plate (9).

f) Remove the screws (10), the plate (11) and the slider (12).

g) Assemble in the reverse order.

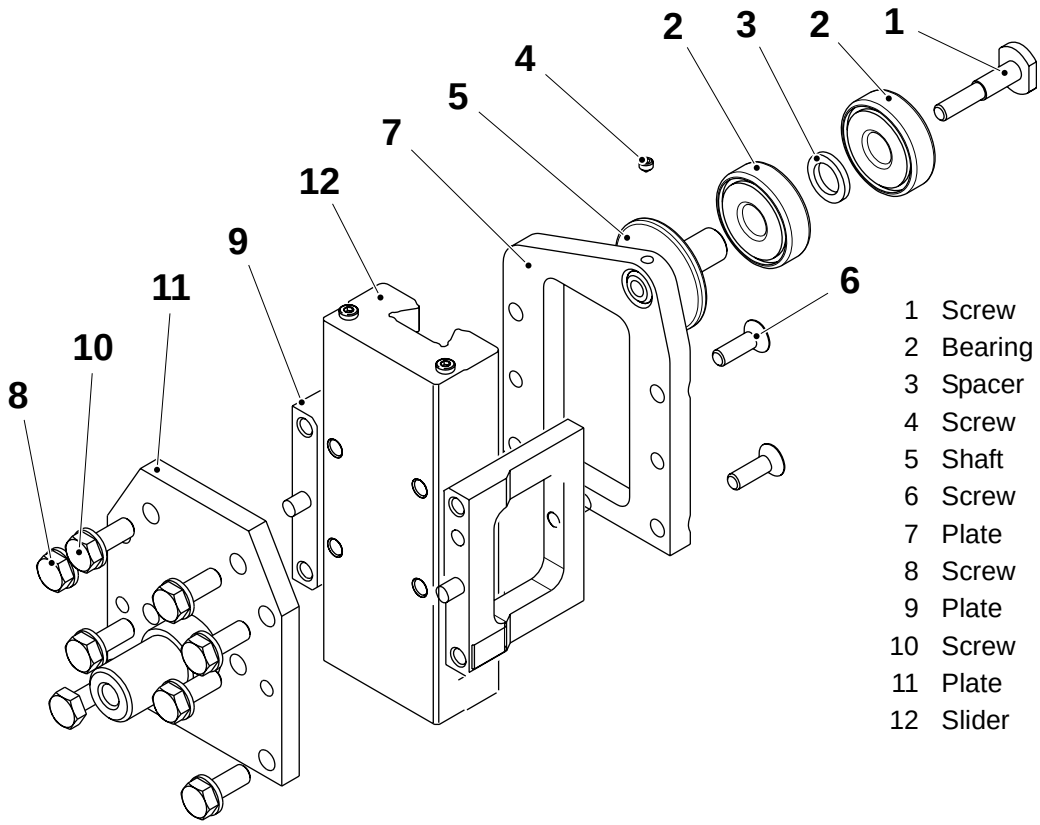

TechPub_2614345_0106 - 0702_3047135_01.fm

5.6 Hotmelt Wheel

SPC Reference	662806-0200

5.6-1 Functional Description

DANGER

Risk of immediate danger to life.

The voltage is 400V inside the hotmelt unit. There is risk of immediate danger to life through electrical shock if the warning signs are ignored.

WARNING

Risk of personal injury.

Carefully follow all of the instructions in the ii Safety Precautions Chapter and the Nordson manual.

The hotmelt equipment consists of the tank (1), the hose (2) and the wheel applicator (3). The hose (2) and the wheel applicator (3) are electrically heated. The level of hotmelt is controlled by the level controller (4) via the sensor (5).

TechPub_2614345_0106 - 0702_3047136_01.fm

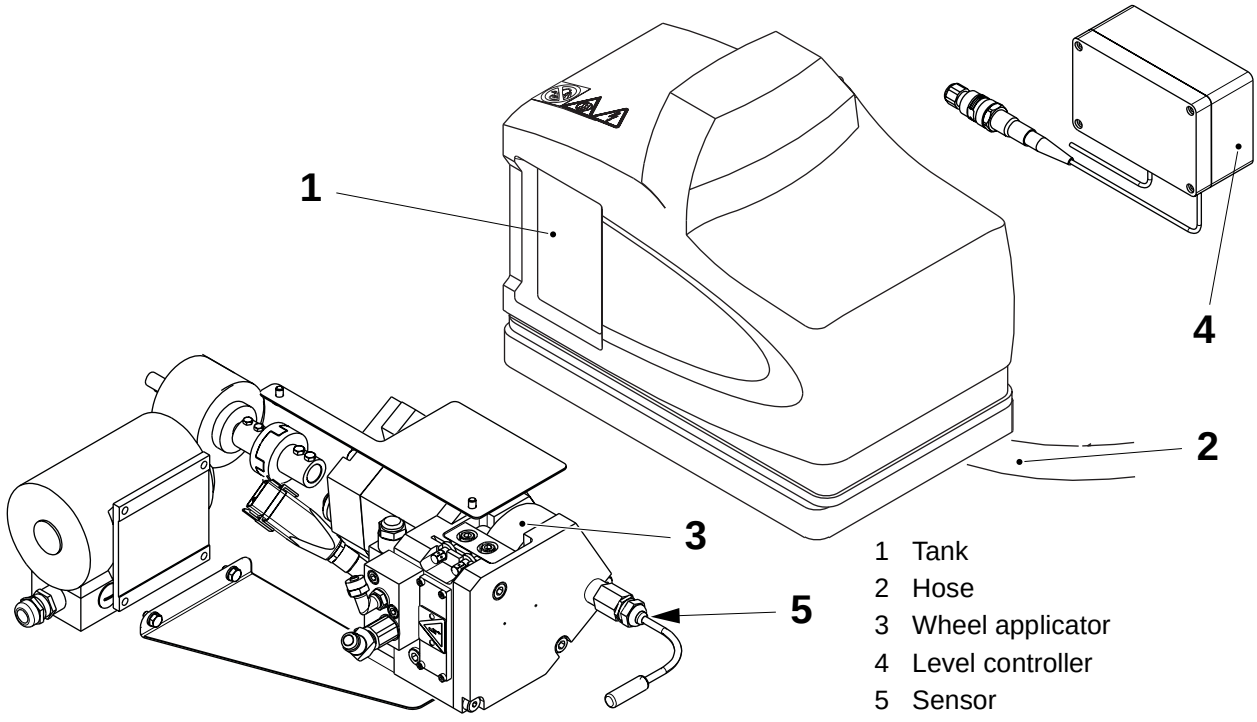

1 Tank
2 Hose
3 Wheel applicator
4 Level controller
5 Sensor

(Cont'd)

(Cont'd)

When the system is turned ON, the tank (1) and the hose (2) are heated. When the tank (1), the hose (2) and the wheel applicator (3) are within 3°C (37.5°F) of their set point temperatures, a time delay starts. The time delay provides additional time for the adhesive in the tank to melt. During the time delay, the green ready LED (6) flashes. When the green ready LED (6) is fixed, the hotmelt equipment is ready.

The adhesive passes through the hotmelt pump into a distribution manifold. The adhesive then flows through a filter into the hose (2) and to the wheel applicator (3).

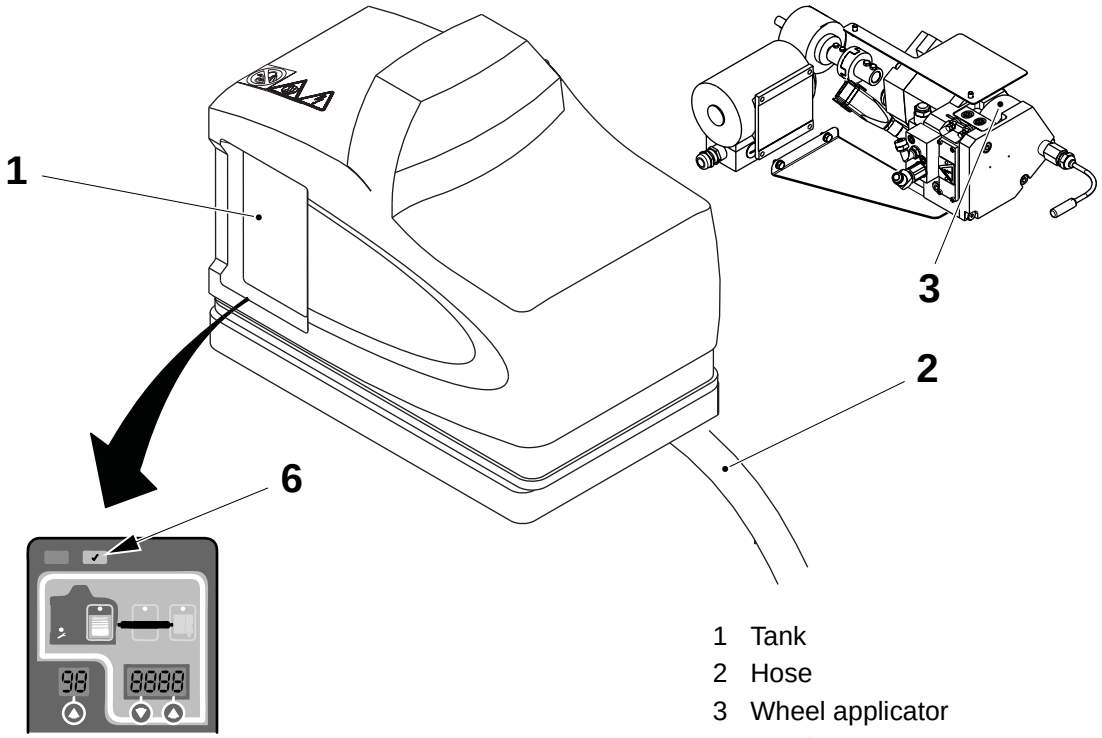

1 Tank
2 Hose
3 Wheel applicator
6 Ready LED

TechPub_2614345_0106 - 0702_3047136_01.fm

5.6.1-1 Hotmelt Wheel - Set Cam Position

Machine Status	Mains Power ON Air OFF
SPC Reference	2839315-0100

The distance between the surface of the cap (1), to which hotmelt is applied, and the surface of the wheel (2), that applies the hotmelt, is set by adjusting the forward position of the cam (3).

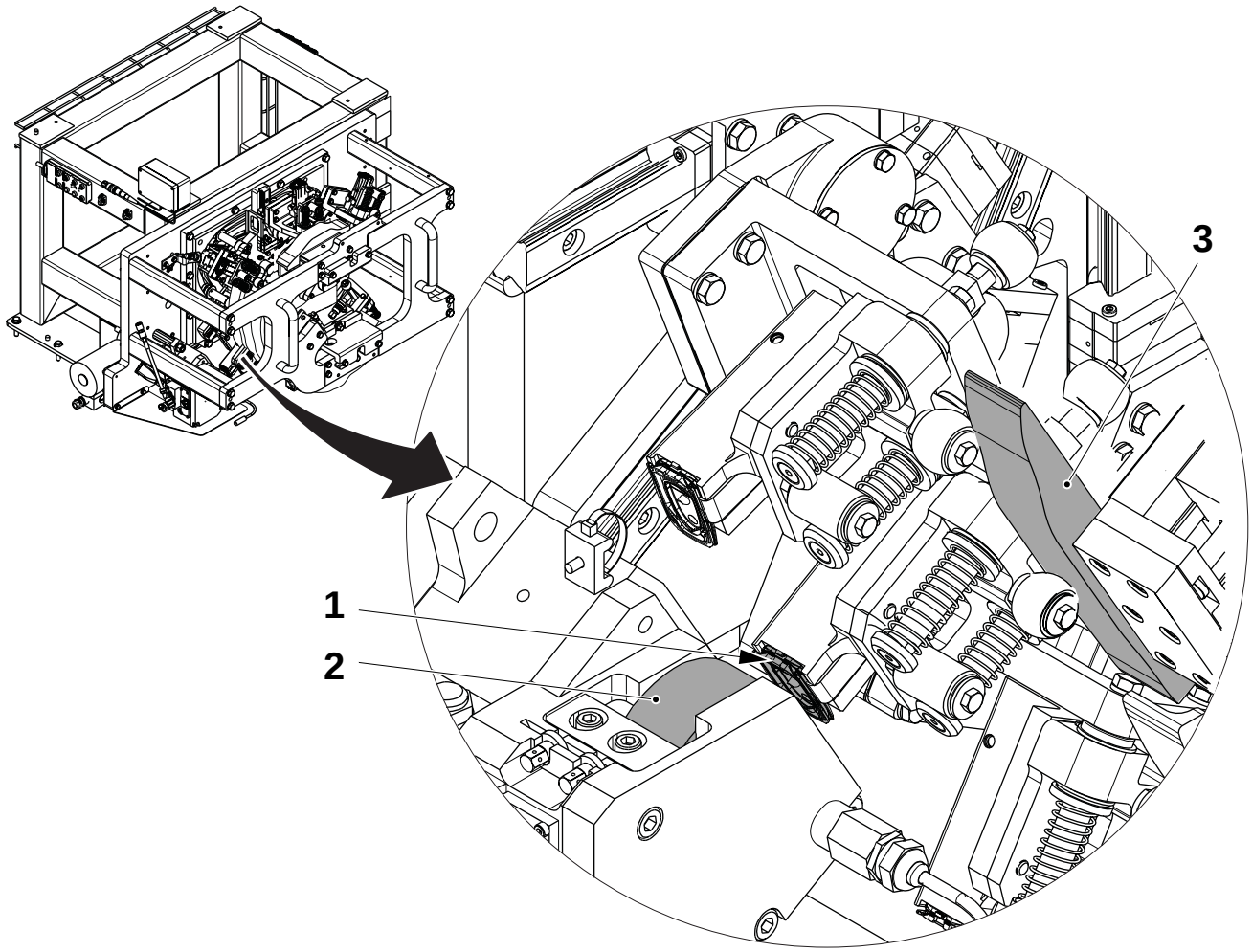

1 Surface of cap
2 Surface of wheel
3 Cam

(Cont'd)

TechPub_2614345_0106 - 0702_3047136_01.fm

(Cont'd)

Return Position

CAUTION
Risk of burns.
The wheel applicator (1) is very hot. Failure to observe this could result in burn injuries.

a) Make sure the air is turned OFF.

b) Loosen the nut (2) then adjust the screw (3) until the roller (4) leaves the cam (5). Now turn a little in the opposite direction so that the cam (5) and the roller (4) are always in contact.

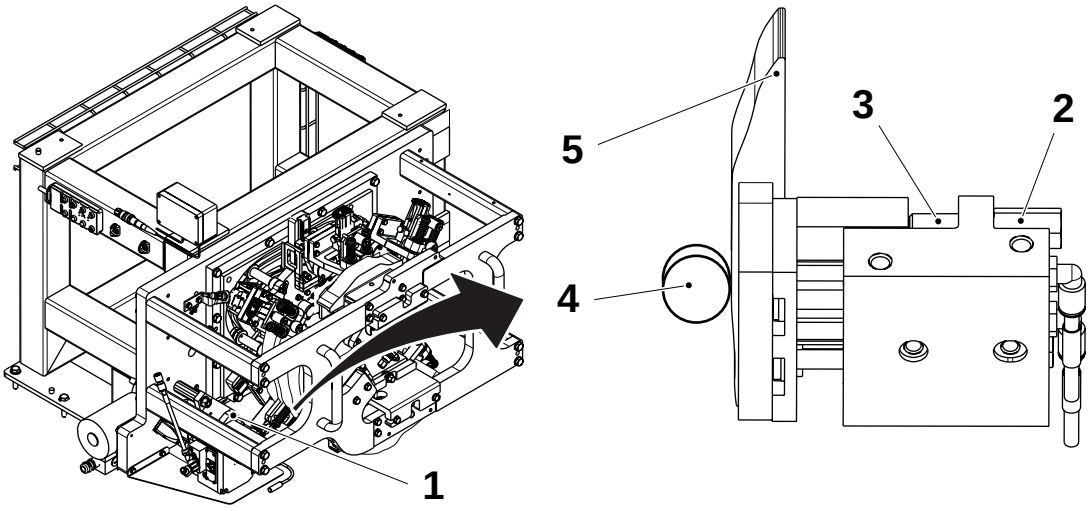

1 Wheel applicator
2 Nut
3 Screw
4 Roller
5 Cam

TechPub_2614345_0106 - 0702_3047136_01.fm

(Cont'd)

(Cont'd)

Forward Position

CAUTION
Risk of burns.
The wheel applicator (1) is very hot. Failure to observe this could result in burn injuries.

a) Make sure the air is turned OFF.

b) Loosen the nut (2) then adjust the screw (3) so that the cap (4) just touches the roller (5).

c) Check the hotmelt pattern see, Hotmelt on the next page.

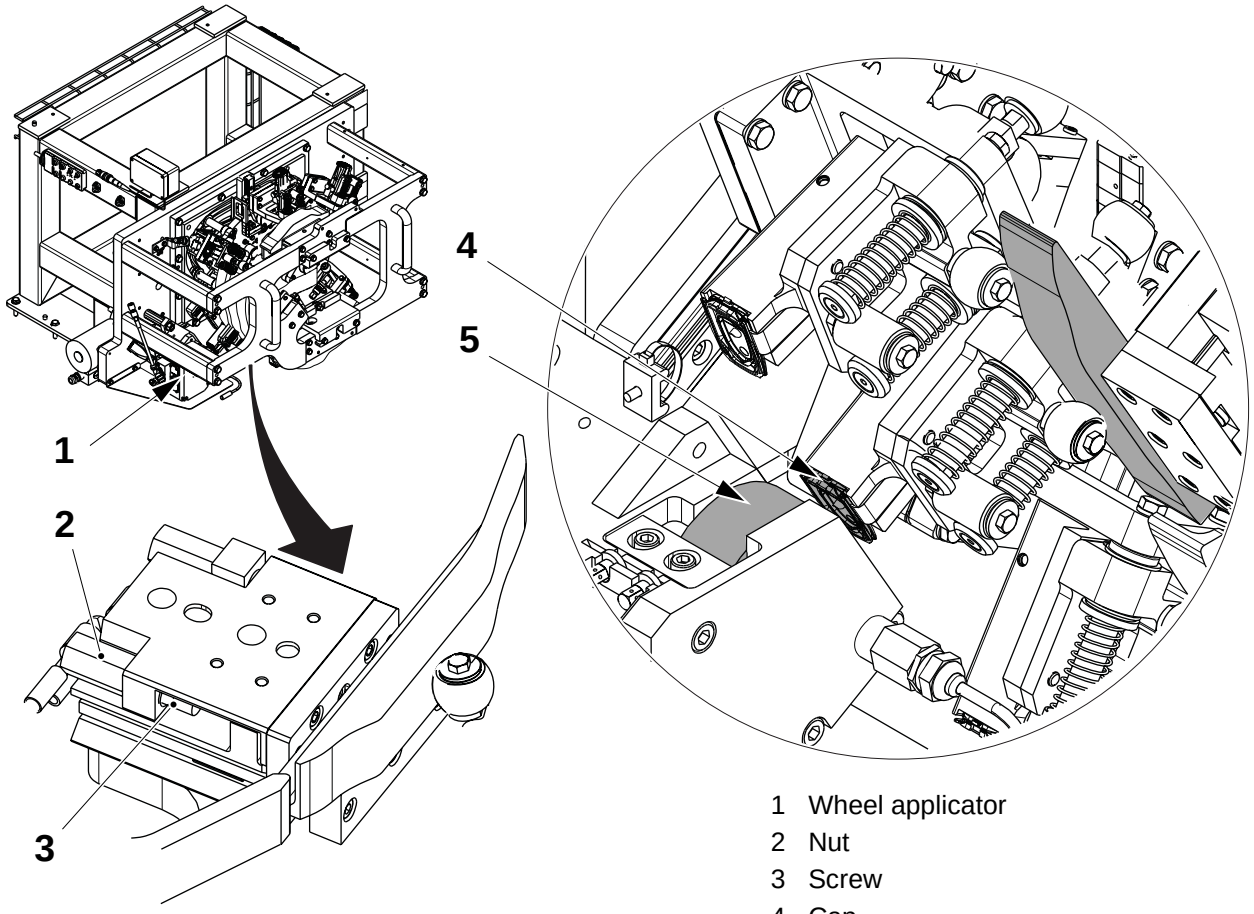

1 Wheel applicator
2 Nut
3 Screw
4 Cap
5 Hotmelt wheel

(Cont'd)

TechPub_2614345_0106 - 0702_3047136_01.fm

(Cont'd)

Set Sensor (30B201) Position

a) With the cylinder (1) fully extended, release the screw (2) and slide the sensor (3) towards the cam (4) until the LED illuminates.

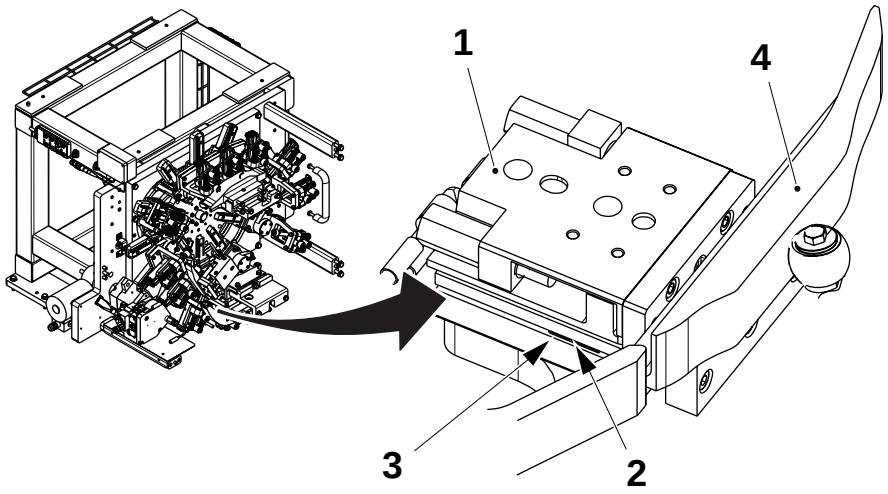

1 Cylinder
2 Screw
3 Sensor
4 Cam

(Cont'd)

TechPub_2614345_0106 - 0702_3047136_01.fm

(Cont'd)

Hotmelt

Depending on the distance between the wheel applicator and the cap, the result is as follows:

- If an uneven pattern of hotmelt is applied to the cap the distance is to small and requires increasing see, Forward Position on page 5-39.
- If the distance is correct, an even pattern of hotmelt is applied to the cap.
- If the hotmelt is pressed outside of the edges of the cap the distance is to large and requires decreasing see, Forward Position on page 5-39.

Note! Always adjust in small steps.

ReCap 2

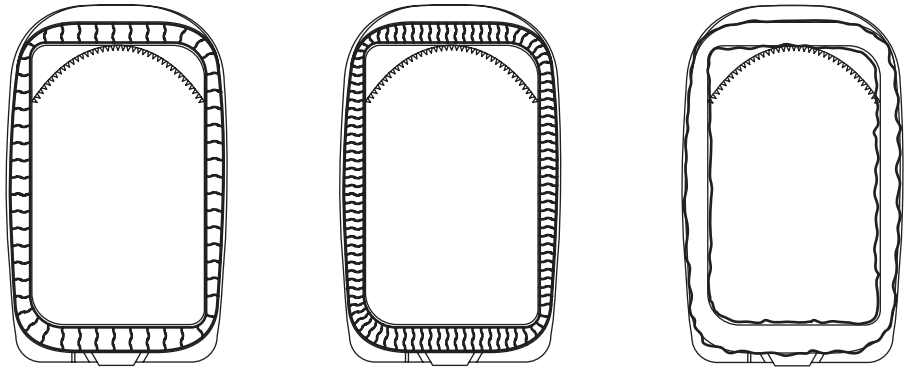

Distance A to small | Correct distance | Distance A to large

ReCap 3

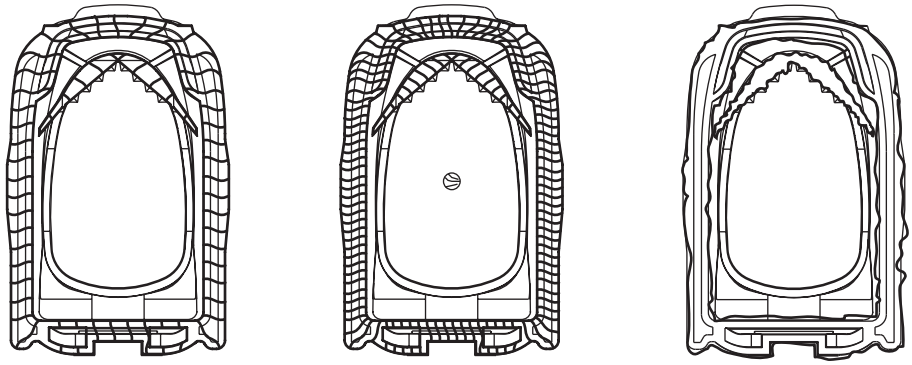

Distance A to small | Correct distance | Distance A to large

TechPub_2614345_0106 - 0702_3047136_01.fm

5.6.1-2 Hotmelt Wheel - Calibration

Machine Status	Mains Power ON Air ON
SPC Reference	2703755-0100

Note! Calibration should only be required after changing the sensor or control box.

a) Step up to STEP1 and wait for the hotmelt unit to reach the correct temperature.

b) Touch the MAINTENANCE button (1) after you have logged in, see HMI User Management - Log On as a User on page 1-6. In this condition there is no hotmelt pumped from the unit to the hotmelt wheel.

c) Open the drain plug on the hotmelt wheel to drain the hotmelt.

d) Step up to STEP 2 and touch the SERVICE button (2).

e) Touch the APPLICATOR UNIT maintenance button (3).

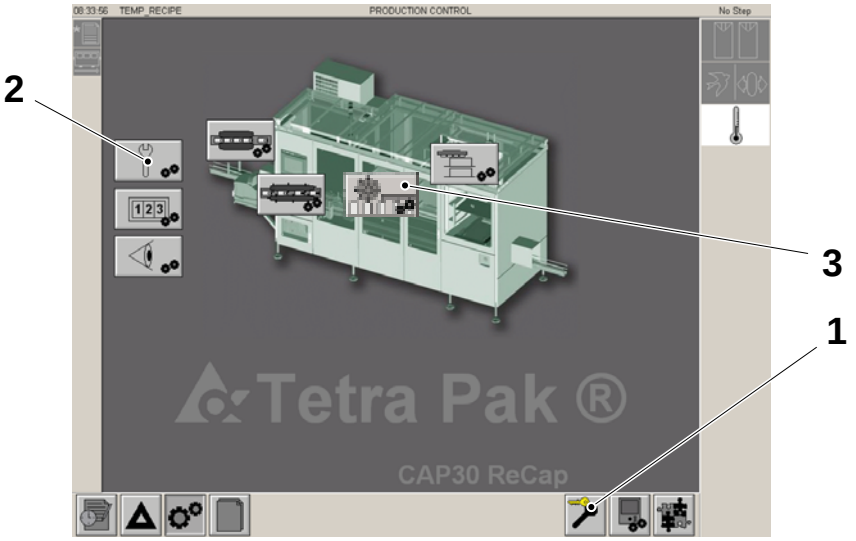

1 MAINTENANCE button
2 SERVICE button
3 APPLICATION UNIT button

(Cont'd)

TechPub_2614345_0106 - 0702_3047136_01.fm

(Cont'd)

f) Touch the HOTMELT WHEEL icon (4).

g) Touch the MANUAL FILL button (5).

Note! Touching the OK button (6) turns the hotmelt pump on for 0.5 seconds.

h) Touch the OK button (6).

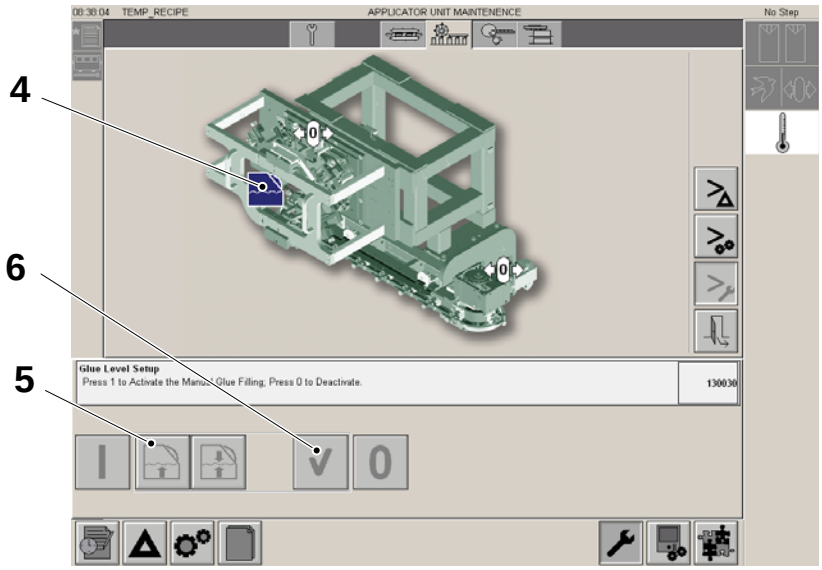

4 HOTMELT WHEEL icon
5 MANUAL FILL button
6 OK button

(Cont'd)

TechPub_2614345_0106 - 0702_3047136_01.fm

(Cont'd)

i) Check for hotmelt (7) at the point where the two rollers (8) and (9) come together.

j) Repeat steps h) and i) until a thin even layer of hotmelt (7) can be seen.

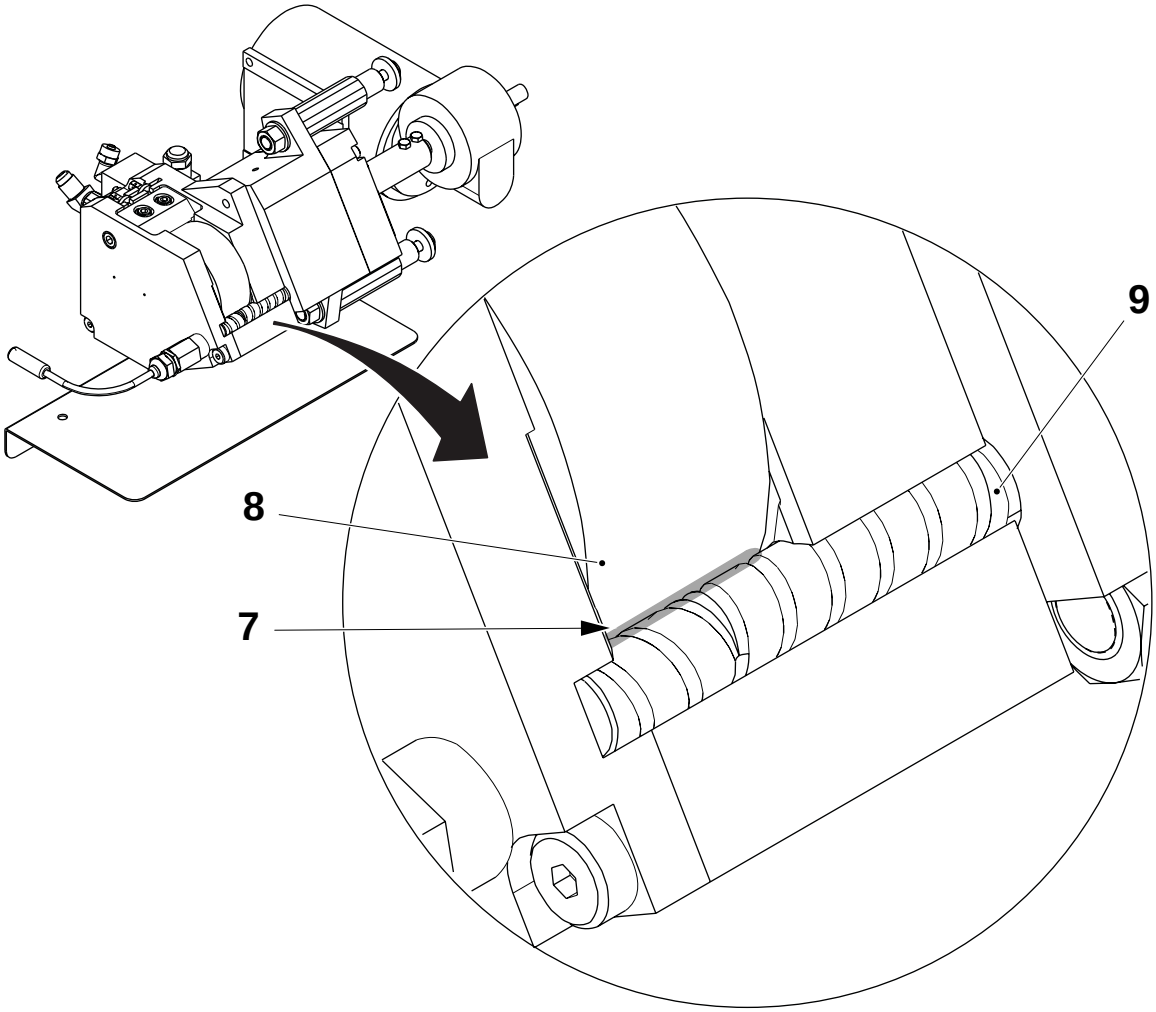

7 Hotmelt
8 Roller
9 Roller

(Cont'd)

TechPub_2614345_0106 - 0702_3047136_01.fm

(Cont'd)

k) When hotmelt is seen, press the SENSOR CALIBRATION button (10) followed by the OK button (6). The SENSOR CALIBRATION button (10) will become green.

l) Touch the EXIT button (11).

Note! If during production there is hotmelt leaking from the rollers, the calibration should be repeated reducing the amount of hotmelt in step i).

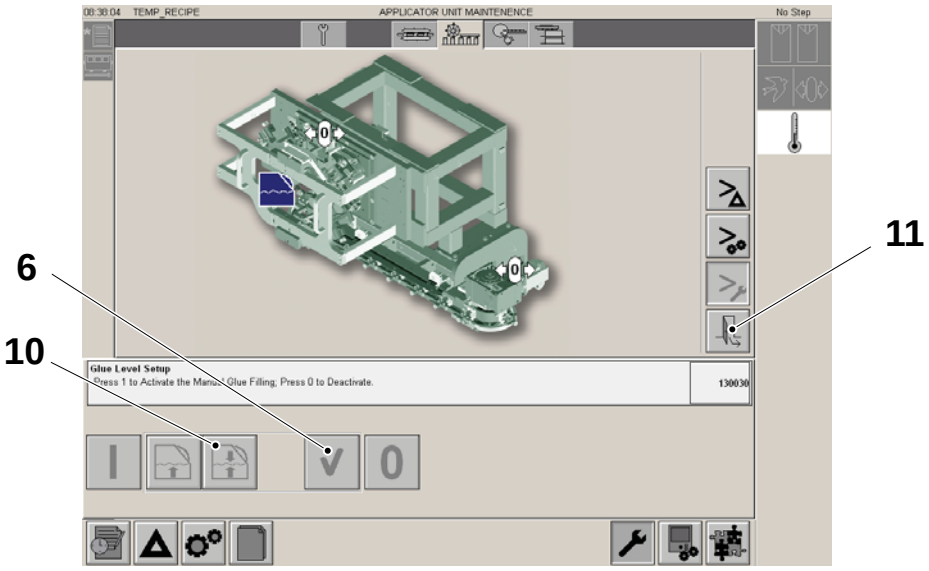

6 OK button
10 SENSOR CALIBRATION button
11 EXIT button

TechPub_2614345_0106 - 0702_3047136_01.fm

This page intentionally left blank

TechPub_2614345_0106 - 0702_3047136_01.fm

6 ReCap Cutting and Feeding

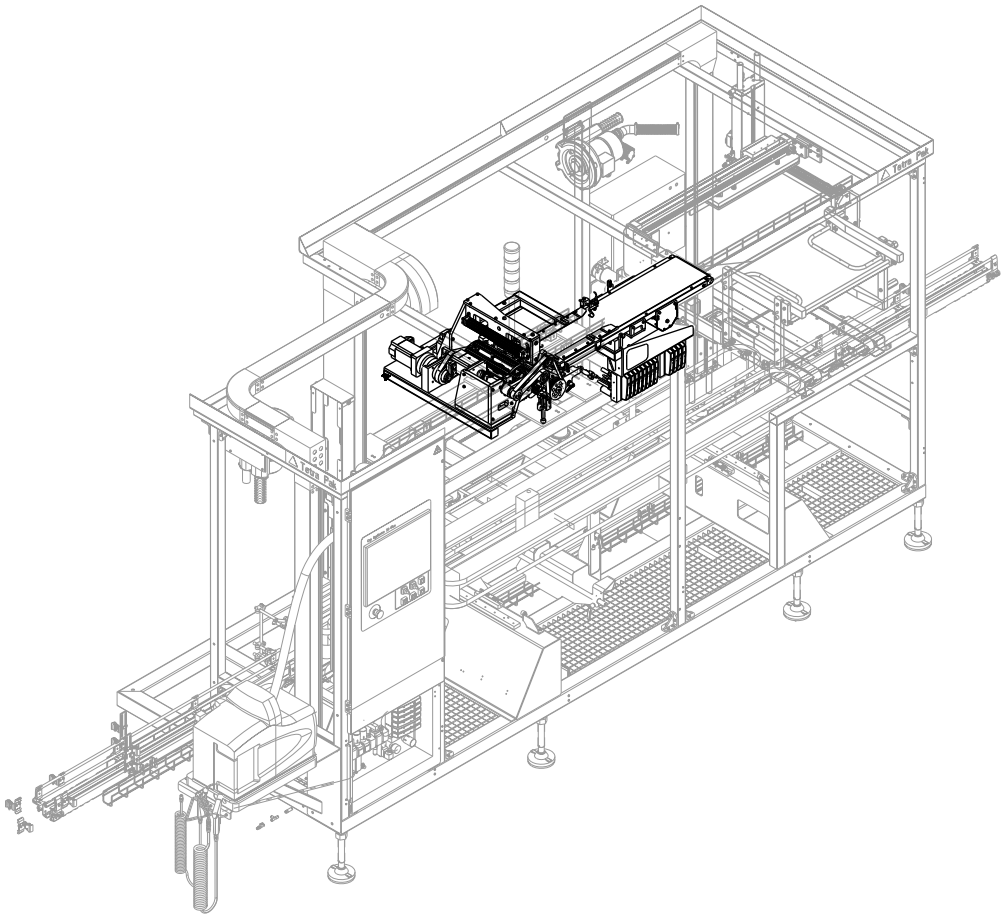

TechPub_2614345_0106 - 1002_3047143_01.fm

ReCap Cutting and Feeding - Description

SPC Reference	662909-0200

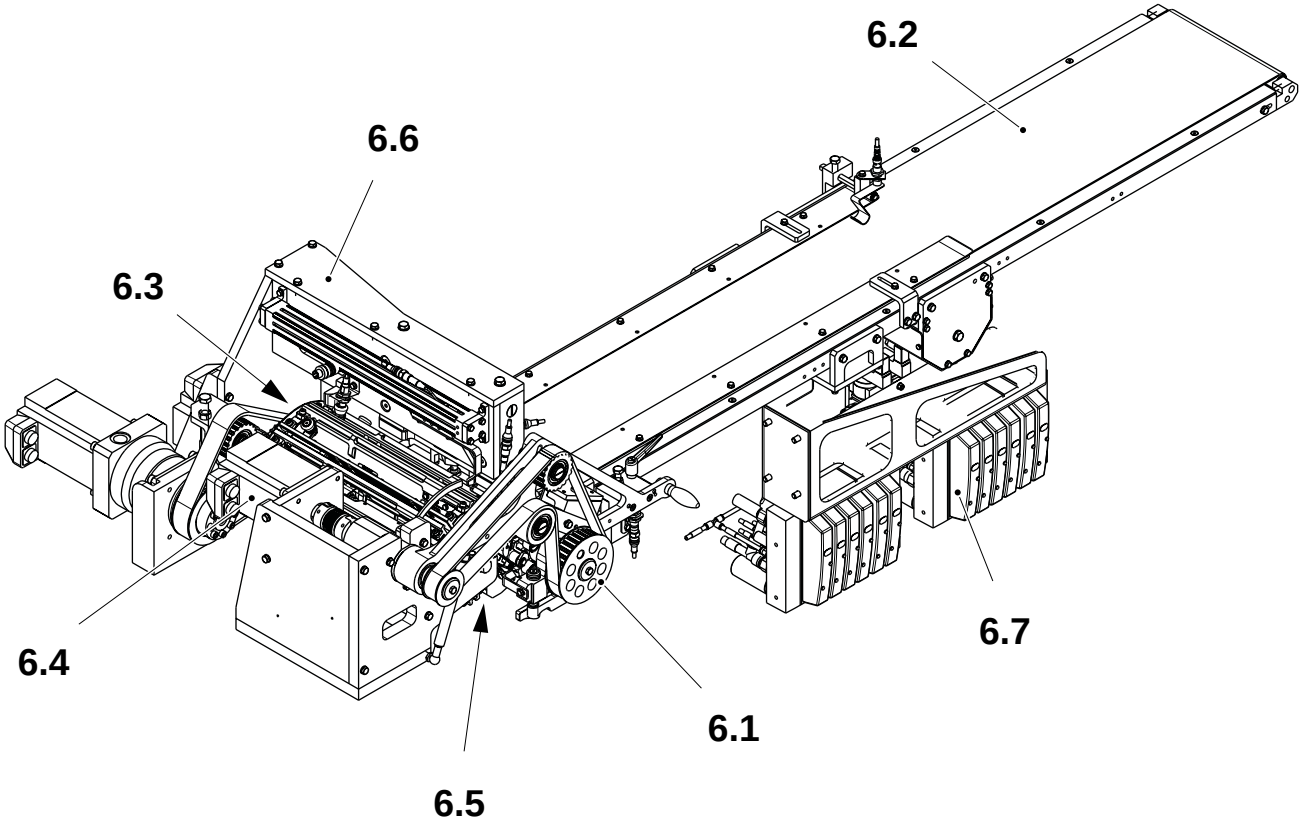

6.1 Cutting Unit
6.2 Conveying Equipment
6.3 Row Cutter
6.4 Drive Unit - Single Cut
6.5 Indexing Unit
6.6 Drive Unit
6.7 Pneumatic Unit

TechPub_2614345_0106 - 1002_3047143_01.fm

6.0 Functional Description - ReCap Cutting and Feeding . . . . . 6 - 7

6.0-1 ReCap Cutting and Feeding - Trouble Shooting . . . . . 6 - 8

6.0.1-1 Row Cutter - Jam Clearance . . . . . 6 - 8

6.1 Cutting Unit . . . . . 6 - 11

6.1.1 Cutting Unit - Overhaul . . . . . 6 - 11

6.1.1-1 Single Cut - Check Belt . . . . . 6 - 11

6.1.1-2 Single Cut - Change Belt . . . . . 6 - 12

6.1.1-3 Single Cut - Set Belt Tension . . . . . 6 - 13

6.1.1-4 Single Cut - Removal and Assembly . . . . . 6 - 14

6.1.1-5 Single Cut - Change Bearings . . . . . 6 - 15

6.1.1-6 Single Cut - Set X and Z Direction . . . . . 6 - 20

6.1.1-7 Single Cut - Set Zero Position . . . . . 6 - 22

6.1.1-8 Single Cut - Set Sensor Position . . . . . 6 - 31

6.1.1-9 Single Cut - Set Cap Stop . . . . . 6 - 32

6.1.1-10 Single Cut - Set Cap Present Sensor . . . . . 6 - 33

6.2 Conveying Equipment. . . . . 6 - 36

6.2.1 Sheet Holder . . . . . 6 - 36

6.2.1-1 Sheet Holder - Removal . . . . . 6 - 36

6.2.1-2 Sheet Holder - Overhaul . . . . . 6 - 37

6.2.1-3 Sheet Holder - Set . . . . . 6 - 39

6.2.1-4 Sheet Holder - Set the Sensors . . . . . 6 - 41

6.2.2 Conveyor. . . . . 6 - 43

6.2.2-1 Conveyor - Change . . . . . 6 - 43

6.2.2-2 Conveyor - Check . . . . . 6 - 44

6.2.2-3 Conveyor - Change Belt . . . . . 6 - 45

6.2.2-4 Conveyor - Drive Overhaul . . . . . 6 - 47

6.2.2-5 Conveyor - Rollers Overhaul . . . . . 6 - 48

6.2.2-6 Conveyor - Framework Change . . . . . 6 - 49

6.2.2-7 Conveyor - Set X Position . . . . . 6 - 50

6.2.2-8 Conveyor - Set Z Position . . . . . 6 - 51

TechPub_2614345_0106 - 1002_3047143_01.fm

6.2.2-9 Conveyor - Set Belt Alignment and Tension . . . 6 - 52

6.2.3 Sheet Detector . . . . . 6 - 53

6.2.3-1 Sheet Detector - Change . . . . . 6 - 53

6.2.3-2 Sheet Detector - Set . . . . . 6 - 54

6.2.4 Sheet Guides . . . . . 6 - 55

6.2.4-1 Sheet Guides - Set . . . . . 6 - 55

6.2.4-2 Sheet Guides - Set Height . . . . . 6 - 56

6.3 Row Cutter . . . . . 6 - 57

6.3.1 Row Cutter - Change . . . . . 6 - 57

6.3.1-1 Removal . . . . . 6 - 57

6.3.1-2 Cutting Mechanism Body - Change . . . . . 6 - 59

6.3.1-3 Cutting Mechanism Body - Set Sensors . . . . . 6 - 61

6.3.1-4 Cutting Mechanism Body - Set X . . . . . 6 - 63

6.3.1-5 Cutting Mechanism Body - Set Belt Tension . . . . . 6 - 64

6.3.1-6 Cutting Mechanism Body - Set Zero . . . . . 6 - 65

6.3.2 Cutting Unit . . . . . 6 - 68

6.3.2-1 Cutting Unit - Change . . . . . 6 - 68

6.3.2-2 Cutting Unit - Set Sprung Retainer . . . . . 6 - 71

6.3.2-3 Cutting Unit - Set Shim . . . . . 6 - 72

6.3.3 Drive Unit . . . . . 6 - 73

6.3.3-1 Drive Unit - Change . . . . . 6 - 73

6.3.3-2 Clamping Element - Removal and Installation . . . . . 6 - 75

6.4 Drive Unit - Single Cut . . . . . 6 - 77

6.4.1 Drive Unit - Overhaul . . . . . 6 - 77

6.4.1-1 Drive Unit - Change . . . . . 6 - 77

6.5 Indexing Unit . . . . . 6 - 79

6.5.1 Indexing Unit - Overhaul . . . . . 6 - 79

6.5.1-1 Indexing Unit - Change . . . . . 6 - 79

6.5.1-2 Indexing Unit - Set X position and Zero . . . . . 6 - 85

6.5.1-3 Indexing Unit - Check X Direction . . . . . 6 - 89

TechPub_2614345_0106 - 1002_3047143_01.fm

6.6 Drive Unit . . . . . 6 - 90

6.6.1 Drive Unit - Overhaul . . . . . 6 - 90

6.6.1-1 Drive Unit - Change . . . . . 6 - 90

6.6.1-2 Drive Unit - Set X Position Stop and Sensor . . . . . 6 - 91

6.6.1-3 Drive Unit - Set Carrier Sensor . . . . . 6 - 92

6.6.1-4 Drive Unit - Set Carrier Speed . . . . . 6 - 93

6.6.1-5 Drive Unit - Align Combe with Shim . . . . . 6 - 95

6.7 Pneumatic Unit . . . . . 6 - 96

6.7.1 Pneumatic Unit - Panel . . . . . 6 - 96

6.7.1-1 Pneumatic Unit - Panel Front . . . . . 6 - 96

6.7.1-2 Pneumatic Unit - Panel Back . . . . . 6 - 98

TechPub_2614345_0106 - 1002_3047143_01.fm

This page intentionally left blank

TechPub_2614345_0106 - 1002_3047143_01.fm

6.0 Functional Description - ReCap Cutting and Feeding

SPC Reference	662909-0200

The ReCap Cutting and Feeding supplies single caps from the sheets of caps located in the box.

A sheet of caps from the box in the magazine, via the sheet carrier (see 7 ReCap Magazine) is dropped on to the conveyor belt (1). The conveyor belt (1) delivers the sheet of caps to the row cutter (2) through the sheet holder part of the drive unit (3). The sheet holder (3) is lowered over the sheet while the row cutter (2) cuts the row of caps from the sheet. The row of caps are fed into the single cap cutter (4) via the cap carrier (5) which is driven by the indexing unit (6). At the single cap cutter (4) the caps are collected by the applicator unit for delivery to the package via the hotmelt wheel.

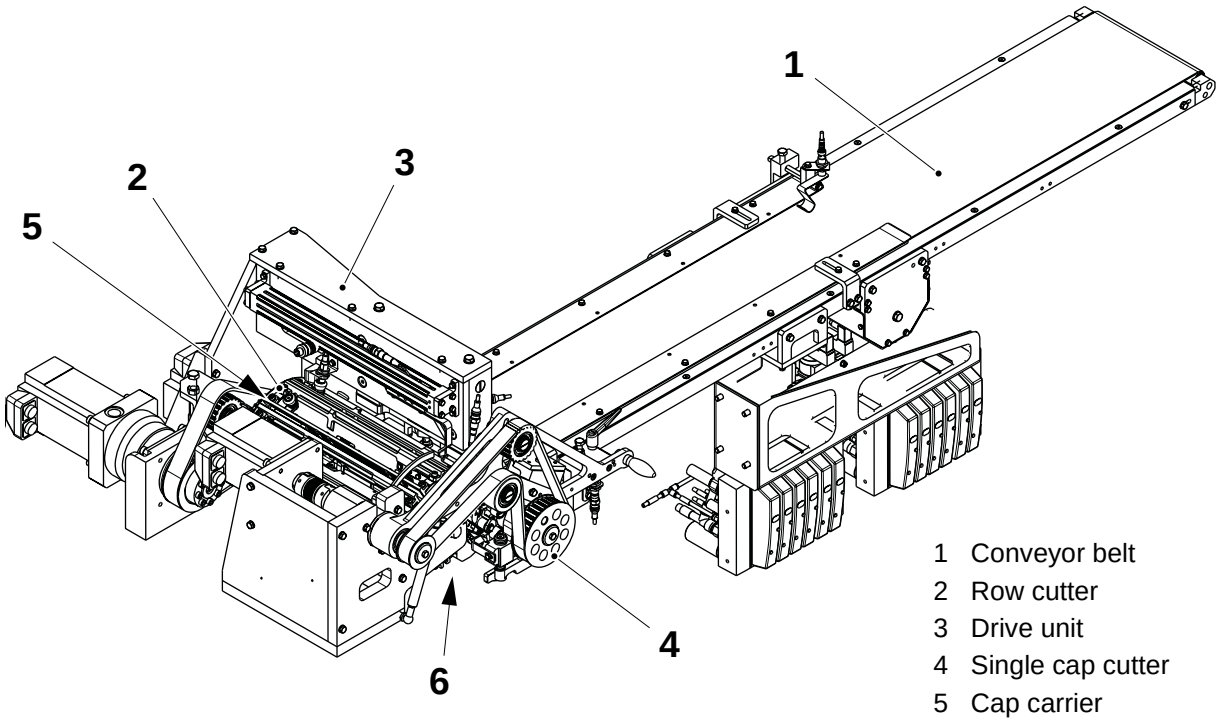

1 Conveyor belt
2 Row cutter
3 Drive unit
4 Single cap cutter
5 Cap carrier
6 Indexing unit

TechPub_2614345_0106 - 1002_3047144_01.fm

6.0-1 ReCap Cutting and Feeding - Trouble Shooting

Cap Jam in Row Cutter

When the sheet of caps is pushed into the row cutter and both triggers are hit, the sheet holder moves down and the row cutter will rotate. If any of the other caps in that row have become detached from the rest of the sheet, when the wheel rotates a jam is probable.

When the row cutter stops due to a jam it is signalled by an alarm.

6.0.1-1 Row Cutter - Jam Clearance

a) Release the lever (1) and move the single cut (2) up.

b) Release the sheet holder (3) and remove any caps and residue.

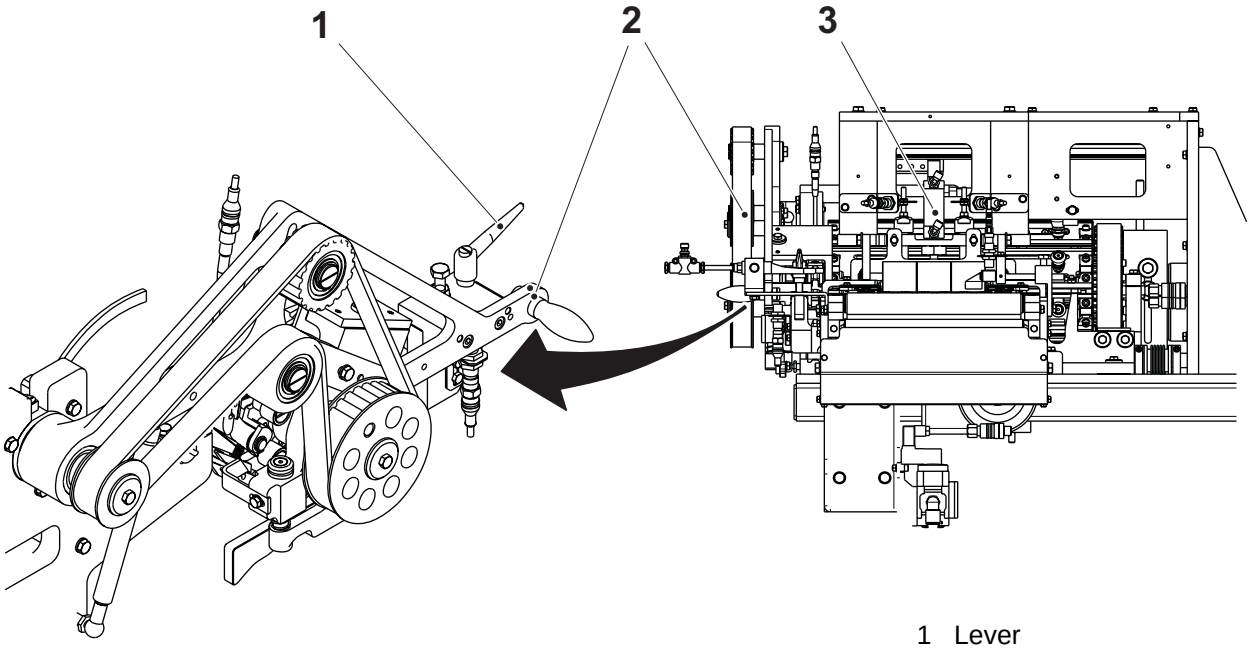

1 Lever
2 Single cut
3 Sheet holder

TechPub_2614345_0106 - 1002_3047144_01.fm

(Cont'd)

(Cont'd)

c) If step b) is not possible release the two screws (4) and move the slider (5) away from the row cutter (6).

d) Move the carrier roller (7) to its start point (the end away from the single cut) each time before you rotate the row cutter (6).

e) Rotate the indexing wheel to the zero mark (8).

f) Rotate the row cutter (6) in a clockwise direction until the trapped caps drop from the slider (5).

Note! Make sure that all cap parts and residue are removed.

g) Tighten the two screws (4).

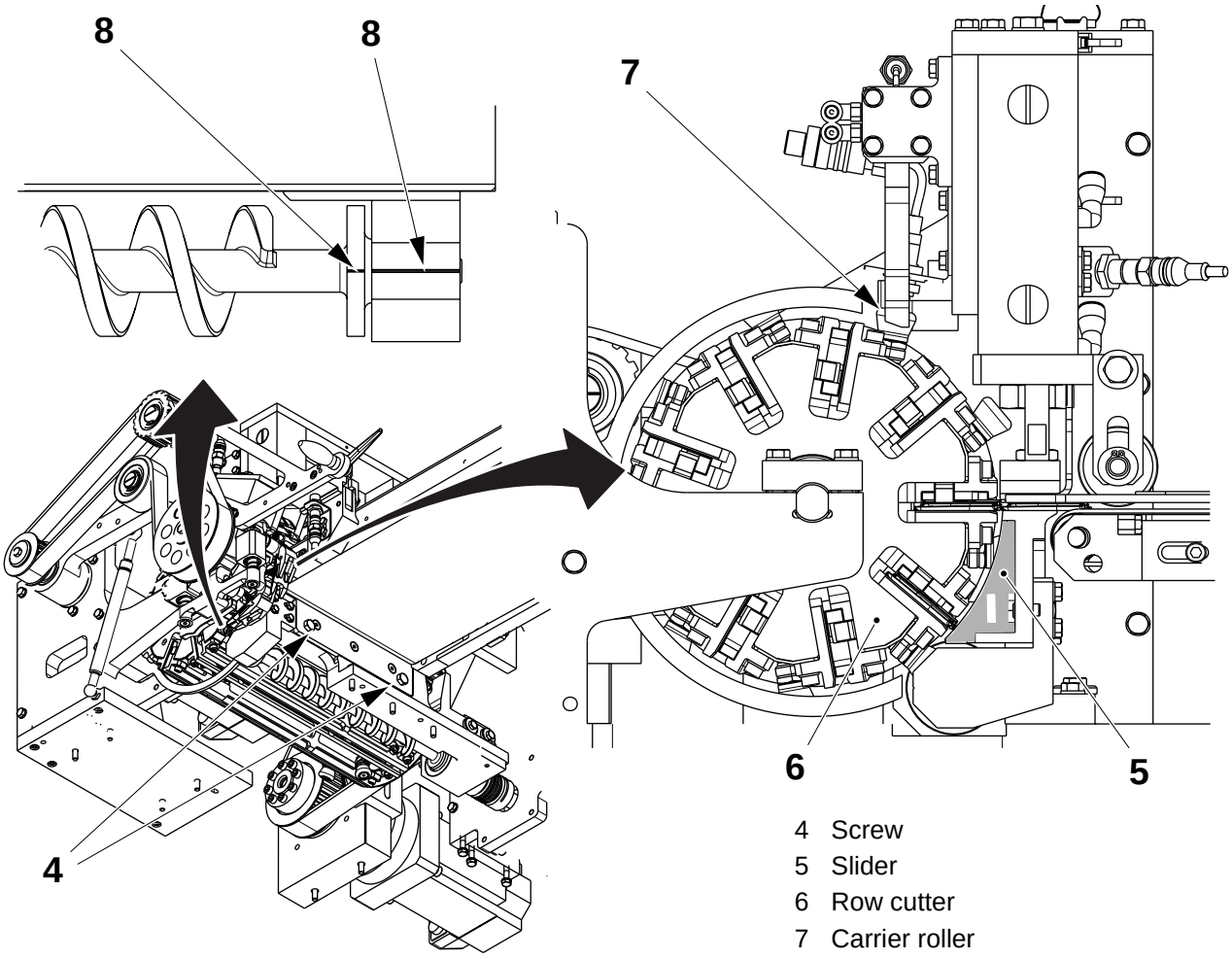

4 Screw
5 Slider
6 Row cutter
7 Carrier roller
8 Zero mark

(Cont'd)

TechPub_2614345_0106 - 1002_3047144_01.fm

(Cont'd)

h) Pull down the single cut (2) and tighten the lever (1) to retain it.

i) Close all guards, doors and covers.

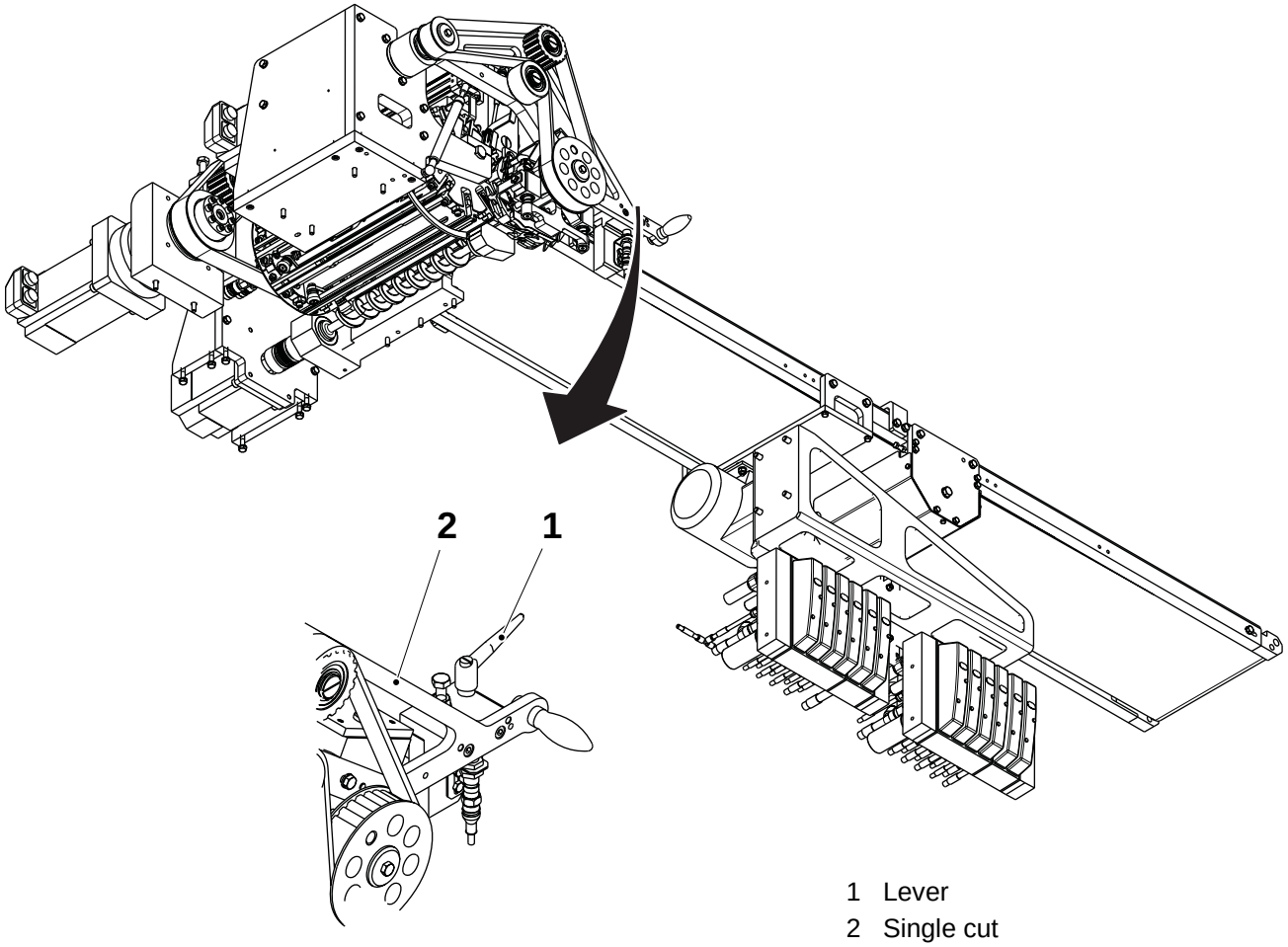

1 Lever
2 Single cut

TechPub_2614345_0106 - 1002_3047144_01.fm

6.1 Cutting Unit

SPC Reference	2835403-0200

6.1.1 Cutting Unit - Overhaul

6.1.1-1 Single Cut - Check Belt

Machine Status	Mains Power OFF
SPC Reference	2835403-0200

a) Visually check that the belt (1) is not damaged or worn, if necessary change, see 6.1.1-2 Single Cut - Change Belt.

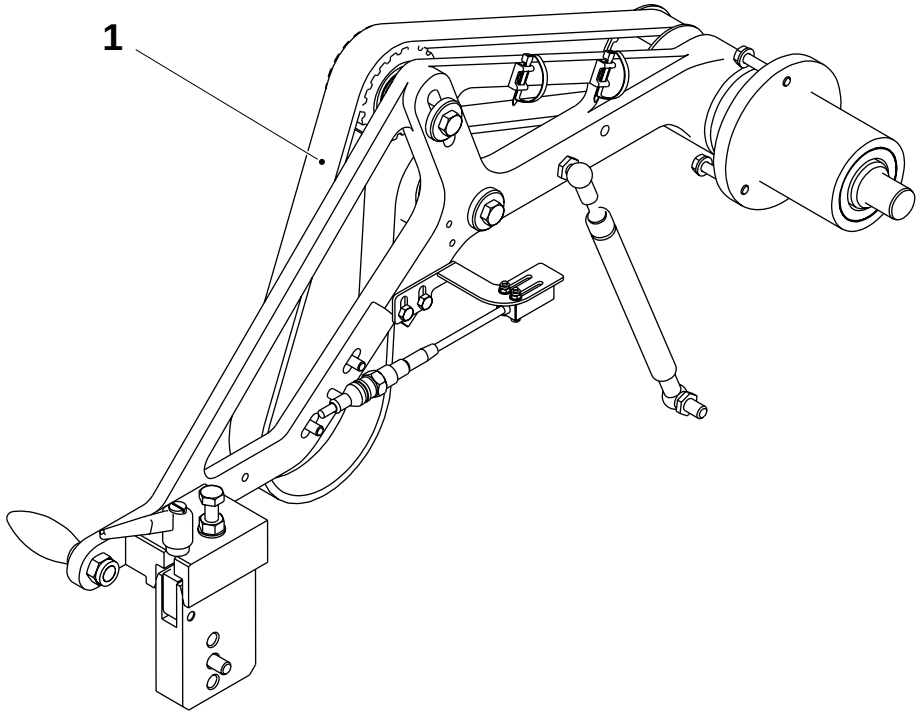

1 Belt

TechPub_2614345_0106 - 1002_3047144_01.fm

6.1.1-2 Single Cut - Change Belt

Machine Status	Mains Power OFF
SPC Reference	2835403-0200

a) Release the screw (1), lower the toothed pulley (2) and remove the belt (3).

b) Install new belt (3) and tighten the screw (1).

c) Set the belt tension see, 6.1.1-3 Single Cut - Set Belt Tension.

d) Zero the servo motor again see, 6.1.1-7 Single Cut - Set Zero Position.

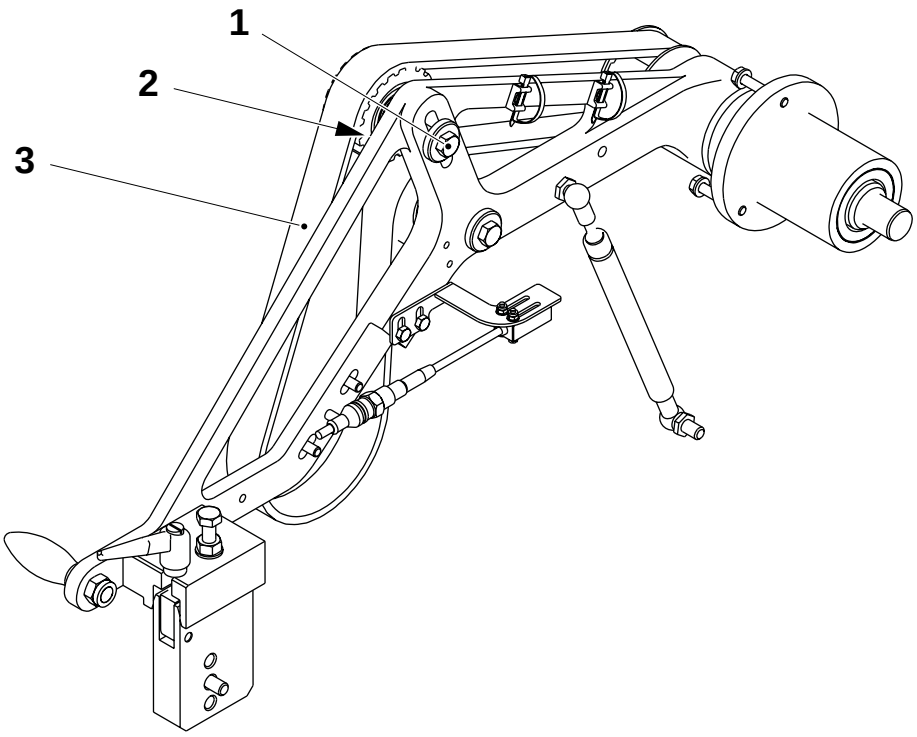

1 Screw
2 Toothed Pulley
3 Belt

TechPub_2614345_0106 - 1002_3047144_01.fm

6.1.1-3 Single Cut - Set Belt Tension

Machine Status	Mains Power OFF
SPC Reference	2835403-0200

a) Release the screw (1) and move the toothed pulley (2) in the direction of the arrow until the belt (3) reaches it's correct tension.
   - Measuring the belt tension using a "belt tension measuring meter" the tension should be about 60 - 70 Hz.
   - Measure it in the middle of the belt and produce vibrations hitting the belt with a spanner.

b) Tighten the screw (1).

c) Check the servo motor zero, set again if necessary see, 6.1.1-7 Single Cut - Set Zero Position.

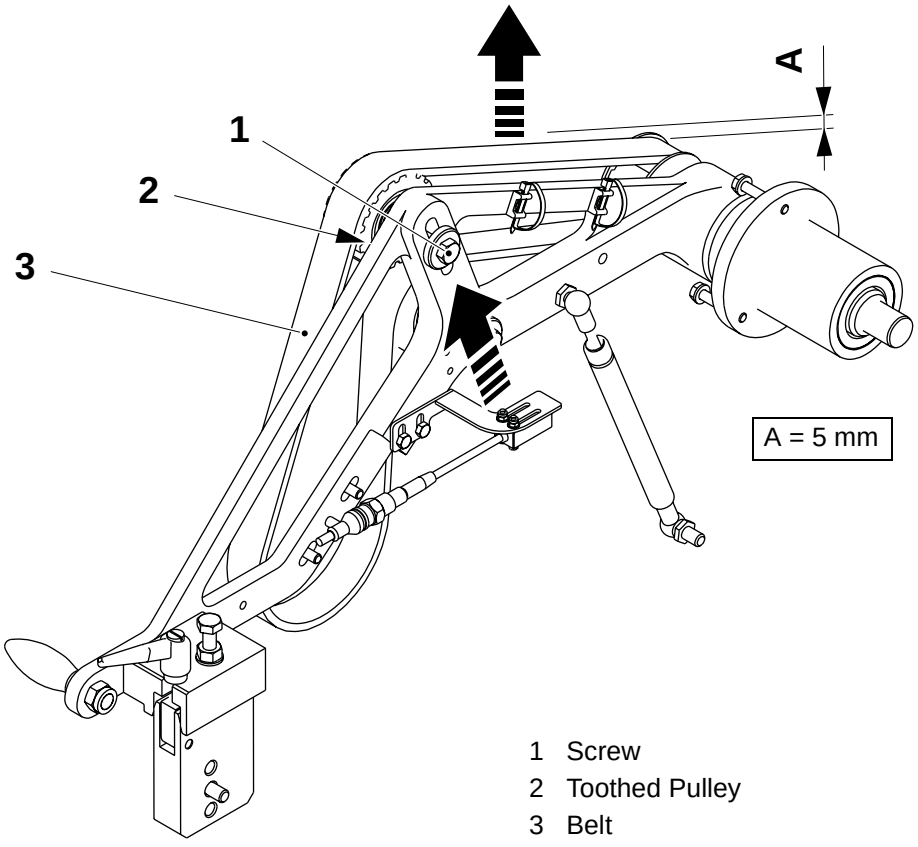

1 Screw
2 Toothed Pulley
3 Belt

TechPub_2614345_0106 - 1002_3047144_01.fm

6.1.1-4 Single Cut - Removal and Assembly

Machine Status	Mains Power OFF
SPC Reference	2835403-0200

a) Release the handle (1) that holds the single cut in position.
b) Raise the single cut unit (2) into its upper position.
c) Release the clip (3) that fastens the cylinder (4).
d) Release the screw (5) and the coupling (6).
e) Remove the screws (7) and the single cut unit (2).
f) Assemble in the reverse order.
g) Zero the single cut see, 6.1.1-7 Single Cut - Set Zero Position.

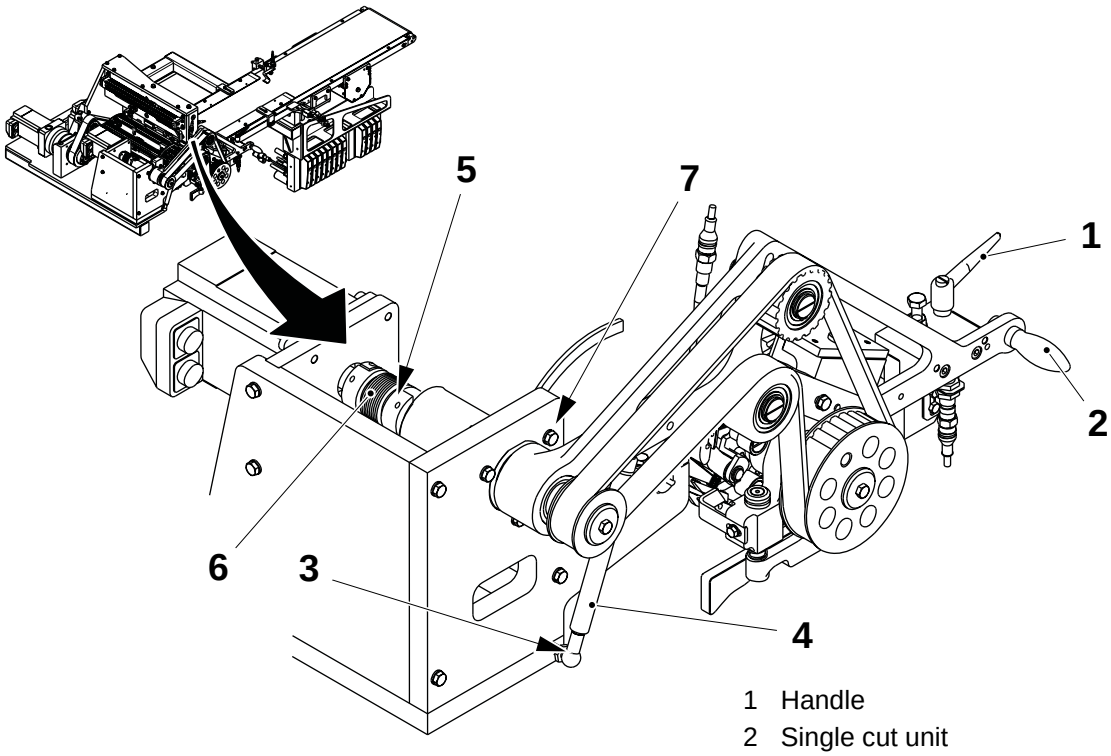

1 Handle
2 Single cut unit
3 Clip
4 Cylinder
5 Screw
6 Coupling
7 Screw

TechPub_2614345_0106 - 1002_3047144_01.fm

6.1.1-5 Single Cut - Change Bearings

Machine Status	Mains Power OFF
SPC Reference	2835403-0200

Change Drive End Bearings

a) Remove the screw (1), the washer (2) and the toothed pulley (3).

b) Remove the key (4) and the housing (5).

c) Remove the seals (6), the bearings (7) and the spacer (8) from the shaft (9).

d) Remove the retaining ring (10), the spacers (11) and the bearings (12).

e) Assemble in the reverse order.

f) Zero the single cut see, 6.1.1-7 Single Cut - Set Zero Position.

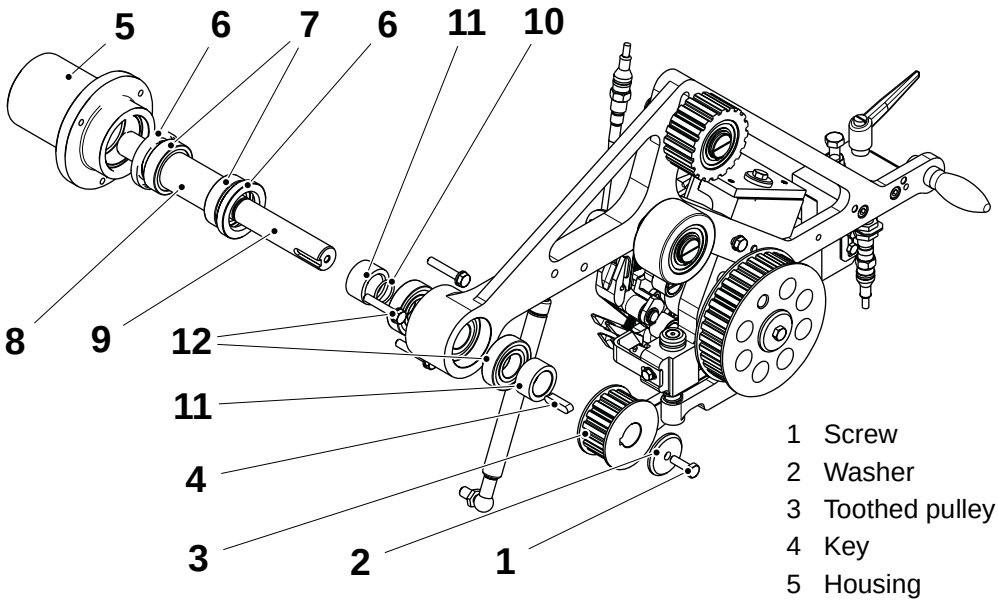

1 Screw
2 Washer
3 Toothed pulley
4 Key
5 Housing
6 Seal
7 Bearings
8 Spacer
9 Shaft
10 Retaining ring
11 Spacer
12 Bearing

TechPub_2614345_0106 - 1002_3047144_01.fm

Change Guide Roller Bearings

a) Remove the screw (1) and the washer (2).

b) Remove the retaining rings (3), the bearings (4) and the toothed pulley (5) from the shaft (6).

c) Remove the screw (7).

d) Remove the retaining rings (8), the bearings (9) and the guide roller (10) from the shaft (11).

e) Assemble in the reverse order.

f) Zero the single cut see, 6.1.1-7 Single Cut - Set Zero Position.

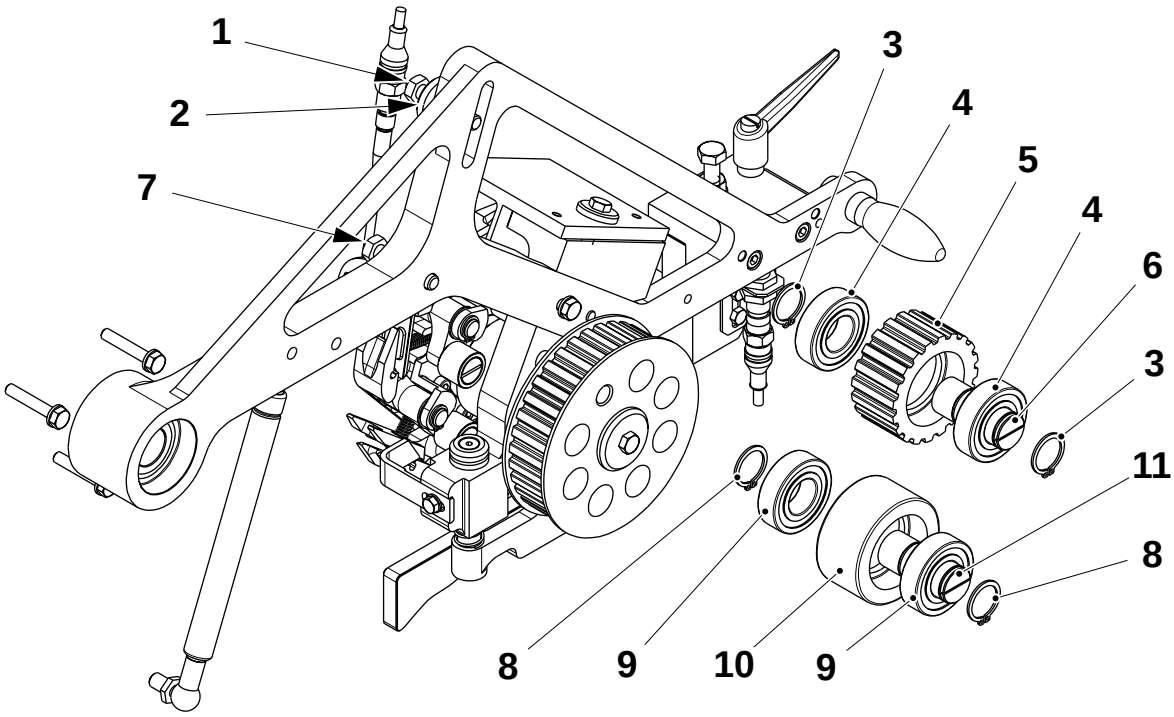

1 Screw
2 Washer
3 Retaining ring
4 Bearings
5 Toothed pulley
6 Shaft
7 Screw
8 Retaining ring
9 Bearings
10 Guide roller
11 Shaft

TechPub_2614345_0106 - 1002_3047144_01.fm

Remove Single Cut Roller

a) Remove the screw (1), the washer (2) and the cap carrier unit (3).
b) If necessary remove the screw (4), the washer (5) and the guide (6).
c) Remove the screw (7), the washer (8) and the toothed pulley (9).
d) Remove the key (10), the spacer (11), the screws (12) and the shaft (13).
e) Assemble in the reverse order.
f) Zero the single cut see, 6.1.1-7 Single Cut - Set Zero Position.

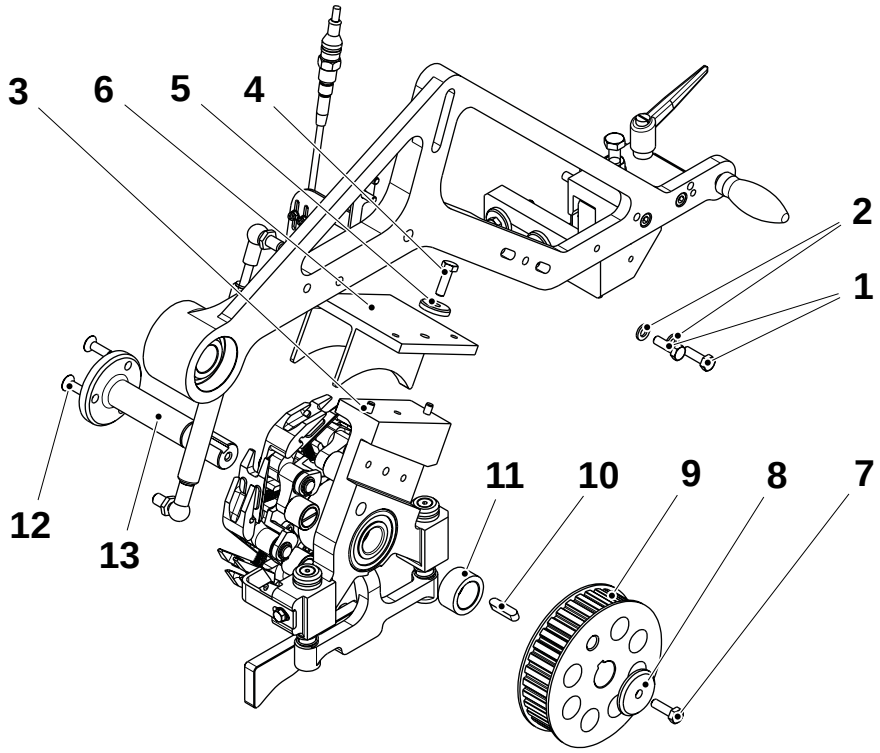

1 Screw
2 Washer
3 Carrier unit
4 Screw
5 Washer
6 Guide
7 Screw
8 Washer
9 Toothed pulley
10 Key
11 Spacer
12 Screw
13 Shaft

TechPub_2614345_0106 - 1002_3047144_01.fm

Change Cap Carrier Bushings and Rollers

a) Remove the retaining ring (1), the screws (2) and the retaining plate (3).
b) Remove the shaft (4) and the roller (5).
c) Remove the bushings (6) from the arm (7).
d) Assemble in the reverse order checking that the spring (8) is in place.
e) Zero the single cut see, 6.1.1-7 Single Cut - Set Zero Position.

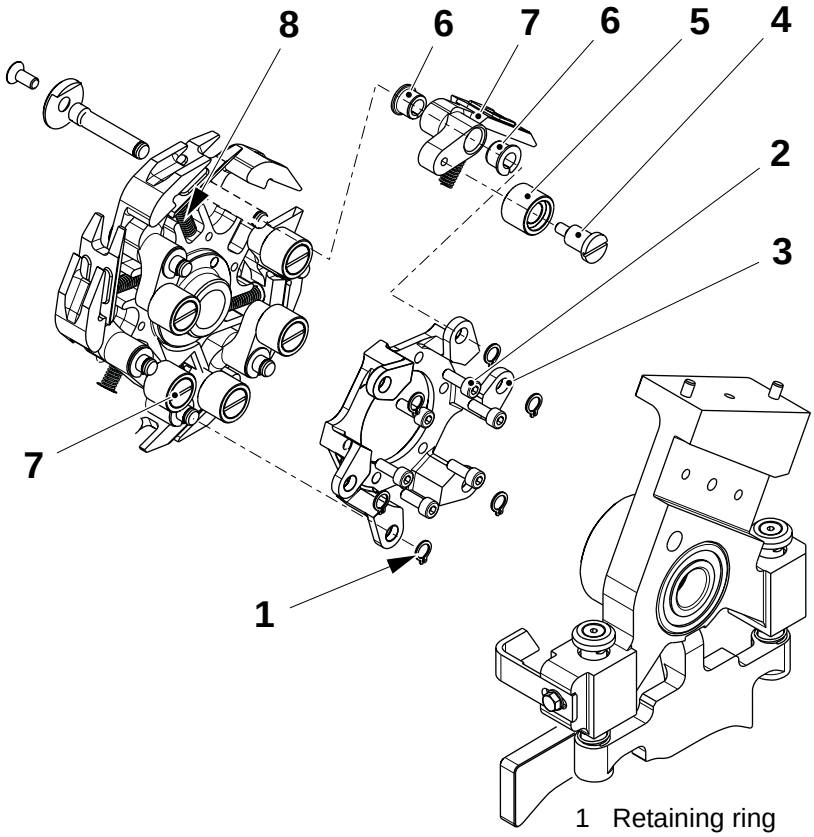

1 Retaining ring
2 Screw
3 Retaining plate
4 Shaft
5 Roller
6 Bushing
7 Arm
8 Spring

TechPub_2614345_0106 - 1002_3047144_01.fm

Change Cam Holder Bushings

a) Remove the screws (1) and the washer (2).

b) Remove the screws (3), the shaft (4) and the spring (5) from the cam holder (6).

c) Remove the retaining ring (7) and the bushings (8).

d) Remove the screw (9) and the cam (10).

e) Assemble in the reverse order.

f) Zero the single cut see, 6.1.1-7 Single Cut - Set Zero Position.

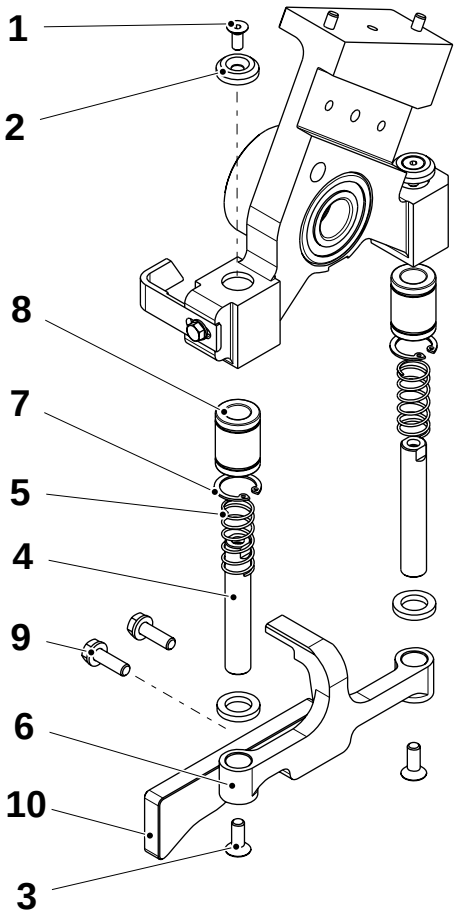

1 Screw
2 Washer
3 Screw
4 Shaft
5 Spring
6 Cam holder
7 Retaining ring
8 Bushing
9 Screw
10 Cam

TechPub_2614345_0106 - 1002_3047144_01.fm

6.1.1-6 Single Cut - Set X and Z Direction

Machine Status	Mains Power OFF
SPC Reference	2835403-0200

Set X Direction

a) Release the belt tension (1), see 6.1.1-2 Single Cut - Change Belt.

b) Insert shims (2) as required.

c) When the bracket (3) and the single cut (4) locate freely in the X direction, tighten the screw (5).

Note! The bracket (3) and the single cut (4) must locate freely.

d) Set the belt (1) tension see, 6.1.1-3 Single Cut - Set Belt Tension.

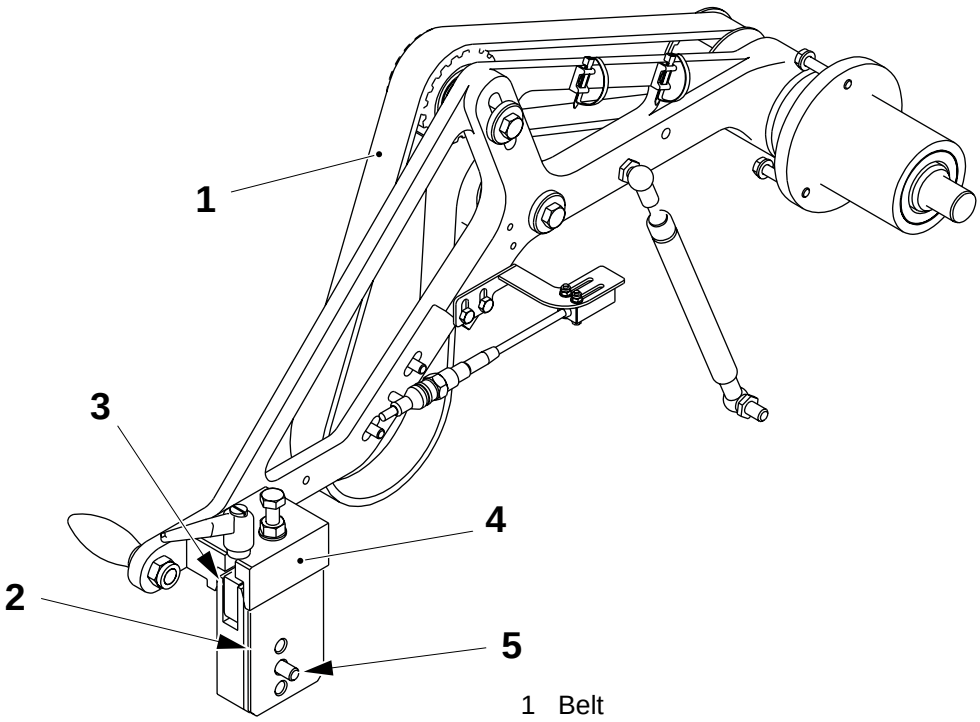

1 Belt
2 Screw
3 Bracket
4 Single cut unit
5 Screw

(Cont'd)

TechPub_2614345_0106 - 1002_3047144_01.fm

(Cont'd)

Set Z Direction - Course setting

a) Make sure that the belt (1) has been tensioned see, 6.1.1-3 Single Cut - Set Belt Tension.

b) Release the lever (2) and adjust the nut (3) and screw (4) until the distance A is obtained.

Set Z Direction - Fine setting

c) Lift the single cut (5) and insert the template (6) into the row cutter and then lower the single cut (5) sliding the template (6) into its jaws see 6.1.1-7 Single Cut - Set Zero Position.

d) Loosen the nut (3) and adjust the Z position of the single cut unit (5) by turning the screw (4) until the jaws (7) and the template (6) are parallel. Tighten the nut (3).

e) Set the cap present sensor see, 6.1.1-7 Single Cut - Set Zero Position.

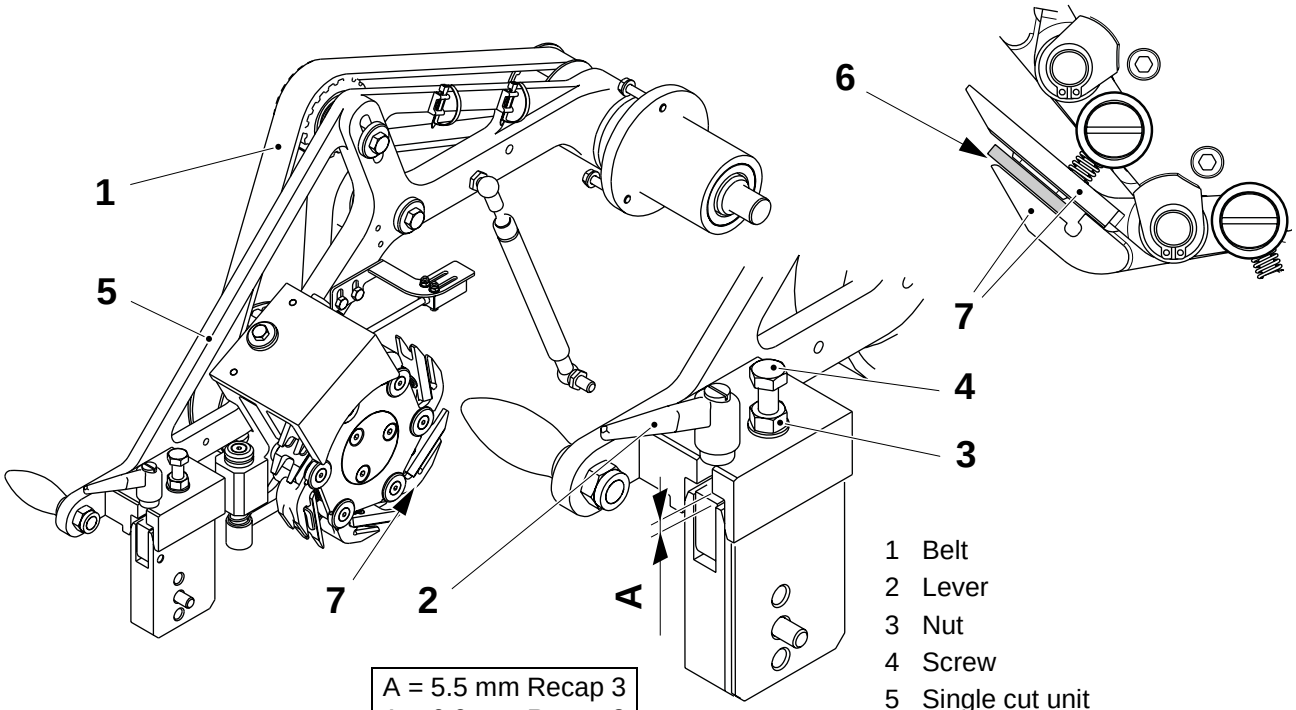

TechPub_2614345_0106 - 1002_3047144_01.fm

6.1.1-7 Single Cut - Set Zero Position

Machine Status	STEP 2
Template	2911910-0000
SPC Reference	2835403-0200

a) Check if the row cutter is in its zero position by touching the SETTINGS button (1), then the OVERVIEW button (2).



1 SETTING button
2 OVERVIEW button

(Cont'd)

TechPub_2614345_0106 - 1002_3047144_01.fm

(Cont'd)

b) Touch the ROW CUTTER ACTUAL POSITION window (3) and then read the value in the angle value window (4). If the row cutter is not in its zero position see 6.3.1-6 Cutting Mechanism Body - Set Zero.

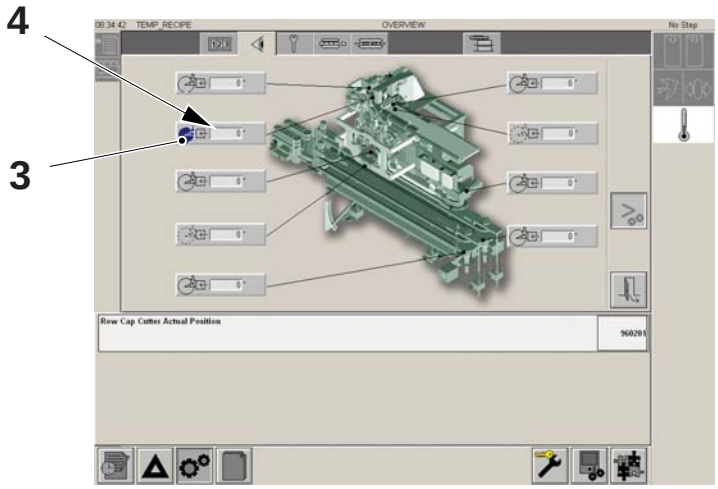

3 ROW CAP CUTTER ACTUAL POSITION button
4 Value window

(Cont'd)

TechPub_2614345_0106 - 1002_3047144_01.fm

(Cont'd)

Note! If the cap stopper is already set mark its position, if not see 6.1.1-9 Single Cut - Set Cap Stop.

a) Remove the screw (5) and the cap stopper (6).

b) Release the lever (7) and lift the single cut (8) up.

Note! Move the carrier away to allow for the template (9).

c) Insert the template (9) into the row cutter (10), lower the single cut (8).

CAUTION
Damage to equipment
The machine must NOT be used until the template (9) is removed.

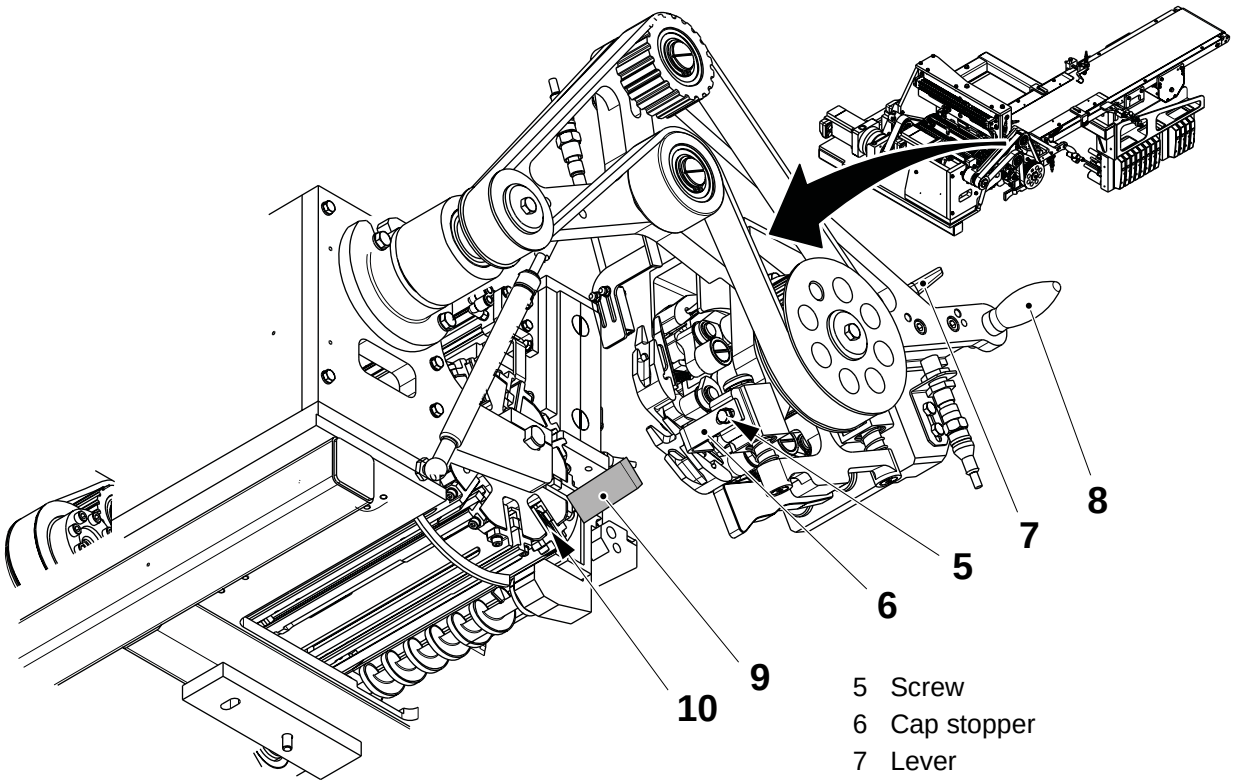

5 Screw
6 Cap stopper
7 Lever
8 Single cut
9 Template
10 Row cutter

TechPub_2614345_0106 - 1002_3047144_01.fm

(Cont'd)

(Cont'd)

d) Rotate the single cut (8) until the template (9) is parallel with the lower jaw (11). It may be necessary to raise or lower the single cut see, 6.1.1-6 Single Cut - Set X and Z Direction.

Note! Make sure that the template in the row cutter is touching the slider (12) during the setting.

CAUTION
Damage to equipment
The machine must NOT be used until the template (9) is removed.

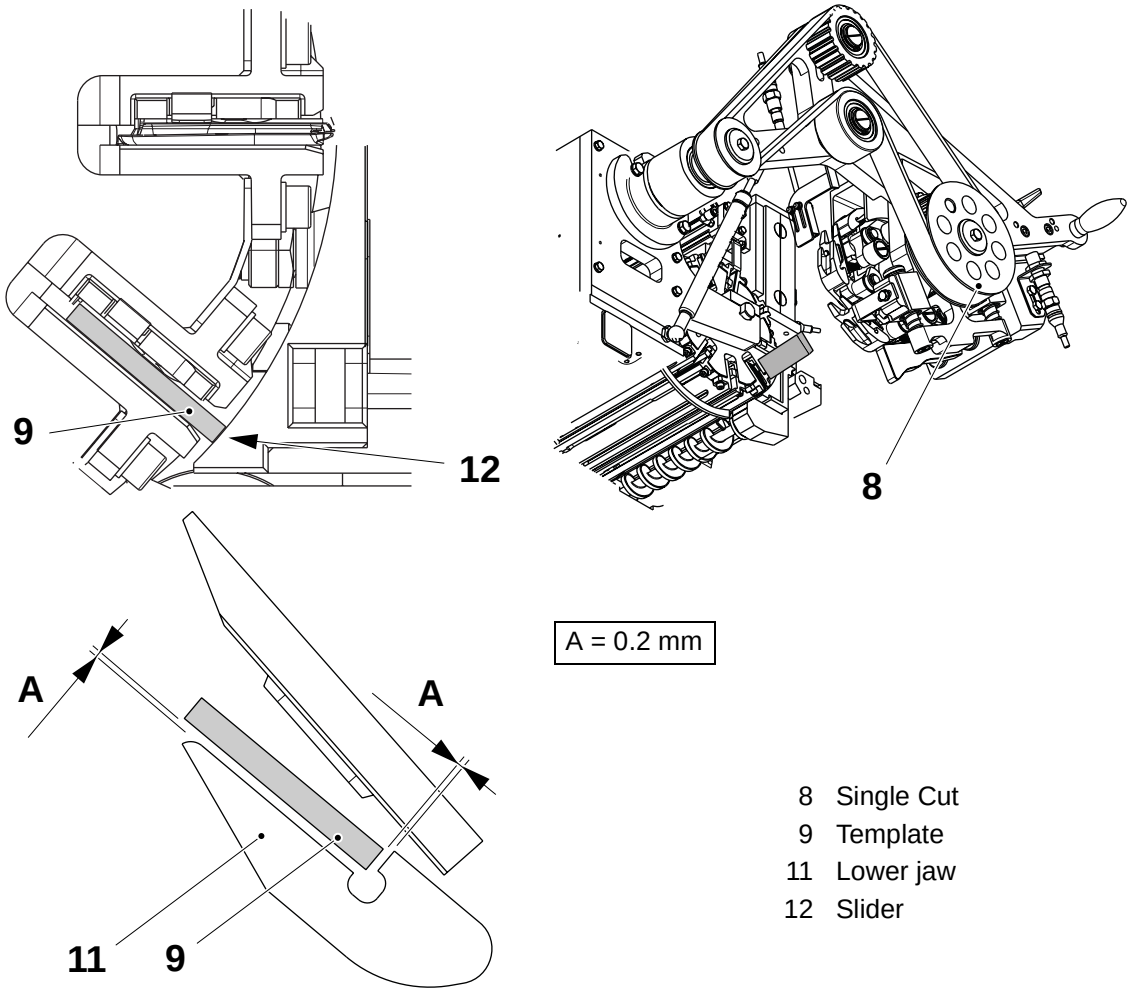

8 Single Cut
9 Template
11 Lower jaw
12 Slider

(Cont'd)

TechPub_2614345_0106 - 1002_3047144_01.fm

(Cont'd)

e) Check the row cutter is still at zero by touching the SETTINGS button (1), then the OVERVIEW button (2), the ROW CUTTER ACTUAL POSITION button (3) and reading the value in the angle value windows (4).

CAUTION
Damage to equipment
The machine must NOT be used until the template is removed.

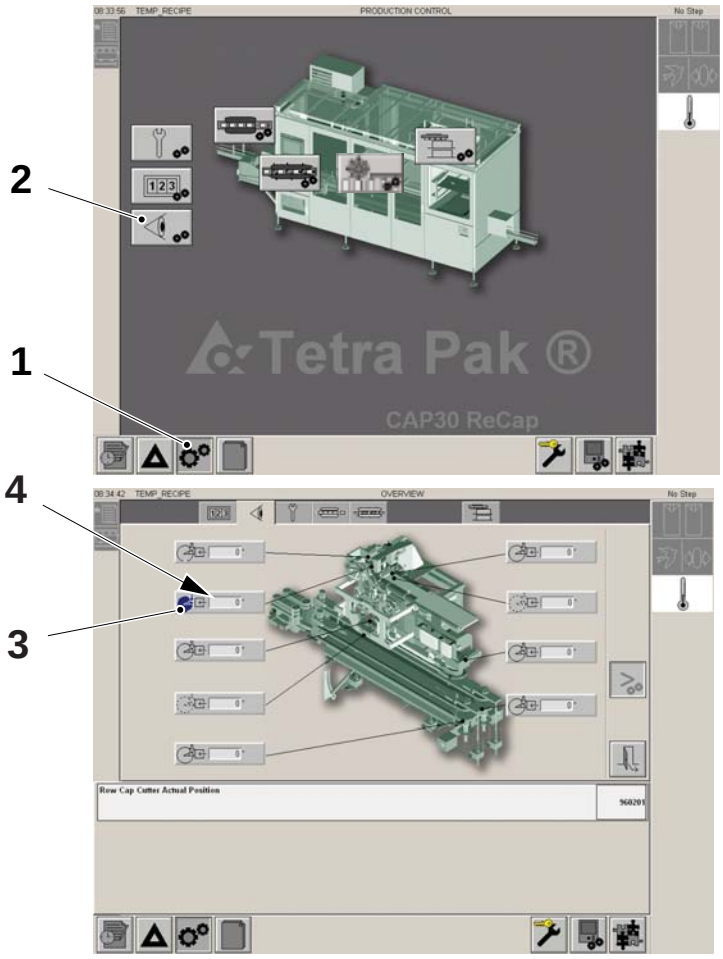

1 SETTINGS button
2 OVERVIEW button
3 ROW CUTTER ACTUAL POSITION button
4 Angle value window

(Cont'd)

TechPub_2614345_0106 - 1002_3047144_01.fm

(Cont'd)

f) If the row cutter is not at 0 manually move it to the zero position checking the angle value window (4). If the angle can not be obtained, see 6.3.1-6 Cutting Mechanism Body - Set Zero.

CAUTION
Damage to equipment
The machine must NOT be used until the template is removed.

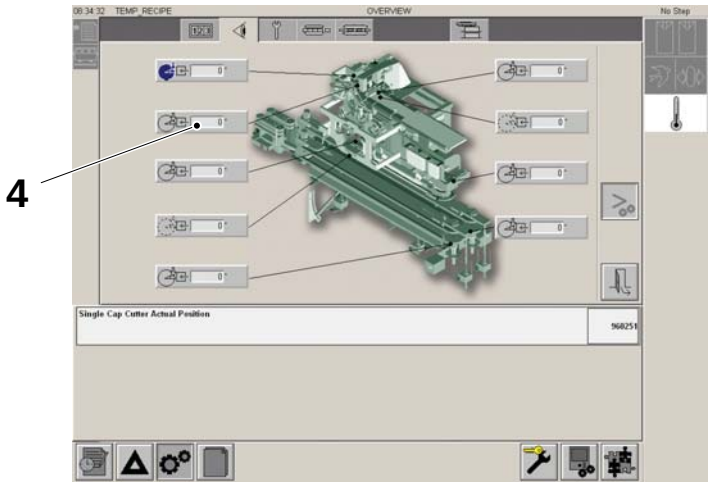

4 Angle value window

TechPub_2614345_0106 - 1002_3047144_01.fm

(Cont'd)

(Cont'd)

g) Touch the service key (13) to release the maintenance function.

h) Touch the MAINTENANCE button (14).

i) Touch the CUTTING AND FEEDING button (15).

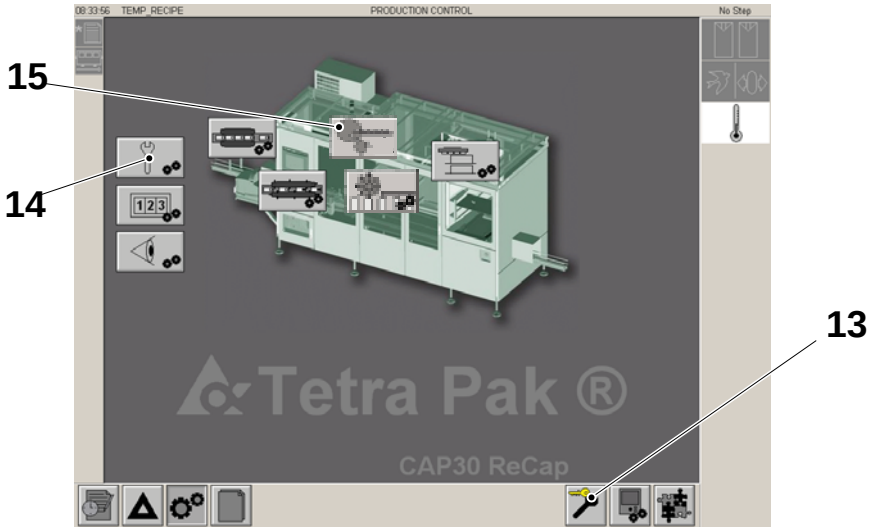

13 Service key
14 MAINTENANCE button
15 CUTTING AND FEEDING button

(Cont'd)

TechPub_2614345_0106 - 1002_3047144_01.fm

(Cont'd)

j) Touch the ZERO button (16).

k) Touch the ENABLE button (17), this will start flashing.

l) Touch the OK button (18) for three seconds. The background of the ENABLE button (17) should go green.

m) Touch the EXIT button (19).

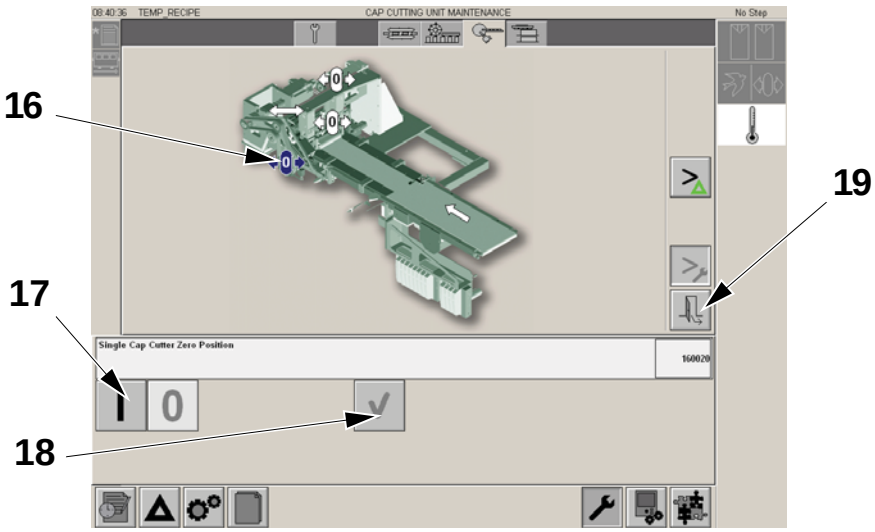

16 ZERO button
17 ENABLE button
18 OK button
19 EXIT button

(Cont'd)

TechPub_2614345_0106 - 1002_3047144_01.fm

(Cont'd)

n) Remove the template (9), then install the screw (5) and cap stopper (6). Adjust into position after assembly see, 6.1.1-9 Single Cut - Set Cap Stop.

CAUTION
Damage to equipment
The machine must NOT be used until the template (9) is removed.

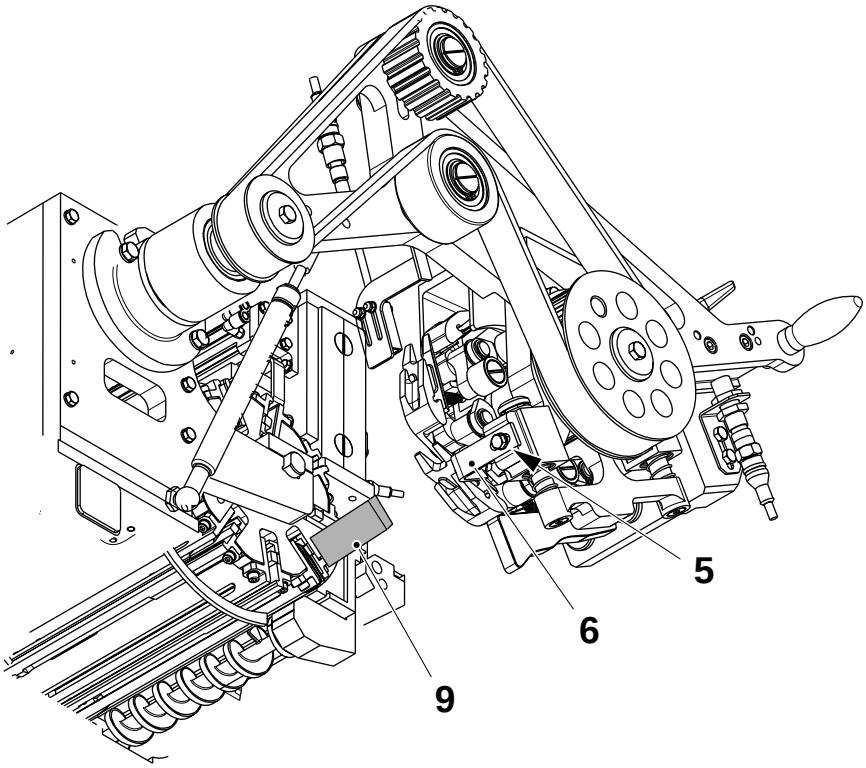

5 Screw
6 Stopper
9 Template

TechPub_2614345_0106 - 1002_3047144_01.fm

6.1.1-8 Single Cut - Set Sensor Position

Machine Status	STEP 2
SPC Reference	2835403-0200

a) Release the nut (1) and move the sensor (2) downward until the LED comes on.

b) Turn the nut (1) in an upward direction until the LED goes out.

c) Tighten the nuts (1) making sure that the LED is off.

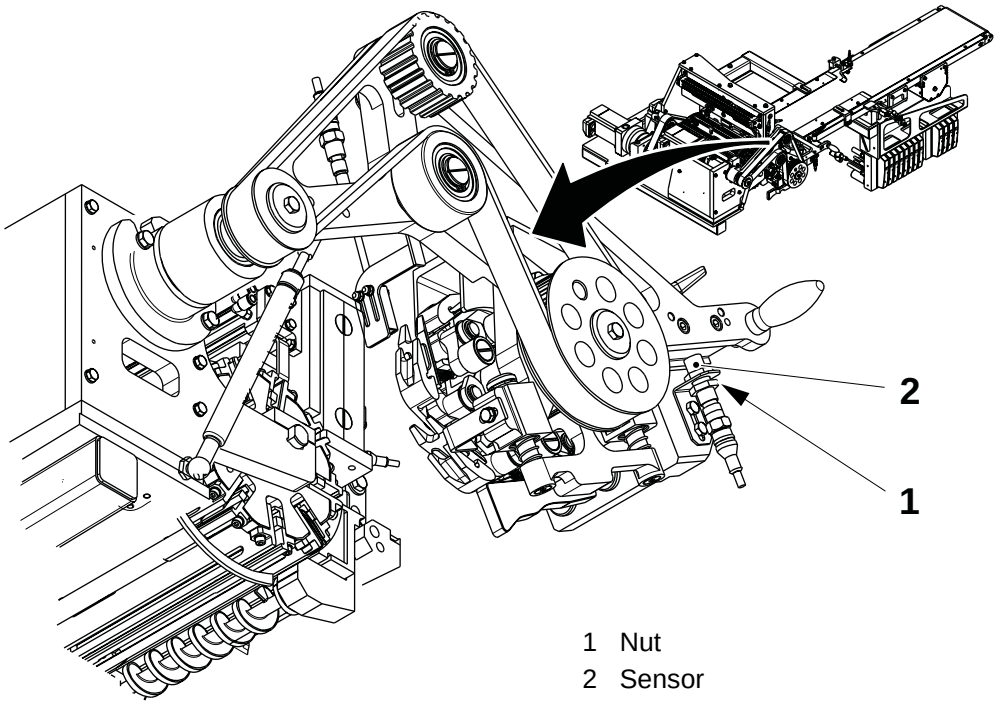

1 Nut
2 Sensor
3 Lever

TechPub_2614345_0106 - 1002_3047144_01.fm

6.1.1-9 Single Cut - Set Cap Stop

Machine Status	Mains Power OFF
SPC Reference	2835403-0200

a) Loosen the screw (1) and clamp the cap (2) into the single cut (3) using your hand then adjust the cap stop (4) until the cap is centred in the single cut (3).

b) Tighten the screw (1).

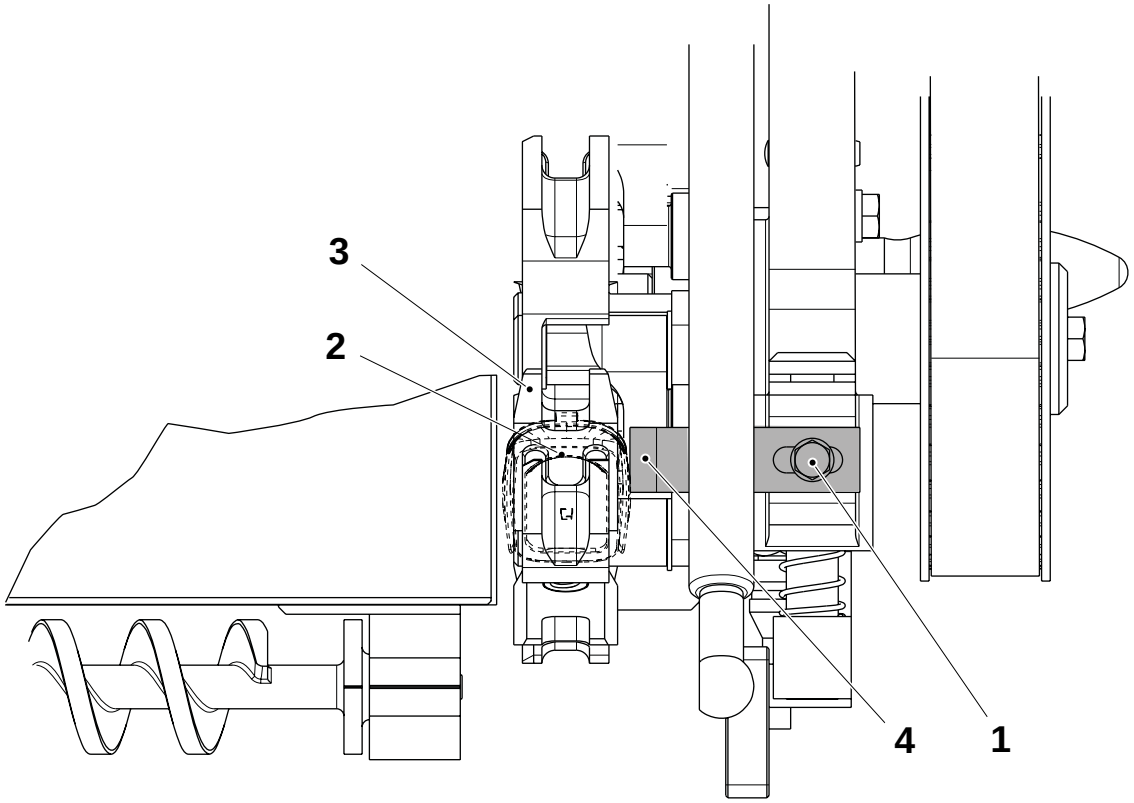

1 Screw
2 Cap
3 Single cut
4 Cap Stop

TechPub_2614345_0106 - 1002_3047144_01.fm

6.1.1-10 Single Cut - Set Cap Present Sensor

Machine Status	Mains Power OFF
SPC Reference	2835403-0200

a) Touch the SETTINGS button (1).

b) Touch the OVERVIEW button (2) to display the OVERVIEW window.

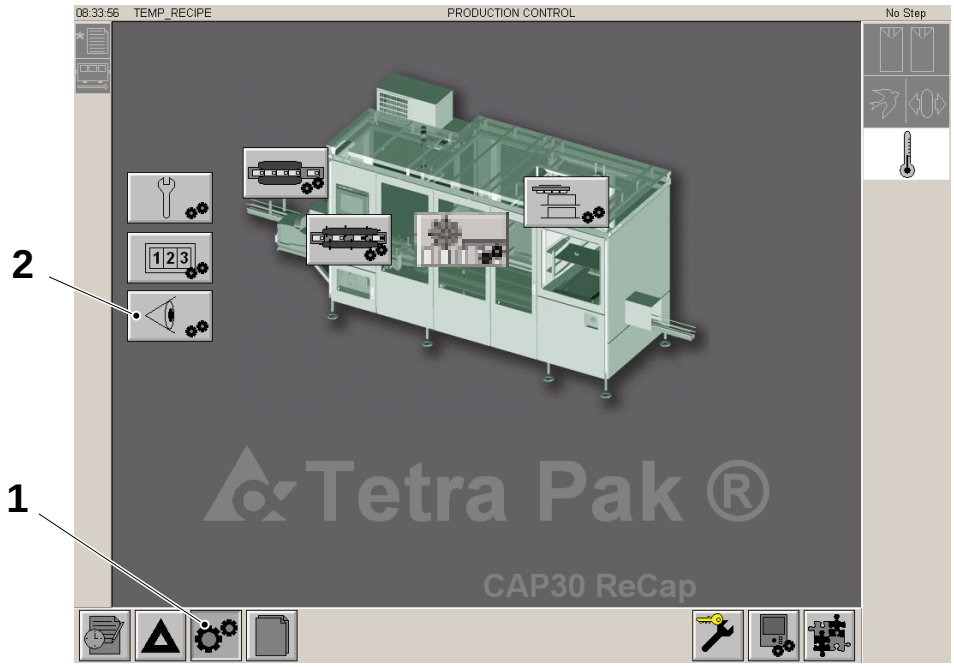

1 SETTINGS button
2 OVERVIEW button

TechPub_2614345_0106 - 1002_3047144_01.fm

(Cont'd)

(Cont'd)

c) In the Overview window (3) touch the SINGLE CAP CUTTER ACTUAL POSITION window (4) and read the value in the angle value window (5).

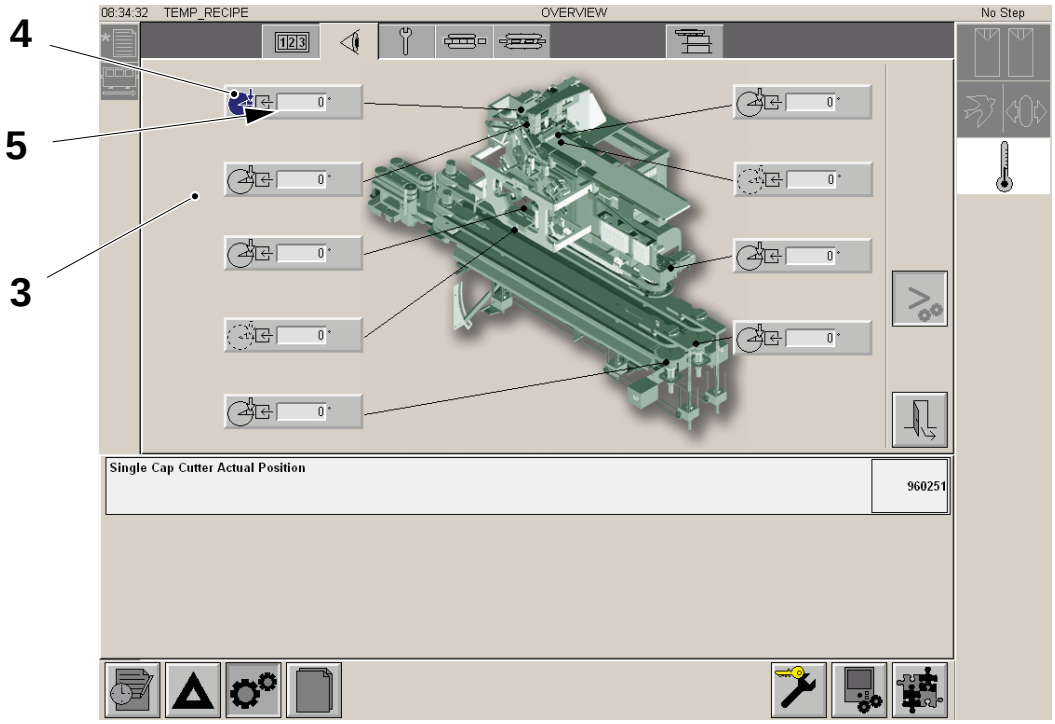

3 OVERVIEW window
4 SINGLE CUT ACTUAL POSITION window
5 Value window

TechPub_2614345_0106 - 1002_3047144_01.fm

(Cont'd)

(Cont'd)

d) Turn the single cut until 0 appears in the window (5).

e) Adjust the sensor (6) by releasing the screws (7) and moving the sensor (6) until the beam (8) appears on the cap (9).

f) Tighten the screws (7).

g) Check that the 0 is still in the window (5).

Note! When changing to blue caps set the sensitivity of the sensor again see, 8.7.2-1 Sensor (50B200) - Set.

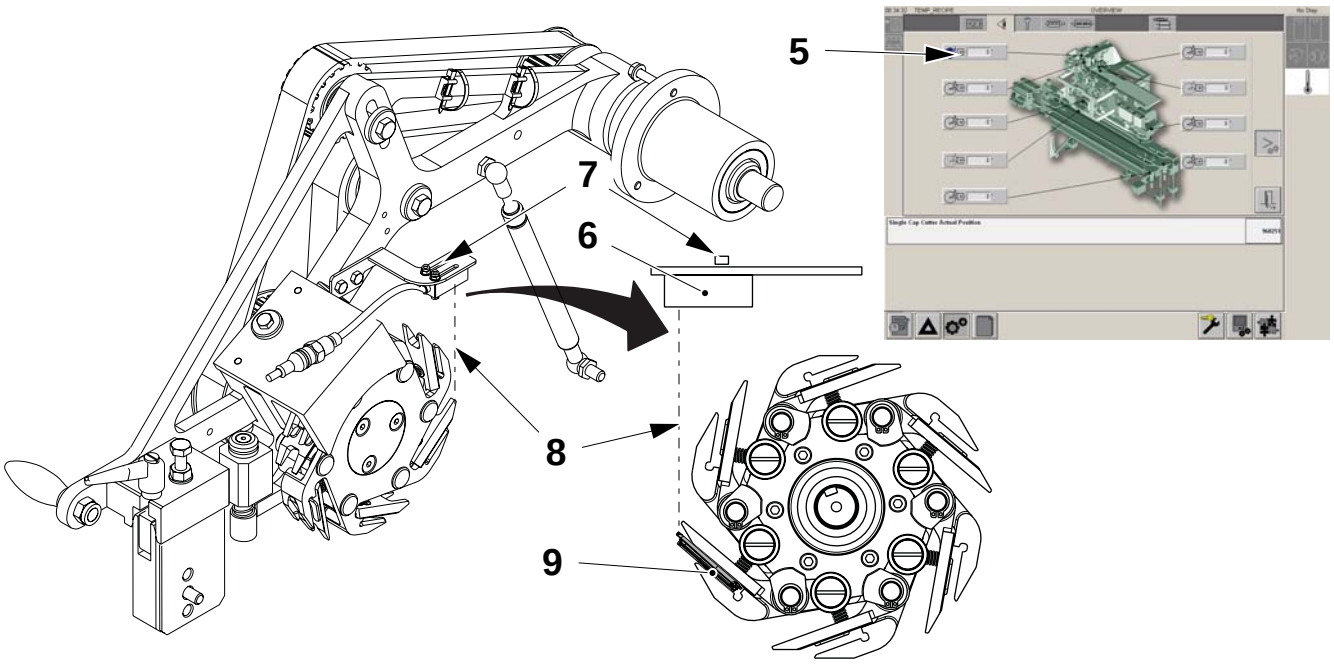

5 Window
6 Sensor
7 Screw
8 Beam
9 Cap

TechPub_2614345_0106 - 1002_3047144_01.fm

6.2 Conveying Equipment

SPC Reference	2703794-0100

6.2.1 Sheet Holder

6.2.1-1 Sheet Holder - Removal

Machine Status	Mains Power OFF
SPC Reference	2703794-0100

a) Disconnect the air pipe and the sensor connections.

b) Remove the screws (1) and the cylinder (2).

c) Remove the screws (3), the four screws (4) and the sheet holder (5).

Note! Check that the sheet holder (5) is parallel.

d) Assemble in the reverse order.

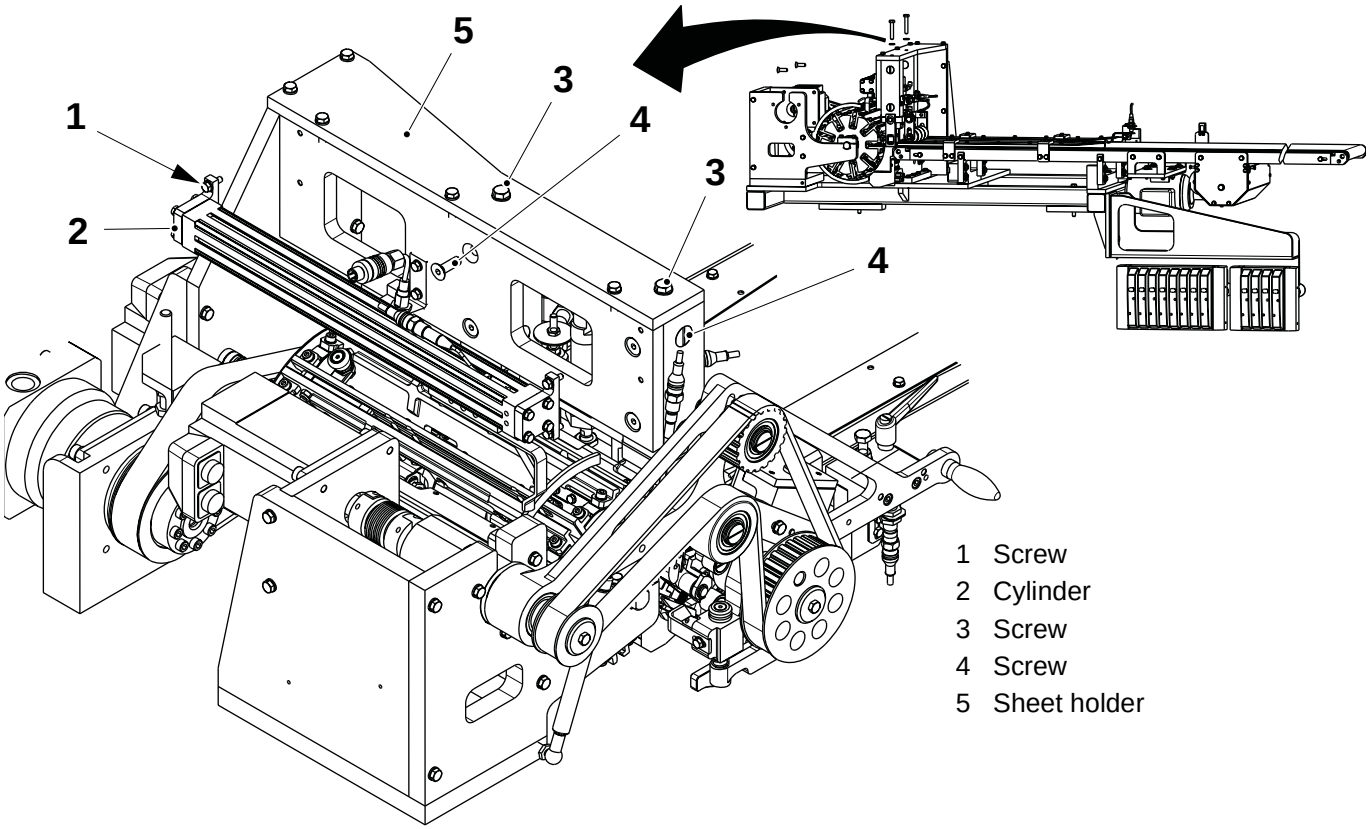

1 Screw
2 Cylinder
3 Screw
4 Screw
5 Sheet holder

TechPub_2614345_0106 - 1002_3047145_01.fm

6.2.1-2 Sheet Holder - Overhaul

Machine Status	Mains Power OFF
SPC Reference	2703794-0100

a) Remove the retaining rings (1), the washers (2) and the rollers (3) from the shaft (4).

b) Remove the screws (5) and the comb (6).

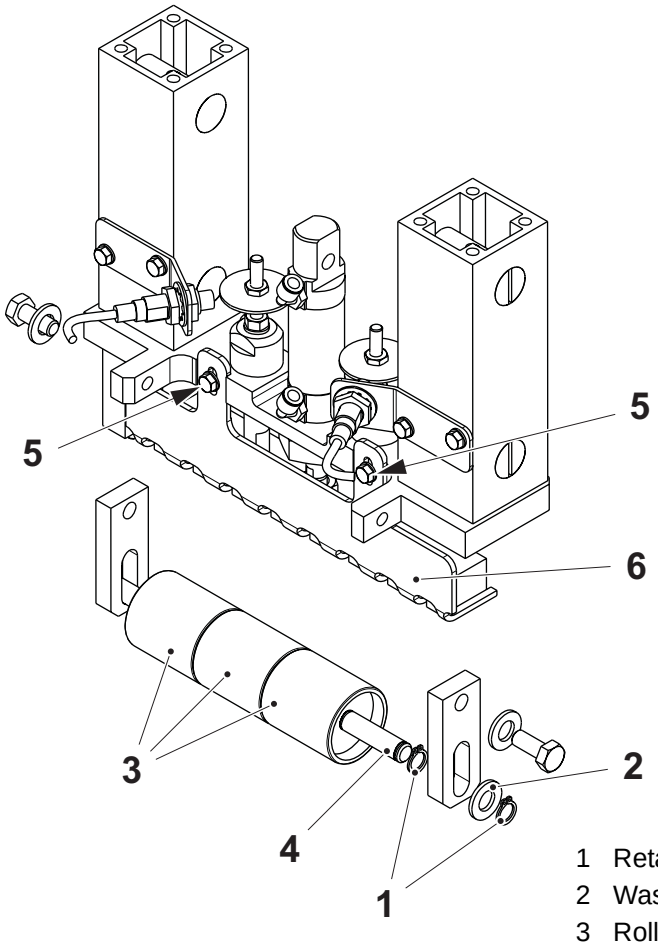

1 Retaining ring
2 Washer
3 Roller
4 Shaft
5 Screw
6 Comb

(Cont'd)

TechPub_2614345_0106 - 1002_3047145_01.fm

(Cont'd)

c) Remove the nut (7), the sensor activator (8), the nut (9), the nut (10), the washer (11) and the stop (12) from the shaft (13).

d) Release the nut (14), the shaft (15), the spacer (16) and the stopper (17).

e) Release the nut (18) and the cylinder (19).

f) Remove the bushings (20).

g) Assemble in the reverse order.

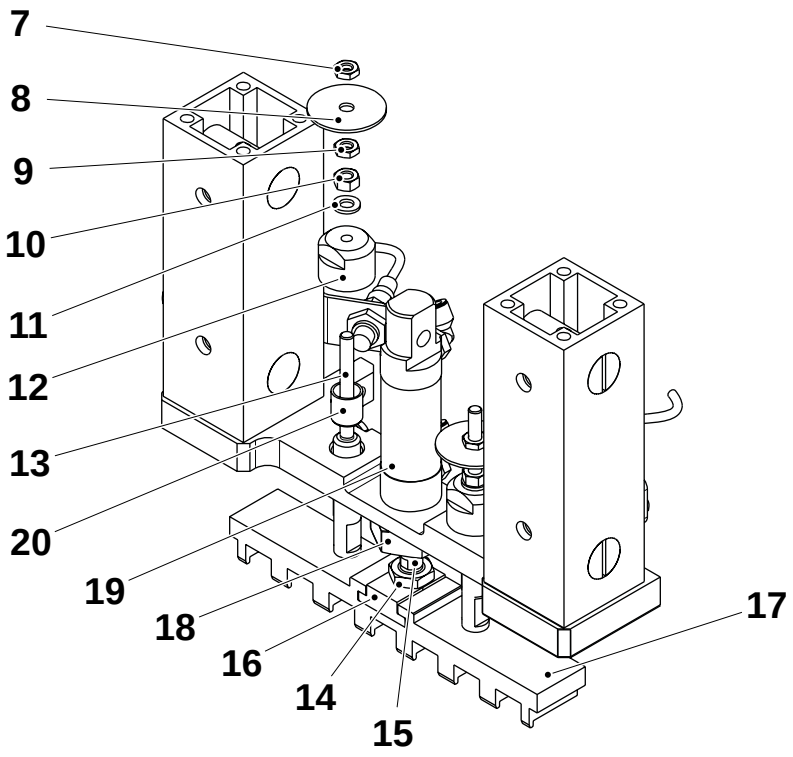

7	Nut	14	Nut
8	Activator	15	Shaft
9	Nut	16	Spacer
10	Nut	17	Stopper
11	Washer	18	Nut
12	Stop	19	Cylinder
13	Shaft	20	Bushing

TechPub_2614345_0106 - 1002_3047145_01.fm

6.2.1-3 Sheet Holder - Set

Machine Status	Mains Power OFF
SPC Reference	2703794-0100

a) Release the screws (1) and set the distance **A** between the bottom plate (2) and the bottom of the comb (3).

Note! Distance **A** is minimum along the length of the comb (3).

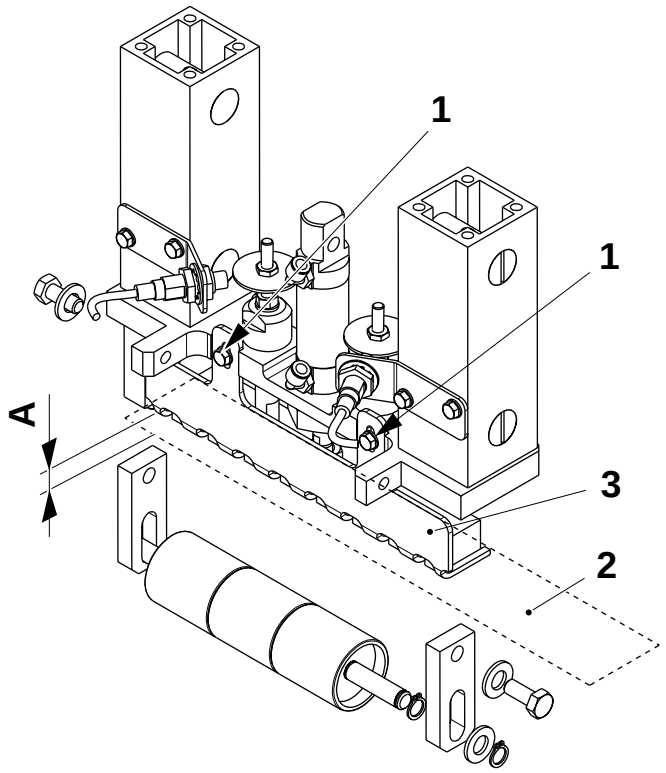

A = 4.5 mm minimum for Recap 2
A = 6.0 mm minimum for Recap 3

1 Screw
2 Bottom plate
3 Comb

(Cont'd)

TechPub_2614345_0106 - 1002_3047145_01.fm

(Cont'd)

b) Release the nut (4) and set the distance **A** between the bottom plate (2) and the bottom of the stopper (5) using the plastic stopper (6).

c) Check that the stopper is still parallel after the setting.

Note! Distance **A** is minimum along the length of the stopper (5).

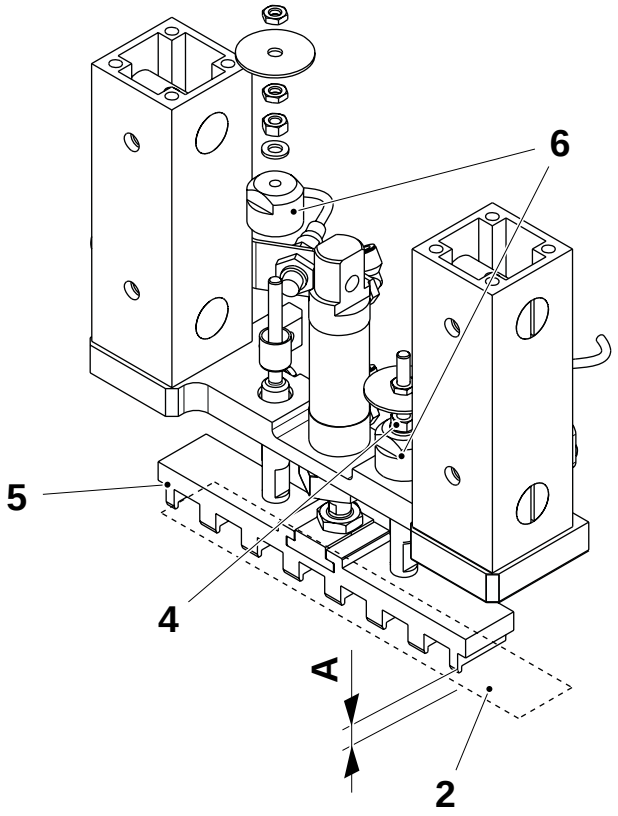

A = 4.5 mm minimum for Recap 2
A = 6.0 mm minimum for Recap 3

2 Bottom plate
4 Nut
5 Stopper
6 Plastic stopper

TechPub_2614345_0106 - 1002_3047145_01.fm

6.2.1-4 Sheet Holder - Set the Sensors

Machine Status	Mains Power ON
SPC Reference	2703794-0100

a) Set the sensors (1) to the distance **A** from the triggers (2) and (3) by adjusting the nuts (4).

b) Push the cylinder (5) to the bottom of its stroke with caps under it.

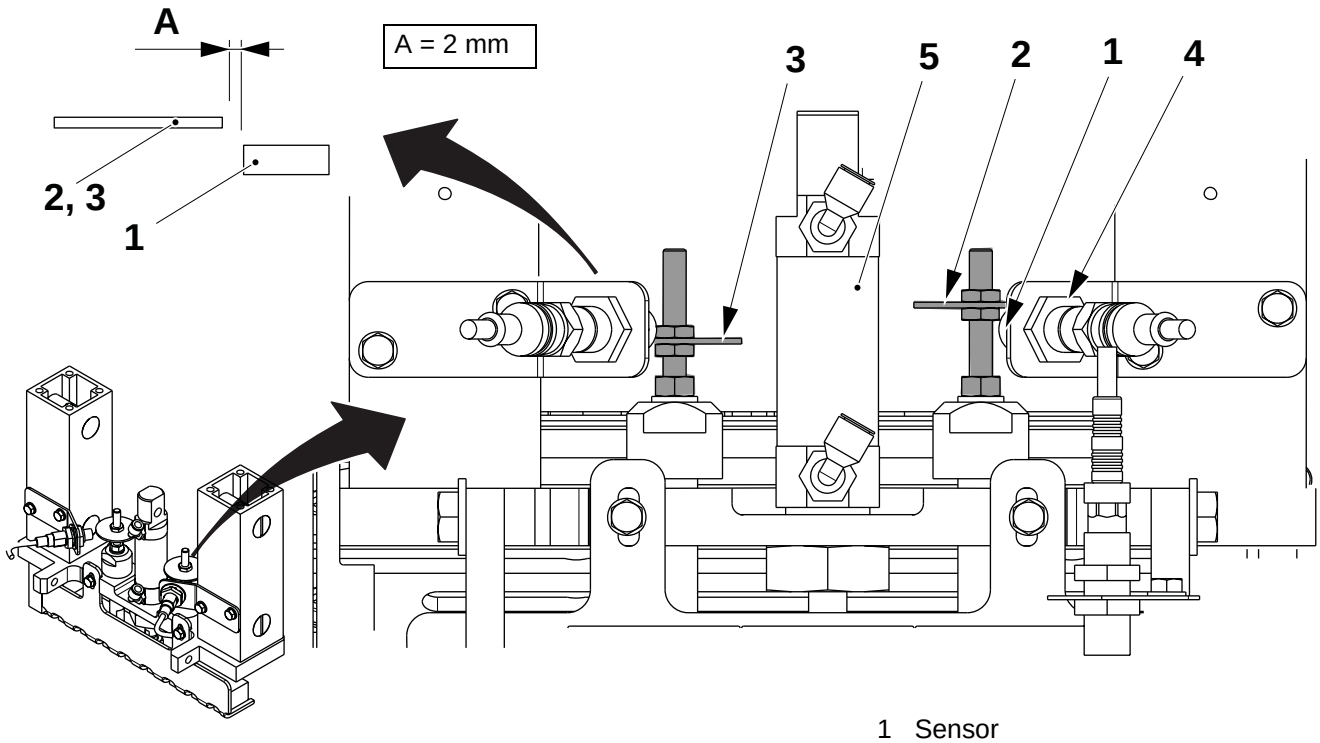

1 Sensor
2 Trigger
3 Trigger
4 Nut
5 Cylinder

(Cont'd)

TechPub_2614345_0106 - 1002_3047145_01.fm

(Cont'd)

c) Move the trigger (3) by adjusting the nuts (6) so that the sensor LED is activated. Tighten the nuts (6).

d) Lift the cylinder (5).

e) Adjust the position of the trigger (2) by adjusting the nuts (7) until the distance **B** is obtained. Tighten the nuts (7).

f) Check that one sensor reads when up and the other when down.

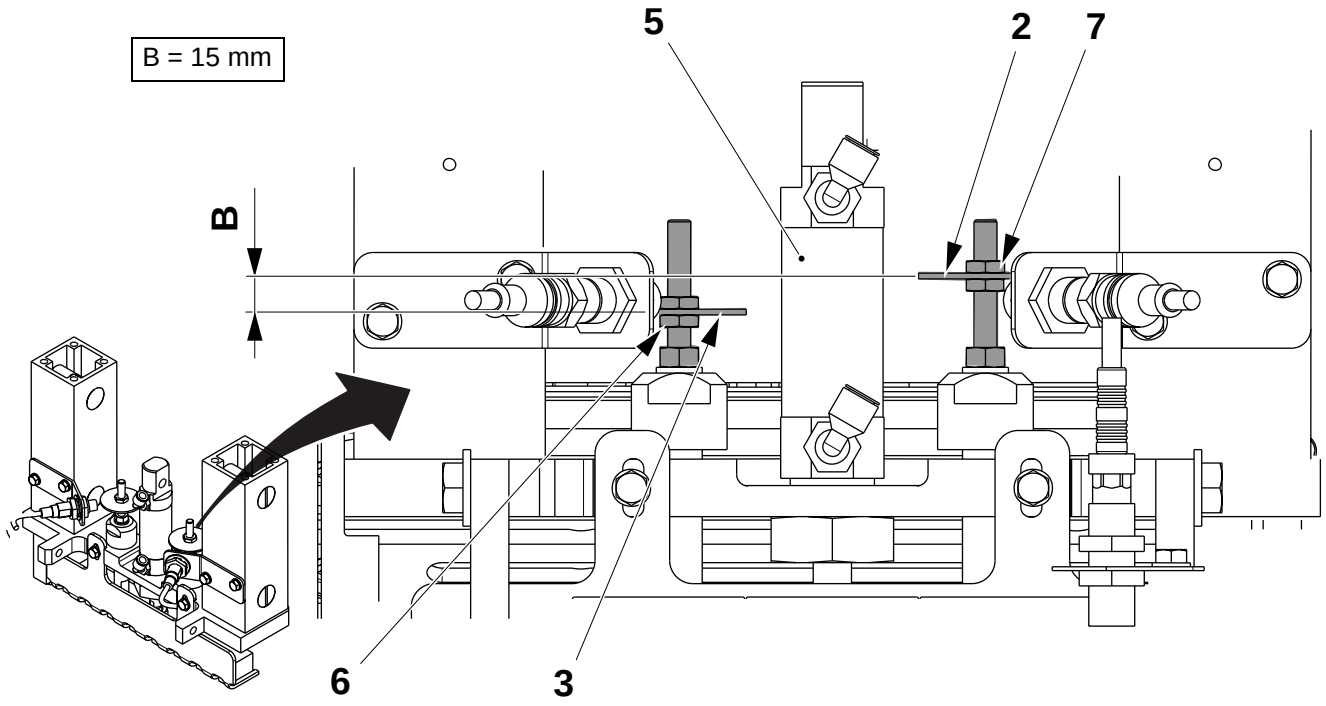

2 Trigger
3 Trigger
4 Nut
5 Cylinder
6 Nut
7 Nut

TechPub_2614345_0106 - 1002_3047145_01.fm

6.2.2 Conveyor

6.2.2-1 Conveyor - Change

Machine Status	Mains Power OFF
SPC Reference	2703794-0100

a) Disconnect the electrical connections.
b) Mark the position of the conveyor.
c) Remove the four screws (1) and the conveyor (2).
d) Assemble in the reverse order.

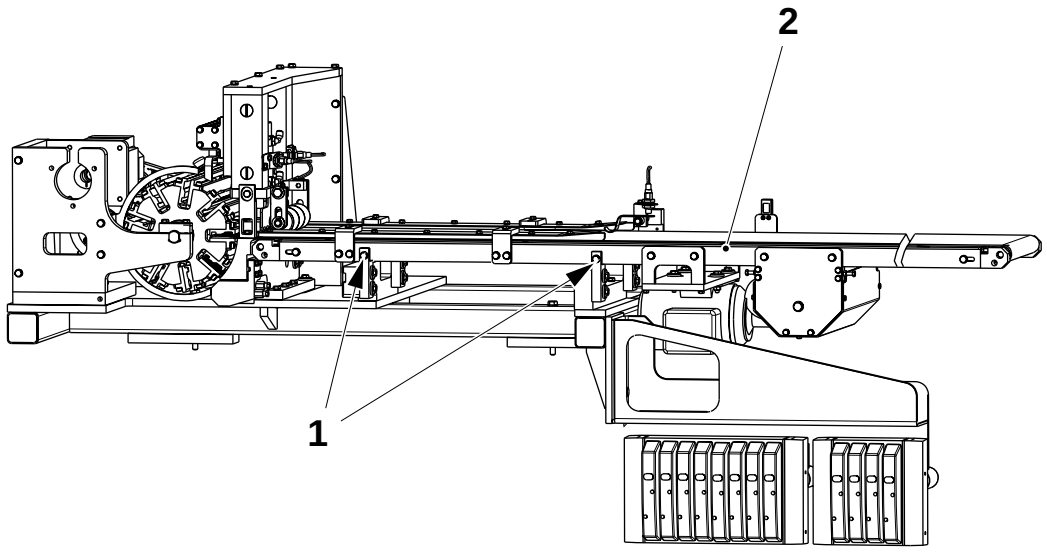

1 Screw
2 Conveyor

TechPub_2614345_0106 - 1002_3047145_01.fm

6.2.2-2 Conveyor - Check

Machine Status	Mains Power OFF
SPC Reference	2703794-0100

Check each of the following parts for wear:

- the bending rollers (1)
- the bending rollers (2)
- the drive roller (3)
- the drive belt (4).

Change all worn parts.

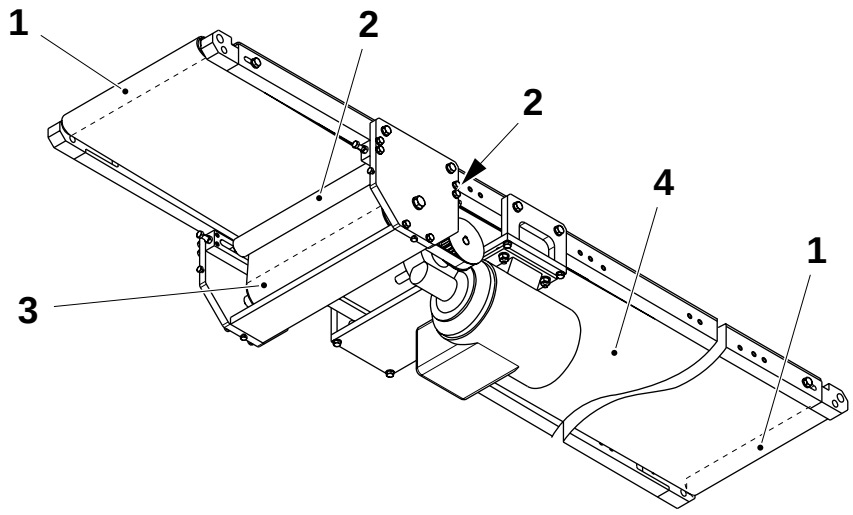

1 Roller
2 Roller
3 Roller
4 Belt

TechPub_2614345_0106 - 1002_3047145_01.fm

6.2.2-3 Conveyor - Change Belt

Machine Status	Mains Power OFF
SPC Reference	2703794-0100

a) Remove the screws (1) and the cover (2).

b) Release the screws (3) and move the drive unit (4) until you are able to remove the belt (5) from the toothed pulley (6).

c) Remove the screws (7) and the drive unit (4).

d) Release the tension on the conveyor belt (8) by releasing the screws (9).

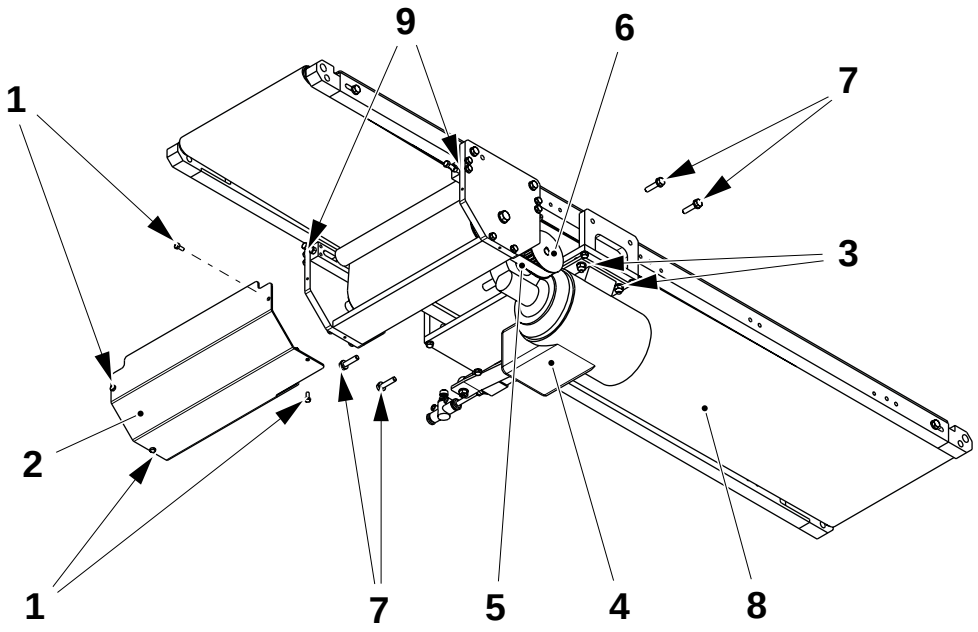

1 Screw
2 Cover
3 Screw
4 Drive unit
5 Belt
6 Toothed pulley
7 Screw
8 Conveyor belt
9 Screw

(Cont'd)

TechPub_2614345_0106 - 1002_3047145_01.fm

(Cont'd)

e) Remove the screw (10), the screws (11), the screws (12) and the end plate (13).

f) Remove the rollers (14).

g) Remove the belt (15) from the drive roller (16).

h) Remove the conveyor belt (8).

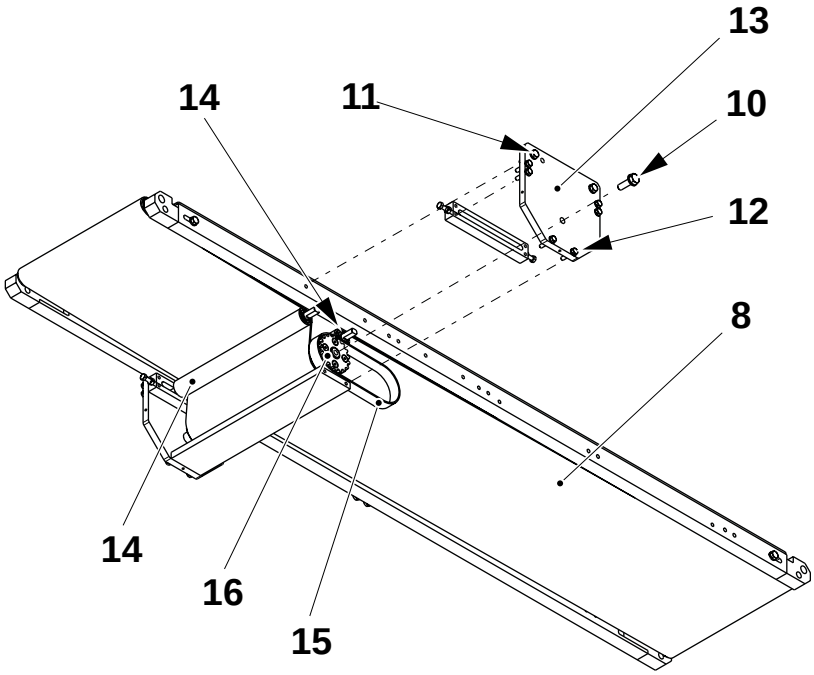

8 Conveyor belt
10 Screw
11 Screw
12 Screw
13 End plate
14 Rollers
15 Belt
16 Drive roller

TechPub_2614345_0106 - 1002_3047145_01.fm

6.2.2-4 Conveyor - Drive Overhaul

Machine Status	Mains Power OFF
SPC Reference	2703794-0100

a) Remove the screws (1), the motor (2), the screw (3) and the toothed pulley (4).

b) Remove the screws (5), the screws (6), the guard (7) and the supports (8).

c) Remove the screws (9) and the adjustment brackets (10).

d) Assemble in the reverse order but remember to install the three rollers and the conveyor belt.

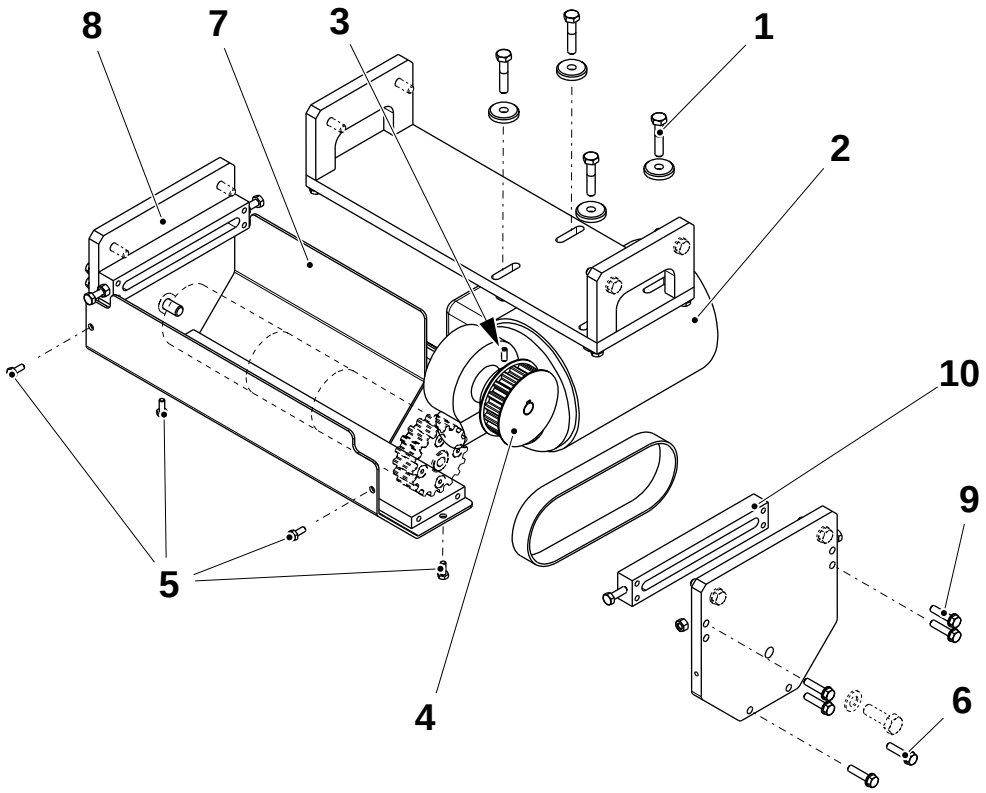

1 Screw
2 Motor
3 Screw
4 Toothed pulley
5 Screw
6 Screw
7 Guard
8 Support
9 Screw
10 Adjustment bracket

TechPub_2614345_0106 - 1002_3047145_01.fm

6.2.2-5 Conveyor - Rollers Overhaul

Machine Status	Mains Power OFF
SPC Reference	2703794-0100

a) Remove the retaining ring (1), the bearings (2) and the rollers (3) from the shaft (4).

b) Remove the retaining ring (5), the bearings (6) and the rollers (7) from the shaft (8).

c) Remove the screws (9) and the gear (10).

d) Remove the retaining ring (11), the bearings (12) and the rollers (13) from the shaft (14).

e) Assemble in the reverse order.

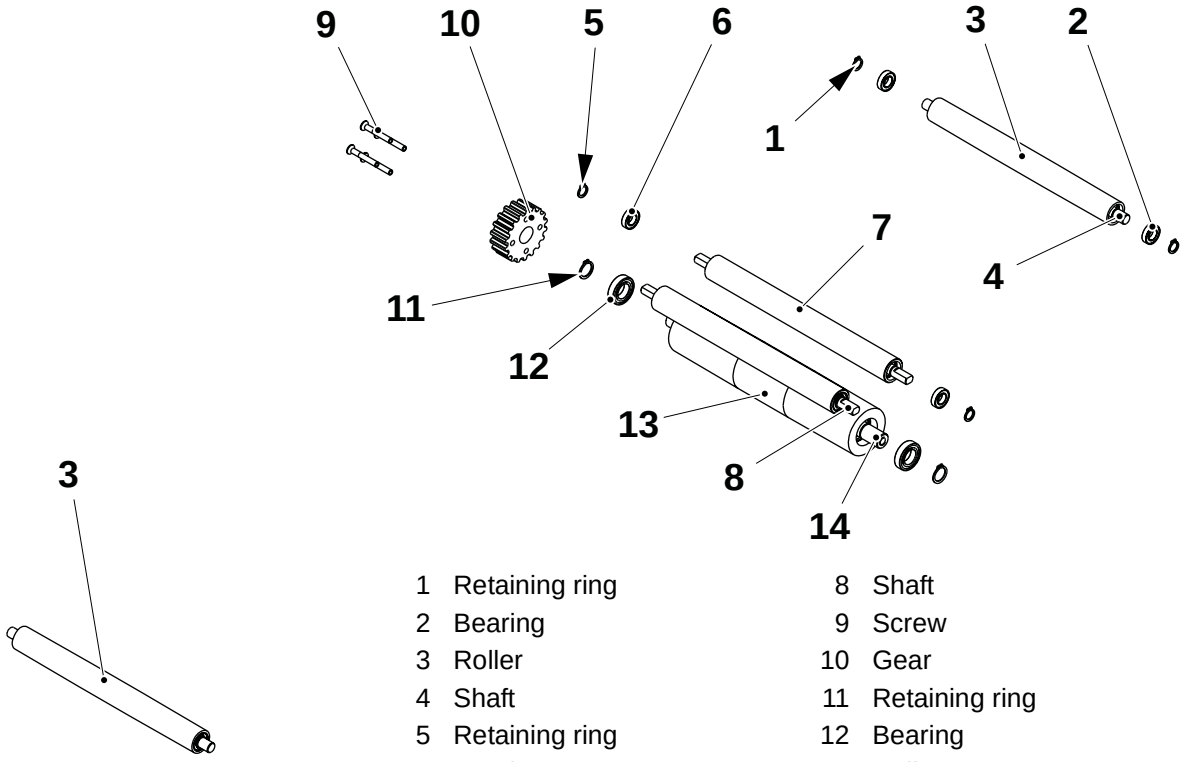

1	Retaining ring	8	Shaft
2	Bearing	9	Screw
3	Roller	10	Gear
4	Shaft	11	Retaining ring
5	Retaining ring	12	Bearing
6	Bearing	13	Roller
7	Roller	14	Shaft

TechPub_2614345_0106 - 1002_3047145_01.fm

6.2.2-6 Conveyor - Framework Change

Machine Status	Mains Power OFF
SPC Reference	2703794-0100

a) Release the screws (1), the brackets (2) and the rollers (3).

b) Remove the belt (4).

c) Assemble in the reverse order.

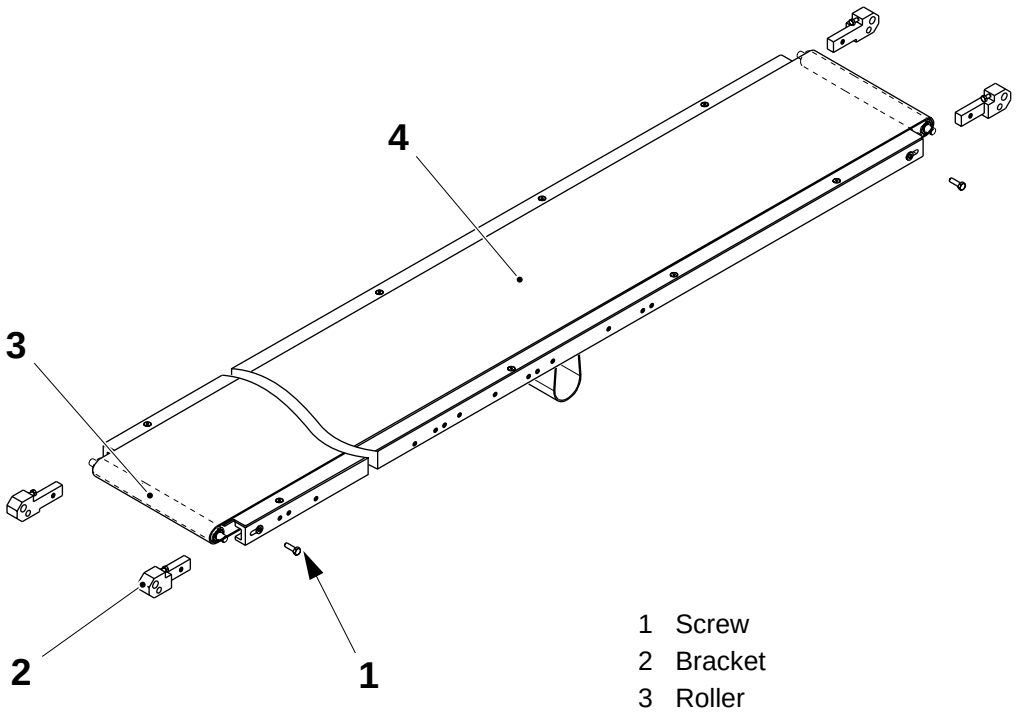

1 Screw
2 Bracket
3 Roller
4 Belt

TechPub_2614345_0106 - 1002_3047145_01.fm

6.2.2-7 Conveyor - Set X Position

Machine Status	Mains Power OFF
SPC Reference	2703794-0100

To set the X position use the set sheet guides procedure, see 6.2.4-1 Sheet Guides - Set.

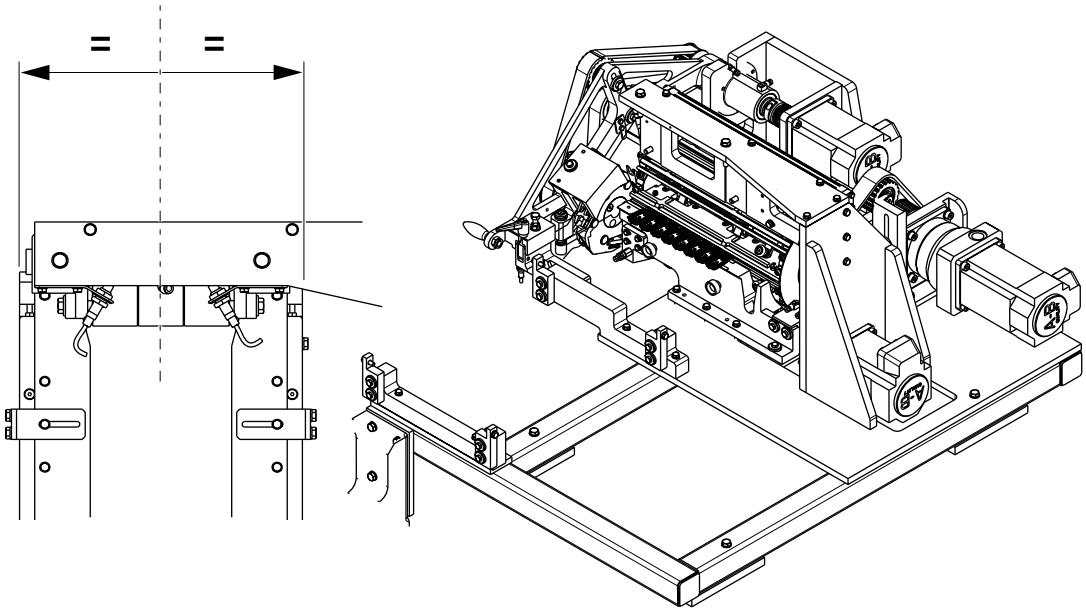

TechPub_2614345_0106 - 1002_3047145_01.fm

6.2.2-8 Conveyor - Set Z Position

Machine Status	Mains Power OFF
SPC Reference	2703794-0100

a) Release the eight screws (1) and set the distance **A**.

b) Make sure that the distance **A** is the same on the left-hand and right-hand sides of the conveyor (2).

Note! Check that the height at the four brackets which are adjusted by the screws (1), all have the same dimension.

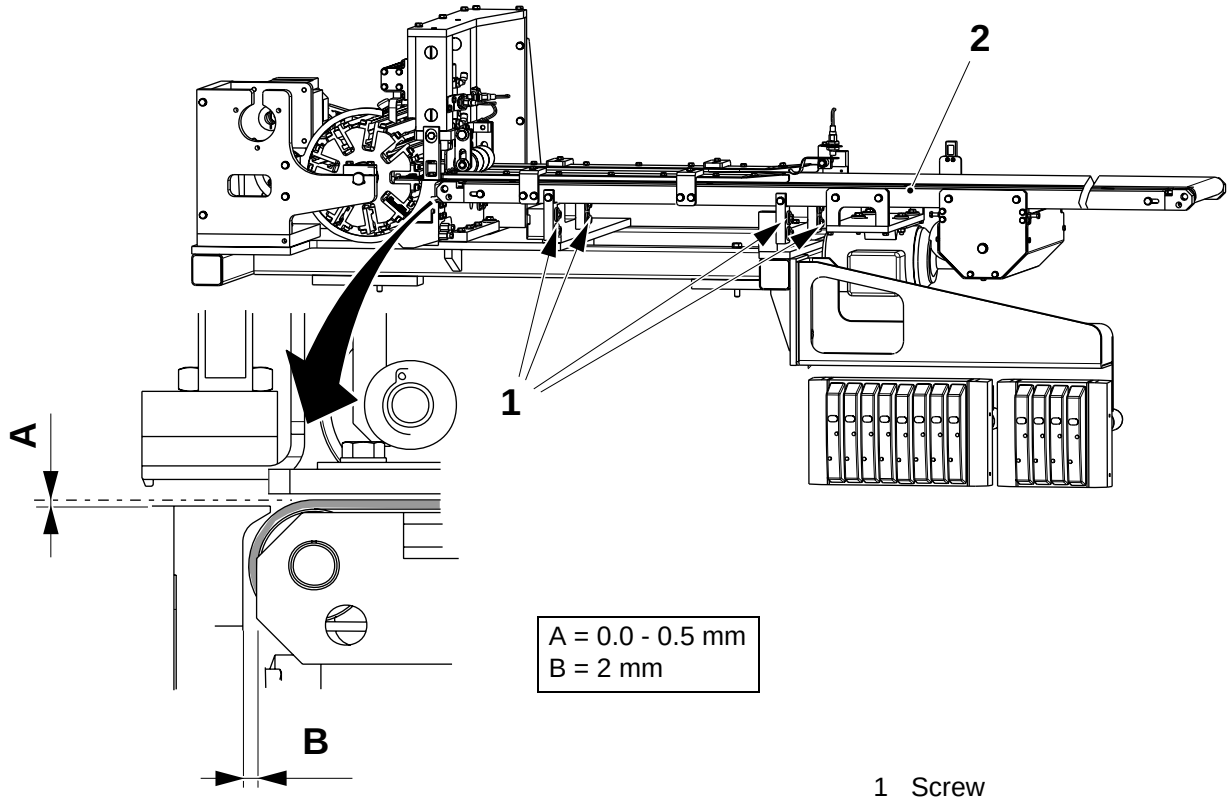

1 Screw
2 Conveyor

TechPub_2614345_0106 - 1002_3047145_01.fm

6.2.2-9 Conveyor - Set Belt Alignment and Tension

Machine Status	Mains Power OFF
SPC Reference	2703794-0100

Note! Only make very small adjustments when setting the conveyor belt before running the machine. It is easy to obtain a bad function.

Tension of the Conveyor Belt

Loosen the nuts (1) and adjust the tension of the belt by means of the screw (2). Tighten the nut (1) making sure that the roller (3) is parallel to the upper drive roller (4).

Conveyor Belt

The conveyor belt (5) must stay centred on the rollers when in motion. If necessary, adjust by means of the screw (6) and the screw (7).

Note! Do not set the tension on the row cutter side.

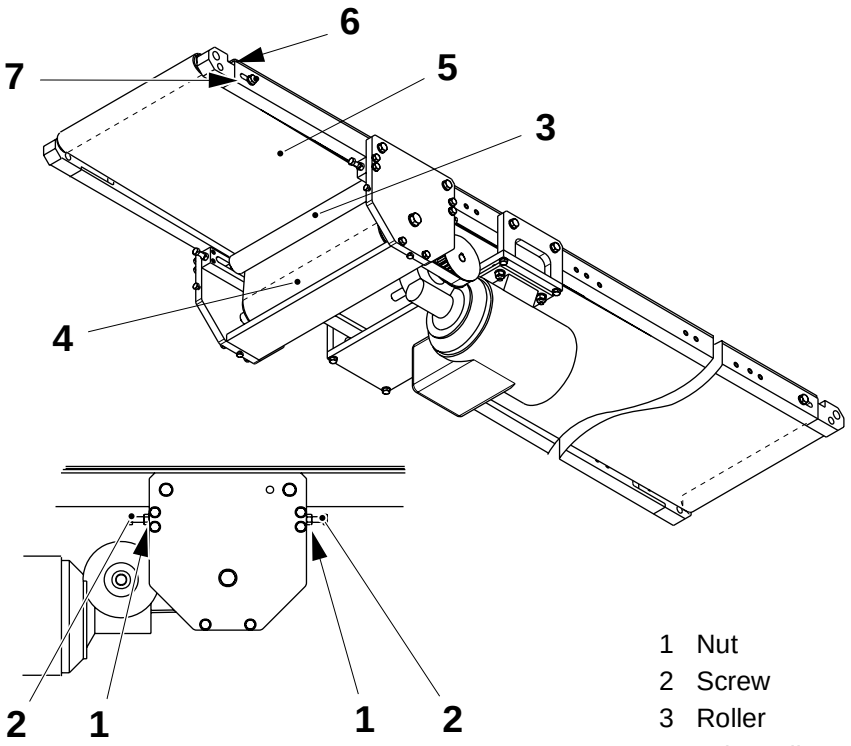

1 Nut
2 Screw
3 Roller
4 Drive roller
5 Belt
6 Screw
7 Screw

TechPub_2614345_0106 - 1002_3047145_01.fm

6.2.3 Sheet Detector

6.2.3-1 Sheet Detector - Change

Machine Status	Mains Power OFF
SPC Reference	2703794-0100

a) Disconnect the cable to the sensor (1).
b) Remove the screws (2) and the mounting block (3).
c) Remove the retaining ring (4) and the trigger (5).
d) Assemble in the reverse order.

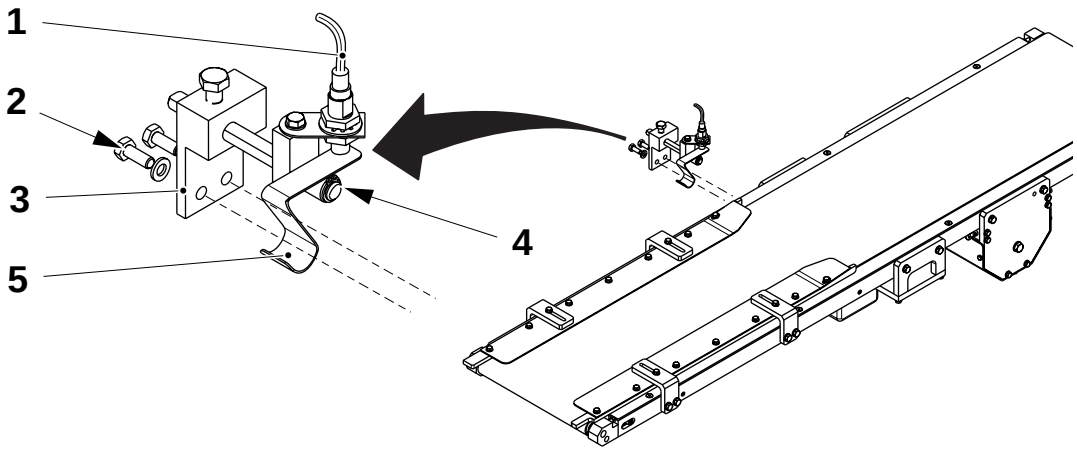

1 Sensor connection
2 screw
3 Mounting block
4 Retaining ring
5 Trigger

TechPub_2614345_0106 - 1002_3047145_01.fm

6.2.3-2 Sheet Detector - Set

Machine Status	Mains Power ON
SPC Reference	2703794-0100

a) Release the nuts (1).
b) Release the screw (2) and move the sensor (3) over the trigger (4).
c) Without a sheet of caps adjust the sensor (3) until the LED is ON.
d) With a sheet of caps under the trigger (4), check that the LED is OFF.

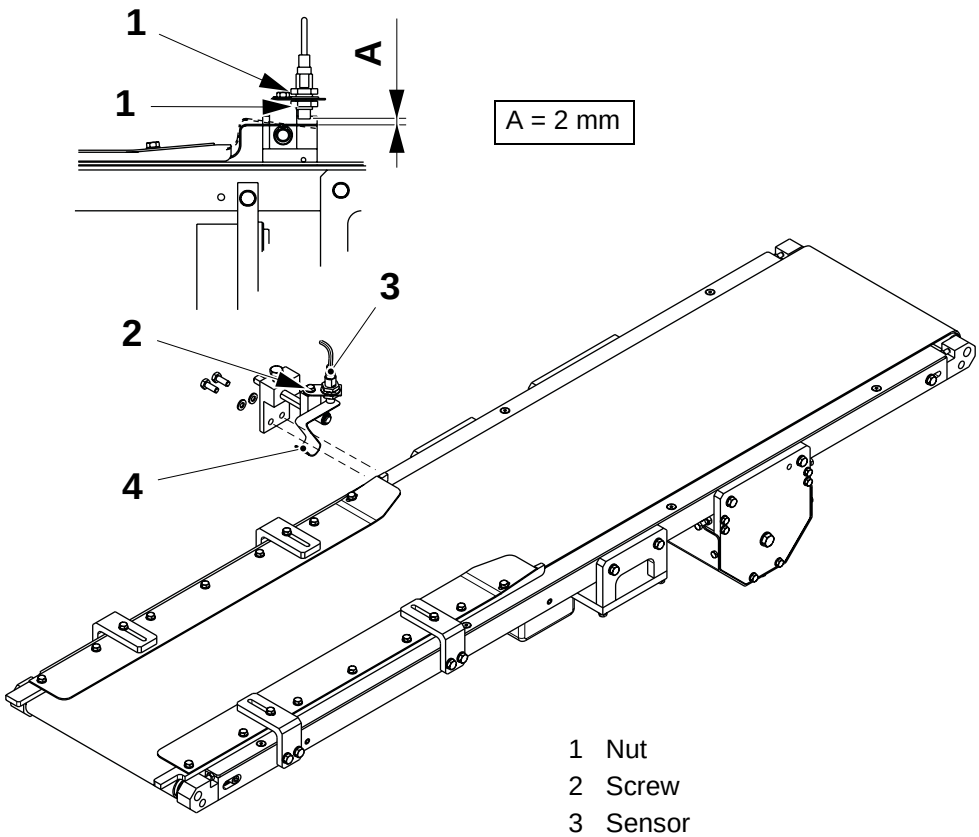

1 Nut
2 Screw
3 Sensor
4 Trigger

TechPub_2614345_0106 - 1002_3047145_01.fm

6.2.4 Sheet Guides

6.2.4-1 Sheet Guides - Set

Machine Status	Mains Power OFF
SPC Reference	2703794-0100

Release the screws (1) and move the guide units (2) so that the sheet is delivered with the four outer caps (3) in line with the grooves (4) in the row cutter (5) without trapping the sheet.

Check that the clearance between the guides (2) and the sheet is the distance **A**.

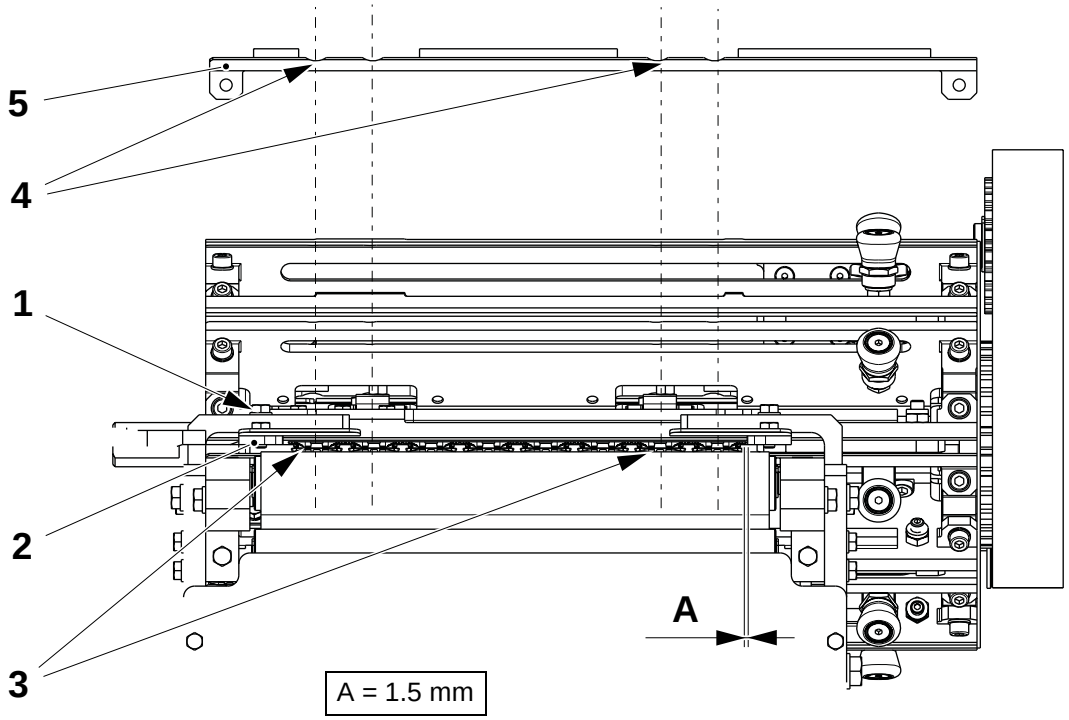

1 Screw
2 Guide unit
3 Caps
4 Grooves
5 Row cutter

TechPub_2614345_0106 - 1002_3047145_01.fm

6.2.4-2 Sheet Guides - Set Height

Machine Status	Mains Power OFF
SPC Reference	2703794-0100

Release the screws (1) and move the guide units (2) until the distance **A** is obtained.

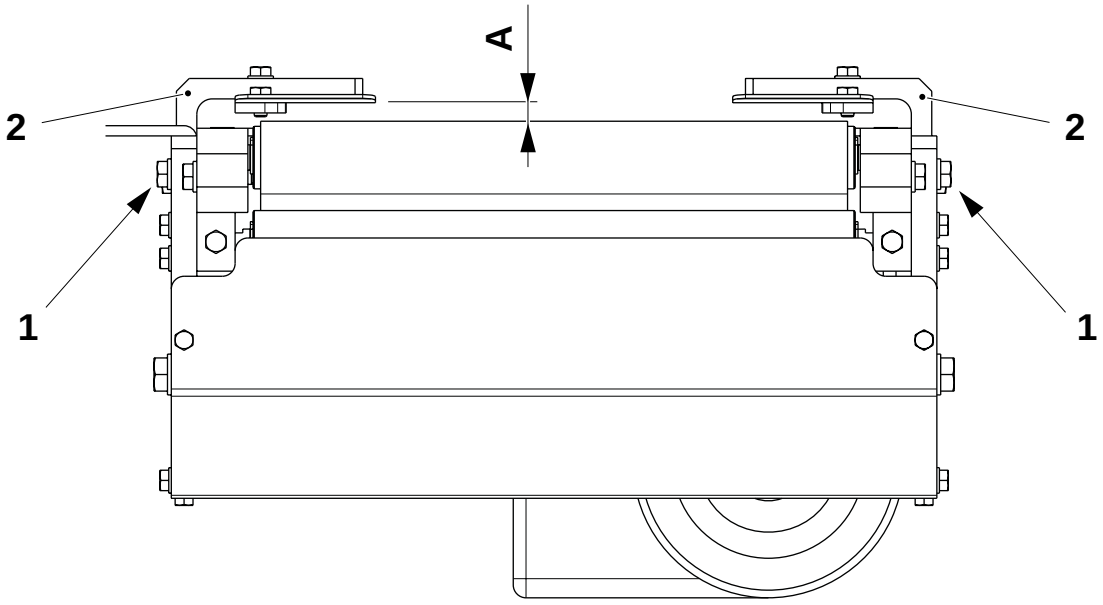

A = 6 mm for Recap 2
A = 7 mm for Recap 3

1 Screw
2 Guide unit

TechPub_2614345_0106 - 1002_3047145_01.fm

6.3 Row Cutter

SPC Reference	2703800-0100

6.3.1 Row Cutter - Change

6.3.1-1 Removal

Machine Status	Mains Power OFF
SPC Reference	2703810-0100

a) Disconnect the sensor’s cable at the connection box.

b) Release the screws (1) and the belt (2).

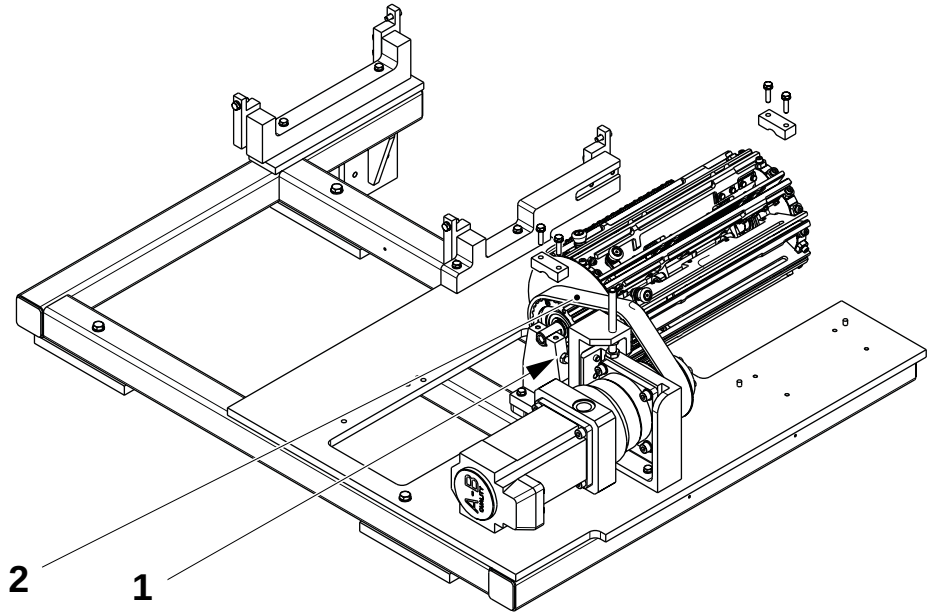

1 Screw
2 Belt

(Cont'd)

TechPub_2614345_0106 - 1003_3047146_01.fm

(Cont'd)

c) Remove the screws (3), the washers and the clamping block (4).

d) Remove the screws (5) and the drive unit (6).

e) Assemble in the reverse order.

f) Set new zero see, 6.3.1-6 Cutting Mechanism Body - Set Zero.

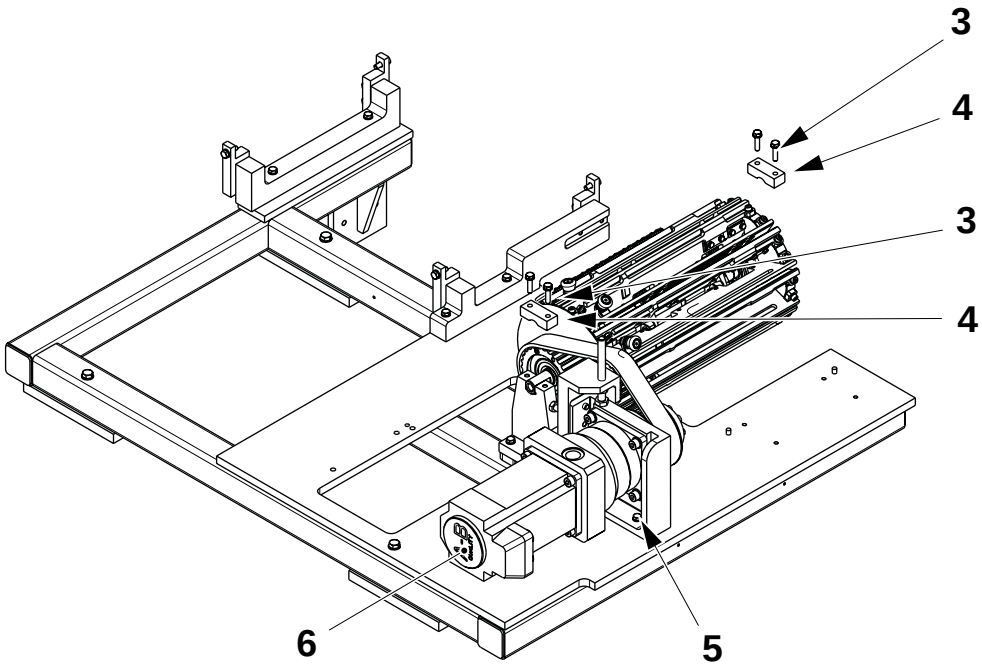

3 Screw
4 Clamping block
5 Screws
6 Drive unit

TechPub_2614345_0106 - 1003_3047146_01.fm

6.3.1-2 Cutting Mechanism Body - Change

Machine Status	Mains Power OFF
SPC Reference	2703810-0100

a) Remove the screws (1) and the cutting units (2).

b) Remove the screws (3), the toothed pulley (4) and the plate (5).

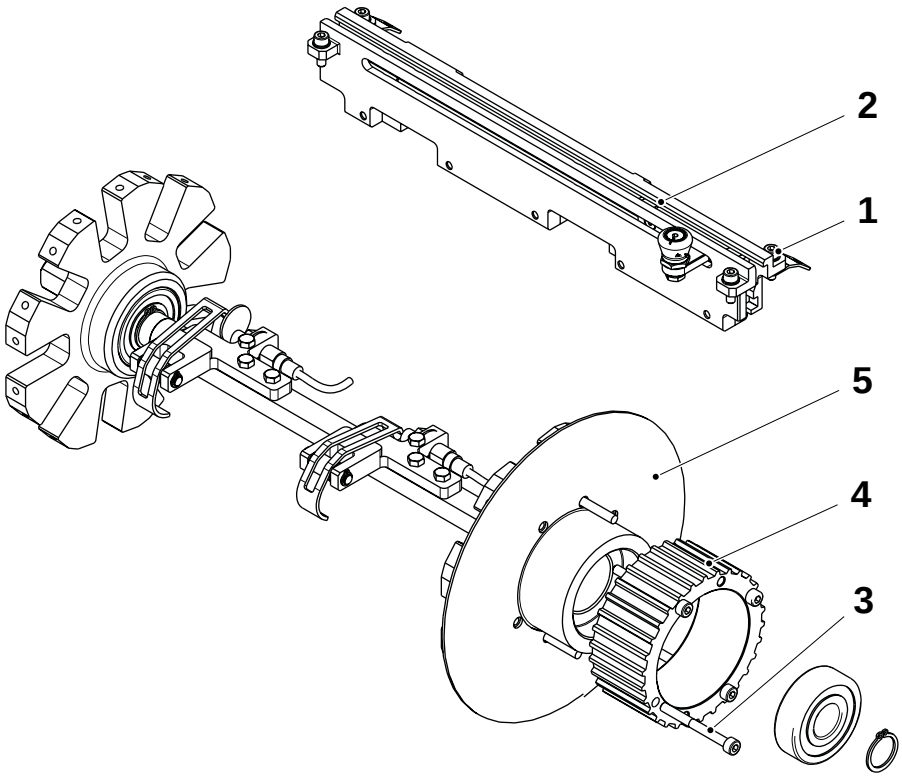

1 Screw
2 Cutting unit
3 Screw
4 Toothed pulley
5 Plate

(Cont'd)

TechPub_2614345_0106 - 1003_3047146_01.fm

(Cont'd)

c) Remove the retaining ring (6), the bearing (7), the end section (8), the bearing (9) and the retaining ring (10) from the shaft (11).

d) Change the sensor (12) and the flag (13) only if necessary.

Note! The cable for the sensor enters through the hole (14).

e) Assemble in the reverse order.

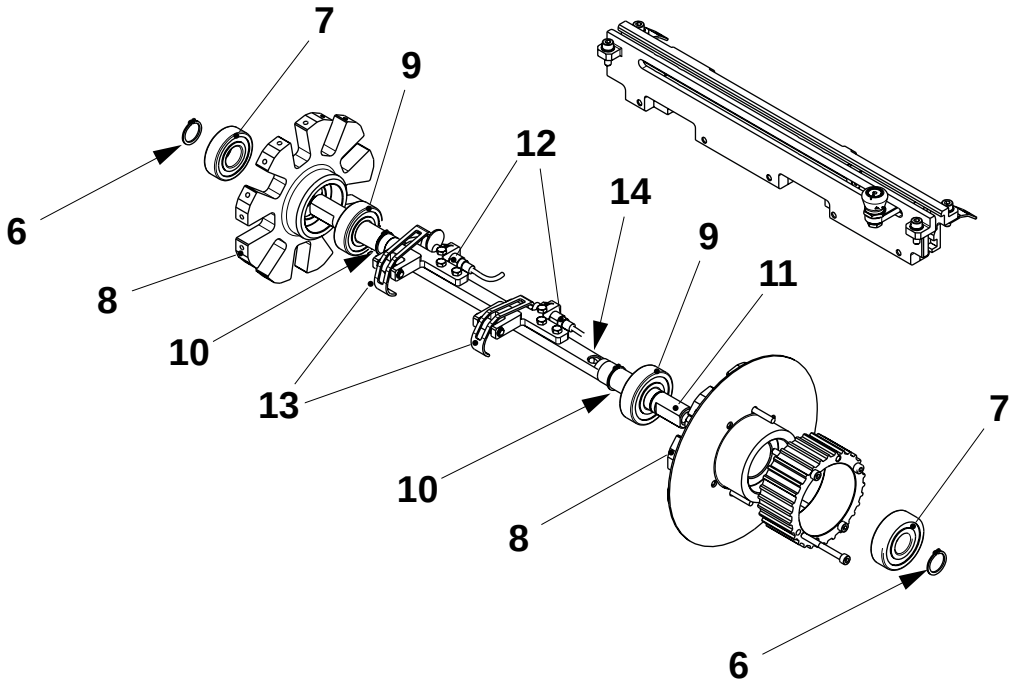

6 Retaining ring
7 Bearing
8 End section
9 Bearing
10 Retaining ring
11 Shaft
12 Sensor
13 Flag
14 Hole

TechPub_2614345_0106 - 1003_3047146_01.fm

6.3.1-3 Cutting Mechanism Body - Set Sensors

Machine Status	Mains Power ON
SPC Reference	2703810-0100

Note! Valid for machines from T Order; T75721/00001 to T75721/00045

a) Remove only as many as necessary of the screws (1), the cutting units (2) and the shims (3) to obtain access.

Note! Make sure that the shims are returned to the side they came from.

b) Adjust the sensor (4) by releasing the nuts (5).

c) Set the distance **A** between the sensor (4) and the flag (6).

d) Assemble in the reverse order.

Note! Check that the sensors are only activated when the sheet of cap is completely in the row cutter.

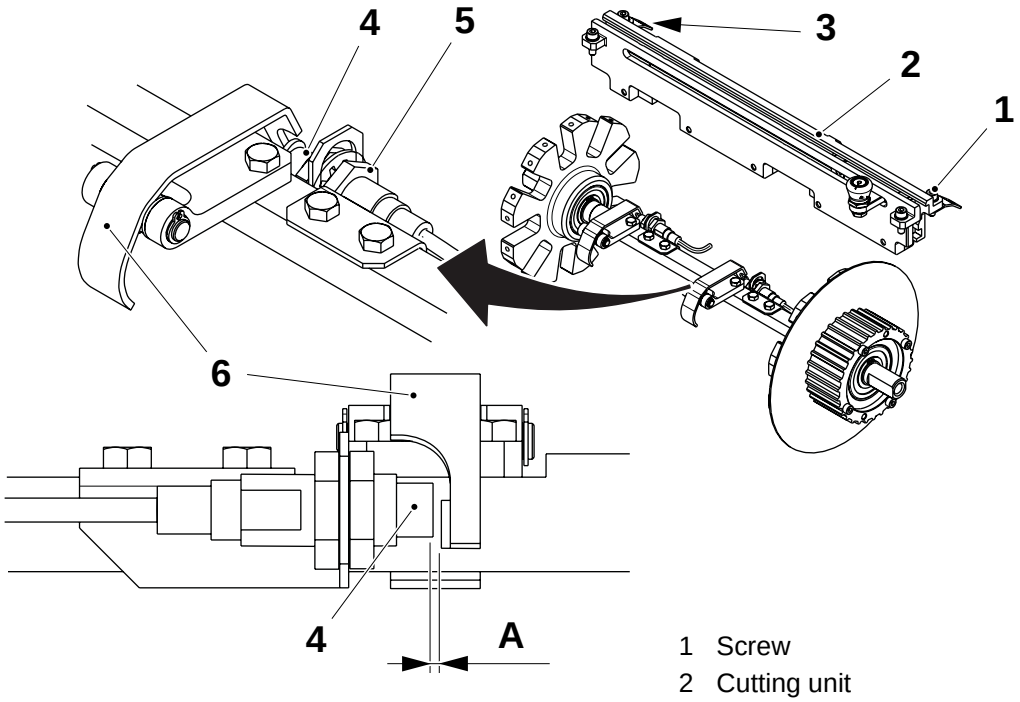

A = 2 mm

1 Screw
2 Cutting unit
3 Shim
4 Sensor
5 Nut
6 Flag

(Cont'd)

TechPub_2614345_0106 - 1003_3047146_01.fm

(Cont'd)

Note! Valid for machines from T Order; T75721/00045

a) Remove only as many as necessary of the screws (1), the cutting units (2) and the shims (3) to obtain access.

Note! Make sure that the shims are returned to the side they came from.

b) Adjust the sensor (4) by releasing the nuts (5).

c) Set the distance **A** between the sensor (4) and the flag (6).

d) Assemble in the reverse order.

Note! Check that the sensors are only activated when the sheet of cap is completely in the row cutter.

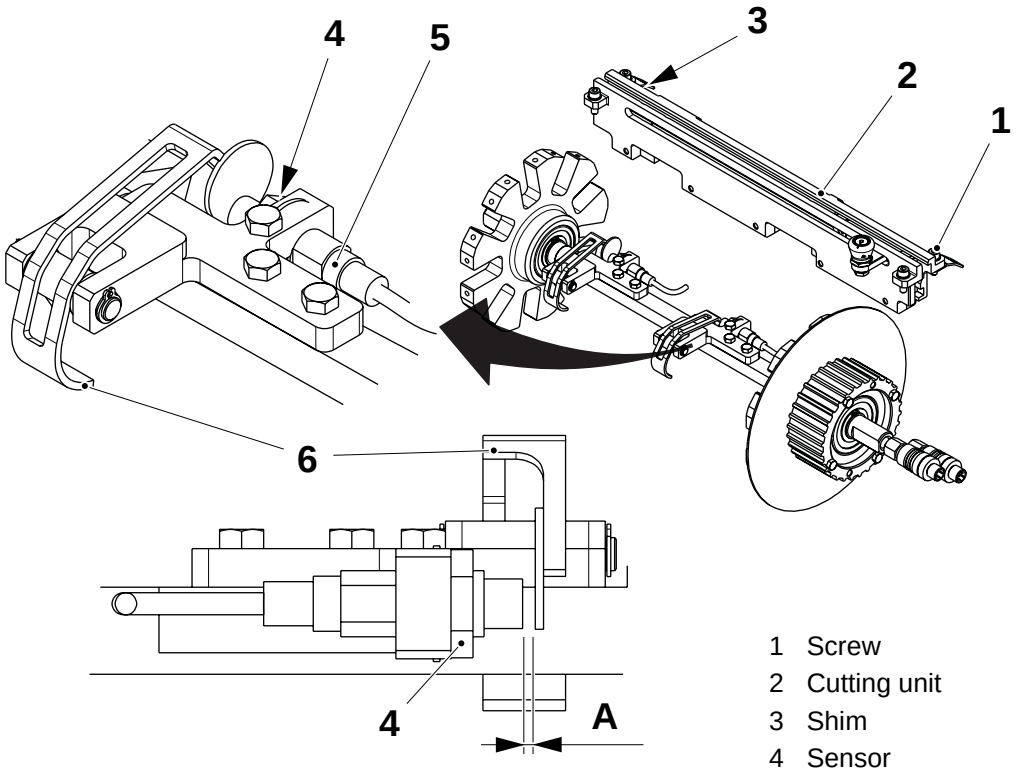

A = 2 mm

1 Screw
2 Cutting unit
3 Shim
4 Sensor
5 Nut
6 Flag

TechPub_2614345_0106 - 1003_3047146_01.fm

6.3.1-4 Cutting Mechanism Body - Set X

Machine Status	Mains Power OFF
SPC Reference	2703810-0100

a) Release the screws (1), the clamping block (2) and move the row cutter (3) until the distance **A** is obtained.

Note! Distance **A** is between the row cutter (3) and the side of the lower jaw of the cap holder (4) part.

b) Tighten the screws (1).

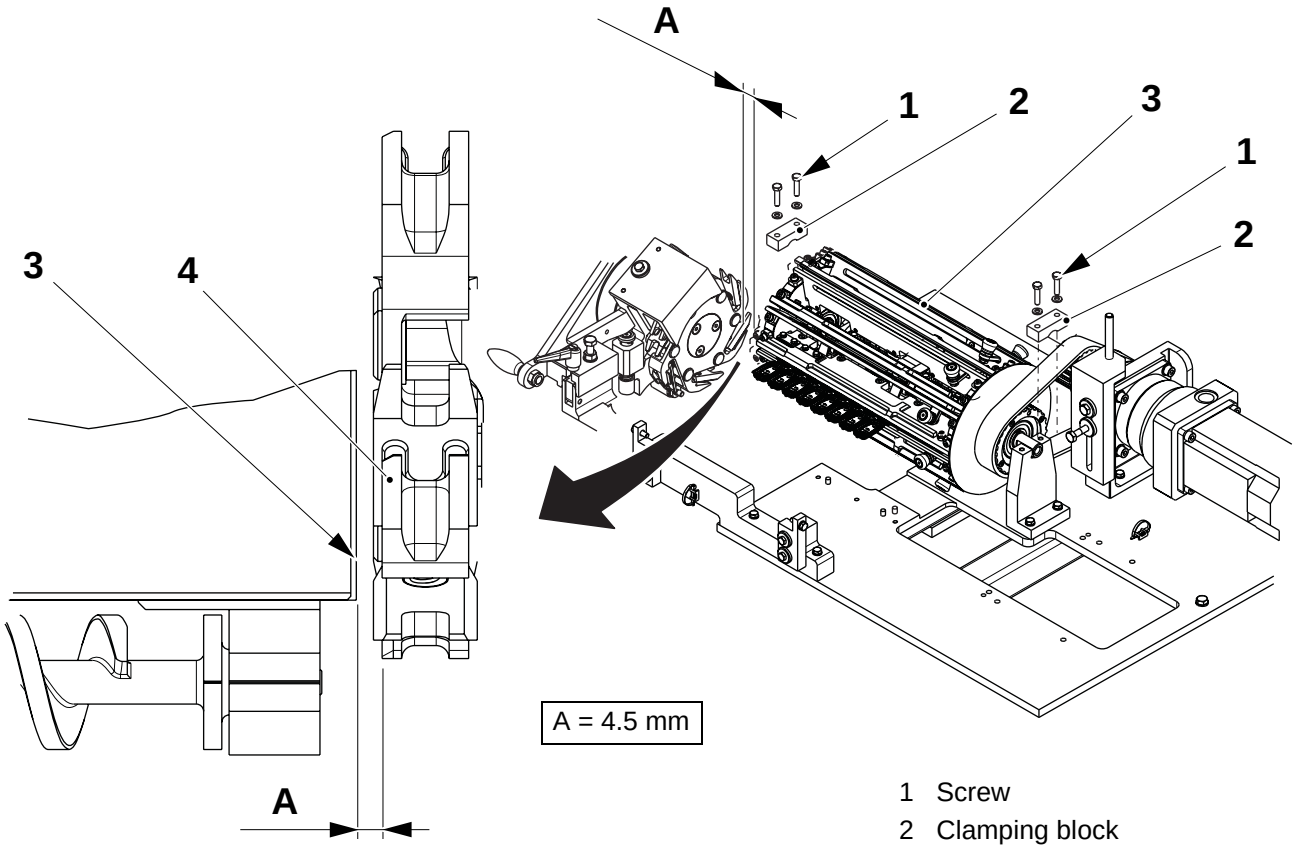

1 Screw
2 Clamping block
3 Row cutter
4 Lower cap holder

TechPub_2614345_0106 - 1003_3047146_01.fm

6.3.1-5 Cutting Mechanism Body - Set Belt Tension

Machine Status	Mains Power OFF
SPC Reference	2703810-0100

a) Release the screws (1).

b) Adjust the screw (2) and the nut (3) until the dimension **A** is obtained with the belt (4).

- Measuring the belt tension using a "belt tension measuring meter" the tension should be about 270 - 280 Hz.
- Measure it in the middle of the belt and produce vibrations hitting the belt with a spanner.

c) Tighten the screws (1).

Note! If the distance **A** is not obtained the row cutter does not always arrive at the correct position causing stoppages due to miss fed caps.

d) Set new zero see, 6.3.1-6 Cutting Mechanism Body - Set Zero.

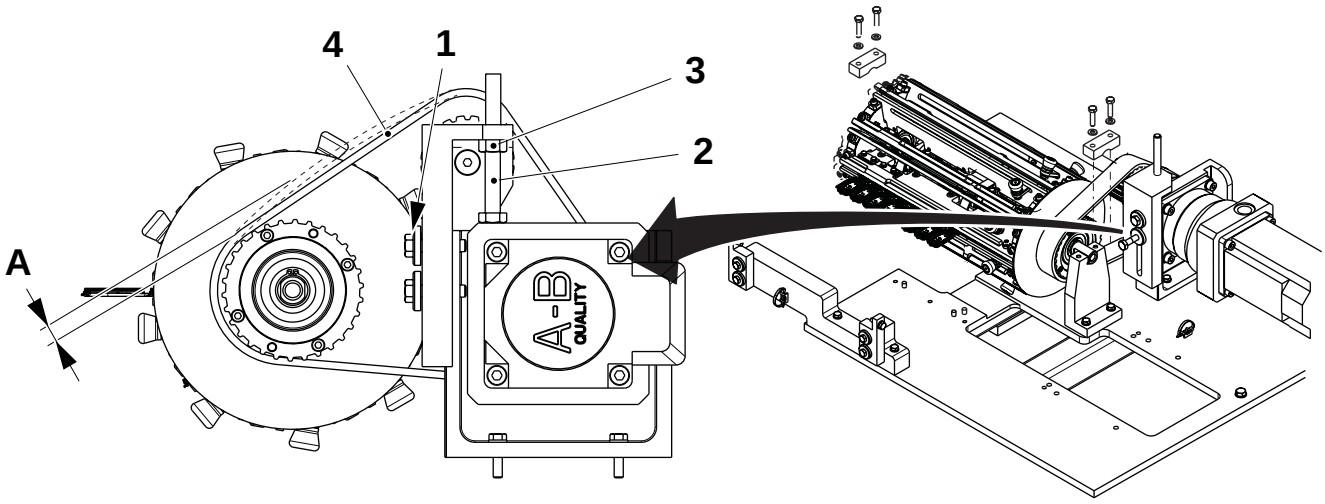

A = 1 mm max

1 Screw
2 Screw
3 Nut
4 Belt

TechPub_2614345_0106 - 1003_3047146_01.fm

6.3.1-6 Cutting Mechanism Body - Set Zero

Machine Status	Mains Power OFF
SPC Reference	2703810-0100

a) Align the cap slide (1) with the bottom plate (2).

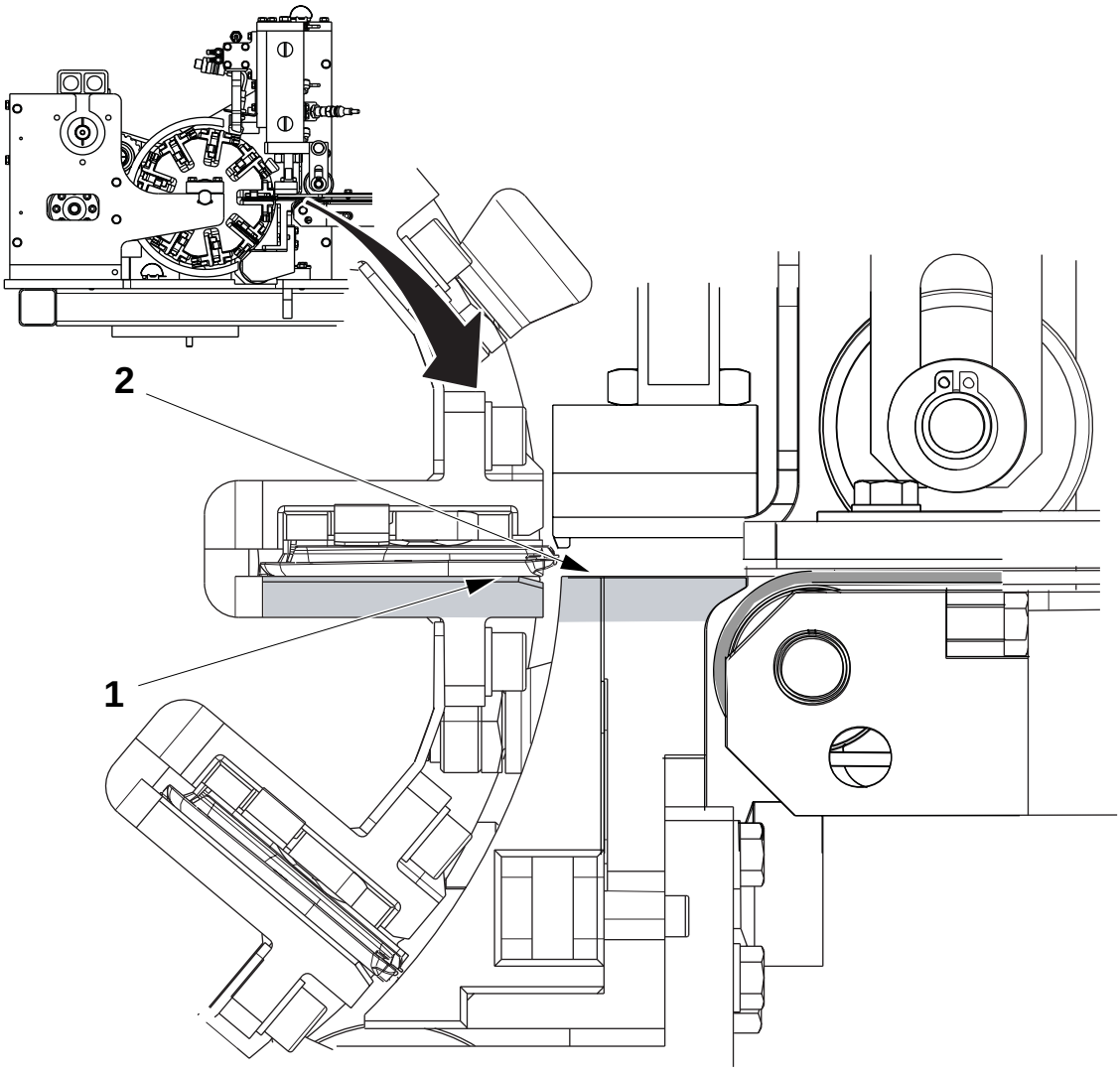

1 Cap slide
2 Bottom plate

TechPub_2614345_0106 - 1003_3047146_01.fm

(Cont'd)

b) Turn the main power on.

c) Turn the service key (3) to the right to release the maintenance function.

d) Touch the MAINTENANCE button (4).

e) Touch the CUTTING AND FEEDING button (5).

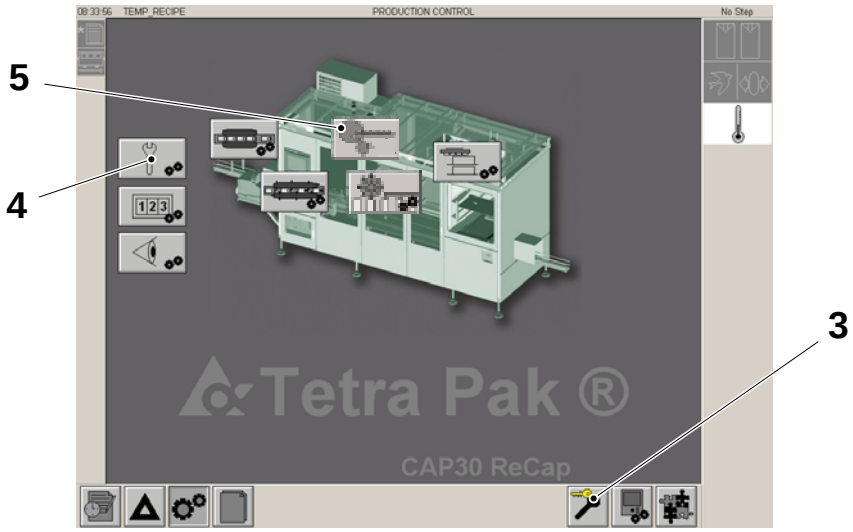

3 Service key
4 MAINTENANCE button
5 CUTTING AND FEEDING button

(Cont'd)

TechPub_2614345_0106 - 1003_3047146_01.fm

(Cont'd)

f) Touch the ROW CUTTER button (6).

g) Touch the ENABLE button (7).

h) Touch the OK button (8) for three seconds. The background of the ENABLE button (7) should go green.

i) Touch the EXIT button (9).

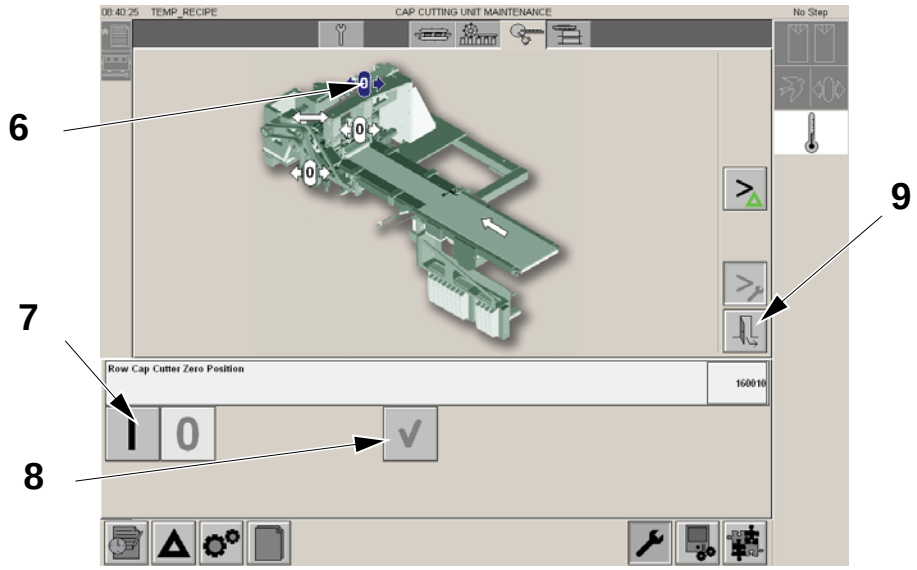

6 ROW CUTTER button
7 ENABLE button
8 OK button
9 EXIT button

TechPub_2614345_0106 - 1003_3047146_01.fm

6.3.2 Cutting Unit

6.3.2-1 Cutting Unit - Change

Machine Status	Mains Power OFF
SPC Reference	2703820-0100

a) Remove the screws (1), the shims (2), the screws (3) and separate the two guides (4) and (5).

b) Remove the screw (6), the washer (7) and the roller (8).

c) Remove the nut (9), the washer (10) and the shaft (11).

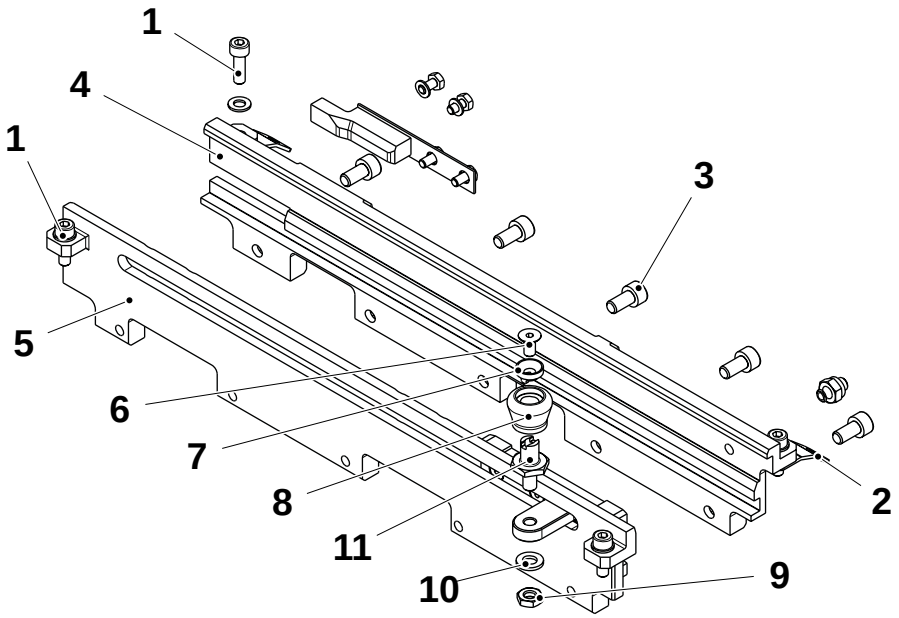

1 Screw
2 Shim
3 Screw
4 Guide
5 Guide
6 Screw
7 Washer
8 Roller
9 Nut
10 Washer
11 Shaft

(Cont'd)

TechPub_2614345_0106 - 1003_3047146_01.fm

(Cont'd)

d) Disassemble the slider (12) see g).

e) Remove the spring loaded retainer (13).

f) Remove the screw (14), the spring (15) and the block (16).

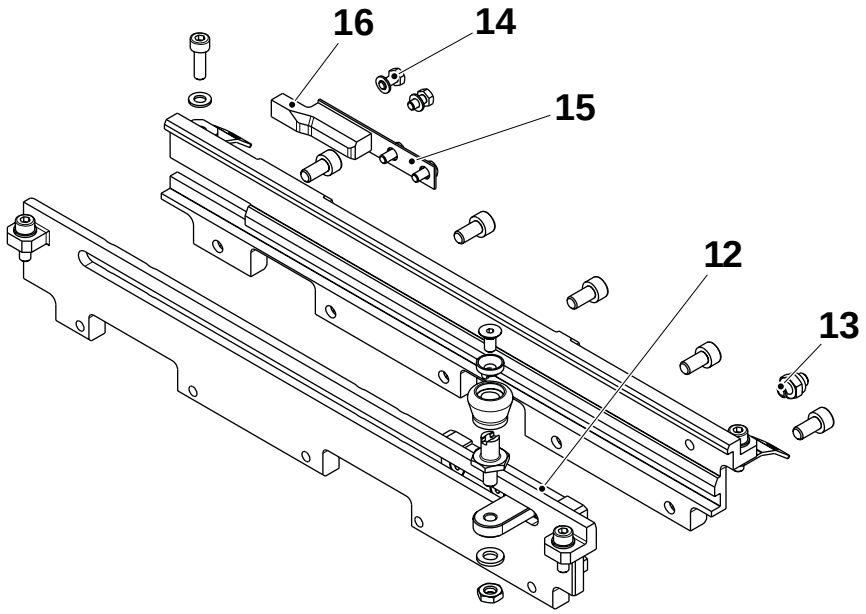

12 Slider
13 Retainer
14 Screw
15 Spring
16 Block

TechPub_2614345_0106 - 1003_3047146_01.fm

(Cont'd)

g) Remove the screws (17) and separate the arm (18) from the slide (19).

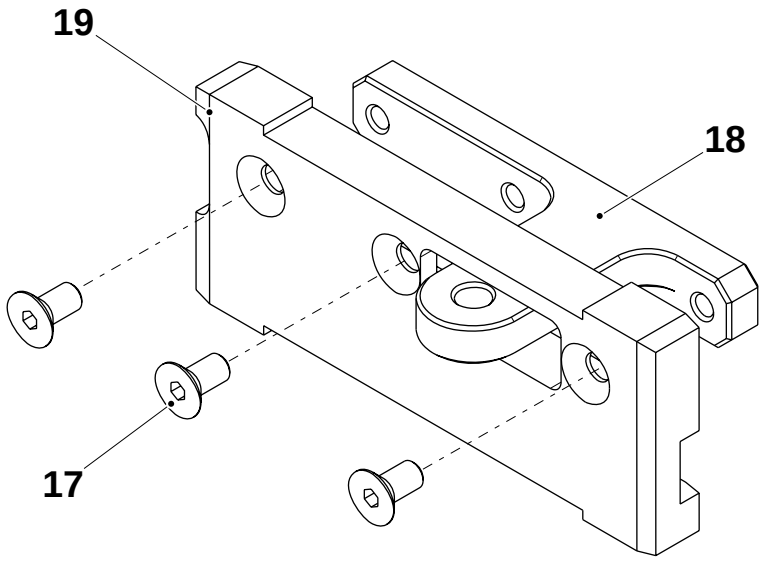

17 Screw
18 Arm
19 Slide

TechPub_2614345_0106 - 1003_3047146_01.fm

6.3.2-2 Cutting Unit - Set Sprung Retainer

Machine Status	Mains Power OFF
SPC Reference	2703820-0100

a) Release the nut (1) and adjust the screw (2) so that the ball locates in the hole (3) on the back of the carrier (4).

Note! This is approximately the distance **A**.

b) Tighten the nut (1).

c) Repeat for the other carriers.

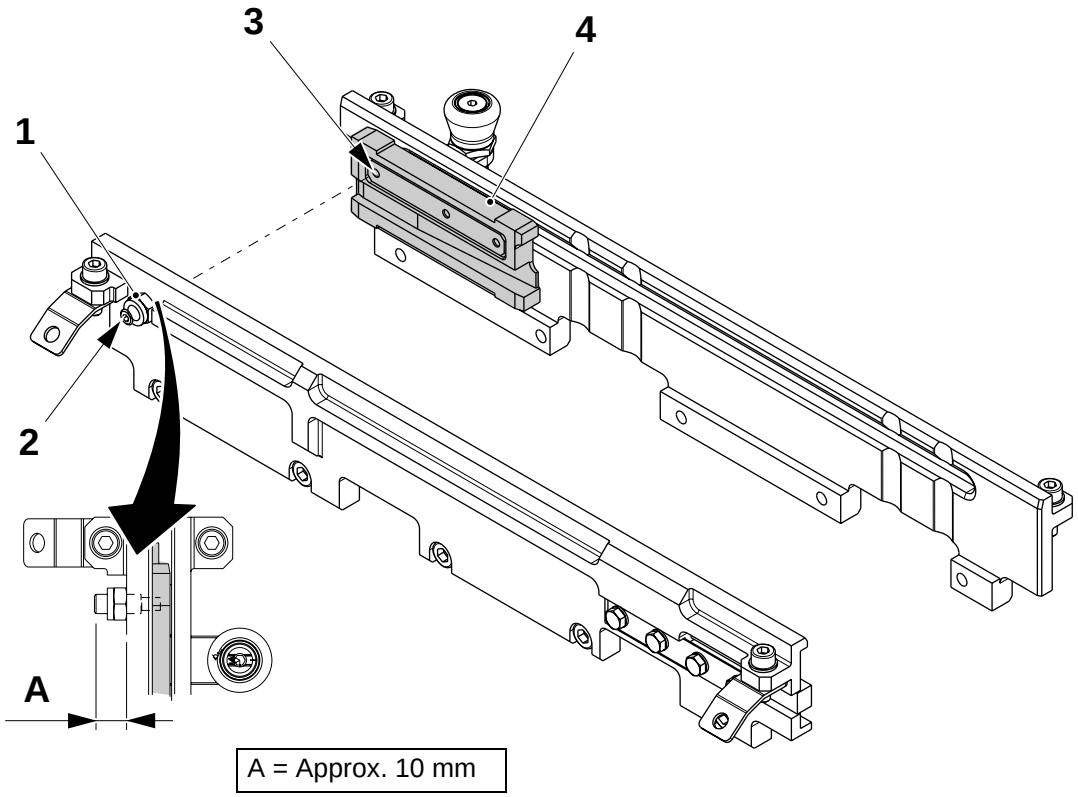

A = Approx. 10 mm

1 Nut
2 Screw
3 Hole
4 Carrier

TechPub_2614345_0106 - 1003_3047146_01.fm

6.3.2-3 Cutting Unit - Set Shim

Machine Status	Mains Power OFF
SPC Reference	2703820-0100

a) Adjust the shims (1) as required by removing the screws (2) until the distance **A** (these are base settings which will vary depedant on caps) is obtained on both sides.

Note! If adjusted check the trigger sensors see, 6.3.1-3 Cutting Mechanism Body - Set Sensors.

A = 1.2 mm for Recap 2
A = 2.5 mm for Recap 3

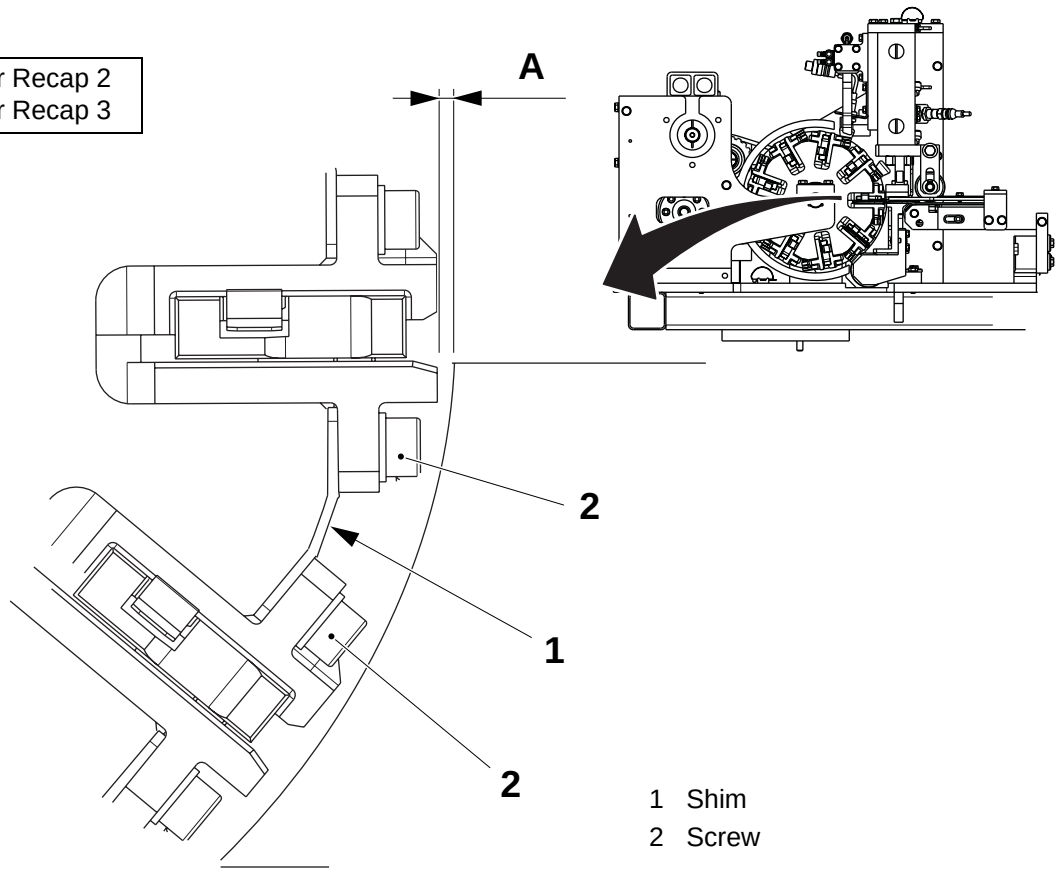

1 Shim
2 Screw

TechPub_2614345_0106 - 1003_3047146_01.fm

6.3.3 Drive Unit

6.3.3-1 Drive Unit - Change

Machine Status	Mains Power OFF
SPC Reference	2715713-0100

a) Remove the retaining ring (1), the bearing (2) and the toothed pulley (3).

b) Remove the bearing (4), the retaining ring (5), and the shaft (6).

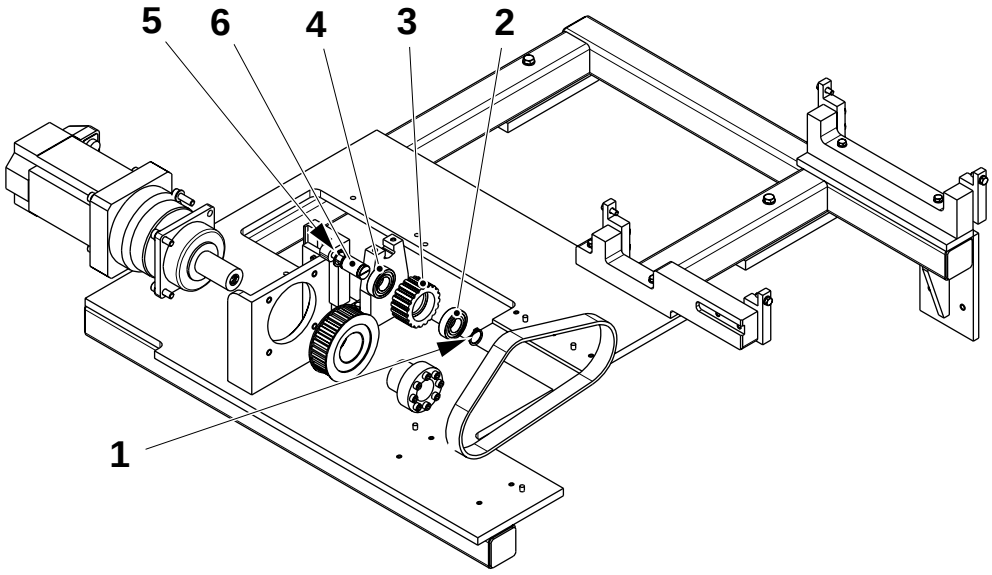

1 Retaining ring
2 Bearing
3 Toothed pulley
4 Bearing
5 Retaining ring
6 Shaft

(Cont'd)

TechPub_2614345_0106 - 1003_3047146_01.fm

(Cont'd)

c) Remove the clamping element (7) see, 6.3.3-2 Clamping Element - Removal and Installation

d) Remove the toothed pulley (8).

e) Remove the screws (9) and the motor (10).

f) Assemble in the reverse order, see 6.3.3-2 Clamping Element - Removal and Installation.

g) Set new zero see, 6.3.1-6 Cutting Mechanism Body - Set Zero.

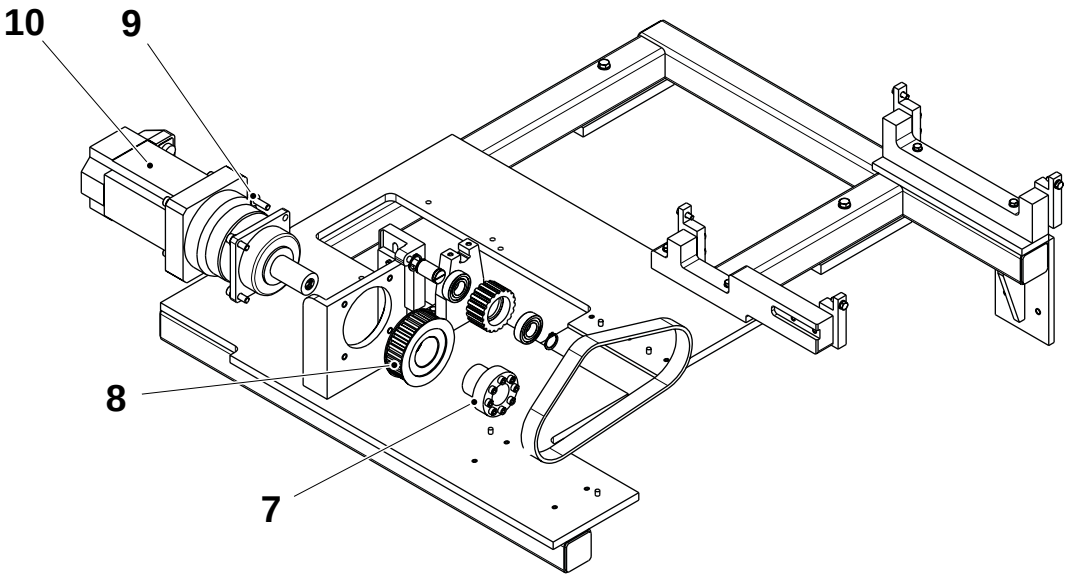

7 Clamping element
8 Toothed pulley
9 Screw
10 Motor

TechPub_2614345_0106 - 1003_3047146_01.fm

6.3.3-2 Clamping Element - Removal and Installation

Machine Status	Mains Power OFF Air OFF,
Special Equipment	Torque Wrench min. 17 Nm
Consumables	Silicon grease - TP No. 92296-0002
SPC Reference	90458-2029

a) Remove the screws (1) and insert them into the withdrawal holes (2) and tighten.

CAUTION
Risk of major damage to the machine!
Always tighten the screws (1) crosswise using the method described below.
Never adjust the tightening torque after locking, remove and start again.

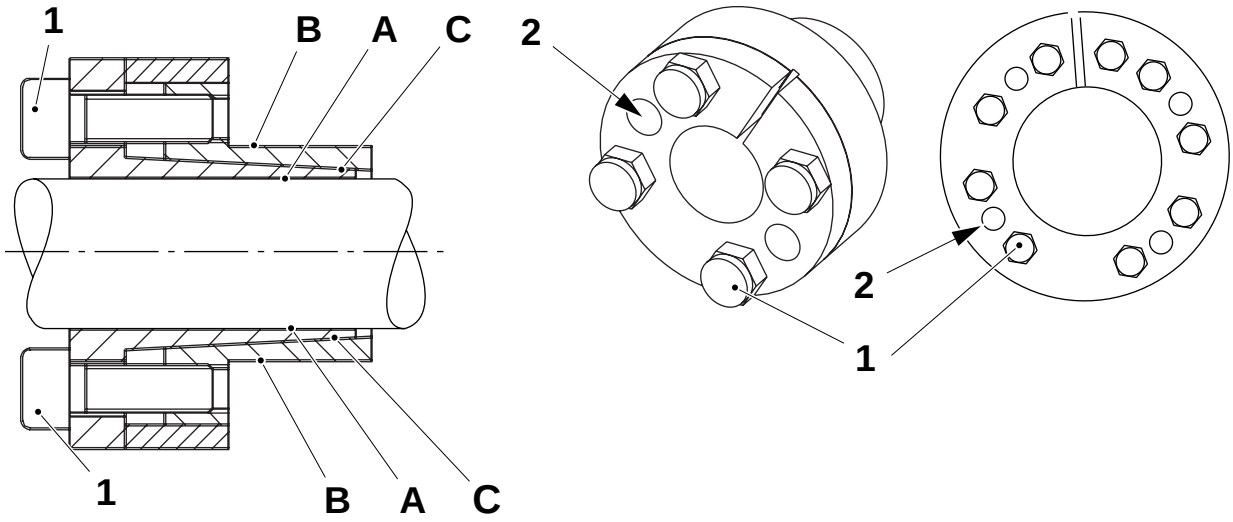

1 Screw
2 Withdrawal hole

(Cont'd)

TechPub_2614345_0106 - 1003_3047146_01.fm

(Cont'd)

The inner surface **A** and the outer surface **B** of the clamping element must be cleaned before assembling.

Note! Lubricate the screws (1). Apply grease (TP No.92296-0002) **only** onto the clamps inner surface **C**. Grease accidentally applied to other areas of the roller or shaft will cause slippage.

b) Put the clamping element (3) in place and tighten the screws (1) crosswise, first by hand and then to **9 ±2 Nm** with the aid of a torque wrench.

c) Continue to tighten the screw (1) crosswise to **17 ±2 Nm** with the aid of a torque wrench.

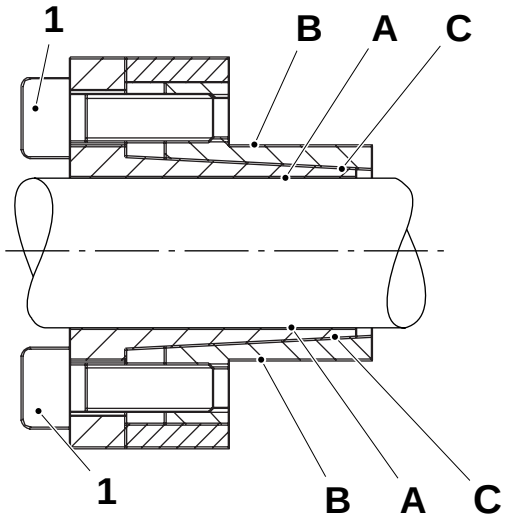

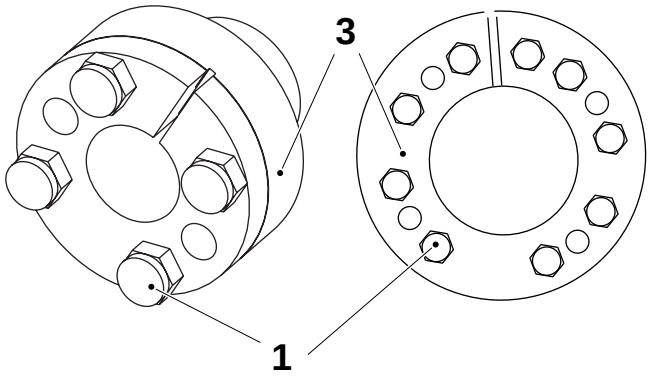

1 Screw
3 Clamping element

TechPub_2614345_0106 - 1003_3047146_01.fm

6.4 Drive Unit - Single Cut

SPC Reference	2715714-0100

6.4.1 Drive Unit - Overhaul

6.4.1-1 Drive Unit - Change

Machine Status	Mains Power OFF
SPC Reference	2715714-0100

Removal

a) Release the screw (1) and the coupling (2).

b) Remove the four screws (3) and the drive (4).

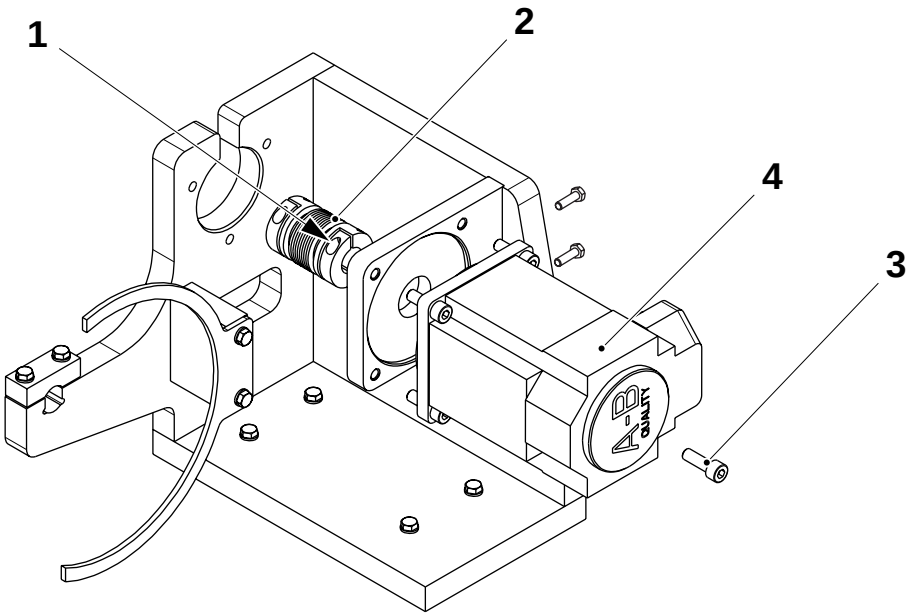

1 Screw
2 Coupling
3 Screw
4 Drive

(Cont'd)

TechPub_2614345_0106 - 1002_3047147_01.fm

(Cont'd)

Assembly

c) Loosen the screws (5) and install the drive (4) with the screws (3).

d) Lightly tighten the screws (3) and (5) making sure that the coupling (2) is still in line and moves freely.

e) Tighten completely the screw (1), then the screws (5) and finally the screws (3).

f) Set zero see, 6.1.1-7 Single Cut - Set Zero Position.

Note! If noise or vibration occurs assembly should be done again.

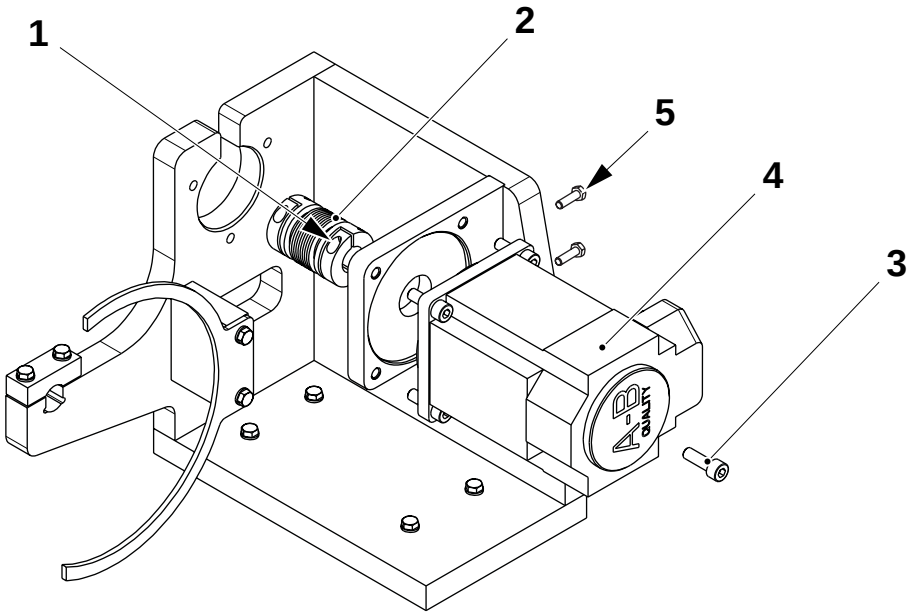

1 Screw
2 Coupling
3 Screw
4 Drive
5 Screw

TechPub_2614345_0106 - 1002_3047147_01.fm

6.5 Indexing Unit

SPC Reference	2715730-0200

6.5.1 Indexing Unit - Overhaul

6.5.1-1 Indexing Unit - Change

Machine Status	Mains Power OFF
SPC Reference	2715730-0200

Note! Valid for machines from T Order; T75721/00001 to T75721/00045

a) Release the screw (1) and remove the seal (2).

b) Remove the retaining rings (3), the screws (4) and the housing (5).

c) Remove the screw (6), the washer (7) and the bearing (8) from the shaft (9).

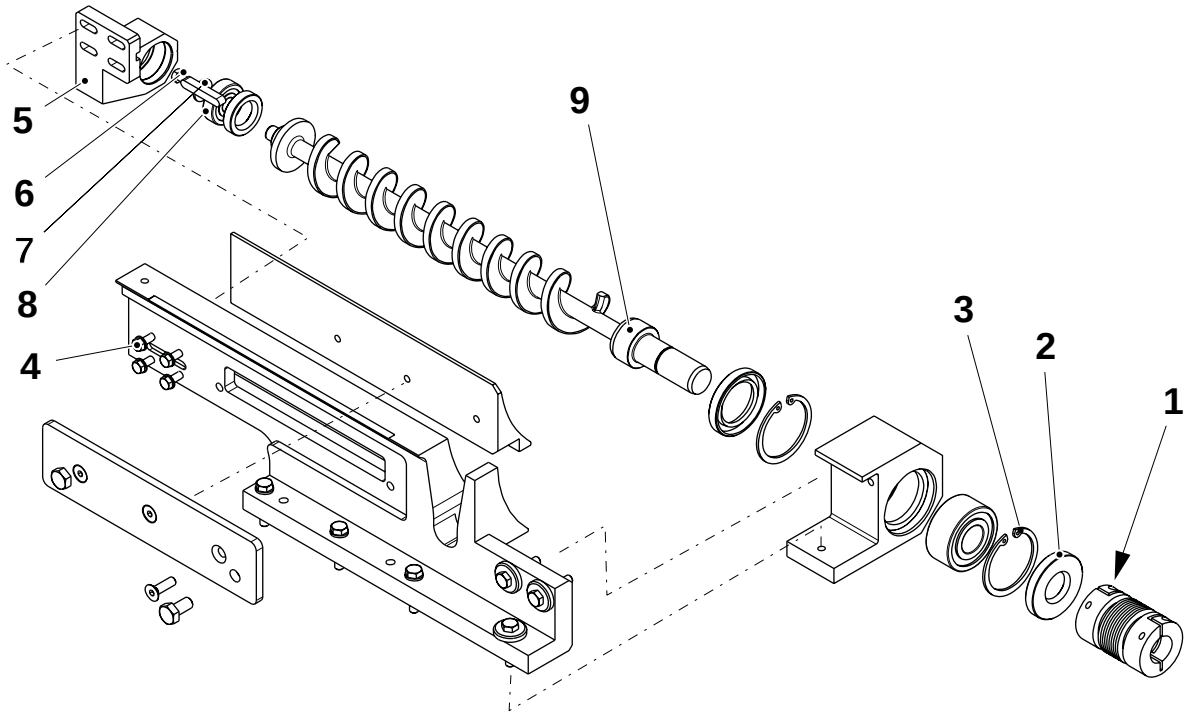

1 Screw
2 Seal
3 Retaining ring
4 Screw
5 Housing
6 Screw
7 Washer
8 Bearing
9 Shaft

(Cont'd)

TechPub_2614345_0106 - 1003_3047148_01.fm

(Cont'd)

d) Remove the screws (10), the seal (11), the retaining ring (12) and the bearing (13) from the housing (14).

e) Tighten the screws (15) to move the slider (16) away from the row cutter. Remove the screws (15) to remove the slider (16).

f) Remove the screws (17) and the plate (18).

g) Remove the screws (19) and the bottom plate (20).

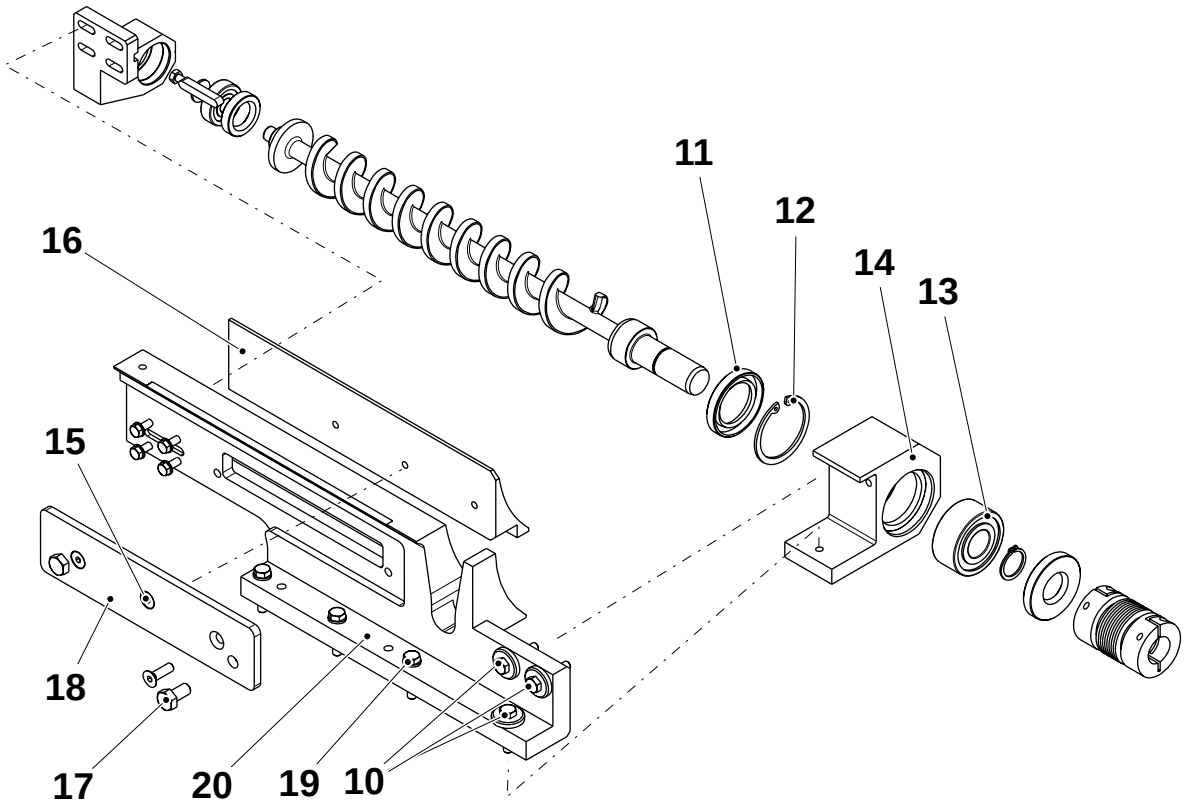

10	Screw	16	Slider
11	Seal	17	Screw
12	Retaining ring	18	Plate
13	Bearing	19	Screw
14	Housing	20	Bottom plate
15	Screw		

(Cont'd)

TechPub_2614345_0106 - 1003_3047148_01.fm

(Cont'd)

Note! Valid for machines from T Order; T75721/00045

a) Release the screw (1) and the screws (2).

b) Remove the housing (3) compltete with the indexing screw (4) from the housing (5).

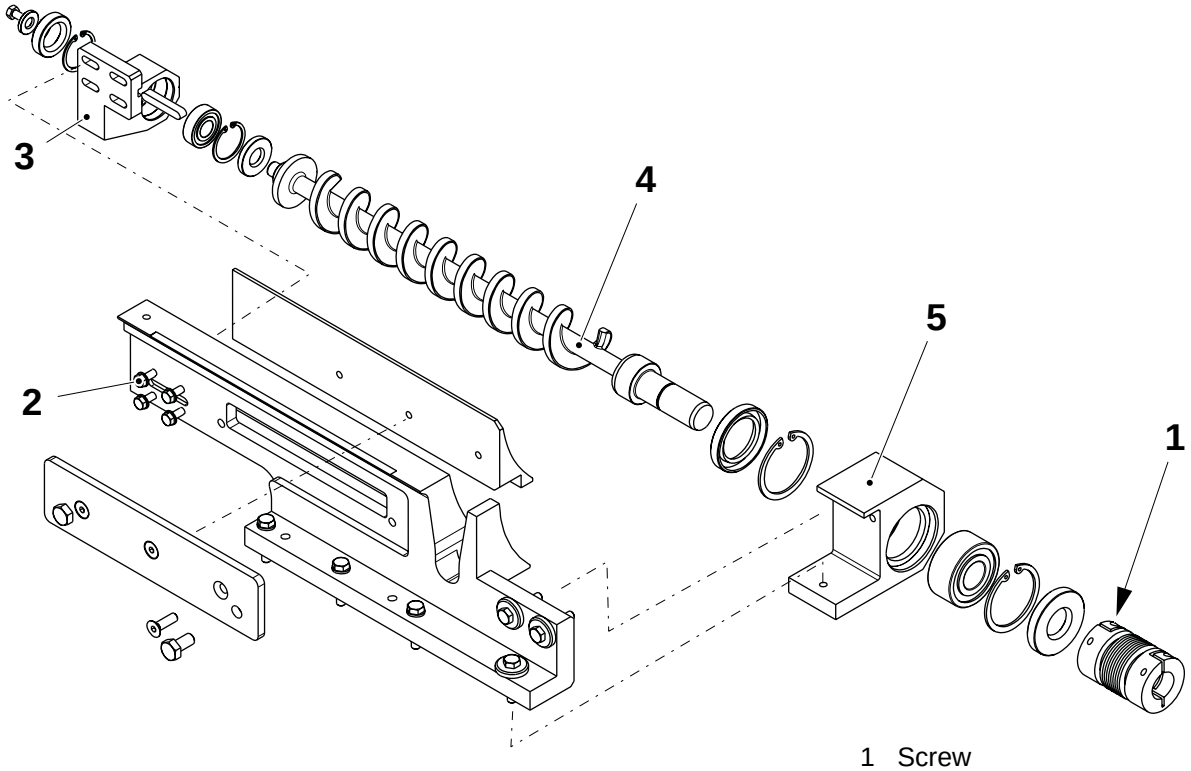

1 Screw
2 Screw
3 Housing
4 Indexing screw
5 Housing

(Cont'd)

TechPub_2614345_0106 - 1003_3047148_01.fm

(Cont'd)

c) Release the screw (6) and remove the washer (7) and the seal (8).

d) Remove the seal (9) and the shaft (4).

e) Remove the retaining rings (10) and the bearing (11) from the housing (3).

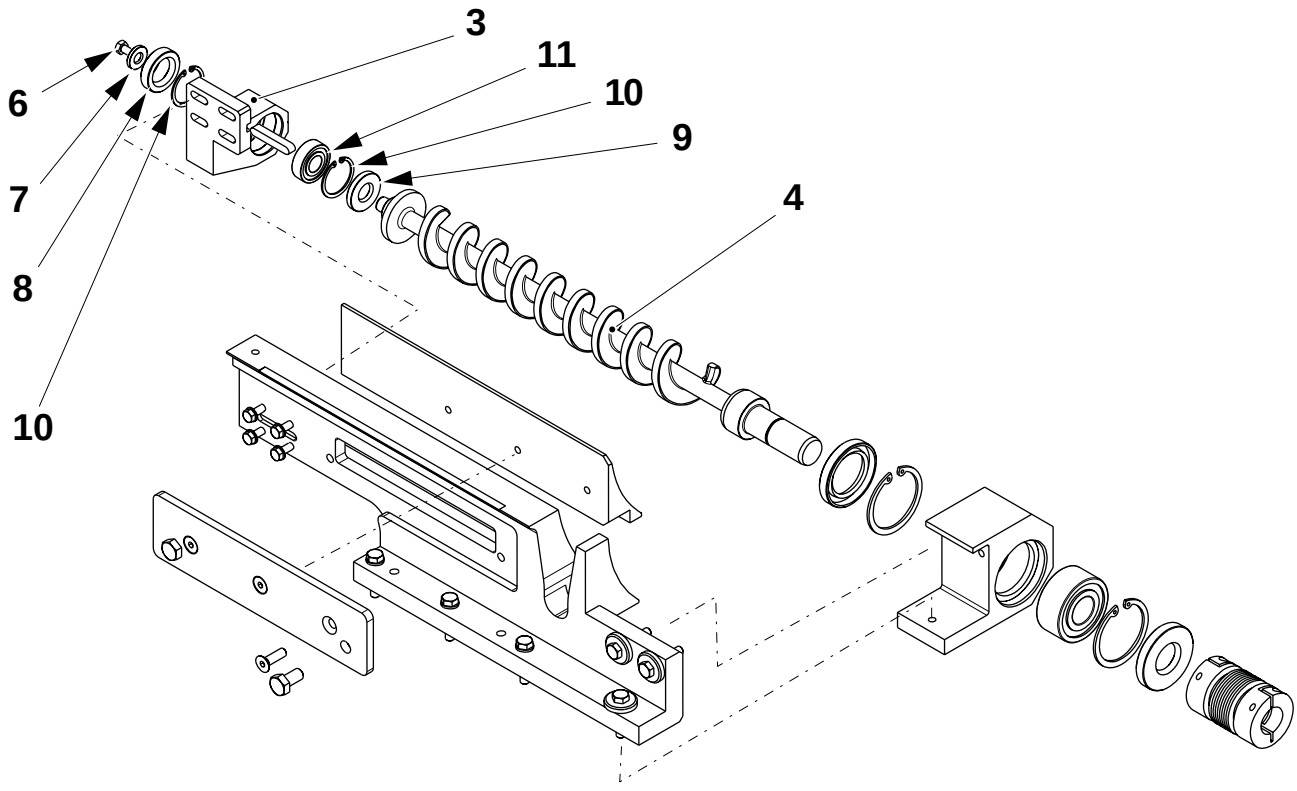

3	Housing	8	Seal
4	Indexing screw	9	Seal
6	Screw	10	Retaining ring
7	Washer	11	Bearing

TechPub_2614345_0106 - 1003_3047148_01.fm

(Cont'd)

(Cont'd)

f) Remove the three screws (12) and the housing (3).
g) Remove the seals (13) and the retaining rings (14).
h) Removethe bearing (15) from the housing (5).

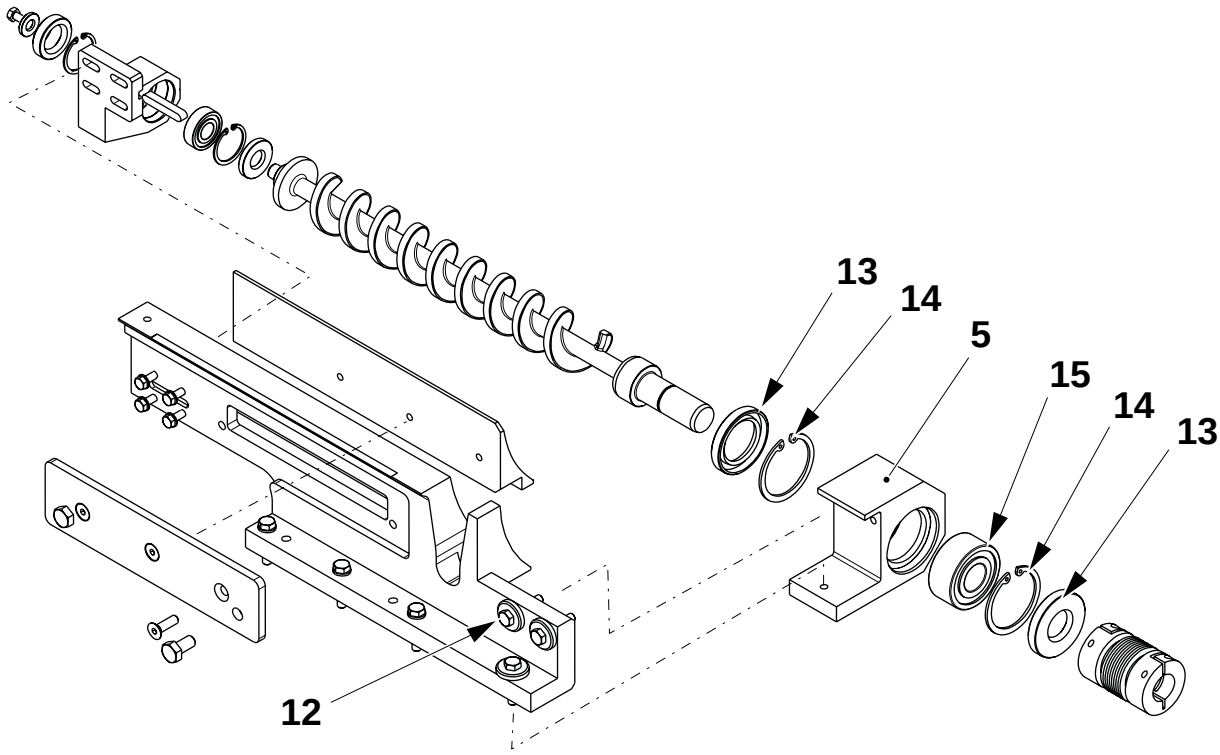

5 Housing
12 Screw
13 Seal
14 Retaining ring
15 Bearing

(Cont'd)

TechPub_2614345_0106 - 1003_3047148_01.fm

(Cont'd)

i) Tighten the screws (16) to move the slider (17) away from the row cutter. Remove the screws (16) to remove the slider (17).

j) Remove the screws (18) and the plate (19).

k) Remove the screws (20) and the bottom plate (21).

l) Assemble in the reverse order.

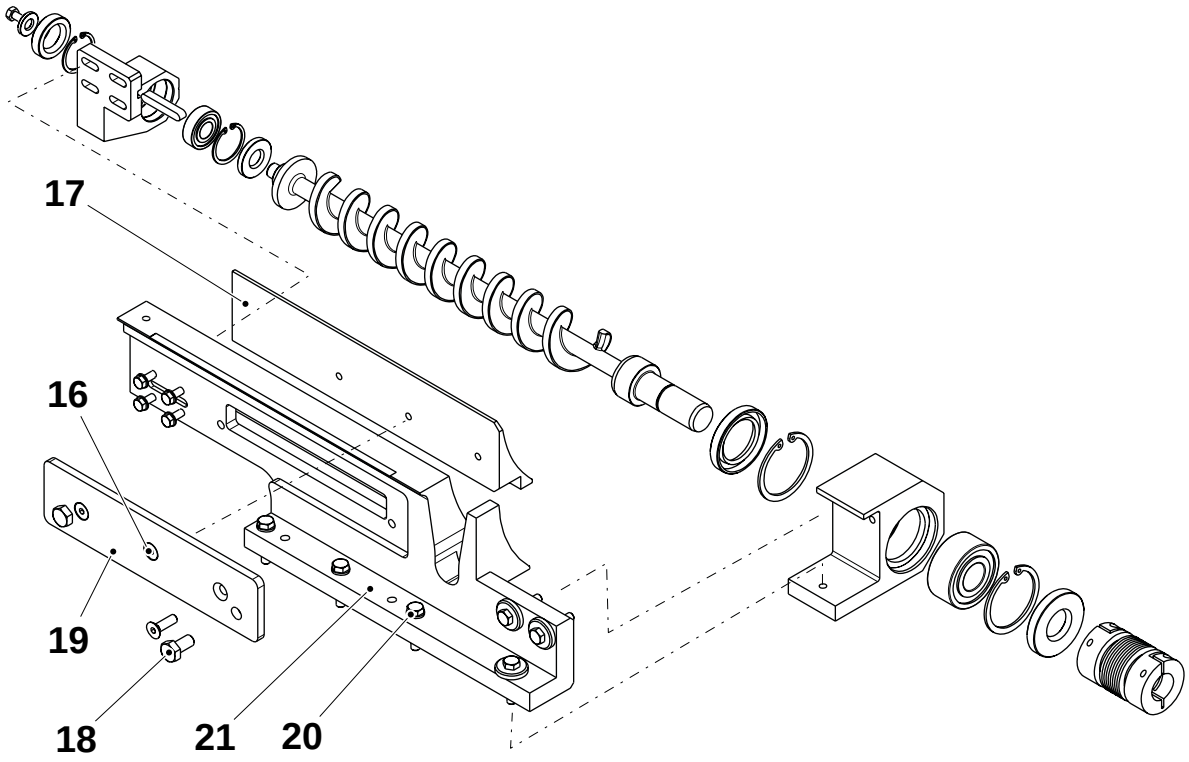

16	Screw	19	Plate
17	Slider	20	Screw
18	Screw	21	Bottom plate

TechPub_2614345_0106 - 1003_3047148_01.fm

6.5.1-2 Indexing Unit - Set X position and Zero

Machine Status	Mains Power ON
SPC Reference	2715730-0200

Set X Position

a) Before setting, check the protrusion of the slider (1) from the row cutter (2). The distance **A** should be 1.5 mm (this is a base setting which will vary with caps) when the screw is at its zero mark (3) and the roller is touching the indexing screw (4). If not 1.5 mm adjust as follows.

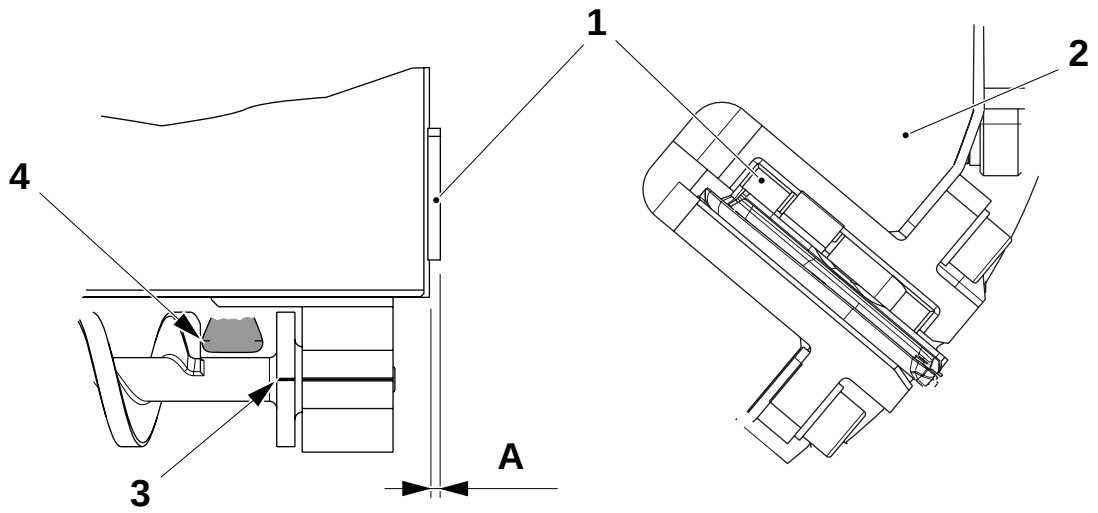

A = 1.5 mm

1 Slider
2 Row cutter
3 Zero mark
4 Indexing screw

(Cont'd)

TechPub_2614345_0106 - 1003_3047148_01.fm

(Cont'd)

b) Adjust by releasing the screw (5) and the screws (6) that retain the blocks (7).

c) Check the correction to the slider position and if correct tighten the screws (6).

Set Zero

d) Rotate the indexing screw (4), until the zero mark (3) lines up with the housing zero mark (8).

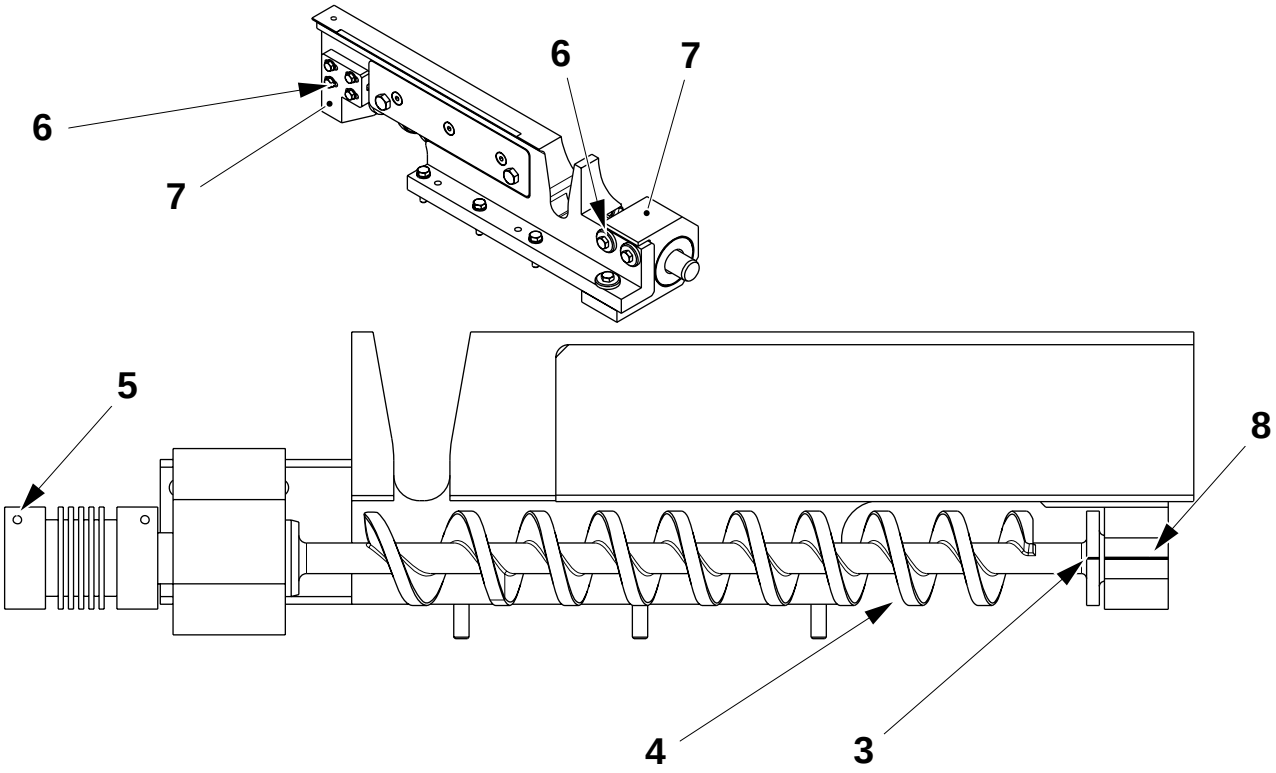

3 Zero mark
4 Indexing screw
5 Screw
6 Screw
7 Block
8 Zero mark

(Cont'd)

TechPub_2614345_0106 - 1003_3047148_01.fm

(Cont'd)

e) Turn the main power on.
f) Turn the service key (9) to the right to release the maintenance function.
g) Touch the MAINTENANCE button (10).
h) Touch the CUTTING AND FEEDING button (11).

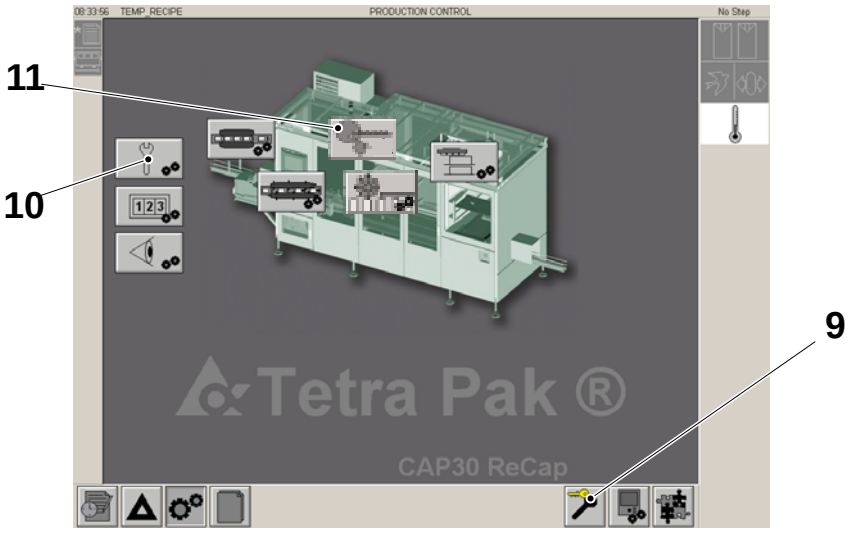

9 Service key
10 MAINTENANCE button
11 CUTTING AND FEEDING button

(Cont'd)

TechPub_2614345_0106 - 1003_3047148_01.fm

(Cont'd)

i) Touch the INDEXING button (12).

j) Touch the ENABLE button (13).

k) Touch the OK button (14) for three seconds. The background of the ENABLE button (13) should go green.

l) Touch the EXIT button (15).

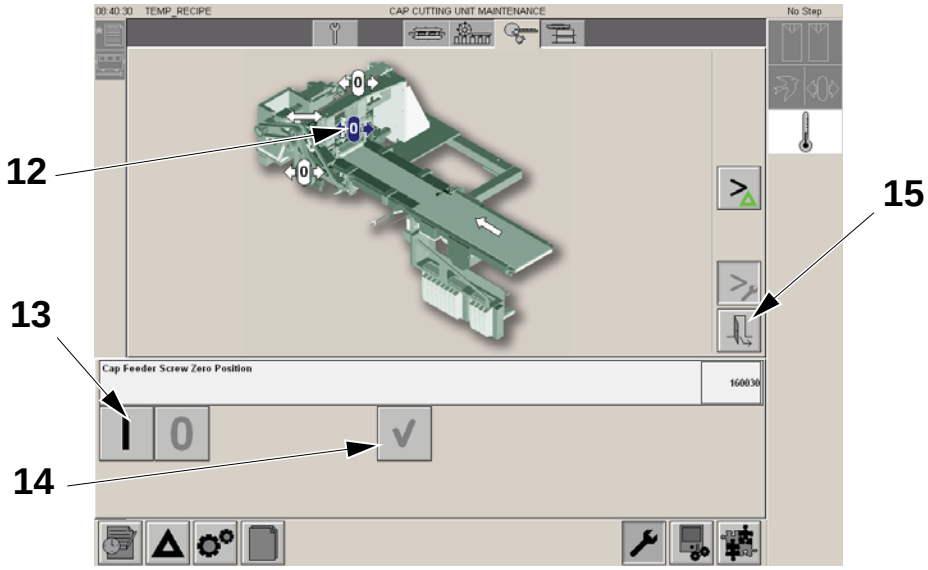

12 INDEXING button
13 ENABLE button
14 OK button
15 EXIT button

TechPub_2614345_0106 - 1003_3047148_01.fm

6.5.1-3 Indexing Unit - Check X Direction

Machine Status	Mains Power OFF
SPC Reference	2715730-0200

a) Set the servo motor to zero, see 6.5.1-2 Indexing Unit - Set X position and Zero.

b) Place a row of caps into the row cutter (1) and turn ready for the next row to be fed in moving the caps to the single cut feed position (2).

c) Manually turn the indexing unit until the screen reads 822 deg, the cap should touch the cap stopper when the single cut is in position.

Note! If a cap does not touch the cap stopper mechanical adjustment of the indexing unit should be made.

d) Check all the caps of a row except the last. For the last the cap carrier should be out of the row cutter by 1 - 1.5mm.

	Cap	1 st	2 nd	3 rd	4 th	5 th	6 th	7 th	8 th
Screw Phase	ReCap3	822 degrees	1167 degrees	1512 degrees	1856 degrees	2197 degrees	2537 degrees	2880 degrees	3240 degrees
Screw Phase	ReCap2	720 degrees	1080 degrees	1440 degrees	1800 degrees	2160 degrees	2520 degrees	2880 degrees	3240 degrees

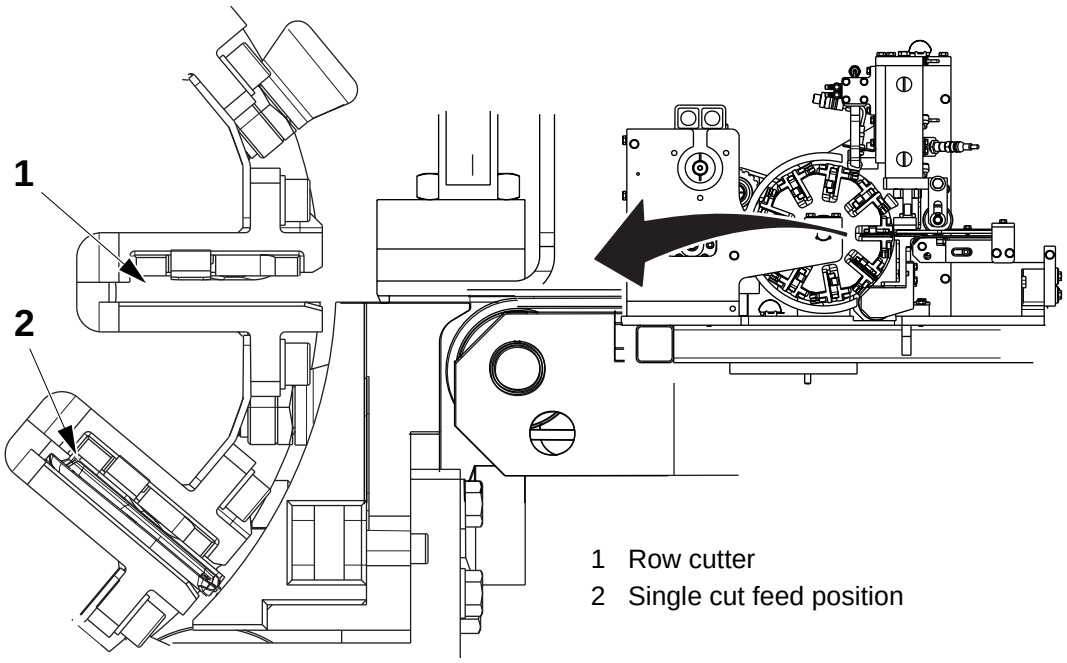

1 Row cutter
2 Single cut feed position

TechPub_2614345_0106 - 1003_3047148_01.fm

6.6 Drive Unit

SPC Reference	2715770-0100

6.6.1 Drive Unit - Overhaul

6.6.1-1 Drive Unit - Change

Machine Status	Mains Power OFF
SPC Reference	2715770-0100

a) Release the screw (1), the screws (2) and the motor (3).

b) Assemble in the reverse order.

c) Set zero see, 6.5.1-2 Indexing Unit - Set X position and Zero.

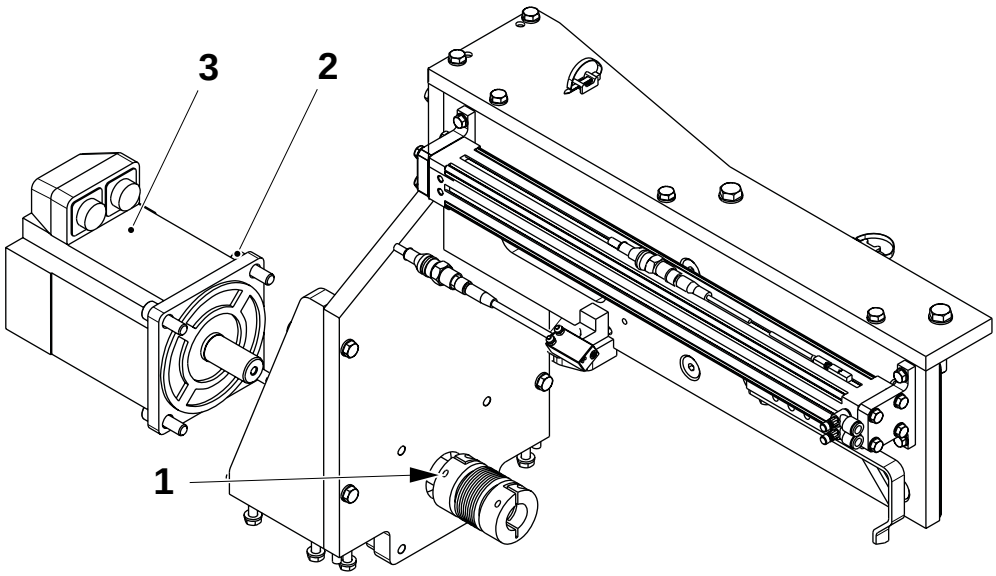

1 Screw
2 Screw
3 Motor

TechPub_2614345_0106 - 1002_3047149_01.fm

6.6.1-2 Drive Unit - Set X Position Stop and Sensor

Machine Status	Mains Power OFF
SPC Reference	2715770-0100

a) Release the screw (1) and set the stop (2) at the distance **A**.

b) The sensor (3) should activate when the roller (4) is touching the stop (2).

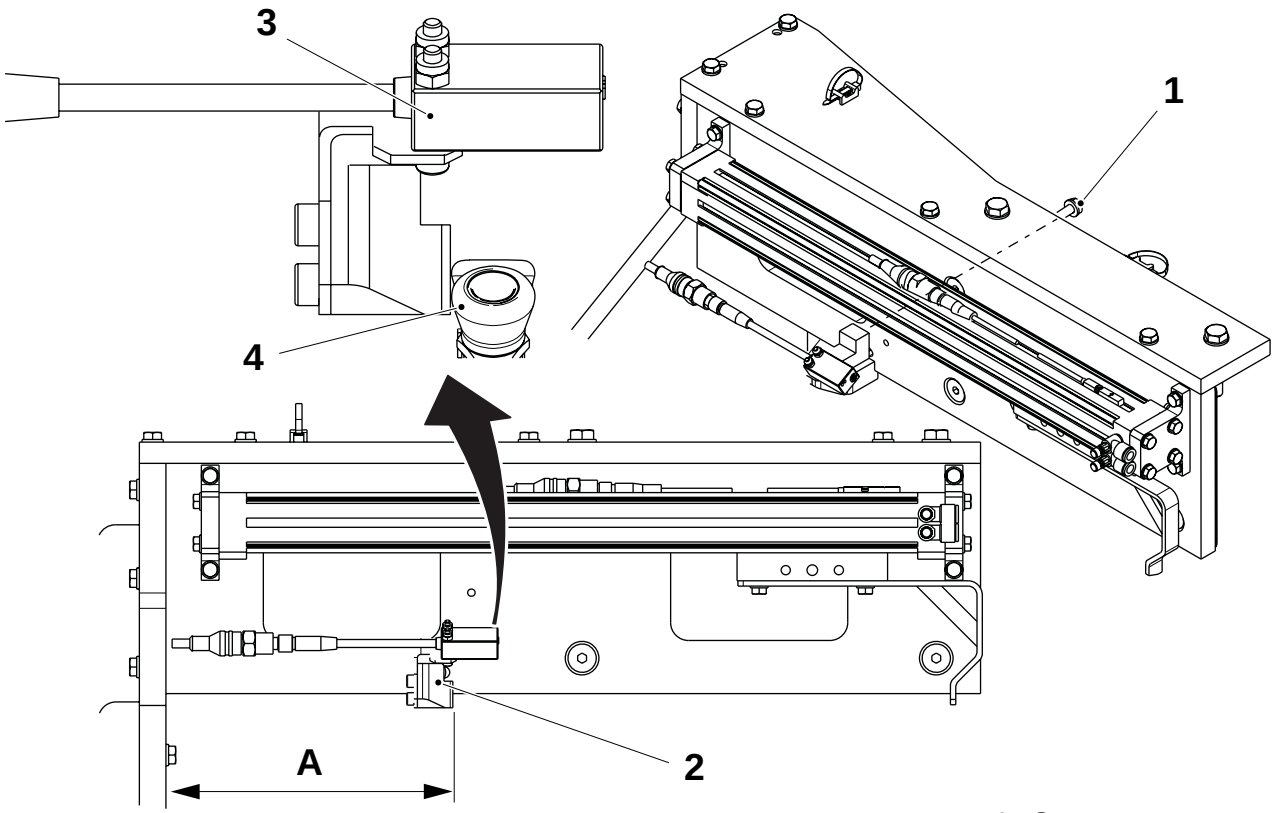

A = 162 mm

1 Screw
2 Stop
3 Sensor
4 Roller

TechPub_2614345_0106 - 1002_3047149_01.fm

6.6.1-3 Drive Unit - Set Carrier Sensor

Machine Status	Mains Power OFF
SPC Reference	2715770-0100

a) Set the position of the sensor (1) by releasing the screw (2) and moving the sensor (1) until the LED (3) indicates that the carrier is in its home position (4).

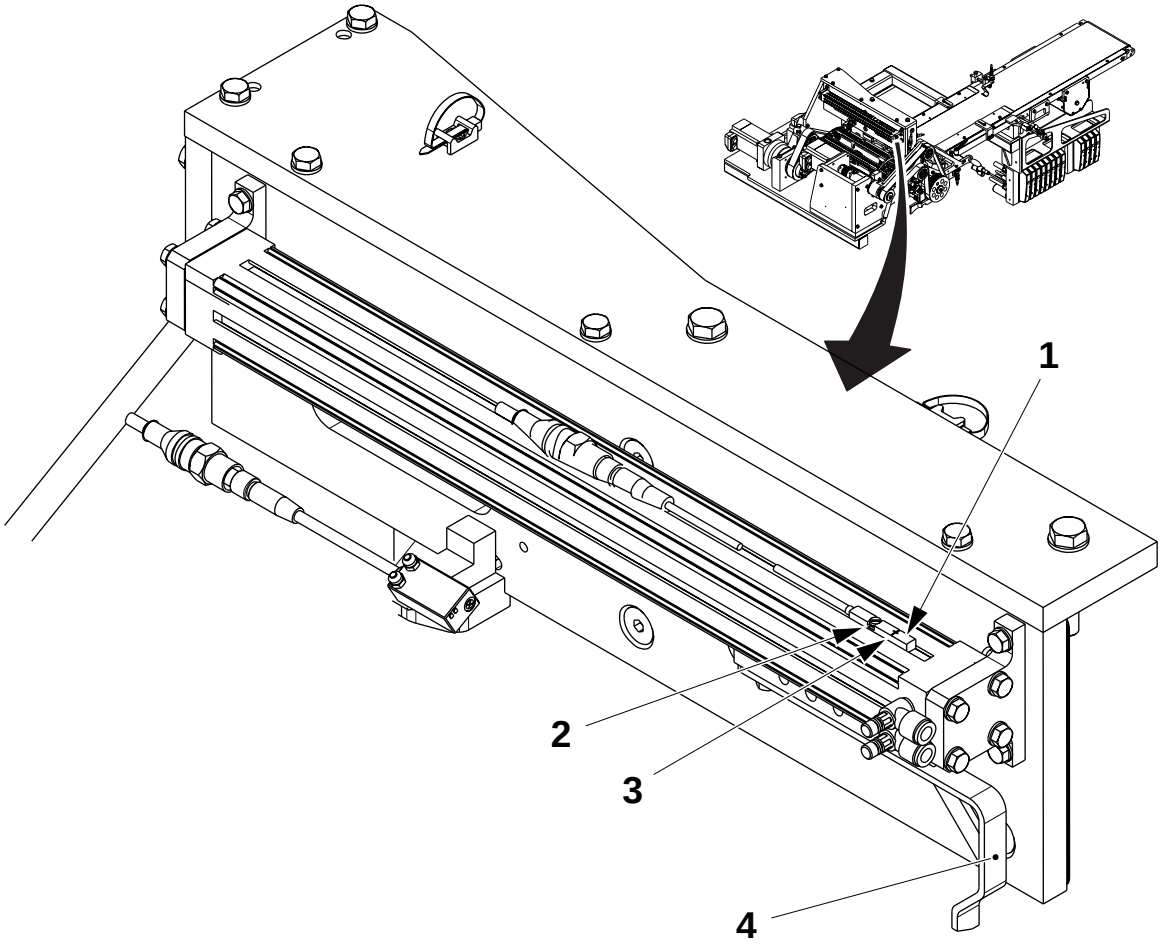

1 Sensor
2 Screw
3 LED
4 Home position

TechPub_2614345_0106 - 1002_3047149_01.fm

6.6.1-4 Drive Unit - Set Carrier Speed

Machine Status	Mains Power OFF
SPC Reference	2715770-0100

Carrier Cylinder

Note! Check that the working pressure is 6.0 Bar / 0.6 MPa.

a) Touch the CARRIER icon (1).

b) Touch the FORWARD (2) or BACKWARD (3) button to move the box eject cylinder in the desired direction.

c) Read the speed value given in the S window (4) for the forward and backward movement. Adjust as required until the correct value in the table is obtained.

Direction	Speed
Forward	0.5 Sec
Backward	0.5 Sec

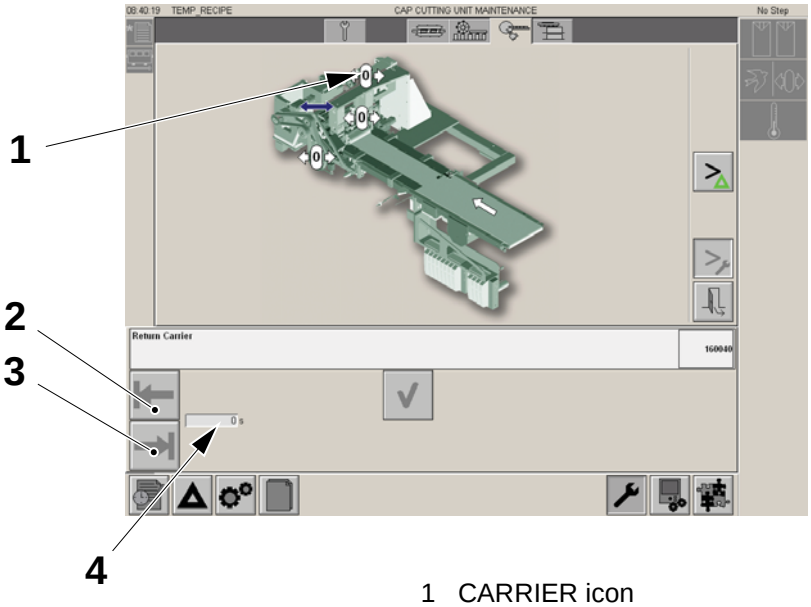

1 CARRIER icon
2 FORWARD button
3 BACKWARD button
4 S window

(Cont'd)

TechPub_2614345_0106 - 1002_3047149_01.fm

(Cont'd)

d) To adjust the forward speed, use the regulator (5).

e) To adjust the backward speed, use the regulator (6).

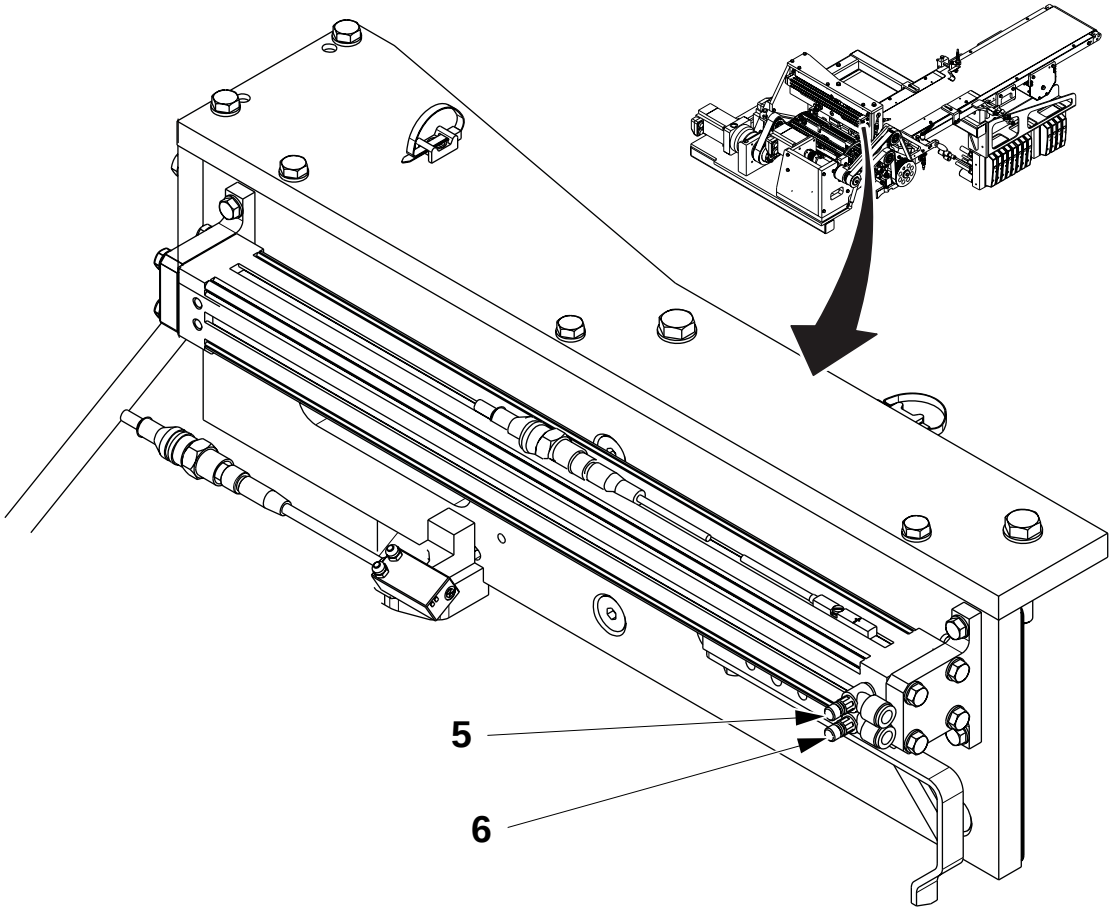

5 FORWARD speed regulator
6 BACKWARD speed regulator

TechPub_2614345_0106 - 1002_3047149_01.fm

6.6.1-5 Drive Unit - Align Combe with Shim

Machine Status	Mains Power OFF Air OFF
SPC Reference	2715770-0100

Note! Check the alignment between the combe (1) and the slider (2) before adding the shims (3).

a) Release the screws (4) just enough to insert the shims (3) required to align the combe (1) into and along the length of the gap between the caps (5) and the caps (6).

b) The cap (6) should overhang the slider (2) by distance **A**.

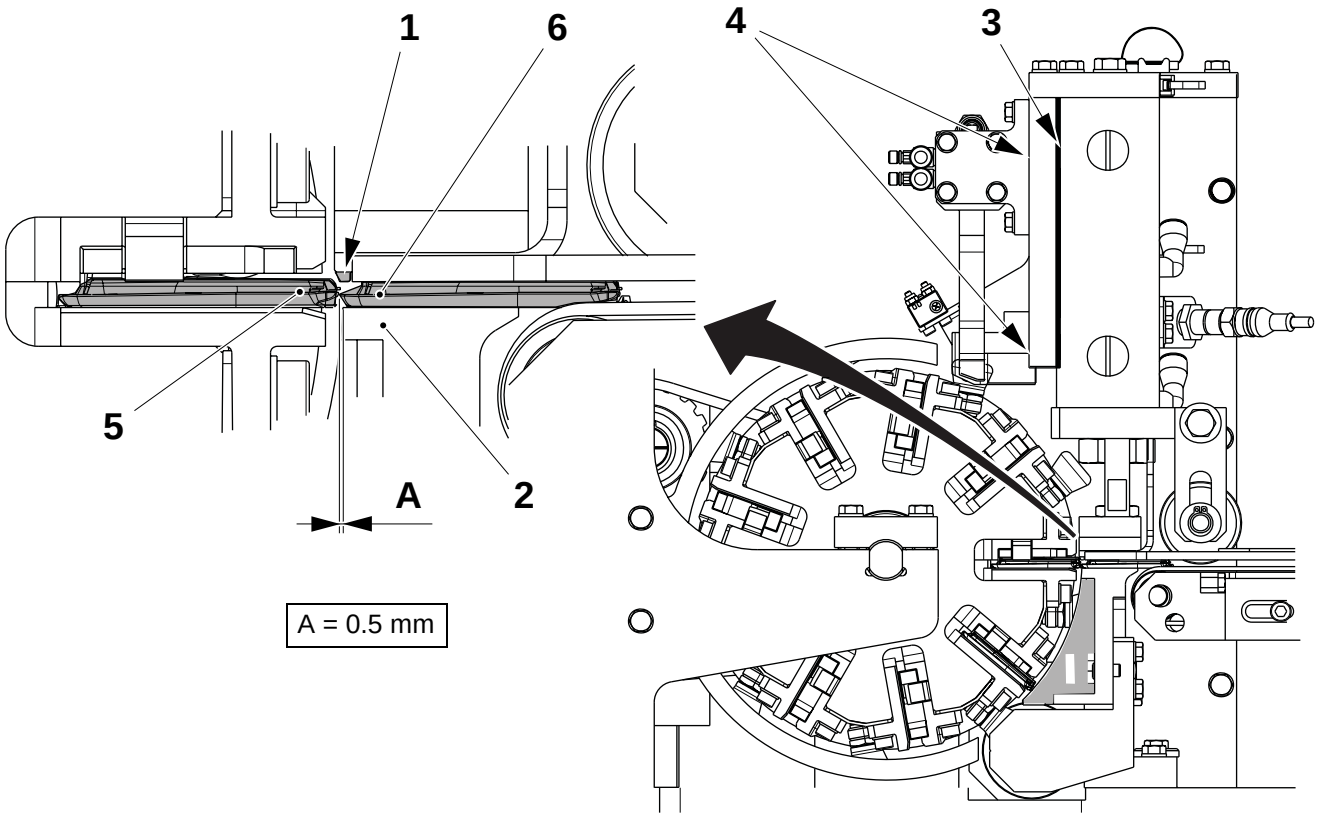

1 Combe
2 Slider
3 Shim
4 Screw
5 Cap
6 Cap

TechPub_2614345_0106 - 1002_3047149_01.fm

6.7 Pneumatic Unit

SPC Reference	2812002-0200

6.7.1 Pneumatic Unit - Panel

6.7.1-1 Pneumatic Unit - Panel Front

SPC Reference	2812002-0200

Note! Valid for machines from T Order; T75721/00001 to T75721/00045

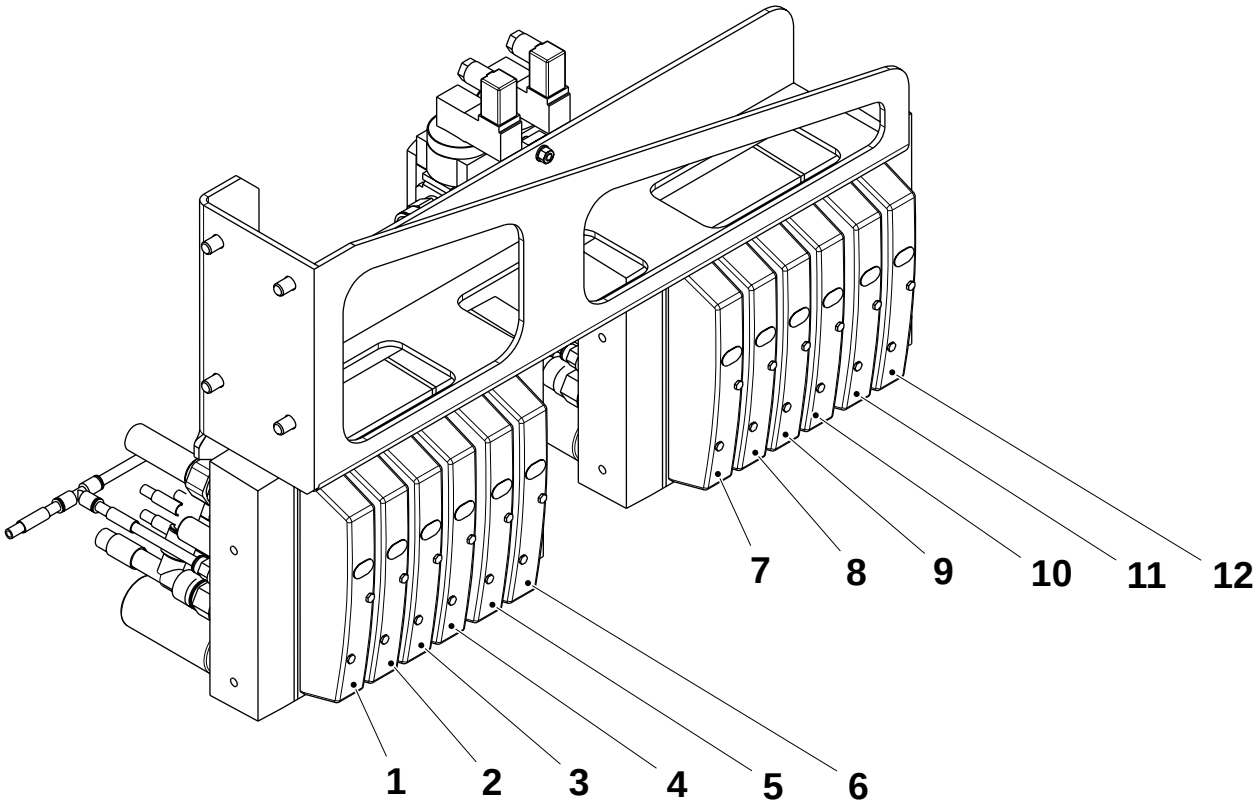

1 60K100 Screw elevator
2 60K000 Cap sheet holder
3 30K200 Glue wheel cam
4 60K604 Quick vacuum sheet release
5 60K603 Sheet plate
30K302 Glue wheel
6 60K010 Air blow cap sheet conveyor
7 60K600 Pick up cylinder to down position
60K605 Pick up to up position
8 60K601 Place cylinder to forward position
9 30K400 Magazine box ejector
10 60K401 Magazine box elevator
11 60K402 Align box in elevator
12 60K602 Magazine box elevator
30K403 Magazine box elevator

(Cont'd)

TechPub_2614345_0106 - 1003_3047150_01.fm

(Cont'd)

Note! Valid for machines from T Order; T75721/00045

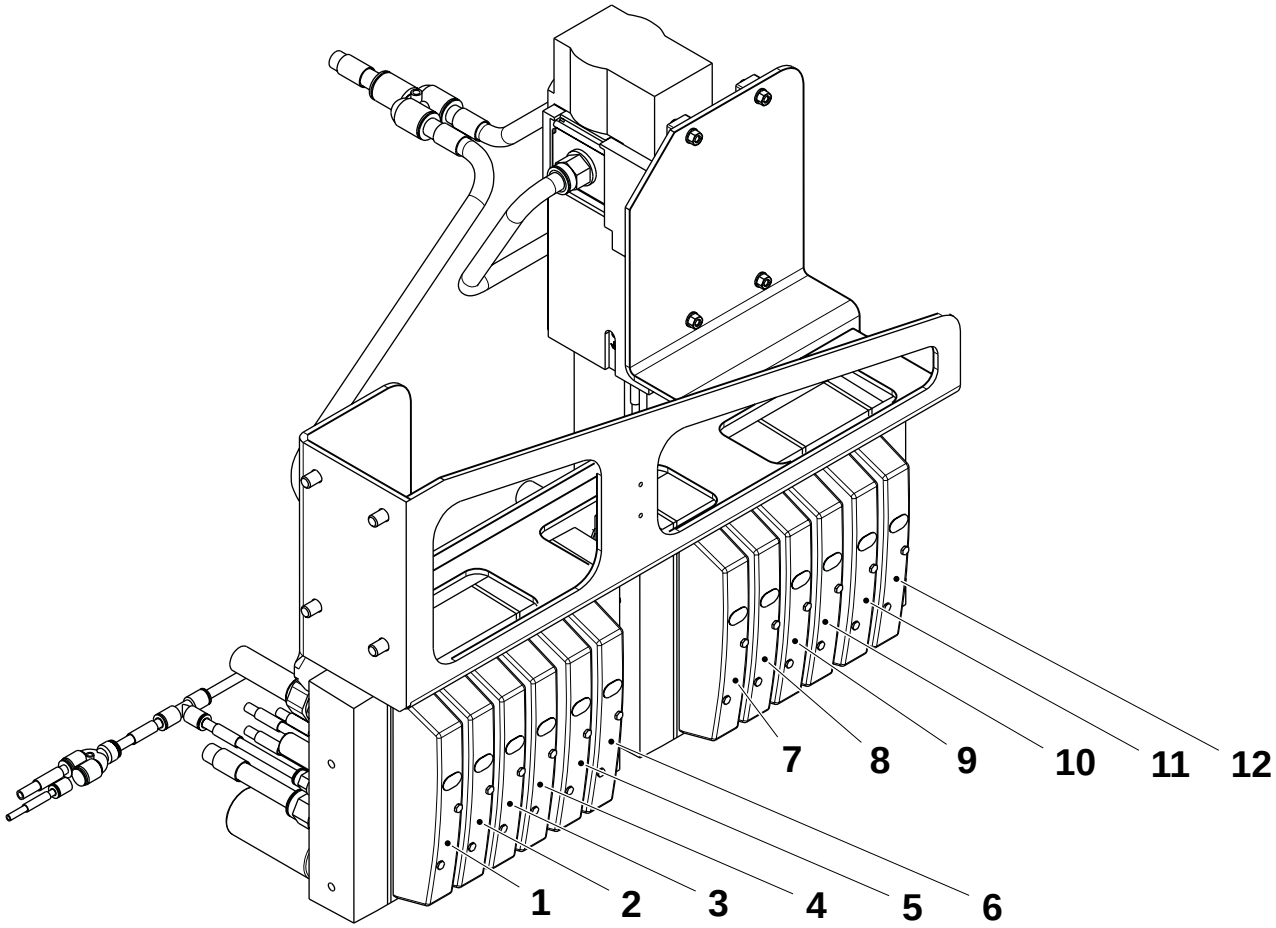

1 60K100 Screw elevator
2 60K000 Cap sheet holder
3 30K200 Glue wheel cam
4 60K604 Quick vacuum sheet release
5 60K603 Sheet plate
30K302 Glue wheel
6 60K010 Air blow cap sheet conveyor
7 60K600 Pick up cylinder to down position
60K605 Pick up to up position
8 60K601 Place cylinder to forward position
9 30K400 Magazine box ejector
10 60K401 Magazine box elevator
11 60K602 Magazine box elevator
30K403 Magazine box elevator
12 60K402 Align box in elevator

TechPub_2614345_0106 - 1003_3047150_01.fm

6.7.1-2 Pneumatic Unit - Panel Back

SPC Reference	2812002-0200

Note! Valid for machines from T Order; T75721/00001 to T75721/00045

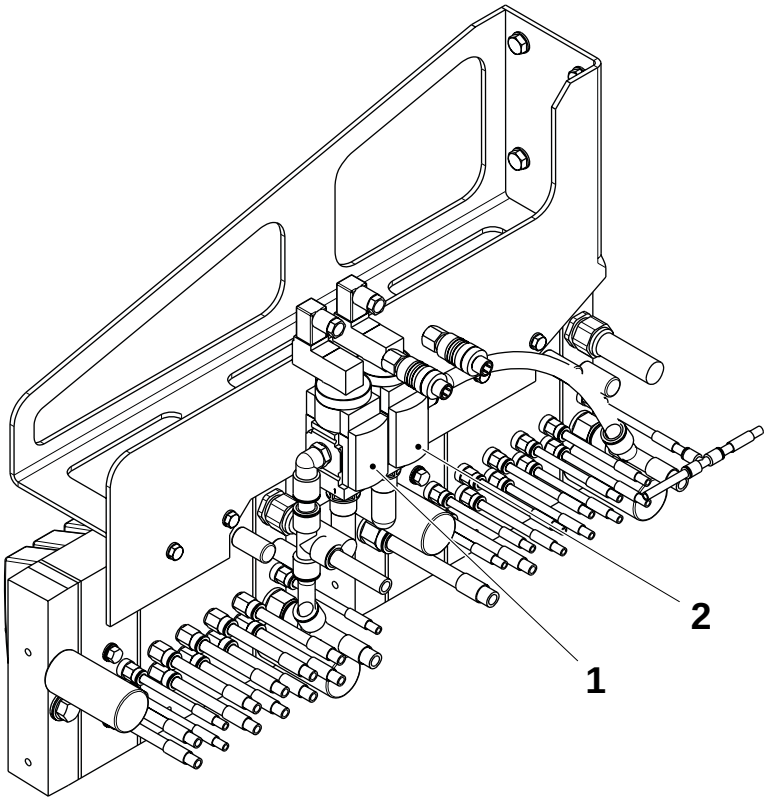

1 Shutoff valve
2 Shutoff valve

TechPub_2614345_0106 - 1003_3047150_01.fm

(Cont'd)

(Cont'd)

Note! Valid for machines from T Order; T75721/00045

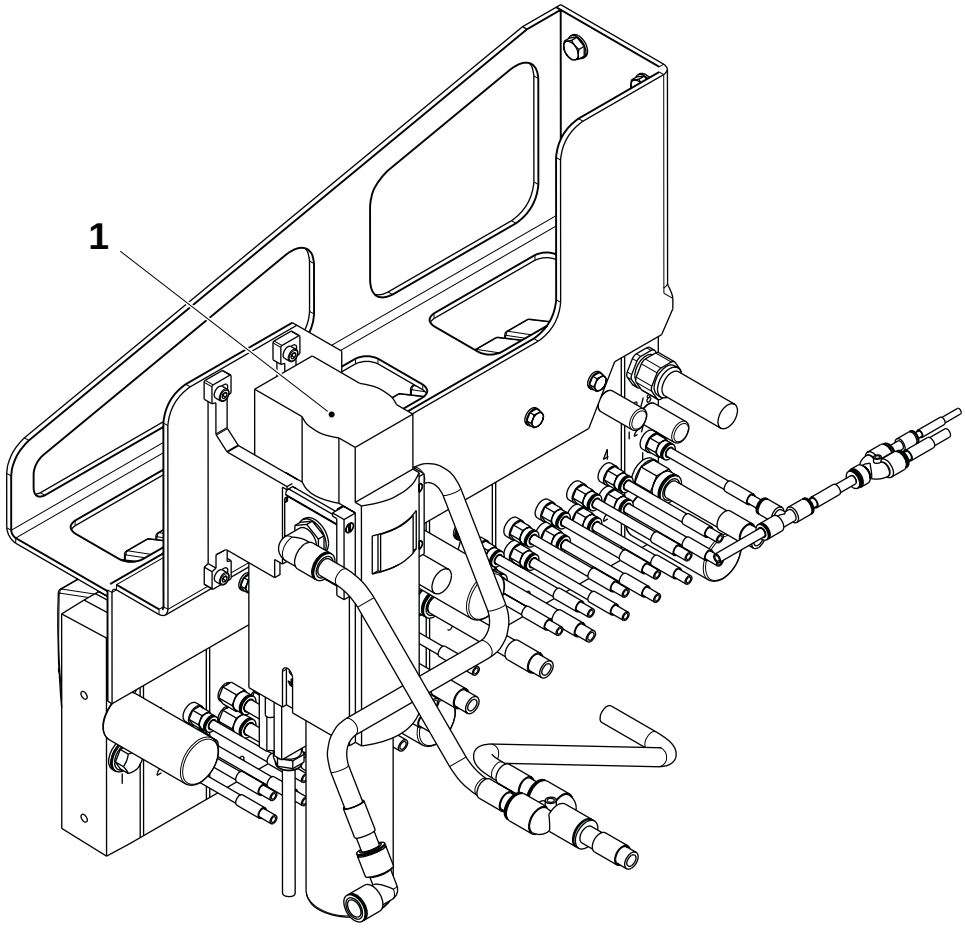

1 60K612 Shutoff valve

TechPub_2614345_0106 - 1003_3047150_01.fm

This page intentionally left blank

TechPub_2614345_0106 - 1003_3047150_01.fm

7 ReCap Magazine

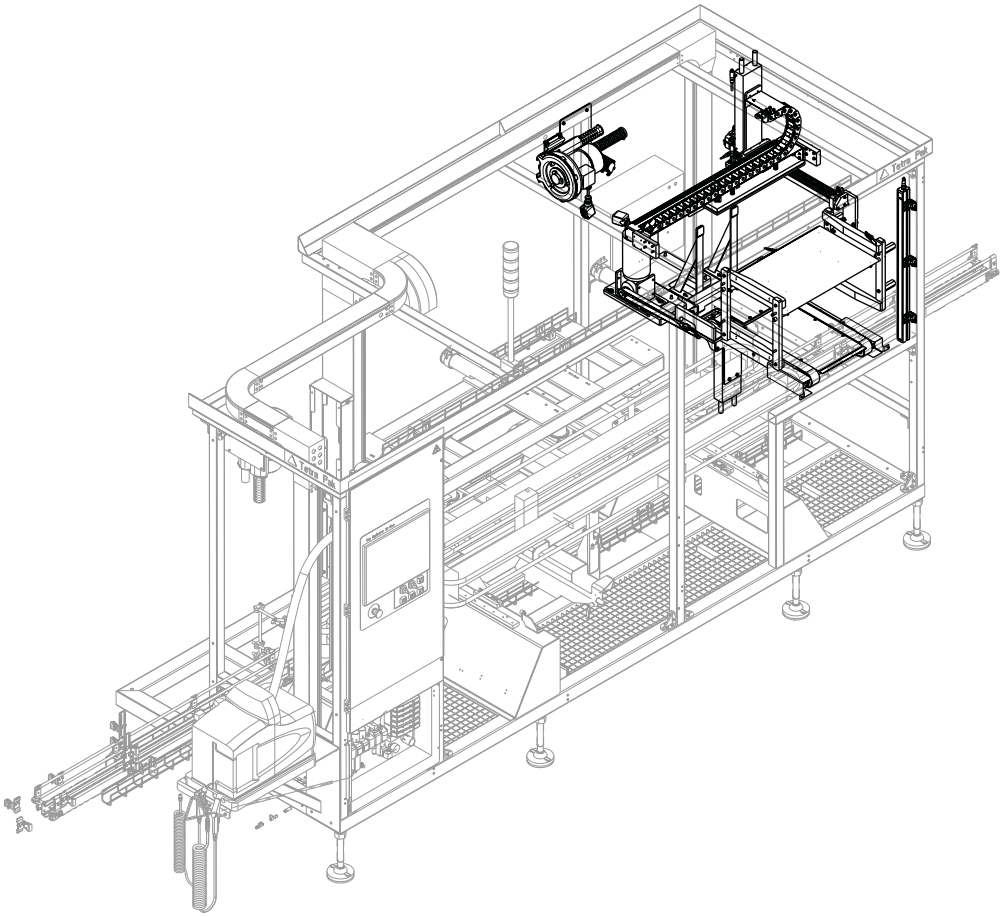

TechPub_2614345_0106 - 1102_3047151_01.fm

Magazine - Description

SPC Reference	662910-0100

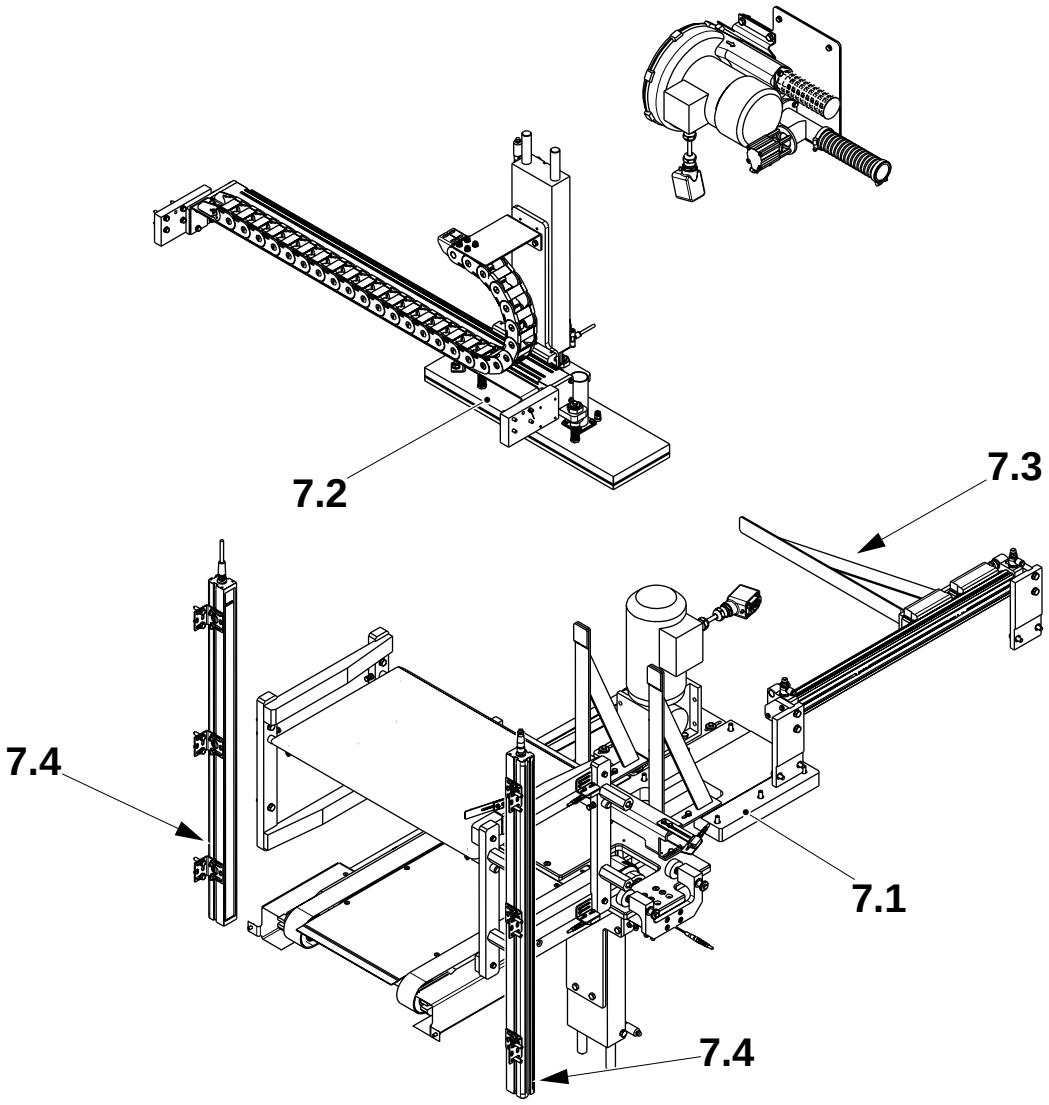

TechPub_2614345_0106 - 1102_3047151_01.fm

7.1 ReCap Magazine - Lift
7.2 ReCap Magazine - Positioning Unit
7.3 ReCap Magazine - Pusher
7.4 ReCap Magazine - Light Barrier

7.0 Functional Description . . . . . 7 - 5

7.0.1 Position Sensors . . . . . 7 - 7

7.0.1-1 Sensors - Method for Setting a Sensor Position . . . . . 7 - 7

7.0.1-2 Sensors - Set Box Detection Sensors . . . . . 7 - 10

7.0.1-3 Sensor - Set Horizontal Cylinder Sensor Position . . . . . 7 - 11

7.0.1-4 Sensor - Set Vertical Cylinder Position Sensors . . . . . 7 - 13

7.0.1-5 Brake Sensors - Method for Setting a Brake Sensor . . . . . 7 - 17

7.0.2 Cylinders. . . . . 7 - 18

7.0.2-1 Cylinders - Set Speeds . . . . . 7 - 18

7.1 ReCap Magazine - Lift . . . . . 7 - 28

7.1.1 Lift -Elevator . . . . . 7 - 28

7.1.1-1 Elevator - Change Cylinder . . . . . 7 - 28

7.1.1-2 Elevator - Set Box Stopper . . . . . 7 - 30

7.1.2 Lift - Box Conveyor . . . . . 7 - 31

7.1.2-1 Box Conveyor - Change Drive Belt . . . . . 7 - 31

7.1.2-2 Box Conveyor - Change Conveyor Belts . . . . . 7 - 33

7.1.2-3 Box Conveyor - Set Drive Belt tension . . . . . 7 - 36

7.1.2-4 Box Conveyor - Set Conveyor Belt Tension . . . . . 7 - 37

7.1.2-5 Box Conveyor - Change Bearings . . . . . 7 - 38

7.1.2-6 Box Conveyor - Change for Box Size . . . . . 7 - 43

7.2 ReCap Magazine - Positioning Unit . . . . . 7 - 44

7.2.1 Positioning Unit - Drive Unit . . . . . 7 - 44

7.2.1-1 Drive Unit - Change Horizontal Cylinder . . . . . 7 - 44

7.2.1-2 Drive Unit - Change Vertical Cylinder . . . . . 7 - 47

7.2.2 Positioning Unit - Sheet Carrier . . . . . 7 - 52

7.2.2-1 Sheet Carrier - Overhaul . . . . . 7 - 52

7.2.2-2 Sheet Carrier - Change Rubber Mat . . . . . 7 - 53

TechPub_2614345_0106 - 1102_3047151_01.fm

7.2.3 Positioning Unit - Set . . . . . 7 - 55

7.2.3-1 Positioning Unit - Setting . . . . . 7 - 55

7.3 ReCap Magazine - Pusher . . . . . 7 - 56

7.3.1 Pusher - Cylinder. . . . . 7 - 56

7.3.1-1 Pusher - Change Cylinder . . . . . 7 - 56

7.4 ReCap Magazine - Light Barrier . . . . . 7 - 58

7.4.1 Light Barrier - Transmitter and Receiver. . . . . 7 - 58

7.4.1-1 Receiver - Change . . . . . 7 - 58

7.4.1-2 Transmitter - Change . . . . . 7 - 60

7.4.1-3 Align - Transmitter and Receiver . . . . . 7 - 61

7.4.1-4 Check - Transmitter and Receiver . . . . . 7 - 63

TechPub_2614345_0106 - 1102_3047151_01.fm

7.0 Functional Description

SPC Reference	662910-0100

The caps are delivered in boxes (1), in which they are joined together in sheets by plastic tabs. The box is opened at the top by the operator and then placed on the magazine conveyor (2).

The magazine moves the box of caps into position under the cap handling device (3). The vacuum for the cap handling device (3) is created by the vacuum system (4).

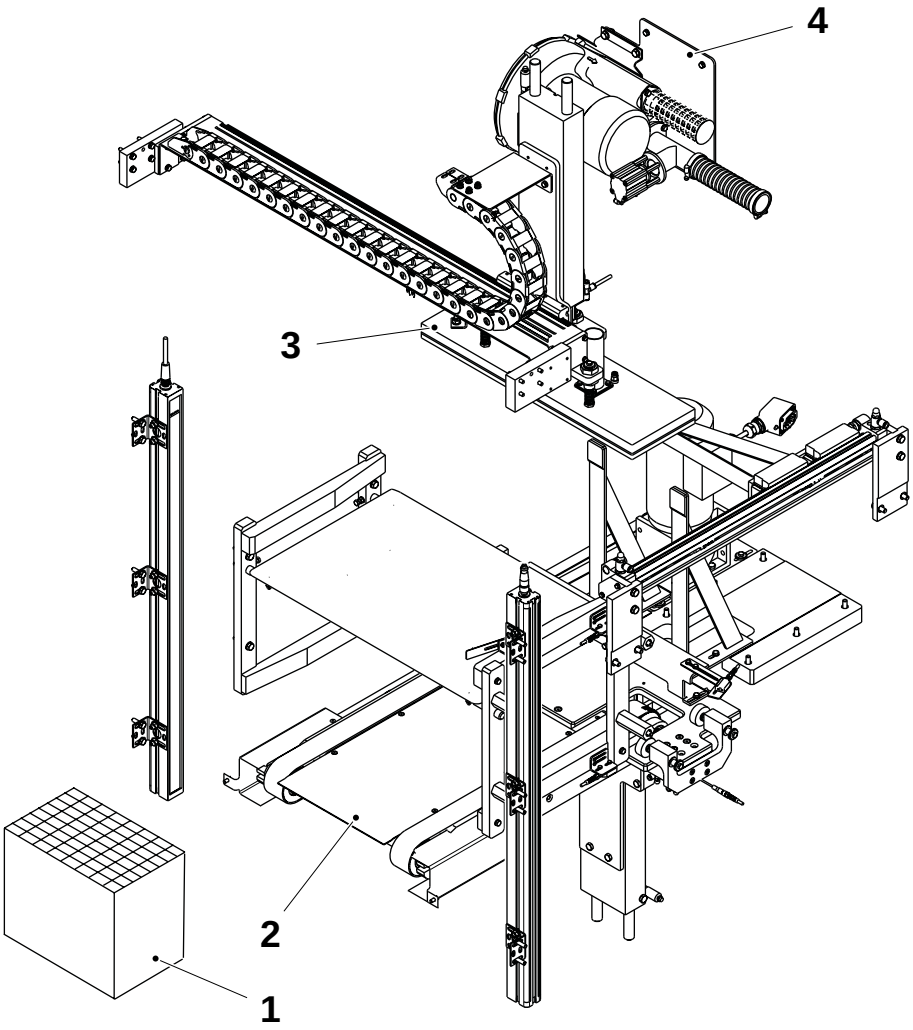

1 Box
2 Conveyor
3 Cap handling device
4 Vacuum system

(Cont'd)

TechPub_2614345_0106 - 1102_3047152_01.fm

(Cont'd)

In the magazine, the box is raised by the lift (5) so that the bottom sheet of caps can be picked up by the cap handling device (3).

The empty box is then pushed out by the pusher (6) into the waste position (7) and the cycle starts again.

The light barrier transmitter (8) and receiver (9) are part of the safety system that bring moving parts to a stop when boxes are being inserted or removed.

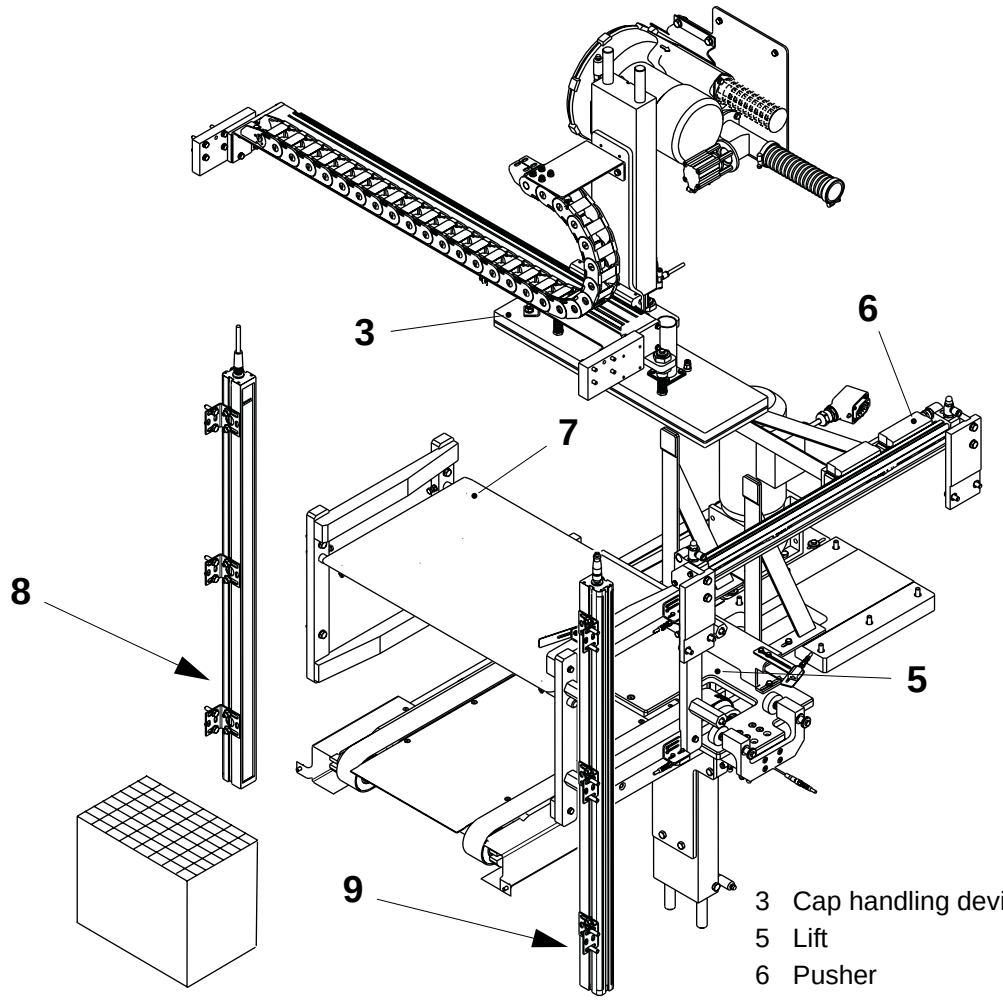

3 Cap handling device
5 Lift
6 Pusher
7 Waste position
8 Transmitter
9 Receiver

TechPub_2614345_0106 - 1102_3047152_01.fm

7.0.1 Position Sensors

7.0.1-1 Sensors - Method for Setting a Sensor Position

Machine Status	Mains Power ON Air ON
SPC Reference	662910-0100

a) Touch the MAINTENANCE button (1) after the login, see HMI User Management - Log On as a User.

b) Touch the SERVICE button (2).

c) Touch the MAGAZINE MAINTENANCE button (3).

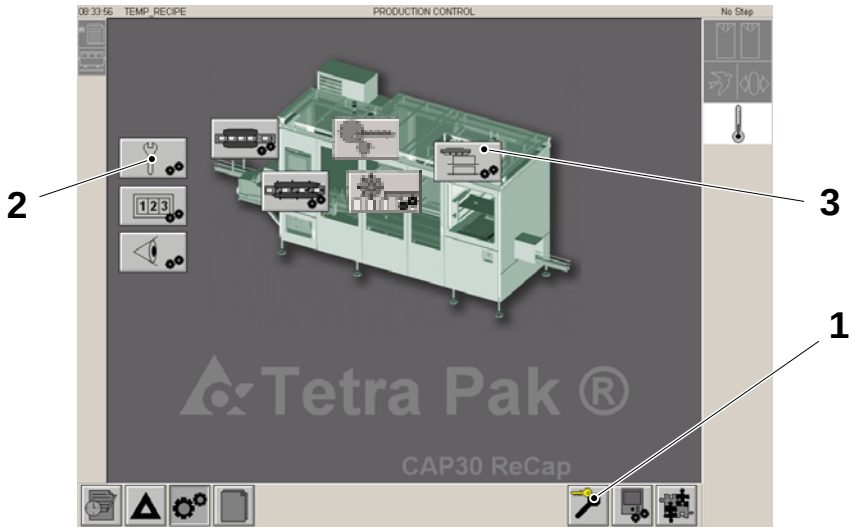

1 MAINTENANCE button
2 SERVICE button
3 MAGAZINE MAINTENANCE button

(Cont'd)

TechPub_2614345_0106 - 1102_3047152_01.fm

(Cont'd)

d) Touch the icon, for example the cap handling device horizontal cylinder (4).

e) Touch the UP (5) or DOWN (6) arrow to move the cylinder in the desired direction.

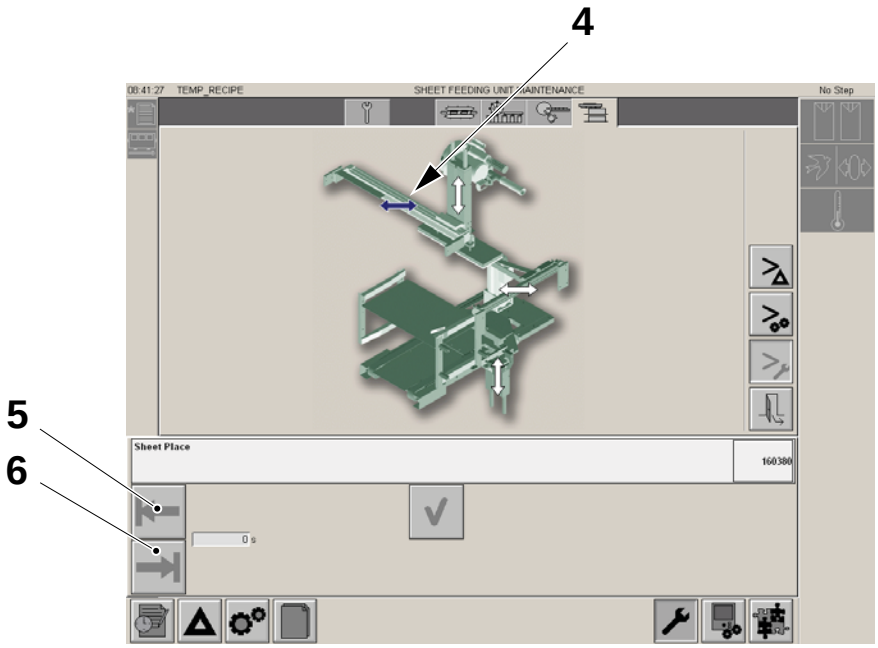

4 CAP HANDLING DEVICE HORIZONTAL CYLINDER icon
5 UP button
6 DOWN button

TechPub_2614345_0106 - 1102_3047152_01.fm

(Cont'd)

(Cont'd)

f) Loosen the screw (7) in the sensor (8) and move the sensor (8) toward the centre of the cylinder (9) so that the LED (10) is OFF.

g) Move the sensor (8) toward the end of the cylinder (9) until the LED just comes ON and tighten the screw in the sensor (7).

h) Repeat the procedure at the other end of the cylinder (9).

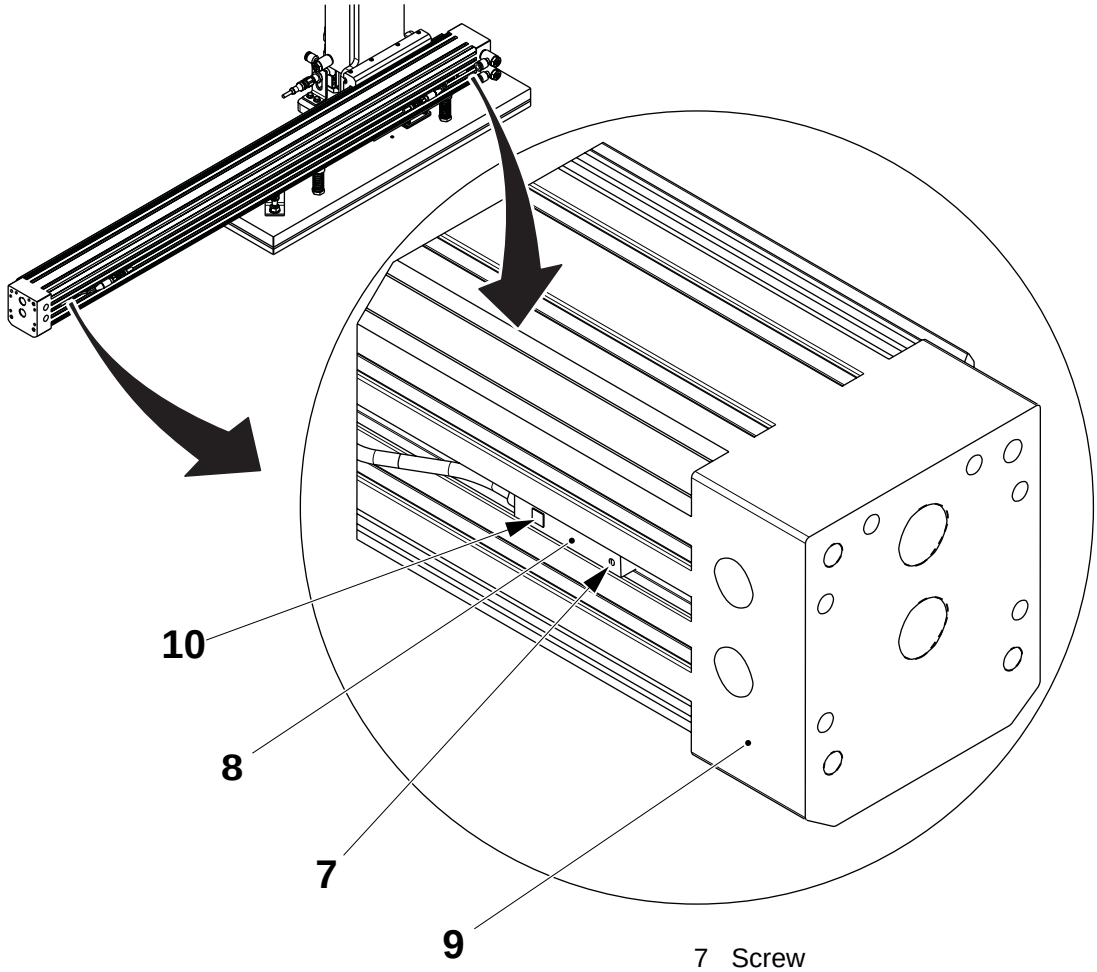

7 Screw
8 Sensor
9 Cylinder
10 LED

TechPub_2614345_0106 - 1102_3047152_01.fm

7.0.1-2 Sensors - Set Box Detection Sensors

Machine Status	Mains Power ON Air ON
SPC Reference	662910-0100

Locate the box detection sensors (1) and then use a box to set them, see 8.7 Sensors.

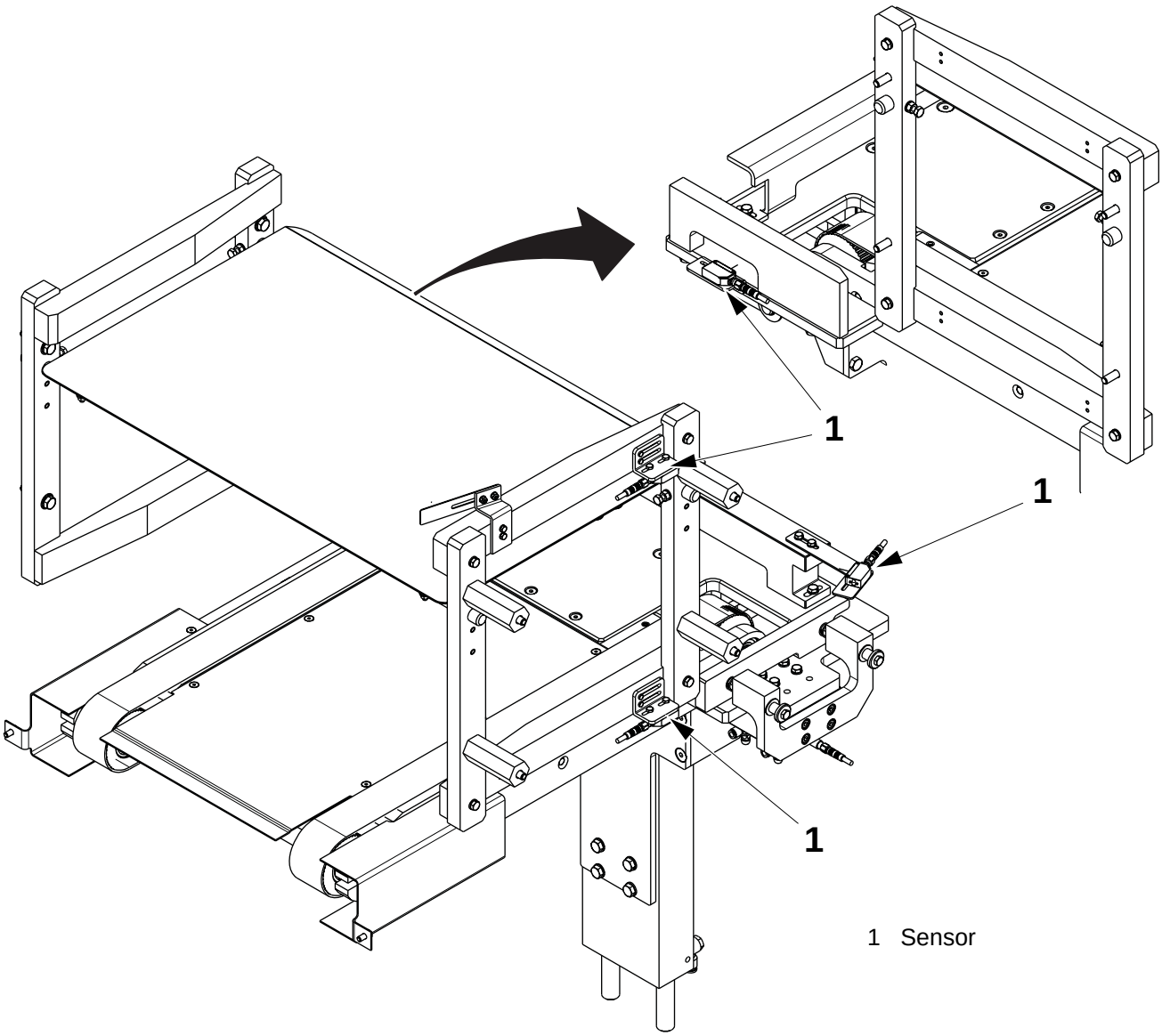

1 Sensor

TechPub_2614345_0106 - 1102_3047152_01.fm

7.0.1-3 Sensor - Set Horizontal Cylinder Sensor Position

Cap Handling Device Horizontal Cylinder Sensors

Set the sensors (1) and (2), see 7.0.1-1 Sensors - Method for Setting a Sensor Position.

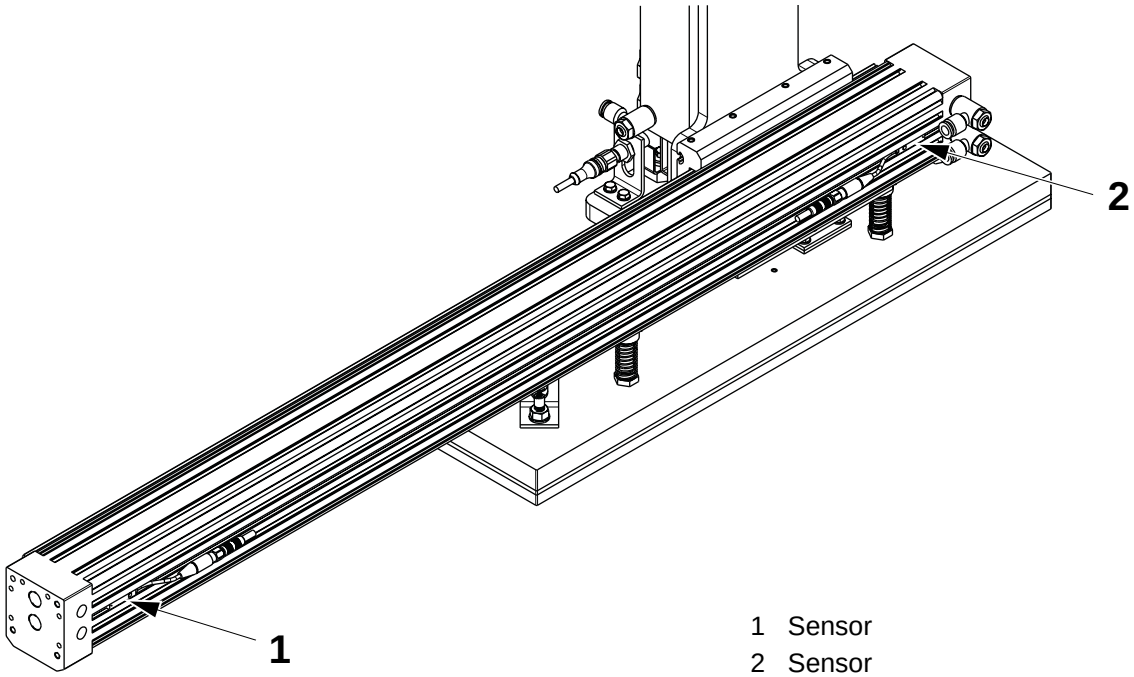

1 Sensor
2 Sensor

(Cont'd)

TechPub_2614345_0106 - 1102_3047152_01.fm

(Cont'd)

Box Pusher Cylinder Sensors

Set the sensors (1) and (2), see 7.0.1-1 Sensors - Method for Setting a Sensor Position.

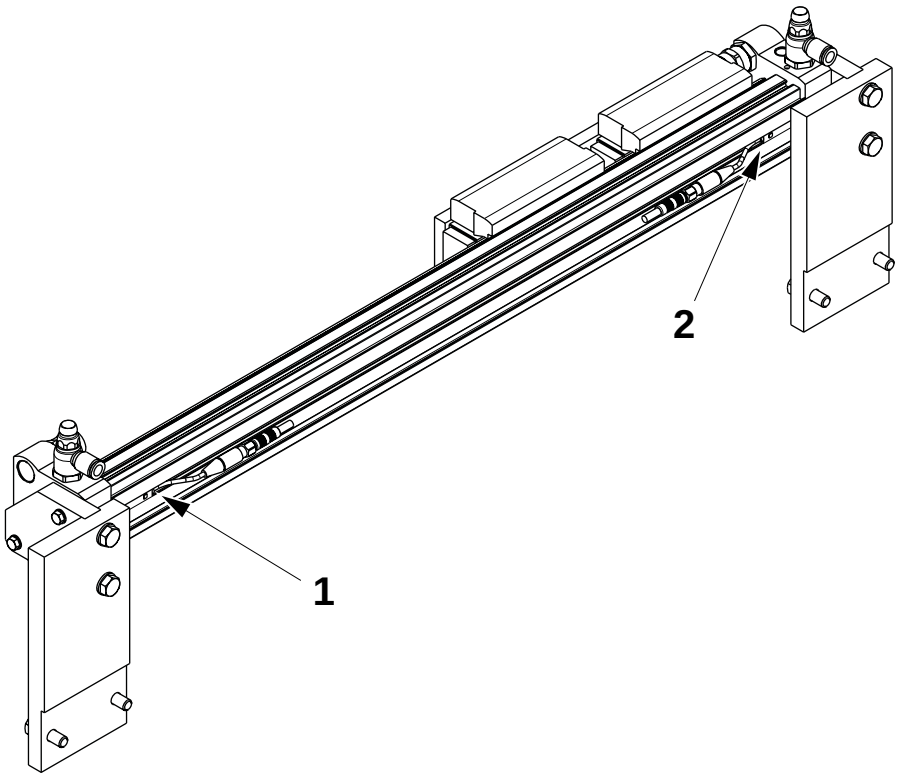

1 Sensor
2 Sensor

TechPub_2614345_0106 - 1102_3047152_01.fm

7.0.1-4 Sensor - Set Vertical Cylinder Position Sensors

Machine Status	Mains Power ON Air ON
SPC Reference	662910-0100

Elevator Cylinder Sensors

Set the sensors (1) and (2), see 7.0.1-1 Sensors - Method for Setting a Sensor Position.

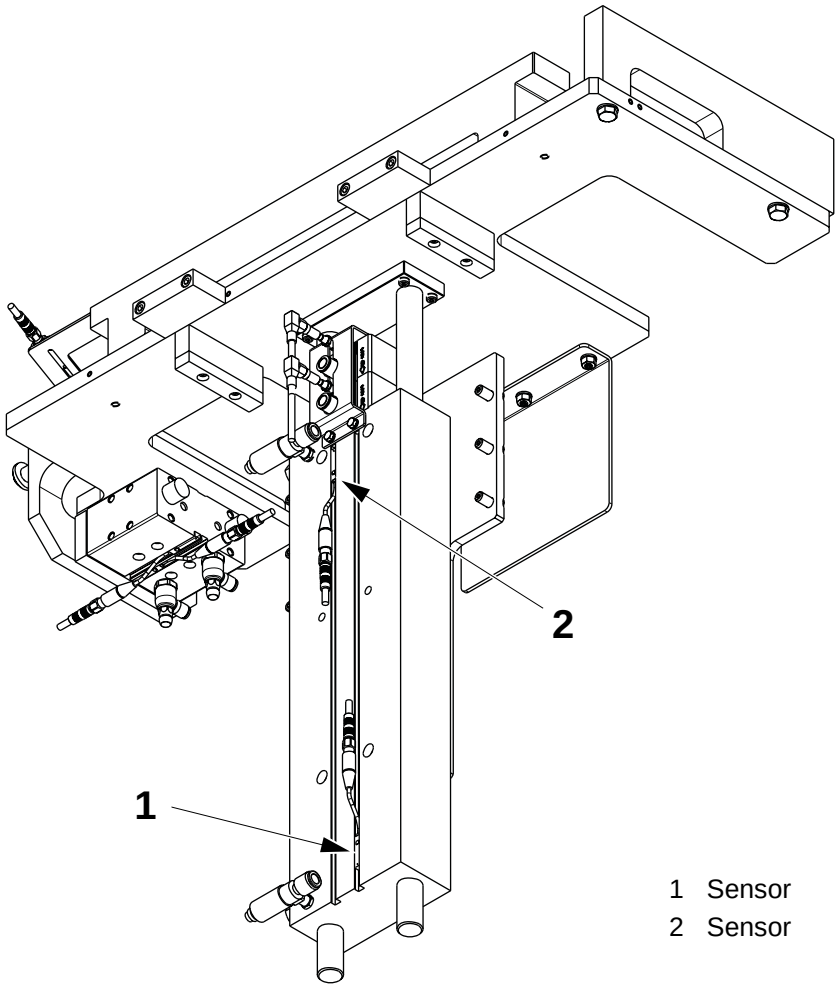

1 Sensor
2 Sensor

(Cont'd)

TechPub_2614345_0106 - 1102_3047152_01.fm

(Cont'd)

Positioning Unit - Set Sensor Positions

a) Set the sensors (1) and (2), see 7.0.1-1 Sensors - Method for Setting a Sensor Position.

Note! The sensor (3) although fitted to speed machines does not require setting as not functional for speed machines.

b) Set the top of the sensor (3) the distance A from the top of the cylinder (4).

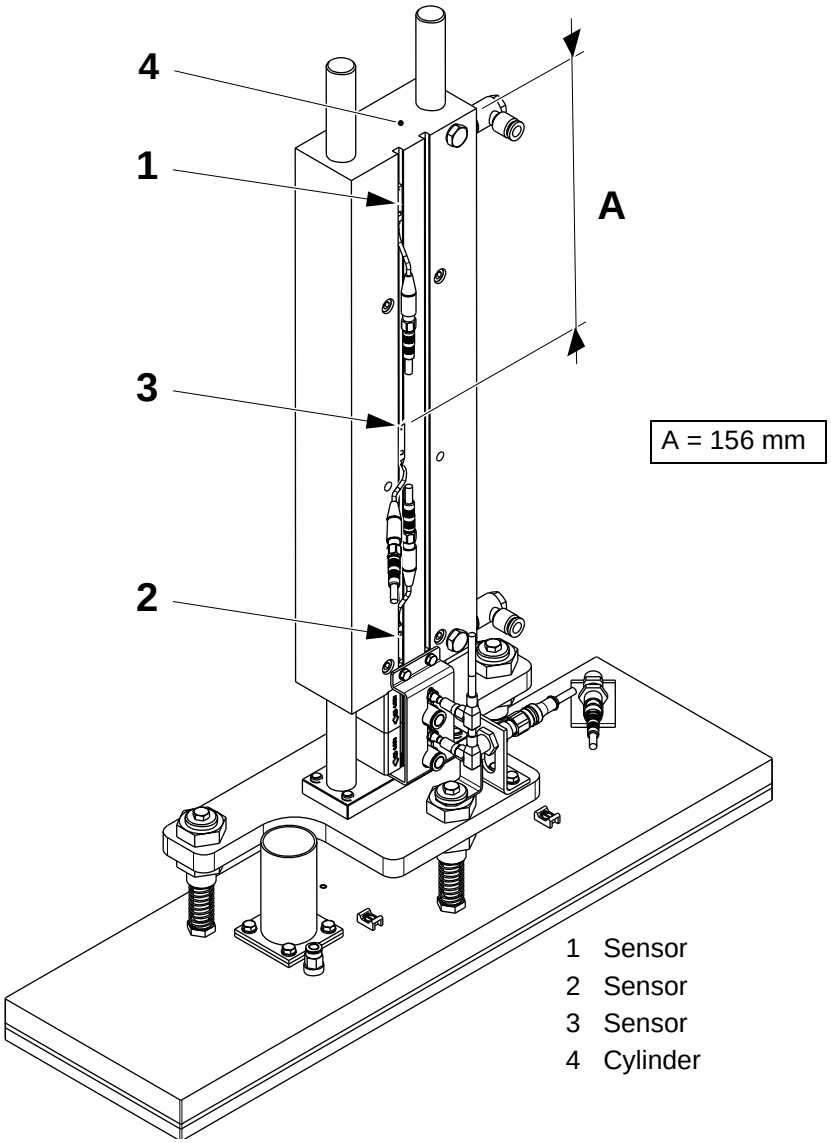

(Cont'd)

TechPub_2614345_0106 - 1102_3047152_01.fm

(Cont'd)

c) Loosen the lock nut on the sensor (5).

d) Raise the plate (6) approximately 10 mm by hand and then move the sensor (5) until the LED in the sensor (5) turns ON.

e) Without moving the sensor (5) tighten the lock nut on the sensor (5).

f) Loosen the lock nut on the sensor (7).

g) Raise the actuator (8) until the bottom of the actuator (8) is level with the bottom of the plate (6).

h) Without moving the actuator (8) move the sensor (7) until the LED in the sensor (7) turns ON. Lock the sensor (7) in position.

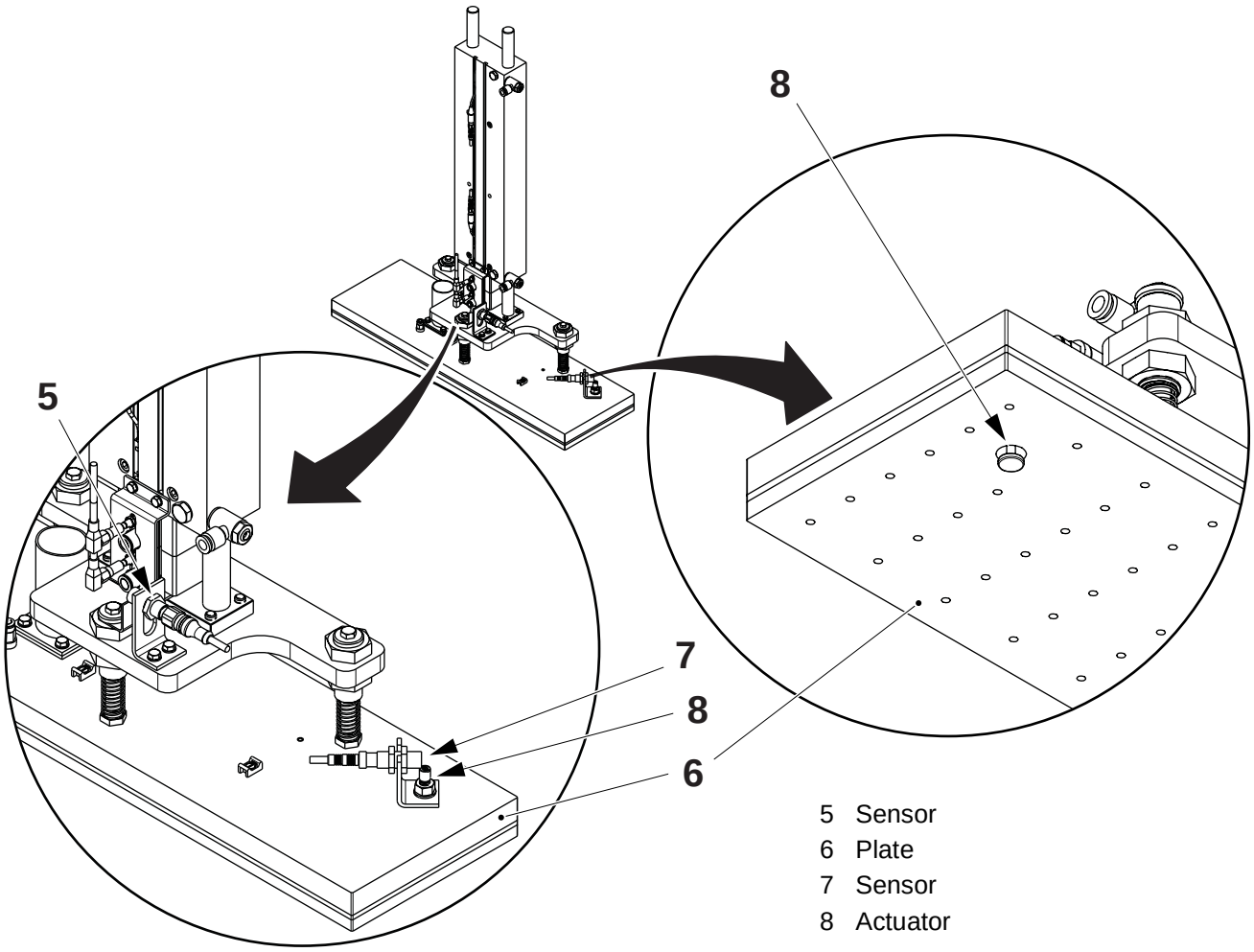

(Cont'd)

TechPub_2614345_0106 - 1102_3047152_01.fm

(Cont'd)

i) Raise the elevator to the upper position.

j) Place a box with 4 or 5 sheets of caps on the elevator platform.

k) Place a full box on the conveyor.

l) Run the machine.

m) Check the elevator sensors (2) as follows:

- If the machine ejects an empty box with no alarms displayed, all sensors (2) have been set correctly and no further adjustment is required.
- Place an box with 1 sheet of caps on the elevator and raise the elevator, if necessary refer to 7.0.2-1 Cylinders - Set Speeds, Elevator Cylinder.
- Move the pick up down, if necessary refer to 7.0.2-1 Cylinders - Set Speeds, Pick Up Cylinder.
- Move the sensor (2) toward the middle of the cylinder and then back until the LED in the centre just comes ON.

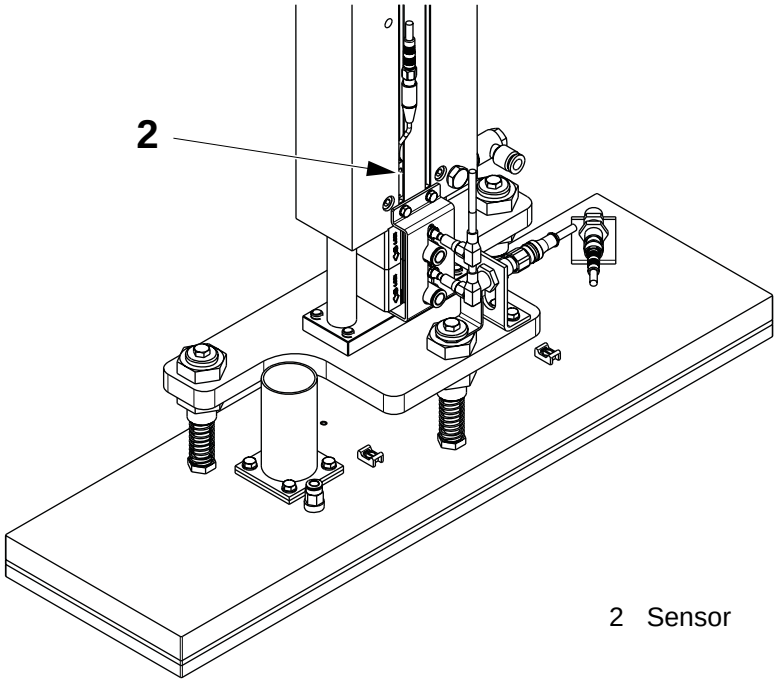

2 Sensor

TechPub_2614345_0106 - 1102_3047152_01.fm

7.0.1-5 Brake Sensors - Method for Setting a Brake Sensor

Machine Status	Mains Power ON
SPC Reference	662910-0100

a) Adjust the sensors (1) using the nuts (2) until the distance **A** is obtained with the tab in the brake off position (3).

b) The LED should be on when the tab is in the brake off position (3).

c) The LED should be off when the tab is in the brake on position (4) on the brakes (5).

Note! This sensor (1) is very sensitive.

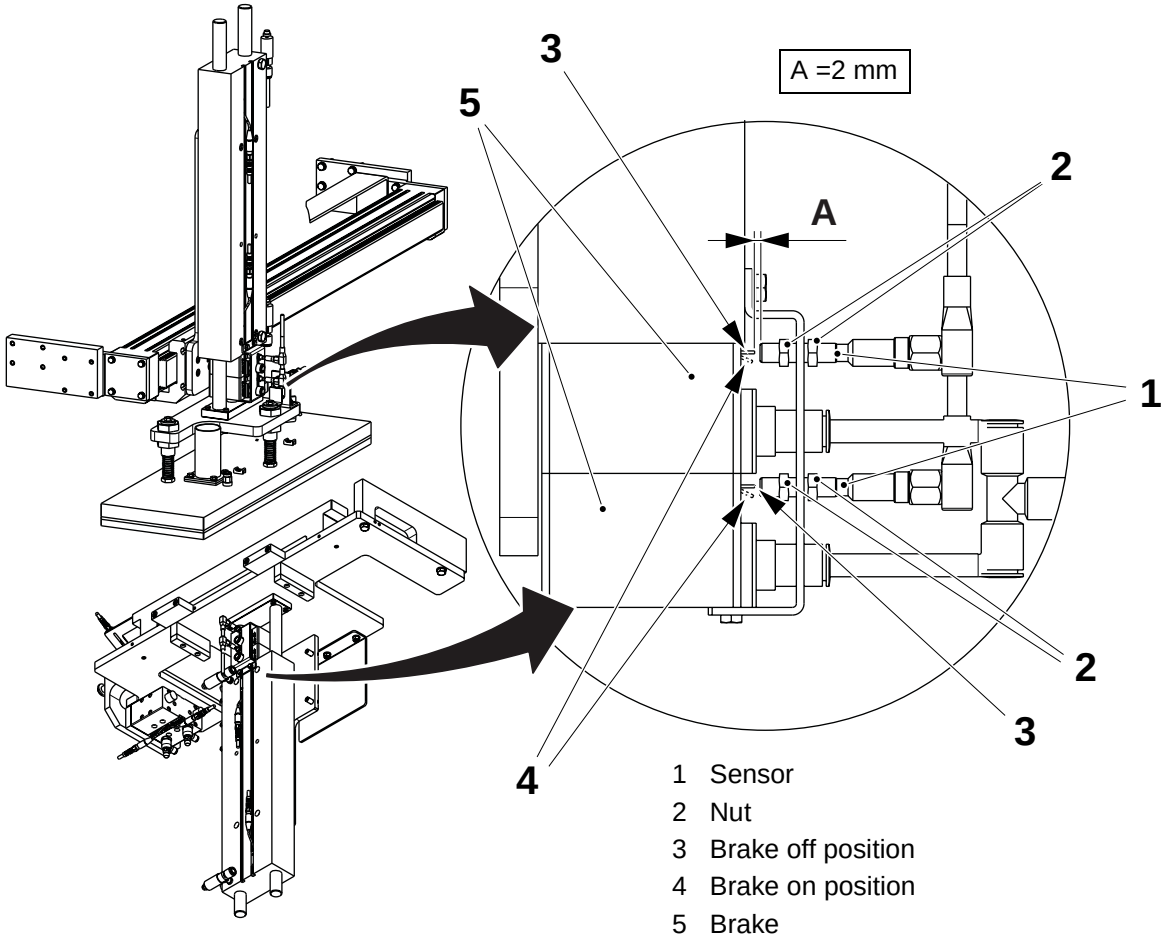

1 Sensor
2 Nut
3 Brake off position
4 Brake on position
5 Brake

TechPub_2614345_0106 - 1102_3047152_01.fm

7.0.2 Cylinders

7.0.2-1 Cylinders - Set Speeds

Machine Status	Mains Power ON Air ON
SPC Reference	662910-0100

General

Set the magazine cylinder speeds as follows:

a) Turn the service switch (1) to the right.

b) Touch the MAINTENANCE button (2).

c) Touch the MAGAZINE MAINTENANCE button (3).

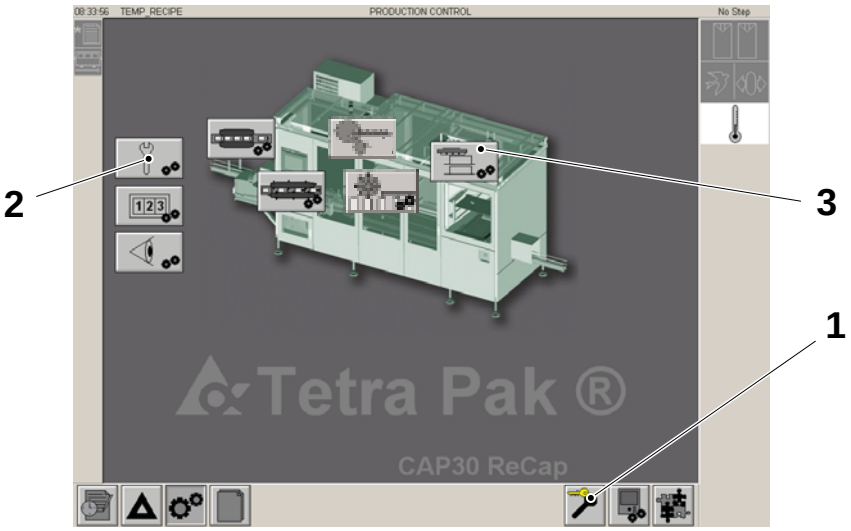

1 Service key
2 MAINTENANCE button
3 MAGAZINE MAINTENANCE button

(Cont'd)

TechPub_2614345_0106 - 1102_3047152_01.fm

(Cont'd)

Elevator Cylinder

Note! Check that the working pressure is 6.0 Bar / 0.6 MPa.

a) Touch the ELEVATOR icon (1).

b) Touch the UP (2) or DOWN (3) arrows to move the elevator cylinder in the desired direction.

c) Read the speed value given in the S window (4) for the up and down movement. Adjust as required until the correct value in the table is obtained.

Direction	Speed
Up	3.0 Sec
Down	2.0 Sec

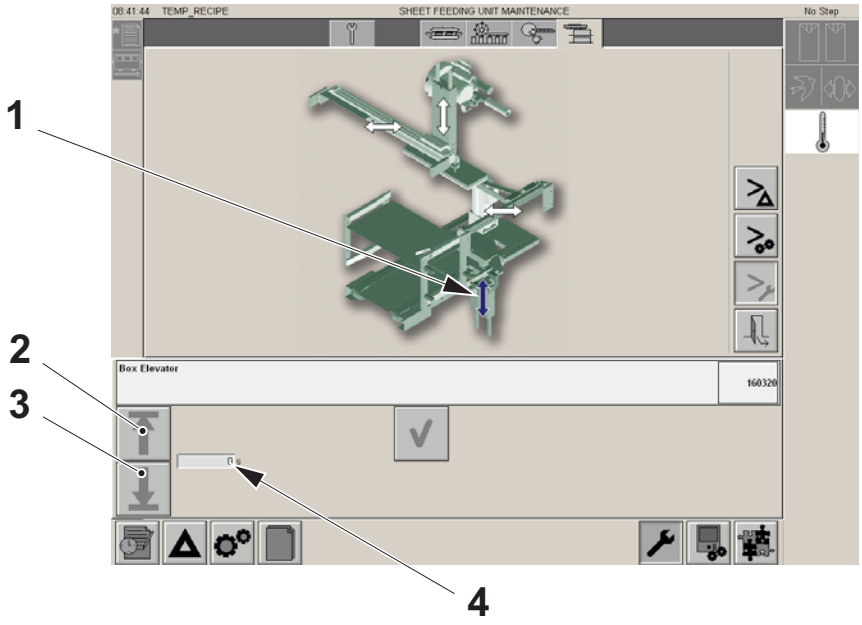

1 ELEVATOR icon
2 UP button
3 DOWN button
4 S window

(Cont'd)

TechPub_2614345_0106 - 1102_3047152_01.fm

(Cont'd)

d) To adjust the up speed, use the regulator (5).

e) To adjust the down speed, use the regulator (6).

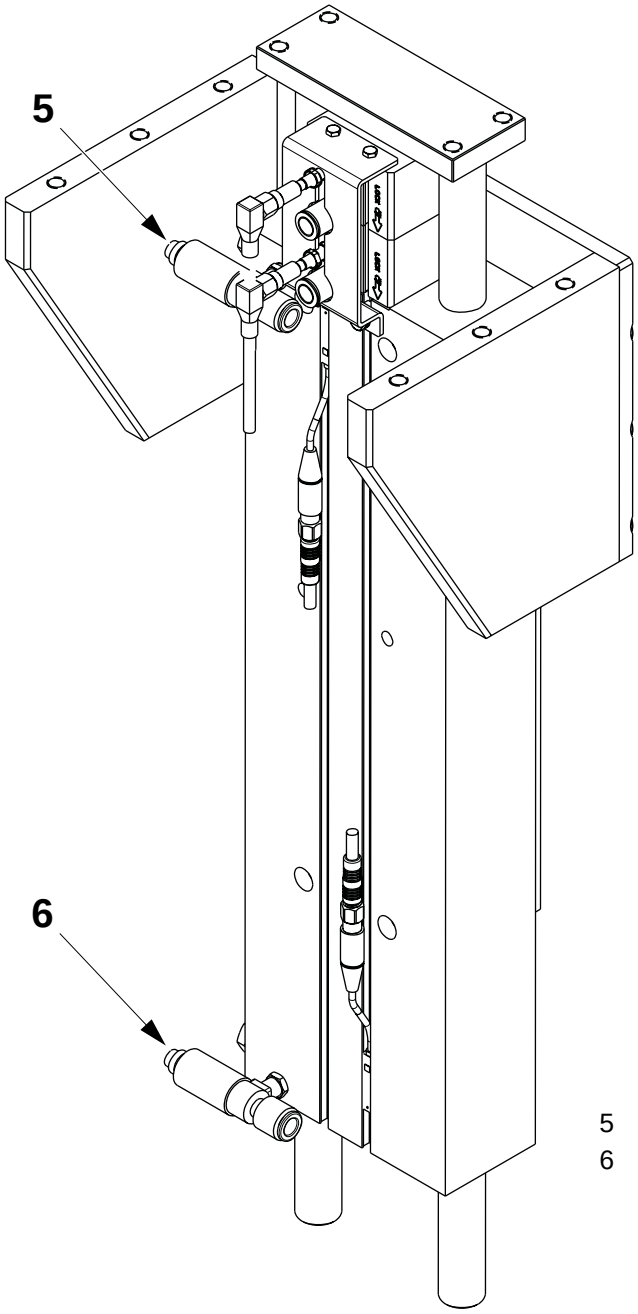

5 UP speed regulator
6 DOWN speed regulator

(Cont'd)

TechPub_2614345_0106 - 1102_3047152_01.fm

(Cont'd)

Box Alignment Cylinder

a) Adjust the speed of the alignment cylinder (1) (so that it completes its stroke before the elevator cylinder (2) completes its stroke) by turning the pressure regulators (3).

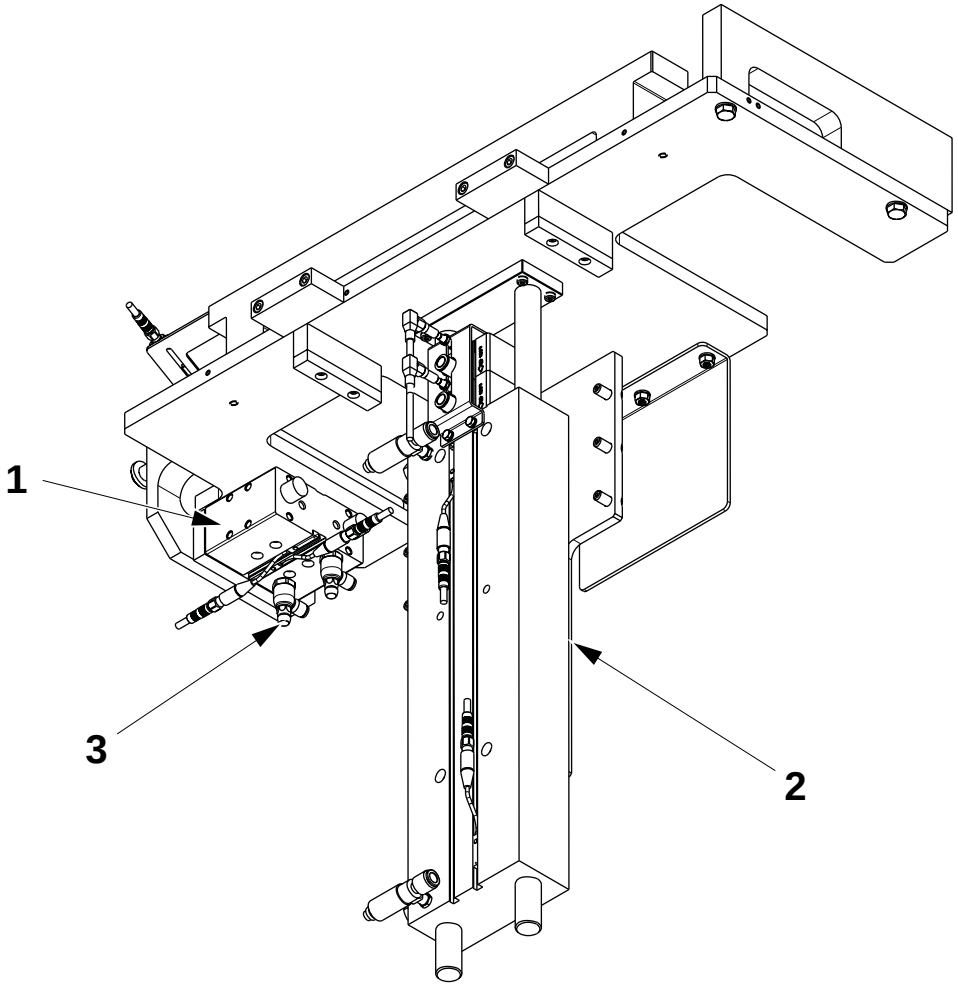

1 Alignment cylinder
2 Elevator cylinder
3 Regulator

(Cont'd)

TechPub_2614345_0106 - 1102_3047152_01.fm

(Cont'd)

Pick Up Cylinder

Note! Check that the air pressure is set to 2.0 Bar see, 4.3.2 Pneumatic Panel page 4-17 for the down stroke.

Note! Put an empty box inside the elevator (in this way the pick up cylinder down movement does not interfere with the alignment cylinder) and lift the elevator to have the possibility of moving the pick up upwards and downward.

a) Touch the PICK UP icon (1).

b) Touch the UP (2) or DOWN (3) buttons to move the pick up cylinder in the desired direction.

c) Read the speed value given in the S window (4) for the up movement. Adjust as required until the correct value in the table is obtained.

Note! This adjustment is only for the pick up cylinders upward speed.

Direction	Speed
Up	3.0 Sec
Down	N/A

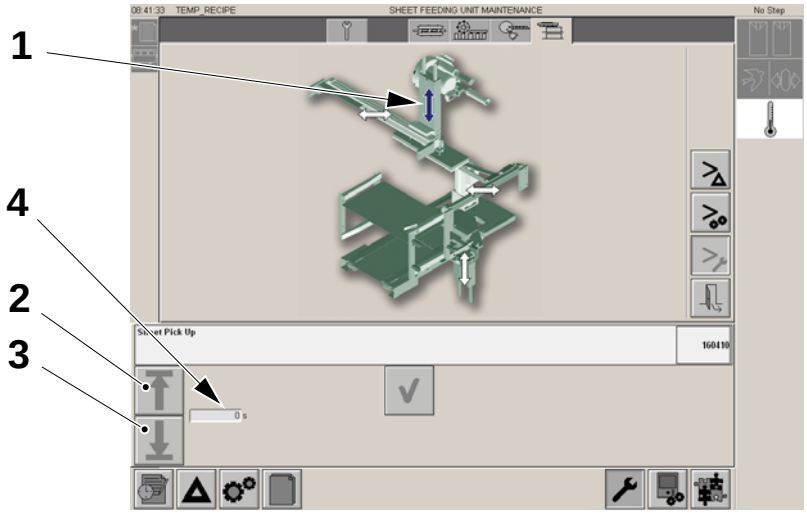

1 PICK UP icon
2 UP button
3 DOWN button
4 S window

(Cont'd)

TechPub_2614345_0106 - 1102_3047152_01.fm

(Cont'd)

d) To adjust the up speed, use the regulator (5).

e) To adjust the down speed, use the regulator (6).

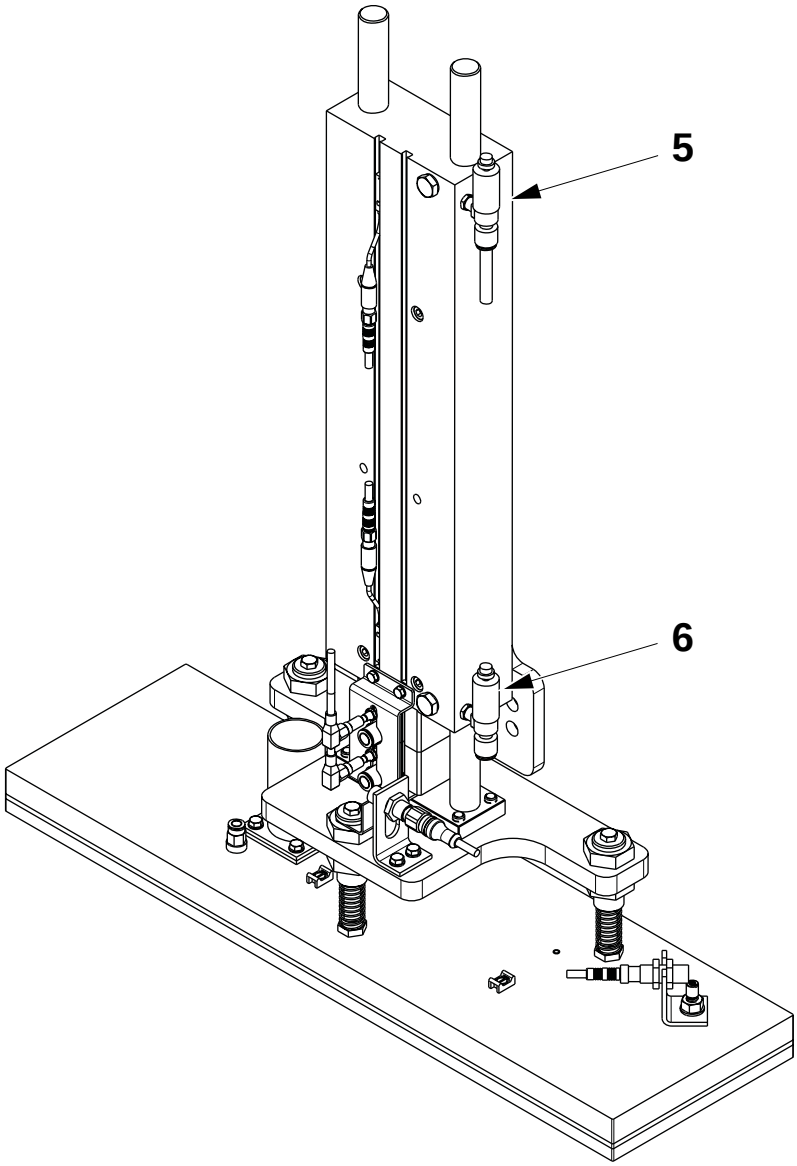

5 UP speed regulator
6 DOWN speed regulator

(Cont'd)

TechPub_2614345_0106 - 1102_3047152_01.fm

(Cont'd)

Place Cylinder

Note! Check that the working pressure is 6.0 Bar / 0.6 MPa.

a) Touch the PLACE icon (1).

b) Touch the PLACE (2) or RETURN (3) buttons to move the place cylinder in the desired direction.

c) Read the speed value given in the S window (4) for the up and down movement. Adjust as required until the correct value in the table is obtained.

Direction	Speed
Place	2.5 Sec
Return	2.5 Sec

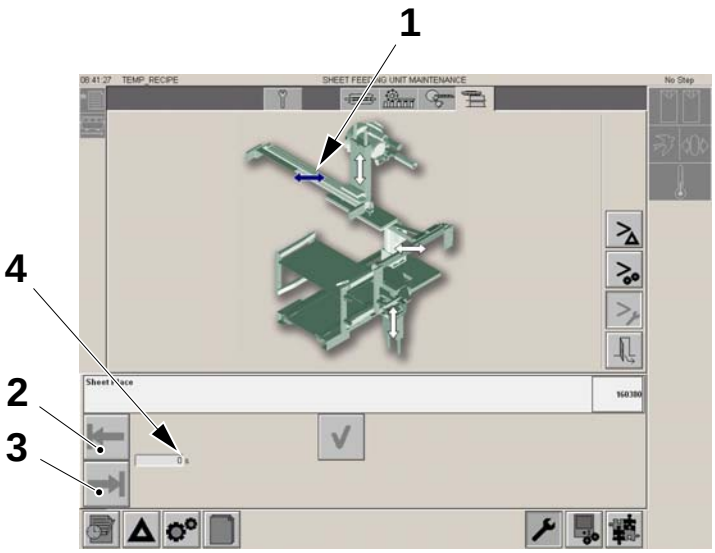

1 PLACE icon
2 PLACE button
3 RETURN button
4 S window

(Cont'd)

TechPub_2614345_0106 - 1102_3047152_01.fm

(Cont'd)

d) To adjust the place speed, use the regulator (5).

e) To adjust the return speed, use the regulator (6).

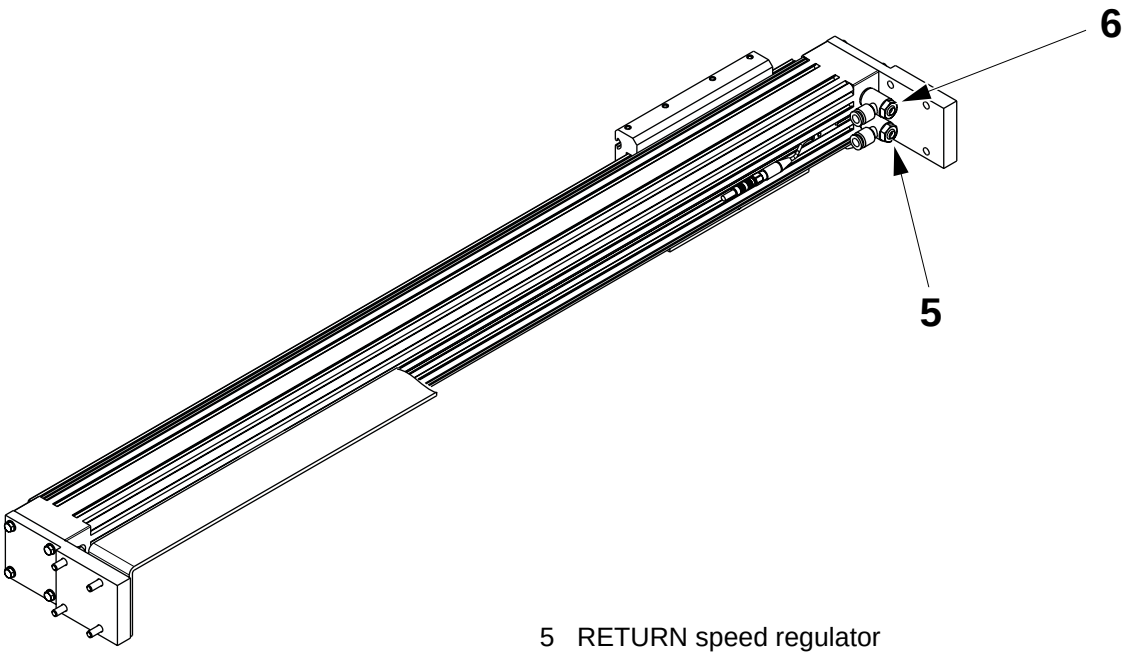

5 RETURN speed regulator
6 PLACE speed regulator

(Cont'd)

TechPub_2614345_0106 - 1102_3047152_01.fm

(Cont'd)

Box Eject Cylinder

Note! Check that the working pressure is 6.0 Bar / 0.6 MPa.

a) Touch the BOX EJECT icon (1).

b) Touch the EJECT (2) or RETURN (3) buttons to move the box eject cylinder in the desired direction.

c) Read the speed value given in the S window (4) for the up and down movement. Adjust as required until the correct value in the table is obtained.

Direction	Speed
Eject	1.5 Sec
Return	1.5 Sec

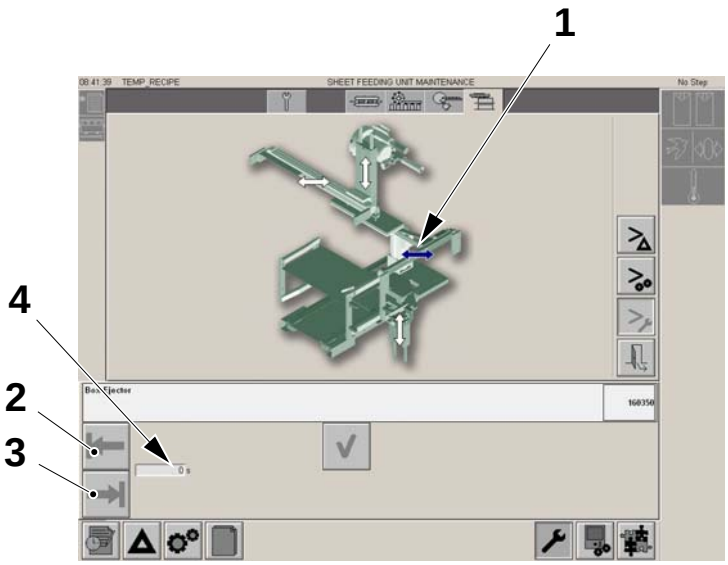

1 BOX EJECT icon
2 EJECT button
3 RETURN button
4 S window

(Cont'd)

TechPub_2614345_0106 - 1102_3047152_01.fm

(Cont'd)

d) To adjust the eject speed, use the regulator (5).

e) To adjust the return speed, use the regulator (6).

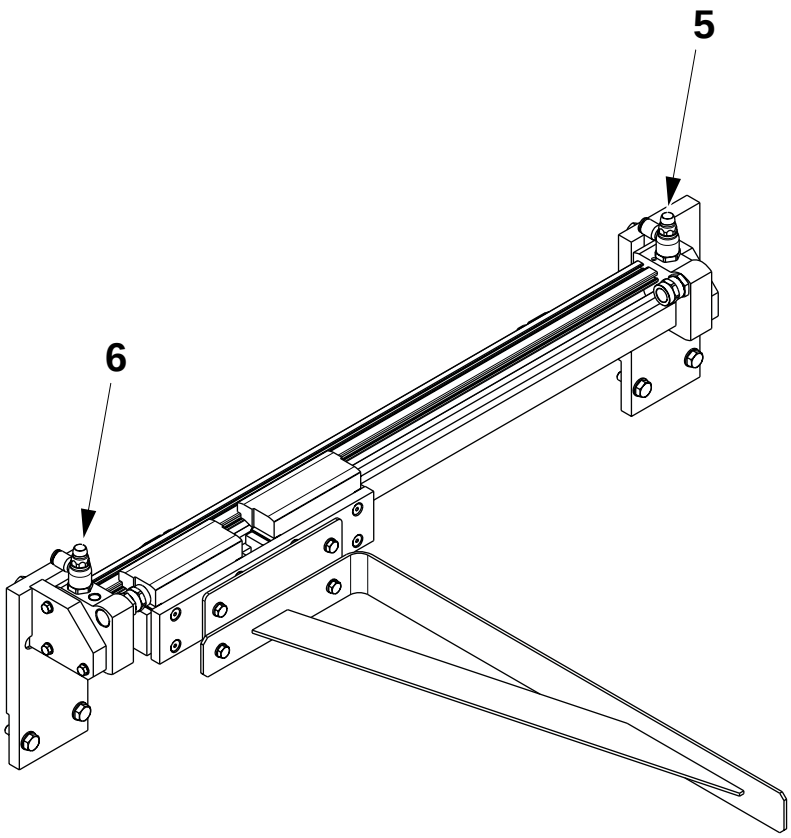

5 EJECT speed regulator

6 RETURN speed regulator

TechPub_2614345_0106 - 1102_3047152_01.fm

7.1 ReCap Magazine - Lift

SPC Reference	2792484-0100

7.1.1 Lift -Elevator

7.1.1-1 Elevator - Change Cylinder

Machine Status	Mains Power OFF Air OFF
SPC Reference	2792485-0100

a) At the rear of the cylinder assembly (1), disconnect the cables from the sensors (2), the cables from the brake sensors (3) and the air hoses from the connector/regulators (4).

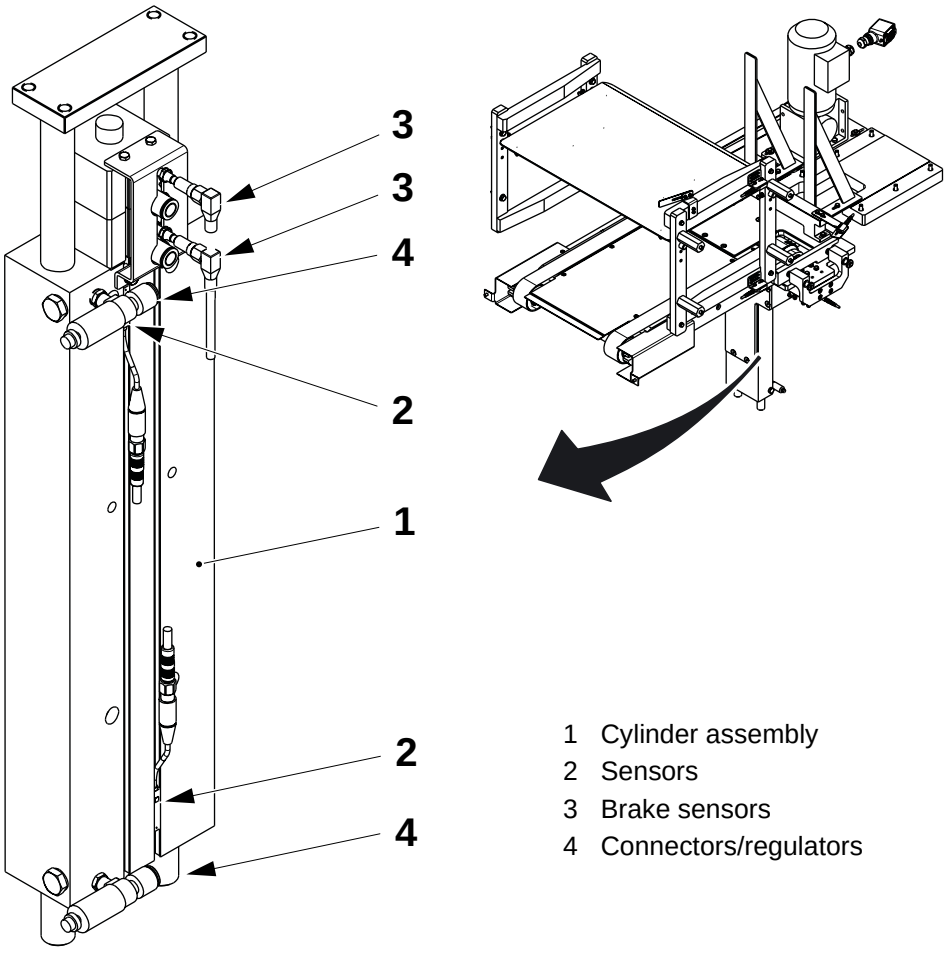

1 Cylinder assembly
2 Sensors
3 Brake sensors
4 Connectors/regulators

(Cont'd)

TechPub_2614345_0106 - 1102_3047152_01.fm

(Cont'd)

b) Remove the screws (5) and (6) and the cylinder (1) assembly.

c) Remove the regulators and the sensors from the cylinder (1).

d) Change the cylinder (1).

e) Assemble in the reverse order installing the sensors, the regulators and trying to set the cylinder brake before installing the cylinder.

f) Check the movement of the cylinder (1). See 7.0.2-1 Cylinders - Set Speeds.

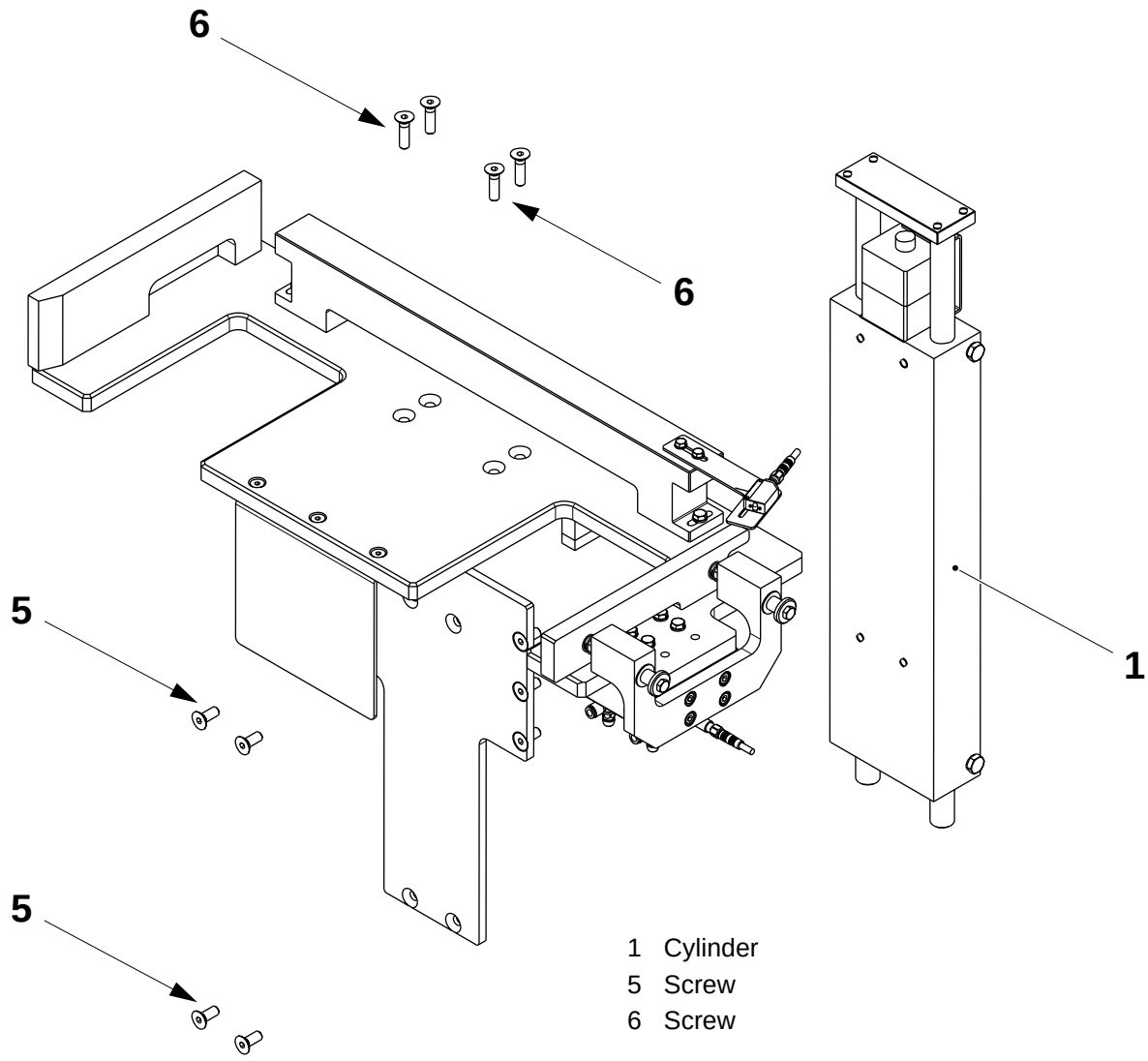

1 Cylinder
5 Screw
6 Screw

TechPub_2614345_0106 - 1102_3047152_01.fm

7.1.1-2 Elevator - Set Box Stopper

Machine Status	Mains Power OFF Air OFF
SPC Reference	2792485-0100

a) Loosen the screws (1) at both sides of the box stopper (2).

b) Move the box stopper (2) until it is the distance **A** from the edge of the plate (3) and parallel to it.

c) Tighten the screws (1).

Note! Check when the pickup collects the caps that they are centred on the pickup plate.

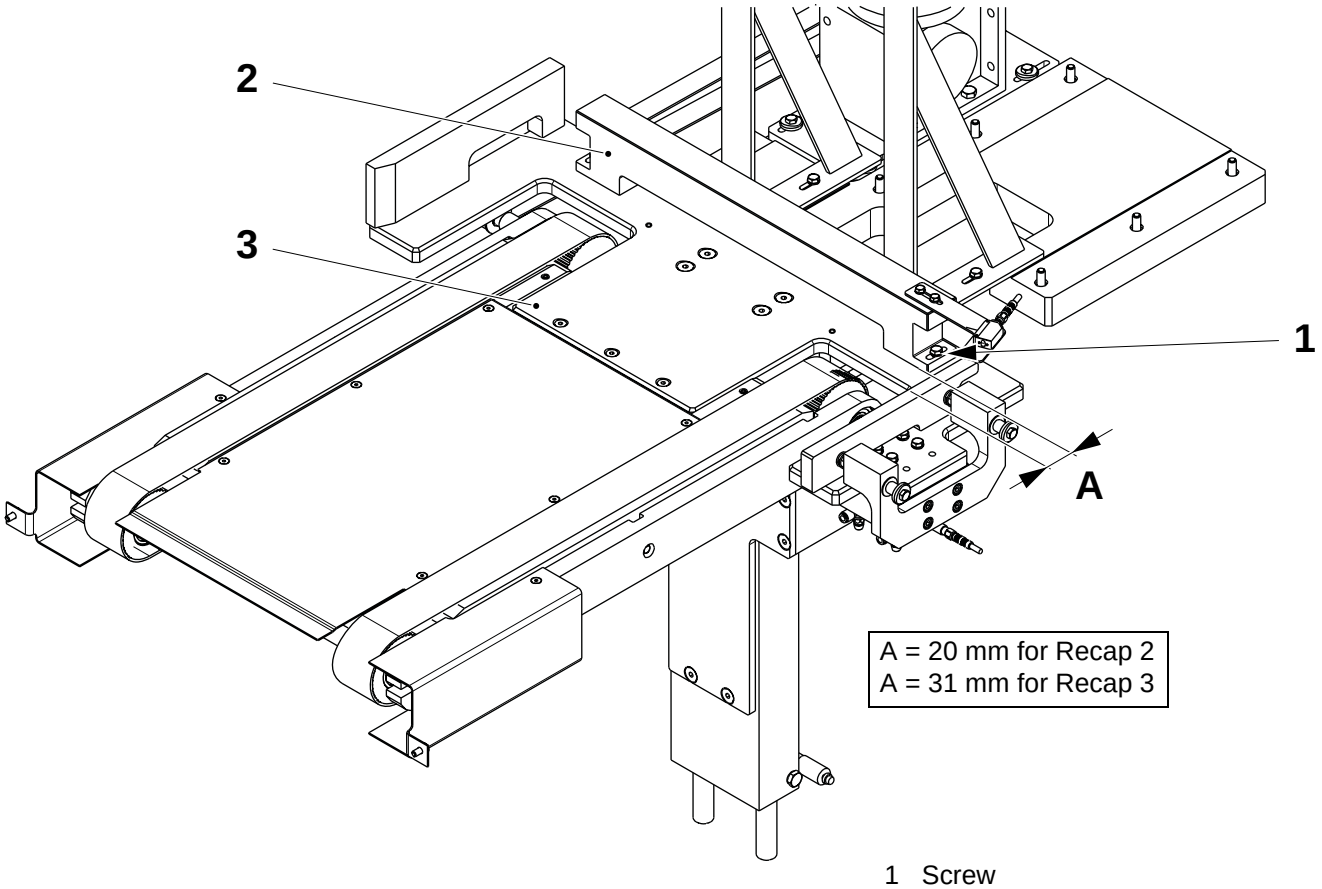

1 Screw
2 Box stopper
3 Plate

TechPub_2614345_0106 - 1102_3047152_01.fm

7.1.2 Lift - Box Conveyor

7.1.2-1 Box Conveyor - Change Drive Belt

Machine Status	Mains Power OFF Air OFF
SPC Reference	2792487-0100

a) Raise the elevator to the upper position to give better access to the pulley (1).

b) Release the tension on the belt (2) by releasing the screws (3).

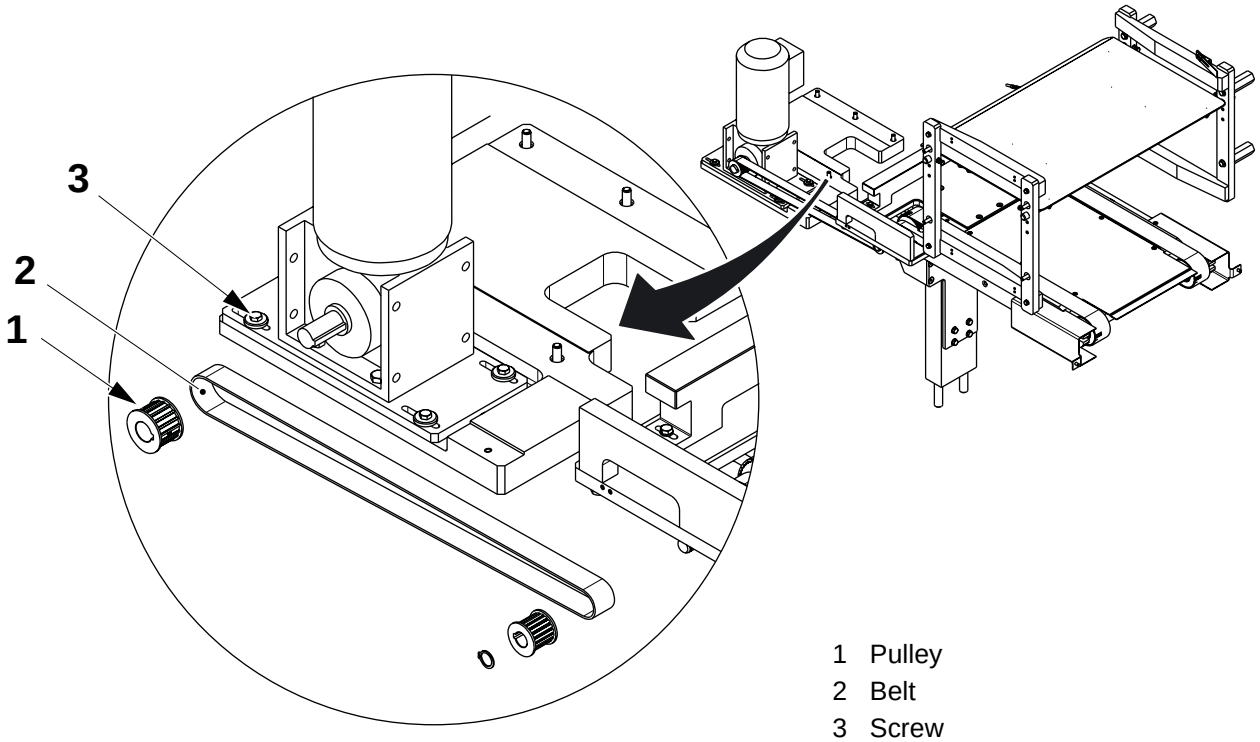

1 Pulley
2 Belt
3 Screw

(Cont'd)

TechPub_2614345_0106 - 1102_3047152_01.fm

(Cont'd)

c) Check and replace the pulleys if necessary as follows.
d) Loosen the grub screw (4) in the pulley (1).
e) Remove the retaining ring (5) from the shaft (6).
f) Pull the pulleys (1) and (7) off the shafts (6) and (8).
g) Change the belt (2).
h) Assemble in the reverse order.
i) Tension the belt see, 7.1.2-3 Box Conveyor - Set Drive Belt tension.

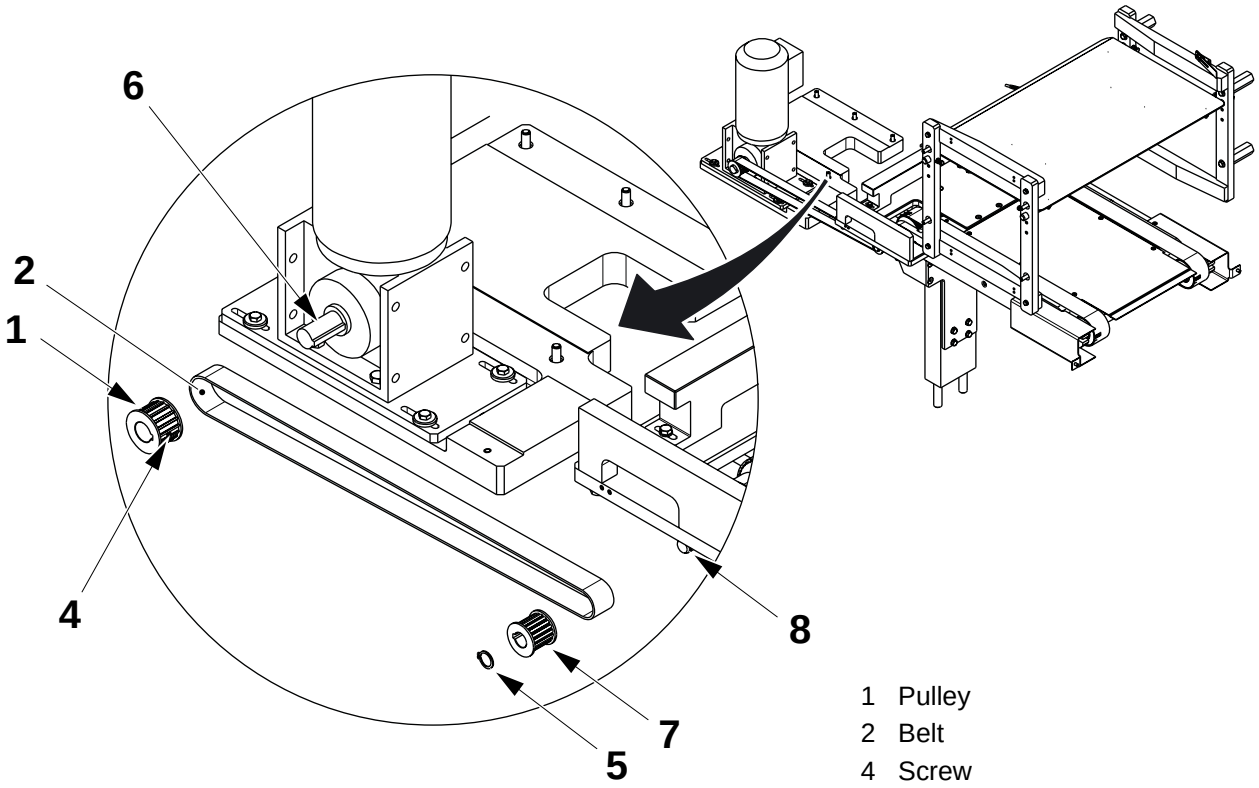

1 Pulley
2 Belt
4 Screw
5 Retaining ring
6 Shaft
7 Pulley
8 Shaft

TechPub_2614345_0106 - 1102_3047152_01.fm

7.1.2-2 Box Conveyor - Change Conveyor Belts

Machine Status	Mains Power OFF Air OFF
SPC Reference	2792487-0100

a) Remove the drive belt (1), see 7.1.2-1 Box Conveyor - Change Drive Belt.

b) Remove the screws (2) and (3) and the cover (4).

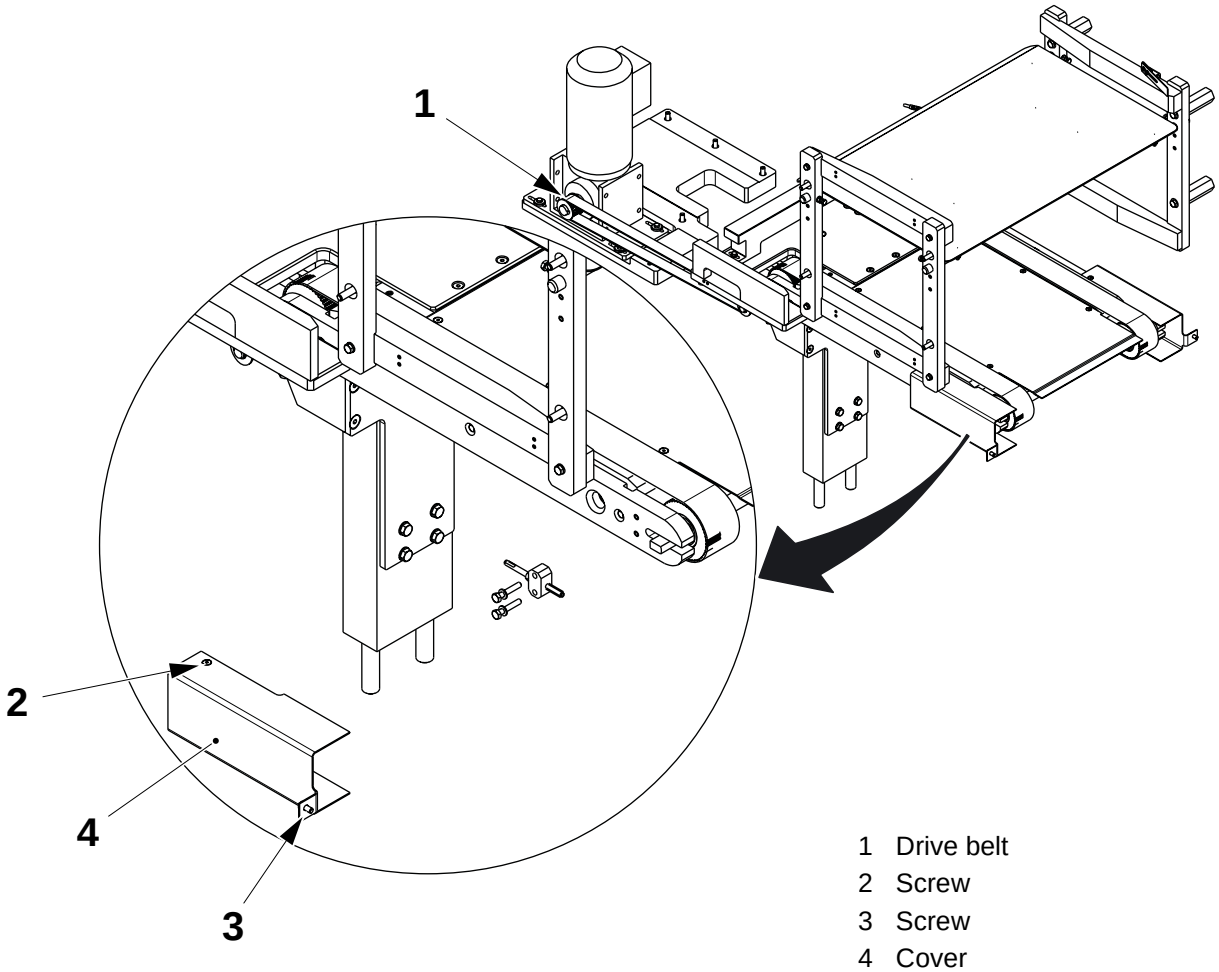

1 Drive belt
2 Screw
3 Screw
4 Cover

(Cont'd)

TechPub_2614345_0106 - 1102_3047152_01.fm

(Cont'd)

c) Measure the distance of the stop (5) setting.

d) Release the tension on the belt (6) by turning the nut (7).

e) Change the belt (6) and set the tension, see 7.1.2-4 Box Conveyor - Set Conveyor Belt Tension.

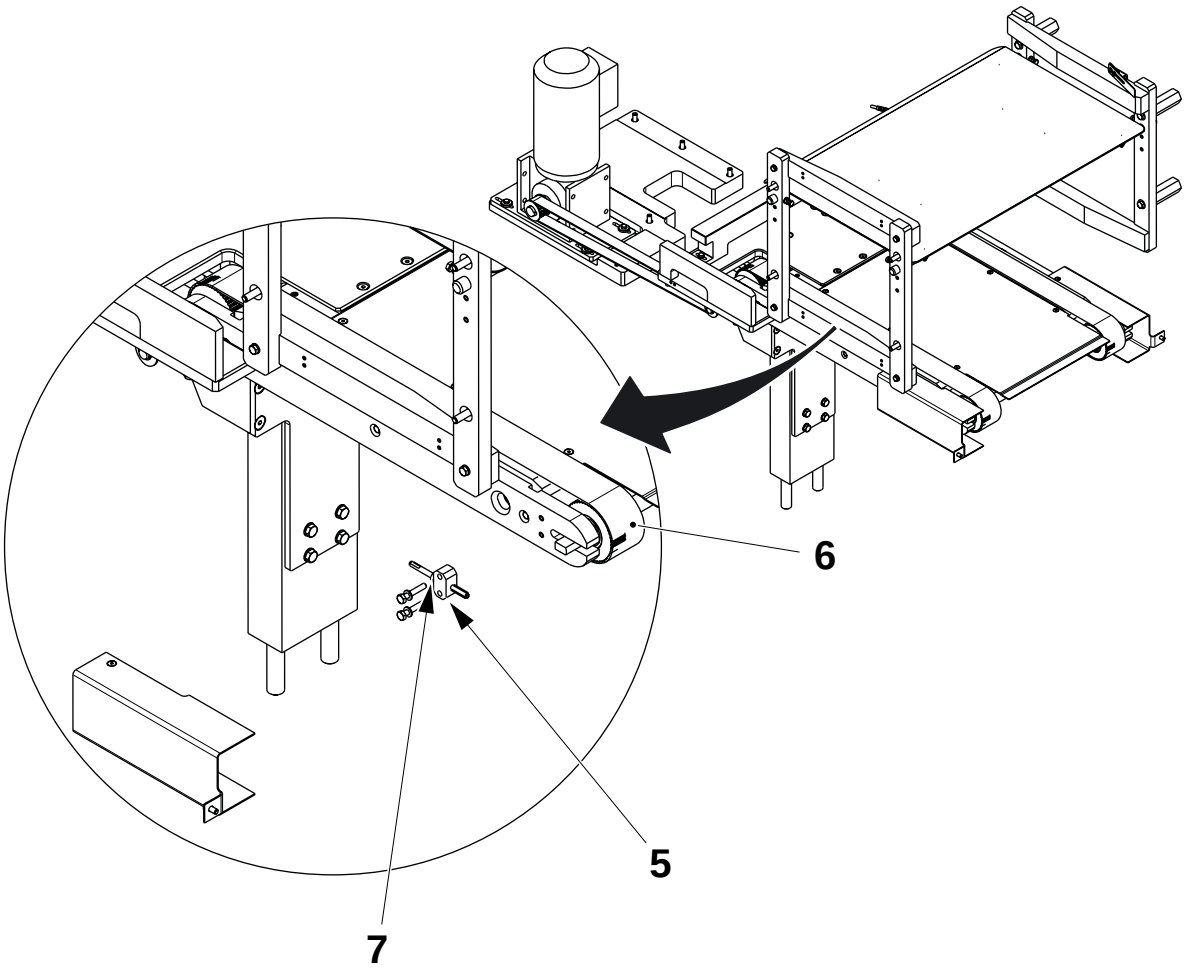

5 Stop
6 Belt
7 Nut

(Cont'd)

TechPub_2614345_0106 - 1102_3047152_01.fm

(Cont'd)

f) Remove the screws (8) and (9) and the cover (10).
g) Measure the distance of the stop (11) setting.
h) Release the tension on the belt (12) by turning the nut (13).
i) Change the belt (12).
j) Assemble in the reverse order.
k) Set belt tension see, 7.1.2-4 Box Conveyor - Set Conveyor Belt Tension.

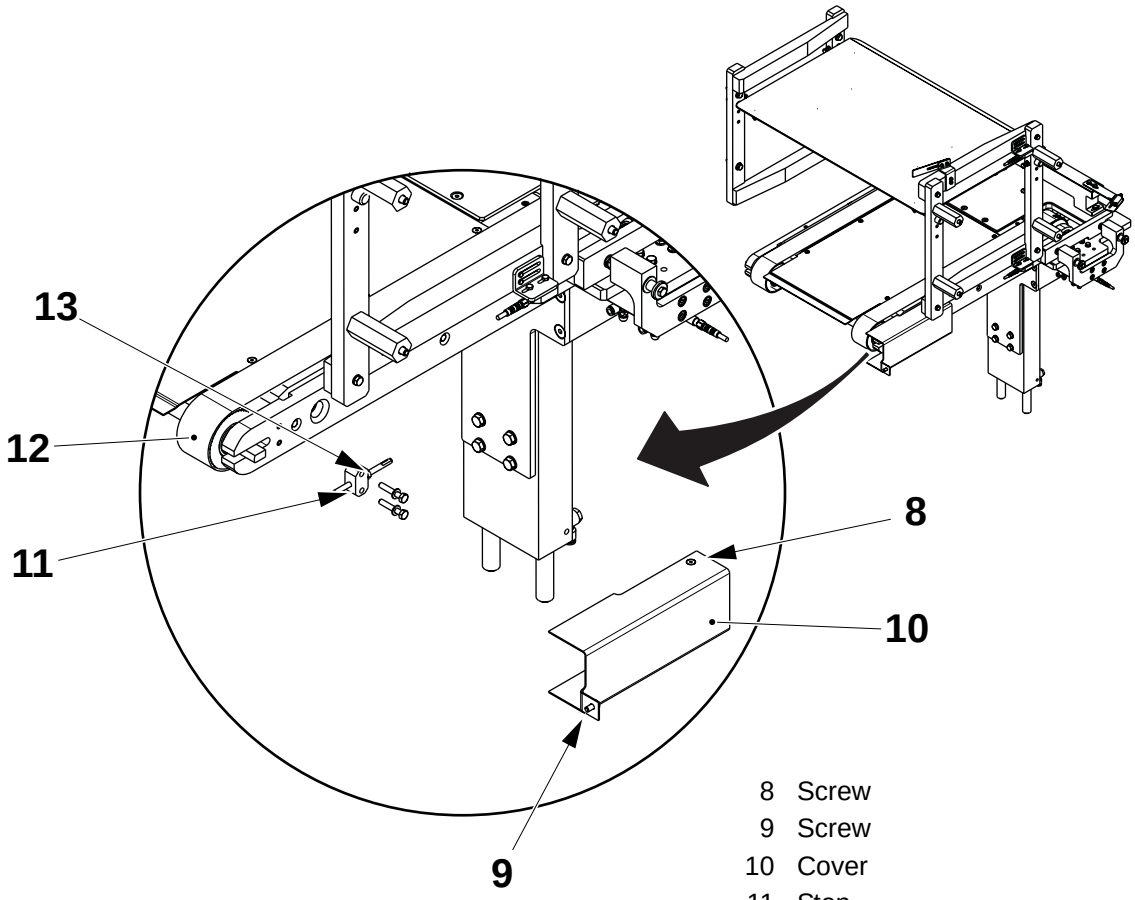

8 Screw
9 Screw
10 Cover
11 Stop
12 Belt
13 Nut

TechPub_2614345_0106 - 1102_3047152_01.fm

7.1.2-3 Box Conveyor - Set Drive Belt tension

Machine Status	Mains Power OFF Air OFF
SPC Reference	2792487-0100

a) Loosen the screws (1).

b) Move the bracket (2) to set the belt tension. It should be possible to move the belt (3) the distance **A** at its centre.

c) When the belt tension is correct, tighten the screws (1).

d) Check the tension again. If the tension is incorrect, repeat the procedure.

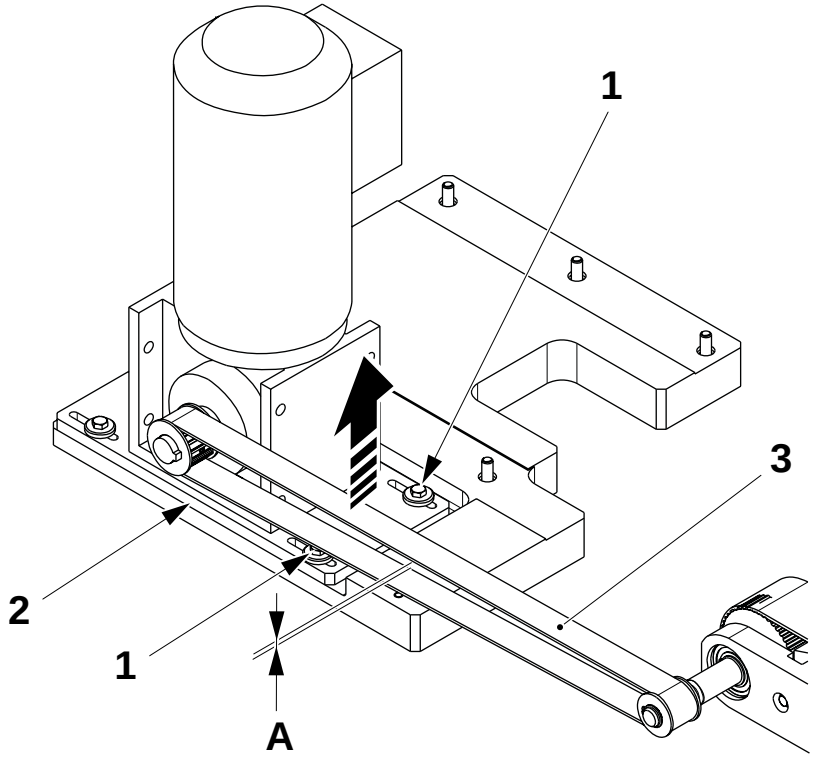

A = 5 mm

1 Screw
2 Bracket
3 Belt

TechPub_2614345_0106 - 1102_3047152_01.fm

7.1.2-4 Box Conveyor - Set Conveyor Belt Tension

Machine Status	Mains Power OFF Air OFF
SPC Reference	2792487-0100

a) Loosen the nut (1).

b) Rotate the shaft (2) to set the belt tension. It should be possible to move the belt (3) the distance **A** at its centre.

c) When the belt tension is correct, tighten the nut (1).

d) Check the tension again. If the tension is incorrect, repeat steps a) to c).

e) Repeat the procedure for the other belt.

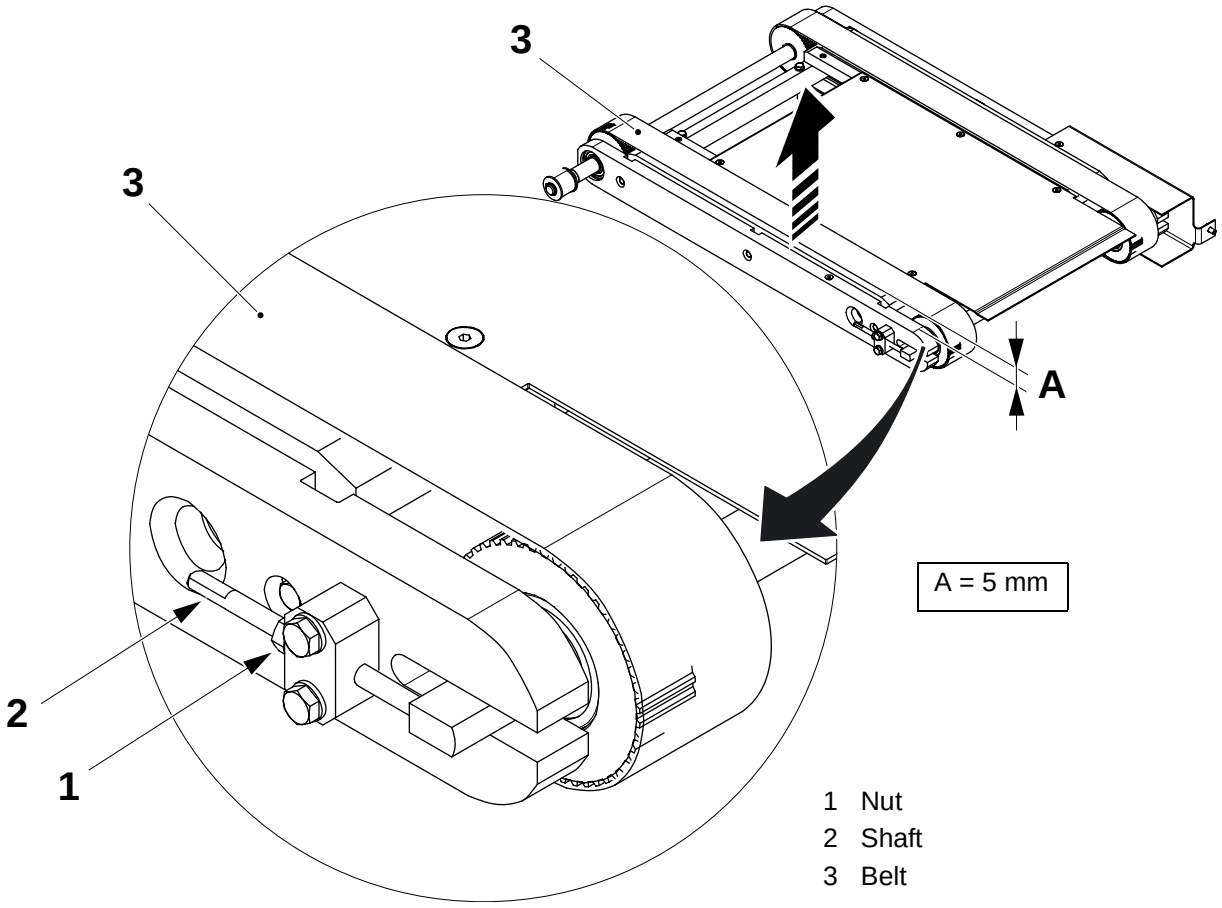

1 Nut
2 Shaft
3 Belt

TechPub_2614345_0106 - 1102_3047152_01.fm

7.1.2-5 Box Conveyor - Change Bearings

Machine Status	Mains Power OFF Air OFF
SPC Reference	2792487-0100

a) Remove the drive belt (1), see 7.1.2-1 Box Conveyor - Change Drive Belt.

b) Remove the conveyor belts, (2) and (3), see 7.1.2-2 Box Conveyor - Change Conveyor Belts.

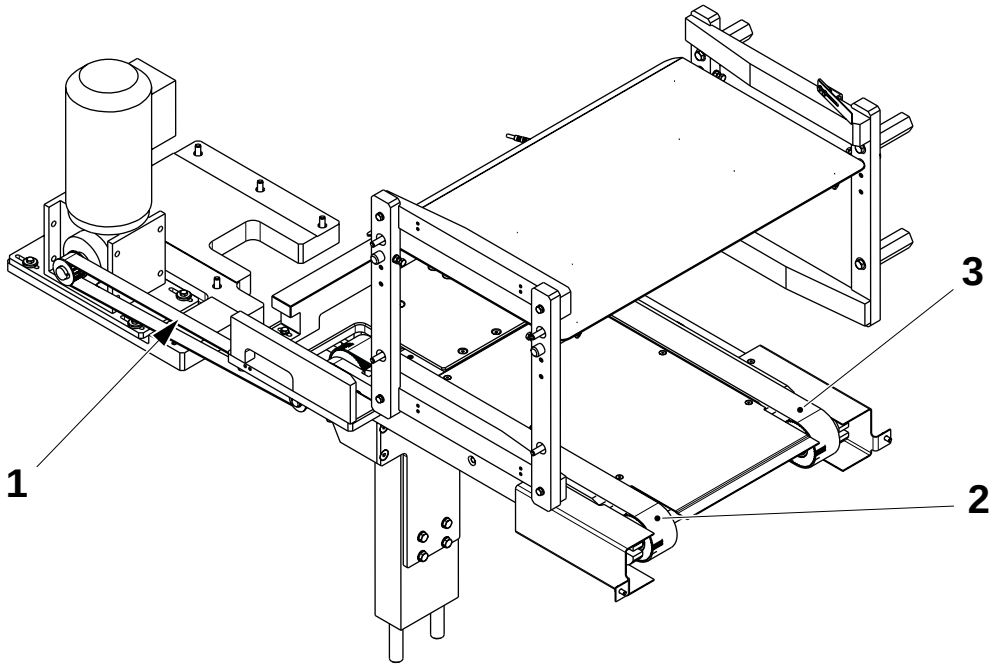

1 Drive belt
2 Conveyor belt
3 Conveyor belt

TechPub_2614345_0106 - 1102_3047152_01.fm

(Cont'd)

(Cont'd)

c) Remove the shaft (4).
d) Remove retaining rings (5).
e) Pull the pulleys (6) off the shaft (4).
f) Extract and change the bearings (7).
g) Remove the cover (8).

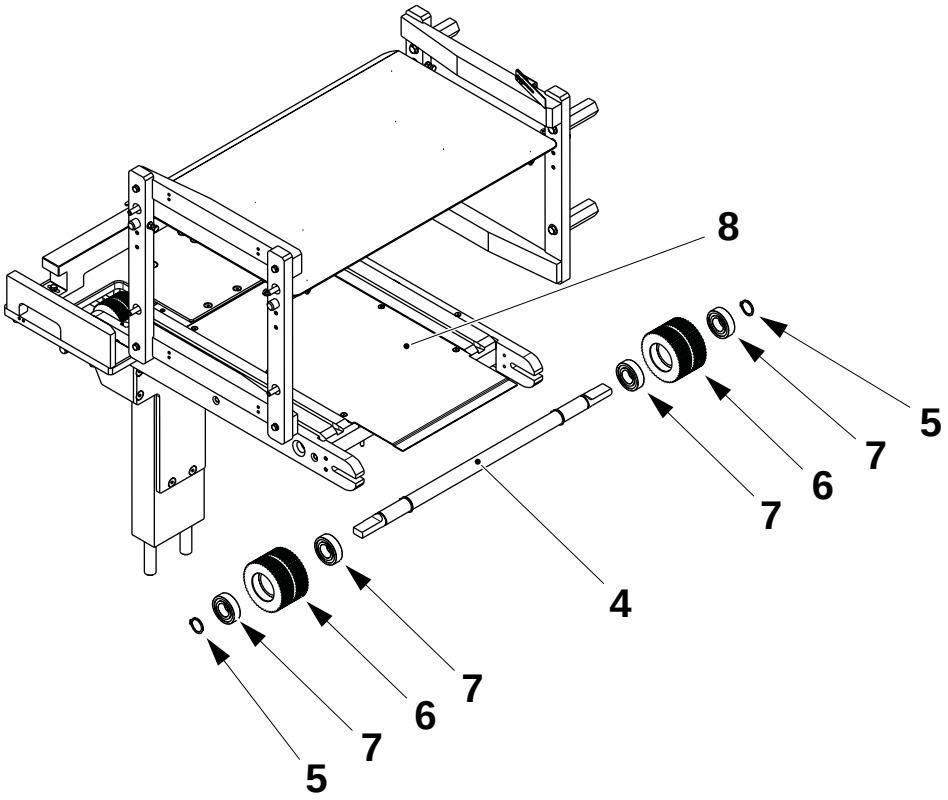

4 Shaft
5 Retaining ring
6 Pulley
7 Bearing
8 Cover

(Cont'd)

TechPub_2614345_0106 - 1102_3047152_01.fm

(Cont'd)

Note! To gain access to the rear two screws (9) it is necessary to lift the elevator plate (10) or remove the machine side panel.

h) Remove the six screws (9) and the frame (11).

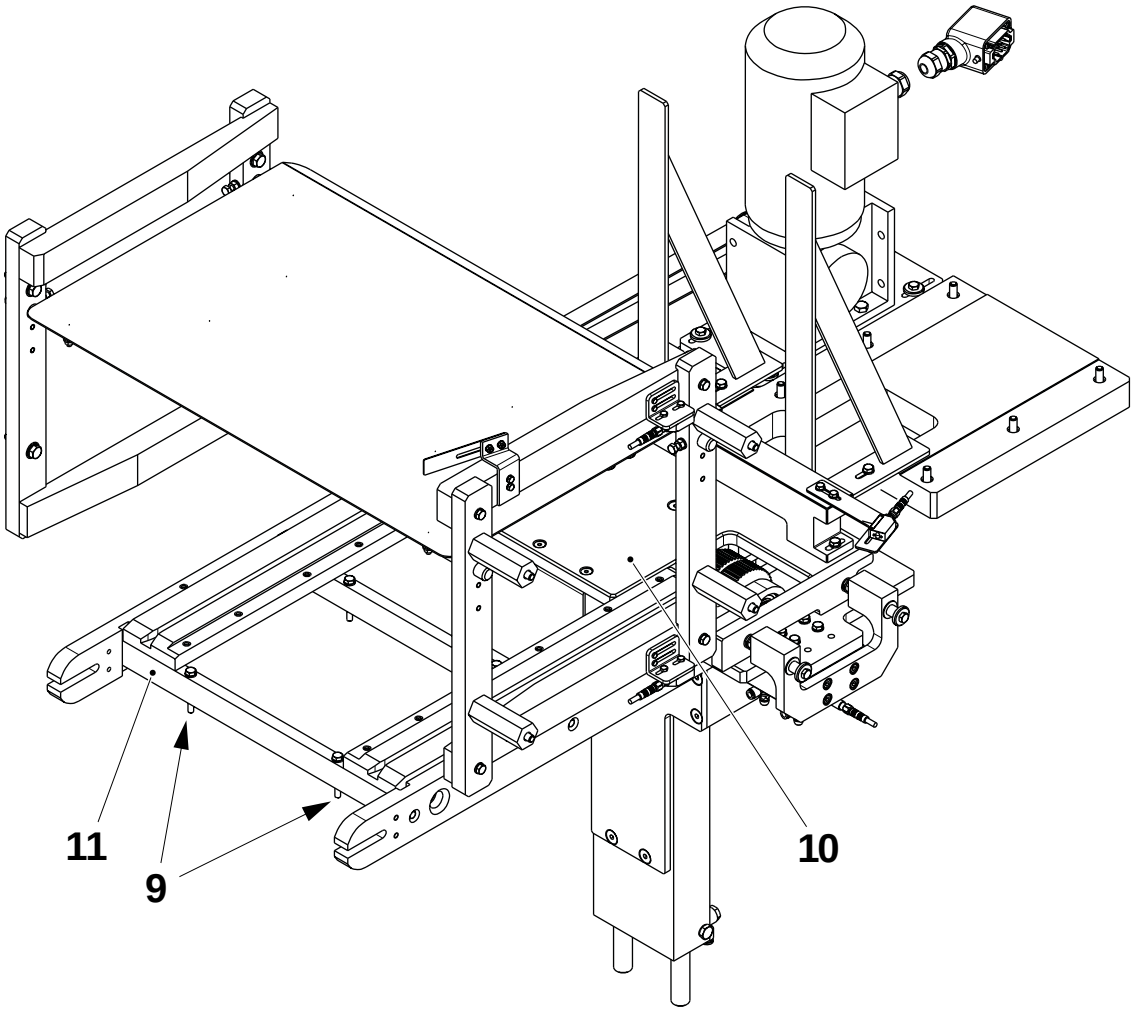

9 Screw
10 Elevator plate
11 Frame

(Cont'd)

TechPub_2614345_0106 - 1102_3047152_01.fm

(Cont'd)

Note! The retaining ring (12) and the key (13) are for one of the drive pulleys, see item (4) in 7.1.2-1 Box Conveyor - Change Drive Belt.

i) Remove the retaining ring (12) and the key (13).

j) Remove the retaining rings (14).

k) Remove the inner retaining rings (15) and slide the pulleys (16) toward the centre of the shaft (17).

l) Remove the keys (18) and the outer retaining rings (19).

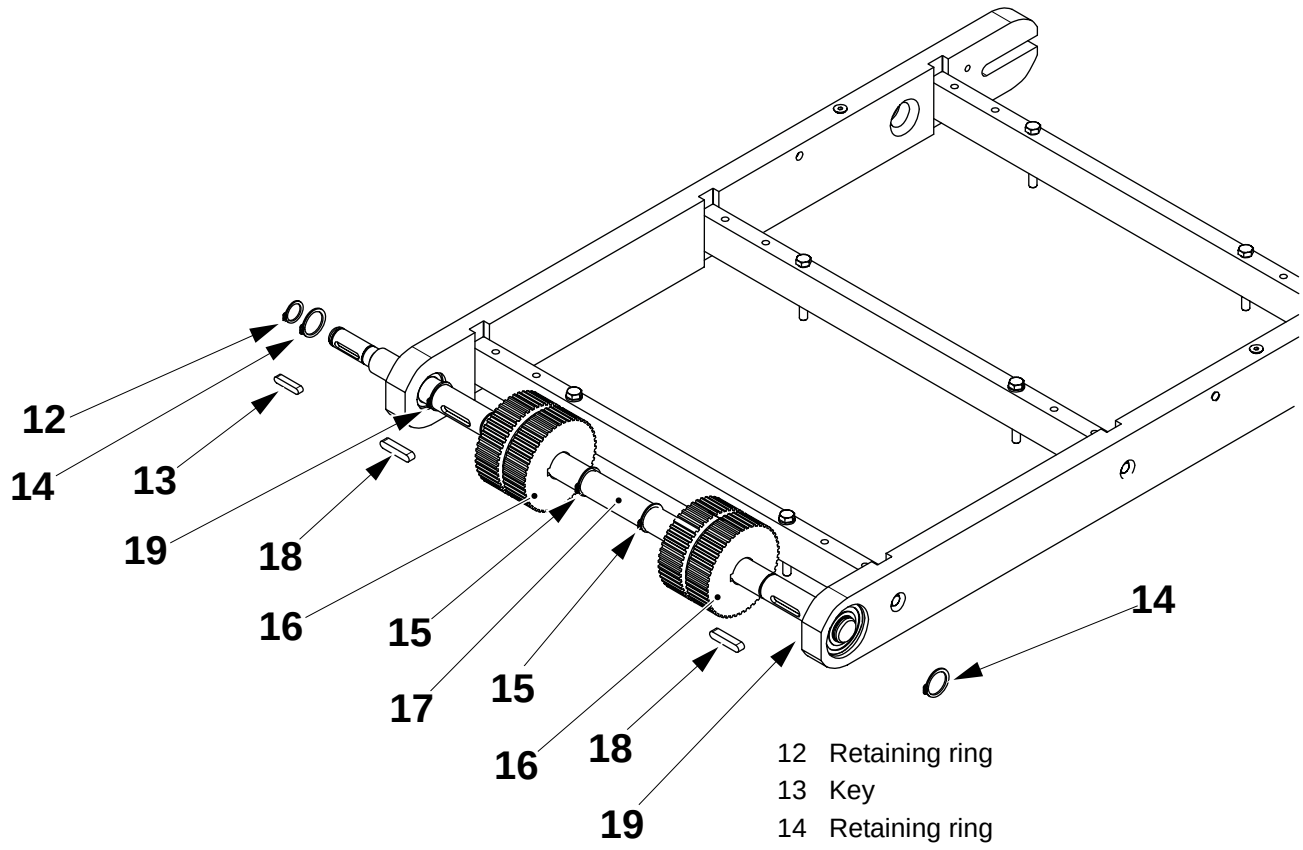

12 Retaining ring
13 Key
14 Retaining ring
15 Retaining ring
16 Pulley
17 Shaft
18 Key
19 Retaining ring

(Cont'd)

TechPub_2614345_0106 - 1102_3047152_01.fm

(Cont'd)

m) Remove the shaft (17) and the pulleys (16).
n) Extract the bearings (20) from the frame (10).
o) Change the bearings (20).
p) Assemble in the reverse order.

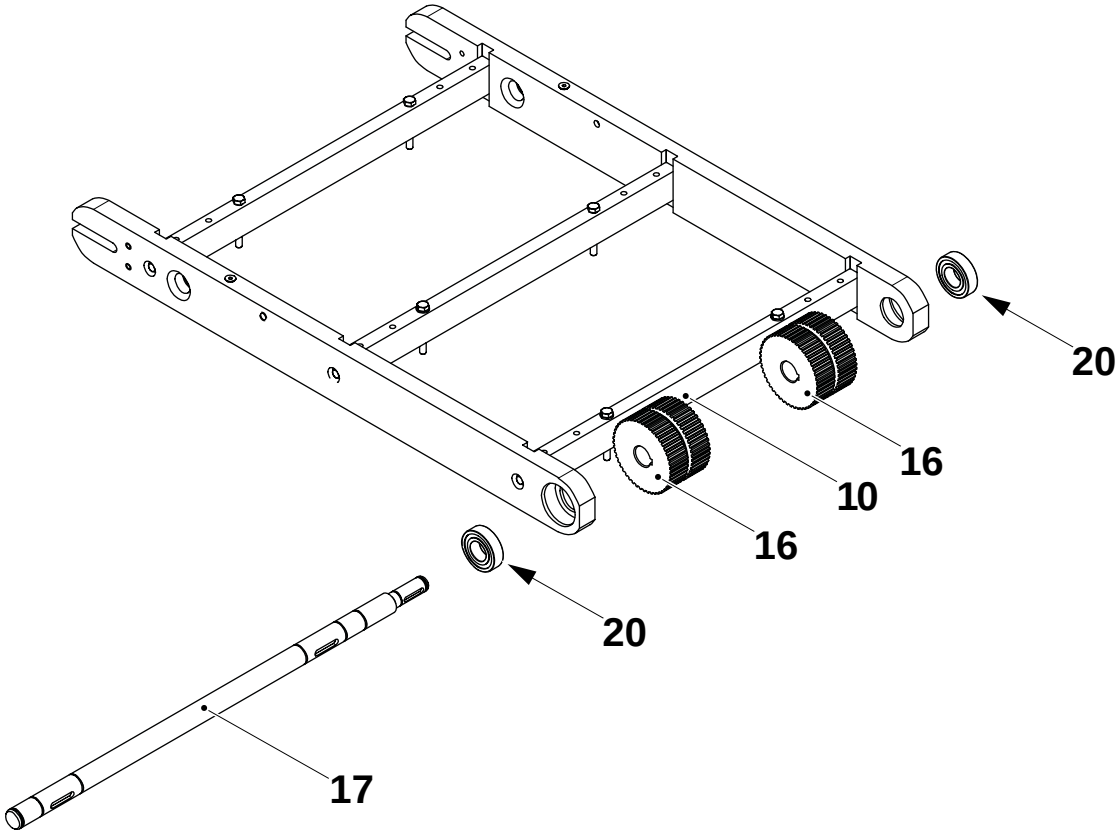

10 Frame
16 Pulley
17 Shaft
20 Bearing

TechPub_2614345_0106 - 1102_3047152_01.fm

7.1.2-6 Box Conveyor - Change for Box Size

Machine Status	Mains Power OFF Air OFF
SPC Reference	2792487-0100

a) Insert the four spacers (1) when ReCap 2 is to be used.

b) Remove the spacers (1) if present, when ReCap 3 is to be used.

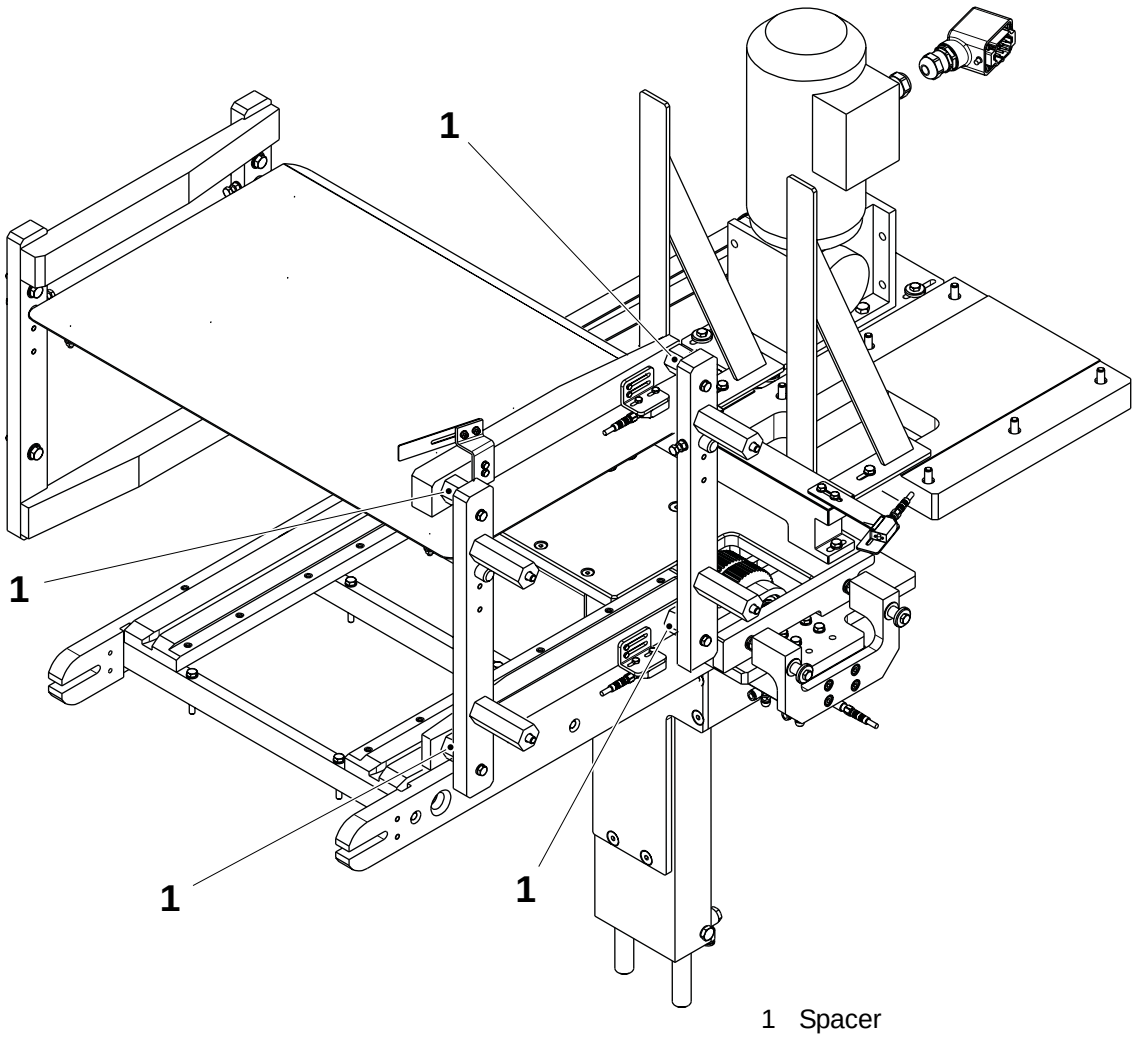

1 Spacer

TechPub_2614345_0106 - 1102_3047152_01.fm

7.2 ReCap Magazine - Positioning Unit

SPC Reference	2715960-0100

7.2.1 Positioning Unit - Drive Unit

7.2.1-1 Drive Unit - Change Horizontal Cylinder

Machine Status	Mains Power OFF Air OFF
SPC Reference	2897952-0100

a) Disconnect the connectors (1) from the sensors (2).

b) Remove the sensors (2) from the cylinder (3).

c) Disconnect the air hoses from the connectors (4).

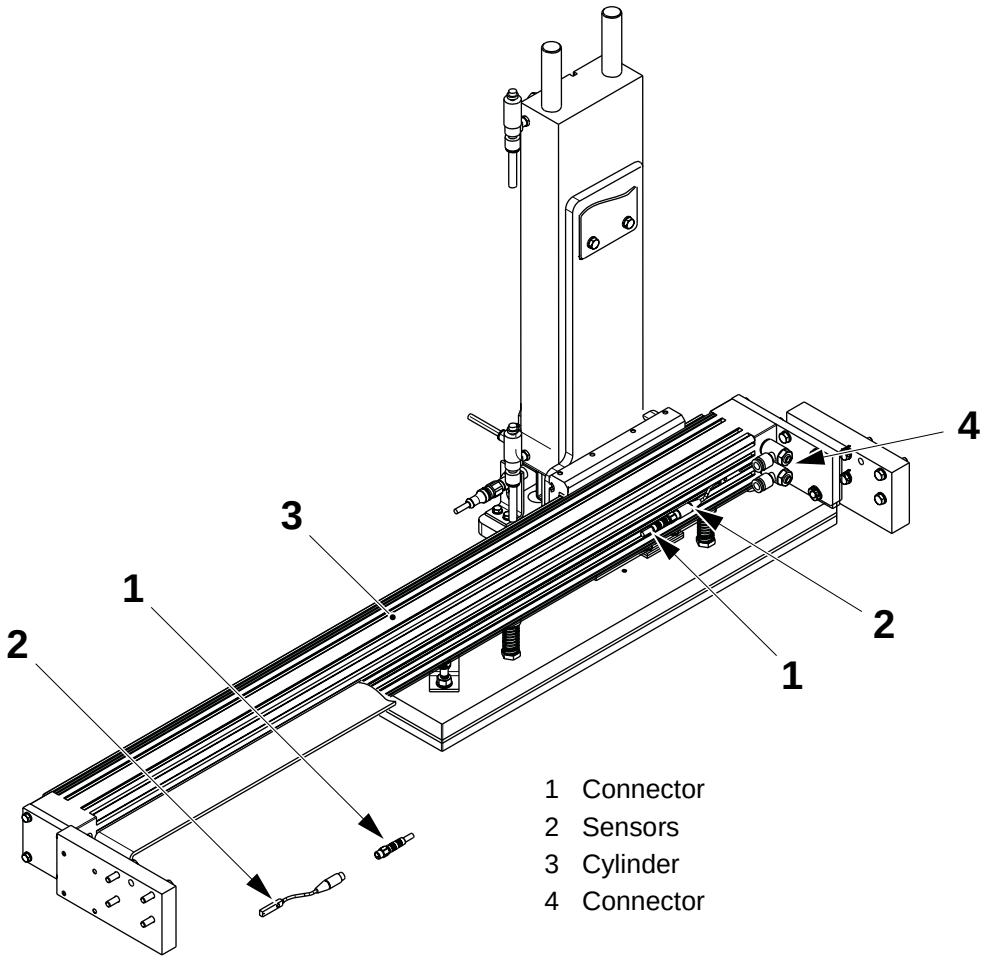

1 Connector
2 Sensors
3 Cylinder
4 Connector

(Cont'd)

TechPub_2614345_0106 - 1102_3047153_01.fm

(Cont'd)

d) At both ends of the cylinder (3), remove the screws (5) securing the cylinder (3) in position on the brackets (6).

e) Remove the screws (7) and remove the cylinder (3) from the cylinder (8).

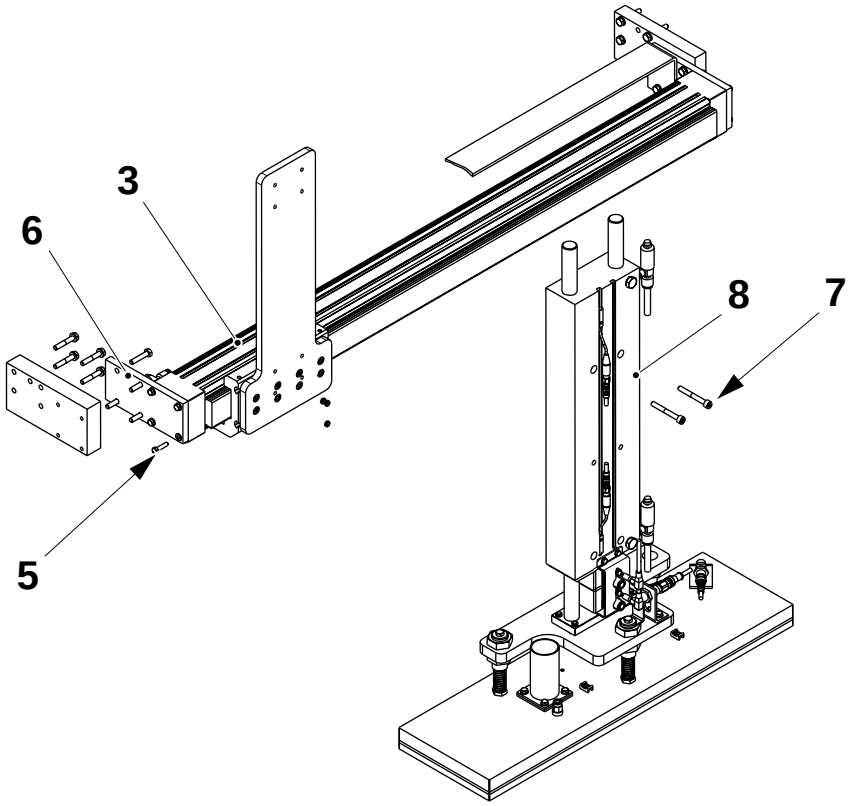

3 Cylinder
5 Screw
6 Bracket
7 Screw
8 Cylinder

(Cont'd)

TechPub_2614345_0106 - 1102_3047153_01.fm

(Cont'd)

f) Remove the screws (9) and the plate (10).

g) Assemble in the reverse order.

h) Set the sensors, see 7.0.1-3 Sensor - Set Horizontal Cylinder Sensor Position.

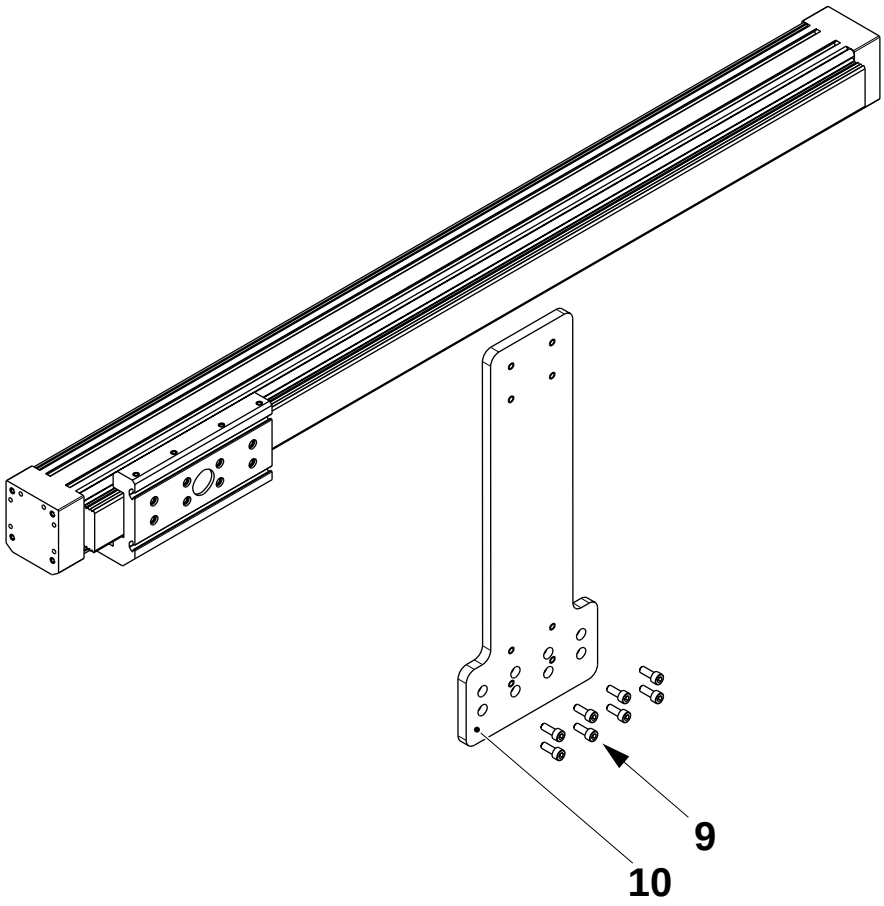

9 Screw
10 Plate

TechPub_2614345_0106 - 1102_3047153_01.fm

7.2.1-2 Drive Unit - Change Vertical Cylinder

Machine Status	Mains Power OFF Air OFF
SPC Reference	2897952-0100

a) At the rear of the vertical cylinder assembly (1), disconnect the cables from the sensors (2).

b) Disconnect the cables from the brake sensors (3).

c) At the ends of the vertical cylinder assembly (1), disconnect the air hoses from the connector/regulators (4).

d) Disconnect any other connection from the vacuum assembly (5).

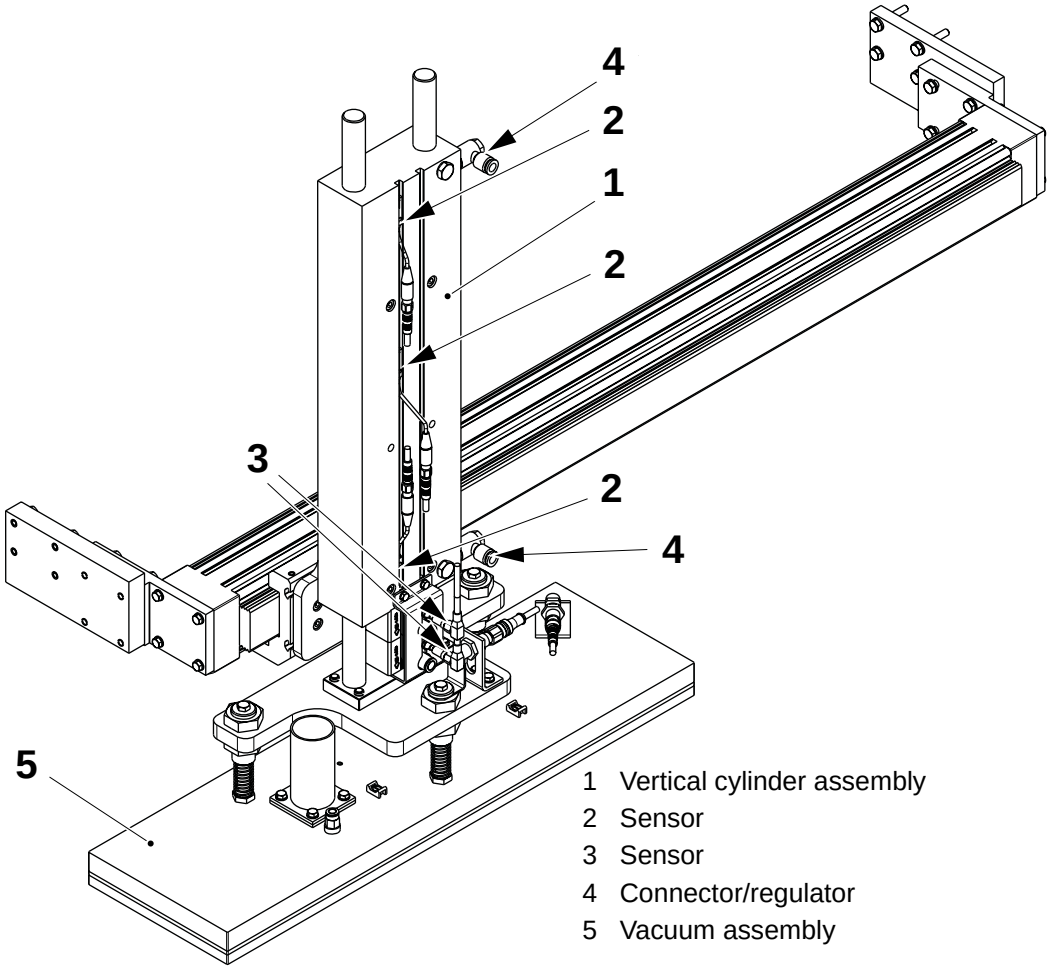

(Cont'd)

TechPub_2614345_0106 - 1102_3047153_01.fm

(Cont'd)

e) Remove the screws (6) and the vertical cylinder assembly (1).

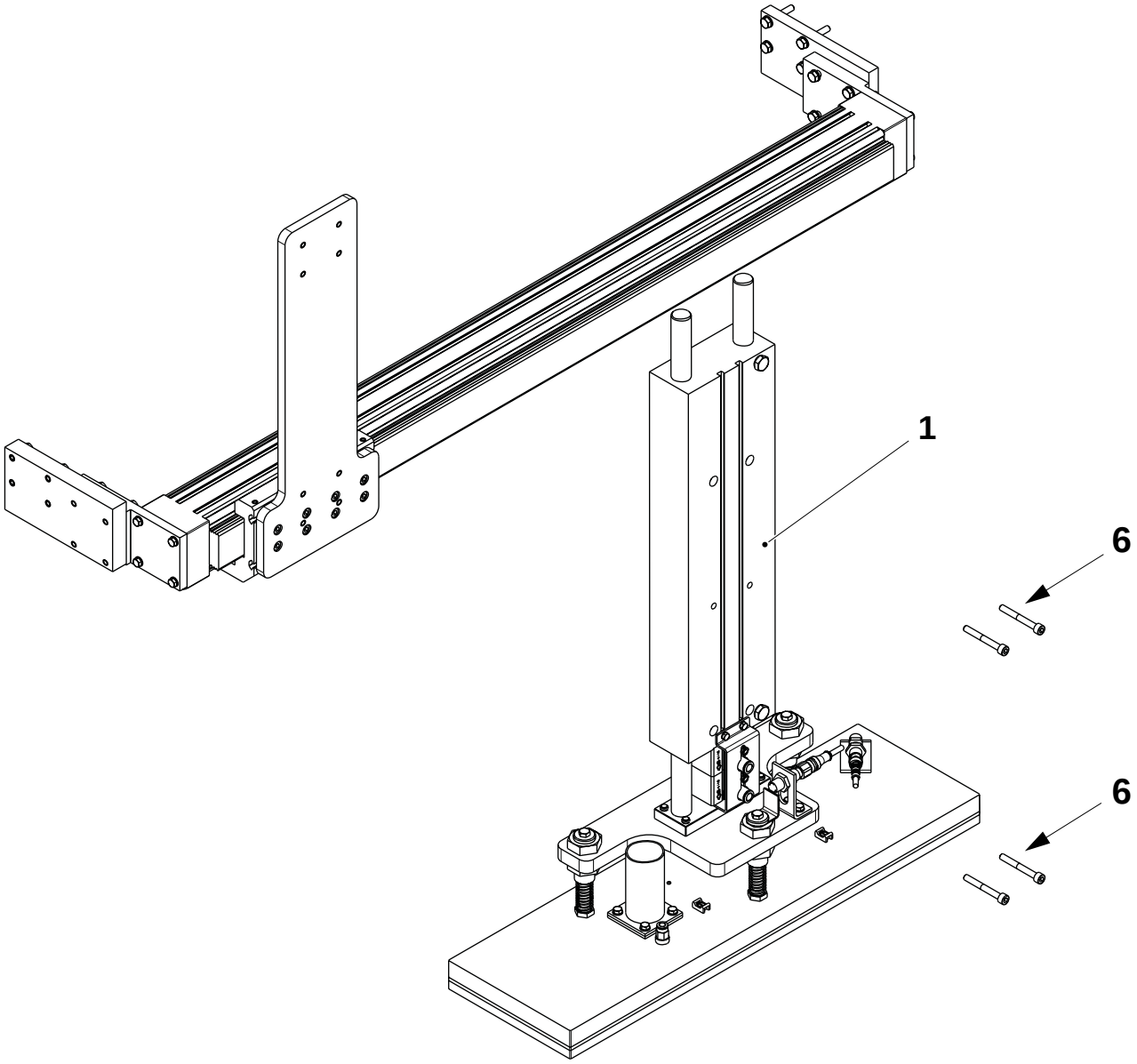

1 Vertical cylinder assembly
6 Screw

(Cont'd)

TechPub_2614345_0106 - 1102_3047153_01.fm

(Cont'd)

f) From beneath the plate (7) remove the screws (8) and separate the vacuum assembly (5) from the cylinder (1).

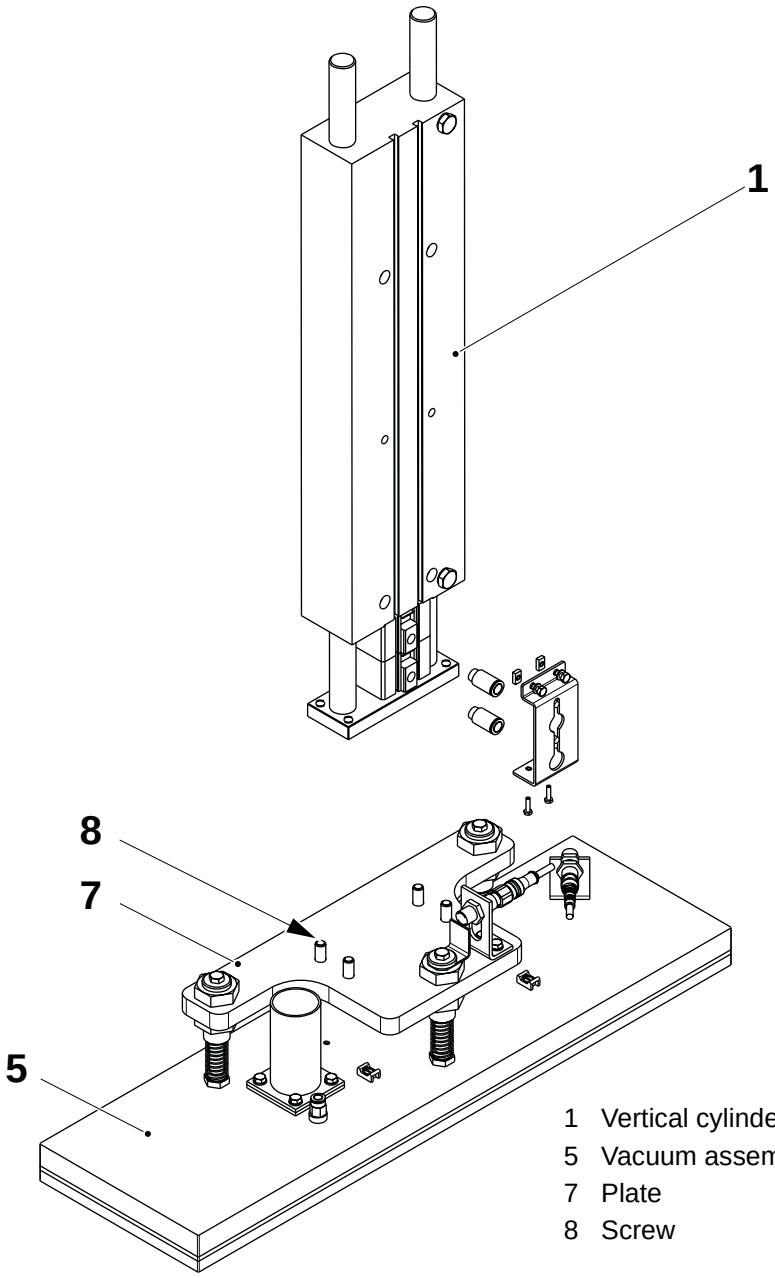

1 Vertical cylinder assembly
5 Vacuum assembly
7 Plate
8 Screw

(Cont'd)

TechPub_2614345_0106 - 1102_3047153_01.fm

(Cont'd)

g) Remove the sensors (2) and (3) from the cylinder (1).

Note! Assemble the sensors before installation.

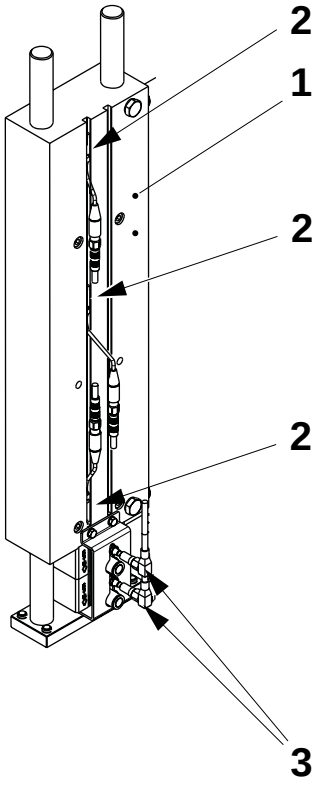

1 Cylinder
2 Sensor
3 Sensor

TechPub_2614345_0106 - 1102_3047153_01.fm

(Cont'd)

(Cont'd)

h) Remove the screws (9) and (10) and the cover (11) from the cylinder (1).

i) Remove the adaptors (12) from the cylinder (1).

j) Assemble in the reverse order.

k) Set the sensors, see 7.0.1-4 Sensor - Set Vertical Cylinder Position Sensors.

Note! Check that the air pressure is set to 2.0 Bar see, 4.3.2 Pneumatic Panel page 4-17 for the down stroke.

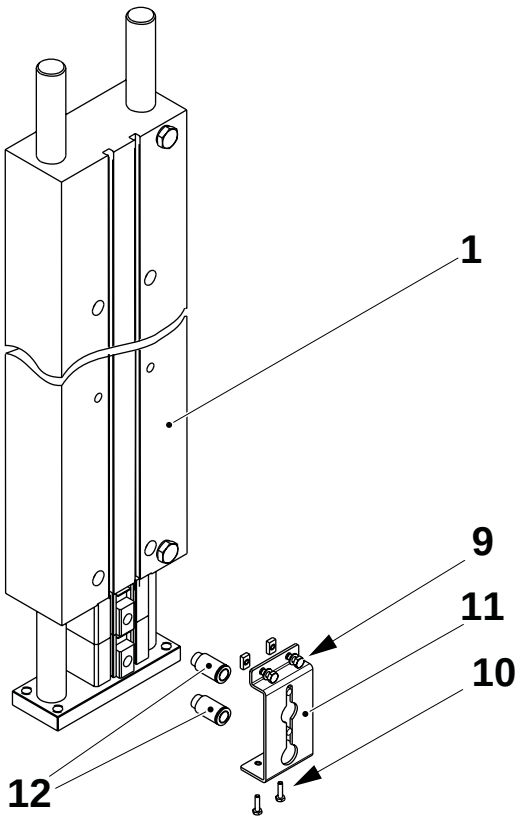

1 Vertical cylinder assembly
9 Screw
10 Screw
11 Cover
12 Adaptor

TechPub_2614345_0106 - 1102_3047153_01.fm

7.2.2 Positioning Unit - Sheet Carrier

7.2.2-1 Sheet Carrier - Overhaul

Machine Status	Mains Power OFF Air OFF
SPC Reference	2780415-0100

a) Disconnect the air hoses any other connector from the sheet carrier (1).

b) From beneath the plate (2), remove the screws (3) securing the sheet carrier (1) in position under the cylinder (4).

c) Overhaul the sheet carrier (1) as necessary.

d) Assemble in the reverse order.

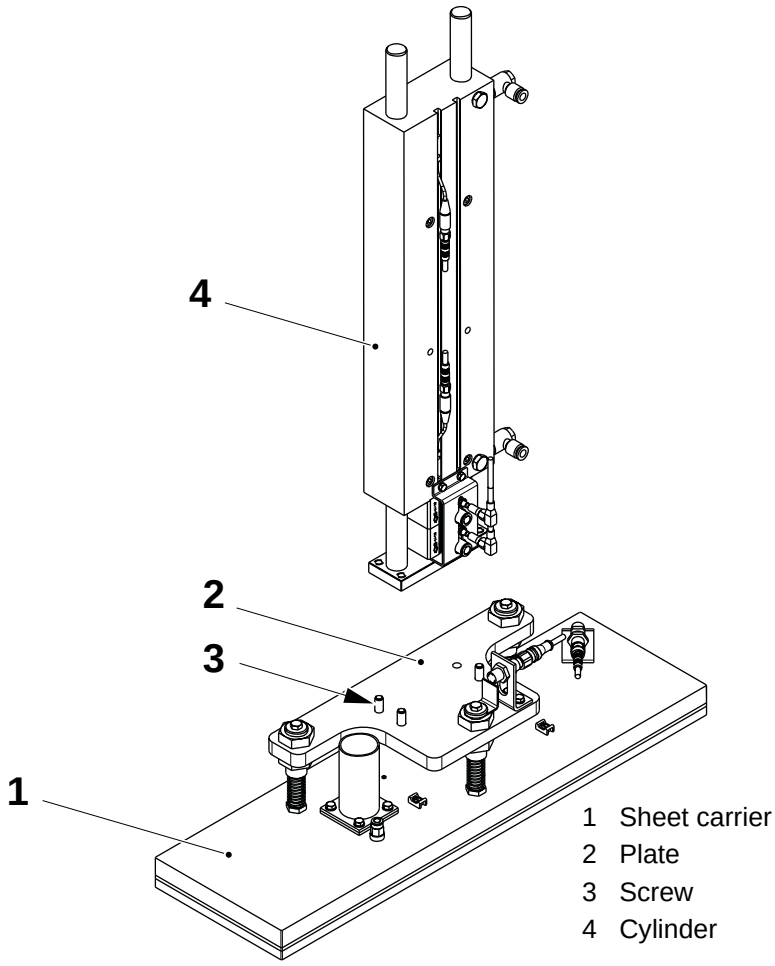

TechPub_2614345_0106 - 1102_3047153_01.fm

7.2.2-2 Sheet Carrier - Change Rubber Mat

Machine Status	Mains Power OFF Air OFF
SPC Reference	2780415-0100

a) Disconnect the air hoses any other connector from the sheet carrier (1).

b) From beneath the plate (2), remove the screws (3) securing the sheet carrier (1) in position under the cylinder (4).

c) Take the sheet carrier (1) to a suitable place to remove the rubber mat.

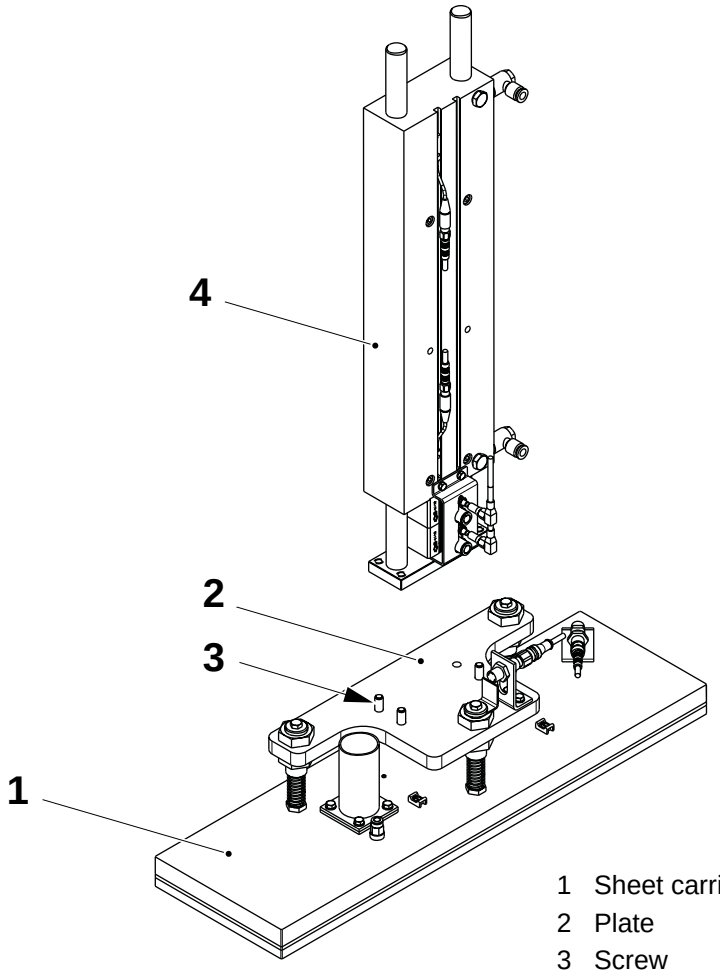

1 Sheet carrier
2 Plate
3 Screw
4 Cylinder

(Cont'd)

TechPub_2614345_0106 - 1102_3047153_01.fm

(Cont'd)

d) Remove the rubber mat (5) with the aid of a scrapper taking care not to damage the sheet present sensing device (6).

e) Using a suitable solvent carefully remove the remaining adhesive.

Note! The plate must be clear of all adhesive residue before attempting to stick the new rubber mat on.

f) Assemble in the reverse order.

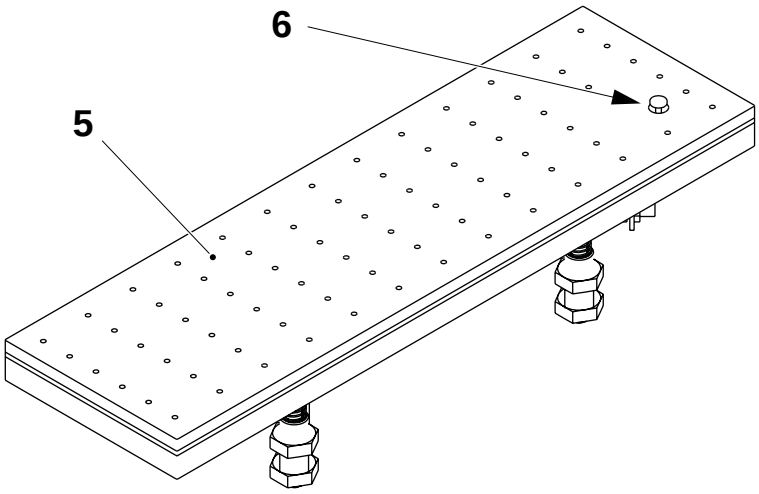

5 Rubber mat
6 Sheet present sensing device

TechPub_2614345_0106 - 1102_3047153_01.fm

7.2.3 Positioning Unit - Set

7.2.3-1 Positioning Unit - Setting

Machine Status	Mains Power OFF Air OFF
SPC Reference	2780415-0100

a) Set the distance **A** between the sheet carrier (1) and the top of the cap box (2) by adjusting the nuts (3).

b) Centre the sheet carrier (1) in the Y direction by loosening the screws (4) and sliding the plate (5) in its the elongated holes.

Note! Collect a sheet of caps and check the position.

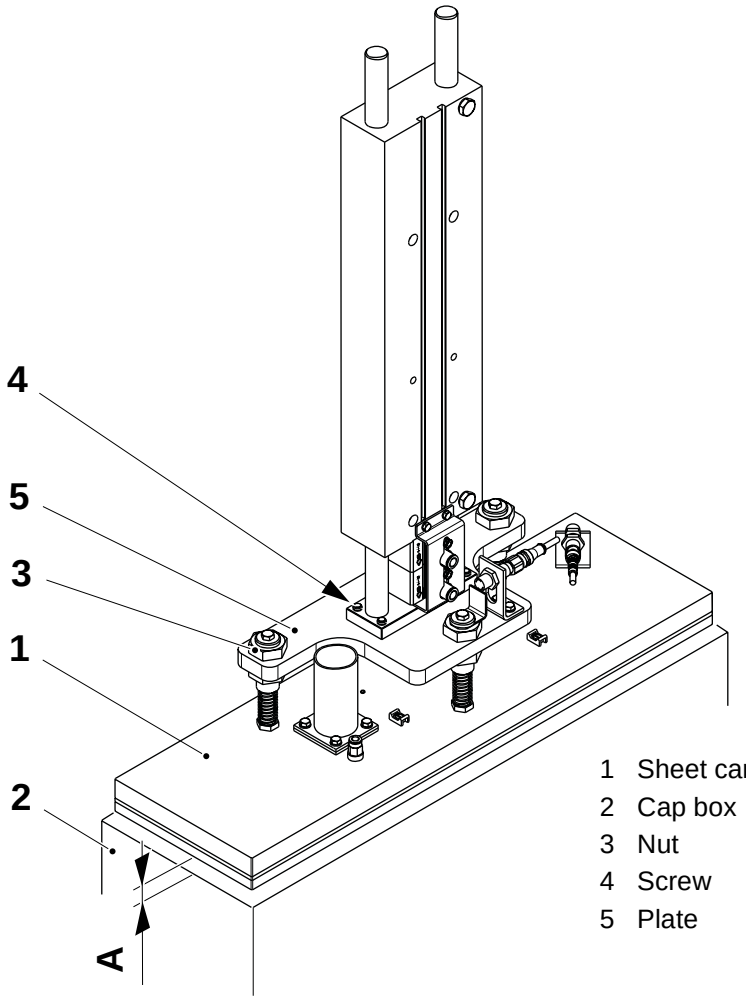

TechPub_2614345_0106 - 1102_3047153_01.fm

7.3 ReCap Magazine - Pusher

7.3.1 Pusher - Cylinder

7.3.1-1 Pusher - Change Cylinder

Machine Status	Mains Power OFF Air OFF
SPC Reference	2792486-0100

a) Remove the screws (1) and the pusher arm (2).

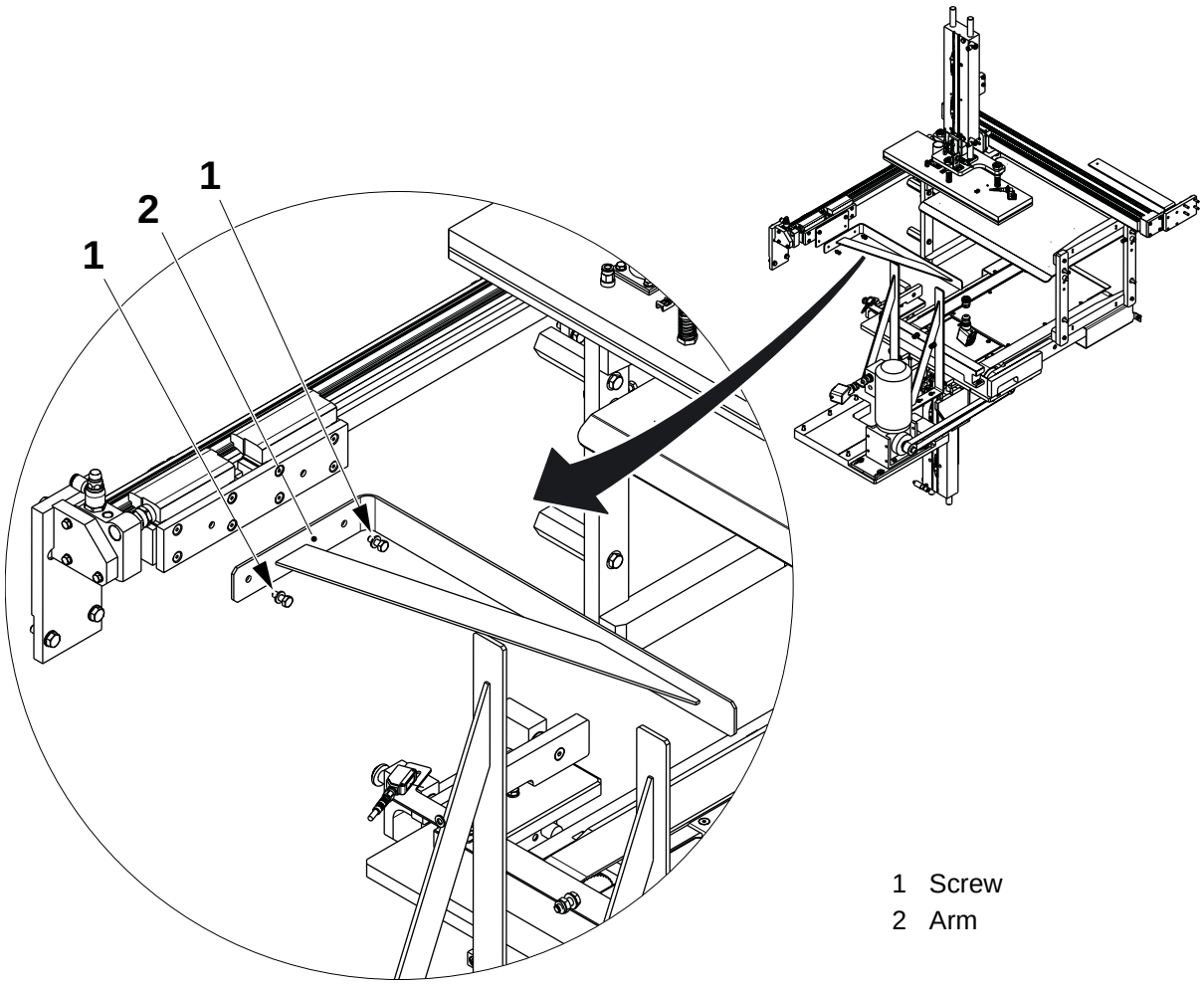

1 Screw
2 Arm

TechPub_2614345_0106 - 1102_3047154_01.fm

(Cont'd)

(Cont'd)

b) Disconnect the air hoses from the connectors (3).

c) Remove the connectors (4) from the sensors (5) and then remove the sensors (5).

d) At both ends of the cylinder (6), remove the screws (7) securing the cylinder (6) in position on the brackets (8) and lift out the cylinder (6).

e) Remove the screws (9) and the plate (10).

f) Change the cylinder (6).

g) Assemble in the reverse order.

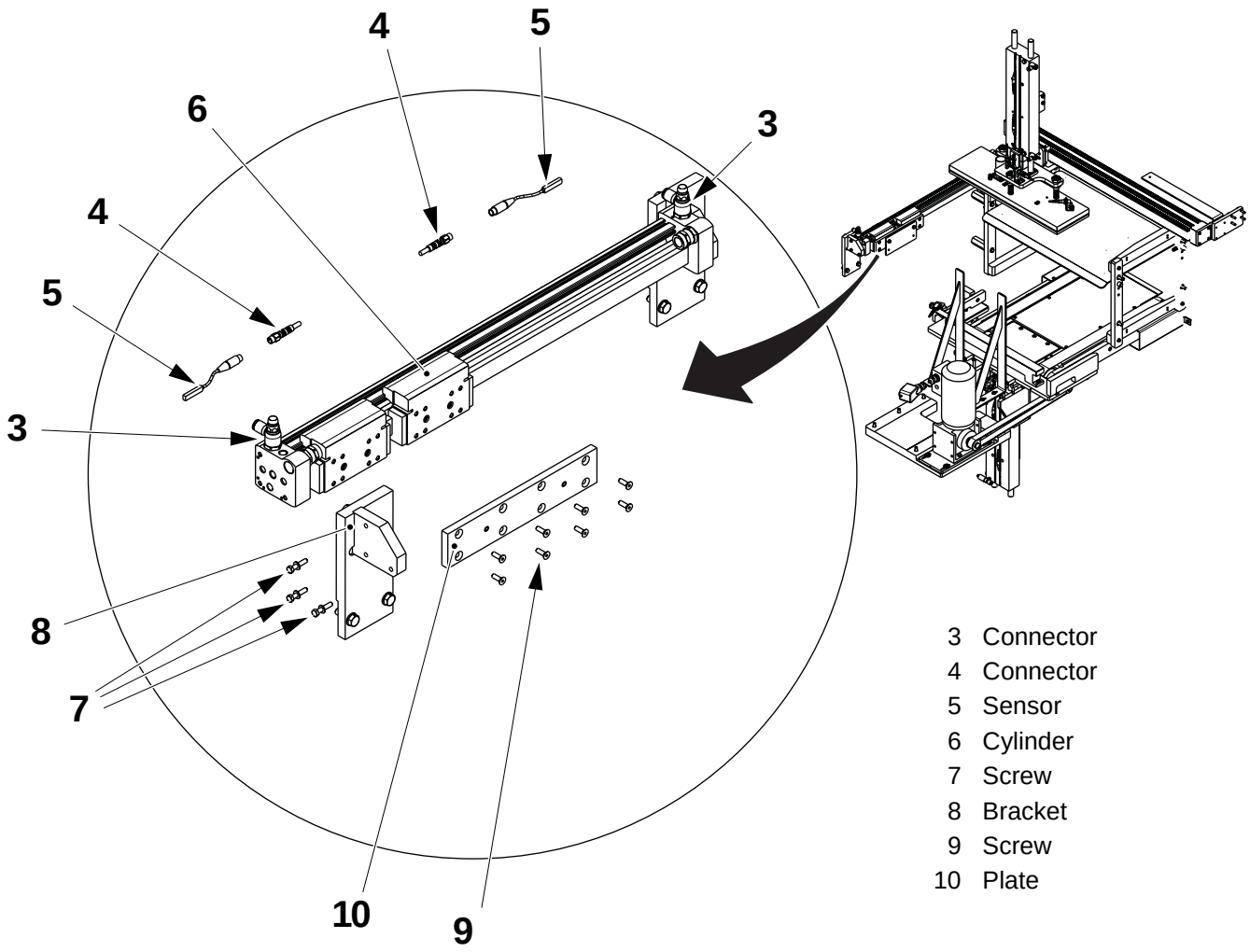

3 Connector
4 Connector
5 Sensor
6 Cylinder
7 Screw
8 Bracket
9 Screw
10 Plate

TechPub_2614345_0106 - 1102_3047154_01.fm

7.4 ReCap Magazine - Light Barrier

7.4.1 Light Barrier - Transmitter and Receiver

7.4.1-1 Receiver - Change

Machine Status	Mains Power OFF Air OFF
SPC Reference	2779794-0100

a) Disconnect the connector (1) from the light barrier receiver (2).

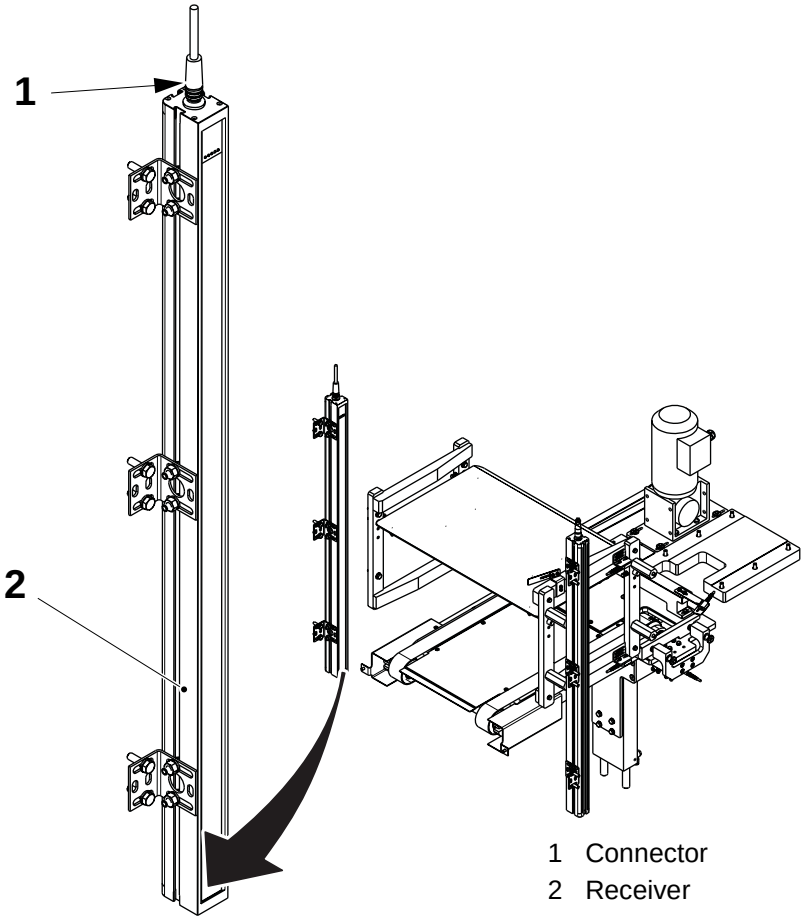

1 Connector
2 Receiver

(Cont'd)

TechPub_2614345_0106 - 1102_3047155_01.fm

(Cont'd)

b) Remove the 6 nuts (3) securing the receiver (2) in position and change the receiver (2).

c) Install the new receiver in the reverse order.

d) Turn the mains power to ON and check that the POWER LED (4) is ON.

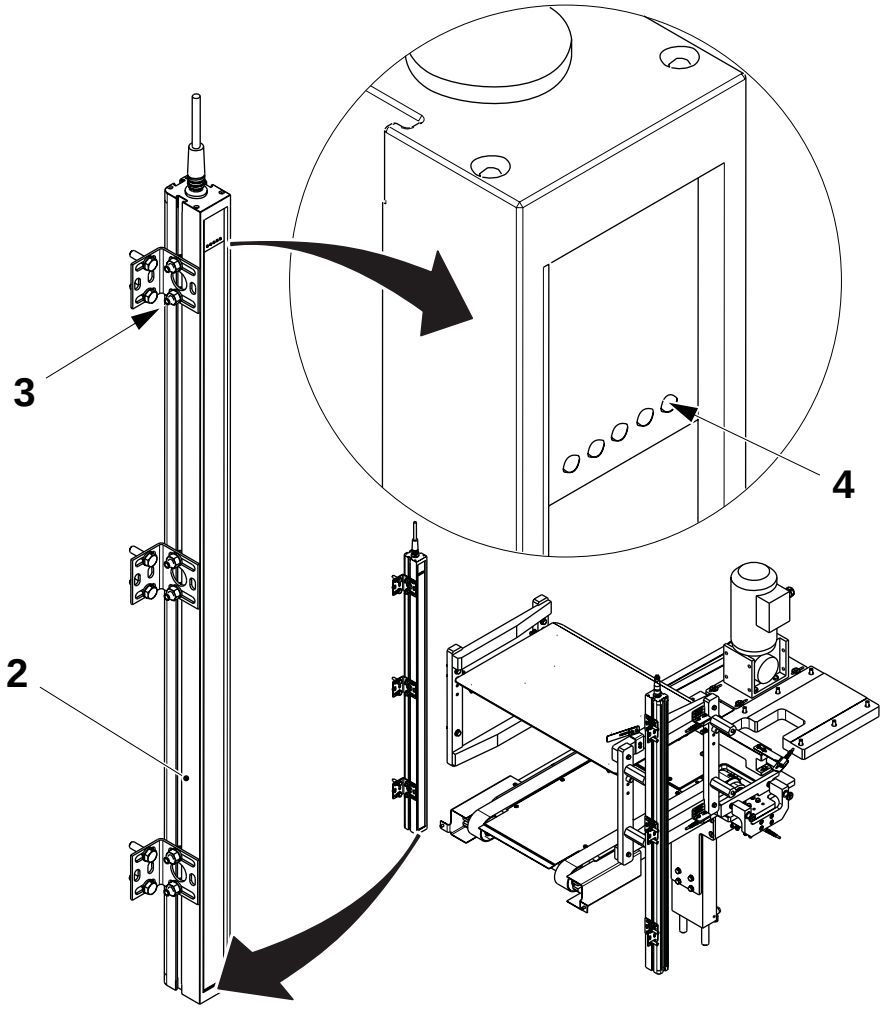

2 Receiver
3 Nut
4 POWER LED

TechPub_2614345_0106 - 1102_3047155_01.fm

7.4.1-2 Transmitter - Change

Machine Status	Mains Power OFF Air OFF
SPC Reference	2779794-0100

a) Disconnect the connector (1) from the light barrier transmitter (2).

b) Remove the 6 nuts (3) securing the transmitter (2) in position and change the transmitter (2).

c) Install the new transmitter in the reverse order.

d) Turn the mains power to ON and check that the green POWER LED (4) is ON.

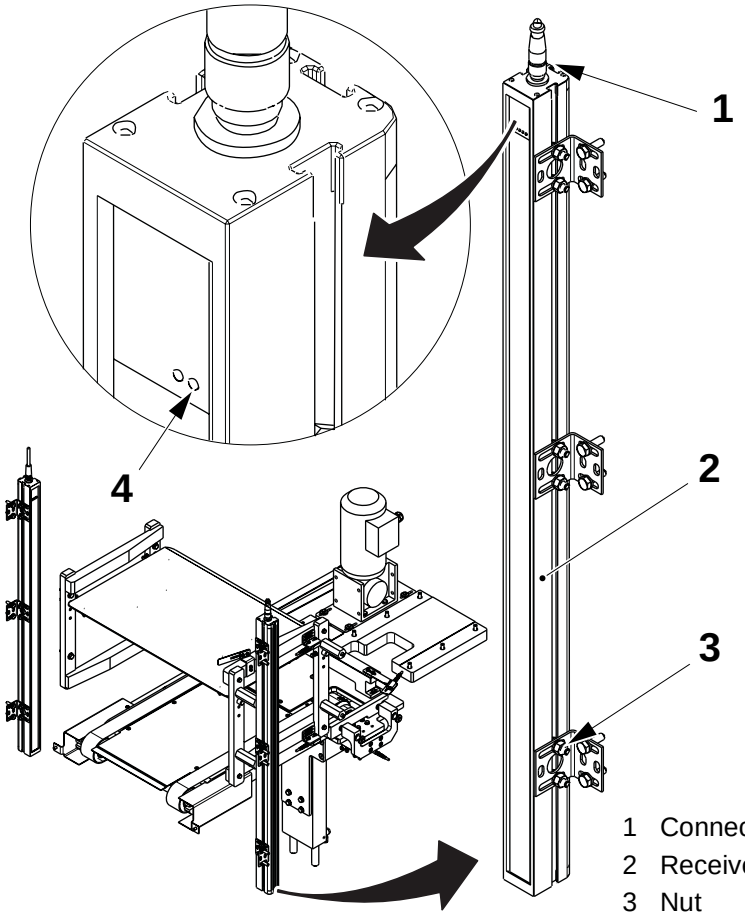

1 Connector
2 Receiver
3 Nut
4 POWER LED

(Cont'd)

TechPub_2614345_0106 - 1102_3047155_01.fm

7.4.1-3 Align - Transmitter and Receiver

a) Check the green POWER LED (1) on the receiver (2) is ON.

a) Check the green POWER LED (3) on the transmitter (4) is ON.

a) Use the slotted brackets (5) to move the relative positions of the receiver (2) and the transmitter (4) until the yellow UPPER LED (6) on the receiver (4) is on.

b) Tighten the slotted brackets (5) when this is achieved.

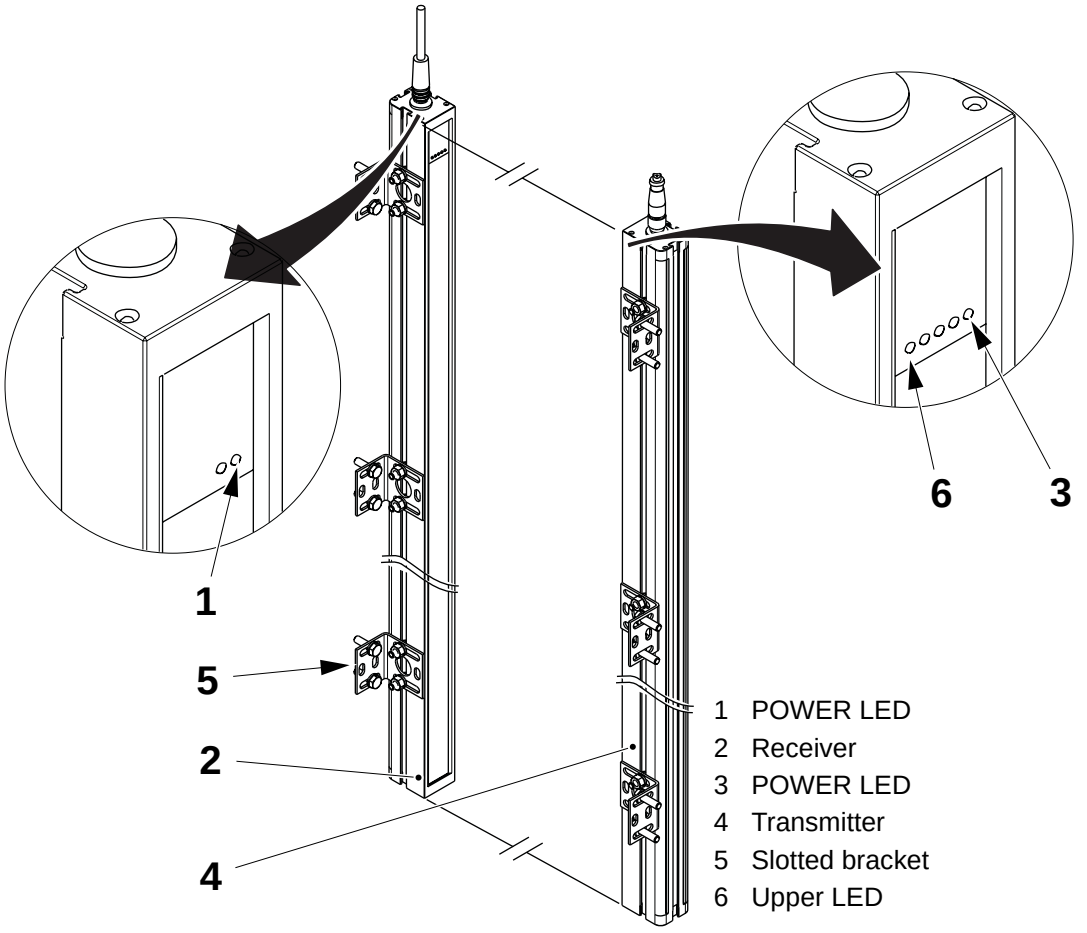

(Cont'd)

TechPub_2614345_0106 - 1102_3047155_01.fm

(Cont'd)

c) If the yellow STATUS LED (7) is ON, the transmitter is functioning correctly. If the yellow STATUS LED (7) is OFF or FLASHING, a transmitter error exists.

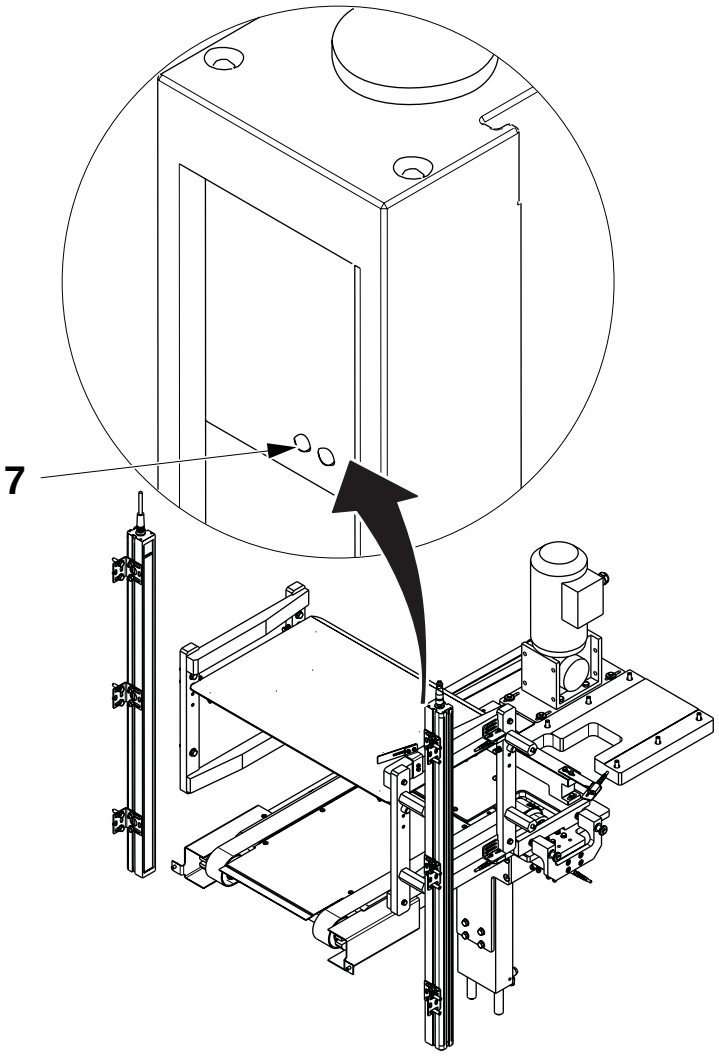

7 STATUS LED

TechPub_2614345_0106 - 1102_3047155_01.fm

7.4.1-4 Check - Transmitter and Receiver

a) Check that the UPPER LED (1) is on. If not align the transmitter and receiver, see 7.4.1-3 Align - Transmitter and Receiver and then continue below.

b) Check that the green GUARD LED (2) and BREAK LED (3) toggle ON and OFF when an object is used to break the light barrier.

c) Check if the yellow LOWER LED (4) is on or flashing.
   - If it is on, clean the front glass of the transmitter and receiver.
   - If it is flashing, there is a short circuited output to the PLUTO system.

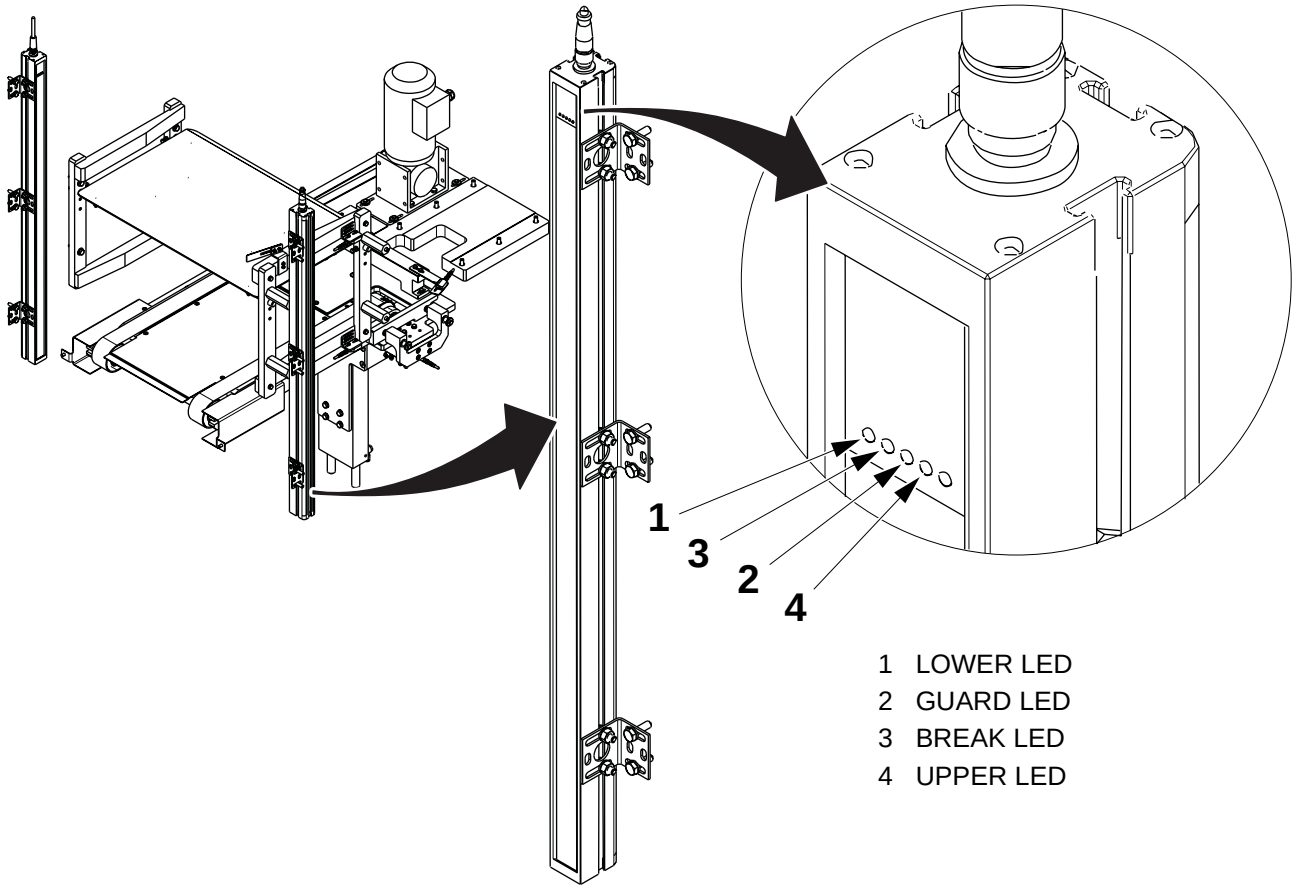

1 LOWER LED
2 GUARD LED
3 BREAK LED
4 UPPER LED

TechPub_2614345_0106 - 1102_3047155_01.fm

This page intentionally left blank

TechPub_2614345_0106 - 1102_3047155_01.fm

8 Electrical System

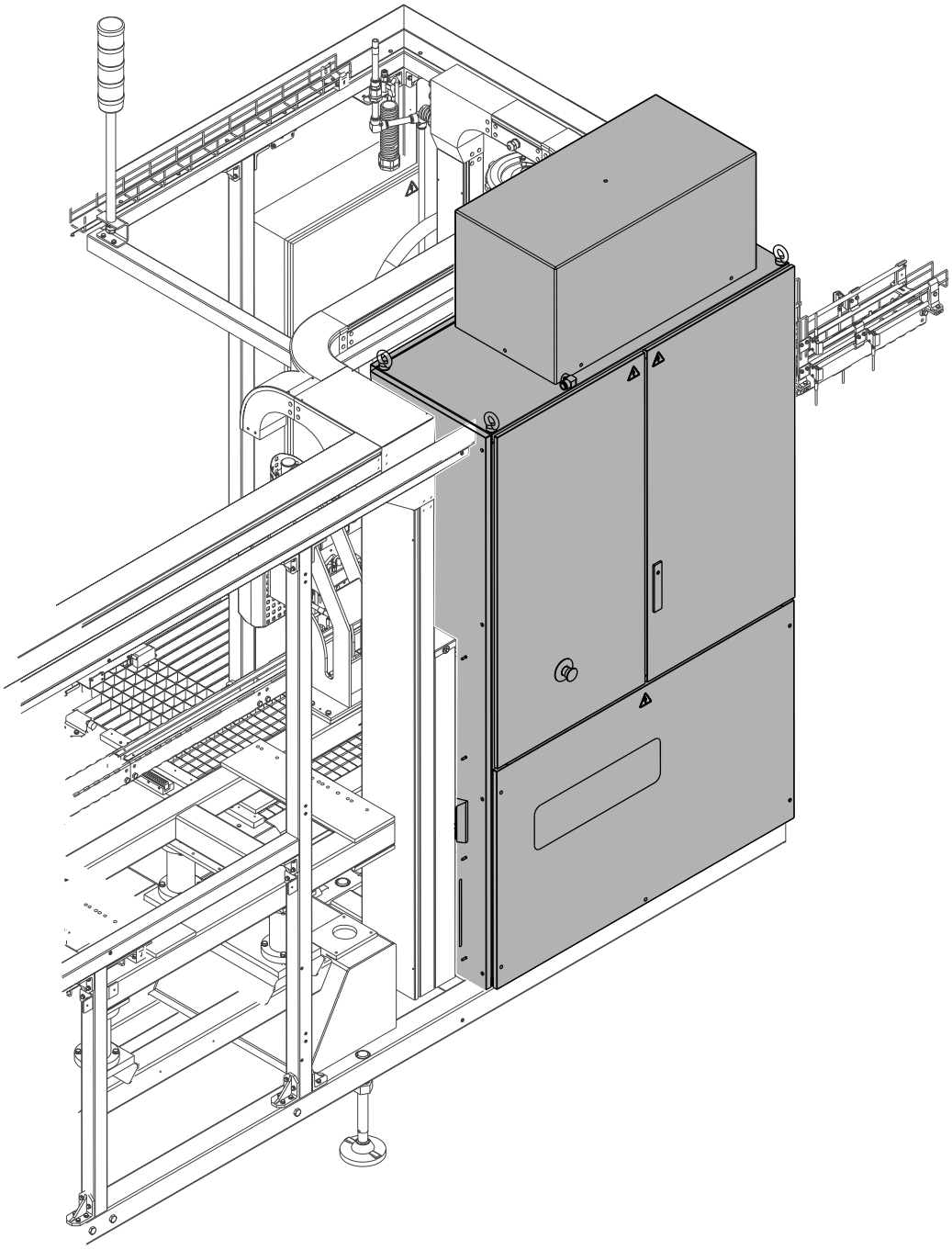

TechPub_2614345_0106 - 1203_3047156_01.fm

Electrical System - Description

SPC Reference	662911-0200

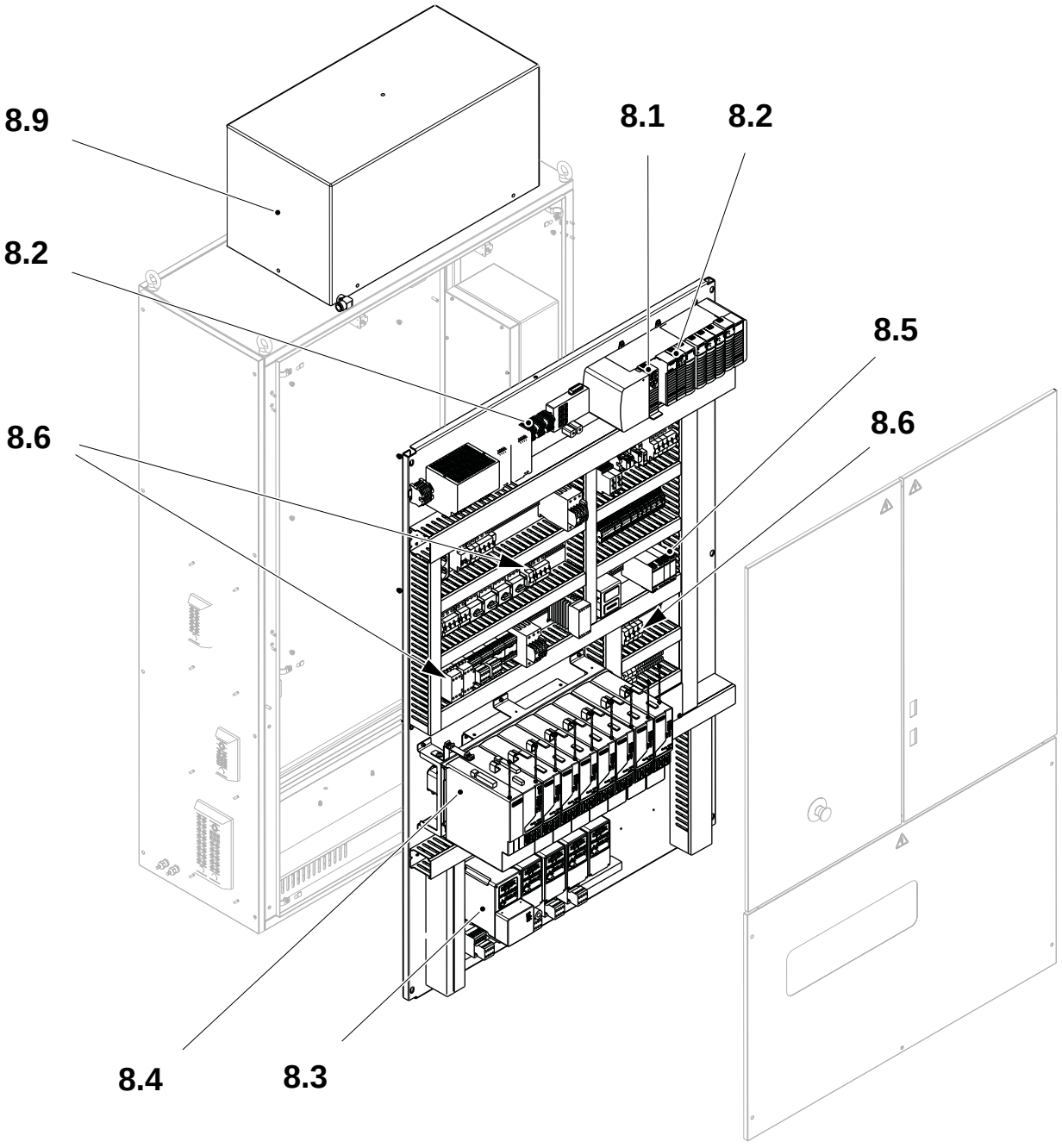

8.1 PLC
8.2 Distributed I/O and Network
8.3 Frequency Converter PowerFlex 4 and 40
8.4 Motor Drive Control
8.5 Safety System
8.6 Circuit Breaker
8.7 Sensors*
8.8 Control Panel*
8.9 Cooling System
8.10 Electrical Conversion*

*Not illustrated

TechPub_2614345_0106 - 1203_3047156_01.fm

8.0 Functional Description . . . . . 8 - 9

8.1 PLC . . . . . 8 - 22

8.1.1 Preparation for PLC Communication . . . . . 8 - 22

8.1.1-1 Preparation for PLC Communication - Configure PC Network Communications . . . . . 8 - 22

8.1.1-2 Preparations for PLC Communication - Configure RSLinx for PLC . . . . . 8 - 30

8.1.1-3 Preparations for PLC Communication - Set EtherNet Module IP Address . . . . . 8 - 34

8.1.2 PLC Controller . . . . . 8 - 41

8.1.2-1 PLC Controller - Software Requirements . . . . . 8 - 41

8.1.2-2 PLC Controller - Change Battery . . . . . 8 - 42

8.1.2-3 PLC Controller - Change . . . . . 8 - 43

8.1.2-4 PLC - Removing and Installing the Compact Flash Card . . . . . 8 - 49

8.1.2-5 PLC - PLC Status . . . . . 8 - 51

8.1.2-6 PLC - Download Program . . . . . 8 - 53

8.1.2-7 PLC - Upload Program . . . . . 8 - 63

8.1.2-8 Install the ControlFlash Application Firmware Library . . . . . 8 - 67

8.1.2-9 PLC - Load FirmWare in PLC, Ethernet, DeviceNet and SERCOS Modules . . . . . 8 - 73

8.1.2-10 Install the Driver for the First Kinetix Servo Driver . . . . . 8 - 76

8.2 Distributed I/O and Network . . . . . 8 - 85

8.2.1 Distributed I/O and Network - Overview. . . . . 8 - 85

8.2.2 Distributed I/O and DeviceNet - I/O Modules. . . . . 8 - 89

8.2.2-1 I/O Modules - Overview . . . . . 8 - 89

8.2.3 Distributed I/O and DeviceNet - DeviceNet Scanner . . . . . 8 - 96

8.2.3-1 DeviceNet Scanner - Change . . . . . 8 - 96

8.2.3-2 DeviceNet Scanner - Set DeviceNet Scanner (01K304) Node Address and Baudrate . . . . . 8 - 99

TechPub_2614345_0106 - 1203_3047156_01.fm

8.2.3-3 DeviceNet - DeviceNet on the Machine . . . . . 8 - 100
8.2.3-4 DeviceNet - Saving DeviceNet Files in a Computer . . . . . 8 - 108
8.2.3-5 DeviceNet - Loading a Program in a New DeviceNet Scanner . . . . . 8 - 109
8.2.3-6 DeviceNet - Loading a DeviceNet Program in a New Point I/O Module Adaptor . . . . . 8 - 112

8.2.4 Distributed I/O and DeviceNet - Troubleshooting . . . . . 8 - 115

8.2.4-1 Troubleshooting - General DeviceNet Error . . 8 - 115
8.2.4-2 Troubleshooting - DeviceNet Error Indications and Messages on DeviceNet Scanner (Node 0) . . . . . 8 - 116
8.2.4-3 Troubleshooting - DeviceNet Error Indications on the PowerFlex40 Module 22-COMM-D Adaptor (Node 1) . . . . . 8 - 122
8.2.4-4 Troubleshooting - DeviceNet Error Indications on the 1734-ADN Adaptor for the Point I/O Modules (Node 2) . . . . . 8 - 126
8.2.4-5 Troubleshooting - DeviceNet Error Indications on the Armor Block I/O Module (Node 3) . . . . . 8 - 129
8.2.4-6 Troubleshooting - DeviceNet Error Indications on the Armor Block I/O Module (Node 4) . . . . . 8 - 132
8.2.4-7 Troubleshooting - DeviceNet Error Indications on the Armor Block I/O Module (Node 5) (ReCap Only) . . . . . 8 - 132
8.2.4-8 Troubleshooting - DeviceNet Error Indications on the Armor Block I/O Module (Node 6) (ReCap Only) . . . . . 8 - 132

8.2.5 Ethernet . . . . . 8 - 133

8.2.5-1 EtherNet Module - Change . . . . . 8 - 134

8.3 Frequency Converter PowerFlex 4 and 40 . . 8 - 137

8.3.1 PowerFlex40 and PowerFlex 4 Frequency Converters . . . . . 8 - 137

8.3.1-1 PowerFlex40 DeviceNet Adaptor - Change . . . . . 8 - 138
8.3.1-2 Frequency Converter - Change . . . . . 8 - 149
8.3.1-3 Frequency Converter - LED Description . . . . . 8 - 154

TechPub_2614345_0106 - 1203_3047156_01.fm

8.3.1-4 Frequency Converters - Change Parameters . . . . . 8 - 158
8.3.1-5 Frequency Converters - Fault Types . . . . . 8 - 163
8.3.1-6 Frequency Converters - Identifying the Fault . . . . . 8 - 164
8.3.1-7 Frequency Converters - Clearing a Fault Indication Manually . . . . . 8 - 165
8.3.1-8 Frequency Converters - Clearing a Fault Indication Automatically . . . . . 8 - 166

8.4 Motor Drive Control . . . . . 8 - 171

8.4.1 Servo System - Overview . . . . . 8 - 171

8.4.2 Servo System - Sercos Module. . . . . 8 - 174

8.4.2-1 Sercos Module - Description . . . . . 8 - 174
8.4.2-2 Sercos Module - Change . . . . . 8 - 176

8.4.3 Servo Drive . . . . . 8 - 180

8.4.3-1 Servo Drive - Description . . . . . 8 - 180
8.4.3-2 Servo Drive - Change Drive . . . . . 8 - 184
8.4.3-3 Servo Drive - Set Baud Rate . . . . . 8 - 190

8.4.4 Servo System Troubleshooting . . . . . 8 - 191

8.4.4-1 Troubleshooting - General . . . . . 8 - 191
8.4.4-2 Troubleshooting - SERCOSNet Error Indication and Error Codes on the Integrated Axis Module and Axis Modules . . . . . 8 - 192
8.4.4-3 SERCOS Module - Troubleshooting . . . . . 8 - 203

8.5 Safety System . . . . . 8 - 207

8.5-1 Safety System - Description . . . . . 8 - 207

8.5.1 Pluto Maintenance . . . . . 8 - 208

8.5.1-1 Pluto Maintenance - Connecting a PC to Pluto Module . . . . . 8 - 208
8.5.1-2 Pluto Maintenance - Set the ID-FIX Address after Replacing an ID-FIX . . . . . 8 - 209
8.5.1-3 Pluto Maintenance - Change Baud Rate, Error Code E26 . . . . . 8 - 216
8.5.1-4 Pluto Maintenance - Installing a Pluto Module in an Existing Application . . . . . 8 - 218

TechPub_2614345_0106 - 1203_3047156_01.fm

8.5.1-5 Pluto Maintenance - Program Download from a PC to a Pluto Unit . . . . . 8 - 220

8.5.2 Pluto Troubleshooting . . . . . 8 - 226

8.5.2-1 Pluto Troubleshooting - Safety System Alarm on the Control Panel . . . . . 8 - 226

8.5.2-2 Pluto Troubleshooting - Explanations of Inputs, Outputs and LEDs . . . . . 8 - 229

8.6 Circuit Breaker . . . . . 8 - 233

8.6.1 Automatic Fuses . . . . . 8 - 233

8.6.1-1 Automatic Fuses - Set . . . . . 8 - 233

8.6.2 Residual Current Device . . . . . 8 - 237

8.6.2-1 Residual Current Device - Check Function . . . . . 8 - 237

8.6.3 Power Supply - Current Control Relay . . . . . 8 - 239

8.6.3-1 Current Control Relay- Check Function . . . . . 8 - 239

8.7 Sensors . . . . . 8 - 240

8.7.1 Belt Brake Package Sensor . . . . . 8 - 240

8.7.1-1 Sensor (20B003) - Set Sensitivity . . . . . 8 - 240

8.7.1-2 Sensors (20B003) - Check NC/NO Function . . . . . 8 - 241

8.7.1-3 Sensors - Set NC/NO Function . . . . . 8 - 242

8.7.2 Cap Sorter Outfeed Congestion Sensor . . . . . 8 - 243

8.7.2-1 Sensor (50B200) - Set . . . . . 8 - 243

8.7.3 General Purpose Sensor . . . . . 8 - 246

8.7.3-1 Sensor (21B402, 21B404, 21B406, 21B408, 21B424, 21B602, 21B604, 50B013, 50B500, 50B504) - Set . . . . . 8 - 246

8.7.4 Elevator Sensors . . . . . 8 - 249

8.7.4-1 Sensor - Set . . . . . 8 - 249

8.8 Control Panel . . . . . 8 - 251

8.8-1 Control Panel . . . . . 8 - 251

8.8-1-1 Control Panel - Overview . . . . . 8 - 251

8.8-1-2 Control Panel - Touch Screen . . . . . 8 - 252

TechPub_2614345_0106 - 1203_3047156_01.fm

8.8.1 Touch Screen . . . . . 8 - 253

8.8.1-1 Touch Screen - TPOP SHUTDOWN . . . . . 8 - 253
8.8.1-2 Touch Screen - Firmware Installation . . . . . 8 - 254
8.8.1-3 Touch Screen - New Application Software Installation . . . . . 8 - 273
8.8.1-4 Touch Screen - Load New Application . . . . . 8 - 278
8.8.1-5 Touch Screen - Check/Set Network Configuration . . . . . 8 - 283
8.8.1-6 Touch Screen - Startup Options Setup . . . . . 8 - 299
8.8.1-7 Touch Screen - Display Setup . . . . . 8 - 305
8.8.1-8 Touch Screen - Time/Date/Regional Settings Setup . . . . . 8 - 309
8.8.1-9 Touch Screen - Start-Up Language Setup . . . . 8 - 313
8.8.1-10 Touch Screen - Language Setup . . . . . 8 - 319
8.8.1-11 Touch Screen - Create New Recipes . . . . . 8 - 326
8.8.1-12 Touch Screen - Saving Recipe Settings . . . . . 8 - 332
8.8.1-13 Touch Screen - Create New Recipes . . . . . 8 - 333
8.8.1-14 Touch Screen - Delete Recipes . . . . . 8 - 339
8.8.1-15 Touch Screen - Change Recipes . . . . . 8 - 341

8.9 Cooling System . . . . . 8 - 343

8.9.1 Cooling Unit . . . . . 8 - 343

8.9.1-1 Cooling Unit - Clean Filter . . . . . 8 - 343
8.9.1-2 Cooling Unit - Change Filter . . . . . 8 - 345
8.9.1-3 Cooling Unit - Check . . . . . 8 - 346
8.9.1-4 Cooling Unit - Overhaul . . . . . 8 - 348
8.9.1-5 Cooling Unit - Troubleshooting . . . . . 8 - 354

8.10 Electrical Conversion . . . . . 8 - 355

8.10.1 Variable Frequency Drive . . . . . 8 - 355

8.10.1-1 Maintenance Instructions . . . . . 8 - 355

8.10.2 Axis Module . . . . . 8 - 355

8.10.2-1 Maintenance Instructions . . . . . 8 - 355

8.10.3 Communication Unit . . . . . 8 - 355

8.10.3-1 Maintenance Instructions . . . . . 8 - 355

TechPub_2614345_0106 - 1203_3047156_01.fm

This page intentionally left blank

TechPub_2614345_0106 - 1203_3047156_01.fm

8.0 Functional Description

The Networks

The system uses networks for almost all communications.

There are 3 networks in the machine:

- the Ethernet; used for data exchange on the”input” side of the PLC
- the Sercos net; a fibre optic high speed link for the communication of motion data between the SERCOS module, in the Control Logic Rack, and the Servo drivers of the Motor Drive Control
- the Device net; used for the transmission of data to and from sensors and actuators via the I/O Modules and the Armor Block devices. The DeviceNet is also used for the control of the Frequency Converters and the AC motors connected to them.

(Cont'd)

TechPub_2614345_0106 - 1203_3047157_01.fm

(Cont'd)

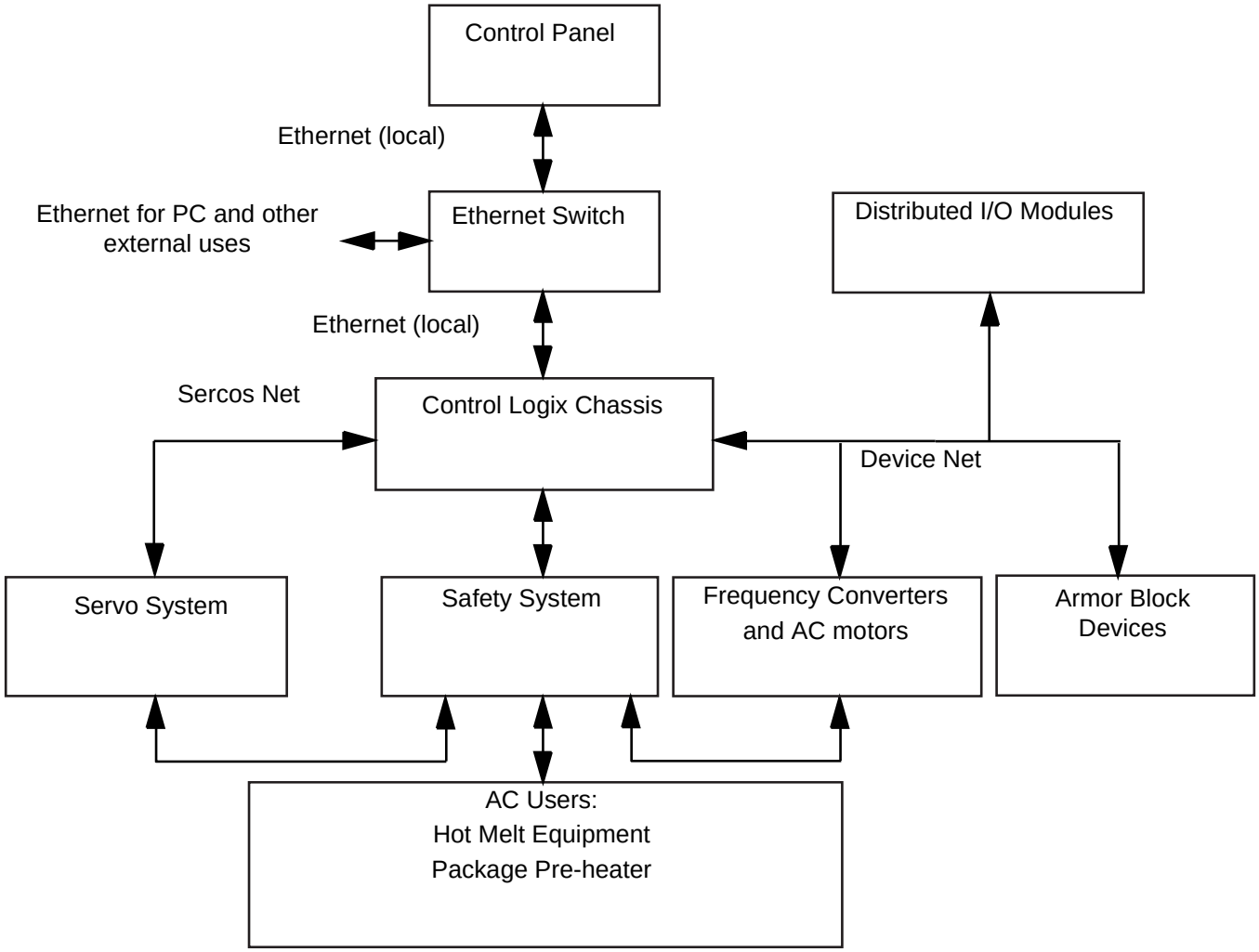

TechPub_2614345_0106 - 1203_3047157_01.fm

(Cont'd)

(Cont'd)

The Control Panel (HMI)

The Control Panel is used to start, stop and supervise the machine from one common point. The control panel display (touch screen) is touch sensitive.

The operating panel is described in detail in the Operating Manual for this machine.

The Safety System

The Pluto PLC safety system provides a method of putting the machine in a mode that is safe to work with when an action is taken that could put the operator in danger or create a situation where the machinery could be damaged. The Pluto PLC communicates via the I/O bus with the system PLC.

(Cont'd)

TechPub_2614345_0106 - 1203_3047157_01.fm

(Cont'd)

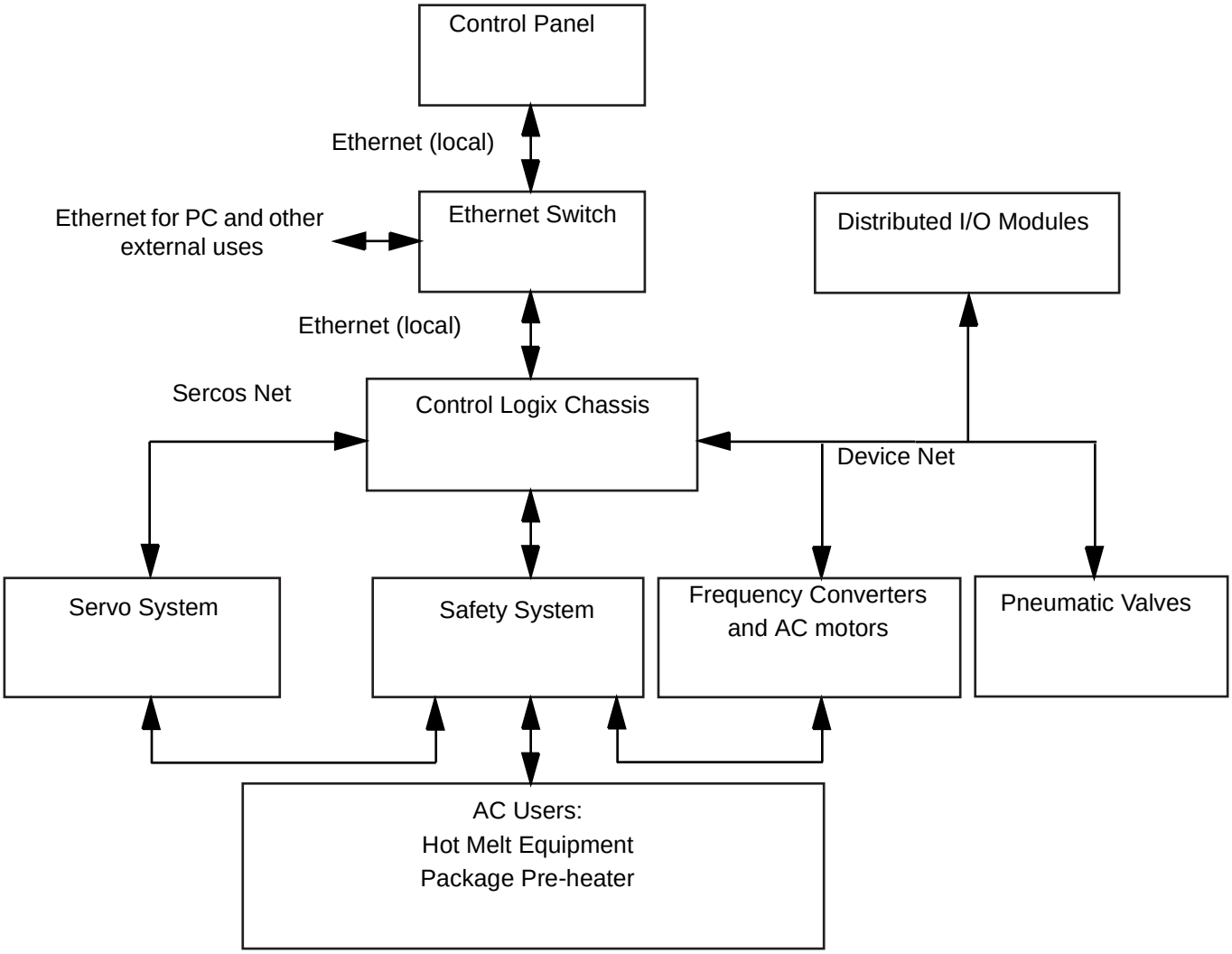

TechPub_2614345_0106 - 1203_3047157_01.fm

(Cont'd)

(Cont'd)

Control Logic Chassis - PLC Processor

The PLC Processor (01K301) uses upgradeable firmware to perform the tasks contained in PLC program. The PLC program can be loaded into the unit from a PC and, if necessary, the program in the PLC can be copied to a PC. System variables, entered via the Control Panel or the PC are also stored in the PLC.

A CompactFlash card is provided in the PLC module to allow a back-up of the system data and the PLC program to be made.

See 8.1 PLC for further information.

Control Logic Chassis - Ethernet Bridge Modules

There are two ethernet bridge modules. The bridge module (01K302) provides a link to external devices such as a line controller.

The other ethernet bridge module (01K303) is connected to the ethernet switch (81T200) to provide a connection to the Control Panel, the Vision System, if it is installed, and the host PC.

See 8.1 PLC for further information.

Control Logic Chassis - DeviceNet Bridge Scanner Module

The devicenet scanner (01K304) provides a link between the PLC Processor, the Frequency Converters, the I/O modules. and the Armor Block modules.

See 8.2.2 Distributed I/O and DeviceNet - I/O Modules for further information.

(Cont'd)

TechPub_2614345_0106 - 1203_3047157_01.fm

(Cont'd)

Control Logix Chassis

PLC Processor ((01K301)	Ethernet Bridge Module (01k302) Ethernet Bridge Module (01k303)	DeviceNet Bridge Scanner Module (01K304)	Digital Input Module (01k305) Digital Input Module (01k306)	Digital Output Module (01K307) Digital Output Module (01K308)	ReCap Machines Only Digital Output Module (01K309)	Sercos Module (01K310)

(Cont'd)

TechPub_2614345_0106 - 1203_3047157_01.fm

(Cont'd)

Control Logic Chassis - Digital Input Module

The digital input modules (01K305) and (01K306) receive digital signals from devices such as sensors and relays and distributes them in the electrical cabinet and the machine board.

These are “plug and play” devices and require no maintenance.

Control Logic Chassis - Digital Output Module

The two digital output modules (01K307) and (01K308) send signals to devices such as sensors, relays and valves and also distribute signals to components in the electrical cabinet and the machine board.

These are “plug and play” devices and require no maintenance.

Control Logic Chassis - Digital Output Module (Recap Only)

The digital output module (01K309) sends signals to pneumatic panel to operate the additional valves used in Recap machines.

This is a “plug and play” device and requires no maintenance.

Control Logic Chassis - Sercos Module

The SERCOS module (01K310), in the Control Logix Chassis, converts motion data from the PLC Processor into data that can be transmitted via the SErial Real time COmmunication System SERCOS digital interface to the Kinetix 6000 drivers.

See 8.4.2 Servo System - Sercos Module for further information.

Power Supplies

The low voltage power supply unit (01T200) produces the stabilised 24V DC for Control Logix Chassis and other components in the machine.

The low voltage power supply unit (81T400) produces 24V DC for the DeviceNet.

(Cont'd)

TechPub_2614345_0106 - 1203_3047157_01.fm

(Cont'd)

Control Logix Chassis

PLC Processor ((01K301)	Ethernet Bridge Module (01k302) Ethernet Bridge Module (01k303)	DeviceNet Bridge Scanner Module (01K304)	Digital Input Module (01k305) Digital Input Module (01k306)	Digital Output Module (01K307) Digital Output Module (01K308)	ReCap Machines Only Digital Output Module (01K309)	Sercos Module (01K310)

(Cont'd)

TechPub_2614345_0106 - 1203_3047157_01.fm

(Cont'd)

Kinetix 6000 Servo Control

ScrewCap Machines

The kinetix servo control modules, convert the position or motion data arriving on the SERCOS net into servo motor power.

There is one module for each servo motor.

Servo motors are used where precise positioning or exact speeds are required.

See 8.4.1 Servo System - Overview for more information.

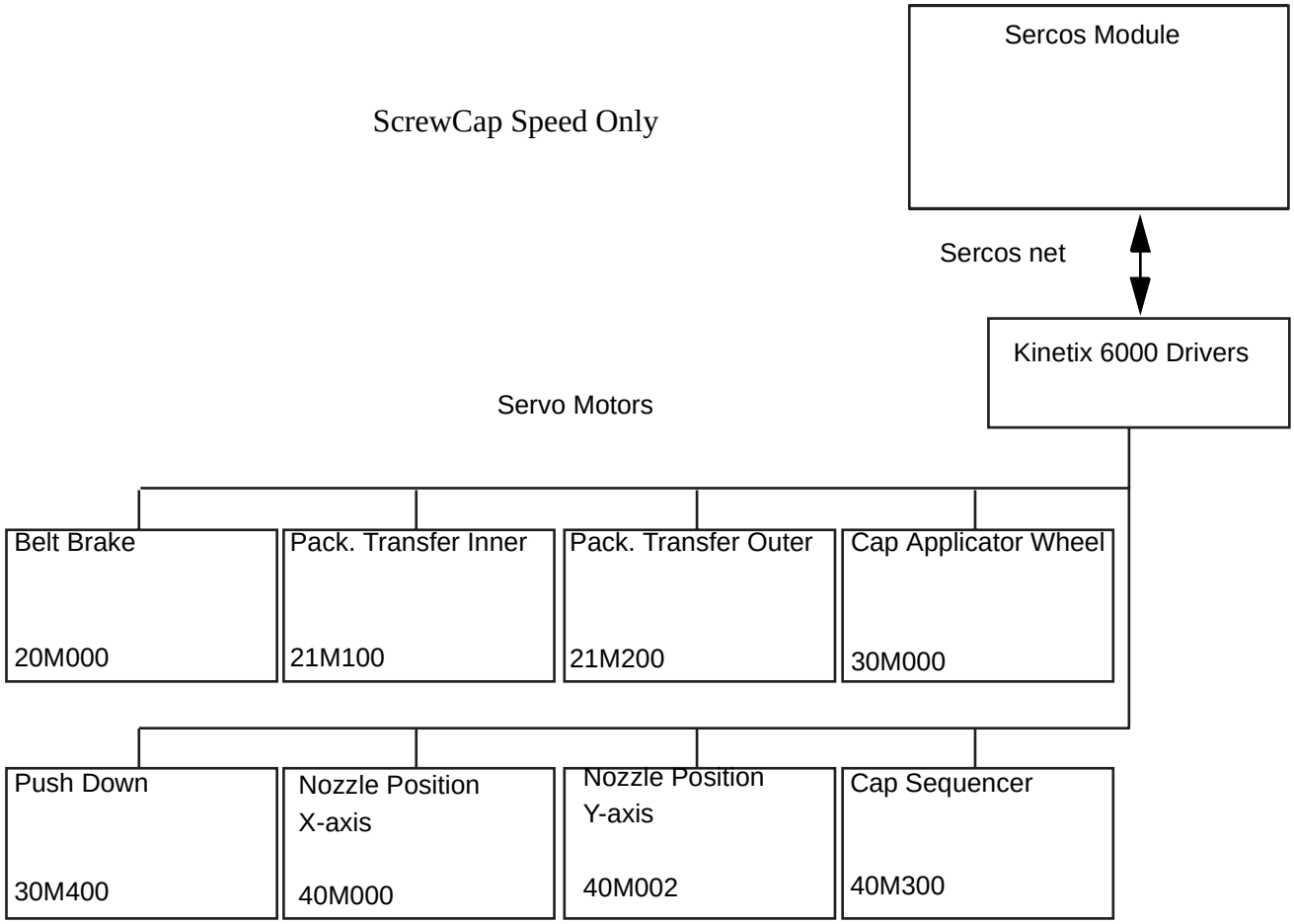

(Cont'd)

TechPub_2614345_0106 - 1203_3047157_01.fm

(Cont'd)

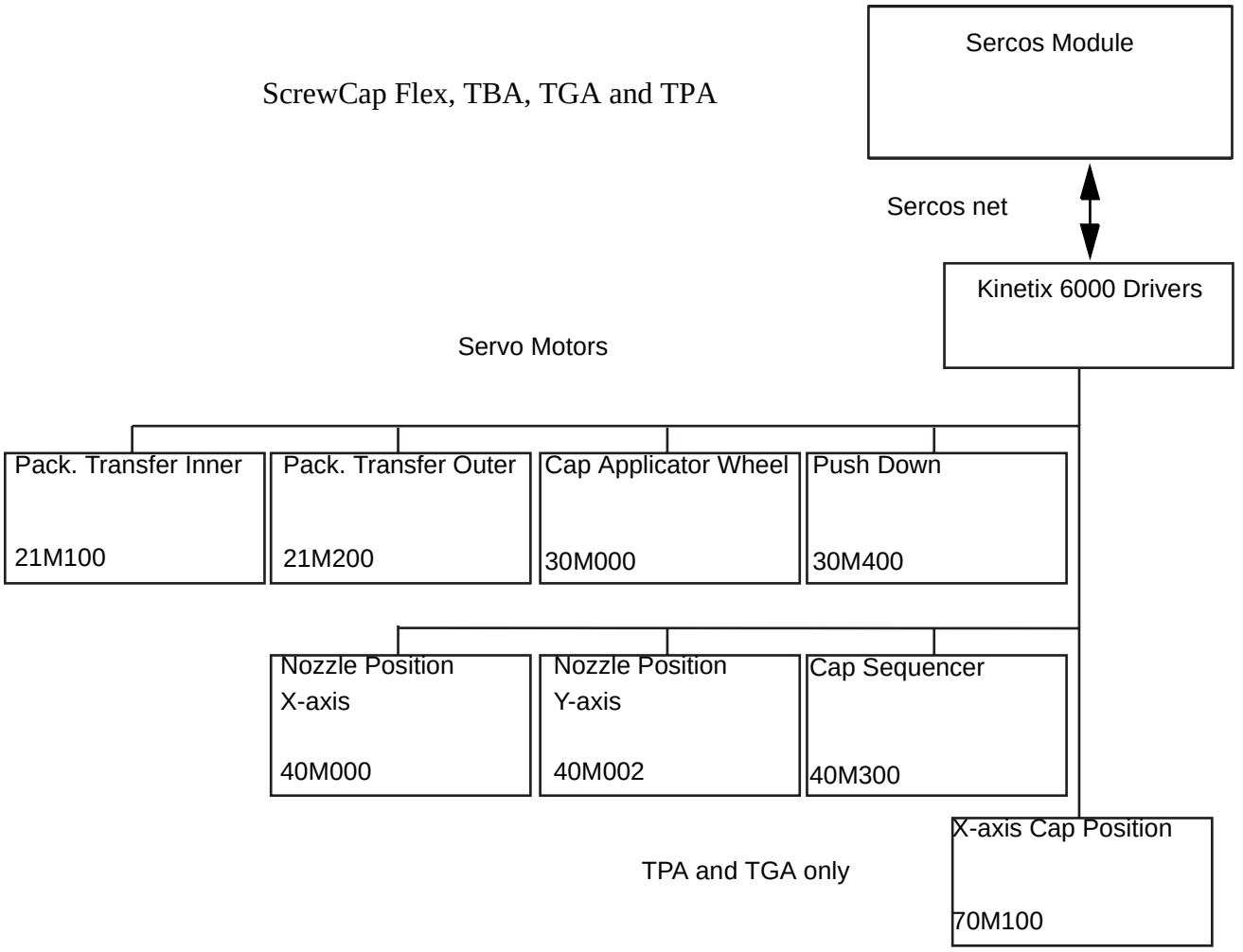

(Cont'd)

TechPub_2614345_0106 - 1203_3047157_01.fm

(Cont'd)

Kinetix 6000 Servo Control

ReCap Machines

The kinetix servo control modules, convert the position or motion data arriving on the SERCOS net into servo motor power.

There is one module for each servo motor.

Servo motors are used where precise positioning or exact speeds are required.

See 8.4.1 Servo System - Overview for more information.

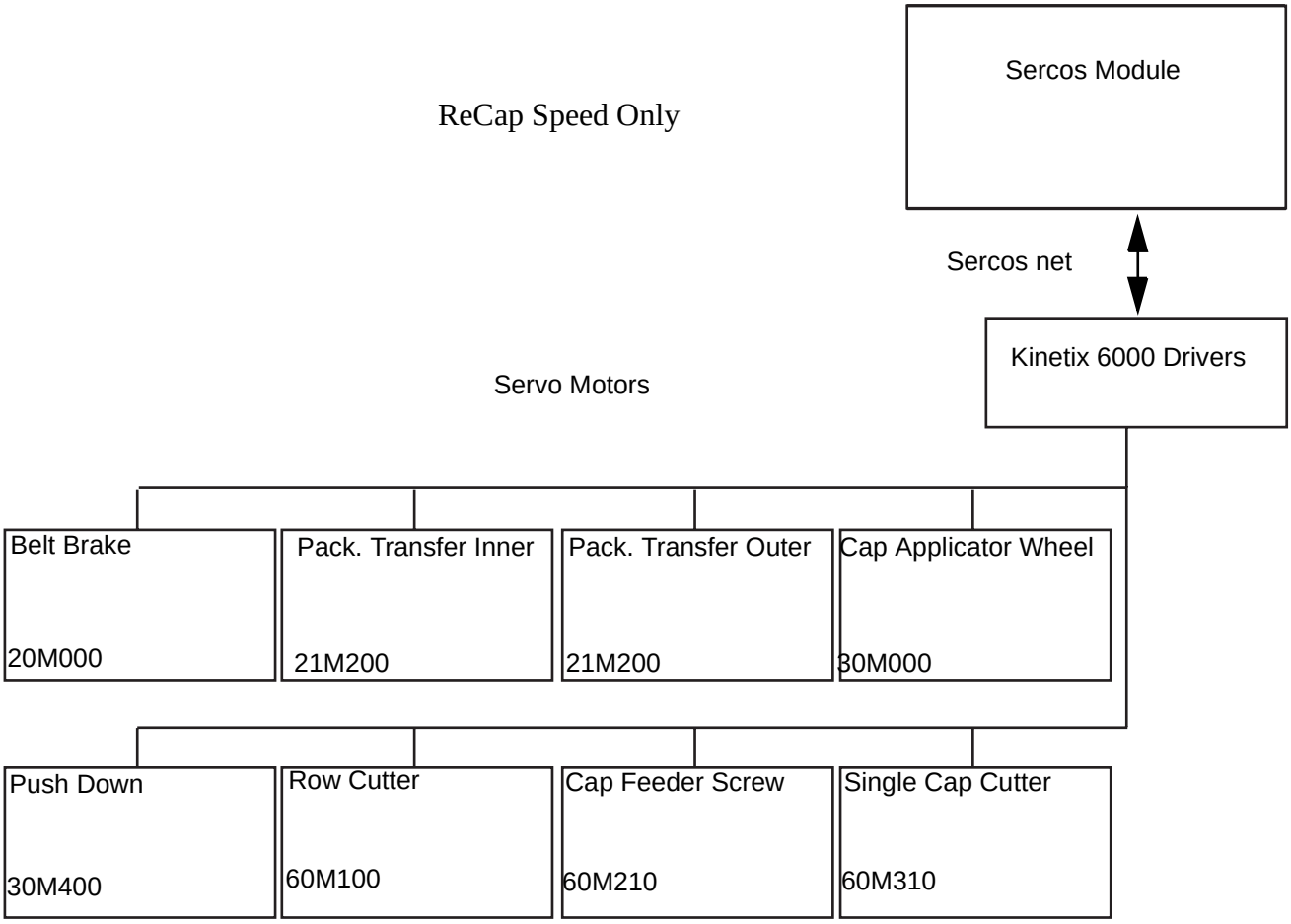

(Cont'd)

TechPub_2614345_0106 - 1203_3047157_01.fm

(Cont'd)

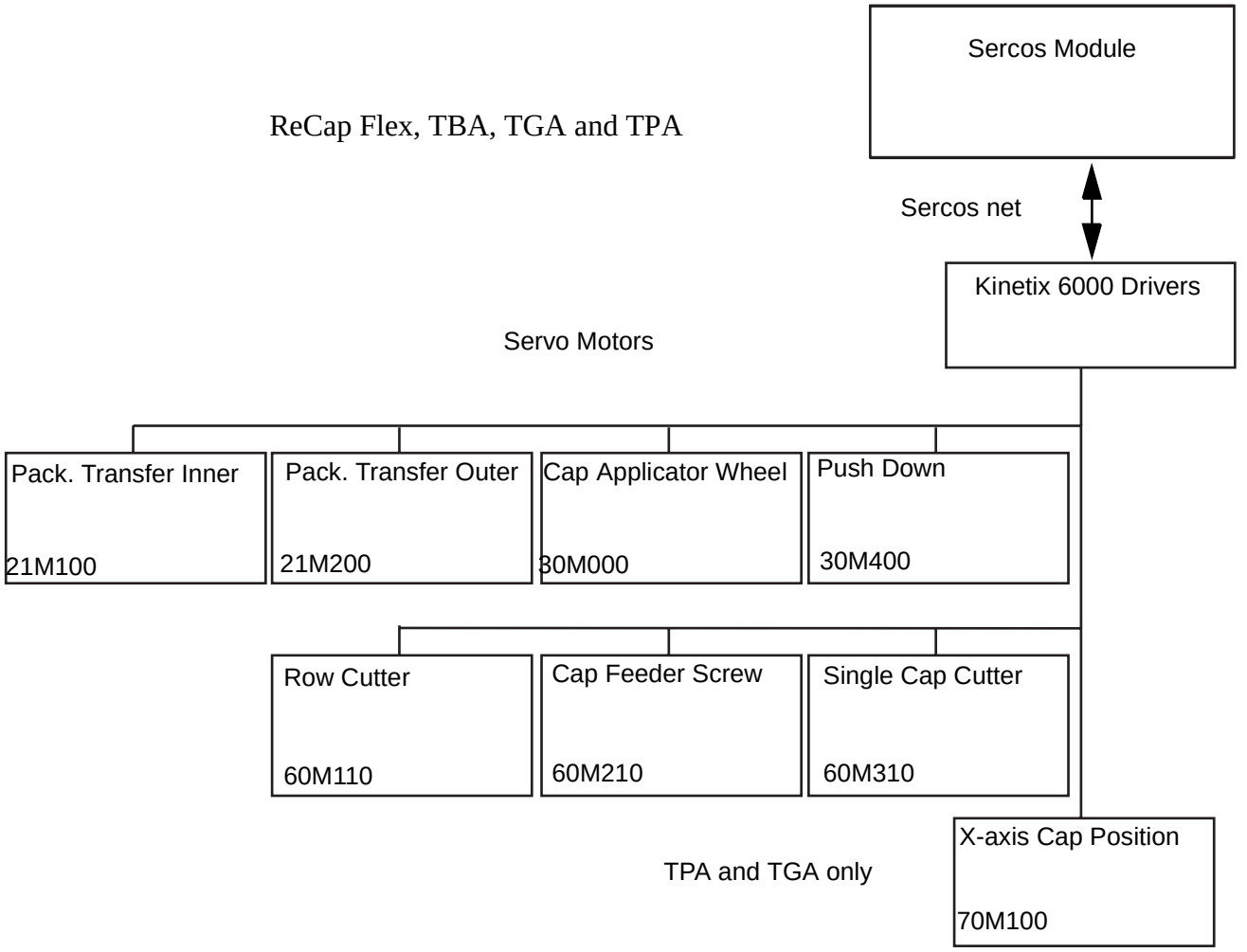

(Cont'd)

TechPub_2614345_0106 - 1203_3047157_01.fm

(Cont'd)

The Frequency Converters

Frequency converters are used to provide the drive power for the AC motors.

AC motors are used where a constant speed is required irrespective of their load.

There is one frequency converter for each AC motor.

The Distributed I/O Modules

The Distributed I/O Modules communicate with sensors and actuators in the system on one side and with the DeviceNet Bridge Module on the other.
See 8.2.1 Distributed I/O and Network - Overview for more information.

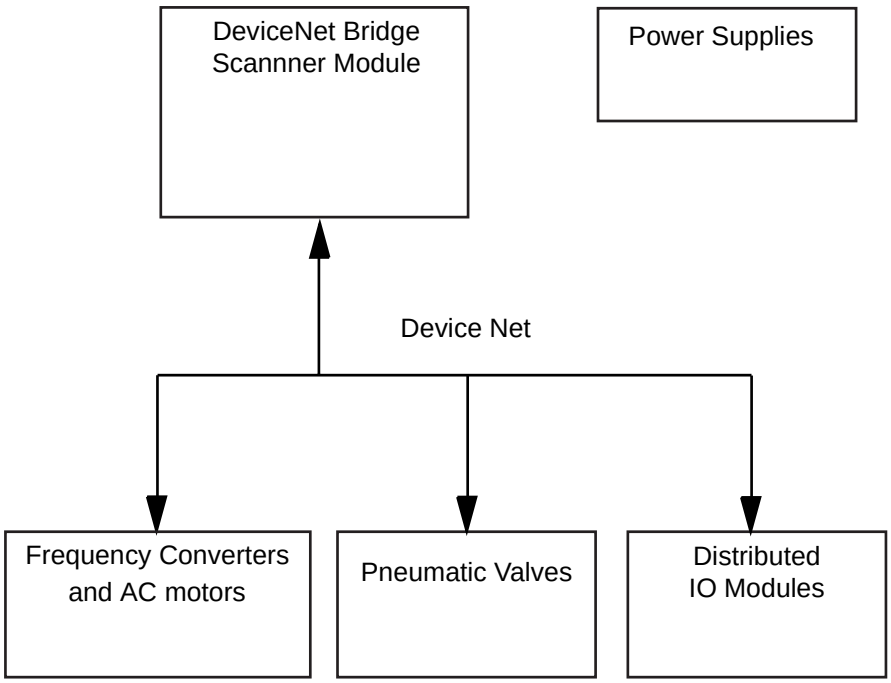

TechPub_2614345_0106 - 1203_3047157_01.fm

8.1 PLC

SPC Reference	662911-0200

8.1.1 Preparation for PLC Communication

8.1.1-1 Preparation for PLC Communication - Configure PC Network Communications

Machine Status	Mains Power ON
Special Equipment	PC with CD drive
SPC Reference	2833407-0100

Before data can be sent to the PLC from the PC via an ethernet cable, the PC network settings must first be configured. The following procedure describes how to configure the PC network communications.

Note! If after configuring the PC network communications it is not possible to connect to the PLC, it is recommended to disable the PC firewall protection. Contact the local IT administrator for assistance in disabling the PC fire wall protection.

(Cont'd)

TechPub_2614345_0106 - 1203_3047157_01.fm

(Cont'd)

Disable Wireless Network Connection

a) Open the START MENU (1) on the PC and select SETTINGS (2) and then NETWORK CONNECTIONS (3) to open the NETWORK CONNECTIONS window (4).

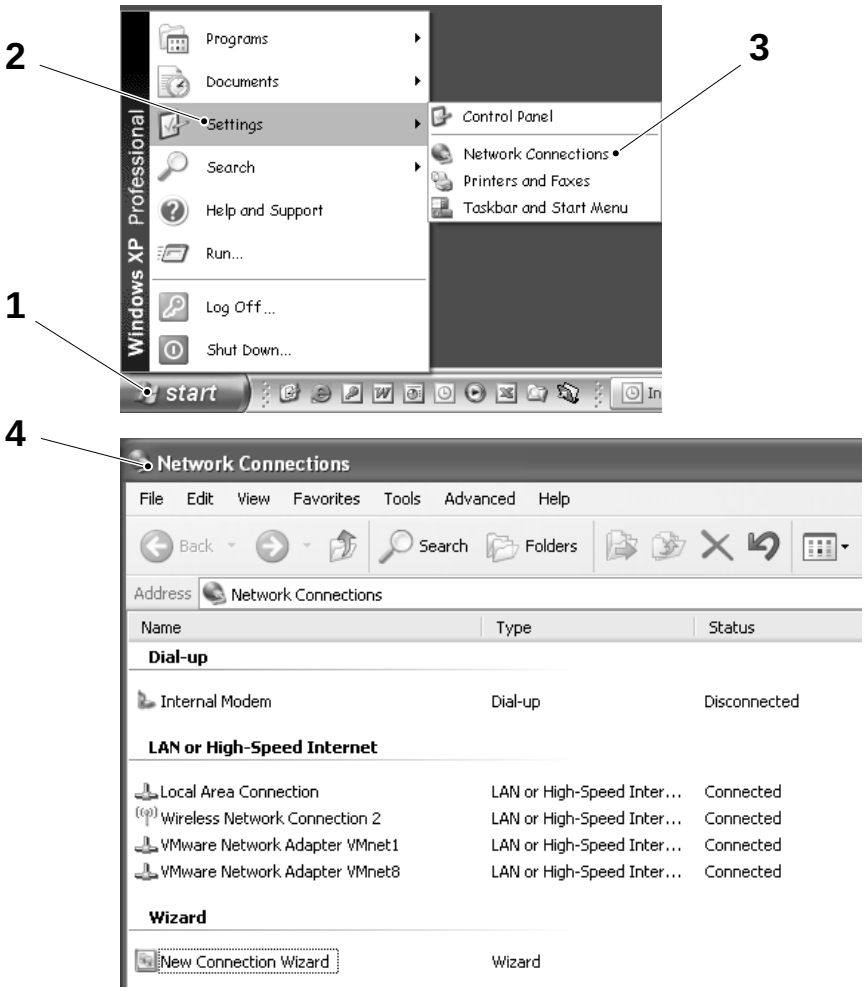

1 START menu
2 SETTINGS
3 NETWORK CONNECTIONS
4 NETWORK CONNECTIONS window

(Cont'd)

TechPub_2614345_0106 - 1203_3047157_01.fm

(Cont'd)

b) In the NETWORK CONNECTIONS window (4) select the WIRELESS NETWORK CONNECTION (5).

c) Right click the PC mouse and select DISABLE (6).

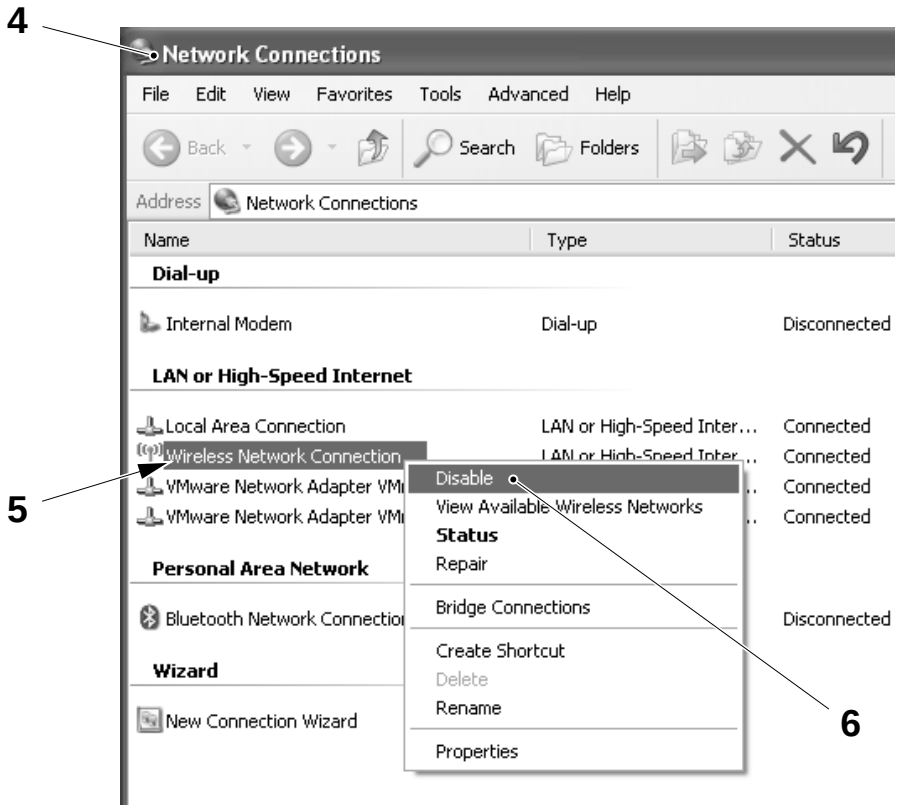

4 NETWORK CONNECTIONS window
5 WIRELESS NETWORK CONNECTION
6 DISABLE

TechPub_2614345_0106 - 1203_3047157_01.fm

(Cont'd)

(Cont'd)

Configure PC IP Address

a) Open the START MENU (1) on the PC and select SETTINGS (2) and then NETWORK CONNECTIONS (3) to open the NETWORK CONNECTIONS window (4).

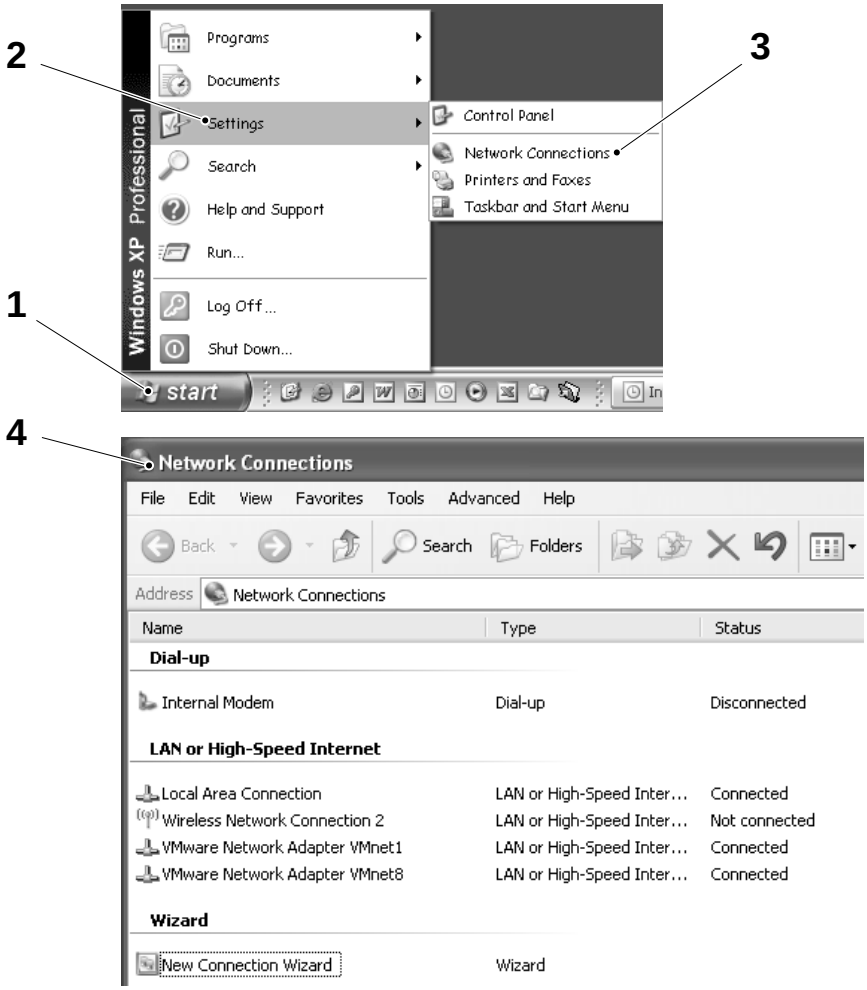

1 START menu
2 SETTINGS
3 NETWORK CONNECTIONS
4 NETWORK CONNECTIONS window

(Cont'd)

TechPub_2614345_0106 - 1203_3047157_01.fm

(Cont'd)

Note! The LOCAL AREA CONNECTION (5) is given only as an example, if multiple area connections are listed in the NETWORK CONNECTIONS window (4), select the required network connection.

b) In the NETWORK CONNECTIONS window (4) select the LOCAL AREA CONNECTION (5) and right click the PC mouse to select PROPERTIES (6).

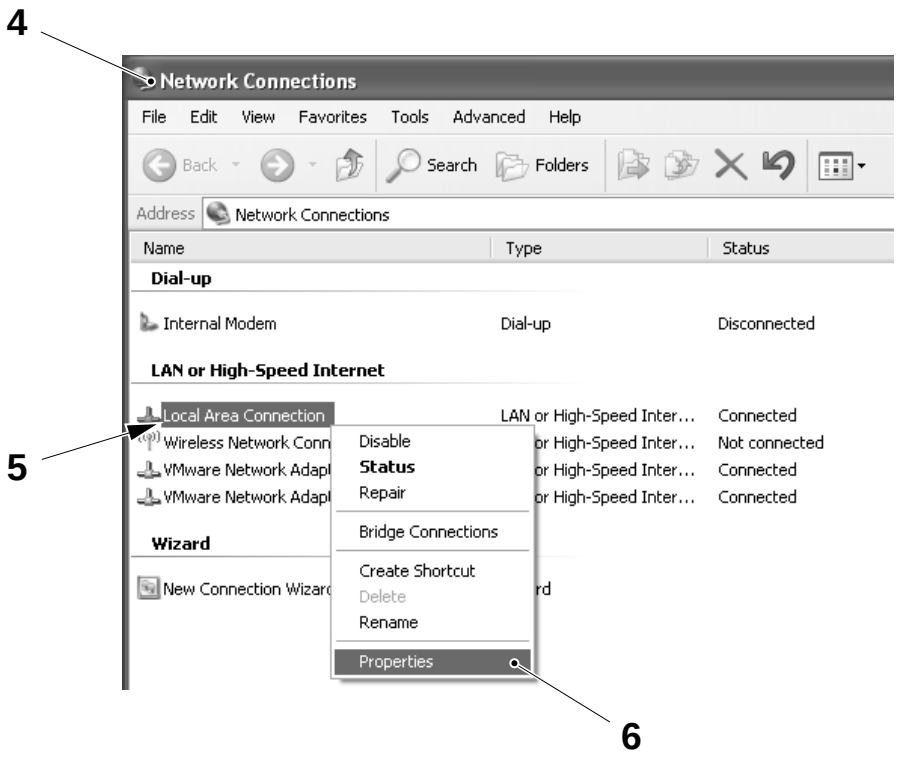

4 NETWORK CONNECTIONS window
5 LOCAL AREA CONNECTION
6 PROPERTIES window

TechPub_2614345_0106 - 1203_3047157_01.fm

(Cont'd)

(Cont'd)

c) In the LOCAL AREA CONNECTION PROPERTIES window (7) select INTERNET PROTOCOL (TCP/IP) (8) and then select PROPERTIES (9).

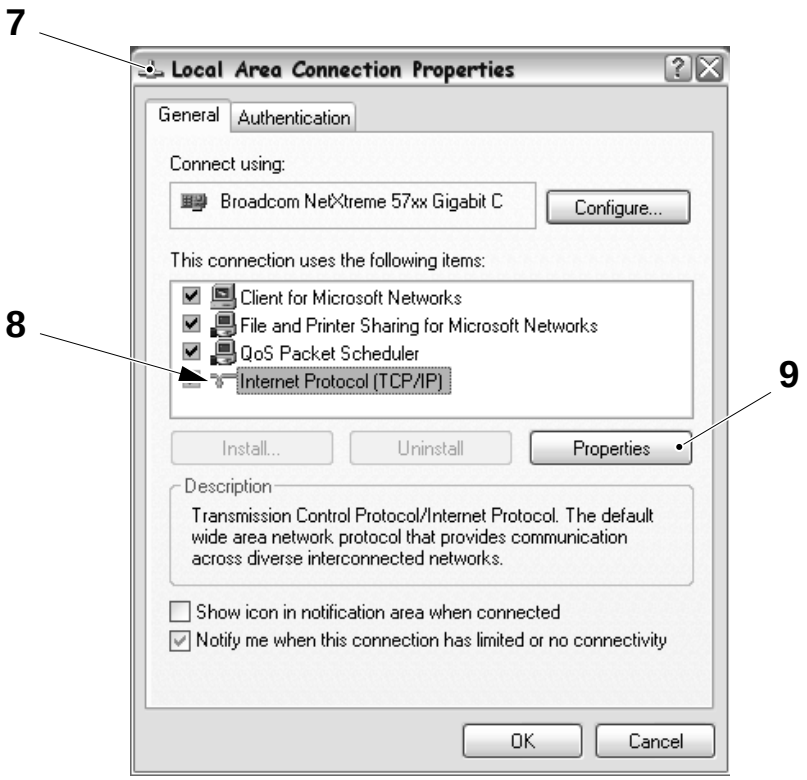

7 LOCAL AREA CONNECTION PROPERTIES window
8 INTERNET PROTOCOL (TCP/IP)
9 PROPERTIES

(Cont'd)

TechPub_2614345_0106 - 1203_3047157_01.fm

(Cont'd)

Note! The unique number “XXX” must be within the range of the permitted IP addresses if the firewall protection is configured to allow a range of IP addresses and higher than the number 100 to avoid possible conflicts with machine device IP addresses.

d) Check the USE THE FOLLOWING IP ADDRESS button (10) and the USE THE FOLLOWING DNS SERVER ADDRESSES button (11).

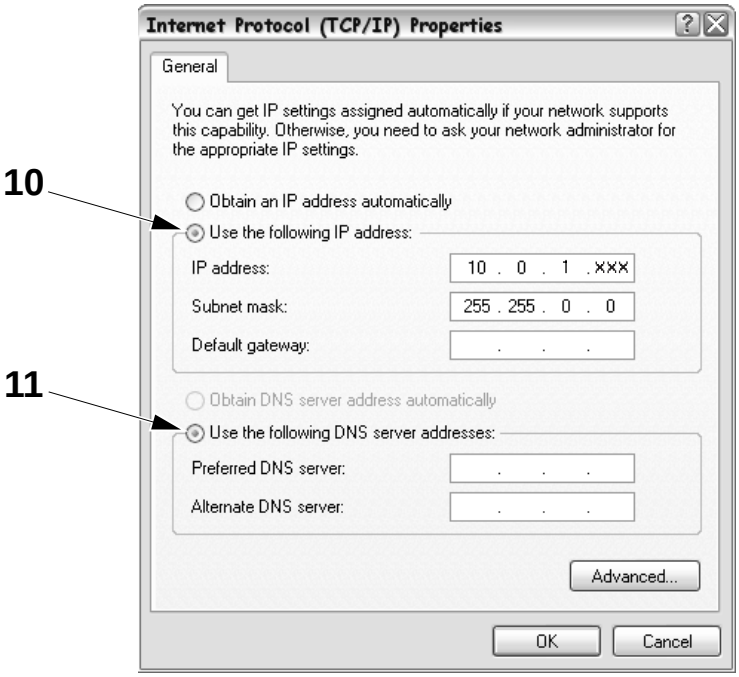

10 USE THE FOLLOWING IP ADDRESS button
11 USE THE FOLLOWING DNS SERVER ADDRESSES button

TechPub_2614345_0106 - 1203_3047157_01.fm

(Cont'd)

(Cont'd)

e) In the IP ADDRESS box (12) enter the IP address chosen for the PC. The IP address chosen must conform to the format 10.0.1.XXX. This must be a unique number that is not assigned previously to any PC or PLC connected to the same network.

f) In the SUBNET MASK box (13) enter the same subnet mask shown in the illustration below.

g) Select the OK button (14) to confirm the setting and close the window.

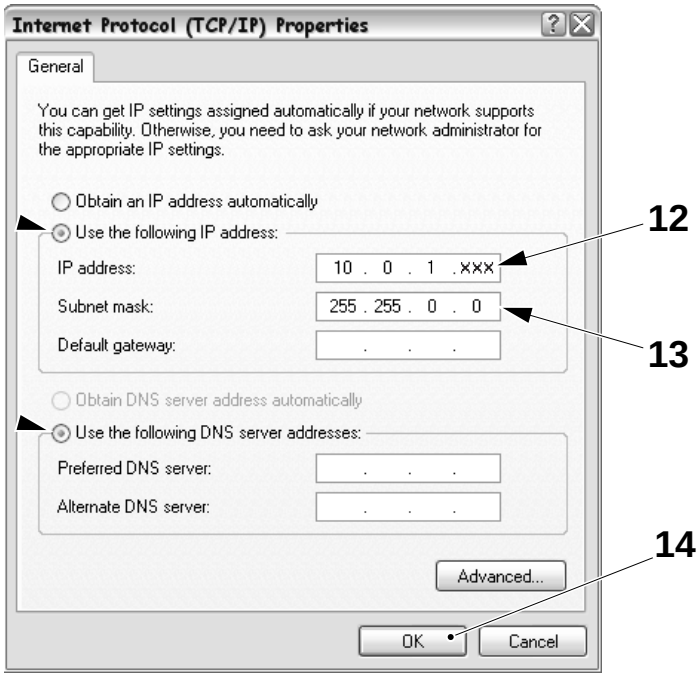

12 IP ADDRESS box
13 SUBNET MASK box
14 OK button

TechPub_2614345_0106 - 1203_3047157_01.fm

8.1.1-2 Preparations for PLC Communication - Configure RSLinx for PLC

Machine Status	Mains Power ON
Special Equipment	PC with CD drive Ethernet communication cable
SPC Reference	2833407-0100

The RSLinx software enables seamless communication between the PC and the PLC and its components over different networks such as ethernet and DeviceNet. Before communication is possible, the network and IP addresses for the PC and PLC must be set in RSLinx as follows:

a) Open the START menu on the PC and select PROGRAMS (1), ROCKWELL SOFTWARE (2), RSLINX (3) and then RSLINX CLASSIC (4).

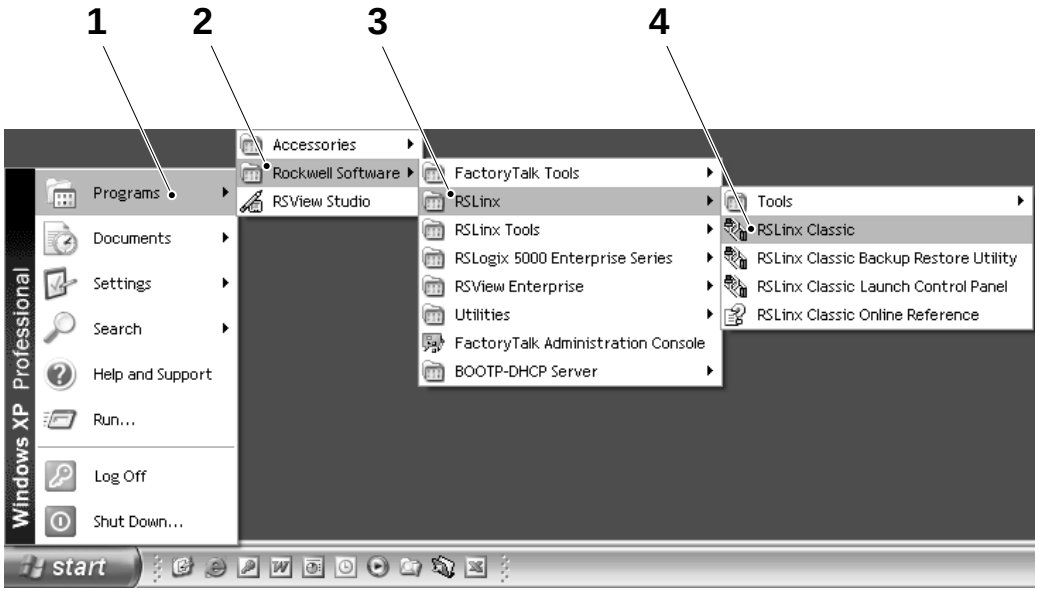

1 PROGRAMS
2 ROCKWELL SOFTWARE
3 RSLINX
4 RSLINX CLASSIC

(Cont'd)

TechPub_2614345_0106 - 1203_3047157_01.fm

(Cont'd)

b) The RSLINX CLASSIC PROFESSIONAL window (5) appears, select the CONFIGURE DRIVERS button (6).

c) In the CONFIGURE DRIVERS window (7), select ETHERNET DEVICES (8) from the drop down menu.

d) Select the ADD NEW button (9).

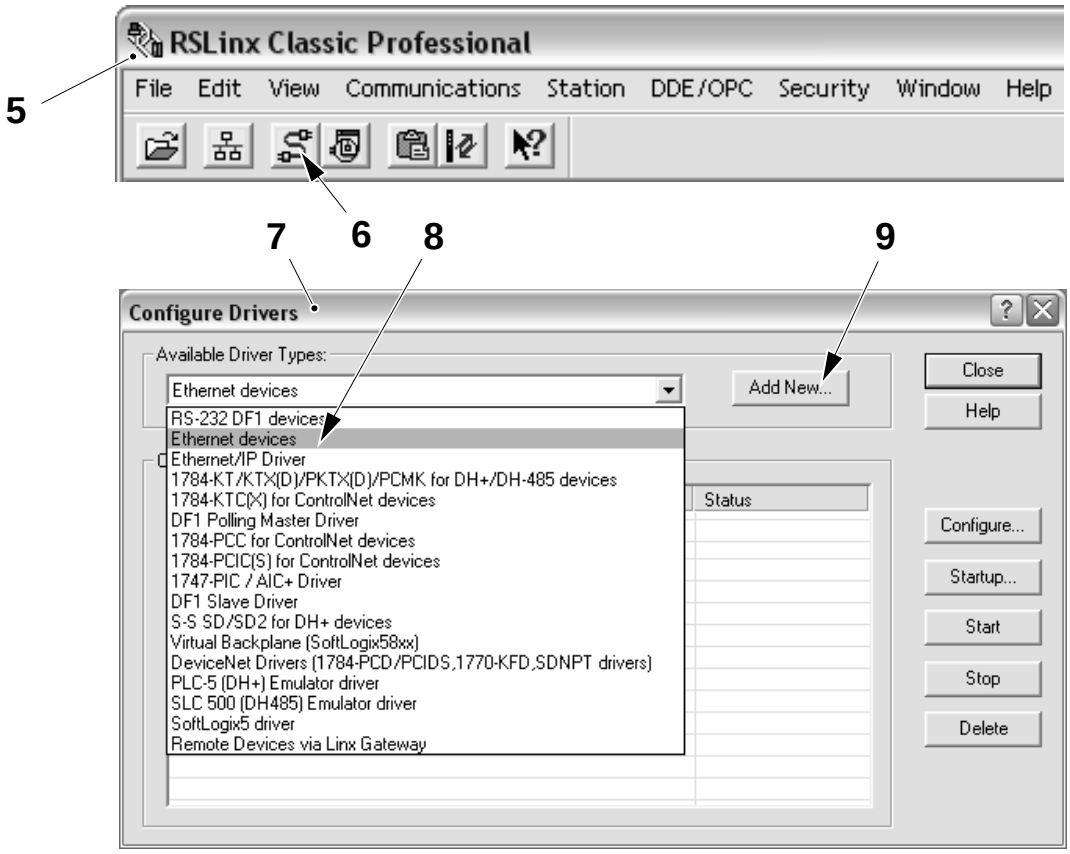

5 RSLINX CLASSIC PROFESSIONAL window
6 CONFIGURE DRIVERS button
7 CONFIGURE DRIVERS window
8 ETHERNET DEVICES
9 ADD NEW button

(Cont'd)

TechPub_2614345_0106 - 1203_3047157_01.fm

(Cont'd)

e) Accept the default driver name that appears by selecting the OK button (10).

f) Enter the PC's IP address (set in 8.1.1-1 Preparation for PLC Communication - Configure PC Network Communications) in the HOST NAME field (11) and then select the ADD NEW button (12).

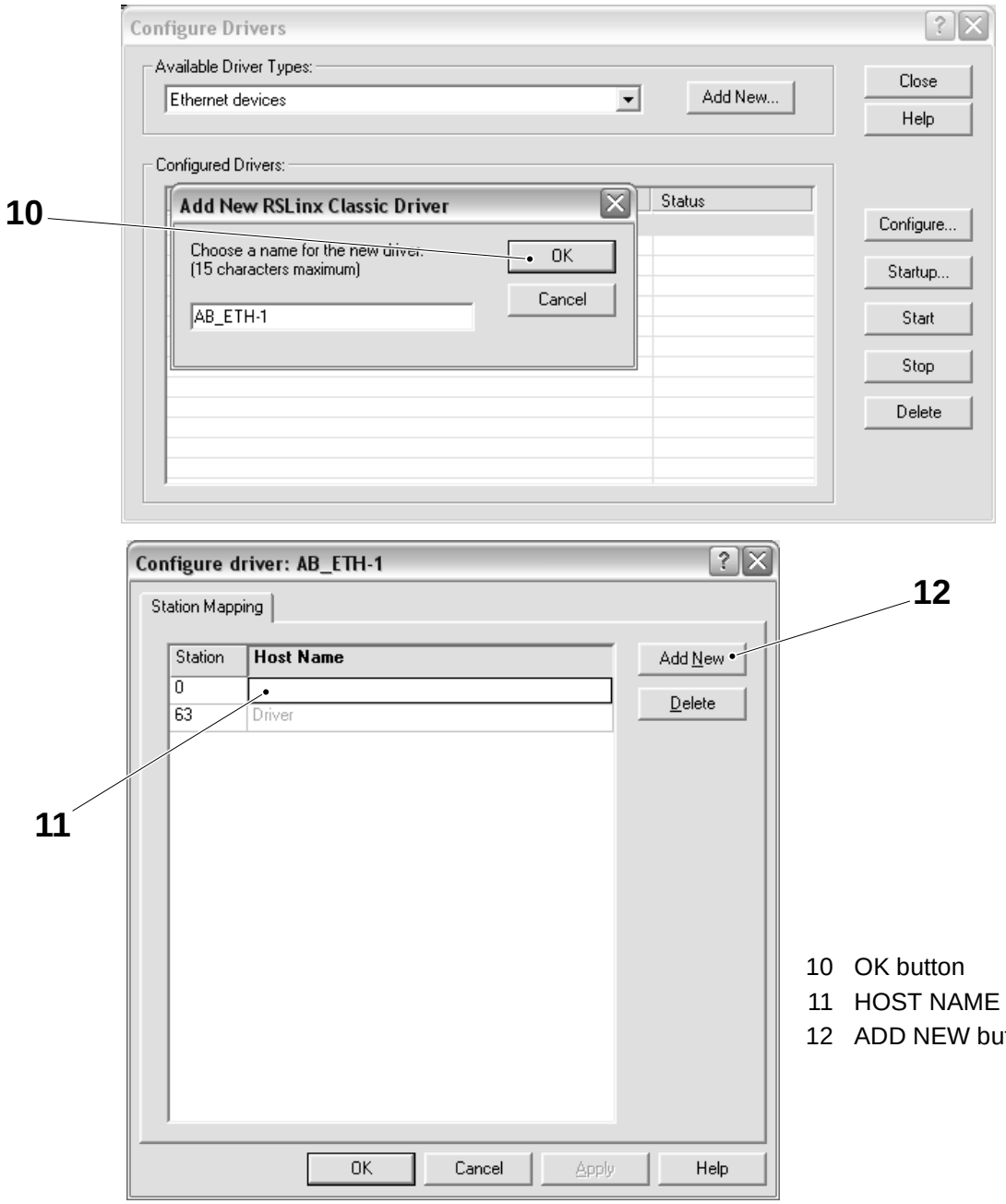

10 OK button
11 HOST NAME field
12 ADD NEW button

(Cont'd)

TechPub_2614345_0106 - 1203_3047157_01.fm

(Cont'd)

g) Enter the IP address 10.0.1.80 for the PLC in the HOST NAME field (13).

h) Select the OK button (14) to save the configuration.



13 HOST NAME field
14 OK button

TechPub_2614345_0106 - 1203_3047157_01.fm

8.1.1-3 Preparations for PLC Communication - Set EtherNet Module IP Address

Machine Status	Mains Power ON
Special Equipment	PC with CD Drive CD 2861168-0001 with software Ethernet communication cable
SPC Reference	2833407-0100

Note! This procedure is for a new EtherNet module. If the module has been previously configured, skip this procedure.

Note! New EtherNet modules have a MAC address programmed as a factory setting. The MAC address must be changed to an IP address.

a) Using the ethernet communication cable (1), connect the PC (2) to any vacant ethernet connection port (3) on the ethernet switch (4).

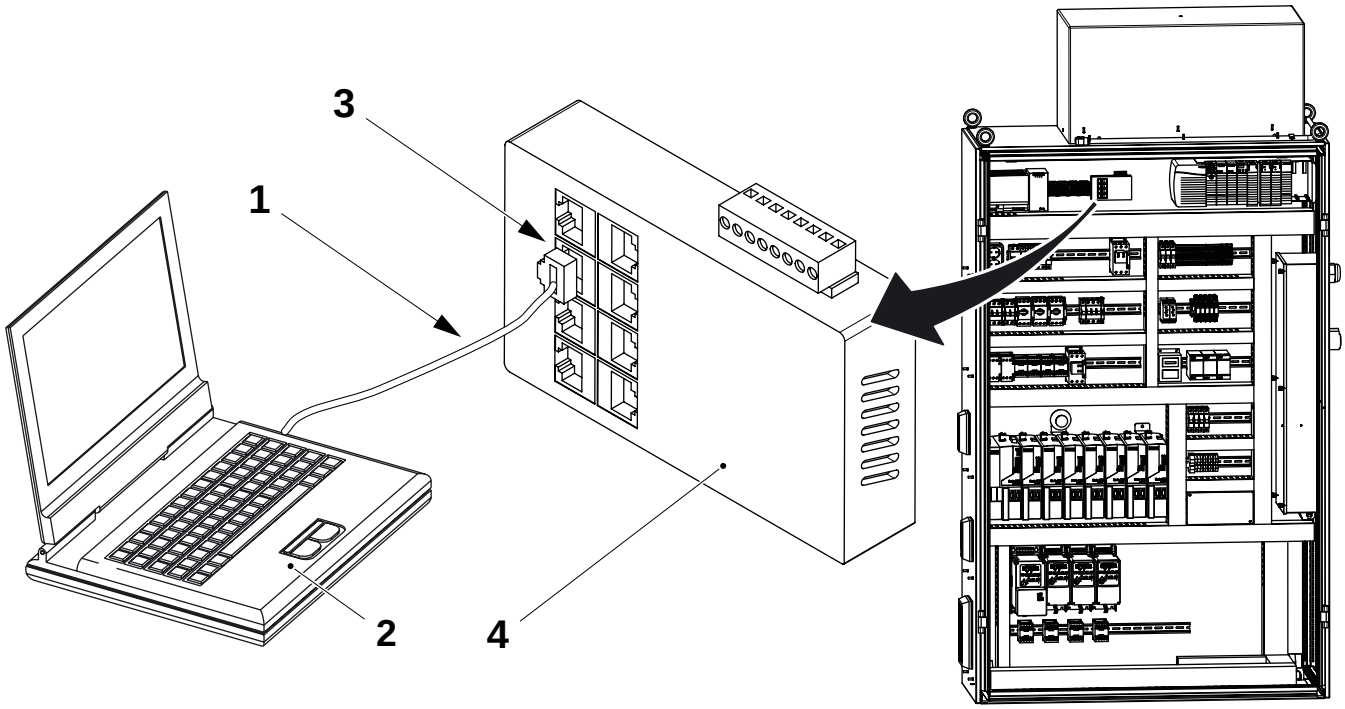

1 Ethernet communication cable
2 PC
3 Ethernet connection port
4 Ethernet switch

(Cont'd)

TechPub_2614345_0106 - 1203_3047157_01.fm

(Cont'd)

b) Make sure that the network cables between the Ethernet switch and the EtherNet module are connected.

c) Close the RSLINX PROGRAM as follows:

– Open the RSLINX GATEWAY window, see step a) in 8.1.1-2 Preparations for PLC Communication - Configure RSLinx for PLC.

– In the File menu, select EXIT AND SHUTDOWN (5).

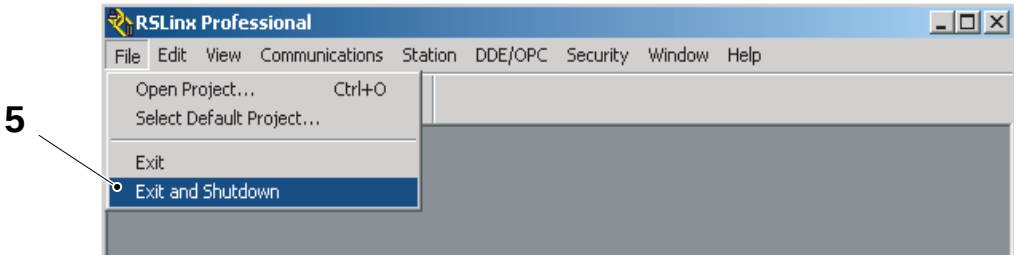

5 EXIT AND SHUTDOWN

(Cont'd)

TechPub_2614345_0106 - 1203_3047157_01.fm

(Cont'd)

d) Open the start menu on the PC and select PROGRAMS (6), ROCKWELL SOFTWARE (7), BOOTP DHCP SERVER (8) and BOOTP DHCP SERVER (9).

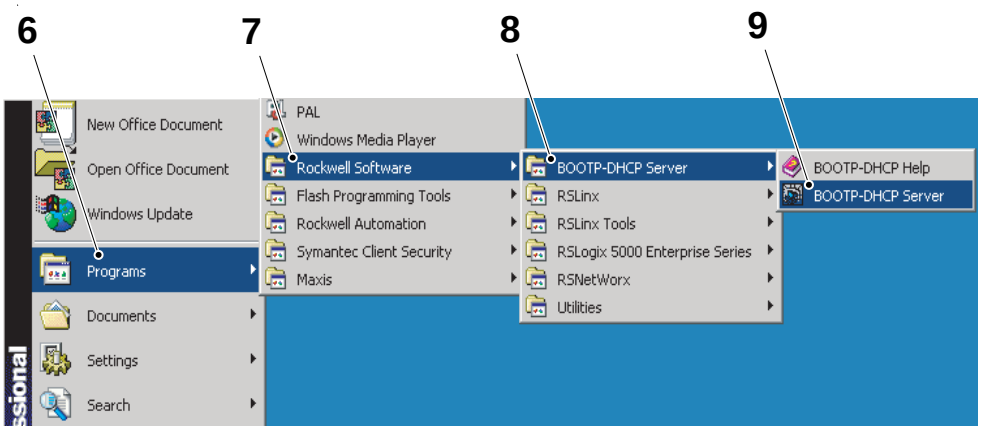

6 PROGRAM
7 ROCKWELL SOFTWARE
8 BOOTP DHCP SERVER
9 BOOTP DHCP SERVER

(Cont'd)

TechPub_2614345_0106 - 1203_3047157_01.fm

(Cont'd)

Note! If it is the first time the BOOT program is used, a network setting will be requested. If it is not, continue with step g)

e) Enter 255.255.0.0 as the SUBNET MASK (10). All other settings should be set to 0.

f) Press the OK button (11) to confirm the setting.

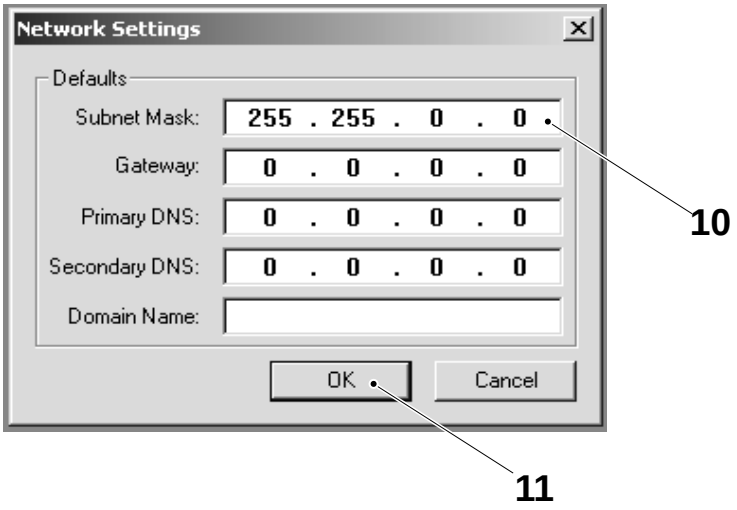

10 SUBNET MASK
11 OK button

(Cont'd)

TechPub_2614345_0106 - 1203_3047157_01.fm

(Cont'd)

g) When the MAC address appears in the REQUEST HISTORY window (12) of the BOOTP DHCP SERVER window (13), check that the same address is displayed on the EtherNet module and press the NEW button (14) to begin the conversion from the MAC address to an IP address.

h) When the MAC address appears in the RELATION LIST window (15), select the MAC address.

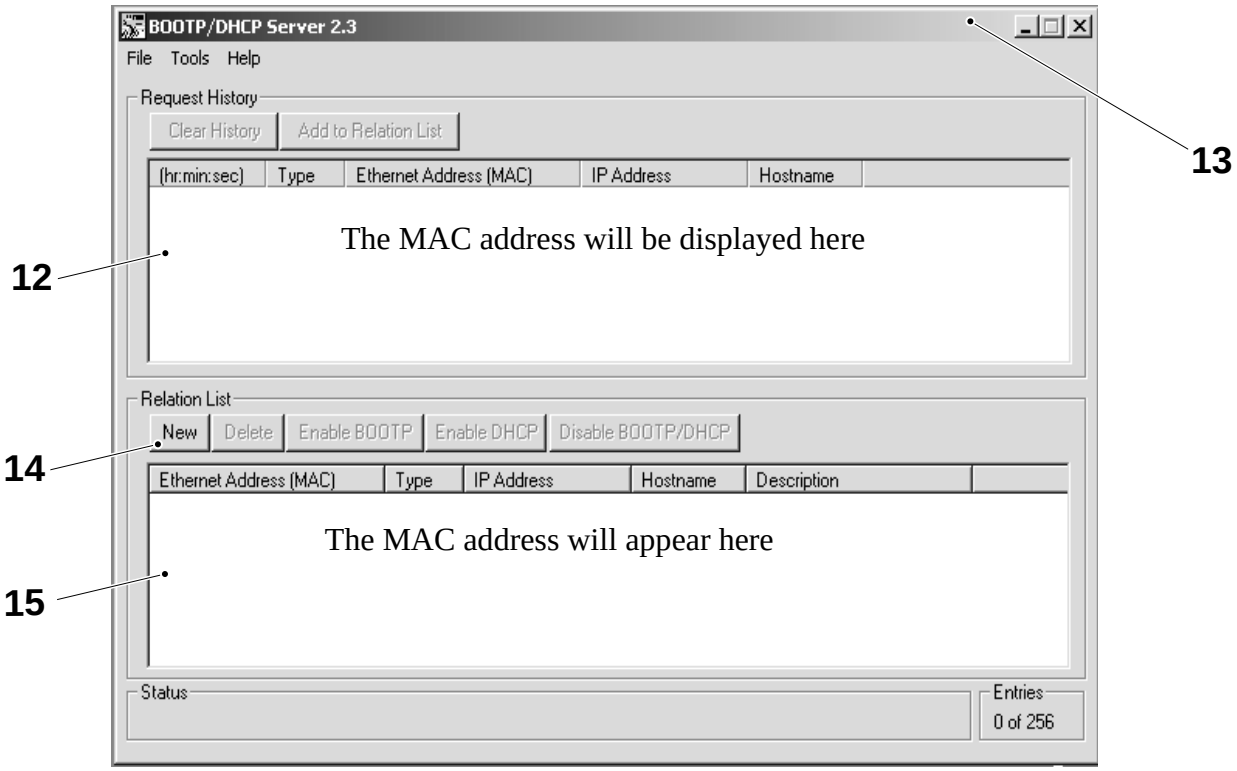

12 REQUEST HISTORY window
13 BOOT DHCP SERVER window
14 NEW button
15 RELATION LIST window

(Cont'd)

TechPub_2614345_0106 - 1203_3047157_01.fm

(Cont'd)

i) For the EtherNet module to be addressed, enter the MAC address in the ETHERNET ADDRESS (MAC) field (16) and the new IP address in the IP ADDRESS field (17) of the NEW ENTRY window (18) that appears.

j) Select the OK button (19). The new IP address will appear in the REQUEST HISTORY window (12) and on the EtherNet module.

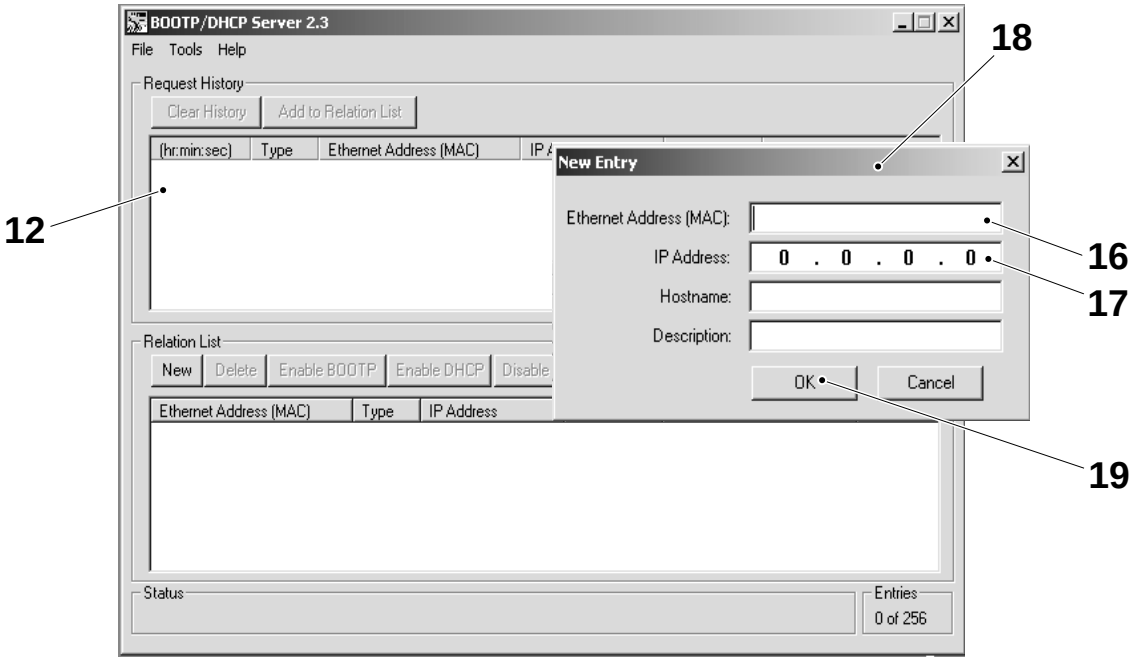

12 REQUEST HISTORY window
16 ETHERNET ADDRESS (MAC) field
17 IP ADDRESS field
18 NEW ENTRY window
19 OK button

(Cont'd)

TechPub_2614345_0106 - 1203_3047157_01.fm

(Cont'd)

k) Select the EtherNet module relation in the RELATION LIST window (15) and then select the DISABLE BOOTP/DHCP button (20).

l) To configure the other EtherNet module, select the NEW button (14) and repeat step i) to .k).

m) After configuring an EtherNet module, check that the correct IP address appears on the display on the EtherNet module. If the display cycles data continuously, the configuration has not been completed successfully. Repeat the complete procedure for the module in question.

n) Disconnect the PC from the Ethernet switch.

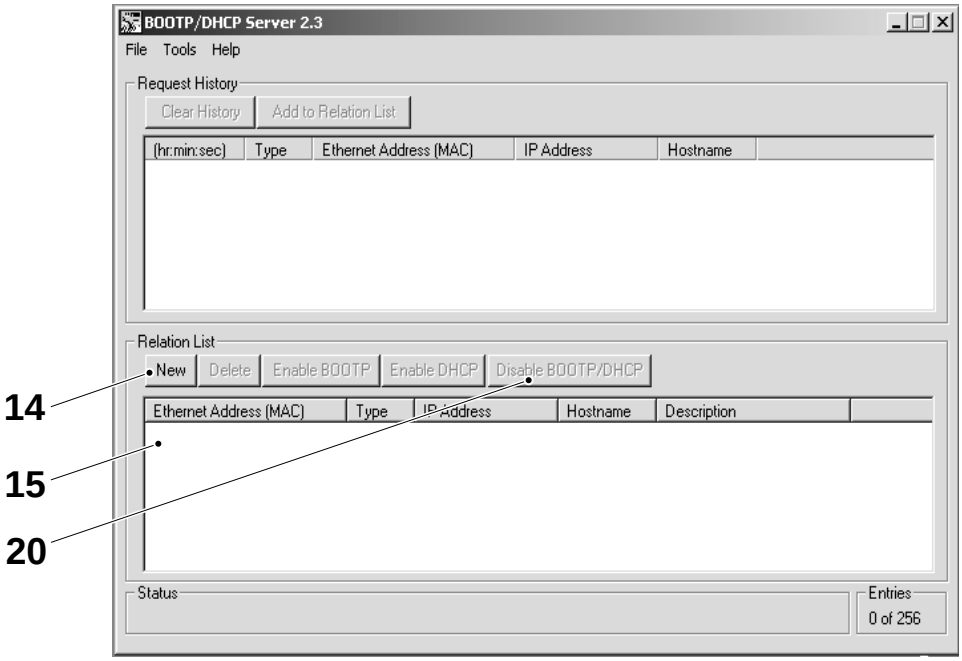

14 NEW button
15 RELATION LIST window
20 DISABLE BOOTP/DHCP button

TechPub_2614345_0106 - 1203_3047157_01.fm

8.1.2 PLC Controller

8.1.2-1 PLC Controller - Software Requirements

SPC Reference	2861166-0200

The following CD with software program is required.

CD part number	Used on Equipment
3055062-0001	Cap30 Flex
3055071-0001	Cap30 Speed
3055090-0001	Cap30 Recap Speed
3055083-0001	Cap30 Recap Flex
2869128-0007	Firmware CD
3055078-0001	Compact Flash SW CD

TechPub_2614345_0106 - 1203_3047157_01.fm

8.1.2-2 PLC Controller - Change Battery

Machine Status	Mains Power ON
Consumables	Battery TP No. 90459-2489
SPC Reference	2833407-0100

CAUTION
Loss of data.
Make sure that the Mains Power switch is turned to the ON position. Failure to do this may result in the data stored in the PLC being lost.

a) Press the clip (1) and disconnect the battery cable connection (2) from the connection (3) and remove the battery (4).

b) Connect the battery cable for the new battery to the connection (3) and fit the new battery. Make sure that the new battery is fitted with the arrow (5) pointing upwards.

c) Write the date of the battery installation on the battery label (6).

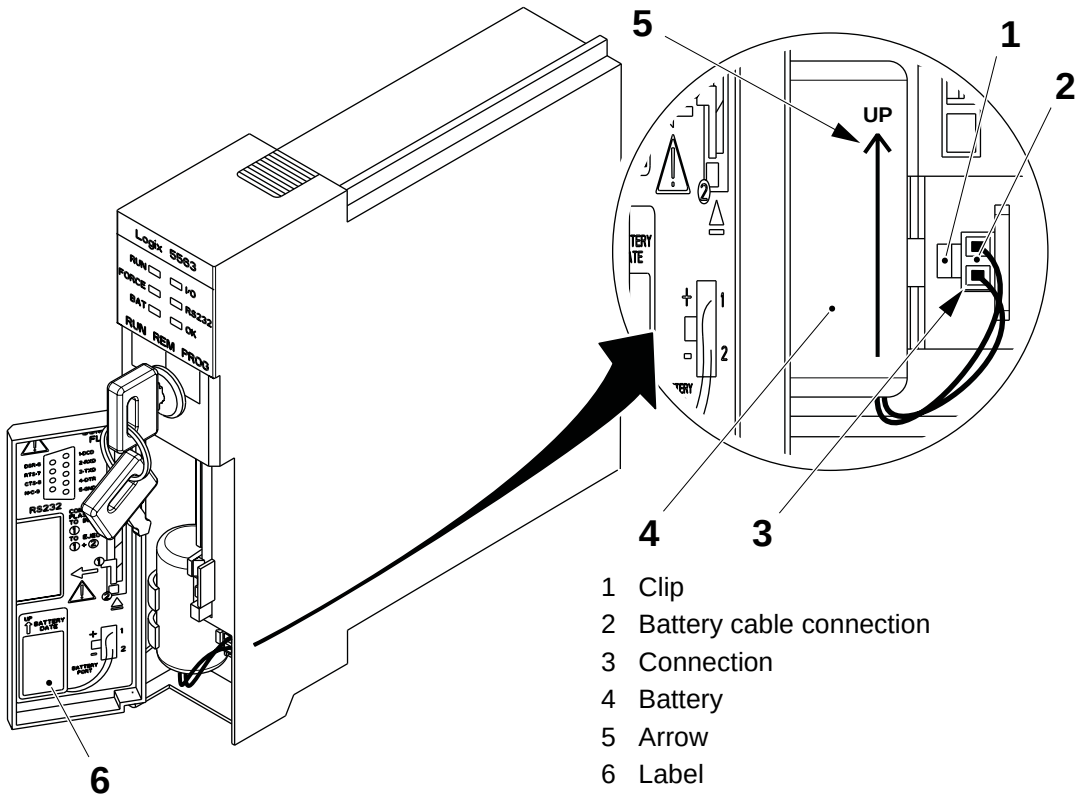

1 Clip
2 Battery cable connection
3 Connection
4 Battery
5 Arrow
6 Label

TechPub_2614345_0106 - 1203_3047157_01.fm

8.1.2-3 PLC Controller - Change

Machine Status	Mains Power OFF
SPC Reference	2833407-0100

Note! New PLC controllers are supplied with basic firmware. The correct firmware revision must be installed before the PLC program can be downloaded to the PLC controller.

Note! The firmware revision of the PLC controller maybe equal to, or newer than the firmware revision of the old PLC controller. Any attempt to go online with a newer firmware revision installed, without the very latest EDS files in the PC may create errors such as, unrecognised device or a device mismatch.

Preparation

Before changing the PLC controller:

- Use the RSLinx Classic program to verify and record the firmware version of the PLC program.
- Use the Flow Chart of Procedures for Changing the PLC controller on the next page to determine which procedures must be performed and their correct sequence.

(Cont'd)

TechPub_2614345_0106 - 1203_3047157_01.fm

(Cont'd)

Flow Chart of Procedures for Changing the PLC controller

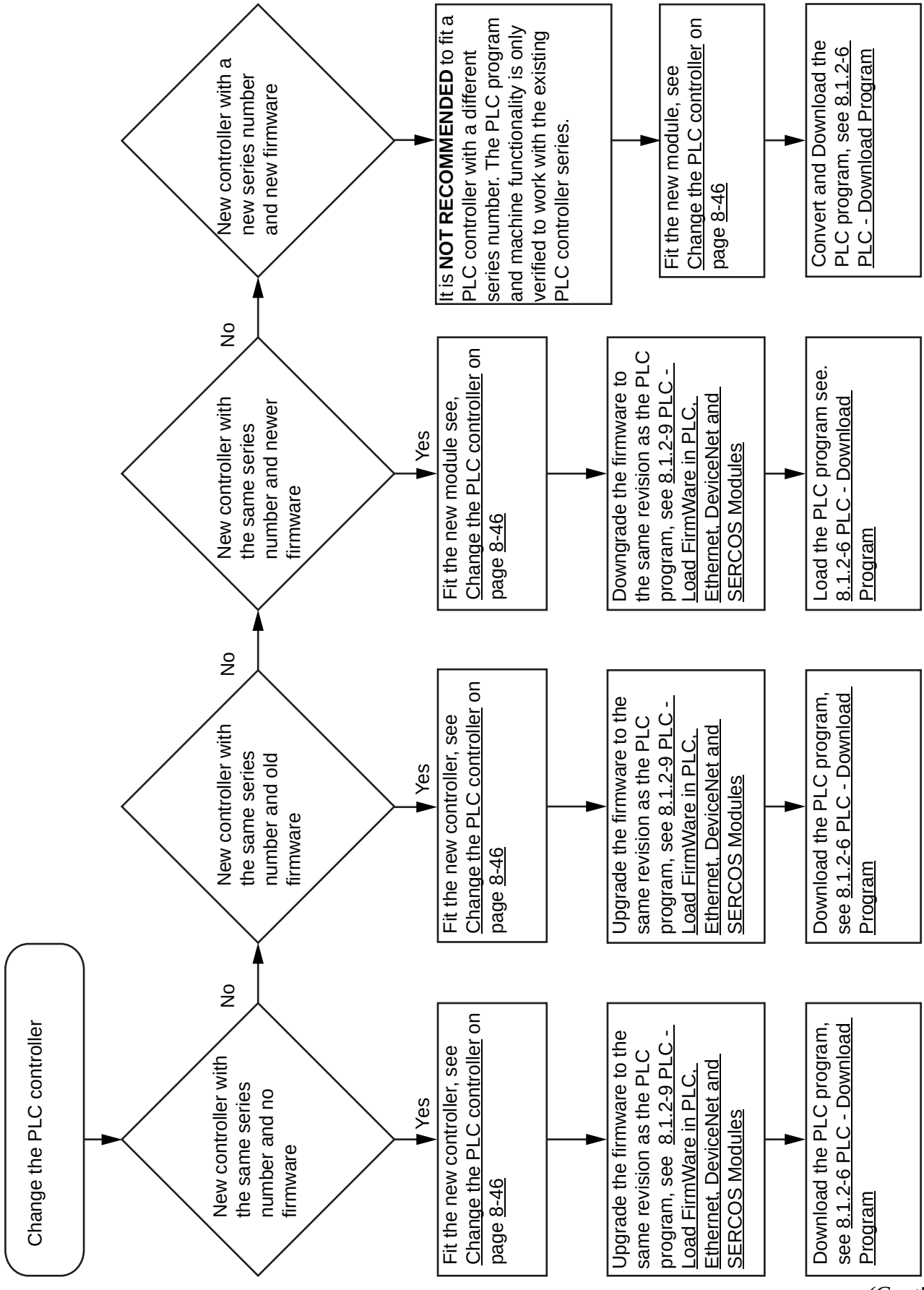

(Cont'd)

TechPub_2614345_0106 - 1203_3047157_01.fm

(Cont'd)

Note! It is recommended that the Mains Power is turned OFF before the PLC is removed or installed. The PLC may be removed or installed with the chassis power ON and the system operating, but doing this repeatedly may cause excessive wear to the contacts on the module and its mating connector. Worn contacts can create electrical resistance that may effect the operation of the module.

Note! If the PLC controller is removed with the power turned ON, all the devices connected to the PLC controller will go to their configured default state.

Note! A CompactFlash card fitted inside the PLC controller is used to store a back-up of the PLC program. When the PLC controller is changed, the CompactFlash card must be transferred from the old PLC controller to the new PLC controller.

(Cont'd)

TechPub_2614345_0106 - 1203_3047157_01.fm

(Cont'd)

Change the PLC controller

a) Press the locking tabs (1) on the top and the bottom of the PLC.

b) Slide the PLC out of the chassis.

c) Push the retaining clip (2) to the LH side and press the eject button (3) to remove the CompactFlash card (4) from the PLC.

d) Store the CompactFlash card (4) in a safe and clean place.

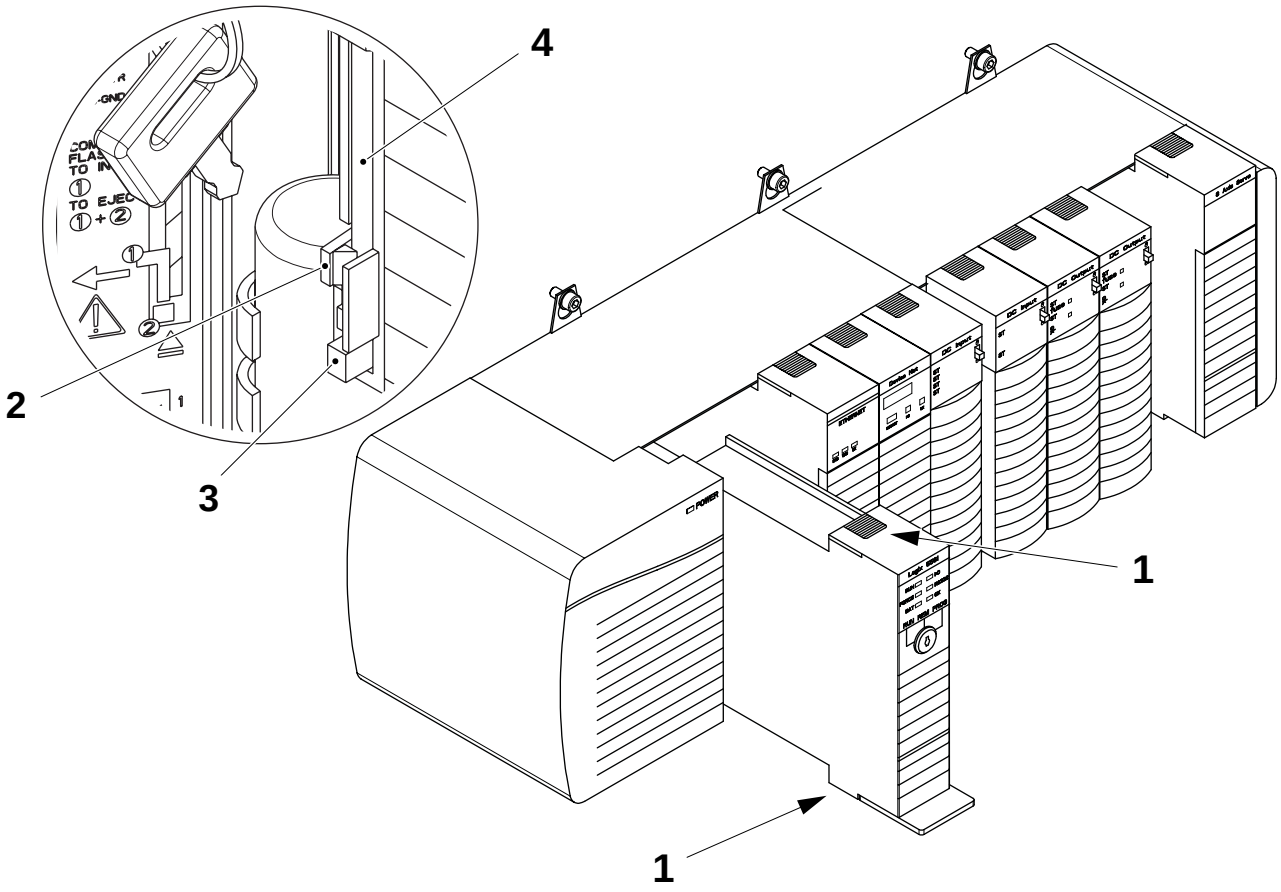

1 Locking tab
2 Retaining clip
3 Eject button
4 CompactFlash card

(Cont'd)

TechPub_2614345_0106 - 1203_3047157_01.fm

(Cont'd)

e) Fit the CompactFlash card (4) into the new PLC.

f) Insert the key (5) into the new PLC.

g) Turn the key (5) to the REM position.

h) Align the new PLC with the top and the bottom guides in the chassis.

i) Slide the PLC into the chassis. Make sure it is flush with the power supply or the other modules and the top and bottom latches are engaged.

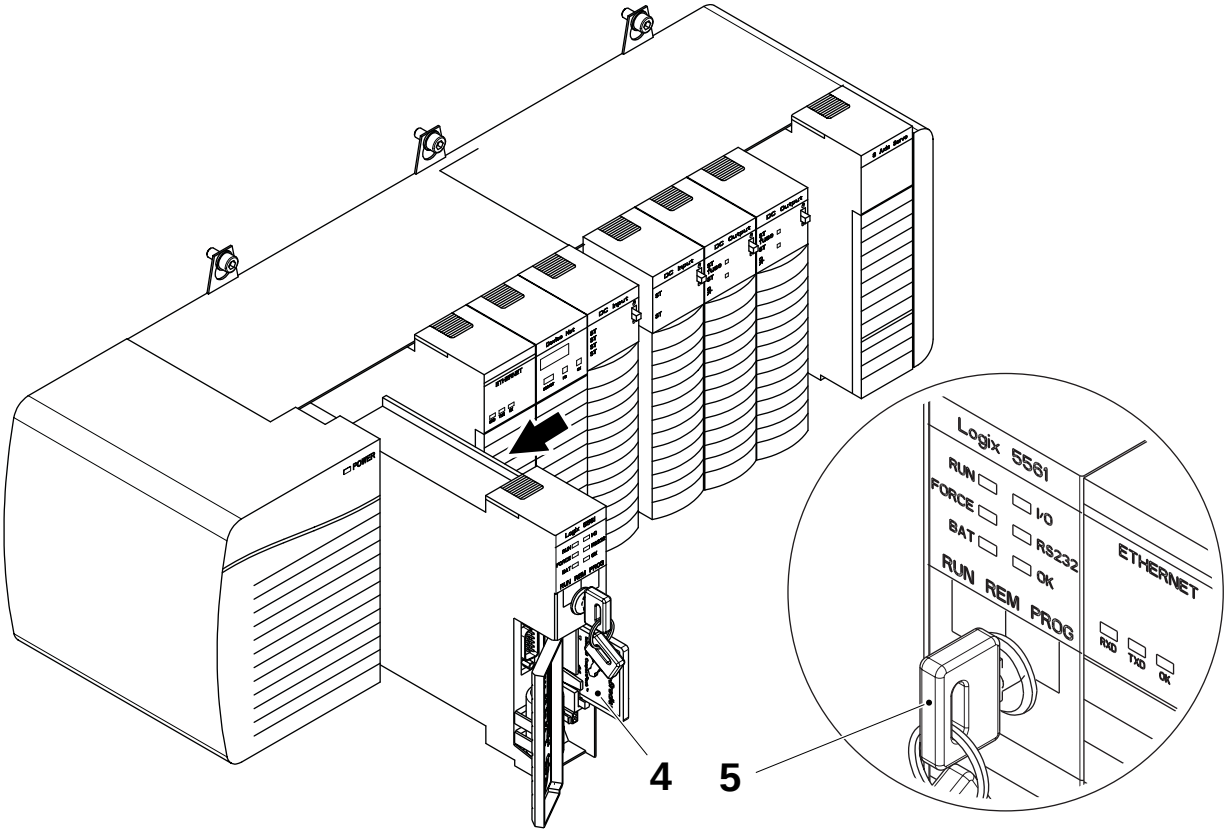

4 CompactFlash card
5 Key

(Cont'd)

TechPub_2614345_0106 - 1203_3047157_01.fm

(Cont'd)

j) Turn the Mains Power switch to the ON position.

k) Check the status of the PLC according to the LED table in section 8.1.2-5 PLC - PLC Status.

l) If the CompactFlash card (4) is unavailable or not updated do the following:

– load the correct version of the firmware into the PLC, see 8.1.2-9 PLC - Load FirmWare in PLC, Ethernet, DeviceNet and SERCOS Modules.

– load the PLC program application into the PLC, see 8.1.2-6 PLC - Download Program.

TechPub_2614345_0106 - 1203_3047157_01.fm

8.1.2-4 PLC - Removing and Installing the Compact Flash Card

Machine Status	Mains Power OFF
SPC Reference	2833407-0100

Removal

Note! It is recommended that the Mains Power is turned OFF before the CompactFlash Card (4) is removed. If it is not convenient to turn off the power, make sure that the OK LED (5) is not flashing when the card is removed. A flashing OK LED (5) indicates that data transfer is in progress.

a) Open the door (1) of the PLC.

b) Push and hold the CompactFlash latch (2) to the left.

c) Push the eject button (3) and remove the CompactFlash card (4).

d) Release the CompactFlash latch (2).

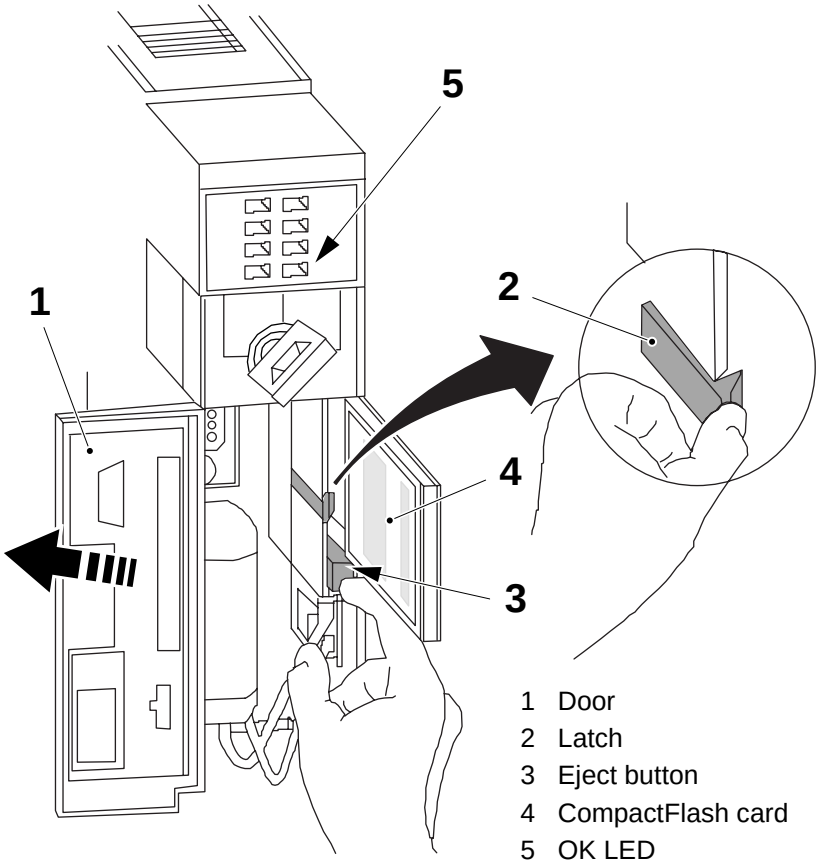

1 Door
2 Latch
3 Eject button
4 CompactFlash card
5 OK LED

(Cont'd)

TechPub_2614345_0106 - 1203_3047157_01.fm

(Cont'd)

Installation

Note! It is recommended that the Mains Power is turned OFF before the CompactFlash Card (3) is installed. If it is not convenient to turn off the power, make sure that the OK LED (4) is not flashing when the CompactFlash Card (3) is installed. A flashing OK LED (4) indicates that data transfer is in progress.

Note! The CompactFlash (3) card to be installed must be of a type intended for use in an industrial environment.

a) Open the door (1) of the PLC.

b) Push and hold the CompactFlash latch (2) to the left.

c) Insert the CompactFlash card (3) with the A-M logo to the left.

d) Release the CompactFlash latch (2) and make sure that it slides over the CompactFlash card (3).

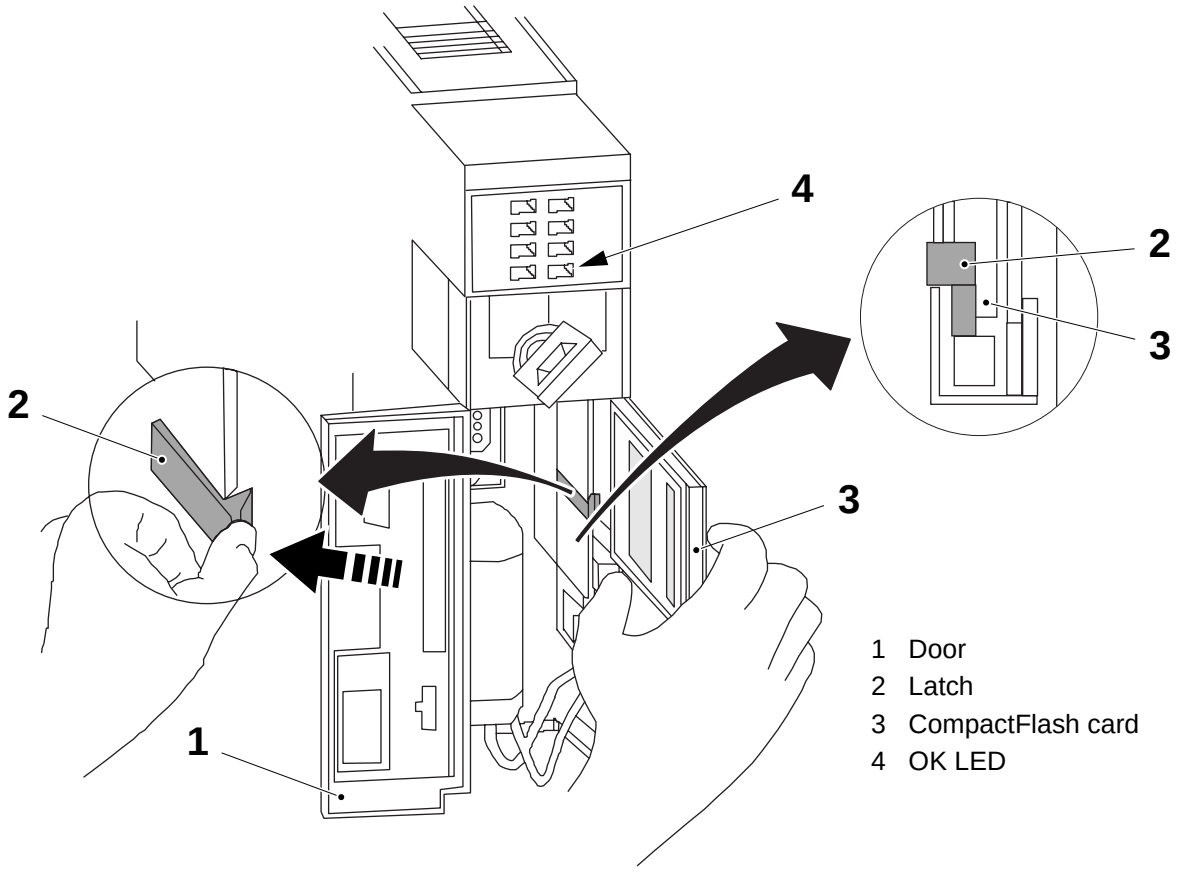

1 Door
2 Latch
3 CompactFlash card
4 OK LED

TechPub_2614345_0106 - 1203_3047157_01.fm

8.1.2-5 PLC - PLC Status

Machine Status	Mains Power ON
SPC Reference	2833407-0100

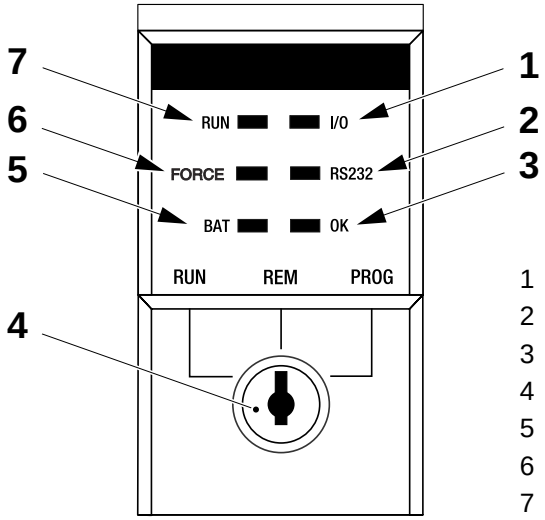

1 I/O LED
2 RS232 LED
3 OK LED
4 Keyswitch
5 BAT LED
6 FORCE LED
7 RUN LED

Indicator:	Colour:	Description:
RUN	Off	The controller is in Program or Test mode.
	Solid green	The controller is in Run mode.
I/O	Off	There are no devices in the I/O configuration of the controller. or The controller does not contain a project (controller memory is empty).
	Solid green	The controller is communicating with all the devices in its I/O configuration.
	Flashing green	One or more devices in the I/O configuration of the controller are not responding.
	Flashing red	The chassis is bad. Replace the chassis.
FORCE	Off	No tags contain I/O force values. I/O forces are inactive (disabled).
	Solid amber	I/O forces are active (enabled). I/O force values may or may not exist.
RS232	Off	There is no activity.
	Solid green	Data is being received or transmitted.

(Cont'd)

TechPub_2614345_0106 - 1203_3047157_01.fm

(Cont'd)

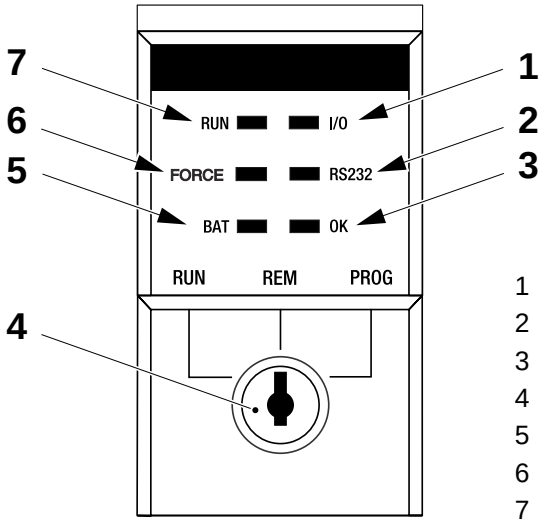

1 I/O LED
2 RS232 LED
3 OK LED
4 Keyswitch
5 BAT LED
6 FORCE LED
7 RUN LED

Indicator:	Colour:	Description:
BAT	Off	The battery supports memory.
	Solid red	The battery is not installed. or The battery is 95% discharged and should be replaced.
OK	Off	No power is applied.
	Flashing red	If the controller is a new controller, then the controller requires a firmware update. If the controller is **not** a new controller, then Board Major fault has occurred. To clear the fault, either turn the key switch to PROG, then to RUN and then back to PROG again or go on-line with RSLogix 5000 software.
	Solid red	The controller detected a non-recoverable fault, so it cleared the project from memory. To recover: 1. Cycle power to the chassis. 2. Download the project. 3. Change to Run mode. If the OK LED remains solid red, contact your Rockwell Automation representative or local distributor.
	Solid green	The controller is ok.
	Flashing green	The controller is storing or loading a project to or from nonvolatile memory.

TechPub_2614345_0106 - 1203_3047157_01.fm

8.1.2-6 PLC - Download Program

Machine Status	Mains Power ON
Special Equipment	Ethernet communication cable PC with CD drive Program CD TP No. 2861166-0100
SPC Reference	2833407-0100

Note! To connect to the PLC using an ethernet communication cable, the PC must first be configured for this type of communication. See 8.1.1-1 Preparation for PLC Communication - Configure PC Network Communications and 8.1.1-2 Preparations for PLC Communication - Configure RSLinx for PLC for more details.

a) Connect the ethernet communication cable between a vacant connection port on the ethernet switch (1) and the PC (2).

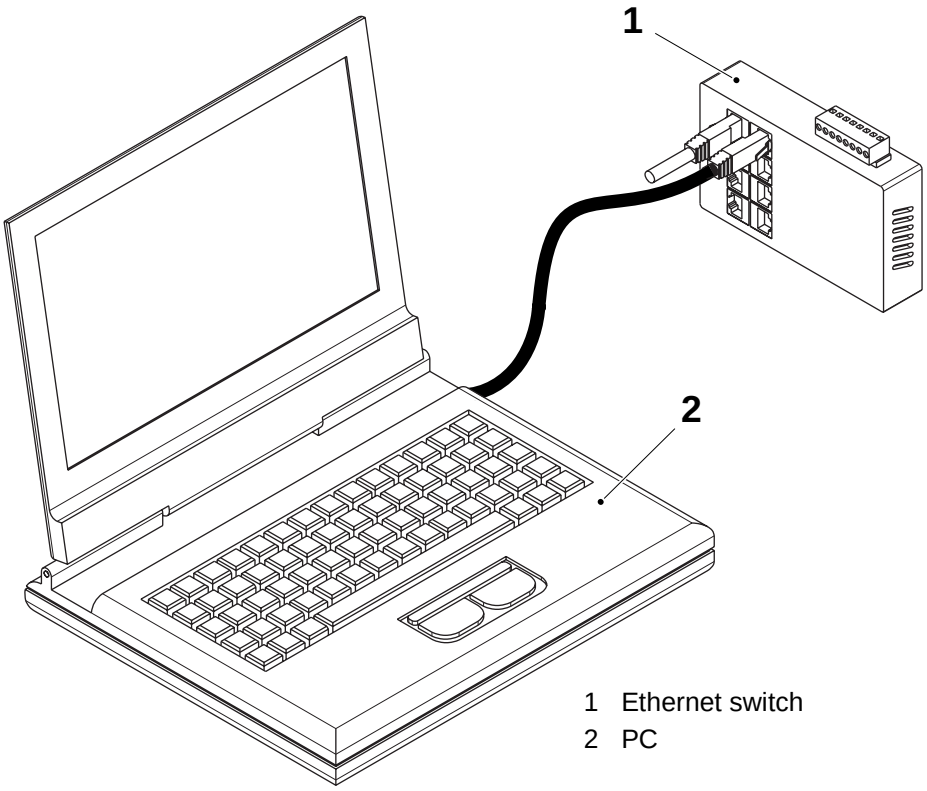

1 Ethernet switch
2 PC

(Cont'd)

TechPub_2614345_0106 - 1203_3047157_01.fm

(Cont'd)

b) Make sure that the mains power switch is ON and the machine is at STEP 0.

c) Insert the PLC program CD into the PC CD drive.

d) Browse to the CD drive and copy the compressed program folder to the PC desktop and extract the program file with the format *.ADC.

e) Double click on the program file to automatically start the RSLogix program and open the program file.

f) Use the COMMUNICATIONS menu (1) in RSLogix and select GO ONLINE (2).

g) If the program:

– matches the program in the PLC Processor, an online connection will be established without any further messages. A download is not necessary.

– does not match the program in the PLC Processor, the CONNECTED TO GO ONLINE window (3) will appear.

h) Select the DOWNLOAD button (4).

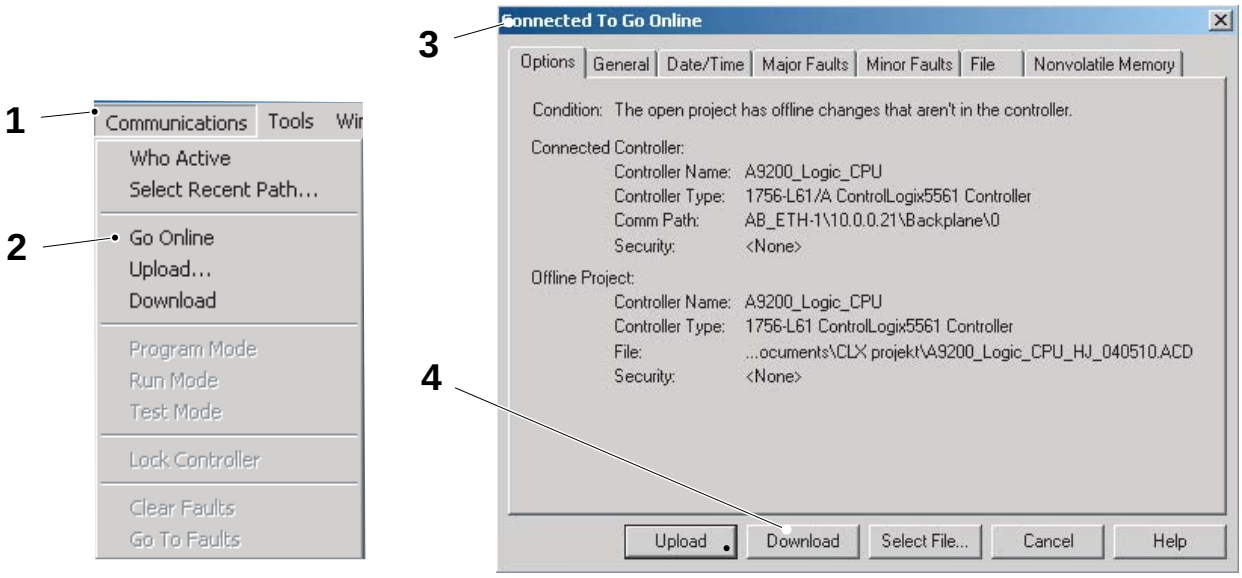

1 COMMUNICATION menu
2 GO ONLINE
3 CONNECTED TO GO ONLINE window
4 DOWNLOAD button

TechPub_2614345_0106 - 1203_3047157_01.fm

(Cont'd)

(Cont'd)

i) In the DOWNLOAD window (5), select the DOWNLOAD button (6).

Note! All the values and settings in the PLC Processor will be replaced with those from the down loaded program.

j) When the download is complete the dialogue box (7) appears, select the YES button (8) to put the PLC in the RUN mode.

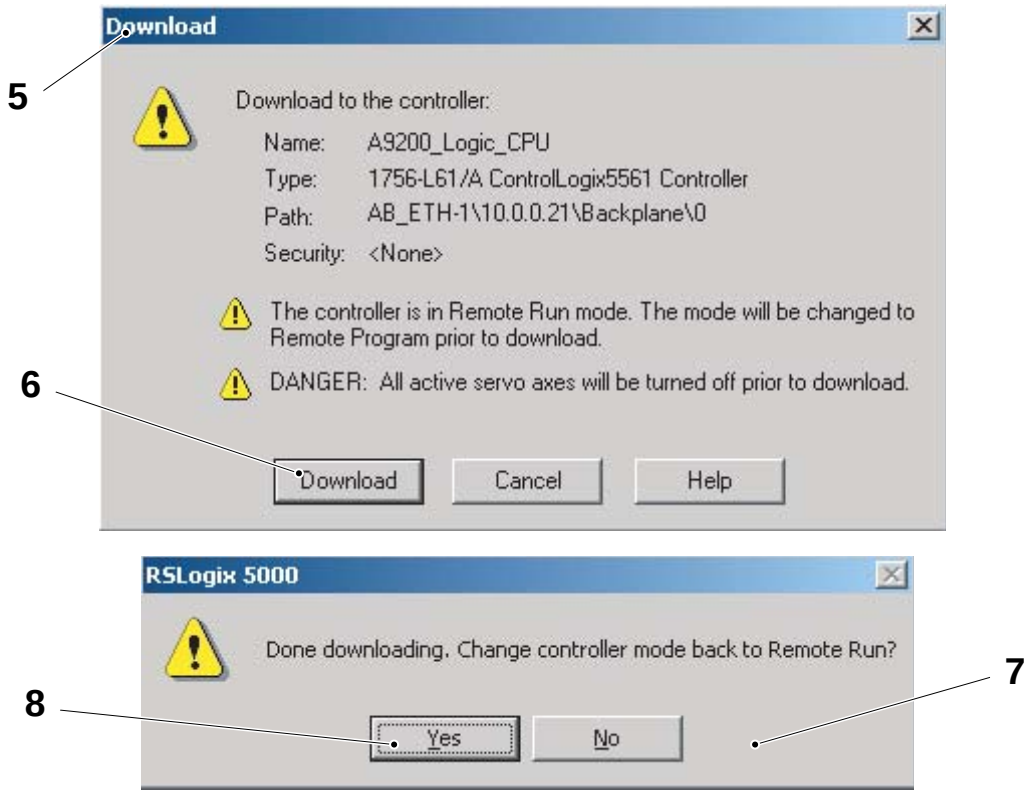

5 DOWNLOAD window
6 DOWNLOAD button
7 Dialogue box
8 YES button

(Cont'd)

TechPub_2614345_0106 - 1203_3047157_01.fm

(Cont'd)

k) If the download is to:
   - an existing PLC, cycle the PLC power supply to force the PLC to store the PLC program to the controller's memory. The download procedure is complete
   - a replacement PLC controller continue with the procedure below to set the nonvolatile memory.

Set Nonvolatile Memory

a) Select the COMMUNICATION menu (1) and then select GO ONLINE (2).

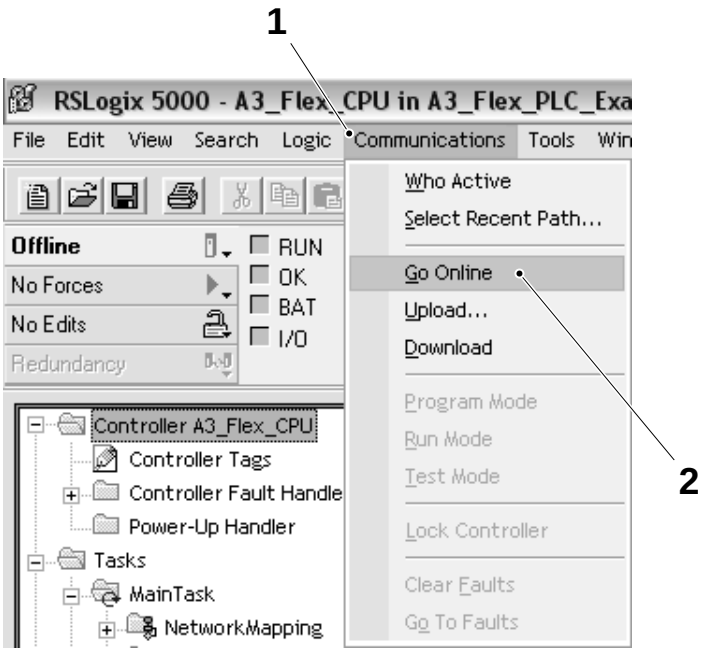

1 COMMUNICATION menu
2 GO ONLINE

(Cont'd)

TechPub_2614345_0106 - 1203_3047157_01.fm

(Cont'd)

b) Select the COMMUNICATION menu (1), then select PROGRAM MODE (3).

c) When the RSLOGIX 5000 dialogue box (4) appears, select the YES button (5) to put the PLC in the PROGRAM mode.

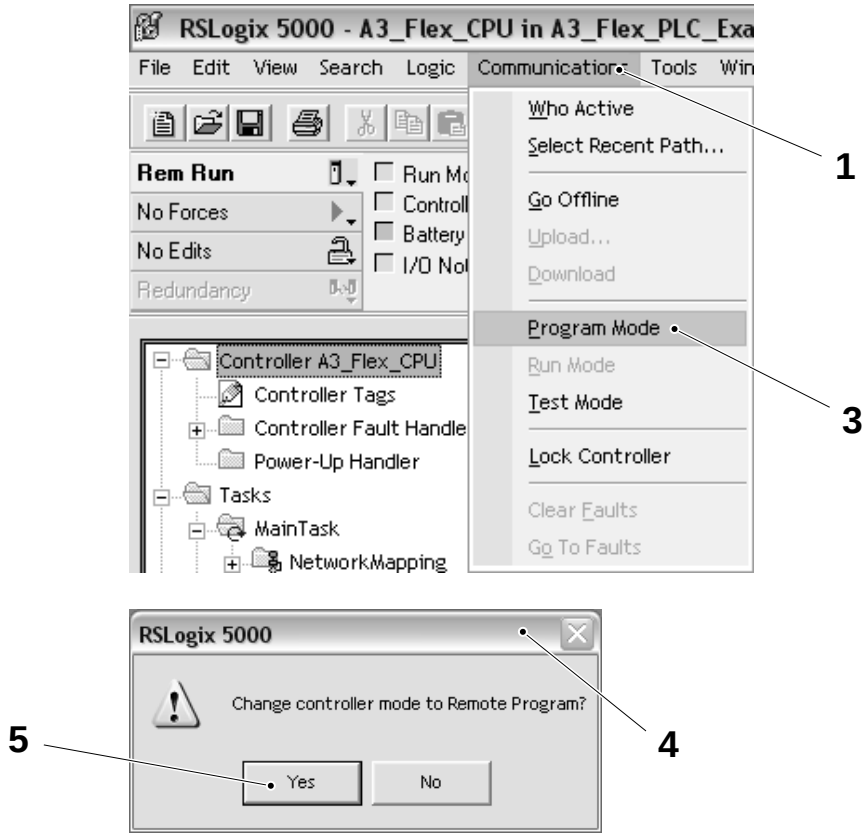

1 COMMUNICATION menu
3 PROGRAM MODE
4 RSLOGIX 5000 dialogue box
5 YES button

(Cont'd)

TechPub_2614345_0106 - 1203_3047157_01.fm

(Cont'd)

d) In the RSLOGIX 5000 window (6), select the CONTROLLER PROPERTIES button (7). The CONTROLLER PROPERTIES window (8) opens.

e) Select the NONVOLATILE MEMORY tab (9).

f) Select the LOAD/STORE button (10).

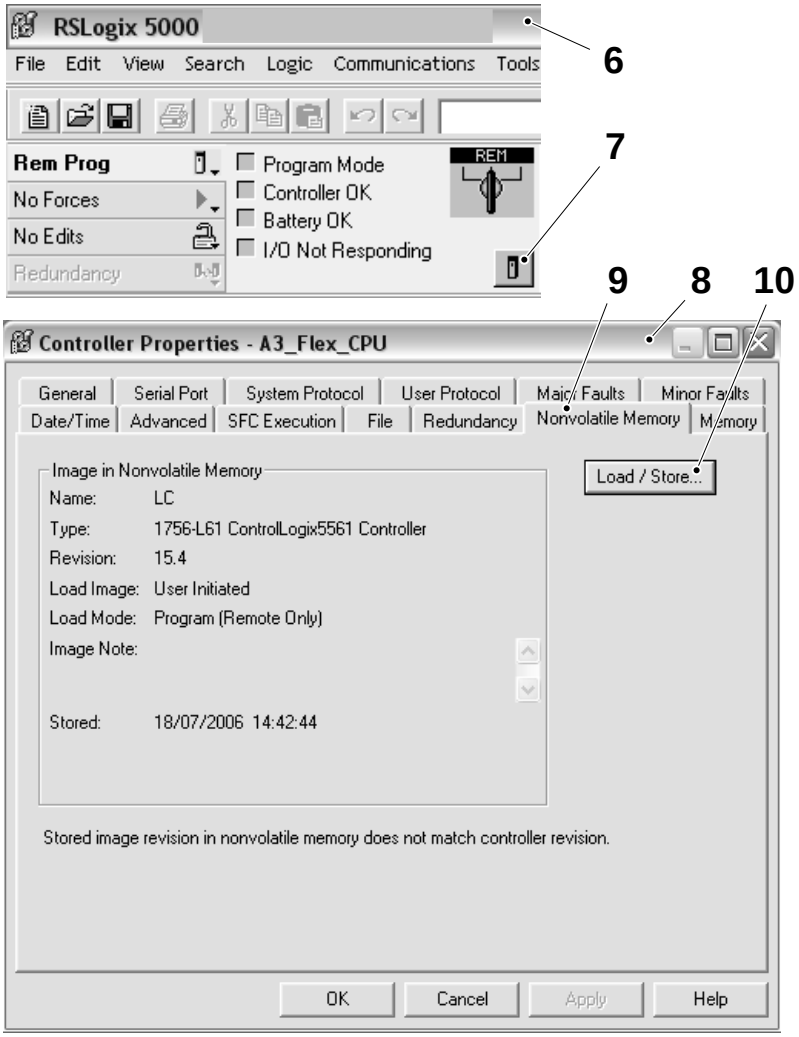

6 RSLOGIX 5000 window
7 CONTROLLER PROPERTIES button
8 CONTROLLER PROPERTIES window
9 NONVOLATILE MEMORY tab
10 LOAD/STORE button

(Cont'd)

TechPub_2614345_0106 - 1203_3047157_01.fm

(Cont'd)

g) In the NONVOLATILE MEMORY LOAD/STORE window (11), select ON CORRUPT MEMORY (12) from the drop down list of the LOAD IMAGE option (13).

h) In the NONVOLATILE MEMORY LOAD/STORE window (11), select PROGRAM (REMOTE ONLY) (14) from the drop down list of the LOAD MODE option (15).

i) Select the STORE button (16).

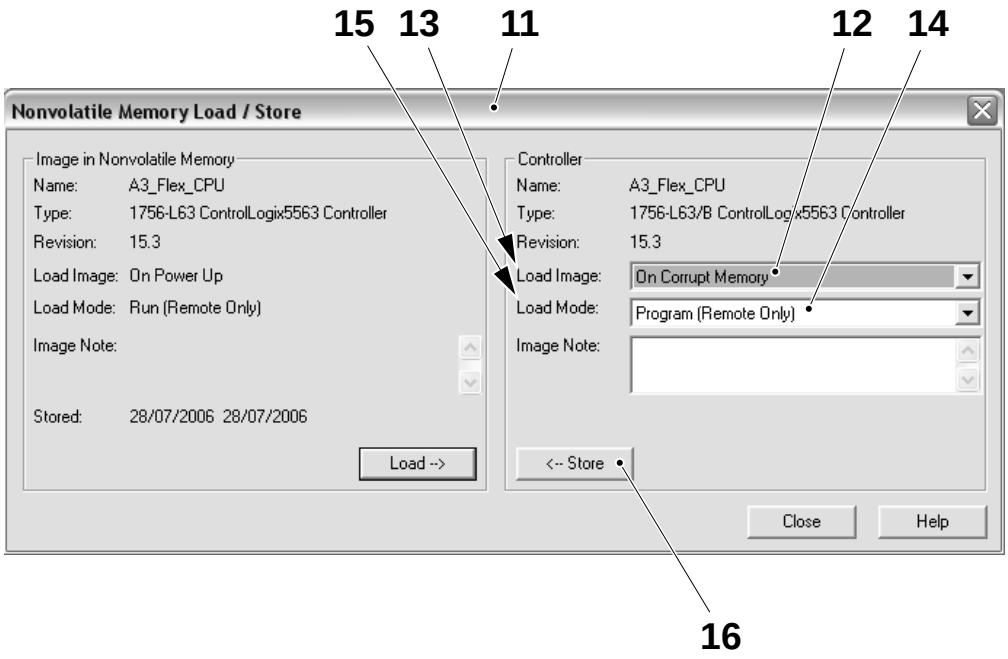

11 NONVOLATILE MEMORY LOAD/STORE window
12 ON CORRUPT memory
13 LOAD IMAGE option
14 PROGRAM (REMOTE ONLY)
15 LOAD MODE option
16 STORE button

(Cont'd)

TechPub_2614345_0106 - 1203_3047157_01.fm

(Cont'd)

j) Select the YES button (17) to confirm the store.

k) During the process a dialogue box indicates that the store is in progress, select the OK button (18).

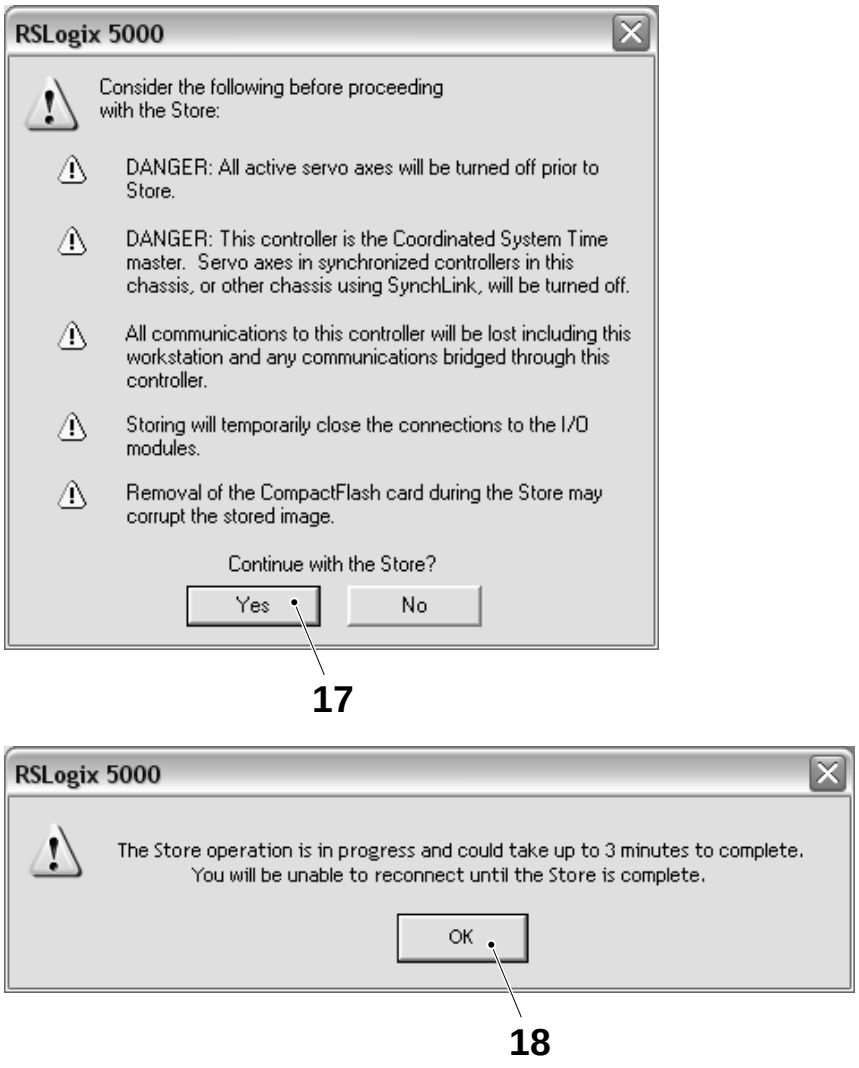

17 YES button
18 OK button

(Cont'd)

TechPub_2614345_0106 - 1203_3047157_01.fm

(Cont'd)

l) Select the OK button (19) to close the CONTROLLER PROPERTIES (8) window.

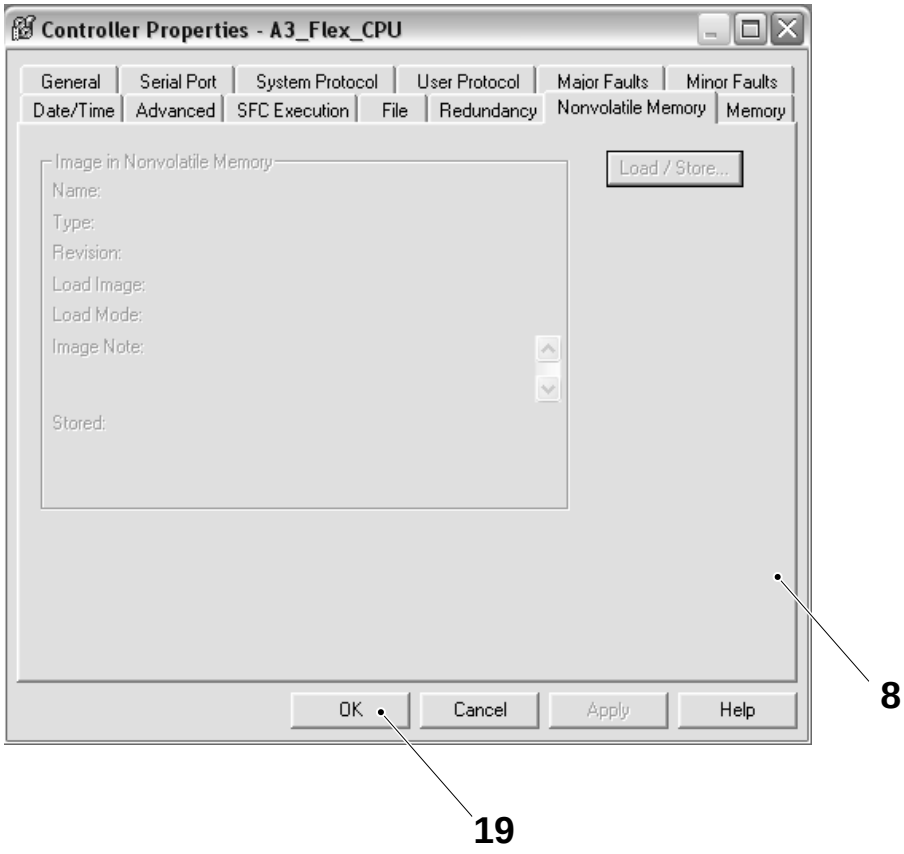

8 CONTROLLER PROPERTIES window
19 OK button

(Cont'd)

TechPub_2614345_0106 - 1203_3047157_01.fm

(Cont'd)

m) Select the COMMUNICATION menu (1) and then select GO ONLINE (2).

n) Select the COMMUNICATION menu (1), then select the RUN MODE (20) to put the PLC in the RUN MODE.

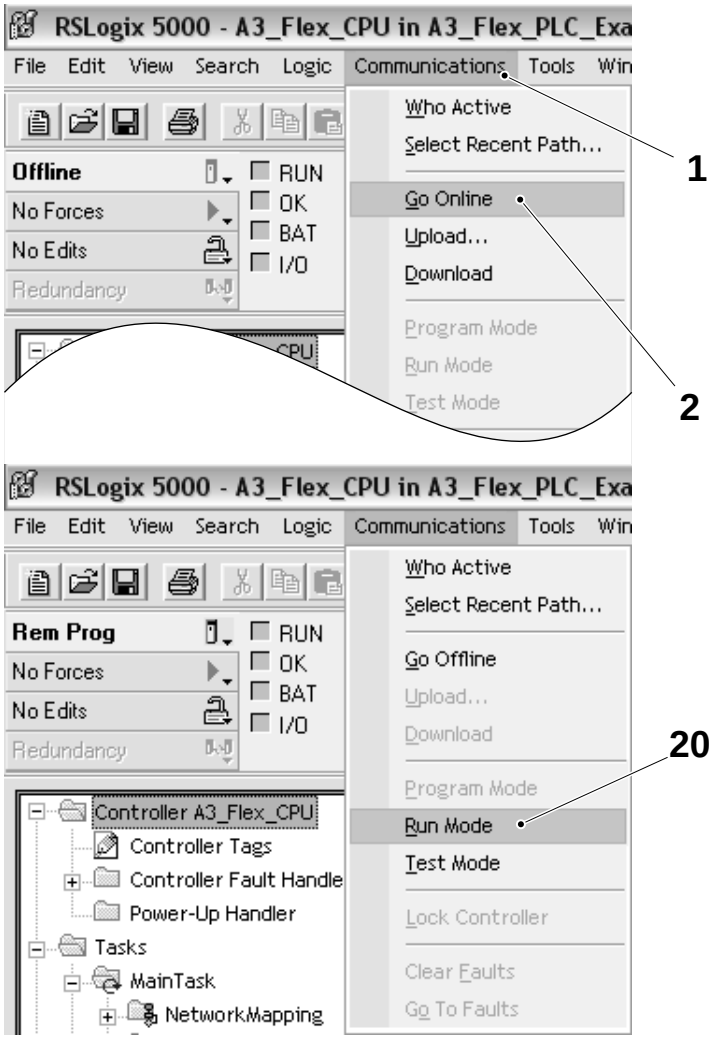

1 Communication menu
2 GO ONLINE
20 RUN MODE

TechPub_2614345_0106 - 1203_3047157_01.fm

8.1.2-7 PLC - Upload Program

Machine Status	Mains Power ON
Special Equipment	PC with CD Drive Ethernet communication cable
SPC Reference	2833407-0100

Note! To connect to the PLC using an ethernet communication cable, the PC must first be configured for this type of communication. See8.1.1-1 Preparation for PLC Communication - Configure PC Network Communications and 8.1.1-2 Preparations for PLC Communication - Configure RSLinx for PLC for more details.

It is possible to upload the current PLC program from the PLC to the PC. This might be necessary to compare the contents of the current and new PLC programs.

a) Connect the ethernet communication cable between a vacant connection port on the ethernet switch (1) and the PC (2).

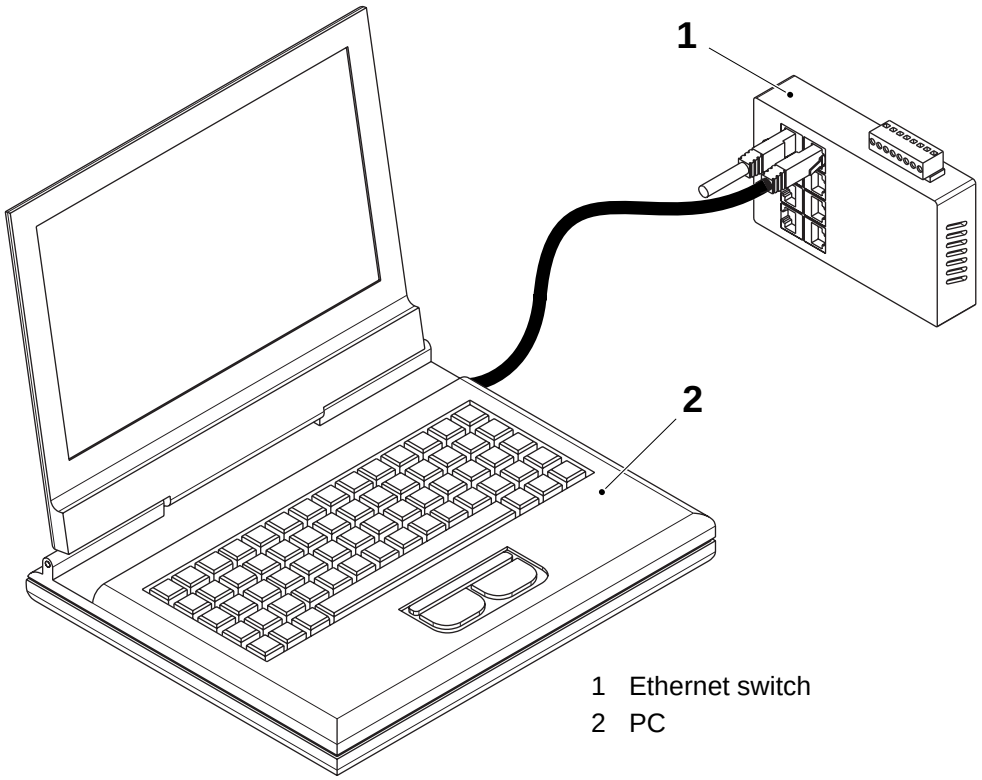

1 Ethernet switch
2 PC

(Cont'd)

TechPub_2614345_0106 - 1203_3047157_01.fm

(Cont'd)

b) Start the RSLogix program, select the COMMUNICATION menu (3) and then select GO ONLINE (4).

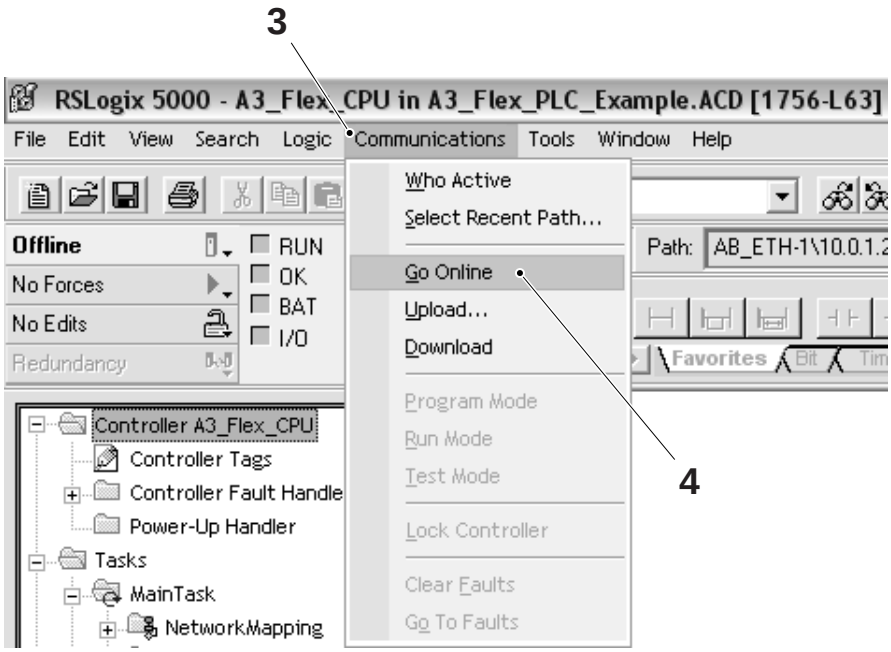

3 COMMUNICATION menu
4 GO ONLINE

(Cont'd)

TechPub_2614345_0106 - 1203_3047157_01.fm

(Cont'd)

c) In the CONNECTED TO GO ONLINE window (5), select the SELECT FILE button (6).

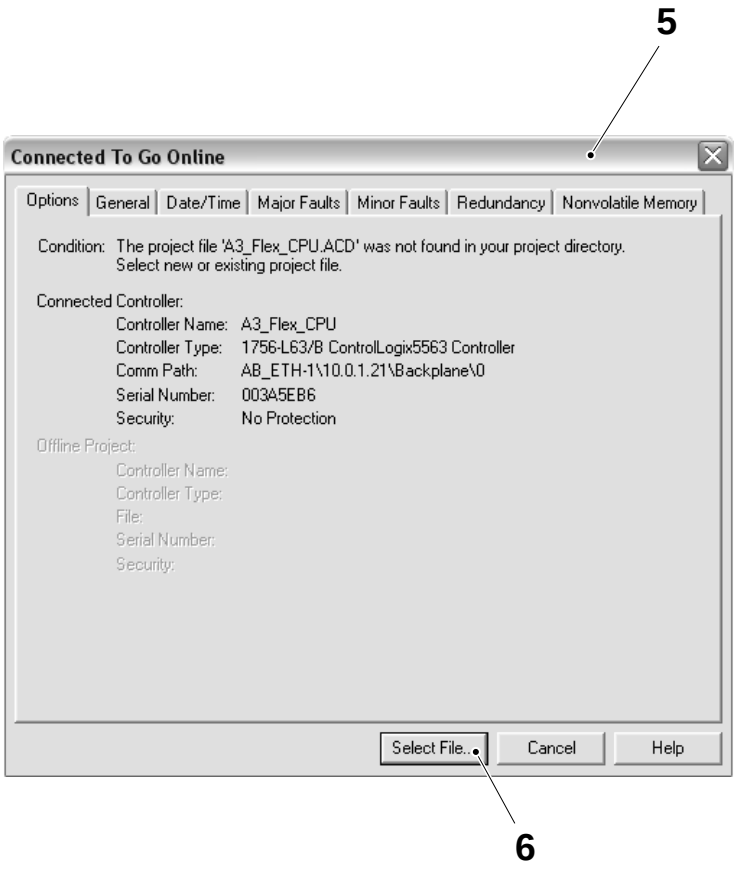

5 CONNECTED TO GO ONLINE window
6 SELECT FILE button

(Cont'd)

TechPub_2614345_0106 - 1203_3047157_01.fm

(Cont'd)

Note! Choose a unique name and file location for the program upload to avoid over writing other program files on the PC.

d) The ENTER NEW OR SELECT EXISTING FILE window (7) is displayed, enter a name for the program upload in the FILE NAME box (8).

e) Select the SELECT button (9).

f) When the RSLOGIX 5000 DIALOGUE box (10) appears, select the YES button (11) to upload the PLC program to the PC.

Note! The upload process takes several minutes to complete.

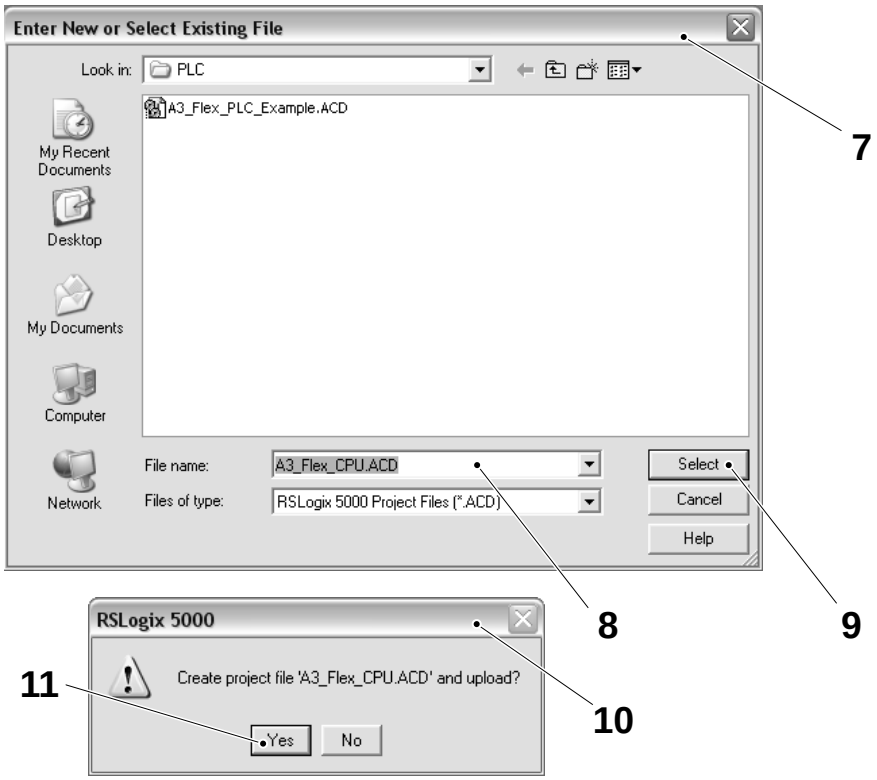

7 ENTER NEW OR SELECT EXISTING FILE window
8 FILE NAME box
9 SELECT button
10 RSLOGIX 5000 DIALOGUE box
11 YES button

TechPub_2614345_0106 - 1203_3047157_01.fm

8.1.2-8 Install the ControlFlash Application Firmware Library

Machine Status	Mains Power ON
Special Equipment	Ethernet communication cable PC with CD drive RSLogix 5000 installed Program CD TP No. 2869128-0003

Note! The firmware of the drivers of the servomotors has to be updated in all the machines. CAP 30/Speed is shown in the illustration as reference only.

a) Open the required (not the example shown) compressed folder (1).

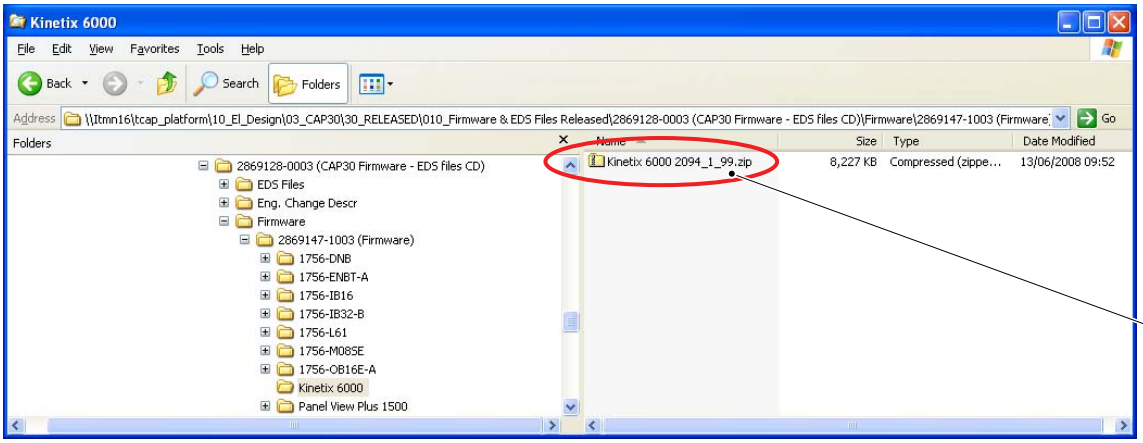

1 Compressed folder

b) Move the installation file (2) in the desktop of the PC and

c) Execute the installation file (2).

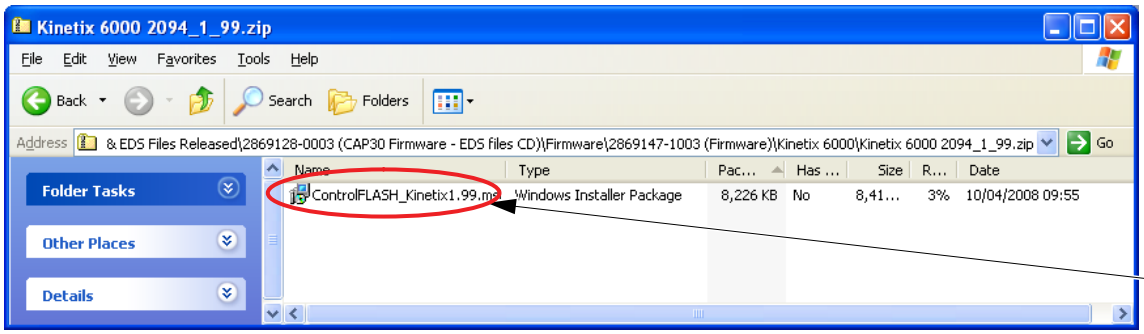

2 Installation file

(Cont'd)

TechPub_2614345_0106 - 1203_3047157_01.fm

(Cont'd)

d) Click on the Next button (3).

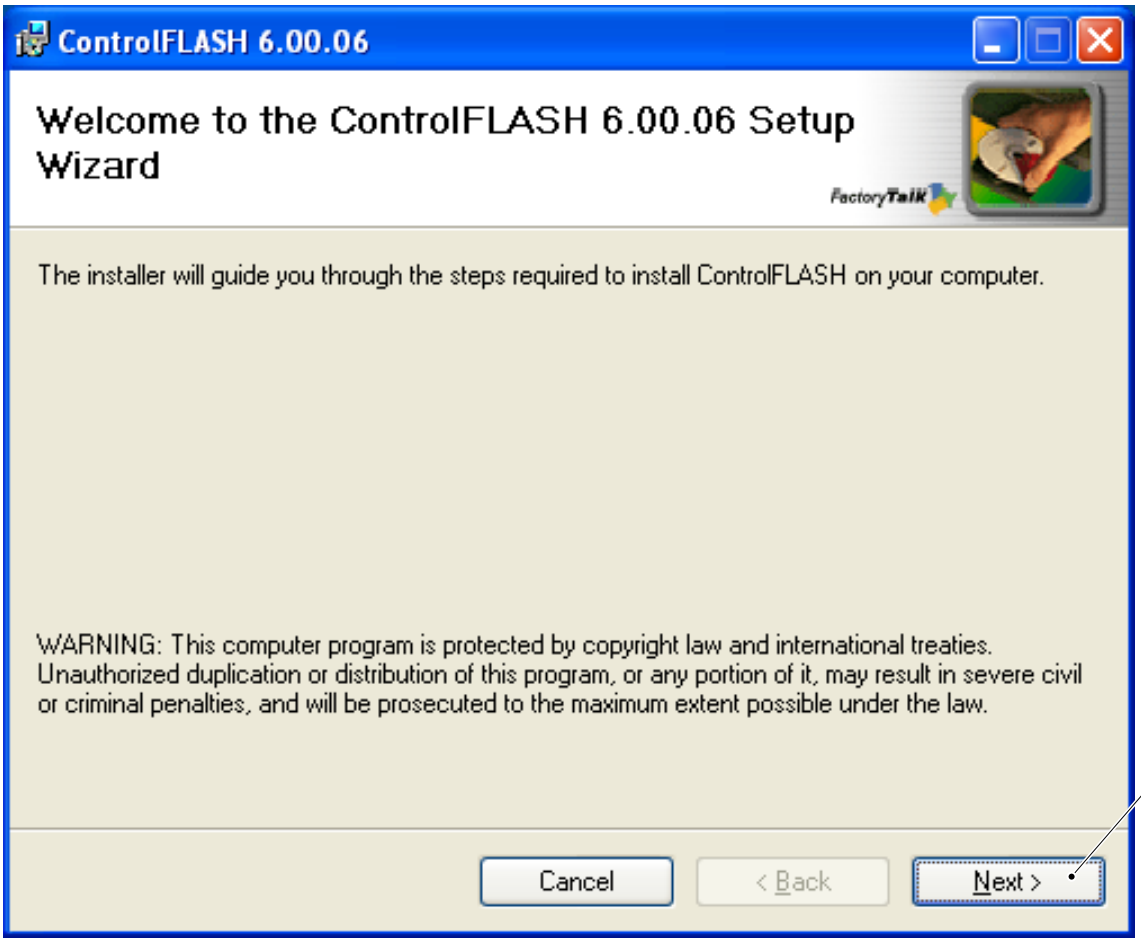

3 Next button

(Cont'd)

TechPub_2614345_0106 - 1203_3047157_01.fm

(Cont'd)

e) Select “I Agree“and then click on the Next button (4).

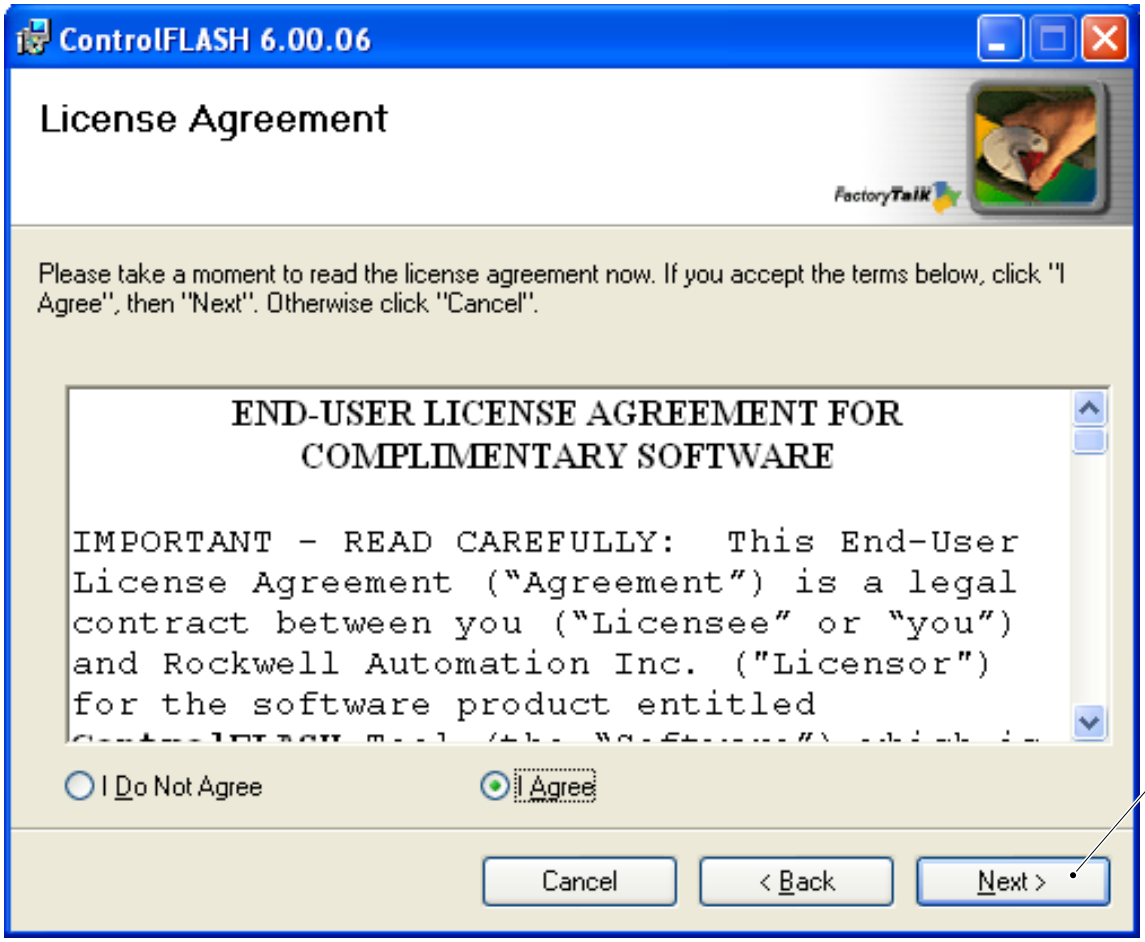

4 Next button

(Cont'd)

TechPub_2614345_0106 - 1203_3047157_01.fm

(Cont'd)

f) Select the folder for the installation and then click on the Next button (5).

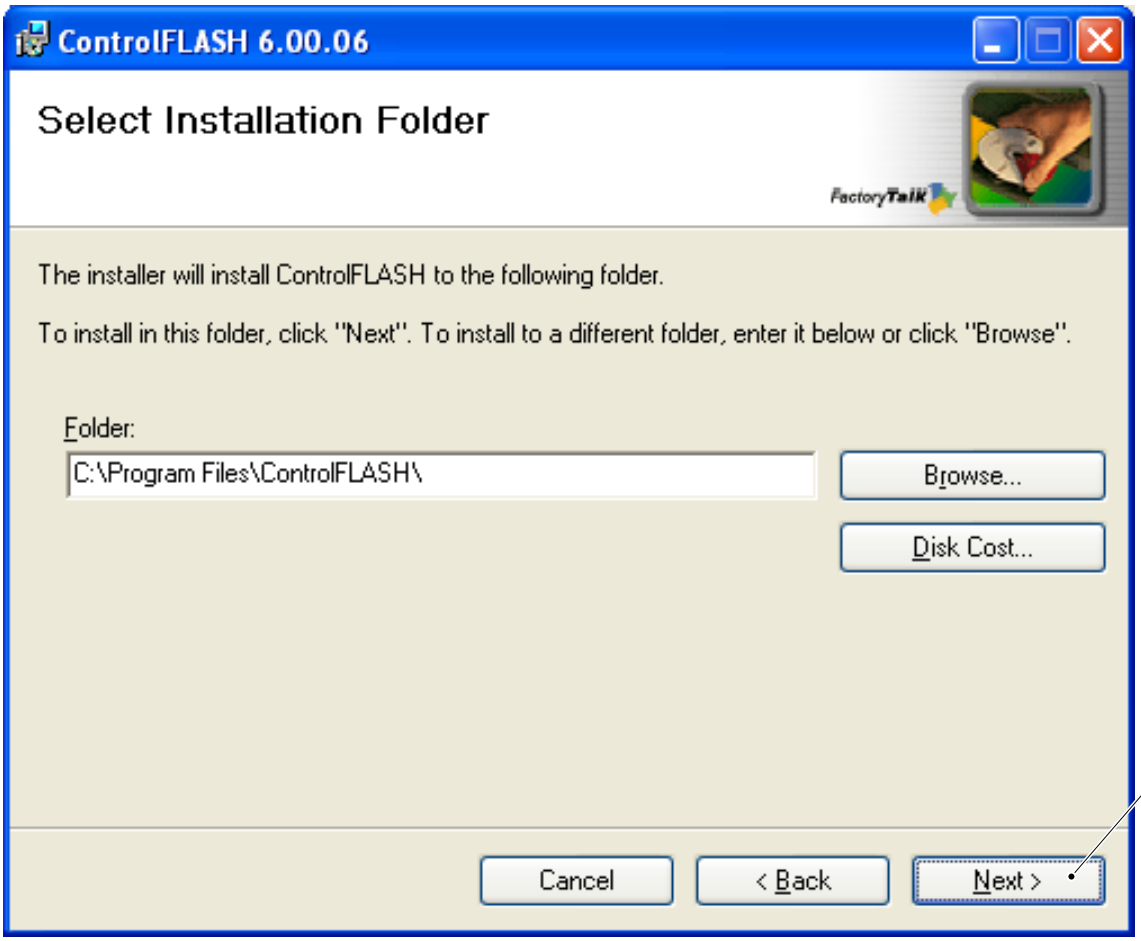

5 Next button

(Cont'd)

TechPub_2614345_0106 - 1203_3047157_01.fm

(Cont'd)

g) Click on the Next button (6) to start the installation.

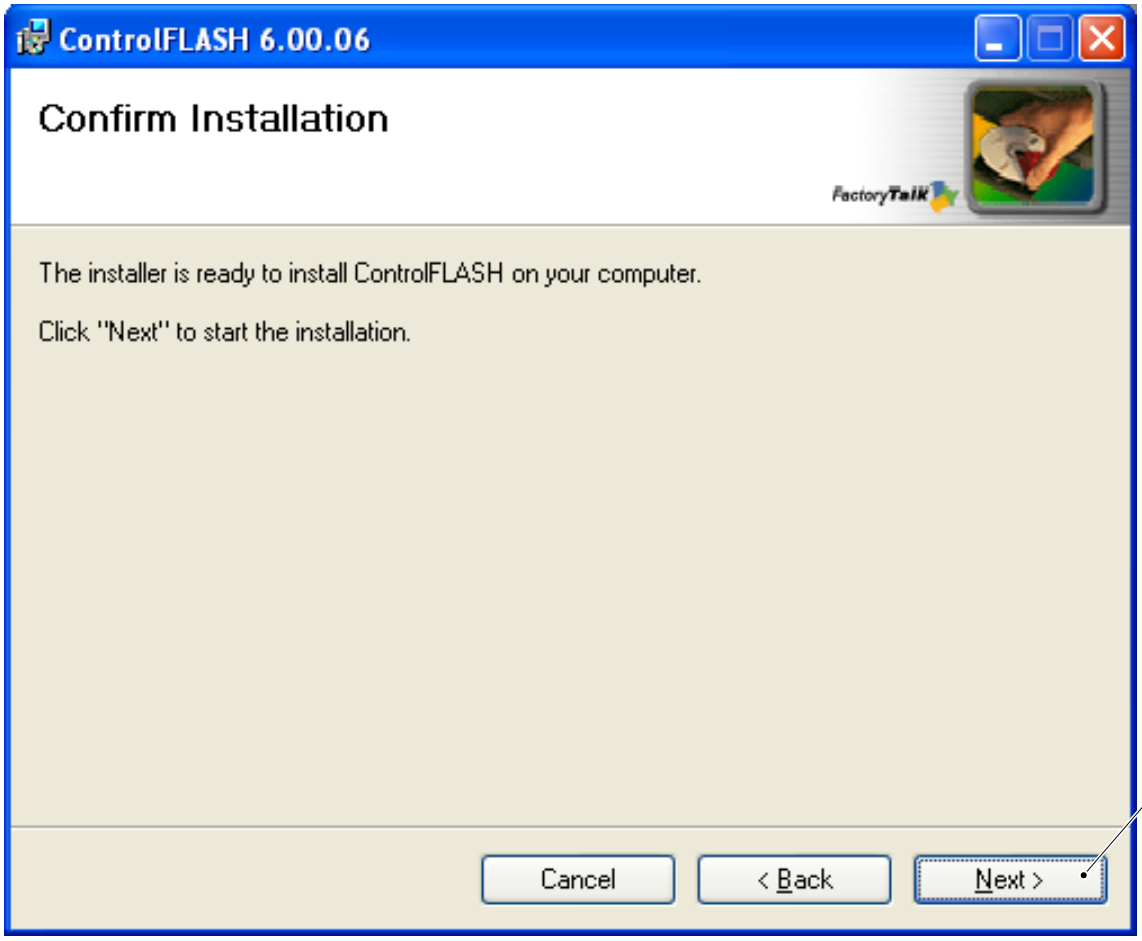

6 Next button

(Cont'd)

TechPub_2614345_0106 - 1203_3047157_01.fm

(Cont'd)

h) Click on the Close button (7) to exit.

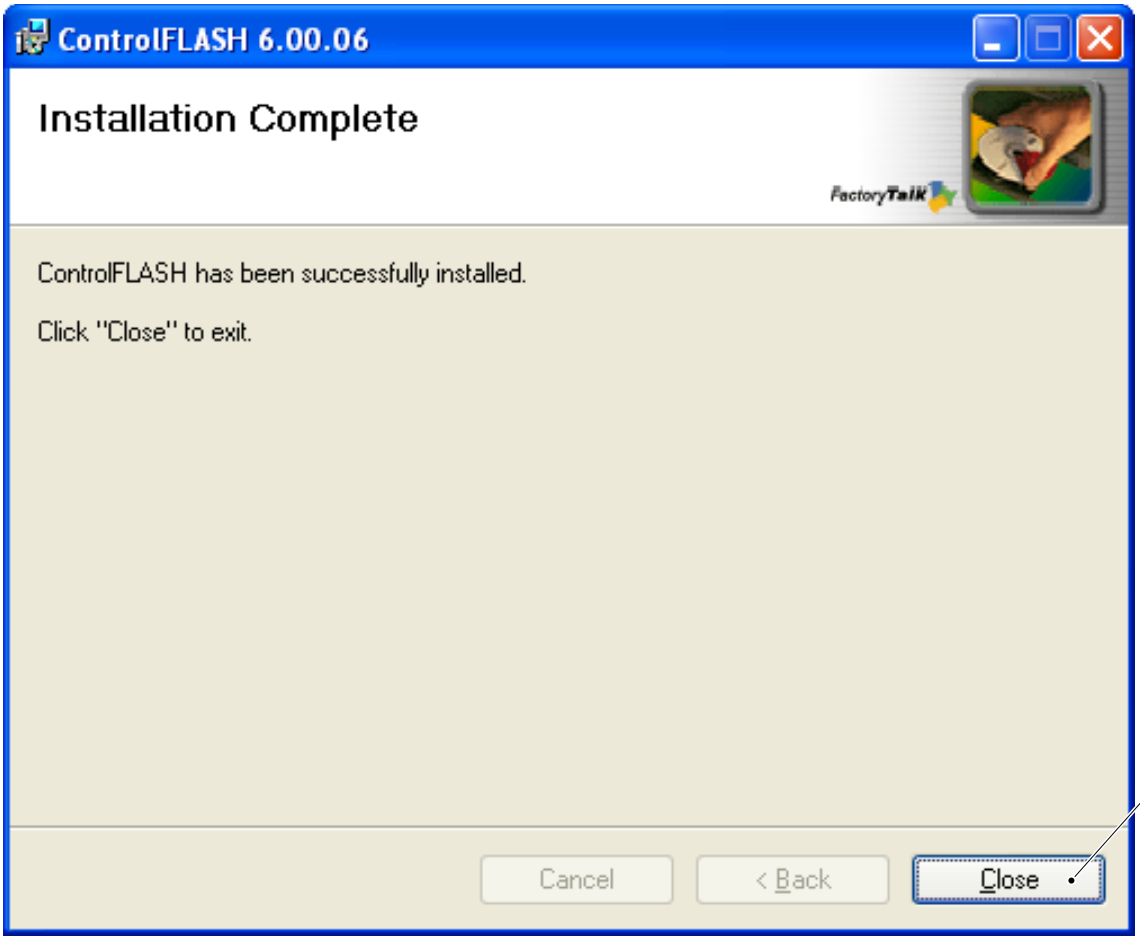

7 Close button

(Cont'd)

TechPub_2614345_0106 - 1203_3047157_01.fm

8.1.2-9 PLC - Load FirmWare in PLC, Ethernet, DeviceNet and SERCOS Modules

Machine Status	Mains Power ON
Special Equipment	PC with CD Drive CD TP No. with software Ethernet communication cable
SPC Reference	2833407-0100

CAUTION
Risk of damage to the equipment.
If a FirmWare update is interrupted, e.g. by a power loss on the machine, or if the communication fails between the device and the PC, the PLC Processor will be corrupted and must be sent for repair.

Note! The following procedure is valid for all PLC rack mounted or distributed modules requiring firmware.

Use the table below to identify the correct firmware revision for the module to be flashed.

PLC				
Slot No.	**Pos. No.**	**Module type**	**TP No.**	**Firmware revision**
1	01K301	1756-L61	90459-3142	13.36.1
2	01K302	1756-ENBT	90459-2477	3.2.6
3	01K303	1756-ENBT	90459-2477	3.2.6
4	01K304	1756-DNB	90600-4543	10.005
10	01K310	1756-M08SE	90459-2480	13.7

(Cont'd)

TechPub_2614345_0106 - 1203_3047157_01.fm

(Cont'd)

a) Make sure that the PC is configured as described in See 8.1.1-1 Preparation for PLC Communication - Configure PC Network Communications and 8.1.1-2 Preparations for PLC Communication - Configure RSLinx for PLC.

b) Open the start menu on the PC and select PROGRAMS (1), FLASH PROGRAMMING TOOLS (2) and CONTROL FLASH (3).

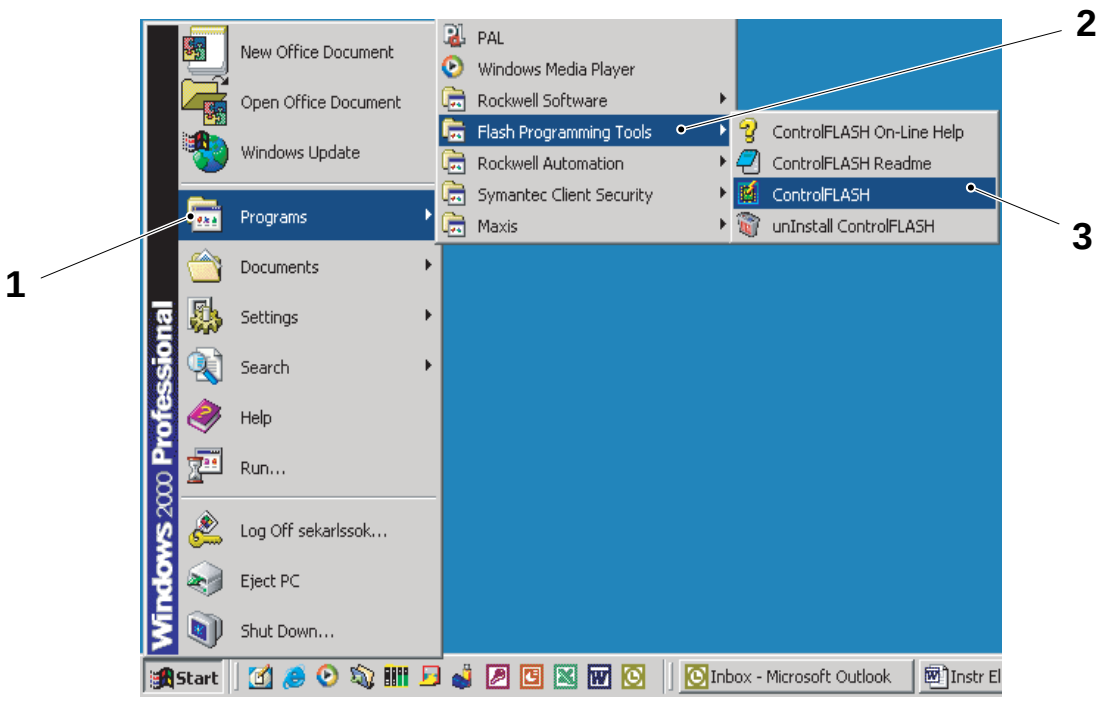

1 PROGRAMS
2 FLASH PROGRAMMING TOOLS
3 CONTROL FLASH

(Cont'd)

TechPub_2614345_0106 - 1203_3047157_01.fm

(Cont'd)

c) Follow the instructions in the CONTROL FLASH PROGRAM window (4) to load the firmware.



4 CONTROL FLASH PROGRAM window

TechPub_2614345_0106 - 1203_3047157_01.fm

8.1.2-10 Install the Driver for the First Kinetix Servo Driver

Machine Status	Mains Power ON
Special Equipment	PC with CD Drive CD TP No. with software Ethernet communication cable
SPC Reference	2833407-0100

a) Launch RSLogix and enable the on-line connection with the PLC.

b) In the menu select “Tools” (1) and then “ControlFLASH” (2).

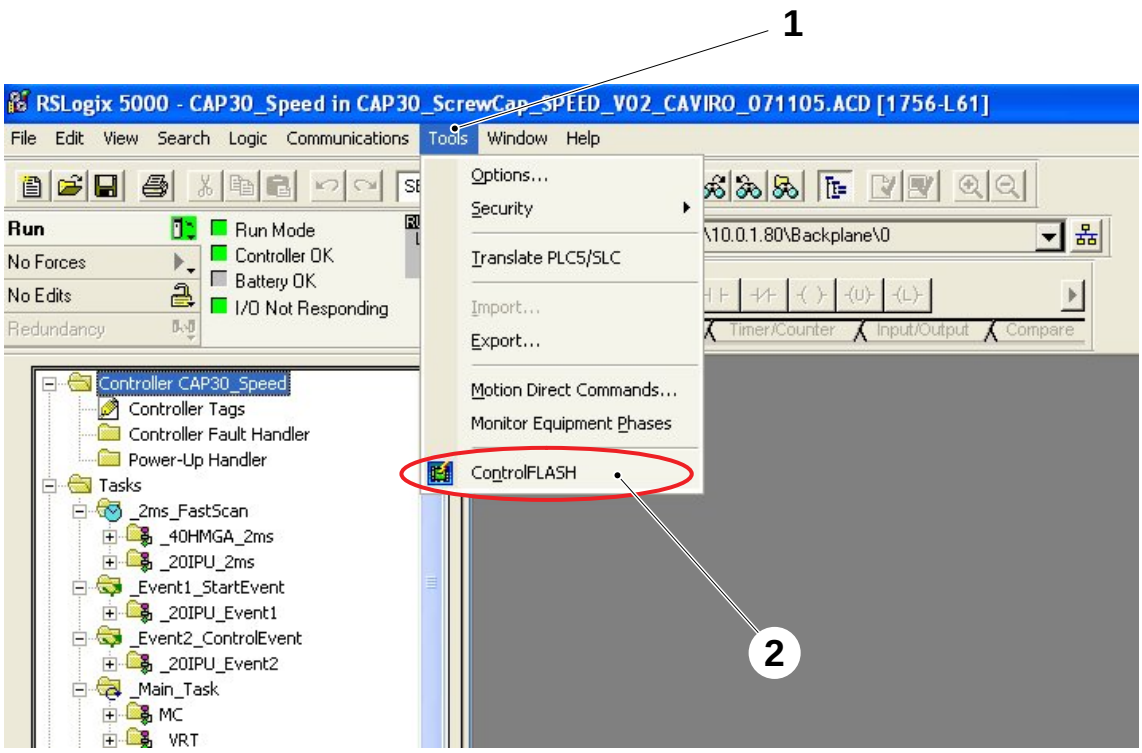

1 Tools
2 ControlFLASH

(Cont'd)

TechPub_2614345_0106 - 1203_3047157_01.fm

(Cont'd)

c) The ControlFLASH (3) window appears as shown in picture.

d) Click on the NEXT button (4).

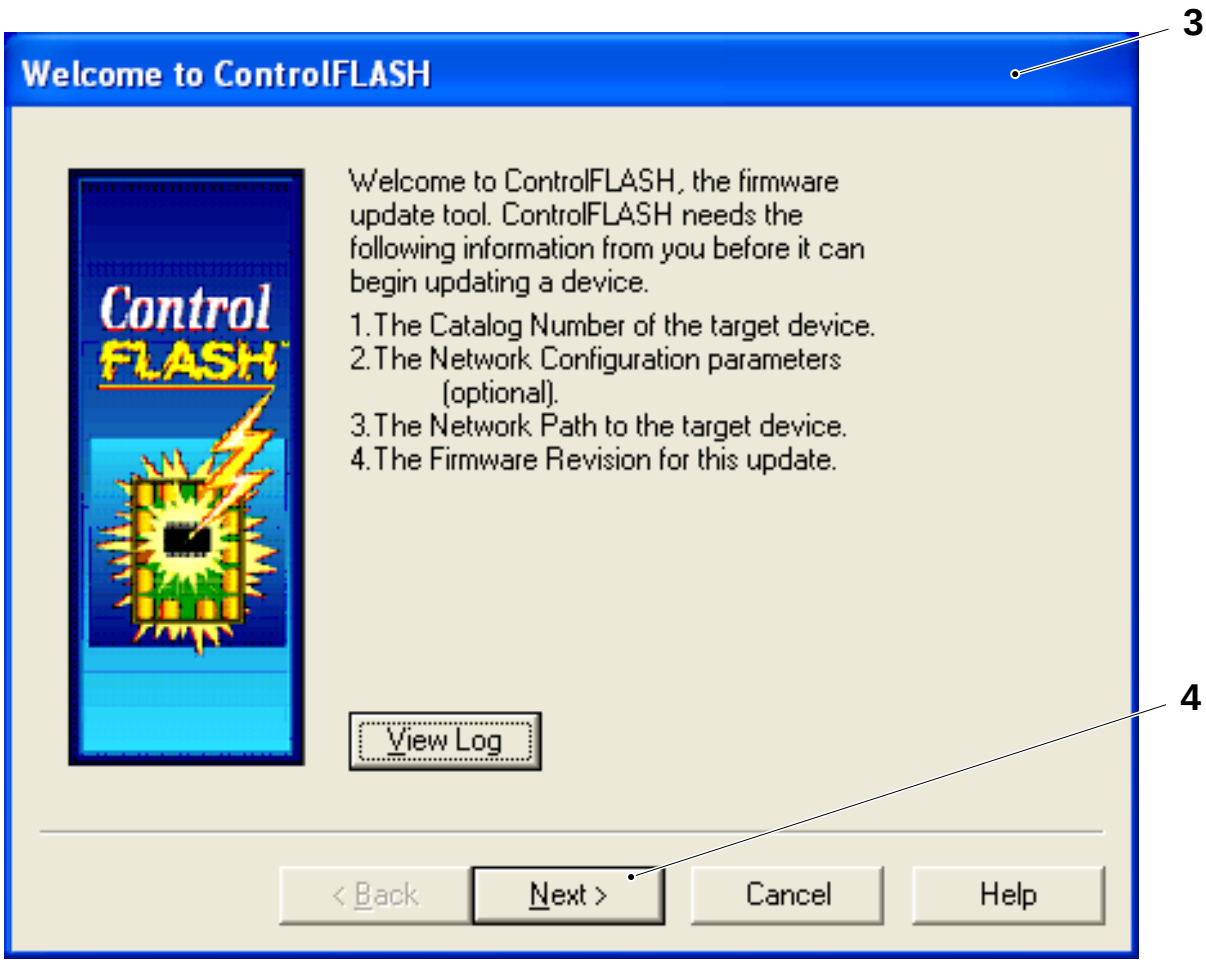

3 ControlFLASH window
4 NEXT button

(Cont'd)

TechPub_2614345_0106 - 1203_3047157_01.fm

(Cont'd)

e) Read the code number (5) of the first driver (6) starting from the left side of the Kinetix Rack, in the electrical cabinet.

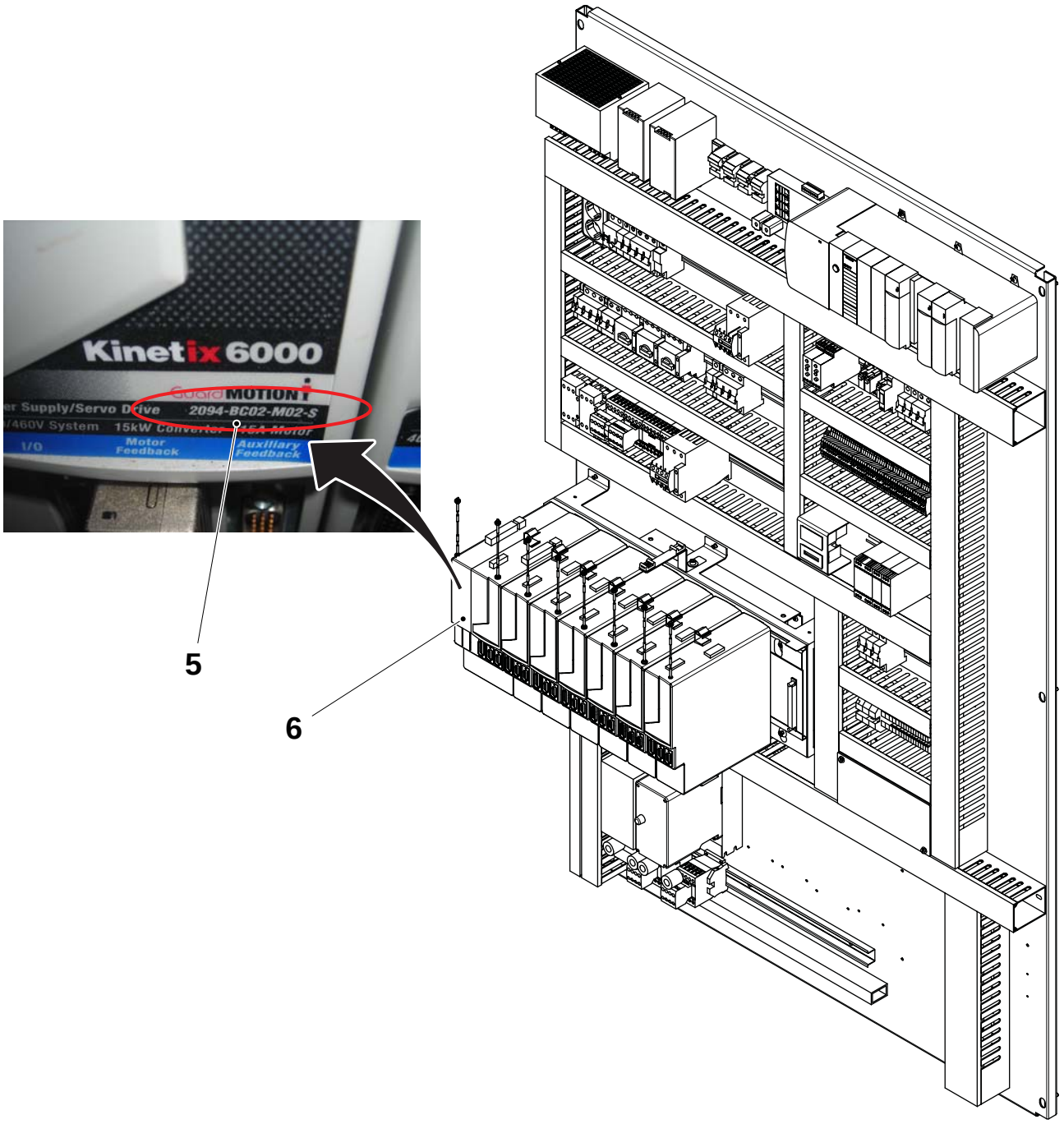

5 Code number
6 Driver

(Cont'd)

TechPub_2614345_0106 - 1203_3047157_01.fm

(Cont'd)

f) In the catalogue number window (7), scroll the search bar (8) and select the code number (5) of the first driver.

g) Click on the NEXT button (9).

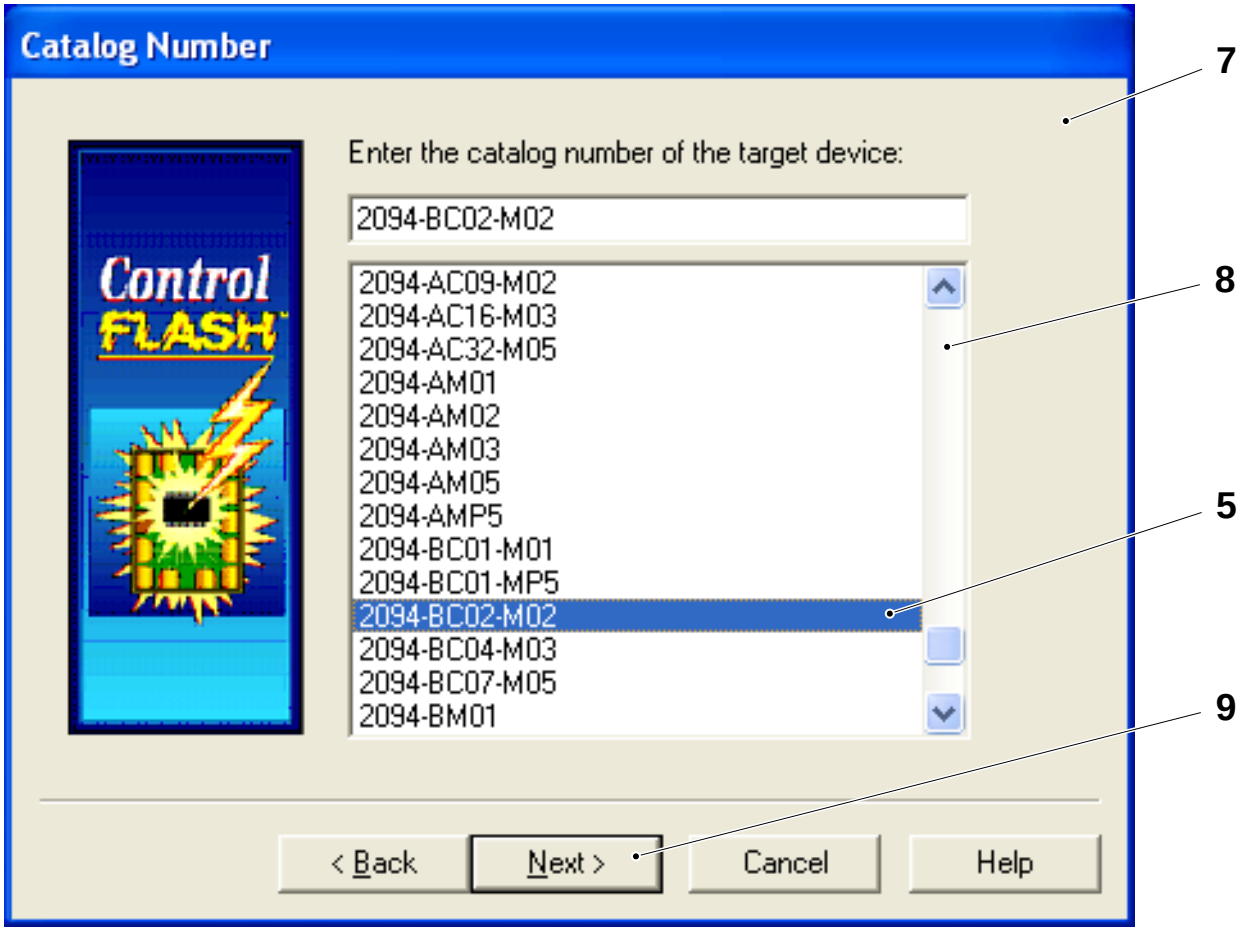

5 Code number
7 Catalogue number window
8 Search bar
9 NEXT button

(Cont'd)

TechPub_2614345_0106 - 1203_3047157_01.fm

(Cont'd)

h) Select the communication path (10) where the first driver is allocated.

i) Select the driver (11) that will be updated with the new firmware.

j) Click on the OK button (12).

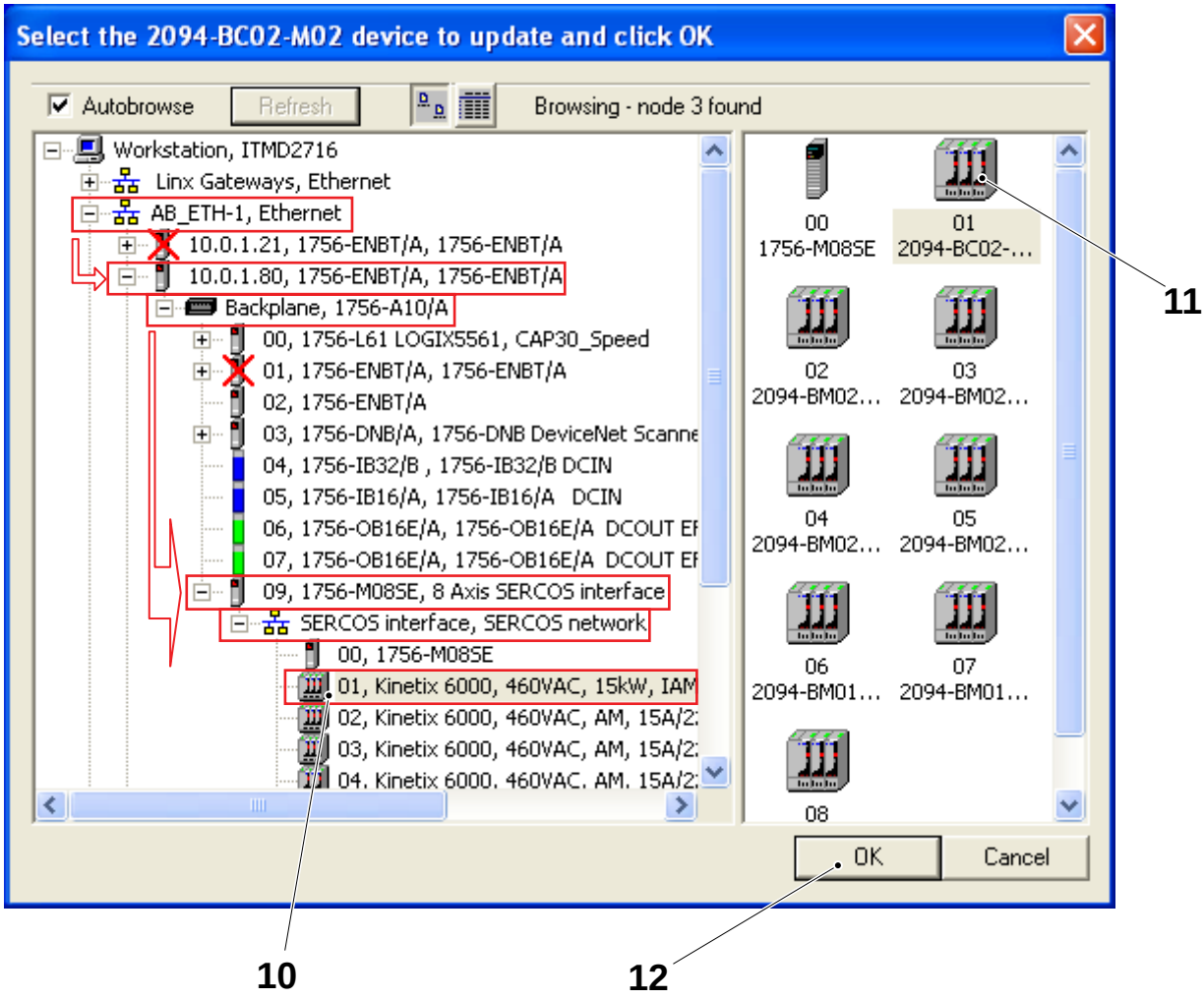

10 Communication path
11 Driver
12 OK button

(Cont'd)

TechPub_2614345_0106 - 1203_3047157_01.fm

(Cont'd)

k) Select the new revision 1.111 (13) in the firmware revision window by clicking on it.

l) Click on the OK button (14).

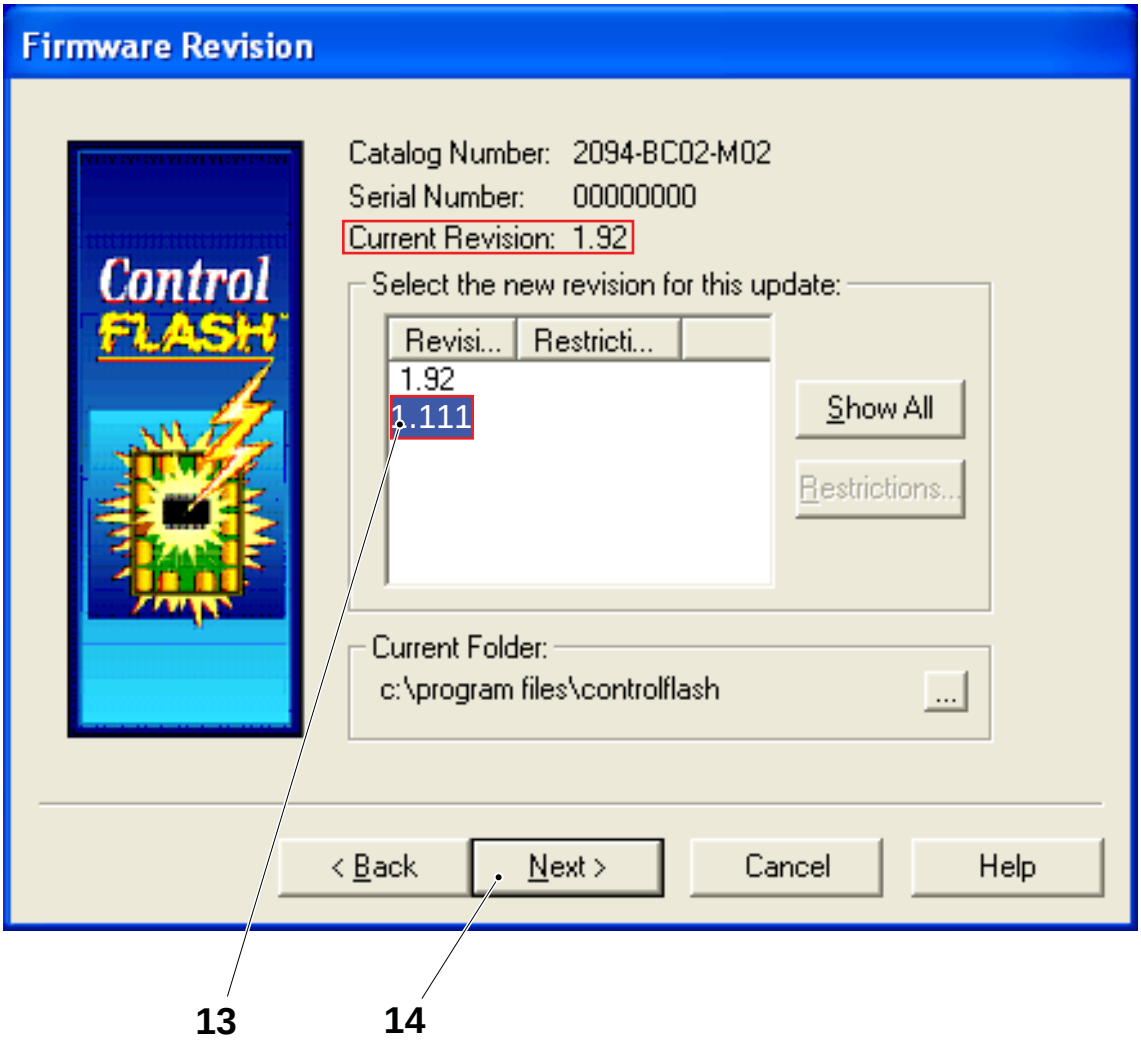

13 Revision
14 NEXT button

(Cont'd)

TechPub_2614345_0106 - 1203_3047157_01.fm

(Cont'd)

m) Click on the finish button (15) in the summary window.

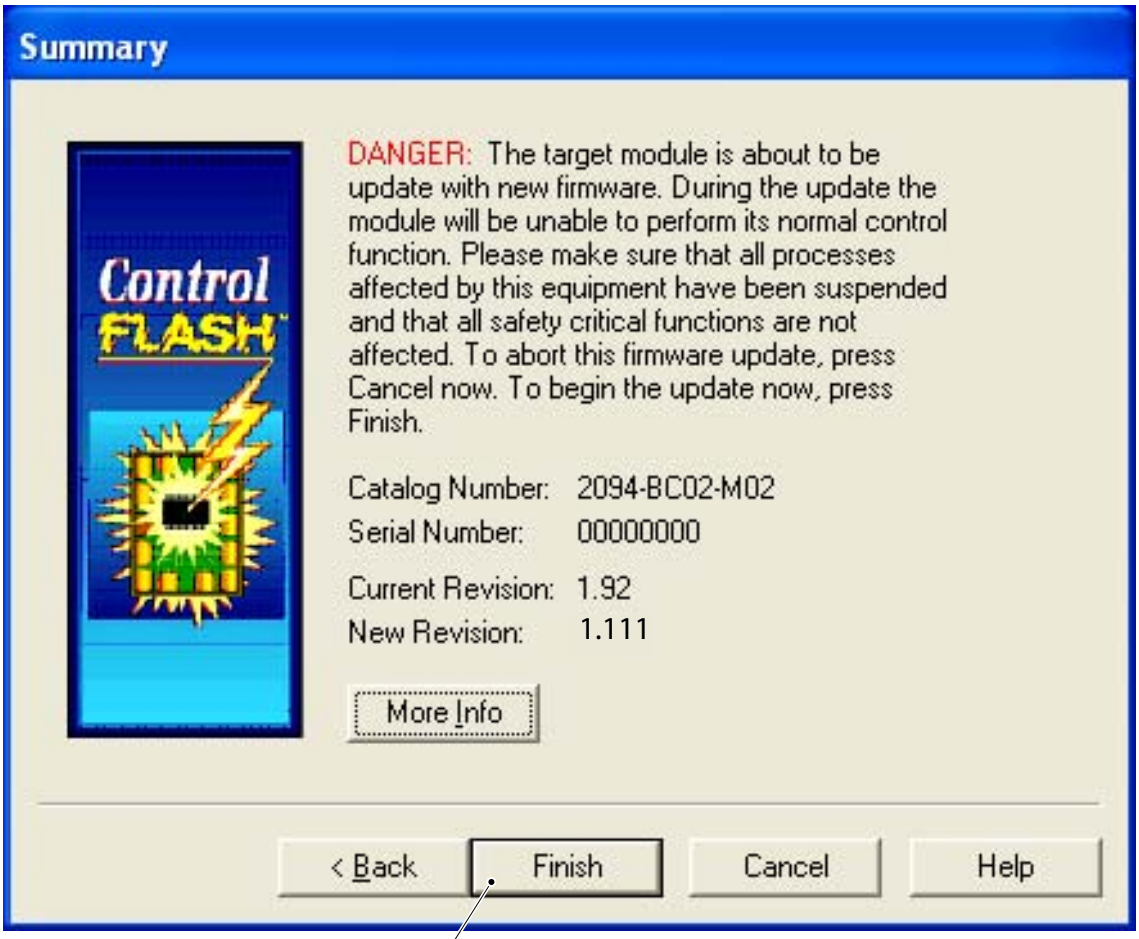

15 Finish button

n) Click on the Yes button (16).



16 Yes button

(Cont'd)

TechPub_2614345_0106 - 1203_3047157_01.fm

(Cont'd)

o) Click on the OK button (17).

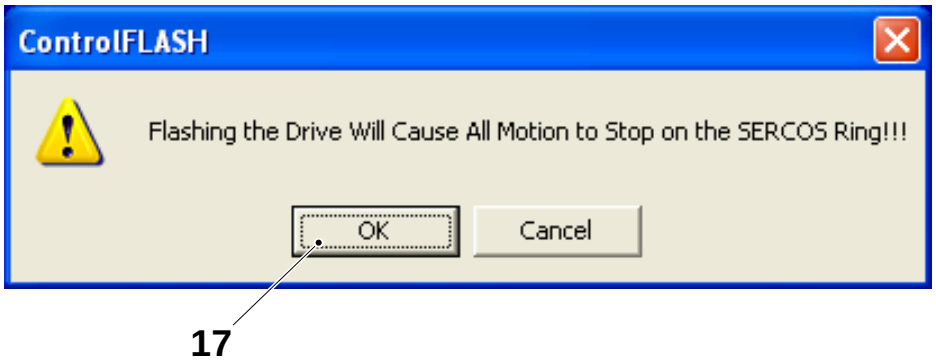

17 OK button

p) When the downloading of the firmware is finished, click on the OK button (18) in the update status window.

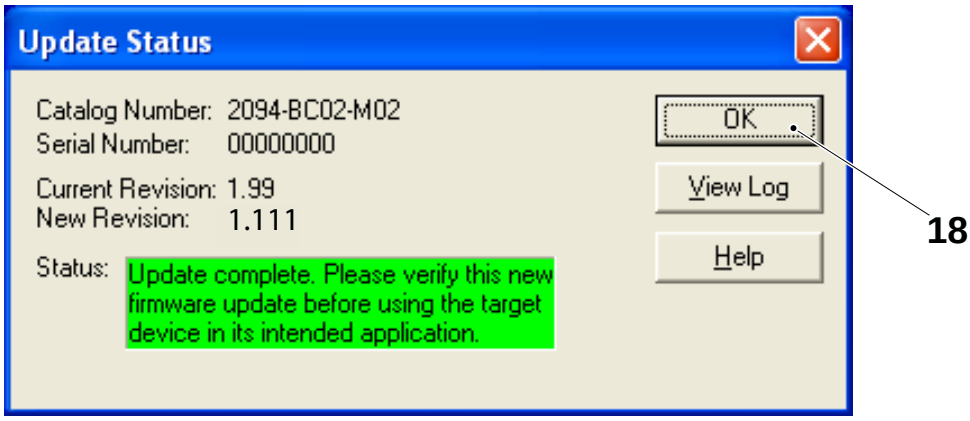

18 OK button

Note! After the installation of the first driver, the ControlFLASH tool returns to the first screen of page 8-79.

(Cont'd)

TechPub_2614345_0106 - 1203_3047157_01.fm

(Cont'd)

Install the Driver for the Next Kinetix Servo Driver

CAUTION

Always make sure to select the correct servo driver.

Carefully read the code number of the Kinetix servo driver.

a) Install the firmware in the next servo driver, see step f) on page 8-79.

b) Repeat this procedure for all the servo drivers.

TechPub_2614345_0106 - 1203_3047157_01.fm

8.2 Distributed I/O and Network

SPC Reference	662850-0100

8.2.1 Distributed I/O and Network - Overview

General

"Distributed I/O" is a generic term for I/O devices in the system that communicate, via a network, to a component or components in the Control Logix Rack.

(Cont'd)

TechPub_2614345_0106 - 1202_3047158_01.fm

(Cont'd)

ReCap Machines

In this machine there are six such devices that communicate with the DNB DeviceNet Scanner (Node 0) (1) in the Control Logix Rack.

- The PowerFlex40 (PF40) module (2) via a 22-COMM-D DeviceNet adaptor. The adaptor is integrated in the PowerFlex40 module. This adaptor has been assigned with Node address 1.
- The 10 Point I/O modules via a 1734-ADN DeviceNet adaptor (3). The adaptor has been assigned with Node address 2.

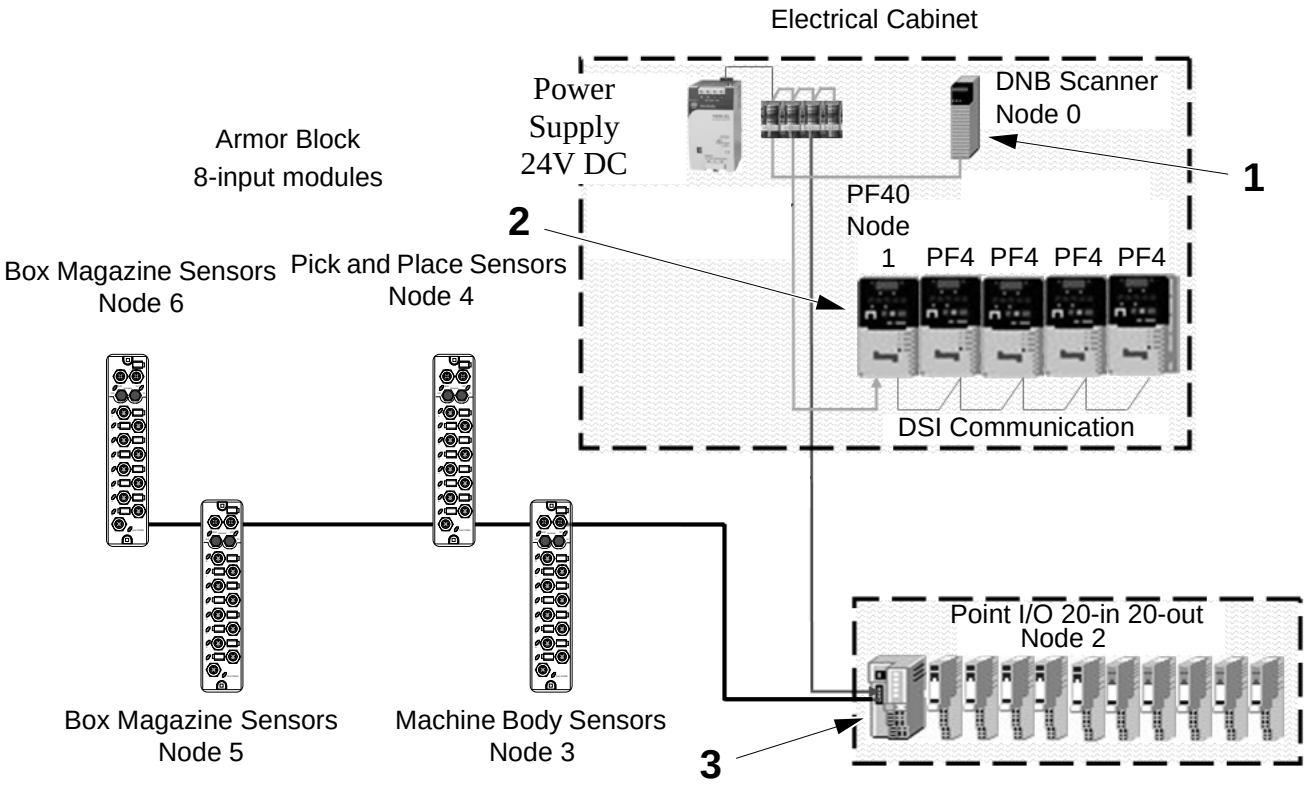

1 DeviceNet scanner
2 PowerFlex 40 module
3 1734-ADN DeviceNet adaptor

(Cont'd)

TechPub_2614345_0106 - 1202_3047158_01.fm

(Cont'd)

- Four Armor Block DeviceNet I/O modules (4). These modules have been assigned with the Node addresses 3, 4 5 and 6.

Drop lines (5) are used to connect to modules in the Electrical Cabinet and trunk lines (6) for connections to components in the machine.

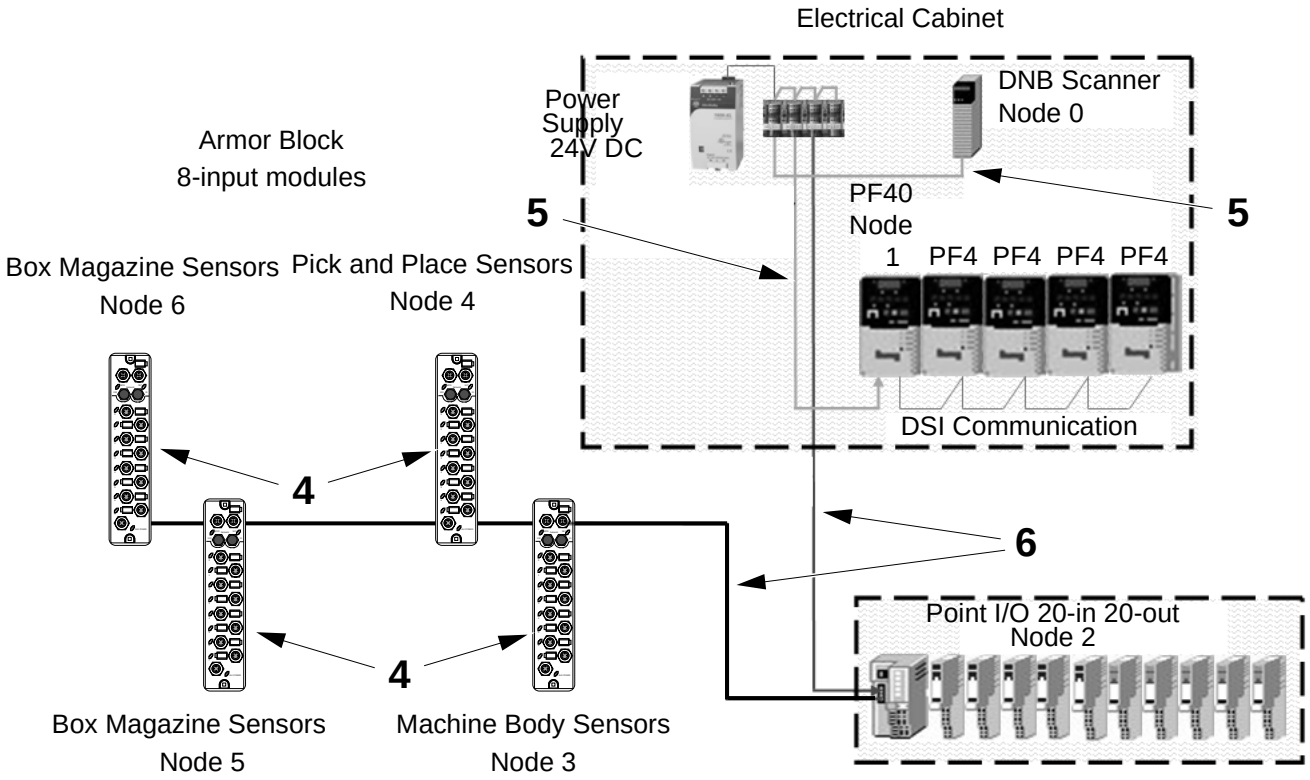

4 Armor block DeviceNet I/O module
5 Drop line
6 Trunk line

TechPub_2614345_0106 - 1202_3047158_01.fm

Configuration Tools

The DeviceNet can be configured from a PC by using the RSLogix5000 and RSNetwork software.

Power Supplies and Cabling

The network is connected to a separate 24VDC power supply and has a terminating resistor (*TR*) (121 ohm), attached to the ends of the trunk line.

The network cable is colour coded to avoid wiring faults:

- +24 VDC (V+) Red
- CAN -H White
- Drain Shield or Bare
- CAN -L Blue
- +0 VDC (V-) Black

TechPub_2614345_0106 - 1202_3047158_01.fm

8.2.2 Distributed I/O and DeviceNet - I/O Modules

8.2.2-1 I/O Modules - Overview

Machine Status	Mains Power OFF
SPC Reference	662911-0200

DeviceNet Scanner (01K304) Node 0

The DeviceNet Scanner (1) is located in the Control Logix Chassis. On the input side, the DeviceNet Scanner (1), communicates with the PLC via the backplane of the Control Logix Chassis. On the output side it communicates, via the DeviceNet, with the other DeviceNet modules.

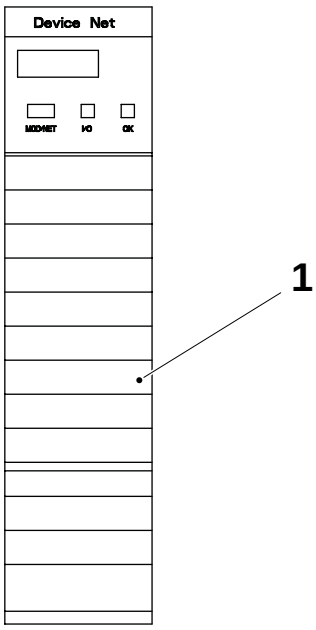

1 DeviceNet Scanner

(Cont'd)

TechPub_2614345_0106 - 1202_3047158_01.fm

(Cont'd)

Status indicators and an alphanumeric display are provided to report the status of the module and the DeviceNet.

If this module is changed, do the following:

- download the firmware to the module, see 8.1.2-9 PLC - Load FirmWare in PLC, Ethernet, DeviceNet and SERCOS Modules.
- set the Node address number and the baudrate, see 8.2.3-3 DeviceNet - DeviceNet on the Machine
- load the DeviceNet program, 8.2.3-5 DeviceNet - Loading a Program in a New DeviceNet Scanner.

For DeviceNet troubleshooting information regarding this module, see 8.2.4-2 Troubleshooting - DeviceNet Error Indications and Messages on DeviceNet Scanner (Node 0).

(Cont'd)

TechPub_2614345_0106 - 1202_3047158_01.fm

(Cont'd)

DeviceNet Adaptor (22-COMM-D) Node 1

The (22-COMM-D) DeviceNet Adaptor (1) is mounted behind the cover (2) of the PowerFlex 40 Drive (3).

The DeviceNet Adaptor (1) is used to set the Node address number and the baudrate.

Status indicators are provided to report the status of the module and the DeviceNet.

If this module is changed, do the following:

- set the Node address number and the baudrate, see 8.2.3-3 DeviceNet - DeviceNet on the Machine
- load the DeviceNet program, 8.2.3-5 DeviceNet - Loading a Program in a New DeviceNet Scanner.

For DeviceNet troubleshooting information regarding this module, see 8.2.4-3 Troubleshooting - DeviceNet Error Indications on the PowerFlex40 Module 22-COMM-D Adaptor (Node 1).

TechPub_2614345_0106 - 1202_3047158_01.fm

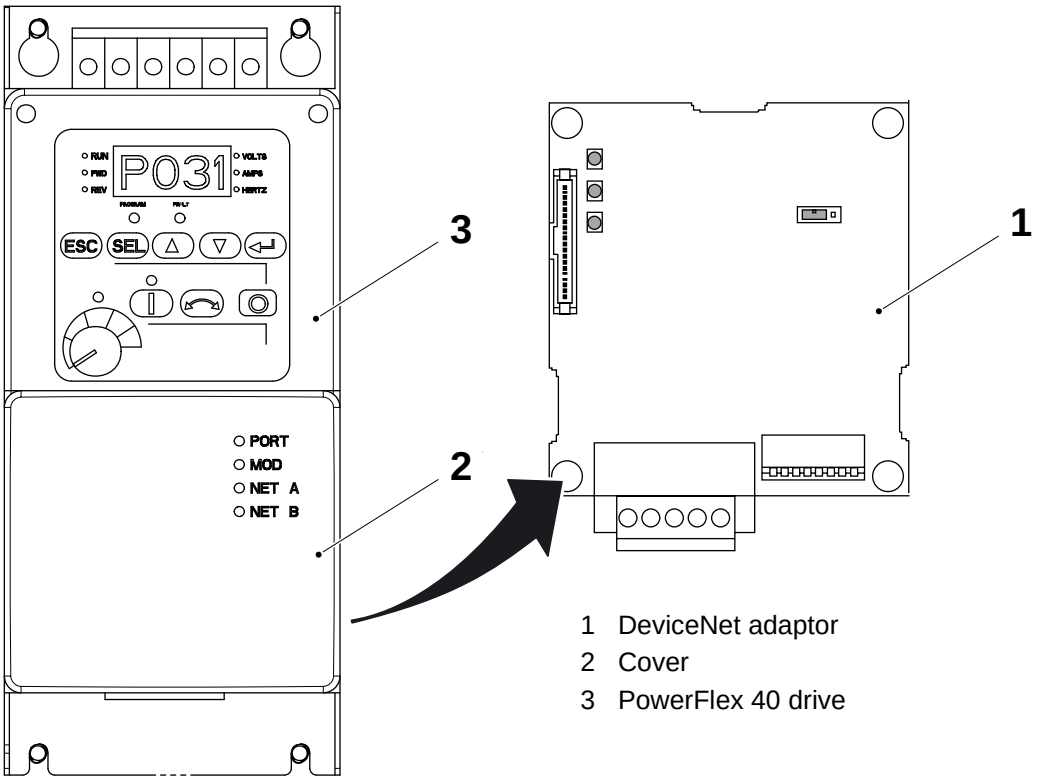

1 DeviceNet adaptor
2 Cover
3 PowerFlex 40 drive

(Cont'd)

(Cont'd)

DeviceNet Adaptor (1734-ADN) Node 2

The DeviceNet Adaptor (1) is mounted in the Control Panel box and physically connected to the point I/O modules. On one side, the DeviceNet Adaptor (1) sends and receives I/O data, via the DeviceNet, to and from the DeviceNet Scanner. On the other side, the DeviceNet Adaptor (1) transfers outputs to the Point I/O output modules and receives data from the Point I/O input modules.

The DeviceNet Adaptor (1) is used to set the Node address number and the baudrate.

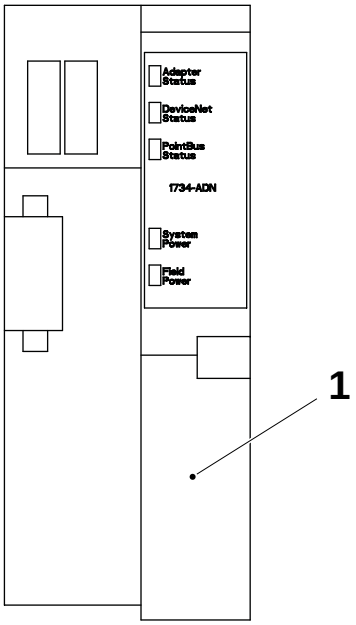

1 1734-ADN DeviceNet Adaptor

TechPub_2614345_0106 - 1202_3047158_01.fm

(Cont'd)

(Cont'd)

Status indicators are provided to report the status of the module and the DeviceNet.

If this module is changed, do the following:

- set the Node address number, see, 1734 DeviceNet Adaptor for Point I/O Module (01K320) - Change
- load the DeviceNet program, 8.2.3-6 DeviceNet - Loading a DeviceNet Program in a New Point I/O Module Adaptor.

For DeviceNet troubleshooting information regarding this module, see 8.2.4-4 Troubleshooting - DeviceNet Error Indications on the 1734-ADN Adaptor for the Point I/O Modules (Node 2).

(Cont'd)

TechPub_2614345_0106 - 1202_3047158_01.fm

(Cont'd)

DeviceNet Armor Block

For all Machines (Node 3 and 4)

These devices (1) are used to monitor components in the machine and transmit the information via the DeviceNet to the PLC.

The Node address number is set by rotary switches on the module.

Status indicators are provided to report the status of the module and the DeviceNet.

If a module is changed, do the following:

– set the Node address number, see 8.2.3-2 DeviceNet Scanner - Set DeviceNet Scanner (01K304) Node Address and Baudrate, Armor Block I/O Modules - Set Node Address.

For DeviceNet troubleshooting information regarding this module, see 8.2.4-5 Troubleshooting - DeviceNet Error Indications on the Armor Block I/O Module (Node 3) and 8.2.4-6 Troubleshooting - DeviceNet Error Indications on the Armor Block I/O Module (Node 4).

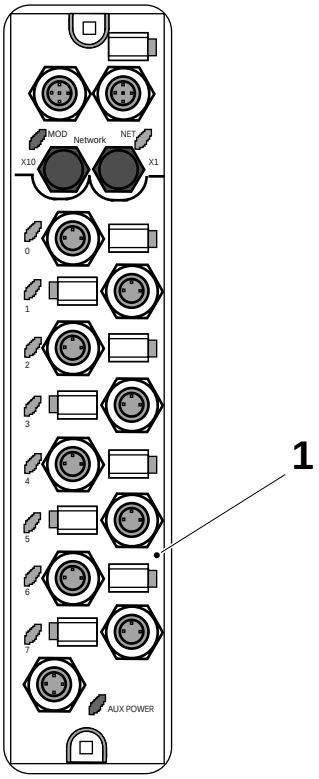

1 DeviceNet Armor Block Module

(Cont'd)

TechPub_2614345_0106 - 1202_3047158_01.fm

(Cont'd)

For ReCap Machines Only (Node 5 and 6)

These devices (1) are used to monitor components in the machine and transmit the information via the DeviceNet to the PLC.

The Node address number is set by rotary switches on the module.

Status indicators are provided to report the status of the module and the DeviceNet.

If a module is changed, do the following:

– set the Node address number, see 8.2.3-3 DeviceNet - DeviceNet on the Machine, Armor Block I/O Modules - Set Node AddressArmor Block I/O Modules - Set Node Address.

For DeviceNet troubleshooting information regarding this module, see 8.2.4-7 Troubleshooting - DeviceNet Error Indications on the Armor Block I/O Module (Node 5) (ReCap Only) and 8.2.4-8 Troubleshooting - DeviceNet Error Indications on the Armor Block I/O Module (Node 6) (ReCap Only).

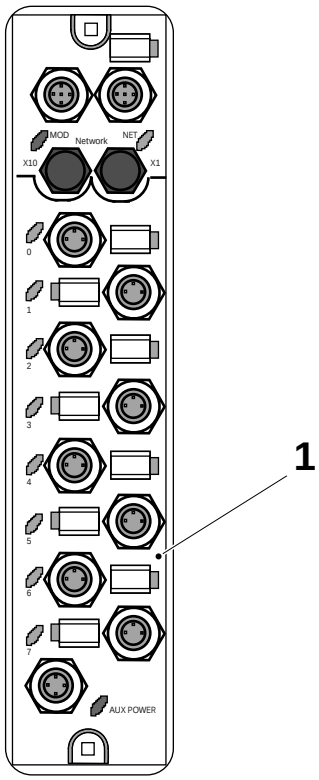

1 DeviceNet Armor Block Module

TechPub_2614345_0106 - 1202_3047158_01.fm

8.2.3 Distributed I/O and DeviceNet - DeviceNet Scanner

8.2.3-1 DeviceNet Scanner - Change

Machine Status	Mains Power ON
SPC Reference	2833407-0100

Note! The firmware revision of the PLC controller maybe equal to, or newer than the firmware revision of the old PLC controller. If an attempt to go online is made with a newer firmware revision installed, this may create errors such as an unrecognised device or a device mismatch if the PC does not contain the very latest EDS files.

Preparation

Before changing the PLC controller:

- Use the RSLinx Classic program to verify and record the firmware version of the PLC program.
- Use the Flow Chart of Procedures for Changing the DeviceNet Scanner on the next page to determine which procedures must be performed and their correct sequence.

(Cont'd)

TechPub_2614345_0106 - 1202_3047158_01.fm

(Cont'd)

Flow Chart of Procedures for Changing the DeviceNet Scanner

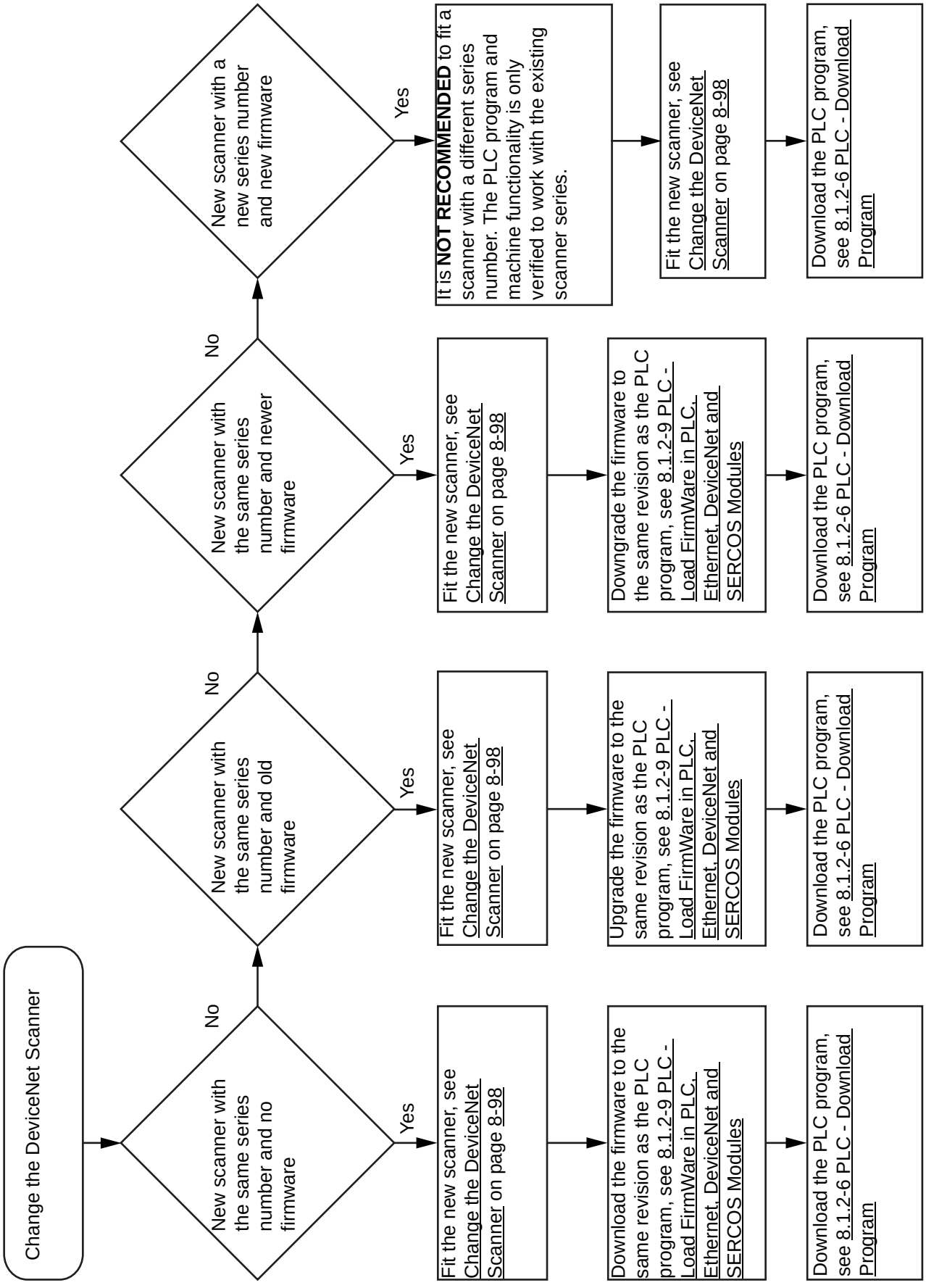

(Cont'd)

TechPub_2614345_0106 - 1202_3047158_01.fm

(Cont'd)

Change the DeviceNet Scanner

a) Press the locking tabs (1) on the top and the bottom of the DeviceNet Scanner (2).

b) Slide the DeviceNet Scanner (2) out of the chassis.

c) Align the new DeviceNet Scanner (2) with the top and the bottom guides in the chassis.

d) Slide the DeviceNet Scanner (2) into the chassis. Make sure it is flush with the power supply or the other modules and the top and bottom latches are engaged.

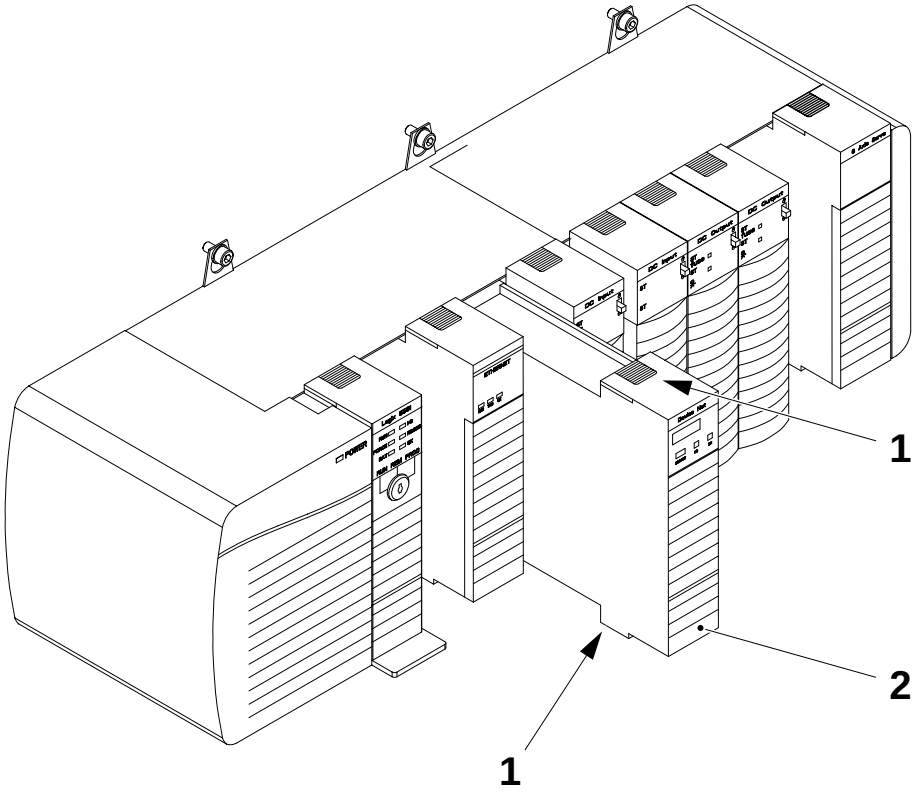

1 Locking tab
2 DeviceNet scanner

TechPub_2614345_0106 - 1202_3047158_01.fm

8.2.3-2 DeviceNet Scanner - Set DeviceNet Scanner (01K304) Node Address and Baudrate

Machine Status	Mains Power ON
SPC Reference	2833407-0100

DeviceNet Scanner Module Series C/D

Set the switches (1), (2) and (3) according to the table below.

Switch Number	Setting Position	Note
1	2	Sets the baud rate to 500 Kbps
2	0	Sets the first digit of the node address
3	0	Sets the second digit of the node address

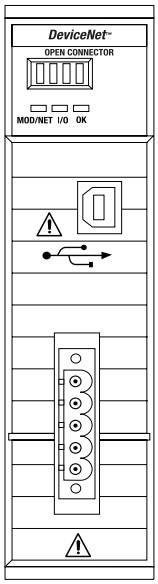

Front of module

Top of module

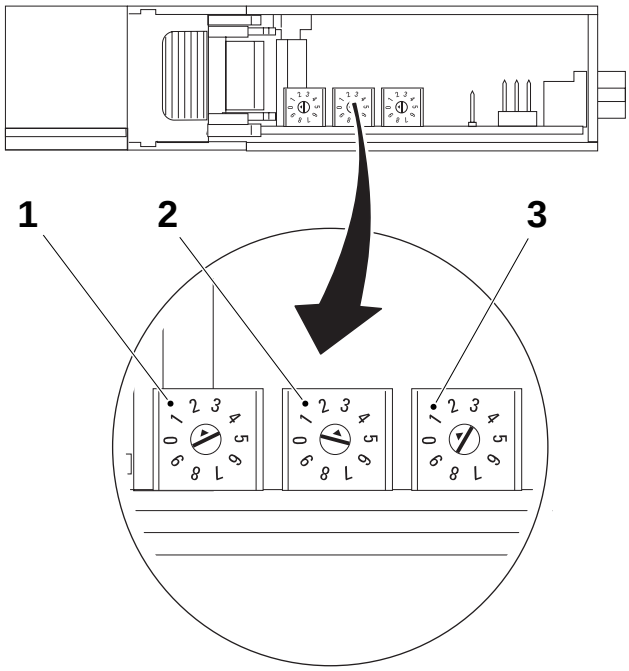

1 Switch for baud rate
2 Switch for first node digit
3 Switch for second node digit

TechPub_2614345_0106 - 1202_3047158_01.fm

8.2.3-3 DeviceNet - DeviceNet on the Machine

Machine Status	Mains Power OFF
Tools - CD with software - network cable	2861168-0001
SPC Reference	2779070-0100 662911-0200

Note! The firmware revision of the PLC controller maybe equal to, or newer than the firmware revision of the old PLC controller. If an attempt to go online is made with a newer firmware revision installed, this may create errors such as an unrecognised device or a device mismatch if the PC does not contain the very latest EDS files.

1734 DeviceNet Adaptor for Point I/O Module (01K320) - Change

Preparation

Before changing the DeviceNet adaptor:

- Use the Flow Chart of Procedure for Changing a 1734-Point I/O Adaptor on the next page to determine which procedures must be performed and their correct sequence.

(Cont'd)

TechPub_2614345_0106 - 1202_3047158_01.fm

(Cont'd)

Flow Chart of Procedure for Changing a 1734-Point I/O Adaptor

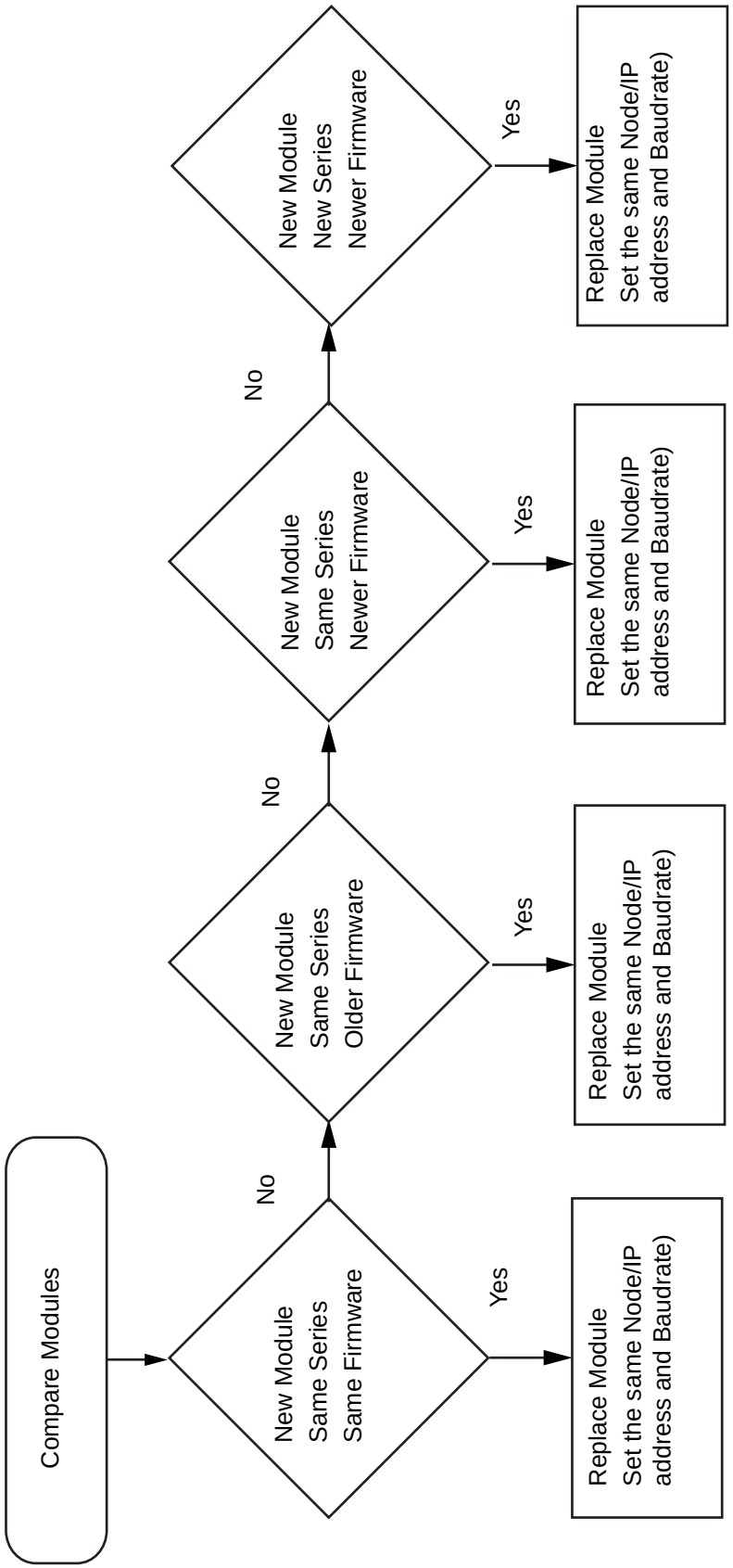

(Cont'd)

TechPub_2614345_0106 - 1202_3047158_01.fm

(Cont'd)

Remove

a) Disconnect the power connection (1) from the adaptor (2).

b) Disconnect the DeviceNet connection (3) from the adaptor (2).

c) Remove the first I/O slice (4).

d) Turn the screw (5) to the release position and pull out the adaptor (2).

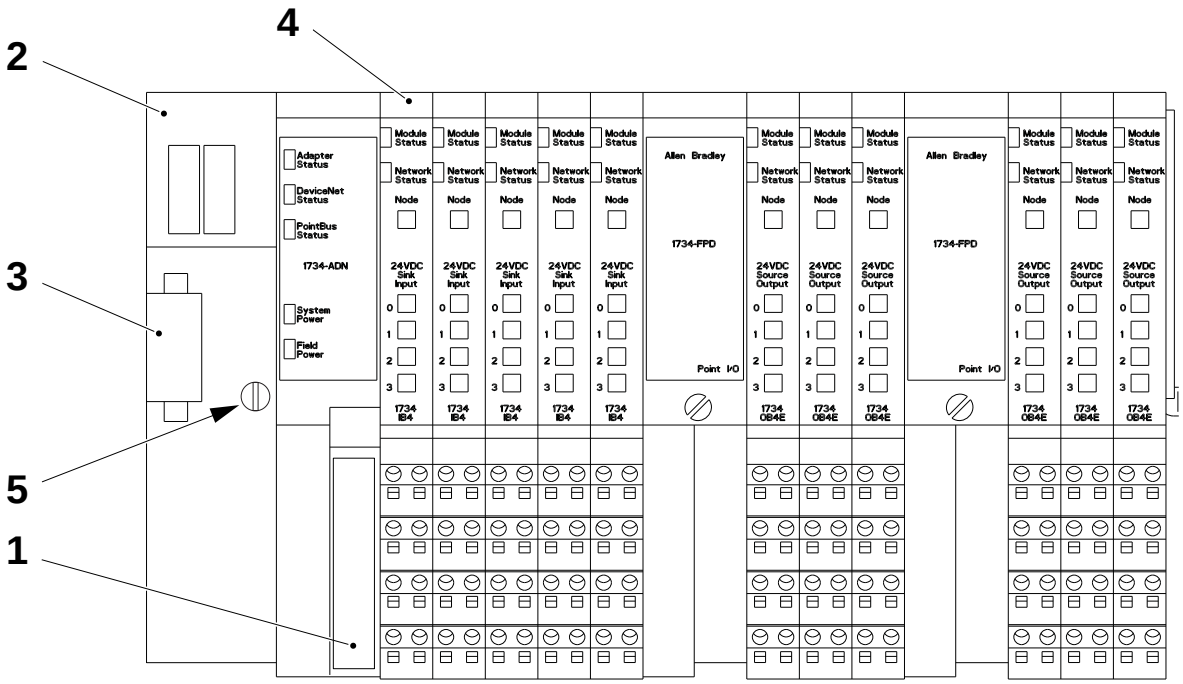

1 Power connector
2 DeviceNet adaptor
3 DeviceNet connector
4 First I/O slice
5 Screw

TechPub_2614345_0106 - 1202_3047158_01.fm

(Cont'd)

(Cont'd)

Install

a) Remove the blank connectors and the cover plate from the new adaptor.

b) Insert the new adaptor (1) and turn the screw (2).

c) Set the node address, see 1734 DeviceNet Adaptor for Point I/O Module (01K320) - Set Node Address.

d) Insert the first I/O slice (3).

e) Connect the DeviceNet connector (4).

f) Connect the power connector (5).

g) The POINTBUS STATUS LED (6) will flash red to indicate that the local bus must be configured. Configure the bus as described in 8.2.3-5 DeviceNet - Loading a Program in a New DeviceNet Scanner.

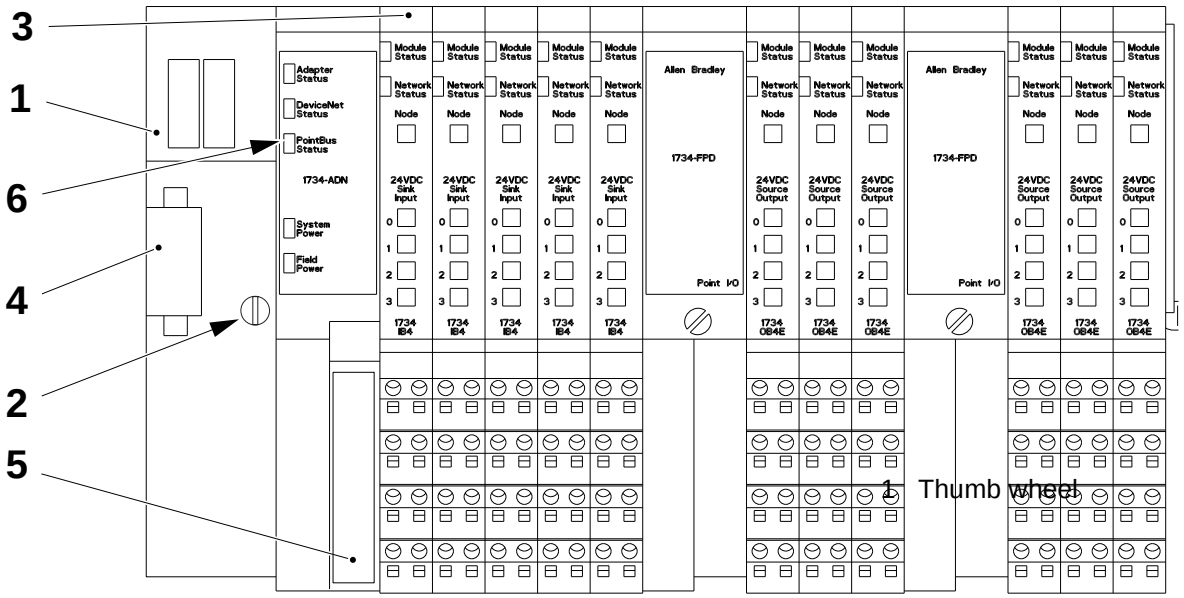

1 DeviceNet adaptor
2 Screw
3 First I/O slice
4 DeviceNet connector
5 Power connector
6 POINTBUS STATUS LED

(Cont'd)

TechPub_2614345_0106 - 1202_3047158_01.fm

(Cont'd)

1734 DeviceNet Adaptor for Point I/O Module (01K320) - Set Node Address

Note! On this adaptor, the baudrate is set automatically.

Note! Thumb wheels (1) at the top of 1734 DeviceNet adaptor (2) are used to set the node address.

On the 1734 DeviceNet adaptor (2), use the thumb wheels (1) to set the node address to 02.

Note! If the DeviceNet Scanner has been in the RUN position with an incorrect Baudrate setting, the ADN modules 24V supply power (not the network power) must be disconnected and reconnected again to make a new automatic Baudrate setting.

Disconnect the 24V connection cable on the ADN modules and reconnect it again.

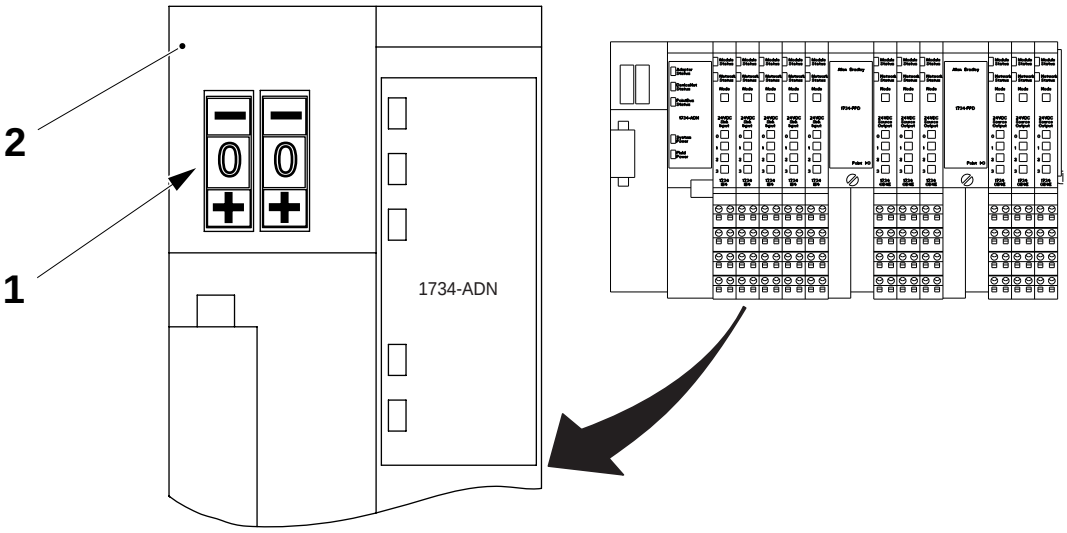

1 Thumb wheel
2 1734 DeviceNet adaptor

(Cont'd)

TechPub_2614345_0106 - 1202_3047158_01.fm

(Cont'd)

PowerFlex 40 Module (20T000) - Set Node address, Baudrate and Operating Mode

The position of the F/C switches (1) on the 22-COMM-D adaptor (2), under the front cover of the PowerFlex 40 frequency converter, determines the node address and the communication baud rate.

The position of the F/C switches 1-6 (3) determines the node address and the switches 7 and 8 (4) determines the baudrate.

Set the F/C switches 1-6 (3) as shown in the following table to set the Node address to 1.

Set the F/C switches 7 and 8 (4) as shown in the following table to select the Auto Baud mode.

Switch No.	1	2	3	4	5	6	7	8
Switch Pos.	UP	DOWN	DOWN	DOWN	DOWN	DOWN	UP	UP

The position of the jumper (5) on the connector (6) determines the operating mode of the adaptor.

Set the jumper (5) to the left, as shown, to select the Multi Drive mode.

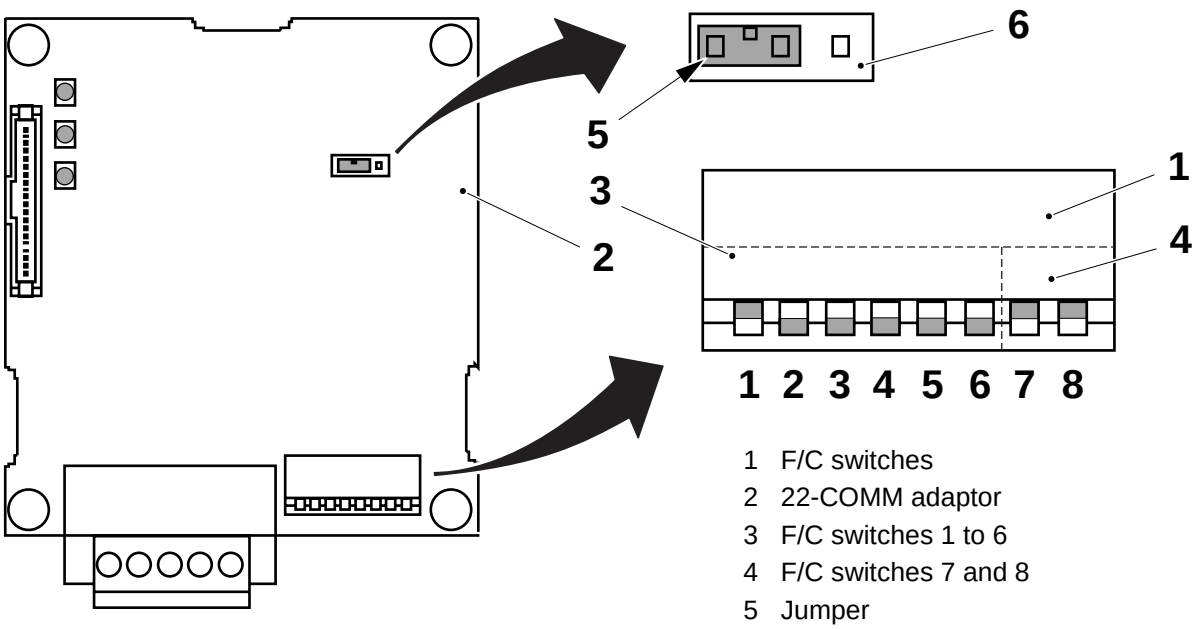

1 F/C switches
2 22-COMM adaptor
3 F/C switches 1 to 6
4 F/C switches 7 and 8
5 Jumper
6 Connector

(Cont'd)

TechPub_2614345_0106 - 1202_3047158_01.fm

(Cont'd)

Note! Behind the front cover of the PowerFlex 40 frequency converter there is another circuit card. On this circuit card there is a switch annotated SNK - SRC (7). This switch must be set to the position SRC (8).

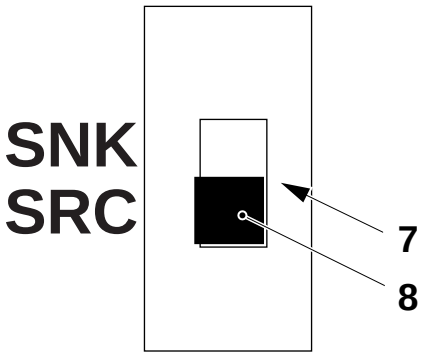

7 SNK - SRC Switch
8 SRC Position

(Cont'd)

TechPub_2614345_0106 - 1202_3047158_01.fm

(Cont'd)

Armor Block I/O Modules - Set Node Address

a) At the armor block modules (1) referred to in the following table, remove the protective cap (2) from the X1 switch access hole (3).

b) Use a small screw driver to set the node address for that module.

c) Fit the protective cap (2).

d) Remove the protective cap (4) and check that the X10 switch (5) is set to 0, if not turn the X10 switch (5) to that position.

Machine Type	Module Number	Switch X1 Position	Switch X10 Position	Node address
All machines	81K420	3	0	3
	01K340	4	0	4
ReCap only	01K350	5	0	5
	01K360	6	0	6

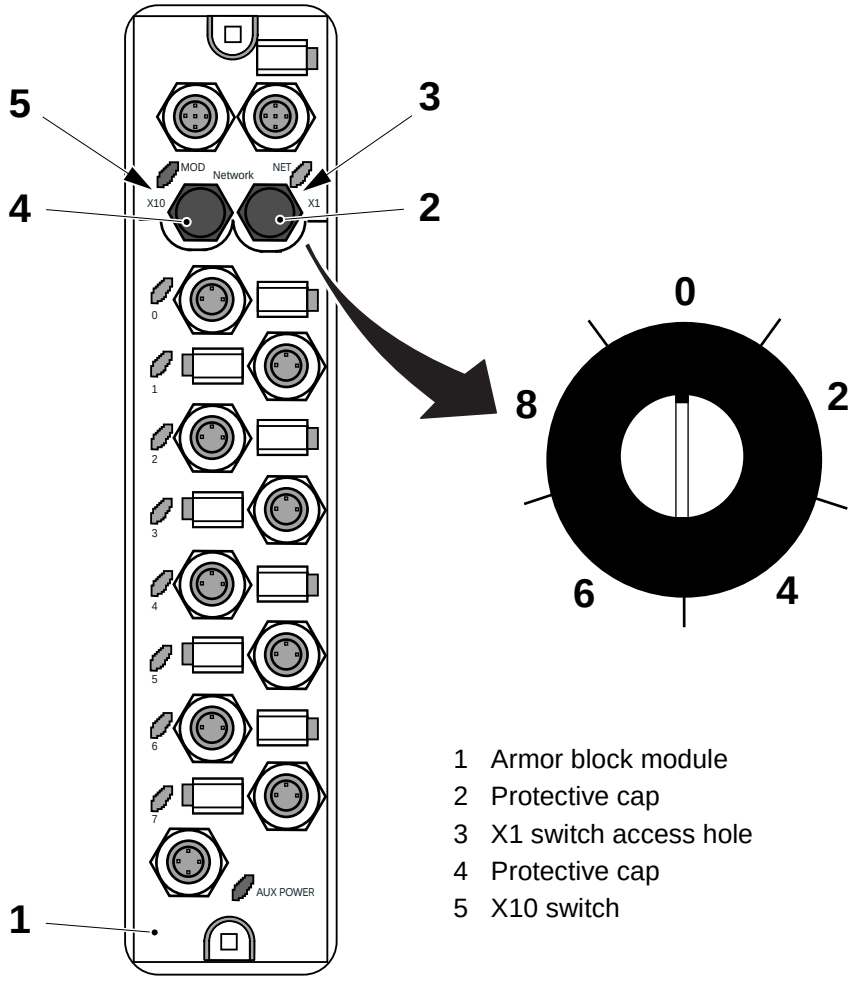

1 Armor block module
2 Protective cap
3 X1 switch access hole
4 Protective cap
5 X10 switch

TechPub_2614345_0106 - 1202_3047158_01.fm

8.2.3-4 DeviceNet - Saving DeviceNet Files in a Computer

Machine Status	Mains Power ON
SPC Reference	2833407-0100

Put the DeviceNet files in a folder with the following path way:

C:\180v program\Projects\Networks

Note! It is important that the files have this path way so that the Device Bridging function will work.

This function makes it possible to jump between the DeviceNet Scanner program and the Point I/O files program that are linked to this, and vice versa. If the files are placed in another folder the Device Bridging must be done again on all files in both directions.

TechPub_2614345_0106 - 1202_3047158_01.fm

8.2.3-5 DeviceNet - Loading a Program in a New DeviceNet Scanner

Machine Status	Mains Power ON
Tools - CD with software - network cable	2861168-0001
SPC Reference	2833407-0100

Note! To connect to the PLC using an ethernet communication cable, the PC must first be configured for this type of communication. See 8.1.1-1 Preparation for PLC Communication - Configure PC Network Communications and 8.1.1-2 Preparations for PLC Communication - Configure RSLinx for PLC for more details.

a) Set the address and baud rate for the DeviceNet scanner, see 8.2.3-2 DeviceNet Scanner - Set DeviceNet Scanner (01K304) Node Address and Baudrate.

b) Connect the ethernet communication cable between a vacant connection port on the ethernet switch (1) and the PC (2).

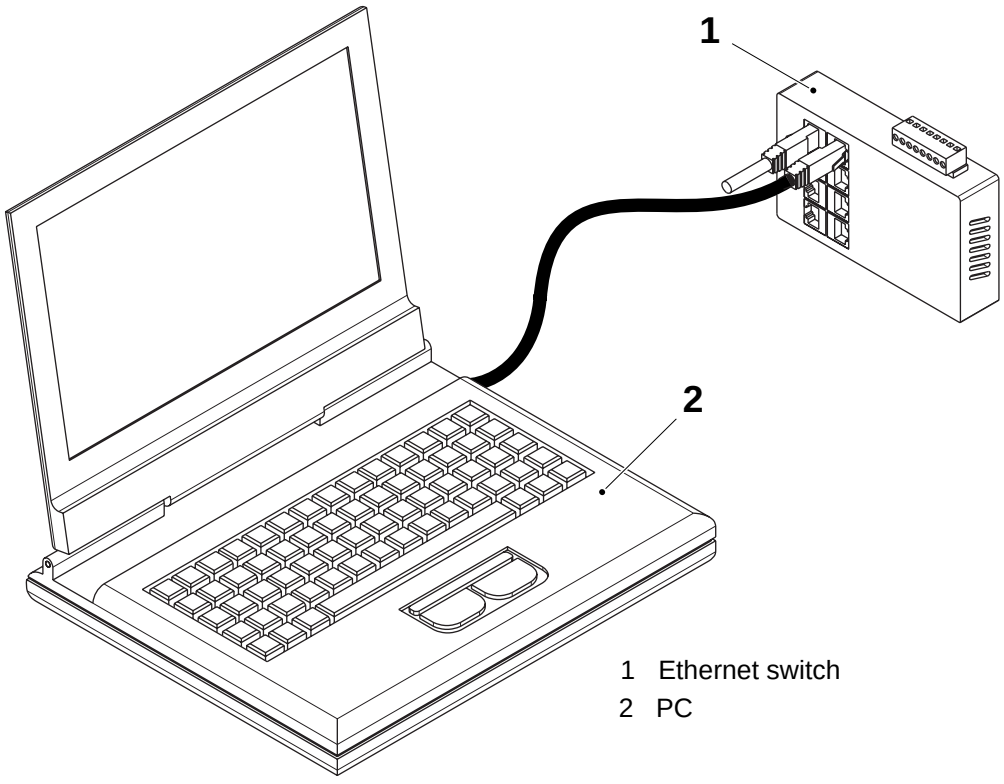

1 Ethernet switch
2 PC

(Cont'd)

TechPub_2614345_0106 - 1202_3047158_01.fm

(Cont'd)

Note! The DeviceNet Scanner that is being loaded must not be in the RUN position when loading the program.

c) Turn the key, on the Logic CPU, to the PROG mode position. The scanner will show IDLE in the display.

a) Insert the DeviceNet program CD into the PC CD drive.

b) Browse to the CD drive and copy the compressed program folder to the PC desktop and extract the program file.

c) Double click on the program file to automatically start the RSNetWorx program and open the program file.

d) Select the NETWORK menu (3) and then select ONLINE (4).

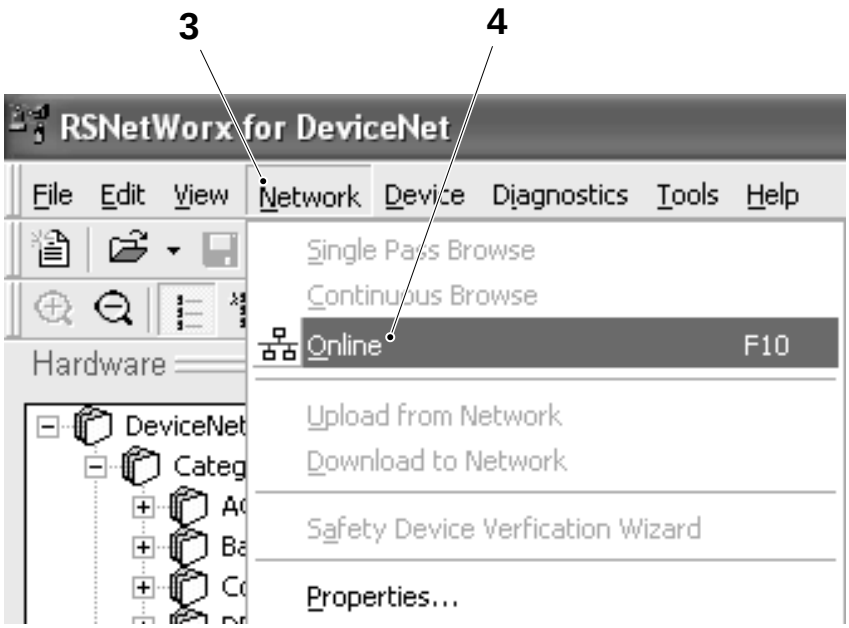

3 NETWORK menu
4 ONLINE

(Cont'd)

TechPub_2614345_0106 - 1202_3047158_01.fm

(Cont'd)

e) Highlight the DeviceNet scanner (5) and right click the PC mouse, select DOWNLOAD TO DEVICE (6) to start the download.

f) When the dialogue box (7) appears, select the YES button (8) to continue.

g) When the download is complete, close the RSNetWorx program and turn the key on the Rockwell PLC module to the REM mode position.

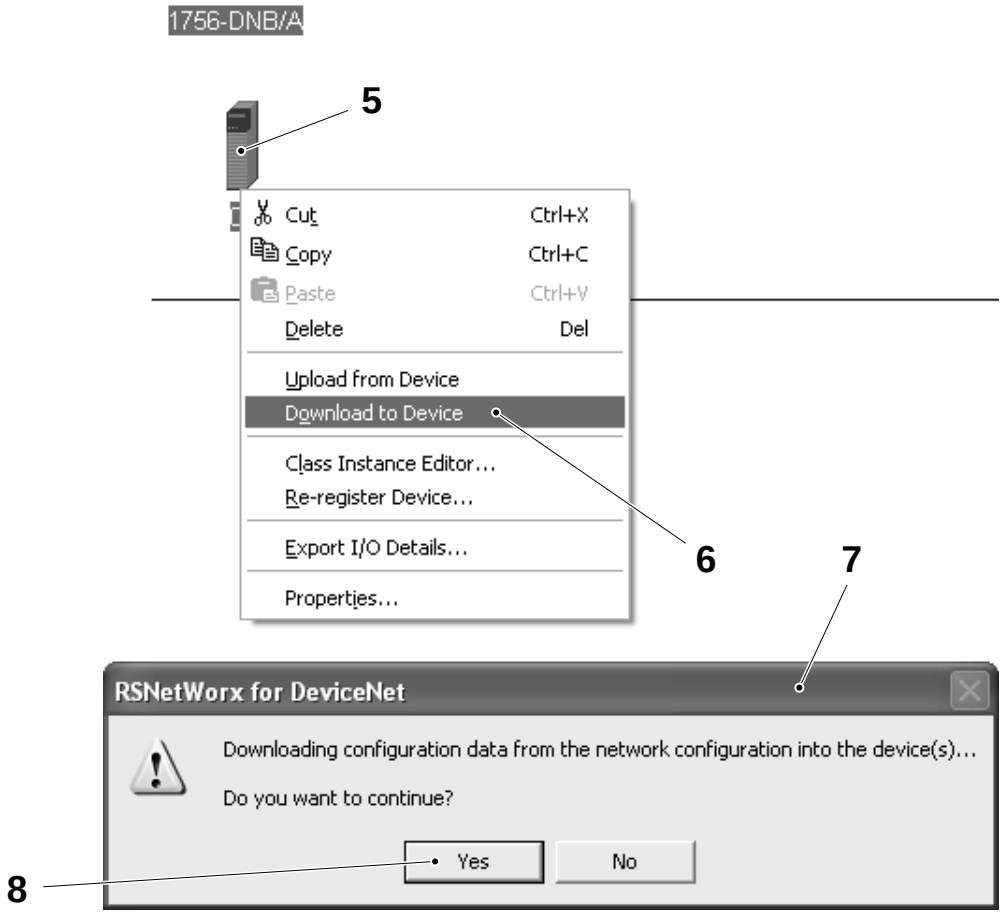

5 Devicenet scanner
6 DOWNLOAD TO DEVICE
7 Dialogue box
8 YES button

TechPub_2614345_0106 - 1202_3047158_01.fm

8.2.3-6 DeviceNet - Loading a DeviceNet Program in a New Point I/O Module Adaptor

Machine Status	Mains Power ON
Tools - CD with software - network cable	2861168-0001
SPC Reference	2833407-0100

Note! To connect to the PLC using an ethernet communication cable, the PC must first be configured for this type of communication. See 8.1.1-1 Preparation for PLC Communication - Configure PC Network Communications and 8.1.1-2 Preparations for PLC Communication - Configure RSLinx for PLC for more details.

a) Set the Node address for the DeviceNet adaptor, see 8.2.3-2 DeviceNet Scanner - Set DeviceNet Scanner (01K304) Node Address and Baudrate and 1734 DeviceNet Adaptor for Point I/O Module (01K320) - Set Node Address.

b) Connect the ethernet communication cable between a vacant connection port on the ethernet switch (1) and the PC (2).

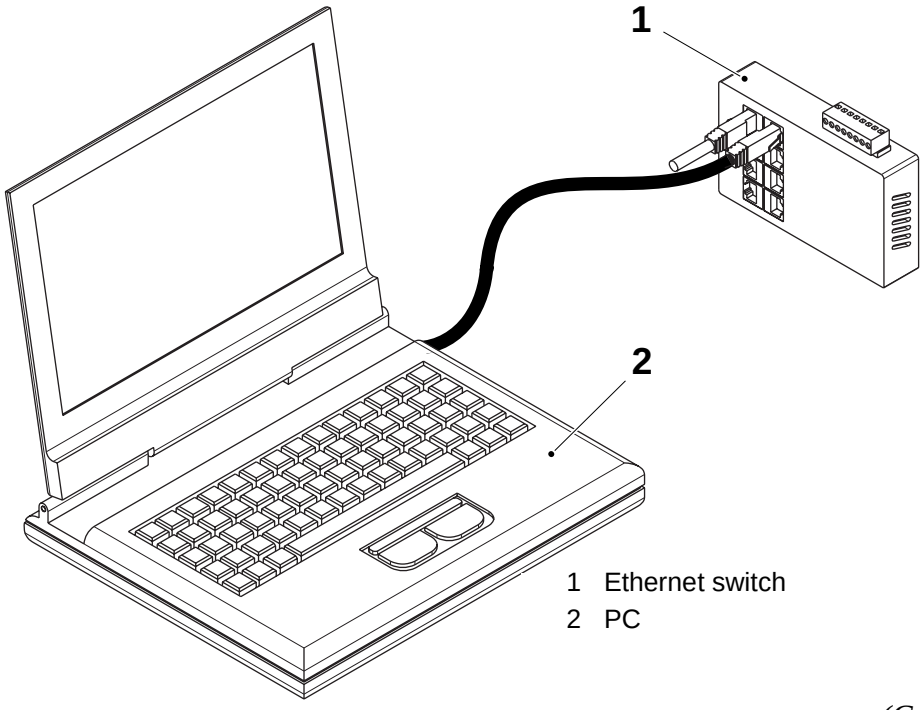

1 Ethernet switch
2 PC

(Cont'd)

TechPub_2614345_0106 - 1202_3047158_01.fm

(Cont'd)

a) Insert the DeviceNet program CD into the PC CD drive.

b) Browse to the CD drive and copy the compressed program folder to the PC desktop and extract the program file.

c) Double click on the program file to automatically start the RSNetWorx program and open the program file.

d) Select the NETWORK menu (3) and then select ONLINE (4).

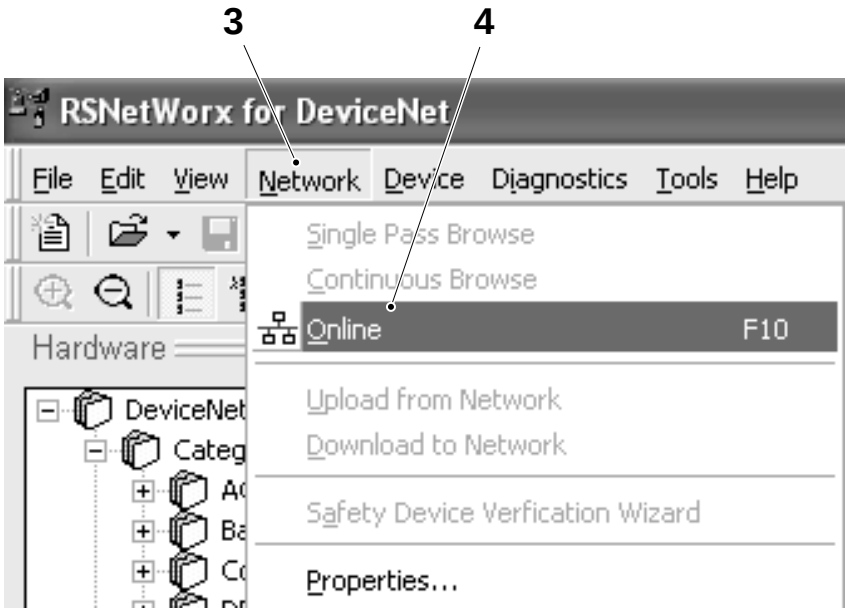

3 NETWORK menu
4 ONLINE

(Cont'd)

TechPub_2614345_0106 - 1202_3047158_01.fm

(Cont'd)

e) Highlight the 1734 DeviceNet Adaptor (5) and right click the PC mouse, select DOWNLOAD TO DEVICE (6) to start the download.

f) When the dialogue box (7) appears, select the YES button (8) to continue.

g) When the download is complete, close the RSNetWorx program.

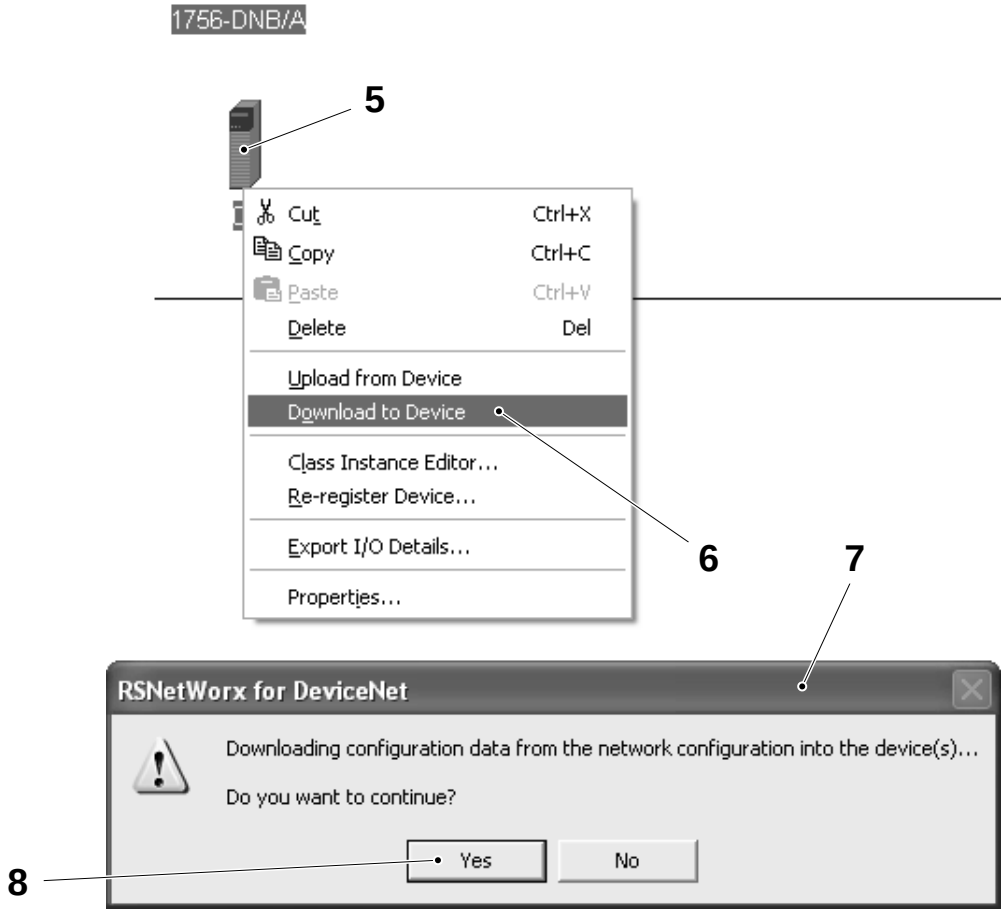

5 1734 DeviceNet Adaptor
6 DOWNLOAD TO DEVICE
7 Dialogue box
8 YES button

TechPub_2614345_0106 - 1202_3047158_01.fm

8.2.4 Distributed I/O and DeviceNet - Troubleshooting

8.2.4-1 Troubleshooting - General DeviceNet Error

Machine Status	Mains Power ON
SPC Reference	2779070-0100

If an error occurs on the DeviceNet, this will be indicated by the appearance of the following DEVICENET ERROR icon (1) and the DEVICENET ERROR message (2) on the TPOP.

To continue with troubleshooting, see 8.2.4-2 Troubleshooting - DeviceNet Error Indications and Messages on DeviceNet Scanner (Node 0).

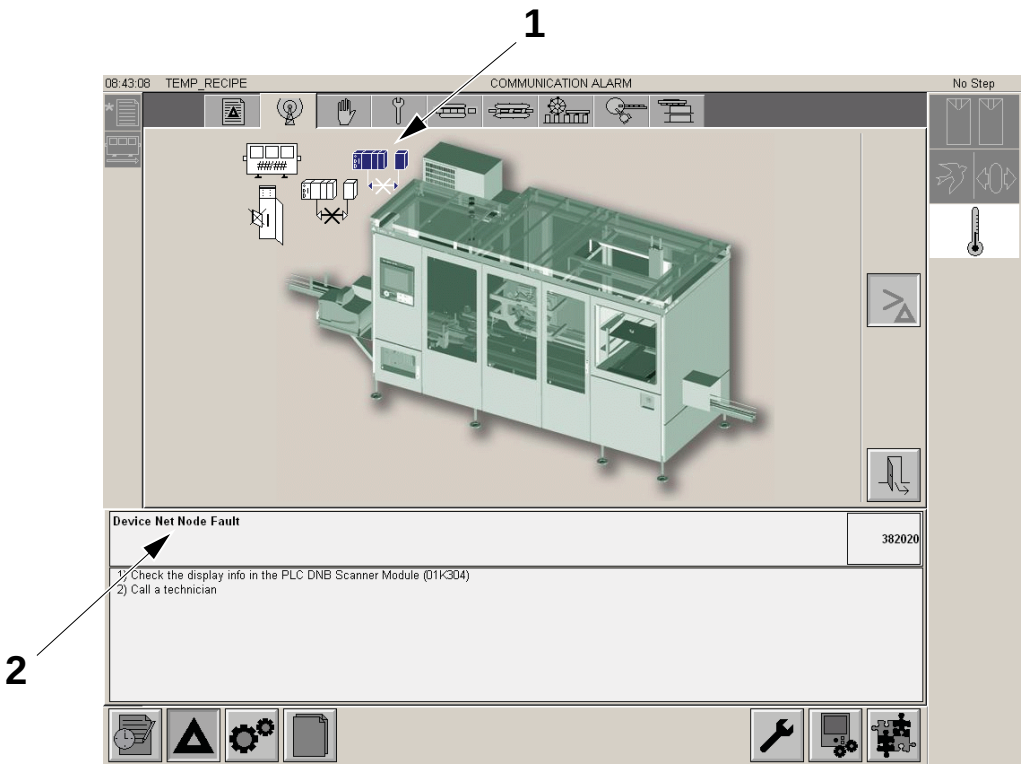

1 DEVICENET ERROR icon
2 DEVICENET ERROR message

TechPub_2614345_0106 - 1202_3047158_01.fm

8.2.4-2 Troubleshooting - DeviceNet Error Indications and Messages on DeviceNet Scanner (Node 0)

Machine Status	Mains Power ON
SPC Reference	2833407-0100

To locate the source of the error and then find the cause, proceed as follows:

a) At the Control Logix Chassis in the electrical cabinet, note the status indicated by the alphanumeric display (1) and the MOD/NET, I/O and OK LED's (2), (3) and (4) on the DeviceNet Scanner (01K304) (5).

b) Use the following tables to determine the cause of the error.

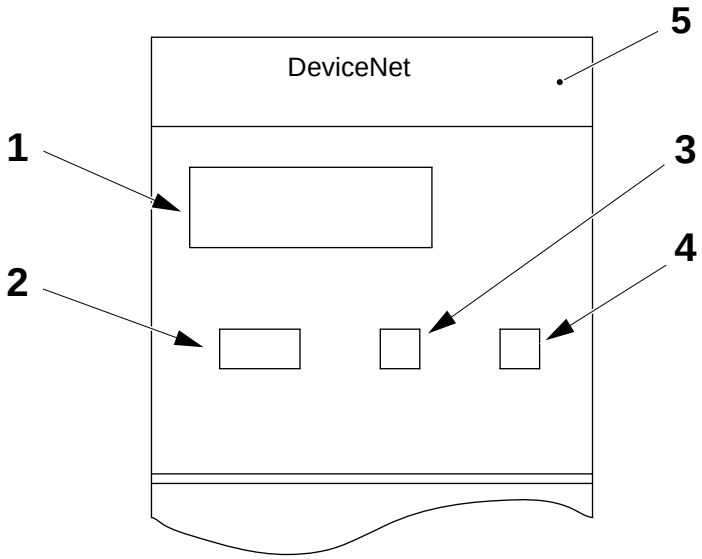

1 Alphanumeric display
2 MOD/NET LED
3 I/O LED
4 OK LED
5 DeviceNet scanner

TechPub_2614345_0106 - 1202_3047158_01.fm

(Cont'd)

(Cont'd)

MOD/NET LED

Condition	Status	Indicates
OFF	No power or not on line	Device is not online. - The device has not completed the Dup_MAC_ID test - The device is not powered
GREEN	Device operational AND online and connected	Device is operating normally and is online with connections established.
FLASHING GREEN	Device operational AND online but not connected or device online and device needs commissioning	Device is operating normally and is online but with NO connections established. - The device has passed the Dup_MAC_ID test but has NO established connections to other Nodes
FLASHING RED	Minor fault and/or connection time out	Recoverable fault and/or one or more I/O connection in timed out state
RED	Critical fault or critical link failure	Device has an unrecoverable fault and may need to be replaced. Failed communication device. The device has detected an error (duplicate MAC ID or bus-off) that has rendered it incapable of communicating on the network.

(Cont'd)

TechPub_2614345_0106 - 1202_3047158_01.fm

(Cont'd)

I/O LED

Condition	Indicates
OFF	Scanner is not online
GREEN	Scanner is in RUN mode, outputs are under control and inputs are being consumed
FLASHING GREEN	Scanner is in IDLE mode, outputs are not under control and inputs are being consumed

OK LED

Condition	Status	Indicates
OFF	No power	No power applied to device. Apply chassis power. Verify module is completely inserted into chassis and backplane.
GREEN	Device operational	Device is operating normally. The DNB has at least one connection to it from a controller.
FLASHING GREEN	Device in stand-by	Device is operating correctly, however no controller is controlling it. Verify the DNB is correctly configured in the controllers I/O configuration
RED	Unrecoverable fault or Device self testing	Device has an unrecoverable fault; change the device or Device is in self test during power up; wait until self test has finished

(Cont'd)

TechPub_2614345_0106 - 1202_3047158_01.fm

(Cont'd)

Alphanumeric Display

When there are no problems the alphanumeric display will toggle between the node address of the scanner module and the operating mode i.e.

A#00

RUN

When there is a problem, the alphanumeric display will display first the node address of the scanner followed by the node address of the device from where the error originated and finally the error code i.e.

A#00

N#01

E#72

The error messages are shown below.

Condition	Status	Indicates
70	Scanner failed Duplicate Node Address check	Change the scanner address to the correct node address A#00
71	Illegal data in scan list table (node number alternately flashes)	Reconfigure the scan list table and remove any illegal data
72	Slave device stopped communicating (node number alternately flashes)	Inspect the slave devices and verify the connections
73	Device's identity information does not match electronic key in scan list table entry (node number alternately flashes)	Verify that the correct device is at this node number. Make sure that the device at the scrolling node address matches the desired electronic key (vendor, product code, product type, etc.)
74	Data overrun on port detected	Modify your configuration and check for invalid data. Check network communication traffic.
75	No traffic detected on network	Check the network configuration
76	No direct network traffic for scanner detected	None. The scanner hears other network communication but none for itself
77	Data size expected by the device does not match scan list entry (node number alternately flashes)	Reconfigure the module for the correct transmit and receive data sizes
78	Slave device is scan list table does not exist (node number alternately flashes)	Add the device to the network or delete the scan list entry for that device
79	Scanner has failed to transmit a message	Make sure the module is connected to the network. Check for disconnected cables

TechPub_2614345_0106 - 1202_3047158_01.fm

Condition	Status	Indicates
80	Scanner is in IDLE mode	Put controller in run mode. Enable RUN bit in Module Command Register
81	Scanner is in FAULT mode	Check Module Command Register for FAULT bit set
82	Error detected in sequence of fragmented I/O messages from device (node number alternately flashes)	Check scan list table entry for slave device
83	Slave device is returning error responses when scanner attempts to communicate with it (node number alternately flashes)	Check accuracy of scan list table entry. Check slave device configuration. Slave device may be in another master's scan list. Reboot slave device.
84	Scanner is initialising the DeviceNet network.	None. This code clears itself once scanner attempts to initialize all devices on the network.
85	Data size was incorrect for this device at runtime.	Slave device is transmitting incorrect length data. Try replacing slave device.
86	Device is producing zero length data (idle state) while scanner is in RUN mode.	Check device configuration and slave node status.
90	User has disabled communication port.	Check Module Command Register for DISABLE bit set.
91	Bus-off condition detected con comm. port. Scanner is detecting communication errors.	Check DeviceNet connections and physical media integrity. Check system for failed slave devices or other possible sources of network interference.
92	No network power detected on communication port.	Provide network power. Make sure that module drop cable is providing network power to scanner communication port.
95	Application FLASH update in progress.	None. Do not disconnect the module while application flash is in progress. If this is done existing data in the scanner's memory will be lost.
97	Scanner halted by user command.	Check Module Command Register for HALT bit set.
98	General firmware error.	Replace module.
A#00 to A#63	Normal operation. The numeric display matches the scanners node address on the DeviceNet network.	Do nothing.
IDLE	Scanner is in IDLE mode.	Put controller in RUN mode. Enable RUN bit in Module Command Register.

TechPub_2614345_0106 - 1202_3047158_01.fm

Condition	Status	Indicates
Network Disabled	User has disabled communication port.	Reconfigure the module. Check Module Command Register.
No Network Power	No network power detected on communication port.	Provide network power. Make sure that module drop cable is providing network power to scanner communication port.
NoRX	No scan list is active in the module or no messages have been received by the scanner.	Enter a scan list. Check DeviceNet connection on front of module.
NoTX	No direct network traffic for scanner device.	None. The scanner hears other network communication.

TechPub_2614345_0106 - 1202_3047158_01.fm

8.2.4-3 Troubleshooting - DeviceNet Error Indications on the PowerFlex40 Module 22-COMM-D Adaptor (Node 1)

Machine Status	Mains Power ON
SPC Reference	662911-0200

The PowerFlex40 module is connected to the DeviceNet via an adaptor.

The adaptor has four LED's that are visible through the front panel of the PowerFlex40 module (1).

To locate the source of the error and then find the cause, proceed as follows:

Note! The NET B LED (5) is not used for DeviceNet communications.

a) At the PowerFlex40 Module (20T000) (1) in the Electrical Cabinet, check the status of the PORT, MOD and NET A LED's (2), (3) and (4).

b) Use the following tables to determine the cause of the error.

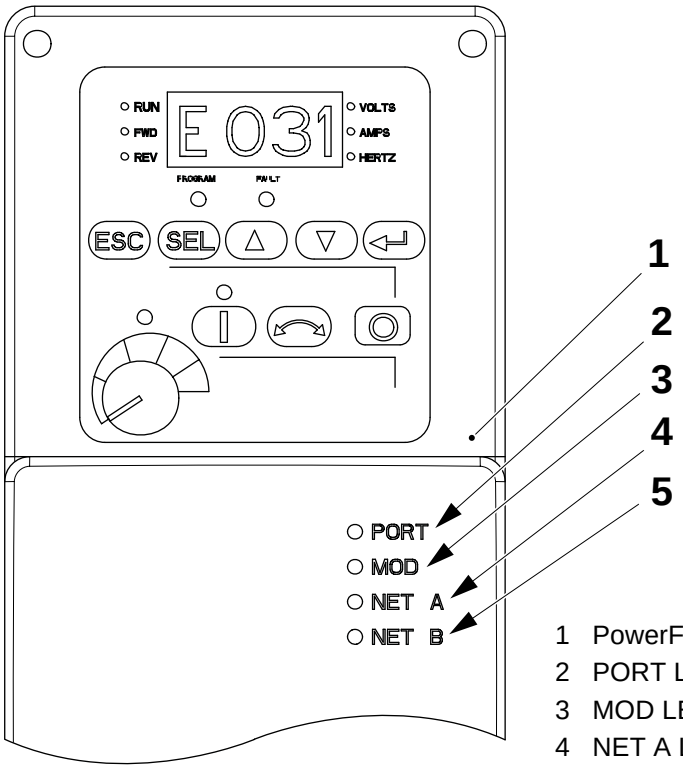

1 PowerFlex40 module
2 PORT LED
3 MOD LED
4 NET A LED
5 NET B LED

(Cont'd)

TechPub_2614345_0106 - 1202_3047158_01.fm

(Cont'd)

PORT STATUS LED

State	Status	Recommendation
OFF	The adaptor is not powered or connected correctly to the drive.	Use the ribbon cable to connect the adaptor securely to the drive. Apply power to the adaptor.
FLASHING RED	The adaptor is not receiving communications from a drive, a connected drive has failed or a drive is missing.	Clear any drive faults. Check that all cables are securely connected. Cycle power to the drive.
RED	The drive has refused an I/O connection from the adaptor. Another DSI peripheral is using the same DSI port as the adaptor.	Important: Cycle power to the adaptor after making the following correction. Check that all DSI cables are securely connected and undamaged. If necessary, replace any damaged cable.
FLASHING GREEN	The adaptor is establishing an I/O connection to the drive or (DSI I/O Config) is configured for all I/O disabled.	None: This indication will turn GREEN or RED. Check the setting of parameter 15 (DSI I/O Config). The adaptor is operating normally if no DSI I/O is enabled.
GREEN	The adaptor is properly connected and is communicating with the drive.	None.
ORANGE	Daisy-chained devices in the Multi-Drive mode are not all Allen-Bradley devices.	Use correct devices

(Cont'd)

TechPub_2614345_0106 - 1202_3047158_01.fm

(Cont'd)

MOD STATUS LED

State	Status	Recommendation
OFF	The adaptor is not powered.	Use the ribbon cable to connect the adaptor securely to the drive. Apply power to the adaptor.
FLASHING RED	The adaptor has failed the firmware test, a connected drive has failed or a drive is missing.	Clear any drive faults. Cycle power to the drive. If cycling power does not correct the problem, the parameter settings may have been corrupted. Restore default values reconfigure the adaptor. If restoring default values does not correct the problem, flash the adaptor with the latest firmware release. Determine which drive is missing or has failed. Check cabling and configuration settings.
RED	The adaptor has failed the hardware test	Cycle power to the drive Replace the adaptor.
FLASHING GREEN	The adaptor is operational but is not transferring I/O data.	Put the scanner in the RUN mode. Program the controller to recognise and transmit I/O data to the adaptor. Configure the adaptor for the program in the controller. The adaptor is operating normally if no DSI I/O is enabled.
GREEN	The adaptor is operational and transferring I/O data.	None.

(Cont'd)

TechPub_2614345_0106 - 1202_3047158_01.fm

(Cont'd)

NET A STATUS LED

State	Status	Recommendation
OFF	The adaptor and/or the network is not powered or the adaptor is not connected correctly to the network.	Use the ribbon cable to connect the adaptor securely to the drive and the DeviceNet cable to connect it to the network. Connect the DeviceNet cable correctly to the DeviceNet plug. Apply power to the adaptor and the network.
FLASHING RED	A DeviceNet I/O connection has timed out.	Put the scanner in the RUN mode, or apply power to the peer device that will send I/O data. Check the amount of traffic on the network.
RED	Failed duplicate node detection test or bus off condition exists.	Configure the adaptor to use a unique node address on the DeviceNet. Configure the adaptor to use the correct baudrate. Ensure the network has the correct media installed.
FLASHING GREEN	The adaptor is properly connected but is not communicating with any devices on the network.	Put the scanner in the RUN mode, or apply power to the peer device that will send I/O data. Configure a controller or peer device to recognise and transmit I/O to the adaptor. Configure the adaptor for the program in the controller or the I/O from the peer device.
GREEN	The adaptor is properly connected and is communicating with devices on the network.	None.

TechPub_2614345_0106 - 1202_3047158_01.fm

8.2.4-4 Troubleshooting - DeviceNet Error Indications on the 1734-ADN Adaptor for the Point I/O Modules (Node 2)

Machine Status	Mains Power ON
SPC Reference	2779070-0100

To locate the source of the error and then find the cause, proceed as follows:

a) At the Point I/O Module (01K320) in the Operator Panel Box, check the the SYSTEM POWER, the FIELD POWER, the ADAPTER STATUS, the NETWORK STATUS and the POINTBUS STATUS LED's (1), (2), (3), (4) and (5).

b) Use the following tables to determine the cause of the error.

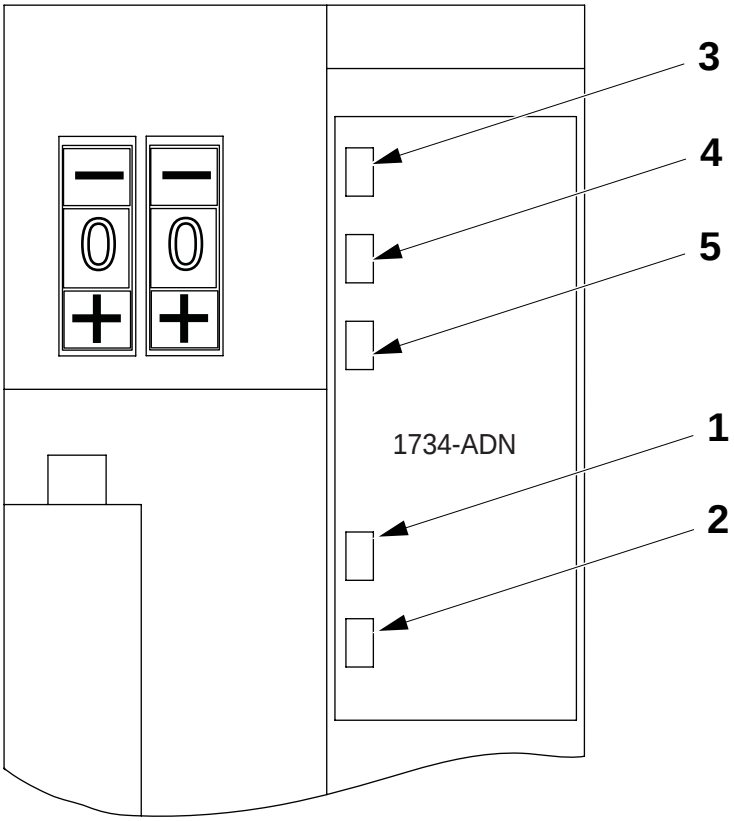

1 SYSTEM POWER LED
2 FIELD POWER LED
3 ADAPTOR STATUS LED
4 NETWORK STATUS LED
5 POINTBUS STATUS LED

(Cont'd)

TechPub_2614345_0106 - 1202_3047158_01.fm

(Cont'd)

SYSTEM POWER LED

State	Status	Recommendation
OFF	Not active. Field power is OFF. DC-DC converter problem.	Check adaptor configuration. Turn Field power ON. Contact Tetra Pak Services.
GREEN	System power is ON. DC-DC converter is active (5V)	None

FIELD POWER LED

State	Status	Recommendation
OFF	Not active.	Check adaptor configuration. Turn Field power ON.
GREEN	Power is ON with 24V present.	None

ADAPTOR STATUS LED

State	Status	Recommendation
OFF	No power is applied to the device.	Provide power to the adaptor.
GREEN	Device is operating normally.	None
FLASHING GREEN	Device needs to be commissioned because configuration is missing, incomplete or incorrect.	Check the configuration and re-commission the adaptor.
FLASHING RED	Recoverable fault is present.	Make sure that it does not need a FLASH update.
RED	Unrecoverable fault may require the adaptor to be changed.	Replace the adaptor.
FLASHING RED/GREEN	Device is in self-test.	Wait for the self-test to finish.

(Cont'd)

TechPub_2614345_0106 - 1202_3047158_01.fm

(Cont'd)

NETWORK STATUS LED

State	Status	Recommendation
OFF	Device is not online. -Device is autobauding. -Device has not completed the dup_MAC_id test.	Check the adaptor status indicator to determine if more time is required to complete the dup_MAC_id test or if power is required at the module.
FLASHING GREEN	Device is online but has no connections in the established state	None
GREEN	Device is online and has connections in the established state	None
FLASHING RED	1 or more I/O connections are in a timed-out state.	Determine the cause of the time-out. An increase in packet rate may be required.
RED	Critical link failure - communication device failed. Device detected error that prevents it from communicating on the network.	Make sure the device is using the correct MAC ID and baudrate.

SUBNET AND POINTBUS STATUS LED

State	Status	Recommendation
OFF	Device is not online. -Device has not completed the dup_MAC_id test. -Device is not powered. Check module status indicator	Check the adaptor status indicator to determine if more time is required to complete the dup_MAC_id test or if power is required at the module.
FLASHING GREEN	Device is online but has no connections in the established state	None
GREEN	Device is online and has connections in the established state	None
FLASHING RED	No scan list is available. I/O module is missing.	Make sure all I/O modules are connecting and using the correct MAC ID's. Check the "Cycling Node Status" parameter in RSnetWorx for DeviceNet.
RED	Critical link failure - communication device failed. Device detected error that prevents it from communicating on the network.	Make sure an I/O module is not using MAC ID = 0. Make sure all backplane modules are correcting at the correct baudrate.

TechPub_2614345_0106 - 1202_3047158_01.fm

8.2.4-5 Troubleshooting - DeviceNet Error Indications on the Armor Block I/O Module (Node 3)

Machine Status	Mains Power ON
SPC Reference	662905-0100

a) At the Armor Block module (node 3), note the status indicated by the MOD, NET, AUX POWER and I/O status LED's (1), (2), (3) and (4).

b) Use the following tables to determine the cause of the error.

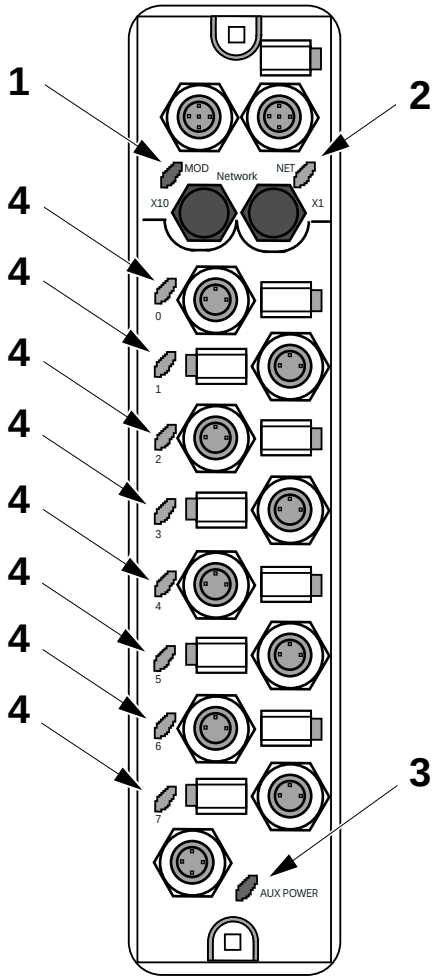

1 MOD LED
2 NET LED
3 AUX POWER
4 I/O LED

(Cont'd)

TechPub_2614345_0106 - 1202_3047158_01.fm

(Cont'd)

NET LED

State	Status	Description	Recommendation
OFF	No power or not on line	The module is not online.	Wait until module has completed the dup_MAC_id test or power the module.
GREEN	Online Connected	Device is operating normally and is online with connections established.	None
FLASHING GREEN	Online but not connected	The module is online with connections established.	Establish connections to other nodes.
RED	Critical link failure	Failed communication module.	Check the communication and cycle power.
FLASHING RED	Connection time out	An I/O connection has timed out	Cycle power to the module.

MOD LED

State	Status	Description	Recommendation
OFF	No power	There is no power applied to the module.	Apply power to the module.
GREEN	Module operational	The module is operating normally.	None
FLASHING GREEN	Module needs commissioning	The module needs commissioning due to missing, incomplete or an incorrect configuration.	Check the configuration and cycle power
FLASHING RED	Minor fault	The module has a recoverable fault.	Check the configuration and cycle power
RED	Critical fault	Watchdog timeout or the module has an unrecoverable fault.	Cycle power to the module. If this does not solve the problem contact the Tetra Pak service desk. The module may need to be changed.

(Cont'd)

TechPub_2614345_0106 - 1202_3047158_01.fm

(Cont'd)

AUX POWER LED

State	Status	Description	Recommendation
OFF	No auxiliary power	There is no auxiliary power applied to the module.	Apply auxiliary power to the module.
GREEN	Auxiliary power present	There is auxiliary power applied to the module.	None

I/O LED

State	Status	Description	Recommendation
OFF	Output not energised or no valid input	Output is not energised or input not valid	None
YELLOW	Output energised or valid input	Output is energised or input is valid	None

TechPub_2614345_0106 - 1202_3047158_01.fm

8.2.4-6 Troubleshooting - DeviceNet Error Indications on the Armor Block I/O Module (Node 4)

Machine Status	Mains Power ON
SPC Reference	662905-0100

See, 8.2.4-5 Troubleshooting - DeviceNet Error Indications on the Armor Block I/O Module (Node 3)

8.2.4-7 Troubleshooting - DeviceNet Error Indications on the Armor Block I/O Module (Node 5) (ReCap Only)

Machine Status	Mains Power ON
SPC Reference	662905-0100

See, 8.2.4-5 Troubleshooting - DeviceNet Error Indications on the Armor Block I/O Module (Node 3)

8.2.4-8 Troubleshooting - DeviceNet Error Indications on the Armor Block I/O Module (Node 6) (ReCap Only)

Machine Status	Mains Power ON
SPC Reference	662905-0100

See, 8.2.4-5 Troubleshooting - DeviceNet Error Indications on the Armor Block I/O Module (Node 3)

TechPub_2614345_0106 - 1202_3047158_01.fm

8.2.5 Ethernet

The Ethernet is used for data exchange on the input side of the PLC.

For more information about the Ethernet, see the following sections:

- 8.1.1-1 Preparation for PLC Communication - Configure PC Network Communications
- 8.1.1-2 Preparations for PLC Communication - Configure RSLinx for PLC
- 8.1.1-3 Preparations for PLC Communication - Set EtherNet Module IP Address.

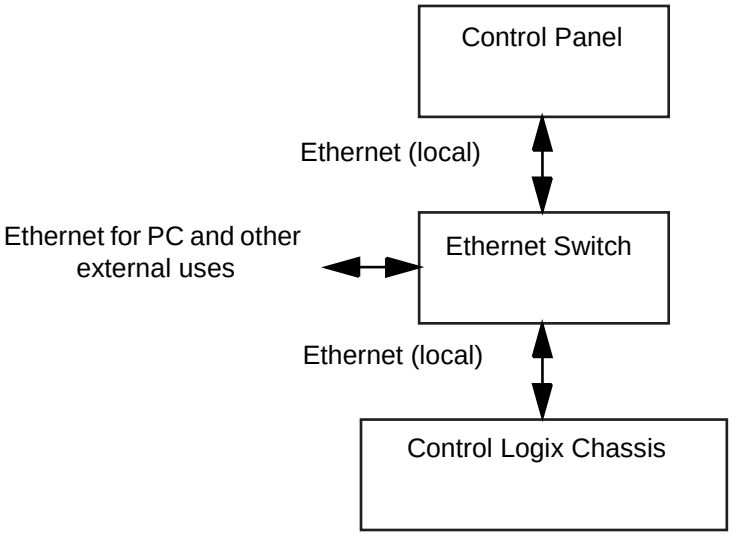

TechPub_2614345_0106 - 1202_3047158_01.fm

8.2.5-1 EtherNet Module - Change

Machine Status	Mains Power ON
SPC Reference	2833407-0100

Note! The firmware revision of the PLC controller maybe equal to, or newer than the firmware revision of the old PLC controller. If an attempt to go online is made with a newer firmware revision installed, this may create errors such as an unrecognised device or a device mismatch if the PC does not contain the very latest EDS files.

Preparation

Before changing the EtherNet Module:

- Use the RSLinx Classic program to verify and record the firmware version of the EtherNet Module.
- Use the Flow Chart of Procedures for Changing the EtherNet Module on the next page to determine which procedures must be performed and their correct sequence.

(Cont'd)

TechPub_2614345_0106 - 1202_3047158_01.fm

(Cont'd)

Flow Chart of Procedures for Changing the EtherNet Module

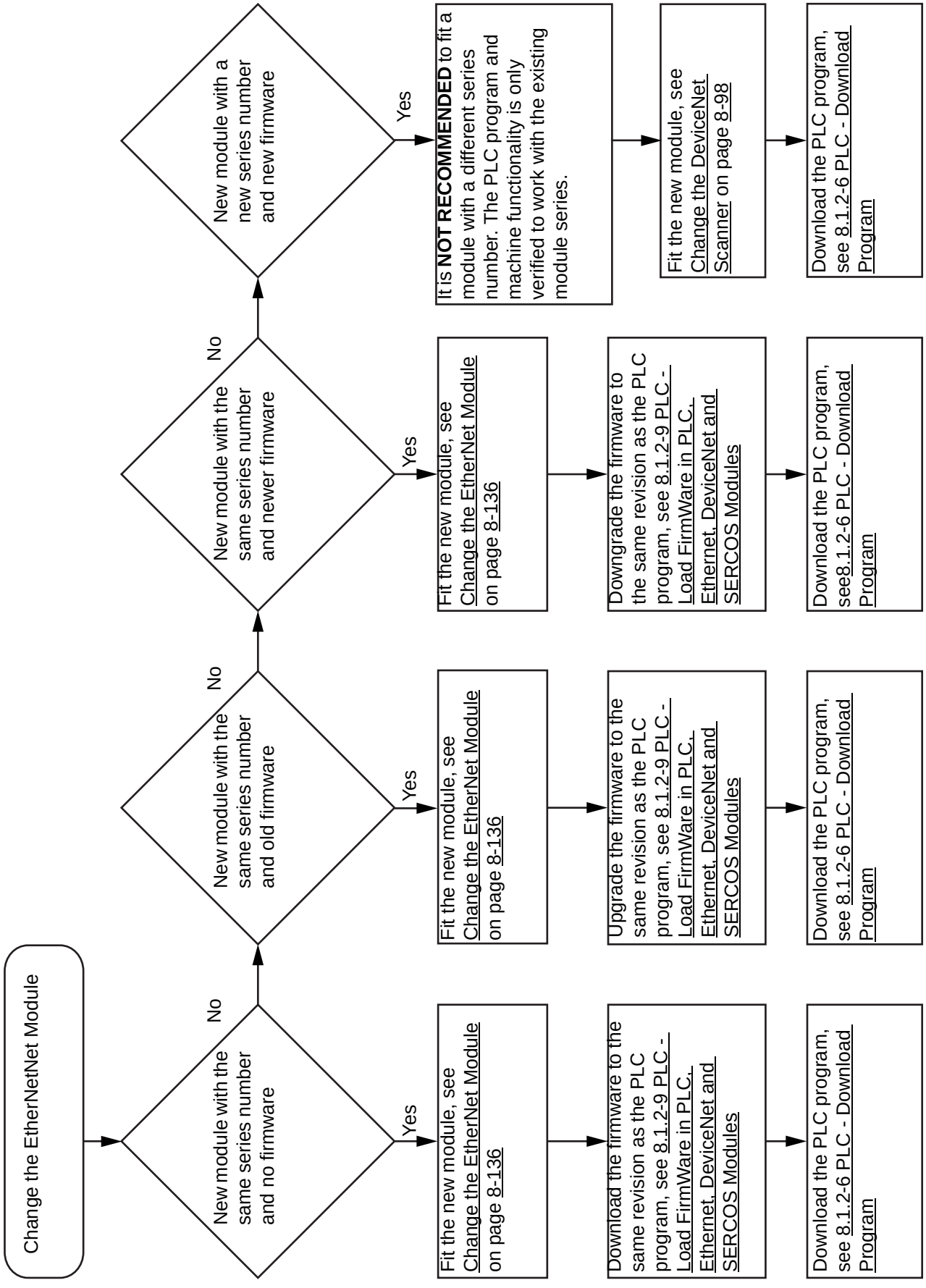

(Cont'd)

TechPub_2614345_0106 - 1202_3047158_01.fm

(Cont'd)

Change the EtherNet Module

a) Press the locking tabs (1) on the top and the bottom of the EtherNet Module (2).

b) Slide the EtherNet Module (2) out of the chassis.

c) Align the new EtherNet Module (2) with the top and the bottom guides in the chassis.

d) Slide the EtherNet Module (2) into the chassis. Make sure it is flush with the power supply or the other modules and the top and bottom latches are engaged.

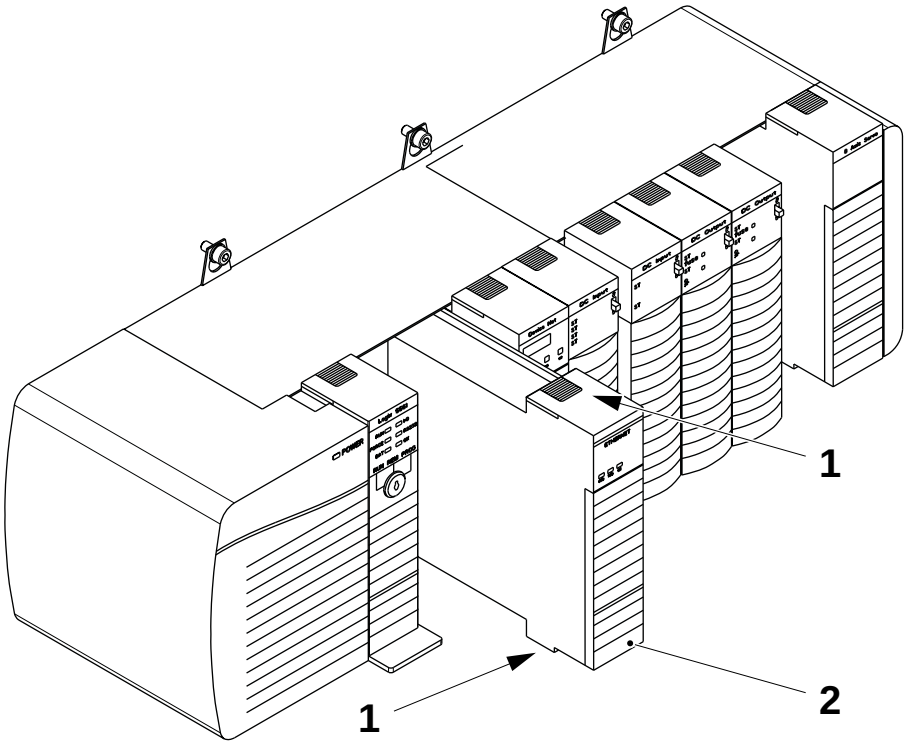

1 Locking tab
2 EtherNet module

TechPub_2614345_0106 - 1202_3047158_01.fm

8.3 Frequency Converter PowerFlex 4 and 40

SPC Reference	662911-0200

8.3.1 PowerFlex40 and PowerFlex 4 Frequency Converters

General

The PowerFlex 40 (PF 40) (1) and the PowerFlex 4 (PF 4) (2) frequency converters are connected by links (3) to form a DSI network as shown.

The 22-COMM DeviceNet adaptor, mounted on the PF 40 module, provides the communications link between DNB scanner module in the PLC and the frequency converters.

The adaptor stores the parameters required to operate the frequency converters as a DSI system. A new adaptor must be configured to set these parameters.

The individual converters (PF 40 and PF 4) store there own motor control parameters. These parameters are set manually at each of the converters.

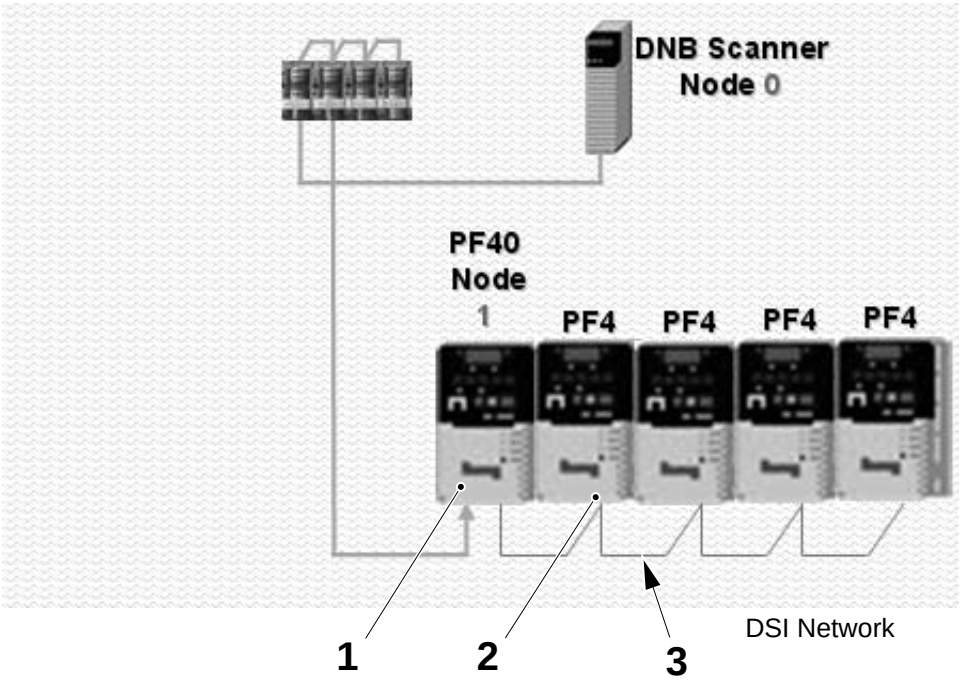

1 PF 40 frequency converter
2 PF 4 frequency converter
3 DSI network

TechPub_2614345_0106 - 1202_3047159_01.fm

8.3.1-1 PowerFlex40 DeviceNet Adaptor - Change

Machine Status	Mains Power OF
SPC Reference	90459-2614

Note! The firmware revision of the PLC controller maybe equal to, or newer than the firmware revision of the old PLC controller. If an attempt to go online is made with a newer firmware revision installed, this may create errors such as an unrecognised device or a device mismatch if the PC does not contain the very latest EDS files.

Preparation

Before changing the 22-COMM DeviceNet adaptor:

- Use the Flow Chart of Procedures for Changing a 22-COMM Adaptor on the next page to determine which procedures must be performed and their correct sequence.

(Cont'd)

TechPub_2614345_0106 - 1202_3047159_01.fm

(Cont'd)

Flow Chart of Procedures for Changing a 22-COMM Adaptor

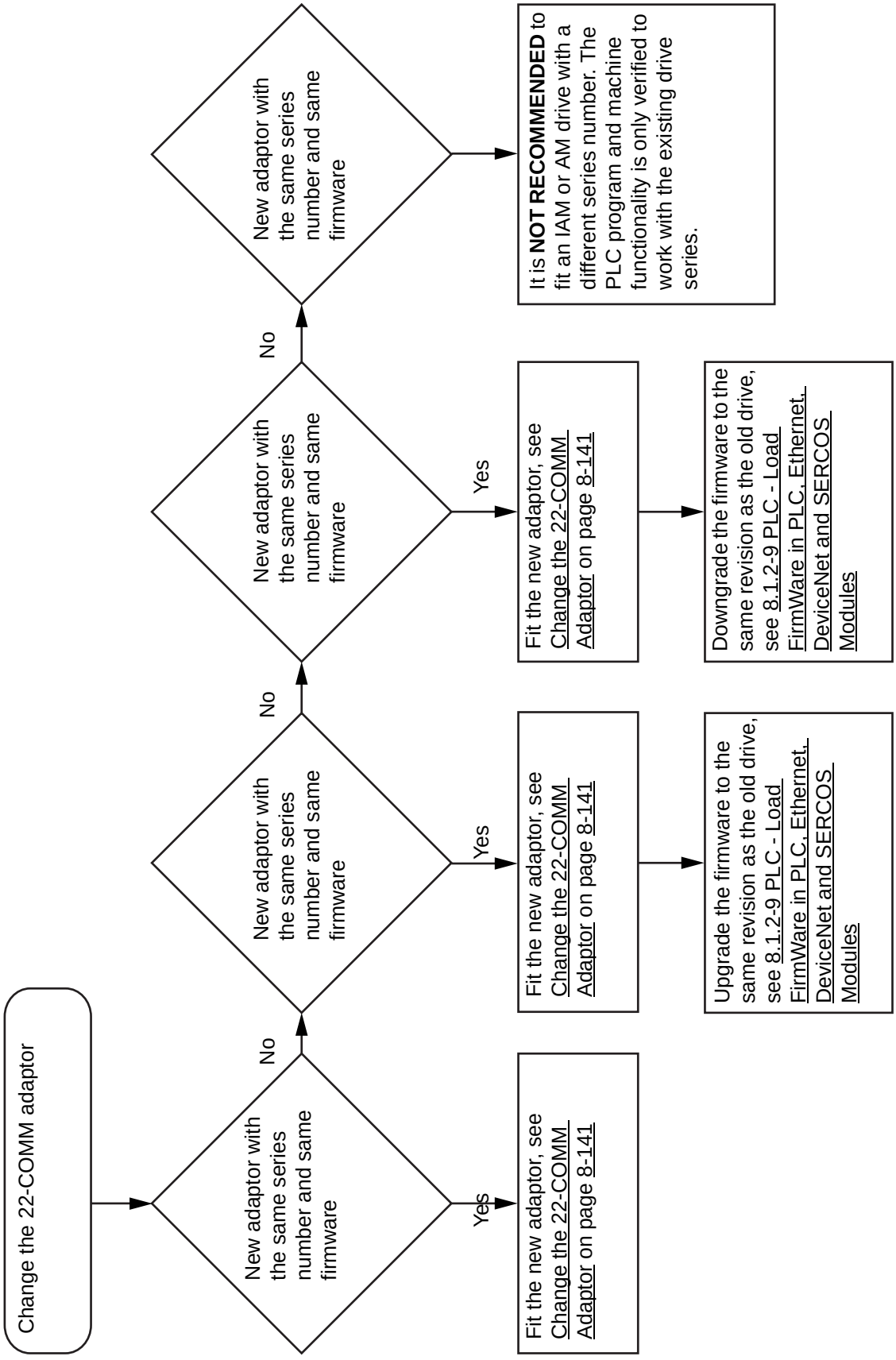

(Cont'd)

TechPub_2614345_0106 - 1202_3047159_01.fm

(Cont'd)

Set the Node Address and Baud Rate

The position of the F/C switches (1) on the 22-COMM-D adaptor (2), under the front cover of the PowerFlex 40 frequency converter, determines the node address and the communication baud rate.

The position of the F/C switches 1-6 determine the node address and the switches 7 and 8 determine the baudrate.

Set the F/C switches 1-6 as shown in the following table to set the Node address to 1.

Set the F/C switches 7 and 8 as shown in the following table to select the Auto Baud mode.

Switch No.	1	2	3	4	5	6	7	8
Switch Pos.	UP	DOWN	DOWN	DOWN	DOWN	DOWN	UP	UP

Note! When configuring the adaptor, the jumper 3 should be set to the right, see Configure the PowerFlex40 DeviceNet Adaptor.

The position of the jumper (3) on the connector (4) determines the operating mode of the adaptor.

Set the jumper (3) to the left as shown to select the MULTI DRIVE mode.

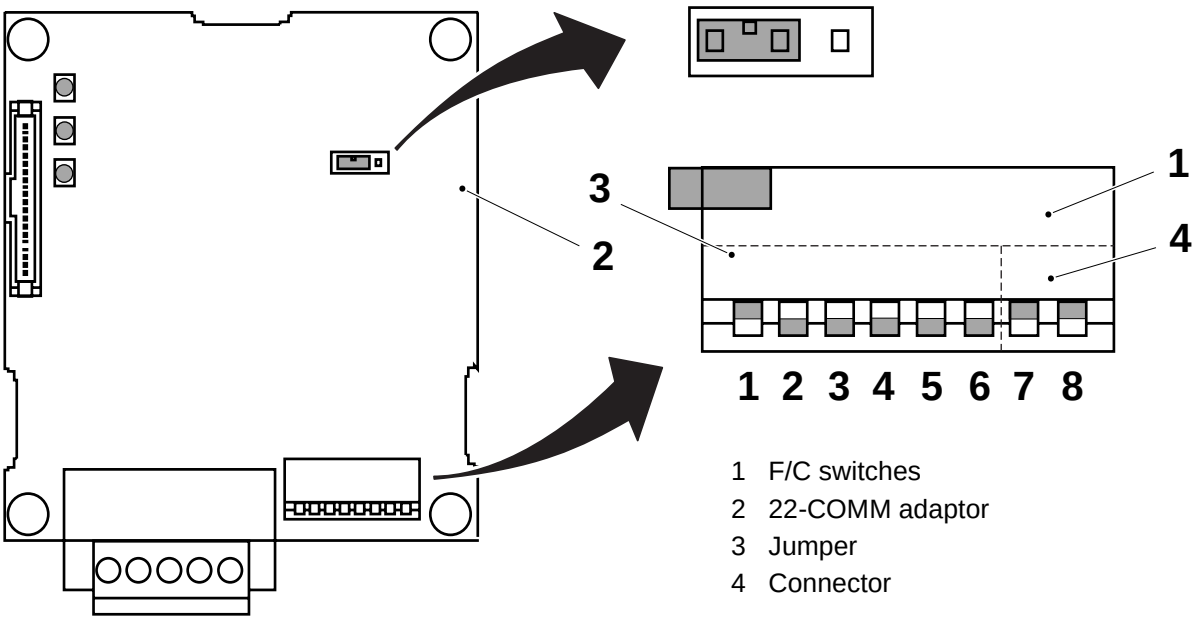

1 F/C switches
2 22-COMM adaptor
3 Jumper
4 Connector

(Cont'd)

TechPub_2614345_0106 - 1202_3047159_01.fm

(Cont'd)

Change the 22-COMM Adaptor

a) Remove the cover (1) from the front of the PowerFlex 40 drive (2).

b) Disconnect the devicenet cable (3) and the internal interface cable (4) from the 22-COMM adaptor (5).

c) Remove the screws (6) and change the adaptor (5).

d) Install the new 22-COMM adaptor in the reverse order.

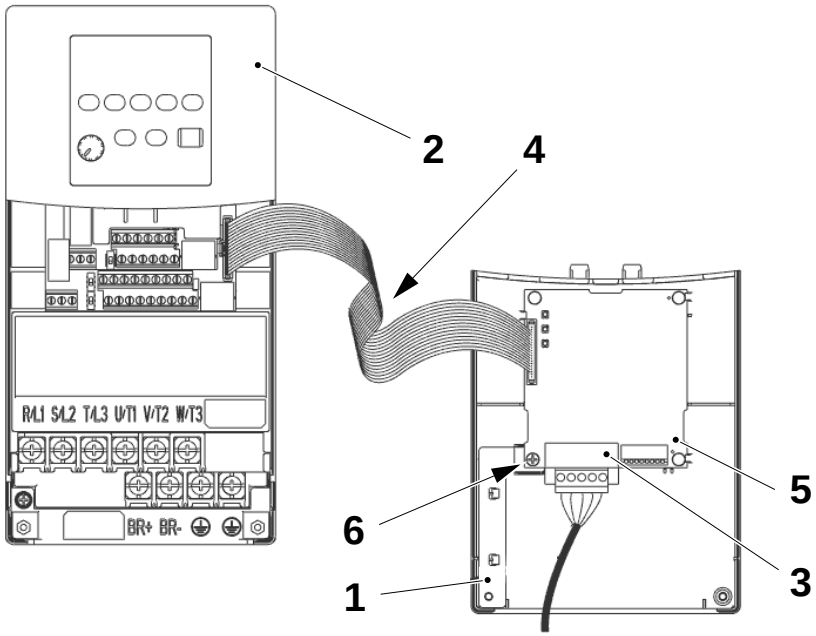

1 Cover
2 PowerFlex 40 drive
3 DeviceNet cable
4 Internal interface cable
5 22-COMM adaptor
6 Screw

(Cont'd)

TechPub_2614345_0106 - 1202_3047159_01.fm

(Cont'd)

Configure the PowerFlex40 DeviceNet Adaptor

a) Interrupt the DSI network (1) at the output (2) of the PF 40 module (3).

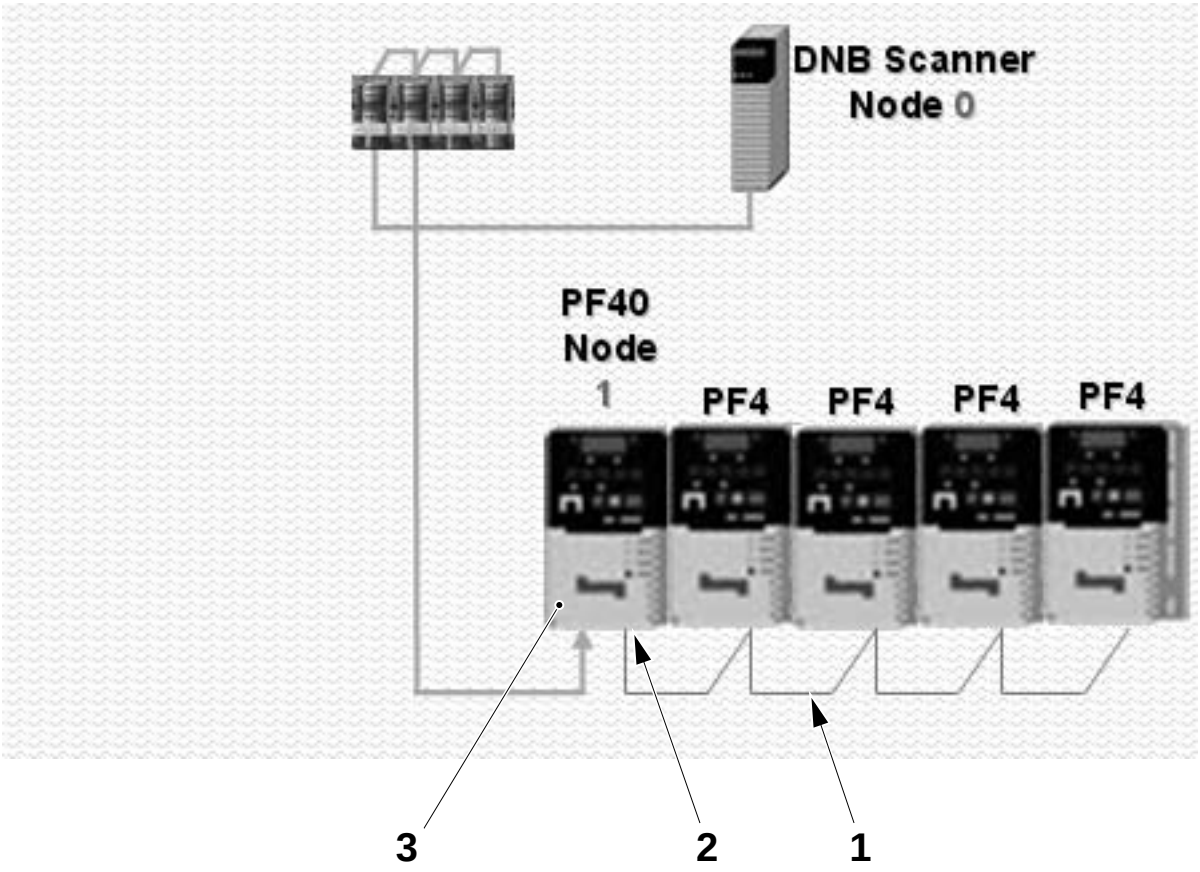

1 DSI network
2 Output
3 PF 40 module

(Cont'd)

TechPub_2614345_0106 - 1202_3047159_01.fm

(Cont'd)

b) On the 22-COMM adaptor (4), move the jumper (5) on the connector (6) to the right as shown to select the SINGLE DRIVE operating mode.

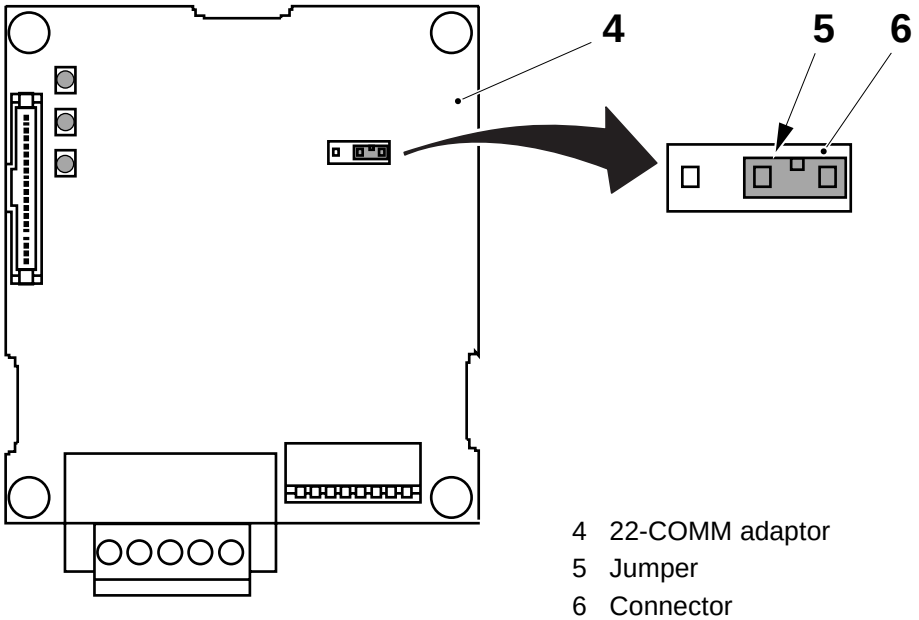

4 22-COMM adaptor
5 Jumper
6 Connector

c) On the PC double click on the RSNetWorx icon to open the RSNetWorx program.

d) Select the NETWORK menu (7) and then select ONLINE (8).

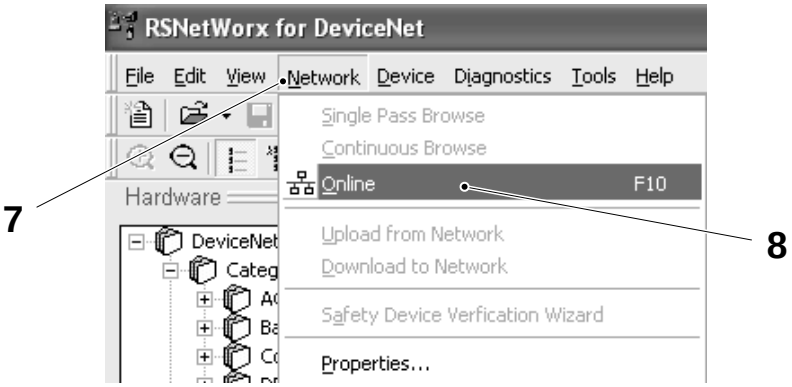

7 Network menu
8 Online

(Cont'd)

TechPub_2614345_0106 - 1202_3047159_01.fm

(Cont'd)

e) Double click on the POWERFLEX 40 (9) icon to open the adaptor parameters window.

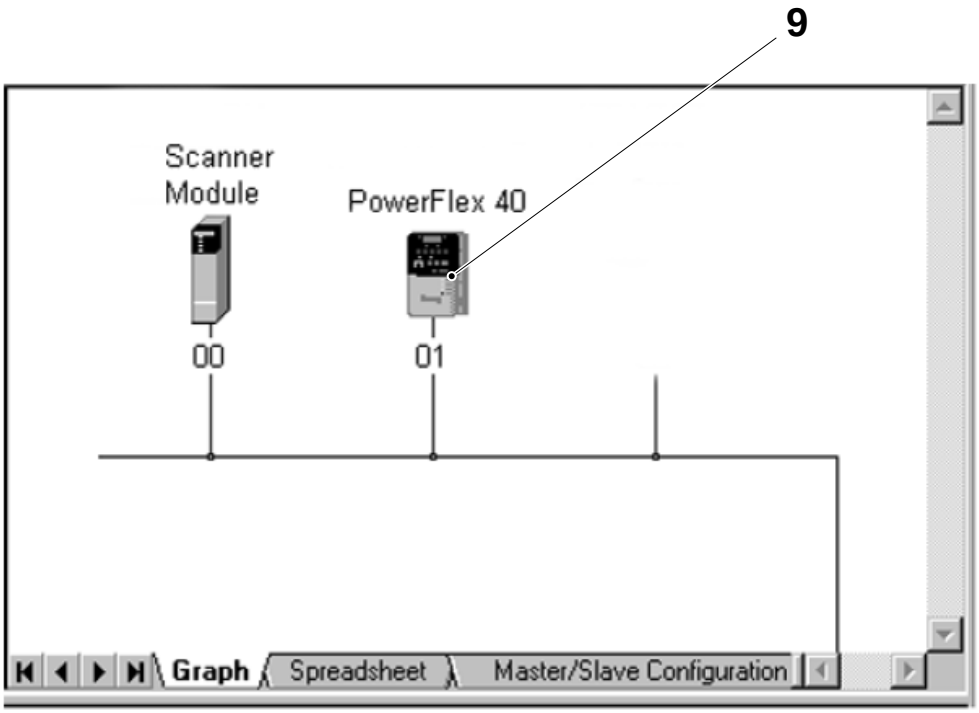

9 POWERFLEX 40 icon

TechPub_2614345_0106 - 1202_3047159_01.fm

(Cont'd)

(Cont'd)

f) Scroll to end of the parameter list (10) and change the parameters shown in the following table.

g) Select OK when done.

Note! In the table Drv 0 - 2 means 3 drives are used Drv 0 - 4 means all.

Parameter	**Value**
DSI I/O Config	Drv 0 - 2 up to 0 - 4
Drive 0 Address	100
Drive 1 Address	101
Drive 2 Address	102
Drive 3 Address	103
Drive 4 Address	104

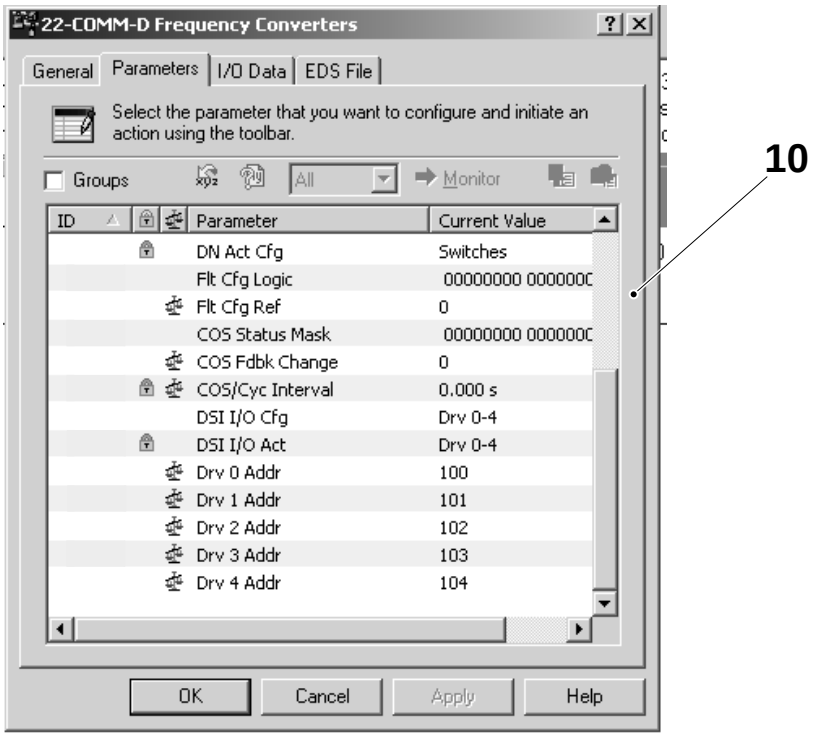

10 Parameter list

(Cont'd)

TechPub_2614345_0106 - 1202_3047159_01.fm

(Cont'd)

h) Connect the DSI network (1) at the output (2) of the PF 40 module (3).

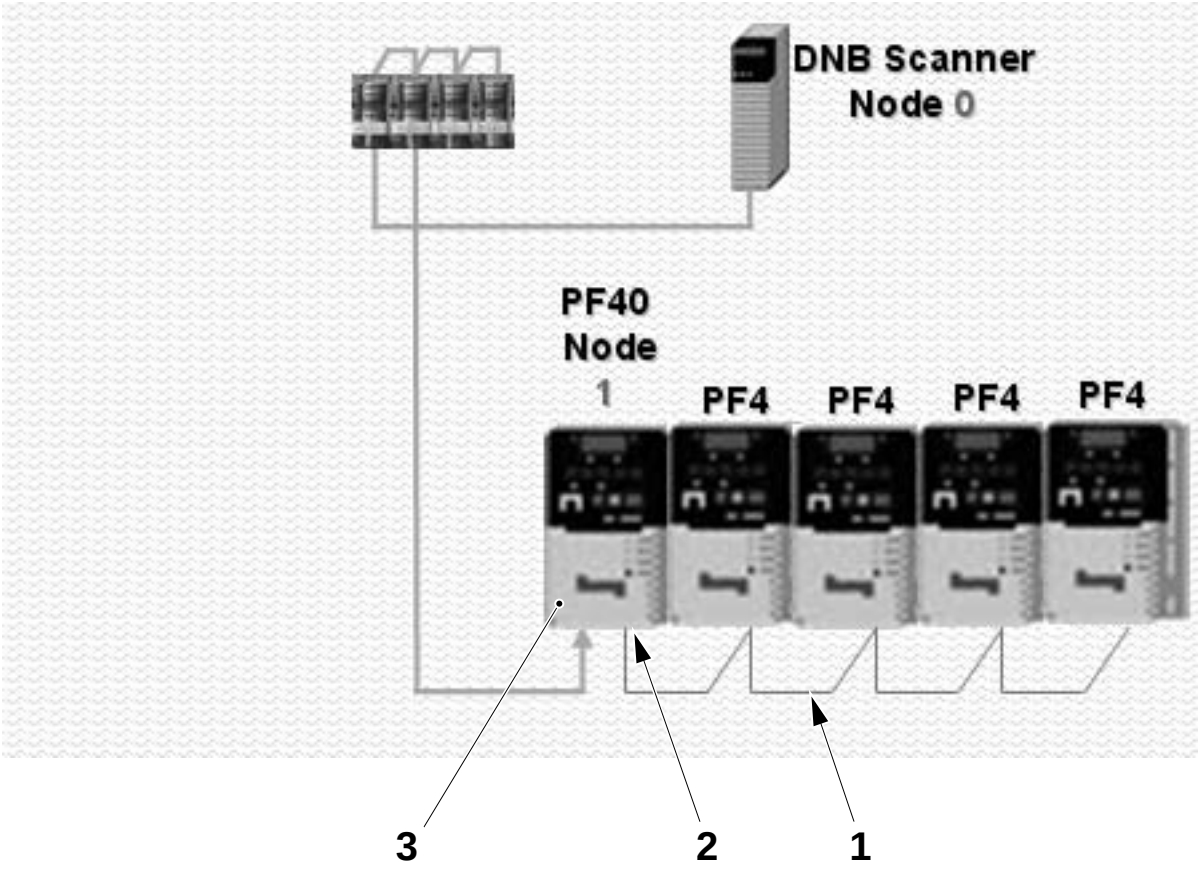

1 DSI network
2 Output
3 PF 40 module

(Cont'd)

TechPub_2614345_0106 - 1202_3047159_01.fm

(Cont'd)

i) On the 22-COMM adaptor (4), move the jumper (5) on the connector (6) to the left as shown to select the MULTI DRIVE operating mode.

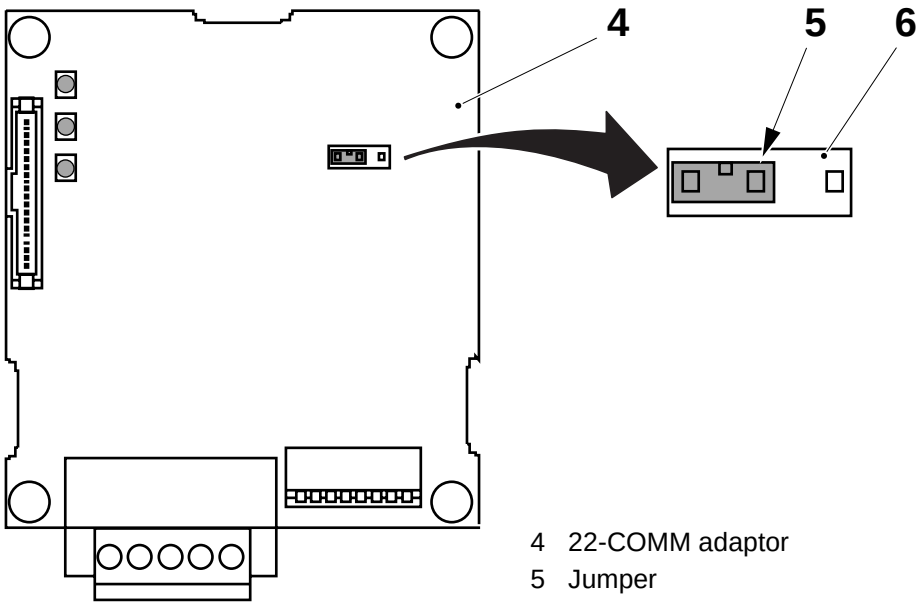

4 22-COMM adaptor
5 Jumper
6 Connector

j) On the PC double click on the RSNetWorx icon to open the RSNetWorx program.

k) Select the NETWORK menu (7) and then select ONLINE (8).

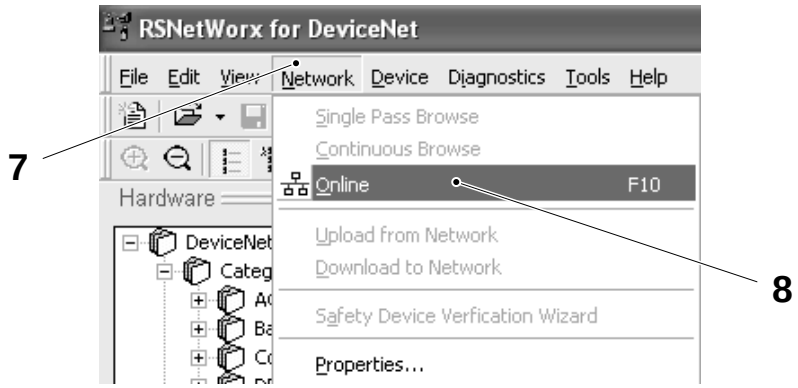

7 Network menu
8 Online

(Cont'd)

TechPub_2614345_0106 - 1202_3047159_01.fm

(Cont'd)

l) Check that the DSI icon (11) appears confirming that the adaptor has been configured correctly and the frequency converters are now recognised as part of the network as Node 1.

m) Exit RSNetWorx.

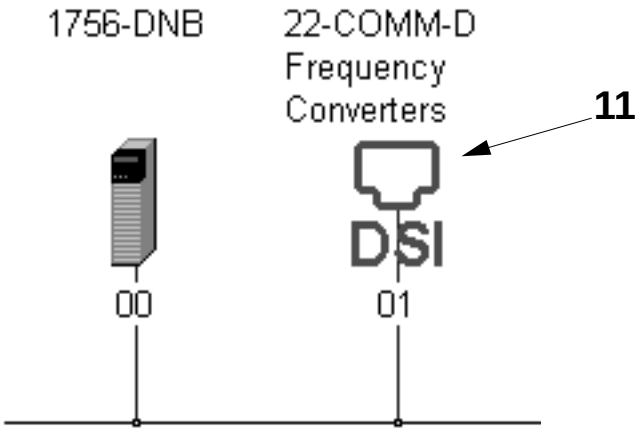

11 DSI icon

TechPub_2614345_0106 - 1202_3047159_01.fm

8.3.1-2 Frequency Converter - Change

Machine Status	Mains Power OFF
SPC Reference	90459-3441 90459-3450

For the PowerFlex 40 Module

a) Remove the cover (1) from the front of the PowerFlex 40 module (2).

b) Disconnect the devicenet cable (3) and the internal interface cable (4) from the 22-COMM adaptor (5) and the PowerFlex 40 module (2).

c) Remove the screws (6) and the adaptor (5).

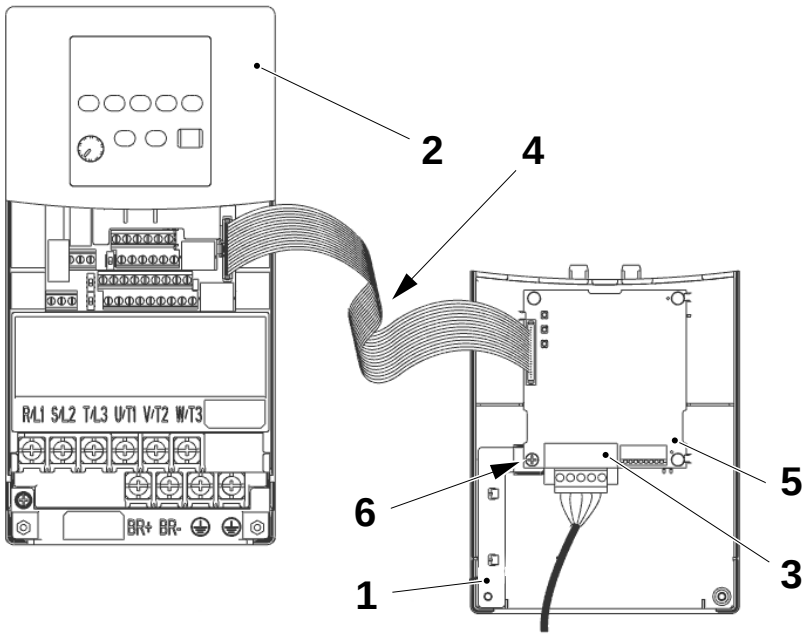

1 Cover
2 PowerFlex 40 module
3 DeviceNet cable
4 Internal interface cable
5 22-COMM adaptor
6 Screw

(Cont'd)

TechPub_2614345_0106 - 1202_3047159_01.fm

(Cont'd)

d) Make a note of the electrical connections (7) at the base of the PowerFlex 40 module (2) and then disconnect all of the cables and wires.

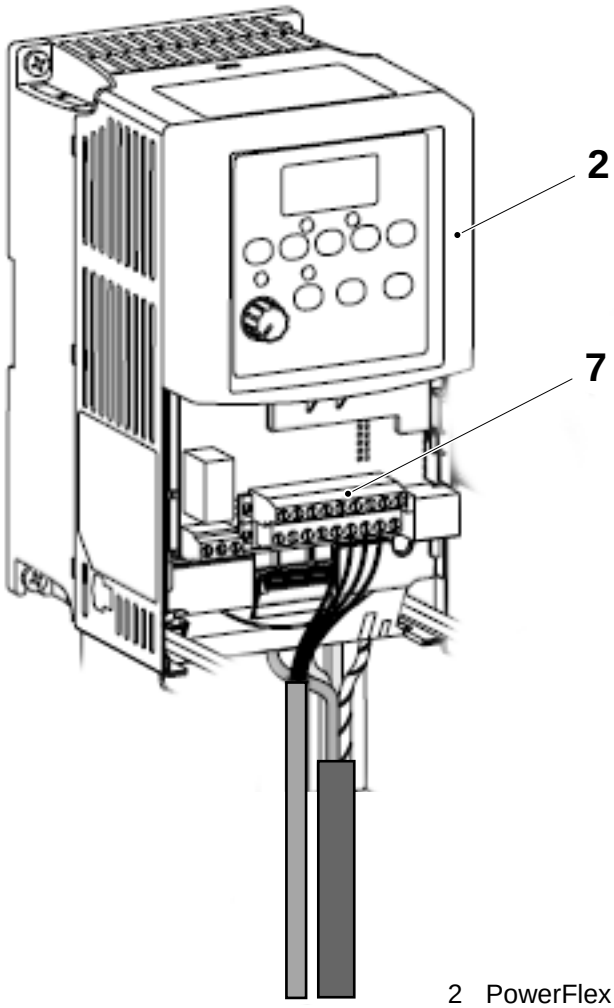

2 PowerFlex 40 module
7 Electrical connections

(Cont'd)

TechPub_2614345_0106 - 1202_3047159_01.fm

(Cont'd)

e) Remove the screws (8) and the PowerFlex 40 module (2).

f) Assemble in the reverse order.

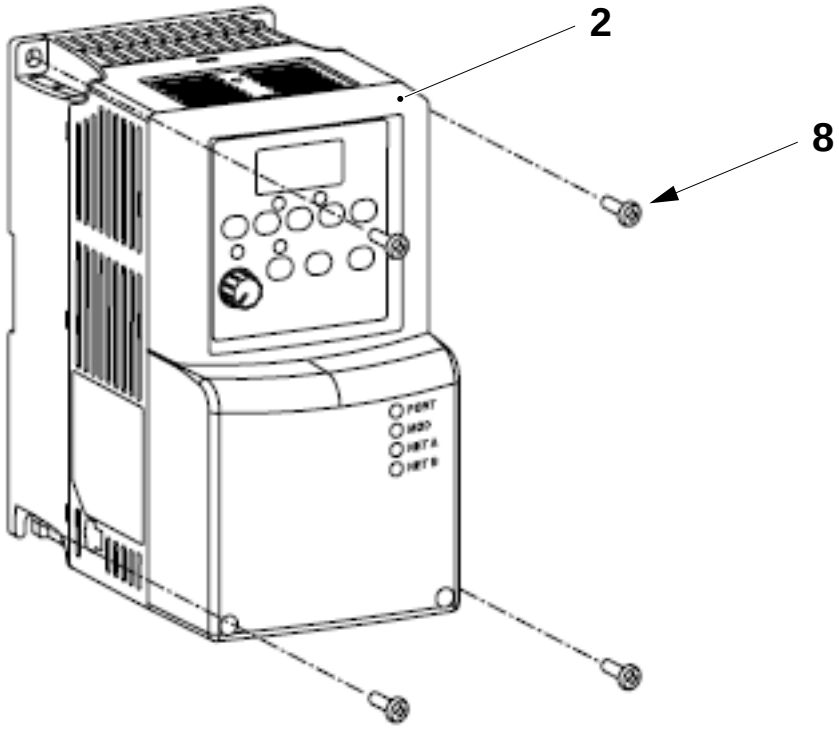

2 PowerFlex 40 module
8 Screw

(Cont'd)

TechPub_2614345_0106 - 1202_3047159_01.fm

(Cont'd)

For the PowerFlex 4 Modules

a) Make a note of the electrical connections (1) at the base of the PowerFlex 4 module (2) and then disconnect all of the cables and wires.

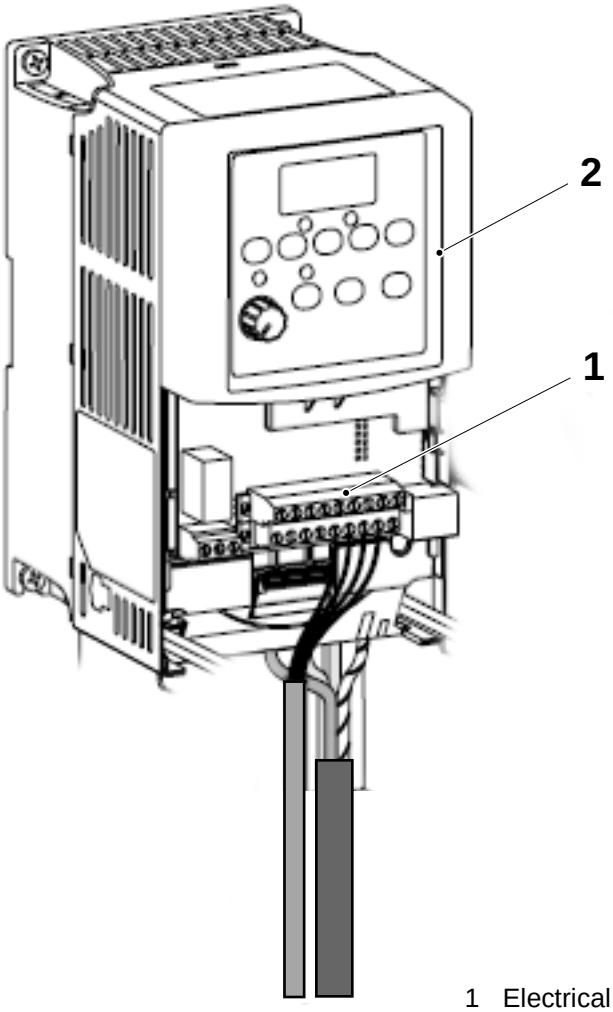

1 Electrical connections
2 PowerFlex 4 module

(Cont'd)

TechPub_2614345_0106 - 1202_3047159_01.fm

(Cont'd)

b) Remove the screws (3) and the PowerFlex 4 module (2).

c) Assemble in the reverse order.

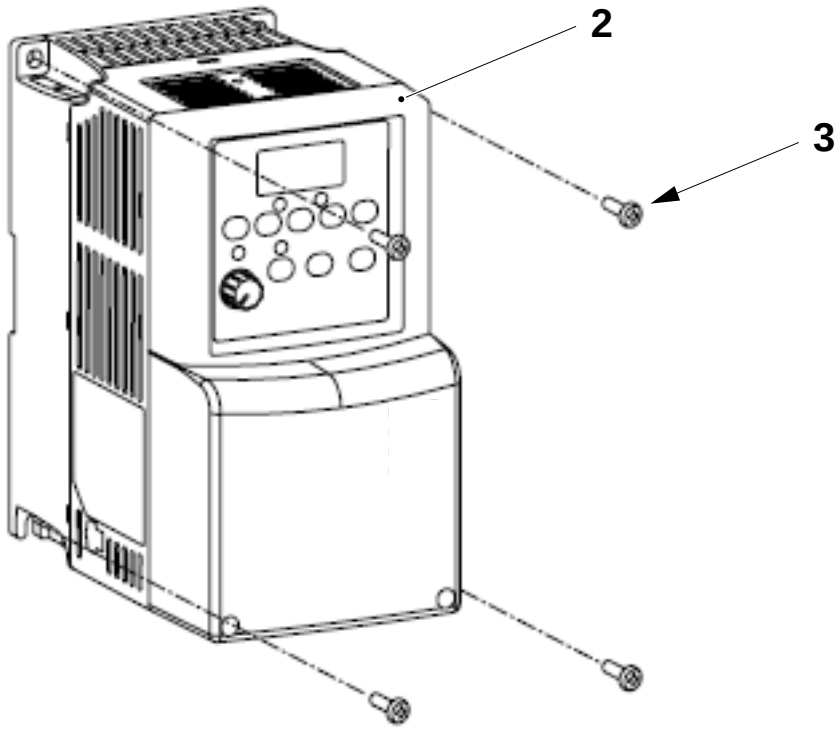

2 PowerFlex 4 module
3 Screw

TechPub_2614345_0106 - 1202_3047159_01.fm

8.3.1-3 Frequency Converter - LED Description

Machine Status	Mains Power ON
SPC Reference	90459-3441

The PowerFlex40 module is connected to the DeviceNet via an adaptor.

The adaptor has four LED's that are visible through the front panel of the PowerFlex40 module.

To locate the source of the error and then find the cause, proceed as follows:

Note! The NET B LED (5) is not used for DeviceNet communications.

a) At the PowerFlex40 Module (20T000) (1) in the Electrical Cabinet, check the status of the PORT, MOD and NET A LED's (2), (3) and (4).

b) Use the following tables to determine the cause of the error.

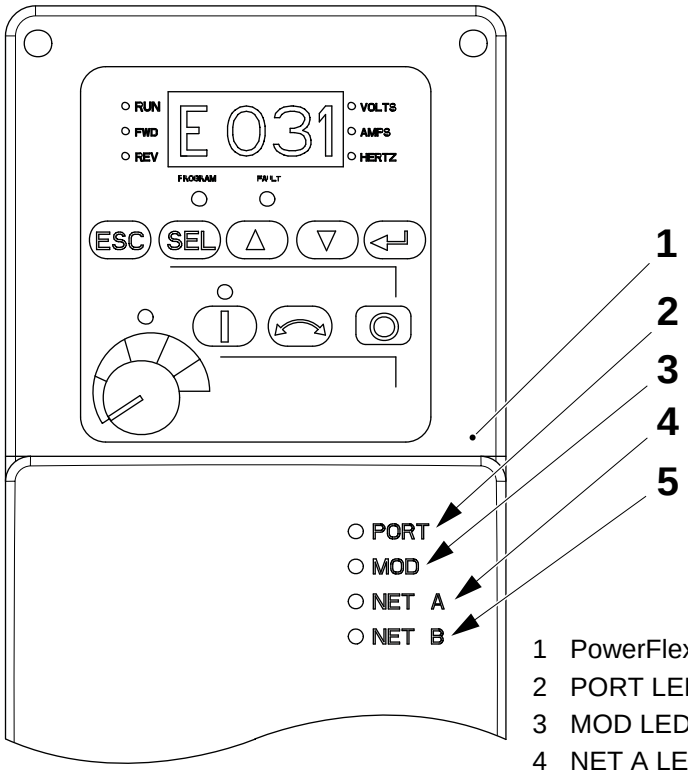

1 PowerFlex40 module
2 PORT LED
3 MOD LED
4 NET A LED
5 NET B LED

(Cont'd)

TechPub_2614345_0106 - 1202_3047159_01.fm

(Cont'd)

LED	Colour	Status	Action
Port Status (2)	Off	The adaptor is not powered or connected correctly to the drive.	Use the ribbon cable to connect the adaptor securely to the drive. Apply power to the adaptor.
	Flashing red	The adaptor is not receiving communications from a drive, a connected drive has failed or a drive is missing.	Clear any drive faults. Check that all cables are securely connected. Cycle power to the drive.
	Solid red	The drive has refused an I/O connection from the adaptor. Another DSI peripheral is using the same DSI port as the adaptor.	Important: Cycle power to the adaptor after making the following correction. Check that all DSI cables are securely connected and undamaged. If necessary, replace any damaged cable.
	Flashing green	The adaptor is establishing an I/O connection to the drive or (DSI I/O Config) is configured for all I/O disabled.	None: This indication will turn GREEN or RED. Check the setting of parameter 15 (DSI I/O Config). The adaptor is operating normally if no DSI I/O is enabled.
	Solid green	The adaptor is properly connected and is communicating with the drive.	None.
	Orange	Daisy-chained devices in the Multi-Drive mode are not of the correct type.	Install the correct modules.

(Cont'd)

TechPub_2614345_0106 - 1202_3047159_01.fm

(Cont'd)

LED	Colour	Status	Action
Mod Status (3)	Off	The adaptor is not powered.	Use the ribbon cable to connect the adaptor securely to the drive. Apply power to the adaptor.
	Flashing red	The adaptor has failed the firmware test, a connected drive has failed or a drive is missing.	Clear any drive faults. Cycle power to the drive. If cycling power does not correct the problem, the parameter settings may have been corrupted. Restore default values reconfigure the adaptor. If restoring default values does not correct the problem, flash the adaptor with the latest firmware release. Determine which drive is missing or has failed. Check cabling and configuration settings.
	Solid red	The adaptor has failed the hardware test	Cycle power to the drive Replace the adaptor.
	Flashing green	The adaptor is operational but is not transferring I/O data.	Put the scanner in the RUN mode. Program the controller to recognise and transmit I/O data to the adaptor. Configure the adaptor for the program in the controller. The adaptor is operating normally if no DSI I/O is enabled.
	Solid green	The adaptor is operational and transferring I/O data.	None.

(Cont'd)

TechPub_2614345_0106 - 1202_3047159_01.fm

(Cont'd)

LED	Colour	Status	Action
Net A Status (3)	Off	The adaptor and/or the network is not powered or the adaptor is not connected correctly to the network.	Use the ribbon cable to connect the adaptor securely to the drive and the DeviceNet cable to connect it to the network. Connect the DeviceNet cable correctly to the DeviceNet plug. Apply power to the adaptor and the network.
	Flashing red	A DeviceNet I/O connection has timed out.	Put the scanner in the RUN mode, or apply power to the peer device that will send I/O data. Check the amount of traffic on the network.
	Solid red	RED	Failed duplicate node detection test or bus off condition exists.
	Flashing green	The adaptor is properly connected but is not communicating with any devices on the network.	Put the scanner in the RUN mode, or apply power to the peer device that will send I/O data. Configure a controller or peer device to recognise and transmit I/O to the adaptor. Configure the adaptor for the program in the controller or the I/O from the peer device.
	Solid green	The adaptor is properly connected and is communicating with devices on the network.	None.

TechPub_2614345_0106 - 1202_3047159_01.fm

8.3.1-4 Frequency Converters - Change Parameters

Machine Status	Mains Power ON
SPC Reference	90459-3441 90459-3450

Note! The procedure for setting the parameters is the same for all frequency converters.

Note! Before setting the converter, make sure that the sink/source switch, located behind the removable cover, is set to the SRC position.

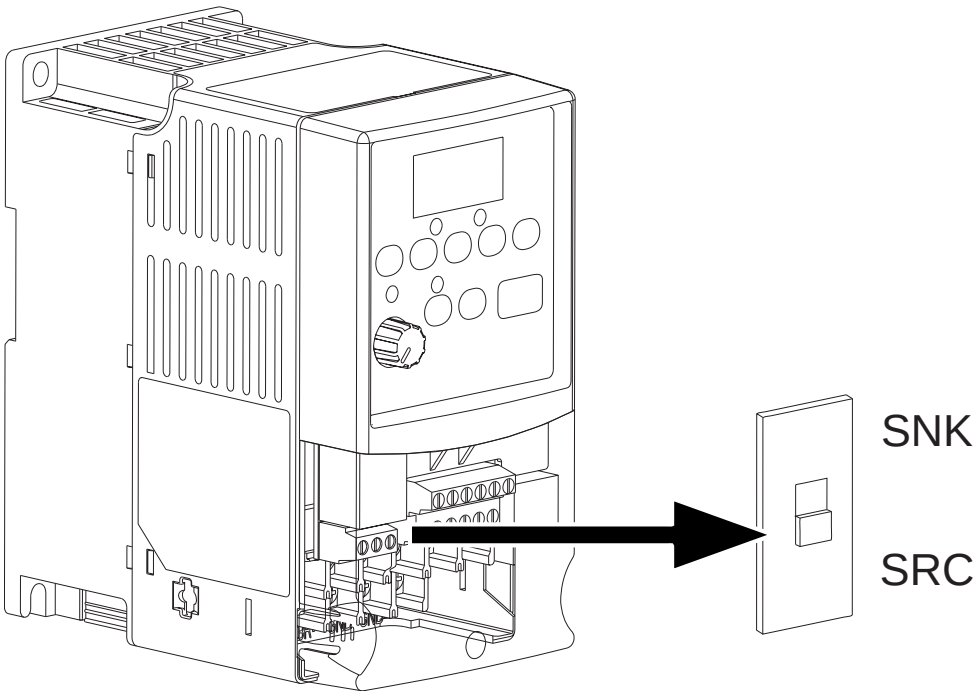

TechPub_2614345_0106 - 1202_3047159_01.fm

(Cont'd)

(Cont'd)

a) Press the ESC button (1) twice. The letter d, P, or A flashes.

b) Press the UP or DOWN buttons (2) or (3) to scroll through the group menu (d, P or A).

c) Press the ⏎ button (4) or the SEL button (5) to enter a group. The digit on the right of the 3 digit parameter 031, in the example below flashes.

d) Press the UP or DOWN buttons (2) or (3) to scroll through the parameters that are in the group.

e) Press the ⏎ button (4) or the SEL button (5) to view the value of a parameter. To return to the parameter number without editing, press the ESC button (1).

f) To edit a parameter value, press the ⏎ button (4) or the SEL button (5) to enter the program mode. The digit on the right flashes and the Program LED (6) turns red when the value can be edited.

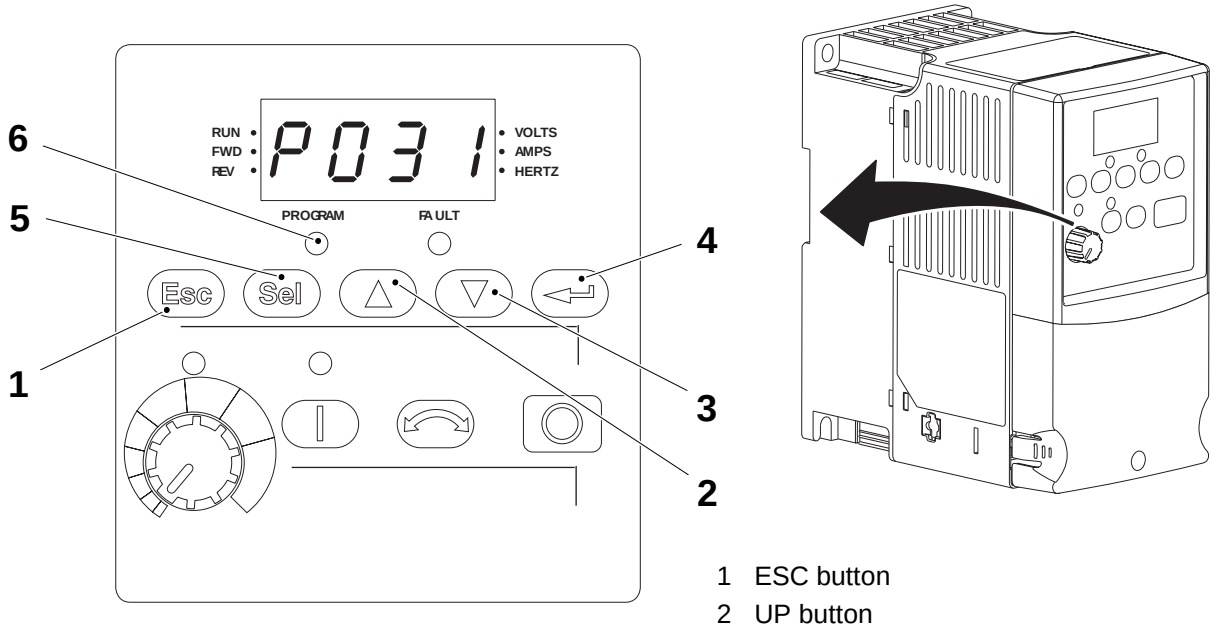

1 ESC button
2 UP button
3 DOWN button
4 ENTER button
5 SEL button
6 Program LED

(Cont'd)

TechPub_2614345_0106 - 1202_3047159_01.fm

(Cont'd)

g) Press the UP or the DOWN buttons (2) or (3) to change the parameter value. Press the SEL button (5) to move from digit to digit or from bit to bit. When a digit or bit flashes, it can be changed.

h) Press the ESC button (1) to cancel a change. The digit or bit stops flashing, the previous is restored and the Program LED (6) turns OFF or press the ⏎ button (4) to save a change. The digit or bit stops flashing and the Program LED (6) turns OFF.

i) Press the ESC button (1) to return to the parameter list.

j) Continue to press the ESC button (1) to leave the programming menu. When pressing the ESC button (1) does not change the display, d001 (output frequency) is displayed. Press the ⏎ button (4) or the SEL button (5) to enter the group menu.

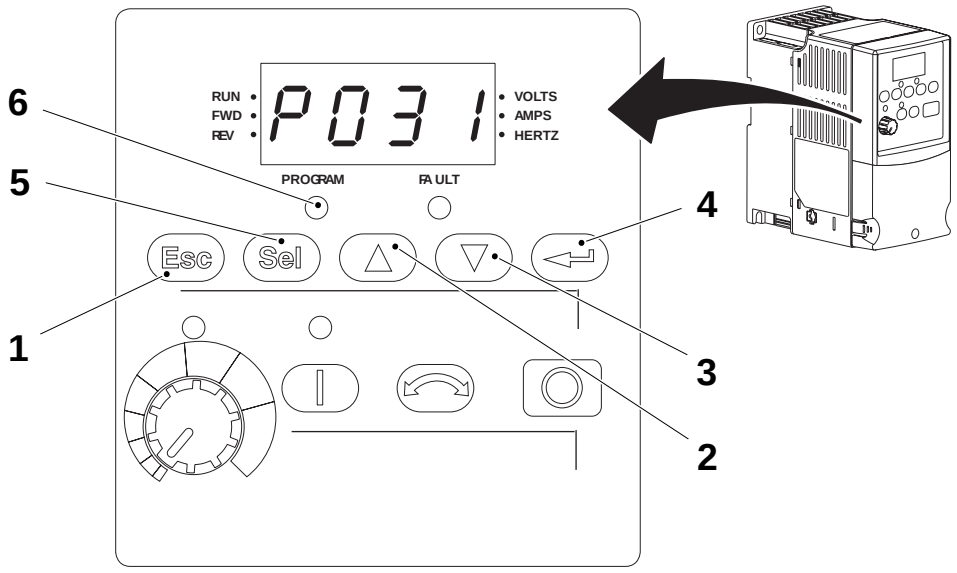

1 ESC button
2 UP button
3 DOWN button
4 ENTER button
5 SEL button
6 Program LED

(Cont'd)

TechPub_2614345_0106 - 1202_3047159_01.fm

(Cont'd)

Table showing Read Only Display Groups

Parameter	Function
d001	Output Frequency
d002	Commanded Frequency
d003	Output Current
d004	Output Voltage
d005	DC Bus Voltage
d006	Drive Status
d007	Fault Code 1
d008	Fault Code 2
d009	Fault Code 3
d010	Process Display
d012	Control Source
d013	Control In Status
d014	Dig In Status
d015	Comm In Status
d016	Control SW Version
d017	Drive Type
d018	Elapsed Run Time
d019	Testpoint Data
d020	0-10V Analog Input
d021	4-20 mA Analog Input

TechPub_2614345_0106 - 1202_3047159_01.fm

Tables for Customising Inverter Values

See the enclosed “Rockwell” manual for more details.

Basic Program Group

Parameter	Description	Unit	Belt Brake 20T000	Package Line Conveyor 21T400	Hotmelt Wheel 30T100	Outfeed Package Conveyor 21T600 **
P031	Motor NP Volts	V	230	230	230	230
P032	Motor NP Hertz	Hz	50	50	50	50
P033	Motor OL Current	A	1.2	2.6	0.6	2.6
P034	Minimum Freq	Hz	0.0	0.0	0.0	0.0
P035	Maximum Freq	Hz	100	100	100	100
P036	Start Source		4	5	5	5
P037	Stop Mode		0	Default	Default	Default
P038	Speed Reference		5	5	5	5
P039	Accel Time 1	Sec	0	3	1	3
P040	Decel Time 1	Sec	0.1	3	1	3
A080	*		0.5			
A081	*		2			
A103	*		4	4	4	4
A104	*		100	101	102	103
A105	*		0	0	0	0
A107	*		0	0	0	0

***** The default values for these parameters are shown in the **Advanced Program Group** table
**** This item is optional equipment.**

TechPub_2614345_0106 - 1202_3047159_01.fm

8.3.1-5 Frequency Converters - Fault Types

Machine Status	Mains Power ON
SPC Reference	90459-3441 90459-3450

Note! The fault codes in the format Fxxx are the same for PowerFlex40 and PowerFlex4 frequency converters.

There are two types of fault, this is explained in the following table:

Note! The Auto Restart (Reset/Run) feature allows the drive to perform a fault reset followed by a start attempt without user or application intervention. This provides for either remote or “unattended operation”. Only certain faults can be reset. Certain type 2 faults that indicate possible drive component malfunction can not be reset. Caution should be used when enabling this feature as the drive will attempt to issue its own START command based on user selected programming.

Fault Type	Fault Description	
1	Auto-Reset/Run	When this type of fault occurs and parameter A092 (Auto Rstrt Tries) is set to a value greater than “0”, a user configurable timer A093 (Auto Rstrt Delay), begins. When the timer reaches zero, the drive attempts to automatically reset the fault. If the condition that caused the fault is no longer present, the fault will be reset and the drive will be restarted.
2	Non-Resetable	This type of fault may require drive or motor repair, or is caused by wiring or programming error. The cause of the fault must be corrected before the fault can be cleared.

TechPub_2614345_0106 - 1202_3047159_01.fm

8.3.1-6 Frequency Converters - Identifying the Fault

Machine Status	Mains Power ON
SPC Reference	90459-3441 90459-3450

If a fault occurs the FAULT LED (1) on the front panel of the converter will flash to indicate the presence of a fault and the relevant fault code, F013 in the example below, will flash on the alphanumeric display (2).

a) Use the table on page 8-168 to determine the type of fault that has occurred.
   - If the fault is a type 1, follow the instructions 8.3.1-7 Frequency Converters - Clearing a Fault Indication Manually.
   - If the fault is a type 2, follow the instructions 8.3.1-8 Frequency Converters - Clearing a Fault Indication Automatically.

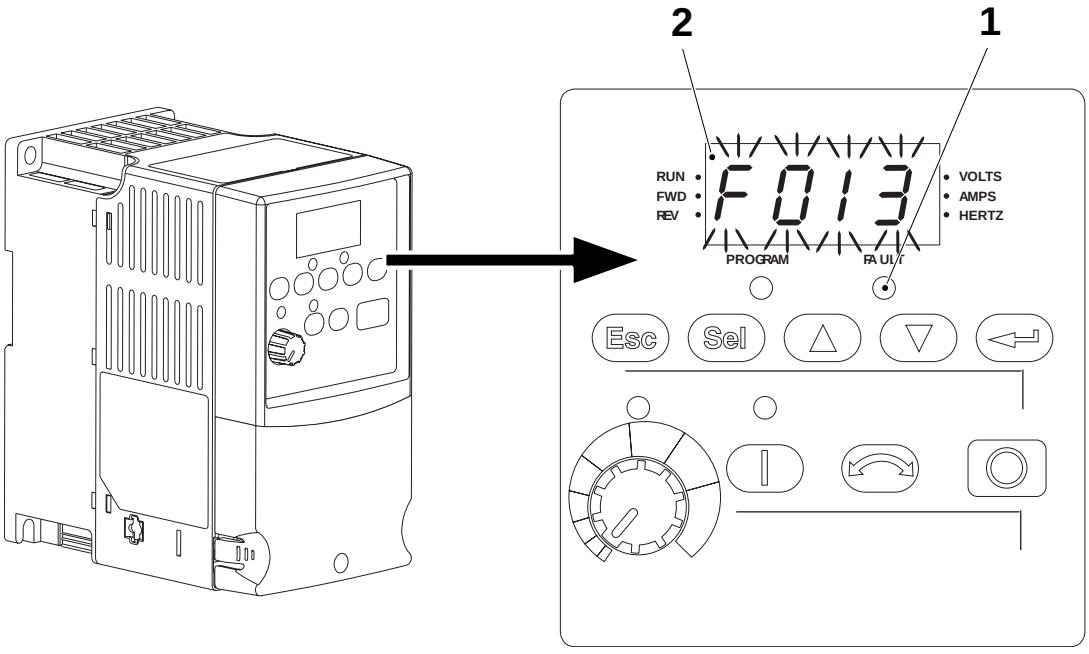

1 FAULT LED
2 Alphanumeric display

TechPub_2614345_0106 - 1202_3047159_01.fm

8.3.1-7 Frequency Converters - Clearing a Fault Indication Manually

Machine Status	Mains Power ON
SPC Reference	90459-3441 90459-3450

a) When a fault occurs, press the ESC button (1) to acknowledge the alarm and to gain control of the control panel. The controls will be locked until the alarm is acknowledged. When the ESC button (1) is pressed the fault indication will be removed.

b) Use the control panel to access the parameter d007 (FAULT CODE 1), if necessary see 8.3.1-1 PowerFlex40 DeviceNet Adaptor - Change.

c) Locate and clear the cause of the fault, see Fault Code Descriptions.

d) After corrective action has been taken, clear the fault indication using one of the following methods:

- Press STOP (2) if the parameter P037 (STOP MODE) is set to a value between “0” and “3”
- Cycle drive power
- Set parameter A100 (FAULT CLEAR) to “1” or “2”.
- Cycle digital input if the parameters A051 - A052 (DIGITAL INX SEL) are set to option 7.

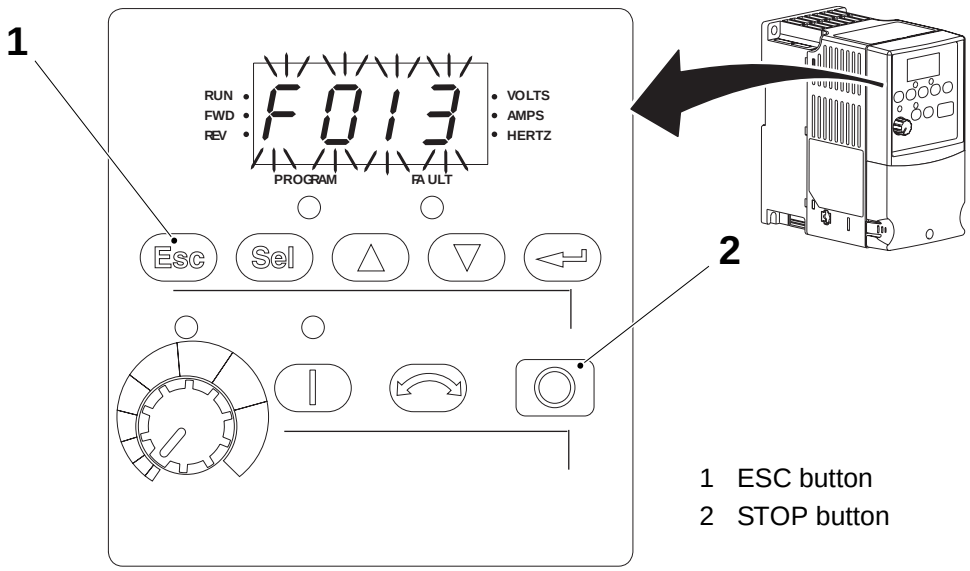

1 ESC button
2 STOP button

TechPub_2614345_0106 - 1202_3047159_01.fm

8.3.1-8 Frequency Converters - Clearing a Fault Indication Automatically

Machine Status	Mains Power ON
SPC Reference	90459-3441 90459-3450

Option 1: Clear a type 1 fault and restart the drive

a) When a fault occurs, press the ESC button (1) to acknowledge the alarm and to gain control of the control panel. The controls will be locked until the alarm is acknowledged. When the ESC button (1) is pressed the fault indication will be removed.

b) Use the control panel to set the parameter A092 (Auto Rstrt Tries) to any value other than "0". If necessary see 8.3.1-1 PowerFlex40 DeviceNet Adaptor - Change.

c) Set parameter A093 (Auto Rstrt Delay) to any value other than "0".

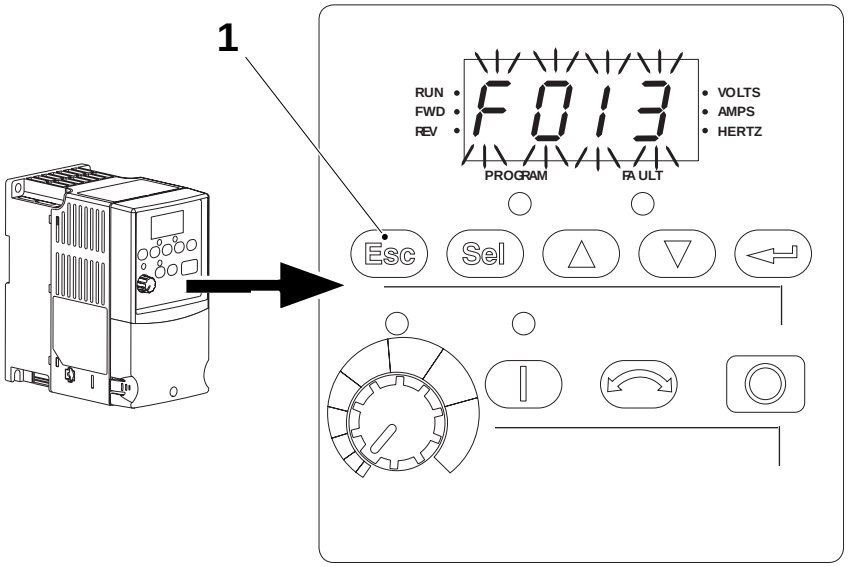

1 ESC button

TechPub_2614345_0106 - 1202_3047159_01.fm

(Cont'd)

Option 2: Clear an OverVoltage, UnderVoltage or Heatsink OverTemp fault without restarting the drive

a) When a fault occurs, press the ESC button (1) to acknowledge the alarm and to gain control of the control panel. The controls will be locked until the alarm is acknowledged. When the ESC button (1) is pressed the fault indication will be removed.

b) Use the control panel to set the parameter A092 (Auto Rstrt Tries) to any value other than "0". If necessary see 8.3.1-1 PowerFlex40 DeviceNet Adaptor - Change.

c) Set parameter A093 (Auto Rstrt Delay) to "0".

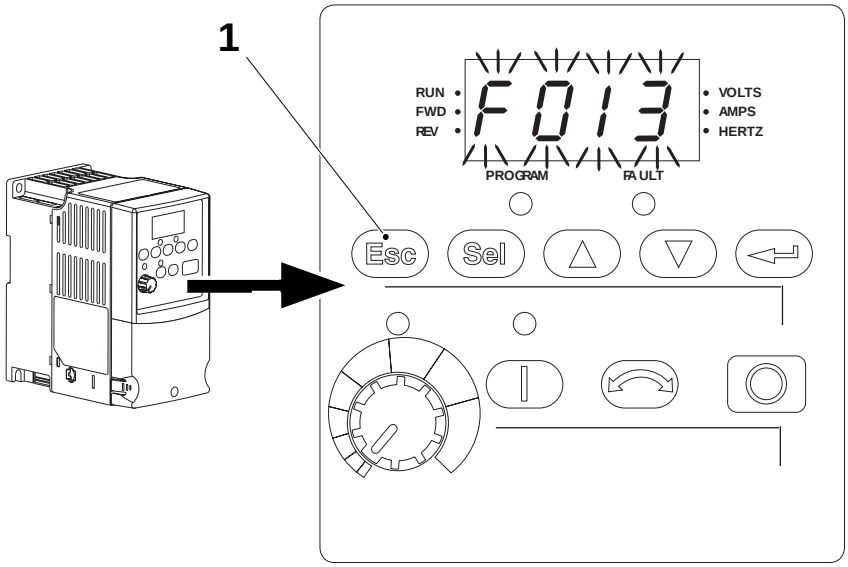

1 ESC button

(Cont'd)

TechPub_2614345_0106 - 1202_3047159_01.fm

(Cont'd)

Fault Code Descriptions

No.	Fault	Type	Description	Recommendation
F002	Auxiliary Input	1	Auxiliary input interlock is open	Check remote wiring. Verify communications programming for intentional fault
F003	Power Loss	2	DC bus voltage remained below 85% of normal	Monitor the incoming AC line for low voltage or line power interruption. Check input fuses.
F004	UnderVoltage	1	DC bus voltage fell below the minimum value	Monitor the incoming AC line for low voltage or line power interruption.
F005	OverVoltage	1	DC bus voltage exceeded the maximum value	Monitor the AC line for high line voltage or transient conditions. Bus overvoltage can also be caused by motor regeneration. Extend the decel. time or install the dynamic brake option.
F006	Motor Stalled	1	Drive is unable to accelerate the motor	Increase parameters P039 and A067 (Accel Time x) or reduce the load so that the drive output current does not exceed the value set by parameter A089 (Current Limit1)
F007	Motor Overload	1	Internal electronic overload trip	An excessive motor load exists. Reduce the load so that the drive output current does not exceed the value set by parameter P033 (Motor OL Current).
F008	Heatsink OvrTmp	1	Heatsink temperature exceeds a predefined value	Check for blocked or dirty heatsink fins. Verify that the ambient temperature has not exceeded 40°C (104°F). Check fan.
F012	HW OverCurrent	2	The drive output current has exceeded the hardware current limit	Check programming. Check for excessive load, an incorrect value for parameter A084 (Boost Select), DC brake volts set too high or other causes of excess current.
F013	Ground Fault	2	A current path to earth has been detected at one or more of the drive output terminals	Check the motor and external wiring to the drive output terminals from a grounded condition.
F029	Analog Input Loss	1	An analog input is configured to fault on signal loss. A signal loss has occurred. Configure with parameter A122.	Check the parameters. Check for loose or broken connections at the inputs.

TechPub_2614345_0106 - 1202_3047159_01.fm

No.	Fault	Type	Description	Recommendation
F033	Auto Rstrt Tries	2	Drive unsuccessfully attempted to reset a fault and resume running for the programmed number of parameter A092 (Auto Rstrt Tries)	Correct the cause of the fault and manually clear.
F038	Phase U to Gnd	2	A phase to ground has been detected between the drive and motor in this phase.	Check the wiring between the drive and the motor. Check the motor for a grounded phase. Replace the drive if the fault cannot be cleared.
F039	Phase V to Gnd	2	A phase to ground has been detected between the drive and motor in this phase.	Check the wiring between the drive and the motor. Check the motor for a grounded phase. Replace the drive if the fault cannot be cleared.
F040	Phase W to Gnd	2	A phase to ground has been detected between the drive and motor in this phase.	Check the wiring between the drive and the motor. Check the motor for a grounded phase. Replace the drive if the fault cannot be cleared.
F041	Phase UV Short	2	Excessive current has been detected between these two output terminals	Check the motor and drive output terminal wiring for a short circuit condition. Replace the drive if the fault cannot be cleared.
F042	Phase UW Short	2	Excessive current has been detected between these two output terminals	Check the motor and drive output terminal wiring for a short circuit condition. Replace the drive if the fault cannot be cleared.
F043	Phase VW Short	2	Excessive current has been detected between these two output terminals	Check the motor and drive output terminal wiring for a short circuit condition. Replace the drive if the fault cannot be cleared.
F048	Parameters Defaulted		The drive was commanded to write default values to EEPROM.	Clear the fault or cycle power to the drive. Program the drive parameters as necessary.
F063	SW OverCurrent	1	Programmed value of parameter A098 (SW Current Trip) has been exceeded	Check load requirements and parameter A098 (SW Current Trip) setting.
F064	Drive Overload	2	Drive rating of 150% for 1 minute or 200% for 3 seconds has been exceeded.	Reduce load or extend Accel Time.
F070	Power Unit	2	Failure has been detected in the drive power section	Cycle power. Replace the drive if fault cannot be cleared.

TechPub_2614345_0106 - 1202_3047159_01.fm

No.	Fault	Type	Description	Recommendation
F071	Net Loss		The communication network has failed	Cycle power Check communications cabling Check network adaptor setting Check external network status.
F080	SVC Autotune		The autotune function was either cancelled by the user or has failed.	Restart procedure.
F081	Comm Loss	2	RS485 (DSI) port stopped communicating.	If the adaptor was not intentionally disconnected, check the wiring to the port. If necessary, replace the wiring, port expander, adaptors or complete drive.
F100	Parameter Checksum	2	The checksum read from the board does not match the checksum calculated.	Set parameter P041 (Reset to Defaults) to option 1 “Reset Defaults”
F122	I/O Board Failure	2	Failure has been detected in the drive control and I/O section	Cycle power Replace the drive if the fault cannot be cleared.

TechPub_2614345_0106 - 1202_3047159_01.fm

8.4 Motor Drive Control

Machine Status	Mains Power OFF
SPC Reference	662911-0200

8.4.1 Servo System - Overview

The program in the PLC Processor (1) determines the actions to be taken by the servo motors in the machine. The PLC (1) communicates with the servo control module, called the SERCOS module (2) through the backplane of the Logix Control Chassis (3). The SERCOS module (2) communicates with the servo rack (4) via the SERCOS optical fibre networks (5) and (6).

The servo rack (4) contains one Integrated Axis Module (IAM) (7) and a number of Axis Modules (8).

Each Axis module (7) and (8) controls one servo motor.

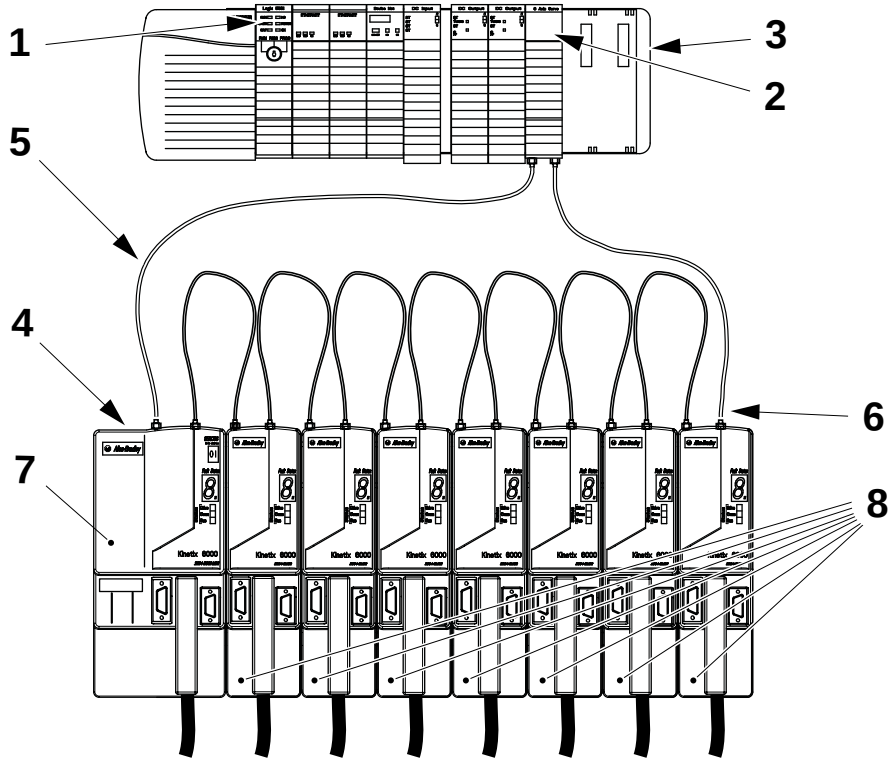

1 PLC
2 SERCOS module
3 Logic Control Chassis
4 Servo rack
5 SERCOS network
6 SERCOS network
7 Integrated Axis Module
8 Axis Module

(Cont'd)

TechPub_2614345_0106 - 1202_3047160_01.fm

(Cont'd)

The SERCOS module (2) and the servo drives (IAM and AM) (7) and (8) are connected to form a ring with the Tx port (9) of one module being connected to the Rx port (10) of the next.

The SERCOS module (2), the IAM (7) and the AM (8) transmit data from the Tx port (9) and receive data on the Rx port (10). The ports are located on top of the servo drives (IAM and AM) (7) and (8), and on the bottom of the SERCOS module (2). The ports are clearly marked on the modules.

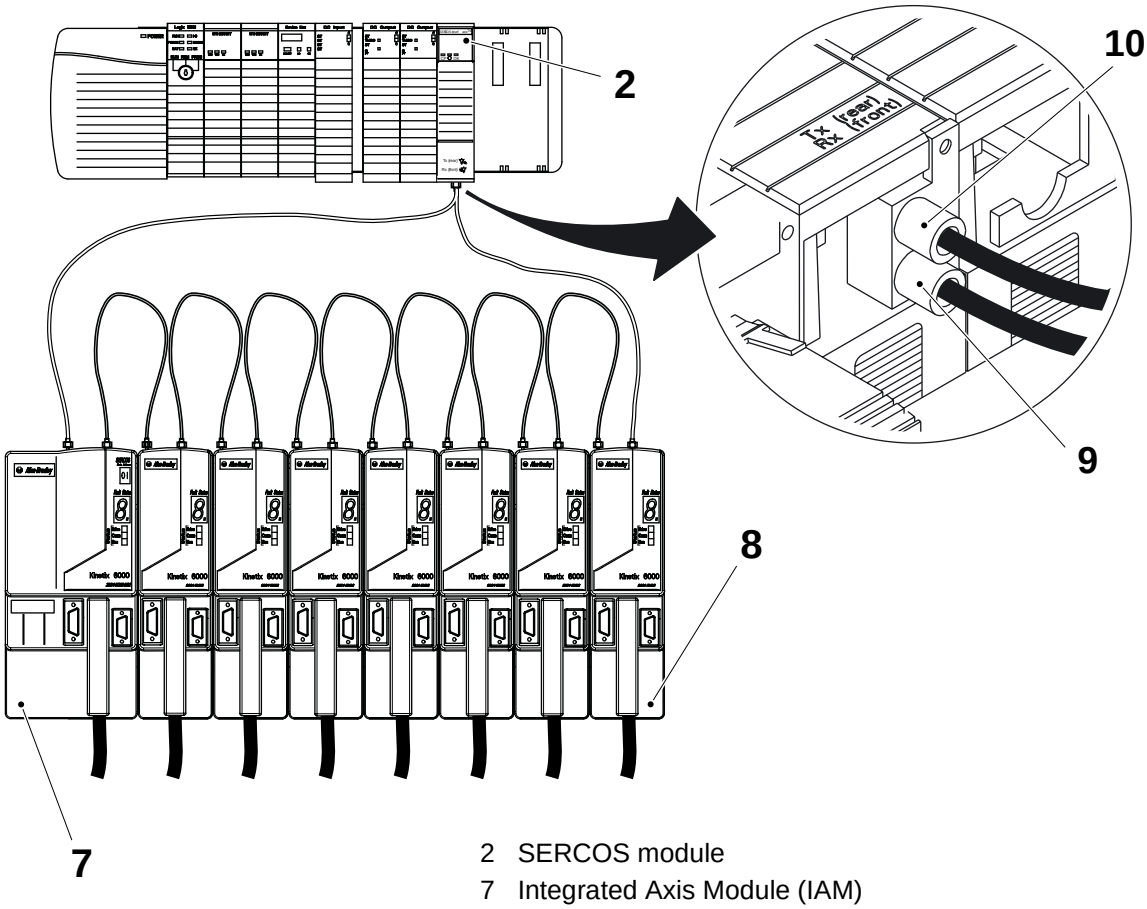

2 SERCOS module
7 Integrated Axis Module (IAM)
8 Axis Module (AM)
9 Tx port
10 Rx port

(Cont'd)

TechPub_2614345_0106 - 1202_3047160_01.fm

(Cont'd)

Note! Normally the AC voltages supplied to this machine are at 50Hz.

The Integrated Axis Module (7) receives a 440V, 3 Phase, AC supply and a single phase 220 V AC supply (11).

The two supplies are distributed via the backplane of the servo rack to the Axis Modules (8).

The drive power for a servo drive motor (12) is provided through a power cable (13) and the motor position feedback is sent to its driver through the feedback cable (14).

The power connector (15) and the feedback connector (16) are not interchangeable so there is no possibility of an incorrect connection.

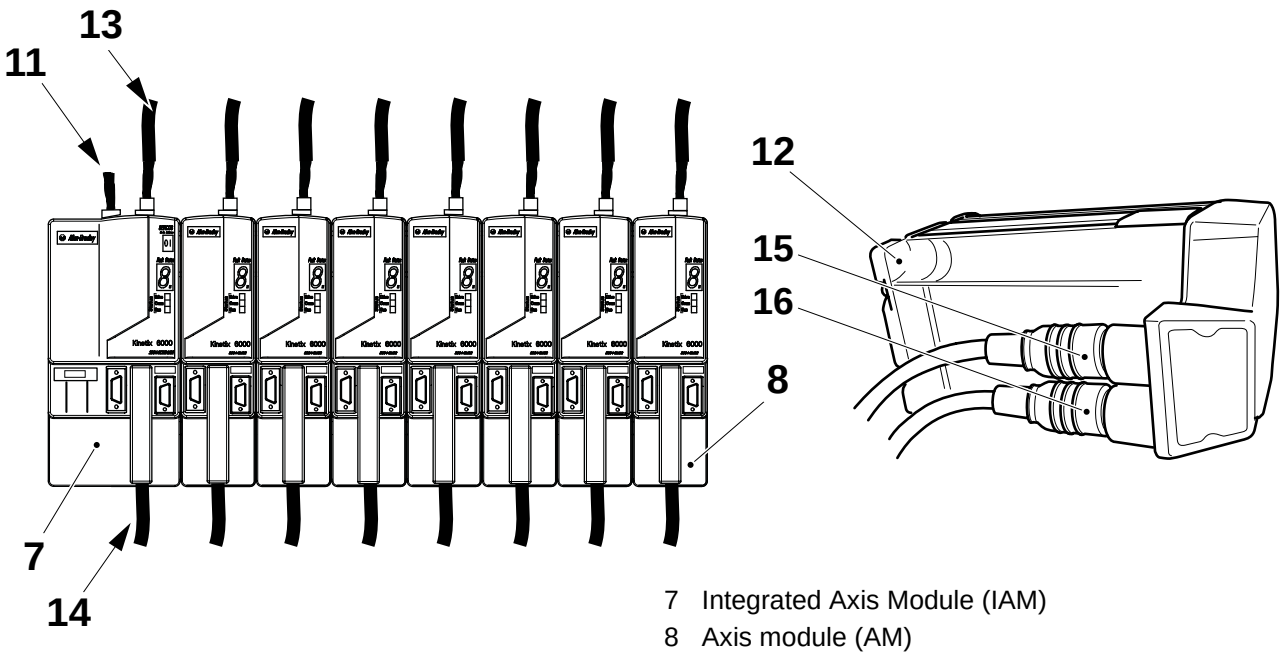

7 Integrated Axis Module (IAM)
8 Axis module (AM)
11 AC Supply
12 Servo drive motor
13 Power cable
14 Motor position feedback cable
15 Power connector
16 Feedback connector

TechPub_2614345_0106 - 1202_3047160_01.fm

8.4.2 Servo System - Sercos Module

8.4.2-1 Sercos Module - Description

Machine Status	Mains Power ON
SPC Reference	662911-0200

The SERCOS Module (1) is located in the Control Logix Chassis. On the input side, the SERCOS Module (1), communicates with the PLC via the backplane of the Control Logix Chassis. On the output side it communicates, via the SERCOS Net, with the Servo Drivers.

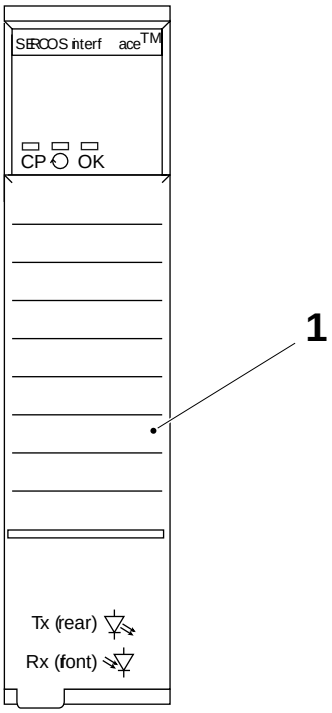

1 SERCOS Module

TechPub_2614345_0106 - 1202_3047160_01.fm

(Cont'd)

(Cont'd)

Status indicators are provided to report the status of the module and the SERCOS Net.

After a SERCOS module (1) has been changed, the firmware in the module should be checked to see if it has the correct version and revision state. See 8.1.2-9 PLC - Load FirmWare in PLC, Ethernet, DeviceNet and SERCOS Modules.

For SERCOS module troubleshooting information, see 8.2.4 Distributed I/O and DeviceNet - Troubleshooting, 8.2.4-2 Troubleshooting - DeviceNet Error Indications and Messages on DeviceNet Scanner (Node 0).

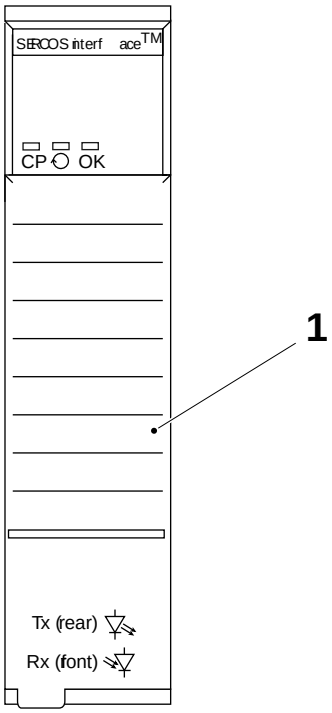

1 SERCOS Module

TechPub_2614345_0106 - 1202_3047160_01.fm

8.4.2-2 Sercos Module - Change

Machine Status	Mains Power OFF
SPC Reference	2833407-0100

Preparation

Before changing the Sercos module:

- Use the RSLinx Classic program to verify and record the firmware version of the existing Sercos module.
- Use the Flow Chart of Procedures for Changing the Sercos Module on the next page to determine which procedures must be performed and their correct sequence.

(Cont'd)

TechPub_2614345_0106 - 1202_3047160_01.fm

(Cont'd)

Flow Chart of Procedures for Changing the Sercos Module

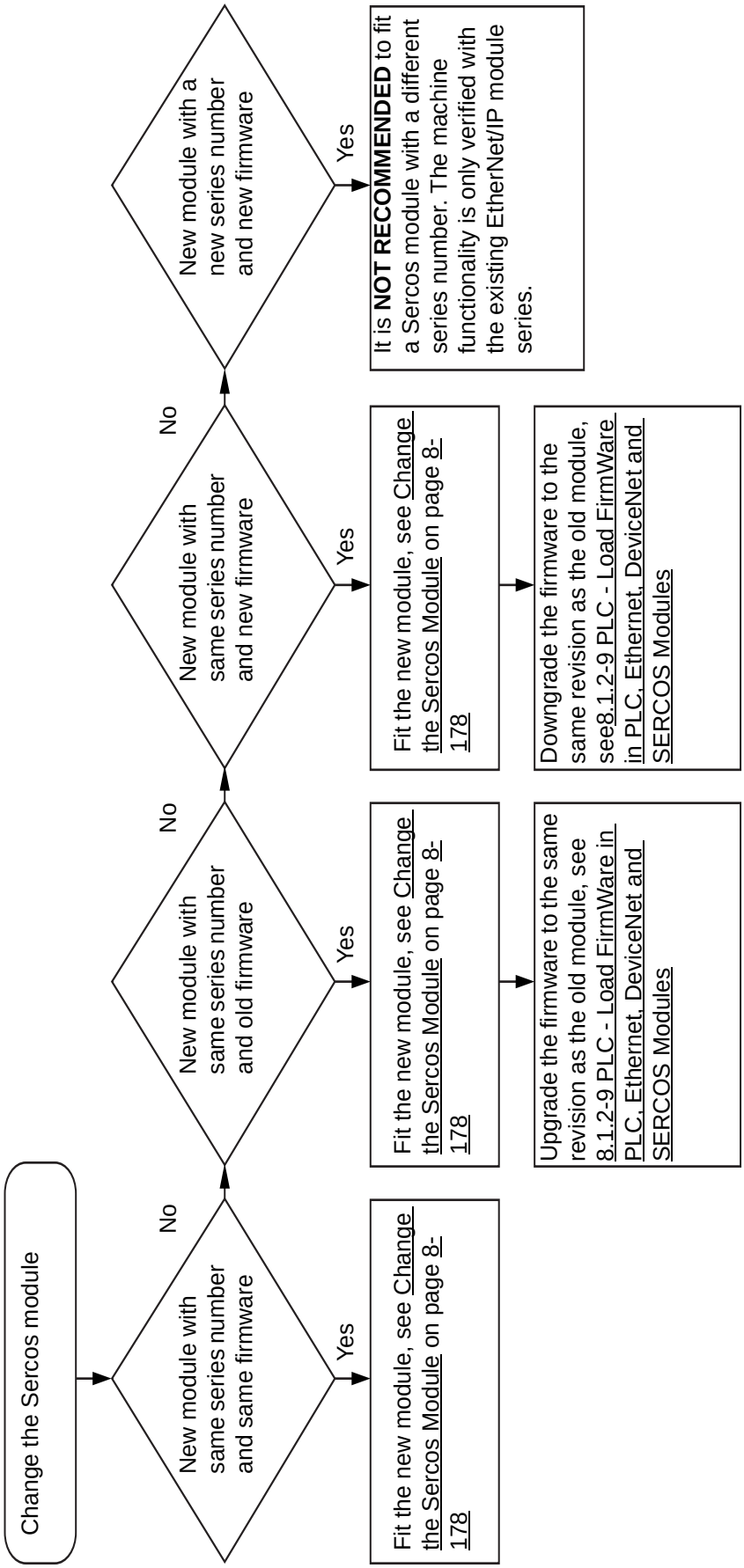

(Cont'd)

TechPub_2614345_0106 - 1202_3047160_01.fm

(Cont'd)

Change the Sercos Module

a) Mark the receive connector (1) and the transmit connector (2) and disconnect the connectors from the Sercos module (3).

b) Push in and hold the top and bottom locking tabs (4) on the Sercos module (3).

c) Pull out the Sercos module (3).

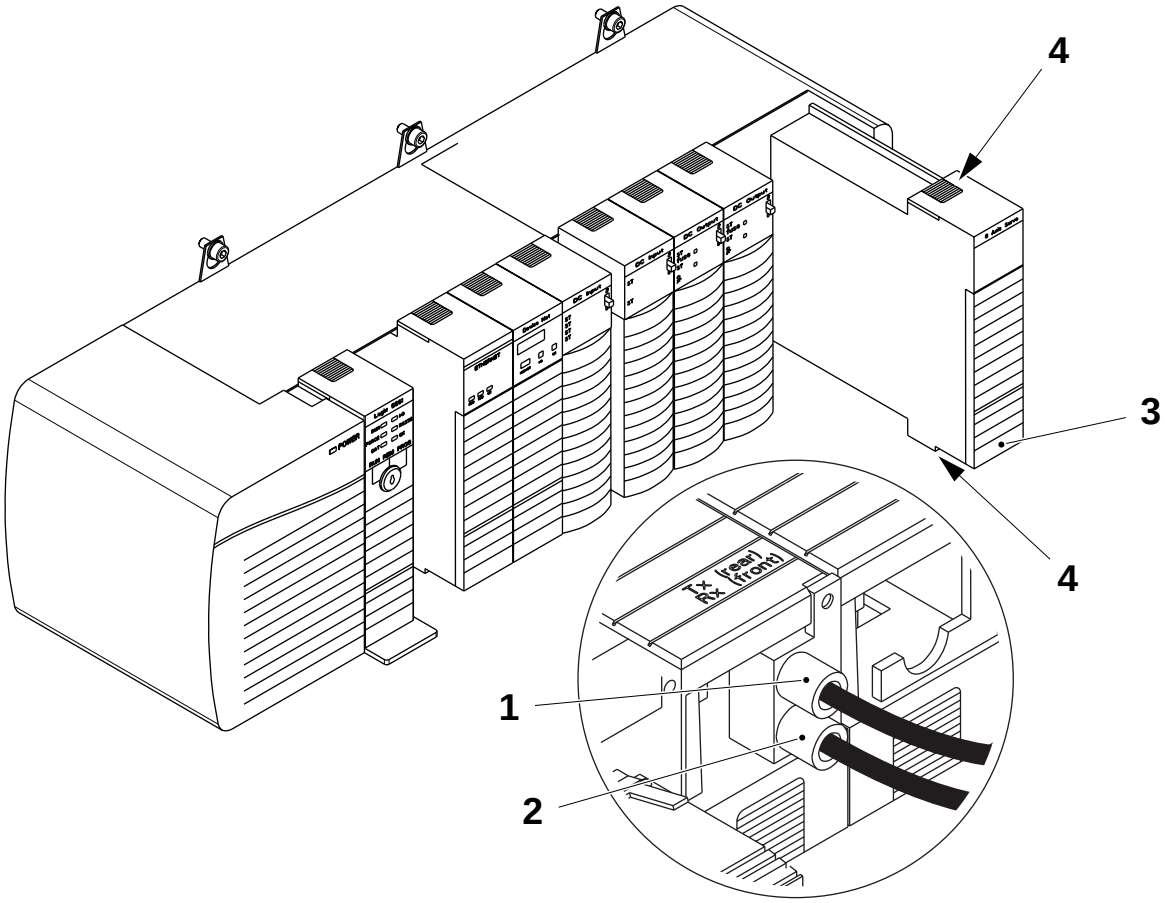

1 Receive connector, Rx
2 Transmit connector, Tx
3 Sercos module
4 Locking tab

(Cont'd)

TechPub_2614345_0106 - 1202_3047160_01.fm

(Cont'd)

d) Align the new Sercos module (3) with the top and the bottom guides in the chassis.

e) Slide the Sercos module (3) into the chassis. Make sure it is flush with the other modules and the top and bottom latches are engaged.

f) Connect the receive connector (1) and the transmit connector (2) to the Sercos module (3).

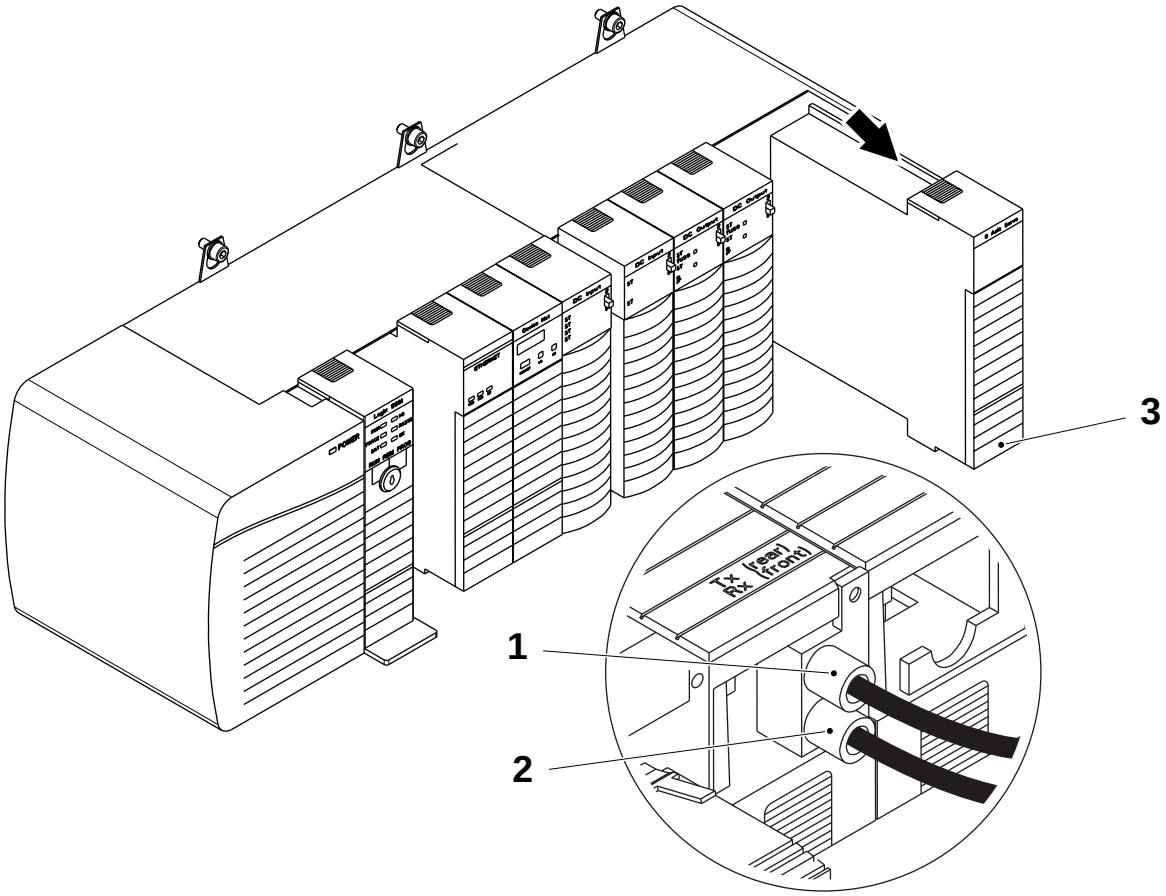

1 Receive connector, Rx
2 Transmit connector, Tx
3 Sercos module

TechPub_2614345_0106 - 1202_3047160_01.fm

8.4.3 Servo Drive

8.4.3-1 Servo Drive - Description

Machine Status	Mains Power ON
SPC Reference	662911-0200

Integrated Axis Module (IAM)

The Integrated Axis Module (1) receives drive data from the SERCOS module via the SERCOS net. It also receives feedback data from the servo drive motor it controls.

Status indicators and an alphanumeric display are provided to report the status of the module and the SERCOS Net.

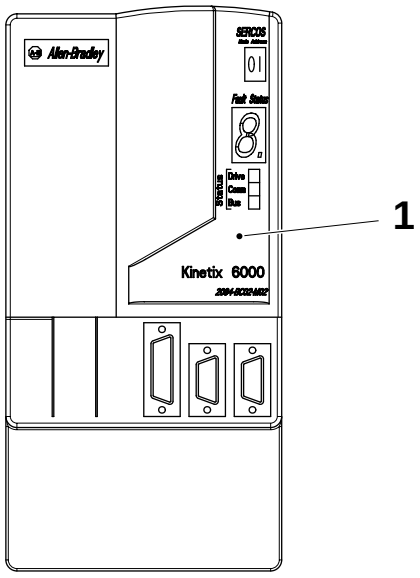

1 Integrated Axis Module

TechPub_2614345_0106 - 1202_3047160_01.fm

(Cont'd)

(Cont'd)

The Integrated Axis Module (1) is assigned the Node number 1.

After the Integrated Axis Module (1) has been changed, do the following:

- set the Node address, see 8.4.3-2 Servo Drive - Change Drive
- set the baudrate and the optical power, see 8.4.3-3 Servo Drive - Set Baud Rate
- download the firmware, see 8.1.2-9 PLC - Load FirmWare in PLC, Ethernet, DeviceNet and SERCOS Modules.

For troubleshooting information, see 8.2.4 Distributed I/O and DeviceNet - Troubleshooting, 8.2.4-2 Troubleshooting - DeviceNet Error Indications and Messages on DeviceNet Scanner (Node 0).

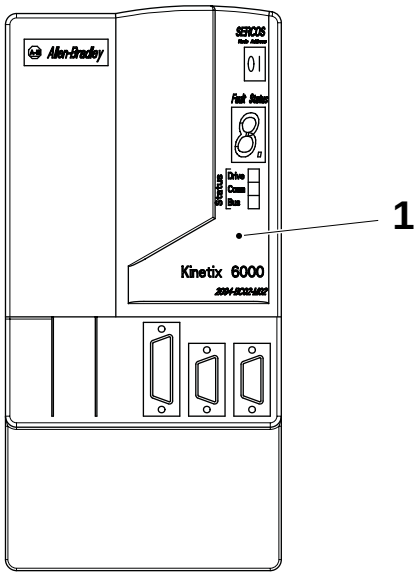

1 Integrated Axis Module

(Cont'd)

TechPub_2614345_0106 - 1202_3047160_01.fm

(Cont'd)

Axis Module (AM) Description

The Axis Module (1) receives drive data from the SERCOS module via the SERCOS net. It also receives feedback data from the servo drive motor it controls.

Status indicators and an alphanumeric display are provided to report the status of the module and the SERCOS Net.

Each servo drive has a node number which is determined by the base node number set on the IAM and a second digit which is determined by the rack-slot the drive is located in.

The Axis Modules (1) receives AC and DC supplies from the backplane of the servo rack.

After the Axis Module (1) has been changed, no settings are required.

For SERCOS Module troubleshooting information, see 8.2.4 Distributed I/O and DeviceNet - Troubleshooting, 8.2.4-2 Troubleshooting - DeviceNet Error Indications and Messages on DeviceNet Scanner (Node 0).

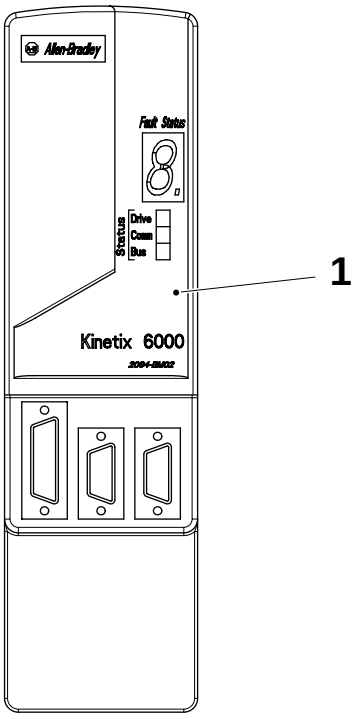

1 Axis Module

(Cont'd)

TechPub_2614345_0106 - 1202_3047160_01.fm

(Cont'd)

Servo Motor

A Servo Motor (1) receives power from an Axis Module. This can be an Axis Module or the Integrated Axis Module. It provides position feedback data to the same Axis Module.

The power connector (2) and the feedback connector (3) are not interchangeable so there is no possibility of an incorrect connection.

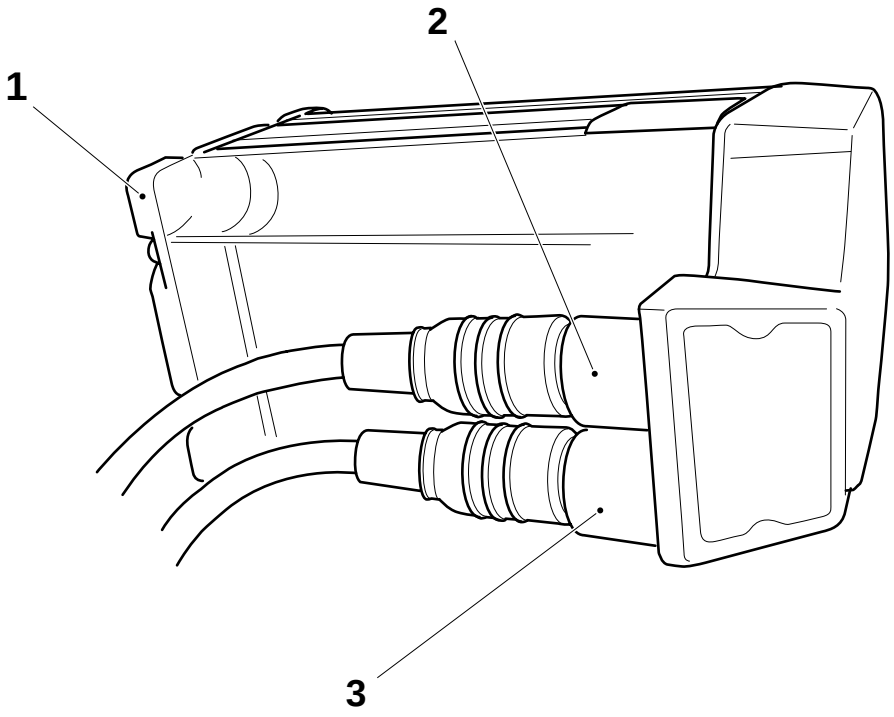

1 Servo motor
2 Power connector
3 Feedback connector

TechPub_2614345_0106 - 1202_3047160_01.fm

8.4.3-2 Servo Drive - Change Drive

Machine Status	Mains Power OFF
SPC Reference	662950-0100

Remove Drive

CAUTION

Risk of electric shock

Allow 5 minutes for the unit to discharge.

a) Make sure that all control and input power has been removed from the servo system. Wait five minutes for the DC bus to completely discharge before proceeding.

b) Mark and record the position of all connectors from the servo drive and then remove the connectors.

c) Use a screwdriver to remove the motor cable (1) from the cable shield clamp (2).

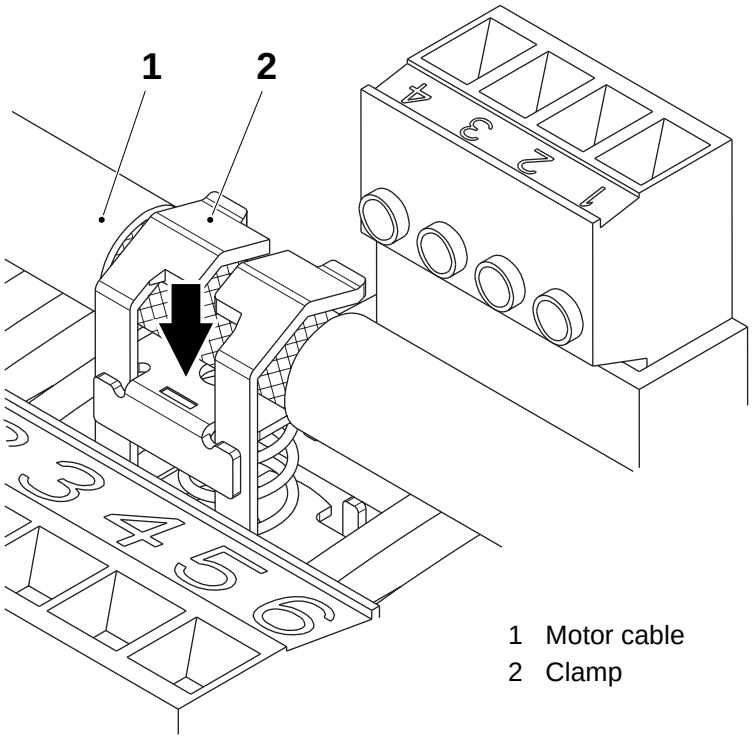

1 Motor cable
2 Clamp

(Cont'd)

TechPub_2614345_0106 - 1202_3047160_01.fm

(Cont'd)

d) Loosen the screw (3).

e) Grip the top and bottom of the servo drive (4) and gently pull it away from the connectors enough to clear the guide pins (5) (the servo drive will pivot on the top bracket). Lift the bracket out of the power rail slot (6) and remove the servo drive from the power rail.

f) If the servo drive to be changed is an IAM module, record the node address (7) and baud rate settings (8).

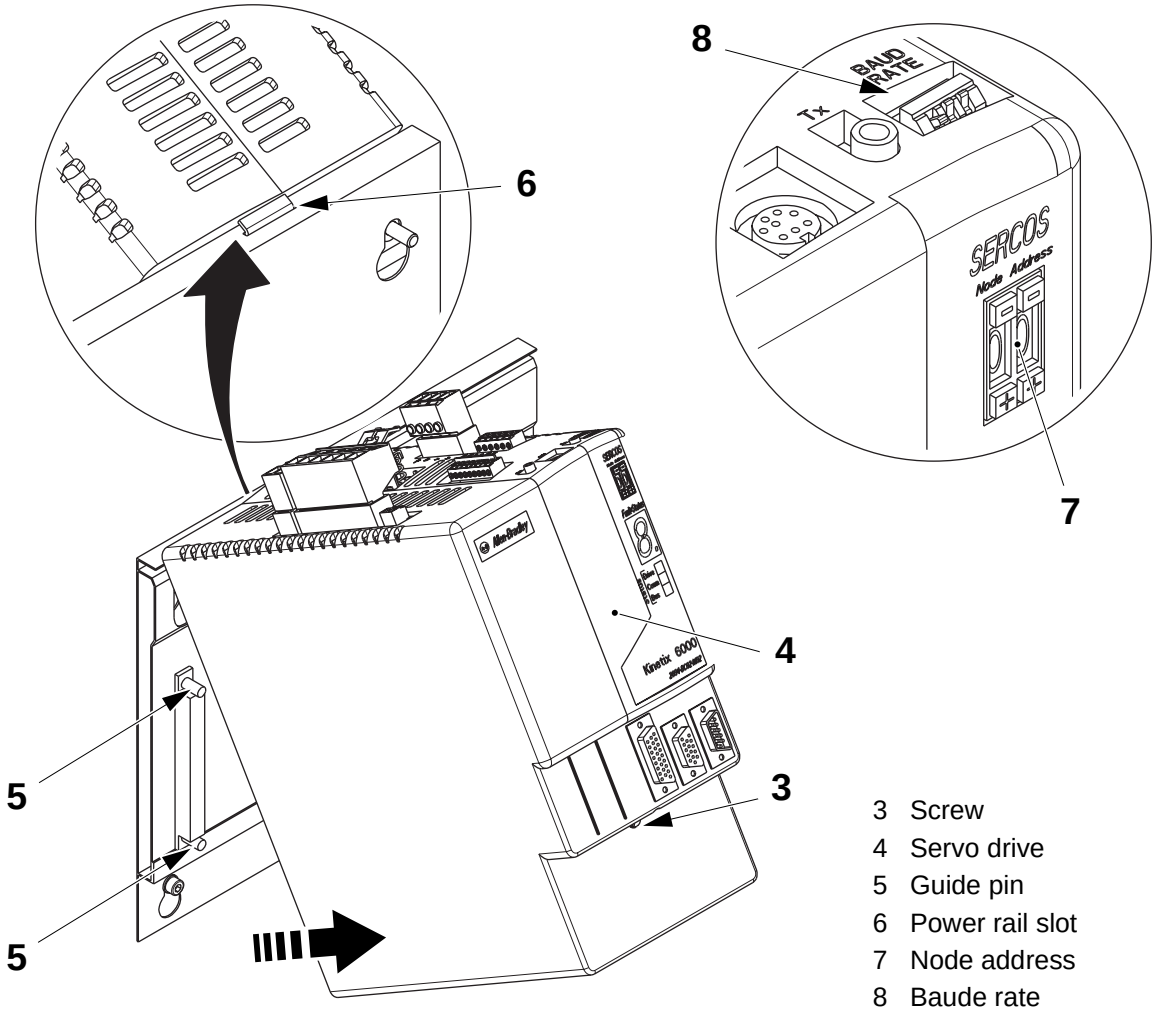

3 Screw
4 Servo drive
5 Guide pin
6 Power rail slot
7 Node address
8 Baude rate

(Cont'd)

TechPub_2614345_0106 - 1202_3047160_01.fm

(Cont'd)

Change Power Rail

a) Disconnect all power from the power rail servo drives and remove all servo drives from the power rail (3).

b) Disconnect the braided grounding strap (1) from the grounding stud (2).

c) Loosen the mounting bolts.

d) Lift the power rail (3) up and off the mounting bolts.

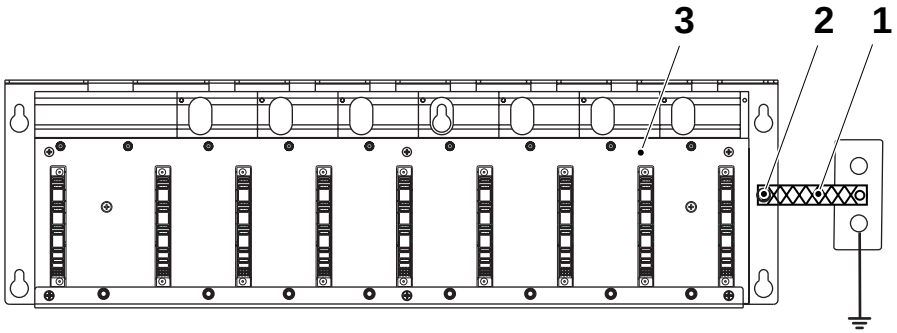

1 Braided ground strap
2 Grounding stud
3 Power rail

(Cont'd)

TechPub_2614345_0106 - 1202_3047160_01.fm

(Cont'd)

CAUTION
Equipment damage.
To avoid damage to the power rail (3) during installation, do not remove the protective boots until the servo drive for each slot is ready for mounting.

e) Align the replacement power rail (3) over the existing mounting bolts.

f) Tighten the mounting bolts.

g) Connect the braided grounding strap (1) to the power rail grounding stud (2).

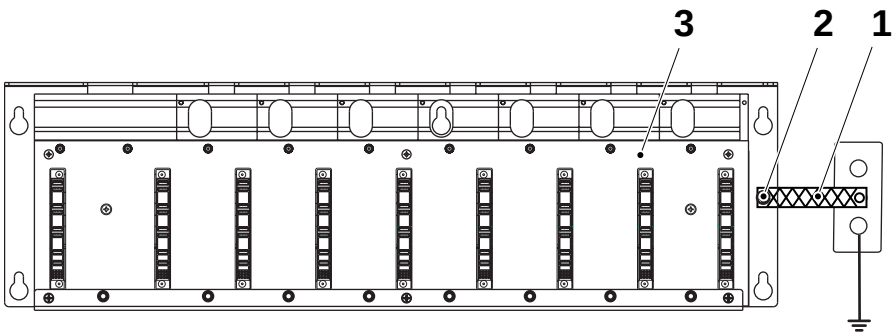

1 Braided ground strap
2 Grounding stud
3 Power rail

(Cont'd)

TechPub_2614345_0106 - 1202_3047160_01.fm

(Cont'd)

Fit New Servo Drive

CAUTION
Risk of damage to the equipment.
Make sure the guide pins (1) are correctly seated.

a) Attach the new servo drive mounting bracket (2) to the slot (3) in the power rail (4).

Note! The IAM has two power rail connectors and guide pins (1), all other servo drives have only one connector and one guide pin (1).

b) Align the guide pins (1) on the power rail (4) with the guide pin holes in the back of the servo drive (5).

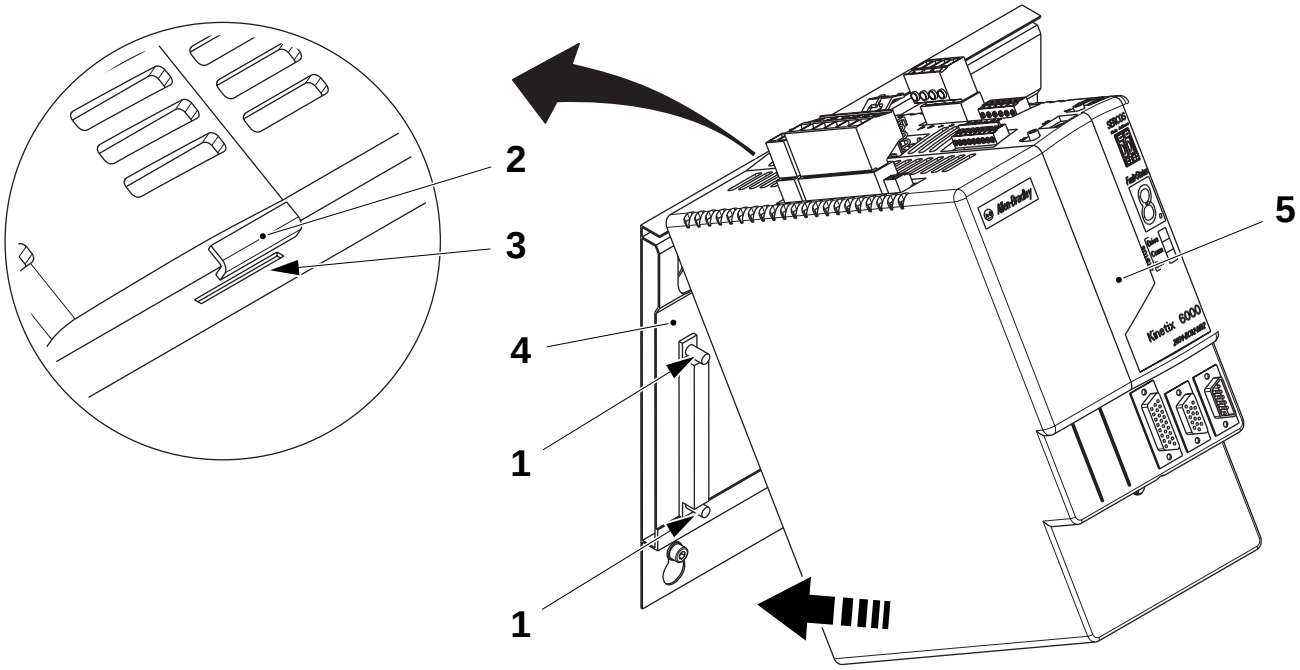

1 Guide pin
2 Mounting bracket
3 Slot
4 Power rail
5 Servo drive

TechPub_2614345_0106 - 1202_3047160_01.fm

(Cont'd)

(Cont'd)

c) Tighten the screws (6) to a torque of 2.26 Nm.

d) If the servo drive is an IAM, set the node address (7) and the baud rate (8) according to the setting recorded previously.

e) Connect the servo drive connectors and apply power to the system.

f) Check that the system is operating properly, see 8.4.4 Servo System Troubleshooting.

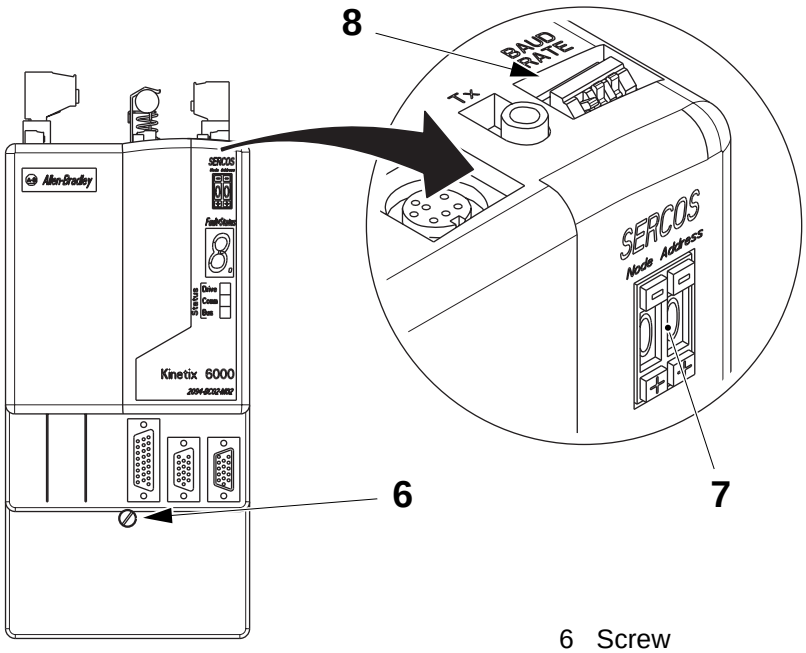

6 Screw
7 Node address
8 Baud rate

TechPub_2614345_0106 - 1202_3047160_01.fm

8.4.3-3 Servo Drive - Set Baud Rate

Machine Status	Mains Power OFF
SPC Reference	662911-0200

Use the DIP switches (1), 1 to 3, to set the baudrate and the optical power level according to the table below.

Setting	Dip switch 1	Dip switch 2	Dip switch 3	Value
Optical Power Level	ON			HIGH
Baudrate		ON	OFF	8M

The illustration shows an Integrated Axis Module

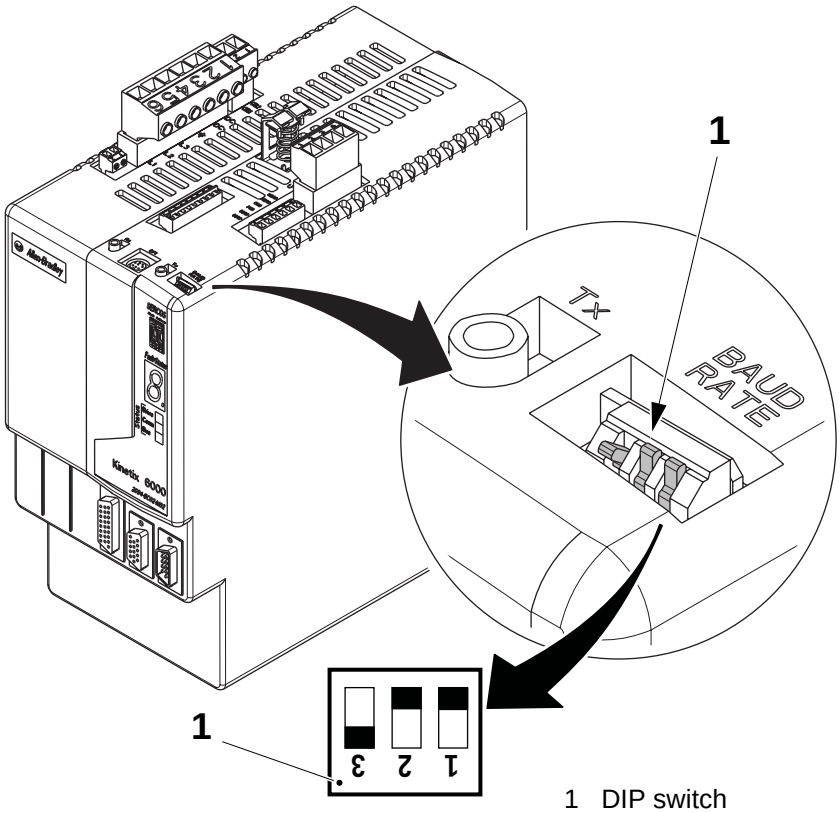

1 DIP switch

TechPub_2614345_0106 - 1202_3047160_01.fm

8.4.4 Servo System Troubleshooting

8.4.4-1 Troubleshooting - General

Machine Status	Mains Power ON
SPC Reference	662950-0100

If an error occurs on the SERCOSNet, this will be indicated by the appearance of the following SERCOSNET ERROR icon (1) and the SERCOSNET ERROR message (2) on the TPOP.

To continue with troubleshooting, see 8.4.4-2 Troubleshooting - SERCOSNet Error Indication and Error Codes on the Integrated Axis Module and Axis Modules.

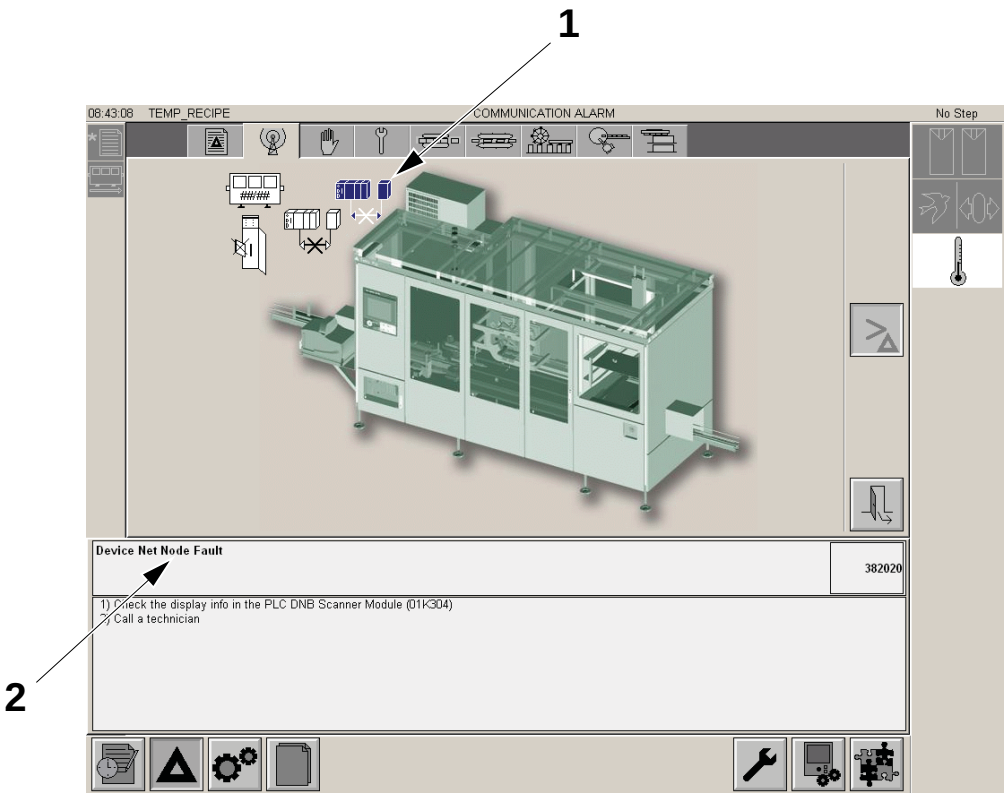

1 SERCOSNET ERROR icon
2 SERCOSNET ERROR message

TechPub_2614345_0106 - 1202_3047160_01.fm

8.4.4-2 Troubleshooting - SERCOSNet Error Indication and Error Codes on the Integrated Axis Module and Axis Modules

Machine Status	Mains Power ON
SPC Reference	662911-0200

To locate the source of the error and then find the cause, proceed as follows:

Note! The small LED (1) on the alphanumeric display (2) of the integrated axis module (3) and the axis modules (4), is the CONTROL POWER LED.

a) Note the status of the CONTROL POWER LED (1). If the LED (1) is OFF, check the power supplies at the servo rack. If the LED (1) is ON, continue below.

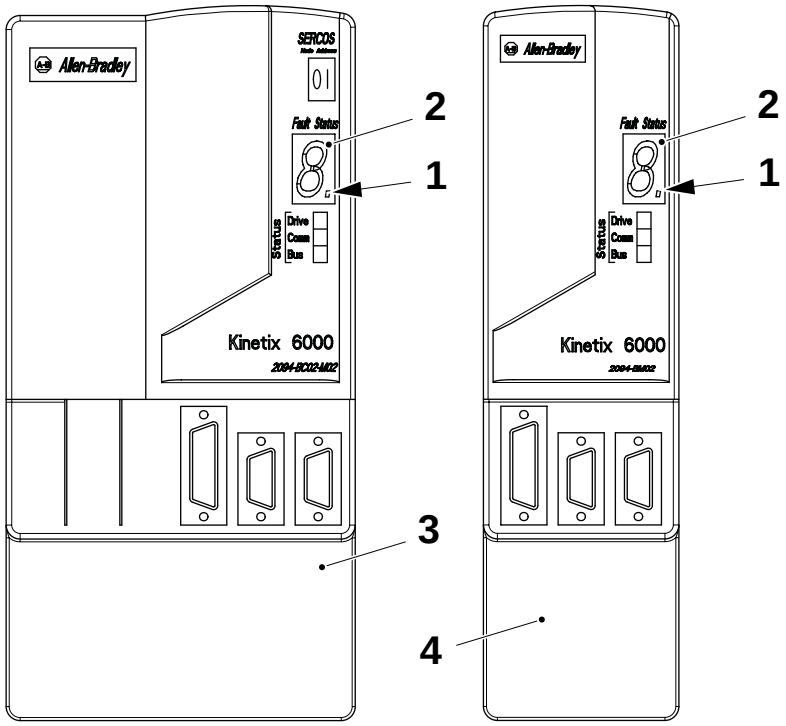

1 CONTROL POWER LED
2 Alphanumeric display
3 Integrated Axis module
4 Axis module

(Cont'd)

TechPub_2614345_0106 - 1202_3047160_01.fm

(Cont'd)

b) Note the status indicated by the alphanumeric display (2) and the DRIVE, COMM and BUS LED's (5), (6) and (7) on the Integrated Axis Module (3) and the Axis Modules (4).

c) Use the following tables to determine the cause of the error.

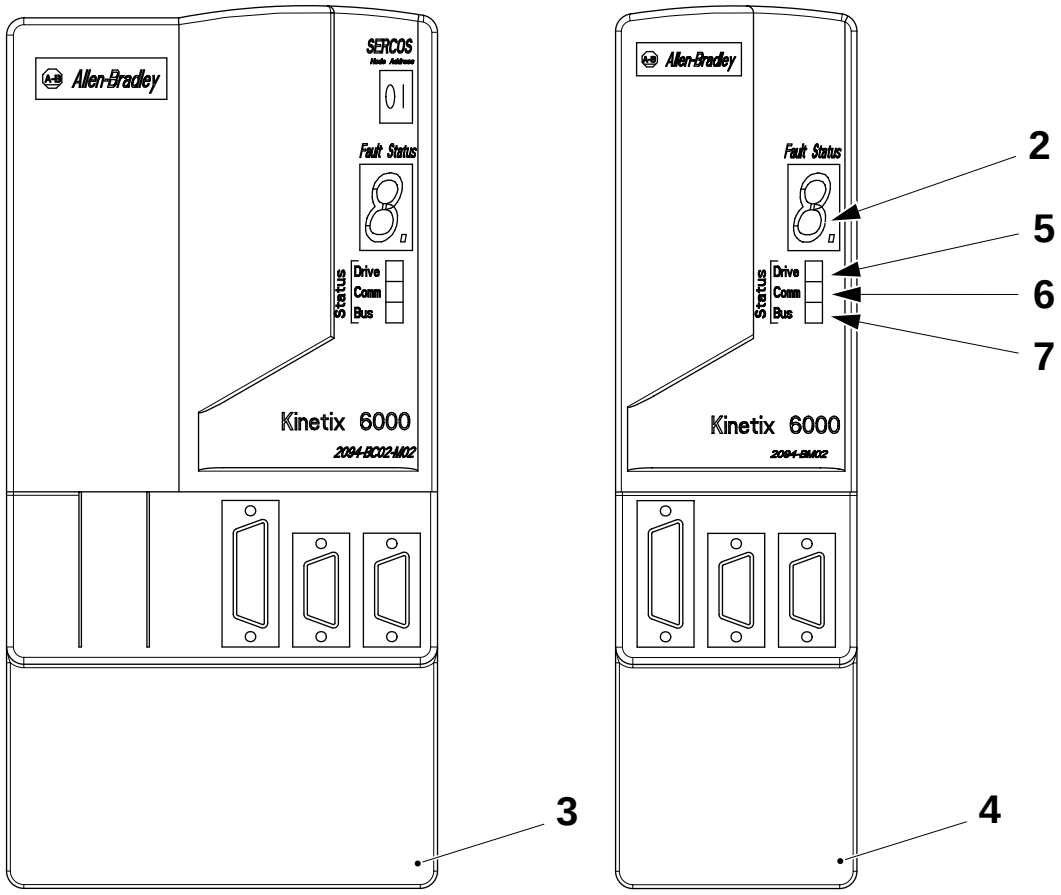

2 Alphanumeric display
3 Integrated Axis module
4 Axis module
5 DRIVE LED
6 COMM LED
7 BUS LED

(Cont'd)

TechPub_2614345_0106 - 1202_3047160_01.fm

(Cont'd)

Troubleshooting Alphanumeric Display at Start-Up

At start-up, the alphanumeric display will toggle between the node address of each module and then display the operating mode i.e.

If	Is	Status	Do this
INTEGRATED AXIS MODULE OR AN AXIS MODULE	Actively Cycling (Phase 0)	The drive is looking for a closed SERCOS ring. Wait for phase 1 or take corrective action to reach phase 1.	Check fibre optic connections
	Displaying a fixed 1 (Phase 1)	The drive is looking for active nodes. Wait for phase 2 or take corrective action to reach phase 2.	Check node addressing
	Displaying a fixed 2 (Phase2)	The drive is configuring nodes for communication. Wait for Phase 3 or take corrective action to reach phase 3.	Check program and drive configuration
	Displaying a fixed 3 (Phase 3)	The drive is configuring drive specific parameters. Wait for Phase 4 or take corrective action to reach phase 4.	Check motor catalogue against the selection (1)
	Displaying a fixed 4 (Phase 4)	The drive is configured and active.	Continue below
	Displaying an E followed by two numbers	Drive has an error.	Go to page 8-197

(1) Diagnostic information can be obtained from the module by highlighting the module name in PSLogix 5000. A pseudo key failure often indicates that the motor selection does not match the motor installed.

(Cont'd)

TechPub_2614345_0106 - 1202_3047160_01.fm

(Cont'd)

Troubleshooting IAM/AM LED's

After start-up, observe the status of the following LED's on the IAM and AM modules:

DRIVE LED

Condition	Status	Action
OFF	Normal condition	Go to COMM LED table.
PERMANENT RED	Drive is faulted	Go to 8-197

COMM LED

Condition	Status	Action
FLASHING GREEN	Establishing communication with network	Wait for a permanent green.
PERMANENT GREEN	Communication is ready.	Go to BUS STATUS LED table.
OFF	No ring present	Verify correct fibre optical cable connections. Replace any damaged or broken fibre optical connections.

BUS STATUS LED

Condition	Status	Action
PERMANENT GREEN	DC bus is present. Axis is enabled. No faults or failures.	Verify Hardware Enable Input (IOD-2) is open. Verify MSO instruction is not commanded in RSLogix 5000. Recycle power to module.
FLASHING GREEN	Bus is running, axis is disabled (normal condition)	Go to SERCOS STATUS LED table. See 8.4.4-3 SERCOS Module - Troubleshooting
OFF	DC Bus not present	Go to 8-197

(Cont'd)

TechPub_2614345_0106 - 1202_3047160_01.fm

(Cont'd)

Troubleshooting IAM/AM Problems with no Error Codes

The following list of problematic symptoms with no error codes is designed to help resolve problems.

		Power (PWR) indicator not ON	No AC power or auxiliary logic power.	Verify AC control power is applied to the Kinetix 6000.
			Internal power supply malfunction.	Call your Allen-Bradley representative to return module for repair.
		Motor jumps when first enabled.	Motor wiring error.	Check motor wiring. Run Hookup test in RSLogix 5000.
			Incorrect motor chosen.	Verify the proper motor is selected.
		Digital I/O not working correctly	I/O power supply disconnected.	Verify connections and I/O power source.

(Cont'd)

TechPub_2614345_0106 - 1202_3047160_01.fm

(Cont'd)

Troubleshooting IAM/AM Problems with Error Codes

When a fault is detected, the 7-segment LED will display an E followed by the flashing of the two-digit error code, one digit at a time. This is repeated until the problem is cleared.

Error code	Fault message RSLogix (HIM)	Problem or symptom	Possible cause(s)	Action/solution
E00	**BusUndervoltage Fault** (Blown fuse)	A blown fuse was detected on the inverter PCB.	Blown fuse.	Call your Allen-Bradley representative to return module for repair.
E04	**MotorOvertemp Fault** (Motor Overtemp)	Motor thermal switch tripped	High motor ambient temperature and/or excessive current.	Operate within (not above) the continuous torque rating for the ambient temperature (40°C maximum). Lower ambient temperature, increase motor cooling.
			Motor wiring error.	Check motor wiring at MF connector on the IAM/AM.
			Incorrect motor selection.	Verify the proper motor has been selected.
E05	**DriveOvercurrent Fault** (Power Fault)	Self-protection of the Intelligent Power Module (IPM) is indicating a major power related fault condition.	Motor cables shorted.	Verify continuity of motor power cable and connector.
			Motor winding shorted internally.	Disconnect motor power cables from the motor. If the motor is difficult to turn by hand, it may need to be replaced.
			Kinetix 6000 temperature too high.	Check for clogged vents or defective fan. Ensure cooling is not restricted by insufficient space around the unit.
			Operation above continuous power rating and/or product environmental ratings.	Verify ambient temperature is not too high. Operate within the continuous power rating. Reduce acceleration rates.
			Kinetix 6000 has a short circuit, overcurrent, or failed component.	Remove all power and motor connections, and preform a continuity check from the DC bus to the U, V, and W motor outputs. If a continuity exists, check for wire fibres between terminals, or send drive in for repair.

TechPub_2614345_0106 - 1202_3047160_01.fm

Error code	Fault message RSLogix (HIM)	Problem or symptom	Possible cause(s)	Action/solution
E06	**HardOvertravel Fault** (+/- Hard Overtravel)	Axis moved beyond the physical travel limits in the positive/negative direction.	Dedicated overtravel input is inactive.	Check wiring. Verify motion profile. Verify axis configuration in software.
E07	**MotFeedback Fault** (Motor Feedback Loss)	The feedback wiring is open, shorted, or missing.		Check motor encoder wiring. Run Hookup test in RSLogix 5000.
E09	**BusUndervoltage Fault** (Bus Under Voltage)	With three-phase power present, the DC bus voltage is below limits.	DC bus voltage for 460V system is below 275V DC bus voltage for 230V system is below 137V	Verify voltage level of the incoming AC power. Check AC power source for glitches or line drop. Install an uninterruptible power supply (UPS) on your AC input.
E10	**DriveOvervoltage Fault** (Bus Overvoltage)	The DC bus voltage is above limits.	Excessive regeneration of power. When the motor is driven by an external mechanical power source, it may regenerate too much peak energy through the Kinetix 6000's power supply. The system faults to save itself from an overload.	Change the deceleration or motion profile. Use a larger system (motor and Kinetix 6000). Install shunt module.
			DC bus voltage for 460V system is over 820V DC bus voltage for 230V system is over 410V	Verify input is within specifications.
E11	**MotFeedback Fault** (Illegal Hall State)	State of Hall feedback inputs is incorrect.	Bad connections.	Verify the Hall wiring at the MF connector on the IAM/AM. Verify 5V power supply to the encoder.
E16	**Softovertravel Fault** (+/- Software Overtravel)	Axis position exceeded maximum software setting.		Verify motion profile. Verify overtravel settings are appropriate.
E18	**OverSpeed Fault** (Overspeed Fault)	Motor speed has exceeded 150% of maximum rated speed. The 100% trip point is dedicated by the lesser of the the user velocity limits or the motor rated base speed.		Check cables for noise. Check tuning.
E19	**PositionError Fault** (Follow Error)	Position error limit was exceeded.		Increase the feed forward gain. Increase following error limit or time. Check position loop tuning. Verify sizing of system. Verify mechanical integrity of system within specification limits.

TechPub_2614345_0106 - 1202_3047160_01.fm

Error code	Fault message RSLogix (HIM)	Problem or symptom	Possible cause(s)	Action/solution
E20	**MotFeedback Fault** (Mtr Fdbk AQB)	Motor Encoder State Error	The motor encoder encountered an illegal transition.	Use shielded cables with twisted pair wires. Route the feedback away from potential noise sources. Check the system grounds. Replace the motor/encoder.
E21	**AuxFeedback Fault** (Aux Feedback Comm)	Communication was not established with an intelligent encoder.		Verify auxiliary encoder wiring.
E30	**MotFeedback Fault** (Motor Feedback Comm)	Communication was not established with an intelligent encoder.		Verify motor selection. Verify the motor supports automatic identification. Verify motor encoder wiring.
E34	**GroundShort Fault** (Ground Fault)	Excessive ground current in the converter was detected.	Wiring error.	Check motor power wiring. Check input power wiring (refer to Kinetix 6000 Installation Manual, publication 2094-IN001x-EN-P, regarding use of isolation transformer).
			Motor internal ground short.	Replace motor.
			Internal malfunction.	Disconnect motor power cable from drive and enable drive with current limit set to 0. If fault clears, then a wiring error or motor internal problem exists. If fault remains, call your A-B representative.
E35	**DriveUndervoltage Fault** (Precharge Fault)	Converter pre-charge cycle failed.	Low AC input voltage.	Check input AC voltage on all phases.
			Internal malfunction.	Call your A-B representative.
E36	**DriveOvertemp Fault** (System Overtemperature)	Converter thermal switch tripped.	Excessive heat exists in the power circuitry.	Reduce acceleration rates. Reduce duty cycle (ON/OFF) of commanded motion. Increase time permitted for motion. Use larger Kinetix 6000 converter. Check for clogged vents or defective fan. Ensure cooling is not restricted by insufficient space around the unit.

TechPub_2614345_0106 - 1202_3047160_01.fm

Error code	Fault message RSLogix (HIM)	Problem or symptom	Possible cause(s)	Action/solution
E37	**PowerPhaseLoss** Fault	One or more phases of the input AC power is missing. Axis was enabled when main (3-phase) power was removed. Expect the following symptoms with: Firmware v11: Shutdown, CED relay opens, motor coasts Firmware v12: Shutdown, motor stops		Check input AC voltage on all phases. Disable axis before removing power. Clear fault.
E38	**SERCOSFault** (SERCOS Ring Flt)	The SERCOS ring is not active after being active and operational.	Cable disconnected.	Check that the fibre cable is present and connected properly.
E39	**DriveHardFault** (Self Sense Flt)	Control hardware fault detected.	Motion required for self-sensing strartup commutation was obstructed.	Verify that there are no impediments to motion at startup, such as hard limits. Increase self-sensing current if high friction or load conditions exist. Check motor or encoder wiring using wiring diagnostics.
E43	**DriveEnableInput** (Drive Enable Flt)	Missing Drive Enable Input Signal	An attempt was made to enable the axis through software while the Drive Enable hardware input was inactive. The Drive Enable input transitioned from active to inactive while the axis was enabled.	Disable the Drive Enable Input fault. Verify that Drive Enable hardware input is active whenever the drive is enabled through software.
E50	**SERCOSFault** (Sercos Same ADDR)	Duplicate node address detected on SERCOS ring.		Verify that each SERCOS drive is assigned an unique node address.
E60	**DriveHardFault** (Unknown Axis)	Illegal ID bits detected.		Replace the module.
E61	**AuxFeedback Fault** (Aux Fdbk AQB)	Auxiliary Encoder State Error.	The auxiliary encoder encountered an illegal transition.	Use shielded cables with twisted pair wires. Route the feedback away from potential noise sources. Check the system grounds. Replace the motor/encoder..
E62	**AuxFeedback Fault** (Aux Fdbk Loss)	The feedback wiring is open, shorted, or missing.		Check the motor feedback cable connectors/wiring to the IAM/AM and motor.
E65	**No Fault Message** (condition indicated by on-screen message) (Hookup Fault)	Hookup procedure failed.	Motor or feedback device malfunction.	Check motor power/feedback wiring. Refer to on-screen message for resolution.

TechPub_2614345_0106 - 1202_3047160_01.fm

Error code	Fault message RSLogix (HIM)	Problem or symptom	Possible cause(s)	Action/solution
E66	**No Fault Message** (condition indicated by on-screen message) (Atune Flt)	Autotune procedure failed.	Motor or feedback device malfunction.	Check motor power/feedback wiring. Refer to on-screen message solution. Perform Hookup in RSLogix 5000. Consult RSLogix 5000 for help screen.
E67	**DriveHard Fault** (Task init)	Operation system failed.	Software initalisation fault detected due to hardware failure.	Cycle power. If fault persists, replace module.
E68	**DriveHard Fault** (SCANport™Comm)	DPI communication failed.	The DPI device or cable is faulty.	Check DPI connections.
E69	**HardDrive Fault** (Objects init)	Non-volatile memory is corrupt due to control board hardware failure.		Load default parameters, save to non-volatile memory, and recycle power or reset the drive.
E70	**DriveHard Fault** (NV Mem Init)	Non-volatile memory is corrupt due to control board software error.		Load default parameters, save to non-volatile memory, and recycle power or reset the drive.
E71	**DriveHard Fault** (Memory Init)	RAM or flash memory validation failure.		Cycle power. If fault persists, replace module.
E72	**DriveOvertemp Fault** (Drive Overtemp)	Inverter thermal switch tripped.	The fan on the IAM or an AM failed.	Replace the failed module.
			The cabinet ambient temperature is above rating.	Check the cabinet temperature.
			The machine duty cycle requires an RMS current exceeding the continuous rating of the controller.	Change the command profile to reduce speed or increase time.
			The airflow access to the Kinetix 6000 is limited or blocked.	Check airflow and re-route cables away from the Kinetix 6000.
E73	**GroundShort Fault** (Backplane Comm)	Power rail CAN communications failed.		Check module for proper mount.
		Power rail connection shorted or open.		Check power rail and module for foreign objects.

TechPub_2614345_0106 - 1202_3047160_01.fm

Error code	Fault message RSLogix (HIM)	Problem or symptom	Possible cause(s)	Action/solution
E74	**DriveOvercurrent Fault** (BusOverCurrent)	DC link current exceeds rating.	Motor or transmission malfunction.	Check for proper motor sizing. Check/replace transmission device. Check/replace motor.
			IAM not properly sized.	Check for proper IAM sizing. Install larger kW rated IAM.
E75	**DriveOvervoltage Fault** (Shunt Time Out)	The IAM or AM has exceeded its shunt resistor continuous rating.		Use properly sized shunt or modify duty cycle of the application. System uses internal shunt for additional capacity.
E76	**DriveHard Fault** (Can Init)	DPI hardware initialisation fault detected.	Control board hardware failure.	Reset system. If fault persists, replace the module.
E77	**DriveHard Fault** (Module Mismatch)	Either 230V AM is installed on power rail with 460V IAM, or 460V AM is installed on power rail with 230V IAM.		Replace mismatched module.
E78	**DriveHard Fault** (SERCOS Init)	Control hardware fault detected.		Cycle power. If fault persists, replace module.
E79	Not applicable			
E80	**Hardware Fault** (CPLD FLT)	Control hardware fault detected.		Replace module.
All others	RESERVED			Call your local Allen-Bradley representative.

TechPub_2614345_0106 - 1202_3047160_01.fm

8.4.4-3 SERCOS Module - Troubleshooting

Machine Status	Mains Power ON
SPC Reference	2833407-0100

Note! During power up, the module completes a self test that includes an indicator test. All LEDs go red for one second, green for one second, and off for one second.

To locate the source of an error and then find the cause, proceed as follows:

a) At the Control Logix Chassis in the electrical cabinet, note the status indicated by the CP, O (SERCOS Ring) and OK LED's (1), (2) and (3) on the SERCOS Module (01K304).

b) Use the following tables to determine the cause of the error.

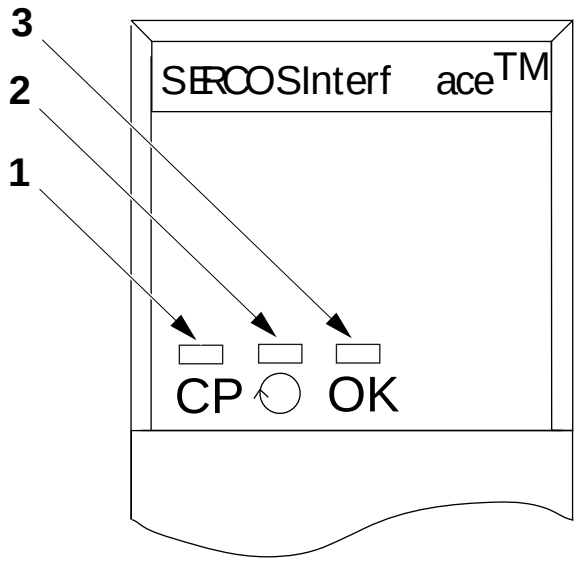

1 SERCOS CP LED
2 SERCOS ring LED
3 OK LED

(Cont'd)

TechPub_2614345_0106 - 1202_3047160_01.fm

(Cont'd)

SERCOS CP (Communication Port) LED

If the SERCOS CP LED is:	Then the module status is:
SOLID ORANGE	In Phase -1: autobaud detection in progress.
OFF	In Phase 0: looking for a closed ring.
FLASHING RED	In Phase 1: looking for active nodes.
ALTERNATING RED/ GREEN	In Phase 2: configuring nodes for communication.
FLASHING GREEN	In Phase 3: configuring device specific parameters
SOLID GREEN	In Phase 4: configured and active.

SERCOS Ring LED

If the SERCOS Ring LED is:	Then the ring status is:	Take this action:
SOLID GREEN	The ring, drive, and axes are configured and are actively communicating through to the nodes on the ring.	None
FLASHING RED	The module has detected a setup or configuration fault with the ring.	Check your system setup and configuration as follows: - Ensure drive and axes addresses are correct. - Remove excess axes from ring. - Make sure application program has selected the proper Ring Cycle Period and Baud Rate.

TechPub_2614345_0106 - 1202_3047160_01.fm

If the SERCOS Ring LED is:	Then the ring status is:	Take this action:
SOLID RED	The module has detected a hardware or installation fault with the ring.	Check your system hardware and installation as follows: - Make sure all cables are properly installed. - Make sure cable is of the correct type and length. - Make sure application program has configured the ring transmit level of the module to High when using specified cables. - Make sure the transmit levels of the drive are set appropriately. - Inspect cables for degradation. - Inspect drives for any faults and correct them.
OFF	The module has detected no ring data on its receiver or has not successfully completed phase 2.	Check your system and installation as follows: - Make sure all cables are properly installed - Inspect cable for degradation and breakage. - Inspect drives for faults.
FLASHING GREEN	The ring, drive, or axes are not configured but, at least one has been identified.	Not a problem if the system has not been configured.If you are having trouble configuring the ring, drive, and axes: - Make sure that the application program is setup properly for the equipment in use.

OK LED

If the OK Ring LED is:	Then the ring status is:	Take this action:
OFF	The module is not operating.	Apply chassis power. Verify the module is completely inserted into the chassis and backplane.
FLASHING GREEN	The module has passed internal diagnostics, but has not established active communications.	None, if the module is not configured.

TechPub_2614345_0106 - 1202_3047160_01.fm

If the OK Ring LED is:	Then the ring status is:	Take this action:
STEADY GREEN	Data is being exchanged. The module is in the normal operating state.	None. The module is ready for action.
FLASHING RED	A major recoverable failure has occurred. An NVS update is in progress.	If an NVS update is in progress, complete the NVS update. If an NVS update is not in progress: Reboot
SOLID RED	A potential nonrecoverable fault has occurred.	Reboot the module. If the solid red persists, replace the module.

TechPub_2614345_0106 - 1202_3047160_01.fm

8.5 Safety System

SPC Reference	662911-0200

8.5-1 Safety System - Description

Note! A simplified illustration of the safety system is shown on page 114.

The main component of the safety system is the Pluto Safety PLC (09F00). To increase the number of input and output possibilities, the main unit is assisted by two expansion relays (09F001 and 09F003).

The pluto system monitors the:

- emergency stop buttons
- doors fitted with a safety switch
- covers fitted with a safety switch
- contactors for the ac motor driven units
- modules for the servo controlled units
- contactor for units using ac power.

When an emergency stop button is pushed, a door is opened or a cover is removed, an EMERGENCY STOP signal is sent to the system PLC Processor which takes the necessary actions to stop the motors in the machine.

When the emergency stop button is released, the door is closed or the cover is replaced, a reset is produced by the PLC Processor when it is triggered from the touch screen.

(Cont'd)

TechPub_2614345_0106 - 1202_3047161_01.fm

8.5.1 Pluto Maintenance

8.5.1-1 Pluto Maintenance - Connecting a PC to Pluto Module

Machine Status	Mains Power ON
Special Equipment	PC with Pluto Manager RS 232-C Communication Cable
SPC Reference	2839221-0100

To communicate with the main Pluto module, use the special cable (1) to connect the RS-232 connector (2) at the rear of a PC to the connector (3) at the front of the Pluto module.

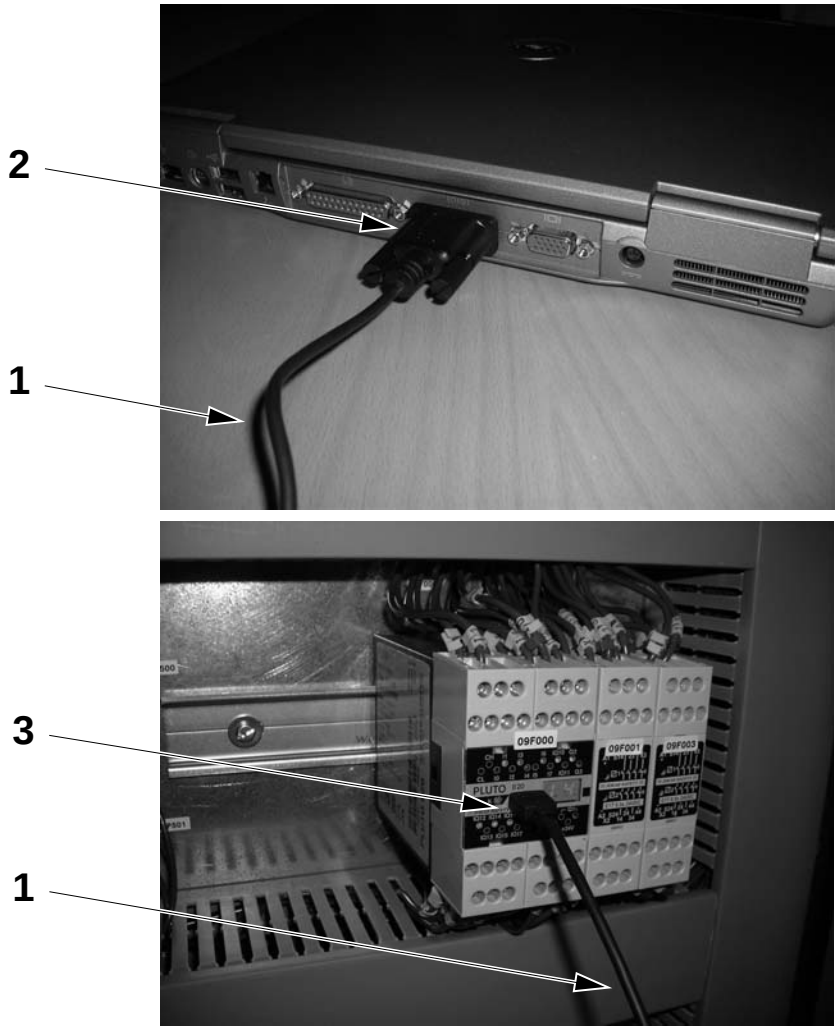

1 RS-232 communication cable
2 RS-232 connector
3 Pluto connector

TechPub_2614345_0106 - 1202_3047161_01.fm

8.5.1-2 Pluto Maintenance - Set the ID-FIX Address after Replacing an ID-FIX

Machine Status	Mains Power ON
Special Equipment	PC with Pluto Manager RS 232-C Communication Cable
SPC Reference	2839221-0100

Introduction

To enable the system PLC program to recognise a Pluto module, an ID code must be given to the module. This is done by connecting an external component, called ID-FIX (1), between the ID terminal (2) and the 0V terminal (3) at the front of the Pluto module (4). The unique code associated with the ID-FIX (1) must then be entered in the PLC program.

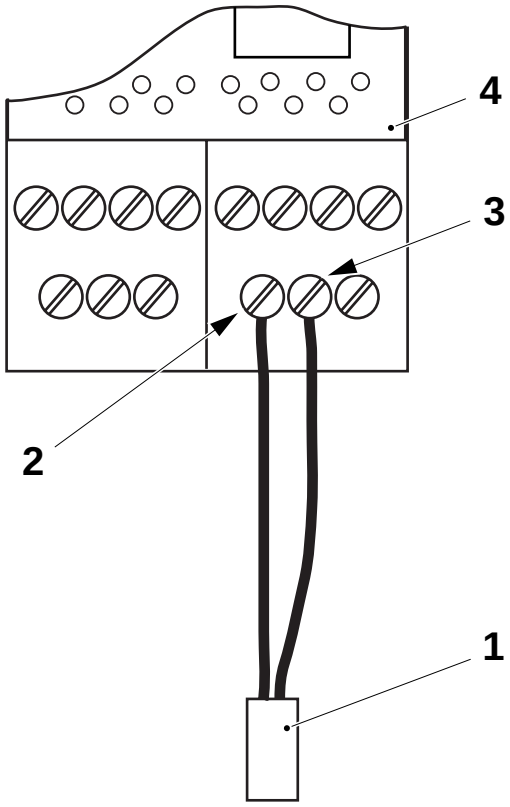

1 ID-FIX
2 ID terminal
3 0V terminal
4 Pluto module

(Cont'd)

TechPub_2614345_0106 - 1202_3047161_01.fm

(Cont'd)

Entering the ID-FIX Address

If an ID-FIX is replaced, the code for the ID-FIX must be entered in the PLC program as follows:

a) Connect the PC to the Pluto module, see 8.5.1-1 Pluto Maintenance - Connecting a PC to Pluto Module.

b) Open the Pluto Manager by clicking the PLUTO MANAGER icon (1).

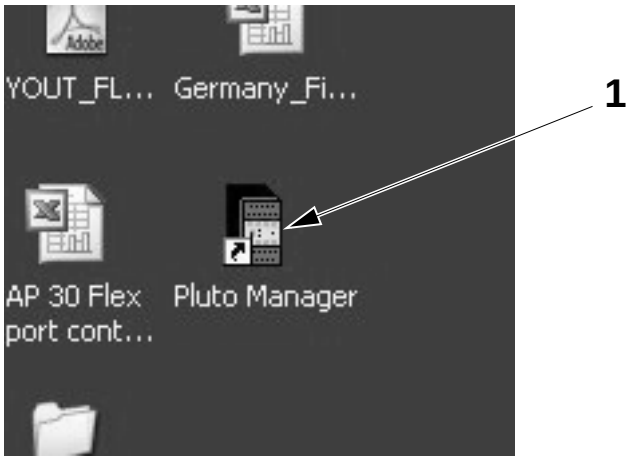

1 PLUTO MANAGER icon

c) In the PLUTO MANAGER - [PROJECTS] window (2), select PROJECTS (3) and click OPEN (4).

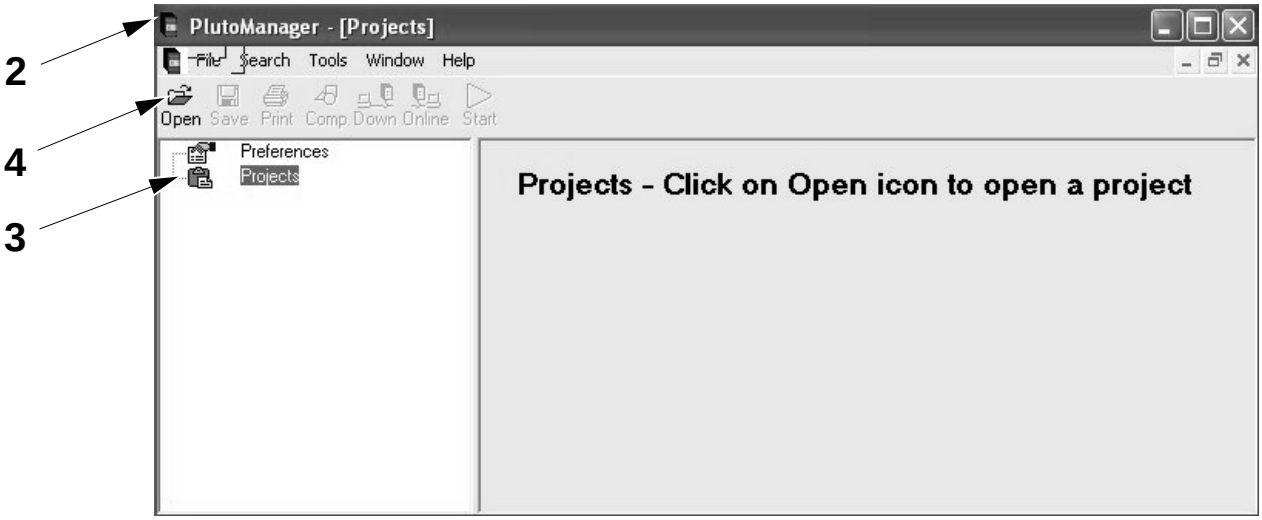

2 PLUTO MANAGER - [PROJECTS]
3 PROJECTS
4 OPEN

(Cont'd)

TechPub_2614345_0106 - 1202_3047161_01.fm

(Cont'd)

Note! The project number BW00159_2.SPS (5) shown below is an example.

d) Select a PROJECT (5) and click OPEN (6).

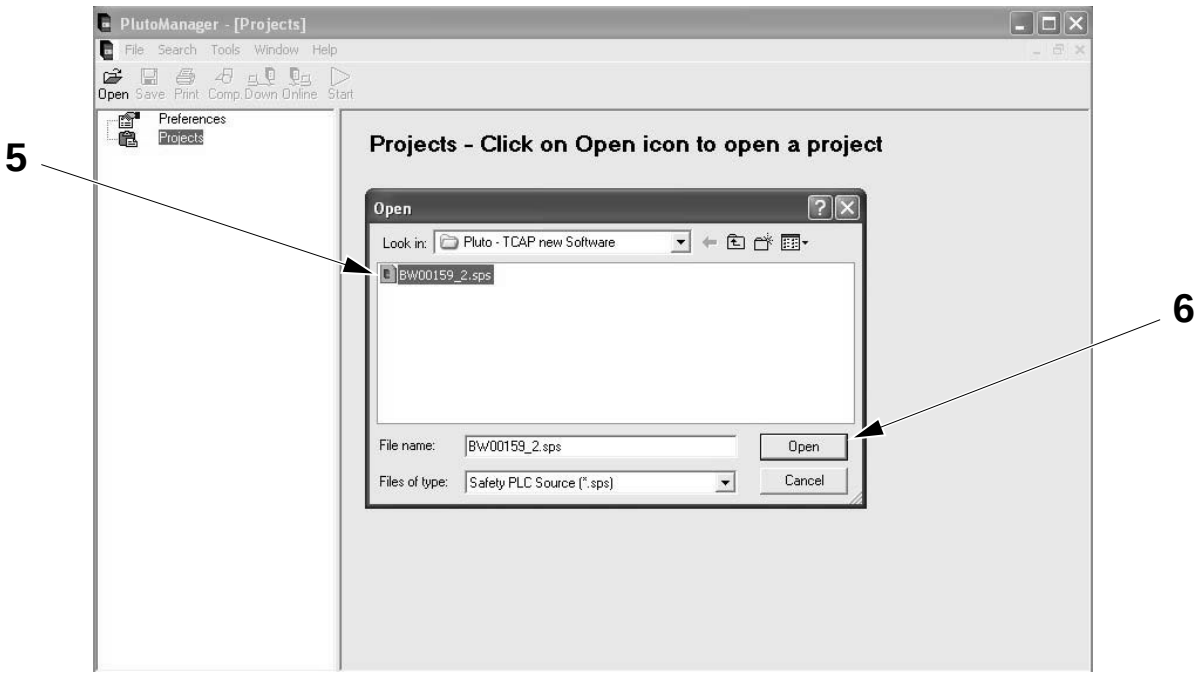

5 PROJECT
6 OPEN

(Cont'd)

TechPub_2614345_0106 - 1202_3047161_01.fm

(Cont'd)

e) In the project window (7) that opens, click on the PLUTO 14 icon (8).

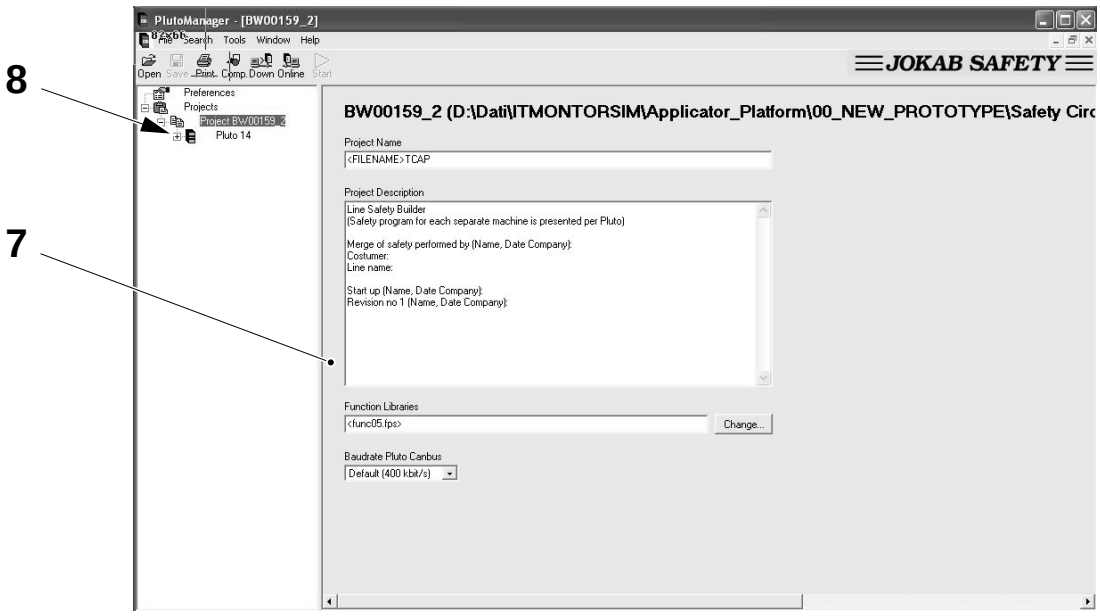

7 Project window
8 PLUTO 14

(Cont'd)

TechPub_2614345_0106 - 1202_3047161_01.fm

(Cont'd)

f) The IDFIX number (14000009F000) appears in the IDFIX window (9).

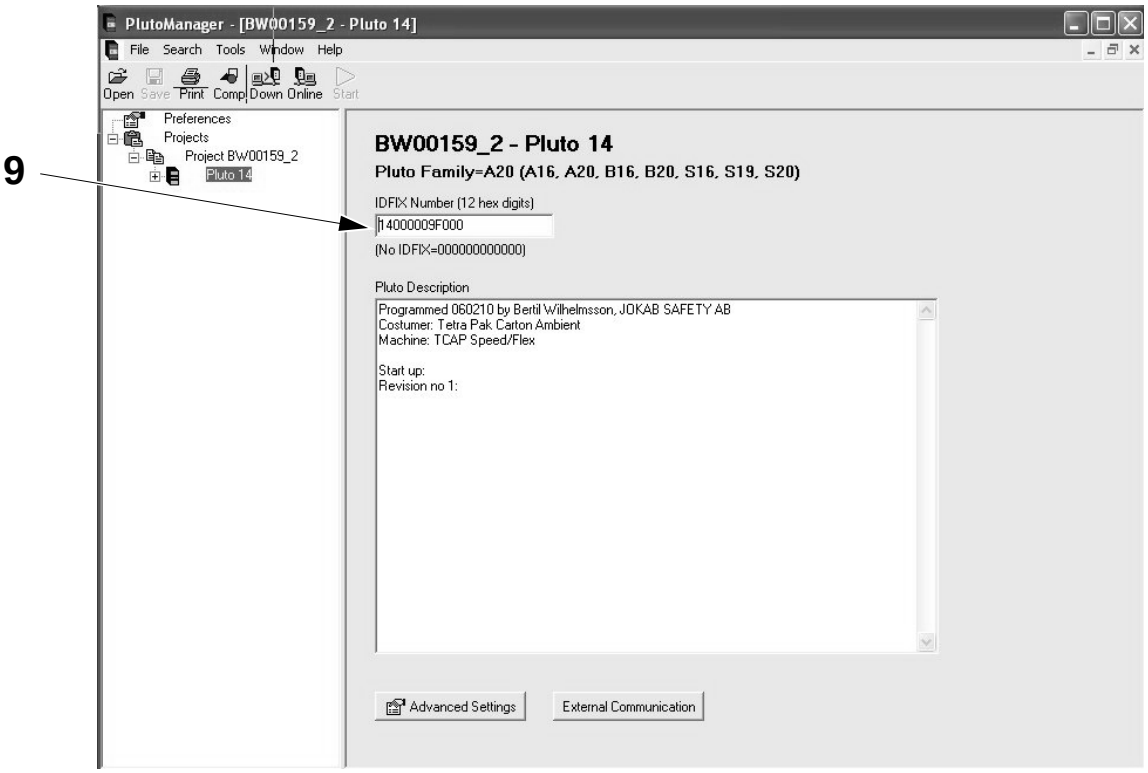

9 IDFIX number window

(Cont'd)

TechPub_2614345_0106 - 1202_3047161_01.fm

(Cont'd)

g) From the TOOLS (10) pull down menu, select WRITE IDFIX (11).

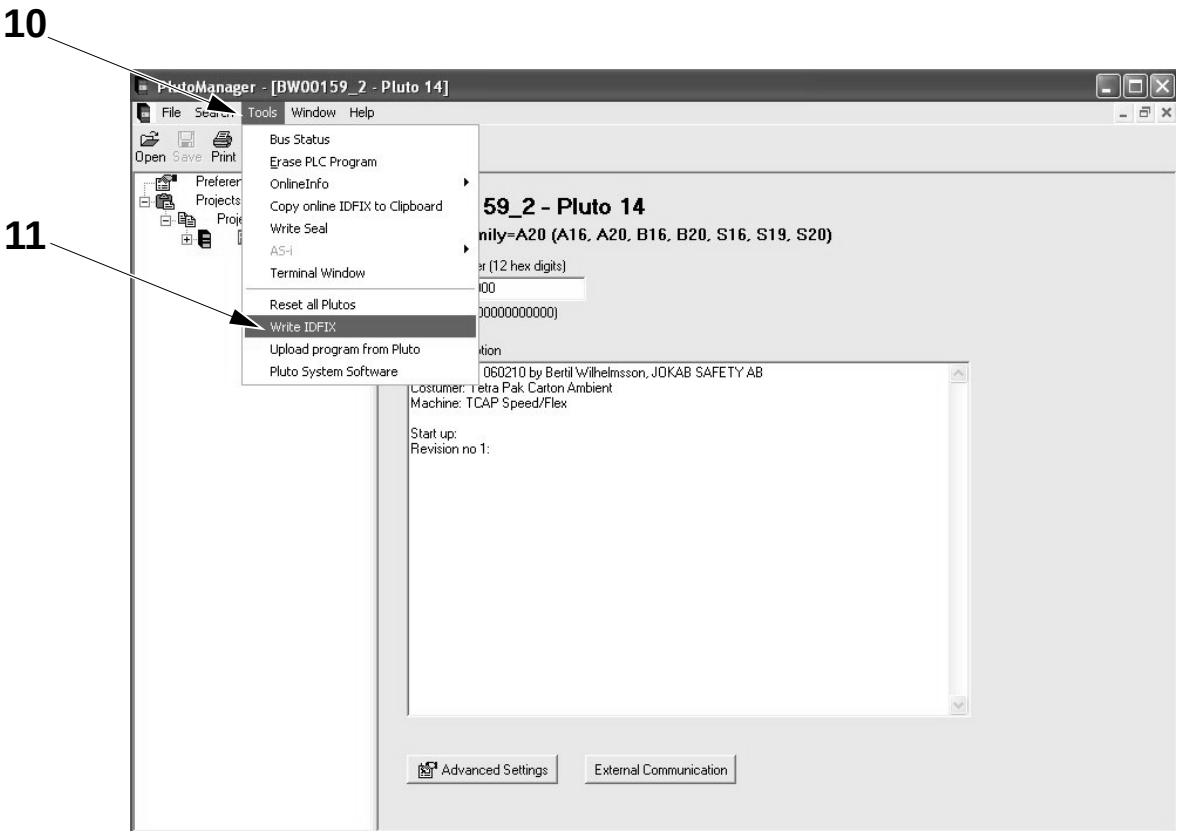

10 TOOLS
11 WRITE IDFIX

(Cont'd)

TechPub_2614345_0106 - 1202_3047161_01.fm

(Cont'd)

CAUTION
Do not select the ERASE PROTECT ID checkbox (12). Doing so will prevent any further IDFIX changes being made.
Do not press the SUGGEST UNIQUE ID button (13).

h) Write the IDFIX code, displayed in the IDFIX window (9), in the ID NUMBER field (14) and select WRITE ID CIRCUIT (15).

i) Select CLOSE (16).

Note! The ID-FIX code for the Pluto module is shown below.

Unit	ID number
09F000	14000009F000

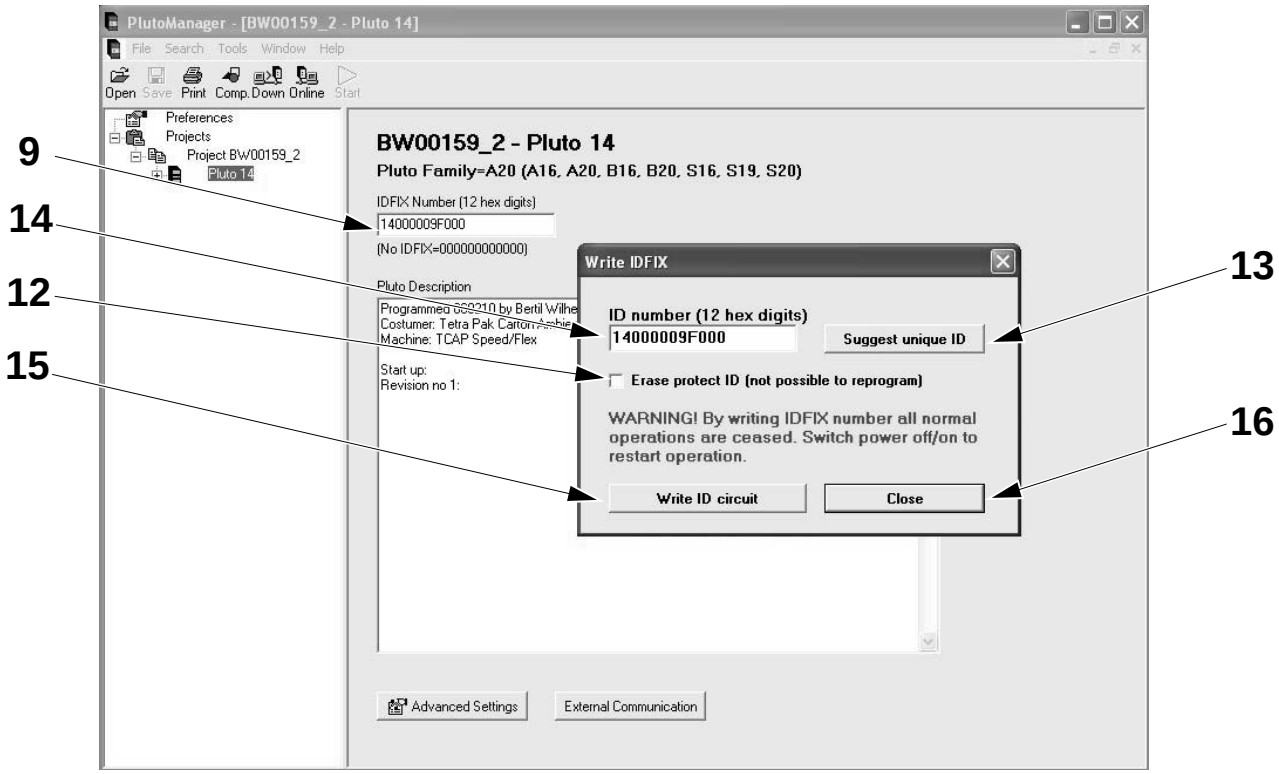

9 IDFIX number
12 ERASE PROTECT ID
13 SUGGEST UNIQUE ID
14 ID NUMBER field
15 WRITE ID CIRCUIT
16 CLOSE

TechPub_2614345_0106 - 1202_3047161_01.fm

8.5.1-3 Pluto Maintenance - Change Baud Rate, Error Code E26

Machine Status	Mains Power ON
Special Equipment	PC with Pluto Manager RS 232-C Communication Cable
SPC Reference	2839221-0100

Note! It is not possible to change the baud rate of a Pluto module when it is in operation. If a unit is loaded with a program with a new baud rate, it will continue to function with the old baud rate and indicate the error code E26.

Note! If a Pluto module does not contain a program it will display the error code E20. If a program is loaded into the Pluto it will also display error code E26 to indicate that the module must be rebooted to start with the programmed baud rate.

The baud rate can be changed by turning the power OFF and ON to reboot the system

or

by using the Pluto Manager as follows:

a) Connect the PC to the Pluto module, see 8.5.1-1 Pluto Maintenance - Connecting a PC to Pluto Module.

b) Open the Pluto Manager by clicking the PLUTO MANAGER icon (1).

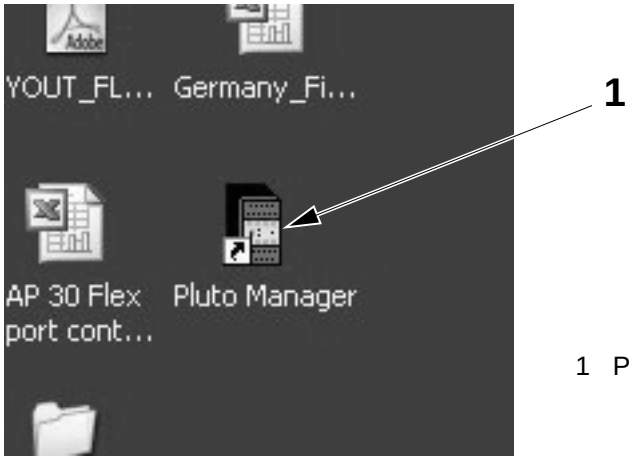

1 PLUTO MANAGER icon

(Cont'd)

TechPub_2614345_0106 - 1202_3047161_01.fm

(Cont'd)

c) Click on TOOLS (2) and select RESET ALL PLUTOS (3).

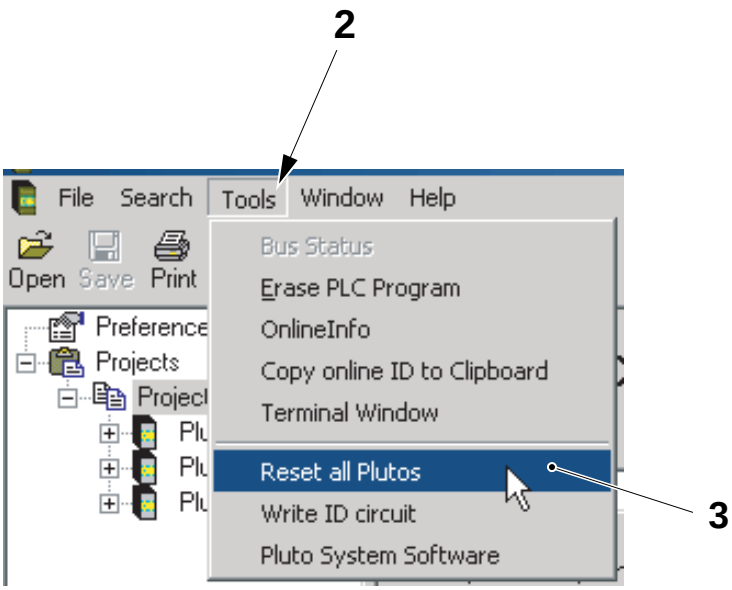

2 TOOLS
3 RESET ALL PLUTOS

TechPub_2614345_0106 - 1202_3047161_01.fm

8.5.1-4 Pluto Maintenance - Installing a Pluto Module in an Existing Application

Machine Status	Mains Power ON
Special Equipment	PC with Pluto Manager RS 232-C Communication Cable
SPC Reference	2839221-0100

When a system comprises of more than one Pluto module they are loaded with a common program. The modules check each other to confirm that they contain exactly the same version of the program. With a program mismatch the modules do not accept each others I/O data.

If a new Pluto module belonging to a program project is connected to the bus that is already connected to one or more Pluto modules, two possible situations may arise depending upon the status of the new Pluto module:

1) The new Pluto does not contain a PLC program (message code E20) but it is fitted with the correct IDFIX circuit. When this is the case the new Pluto can be programmed using its self programming function. To do this proceed as follows:
   a) Press the ‘K’-button (1) on the Pluto front panel for two seconds. The display flashes ‘L’ indicating that the system is ready for self programming.
   b) Press the ‘K’-button (1) again.
   c) The program load is started. This is indicated by a steady ‘L’ on the display.

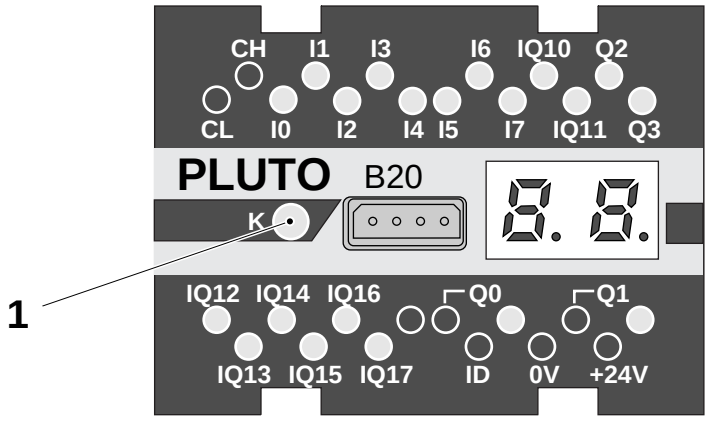

1 K button

(Cont'd)

TechPub_2614345_0106 - 1202_3047161_01.fm

(Cont'd)

2) The new Pluto is fitted with a correct ID-fix circuit but loaded with wrong version of the program.

   In this situation, all Pluto modules of the project will display the error code E27 indicating that the new Pluto module with the incorrect software has been detected. The units will run the PLC program, but will not accept I/O data from the new Pluto module.

   To correct this situation, download the correct version of the program to all of the units in the project, all of them will be updated with the same version. To download the program, see 8.5.1-5 Pluto Maintenance - Program Download from a PC to a Pluto Unit.

TechPub_2614345_0106 - 1202_3047161_01.fm

8.5.1-5 Pluto Maintenance - Program Download from a PC to a Pluto Unit

Machine Status	Mains Power ON
Special Equipment	PC with Pluto Manager RS 232-C Communication Cable
SPC Reference	2839221-0100

Note! The program must be compiled before it can be downloaded. A fault message is shown if the program is not compiled.

a) Connect the PC to the Pluto module.

b) Open the Pluto Manager by clicking the PLUTO MANAGER icon (1).

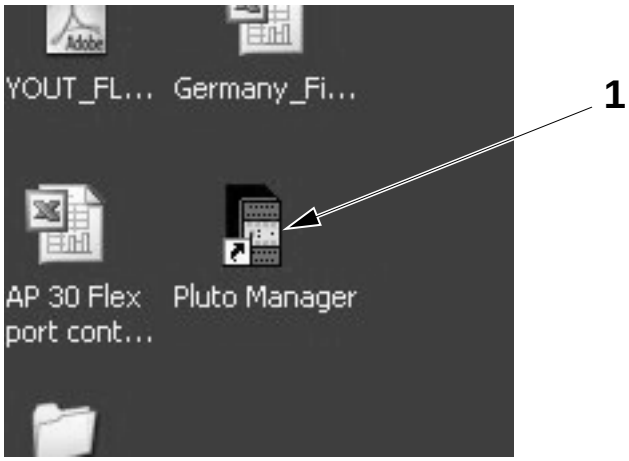

1 PLUTO MANAGER icon

(Cont'd)

TechPub_2614345_0106 - 1202_3047161_01.fm

(Cont'd)

c) In the PLUTO MANAGER - [PROJECTS] window (2), select PROJECTS (3) and click OPEN (4).

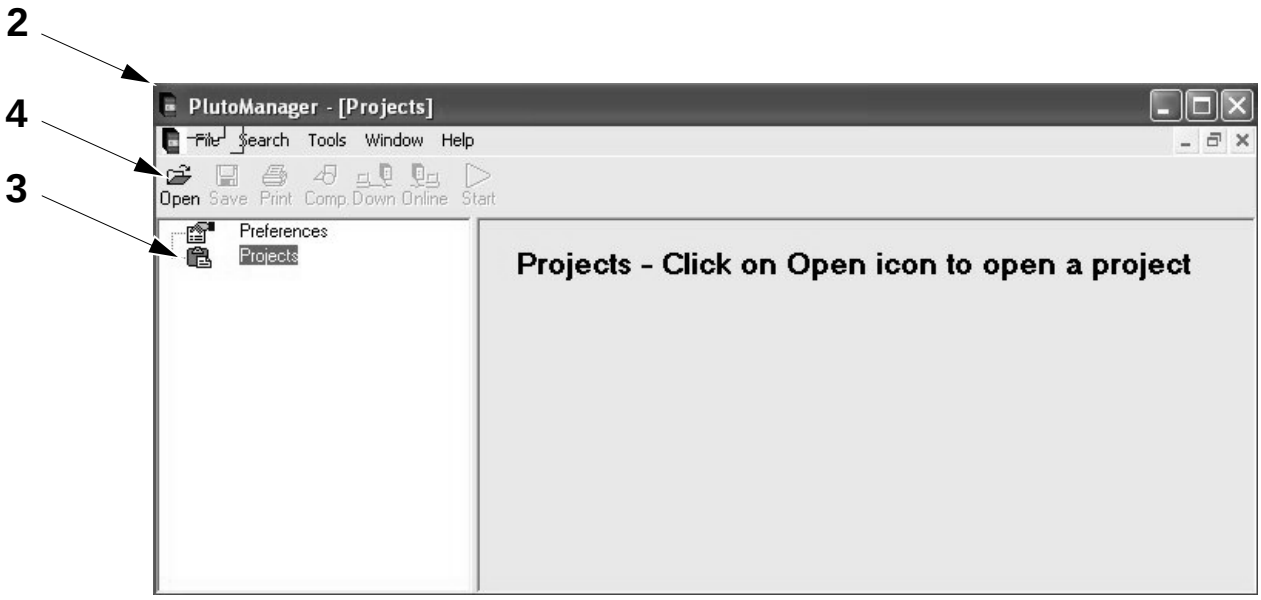

2 PLUTO MANAGER - [PROJECTS]
3 PROJECTS
4 OPEN

(Cont'd)

TechPub_2614345_0106 - 1202_3047161_01.fm

(Cont'd)

Note! The project number BW00159_2.SPS (5) shown below is an example.

d) Select a PROJECT (5) and click OPEN (6).

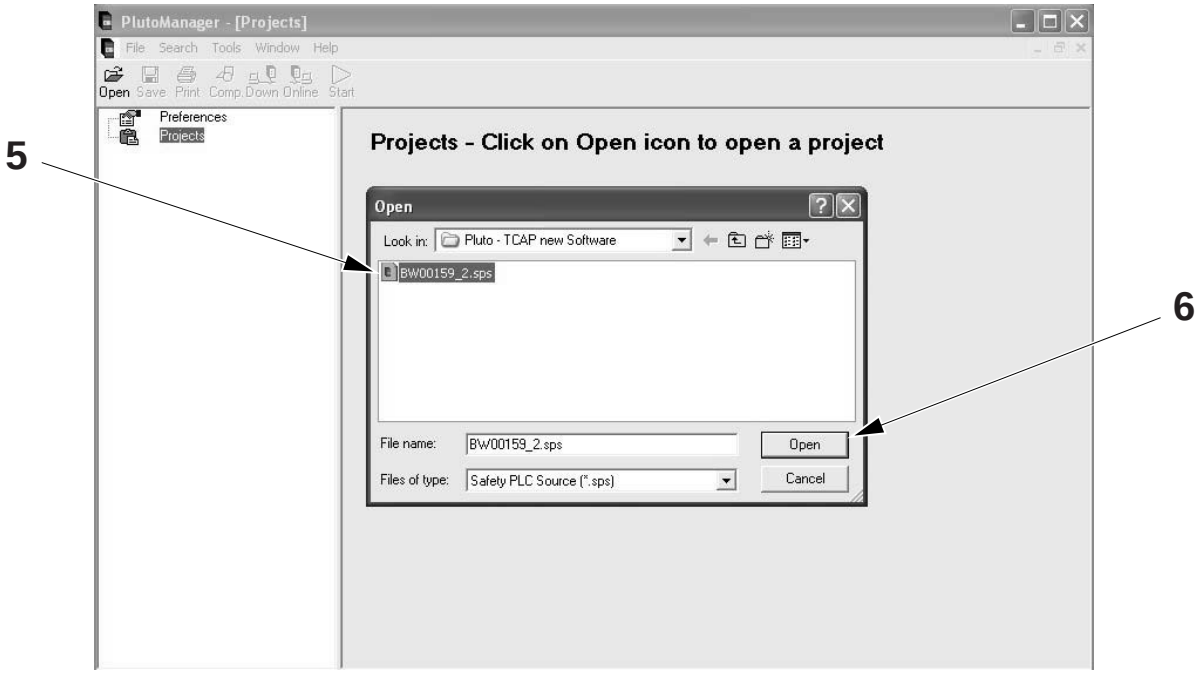

5 PROJECT
6 OPEN

(Cont'd)

TechPub_2614345_0106 - 1202_3047161_01.fm

(Cont'd)

e) Press the DOWN button (7) in the tool bar.

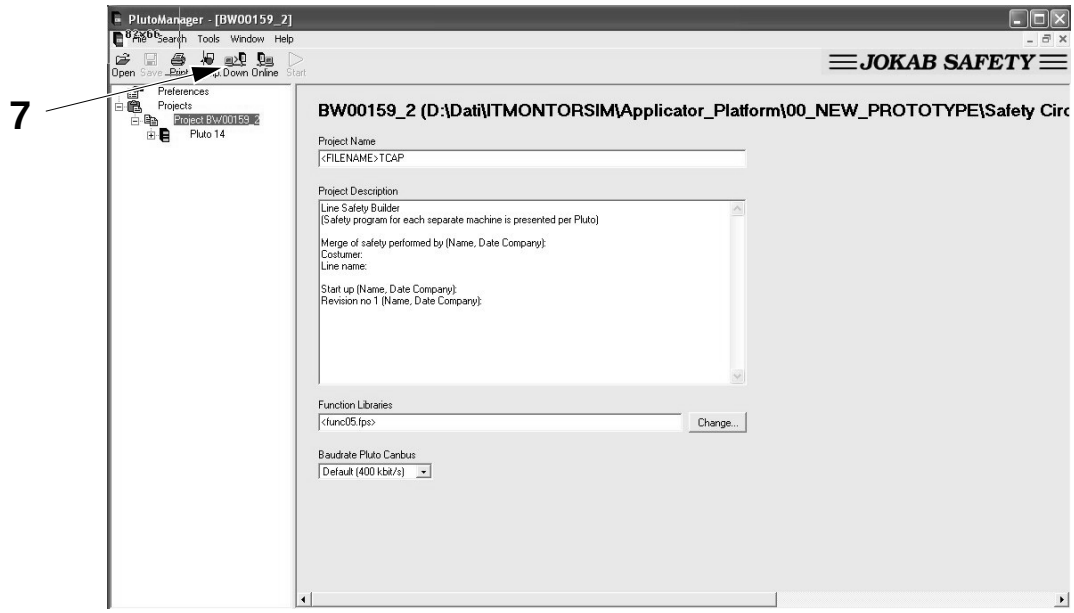

7 DOWN button

f) If the unit is not loaded with a password, a dialogue box appears asking for a new password.

g) Type the password “abc80” in the PASSWORD field (8).

h) Type the same password in the CONFIRM PASSWORD field (9) and click the OK button (10).

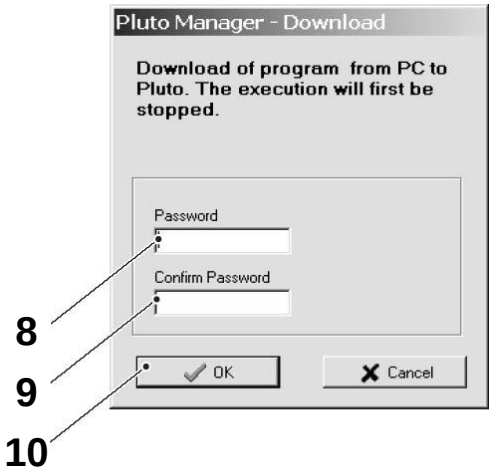

8 PASSWORD field
9 CONFIRM PASSWORD field
10 OK button

(Cont'd)

TechPub_2614345_0106 - 1202_3047161_01.fm

(Cont'd)

i) If the unit is loaded with a password, a dialogue box appears asking for the password.

j) Type the password “abc80” in the PASSWORD field (11).

k) Click the OK button (12).



11 PASSWORD field
12 OK button

- If the fault message COULDN’T ESTABLISH CONNECTION appears there is no connection at all.
- If the fault message CONNECTION TIME OUT appears the communication is interrupted.

  If any of these two fault messages appears check that the communication cable is correctly connected.

(Cont'd)

TechPub_2614345_0106 - 1202_3047161_01.fm

(Cont'd)

l) If everything is OK a dialogue box appears telling that the file is downloaded together with the question START PROGRAM EXECUTION? (13).

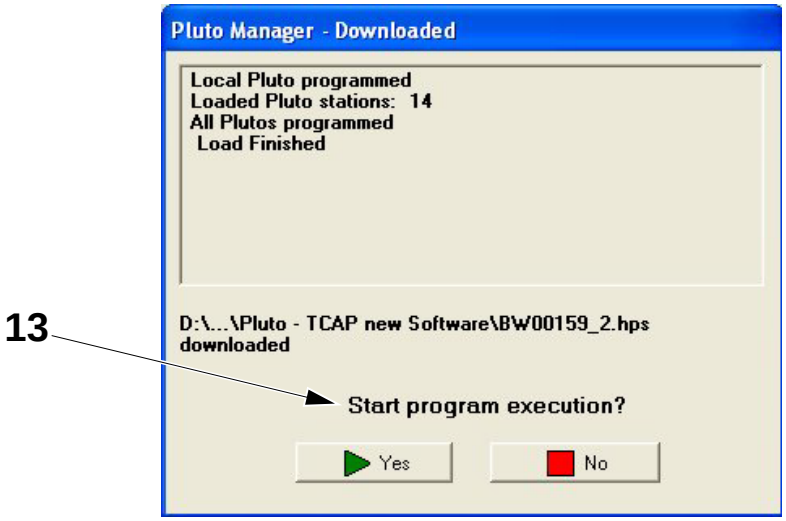

13 START PROGRAM EXECUTION

m) Click the YES button (14).

Note! A warning is given if the program project is for several Pluto stations and all stations are not connected to the bus.

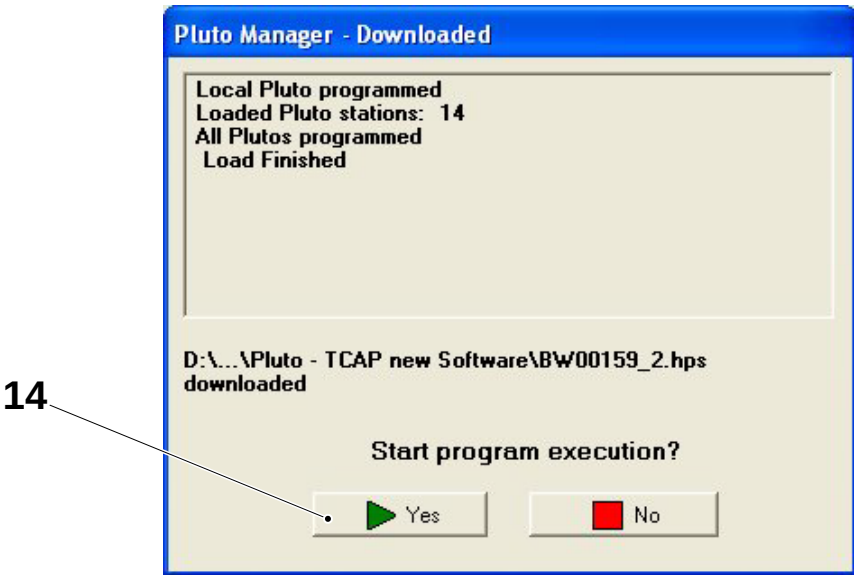

14 YES button

TechPub_2614345_0106 - 1202_3047161_01.fm

8.5.2 Pluto Troubleshooting

8.5.2-1 Pluto Troubleshooting - Safety System Alarm on the Control Panel

Machine Status	Mains Power ON
Special Equipment	PC with Pluto Manager RS 232-C Communication Cable
SPC Reference	2839221-0100

The symbol (1) indicates that the PLC monitors all safety doors and EMERGENCY STOP buttons are OK but the system has not been reset.

Note! The PLC can only monitor the channel which has a constant +24V DC.

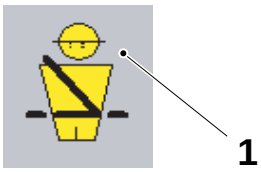

1 Safety System Alarm symbol

(Cont'd)

TechPub_2614345_0106 - 1202_3047161_01.fm

(Cont'd)

There are two different fault reasons:

Two channel fault

- **Reason 1:** One of the channels (inputs) may have been temporarily interrupted but is now OK.
  - **Symptom 1:** The system has tripped but will not automatically reset when the input is OK again.
  - **Indication 1**: The LED associated with the faulty input flashes as does the information output to the PLC.
  - **Reset 1:** Open and close both channels (for example by opening and closing a door in the affected circuit) and reset the alarm.
- **Reason 2:** One or both channels are permanently OFF.
  - **Symptom 2**: The system has tripped and cannot be reset.
  - **Indication 2:** The LED associated with the faulty input is OFF.
  - **Reset 2:** Repair the faulty circuit, open and close both channels (for example by opening and closing a door in the affected circuit) and reset the alarm.

(Cont'd)

TechPub_2614345_0106 - 1202_3047161_01.fm

(Cont'd)

Feedback fault

- **Reason:** One of the feedback circuits has not been closed when the output has tripped.
  - **Symptom:** It is not possible to reset the system.
  - **Indication:** The LED associated with the faulty input (feedback circuit) is OFF and the information output to the PLC is ON.
  - **Reset:** Repair the faulty circuit or contactor and reset the alarm.

TechPub_2614345_0106 - 1202_3047161_01.fm

8.5.2-2 Pluto Troubleshooting - Explanations of Inputs, Outputs and LEDs

Machine Status	Mains Power ON
Special Equipment	PC with Pluto Manager RS 232-C Communication Cable
SPC Reference	2839221-0100

For more detailed information on connections, refer to the circuit diagram.

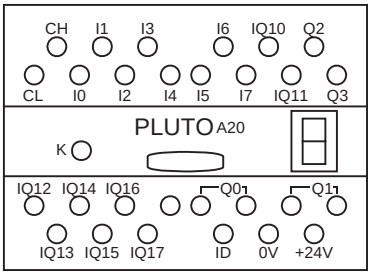

Pluto 09F00

CL	CAN bus
CH	CAN bus
I0	Input emergency stops on the machine (+24V)
I1	Input emergency stops on the machine (Pulse)
I2	Not used
I3	Not used
I4	Input power ON, cap conveyor and belt brake and Servos
I5	Input power ON, package line conveyor, outfeed conveyor, cap elevator and mains power
I6	Input power ON
I7	Input power ON
Q0	Doors Closed (L32)
Q1	No Emergency Stop (L22)
Q2	Mains power ON, AC users
Q3	Output to expansion units 09F003
IQ10	Output pulse to safety circuits
IQ11	Input from applicator doors
IQ12	Input doors
IQ13	Input cap sorter
IQ14	Safety Relay reset from PLC
IQ15	Power On step from PLC
IQ16	Emergency stop to PLC
IQ17	Safety relay error message to PLC
ID	Identifier on the CAN bus
0V	0V
+24V	+24V DC (L12)

(Cont'd)

TechPub_2614345_0106 - 1202_3047161_01.fm

(Cont'd)

Message and fault code list

General Status messages

No:	Description
-	Power up
n	Run mode for station number 0-9. (n = station number)
P nn	Run mode for station number 10-31. (nn = station number)
L	Program load mode state. Flashing 'L', ready for self programming (program found in other unit).
H	Program execution stopped from PC computer.

User faults

No:	Fault and possible reason	Reset action
E10	Dynamic output short circuited to foreign voltage	Remedy of fault
E11	IQ_for illuminated push button function. Missing diode	Remedy of fault
E12	Short circuit between two dynamic inputs	Remedy of fault
E13	Static output Q10...Q17 short circuited to 0V or Q2-Q3 overloaded	Reset button, power off/on
E14	Static output Q10...Q17 short circuited to 24V	Remedy of fault
E15	Power supply below 18V	Reset button, power off/on
E16	Power supply above 30V	Reset button, power off/on
E17		
E18	CAN-bus fault. (Short circuit, termination resistor, etc.)	Remedy of fault+ reset button
E19	Other unit same station ID on CAN-bus.	
E20	PLC-program not loaded	Load of program
E21	PLC-program CRC-error	Re-load with valid PLC-program
E22	Identifier problem. External identifier can not be read.	Power off/on
E23	Unmatched ID. Identifier does not match declaration in program.	Exchange of identifiers or re-declaration of identifier in program
E24	Erroneous PLC-code. Invalid PLC-instructions.	Reload with valid code
E25	For version A16. Non existing output used in program.	
E26	Baud rate conflict. Unit programmed for other baud rate than current bus baud rate.	Reprogramming
E27	Wrong checksum for unit member in common program.	Reprogramming or reboot

TechPub_2614345_0106 - 1202_3047161_01.fm

I/O faults

No:	Fault and possible reason	Reset action
E40	Error output Q0-Q3	Remedy of fault + reset button
E41	Error output Q2 or Q3. Overload or foreign voltage.	Remedy of fault + reset button
E42	Error output Q0 or Q1. (No answer from relay monitoring)	Remedy of fault + reset button
E43	Error output Q0 or Q1. (Self test of transistors)	Power off/on
E45	Analogue functions not calibrated.	System must be calibrated
E49	Error calibration values, analogue functions	Recalibration

CPU faults

No:	Fault and possible reason	Reset action
E50	a/b twin input data diff	Power off/on
E51	a/b twin output data diff	Power off/on
E59	Calibration analogue functions CRC fault	Power off/on
E60	Twin self test monitoring	Power off/on
E61	Timer IRQ monitoring	Power off/on
E62	Internal serial communication	Power off/on
E63	Boot-flash CRC	Power off/on
E64	OS-flash CRC	Power off/on
E65	PLC-flash CRC	Power off/on
E66	5 volt under/over voltage monitoring	Power off/on
E67	CPU-test error	Power off/on
E68	Ram-test error	Power off/on
E69	Scan cycle time over run	Power off/on
E70	System, sum of system and stack monitoring	Power off/on
E71	Pluto used for IDFIX writing. Normal operation ceased	Power off/on
E80	Undefined self-test error	Power off/on

(Cont'd)

TechPub_2614345_0106 - 1202_3047161_01.fm

(Cont'd)

User Errors

No:	Fault and possible reason	Reset action
UE00	Emergency stop inputs, one channel missing, one remaining	Power off/on
UE10	Emergency stop inputs, both channels missing	Power off/on
UE24	Missing feedback - L42 Applicator Frequency Converter	
UE25	Missing feedback - L22 Emergency stop circuit	Power off/on
UE26	Missing feedback - L32 - L42 - L43 - L44	Power off/on
UE27	Missing feedback - L72	Power off/on
UE29	Feedback not cycling - L42	Power off/on
UE34	Constant reset	Power off/on

TechPub_2614345_0106 - 1202_3047161_01.fm

8.6 Circuit Breaker

SPC Reference	2833407-0100

8.6.1 Automatic Fuses

8.6.1-1 Automatic Fuses - Set

Machine Status	Mains Power OFF
SPC Reference	2833407-0100

ScrewCap Machines

01F100	01F200	01F201	01F202	01F300	01F400	01F700	01F701
100 A	6 A	4 A	6 A	4 A	4 A	10 A	

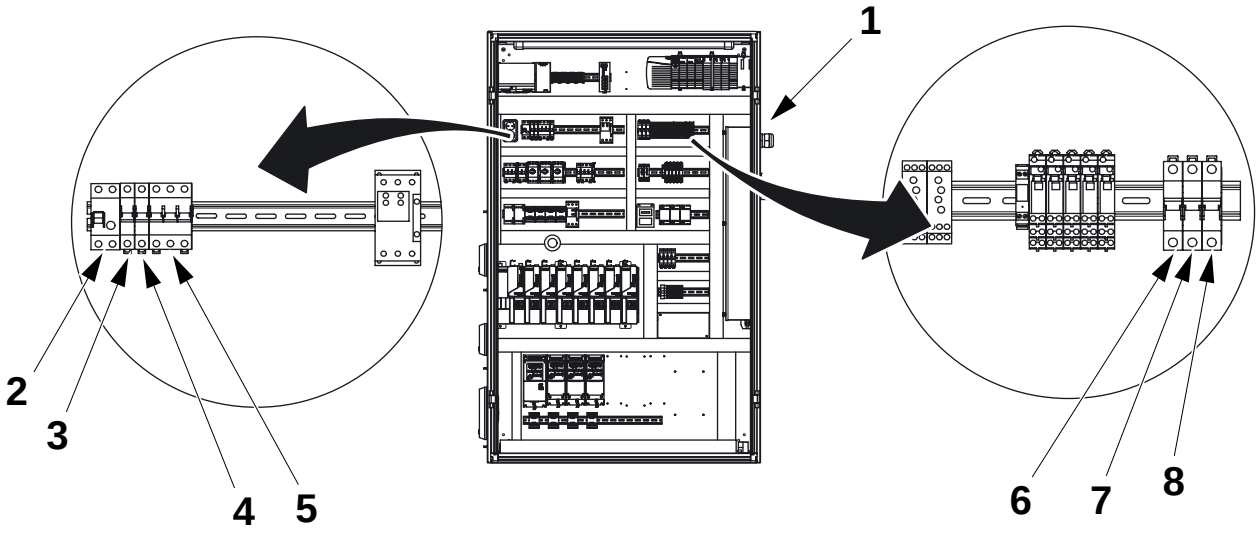

1 01F100 Mains Power
2 01F701 Earth fault breaker
3 01F700 Cabinet/Machine lighting and wall socket power
4 01F300 PLC rack power
5 01F200 24 V control voltage
6 01F201 24 V input control voltage
7 01F202 24 V output control voltage
8 01F400 24 V touch screen

(Cont'd)

TechPub_2614345_0106 - 1202_3047162_01.fm

(Cont'd)

01F104	01F500	01F600	20F100	20F200	21F400	21F600	21F800
25 A	20 A	6 A	6 A	6 A	10 A	10 A	2.5 - 4A
21F801	**40F400**	**50F000**	**50F100**				
10 A	.6 - 1A	.6 - 1A	6 A				

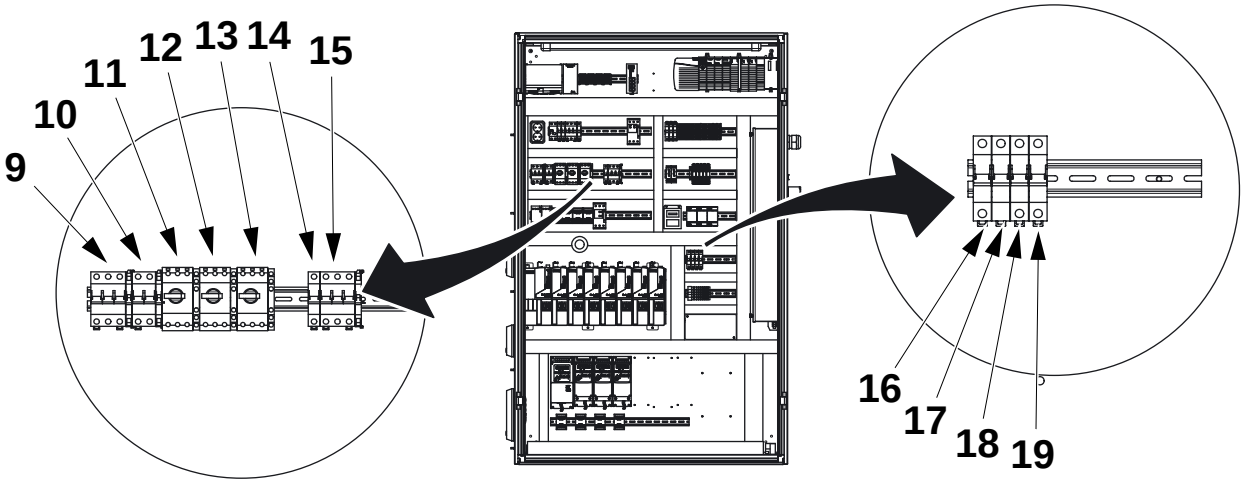

9 01F500 Hot melt unit
10 21F801 Package pre-heater
11 40F400 Cap conveyor
12 50F000 Cap elevator
13 21F800 Air pump
14 01F600 Cooling unit
15 01F104 Servo power
16 20F000 Belt brake
17 21F400 Package line conveyor
18 21F600 Outfeed package conveyor
19 50F100 Cap sorter disk

TechPub_2614345_0106 - 1202_3047162_01.fm

(Cont'd)

(Cont'd)

ReCap Machines

01F100	01F200	01F201	01F202	01F300	01F400	01F700	01F701
40 A	6 A	4 A	6 A	4 A	4 A	10 A	

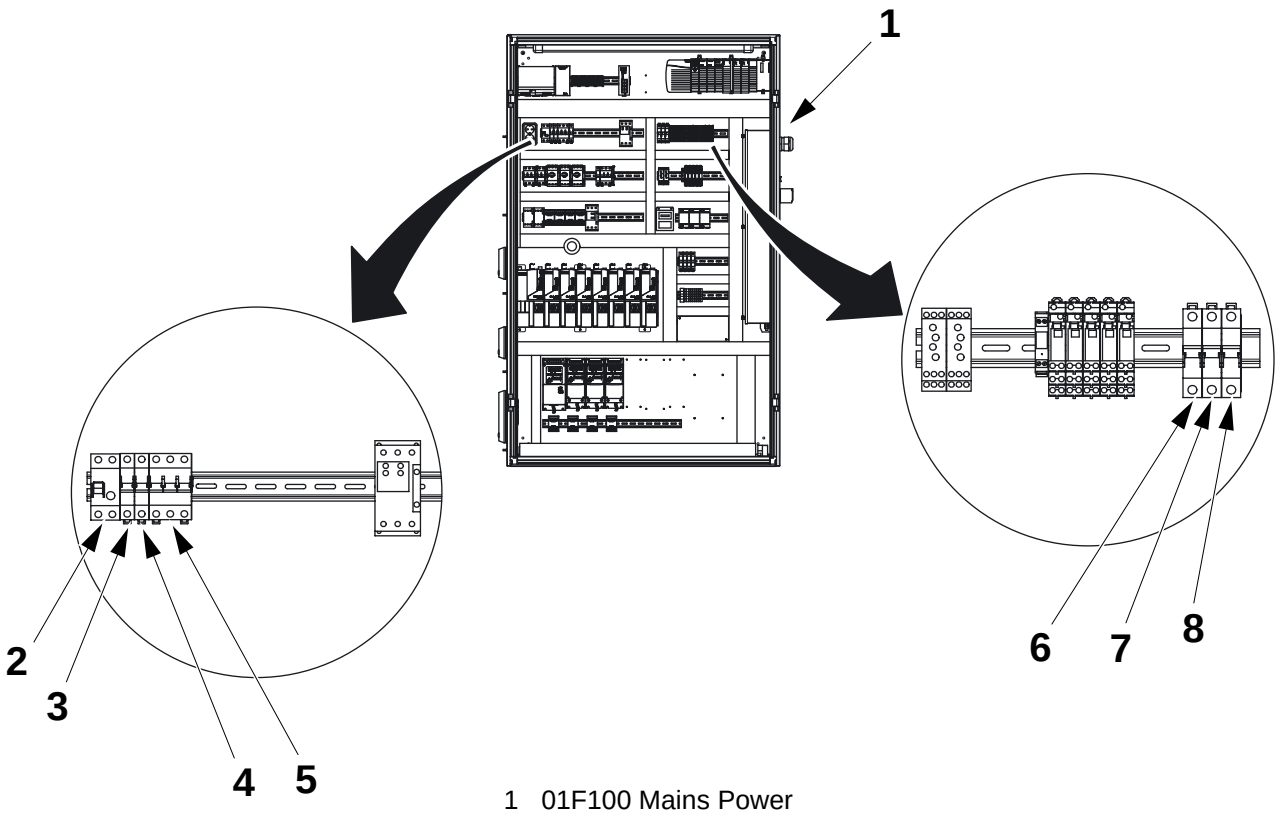

1 01F100 Mains Power
2 01F701 Earth fault breaker
3 01F700 Cabinet/Machine lighting and wall socket power
4 01F300 PLC rack power
5 01F200 24 V control voltage
6 01F201 24 V input control voltage
7 01F202 24 V output control voltage
8 01F400 24 V touch screen

(Cont'd)

TechPub_2614345_0106 - 1202_3047162_01.fm

(Cont'd)

01F104	**01F105**	**01F500**	**01F600**	**20F100**	**20F200**	**21F400**	**21F600**
25 A	6 A	20 A	6 A	6 A	6 A	10 A	10 A
21F800	**21F801**	**30F100**	**60F010**	**60F420**	**60F610**		
2.5 - 4 A	10 A	6 A	0.2 -0.4A	0.6 - 1 A	1 - 1.6 A		

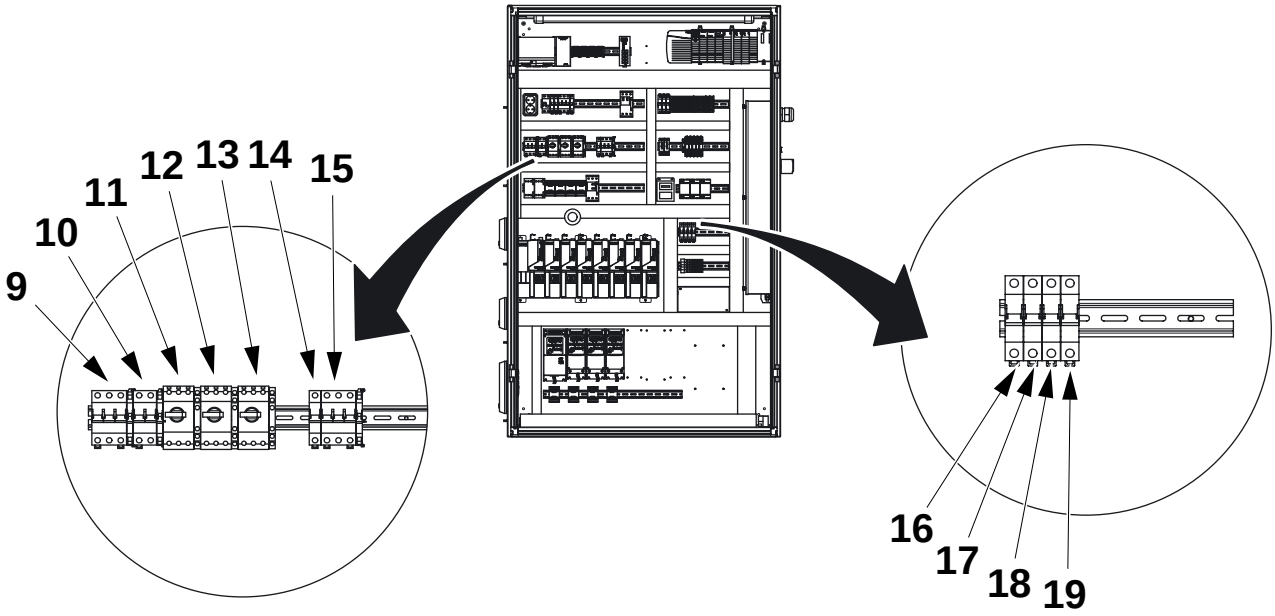

9 01F500 Hot melt unit
10 21F801 Package pre-heater
11 30F300 Hot melt wheel
12 60F010 Cap sheet conveyor
13 21F800 Air pump
14 01F600 Cooling unit
15 01F104 Servo power
16 20F000 Belt brake
17 21F400 Package line conveyor
18 21F600 Outfeed package conveyor
19 60F420 Box conveyor

TechPub_2614345_0106 - 1202_3047162_01.fm

8.6.2 Residual Current Device

8.6.2-1 Residual Current Device - Check Function

Machine Status	Mains Power ON
SPC Reference	2833407-0100

DANGER

Hazardous voltage.
Electric shock will cause death or serious injury.
Change the residual current device (1) if it does not trip immediately.

The residual current device (1) must always be tested before using the socket outlet (2).

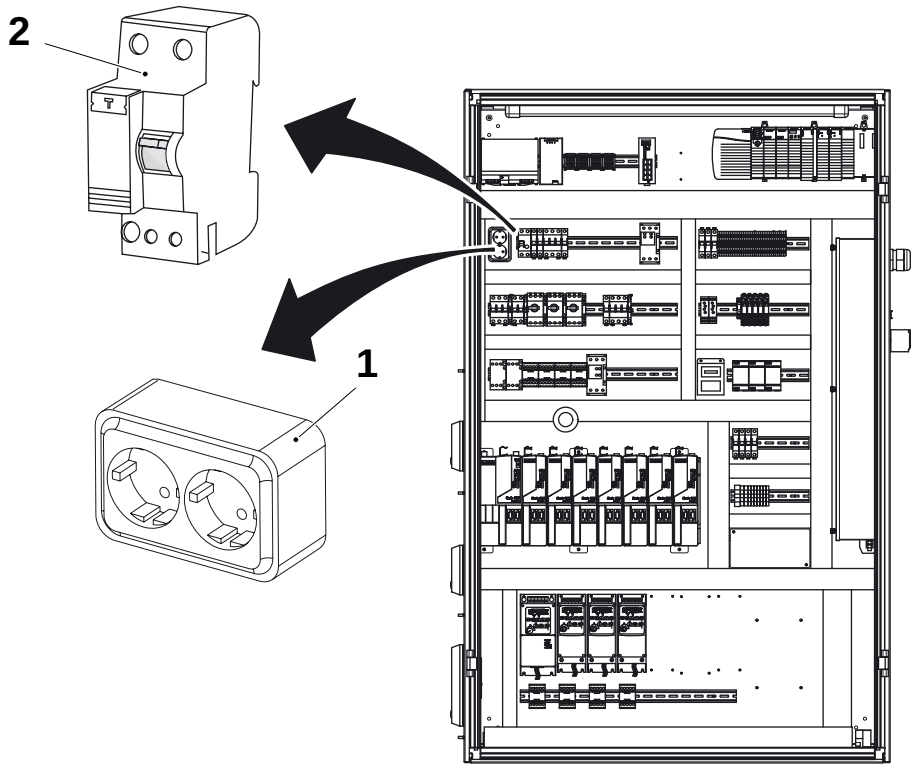

1 01F701 Residual current device
2 Socket outlet X007

(Cont'd)

TechPub_2614345_0106 - 1202_3047162_01.fm

(Cont'd)

a) Make sure that the switch (3) is in its up position (position “1”).

b) Press the test button (4).

c) The earth fault breaker must trip immediately (the switch (3) will jump to the lower position”0”).

d) If the earth fault breaker does not trip immediately, change the earth fault breaker.

e) Move the switch (3) to its upper position.

f) Turn OFF the power supply disconnecter.

Note! The residual current device should be checked once a month.

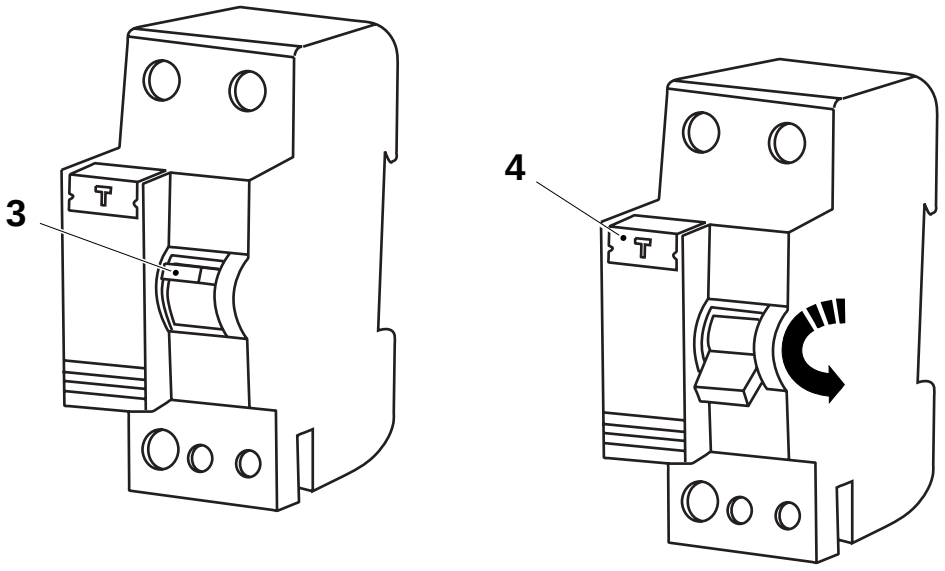

3 Switch
4 Test button

TechPub_2614345_0106 - 1202_3047162_01.fm

8.6.3 Power Supply - Current Control Relay

8.6.3-1 Current Control Relay- Check Function

Machine Status	Mains Power ON Air OFF
SPC Reference	2603364-0100

Use a screwdriver to set the element function as follows:

a) Switch “SV value” (1) to 5.

b) Switch “Hysteresis” (2) to 0 (fully counter clockwise).

c) Potentiometers T (3) to 0 (fully counter clockwise).

d) Potentiometers LOCK (4) to 0 (fully counter clockwise).

Note! The LED PWR (5) switches OFF if a malfunction occurs during PRODUCTION.

e) LED (6) shows relay output and LED (7) alarm.

f) Set the selectors on the bottom of the relay to OFF (8) and ON (9) as shown below.

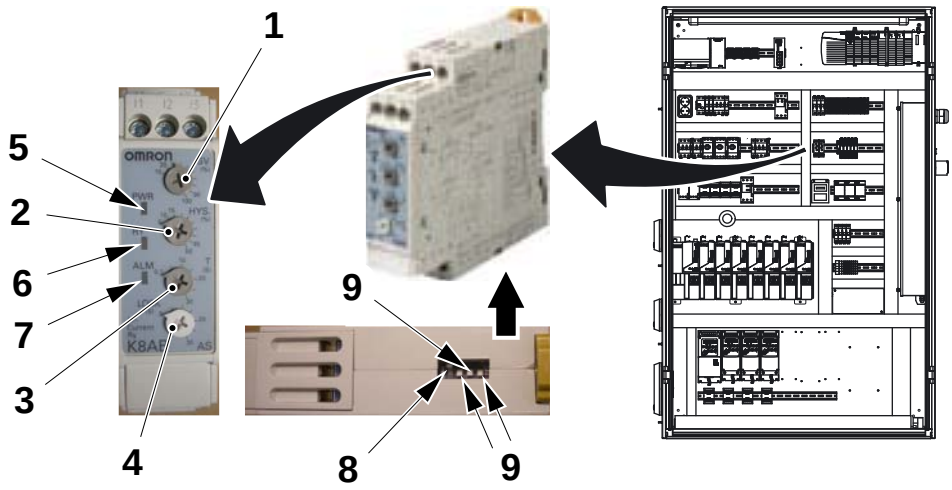

1 Switch “SV value”
2 Switch “Hysteresis”
3 Potentiometer T
4 Potentiometer LOCK
5 LED PWR
6 LED relay output
7 LED alarm
8 Selector (OFF)
9 Selector (ON)

TechPub_2614345_0106 - 1202_3047162_01.fm

8.7 Sensors

Machine Status	Mains Power ON
SPC Reference	662950-0200

8.7.1 Belt Brake Package Sensor

8.7.1-1 Sensor (20B003) - Set Sensitivity

Machine Status	Mains Power ON
SPC Reference	90459-0779

a) Check that there are no objects between the sensor (1) and the reflector (2)

b) Line up the sensor (1) with the reflector (2).
   – The yellow and green LEDs (3) and (4) should be ON.

c) Press the button (5) for 3 seconds or more so that the yellow and green LEDs (3) and (4) are flashing synchronously.
   – The first threshold has been taught.

d) Put a package (6) between the sensor (1) and the reflector (2).

e) Press the button (5) for 1 second or more to teach (set) the background sensitivity.
   – The green LED (4) will flash and then stay ON. The sensitivity thresholds have been set and the sensor (1) is ready for use.

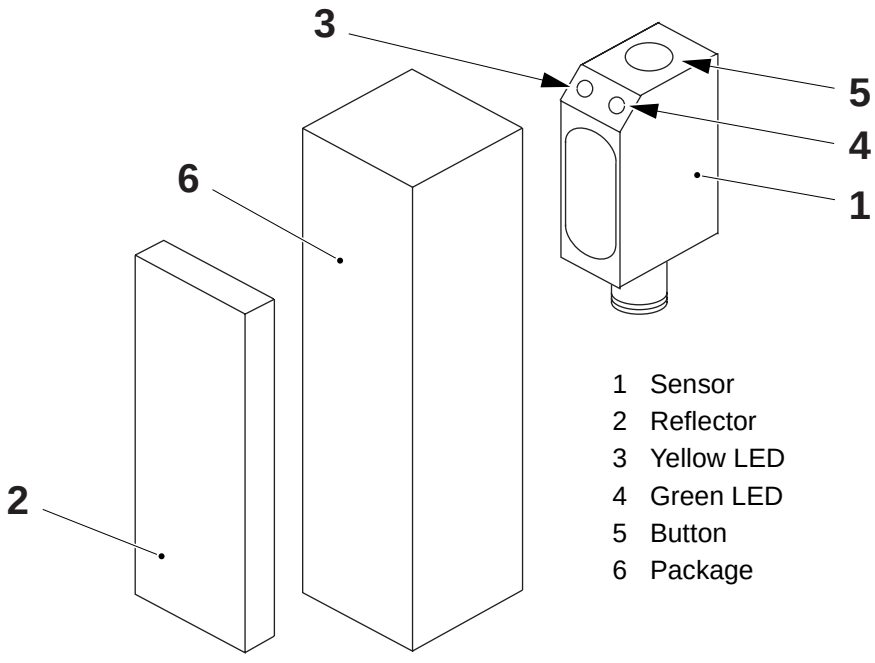

1 Sensor
2 Reflector
3 Yellow LED
4 Green LED
5 Button
6 Package

TechPub_2614345_0106 - 1202_3047163_01.fm

8.7.1-2 Sensors (20B003) - Check NC/NO Function

Machine Status	Mains Power ON
SPC Reference	90459-0779

a) Check that the green LED (1) is ON, if not check the sensitivity of the sensor (2), see 8.7.1-1 Sensor (20B003) - Set Sensitivity.

Note! The yellow LED (5) indicates the presence of a package (3) between the sensor (2) and the reflector (4). It does not indicate the logic level of the output signal to the PLC. See the following table for clarification.

LED condition	**Package**	
	Present	**Not Present**
Yellow LED	OFF	ON
IP LED 17	OFF	ON

b) With no package (3) between the sensor (2) and the reflector (4), check that the yellow LED (5) is ON.

c) In the electrical cabinet check that the LED for input 17 of the Digital Input Module (01K305) is ON. If not set the NC/NO function, see 8.7.1-3 Sensors - Set NC/NO Function.

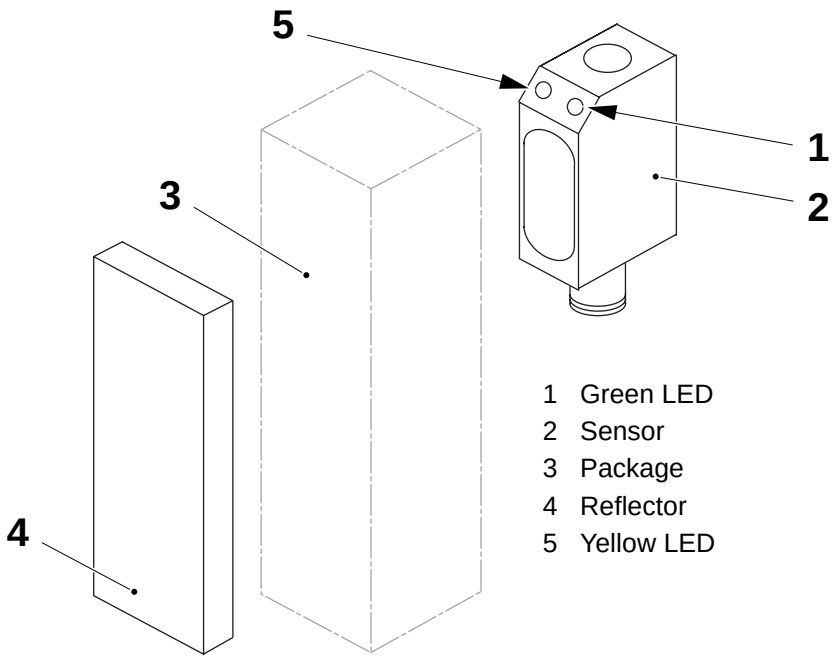

TechPub_2614345_0106 - 1202_3047163_01.fm

8.7.1-3 Sensors - Set NC/NO Function

Machine Status	Mains Power ON
SPC Reference	90459-0779

a) With no package (1) between the sensor (2) and the reflector (3), check that the LED for input 17 of the Digital Input Module (01K305) is ON.

Note! The yellow LED (6) indicates the presence of a package (1) between the sensor (2) and the reflector (3). It does not indicate the logic level of the output signal to the PLC. See the following table for clarification.

LED condition	**Package**	
	Present	**Not Present**
Yellow LED	OFF	ON
IP LED 17	OFF	ON

b) If the LED for input 17 of the Digital Input Module (01K305) is OFF, press the button (4) for approximately 13 seconds. When the button (4) is released, the green LED (5) is ON and the NC/NO function can be changed.

Note! Pressing the button (4) within 10 seconds will toggle the NO/NC function.

c) Press the button (4) to invert the output. The the LED for input 17 of the Digital Input Module (01K305) is ON. This is the correct result.

d) Do not touch the button (4) again for at least 10 seconds. The correct condition is memorised.

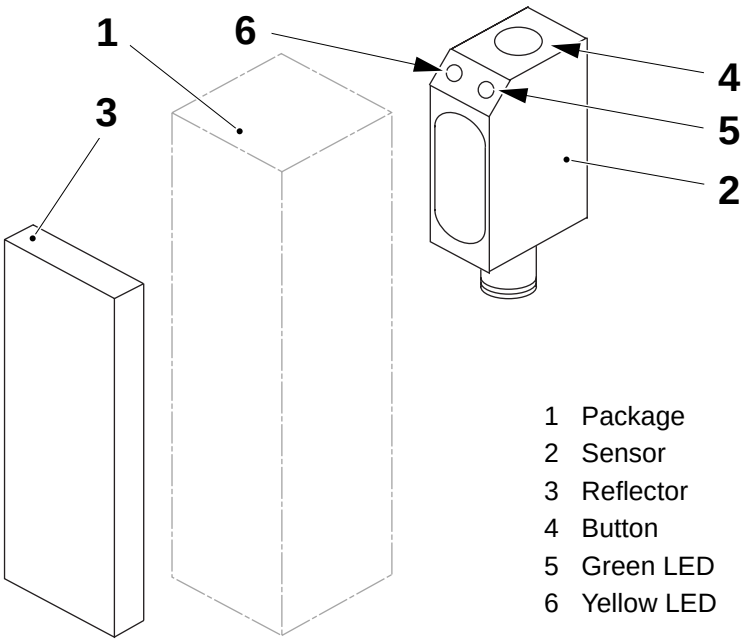

1 Package
2 Sensor
3 Reflector
4 Button
5 Green LED
6 Yellow LED

TechPub_2614345_0106 - 1202_3047163_01.fm

8.7.2 Cap Sorter Outfeed Congestion Sensor

8.7.2-1 Sensor (50B200) - Set

Machine Status	Mains Power ON
SPC Reference	90459-7366

a) Set the scanning distance to the maximum by turning the control knob (1) fully counter clockwise to the MAX position.

b) Place a cap in front of the sensor (2).

c) Make sure that the red light spot is visible on the cap and the signal strength indicator (3) is ON. If not, change the sensor (2).

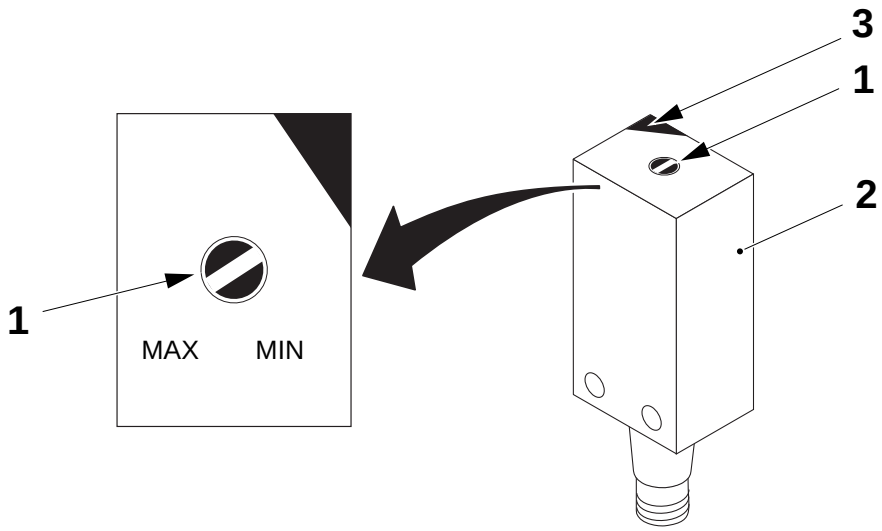

1 Knob
2 Sensor
3 Strength indicator

(Cont'd)

TechPub_2614345_0106 - 1202_3047163_01.fm

(Cont'd)

d) Remove the cap from in front of the sensor (2).

e) Check the condition of the signal strength indicator (3).

f) If the signal strength indicator (3) is OFF, position **A** is defined and only positions **B** and **C** need to be found. See Situation 1 below.

g) If the signal strength indicator (3) is still ON, turn the control knob (1) slowly clockwise until the signal strength indicator (3) goes OFF. The control knob (1) is now at the new position **A** as shown in Situation 2 below. Note this position.

Situation 1

Situation 2

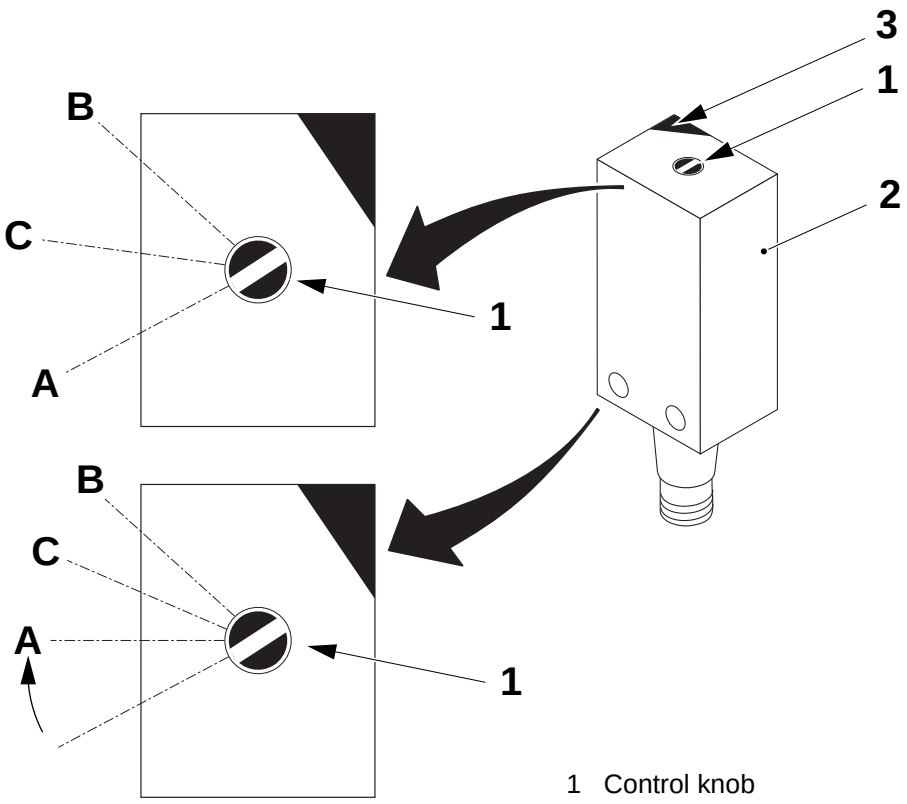

1 Control knob
2 Sensor
3 Strength indicator

TechPub_2614345_0106 - 1202_3047163_01.fm

(Cont'd)

(Cont'd)

h) Turn the switch fully clockwise to the MIN position.

i) Place a cap in front of the sensor (2).

j) Turn the control knob (1) slowly counter clockwise until the signal strength indicator (3) comes ON. The control knob (1) is now at the position **B**. Note this position.

k) If the position **B** is further clockwise than the relevant position **A**, set the control knob (1) to a position half way between **A** and **B**. This is position **C** and the correct setting for the scanning distance.

l) If the position **B** is further counter clockwise than the position **A**, the affect of the background is too great and the sensor mechanical setting must be rechecked.

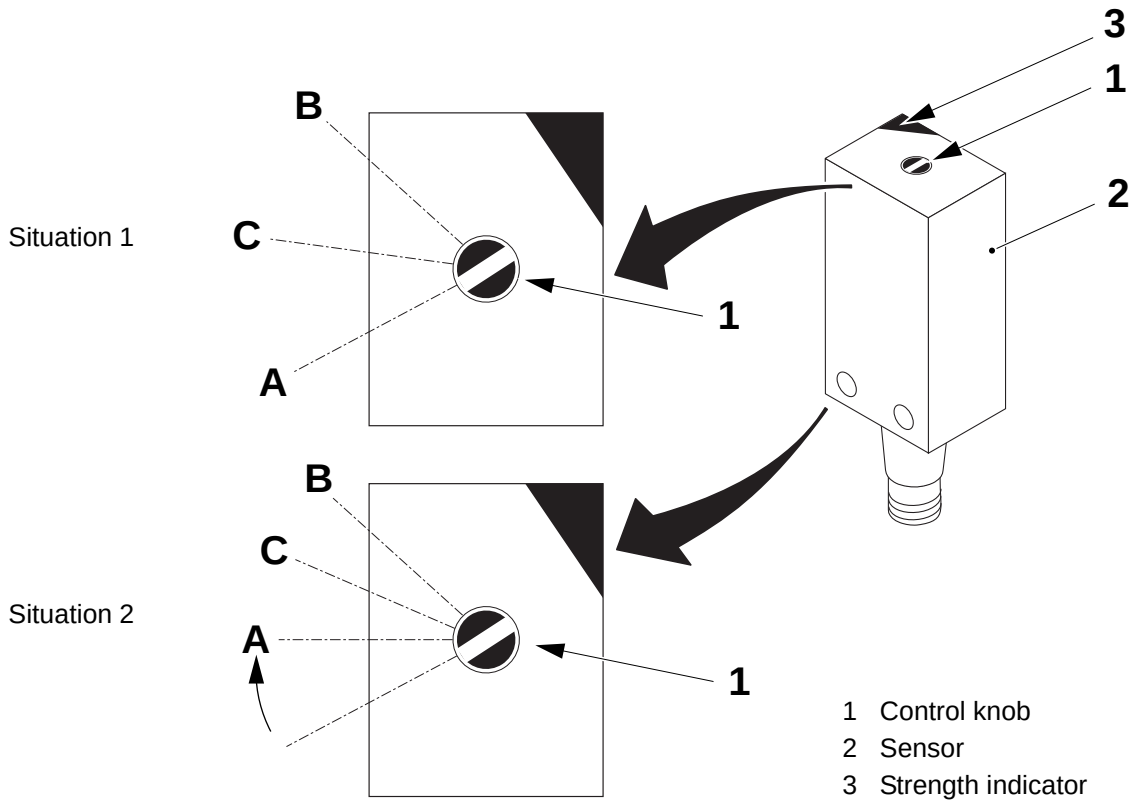

TechPub_2614345_0106 - 1202_3047163_01.fm

8.7.3 General Purpose Sensor

8.7.3-1 Sensor (21B402, 21B404, 21B406, 21B408, 21B424, 21B602, 21B604, 50B013, 50B500, 50B504) - Set

Machine Status	Mains Power ON
SPC Reference	90459-5529

a) Line up the sensor (1) with the reflector (2).

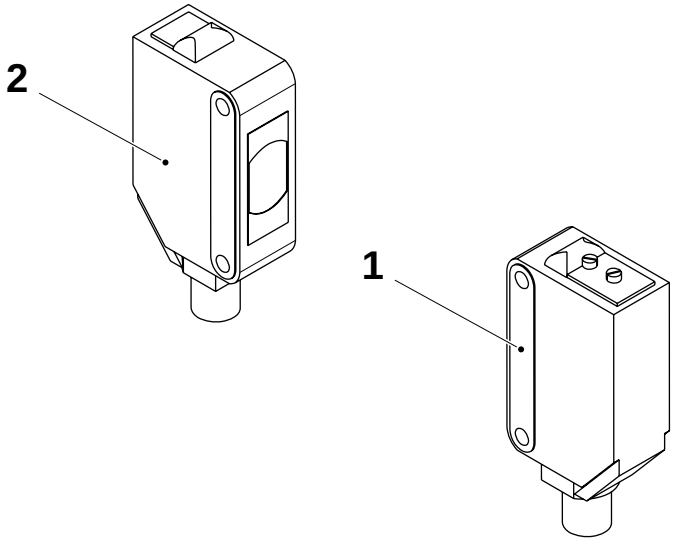

1 Sensor
2 Reflector

(Cont'd)

TechPub_2614345_0106 - 1202_3047163_01.fm

(Cont'd)

Note! The MIN/MAX knob (3) sets the sensitivity and the D/L knob (4) sets the dark background/light background function.

b) Turn the MIN/MAX knob (3) to the middle of its range.

c) Turn the D/L knob (4) to the D position.

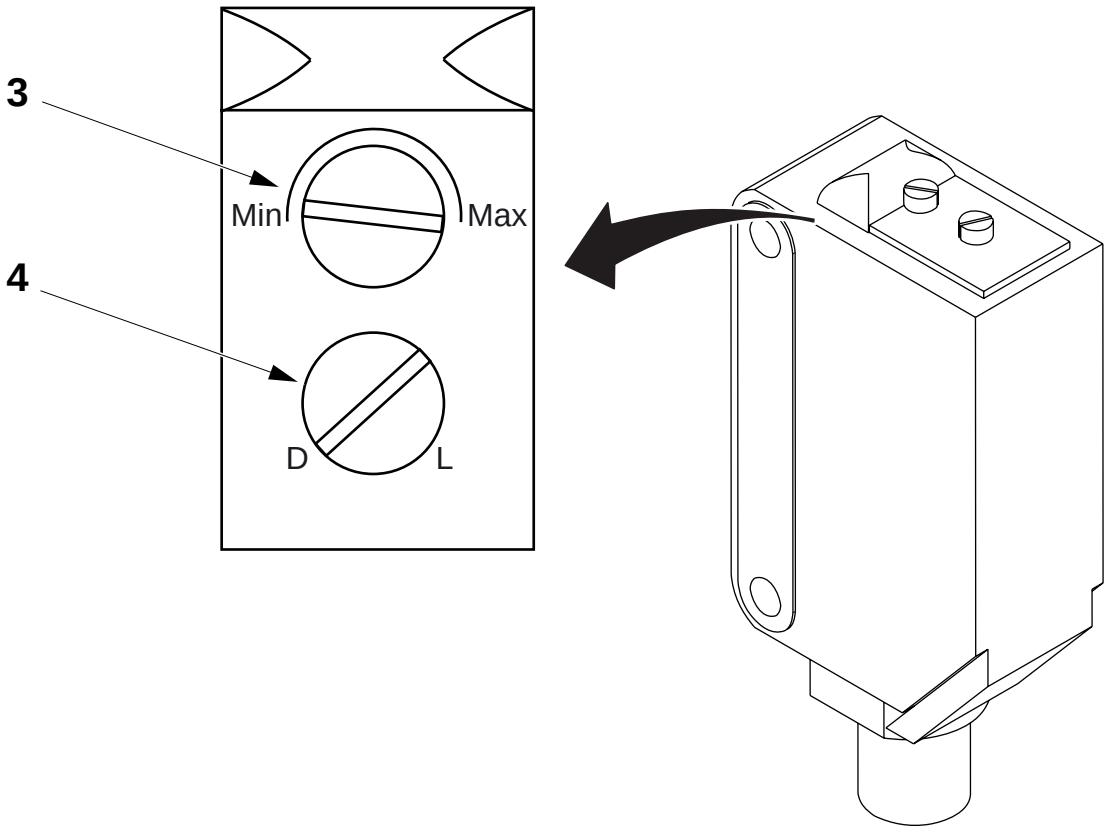

3 MIN/MAX knob
4 D/L knob

(Cont'd)

TechPub_2614345_0106 - 1202_3047163_01.fm

(Cont'd)

Note! The STABILITY LED (6) is on whenever power is supplied to the sensor.

d) Put a package between the sensor and the reflector and check that the OPERATION LED (5) comes on.

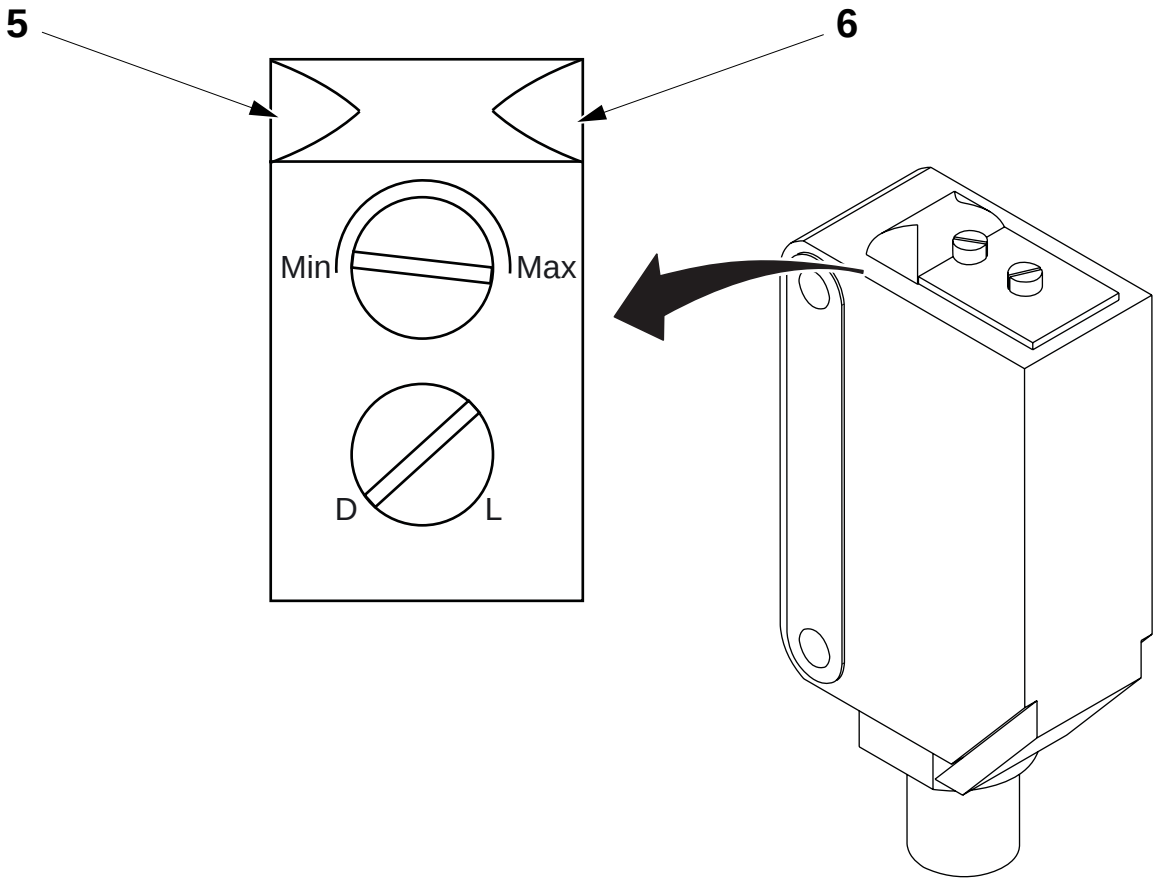

5 OPERATION LED
6 STABILITY LED

TechPub_2614345_0106 - 1202_3047163_01.fm

8.7.4 Elevator Sensors

8.7.4-1 Sensor - Set

Machine Status	Mains Power ON
SPC Reference	90459-7272

Note! The MIN/MAX knob (1) sets the sensitivity and the D/L knob (2) sets the dark background/light background function.

a) Turn the MIN/MAX knob (1) to the middle of its range.

b) Turn the D/L knob (2) to the D position.

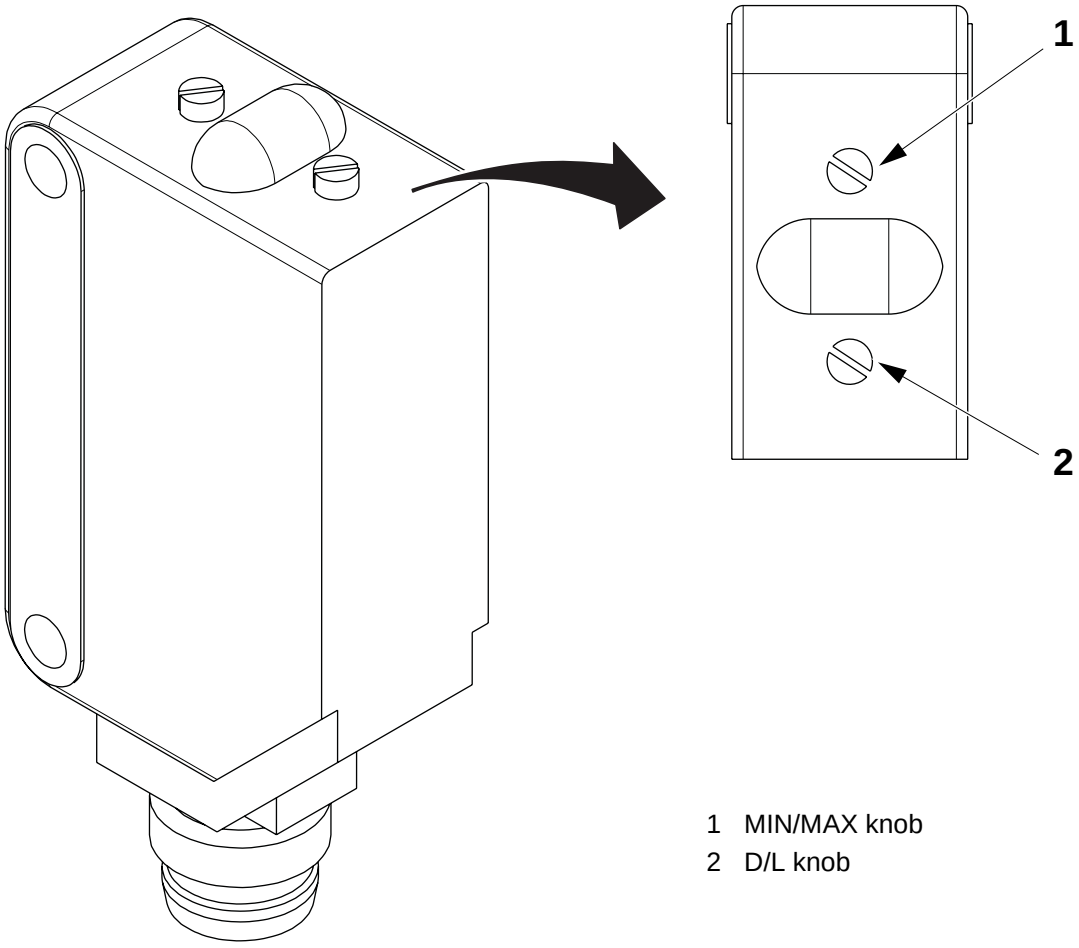

1 MIN/MAX knob
2 D/L knob

(Cont'd)

TechPub_2614345_0106 - 1202_3047163_01.fm

(Cont'd)

Note! The STABILITY LED (3) is on whenever power is supplied to the sensor.

c) Put a package between the sensor and the reflector and check that the OPERATION LED (4) comes on.

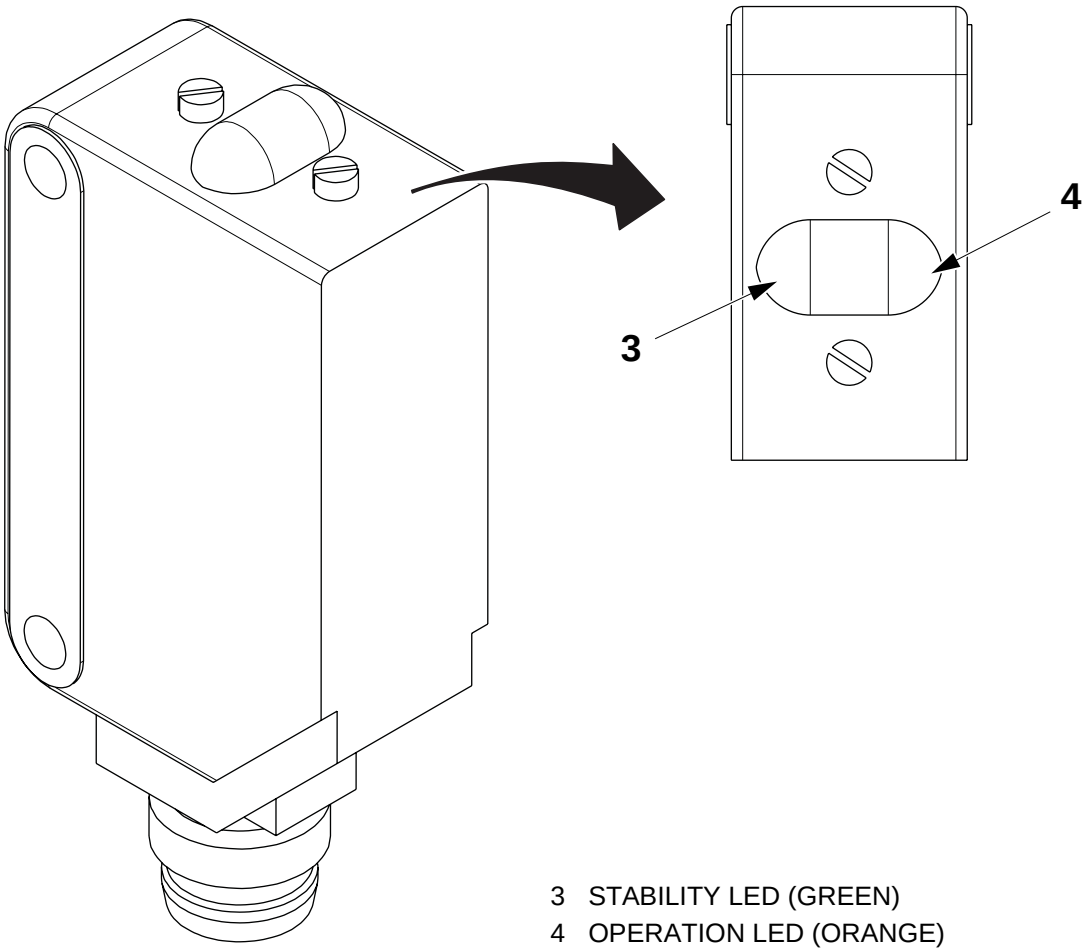

3 STABILITY LED (GREEN)
4 OPERATION LED (ORANGE)

TechPub_2614345_0106 - 1202_3047163_01.fm

8.8 Control Panel

SPC Reference	2779070-0100

8.8-1 Control Panel

8.8-1-1 Control Panel - Overview

SPC Reference	90600-0980

The Control Panel is used to start, stop and supervise the machine from one common point. It has two main parts:

- the touch screen display (1)
- the operator pushbutton panel (2).

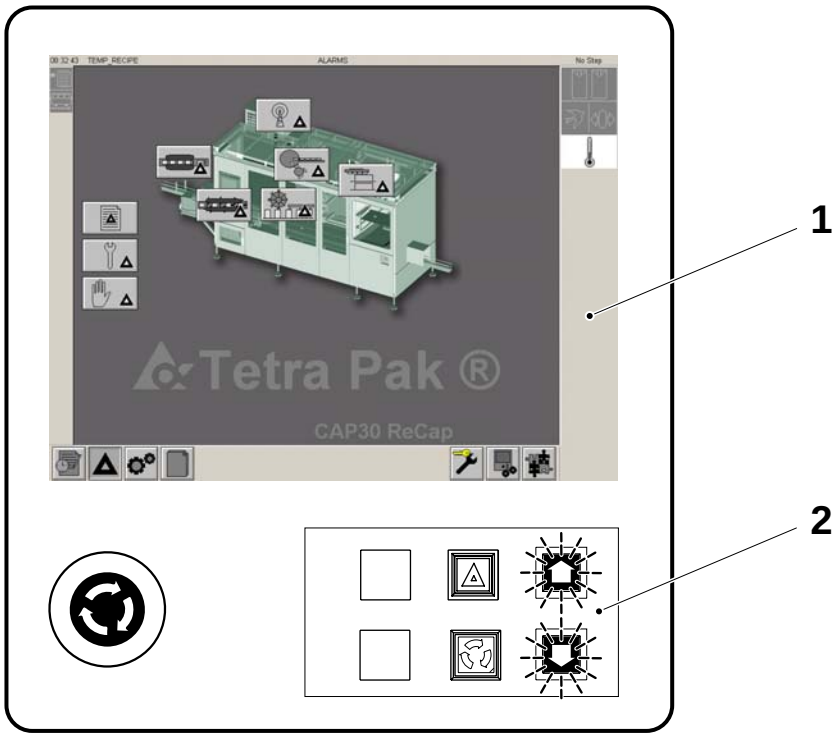

1 Touch screen display
2 Operator pushbutton panel

TechPub_2614345_0106 - 1203_3047164_01.fm

8.8-1-2 Control Panel - Touch Screen

SPC Reference	90600-0980

This section describes the maintenance procedures associated with the touch screen display. The procedures must be performed in a specific order according to the situation. Proceed as follows:

1) 8.8.1-1 Touch Screen - TPOP SHUTDOWN
2) 8.8.1-2 Touch Screen - Firmware Installation
3) 8.8.1-3 Touch Screen - New Application Software Installation
4) 8.8.1-4 Touch Screen - Load New Application
5) 8.8.1-5 Touch Screen - Check/Set Network Configuration
6) 8.8.1-6 Touch Screen - Startup Options Setup
7) 8.8.1-7 Touch Screen - Display Setup
8) 8.8.1-8 Touch Screen - Time/Date/Regional Settings Setup
9) 8.8.1-9 Touch Screen - Start-Up Language Setup
10) 8.8.1-10 Touch Screen - Language Setup.

Note! Step 2 should only be used for a TPOP that has previously been used.

TechPub_2614345_0106 - 1203_3047164_01.fm

8.8.1 Touch Screen

Machine Status	Mains Power ON
Tools	Compact Flash Card for Firmware 3009961-0001 Compact Flash Card for Software 3009962-0002
SPC Reference	2779070-0100

8.8.1-1 Touch Screen - TPOP SHUTDOWN

Machine Status	Mains Power ON
SPC Reference	2779070-0100

a) Login as Service technician in the TPOP, see HMI User Management - Log On as a User.

b) In the SERVICE window, touch the SHUTDOWN button (1) to shutdown the TPOP.

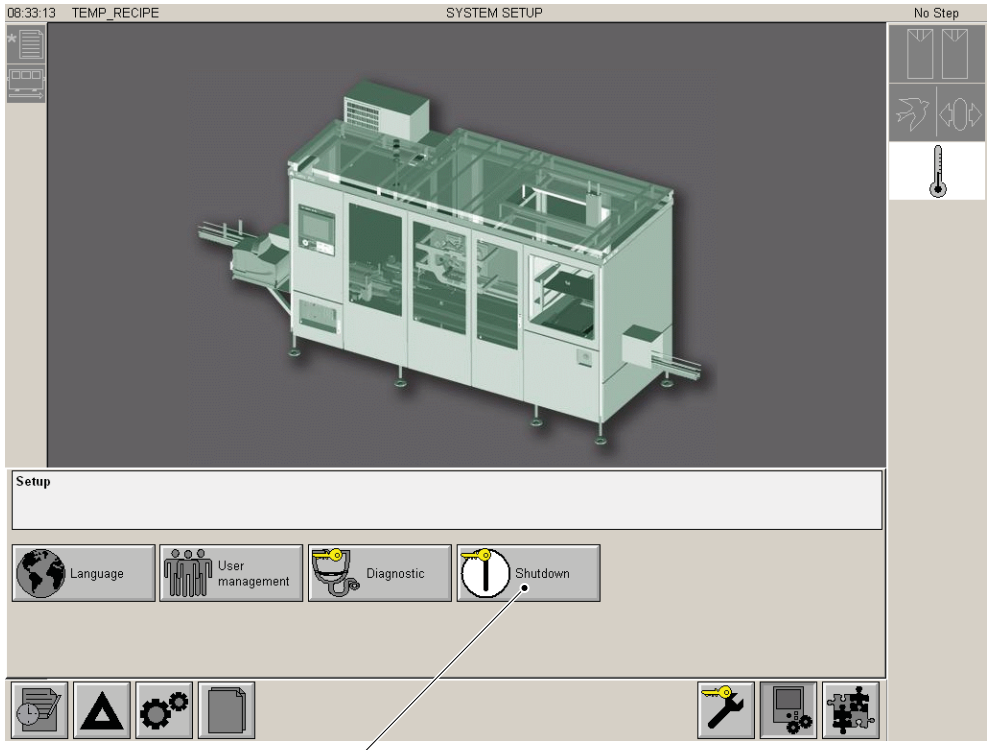

1 SHUTDOWN button

TechPub_2614345_0106 - 1203_3047164_01.fm

8.8.1-2 Touch Screen - Firmware Installation

Machine Status	Mains Power ON
SPC Reference	2779070-0100

a) In the configuration window (1) touch the Terminal settings button (2).

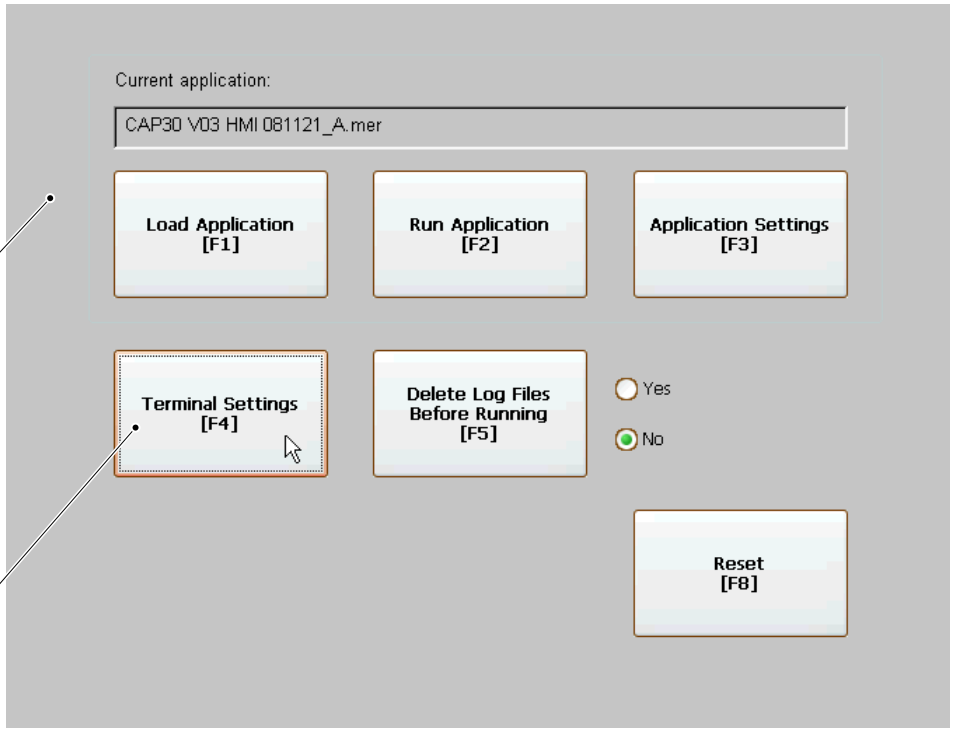

1 Configuration window
2 Terminal setting button

TechPub_2614345_0106 - 1203_3047164_01.fm

(Cont'd)

(Cont'd)

b) Select file management (3) and touch ENTER (4).

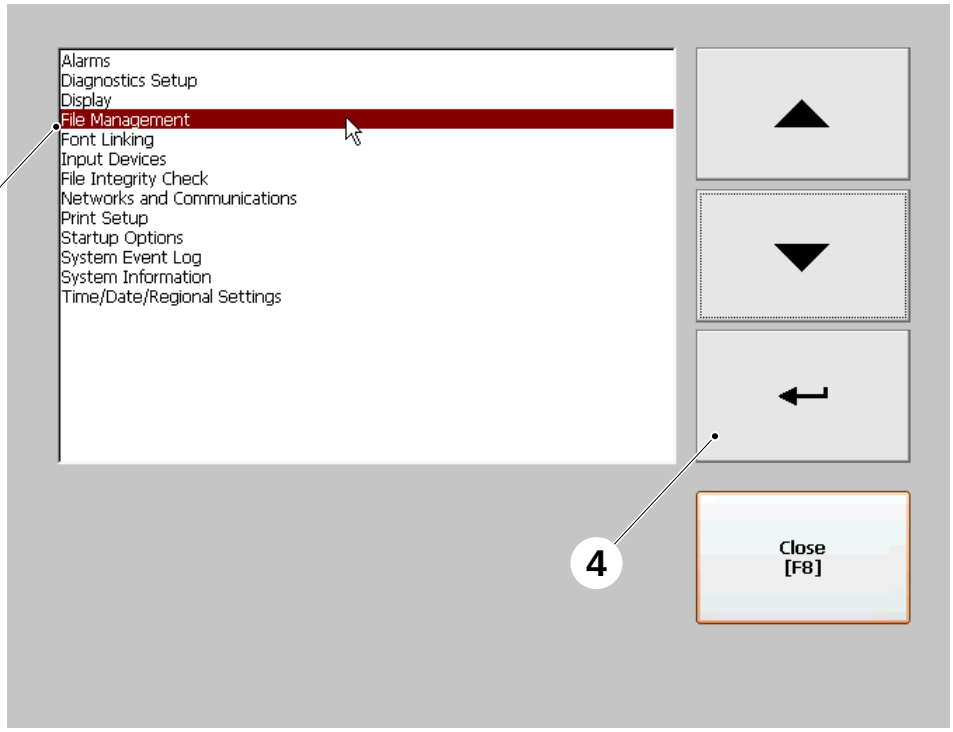

3 File management
4 ENTER button

(Cont'd)

TechPub_2614345_0106 - 1203_3047164_01.fm

(Cont'd)

c) Touch the ARROW buttons (5) to select “Delete Files”.

d) Touch ENTER (4).

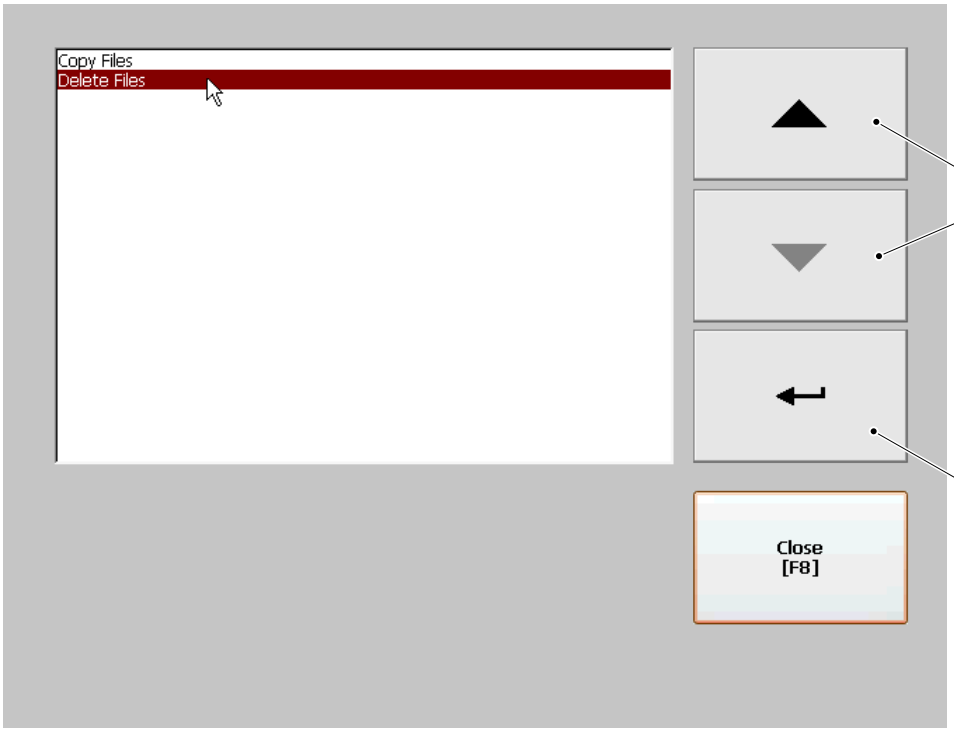

4 ENTER button
5 ARROW button

TechPub_2614345_0106 - 1203_3047164_01.fm

(Cont'd)

(Cont'd)

e) Select “Delete Applications” and touch ENTER (4).

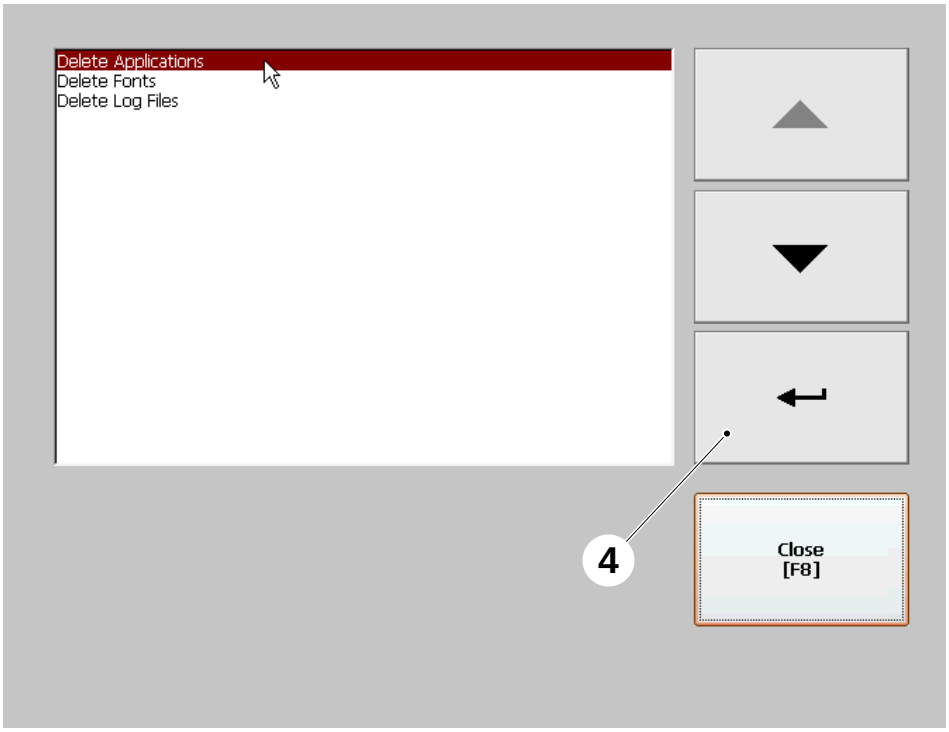

4 ENTER button

(Cont'd)

TechPub_2614345_0106 - 1203_3047164_01.fm

(Cont'd)

f) Touch Delete (6) to remove all the Applications (7) if any are present, if not and the field appears empty go to step m) on page 8-264.

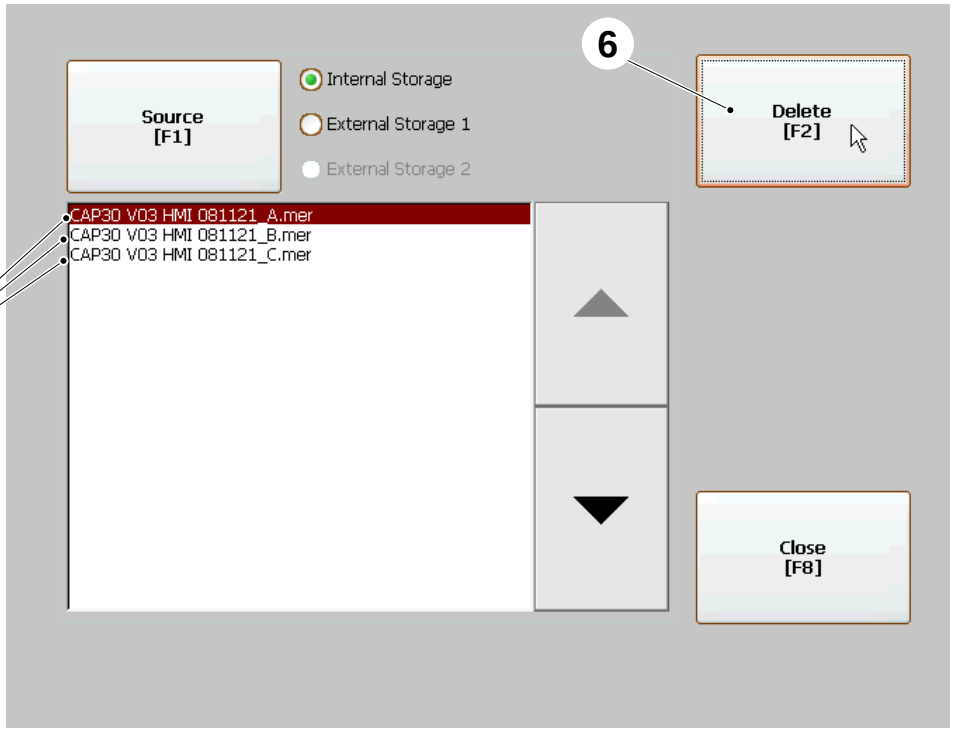

6 Delete button
7 Firmware applications

(Cont'd)

TechPub_2614345_0106 - 1203_3047164_01.fm

(Cont'd)

g) Touch YES (8) to confirm.

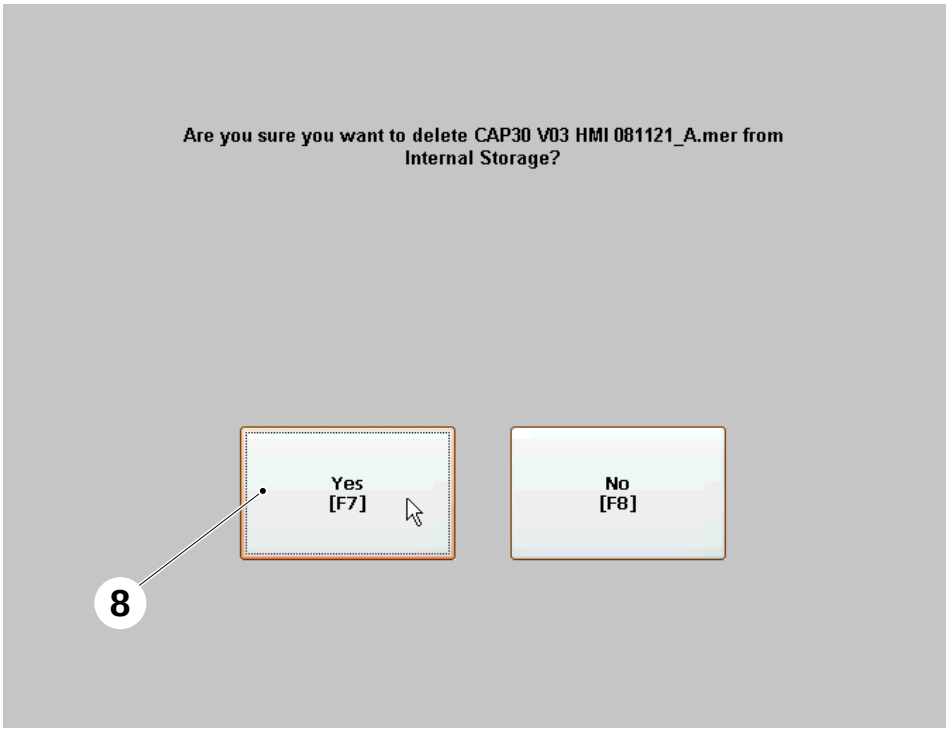

8 YES button

(Cont'd)

TechPub_2614345_0106 - 1203_3047164_01.fm

(Cont'd)

h) Delete all the applications by repeating the instructions from f), on page 8-258.

i) When all the applications are deleted, touch Close (9) until the configuration window is displayed.

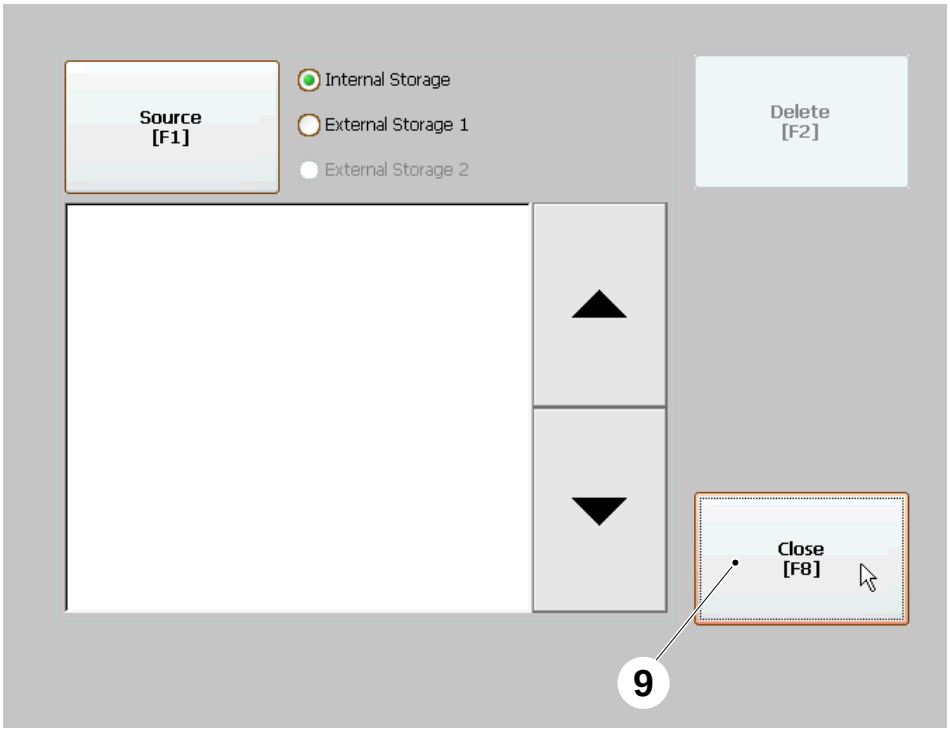

9 Close button

(Cont'd)

TechPub_2614345_0106 - 1203_3047164_01.fm

(Cont'd)

j) In the configuration window (1) touch the Reset button (10).

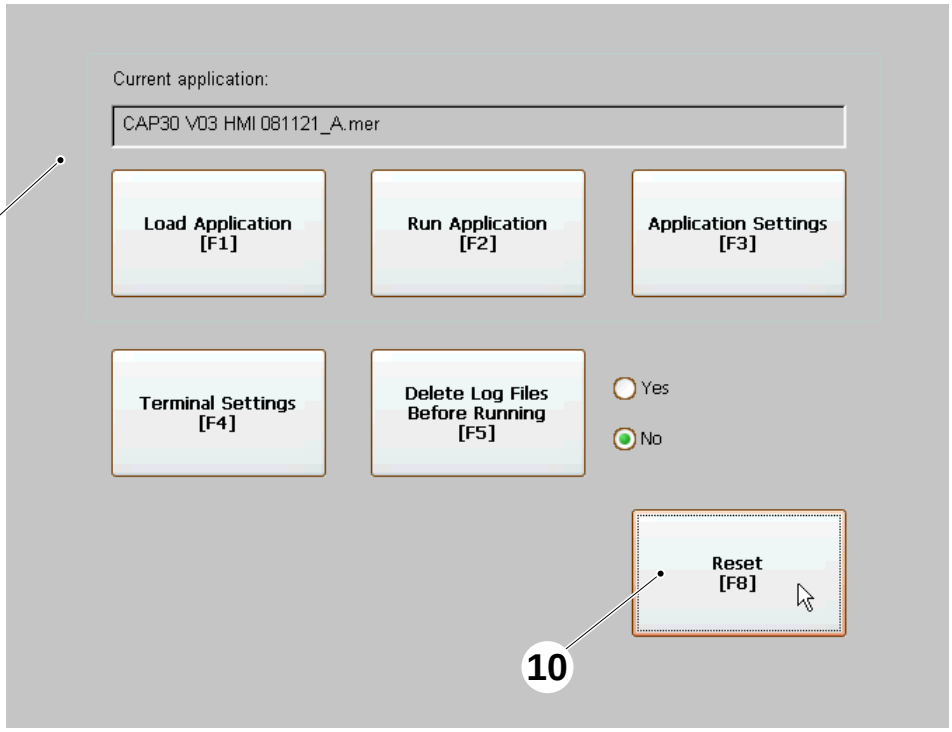

1 Configuration window
10 Reset button

(Cont'd)

TechPub_2614345_0106 - 1203_3047164_01.fm

(Cont'd)

k) Touch YES (8) to confirm.

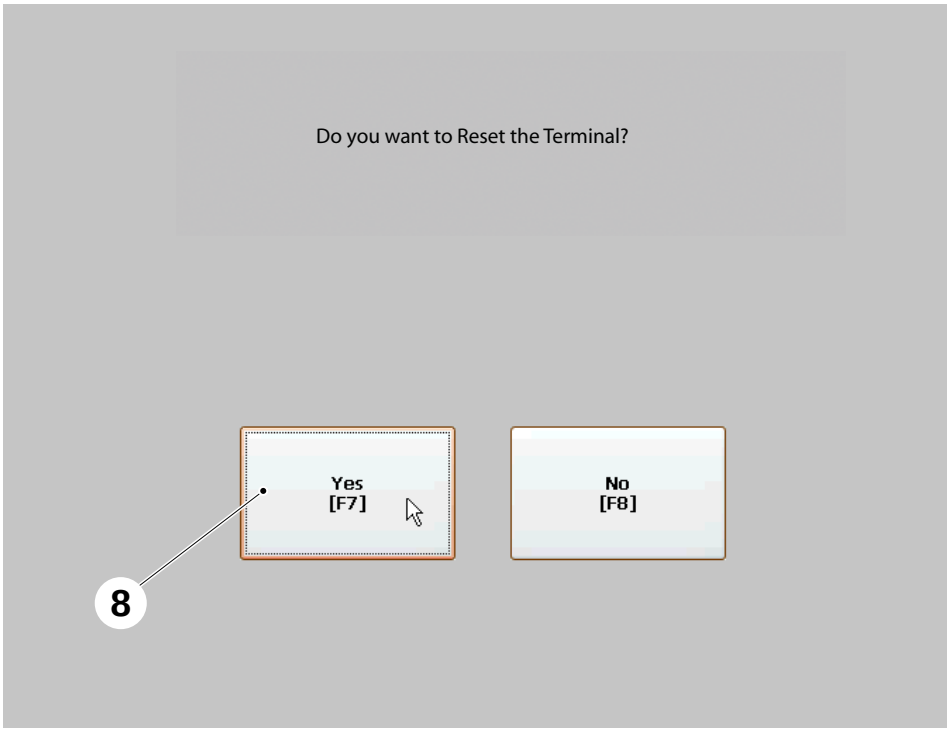

8 YES button

(Cont'd)

TechPub_2614345_0106 - 1203_3047164_01.fm

(Cont'd)

l) When the TPOP reboots, touch OK (11) in the ERROR window (12).

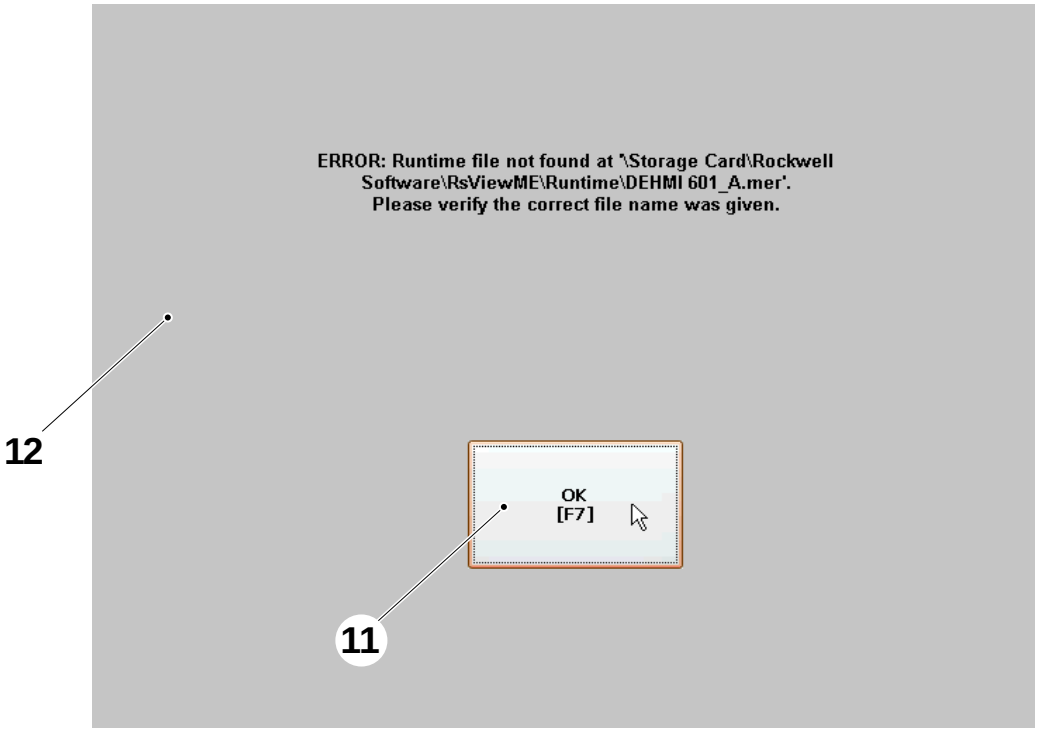

11 OK button
12 ERROR window

(Cont'd)

TechPub_2614345_0106 - 1203_3047164_01.fm

(Cont'd)

m) Remove the screws (1) and open the panel (2) to access the rear of the TPOP.

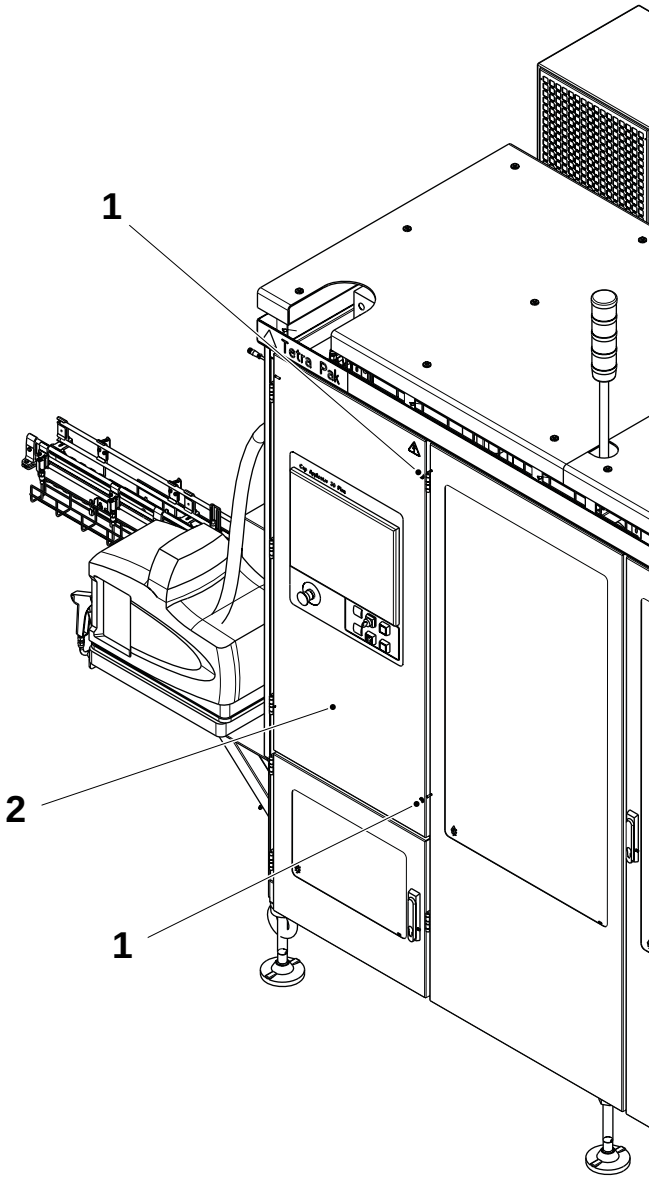

1 Screw
2 Panel

(Cont'd)

TechPub_2614345_0106 - 1203_3047164_01.fm

(Cont'd)

n) Insert the CompactFlash Card (3) with the new Firmware inside the slot (4), making sure that the thin edge (5) is placed on the outer side.

Note! The CompactFlash Card (3) must be inserted following the direction shown by the arrow (6).

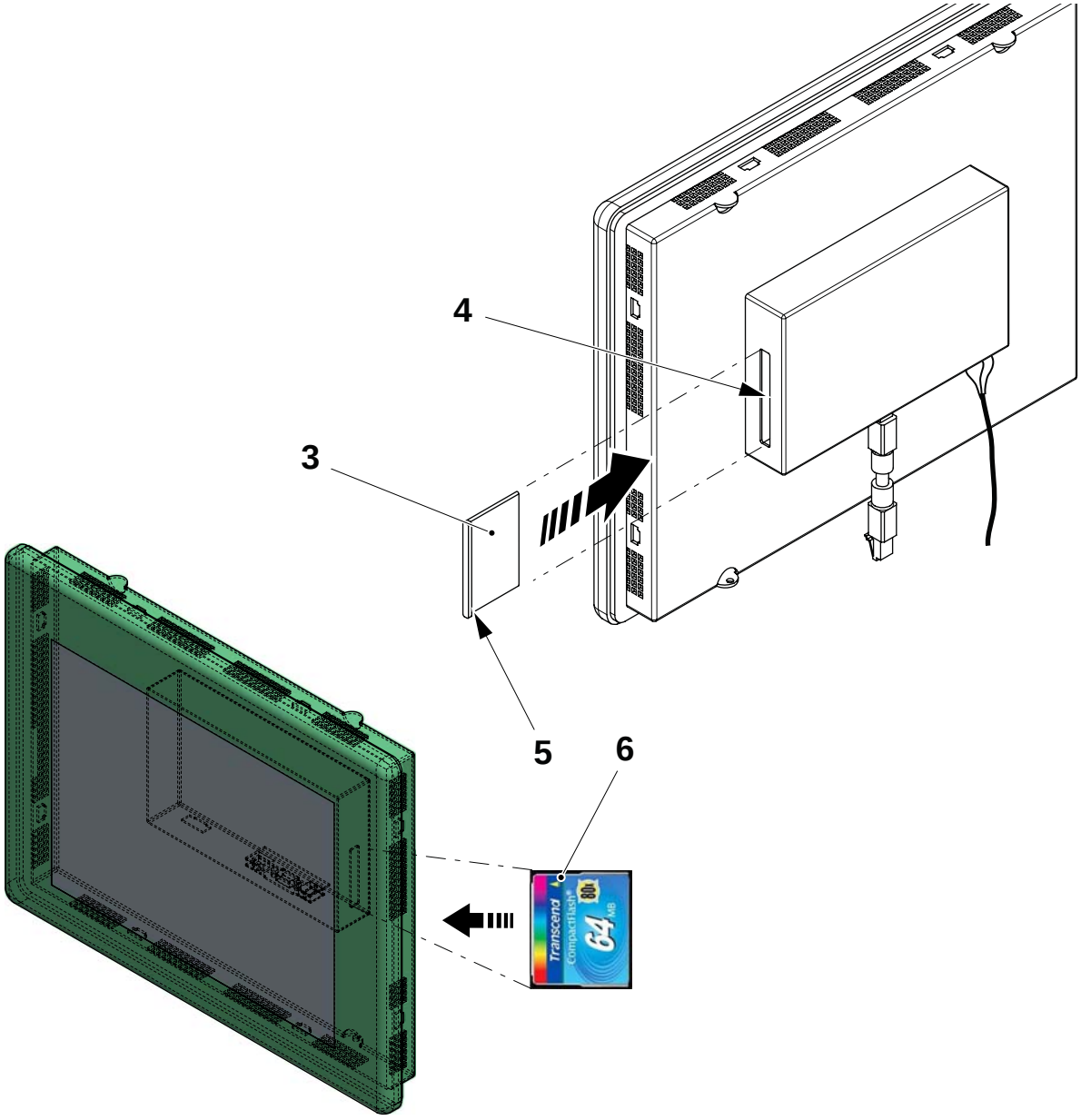

3 Firmware CompactFlash card
4 Slot
5 Edge
6 Arrow

TechPub_2614345_0106 - 1203_3047164_01.fm

(Cont'd)

o) When the “firmware upgrade card” window (7) appears, check the versions of the Firmware and touch the Upgrade button (8) to upgrade to the latest version.

p) In case the Firmware is already updated, touch the Exit button (9) and proceed from 8.8.1-3 Touch Screen - New Application Software Installation on page 8-273.

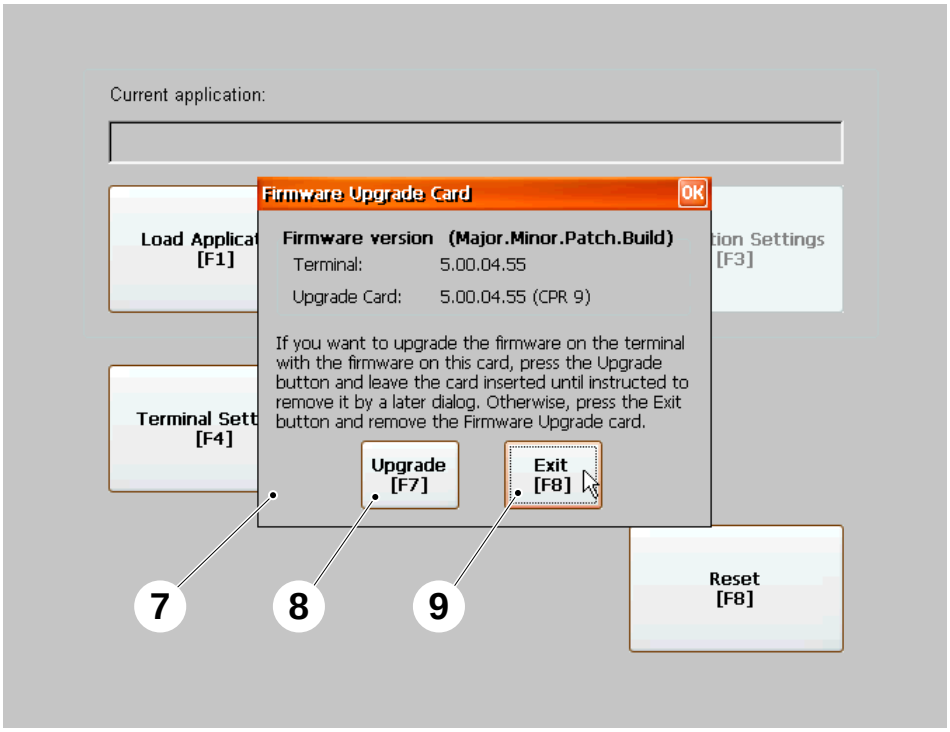

7 Firmware upgrade card window
8 Upgrade button
9 Exit button

(Cont'd)

TechPub_2614345_0106 - 1203_3047164_01.fm

(Cont'd)

q) Touch YES (10) to confirm.

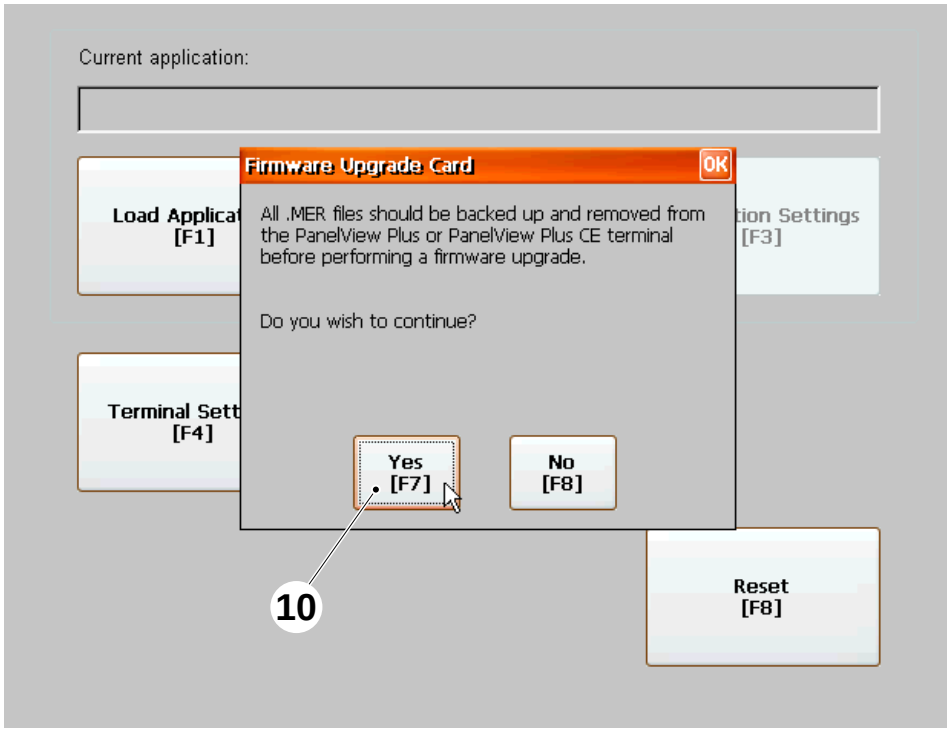

10 YES button

(Cont'd)

TechPub_2614345_0106 - 1203_3047164_01.fm

(Cont'd)

r) Wait for the TPOP to finish the uploading of Firmware.

s) Follow the instructions of the TPOP.

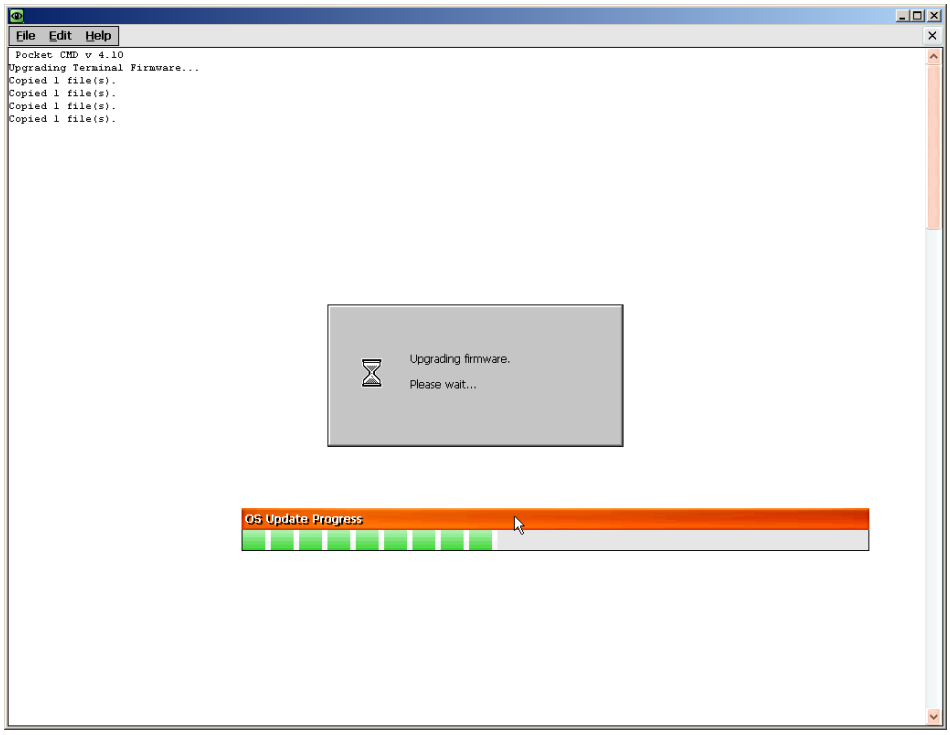

TechPub_2614345_0106 - 1203_3047164_01.fm

(Cont'd)

(Cont'd)

t) When requested, carefully touch and briefly hold stylus on the centre of the targets (11) in the four corners of the screen.



11 Target

(Cont'd)

TechPub_2614345_0106 - 1203_3047164_01.fm

(Cont'd)

u) When the installation is finished, the confirmation “Upgrade Complete” appears.

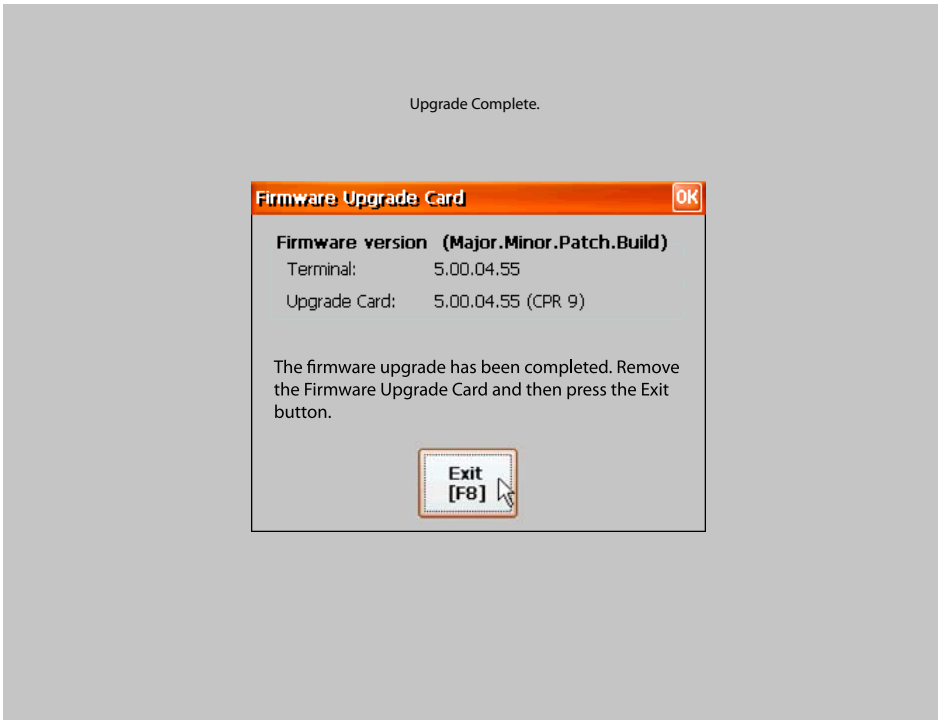

TechPub_2614345_0106 - 1203_3047164_01.fm

(Cont'd)

(Cont'd)

v) Remove the CompactFlash Card (3) with the new Firmware.

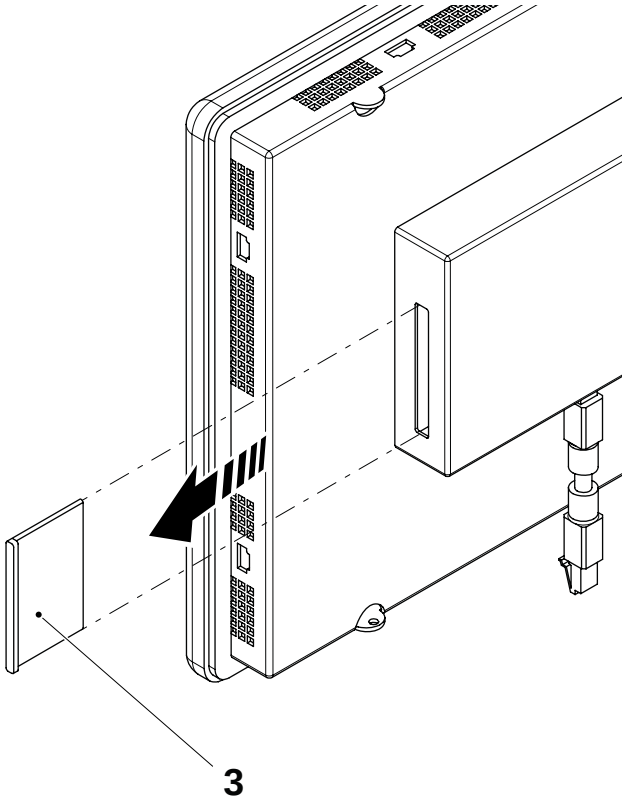

3 Firmware CompactFlash card

(Cont'd)

TechPub_2614345_0106 - 1203_3047164_01.fm

(Cont'd)

w) Touch the EXIT button (9) to reboot the TPOP.

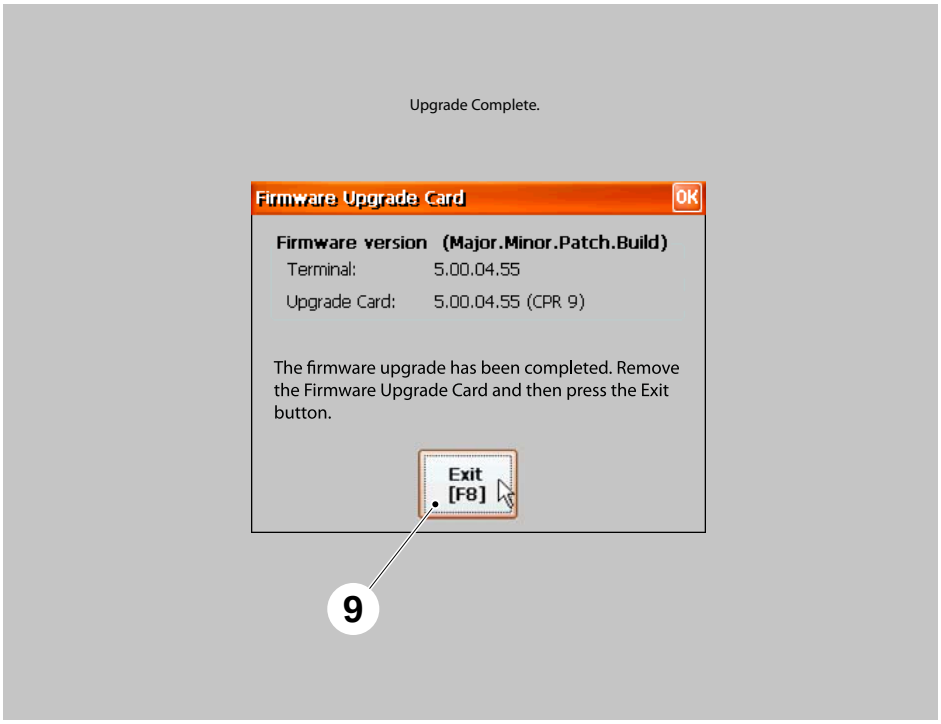

9 EXIT button

TechPub_2614345_0106 - 1203_3047164_01.fm

8.8.1-3 Touch Screen - New Application Software Installation

Machine Status	Mains Power ON
Tools	Compact Flash Card for Software 3009962-0002
SPC Reference	2779070-0100

a) When the TPOP reboots, wait for the configuration window (1) to appear.

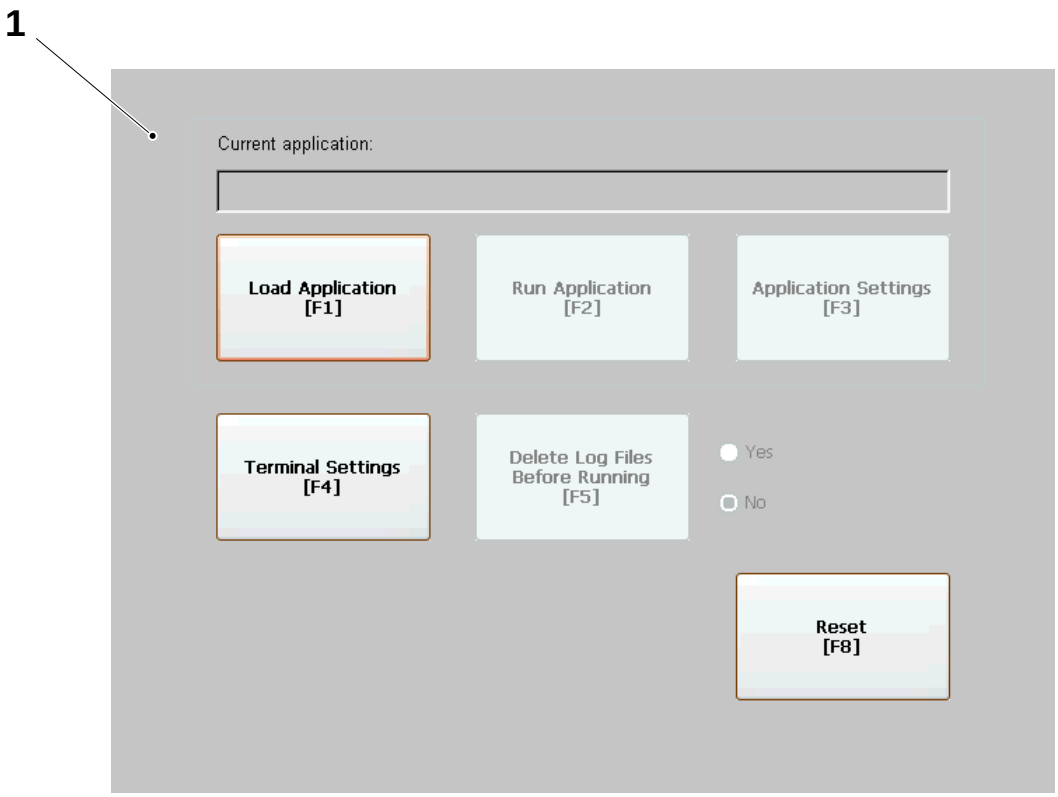

1 Configuration window

(Cont'd)

TechPub_2614345_0106 - 1203_3047164_01.fm

(Cont'd)

b) Insert the CompactFlash Card (2) with the new Application inside the slot (3), making sure that the thin edge (4) is placed on the outer side.

Note! The CompactFlash Card (3) must be inserted following the direction shown by the arrow (5).

Note! The new software application will be installed automatically.

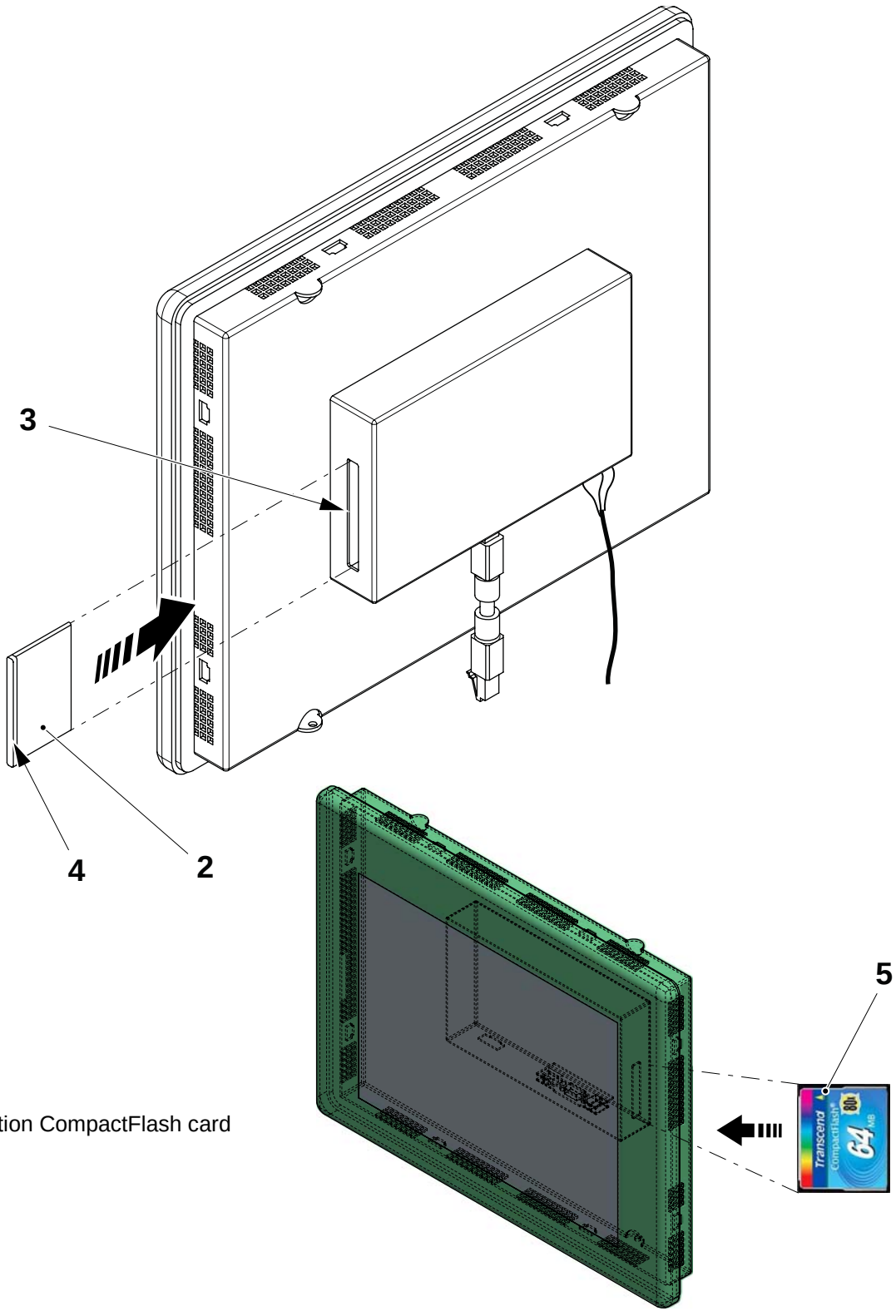

2 Application CompactFlash card
3 Slot
4 Edge
5 Arrow

(Cont'd)

TechPub_2614345_0106 - 1203_3047164_01.fm

(Cont'd)

c) When the installation is completed, the window below appears.

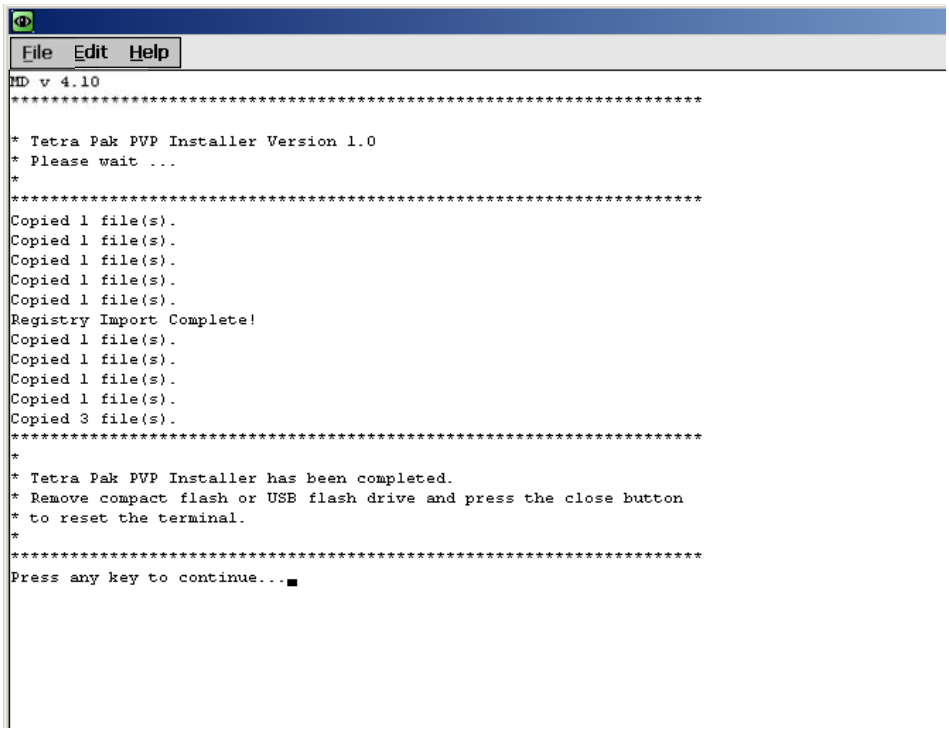

(Cont'd)

TechPub_2614345_0106 - 1203_3047164_01.fm

(Cont'd)

d) Remove the CompactFlash Card (2) with the new Application.

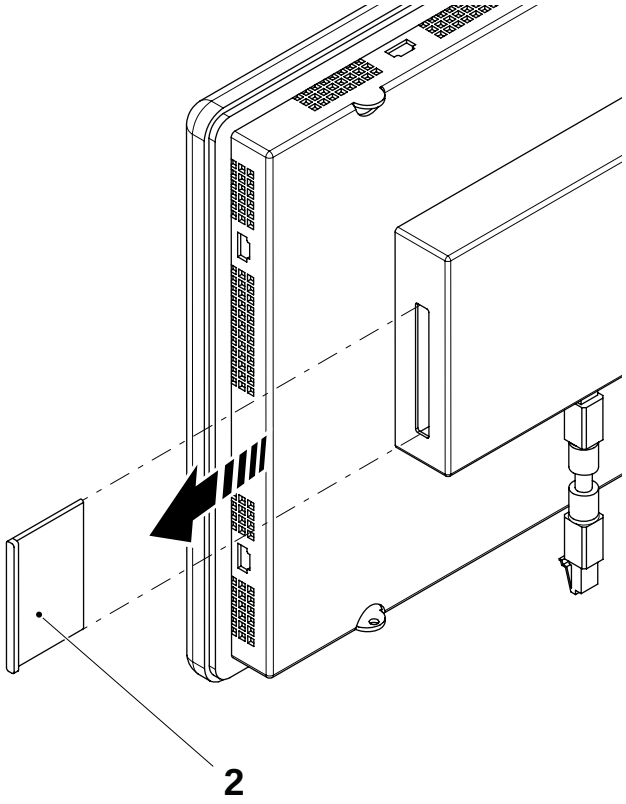

2 Application CompactFlash card

(Cont'd)

TechPub_2614345_0106 - 1203_3047164_01.fm

(Cont'd)

e) Touch File and then Close.

Note! After the window is closed, the TPOP will reboot.

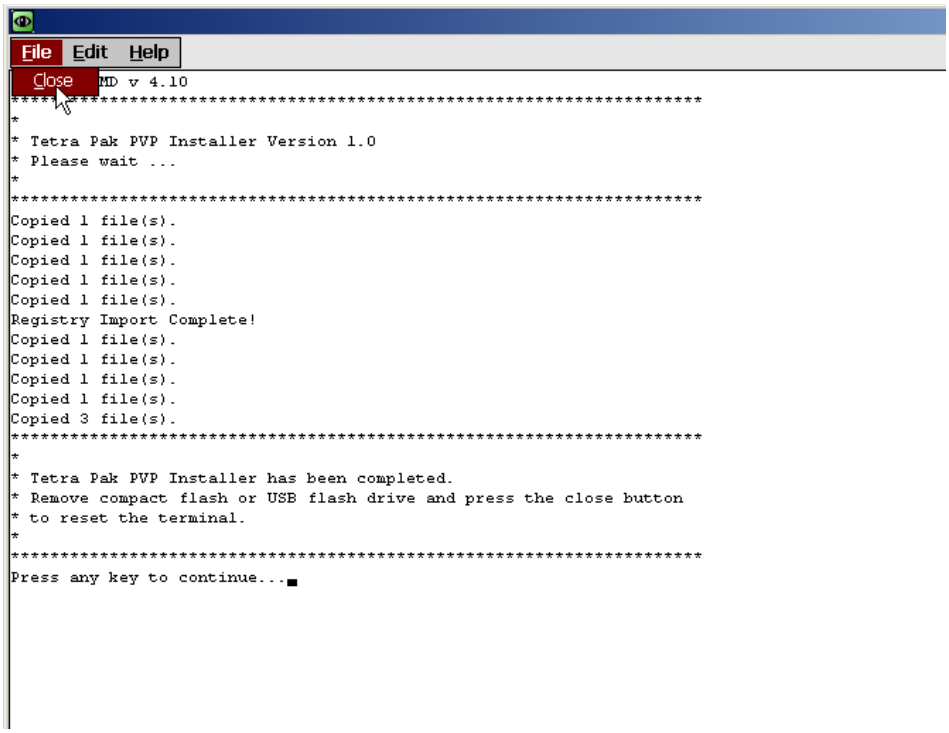

TechPub_2614345_0106 - 1203_3047164_01.fm

8.8.1-4 Touch Screen - Load New Application

Machine Status	Mains Power ON
SPC Reference	2779070-0100

a) When the TPOP reboots, in the configuration window (1) touch the Load Application button (2).

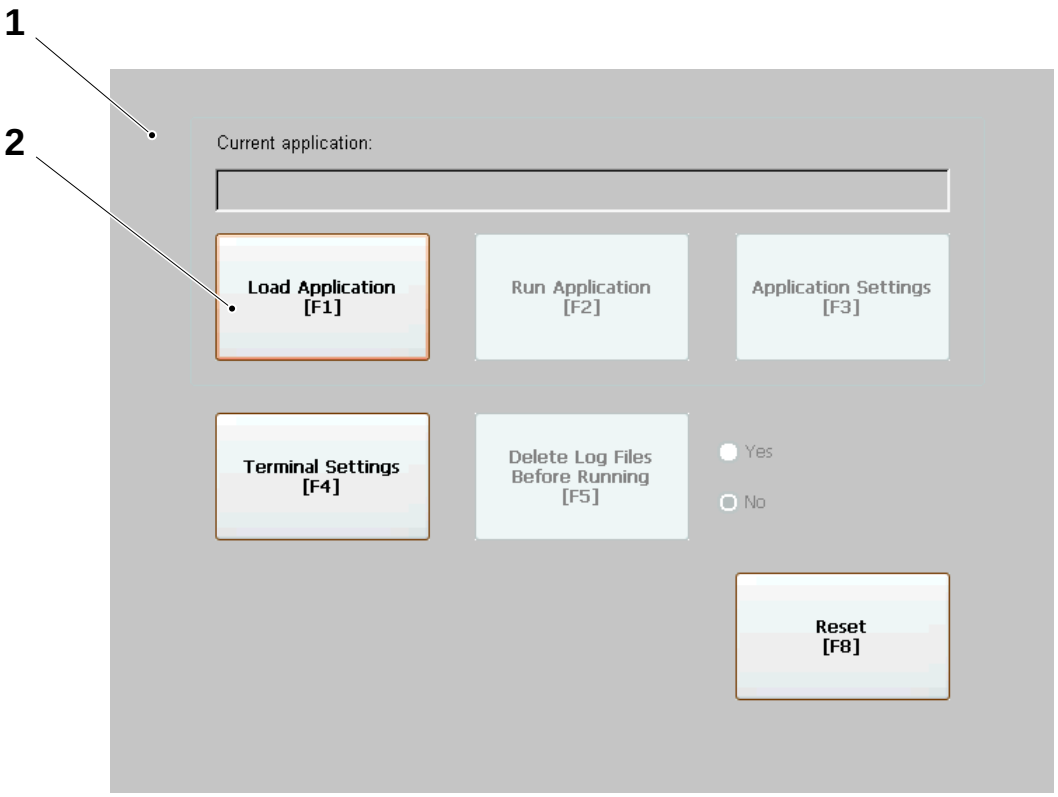

1 Configuration window
2 Load application button

(Cont'd)

TechPub_2614345_0106 - 1203_3047164_01.fm

(Cont'd)

b) Touch the ARROW buttons (3) and select the proper application of the TPOP that matches the desired language, see table on page 8-280.

c) Touch the LOAD button (4).

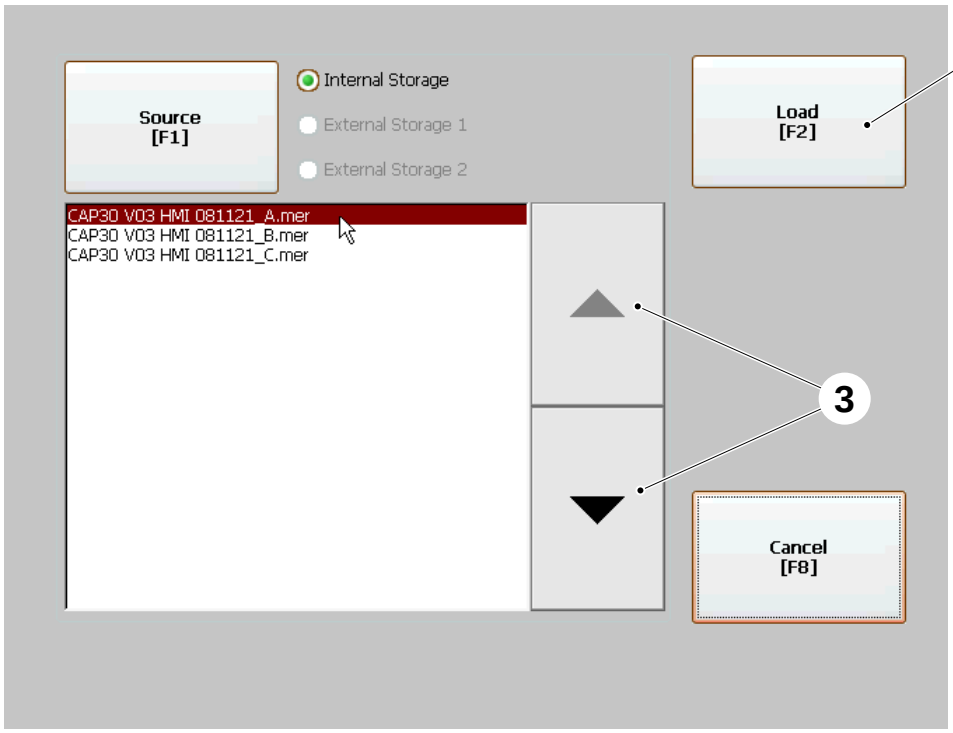

3 ARROW button
4 LOAD button

(Cont'd)

TechPub_2614345_0106 - 1203_3047164_01.fm

(Cont'd)

Note! In the table below there are all the languages available for the TPOP. The languages of the group **A** are available in the application program named XXXXXX_A.mer and consequently for the group **B** and **C.**

Note! English is available in all the three groups.

LANGUAGE GROUP A	LANGUAGE GROUP B	LANGUAGE GROUP C
English	**English**	**English**
Swedish	Czech	Arabic
German	Croatian	Persian
French	Slovenian	Malay
Spanish	Slovak	Japanese
Italian	Romanian	Simplified Chinese
Portuguese	Bulgarian	Thai
Danish	Hungarian	Korean
Greek	Russian	Traditional Chinese
Finnish	Latvian	Vietnamese
Polish	Estonian	
Dutch	Lithuanian	
Norwegian	Serbian	
Turkish		

Note! If your language is not shown above you should TetraPak for more information.

(Cont'd)

TechPub_2614345_0106 - 1203_3047164_01.fm

(Cont'd)

d) Touch YES (5) to confirm.

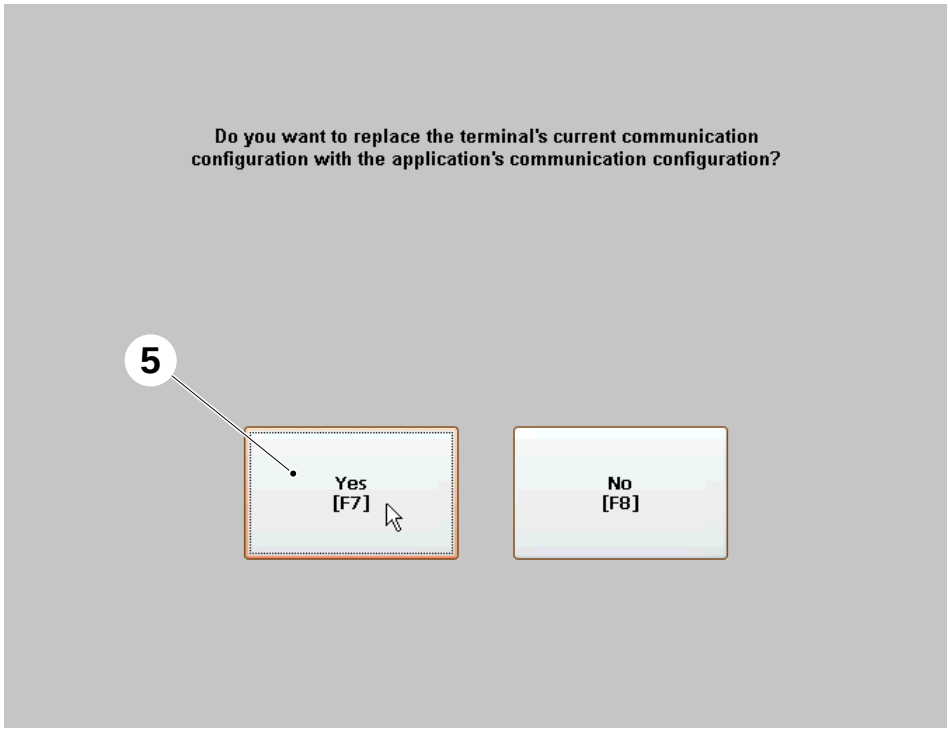

5 YES button

(Cont'd)

TechPub_2614345_0106 - 1203_3047164_01.fm

(Cont'd)

e) Wait for the TPOP to upload the selected application.

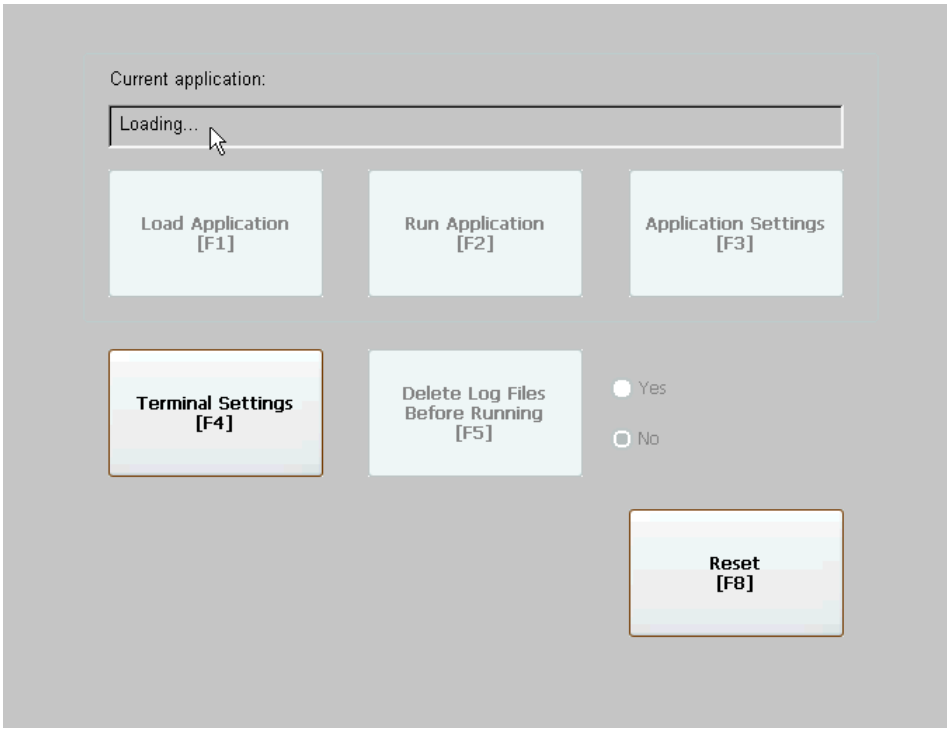

TechPub_2614345_0106 - 1203_3047164_01.fm

8.8.1-5 Touch Screen - Check/Set Network Configuration

Machine Status	Mains Power ON
SPC Reference	2779070-0100

Note! Check the application program (1) on the configuration window (2).

a) Touch Terminal Settings (3).

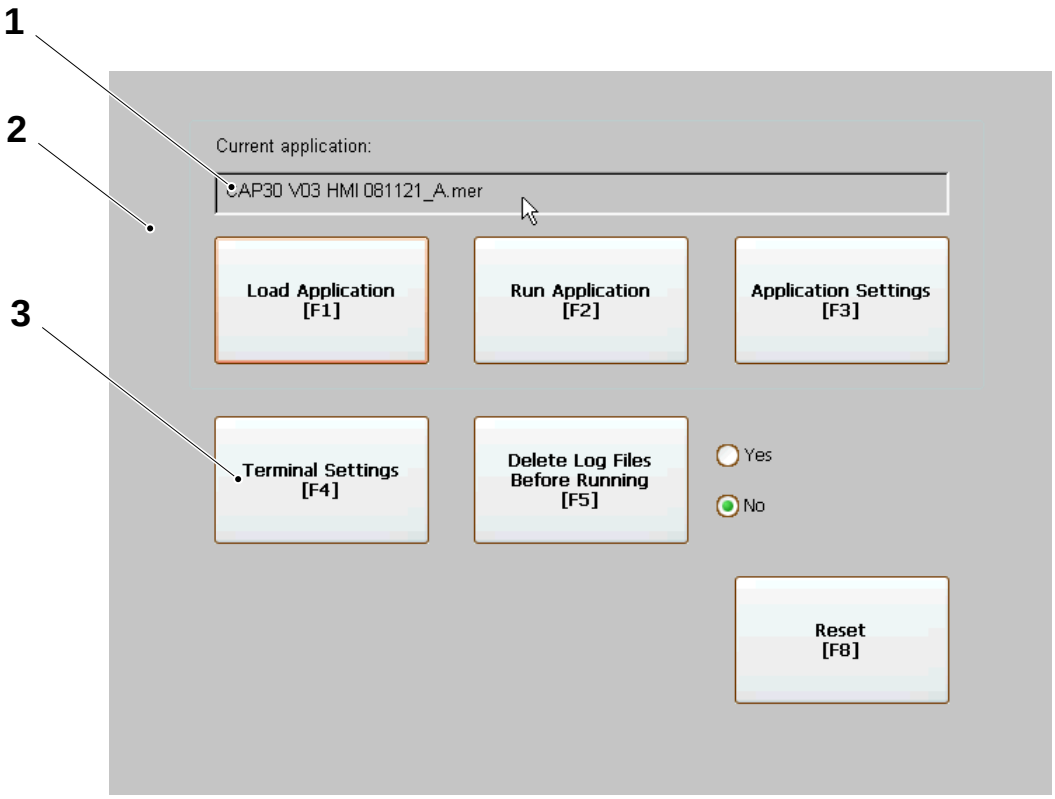

1 Application program
2 Configuration window
3 Terminal settings button

(Cont'd)

TechPub_2614345_0106 - 1203_3047164_01.fm

(Cont'd)

b) Touch the ARROW buttons (4) and select “Network and Communications“.

c) Touch ENTER (5) to confirm.

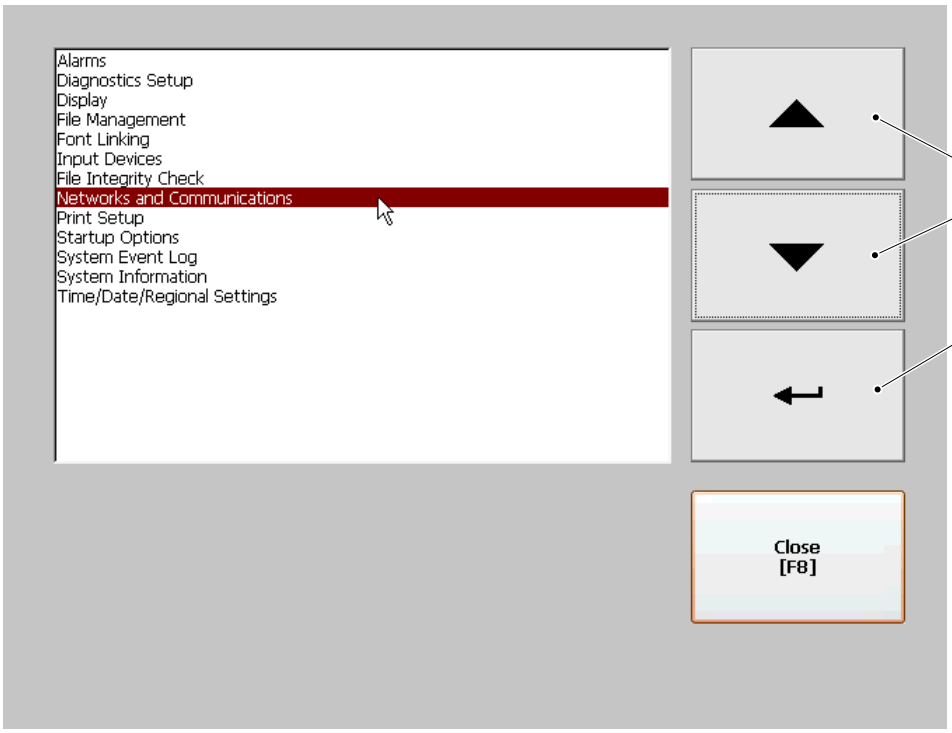

4 ARROW button
5 ENTER button

TechPub_2614345_0106 - 1203_3047164_01.fm

(Cont'd)

(Cont'd)

d) Touch the ARROW buttons (4) and select “Network Connections“.

e) Touch ENTER (5) to confirm.

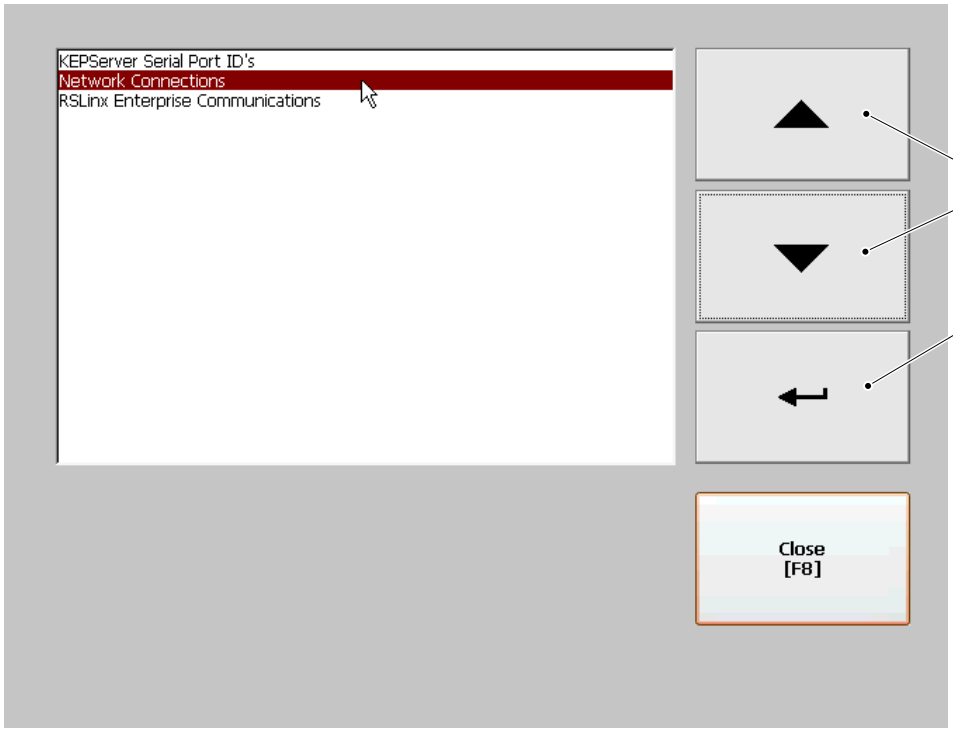

4 ARROW button
5 ENTER button

(Cont'd)

TechPub_2614345_0106 - 1203_3047164_01.fm

(Cont'd)

f) Touch the ARROW buttons (4) and select “Network Adaptors“.

g) Touch ENTER (5) to confirm.

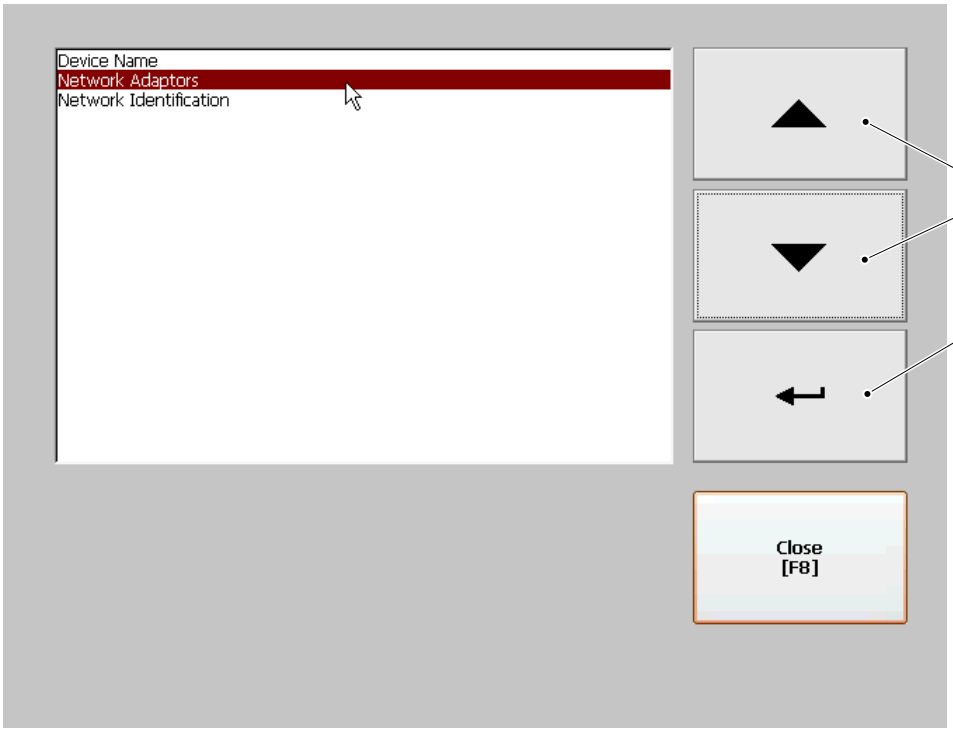

4 ARROW button
5 ENTER button

TechPub_2614345_0106 - 1203_3047164_01.fm

(Cont'd)

(Cont'd)

h) Check it's selected "Built-in Ethernet Controller" and touch IP Address (6).

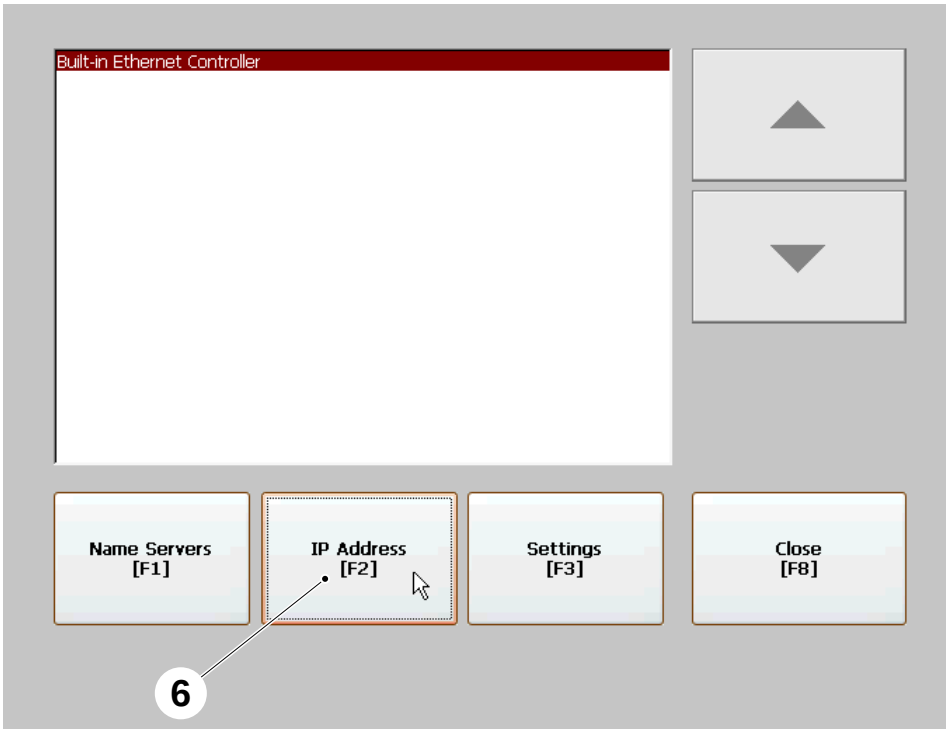

6 IP Address button

(Cont'd)

TechPub_2614345_0106 - 1203_3047164_01.fm

(Cont'd)

Note! Check that Checkbox No (7) is selected. If not, touch Checkbox No (7).

i) Touch IP Address (6).

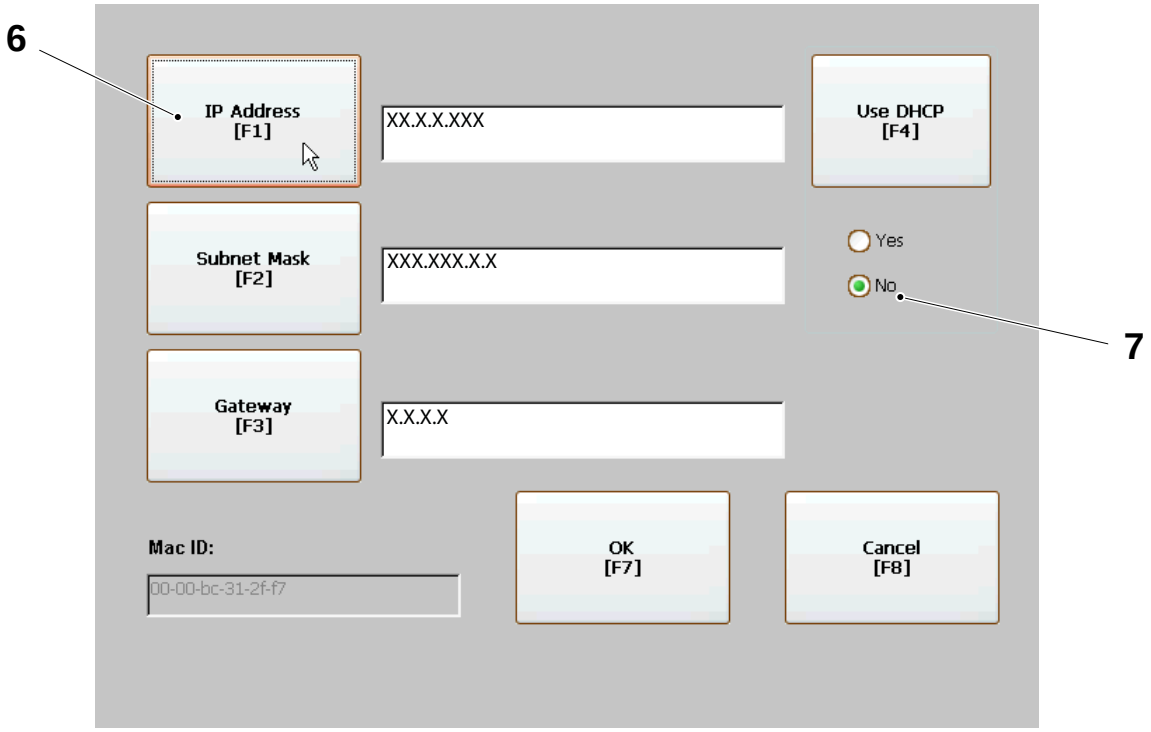

6 IP Address button
7 Checkbox

TechPub_2614345_0106 - 1203_3047164_01.fm

(Cont'd)

(Cont'd)

j) Enter the correct IP Address (8).

k) Touch ENTER (5) to confirm.



5 ENTER button
8 IP Address

(Cont'd)

TechPub_2614345_0106 - 1203_3047164_01.fm

(Cont'd)

l) Touch Subnet Mask (9).

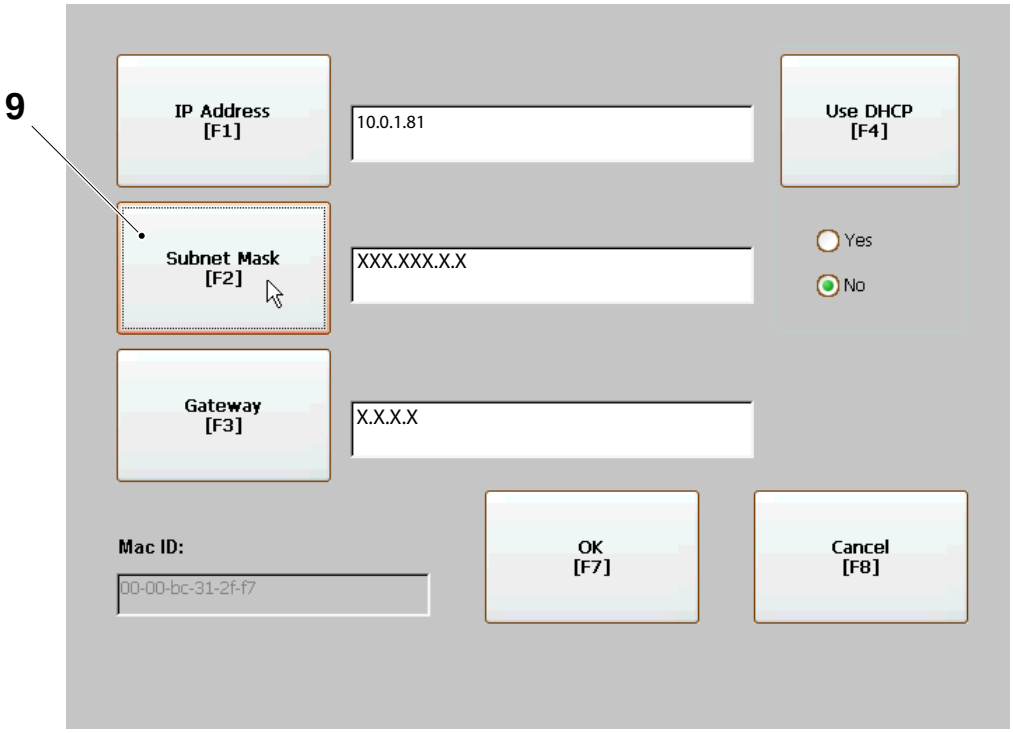

9 Subnet Mask button

(Cont'd)

TechPub_2614345_0106 - 1203_3047164_01.fm

(Cont'd)

m) Enter the correct Subnet Mask Code (10).

n) Touch ENTER (5) to confirm.

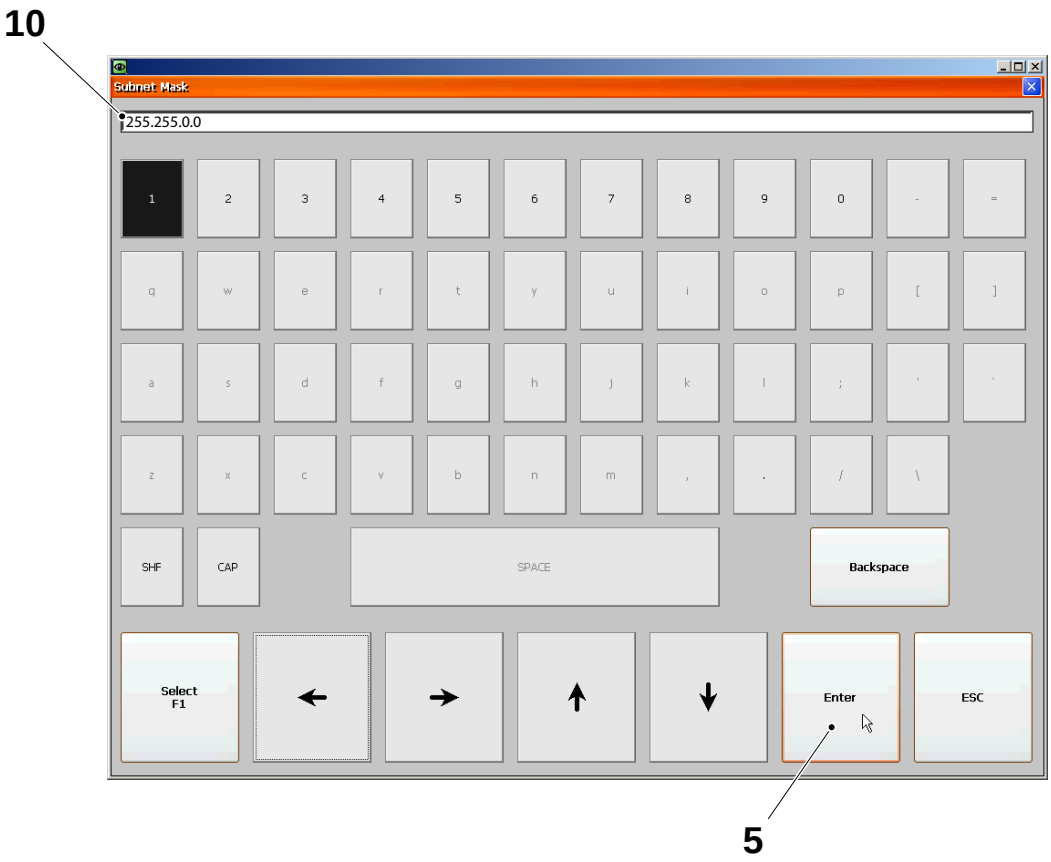

5 ENTER button
10 Subnet Mask Code

(Cont'd)

TechPub_2614345_0106 - 1203_3047164_01.fm

(Cont'd)

o) Touch Gateway (11).

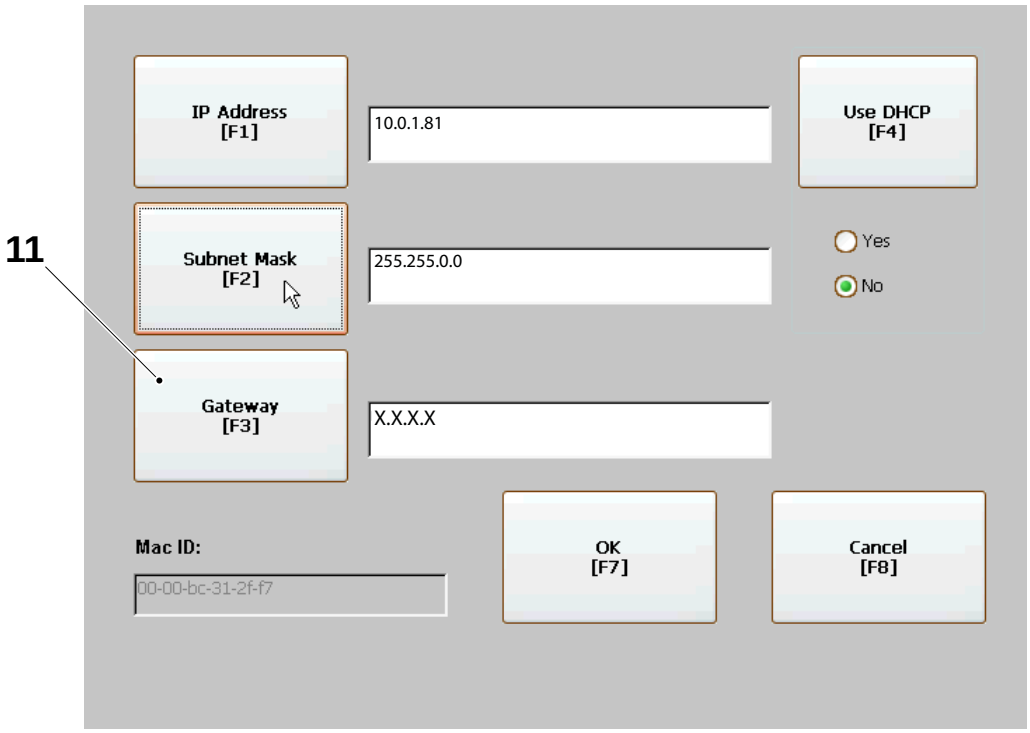

11 Gateway button

(Cont'd)

TechPub_2614345_0106 - 1203_3047164_01.fm

(Cont'd)

p) Enter the correct Gateway Code (12).

q) Touch ENTER (5) to confirm.

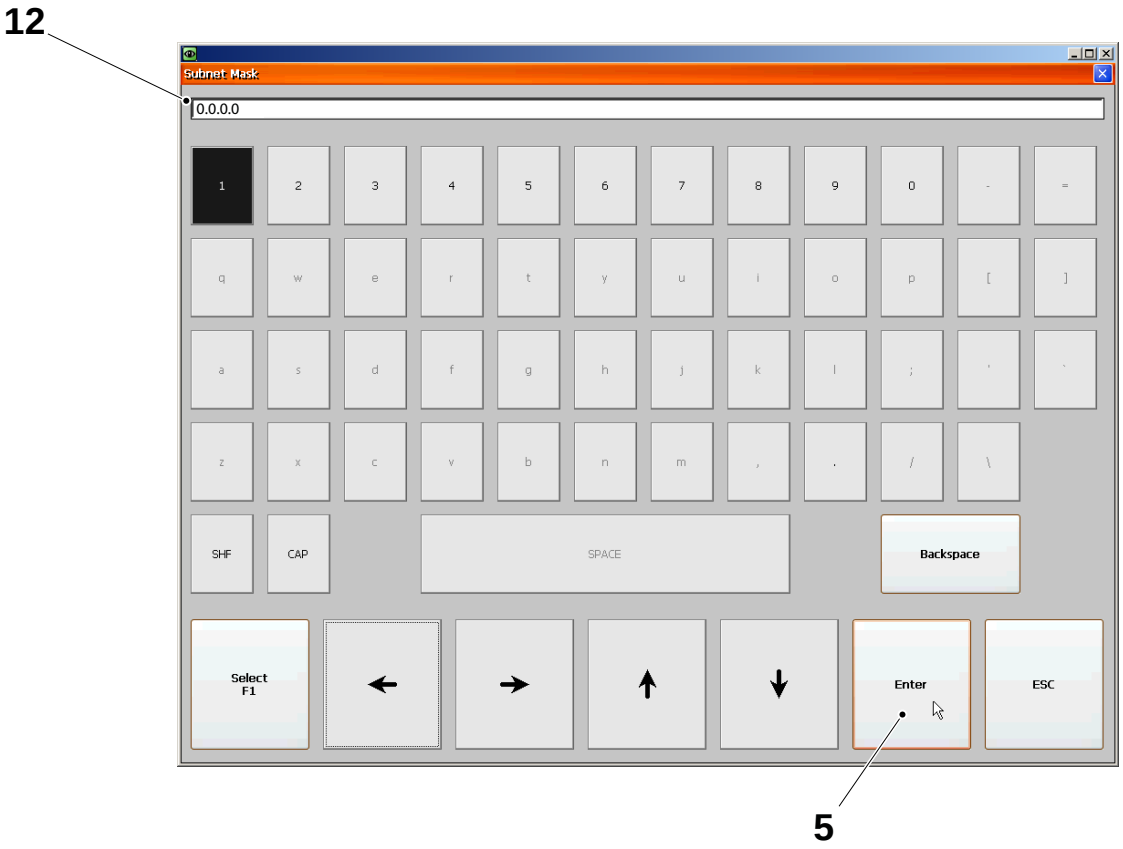

5 ENTER button
12 Gateway Code

(Cont'd)

TechPub_2614345_0106 - 1203_3047164_01.fm

(Cont'd)

r) Touch OK (13).

Note! In the window below there's the complete right address.

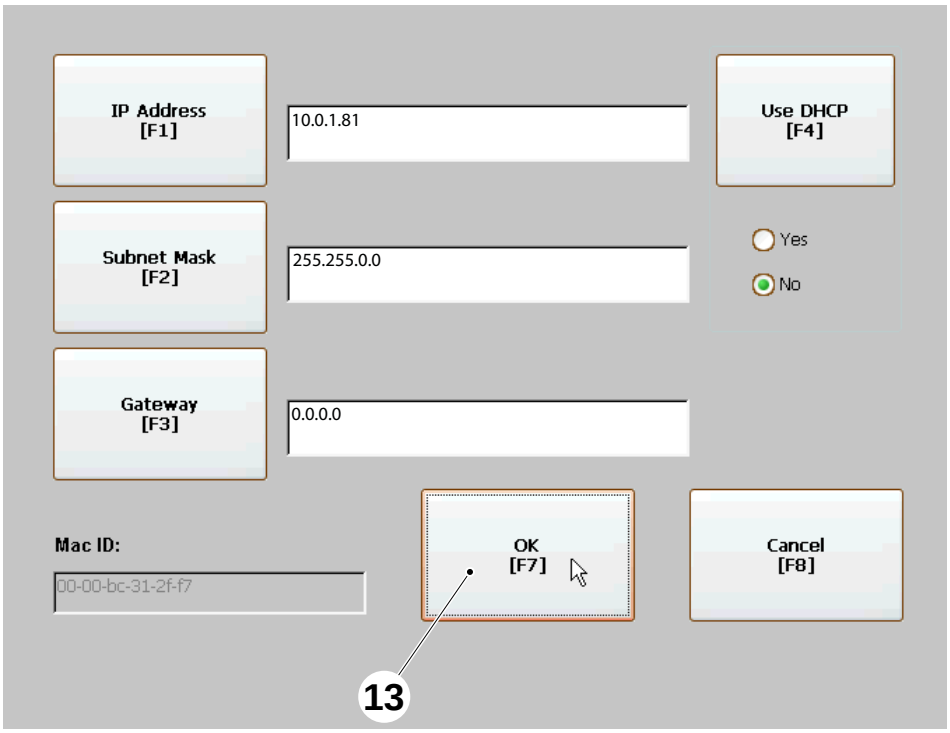

13 OK button

TechPub_2614345_0106 - 1203_3047164_01.fm

(Cont'd)

(Cont'd)

s) Touch OK (13).

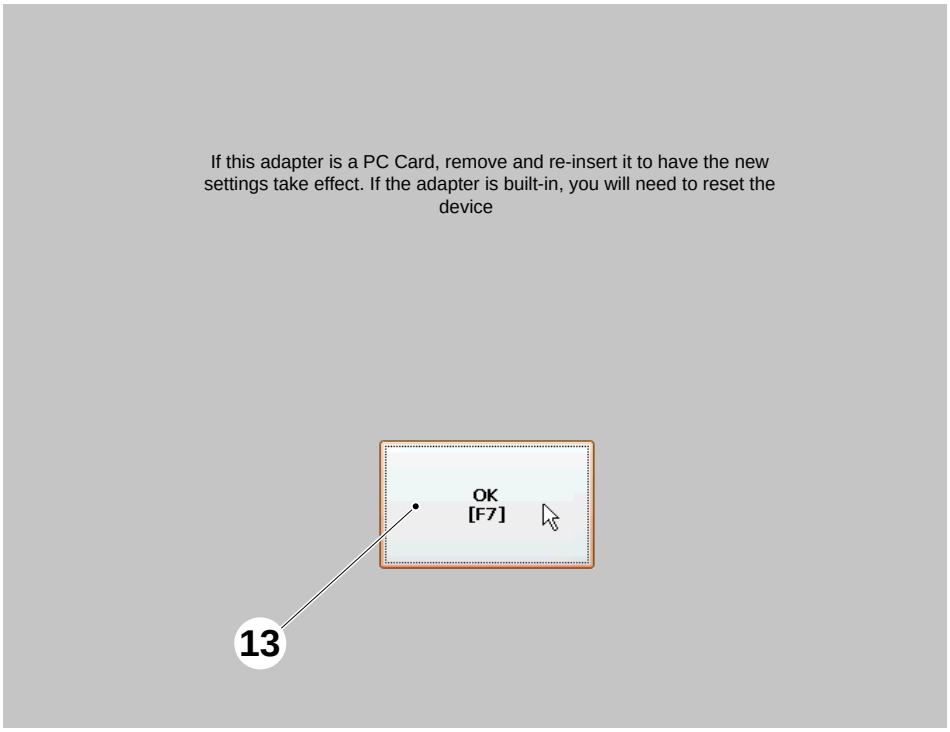

13 OK button

(Cont'd)

TechPub_2614345_0106 - 1203_3047164_01.fm

(Cont'd)

t) Touch CLOSE (14).

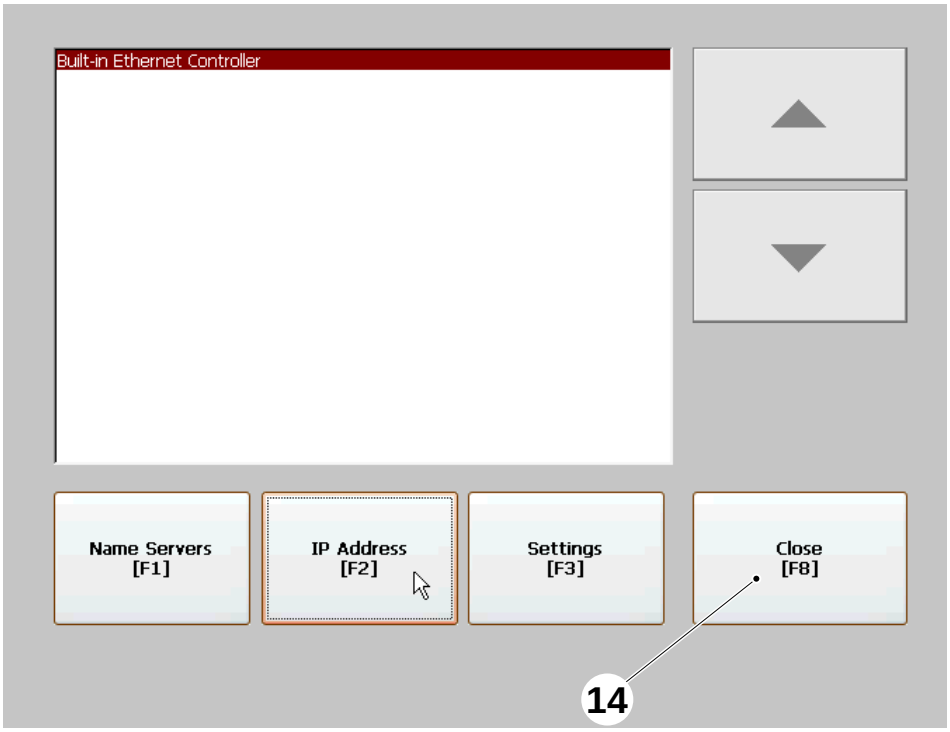

14 CLOSE button

TechPub_2614345_0106 - 1203_3047164_01.fm

(Cont'd)

(Cont'd)

u) Touch CLOSE (14).

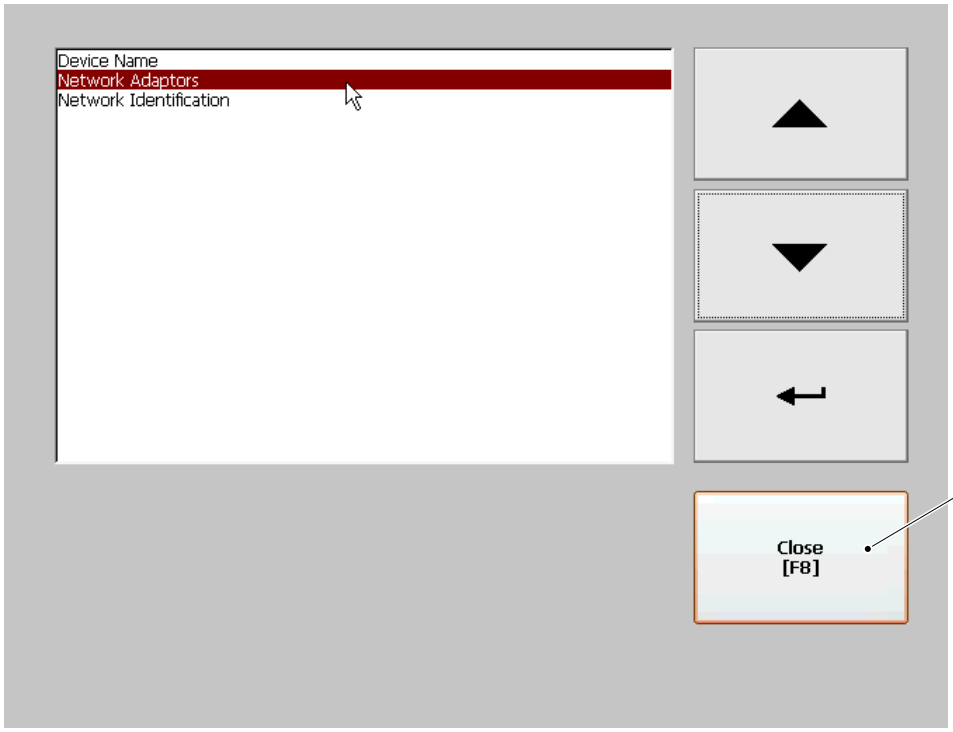

14 CLOSE button

(Cont'd)

TechPub_2614345_0106 - 1203_3047164_01.fm

(Cont'd)

v) Touch CLOSE (14).

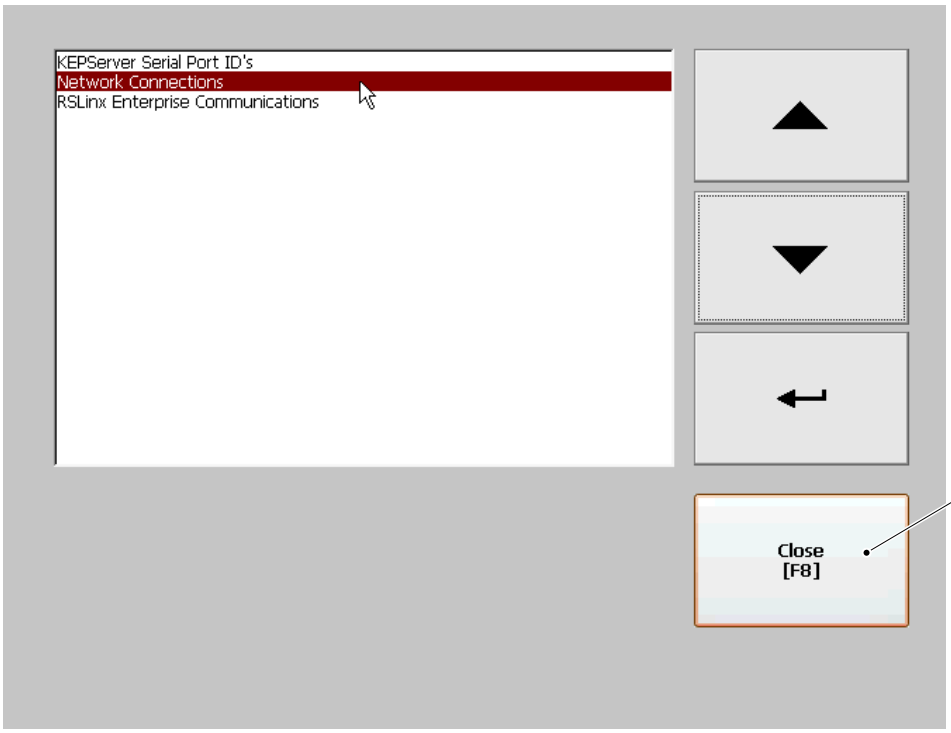

14 CLOSE button

TechPub_2614345_0106 - 1203_3047164_01.fm

8.8.1-6 Touch Screen - Startup Options Setup

Machine Status	Mains Power ON
SPC Reference	2779070-0100

a) Touch the ARROW buttons (1) and select “Startup Options“.

b) Touch ENTER (2) to confirm.

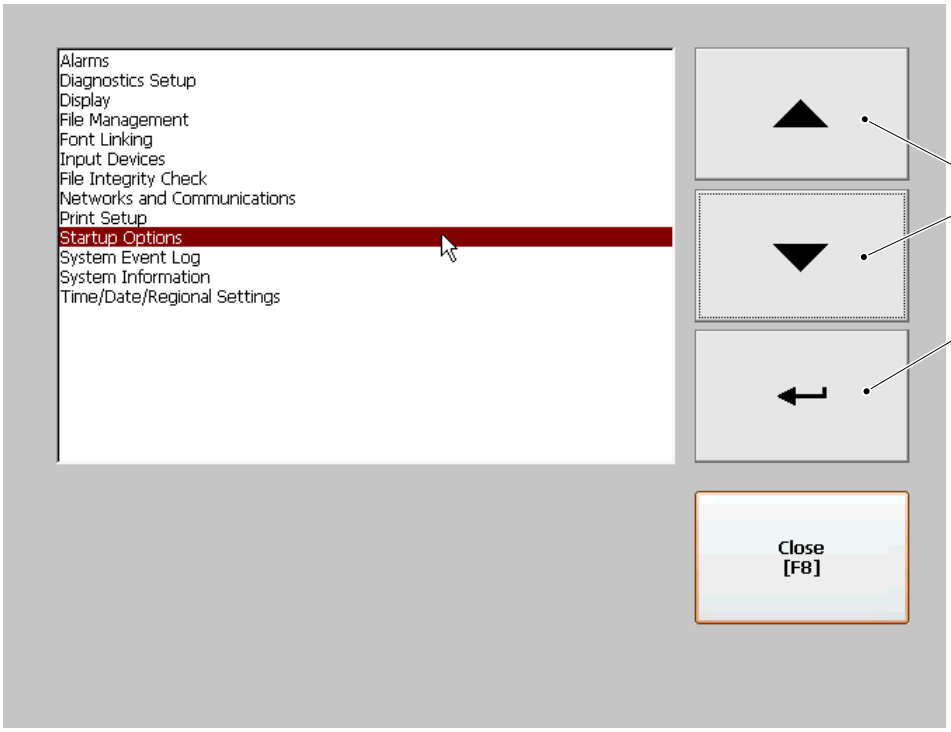

1 ARROW button
2 ENTER button

(Cont'd)

TechPub_2614345_0106 - 1203_3047164_01.fm

(Cont'd)

c) Touch the ARROW buttons (1) and select “FactoryTalk View ME Station Startup“.

d) Touch ENTER (2) to confirm.

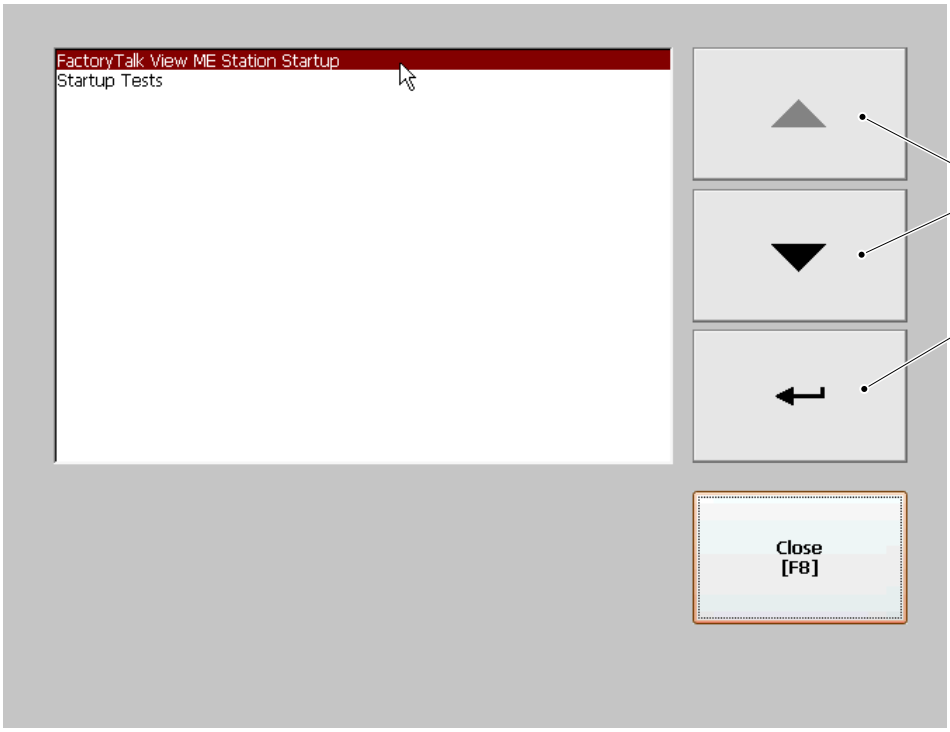

1 ARROW button
2 ENTER button

TechPub_2614345_0106 - 1203_3047164_01.fm

(Cont'd)

(Cont'd)

e) Touch Run Current Application (3).

f) Touch Run Options (4).

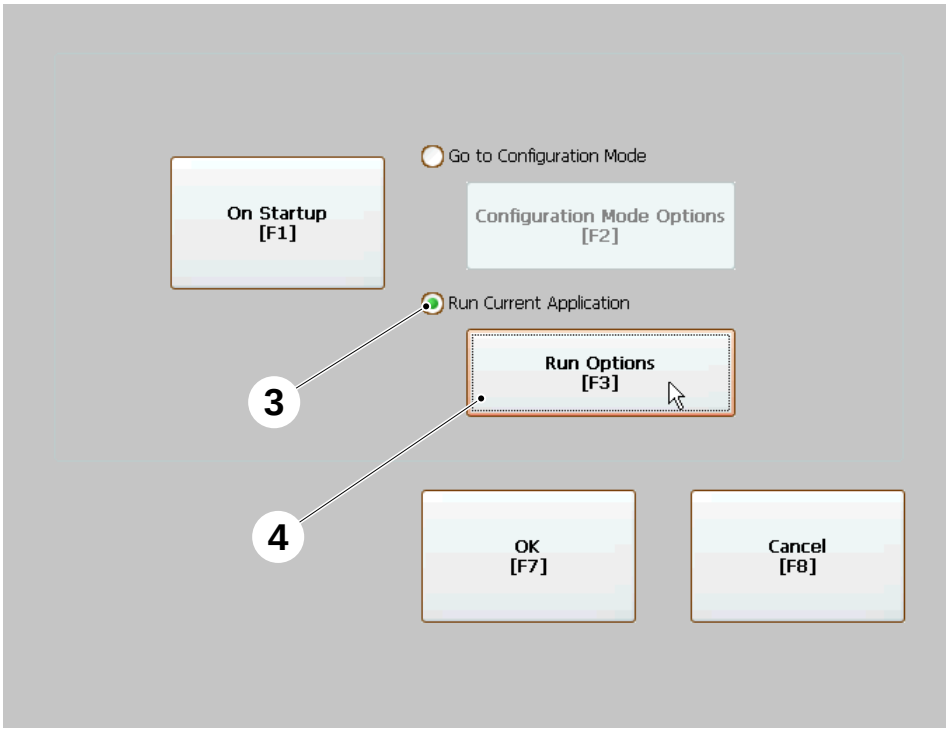

3 Run Current Application
4 Run Options button

(Cont'd)

TechPub_2614345_0106 - 1203_3047164_01.fm

(Cont'd)

g) Touch Yes (5) to activate “Replace RSLinx Enterprise Communications”.

h) Touch Yes (6) to activate “Delete Log Files On Every Power Cycle”.

i) Touch OK (7) to confirm.

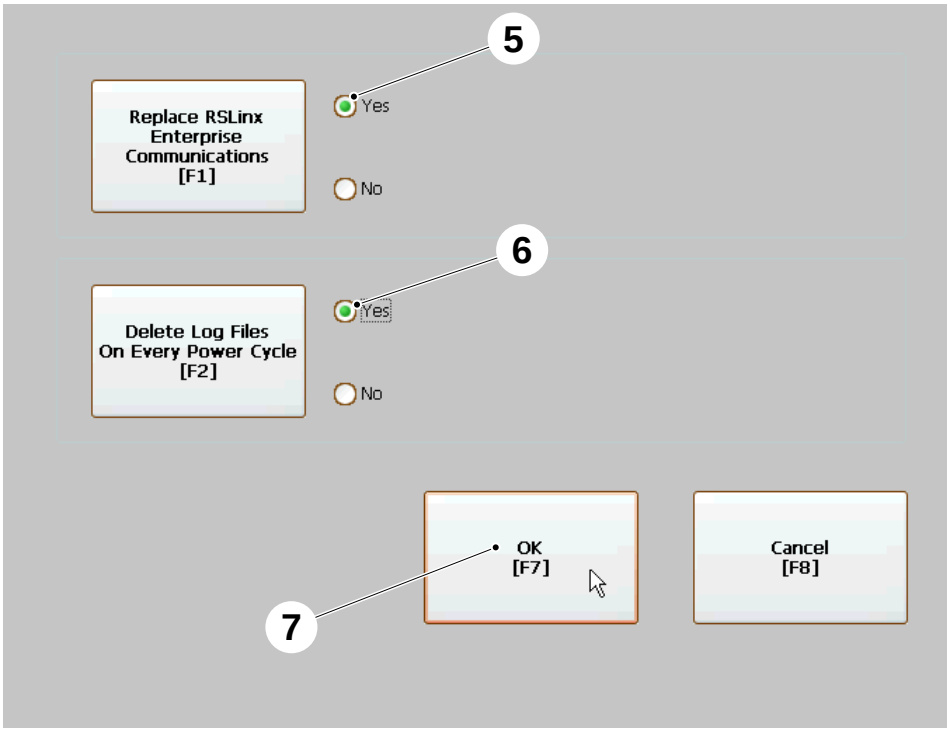

5 Yes button
6 Yes button
7 OK button

(Cont'd)

TechPub_2614345_0106 - 1203_3047164_01.fm

(Cont'd)

j) Touch OK (7).

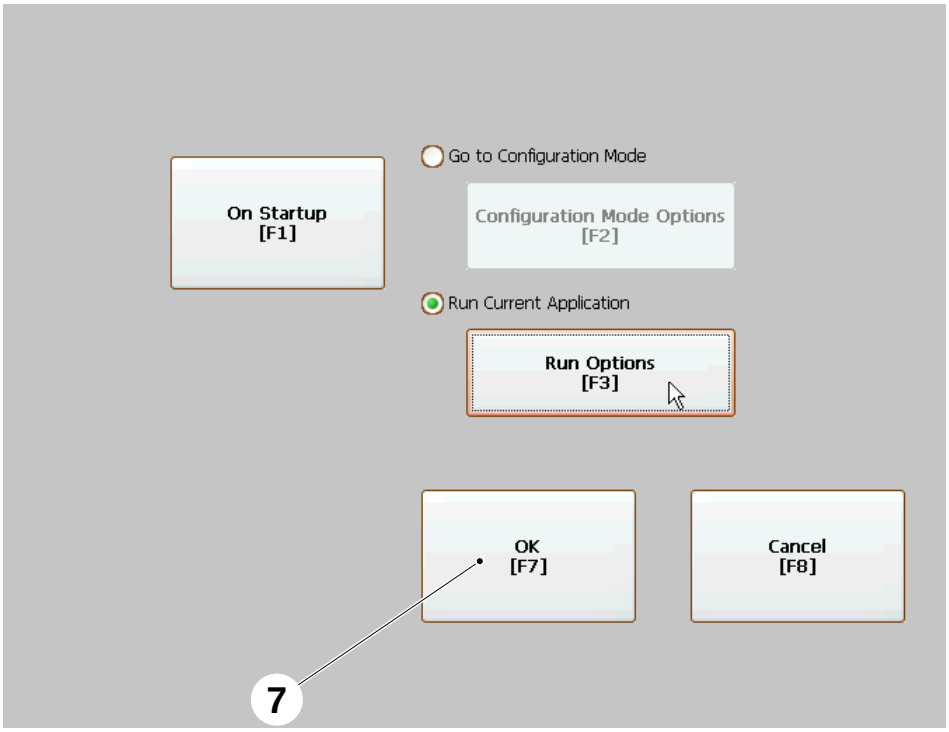

7 OK button

(Cont'd)

TechPub_2614345_0106 - 1203_3047164_01.fm

(Cont'd)

k) Touch CLOSE (8).

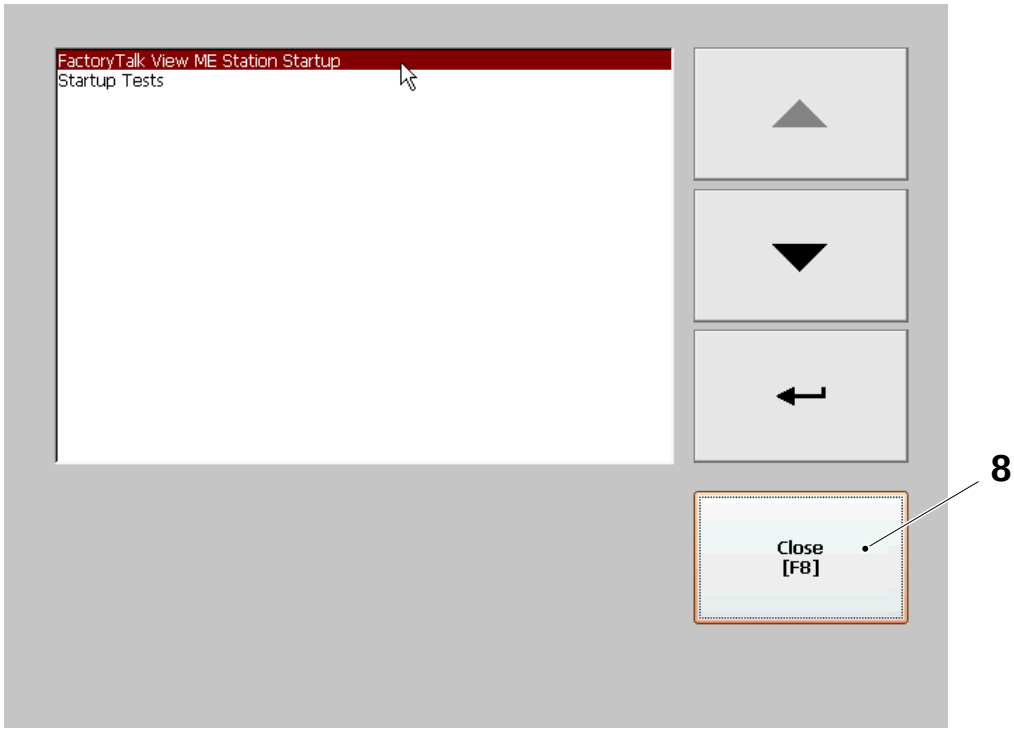

8 CLOSE button

TechPub_2614345_0106 - 1203_3047164_01.fm

8.8.1-7 Touch Screen - Display Setup

Machine Status	Mains Power ON
SPC Reference	2779070-0100

a) Touch the ARROW buttons (1) to select “Display“.

b) Touch ENTER (2) to confirm.

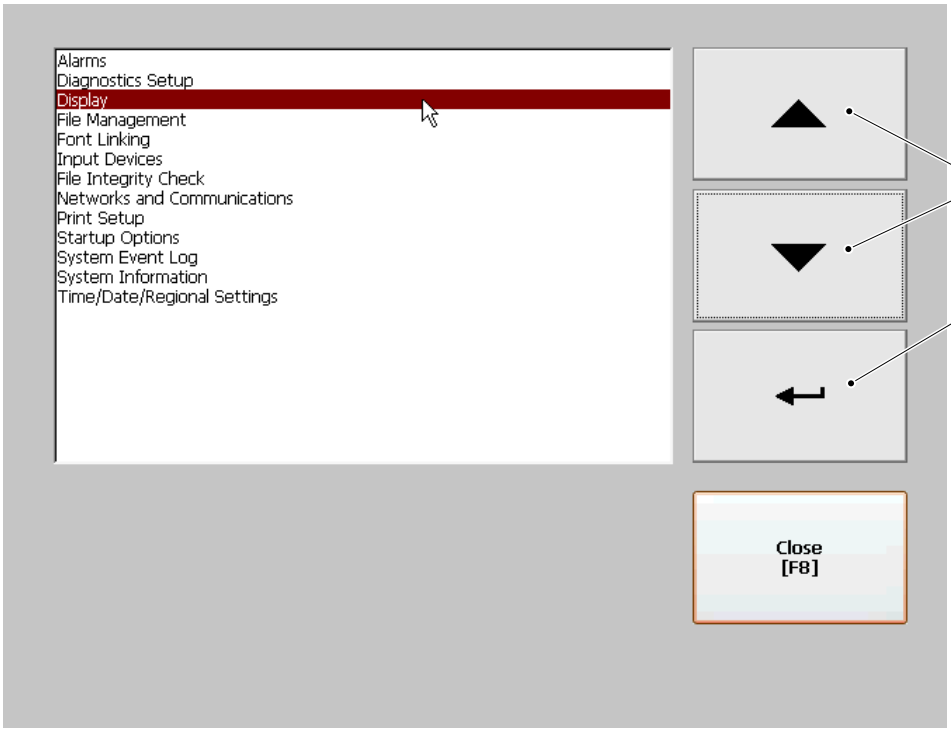

1 ARROW button
2 ENTER button

(Cont'd)

TechPub_2614345_0106 - 1203_3047164_01.fm

(Cont'd)

c) Touch the ARROW buttons (1) to select “Screen Saver“.

d) Touch ENTER (2) to confirm.

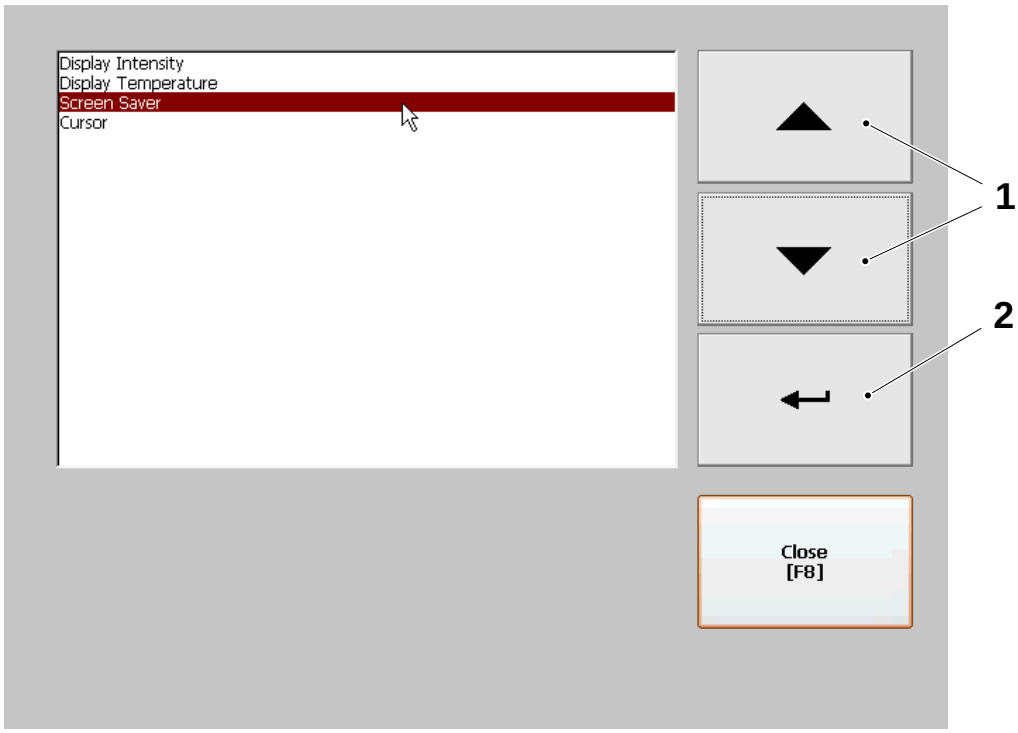

1 ARROW button
2 ENTER button

TechPub_2614345_0106 - 1203_3047164_01.fm

(Cont'd)

(Cont'd)

e) Touch Disabled (3) to select no active screen saver.

f) Touch OK (4) to confirm.

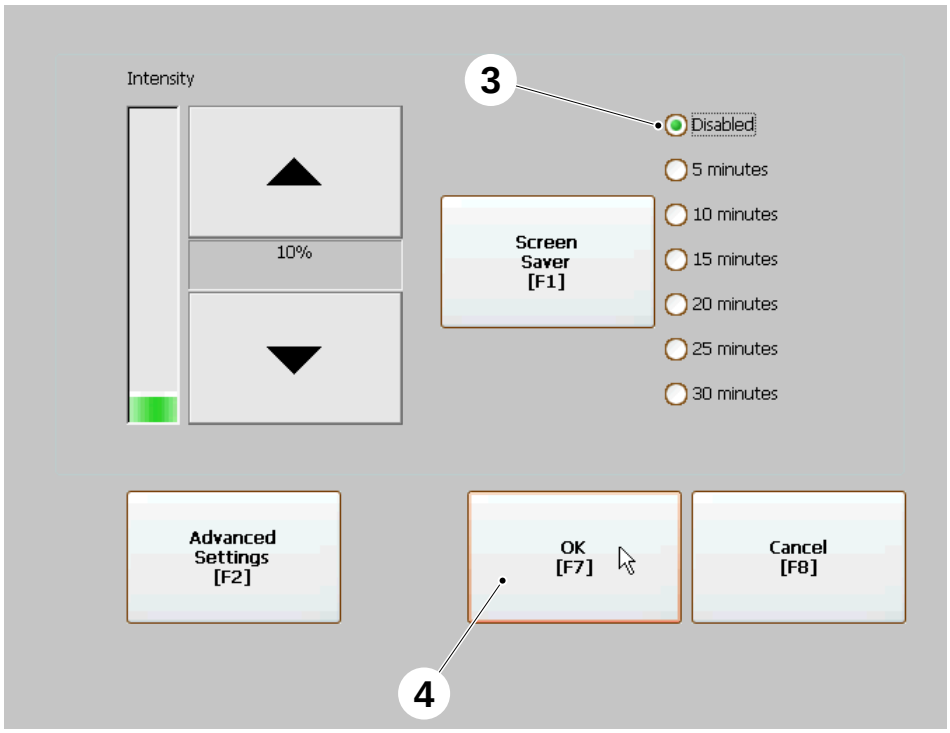

3 Disabled button
4 OK button

(Cont'd)

TechPub_2614345_0106 - 1203_3047164_01.fm

(Cont'd)

g) Touch CLOSE (5) to exit.

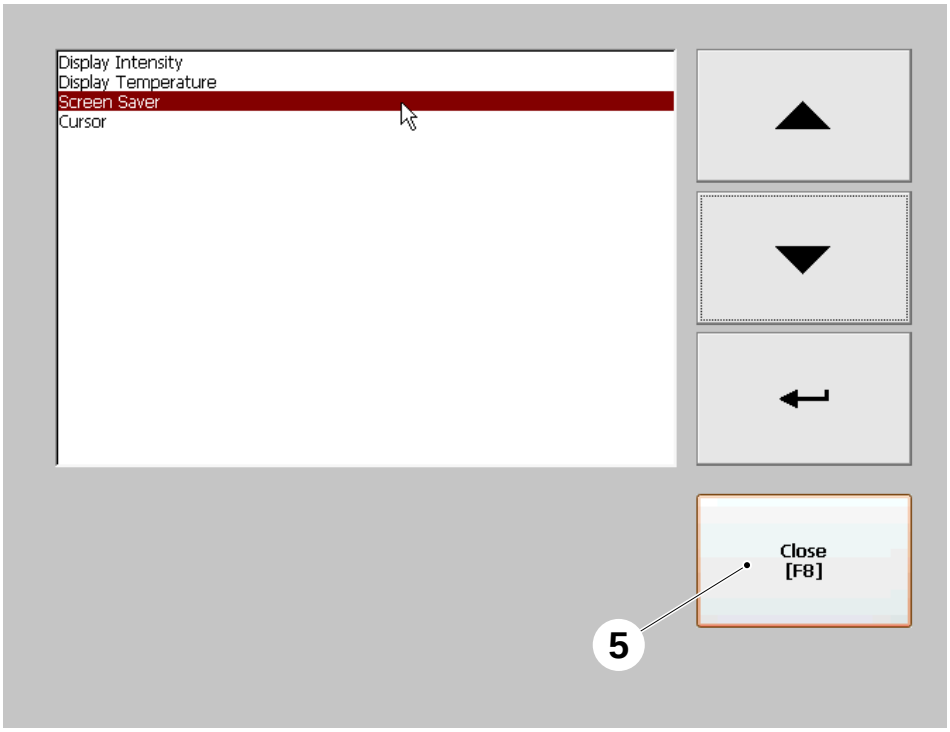

5 CLOSE button

TechPub_2614345_0106 - 1203_3047164_01.fm

8.8.1-8 Touch Screen - Time/Date/Regional Settings Setup

Machine Status	Mains Power ON
SPC Reference	2779070-0100

a) Touch the ARROW buttons (1) to select “Time/Date/Regional Settings“.

b) Touch ENTER (2) to confirm.

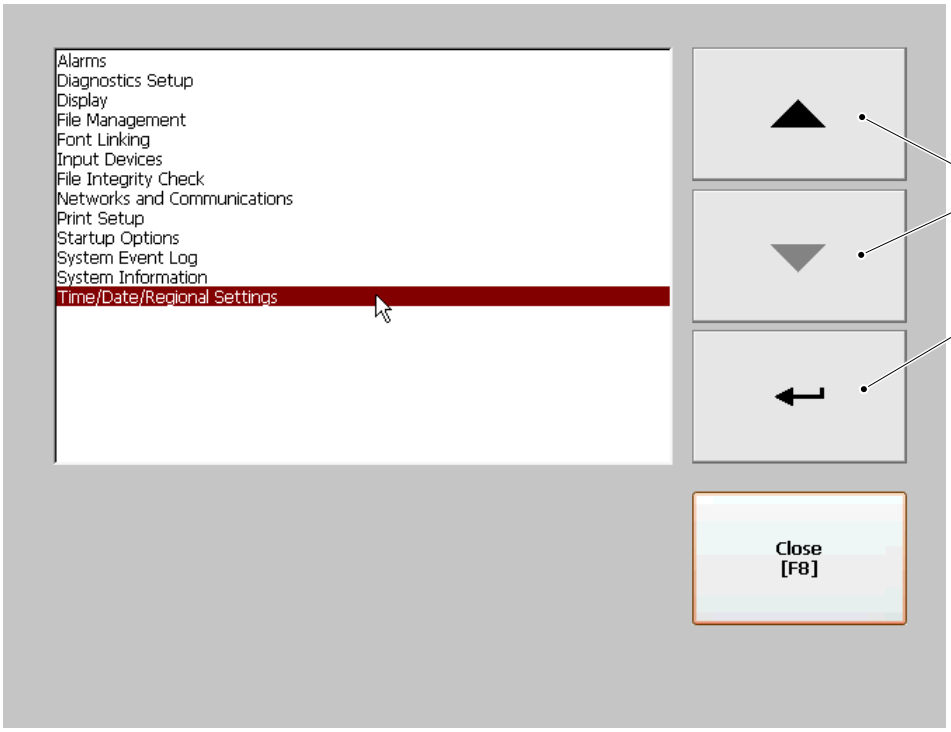

1 ARROW button
2 ENTER button

(Cont'd)

TechPub_2614345_0106 - 1203_3047164_01.fm

(Cont'd)

c) Touch the ARROW buttons (1) to select “Time Zone“.

d) Touch ENTER (2) to confirm.

e) Set the proper Time Zone.

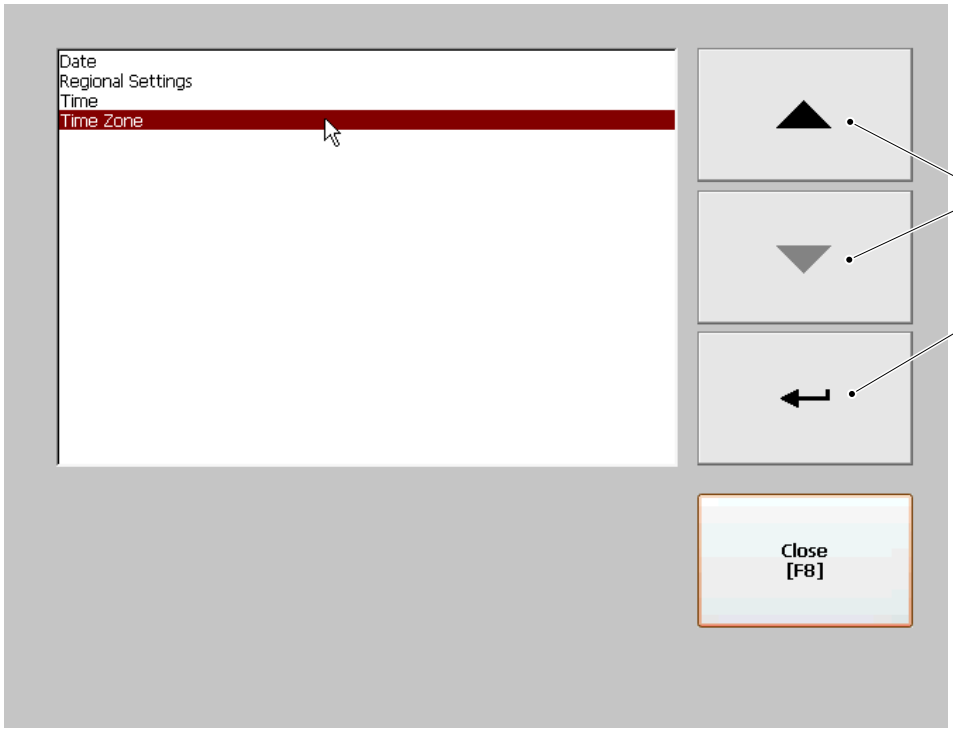

1 ARROW button
2 ENTER button

TechPub_2614345_0106 - 1203_3047164_01.fm

(Cont'd)

(Cont'd)

f) Touch the ARROW buttons (1) to select “Date“.

g) Touch ENTER (2) to confirm.

h) Set the current Date.

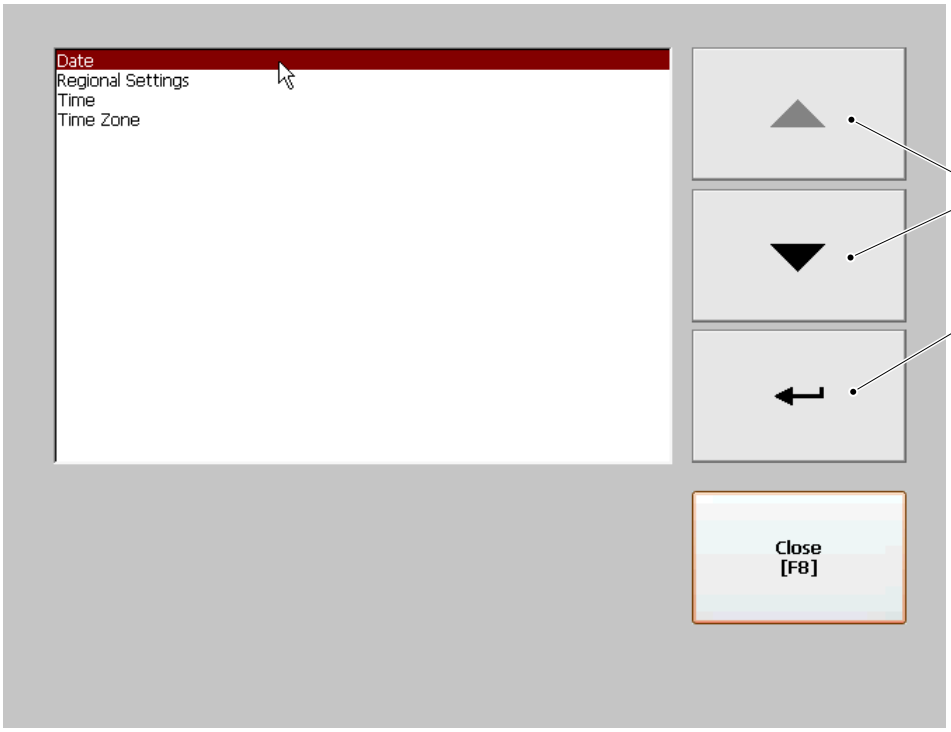

1 ARROW button
2 ENTER button

(Cont'd)

TechPub_2614345_0106 - 1203_3047164_01.fm

(Cont'd)

i) Touch the ARROW buttons (1) to select “Time“.
j) Touch ENTER (2) to confirm.
k) Set the current Time.
l) Touch the Close button (3) to display the configuration window.

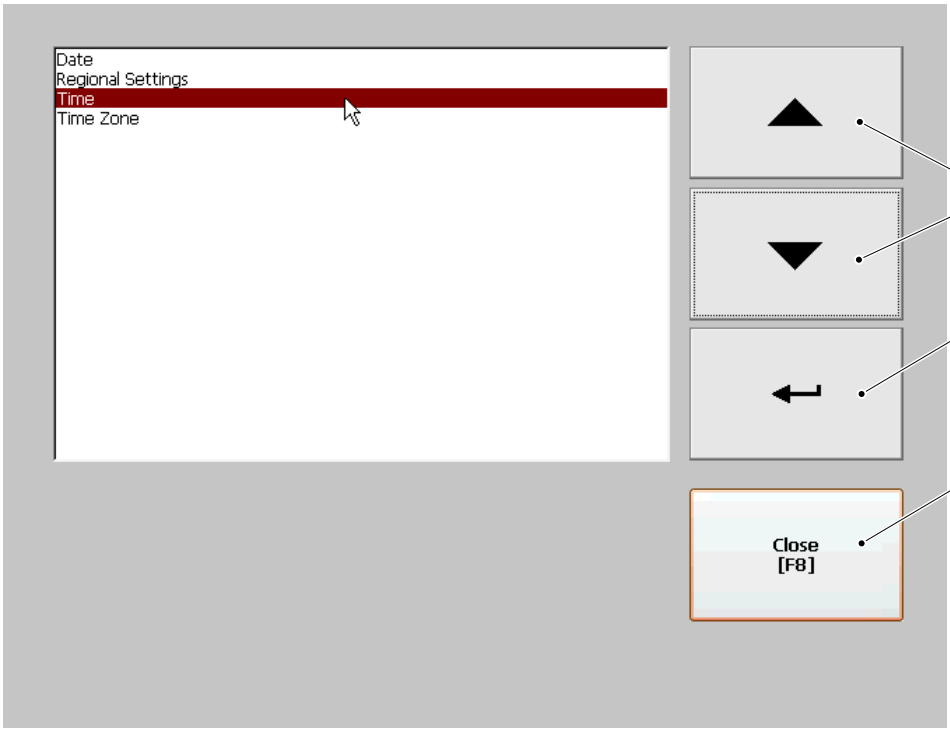

1 ARROW button
2 ENTER button
3 Close button

TechPub_2614345_0106 - 1203_3047164_01.fm

8.8.1-9 Touch Screen - Start-Up Language Setup

Machine Status	Mains Power ON
SPC Reference	2779070-0100

a) In the configuration window (1) touch the Application Settings button (2).

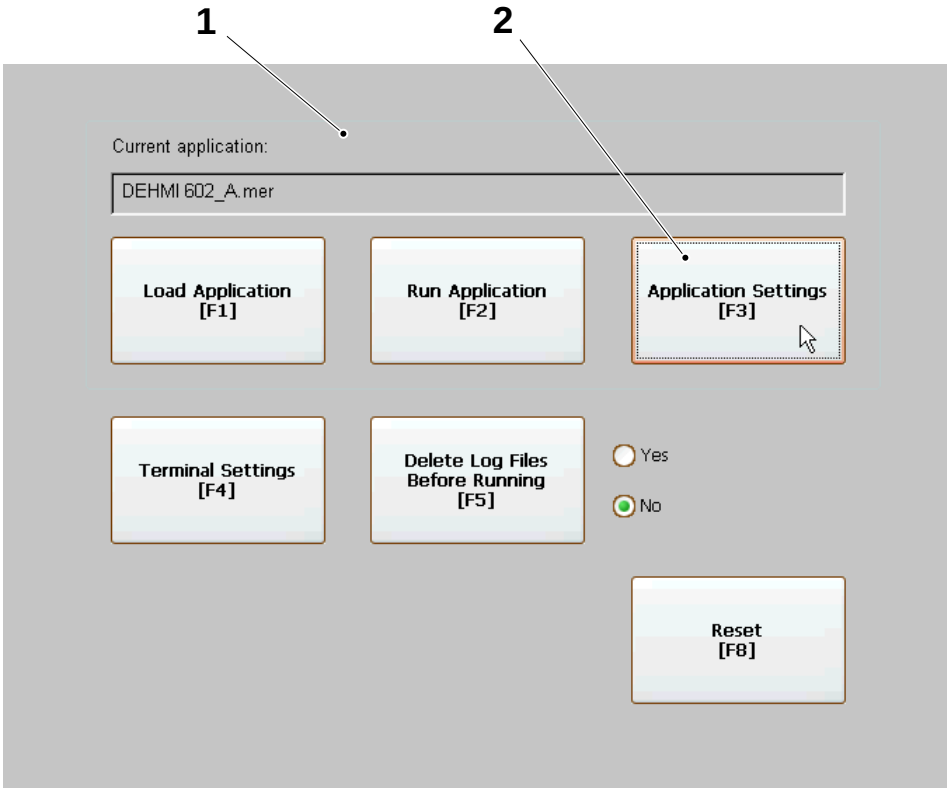

1 Configuration window
2 Application settings button

(Cont'd)

TechPub_2614345_0106 - 1203_3047164_01.fm

(Cont'd)

b) Touch the ARROW buttons (3) to select “Startup Language“.

c) Touch ENTER (4) to confirm.

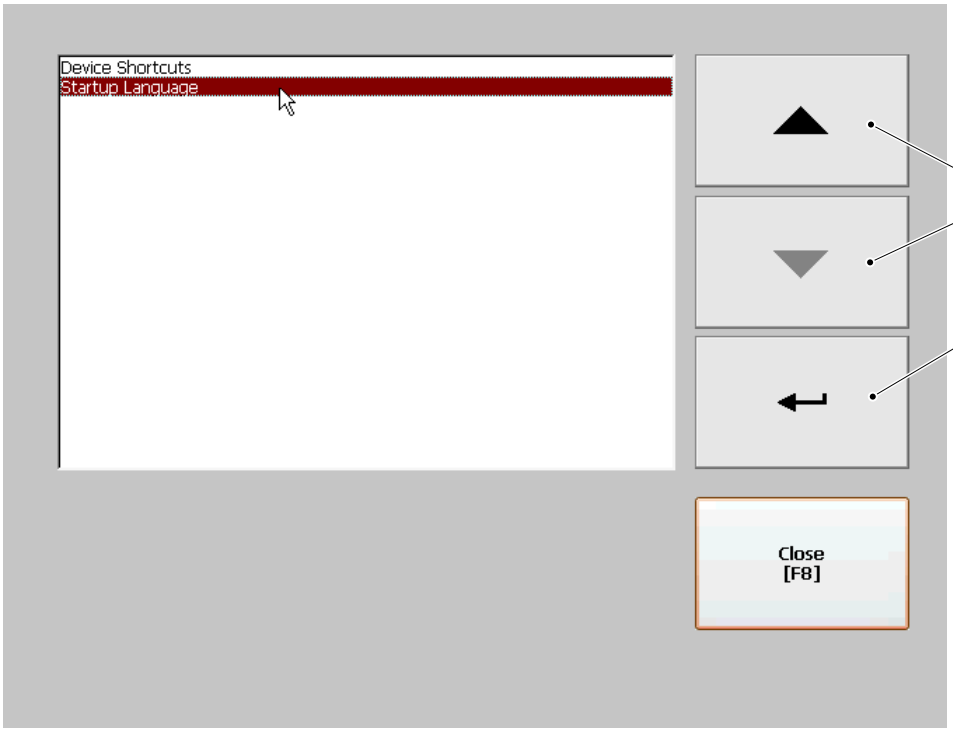

3 ARROW button
4 ENTER button

TechPub_2614345_0106 - 1203_3047164_01.fm

(Cont'd)

(Cont'd)

d) Touch Start in Last Runtime Language (5) to select make the TPOP to select the active language after every reboot.

e) Touch OK (6) to confirm.

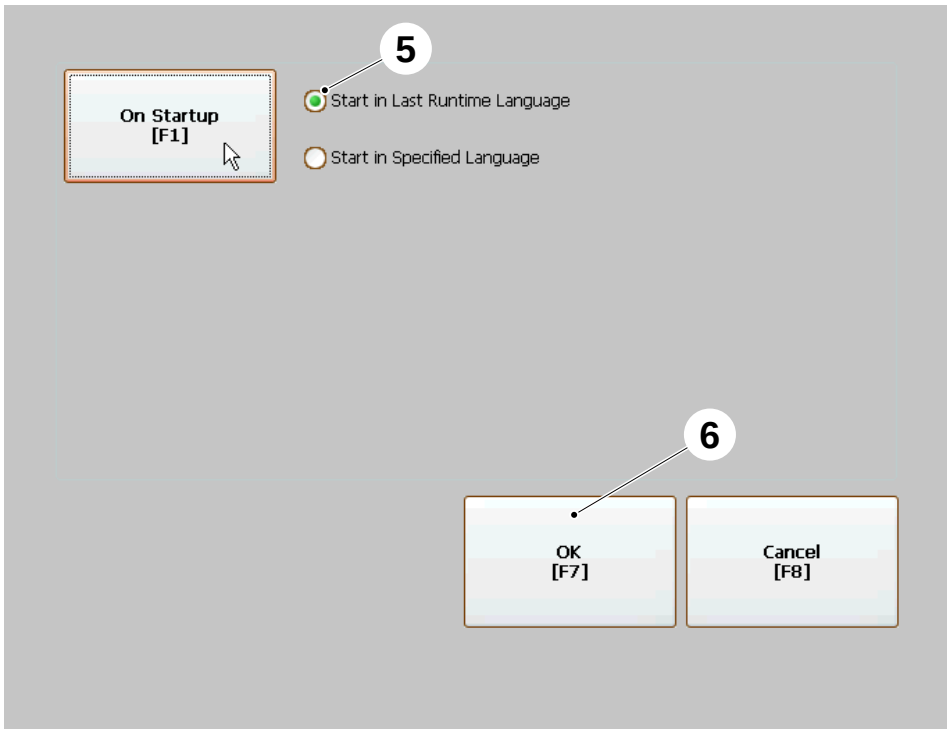

5 ARROW button
6 ENTER button

(Cont'd)

TechPub_2614345_0106 - 1203_3047164_01.fm

(Cont'd)

f) Touch CLOSE (7) to exit.

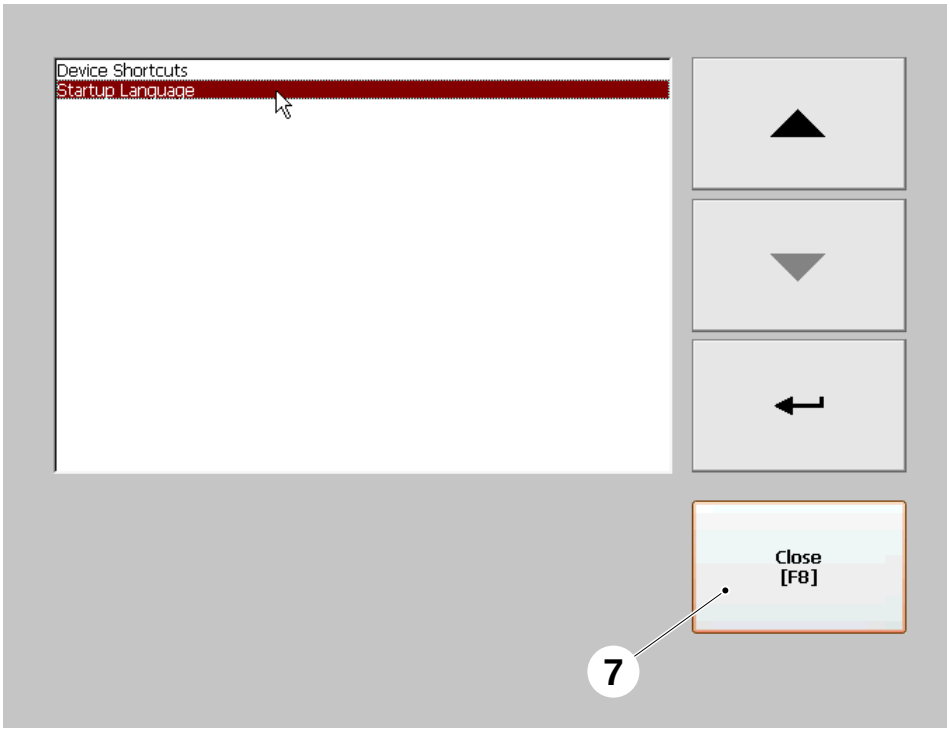

7 CLOSE button

TechPub_2614345_0106 - 1203_3047164_01.fm

Reboot the TPOP

a) In the configuration window (1) touch the Reset button (2).

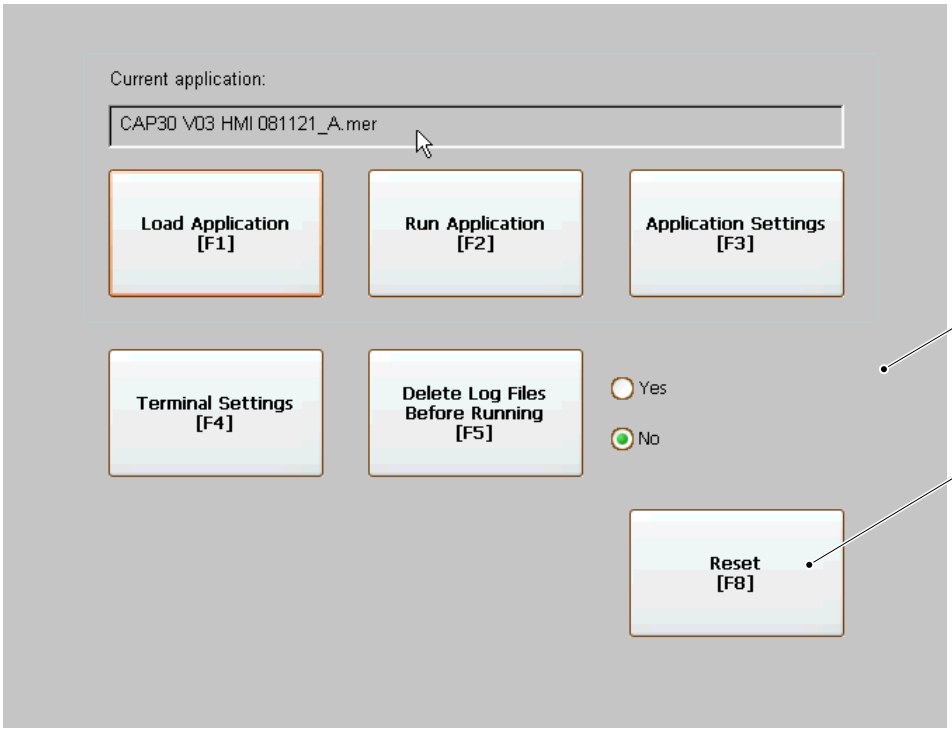

1 Configuration window
2 Reset button

(Cont'd)

TechPub_2614345_0106 - 1203_3047164_01.fm

(Cont'd)

b) Touch YES (3) to confirm.

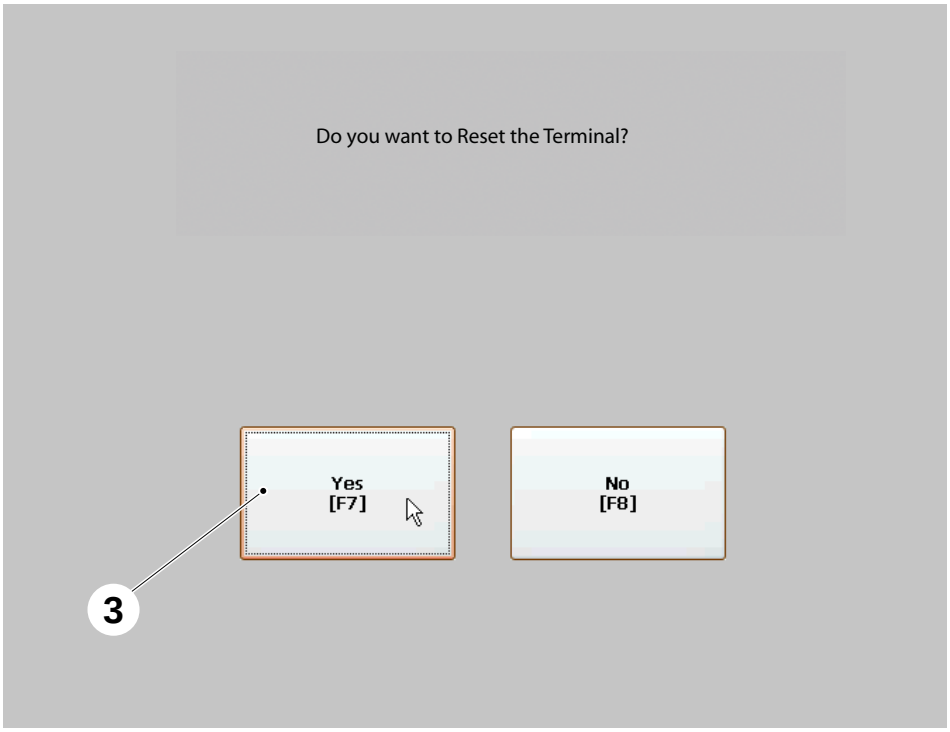

3 YES button

TechPub_2614345_0106 - 1203_3047164_01.fm

8.8.1-10 Touch Screen - Language Setup

Machine Status	Mains Power ON
SPC Reference	2779070-0100

Language Installation

Note! After the installation of the new application of the TPOP it's necessary to install and then activate the desired languages.

a) Access the TPOP as a Service Technician, see HMI User Management - Log On as a User on page 1-6.

b) Touch the SYSTEM SETUP button (1) to display the Setup window.

c) Touch the LANGUAGE button (2).

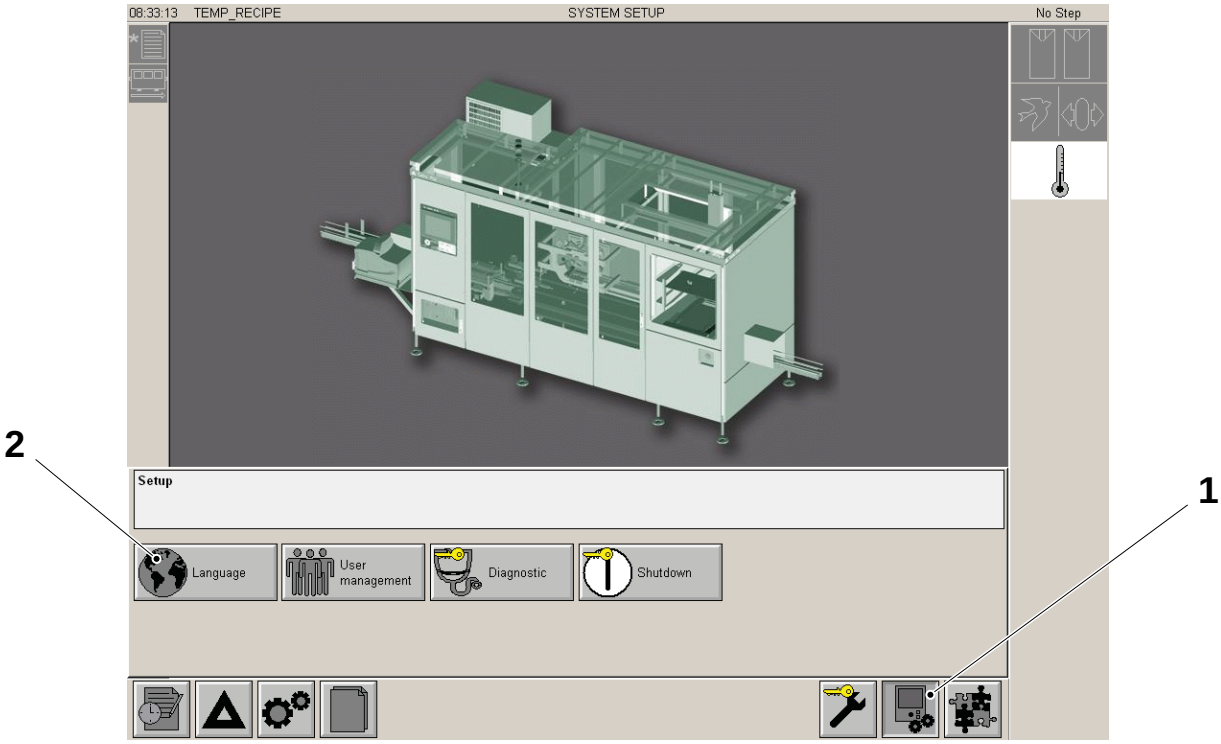

1 SYSTEM SETUP button
2 ENTER button

(Cont'd)

TechPub_2614345_0106 - 1203_3047164_01.fm

(Cont'd)

d) Touch the LANGUAGE SETUP button (3) to display all the language buttons (4).

Note! CAP30 ScrewCap shown in picture.

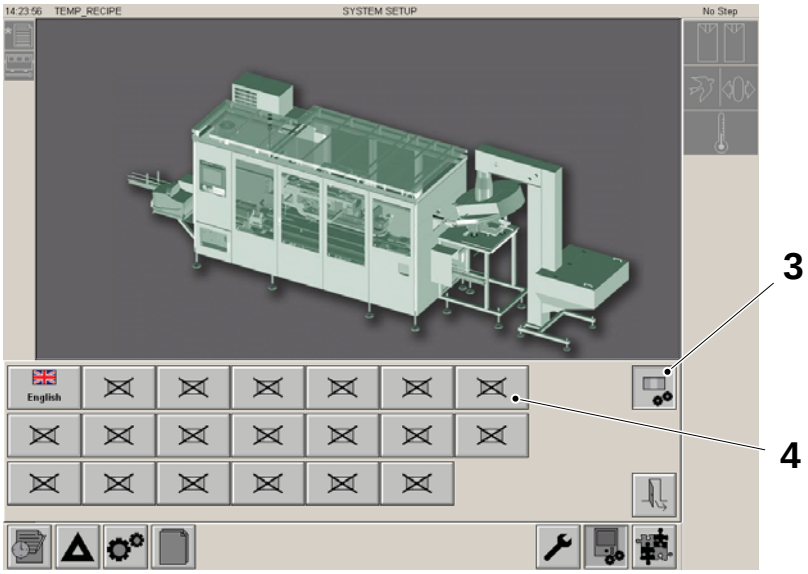

3 LANGUAGE SETUP button
4 LANGUAGE button

(Cont'd)

TechPub_2614345_0106 - 1203_3047164_01.fm

(Cont'd)

e) Touch several times the language button (4) until the icon (5) of the desired language is shown.

f) Touch the LANGUAGE SETUP button (3) to end the language installation.

Note! CAP30 ScrewCap shown in picture.

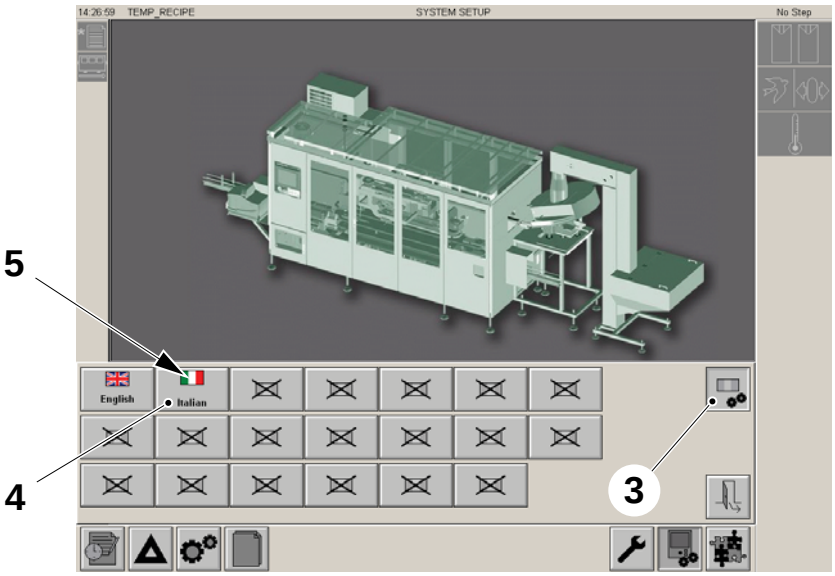

3 LANGUAGE SETUP button
4 LANGUAGE button
5 Icon

(Cont'd)

TechPub_2614345_0106 - 1203_3047164_01.fm

(Cont'd)

Logout from Service technician in the TPOP

a) Touch the SYSTEM SETUP button (1) to display the Setup window.

b) Touch the USER MANAGEMENT button (2).

Note! CAP30 ScrewCap shown in picture.

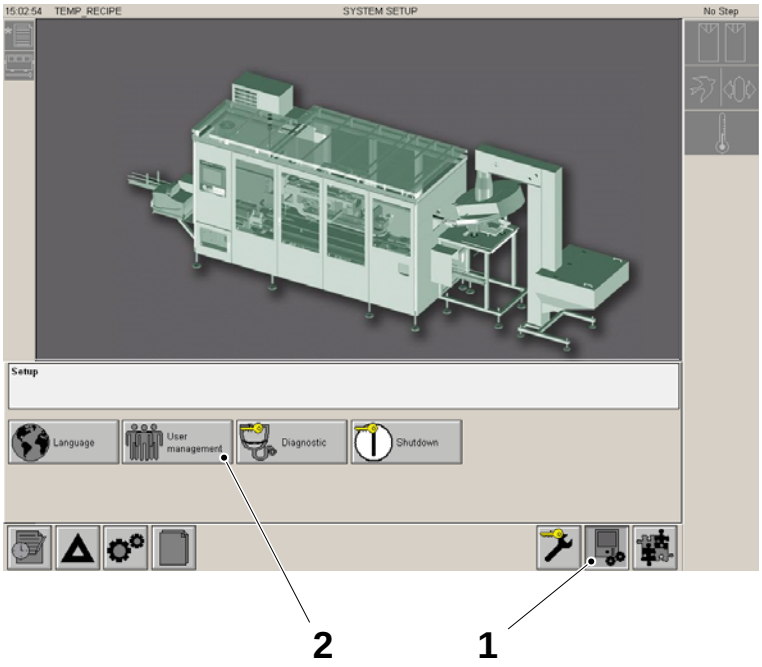

1 SYSTEM SETUP button
2 USER MANAGEMENT button

TechPub_2614345_0106 - 1203_3047164_01.fm

(Cont'd)

(Cont'd)

c) Touch the LOGOUT button (3).

d) Touch the EXIT button (4).

Note! CAP30 ScrewCap shown in picture.

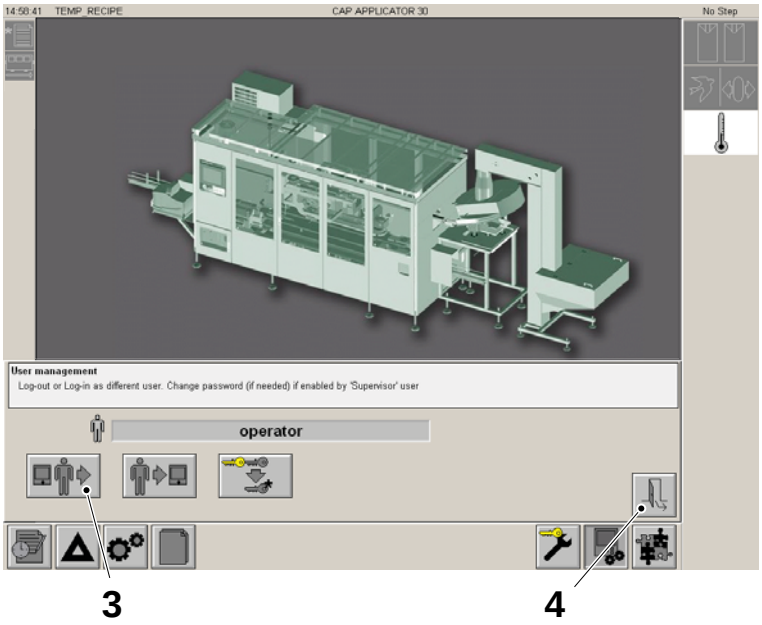

3 LOGOUT button
4 EXIT button

(Cont'd)

TechPub_2614345_0106 - 1203_3047164_01.fm

(Cont'd)

Language Activation

Note! After the installation of the new application of the TPOP it's necessary to install and then activate the desired languages.

a) Touch the SYSTEM SETUP button (1) to display the Setup window.

b) Touch the LANGUAGE button (2).

Note! CAP30 ScrewCap shown in picture.

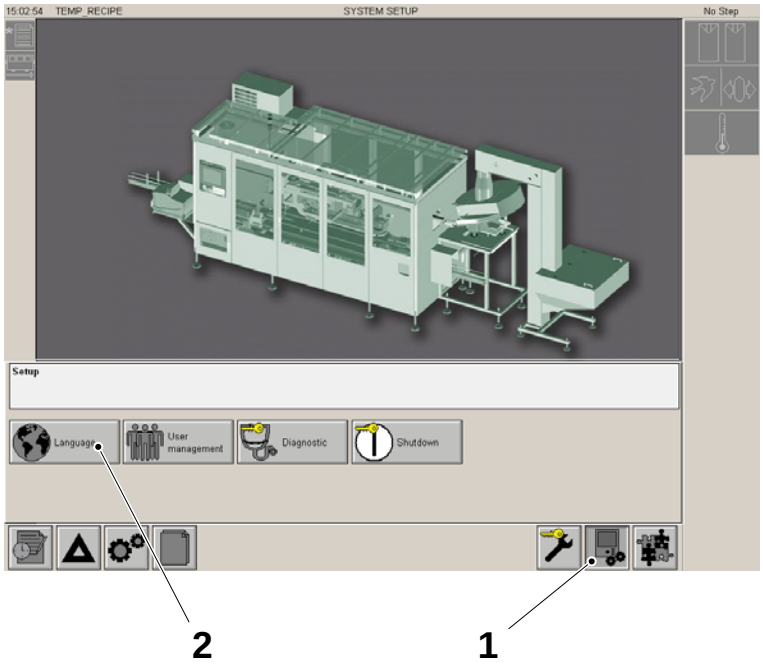

1 SYSTEM SETUP button
2 ENTER button

TechPub_2614345_0106 - 1203_3047164_01.fm

(Cont'd)

(Cont'd)

c) Touch the required LANGUAGE button (3) to change the language.

d) Touch the EXIT button (4).

Note! CAP30 ScrewCap shown in picture.

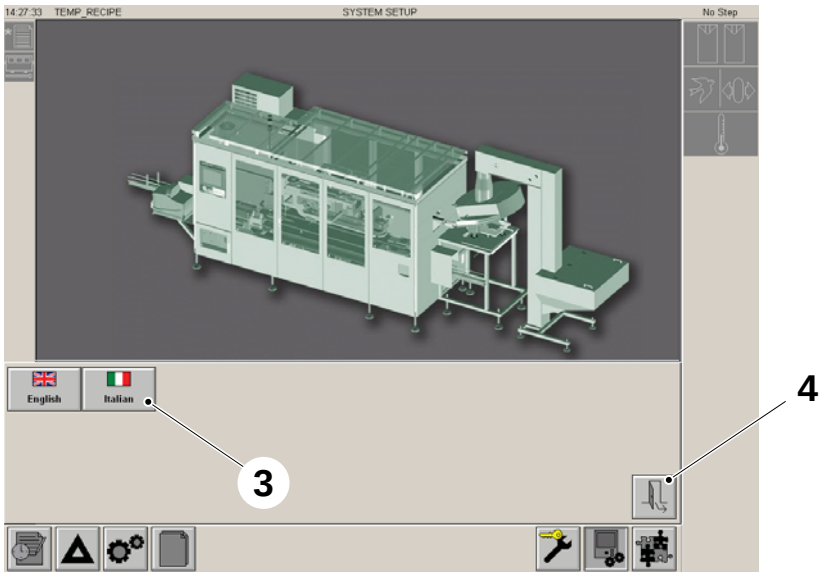

3 LANGUAGE button
4 EXIT button

TechPub_2614345_0106 - 1203_3047164_01.fm

8.8.1-11 Touch Screen - Create New Recipes

Machine Status	Mains Power ON
SPC Reference	2779070-0100

Note! Create a new recipe in case the recipes have been deleted or in case of a package conversion.

General Description

The machine can produce only if a recipe has been selected. Each recipe includes the machine settings necessary for a specific type of production.

To create a new recipe for example package TBA 500 S ReCap, proceed as follows:

a) Set the machine to STEP 0.

b) Access the TPOP as a Service Technician, see HMI User Management - Log On as a User on page 1-6.

c) Touch the RECIPE button (1) to open the recipe window.

Note! CAP30 Flex ScrewCap shown in picture.

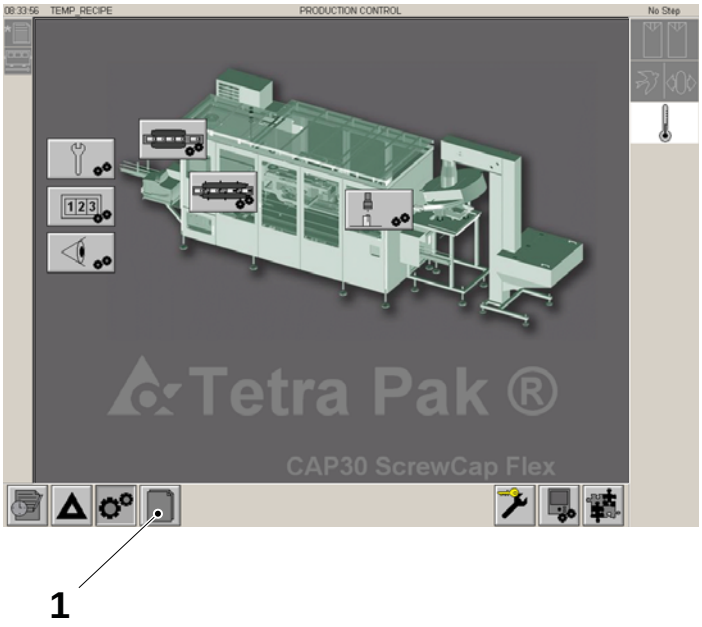

1 RECIPE button

(Cont'd)

TechPub_2614345_0106 - 1203_3047164_01.fm

(Cont'd)

d) Touch the NEW RECIPE button (3).

e) Touch the configuration of the package button (4) to select the package. Touch the ARROW buttons (5) to see the available packages and stop on the desired one.

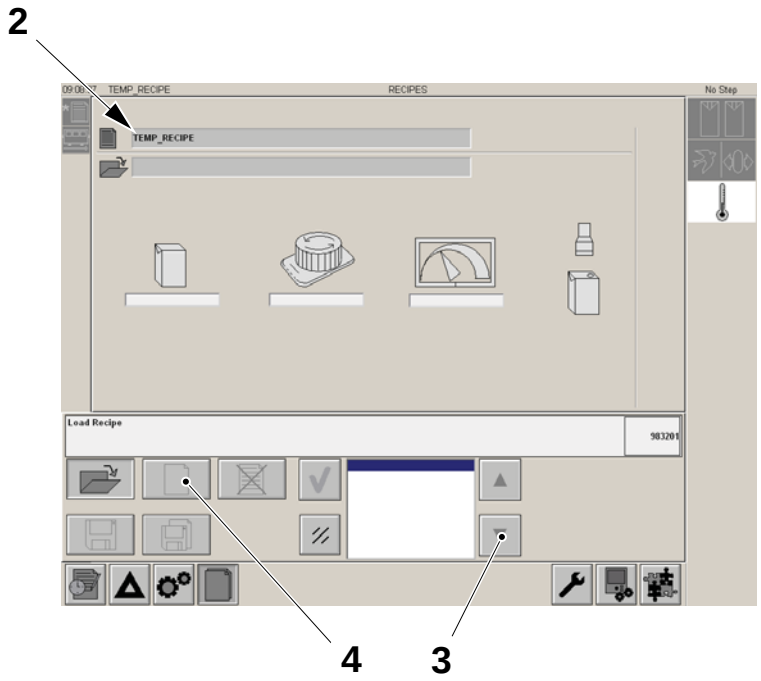

2 NEW RECIPE button
3 Configuration of the package button
4 ARROW button

(Cont'd)

TechPub_2614345_0106 - 1203_3047164_01.fm

(Cont'd)

f) Touch the cap button (5) to select the cap.

g) Touch the ARROW buttons (4) to see the available caps for the selected package and stop on the desired one.

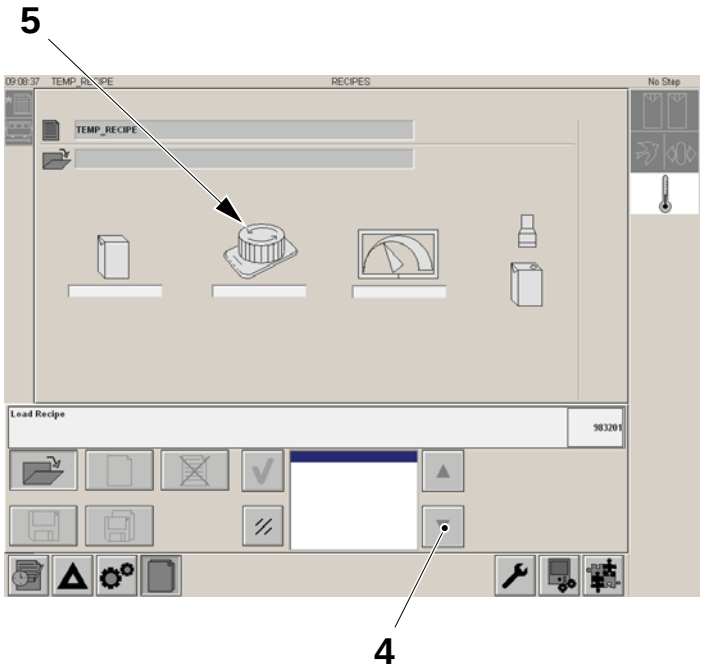

4 ARROW button
5 Cap button

(Cont'd)

TechPub_2614345_0106 - 1203_3047164_01.fm

(Cont'd)

h) Touch the machine speed button (7) to select the speed of the machine for this cap/package configuration.

i) Touch the ARROW buttons (4) to see the available speeds and stop on the desired one.

j) Touch the OK button (6).

Note! The speed of the machine must be set 20% higher than the speed of the filling machine. In example: if the speed of the filling machine is 6000 p/h a good setting for the speed is 7200 p/h.

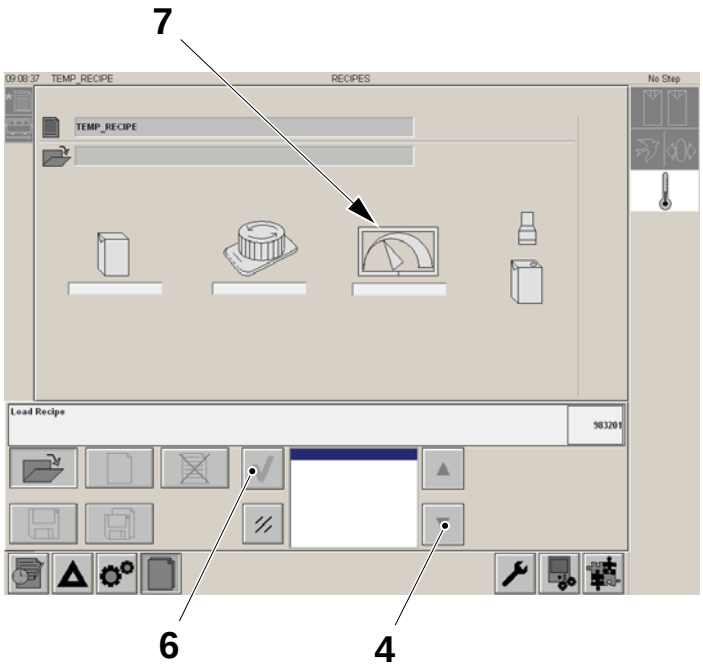

4 ARROW button
6 OK button
7 Speed button

(Cont'd)

TechPub_2614345_0106 - 1203_3047164_01.fm

(Cont'd)

k) Touch the machine vision system button (8) to access the settings of the vision system.

l) Touch the ARROW buttons (4) to select the non-metalized package configuration.

m) Touch the OK button (6).

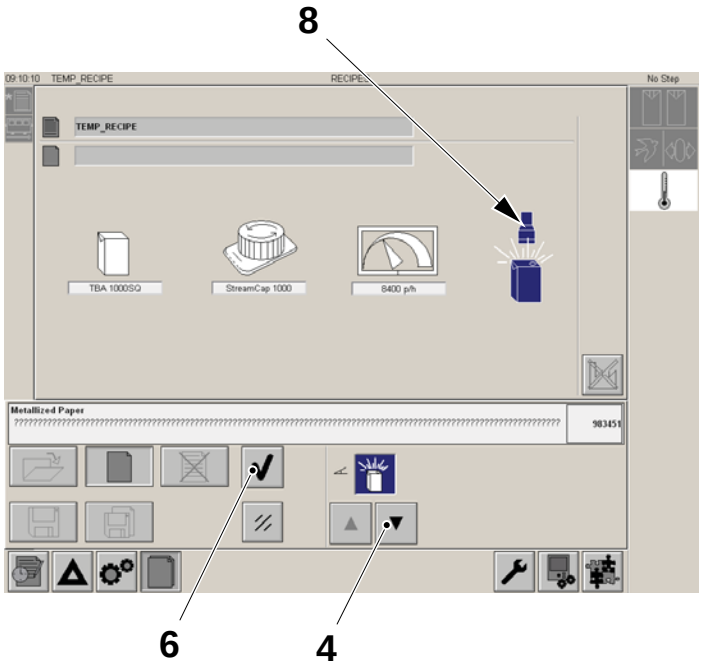

4 ARROW button
6 OK button
8 Vision system button

(Cont'd)

TechPub_2614345_0106 - 1203_3047164_01.fm

(Cont'd)

n) When the keyboard window (9) appears, type the name of the recipe. A good example can be: TBA1500S7200.

o) Touch the ENTER button (10) to confirm.

p) Touch the EXIT button (11) to quit.

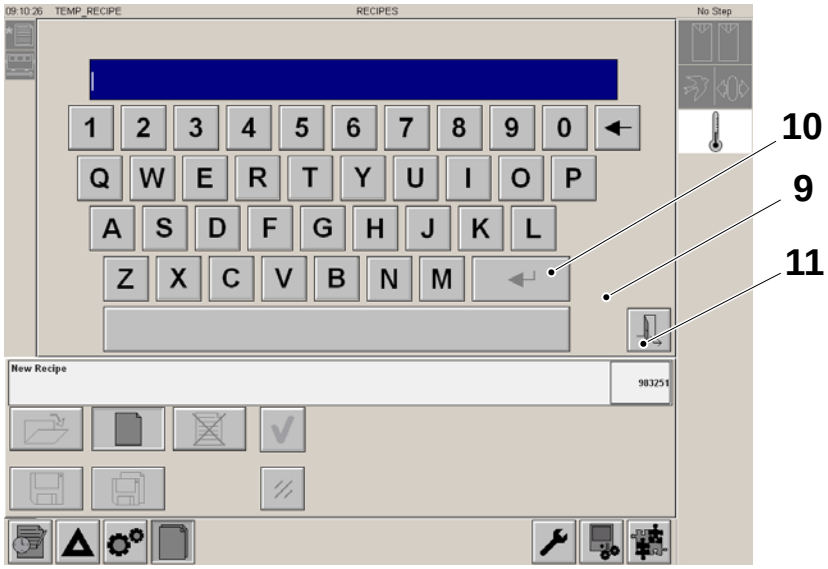

9 Keyboard window
10 ENTER button
11 EXIT button

TechPub_2614345_0106 - 1203_3047164_01.fm

8.8.1-12 Touch Screen - Saving Recipe Settings

Machine Status	Mains Power ON
SPC Reference	2779070-0100

To save any change made to a machine setting in a recipe, proceed as follows:

a) Touch the RECIPE button (1) and the active RECIPE NAME (2) will appear.

b) Touch the SAVE button (3).

c) Touch the OK button (4) to confirm. The changes will be saved as default values in the recipe.

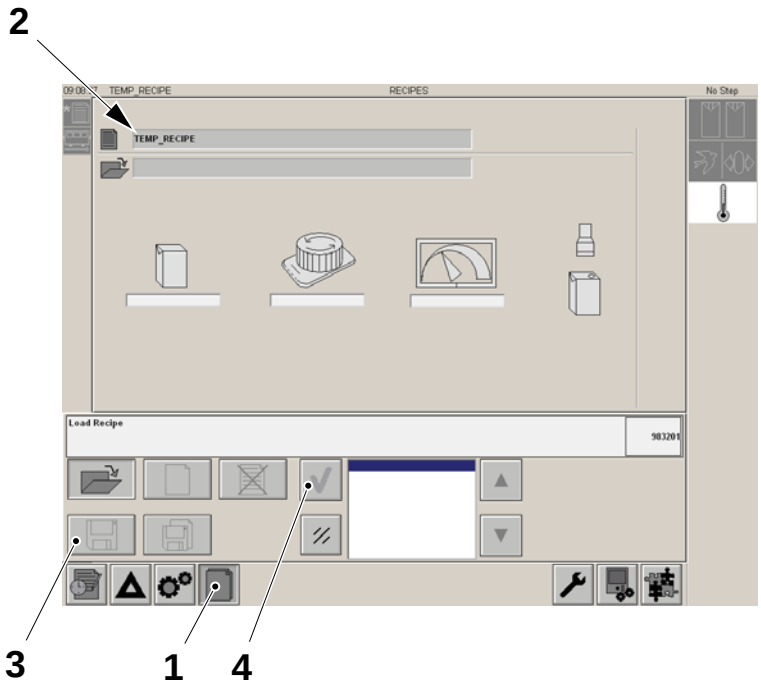

1 RECIPE button
2 RECIPE NAME
3 SAVE button
4 OK button

TechPub_2614345_0106 - 1203_3047164_01.fm

8.8.1-13 Touch Screen - Create New Recipes

Machine Status	Mains Power ON
SPC Reference	2779070-0100

Note! Create a new recipe in case the recipes have been deleted or in case of a package conversion.

General Description

The machine can produce only if a recipe has been selected. Each recipe includes the machine settings necessary for a specific type of production.

To create a new recipe for example package TBA 500 S ReCap, proceed as follows:

a) Set the machine to STEP 0.

b) Touch the RECIPE button (1) to open the recipe window.

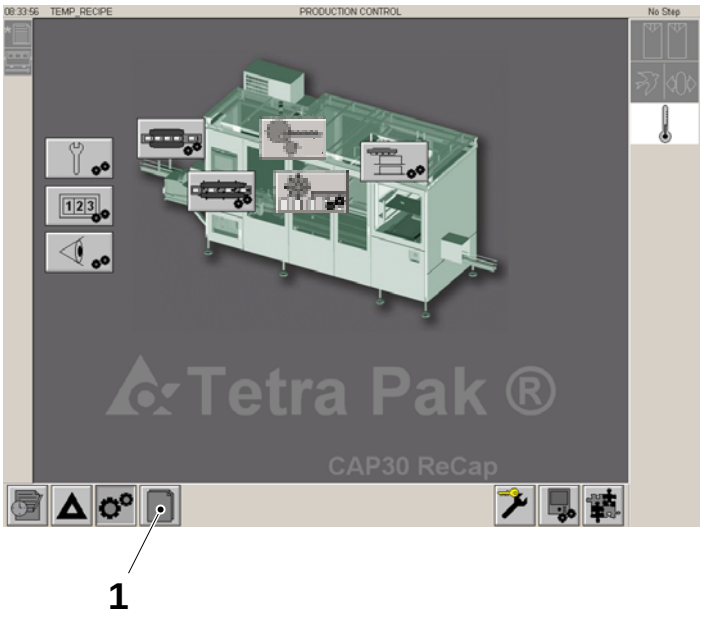

1 RECIPE button

(Cont'd)

TechPub_2614345_0106 - 1203_3047164_01.fm

(Cont'd)

c) Touch the NEW RECIPE button (3).

d) Touch the configuration of the package button (4) to select the package.

e) Touch the ARROW buttons (5) to see the available packages and stop on the desired one.

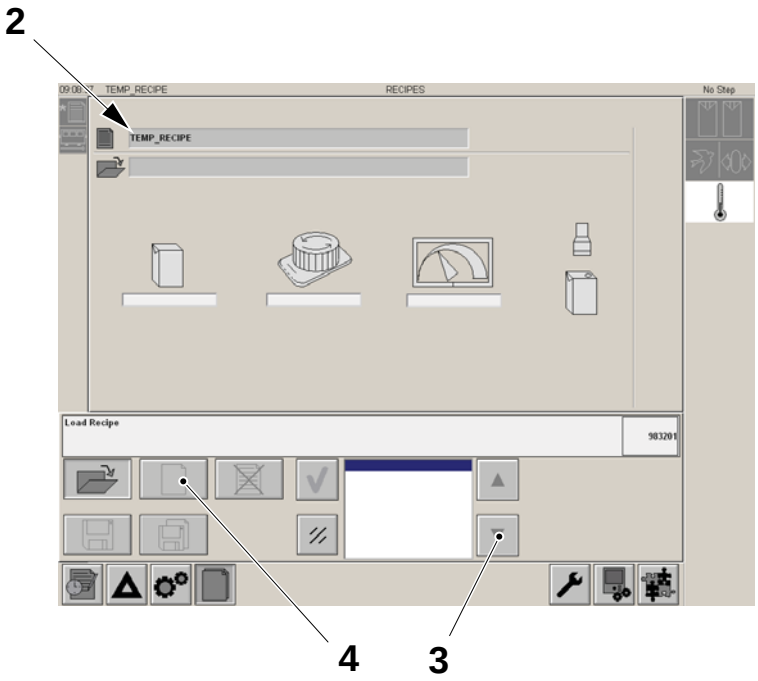

2 NEW RECIPE button
3 Configuration of the package button
4 ARROW button

TechPub_2614345_0106 - 1203_3047164_01.fm

(Cont'd)

(Cont'd)

f) Touch the cap button (5) to select the cap.

g) Touch the ARROW buttons (4) to see the available caps for the selected package and stop on the desired one.

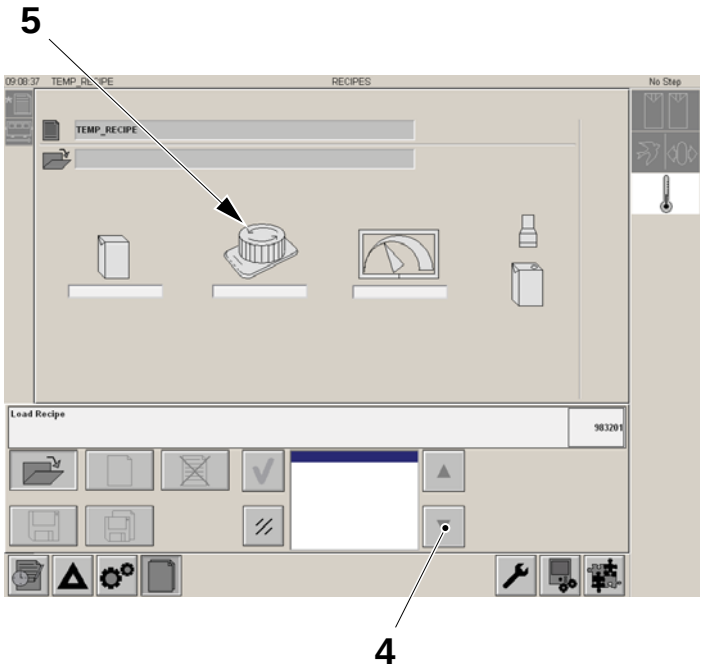

4 ARROW button
5 Cap button

(Cont'd)

TechPub_2614345_0106 - 1203_3047164_01.fm

(Cont'd)

h) Touch the machine speed button (7) to select the speed of the machine for this cap/package configuration.

i) Touch the ARROW buttons (4) to see the available speeds and stop on the desired one.

j) Touch the OK button (6).

Note! The speed of the machine must be set 20% higher than the speed of the filling machine. In example: if the speed of the filling machine is 6000 p/h a good setting for the speed is 7200 p/h.

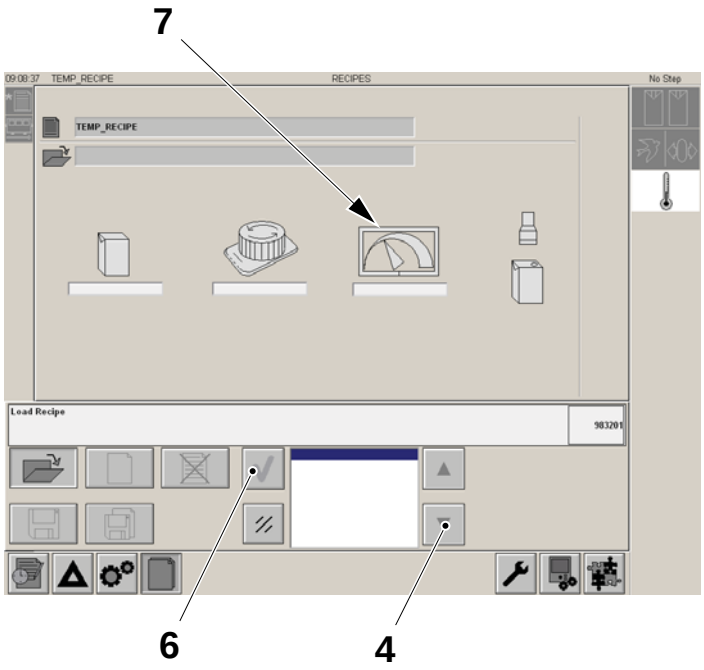

4 ARROW button
6 OK button
7 Speed button

(Cont'd)

TechPub_2614345_0106 - 1203_3047164_01.fm

(Cont'd)

k) When the keyboard window (8) appears, type the name of the recipe. A good example can be: TBA1500S7200.

l) Touch the ENTER button (9) to confirm.

m) Touch the EXIT button (10) to quit.

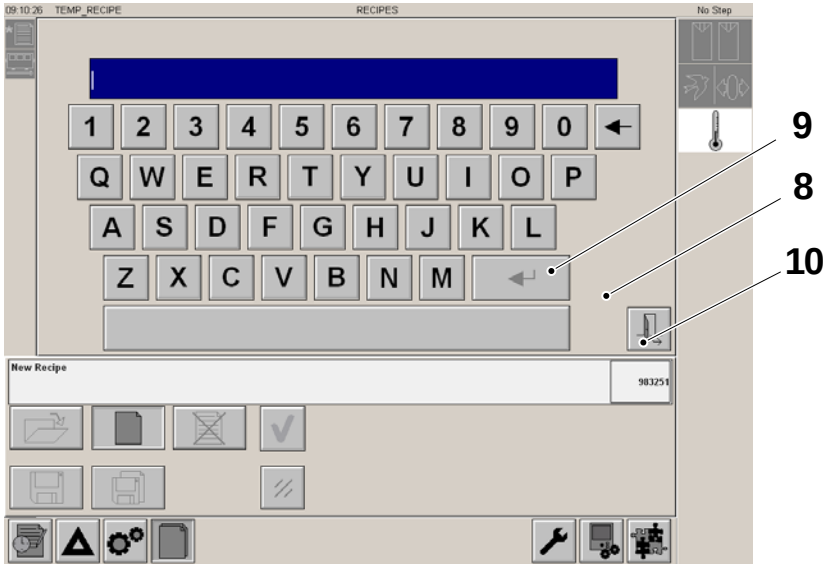

8 Keyboard window
9 ENTER button
10 EXIT button

TechPub_2614345_0106 - 1203_3047164_01.fm

Set the correct values of the recipe

To set the correct values of the recipe insert the new settings according to the Final Inspection Report and the MM. The settings are as follows:

a) Package infeed start angle, see Set Package Infeed Start Angle on page 1-41.

b) Package infeed running angle, see Set Package Infeed Running Angle on page 1-44.

c) Belt brake speed, see Set Belt Brake Speed on page 1-44.

d) Package conveyor speed, see Set Package Conveyor Speed on page 1-44.

e) Package positioner Y setting, see 2.2.3-8 Set - Package Length Y on page 2-63.

f) The setting of the Wheel Pushdown, see 2.2.3-9 Set - Wheel Pushdown Offset on page 2-65.

g) Cap position Y setting, see 2.2.3-6 Set - Cap Position Y Direction on page 2-59.

Note! Save the recipe after all the new values are set, see 8.8.1-12 Touch Screen - Saving Recipe Settings on page 8-332.

Note! As soon as the new recipe is saved the machine will automatically load it.

TechPub_2614345_0106 - 1203_3047164_01.fm

8.8.1-14 Touch Screen - Delete Recipes

Machine Status	Mains Power ON
SPC Reference	2779070-0100

To delete a recipe, proceed as follows:

a) Set the machine to STEP 0.

b) Touch the RECIPE button (1) to open the recipe window.

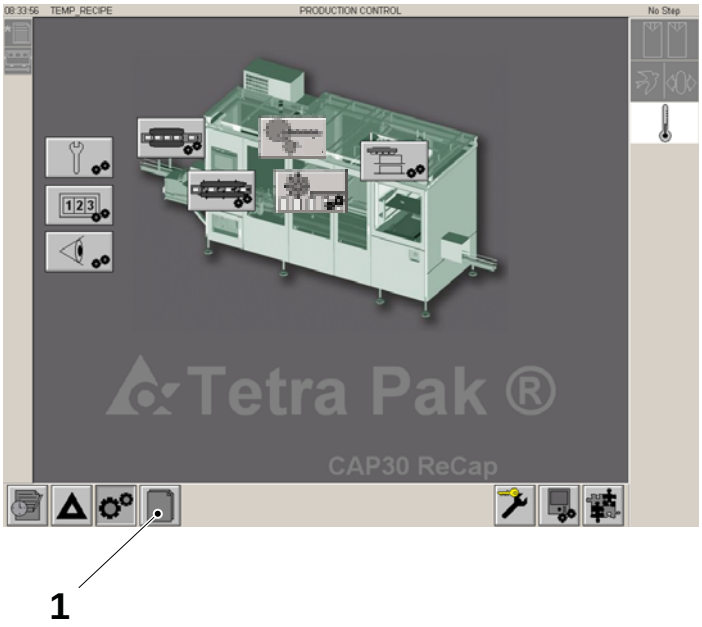

1 RECIPE button

(Cont'd)

TechPub_2614345_0106 - 1203_3047164_01.fm

(Cont'd)

c) Touch the ARROW buttons (2) to scroll the recipes and stop in the recipe to be deleted.

d) Touch the DELETE button (3) to delete the recipe.

Note! It is not possible to delete the active recipe.

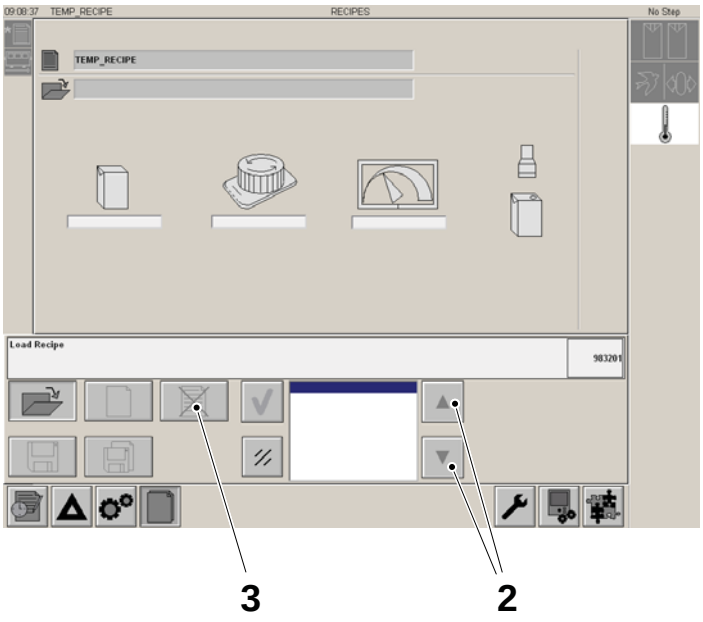

2 ARROW button
3 DELETE button

TechPub_2614345_0106 - 1203_3047164_01.fm

8.8.1-15 Touch Screen - Change Recipes

Machine Status	Mains Power ON
SPC Reference	2779070-0100

To change the recipe in the machine, proceed as follows:

a) Set the machine to STEP 0.

b) Touch the RECIPE button (1) to open the recipe window.

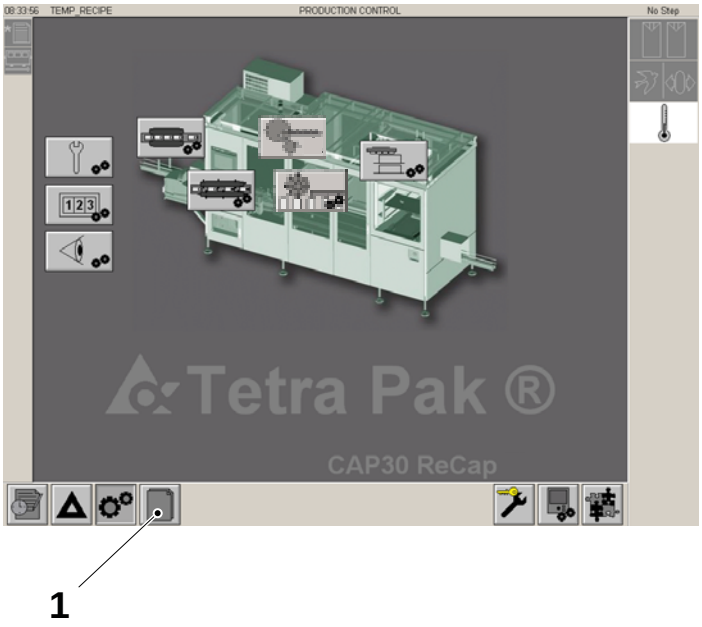

1 RECIPE button

(Cont'd)

TechPub_2614345_0106 - 1203_3047164_01.fm

(Cont'd)

c) Touch the ARROW buttons (2) to scroll the recipes and stop in the recipe to be selected.

d) Touch the OK button (3) to select the recipe.

e) Check the configuration name in the field (4) is correct.

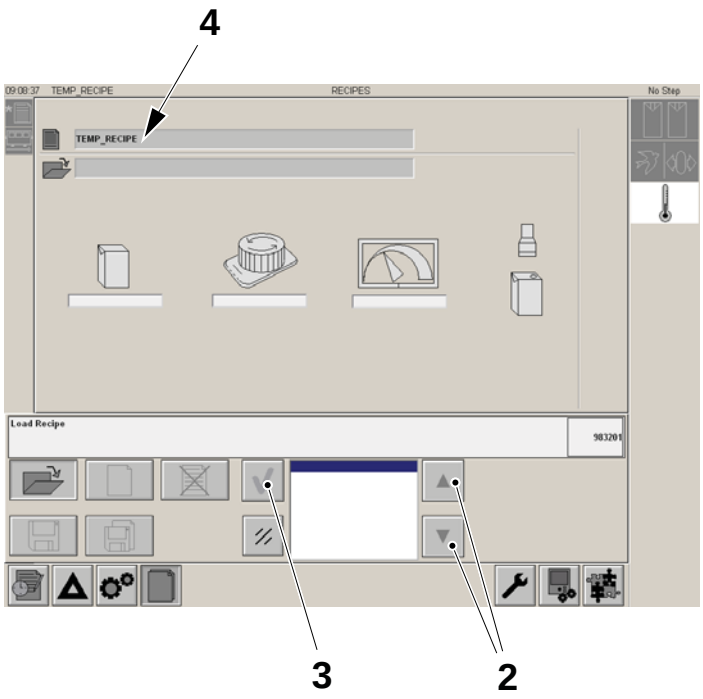

2 ARROW button
3 OK button
4 Field

TechPub_2614345_0106 - 1203_3047164_01.fm

8.9 Cooling System

SPC Reference	2833406-0100

8.9.1 Cooling Unit

8.9.1-1 Cooling Unit - Clean Filter

Machine Status	Mains Power ON Air ON
SPC Reference	2833406-0100

WARNING

Refrigerant gas.

Cooling media R134A. See the Safety Precautions.

CAUTION

Risk of damage to the equipment.

Only the procedures described may be performed by Tetra Pak or Tetra Pak trained customer technicians. In all other cases contact Tetra Pak.

(Cont'd)

TechPub_2614345_0106 - 1202_3047165_01.fm

(Cont'd)

a) Remove the screws (1).
b) Remove the cover (2) and the filter (3).
c) Clean the filter (3) with compressed air.
d) Assemble in the reverse order.

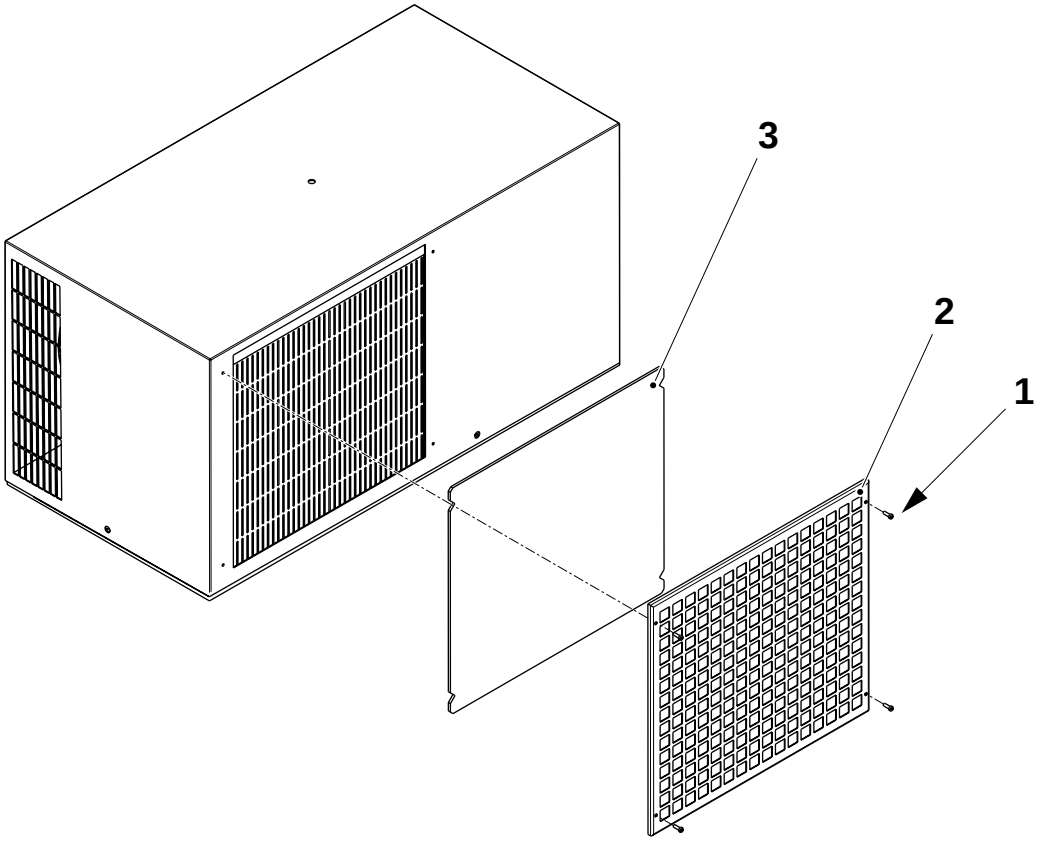

1 Screw
2 Cover
3 Filter

TechPub_2614345_0106 - 1202_3047165_01.fm

8.9.1-2 Cooling Unit - Change Filter

Machine Status	Mains Power ON Air ON
SPC Reference	2833406-0100

WARNING

Refrigerant gas.

Cooling media R134A. See the Safety Precautions.

CAUTION

Risk of damage to the equipment.

Only the procedures described may be performed by Tetra Pak or Tetra Pak trained customer technicians. In all other cases contact Tetra Pak.

a) Remove the screws (1).

b) Remove the cover (2) and the filter (3).

c) Change the filter (3).

d) Assemble in the reverse order.

TechPub_2614345_0106 - 1202_3047165_01.fm

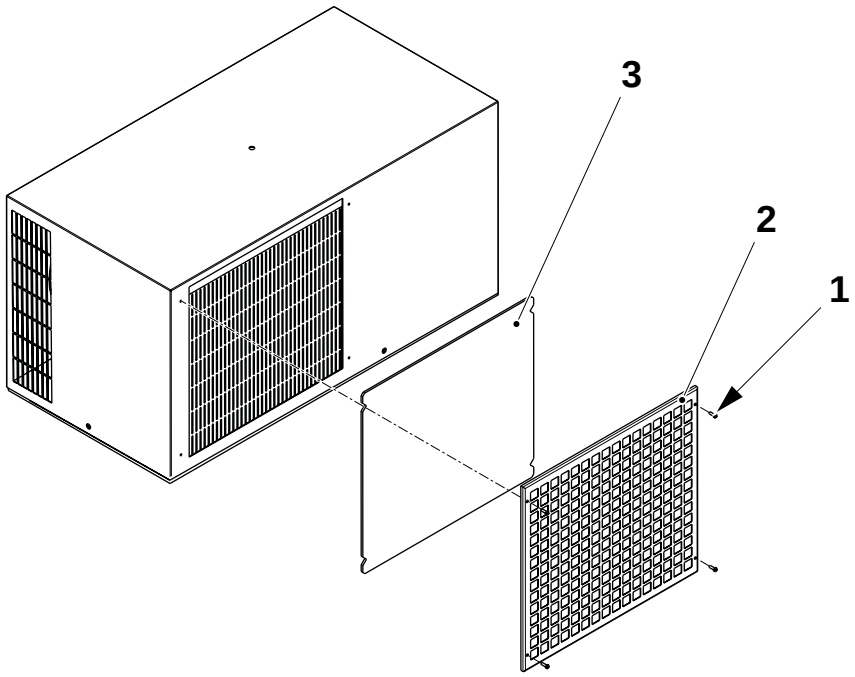

1 Screw
2 Cover
3 Filter

8.9.1-3 Cooling Unit - Check

Machine Status	Mains Power ON Air ON
SPC Reference	2833406-0100

DANGER

Hazardous voltage.
Will shock, burn or cause death. Follow the lockout procedure before performing this procedure.

CAUTION

Risk of damage to the equipment.
Only the procedures described may be performed by Tetra Pak or Tetra Pak trained customer technicians. In all other cases contact Tetra Pak.

a) Remove the screws (1) and the cover (2).

b) Clean the heat exchanger unit (3) with compressed air, blow the compressed air through from the inner side of the heat exchanger unit (3) to the outside of the cooling unit.

c) Clean any build up of dirt from the fan blades (4).

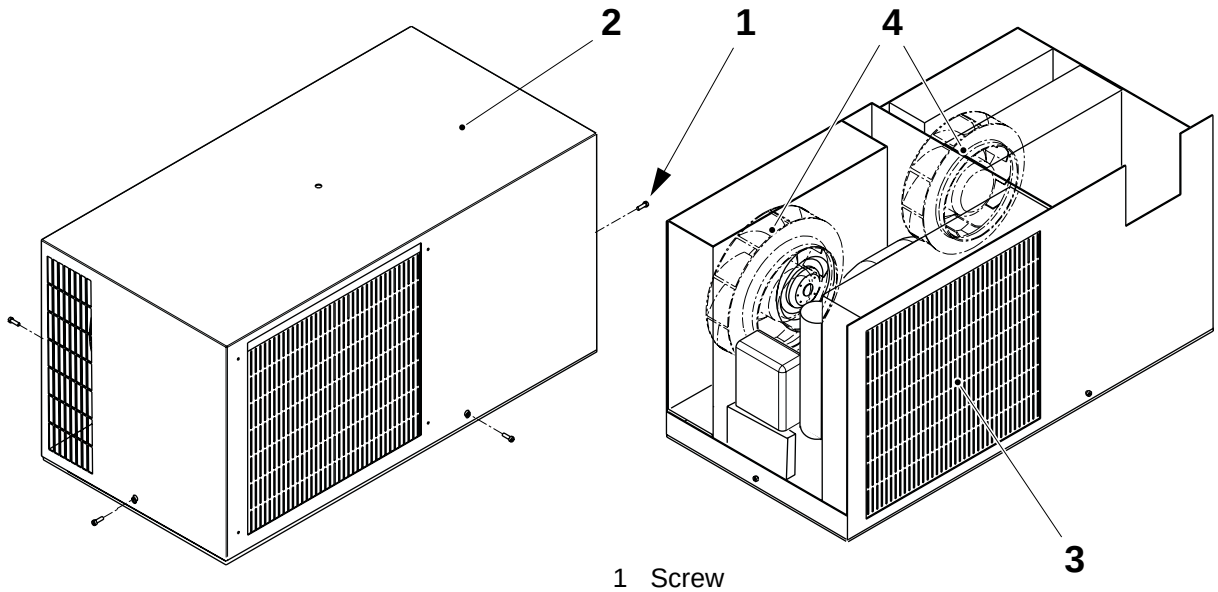

1 Screw
2 Cover
3 Heat exchanger unit
4 Fan blade

(Cont'd)

TechPub_2614345_0106 - 1202_3047165_01.fm

(Cont'd)

d) Check for:

- oil leakages on the copper pipe connections, if oil is leaking from the pipe connections, contact Tetra Pak
- that the compressor (5) is securely fastened to the cooling unit base
- that the fans (6) are securely fixed and there is not excessive radial play. To change the fans, see 8.9.1-4 Cooling Unit - Overhaul.

e) Assemble in the reverse order.

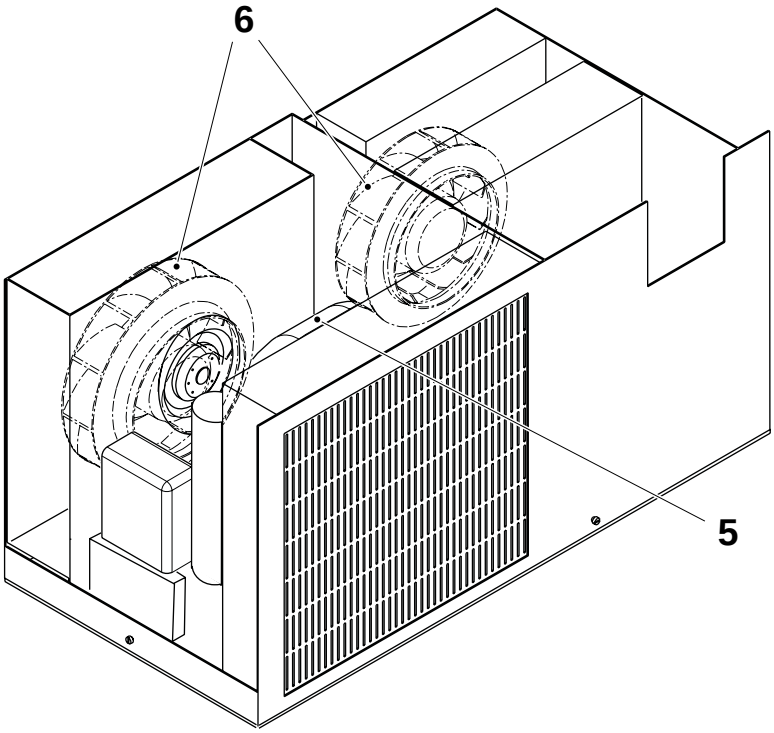

5 Compressor
6 Fan

TechPub_2614345_0106 - 1202_3047165_01.fm

8.9.1-4 Cooling Unit - Overhaul

Machine Status	Mains Power ON Air ON
SPC Reference	2833406-0100

DANGER

Hazardous voltage.
Will shock, burn or cause death. Follow the lockout procedure before performing this procedure.

WARNING

Refrigerant gas.
Cooling media R134A. See the Safety Precautions.

CAUTION

Risk of damage to the equipment.
Only the procedures described may be performed by Tetra Pak or Tetra Pak trained customer technicians. In all other cases contact Tetra Pak.

Note! If the cooling unit is removed from the electrical cabinet it is advisable to fit a new gasket to ensure a sufficient seal between the electrical cabinet and the cooling unit. Apply the self adhesive side of the new gasket to the cooling unit base.

(Cont'd)

TechPub_2614345_0106 - 1202_3047165_01.fm

(Cont'd)

a) Remove the screws (1) and the cover (2).

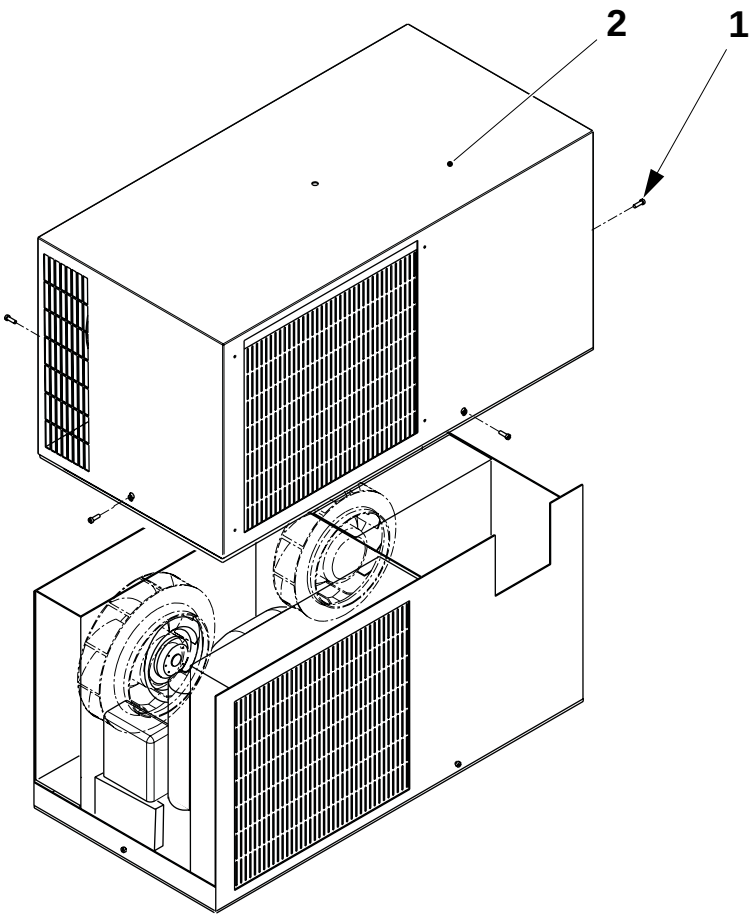

1 Screw
2 Cover

(Cont'd)

TechPub_2614345_0106 - 1202_3047165_01.fm

(Cont'd)

Change the Condenser Fan

a) Disconnect the electrical cable (1) from the electrical connection block (2) making a note of which wire is connected where.

b) Remove the screws (3) and the fan (4).

c) Assemble in the reverse order.

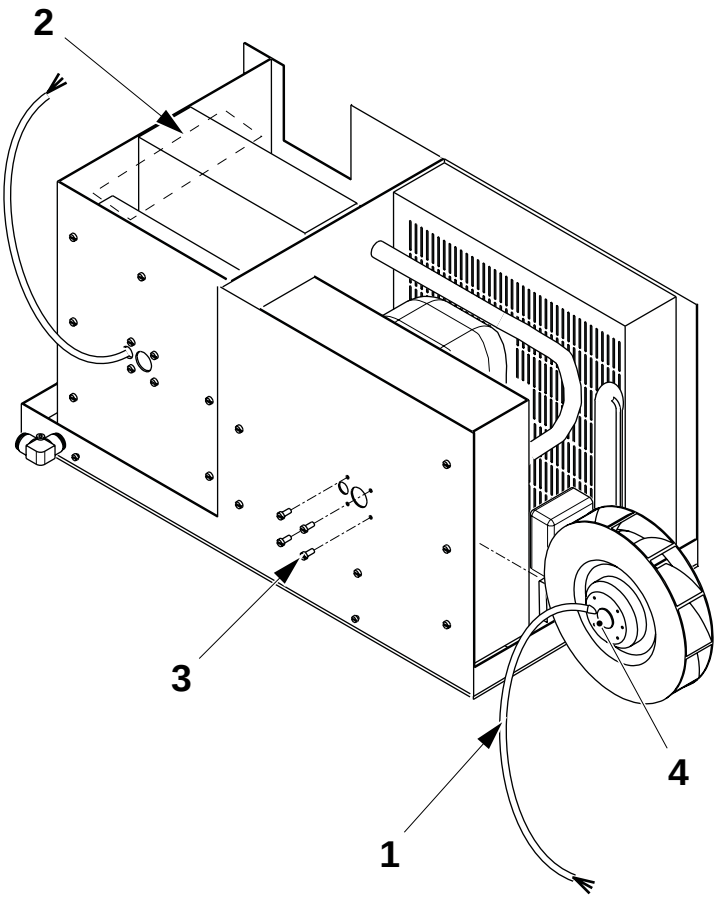

1 Cable
2 Connection block
3 Screw
4 Fan

(Cont'd)

TechPub_2614345_0106 - 1202_3047165_01.fm

(Cont'd)

Change the Expansion Chamber Fan

a) Disconnect the electrical cable (1) from the electrical connection box (2).

b) Remove the screws (3) and the cover (4).

c) Remove the screws (5) and the fan (6).

CAUTION
Risk of damage to the equipment.
Take care to fit the fan (6) with the correct screws (5), the screws (3) may damage the fan.

d) Assemble in the reverse order.

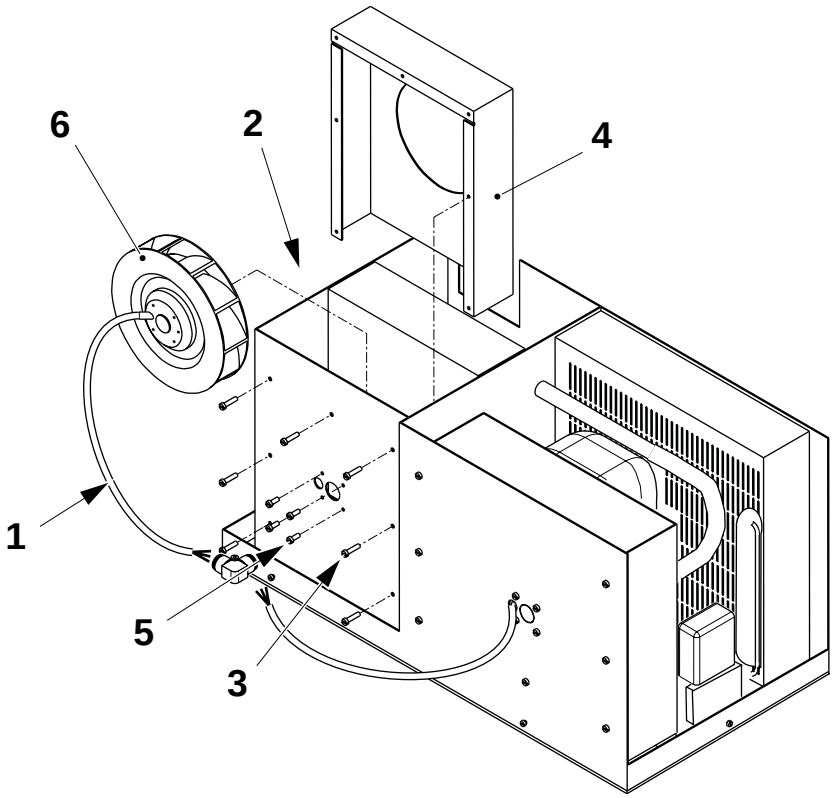

1 Electrical cable
2 Connection box
3 Screw
4 Cover
5 Screw
6 Fan

(Cont'd)

TechPub_2614345_0106 - 1202_3047165_01.fm

(Cont'd)

Change the Anti-freeze Thermostat

a) Remove the thermostat sensor (1) from the expansion chamber unit (2).

b) Remove the screws (3) and the thermostat unit (4).

c) Assemble in the reverse order.

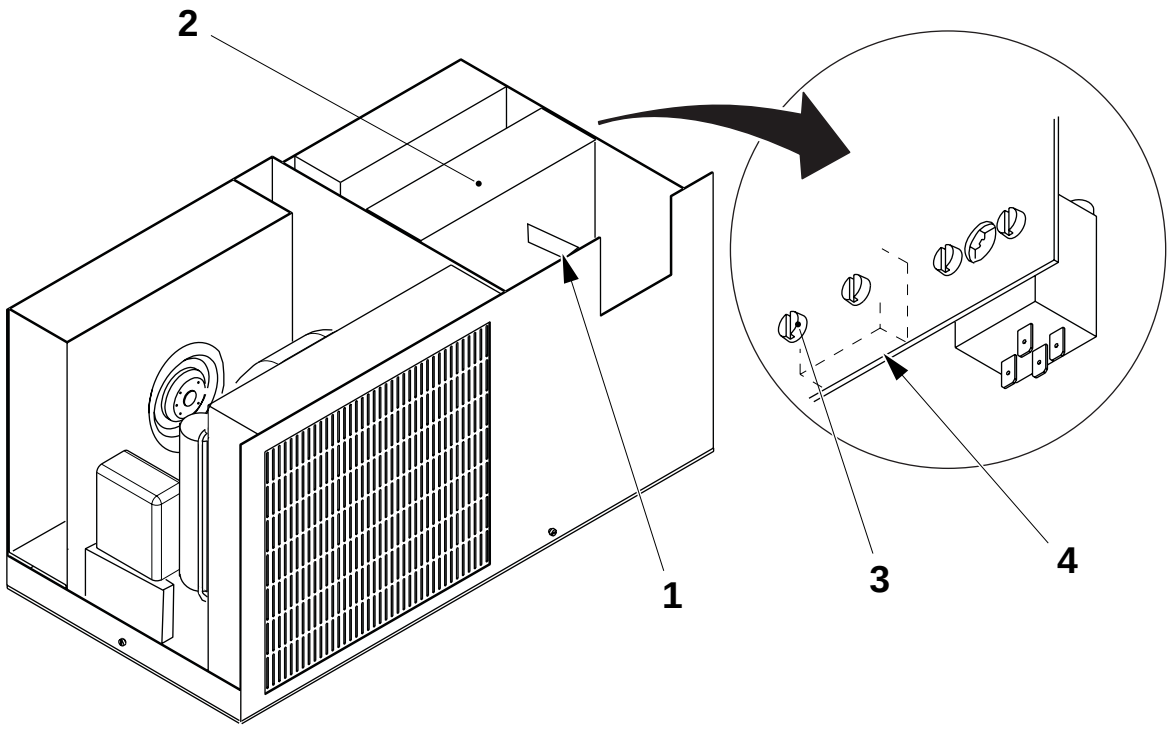

1 Thermostat
2 Expansion chamber unit
3 Screw
4 Thermostat unit

TechPub_2614345_0106 - 1202_3047165_01.fm

(Cont'd)

(Cont'd)

Change the Cabinet Temperature Thermostat

a) Remove the electrical connections from the thermostat (1).

b) Remove the screws (2) and the cabinet temperature thermostat (1).

c) Assemble the new thermostat unit (1) placing the sensor (3) into the airflow.

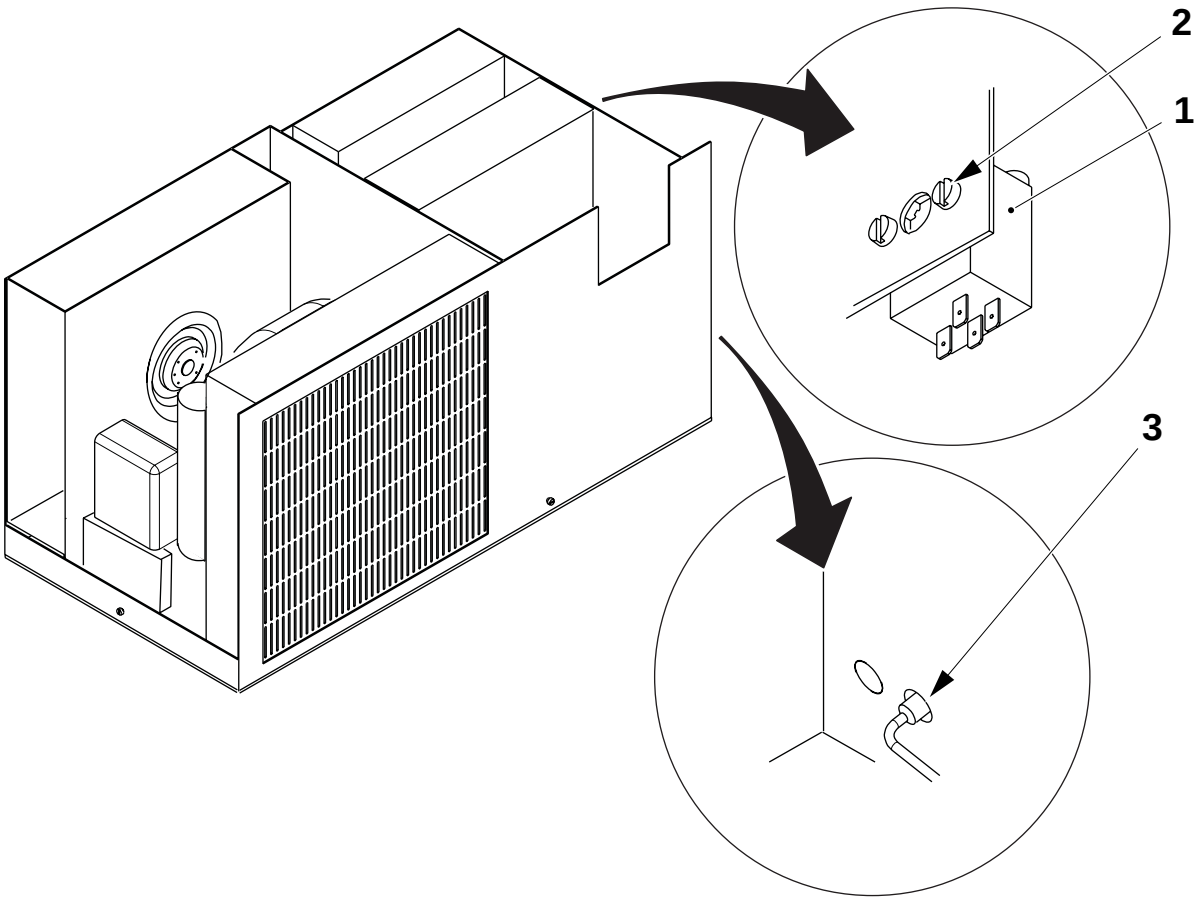

1 Thermostat
2 Screw
3 Thermostat sensor

TechPub_2614345_0106 - 1202_3047165_01.fm

8.9.1-5 Cooling Unit - Troubleshooting

Machine Status	Mains Power ON Air ON
SPC Reference	2833406-0100

CAUTION
Risk of damage to the equipment.
Only the procedures described may be performed by Tetra Pak or Tetra Pak trained customer technicians. In all other cases contact Tetra Pak.

If the cooling unit fails to operate or is operating insufficiently use the table below to determine the possible cause and actions to be taken.

Description	Possible Cause	Action
The cooling unit will not start.	No mains power supply to the cooling unit.	Check the circuit breaker and connections to the mains power supply.
Only the inside fan runs. Practically no electric consumption	The electrical cabinet internal thermostat has tripped or is wrongly set. The freeze thermostat has tripped.	Check the electrical cabinet internal thermostat and if necessary set to 35°C.
Normal operation. Insufficient cooling. High electric consumption	Condenser coil or filter dirty. Faulty condenser fan. Electric panel not properly sealed.	Check coil and air filter. Check the fans. Remove any obstacles. Close the cabinet doors.
The fan runs but the compressor does not run. Low electric consumption	Compressor internal protection has tripped probably due to too many frequent start ups or insufficient refrigerant gas	Contact Tetra Pak.
Normal operation. Low electric consumption and compressor very hot.	Insufficient or complete lack of refrigerant gas.	Contact Tetra Pak.
Compressor never stops.	Check that the thermostat contacts or any switch contacts are not stuck.	Replace the necessary faulty part.
During operation a lot of condensation forms and is drained off.	Cabinet not sealed sufficiently. Cabinet doors open. Holes in cabinet walls.	Improve the cabinet sealing. Close the cabinet doors. Fill any holes in the cabinet.

TechPub_2614345_0106 - 1202_3047165_01.fm

8.10 Electrical Conversion

Machine Status	Mains Power ON
SPC Reference	2841404-0100

8.10.1 Variable Frequency Drive

8.10.1-1 Maintenance Instructions

Machine Status	Mains Power ON
SPC Reference	2841404-0100

For maintenance instructions, see 8.3.1 PowerFlex40 and PowerFlex 4 Frequency Converters.

8.10.2 Axis Module

8.10.2-1 Maintenance Instructions

Machine Status	Mains Power ON
SPC Reference	2841404-0100

For maintenance instructions, see 8.4.3 Servo Drive.

8.10.3 Communication Unit

8.10.3-1 Maintenance Instructions

Machine Status	Mains Power ON
SPC Reference	2841404-0100

For maintenance instructions, see 10.3 Communication Unit in chapter .10 Optional Equipment.

TechPub_2614345_0106 - 1202_3047166_01.fm

This page intentionally left blank

TechPub_2614345_0106 - 1202_3047166_01.fm

9 Regular Accessories

TechPub_2614345_0106 - 1302_3047167_01.fm

Description - Cap Detector

SPC Reference	2986247-0100

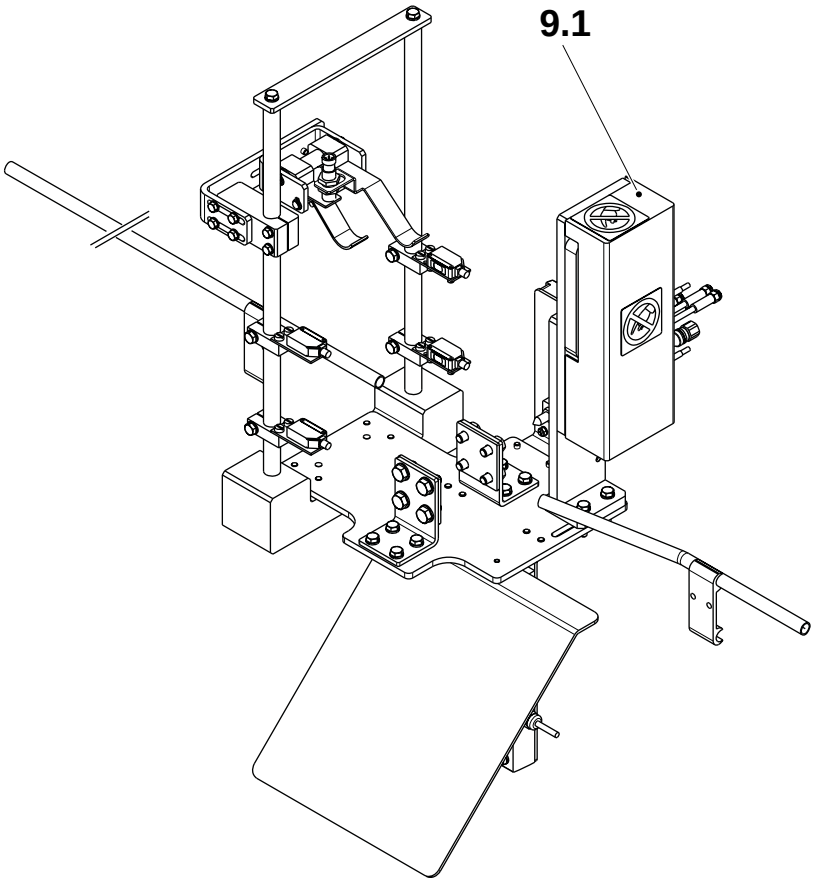

9.1 Cap Detector - ReCap

TechPub_2614345_0106 - 1302_3047167_01.fm

9.1 Cap Detector - ReCap . . . . . 9 - 5

9.1-0 Functional Description . . . . . 9 - 5

9.1.1 Cap Detector . . . . . 9 - 6

9.1.1-1 Cap Detector - Check . . . . . 9 - 6

9.1.1-2 Cap Detector - Set . . . . . 9 - 7

9.1.2 Cap Detector - Package Ejector Timing . . . . . 9 - 10

9.1.2-1 Cap Detector - Package Ejector Timing Setting . . . . . 9 - 10

TechPub_2614345_0106 - 1302_3047167_01.fm

This page intentionally left blank

TechPub_2614345_0106 - 1302_3047167_01.fm

9.1 Cap Detector - ReCap

SPC Reference	2986247-0100

9.1-0 Functional Description

The cap detector is mounted at the discharge (front) end of the machine and is used to remove packages without caps from the conveyor. These packages are sensed by the photocells (1). The cap sensor (2) is activated by the trigger (3) and the trigger (4) lifts the trigger (3) to the package height. This device also ejects packages when the cap is found out of position by the vision system which can be adjusted on the HMI.

When no cap is found the package is removed by the pusher (5).

If a cap leaves the package but stays on the conveyor this will be detected by the photocells (6) and removed by a jet of air from the nozzle (7).

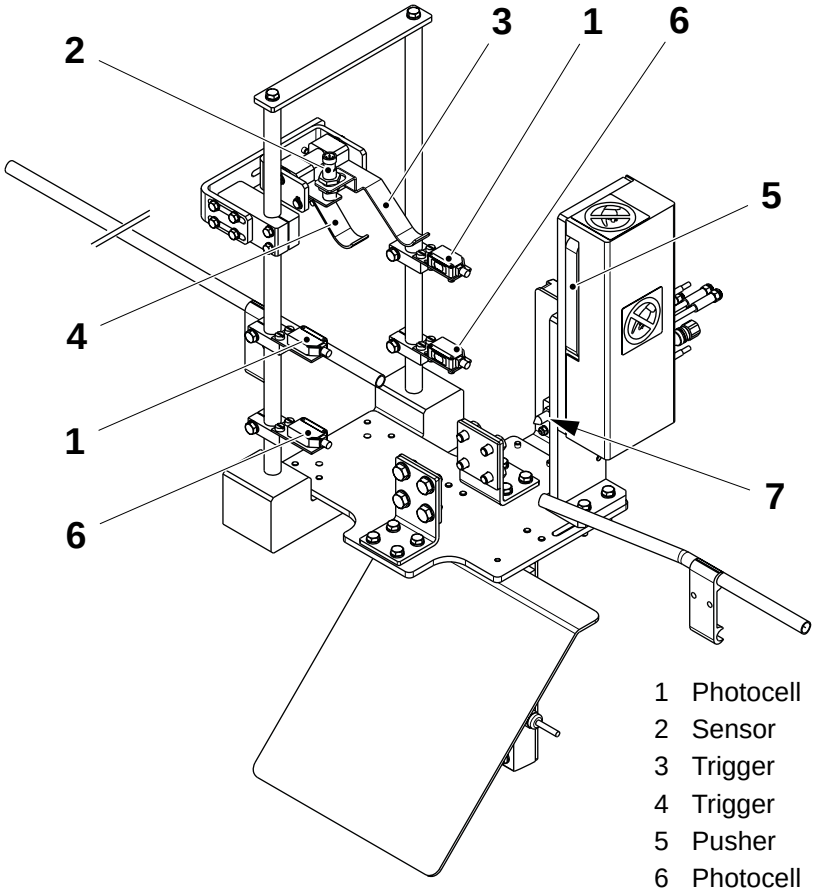

1 Photocell
2 Sensor
3 Trigger
4 Trigger
5 Pusher
6 Photocell
7 Nozzle

TechPub_2614345_0106 - 1302_3047168_01.fm

9.1.1 Cap Detector

9.1.1-1 Cap Detector - Check

Machine Status	Mains Power OFF
SPC Reference	2986247-0100

Check each of the following parts for wear:

- Link head (1)
- Cylinder (2)
- Pusher (3).

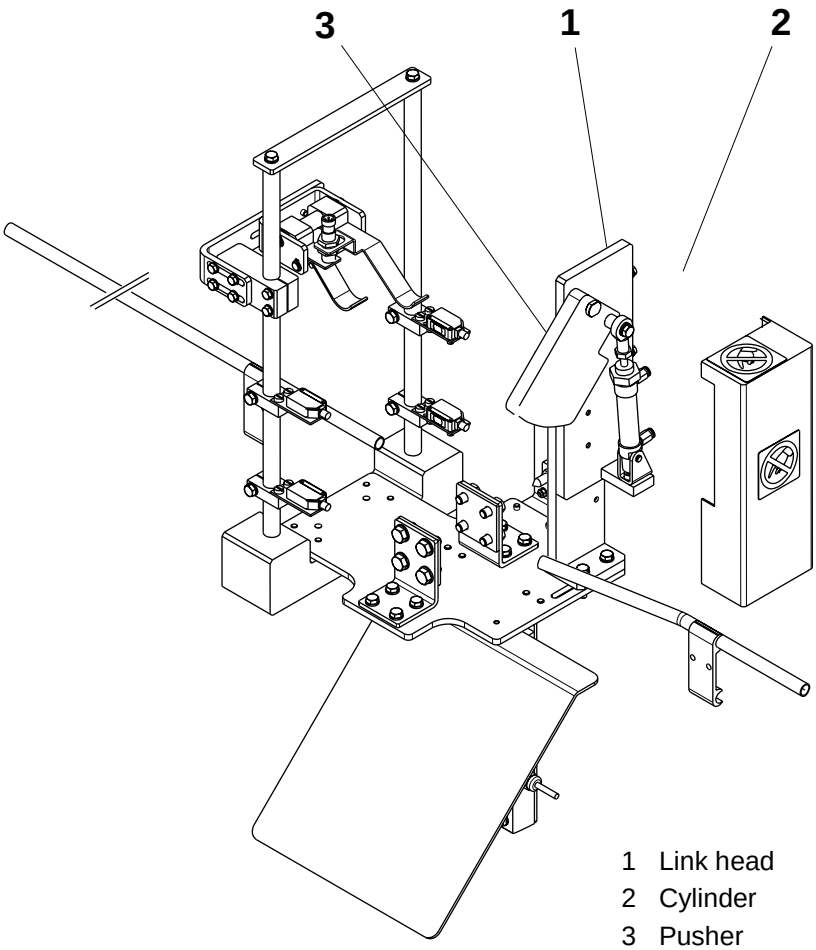

TechPub_2614345_0106 - 1302_3047168_01.fm

9.1.1-2 Cap Detector - Set

Machine Status	Mains Power OFF
SPC Reference	2815689-0100

Note! Install the cap detector according to the Installation Manual (IM).

a) Set the distance **A** between the plate (1) and the photocell (2) by releasing and tightening the screw (3).

b) Set the distance **B** between the plate (1) and the photocell (4) by releasing and tightening the screw (5).

Package	**A ± (mm)**	**B ± (mm)**
TBA 1000 B, TBA 1000 Sq	100	170
TBA 1000 Sq, TBA 1500 S	100	170

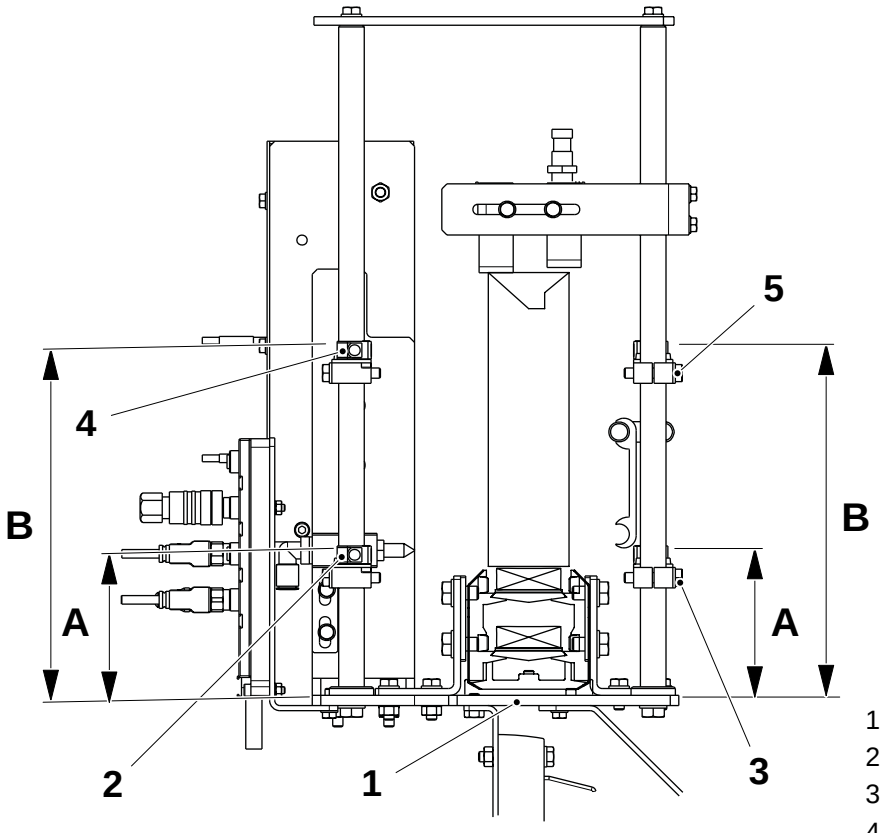

1 Plate
2 Photocell
3 Screw
4 Photocell
5 Screw

(Cont'd)

TechPub_2614345_0106 - 1302_3047168_01.fm

(Cont'd)

c) Set the distance between the bottom of the sensor (6) and the top of the trigger (7) by releasing the screw (8) and moving the bracket (9).

d) Release the screws (10) and centre the triggers (7) and (11) on the package.

e) Release the screws (12) and set the nozzle (13) to blow the over the conveyor belt and under the bar.

Package	C ± (mm)	D ± (mm)
TBA 1000 SQ	100	N/A
TBA 1500 S	100	N/A

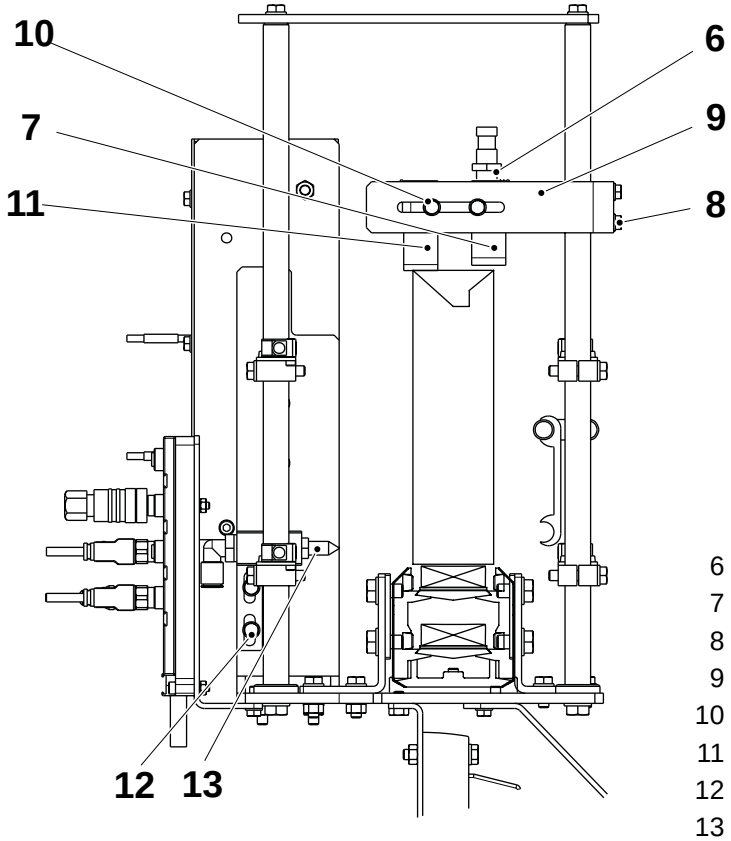

6 Sensor
7 Trigger
8 Screw
9 Bracket
10 Screw
11 Trigger
12 Screw
13 Nozzle

(Cont'd)

TechPub_2614345_0106 - 1302_3047168_01.fm

(Cont'd)

f) Make sure that the photocells (2) and (4) are in line with the opposite photocell.

g) Set the photocells switches as follows:
   - D/L (Dark ON/Light ON) (14) to D.
   - S (Sensitivity) MIN/MAX (15) to MAX.

h) Make sure that the upper photocells do not detect the reversed top fin. If they are detected, increase the distance **A**, see item a).

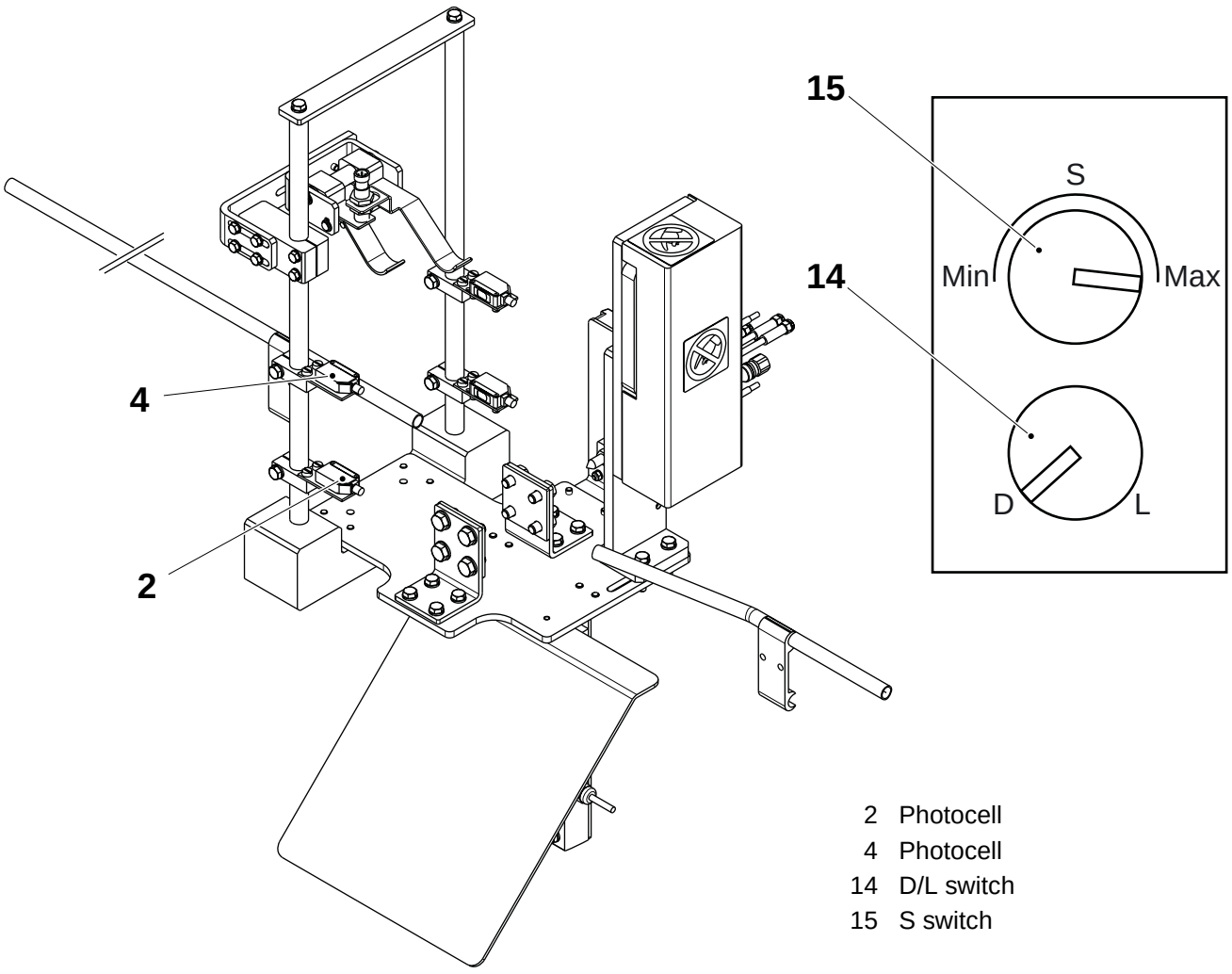

2 Photocell
4 Photocell
14 D/L switch
15 S switch

i)

j)

k)

TechPub_2614345_0106 - 1302_3047168_01.fm

9.1.2 Cap Detector - Package Ejector Timing

9.1.2-1 Cap Detector - Package Ejector Timing Setting

Machine Status	Mains Power ON
SPC Reference	2986247-0100

Note! This setting should only be done when the machine is functioning correctly, with or without the vision system. With the vision system the cap ejector will discard packages that have incorrectly positioned caps.

Description

The reason for this setting is to eject those package that will receive caps with glue not at the correct temperature and packages likely to be miss fed at the restart. This occurs when the machine goes into a fast stop, for example the queue congestion sensor is covered. When the machine restarts the caps held in the cap holders between the hotmelt guns and the pushdown fingers will have glue not at temperature, but the packages already with caps held on by the pushdown will be good and must pass by the ejector.

(Cont'd)

TechPub_2614345_0106 - 1302_3047168_01.fm

(Cont'd)

Procedure

a) Make a fast stop by preventing the packages from leaving the machine.

b) Open the door and mark the second package (1) under a pushdown finger.

c) Remove any loose packages (2) after the belt brake and before the package transfer, also the last package in the belt brake that is in front of the photocells.

d) Remove any packages in front of the outfeed sensor.

e) Close the doors and reset the alarms.

f) Restart the machine making sure that either you or someone else can see the cap detector.

g) Start counting the packages when they start being ejected, this may be before or after the marked package.

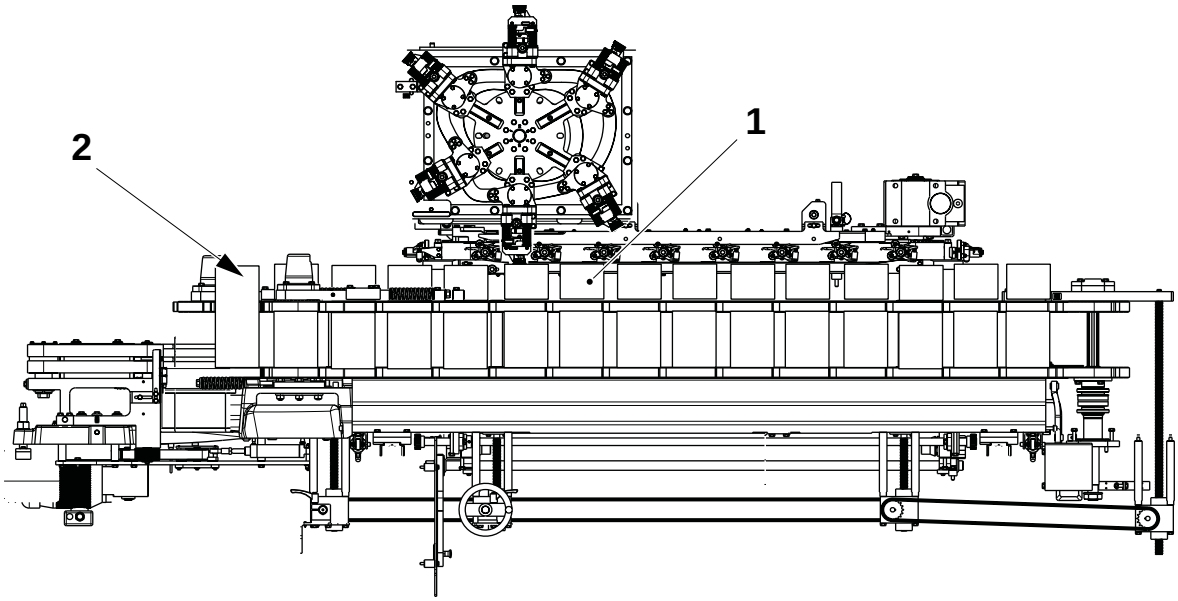

1 Second package
2 Loose package

(Cont'd)

TechPub_2614345_0106 - 1302_3047168_01.fm

(Cont'd)

h) Login and enter password, see HMI User Management - Log On as a User.

i) Enter the package transfer screen (3), touch the waste device icon (4) and then the default setting icon (5).

j) Using the UP-DOWN button (6) set the number in the value window (7) and then touch the OK button (8).

k) Confirm that the number has been changed in the default window (9).

l) Touch the exit button (10) to leave.

If the marked package is the first package to be discarded all is correct. If for example three packages before the marked package are discarded, increase the default number by three. If three packages after the marked package are discarded then decrease the default number by three.

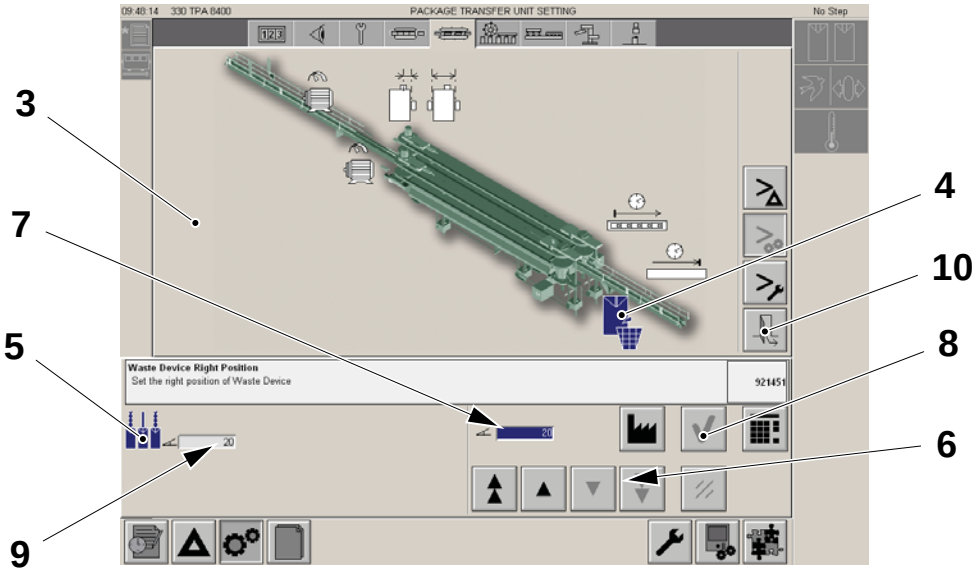

3 Package transfer screen
4 Waste device icon
5 Default setting icon
6 UP-DOWN button
7 Value window
8 OK button
9 Default window
10 EXIT button

TechPub_2614345_0106 - 1302_3047168_01.fm

10 Optional Equipment

TechPub_2614345_0106 - 1402_3047169_01.fm

Description - Optional Equipment

SPC Reference	662812-0100

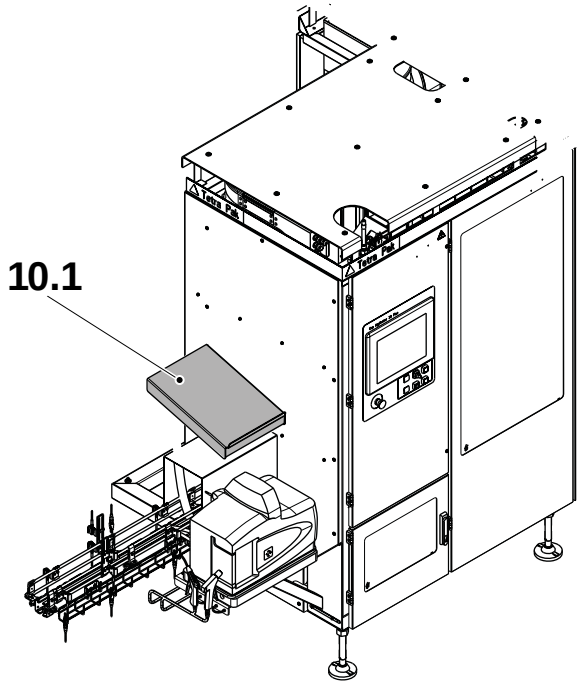

10.1 Glue Shelf
10.2 Sensor Group - Line Switching *
10.3 Communication Unit *

*Not illustrated

TechPub_2614345_0106 - 1402_3047169_01.fm

10.0 Optional Equipment . . . . . 10 - 5

10.1 Glue Shelf. . . . . 10 - 6

10.1.1 Glue Shelf Description. . . . . 10 - 6

10.1.1-1 Glue Shelf Change . . . . . 10 - 6

10.1.1-2 Glue Shelf Installation . . . . . 10 - 7

10.2 Sensor Group - Line Switching . . . . . 10 - 8

10.2.1 Sensor Group - Description . . . . . 10 - 8

10.2.1-1 Sensor Group - Setting . . . . . 10 - 8

10.3 Communication Unit . . . . . 10 - 9

10.3.1 Communication Unit Description . . . . . 10 - 9

10.3.1-1 SNP to DF1 Gateway - Set DIP Switch . . . . . 10 - 9

10.3.1-2 SNP Converter - Electrical Connections . . . . . 10 - 10

TechPub_2614345_0106 - 1402_3047169_01.fm

This page intentionally left blank

TechPub_2614345_0106 - 1402_3047169_01.fm

10.0 Optional Equipment

SPC Reference	2873924-0100

This chapter covers the equipment considered as optional;

- Glue Shelf
- Sensor Group - Line Switching
- Communication Unit

TechPub_2614345_0106 - 1402_3047170_01.fm

10.1 Glue Shelf

SPC Reference	662912-0100

10.1.1 Glue Shelf Description

The glue shelf is a convenient storage place for the glue packages.

10.1.1-1 Glue Shelf Change

SPC Reference	662912-0100

a) Remove the screws (1), the shelf (2) and the spacer (3).

b) Only if damaged remove the screws (4) and the cross bar (5).

c) Only if damaged remove the screws (6) and the brackets (7).

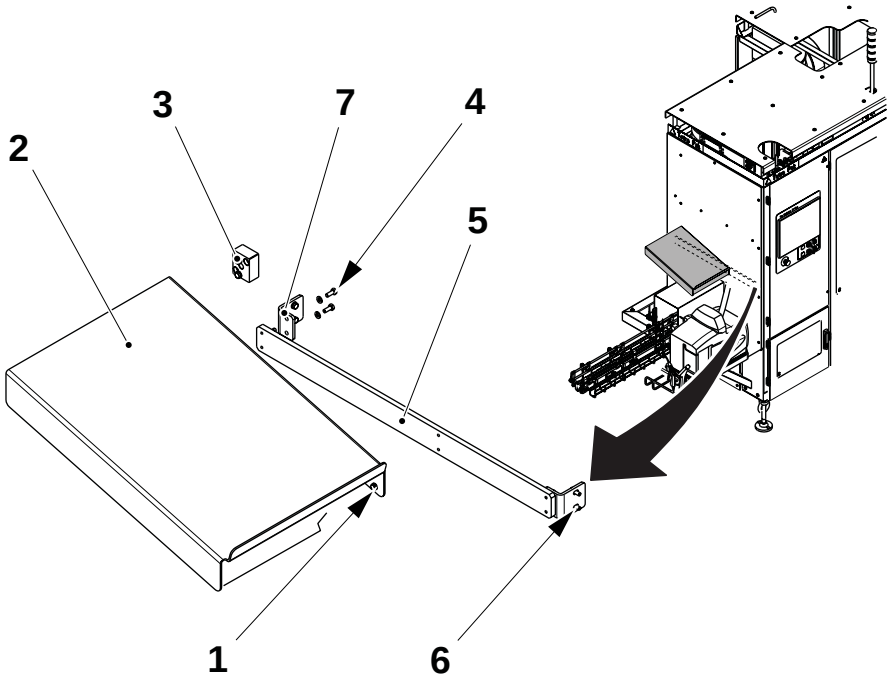

1 Screw
2 Shelf
3 Spacer
4 Screw
5 Cross bar
6 Screw
7 Angle bracket

TechPub_2614345_0106 - 1402_3047170_01.fm

10.1.1-2 Glue Shelf Installation

SPC Reference	662912-0100

a) Fasten the cross bar (1) to the angle brackets (2) using the screws (3).

b) Fasten the angle brackets (2) to the frame using the screws (4).

c) Fasten the shelf (5) by passing the screws (6) through the machine cover (7) and into the cross bar (1) at one end and the frame at the other end using the spacer (8).

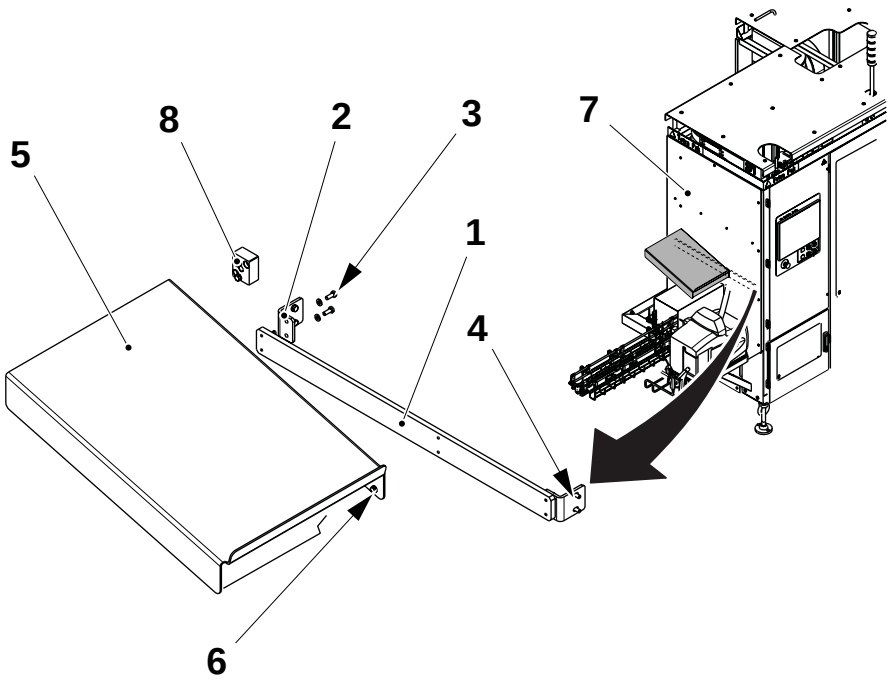

1 Cross bar
2 Angle bracket
3 Screw
4 Screw
5 Shelf
6 Screw
7 Cover
8 Spacer

TechPub_2614345_0106 - 1402_3047170_01.fm

10.2 Sensor Group - Line Switching

SPC Reference	2930179-0100

10.2.1 Sensor Group - Description

This sensor indicates to the Cap30 which downstream equipment is being used.

10.2.1-1 Sensor Group - Setting

SPC Reference	2930179-0100

a) Adjust the nuts (1) until the sensor (2) is distance **A** from the switch arm (3).

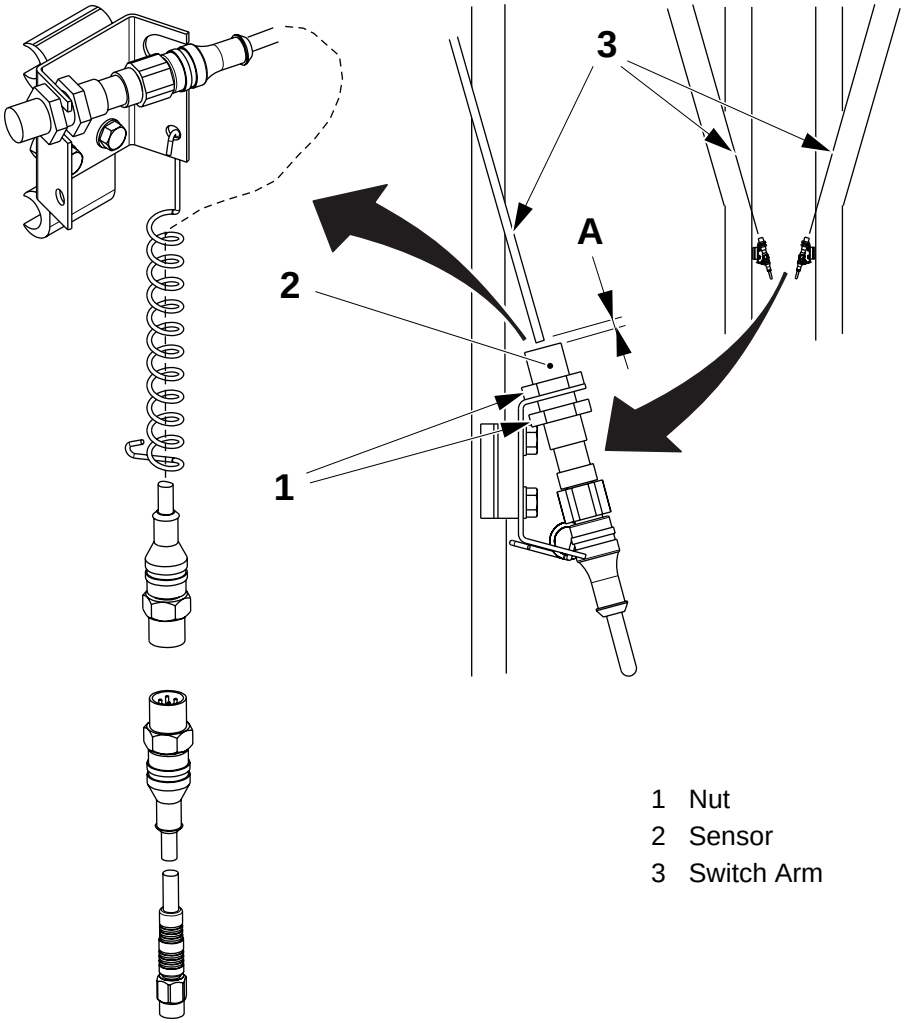

1 Nut
2 Sensor
3 Switch Arm

TechPub_2614345_0106 - 1402_3047177_01.fm

10.3 Communication Unit

SPC Reference	662916-0100

10.3.1 Communication Unit Description

This is a switching unit.

10.3.1-1 SNP to DF1 Gateway - Set DIP Switch

Machine Status	Mains Power OFF Air OFF
SPC Reference	2873925-0100

Set the 4 bit DIP switches (1), the 8 bit DIP switches (2), and the term switch (3) according to the table below.

4 Bit DIP Switch	**Position**	**8 Bit DIP Switch**	**Position**
1	ON	1	Off
2	ON	2	ON
3	Off	3	Off
4	Off	4	ON
		5	Off
		6	Off
Term Switch		7	Off
Term switch	Off	8	ON

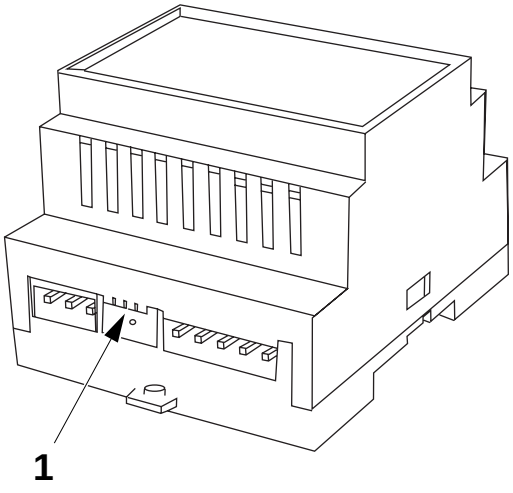

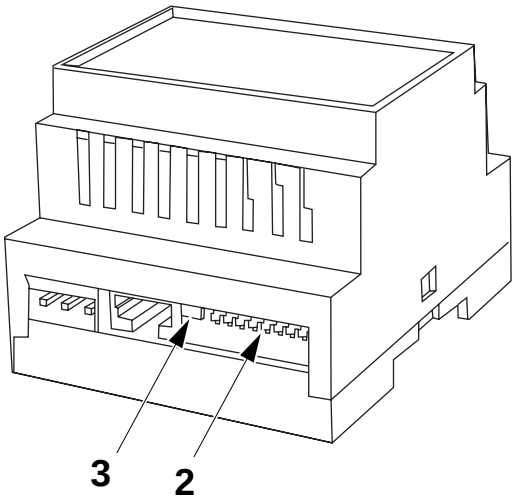

1 4 bit DIP switch
2 8 bit DIP switch
3 Term switch

TechPub_2614345_0106 - 1402_3047178_01.fm

10.3.1-2 SNP Converter - Electrical Connections

Machine Status	Power Disconnector OFF Air Valve OFF
SPC Reference	2844513

Connect the SNP converter according to the tables below.

SNP - DF1		**Flexbox (Filling machine)**		
COM2 RS-422		**COM4**		
Pin number	**Signal name**	**Pin number**	**Signal name**	**Cable, colour**
x	x			
x	x			
1	Receive, inverting	5		Brown
2	Receive, non-inverting	4		White
3	Transmit, inverting	9		Yellow
4	Transmit, non-inverting	8		Green
x	x			
x	x			
5	Shield	connect to chassis	Shield	

GE-Fanuc Series 90 PLC			
RS-422 Serial port pin			
Pin number	**Signal name**	**Description**	**Note**
6	RTS (A)	Request To Send	connect with pin 15
8	CTS (B')	Clear To Send	connect with pin 14
10	RD (A')	Receive Data	
11	RD (B')	Receive Data	
12	SD (A)	Send Data	
13	SD (B)	Send Data	
14	RTS (B)	Request To Send	connect with pin 8
15	CTS (A')	Clear To Send	connect with pin 6
1	Shield		

TechPub_2614345_0106 - 1402_3047178_01.fm

11 General

TechPub_2614345_0106 - 1502_3047171_01.fm

How to use this chapter

SPC Reference	662950-0100

This chapter provides the standard values for setting the Tetra Cap Applicator and information on the lubricants and cleaning compounds used with Tetra Pak machines.

TechPub_2614345_0106 - 1502_3047171_01.fm

11.1 Technical Data . . . . . 11 - 5

11.1-1 Pressures . . . . . 11 - 5

11.1-2 Temperatures . . . . . 11 - 5

11.1-3 Hotmelt Specification . . . . . 11 - 5

11.1-4 Hotmelt Consumption . . . . . 11 - 6

11.2 Templates and Tools . . . . . 11 - 7

11.3 Consumables . . . . . 11 - 9

11.3-1 Lubricants . . . . . 11 - 9

11.3-2 Cleaning Compounds . . . . . 11 - 12

11.4 Safety Functions . . . . . 11 - 14

11.4-1 Safety Functions - Check . . . . . 11 - 14

TechPub_2614345_0106 - 1502_3047171_01.fm

This page intentionally left blank

TechPub_2614345_0106 - 1502_3047171_01.fm

11.1 Technical Data

11.1-1 Pressures

This table gives the pressure settings for the applicator.

Function	Unit	Value ReCap
Main air supply	Bar (MPa)	6.0 (0.6)
Hotmelt unit, pump	Bar (psi)	1.8 (26.1)

11.1-2 Temperatures

Function - Hotmelt Unit	Unit	Value ReCap
Hotmelt tank	°C (°F)	195 (383)
Hotmelt hose	°C (°F)	200 (392)
Hotmelt wheel	°C (°F)	205 (401)

11.1-3 Hotmelt Specification

Type	TP Number	Use
Jowatherm Hotmelt 250.00	90153-0059	ReCap 3
Jowatherm Hotmelt 250.00	90153-0059	ReCap 2

TechPub_2614345_0106 - 1502_3047172_01.fm

11.1-4 Hotmelt Consumption

Cap	Consumption Value
ReCap2 A3	Approximately 40 grams / 1000 caps
ReCap3	Approximately 90 grams / 1000 caps

TechPub_2614345_0106 - 1502_3047172_01.fm

11.2 Templates and Tools

Illustration	Description
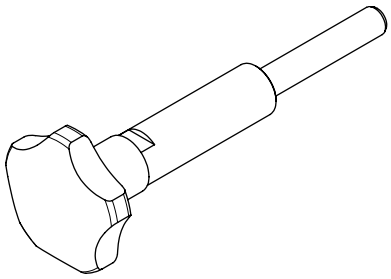	Zero Setting Template TP No. 2715750-0100 **5 Applicator Unit**
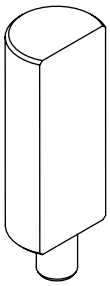	Zero Alignment TP No. 2788136-0000 **2 Package Line**
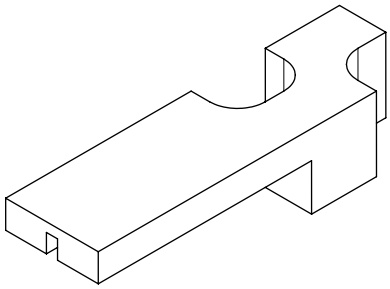	Zero Alignment: - TGA, TBA 1000 Slimcap TBA 2000 Slimcap, TBA 1000 Streamcap TP No. 2788137-0000 **2 Package Line**
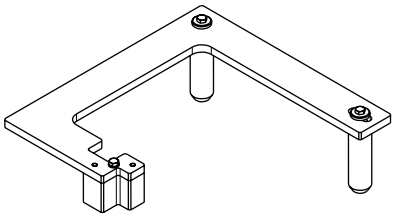	Zero Alignment: - TBA 200 Streamcap TP No. 2939208-0100 **2 Package Line**
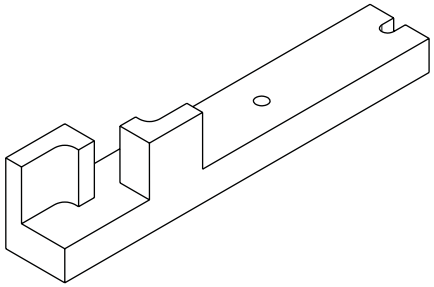	Zero Alignment: - TPA 330, 500 and 1000 Streamcap TP No. 2873935-0000 **2 Package Line**
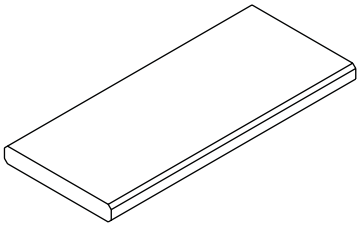	Zero Alignment TP No. 2911910-0000 **6 ReCap Cutting and Feeding**

TechPub_2614345_0106 - 1503_3047173_01.fm

Illustration	Description
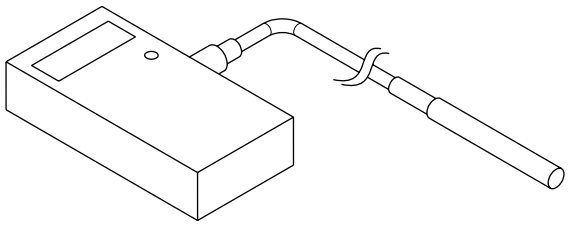	Belt Tension TP No. 90459-2181 **2 Package Line** **6 ReCap Cutting and Feeding**
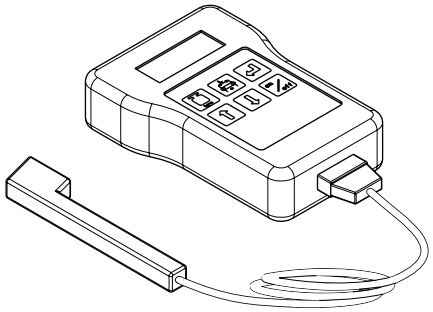	Belt Tension TP No. 90600-3415 **2 Package Line** **6 ReCap Cutting and Feeding**

TechPub_2614345_0106 - 1503_3047173_01.fm

11.3 Consumables

11.3-1 Lubricants

WARNING

Risk of personal injury!

Certain lubricants can cause injury if they come into contact with the eyes, skin, mucous membranes, or clothing. Always follow the manufacturer's instructions for handling chemical products.

The table below lists only a selection of lubricants with their respective designations.

Lubricant specifications may be ordered from:
Tetra Pak GTS AB - Parts Supply Chain, Ruben Rausings gata, SE-221 86 LUND, Sweden.

Lubricant Code	Part No. (used when ordering from Tetra Pak)	Supplier	Product Designation (2004-06)
A Motor oil	90 296-28	Statoil	PowerWay D2 10W-30
B High-pressure oil	90 296-73 90 296-78	BP Esso Statoil Mobil Shell	Energol GR-XP 220 Spartan EP 220 LoadWay EP 220 Mobilgear 630 Omala oil 220
	90 296-72 For use in production plant with start temperature below 5° C.	BP Esso Statoil Mobil Shell	Energol GR-XP 150 Spartan EP 150 LoadWay EP 150 Mobilgear 629 Omala oil 150
C Hydraulic oil	90 296-53	BP Esso Statoil Mobil Shell	Bartran HV 32 Univis N 32 HydraWay HVX 32 DTE Oil 13 Tellus Oil T 32
D Mist lubrication oil	90 296-80	BP Esso Statoil Mobil Shell	Autran DX ATF Dextron II TransWay DX II ATF 220 ATF Dextron II
E Compounded cylinder oil	90 296-77 90 296-2	BP Esso Statoil Mobil Shell	Energol AC-C460 Cylesso TK 460 CylWay FZ 460 600W Super Cylinder Oil Valvata Oil J460

TechPub_2614345_0106 - 1502_3047174_01.fm

Lubricant Code	Part No. (used when ordering from Tetra Pak)	Supplier	Product Designation (2004-06)
F Lithium grease, EP type	90 296-68	BP Esso Statoil Mobil Shell Shell	Energrease LS EP 2 / XRB2 EP Esso MP Grease/Beacon EP 2 UniWay LI 62 Mobillux EP 2 Grease 1344 LiEP 2 Calithia EP Grease T2
H High-pressure oil	90 296-75 90 296-76	BP Esso Statoil Mobil Shell	Energol GR-XP 320 Spartan EP 320 / Mobilgear 632 (mineral) 320 LoadWay EP 320 Mobilgear 632 Omala oil 320
	90 296-73 90 296-78 For use in production plant with start temperature below 5° C.	BP Esso Statoil Mobil Shell	Energol GR-XP 220 Spartan EP 220 LoadWay EP 220 Mobilgear 630 Omala oil 220
K Circulation oil	90 296-15	BP Esso Statoil Mobil Shell	Energol CS 100 Teresso 100 TurbWay 100 DTE Oil Heavy Tellus Oil 100
L Silicon grease	90 296-9		Grease 55322-30 ACC to M 1255.322 TUBE 100 GR
M Lithium grease, EP type	90 296-70	BP Esso Statoil Mobil	Energrease LS EP 1 Beacon EP 1 UniWay LI 61 Mobillux EP 1
N PTFE grease	90 296-91	Sikema	
O Lithium complex grease	90 296-61	BP Esso Statoil	Energrease LS 3 Unirex N3 UniWay HT-63
P Synthetic compressor oil	90 296-54	BP Esso Statoil Mobil Shell	Energol RC 68 Compressor Oil 68 CompWay 68 Rarus 427 Corena Oil H68
Q Low friction assembly paste	90 296-12	Dow Kluber	Molykote G-N Plus Unimoly Plus

TechPub_2614345_0106 - 1502_3047174_01.fm

Lubricant Code	**Part No. (used when ordering from Tetra Pak)**	**Supplier**	**Product Designation** (2004-06)
R Synthetic grease	90 459-246	Kluber	Klubersynth UH1 14-1600
S Synthetic hydrocarbon grease	90 296-10	Mecman	435-1
T Synthetic lubricating grease	90 459-0340	Shell	Cassida HDS2
U Hydraulic fluid	90 459-1310	Shell	Cassida Fluid HF32
V Oil	90 296-104	Molykote	Molykote Foodslip EP Gear Oil 220
W Hydraulic fluid	90 458-1427	Shell	Hydraulic Oil 46 Shell Tellus T 46
X Oil	90 296-105	Kluber Lubrication	Kluberoil 4 UH1-220
Y Lubrication oil	90 458-2735	Mobil	Mobil SHC 634
Lubricant (Jaw System gearboxes)	90459-1041	Shell	Tivela S460 (recommended)
	90459-1062	Mobil	Glycole 460

TechPub_2614345_0106 - 1502_3047174_01.fm

11.3-2 Cleaning Compounds

WARNING

Risk of explosion.

Cleaning with non recommended cleaning agents, for example agents including alcohol, could cause an explosion. Use only Tetra Pak recommended cleaning agents when cleaning or disinfecting parts that can come into contact with hydrogen peroxide.

It is strongly recommended, in order to optimise the cleaning efficiency, to use water characterised by the following physio chemical parameters:

- water quality; chlorine free, drinkable water
- pH; between 6 and 8 pH units
- water hardness; between 5 and 10 °f French degrees of hardness (between 3 and 6 German degrees of hardness)
- chlorides; lower than 50 ppm
- silicates; lower than 10 ppm.

(Cont'd)

TechPub_2614345_0106 - 1502_3047174_01.fm

(Cont'd)

Cleaning Compound Table

Comparable qualities from other suppliers may be selected in compliance with the technical requirements listed in the table. All cleaning compounds must comply with local legal requirements.

The supplier recommendations for concentration and temperature should be followed. When dosing the products automatically, the concentration should be checked.

Cleaning Type	TP Code		Detergent Type	Example 071119									
				Raw Material				Formulated Products					
				Name	Max Conc w/w	Use Conc w/w	Use Temp °C	Ecolab	Use Conc. w/w	Use Temp. °C	Johnson Diversey	Use Conc. vol/vol	Use Temp. °C
CIP	A	1	Alkali	NaOH	30%	1.50%	80	P3-mip CIP	2.0%	80	VC 13 VC 7	3.0% 4.5%	80
	B	1	Acid	HNO_3	50%	1.00%	60	P3-horolith L31	1.0%	60	VA 5	2.0%	60
External Cleaning (automatic)	C	1	Alkali foam (*)					P3-Topax 12	3.0%	25	VF 9	3.0%	25
		2	Alkali solution (**)					P3-mip FPC	2.0%	55	VK 12	1.0%	55
		3	Disinfection foam (***)					P3-Topax 99	2.0%	25	VS 1	1.0%	25
		4	Acid foam (***)					P3-Topax 56		25	VF 11	2.0%	25
Manual Cleaning (wiping)	D	1	Alkali					P3-mip FPC	2.0%	25	VK 12	1.0%	25
Manual Disinfection (immersion)	F	1	Low alkali					P3-Topax 99	2.0%	25	VS 1	1.0%	25
		2	Low alkali					P3-Steril	2.0%	25	VT 1	1.0%	25
		3	Acid solution	Peracetic acid solution	15%	200ppm	25	Oxonia Active	0.50%	25	VT 6	0.10%	25
Manual Disinfection (spraying)	G	1	Alcoholic solution	Isopropanol	70%		25	Spitaderm	Pure	25	VT 10	pure	25
		2	Alcoholic solution	Ethanol	70%		25	Alcodes	Pure	25		pure	25
		3	Acid solution	Peracetic acid solution	15%	200ppm	25	Oxonia Active	0.50%	25	VT 6	0.10%	25
Hand Disinfection	H	1						Manodes	pure	25	H34	pure	25
Deliming agent	K	1	Citric acid compound (***)					Lime-A-Way Special	pure	25			

*To be used on TBA/21, TBA/22, TP A3/Flex, TP A3/Speed, TB/21, TP C3/Flex.

**To be used on TBA/8, TBA/9, TBA/19, TB/8, TB/9, TB/19.

***To be used only on C3/Flex.

TechPub_2614345_0106 - 1502_3047174_01.fm

11.4 Safety Functions

11.4-1 Safety Functions - Check

Machine Status	PREPARATION

Make sure that the machine can not be inched if:

- any of the doors or covers are open
- any EMERGENCY STOP is pushed
- any crank is in the cranking position.

For the location of safety components, see the sections Safeguards and Emergency Stop in the ii Safety Precautions chapter.

Make sure that when any EMERGENCY STOP is pushed the machine resets to step ZERO.

Check that the warning sign labels are present and readable. Replace any missing and /or illegible signs, see Location of Safety Signs in the ii Safety Precautions chapter.

Also see the Optional Equipment documentation.

TechPub_2614345_0106 - 1502_3047175_01.fm

A

Align - Transmitter and Receiver . . . . . 7 - 61
Automatic Fuses - Set . . . . . 8 - 233

B

Basic Setting Sequence . . . . . 1 - 16
Belt Stretcher - Change Bearings . . . . 2 - 52, 3 - 30
Belt Stretcher - Set Belt Tension . . . . . 3 - 32
Blowing System - Check . . . . . 4 - 15
Blowing System - Set Blowing Device . . . . . 4 - 16
Box Conveyor - Change Bearings . . . . . 7 - 38
Box Conveyor - Change Conveyor Belts . . . . 7 - 33
Box Conveyor - Change Drive Belt . . . . . 7 - 31
Box Conveyor - Change for Box Size . . . . . 7 - 43
Box Conveyor - Set Conveyor Belt Tension . 7 - 37
Box Conveyor - Set Drive Belt tension . . . . . 7 - 36
Brake Sensors - Method for Setting a Brake Sensor 7 - 17
Brake Unit - Change Belt . . . . . 2 - 8
Brake Unit - Check . . . . . 2 - 13
Brake Unit - Check Belt Tension . . . . . 2 - 6
Brake Unit - Check Belts . . . . . 2 - 7
Brake Unit - Set Belt Tension . . . . . 2 - 9
Brake Unit - Set Position . . . . . 2 - 11
Brake Unit - Set Sensor . . . . . 2 - 14

C

Cam Module - Removal . . . . . 5 - 13
Cams - Set Applicator and Release Cams . . 5 - 11
Cams - Set Picking and Gripper Cams . . . . . 5 - 6
Cap Detector - Check . . . . . 9 - 6
Cap Detector - Package Ejector Timing Setting . 9 - 10
Cap Detector - Set . . . . . 9 - 7
Cap Holder - Change Roller and Bushings . . 5 - 15
Cap Holder - Check . . . . . 5 - 14
Cap Holder - Set Y Position . . . . . 5 - 16
Central Lubrication - Check Level Switch . . . 4 - 30
Central Lubrication - Check Pressure Switch 4 - 31
Central Lubrication - Clean Oil Tank . . . . . 4 - 32
Central Lubrication - Fault Finding . . . . . 4 - 33
Check - Transmitter and Receiver . . . . . 7 - 63
Clamping Element - Removal and Installation 6 - 75
Cleaning Compounds . . . . . 11 - 12
Control Panel - Overview . . . . . 8 - 251
Control Panel - Touch Screen . . . . . 8 - 252
Conveyor - Change . . . . . 6 - 43
Conveyor - Change Belt . . . . . 6 - 45
Conveyor - Check . . . . . 6 - 44
Conveyor - Drive Overhaul . . . . . 6 - 47
Conveyor - Framework Change . . . . . 6 - 49
Conveyor - Rollers Overhaul . . . . . 6 - 48
Conveyor - Set Belt Alignment and Tension . . 6 - 52
Conveyor - Set X Position . . . . . 6 - 50
Conveyor - Set Z Position . . . . . 6 - 51
Conveyor Support - Set . . . . . 4 - 6
Cooling Unit - Change Filter . . . . . 8 - 345
Cooling Unit - Check . . . . . 8 - 346
Cooling Unit - Clean Filter . . . . . 8 - 343
Cooling Unit - Overhaul . . . . . 8 - 348
Cooling Unit - Troubleshooting . . . . . 8 - 354
Current Control Relay- Check Function . . . . 8 - 239
Cutting Mechanism Body - Change . . . . . 6 - 59
Cutting Mechanism Body - Set Belt Tension . . 6 - 64
Cutting Mechanism Body - Set Sensors . . . . . 6 - 61
Cutting Mechanism Body - Set X . . . . . 6 - 63
Cutting Mechanism Body - Set Zero . . . . . 6 - 65
Cutting Unit - Change . . . . . 6 - 68
Cutting Unit - Set Shim . . . . . 6 - 72
Cutting Unit - Set Sprung Retainer . . . . . 6 - 71
Cylinder Speed - Set Regulator Valve . . . . . 2 - 57
Cylinders - Set Speeds . . . . . 7 - 18

D

DeviceNet - DeviceNet on the Machine . . . . 8 - 100
DeviceNet - Loading a DeviceNet Program in a New Point I/O Module Adaptor . . . . . 8 - 112
DeviceNet - Loading a Program in a New DeviceNet Scanner . . . . . 8 - 109
DeviceNet - Saving DeviceNet Files in a Computer 8

TechPub_2614345_0106 - MM-3047192-0103iOM.fm

- 108
DeviceNet Scanner - Change . . . . . 8 - 96
DeviceNet Scanner - Set DeviceNet Scanner (01K304) Node Address and Baudrate . . . . . 8 - 99
Drive - Change Bearings . . . . . 2 - 19, 2 - 38
Drive - Change Belt . . . . . 2 - 17
Drive - Check Belt . . . . . 2 - 16
Drive - Motor and Gearbox . . . . . 2 - 49
Drive Unit - Align Combe with Shim . . . . . 6 - 95
Drive Unit - Change . . . . . 6 - 73, 6 - 77, 6 - 90
Drive Unit - Change Horizontal Cylinder . . . . 7 - 44
Drive Unit - Change Motor . . . . . 3 - 27
Drive Unit - Change Vertical Cylinder . . . . . 7 - 47
Drive Unit - Set Carrier Sensor . . . . . 6 - 92
Drive Unit - Set Carrier Speed . . . . . 6 - 93
Drive Unit - Set X Position Stop and Sensor . 6 - 91

E

Elevator - Change Cylinder . . . . . 7 - 28
Elevator - Set Box Stopper . . . . . 7 - 30
EtherNet Module - Change . . . . . 8 - 134

F

Fan System - Check . . . . . 4 - 9
Fan System - Clean Fan Filter . . . . . 4 - 10
Frequency Converter - Change . . . . . 8 - 149
Frequency Converter - LED Description . . . 8 - 154
Frequency Converters - Change Parameters 8 - 158
Frequency Converters - Clearing a Fault Indication Automatically . . . . . 8 - 166
Frequency Converters - Clearing a Fault Indication Manually . . . . . 8 - 165
Frequency Converters - Fault Types . . . . . 8 - 163
Frequency Converters - Identifying the Fault 8 - 164

G

Glue Shelf Change . . . . . 10 - 6
Glue Shelf Installation . . . . . 10 - 7
Guide Bracket - Change Roller and Bushings 5 - 26
Guide Bracket - Check . . . . . 5 - 25
Guide Bracket - Set X Position . . . . . 5 - 27

H

Heating Element - Change . . . . . 4 - 11
Heating Element - Set . . . . . 4 - 13
Height Adjustment - Check . . . . . 4 - 51
Height Adjustment - Set . . . . . 4 - 52
Hotmelt Consumption . . . . . 11 - 6
Hotmelt Equipment - Change Filter . . . . . 4 - 40
Hotmelt Equipment - Check . . . . . 4 - 35
Hotmelt Equipment - Empty Tank . . . . . 4 - 37
Hotmelt Equipment - F2 Alarm . . . . . 4 - 48
Hotmelt Equipment - Set Parameters . . . . . 4 - 44
Hotmelt Specification . . . . . 11 - 5
Hotmelt Wheel - Calibration . . . . . 5 - 42
Hotmelt Wheel - Set Cam Position . . . . . 5 - 37

I

I/O Modules - Overview . . . . . 8 - 89
Indexing Unit - Change . . . . . 6 - 79
Indexing Unit - Check X Direction . . . . . 6 - 89
Indexing Unit - Set X position and Zero . . . . . 6 - 85
Install the ControlFlash Application Firmware Library . . . . . 8 - 67
Install the Driver for the First Kinetix Servo Driver 8 - 76

L

Lubricants . . . . . 11 - 9

M

Maintenance Instructions . . . . . 8 - 355

P

Package Infeed - Performance Settings . . . . . 1 - 25

TechPub_2614345_0106 - MM-3047192-0103IOM.fm

Package Positioner (Left) - Change Belts . . . 2 - 30

Package Positioner (Left) - Set Belts Alignment (Not applicable to TBA 200 Sq or TBA 250 Sq) . . . 2 - 37

Package Positioner (Left) - Set Belts Tension 2 - 36

Package Positioner (Right) - Change Belts . . 2 - 21

Package Positioner (Right) - Set Belts Alignment (Not applicable to TBA 200 Sq or TBA 250 Sq) . . . 2 - 29

Package Positioner (Right) - Set Belts Tension . . 2 - 28

PLC - Download Program . . . . . 8 - 53

PLC - Load FirmWare in PLC, Ethernet, DeviceNet and SERCOS Modules . . . . . 8 - 73

PLC - PLC Status . . . . . 8 - 51

PLC - Removing and Installing the Compact Flash Card . . . . . 8 - 49

PLC - Upload Program . . . . . 8 - 63

PLC Controller - Change . . . . . 8 - 43

PLC Controller - Change Battery . . . . . 8 - 42

PLC Controller - Software Requirements . . . . 8 - 41

Pluto Maintenance - Change Baud Rate, Error Code E26 . . . . . 8 - 216

Pluto Maintenance - Connecting a PC to Pluto Module . . . . . 8 - 208

Pluto Maintenance - Installing a Pluto Module in an Existing Application . . . . . 8 - 218

Pluto Maintenance - Program Download from a PC to a Pluto Unit . . . . . 8 - 220

Pluto Maintenance - Set the ID-FIX Address after Replacing an ID-FIX . . . . . 8 - 209

Pluto Troubleshooting - Explanations of Inputs, Outputs and LEDs . . . . . 8 - 229

Pluto Troubleshooting - Safety System Alarm on the Control Panel . . . . . 8 - 226

Pneumatic Panel - Check . . . . . 4 - 19

Pneumatic Panel - Clean Filter Regulator . . . 4 - 23

Pneumatic Panel - Set Filter Regulator . . . . . 4 - 25

Pneumatic Panel - Set Pressure Switch . . . . 4 - 21

Pneumatic Unit - Panel Back . . . . . 6 - 98

Pneumatic Unit - Panel Front . . . . . 6 - 96

Positioning Unit - Setting . . . . . 7 - 55

PowerFlex40 DeviceNet Adaptor - Change . 8 - 138

Preparation for PLC Communication - Configure PC Network Communications . . . . . 8 - 22

Preparations for PLC Communication - Configure RSLinx for PLC . . . . . 8 - 30

Preparations for PLC Communication - Set EtherNet Module IP Address . . . . . 8 - 34

Pressure Finger - Change Bushings and Rollers 3 - 16

Pressure Finger - Check Bushings and Rollers . 3 - 15

Pressures . . . . . 11 - 5

Pusher - Change Cylinder . . . . . 7 - 56

R

Receiver - Change . . . . . 7 - 58

Removal . . . . . 6 - 57

Residual Current Device - Check Function . . 8 - 237

Row Cutter - Jam Clearance . . . . . 6 - 8

S

Safety Functions - Check . . . . . 11 - 14

Sensor - Set . . . . . 8 - 249

Sensor - Set Horizontal Cylinder Sensor Position 7 - 11

Sensor - Set Vertical Cylinder Position Sensors . 7 - 13

Sensor (20B003) - Set Sensitivity . . . . . 8 - 240

Sensor (21B402, 21B404, 21B406, 21B408, 21B424, 21B602, 21B604, 50B013, 50B500, 50B504) - Set 8 - 246

Sensor (50B200) - Set . . . . . 8 - 243

Sensor Group - Setting . . . . . 10 - 8

Sensors - Cap Holder No.1 Position . . . . . 5 - 28

Sensors - Method for Setting a Sensor Position 7 - 7

Sensors - Set Box Detection Sensors . . . . . 7 - 10

Sensors - Set NC/NO Function . . . . . 8 - 242

Sensors (20B003) - Check NC/NO Function 8 - 241

Sercos Module - Change . . . . . 8 - 176

Sercos Module - Description . . . . . 8 - 174

SERCOS Module - Troubleshooting . . . . . 8 - 203

Servo Drive - Change Drive . . . . . 8 - 184

Servo Drive - Description . . . . . 8 - 180

Servo Drive - Set Baud Rate . . . . . 8 - 190

Set - Cap Position X Direction . . . . . 2 - 58

Set - Cap Position Y Direction . . . . . 2 - 59

Set - Package Length Y . . . . . 2 - 63

TechPub_2614345_0106 - MM-3047192-0103iOM.fm

Set - Package Width X . . . . . 2 - 62
Set - Wheel Pushdown Offset . . . . . 2 - 65
Set Belt Brake Speed . . . . . 2 - 15
Set Package Positioner Zero Setting . . . . . 2 - 68
Set X Cam . . . . . 3 - 10
Set Y Cam . . . . . 3 - 6
Set Z Cam . . . . . 3 - 8
Set Zero . . . . . 3 - 12
Sheet Carrier - Change Rubber Mat . . . . . 7 - 53
Sheet Carrier - Overhaul . . . . . 7 - 52
Sheet Detector - Change . . . . . 6 - 53
Sheet Detector - Set . . . . . 6 - 54
Sheet Guides - Set . . . . . 6 - 55
Sheet Guides - Set Height . . . . . 6 - 56
Sheet Holder - Overhaul . . . . . 6 - 37
Sheet Holder - Removal . . . . . 6 - 36
Sheet Holder - Set . . . . . 6 - 39
Sheet Holder - Set the Sensors . . . . . 6 - 41
Single Cut - Change Bearings . . . . . 6 - 15
Single Cut - Change Belt . . . . . 6 - 12
Single Cut - Check Belt . . . . . 6 - 11
Single Cut - Removal and Assembly . . . . . 6 - 14
Single Cut - Set Belt Tension . . . . . 6 - 13
Single Cut - Set Cap Present Sensor . . . . . 6 - 33
Single Cut - Set Cap Stop . . . . . 6 - 32
Single Cut - Set Sensor Position . . . . . 6 - 31
Single Cut - Set X and Z Direction . . . . . 6 - 20
Single Cut - Set Zero Position . . . . . 6 - 22
SNP Converter - Electrical Connections . . . 10 - 10
SNP to DF1 Gateway - Set DIP Switch . . . . . 10 - 9
Star Wheel - Change . . . . . 5 - 33
Star Wheel - Change Inner Cam Follower Bearings 5 - 34
Star Wheel - Change Outer Cam Follower Bearings 5 - 32
Star Wheel - Set Zero Position . . . . . 5 - 29

T

Temperatures . . . . . 11 - 5
Timing Belt - Change . . . . . 3 - 20
Timing Belt - Change Guides . . . . . 3 - 25
Timing Belt - Check . . . . . 3 - 19
Touch Screen - Change Recipes . . . . . 8 - 341
Touch Screen - Check/Set Network Configuration 8 - 283
Touch Screen - Create New Recipes 8 - 326, 8 - 333
Touch Screen - Delete Recipes . . . . . 8 - 339
Touch Screen - Display Setup . . . . . 8 - 305
Touch Screen - Firmware Installation . . . . . 8 - 254
Touch Screen - Language Setup . . . . . 8 - 319
Touch Screen - Load New Application . . . . . 8 - 278
Touch Screen - New Application Software Installation . . . . . 8 - 273
Touch Screen - Saving Recipe Settings . . . . 8 - 332
Touch Screen - Start-Up Language Setup . . 8 - 313
Touch Screen - Startup Options Setup . . . . . 8 - 299
Touch Screen - Time/Date/Regional Settings Setup 8 - 309
Touch Screen - TPOP SHUTDOWN . . . . . 8 - 253
TPOP - Change . . . . . 4 - 49
Transmitter - Change . . . . . 7 - 60
Troubleshooting - DeviceNet Error Indications and Messages on DeviceNet Scanner (Node 0) . 8 - 116
Troubleshooting - DeviceNet Error Indications on the 1734-ADN Adaptor for the Point I/O Modules (Node 2) . . . . . 8 - 126
Troubleshooting - DeviceNet Error Indications on the Armor Block I/O Module (Node 3) . . . . . 8 - 129
Troubleshooting - DeviceNet Error Indications on the Armor Block I/O Module (Node 4) . . . . . 8 - 132
Troubleshooting - DeviceNet Error Indications on the Armor Block I/O Module (Node 5) (ReCap Only) 8 - 132
Troubleshooting - DeviceNet Error Indications on the Armor Block I/O Module (Node 6) (ReCap Only) 8 - 132
Troubleshooting - DeviceNet Error Indications on the PowerFlex40 Module 22-COMM-D Adaptor (Node 1) . . . . . 8 - 122
Troubleshooting - General . . . . . 8 - 191
Troubleshooting - General DeviceNet Error . 8 - 115
Troubleshooting - SercosNet Error Indication and Error Codes on the Integrated Axis Module and Axis Modules . . . . . 8 - 192

TechPub_2614345_0106 - MM-3047192-0103IOM.fm

Z

Zero Setting Sequence (with no mechanical adjustment). . . . . 1 - 24

TechPub_2614345_0106 - MM-3047192-0103iOM.fm

TechPub_2614345_0106 - MM-3047192-0103IOM.fm

Tetra Pak

Note! *This page is generated* ***automatically****.*
using the ***variable definitions*** *made in the* ***front page*** *file!*

CAP 30/Flex
662950-0200
Issue 2010-03 Doc. No. MM-3047192-0103

CAP 30/Flex 1(2)
662950-0200
Issue 2010-03 Doc. No. MM-3047192-0103

CAP 30/Flex
662950-0200
Issue 2010-03 Doc. No. MM-3047192-0103

CAP 30/Flex 1(2)
662950-0200
Issue 2010-03 Doc. No. MM-3047192-0103

CAP 30/Flex
662950-0200
Issue 2010-03 Doc. No. MM-3047192-0103

CAP 30/Flex 1(2)
662950-0200
Issue 2010-03 Doc. No. MM-3047192-0103

CAP 30/Flex
662950-0200
Issue 2010-03 Doc. No. MM-3047192-0103

CAP 30/Flex 1(2)
662950-0200
Issue 2010-03 Doc. No. MM-3047192-0103

CAP 30/Flex
662950-0200
Issue 2010-03 Doc. No. MM-3047192-0103

CAP 30/Flex 2(2)
662950-0200
Issue 2010-03 Doc. No. MM-3047192-0103

CAP 30/Flex
662950-0200
Issue 2010-03 Doc. No. MM-3047192-0103

CAP 30/Flex 2(2)
662950-0200
Issue 2010-03 Doc. No. MM-3047192-0103

CAP 30/Flex
662950-0200
Issue 2010-03 Doc. No. MM-3047192-0103

CAP 30/Flex 2(2)
662950-0200
Issue 2010-03 Doc. No. MM-3047192-0103

40 mm Full width ***Note!*** *This page is generated* ***automatically****.*
using the ***variable definitions*** *made in the* ***front page*** *file!*

CAP 30/Flex
662950-0200

Issue 2010-03 Doc. No. MM-3047192-0103

CAP 30/Flex 1(2)
662950-0200

Issue 2010-03 Doc. No. MM-3047192-0103

CAP 30/Flex
662950-0200

Issue 2010-03 Doc. No. MM-3047192-0103

CAP 30/Flex 1(2)
662950-0200

Issue 2010-03 Doc. No. MM-3047192-0103

CAP 30/Flex
662950-0200

Issue 2010-03 Doc. No. MM-3047192-0103

CAP 30/Flex 1(2)
662950-0200

Issue 2010-03 Doc. No. MM-3047192-0103

CAP 30/Flex
662950-0200

Issue 2010-03 Doc. No. MM-3047192-0103

CAP 30/Flex 2(2)
662950-0200

Issue 2010-03 Doc. No. MM-3047192-0103

CAP 30/Flex
662950-0200

Issue 2010-03 Doc. No. MM-3047192-0103

CAP 30/Flex 2(2)
662950-0200

Issue 2010-03 Doc. No. MM-3047192-0103

CAP 30/Flex
662950-0200

Issue 2010-03 Doc. No. MM-3047192-0103

CAP 30/Flex 2(2)
662950-0200

Issue 2010-03 Doc. No. MM-3047192-0103