SPC

Spare Parts Catalogue

CAP 30/Flex ScrewCap 020V

662950-0200

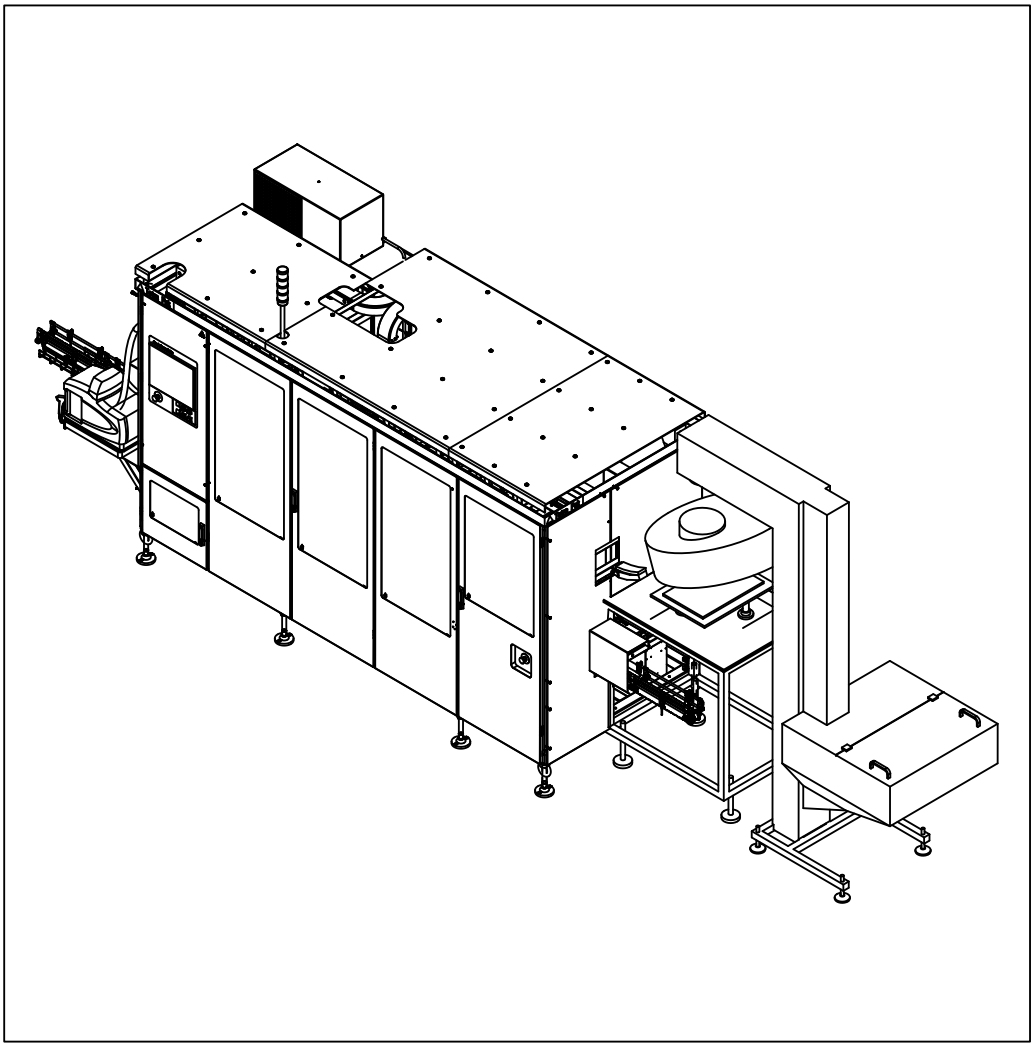

Tetra Pak

Doc. No: SPC-3022047-0107

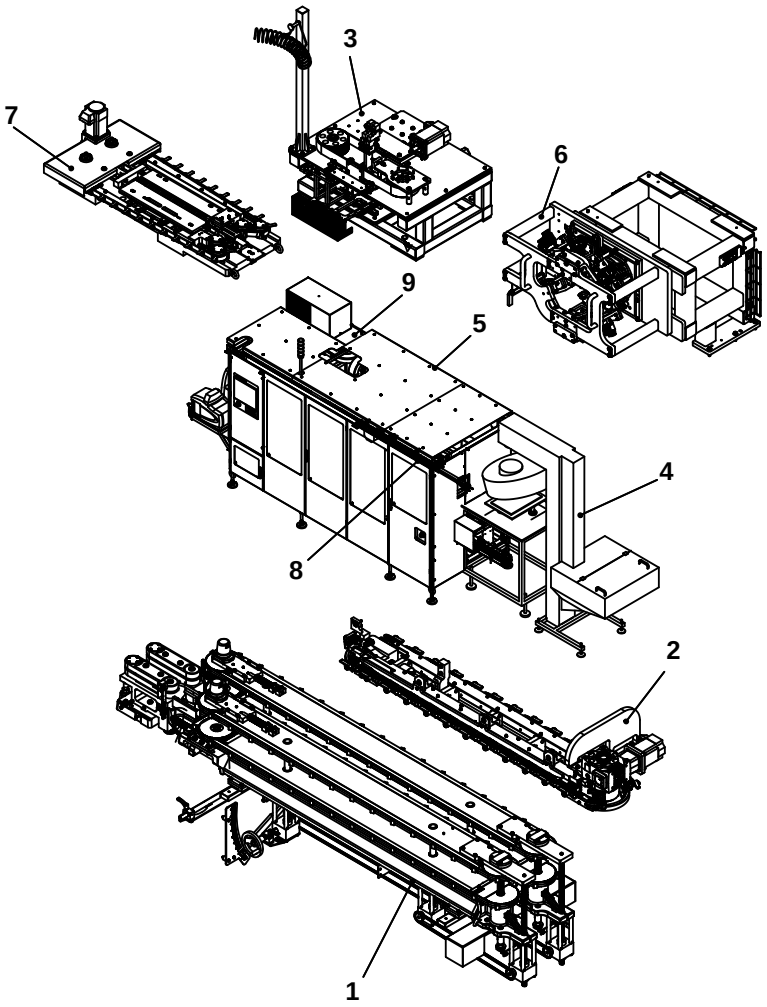

The position numbers in the illustration correspond with the chapter numbers listed on the next page.

Copyright © 2011 Tetra Pak Group

All rights reserved. No part of this document may be reproduced or copied in any form or by any means without written permission from Tetra Pak Packaging Solutions .

Tetra Pak and all Tetra Pak products are trademarks belonging to the Tetra Pak Group.

The content of this manual is in accordance with the design and construction of the machine or equipment at the time of publishing. Tetra Pak reserves the right to introduce design modifications without prior notice.

This document was produced by:

Tetra Pak Packaging Solutions
Via Delfini 1
41123 Modena
ITALY

Additional copies can be ordered from Tetra Pak. When ordering additional copies, always provide the document number.

Doc. No. SPC-3022047-0107

Issue 2011-03

This document is valid for:

Series No/Machine No Sign.

SPC

Spare Parts Catalogue

CAP 30/Flex ScrewCap 020V
662950-0200

Machine or equipment configurations that this catalogue is valid for are described on the next page.

i Introduction

1 Package Line

2 Push Down

3 Screw Cap Hot Melt Ap.

4 Cap Sorter

5 Machine Body

6 Applicator Unit

7 Cap Sequencer

8 Cap Conveyor

9 Electrical Cabinet

10 Regular Accessories

11 Electric Equipment

12 Optional Equipment

ii Part Number Index

iii Ref. Des. Parts Index

Doc. No: SPC-3022047-0107

Issue 2011-03

Tetra Pak

Tetra Pak Packaging Solutions

Valid for:

Name	Drawing Specification and Development Step	Additional Information
CAP 30/Flex ScrewCap	662950-0200	Volume, Package shape and Cap: TBA 200 Sq StreamCap 200 TBA 250 Sq StreamCap 200 TBA 500 Sq StreamCap 500 TBA 750 Sq StreamCap 1000 TBA 1000 Sq StreamCap 1000 TBA 1000 S SlimCap 1000 TBA 1500 S SlimCap 1000 TBA 1890 S SlimCap 2000 TBA 2000 S SlimCap 2000 TGA 500 Sq StreamCap 1000 TGA 750 Sq StreamCap 1000 TGA 1000 Sq StreamCap 1000 TGA 1500 Sq StreamCap 1000 TPA 330 Sq StreamCap 330 TPA 500 Sq StreamCap 500 TPA 1000 Sq StreamCap 1000 TBA 1000 S HeliCap2 23

Update Log for Doc. No. SPC-3022047-0107

This table shows all changes made to this catalogue, including installed rebuilding kits, added or removed pages.

Date	Installed Kit	Added Pages (Doc. No.)	Removed Pages	Signature

Date	Installed Kit	Added Pages (Doc. No.)	Removed Pages	Signature

i Introduction

en About the Introduction Chapter
This chapter contains basic information about this catalogue and related Tetra Pak equipment.

bg За уводната глава
Тази глава съдържа основна информация за този каталог и приложимото Tetra Pak оборудване.

cs O kapitole Úvod
Tato kapitola obsahuje základní informace o této příručce a souvisejícím zařízení Tetra Pak.

da Om indledningen
Kapitlet indeholder grundlæggende oplysninger om dette katalog og tilhørende Tetra Pak-udstyr.

de Über das Einleitungskapitel
Diese Kapitel enthält grundlegende Informationen über diesen Katalog und die zugehörige Tetra Pak-Ausrüstung

el Σχετικά με το Κεφάλαιο 'Εισαγωγή'
Αυτό το κεφάλαιο περιέχει βασικές πληροφορίες για τον παρόντα κατάλογο και τον σχετικό εξοπλισμό της Tetra Pak.

es Acerca del capítulo Introducción
Este capítulo contiene información básica sobre este catálogo y el equipo Tetra Pak relacionado.

et Sissejuhatava peatüki kohta
See peatükk sisaldab teavet käesoleva kataloogi ja sellega seonduva Tetra Paki seadme kohta.

fi Tietoja Johdanto-luvusta
Tässä luvussa on perustietoja tästä luettelosta ja Tetra Pak -laitteesta.

fr À propos du chapitre Introduction
Ce chapitre contient les informations de base à propos de ce catalogue et de l'équipement Tetra Pak concerné.

hu A Bevezetés fejezetről
Ez a fejezet alapvető információkat tartalmaz a katalógusról és a hozzá tartozó Tetra Pak berendezésről.

is Um inngangskaflann
Þessi kafli inniheldur grundvallarupplýsingar um þennan vörulista og tengdan Tetra Pak búnað.

it Informazioni sul capitolo Introduzione
Questo capitolo contiene informazioni generali sul presente catalogo e sulla relativa macchina Tetra Pak.

lt Apie įvadinį skyrių
Šiame skyriuje pateikta pagrindinė informacija apie šį katalogą ir su juo susijusią "Tetra Pak" įrangą.

lv Par Ievada nodaļu
Šī nodaļa ietver galveno informāciju par šo katalogu un saistītajām Tetra Pak iekārtām.

nl Over de inleiding
Dit hoofdstuk bevat basisinformatie omtrent deze catalogus en aanverwante Tetra Pak-installatie.

no Om kapitlet Introduksjon
Dette kapitlet inneholder grunnleggende informasjon om denne katalogen og relatert Tetra Pak-utstyr.

pl Informacje na temat rozdziału wprowadzającego
Rozdział wprowadzający zawiera podstawowe informacje dotyczące niniejszego katalogu i związanej z nim maszyny Tetra Pak.

pt Acerca do Capítulo de Introdução
Este capítulo contém informações básicas sobre este catálogo e os equipamentos relacionados da Tetra Pak.

ro Despre capitolul introductiv
Acest capitol conține informații de bază despre acest catalog și despre echipamentul Tetra Pak corelat.

sk O kapitole Úvod
Táto kapitola obsahuje základné informácie o tomto návode a informácie súvisiace so zariadením Tetra Pak.

sl O uvodnem poglavju
To poglavje vsebuje osnovne informacije o tem katalogu in opremi Tetra Pak.

sv Om inledningskapitlet
Det här kapitlet innehåller grundläggande information om katalogen och Tetra Pak-utrustningen.

Introduction

Illustrations . . . . . i - 5
English Text . . . . . i - 7

Увод

Илюстрации . . . . . i - 5
Текст на български език . . . . . i -11

Úvod

Obrázky . . . . . i -5
Český text . . . . . i - 15

Indledning

Illustrationer . . . . . i - 5
Dansk tekst . . . . . i - 19

Einleitung

Abbildungen . . . . . i - 5
Deutscher Text . . . . . i - 23

Εισαγωγή

Εικόνες . . . . . i - 5
Ελληνικό Κείμενο . . . . . i - 27

Introducción

Ilustraciones . . . . . i - 5
Texto en español . . . . . i - 31

Sissejuhatus

Joonised . . . . . i - 5
Eestikeelne tekst . . . . . i - 35

Johdanto

Kuvat . . . . . i - 5
Suomenkielinen teksti . . . . . i - 39

Introduction

Illustrations . . . . . i - 5
Texte français . . . . . i - 43

Bevezetés

Ábrák . . . . . i - 5
Magyar szöveg . . . . . i - 47

Inngangur

Skýringarmyndir . . . . . i - 5
Íslenskur texti . . . . . i - 51

Introduzione

Figure . . . . . i - 5
Testo in italiano . . . . . i - 55

Įvadas

Paveikslėliai . . . . . i - 5
Lietuviškas tekstas . . . . . i - 59

Ievads

Ilustrācijas . . . . . i - 5
Teksts latviešu valodā . . . . . i - 63

Inleiding

Afbeeldingen . . . . . i - 5
Nederlands tekst . . . . . i - 67

Introduksjon

Illustrasjoner . . . . . i - 5
Norsk tekst . . . . . i - 71

Wprowadzenie

Rysunki . . . . . i - 5
Tekst polski . . . . . i - 75

Introdução

Ilustrações . . . . . i - 5
Texto em português . . . . . i - 79

Introducere

Ilustrații . . . . . i - 5
Text în limba română . . . . . i - 83

Úvod

Ilustrácie . . . . . i – 5
Slovenský text . . . . . i - 87

Uvod

Slike . . . . . i - 5
Slovensko besedilo . . . . . i - 91

Inledning

Bilder . . . . . i - 5
Svensk text . . . . . i - 95

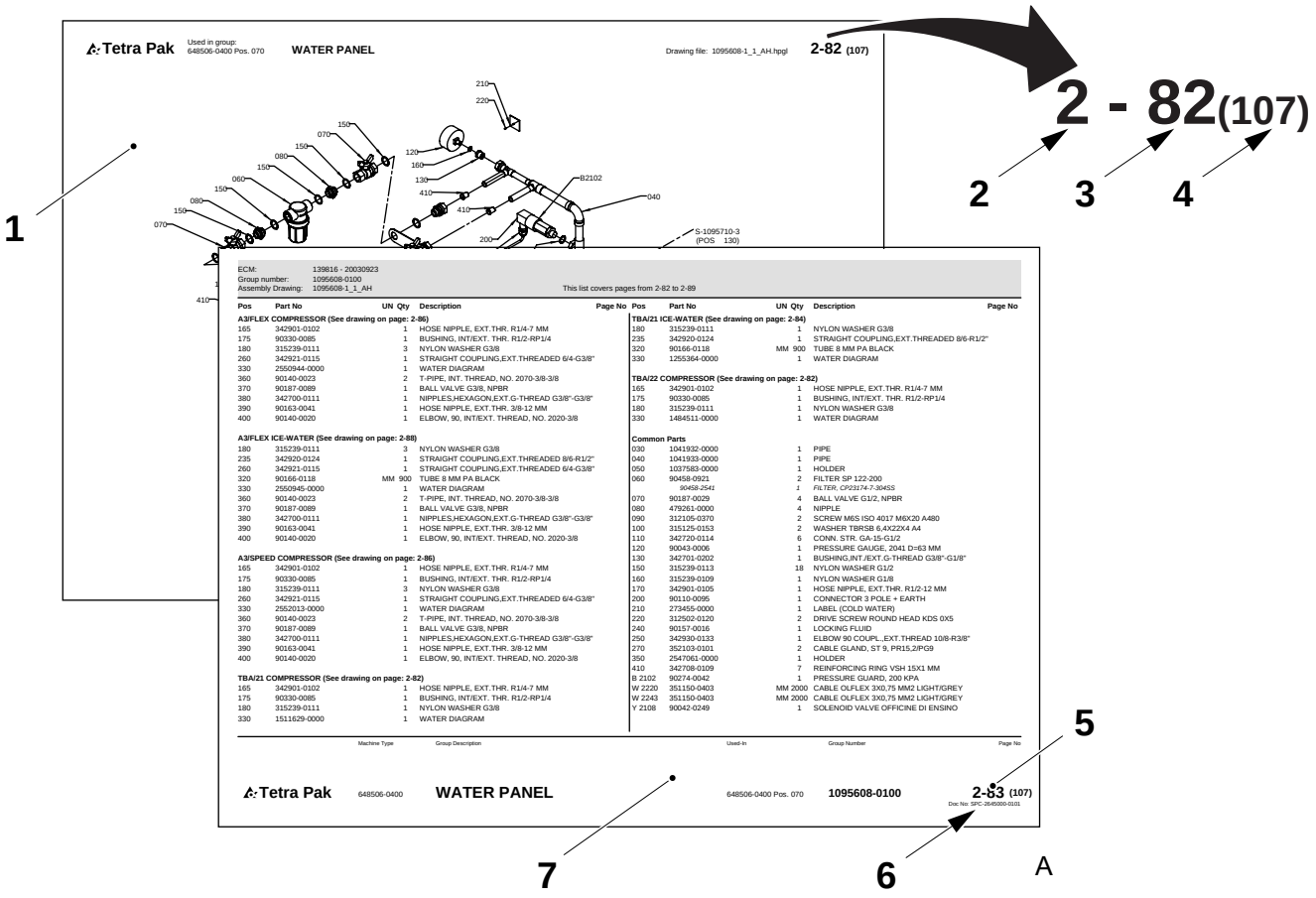
Tetra Pak
Used in group: 648506-0400 Pos. 070
WATER PANEL
Drawing file: 1095608-1_1_AH.hpgl
2-82 (107)
2 - 82(107)
1
2
3
4
5
6
7
A
ECM: 139816 - 20030923
Group number: 1095608-0100
Assembly Drawing: 1095608-1_1_AH
This list covers pages from 2-82 to 2-89
Tetra Pak
648506-0400
WATER PANEL
648506-0400 Pos. 070
1095608-0100
2-83 (107)

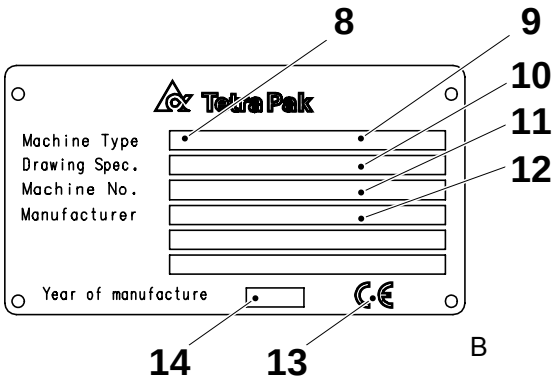
8
9
10
11
12
Tetra Pak
Machine Type
Drawing Spec.
Machine No.
Manufacturer
Year of manufacture
14
13
B

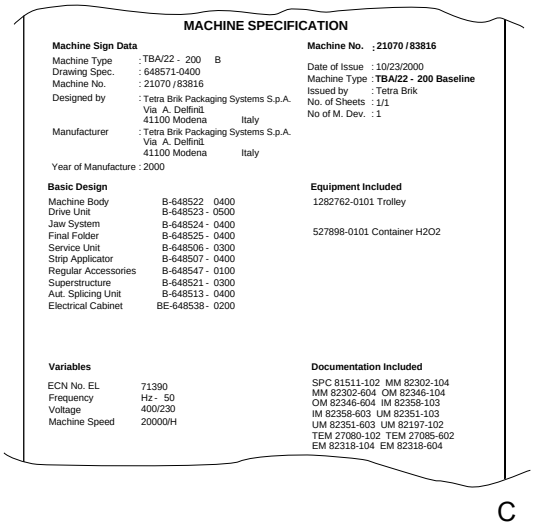
MACHINE SPECIFICATION
Machine Sign Data
Machine Type : TBA/22 - 200 B
Drawing Spec. : 648571-0400
Machine No. : 21070 / 83816
Designed by : Tetra Brik Packaging Systems S.p.A. Via A. Delfini1 41100 Modena Italy
Manufacturer : Tetra Brik Packaging Systems S.p.A. Via A. Delfini1 41100 Modena Italy
Year of Manufacture : 2000
Machine No. ; 21070 / 83816
Date of Issue : 10/23/2000
Machine Type : TBA/22 - 200 Baseline
Issued by : Tetra Brik
No. of Sheets : 1/1
No of M. Dev. : 1
Basic Design
Machine Body B-648522 0400
Drive Unit B-648523 - 0500
Jaw System B-648524 - 0400
Final Folder B-648525 - 0400
Service Unit B-648506 - 0300
Strip Applicator B-648507 - 0400
Regular Accessories B-648547 - 0100
Superstructure B-648521 - 0300
Aut. Splicing Unit B-648513 - 0400
Electrical Cabinet BE-648538 - 0200
Equipment Included
1282762-0101 Trolley
527898-0101 Container H2O2
Variables
ECN No. EL 71390
Frequency Hz - 50
Voltage 400/230
Machine Speed 20000/H
Documentation Included
SPC 81511-102 MM 82302-104
MM 82302-604 OM 82346-104
OM 82346-604 IM 82358-103
IM 82358-603 UM 82351-103
UM 82351-603 UM 82197-102
TEM 27080-102 TEM 27085-602
EM 82318-104 EM 82318-604
C

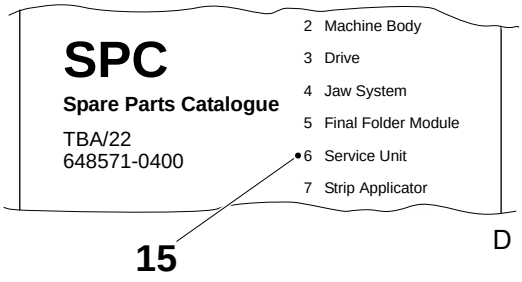
SPC
Spare Parts Catalogue
TBA/22
648571-0400
2 Machine Body
3 Drive
4 Jaw System
5 Final Folder Module
6 Service Unit
7 Strip Applicator
15
D

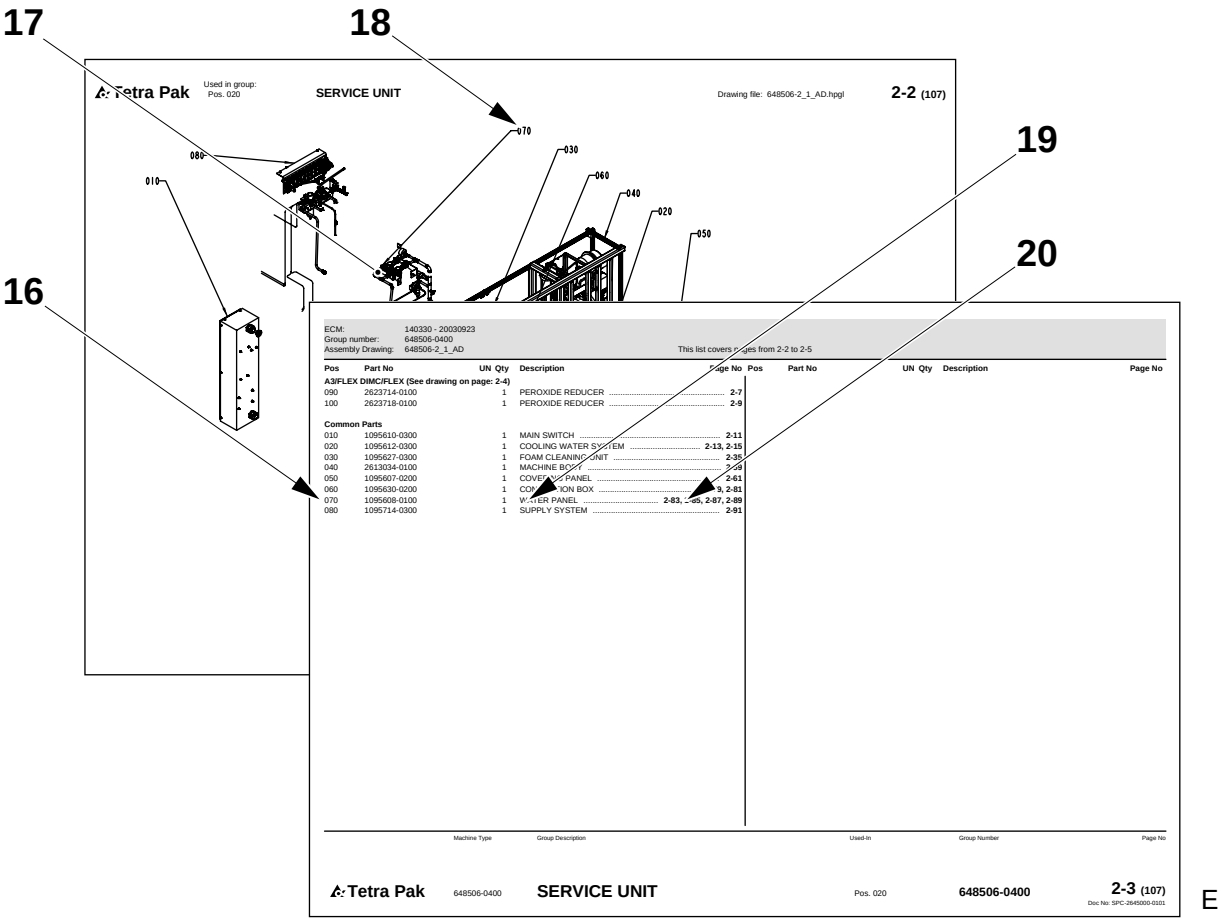
17
18
19
20
16
Tetra Pak
Used in group:
Pos. 020
SERVICE UNIT
Drawing file: 648506-2_1_AD.hpgl
2-2 (107)
070
030
080
060
010
040
020
050
ECM: 140330 - 20030923
Group number: 648506-0400
Assembly Drawing: 648506-2_1_AD
This list covers pages from 2-2 to 2-5
Pos Part No UN Qty Description Page No
A3/FLEX DIMC/FLEX (See drawing on page: 2-4)
090 2623714-0100 1 PEROXIDE REDUCER 2-7
100 2623718-0100 1 PEROXIDE REDUCER 2-9
Common Parts
010 1095610-0300 1 MAIN SWITCH 2-11
020 1095612-0300 1 COOLING WATER SYSTEM 2-13, 2-15
030 1095627-0300 1 FOAM CLEANING UNIT 2-35
040 2613034-0100 1 MACHINE BODY 2-39
050 1095607-0200 1 COVERING PANEL 2-61
060 1095630-0200 1 CONNECTION BOX 2-79, 2-81
070 1095608-0100 1 WATER PANEL 2-83, 2-85, 2-87, 2-89
080 1095714-0300 1 SUPPLY SYSTEM 2-91
Pos Part No UN Qty Description Page No
Machine Type Group Description Used-In Group Number Page No
Tetra Pak 648506-0400 SERVICE UNIT Pos. 020 648506-0400 2-3 (107)
Doc No: SPC-2645000-0101
E

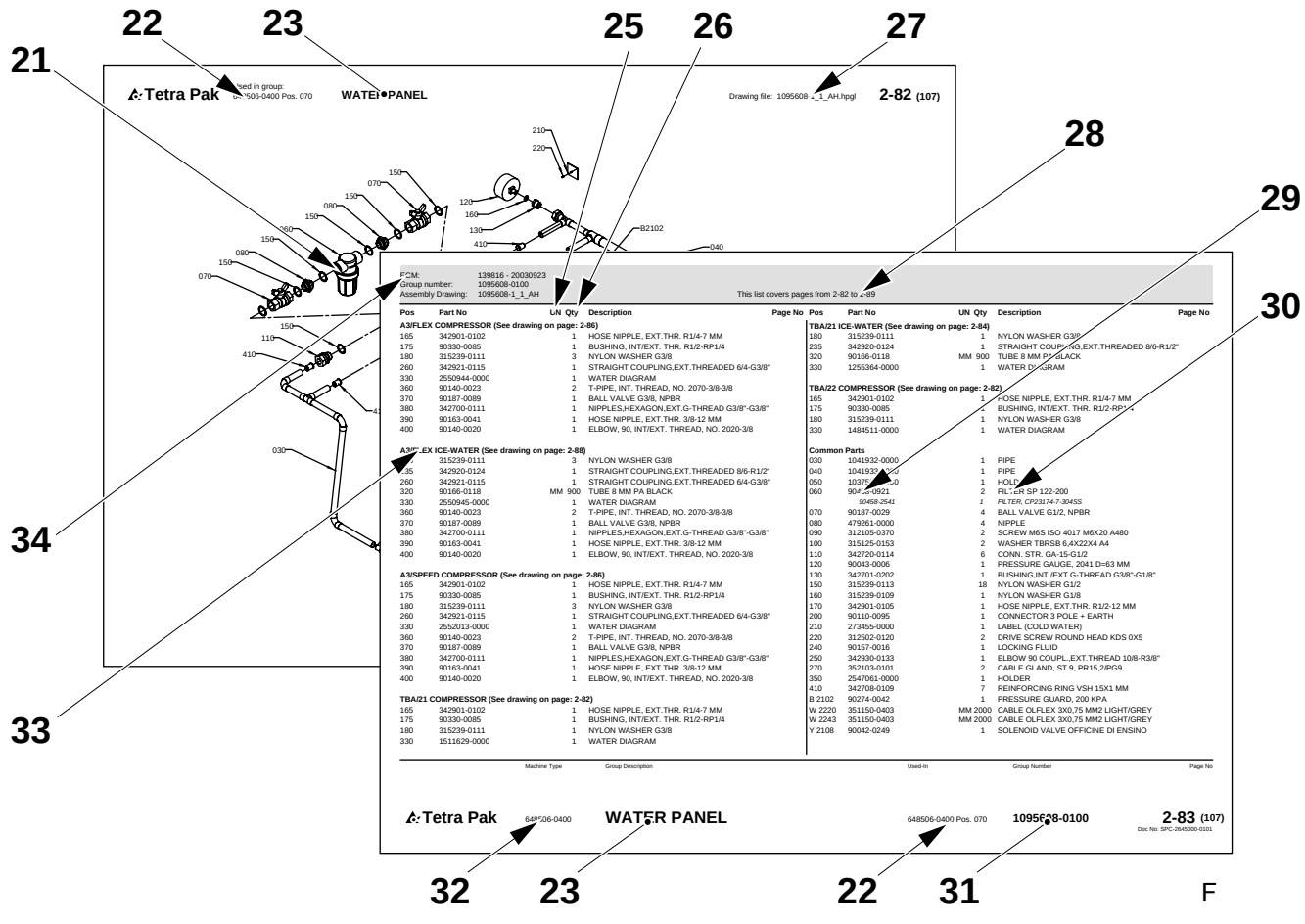
22
23
25
26
27
21
28
29
30
34
33
Tetra Pak
Used in group:
Pos. 070
WATER PANEL
Drawing file: 1095608-1_1_AH.hpgl
2-82 (107)
210
220
150
070
080
150
150
080
150
070
120
160
130
410
B2102
040
030
110
410
ECM: 139816 - 20030923
Group number: 1095608-0100
Assembly Drawing: 1095608-1_1_AH
This list covers pages from 2-82 to 2-89
Pos Part No UN Qty Description Page No
A3/FLEX COMPRESSOR (See drawing on page: 2-86)
165 342901-0102 1 HOSE NIPPLE, EXT.THR. R1/4-7 MM
175 90330-0085 1 BUSHING, INT/EXT. THR. R1/2-RP1/4
180 315239-0111 3 NYLON WASHER G3/8
260 342921-0115 1 STRAIGHT COUPLING,EXT.THREADED 6/4-G3/8"
330 2550944-0000 1 WATER DIAGRAM
360 90140-0023 2 T-PIPE, INT. THREAD, NO. 2070-3/8-3/8
370 90187-0089 1 BALL VALVE G3/8, NPBR
380 342700-0111 1 NIPPLES,HEXAGON,EXT.G-THREAD G3/8"-G3/8"
390 90163-0041 1 HOSE NIPPLE, EXT.THR. 3/8-12 MM
400 90140-0020 1 ELBOW, 90, INT/EXT. THREAD, NO. 2020-3/8
A3/FLEX ICE-WATER (See drawing on page: 2-88)
235 315239-0111 3 NYLON WASHER G3/8
235 342920-0124 1 STRAIGHT COUPLING,EXT.THREADED 8/6-R1/2"
260 342921-0115 1 STRAIGHT COUPLING,EXT.THREADED 6/4-G3/8"
320 90166-0118 MM 900 TUBE 8 MM PA BLACK
330 2550945-0000 1 WATER DIAGRAM
360 90140-0023 2 T-PIPE, INT. THREAD, NO. 2070-3/8-3/8
370 90187-0089 1 BALL VALVE G3/8, NPBR
380 342700-0111 1 NIPPLES,HEXAGON,EXT.G-THREAD G3/8"-G3/8"
390 90163-0041 1 HOSE NIPPLE, EXT.THR. 3/8-12 MM
400 90140-0020 1 ELBOW, 90, INT/EXT. THREAD, NO. 2020-3/8
A3/SPEED COMPRESSOR (See drawing on page: 2-86)
165 342901-0102 1 HOSE NIPPLE, EXT.THR. R1/4-7 MM
175 90330-0085 1 BUSHING, INT/EXT. THR. R1/2-RP1/4
180 315239-0111 3 NYLON WASHER G3/8
260 342921-0115 1 STRAIGHT COUPLING,EXT.THREADED 6/4-G3/8"
330 2552013-0000 1 WATER DIAGRAM
360 90140-0023 2 T-PIPE, INT. THREAD, NO. 2070-3/8-3/8
370 90187-0089 1 BALL VALVE G3/8, NPBR
380 342700-0111 1 NIPPLES,HEXAGON,EXT.G-THREAD G3/8"-G3/8"
390 90163-0041 1 HOSE NIPPLE, EXT.THR. 3/8-12 MM
400 90140-0020 1 ELBOW, 90, INT/EXT. THREAD, NO. 2020-3/8
TBA/21 COMPRESSOR (See drawing on page: 2-82)
165 342901-0102 1 HOSE NIPPLE, EXT.THR. R1/4-7 MM
175 90330-0085 1 BUSHING, INT/EXT. THR. R1/2-RP1/4
180 315239-0111 1 NYLON WASHER G3/8
330 1511629-0000 1 WATER DIAGRAM
TBA/21 ICE-WATER (See drawing on page: 2-84)
180 315239-0111 1 NYLON WASHER G3/8
235 342920-0124 1 STRAIGHT COUPLING,EXT.THREADED 8/6-R1/2"
320 90166-0118 MM 900 TUBE 8 MM PA BLACK
330 1255364-0000 1 WATER DIAGRAM
TBA/22 COMPRESSOR (See drawing on page: 2-82)
165 342901-0102 1 HOSE NIPPLE, EXT.THR. R1/4-7 MM
175 90330-0085 1 BUSHING, INT/EXT. THR. R1/2-RP1/4
180 315239-0111 1 NYLON WASHER G3/8
330 1484511-0000 1 WATER DIAGRAM
Common Parts
030 1041932-0000 1 PIPE
040 1041933-0000 1 PIPE
050 1037[illegible]-0000 1 HOLDER
060 90458-0921 2 FILTER SP 122-200
90458-2541 FILTER, CP23174-7-304SS
070 90187-0029 4 BALL VALVE G1/2, NPBR
080 479261-0000 4 NIPPLE
090 312105-0370 2 SCREW M6S ISO 4017 M6X20 A480
100 315125-0153 2 WASHER TBRSB 6,4X22X4 A4
110 342720-0114 6 CONN. STR. GA-15-G1/2
120 90043-0006 1 PRESSURE GAUGE, 2041 D=63 MM
130 342701-0202 1 BUSHING,INT./EXT.G-THREAD G3/8"-G1/8"
150 315239-0113 18 NYLON WASHER G1/2
160 315239-0109 1 NYLON WASHER G1/8
170 342901-0105 1 HOSE NIPPLE, EXT.THR. R1/2-12 MM
200 90110-0095 1 CONNECTOR 3 POLE + EARTH
210 273455-0000 1 LABEL (COLD WATER)
220 312502-0120 2 DRIVE SCREW ROUND HEAD KDS 0X5
240 90157-0016 1 LOCKING FLUID
250 342930-0133 1 ELBOW 90 COUPL.,EXT.THREAD 10/8-R3/8"
270 352103-0101 2 CABLE GLAND, ST 9, PR15,2/PG9
350 2547061-0000 1 HOLDER
410 342708-0109 7 REINFORCING RING VSH 15X1 MM
B 2102 90274-0042 1 PRESSURE GUARD, 200 KPA
W 2220 351150-0403 MM 2000 CABLE OLFLEX 3X0,75 MM2 LIGHT/GREY
W 2243 351150-0403 MM 2000 CABLE OLFLEX 3X0,75 MM2 LIGHT/GREY
Y 2108 90042-0249 1 SOLENOID VALVE OFFICINE DI ENSINO
Pos Part No UN Qty Description Page No
Machine Type Group Description Used-In Group Number Page No
Tetra Pak 648506-0400 WATER PANEL 648506-0400 Pos. 070 1095608-0100 2-83 (107)
Doc No: SPC-2645000-0101
32 23 22 31
F

Introduction

Manual Information

Tetra Pak recommends reading all delivered manuals carefully. Make sure that the delivered manuals are available to personnel who operate or maintain the equipment.

It is important to keep this catalogue for the lifetime of the equipment and to pass the catalogue on to any subsequent holder or user.

Tetra Pak will not be held responsible for any damage to the equipment caused by not following the instructions given in the manuals that accompany this equipment.

Delivered Manuals

Manuals delivered with this equipment may include

- CM
  The Conversion Manual provides technicians with information on converting the equipment between different production modes.
- EM
  The Electrical Manual provides technicians with information about the equipment's electrical system.
- IM
  The Installation Manual provides technicians with information required to safely install the equipment.
- MM
  The Maintenance Manual provides technicians with information on maintaining the equipment.
- OM
  The Operation Manual manual provides the operator with information on handling and operating the equipment before, during, and after production.
- SPC
  The Spare Parts Catalogue provides the information necessary to order spare parts from Tetra Pak
- TeM
  The Technical Manual
  - provides technicians with information required to safely install the equipment
  - provides technicians with information on maintaining the equipment
  - provides technicians with information about the machine's/ equipment's electrical system
  - provides the information necessary to order spare parts from Tetra Pak.

Page Layout

Refer to the illustration (A) on page i-5: The main pages in a Spare Parts Catalogue consist of an illustration page (1) and a corresponding list page (7). The page number (5) is shown in the header of an illustration page and in the footer of a list page. The document number (6) is shown in the footer of a list page.

Page Numbering

Refer to the illustration (A) on page i-5: A page number (5) has three parts:

- chapter number (2)
- consecutive page number within the chapter (3)
- total number of pages in the chapter (4)

Machine Introduction

Manufacturer

For the manufacturer's name and address, see the second page of this catalogue.

Service

To order spare parts for this machine, or to report problems associated with operating this machine, contact the nearest Tetra Pak office.

Contact the Liaison with other inquiries, comments, or suggestions for improvement regarding the equipment and its documentation.

Identification

CE Classification

This equipment complies with the basic health and safety regulations of the European Economic Area (EEA).

Machine Plate

The illustration (B) on page i-5 shows an example of a machine plate. An illustration of the valid machine plate and its location on the equipment is shown in the Introduction chapter of the manuals delivered with this equipment. The machine plate contains the data listed below, needed when contacting Tetra Pak concerning this specific equipment.

- Machine type (8)
- Volume (9)
- Drawing specifications (10)
- Machine serial number (11)
- Manufacturer (12)
- CE mark (13)
- Year of manufacture (14)

The illustration (C) on page i-5 shows an example of a machine specification. Make sure that the equipment data listed in the front pages of this manual corresponds to the machine plate data and the machine specification.

How to Use This Spare Parts Catalogue

Locate a Spare Part Number

a) Refer to the illustration (D) on page i-5: Go to the chapter number (15) indicated beside the main group that contains the part you want to locate.

Items b) and c) refer to the illustration (E) on page i-6.

b) On the main group illustration, look for the machine subgroup (17) that contains the part or subgroup you are looking for. Note the position number (18) and go to the list page that follows the illustration.

c) Look for the position number/reference designation (16) or the subgroup name (19). Go to the corresponding page number (20) listed in the right-hand column. Tetra Pak has chosen to always use the function oriented structure for reference designation. The prefix indicating function oriented structure (=) is not shown in the reference designation.

Items d) and e) refer to the illustration (F) on page i-6.

d) Locate the part (21) that you are looking for on the subgroup illustration and note the part's position number.

e) The part number (29) and part description (30) are listed beside the position number on the list page.

Information Listed in a Spare Parts Catalogue

The list below refers to the illustration (F) on page i-6. A Spare Parts Catalogue contains the following information about groups, subgroups, and spare parts for the equipment:

- Group structure reference (22). Indicates the next higher group in the equipment list structure.
- Group name (23)
- Unit of measure (25)
- Quantity (26)
- Assembly drawing number (27)
- List page range (28). Included if there are multiple pages in the group illustration or list.
- Part or subgroup number (29)
- Subgroup name or part description (30)
- Group number (31)
- Equipment number (32)
- Group information heading (33). Indicates if the section below the heading is for a specific machine variant or if it is a list of common parts. If a list has more than one variant and each variant has its own assembly drawing, a page reference to the variant's assembly drawing is shown.
- Internal information (34)

Увод

Информация за ръководството

Tetra Pak Ви препоръчва да прочетете внимателно всички доставени ръководства. Проверете дали доставените ръководства са достъпни за служителите, които поддържат или работят с оборудването.

Важно е да запазите този каталог през целия живот на оборудването и да го предадете на трети лица, които ще използват или съхраняват оборудването.

Tetra Pak не може да бъде държана под отговорност за щети върху оборудването, причинени от неспазване на даденте инструкции в ръководствата, които съпровождат оборудването.

Доставени ръководства

Ръководствата, доставени с това оборудване, могат да включват

- CM
  Ръководството за приспособяване осигурява на техническите лица информация за приспособяването на оборудване към различни производствени режими.
- EM
  Електрическото ръководство осигурява на техническите лица информация за електрическата система на оборудването.
- IM
  Ръководството за инсталиране предоставя на техническите лица информацията, която е необходима за безопасно инсталиране на оборудването.
- MM
  Ръководството за поддръжка предоставя на техническите лица информация относно поддържането на оборудването.
- OM
  Ръководството за операции предоставя на операторите информация за това, как да боравят и функционират с оборудването преди, по време на и след производство.
- SPC
  Каталогът с резервни части предоставя необходимата информация за поръчка на резервни части от Tetra Pak
- TeM
  Техническото ръководство
  - предоставя на техническите лица необходимата информация за безопасно инсталиране на оборудването
  - предоставя на техническите лица информация за поддръжка на оборудването
  - предоставя на техническите лица информация за електрическата система на машината/оборудването
  - предоставя необходимата информация за поръчка на резервни части от Tetra Pak.

Формат на страниците

Разгледайте илюстрация (A) на страница i-5: Главните страници в Каталога с резервни части се състоят от страница с илюстрация (1) и прилежаща страница със списък (7). Номерът на страницата (5) е посочен в горната част на страницата с илюстрация и в долната част на страницата със списъка. Номерът на документа (6) е показан в долната част на страницата със списъка.

Номериране на страници

Разгледайте илюстрация (A) на страница i-5: Един номер на страница (5) има три части:

- номер на глава (2)
- последователен номер на страница в една глава (3)
- общ брой страници в главата (4)

Машини Увод

Производител

Вижте втората страница на този каталог, за да проверите името и адреса на производителя.

Обслужване

За да поръчате резервни части за тази машина или да докладвате за проблеми, свързани с работата с тази машина, се свържете с най-близкия офис на Tetra Pak.

Свържете се с отдела за контакти с клиенти за други запитвания, коментари и предложения за подобрение по отношение на оборудването и прилежащата му документация.

Идентификация

Класификация на ЦЕ

Това оборудване отговаря на основните наредби, свързани с опазване на здравето и безопасността на Европейската Икономическа Общност (ЕИО).

Табелка на машина

Илюстрация (B) на страница i-5 показва пример с табелка на машина. В уводната глава на ръководствата, доставени с това оборудване, е показана илюстрация с валидната табелка на машината и нейното положение върху оборудването. Табелката на машината съдържа посочените по-долу данни, които Ви трябват, когато се свързвате с Tetra Pak относно това специфично оборудване.

- Тип машина (8)
- Обем (9)
- Спесификации за чертане (10)
- Сериен номер на машината (11)
- Производител (12)
- CE печат (13)
- Година на производство (14)

Илюстрация (C) на страница i-5 показва пример със спесификация за машина. Проверете дали данните за оборудването, изброени на предните страници в това ръководство отговарят на данните от табелката на машината и на спесификацията на машината.

Как да използвате този Каталог за резервни части

Намерете Номер на резервна част

a) Разгледайте илюстрация (D) на страница i-5: Отидете в глава номер (15) посочена до главната група, която съдържа частта, която искате да намерите.

Артикули b) и c) се отнасят до илюстрация (E) на страница i-6.

b) На главната обща илюстрация вижте подгрупата на машината (17), която съдържа частта или подгрупата, която търсите. Намерете номера на позицията (18) и отворете на страницата със списъка, която е след илюстрацията.

c) Намерете номера на позицията/референцията (16) или името на подгрупата (19). Отворете съответстващия номер на страница (20) в дясната колона. Tetra Pak е избрала да използва винаги функционално-ориентирана структура при обозначаване на референциите. Префиксът, който показва функционално-ориентирана структура (=) не е посочен в обозначаването на референциите.

Артикули d) и e) се отнасят до илюстрация (F) на страница i-6.

d) Намерете частта (21), която търсите в илюстрацията на подгрупата и запомнете номера на частта.

e) Номерът на частта (29) и описанието на частта (30) са изброени до номера на позицията на страницата със списъка.

Изброена информация в Каталога с резервни части

По-долу посоченият списък се отнася до илюстрация (F) на страница i-6. Каталогът с резервни части съдържа следната информация за групи, подгрупи и резервни части за оборудването:

- Референция за структурата (22). Показва следващата по-голяма група в структурата със списъка на оборудването.
- Име на група (23)
- Единица мярка (25)
- Количество (26)
- Номер за монтажен чертеж (27)
- Обхват на страницата със списък (28). Включен, ако има няколко страници в илюстрацията на групата или списъка.
- Номер на част или подгрупа (29)
- Име на подгрупа или описание на част (30)
- Номер на група (31)
- Номер на оборудване (32)
- Референция за информацията за групата (33). Показва дали частта под заглавието е за специфична версия на машината или е списък с общи части. Ако един списък има повече от един вариант и всеки вариант има собствен монтажен чертеж, се показва референцията на страницата към монтажния чертеж на варианта.
- Вътрешна информация (34)

Úvod

Informace o manuálu

Tetra Pak doporučuje, abyste si pozorně přečetli všechny dodané příručky. Přesvědčte se, že dodané manuály jsou k dispozici personálu, který obsluhuje nebo provádí údržbu zařízení.

Je důležité ponechat si tuto příručku po celou dobu životnosti zařízení a předat ho jakémukoliv následujícímu vlastníkovi nebo uživateli.

Tetra Pak nebude odpovídat za žádné škody zařízení, způsobené nedodržováním pokynů uvedených v této příručce.

Dodané příručky

Příručky dodané s tímto zařízením mohou obsahovat

- CM
  Konverzní manuál (CM) poskytuje technikům informace o konverzi zařízení mezi různými výrobními režimy.
- EM
  Elektrický manuál (EM) poskytuje technikům informace o elektrickém systému tohoto zařízení.
- IM
  Instalační manuál (IM) poskytuje technikům informace potřebné k bezpečné instalaci zařízení.
- MM
  Údržbový manuál (MM) poskytuje technikům informace o údržbě tohoto zařízení.
- OM
  Provozní manuál (OM) poskytuje operátorovi informace o manipulaci s tímto zařízením a provozu před, během a po výrobě.
- SPC
  Katalog náhradních dílů (SPC) poskytuje informace potřebné pro objednávání náhradních dílů od společnosti Tetra Pak
- TeM
  Technický manuál
  - poskytuje technikům informace potřebné k bezpečné instalaci tohoto zařízení
  - poskytuje technikům informace o údržbě tohoto zařízení
  - poskytuje technikům informace o elektrickém systému tohoto zařízení
  - poskytuje informace potřebné pro objednávání náhradních dílů od společnosti Tetra Pak

Rozvržení stránky

Viz obrázek (A) na straně i-5: Hlavní strany Katalogu náhradních dílů obsahují stranu s obrázky (1) a odpovídající stranu seznamu (7). Číslo strany (5) je uvedeno v záhlaví strany s obrázky a v zápatí strany seznamu. Číslo dokumentu (6) je uvedeno v zápatí strany seznamu.

Číslování stran

Viz obrázek (A) na straně i-5: Číslo strany (5) sestává ze tří částí:

- číslo kapitoly (2)
- pořadové číslo strany (3) v kapitole
- celkový počet stránek (4) v kapitole

Úvod ke stroji

Výrobce

Název a adresa výrobce je uvedena na druhé straně tohoto katalogu.

Servis

Chcete-li objednat náhradní díly nebo ohlásit problémy související s provozem tohoto stroje, kontaktujte nejbližší kancelář Tetra Pak.

S dalšími dotazy, připomínkami nebo náměty na vylepšení ohledně zařízení a této dokumentace se obracejte na kontaktní osobu.

Identifikace

Klasifikace CE

Toto zařízení splňuje základní zdravotní a bezpečnostní předpisy Evropského hospodářského prostoru (EEA).

Štítek na stroji

Obrázek (B) na straně i-5 znázorňuje příklad štítku na stroji. Obrázek platného štítku na stroji a jeho umístění na zařízení je uveden v příručkách dodaných s tímto strojem v kapitole Úvod. Na štítku jsou uvedeny údaje potřebné při kontaktování společnosti Tetra Pak, týkající se tohoto specifického zařízení.

- Typ stroje (8)
- Objem (9)
- Výkresové specifikace (10)
- Výrobní číslo stroje (11)
- Výrobce (12)
- Označení CE (13)
- Rok výroby (14)

Obrázek (C) na straně i-5 zobrazuje příklad specifikace stroje. Přesvědčte se, že údaje o zařízení uvedená v seznamu na předních stranách tohoto manuálu odpovídají údajům štítku na stroji a specifikaci stroje.

Jak používat tento Katalog náhradních dílů

Vyhledejte číslo náhradního dílu

a) Viz obrázek (D) na straně i-5: Přejděte na číslo kapitoly (15) uvedené vedle hlavní skupiny, která obsahuje hledaný díl.

Položky b) a c) odkazují na obrázek (E) na straně i-6.

b) Na vyobrazení hlavní skupiny vyhledejte strojní podskupinu (17), která obsahuje hledaný díl nebo podskupinu. Poznamenejte si číslo pozice (18) a přejděte na stranu seznamu vyplývající z obrázku.

c) Vyhledejte číslo pozice/označení odkazu (16) nebo název podskupiny (19). Přejděte na odpovídající číslo strany (20) v seznamu v pravém sloupci. Tetra Pak zvolil pro označování odkazu používat vždy uspořádání orientované na funkci. Prefix indikující uspořádání orientované na funkci (=) není uveden v označení odkazu.

Položky d) a e) odkazují na obrázek (F) na straně i-6.

d) Vyhledejte díl (21), který hledáte na vyobrazení podskupiny a poznamenejte si číslo pozice dílu.

e) Číslo dílu (29) a popis dílu (30) jsou uvedeny v seznamu vedle čísla pozice na straně seznamu.

Informace uvedené v seznamu v Katalogu náhradních dílů

Níže uvedený seznam odkazuje na obrázek (F) na straně i-6. Katalog náhradních dílů obsahuje následující informace o skupinách, podskupinách a náhradních dílech pro toto zařízení:

- Odkaz na uspořádání skupiny (22). Indikuje další vyšší skupinu v uspořádání seznamu zařízení.
- Název skupiny (23)
- Měrná jednotka (25)
- Množství (26)
- Číslo montážního výkresu (27)
- Rozsah stran seznamu (28). Včetně toho, zda existuje více stran v obrázku skupiny nebo seznamu.
- Díl nebo číslo podskupiny (29)
- Název podskupiny nebo popis dílu (30)
- Číslo skupiny (31)
- Číslo zařízení (32)
- Záhlaví informace o skupině (33). Indikuje, že oddíl pod záhlavím je pro specifickou variantu stroje nebo jde-li o seznam běžných dílů. Jestliže seznam obsahuje více než jednu variantu a každá varianta má svůj vlastní montážní výkres, pak je uveden odkaz na stranu montážního výkresu této varianty.
- Interní informace (34)

Indledning

Oplysninger om manualen

Tetra Pak anbefaler, at alle leverede manualer læses omhyggeligt. Sørg for, at de udleverede manualer er til rådighed for personale, som arbejder med eller vedligeholder udstyret.

Det er vigtigt at opbevare dette katalog hele udstyrets levetid og give kataloget videre til eventuelt kommende ejere eller brugere.

Tetra Pak kan ikke holdes ansvarlig for eventuel beskadigelse af udstyr, der opstår, fordi instruktionerne i manualerne til dette udstyr ikke følges.

Udleverede manualer

De manualer, der leveres sammen med dette udstyr, kan omfatte

- CM
  Denne konverteringsmanual forsyner teknikere med oplysninger om konvertering af udstyret mellem forskellige produktionstilstande.
- EM
  Denne elektriske manual forsyner teknikere med informationer om udstyrets elektriske system.
- IM
  Denne installationsmanual forsyner teknikere med nødvendig information i forbindelse med sikker installation af udstyret.
- MM
  Denne vedligeholdelsesmanual forsyner teknikere med information om vedligeholdelse af udstyret.
- OM
  Denne betjeningsmanual giver operatøren oplysninger om betjening af udstyret før, under og efter produktion.
- SPC
  Denne reservedelskatalog indeholder oplysninger, der er nødvendig for at bestille reservedele fra Tetra Pak
- TeM
  Den tekniske manual
  – forsyner teknikere med information, der er nødvendig for en sikker installation af udstyret.
  – forsyner teknikere med information om vedligeholdelse af udstyret.
  – forsyner teknikere med information om maskinens/udstyrets elektriske system.
  – indeholder de informationer, der er nødvendige for at kunne bestille reservedele fra Tetra Pak.

Sidelayout

Se illustration (A) på side i-5: Hovedsiderne i et reservedelskatalog består af en illustrationsside (1) og en tilsvarende listeside (7). Sidenummeret (5) vises i sidehovedet på en illlustrationsside og i sidefoden på en listeside. Dokumentnummeret (6) vises i sidefoden på en listeside.

Sidenummerering

Se illustrationen (A) på side i-5: Et sidenummer (5) har tre dele:

- kapitelnummer (2)
- fortløbende sidenummer i kapitlet (3)
- samlet sideantal i kapitlet (4)

Præsentation af maskinen

Producent

Producentens navn og adresse findes på side to i dette katalog.

Service

Kontakt nærmeste Tetra Pak-kontor for at bestille reservedele eller rapportere problemer i forbindelse med betjening af denne maskine.

Henvendelse til vores kontaktperson med andre forespørgsler, kommentarer eller forslag til forbedring angående udstyr og dokumentation.

Identificering

CE-klassificering

Dette udstyr lever op til de grundlæggende regulativer for sundhed og sikkerhed indenfor den Europæiske Økonomiske Samarbejdsområde (EØS).

Maskinskilt

Illustrationen (B) på side i-5 viser et eksempel på et maskinskilt.
En illustration af et gyldigt maskinskilt og dets placering på udstyret er vist i indledningskapitlet i de manualer, der leveres med dette udstyr. Maskinskiltet indeholder nedennævnte data. Disse er nødvendige ved kontakt med Tetra Pak vedrørende dette specifikke udstyr.

- Maskintype (8)
- Volumen (9)
- Tegningsspecifikationer (10)
- Maskinens serienummer (11)
- Producent (12)
- CE-mærke (13)
- Produktionsår (14)

Illustrationen (C) på side i-5 viser et eksempel på en maskinspecifikation. Kontroller, at de udstyrsdata, der er anført på de første sider i denne manual, svarer til maskinskiltsdataene og maskinspecifikationen.

Sådan bruges dette reservedelskatalog.

Find et reservedelsnummer

a) Se illustrationen (D) på side i-5: Gå til kapitelnummeret (15), der er angivet ved siden af hovedgruppen, der indeholder den del, der ønskes fundet.

Punkterne b) og c) refererer til illustrationen (E) på side i-6.

b) I hovedgruppeillustrationen skal man se efter maskinundergruppen (17), som indeholder den del eller undergruppe, der søges. Bemærk placeringsnummeret (18), og gå til listesiden, som følger illustrationen.

c) Se efter placeringsnummeret/henvisningsbetegnelse (16) eller undergruppens navn (19). Gå til det tilsvarende sidenummer (20) angivet i den højre kolonne. Tetra Pak har valgt altid at anvende den funktionsorienterede struktur til henvisningsbetegnelse. Præfikset angiver funktionsorienteret struktur (=) ikke vist i henvisningsbetegnelsen.

Punkterne d) og e) refererer til illustrationen (F) på side i-6.

d) Find den del (21), du søger i undergruppeillustrationen, og notér delens placeringsnummer.

e) Reservedelsnummeret (29) og -beskrivelsen (30) er angivet ved siden af placeringsnummeret på listesiden.

Informationer der er angivet i et reservedelskatalog

Listen nedenfor refererer til illustrationen (F) på side i-6. Et reservedelskatalog indeholder følgende informationer om grupper, undergrupper og reservedele til udstyret:

- Gruppestrukturreference (22). Angiver næste overordnede gruppe i udstyrslistestrukturen.
- Gruppenavn (23)
- Måleenhed (25)
- Antal (26)
- Samletegningsnummer (27)
- Listens sideområde (28). Er angivet, hvis gruppeillustrationen eller -listen inkluderer mange sider.
- Del- eller undergruppenummer (29)
- Undergruppens navn eller delsbeskrivelse (30)
- Gruppenummer (31)
- Udstyrsnummer (32)
- Overskrift for gruppeinformation (33). Angiver, om afsnittet under overskriften er for en specifik maskinvariant, eller om det er en liste over fælles dele. Hvis en liste har mere end én variant, og hver variant har sin egen samletegning, vises en sidereference til variantens samletegning.
- Intern information (34)

Einleitung

Informationen über das Handbuch

Tetra Pak empfiehlt, alle mitgelieferten Handbücher sorgfältig durchzulesen. Stellen Sie sicher, dass die Handbücher dem Personal, das die Ausrüstung betreibt oder wartet, zur Verfügung steht.

Es ist wichtig, dass Sie diesen Katalog für die gesamte Lebensdauer der Ausrüstung vorliegen haben und einem etwaigen Nachbesitzer oder -betreiber übergeben.

Tetra Pak haftet nicht für Schäden an der Ausrüstung, die aufgrund von Nichtbeachtung der Anweisungen aus den Handbüchern, die mit diesem Gerät geliefert werden, entstehen.

Gelieferte Handbücher

Die Handbücher, die mit dieser Ausrüstung geliefert wird, können Folgendes beinhalten

- CM
  Das Umbauhandbuch gibt den Technikern Informationen über den Umbau der Ausrüstung zwischen verschiedenen Produktionsweisen.
- EM
  Das Elektrohandbuch gibt den Technikern Informationen zum Elektrosystem der Ausrüstung.
- IM
  Das Installationshandbuch gibt den Technikern Informationen für die sichere Installation der Ausrüstung.
- MM
  Das Wartungshandbuch gibt den Technikern Informationen für die Wartung der Ausrüstung.
- OM
  Das Betriebshandbuch gibt dem Bediener Informationen über die Bedienung und den Betrieb der Ausrüstung vor, während und nach der Produktion.
- SPC
  Der Ersatzteilkatalog liefert die Informationen, die für die Bestellung von Ersatzteilen bei Tetra Pak erforderlich sind.
- TeM
  Das technische Handbuch
  - gibt den Technikern Informationen für die sichere Installation der Ausrüstung
  - gibt den Technikern Informationen für die Wartung der Ausrüstung
  - gibt den Techniker Informationen zum Elektrosystem der Ausrüstung/der Maschine
  - liefert die Informationen, die für die Bestellung von Ersatzteilen bei Tetra Pak erforderlich sind.

Seitenlayout

Bezugnahme auf Abbildung (A) auf Seite i-5: Die Hauptseiten in einem Ersatzteilkatalog bestehen aus einer Abbildungsseite (1) und einer entsprechenden Listenseite (7). Die Seitennummer (5) wird in der Kopfzeile einer Abbildungsseite und in der Fußzeile einer Listenseite aufgeführt. Die Dokumentennummer (6) wird in der Fußzeile einer Listenseite aufgeführt.

Seitennummerierung

Bezugnahme auf Abbildung (A) auf Seite i-5: Eine Seitennummer (5) besteht aus drei Teilen:

- Kapitelnummer (2)
- Fortlaufende Seitennummer innerhalb des Kapitels (3)
- Gesamtzahl der Seiten im Kapitel (4)

Einführung zur Maschine

Hersteller

Bitte entnehmen Sie den Namen und die Adresse des Herstellers der zweiten Seite dieses Katalogs.

Service

Zur Bestellung von Ersatzteilen für diese Maschine oder um Probleme im Zusammenhang mit dem Betrieb dieser Maschine zu melden, wenden Sie sich bitte an das nächstgelegene Büro von Tetra Pak.

Wenden Sie sich bei anderen Anfragen, Kommentaren oder Verbesserungsvorschlägen mit Bezug auf die Ausrüstung und seine Dokumentation an die Verbindungsstelle.

Identifizierung

CE-Klassifizierung

Diese Ausrüstung erfüllt die wesentlichen Anforderungen des Europäischen Wirtschaftsraum (EWR) für Gesundheitsschutz und die Sicherheit.

Maschinenschild

Die Abbildung (B) auf Seite i-5 zeigt ein Beispiel eines Maschinenschilds. Die Abbildung eines gültigen Maschinenschildes und seine Position auf der Ausrüstung wird im Einleitungskapitel der mit dieser Ausrüstung gelieferten Handbücher gezeigt. Das Maschinenschild enthält die Daten, die erforderlich sind, wenn Sie sich bezüglich dieser speziallen Ausrüstung an Tetra Pak wenden.

- Maschinentyp (8)
- Volumen (9)
- Zeichnungsspezifikationen (10)
- Seriennummer der Maschine (11)
- Hersteller (12)
- CE-Zeichen (13)
- Baujahr (14)

Die Abbildung (C) auf Seite i-5 zeigt ein Beispiel einer Maschinenspezifikation. Stellen Sie sicher, dass die Ausrüstungsdaten, die in den vorderen Seiten dieses Handbuchs aufgelistet sind, mit den Maschinenschilddaten und der Maschinenspezifikation übereinstimmen.

Benutzung dieses Ersatzteilkatalogs

Finden einer Ersatzteilnummer

a) Bezugnahme auf Abbildung (D) auf Seite i-5: Weiter zur Kapitel nummer (15), die neben der Hauptgruppe angegeben ist, die das entsprechende Teil enthält.

Die Positionen b) und c) beziehen sich auf die Abbildung (E) auf Seite i-6.

b) Suchen Sie auf der Hauptgruppenillustration nach der Maschinen-Untergruppe (17), die das gesuchte Teil oder die Untergruppe enthält. Notieren Sie die Positionsnummer (18) und gehen Sie dann zur Listenseite, die der Abbildung folgt.

c) Suchen Sie nach der Positionsnummer/Referenzbezeichnung (16) oder dem Namen der Untergruppe (19). Gehen Sie zur entsprechenden Seitennummer (20), die in der rechten Spalte aufgelistet ist. Tetra Pak hat sich dazu entschieden, stets eine funktionsorientierte Struktur für die Referenzbezeichnung zu verwenden. Die vorangestellte Kennzeichnung, welche die funktionsorientierte Struktur angibt (=), wird in der Referenzbezeichnung nicht angezeigt.

Die Positionen d) und e) beziehen sich auf die Abbildung (F) auf Seite i-6.

d) Finden Sie das gesuchte Teil (21) auf der Abbildung der Untergruppe und notieren Sie die Positionsnummer des Teils.

e) Die Teilenummer (29) und die Teilebeschreibung (30) werden neben der Positionsnummer auf der Listenseite aufgelistet.

In einem Ersatzteilkatalog aufgelistete Informationen

Die folgende Liste bezieht sich auf die Abbildung (F) auf Seite i-6. Ein Ersatzteilkatalog enthält folgende Informationen über Gruppen, Untergruppen und Ersatzteile für die Ausrüstung:

- Gruppenstrukturreferenz (22). Sie gibt die nächst höhere Gruppe in der Ausrüstungslistenstruktur an.
- Gruppenname (23)
- Maßeinheit (25)
- Menge (26)
- Nummer der Zusammenbauzeichnung (27)
- Listenseitenbereich (28). Enthalten, wenn es mehrere Seiten in der Gruppenabbildung oder Liste gibt.
- Teile- oder Untergruppennummer (29)
- Untergruppenname oder Teilebeschreibung (30)
- Gruppennummer (31)
- Ausrüstungsnummer (32)
- Gruppeninformationsüberschrift (33). Gibt an, ob sich der Abschnitt unter der Überschrift auf eine spezifische Maschinenvariante bezieht oder ob es sich um eine Liste der allgemeinen Teile handelt. Wenn eine Liste mehr als eine Variante hat und jede Variante über eine eigene Zusammenbauzeichnung verfügt, wird eine Seitenreferenz zur Zusammenbauzeichnung angezeigt.
- Interne Informationen (34)

Εισαγωγή

Πληροφορίες για το Εγχειρίδιο

Η Tetra Pak σάς συνιστά να διαβάζετε προσεκτικά όλα τα παρεχόμενα εγχειρίδια. Εξασφαλίζετε ότι όλα τα παρεχόμενα εγχειρίδια διατίθενται στο προσωπικό που χειρίζεται ή συντηρεί τον εξοπλισμό.

Είναι σημαντικό να διατηρείτε αυτό τον κατάλογο καθ' όλη τη διάρκεια ζωής του εξοπλισμού καθώς και να παραδίδετε τον κατάλογο στον τυχόν επόμενο ιδιοκτήτη ή χρήστη του εξοπλισμού.

Η Tetra Pak δεν πρόκειται να αναλάβει καμία ευθύνη για οποιαδήποτε ζημιά που μπορεί να προκληθεί στον εξοπλισμό εξαιτίας της μη τήρησης των οδηγιών οι οποίες παρέχονται στα εγχειρίδια που συνοδεύουν αυτό τον εξοπλισμό.

Παρεχόμενα Εγχειρίδια

Στα εγχειρίδια που παρέχονται μαζί μ' αυτό τον εξοπλισμό, μπορεί να περιλαμβάνονται τα εξής:

- CM
  Αυτό το Εγχειρίδιο Μετατροπής παρέχει στους τεχνικούς πληροφορίες για τη μετατροπή του εξοπλισμού μεταξύ των διάφορων λειτουργιών παραγωγής.
- EM
  Αυτό το Ηλεκτρικό Εγχειρίδιο παρέχει στους τεχνικούς πληροφορίες για το ηλεκτρικό σύστημα του εξοπλισμού.
- IM
  Αυτό το Εγχειρίδιο Εγκατάστασης παρέχει στους τεχνικούς τις απαιτούμενες πληροφορίες για την ασφαλή εγκατάσταση του εξοπλισμού.
- MM
  Αυτό το Εγχειρίδιο Συντήρησης παρέχει στους τεχνικούς πληροφορίες για τη συντήρηση του εξοπλισμού.
- OM
  Αυτό το Εγχειρίδιο Χειρισμού παρέχει στο χειριστή πληροφορίες για το χειρισμό και τη λειτουργία του εξοπλισμού πριν, κατά τη διάρκεια και μετά την παραγωγή.
- SPC
  Αυτός ο Κατάλογος Ανταλλακτικών παρέχει τις απαραίτητες πληροφορίες για την παραγγελία ανταλλακτικών από την Tetra Pak.
- TeM
  Το Τεχνικό Εγχειρίδιο
  - παρέχει στους τεχνικούς τις απαιτούμενες πληροφορίες για την ασφαλή εγκατάσταση του εξοπλισμού
  - παρέχει στους τεχνικούς πληροφορίες για τη συντήρηση του εξοπλισμού
  - παρέχει στους τεχνικούς πληροφορίες για το ηλεκτρικό σύστημα του εξοπλισμού/μηχανής
  - παρέχει τις απαραίτητες πληροφορίες για την παραγγελία ανταλλακτικών από την Tetra Pak.

Διάταξη Σελίδων

Ανατρέξτε στην εικόν (A) της σελίδας i-5: Οι κύριες σελίδες ενός Καταλόγου Ανταλλακτικών αποτελούνται από μία εικονογραφημένη σελίδα (1) και από μία αντίστοιχη σελίδα λίστας (7). Ο αριθμός σελίδας (5) εμφανίζεται στην κεφαλίδα μιας εικονογραφημένης σελίδας και στο υποσέλιδο μιας σελίδας λίστας. Ο αριθμός εγγράφου (6) εμφανίζεται στο υποσέλιδο μιας σελίδας λίστας.

Αρίθμηση Σελίδων

Ανατρέξτε στην εικόνα (A) της σελίδας i-5: Ένας αριθμός σελίδας (5) αποτελείται από τα εξής τρία μέρη:

- αριθμός κεφαλαίου (2)
- αύξων αριθμός σελίδας του κεφαλαίου (3)
- συνολικός αριθμός σελίδων του κεφαλαίου (4)

Παρουσίαση Μηχανής

Κατασκευαστής

Για το όνομα και τη διεύθυνση του κατασκευαστή, ανατρέξτε στη δεύτερη σελίδα αυτού του καταλόγου.

Τεχνική Εξυπηρέτηση

Για να παραγγείλετε ανταλλακτικά για τη συγκεκριμένη μηχανή ή για να αναφέρετε προβλήματα που σχετίζονται με τη λειτουργία αυτής της μηχανής, επικοινωνήστε με το πλησιέστερο γραφείο της Tetra Pak.

Εάν έχετε άλλου είδους ερωτήσεις, σχόλια ή προτάσεις βελτίωσης σχετικά με τον εξοπλισμό και την έγγραφη τεκμηρίωσή του, επικοινωνήστε με το Τμήμα Σχέσεων.

Στοιχεία Ταυτότητας

Σήμανση CE

Αυτός ο εξοπλισμός συμμορφώνεται με τους βασικούς κανονισμούς υγείας και ασφάλειας του Ευρωπαϊκού Οικονομικού Χώρου (ΕΟΧ).

Πινακίδα Αναγνώρισης Μηχανής

Η εικόνα (B) της σελίδας i-5 δείχνει ένα παράδειγμα μιας πινακίδας αναγνώρισης μηχανής.
Μια εικόνα που δείχνει την ενδεδειγμένη μορφή και θέση της πινακίδας αναγνώρισης μηχανής στον εξοπλισμό, παρουσιάζεται στο κεφάλαιο 'Εισαγωγή' των εγχειριδίων που παρέχονται μ' αυτόν τον εξοπλισμό.
Η πινακίδα αναγνώρισης μηχανής αναγράφει τα δεδομένα που παρατίθενται στη συνέχεια, τα οποία είναι απαραίτητα όταν επικοινωνείτε με την Tetra Pak για θέματα που αφορούν αυτό το συγκεκριμένο εξοπλισμό.

- Τύπος μηχανής (8)
- Χωρητικότητα (9)
- Στοιχεία σχεδίου (10)
- Αριθμός σειράς μηχανής (11)
- Κατασκευαστής (12)
- Σήμανση CE (13)
- Έτος κατασκευής (14)

Η εικόνα (Γ) της σελίδας i-5 δείχνει ένα παράδειγμα τεχνικών χαρακτηριστικών μηχανής. Βεβαιωθείτε ότι τα δεδομένα εξοπλισμού που παρατίθενται στις πρώτες σελίδες αυτού του εγχειριδίου συμφωνούν με τα δεδομένα της πινακίδας αναγνώρισης μηχανής και των τεχνικών χαρακτηριστικών μηχανής.

Πώς Χρησιμοποιείται Αυτός ο Κατάλογος Ανταλλακτικών

Εύρεση ενός Αριθμού Ανταλλακτικού

a) Ανατρέξτε στην εικόνα (Δ) της σελίδας i-5: Πηγαίνετε στον αριθμό κεφαλαίου (15) που υποδεικνύεται δίπλα από την κύρια ομάδα της μηχανής η οποία περιλαμβάνει το εξάρτημα που θέλετε να βρείτε.

Τα βήματα b) και c) αναφέρονται στην εικόνα (Ε) της σελίδας i-6.

b) Στην εικόνα της κύριας ομάδας μηχανής, αναζητήστε την υποομάδα μηχανής (17) η οποία περιλαμβάνει το εξάρτημα ή την υποομάδα που αναζητάτε. Σημειώστε τον αριθμό θέσης (18) και πηγαίνετε στη σελίδα λίστας που ακολουθεί την εικόνα.

c) Αναζητήστε τον αριθμό θέσης/ονομασία αναφοράς (16) ή το όνομα υποομάδας (19). Πηγαίνετε στον αντίστοιχο αριθμό σελίδας (20) που αναγράφεται στη δεξιά στήλη. Η Tetra Pak έχει επιλέξει να χρησιμοποιεί πάντα δομή ονομασίας αναφοράς με βάση τη λειτουργία. Το πρόθεμα που υποδεικνύει τη δομή με βάση τη λειτουργία (=) δε φαίνεται στο διάγραμμα αναφοράς.

Τα βήματα d) και e) αναφέρονται στην εικόνα (ΣΤ) της σελίδας i-6.

d) Βρείτε το εξάρτημα (21) που αναζητάτε στην εικόνα υποομάδας μηχανής και σημειώστε τον αριθμό θέσης του εξαρτήματος.

e) Ο αριθμός του εξαρτήματος (29) και η περιγραφή του εξαρτήματος (30) παρατίθενται δίπλα στον αριθμό θέσης στη σελίδα λίστας.

Πληροφορίες που Περιέχονται σε έναν Κατάλογο Ανταλλακτικών

Η λίστα που ακολουθεί αναφέρεται στην εικόνα (F) της σελίδας i-6. Ένας Κατάλογος Ανταλλακτικών περιέχει τις παρακάτω πληροφορίες σχετικά με τις ομάδες, τις υποομάδες και τα ανταλλακτικά του εξοπλισμού:

- Αναφορά δομής ομάδας (22). Υποδηλώνει την επόμενη μεγαλύτερη ομάδα στη δομή λίστας του εξοπλισμού.
- Όνομα ομάδας (23)
- Μονάδα μέτρησης (25)
- Ποσότητα (26)
- Αριθμός σχεδίου συγκροτήματος (27)
- Περιοχή σελίδων λίστας (28). Περιλαμβάνεται εφόσον η εικόνα ή η λίστα μιας ομάδας εκτίθεται σε περισσότερες από μία σελίδες.
- Αριθμός εξαρτήματος ή υποομάδας (29)
- Αριθμός υποομάδας ή περιγραφή εξαρτήματος (30)
- Αριθμός ομάδας (31)
- Αριθμός εξοπλισμού (32)
- Επικεφαλίδα πληροφοριών ομάδας (33). Υποδεικνύει εάν η ενότητα κάτω από την επικεφαλίδα αφορά μια συγκεκριμένη παραλλαγή μηχανής ή αποτελεί μια λίστα κοινών εξαρτημάτων. Σε περίπτωση που μια λίστα περιέχει περισσότερες από μία παραλλαγές και κάθε παραλλαγή έχει ξεχωριστό σχέδιο συγκροτήματος, εμφανίζεται μια παραπομπή προς τη σελίδα όπου βρίσκεται το σχέδιο συγκροτήματος της παραλλαγής.
- Εσωτερικές πληροφορίες (34)

Introducción

Información sobre el manual

Tetra Pak recomienda leer atentamente todos los manuales suministrados. Asegúrese de que los manuales están disponibles para el personal que opera o mantiene el equipo.

Es importante conservar este catálogo durante la vida útil del equipo, así como facilitárselo a cualquier propietario o usuario posterior.

Tetra Pak no se responsabilizará de daños en el equipo por no seguir las instrucciones proporcionadas en los manuales que acompañan este equipo.

Manuales entregados

Los manuales entregados con este equipo pueden incluir:

- CM
  El Manual de conversión proporciona a los técnicos información sobre cómo convertir el equipo a diferentes modos de producción.
- EM
  El Manual eléctrico proporciona a los técnicos información sobre el sistema eléctrico del equipo.
- IM
  El Manual de instalación proporciona a los técnicos la información necesaria para instalar el equipo de manera segura.
- MM
  El Manual de mantenimiento proporciona a los técnicos información sobre el mantenimiento del equipo.
- OM
  El Manual de funcionamiento proporciona al operador información sobre el manejo y el funcionamiento del equipo antes, durante y después de la producción.
- SPC
  El Catálogo de recambios proporciona la información necesaria para pedir las piezas de recambio a Tetra Pak.
- TeM
  El Manual técnico
  - proporciona a los técnicos la información necesaria para instalar de manera segura el equipo
  - proporciona a los técnicos información sobre el mantenimiento del equipo
  - proporciona a los técnicos información sobre el sistema eléctrico de la máquina/equipo
  - proporciona la información necesaria para pedir las piezas de recambio a Tetra Pak.

Organización de las páginas

Consultar la ilustración (A) en la página i-5: Las páginas principales en un Catálogo de recambios se componen de una página de ilustración (1) y una página de lista correspondiente (7). El número de la página (5) se muestra en el encabezado de una página de ilustración y en el pie de página de una página de lista. El número del documento (6) se muestra en el pie de página de una página de lista.

Numeración de las páginas

Consulte la ilustración (A) en la página i-5: Un número de página (5) consta de tres partes:

- número de capítulo (2)
- número de página consecutivo dentro del capítulo (3)
- número total de páginas del capítulo (4)

Introducción a la máquina

Fabricante

Para obtener el nombre y la dirección del fabricante, véase la segunda página de este catálogo.

Servicio

Para pedir recambios para esta máquina o informar de problemas asociados con el funcionamiento de la misma, póngase en contacto con la oficina de Tetra Pak más cercana.

Póngase en contacto con el representante para otras consultas, comentarios o consejos sobre mejoras referidos al equipo y su documentación.

Identificación

Clasificación de la CE

Este equipo cumple con la normativa básica sobre salud y seguridad del Espacio Económico Europeo (EEE).

Placa de máquina

La ilustración (B) en la página i-5 muestra un ejemplo de una placa de máquina.
En el capítulo Introducción de los manuales entregados con este equipo, se muestra una ilustración de la placa de máquina válida y su ubicación en el equipo. La placa de máquina contiene los datos que se enumeran a continuación, requeridos al ponerse en contacto con Tetra Pak en relación con este equipo específico.

- Tipo de máquina (8)
- Volumen (9)
- Especificaciones de plano (10)
- Número de serie de la máquina (11)
- Fabricante (12)
- Marca de la CE (13)
- Año de fabricación (14)

La ilustración (C) en la página i-5 muestra un ejemplo de especificación de la máquina. Asegúrese de que los datos de equipo que se enumeran en las páginas de la cubierta de este manual corresponden a los datos de la placa y las especificaciones de la máquina.

Cómo utilizar este Catálogo de recambios

Localizar un número de recambio

a) Consulte la ilustración (D) en la página i-5: Vaya al número de capítulo (15) indicado junto al grupo principal que contiene la pieza que desea localizar.

Los puntos b) y c) hacen referencia a la ilustración (E) en la página i-6.

b) En la ilustración del grupo principal, busque el subgrupo de la máquina (17) que contiene la pieza o el subgrupo que busca. Anote el número de posición (18) y vaya a la página de lista que sigue a la ilustración.

c) Busque el número de posición/denominación de referencia (16) o el nombre del subgrupo (19). Vaya al número de página correspondiente (20) que aparece en la columna de la derecha. Tetra Pak ha elegido utilizar siempre la estructura orientada a la función para la denominación de referencia. El prefijo que indica la estructura orientada a la función (=) no aparece en la denominación de referencia.

Los puntos d) y e) hacen referencia a la ilustración (F) en la página i-6.

d) Localice la pieza (21) que busca en la ilustración del subgrupo y anote el número de posición de la pieza.

e) El número de pieza (29) y la descripción de la misma (30) aparecen junto al número de posición en la página de lista.

Información que contiene un Catálogo de recambios

La lista que aparece a continuación hace referencia a la ilustración (F) en la página i-6. Un Catálogo de recambios contiene la siguiente información sobre grupos, subgrupos y recambios para el equipo:

- Referencia de estructura de grupo (22). Indica el siguiente grupo más alto en la estructura de lista del equipo.
- Nombre del grupo (23)
- Unidad de medida (25)
- Cantidad (26)
- Número de dibujo del conjunto (27)
- Intervalo de página de lista (28). Incluido si hay varias páginas en la ilustración o lista de grupo.
- Número de pieza o subgrupo (29)
- Nombre de subgrupo o descripción de pieza (30)
- Número de grupo (31)
- Número de equipo (32)
- Encabezado de información de grupo (33). Indica si la sección que aparece debajo del encabezado corresponde a una variante específica de la máquina o si es una lista de piezas comunes. Si la lista tiene más de una variante y cada variante tiene su propio dibujo de conjunto, se muestra una referencia de página al dibujo de conjunto de la variante.
- Información interna (34)

Sissejuhatus

Juhendi teave

Tetra Pak soovitab kõik juhendid hoolikalt läbi lugeda. Kontrollige, et juhendid oleksid seadmetega töötavatele ja neid hooldavatele isikutele kättesaadavad.

Kataloog tuleb seadme kasutusaja vältel alles hoida ning järgmisele omanikule või kasutajale edasi anda.

Tetra Pak ei vastuta seadme vigastuste eest, mis on tekkinud seadmega kaasnevate juhendite mittejärgimise tõttu.

Kaasaolevad juhendid

Seadmega kaasasolevad juhendid võivad sisaldada järgmist:

- CM
  Ümberseadistusjuhend annab tehnikutele teavet seadme ümber seadistamise kohta eri tootmisrežiimide korral.
- EM
  Elektrijuhend annab tehnikutele informatsiooni seadme elektrisüsteemi kohta.
- IM
  Paigaldusjuhend annab tehnikutele vajalikku teavet seadme ohutu paigaldamise kohta.
- MM
  Hooldusjuhend annab tehnikutele teavet seadme hoolduse kohta.
- OM
  Kasutusjuhend annab operaatorile teavet seadme käsitsemise ja kasutamise kohta enne tootmist, selle ajal ja pärast seda.
- SPC
  Varuosade kataloog annab vajalikku teavet Tetra Pakilt varuosade tellimiseks
- TeM
  Tehniline juhend
  - annab tehnikutele vajalikku teavet seadme ohutuks paigaldamiseks
  - annab tehnikutele teavet seadme hooldamise kohta
  - annab tehnikutele teavet masina/seadme elektrisüsteemi kohta
  - annab vajalikku teavet Tetra Pakilt varuosade tellimiseks.

Lehekülje kujundus

Vt joonist (A) lk i-5: Varuosade kataloogi põhilehtedeks on jooniste lehekülg (1) ja vastav loeteluleht (7). Lehekülje number (5) on toodud joonistelehe päises ja loetelulehe jaluses. Dokumendi number (6) on toodud loetelulehe jaluses.

Lehekülje nummerdus

Vt joonist (A) lk i-5: Lehekülje number (5) koosneb kolmest osast:

- peatüki number (2)
- järgneva lehekülje number (3) peatükis
- lehekülgede koguarv peatükis (4)

Sissejuhatus masina kohta

Tootja

Tootja nimi ja aadress on toodud kataloogi teisel lehel.

Teenindus

Masina varuosade tellimiseks või masina kasutamisega seonduvate probleemide teatamiseks võtke ühendust lähima Tetra Pak kontoriga.

Seadme ja dokumendiga seonduvate küsimuste, kommentaaride ja parandusettepanekute puhul võtke ühendust ettevõtte esindajaga.

Identifikatsioon

CE klassifikatsioon

Seade on kooskõlas Euroopa Majanduspiirkonna (EEA) tervishoiu- ja ohutusnõuetega.

Masina andmeplaat

Joonisel (B) leheküljel i-5 on kujutatud masina andmeplaati. Masina andmeplaadi joonis ja selle asukoht seadmel on toodud seadmega kaasasoleva juhendi sissejuhatavas peatükis. Masina andmeplaadil on toodud allpool loetletud andmed, mida vajate antud konkreetse seadmega seoses Tetra Paki poole pöördudes.

- Masina tüüp (8)
- Maht (9)
- Joonisspetsifikatsioonid (10)
- Masina seerianumber (11)
- Tootja (12)
- CE tähis (13)
- Tootmisaasta (14)

Joonisel (C) leheküljel i-5 on kujutatud näide masina spetsifikatsioonist. Veenduge, et juhendi esimestel lehekülgedel toodud andmed seadme kohta vastavad masina andmesildil olevatele andmetele ja masina spetsifikatsioonile.

Kuidas varuosade kataloogi kasutada

Leidke varuosa number

a) Vt joonist (D) lk i-5: Leidke peatükk, mille number (15) on toodud selle põhirühma juures, mis sisaldab otsitavat varuosa.

Punktid b) ja c) viitavad joonisele (E) lk i-6.

b) Põhirühma joonisel leidke masina alamrühm (17), mis sisaldab otsitavat osa või alamrühma. Leidke positsiooninumber (18) ja avage joonisele järgnev loeteluleht.

c) Leidke positsiooninumber/viite tähis (16) või alamgrupi nimetus (19). Avage parempoolses veerus loetletud vastav lehekülje number (20). Tetra Pak on valinud viite tähise puhul alatiseks kasutamiseks funktsioonile suunatud struktuuri. Funktsioonile suunatud struktuuri prefiks (=) pole viite tähises näidatud.

Punktid d) ja e) viitavad jooniselerefer (F) lk i-6.

d) Leidke otsitav osa (21) alamrühma joonisel ja seejärel osa positsioonnumber.

e) Osa number (29) ja osa kirjeldus (30) on toodud loetelulehel positsioonnumbri kõrval.

Varuosade kataloogis toodud teave

Allpool toodud loetelui viitab joonisele (F) lk i-6. Varuosade kataloog sisaldab järgmist teavet seadme rühmade, alamrühmade ja varuosade kohta:

- Rühmastruktuuri viide (22). Märgib seadme loetelu struktuuris järgmist kõrgemat rühma.
- Rühma nimetus (23)
- Mõõtühik (25)
- Kogus (26)
- Koostejoonise number (27)
- Loetelu lehekülgede vahemik (28). Kaasatud kui rühma joonised või loetelu on toodud mitmel lehel.
- Osa või alamrühma number (29)
- Alamrühma nimetus või osa kirjeldus (30)
- Rühma number (31)
- Seadme number (32)
- Rühma teabe pealkiri (33). Näitab, kas pealkirja all toodud jaotis on konkreetse masinavariandi kohta või on tegemist tavaliste varuosade loeteluga. Kui loetelus on toodud rohkem kui üks variant ja iga variandi jaoks on oma koostejoonis, esitatakse viide selle variandi koostejoonise leheküljele.
- Siseteave (34)

Johdanto

Tietoja käsikirjasta

Tetra Pak suosittelee kaikkien toimitettavien oppaiden lukemista huolellisesti. Varmista, että toimitetut oppaat ovat laitetta käyttävän tai huoltavan henkilökunnan saatavilla.

Tämä luettelo on säilytettävä laitteen käyttöiän ajan ja toimitettava edelleen mahdolliselle seuraavalle omistajalle tai käyttäjälle.

Tetra Pak ei vastaa laitevaurioista, jotka aiheutuvat laitteen mukana tulevissa oppaissa annettujen ohjeiden noudattamatta jättämisestä.

Toimitettavat ohjeet

Tämän laitteen mukana toimitettaviin ohjeisiin kuuluvat:

- CM
  Muunnoskirjassa on teknikoille tarkoitettuja ohjeita laitteiston muuttamisesta eri tuotantotiloihin.
- EM
  Sähkökirjassa on teknikoille tarkoitettuja tietoja laitteen sähköjärjestelmästä.
- IM
  Asennuskäsikirjassa on teknikoille tarkoitettuja tietoja, jotka tarvitaan laitteen turvallista asentamista varten.
- MM
  Huoltokäsikirjassa on teknikoille tarkoitettuja tietoja tämän laitteen huoltamisesta.
- OM
  Käyttäjän käsikirjassa on käyttäjälle tarkoitettuja tietoja laitteen käsittelystä ja käyttämisestä ennen tuotantoa, tuotannon aikana ja sen jälkeen.
- SPC
  Varaosaluettelossa on tietoja, joita tarvitaan varaosien tilaamiseen Tetra Pakilta.
- TeM
  Tekninen käsikirja
  - sisältää teknikoille tarkoitettuja tietoja, joita tarvitaan laitteen turvallista asentamista varten
  - sisältää teknikoille tarkoitettuja tietoja laitteen huoltamisesta
  - sisältää teknikoille tarkoitettuja tietoja koneen/laitteen sähköjärjestelmästä
  - sisältää tietoja, joita tarvitaan varaosien tilaamiseen Tetra Pakilta.

Sivujen asettelu

Katso kuva (A) sivulla i-5: Varaosaluettelon pääsivut koostuvat kuvasivusta (1) ja sitä vastaavasta luettelosivusta (7). Sivunumero (5) näytetään kuvasivun ylätunnisteessa ja luettelosivun alatunnisteessa. Asiakirjan numero (6) näytetään luettelosivun alatunnisteessa.

Sivunumerointi

Katso kuva (A) sivulla i-5: Sivunumerossa (5) on kolme osaa:

- luvun numero (2)
- perättäinen sivunumero (3) luvun sisällä
- luvun kokonaissivumäärä (4).

Koneen esittely

Valmistaja

Valmistajan nimi ja osoite on ilmoitettu tämän luettelon toisella sivulla.

Huolto

Jos haluat tilata tähän koneeseen varaosia tai jos tämän koneen käytössä ilmenee ongelmia, jotka haluat raportoida, ota yhteyttä lähimpään Tetra Pakin toimistoon.

Jos sinulla on muuta kysyttävää, huomautettavaa tai ehdotuksia ja sen asiakirjoja koskevista parannuksista, ota yhteys yhteyshenkilöön.

Tunnistetiedot

CE-luokitus

Tämä laite vastaa Euroopan talousalueen (ETA) terveyttä ja turvallisuutta koskevia perusvaatimuksia.

Koneen tyyppikilpi

Kuvassa (B) sivulla i-5 on esimerkki koneen tyyppikilvestä. Voimassa olevan tyyppikilven kuva ja sen sijainti koneessa käy ilmi laitteiston mukana tulleiden ohjeiden Johdanto-luvusta. Tyyppikilvessä on tarvitsemasi Tetra Pakin voimassa olevat yhteystiedot, kun on kyseessä tämä nimenomainen laite.

- Konetyyppi (8)
- Tilavuus (9)
- Piirustuserittely (10)
- Koneen sarjanumero (11)
- Valmistaja (12)
- CE-merkki (13)
- Valmistusvuosi (14)

Kuvassa (C) sivulla i-5 on esimerkki koneen erittelystä. Varmista, että tämän ohjeen etusivuilla ilmoitetut laitetiedot vastaavat tyyppikilven ja kone-erittelyn tietoja.

Tämän varaosaluettelon käyttäminen

Etsi varaosan numero

a) Katso kuva (D) sivulla i-5: Siirry lukuun (15), joka on ilmoitettu etsittävän osan pääryhmän vieressä.

Kohdat b) ja c) viittaavat kuvaan (E) sivulla i-6.

b) Etsi pääryhmän kuvasta koneen alaryhmä (17), joka sisältää etsimäsi osan tai alaryhmän. Merkitse muistiin paikkanumero (18) ja siirry luettelosivulle, joka seuraa kuvaa.

c) Etsi paikkanumero (16) tai alaryhmän nimi (19). Siirry vastaavalle sivunumerolle (20), joka on ilmoitettu oikeassa sarakkeessa. Tetra Pak on päättänyt aina noudattaa toimintoperusteista rakennetta viitemerkinnöissä. Viitemerkinnässä ei esitetä toimintoperusteisen rakenteen osoittavaa etuliitettä (=).

Kohdat d) ja e) viittaavat kuvaan (F) sivulla i-6.

d) Hae etsittävä osa (21) alaryhmän kuvasta ja merkitse osan paikkanumero muistiin.

e) Osanumero (29) ja osan kuvaus (30) on annettu paikkanumeron vieressä luettelosivulla.

Varaosaluettelossa olevat tiedot

Alla oleva luettelo viittaa kuvaan (F) sivulla i-6. Varaosaluettelo sisältää seuraavat tiedot ryhmistä, alaryhmistä ja laitteen varaosista:

- Ryhmärakenneviite (22). Osoittaa seuraavaksi ylemmän ryhmän laiteluettelorakenteessa.
- Ryhmän nimi (23)
- Mittayksikkö (25)
- Määrä (26)
- Kokoonpanopiirustuksen numero (27)
- Luettelon sivualue (28). Tämä on mukana, jos ryhmäkuvassa tai luettelossa on useita sivuja.
- Osan tai alaryhmän numero (29)
- Alaryhmän nimi tai osan kuvaus (30)
- Ryhmän numero (31)
- Laitteen numero (32)
- Ryhmätietojen otsikko (33). Osoittaa, koskeeko alla oleva osio tiettyä koneversiota vai onko kyseessä yhteisten osien luettelo. Jos luettelolla on useampi kuin yksi versio ja kullakin versiolla on oma kokoonpanopiirustuksensa, näytetään version kokoonpanopiirustuksen sivuviittaus.
- Sisäiset tiedot (34)

Introduction

Informations sur ce manuel

Tetra Pak recommande de lire attentivement tous les manuels remis. S'assurer que ceux-ci sont accessibles au personnel d'exploitation et de maintenance de l'équipement.

Il est important de conserver ce catalogue pendant la durée de vie de l'équipement et de le transmettre à tout détenteur ou à tout utilisateur ultérieur de l'équipement.

Tetra Pak ne pourra être tenu responsable d'aucun dommage causé à l'équipement suite au non respect des instructions fournies dans les manuels remis avec cet équipement.

Manuels remis

Les manuels remis avec cet équipement peuvent comprendre

- CM
  Le Manuel de Conversion contient les informations destinées aux techniciens pour la conversion de l'équipement en vue des différents modes de production.
- EM
  Le Manuel Electrique fournit aux techniciens des informations sur le système électrique de l'équipement.
- IM
  Le Manuel d'Installation fournit les informations nécessaires aux techniciens pour installer l'équipement en toute sécurité.
- MM
  Le Manuel d'Entretien contient les informations nécessaires aux techniciens pour la maintenance de l'équipement.
- OM
  Le Manuel d'Utilisation fournit à l'opérateur les informations nécessaires à la manutention et à l'exploitation de l'équipement, avant, pendant et après la production.
- SPC
  Le Catalogue des Pièces de Rechange contient les informations permettant de commander des pièces de rechange auprès de Tetra Pak
- TeM
  Le Manuel Technique
  - contient les informations nécessaires aux techniciens pour installer l'équipement en toute sécurité.
  - contient les informations nécessaires aux techniciens pour la maintenance de l'équipement.
  - fournit aux techniciens des informations sur le système électrique de la machine/de l'équipement.
  - fournit les informations permettant de commander des pièces de rechange auprès de Tetra Pak.

Mise en page

Reportez-vous au schéma (A) page i-5 : Dans un catalogue de Pièces de Rechange, les pages principales sont les pages de schémas (1) et les pages de listes correspondantes (7). Le numéro de page (5) est indiqué en en-tête sur une page de schéma et en bas de page sur une page de liste. Le numéro de document (6) est indiqué au bas d'une page de liste.

Numérotation des pages

Reportez-vous au schéma (A) page i-5 : Un numéro de page (5) se compose de trois éléments :

- numéro du chapitre (2)
- numéro de page séquentiel à l'intérieur du chapitre (3)
- nombre total de pages du chapitre (4)

Présentation de la machine

Fabricant

Les nom et adresse du fabricant sont donnés en deuxième page de ce catalogue.

Assistance technique

Pour commander des pièces de rechange pour cette machine ou signaler un problème lié à son fonctionnement, contactez l'agence Tetra Pak la plus proche.

Contactez le responsable de liaison pour tout autre renseignement, commentaire ou suggestion d'amélioration relatifs à l'équipement et à sa documentation.

Identification

Certification CE

Cet équipement est conforme aux réglementations essentielles en matière d'hygiène et de sécurité de l'Espace économique européen (EEE).

Plaque signalétique de la machine

Le schéma (B) de la page i-5 reproduit un exemple de plaque signalétique de la machine.
Le chapitre Introduction des manuels remis avec cet équipement comprend une reproduction de la plaque signalétique valide de la machine et indique son emplacement sur l'équipement. La plaque comporte les caractéristiques indiquées ci-dessous, nécessaires pour prendre contact avec Tetra Pak à propos de cet équipement spécifique.

- Type de la machine (8)
- Volume (9)
- Caractéristiques schéma (10)
- Numéro de série de la machine (11)
- Fabricant (12)
- Marquage CE (13)
- Année de fabrication (14)

Le schéma (C) de la page i-5 reproduit un exemple de plaque signalétique de la machine. Assurez-vous que les données relatives à l'équipement qui se trouvent au début de ce manuel correspondent bien aux données figurant sur la plaque signalétique de la machine et à ses spécifications.

Comment utiliser ce Catalogue des Pièces de Rechange

Trouver un numéro de pièce de rechange

a) Reportez-vous au schéma (D) page i-5 : Allez au numéro de chapitre (15) indiqué à côté du groupe principal contenant la pièce que vous recherchez.

Les éléments b) et c) se rapportent au schéma (E) de la page i-6.

b) Sur le schéma du groupe principal, recherchez le sous-groupe de la machine (17) contenant la pièce ou le sous-groupe que vous recherchez. Notez le numéro de position (18) et reportez-vous à la page de liste suivant le schéma.

c) Recherchez le numéro de position/la désignation de référence (16) ou le nom du sous-groupe (19). Allez au numéro de page correspondant (20) figurant dans la liste de la colonne de droite. Tetra Pak a pris le parti de toujours utiliser la structure de la fonction pour la désignation de la référence. Le préfixe indiquant la structure de la fonction (=) ne figure pas dans la désignation de la référence.

Les éléments d) et e) se rapportent au schéma (F) de la page i-6.

d) Repérez la pièce (21) que vous recherchez dans le schéma du sous-groupe et notez le numéro de position de la pièce.

e) Le numéro de la pièce (29) et sa description (30) figurent à côté du numéro de position sur la page de liste.

Informations données dans un Catalogue de Pièces de Rechange

La liste ci-dessous se rapporte au schéma (F) de la page i-6. Un Catalogue de Pièces de Rechange contient les informations suivantes concernant les groupes, sous-groupes et pièces de rechange de l'équipement :

- Référence de structure de groupe (22). Indique le groupe immédiatement supérieur dans la structure de liste de l'équipement.
- Nom du groupe (23)
- Unité de mesure (25)
- Quantité (26)
- Numéro de plan de montage (27)
- Groupe de pages de liste (28). Indiqué si la liste ou l'illustration du groupe comporte plusieurs pages.
- Numéro de pièce ou de sous-groupe (29)
- Nom du sous-groupe ou description de la pièce (30)
- Numéro de groupe (31)
- Numéro de l'équipement (32)
- Titre information du groupe (33) Indique si la section en-dessous du titre est destinée à une variante spécifique de la machine ou s'il s'agit d'une liste de pièces communes. Si une liste comprend plus d'une variante et que chaque variante a son propre plan de montage, une référence de page est donnée pour le plan de montage de la variante.
- Information interne (34)

Bevezetés

Kézikönyvre vonatkozó információk

A Tetra Pak javasolja, hogy az összes kapott kézikönyvet gondosan olvassa el. Gondoskodjon róla, hogy a kézikönyvek a berendezést üzemeltető és karbantartó személyzet számára elérhetők legyenek.

Fontos, hogy megőrizzék ezt a katalógust a berendezés élettartama alatt, és átadják a következő tulajdonosoknak és felhasználóknak.

A Tetra Pak nem vállal felelősséget a berendezés semmilyen megrongálódása esetén, ha nem követték a berendezéshez tartozó kézikönyvekben leírt utasításokat.

Szállított kézikönyvek

A berendezéssel szállított kézikönyvek az alábbiak lehetnek

- CM
  Az Átállási kézikönyv a műszaki szakemberek számára a berendezés különböző gyártási módjai közötti átállásra vonatkozó információkat tartalmaz.
- EM
  A Villamossági kézikönyv a berendezés elektronikai rendszerére vonatkozó információkat szolgáltat a műszaki szakemberek részére.
- IM
  Az Üzembe helyezési kézikönyv a berendezés biztonságos üzembe helyezésére vonatkozó információkat biztosít a technikai szakemberek részére.
- MM
  A Karbantartási kézikönyv a berendezés karbantartására vonatkozó információkat biztosít a technikai szakemberek részére.
- OM
  Az Üzemeltetési kézikönyv az üzemeltető személyzetnek szolgáltat a berendezés kezelésére és üzemeltetésére, a feldolgozás előtti, közbeni és utáni teendőkre vonatkozó információkat.
- SPC
  A Tartalékalkatrész-katalógus információt biztosít a pótalkatrészek Tetra Pak-tól történő megrendeléséhez.
- TeM
  A Technikai kézikönyv
  – a berendezés biztonságos üzembe helyezésére vonatkozó információkat biztosít a technikai szakemberek részére.
  – a berendezés karbantartására vonatkozó információkat biztosít a technikai szakemberek részére.
  – a gép/berendezés elektromos rendszerére vonatkotó információkat szolgáltat a technikai szakemberek számára.
  – információkat biztosít a pótalkatrészek Tetra Pak-tól történő megrendeléséhez.

Oldalelrendezés

Tekintse meg az i-5 oldalon lévő (A) ábrát: A Tartalékalkatrész-katalógus főoldalai egy rajzoldalból (1) és egy hozzá tartozó listaoldalból (7) állnak. Az oldalszám (5) a rajzoldal fejlécében és a listaoldal láblécében látható. A dokumentum száma (6) a listaoldal láblécében jelenik meg.

Oldalszámozás

Tekintse meg az i-5 oldalon lévő (A) ábrát: Az oldalszám (5) három részből áll:

- fejezetszám (2)
- folyamatos oldalszám (3) a fejezeten belül
- összes oldalszám (4) a fejezeten belül.

Bevezetés

Gyártó

A gyártó neve és címe a katalógus második oldalán található.

Szerviz

A gép valamely pótalkatrészének megrendelése vagy a berendezés működésével kapcsolatos zavarok bejelentése végett forduljon a legközelebbi Tetra Pak képviselethez.

Bármilyen más, a berendezésre illetve a dokumentációra vonatkozó kérdéseivel, megjegyzéseivel vagy javaslataival forduljon területi képviselőjéhez.

Azonosítás

CE besorolás

Ez a berendezés megfelel az Európai Gazdasági Régió (EEA) alapvető egészségügyi és biztonsági előírásainak.

Gépcímke

A(z) i-5 oldalon található (B) ábra a gépcímke egy példáját mutatja be. Egy érvényes gépcímkét és megfelelő elhelyezését ábrázoló rajz látható a berendezéssel szállított kézikönyv Bevezetés fejezetében. A gépcímke azokat az alább felsorolt adatokat tartalmazza, amelyek a Tetra Pak-kal történő, a berendezésre vonatkozó kommunikációhoz szükségesek.

- Géptípus (8)
- Térfogat (9)
- Tervrajzok (10)
- A gép sorozatszáma (11)
- Gyártó (12)
- CE jelzés (13)
- Gyártási év (14)

A(z) i-5 oldalon található (C) ábra a gép műszaki specifikációjának egy példáját mutatja be. Győződjön meg róla, hogy a kézikönyv első lapjain közölt berendezésadatok megegyeznek a gép adattábláján és a gép műszaki leírásában megjelenő információkkal.

A Tartalékalkatrész-katalógus használata

A tartalékalkatrész számának kikeresése

a) Tekintse meg a(z) i-5 oldalon lévő (D) ábrát: Lapozzon a keresett alkatrészt tartalmazó főcsoport mellett feltüntetett (15) számú fejezetre.

A b) és c) elemek az i-6 oldalon található ábrára vonatkoznak.

b) A főcsoport-ábrán keresse meg azt az alcsoportot (17), amelyik a keresett alkatrészt vagy alcsoportot tartalmazza. Jegyezze meg a pozíciószámot (18), majd lapozzon az ábrát követő listaoldalra.

c) Keresse meg a lejegyzett pozíciószámot/hivatkozási megjelölést (16) vagy a keresett alcsoport nevét (19). Lapozzon a jobb oldali oszlopban feltüntetett számú (20) oldalra. A Tetra Pak a hivatkozási jelöléseket mindig funkció-orientált struktúra alapján végzi el. Az előtaggal jelölt funkció-orientált struktúra (=) nem jelenik meg a hivatkozási jelölésben.

A d) és e) elemek az i-6 oldalon található (F) ábrára vonatkoznak.

d) Az alcsoport ábrán keresse meg a kívánt alkatrészt (21), és jegyezze meg az alkatrész pozíciószámát.

e) Az alkatrész száma (29) és leírása (30) a listaoldalon, a pozíciószám mellett látható.

A Tartalékalkatrész-katalógusban megtalálható információk

Az alábbi lista az i-6 oldalon található (F) ábrára vonatkozik.
A Tartalékalkatrész-katalógus a következő, csoportokra, alcsoportokra és pótalkatrészekre vonatkozó adatokat tartalmazza:

- Csoportstruktúra-hivatkozás (22). A berendezés listás struktúrájában közvetlenül az aktuális csoport fölött álló csoportot jelöli.
- Csoportnév (23)
- Mértékegység (25)
- Mennyiség (26)
- Összeszerelési rajzszám (27)
- Lista oldaltartománya (28). Abban az esetben jelenik meg, ha a csoport ábrája vagy listája többoldalas.
- Alkatrész vagy alcsoport száma (29)
- Alcsoport neve vagy alkatrész leírása (30)
- Csoportszám (31)
- Berendezésszám (32)
- Csoportinformáció fejléce (33). Azt mutatja, hogy a fejléc után következő rész egy speciális gépváltozatra vonatkozik vagy az általános pótalkatrészek listája. Ha a listának több változata van, és mindegyikhez saját összeszerelési rajz tartozik, az illető összeszerelési rajz oldalhivatkozása is megjelenik.
- Belső információ (34)

Inngangur

Upplýsingar um handbók

Tetra Pak mælir með því að allar handbækur sem afhentar eru séu lesnar vandlega. Gætið þess að afhentar handbækur séu tiltækar fyrir starfsfólk sem vinnur við eða viðheldur tækjabúnaðinum.

Það er mikilvægt að halda upp á þennan vörulista allan líftíma tækjabúnaðarins og að láta síðari eiganda eða notanda hafa vörulistann.

Ekki er hægt að gera Tetra Pak ábyrgt fyrir neinum skemmdum sem verða á tækjabúnaðinum vegna þess að ekki er farið eftir leiðbeiningunum í þeim handbókum sem fylgja tækjabúnaðinum.

Afhentar handbækur

Handbækur sem afhentar eru með þessum tækjabúnaði geta verið

- CM
  Breytingahandbók, sem veitir tæknimönnum upplýsingar um breytingar á tækjabúnaðinum milli mismunandi framleiðsluhama.
- EM
  Rafmagnshandbók, sem veitir tæknimönnum upplýsingar um rafkerfi tækjabúnaðarins.
- IM
  Uppsetningarhandbók, sem veitir tæknimönnum nauðsynlegar upplýsingar til að setja tækjabúnaðinn upp á öruggan hátt.
- MM
  Viðhaldshandbók, sem eitir tæknimönnum upplýsingar um viðhald tækjabúnaðarins.
- OM
  Notkunarhandbók, sem veitir stjórnandanum upplýsingar um meðhöndlun og notkun tækjabúnaðarins, fyrir, eftir og meðan á framleiðslu stendur.
- SPC
  Varahlutavörulisti, sem veitir nauðsynlegar upplýsingar til pöntunar varahluta frá Tetra Pak.
- TeM
  Tæknihandbók
  - sem veitir tæknimönnum nauðsynlegar upplýsingar til að setja tækjabúnaðinn upp á öruggan hátt
  - sem veitir tæknimönnum upplýsingar um viðhald tækjabúnaðarins
  - sem veitir tæknimönnum upplýsingar um rafkerfi vélarinnar/ tækjabúnaðarins
  - sem veitir nauðsynlegar upplýsingar til pöntunar varahluta frá Tetra Pak.

Umbrot

Sjá skýringarmynd (A) á síðu i-5: Aðalsíðurnar í Varahlutavörulistanum samanstanda af skýringarsíðu (1) og samsvarandi listasíðu (7). Síðunúmerið (5) er sýnt í haus síðunnar með skýringarmyndinni og í fæti listasíðunnar. Skjalnúmerið (6) er sýnt í fæti listasíðunnar.

Númerun síðu

Sjá skýringarmynd (A) á síðu i-5: Síðunúmer (5) er í þremur hlutum:

- kaflanúmer (2)
- samfellt síðunúmer innan kaflans (3)
- heildarfjölda blaðsíðna í kaflanum (4)

Kynning á vél

Framleiðandi

Fyrir nafn og heimilisfang framleiðanda, sjá síðu tvö í þessum vörulista.

Þjónusta

Til að panta varahluti fyrir þessa vél, eða til að tilkynna vandamál sem tengjast notkun þessarar vélar, skal hafa samband við næstu Tetra Pak skrifstofu.

Hafðu samband við Samskiptatengsl með aðrar fyrirspurnir, athugasemdir eða uppástungur varðandi tækjabúnaðinn og fylgiskjöl hans.

Kennsl

CE flokkun

Þessi tækjabúnaður er í samræmi við grundvallar heilbrigðis- og öryggisreglugerðir á Evrópska efnahags svæðinu (EES).

Nafnplata

Skýringarmynd (B) á síðu i-5 sýnir dæmi um nafnplötu.
Skýringarmynd af gildri nafnplötu og staðsetningu hennar á tækjabúnaðinum er sýnd í Inngangskafla handbókanna sem afhentar eru með þessum tækjabúnaði. Á nafnplötunni eru upplýsingarnar sem taldar eru upp hér að neðan, sem þörf er á þegar haft er samband við Tetra Pak varðandi þennan tiltekna tækjabúnað.

- Vélartegund (8)
- Fjöldi (9)
- Teikniupplýsingar (10)
- Raðnúmer vélar (11)
- Framleiðandi (12)
- CE merki (13)
- Framleiðsluár (14)

Skýringarmynd (C) á síðu i-5 sýnir dæmi um tæknilýsingu vélar. Gættu þess að upplýsingar um tækjabúnað sem talinn er upp á fremstu síðum þessarar handbóka samsvari upplýsingum á nafnplötu og tæknilýsingu vélar.

Hvernig nota á þennan Varahlutavörulista

Finndu varahlutarnúmer

a) Sjá skýringarmynd (D) á síðu i-5: Farðu í kaflanúmerið (15) sem gefið er til kynna við hlið aðalflokksins sem inniheldur hlutinn sem þú vilt finna.

Atriði b) og c) vísa til skýringarmyndar (E) á síðu i-6:

b) Á skýringarmynd aðalflokksins skaltu leita að undirflokki (17) vélarinnar, sem inniheldur hlutinn eða undirflokkinn sem þú ert að leita að. Taktu eftir stöðunúmerinu (18) og farðu á listasíðuna sem fylgir skýringarmyndinni.

c) Leitaðu að stöðunúmeri/tilvísunartitli (16) eða heiti undirflokksins (19). Farðu á samsvarandi síðunúmer (20) sem sýnt er í hægri dálkinum. Tetra Pak hefur kosið að nota alltaf sérhæfða skipan fyrir tilvísunartitla. Forskeytið sem gefur til kynna sérhæfða skipan (=) er ekki sýnt í tilvísunartitlinum.

Atriði d) og e) vísa til skýringarmyndar (F) á síðu i-6:

d) Finndu hlutinn (21) sem þú ert að leita að á undirflokksskýringarmyndinni og taktu eftir stöðunúmeri hlutarins.

e) Hlutarnúmerið (29) og lýsing hlutar (30) eru skráð hjá stöðunúmerinu á listasíðunni.

Upplýsingar skráðar í Varahlutavörulista

Listinn að neðan vísar til skýringarmyndar (F) á síðu i-6: Varahlutavörulisti inniheldur eftirfarandi upplýsingar um flokka, undirflokka og varahluti fyrir tækjabúnaðinn:

- Tilvísun flokkaskipunar (22). Gefur til kynna næsta flokk fyrir ofan í listaskipan tækjabúnaðarins.
- Heiti flokks (23)
- Mælieining (25)
- Magn (26)
- Númer samsetningarteikningar (27)
- Röð listasíðu (28). Fylgir með ef það eru margar blaðsíður í skýringarmynd eða lista flokksins.
- Númer hlutar eða undirflokks (29)
- Heiti undirflokks eða lýsing hlutar (30)
- Númer flokks (31)
- Númer tækjabúnaðar (32)
- Fyrirsögn flokkaskipunar (33). Gefur til kynna ef kaflinn fyrir neðan fyrirsögnina er fyrir sérstakt afbrigði vélar eða ef hann er listi yfir algenga hluti. Ef listi er með meira en eitt afbrigði og hvert afbrigði á sína eigin samsetningarteikningu, er sýnd blaðsíðutilvísun til samsetningarteikningar afbrigðisins.
- Innri upplýsingar (34)

Introduzione

Informazioni sul manuale

Tetra Pak consiglia di leggere con attenzione tutti i manuali forniti in dotazione. Assicurarsi che tutti i manuali in dotazione siano disponibili per il personale addetto al funzionamento o alla manutenzione della macchina.

È importante conservare il presente catalogo per tutta la durata della macchina e consegnarlo al successivo proprietario o utilizzatore.

Tetra Pak non sarà da ritenersi responsabile per eventuali danni alla macchina causati dal mancato rispetto delle istruzioni fornite nei manuali che accompagnano questa macchina.

Manuali in dotazione

I manuali consegnati con la presente macchina possono comprendere:

- CM (Manuale di conversione)
  Questo manuale fornisce ai tecnici le informazioni necessarie per la conversione della macchina da una modalità di produzione a un'altra.
- EM (Manuale elettrico)
  Questo manuale fornisce ai tecnici informazioni sull'impianto elettrico della macchina.
- IM (Manuale d'installazione)
  Questo manuale fornisce ai tecnici le informazioni necessarie per installare in sicurezza la macchina.
- MM (Manuale di manutenzione)
  Questo manuale fornisce ai tecnici le informazioni sulla manutenzione della macchina.
- OM (Manuale operativo)
  Questo manuale fornisce all'operatore le informazioni sull'utilizzo e il funzionamento della macchina prima, durante e dopo la produzione.
- SPC (Catalogo dei pezzi di ricambio)
  Questo catalogo fornisce le informazioni necessarie per ordinare i pezzi di ricambio a Tetra Pak.
- TeM (Manuale tecnico)
  Questo manuale:
  - fornisce ai tecnici le informazioni necessarie per installare in sicurezza la macchina
  - fornisce ai tecnici le informazioni sulla manutenzione della macchina
  - fornisce ai tecnici informazioni sull'impianto elettrico della macchina
  - fornisce le informazioni necessarie per ordinare i pezzi di ricambio a Tetra Pak.

Schema delle pagine

Consultare la figura (A) a pagina i-5: Le pagine principali di un Catalogo dei pezzi di ricambio sono costituite da una pagina con la figura (1) e una pagina elenco corrispondente (7). Il numero di pagina (5) è indicato nell'intestazione delle pagine con le figure e nel piè di pagina delle pagine elenco. Il codice del documento (6) è indicato nel piè di pagina delle pagine elenco.

Numerazione delle pagine

Consultare la figura (A) a pagina i-5: Il numero di pagina (5) è suddiviso in tre parti:

- numero del capitolo (2)
- numero progressivo di pagina all'interno del capitolo (3)
- numero totale di pagine nel capitolo (4)

Introduzione alla macchina

Fabbricante

Il nome e l'indirizzo del fabbricante sono riportati sulla seconda pagina del presente catalogo.

Assistenza

Per ordinare i pezzi di ricambio per questa macchina oppure per riferire problemi associati al funzionamento della macchina, contattare l'ufficio Tetra Pak più vicino.

Per tutte le altre richieste, commenti o suggerimenti per eventuali miglioramenti da apportare alla macchina e alla relativa documentazione, contattare il responsabile di collegamento.

Identificazione

Classificazione CE

Questa macchina è conforme alle principali norme sanitarie e di sicurezza dell'Area Economica Europea (EEA).

Targhetta della macchina

La figura (B) a pagina i-5 mostra un esempio di targhetta della macchina. Il capitolo Introduzione di tutti i manuali consegnati con la presente macchina contiene invece la figura della targhetta della macchina valida e la sua posizione sulla macchina. La targhetta riporta i dati elencati qui sotto, che sono necessari per contattare Tetra Pak in relazione a questa macchina specifica.

- Tipo di macchina (8)
- Volume (9)
- Specifiche disegno (10)
- Numero di matricola della macchina (11)
- Fabbricante (12)
- Marchio CE (13)
- Anno di fabbricazione (14)

La figura (C) a pagina i-5 mostra un esempio delle specifiche di una macchina. Verificare che i dati relativi alla macchina elencati nelle pagine iniziali del presente manuale corrispondano ai dati riportati sulla targhetta della macchina e nelle specifiche della macchina.

Come usare questo Catalogo dei pezzi di ricambio

Individuare il numero del pezzo di ricambio

a) Consultare la figura (D) a pagina i-5: andare al numero del capitolo (15) indicato accanto al gruppo principale che contiene il pezzo che si desidera individuare.

I punti b) e c) fanno riferimento alla figura (E) a pagina i-6.

b) Nella figura del gruppo principale, identificare il sottogruppo della macchina (17) che contiene il pezzo o il sottogruppo cercato. Annotare il numero di posizione (18) e andare alla pagina elenco che segue la figura.

c) Identificare il numero di posizione/l'indicazione di riferimento (16) o il nome del sottogruppo (19). Andare al numero di pagina corrispondente (20) indicato nella colonna di destra. Per le indicazioni di riferimento, Tetra Pak ha scelto di usare sempre la struttura "function-oriented". Il prefisso che indica la struttura "function-oriented" (=) non è mostrato nell'indicazione di riferimento.

I punti d) e e) fanno riferimento alla figura (F) a pagina i-6.

d) Individuare il pezzo (21) cercato sulla figura del sottogruppo e annotare il numero di posizione del pezzo.

e) Il numero del pezzo (29) e la descrizione del pezzo (30) sono indicati accanto al numero di posizione sulla pagina elenco.

Informazioni contenute nel Catalogo dei pezzi di ricambio

L'elenco seguente fa riferimento alla figura (F) a pagina i-6. Il Catalogo dei pezzi di ricambio contiene le seguenti informazioni sui gruppi, i sottogruppi e i pezzi di ricambio della macchina:

- Riferimento struttura gruppo (22). Indica il gruppo superiore successivo nella struttura elenco della macchina.
- Nome gruppo (23)
- Unità di misura (25)
- Quantità (26)
- Numero disegno di assemblaggio (27)
- Intervallo delle pagine elenco (28). Questa informazione è presente se la figura o l'elenco relativi al gruppo occupano più di una pagina del manuale.
- Numero pezzo o sottogruppo (29)
- Nome sottogruppo o descrizione pezzo (30)
- Numero gruppo (31)
- Numero macchina (32)
- Intestazione informazioni gruppo (33). Indica se la sezione che segue l'intestazione si riferisce a una variante di macchina specifica oppure se si tratta di un elenco di parti comuni. Se un elenco contiene più di una variante ed esiste un disegno di assemblaggio specifico per ogni variante, viene fornito il riferimento alla pagina in cui è mostrato il disegno di assemblaggio relativo alla variante.
- Informazioni interne (34)

Įvadas

Informacija apie instrukciją

"Tetra Pak" rekomenduoja atidžiai perskaityti visas pateiktas instrukcijas. Pasirūpinkite, kad instrukcijos būtų prieinamos darbuotojams, kurie eksploatuoja arba prižiūri įrangą.

Svarbu šį katalogą išsaugoti visą įrangos tarnavimo laiką ir perduoti jį kitam įrangos savininkui arba naudotojui.

"Tetra Pak" neprisiima atsakomybės už įrangos sugadinimą, jei nesilaikoma nurodymų, pateiktų prie šios įrangos pridedamuose kataloguose.

Pateikiamos instrukcijos

Su šia įranga pateikiamose instrukcijose gali būti

- CM
  Transformacijos instrukcija, suteikianti technikams informaciją apie įrangos transformavimą skirtingiems gamybos režimams.
- EM
  Elektrinės dalies instrukcija, suteikianti technikams informaciją apie įrangos elektros sistemą.
- IM
  Įrengimo instrukcija, suteikianti technikams informaciją, reikalingą norint saugiai sumontuoti įrangą.
- MM
  Techninės priežiūros instrukcija, suteikianti technikams informaciją apie įrangos priežiūrą.
- OM
  Eksploatavimo instrukcijos paskirtis yra suteikti informaciją operatoriui, kaip naudoti ir valdyti įrangą prieš gamybos procesą, jo metu ir po jo.
- SPC
  Atsarginių dalių katalogas, kuriame yra informacija, reikalinga atsarginėms dalims iš "Tetra Pak" užsakyti
- TeM
  Techninė instrukcija
  – suteikia technikams informaciją, reikalingą saugiai sumontuoti įrangą
  – suteikia technikams informaciją apie įrangos priežiūrą
  – suteikia technikams informaciją apie įrangos elektros sistemą
  – suteikia informaciją, reikalingą užsakyti iš "Tetra Pak" atsargines dalis

Puslapių išdėstymas

Žr. paveikslėlį (A) puslapyje i-5. Pagrindiniai atsarginių dalių katalogo puslapiai sudaryti iš paveikslėlio puslapio (1) ir atitinkamo sąrašo puslapio (7). Puslapio numeris (5) nurodomas paveikslėlio puslapio viršuje ir sąrašo puslapio apačioje. Dokumento numeris (6) nurodomas sąrašo puslapio apačioje.

Puslapių numeravimas

Žr. iliustraciją (A) puslapyje i-5. Puslapio numerį (5) sudaro trys dalys:

- skyriaus numeris (2)
- puslapio eilės numeris (3) skyriuje
- bendras puslapių skaičius (4) skyriuje

Įrenginio pristatymas

Gamintojas

Gamintojo pavadinimas ir adresas pateikti antrajame šio katalogo puslapyje.

Aptarnavimas

Jei reikia šiai įrangai užsakyti atsarginių dalių arba pranešti apie jos eksploatavimo nesklandumus, kreipkitės į artimiausią "Tetra Pak" biurą.

Su kitais klausimais, pastabomis ar įrangos ir jos dokumentacijos tobulinimo pasiūlymais kreipkitės į savo kontaktinį asmenį.

Identifikavimas

CE klasifikacija

Šis įrenginys atitinka esminius Europos ekonominės erdvės (EEE) sveikatos ir saugumo reikalavimus.

Vardinė plokštelė

Puslapyje i-5 pateiktame paveikslėlyje (B) parodytas įrangos vardinės plokštelės pavyzdys.
Atitinkamos įrangos vardinė plokštelė ir jos vieta ant įrangos parodoma su šia įranga pateikiamų instrukcijų įvade. Įrangos vardinėje plokštelėje pateikiami žemiau nurodyti duomenys, kurie reikalingi kreipiantis į "Tetra Pak" dėl konkretaus įrenginio.

- Mašinos tipas (8)
- Tomas (9)
- Brėžinių specifikacijos (10)
- Įrangos serijos numeris (11)
- Gamintojas (12)
- CE ženklas (13)
- Pagaminimo metai (14)

Paveikslėlyje (C) puslapyje i-5 parodytas įrangos specifikacijos pavyzdys. Patikrinkite, ar šios instrukcijos pirmuosiuose puslapiuose nurodyti duomenys atitinka duomenis vardinėje plokštelėje ir įrangos specifikaciją.

Kaip naudotis atsarginių dalių katalogu

Atsarginės dalies numerio suradimas

a) Žr. iliustraciją (D) puslapyje i-5. Atsiverskite skyrių (15), nurodytą šalia pagrindinio mazgo, kuriame yra jūsų ieškoma dalis.

Punktai b) ir c) atitinka paveikslėlį (E) puslapyje i-6.

b) Pagrindinio mazgo paveikslėlyje suraskite smulkesnį įrangos mazgą (17), kuriame yra jūsų ieškoma dalis arba mazgas. Pasižiūrėkite pozicijos numerį (18) ir suraskite jį toliau pateiktame sąraše.

c) Suraskite pozicijos numerį/pavadinimą (16) arba smulkesnio mazgo pavadinimą (19). Atsiverskite dešiniajame stulpelyje nurodytą puslapį (20). "Tetra Pak" nusprendė pavadinimuose visada naudoti paskirtį atitinkančią struktūrą. Pavadinimuose nepateikiamas paskirtį atitinkančios struktūros prefiksas (=).

Punktai d) ir e) atitinka paveikslėlį (F) puslapyje i-6.

d) Suraskite ieškomą dalį (21) smulkesnio mazgo paveikslėlyje ir pasižiūrėkite dalies pozicijos numerį.

e) Dalies numeris (29) ir dalies aprašymas (30) sąrašo puslapyje nurodyti šalia pozicijos numerio.

Atsarginių dalių kataloge pateikiama informacija

Žemiau pateiktas sąrašas atitinka paveikslėlį (F) puslapyje i-6. Atsarginių dalių kataloge apie įrangos mazgus, smulkesnius mazgus ir atsargines dalis pateikiama tokia informacija:

- Struktūrinė mazgo nuoroda (22). Nurodo stambesnį mazgą įrangos sąrašo struktūroje.
- Mazgo pavadinimas (23)
- Matavimo vienetai (25)
- Kiekis (26)
- Surinkimo brėžinio numeris (27)
- Sąrašo puslapių intervalas (28) Pateikiamas, jei mazgo paveikslėlis arba sąrašas užima kelis puslapius.
- Dalies arba smulkesnio mazgo numeris (29)
- Smulkesnio mazgo arba dalies aprašymas (30)
- Mazgo numeris (31)
- Įrangos numeris (32)
- Informacijos apie mazgą puslapio antraštė (33). Nurodo, ar po antrašte pateikta informacija yra specifinio įrangos varianto, ar tai paprastų dalių sąrašas. Jei yra daugiau kaip vienas sąrašo variantas ir kiekvienam variantui yra atskiras surinkimo brėžinys, nurodomas puslapis, kuriame pateiktas konkretaus varianto surinkimo brėžinys.
- Vidinė informacija (34)

Ievads

Informācija par rokasgrāmatu

Tetra Pak iesaka rūpīgi izlasīt visas piegādātās rokasgrāmatas. Jānodrošina, lai piegādātas rokasgrāmatas būtu pieejamas personālam, kas apkalpo iekārtas vai veic to apkopi.

Šo katalogu ir nepieciešams saglabāt visu laiku, kamēr iekārtas tiek izmantotas, un nodot katalogu nākamajam īpašniekam vai lietotājam.

Tetra Pak neatbild par jebkuriem iekārtas bojājumiem, kuri rodas līdz ar iekārtu piegādāto instrukciju neievērošanas rezultātā.

Piegādātas rokasgrāmatas

Līdz ar iekārtu var tikt piegādātas šādas rokasgrāmatas

- CM
  Pārslēgšanas rokasgrāmata sniedz tehniķiem informāciju par iekārtas pārslēgšanu dažādos atšķirīgos ražošanas režīmos.
- EM
  Elektriskās instalācijas rokasgrāmata sniedz tehniķiem informāciju par iekārtas elektriskās instalācijas sistēmu.
- IM
  Uzstādīšanas rokasgrāmata sniedz tehniķiem informāciju, kas nepieciešama drošai iekārtas uzstādīšanai.
- MM
  Apkopes rokasgrāmata sniedz tehniķiem informāciju par iekārtas apkopi.
- OM
  Ekspluatācijas rokasgrāmata sniedz apkalpojošajam personālam informāciju par iekārtas apkalpošanu un ekspluatēšanu pirms darba sākuma, darba laikā un pēc darba beigām.
- SPC
  Rezerves daļu katalogs sniedz informāciju, kas nepieciešama, lai pasūtītu rezerves daļas no Tetra Pak
- TeM
  Tehniskā rokasgrāmata
  - sniedz tehniķiem informāciju, kas nepieciešama drošai iekārtas uzstādīšanai
  - sniedz tehniķiem informāciju par iekārtas apkopi
  - sniedz tehniķiem informāciju par mašīnas/iekārtas elektrisko instalāciju
  - sniedz informāciju, kas nepieciešama, lai pasūtītu rezerves daļas no Tetra Pak.

Lappuses izkārtojums

Skatīt ilustrāciju (A) i-5 lappusē: Galvenās lappuses Rezerves daļu katalogā sastāv no ilustrāciju lapas (1) un atbilstīgās saraksta lapas (7). Lappuses numurs (5) ir norādīts ilustrāciju lapas galvenē un saraksta lapas kājenē. Dokumenta numurs (6) ir norādīts saraksta lapas kājenē.

Lappušu numerācija

Skatīt ilustrāciju (A) lappusē i-5: Lappuses numurs (5) sastāv no trim daļām:

- nodaļas numura (2)
- secīga lappuses numura nodaļas ietvaros (3)
- kopējā lappušu skaita nodaļā (3)

Iepazīstināšana ar iekārtu

Ražotājs

Ražotāja nosaukumu un adresi skatīt šī kataloga otrajā lappusē.

Serviss

Lai pasūtītu rezerves daļas šai mašīnai vai lai ziņotu par problēmām saistībā ar šīs mašīnas ekspluatāciju, sazinieties ar tuvāko Tetra Pak pārstāvniecību.

Ja Jums ir citi jautājumi, piezīmes vai ieteikumi par iekārtas un tās dokumentācijas uzlabošanu, tad lūdzam sazināties ar Sakaru biroju.

Identifikācija

EK klasifikācija

Šī iekārta atbilst galvenajām Eiropas Ekonomiskās Zonas (EEA) regulām, kuras attiecas uz veselību un drošību.

Mašīnas tipa plāksnīte

Ilustrācijā (B) i-5 lappusē ir redzams mašīnas tipa plāksnītes paraugs. Aktuālās mašīnas tipa plāksnīte un tās atrašanās vieta uz iekārtas ir parādīta līdz ar šo iekārtu piegādāto rokasgrāmatu Ievada nodaļā. Mašīnas tipa plāksnīte ietver turpmāk uzskaitīto informāciju, kura ir nepieciešama, sazinoties ar Tetra Pak par šo konkrēto iekārtu.

- Mašīnas tips (8)
- Daudzums (9)
- Rasējuma specifikācijas (10)
- Mašīnas sērijas numurs (11)
- Ražotājs (12)
- CE apzīmējums (13)
- Izgatavošanas gads (14)

Ilustrācijā (C) lappusē i-5 ir parādīts mašīnas specifikācijas paraugs. Pārliecinieties, ka šīs rokasgrāmatas titullapās minētā informācija par iekārtu atbilst tai, kas norādīta uz mašīnas tipa plāksnītes un mašīnas specifikācijā.

Rezerves daļu kataloga lietošana

Vajadzīgās rezerves daļas numura atrašana

a) Skatiet ilustrāciju (D) lappusē i-5: Atrodiet nodaļas numuru (15), kas norādīts līdzās galvenajai grupai, kurā ietilpst Jūsu meklētā rezerves daļa.

Pozīcijas b) un c) skatiet ilustrāciju (E) lappusē i-6.

b) Galvenās grupas ilustrācijā atrodiet mašīnas apakšgrupu (17), kurā ietilpst Jūsu meklētā detaļa vai apakšgrupa. Atzīmējiet pozīcijas numuru (18) un pievērsieties saraksta lappusei, kura seko šai ilustrācijai.

c) Sameklējiet atbilstīgo pozīcijas numuru (16) vai apakšgrupas nosaukumu (19). Pievērsieties atbilstīgajam lappuses numuram (20), kas norādīts ailē pa labi. Tetra Pak norādes apzīmēšanai ir izvēlējies vienmēr izmantot uz funkciju orientētu struktūru. Priedēklis, kas norāda uz funkciju orientētu struktūru (=), norādes apzīmējumā nav parādīts.

Pozīcijas d) un e) skatiet ilustrāciju (F) lappusē i-6.

d) Atrodiet vajadzīgo rezerves daļu (21) apakšgrupas ilustrācijā un atzīmējiet šīs detaļas pozīcijas numuru.

e) Šīs detaļas numurs (29) un apraksts (30) atrodas saraksta lapā līdzās pozīcijas numuram.

Rezerves daļu katalogā sniegtā informācija

Šis saraksts attiecas uz ilustrāciju (F) lappusē i-6. Rezerves daļu katalogs satur šādu informāciju par grupām, apakšgrupām un iekārtas rezerves daļām:

- Grupas struktūras norāde (22). Norāda nākamo augstāko grupu iekārtas saraksta struktūrā.
- Grupas nosaukums (23)
- Mērvienība (25)
- Skaits (26)
- Montāžas rasējuma numurs (27)
- Saraksta lappuses zona (28). Tiek izmantota tad, ja grupas ilustrācija vai saraksts ir uz vairākām lappusēm.
- Daļas vai apakšgrupas numurs (29)
- Apakšgrupas nosaukums vai daļas apraksts (30)
- Grupas numurs (31)
- Iekārtas numurs (32)
- Grupas informācijas iedaļas apzīmējums (33). Norāda, vai iedaļa zem šī apzīmējuma attiecas uz noteiktu mašīnas variantu, vai arī tas ir kopējo rezerves daļu saraksts. Ja sarakstam ir vairāk nekā viens variants un katram variantam ir savs montāžas rasējums, tad tiek dota atsauce uz lappusi, kur atrodams katra varianta montāžas rasējums.
- Iekšējā informācija (34)

Inleiding

Informatiehandboek

Tetra Pak adviseert alle meegeleverde handboeken zorgvuldig te lezen. Controleer of het bedienende of onderhoudspersoneel van de machine de beschikking heeft over de meegeleverde handboeken

Het is belangrijk deze catalogus tijdens de levensduur van de machine te bewaren en de catalogus door te geven aan iedere volgende eigenaar of gebruiker.

Tetra Pak stelt zich niet aansprakelijk voor eventuele schade aan de installatie als gevolg van het niet naleven van de instructies die in de meegeleverde handboeken worden gegeven.

Meegeleverde handboeken

De bij deze installatie meegeleverde handboeken omvatten

- CM
  Het conversiehandboek geeft technici informatie met betrekking tot de ombouw van de installatie tussen verschillende productiemodi.
- EM
  Het elektriciteitshandboek informeerttechnici omtrent het elektrischesysteem van de installatie.
- IM
  Het installatiehandboek informeert technici hoe men de installatie op veilige wijze installeert.
- MM
  Het onderhoudshandboek geeft technici informatie over het onderhoud van de installatie.
- OM
  Het bedieningshandboek informeert de operator betreffende het omgaan met en het bedienen van de installatie voor, tijdens en na de productie.
- SPC
  De reserveonderdelencatalogus geeft de nodige informatie omtrent het bestellen van reserveonderdelen bij Tetra Pak
- TeM
  Het technische handboek
  - informeert technici hoe men de installatie op veilige wijze installeert
  - informeert technici omtrent het onderhoud van de installatie
  - informeert technici omtrent het elektrische systeem van de machine/ installatie
  - informeert over welke informatie men nodig heeft om reserveonderdelen bij Tetra Pak te bestellen.

Pagina layout

Zie afbeelding (A) op pagina i-5: De belangrijkste bladzijden van een reserveonderdelencatalogus bestaan uit een bladzijde met afbeeldingen (1) en een bladzijde met een corresponderende lijst (7). Het bladzijde-nummer (5) is te vinden in de kop van een bladzijde met een afbeelding en in de voetnoot van een lijstbladzijde. Het documentennummer (6) is te vinden in de voetnoot van een lijstbladzijde.

Bladzijdenummering

Zie afbeelding (A) op pagina: i-5: Een bladzijdenummer (5) bestaat uit drie delen:

- hoofdstuknummer (2)
- opeenvolgend bladzijdenummer in het hoofdstuk (3)
- totaal aantal bladzijden in het hoofdstuk (4)

Introductie van de machine

Fabrikant

Zie de tweede bladzijde van deze catalogus voor naam en adres van de fabrikant.

Service

Neem voor het bestellen van reserveonderdelen voor deze machine, of om bedieningsproblemen met betrekking tot deze machine te melden, contact op met de dichtstbijzijnde Tetra Pak vestiging.

Neem contact op met de contactpersoon voor verdere informatie, opmerkingen of suggesties ter verbetering van de installatie en de bijbehorende documentatie.

Identificatie

CE-classificatie

Deze installatie voldoet aan de basisvoorschriften voor gezondheid en veiligheid voor het Europese Economische Gebied (EEG).

Machineplaatje

Afbeelding (B) op bladzijde i-5 toont een voorbeeld van een machineplaatje. Een afbeelding van het geldige machineplaatje en de plaatsing ervan worden getoond in de Inleiding van de handboeken, die bij deze installatie worden meegeleverd. Het machineplaatje bevat onderstaande gegevens, die men nodig heeft wanneer men omtrent de desbetreffende installatie contact opneemt met Tetra Pak.

- Machinetype (8)
- Volume (9)
- Specificatietekeningen (10)
- Serienummer van de machine (11)
- Fabrikant (12)
- CE-markering (13)
- Jaar van fabrikage (14)

Afbeelding (C) op pagina i-5 toont een voorbeeld van een machinespecificatie. Controleer of de gegevens betreffende de installatie op de eerste bladzijden van dit handboek overeenkomen met de gegevens op het machineplaatje en de machinespecificatie.

Gebruik van de reserveonderdelencatalogus

Vinden van het bestelnummer van een reserveonderdeel

a) Zie afbeelding (D) op pagina i-5: Ga naar het hoofdstuknummer (15) dat wordt aangeven naast de hoofdgroep waarin zich het door u gezochte onderdeel bevindt.

Items b) en c) verwijzen naar afbeelding (E) op pagina i-6.

b) Op de afbeelding van de hoofdgroep zoekt u de machinesubgroep (17), die het gezochte onderdeel of de gezochte subgroep bevat. Noteer het positienummer (18) en ga naar de lijstbladzijde die op de afbeelding volgt.

c) Zoek naar het positienummer/de referentie (16) of de subgroep-naam (19). Ga naar de corresponderende bladzijde (20) die in de rechterkolom staat vermeld. Tetra Pak heeft voor de benoeming van de referenties gekozen voor de functiegeoriënteerde structuur. De prefixaanduidende functiegeoriënteerde structuur (=) wordt niet in de referentie getoond.

Items d) en e) verwijzen naar afbeelding (F) op pagina i-6.

d) Zoek het gewenste deel (21) op de subgroepafbeelding en noteer het positienummer van het onderdeel.

e) Het bestelnummer (29) en de omschrijving (30) van het onderdeel staan naast het positienummer op de lijstbladzijde.

Informatie die in een reserveonderdelencatalogus wordt gegeven

De onderstaande lijst verwijst naar afbeelding (F) op bladzijde i-6. Een reserveonderdelencatalogus bevat de volgende informatie over groepen, subgroepen en reserveronderdelen voor de installatie:

- Referentie groepstructuur (22). Geeft de volgende hogere groep in de lijststructuur van de installatie aan.
- Groepsnaam (23)
- Meeteenheid (25)
- Hoeveelheid (26)
- Nummer montagetekening (27)
- Lijst bladzijdenreeks (28). Wordt vermeld wanneer er meerdere bladzijden in de groepsafbeelding of -lijst voorkomen.
- Deel- of subgroepnummer (29)
- Subgroepnaam of onderdeelbeschrijving (30)
- Groepsnummer (31)
- Machinenummer (32)
- Titel groepsinformatie (33). Geeft aan of het gedeelte onder de titel voor een specifieke machinesoort is of dat het een lijst met gebruikelijke onderdelen is. Indien een lijst meer dan één type bevat en ieder type zijn eigen montagetekening heeft, wordt een bladzijdereferentie getoond voor de montagetekening van het type.
- Interne informatie (34)

Introduksjon

Informasjon om manualen

Tetra Pak anbefaler at du leser nøye gjennom alle leverte manualer. Sørg for at manualene er tilgjengelige for alle som betjener eller vedlikeholder utstyret.

Det er viktig at du tar vare på denne katalogen under hele levetiden til utstyret og at du gir den videre til eventuelle nye eiere eller brukere.

Tetra Pak vil ikke være ansvarlig for skader på utstyret som oppstår fordi brukeren ikke følger instruksjonene i manualene som følger med utstyret.

Leverte manualer

Manualene som leveres med dette utstyret, kan inkludere

- CM
  Konverteringsmanualen gir teknikere informasjon om hvordan de konverterer utstyret mellom ulike produksjonsmodi.
- EM
  Den elektriske manualen gir teknikere informasjon om utstyrets elektriske system.
- IM
  Installasjonsmanualen gir teknikere informasjon som kreves for å kunne installere utstyret på en sikker måte.
- MM
  Vedlikeholdsmanualen gir teknikere informasjon om vedlikehold av utstyret.
- OM
  Driftsmanualen gir operatøren informasjon om hvordan han håndterer og bruker utstyret før, under og etter produksjon.
- SPC
  Reservedelskatalogen inneholder informasjon som du trenger for å bestille reservedeler fra Tetra Pak
- TeM
  Den tekniske manualen
  – gir teknikere informasjon om sikker installasjon av utstyret
  – gir teknikere informasjon om vedlikehold av utstyret
  – gir teknikere informasjon om maskinens/utstyrets elektriske system
  – inneholder informasjon som du trenger for å bestille reservedeler fra Tetra Pak.

Sideoppsett

Se illustrasjonen (A) på side i-5: Hovedsidene i reservedelskatalogen består av en illustrasjonsside (1) og en korresponderende listeside (7). Sidenummeret (5) vises i topteksten på illustrasjonssiden og i bunnteksten på listesiden. Dokumentnummeret (6) vises i bunnteksten på listesiden.

Sidenummerering

Se illustrasjonen (A) på side i-5: Et sidenummer (5) består av tre deler:

- kapittelnummer (2)
- etterfølgende sidenummer i kapitlet (3)
- det totale antall sider i kapitlet (4)

Introduksjon av maskinen

Produsent

Hvis du ønsker produsentens navn og adresse, kan du se side to i denne katalogen.

Service

Når du skal bestille reservedeler til denne maskinen eller rapportere problemer forbundet med driften av denne maskinen, må du kontakte ditt nærmeste Tetra Pak-kontor.

Når det gjelder andre forespørsler, kommentarer eller forslag til forbedringer av utstyret og dets dokumentasjon, kan du ta kontakt med din kontaktperson.

Identifisering

CE-klassifisering

Dette utstyret er i overensstemmelse med de grunnleggende helse- og sikkerhetsforskriftene i Det europeiske økonomiske samarbeidsområdet (EØS).

Maskinplate

Illustrasjonen (B) på side i-5 viser et eksempel på en maskinplate.
En illustrasjon av en gyldig maskinplate og hvor denne er plassert på utstyret, er vist i introduksjonskapitlet i manualene som følger med dette utstyret. Maskinplaten inneholder nedenstående data, som du trenger når du skal kontakte Tetra Pak angående dette bestemte utstyret.

- Maskintype (8)
- Volum (9)
- Tegningsspesifikasjoner (10)
- Maskin-serienummer (11)
- Produsent (12)
- CE-merke (13)
- Produksjonsår (14)

Illustrasjonen (C) på side i-5 viser et eksempel på en maskinspesifikasjon. Sørg for at utstyrsdataene som står oppført foran i denne manualen, samsvarer med dataene på maskinplaten og maskinspesifikasjonen.

Hvordan bruke denne reservedelskatalogen

Finn et reservedelsnummer

a) Se illustrasjonen (D) på side i-5: Gå til kapittelnummeret (15) som er angitt ved siden av hovedgruppen som inneholder delen du vil finne.

Punkt b) og c) viser til illustrasjonen (E) på side i-6.

b) På hovedgruppeillustrasjonen ser du etter maskinundergruppen (17) som inneholder delen eller undergruppen du ser etter. Merk deg posisjonsnummeret (18), og gå til listesiden som kommer etter illustrasjonen.

c) Se etter posisjonsnummeret/referansebetegnelsen (16) eller undergruppenavnet (19). Gå til det korresponderende sidenummeret (20) som står oppført i høyre kolonne. Tetra Pak har valgt å alltid bruke den funksjonsorienterte inndelingen for referansebetegnelse. Prefiksen som angir funksjonsorientert inndeling (=), er ikke vist i referansebetegnelsen.

Punkt d) og e) viser til illustrasjonen (F) på side i-6.

d) Finn delen (21) du ser etter på undergruppeillustrasjonen, og merk deg delens posisjonsnummer.

e) Delenummeret (29) og delebeskrivelsen (30) finner du ved siden av posisjonsnummeret på listesiden.

Informasjon i en reservedelskatalog

Listen nedenfor viser til illustrasjonen (F) på side i-6. En reservedelskatalog inneholder følgende informasjon om grupper, undergrupper og reservedeler for utstyret:

- Gruppeinndelingsreferanse (22). Angir den neste gruppen opp i inndelingen av utstyrslisten.
- Gruppenavn (23)
- Målenhet (25)
- Antall (26)
- Tegningsnummer (27)
- Listesideområde (28). Inkludert hvis det er flere sider i gruppe-illustrasjonen eller listen.
- Dele- eller undergruppenummer (29)
- Undergruppenavn eller delebeskrivelse (30)
- Gruppenummer (31)
- Utstyrsnummer (32)
- Gruppeinformasjonsoverskrift (33). Angir om avsnittet under overskriften er for en bestemt maskinvariant eller om det er en liste over vanlige deler. Hvis en liste har flere varianter og hver variant har sin egen sammenstillingstegning, vises det en sidereferanse til variantens sammenstillingstegning.
- Intern informasjon (34)

Wprowadzenie

Informacje na temat instrukcji

Firma Tetra Pak zaleca dokładne przeczytanie wszystkich dostarczonych instrukcji. Należy upewnić się, że dostarczone instrukcje są dostępne dla personelu, który obsługuje lub konserwuje maszynę.

Należy przechowywać ten katalog przez cały okres użytkowania maszyny i przekazać go kolejnemu właścicielowi lub użytkownikowi.

Firma Tetra Pak nie będzie ponosić odpowiedzialności za jakiekolwiek uszkodzenia maszyny spowodowane niestosowaniem się do zaleceń zawartych w instrukcjach dostarczonych z maszyną.

Dostarczone instrukcje

W skład dokumentacji dostarczonej z maszyną wchodzą:

- Instrukcja konwersji (CM)
  W tej instrukcji zawarte są informacje dotyczące dostosowania maszyny do różnych trybów produkcji.
- Instrukcja dotycząca wyposażenia elektrycznego (EM)
  W tej instrukcji zawarte są informacje dotyczące układu elektrycznego maszyny.
- Instrukcja instalacji (IM)
  W tej instrukcji zawarte są informacje niezbędne do bezpiecznego zainstalowania maszyny.
- Instrukcja konserwacji (MM)
  W tej instrukcji zawarte są informacje dotyczące konserwacji maszyny.
- Instrukcja obsługi (OM)
  W tej instrukcji zawarte są informacje dotyczące obsługi maszyny przed rozpoczęciem produkcji, w jej trakcie oraz po jej zakończeniu.
- Katalog części zamiennych (SPC)
  W katalogu zawarte są informacje dotyczące zamawiania części zamiennych w firmie Tetra Pak.
- Instrukcja techniczna (TeM)
  Instrukcja techniczna zawiera informacje:
  - dotyczące bezpiecznego instalowania maszyny,
  - dotyczące konserwacji maszyny,
  - dotyczące układu elektrycznego maszyny,
  - dotyczące zamawiania części zamiennych w firmie Tetra Pak.

Układ strony

Patrz rysunek (A) na stronie i-5: Główne strony w Katalogu części zamiennych składają się ze strony zawierającej rysunek (1) i odpowiadającej jej strony zawierającej listę (7). Numer strony (5) znajduje się w nagłówku strony zawierającej rysunek i w stopce strony zawierającej listę. Numer dokumentu (6) znajduje się w stopce strony zawierającej listę.

Numeracja stron

Patrz rysunek (A) na stronie i-5: Numer strony (5) składa się z trzech części:

- numeru rozdziału (2),
- kolejnego numeru strony w rozdziale (3),
- całkowitej liczby stron w rozdziale (4).

Ogólne informacje o maszynie

Producent

Nazwę i adres producenta można znaleźć na drugiej stronie niniejszego katalogu.

Serwis

Aby zamówić części zapasowe do tej maszyny lub zgłosić problemy związane z jej pracą, należy skontaktować się z najbliższym biurem Tetra Pak.

Można kontaktować się także w przypadku innych zapytań, uwag lub sugestii dotyczących udoskonalenia urządzenia i dokumentacji.

Identyfikacja

Klasyfikacja CE

Maszyna spełnia podstawowe wymogi z zakresu bezpieczeństwa i ochrony zdrowia obowiązujące w Europejskiej Strefie Ekonomicznej (EEA).

Tabliczka znamionowa

Na rysunku (B), znajdującym się na stronie i-5, pokazano przykładową tabliczkę znamionową.
Rysunek prawidłowej tabliczki znamionowej oraz jej umiejscowienie na maszynie pokazano w rozdziale Wprowadzenie zawartym w instrukcjach dostarczonych z maszyną. Tabliczka znamionowa zawiera następujące dane potrzebne w przypadku kontaktowania się z firmą Tetra Pak w sprawie dotyczącej danej maszyny:

- typ maszyny (8),
- objętość (9),
- specyfikacje rysunkowe (10),
- numer seryjny maszyny (11),
- nazwę producenta (12),
- oznaczenie CE (13),
- rok produkcji (14).

Na rysunku (C) zamieszczonym na stronie i-5 pokazano przykład specyfikacji maszyny. Należy sprawdzić, czy dane dotyczące maszyny przedstawione na pierwszej stronie tej instrukcji odpowiadają danym zawartym na tabliczce znamionowej maszyny oraz specyfikacji maszyny.

Jak korzystać z niniejszego Katalogu części zamiennych

Należy odnaleźć numer części zamiennej

a) Zapoznaj się z rysunkiem (D) na stronie i-5: przejdź do numeru rozdziału (15) pokazanego obok głównej grupy zawierającej część, którą chcesz odszukać.

Punkty b) i c) odnoszą się do rysunku (E) na stronie i-6.

b) Na rysunku grupy głównej odszukaj podgrupę maszyny (17), która zawiera odpowiednią część lub podgrupę, której szukasz. Zanotuj numer pozycji (18) i przejdź do strony z listą odpowiadającą rysunkowi.

c) Odszukaj numer pozycji/oznaczenie odnośnika (16) lub nazwę podgrupy (19). Przejdź do odpowiedniego numeru strony (20) podanego w kolumnie umieszczonej po prawej stronie. Firma Tetra Pak w przypadku oznaczenia odnośnika korzysta ze struktury ukierunkowanej na funkcję. Przedrostek wskazujący strukturę ukierunkowaną na funkcję (=) nie jest pokazany w oznaczeniu odnośnika.

Punkty d) i e) odnoszą się do rysunku (F) na stronie i-6.

d) Na rysunku podgrupyodszukaj odpowiednią część (21) i zanotuj numer pozycji części.

e) Numer części (29) oraz jej opis (30) podano na stronie zawierającej listę obok numeru pozycji.

Informacje zawarte w Katalogu części zamiennych

Poniższa lista odnosi się do rysunku (F), znajdującego się na stronie i-6. Katalog części zamiennych zawiera następujące informacje o grupach, podgrupach oraz częściach zamiennych maszyny:

- Odnośnik struktury grup (22). Wskazuje następną wyższą grupę zawartą w strukturze listy maszyny.
- Nazwa grupy (23).
- Jednostka miary (25).
- Liczba (26).
- Numer rysunku złożeniowego (27).
- Zakres stron zawierających listę (28). Podany w przypadku występowania wielu stron zawierających rysunek grupy lub listę.
- Numer części lub podgrupy (29).
- Nazwa podgrupy lub opis części (30).
- Numer grupy (31).
- Numer maszyny (32).
- Nagłówek informacyjny grupy (33). Wskazuje, czy sekcja umieszczona pod nagłówkiem dotyczy określonego wariantu maszyny, czy też jest to lista wspólna dla wszystkich wariantów. Jeśli lista występuje w wielu wariantach i dla każdego z nich dostępny jest osobny rysunek złożeniowy, podany jest odnośnik strony do rysunku złożeniowego dla danego wariantu.
- Informacje wewnętrzne (34).

Introdução

Informações sobre o Manual

A Tetra Pak recomenda que leia atentamente todos os manuais incluídos. Certifique-se de que os manuais incluídos estão disponíveis para o pessoal que utiliza ou faz a manutenção do equipamento.

É importante que mantenha este catálogo durante toda a vida útil do equipamento, devendo ainda ser fornecido a quaisquer proprietários e operadores subsequentes do mesmo.

A Tetra Pak não será responsável por quaisquer danos no equipamento provocados pelo não seguimento das instruções fornecidas nos manuais que acompanham este equipamento.

Manuais Fornecidos

Os manuais fornecidos com este equipamento podem incluir

- CM
  O Manual de Conversão (Conversion Manual) fornece aos técnicos informações sobre a conversão do equipamento entre modos de produção diferentes.
- EM
  O Manual Eléctrico (Electrical Manual) fornece aos técnicos informações sobre o sistema eléctrico do equipamento.
- IM
  O Manual de Instalação (Installation Manual) fornece aos técnicos as informações necessárias à instalação do equipamento em segurança.
- MM
  O Manual de Manutenção (Maintenance Manual) fornece aos técnicos informações sobre como realizar a manutenção do equipamento.
- OM
  O Manual de Funcionamento (Operation Manual) fornece ao operador informações sobre o manuseamento e funcionamento do equipamento antes, durante e após a produção.
- SPC
  O Spare Parts Catalogue (Catálogo das Peças Sobressalentes) fornece as informações necessárias para encomendar peças sobressalentes à Tetra Pak
- TeM
  O Manual Técnico (Technical Manual)
  - fornece aos técnicos as informações necessárias à instalação do equipamento em segurança
  - fornece aos técnicos informações sobre a manutenção do equipamento
  - fornece aos técnicos informações sobre o sistema eléctrico da máquina/equipamento
  - fornece as informações necessárias para encomendar peças sobressalentes à Tetra Pak.

Desenho da Página

Consulte a ilustração (A) na página i-5: As páginas principais num Catálogo de Peças Sobressalentes são constituídas por uma página de ilustração (1) e uma página de lista correspondente (7). O número de página (5) é apresentado no cabeçalho de uma página de ilustração e no rodapé de uma página de lista. O número do documento (6) é apresentado no rodapé de uma página de lista.

Numeração das Páginas

Consulte a ilustração (A) na página i-5: Um número de página (5) tem três partes:

- número do capítulo (2)
- número das páginas consecutivas dentro do capítulo (3)
- número de páginas total no capítulo (4)

Introdução da Máquina

Fabricante

Quanto ao nome e endereço do fabricante, consulte a segunda página deste catálogo.

Manutenção

Para encomendar peças sobressalentes para esta máquina ou para apresentar relatórios de problemas associados com o funcionamento desta máquina, contacte os escritórios mais próximos da Tetra Pak.

Contacte a Ligação com outras questões, comentários ou sugestões para melhoria referentes ao equipamento e à sua documentação.

Identificação

Classificação da CE

Este equipamento está em conformidade com as regulamentações básicas da saúde e segurança da Área Económica Europeia (AEE).

Chapa de Identificação da Máquina

A ilustração (B) na página i-5 mostra um exemplo de uma chapa de identificação da máquina.
No capítulo Introdução dos manuais entregues com este equipamento é apresentada uma ilustração da chapa de identificação válida da máquina e a sua localização no equipamento. A chapa de identificação da máquina contém os dados listados em baixo, necessários quando contactar a Tetra Pak em relação a este equipamento específico.

- Tipo de máquina (8)
- Volume (9)
- Especificações do desenho (10)
- Número de série da máquina (11)
- Fabricante (12)
- Marca da CE (13)
- Ano de fabricação (14)

A ilustração (C) na página i-5 mostra um exemplo de uma especificação da máquina. Certifique-se de que os dados do equipamento listados nas primeiras páginas deste manual correspondem aos dados indicados na chapa de identificação da máquina e às especificações da máquina.

Como utilizar este Catálogo de Peças Sobressalentes

Localize o Número da Peça Sobressalente

a) Consulte a ilustração (D) na página i-5: Vá para o número do capítulo (15) indicado no grupo principal que contém a peça que pretende localizar.

Os itens b) e c) referem-se à ilustração (E) na página i-6:

b) Na ilustração do grupo principal, procure o subgrupo da máquina (17) que contém a peça ou o subgrupo que procura. Tome nota do número de posição (18) e vá para a página de lista a seguir à ilustração.

c) Procure o número de posição/designação de referência (16) ou o nome do subgrupo (19). Vá para o número de página correspondente (20) indicado na coluna do lado direito. A Tetra Pak preferiu utilizar sempre a estrutura orientada para a função como designação de referência. O prefixo que inicia a estrutura orientada para a função (=) não está indicada na designação de referência.

Os itens d) e e) referem-se à ilustração (F) na página i-6:

d) Localize a peça (21) que procura na ilustração do subgrupo e tome nota do número de posição da peça.

e) O número de peça (29) e a descrição da peça (30) são apresentados ao lado do número da posição na página de lista.

Informações listadas num Catálogo de Peças Sobressalentes

A lista em baixo refere-se à ilustração (F) na página i-6: Um Catálogo de Peças Sobressalentes contém as seguintes informações sobre grupos, subgrupos e peças sobressalentes para o equipamento:

- Referência da estrutura do grupo (22). Indica o grupo mais elevado seguinte na estrutura da lista do equipamento.
- Nome do grupo (23)
- Unidade de medida (25)
- Quantidade (26)
- Número de série do conjunto (27)
- Intervalo de páginas da lista (28). Incluído se existirem várias páginas na ilustração ou na lista do grupo.
- Número de peça ou subgrupo (29)
- Nome do subgrupo ou descrição da peça (30)
- Número do grupo (31)
- Número do equipamento (32)
- Cabeçalho das informações do grupo (33). Indica se a secção em baixo do cabeçalho é de uma variante específica da máquina ou se é uma lista de peças comuns. Se uma lista tiver mais de uma variante e cada variante tiver o seu próprio desenho de conjunto, é apresentada uma referência de página ao desenho do conjunto da variante.
- Informações internas (34)

Introducere

Informații despre manual

Tetra Pak recomandă citirea cu atenție a tuturor manualelor livrate. Asigurați-vă că manualele livrate sunt puse la îndemâna personalului care exploatează sau întreține echipamentul.

Este important să păstrați acest catalog pe întreaga durată de viață a echipamentului și să transmiteți catalogul deținătorilor sau utilizatorilor ulteriori.

Tetra Pak nu va fi răspunzător pentru niciun defect al echipamentului cauzat prin nerespectarea instrucțiunilor date în manualele care însoțesc acest echipament.

Manuale livrate

Manualele livrate cu acest echipament pot include

- CM
  Manualul de conversie furnizează tehnicienilor informații despre conversia echipamentului între diferite moduri de producție.
- EM
  Manualul electric furnizează tehnicienilor informații despre sistemul electric al echipamentului.
- IM
  Manualul de instalare furnizează tehnicienilor informații necesare pentru instalarea în siguranță a echipamentului.
- MM
  Manualul de întreținere furnizează tehnicienilor informații cu privire la întreținerea echipamentului.
- OM
  Manualul de exploatare pune la dispoziție operatorilor informații despre manevrarea și exploatarea echipamentului înainte, în timpul și după producție.
- SPC
  Catalogul pieselor de schimb furnizează informații necesare pentru comandarea pieselor de schimb de la Tetra Pak.
- TeM
  Manualul tehnic
  – furnizează tehnicienilor informații necesare pentru instalarea în siguranță a echipamentului
  – furnizează tehnicienilor informații necesare cu privire la întreținerea echipamentului
  – furnizează tehnicienilor informații despre sistemul electric al mașinii/echipamentului
  – furnizează informații necesare pentru comandarea pieselor de schimb de la Tetra Pak.

Configurația paginilor

Examinați ilustrația (A) de pe pagina i-5: Paginile principale dintr-un catalog de piese de schimb constau dintr-o pagină de ilustrare (1) și o pagină de liste corespunzătoare (7). Numărul paginii (5) apare în antetul unei pagini de ilustrare și în subsolul unei pagini de liste. Numărul documentului (6) apare în subsolul unei pagini de liste.

Numerotarea paginilor

Examinați ilustrația (A) de la pagina i-5: Un număr de pagină (5) are trei părți:

- numărul capitolului (2)
- numărul paginii consecutive din cadrul capitolului (3)
- număr total de pagini din capitol (4)

Prezentare introductivă a mașinii

Producător

Pentru numele și adresa producătorului, consultați pagina a doua a acestui catalog.

Service

Pentru comandarea pieselor de schimb pentru această mașină sau pentru a raporta problemele asociate cu exploatarea acestei mașini, contactați cel mai apropiat birou Tetra Pak.

Contactați Liaison cu privire la alte întrebări, comentarii sau sugestii legate de îmbunătățirea echipamentului și a documentației acestuia.

Identificare

Clasificare CE

Acest echipament este fabricat în conformitate cu reglementările de bază cu privire la sănătate și siguranță din Zona economică europeană (EEA).

Plăcuța mașinii

Ilustrația (B) de la pagina i-5 arată un exemplu al unei plăcuțe de mașină. O ilustrație a plăcuței valide a mașinii și a poziției acesteia pe echipament este arătată în capitolul introductiv al manualelor livrate împreună cu acest echipament. Plăcuța mașinii conține datele listate mai jos, necesare în cazul în care contactați Tetra Pak în legătură cu acest echipament specific.

- Tip mașină (8)
- Volum (9)
- Specificații de desen (10)
- Număr de serie al mașinii (11)
- Producător (12)
- Marcaj CE (13)
- Anul fabricației (14)

Ilustrația (C) de la pagina i-5 arată un exemplu al unei specificații de mașină. Asigurați-vă că datele specifice echipamentului, listate în paginile din față ale acestui manual, corespund cu datele de pe plăcuța mașinii și cu specificațiile mașinii.

Cum se utilizează acest catalog de piese de schimb

Localizarea unui număr de piesă de schimb

a) Examinați ilustrația (D) de la pagina i-5: Treceți la numărul de capitol (15) indicat lângă grupa principală care conține piesa pe care doriți să o localizați.

Articolele b) și c) se referă la ilustrația (E) de la pagina i-6.

b) Pe ilustrația grupei principale, căutați subgrupa aferentă mașinii (17) care conține piesa sau subgrupa pe care o căutați. Notați numărul poziției (18) și treceți la pagina de liste care urmează după ilustrație.

c) Căutați numărul poziției/marcarea de referință (16) sau numele subgrupei (19). Treceți la numărul de pagină corespunzător (20) listat în coloana din partea dreaptă. Tetra Pak a optat ca întotdeauna să utilizeze structura orientată pe funcție pentru marcarea de referință. Prefixul care indică structura orientată pe funcție (=) nu este arătat în marcarea de referință.

Articolele d) și e) se referă la ilustrația (F) de la pagina i-6.

d) Localizați piesa (21) pe care o căutați pe ilustrația subgrupei și notați numărul de poziție al piesei.

e) Numărul piesei (29) și descrierea piesei (30) sunt listate lângă numărul de poziție de pe pagina de liste.

Informațiile listate într-un catalog de piese de schimb

Lista de mai jos se referă la ilustrația (F) de la pagina i-6. Un catalog de piese de schimb conține următoarele informații despre grupe, subgrupe și piese de schimb pentru echipament:

- Referința despre structura grupelor (22). Indică următoarea grupă superioară din structura de liste a echipamentului.
- Numele grupei (23)
- Unitatea de măsură (25)
- Cantitatea (26)
- Numărul de desen de ansamblu (27)
- Intervalul de pagini de liste (28). Inclus dacă există mai multe pagini în ilustrația sau lista grupei.
- Numărul piesei sau al subgrupei (29)
- Numele subgrupei sau descrierea piesei (30)
- Numărul grupei (31)
- Numărul echipamentului (32)
- Antet cu informații despre grupă (33). Indică dacă secțiunea de sub antet se referă la o anumită variantă de mașină sau este o listă de piese comune. Dacă o listă are mai multe variante și fiecare variantă are propriul său desen de ansamblu, este arătată o referință de pagină pentru desenul de ansamblu al variantei.
- Informații interne (34)

Úvod

Informácie o návode

Spoločnosť Tetra Pak odporúča, starostlivo si prečítať všetky dodané návody. Dbajte, aby pracovníci, obsluhujúci zariadenie alebo zabezpečujúci jeho údržbu, mali vždy dodané návody k dispozícii.

Je dôležité, aby bol tento katalóg k dispozícii počas celého času životnosti zariadenia, a aby sa katalóg dostal aj k jeho prípadnému ďalšiemu držiteľovi alebo používateľovi.

Spoločnosť Tetra Pak nepreberá zodpovednosť za akékoľvek poškodenie zariadenia spôsobené nedodržaním pokynov uvedených v návodoch dodávaných s týmto zariadením.

Dodané návody

S týmto zariadením vám mohli byť dodané nasledujúce návody:

- CM
  Návod na prestavovanie poskytuje technikom informácie o prestavovaní zariadenia do rôznych výrobných režimov.
- EM
  Elektrotechnický návod poskytujetechnikom informácie o elektrickom systéme zariadenia.
- IM
  Návod na inštaláciu poskytuje technikom informácie potrebné na bezpečnú inštaláciu zariadenia.
- MM
  Návod na údržbu poskytujetechnikom informácie o údržbe zariadenia.
- OM
  Návod na obsluhu poskytuje obsluhe informácie o zaobchádzaní a obsluhe zariadenia pred, počas a po prevádzke.
- SPC
  Katalóg náhradných dielcov poskytuje informácie potrebné na objednávanie náhradných dielcov od spoločnosti Tetra Pak
- TeM
  Technický návod
  - poskytuje technikom informácie potrebné na bezpečnú inštaláciu zariadenia
  - poskytuje technikom informácie o údržbe zariadenia
  - poskytuje technikom informácie o elektrickom systéme stroja/ zariadenia
  - poskytuje informácie potrebné na objednávanie náhradných dielcov od spoločnosti Tetra Pak.

Rozloženie strany

Pozri ilustráciu (A) na strane i-5: Hlavné strany Katalógu náhradných dielcov obsahujú stránku s ilustráciami (1) a príslušnú stranu so zoznamom (7). Číslo strany (5) sa uvádza v záhlaví na strane s ilustráciami a v päte strany so zoznamom. Číslo dokumentu (6) sa uvádza v päte strany so zoznamom.

Číslovanie strán

Pozri ilustráciu (A) na strane i-5: Číslo strany (5) má tri časti:

- číslo kapitoly (2)
- poradové číslo strany v rámci kapitoly (3)
- celkový počet strán v kapitole (4)

Základné informácie o stroji

Výrobca

Meno a adresa výrobcu sa uvádza na druhej strane tohto katalógu.

Servis

Pri objednávaní náhradných dielcov pre tento stroj alebo na nahlasovanie problémov súvisiacich s prevádzkou tohto stroja sa obráťte na najbližšie zastúpenie spoločnosti Tetra Pak.

S ostatnými otázkami, pripomienkami a podnetmi na vylepšenie stroja alebo zariadenia a jeho dokumentácie sa obracajte na kontaktnú osobu.

Identifikácia

Klasifikácia CE

Toto zariadenie spĺňa základné predpisy o ochrane zdravia a bezpečnosti Európskeho hospodárskeho priestoru (EEA).

Typový štítok stroja

Na ilustrácii (B) na strane i-5 uvádzame príklad typového štítku. Ilustrácia platného typového štítku stroja a jeho umiestnenia na zariadení sa uvádza v kapitole Úvod v návodoch, dodaných s týmto zariadením. Typový štítok obsahuje dolu údaje uvedené, potrebné pri kontaktoch so spoločnosťou Tetra Pak ohľadom tohto špecifického zariadenia.

- Typ stroja (8)
- Objem (9)
- Údaje o výkrese (10)
- Výrobné číslo stroja (11)
- Výrobca (12)
- Značka CE (13)
- Rok výroby (14)

Ilustrácia (C) na strane i-5 zobrazuje príklad špecifikácie stroja. Presvedčite sa, že údaje zariadenia uvedené na predných stranách tohto návodu zodpovedajú údajom na typovom štítku a v špecifikácii stroja.

Ako sa tento Katalóg náhradných dielcov používa

Vyhľadanie čísla náhradného dielca

a) Pozri ilustráciu (D) na strane i-5: Prejdite na číslo kapitoly (15) uvedené vedľa hlavnej skupiny obsahujúcej dielec, ktorý chcete vyhľadať.

Položky b) a c) odkazujú na ilustráciu (E) na strane i-6.

b) Na ilustrácii hlavnej skupiny hľadajte podskupinu stroja (17), ktorý obsahuje dielec alebo podskupinu, ktorú hľadáte. Poznamenajte si číslo položky (18) a prejdite stranu so zoznamom nasledujúcu po ilustrácii.

c) Vyhľadajte číslo položky/referenčné označenie (16) alebo názov podskupiny (19). Prejdite na príslušné číslo strany (20) uvedené v zozname v pravom stĺpci. Spoločnosť Tetra Pak sa rozhodla vždy používať funkčne zameranú štruktúru na referenčné označovanie. Predčíslie udávajúce funkčne orientovanú štruktúra (=) sa v referenčnom označení nezobrazuje.

Položky d) a e) odkazujú na ilustráciu (F) na strane i-6.

d) Nájdite dielec (21), ktorý hľadáte, na ilustrácii podskupiny a poznamenajte si číslo položky daného dielca.

e) Číslo dielca (29) a popis dielca (30) sa uvádza vedľa čísla položky na stránke so zoznamom.

Informácie uvádzané v Katalógu náhradných dielcov

Dolu uvedený zoznam odkazuje na ilustráciu (F) na strane i-6. Katalóg náhradných dielcov obsahuje nasledujúce informácia o skupinách, podskupinách a náhradných dielcov zariadenia:

- Referenčná štruktúrna skupina (22). Označuje najbližšiu vyššiu skupinu v štruktúre zoznamu zariadenia.
- Názobv skupiny (23)
- Jednotka merania (25)
- Množstvo (26)
- Číslo výkresu celkovej zostavy (27)
- Rozsah strán zoznamu (28). Uvádza sa, ak má ilustrácia alebo zoznam skupiny viac strán.
- Číslo dielca alebo podskupiny (29)
- Názov podskupiny alebo popis dielca (30)
- Číslo skupiny (31)
- Číslo zariadenia (32)
- Záhlavie informácií o skupine (33). Uvádza, či je časť nasledujúca pod záhlavím určená pre špecifický variant stroja, alebo či ide o zoznam spoločných dielcov. Ak má zoznam viac ako jeden variant a každý z variantov má vlastný výkres celkovej zostavy, uvádza sa odkaz na stranu s výkresom zostavy daného variantu.
- Interné informácie (34)

Uvod

Informacije o priročnikih

Tetra Pak priporoča, da natančno preberete vse priložene priročnike. Osebje, ki upravlja in vzdržuje opremo mora imeti dostop do priloženih priročnikov.

Katalog hranite v celotnem času uporabe opreme. V primeru, ko opremo pridobi drug imetnik ali uporabnik, mu obenem izročite tudi katalog.

Podjetje Tetra Pak ne prevzema odgovornosti za poškodbe na opremi, ki nastanejo zaradi neupoštevanja navodil iz priročnikov, ki so priloženi opremi.

Priloženi priročniki

Priročniki, ki so priloženi tej opremi, lahko vključujejo

- Priročnik za zamenjavo (CM)
  V tem priročniku so podatki, ki tehnikom omogočajo izvesti zamenjavo opreme med različnimi načini proizvodnje.
- Elektrotehnični priročnik (EM)
  Priročnik vsebuje podatke za tehnike o električnem sistemu opreme.
- Priročnik za montažo (IM)
  Priročnik vsebuje podatke, ki jih tehniki potrebujejo za varno montažo opreme.
- Priročnik za vzdrževanje (MM)
  Priročnik vsebuje podatke za tehnike o vzdrževanju opreme.
- Priročnik za obratovanje (OM)
  Priročnik je namenjen informiranju za pravilno rokovanje in upravljanje s strojem pred, med in po proizvodnem postopku.
- Katalog nadomestnih delov (SPC)
  Katalog vsebuje potrebne podatke za naročilo nadomestnih delov pri podjetju Tetra Pak.
- Tehnični priročnik (TeM)
  Priročnik
  - vsebuje podatke, ki jih tehniki potrebujejo za varno montažo opreme;
  - vsebuje podatke za tehnike o vzdrževanju opreme;
  - vsebuje podatke za tehnike o električnem sistemu stroja/opreme;
  - vsebuje potrebne podatke za naročilo nadomestnih delov pri podjetju Tetra Pak.

Postavitev strani

Poglejte sliko (A) na strani i-5: Glavne strani v Katalogu nadomestnih delov sestavljata stran s sliko (1) in ustrezna stran s seznamom (7). Številka strani (5) je prikazana na vrhu strani s sliko in na dnu strani s seznamom. Številka dokumenta (6) je prikazana na dnu strani s seznamom.

Številčenje strani

Oglejte si sliko (A) na strani i-5: Številka strani (5) ima tri dele:

- številko poglavja (2);
- zaporedno številko strani v poglavju (3);
- število vseh strani v poglavju (4).

Predstavitev stroja

Proizvajalec

Ime in naslov proizvajalca najdete na drugi strani kataloga.

Servisiranje

Za naročanje nadomestnih delov za stroj ter za sporočanje motenj pri delovanju stroja se obrnite na najbližjo servisno službo podjetja Tetra Pak.

V primeru drugih zahtev, komentarjev, predlogov za izboljšavo opreme ali dokumentacije se obrnite na odgovorno osebo.

Identifikacijska oznaka

CE-klasifikacija

Oprema je izdelana v skladu z osnovnimi zdravstvenimi in varnostnimi predpisi Evropskega gospodarskega prostora (EGS).

Napisna ploščica

Slika (B) na strani i-5 prikazuje primer napisne ploščice.
Sliko veljavne napisne ploščice in njeno mesto na opremi najdete v uvodnem poglavju priloženih priročnikov. Ploščica vsebuje spodaj navedene podatke, ki jih potrebujete, ko se v zvezi z določeno opremo obrnete na podjetje Tetra Pak:

- tip stroja (8);
- prostornino (9);
- specifikacije risbe (10);
- serijsko številko stroja (11);
- proizvajalca (12);
- oznako CE (13);
- leto izdelave (14).

Slika (C) na strani i-5 prikazuje primer specifikacije stroja. Podatki o opremi, navedeni na prvih straneh tega priročnika, se morajo ujemati s podatki o stroju, navedenimi na napisni ploščici in v specifikacijah.

Uporaba Kataloga nadomestnih delov

Iskanje številke nadomestnega dela

a) Oglejte si sliko (D) na strani i-5: Poiščite številko poglavja (15), navedeno poleg glavne skupine, ki vsebuje iskani del.

Točki b) in c) se nanašata na sliko (E) na strani i-6.

b) Na sliki glavne skupine poiščite podskupino stroja (17), ki vsebuje iskani del ali podskupino. Zapomnite si pozicijsko številko (18) in poiščite stran s seznamom, ki pripada sliki.

c) Poiščite pozicijsko številko/referenčno oznako (16) ali ime podskupine (19). Pojdite na stran (20), navedeno v desnem stolpcu. Tetra Pak za referenčno označevanje vedno uporablja funkcijsko strukturo. Predpona, ki označuje funkcijsko strukturo (=), ni prikazana v referenčni oznaki.

Točki d) in e) se nanašata na sliko (F) na strani i-6.

d) Na sliki podskupine poiščite del (21), ki ga iščete, in si zapomnite njegovo pozicijsko številko.

e) Številka (29) in opis dela (30) sta navedena poleg pozicijske številke na strani s seznamom.

Informacije v Katalogu nadomestnih delov

Spodnji seznam se nanaša na sliko (F) na strani i-6. Katalog nadomestnih delov vsebuje naslednje informacije o skupinah, podskupinah in nadomestnih delih za opremo:

- referenco strukture skupine (22); Označuje naslednjo višjo skupino v strukturi seznamov opreme.
- ime skupine (23);
- mersko enoto (25);
- količino (26);
- številko sestavne risbe (27);
- število strani seznama (28); Če je slika ali seznam skupine sestavljen iz več strani.
- številko dela ali podskupine (29);
- ime podskupine ali opis dela (30);
- številko skupine (31);
- številko opreme (32);
- naslov z informacijami o skupini (33). Označuje, ali je razdelek pod naslovom namenjen specifični izvedbi stroja ali gre za seznam skupnih delov. Če ima seznam več izvedb in če ima vsaka od njih svojo sestavno risbo, je ob vsaki izvedbi navedena referenčna stran s sestavno risbo.
- interne informacije (34).

Inledning

Information om manualen

Tetra Pak rekommenderar att alla manualer läses noggrant. Se till att manualerna är tillgängliga för personalen som använder eller underhåller utrustningen.

Det är viktigt att denna katalog behålls under utrustningens livslängd, och att den överlämnas till varje efterföljande innehavare eller användare av utrustningen.

Tetra Pak tar inte ansvar för någon skada på utrustningen som orsakats av att instruktionerna i medföljande manualer inte har följts.

Medföljande manualer

Följande manualer kan levereras tillsammans med utrustningen:

- CM
  Konverteringsmanualen (CM) innehåller information för tekniker om hur man konverterar utrustningen mellan olika produktionslägen.
- EM
  Den elektriska manualen (EM) innehåller information för tekniker om utrustningens elektriska system.
- IM
  Installationsmanualen (IM) innehåller information för tekniker om hur utrustningen installeras på ett säkert sätt.
- MM
  Underhållsmanualen (MM) innehåller information för tekniker om hur utrustningen underhålls.
- OM
  Driftsmanualen (OM) innehåller information för operatören om hur utrustningen ska hanteras före, under och efter produktion.
- SPC
  Reservdelskatalogen (SPC) innehåller den information som behövs för att beställa reservdelar från Tetra Pak.
- TeM
  Den tekniska manualen (TeM)
  - innehåller information för tekniker om hur utrustningen installeras på ett säkert sätt.
  - innehåller information för tekniker om hur utrustningen underhålls.
  - innehåller information för tekniker om maskinens/utrustningens elektriska system.
  - innehåller den information som behövs för att beställa reservdelar från Tetra Pak.

Sidlayout

Se bild (A) på sidan i-5: Huvudsidorna i reservdelskatalogen består av en bildsida (1) och en motsvarande listsida (7). Sidnumret (5) visas i sidhuvudet på bildsidan och i sidfoten på listsidan. Dokumentnumret (6) visas i sidfoten på listsidan.

Sidnumrering

Se bild (A) på sidan i-5: Ett sidnummer (5) består av tre delar:

- kapitlets nummer (2)
- löpande sidnummer inom kapitlet (3)
- totalt sidantal i kapitlet (4)

Introduktion till maskinen

Tillverkare

Tillverkarens namn och adress finns på sidan 2 i katalogen.

Service

För att beställa reservdelar till denna maskin eller för att rapportera problem som uppstått i samband med driften kontaktar du närmaste Tetra Pak-kontor.

Om du har andra frågor, kommentarer eller förslag till förbättringar av utrustningen och dokumentationen vänder du dig till din kontaktperson på Tetra Pak.

Identifiering

CE-märkning

Denna utrustning överensstämmer med den grundläggande hälso- och säkerhetslagstiftningen inom Europeiska ekonomiska samarbetsområdet (EES).

Maskinskylt

Bild (B) på sidan i-5 visar ett exempel på en maskinskylt.
En bild på giltig maskinskylt och dess placering på utrustningen visas i inledningskapitlet som medföljer utrustningen. Skylten innehåller de uppgifter som listas nedan och som behövs vid kontakt med Tetra Pak angående utrustningen.

- Maskintyp (8)
- Volym (9)
- Ritningsspecifikationer (10)
- Maskinnummer (11)
- Tillverkare (12)
- CE-märkning (13)
- Tillverkningsår (14)

Bild (C) på sidan i-5 visar ett exempel på en maskinspecifikation. Kontrollera att informationen om utrustningen som listas på de första sidorna i manualen motsvarar informationen på maskinskylten och i maskinspecifikationen.

Använda reservdelskatalogen

Hitta ett reservdelsnummer

a) Se bild (D) på sidan i-5: Gå till kapitelnumret (15) som står vid sidan om huvudgruppen som innehåller den del du vill hitta.

Punkt b) och c) hänvisar till bild (E) på sidan i-6.

b) På huvudgruppsbilden letar du efter den maskinundergrupp (17) som innehåller delen eller undergruppen du letar efter. Notera positionsnumret (18) och gå till listsidan som anges efter bilden.

c) Leta efter positionsnumret/referensbeteckningen (16) eller undergruppsnamnet (19). Gå till motsvarande sidnummer (20) som listas i den högra kolumnen. Tetra Pak har valt allt alltid använda en funktionsorienterad struktur för referensbeteckningarna. Prefixet för funktionsorienterad struktur (=) visas inte i referensbeteckningen.

Punkt d) och e) hänvisar till bild (F) på sidan i-6.

d) Leta reda på delen (21) i undergruppsbilden och notera delens positionsnummer.

e) Reservdelsnumret (29) och reservdelsbeskrivningen (30) står bredvid positionsnumret på listsidan.

Information i reservdelskatalogen

Listan nedan hänvisar till bild (F) på sidan i-6. Reservdelskatalogen innehåller följande information om grupper, undergrupper och reservdelar för utrustningen:

- Gruppstrukturreferens (22). Anger nästa högre grupp i utrustningslistans struktur.
- Gruppnamn (23)
- Måttenhet (25)
- Kvantitet (26)
- Monteringsritningsnummer (27)
- Listsideintervall (28). Anges om det finns flera sidor i gruppbilden eller grupplistan.
- Reservdels- eller undergruppsnummer (29)
- Undergruppsnamn eller reservdelsbeskrivning (30)
- Gruppnummer (31)
- Utrustningsnummer (32)
- Gruppinformationsrubrik (33). Anger om avsnittet under rubriken gäller en viss maskinvariant eller om det är en lista över allmänna delar. Om en lista har fler än en variant och varje variant har sin egen monteringsritning visas en sidhänvisning till variantens monteringsritning.
- Intern information (34)

SPC
Spare Parts Catalogue

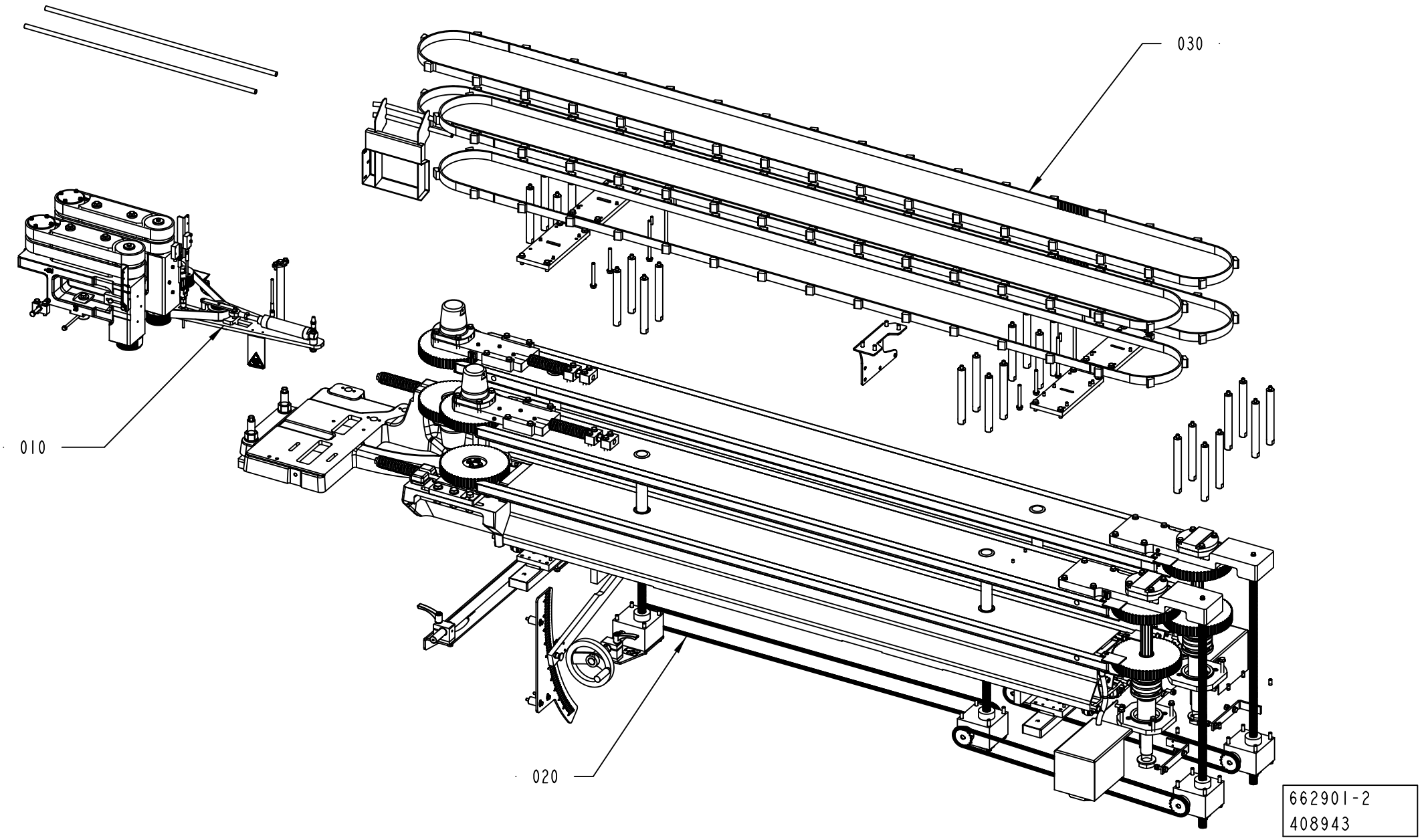
030
010
020
662901-2
408943

ECM: 408943 - 20091001
Group number: 662901-0200
Assembly Drawing: 662901-2_1_AA

Pos	Part No	UN	Qty	Description	Page No
-					
010	2838654-0200		1	BELT BRAKE	**1-5**
020	2838643-0200		1	PACKAGE POSITIONER	**1-17, 1-19**
030	2838633-0200		1	PACKAGE HANDLING	**1-67, 1-69, 1-71, 1-73**

Pos	Part No	UN	Qty	Description	Page No

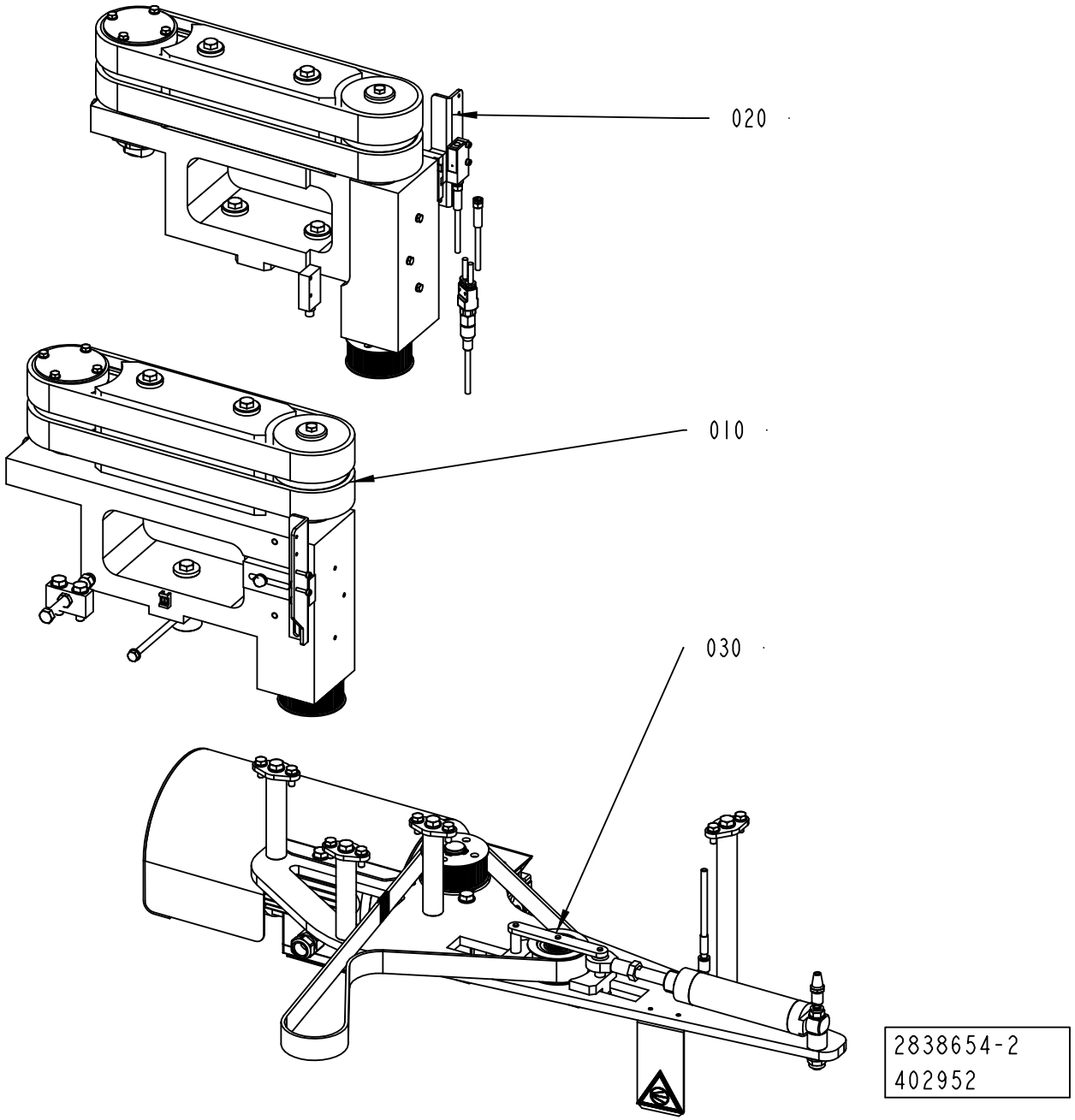
020
010
030
2838654-2
402952

ECM: 407693 - 20091001
Group number: 2838654-0200
Assembly Drawing: 2838654-2_1_AA

Pos	Part No	UN	Qty	Description	Page No
-					
010	2766990-0100		1	BRAKE UNIT	**1-7**
020	2766991-0100		1	BRAKE UNIT	**1-9**
030	2766994-0200		1	DRIVE	**1-11**

Pos	Part No	UN	Qty	Description	Page No

BRAKE UNIT

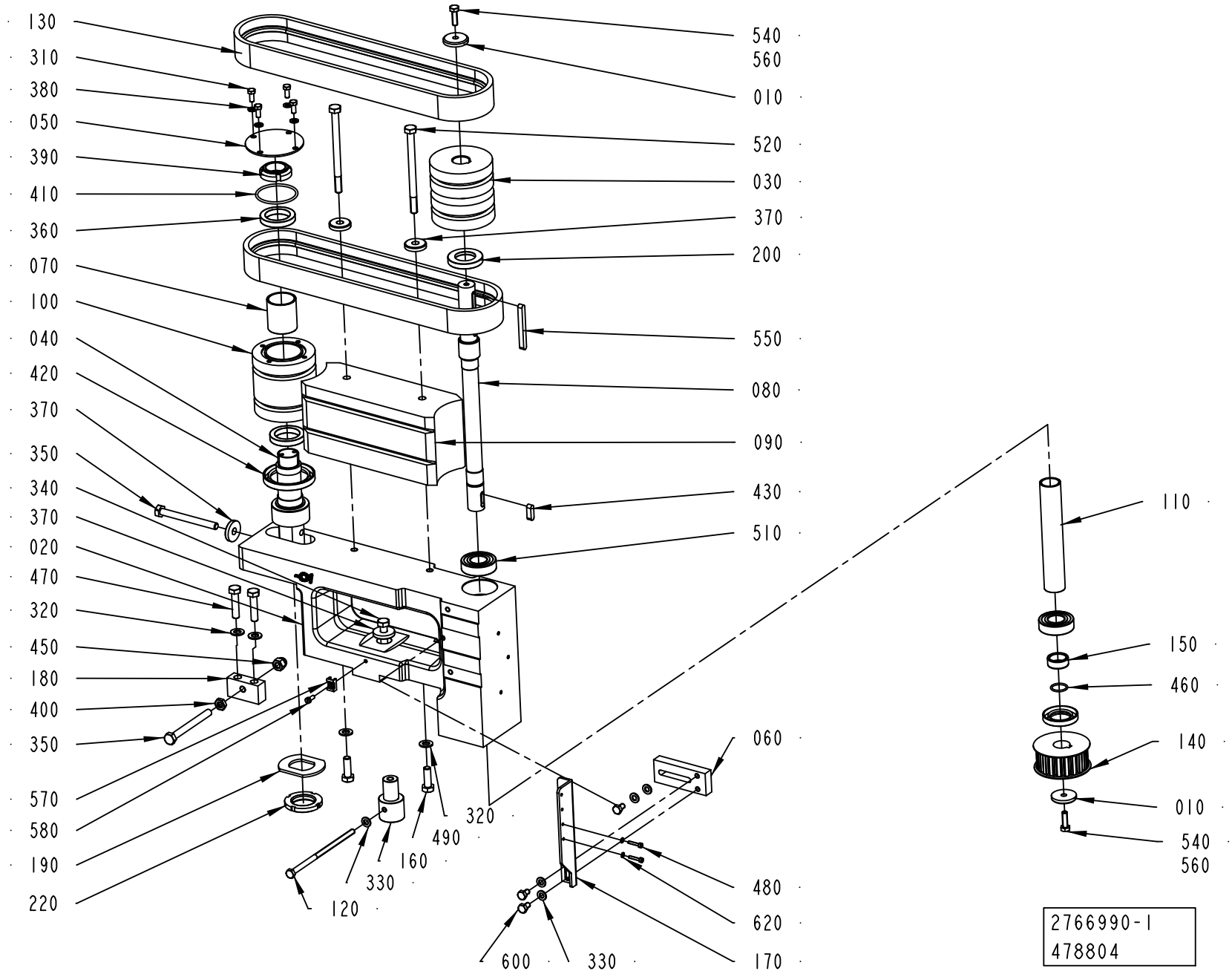
130
310
380
050
390
410
360
070
100
040
420
370
350
340
370
020
470
320
450
180
400
350
570
580
190
220
120
330
160
490
320
540
560
010
520
030
370
200
550
080
090
430
510
060
480
620
170
600
330
110
150
460
140
010
540
560
2766990-1
478804

ECM: 484896 - 20110401
Group number: 2766990-0100
Assembly Drawing: 2766990-1_1_AF

Pos	Part No	UN	Qty	Description	Page No
-					
010	290027-0000		2	WASHER	
020	3010622-0000		1	CANTILEVER	
030	2826728-0000		1	DRIVE PULLEY	
040	2769682-0000		1	SHAFT	
050	2769686-0000		1	COVER	
060	2936120-0000		1	BRACKET	
070	2769741-0000		1	SPACER	
080	2769679-0000		1	DRIVE SHAFT	
090	2826737-0000		1	GUIDE	
100	2826729-0000		1	PULLEY	
110	2830225-0000		1	SPACER	
120	2805468-0000		1	SCREW	
130	90602-4689		2	TIMING BELT 32T5/780 PU + SUPERGRIP	
140	3039030-0000		1	TOOTHED PULLEY	
150	2773600-0000		1	SPACER	
160	2775418-0000		1	SHAFT	
170	2936740-0000		1	BRACKET	
180	2775427-0000		1	BRACKET	
190	2778564-0000		1	WASHER	
200	90091-0322		2	RADIAL SEAL 25X42X7 MM DUST LIP	
220	90459-2644		1	NUT ROUND WITH SLOTS M30X1,5 SS	
310	312105-0327		4	SCREW M6S ISO 4017 M5X12 A480	
320	315105-0165		4	WASHER BRB 8,4X16 RFR	
330	315105-0153		5	WASHER BRB 6,4X12 RFR	
340	312105-0455		1	SCREW M6S ISO 4017 M8X30 A480	
350	312109-0467		2	SCREW M6S ISO 4017 M8X80 A480	
360	90214-0186		2	BALL BEARING 30/42X7	
370	315125-0165		4	WASHER TBRSB 8,4X26X5 A4	
380	315105-0146		4	WASHER BRB 5,3X10 RFR	
390	90459-6280		1	NUT GUK 5 M25 X 1.5 FZB	
400	312625-0318		1	HEXAGON THIN NUT, EN 24035 ML6M M8 A4	
410	315202-0733		1	O-RING 45,69X2,62 MM	
420	315221-0192		1	RADIAL SEAL 45X62X8 MM	
430	315705-0232		1	PARALLEL KEY W. ROUND ENDS 6X6X20 MM	
450	312705-0318		1	NUT HEX. DOMED CAP MHM-6 M8 A280	
460	315202-0705		1	O-RING 17,17X1,78 MM	
470	312105-0457		2	SCREW M6S ISO 4014 M8X35 A480	
480	312115-0228		2	SCREW ISO4762 M3X16 A4 80	
490	312105-0453		2	SCREW M6S ISO 4017 M8X25 A480	
510	321306-0104		2	BALL BEARING 20/42X12	
520	312105-0473		2	SCREW M6S ISO 4014 M8X110 A480	
540	312105-0370		2	SCREW M6S ISO 4017 M6X20 A480	
550	90458-0507		1	PARALLEL KEY W. ROUND ENDS 6X6X60 MM	
560	90157-0037	ML	1	THREAD SEALANT LOCTITE 542	
570	352113-0205		1	ANCHOR PLATES FOR STRIPS, TM2S8-C100	
580	312125-0289		1	SCREW ISO 1207 M4X10 A4	
600	312105-0364		3	SCREW M6S ISO 4017 M6X10 A480	
620	315105-0124		2	WASHER BRB 3,2X6 RFR	

Machine Type | Group Description | Used-In | Group Number | Page No

BRAKE UNIT

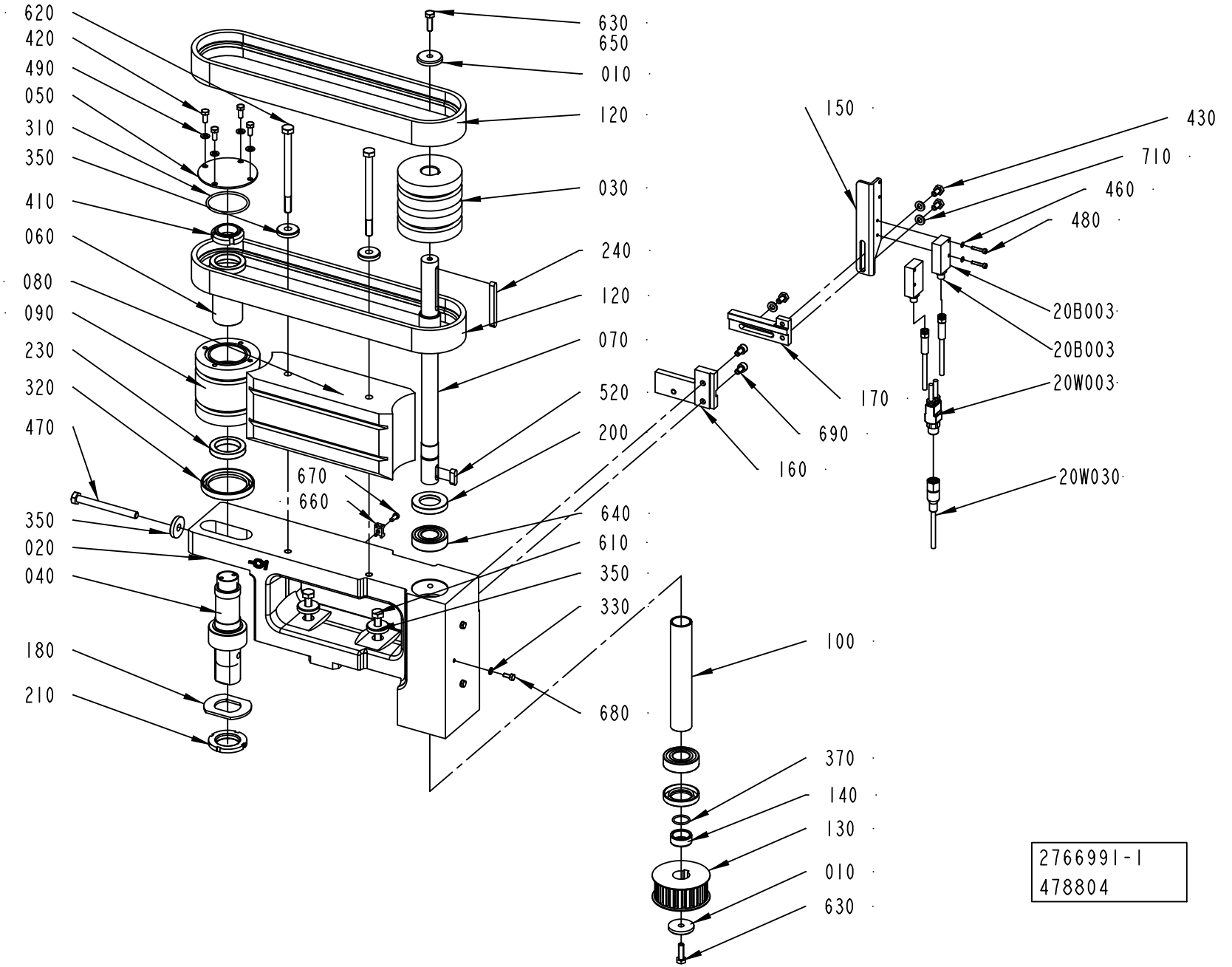
620
420
490
050
310
350
410
060
080
090
230
320
470
350
020
040
180
210
630
650
010
120
030
240
120
070
520
200
670
660
640
610
350
330
680
150
430
710
460
480
20B003
20B003
20W003
20W030
170
690
160
100
370
140
130
010
630
2766991-1
478804

ECM: 484897 - 20110401
Group number: 2766991-0100
Assembly Drawing: 2766991-1_1_AE

Pos	Part No	UN	Qty	Description	Page No
-					
010	290027-0000		2	WASHER	
020	3010624-0000		1	CANTILEVER	
030	2826728-0000		1	DRIVE PULLEY	
040	2769682-0000		1	SHAFT	
050	2769686-0000		1	COVER	
060	2769741-0000		1	SPACER	
070	2769679-0000		1	DRIVE SHAFT	
080	2826737-0000		1	GUIDE	
090	2826729-0000		1	PULLEY	
100	2830225-0000		1	SPACER	
120	90602-4689		2	TIMING BELT 32T5/780 PU + SUPERGRIP	
130	3039030-0000		1	TOOTHED PULLEY	
140	2773600-0000		1	SPACER	
150	2936506-0000		1	BRACKET	
160	2943597-0000		1	PLATE	
170	2944164-0000		1	PLATE	
180	2778564-0000		1	WASHER	
200	90091-0322		2	RADIAL SEAL 25X42X7 MM DUST LIP	
20B003	90600-4732		1	LASER SENSOR, WS/WE9L-P330	
20W003	90459-6586		1	ACT/SENS.Y-CABLE, ASBN 2-PRKMV 4-07/0,6M	
20W030	351309-0100		1	ACTUATOR/SENSOR CABLE PRKT 4-07/10M	
210	90459-2644		1	NUT ROUND WITH SLOTS M30X1,5 SS	
230	90214-0186		2	BALL BEARING 30/42X7	
240	90458-0507		1	PARALLEL KEY W. ROUND ENDS 6X6X60 MM	
310	315202-0733		1	O-RING 45,69X2,62 MM	
320	315221-0192		1	RADIAL SEAL 45X62X8 MM	
330	315105-0136		3	WASHER BRB 4,3X8 RFR	
350	315125-0165		5	WASHER TBRSB 8,4X26X5 A4	
370	315202-0705		1	O-RING 17,17X1,78 MM	
410	90459-6280		1	NUT GUK 5 M25 X 1.5 FZB	
420	312105-0327		4	SCREW M6S ISO 4017 M5X12 A480	
430	312105-0364		3	SCREW M6S ISO 4017 M6X10 A480	
460	315105-0124		2	WASHER BRB 3,2X6 RFR	
470	312109-0467		1	SCREW M6S ISO 4017 M8X80 A480	
480	312115-0228		2	SCREW ISO4762 M3X16 A4 80	
490	315105-0146		4	WASHER BRB 5,3X10 RFR	
520	315705-0232		1	PARALLEL KEY W. ROUND ENDS 6X6X20 MM	
550	312605-0310		2	HEXAGON NUT, M6M M3 A280	
610	312109-0459		2	SCREW M6S ISO 4017 M8X40 A480	
620	312105-0473		2	SCREW M6S ISO 4014 M8X110 A480	
630	312105-0370		2	SCREW M6S ISO 4017 M6X20 A480	
640	321306-0104		2	BALL BEARING 20/42X12	
650	90157-0037	ML	1	THREAD SEALANT LOCTITE 542	
660	352113-0205		1	ANCHOR PLATES FOR STRIPS, TM2S8-C100	
670	312125-0289		1	SCREW ISO 1207 M4X10 A4	
680	312105-0289		3	SCREW M6S H4X10 A4 70 ISO4017/DIN933	
690	312115-0364		2	SCREW ISO4762 M6X10 A4 80	
710	315105-0153		3	WASHER BRB 6,4X12 RFR	

Machine Type	Group Description	Used-In	Group Number	Page No

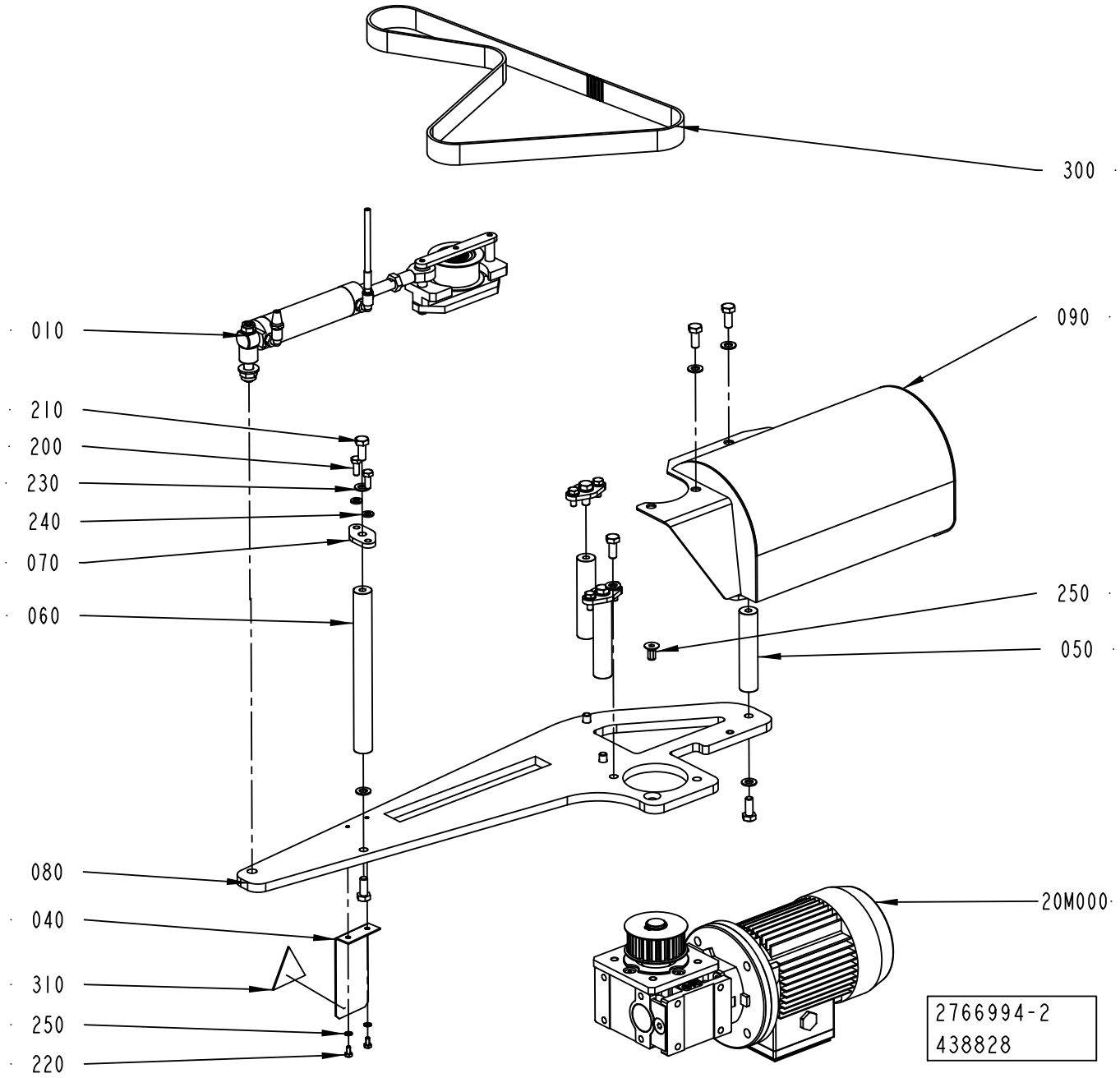
300
010
210
200
230
240
070
060
090
250
050
080
040
310
250
220
20M000
2766994-2
438828

ECM: 438860 - 20100701
Group number: 2766994-0200
Assembly Drawing: 2766994-2_1_AC

Pos	Part No	UN	Qty	Description	Page No
-					
010	2773636-0100		1	BELT STRETCHER	**1-13**
040	2985847-0000		1	PLATE	
050	2769773-0000		3	SPACER	
060	2773601-0000		1	SPACER	
070	2775412-0000		4	PLATE	
080	3017287-0000		1	PLATE	
090	2985832-0000		1	COVER	
200	312105-0368		8	SCREW M6S ISO 4017 M6X16 A480	
20M000	2838710-0200		1	WORM GEAR MOTOR	**1-15**
210	312105-0451		11	SCREW M6S ISO 4017 M8X20 A480	
220	312105-0287		2	SCREW M6S ISO 4017 M4X8 A470	
230	315105-0165		12	WASHER BRB 8,4X16 RFR	
240	315105-0153		8	WASHER BRB 6,4X12 RFR	
250	315105-0136		2	WASHER BRB 4,3X8 RFR	
260	312155-0449		1	SCREW DIN 7991 MF6S M8X16 A4 70	
300	90602-4674		1	TIMING BELT 25T10/1150-DL PU	
310	359705-0021		1	WARNING SIGN ISO, PNEUMATIC ENERGY	

Pos	Part No	UN	Qty	Description	Page No

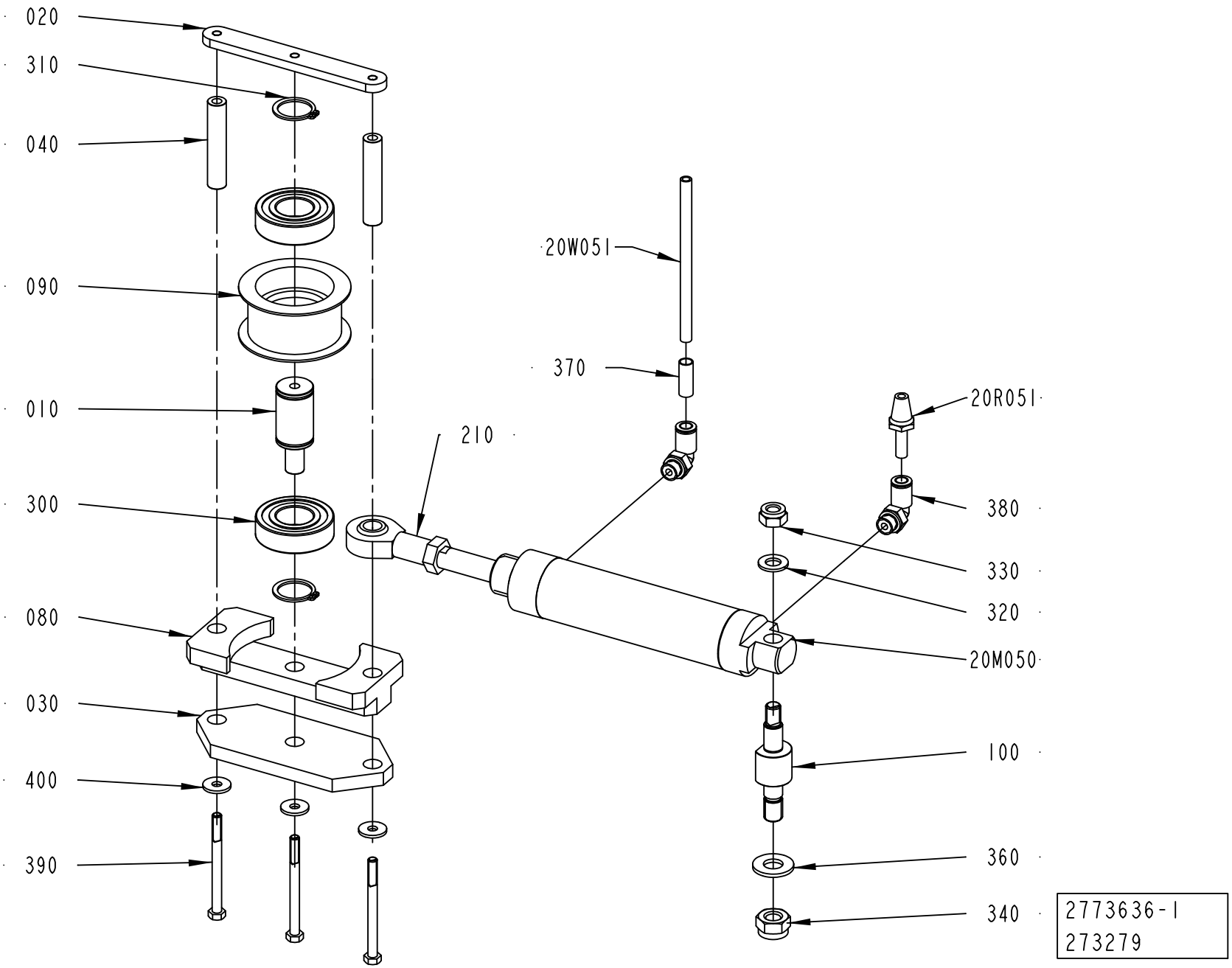
020
310
040
090
010
300
080
030
400
390
20W051
370
210
20R051
380
330
320
20M050
100
360
340
2773636-1
273279

ECM: 273309 - 20060921
Group number: 2773636-0100
Assembly Drawing: 2773636-1_1_AA

Pos	Part No	UN	Qty	Description	Page No
-					
010	2775398-0000		1	PIN	
020	2773604-0000		1	PLATE	
030	2773638-0000		1	PLATE	
040	2773639-0000		2	SHAFT	
080	2773637-0000		1	BRACKET	
090	2773615-0000		1	ROLLER	
100	2781292-0000		1	SHAFT	
20M050	90600-1080		1	DOUBLE ACTING, ROUND, CYL 32-80	
20R051	90328-0017		1	SILENCER, D=6 MM	
20W051	315400-0001	M	3	TUBE PUN-H-6X1-BL	
210	90115-0134		1	ROD END, ID=10 MM, M10X1,25	
300	321308-0204		2	BALL BEARING 20/42X12	
310	315751-0116		2	RETAINING RING FOR SHAFT DIN 471 20 SS	
320	315105-0165		1	WASHER BRB 8,4X16 RFR	
330	312812-0318		1	HEXAGON NUT, NY-LOCK M8 A480	
340	312812-0320		1	HEXAGON NUT, NY-LOCK M10 A480	
360	315105-0173		1	WASHER BRB 10,5X22 RFR	
370	90459-7369		1	MARKING FOR PNEUM. TUBING, PRZ06	
380	350002-0006		2	PUSH-IN L-FITTING QSL-F-G1/8-6	
390	312105-0343		3	SCREW M6S ISO 4014 M5X60 A480	
400	90005-0139		3	WASHER PLAIN ROUND 5,2(M5)/15, H=1,6	

Pos	Part No	UN	Qty	Description	Page No

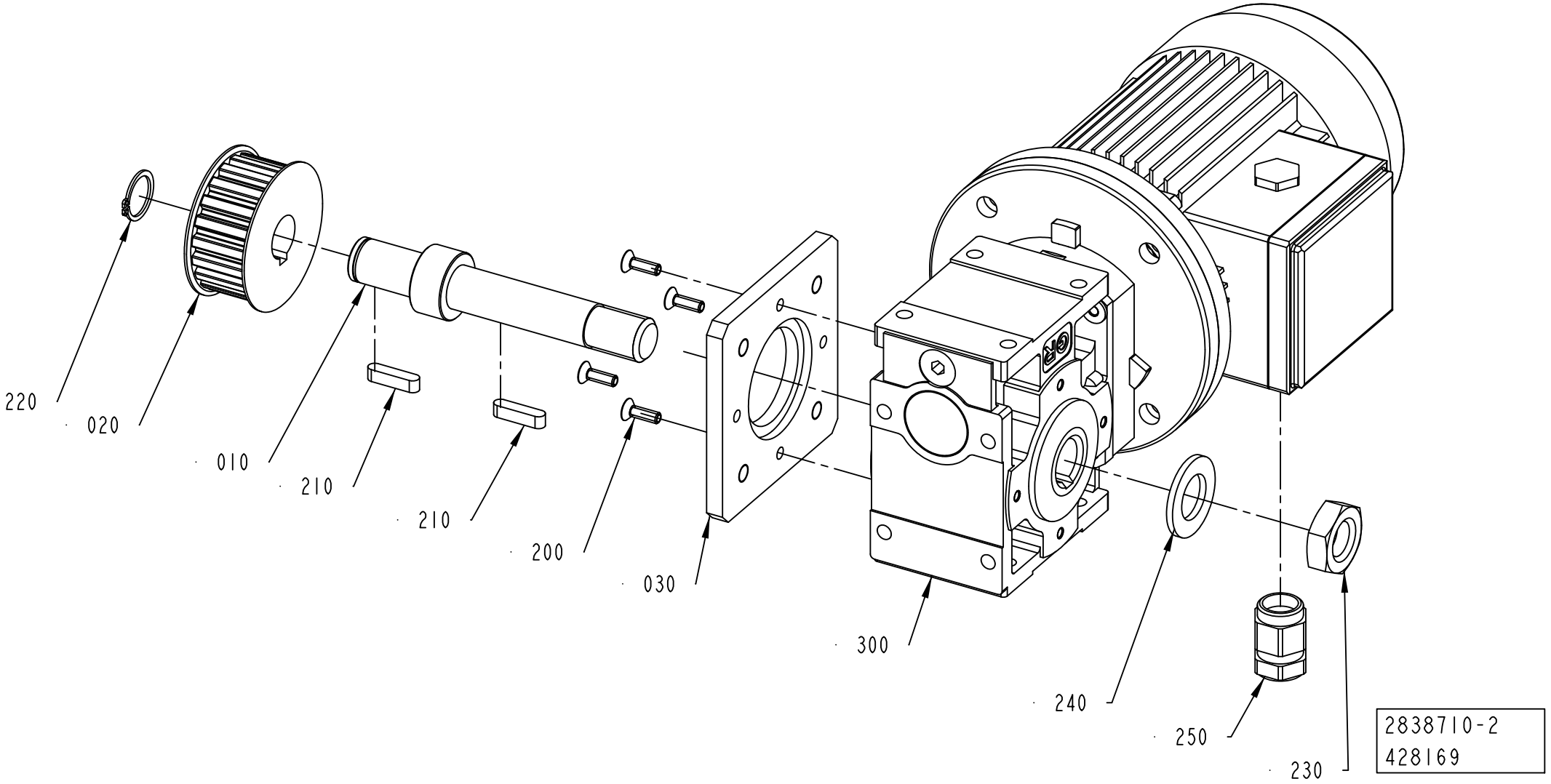
220
020
010
210
210
200
030
300
240
250
230
2838710-2
428169

ECM: 433239 - 20100401
Group number: 2838710-0200
Assembly Drawing: 2838710-2_1_AC

Pos	Part No	UN	Qty	Description	Page No
-					
010	3016909-0000		1	DRIVE SHAFT	
020	3039030-0000		1	TOOTHED PULLEY	
030	3017300-0000		1	FLANGE	
200	312155-0329		4	SCREW DIN 7991 MF6S M5X16 A4 70	
210	315705-0234		2	PARALLEL KEY W. ROUND ENDS 6X6X25 MM	
220	315751-0116		1	RETAINING RING FOR SHAFT DIN 471 20 SS	
230	312625-0326		1	HEXAGON THIN NUT, EN 24035 ML6M M20 A4	
240	315106-0192		1	WASHER ISO 7089-20-200 HV A4	
250	90458-0438		1	GLAND, EXTENDED WITH INSERT, M20X1,5	
300	2985833-0000		1	WORM GEAR MOTOR	

Pos	Part No	UN	Qty	Description	Page No

PACKAGE POSITIONER

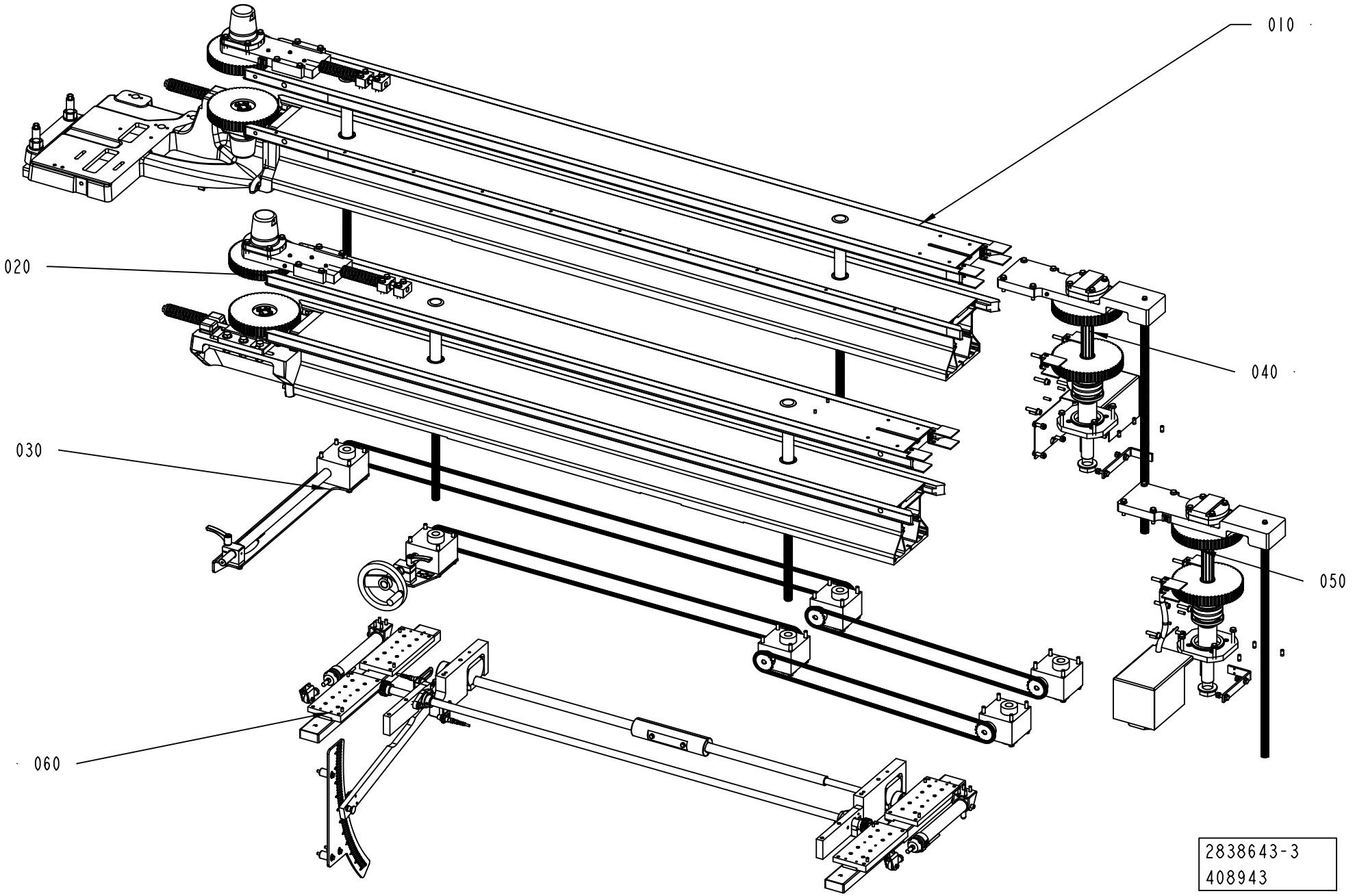

ECM: 408943 - 20091001
Group number: 2838643-0200
Assembly Drawing: 2838643-3_1_AA

This list covers pages from 1-16 to 1-19

Pos	Part No	UN	Qty	Description	Page No
TBA 1000B, TBA 1000SQ, TBA 1000S, TBA 1500S, TPA, TBA 1890S, TBA 2000S, TGA, TBA 0500SQ (See drawing on pages: 1-16, 1-18)					
030	2838647-0100		1	SLIDING RACK	**1-21**
Common Parts					
010	2838639-0200		1	PACKAGE POSITIONER	**1-25, 1-27**
020	2838644-0200		1	PACKAGE POSITIONER	**1-37, 1-39**
040	2838648-0200		1	DRIVE	**1-49, 1-51**
050	2838649-0200		1	DRIVE	**1-53, 1-55**
060	2838650-0100		1	SLIDING RACK	**1-57**

PACKAGE POSITIONER

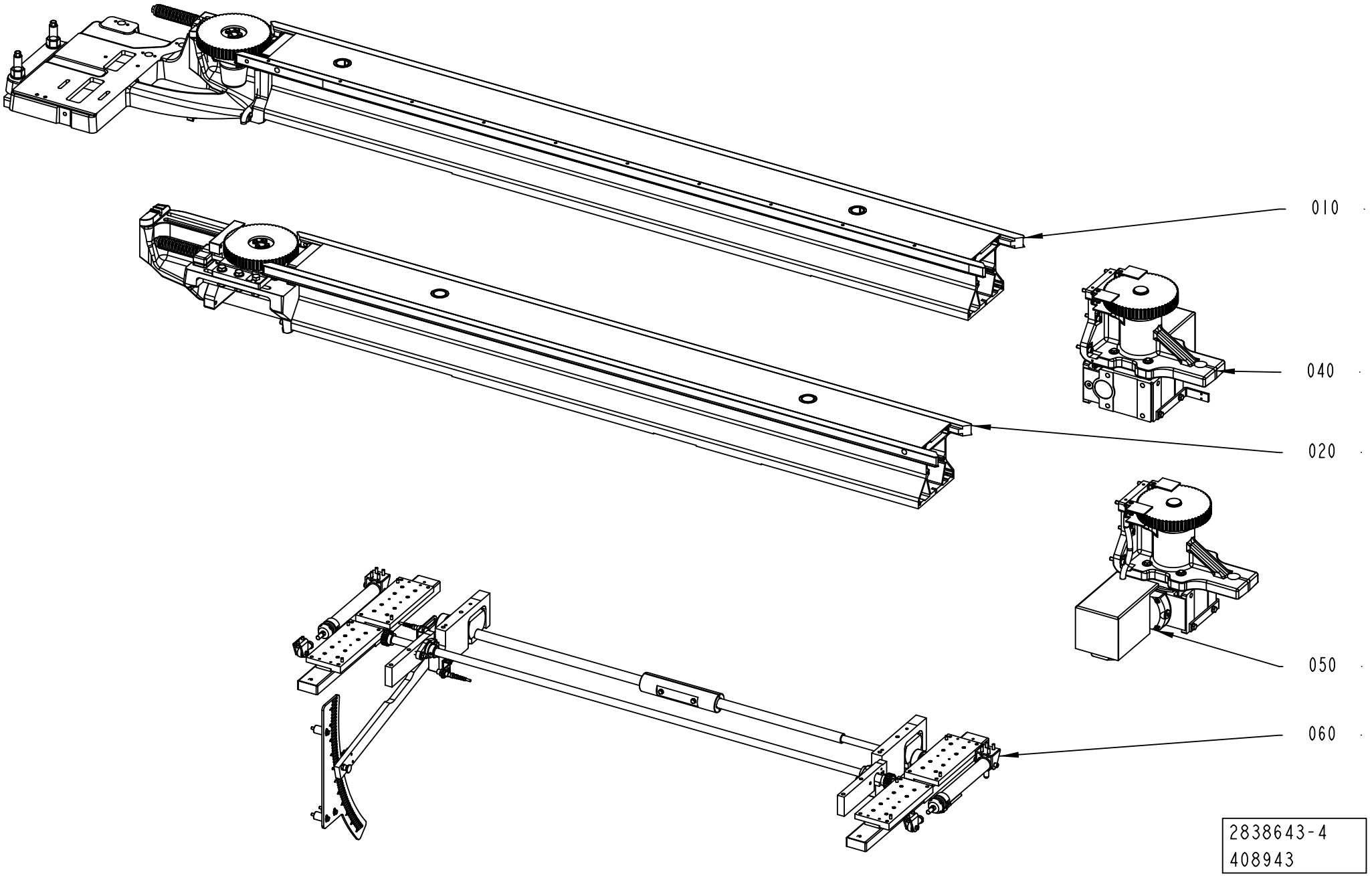

ECM: 408943 - 20091001
Group number: 2838643-0200
Assembly Drawing: 2838643-4_1_AA

This list covers pages from 1-16 to 1-19

Pos	Part No	UN	Qty	Description	Page No
TBA 1000B, TBA 1000SQ, TBA 1000S, TBA 1500S, TPA, TBA 1890S, TBA 2000S, TGA, TBA 0500SQ (See drawing on pages: 1-16, 1-18)					
030	2838647-0100		1	SLIDING RACK	**1-21**
Common Parts					
010	2838639-0200		1	PACKAGE POSITIONER	**1-25, 1-27**
020	2838644-0200		1	PACKAGE POSITIONER	**1-37, 1-39**
040	2838648-0200		1	DRIVE	**1-49, 1-51**
050	2838649-0200		1	DRIVE	**1-53, 1-55**
060	2838650-0100		1	SLIDING RACK	**1-57**

Pos	Part No	UN	Qty	Description	Page No

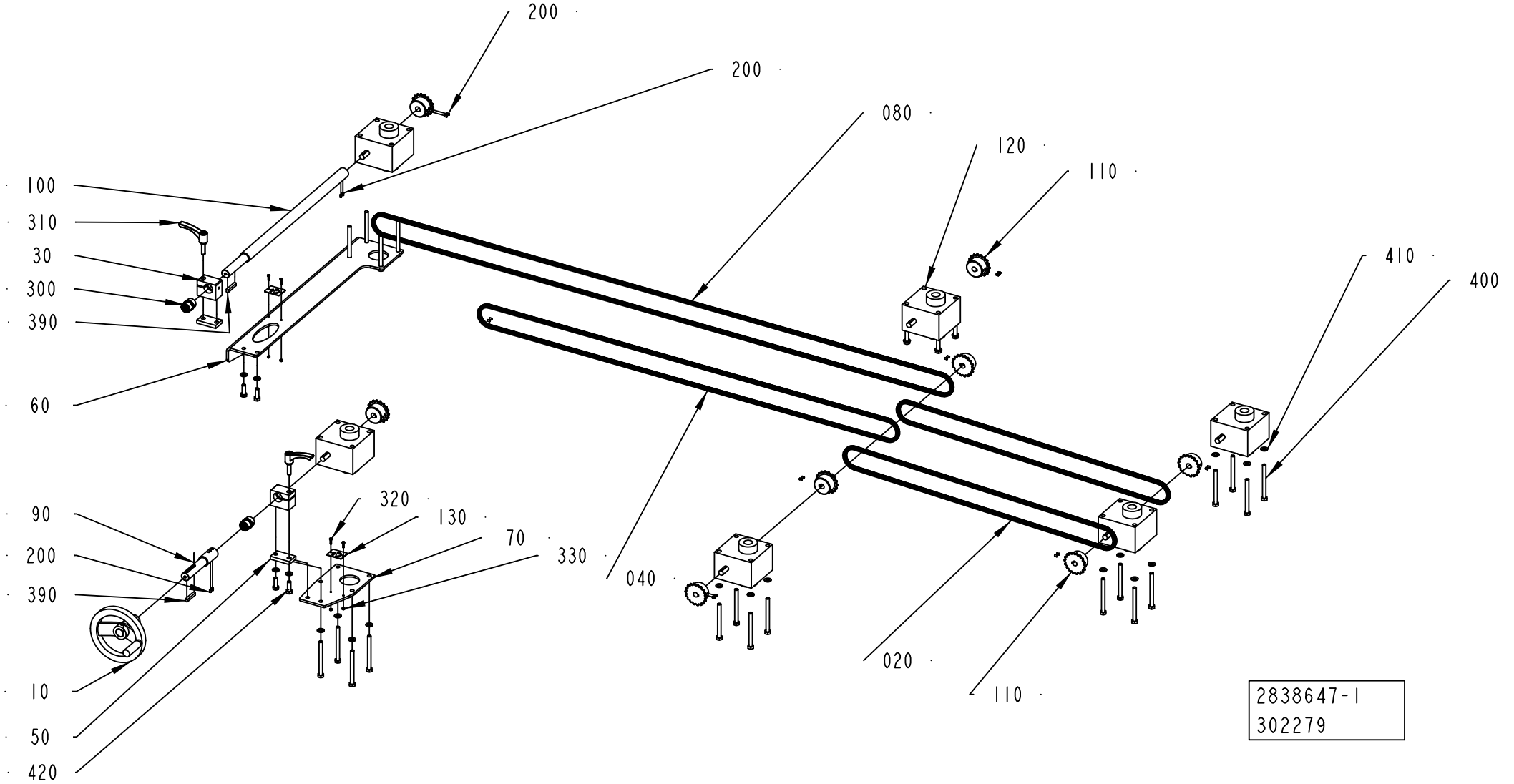
200
200
080
120
110
100
310
30
300
390
60
410
400
90
200
390
320
130
70
330
040
020
10
50
420
110
2838647-1
302279

ECM: 308667 - 20070525
Group number: 2838647-0100
Assembly Drawing: 2838647-1_1_AB

Pos	Part No	UN	Qty	Description	Page No
-					
010	2802404-0100		1	HANDLE	**1-23**
020	90600-0961		2	ROLLER CHAIN, SIMPLEX 3/8 -159, SS	
030	2769726-0000		2	BRACKET	
040	90600-0962		1	ROLLER CHAIN, SIMPLEX 3/8 -243, SS	
050	2778594-0000		2	PLATE	
060	2779063-0000		1	PLATE	
070	2779759-0000		1	PLATE	
080	90600-0964		1	ROLLER CHAIN, SIMPLEX 3/8 -333, SS	
090	2769729-0000		1	SHAFT	
100	2779756-0000		1	SHAFT	
110	2779062-0000		8	SPROCKET	
120	90600-0812		6	GEAR BOX, TP00042000110	
130	2873941-0000		2	SIGN	
200	312318-0285		20	SCREW ISO4029 M4X6 A4	
300	90458-2932		2	PLAIN BEARING, JUM-02-20	
310	90017-0029		2	LOCKING LEVER, NO. KR8X30-SUS	
320	90287-0175		4	SCREW M6S M3X12 A480	
330	312605-0310		4	HEXAGON NUT, M6M M3 A280	
390	315705-0239		2	PARALLEL KEY W. ROUND ENDS 6X6X40 MM	
400	312105-0469		24	SCREW M6S ISO 4014 M8X90 A480	
410	315105-0165		28	WASHER BRB 8,4X16 RFR	
420	312105-0453		4	SCREW M6S ISO 4017 M8X25 A480	

Pos	Part No	UN	Qty	Description	Page No

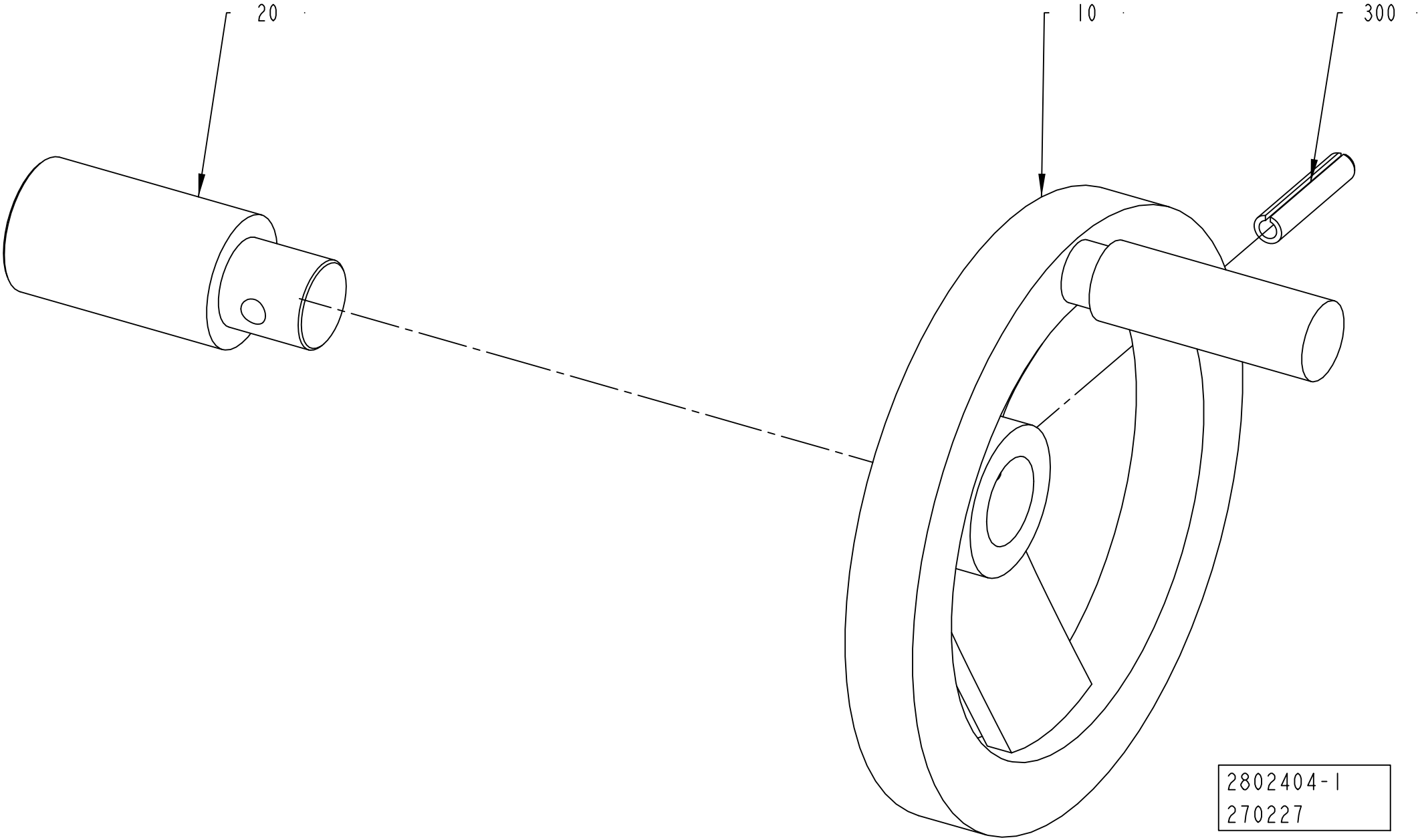
20
10
300
2802404-1
270227

ECM: 273295 - 20060921
Group number: 2802404-0100
Assembly Drawing: 2802404-1_1_AA

Pos	Part No	UN	Qty	Description	Page No
-					
010	2781286-0000		1	HAND WHEEL	
020	2788144-0000		1	SHAFT	
300	311112-0345		1	SPRING PIN, ISO 8752 6X32-C	

Pos	Part No	UN	Qty	Description	Page No

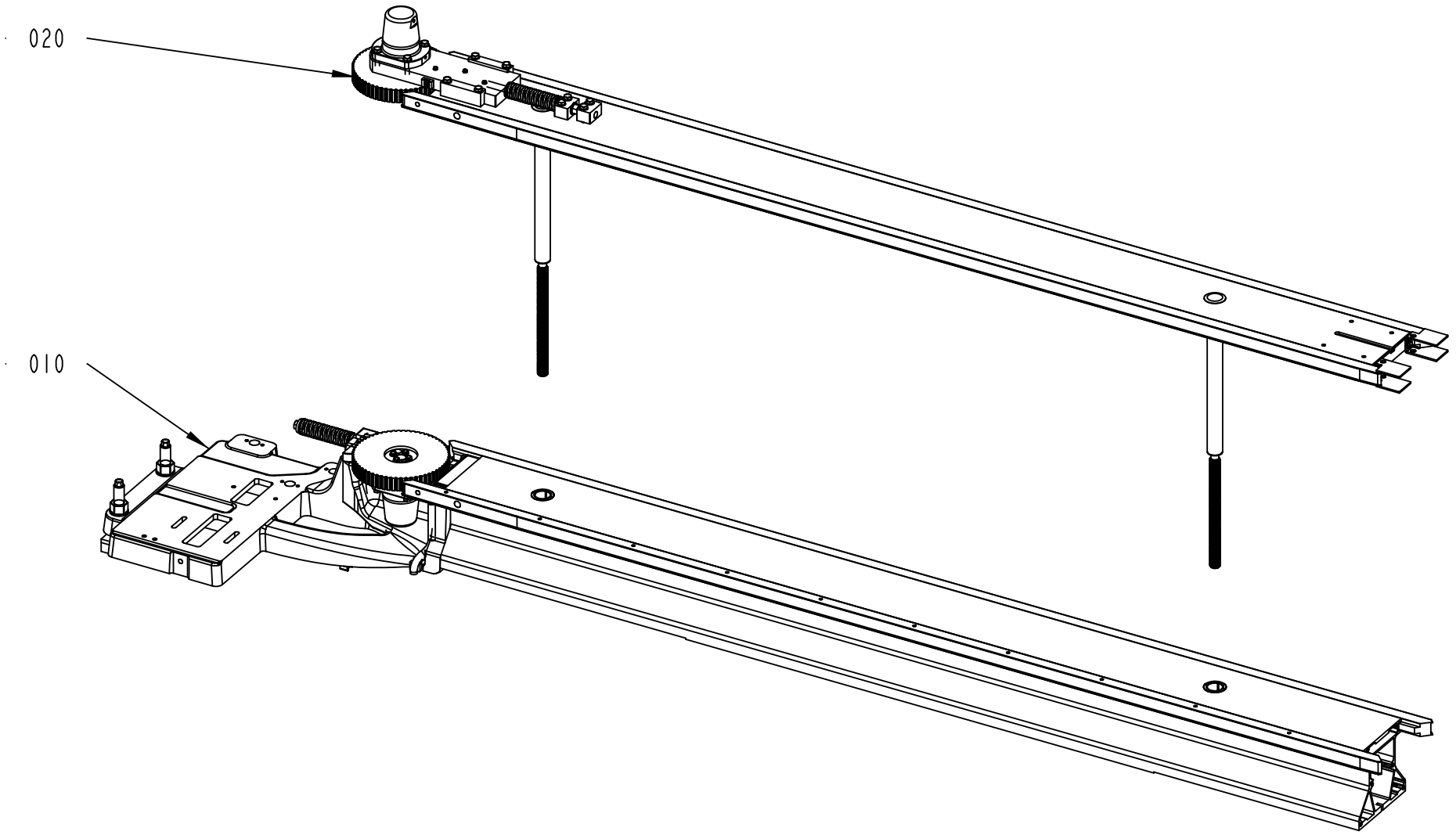

2838639-3
402952

Pos	Part No	UN	Qty	Description	Page No
TBA 0500SQ, TBA 1000B, TBA 1000SQ, TBA 1000S, TBA 1500S, TPA, TBA 1890S, TBA 2000S, TGA (See drawing on pages: 1-24, 1-26)					
020	2838641-0200		1	BELT	**1-29**
Common Parts					
010	2838640-0100		1	BELT UNIT	**1-33**

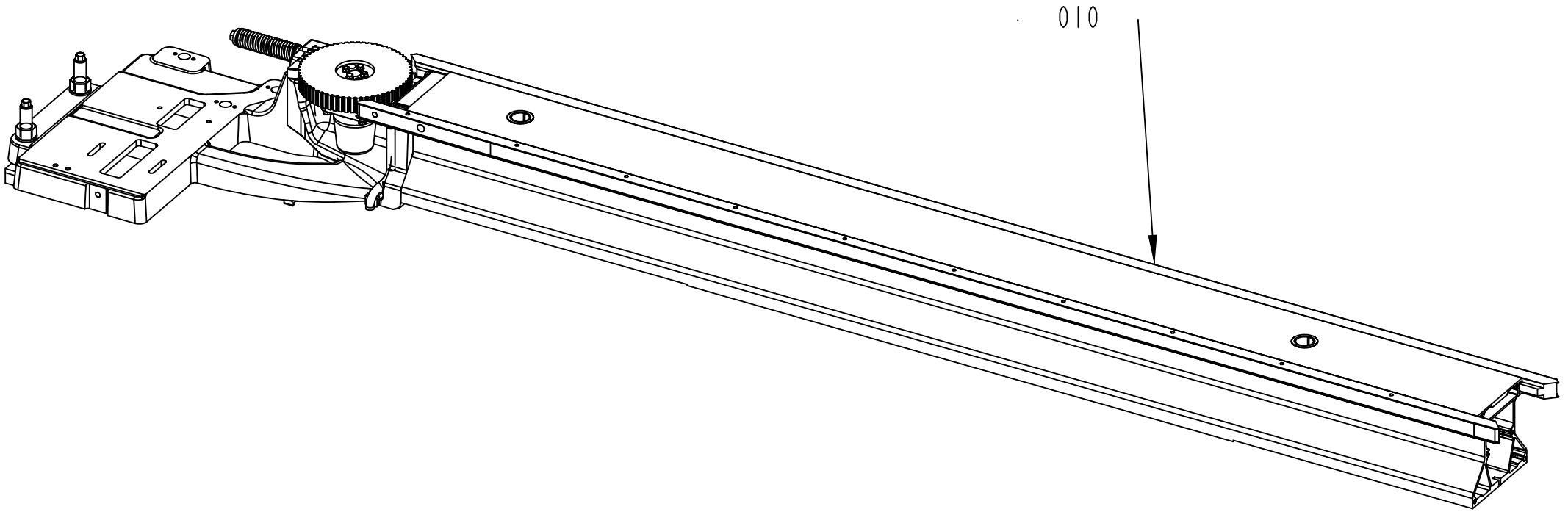

2838639-4
402952

Pos	Part No	UN	Qty	Description	Page No
TBA 0500SQ, TBA 1000B, TBA 1000SQ, TBA 1000S, TBA 1500S, TPA, TBA 1890S, TBA 2000S, TGA (See drawing on pages: 1-24, 1-26)					
020	2838641-0200		1	BELT	**1-29**
Common Parts					
010	2838640-0100		1	BELT UNIT	**1-33**

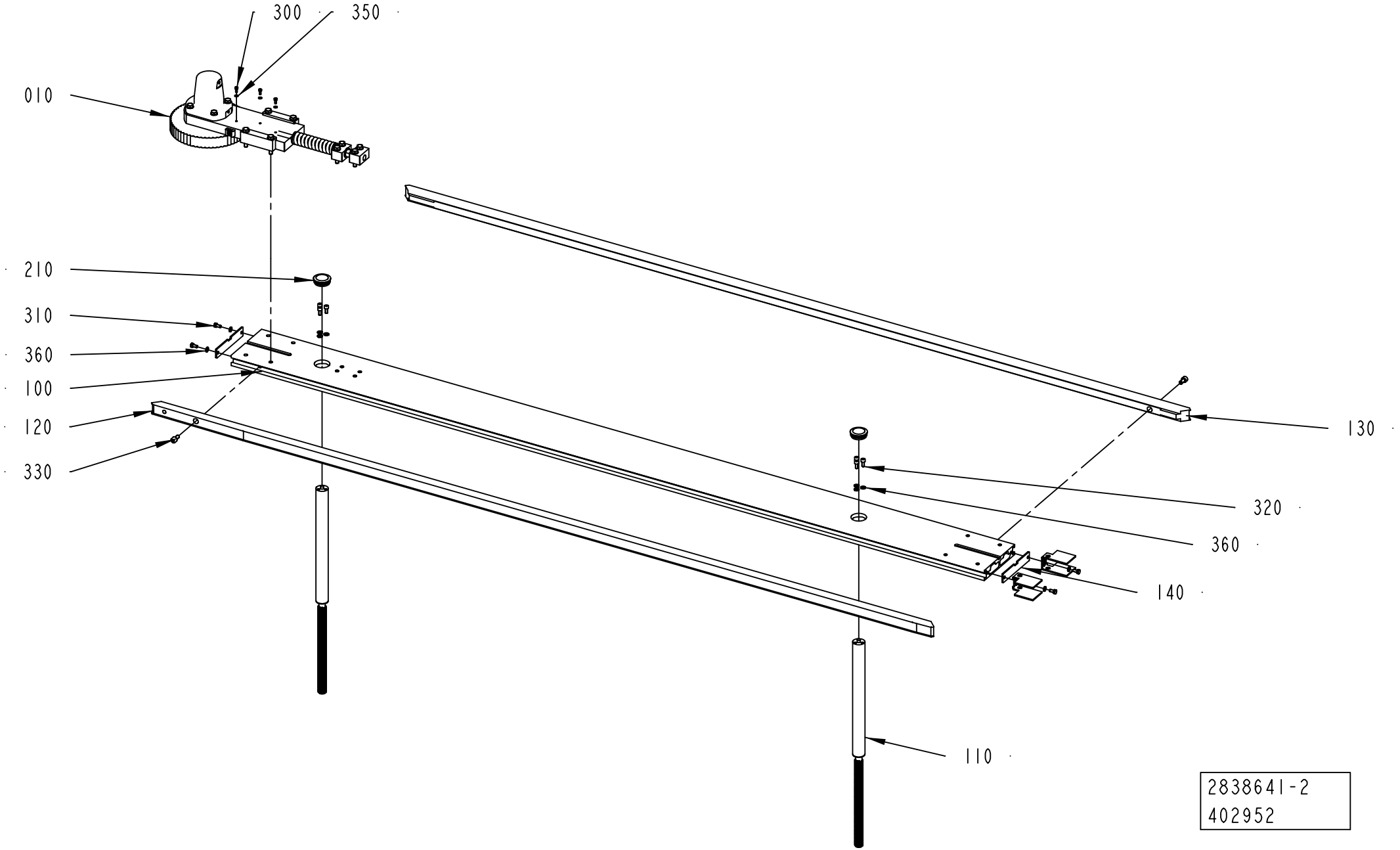
300
350
010
210
310
360
100
120
330
130
320
360
140
110
2838641-2
402952

ECM: 407687 - 20091001
Group number: 2838641-0200
Assembly Drawing: 2838641-2_1_AA

Pos	Part No	UN	Qty	Description	Page No
-					
010	2766954-0100		1	BELT STRETCHER	**1-31**
100	2766615-0000		1	FRAME	
110	2766927-0000		2	PILLAR	
120	2766611-0000		1	GUIDE	
130	2773616-0000		1	GUIDE	
140	2788134-0000		2	COVER	
150	3043254-0000		2	COVER	
210	90261-0064		2	PLUG, BLIND, PLASTIC, NO. SFL42	
300	312105-0289		3	SCREW M6S H4X10 A4 70 ISO4017/DIN933	
310	312105-0366		4	SCREW M6S ISO 4017 M6X12 A480	
320	312115-0367		6	SCREW ISO4762 M6X14 A4 80	
330	312115-0449		2	SCREW ISO4762 M8X16 A4 80	
350	315105-0136		3	WASHER BRB 4,3X8 RFR	
360	315105-0153		10	WASHER BRB 6,4X12 RFR	

Pos	Part No	UN	Qty	Description	Page No

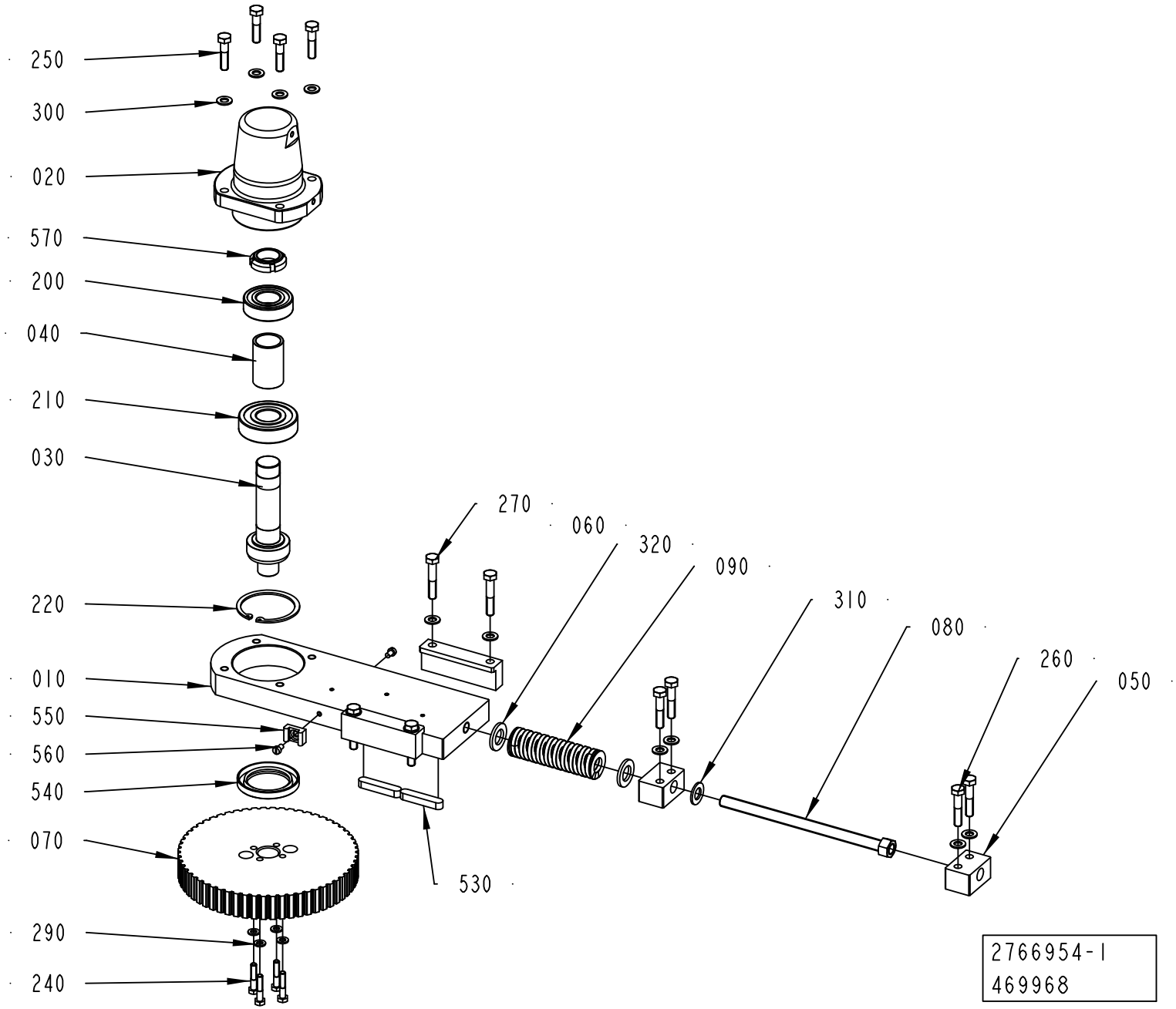
250
300
020
570
200
040
210
030
220
010
550
560
540
070
290
240
270
060
320
090
310
080
260
050
530
2766954-1
469968

ECM: 471862 - 20101109
Group number: 2766954-0100
Assembly Drawing: 2766954-1_1_AC

Pos	Part No	UN	Qty	Description	Page No
-					
010	2766953-0000		1	PLATE	
020	3022796-0000		1	BELLOWS	
030	2766958-0000		1	SHAFT	
040	2766959-0000		1	SPACER	
050	2766962-0000		2	BLOCK	
060	2766963-0000		2	BRACKET	
070	2766981-0000		1	TOOTHED PULLEY	
080	2817784-0000		1	SCREW	
090	3123920-0000		1	TENSION SPRING	
200	321309-0105		1	BALL BEARING 25/52X15	
210	321314-0105		1	BALL BEARING 25/62X17	
220	315752-0136		1	RETAINING RING FOR BORE DIN 472 62	
240	312105-0374		4	SCREW M6S ISO 4014 M6X30 A480	
250	312105-0457		4	SCREW M6S ISO 4014 M8X35 A480	
260	312105-0459		4	SCREW M6S ISO 4014 M8X40 A480	
270	312105-0460		4	SCREW M6S ISO 4014 M8X45 A480	
290	315105-0153		4	WASHER BRB 6,4X12 RFR	
300	315105-0165		12	WASHER BRB 8,4X16 RFR	
310	315105-0178		1	WASHER BRB 13X24 RFR	
320	315105-0186		2	WASHER BRB 17X30 RFR	
530	315705-0303		2	PARALLEL KEY W. ROUND ENDS 10X8X50 MM	
540	90091-0304		1	RADIAL SEAL 45X65X8 MM DUST LIP	
550	352113-0204		1	ANCHOR PLATES FOR STRIPS, TM3S25-M	
560	312125-0323		2	SCREW ISO 1207 M5X8 A4	
570	90459-6280		1	NUT GUK 5 M25 X 1.5 FZB	

Pos	Part No	UN	Qty	Description	Page No

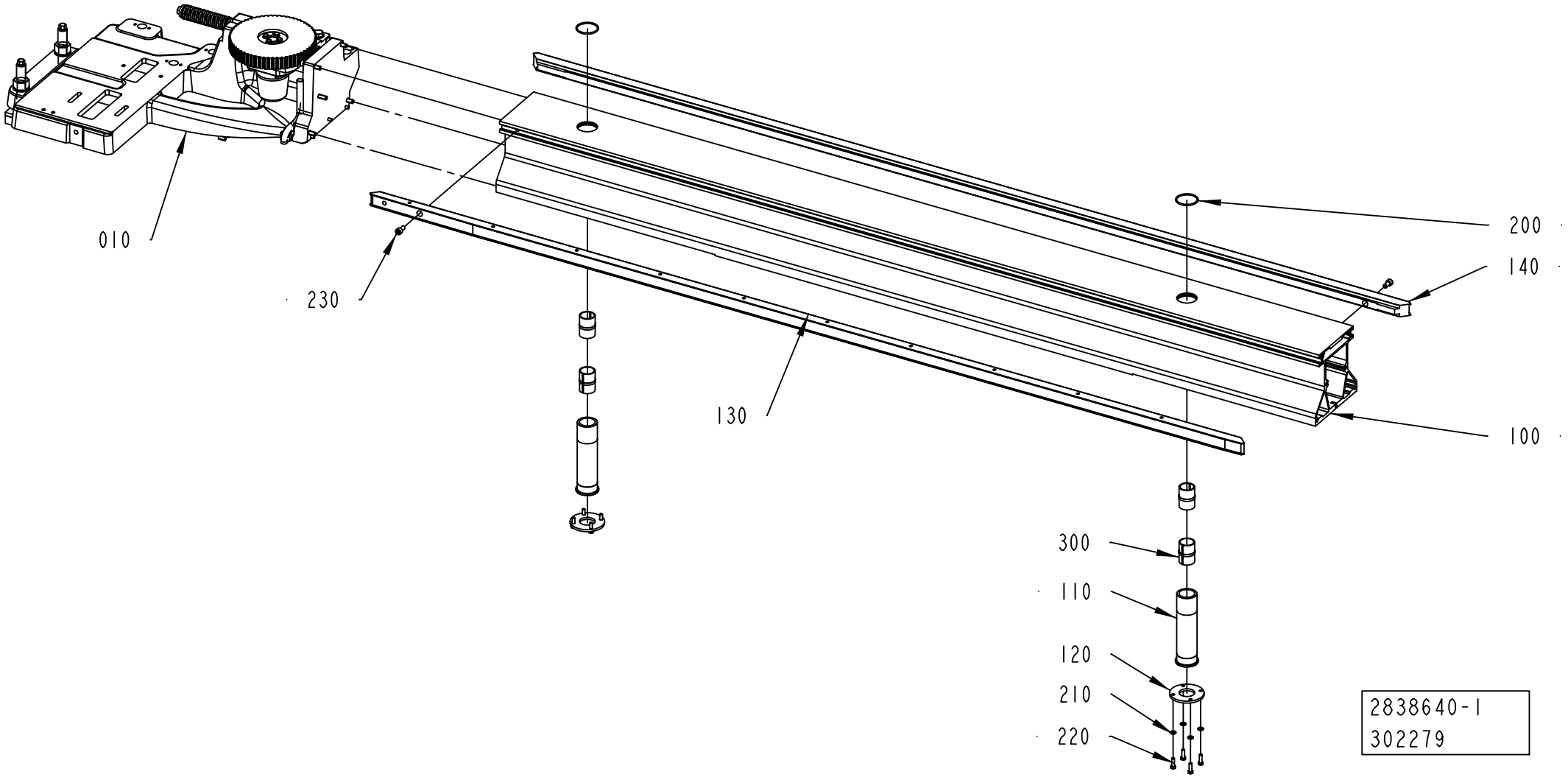
010
230
130
200
140
100
300
110
120
210
220
2838640-1
302279

ECM: 308663 - 20070525
Group number: 2838640-0100
Assembly Drawing: 2838640-1_1_AB

Pos	Part No	UN	Qty	Description	Page No
-					
010	2766980-0100		1	BELT STRETCHER	**1-35**
100	2766610-0000		1	FRAME	
110	2766974-0000		2	SLEEVE	
120	2766976-0000		2	FLANGE	
130	2873879-0000		1	GUIDE	
140	2773616-0000		1	GUIDE	
200	315202-0732		2	O-RING 44,12X2,62 MM	
210	315105-0153		8	WASHER BRB 6,4X12 RFR	
220	312105-0370		8	SCREW M6S ISO 4017 M6X20 A480	
230	312115-0449		2	SCREW ISO4762 M8X16 A4 80	
300	90600-0798		4	BUSHING INSERT, JUM-02-30	

Pos	Part No	UN	Qty	Description	Page No

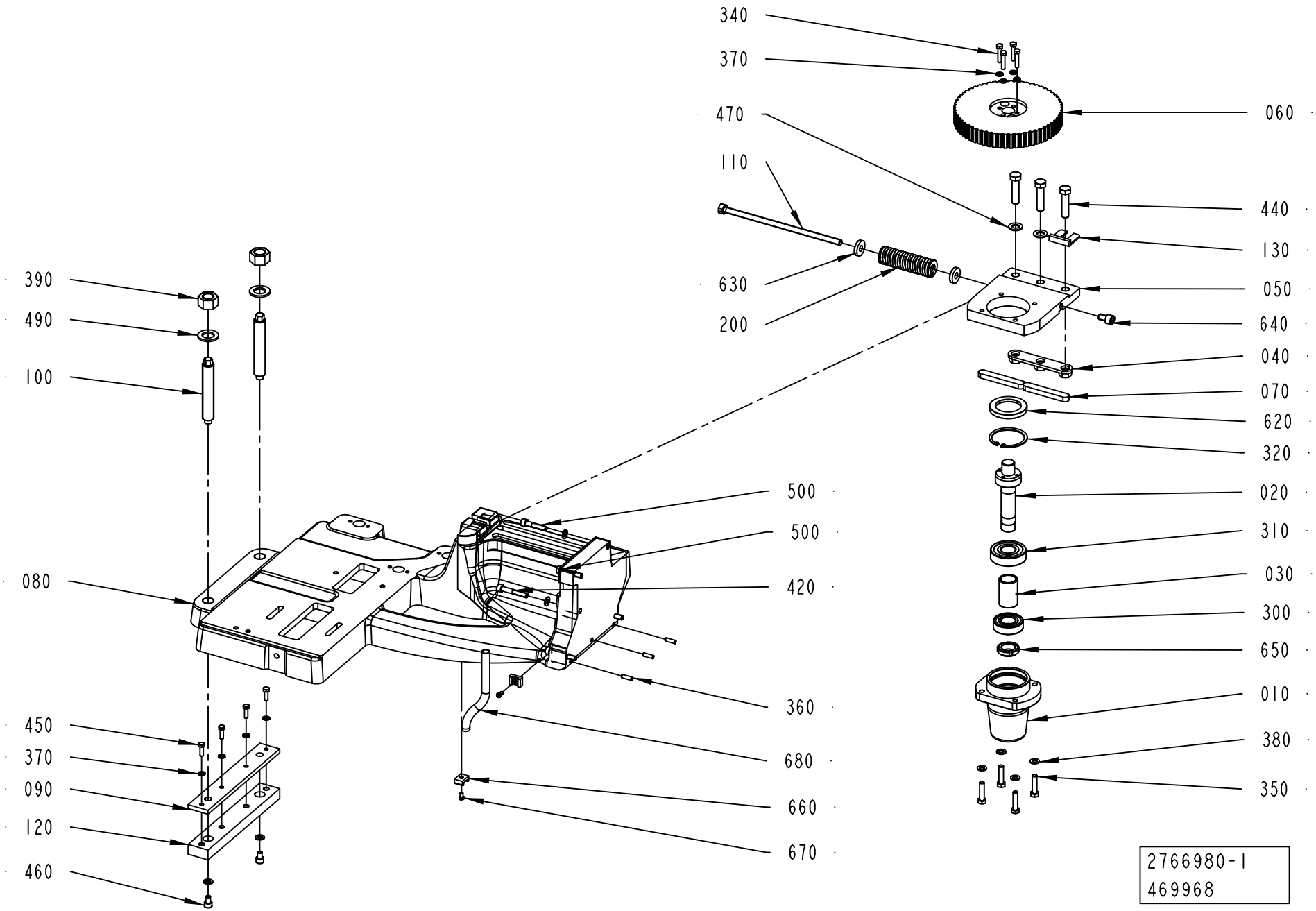
340
370
470
110
630
200
390
490
100
080
450
370
090
120
460
500
500
420
360
680
660
670
060
440
130
050
640
040
070
620
320
020
310
030
300
650
010
380
350
2766980-1
469968

ECM: 471863 - 20101109
Group number: 2766980-0100
Assembly Drawing: 2766980-1_1_AD

Pos	Part No	UN	Qty	Description	Page No
-					
010	3022796-0000		1	BELLOWS	
020	2766958-0000		1	SHAFT	
030	2766959-0000		1	SPACER	
040	2775417-0000		1	BRACKET	
050	2766989-0000		1	BRACKET	
060	2766981-0000		1	TOOTHED PULLEY	
070	315701-0371		2	PARALLEL KEY W. ROUND ENDS 14X9X90 MM	
080	2769746-0000		1	FRAME	
090	2775423-0000		1	PLATE	
100	2775421-0000		2	SCREW	
110	2805467-0000		1	SCREW	
120	2775420-0000		1	SLIDE	
130	2937337-0000		1	SPACER	
200	3123920-0000		1	TENSION SPRING	
300	321309-0105		1	BALL BEARING 25/52X15	
310	321314-0105		1	BALL BEARING 25/62X17	
320	315752-0136		1	RETAINING RING FOR BORE DIN 472 62	
340	312105-0374		4	SCREW M6S ISO 4014 M6X30 A480	
350	312105-0457		4	SCREW M6S ISO 4014 M8X35 A480	
360	311103-0353		3	PARALLEL PIN ISO 2338 6M6X20 A1	
370	315105-0153		8	WASHER BRB 6,4X12 RFR	
380	315105-0165		11	WASHER BRB 8,4X16 RFR	
390	312607-0326		2	HEXAGON NUT, EN 24032 M6M M20 A480	
420	312115-0461		2	SCREW ISO4762 M8X50 A4 80	
440	312109-0542		3	SCREW M6S ISO 4017 M12X50 A280	
450	312105-0370		4	SCREW M6S ISO 4017 M6X20 A480	
460	312115-0447		2	SCREW ISO4762 M8X12 A4 80	
470	315105-0178		2	WASHER BRB 13X24 RFR	
490	315105-0192		2	WASHER BRB 21X36 RFR	
500	312115-0459		3	SCREW ISO4762 M8X40 A4 80	
620	90091-0304		1	RADIAL SEAL 45X65X8 MM DUST LIP	
630	315125-0173		2	WASHER TBRSB 10,5X28X6 A4	
640	312115-0489		1	SCREW ISO4762 M10X16 A4 80	
650	90459-6280		1	NUT GUK 5 M25 X 1.5 FZB	
660	352113-0204		2	ANCHOR PLATES FOR STRIPS, TM3S25-M	
670	312125-0323		2	SCREW ISO 1207 M5X8 A4	
680	90166-0126	M	3	TUBE 12 MM PA,TRANSP.	

Pos	Part No	UN	Qty	Description	Page No

Machine Type	Group Description	Used-In	Group Number	Page No

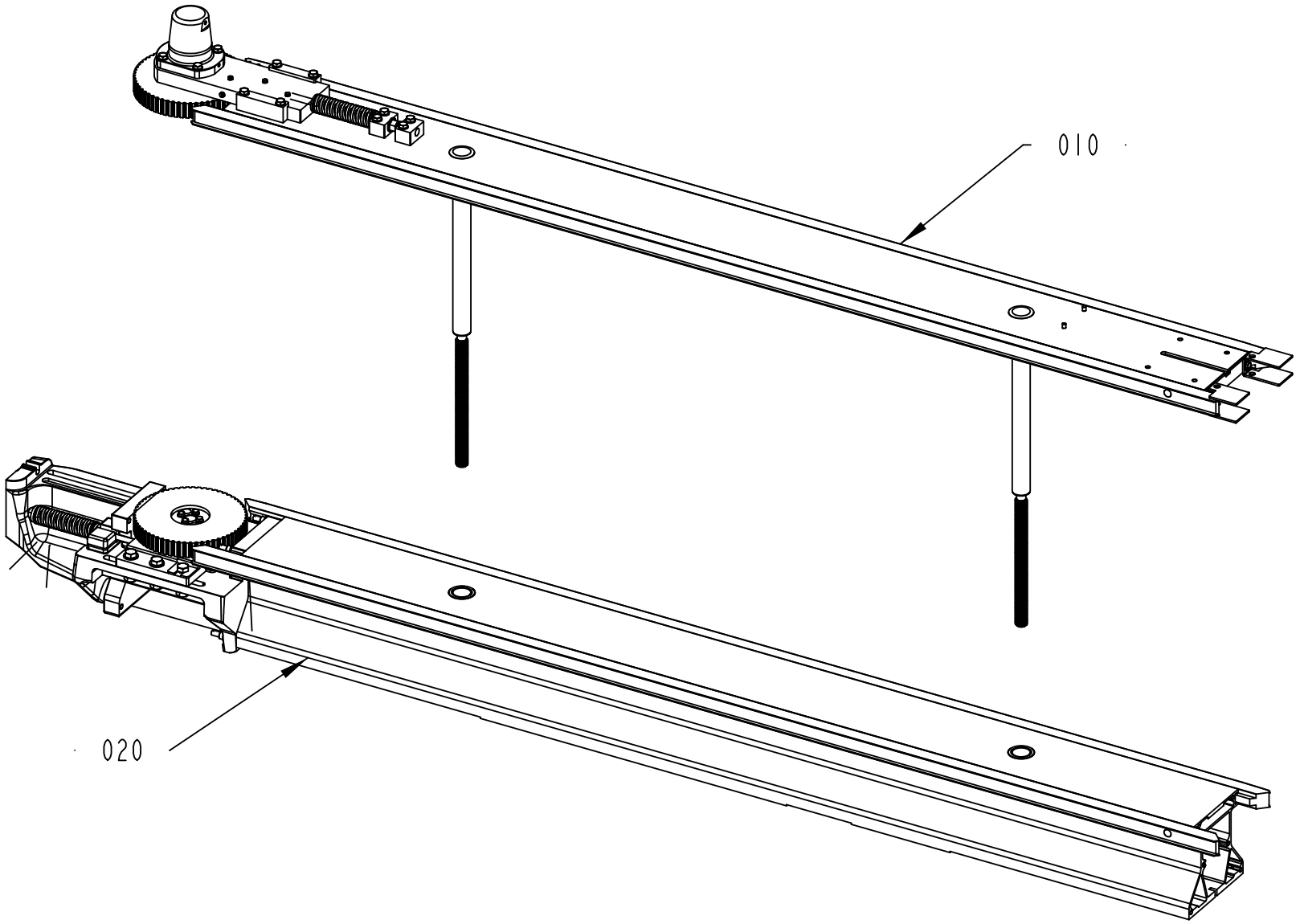

2838644-3
402952

Pos	Part No	UN	Qty	Description	Page No
TBA 0500SQ, TBA 1000B, TBA 1000SQ, TBA 1000S, TBA 1500S, TPA, TBA 1890S, TBA 2000S, TGA (See drawing on pages: 1-36, 1-38)					
010	2838645-0200		1	BELT	**1-41**
Common Parts					
020	2838646-0100		1	BELT UNIT	**1-45**

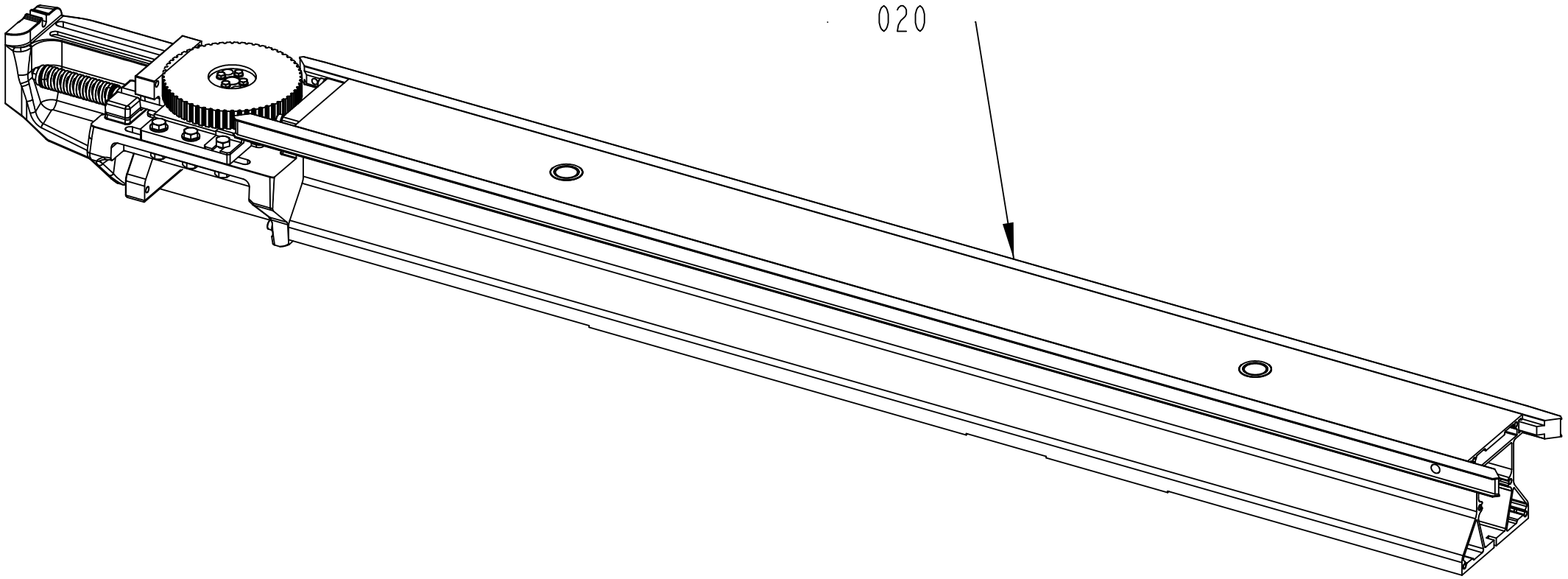

2838644-4
402952

Pos	Part No	UN	Qty	Description	Page No
TBA 0500SQ, TBA 1000B, TBA 1000SQ, TBA 1000S, TBA 1500S, TPA, TBA 1890S, TBA 2000S, TGA (See drawing on pages: 1-36, 1-38)					
010	2838645-0200		1	BELT	**1-41**
Common Parts					
020	2838646-0100		1	BELT UNIT	**1-45**

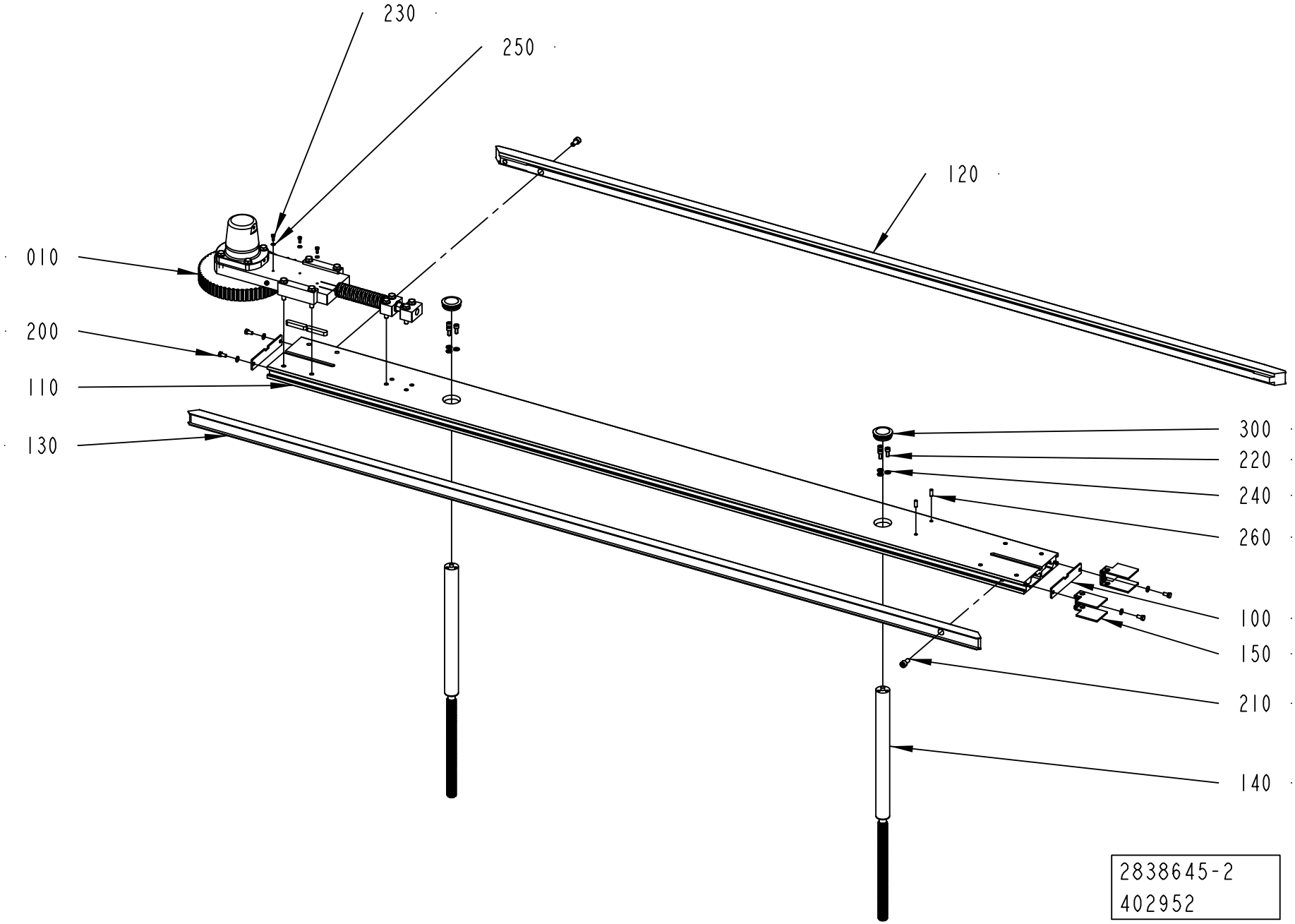
230
250
120
010
200
110
130
300
220
240
260
100
150
210
140
2838645-2
402952

ECM: 407690 - 20091001
Group number: 2838645-0200
Assembly Drawing: 2838645-2_1_AA

Pos	Part No	UN	Qty	Description	Page No
-					
010	2778572-0100		1	BELT STRETCHER	**1-43**
100	2788134-0000		2	COVER	
110	2778588-0000		1	FRAME	
120	2779774-0000		1	GUIDE	
130	2779775-0000		1	GUIDE	
140	2766927-0000		2	PILLAR	
150	3043254-0000		2	COVER	
200	312105-0366		4	SCREW M6S ISO 4017 M6X12 A480	
210	312115-0449		2	SCREW ISO4762 M8X16 A4 80	
220	312115-0367		6	SCREW ISO4762 M6X14 A4 80	
230	312105-0289		3	SCREW M6S H4X10 A4 70 ISO4017/DIN933	
240	315105-0153		10	WASHER BRB 6,4X12 RFR	
250	315105-0136		3	WASHER BRB 4,3X8 RFR	
260	311103-0351		2	PARALLEL PIN ISO 2338 6M6X16 A1	
300	90261-0064		2	PLUG, BLIND, PLASTIC, NO. SFL42	

Pos	Part No	UN	Qty	Description	Page No

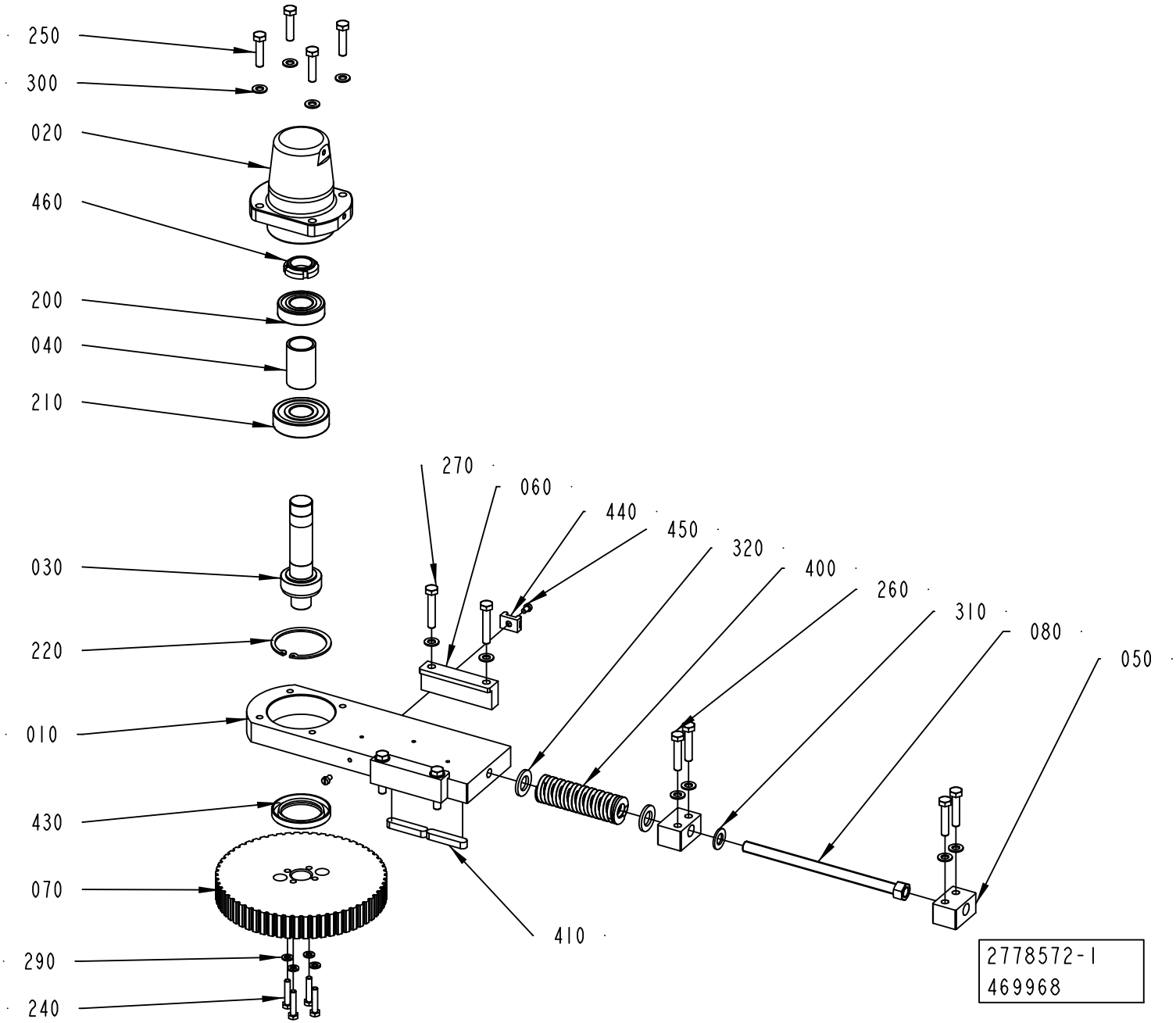
250
300
020
460
200
040
210
270
060
440
450
320
400
260
310
080
050
030
220
010
430
070
290
240
410
2778572-1
469968

ECM: 471865 - 20101109
Group number: 2778572-0100
Assembly Drawing: 2778572-1_1_AC

Pos	Part No	UN	Qty	Description	Page No
-					
010	2766953-0000		1	PLATE	
020	3022796-0000		1	BELLOWS	
030	2766958-0000		1	SHAFT	
040	2766959-0000		1	SPACER	
050	2766962-0000		2	BLOCK	
060	2766963-0000		2	BRACKET	
070	2766981-0000		1	TOOTHED PULLEY	
080	2817784-0000		1	SCREW	
200	321309-0105		1	BALL BEARING 25/52X15	
210	321314-0105		1	BALL BEARING 25/62X17	
220	315752-0136		1	RETAINING RING FOR BORE DIN 472 62	
240	312105-0374		4	SCREW M6S ISO 4014 M6X30 A480	
250	312105-0457		4	SCREW M6S ISO 4014 M8X35 A480	
260	312105-0459		4	SCREW M6S ISO 4014 M8X40 A480	
270	312105-0460		4	SCREW M6S ISO 4014 M8X45 A480	
290	315105-0153		4	WASHER BRB 6,4X12 RFR	
300	315105-0165		12	WASHER BRB 8,4X16 RFR	
310	315105-0178		1	WASHER BRB 13X24 RFR	
320	315105-0186		2	WASHER BRB 17X30 RFR	
400	3123920-0000		1	TENSION SPRING	
410	315705-0303		2	PARALLEL KEY W. ROUND ENDS 10X8X50 MM	
430	90091-0304		1	RADIAL SEAL 45X65X8 MM DUST LIP	
440	352113-0204		1	ANCHOR PLATES FOR STRIPS, TM3S25-M	
450	312125-0323		2	SCREW ISO 1207 M5X8 A4	
460	90459-6280		1	NUT GUK 5 M25 X 1.5 FZB	

Pos	Part No	UN	Qty	Description	Page No

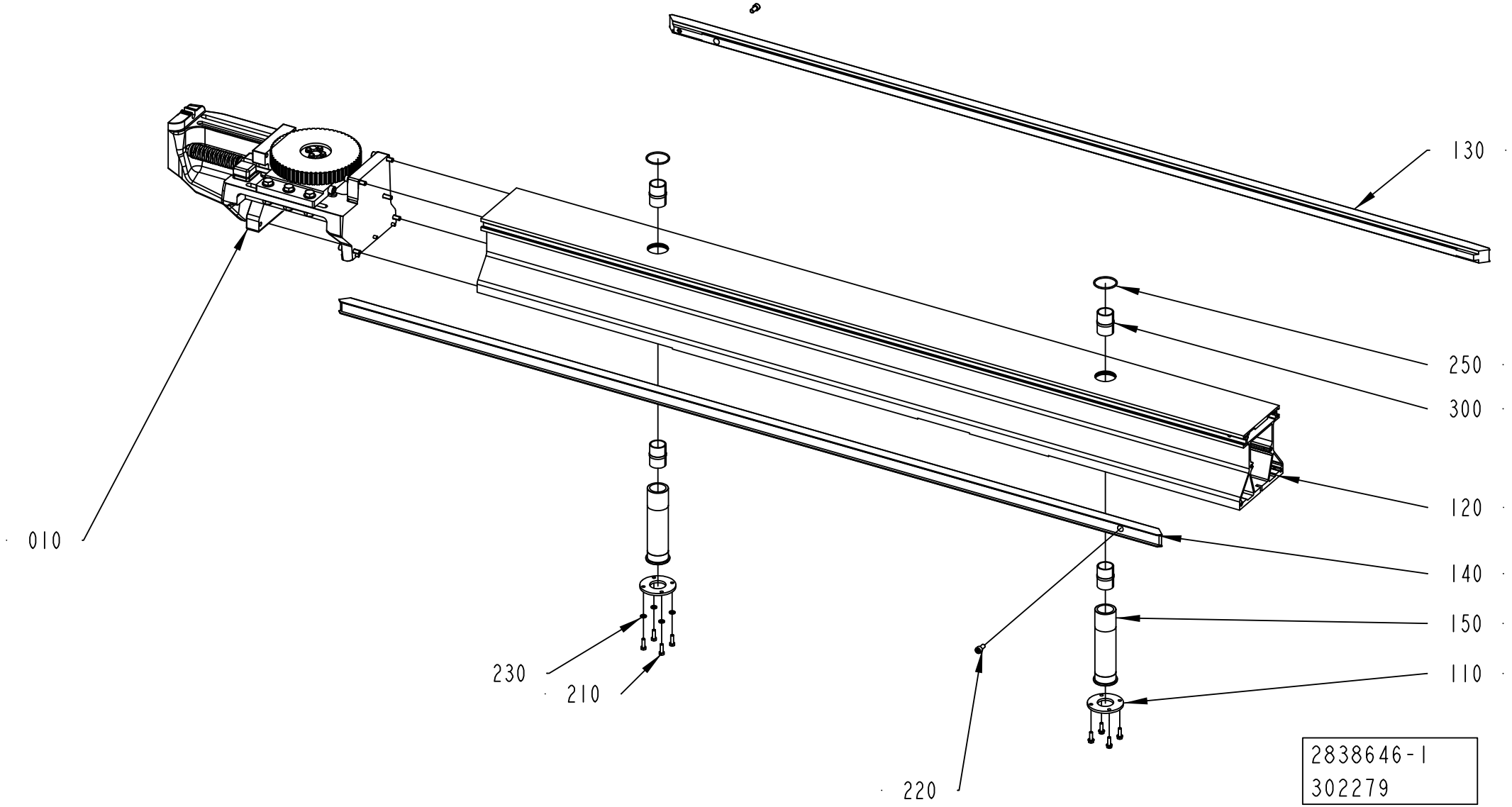
130
250
300
120
140
150
110
010
230
210
220
2838646-1
302279

ECM: 308666 - 20070525
Group number: 2838646-0100
Assembly Drawing: 2838646-1_1_AB

Pos	Part No	UN	Qty	Description	Page No
-					
010	2769743-0100		1	BELT STRETCHER	**1-47**
110	2766976-0000		2	FLANGE	
120	2778570-0000		1	FRAME	
130	2873878-0000		1	GUIDE	
140	2779775-0000		1	GUIDE	
150	2766974-0000		2	SLEEVE	
210	312105-0370		8	SCREW M6S ISO 4017 M6X20 A480	
220	312115-0449		2	SCREW ISO4762 M8X16 A4 80	
230	315105-0153		8	WASHER BRB 6,4X12 RFR	
250	315202-0732		2	O-RING 44,12X2,62 MM	
300	90600-0798		4	BUSHING INSERT, JUM-02-30	

Pos	Part No	UN	Qty	Description	Page No

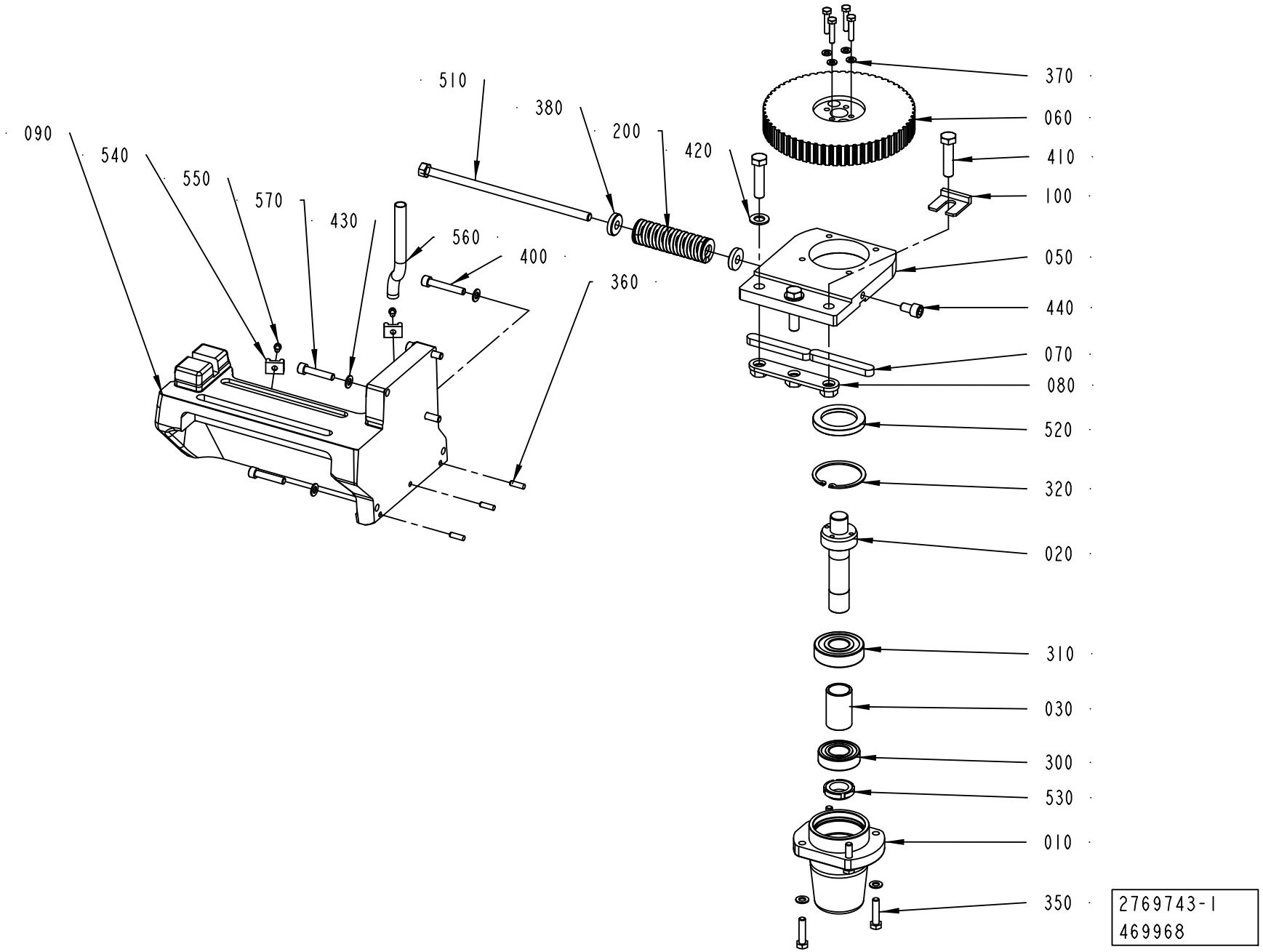
090
540
550
570
430
560
400
510
380
200
420
360
370
060
410
100
050
440
070
080
520
320
020
310
030
300
530
010
350
2769743-1
469968

ECM: 471864 - 20101109
Group number: 2769743-0100
Assembly Drawing: 2769743-1_1_AD

Pos	Part No	UN	Qty	Description	Page No
-					
010	3022796-0000		1	BELLOWS	
020	2766958-0000		1	SHAFT	
030	2766959-0000		1	SPACER	
050	2766989-0000		1	BRACKET	
060	2766981-0000		1	TOOTHED PULLEY	
070	315701-0371		2	PARALLEL KEY W. ROUND ENDS 14X9X90 MM	
080	2775417-0000		1	BRACKET	
090	2778571-0000		1	FRAME	
100	2937337-0000		1	SPACER	
200	3123920-0000		1	TENSION SPRING	
300	321309-0105		1	BALL BEARING 25/52X15	
310	321314-0105		1	BALL BEARING 25/62X17	
320	315752-0136		1	RETAINING RING FOR BORE DIN 472 62	
340	312105-0374		4	SCREW M6S ISO 4014 M6X30 A480	
350	312105-0457		4	SCREW M6S ISO 4014 M8X35 A480	
360	311103-0353		3	PARALLEL PIN ISO 2338 6M6X20 A1	
370	315105-0153		4	WASHER BRB 6,4X12 RFR	
380	315125-0173		2	WASHER TBRSB 10,5X28X6 A4	
400	312115-0461		2	SCREW ISO4762 M8X50 A4 80	
410	312109-0542		3	SCREW M6S ISO 4017 M12X50 A280	
420	315105-0178		2	WASHER BRB 13X24 RFR	
430	315105-0165		9	WASHER BRB 8,4X16 RFR	
440	312115-0489		1	SCREW ISO4762 M10X16 A4 80	
510	2805467-0000		1	SCREW	
520	90091-0304		1	RADIAL SEAL 45X65X8 MM DUST LIP	
530	90459-6280		1	NUT GUK 5 M25 X 1.5 FZB	
540	352113-0204		2	ANCHOR PLATES FOR STRIPS, TM3S25-M	
550	312125-0323		2	SCREW ISO 1207 M5X8 A4	
560	90166-0126	M	1	TUBE 12 MM PA,TRANSP.	
570	312115-0459		3	SCREW ISO4762 M8X40 A4 80	

Pos	Part No	UN	Qty	Description	Page No

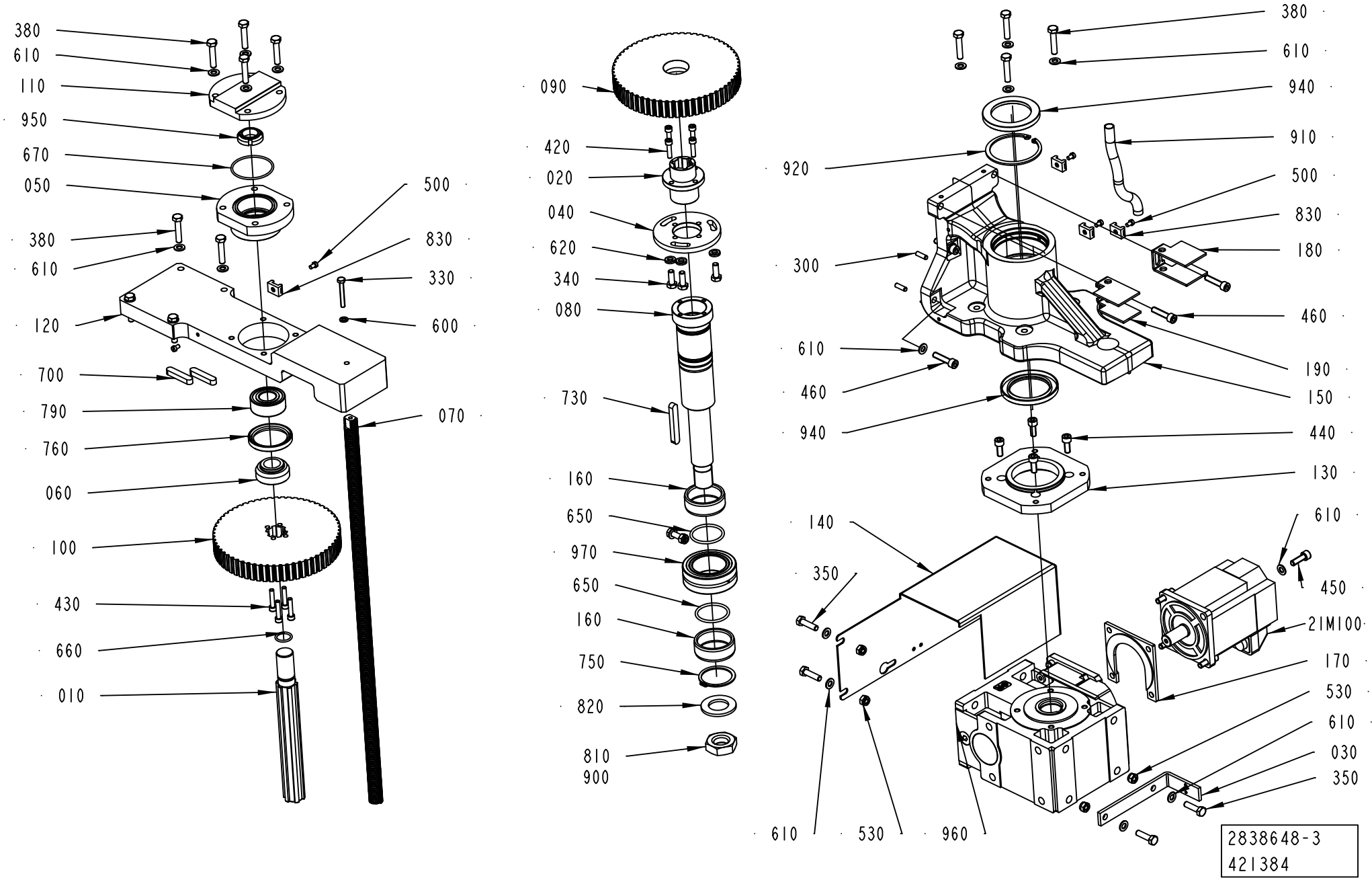
380
610
110
950
670
050
380
610
120
700
790
760
060
100
430
660
010
500
830
330
600
070
090
420
020
040
620
340
080
730
160
650
970
650
160
750
820
810
900
380
610
940
910
920
500
830
180
300
460
610
460
940
190
150
440
130
140
610
350
450
21M100
170
530
610
030
350
610
530
960
2838648-3
421384

ECM: 433237 - 20100401
Group number: 2838648-0200
Assembly Drawing: 2838648-3_1_AC

This list covers pages from 1-48 to 1-51

Pos	Part No	UN	Qty	Description	Page No
TBA 0200SQ, TBA 0250SQ (See drawing on page: 1-50)					
100	2907981-0000		1	NUT	
380	312105-0459		4	SCREW M6S ISO 4014 M8X40 A480	
500	312125-0323		3	SCREW ISO 1207 M5X8 A4	
610	315105-0165		17	WASHER BRB 8,4X16 RFR	
830	352113-0204		3	ANCHOR PLATES FOR STRIPS, TM3S25-M	
TBA 0500SQ, TBA 1000B, TBA 1000SQ, TBA 1000S, TBA 1500S, TPA, TBA 1890S, TBA 2000S, TGA (See drawing on page: 1-48)					
010	2775446-0000		1	SHAFT	
050	2775445-0000		1	SPACER	
060	2775443-0000		1	SPACER	
070	2802392-0000		1	PILLAR	
100	2775442-0000		1	TOOTHED PULLEY	
110	2778566-0000		1	BELLOWS	
120	2985846-0000		1	PLATE	
330	312104-0379		1	SCREW M6S M6X45H FZB	
380	312105-0459		12	SCREW M6S ISO 4014 M8X40 A480	
430	312115-0374		4	SCREW ISO4762 M6X30 A4 80	
500	312125-0323		5	SCREW ISO 1207 M5X8 A4	
600	315105-0153		1	WASHER BRB 6,4X12 RFR	
610	315105-0165		25	WASHER BRB 8,4X16 RFR	
660	315202-0717		1	O-RING 20,29X2,62 MM	
670	315202-0741		1	O-RING 58,42X2,62 MM	
700	315705-0303		2	PARALLEL KEY W. ROUND ENDS 10X8X50 MM	
760	315221-0198		1	RADIAL SEAL 50X65X8 MM	
790	321330-0105		1	ANG. BALL BEAR 25/52X20,6	
830	352113-0204		4	ANCHOR PLATES FOR STRIPS, TM3S25-M	
950	90459-6280		1	NUT GUK 5 M25 X 1.5 FZB	
Common Parts					
020	2775439-0000		1	BUSHING	
030	2837626-0000		1	BRACKET	
040	2775438-0000		1	PLATE	
080	2837624-0000		1	SHAFT	
090	2775437-0000		1	TOOTHED PULLEY	
130	2837627-0000		1	FLANGE	
140	2837630-0000		1	COVER	
150	2837623-0000		1	BRACKET	
160	2837628-0000		2	SPACER	
170	2985781-0000		1	PLATE	
180	3043254-0000		1	COVER	
190	3053815-0000		1	COVER	
21M100	90601-0668		1	SERVO MOTOR MPL-B420P-MK72AA SERIES A	
300	311103-0353		3	PARALLEL PIN ISO 2338 6M6X20 A1	
340	312105-0452		3	SCREW M6S ISO 4017 M8X22 A480	
350	312105-0455		5	SCREW M6S ISO 4017 M8X30 A480	
420	312115-0372		4	SCREW ISO4762 M6X25 A4 80	
440	312115-0451		8	SCREW ISO4762 M8X20 A4 80	
450	312115-0453		4	SCREW ISO4762 M8X25 A4 80	
460	312115-0457		6	SCREW ISO4762 M8X35 A4 80	
530	312812-0318		5	HEXAGON NUT, NY-LOCK M8 A480	
620	315115-0165		3	WASHER PLAIN, TBRB 8,4/16 H=3	
650	315202-0602		2	O-RING 44,04X3,53 MM	
730	315705-0307		1	PARALLEL KEY W. ROUND ENDS 10X8X70 MM	
750	315751-0130		1	RETAINING RING FOR SHAFT DIN 471 50 SS	
810	312625-0330		1	HEXAGON THIN NUT, EN 24035 ML6M M27 A4	
820	315105-0203		1	WASHER BRB 30X52 RFR	
900	90157-0037	ML	1	THREAD SEALANT LOCTITE 542	
910	90166-0126	M	3	TUBE 12 MM PA,TRANSP.	
920	90458-0181		1	RETAINING RING FOR BORE DIN 472 80 SS	
940	90459-4588		2	RADIAL SEAL 60X85X8 MM DUST LIP	
960	90600-0803		1	WORM GEAR MR V 63 UO3A-80B4 … B5/35	
970	90600-0892		1	NEEDLE ROLLER BEARING, 50X80X28 MM	

Machine Type | Group Description | Used-In | Group Number | Page No

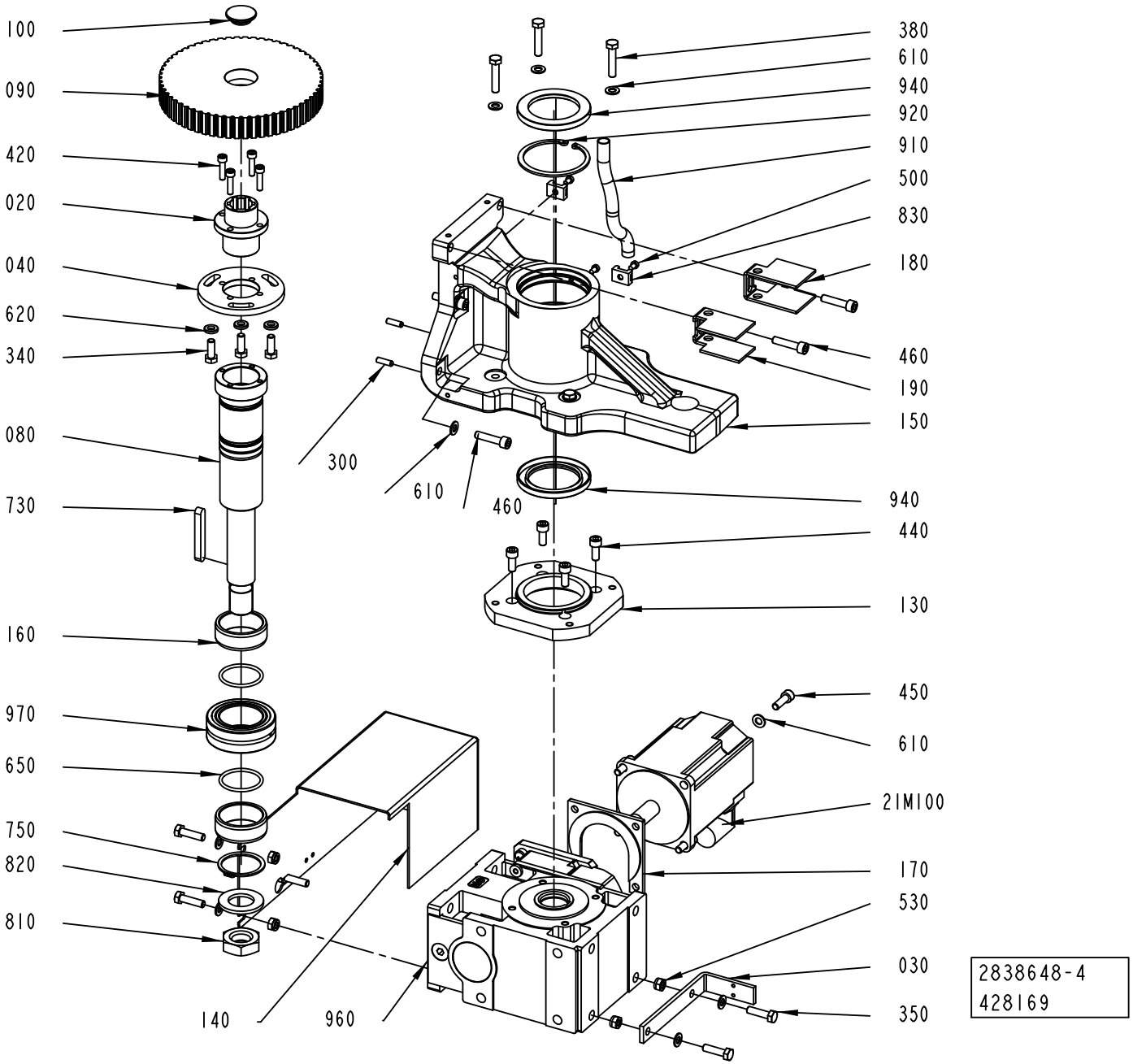
100
090
420
020
040
620
340
080
730
160
970
650
750
820
810
140
960
380
610
940
920
910
500
830
180
460
190
150
300
610
460
940
440
130
450
610
21M100
170
530
030
350
2838648-4
428169

ECM: 433237 - 20100401
Group number: 2838648-0200
Assembly Drawing: 2838648-4_1_AC

This list covers pages from 1-48 to 1-51

Pos	Part No	UN	Qty	Description	Page No
TBA 0200SQ, TBA 0250SQ (See drawing on page: 1-50)					
100	2907981-0000		1	NUT	
380	312105-0459		4	SCREW M6S ISO 4014 M8X40 A480	
500	312125-0323		3	SCREW ISO 1207 M5X8 A4	
610	315105-0165		17	WASHER BRB 8,4X16 RFR	
830	352113-0204		3	ANCHOR PLATES FOR STRIPS, TM3S25-M	
TBA 0500SQ, TBA 1000B, TBA 1000SQ, TBA 1000S, TBA 1500S, TPA, TBA 1890S, TBA 2000S, TGA (See drawing on page: 1-48)					
010	2775446-0000		1	SHAFT	
050	2775445-0000		1	SPACER	
060	2775443-0000		1	SPACER	
070	2802392-0000		1	PILLAR	
100	2775442-0000		1	TOOTHED PULLEY	
110	2778566-0000		1	BELLOWS	
120	2985846-0000		1	PLATE	
330	312104-0379		1	SCREW M6S M6X45H FZB	
380	312105-0459		12	SCREW M6S ISO 4014 M8X40 A480	
430	312115-0374		4	SCREW ISO4762 M6X30 A4 80	
500	312125-0323		5	SCREW ISO 1207 M5X8 A4	
600	315105-0153		1	WASHER BRB 6,4X12 RFR	
610	315105-0165		25	WASHER BRB 8,4X16 RFR	
660	315202-0717		1	O-RING 20,29X2,62 MM	
670	315202-0741		1	O-RING 58,42X2,62 MM	
700	315705-0303		2	PARALLEL KEY W. ROUND ENDS 10X8X50 MM	
760	315221-0198		1	RADIAL SEAL 50X65X8 MM	
790	321330-0105		1	ANG. BALL BEAR 25/52X20,6	
830	352113-0204		4	ANCHOR PLATES FOR STRIPS, TM3S25-M	
950	90459-6280		1	NUT GUK 5 M25 X 1.5 FZB	
Common Parts					
020	2775439-0000		1	BUSHING	
030	2837626-0000		1	BRACKET	
040	2775438-0000		1	PLATE	
080	2837624-0000		1	SHAFT	
090	2775437-0000		1	TOOTHED PULLEY	
130	2837627-0000		1	FLANGE	
140	2837630-0000		1	COVER	
150	2837623-0000		1	BRACKET	
160	2837628-0000		2	SPACER	
170	2985781-0000		1	PLATE	
180	3043254-0000		1	COVER	
190	3053815-0000		1	COVER	
21M100	90601-0668		1	SERVO MOTOR MPL-B420P-MK72AA SERIES A	
300	311103-0353		3	PARALLEL PIN ISO 2338 6M6X20 A1	
340	312105-0452		3	SCREW M6S ISO 4017 M8X22 A480	
350	312105-0455		5	SCREW M6S ISO 4017 M8X30 A480	
420	312115-0372		4	SCREW ISO4762 M6X25 A4 80	
440	312115-0451		8	SCREW ISO4762 M8X20 A4 80	
450	312115-0453		4	SCREW ISO4762 M8X25 A4 80	
460	312115-0457		6	SCREW ISO4762 M8X35 A4 80	
530	312812-0318		5	HEXAGON NUT, NY-LOCK M8 A480	
620	315115-0165		3	WASHER PLAIN, TBRB 8,4/16 H=3	
650	315202-0602		2	O-RING 44,04X3,53 MM	
730	315705-0307		1	PARALLEL KEY W. ROUND ENDS 10X8X70 MM	
750	315751-0130		1	RETAINING RING FOR SHAFT DIN 471 50 SS	
810	312625-0330		1	HEXAGON THIN NUT, EN 24035 ML6M M27 A4	
820	315105-0203		1	WASHER BRB 30X52 RFR	
900	90157-0037	ML	1	THREAD SEALANT LOCTITE 542	
910	90166-0126	M	3	TUBE 12 MM PA,TRANSP.	
920	90458-0181		1	RETAINING RING FOR BORE DIN 472 80 SS	
940	90459-4588		2	RADIAL SEAL 60X85X8 MM DUST LIP	
960	90600-0803		1	WORM GEAR MR V 63 UO3A-80B4 … B5/35	
970	90600-0892		1	NEEDLE ROLLER BEARING, 50X80X28 MM	

Machine Type | Group Description | Used-In | Group Number | Page No

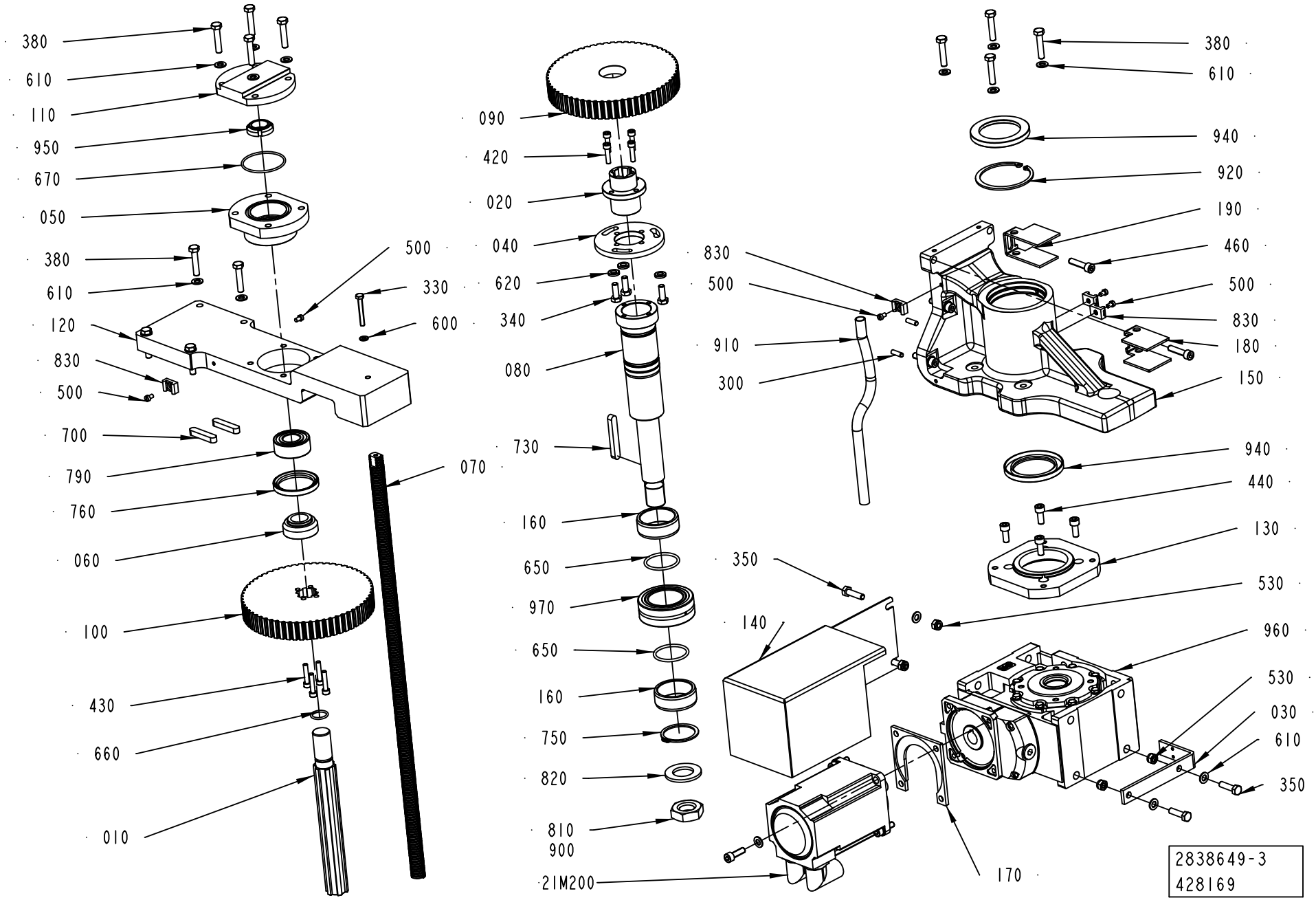
380
610
110
950
670
050
380
610
120
830
500
700
790
760
060
100
430
660
010
500
330
600
070
090
420
020
040
620
340
080
730
160
650
970
650
160
750
820
810
900
21M200
830
500
910
300
380
610
940
920
190
460
500
830
180
150
940
440
130
530
350
140
960
530
030
610
350
170
2838649-3
428169

ECM: 433238 - 20100401
Group number: 2838649-0200
Assembly Drawing: 2838649-3_1_AC

This list covers pages from 1-52 to 1-55

Pos	Part No	UN	Qty	Description	Page No
TBA 0200SQ, TBA 0250SQ (See drawing on page: 1-54)					
100	2907981-0000		1	NUT	
380	312105-0459		4	SCREW M6S ISO 4014 M8X40 A480	
500	312125-0323		3	SCREW ISO 1207 M5X8 A4	
610	315105-0165		17	WASHER BRB 8,4X16 RFR	
830	352113-0204		3	ANCHOR PLATES FOR STRIPS, TM3S25-M	
TBA 0500SQ, TBA 1000B, TBA 1000SQ, TBA 1000S, TBA 1500S, TPA, TBA 1890S, TBA 2000S, TGA (See drawing on page: 1-52)					
010	2775446-0000		1	SHAFT	
050	2775445-0000		1	SPACER	
060	2775443-0000		1	SPACER	
070	2802392-0000		1	PILLAR	
100	2775442-0000		1	TOOTHED PULLEY	
110	2778566-0000		1	BELLOWS	
120	2985846-0000		1	PLATE	
330	312104-0379		1	SCREW M6S M6X45H FZB	
380	312105-0459		12	SCREW M6S ISO 4014 M8X40 A480	
430	312115-0374		4	SCREW ISO4762 M6X30 A4 80	
500	312125-0323		5	SCREW ISO 1207 M5X8 A4	
600	315105-0153		1	WASHER BRB 6,4X12 RFR	
610	315105-0165		25	WASHER BRB 8,4X16 RFR	
660	315202-0717		1	O-RING 20,29X2,62 MM	
670	315202-0741		1	O-RING 58,42X2,62 MM	
700	315705-0303		2	PARALLEL KEY W. ROUND ENDS 10X8X50 MM	
760	315221-0198		1	RADIAL SEAL 50X65X8 MM	
790	321330-0105		1	ANG. BALL BEAR 25/52X20,6	
830	352113-0204		4	ANCHOR PLATES FOR STRIPS, TM3S25-M	
950	90459-6280		1	NUT GUK 5 M25 X 1.5 FZB	
Common Parts					
020	2775439-0000		1	BUSHING	
030	2837626-0000		1	BRACKET	
040	2775438-0000		1	PLATE	
080	2837624-0000		1	SHAFT	
090	2775437-0000		1	TOOTHED PULLEY	
130	2837627-0000		1	FLANGE	
140	2837625-0000		1	COVER	
150	2837623-0000		1	BRACKET	
160	2837628-0000		2	SPACER	
170	2985781-0000		1	PLATE	
180	3043254-0000		1	COVER	
190	3053816-0000		1	COVER	
21M200	90601-0668		1	SERVO MOTOR MPL-B420P-MK72AA SERIES A	
300	311103-0353		3	PARALLEL PIN ISO 2338 6M6X20 A1	
340	312105-0452		3	SCREW M6S ISO 4017 M8X22 A480	
350	312105-0455		6	SCREW M6S ISO 4017 M8X30 A480	
420	312115-0372		4	SCREW ISO4762 M6X25 A4 80	
440	312115-0451		8	SCREW ISO4762 M8X20 A4 80	
450	312115-0453		4	SCREW ISO4762 M8X25 A4 80	
460	312115-0457		6	SCREW ISO4762 M8X35 A4 80	
530	312812-0318		6	HEXAGON NUT, NY-LOCK M8 A480	
620	315115-0165		3	WASHER PLAIN, TBRB 8,4/16 H=3	
650	315202-0602		2	O-RING 44,04X3,53 MM	
730	315705-0307		1	PARALLEL KEY W. ROUND ENDS 10X8X70 MM	
750	315751-0130		1	RETAINING RING FOR SHAFT DIN 471 50 SS	
810	312625-0330		1	HEXAGON THIN NUT, EN 24035 ML6M M27 A4	
820	315105-0203		1	WASHER BRB 30X52 RFR	
900	90157-0037	ML	1	THREAD SEALANT LOCTITE 542	
910	90166-0126	M	3	TUBE 12 MM PA,TRANSP.	
920	90458-0181		1	RETAINING RING FOR BORE DIN 472 80 SS	
940	90459-4588		2	RADIAL SEAL 60X85X8 MM DUST LIP	
960	90600-0803		1	WORM GEAR MR V 63 UO3A-80B4 … B5/35	
970	90600-0892		1	NEEDLE ROLLER BEARING, 50X80X28 MM	

Machine Type | Group Description | Used-In | Group Number | Page No

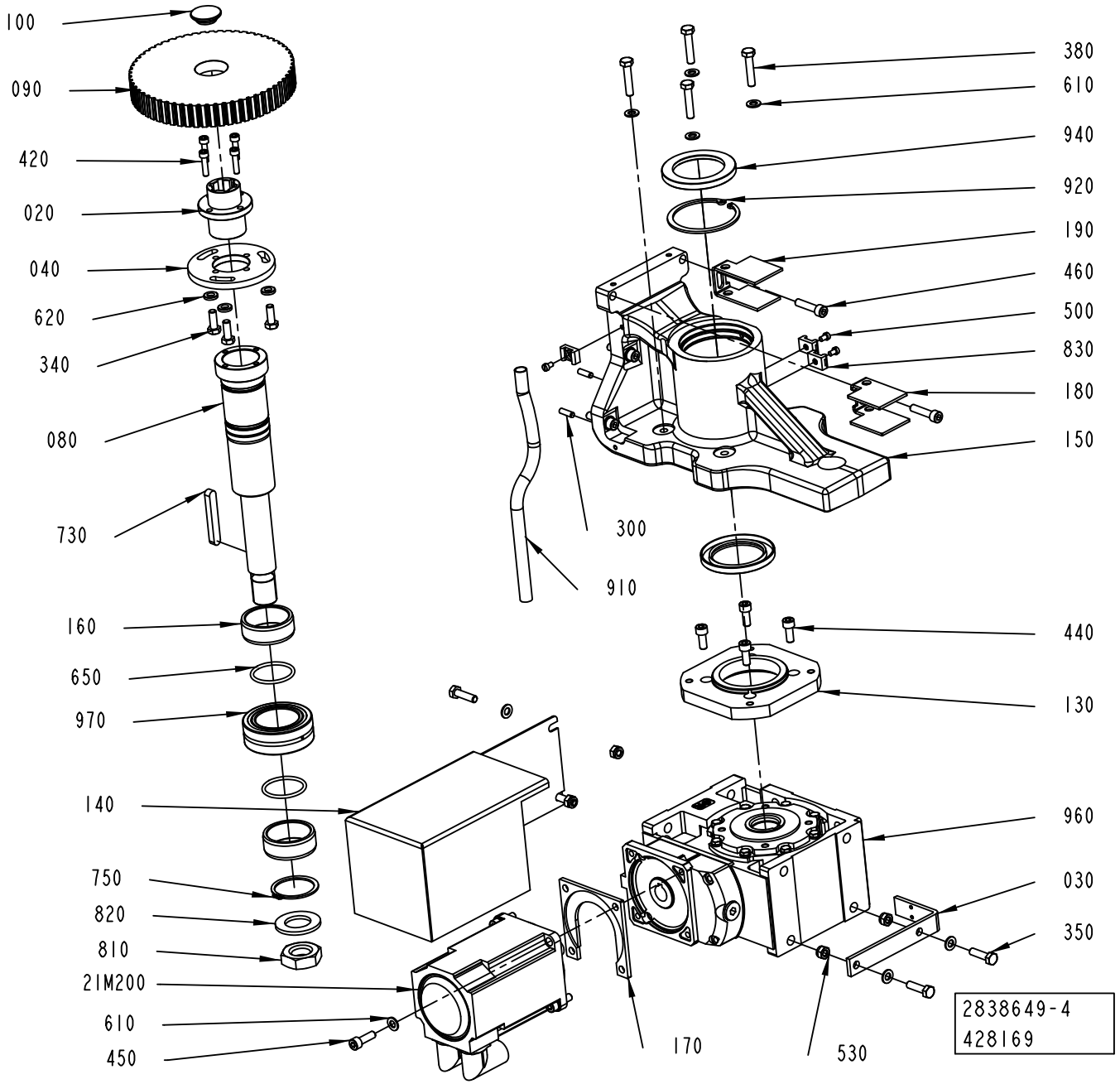
100
090
420
020
040
620
340
080
730
160
650
970
140
750
820
810
21M200
610
450
380
610
940
920
190
460
500
830
180
150
300
910
440
130
960
030
350
170
530
2838649-4
428169

ECM: 433238 - 20100401
Group number: 2838649-0200
Assembly Drawing: 2838649-4_1_AC

This list covers pages from 1-52 to 1-55

Pos	Part No	UN	Qty	Description	Page No
TBA 0200SQ, TBA 0250SQ (See drawing on page: 1-54)					
100	2907981-0000		1	NUT	
380	312105-0459		4	SCREW M6S ISO 4014 M8X40 A480	
500	312125-0323		3	SCREW ISO 1207 M5X8 A4	
610	315105-0165		17	WASHER BRB 8,4X16 RFR	
830	352113-0204		3	ANCHOR PLATES FOR STRIPS, TM3S25-M	
TBA 0500SQ, TBA 1000B, TBA 1000SQ, TBA 1000S, TBA 1500S, TPA, TBA 1890S, TBA 2000S, TGA (See drawing on page: 1-52)					
010	2775446-0000		1	SHAFT	
050	2775445-0000		1	SPACER	
060	2775443-0000		1	SPACER	
070	2802392-0000		1	PILLAR	
100	2775442-0000		1	TOOTHED PULLEY	
110	2778566-0000		1	BELLOWS	
120	2985846-0000		1	PLATE	
330	312104-0379		1	SCREW M6S M6X45H FZB	
380	312105-0459		12	SCREW M6S ISO 4014 M8X40 A480	
430	312115-0374		4	SCREW ISO4762 M6X30 A4 80	
500	312125-0323		5	SCREW ISO 1207 M5X8 A4	
600	315105-0153		1	WASHER BRB 6,4X12 RFR	
610	315105-0165		25	WASHER BRB 8,4X16 RFR	
660	315202-0717		1	O-RING 20,29X2,62 MM	
670	315202-0741		1	O-RING 58,42X2,62 MM	
700	315705-0303		2	PARALLEL KEY W. ROUND ENDS 10X8X50 MM	
760	315221-0198		1	RADIAL SEAL 50X65X8 MM	
790	321330-0105		1	ANG. BALL BEAR 25/52X20,6	
830	352113-0204		4	ANCHOR PLATES FOR STRIPS, TM3S25-M	
950	90459-6280		1	NUT GUK 5 M25 X 1.5 FZB	
Common Parts					
020	2775439-0000		1	BUSHING	
030	2837626-0000		1	BRACKET	
040	2775438-0000		1	PLATE	
080	2837624-0000		1	SHAFT	
090	2775437-0000		1	TOOTHED PULLEY	
130	2837627-0000		1	FLANGE	
140	2837625-0000		1	COVER	
150	2837623-0000		1	BRACKET	
160	2837628-0000		2	SPACER	
170	2985781-0000		1	PLATE	
180	3043254-0000		1	COVER	
190	3053816-0000		1	COVER	
21M200	90601-0668		1	SERVO MOTOR MPL-B420P-MK72AA SERIES A	
300	311103-0353		3	PARALLEL PIN ISO 2338 6M6X20 A1	
340	312105-0452		3	SCREW M6S ISO 4017 M8X22 A480	
350	312105-0455		6	SCREW M6S ISO 4017 M8X30 A480	
420	312115-0372		4	SCREW ISO4762 M6X25 A4 80	
440	312115-0451		8	SCREW ISO4762 M8X20 A4 80	
450	312115-0453		4	SCREW ISO4762 M8X25 A4 80	
460	312115-0457		6	SCREW ISO4762 M8X35 A4 80	
530	312812-0318		6	HEXAGON NUT, NY-LOCK M8 A480	
620	315115-0165		3	WASHER PLAIN, TBRB 8,4/16 H=3	
650	315202-0602		2	O-RING 44,04X3,53 MM	
730	315705-0307		1	PARALLEL KEY W. ROUND ENDS 10X8X70 MM	
750	315751-0130		1	RETAINING RING FOR SHAFT DIN 471 50 SS	
810	312625-0330		1	HEXAGON THIN NUT, EN 24035 ML6M M27 A4	
820	315105-0203		1	WASHER BRB 30X52 RFR	
900	90157-0037	ML	1	THREAD SEALANT LOCTITE 542	
910	90166-0126	M	3	TUBE 12 MM PA,TRANSP.	
920	90458-0181		1	RETAINING RING FOR BORE DIN 472 80 SS	
940	90459-4588		2	RADIAL SEAL 60X85X8 MM DUST LIP	
960	90600-0803		1	WORM GEAR MR V 63 UO3A-80B4 … B5/35	
970	90600-0892		1	NEEDLE ROLLER BEARING, 50X80X28 MM	

Machine Type | Group Description | Used-In | Group Number | Page No

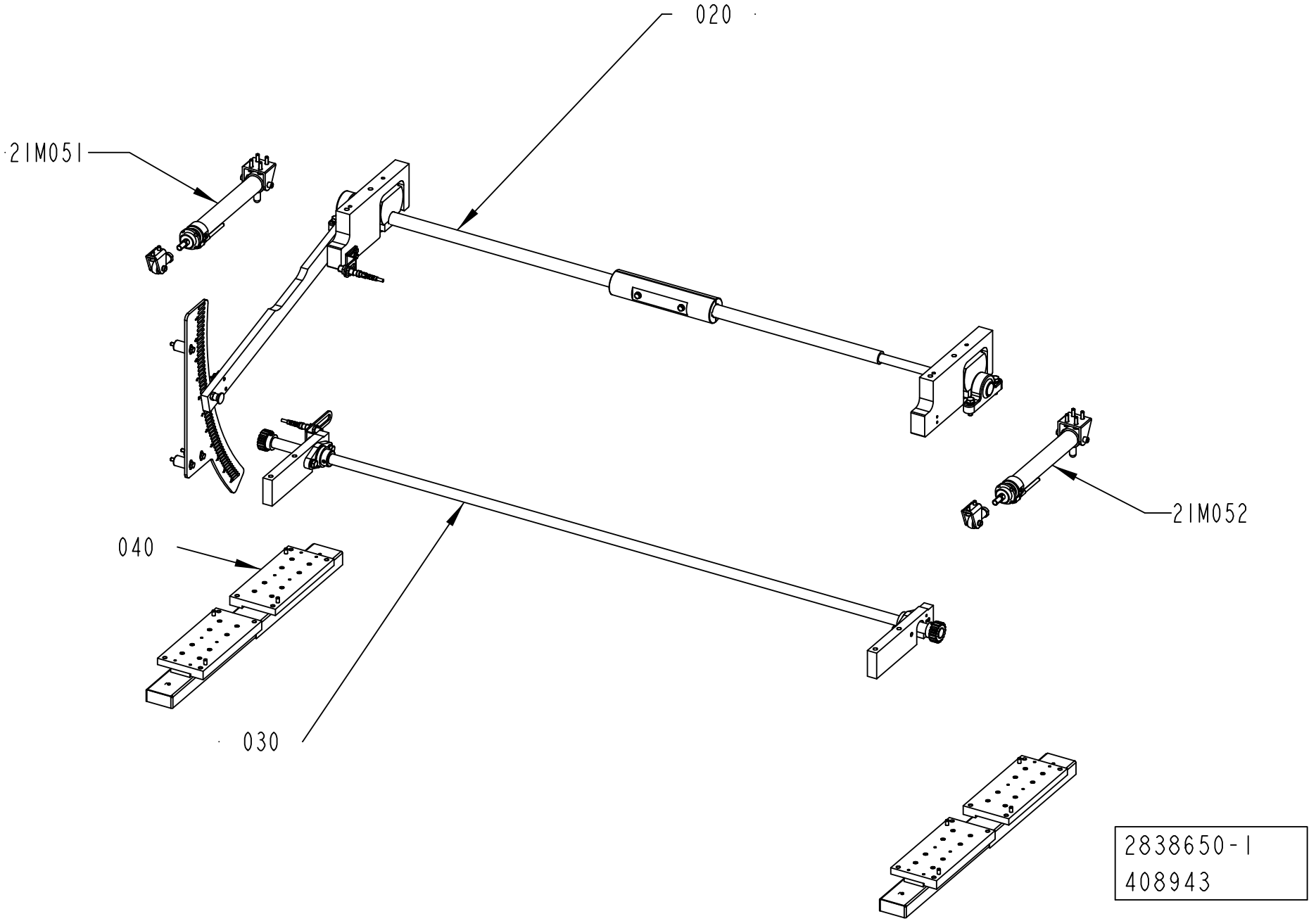
020
21M051
21M052
040
030
2838650-1
408943

ECM: 419435 - 20100110
Group number: 2838650-0100
Assembly Drawing: 2838650-1_1_AB

Pos	Part No	UN	Qty	Description	Page No
-					
020	2838669-0100		1	SETTING ARM	**1-59**
030	2838652-0100		1	SETTING ARM	**1-61**
040	2838653-0100		1	GUIDE RAIL	**1-63**
21M051	2769718-0100		1	PNEUMATIC CYLINDER	**1-65**
21M052	2769718-0100		1	PNEUMATIC CYLINDER	**1-65**

Pos	Part No	UN	Qty	Description	Page No

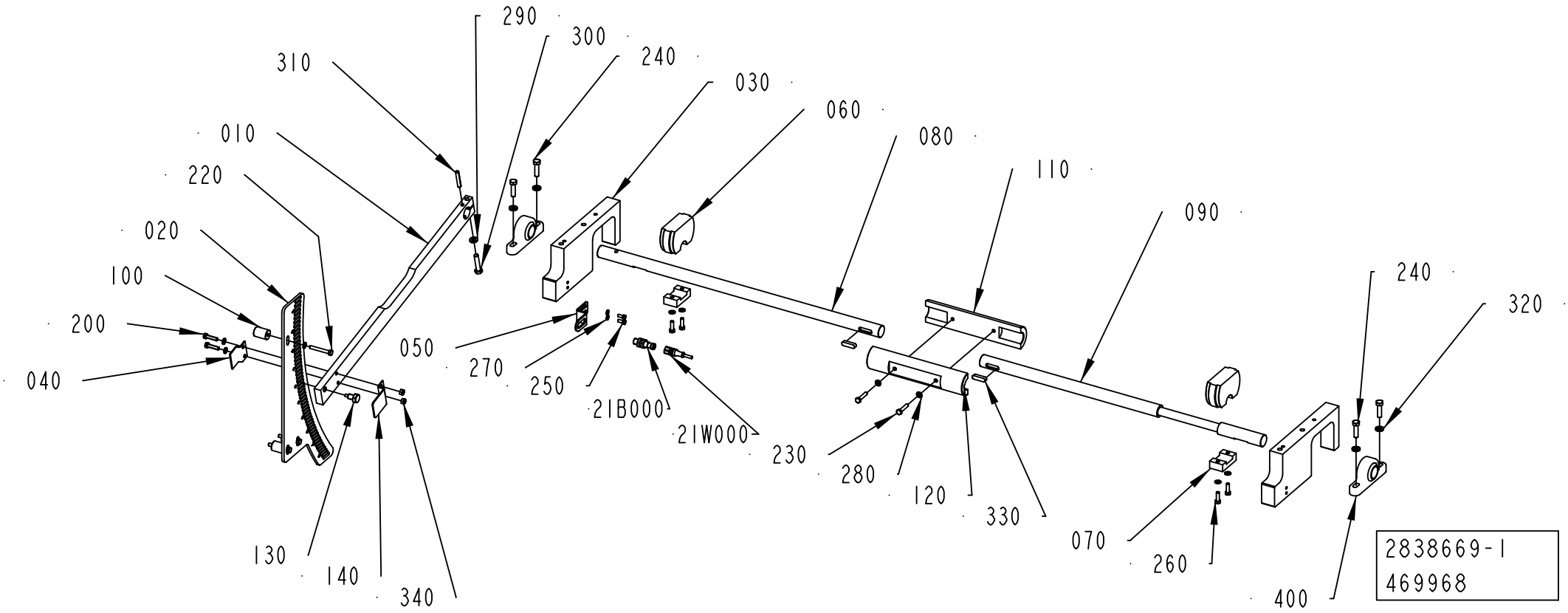
290
300
240
310
030
060
010
080
110
220
090
020
240
100
320
200
050
270
250
21B000
21W000
230
040
280
120
330
070
130
260
140
340
400
2838669-1
469968

ECM: 471139 - 20101109
Group number: 2838669-0100
Assembly Drawing: 2838669-1_1_AH

Pos	Part No	UN	Qty	Description	Page No
-					
010	2788174-0000		1	LEVER	
020	3021525-0000		1	PLATE	
030	2766944-0000		2	BRACKET	
040	2769695-0000		1	BRACKET	
050	2779057-0000		1	PLATE	
060	3022488-0000		2	CAM	
070	2838683-0000		2	PLATE	
080	3022022-0000		1	SHAFT	
090	3022023-0000		1	SHAFT	
100	2773632-0000		3	SPACER	
110	2985809-0000		1	HOUSING	
120	3022021-0000		1	HOUSING	
130	3086231-0000		1	SCREW	
140	3086233-0000		1	BRACKET	
200	312105-0372		2	SCREW M6S ISO 4017 M6X25 A480	
21B000	90458-2907		1	PROX.SWITCH IFS204	
21W000	351405-0050		1	SENS. CABLE RSMVN 3-PRKT 4-3-06/5,0M	
220	312105-0379		3	SCREW M6S ISO 4014 M6X45 A480	
230	312109-0374		2	SCREW M6S ISO 4017 M6X30 A480	
240	312105-0455		4	SCREW M6S ISO 4017 M8X30 A480	
250	312105-0327		2	SCREW M6S ISO 4017 M5X12 A480	
260	312105-0370		4	SCREW M6S ISO 4017 M6X20 A480	
270	315105-0146		2	WASHER BRB 5,3X10 RFR	
280	315105-0153		11	WASHER BRB 6,4X12 RFR	
290	315105-0165		1	WASHER BRB 8,4X16 RFR	
300	312105-0459		1	SCREW M6S ISO 4014 M8X40 A480	
310	311112-0347		1	SPRING PIN, ISO 8752 6X40-C	
320	315115-0165		4	WASHER PLAIN, TBRB 8,4/16 H=3	
330	315705-0267		2	PARALLEL KEY W. ROUND ENDS 8X7X30 MM	
340	312605-0316		2	HEXAGON NUT, M6M M6 A280	
400	90600-0799		2	STANDING BEARING, KSTM-25	

Pos	Part No	UN	Qty	Description	Page No

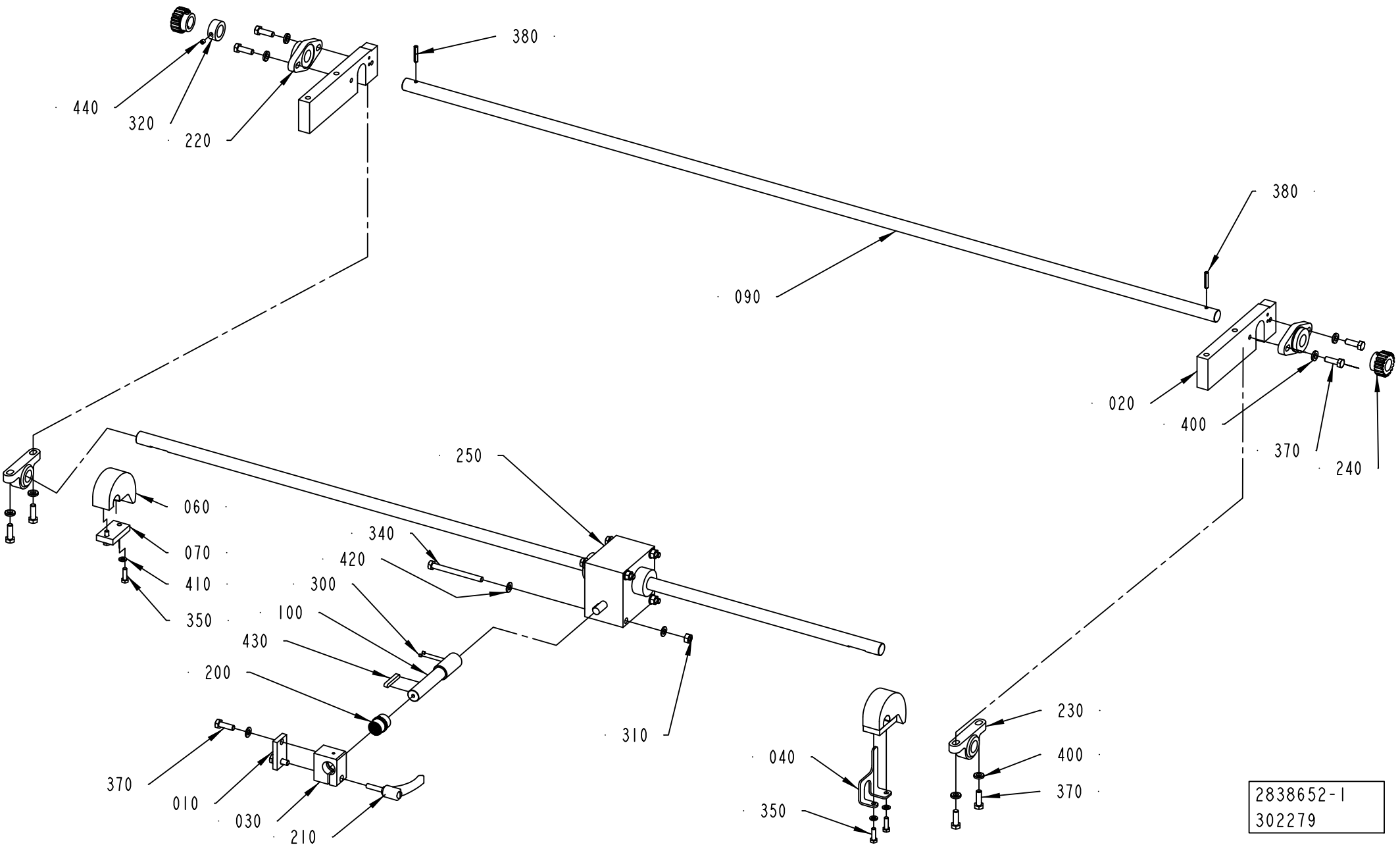
440
320
220
380
090
380
020
400
370
240
250
060
070
410
350
340
420
300
100
430
200
310
370
010
030
210
040
350
230
400
370
2838652-1
302279

ECM: 328412 - 20080407
Group number: 2838652-0100
Assembly Drawing: 2838652-1_1_AB

Pos	Part No	UN	Qty	Description	Page No
-					
010	2778594-0000		1	PLATE	
020	2779014-0000		2	PLATE	
030	2769726-0000		1	BRACKET	
040	2802405-0000		1	STOP ARM	
060	2779013-0000		2	CAM	
070	2712603-0000		2	PLATE	
090	2766950-0000		1	SHAFT	
100	2769729-0000		1	SHAFT	
200	90458-2932		1	PLAIN BEARING, JUM-02-20	
210	90017-0029		1	LOCKING LEVER, NO. KR8X30-SUS	
220	90600-0800		2	FLANGE BEARING 20X89X20 MM	
230	90459-4727		2	STANDING BEARING, KSTM-20	
240	2838690-0000		2	WHEEL	
250	90600-1005		1	WORM GEAR SCREW JACK, TR00042000130	
300	312318-0283		2	SCREW ISO4029 M4X4 A4	
310	312605-0318		4	HEXAGON NUT, M6M M8 A280	
320	315741-0216		1	RETAINING RING DIN 705 A4 20	
340	312105-0469		4	SCREW M6S ISO 4014 M8X90 A480	
350	312105-0370		4	SCREW M6S ISO 4017 M6X20 A480	
370	312105-0453		10	SCREW M6S ISO 4017 M8X25 A480	
380	311112-0312		2	SPRING PIN, ISO 8752 5X28-C	
400	315115-0165		8	WASHER PLAIN, TBRB 8,4/16 H=3	
410	315105-0153		4	WASHER BRB 6,4X12 RFR	
420	315105-0165		10	WASHER BRB 8,4X16 RFR	
430	315705-0239		1	PARALLEL KEY W. ROUND ENDS 6X6X40 MM	
440	312318-0360		1	SCREW ISO4029 M6X6 A4	

Pos	Part No	UN	Qty	Description	Page No

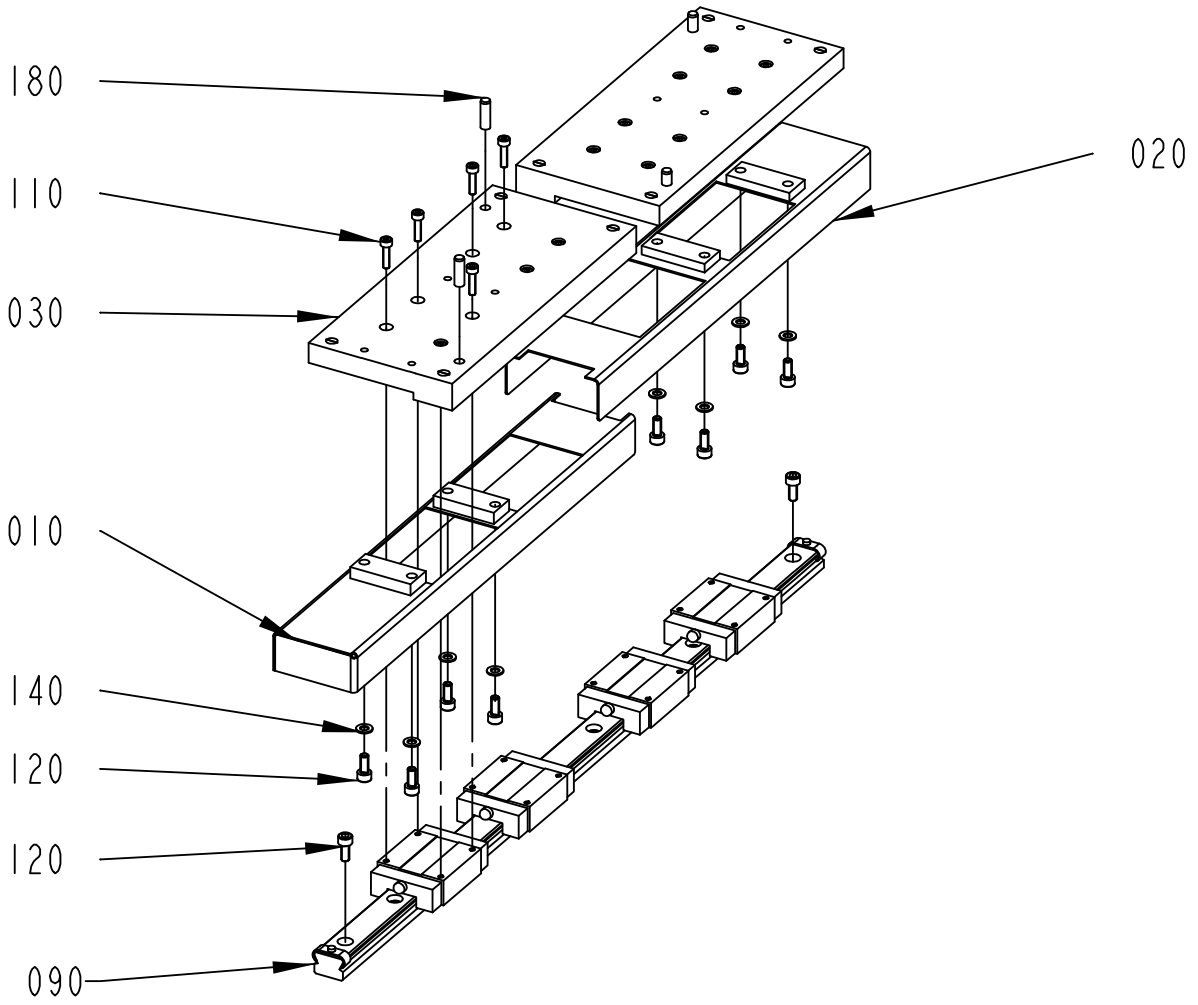

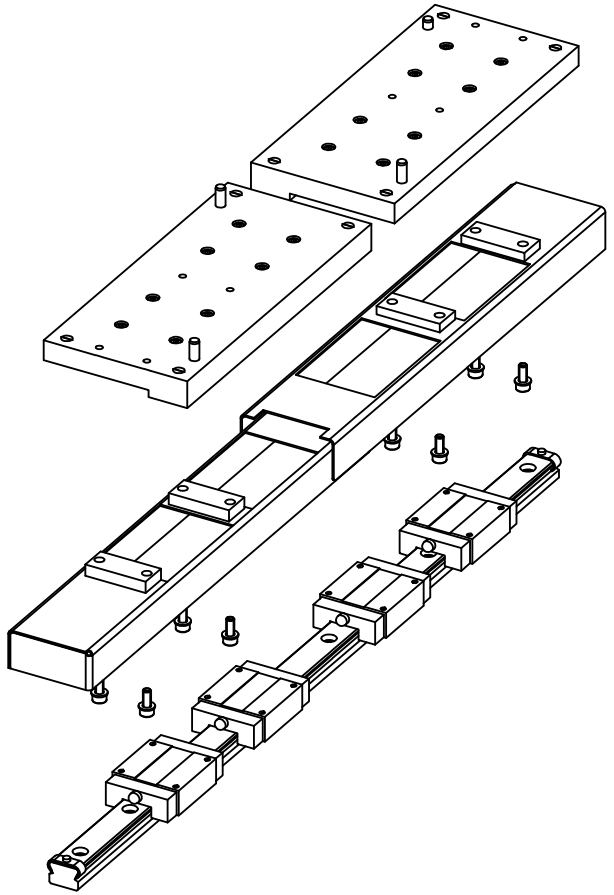

2838653-1
302279

ECM: 308942 - 20070525
Group number: 2838653-0100
Assembly Drawing: 2838653-1_1_AB

Pos	Part No	UN	Qty	Description	Page No
-					
010	2802375-0000		2	COVER	
020	2802376-0000		2	COVER	
030	2788168-0000		4	PLATE	
090	90600-0825		2	GUIDE BAR, 4 RSR20VMUU+580LM	
	90600-0826		*4*	*CARRIAGE, RSR20VMUU*	
110	312115-0293		32	SCREW ISO4762 M4X16 A4 80	
120	312115-0327		36	SCREW ISO4762 M5X12 A4 80	
140	315105-0146		16	WASHER BRB 5,3X10 RFR	
180	311103-0353		8	PARALLEL PIN ISO 2338 6M6X20 A1	

Pos	Part No	UN	Qty	Description	Page No

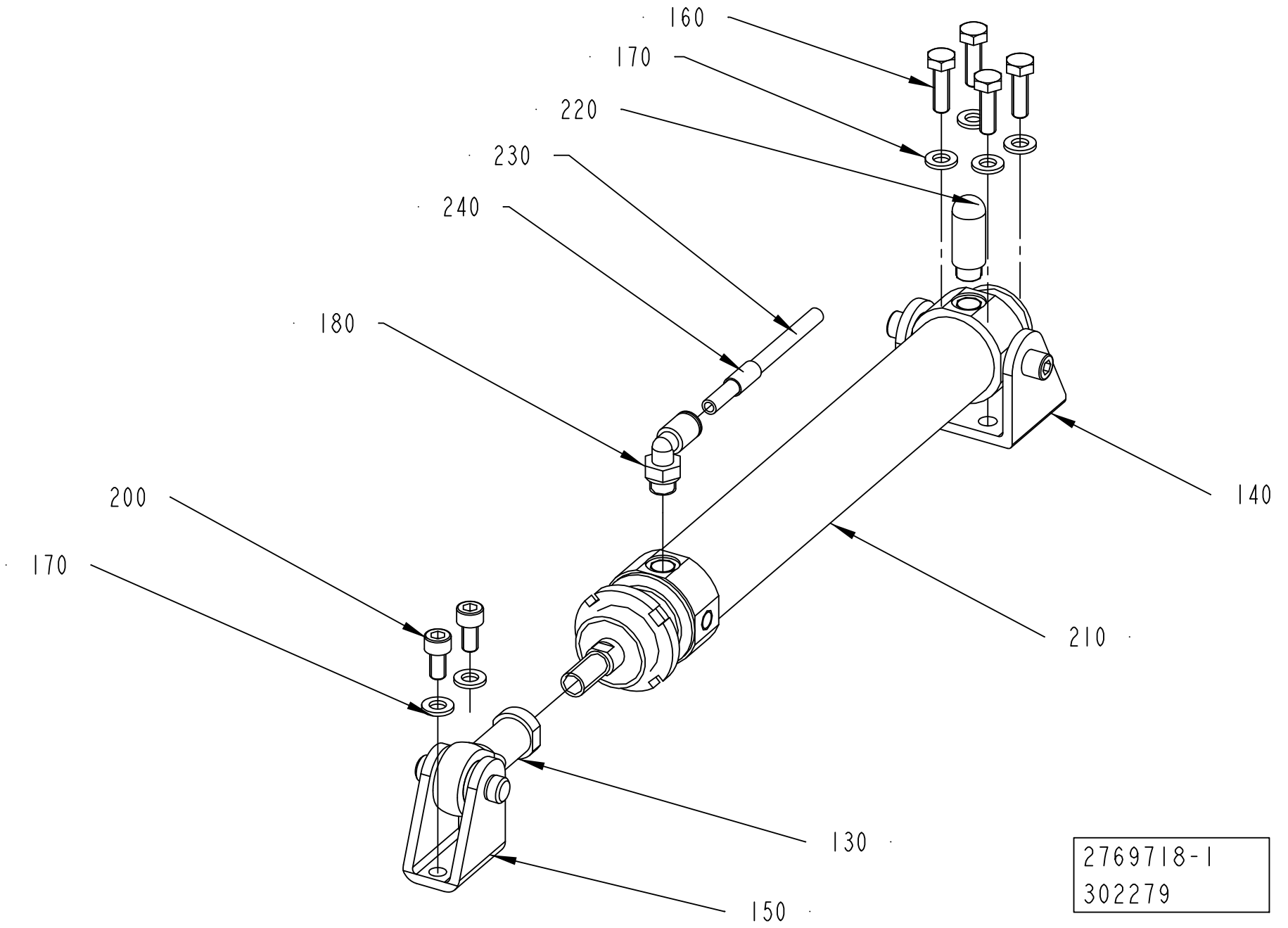
160
170
220
230
240
180
200
170
140
210
130
150
2769718-1
302279

ECM: 308945 - 20070525
Group number: 2769718-0100
Assembly Drawing: 2769718-1_1_AB

Pos	Part No	UN	Qty	Description	Page No
-					
130	90459-1018		1	ROD END, BALL JOINT EYE M10X1,25	
140	90459-3115		1	BRACKET, REAR, CLEVIS, ROUND, BORE 32	
150	90459-5949		1	REAR CLEVIS FOOT MOUNTING, CRLBN-32	
160	312105-0370		4	SCREW M6S ISO 4017 M6X20 A480	
170	315105-0153		6	WASHER BRB 6,4X12 RFR	
180	350002-0006		1	PUSH-IN L-FITTING QSL-F-G1/8-6	
200	312115-0366		2	SCREW ISO4762 M6X12 A4 80	
210	90458-2370		1	DOUBLE ACTING, ROUND, CYL 32-150	
220	90328-0047		1	SILENCER G1/8"	
230	315400-0001	MM	200	TUBE PUN-H-6X1-BL	
240	90459-7369		1	MARKING FOR PNEUM. TUBING, PRZ06	

Pos	Part No	UN	Qty	Description	Page No

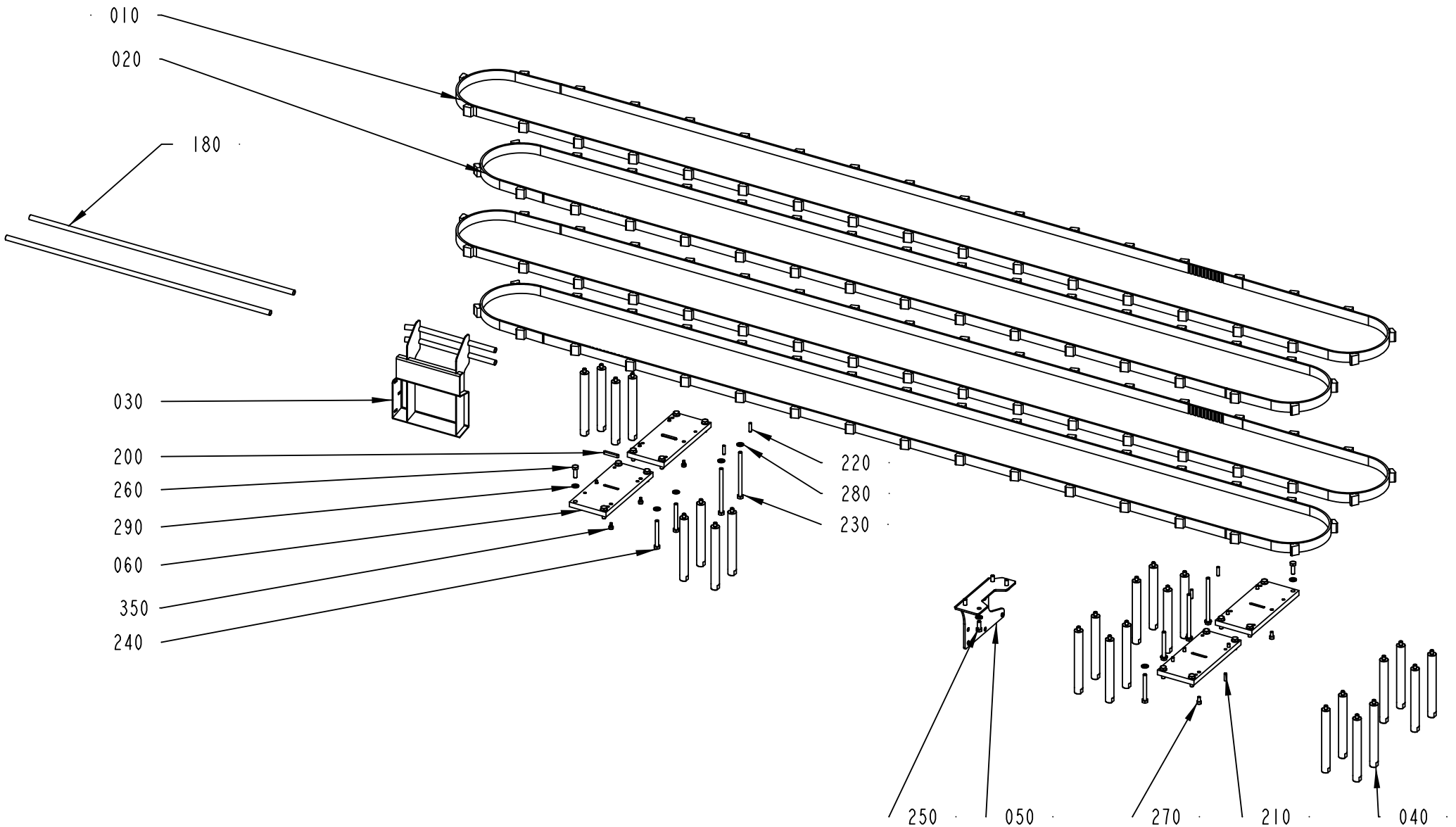

2838633-5
408943

ECM: 479291 - 20110401
Group number: 2838633-0200
Assembly Drawing: 2838633-5_1_AA

This list covers pages from 1-66 to 1-73

Pos	Part No	UN	Qty	Description	Page No
TBA 0200SQ, TBA 0250SQ (See drawing on page: 1-72)					
010	90600-0814		1	TIMING BELT AT10 5250X25 MM+35236050	
020	90600-0815		1	TIMING BELT 25AT10/4800 +32 2. 3.6.050	
030	2940569-0000		1	GUIDE	
070	2940677-0000		1	GUIDE	
120	2873952-0100		1	COVER	**1-75**
180	2779831-0000		2	PIPE	
360	312105-0370		4	SCREW M6S ISO 4017 M6X20 A480	
TBA 0500SQ, TBA 1000B, TBA 1000SQ, TBA 1000S, TBA 1500S, TBA 1890S, TBA 2000S, TGA (See drawing on page: 1-66)					
010	90600-0814		2	TIMING BELT AT10 5250X25 MM+35236050	
020	90600-0815		2	TIMING BELT 25AT10/4800 +32 2. 3.6.050	
030	2805461-0000		1	GUIDE	
040	2778585-0000		24	PILLAR	
180	2779831-0000		2	PIPE	
360	312105-0370		4	SCREW M6S ISO 4017 M6X20 A480	
TPA 0330SQ STREAMCAP 330 (See drawing on page: 1-70)					
010	90600-4822		2	TIMING BELT 25AT10/5250+35 2.3.7.358	
020	90600-4821		2	TIMING BELT 25AT10/4800 PU	
040	2778585-0000		24	PILLAR	
110	2880018-0100		1	PACKAGE ALIGNER	**1-77**
120	2873952-0100		1	COVER	**1-75**
180	2982989-0000		2	GUIDE	
TPA 1000SQ, TPA 0500SQ, TPA 0750SQ (See drawing on page: 1-68)					
010	90600-3011		2	CONVEYOR BELT, -25 AT10/5250 +35 2.3.7.3	
020	90600-3012		2	TIMING BELT 25AT10/4800 PU	
040	2778585-0000		24	PILLAR	
110	2880018-0100		1	PACKAGE ALIGNER	**1-77**
120	2873952-0100		1	COVER	**1-75**
180	2982989-0000		2	GUIDE	
360	312105-0370		4	SCREW M6S ISO 4017 M6X20 A480	
Common Parts					
050	2778592-0000		1	PLATE	
060	2788169-0000		4	PLATE	
200	315705-0239		2	PARALLEL KEY W. ROUND ENDS 6X6X40 MM	
210	311103-0353		2	PARALLEL PIN ISO 2338 6M6X20 A1	
220	311103-1355		4	PARALLEL PIN ISO 2338 6M6X24 A1	
230	312105-0475		4	SCREW M6S ISO 4014 M8X120 A480	
240	312105-0465		4	SCREW M6S ISO 4014 M8X70 A480	
250	312105-0451		4	SCREW M6S ISO 4017 M8X20 A480	
260	312105-0453		16	SCREW M6S ISO 4017 M8X25 A480	
270	312115-0366		6	SCREW ISO4762 M6X12 A4 80	
280	315105-0165		12	WASHER BRB 8,4X16 RFR	
290	315106-0165		16	WASHER ISO 7089-8-200 HV A4	
350	90287-0230		6	SCREW, HEX.SOCK.HEAD SHOULD. M5X6	

Machine Type | Group Description | Used-In | Group Number | Page No

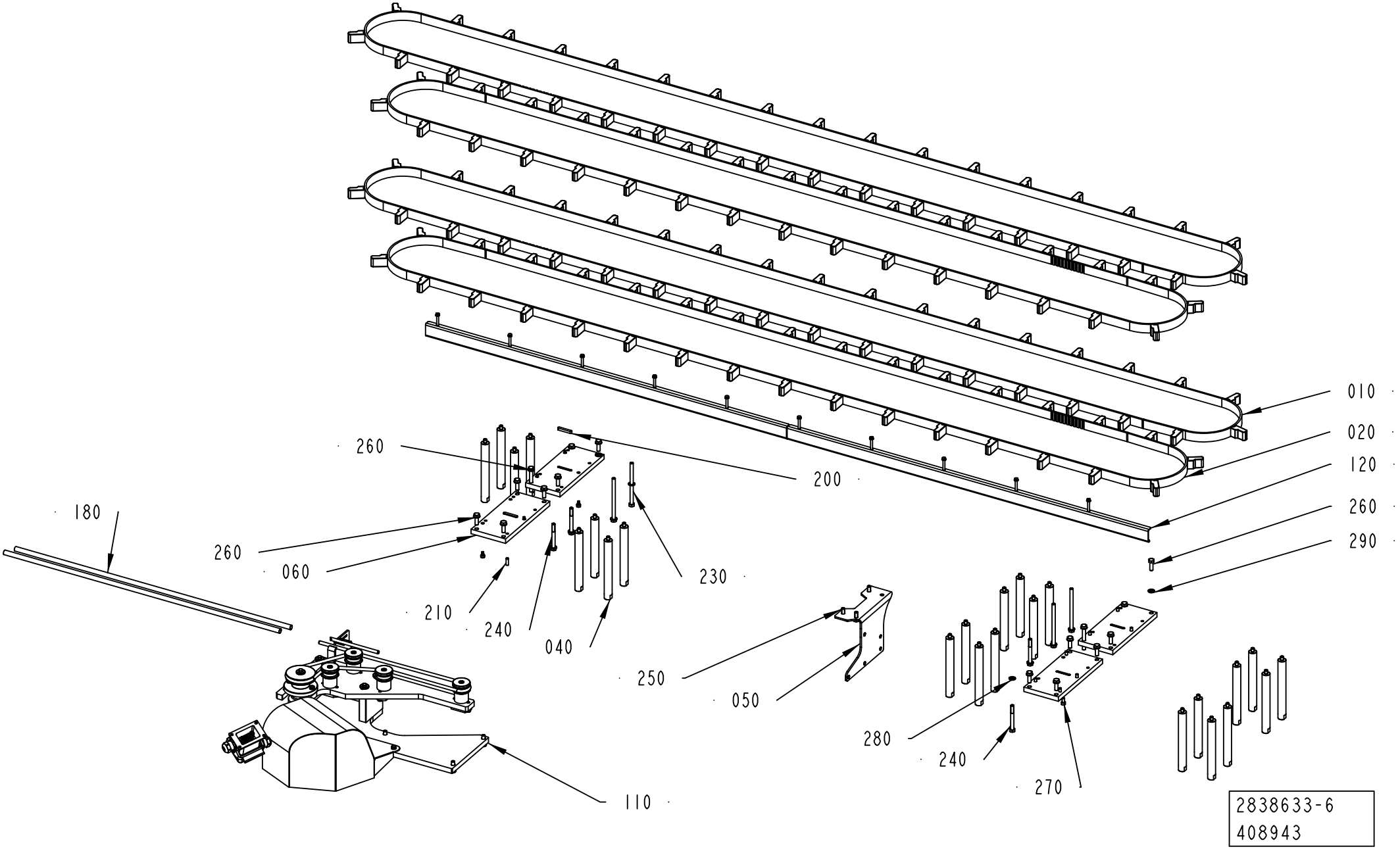
010
020
120
260
290
200
260
180
260
060
210
240
040
230
250
050
280
240
270
110
2838633-6
408943

ECM: 479291 - 20110401
Group number: 2838633-0200
Assembly Drawing: 2838633-6_1_AA

This list covers pages from 1-66 to 1-73

Pos	Part No	UN	Qty	Description	Page No
TBA 0200SQ, TBA 0250SQ (See drawing on page: 1-72)					
010	90600-0814		1	TIMING BELT AT10 5250X25 MM+35236050	
020	90600-0815		1	TIMING BELT 25AT10/4800 +32 2. 3.6.050	
030	2940569-0000		1	GUIDE	
070	2940677-0000		1	GUIDE	
120	2873952-0100		1	COVER	**1-75**
180	2779831-0000		2	PIPE	
360	312105-0370		4	SCREW M6S ISO 4017 M6X20 A480	
TBA 0500SQ, TBA 1000B, TBA 1000SQ, TBA 1000S, TBA 1500S, TBA 1890S, TBA 2000S, TGA (See drawing on page: 1-66)					
010	90600-0814		2	TIMING BELT AT10 5250X25 MM+35236050	
020	90600-0815		2	TIMING BELT 25AT10/4800 +32 2. 3.6.050	
030	2805461-0000		1	GUIDE	
040	2778585-0000		24	PILLAR	
180	2779831-0000		2	PIPE	
360	312105-0370		4	SCREW M6S ISO 4017 M6X20 A480	
TPA 0330SQ STREAMCAP 330 (See drawing on page: 1-70)					
010	90600-4822		2	TIMING BELT 25AT10/5250+35 2.3.7.358	
020	90600-4821		2	TIMING BELT 25AT10/4800 PU	
040	2778585-0000		24	PILLAR	
110	2880018-0100		1	PACKAGE ALIGNER	**1-77**
120	2873952-0100		1	COVER	**1-75**
180	2982989-0000		2	GUIDE	
TPA 1000SQ, TPA 0500SQ, TPA 0750SQ (See drawing on page: 1-68)					
010	90600-3011		2	CONVEYOR BELT, -25 AT10/5250 +35 2.3.7.3	
020	90600-3012		2	TIMING BELT 25AT10/4800 PU	
040	2778585-0000		24	PILLAR	
110	2880018-0100		1	PACKAGE ALIGNER	**1-77**
120	2873952-0100		1	COVER	**1-75**
180	2982989-0000		2	GUIDE	
360	312105-0370		4	SCREW M6S ISO 4017 M6X20 A480	
Common Parts					
050	2778592-0000		1	PLATE	
060	2788169-0000		4	PLATE	
200	315705-0239		2	PARALLEL KEY W. ROUND ENDS 6X6X40 MM	
210	311103-0353		2	PARALLEL PIN ISO 2338 6M6X20 A1	
220	311103-1355		4	PARALLEL PIN ISO 2338 6M6X24 A1	
230	312105-0475		4	SCREW M6S ISO 4014 M8X120 A480	
240	312105-0465		4	SCREW M6S ISO 4014 M8X70 A480	
250	312105-0451		4	SCREW M6S ISO 4017 M8X20 A480	
260	312105-0453		16	SCREW M6S ISO 4017 M8X25 A480	
270	312115-0366		6	SCREW ISO4762 M6X12 A4 80	
280	315105-0165		12	WASHER BRB 8,4X16 RFR	
290	315106-0165		16	WASHER ISO 7089-8-200 HV A4	
350	90287-0230		6	SCREW, HEX.SOCK.HEAD SHOULD. M5X6	

Machine Type | Group Description | Used-In | Group Number | Page No

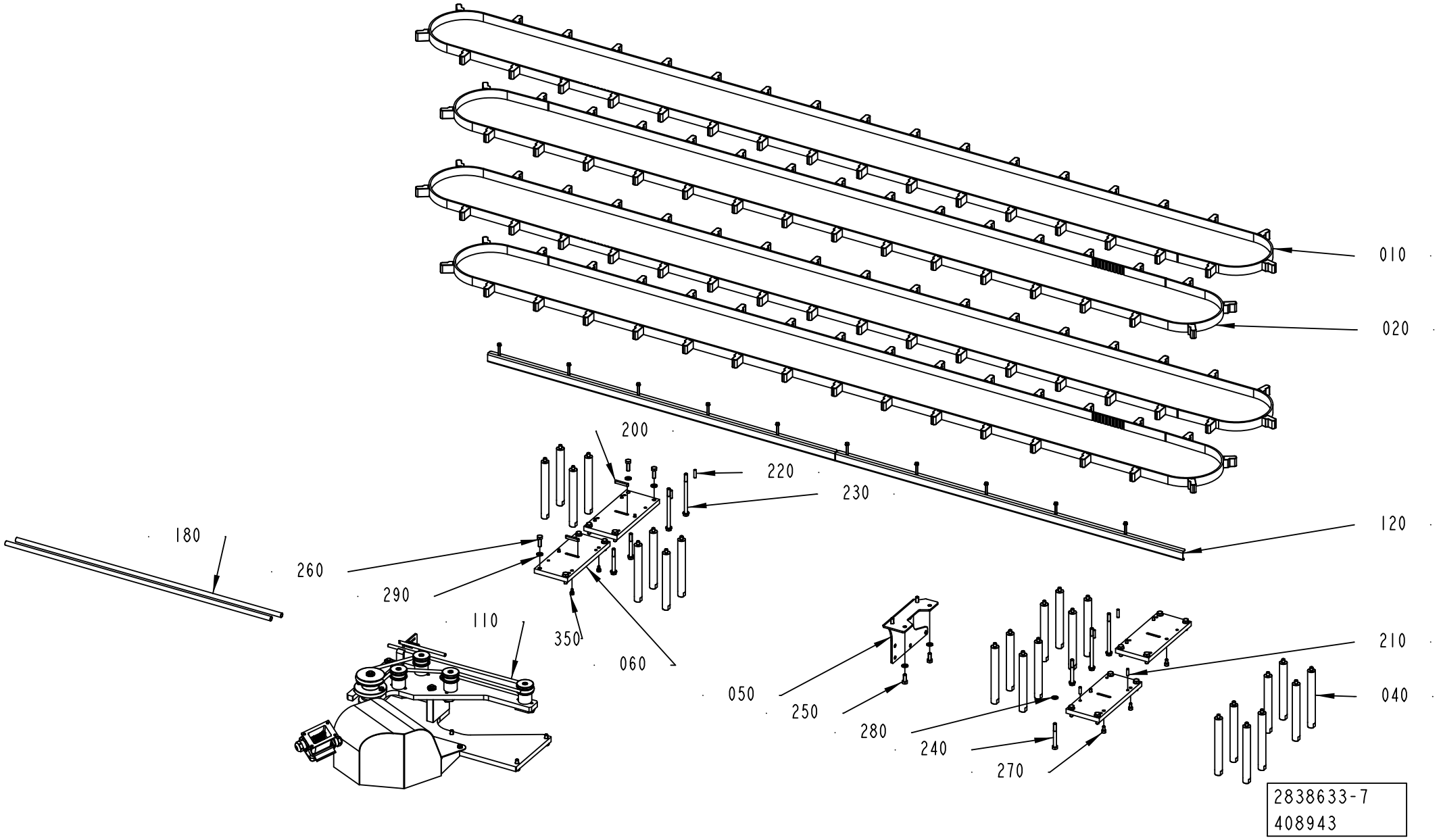
010
020
120
200
220
230
180
260
290
110
350
060
050
250
280
240
270
210
040
2838633-7
408943

ECM: 479291 - 20110401
Group number: 2838633-0200
Assembly Drawing: 2838633-7_1_AA

This list covers pages from 1-66 to 1-73

Pos	Part No	UN	Qty	Description	Page No
TBA 0200SQ, TBA 0250SQ (See drawing on page: 1-72)					
010	90600-0814		1	TIMING BELT AT10 5250X25 MM+35236050	
020	90600-0815		1	TIMING BELT 25AT10/4800 +32 2. 3.6.050	
030	2940569-0000		1	GUIDE	
070	2940677-0000		1	GUIDE	
120	2873952-0100		1	COVER	**1-75**
180	2779831-0000		2	PIPE	
360	312105-0370		4	SCREW M6S ISO 4017 M6X20 A480	
TBA 0500SQ, TBA 1000B, TBA 1000SQ, TBA 1000S, TBA 1500S, TBA 1890S, TBA 2000S, TGA (See drawing on page: 1-66)					
010	90600-0814		2	TIMING BELT AT10 5250X25 MM+35236050	
020	90600-0815		2	TIMING BELT 25AT10/4800 +32 2. 3.6.050	
030	2805461-0000		1	GUIDE	
040	2778585-0000		24	PILLAR	
180	2779831-0000		2	PIPE	
360	312105-0370		4	SCREW M6S ISO 4017 M6X20 A480	
TPA 0330SQ STREAMCAP 330 (See drawing on page: 1-70)					
010	90600-4822		2	TIMING BELT 25AT10/5250+35 2.3.7.358	
020	90600-4821		2	TIMING BELT 25AT10/4800 PU	
040	2778585-0000		24	PILLAR	
110	2880018-0100		1	PACKAGE ALIGNER	**1-77**
120	2873952-0100		1	COVER	**1-75**
180	2982989-0000		2	GUIDE	
TPA 1000SQ, TPA 0500SQ, TPA 0750SQ (See drawing on page: 1-68)					
010	90600-3011		2	CONVEYOR BELT, -25 AT10/5250 +35 2.3.7.3	
020	90600-3012		2	TIMING BELT 25AT10/4800 PU	
040	2778585-0000		24	PILLAR	
110	2880018-0100		1	PACKAGE ALIGNER	**1-77**
120	2873952-0100		1	COVER	**1-75**
180	2982989-0000		2	GUIDE	
360	312105-0370		4	SCREW M6S ISO 4017 M6X20 A480	
Common Parts					
050	2778592-0000		1	PLATE	
060	2788169-0000		4	PLATE	
200	315705-0239		2	PARALLEL KEY W. ROUND ENDS 6X6X40 MM	
210	311103-0353		2	PARALLEL PIN ISO 2338 6M6X20 A1	
220	311103-1355		4	PARALLEL PIN ISO 2338 6M6X24 A1	
230	312105-0475		4	SCREW M6S ISO 4014 M8X120 A480	
240	312105-0465		4	SCREW M6S ISO 4014 M8X70 A480	
250	312105-0451		4	SCREW M6S ISO 4017 M8X20 A480	
260	312105-0453		16	SCREW M6S ISO 4017 M8X25 A480	
270	312115-0366		6	SCREW ISO4762 M6X12 A4 80	
280	315105-0165		12	WASHER BRB 8,4X16 RFR	
290	315106-0165		16	WASHER ISO 7089-8-200 HV A4	
350	90287-0230		6	SCREW, HEX.SOCK.HEAD SHOULD. M5X6	

Machine Type | Group Description | Used-In | Group Number | Page No

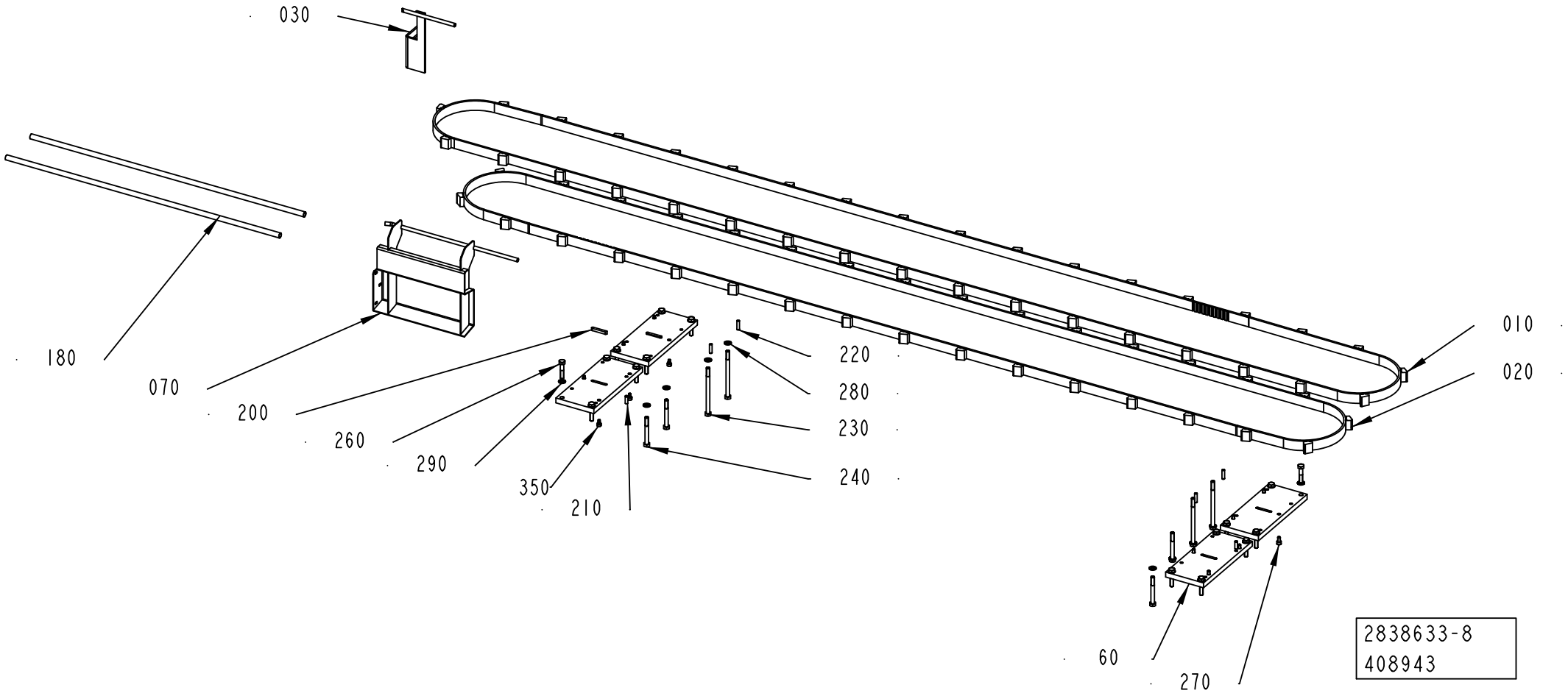
030
180
070
200
260
290
350
210
220
280
230
240
010
020
60
270
2838633-8
408943

ECM: 479291 - 20110401
Group number: 2838633-0200
Assembly Drawing: 2838633-8_1_AA

This list covers pages from 1-66 to 1-73

Pos	Part No	UN	Qty	Description	Page No
TBA 0200SQ, TBA 0250SQ (See drawing on page: 1-72)					
010	90600-0814		1	TIMING BELT AT10 5250X25 MM+35236050	
020	90600-0815		1	TIMING BELT 25AT10/4800 +32 2. 3.6.050	
030	2940569-0000		1	GUIDE	
070	2940677-0000		1	GUIDE	
120	2873952-0100		1	COVER	**1-75**
180	2779831-0000		2	PIPE	
360	312105-0370		4	SCREW M6S ISO 4017 M6X20 A480	
TBA 0500SQ, TBA 1000B, TBA 1000SQ, TBA 1000S, TBA 1500S, TBA 1890S, TBA 2000S, TGA (See drawing on page: 1-66)					
010	90600-0814		2	TIMING BELT AT10 5250X25 MM+35236050	
020	90600-0815		2	TIMING BELT 25AT10/4800 +32 2. 3.6.050	
030	2805461-0000		1	GUIDE	
040	2778585-0000		24	PILLAR	
180	2779831-0000		2	PIPE	
360	312105-0370		4	SCREW M6S ISO 4017 M6X20 A480	
TPA 0330SQ STREAMCAP 330 (See drawing on page: 1-70)					
010	90600-4822		2	TIMING BELT 25AT10/5250+35 2.3.7.358	
020	90600-4821		2	TIMING BELT 25AT10/4800 PU	
040	2778585-0000		24	PILLAR	
110	2880018-0100		1	PACKAGE ALIGNER	**1-77**
120	2873952-0100		1	COVER	**1-75**
180	2982989-0000		2	GUIDE	
TPA 1000SQ, TPA 0500SQ, TPA 0750SQ (See drawing on page: 1-68)					
010	90600-3011		2	CONVEYOR BELT, -25 AT10/5250 +35 2.3.7.3	
020	90600-3012		2	TIMING BELT 25AT10/4800 PU	
040	2778585-0000		24	PILLAR	
110	2880018-0100		1	PACKAGE ALIGNER	**1-77**
120	2873952-0100		1	COVER	**1-75**
180	2982989-0000		2	GUIDE	
360	312105-0370		4	SCREW M6S ISO 4017 M6X20 A480	
Common Parts					
050	2778592-0000		1	PLATE	
060	2788169-0000		4	PLATE	
200	315705-0239		2	PARALLEL KEY W. ROUND ENDS 6X6X40 MM	
210	311103-0353		2	PARALLEL PIN ISO 2338 6M6X20 A1	
220	311103-1355		4	PARALLEL PIN ISO 2338 6M6X24 A1	
230	312105-0475		4	SCREW M6S ISO 4014 M8X120 A480	
240	312105-0465		4	SCREW M6S ISO 4014 M8X70 A480	
250	312105-0451		4	SCREW M6S ISO 4017 M8X20 A480	
260	312105-0453		16	SCREW M6S ISO 4017 M8X25 A480	
270	312115-0366		6	SCREW ISO4762 M6X12 A4 80	
280	315105-0165		12	WASHER BRB 8,4X16 RFR	
290	315106-0165		16	WASHER ISO 7089-8-200 HV A4	
350	90287-0230		6	SCREW, HEX.SOCK.HEAD SHOULD. M5X6	

Machine Type | Group Description | Used-In | Group Number | Page No

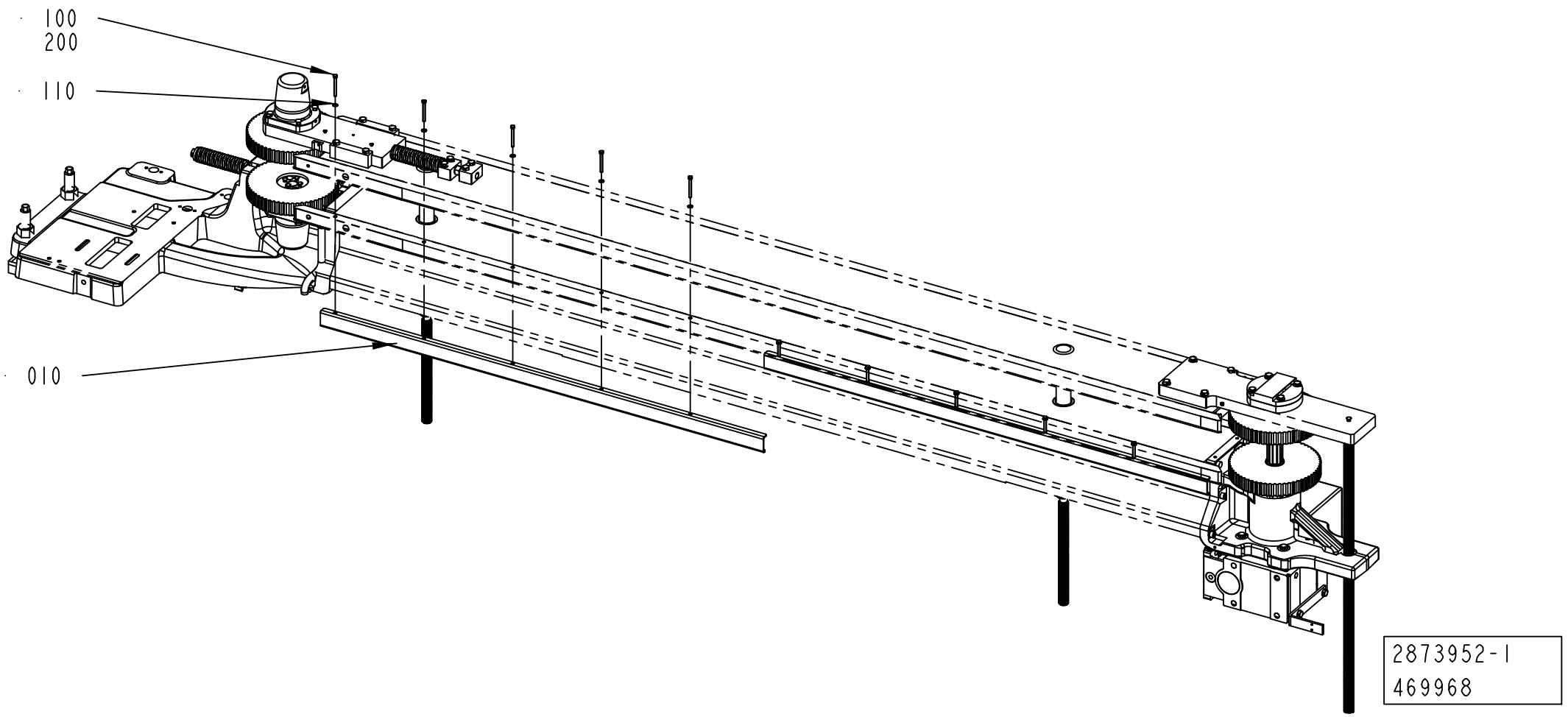
100
200
110
010
2873952-1
469968

ECM: 479292 - 20110401
Group number: 2873952-0100
Assembly Drawing: 2873952-1_1_AB

Pos	Part No	UN	Qty	Description	Page No
TBA 0200SQ, TBA 0250SQ (See drawing on page: 1-74)					
010	2991257-0000		2	COVER	
100	312109-0340		10	SCREW M6S ISO 4017 M5X45 A480	
110	315106-0146		10	WASHER ISO 7089-5-200 HV A4	
TPA 0330SQ STREAMCAP 330 (See drawing on page: 1-74)					
010	2873966-0000		2	COVER	
100	312109-0340		10	SCREW M6S ISO 4017 M5X45 A480	
110	315106-0146		10	WASHER ISO 7089-5-200 HV A4	
TPA 1000SQ, TPA 0500SQ, TPA 0750SQ (See drawing on page: 1-74)					
010	2873951-0000		2	COVER	
100	312109-0340		10	SCREW M6S ISO 4017 M5X45 A480	
110	315106-0146		10	WASHER ISO 7089-5-200 HV A4	
Common Parts					
200	90602-4847		1	THREAD LOCKING, LOCTITE 243 50 ML	

Pos	Part No	UN	Qty	Description	Page No

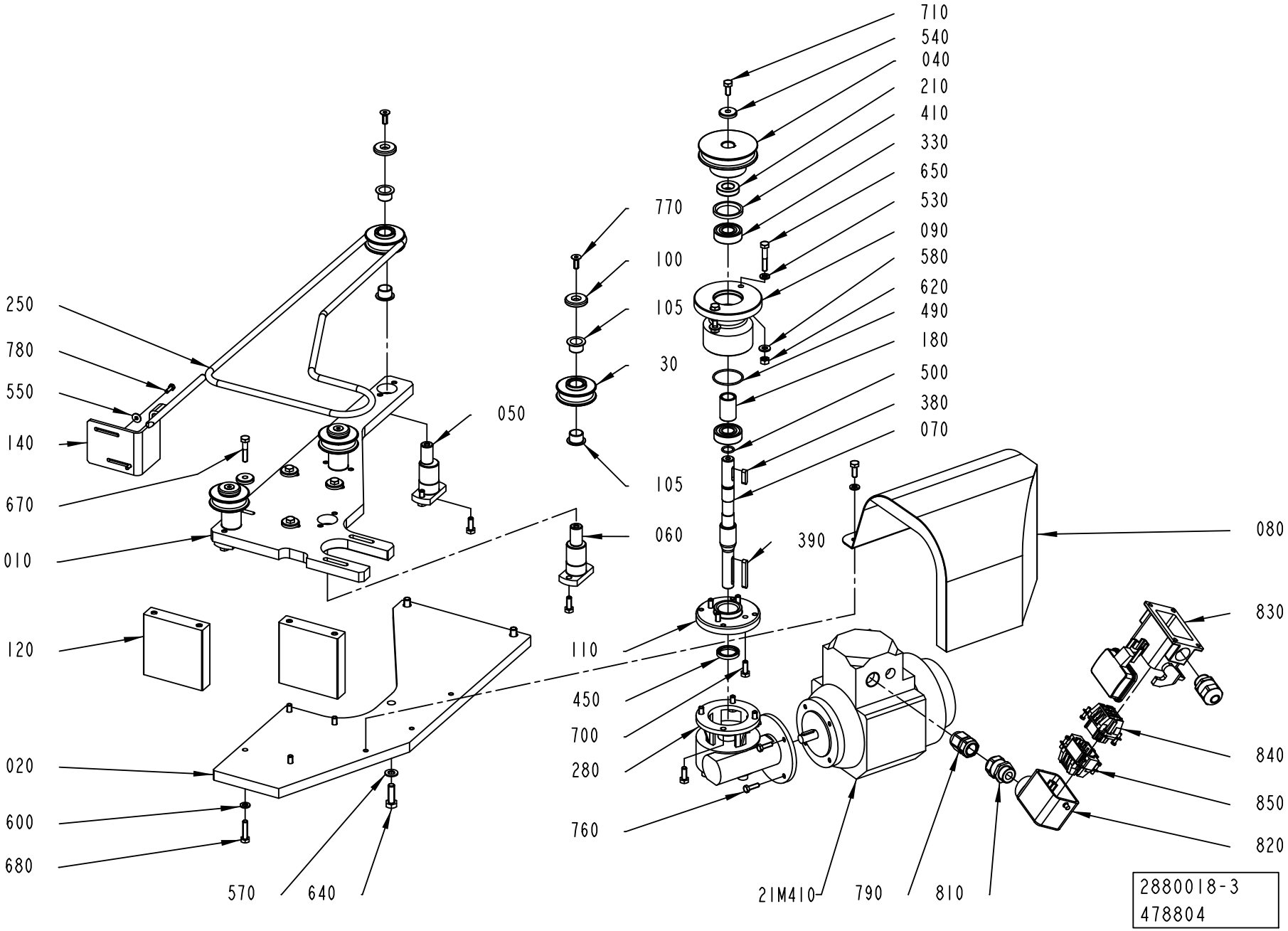
710
540
040
210
410
330
650
530
090
580
620
490
180
500
380
070
770
100
105
30
105
060
050
250
780
550
140
670
010
120
020
600
680
570
640
110
450
700
280
760
390
080
830
840
850
820
21M410
790
810
2880018-3
478804

ECM: 484768 - 20110401
Group number: 2880018-0100
Assembly Drawing: 2880018-3_1_AC

Pos	Part No	UN	Qty	Description	Page No
TPA 0330SQ					
120	2902792-0000		2	SPACER	
TPA 1000SQ, TPA 0500SQ, TPA 0750SQ					
120	2880031-0000		2	SPACER	
Common Parts					
010	3149904-0000		1	PLATE	
020	3149903-0000		1	PLATE	
030	3149899-0000		4	WHEEL	
040	2880026-0000		1	PULLEY	
050	3149898-0000		2	SHAFT	
060	3149897-0000		2	SHAFT	
070	2880023-0000		1	SHAFT	
080	2901693-0000		1	COVER	
090	2880028-0000		1	FLANGE	
100	3115101-0000		4	WASHER	
110	2880027-0000		1	COVER	
140	2901692-0000		1	GUIDE	
150	3115097-0000		8	FLANGE BUSHING	
180	2880024-0000		1	SPACER	
210	2880025-0000		1	SPACER	
21M410	2901694-0000		1	MOTOR	
250	3149905-0000		1	BELT	
280	90056-0177		1	WORM GEAR VF30 F1-7 P63 B14 B3	
330	321313-0102		2	BALL BEARING 15/35X11	
380	315705-0201		1	PARALLEL KEY W. ROUND ENDS 5X5X20 MM	
390	315701-0208		1	PARALLEL KEY W. ROUND ENDS 5X5X40 MM	
410	315230-0330		1	SEAL RING G 28X37X4	
450	315230-0252		1	BEARING SEAL G20X28X4 MM	
490	315202-0716		1	O-RING 34,65X1,78 MM	
500	315202-0702		1	O-RING 12,42X1,78 MM	
530	315106-0153		5	WASHER ISO 7089-6-200 HV A4	
540	315125-0153		5	WASHER TBRSB 6,4X22X4 A4	
550	90005-0082		2	WASHER PLAIN ROUND 4,3(M4)/12,H=1	
570	315105-0165		3	WASHER BRB 8,4X16 RFR	
580	315105-0156		2	WASHER BRB 6,7X14 RFR	
600	315105-0153		4	WASHER BRB 6,4X12 RFR	
620	312605-0316		2	HEXAGON NUT, M6M M6 A280	
640	312105-0453		3	SCREW M6S ISO 4017 M8X25 A480	
650	312105-0376		2	SCREW M6S ISO 4014 M6X35 A480	
670	312105-0374		4	SCREW M6S ISO 4014 M6X30 A480	
680	312105-0372		4	SCREW M6S ISO 4017 M6X25 A480	
700	312105-0368		19	SCREW M6S ISO 4017 M6X16 A480	
710	312105-0367		1	REW M6S ISO 4017 M6X14 A480	
760	312105-0329		4	SCREW M6S ISO 4017 M5X16 A480	
770	312155-0368		4	SCREW DIN 7991 MF6S M6X16 A4 70	
780	312105-0291		2	SCREW M6S ISO 4017 M4X12 A470	
790	90458-0438		1	GLAND, EXTENDED WITH INSERT, M20X1,5	
800	90296-0068	G	50	SHELL ALVANIA GREASE EP 2	
810	90458-0307		2	CABLE GLAND, M20X1,5, NO.5311 1020	
820	90459-1458		1	HOOD HAN 6 E 19 30 006 1540	
830	90459-1461		1	HOUSING HAN 6 E 19 30 006 1255	
840	90110-0053		1	FEMALE INSERT HAN 6 E 09 33 006 2701	
850	90110-0052		1	MALE INSERT, HAN E 06, 0933 0062 601	

Machine Type	Group Description	Used-In	Group Number	Page No

Tetra Pak

SPC
Spare Parts Catalogue

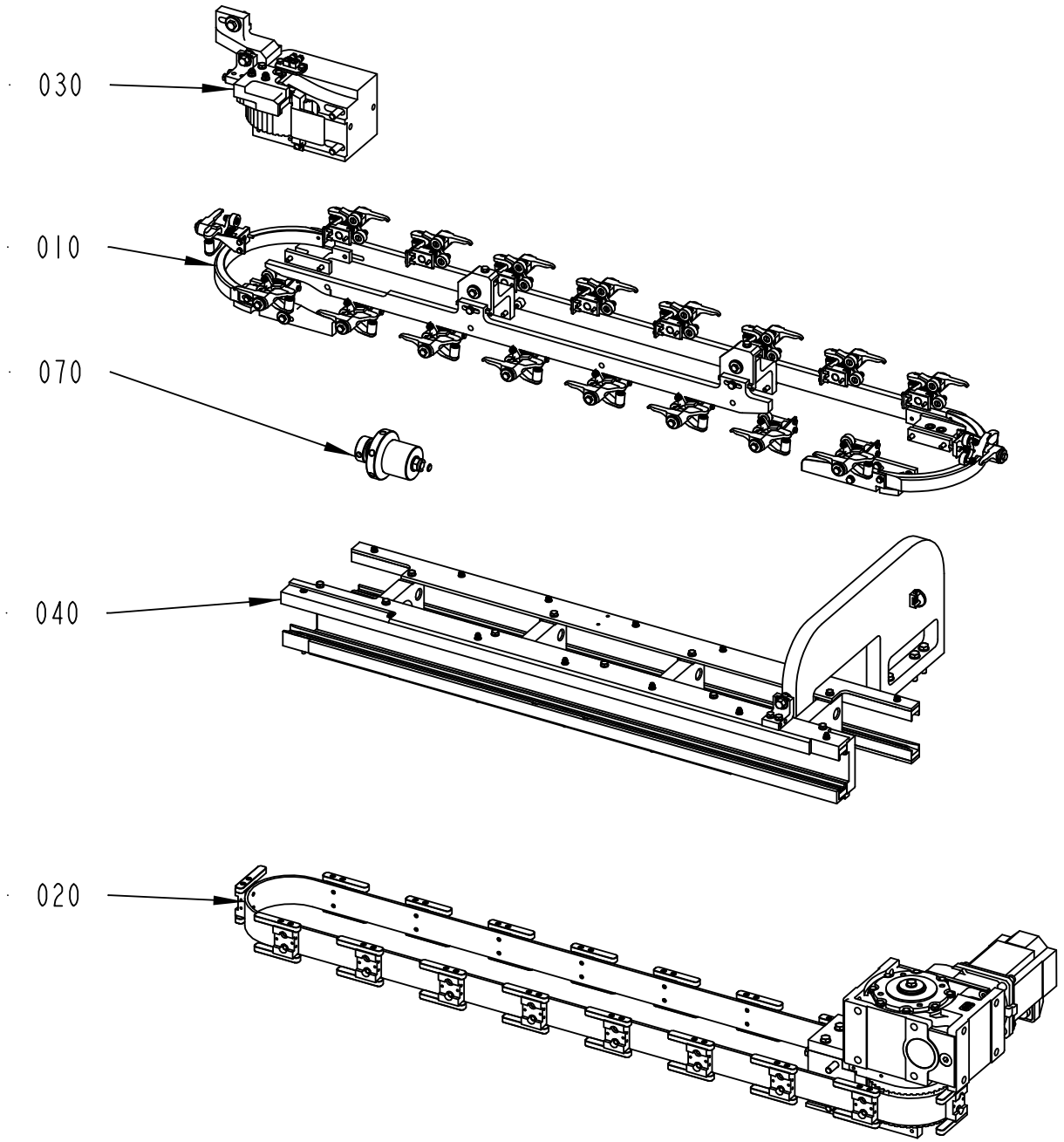

662902-1
287784

ECM: 444319 - 20100701
Group number: 662902-0100
Assembly Drawing: 662902-1_1_AB

This list covers pages from 2-2 to 2-5

Pos	Part No	UN	Qty	Description	Page No
TPA, TGA (See drawing on pages: 2-2, 2-4)					
080	2838718-0100		1	TRIGGER	**2-7, 12-35**
Common Parts					
010	2802648-0100		1	CAP HOLDERS GROUP	**2-9, 2-11**
020	2802647-0100		1	DRIVE	**2-15**
030	2802645-0100		1	BELT STRETCHER	**2-17**
040	2802646-0100		1	FRAME SECTION	**2-19**
070	2843157-0100		1	CLAMPING ELEMENT	**2-21**

Pos	Part No	UN	Qty	Description	Page No

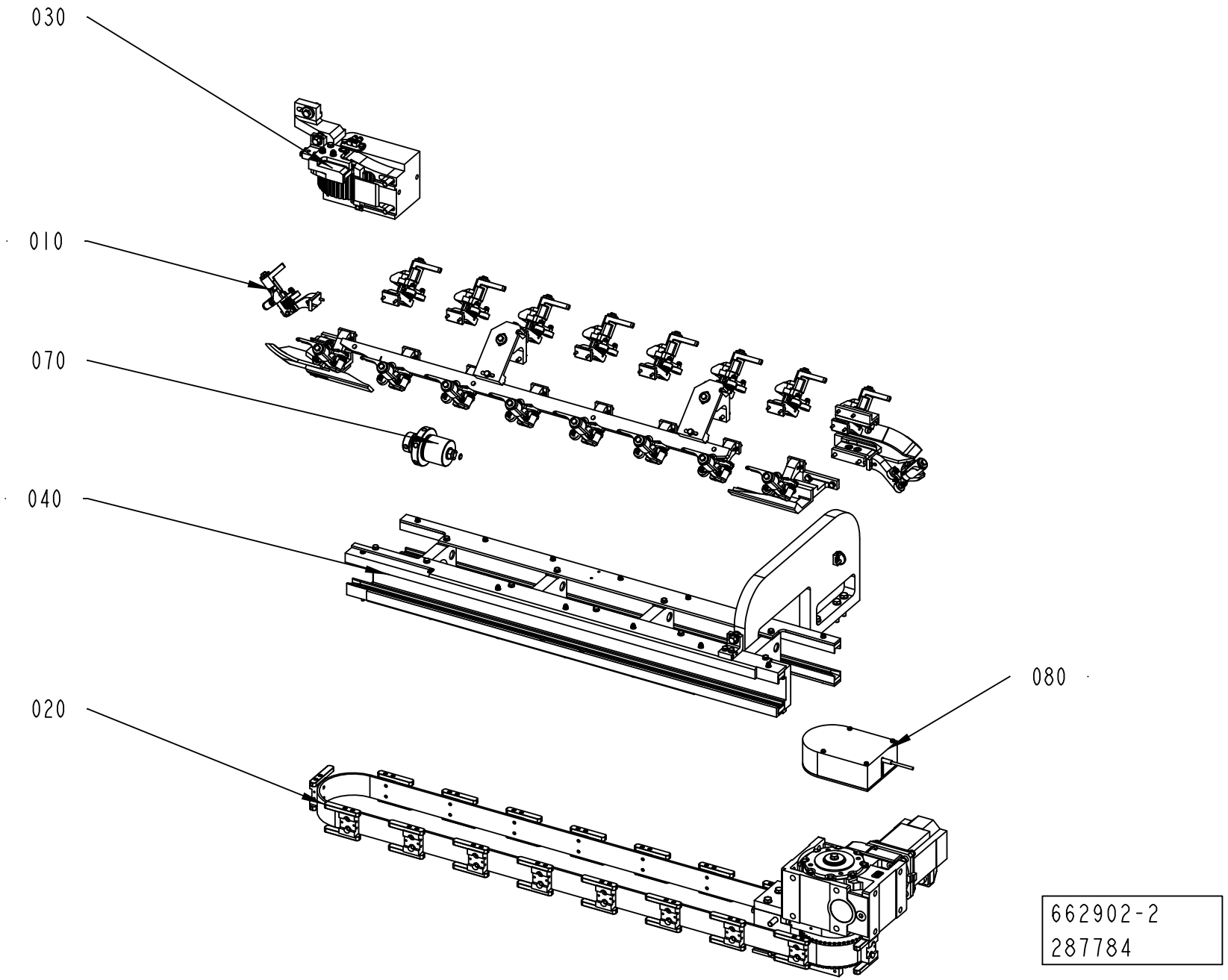
030
010
070
040
080
020
662902-2
287784

ECM: 444319 - 20100701
Group number: 662902-0100
Assembly Drawing: 662902-2_1_AA

This list covers pages from 2-2 to 2-5

Pos	Part No	UN	Qty	Description	Page No
TPA, TGA (See drawing on pages: 2-2, 2-4)					
080	2838718-0100		1	TRIGGER	**2-7, 12-35**
Common Parts					
010	2802648-0100		1	CAP HOLDERS GROUP	**2-9, 2-11**
020	2802647-0100		1	DRIVE	**2-15**
030	2802645-0100		1	BELT STRETCHER	**2-17**
040	2802646-0100		1	FRAME SECTION	**2-19**
070	2843157-0100		1	CLAMPING ELEMENT	**2-21**

Pos	Part No	UN	Qty	Description	Page No

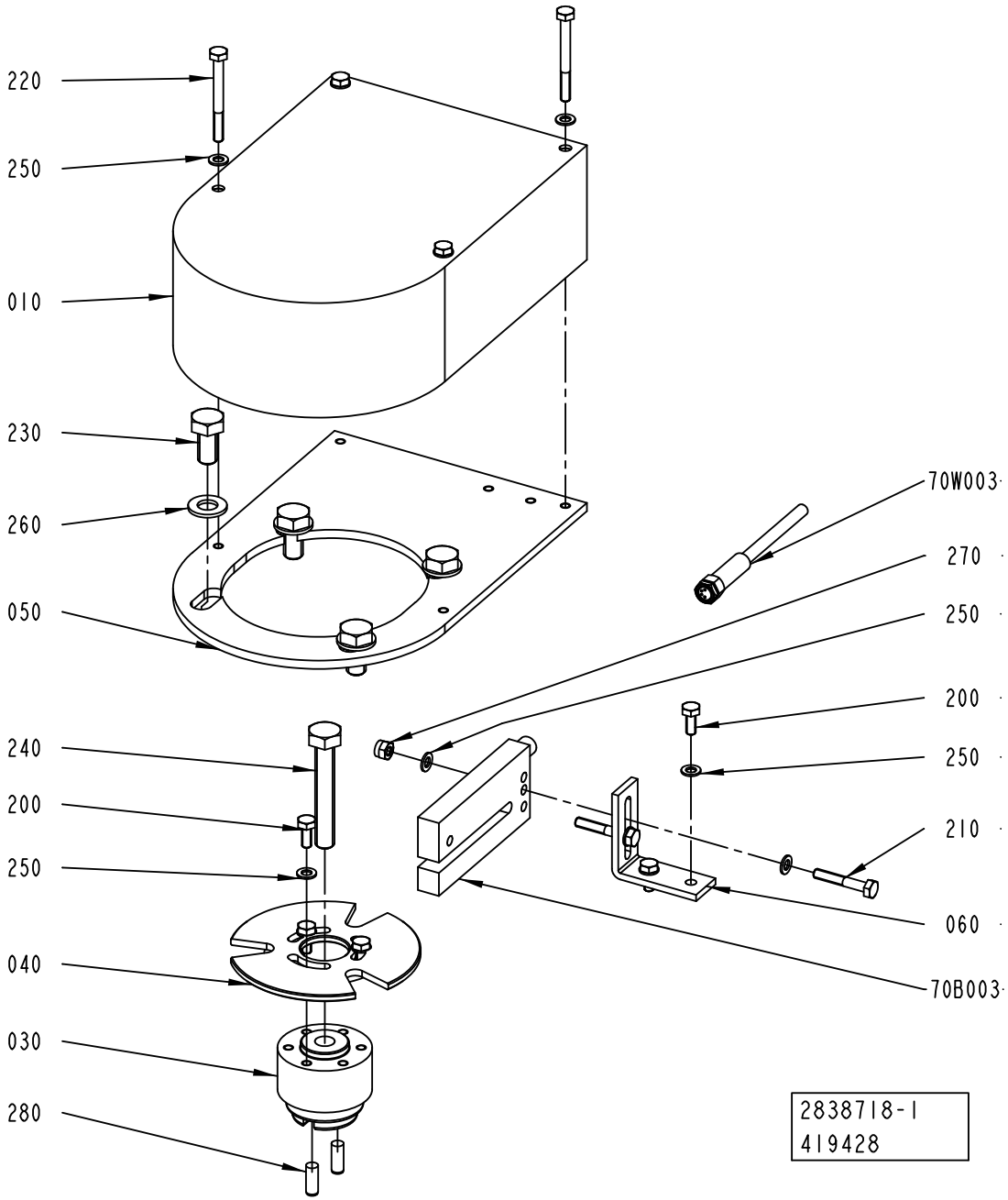
220
250
010
230
260
050
240
200
250
040
030
280
70W003
270
250
200
250
210
060
70B003
2838718-1
419428

ECM: 419446 - 20100110
Group number: 2838718-0100
Assembly Drawing: 2838718-1_1_AB

Pos	Part No	UN	Qty	Description	Page No
-					
010	2838719-0000		1	COVER	
030	2799864-0000		1	FLANGE	
040	2799865-0000		1	DISC	
050	2799866-0000		1	PLATE	
060	2799867-0000		1	ANGLE BRACKET	
200	312105-0289		5	SCREW M6S H4X10 A4 70 ISO4017/DIN933	
210	312105-0297		2	SCREW M6S ISO 4017 M4X25 A470	
220	312105-0303		4	SCREW M6S ISO 4017 M4X40 A470	
230	312105-0449		4	SCREW M6S ISO 4017 M8X16 A480	
240	312109-0461		1	SCREW M6S ISO 4017 M8X50 A480	
250	315105-0136		13	WASHER BRB 4,3X8 RFR	
260	315105-0165		4	WASHER BRB 8,4X16 RFR	
270	312812-0312		2	HEXAGON NUT, NY-LOCK M4 A480	
280	311103-0307		2	PARALLEL PIN ISO 2338 5M6X14 A1	
70B003	90600-2052		1	PHOTOCELL	
70B003	3039014-0000		1	SENSOR	
70B003	90601-6410		1	PHOTOCELL, WF 5-60 B410	
70W003	351305-0100		1	ACTUATOR/SENSOR CABLE PRKMV 4-07/10M	

Pos	Part No	UN	Qty	Description	Page No

CAP HOLDERS GROUP

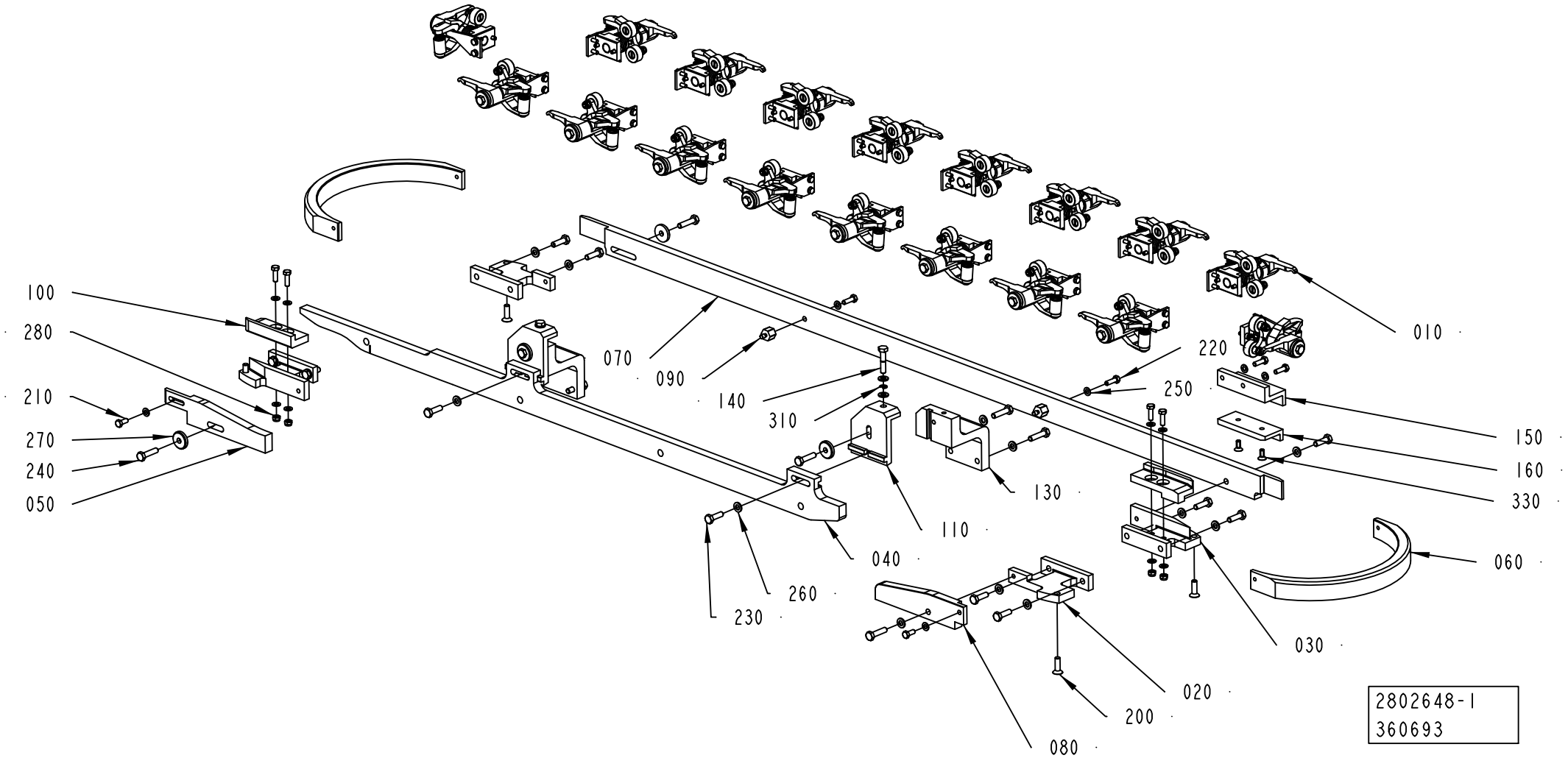

Pos	Part No	UN	Qty	Description	Page No
TBA SLIMCAP1000, TBA STREAMCAP1000, TBA SLIMCAP 2000, TBA STREAMCAP200, TPA STREAMCAP330, TBA HELICAP2 23 (See drawing on page: 2-8)					
020	2715666-0000		2	BRACKET	
030	2715671-0000		2	BRACKET	
040	2873895-0000		1	CURVE	
050	2838737-0000		1	CURVE	
060	2751708-0000		2	CURVE	
070	2751722-0000		1	CURVE	
080	2751733-0000		1	CURVE	
090	2751721-0000		2	SPACER	
110	2838728-0000		2	ADJUSTMENT BRACKET	
130	2751742-0000		2	BRACKET	
200	312155-0370		4	SCREW DIN 7991 MF6S M6X20 A4 70	
210	312105-0327		2	SCREW M6S ISO 4017 M5X12 A480	
220	312105-0329		8	SCREW M6S ISO 4017 M5X16 A480	
230	312105-0370		11	SCREW M6S ISO 4017 M6X20 A480	
240	312105-0372		9	SCREW M6S ISO 4017 M6X25 A480	
250	315105-0146		14	WASHER BRB 5,3X10 RFR	
260	315105-0153		20	WASHER BRB 6,4X12 RFR	
270	315125-0153		4	WASHER TBRSB 6,4X22X4 A4	
TGA (See drawing on page: 2-10)					
020	2873859-0000		2	BRACKET	
030	2873868-0000		1	BRACKET	
040	2873857-0000		1	CAM	
050	2873860-0000		1	CURVE	
060	2873864-0000		2	CAM	
080	2873869-0000		1	CURVE	
110	2873870-0000		2	ADJUSTMENT BRACKET	
130	2780469-0000		2	BRACKET	
200	312155-0370		1	SCREW DIN 7991 MF6S M6X20 A4 70	
220	312105-0329		6	SCREW M6S ISO 4017 M5X16 A480	
230	312105-0370		10	SCREW M6S ISO 4017 M6X20 A480	
240	312105-0372		7	SCREW M6S ISO 4017 M6X25 A480	
250	315105-0146		10	WASHER BRB 5,3X10 RFR	
260	315105-0153		21	WASHER BRB 6,4X12 RFR	
270	315125-0153		2	WASHER TBRSB 6,4X22X4 A4	
290	312812-0316		1	HEXAGON NUT, NY-LOCK M6 A480	
300	312109-0376		2	SCREW M6S ISO 4017 M6X35 A480	
TPA STREAMCAP 1000, TPA STREAMCAP 500 (See drawing on page: 2-8)					
020	2780339-0000		2	BRACKET	
030	2780338-0000		2	BRACKET	
040	2838727-0000		1	CURVE	
050	2780341-0000		1	CURVE	
060	2780337-0000		2	CURVE	
070	2780343-0000		1	CURVE	
080	2780342-0000		1	CURVE	
090	2715807-0000		2	SPACER	
110	2838728-0000		2	ADJUSTMENT BRACKET	
130	2780344-0000		2	BRACKET	
200	312155-0370		4	SCREW DIN 7991 MF6S M6X20 A4 70	
210	312105-0327		2	SCREW M6S ISO 4017 M5X12 A480	
220	312105-0329		6	SCREW M6S ISO 4017 M5X16 A480	
230	312105-0370		11	SCREW M6S ISO 4017 M6X20 A480	
240	312105-0372		9	SCREW M6S ISO 4017 M6X25 A480	
250	315105-0146		14	WASHER BRB 5,3X10 RFR	
260	315105-0153		20	WASHER BRB 6,4X12 RFR	
270	315125-0153		4	WASHER TBRSB 6,4X22X4 A4	
320	312105-0331		2	SCREW M6S ISO 4017 M5X20 A480	
Common Parts					
010	2751667-0100		18	PRESSURE FINGER	**2-13**
100	2751695-0000		2	STEERING	
140	2715804-0000		2	SCREW	
150	2873871-0000		1	BRACKET	
160	2838781-0000		1	STEERING	
280	312812-0314		4	HEXAGON NUT, NY-LOCK M5 A480	
310	315755-0106		2	RETAINING RING SHAFT DIN 6799 4 SS	
330	312155-0327		2	SCREW DIN 7991 MF6S M5X12 A4 70	

Machine Type | Group Description | Used-In | Group Number | Page No

CAP HOLDERS GROUP

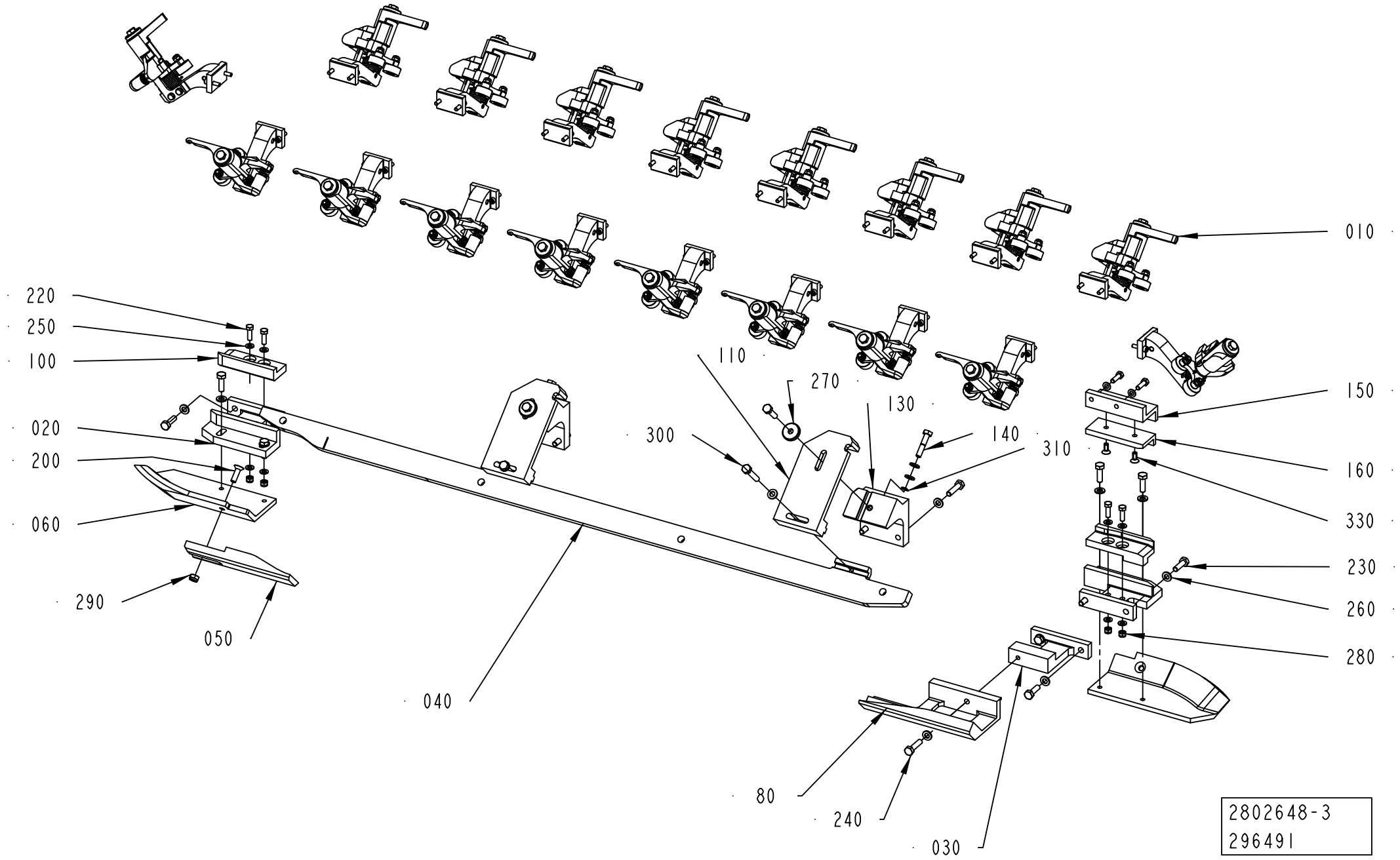

Pos	Part No	UN	Qty	Description	Page No
TBA SLIMCAP1000, TBA STREAMCAP1000, TBA SLIMCAP 2000, TBA STREAMCAP200, TPA STREAMCAP330, TBA HELICAP2 23 (See drawing on page: 2-8)					
020	2715666-0000		2	BRACKET	
030	2715671-0000		2	BRACKET	
040	2873895-0000		1	CURVE	
050	2838737-0000		1	CURVE	
060	2751708-0000		2	CURVE	
070	2751722-0000		1	CURVE	
080	2751733-0000		1	CURVE	
090	2751721-0000		2	SPACER	
110	2838728-0000		2	ADJUSTMENT BRACKET	
130	2751742-0000		2	BRACKET	
200	312155-0370		4	SCREW DIN 7991 MF6S M6X20 A4 70	
210	312105-0327		2	SCREW M6S ISO 4017 M5X12 A480	
220	312105-0329		8	SCREW M6S ISO 4017 M5X16 A480	
230	312105-0370		11	SCREW M6S ISO 4017 M6X20 A480	
240	312105-0372		9	SCREW M6S ISO 4017 M6X25 A480	
250	315105-0146		14	WASHER BRB 5,3X10 RFR	
260	315105-0153		20	WASHER BRB 6,4X12 RFR	
270	315125-0153		4	WASHER TBRSB 6,4X22X4 A4	
TGA (See drawing on page: 2-10)					
020	2873859-0000		2	BRACKET	
030	2873868-0000		1	BRACKET	
040	2873857-0000		1	CAM	
050	2873860-0000		1	CURVE	
060	2873864-0000		2	CAM	
080	2873869-0000		1	CURVE	
110	2873870-0000		2	ADJUSTMENT BRACKET	
130	2780469-0000		2	BRACKET	
200	312155-0370		1	SCREW DIN 7991 MF6S M6X20 A4 70	
220	312105-0329		6	SCREW M6S ISO 4017 M5X16 A480	
230	312105-0370		10	SCREW M6S ISO 4017 M6X20 A480	
240	312105-0372		7	SCREW M6S ISO 4017 M6X25 A480	
250	315105-0146		10	WASHER BRB 5,3X10 RFR	
260	315105-0153		21	WASHER BRB 6,4X12 RFR	
270	315125-0153		2	WASHER TBRSB 6,4X22X4 A4	
290	312812-0316		1	HEXAGON NUT, NY-LOCK M6 A480	
300	312109-0376		2	SCREW M6S ISO 4017 M6X35 A480	
TPA STREAMCAP 1000, TPA STREAMCAP 500 (See drawing on page: 2-8)					
020	2780339-0000		2	BRACKET	
030	2780338-0000		2	BRACKET	
040	2838727-0000		1	CURVE	
050	2780341-0000		1	CURVE	
060	2780337-0000		2	CURVE	
070	2780343-0000		1	CURVE	
080	2780342-0000		1	CURVE	
090	2715807-0000		2	SPACER	
110	2838728-0000		2	ADJUSTMENT BRACKET	
130	2780344-0000		2	BRACKET	
200	312155-0370		4	SCREW DIN 7991 MF6S M6X20 A4 70	
210	312105-0327		2	SCREW M6S ISO 4017 M5X12 A480	
220	312105-0329		6	SCREW M6S ISO 4017 M5X16 A480	
230	312105-0370		11	SCREW M6S ISO 4017 M6X20 A480	
240	312105-0372		9	SCREW M6S ISO 4017 M6X25 A480	
250	315105-0146		14	WASHER BRB 5,3X10 RFR	
260	315105-0153		20	WASHER BRB 6,4X12 RFR	
270	315125-0153		4	WASHER TBRSB 6,4X22X4 A4	
320	312105-0331		2	SCREW M6S ISO 4017 M5X20 A480	
Common Parts					
010	2751667-0100		18	PRESSURE FINGER	**2-13**
100	2751695-0000		2	STEERING	
140	2715804-0000		2	SCREW	
150	2873871-0000		1	BRACKET	
160	2838781-0000		1	STEERING	
280	312812-0314		4	HEXAGON NUT, NY-LOCK M5 A480	
310	315755-0106		2	RETAINING RING SHAFT DIN 6799 4 SS	
330	312155-0327		2	SCREW DIN 7991 MF6S M5X12 A4 70	

PRESSURE FINGER

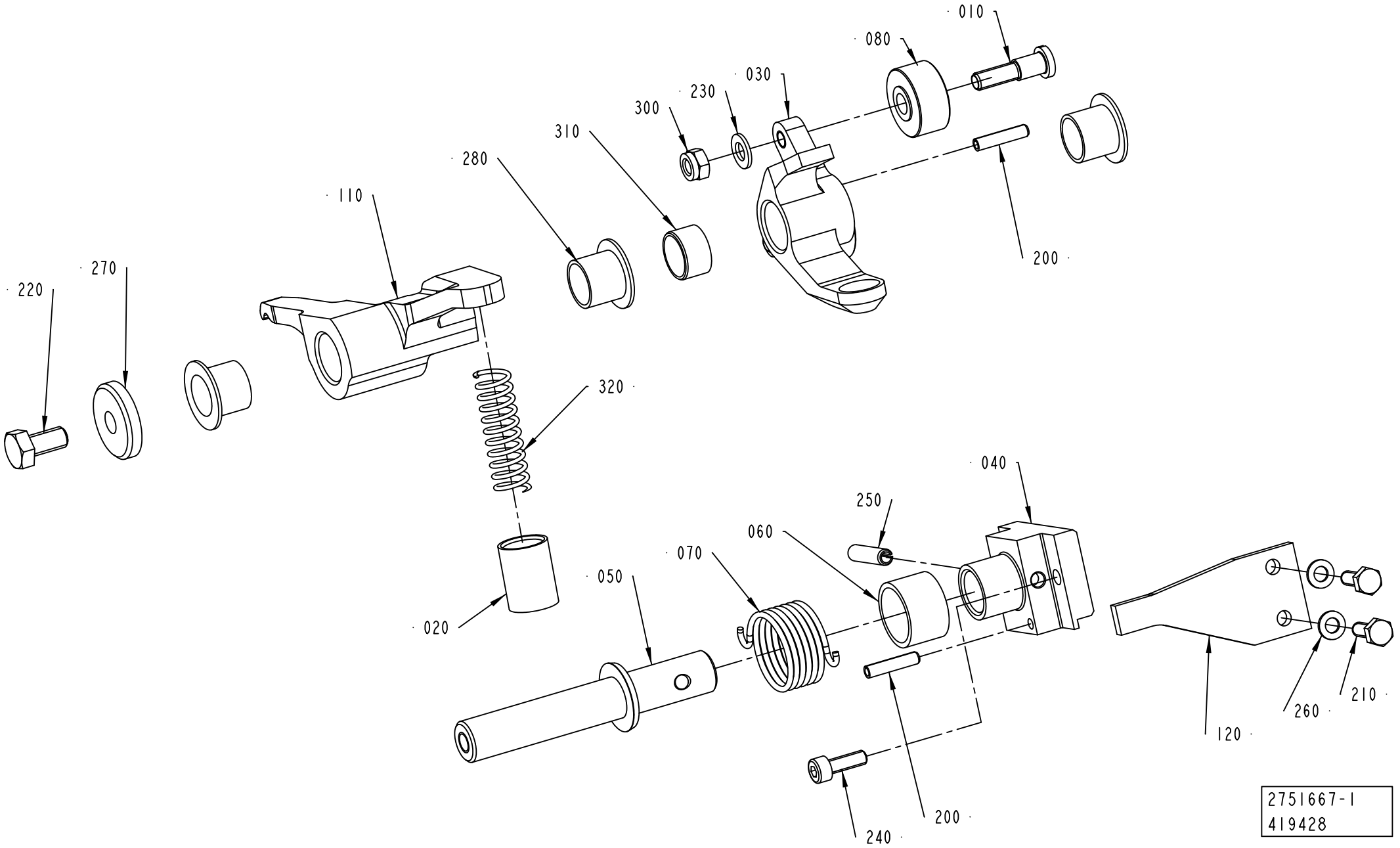

ECM: 479882 - 20110401
Group number: 2751667-0100
Assembly Drawing: 2751667-1_1_AD

Pos	Part No	UN	Qty	Description	Page No
CAP 30/FLEX TBA HELICAP2 23 (See drawing on page: 2-12)					
040	2703714-0000		1	HOLDER	
050	2703715-0000		1	SHAFT	
110	2716056-0000		1	ARM	
120	2751732-0000		1	BRACKET	
210	312105-0291		2	SCREW M6S ISO 4017 M4X12 A470	
230	315105-0146		2	WASHER BRB 5,3X10 RFR	
250	311112-0256		1	SPRING PIN, ISO 8752 4X20-C	
270	315125-0153		1	WASHER TBRSB 6,4X22X4 A4	
300	312812-0314		2	HEXAGON NUT, NY-LOCK M5 A480	
310	90600-5135		1	BUSHING, 12X14X8 MM	
320	3058864-0000		1	COMPRESSION SPRING	
TBA SLIMCAP1000, TBA STREAMCAP1000, TBA SLIMCAP 2000, TBA STREAMCAP200, TPA STREAMCAP330 (See drawing on page: 2-12)					
040	2703714-0000		1	HOLDER	
050	2703715-0000		1	SHAFT	
110	2716056-0000		1	ARM	
120	2751732-0000		1	BRACKET	
210	312105-0291		2	SCREW M6S ISO 4017 M4X12 A470	
230	315105-0146		2	WASHER BRB 5,3X10 RFR	
250	311112-0256		1	SPRING PIN, ISO 8752 4X20-C	
270	315125-0153		1	WASHER TBRSB 6,4X22X4 A4	
300	312812-0314		2	HEXAGON NUT, NY-LOCK M5 A480	
310	90600-5135		1	BUSHING, 12X14X8 MM	
320	90600-0683		1	COMP. SPRING 2496, 1,2X10,4X45	
TGA (See drawing on page: 2-12)					
040	2780391-0000		1	HOLDER	
050	2780393-0000		1	SHAFT	
110	2780394-0000		1	ARM	
120	2715813-0000		1	BRACKET	
210	312105-0291		2	SCREW M6S ISO 4017 M4X12 A470	
230	315105-0146		2	WASHER BRB 5,3X10 RFR	
250	311112-0256		1	SPRING PIN, ISO 8752 4X20-C	
270	315125-0153		1	WASHER TBRSB 6,4X22X4 A4	
300	312812-0314		2	HEXAGON NUT, NY-LOCK M5 A480	
310	90600-5135		1	BUSHING, 12X14X8 MM	
320	90600-0683		1	COMP. SPRING 2496, 1,2X10,4X45	
TPA STREAMCAP 1000, TPA STREAMCAP 500 (See drawing on page: 2-12)					
040	2780352-0000		1	HOLDER	
050	2703715-0000		1	SHAFT	
110	2780346-0000		1	ARM	
120	2780353-0000		1	BRACKET	
210	312105-0291		2	SCREW M6S ISO 4017 M4X12 A470	
230	315105-0146		2	WASHER BRB 5,3X10 RFR	
250	311112-0256		1	SPRING PIN, ISO 8752 4X20-C	
270	315125-0153		1	WASHER TBRSB 6,4X22X4 A4	
300	312812-0314		2	HEXAGON NUT, NY-LOCK M5 A480	
310	90600-5135		1	BUSHING, 12X14X8 MM	
320	90600-0683		1	COMP. SPRING 2496, 1,2X10,4X45	
Common Parts					
010	2684864-0000		2	SHAFT	
020	2715695-0000		1	SLEEVE	
030	2715794-0000		1	ARM	
060	2715797-0000		1	BUSHING	
070	2715798-0000		1	TURN SPRING	
080	2703725-0000		2	ROLLER	
200	311112-0208		2	SPRING PIN, ISO 8752 3X16-C	
220	312105-0366		1	SCREW M6S ISO 4017 M6X12 A480	
240	312115-0291		2	SCREW ISO4762 M4X12 A4 80	
260	315105-0136		2	WASHER BRB 4,3X8 RFR	
280	90240-0262		3	FLANGE BUSHING, IGLIDUR X 12X14X12	

Machine Type | Group Description | Used-In | Group Number | Page No

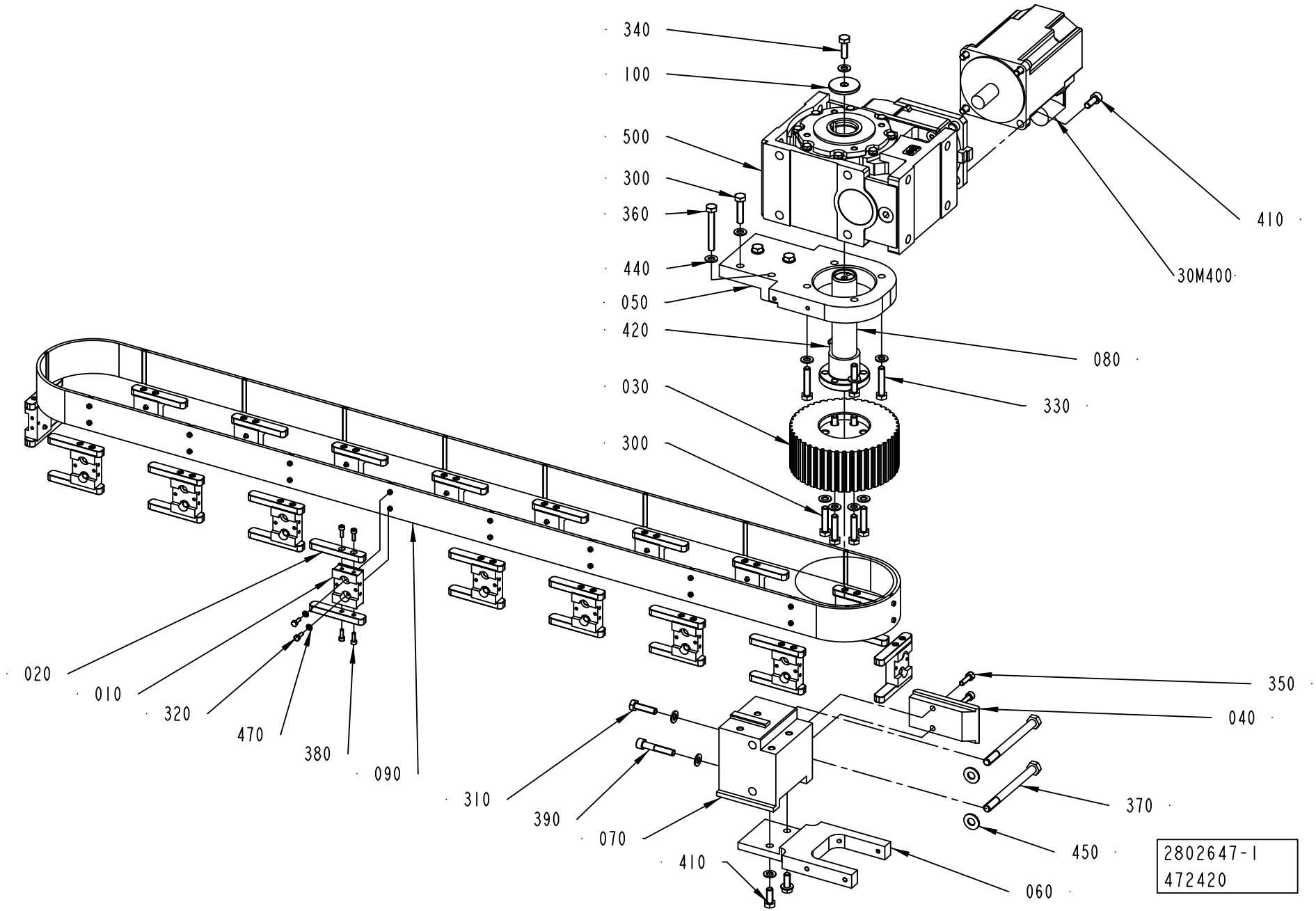
340
100
500
300
360
440
050
420
030
300
020
010
320
470
380
090
310
390
070
410
060
410
30M400
080
330
350
040
370
450
2802647-1
472420

ECM: 472477 - 20101109
Group number: 2802647-0100
Assembly Drawing: 2802647-1_1_AD

Pos	Part No	UN	Qty	Description	Page No
-					
010	2703711-0000		18	HOLDER	
020	2715837-0000		36	KEY	
030	2837191-0000		1	TOOTHED PULLEY	
040	2751710-0000		1	SUPPORT PLATE	
050	2837175-0000		1	BEARING HALF	
060	2716041-0000		1	BRACKET	
070	2751700-0000		1	BOW CLAMP	
080	2838721-0000		1	SHAFT	
090	3117862-0000		1	TIMING BELT	
010	*3117863-0000*		*1*	*TIMING BELT*	
020	*3117864-0000*		*18*	*INSERT NUT*	
100	2837255-0000		1	WASHER	
300	312109-0457		8	SCREW M6S ISO 4017 M8X35 A480	
30M400	90601-0668		1	SERVO MOTOR MPL-B420P-MK72AA SERIES A	
310	312105-0455		1	SCREW M6S ISO 4017 M8X30 A480	
320	312105-0291		36	SCREW M6S ISO 4017 M4X12 A470	
330	312109-0459		4	SCREW M6S ISO 4017 M8X40 A480	
340	312105-0453		1	SCREW M6S ISO 4017 M8X25 A480	
350	312115-0370		2	SCREW ISO4762 M6X20 A4 80	
360	312109-0463		2	SCREW M6S ISO 4017 M8X60 A480	
370	312105-0515		2	SCREW M6S ISO 4014 M10X120 A480	
380	312115-0291		72	SCREW ISO4762 M4X12 A4 80	
390	312115-0460		1	SCREW ISO4762 M8X45 A4 80	
410	312105-0451		6	SCREW M6S ISO 4017 M8X20 A480	
420	315705-0307		1	PARALLEL KEY W. ROUND ENDS 10X8X70 MM	
440	315105-0165		19	WASHER BRB 8,4X16 RFR	
450	315105-0173		2	WASHER BRB 10,5X22 RFR	
470	315105-0136		36	WASHER BRB 4,3X8 RFR	
500	90600-0804		1	WORM GEAR MR V 63 UO3A-80B4 … B5/140	

Pos	Part No	UN	Qty	Description	Page No

Machine Type | Group Description | Used-In | Group Number | Page No

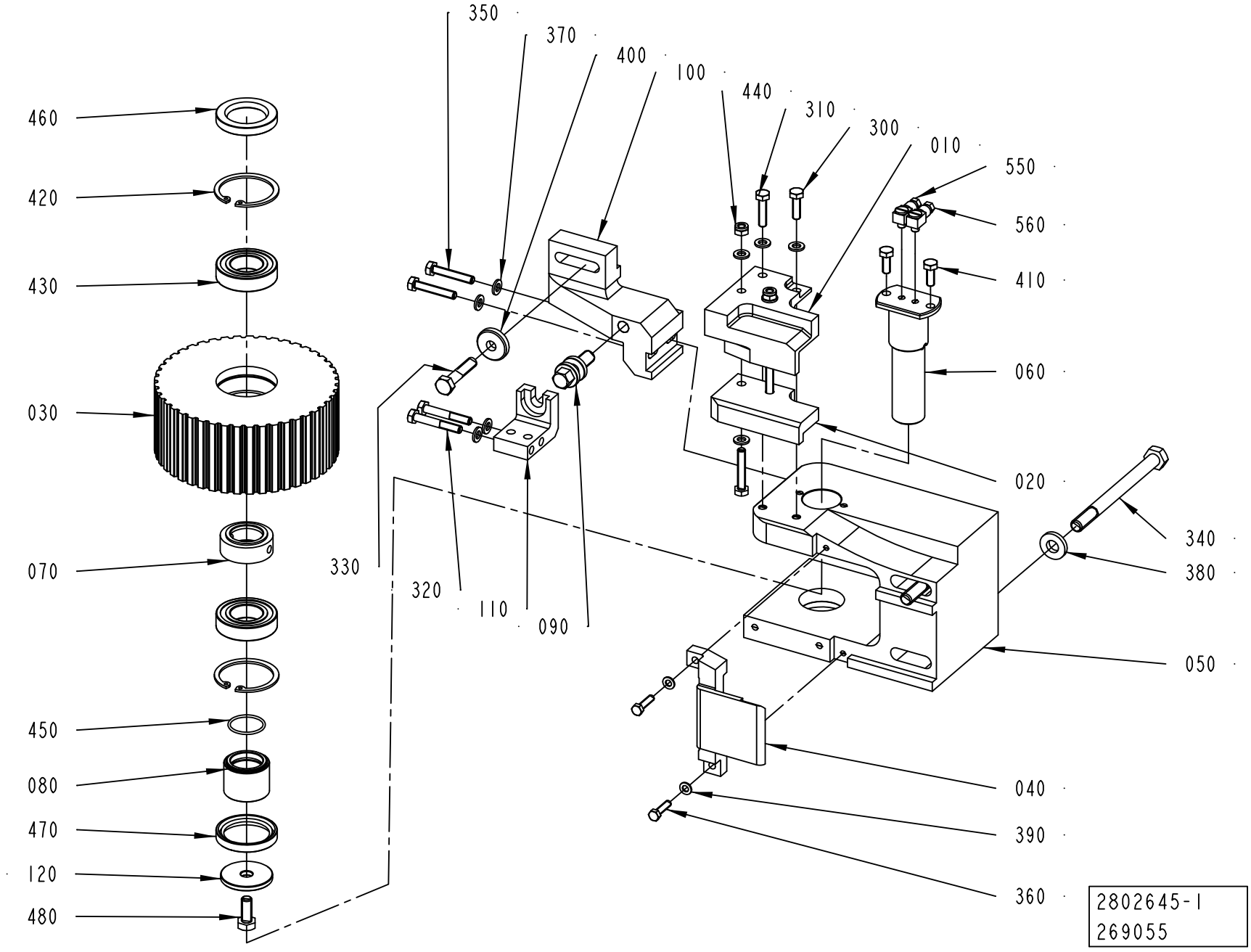
350
370
400
100
440
310
300
010
550
560
410
060
020
340
380
050
040
390
360
460
420
430
030
070
450
080
470
120
480
330
320
110
090
2802645-1
269055

ECM: 479883 - 20110401
Group number: 2802645-0100
Assembly Drawing: 2802645-1_1_AA

Pos	Part No	UN	Qty	Description	Page No
STREAMCAP500, STREAMCAP1000, SLIMCAP 2000, SLIMCAP 1000, STREAMCAP200, STREAMCAP330					
010	2751692-0000		1	BRACKET	
100	2802629-0000		1	BRACKET	
310	312105-0372		1	SCREW M6S ISO 4017 M6X25 A480	
350	312109-0376		4	SCREW M6S ISO 4017 M6X35 A480	
370	315105-0153		10	WASHER BRB 6,4X12 RFR	
Common Parts					
020	2751693-0000		1	STEERING	
030	2751712-0000		1	TOOTHED PULLEY	
040	2751714-0000		1	SUPPORT PLATE	
050	2751725-0000		1	BOW CLAMP	
060	2838815-0000		1	SHAFT	
070	2751747-0000		1	SPACER	
080	2751748-0000		1	SLEEVE	
090	2703842-0000		1	ADJUSTING SCREW	
110	2802635-0000		1	SUPPORT	
120	2837255-0000		1	WASHER	
300	312105-0370		1	SCREW M6S ISO 4017 M6X20 A480	
320	312105-0378		2	SCREW M6S ISO 4014 M6X40 A480	
330	312105-0459		1	SCREW M6S ISO 4014 M8X40 A480	
340	312105-0515		2	SCREW M6S ISO 4014 M10X120 A480	
360	312105-0331		2	SCREW M6S ISO 4017 M5X20 A480	
380	315115-0173		2	WASHER PLAIN, TBRB 10,5/22 H=4	
390	315105-0146		2	WASHER BRB 5,3X10 RFR	
400	315125-0165		1	WASHER TBRSB 8,4X26X5 A4	
410	312105-0368		2	SCREW M6S ISO 4017 M6X16 A480	
420	315753-0130		2	RETAINING RING FOR BORE DIN 472 47 SS	
430	321306-0105		2	BALL BEARING 25/47X12	
440	312812-0316		2	HEXAGON NUT, NY-LOCK M6 A480	
450	315202-0710		1	O-RING 25,12X1,78 MM	
460	315221-0169		1	RADIAL SEAL 30X47X7 MM	
470	315221-0175		1	RADIAL SEAL 35X47X7 MM	
480	312105-0451		1	SCREW M6S ISO 4017 M8X20 A480	
550	90134-0058		1	CONNECTION	
560	90134-0068		1	CONNECTION	

Pos	Part No	UN	Qty	Description	Page No

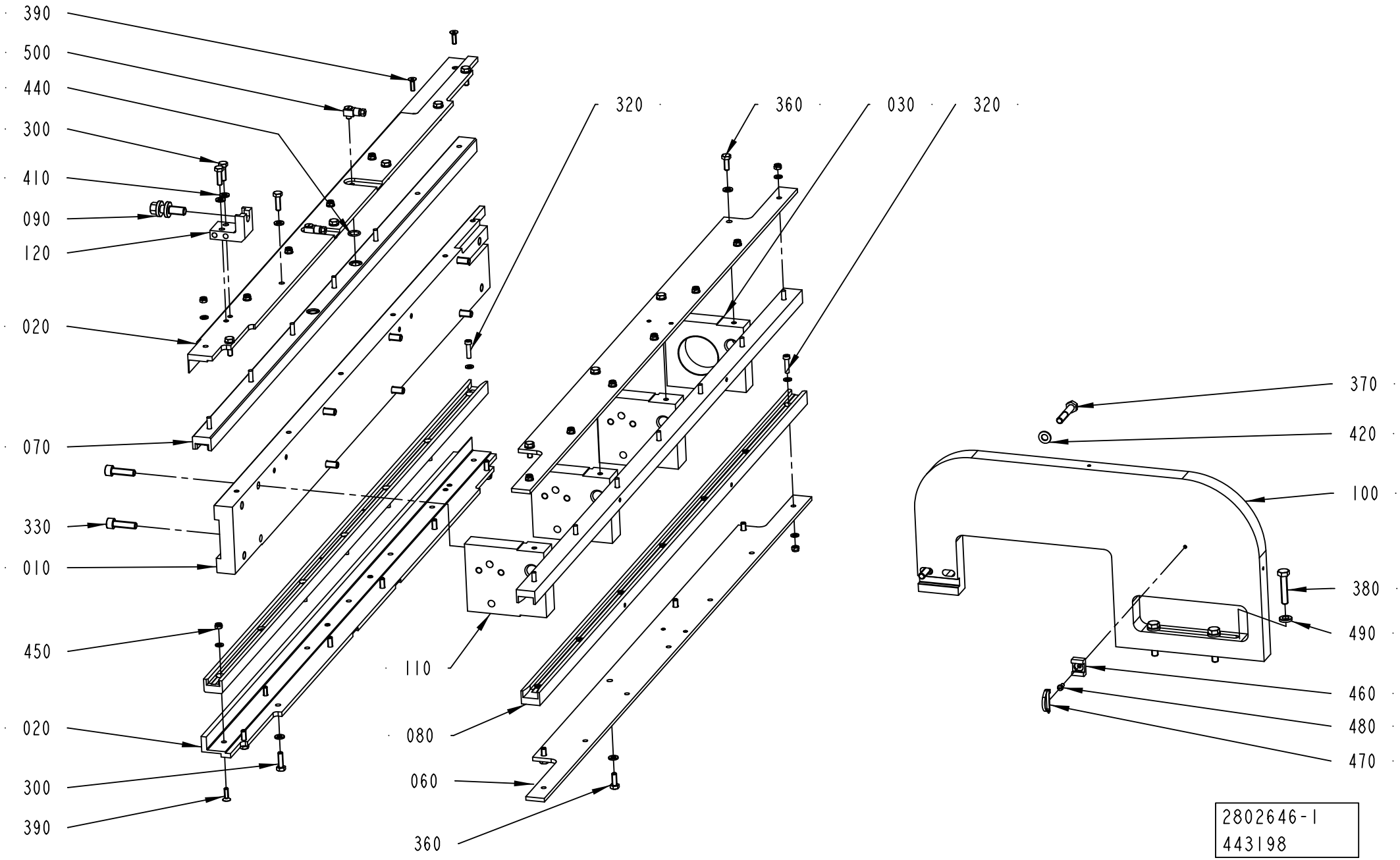
390
500
440
300
410
090
120
020
070
330
010
450
020
300
390
320
360
030
320
110
080
060
360
370
420
100
380
490
460
480
470
2802646-1
443198

ECM: 479884 - 20110401
Group number: 2802646-0100
Assembly Drawing: 2802646-1_1_AD

Pos	Part No	UN	Qty	Description	Page No
STREAMCAP500, STREAMCAP1000, SLIMCAP 2000, SLIMCAP 1000, STREAMCAP200, STREAMCAP330					
010	3095793-0000		1	PLATE	
020	3095794-0000		2	ANGLE BRACKET	
070	3095795-0000		2	SLIDING STRIP	
100	2802637-0000		1	MOUNTING SHEET	
320	312125-0331		24	SCREW ISO 1207 M5X20 A4	
390	312155-0329		4	SCREW DIN 7991 MF6S M5X16 A4 70	
400	315105-0146		52	WASHER BRB 5,3X10 RFR	
410	315105-0153		23	WASHER BRB 6,4X12 RFR	
Common Parts					
030	2837631-0000		1	SPACER	
060	2838783-0000		2	PLATE	
080	2838784-0000		2	SLIDING STRIP	
090	2703842-0000		1	ADJUSTING SCREW	
110	2802644-0000		3	SPACER	
120	2802635-0000		1	SUPPORT	
300	312105-0370		15	SCREW M6S ISO 4017 M6X20 A480	
330	312115-0455		8	SCREW ISO4762 M8X30 A4 80	
360	312105-0368		8	SCREW M6S ISO 4017 M6X16 A480	
370	312105-0460		2	SCREW M6S ISO 4014 M8X45 A480	
380	312109-0459		3	SCREW M6S ISO 4017 M8X40 A480	
420	315105-0165		2	WASHER BRB 8,4X16 RFR	
440	315202-0702		4	O-RING 12,42X1,78 MM	
450	312812-0314		28	HEXAGON NUT, NY-LOCK M5 A480	
460	352113-0203		1	ANCHOR PLATES FOR STRIPS, TM3S8-M0	
470	352113-0104		1	CABLE TIE, BLACK 300X4,8 MM	
480	312125-0287		1	SCREW ISO 1207 M4X8 A4	
490	315115-0165		3	WASHER PLAIN, TBRB 8,4/16 H=3	
500	90134-0058		3	CONNECTION	

Pos	Part No	UN	Qty	Description	Page No

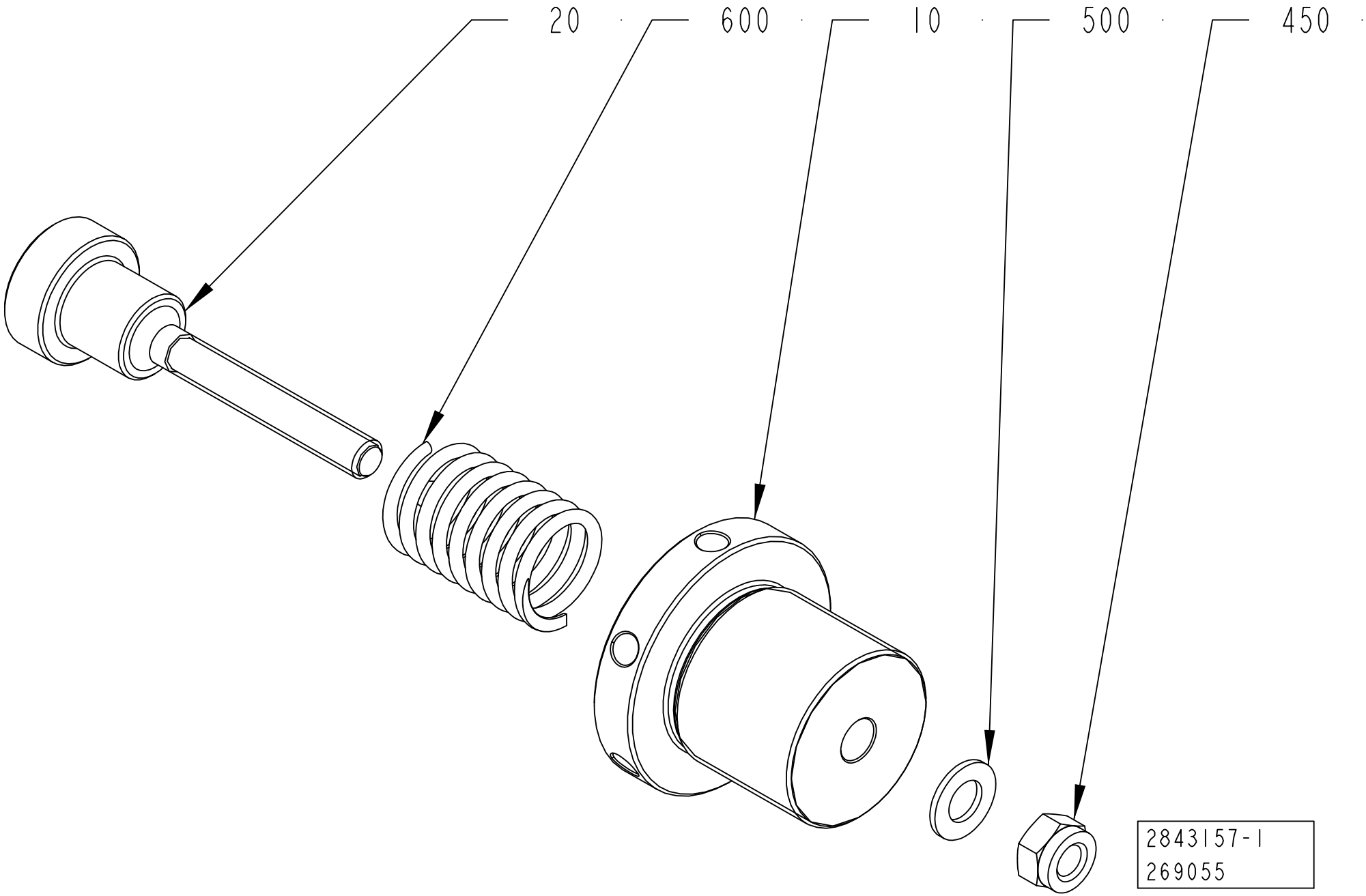
20
600
10
500
450
2843157-1
269055

ECM: 350651 - 20080701
Group number: 2843157-0100
Assembly Drawing: 2843157-1_1_AA

Pos	Part No	UN	Qty	Description	Page No
-					
010	2843158-0000		1	FLANGE	
020	2843159-0000		1	SHAFT	
450	312812-0322		1	HEXAGON NUT, NY-LOCK M12 A480	
500	315105-0178		1	WASHER BRB 13X24 RFR	
600	90600-0656		1	COMP. SPRING 6777, 4X36X120	

Pos	Part No	UN	Qty	Description	Page No

Tetra Pak

SPC
Spare Parts Catalogue

SCREW CAP HOT MELT APPLICATOR

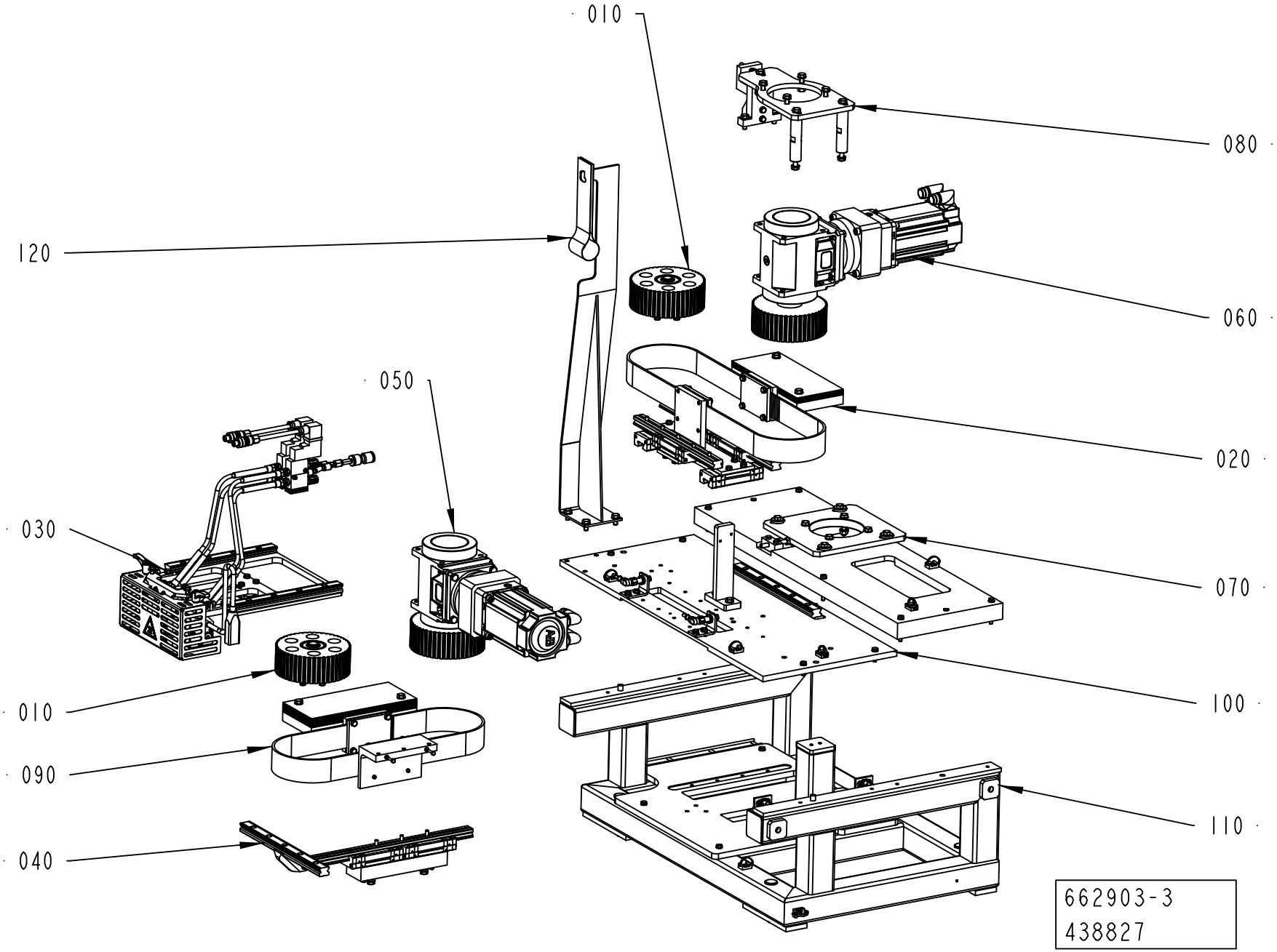

ECM: 480960 - 20110401
Group number: 662903-0200
Assembly Drawing: 662903-3_1_AB

Pos	Part No	UN	Qty	Description	Page No
CAP 30/FLEX SLIMCAP1000, CAP 30/FLEX STREAMCAP1000, CAP 30/FLEX SLIMCAP2000, CAP 30/FLEX STREAMCAP500, CAP 30/FLEX STREAMCAP200, CAP 30/FLEX STREAMCAP330, CAP 30/FLEX HELICAP223					
030	2716091-0300		1	HOTMELT GUN	**3-5, 3-7**
080	2840146-0100		1	MOTOR BRACKET	**3-11**
Common Parts					
010	2695135-0100		2	PULLEY	**3-13**
020	2716090-0100		1	MOTION CONTROL	**3-15**
040	2716092-0100		1	TRANSMISSION RAIL	**3-17**
050	2840143-0100		1	SERVO MOTOR	**3-19**
060	2840144-0100		1	SERVO MOTOR	**3-21**
070	2840145-0100		1	MOTOR BRACKET	**3-23**
090	2716097-0100		1	MOTION CONTROL	**3-25**
100	2840147-0100		1	FASTENING BRACKET	**3-27**
110	2841501-0100		1	FRAME	**3-29**
120	2901708-0100		1	MOTOR BRACKET	**3-31**

Pos	Part No	UN	Qty	Description	Page No

Machine Type | Group Description | Used-In | Group Number | Page No

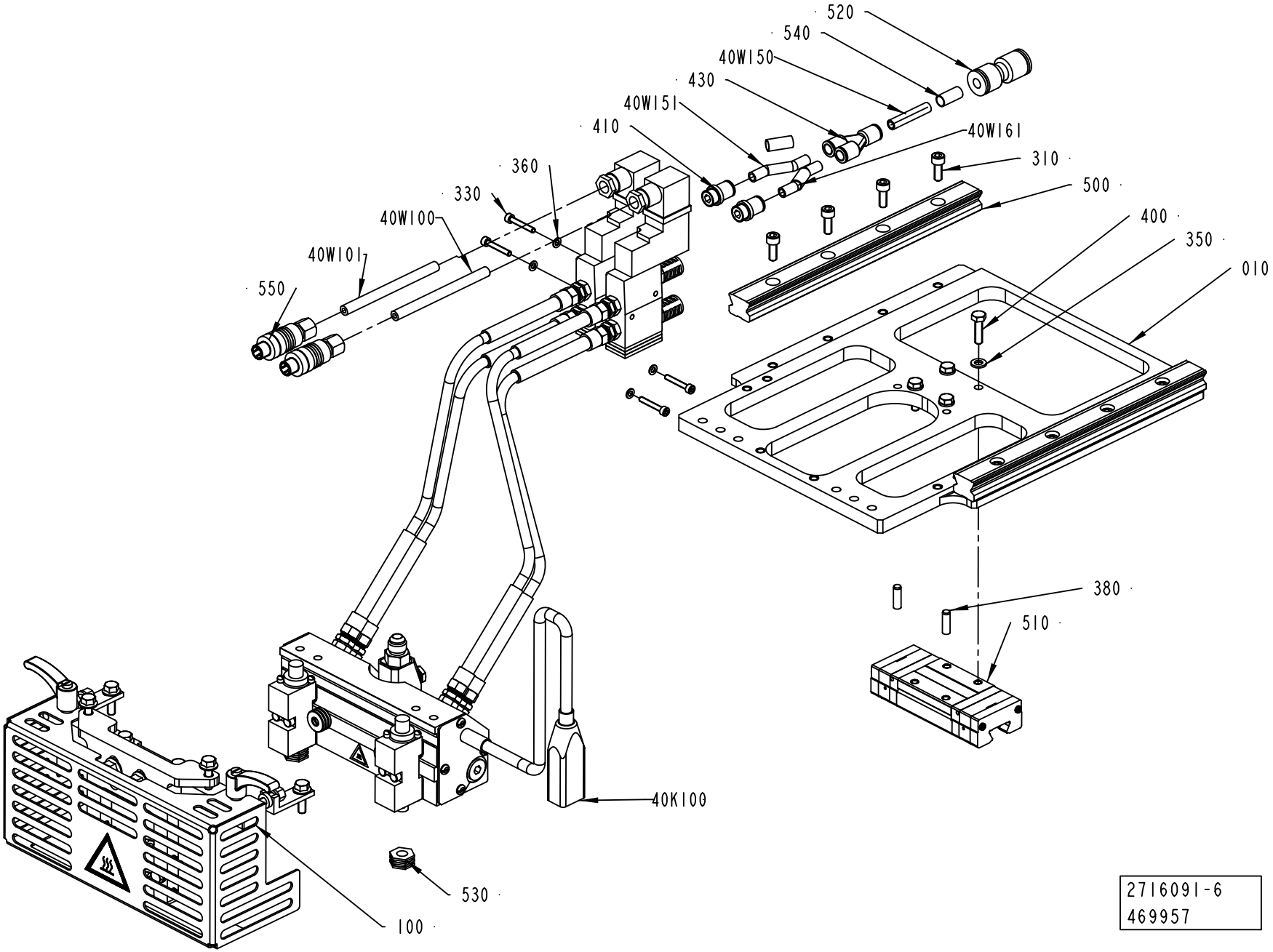
520
540
40W150
430
40W151
410
40W161
310
500
400
350
010
360
330
40W100
40W101
550
380
510
40K100
530
100
2716091-6
469957

ECM: 480961 - 20110401
Group number: 2716091-0300
Assembly Drawing: 2716091-6_1_AB

This list covers pages from 3-4 to 3-7

Pos	Part No	UN	Qty	Description	Page No
CAP 30/FLEX SLIMCAP1000, CAP 30/FLEX STREAMCAP200 (See drawing on pages: 3-4, 3-6)					
330	312115-0297		4	SCREW ISO4762 M4X25 A4 80	
360	315105-0136		5	WASHER BRB 4,3X8 RFR	
40K100	3098039-0000		1	HOTMELT GUN	
010	*90459-6327*		*2*	*SOLENOID VALVE, #1053894*	
	90042-0392		*1*	*CONTACT 2 POLE + EARTH*	
	90459-6332		*1*	*SILENCER, #1058058*	
020	*90600-0684*		*6*	*SPACER 75ODX.328IDX.12THK, #1028115*	
030	*90600-0550*		*4*	*STRAIGHT COUPLING,EXT.THREADED 8/6-R1/8"*	
040	*90600-0551*		*4*	*STRAIGHT COUPLING,EXT.THREADED 8/6-R1/4"*	
050	*342903-0121*		*8*	*NUT WITH SPRING, 1723 8/6-M12X1*	
060	*90600-0558*		*1*	*CERAMIC BLOCK CONNECTOR, #939586*	
070	*3100274-0000*		*1*	*FILTER*	
	3117842-0000		*1*	*FILTER INSERT*	
080	*90459-6329*		*2*	*GUN MODULE SOLIDBLUE A #1052927*	
090	*90600-0547*		*1*	*SATURN IN-LINE FILTER JACKET, #1056296*	
100	*90439-0206*		*1*	*CABLE*	
110	*90600-0561*		*1*	*HEATING CARTRIDGE 400W/240V, #1054659*	
120	*90600-0553*		*4*	*TUBE, 8X1 MM PTFE*	
410	350003-0007		2	USH-IN FITTING QS-F-G1/4-8-I	
430	350015-0003		1	PUSH-IN Y-CONNECTOR QSY-F-8	
530	90439-0155		2	PRECISION NOZZLE SATURN 322012	
540	90459-7370		3	MARKING FOR PNEUM. TUBING, PRZ08	
550	90459-1663		2	CONNECTOR, 405204 RSC4/7	
CAP 30/FLEX SLIMCAP2000, CAP 30/FLEX STREAMCAP330 (See drawing on pages: 3-4, 3-6)					
330	312115-0297		4	SCREW ISO4762 M4X25 A4 80	
360	315105-0136		5	WASHER BRB 4,3X8 RFR	
40K100	3098039-0000		1	HOTMELT GUN	
010	*90459-6327*		*2*	*SOLENOID VALVE, #1053894*	
	90042-0392		*1*	*CONTACT 2 POLE + EARTH*	
	90459-6332		*1*	*SILENCER, #1058058*	
020	*90600-0684*		*6*	*SPACER 75ODX.328IDX.12THK, #1028115*	
030	*90600-0550*		*4*	*STRAIGHT COUPLING,EXT.THREADED 8/6-R1/8"*	
040	*90600-0551*		*4*	*STRAIGHT COUPLING,EXT.THREADED 8/6-R1/4"*	
050	*342903-0121*		*8*	*NUT WITH SPRING, 1723 8/6-M12X1*	
060	*90600-0558*		*1*	*CERAMIC BLOCK CONNECTOR, #939586*	
070	*3100274-0000*		*1*	*FILTER*	
	3117842-0000		*1*	*FILTER INSERT*	
080	*90459-6329*		*2*	*GUN MODULE SOLIDBLUE A #1052927*	
090	*90600-0547*		*1*	*SATURN IN-LINE FILTER JACKET, #1056296*	
100	*90439-0206*		*1*	*CABLE*	
110	*90600-0561*		*1*	*HEATING CARTRIDGE 400W/240V, #1054659*	
120	*90600-0553*		*4*	*TUBE, 8X1 MM PTFE*	
410	350003-0007		2	USH-IN FITTING QS-F-G1/4-8-I	
430	350015-0003		1	PUSH-IN Y-CONNECTOR QSY-F-8	
530	90459-3197		2	HOT MELT NOZZLE, SATURN 322014	
540	90459-7370		3	MARKING FOR PNEUM. TUBING, PRZ08	
550	90459-1663		2	CONNECTOR, 405204 RSC4/7	
CAP 30/FLEX STREAMCAP1000, CAP 30/FLEX STREAMCAP500, CAP 30/FLEX HELICAP2 23 (See drawing on pages: 3-4, 3-6)					
330	312115-0297		4	SCREW ISO4762 M4X25 A4 80	
360	315105-0136		5	WASHER BRB 4,3X8 RFR	
40K100	3098039-0000		1	HOTMELT GUN	
010	*90459-6327*		*2*	*SOLENOID VALVE, #1053894*	
	90042-0392		*1*	*CONTACT 2 POLE + EARTH*	
	90459-6332		*1*	*SILENCER, #1058058*	
020	*90600-0684*		*6*	*SPACER 75ODX.328IDX.12THK, #1028115*	
030	*90600-0550*		*4*	*STRAIGHT COUPLING,EXT.THREADED 8/6-R1/8"*	
040	*90600-0551*		*4*	*STRAIGHT COUPLING,EXT.THREADED 8/6-R1/4"*	
050	*342903-0121*		*8*	*NUT WITH SPRING, 1723 8/6-M12X1*	
060	*90600-0558*		*1*	*CERAMIC BLOCK CONNECTOR, #939586*	
070	*3100274-0000*		*1*	*FILTER*	
	3117842-0000		*1*	*FILTER INSERT*	
080	*90459-6329*		*2*	*GUN MODULE SOLIDBLUE A #1052927*	
090	*90600-0547*		*1*	*SATURN IN-LINE FILTER JACKET, #1056296*	
100	*90439-0206*		*1*	*CABLE*	
110	*90600-0561*		*1*	*HEATING CARTRIDGE 400W/240V, #1054659*	
120	*90600-0553*		*4*	*TUBE, 8X1 MM PTFE*	
410	350003-0007		2	USH-IN FITTING QS-F-G1/4-8-I	
430	350015-0003		1	PUSH-IN Y-CONNECTOR QSY-F-8	
530	90458-0651		2	PRECISION NOZZLE, PART NO. 322 010	
540	90459-7370		3	MARKING FOR PNEUM. TUBING, PRZ08	
550	90459-1663		2	CONNECTOR, 405204 RSC4/7	
Common Parts					
010	3123206-0000		1	PLATE	
100	3073395-0100		1	ADJUSTMENT BRACKET	**3-9**
310	312115-0368		10	SCREW ISO4762 M6X16 A4 80	
350	315105-0153		10	WASHER BRB 6,4X12 RFR	
380	311103-0353		2	PARALLEL PIN ISO 2338 6M6X20 A1	
400	312105-0371		4	SCREW M6S ISO 4017 M6X22 A480	
40W100	351150-0403	M	2	CABLE OLFLEX 3X0,75 MM2 LIGHT/GREY	
40W101	351150-0403	M	2	CABLE OLFLEX 3X0,75 MM2 LIGHT/GREY	
40W150	315400-0004	M	1	TUBE PUN-H-8X1,25-BL	
40W151	315400-0004	M	1	TUBE PUN-H-8X1,25-BL	

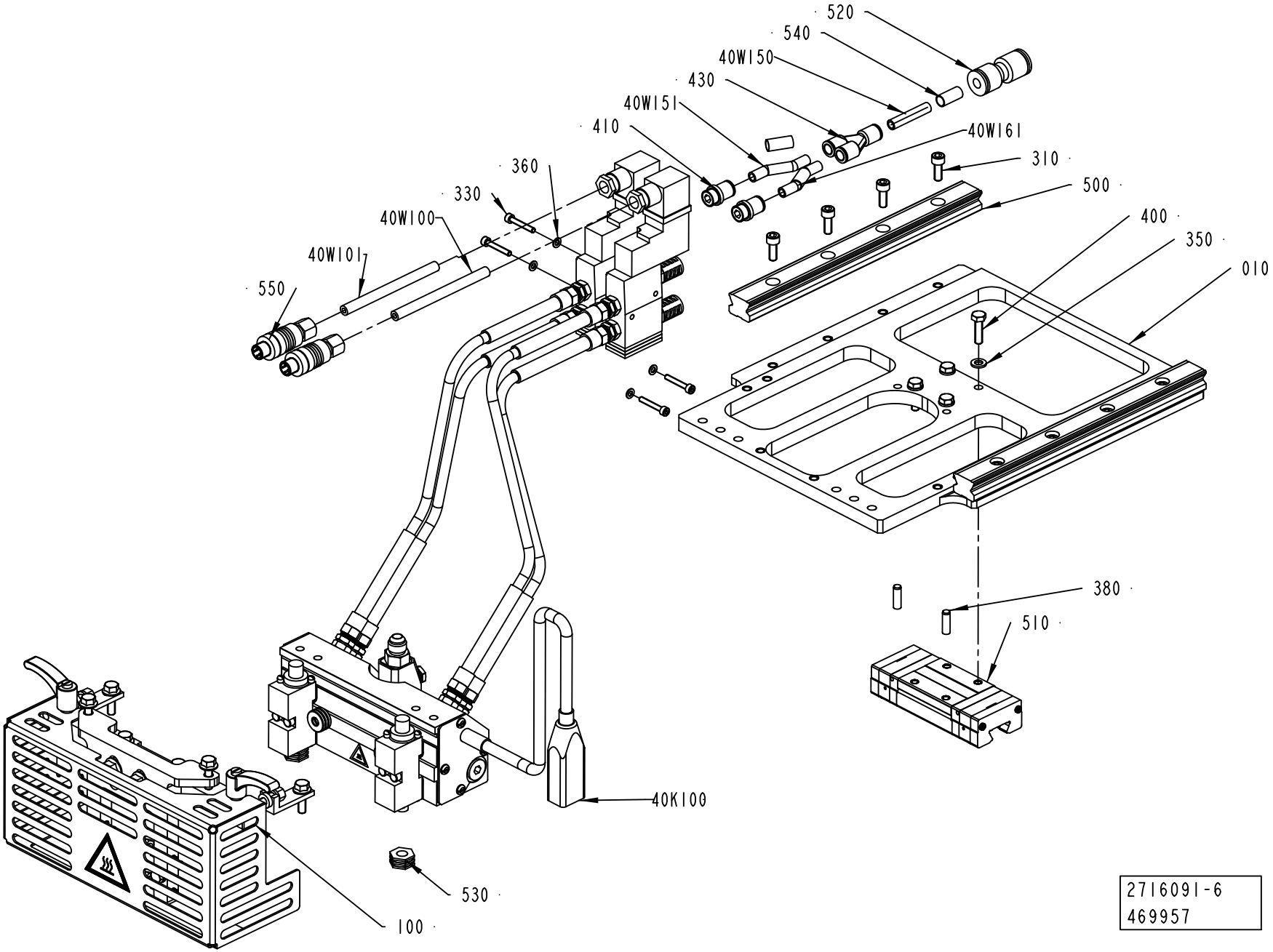
520
540
40W150
430
40W151
410
40W161
310
500
400
350
010
360
330
40W100
40W101
550
380
510
40K100
530
100
2716091-6
469957

ECM: 480961 - 20110401
Group number: 2716091-0300
Assembly Drawing: 2716091-6_1_AB

This list covers pages from 3-4 to 3-7

Pos	Part No	UN	Qty	Description	Page No
Common Parts (Cont'd)					
40W161	315400-0004	M	1	TUBE PUN-H-8X1,25-BL	
500	90600-0484		2	GUIDE BAR, SSR 25 253L-YM G36.5/36.5	
510	90600-0344		1	CARRIAGE, SSR 25 XWYQZSSHH M	
520	90459-5863		1	PUSH-IN FITTING QS-12-8	

Pos	Part No	UN	Qty	Description	Page No

ADJUSTMENT BRACKET

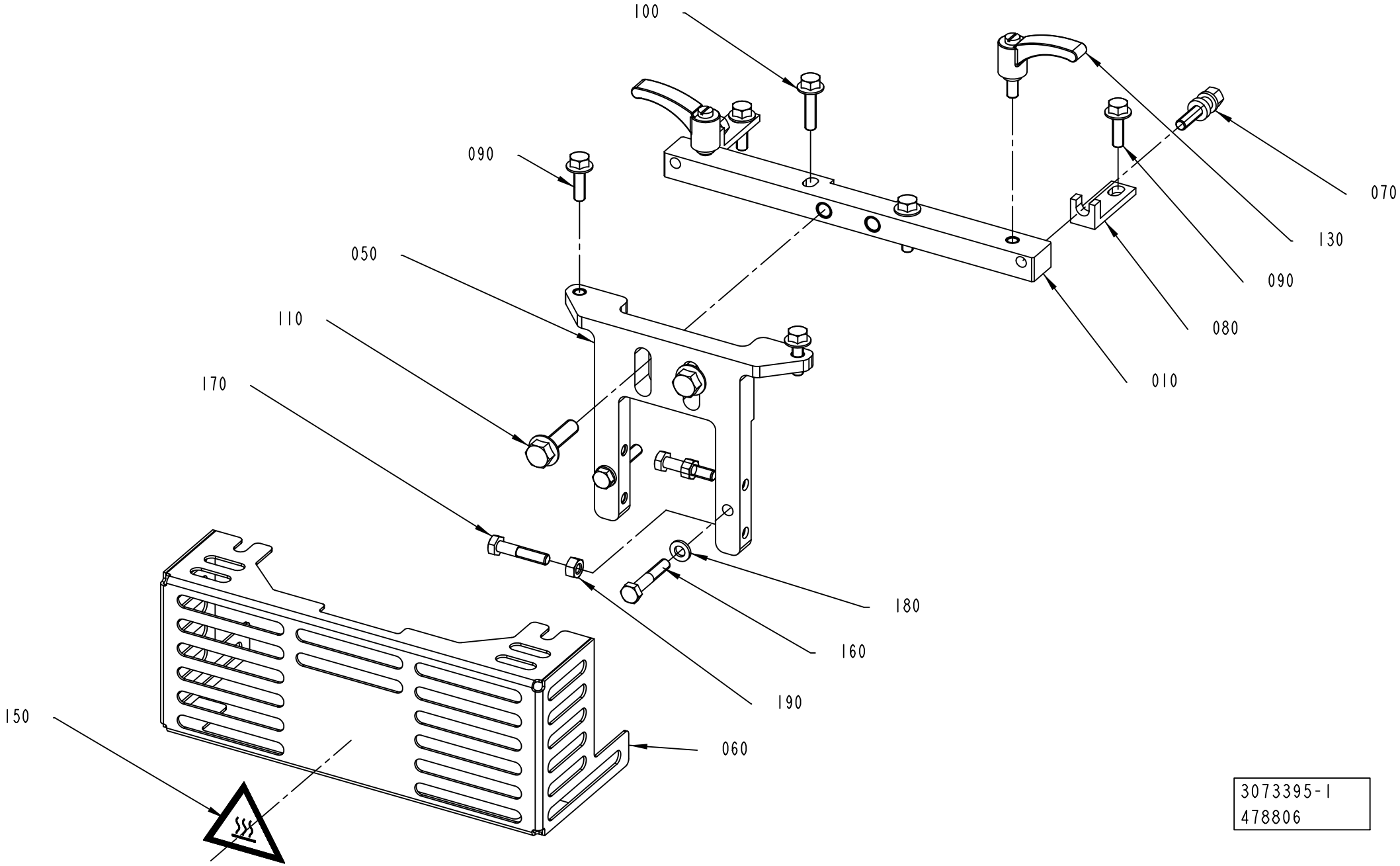

ECM: 485485 - 20110401
Group number: 3073395-0100
Assembly Drawing: 3073395-1_1_AB

Pos	Part No	UN	Qty	Description	Page No
CAP 30/FLEX					
170	312105-0374		2	SCREW M6S ISO 4014 M6X30 A480	
190	312605-0316		2	HEXAGON NUT, M6M M6 A280	
Common Parts					
010	3073387-0000		1	PLATE	
050	3096118-0000		1	PLATE	
060	3073391-0000		1	COVER	
070	3034454-0000		2	ADJUSTING SCREW	
080	3034455-0000		2	SUPPORT	
090	312108-0370		4	SCREW EN 1665 TYPE F M6X20 A270	
100	312108-0372		2	SCREW EN 1665 TYPE F M6X25 A270	
110	312108-0455		2	SCREW EN 1665 TYPE F M8X30 A270	
130	2911985-0000		2	LOCKING LEVER	
150	359710-0001		1	WARNING SIGN ISO, HOT SURFACE	
160	312109-0376		2	SCREW M6S ISO 4017 M6X35 A480	
180	315106-0153		2	WASHER ISO 7089-6-200 HV A4	

Pos	Part No	UN	Qty	Description	Page No

MOTOR BRACKET

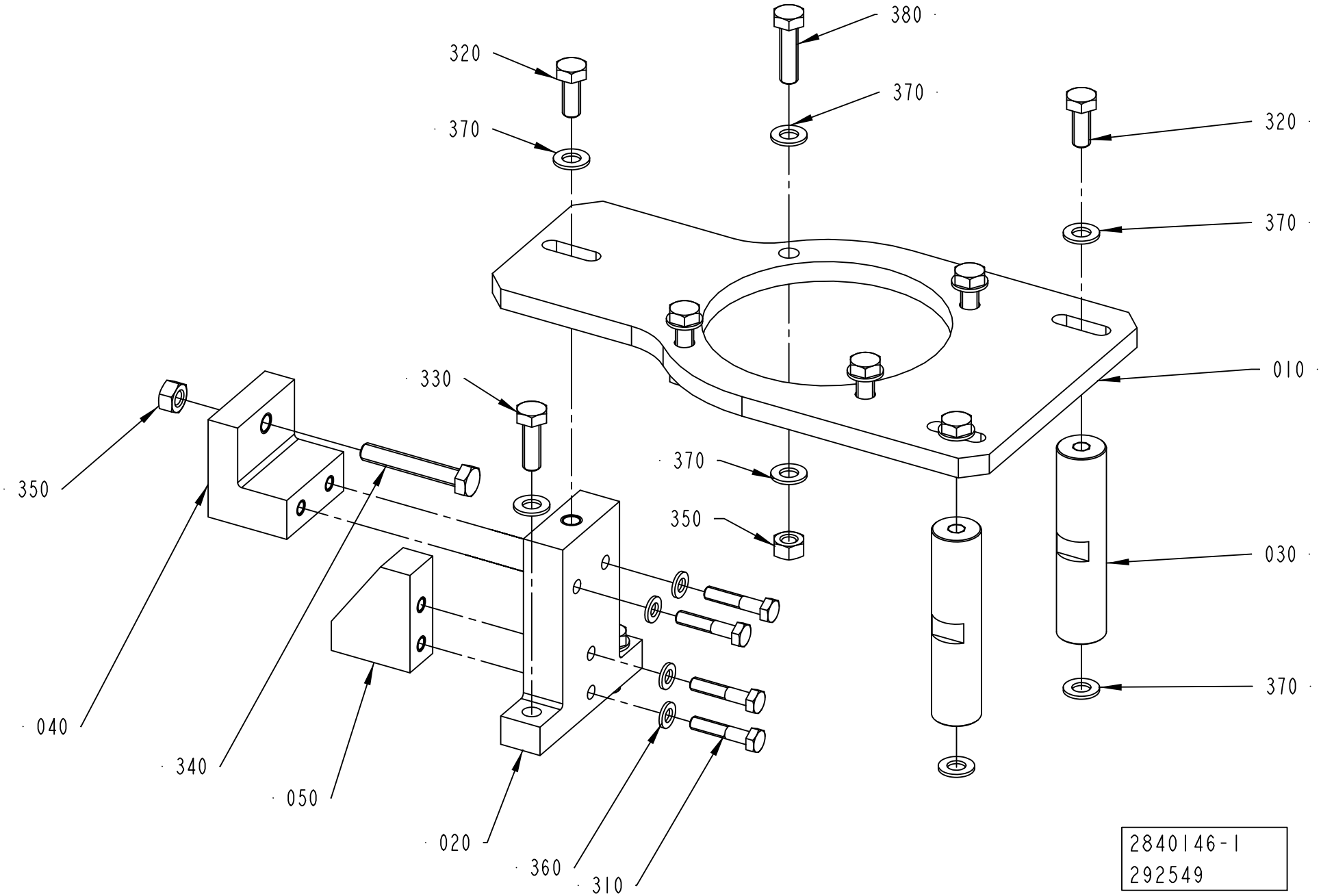

ECM: 293232 - 20070323
Group number: 2840146-0100
Assembly Drawing: 2840146-1_1_AB

Pos	Part No	UN	Qty	Description	Page No
-					
010	2841344-0000		1	PLATE	
020	2841346-0000		1	BLOCK	
030	2841345-0000		2	COLUMN	
040	2696481-0000		1	BLOCK	
050	2873921-0000		1	BLOCK	
310	312105-0374		4	SCREW M6S ISO 4014 M6X30 A480	
320	312105-0451		3	SCREW M6S ISO 4017 M8X20 A480	
330	312105-0453		4	SCREW M6S ISO 4017 M8X25 A480	
340	312109-0461		1	SCREW M6S ISO 4017 M8X50 A480	
350	312605-0318		5	HEXAGON NUT, M6M M8 A280	
360	315105-0153		4	WASHER BRB 6,4X12 RFR	
370	315105-0165		15	WASHER BRB 8,4X16 RFR	
380	312105-0455		4	SCREW M6S ISO 4017 M8X30 A480	

Pos	Part No	UN	Qty	Description	Page No

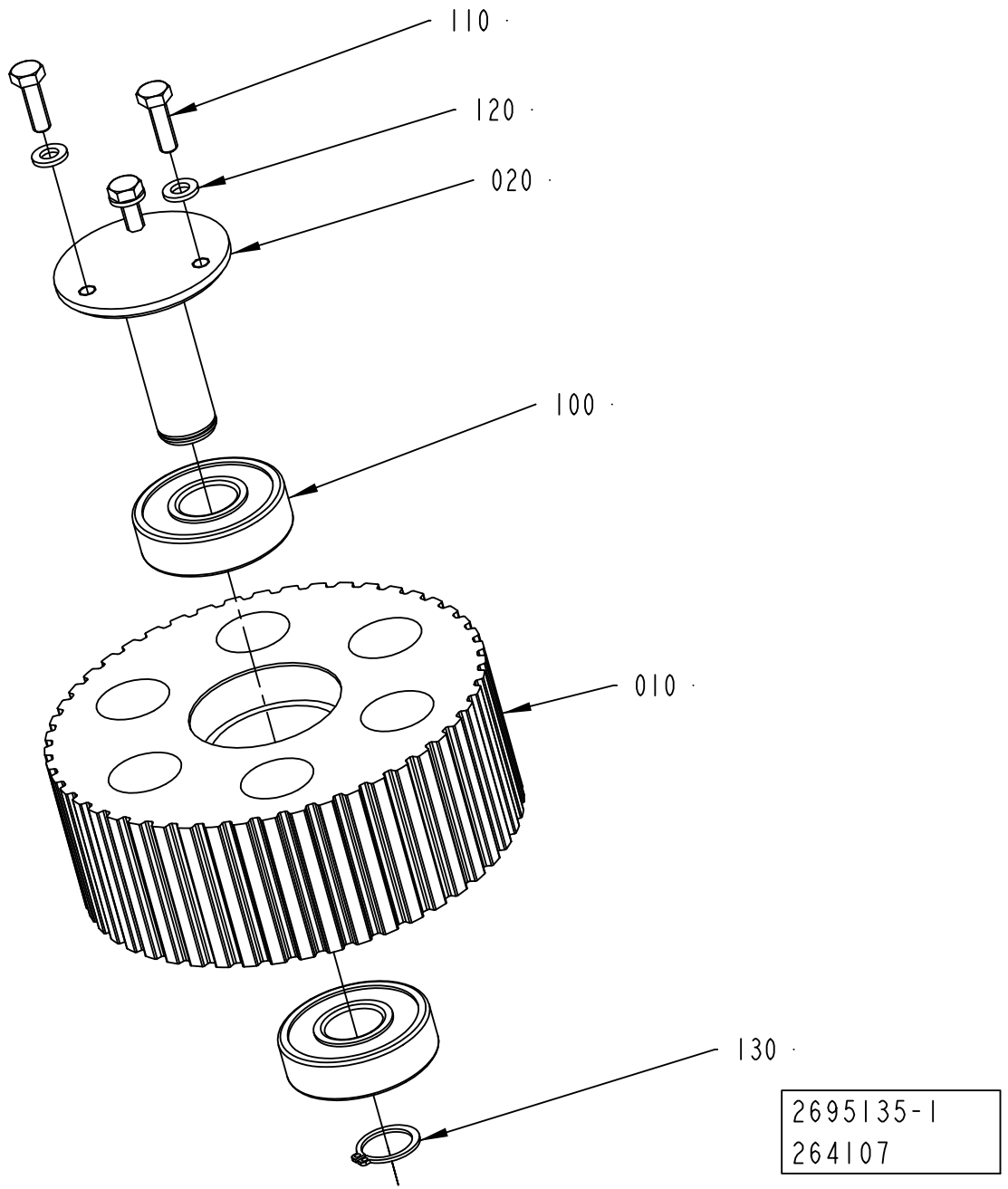
110
120
020
100
010
130
2695135-1
264107

ECM: 316585 - 20080407
Group number: 2695135-0100
Assembly Drawing: 2695135-1_1_AA

Pos	Part No	UN	Qty	Description	Page No
-					
010	2695133-0000		1	TOOTHED PULLEY	
020	2695134-0000		1	SHAFT	
100	90458-2170		2	BALL BEARING 20/52X15	
110	312105-0370		3	SCREW M6S ISO 4017 M6X20 A480	
120	315106-0153		3	WASHER ISO 7089-6-200 HV A4	
130	315751-0116		1	RETAINING RING FOR SHAFT DIN 471 20 SS	

Pos	Part No	UN	Qty	Description	Page No

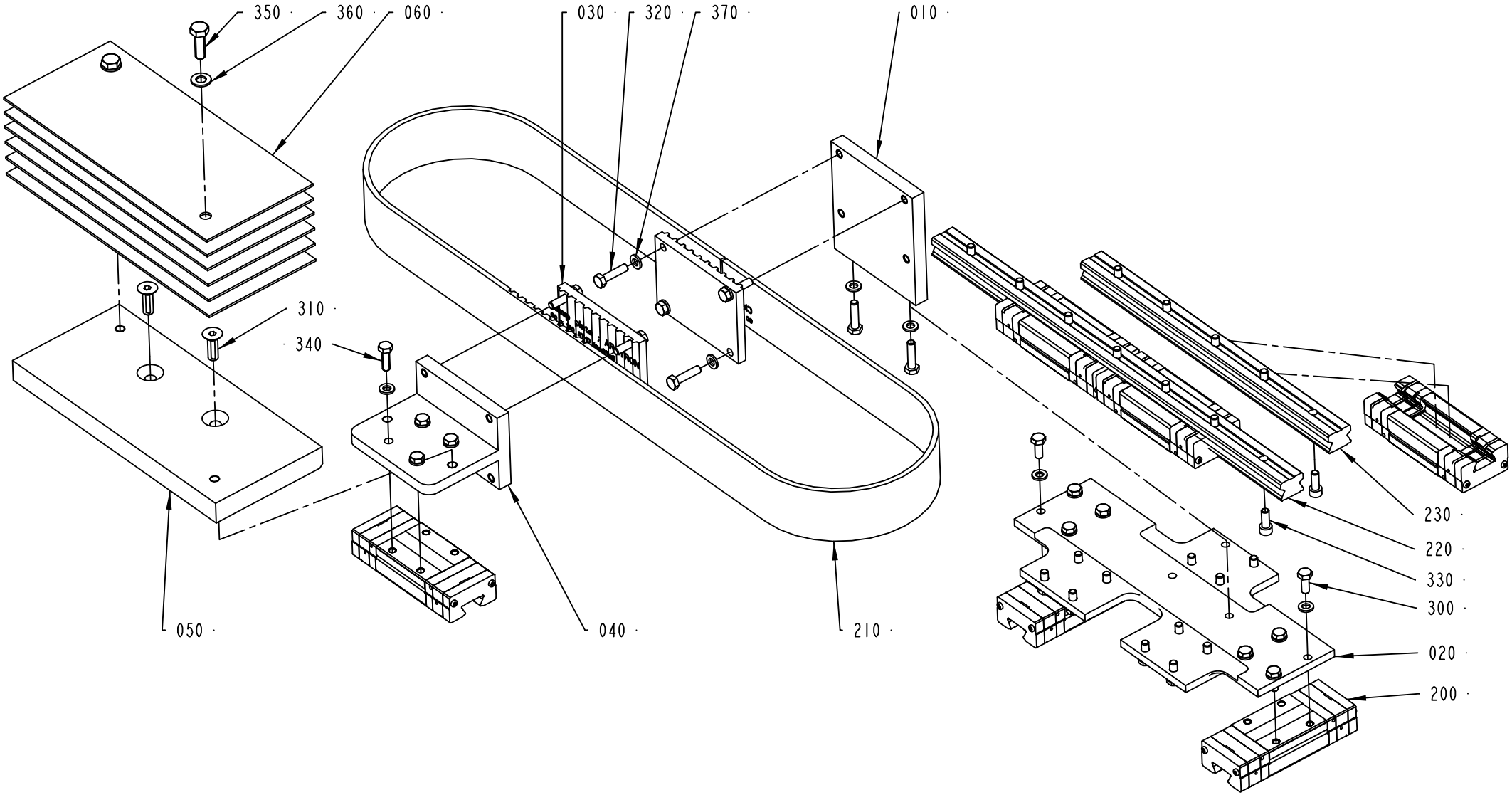
350
360
060
030
320
370
010
310
340
230
220
330
300
020
200
050
040
210
2716090-1
292549

ECM: 480951 - 20110401
Group number: 2716090-0100
Assembly Drawing: 2716090-1_1_AB

Pos	Part No	UN	Qty	Description	Page No
STREAMCAP500, STREAMCAP1000, SLIMCAP 2000, SLIMCAP 1000, STREAMCAP200, STREAMCAP330, HELICAP2 23					
010	2695610-0000		1	CLAMP BRACKET	
020	2716083-0000		1	BRACKET	
300	312105-0368		20	SCREW M6S ISO 4017 M6X16 A480	
320	312105-0372		10	SCREW M6S ISO 4017 M6X25 A480	
330	312115-0368		12	SCREW ISO4762 M6X16 A4 80	
370	315106-0153		34	WASHER ISO 7089-6-200 HV A4	
Common Parts					
030	2716073-0000		2	BELT HOLDER	
040	2716074-0000		1	BRACKET	
050	2716085-0000		1	COUNTERWEIGHT	
060	2716075-0000		6	COUNTERWEIGHT	
200	90600-0344		6	CARRIAGE, SSR 25 XWYQZSSHH M	
210	90600-0487		1	TIMING BELT 50AT10/1410 PU	
220	90600-0483		1	GUIDE BAR, SSR 25-430LYM G35/35	
230	90600-0482		1	GUIDE BAR, SSR 25 305 LYM G32.5/32.5	
310	312155-0453		2	SCREW DIN 7991 MF6S M8X25 A4 70	
340	312105-0370		4	SCREW M6S ISO 4017 M6X20 A480	
350	312105-0453		2	SCREW M6S ISO 4017 M8X25 A480	
360	315105-0165		2	WASHER BRB 8,4X16 RFR	

Pos	Part No	UN	Qty	Description	Page No

Machine Type | Group Description | Used-In | Group Number | Page No

TRANSMISSION RAIL

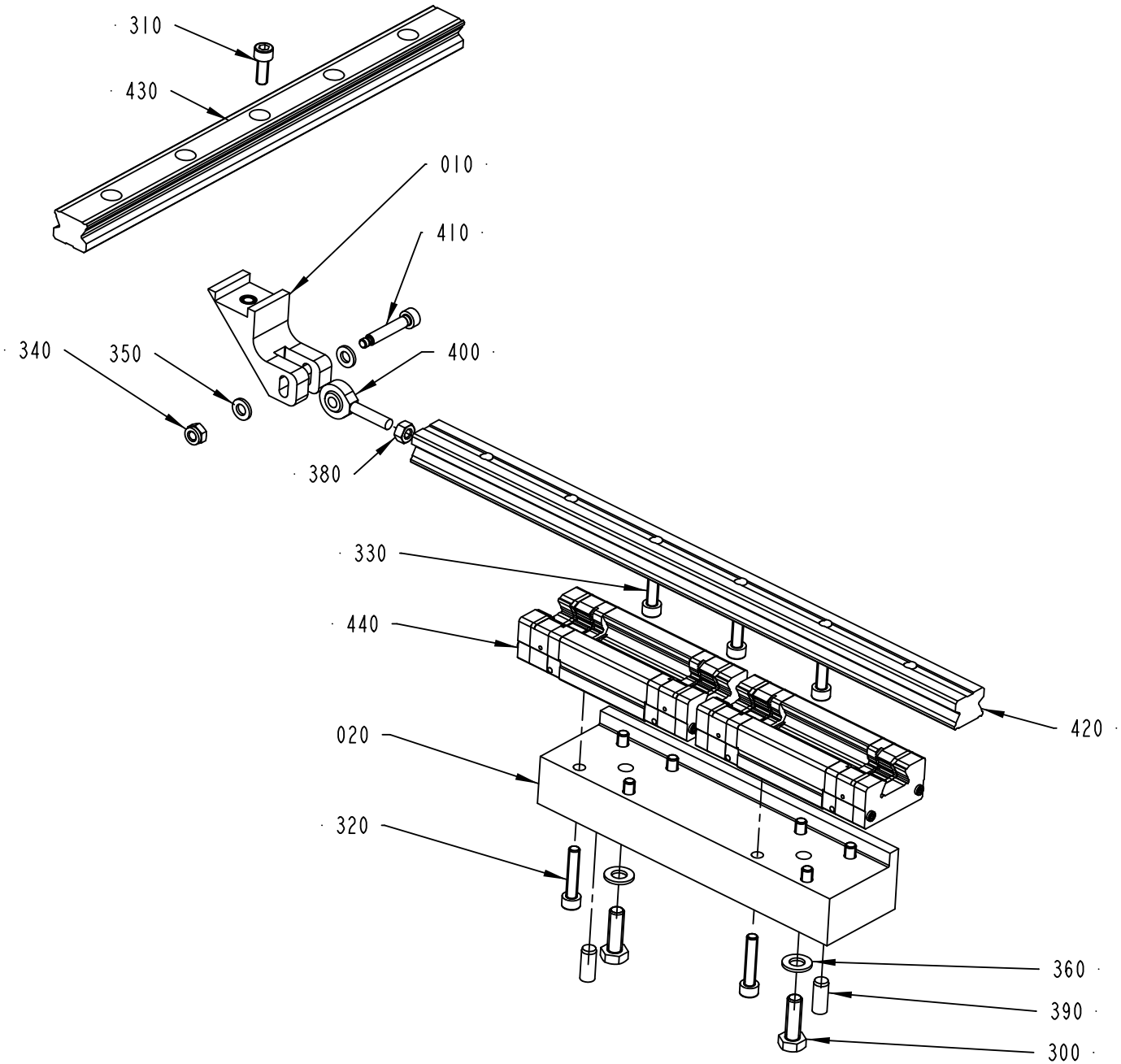

ECM: 480952 - 20110401
Group number: 2716092-0100
Assembly Drawing: 2716092-1_1_AD

Pos	Part No	UN	Qty	Description	Page No
STREAMCAP500, STREAMCAP1000, SLIMCAP 2000, SLIMCAP 1000, STREAMCAP200, STREAMCAP330, HELICAP2 23					
020	2716089-0000		1	FASTENING BRACKET	
310	312115-0368		1	SCREW ISO4762 M6X16 A4 80	
320	312115-0374		8	SCREW ISO4762 M6X30 A4 80	
330	312115-0370		3	SCREW ISO4762 M6X20 A4 80	
420	90600-0485		1	GUIDE BAR, SSR25 385L YM G42.5/42.5	
Common Parts					
010	3039032-0000		1	LINK ATTACHMENT	
300	312105-0453		2	SCREW M6S ISO 4017 M8X25 A480	
340	312812-0316		1	HEXAGON NUT, NY-LOCK M6 A480	
350	315106-0153		2	WASHER ISO 7089-6-200 HV A4	
360	315106-0165		2	WASHER ISO 7089-8-200 HV A4	
380	312605-0316		1	HEXAGON NUT, M6M M6 A280	
390	311103-0401		2	PARALLEL PIN ISO 2338 8M6X20 A1	
400	90115-0137		1	ROD END, ID=6 MM, M6X1	
410	90287-0239		1	SCREW, HEX.SOCK.HEAD SHOULD. M5X6	
430	90600-0482		1	GUIDE BAR, SSR 25 305 LYM G32.5/32.5	
440	90600-0344		2	CARRIAGE, SSR 25 XWYQZSSHH M	

Pos	Part No	UN	Qty	Description	Page No

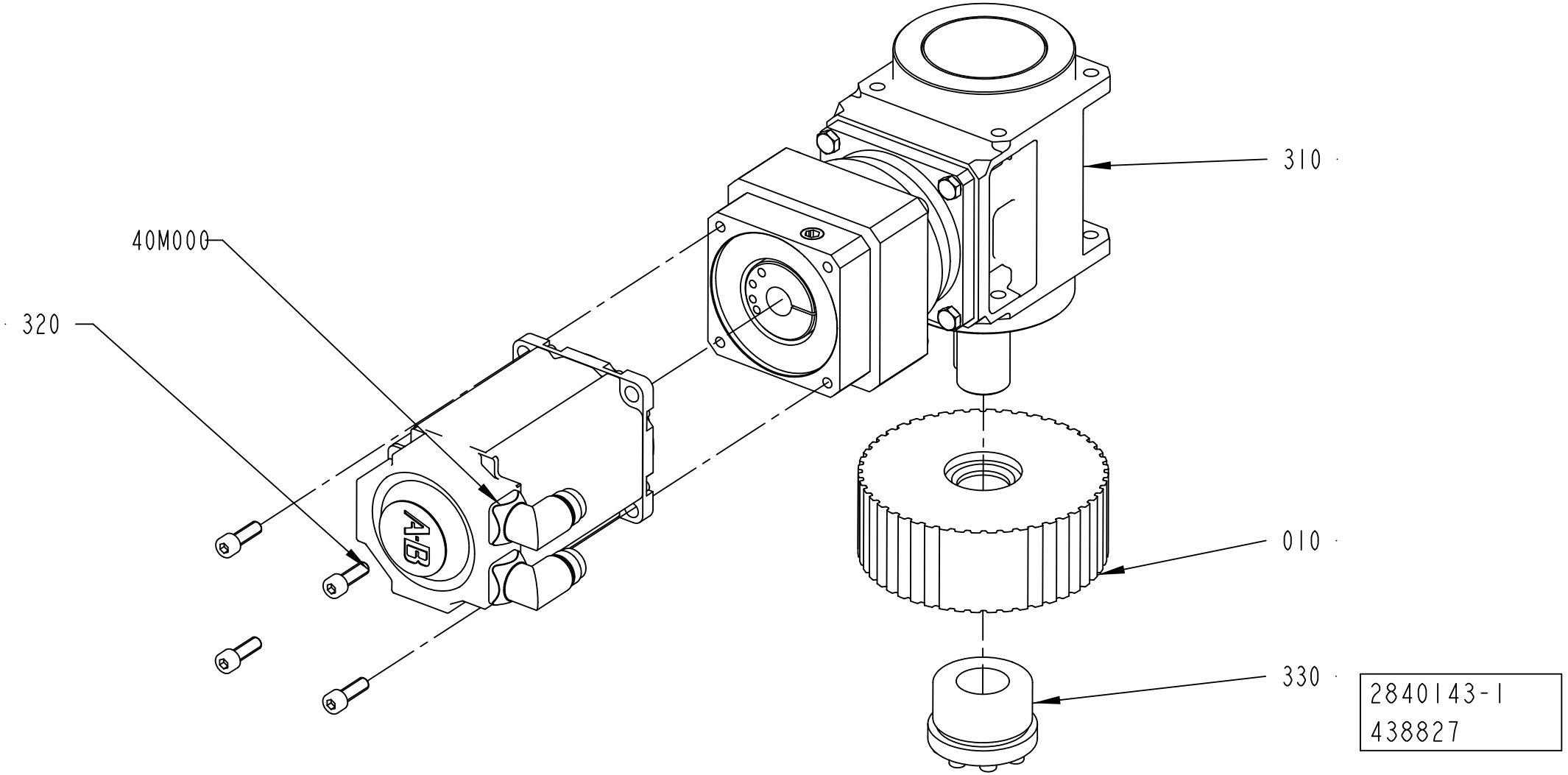
40M000
320
310
010
330
2840143-1
438827

ECM: 441423 - 20100701
Group number: 2840143-0100
Assembly Drawing: 2840143-1_1_AE

Pos	Part No	UN	Qty	Description	Page No
-					
010	3018761-0000		1	TOOTHED PULLEY	
310	90602-3390		1	GEARS, PLAN. MR 112 EC FO2C 00 / I = 10	
320	312115-0453		4	SCREW ISO4762 M8X25 A4 80	
330	3018759-0000		1	CLAMPING ELEMENT	
40M000	90601-1926		1	SERVO MOTOR MPL-B430P-MK72AA SERIES A	

Pos	Part No	UN	Qty	Description	Page No

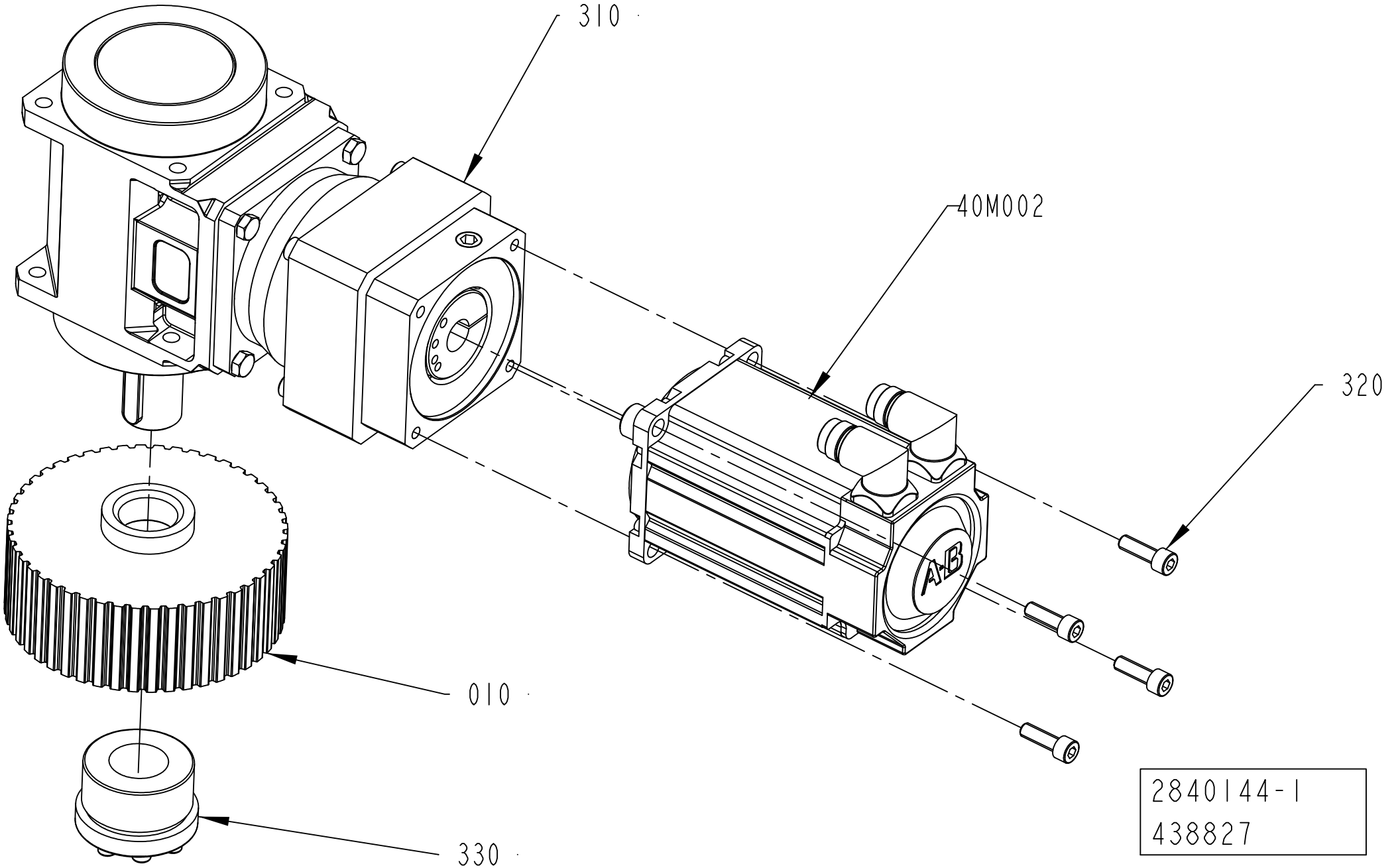
310
40M002
320
010
330
2840144-1
438827

ECM: 441424 - 20100701
Group number: 2840144-0100
Assembly Drawing: 2840144-1_1_AE

Pos	Part No	UN	Qty	Description	Page No
-					
010	3018762-0000		1	TOOTHED PULLEY	
310	90602-3390		1	GEARS, PLAN. MR 112 EC FO2C 00 / I = 10	
320	312115-0453		4	SCREW ISO4762 M8X25 A4 80	
330	3018759-0000		1	CLAMPING ELEMENT	
40M002	90601-1926		1	SERVO MOTOR MPL-B430P-MK72AA SERIES A	

Pos	Part No	UN	Qty	Description	Page No

MOTOR BRACKET

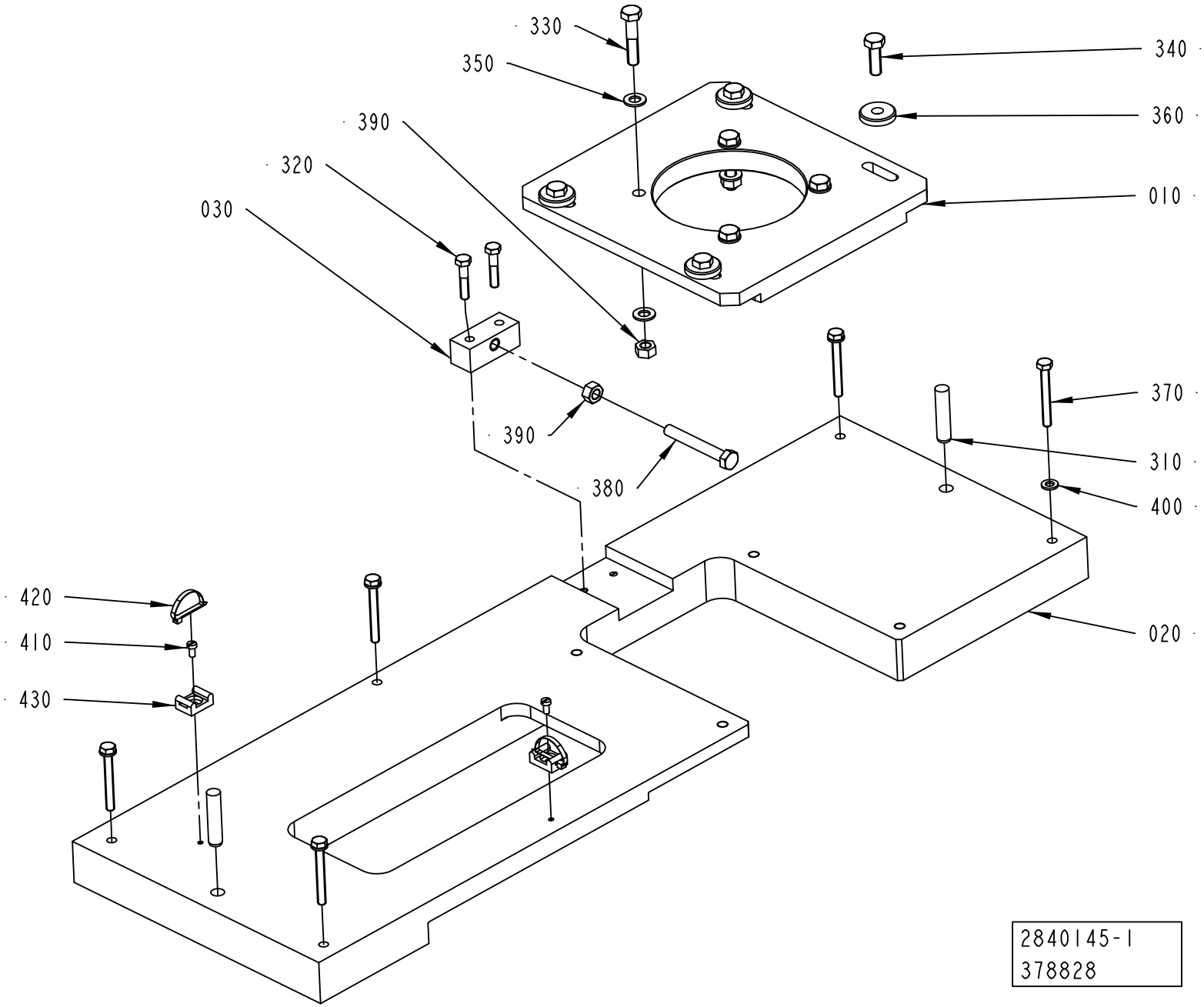

ECM: 378828 - 20090406
Group number: 2840145-0100
Assembly Drawing: 2840145-1_1_AC

Pos	Part No	UN	Qty	Description	Page No
-					
010	2985770-0000		1	FLANGE	
020	2909473-0000		1	PLATE	
030	2840851-0000		1	BLOCK	
310	311103-0464		2	PARALLEL PIN ISO 2338 10M6X45 A1	
320	312105-0374		2	SCREW M6S ISO 4014 M6X30 A480	
330	312105-0459		4	SCREW M6S ISO 4014 M8X40 A480	
340	312105-0453		4	SCREW M6S ISO 4017 M8X25 A480	
350	315105-0165		8	WASHER BRB 8,4X16 RFR	
360	315125-0165		4	WASHER TBRSB 8,4X26X5 A4	
370	312109-0380		5	SCREW M6S ISO 4017 M6X50 A480	
380	312109-0463		1	SCREW M6S ISO 4017 M8X60 A480	
390	312607-0318		5	HEXAGON NUT, EN 24032 M6M M8 A480	
400	315105-0178		5	WASHER BRB 13X24 RFR	
410	312125-0287		2	SCREW ISO 1207 M4X8 A4	
420	352113-0104		2	CABLE TIE, BLACK 300X4,8 MM	
430	352113-0203		2	ANCHOR PLATES FOR STRIPS, TM3S8-M0	

Pos	Part No	UN	Qty	Description	Page No

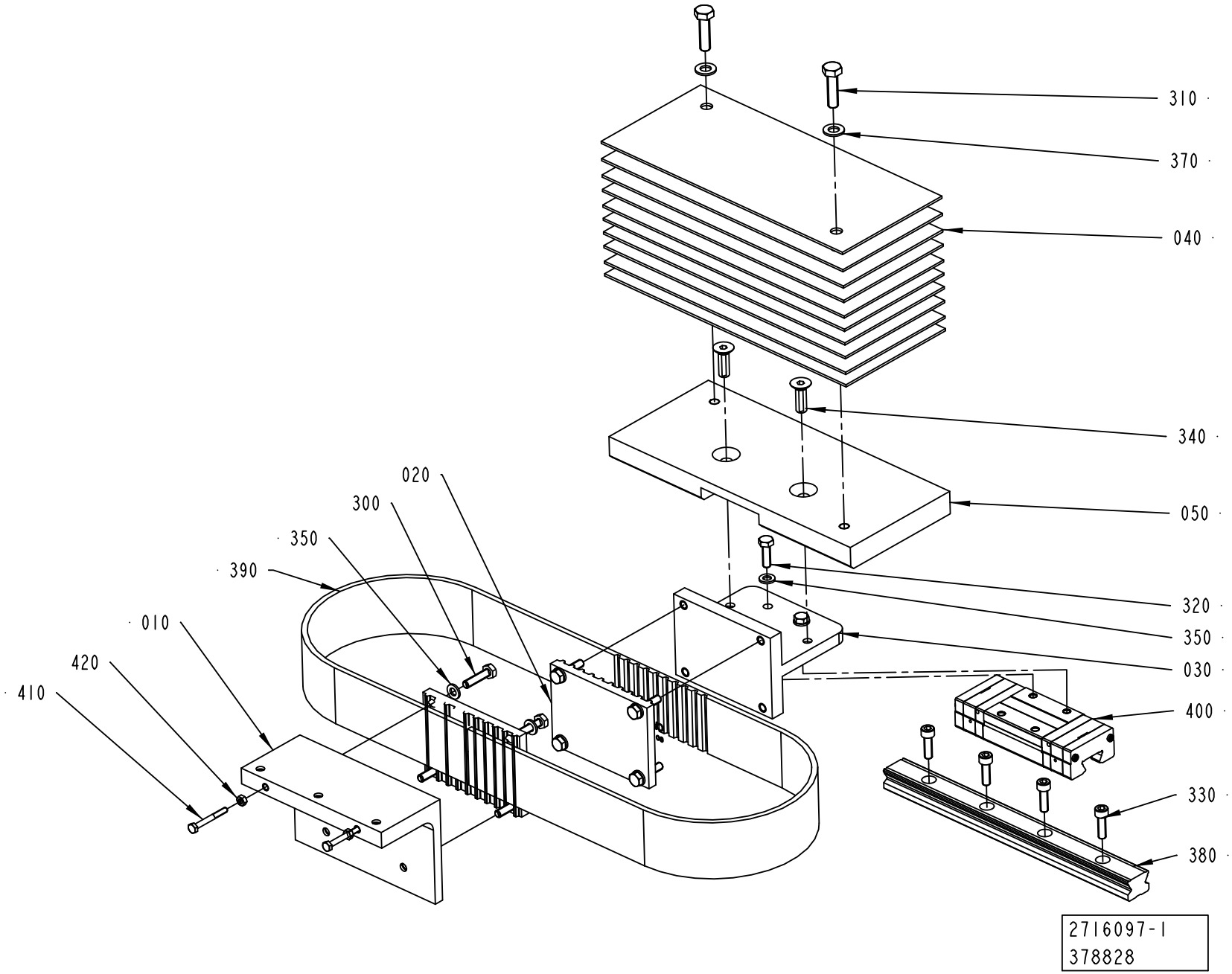
310
370
040
340
050
320
350
030
400
330
380
020
300
350
390
010
420
410
2716097-1
378828

ECM: 480953 - 20110401
Group number: 2716097-0100
Assembly Drawing: 2716097-1_1_AC

Pos	Part No	UN	Qty	Description	Page No
STREAMCAP500, STREAMCAP1000, SLIMCAP 2000, SLIMCAP 1000, STREAMCAP200, STREAMCAP330, HELICAP2 23					
010	2985772-0000		1	BRACKET	
410	312105-0331		2	SCREW M6S ISO 4017 M5X20 A480	
Common Parts					
020	2716073-0000		2	BELT HOLDER	
030	2716074-0000		1	BRACKET	
040	2716075-0000		10	COUNTERWEIGHT	
050	2716085-0000		1	COUNTERWEIGHT	
300	312105-0372		8	SCREW M6S ISO 4017 M6X25 A480	
310	312105-0455		2	SCREW M6S ISO 4017 M8X30 A480	
320	312105-0370		4	SCREW M6S ISO 4017 M6X20 A480	
330	312115-0370		4	SCREW ISO4762 M6X20 A4 80	
340	312155-0453		2	SCREW DIN 7991 MF6S M8X25 A4 70	
350	315105-0153		12	WASHER BRB 6,4X12 RFR	
370	315105-0165		2	WASHER BRB 8,4X16 RFR	
380	90600-0484		1	GUIDE BAR, SSR 25 253L-YM G36.5/36.5	
390	90600-0486		1	TIMING BELT 50AT10/1120 PU	
400	90600-0344		1	CARRIAGE, SSR 25 XWYQZSSHH M	
420	312607-0314		2	HEXAGON NUT, EN 24032 M6M M5 A480	

Pos	Part No	UN	Qty	Description	Page No

FASTENING BRACKET

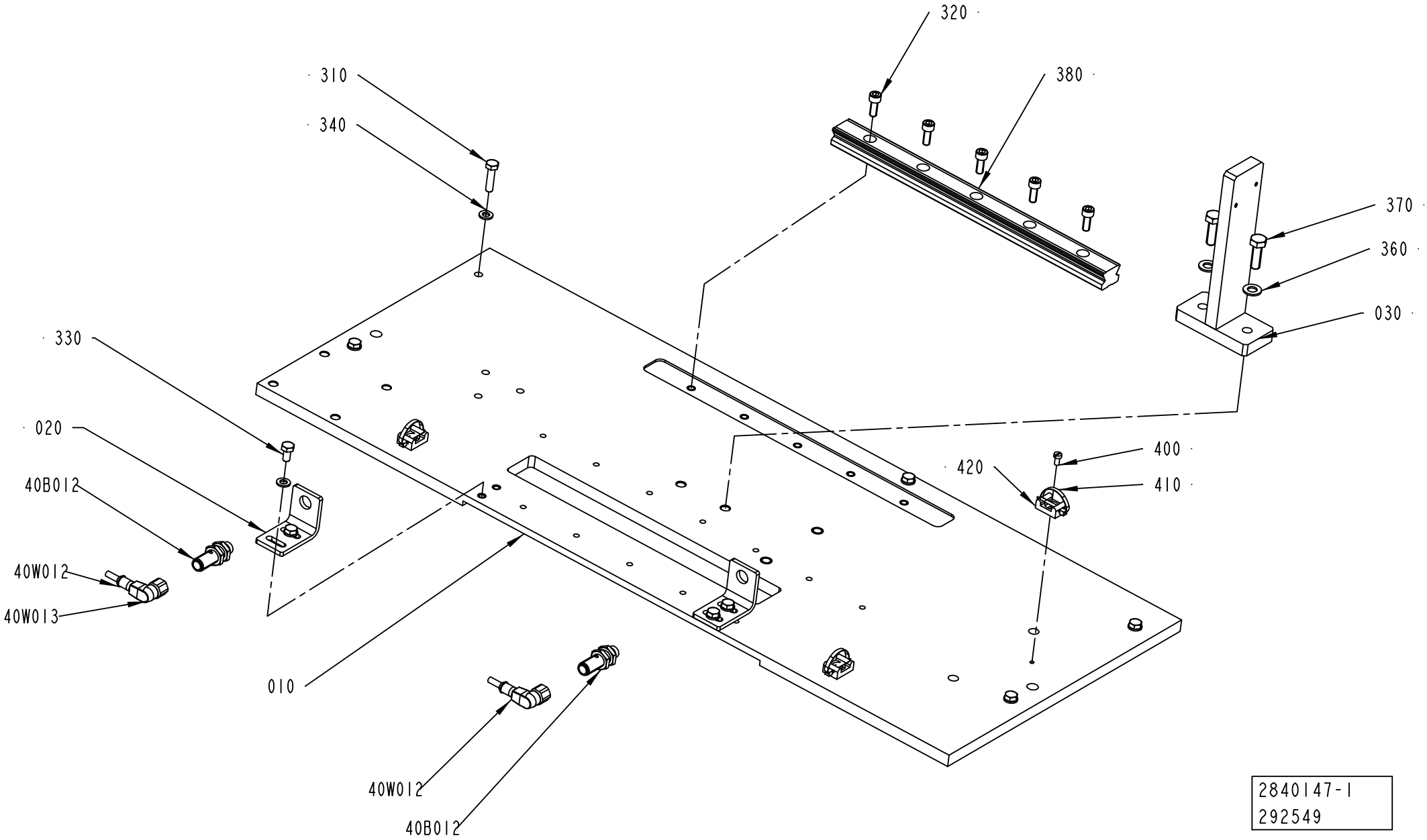

ECM: 480954 - 20110401
Group number: 2840147-0100
Assembly Drawing: 2840147-1_1_AB

Pos	Part No	UN	Qty	Description	Page No
STREAMCAP500, STREAMCAP1000, SLIMCAP 2000, SLIMCAP 1000, STREAMCAP200, STREAMCAP330, HELICAP2 23					
010	2840680-0000		1	ASSEMBLY PLATE	
020	2695629-0000		2	BRACKET	
030	2796055-0000		1	BRACKET	
310	312105-0372		5	SCREW M6S ISO 4017 M6X25 A480	
330	312105-0366		4	SCREW M6S ISO 4017 M6X12 A480	
340	315105-0153		9	WASHER BRB 6,4X12 RFR	
360	315105-0165		2	WASHER BRB 8,4X16 RFR	
Common Parts					
320	312115-0368		5	SCREW ISO4762 M6X16 A4 80	
370	312105-0453		2	SCREW M6S ISO 4017 M8X25 A480	
380	90600-0482		1	GUIDE BAR, SSR 25 305 LYM G32.5/32.5	
400	312125-0287		3	SCREW ISO 1207 M4X8 A4	
40B012	90459-6948		1	PROX.SWITCH IFS206	
40B013	90459-6948		1	PROX.SWITCH IFS206	
40W012	351412-0015		1	ACTU/SENS. CABLE PRST 4-PRKWT 4-07/1,5M	
40W013	351412-0015		1	ACTU/SENS. CABLE PRST 4-PRKWT 4-07/1,5M	
410	352113-0104		3	CABLE TIE, BLACK 300X4,8 MM	
420	352113-0203		3	ANCHOR PLATES FOR STRIPS, TM3S8-M0	

Pos	Part No	UN	Qty	Description	Page No

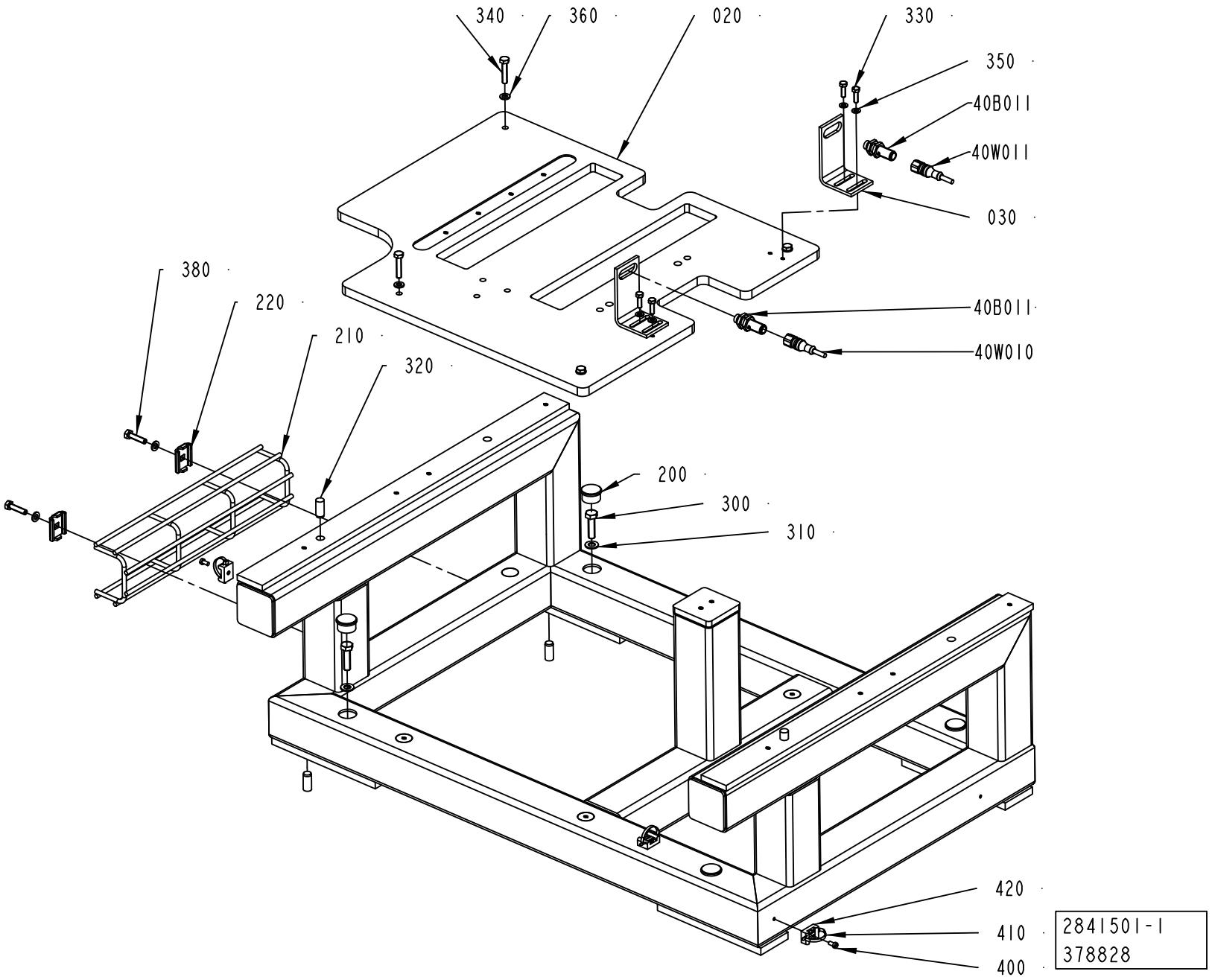
340
360
020
330
350
40B011
40W011
030
380
220
210
320
40B011
40W010
200
300
310
420
410
400
2841501-1
378828

ECM: 480955 - 20110401
Group number: 2841501-0100
Assembly Drawing: 2841501-1_1_AD

Pos	Part No	UN	Qty	Description	Page No
STREAMCAP500, STREAMCAP1000, SLIMCAP 2000, SLIMCAP 1000, STREAMCAP200, STREAMCAP330, HELICAP2 23					
010	2838753-0000		1	FRAME	
020	2985771-0000		1	PLATE	
030	2716112-0000		2	BRACKET	
310	315105-0165		4	WASHER BRB 8,4X16 RFR	
360	315105-0153		10	WASHER BRB 6,4X12 RFR	
400	312125-0287		3	SCREW ISO 1207 M4X8 A4	
410	352113-0104		3	CABLE TIE, BLACK 300X4,8 MM	
420	352113-0203		3	ANCHOR PLATES FOR STRIPS, TM3S8-M0	
Common Parts					
200	90261-0060		4	PLUG, BLIND, PLASTIC, NO. IKPK25X1, 5	
210	2873896-0000		1	CABLE TRAY	
220	90181-0183		2	CABLE DUCT, FITTING, B2	
300	312105-0455		4	SCREW M6S ISO 4017 M8X30 A480	
320	311103-1456		4	PARALLEL PIN ISO 2338 10M6X24 A1	
330	312105-0329		4	SCREW M6S ISO 4017 M5X16 A480	
340	312109-0374		4	SCREW M6S ISO 4017 M6X30 A480	
350	315105-0146		4	WASHER BRB 5,3X10 RFR	
380	312105-0372		2	SCREW M6S ISO 4017 M6X25 A480	
40B010	90459-6948		1	PROX.SWITCH IFS206	
40B011	90459-6948		1	PROX.SWITCH IFS206	
40W010	351411-0010		1	ACTU/SENS. CABLE PRST 4-PRKT 4-07/1,0M	
40W011	351411-0010		1	ACTU/SENS. CABLE PRST 4-PRKT 4-07/1,0M	

Pos	Part No	UN	Qty	Description	Page No

MOTOR BRACKET

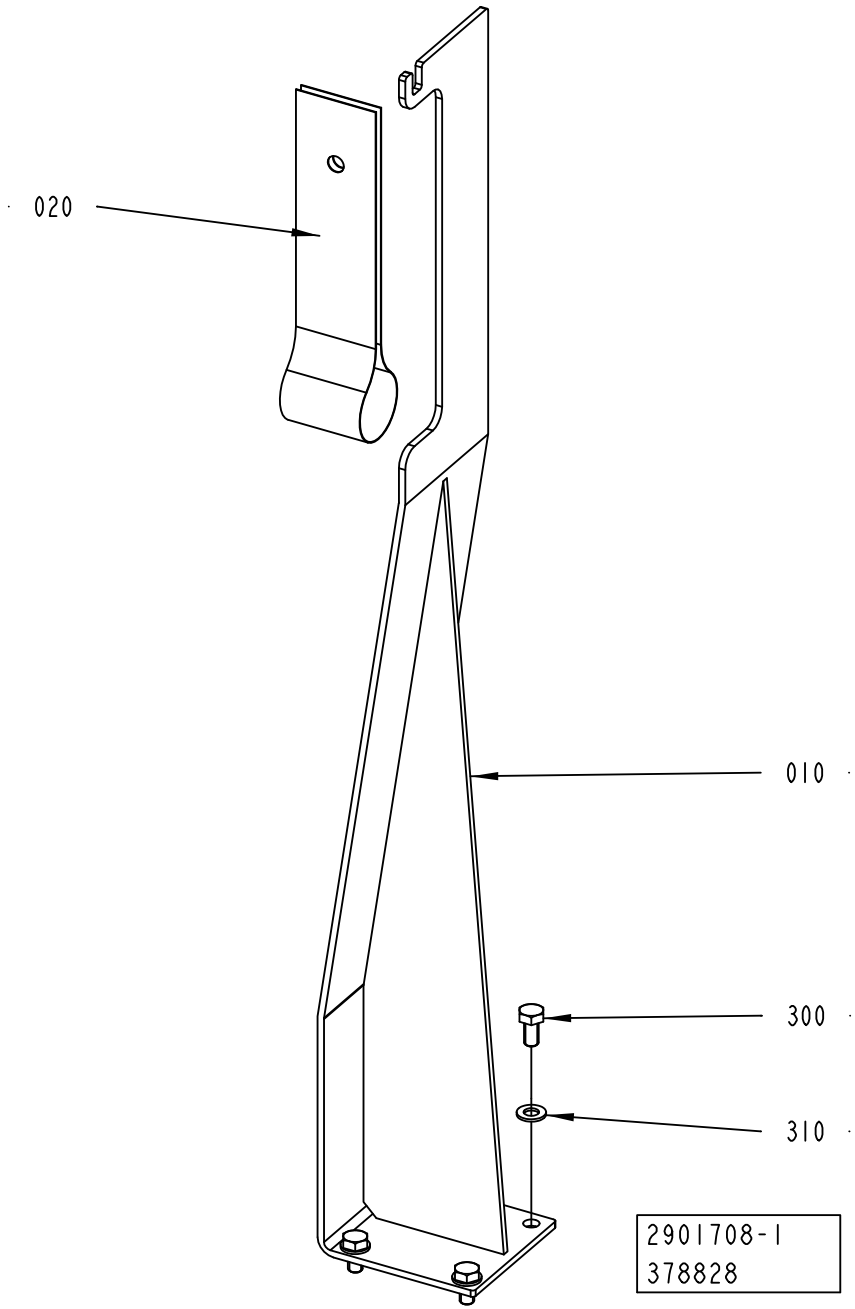

ECM: 378828 - 20090406
Group number: 2901708-0100
Assembly Drawing: 2901708-1_1_AA

Pos	Part No	UN	Qty	Description	Page No
-					
010	2901711-0000		1	SUPPORT	
020	2909155-0000		1	STRIP HOLDER	
300	312105-0449		4	SCREW M6S ISO 4017 M8X16 A480	
310	315105-0165		4	WASHER BRB 8,4X16 RFR	

Pos	Part No	UN	Qty	Description	Page No

Tetra Pak

SPC
Spare Parts Catalogue

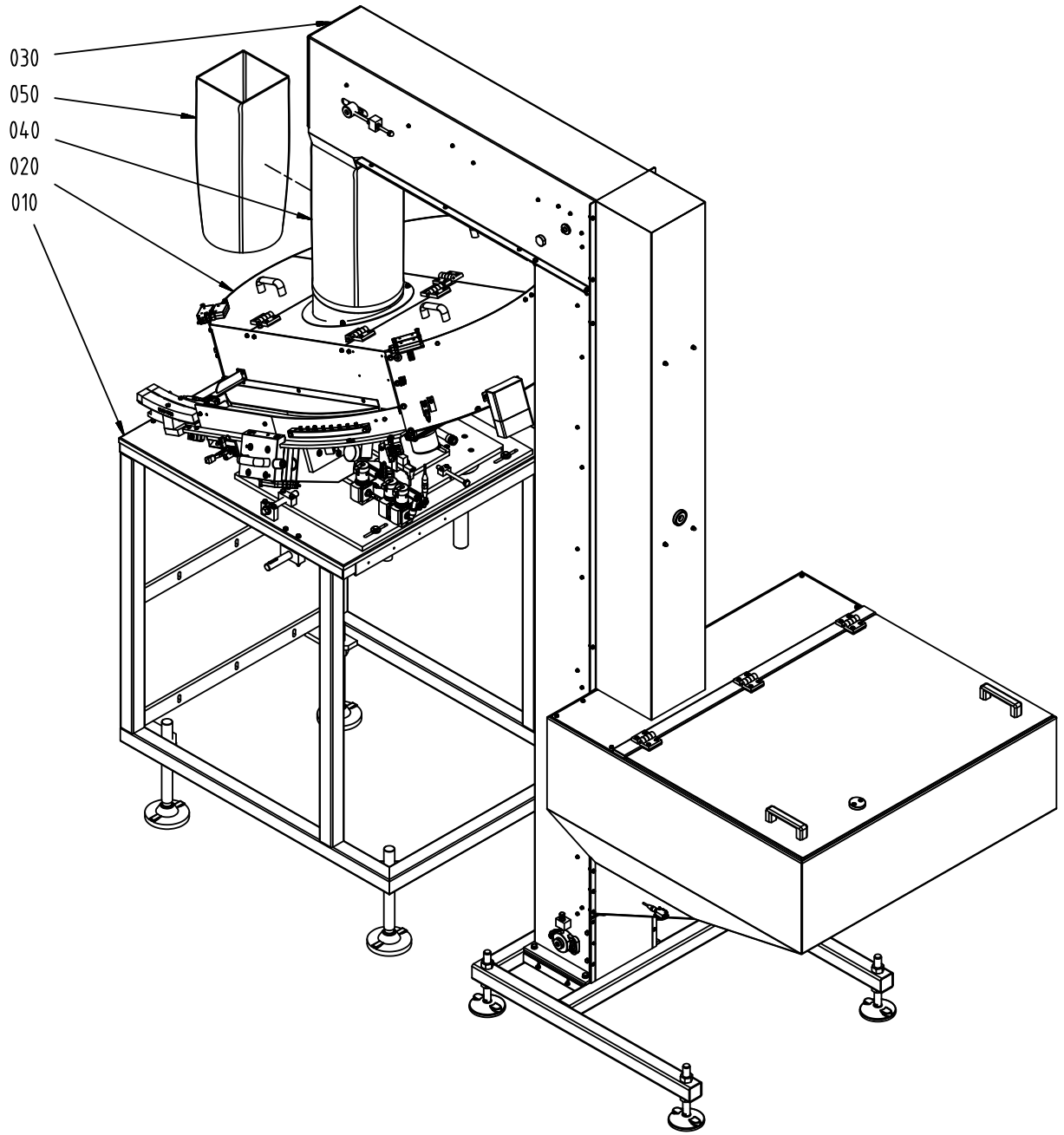
030
050
040
020
010

ECM: 481729 - 20110401
Group number: 662904-0200
Assembly Drawing: 662904-3_1_AA

Pos	Part No	UN	Qty	Description	Page No
-					
010	2842830-0100		1	SUPPORT	**4-5**
020	2846416-0200		1	FEEDER	**4-7**
030	2812005-0200		1	ELEVATOR	**4-43, 4-45**
040	2852912-0000		1	CONNECTION PIPE	
050	2852913-0000		1	CONNECTION PIPE	

Pos	Part No	UN	Qty	Description	Page No

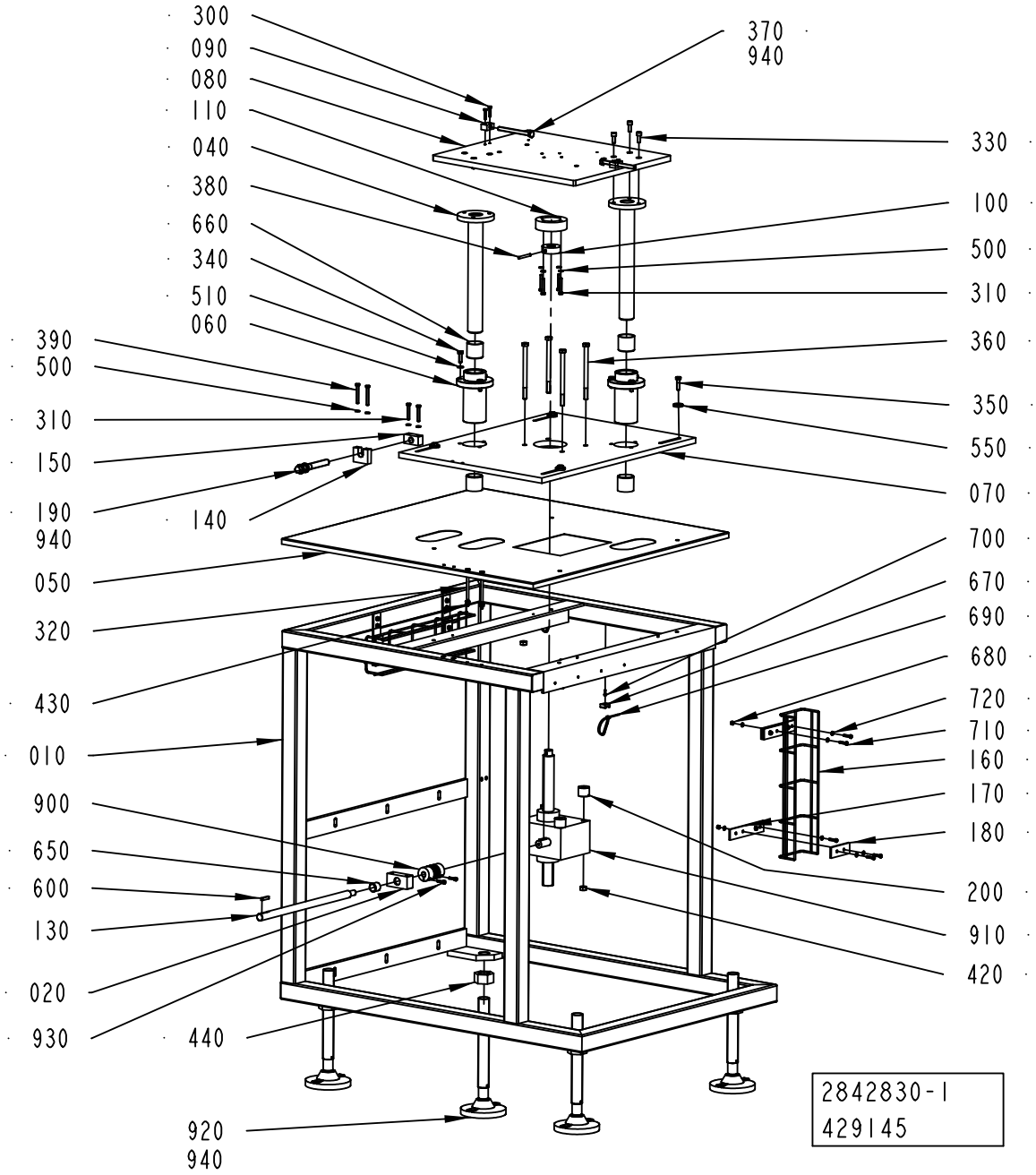
300
090
080
110
040
380
660
340
510
060
390
500
310
150
190
940
140
050
320
430
010
900
650
600
130
020
930
440
920
940
370
940
330
100
500
310
360
350
550
070
700
670
690
680
720
710
160
170
180
200
910
420
2842830-1
429145

ECM: 430661 - 20100401
Group number: 2842830-0100
Assembly Drawing: 2842830-1_1_AD

Pos	Part No	UN	Qty	Description	Page No
-					
010	3068598-0000		1	FRAME	
020	2842832-0000		1	BRACKET	
040	2842835-0000		2	COLUMN	
050	3068596-0000		1	COVER	
060	2842834-0000		2	FLANGE	
070	3068597-0000		1	PLATE	
080	2842837-0000		1	PLATE	
090	2842838-0000		2	BLOCK	
100	2769739-0000		1	DISC	
110	2766964-0000		1	FLANGE	
130	2842831-0000		1	ROD	
140	3068594-0000		1	BLOCK	
150	3068595-0000		1	BLOCK	
160	2844525-0000		2	CABLE DUCT	
170	2844526-0000		4	PLATE	
180	2844527-0000		4	PLATE	
190	3068593-0000		1	SCREW	
200	2845097-0000		4	SPACER	
300	312105-0333		4	SCREW M6S ISO 4017 M5X25 A480	
310	312109-0378		6	SCREW M6S ISO 4017 M6X40 A480	
320	312105-0390		2	SCREW M6S ISO 4014 M6X100 A480	
330	312115-0451		6	SCREW ISO4762 M8X20 A4 80	
340	312105-0453		6	SCREW M6S ISO 4017 M8X25 A480	
350	312105-0455		4	SCREW M6S ISO 4017 M8X30 A480	
360	312105-0519		4	SCREW M6S ISO 4014 M10X150 A480	
370	6-4000 0006 08		2	SCREW M6S 10 X 110	
380	311103-0365		1	PARALLEL PIN ISO 2338 6M6X50 A1	
390	312109-0380		2	SCREW M6S ISO 4017 M6X50 A480	
420	312605-0320		4	HEXAGON NUT, M6M M10 A280	
430	312607-0316		2	HEXAGON NUT, EN 24032 M6M M6 A480	
440	312607-0332		4	HEXAGON NUT, EN 24032 M6M M30 A480	
500	315105-0153		10	WASHER BRB 6,4X12 RFR	
510	315105-0165		6	WASHER BRB 8,4X16 RFR	
550	315125-0165		4	WASHER TBRSB 8,4X26X5 A4	
600	315705-0237		1	PARALLEL KEY W. ROUND ENDS 6X6X32 MM	
650	321133-0260		1	BUSHING IGLIDUR G 20X23X20	
660	321133-0420		4	BUSHING IGLIDUR G 40X44X40	
670	352113-0203		5	ANCHOR PLATES FOR STRIPS, TM3S8-M0	
680	312605-0314		8	HEXAGON NUT, M6M M5 A280	
690	352113-0102		5	CABLE TIE, BLACK 188X4,8 MM	
700	312125-0291		5	SCREW ISO 1207 M4X12 A4	
710	312105-0332		16	SCREW M6S ISO 4017 M5X22 A470	
720	315105-0146		24	WASHER BRB 5,3X10 RFR	
900	90600-2560		1	COUPLING 14X20 MM, 727-38-4838	
910	90600-0658		1	WORM GEAR SCREW JACK, TP00063000130	
920	90600-1002		1	FOOT 45000N, 297/63399N	
930	312115-0331		2	SCREW ISO4762 M5X20 A4 80	
940	90459-0246	KG	0.1	GREASE, KLüBERSYNTH UH1, ONLY IN BOM	
	90459-7413		*1*	*GREASE, KLüBERSYNTH UH1 14-1600, 1 KG*	
	90459-7414		*1*	*GREASE, KLüBERSYNTH UH1 14-1600, 25 KG*	

Machine Type	Group Description	Used-In	Group Number	Page No

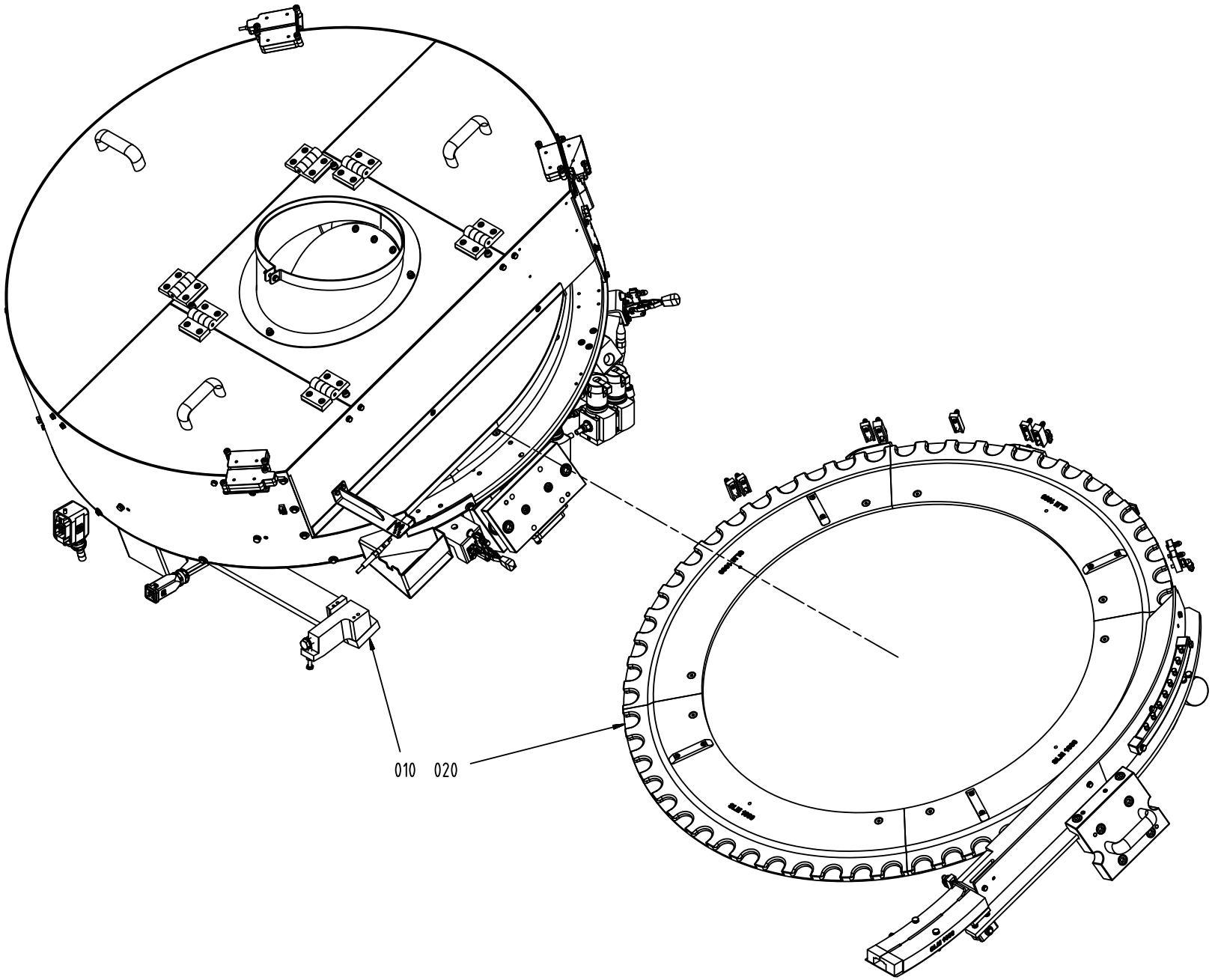
010
020

ECM: 481730 - 20110401
Group number: 2846416-0200
Assembly Drawing: 2846416-3_1_AA

Pos	Part No	UN	Qty	Description	Page No
HELICAP2 23					
010	2846406-0200		1	CAP SORTER	**4-9, 4-11**
020	3068635-0100		1	VOLUME KIT	**4-29**
SLIMCAP 1000					
010	2846406-0200		1	CAP SORTER	**4-9, 4-11**
020	2846408-0200		1	VOLUME KIT	**4-31**
SLIMCAP 2000					
010	2846406-0200		1	CAP SORTER	**4-9, 4-11**
020	2873977-0200		1	VOLUME KIT	**4-33**
STREAMCAP1000					
010	2846406-0200		1	CAP SORTER	**4-9, 4-11**
020	2846407-0200		1	VOLUME KIT	**4-35**
STREAMCAP200					
010	2846406-0200		1	CAP SORTER	**4-9, 4-11**
020	2874001-0200		1	VOLUME KIT	**4-37**
STREAMCAP330					
010	2846406-0200		1	CAP SORTER	**4-9, 4-11**
020	2874002-0200		1	VOLUME KIT	**4-39**
STREAMCAP500					
010	2846406-0200		1	CAP SORTER	**4-9, 4-11**
020	2873978-0200		1	VOLUME KIT	**4-41**

Pos	Part No	UN	Qty	Description	Page No

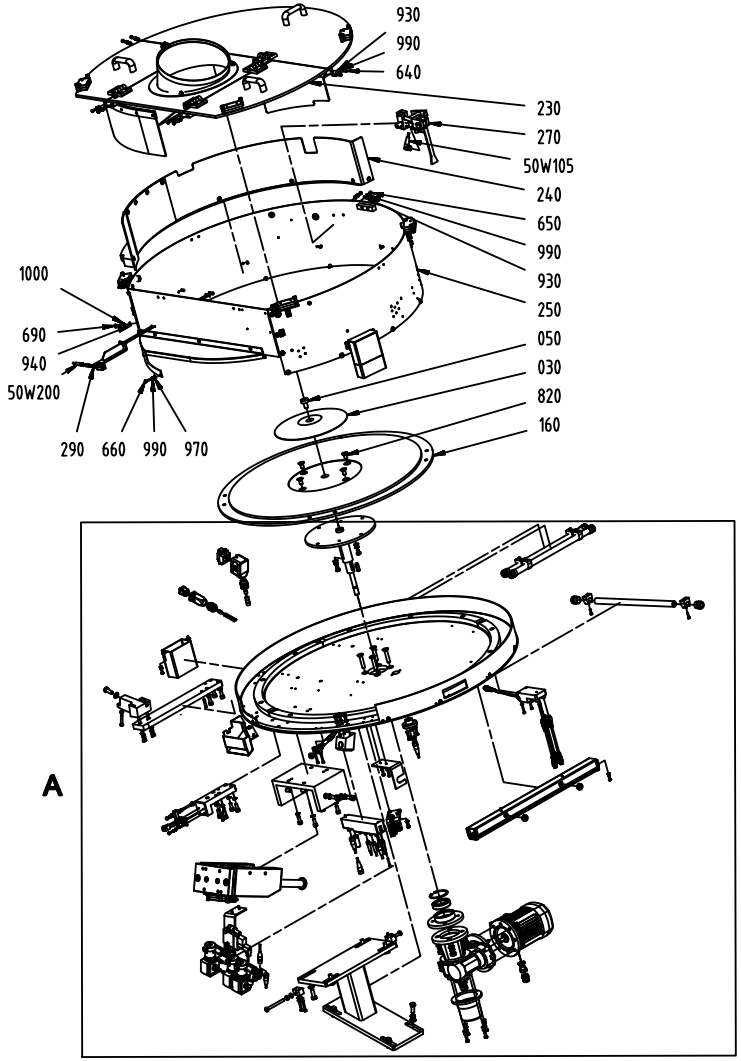
930
990
640
230
270
50W105
240
650
990
930
250
050
030
820
160
1000
690
940
50W200
290
660
990
970
A

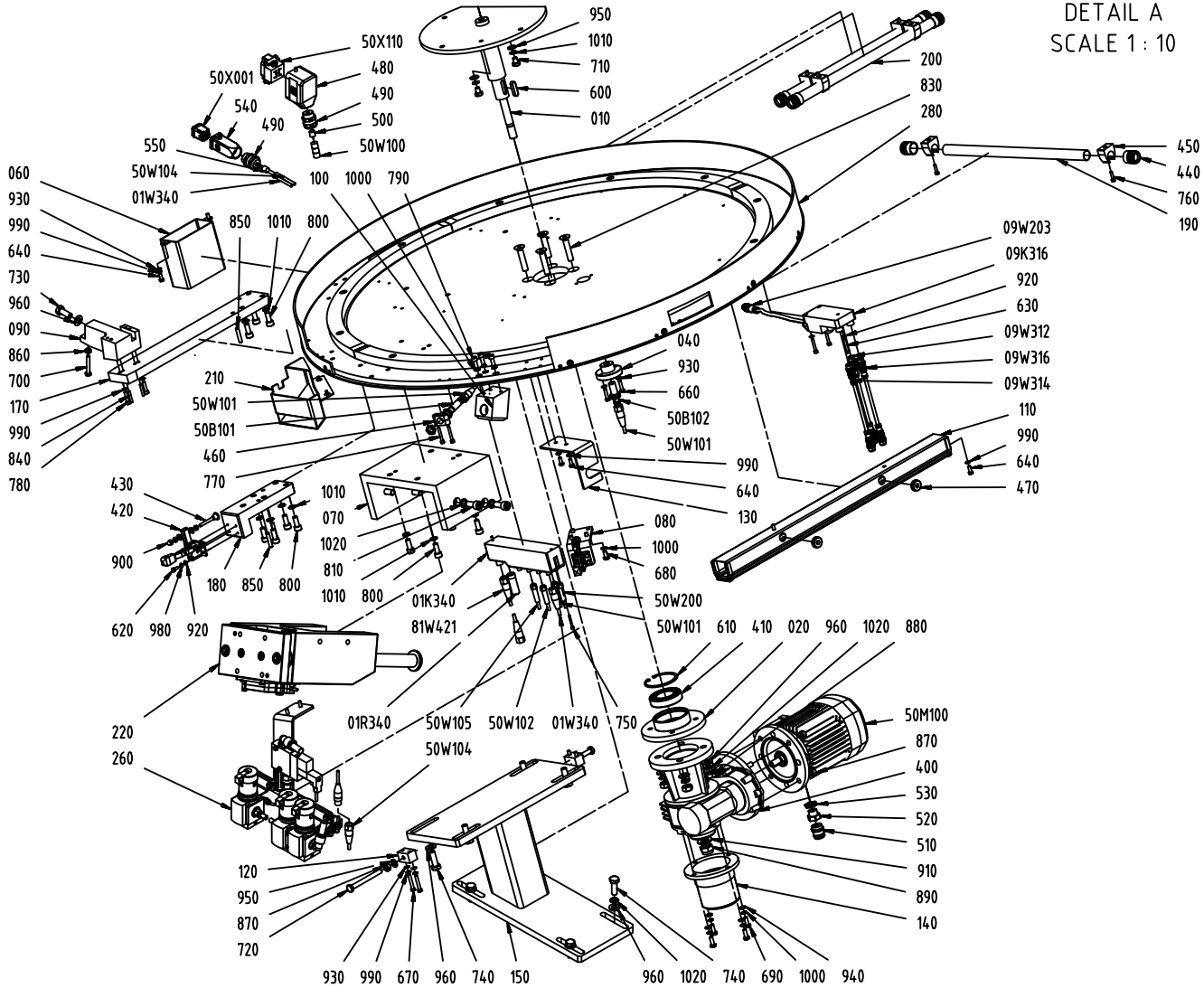
DETAIL A
SCALE 1 : 10
950
1010
710
600
010
50X110
480
490
500
50W100
50X001
540
490
550
50W104
01W340
100
1000
790
060
930
990
640
730
960
090
860
700
170
990
840
780
850
1010
800
210
50W101
50B102
460
770
430
420
900
620
980
920
180
850
800
1010
070
1020
810
1010
800
01K340
81W421
220
260
01R340
50W105
50W102
01W340
750
50W104
120
950
870
720
930
990
670
960
740
150
960
1020
740
690
1000
940
200
830
280
450
440
760
190
09W203
09K316
920
630
09W312
09W316
09W314
040
930
660
50B102
50W101
990
640
130
110
990
640
470
080
1000
680
50W200
50W101
610
410
020
960
1020
880
50M100
870
400
530
520
510
910
890
140

ECM: 481906 - 20110401
Group number: 2846406-0200
Assembly Drawing: 2846406-3_1_AA

This list covers pages from 4-8 to 4-11

Pos	Part No	UN	Qty	Description	Page No
-					
010	3115239-0000		1	SHAFT	
01K340	90459-6062		1	ARMORBLOCK DIGITAL CONFIGURABLE I/O	
01R340	90459-6570		1	CONNECTOR M12 5-POLES MALE, RSCN5/7	
01W340	351309-0050		1	ACTUATOR/SENSOR CABLE PRKT 4-07/5M	
020	3115240-0000		1	REDUCER	
030	3115241-0000		1	CAP	
040	3115242-0000		1	BUSHING	
050	3115243-0000		1	SCREW	
060	3115244-0000		1	PROTECTIVE COVER	
070	3115245-0000		1	SUPPORT	
080	3115246-0000		1	BRACKET	
090	3115247-0000		1	ARM	
09K316	90602-4058		1	CONNECTION BOX TINA 4A, 20-054-03	
09W203	3115264-0000		1	CABLE	
09W312	3115265-0000		1	CABLE	
09W314	3115265-0000		1	CABLE	
09W316	3115265-0000		1	CABLE	
100	3115248-0000		1	CENTERING	
1000	3108453-0000		16	WASHER	
1010	3108454-0000		13	WASHER	
1020	3108455-0000		12	WASHER	
110	3115249-0000		1	CONNECTION BOX	
120	3115250-0000		2	BLOCK	
130	3115251-0000		1	BRACKET	
140	3115252-0000		1	CAP	
150	3115253-0000		1	SUPPORT	
160	3115254-0000		1	SUPPORT	
170	3115255-0000		1	BASE	
180	3115256-0000		1	BASE	
190	3115257-0000		1	CONNECTION	
200	3115258-0000		2	CONNECTION	
210	3115259-0000		1	COVER	
220	3108413-0100		1	PULLER	**4-13**
230	3108442-0100		1	COVER	**4-15**
240	3108443-0100		1	RAKE	**4-17**
250	3108444-0100		1	BODY	**4-19**
260	3108445-0100		1	PNEUMATIC COMPONENT	**4-21**
270	3108446-0100		1	SENSOR	**4-23**
280	3108447-0100		1	HARD DISK	**4-25**
290	3108448-0100		1	PHOTOCELL UNIT	**4-27**
400	2618350-0000		1	WORM GEAR	
410	321308-0207		1	BALL BEARING 35/62X14	
420	3115260-0000		2	LOCKING LEVER	
430	3115261-0000		2	STOP SCREW	
440	3115234-0000		6	CAP	
450	3115233-0000		6	CLAMP	
460	3115263-0000		1	CLAMP	
470	3108471-0000		2	PROTECTION RING	
480	90459-1458		1	HOOD HAN 6 E 19 30 006 1540	
490	90458-0406		2	GLAND W/O INSERT M20 NORMAL	
500	353249-0004		1	INSERT, SINGLE HOLE, E152/13	
50B101	90458-2907		1	PROX.SWITCH IFS204	
50B102	90458-2907		1	PROX.SWITCH IFS204	
50M100	90458-2483		1	MOTOR 3GVA062002-BSB	
50W100	351422-0203	M	3	CABLE ÖLFLEX 150CY QUATTRO 4X1,5	
50W101	351405-0006		1	ACT/SENS. CABLE RSMVN 3-PRKT 4-3-06/0,6M	
50W102	351405-0006		1	ACT/SENS. CABLE RSMVN 3-PRKT 4-3-06/0,6M	
50W104	351309-0050		1	ACTUATOR/SENSOR CABLE PRKT 4-07/5M	
50W105	351406-0015		1	ACT/SENS.CABLE RSMVN 3-PRKWT 4-3-06/1,5M	
50W200	351401-0006		1	ACTU/SENS CABLE RSMVN 3-PRKMV 3-06/0,6M	
50X001	90459-6821		1	MALE INSERT, HAN 4A, 0920 0042 611	
50X110	90110-0052		1	MALE INSERT, HAN E 06, 0933 0062 601	
510	90458-0438		1	GLAND, EXTENDED WITH INSERT, M20X1,5	
520	3115266-0000		1	REDUCTION	
530	90458-0460		1	GLAND, LOCK NUT, M16X1,5	
540	90459-3670		1	HOOD HAN 3A 19 20 003 1440	
550	353249-0041		1	INSERT, SOLID, E151G	
600	315701-0267		1	PARALLEL KEY W. ROUND ENDS 8X7X30 MM	
610	90458-0048		1	RETAINING RING FOR BORE DIN 472 62 SS	
620	312105-0289		8	SCREW M6S H4X10 A4 70 ISO4017/DIN933	
630	312115-0297		3	SCREW ISO4762 M4X25 A4 80	
640	312105-0327		14	SCREW M6S ISO 4017 M5X12 A480	
650	312105-0325		2	SCREW M6S ISO 4017 M5X10 A480	
660	312105-0331		14	SCREW M6S ISO 4017 M5X20 A480	
670	312109-0335		4	SCREW M6S ISO 4017 M5X30 A480	
680	312105-0366		4	SCREW M6S ISO 4017 M6X12 A480	
690	312105-0368		9	SCREW M6S ISO 4017 M6X16 A480	
700	312109-0378		1	SCREW M6S ISO 4017 M6X40 A480	
710	90459-4735		2	SCREW M6S ISO 4017 M8X10 A480	
720	312109-0467		2	SCREW M6S ISO 4017 M8X80 A480	
730	312105-0493		1	SCREW M6S ISO 4017 M10X25 A480	
740	312105-0495		8	SCREW M6S ISO 4017 M10X30 A480	
750	312115-0232		2	SCREW ISO4762 M3X25 A4 80	

Machine Type | Group Description | Used-In | Group Number | Page No

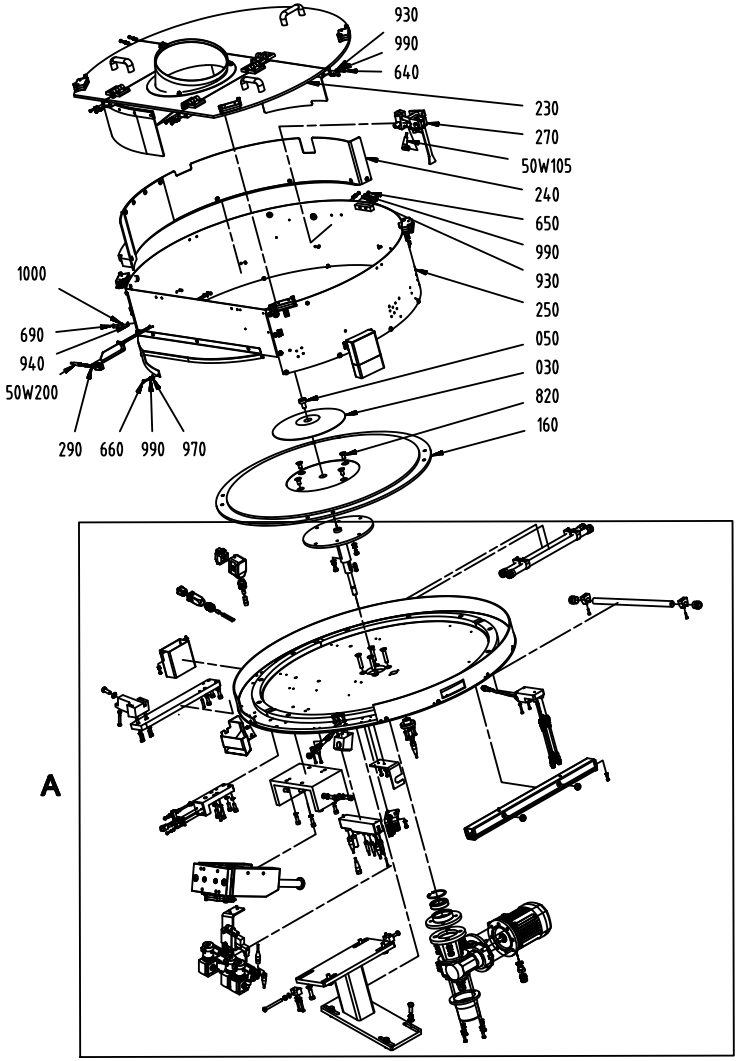
930
990
640
230
270
50W105
240
650
990
930
250
050
030
820
160
1000
690
940
50W200
290
660
990
970
A

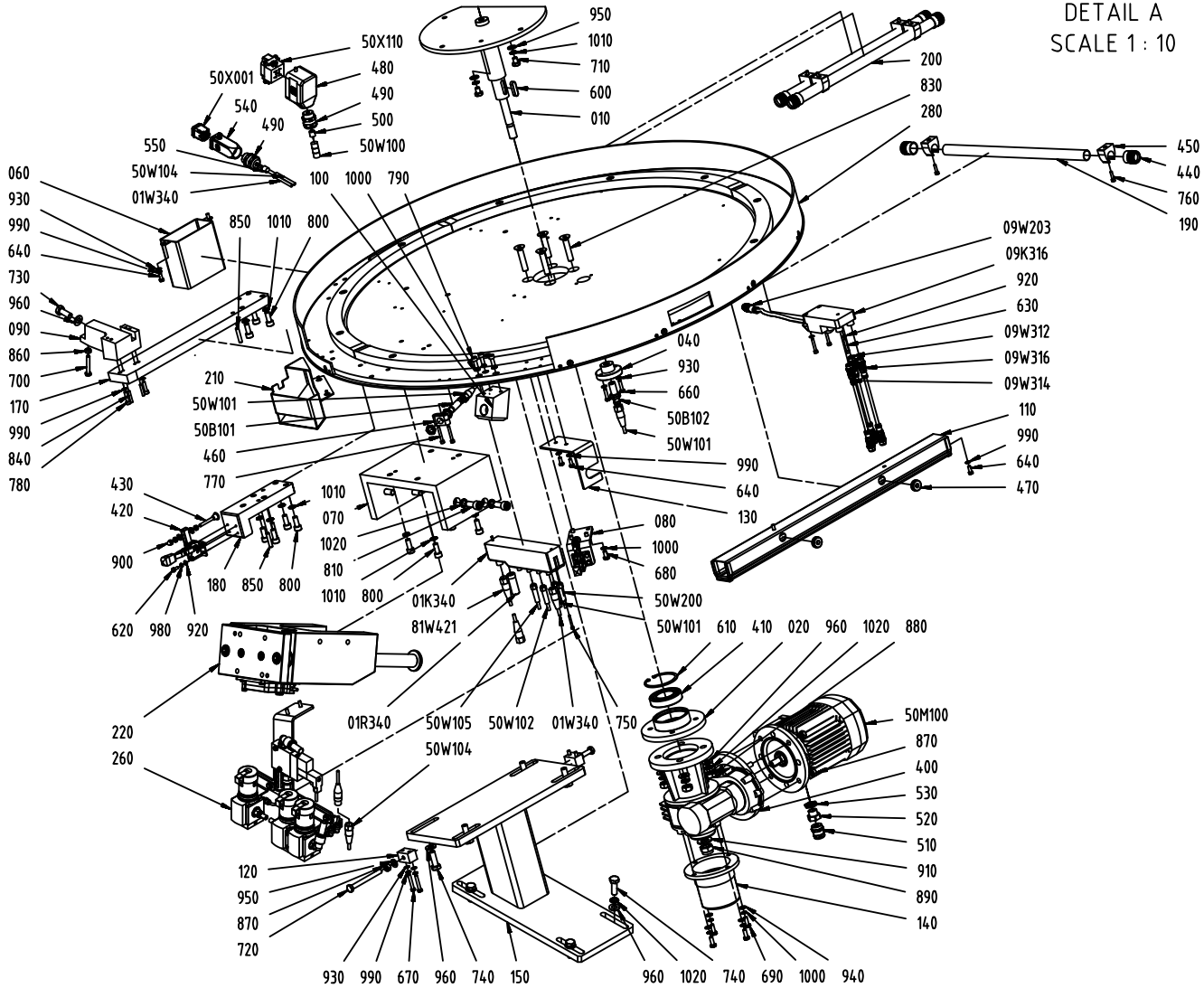
DETAIL A
SCALE 1 : 10
950
1010
710
600
010
50X110
480
490
500
50W100
50X001
540
490
550
50W104
01W340
100
1000
790
060
930
990
640
730
960
090
860
700
170
990
840
780
850
1010
800
210
50W101
50B102
460
770
430
420
900
180
850
800
620
980
920
1010
070
1020
810
1010
800
01K340
81W421
040
930
660
50B102
50W101
990
640
130
080
1000
680
50W200
50W101
610
410
020
960
1020
880
200
830
280
450
440
760
190
09W203
09K316
920
630
09W312
09W316
09W314
110
990
640
470
220
260
01R340
50W105
50W102
01W340
750
50W104
50M100
870
400
530
520
510
910
890
140
120
950
870
720
930
990
670
960
740
150
960
1020
740
690
1000
940

Pos	Part No	UN	Qty	Description	Page No
- (Cont'd)					
760	312115-0293		6	SCREW ISO4762 M4X16 A4 80	
770	312115-0299		2	SCREW ISO4762 M4X30 A4 80	
780	312115-0331		2	SCREW ISO4762 M5X20 A4 80	
790	312115-0368		3	SCREW ISO4762 M6X16 A4 80	
800	312115-0451		11	SCREW ISO4762 M8X20 A4 80	
810	312115-0493		4	SCREW ISO4762 M10X25 A4 80	
81W421	351413-0030		1	DEVICENET CONN. CABLE, 0935 361 103/3M	
820	312155-0491		4	SCREW DIN 7991 MF6S M10X20 A4 70	
830	312155-0501		4	SCREW DIN 7991 MF6S M10X50A4 70	
840	311103-1274		2	PARALLEL PIN ISO 2338 4M6X24 A1	
850	311103-0357		4	PARALLEL PIN ISO 2338 6M6X30 A1	
860	312605-0316		1	HEXAGON NUT, M6M M6 A280	
870	312605-0318		6	HEXAGON NUT, M6M M8 A280	
880	312605-0320		4	HEXAGON NUT, M6M M10 A280	
890	90099-0187		1	HEXAGON NUT, LOCK, M14, DIN985	
900	312705-0314		2	NUT HEX. DOMED CAP MHM-6 M5 A280	
910	3108449-0000		1	WASHER	
920	315103-0136		11	WASHER PLAIN, BRB, 4,3/8,H=0,8 NI PL BR	
930	315103-0146		18	WASHER, BRB, 5,3/10,H=1 NI PL BR	
940	315103-0153		9	WASHER, BRB, 6,4/12,H=1,5 NIPL BR	
950	315103-0165		4	WASHER PLAIN, BRB, 8,4/16,H=1,5 NIPL BR	
960	315103-0173		13	WASHER PLAIN, BRB, 10,5/22,H=2 NI PL BR	
970	315125-0146		12	WASHER TBRSB 5.3X15X1 A4	
980	3108451-0000		8	WASHER	
990	3108452-0000		34	WASHER	

Pos	Part No	UN	Qty	Description	Page No

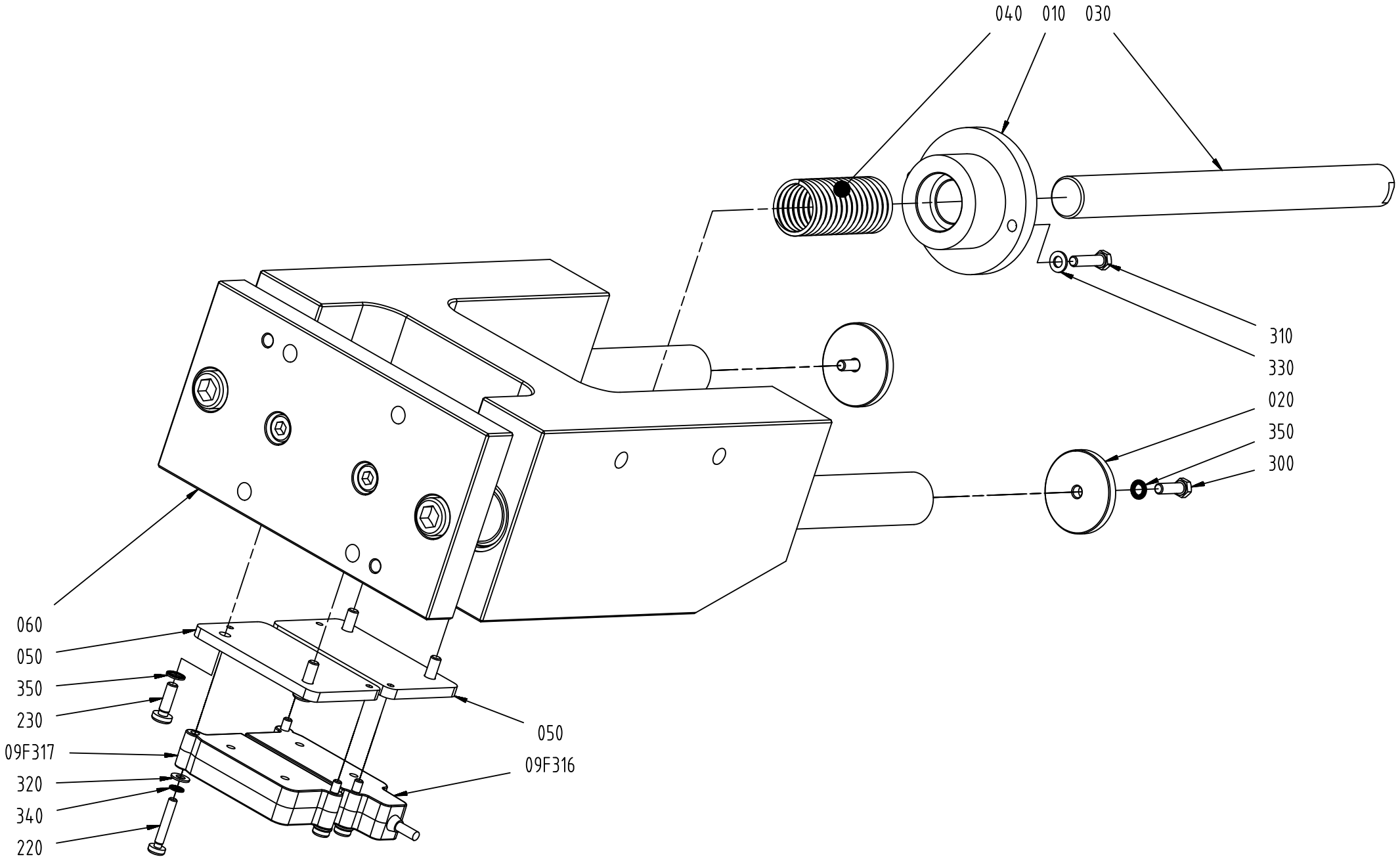
040
010
030
310
330
020
350
300
060
050
350
230
09F317
320
340
220
050
09F316

ECM: 481898 - 20110401
Group number: 3108413-0100
Assembly Drawing: 3108413-1_1_AA

Pos	Part No	UN	Qty	Description	Page No
-					
010	3115268-0000		1	BUSHING	
020	3115269-0000		2	WASHER	
030	3115270-0000		1	PIN	
040	3115271-0000		1	SPRING	
050	3115272-0000		2	PLATE	
060	3115273-0000		1	GUIDE	
09F316	90459-6961		1	SAFETY SENSOR, NON CONT. ADAM-E M12 0,5M	
09F317	90459-4089		1	SAFETY SENSOR NON-CONTACT EVA E	
220	90459-4165		4	SAFETY SCREW SM4X25, 20-053-43	
230	3115274-0000		4	SCREW	
300	312105-0329		2	SCREW M6S ISO 4017 M5X16 A480	
310	312105-0331		2	SCREW M6S ISO 4017 M5X20 A480	
320	315103-0136		4	WASHER PLAIN, BRB, 4,3/8,H=0,8 NI PL BR	
330	315103-0146		2	WASHER, BRB, 5,3/10,H=1 NI PL BR	
340	3108451-0000		4	WASHER	
350	3108452-0000		6	WASHER	

Pos	Part No	UN	Qty	Description	Page No

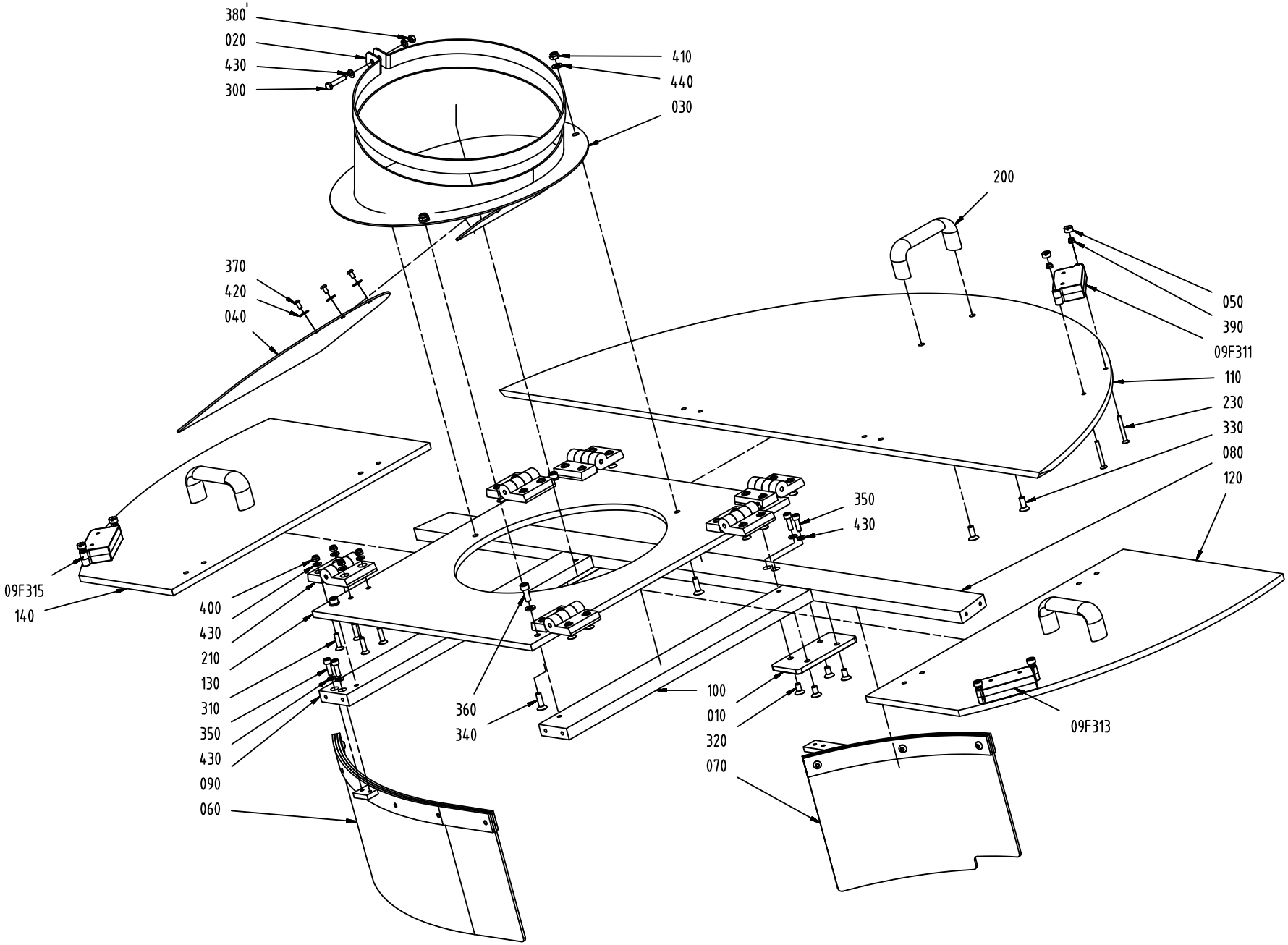
380'
020
430
300
410
440
030
200
370
420
040
050
390
09F311
110
230
330
080
120
350
430
09F315
140
400
430
210
130
310
350
430
090
060
360
340
100
010
320
070
09F313

ECM: 481899 - 20110401
Group number: 3108442-0100
Assembly Drawing: 3108442-1_1_AA

Pos	Part No	UN	Qty	Description	Page No
-					
010	3115287-0000		2	PLATE	
020	3115288-0000		1	CLAMP	
030	3115289-0000		1	FUNNEL	
040	3115290-0000		1	DAMPING ELEMENT	
050	1539391-0000		6	ROUND NUT	
060	3115291-0000		1	PLATE	
070	3115292-0000		1	PLATE	
080	3115293-0000		1	CROSS BAR	
090	3115294-0000		1	CROSS BAR	
09F311	90459-4089		1	SAFETY SENSOR NON-CONTACT EVA E	
09F313	90459-4089		1	SAFETY SENSOR NON-CONTACT EVA E	
09F315	90459-4089		1	SAFETY SENSOR NON-CONTACT EVA E	
100	3115295-0000		1	CROSS BAR	
110	3115296-0000		1	PANEL	
120	3115297-0000		1	PANEL	
130	3115298-0000		1	PANEL	
140	3115299-0000		1	PANEL	
200	3115300-0000		3	HANDLE	
210	3115232-0000		6	HINGE	
230	3115301-0000		6	SCREW	
300	312105-0333		1	SCREW M6S ISO 4017 M5X25 A480	
310	312155-0331		24	SCREW DIN 7991 MF6S M5X20 A4 70	
320	312155-0366		8	SCREW DIN 7991 MF6S M6X12 A4 70	
330	312155-0368		6	SCREW DIN 7991 MF6S M6X16 A4 70	
340	312155-0370		3	SCREW DIN 7991 MF6S M6X20 A4 70	
350	312115-0329		4	SCREW ISO4762 M5X16 A4 80	
360	312115-0368		4	SCREW ISO4762 M6X16 A4 80	
370	3108456-0000		3	SCREW	
380	312605-0314		1	HEXAGON NUT, M6M M5 A280	
390	312810-0312		6	HEXAGON NUT, NY-LOCK M4 FZB	
400	312810-0314		24	HEXAGON NUT, NY-LOCK M5 FZB	
410	312810-0316		3	HEXAGON NUT, NY-LOCK M6 FZB	
420	3108458-0000		3	WASHER	
430	315103-0146		30	WASHER, BRB, 5,3/10,H=1 NI PL BR	
440	315103-0153		7	WASHER, BRB, 6,4/12,H=1,5 NIPL BR	

Pos	Part No	UN	Qty	Description	Page No

Machine Type | Group Description | Used-In | Group Number | Page No

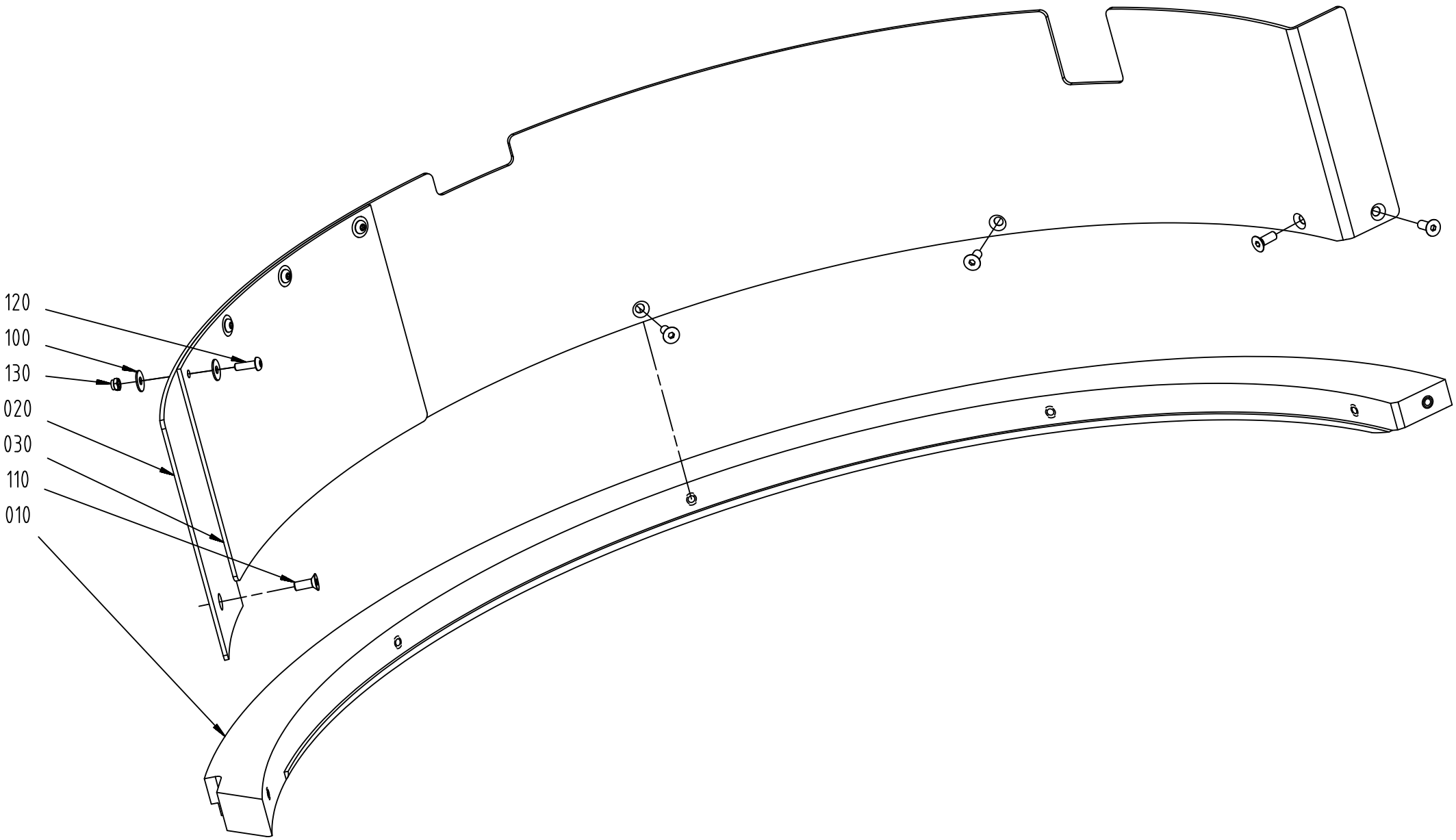
120
100
130
020
030
110
010

ECM: 481900 - 20110401
Group number: 3108443-0100
Assembly Drawing: 3108443-1_1_AA

Pos	Part No	UN	Qty	Description	Page No
-					
010	3115284-0000		1	RING	
020	3115285-0000		1	PLATE	
030	3115286-0000		1	PLATE	
100	315125-0146		8	WASHER TBRSB 5.3X15X1 A4	
110	312155-0368		6	SCREW DIN 7991 MF6S M6X16 A4 70	
120	3108457-0000		4	SCREW	
130	312810-0314		4	HEXAGON NUT, NY-LOCK M5 FZB	

Pos	Part No	UN	Qty	Description	Page No

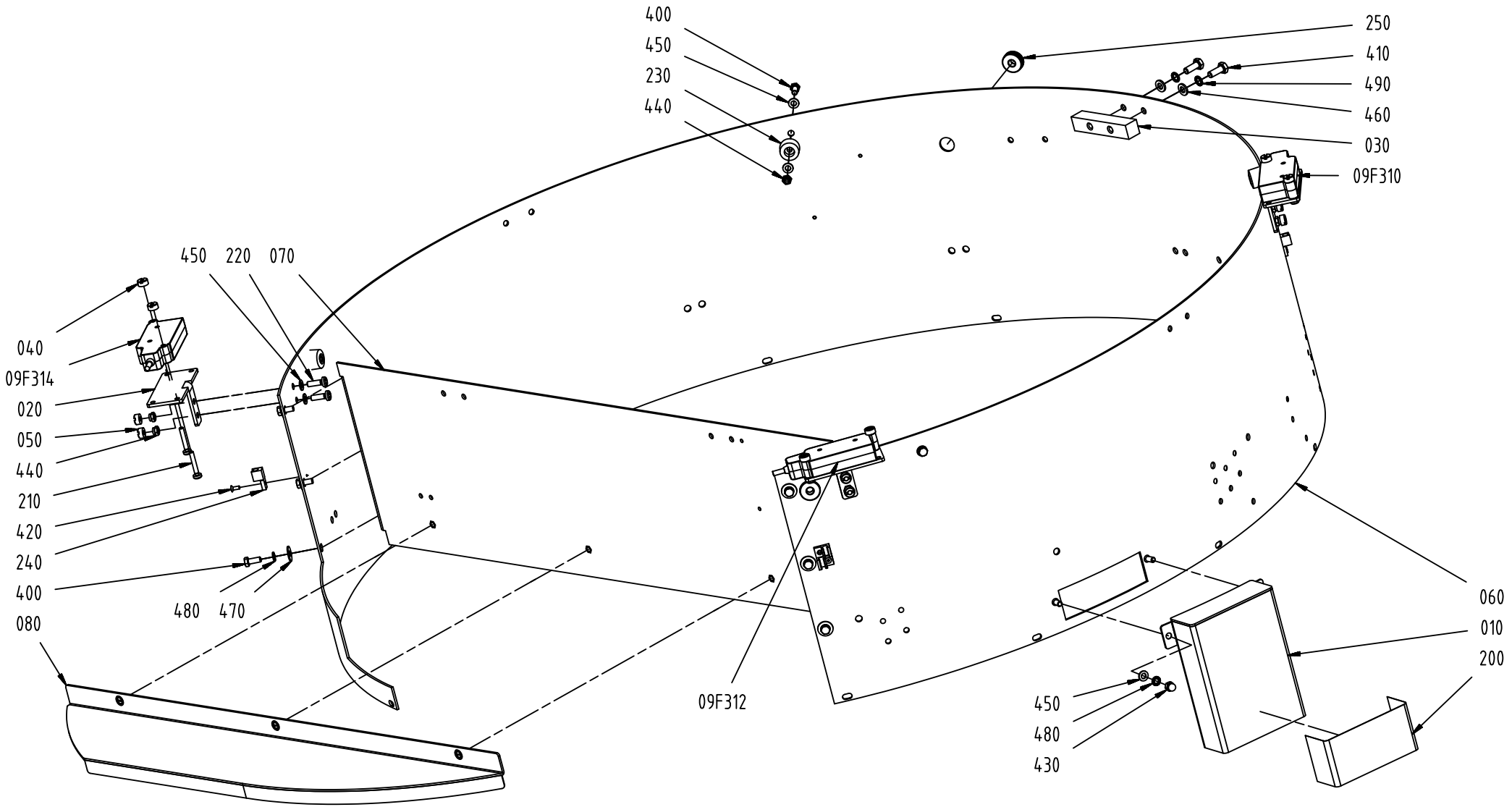
400
450
230
440
250
410
490
460
030
09F310
450 220 070
040
09F314
020
050
440
210
420
240
400
080
480 470
09F312
060
010
200
450
480
430

ECM: 481901 - 20110401
Group number: 3108444-0100
Assembly Drawing: 3108444-1_1_AA

Pos	Part No	UN	Qty	Description	Page No
STREAMCAP500, STREAMCAP1000, SLIMCAP 2000, SLIMCAP 1000, STREAMCAP200, STREAMCAP330, HELICAP2 23					
060	3115280-0000		1	STRIP	
Common Parts					
010	3115275-0000		1	COVER	
020	3115276-0000		3	BRACKET	
030	3115277-0000		1	SUPPORT	
040	1539391-0000		6	ROUND NUT	
050	575034-0000		6	ROUND NUT	
070	3115278-0000		1	PLATE	
080	3115279-0000		1	COVERING	
09F310	90459-6961		1	SAFETY SENSOR, NON CONT. ADAM-E M12 0,5M	
09F312	90459-6961		1	SAFETY SENSOR, NON CONT. ADAM-E M12 0,5M	
09F314	90459-6961		1	SAFETY SENSOR, NON CONT. ADAM-E M12 0,5M	
200	3115281-0000		1	LABEL TAPE	
210	90459-4165		6	SAFETY SCREW SM4X25, 20-053-43	
220	3115274-0000		6	SCREW	
230	3115282-0000		4	FOOT	
240	3115283-0000		6	CLAMP	
250	3108471-0000		2	PROTECTION RING	
400	312105-0327		10	SCREW M6S ISO 4017 M5X12 A480	
410	312105-0368		2	SCREW M6S ISO 4017 M6X16 A480	
420	3108462-0000		5	SCREW	
430	312705-0314		2	NUT HEX. DOMED CAP MHM-6 M5 A280	
440	312810-0314		10	HEXAGON NUT, NY-LOCK M5 FZB	
450	315103-0146		16	WASHER, BRB, 5,3/10,H=1 NI PL BR	
460	315103-0153		2	WASHER, BRB, 6,4/12,H=1,5 NIPL BR	
470	315125-0146		6	WASHER TBRSB 5.3X15X1 A4	
480	3108452-0000		8	WASHER	
490	3108453-0000		2	WASHER	

Pos	Part No	UN	Qty	Description	Page No

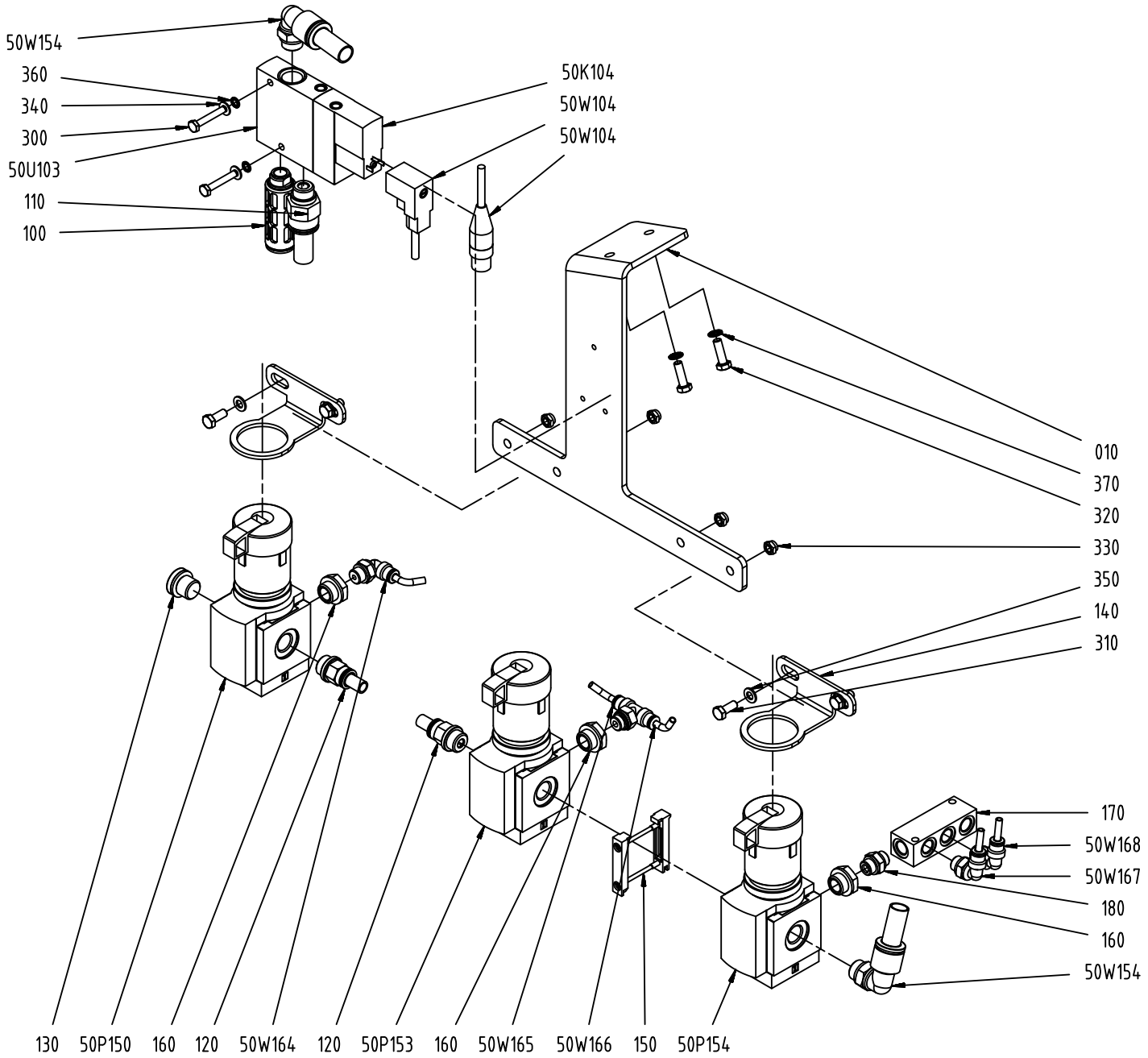
50W154
360
340
300
50U103
110
100
50K104
50W104
50W104
010
370
320
330
350
140
310
170
50W168
50W167
180
160
50W154
130
50P150
160
120
50W164
120
50P153
160
50W165
50W166
150
50P154

ECM: 481902 - 20110401
Group number: 3108445-0100
Assembly Drawing: 3108445-1_1_AA

Pos	Part No	UN	Qty	Description	Page No
-					
010	3124420-0000		1	BRACKET	
100	90328-0013		1	SILENCER U-1/4, 2316	
110	350001-0001		1	PUSH-IN FITTING QS-F-M5-4	
120	350001-0009		2	PUSH-IN FITTING QS-F-G1/4-8	
130	90600-1167		1	PLUG, EXT. R-THREAD, R1/4	
140	90459-2389		2	BRACKET, MS4-LR-WR	
150	90459-2248		1	BRACKET, MS4-MV	
160	90224-0289		3	BUSHING, INT/EXT, R1/8-R1/4	
170	90224-0314		1	DISTRIBUTOR BLOCK, FR-4-1/8-B	
180	342700-0109		1	NIPPLE, EXT.THREAD, HEXAGON, G1/8-G1/8	
300	312105-0297		2	SCREW M6S ISO 4017 M4X25 A470	
310	312105-0327		4	SCREW M6S ISO 4017 M5X12 A480	
320	312105-0329		2	SCREW M6S ISO 4017 M5X16 A480	
330	312810-0314		4	HEXAGON NUT, NY-LOCK M5 FZB	
340	315103-0136		2	WASHER PLAIN, BRB, 4,3/8,H=0,8 NI PL BR	
350	315103-0146		4	WASHER, BRB, 5,3/10,H=1 NI PL BR	
360	3108451-0000		2	WASHER	
370	3108452-0000		2	WASHER	
50P150	90600-1420		1	REGULATOR, MS4-LRB-1/4-D6-AS	
50P153	90600-1420		1	REGULATOR, MS4-LRB-1/4-D6-AS	
50P154	90600-1420		1	REGULATOR, MS4-LRB-1/4-D6-AS	
50U103	90600-5813		1	SOLENOID VALVE, CPE18-M1H-3GL-1/4	
50W104	90600-3573		1	SOCKET CONN. CABLE, KMEB-2-24-M12-0,5-LE	
50W154	350002-0011		2	PUSH-IN L-FITTING QSL-F-G1/4-12	
50W164	350002-0005		1	PUSH-IN L-FITTING QSL-F-G1/8-4	
50W165	350007-0005		1	PUSH-IN T-FITTING QST-F-G1/8-4	
50W167	350002-0005		1	PUSH-IN L-FITTING QSL-F-G1/8-4	
50W168	350002-0005		1	PUSH-IN L-FITTING QSL-F-G1/8-4	

Pos	Part No	UN	Qty	Description	Page No

Machine Type	Group Description	Used-In	Group Number	Page No

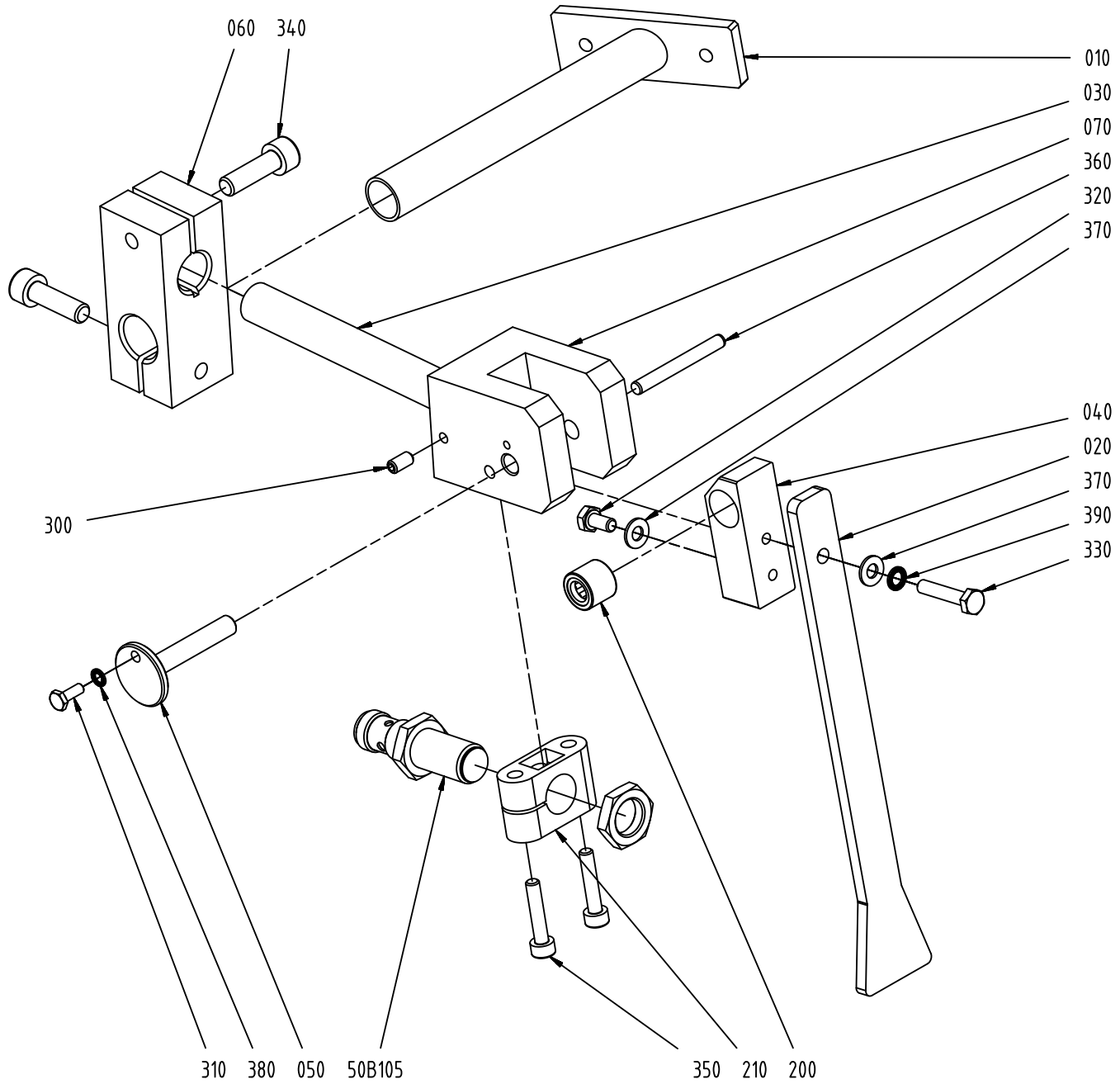
060
340
010
030
070
360
320
370
040
020
370
390
330
300
310
380
050
50B105
350
210
200

ECM: 481903 - 20110401
Group number: 3108446-0100
Assembly Drawing: 3108446-1_1_AA

Pos	Part No	UN	Qty	Description	Page No
-					
010	3115302-0000		1	BRACKET	
020	3115303-0000		1	DIP STICK	
030	3115304-0000		1	PIPE	
040	3115305-0000		1	BRACKET	
050	3115306-0000		1	PIN	
060	3115307-0000		1	CLAMP	
070	3115308-0000		1	PLATE	
200	3115309-0000		1	BEARING	
210	3115263-0000		1	CLAMP	
300	312318-0287		1	SCREW ISO4029 M4X8 A4	
310	312115-0222		1	SCREW ISO4762 M3X8 A4 80	
320	312105-0287		1	SCREW M6S ISO 4017 M4X8 A470	
330	312105-0287		1	SCREW M6S ISO 4017 M4X8 A470	
340	312115-0370		2	SCREW ISO4762 M6X20 A4 80	
350	312115-0295		2	SCREW ISO4762 M4X20 A4 80	
360	311103-0278		1	PARALLEL PIN ISO 2338 4M6X35 A1	
370	315103-0136		2	WASHER PLAIN, BRB, 4,3/8,H=0,8 NI PL BR	
380	3108450-0000		1	WASHER	
390	3108451-0000		1	WASHER	
50B105	90458-2907		1	PROX.SWITCH IFS204	

Pos	Part No	UN	Qty	Description	Page No

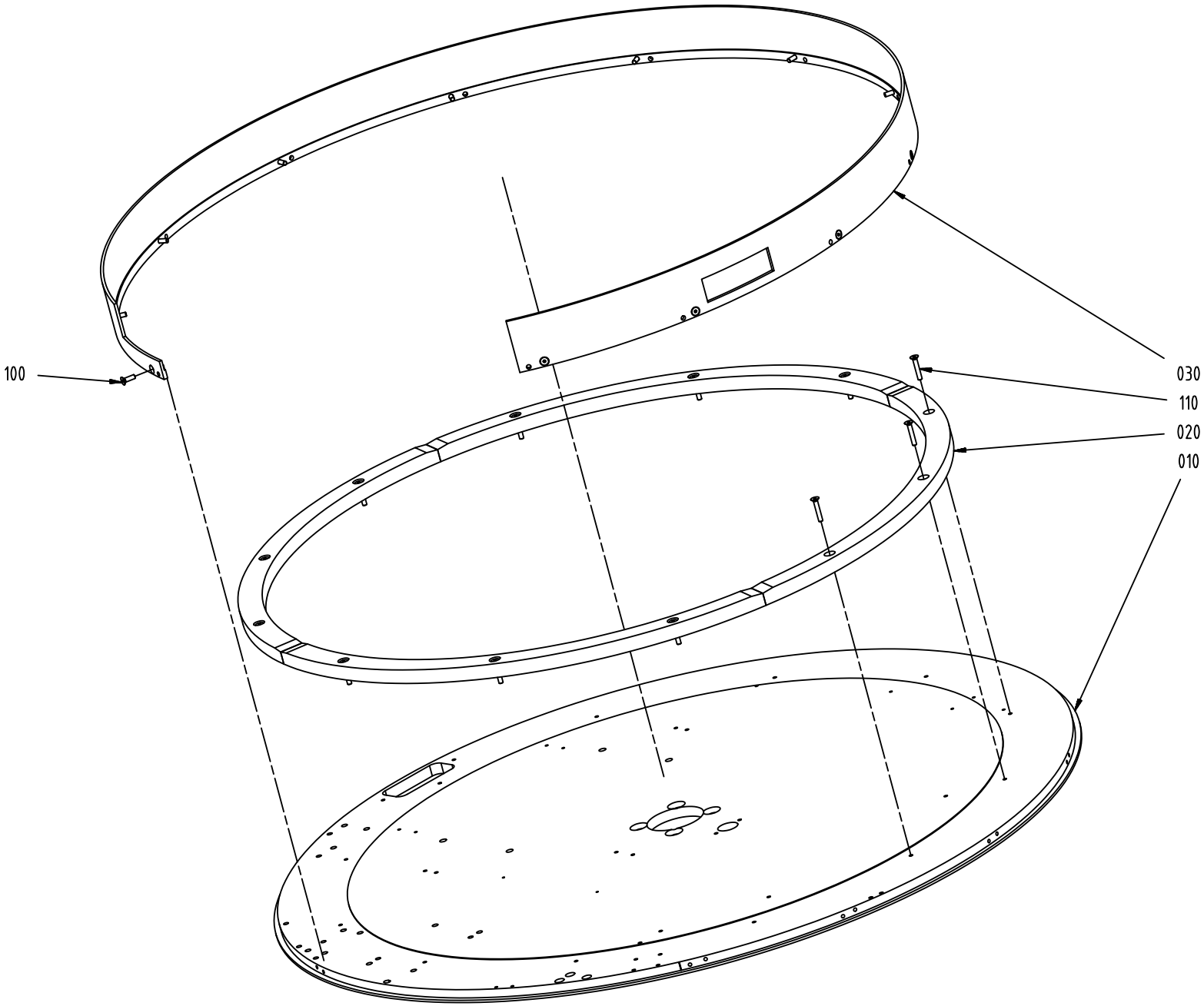
100
030
110
020
010

ECM: 481904 - 20110401
Group number: 3108447-0100
Assembly Drawing: 3108447-1_1_AA

Pos	Part No	UN	Qty	Description	Page No
-					
010	3108464-0000		1	STUD BOLT	
020	3108465-0000		4	SECTOR	
030	3108466-0000		1	RING	
100	312155-0329		12	SCREW DIN 7991 MF6S M5X16 A4 70	
110	312155-0335		12	SCREW DIN 7991 MF6S M5X30 A4 70	

Pos	Part No	UN	Qty	Description	Page No

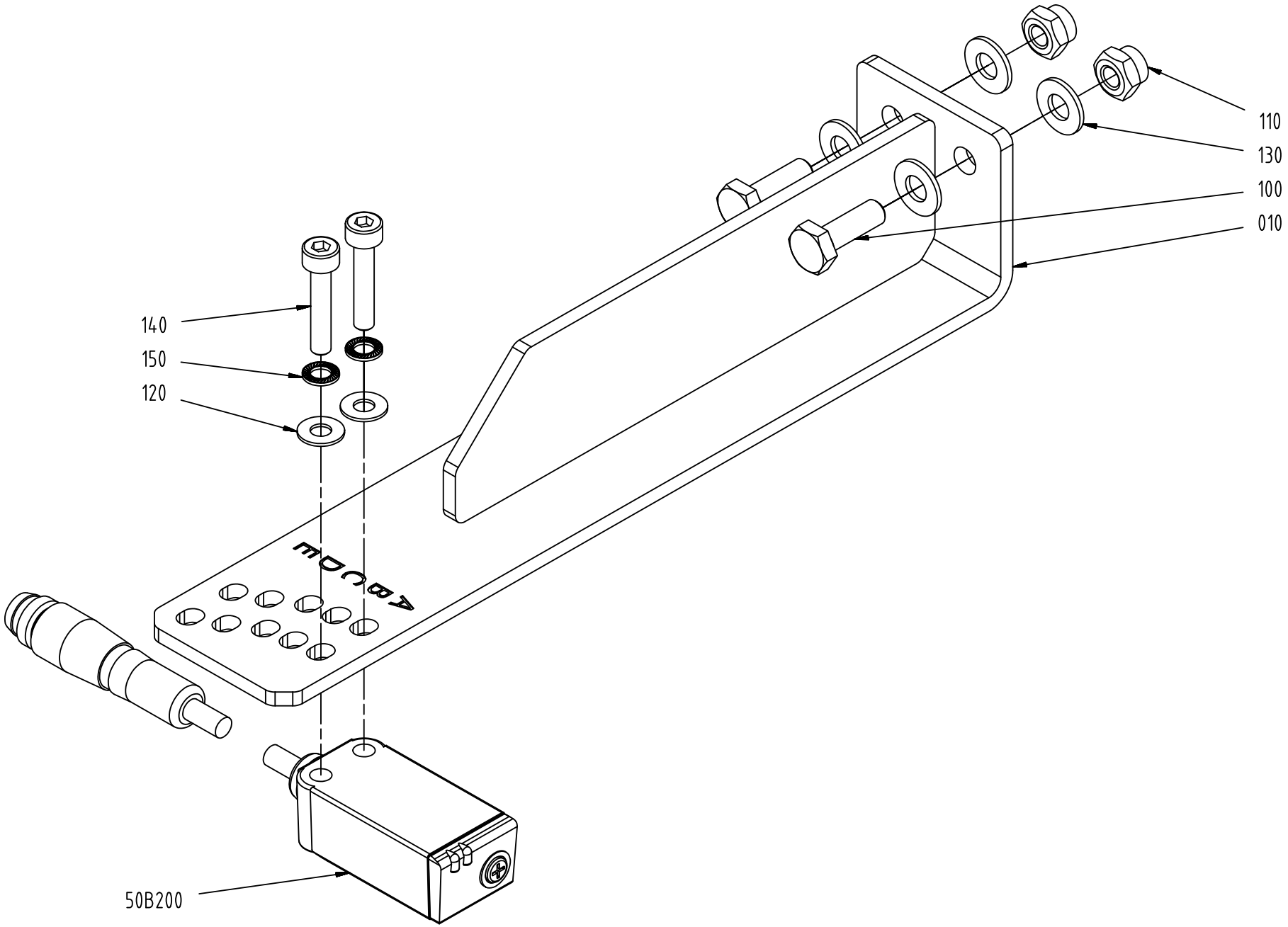
110
130
100
010
140
150
120
50B200

ECM: 481905 - 20110401
Group number: 3108448-0100
Assembly Drawing: 3108448-1_1_AA

Pos	Part No	UN	Qty	Description	Page No
-					
010	3115267-0000		1	PHOTOCELL	
100	312105-0291		2	SCREW M6S ISO 4017 M4X12 A470	
110	312810-0312		2	HEXAGON NUT, NY-LOCK M4 FZB	
120	315103-0124		2	WASHER, BRB, 3,2/6,H=0,5 NI PL BR	
130	315103-0136		4	WASHER PLAIN, BRB, 4,3/8,H=0,8 NI PL BR	
140	312115-0228		2	SCREW ISO4762 M3X16 A4 80	
150	3108450-0000		2	WASHER	
50B200	90459-7366		1	PHOTOCELL WTB4-3P3161 F20	

Pos	Part No	UN	Qty	Description	Page No

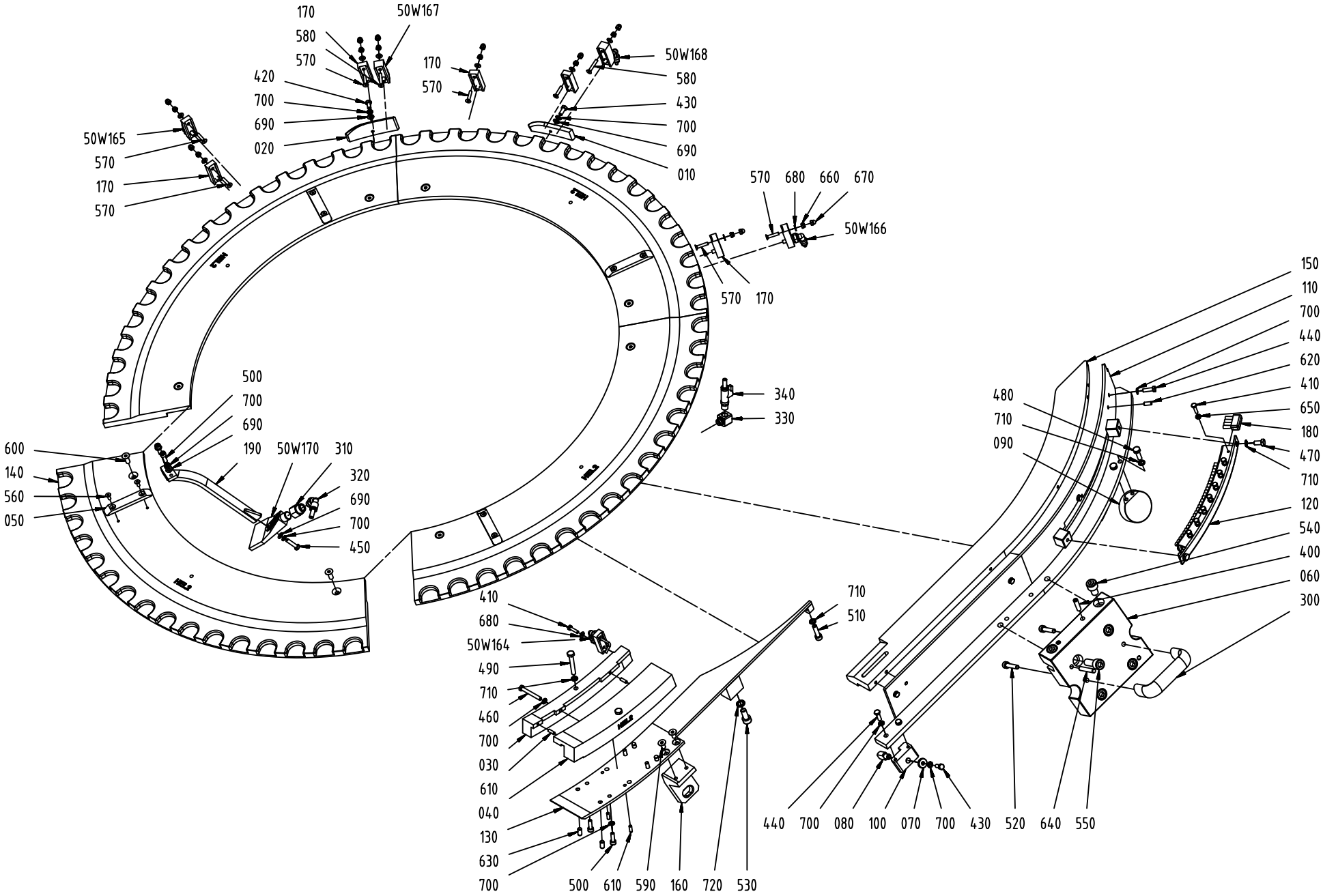
170
580
570
50W167
420
700
690
020
170
570
50W168
580
430
700
690
010
50W165
570
170
570
570 680 660 670
50W166
570 170
500
700
690
190 50W170 310
320
690
700
450
600
140
560
050
340
330
150
110
700
440
620
410
650
180
470
710
120
540
400
060
300
480
710
090
410
680
50W164
490
710
460
700
030
610
040
130
630
700
500 610 590 160 720 530
710
510
440 700 080 100 070 700 430 520 640 550

ECM: 481728 - 20110401
Group number: 3068635-0100
Assembly Drawing: 3068635-2_1_AA

Pos	Part No	UN	Qty	Description	Page No
-					
010	2981410-0000		1	CAM	
020	2981411-0000		1	CAM	
030	3124370-0000		1	GUIDE	
040	3124371-0000		1	GUIDE	
050	3115346-0000		4	CARRIER	
060	3115347-0000		1	PLATE	
070	3115348-0000		1	WASHER	
080	3115349-0000		1	PIN	
090	3115350-0000		1	PIN	
100	3115351-0000		1	PIN	
110	3115354-0000		1	PLATE	
120	3115355-0000		1	BRUSH	
130	3115368-0000		1	BASE	
140	3068636-0000		4	GUIDE	
150	3124373-0000		1	PULLER	
160	3115356-0000		1	CENTERING	
170	2981406-0000		5	AIR BLOW REGULATOR	
180	2857743-0000		8	BRUSH	
190	2981418-0000		1	AIR NOZZLE	
300	3115300-0000		1	HANDLE	
310	3124360-0000		1	REDUCTION SLEEVE	
320	350002-0006		1	PUSH-IN L-FITTING QSL-F-G1/8-6	
330	90224-0031		1	CONN. ELBOW, ART.NO 3814	
340	90187-0191		1	BALL VALVE R1/8, 6 MM	
400	3108463-0000		2	TAPER PIN	
410	312105-0293		9	SCREW M6S ISO 4017 M4X16 A470	
420	312105-0325		1	SCREW M6S ISO 4017 M5X10 A480	
430	312105-0327		2	SCREW M6S ISO 4017 M5X12 A480	
440	312105-0329		6	SCREW M6S ISO 4017 M5X16 A480	
450	312105-0331		1	SCREW M6S ISO 4017 M5X20 A480	
460	312109-0339		1	SCREW M6S ISO 4017 M5X40 A480	
470	312105-0366		2	SCREW M6S ISO 4017 M6X12 A480	
480	312105-0370		2	SCREW M6S ISO 4017 M6X20 A480	
490	312109-0378		2	SCREW M6S ISO 4017 M6X40 A480	
500	312115-0329		6	SCREW ISO4762 M5X16 A4 80	
50W164	3115358-0000		1	AIR NOZZLE	
50W165	2930228-0000		1	AIR NOZZLE	
50W166	2930229-0000		1	AIR NOZZLE	
50W167	3115238-0000		1	AIR NOZZLE	
50W168	3115238-0000		1	AIR NOZZLE	
50W170	2981418-0000		1	AIR NOZZLE	
510	312115-0372		1	SCREW ISO4762 M6X25 A4 80	
520	312115-0374		2	SCREW ISO4762 M6X30 A4 80	
530	312115-0451		1	SCREW ISO4762 M8X20 A4 80	
540	312115-0489		2	SCREW ISO4762 M10X16 A4 80	
550	312115-0495		4	SCREW ISO4762 M10X30 A4 80	
560	312155-0289		8	SCREW DIN 7991 MF6S M4X10 A4 70	
570	312155-0295		7	SCREW DIN 7991 MF6S M4X20 A4 70	
580	312155-0297		2	SCREW DIN 7991 MF6S M4X25 A4 70	
590	312155-0366		2	SCREW DIN 7991 MF6S M6X12 A4 70	
600	312155-0368		8	SCREW DIN 7991 MF6S M6X16 A4 70	
610	311103-0268		4	PARALLEL PIN ISO 2338 4M6X12 A1	
620	311103-0306		2	PARALLEL PIN ISO 2338 5M6X12 A1	
630	311103-0349		4	PARALLEL PIN ISO 2338 6M6X12 A1	
640	311103-0361		2	PARALLEL PIN ISO 2338 6M6X40 A1	
650	312605-0312		8	HEXAGON NUT, M6M M4 A280	
660	312810-0312		9	HEXAGON NUT, NY-LOCK M4 FZB	
670	312705-0312		9	NUT HEX. DOMED CAP MHM-6 M4 A280	
680	315103-0136		10	WASHER PLAIN, BRB, 4,3/8,H=0,8 NI PL BR	
690	315103-0146		5	WASHER, BRB, 5,3/10,H=1 NI PL BR	
700	3108452-0000		17	WASHER	
710	3108453-0000		7	WASHER	
720	3108454-0000		1	WASHER	

Machine Type	Group Description	Used-In	Group Number	Page No

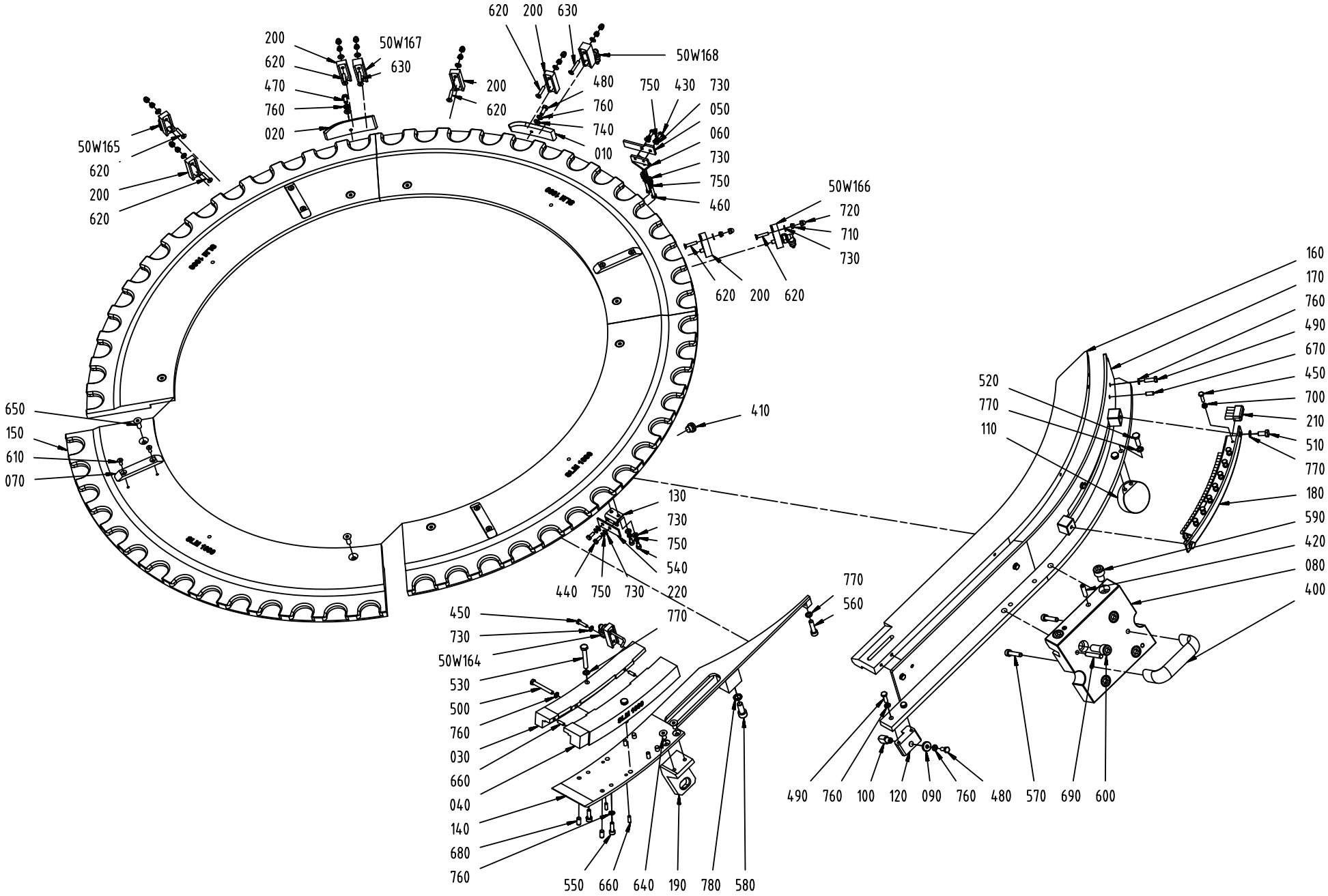
620 200 630
200
620
470
760
020
50W167
630
50W168
200
620
480
760
740
010
750 430 730
050
060
730
750
460
50W165
620
200
620
50W166
720
710
730
620 200 620
650
150
610
070
410
160
170
760
490
670
450
700
210
510
770
180
590
420
080
400
520
770
110
130
730
750
540
220
440 750 730
770
560
450
730
50W164
530
500
760
030
660
040
140
680
760
550 660 640 190 780 580
490 760 100 120 090 760 480 570 690 600

ECM: 481723 - 20110401
Group number: 2846408-0200
Assembly Drawing: 2846408-3_1_AA

Pos	Part No	UN	Qty	Description	Page No
-					
010	2981410-0000		1	CAM	
020	2981411-0000		1	CAM	
030	3115343-0000		1	GUIDE	
040	3115344-0000		1	GUIDE	
050	2981407-0000		1	SCRAPER	
060	3115345-0000		1	SUPPORT	
070	3115346-0000		4	CARRIER	
080	3115347-0000		1	PLATE	
090	3115348-0000		1	WASHER	
100	3115349-0000		1	PIN	
110	3115350-0000		1	PIN	
120	3115351-0000		1	PIN	
130	2981407-0000		1	SCRAPER	
140	3115352-0000		1	BASE	
150	2857744-0000		4	GUIDE	
160	3115353-0000		1	PULLER	
170	3115354-0000		1	PLATE	
180	3115355-0000		1	BRUSH	
190	3115356-0000		1	CENTERING	
200	2981406-0000		5	AIR BLOW REGULATOR	
210	2857743-0000		8	BRUSH	
220	3115357-0000		1	SCRAPER	
400	3115300-0000		1	HANDLE	
410	342713-0209		1	PLUG, EXT THREAD HEX SOCKET 8638-00-180	
420	3108463-0000		2	TAPER PIN	
430	312105-0287		2	SCREW M6S ISO 4017 M4X8 A470	
440	312105-0289		2	SCREW M6S H4X10 A4 70 ISO4017/DIN933	
450	312105-0293		9	SCREW M6S ISO 4017 M4X16 A470	
460	312105-0287		2	SCREW M6S ISO 4017 M4X8 A470	
470	312105-0325		1	SCREW M6S ISO 4017 M5X10 A480	
480	312105-0327		2	SCREW M6S ISO 4017 M5X12 A480	
490	312105-0329		6	SCREW M6S ISO 4017 M5X16 A480	
500	312109-0339		1	SCREW M6S ISO 4017 M5X40 A480	
50W164	3115358-0000		1	AIR NOZZLE	
50W165	2930228-0000		1	AIR NOZZLE	
50W166	2930229-0000		1	AIR NOZZLE	
50W167	2981405-0000		1	AIR NOZZLE	
50W168	2981405-0000		1	AIR NOZZLE	
510	312105-0366		2	SCREW M6S ISO 4017 M6X12 A480	
520	312105-0370		2	SCREW M6S ISO 4017 M6X20 A480	
530	312109-0378		2	SCREW M6S ISO 4017 M6X40 A480	
540	312115-0287		2	SCREW ISO4762 M4X8 A4 80	
550	312115-0329		4	SCREW ISO4762 M5X16 A4 80	
560	312115-0372		1	SCREW ISO4762 M6X25 A4 80	
570	312115-0374		2	SCREW ISO4762 M6X30 A4 80	
580	312115-0451		1	SCREW ISO4762 M8X20 A4 80	
590	312115-0489		2	SCREW ISO4762 M10X16 A4 80	
600	312115-0495		4	SCREW ISO4762 M10X30 A4 80	
610	312155-0289		8	SCREW DIN 7991 MF6S M4X10 A4 70	
620	312155-0295		7	SCREW DIN 7991 MF6S M4X20 A4 70	
630	312155-0297		2	SCREW DIN 7991 MF6S M4X25 A4 70	
640	312155-0366		2	SCREW DIN 7991 MF6S M6X12 A4 70	
650	312155-0368		8	SCREW DIN 7991 MF6S M6X16 A4 70	
660	311103-0268		4	PARALLEL PIN ISO 2338 4M6X12 A1	
670	311103-0306		2	PARALLEL PIN ISO 2338 5M6X12 A1	
680	311103-0349		4	PARALLEL PIN ISO 2338 6M6X12 A1	
690	311103-0361		2	PARALLEL PIN ISO 2338 6M6X40 A1	
700	312605-0312		8	HEXAGON NUT, M6M M4 A280	
710	312810-0312		9	HEXAGON NUT, NY-LOCK M4 FZB	
720	312705-0312		9	NUT HEX. DOMED CAP MHM-6 M4 A280	
730	315103-0136		22	WASHER PLAIN, BRB, 4,3/8,H=0,8 NI PL BR	
740	315103-0146		3	WASHER, BRB, 5,3/10,H=1 NI PL BR	
750	3108451-0000		8	WASHER	
760	3108452-0000		13	WASHER	
770	3108453-0000		7	WASHER	
780	3108454-0000		1	WASHER	

Machine Type	Group Description	Used-In	Group Number	Page No

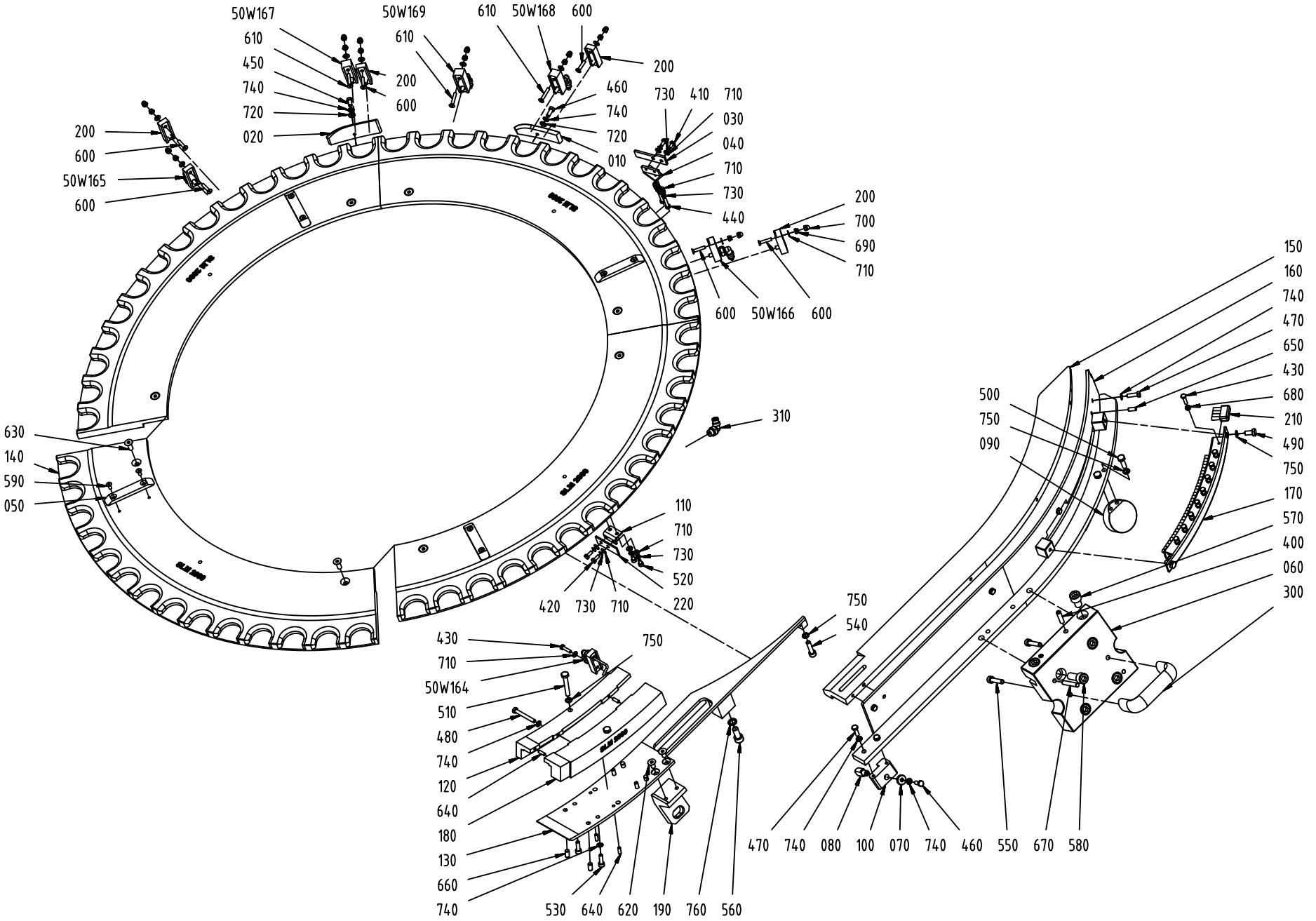
50W167
610
450
740
720
020
50W169
610
200
600
610
50W168
600
200
460
740
720
010
730
410
710
030
040
710
730
440
200
700
690
710
600
50W166
600
200
600
50W165
600
630
140
590
050
310
110
710
730
520
220
420
730
710
750
540
430
710
50W164
510
480
740
120
640
180
130
660
740
750
530
640
620
190
760
560
500
750
090
150
160
740
470
650
430
680
210
490
750
170
570
400
060
300
470
740
080
100
070
740
460
550
670
580

ECM: 481724 - 20110401
Group number: 2873977-0200
Assembly Drawing: 2873977-3_1_AA

Pos	Part No	UN	Qty	Description	Page No
-					
010	2981410-0000		1	CAM	
020	2981411-0000		1	CAM	
030	2981407-0000		1	SCRAPER	
040	3115345-0000		1	SUPPORT	
050	3115346-0000		4	CARRIER	
060	3115347-0000		1	PLATE	
070	3115348-0000		1	WASHER	
080	3115349-0000		1	PIN	
090	3115350-0000		1	PIN	
100	3115351-0000		1	PIN	
110	2981407-0000		1	SCRAPER	
120	3115359-0000		1	GUIDE	
130	3115360-0000		1	BASE	
140	2873979-0000		4	GUIDE	
150	3115361-0000		1	PULLER	
160	3115362-0000		1	PLATE	
170	3115363-0000		1	HOLDER	
180	3115364-0000		1	GUIDE	
190	3115356-0000		1	CENTERING	
200	2981406-0000		4	AIR BLOW REGULATOR	
210	2857743-0000		9	BRUSH	
220	3115357-0000		1	SCRAPER	
300	3115300-0000		1	HANDLE	
310	350002-0005		1	PUSH-IN L-FITTING QSL-F-G1/8-4	
400	3108463-0000		2	TAPER PIN	
410	312105-0287		2	SCREW M6S ISO 4017 M4X8 A470	
420	312105-0289		2	SCREW M6S H4X10 A4 70 ISO4017/DIN933	
430	312105-0293		10	SCREW M6S ISO 4017 M4X16 A470	
440	312105-0287		2	SCREW M6S ISO 4017 M4X8 A470	
450	312105-0325		1	SCREW M6S ISO 4017 M5X10 A480	
460	312105-0327		2	SCREW M6S ISO 4017 M5X12 A480	
470	312105-0329		6	SCREW M6S ISO 4017 M5X16 A480	
480	312109-0339		1	SCREW M6S ISO 4017 M5X40 A480	
490	312105-0366		2	SCREW M6S ISO 4017 M6X12 A480	
500	312105-0370		2	SCREW M6S ISO 4017 M6X20 A480	
50W164	3115358-0000		1	AIR NOZZLE	
50W165	2930228-0000		1	AIR NOZZLE	
50W166	2930229-0000		1	AIR NOZZLE	
50W167	2930230-0000		1	AIR NOZZLE	
50W168	2930230-0000		1	AIR NOZZLE	
50W169	2981405-0000		1	AIR NOZZLE	
510	312109-0378		2	SCREW M6S ISO 4017 M6X40 A480	
520	312115-0287		2	SCREW ISO4762 M4X8 A4 80	
530	312115-0329		4	SCREW ISO4762 M5X16 A4 80	
540	312115-0372		1	SCREW ISO4762 M6X25 A4 80	
550	312115-0374		2	SCREW ISO4762 M6X30 A4 80	
560	312115-0451		1	SCREW ISO4762 M8X20 A4 80	
570	312115-0489		2	SCREW ISO4762 M10X16 A4 80	
580	312115-0495		4	SCREW ISO4762 M10X30 A4 80	
590	312155-0289		8	SCREW DIN 7991 MF6S M4X10 A4 70	
600	312155-0295		6	SCREW DIN 7991 MF6S M4X20 A4 70	
610	312155-0297		3	SCREW DIN 7991 MF6S M4X25 A4 70	
620	312155-0366		2	SCREW DIN 7991 MF6S M6X12 A4 70	
630	312155-0368		8	SCREW DIN 7991 MF6S M6X16 A4 70	
640	311103-0268		4	PARALLEL PIN ISO 2338 4M6X12 A1	
650	311103-0306		2	PARALLEL PIN ISO 2338 5M6X12 A1	
660	311103-0349		4	PARALLEL PIN ISO 2338 6M6X12 A1	
670	311103-0361		2	PARALLEL PIN ISO 2338 6M6X40 A1	
680	312605-0312		9	HEXAGON NUT, M6M M4 A280	
690	312810-0312		9	HEXAGON NUT, NY-LOCK M4 FZB	
700	312705-0312		9	NUT HEX. DOMED CAP MHM-6 M4 A280	
710	315103-0136		22	WASHER PLAIN, BRB, 4,3/8,H=0,8 NI PL BR	
720	315103-0146		2	WASHER, BRB, 5,3/10,H=1 NI PL BR	
730	3108451-0000		8	WASHER	
740	3108452-0000		14	WASHER	
750	3108453-0000		7	WASHER	
760	3108454-0000		1	WASHER	

Machine Type	Group Description	Used-In	Group Number	Page No

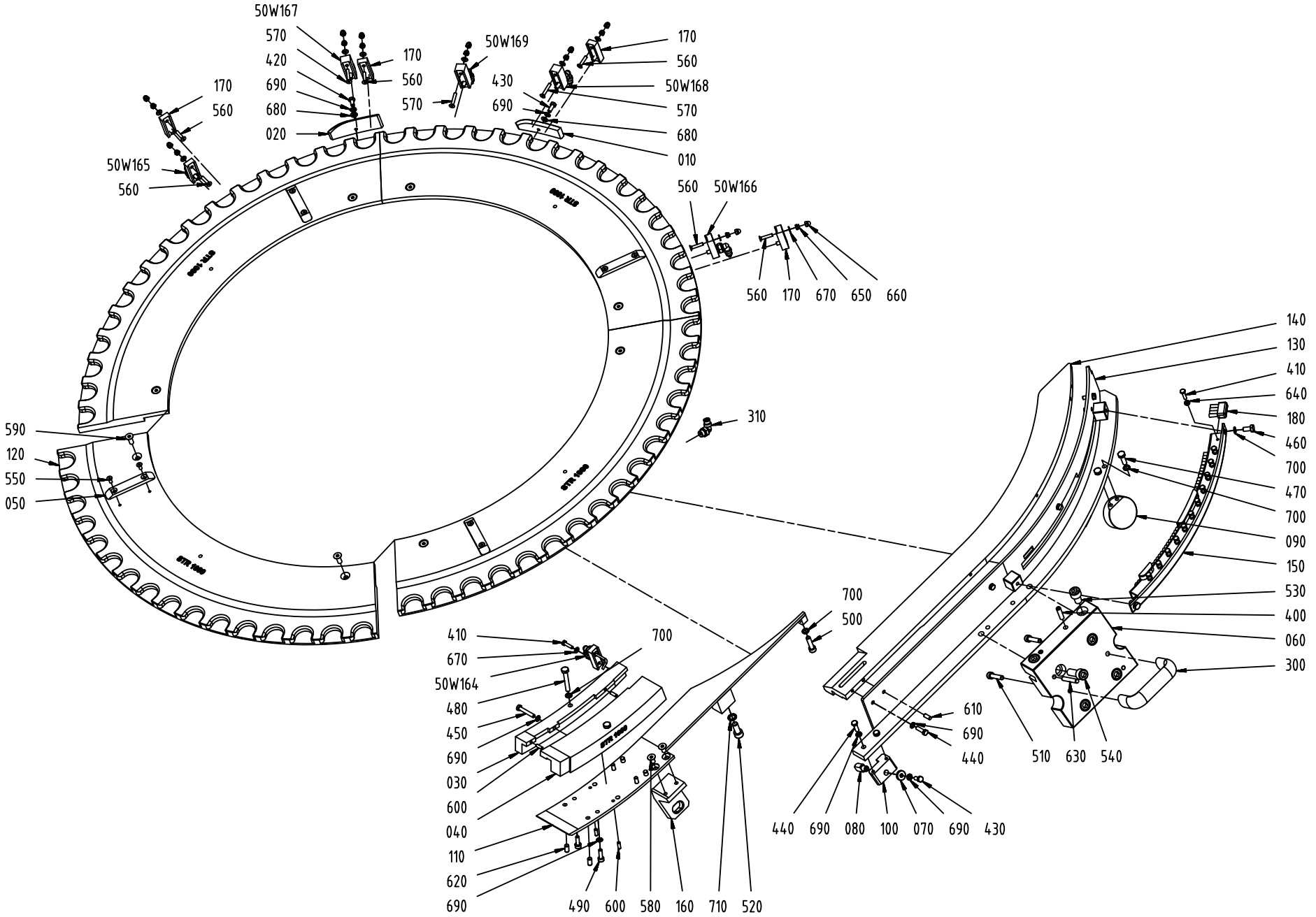
50W167
570
420
690
680
020
170
560
570
50W169
430
690
170
560
50W168
570
680
010
170
560
50W165
560
560
50W166
560
170
670
650
660
590
120
550
050
310
140
130
410
640
180
460
700
470
700
090
150
530
400
060
300
700
500
610
690
440
510
630
540
440
690
080
100
070
690
430
410
670
50W164
480
450
690
030
600
040
110
620
690
700
490
600
580
160
710
520

ECM: 481722 - 20110401
Group number: 2846407-0200
Assembly Drawing: 2846407-3_1_AA

Pos	Part No	UN	Qty	Description	Page No
-					
010	2981410-0000		1	CAM	
020	2981411-0000		1	CAM	
030	3124366-0000		1	GUIDE	
040	3124367-0000		1	GUIDE	
050	3115346-0000		4	CARRIER	
060	3115347-0000		1	PLATE	
070	3115348-0000		1	WASHER	
080	3115349-0000		1	PIN	
090	3115350-0000		1	PIN	
100	3115351-0000		1	PIN	
110	3115368-0000		1	BASE	
120	2857745-0000		4	GUIDE	
130	3124364-0000		1	PLATE	
140	3124368-0000		1	PULLER	
150	3124365-0000		1	BOX	
160	3115356-0000		1	CENTERING	
170	2981406-0000		4	AIR BLOW REGULATOR	
180	2857743-0000		12	BRUSH	
300	3115300-0000		1	HANDLE	
310	350002-0005		1	PUSH-IN L-FITTING QSL-F-G1/8-4	
400	3108463-0000		2	TAPER PIN	
410	312105-0293		13	SCREW M6S ISO 4017 M4X16 A470	
420	312105-0325		1	SCREW M6S ISO 4017 M5X10 A480	
430	312105-0327		2	SCREW M6S ISO 4017 M5X12 A480	
440	312105-0329		6	SCREW M6S ISO 4017 M5X16 A480	
450	312109-0335		1	SCREW M6S ISO 4017 M5X30 A480	
460	312105-0366		2	SCREW M6S ISO 4017 M6X12 A480	
470	312105-0370		2	SCREW M6S ISO 4017 M6X20 A480	
480	312109-0378		2	SCREW M6S ISO 4017 M6X40 A480	
490	312115-0329		4	SCREW ISO4762 M5X16 A4 80	
500	312115-0372		1	SCREW ISO4762 M6X25 A4 80	
50W164	3115358-0000		1	AIR NOZZLE	
50W165	2930228-0000		1	AIR NOZZLE	
50W166	2930229-0000		1	AIR NOZZLE	
50W167	2930230-0000		1	AIR NOZZLE	
50W168	2930230-0000		1	AIR NOZZLE	
50W169	2981405-0000		1	AIR NOZZLE	
510	312115-0374		2	SCREW ISO4762 M6X30 A4 80	
520	312115-0451		1	SCREW ISO4762 M8X20 A4 80	
530	312115-0489		2	SCREW ISO4762 M10X16 A4 80	
540	312115-0495		4	SCREW ISO4762 M10X30 A4 80	
550	312155-0289		8	SCREW DIN 7991 MF6S M4X10 A4 70	
560	312155-0295		6	SCREW DIN 7991 MF6S M4X20 A4 70	
570	312155-0297		3	SCREW DIN 7991 MF6S M4X25 A4 70	
580	312155-0366		2	SCREW DIN 7991 MF6S M6X12 A4 70	
590	312155-0368		8	SCREW DIN 7991 MF6S M6X16 A4 70	
600	311103-0268		4	PARALLEL PIN ISO 2338 4M6X12 A1	
610	311103-0306		2	PARALLEL PIN ISO 2338 5M6X12 A1	
620	311103-0349		4	PARALLEL PIN ISO 2338 6M6X12 A1	
630	311103-0361		2	PARALLEL PIN ISO 2338 6M6X40 A1	
640	312605-0312		12	HEXAGON NUT, M6M M4 A280	
650	312810-0312		9	HEXAGON NUT, NY-LOCK M4 FZB	
660	312705-0312		9	NUT HEX. DOMED CAP MHM-6 M4 A280	
670	315103-0136		10	WASHER PLAIN, BRB, 4,3/8,H=0,8 NI PL BR	
680	315103-0146		2	WASHER, BRB, 5,3/10,H=1 NI PL BR	
690	3108452-0000		14	WASHER	
700	3108453-0000		7	WASHER	
710	3108454-0000		1	WASHER	

Machine Type	Group Description	Used-In	Group Number	Page No

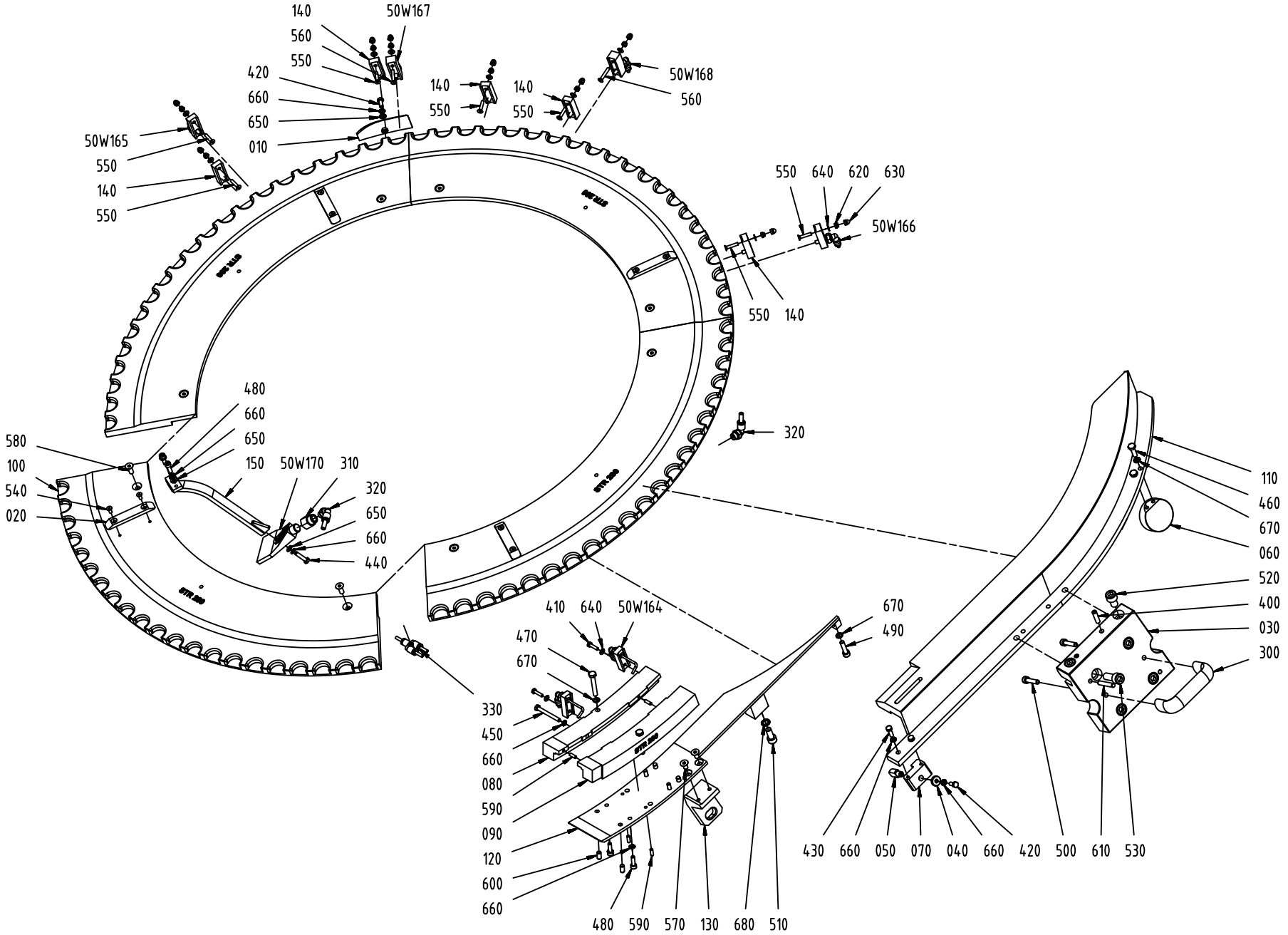
140
50W167
560
550
420
660
650
010
140
550
140
550
50W168
560
50W165
550
140
550
550
640
620
630
50W166
550
140
480
660
650
150
50W170
310
320
650
660
440
580
100
540
020
320
110
460
670
060
520
400
030
300
410
640
50W164
470
670
330
450
660
080
590
090
120
600
660
480
590
570
130
680
510
670
490
430
660
050
070
040
660
420
500
610
530

ECM: 481726 - 20110401
Group number: 2874001-0200
Assembly Drawing: 2874001-3_1_AA

Pos	Part No	UN	Qty	Description	Page No
-					
010	2981409-0000		1	CAM	
020	3115346-0000		4	CARRIER	
030	3115347-0000		1	PLATE	
040	3115348-0000		1	WASHER	
050	3115349-0000		1	PIN	
060	3115350-0000		1	PIN	
070	3115351-0000		1	PIN	
080	3115365-0000		1	GUIDE	
090	3115366-0000		1	GUIDE	
100	2874003-0000		4	GUIDE	
110	3115367-0000		1	PULLER	
120	3115368-0000		1	BASE	
130	3115356-0000		1	CENTERING	
140	2981406-0000		5	AIR BLOW REGULATOR	
150	2981418-0000		1	AIR NOZZLE	
300	3115300-0000		1	HANDLE	
310	3124360-0000		1	REDUCTION SLEEVE	
320	350002-0006		2	PUSH-IN L-FITTING QSL-F-G1/8-6	
330	90458-0745		1	Y-CONNECTION	
400	3108463-0000		2	TAPER PIN	
410	312105-0293		2	SCREW M6S ISO 4017 M4X16 A470	
420	312105-0327		2	SCREW M6S ISO 4017 M5X12 A480	
430	312105-0329		2	SCREW M6S ISO 4017 M5X16 A480	
440	312105-0331		1	SCREW M6S ISO 4017 M5X20 A480	
450	312109-0340		1	SCREW M6S ISO 4017 M5X45 A480	
460	312105-0370		2	SCREW M6S ISO 4017 M6X20 A480	
470	312109-0378		2	SCREW M6S ISO 4017 M6X40 A480	
480	312115-0329		6	SCREW ISO4762 M5X16 A4 80	
490	312115-0372		1	SCREW ISO4762 M6X25 A4 80	
500	312115-0374		2	SCREW ISO4762 M6X30 A4 80	
50W164	3115358-0000		2	AIR NOZZLE	
50W165	2930228-0000		1	AIR NOZZLE	
50W166	2930229-0000		1	AIR NOZZLE	
50W167	2981405-0000		1	AIR NOZZLE	
50W168	2981405-0000		1	AIR NOZZLE	
50W170	2981418-0000		1	AIR NOZZLE	
510	312115-0451		1	SCREW ISO4762 M8X20 A4 80	
520	312115-0489		2	SCREW ISO4762 M10X16 A4 80	
530	312115-0495		4	SCREW ISO4762 M10X30 A4 80	
540	312155-0289		8	SCREW DIN 7991 MF6S M4X10 A4 70	
550	312155-0295		7	SCREW DIN 7991 MF6S M4X20 A4 70	
560	312155-0297		2	SCREW DIN 7991 MF6S M4X25 A4 70	
570	312155-0366		2	SCREW DIN 7991 MF6S M6X12 A4 70	
580	312155-0368		8	SCREW DIN 7991 MF6S M6X16 A4 70	
590	311103-0268		4	PARALLEL PIN ISO 2338 4M6X12 A1	
600	311103-0349		4	PARALLEL PIN ISO 2338 6M6X12 A1	
610	311103-0361		2	PARALLEL PIN ISO 2338 6M6X40 A1	
620	312810-0312		9	HEXAGON NUT, NY-LOCK M4 FZB	
630	312705-0312		9	NUT HEX. DOMED CAP MHM-6 M4 A280	
640	315103-0136		11	WASHER PLAIN, BRB, 4,3/8,H=0,8 NI PL BR	
650	315103-0146		4	WASHER, BRB, 5,3/10,H=1 NI PL BR	
660	3108452-0000		12	WASHER	
670	3108453-0000		5	WASHER	
680	3108454-0000		1	WASHER	

Machine Type	Group Description	Used-In	Group Number	Page No

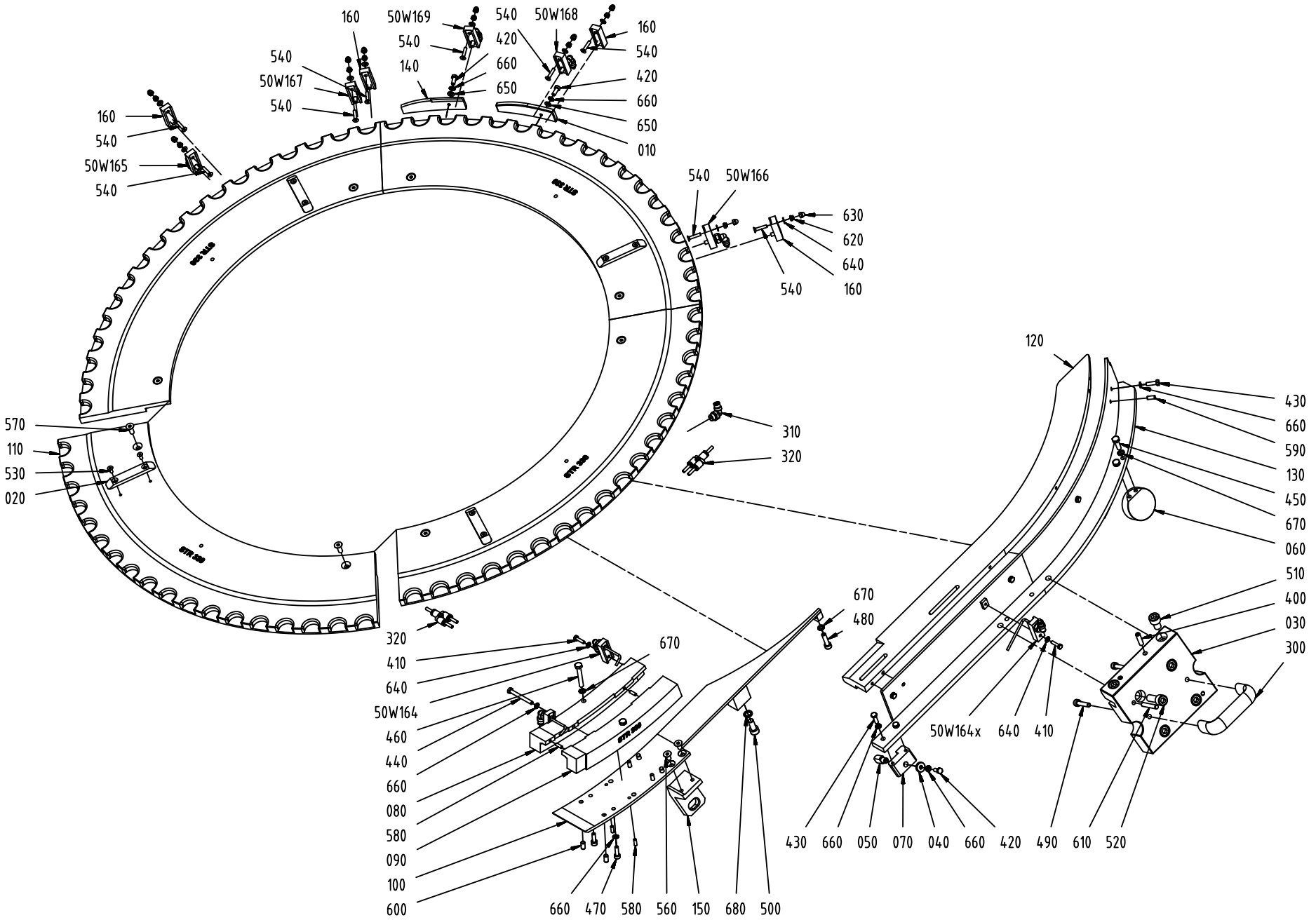
160
50W169
540
50W168
160
540
420
660
650
010
540
50W167
540
140
160
540
50W165
540
540
50W166
630
620
640
160
540
570
110
530
020
310
320
120
430
660
590
130
450
670
060
510
400
030
300
320
410
640
50W164
460
440
660
080
580
090
100
600
670
670
480
50W164x
640
410
660
470
580
560
150
680
500
430
660
050
070
040
660
420
490
610
520

ECM: 481727 - 20110401
Group number: 2874002-0200
Assembly Drawing: 2874002-3_1_AA

Pos	Part No	UN	Qty	Description	Page No
-					
010	3124369-0000		1	CAM	
020	3115346-0000		4	CARRIER	
030	3115347-0000		1	PLATE	
040	3115348-0000		1	WASHER	
050	3115349-0000		1	PIN	
060	3115350-0000		1	PIN	
070	3115351-0000		1	PIN	
080	3115369-0000		1	GUIDE	
090	3115370-0000		1	GUIDE	
100	3115368-0000		1	BASE	
110	2874004-0000		4	GUIDE	
120	3115371-0000		1	PULLER	
130	3115372-0000		1	PLATE	
140	2981412-0000		1	CAM	
150	3115356-0000		1	CENTERING	
160	2981406-0000		4	AIR BLOW REGULATOR	
300	3115300-0000		1	HANDLE	
310	350002-0005		1	PUSH-IN L-FITTING QSL-F-G1/8-4	
320	90458-0745		2	Y-CONNECTION	
400	3108463-0000		2	TAPER PIN	
410	312105-0293		3	SCREW M6S ISO 4017 M4X16 A470	
420	312105-0327		3	SCREW M6S ISO 4017 M5X12 A480	
430	312105-0329		6	SCREW M6S ISO 4017 M5X16 A480	
440	312109-0340		1	SCREW M6S ISO 4017 M5X45 A480	
450	312105-0370		2	SCREW M6S ISO 4017 M6X20 A480	
460	312109-0378		2	SCREW M6S ISO 4017 M6X40 A480	
470	312115-0329		4	SCREW ISO4762 M5X16 A4 80	
480	312115-0372		1	SCREW ISO4762 M6X25 A4 80	
490	312115-0374		2	SCREW ISO4762 M6X30 A4 80	
500	312115-0451		1	SCREW ISO4762 M8X20 A4 80	
50W164	3115358-0000		2	AIR NOZZLE	
50W164X	3115373-0000		1	AIR NOZZLE	
50W165	2930228-0000		1	AIR NOZZLE	
50W166	2930229-0000		1	AIR NOZZLE	
50W167	2930228-0000		1	AIR NOZZLE	
50W168	2930228-0000		1	AIR NOZZLE	
50W169	2930228-0000		1	AIR NOZZLE	
510	312115-0489		2	SCREW ISO4762 M10X16 A4 80	
520	312115-0495		4	SCREW ISO4762 M10X30 A4 80	
530	312155-0289		8	SCREW DIN 7991 MF6S M4X10 A4 70	
540	312155-0295		6	SCREW DIN 7991 MF6S M4X20 A4 70	
550	312155-0297		3	SCREW DIN 7991 MF6S M4X25 A4 70	
560	312155-0366		2	SCREW DIN 7991 MF6S M6X12 A4 70	
570	312155-0368		8	SCREW DIN 7991 MF6S M6X16 A4 70	
580	311103-0268		4	PARALLEL PIN ISO 2338 4M6X12 A1	
590	311103-0306		2	PARALLEL PIN ISO 2338 5M6X12 A1	
600	311103-0349		4	PARALLEL PIN ISO 2338 6M6X12 A1	
610	311103-0361		2	PARALLEL PIN ISO 2338 6M6X40 A1	
620	312810-0312		9	HEXAGON NUT, NY-LOCK M4 FZB	
630	312705-0312		9	NUT HEX. DOMED CAP MHM-6 M4 A280	
640	315103-0136		12	WASHER PLAIN, BRB, 4,3/8,H=0,8 NI PL BR	
650	315103-0146		2	WASHER, BRB, 5,3/10,H=1 NI PL BR	
660	3108452-0000		14	WASHER	
670	3108453-0000		5	WASHER	
680	3108454-0000		1	WASHER	

Machine Type	Group Description	Used-In	Group Number	Page No

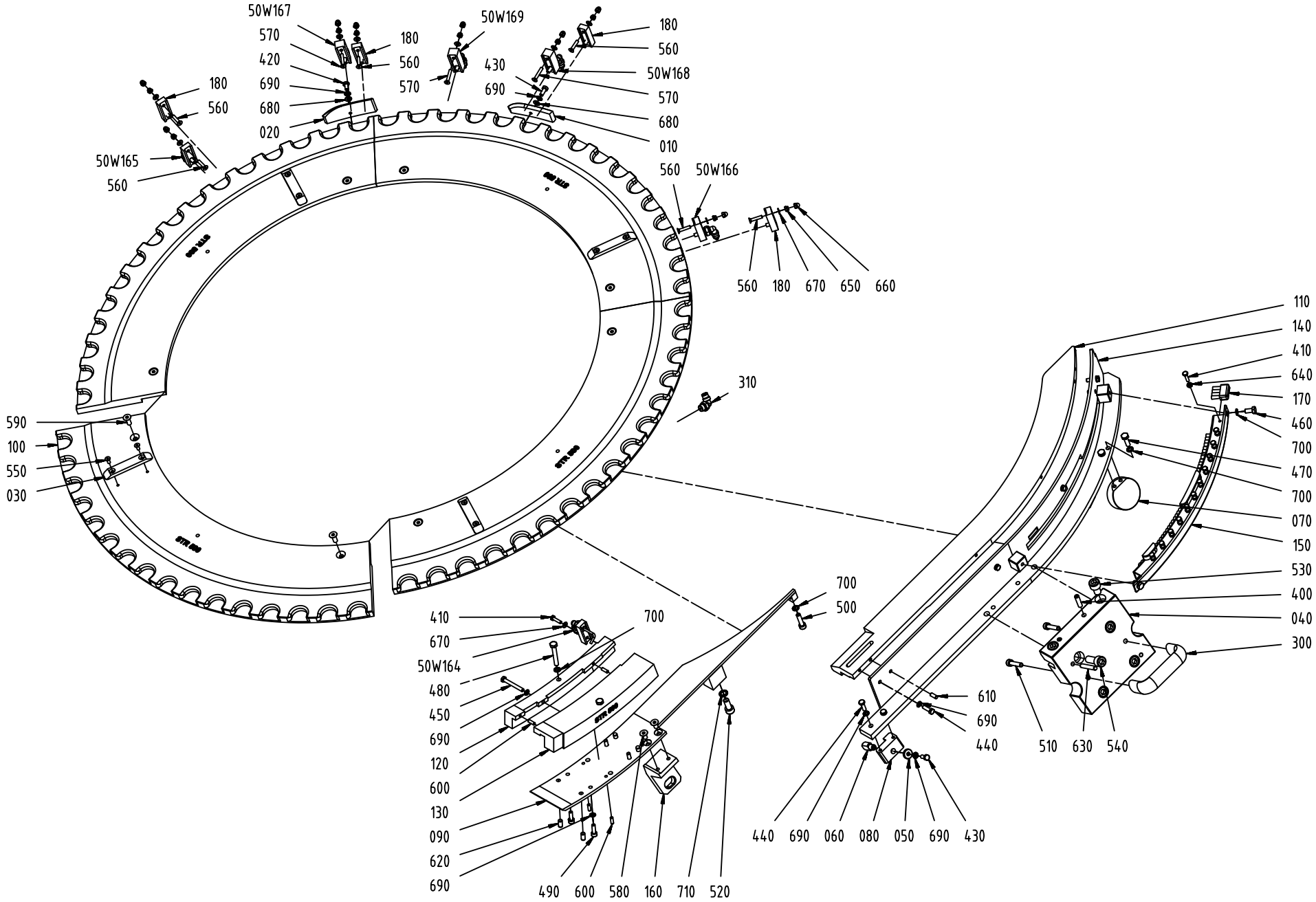
50W167
570
420
690
680
020
180
560
570
50W169
180
560
430
690
180
560
50W168
570
680
010
180
560
50W165
560
560
50W166
560
180
670
650
660
310
590
100
550
030
110
140
410
640
170
460
700
470
700
070
150
530
400
040
300
610
690
440
510
630
540
700
500
410
670
50W164
480
450
690
120
600
130
090
620
690
700
490
600
580
160
710
520
440
690
060
080
050
690
430

ECM: 481725 - 20110401
Group number: 2873978-0200
Assembly Drawing: 2873978-3_1_AA

Pos	Part No	UN	Qty	Description	Page No
-					
010	2981410-0000		1	CAM	
020	2981411-0000		1	CAM	
030	3115346-0000		4	CARRIER	
040	3115347-0000		1	PLATE	
050	3115348-0000		1	WASHER	
060	3115349-0000		1	PIN	
070	3115350-0000		1	PIN	
080	3115351-0000		1	PIN	
090	3115368-0000		1	BASE	
100	2873980-0000		4	GUIDE	
110	3124361-0000		1	PULLER	
120	3124362-0000		1	GUIDE	
130	3124363-0000		1	GUIDE	
140	3124364-0000		1	PLATE	
150	3124365-0000		1	BOX	
160	3115356-0000		1	CENTERING	
170	2857743-0000		12	BRUSH	
180	2981406-0000		4	AIR BLOW REGULATOR	
300	3115300-0000		1	HANDLE	
310	350002-0005		1	PUSH-IN L-FITTING QSL-F-G1/8-4	
400	3108463-0000		2	TAPER PIN	
410	312105-0293		13	SCREW M6S ISO 4017 M4X16 A470	
420	312105-0325		1	SCREW M6S ISO 4017 M5X10 A480	
430	312105-0327		2	SCREW M6S ISO 4017 M5X12 A480	
440	312105-0329		6	SCREW M6S ISO 4017 M5X16 A480	
450	312109-0339		1	SCREW M6S ISO 4017 M5X40 A480	
460	312105-0366		2	SCREW M6S ISO 4017 M6X12 A480	
470	312105-0370		2	SCREW M6S ISO 4017 M6X20 A480	
480	312109-0378		2	SCREW M6S ISO 4017 M6X40 A480	
490	312115-0329		4	SCREW ISO4762 M5X16 A4 80	
500	312115-0372		1	SCREW ISO4762 M6X25 A4 80	
50W164	3115358-0000		1	AIR NOZZLE	
50W165	2930228-0000		1	AIR NOZZLE	
50W166	2930229-0000		1	AIR NOZZLE	
50W167	2930230-0000		1	AIR NOZZLE	
50W168	2930230-0000		1	AIR NOZZLE	
50W169	2981405-0000		1	AIR NOZZLE	
510	312115-0374		2	SCREW ISO4762 M6X30 A4 80	
520	312115-0451		1	SCREW ISO4762 M8X20 A4 80	
530	312115-0489		2	SCREW ISO4762 M10X16 A4 80	
540	312115-0495		4	SCREW ISO4762 M10X30 A4 80	
550	312155-0289		8	SCREW DIN 7991 MF6S M4X10 A4 70	
560	312155-0295		6	SCREW DIN 7991 MF6S M4X20 A4 70	
570	312155-0297		3	SCREW DIN 7991 MF6S M4X25 A4 70	
580	312155-0366		2	SCREW DIN 7991 MF6S M6X12 A4 70	
590	312155-0368		8	SCREW DIN 7991 MF6S M6X16 A4 70	
600	311103-0268		4	PARALLEL PIN ISO 2338 4M6X12 A1	
610	311103-0306		2	PARALLEL PIN ISO 2338 5M6X12 A1	
620	311103-0349		4	PARALLEL PIN ISO 2338 6M6X12 A1	
630	311103-0361		2	PARALLEL PIN ISO 2338 6M6X40 A1	
640	312605-0312		12	HEXAGON NUT, M6M M4 A280	
650	312810-0312		9	HEXAGON NUT, NY-LOCK M4 FZB	
660	312705-0312		9	NUT HEX. DOMED CAP MHM-6 M4 A280	
670	315103-0136		10	WASHER PLAIN, BRB, 4,3/8,H=0,8 NI PL BR	
680	315103-0146		2	WASHER, BRB, 5,3/10,H=1 NI PL BR	
690	3108452-0000		14	WASHER	
700	3108453-0000		7	WASHER	
710	3108454-0000		1	WASHER	

Machine Type	Group Description	Used-In	Group Number	Page No

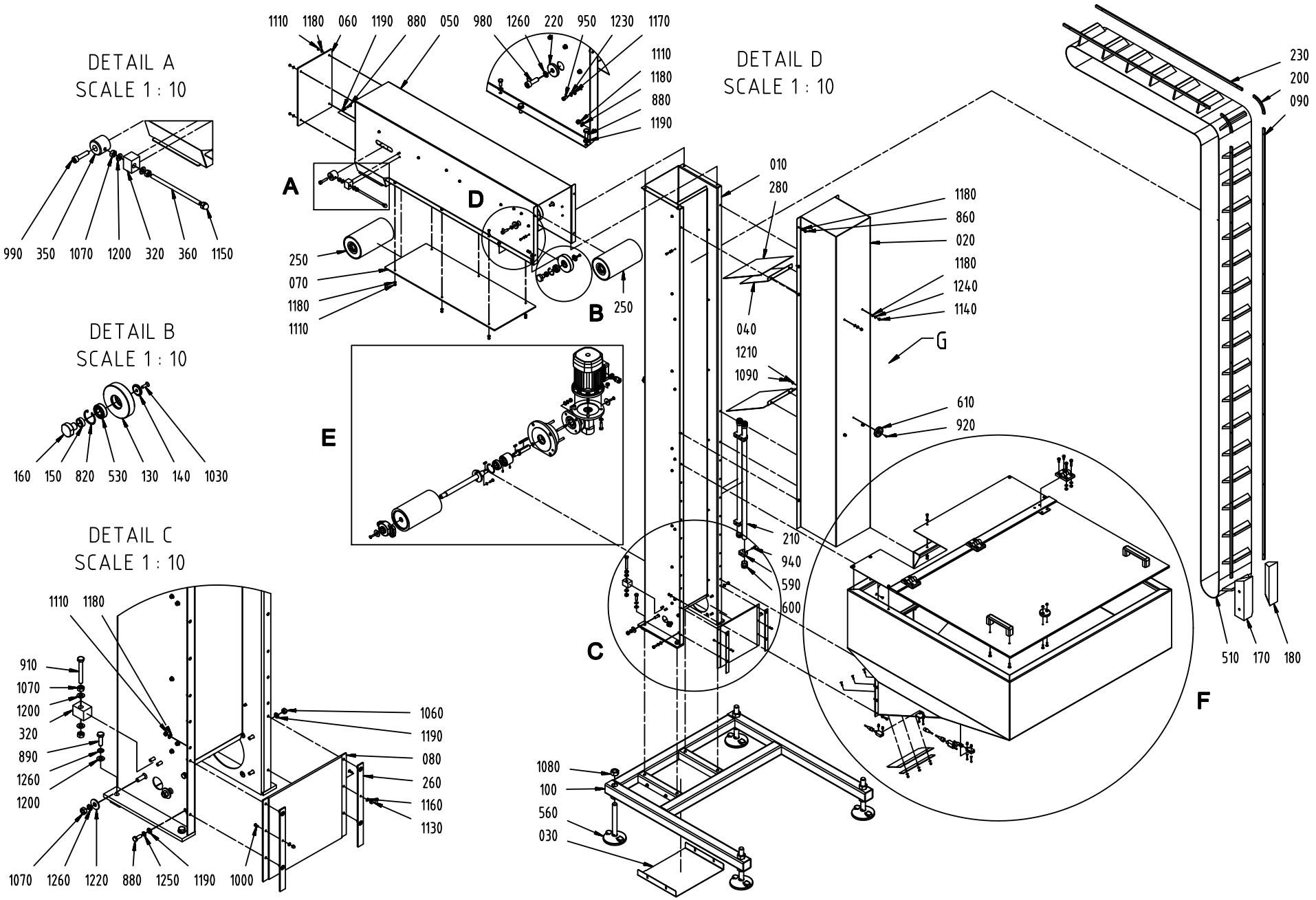
DETAIL A
SCALE 1 : 10
990 350 1070 1200 320 360 1150
DETAIL B
SCALE 1 : 10
160 150 820 530 130 140 1030
DETAIL C
SCALE 1 : 10
1110 1180
910 1070 1200 320 890 1260 1200
1060 1190 080 260 1160 1130
1070 1260 1220 880 1250 1190 1000
1110 1180 060 1190 880 050 980 1260 220 950 1230 1170
1110 1180 880 1190
A
D
250 070 1180 1110
B
250
E
DETAIL D
SCALE 1 : 10
010 280
040 1210 1090
1180 860 020 1180 1240 1140
G
610 920
210 940 590 600
C
1080 100 560 030
F
230 200 090
510 170 180

ECM: 481721 - 20110401
Group number: 2812005-0200
Assembly Drawing: 2812005-3_1_AA

This list covers pages from 4-42 to 4-45

Pos	Part No	UN	Qty	Description	Page No
-					
010	3108472-0000		1	SUPPORT	
020	3108473-0000		1	COVER	
030	3108474-0000		1	COVER	
040	3108475-0000		2	PLATE	
050	3108476-0000		1	CARRIER	
060	3108477-0000		1	COVER	
070	3108478-0000		1	COVER	
080	3108479-0000		1	COVER	
090	3108480-0000		2	PLATE	
100	3108481-0000		1	BED	
1000	3108462-0000		2	SCREW	
1010	312155-0289		12	SCREW DIN 7991 MF6S M4X10 A4 70	
1020	312155-0293		3	SCREW DIN 7991 MF6S M4X16 A4 70	
1030	312155-0329		4	SCREW DIN 7991 MF6S M5X16 A4 70	
1040	312155-0370		4	SCREW DIN 7991 MF6S M6X20 A4 70	
1050	312155-0372		2	SCREW DIN 7991 MF6S M6X25 A4 70	
1060	312605-0316		4	HEXAGON NUT, M6M M6 A280	
1070	312605-0318		16	HEXAGON NUT, M6M M8 A280	
1080	312605-0326		4	HEXAGON NUT, M6M M20 A280	
1090	312810-0310		5	HEXAGON NUT, NY-LOCK M3 FZB	
110	3108482-0000		1	UNIT CONVERGER	
1100	312810-0312		16	HEXAGON NUT, NY-LOCK M4 FZB	
1110	312810-0314		36	HEXAGON NUT, NY-LOCK M5 FZB	
1120	312810-0316		10	HEXAGON NUT, NY-LOCK M6 FZB	
1130	312705-0310		2	NUT HEX. DOMED CAP MHM-6 M3 A2	
1140	312705-0314		4	NUT HEX. DOMED CAP MHM-6 M5 A280	
1150	312705-0318		2	NUT HEX. DOMED CAP MHM-6 M8 A280	
1160	315103-0124		10	WASHER, BRB, 3,2/6,H=0,5 NI PL BR	
1170	315103-0136		39	WASHER PLAIN, BRB, 4,3/8,H=0,8 NI PL BR	
1180	315103-0146		64	WASHER, BRB, 5,3/10,H=1 NI PL BR	
1190	315103-0153		28	WASHER, BRB, 6,4/12,H=1,5 NIPL BR	
120	3108483-0000		1	COVER	
1200	315103-0165		18	WASHER PLAIN, BRB, 8,4/16,H=1,5 NIPL BR	
1210	3108459-0000		1	WASHER	
1220	3108460-0000		2	WASHER	
1230	3108451-0000		24	WASHER	
1240	3108452-0000		4	WASHER	
1250	3108453-0000		14	WASHER	
1260	3108454-0000		12	WASHER	
130	3108484-0000		2	WASHER	
140	3108485-0000		2	WASHER	
150	3108486-0000		2	SPACER	
160	3108487-0000		2	PIN	
170	3108488-0000		1	GUIDE	
180	3108489-0000		1	GUIDE	
190	3108490-0000		1	COVER	
200	3108491-0000		2	PLATE	
210	3108492-0000		2	CABLE CONDUIT	
220	3108493-0000		2	WASHER	
230	3108494-0000		2	PLATE	
240	3058564-0000		1	ROLLER	
250	3108495-0000		2	ROLLER	
260	3108496-0000		2	PLATE	
270	3108497-0000		1	GASKET	
280	3108498-0000		2	GASKET	
290	3108499-0000		1	ANCHOR	
300	3058565-0000		1	SHAFT	
310	3108500-0000		1	SHAFT	
320	3108501-0000		3	PLUG	
330	3115224-0000		1	FLANGE	
340	3115225-0000		1	PLATE	
350	3115226-0000		2	THREADED ROD	
360	3115227-0000		2	BAR	
370	3115228-0000		1	COUPLING	
500	3115229-0000		2	WASHER	
50B013	90459-5529		1	PH.CELL E3Z-T86A, SENDER+RECIEVER	
50M000	90458-2483		1	MOTOR 3GVA062002-BSB	
50W000	351150-0413	M	6	CABLE OLFLEX 4GX1,5 MM2 LIGHT/GREY	
50W012	351405-0050		1	SENS. CABLE RSMVN 3-PRKT 4-3-06/5,0M	
50W013	90459-6586		1	ACT/SENS.Y-CABLE, ASBN 2-PRKMV 4-07/0,6M	
50X000	90110-0052		1	MALE INSERT, HAN E 06, 0933 0062 601	
510	2852914-0000		1	CONVEYOR BELT	
520	90056-0178		1	WORM GEAR VF 44 F1-70 P63 B5 B3	
530	321308-0202		2	BALL BEARING 15/32X9	
540	321308-0204		1	BALL BEARING 20/42X12	
550	90458-1559		1	FLANGE BEARING 17X98X32,1 MM	
560	3115230-0000		4	FOOT	
570	3115231-0000		2	HANDLE	
580	3115232-0000		3	HINGE	
590	3115233-0000		4	CLAMP	
600	3115234-0000		4	CAP	
610	3115235-0000		1	MAGNET	
620	90458-0322		1	NUT, M16X1,5	

Machine Type | Group Description | Used-In | Group Number | Page No

DETAIL E
SCALE 1 : 10

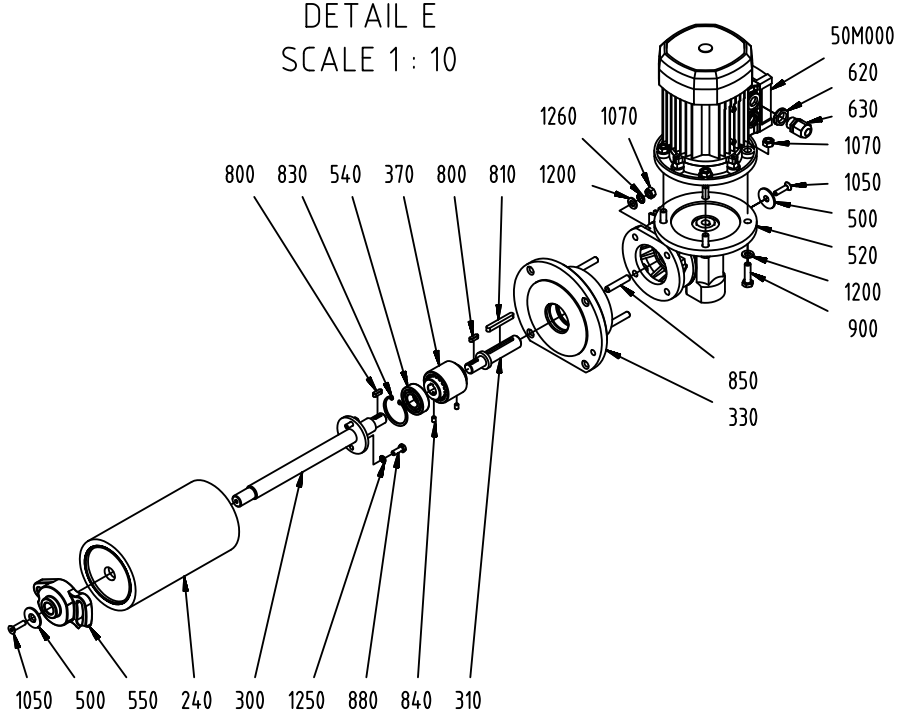

VIEW FROM G

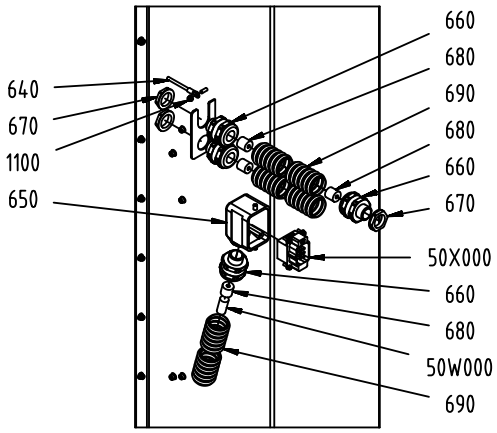

DETAIL F
SCALE 1 : 10

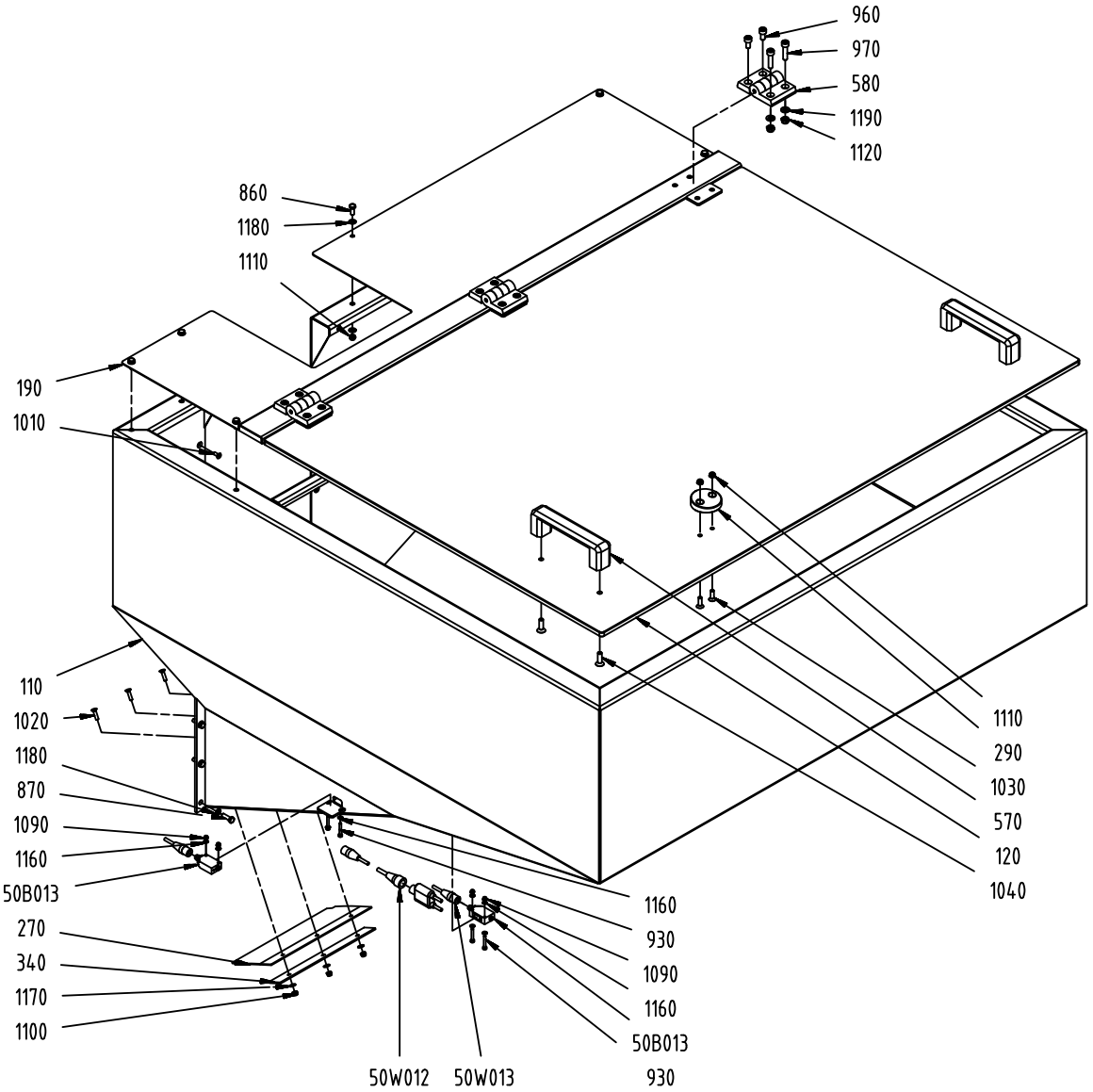

Pos	Part No	UN	Qty	Description	Page No
- (Cont'd)					
630	90458-0306		1	CABLE GLAND, M16X1,5, NO.5311 1010	
640	3115237-0000		4	CABLE	
650	90459-1458		1	HOOD HAN 6 E 19 30 006 1540	
660	90458-0430		4	HOSE GLAND W/O INSERT M20 EXTENDED	
670	90458-0322		3	NUT, M16X1,5	
680	353249-0012		4	INSERT, SINGLE HOLE, EK 154/11	
690	90152-0051	M	7.5	SPIRAL CONDUIT, 25X18, UL 1816	
800	3108461-0000		2	KEY	
810	315701-0241		1	PARALLEL KEY W. ROUND ENDS 6X6X50 MM	
820	315753-0123		2	RETAINING RING FOR BORE DIN 472 32 SS	
830	90141-0020		1	RETAINING RING FOR BORE DIN 472 42 SS	
840	312318-0323		2	SCREW ISO4029 M5X8 A4	
850	3108464-0000		4	STUD BOLT	
860	312105-0327		20	SCREW M6S ISO 4017 M5X12 A480	
870	312105-0329		6	SCREW M6S ISO 4017 M5X16 A480	
880	312105-0368		16	SCREW M6S ISO 4017 M6X16 A480	
890	312105-0453		4	SCREW M6S ISO 4017 M8X25 A480	
900	312105-0455		4	SCREW M6S ISO 4017 M8X30 A480	
910	312109-0463		1	SCREW M6S ISO 4017 M8X60 A480	
920	312115-0222		1	SCREW ISO4762 M3X8 A4 80	
930	312115-0230		4	SCREW ISO4762 M3X20 A4 80	
940	312115-0293		4	SCREW ISO4762 M4X16 A4 80	
950	312115-0287		24	SCREW ISO4762 M4X8 A4 80	
960	312115-0366		6	SCREW ISO4762 M6X12 A4 80	
970	312115-0372		6	SCREW ISO4762 M6X25 A4 80	
980	312115-0453		2	SCREW ISO4762 M8X25 A4 80	
990	312115-0457		2	SCREW ISO4762 M8X35 A4 80	

Pos	Part No	UN	Qty	Description	Page No

Tetra Pak

SPC
Spare Parts Catalogue

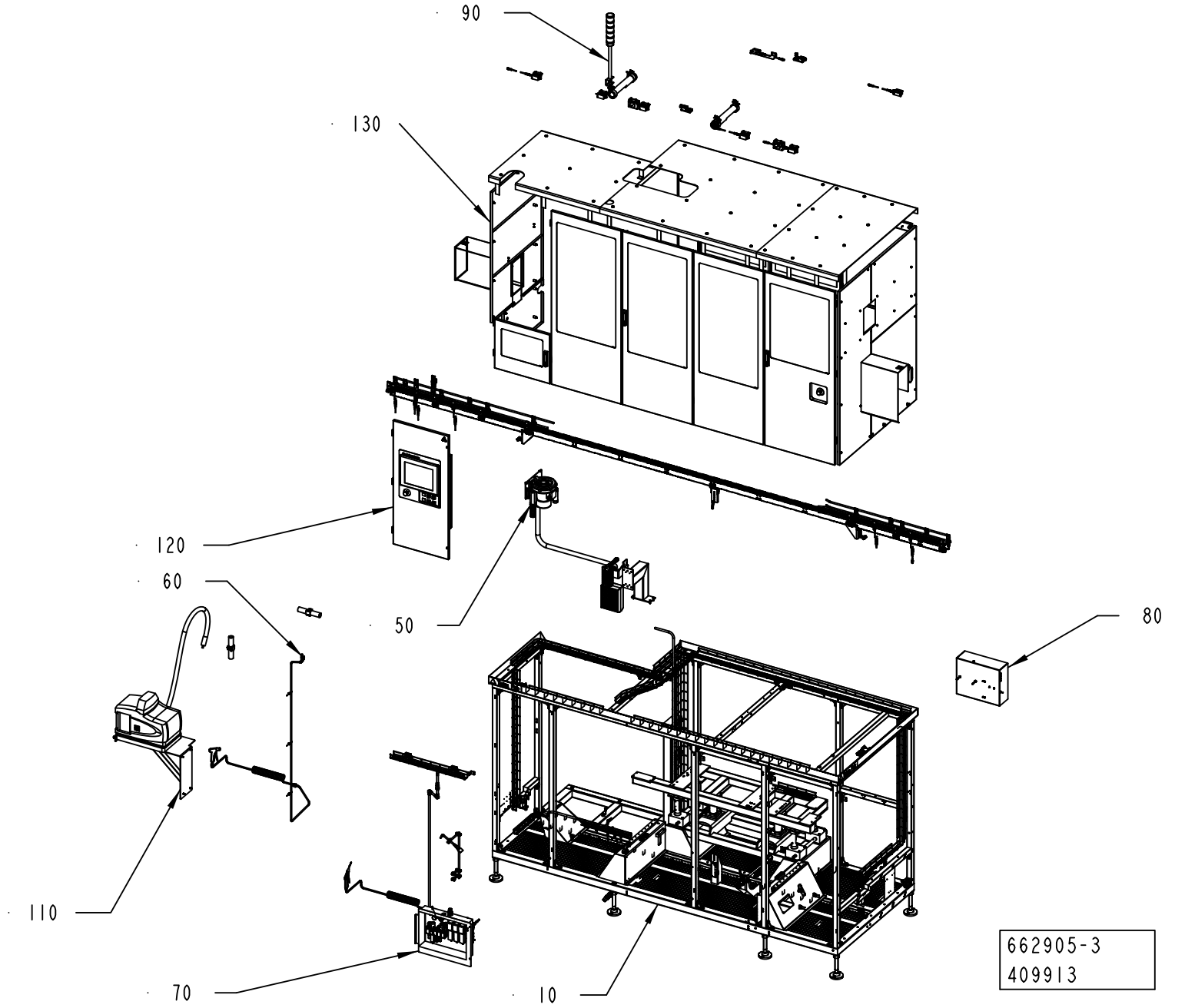
90
130
120
60
50
80
110
70
10
662905-3
409913

ECM: 480147 - 20110401
Group number: 662905-0200
Assembly Drawing: 662905-3_1_AA

Pos	Part No	UN	Qty	Description	Page No
-					
010	2758505-0200		1	MACHINE BODY	**5-5**
040	2758507-0200		1	PACKAGE CONVEYOR	**5-21, 5-23**
050	2773622-0100		1	LINE HEATER	**5-45, 5-47, 5-49**
060	2758514-0100		1	WATER CONNECTION	**5-69**
070	2758513-0100		1	AIR SUPPLY	**5-71**
080	2758522-0100		1	LUBRICATION UNIT	**5-87**
090	2769754-0200		1	ELECTRIC EQUIPMENT	**5-97**
110	2758511-0100		1	HOTMELT UNIT	**5-111**
120	2779070-0200		1	OPERATOR INTERFACE	**5-113**
130	2826741-0200		1	DOORS AND COVERS	**5-121**

Pos	Part No	UN	Qty	Description	Page No

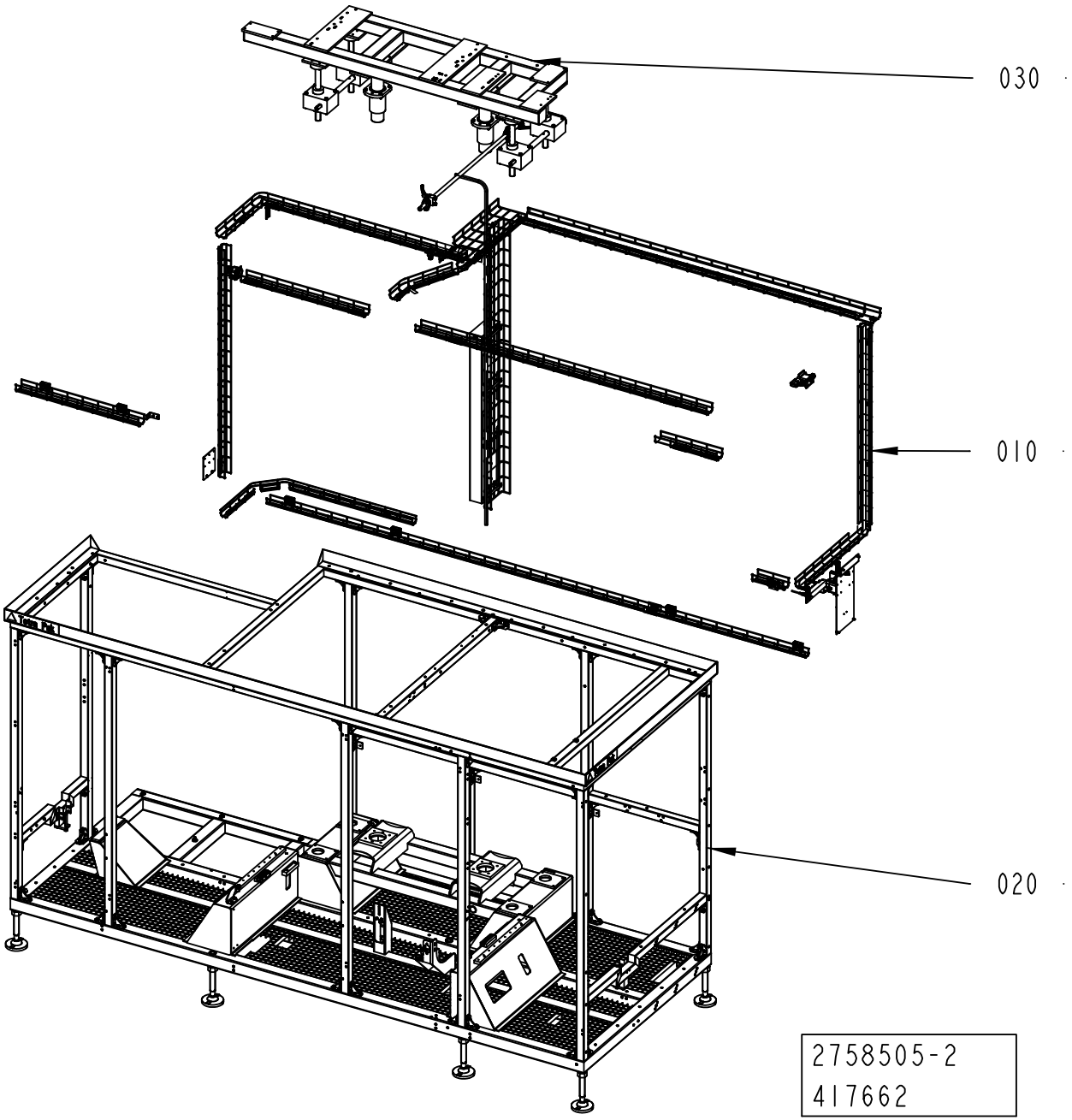
030
010
020
2758505-2
417662

ECM: 417669 - 20100110
Group number: 2758505-0200
Assembly Drawing: 2758505-2_1_AB

Pos	Part No	UN	Qty	Description	Page No
-					
010	2758515-0200		1	CABLE DUCT	**5-7, 5-9**
020	2769761-0200		1	MACHINE BODY	**5-11, 5-13**
030	2769738-0100		1	HEIGHT ADJUSTMENT	**5-17**

Pos	Part No	UN	Qty	Description	Page No

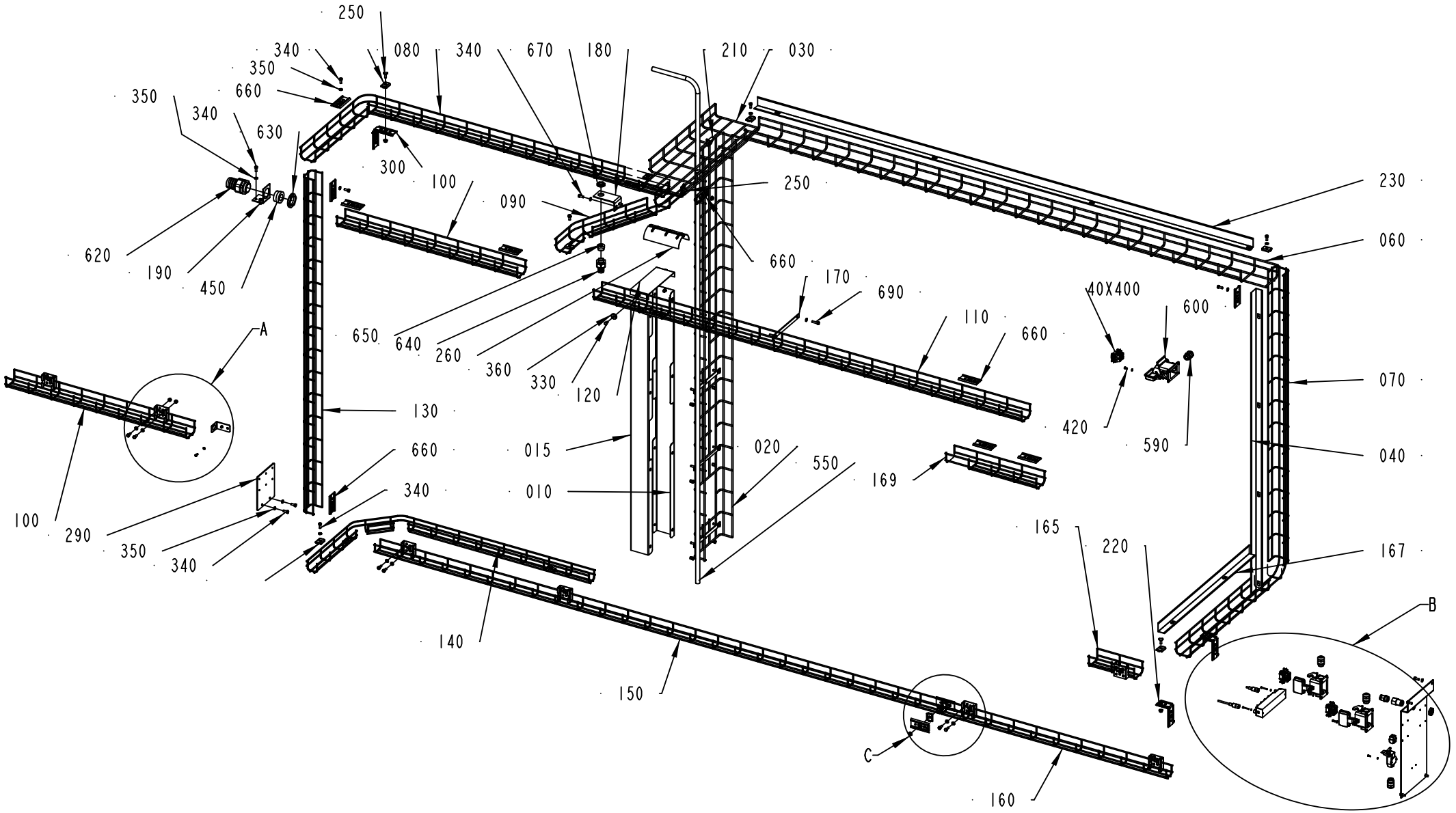
250
340
080
340
670
180
210
030
350
350
660
340
630
300
100
090
250
230
620
190
450
660
060
170
690
40X400
600
650
640
260
360
330
120
110
660
070
130
420
590
660
015
020
550
040
340
010
169
100
290
350
340
165
220
167
140
150
160
A
B
C
2758515-3
417662

ECM: 480139 - 20110401
Group number: 2758515-0200
Assembly Drawing: 2758515-3_1_AA

This list covers pages from 5-6 to 5-9

Pos	Part No	UN	Qty	Description	Page No
STREAMCAP500, STREAMCAP1000, SLIMCAP 2000, SLIMCAP 1000, STREAMCAP200, STREAMCAP330, HELICAP2 23 (See drawing on pages: 5-6, 5-8)					
100	2931775-0000		2	CABLE DUCT	
169	2931782-0000		1	CABLE DUCT	
240	90181-0190		7	CABLE DUCT, WALL BRACKET, B4 MINI	
320	312125-0232		2	SCREW ISO 1207 M3X25 A4	
340	312105-0368		45	SCREW M6S ISO 4017 M6X16 A480	
350	315105-0153		53	WASHER BRB 6,4X12 RFR	
390	315105-0124		4	WASHER BRB 3,2X6 RFR	
Common Parts					
010	2746903-0000		1	CABLE DUCT	
015	2873928-0000		1	CABLE DUCT	
01K420	90459-6062		1	ARMORBLOCK DIGITAL CONFIGURABLE I/O	
020	2931768-0000		1	CABLE DUCT	
030	2931769-0000		1	CABLE DUCT	
040	2931770-0000		1	DIVIDER	
050	3047341-0000		1	ANGLE BRACKET	
060	2931771-0000		1	CABLE DUCT	
070	2931772-0000		1	CABLE DUCT	
080	2931773-0000		1	CABLE DUCT	
090	2931774-0000		1	CABLE DUCT	
110	2931776-0000		1	CABLE DUCT	
120	2779800-0000		1	PLATE	
130	2931777-0000		1	CABLE DUCT	
140	2931778-0000		1	CABLE DUCT	
150	2931779-0000		1	CABLE DUCT	
160	2931780-0000		1	CABLE DUCT	
165	2931781-0000		1	CABLE DUCT	
167	2931784-0000		1	DIVIDER	
170	2931783-0000		4	PLATE	
180	2931785-0000		1	ANGLE	
190	2931786-0000		1	ANGLE	
200	90181-0183		13	CABLE DUCT, FITTING, B2	
210	90181-0184		1	CABLE TRENCH PARTS	
220	2931787-0000		2	ANGLE	
230	2931788-0000		1	DIVIDER	
250	90181-0314		6	CABLE TRENCH PARTS	
260	2934904-0000		1	RAIL BRACKET	
285	2802417-0000		1	PLATE	
290	2802423-0000		1	PLATE	
300	90181-0186		1	CABLE DUCT, ELBOW BRACKET, B27	
310	312115-0289		2	SCREW ISO4762 M4X10 A4 80	
330	312105-0366		2	SCREW M6S ISO 4017 M6X12 A480	
360	315125-0153		2	WASHER TBRSB 6,4X22X4 A4	
400	315105-0136		14	WASHER BRB 4,3X8 RFR	
40X400	90110-0053		1	FEMALE INSERT HAN 6 E 09 33 006 2701	
410	312125-0222		2	SCREW ISO 1207 M3X8 A4	
420	312125-0287		12	SCREW ISO 1207 M4X8 A4	
430	312605-0316		6	HEXAGON NUT, M6M M6 A280	
450	353249-0054		1	INSERT, SINGLE HOLE, EK 156/25	
50X000	90110-0053		1	FEMALE INSERT HAN 6 E 09 33 006 2701	
50X001	90459-6820		1	FEMALE INSERT HAN 4 A, 09 20 004 2711	
50X110	90110-0053		1	FEMALE INSERT HAN 6 E 09 33 006 2701	
550	90166-0113	MM	2500	HOSE	
570	90459-2133		1	PUSH-IN FITTING QSSF-1/2-12-B	
580	350001-0016		1	PUSH-IN FITTING QS-F-G1/2-12	
590	90458-0307		4	CABLE GLAND, M20X1,5, NO.5311 1020	
600	90459-1461		3	HOUSING HAN 6 E 19 30 006 1255	
610	90459-3081		1	HOUSING HAN A 19 20 003 1250	
620	90458-0434		1	HOSE GLAND W/O INSERT M40 EXTENDED	
630	90458-0326		1	NUT, M40X1,5	
640	90458-0430		1	HOSE GLAND W/O INSERT M20 EXTENDED	
650	353249-0012		1	INSERT, SINGLE HOLE, EK 154/11	
660	90181-0182		14	CABLE TRENCH PARTS	
670	90458-0323		1	NUT, M20X1,5	
690	312105-0372		8	SCREW M6S ISO 4017 M6X25 A480	
81W404	351415-0100		1	DEVICENET CONN. CABLE, 0935 361 105/10M	
81W420	351309-0100		1	ACTUATOR/SENSOR CABLE PRKT 4-07/10M	

Machine Type | Group Description | Used-In | Group Number | Page No

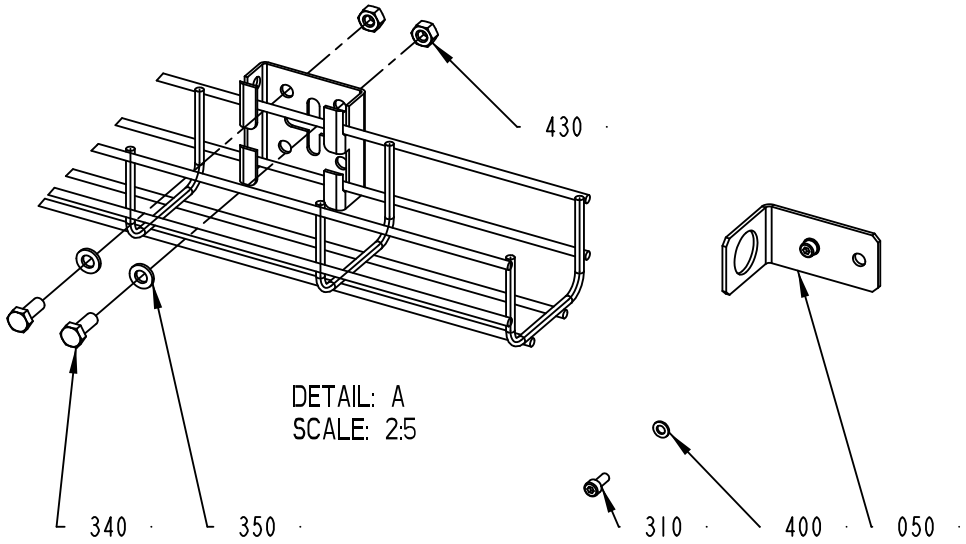

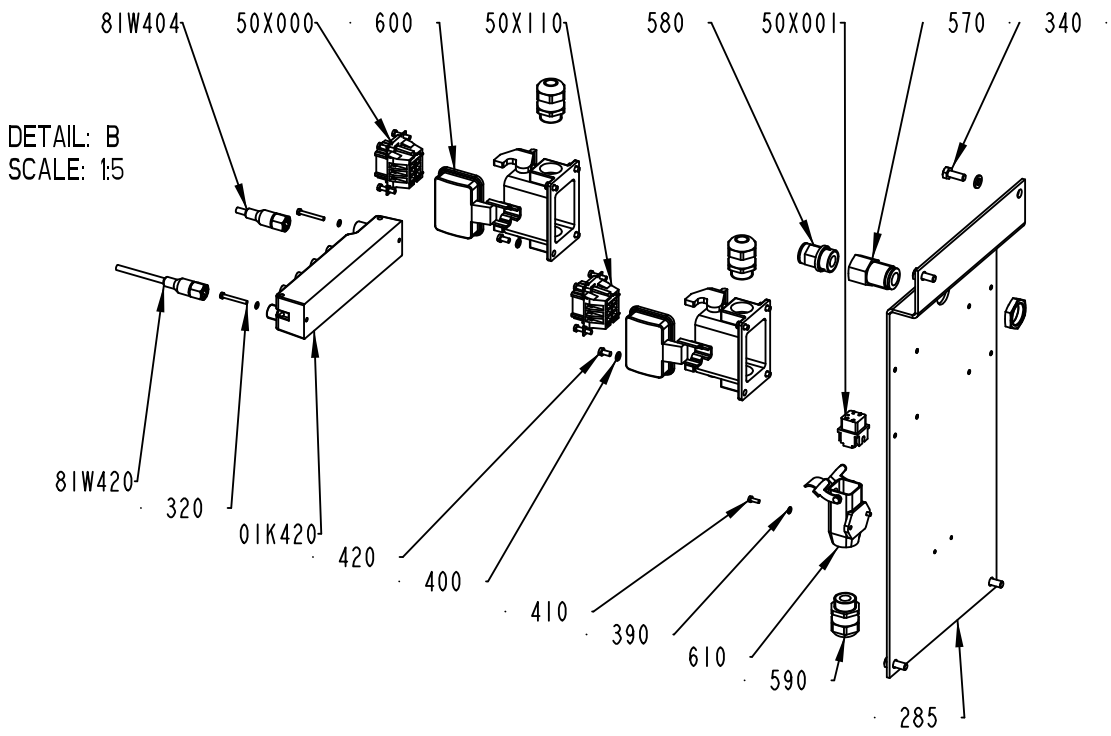

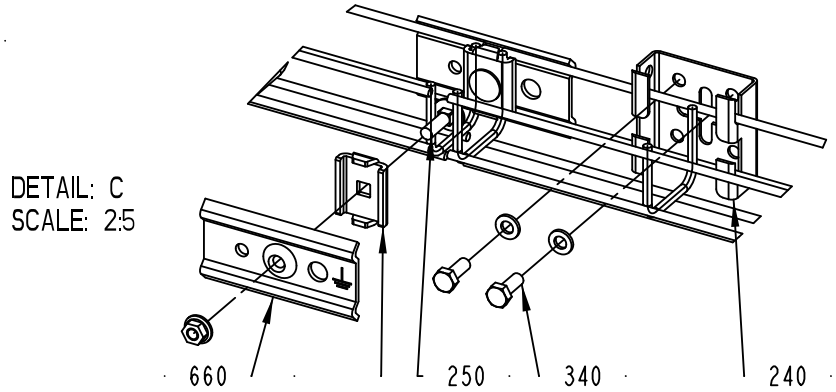

2758515-3
417662

ECM: 480139 - 20110401
Group number: 2758515-0200
Assembly Drawing: 2758515-3_2_AA

This list covers pages from 5-6 to 5-9

Pos	Part No	UN	Qty	Description	Page No
STREAMCAP500, STREAMCAP1000, SLIMCAP 2000, SLIMCAP 1000, STREAMCAP200, STREAMCAP330, HELICAP2 23 (See drawing on pages: 5-6, 5-8)					
100	2931775-0000		2	CABLE DUCT	
169	2931782-0000		1	CABLE DUCT	
240	90181-0190		7	CABLE DUCT, WALL BRACKET, B4 MINI	
320	312125-0232		2	SCREW ISO 1207 M3X25 A4	
340	312105-0368		45	SCREW M6S ISO 4017 M6X16 A480	
350	315105-0153		53	WASHER BRB 6,4X12 RFR	
390	315105-0124		4	WASHER BRB 3,2X6 RFR	
Common Parts					
010	2746903-0000		1	CABLE DUCT	
015	2873928-0000		1	CABLE DUCT	
01K420	90459-6062		1	ARMORBLOCK DIGITAL CONFIGURABLE I/O	
020	2931768-0000		1	CABLE DUCT	
030	2931769-0000		1	CABLE DUCT	
040	2931770-0000		1	DIVIDER	
050	3047341-0000		1	ANGLE BRACKET	
060	2931771-0000		1	CABLE DUCT	
070	2931772-0000		1	CABLE DUCT	
080	2931773-0000		1	CABLE DUCT	
090	2931774-0000		1	CABLE DUCT	
110	2931776-0000		1	CABLE DUCT	
120	2779800-0000		1	PLATE	
130	2931777-0000		1	CABLE DUCT	
140	2931778-0000		1	CABLE DUCT	
150	2931779-0000		1	CABLE DUCT	
160	2931780-0000		1	CABLE DUCT	
165	2931781-0000		1	CABLE DUCT	
167	2931784-0000		1	DIVIDER	
170	2931783-0000		4	PLATE	
180	2931785-0000		1	ANGLE	
190	2931786-0000		1	ANGLE	
200	90181-0183		13	CABLE DUCT, FITTING, B2	
210	90181-0184		1	CABLE TRENCH PARTS	
220	2931787-0000		2	ANGLE	
230	2931788-0000		1	DIVIDER	
250	90181-0314		6	CABLE TRENCH PARTS	
260	2934904-0000		1	RAIL BRACKET	
285	2802417-0000		1	PLATE	
290	2802423-0000		1	PLATE	
300	90181-0186		1	CABLE DUCT, ELBOW BRACKET, B27	
310	312115-0289		2	SCREW ISO4762 M4X10 A4 80	
330	312105-0366		2	SCREW M6S ISO 4017 M6X12 A480	
360	315125-0153		2	WASHER TBRSB 6,4X22X4 A4	
400	315105-0136		14	WASHER BRB 4,3X8 RFR	
40X400	90110-0053		1	FEMALE INSERT HAN 6 E 09 33 006 2701	
410	312125-0222		2	SCREW ISO 1207 M3X8 A4	
420	312125-0287		12	SCREW ISO 1207 M4X8 A4	
430	312605-0316		6	HEXAGON NUT, M6M M6 A280	
450	353249-0054		1	INSERT, SINGLE HOLE, EK 156/25	
50X000	90110-0053		1	FEMALE INSERT HAN 6 E 09 33 006 2701	
50X001	90459-6820		1	FEMALE INSERT HAN 4 A, 09 20 004 2711	
50X110	90110-0053		1	FEMALE INSERT HAN 6 E 09 33 006 2701	
550	90166-0113	MM	2500	HOSE	
570	90459-2133		1	PUSH-IN FITTING QSSF-1/2-12-B	
580	350001-0016		1	PUSH-IN FITTING QS-F-G1/2-12	
590	90458-0307		4	CABLE GLAND, M20X1,5, NO.5311 1020	
600	90459-1461		3	HOUSING HAN 6 E 19 30 006 1255	
610	90459-3081		1	HOUSING HAN A 19 20 003 1250	
620	90458-0434		1	HOSE GLAND W/O INSERT M40 EXTENDED	
630	90458-0326		1	NUT, M40X1,5	
640	90458-0430		1	HOSE GLAND W/O INSERT M20 EXTENDED	
650	353249-0012		1	INSERT, SINGLE HOLE, EK 154/11	
660	90181-0182		14	CABLE TRENCH PARTS	
670	90458-0323		1	NUT, M20X1,5	
690	312105-0372		8	SCREW M6S ISO 4017 M6X25 A480	
81W404	351415-0100		1	DEVICENET CONN. CABLE, 0935 361 105/10M	
81W420	351309-0100		1	ACTUATOR/SENSOR CABLE PRKT 4-07/10M	

Machine Type | Group Description | Used-In | Group Number | Page No

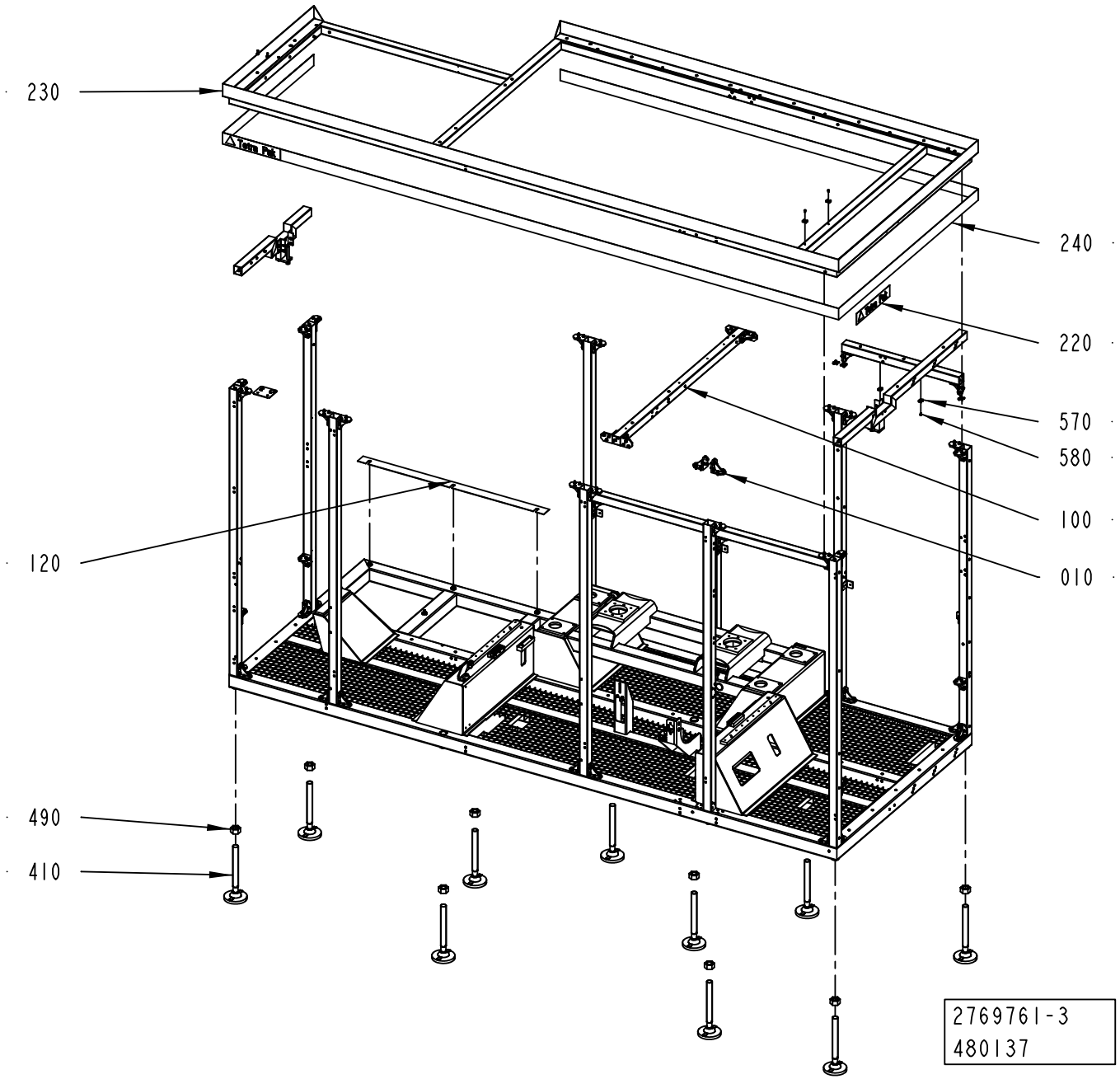
230
240
220
570
580
100
010
120
490
410
2769761-3
480137

ECM: 480140 - 20110401
Group number: 2769761-0200
Assembly Drawing: 2769761-3_1_AC

This list covers pages from 5-10 to 5-13

Pos	Part No	UN	Qty	Description	Page No
STREAMCAP500, STREAMCAP1000, SLIMCAP 2000, SLIMCAP 1000, STREAMCAP200, STREAMCAP330, HELICAP2 23 (See drawing on pages: 5-10, 5-12)					
010	2778595-0100		49	ANGLE	**5-15**
280	2805697-0000		6	SUPPORT	
290	2805696-0000		6	SUPPORT	
450	315105-0156		12	WASHER BRB 6,7X14 RFR	
530	312105-0368		14	SCREW M6S ISO 4017 M6X16 A480	
540	312105-0370		14	SCREW M6S ISO 4017 M6X20 A480	
560	315105-0153		22	WASHER BRB 6,4X12 RFR	
570	352113-0204		12	ANCHOR PLATES FOR STRIPS, TM3S25-M	
580	312125-0323		12	SCREW ISO 1207 M5X8 A4	
590	312115-0230		4	SCREW ISO4762 M3X20 A4 80	
620	312812-0316		1	HEXAGON NUT, NY-LOCK M6 A480	
Common Parts					
030	2807095-0000		1	BEAM	
040	2778576-0000		1	BEAM	
050	2964293-0000		1	BEAM	
060	2964292-0000		1	BEAM	
070	2779009-0000		2	BEAM	
080	2779011-0000		1	BEAM	
090	2779012-0000		1	BEAM	
100	2830220-0000		1	BEAM	
110	2779811-0000		1	BEAM	
120	3039040-0000		1	SPACER	
130	2778567-0000		1	BEAM	
150	2766975-0000		1	FRAME	
190	2775447-0000		2	BRACKET	
200	2779776-0000		2	PLATE	
210	2779786-0000		1	PLATE	
220	1021990-0000		4	SIGN 356X70MM HOUSE MARK TEXT TETRA PAK	
230	2778568-0000		1	FRAME UPPER	
240	90511-8563	M	10	STRIPE HEIGHT 70MM, ROLL LENGTH 25M	
250	2805686-0000		1	BEAM	
260	2805698-0000		1	BEAM	
270	3058859-0000		1	BEAM	
300	2807104-0000		1	BEAM	
320	2788155-0000		4	ANGLE	
330	2788154-0000		1	BLOCK	
340	3039027-0000		2	PLATE	
380	2873941-0000		1	SIGN	
400	90347-0011		2	VIBRATION DAMPER MEGI 781056	
410	90600-1002		10	FOOT 45000N, 297/63399N	
420	312812-0318		6	HEXAGON NUT, NY-LOCK M8 A480	
430	312115-0455		6	SCREW ISO4762 M8X30 A4 80	
440	315125-0165		12	WASHER TBRSB 8,4X26X5 A4	
480	90287-0154		6	SCREW, SOCK.SET DOGPOINT M6X10	
490	312607-0332		10	HEXAGON NUT, EN 24032 M6M M30 A480	
500	311103-0351		4	PARALLEL PIN ISO 2338 6M6X16 A1	
510	312105-0366		2	SCREW M6S ISO 4017 M6X12 A480	
550	312115-0540		1	SCREW ISO4762 M12X40 A4 80	
600	90600-0971		2	RACK, ZRR2-100	
630	90287-0175		2	SCREW M6S M3X12 A480	
640	312605-0310		2	HEXAGON NUT, M6M M3 A280	
650	312105-0388		4	SCREW M6S ISO 4014 M6X90 A480	
660	312109-0552		2	SCREW M6S M12X100H A480	

Machine Type | Group Description | Used-In | Group Number | Page No

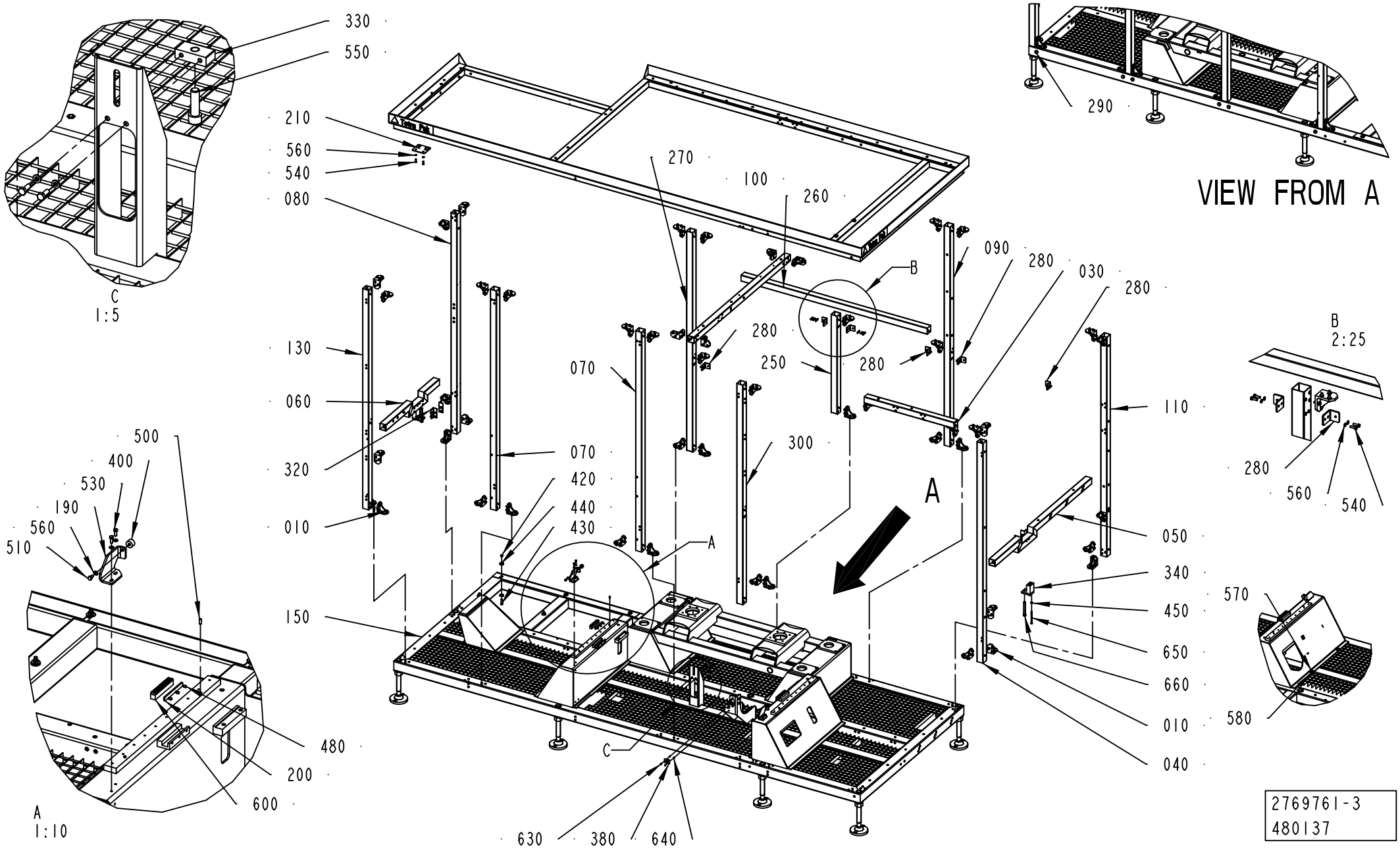
330
550
210
560
540
080
270
100
260
290
VIEW FROM A
C
1:5
090
280
030
280
B
280
250
280
130
070
060
320
070
420
440
430
010
300
A
110
050
340
450
650
660
010
040
B
2:25
280
560
540
570
580
500
400
530
190
560
510
150
480
200
600
A
1:10
630
380
640
2769761-3
480137

ECM: 480140 - 20110401
Group number: 2769761-0200
Assembly Drawing: 2769761-3_2_AC

This list covers pages from 5-10 to 5-13

Pos	Part No	UN	Qty	Description	Page No
STREAMCAP500, STREAMCAP1000, SLIMCAP 2000, SLIMCAP 1000, STREAMCAP200, STREAMCAP330, HELICAP2 23 (See drawing on pages: 5-10, 5-12)					
010	2778595-0100		49	ANGLE	**5-15**
280	2805697-0000		6	SUPPORT	
290	2805696-0000		6	SUPPORT	
450	315105-0156		12	WASHER BRB 6,7X14 RFR	
530	312105-0368		14	SCREW M6S ISO 4017 M6X16 A480	
540	312105-0370		14	SCREW M6S ISO 4017 M6X20 A480	
560	315105-0153		22	WASHER BRB 6,4X12 RFR	
570	352113-0204		12	ANCHOR PLATES FOR STRIPS, TM3S25-M	
580	312125-0323		12	SCREW ISO 1207 M5X8 A4	
590	312115-0230		4	SCREW ISO4762 M3X20 A4 80	
620	312812-0316		1	HEXAGON NUT, NY-LOCK M6 A480	
Common Parts					
030	2807095-0000		1	BEAM	
040	2778576-0000		1	BEAM	
050	2964293-0000		1	BEAM	
060	2964292-0000		1	BEAM	
070	2779009-0000		2	BEAM	
080	2779011-0000		1	BEAM	
090	2779012-0000		1	BEAM	
100	2830220-0000		1	BEAM	
110	2779811-0000		1	BEAM	
120	3039040-0000		1	SPACER	
130	2778567-0000		1	BEAM	
150	2766975-0000		1	FRAME	
190	2775447-0000		2	BRACKET	
200	2779776-0000		2	PLATE	
210	2779786-0000		1	PLATE	
220	1021990-0000		4	SIGN 356X70MM HOUSE MARK TEXT TETRA PAK	
230	2778568-0000		1	FRAME UPPER	
240	90511-8563	M	10	STRIPE HEIGHT 70MM, ROLL LENGTH 25M	
250	2805686-0000		1	BEAM	
260	2805698-0000		1	BEAM	
270	3058859-0000		1	BEAM	
300	2807104-0000		1	BEAM	
320	2788155-0000		4	ANGLE	
330	2788154-0000		1	BLOCK	
340	3039027-0000		2	PLATE	
380	2873941-0000		1	SIGN	
400	90347-0011		2	VIBRATION DAMPER MEGI 781056	
410	90600-1002		10	FOOT 45000N, 297/63399N	
420	312812-0318		6	HEXAGON NUT, NY-LOCK M8 A480	
430	312115-0455		6	SCREW ISO4762 M8X30 A4 80	
440	315125-0165		12	WASHER TBRSB 8,4X26X5 A4	
480	90287-0154		6	SCREW, SOCK.SET DOGPOINT M6X10	
490	312607-0332		10	HEXAGON NUT, EN 24032 M6M M30 A480	
500	311103-0351		4	PARALLEL PIN ISO 2338 6M6X16 A1	
510	312105-0366		2	SCREW M6S ISO 4017 M6X12 A480	
550	312115-0540		1	SCREW ISO4762 M12X40 A4 80	
600	90600-0971		2	RACK, ZRR2-100	
630	90287-0175		2	SCREW M6S M3X12 A480	
640	312605-0310		2	HEXAGON NUT, M6M M3 A280	
650	312105-0388		4	SCREW M6S ISO 4014 M6X90 A480	
660	312109-0552		2	SCREW M6S M12X100H A480	

Machine Type | Group Description | Used-In | Group Number | Page No

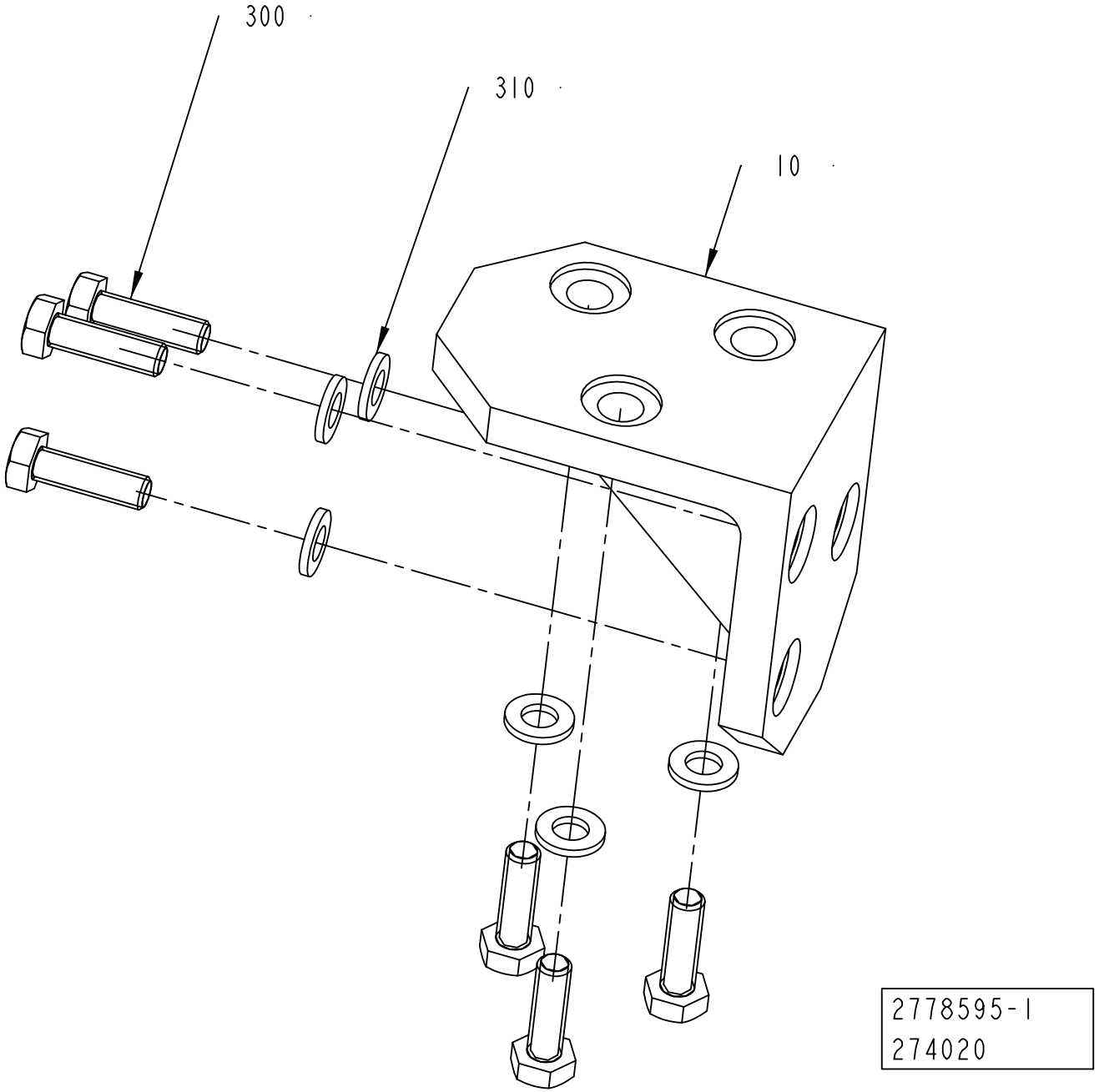
300
310
10
2778595-1
274020

ECM: 274440 - 20060921
Group number: 2778595-0100
Assembly Drawing: 2778595-1_1_AA

Pos	Part No	UN	Qty	Description	Page No
-					
010	2779008-0000		1	BRACKET	
300	312105-0370		6	SCREW M6S ISO 4017 M6X20 A480	
310	315105-0153		6	WASHER BRB 6,4X12 RFR	

Pos	Part No	UN	Qty	Description	Page No

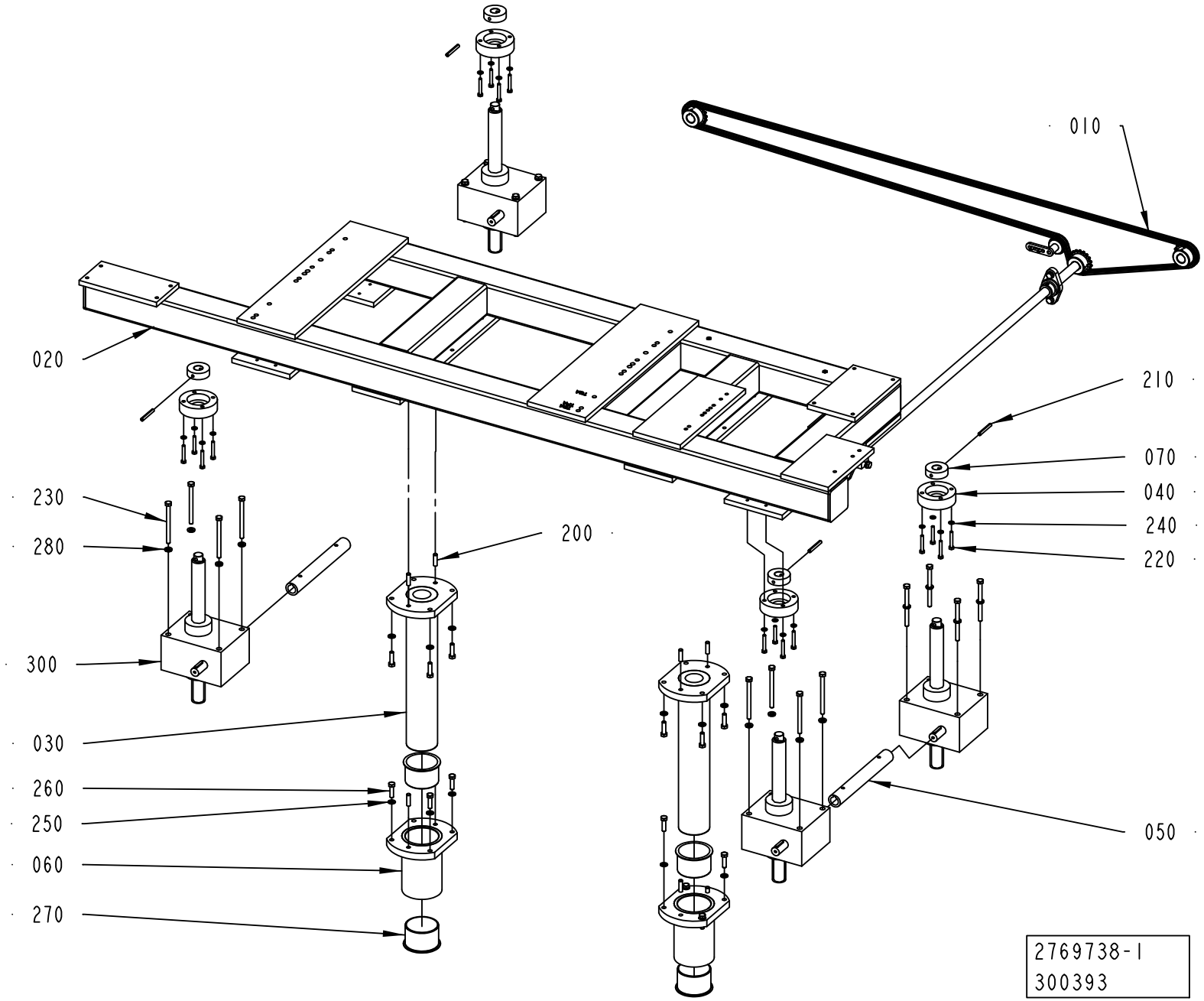
010
020
210
070
040
240
220
230
280
200
300
030
260
250
060
270
050
2769738-1
300393

ECM: 303510 - 20070517
Group number: 2769738-0100
Assembly Drawing: 2769738-1_1_AB

Pos	Part No	UN	Qty	Description	Page No
-					
010	2766973-0100		1	TRANSMISSION	**5-19**
020	2769709-0000		1	FRAME	
030	2769713-0000		2	CYLINDRICAL PIN	
040	2766964-0000		4	FLANGE	
050	2766968-0000		2	SHAFT	
060	2769717-0000		2	FLANGE	
070	2769739-0000		4	DISC	
200	311103-0405		8	PARALLEL PIN ISO 2338 8M6X30 A1	
210	311112-0349		4	SPRING PIN, ISO 8752 6X50-C	
220	312105-0378		16	SCREW M6S ISO 4014 M6X40 A480	
230	312105-0471		16	SCREW M6S ISO 4014 M8X100 A480	
240	315105-0153		16	WASHER BRB 6,4X12 RFR	
250	315105-0165		16	WASHER BRB 8,4X16 RFR	
260	312105-0455		16	SCREW M6S ISO 4017 M8X30 A480	
270	321153-0500		4	FLANGE BUSHING, IGLIDUR G 70X75X50	
280	315115-0165		16	WASHER PLAIN, TBRB 8,4/16 H=3	
300	90600-0658		4	WORM GEAR SCREW JACK, TP00063000130	

Pos	Part No	UN	Qty	Description	Page No

Machine Type | Group Description | Used-In | Group Number | Page No

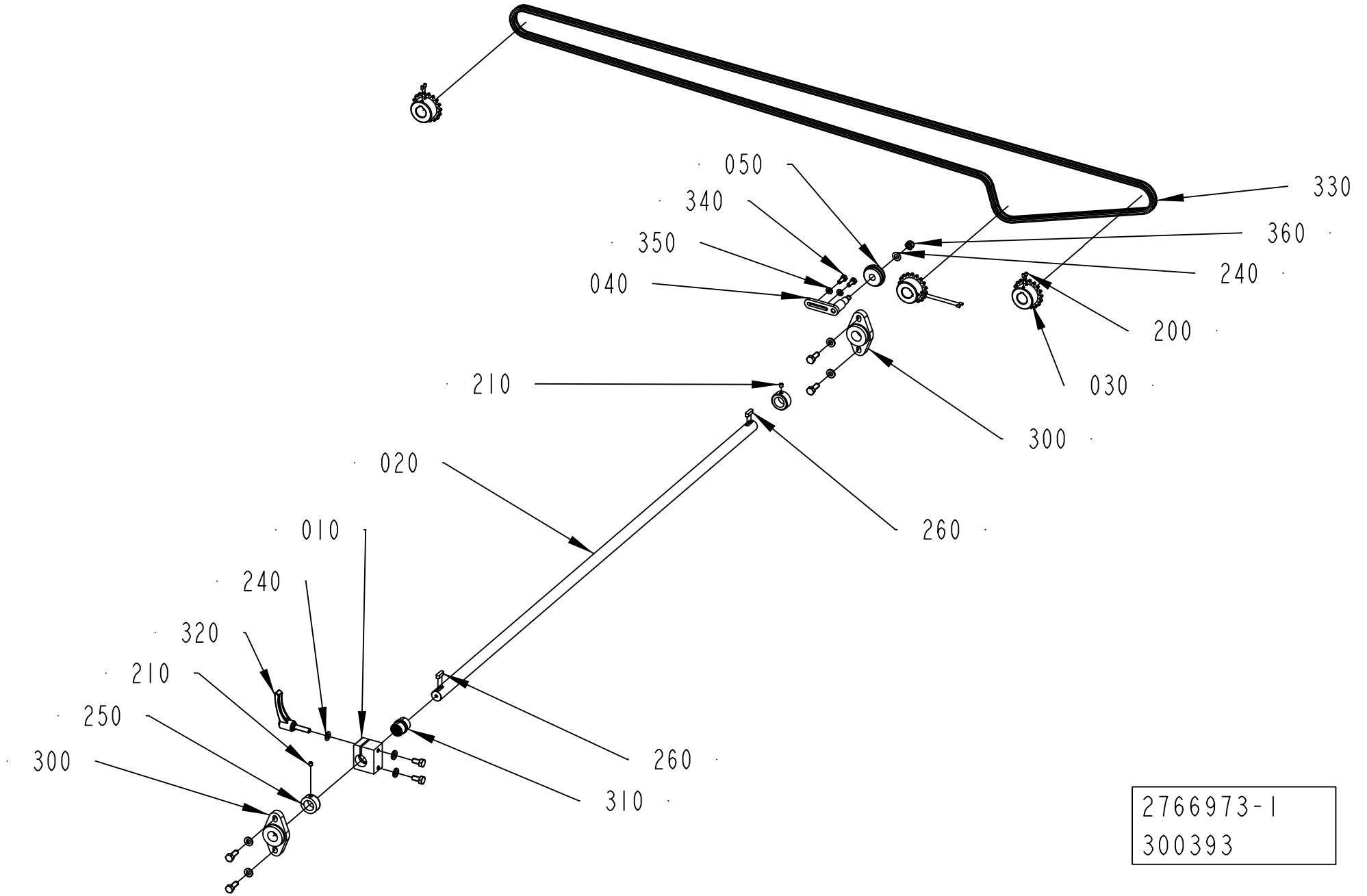
050
340
350
040
330
360
240
200
030
210
300
020
260
010
240
320
210
250
300
260
310
2766973-1
300393

ECM: 349023 - 20080701
Group number: 2766973-0100
Assembly Drawing: 2766973-1_1_AB

Pos	Part No	UN	Qty	Description	Page No
-					
010	2769726-0000		1	BRACKET	
020	2766972-0000		1	SHAFT	
030	2779769-0000		3	SPROCKET	
040	2846405-0000		1	PIVOT ARM	
050	2846403-0000		1	ROLLER	
200	312318-0287		6	SCREW ISO4029 M4X8 A4	
210	312318-0360		2	SCREW ISO4029 M6X6 A4	
220	312105-0452		4	SCREW M6S ISO 4017 M8X22 A480	
230	312105-0449		2	SCREW M6S ISO 4017 M8X16 A480	
240	315105-0165		2	WASHER BRB 8,4X16 RFR	
250	315741-0216		2	RETAINING RING DIN 705 A4 20	
260	315705-0232		2	PARALLEL KEY W. ROUND ENDS 6X6X20 MM	
270	315115-0165		6	WASHER PLAIN, TBRB 8,4/16 H=3	
300	90600-0800		2	FLANGE BEARING 20X89X20 MM	
310	90458-2932		1	PLAIN BEARING, JUM-02-20	
320	90017-0029		1	LOCKING LEVER, NO. KR8X30-SUS	
330	90600-1159		1	ROLLER CHAIN, SIMPLEX 3/8 -290, SS	
340	312105-0368		2	SCREW M6S ISO 4017 M6X16 A480	
350	315105-0153		2	WASHER BRB 6,4X12 RFR	
360	312812-0318		1	HEXAGON NUT, NY-LOCK M8 A480	

Pos	Part No	UN	Qty	Description	Page No

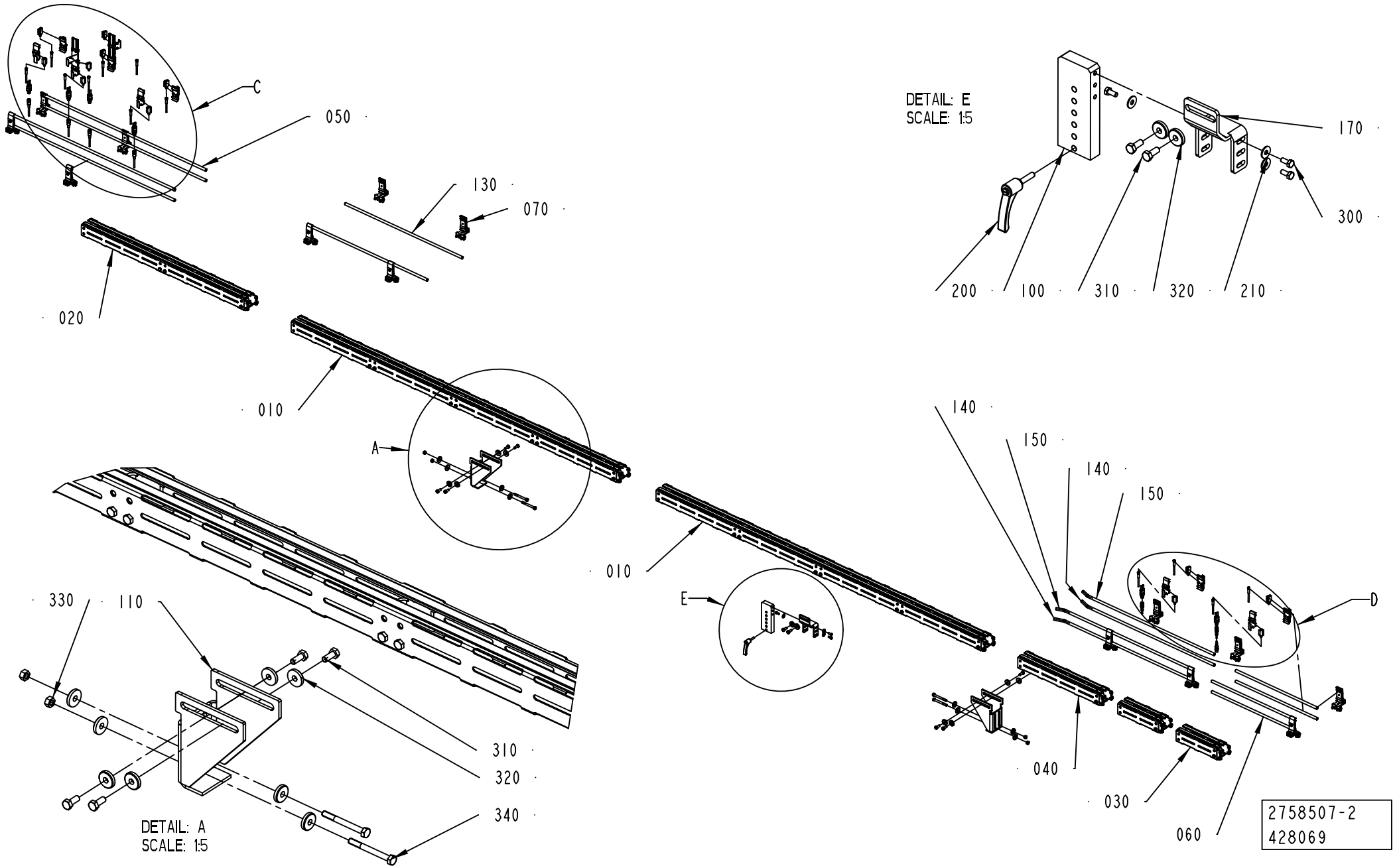
C
050
130
070
020
010
A
330
110
310
320
340
DETAIL: A
SCALE: 1:5
DETAIL: E
SCALE: 1:5
170
300
200
100
310
320
210
140
150
140
150
010
E
D
040
030
060
2758507-2
428069

ECM: 428924 - 20100401
Group number: 2758507-0200
Assembly Drawing: 2758507-2_1_AC

This list covers pages from 5-20 to 5-23

Pos	Part No	UN	Qty	Description	Page No
-					
010	2763616-0104		2	CONVEYOR BODY	**5-25**
020	2763616-0103		1	CONVEYOR BODY	**5-27**
030	2763616-0102		1	CONVEYOR BODY	**5-29**
040	2763616-0101		2	CONVEYOR BODY	**5-31**
050	2561274-0103		1	RAILING	**5-33**
060	2561274-0102		1	RAILING	**5-37**
070	1550743-0200		8	RAIL HOLDER	**5-35**
080	2778586-0100		3	SENSOR	**5-39, 12-19**
090	2778587-0100		1	SENSOR	**5-41**
100	2930211-0000		1	PLATE	
110	2965155-0000		2	SUPPORT	
120	2985775-0100		1	SENSOR	**5-43**
130	2779831-0000		2	PIPE	
140	2836266-0000		2	PIPE	
150	3068599-0000		2	PIPE	
170	2930210-0000		1	PLATE	
200	90017-0029		1	LOCKING LEVER, NO. KR8X30-SUS	
210	90457-0192		4	WASHER PLAIN ROUND, 6,5/18, H=1,5	
21B402	90459-5529		1	PH.CELL E3Z-T86A, SENDER+RECIEVER	
21B404	90459-5529		1	PH.CELL E3Z-T86A, SENDER+RECIEVER	
21B406	90459-5529		1	PH.CELL E3Z-T86A, SENDER+RECIEVER	
21B408	90459-5529		1	PH.CELL E3Z-T86A, SENDER+RECIEVER	
21B424	90459-5529		1	PH.CELL E3Z-T86A, SENDER+RECIEVER	
21B602	90459-5529		1	PH.CELL E3Z-T86A, SENDER+RECIEVER	
21W402	90459-6586		1	ACT/SENS.Y-CABLE, ASBN 2-PRKMV 4-07/0,6M	
21W404	90459-6586		1	ACT/SENS.Y-CABLE, ASBN 2-PRKMV 4-07/0,6M	
21W406	90459-6586		1	ACT/SENS.Y-CABLE, ASBN 2-PRKMV 4-07/0,6M	
21W408	90459-6586		1	ACT/SENS.Y-CABLE, ASBN 2-PRKMV 4-07/0,6M	
21W412	351309-0050		1	ACTUATOR/SENSOR CABLE PRKT 4-07/5M	
21W414	351309-0050		1	ACTUATOR/SENSOR CABLE PRKT 4-07/5M	
21W416	351309-0050		1	ACTUATOR/SENSOR CABLE PRKT 4-07/5M	
21W418	351309-0100		1	ACTUATOR/SENSOR CABLE PRKT 4-07/10M	
21W422	351405-0006		1	ACT/SENS. CABLE RSMVN 3-PRKT 4-3-06/0,6M	
21W424	90459-6586		1	ACT/SENS.Y-CABLE, ASBN 2-PRKMV 4-07/0,6M	
21W602	90459-6586		1	ACT/SENS.Y-CABLE, ASBN 2-PRKMV 4-07/0,6M	
21W612	351405-0050		1	SENS. CABLE RSMVN 3-PRKT 4-3-06/5,0M	
300	312105-0367		4	REW M6S ISO 4017 M6X14 A480	
310	312105-0451		16	SCREW M6S ISO 4017 M8X20 A480	
320	315125-0165		16	WASHER TBRSB 8,4X26X5 A4	
330	312607-0318		4	HEXAGON NUT, EN 24032 M6M M8 A480	
340	312105-0466		4	SCREW M6S ISO 4014 M8X75 A480	
350	351411-0050		1	ACTU/SENS. CABLE PRST 4-PRKT 4-07/5,0	

Machine Type	Group Description	Used-In	Group Number	Page No

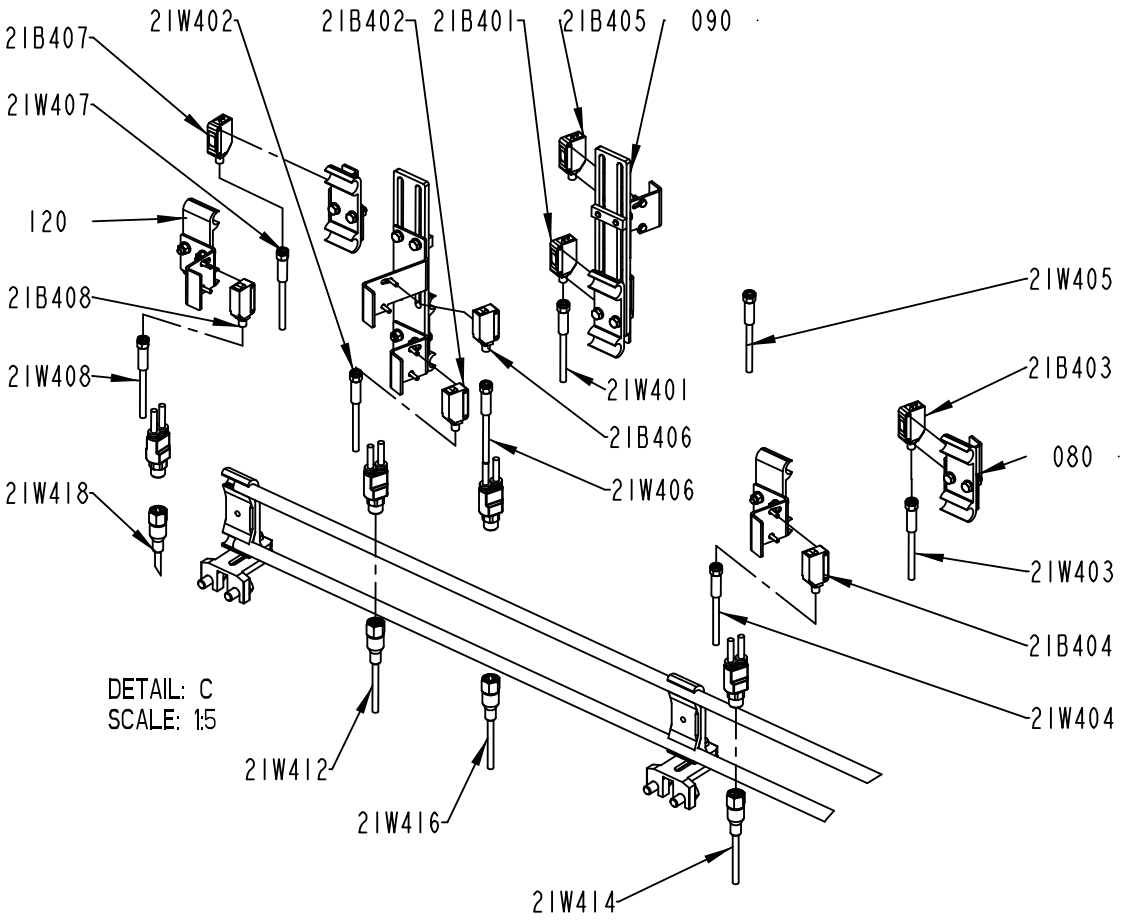

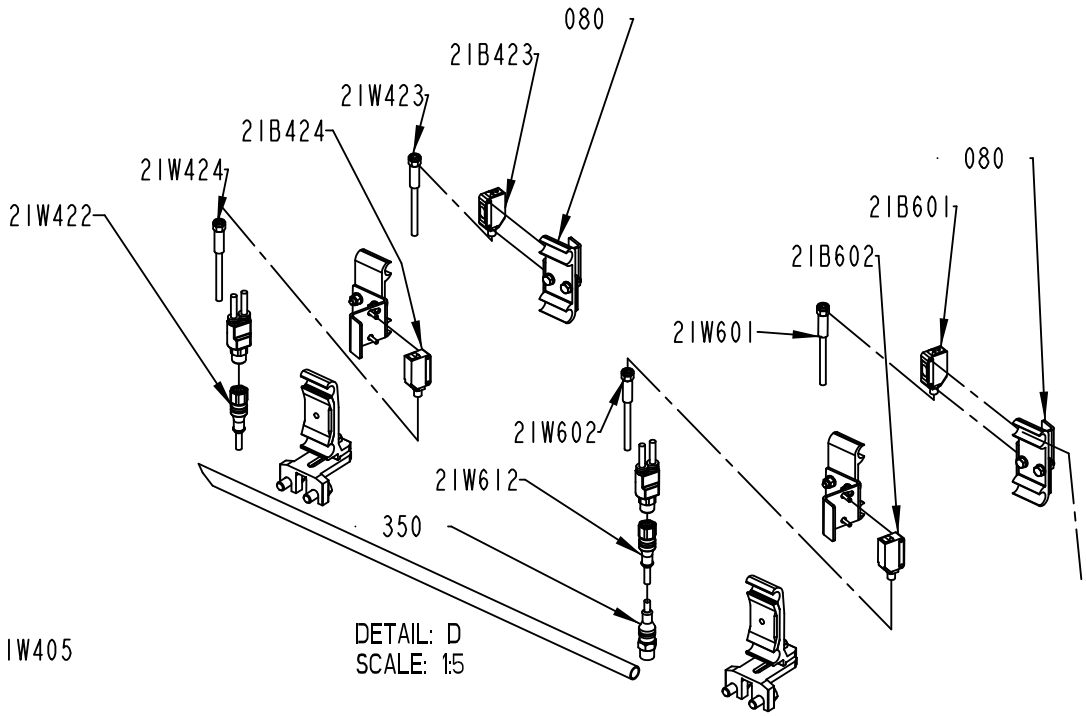

2758507-2
428069

ECM: 428924 - 20100401
Group number: 2758507-0200
Assembly Drawing: 2758507-2_2_AC

This list covers pages from 5-20 to 5-23

Pos	Part No	UN	Qty	Description	Page No
-					
010	2763616-0104		2	CONVEYOR BODY	**5-25**
020	2763616-0103		1	CONVEYOR BODY	**5-27**
030	2763616-0102		1	CONVEYOR BODY	**5-29**
040	2763616-0101		2	CONVEYOR BODY	**5-31**
050	2561274-0103		1	RAILING	**5-33**
060	2561274-0102		1	RAILING	**5-37**
070	1550743-0200		8	RAIL HOLDER	**5-35**
080	2778586-0100		3	SENSOR	**5-39, 12-19**
090	2778587-0100		1	SENSOR	**5-41**
100	2930211-0000		1	PLATE	
110	2965155-0000		2	SUPPORT	
120	2985775-0100		1	SENSOR	**5-43**
130	2779831-0000		2	PIPE	
140	2836266-0000		2	PIPE	
150	3068599-0000		2	PIPE	
170	2930210-0000		1	PLATE	
200	90017-0029		1	LOCKING LEVER, NO. KR8X30-SUS	
210	90457-0192		4	WASHER PLAIN ROUND, 6,5/18, H=1,5	
21B402	90459-5529		1	PH.CELL E3Z-T86A, SENDER+RECIEVER	
21B404	90459-5529		1	PH.CELL E3Z-T86A, SENDER+RECIEVER	
21B406	90459-5529		1	PH.CELL E3Z-T86A, SENDER+RECIEVER	
21B408	90459-5529		1	PH.CELL E3Z-T86A, SENDER+RECIEVER	
21B424	90459-5529		1	PH.CELL E3Z-T86A, SENDER+RECIEVER	
21B602	90459-5529		1	PH.CELL E3Z-T86A, SENDER+RECIEVER	
21W402	90459-6586		1	ACT/SENS.Y-CABLE, ASBN 2-PRKMV 4-07/0,6M	
21W404	90459-6586		1	ACT/SENS.Y-CABLE, ASBN 2-PRKMV 4-07/0,6M	
21W406	90459-6586		1	ACT/SENS.Y-CABLE, ASBN 2-PRKMV 4-07/0,6M	
21W408	90459-6586		1	ACT/SENS.Y-CABLE, ASBN 2-PRKMV 4-07/0,6M	
21W412	351309-0050		1	ACTUATOR/SENSOR CABLE PRKT 4-07/5M	
21W414	351309-0050		1	ACTUATOR/SENSOR CABLE PRKT 4-07/5M	
21W416	351309-0050		1	ACTUATOR/SENSOR CABLE PRKT 4-07/5M	
21W418	351309-0100		1	ACTUATOR/SENSOR CABLE PRKT 4-07/10M	
21W422	351405-0006		1	ACT/SENS. CABLE RSMVN 3-PRKT 4-3-06/0,6M	
21W424	90459-6586		1	ACT/SENS.Y-CABLE, ASBN 2-PRKMV 4-07/0,6M	
21W602	90459-6586		1	ACT/SENS.Y-CABLE, ASBN 2-PRKMV 4-07/0,6M	
21W612	351405-0050		1	SENS. CABLE RSMVN 3-PRKT 4-3-06/5,0M	
300	312105-0367		4	REW M6S ISO 4017 M6X14 A480	
310	312105-0451		16	SCREW M6S ISO 4017 M8X20 A480	
320	315125-0165		16	WASHER TBRSB 8,4X26X5 A4	
330	312607-0318		4	HEXAGON NUT, EN 24032 M6M M8 A480	
340	312105-0466		4	SCREW M6S ISO 4014 M8X75 A480	
350	351411-0050		1	ACTU/SENS. CABLE PRST 4-PRKT 4-07/5,0	

Machine Type	Group Description	Used-In	Group Number	Page No

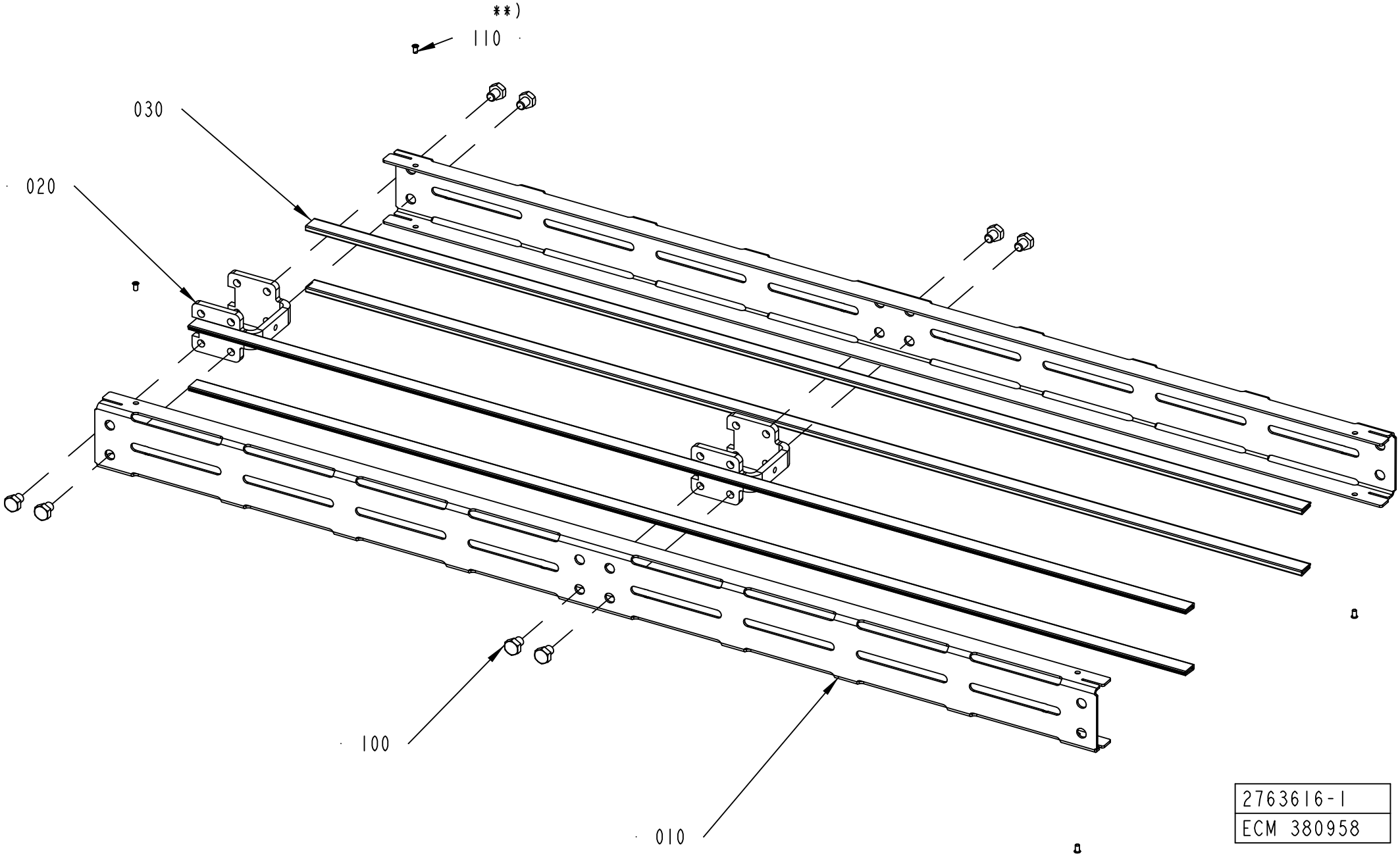
**)
110
030
020
100
010
2763616-1
ECM 380958

ECM: 380958 -
Group number: 2763616-0104
Assembly Drawing: 2763616-1_1_AB

Pos	Part No	UN	Qty	Description	Page No
L 2000					
010	2763617-0004		2	SIDE PLATE	
020	2561206-0000		4	SPACER	
030	2699305-1996		4	SLIDING STRIP	
100	90459-4735		16	SCREW M6S ISO 4017 M8X10 A480	
Common Parts					
010	2763617-0001		2	SIDE PLATE	
010	2763617-0002		2	SIDE PLATE	
010	2763617-0003		2	SIDE PLATE	
020	2561206-0000		1	SPACER	
030	1550595-4960		4	SLIDING STRIP	
030	1550595-9960		4	SLIDING STRIP	
030	1550595-2460		4	SLIDING STRIP	
100	90459-4735		4	SCREW M6S ISO 4017 M8X10 A480	
110	90600-6183		4	TUBULAR RIVET 3,5X6,2	

Pos	Part No	UN	Qty	Description	Page No

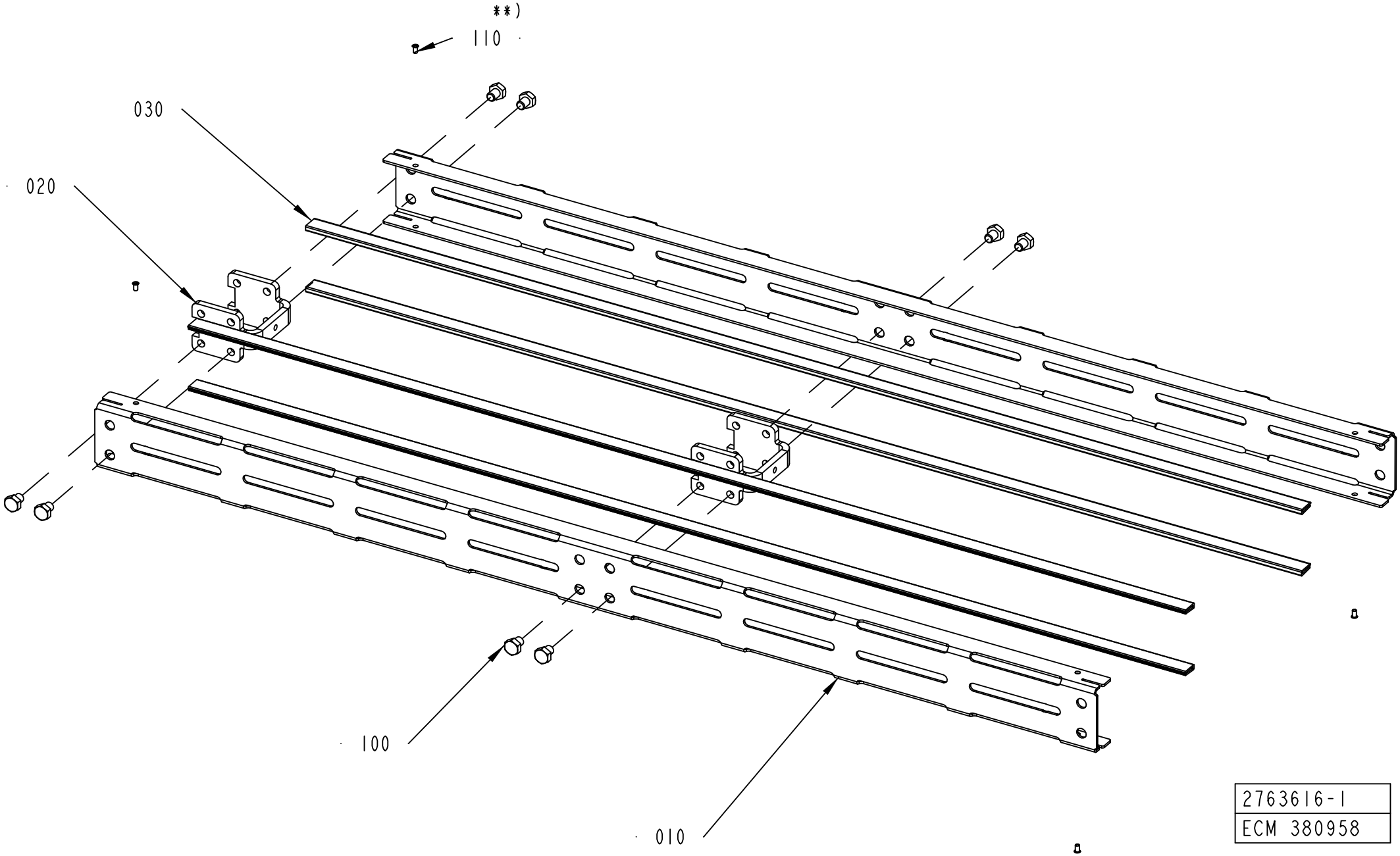
**)
110
030
020
100
010
2763616-1
ECM 380958

ECM: 380958 -
Group number: 2763616-0103
Assembly Drawing: 2763616-1_1_AB

Pos	Part No	UN	Qty	Description	Page No
L 1000					
010	2763617-0003		2	SIDE PLATE	
020	2561206-0000		2	SPACER	
030	1550595-9960		4	SLIDING STRIP	
100	90459-4735		8	SCREW M6S ISO 4017 M8X10 A480	
Common Parts					
010	2763617-0004		2	SIDE PLATE	
010	2763617-0002		2	SIDE PLATE	
010	2763617-0001		2	SIDE PLATE	
020	2561206-0000		1	SPACER	
030	2699305-1996		4	SLIDING STRIP	
030	1550595-4960		4	SLIDING STRIP	
030	1550595-2460		4	SLIDING STRIP	
100	90459-4735		4	SCREW M6S ISO 4017 M8X10 A480	
110	90600-6183		4	TUBULAR RIVET 3,5X6,2	

Pos	Part No	UN	Qty	Description	Page No

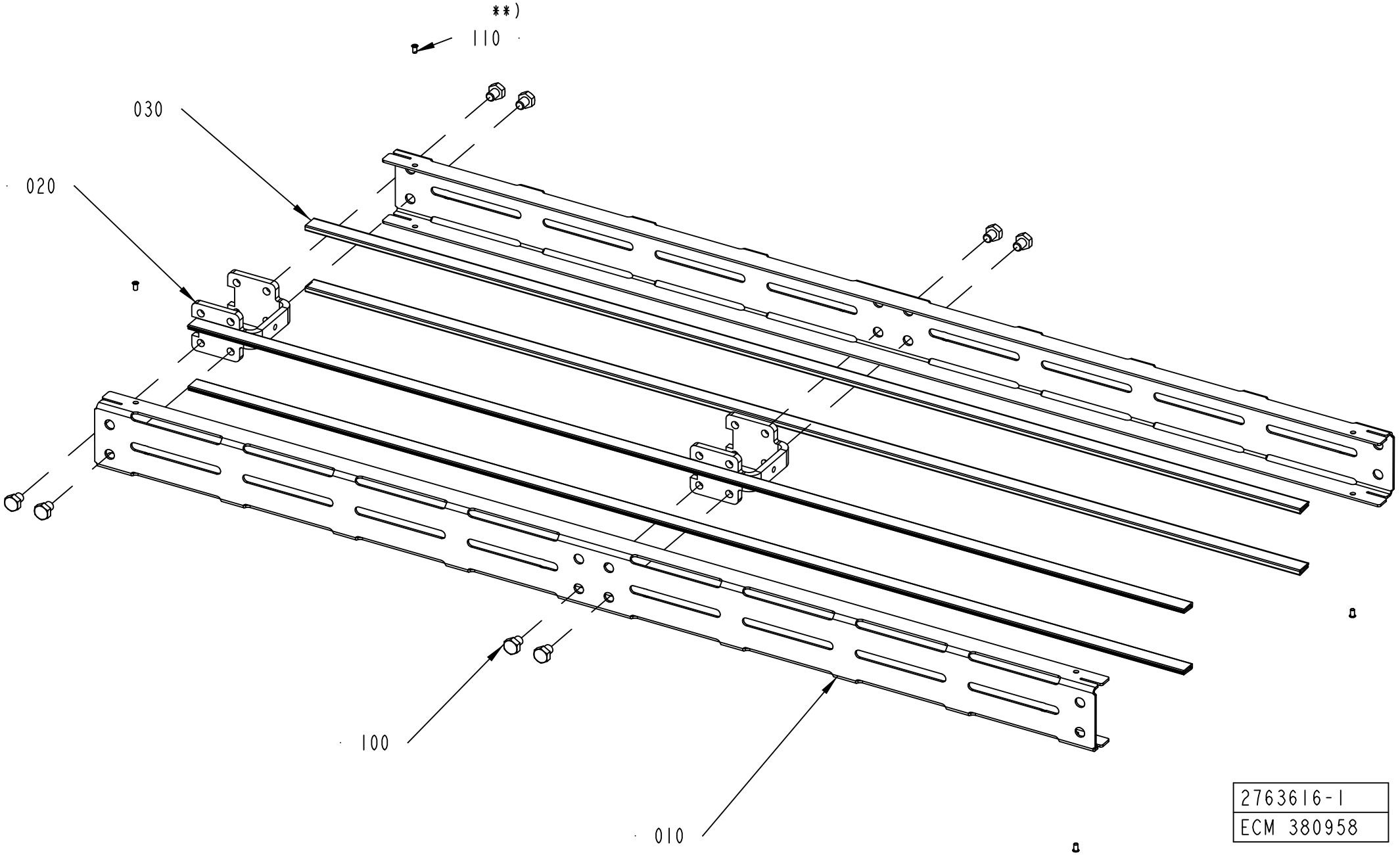

2763616-1
ECM 380958

ECM: 380958 -
Group number: 2763616-0102
Assembly Drawing: 2763616-1_1_AB

Pos	Part No	UN	Qty	Description	Page No
L 0250					
010	2763617-0001		2	SIDE PLATE	
020	2561206-0000		1	SPACER	
030	1550595-2460		4	SLIDING STRIP	
100	90459-4735		4	SCREW M6S ISO 4017 M8X10 A480	
L 0500					
010	2763617-0002		2	SIDE PLATE	
020	2561206-0000		1	SPACER	
030	1550595-4960		4	SLIDING STRIP	
100	90459-4735		4	SCREW M6S ISO 4017 M8X10 A480	
Common Parts					
010	2763617-0003		2	SIDE PLATE	
010	2763617-0004		2	SIDE PLATE	
020	2561206-0000		2	SPACER	
030	2699305-1996		4	SLIDING STRIP	
030	1550595-9960		4	SLIDING STRIP	
100	90459-4735		16	SCREW M6S ISO 4017 M8X10 A480	
110	90600-6183		4	TUBULAR RIVET 3,5X6,2	

Pos	Part No	UN	Qty	Description	Page No

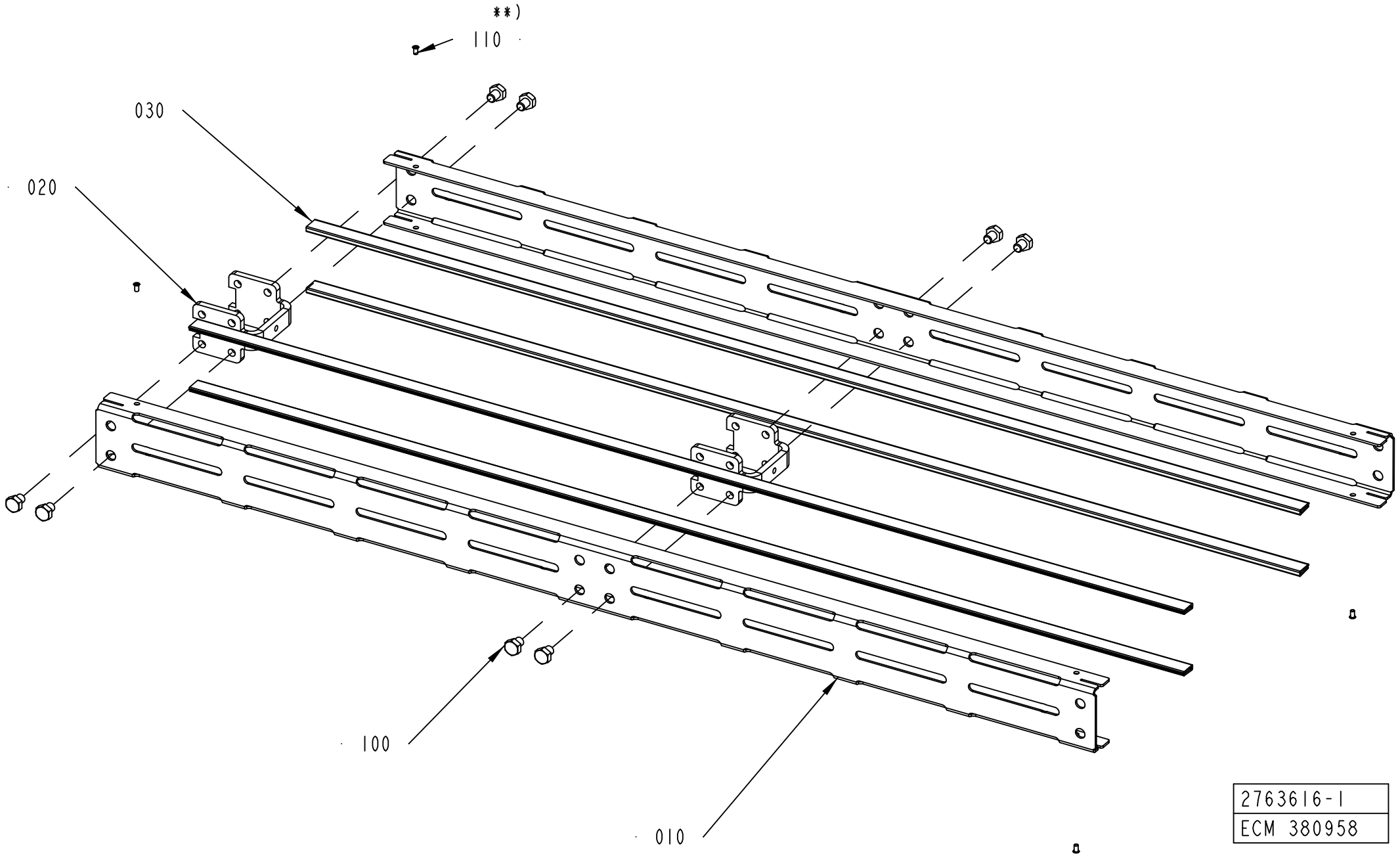
**)
110
030
020
100
010
2763616-1
ECM 380958

ECM: 380958 -
Group number: 2763616-0101
Assembly Drawing: 2763616-1_1_AB

Pos	Part No	UN	Qty	Description	Page No
L 0250					
010	2763617-0001		2	SIDE PLATE	
020	2561206-0000		1	SPACER	
030	1550595-2460		4	SLIDING STRIP	
100	90459-4735		4	SCREW M6S ISO 4017 M8X10 A480	
L 0500					
010	2763617-0002		2	SIDE PLATE	
020	2561206-0000		1	SPACER	
030	1550595-4960		4	SLIDING STRIP	
100	90459-4735		4	SCREW M6S ISO 4017 M8X10 A480	
Common Parts					
010	2763617-0004		2	SIDE PLATE	
010	2763617-0003		2	SIDE PLATE	
020	2561206-0000		2	SPACER	
030	2699305-1996		4	SLIDING STRIP	
030	1550595-9960		4	SLIDING STRIP	
100	90459-4735		16	SCREW M6S ISO 4017 M8X10 A480	
110	90600-6183		4	TUBULAR RIVET 3,5X6,2	

Pos	Part No	UN	Qty	Description	Page No

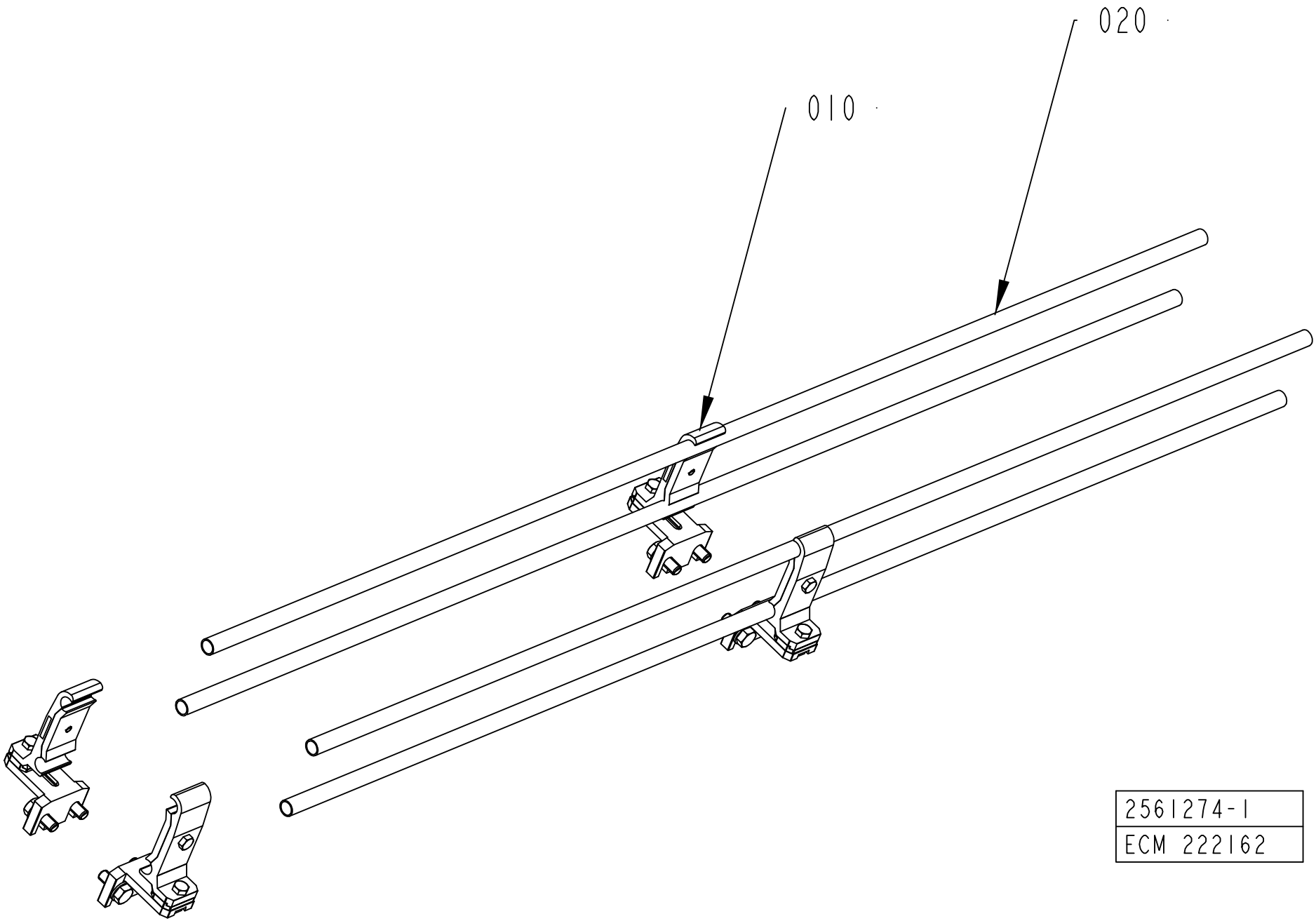
020
010
2561274-1
ECM 222162

ECM: 222162 -
Group number: 2561274-0103
Assembly Drawing: 2561274-1_1_AB

Pos	Part No	UN	Qty	Description	Page No
L 1000					
010	1550743-0200		4	RAIL HOLDER	**5-35**
020	476221-0003		4	PIPE	
Common Parts					
010	1550743-0200		2	RAIL HOLDER	**5-35**
020	476221-0002		4	PIPE	

Pos	Part No	UN	Qty	Description	Page No

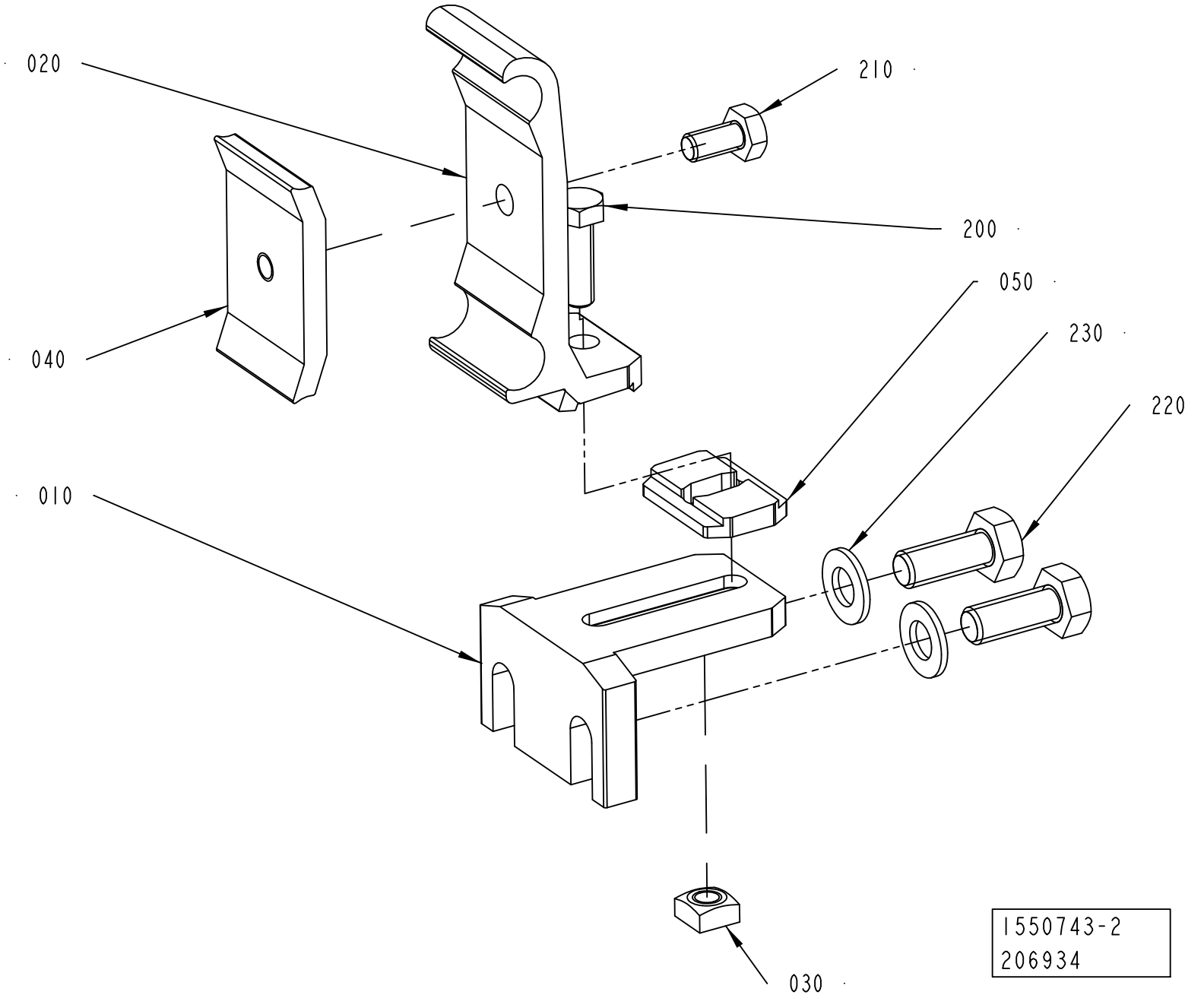
020
210
200
040
050
230
220
010
030
1550743-2
206934

ECM: 429045 - 20091201
Group number: 1550743-0200
Assembly Drawing: 1550743-2_1_AA

Pos	Part No	UN	Qty	Description	Page No
-					
010	1550772-0000		1	HOLDER	
020	2699437-0000		1	RAIL HOLDER	
030	1359565-0000		1	NUT	
040	1366727-0000		1	CLAMP	
050	2699436-0000		1	SPACER	
200	312105-0370		1	SCREW M6S ISO 4017 M6X20 A480	
210	312105-0366		1	SCREW M6S ISO 4017 M6X12 A480	
220	312105-0451		2	SCREW M6S ISO 4017 M8X20 A480	
230	315105-0165		2	WASHER BRB 8,4X16 RFR	

Pos	Part No	UN	Qty	Description	Page No

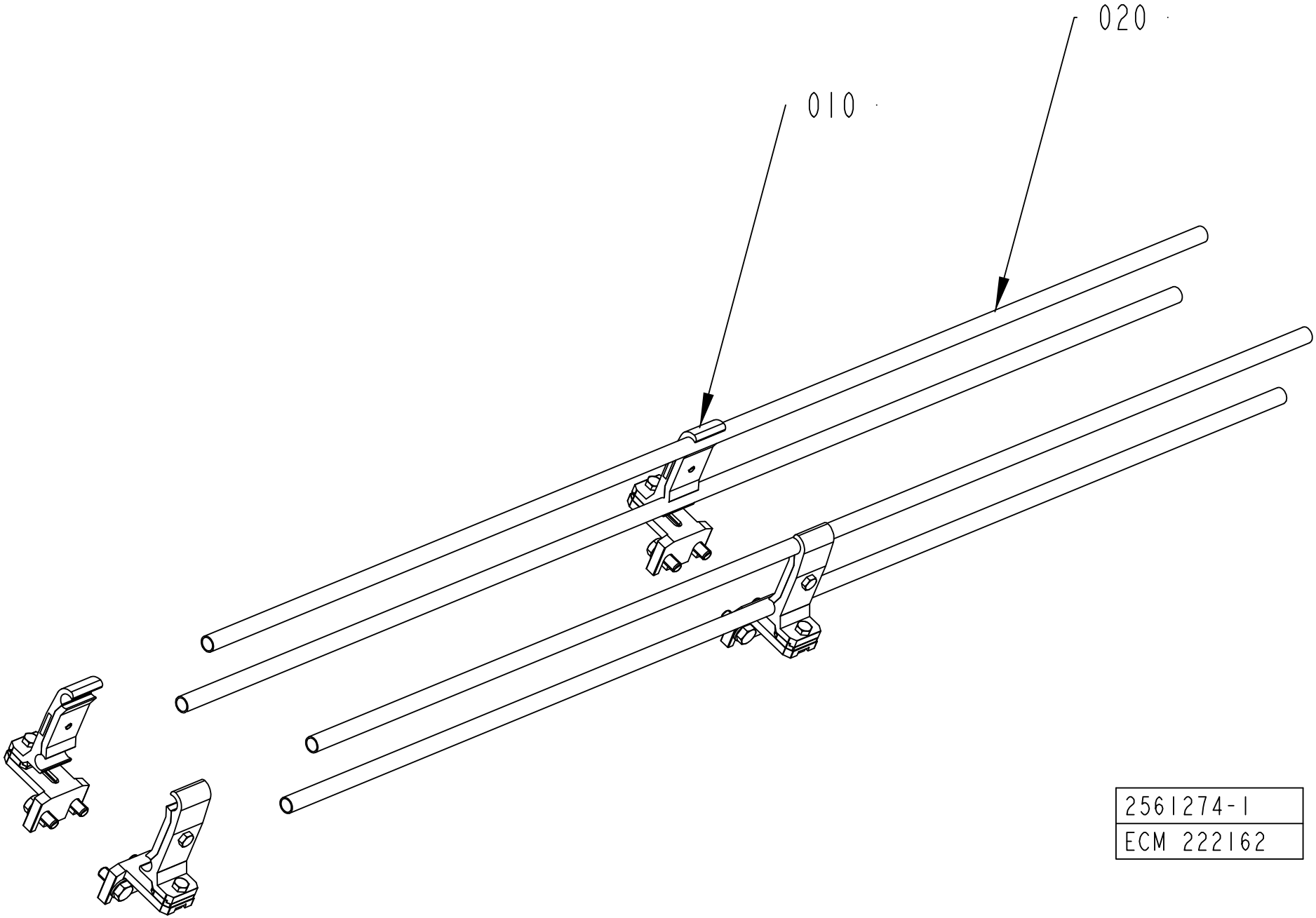

2561274-1
ECM 222162

ECM: 222162 -
Group number: 2561274-0102
Assembly Drawing: 2561274-1_1_AB

Pos	Part No	UN	Qty	Description	Page No
L 0250					
010	1550743-0200		2	RAIL HOLDER	**5-35**
L 0500					
010	1550743-0200		2	RAIL HOLDER	**5-35**
020	476221-0002		4	PIPE	
Common Parts					
010	1550743-0200		4	RAIL HOLDER	**5-35**
020	476221-0003		4	PIPE	

Pos	Part No	UN	Qty	Description	Page No

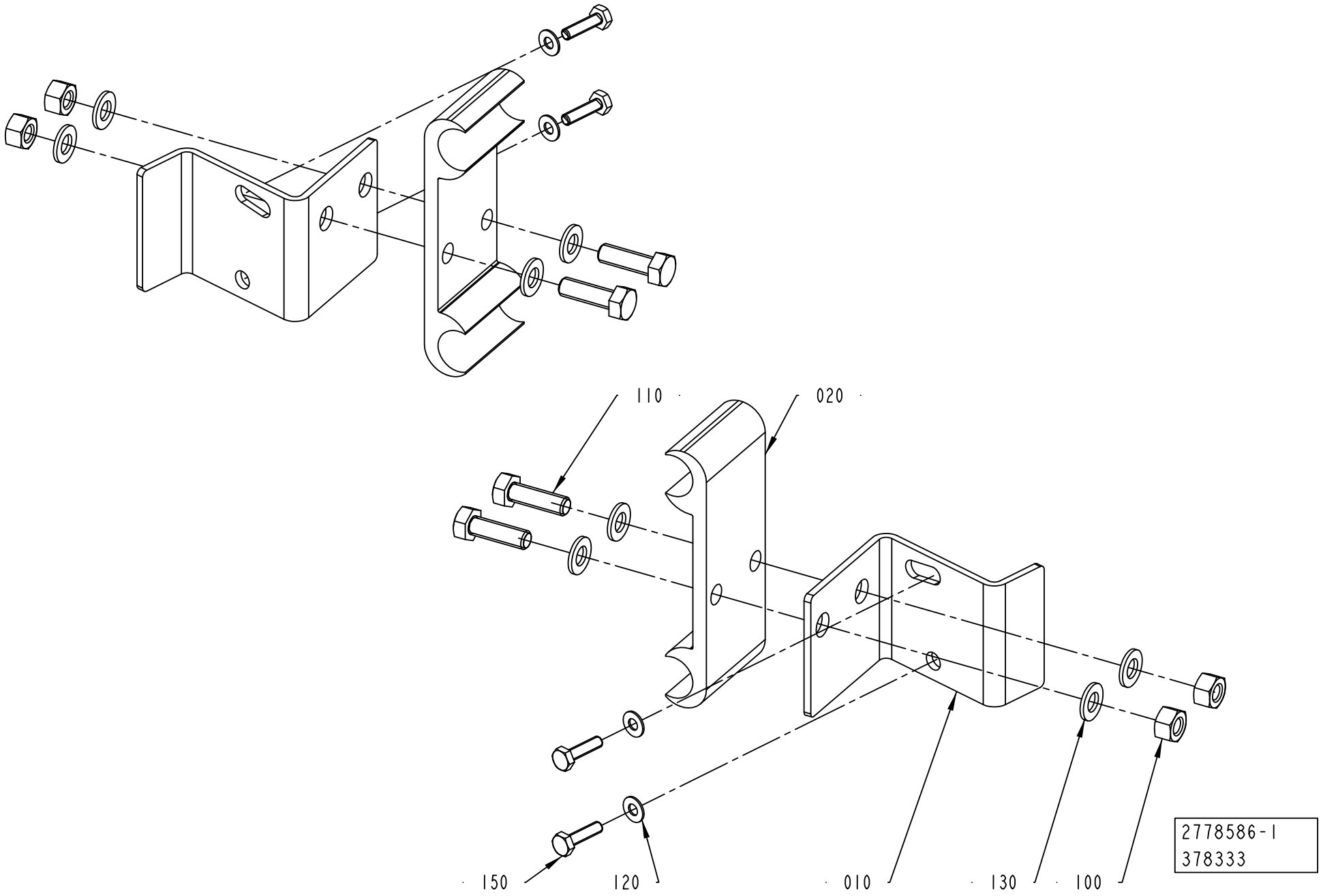
110
020
150
120
010
130
100
2778586-1
378333

ECM: 378333 - 20090406
Group number: 2778586-0100
Assembly Drawing: 2778586-1_1_AB

Pos	Part No	UN	Qty	Description	Page No
-					
010	2778580-0000		2	BRACKET	
020	1020637-0000		2	HOLDER	
100	312605-0314		4	HEXAGON NUT, M6M M5 A280	
110	312105-0329		4	SCREW M6S ISO 4017 M5X16 A480	
120	315106-0124		4	WASHER ISO 7089-3-200 HV A4	
130	315105-0146		8	WASHER BRB 5,3X10 RFR	
150	90287-0175		4	SCREW M6S M3X12 A480	

Pos	Part No	UN	Qty	Description	Page No

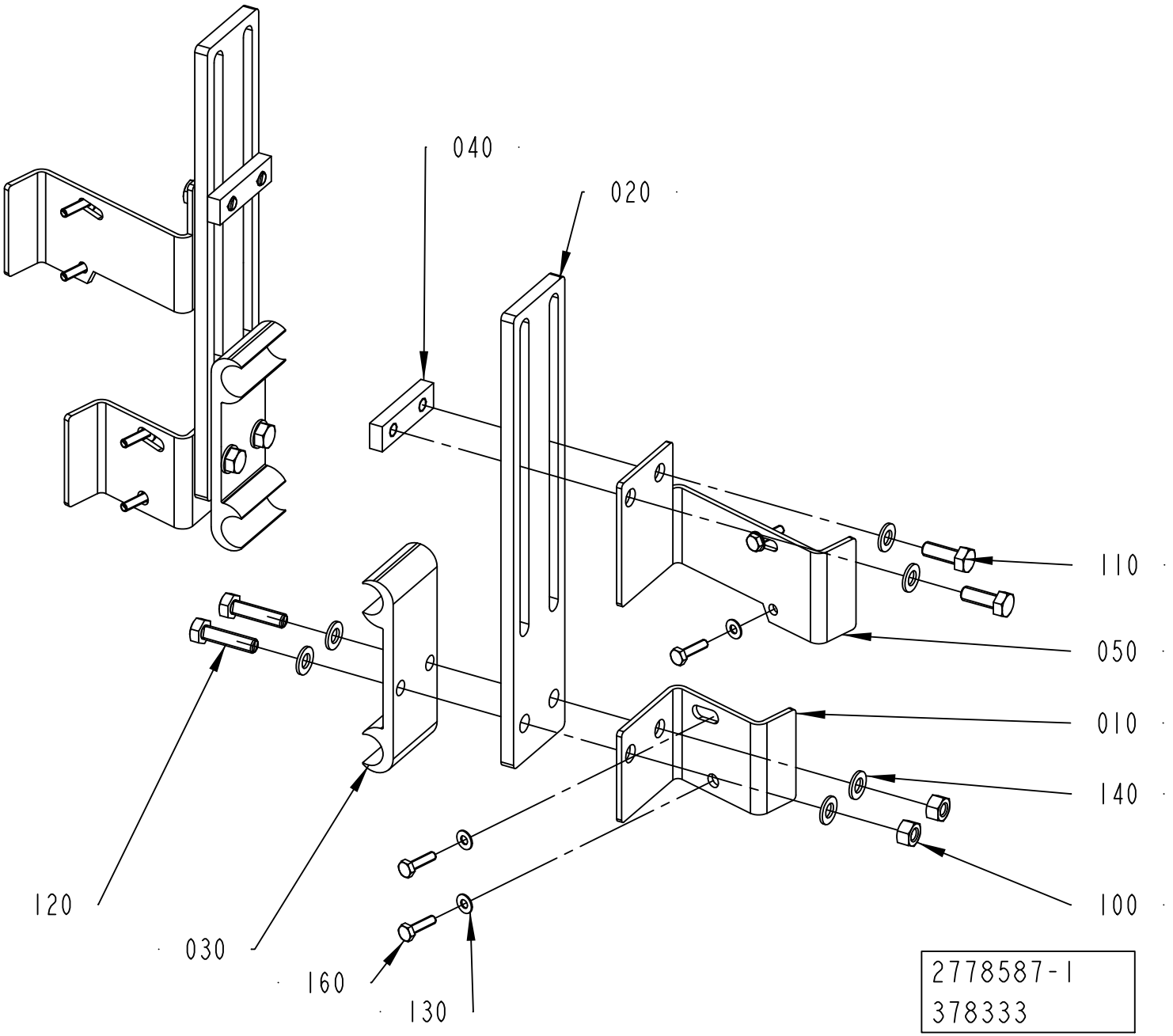
040
020
110
050
010
140
100
120
030
160
130
2778587-1
378333

ECM: 378333 - 20090406
Group number: 2778587-0100
Assembly Drawing: 2778587-1_1_AB

Pos	Part No	UN	Qty	Description	Page No
-					
010	2778580-0000		2	BRACKET	
020	2778584-0000		2	BRACKET	
030	1020637-0000		2	HOLDER	
040	2504290-0000		2	PLATE	
050	2985773-0000		2	BRACKET	
100	312605-0314		4	HEXAGON NUT, M6M M5 A280	
110	312105-0328		4	SCREW M6S ISO 4017 M5X14 A480	
120	312105-0331		4	SCREW M6S ISO 4017 M5X20 A480	
130	315106-0124		8	WASHER ISO 7089-3-200 HV A4	
140	315105-0146		12	WASHER BRB 5,3X10 RFR	
160	90287-0175		8	SCREW M6S M3X12 A480	

Pos	Part No	UN	Qty	Description	Page No

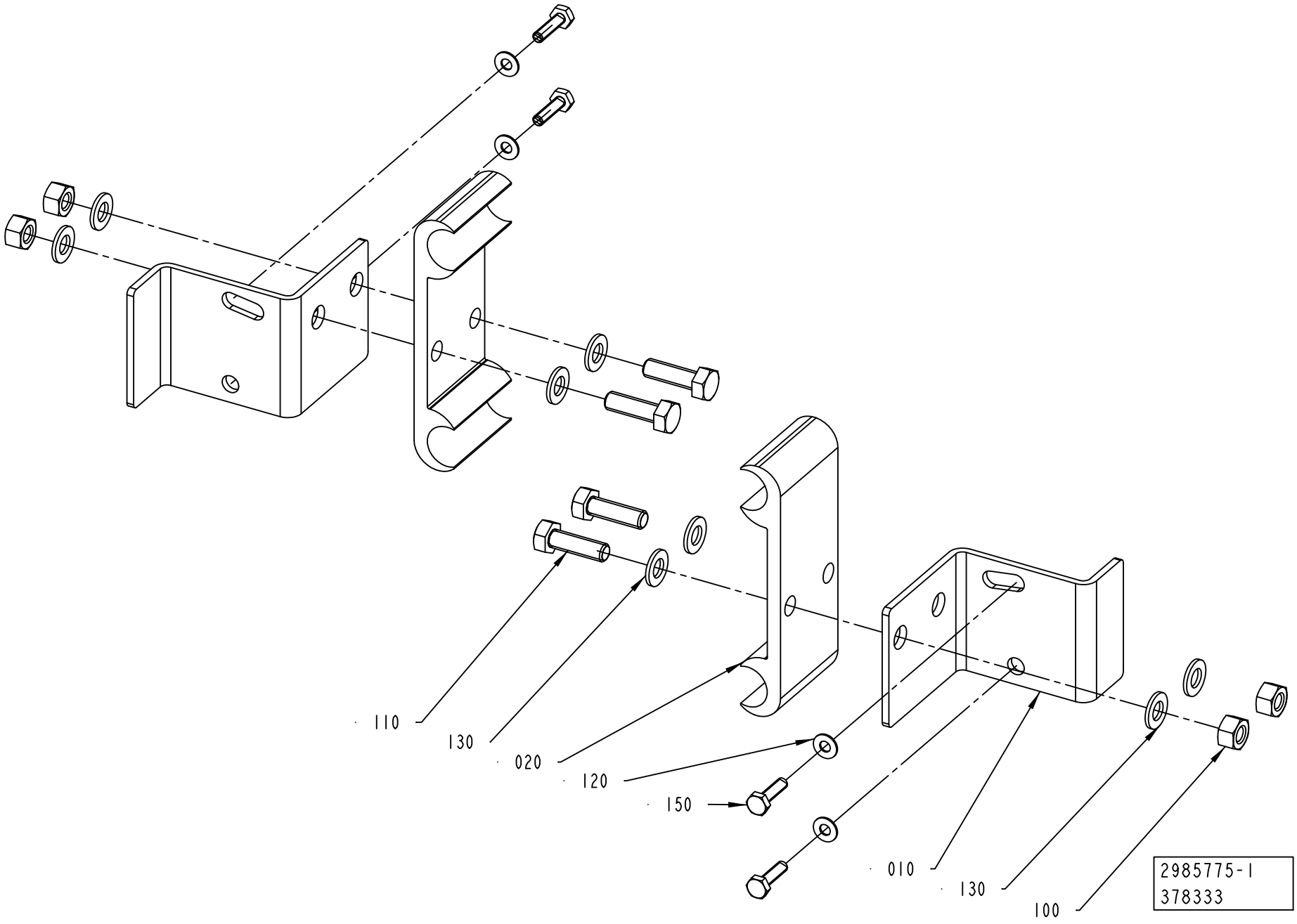
110
130
020
120
150
010
130
100
2985775-1
378333

ECM: 380457 - 20090406
Group number: 2985775-0100
Assembly Drawing: 2985775-1_1_AA

Pos	Part No	UN	Qty	Description	Page No
-					
010	2985774-0000		2	BRACKET	
020	1020637-0000		2	HOLDER	
100	312605-0314		4	HEXAGON NUT, M6M M5 A280	
110	312105-0329		4	SCREW M6S ISO 4017 M5X16 A480	
120	315106-0124		4	WASHER ISO 7089-3-200 HV A4	
130	315105-0146		8	WASHER BRB 5,3X10 RFR	
150	90287-0175		4	SCREW M6S M3X12 A480	

Pos	Part No	UN	Qty	Description	Page No

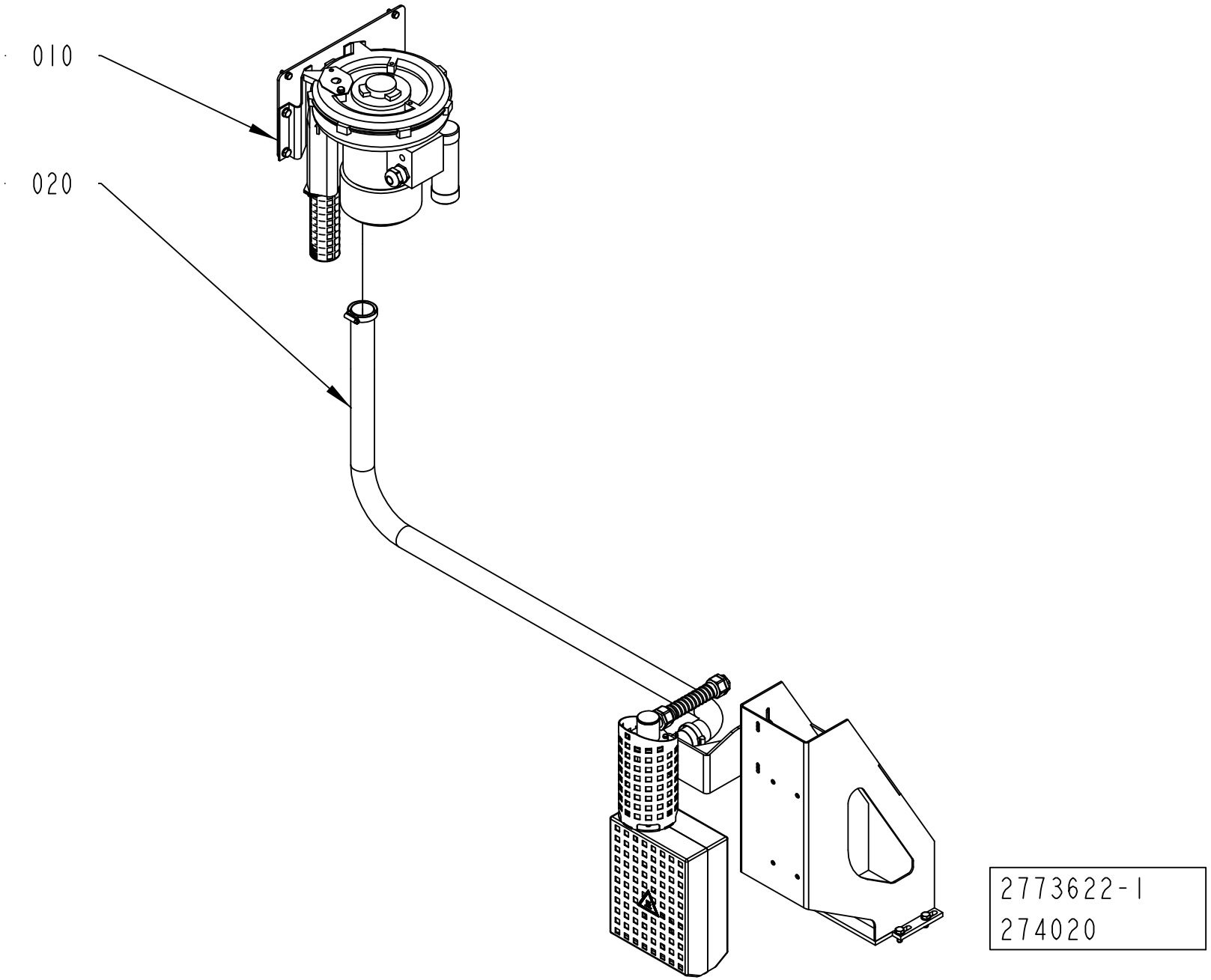
010
020
2773622-1
274020

Pos	Part No	UN	Qty	Description	Page No
CAP 30/FLEX SLIMCAP1000, CAP 30/FLEX SLIMCAP2000 (See drawing on page: 5-44)					
020	2873862-0100		1	HEATING ELEMENT	**5-51**
CAP 30/FLEX STREAMCAP500, CAP 30/FLEX TPA STREAMCAP1000, CAP 30/FLEX STREAMCAP200, CAP 30/FLEX STREAMCAP330, CAP 30/FLEX HELICAP2 23 (See drawing on page: 5-48)					
020	2873862-0100		1	HEATING ELEMENT	**5-51**
030	2873873-0100		1	VISION SYSTEM	**5-53, 5-55, 5-57, 5-59, 12-23, 12-25, 12-27, 12-29**
CAP 30/FLEX TBA STREAMCAP1000 (See drawing on page: 5-44)					
020	2873862-0100		1	HEATING ELEMENT	**5-51**
CAP 30/FLEX TGA STREAMCAP1000 (See drawing on page: 5-46)					
020	2780551-0100		1	HEATING ELEMENT	**5-65**
030	2873873-0100		1	VISION SYSTEM	**5-53, 5-55, 5-57, 5-59, 12-23, 12-25, 12-27, 12-29**
Common Parts					
010	2773623-0100		1	FAN SYSTEM	**5-67**

Pos	Part No	UN	Qty	Description	Page No

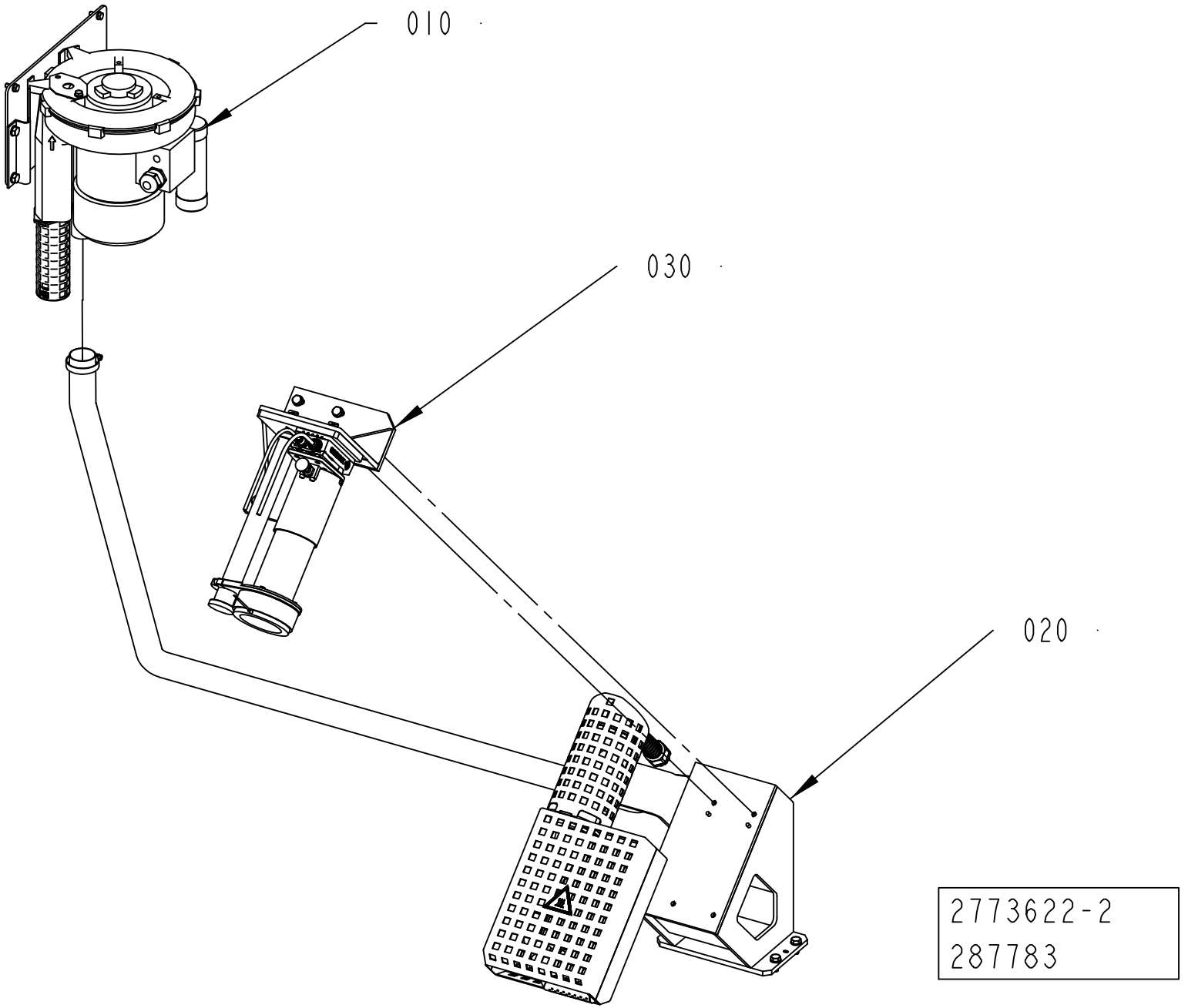
010
030
020
2773622-2
287783

Pos	Part No	UN	Qty	Description	Page No
CAP 30/FLEX SLIMCAP1000, CAP 30/FLEX SLIMCAP2000 (See drawing on page: 5-44)					
020	2873862-0100		1	HEATING ELEMENT	**5-51**
CAP 30/FLEX STREAMCAP500, CAP 30/FLEX TPA STREAMCAP1000, CAP 30/FLEX STREAMCAP200, CAP 30/FLEX STREAMCAP330, CAP 30/FLEX HELICAP2 23 (See drawing on page: 5-48)					
020	2873862-0100		1	HEATING ELEMENT	**5-51**
030	2873873-0100		1	VISION SYSTEM	**5-53, 5-55, 5-57, 5-59, 12-23, 12-25, 12-27, 12-29**
CAP 30/FLEX TBA STREAMCAP1000 (See drawing on page: 5-44)					
020	2873862-0100		1	HEATING ELEMENT	**5-51**
CAP 30/FLEX TGA STREAMCAP1000 (See drawing on page: 5-46)					
020	2780551-0100		1	HEATING ELEMENT	**5-65**
030	2873873-0100		1	VISION SYSTEM	**5-53, 5-55, 5-57, 5-59, 12-23, 12-25, 12-27, 12-29**
Common Parts					
010	2773623-0100		1	FAN SYSTEM	**5-67**

Pos	Part No	UN	Qty	Description	Page No

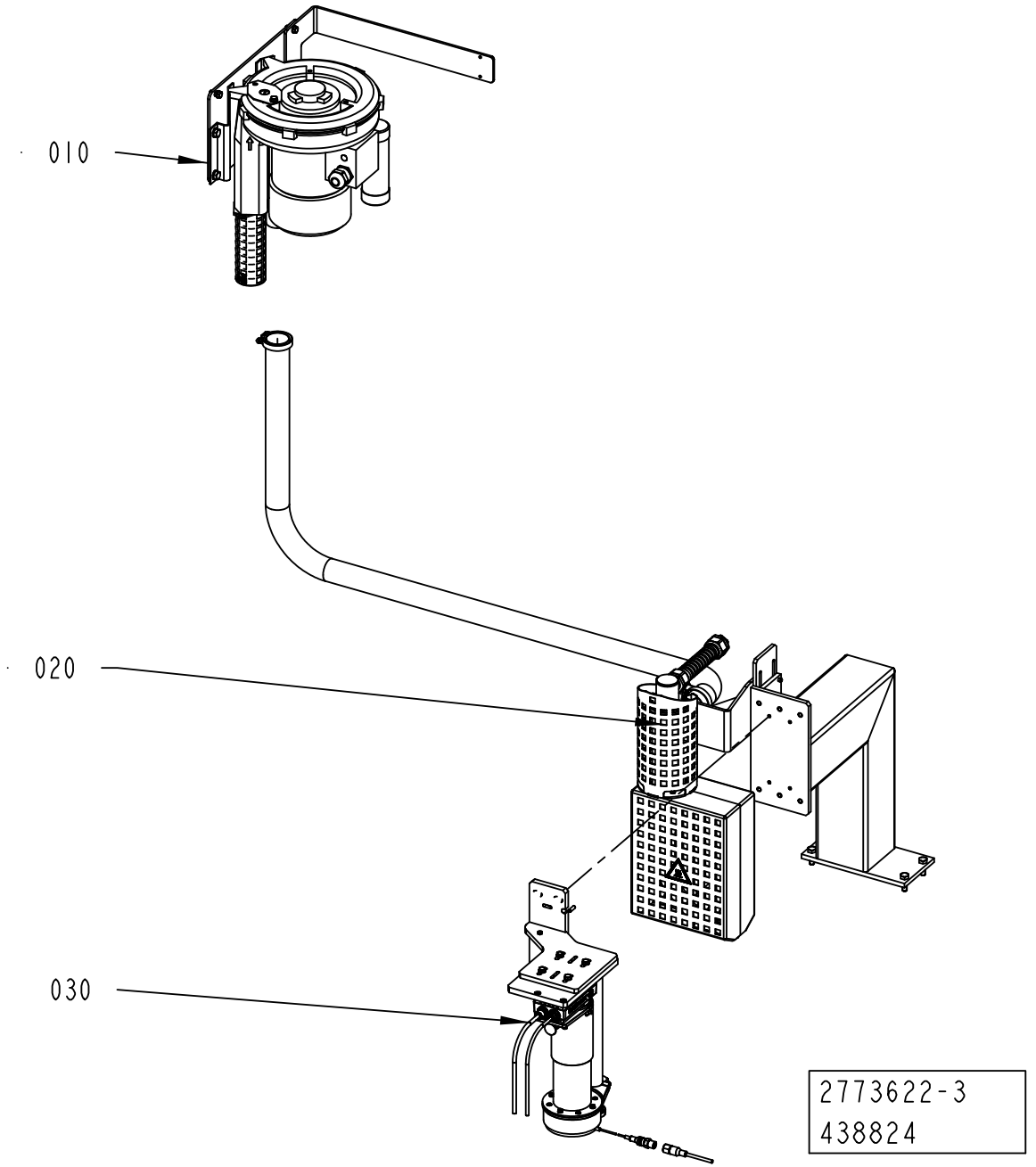
010
020
030
2773622-3
438824

ECM: 480141 - 20110401
Group number: 2773622-0100
Assembly Drawing: 2773622-3_1_AA

This list covers pages from 5-44 to 5-49

Pos	Part No	UN	Qty	Description	Page No
CAP 30/FLEX SLIMCAP1000, CAP 30/FLEX SLIMCAP2000 (See drawing on page: 5-44)					
020	2873862-0100		1	HEATING ELEMENT	**5-51**
CAP 30/FLEX STREAMCAP500, CAP 30/FLEX TPA STREAMCAP1000, CAP 30/FLEX STREAMCAP200, CAP 30/FLEX STREAMCAP330, CAP 30/FLEX HELICAP2 23 (See drawing on page: 5-48)					
020	2873862-0100		1	HEATING ELEMENT	**5-51**
030	2873873-0100		1	VISION SYSTEM	**5-53, 5-55, 5-57, 5-59, 12-23, 12-25, 12-27, 12-29**
CAP 30/FLEX TBA STREAMCAP1000 (See drawing on page: 5-44)					
020	2873862-0100		1	HEATING ELEMENT	**5-51**
CAP 30/FLEX TGA STREAMCAP1000 (See drawing on page: 5-46)					
020	2780551-0100		1	HEATING ELEMENT	**5-65**
030	2873873-0100		1	VISION SYSTEM	**5-53, 5-55, 5-57, 5-59, 12-23, 12-25, 12-27, 12-29**
Common Parts					
010	2773623-0100		1	FAN SYSTEM	**5-67**

Pos	Part No	UN	Qty	Description	Page No

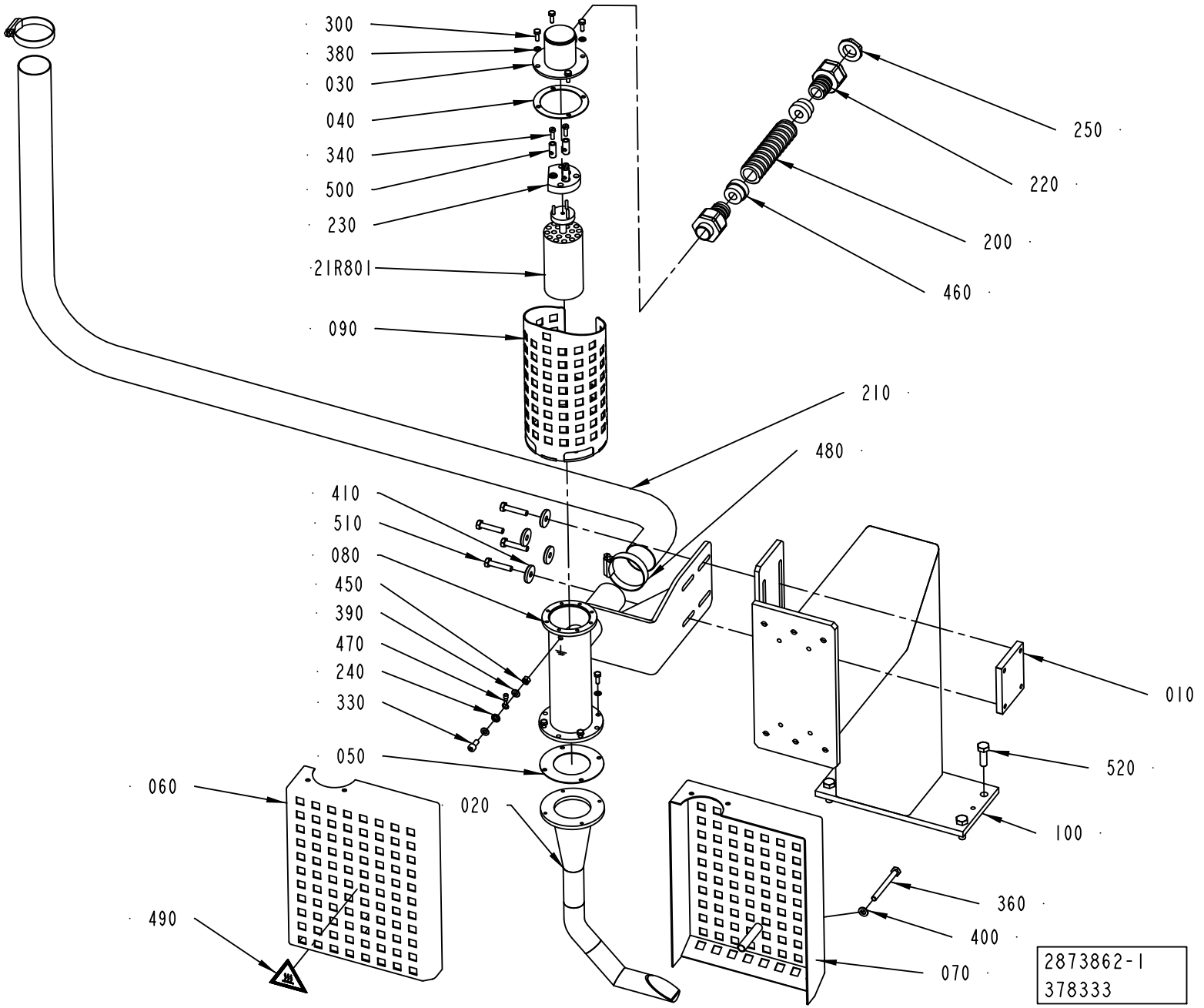
300
380
030
040
340
500
230
21R801
090
250
220
200
460
210
480
410
510
080
450
390
470
240
330
050
060
020
490
010
520
100
360
400
070
2873862-1
378333

ECM: 480145 - 20110401
Group number: 2873862-0100
Assembly Drawing: 2873862-1_1_AB

Pos	Part No	UN	Qty	Description	Page No
CAP 30/FLEX SLIMCAP1000, CAP 30/FLEX SLIMCAP2000					
020	2547915-0000		1	HEATING CHAMBER	
CAP 30/FLEX STREAMCAP500, CAP 30/FLEX TBA STREAMCAP1000, CAP 30/FLEX TPA STREAMCAP1000,					
CAP 30/FLEX STREAMCAP200, CAP 30/FLEX STREAMCAP330, CAP 30/FLEX HELICAP2 23					
020	2662760-0000		1	HEATING CHAMBER	
Common Parts					
010	2873867-0000		1	PLATE	
030	2710819-0000		1	LID	
040	1188609-0000		1	FLANGE SEAL	
050	1188610-0000		1	FLANGE SEAL	
060	2773627-0000		1	HEAT GUARD	
070	2773630-0000		1	HEAT GUARD	
080	2873865-0000		1	PRE-HEATER	
090	2836263-0000		1	HEAT GUARD	
100	2934905-0000		1	SUPPORT	
200	90152-0051	M	1	SPIRAL CONDUIT, 25X18, UL 1816	
210	90152-0075	M	2.35	HOSE	
21R801	90206-0124		1	HEATING ELEMENT 2X1500W 230V	
220	90458-0430		2	HOSE GLAND W/O INSERT M20 EXTENDED	
230	90125-0020		1	PLATE COMPLETE	
	270926-0000		*6*	*NUT*	
	270927-0000		*3*	*SCREW*	
	294464-0000		*1*	*BASE PLATE*	
240	90062-0060		1	LOCK WASHER 5,3/10 H=0,6 FZB	
250	90458-0323		1	NUT, M20X1,5	
300	312105-0291		8	SCREW M6S ISO 4017 M4X12 A470	
330	312115-0327		1	SCREW ISO4762 M5X12 A4 80	
340	312122-0291		3	SCREW ISO 1207 M4X12 NI PL BRASS	
360	312105-0382		1	SCREW M6S ISO 4014 M6X60 A480	
380	315105-0136		8	WASHER BRB 4,3X8 RFR	
390	315105-0146		2	WASHER BRB 5,3X10 RFR	
400	315105-0153		1	WASHER BRB 6,4X12 RFR	
410	315125-0153		4	WASHER TBRSB 6,4X22X4 A4	
450	312605-0314		1	HEXAGON NUT, M6M M5 A280	
460	353249-0012		2	INSERT, SINGLE HOLE, EK 154/11	
470	353101-0122		1	CABLE SHOE 0,5-1,5MM2 M5 RED	
480	342991-0108		2	HOSE CLIP,WORM DRIVE TYPE (38)-50	
490	359710-0001		1	WARNING SIGN ISO, HOT SURFACE	
500	205438-0000		3	CABLE GLAND	
510	312105-0374		4	SCREW M6S ISO 4014 M6X30 A480	
520	312105-0453		4	SCREW M6S ISO 4017 M8X25 A480	

Pos	Part No	UN	Qty	Description	Page No

Machine Type | Group Description | Used-In | Group Number | Page No

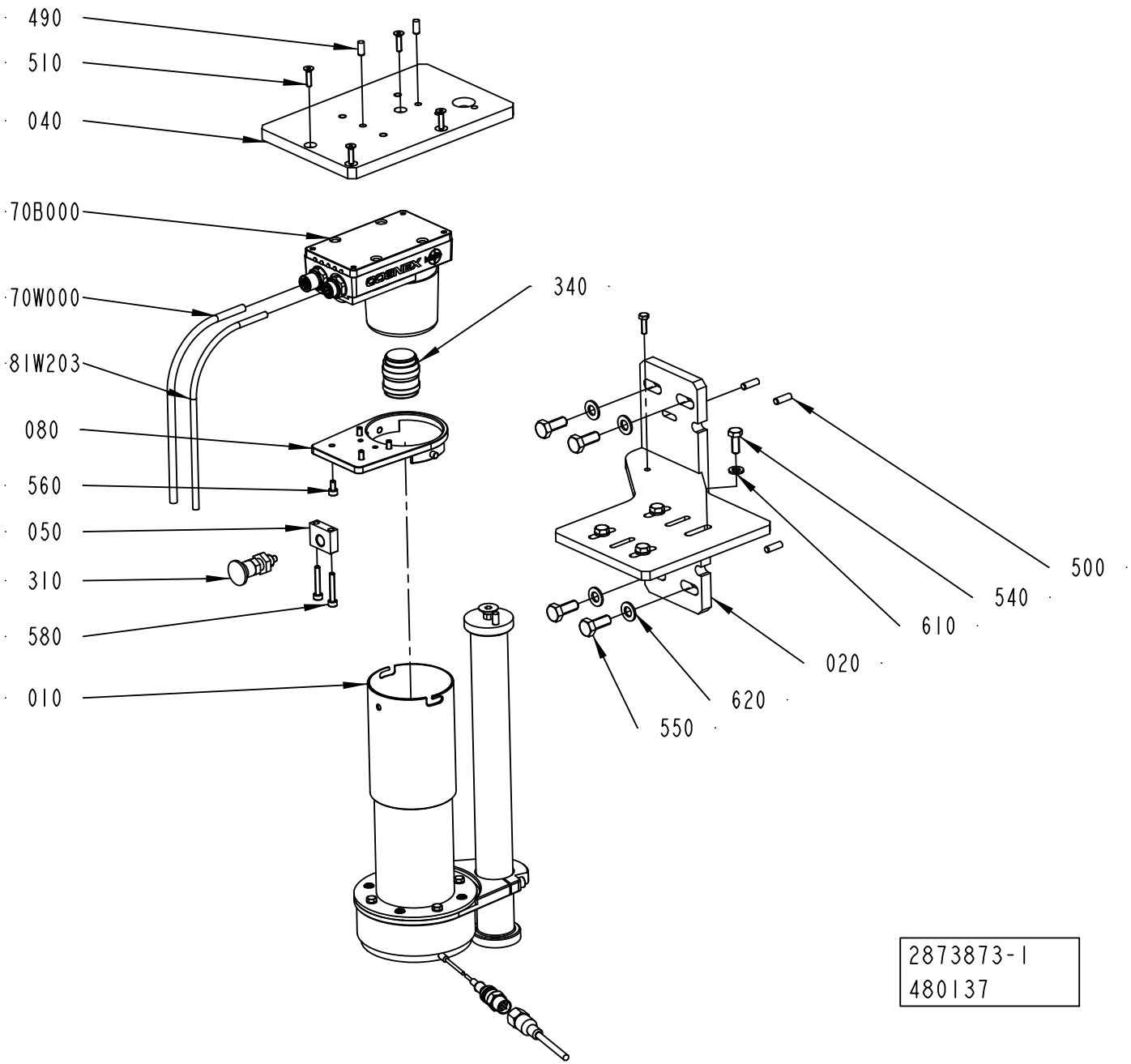
490
510
040
70B000
70W000
81W203
080
560
050
310
580
010
340
500
540
610
020
620
550
2873873-1
480137

ECM: 485907 - 20110401
Group number: 2873873-0100
Assembly Drawing: 2873873-1_1_AE

This list covers pages from 5-52 to 5-59

Pos	Part No	UN	Qty	Description	Page No
TBA RL MP, TPA RL MP (See drawing on pages: 5-56, 12-26)					
010	3149926-0100		1	RING LIGHT	**5-61, 12-31**
020	2792664-0000		1	BRACKET	
040	2873893-0000		1	BRACKET	
490	311103-0306		2	PARALLEL PIN ISO 2338 5M6X12 A1	
500	311103-0308		4	PARALLEL PIN ISO 2338 5M6X16 A1	
TBA RL STD, TPA RL STD (See drawing on pages: 5-52, 12-22)					
010	3052658-0100		1	RING LIGHT METALIZED PACK	**5-63, 12-33**
020	2792664-0000		1	BRACKET	
040	2873893-0000		1	BRACKET	
490	311103-0306		2	PARALLEL PIN ISO 2338 5M6X12 A1	
500	311103-0308		4	PARALLEL PIN ISO 2338 5M6X16 A1	
TGA RL MP (See drawing on pages: 5-58, 12-28)					
010	3149926-0100		1	RING LIGHT	**5-61, 12-31**
020	2780491-0000		1	BRACKET	
040	2780493-0000		1	PLATE	
500	311103-0308		2	PARALLEL PIN ISO 2338 5M6X16 A1	
TGA RL STD (See drawing on pages: 5-54, 12-24)					
010	3052658-0100		1	RING LIGHT METALIZED PACK	**5-63, 12-33**
020	2780491-0000		1	BRACKET	
040	2780493-0000		1	PLATE	
500	311103-0308		2	PARALLEL PIN ISO 2338 5M6X16 A1	
Common Parts					
030	2780492-0000		1	COLUMN	
050	2794721-0000		1	BLOCK	
060	2794790-0000		1	CLAMP	
070	2557544-0000		1	PROTECTION	
080	2792848-0000		1	SUPPORT	
090	2792879-0000		1	TUBE	
100	2873943-0000		1	CLAMP	
310	90051-0112		1	LOCK KNOB, NO. GN 617 NIK5	
340	90459-1180		1	LENS 16MM IN-SIGHT 4100, HF16HA-1B	
510	312155-0293		4	SCREW DIN 7991 MF6S M4X16 A4 70	
520	312155-0453		1	SCREW DIN 7991 MF6S M8X25 A4 70	
530	312105-0287		4	SCREW M6S ISO 4017 M4X8 A470	
540	312105-0368		4	SCREW M6S ISO 4017 M6X16 A480	
550	312105-0451		4	SCREW M6S ISO 4017 M8X20 A480	
560	312115-0287		4	SCREW ISO4762 M4X8 A4 80	
570	312115-0291		4	SCREW ISO4762 M4X12 A4 80	
580	312115-0297		2	SCREW ISO4762 M4X25 A4 80	
590	312115-0331		2	SCREW ISO4762 M5X20 A4 80	
600	315105-0136		4	WASHER BRB 4,3X8 RFR	
610	315105-0153		4	WASHER BRB 6,4X12 RFR	
620	315105-0165		4	WASHER BRB 8,4X16 RFR	
70B000	90600-1096		1	PROCESSOR UNIT IN-SIGHT 5100, IS-5100-00	
70E002	90459-2454		1	RING LIGHT ILLUMINATOR, CLK-003630-00	
70W000	90600-2102		1	POWER I/O CABLE, CCB-84901-0103-10	
70W002	351309-0050		1	'ACTUATOR/SENSOR CABLE PRKT 4-07/5M	
81W203	90600-2103		1	ETHERNET CABLE, CCB-84901-1004-10	

Machine Type | Group Description | Used-In | Group Number | Page No

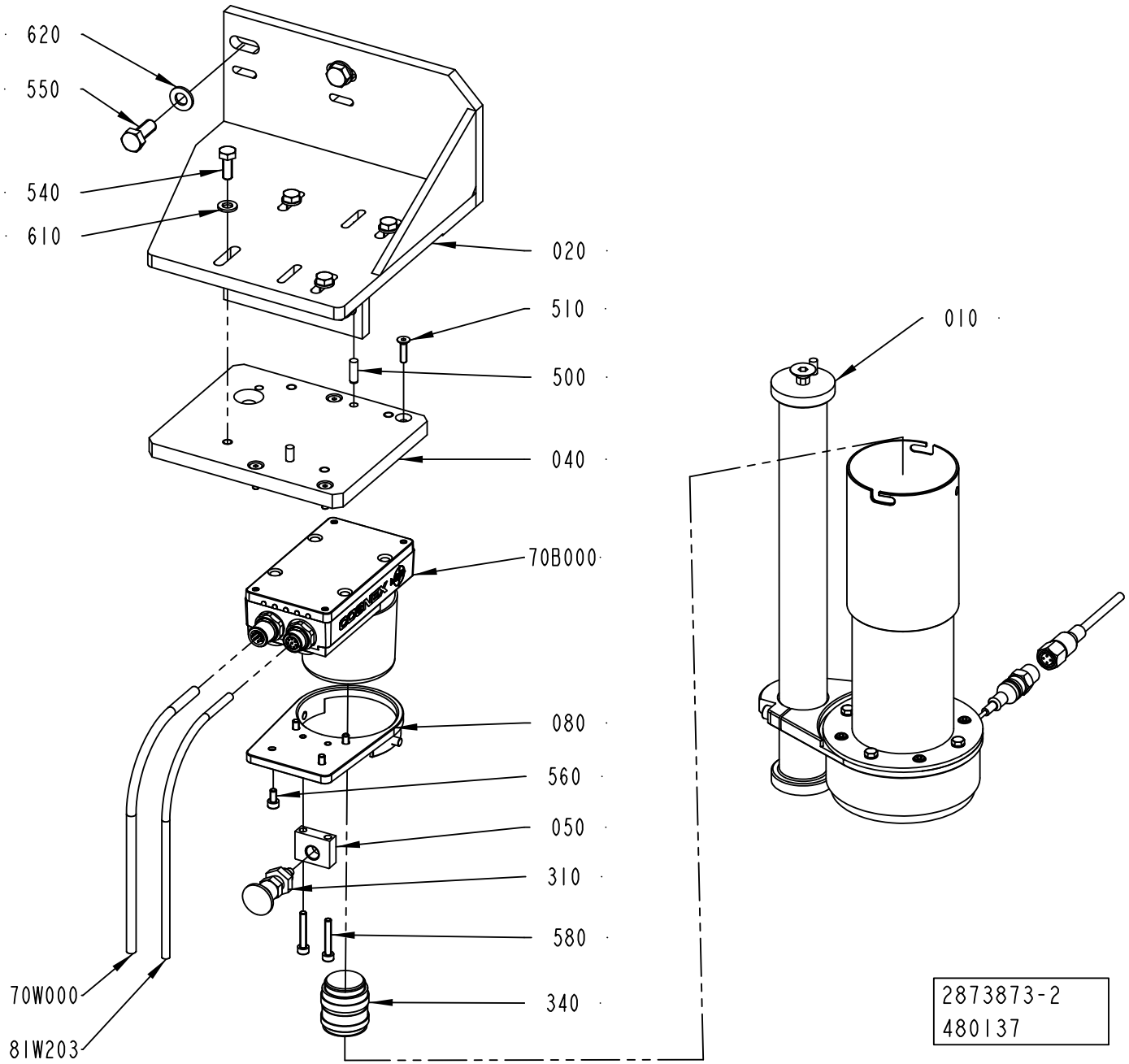
620
550
540
610
020
510
500
040
70B000
080
560
050
310
580
340
70W000
81W203
010
2873873-2
480137

ECM: 485907 - 20110401
Group number: 2873873-0100
Assembly Drawing: 2873873-2_1_AE

This list covers pages from 5-52 to 5-59

Pos	Part No	UN	Qty	Description	Page No
TBA RL MP, TPA RL MP (See drawing on pages: 5-56, 12-26)					
010	3149926-0100		1	RING LIGHT	**5-61, 12-31**
020	2792664-0000		1	BRACKET	
040	2873893-0000		1	BRACKET	
490	311103-0306		2	PARALLEL PIN ISO 2338 5M6X12 A1	
500	311103-0308		4	PARALLEL PIN ISO 2338 5M6X16 A1	
TBA RL STD, TPA RL STD (See drawing on pages: 5-52, 12-22)					
010	3052658-0100		1	RING LIGHT METALIZED PACK	**5-63, 12-33**
020	2792664-0000		1	BRACKET	
040	2873893-0000		1	BRACKET	
490	311103-0306		2	PARALLEL PIN ISO 2338 5M6X12 A1	
500	311103-0308		4	PARALLEL PIN ISO 2338 5M6X16 A1	
TGA RL MP (See drawing on pages: 5-58, 12-28)					
010	3149926-0100		1	RING LIGHT	**5-61, 12-31**
020	2780491-0000		1	BRACKET	
040	2780493-0000		1	PLATE	
500	311103-0308		2	PARALLEL PIN ISO 2338 5M6X16 A1	
TGA RL STD (See drawing on pages: 5-54, 12-24)					
010	3052658-0100		1	RING LIGHT METALIZED PACK	**5-63, 12-33**
020	2780491-0000		1	BRACKET	
040	2780493-0000		1	PLATE	
500	311103-0308		2	PARALLEL PIN ISO 2338 5M6X16 A1	
Common Parts					
030	2780492-0000		1	COLUMN	
050	2794721-0000		1	BLOCK	
060	2794790-0000		1	CLAMP	
070	2557544-0000		1	PROTECTION	
080	2792848-0000		1	SUPPORT	
090	2792879-0000		1	TUBE	
100	2873943-0000		1	CLAMP	
310	90051-0112		1	LOCK KNOB, NO. GN 617 NIK5	
340	90459-1180		1	LENS 16MM IN-SIGHT 4100, HF16HA-1B	
510	312155-0293		4	SCREW DIN 7991 MF6S M4X16 A4 70	
520	312155-0453		1	SCREW DIN 7991 MF6S M8X25 A4 70	
530	312105-0287		4	SCREW M6S ISO 4017 M4X8 A470	
540	312105-0368		4	SCREW M6S ISO 4017 M6X16 A480	
550	312105-0451		4	SCREW M6S ISO 4017 M8X20 A480	
560	312115-0287		4	SCREW ISO4762 M4X8 A4 80	
570	312115-0291		4	SCREW ISO4762 M4X12 A4 80	
580	312115-0297		2	SCREW ISO4762 M4X25 A4 80	
590	312115-0331		2	SCREW ISO4762 M5X20 A4 80	
600	315105-0136		4	WASHER BRB 4,3X8 RFR	
610	315105-0153		4	WASHER BRB 6,4X12 RFR	
620	315105-0165		4	WASHER BRB 8,4X16 RFR	
70B000	90600-1096		1	PROCESSOR UNIT IN-SIGHT 5100, IS-5100-00	
70E002	90459-2454		1	RING LIGHT ILLUMINATOR, CLK-003630-00	
70W000	90600-2102		1	POWER I/O CABLE, CCB-84901-0103-10	
70W002	351309-0050		1	'ACTUATOR/SENSOR CABLE PRKT 4-07/5M	
81W203	90600-2103		1	ETHERNET CABLE, CCB-84901-1004-10	

Machine Type | Group Description | Used-In | Group Number | Page No

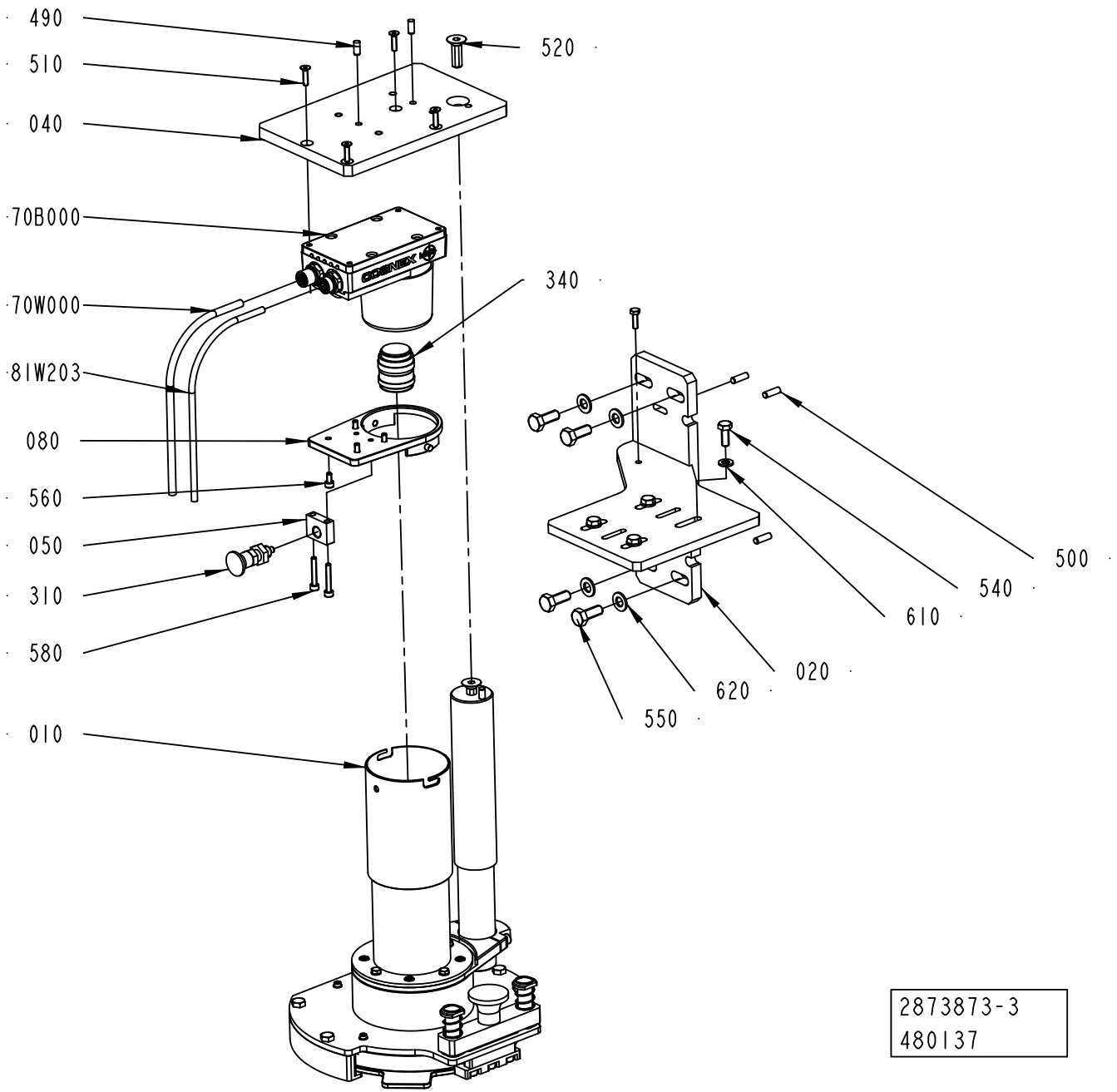
490
510
040
520
70B000
70W000
340
81W203
080
560
050
310
580
010
500
540
610
020
620
550
2873873-3
480137

ECM: 485907 - 20110401
Group number: 2873873-0100
Assembly Drawing: 2873873-3_1_AA

This list covers pages from 5-52 to 5-59

Pos	Part No	UN	Qty	Description	Page No
TBA RL MP, TPA RL MP (See drawing on pages: 5-56, 12-26)					
010	3149926-0100		1	RING LIGHT	**5-61, 12-31**
020	2792664-0000		1	BRACKET	
040	2873893-0000		1	BRACKET	
490	311103-0306		2	PARALLEL PIN ISO 2338 5M6X12 A1	
500	311103-0308		4	PARALLEL PIN ISO 2338 5M6X16 A1	
TBA RL STD, TPA RL STD (See drawing on pages: 5-52, 12-22)					
010	3052658-0100		1	RING LIGHT METALIZED PACK	**5-63, 12-33**
020	2792664-0000		1	BRACKET	
040	2873893-0000		1	BRACKET	
490	311103-0306		2	PARALLEL PIN ISO 2338 5M6X12 A1	
500	311103-0308		4	PARALLEL PIN ISO 2338 5M6X16 A1	
TGA RL MP (See drawing on pages: 5-58, 12-28)					
010	3149926-0100		1	RING LIGHT	**5-61, 12-31**
020	2780491-0000		1	BRACKET	
040	2780493-0000		1	PLATE	
500	311103-0308		2	PARALLEL PIN ISO 2338 5M6X16 A1	
TGA RL STD (See drawing on pages: 5-54, 12-24)					
010	3052658-0100		1	RING LIGHT METALIZED PACK	**5-63, 12-33**
020	2780491-0000		1	BRACKET	
040	2780493-0000		1	PLATE	
500	311103-0308		2	PARALLEL PIN ISO 2338 5M6X16 A1	
Common Parts					
030	2780492-0000		1	COLUMN	
050	2794721-0000		1	BLOCK	
060	2794790-0000		1	CLAMP	
070	2557544-0000		1	PROTECTION	
080	2792848-0000		1	SUPPORT	
090	2792879-0000		1	TUBE	
100	2873943-0000		1	CLAMP	
310	90051-0112		1	LOCK KNOB, NO. GN 617 NIK5	
340	90459-1180		1	LENS 16MM IN-SIGHT 4100, HF16HA-1B	
510	312155-0293		4	SCREW DIN 7991 MF6S M4X16 A4 70	
520	312155-0453		1	SCREW DIN 7991 MF6S M8X25 A4 70	
530	312105-0287		4	SCREW M6S ISO 4017 M4X8 A470	
540	312105-0368		4	SCREW M6S ISO 4017 M6X16 A480	
550	312105-0451		4	SCREW M6S ISO 4017 M8X20 A480	
560	312115-0287		4	SCREW ISO4762 M4X8 A4 80	
570	312115-0291		4	SCREW ISO4762 M4X12 A4 80	
580	312115-0297		2	SCREW ISO4762 M4X25 A4 80	
590	312115-0331		2	SCREW ISO4762 M5X20 A4 80	
600	315105-0136		4	WASHER BRB 4,3X8 RFR	
610	315105-0153		4	WASHER BRB 6,4X12 RFR	
620	315105-0165		4	WASHER BRB 8,4X16 RFR	
70B000	90600-1096		1	PROCESSOR UNIT IN-SIGHT 5100, IS-5100-00	
70E002	90459-2454		1	RING LIGHT ILLUMINATOR, CLK-003630-00	
70W000	90600-2102		1	POWER I/O CABLE, CCB-84901-0103-10	
70W002	351309-0050		1	'ACTUATOR/SENSOR CABLE PRKT 4-07/5M	
81W203	90600-2103		1	ETHERNET CABLE, CCB-84901-1004-10	

Machine Type | Group Description | Used-In | Group Number | Page No

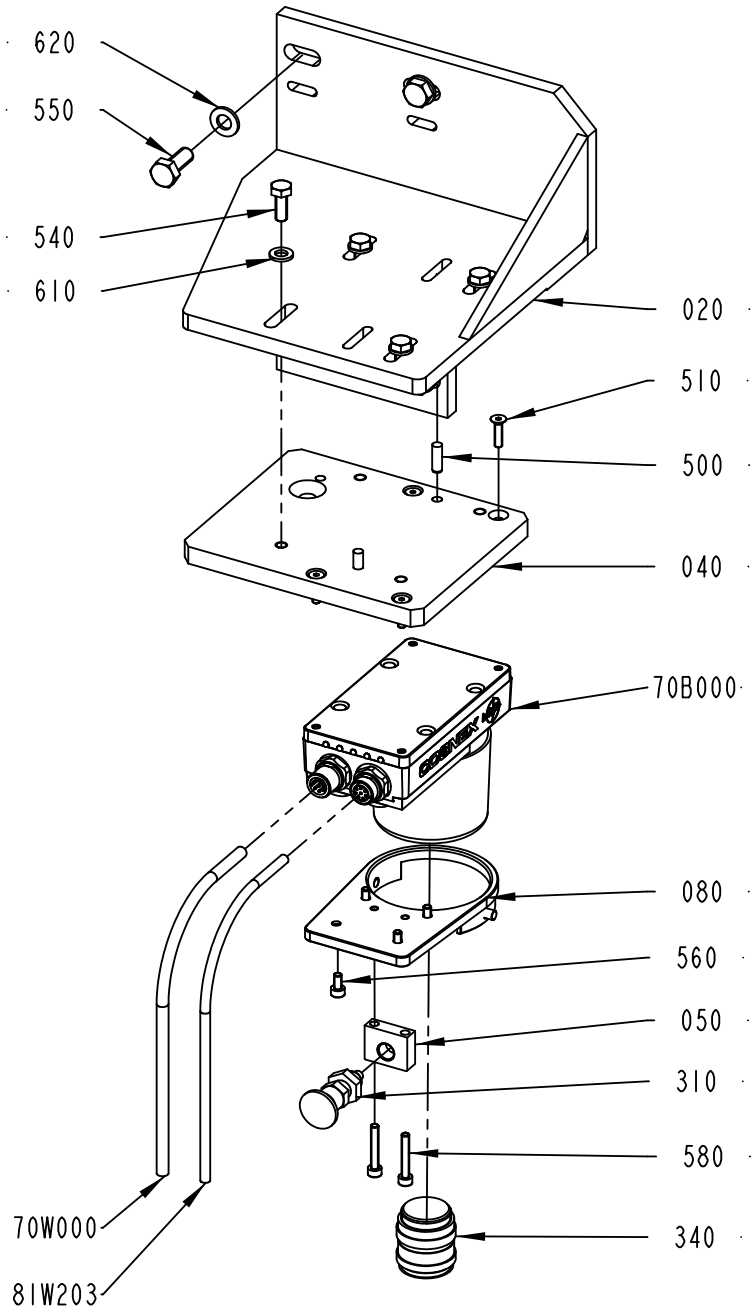

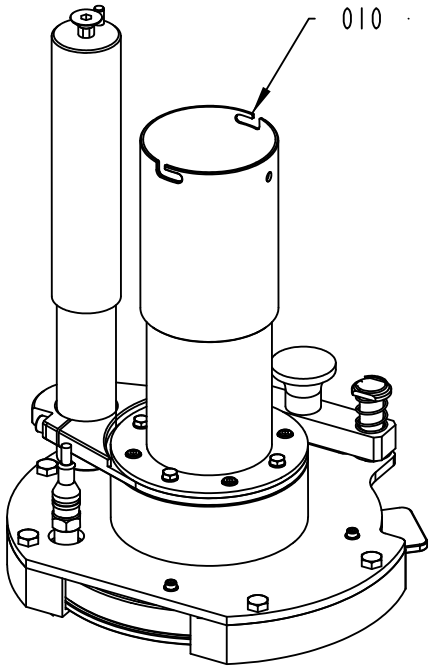

2873873-4
480137

ECM: 485907 - 20110401
Group number: 2873873-0100
Assembly Drawing: 2873873-4_1_AA

This list covers pages from 5-52 to 5-59

Pos	Part No	UN	Qty	Description	Page No
TBA RL MP, TPA RL MP (See drawing on pages: 5-56, 12-26)					
010	3149926-0100		1	RING LIGHT	**5-61, 12-31**
020	2792664-0000		1	BRACKET	
040	2873893-0000		1	BRACKET	
490	311103-0306		2	PARALLEL PIN ISO 2338 5M6X12 A1	
500	311103-0308		4	PARALLEL PIN ISO 2338 5M6X16 A1	
TBA RL STD, TPA RL STD (See drawing on pages: 5-52, 12-22)					
010	3052658-0100		1	RING LIGHT METALIZED PACK	**5-63, 12-33**
020	2792664-0000		1	BRACKET	
040	2873893-0000		1	BRACKET	
490	311103-0306		2	PARALLEL PIN ISO 2338 5M6X12 A1	
500	311103-0308		4	PARALLEL PIN ISO 2338 5M6X16 A1	
TGA RL MP (See drawing on pages: 5-58, 12-28)					
010	3149926-0100		1	RING LIGHT	**5-61, 12-31**
020	2780491-0000		1	BRACKET	
040	2780493-0000		1	PLATE	
500	311103-0308		2	PARALLEL PIN ISO 2338 5M6X16 A1	
TGA RL STD (See drawing on pages: 5-54, 12-24)					
010	3052658-0100		1	RING LIGHT METALIZED PACK	**5-63, 12-33**
020	2780491-0000		1	BRACKET	
040	2780493-0000		1	PLATE	
500	311103-0308		2	PARALLEL PIN ISO 2338 5M6X16 A1	
Common Parts					
030	2780492-0000		1	COLUMN	
050	2794721-0000		1	BLOCK	
060	2794790-0000		1	CLAMP	
070	2557544-0000		1	PROTECTION	
080	2792848-0000		1	SUPPORT	
090	2792879-0000		1	TUBE	
100	2873943-0000		1	CLAMP	
310	90051-0112		1	LOCK KNOB, NO. GN 617 NIK5	
340	90459-1180		1	LENS 16MM IN-SIGHT 4100, HF16HA-1B	
510	312155-0293		4	SCREW DIN 7991 MF6S M4X16 A4 70	
520	312155-0453		1	SCREW DIN 7991 MF6S M8X25 A4 70	
530	312105-0287		4	SCREW M6S ISO 4017 M4X8 A470	
540	312105-0368		4	SCREW M6S ISO 4017 M6X16 A480	
550	312105-0451		4	SCREW M6S ISO 4017 M8X20 A480	
560	312115-0287		4	SCREW ISO4762 M4X8 A4 80	
570	312115-0291		4	SCREW ISO4762 M4X12 A4 80	
580	312115-0297		2	SCREW ISO4762 M4X25 A4 80	
590	312115-0331		2	SCREW ISO4762 M5X20 A4 80	
600	315105-0136		4	WASHER BRB 4,3X8 RFR	
610	315105-0153		4	WASHER BRB 6,4X12 RFR	
620	315105-0165		4	WASHER BRB 8,4X16 RFR	
70B000	90600-1096		1	PROCESSOR UNIT IN-SIGHT 5100, IS-5100-00	
70E002	90459-2454		1	RING LIGHT ILLUMINATOR, CLK-003630-00	
70W000	90600-2102		1	POWER I/O CABLE, CCB-84901-0103-10	
70W002	351309-0050		1	'ACTUATOR/SENSOR CABLE PRKT 4-07/5M	
81W203	90600-2103		1	ETHERNET CABLE, CCB-84901-1004-10	

Machine Type | Group Description | Used-In | Group Number | Page No

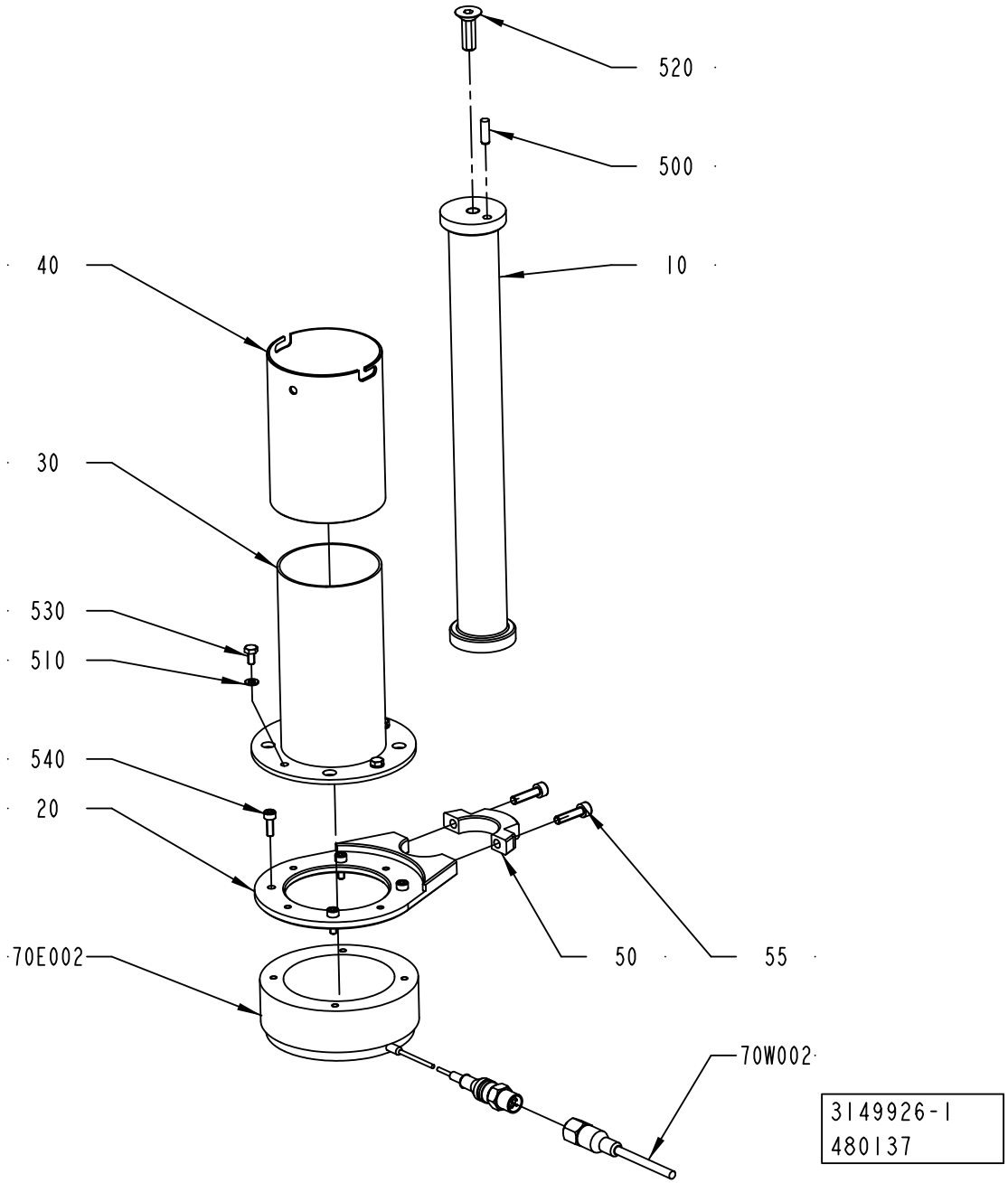
520
500
40
10
30
530
510
540
20
70E002
50
55
70W002
3149926-1
480137

ECM: 485908 - 20110401
Group number: 3149926-0100
Assembly Drawing: 3149926-1_1_AA

Pos	Part No	UN	Qty	Description	Page No
-					
010	2780492-0000		1	COLUMN	
020	2794790-0000		1	CLAMP	
030	2557544-0000		1	PROTECTION	
040	2792879-0000		1	TUBE	
050	2873943-0000		1	CLAMP	
055	312115-0331		1	SCREW ISO4762 M5X20 A4 80	
500	311103-0308		1	PARALLEL PIN ISO 2338 5M6X16 A1	
510	315105-0136		4	WASHER BRB 4,3X8 RFR	
520	312155-0453		1	SCREW DIN 7991 MF6S M8X25 A4 70	
530	312105-0287		4	SCREW M6S ISO 4017 M4X8 A470	
540	312115-0291		4	SCREW ISO4762 M4X12 A4 80	
550	312115-0331		1	SCREW ISO4762 M5X20 A4 80	
70E002	90459-2454		1	RING LIGHT ILLUMINATOR, CLK-003630-00	
70W002	351309-0050		1	ACTUATOR/SENSOR CABLE PRKT 4-07/5M	

Pos	Part No	UN	Qty	Description	Page No

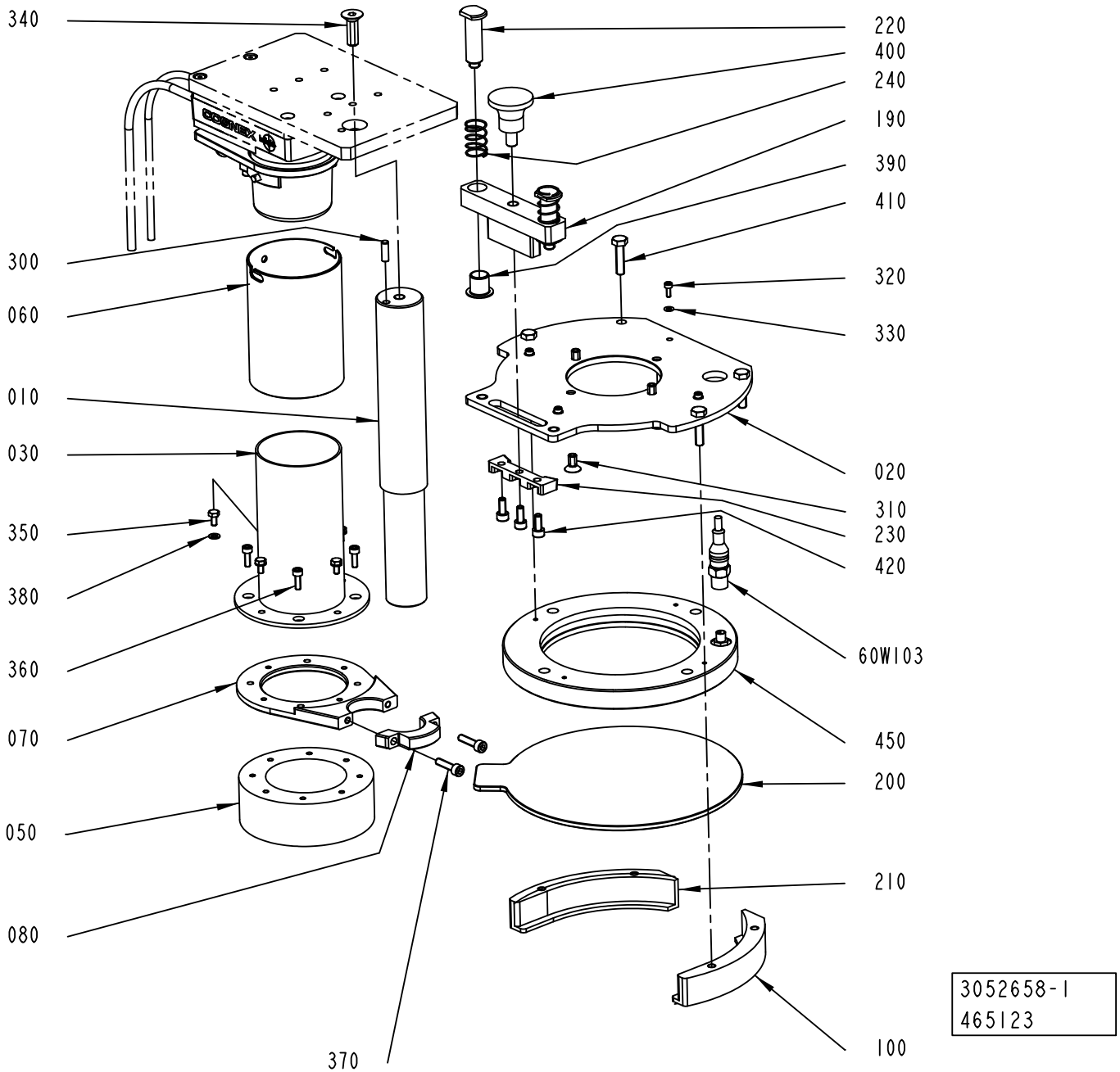
340
300
060
010
030
350
380
360
070
050
080
370
220
400
240
190
390
410
320
330
020
310
230
420
60W103
450
200
210
100
3052658-1
465123

ECM: 465123 - 20101001
Group number: 3052658-0100
Assembly Drawing: 3052658-1_1_AC

Pos	Part No	UN	Qty	Description	Page No
-					
010	2985768-0000		1	COLUMN	
020	3095791-0000		1	PLATE	
030	2557544-0000		1	PROTECTION	
050	3031442-0000		1	SPACER	
060	2792879-0000		1	TUBE	
070	2794790-0000		1	CLAMP	
080	2873943-0000		1	CLAMP	
100	3095796-0000		1	HOLDER	
190	3053477-0000		1	BRACKET	
200	3052393-0000		1	GLASS COVER	
210	3095790-0000		1	HOLDER	
220	3053471-0000		2	PIN	
230	3053478-0000		1	PUSHER	
240	3060116-0000		2	COMPRESSION SPRING	
300	311103-0308		1	PARALLEL PIN ISO 2338 5M6X16 A1	
310	312155-0366		4	SCREW DIN 7991 MF6S M6X12 A4 70	
320	312115-0222		4	SCREW ISO4762 M3X8 A4 80	
330	315106-0124		4	WASHER ISO 7089-3-200 HV A4	
340	312155-0453		1	SCREW DIN 7991 MF6S M8X25 A4 70	
350	312105-0287		4	SCREW M6S ISO 4017 M4X8 A470	
360	312115-0291		4	SCREW ISO4762 M4X12 A4 80	
370	312115-0331		2	SCREW ISO4762 M5X20 A4 80	
380	315105-0136		4	WASHER BRB 4,3X8 RFR	
390	321156-0188		2	FLANGE BUSHING, IGLIDUR H370 12X14X15	
400	318871-0105		1	KNOB CIRCULAR, EXT THREAD, NO. 8302-6150	
410	312105-0372		4	SCREW M6S ISO 4017 M6X25 A480	
420	312115-0327		3	SCREW ISO4762 M5X12 A4 80	
450	90602-3985		1	RING LIGHT ILLUMINATOR, TLD-150-617-C	
60W103	351407-0020		1	ACTU/SENS. CABLE PRST 3-PRKMV 3-06/2,0M	

Pos	Part No	UN	Qty	Description	Page No

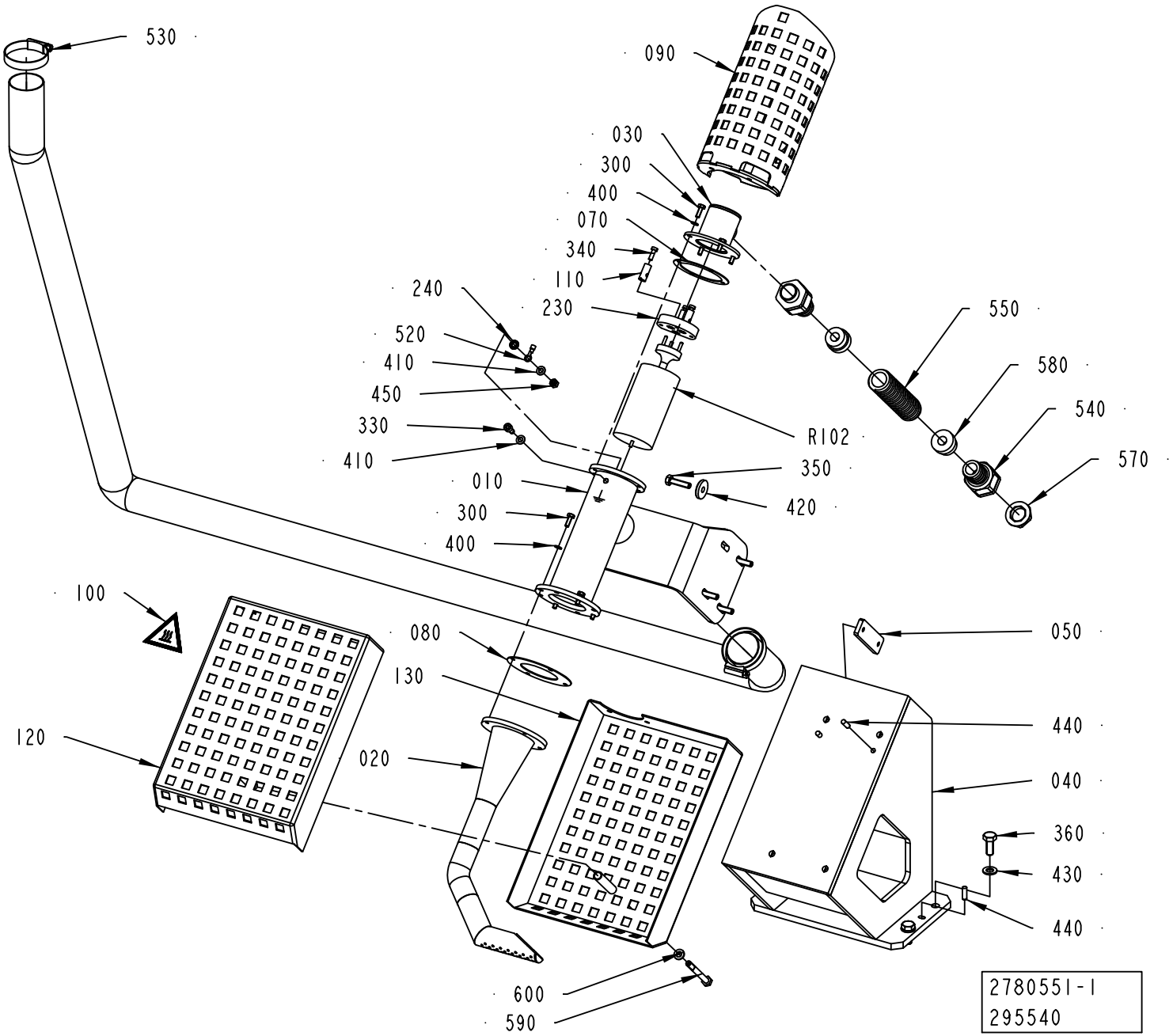
530
090
030
300
400
070
340
110
240
230
520
410
450
330
410
550
580
540
570
R102
350
420
010
300
400
100
080
130
120
020
050
440
040
360
430
440
600
590
2780551-1
295540

ECM: 428925 - 20100401
Group number: 2780551-0100
Assembly Drawing: 2780551-1_1_AA

Pos	Part No	UN	Qty	Description	Page No
-					
010	2780489-0000		1	PRE-HEATER	
020	2662760-0000		1	HEATING CHAMBER	
030	2710819-0000		1	LID	
040	2780488-0000		1	BRACKET	
050	2780487-0000		2	NUT PLATE	
070	1188609-0000		1	FLANGE SEAL	
080	1188610-0000		1	FLANGE SEAL	
090	2836263-0000		1	HEAT GUARD	
100	359710-0001		1	WARNING SIGN ISO, HOT SURFACE	
110	205438-0000		3	CABLE GLAND	
120	2773627-0000		1	HEAT GUARD	
130	2773630-0000		1	HEAT GUARD	
210	90152-0075	MM	2350	HOSE	
230	90125-0020		1	PLATE COMPLETE	
	270926-0000		*6*	*NUT*	
	270927-0000		*3*	*SCREW*	
	294464-0000		*1*	*BASE PLATE*	
240	90062-0060		1	LOCK WASHER 5,3/10 H=0,6 FZB	
300	312105-0291		8	SCREW M6S ISO 4017 M4X12 A470	
330	312115-0327		1	SCREW ISO4762 M5X12 A4 80	
340	312122-0291		3	SCREW ISO 1207 M4X12 NI PL BRASS	
350	312105-0372		4	SCREW M6S ISO 4017 M6X25 A480	
360	312105-0451		4	SCREW M6S ISO 4017 M8X20 A480	
400	315105-0136		8	WASHER BRB 4,3X8 RFR	
410	315105-0146		2	WASHER BRB 5,3X10 RFR	
420	315125-0153		4	WASHER TBRSB 6,4X22X4 A4	
430	315106-0165		4	WASHER ISO 7089-8-200 HV A4	
440	311103-0308		4	PARALLEL PIN ISO 2338 5M6X16 A1	
450	312605-0314		1	HEXAGON NUT, M6M M5 A280	
520	353101-0122		1	CABLE SHOE 0,5-1,5MM2 M5 RED	
530	342991-0108		2	HOSE CLIP,WORM DRIVE TYPE (38)-50	
540	90458-0430		2	HOSE GLAND W/O INSERT M20 EXTENDED	
550	90152-0051	M	1	SPIRAL CONDUIT, 25X18, UL 1816	
570	90458-0323		1	NUT, M20X1,5	
580	353249-0012		2	INSERT, SINGLE HOLE, EK 154/11	
590	312105-0382		1	SCREW M6S ISO 4014 M6X60 A480	
600	315105-0153		1	WASHER BRB 6,4X12 RFR	
R102	90206-0124		1	HEATING ELEMENT 2X1500W 230V	

Pos	Part No	UN	Qty	Description	Page No

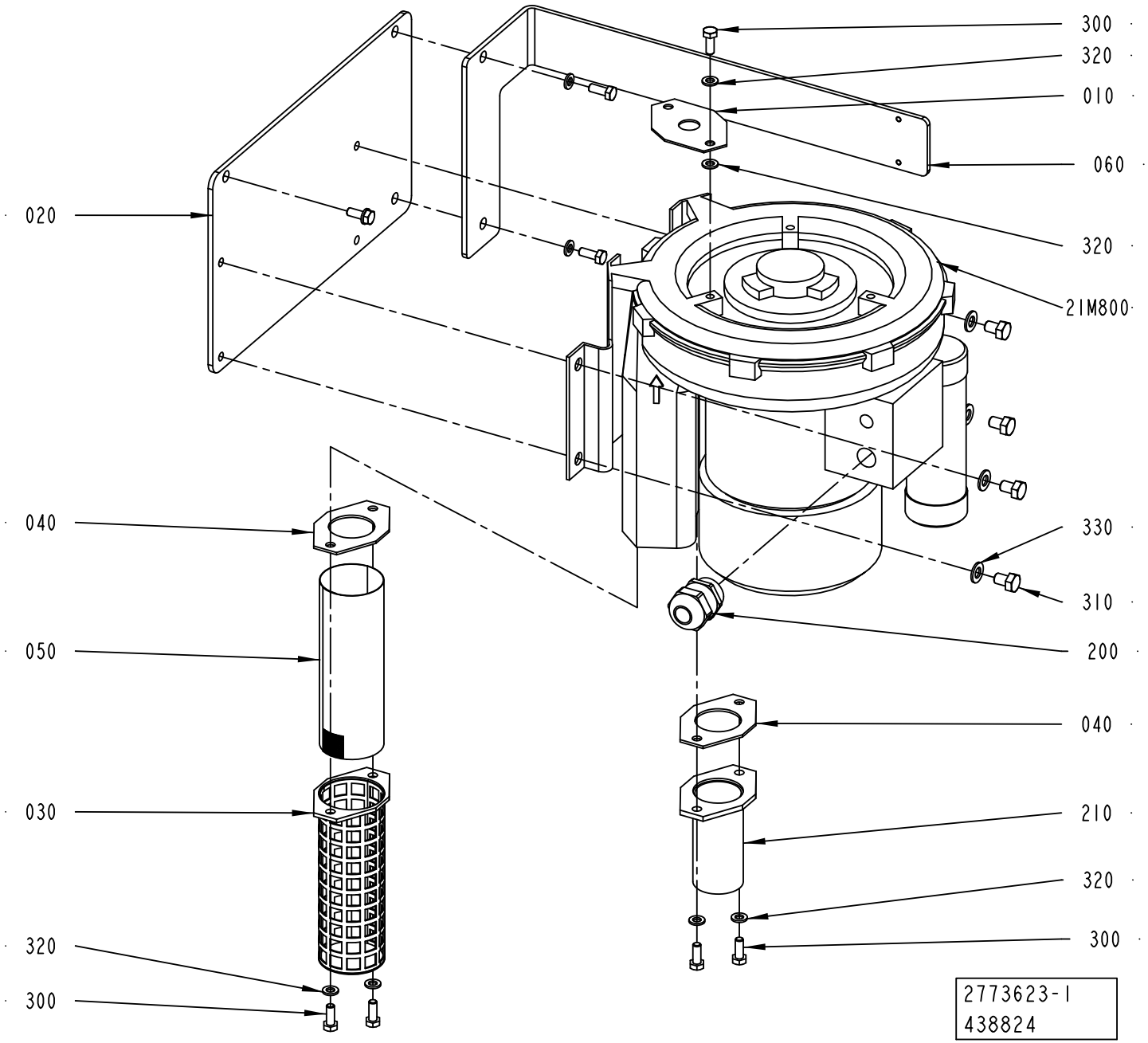
300
320
010
060
020
320
21M800
040
330
310
050
200
040
030
210
320
320
300
300
2773623-1
438824

ECM: 446239 - 20100701
Group number: 2773623-0100
Assembly Drawing: 2773623-1_1_AC

Pos	Part No	UN	Qty	Description	Page No
-					
010	1030874-0000		1	THROTTLE WASHER	
020	2779772-0000		1	BRACKET	
030	1030335-0000		1	FILTER HOLDER	
040	1030878-0000		2	GASKET	
050	1030338-0000		1	NET	
060	3093726-0000		1	PLATE	
200	90458-0316		1	CABLE GLAND, M25X1,5, NO.5311 1130	
210	2663999-0000		1	NIPPLE	
21M800	90459-6768		1	FAN 2BH1300-7AV15	
300	312105-0368		8	SCREW M6S ISO 4017 M6X16 A480	
310	312105-0447		4	SCREW M6S ISO 4017 M8X12 A480	
320	315105-0153		9	WASHER BRB 6,4X12 RFR	
330	315105-0165		4	WASHER BRB 8,4X16 RFR	

Pos	Part No	UN	Qty	Description	Page No

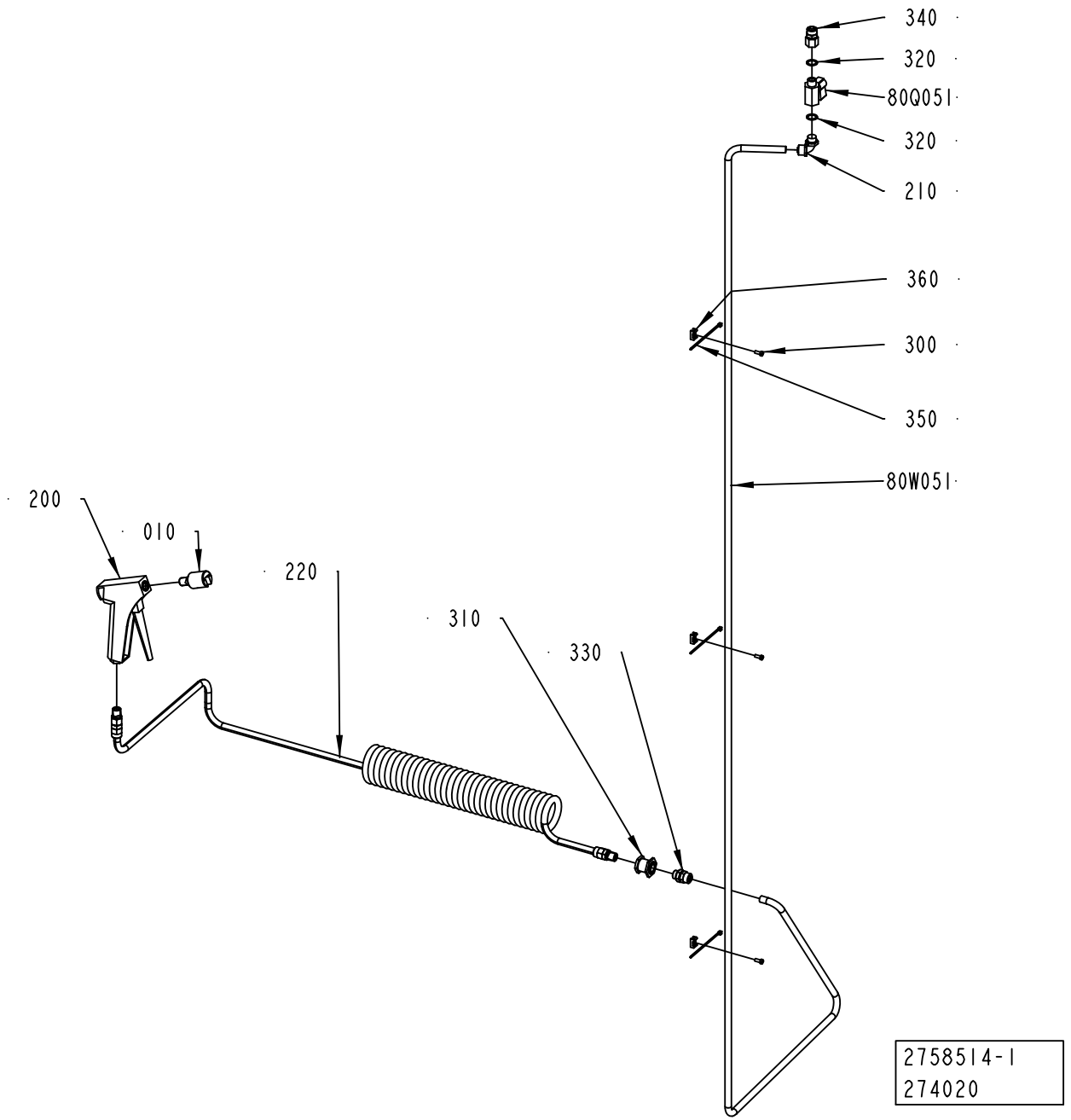
340
320
80Q051
320
210
360
300
350
80W051
200
010
220
310
330
2758514-1
274020

ECM: 274446 - 20060921
Group number: 2758514-0100
Assembly Drawing: 2758514-1_1_AA

Pos	Part No	UN	Qty	Description	Page No
-					
010	2506940-0000		1	NOZZLE	
200	90458-1483		1	SPRAY GUN WATER G1/4	
210	90224-0325		1	ELBOW 90 COUPL.,EXT.THREAD 10/8-G1/4"	
220	90458-1741		1	HOSE ASSEMBLY, CEJN 19 958 9669	
300	312125-0289		3	SCREW ISO 1207 M4X10 A4	
310	342767-0104		1	BULKHEAD LEAD-IN, G1/4	
320	315239-0110		2	NYLON WASHER G1/4, 1/4RRP	
330	342921-0132		1	STRAIGHT COUPL.,EXT.THREADED 10/8-G1/4"	
340	342923-0132		1	STRAIGHT COUPL.,INT.THREADED 10/8-G1/4"	
350	352113-0101		3	CABLE TIE, BLACK 92X2,5 MM	
360	352113-0205		3	ANCHOR PLATES FOR STRIPS, TM2S8-C100	
80Q051	90187-0045		1	BALL VALVE G1/4 CR PL	
80W051	315400-0009	MM	2800	TUBE PUN-H-10X1,5-SW	

Pos	Part No	UN	Qty	Description	Page No

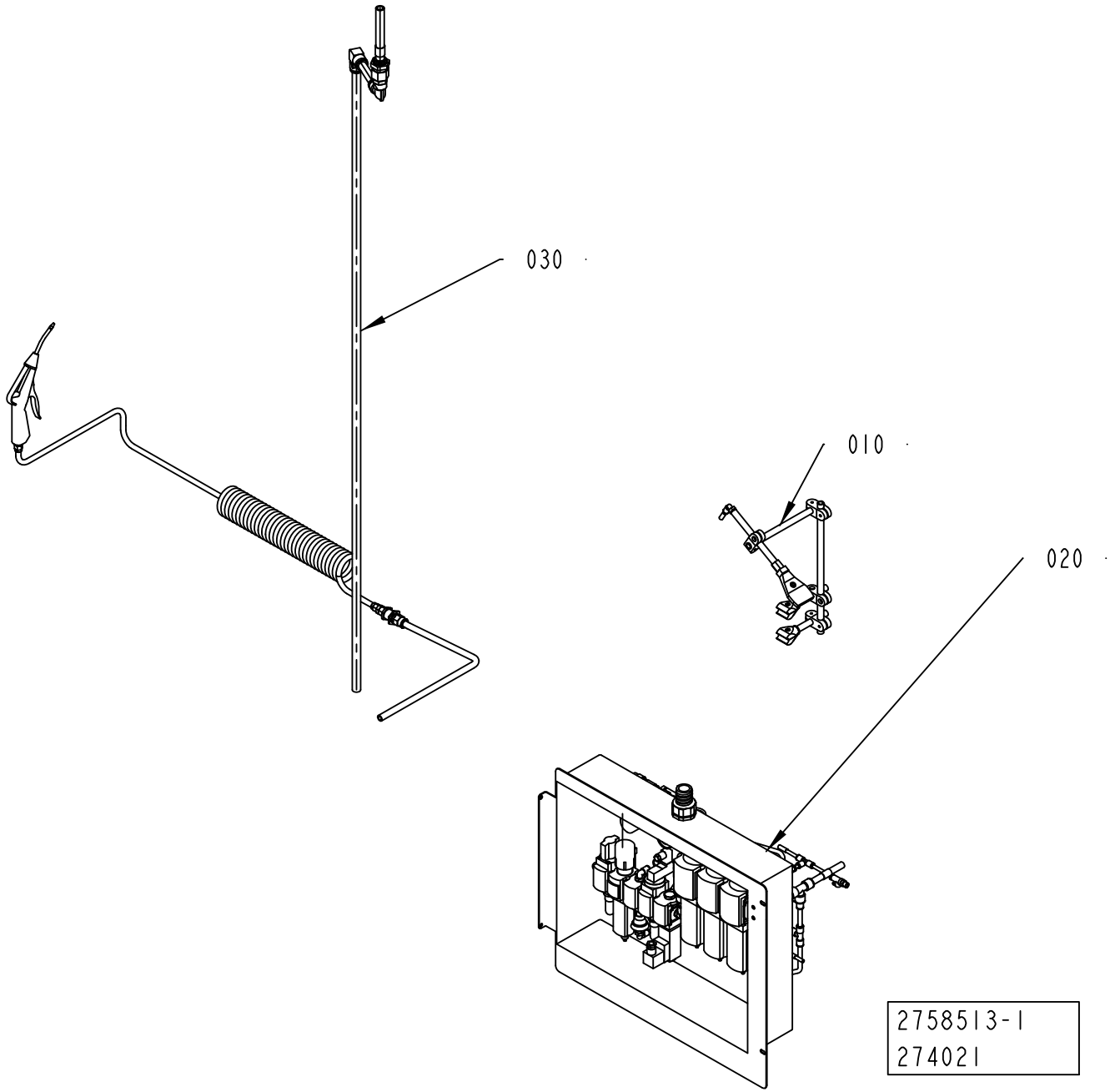
030
010
020
2758513-1
274021

ECM: 274471 - 20060921
Group number: 2758513-0100
Assembly Drawing: 2758513-1_1_AA

Pos	Part No	UN	Qty	Description	Page No
-					
010	2758512-0100		1	BLOWING SYSTEM	**5-73**
020	2838672-0100		1	PNEUMATIC PANEL	**5-75, 5-77, 5-79**
030	2838686-0100		1	AIR JET GUN	**5-85**

Pos	Part No	UN	Qty	Description	Page No

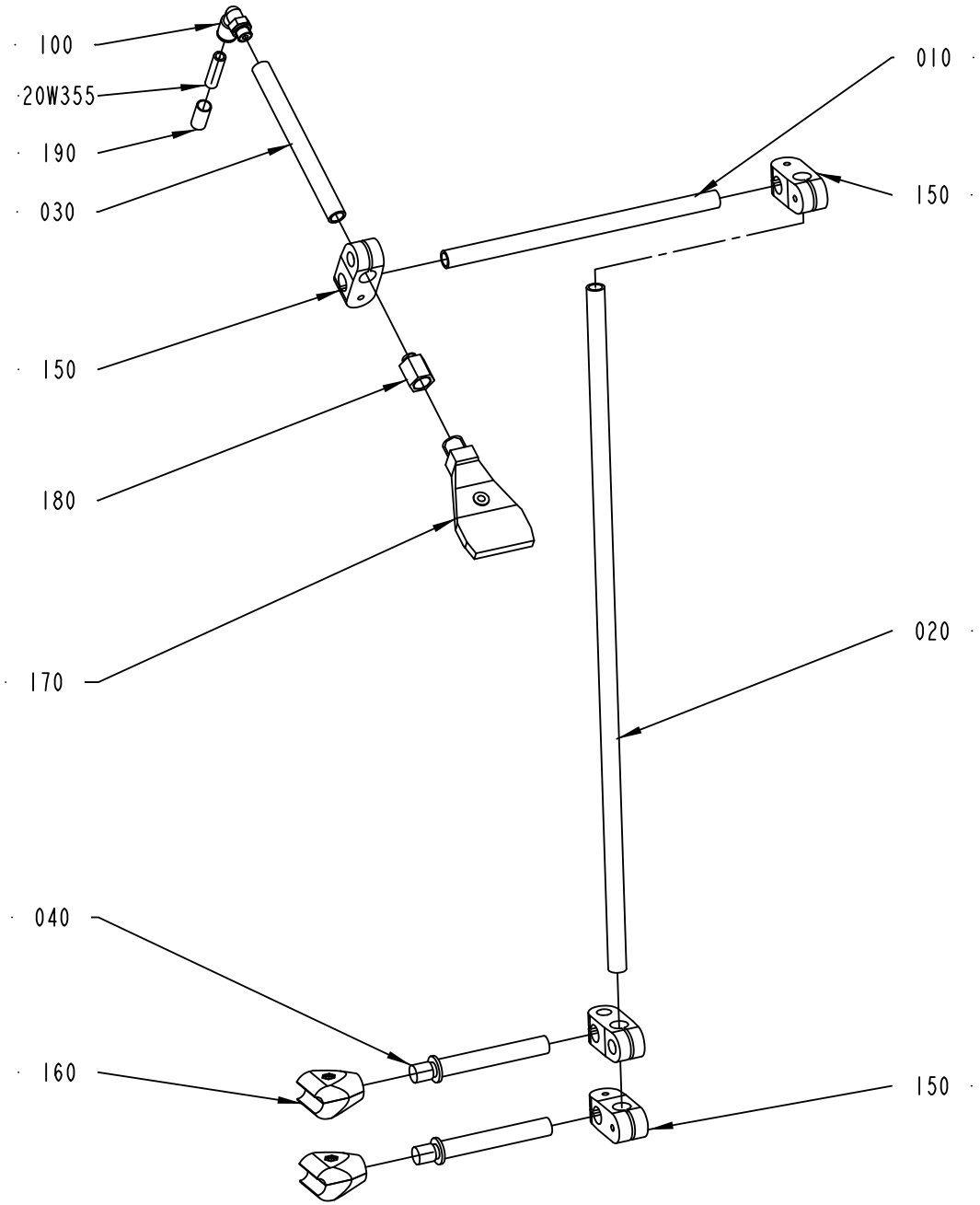
100
20W355
190
030
150
180
170
040
160
010
150
020
150
2758512-1
300393

ECM: 303456 - 20070517
Group number: 2758512-0100
Assembly Drawing: 2758512-1_1_AB

Pos	Part No	UN	Qty	Description	Page No
-					
010	2775403-0000		1	PIPE	
020	2775404-0000		1	PIPE	
030	2788176-0000		1	PIPE	
040	2838679-0000		2	SHAFT	
100	350002-0007		1	PUSH-IN L-FITTING QSL-F-G1/8-8	
150	90600-1001		4	CROSS CLAMP, 340/68385	
160	90458-0499		2	HOLDER 12 MM NO. 82 66861	
170	90424-0089		1	AIR NOZZLE, BSPT1/4, AAB727-1/4-15	
180	90330-0134		1	NIPPLES,REDUCING,INT THREAD, G1/4-G1/8	
190	90459-7370		1	MARKING FOR PNEUM. TUBING, PRZ08	
20W355	315400-0004	MM	3000	TUBE PUN-H-8X1,25-BL	

Pos	Part No	UN	Qty	Description	Page No

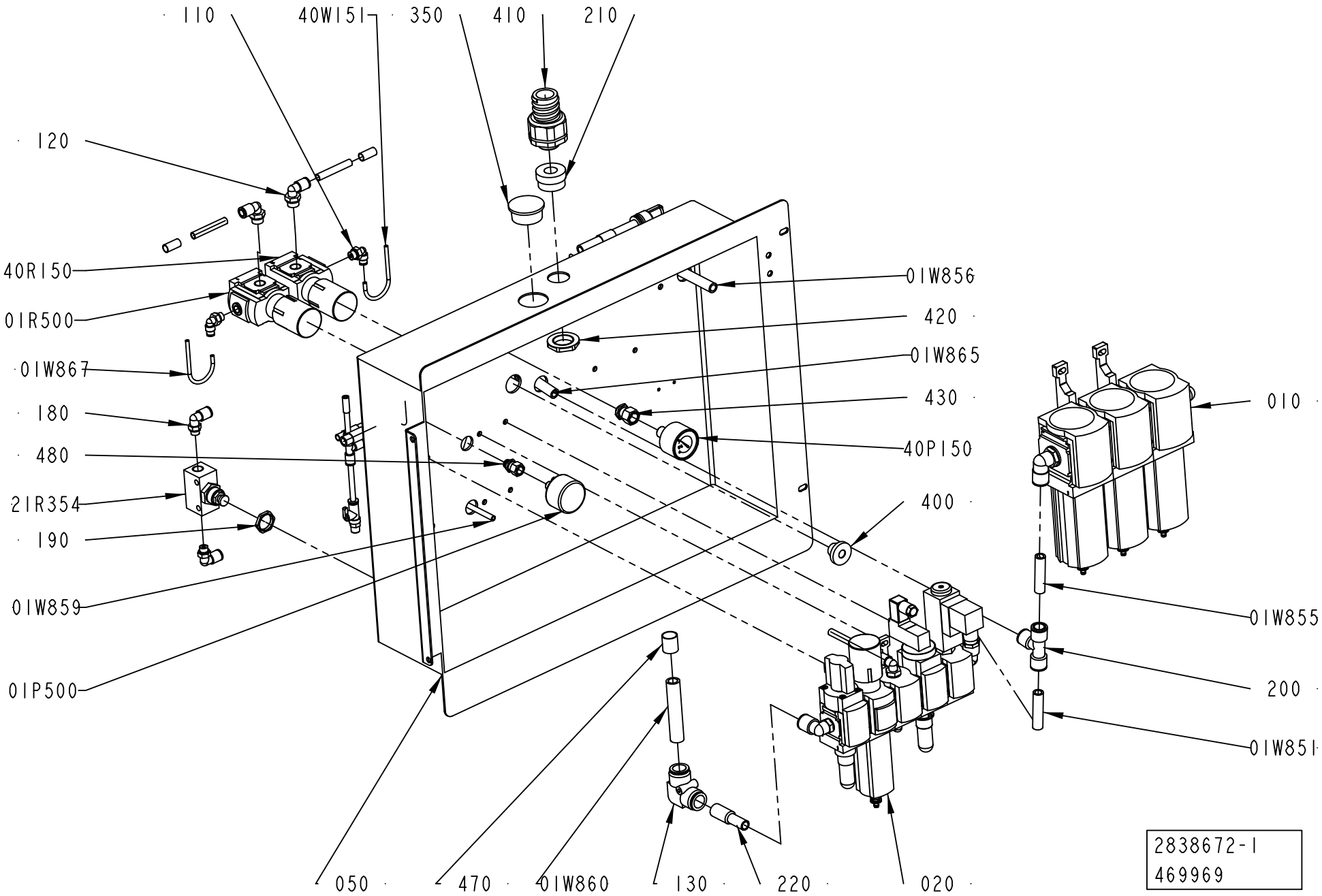
110
40W151
350
410
210
120
40R150
01R500
01W867
180
480
21R354
190
01W859
01P500
01W856
420
01W865
430
40P150
400
010
01W855
200
01W851
050
470
01W860
130
220
020
2838672-1
469969

ECM: 474784 - 20101109
Group number: 2838672-0100
Assembly Drawing: 2838672-1_1_AF

This list covers pages from 5-74 to 5-79

Pos	Part No	UN	Qty	Description	Page No
-					
010	2838673-0100		1	SERVICE UNIT	5-81
01P500	90459-3603		1	PRESSURE GAUGE, MAP-40-6-1/8-EN	
01R500	90459-5817		1	REGULATOR, MS4-LR-1/4-D6-A8-AS	
01R951	90328-0047		1	SILENCER G1/8"	
01R953	90328-0047		1	SILENCER G1/8"	
01R954	90328-0029		1	SILENCER M5	
01R955	90328-0029		1	SILENCER M5	
01U950	90459-2591		1	SINGLE VALVE SUB-BASE CDSV5.0-AS-1/8	
01W851	315400-0010	MM	300	TUBE PUN-H-12X2-BL	
01W853	315400-0001	MM	300	TUBE PUN-H-6X1-BL	
01W854	315400-0010	MM	300	TUBE PUN-H-12X2-BL	
01W855	315400-0010	MM	300	TUBE PUN-H-12X2-BL	
01W856	315400-0010	MM	300	TUBE PUN-H-12X2-BL	
01W857	315400-0004	MM	300	TUBE PUN-H-8X1,25-BL	
01W858	315400-0010	MM	300	TUBE PUN-H-12X2-BL	
01W859	315400-0001	MM	300	TUBE PUN-H-6X1-BL	
01W860	315400-0013	MM	300	TUBE PUN-H-16-2,5-BL	
01W861	315400-0004	MM	300	TUBE PUN-H-8X1,25-BL	
01W862	315400-0010	MM	300	TUBE PUN-H-12X2-BL	
01W863	315400-0010	MM	300	TUBE PUN-H-12X2-BL	
01W864	315400-0010	MM	300	TUBE PUN-H-12X2-BL	
01W865	315400-0010	MM	300	TUBE PUN-H-12X2-BL	
01W867	315400-0016	MM	300	TUBE PUN-H-4X0,75-BL	
01W868	315400-0001	MM	300	TUBE PUN-H-6X1-BL	
01W875	315400-0004	MM	300	TUBE PUN-H-8X1,25-BL	
01W954	315400-0001	MM	300	TUBE PUN-H-6X1-BL	
01W956	315400-0001	MM	300	TUBE PUN-H-6X1-BL	
020	2838674-0100		1	SERVICE UNIT	5-83
050	2838676-0000		1	BRACKET	
100	2838701-0000		1	HOLDER	
110	350002-0005		3	PUSH-IN L-FITTING QSL-F-G1/8-4	
120	350002-0009		2	PUSH-IN L-FITTING QSL-F-G1/4-8	
130	90459-2553		1	PUSH-IN L-FITTING QSL 16	
140	350005-0002		3	PUSH-IN T-FITTING QST-F-6	
150	350006-0008		1	PUSH-IN FITTING QS-F-12H-8	
160	350005-0003		1	PUSH-IN T-FITTING QST-F-8	
170	350001-0011		2	PUSH-IN FITTING QS-F-G1/4-12	
180	350002-0007		4	PUSH-IN L-FITTING QSL-F-G1/8-8	
190	353250-0020		1	GLAND, LOCK NUT M20X1,5	
200	350005-0005		4	PUSH-IN T-FITTING QST-F-12	
20Q051	90459-0290		1	NON-RETURN VALVE H-QS-6	
20Q052	90187-0191		1	BALL VALVE R1/8, 6 MM	
20R352	90328-0047		1	SILENCER G1/8"	
20R353	90328-0047		1	SILENCER G1/8"	
20R354	90328-0029		1	SILENCER M5	
20R355	90328-0029		1	SILENCER M5	
20U350	90459-2591		1	SINGLE VALVE SUB-BASE CDSV5.0-AS-1/8	
20W050	315400-0001	MM	300	TUBE PUN-H-6X1-BL	
20W051	315400-0001	MM	300	TUBE PUN-H-6X1-BL	
20W052	315400-0001	MM	300	TUBE PUN-H-6X1-BL	
20W053	315400-0001	MM	300	TUBE PUN-H-6X1-BL	
20W351	315400-0004	MM	300	TUBE PUN-H-8X1,25-BL	
20W354	315400-0004	MM	300	TUBE PUN-H-8X1,25-BL	
20W355	315400-0004	MM	300	TUBE PUN-H-8X1,25-BL	
20W356	315400-0001	MM	300	TUBE PUN-H-6X1-BL	
210	353249-0015		1	INSERT, SINGLE HOLE, EK 155/16	
21K000	90458-1202		1	VALVES 2X3/2, CLOSED	
21R054	90459-3604		1	FLOW CONTROL VALVE, GR-QS-6	
21R354	90235-0748		1	THROTTLE CHECK VALVE, GRA-1/4-B	
21W051	315400-0004	MM	300	TUBE PUN-H-8X1,25-BL	
21W054	315400-0001	MM	300	TUBE PUN-H-6X1-BL	
21W055	315400-0001	MM	300	TUBE PUN-H-6X1-BL	
220	90459-7107		1	SLEEVE QSH-16-12	
230	350001-0007		1	PUSH-IN FITTING QS-F-G1/8-8	
240	350002-0002		2	PUSH-IN L-FITTING QSL-F-M5-6	
250	350001-0006		2	PUSH-IN FITTING QS-F-G1/8-6	
260	350011-0002		1	PUSH-IN T-FITTING QST-F-8-6	
270	350004-0005		1	PUSH-IN L-FITTING QSL-F-12	
350	90261-0025		1	PLUG, BLIND, PLASTIC GPN300F28	
400	90015-0021		1	LEAD-IN, TET 10-14, E1458023	
40K203	90458-1202		1	VALVES 2X3/2, CLOSED	
40P150	90459-7344		1	PRESSURE GAUGE, MA-40-6-R1/4-EN	
40R150	90459-5817		1	REGULATOR, MS4-LR-1/4-D6-A8-AS	
40W150	315400-0010	MM	300	TUBE PUN-H-12X2-BL	
40W151	315400-0016	MM	300	TUBE PUN-H-4X0,75-BL	
40W152	315400-0004	MM	300	TUBE PUN-H-8X1,25-BL	
40W254	315400-0016	MM	300	TUBE PUN-H-4X0,75-BL	
410	90458-0432		1	HOSE GLAND W/O INSERT M25 EXTENDED	
420	90458-0324		1	NUT, M25X1,5	
430	90459-7333		1	PUSH-IN FITTING QSSF-1/4-4-B	
440	90459-7369		4	MARKING FOR PNEUM. TUBING, PRZ06	
450	90459-7370		5	MARKING FOR PNEUM. TUBING, PRZ08	
460	90459-7372		2	MARKING FOR PNEUM. TUBING, PRZ12	

Machine Type | Group Description | Used-In | Group Number | Page No

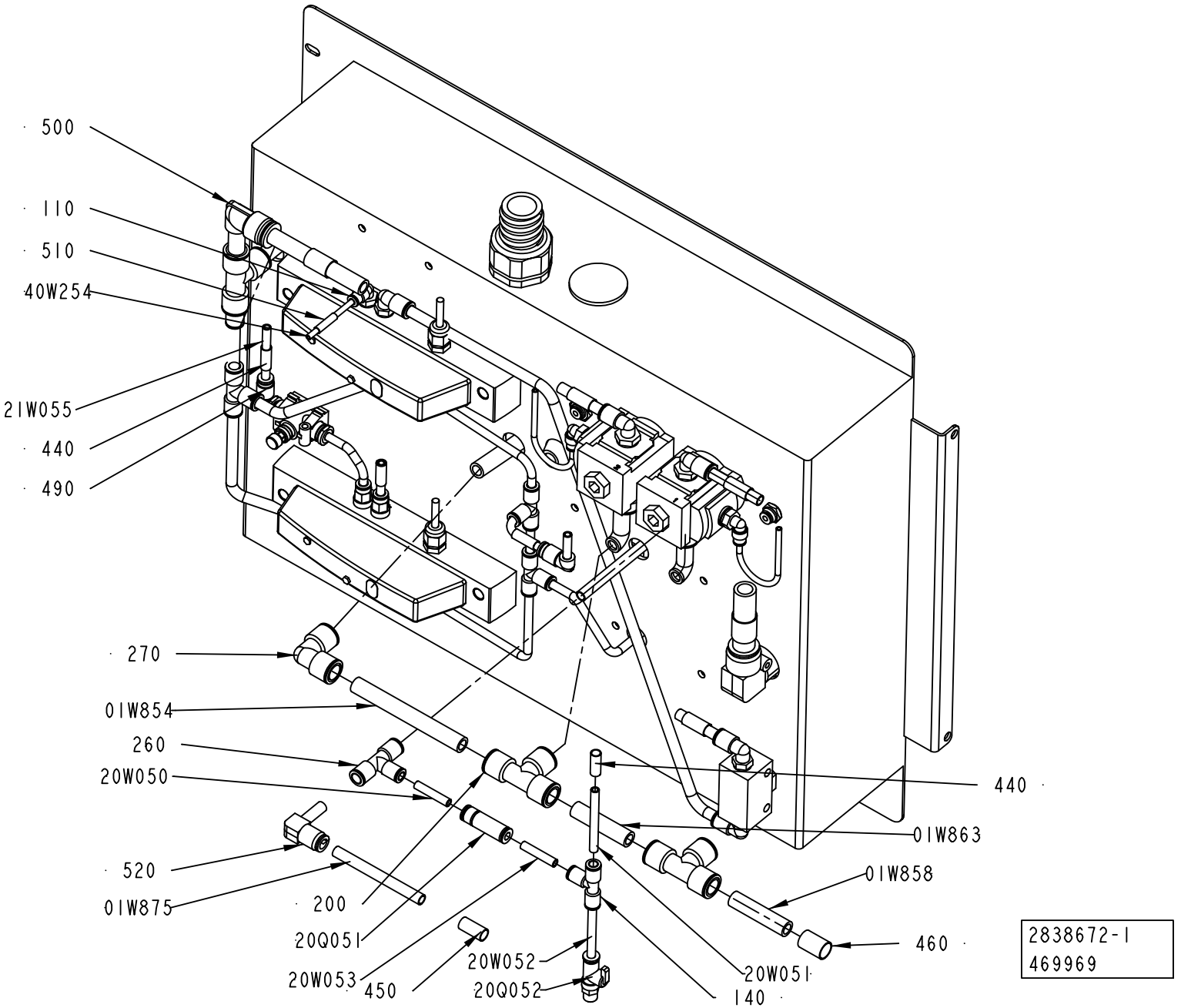
500
110
510
40W254
21W055
440
490
270
01W854
260
20W050
520
01W875
200
20Q051
20W053
450
20W052
20Q052
140
20W051
440
01W863
01W858
460
2838672-1
469969

Pos	Part No	UN	Qty	Description	Page No
- (Cont'd)					
470	90459-7373		1	MARKING FOR PNEUM. TUBING, PRZ16	
480	90459-7332		1	PUSH-IN FITTING QSSF-1/8-4-B	
490	90055-0222		2	ELBOW WITH TAILPIECE 6/6 MM	
500	90459-1825		1	ELBOW WITH TAILPIECE 12/12 MM	
510	90459-7368		1	MARKING FOR PNEUM. TUBING, PRZ04	
520	90600-1175		1	ELBOW WITH TAILPIECE 8/8 MM	

Pos	Part No	UN	Qty	Description	Page No

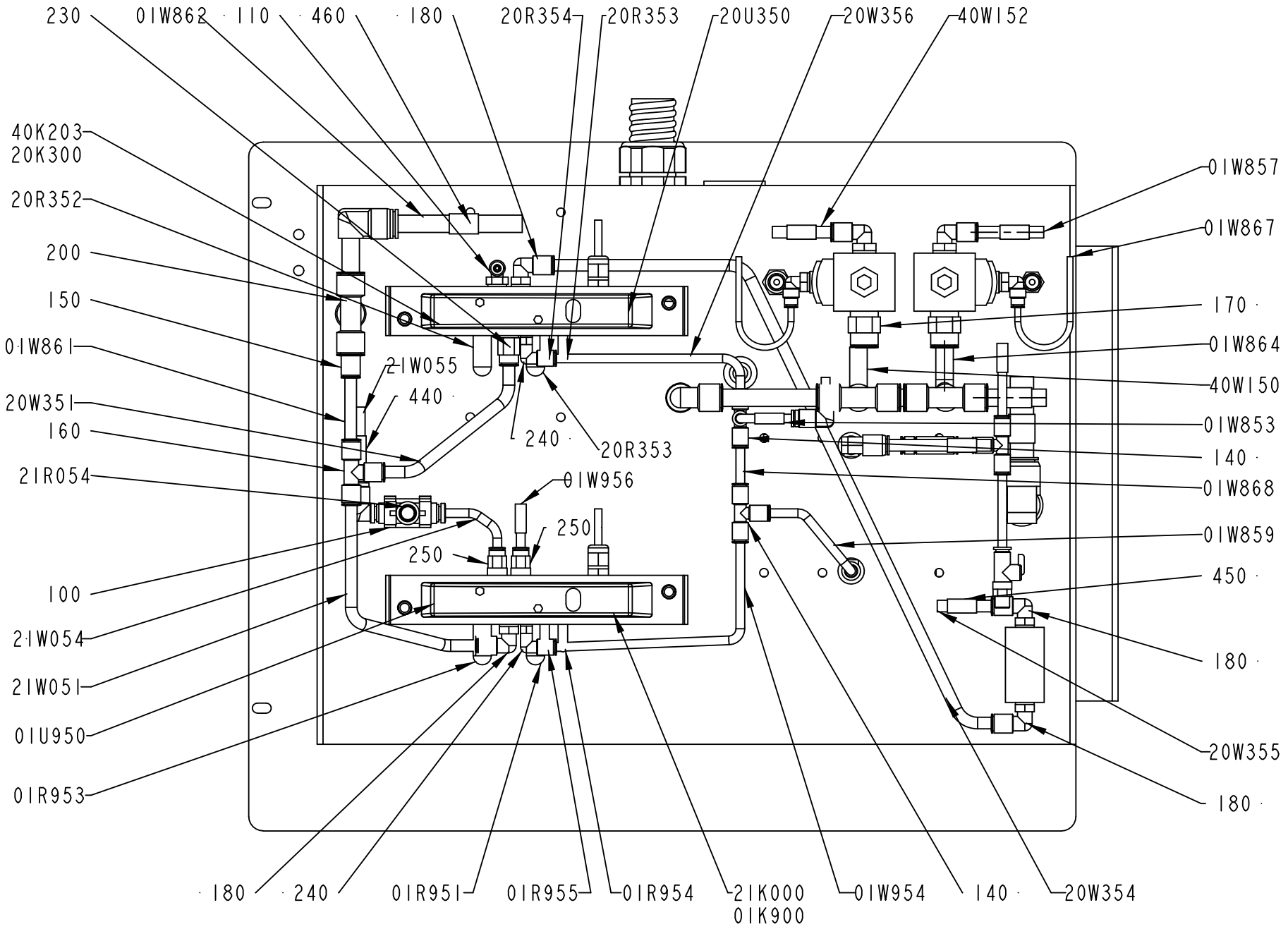

2838672-1
469969

Pos	Part No	UN	Qty	Description	Page No
SEE PREVIOUS LISTS PAGES: 5-75, 5-77.					

Pos	Part No	UN	Qty	Description	Page No

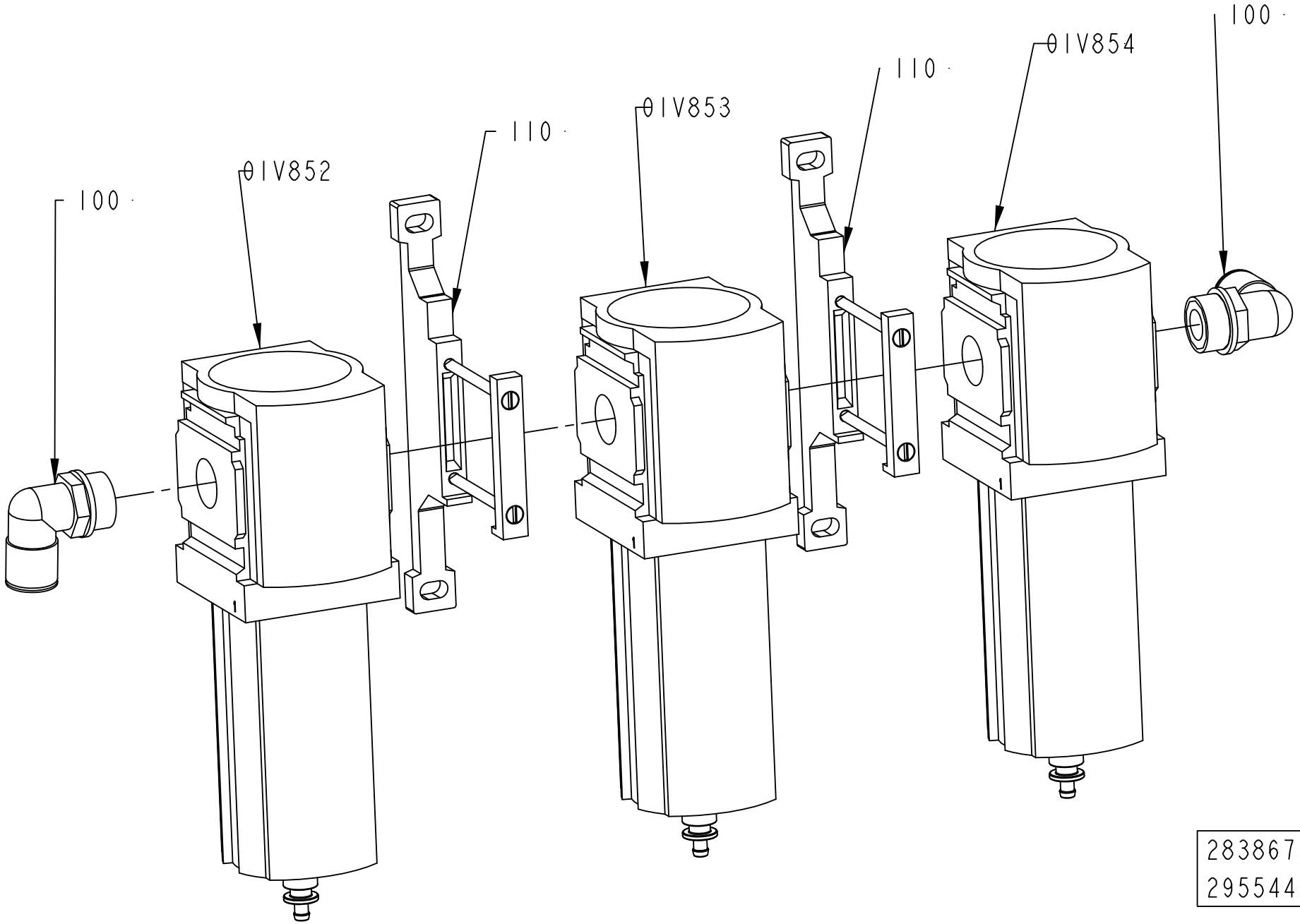
100
01V852
110
01V853
110
01V854
100
2838673-1
295544

ECM: 303486 - 20070517
Group number: 2838673-0100
Assembly Drawing: 2838673-1_1_AB

Pos	Part No	UN	Qty	Description	Page No
-					
01V852	90459-2773		1	FILTER, MS6-LFM-1/2-BRV	
	90459-3812		*1*	*FILTER CARTRIDGE, MS6-LFM-B*	
01V853	90459-2772		1	FILTER, MS6-LFM-1/2-ARV	
	90459-3811		*1*	*FILTER CARTRIDGE MS6-LFM-A*	
01V854	90459-2771		1	FILTER, MS6-LFX-1/2-R	
	90459-3810		*1*	*FILTER CARTRIDGE, MS6-LFX*	
100	350002-0016		2	PUSH-IN L-FITTING QSL-F-G1/2-12	
110	90459-1858		2	BRACKET, MS6-WP	

Pos	Part No	UN	Qty	Description	Page No

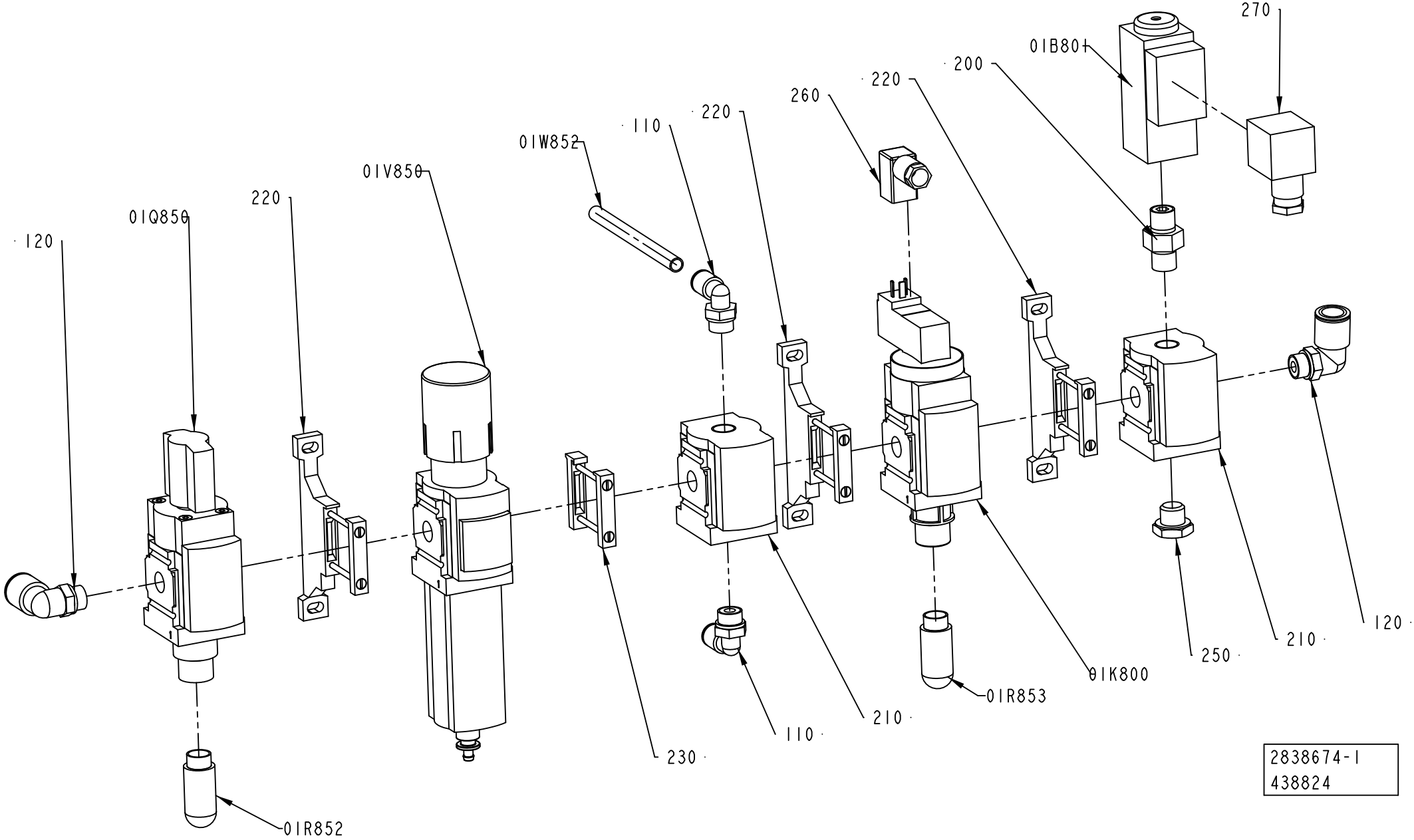
270
01B801
200
220
260
220
110
01W852
01V850
220
01Q850
120
01K800
01R853
250
210
120
110
210
230
01R852
2838674-1
438824

ECM: 438824 - 20100701
Group number: 2838674-0100
Assembly Drawing: 2838674-1_1_AD

Pos	Part No	UN	Qty	Description	Page No
-					
01B801	90459-6426		1	PRESSURE GUARD PEV-1/4-B-OD	
01K800	90459-2243		1	SHUT OFF VALVE, MS4-EE-1/4-10V24	
01Q850	90459-2337		1	SHUT OFF VALVE, MS4-EM1-1/4	
01R852	90328-0026		1	SILENCER G1/4"	
01R853	90328-0026		1	SILENCER G1/4"	
01V850	90459-2339		1	FILTER REGULATOR, MS4-LFR-1/4-D7-ERV-AS	
	90459-3814		*1*	*FILTER CARTRIDGE, MS4-LFP-E*	
01W852	315400-0004	MM	1000	TUBE PUN-H-8X1,25-BL	
110	350002-0009		2	PUSH-IN L-FITTING QSL-F-G1/4-8	
120	350002-0011		2	PUSH-IN L-FITTING QSL-F-G1/4-12	
200	90224-0372		1	NIPPLE, EXT.THREAD, HEXAGON, R1/4-R1/4	
210	90459-2245		2	DISTRIBUTOR, MS4-FRM-1/4	
220	90459-2247		3	BRACKET, MS4-WP	
230	90459-2248		1	BRACKET, MS4-MV	
240	90224-0372		1	NIPPLE, EXT.THREAD, HEXAGON, R1/4-R1/4	
250	90330-0026		1	PLUG, EXT. G-THREAD, G1/4	
260	90458-2837		1	CONNECTING CABLE KMEB-1-24-5-LED	
270	90110-0095		1	CONNECTOR 3 POLE + EARTH	

Pos	Part No	UN	Qty	Description	Page No

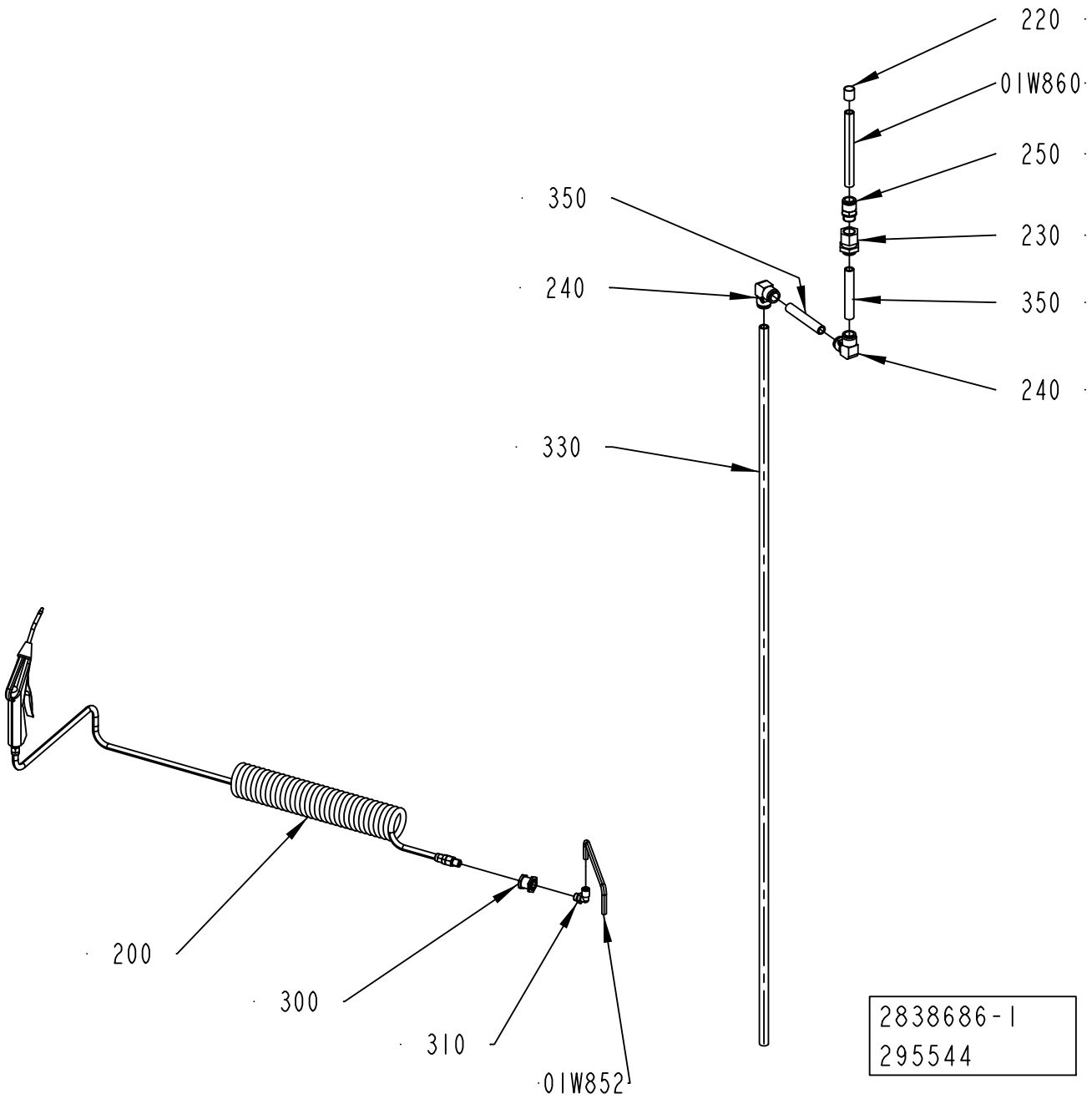
220
01W860
250
350
230
240
350
240
330
200
300
310
01W852
2838686-1
295544

ECM: 303489 - 20070517
Group number: 2838686-0100
Assembly Drawing: 2838686-1_1_AB

Pos	Part No	UN	Qty	Description	Page No
-					
01W852	315400-0004	MM	1800	TUBE PUN-H-8X1,25-BL	
01W860	315400-0013	MM	500	TUBE PUN-H-16-2,5-BL	
200	90458-1740		1	AIR GUN ASSEMBLY, CEJN 199589668	
210	90459-1826		1	ELBOW PIPE JOINT, EXT.THREAD,D=16MM-G1/2	
220	90459-7373		1	MARKING FOR PNEUM. TUBING, PRZ16	
230	90459-0864		1	BULKHEAD CONNECTOR, 12 MM/M27X1,5	
240	90459-2553		2	PUSH-IN L-FITTING QSL 16	
250	90459-2215		1	STRAIGHT COUPLING, D=16 MM - G1/2"	
300	342767-0104		1	BULKHEAD LEAD-IN, G1/4	
310	350002-0009		1	PUSH-IN L-FITTING QSL-F-G1/4-8	
330	315400-0013	MM	2000	TUBE PUN-H-16-2,5-BL	
340	315400-0013	MM	200	TUBE PUN-H-16-2,5-BL	
350	315400-0013	MM	500	TUBE PUN-H-16-2,5-BL	

Pos	Part No	UN	Qty	Description	Page No

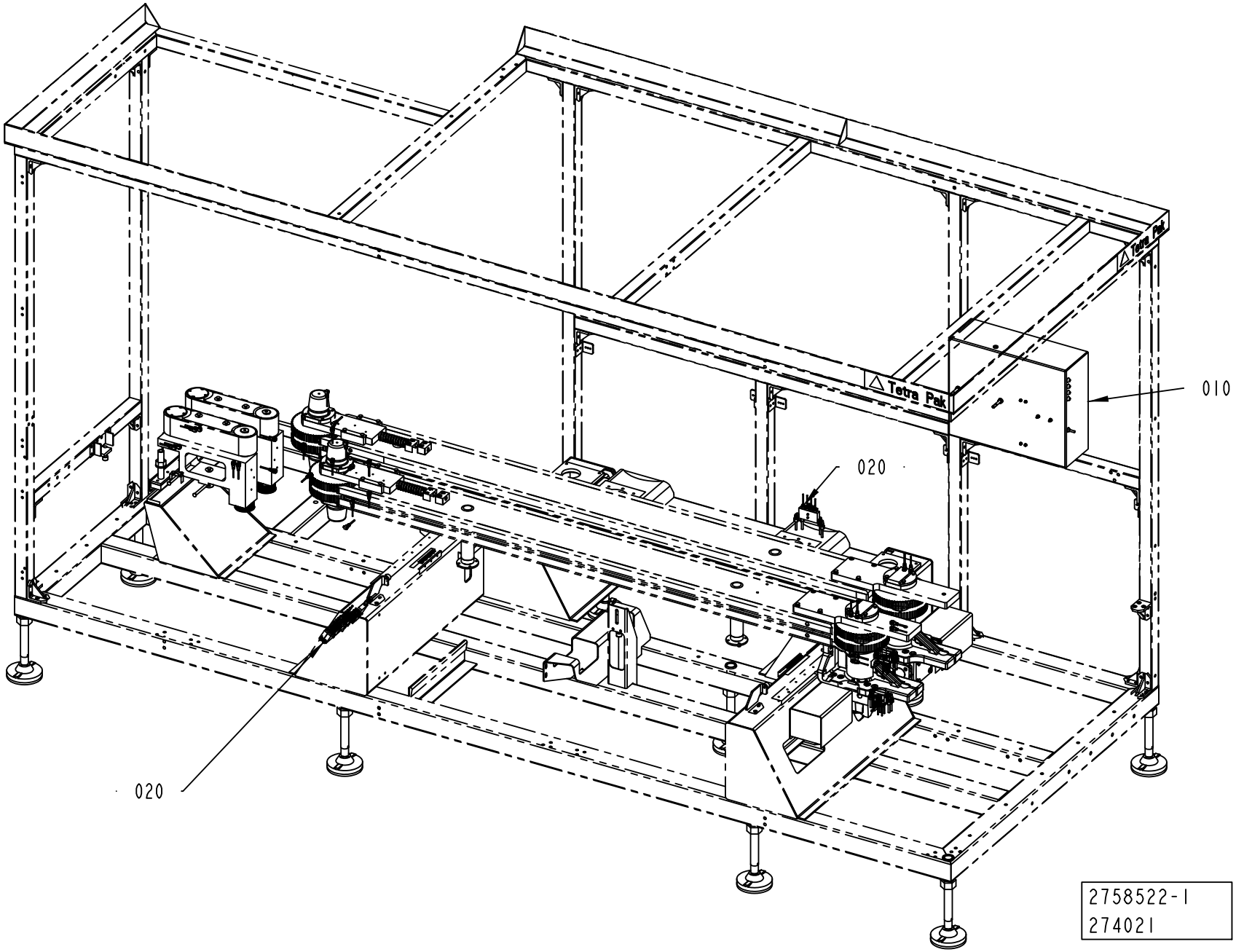
010
020
020
2758522-1
274021

ECM: 274475 - 20060921
Group number: 2758522-0100
Assembly Drawing: 2758522-1_1_AA

Pos	Part No	UN	Qty	Description	Page No
-					
010	2838677-0100		1	CENTRAL LUBRICATION	**5-89**
020	2769763-0100		1	OIL PIPE	**5-91, 5-93, 5-95**

Pos	Part No	UN	Qty	Description	Page No

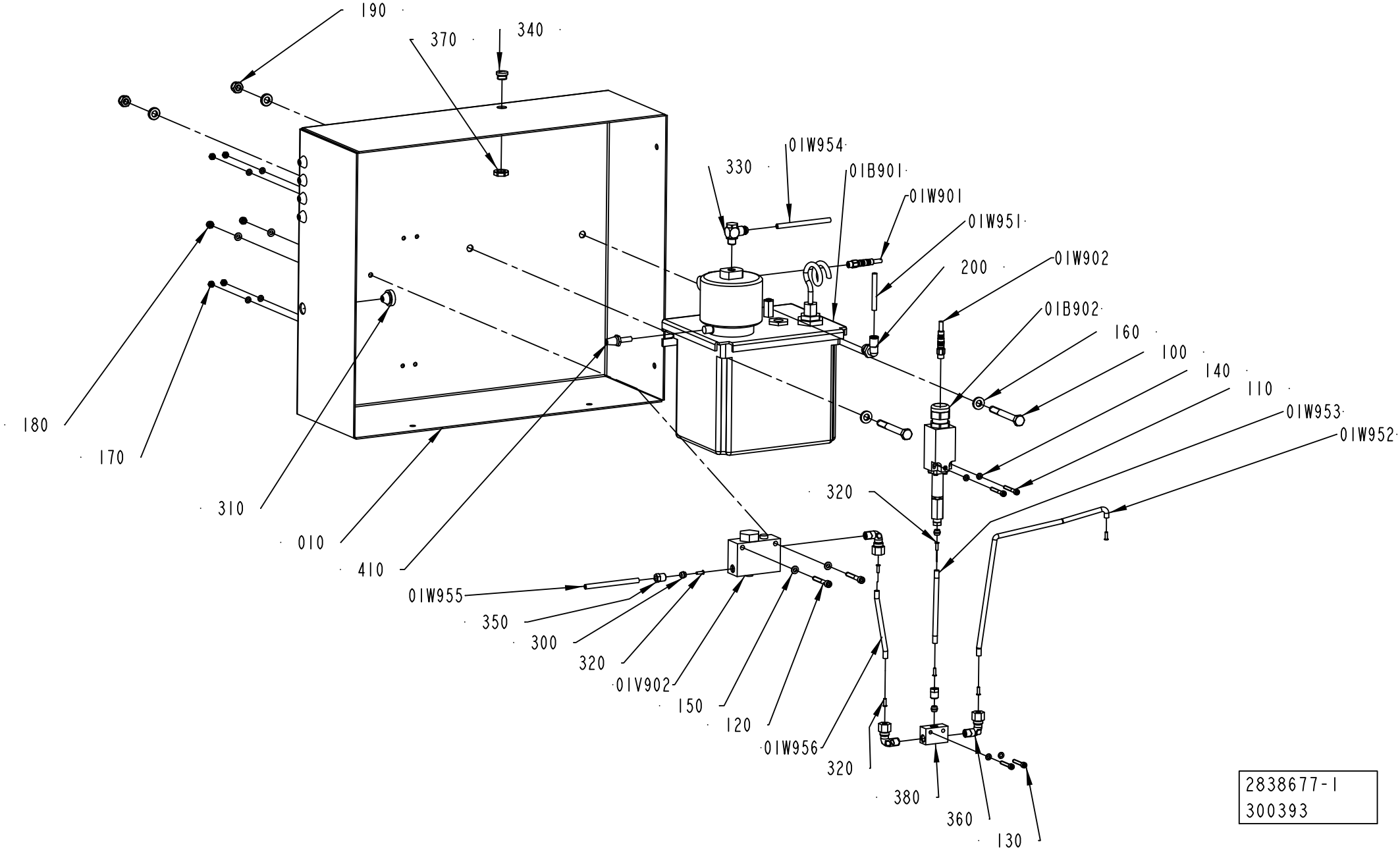
190
370
340
330
01W954
01B901
01W901
01W951
200
01W902
01B902
160
100
140
110
01W953
01W952
180
170
310
010
410
320
01W955
350
300
320
01V902
150
120
01W956
320
380
360
130
2838677-1
300393

ECM: 303488 - 20070517
Group number: 2838677-0100
Assembly Drawing: 2838677-1_1_AB

Pos	Part No	UN	Qty	Description	Page No
-					
010	2838678-0000		1	BRACKET	
01B901	90459-5481		1	OIL PUMP 3L, 10P-P3	
	90048-0450		*1*	*SPARE PARTS KIT*	
	90274-0052		*1*	*LEVEL GUARD, 10VA/250VDC/0,5A*	
01B902	90274-0084		1	PRESSURE GUARD, 1800 KPA	
01V902	90415-0030		1	OIL FILTER PN 100 ORD.NO 2.77 10 70.1	
	90415-0326		*1*	*FILTER INSERT*	
01W901	351401-0050		1	ACTU/SENS CABLE RSMVN 3-PRKMV 3-06/5,0M	
01W902	351401-0050		1	ACTU/SENS CABLE RSMVN 3-PRKMV 3-06/5,0M	
01W951	90166-0132	MM	1000	TUBE 6 MM PA,TRANSP.	
01W952	90166-0108	MM	200	TUBE 6 MM PA TRANSP.	
01W953	90166-0108	MM	200	TUBE 6 MM PA TRANSP.	
01W954	315400-0001	MM	1000	TUBE PUN-H-6X1-BL	
01W955	90166-0108	MM	1000	TUBE 6 MM PA TRANSP.	
01W956	90166-0108	MM	200	TUBE 6 MM PA TRANSP.	
100	312105-0465		2	SCREW M6S ISO 4014 M8X70 A480	
110	312115-0299		2	SCREW ISO4762 M4X30 A4 80	
120	312115-0337		2	SCREW ISO4762 M5X35 A4 80	
130	312115-0297		2	SCREW ISO4762 M4X25 A4 80	
140	315105-0136		8	WASHER BRB 4,3X8 RFR	
150	315105-0146		4	WASHER BRB 5,3X10 RFR	
160	315115-0165		4	WASHER PLAIN, TBRB 8,4/16 H=3	
170	312605-0312		4	HEXAGON NUT, M6M M4 A280	
180	312812-0314		2	HEXAGON NUT, NY-LOCK M5 A480	
190	312812-0318		2	HEXAGON NUT, NY-LOCK M8 A480	
200	350002-0008		1	PUSH-IN L-FITTING QSL-F-G1/4-6	
300	90028-0022		3	CONE TUBE 6 MM	
310	90015-0020		5	LEAD-IN, TET5-7, E-1458016	
320	90134-0030		1	SLEEVE FOR PLASTIC TUBE	
330	90459-5522		1	CONN. BANJO, COR8PB6M10	
340	90458-1306		1	BLIND PLUG CIRCULAR, M12X1,5 514GFK/212	
350	90134-0055		2	BUSHING/NUT INLET/OUTLET 6 MM	
360	90030-0200		3	CONN. ELBOW, WE06LM71	
370	90458-0321		1	NUT, M12X1,5	
380	90032-0043		1	DISTRIBUTION BLOCK 3 WAYS	
390	90134-0030		6	SLEEVE FOR PLASTIC TUBE	
400	90296-0075	L	4	SHELL OMALA OIL 320	
410	90328-0017		1	SILENCER, D=6 MM	

Pos	Part No	UN	Qty	Description	Page No

Machine Type | Group Description | Used-In | Group Number | Page No

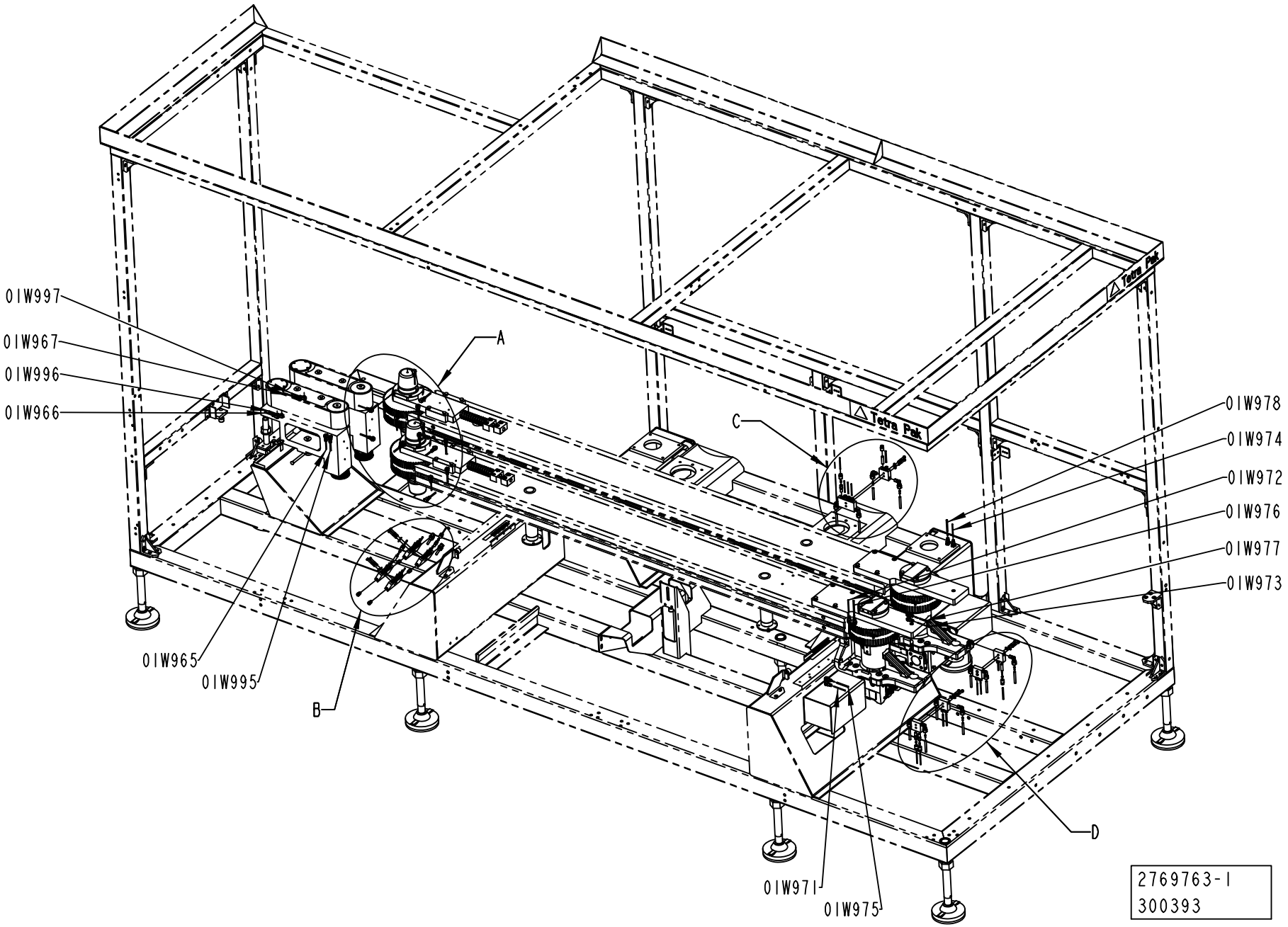
0IW997
0IW967
0IW996
0IW966
0IW965
0IW995
A
B
C
D
0IW978
0IW974
0IW972
0IW976
0IW977
0IW973
0IW971
0IW975
2769763-1
300393

ECM: 303482 - 20070517
Group number: 2769763-0100
Assembly Drawing: 2769763-1_1_AB

This list covers pages from 5-90 to 5-95

Pos	Part No	UN	Qty	Description	Page No
CAP 30/FLEX (See drawing on pages: 5-90, 5-92, 5-94)					
110	312105-0337		10	SCREW M6S ISO 4014 M5X35 A480	
120	315105-0146		10	WASHER BRB 5,3X10 RFR	
200	90134-0058		12	CONNECTION	
210	90134-0068		16	CONNECTION	
220	90134-0039		17	BUSHING VALVE CONNECTION 2,5 MM	
230	90028-0020		16	CONE TUBE 2,5MM	
240	90134-0040		13	BUSHING VALVE CONNECTION 4 MM	
250	90028-0021		13	CONE TUBE 4 MM	
260	90134-0054		2	BLOCK CONNECTION M10X1	
290	90030-0200		14	CONN. ELBOW, WE06LM71	
320	90134-0051		13	SPACING COLLAR DOSING BLOCK	
330	90092-0054		13	METERING VALVE 50 MM3	
340	90134-0031		29	SLEEVE FOR PLASTIC TUBE	
Common Parts					
01U951	90032-0038		1	BLOCK 2 WAYS	
01U952	90032-0038		1	BLOCK 2 WAYS	
01U953	90032-0038		1	BLOCK 2 WAYS	
01U954	90032-0039		1	BLOCK 4 WAYS	
01U955	90032-0039		1	BLOCK 4 WAYS	
01U956	90032-0039		1	BLOCK 4 WAYS	
01U957	90032-0039		1	BLOCK 4 WAYS	
01U958	90032-0039		1	BLOCK 4 WAYS	
01U959	90032-0038		1	BLOCK 2 WAYS	
01U960	90032-0038		1	BLOCK 2 WAYS	
01W951	90166-0132	MM	3000	TUBE 6 MM PA,TRANSP.	
01W955	90166-0108	MM	3000	TUBE 6 MM PA TRANSP.	
01W956	90166-0108	MM	3000	TUBE 6 MM PA TRANSP.	
01W958	90166-0108	MM	3000	TUBE 6 MM PA TRANSP.	
01W960	90166-0108	MM	3000	TUBE 6 MM PA TRANSP.	
01W961	90166-0108	MM	3000	TUBE 6 MM PA TRANSP.	
01W962	90166-0132	MM	3000	TUBE 6 MM PA,TRANSP.	
01W963	90166-0109	MM	3000	TUBE 4 MM PA TRANSP.	
01W964	90166-0109	MM	3000	TUBE 4 MM PA TRANSP.	
01W965	90166-0109	MM	3000	TUBE 4 MM PA TRANSP.	
01W966	90166-0109	MM	3000	TUBE 4 MM PA TRANSP.	
01W967	90166-0109	MM	3000	TUBE 4 MM PA TRANSP.	
01W968	90166-0109	MM	3000	TUBE 4 MM PA TRANSP.	
01W969	90166-0143	MM	3000	TUBE 2,5 MM PA TRANSP.	
01W971	90166-0143	MM	3000	TUBE 2,5 MM PA TRANSP.	
01W972	90166-0143	MM	3000	TUBE 2,5 MM PA TRANSP.	
01W973	90166-0143	MM	3000	TUBE 2,5 MM PA TRANSP.	
01W974	90166-0143	MM	3000	TUBE 2,5 MM PA TRANSP.	
01W975	90166-0109	MM	3000	TUBE 4 MM PA TRANSP.	
01W976	90166-0109	MM	3000	TUBE 4 MM PA TRANSP.	
01W977	90166-0132	MM	3000	TUBE 6 MM PA,TRANSP.	
01W978	90166-0109	MM	3000	TUBE 4 MM PA TRANSP.	
01W979	90166-0109	MM	3000	TUBE 4 MM PA TRANSP.	
01W980	90166-0143	MM	3000	TUBE 2,5 MM PA TRANSP.	
01W981	90166-0143	MM	3000	TUBE 2,5 MM PA TRANSP.	
01W982	90166-0143	MM	3000	TUBE 2,5 MM PA TRANSP.	
01W983	90166-0143	MM	3000	TUBE 2,5 MM PA TRANSP.	
01W984	90166-0109	MM	3000	TUBE 4 MM PA TRANSP.	
01W990	90166-0143	MM	3000	TUBE 2,5 MM PA TRANSP.	
01W991	90166-0143	MM	3000	TUBE 2,5 MM PA TRANSP.	
01W992	90166-0143	MM	3000	TUBE 2,5 MM PA TRANSP.	
01W993	90166-0143	MM	3000	TUBE 2,5 MM PA TRANSP.	
01W994	90166-0143	MM	3000	TUBE 2,5 MM PA TRANSP.	
01W995	90166-0143	MM	3000	TUBE 2,5 MM PA TRANSP.	
01W996	90166-0143	MM	3000	TUBE 2,5 MM PA TRANSP.	
01W997	90166-0143	MM	3000	TUBE 2,5 MM PA TRANSP.	
01W998	90166-0109	MM	3000	TUBE 4 MM PA TRANSP.	
130	342706-0130		7	STIFFNER SLEEVE FOR HOSE 6X1	
270	90134-0030		7	SLEEVE FOR PLASTIC TUBE	
280	90092-0052		3	METERING VALVE 10 MM3	
300	90087-0019		2	PLUG M10X1 STAINLESS	
310	90134-0052		1	PLUG DOSING BLOCK	

Machine Type | Group Description | Used-In | Group Number | Page No

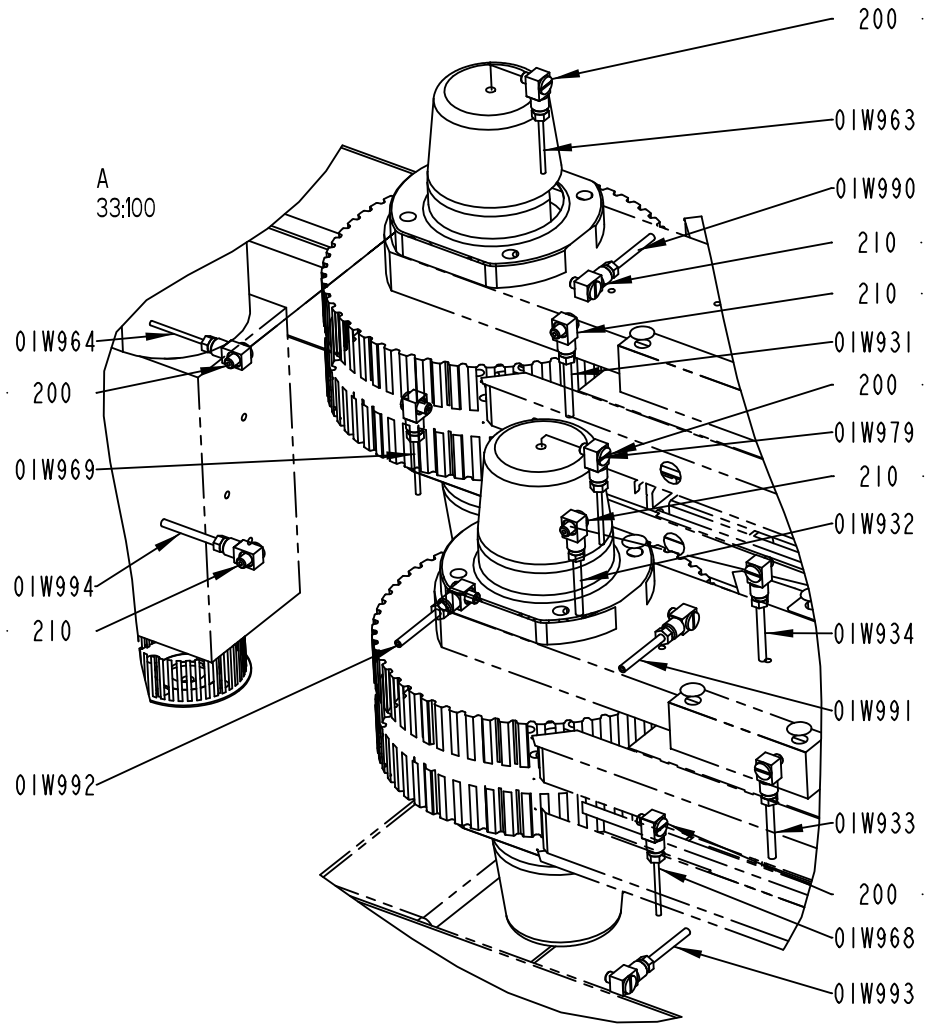
A
33:100
200
01W963
01W990
210
210
01W931
200
01W979
210
01W932
01W934
01W991
01W933
200
01W968
01W993
01W964
200
01W969
01W994
210
01W992

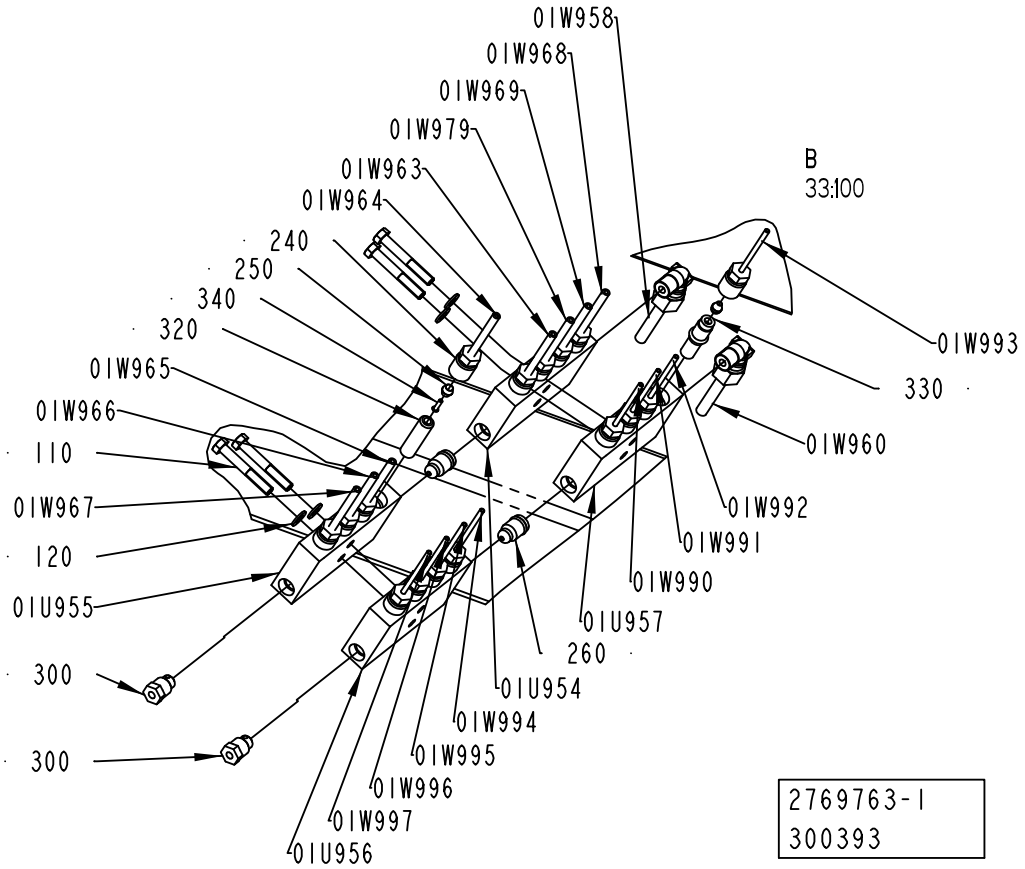
01W958
01W968
01W969
01W979
01W963
01W964
240
250
340
320
01W965
01W966
110
01W967
120
01U955
300
300
B
33:100
01W993
330
01W960
01W992
01W991
01W990
01U957
260
01U954
01W994
01W995
01W996
01W997
01U956
2769763-1
300393

ECM: 303482 - 20070517
Group number: 2769763-0100
Assembly Drawing: 2769763-1_2_AB

This list covers pages from 5-90 to 5-95

Pos	Part No	UN	Qty	Description	Page No
CAP 30/FLEX (See drawing on pages: 5-90, 5-92, 5-94)					
110	312105-0337		10	SCREW M6S ISO 4014 M5X35 A480	
120	315105-0146		10	WASHER BRB 5,3X10 RFR	
200	90134-0058		12	CONNECTION	
210	90134-0068		16	CONNECTION	
220	90134-0039		17	BUSHING VALVE CONNECTION 2,5 MM	
230	90028-0020		16	CONE TUBE 2,5MM	
240	90134-0040		13	BUSHING VALVE CONNECTION 4 MM	
250	90028-0021		13	CONE TUBE 4 MM	
260	90134-0054		2	BLOCK CONNECTION M10X1	
290	90030-0200		14	CONN. ELBOW, WE06LM71	
320	90134-0051		13	SPACING COLLAR DOSING BLOCK	
330	90092-0054		13	METERING VALVE 50 MM3	
340	90134-0031		29	SLEEVE FOR PLASTIC TUBE	
Common Parts					
01U951	90032-0038		1	BLOCK 2 WAYS	
01U952	90032-0038		1	BLOCK 2 WAYS	
01U953	90032-0038		1	BLOCK 2 WAYS	
01U954	90032-0039		1	BLOCK 4 WAYS	
01U955	90032-0039		1	BLOCK 4 WAYS	
01U956	90032-0039		1	BLOCK 4 WAYS	
01U957	90032-0039		1	BLOCK 4 WAYS	
01U958	90032-0039		1	BLOCK 4 WAYS	
01U959	90032-0038		1	BLOCK 2 WAYS	
01U960	90032-0038		1	BLOCK 2 WAYS	
01W951	90166-0132	MM	3000	TUBE 6 MM PA,TRANSP.	
01W955	90166-0108	MM	3000	TUBE 6 MM PA TRANSP.	
01W956	90166-0108	MM	3000	TUBE 6 MM PA TRANSP.	
01W958	90166-0108	MM	3000	TUBE 6 MM PA TRANSP.	
01W960	90166-0108	MM	3000	TUBE 6 MM PA TRANSP.	
01W961	90166-0108	MM	3000	TUBE 6 MM PA TRANSP.	
01W962	90166-0132	MM	3000	TUBE 6 MM PA,TRANSP.	
01W963	90166-0109	MM	3000	TUBE 4 MM PA TRANSP.	
01W964	90166-0109	MM	3000	TUBE 4 MM PA TRANSP.	
01W965	90166-0109	MM	3000	TUBE 4 MM PA TRANSP.	
01W966	90166-0109	MM	3000	TUBE 4 MM PA TRANSP.	
01W967	90166-0109	MM	3000	TUBE 4 MM PA TRANSP.	
01W968	90166-0109	MM	3000	TUBE 4 MM PA TRANSP.	
01W969	90166-0143	MM	3000	TUBE 2,5 MM PA TRANSP.	
01W971	90166-0143	MM	3000	TUBE 2,5 MM PA TRANSP.	
01W972	90166-0143	MM	3000	TUBE 2,5 MM PA TRANSP.	
01W973	90166-0143	MM	3000	TUBE 2,5 MM PA TRANSP.	
01W974	90166-0143	MM	3000	TUBE 2,5 MM PA TRANSP.	
01W975	90166-0109	MM	3000	TUBE 4 MM PA TRANSP.	
01W976	90166-0109	MM	3000	TUBE 4 MM PA TRANSP.	
01W977	90166-0132	MM	3000	TUBE 6 MM PA,TRANSP.	
01W978	90166-0109	MM	3000	TUBE 4 MM PA TRANSP.	
01W979	90166-0109	MM	3000	TUBE 4 MM PA TRANSP.	
01W980	90166-0143	MM	3000	TUBE 2,5 MM PA TRANSP.	
01W981	90166-0143	MM	3000	TUBE 2,5 MM PA TRANSP.	
01W982	90166-0143	MM	3000	TUBE 2,5 MM PA TRANSP.	
01W983	90166-0143	MM	3000	TUBE 2,5 MM PA TRANSP.	
01W984	90166-0109	MM	3000	TUBE 4 MM PA TRANSP.	
01W990	90166-0143	MM	3000	TUBE 2,5 MM PA TRANSP.	
01W991	90166-0143	MM	3000	TUBE 2,5 MM PA TRANSP.	
01W992	90166-0143	MM	3000	TUBE 2,5 MM PA TRANSP.	
01W993	90166-0143	MM	3000	TUBE 2,5 MM PA TRANSP.	
01W994	90166-0143	MM	3000	TUBE 2,5 MM PA TRANSP.	
01W995	90166-0143	MM	3000	TUBE 2,5 MM PA TRANSP.	
01W996	90166-0143	MM	3000	TUBE 2,5 MM PA TRANSP.	
01W997	90166-0143	MM	3000	TUBE 2,5 MM PA TRANSP.	
01W998	90166-0109	MM	3000	TUBE 4 MM PA TRANSP.	
130	342706-0130		7	STIFFNER SLEEVE FOR HOSE 6X1	
270	90134-0030		7	SLEEVE FOR PLASTIC TUBE	
280	90092-0052		3	METERING VALVE 10 MM3	
300	90087-0019		2	PLUG M10X1 STAINLESS	
310	90134-0052		1	PLUG DOSING BLOCK	

Machine Type | Group Description | Used-In | Group Number | Page No

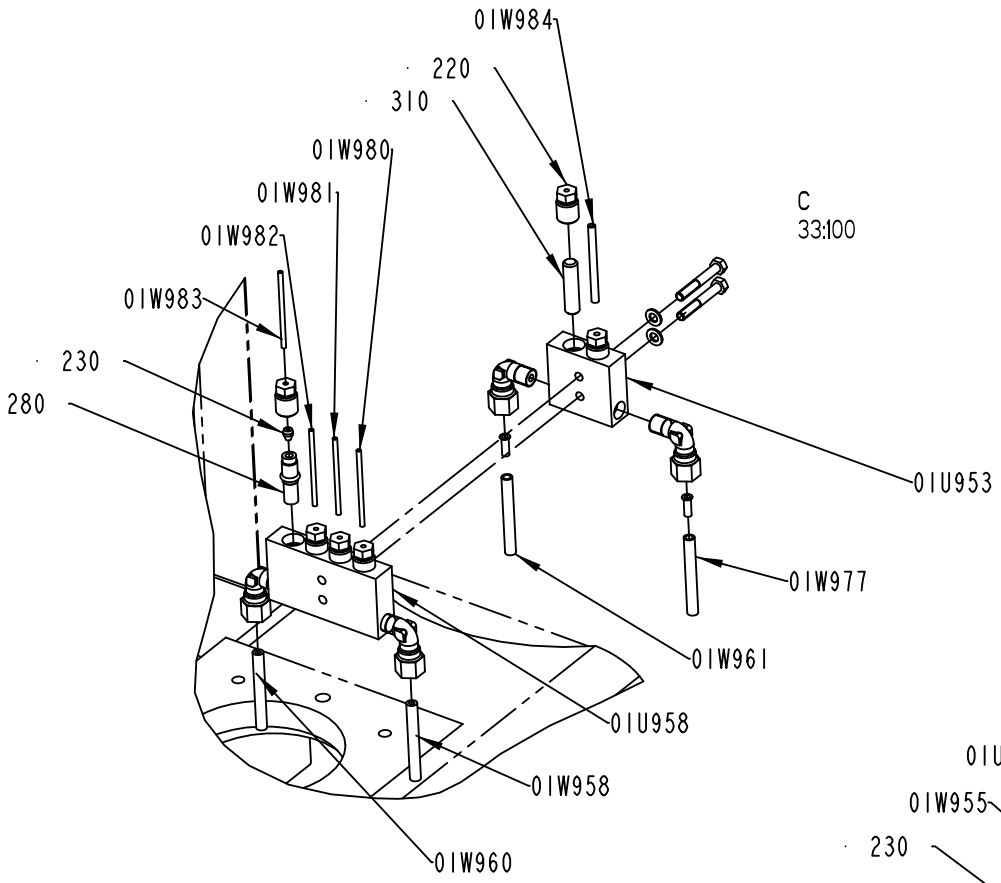

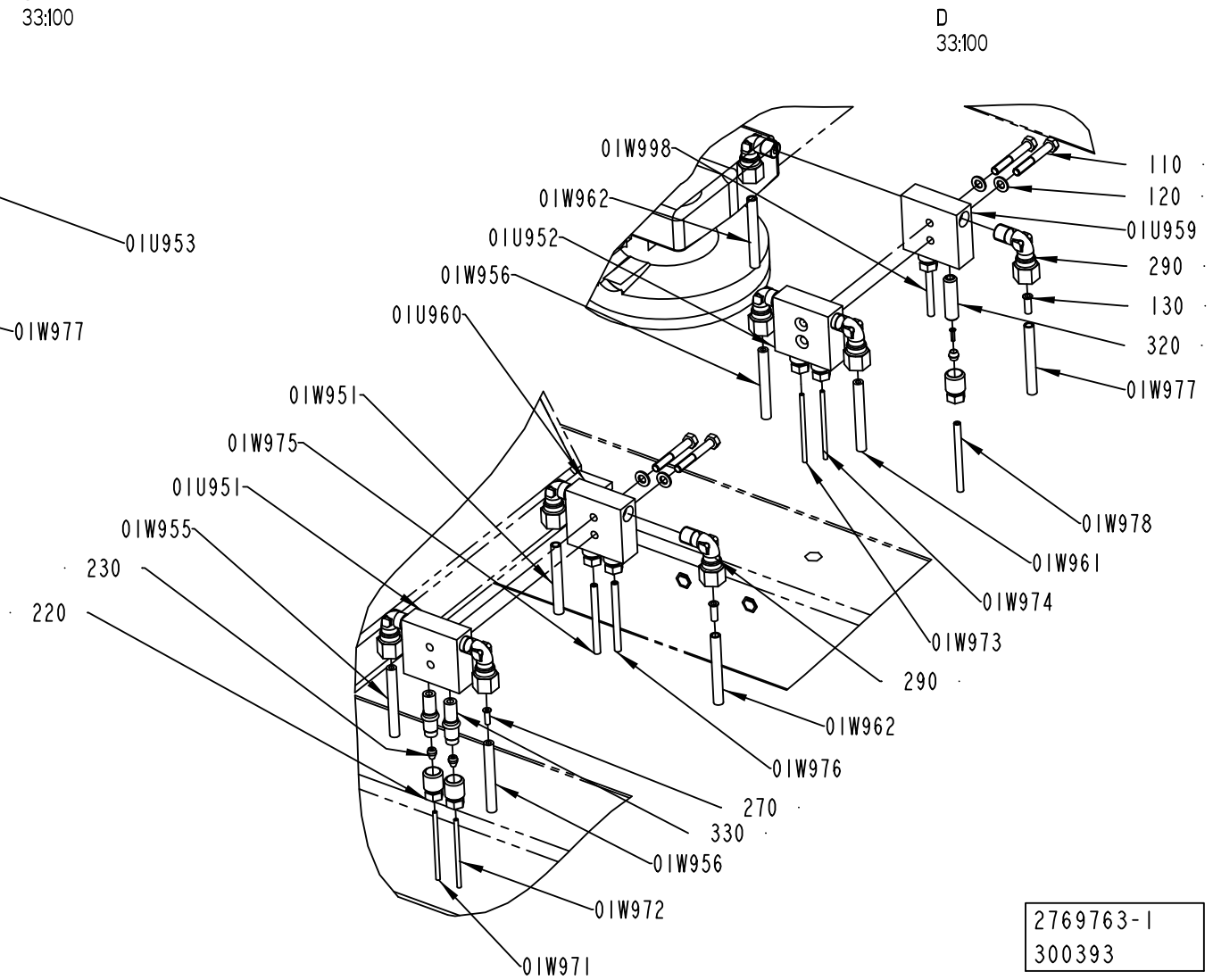

2769763-1
300393

ECM: 303482 - 20070517
Group number: 2769763-0100
Assembly Drawing: 2769763-1_3_AB

This list covers pages from 5-90 to 5-95

Pos	Part No	UN	Qty	Description	Page No
CAP 30/FLEX (See drawing on pages: 5-90, 5-92, 5-94)					
110	312105-0337		10	SCREW M6S ISO 4014 M5X35 A480	
120	315105-0146		10	WASHER BRB 5,3X10 RFR	
200	90134-0058		12	CONNECTION	
210	90134-0068		16	CONNECTION	
220	90134-0039		17	BUSHING VALVE CONNECTION 2,5 MM	
230	90028-0020		16	CONE TUBE 2,5MM	
240	90134-0040		13	BUSHING VALVE CONNECTION 4 MM	
250	90028-0021		13	CONE TUBE 4 MM	
260	90134-0054		2	BLOCK CONNECTION M10X1	
290	90030-0200		14	CONN. ELBOW, WE06LM71	
320	90134-0051		13	SPACING COLLAR DOSING BLOCK	
330	90092-0054		13	METERING VALVE 50 MM3	
340	90134-0031		29	SLEEVE FOR PLASTIC TUBE	
Common Parts					
01U951	90032-0038		1	BLOCK 2 WAYS	
01U952	90032-0038		1	BLOCK 2 WAYS	
01U953	90032-0038		1	BLOCK 2 WAYS	
01U954	90032-0039		1	BLOCK 4 WAYS	
01U955	90032-0039		1	BLOCK 4 WAYS	
01U956	90032-0039		1	BLOCK 4 WAYS	
01U957	90032-0039		1	BLOCK 4 WAYS	
01U958	90032-0039		1	BLOCK 4 WAYS	
01U959	90032-0038		1	BLOCK 2 WAYS	
01U960	90032-0038		1	BLOCK 2 WAYS	
01W951	90166-0132	MM	3000	TUBE 6 MM PA,TRANSP.	
01W955	90166-0108	MM	3000	TUBE 6 MM PA TRANSP.	
01W956	90166-0108	MM	3000	TUBE 6 MM PA TRANSP.	
01W958	90166-0108	MM	3000	TUBE 6 MM PA TRANSP.	
01W960	90166-0108	MM	3000	TUBE 6 MM PA TRANSP.	
01W961	90166-0108	MM	3000	TUBE 6 MM PA TRANSP.	
01W962	90166-0132	MM	3000	TUBE 6 MM PA,TRANSP.	
01W963	90166-0109	MM	3000	TUBE 4 MM PA TRANSP.	
01W964	90166-0109	MM	3000	TUBE 4 MM PA TRANSP.	
01W965	90166-0109	MM	3000	TUBE 4 MM PA TRANSP.	
01W966	90166-0109	MM	3000	TUBE 4 MM PA TRANSP.	
01W967	90166-0109	MM	3000	TUBE 4 MM PA TRANSP.	
01W968	90166-0109	MM	3000	TUBE 4 MM PA TRANSP.	
01W969	90166-0143	MM	3000	TUBE 2,5 MM PA TRANSP.	
01W971	90166-0143	MM	3000	TUBE 2,5 MM PA TRANSP.	
01W972	90166-0143	MM	3000	TUBE 2,5 MM PA TRANSP.	
01W973	90166-0143	MM	3000	TUBE 2,5 MM PA TRANSP.	
01W974	90166-0143	MM	3000	TUBE 2,5 MM PA TRANSP.	
01W975	90166-0109	MM	3000	TUBE 4 MM PA TRANSP.	
01W976	90166-0109	MM	3000	TUBE 4 MM PA TRANSP.	
01W977	90166-0132	MM	3000	TUBE 6 MM PA,TRANSP.	
01W978	90166-0109	MM	3000	TUBE 4 MM PA TRANSP.	
01W979	90166-0109	MM	3000	TUBE 4 MM PA TRANSP.	
01W980	90166-0143	MM	3000	TUBE 2,5 MM PA TRANSP.	
01W981	90166-0143	MM	3000	TUBE 2,5 MM PA TRANSP.	
01W982	90166-0143	MM	3000	TUBE 2,5 MM PA TRANSP.	
01W983	90166-0143	MM	3000	TUBE 2,5 MM PA TRANSP.	
01W984	90166-0109	MM	3000	TUBE 4 MM PA TRANSP.	
01W990	90166-0143	MM	3000	TUBE 2,5 MM PA TRANSP.	
01W991	90166-0143	MM	3000	TUBE 2,5 MM PA TRANSP.	
01W992	90166-0143	MM	3000	TUBE 2,5 MM PA TRANSP.	
01W993	90166-0143	MM	3000	TUBE 2,5 MM PA TRANSP.	
01W994	90166-0143	MM	3000	TUBE 2,5 MM PA TRANSP.	
01W995	90166-0143	MM	3000	TUBE 2,5 MM PA TRANSP.	
01W996	90166-0143	MM	3000	TUBE 2,5 MM PA TRANSP.	
01W997	90166-0143	MM	3000	TUBE 2,5 MM PA TRANSP.	
01W998	90166-0109	MM	3000	TUBE 4 MM PA TRANSP.	
130	342706-0130		7	STIFFNER SLEEVE FOR HOSE 6X1	
270	90134-0030		7	SLEEVE FOR PLASTIC TUBE	
280	90092-0052		3	METERING VALVE 10 MM3	
300	90087-0019		2	PLUG M10X1 STAINLESS	
310	90134-0052		1	PLUG DOSING BLOCK	

Machine Type | Group Description | Used-In | Group Number | Page No

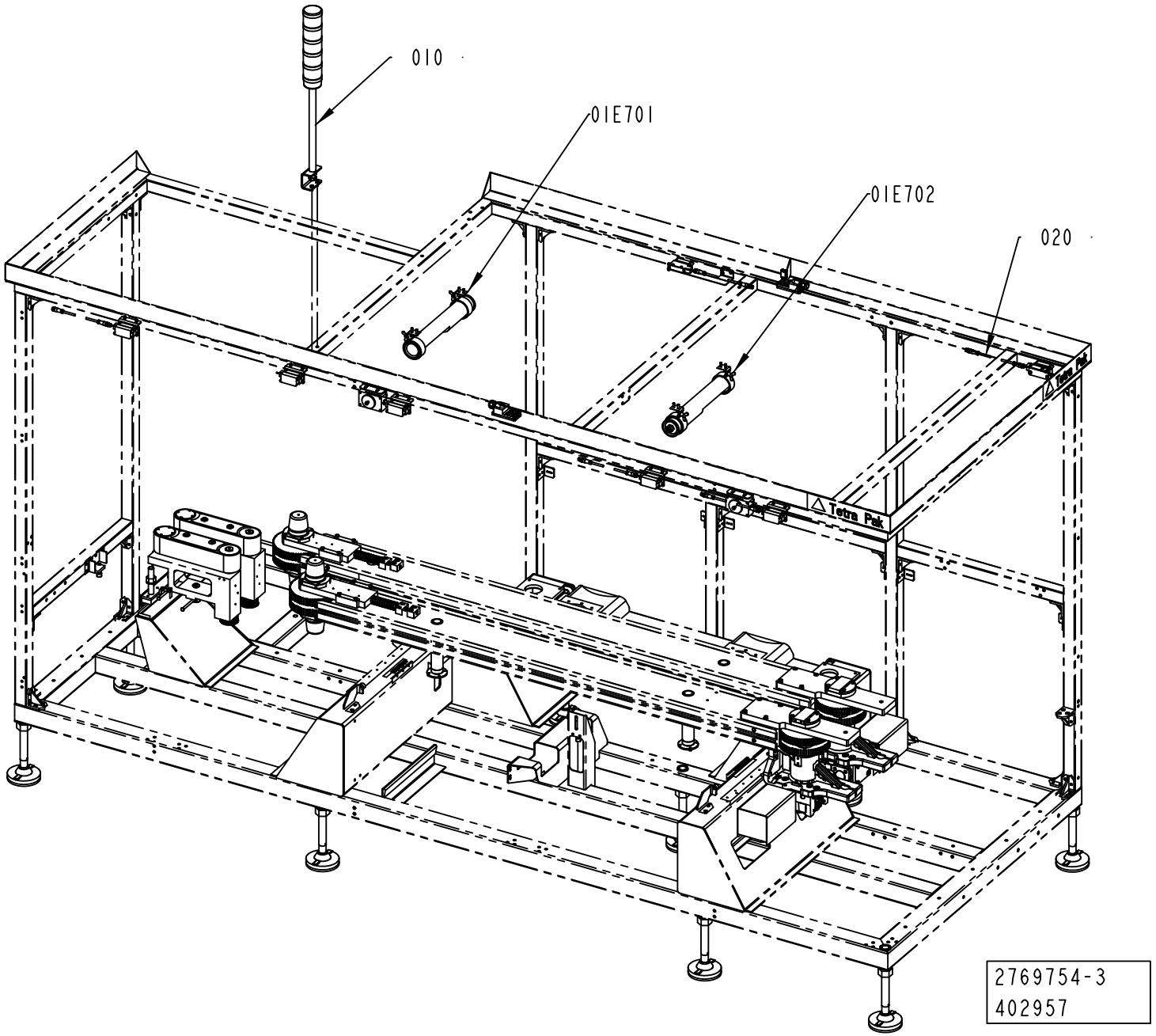
010
01E701
01E702
020
Tetra Pak
2769754-3
402957

ECM: 407735 - 20091001
Group number: 2769754-0200
Assembly Drawing: 2769754-3_1_AA

Pos	Part No	UN	Qty	Description	Page No
TGA					
040	2873922-0100		1	CABLE	**5-99, 12-37**
Common Parts					
010	2779764-0200		1	WARNING LAMP	**5-101**
01E701	2769757-0100		1	LAMP	**5-103**
01E702	2769757-0100		1	LAMP	**5-103**
020	2805700-0200		1	DOOR SAFETY SWITCH	**5-105, 5-107**
030	2873950-0100		1	CABLE SET	**5-109**

Pos	Part No	UN	Qty	Description	Page No

This page is intentionally left blank.

ECM: 428930 - 20100401
Group number: 2873922-0100
Assembly Drawing:

Pos	Part No	UN	Qty	Description	Page No
-					
70W100	90459-2565		1	MOTOR CABLE 16 AWG 2090-XXNPMP-16S09	
70W100	90600-3293		1	MOTOR PWWER CABLE 2090-XXNPMF-16S09	
70W101	90459-7207		1	MOTOR FEEDBACK CABLE 2090-XXNFMP-S09/C	
70W101	90600-3294		1	MOTOR FEEDBACK CABLE 2090-XXNFMF-S09/C	
70X101	90459-2551		1	CONNECTOR, MOTOR FEEDBACK 15 PIN MALE	

Pos	Part No	UN	Qty	Description	Page No

WARNING LAMP

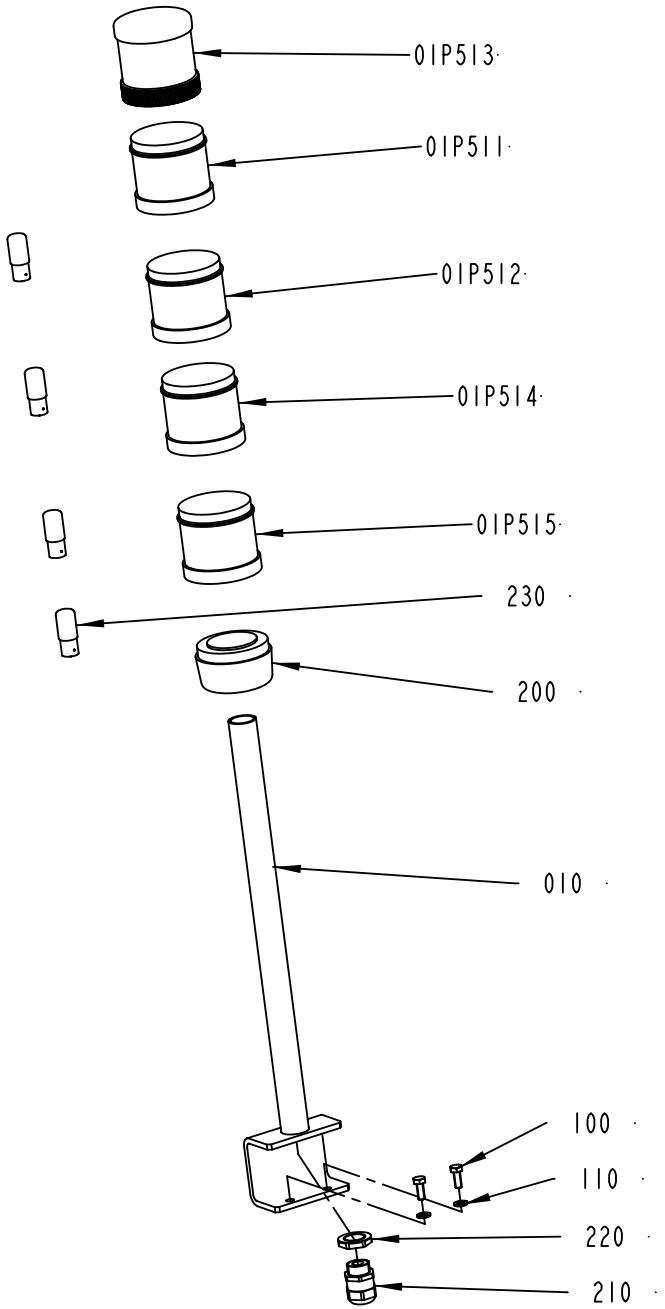

2779764-2
455569

ECM: 458828 - 20101001
Group number: 2779764-0200
Assembly Drawing: 2779764-2_1_AB

Pos	Part No	UN	Qty	Description	Page No
-					
010	2779765-0000		1	BRACKET	
01P511	90602-4062		1	LIGHT ELEMENT, RED, PSD-S OE LED RD	
01P512	90602-4063		1	LIGHT ELEMENT, YELLOW, PSD-S OE LED YE	
01P513	90602-4631		1	SIREN 100DB, PSD-S AE SM8-5 100DB/1	
01P514	90602-4060		1	LIGHT ELEMENT, BLUE, PSD-S OE LED BU	
01P515	90602-4061		1	LIGHT ELEMENT, GREEN, PSD-S OE LED GN	
100	312105-0368		2	SCREW M6S ISO 4017 M6X16 A480	
110	315105-0153		2	WASHER BRB 6,4X12 RFR	
200	90602-4627		1	TERMINAL ELEMENT, PSD-S CE-TM SPRING	
210	90458-0307		1	CABLE GLAND, M20X1,5, NO.5311 1020	
220	90458-0323		1	NUT, M20X1,5	
230	90036-0068		4	BULB 5W 24V, SL-L24 205348	

Pos	Part No	UN	Qty	Description	Page No

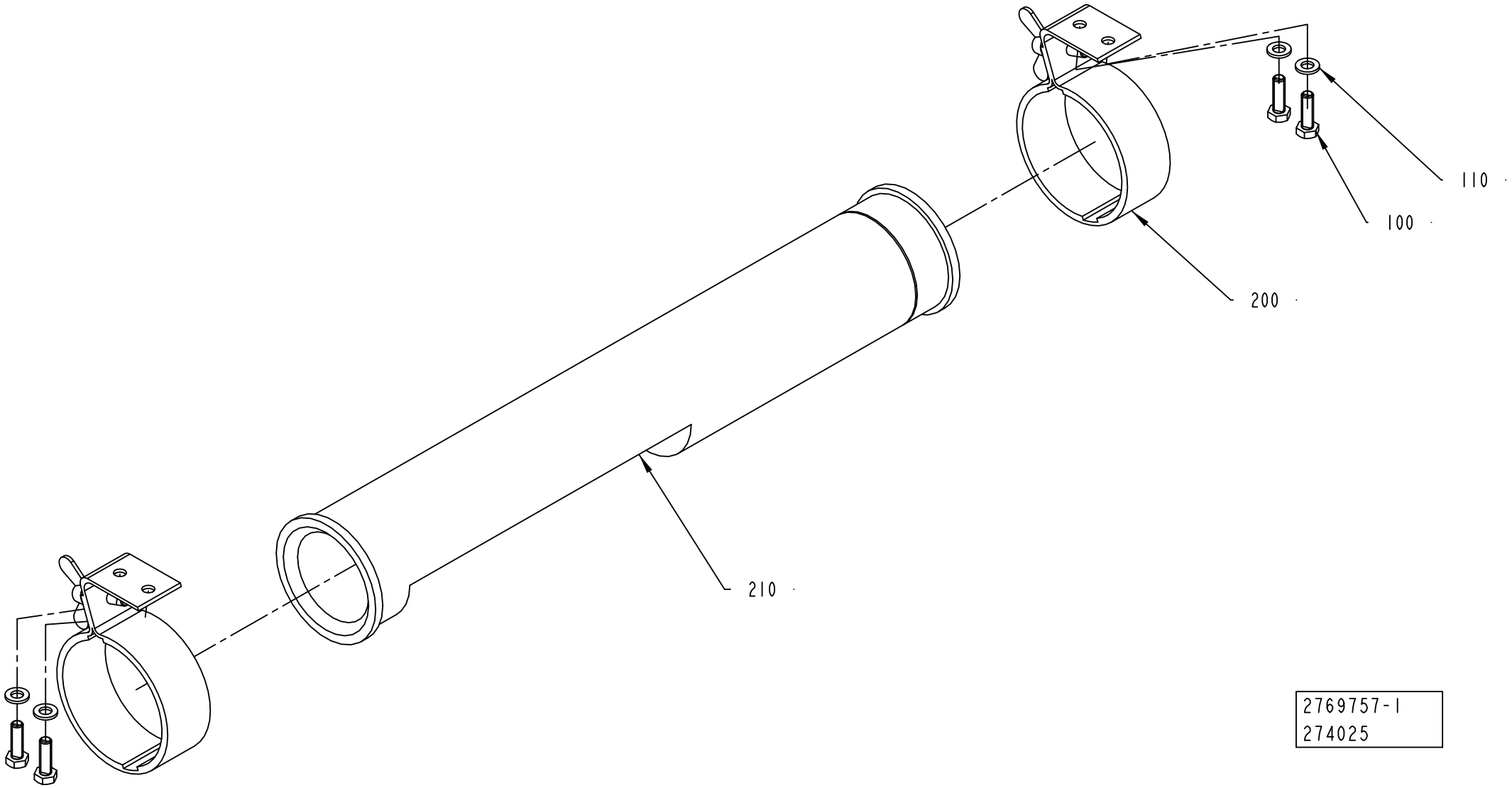
110
100
200
210
2769757-1
274025

ECM: 274503 - 20060921
Group number: 2769757-0100
Assembly Drawing: 2769757-1_1_AA

Pos	Part No	UN	Qty	Description	Page No
-					
100	312105-0370		4	SCREW M6S ISO 4017 M6X20 A480	
110	315105-0153		4	WASHER BRB 6,4X12 RFR	
200	90164-0303		2	LIGHT FIXTURE, BRACKET 70MM	
210	90164-0015		1	LIGHT FIXTURE, RL70CV-111 / 230V 50HZ	
	92297-0301		*1*	*STARTER 4-65W S\10, E 8219023*	
	90297-0007		*1*	*FLUORESCENT TUBE, PLS 11*	

Pos	Part No	UN	Qty	Description	Page No

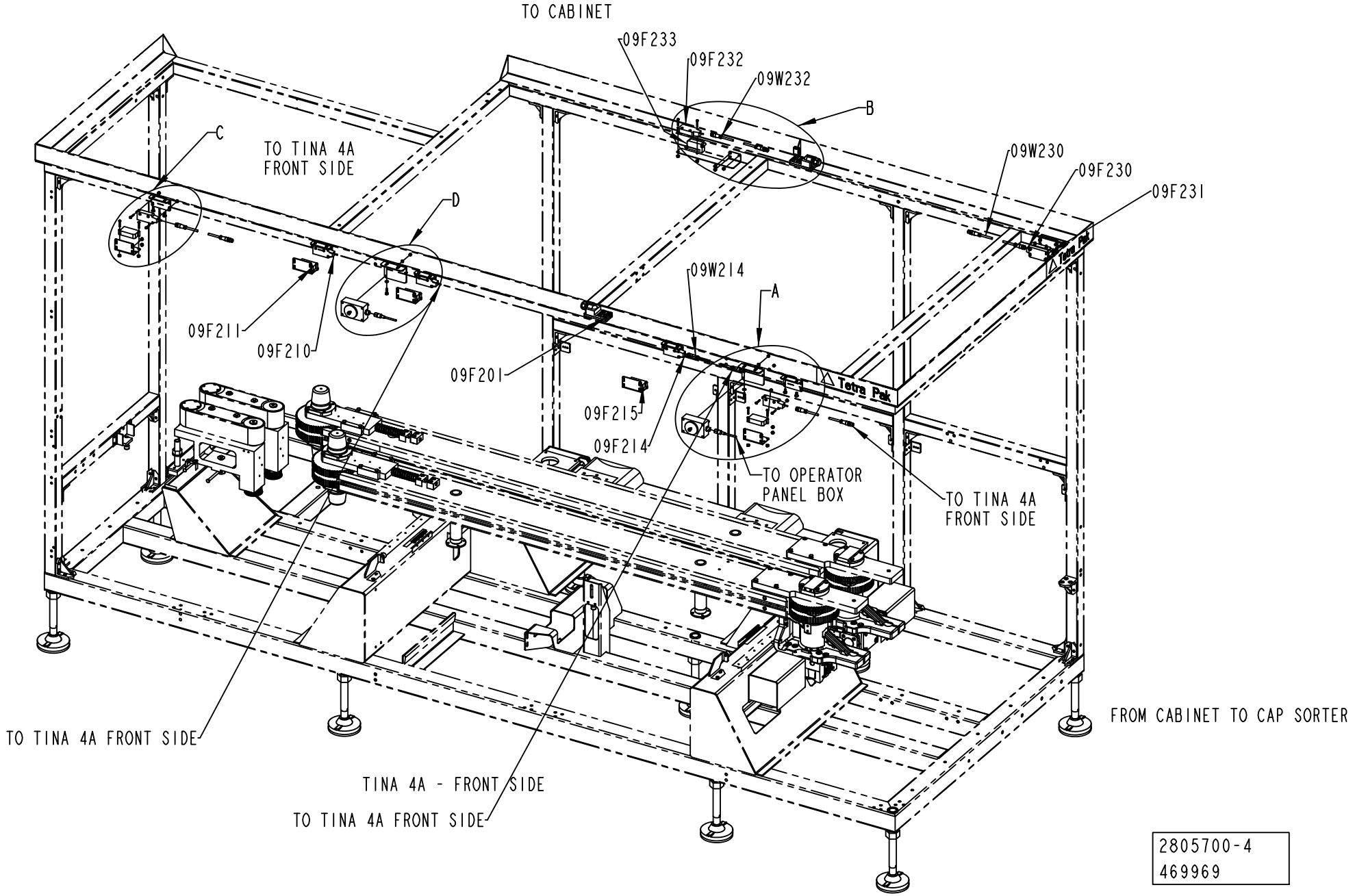
TO CABINET
09F233
09F232
09W232
B
C
TO TINA 4A
FRONT SIDE
D
09W230
09F230
09F231
09W214
A
09F211
09F210
09F201
09F215
09F214
TO OPERATOR
PANEL BOX
TO TINA 4A
FRONT SIDE
TO TINA 4A FRONT SIDE
TINA 4A - FRONT SIDE
TO TINA 4A FRONT SIDE
FROM CABINET TO CAP SORTER
2805700-4
469969

Pos	Part No	UN	Qty	Description	Page No
STREAMCAP500, STREAMCAP1000, SLIMCAP 2000, SLIMCAP 1000, STREAMCAP200, STREAMCAP330, HELICAP2 23 (See drawing on pages: 5-104, 5-106)					
020	2817774-0000		6	SUPPORT	
040	3054997-0000		6	SUPPORT	
09F234	90459-6961		1	SAFETY SENSOR, NON CONT. ADAM-E M12 0,5M	
09F235	90459-4089		1	SAFETY SENSOR NON-CONTACT EVA E	
09W234	90459-4876		1	FOCUS JUMPER CABLE M12 5P 3M, 20-056-21	
300	1539391-0000		52	ROUND NUT	
310	90459-4165		26	SAFETY SCREW SM4X25, 20-053-43	
330	312105-0370		4	SCREW M6S ISO 4017 M6X20 A480	
350	315105-0153		4	WASHER BRB 6,4X12 RFR	
380	90600-2563		12	SCREW PANHEAD SNAKE EYE SPANNER, M6X12	
Common Parts					
010	2781283-0000		2	BRACKET	
030	2817775-0000		1	SUPPORT	
09F201	90602-4058		1	CONNECTION BOX TINA 4A, 20-054-03	
09F202	90602-4058		1	CONNECTION BOX TINA 4A, 20-054-03	
09F210	90459-6961		1	SAFETY SENSOR, NON CONT. ADAM-E M12 0,5M	
09F211	90459-4089		1	SAFETY SENSOR NON-CONTACT EVA E	
09F212	90459-6961		1	SAFETY SENSOR, NON CONT. ADAM-E M12 0,5M	
09F213	90459-4089		1	SAFETY SENSOR NON-CONTACT EVA E	
09F214	90459-6961		1	SAFETY SENSOR, NON CONT. ADAM-E M12 0,5M	
09F215	90459-4089		1	SAFETY SENSOR NON-CONTACT EVA E	
09F216	90459-6961		1	SAFETY SENSOR, NON CONT. ADAM-E M12 0,5M	
09F217	90459-4089		1	SAFETY SENSOR NON-CONTACT EVA E	
09F230	90459-6961		1	SAFETY SENSOR, NON CONT. ADAM-E M12 0,5M	
09F231	90459-4089		1	SAFETY SENSOR NON-CONTACT EVA E	
09F232	90459-6961		1	SAFETY SENSOR, NON CONT. ADAM-E M12 0,5M	
09F233	90459-4089		1	SAFETY SENSOR NON-CONTACT EVA E	
09F236	90459-5627		1	CONNECTION TINA 1A, 20-054-00	
09K241	90459-6913		1	ELECTROMAG. DOOR LOCK. DEV.,JSD-ZH-EM1-K	
09K242	90459-6913		1	ELECTROMAG. DOOR LOCK. DEV.,JSD-ZH-EM1-K	
09W214	90459-4876		1	FOCUS JUMPER CABLE M12 5P 3M, 20-056-21	
09W216	90459-4876		1	FOCUS JUMPER CABLE M12 5P 3M, 20-056-21	
09W230	90459-4876		1	FOCUS JUMPER CABLE M12 5P 3M, 20-056-21	
09W232	90459-4876		1	FOCUS JUMPER CABLE M12 5P 3M, 20-056-21	
09W241	351309-0100		1	ACTUATOR/SENSOR CABLE PRKT 4-07/10M	
09W242	351309-0100		1	ACTUATOR/SENSOR CABLE PRKT 4-07/10M	
320	312605-0314		4	HEXAGON NUT, M6M M5 A280	
360	315105-0146		4	WASHER BRB 5,3X10 RFR	
390	575034-0000		3	ROUND NUT	

Pos	Part No	UN	Qty	Description	Page No

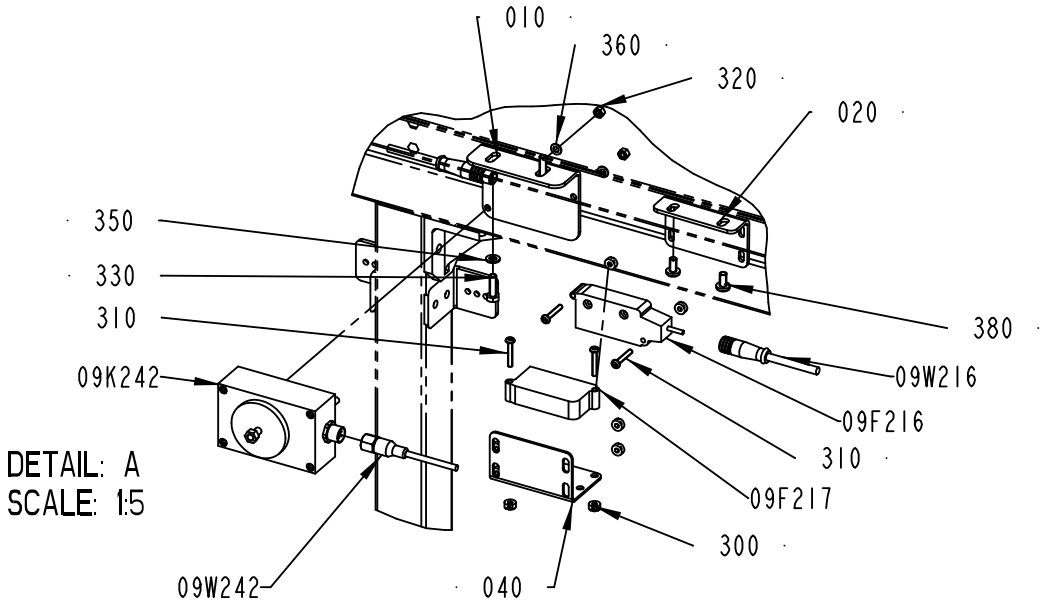

DETAIL: A
SCALE: 1:5

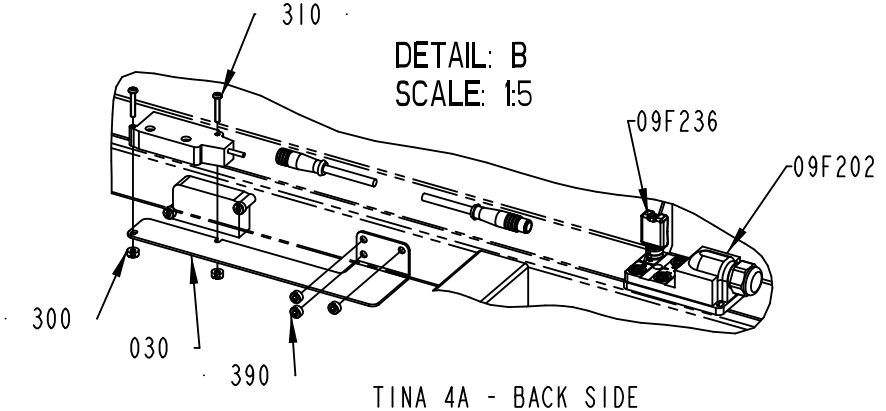

DETAIL: B
SCALE: 1:5

TINA 4A - BACK SIDE
TO CABLE DUCT (BACK SIDE)

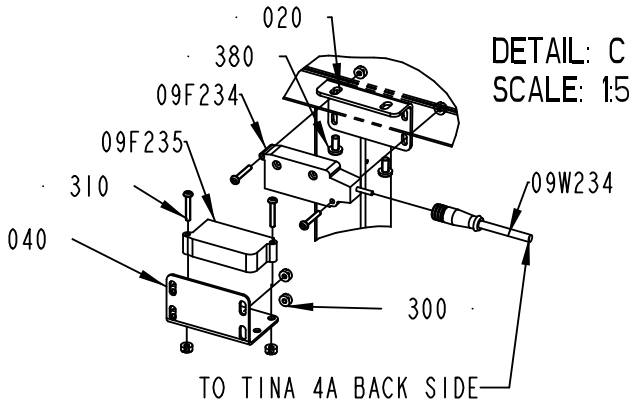

DETAIL: C
SCALE: 1:5

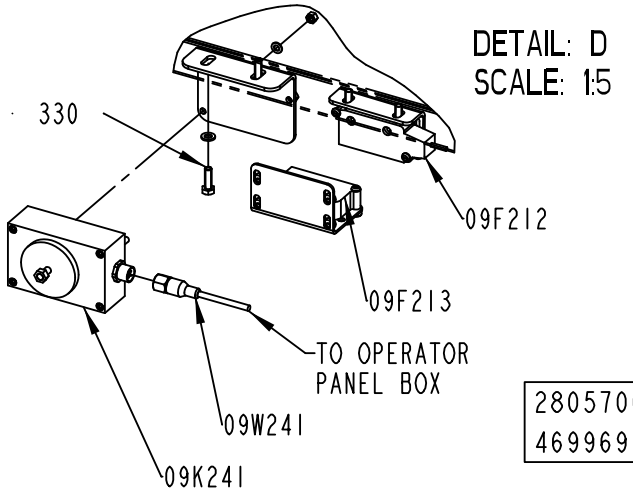

DETAIL: D
SCALE: 1:5

2805700-4
469969

Pos	Part No	UN	Qty	Description	Page No
STREAMCAP500, STREAMCAP1000, SLIMCAP 2000, SLIMCAP 1000, STREAMCAP200, STREAMCAP330, HELICAP2 23 (See drawing on pages: 5-104, 5-106)					
020	2817774-0000		6	SUPPORT	
040	3054997-0000		6	SUPPORT	
09F234	90459-6961		1	SAFETY SENSOR, NON CONT. ADAM-E M12 0,5M	
09F235	90459-4089		1	SAFETY SENSOR NON-CONTACT EVA E	
09W234	90459-4876		1	FOCUS JUMPER CABLE M12 5P 3M, 20-056-21	
300	1539391-0000		52	ROUND NUT	
310	90459-4165		26	SAFETY SCREW SM4X25, 20-053-43	
330	312105-0370		4	SCREW M6S ISO 4017 M6X20 A480	
350	315105-0153		4	WASHER BRB 6,4X12 RFR	
380	90600-2563		12	SCREW PANHEAD SNAKE EYE SPANNER, M6X12	
Common Parts					
010	2781283-0000		2	BRACKET	
030	2817775-0000		1	SUPPORT	
09F201	90602-4058		1	CONNECTION BOX TINA 4A, 20-054-03	
09F202	90602-4058		1	CONNECTION BOX TINA 4A, 20-054-03	
09F210	90459-6961		1	SAFETY SENSOR, NON CONT. ADAM-E M12 0,5M	
09F211	90459-4089		1	SAFETY SENSOR NON-CONTACT EVA E	
09F212	90459-6961		1	SAFETY SENSOR, NON CONT. ADAM-E M12 0,5M	
09F213	90459-4089		1	SAFETY SENSOR NON-CONTACT EVA E	
09F214	90459-6961		1	SAFETY SENSOR, NON CONT. ADAM-E M12 0,5M	
09F215	90459-4089		1	SAFETY SENSOR NON-CONTACT EVA E	
09F216	90459-6961		1	SAFETY SENSOR, NON CONT. ADAM-E M12 0,5M	
09F217	90459-4089		1	SAFETY SENSOR NON-CONTACT EVA E	
09F230	90459-6961		1	SAFETY SENSOR, NON CONT. ADAM-E M12 0,5M	
09F231	90459-4089		1	SAFETY SENSOR NON-CONTACT EVA E	
09F232	90459-6961		1	SAFETY SENSOR, NON CONT. ADAM-E M12 0,5M	
09F233	90459-4089		1	SAFETY SENSOR NON-CONTACT EVA E	
09F236	90459-5627		1	CONNECTION TINA 1A, 20-054-00	
09K241	90459-6913		1	ELECTROMAG. DOOR LOCK. DEV.,JSD-ZH-EM1-K	
09K242	90459-6913		1	ELECTROMAG. DOOR LOCK. DEV.,JSD-ZH-EM1-K	
09W214	90459-4876		1	FOCUS JUMPER CABLE M12 5P 3M, 20-056-21	
09W216	90459-4876		1	FOCUS JUMPER CABLE M12 5P 3M, 20-056-21	
09W230	90459-4876		1	FOCUS JUMPER CABLE M12 5P 3M, 20-056-21	
09W232	90459-4876		1	FOCUS JUMPER CABLE M12 5P 3M, 20-056-21	
09W241	351309-0100		1	ACTUATOR/SENSOR CABLE PRKT 4-07/10M	
09W242	351309-0100		1	ACTUATOR/SENSOR CABLE PRKT 4-07/10M	
320	312605-0314		4	HEXAGON NUT, M6M M5 A280	
360	315105-0146		4	WASHER BRB 5,3X10 RFR	
390	575034-0000		3	ROUND NUT	

Pos	Part No	UN	Qty	Description	Page No

This page is intentionally left blank.

ECM: 480148 - 20110401
Group number: 2873950-0100
Assembly Drawing:

Pos	Part No	UN	Qty	Description	Page No
TGA, TBA SLIMCAP1000, TBA STREAMCAP1000, TBA SLIMCAP 2000, TBA STREAMCAP200, TBA HELICAP2 23					
09W203	90459-4252		1	CABLE M12-C101, 20-056-10	
40W000	90600-3293		1	MOTOR PWWER CABLE 2090-XXNPMF-16S09	
40W001	90600-3294		1	MOTOR FEEDBACK CABLE 2090-XXNFMF-S09/C	
40W002	90600-3293		1	MOTOR PWWER CABLE 2090-XXNPMF-16S09	
40W003	90600-3294		1	MOTOR FEEDBACK CABLE 2090-XXNFMF-S09/C	
40W300	90600-3293		1	MOTOR PWWER CABLE 2090-XXNPMF-16S09	
40W301	90600-3294		1	MOTOR FEEDBACK CABLE 2090-XXNFMF-S09/C	
40W410	351150-0413	M	7	CABLE OLFLEX 4GX1,5 MM2 LIGHT/GREY	
40X001	90459-2551		1	CONNECTOR, MOTOR FEEDBACK 15 PIN MALE	
40X003	90459-2551		1	CONNECTOR, MOTOR FEEDBACK 15 PIN MALE	
40X301	90459-2551		1	CONNECTOR, MOTOR FEEDBACK 15 PIN MALE	
50W004	351150-0405	M	10	CABLE OLFLEX 5X0,75 MM2 LIGHT/GREY	
50W010	351150-0413	M	9	CABLE OLFLEX 4GX1,5 MM2 LIGHT/GREY	
50W110	351422-0203	M	9	CABLE ÖLFLEX 150CY QUATTRO 4X1,5	
TPA					
09W203	90459-4252		1	CABLE M12-C101, 20-056-10	
21W410	351422-0203	M	11	CABLE ÖLFLEX 150CY QUATTRO 4X1,5	
40W000	90600-3293		1	MOTOR PWWER CABLE 2090-XXNPMF-16S09	
40W001	90600-3294		1	MOTOR FEEDBACK CABLE 2090-XXNFMF-S09/C	
40W002	90600-3293		1	MOTOR PWWER CABLE 2090-XXNPMF-16S09	
40W003	90600-3294		1	MOTOR FEEDBACK CABLE 2090-XXNFMF-S09/C	
40W300	90600-3293		1	MOTOR PWWER CABLE 2090-XXNPMF-16S09	
40W301	90600-3294		1	MOTOR FEEDBACK CABLE 2090-XXNFMF-S09/C	
40W410	351150-0413	M	7	CABLE OLFLEX 4GX1,5 MM2 LIGHT/GREY	
40X001	90459-2551		1	CONNECTOR, MOTOR FEEDBACK 15 PIN MALE	
40X003	90459-2551		1	CONNECTOR, MOTOR FEEDBACK 15 PIN MALE	
40X301	90459-2551		1	CONNECTOR, MOTOR FEEDBACK 15 PIN MALE	
50W004	351150-0405	M	10	CABLE OLFLEX 5X0,75 MM2 LIGHT/GREY	
50W010	351150-0413	M	9	CABLE OLFLEX 4GX1,5 MM2 LIGHT/GREY	
50W110	351422-0203	M	9	CABLE ÖLFLEX 150CY QUATTRO 4X1,5	
Common Parts					
01W400	351150-0403	M	8	CABLE OLFLEX 3X0,75 MM2 LIGHT/GREY	
01W401	351150-0407	M	8	CABLE OLFLEX 12X0,75 MM2 LIGHT/GREY	
01W500	351150-0187	M	8	CABLE OLFLEX 5X6 MM2 LIGHT/GREY	
01W501	351150-0406	M	2	CABLE OLFLEX 7X0,75 MM2 LIGHT/GREY	
01W510	351150-0406	M	5.5	CABLE OLFLEX 7X0,75 MM2 LIGHT/GREY	
01W701	351150-0403	M	5	CABLE OLFLEX 3X0,75 MM2 LIGHT/GREY	
01W702	351150-0403	M	9	CABLE OLFLEX 3X0,75 MM2 LIGHT/GREY	
01W800	351150-0403	M	2	CABLE OLFLEX 3X0,75 MM2 LIGHT/GREY	
01W801	351150-0403	M	2	CABLE OLFLEX 3X0,75 MM2 LIGHT/GREY	
09W103	351150-0405	M	11	CABLE OLFLEX 5X0,75 MM2 LIGHT/GREY	
09W201	351423-0006	M	8	CABLE UNITRONIC LICY 5X0,34	
09W202	351423-0006	M	5	CABLE UNITRONIC LICY 5X0,34	
20W000	351422-0203	M	10	CABLE ÖLFLEX 150CY QUATTRO 4X1,5	
21W100	90600-3293		1	MOTOR PWWER CABLE 2090-XXNPMF-16S09	
21W101	90600-3294		1	MOTOR FEEDBACK CABLE 2090-XXNFMF-S09/C	
21W200	90600-3293		1	MOTOR PWWER CABLE 2090-XXNPMF-16S09	
21W201	90600-3294		1	MOTOR FEEDBACK CABLE 2090-XXNFMF-S09/C	
21W400	351422-0203	M	18	CABLE ÖLFLEX 150CY QUATTRO 4X1,5	
21W800	351150-0412	M	6	CABLE OLFLEX 3X1,5 MM2 LIGHT/GREY	
21W801	351120-0266	M	5	CABLE ÖLFLEX HEAT 180 SIHF 4X4	
21X101	90459-2551		1	CONNECTOR, MOTOR FEEDBACK 15 PIN MALE	
21X201	90459-2551		1	CONNECTOR, MOTOR FEEDBACK 15 PIN MALE	
30W000	90600-3293		1	MOTOR PWWER CABLE 2090-XXNPMF-16S09	
30W001	90600-3294		1	MOTOR FEEDBACK CABLE 2090-XXNFMF-S09/C	
30W400	90600-3293		1	MOTOR PWWER CABLE 2090-XXNPMF-16S09	
30W401	90600-3294		1	MOTOR FEEDBACK CABLE 2090-XXNFMF-S09/C	
30X001	90459-2551		1	CONNECTOR, MOTOR FEEDBACK 15 PIN MALE	
30X401	90459-2551		1	CONNECTOR, MOTOR FEEDBACK 15 PIN MALE	

Machine Type | Group Description | Used-In | Group Number | Page No

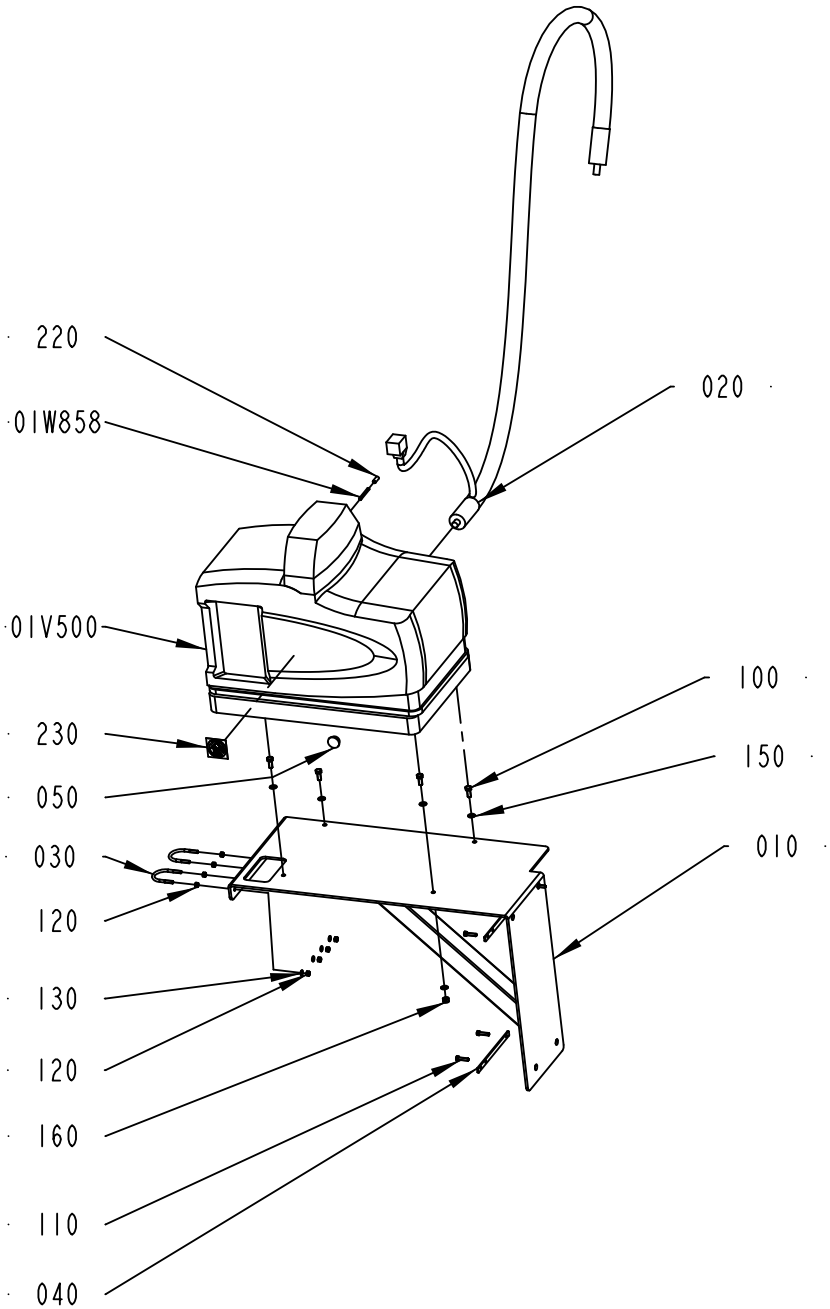
220
01W858
020
01V500
100
230
150
050
030
010
120
130
120
160
110
040

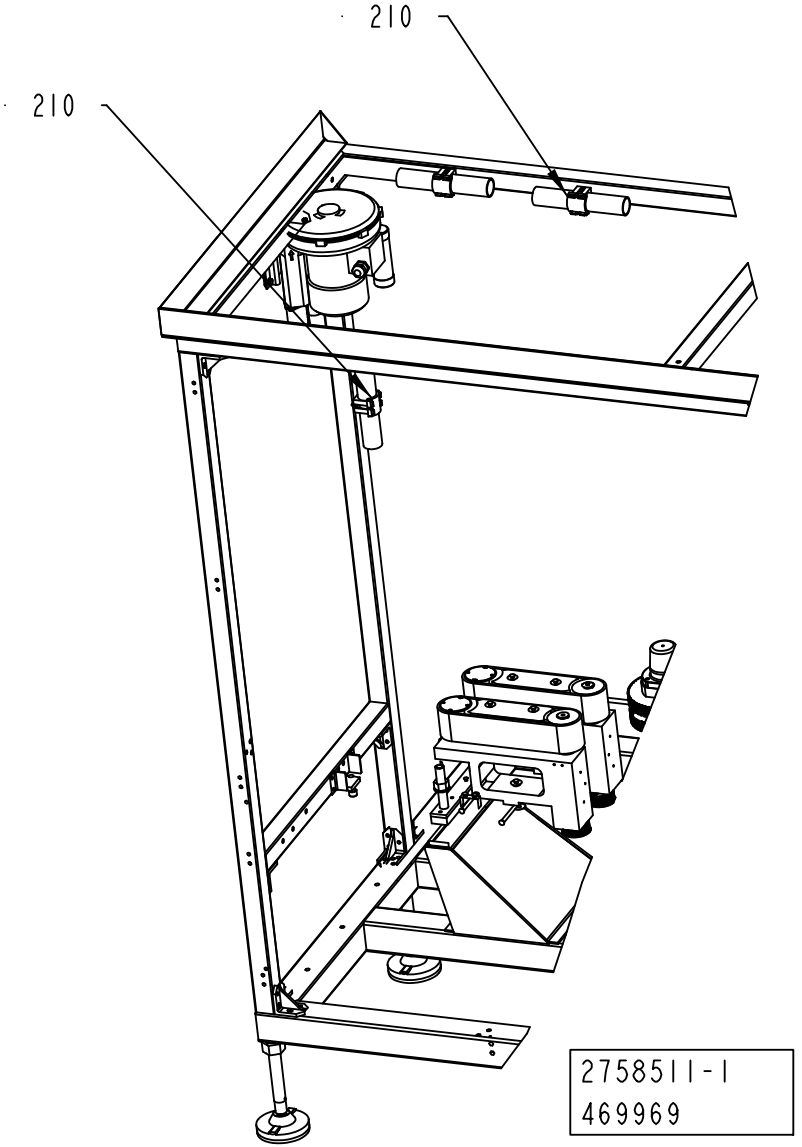
210
210
2758511-1
469969

ECM: 480138 - 20110401
Group number: 2758511-0100
Assembly Drawing: 2758511-1_1_AF

Pos	Part No	UN	Qty	Description	Page No
HELICAP2 23 (See drawing on page: 5-110)					
01V500	3068637-0000		1	HOTMELT UNIT	
01W858	315400-0001	MM	3000	TUBE PUN-H-6X1-BL	
050	3117867-0000		1	PLASTIC PLUG	
220	90459-7369		1	MARKING FOR PNEUM. TUBING, PRZ06	
STREAMCAP500, STREAMCAP1000, SLIMCAP 2000, SLIMCAP 1000, STREAMCAP200, STREAMCAP330 (See drawing on page: 5-110)					
01V500	90459-1991		1	HOT MELT UNIT, #1049296	
	90459-1980		*1*	*MANIFOLD ASSEMBLY, 4-HOSE #1064651*	
	90459-1981		*1*	*MANIFOLD SERVICE KIT (P4,P7,P10)#1028309*	
	90459-1982		*1*	*AUTO. PR. DIS. VALVE (P4/7/10)#1028308*	
	90459-1983		*1*	*HEATER-BLOCK KIT, #1064649*	
	90459-1984		*1*	*PUMP ASS. SERV. KIT (P4/7/10) #102830*	
	90459-1985		*1*	*PUMP SERVICE KIT (P4,P7,P10) #1028304*	
	90459-1986		*1*	*REPL. SATURN® FILTER, 100 MESH #1028305*	
	90459-1987		*1*	*PNEUM. PANEL ASS. (P4/7/10) #1028307*	
	90459-1988		*1*	*COV.,FRAME,SUBBASE MOUNT.PL.(P4)#1021661*	
	90459-1989		*1*	*COVERS,FRAME,CHASSIS, P4 #1021660*	
	90439-0241		*1*	*ANGLE NIPPLE*	
	90459-1971		*1*	*HOSE/GUN MODULE KIT(P4,P7,P10),#1028328*	
	90459-1972		*1*	*FUSE KIT,HOSE/GUN (P4,P7,P10)),#1028331*	
	90459-1973		*1*	*MAIN CIRC.BOARD SERV.KIT(P4,P7),#1028322*	
	90459-1974		*1*	*FUSE KIT,MAIN CIRC.B.(P4/7/10),#1028329*	
	90459-1975		*1*	*CPU CONT.BOARD SERV.KIT(P4/7/10)#1028325*	
	90459-1976		*1*	*OPER. PANEL/ENCL.SERV.KIT(P4/7)#1028326*	
	90459-1977		*1*	*WELDMENT, TANK, P4 #1051033*	
	90459-1978		*1*	*RTD SERVICE KIT (P4,P7,P10) #1028320*	
	90459-1979		*1*	*THERMOSTAT SERV. KIT(P4,P7,P10) #1028321*	
01W858	315400-0001	MM	3000	TUBE PUN-H-6X1-BL	
050	3117867-0000		1	PLASTIC PLUG	
220	90459-7369		1	MARKING FOR PNEUM. TUBING, PRZ06	
Common Parts					
010	2766939-0000		1	SUPPORT	
020	90600-0773		1	AUTOMATIC GUN HOSE, #104008	
030	531616-0000		2	HOLDER	
040	2874024-0000		2	BRACKET	
100	312105-0451		4	SCREW M6S ISO 4017 M8X20 A480	
110	312105-0372		4	SCREW M6S ISO 4017 M6X25 A480	
120	312605-0316		8	HEXAGON NUT, M6M M6 A280	
130	315105-0153		4	WASHER BRB 6,4X12 RFR	
150	315105-0165		8	WASHER BRB 8,4X16 RFR	
160	312812-0318		4	HEXAGON NUT, NY-LOCK M8 A480	

Pos	Part No	UN	Qty	Description	Page No
210	90439-0295		3	SERVICE KIT, NO. 111940	
230	90459-2265		1	PROHIBITION SIGN ISO, DO NOT WASH	

Machine Type | Group Description | Used-In | Group Number | Page No

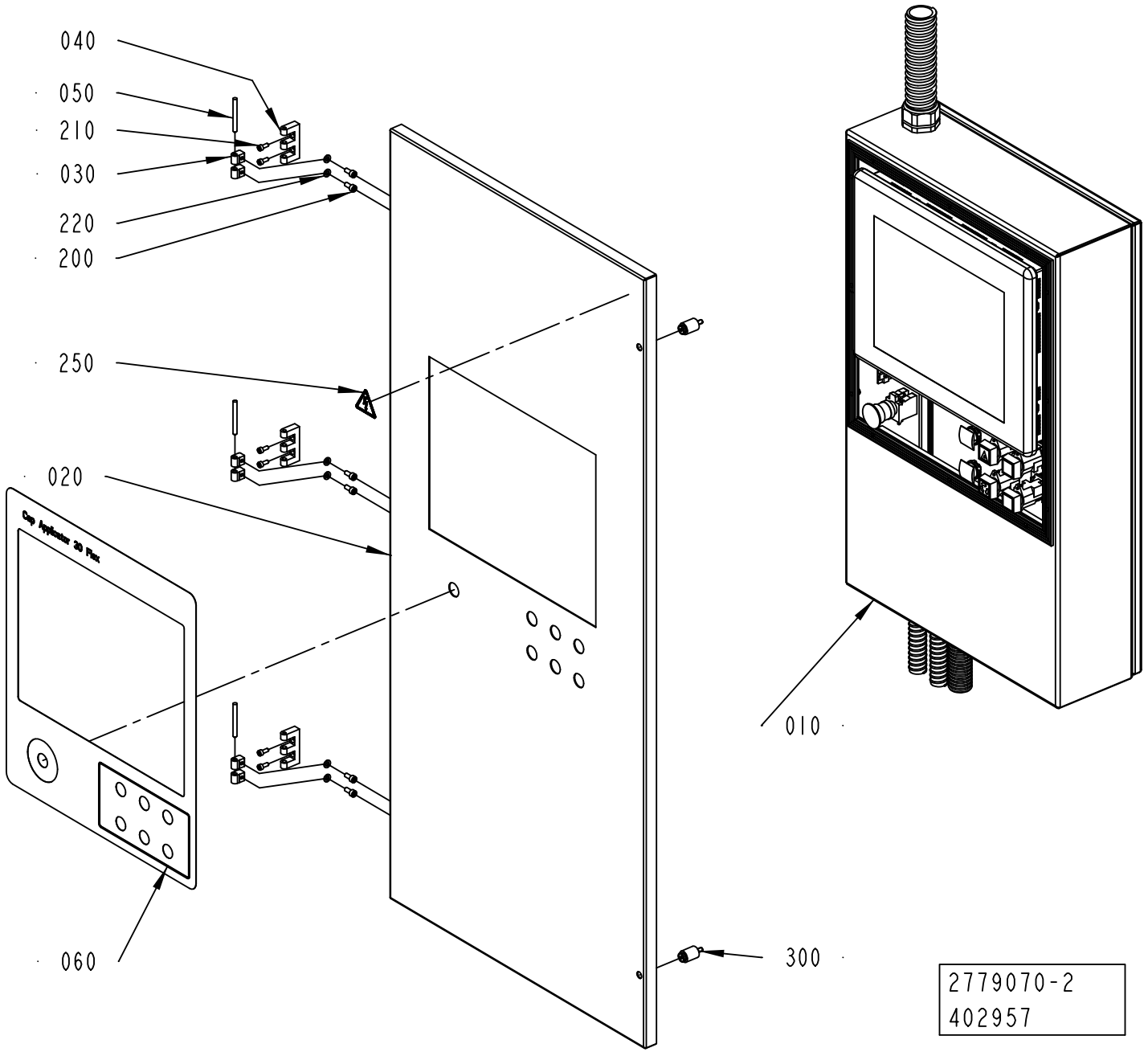
040
050
210
030
220
200
250
020
060
300
010
2779070-2
402957

ECM: 407737 - 20091001
Group number: 2779070-0200
Assembly Drawing: 2779070-2_1_AA

Pos	Part No	UN	Qty	Description	Page No
CAP 30/FLEX					
060	2746920-0000		1	FOIL	
Common Parts					
010	2802386-0200		1	OPERATOR INTERFACE	**5-115**
020	2779768-0000		1	DOOR	
030	1129770-0000		6	BLOCKING PIECE	
040	1035792-0000		3	E-HINGE	
050	988685-0000		3	PIN	
200	312115-0367		6	SCREW ISO4762 M6X14 A4 80	
210	312115-0327		6	SCREW ISO4762 M5X12 A4 80	
220	315105-0153		6	WASHER BRB 6,4X12 RFR	
250	359705-0015		1	WARNING SIGN ISO, RISK OF ELECTRIC SHOCK	
300	90226-0458		2	MOUNTING SCREW	

Pos	Part No	UN	Qty	Description	Page No

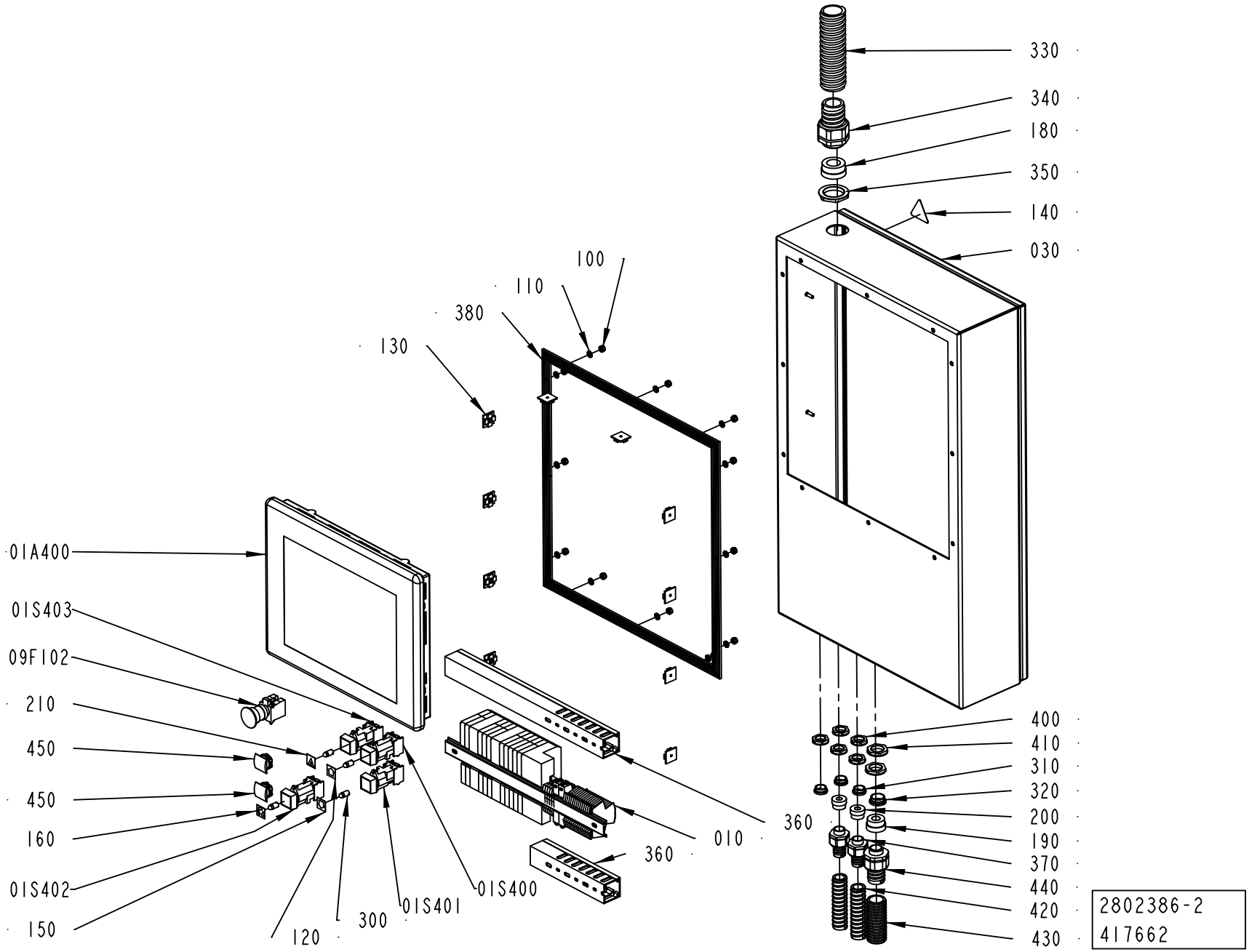
330
340
180
350
140
030
100
110
380
130
01A400
01S403
09F102
210
450
450
160
01S402
150
120
300
01S401
01S400
010
360
360
400
410
310
320
200
190
370
440
420
430
2802386-2
417662

ECM: 428926 - 20100401
Group number: 2802386-0200
Assembly Drawing: 2802386-2_1_AB

Pos	Part No	UN	Qty	Description	Page No
-					
010	2817783-0100		1	PLINTH	**5-117, 5-119**
01A400	90600-8128		1	OPER. PANEL 15"PV+,2711P-T15C4D2TP SER.B	
01S400	90064-0093		1	PUSH BUTTON, GREEN	
	90036-0057		*1*	*LIGHT BULB, BA9S 28V*	
01S401	90064-0098		1	PUSH BUTTON, CLEAR	
01S402	90064-0093		1	PUSH BUTTON, GREEN	
	90036-0057		*1*	*LIGHT BULB, BA9S 28V*	
01S404	90064-0098		1	PUSH BUTTON, CLEAR	
030	2746904-0000		1	BOX	
09F102	90458-1651		1	EMERGENCY STOP, ZB4-BS-844 ZB4-BZ-104	
100	312812-0316		12	HEXAGON NUT, NY-LOCK M6 A480	
110	315105-0153		12	WASHER BRB 6,4X12 RFR	
120	359301-0001		1	BUTTON SIGN, UP	
130	352113-0206		10	ANCHOR PLATES FOR STRIPS, ABM100-AT	
140	359705-0015		1	WARNING SIGN ISO, RISK OF ELECTRIC SHOCK	
150	359301-0005		1	BUTTON SIGN, DOWN	
160	359301-0090		1	BUTTON SIGN, INCHING	
180	353249-0054		1	INSERT, SINGLE HOLE, EK 156/25	
190	353249-0015		1	INSERT, SINGLE HOLE, EK 155/16	
200	353249-0012		2	INSERT, SINGLE HOLE, EK 154/11	
210	359301-0105		1	BUTTON SIGN, ALARM STOP	
300	90036-0057		4	LIGHT BULB, BA9S 28V	
310	90458-1308		3	BLIND PLUG CIRCULAR, M20X1,5 514GFK/220	
320	90458-1309		1	BLIND PLUG CIRCULAR, M25X1,5 514GFK/225	
330	90152-0060	MM	1000	SPIRAL CONDUIT, 42X35, UL3529	
340	90458-0434		1	HOSE GLAND W/O INSERT M40 EXTENDED	
350	90458-0326		1	NUT, M40X1,5	
360	90181-0038	MM	1100	CABLE DUCT 40X40MM	
370	90458-0430		2	HOSE GLAND W/O INSERT M20 EXTENDED	
380	90143-0071	MM	2000	RUBBER STRIP 4X20MM	
390	90152-0051	MM	1800	SPIRAL CONDUIT, 25X18, UL 1816	
400	90458-0323		5	NUT, M20X1,5	
410	90458-0324		2	NUT, M25X1,5	
420	90152-0051	MM	1500	SPIRAL CONDUIT, 25X18, UL 1816	
430	90152-0070	MM	700	METAL HOSE, 32,5X26, UL 2621	
440	90458-0432		1	HOSE GLAND W/O INSERT M25 EXTENDED	
450	90459-3279		3	BLANK PLUG BLACK, SQUARE, PLASTIC ZB5SZ5	

Pos	Part No	UN	Qty	Description	Page No

Machine Type	Group Description	Used-In	Group Number	Page No

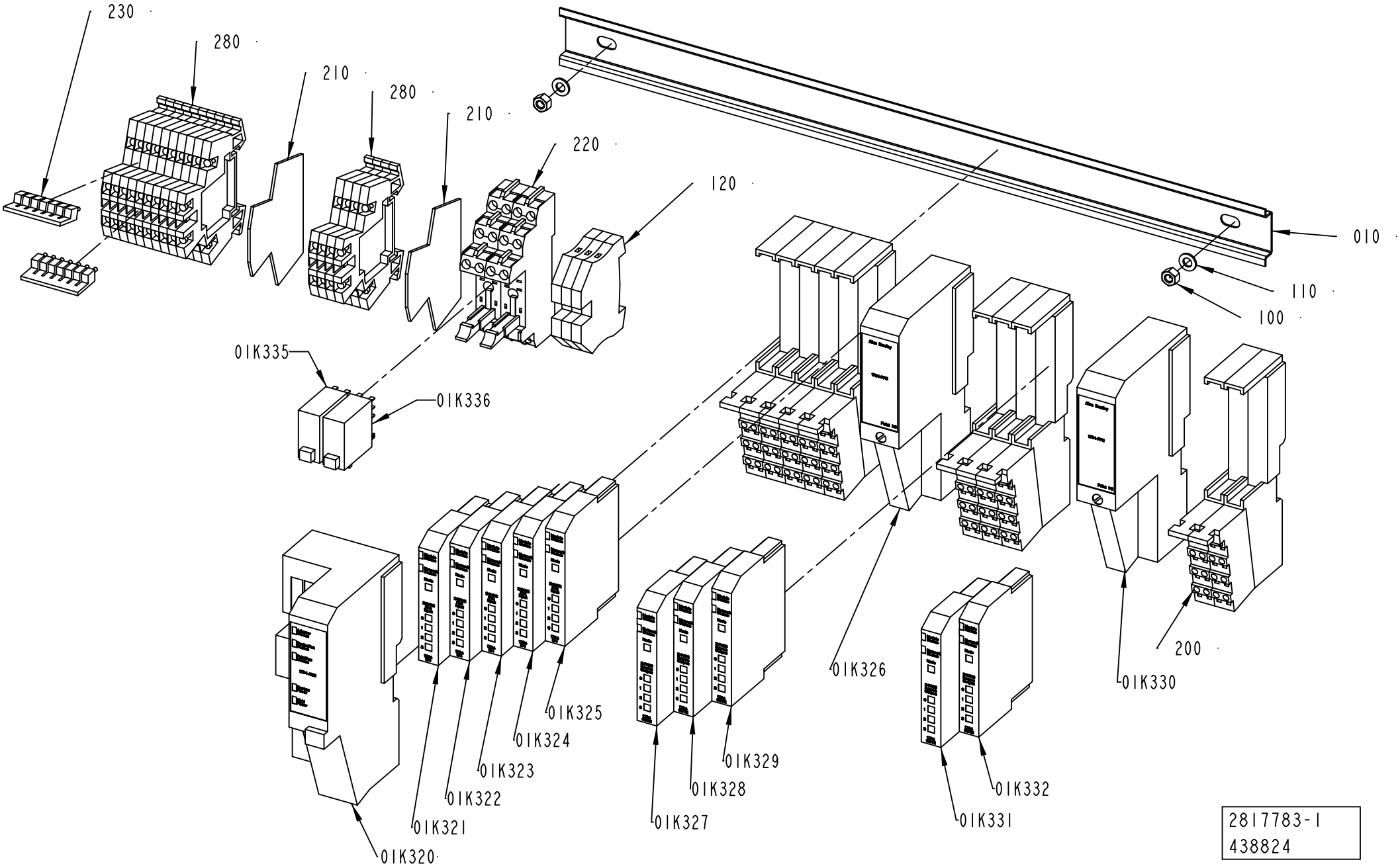

2817783-1
438824

ECM: 438887 - 20100701
Group number: 2817783-0100
Assembly Drawing: 2817783-1_1_AC

This list covers pages from 5-116 to 5-119

Pos	Part No	UN	Qty	Description	Page No
CAP 30/FLEX (See drawing on pages: 5-116, 5-118)					
01K325	90459-2503		1	DIGITAL INPUT 4 PTS SINK, 1734-IB4	
01K335	90119-0108		1	RELAY OMRON G2R-2-SNI-24DC	
	90129-0018		*1*	*BASE, P2RF-08-E*	
01K336	90119-0108		1	RELAY OMRON G2R-2-SNI-24DC	
	90129-0018		*1*	*BASE, P2RF-08-E*	
200	90459-2526		10	REMOTE I/O BASE MODULE 8 POINTS, 1734-TB	
210	90077-0114		2	END PLATE, WAP/WDK 2,5	
220	90129-0018		2	BASE, P2RF-08-E	
280	90077-0113		14	TERMINAL BLOCK WDK 2.5	
Common Parts					
010	2746909-0000		1	RAIL	
01K320	90459-2494		1	DEVICENET I/O ADAPTER MODULE, 1734-ADN	
01K321	90459-2503		1	DIGITAL INPUT 4 PTS SINK, 1734-IB4	
01K322	90459-2503		1	DIGITAL INPUT 4 PTS SINK, 1734-IB4	
01K323	90459-2503		1	DIGITAL INPUT 4 PTS SINK, 1734-IB4	
01K324	90459-2503		1	DIGITAL INPUT 4 PTS SINK, 1734-IB4	
01K326	90459-2501		1	FIELD POWER DISTRIBUTOR, 1734-FPD	
01K327	90459-2505		1	DIGITAL OUTPUT 4 PTS, 1734-OB4E	
01K328	90459-2505		1	DIGITAL OUTPUT 4 PTS, 1734-OB4E	
01K329	90459-2505		1	DIGITAL OUTPUT 4 PTS, 1734-OB4E	
01K330	90459-2501		1	FIELD POWER DISTRIBUTOR, 1734-FPD	
01K331	90459-2505		1	DIGITAL OUTPUT 4 PTS, 1734-OB4E	
01K332	90459-2505		1	DIGITAL OUTPUT 4 PTS, 1734-OB4E	
100	312605-0314		2	HEXAGON NUT, M6M M5 A280	
110	315105-0146		2	WASHER BRB 5,3X10 RFR	
120	353024-0205		3	EARTH TERMINAL WPE 4	
230	353034-0030		2	BRIDGE CONNECTOR WQV 2,5/10	

Pos	Part No	UN	Qty	Description	Page No

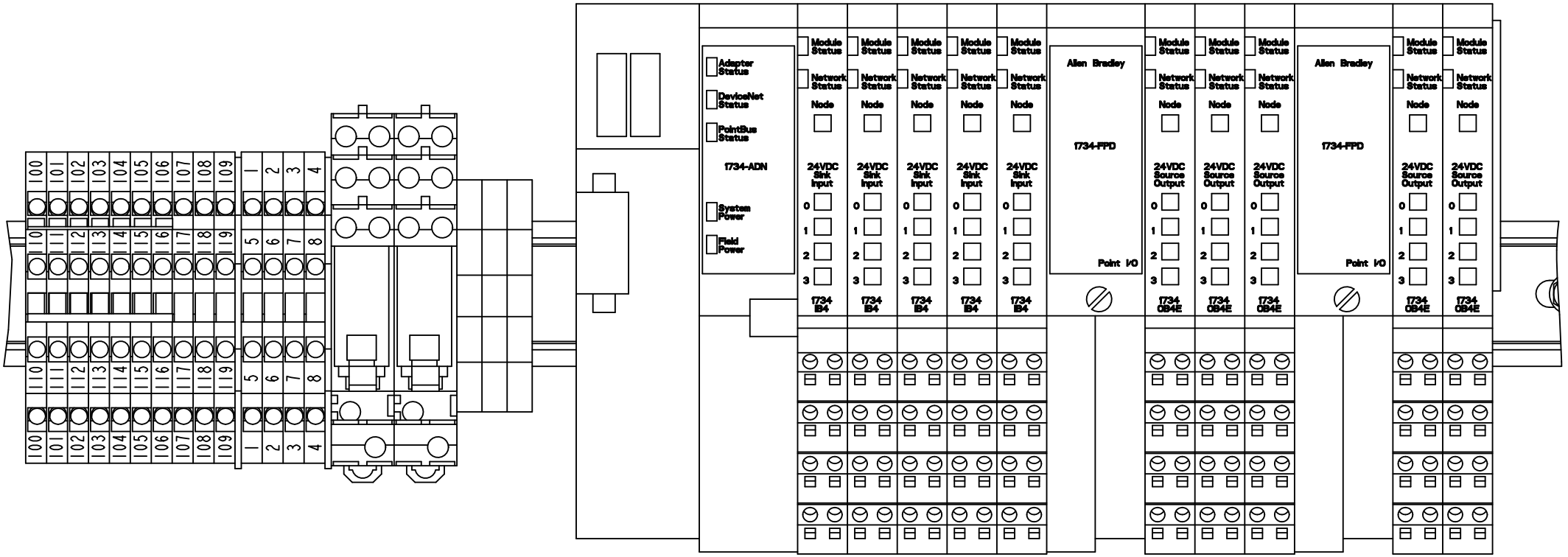

2817783-1
438824

ECM: 438887 - 20100701
Group number: 2817783-0100
Assembly Drawing: 2817783-1_2_AC

This list covers pages from 5-116 to 5-119

Pos	Part No	UN	Qty	Description	Page No
CAP 30/FLEX (See drawing on pages: 5-116, 5-118)					
01K325	90459-2503		1	DIGITAL INPUT 4 PTS SINK, 1734-IB4	
01K335	90119-0108		1	RELAY OMRON G2R-2-SNI-24DC	
	90129-0018		*1*	*BASE, P2RF-08-E*	
01K336	90119-0108		1	RELAY OMRON G2R-2-SNI-24DC	
	90129-0018		*1*	*BASE, P2RF-08-E*	
200	90459-2526		10	REMOTE I/O BASE MODULE 8 POINTS, 1734-TB	
210	90077-0114		2	END PLATE, WAP/WDK 2,5	
220	90129-0018		2	BASE, P2RF-08-E	
280	90077-0113		14	TERMINAL BLOCK WDK 2.5	
Common Parts					
010	2746909-0000		1	RAIL	
01K320	90459-2494		1	DEVICENET I/O ADAPTER MODULE, 1734-ADN	
01K321	90459-2503		1	DIGITAL INPUT 4 PTS SINK, 1734-IB4	
01K322	90459-2503		1	DIGITAL INPUT 4 PTS SINK, 1734-IB4	
01K323	90459-2503		1	DIGITAL INPUT 4 PTS SINK, 1734-IB4	
01K324	90459-2503		1	DIGITAL INPUT 4 PTS SINK, 1734-IB4	
01K326	90459-2501		1	FIELD POWER DISTRIBUTOR, 1734-FPD	
01K327	90459-2505		1	DIGITAL OUTPUT 4 PTS, 1734-OB4E	
01K328	90459-2505		1	DIGITAL OUTPUT 4 PTS, 1734-OB4E	
01K329	90459-2505		1	DIGITAL OUTPUT 4 PTS, 1734-OB4E	
01K330	90459-2501		1	FIELD POWER DISTRIBUTOR, 1734-FPD	
01K331	90459-2505		1	DIGITAL OUTPUT 4 PTS, 1734-OB4E	
01K332	90459-2505		1	DIGITAL OUTPUT 4 PTS, 1734-OB4E	
100	312605-0314		2	HEXAGON NUT, M6M M5 A280	
110	315105-0146		2	WASHER BRB 5,3X10 RFR	
120	353024-0205		3	EARTH TERMINAL WPE 4	
230	353034-0030		2	BRIDGE CONNECTOR WQV 2,5/10	

Pos	Part No	UN	Qty	Description	Page No

DOORS AND COVERS

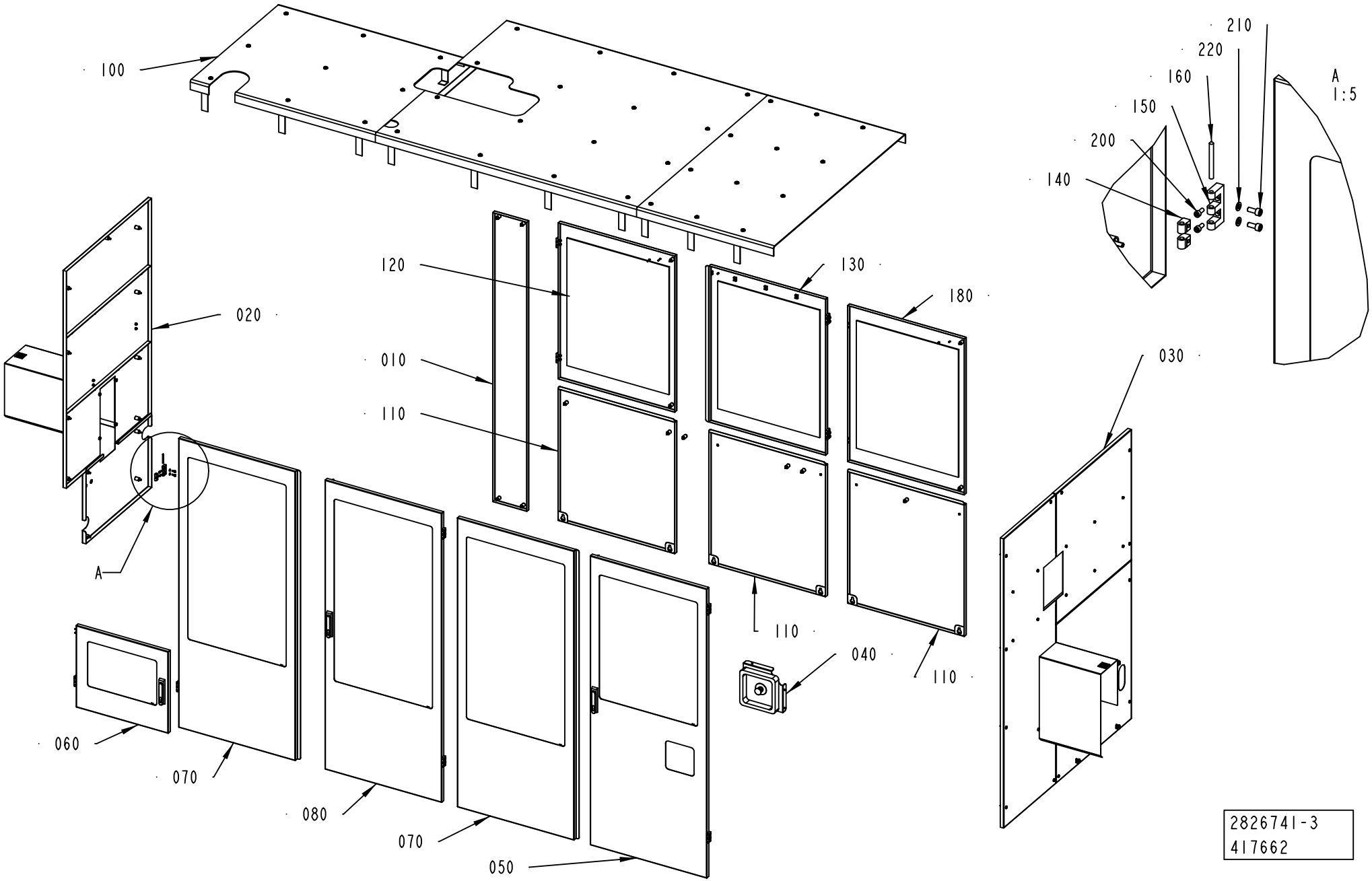

ECM: 480144 - 20110401
Group number: 2826741-0200
Assembly Drawing: 2826741-3_1_AB

Pos	Part No	UN	Qty	Description	Page No
STREAMCAP500, STREAMCAP1000, SLIMCAP 2000, SLIMCAP 1000, STREAMCAP200, STREAMCAP330, HELICAP2 23					
030	2826743-0200		1	COVER	**5-123**
050	2779748-0100		1	GLASS DOOR	**5-133**
070	2779833-0100		2	GLASS DOOR	**5-135**
140	1129770-0000		24	BLOCKING PIECE	
150	1035792-0000		12	E-HINGE	
160	988685-0000		12	PIN	
200	312115-0327		24	SCREW ISO4762 M5X12 A4 80	
210	312115-0367		24	SCREW ISO4762 M6X14 A4 80	
220	315105-0153		24	WASHER BRB 6,4X12 RFR	
Common Parts					
010	2779835-0200		1	DOOR	**5-137**
020	2826742-0200		1	COVER	**5-139**
040	2769760-0100		1	EMERGENCY STOP	**5-147**
060	2779832-0100		1	GLASS DOOR	**5-149**
080	2779834-0100		1	GLASS DOOR	**5-151**
100	2787230-0100		1	TOP SECTION	**5-153**
110	2805693-0100		3	DOOR	**5-155**
120	2805687-0100		1	GLASS DOOR	**5-157**
130	2805694-0100		1	GLASS DOOR	**5-159**
180	3047348-0100		1	GLASS DOOR	**5-161**

Pos	Part No	UN	Qty	Description	Page No

Machine Type | Group Description | Used-In | Group Number | Page No

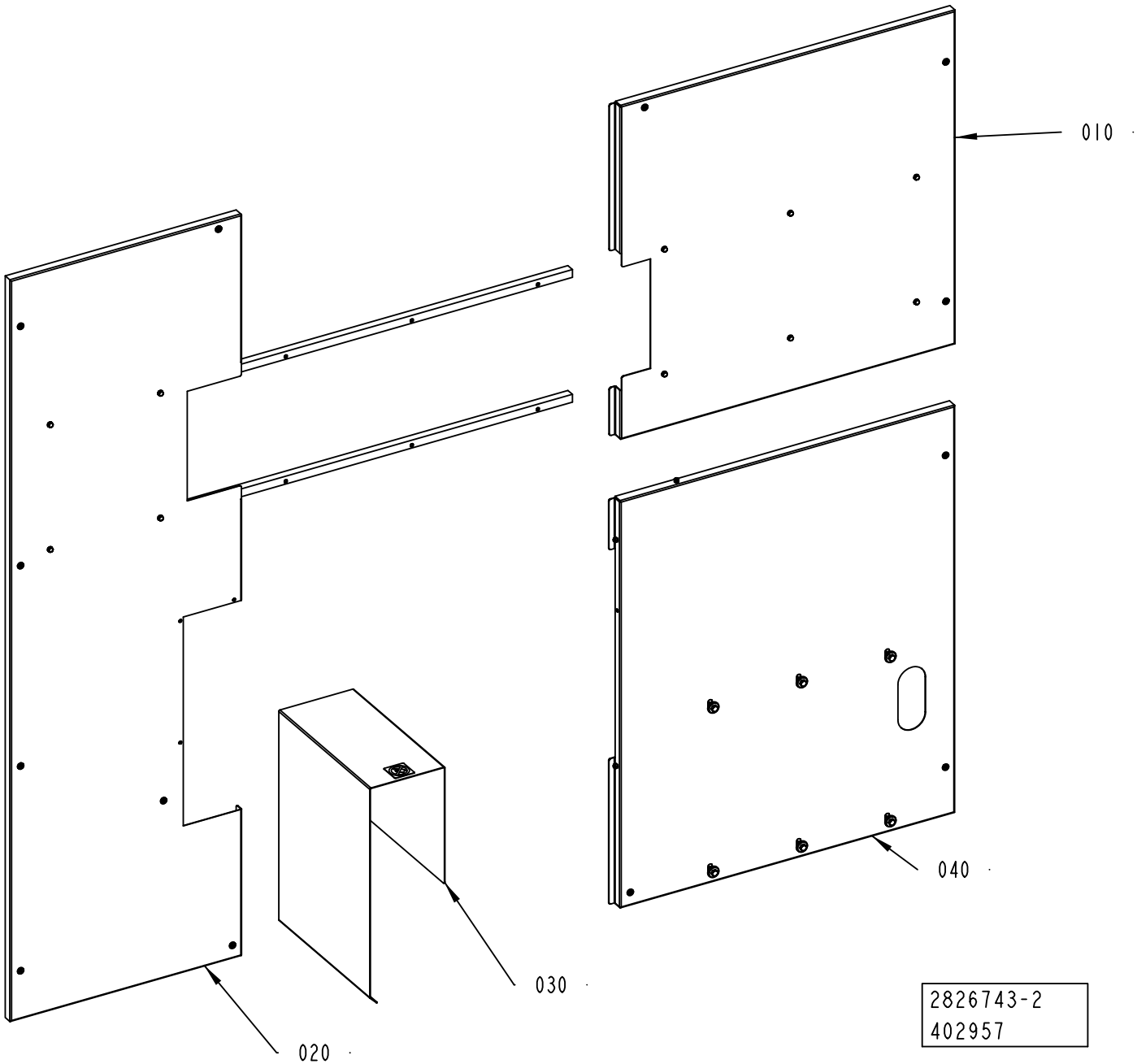
010
020
030
040
2826743-2
402957

ECM: 407742 - 20091001
Group number: 2826743-0200
Assembly Drawing: 2826743-2_1_AA

Pos	Part No	UN	Qty	Description	Page No
-					
010	2842795-0100		1	COVER	**5-125**
020	2842794-0200		1	COVER	**5-127**
030	2846399-0200		1	TUNNEL	**5-129**
040	2842807-0200		1	COVER	**5-131**

Pos	Part No	UN	Qty	Description	Page No

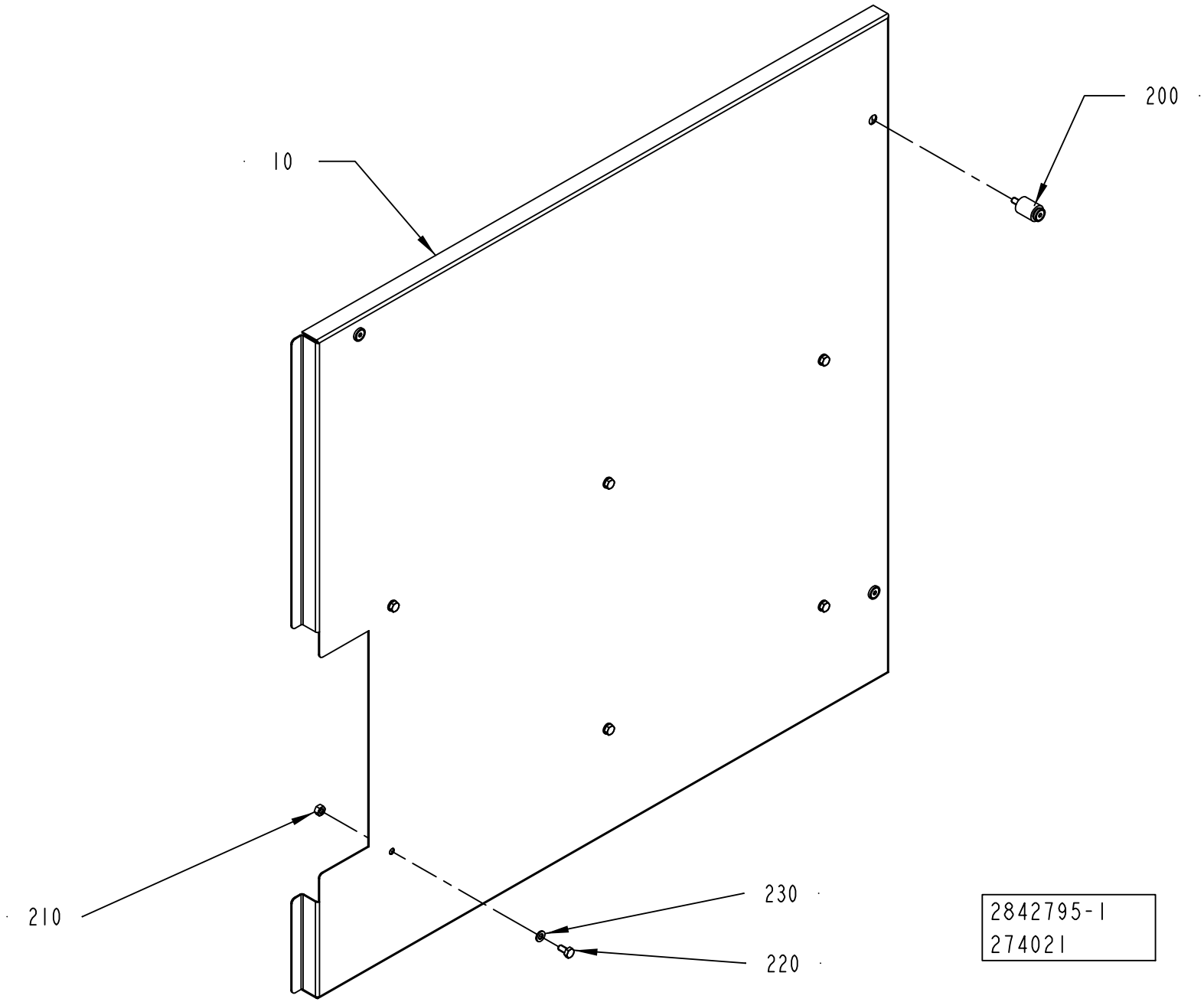
10
200
210
230
220
2842795-1
274021

ECM: 350261 - 20080701
Group number: 2842795-0100
Assembly Drawing: 2842795-1_1_AA

Pos	Part No	UN	Qty	Description	Page No
-					
010	2842799-0000		1	COVER	
200	90226-0458		3	MOUNTING SCREW	
210	312605-0316		6	HEXAGON NUT, M6M M6 A280	
220	312105-0366		6	SCREW M6S ISO 4017 M6X12 A480	
230	315105-0153		6	WASHER BRB 6,4X12 RFR	

Pos	Part No	UN	Qty	Description	Page No

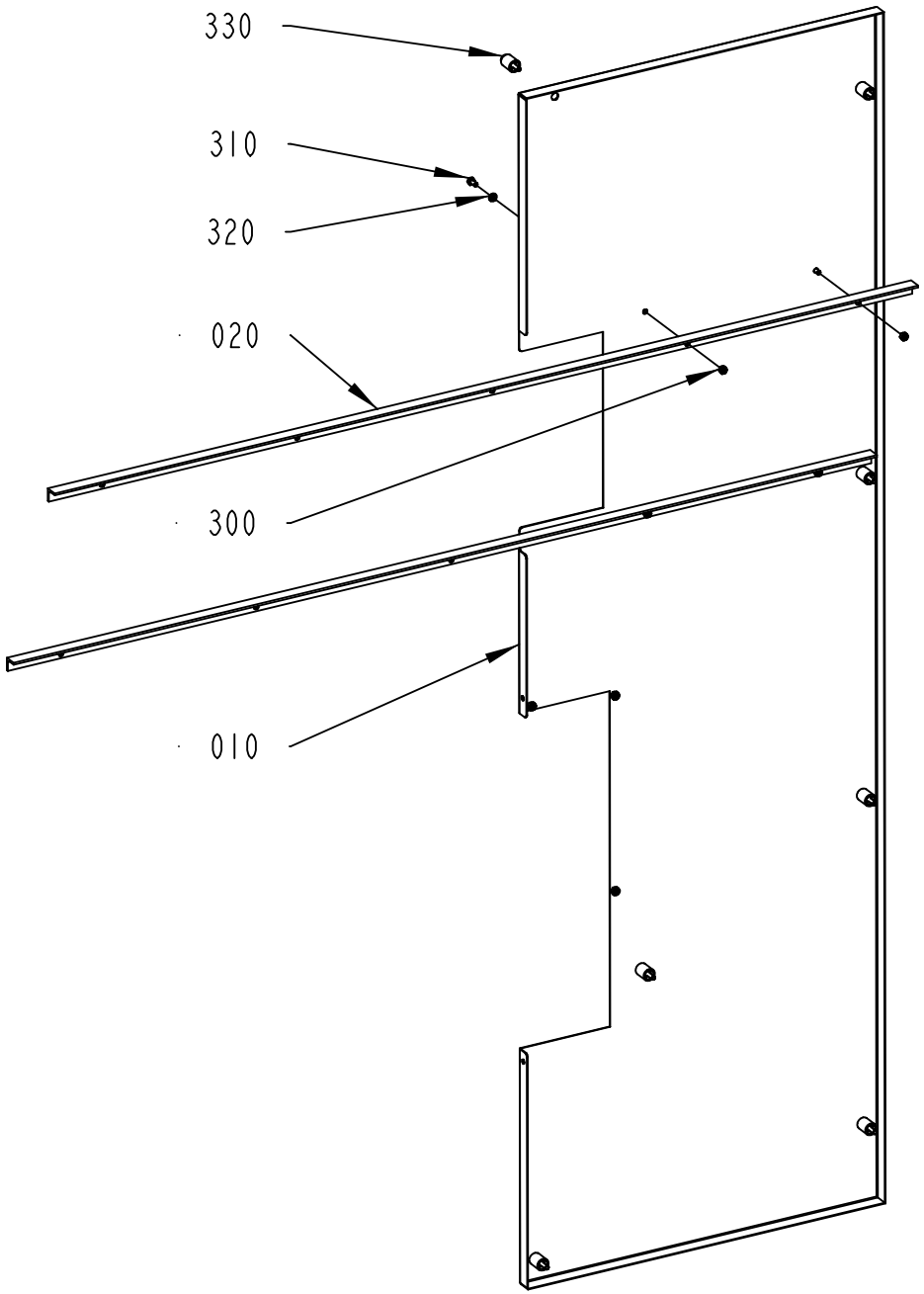

2842794-2
402957

ECM: 407744 - 20091001
Group number: 2842794-0200
Assembly Drawing: 2842794-2_1_AA

Pos	Part No	UN	Qty	Description	Page No
-					
010	2985844-0000		1	COVER	
020	2844501-0000		2	PROFILE	
300	312605-0316		4	HEXAGON NUT, M6M M6 A280	
310	312105-0366		4	SCREW M6S ISO 4017 M6X12 A480	
320	315105-0153		4	WASHER BRB 6,4X12 RFR	
330	90226-0458		7	MOUNTING SCREW	

Pos	Part No	UN	Qty	Description	Page No

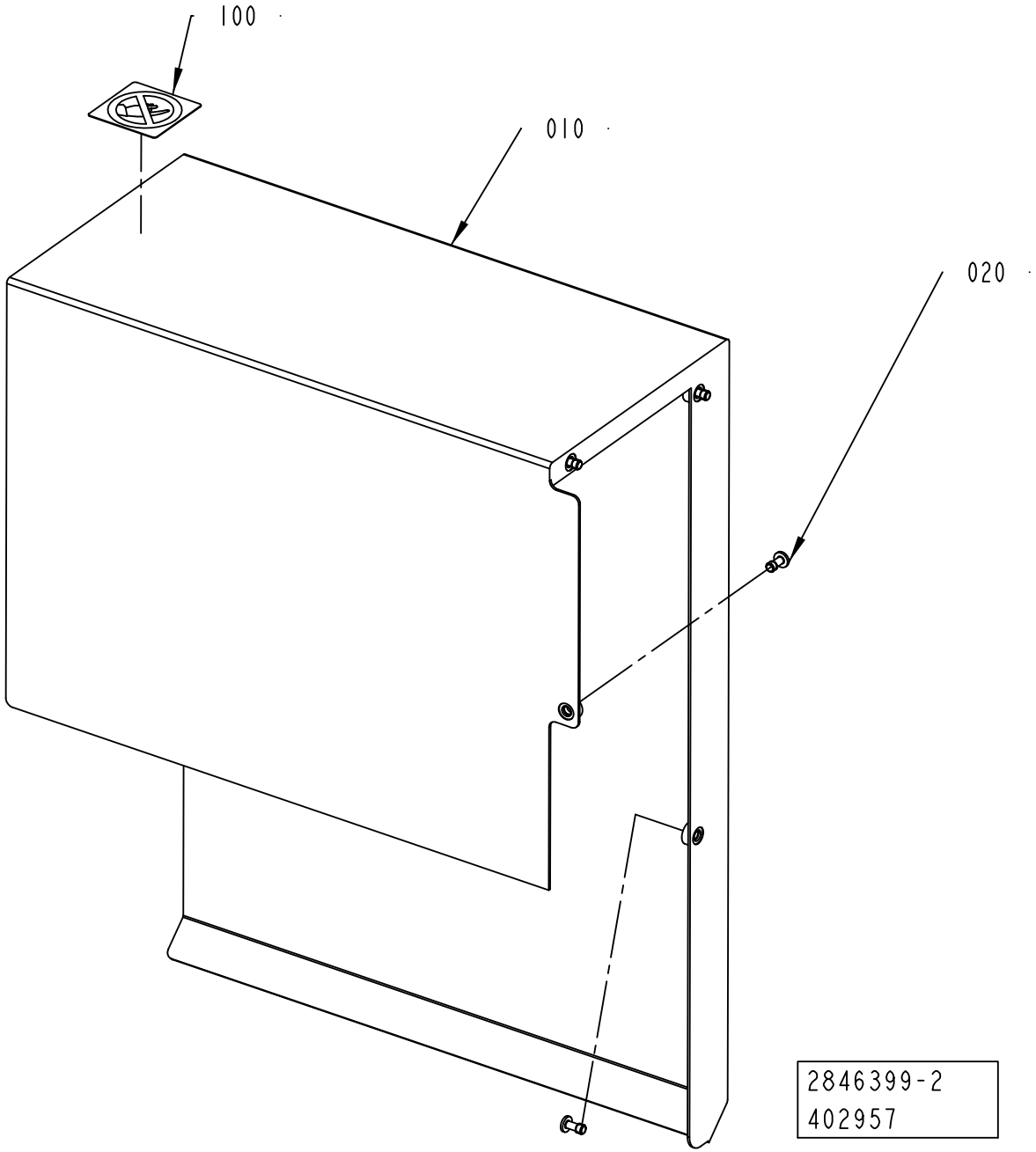
100
010
020
2846399-2
402957

ECM: 419451 - 20100110
Group number: 2846399-0200
Assembly Drawing: 2846399-2_1_AA

Pos	Part No	UN	Qty	Description	Page No
-					
010	2985842-0000		1	TUNNEL	
020	90601-2046		4	CAPTIVE SCREW M6, GUTBG 6-4-12	
100	1128856-0000		1	PROHIBITION SIGN	

Pos	Part No	UN	Qty	Description	Page No

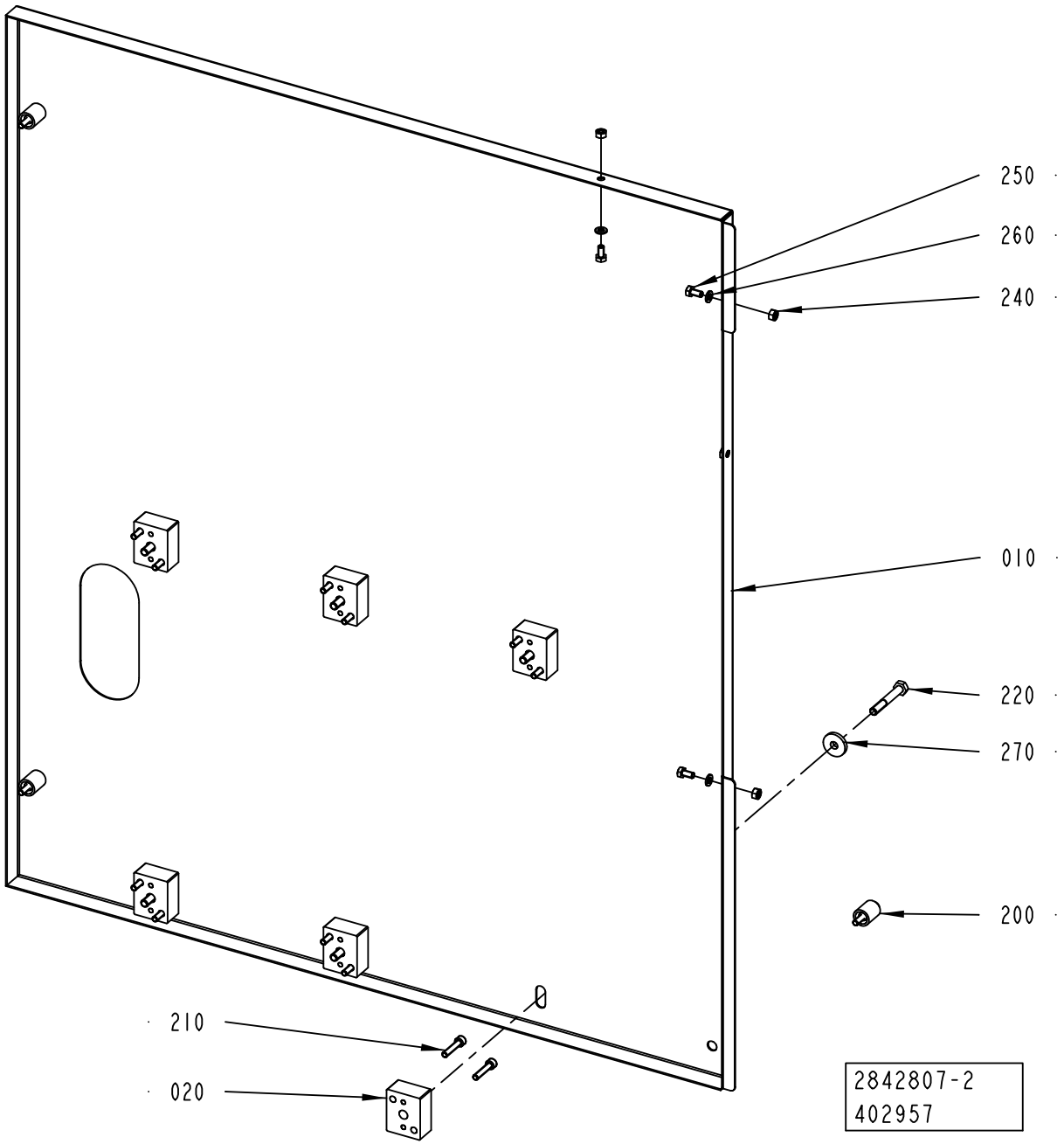
250
260
240
010
220
270
200
210
020
2842807-2
402957

ECM: 407745 - 20091001
Group number: 2842807-0200
Assembly Drawing: 2842807-2_1_AA

Pos	Part No	UN	Qty	Description	Page No
-					
010	2985843-0000		1	COVER	
020	2842805-0000		6	SPACER	
200	90226-0458		3	MOUNTING SCREW	
210	312115-0374		12	SCREW ISO4762 M6X30 A4 80	
220	312105-0462		6	SCREW M6S ISO 4014 M8X55 A480	
240	312605-0316		3	HEXAGON NUT, M6M M6 A280	
250	312105-0366		3	SCREW M6S ISO 4017 M6X12 A480	
260	315105-0153		3	WASHER BRB 6,4X12 RFR	
270	315125-0165		6	WASHER TBRSB 8,4X26X5 A4	

Pos	Part No	UN	Qty	Description	Page No

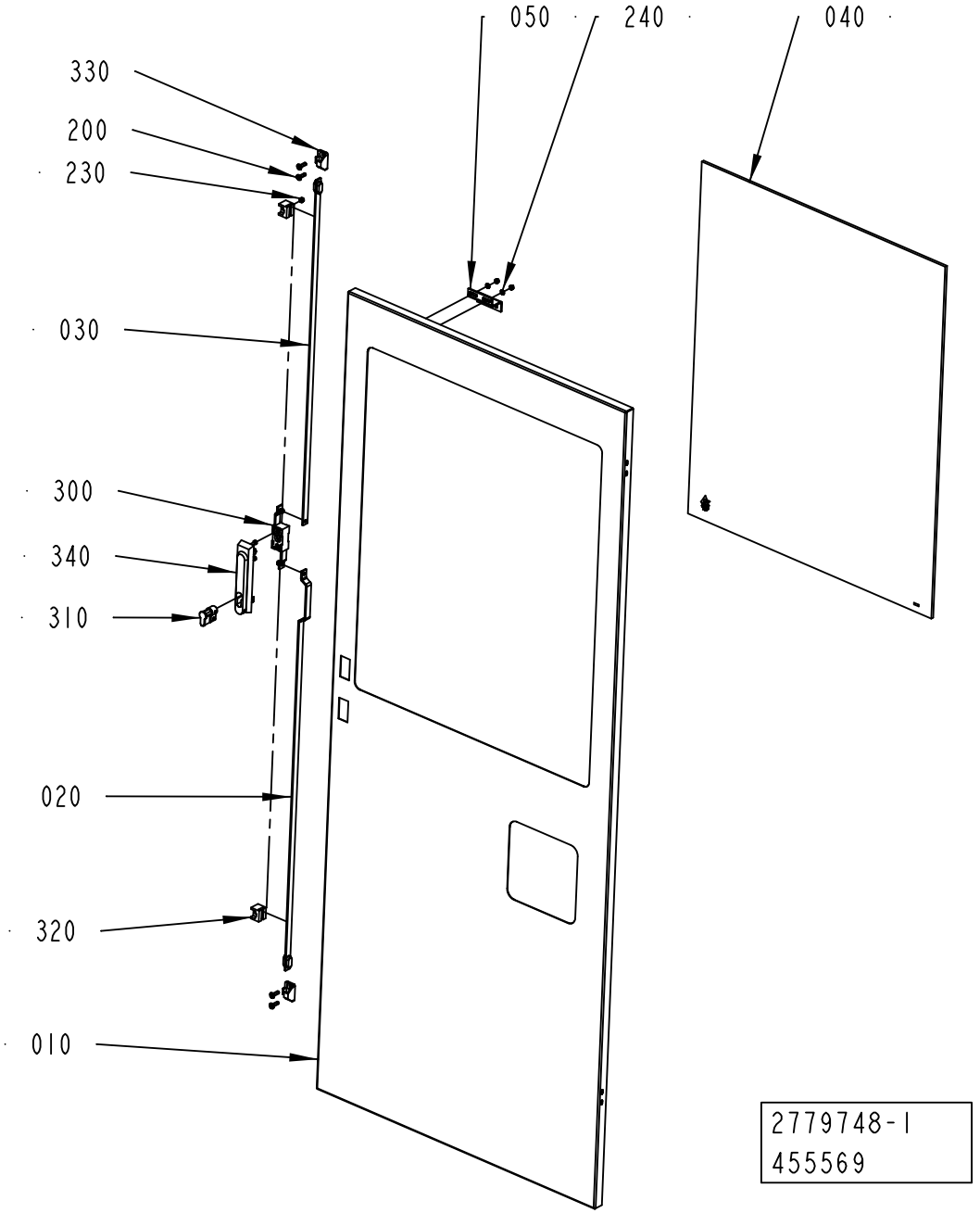
050
240
040
330
200
230
030
300
340
310
020
320
010
2779748-1
455569

ECM: 458827 - 20101001
Group number: 2779748-0100
Assembly Drawing: 2779748-1_1_AB

Pos	Part No	UN	Qty	Description	Page No
-					
010	2779749-0000		1	DOOR	
020	2551030-0000		1	STRUT	
030	2551031-0000		1	STRUT	
040	2805691-0000		1	GLASS	
050	2595618-0000		1	BRACKET	
200	312155-0370		4	SCREW DIN 7991 MF6S M6X20 A4 70	
230	312812-0314		4	HEXAGON NUT, NY-LOCK M5 A480	
240	315105-0146		2	WASHER BRB 5,3X10 RFR	
300	90237-0123		1	LOCK, 1121-U10C	
310	90237-0128		1	LOCK CYLINDER, 1109-SU125	
320	90237-0144		2	GUIDE, 1121-SU540	
330	90237-0147		2	LOCKING LUG, NO. 1121-53-0P	
340	90237-0175		1	TURNING HANDLE, 1125-U185-0A	
360	90157-0041		1	SEALING COMPOUND, RHODORSEAL 5651	

Pos	Part No	UN	Qty	Description	Page No

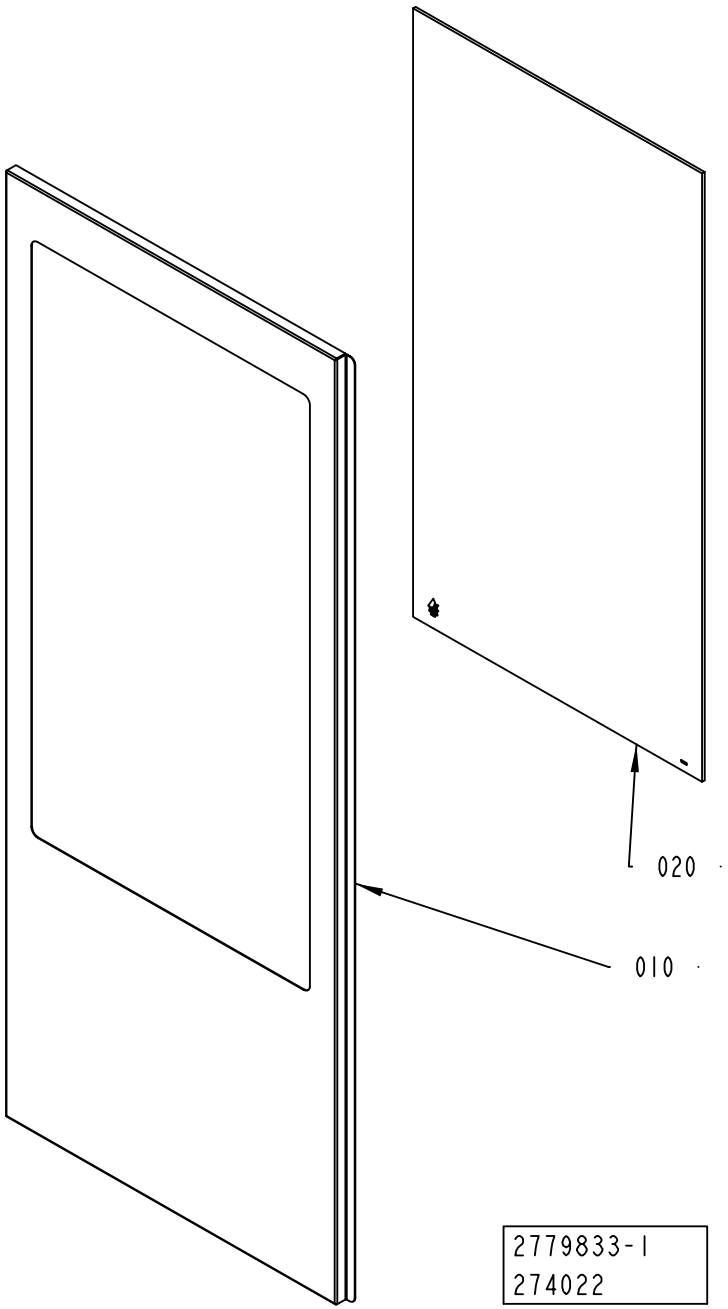
020
010
2779833-1
274022

ECM: 305564 - 20070517
Group number: 2779833-0100
Assembly Drawing: 2779833-1_1_AA

Pos	Part No	UN	Qty	Description	Page No
-					
010	2779840-0000		1	DOOR	
020	2781278-0000		1	GLASS	
110	90157-0041		1	SEALING COMPOUND, RHODORSEAL 5651	

Pos	Part No	UN	Qty	Description	Page No

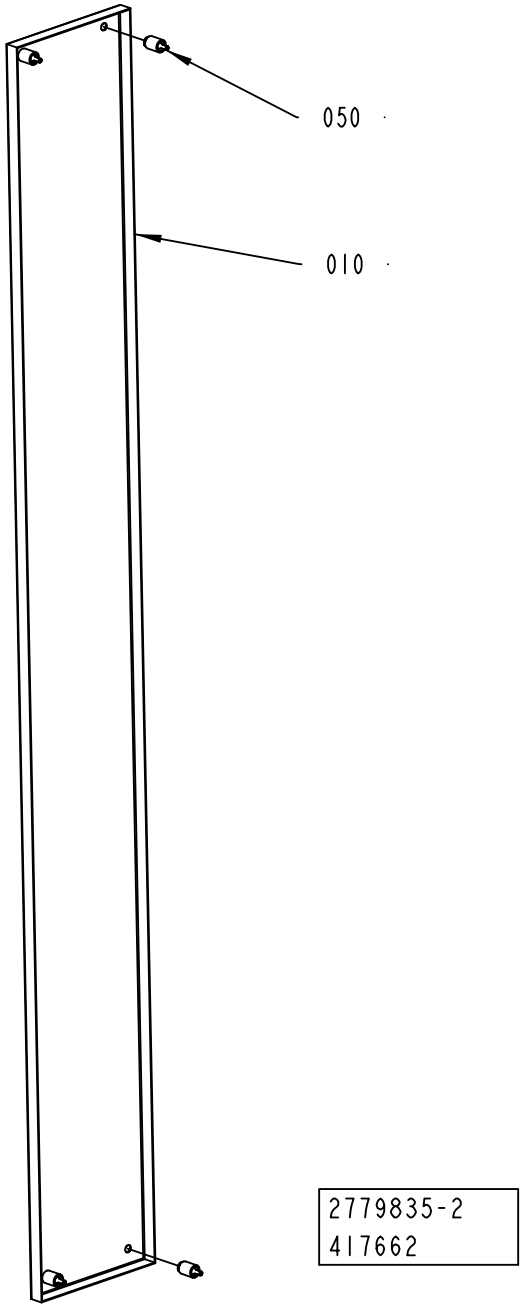
050
010
2779835-2
417662

ECM: 419448 - 20100110
Group number: 2779835-0200
Assembly Drawing: 2779835-2_1_AA

Pos	Part No	UN	Qty	Description	Page No
-					
010	3058858-0000		1	DOOR	
050	90226-0458		4	MOUNTING SCREW	

Pos	Part No	UN	Qty	Description	Page No

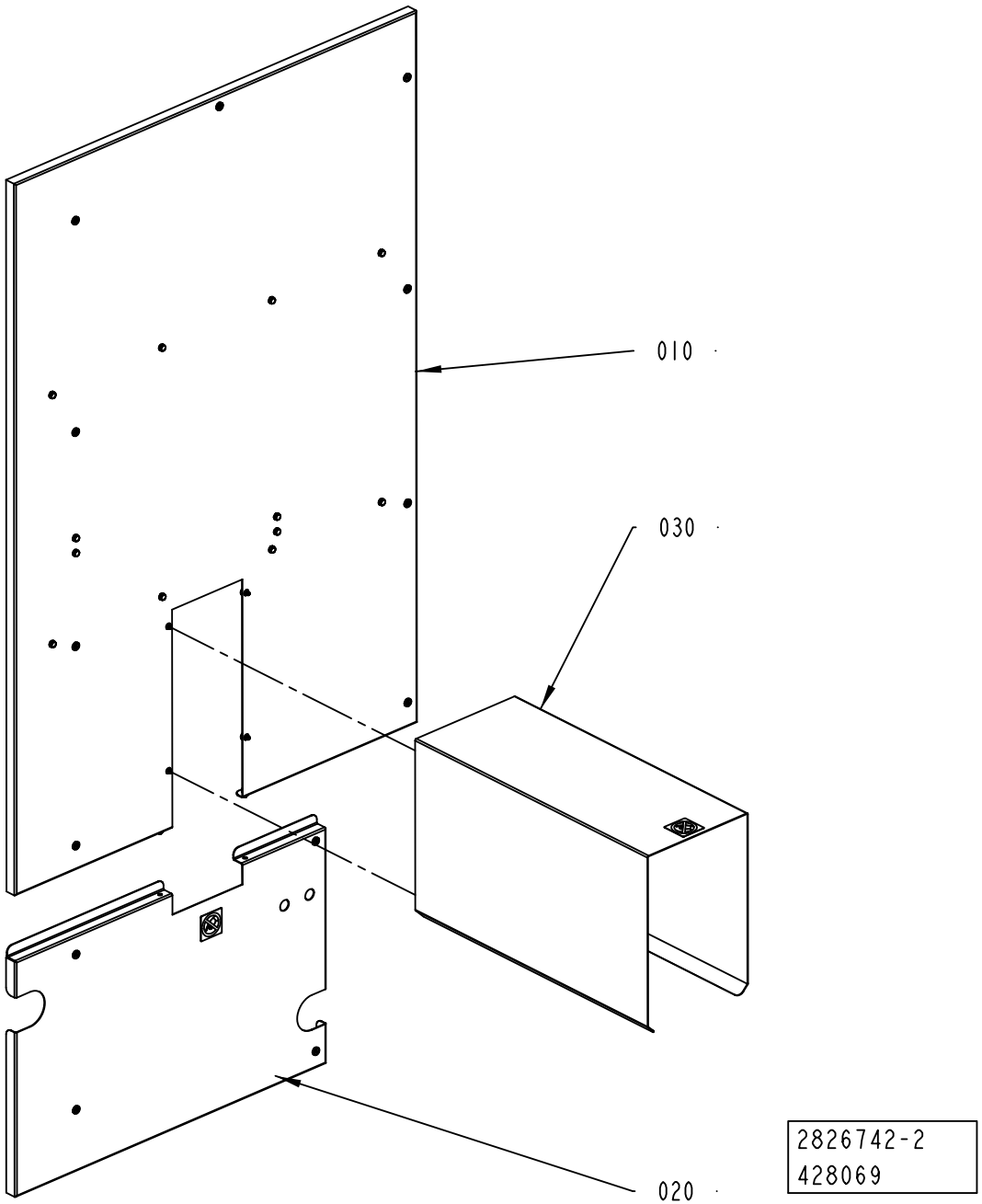
010
030
020
2826742-2
428069

ECM: 428928 - 20100401
Group number: 2826742-0200
Assembly Drawing: 2826742-2_1_AB

Pos	Part No	UN	Qty	Description	Page No
-					
010	2826744-0200		1	COVER	**5-141**
020	2842793-0200		1	DOOR	**5-143**
030	2805493-0200		1	TUNNEL	**5-145**

Pos	Part No	UN	Qty	Description	Page No

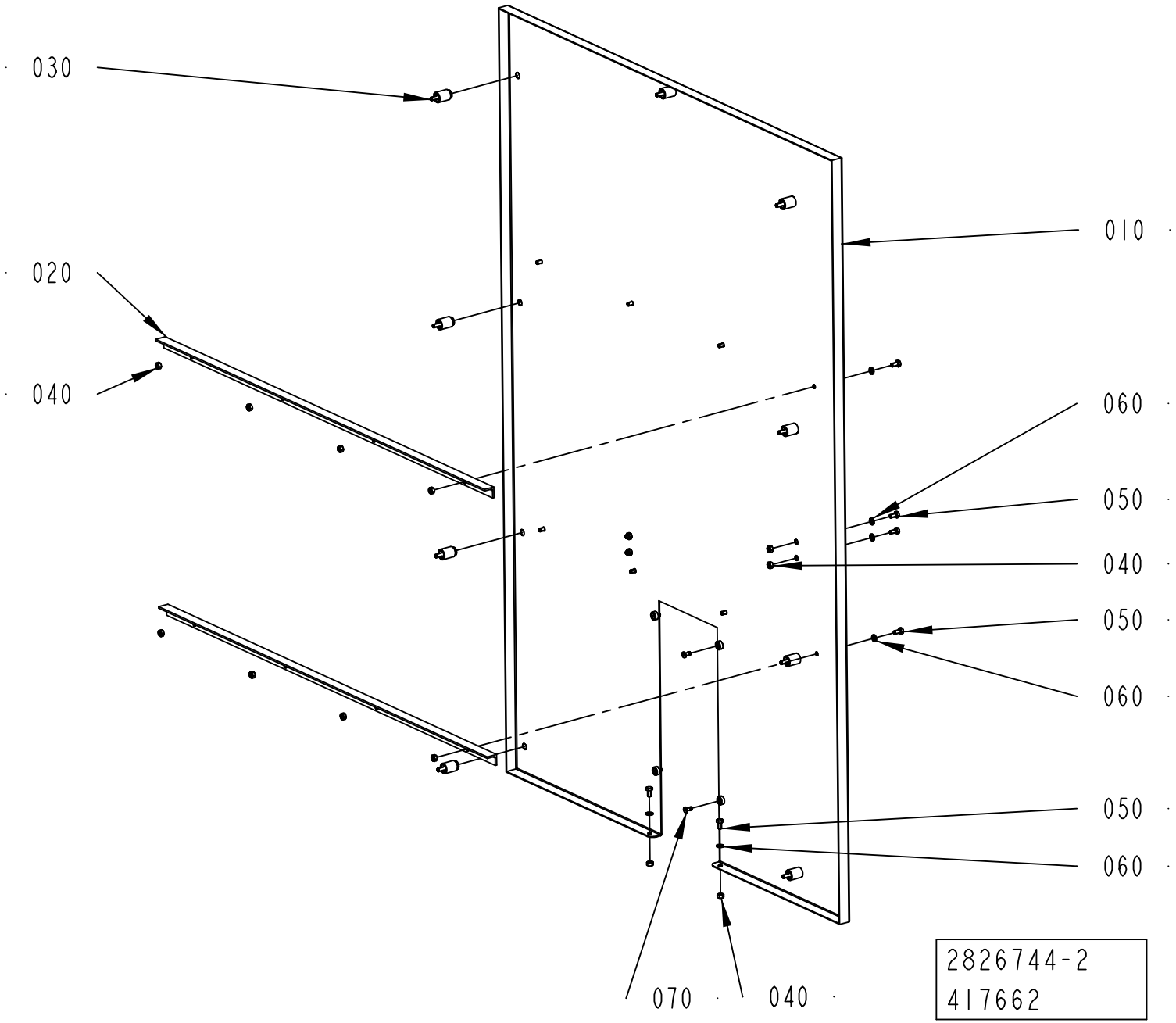
030
020
040
010
060
050
040
050
060
050
060
070
040
2826744-2
417662

ECM: 428929 - 20100401
Group number: 2826744-0200
Assembly Drawing: 2826744-2_1_AA

Pos	Part No	UN	Qty	Description	Page No
-					
010	3056497-0000		1	DOOR	
020	2842801-0000		2	COVER	
030	90226-0458		9	MOUNTING SCREW	
040	312605-0316		14	HEXAGON NUT, M6M M6 A280	
050	312105-0366		14	SCREW M6S ISO 4017 M6X12 A480	
060	315105-0153		14	WASHER BRB 6,4X12 RFR	
070	90601-2046		4	CAPTIVE SCREW M6, GUTBG 6-4-12	

Pos	Part No	UN	Qty	Description	Page No

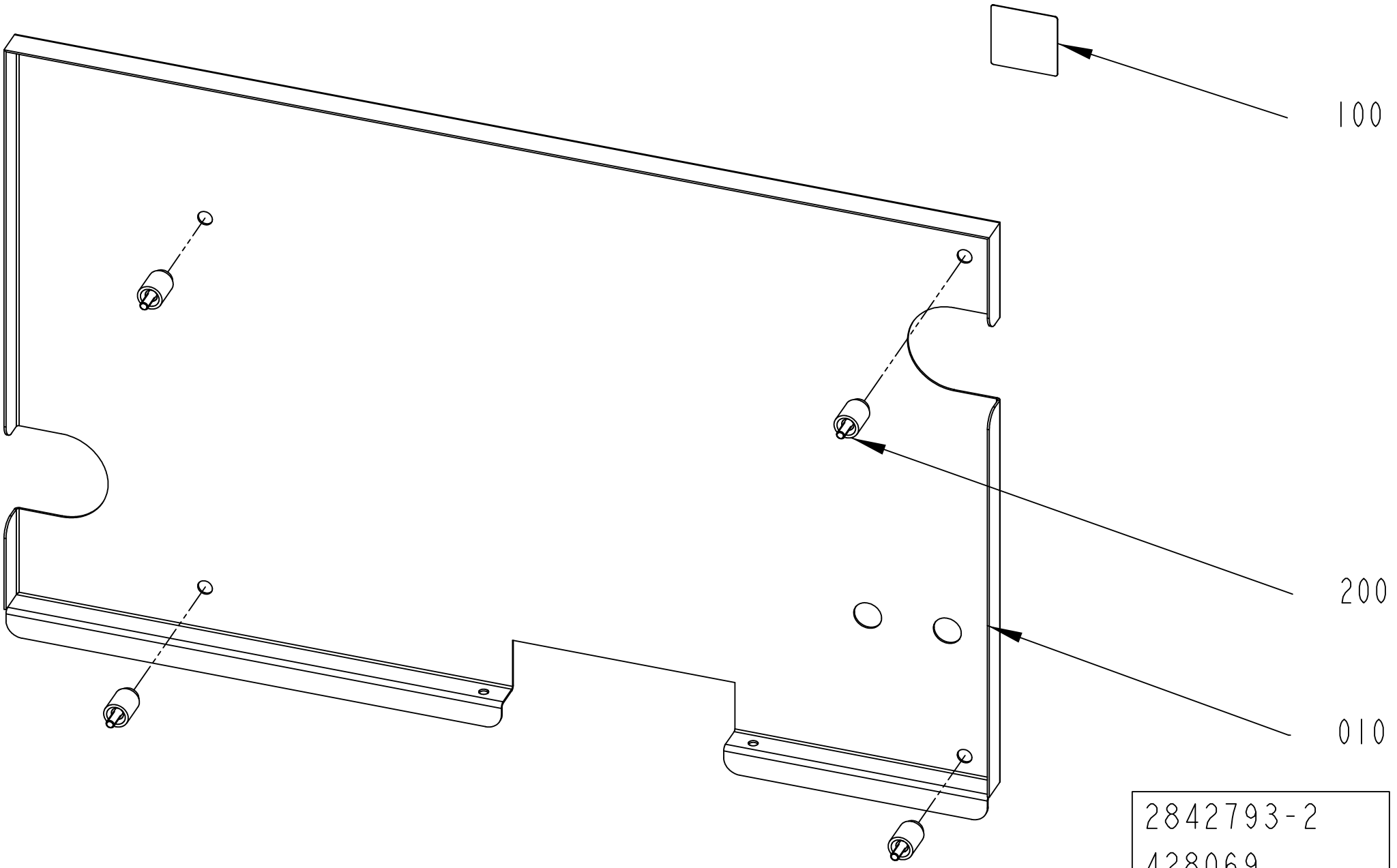
100
200
010
2842793-2
428069

ECM: 430662 - 20100401
Group number: 2842793-0200
Assembly Drawing: 2842793-2_1_AA

Pos	Part No	UN	Qty	Description	Page No
-					
010	2966581-0000		1	COVER	
100	1128856-0000		1	PROHIBITION SIGN	
200	90226-0458		4	MOUNTING SCREW	

Pos	Part No	UN	Qty	Description	Page No

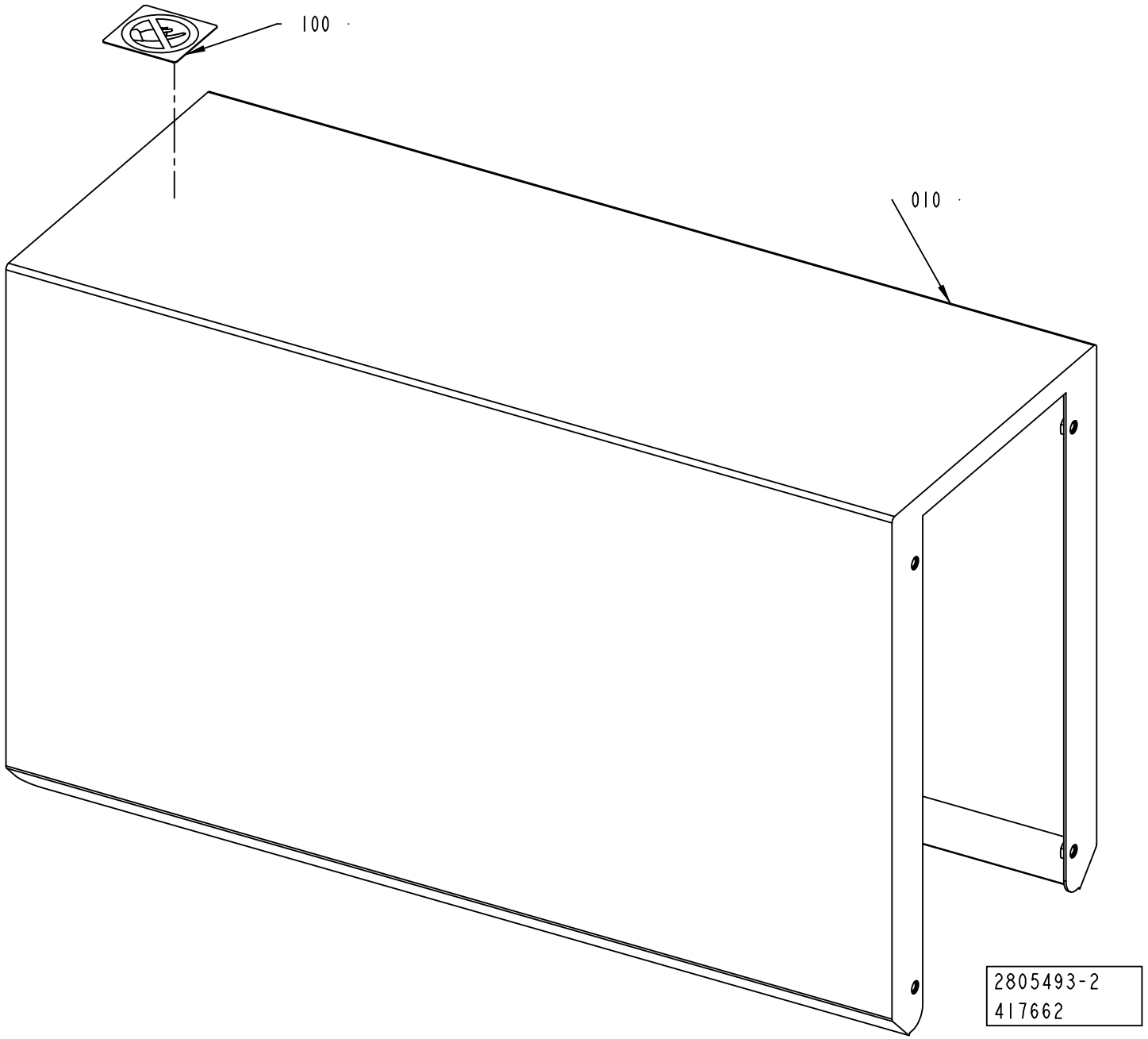
100
010
2805493-2
417662

ECM: 419450 - 20100110
Group number: 2805493-0200
Assembly Drawing: 2805493-2_1_AA

Pos	Part No	UN	Qty	Description	Page No
-					
010	2985804-0000		1	TUNNEL	
100	1128856-0000		1	PROHIBITION SIGN	

Pos	Part No	UN	Qty	Description	Page No

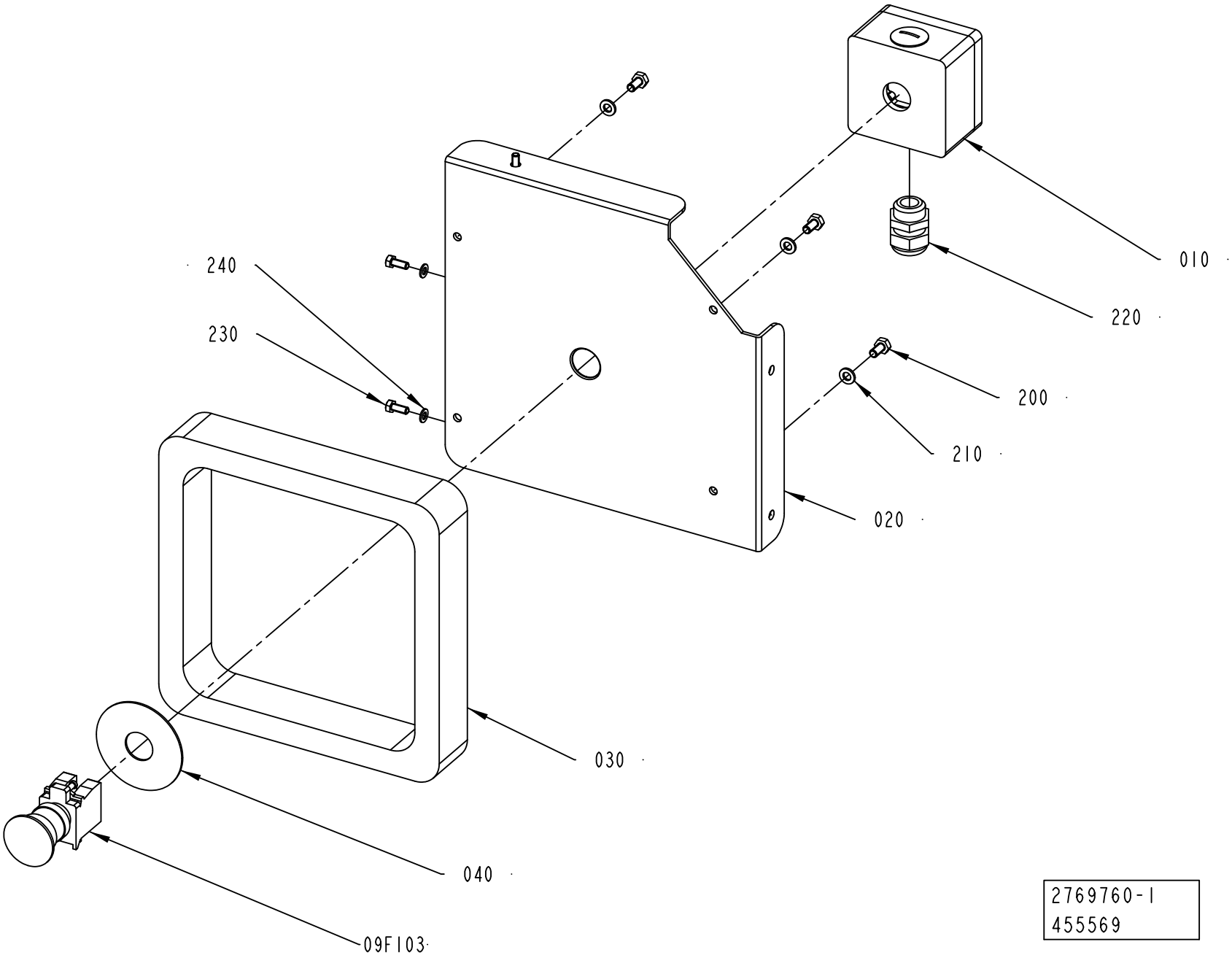

2769760-1
455569

ECM: 458826 - 20101001
Group number: 2769760-0100
Assembly Drawing: 2769760-1_1_AB

Pos	Part No	UN	Qty	Description	Page No
-					
010	1037130-0000		1	,CONNECTION BOX	
020	2779763-0000		1	COVER	
030	2779771-0000		1	SPACER	
040	486826-0001		1	SIGN "EMERGENCY STOP"	
09F103	90458-1651		1	EMERGENCY STOP, ZB4-BS-844 ZB4-BZ-104	
200	312105-0366		4	SCREW M6S ISO 4017 M6X12 A480	
210	315105-0153		4	WASHER BRB 6,4X12 RFR	
220	352103-0110		1	CABLE GLAND, STR 16, PR22,5/PG16	
230	312105-0327		3	SCREW M6S ISO 4017 M5X12 A480	
240	315105-0146		3	WASHER BRB 5,3X10 RFR	

Pos	Part No	UN	Qty	Description	Page No

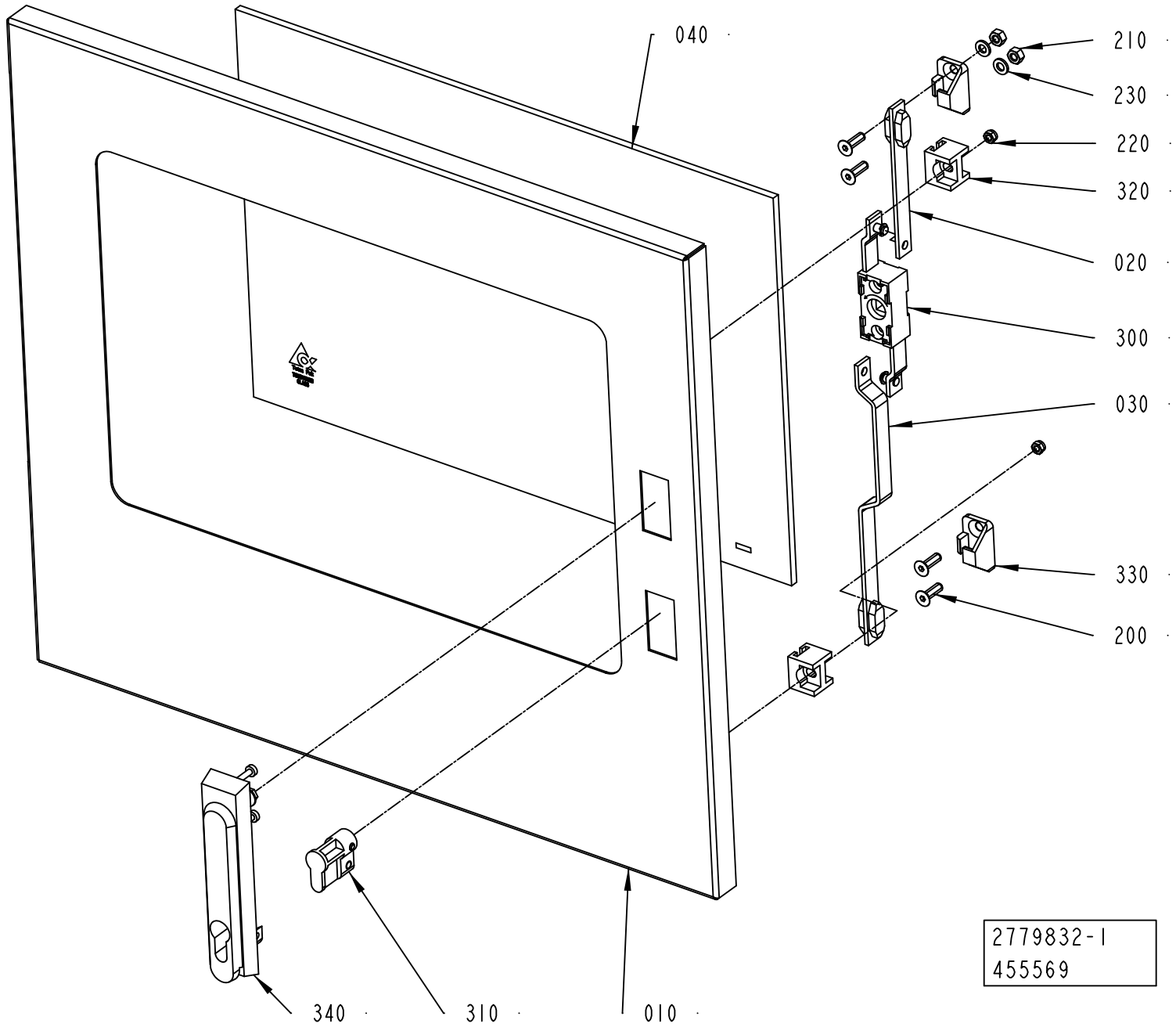
040
210
230
220
320
020
300
030
330
200
340
310
010
2779832-1
455569

ECM: 458829 - 20101001
Group number: 2779832-0100
Assembly Drawing: 2779832-1_1_AB

Pos	Part No	UN	Qty	Description	Page No
-					
010	2779838-0000		1	DOOR	
020	2563891-0000		1	STRUT	
030	2563892-0000		1	STRUT	
040	2779839-0000		1	GLASS	
200	312155-0370		4	SCREW DIN 7991 MF6S M6X20 A4 70	
210	312605-0316		2	HEXAGON NUT, M6M M6 A280	
220	312812-0314		2	HEXAGON NUT, NY-LOCK M5 A480	
230	315105-0153		2	WASHER BRB 6,4X12 RFR	
300	90237-0123		1	LOCK, 1121-U10C	
310	90237-0128		1	LOCK CYLINDER, 1109-SU125	
320	90237-0144		2	GUIDE, 1121-SU540	
330	90237-0147		2	LOCKING LUG, NO. 1121-53-0P	
340	90237-0175		1	TURNING HANDLE, 1125-U185-0A	
360	90157-0041		1	SEALING COMPOUND, RHODORSEAL 5651	

Pos	Part No	UN	Qty	Description	Page No

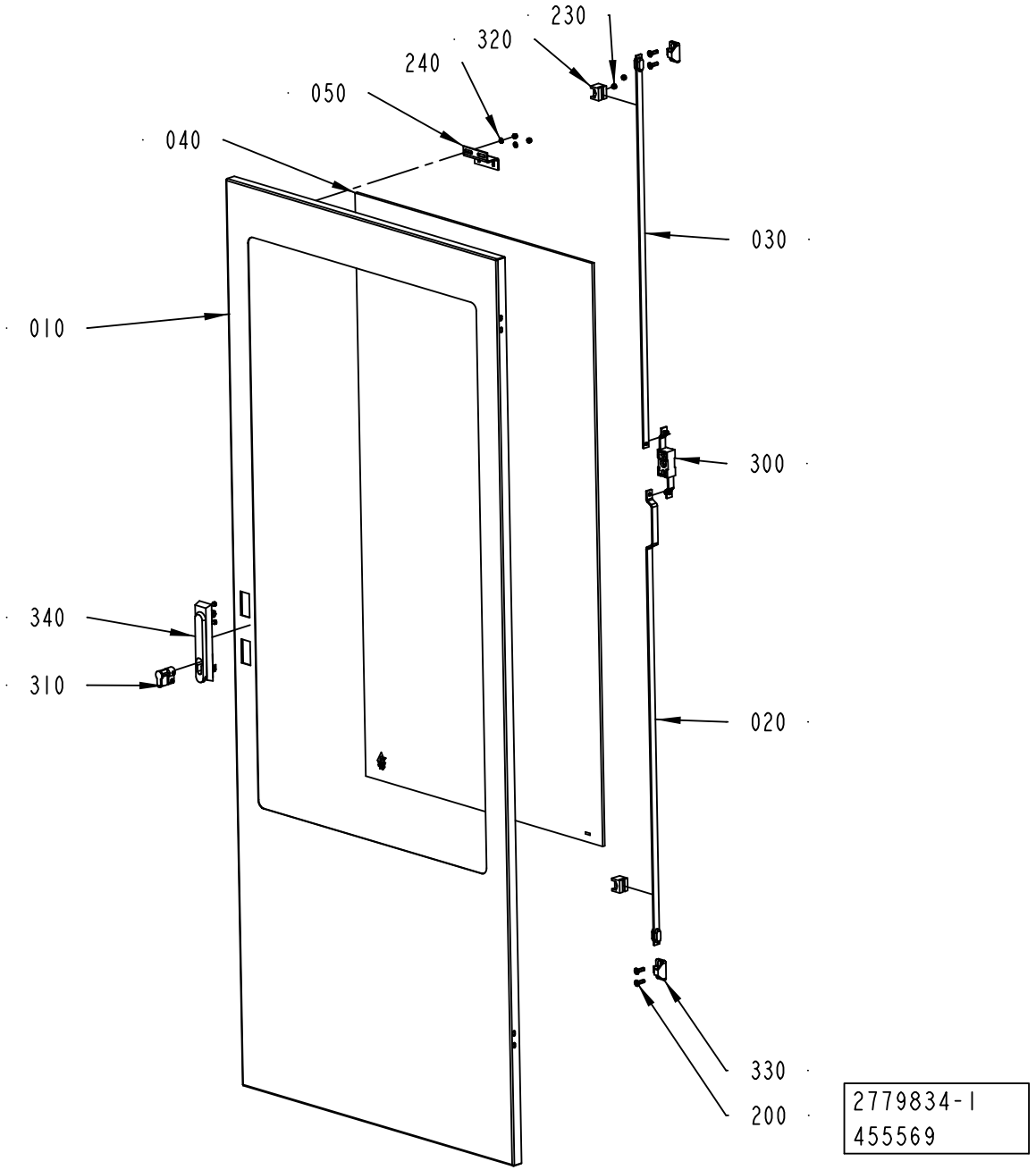
230
320
240
050
040
030
010
300
340
310
020
330
200
2779834-1
455569

ECM: 458830 - 20101001
Group number: 2779834-0100
Assembly Drawing: 2779834-1_1_AB

Pos	Part No	UN	Qty	Description	Page No
-					
010	2781279-0000		1	DOOR	
020	2551030-0000		1	STRUT	
030	2781285-0000		1	STRUT	
040	2781278-0000		1	GLASS	
050	2595618-0000		1	BRACKET	
200	312155-0370		4	SCREW DIN 7991 MF6S M6X20 A4 70	
230	312812-0314		4	HEXAGON NUT, NY-LOCK M5 A480	
240	315105-0146		2	WASHER BRB 5,3X10 RFR	
300	90237-0123		1	LOCK, 1121-U10C	
310	90237-0128		1	LOCK CYLINDER, 1109-SU125	
320	90237-0144		2	GUIDE, 1121-SU540	
330	90237-0147		2	LOCKING LUG, NO. 1121-53-0P	
340	90237-0175		1	TURNING HANDLE, 1125-U185-0A	
360	90157-0041		1	SEALING COMPOUND, RHODORSEAL 5651	

Pos	Part No	UN	Qty	Description	Page No

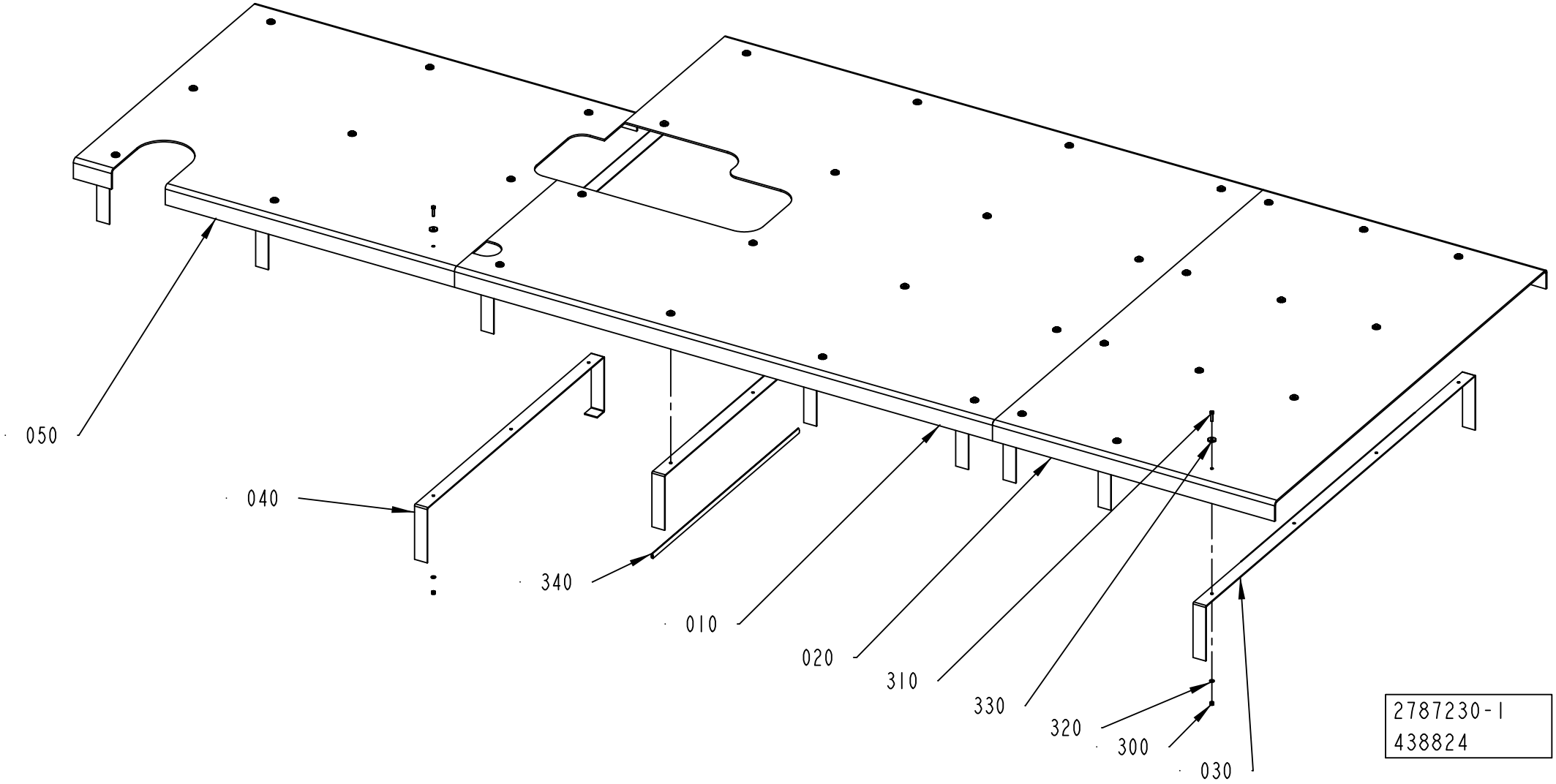
050
040
340
010
020
310
330
320
300
030
2787230-1
438824

ECM: 480142 - 20110401
Group number: 2787230-0100
Assembly Drawing: 2787230-1_1_AB

Pos	Part No	UN	Qty	Description	Page No
STREAMCAP500, STREAMCAP1000, SLIMCAP 2000, SLIMCAP 1000, STREAMCAP200, STREAMCAP330, HELICAP2 23					
010	2779821-0000		1	PLATE	
020	2787232-0000		1	PLATE	
300	312812-0316		37	HEXAGON NUT, NY-LOCK M6 A480	
310	312105-0372		37	SCREW M6S ISO 4017 M6X25 A480	
320	315105-0153		37	WASHER BRB 6,4X12 RFR	
330	315125-0153		37	WASHER TBRSB 6,4X22X4 A4	
340	90143-0098	MM	800	RUBBER STRIP, CLAMPING, NO. 1038-02	
Common Parts					
030	2779823-0000		7	BRACKET	
040	2779824-0000		3	BRACKET	
050	2779825-0000		1	PLATE	

Pos	Part No	UN	Qty	Description	Page No

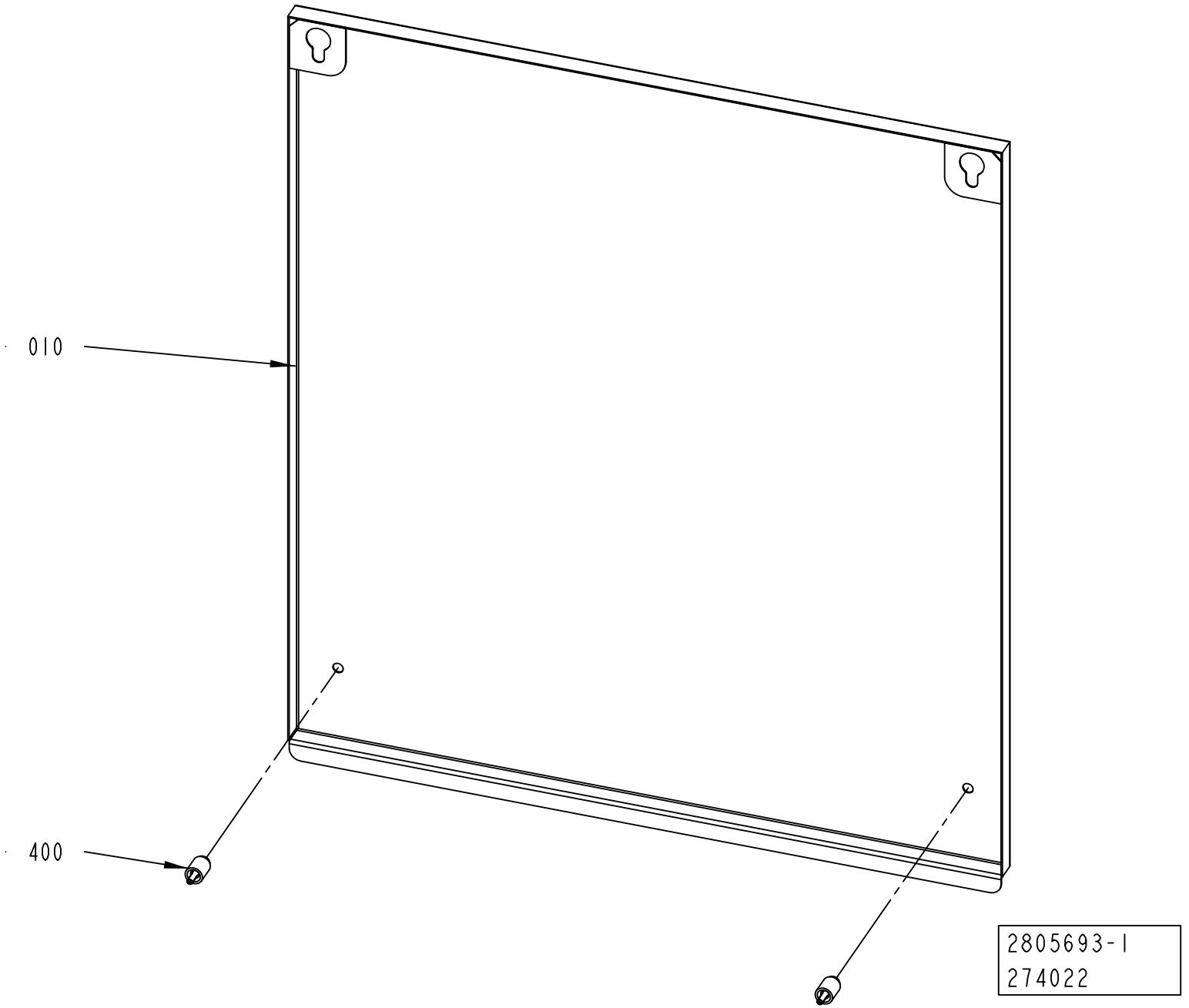
010
400
2805693-1
274022

ECM: 274542 - 20060921
Group number: 2805693-0100
Assembly Drawing: 2805693-1_1_AA

Pos	Part No	UN	Qty	Description	Page No
-					
010	2805692-0000		1	COVER	
400	90226-0458		2	MOUNTING SCREW	

Pos	Part No	UN	Qty	Description	Page No

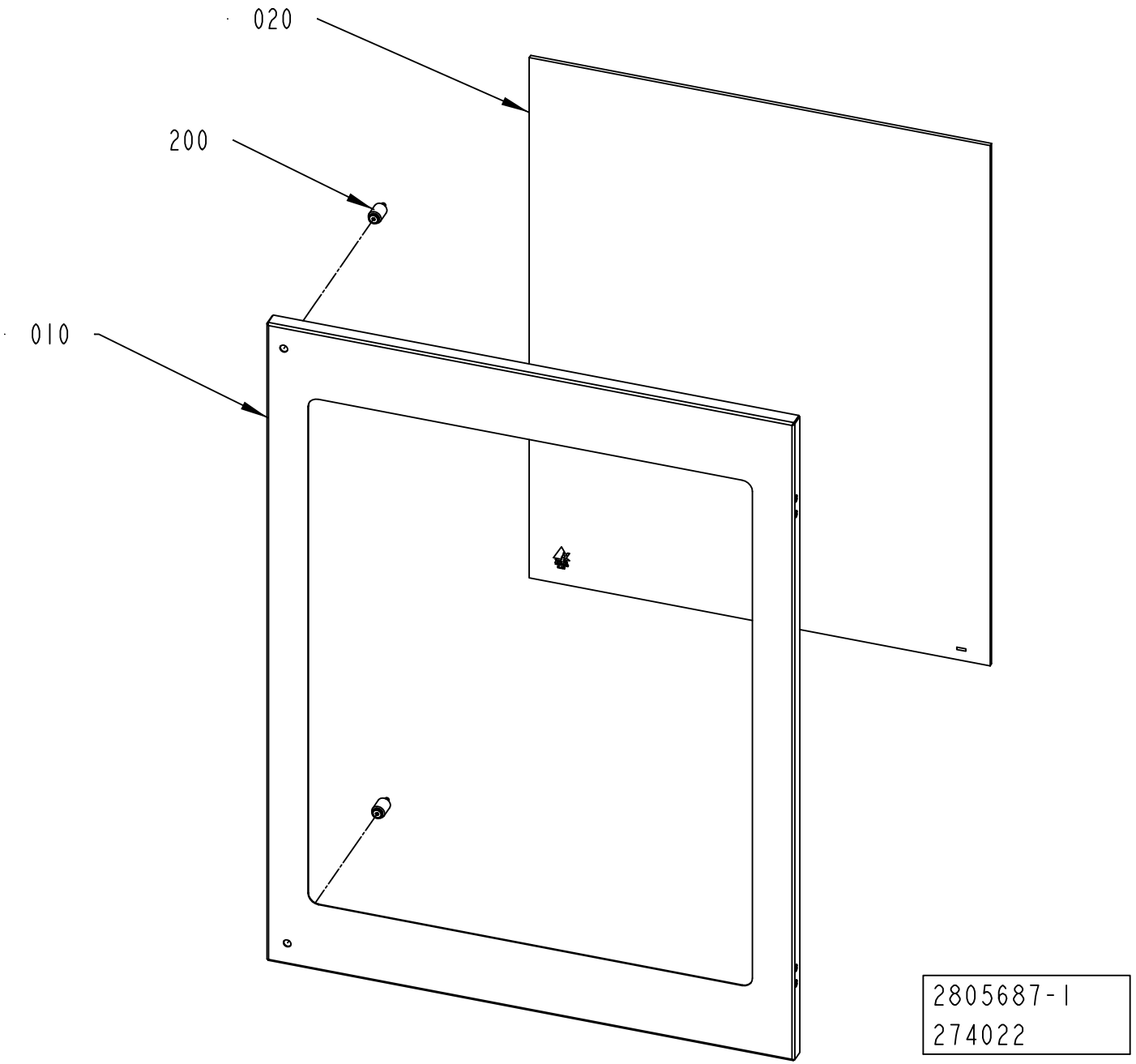
020
200
010
2805687-1
274022

ECM: 274543 - 20060921
Group number: 2805687-0100
Assembly Drawing: 2805687-1_1_AA

Pos	Part No	UN	Qty	Description	Page No
-					
010	2805688-0000		1	DOOR	
020	2805691-0000		1	GLASS	
200	90226-0458		2	MOUNTING SCREW	
220	90157-0041		1	SEALING COMPOUND, RHODORSEAL 5651	

Pos	Part No	UN	Qty	Description	Page No

GLASS DOOR

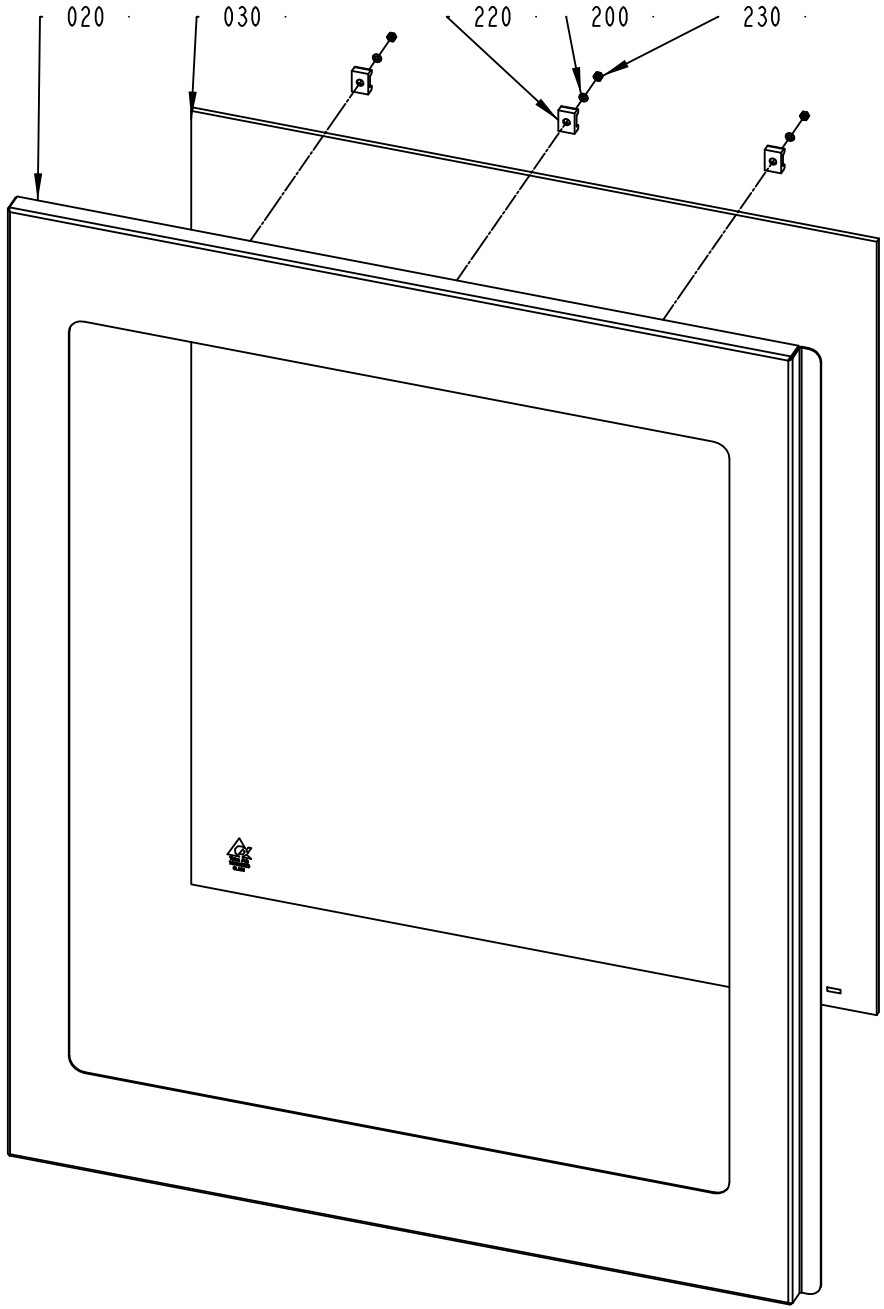

ECM: 303484 - 20070517
Group number: 2805694-0100
Assembly Drawing: 2805694-1_1_AB

Pos	Part No	UN	Qty	Description	Page No
-					
020	2805695-0000		1	DOOR	
030	2805691-0000		1	GLASS	
110	90157-0041		1	SEALING COMPOUND, RHODORSEAL 5651	
200	315105-0136		3	WASHER BRB 4,3X8 RFR	
220	352113-0204		3	ANCHOR PLATES FOR STRIPS, TM3S25-M	
230	312605-0312		3	HEXAGON NUT, M6M M4 A280	

Pos	Part No	UN	Qty	Description	Page No

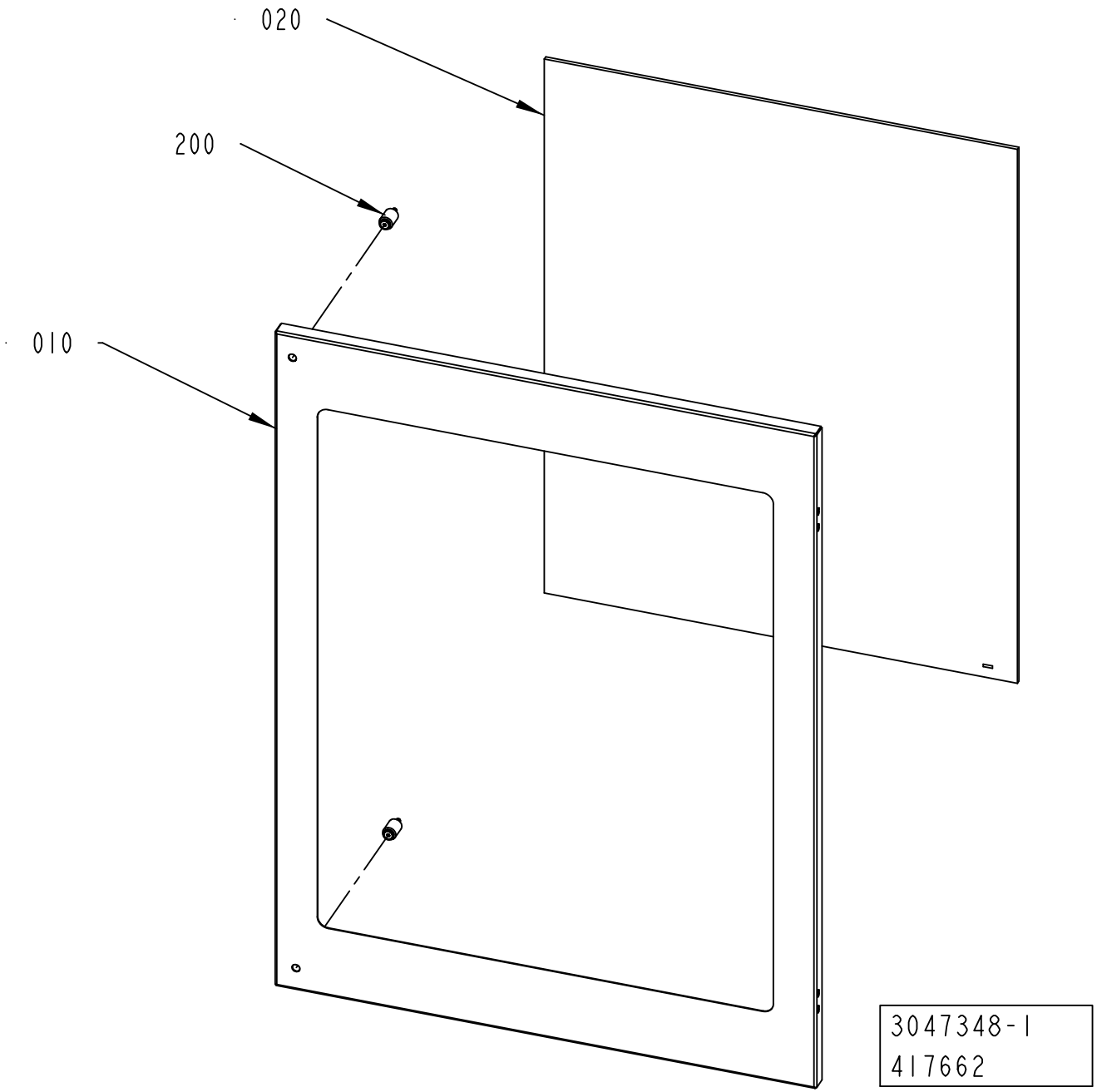
020
200
010
3047348-1
417662

ECM: 419452 - 20100110
Group number: 3047348-0100
Assembly Drawing: 3047348-1_1_AA

Pos	Part No	UN	Qty	Description	Page No
-					
010	3047349-0000		1	DOOR	
020	2805691-0000		1	GLASS	
200	90226-0458		2	MOUNTING SCREW	
220	90157-0041		1	SEALING COMPOUND, RHODORSEAL 5651	

Pos	Part No	UN	Qty	Description	Page No

Tetra Pak

SPC
Spare Parts Catalogue

APPLICATOR UNIT

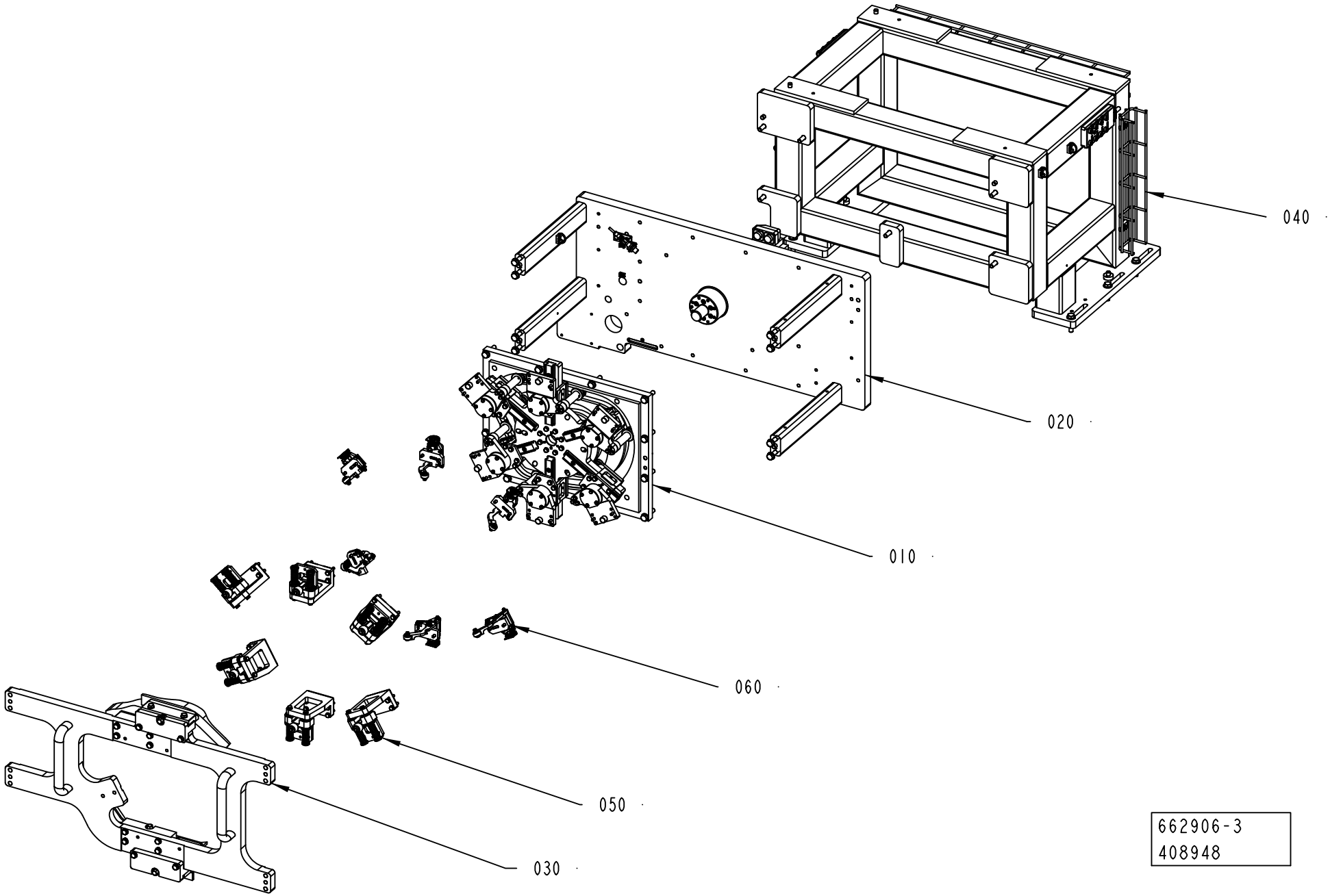

662906-3
408948

ECM: 479897 - 20110401
Group number: 662906-0200
Assembly Drawing: 662906-3_1_AA

Pos	Part No	UN	Qty	Description	Page No
-					
010	2746938-0100		1	TRANSFER UNIT	**6-5**
020	2837072-0100		1	DRIVE UNIT	**6-15**
030	2839315-0100		1	CAMMODULE	**6-21, 6-23, 6-25, 6-27, 6-29**
040	2751664-0200		1	FRAME	**6-67**
050	2746939-0100		1	CAP CARRIER GROUP	**6-69, 6-71**
060	2746941-0200		1	CAP HOLDERS GROUP	**6-81**

Pos	Part No	UN	Qty	Description	Page No

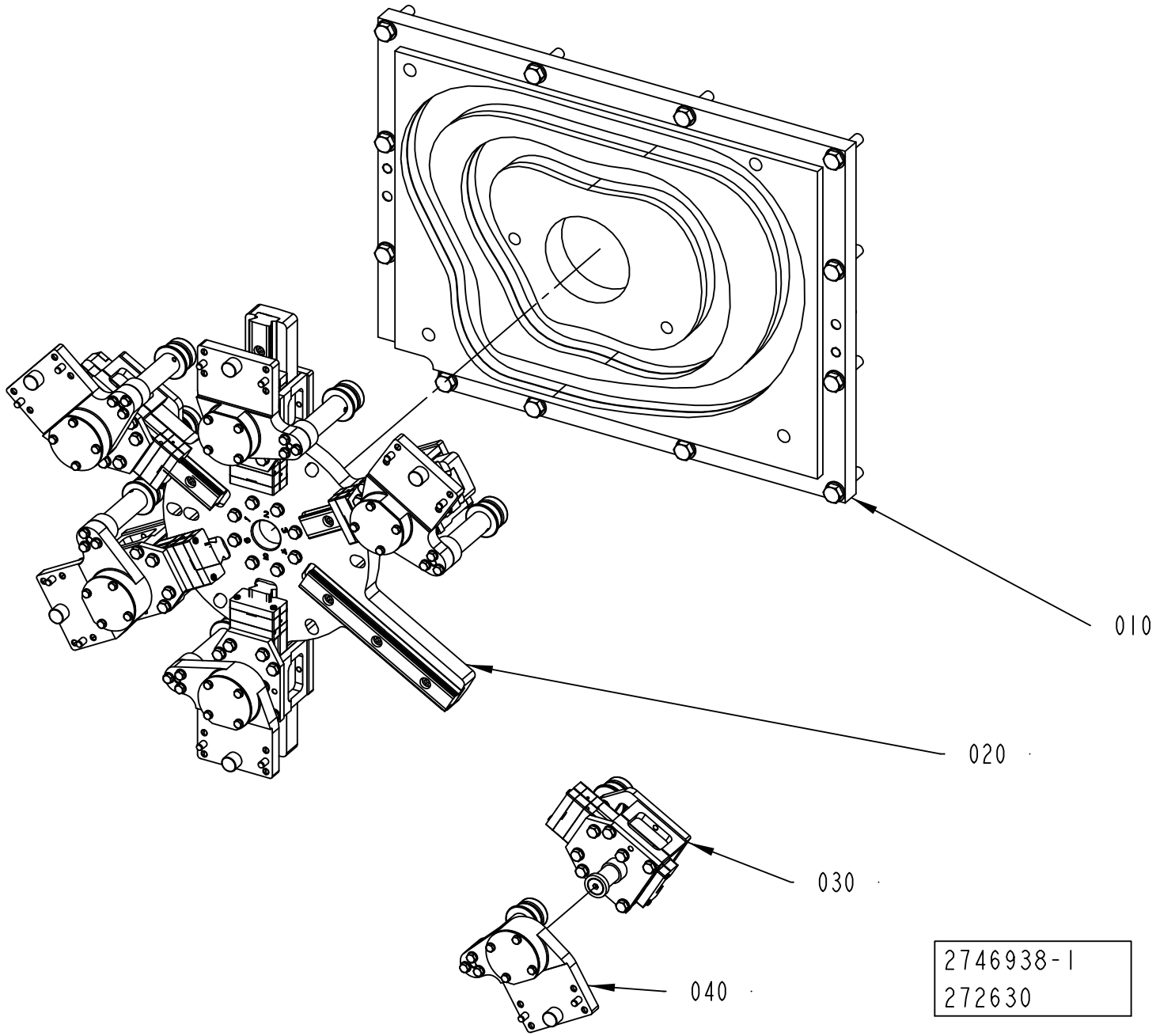
010
020
030
040
2746938-1
272630

ECM: 272707 - 20060921
Group number: 2746938-0100
Assembly Drawing: 2746938-1_1_AA

Pos	Part No	UN	Qty	Description	Page No
-					
010	2751655-0100		1	CAM	**6-7**
020	2751656-0100		1	STAR WHEEL	**6-9**
030	2751657-0100		6	SLIDER	**6-11**
040	2751658-0100		6	FOLLOWER CAM	**6-13**

Pos	Part No	UN	Qty	Description	Page No

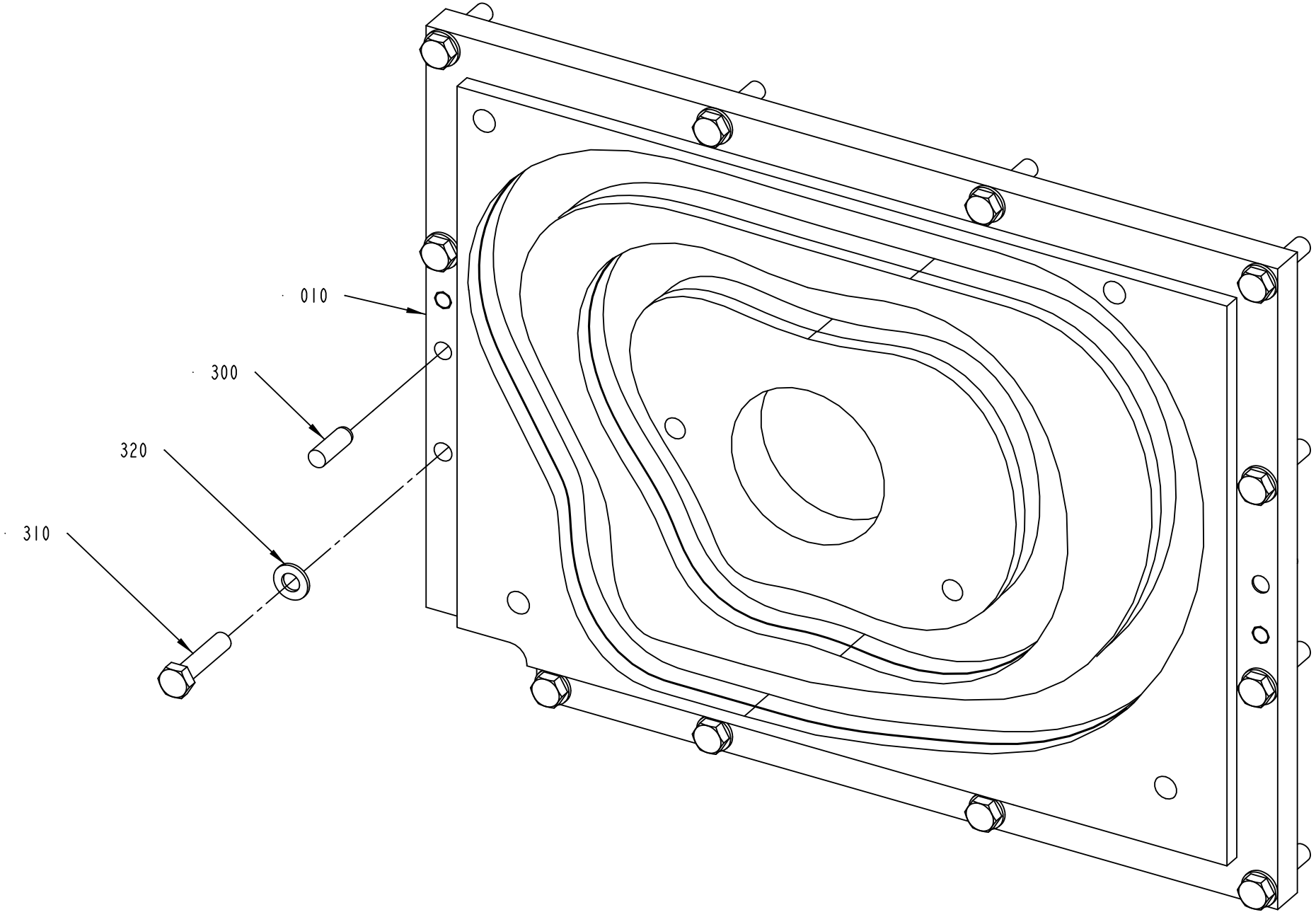

2751655-1
272630

ECM: 272706 - 20060921
Group number: 2751655-0100
Assembly Drawing: 2751655-1_1_AA

Pos	Part No	UN	Qty	Description	Page No
-					
010	2716116-0000		1	CAM	
300	311103-0458		2	PARALLEL PIN ISO 2338 10M6X30 A1	
310	312105-0500		12	SCREW M6S ISO 4014 M10X45 A480	
320	315106-0173		12	WASHER ISO 7089-10-200 HV A4	

Pos	Part No	UN	Qty	Description	Page No

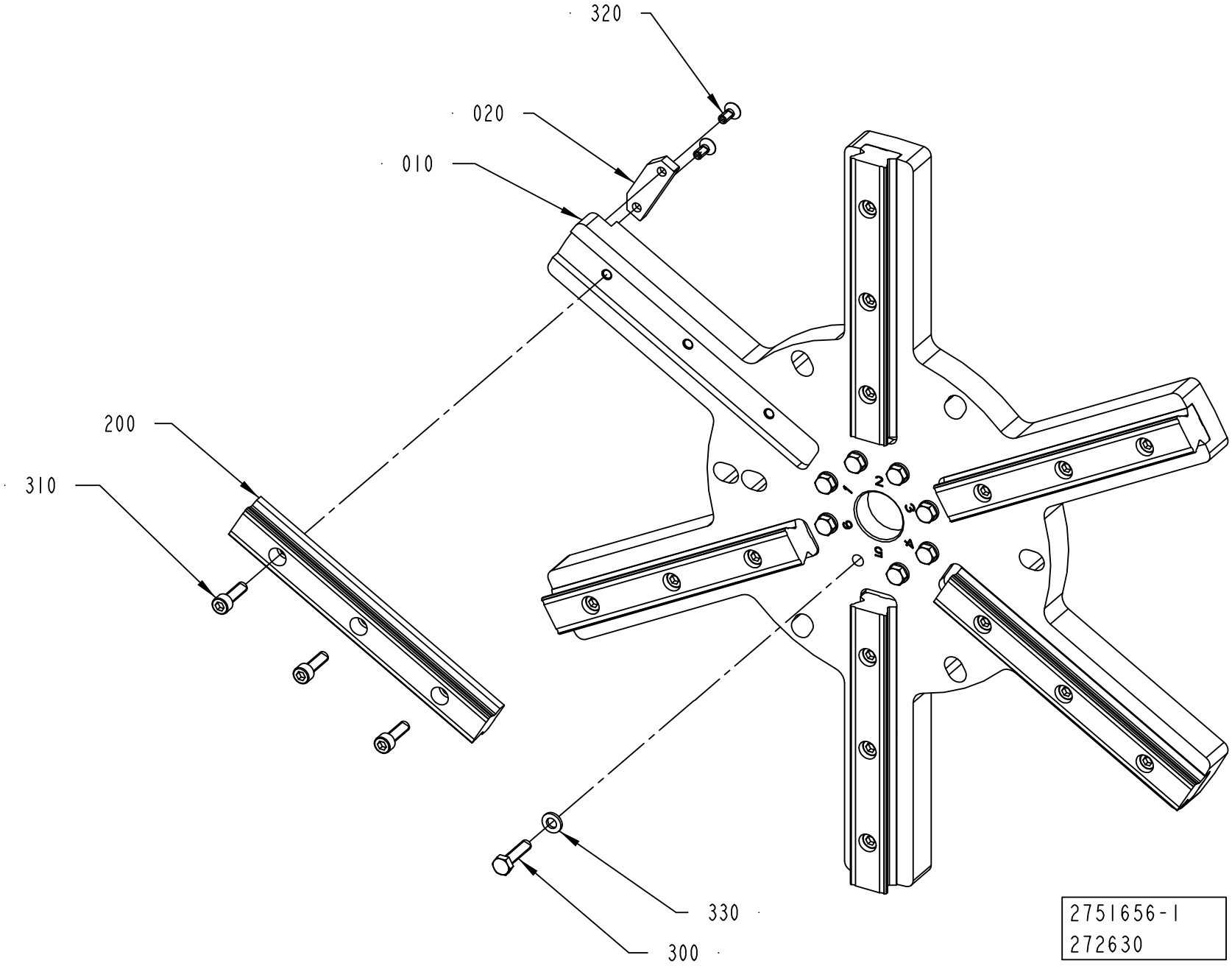
320
020
010
200
310
330
300
2751656-1
272630

ECM: 290152 - 20061221
Group number: 2751656-0100
Assembly Drawing: 2751656-1_1_AA

Pos	Part No	UN	Qty	Description	Page No
-					
010	2751702-0000		1	STAR WHEEL	
020	2751706-0000		1	FLAG	
200	90600-0434		6	GUIDE BAR, SSR25-180L-YM G30/30	
300	312105-0372		8	SCREW M6S ISO 4017 M6X25 A480	
310	312115-0370		18	SCREW ISO4762 M6X20 A4 80	
320	312155-0327		2	SCREW DIN 7991 MF6S M5X12 A4 70	
330	315106-0153		8	WASHER ISO 7089-6-200 HV A4	

Pos	Part No	UN	Qty	Description	Page No

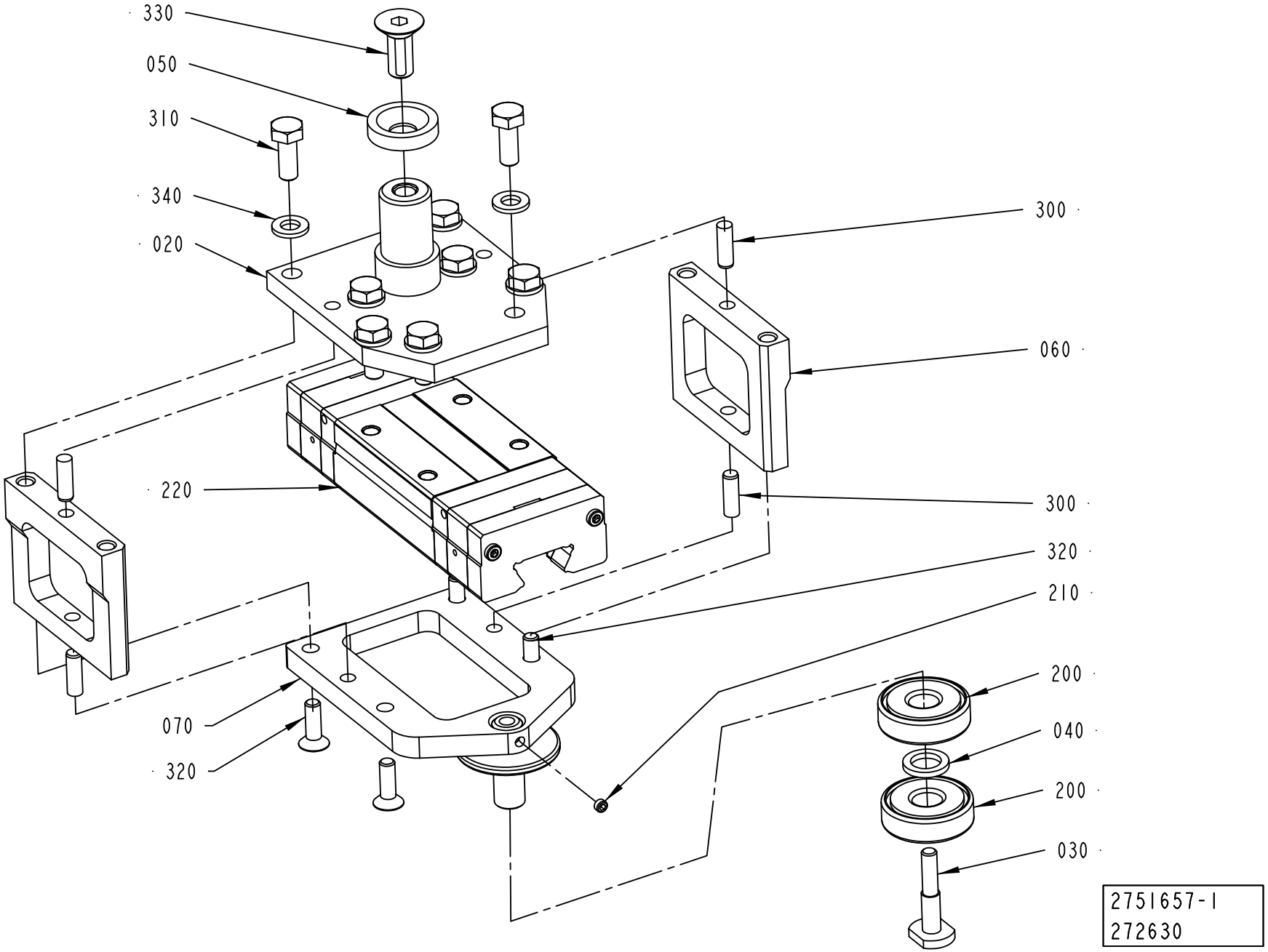
330
050
310
340
020
300
060
220
300
320
210
200
040
200
030
070
320
2751657-1
272630

ECM: 349992 - 20080701
Group number: 2751657-0100
Assembly Drawing: 2751657-1_1_AA

Pos	Part No	UN	Qty	Description	Page No
-					
020	2751739-0000		1	BRACKET	
030	2699680-0000		1	SCREW	
040	2699681-0000		1	SPACER	
050	2699683-0000		1	WASHER	
060	2703697-0000		2	SIDE	
070	2751703-0000		1	BRACKET	
200	90214-0123		2	BALL BEARING, 10X30X9 MM	
210	90459-1395		1	SCREW HEX.SOCK.SET CONEPT.MS6SS M4X4 A2	
220	90600-0344		1	CARRIAGE, SSR 25 XWYQZSSHH M	
300	311103-0308		4	PARALLEL PIN ISO 2338 5M6X16 A1	
310	312105-0368		8	SCREW M6S ISO 4017 M6X16 A480	
320	312155-0329		4	SCREW DIN 7991 MF6S M5X16 A4 70	
330	312155-0451		1	SCREW DIN 7991 MF6S M8X20 A4 70	
340	315105-0153		8	WASHER BRB 6,4X12 RFR	

Pos	Part No	UN	Qty	Description	Page No

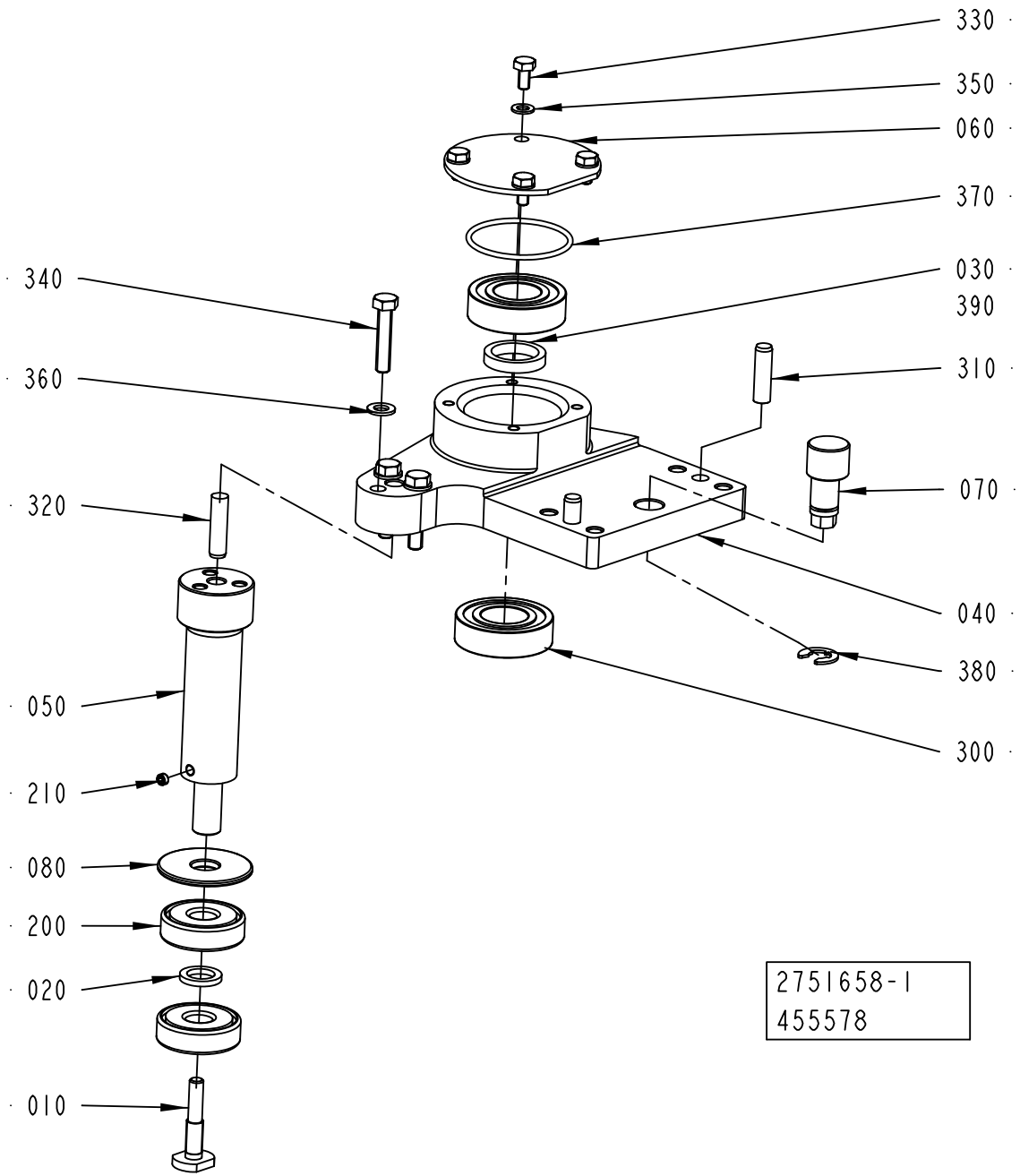
330
350
060
370
030
390
310
070
040
380
300
340
360
320
050
210
080
200
020
010
2751658-1
455578

ECM: 458844 - 20101001
Group number: 2751658-0100
Assembly Drawing: 2751658-1_1_AB

Pos	Part No	UN	Qty	Description	Page No
-					
010	2699680-0000		1	SCREW	
020	2699681-0000		1	SPACER	
030	2699682-0000		1	SPACER	
040	2751704-0000		1	PIVOT BRACKET	
050	2751705-0000		1	SHAFT	
060	2703696-0000		1	PROTECTIVE COVER	
070	2751698-0000		1	ECCENTRIC SHAFT	
080	2751699-0000		1	WASHER	
200	90214-0123		2	BALL BEARING, 10X30X9 MM	
210	90459-1395		1	SCREW HEX.SOCK.SET CONEPT.MS6SS M4X4 A2	
300	321308-0203		2	BALL BEARING 17/35X10	
310	311103-0354		2	PARALLEL PIN ISO 2338 6M6X22 A1	
320	311103-1355		1	PARALLEL PIN ISO 2338 6M6X24 A1	
330	312105-0287		4	SCREW M6S ISO 4017 M4X8 A470	
340	312105-0333		3	SCREW M6S ISO 4017 M5X25 A480	
350	315105-0136		4	WASHER BRB 4,3X8 RFR	
360	315105-0146		3	WASHER BRB 5,3X10 RFR	
370	315202-0716		1	O-RING 34,65X1,78 MM	
380	315755-0109		1	RETAINING RING SHAFT DIN 6799 7 SS	
390	90296-0068		1	SHELL ALVANIA GREASE EP 2	

Pos	Part No	UN	Qty	Description	Page No

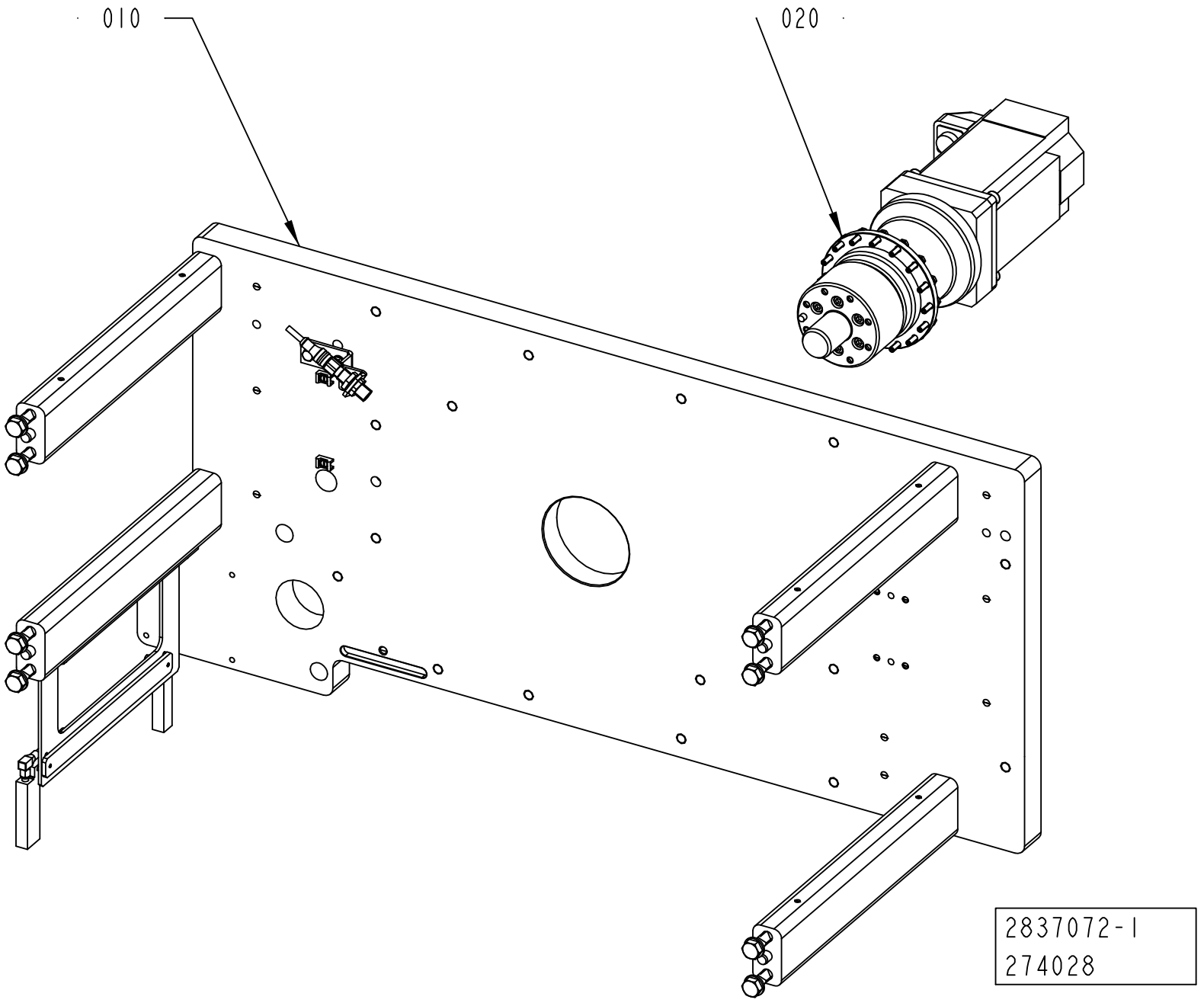
010
020
2837072-1
274028

ECM: 274028 - 20060921
Group number: 2837072-0100
Assembly Drawing: 2837072-1_1_AA

Pos	Part No	UN	Qty	Description	Page No
-					
010	2837073-0100		1	PLATE	**6-17**
020	2836507-0100		1	DRIVE MOTOR	**6-19**

Pos	Part No	UN	Qty	Description	Page No

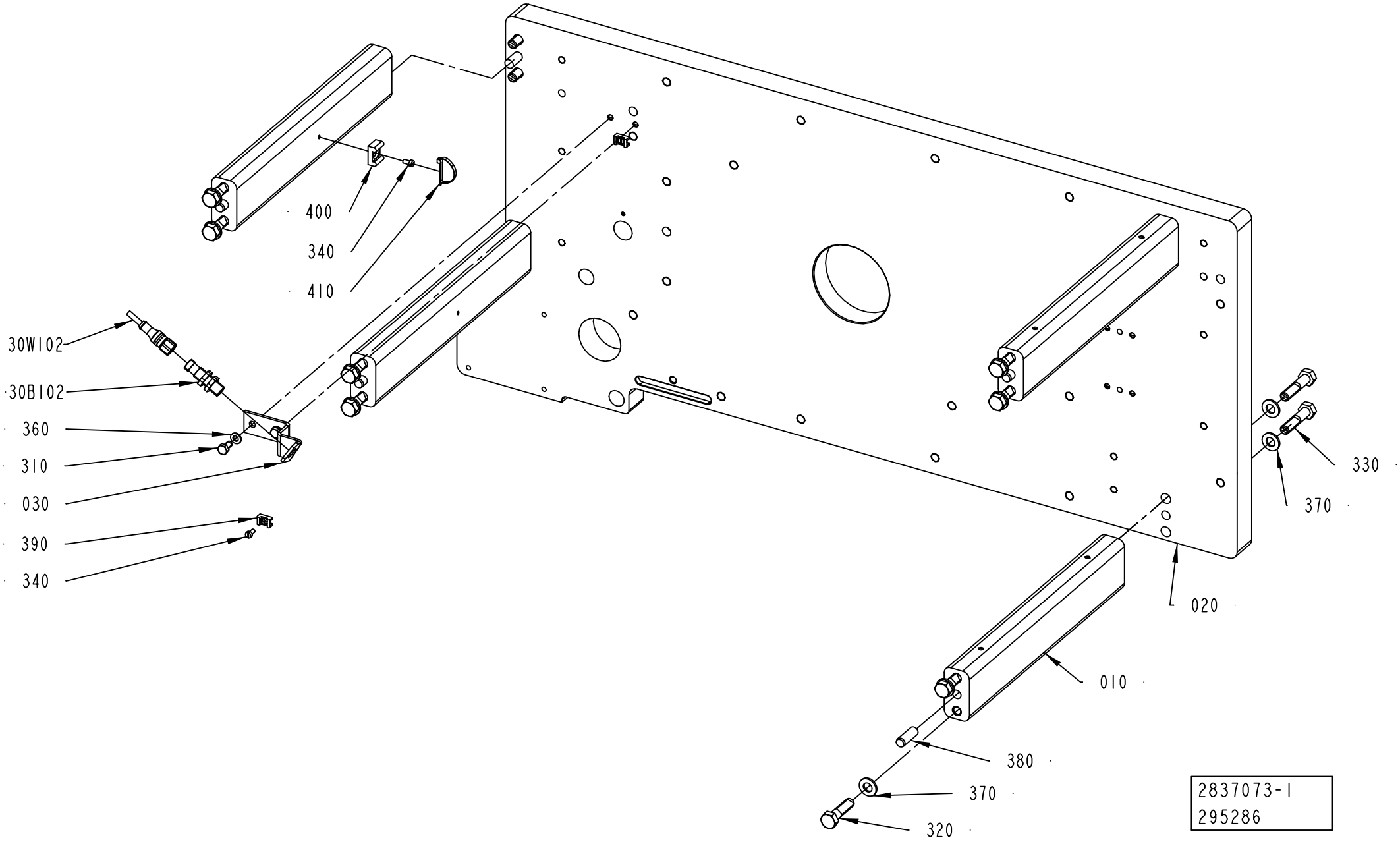
400
340
410
30W102
30B102
360
310
030
390
340
330
370
020
010
380
370
320
2837073-1
295286

ECM: 298769 - 20070323
Group number: 2837073-0100
Assembly Drawing: 2837073-1_1_AB

Pos	Part No	UN	Qty	Description	Page No
-					
010	2703704-0000		4	SPACER STRUT	
020	2835939-0000		1	PLATE	
030	2751741-0000		1	BRACKET	
30B102	90458-2907		1	PROX.SWITCH IFS204	
30W102	351411-0010		1	ACTU/SENS. CABLE PRST 4-PRKT 4-07/1,0M	
310	312105-0366		2	SCREW M6S ISO 4017 M6X12 A480	
320	312105-0499		8	SCREW M6S ISO 4014 M10X40 A480	
330	312105-0500		8	SCREW M6S ISO 4014 M10X45 A480	
340	312125-0287		3	SCREW ISO 1207 M4X8 A4	
360	315105-0153		2	WASHER BRB 6,4X12 RFR	
370	315106-0173		16	WASHER ISO 7089-10-200 HV A4	
380	311103-0458		8	PARALLEL PIN ISO 2338 10M6X30 A1	
390	352113-0205		2	ANCHOR PLATES FOR STRIPS, TM2S8-C100	
400	352113-0203		1	ANCHOR PLATES FOR STRIPS, TM3S8-M0	
410	352113-0104		1	CABLE TIE, BLACK 300X4,8 MM	

Pos	Part No	UN	Qty	Description	Page No

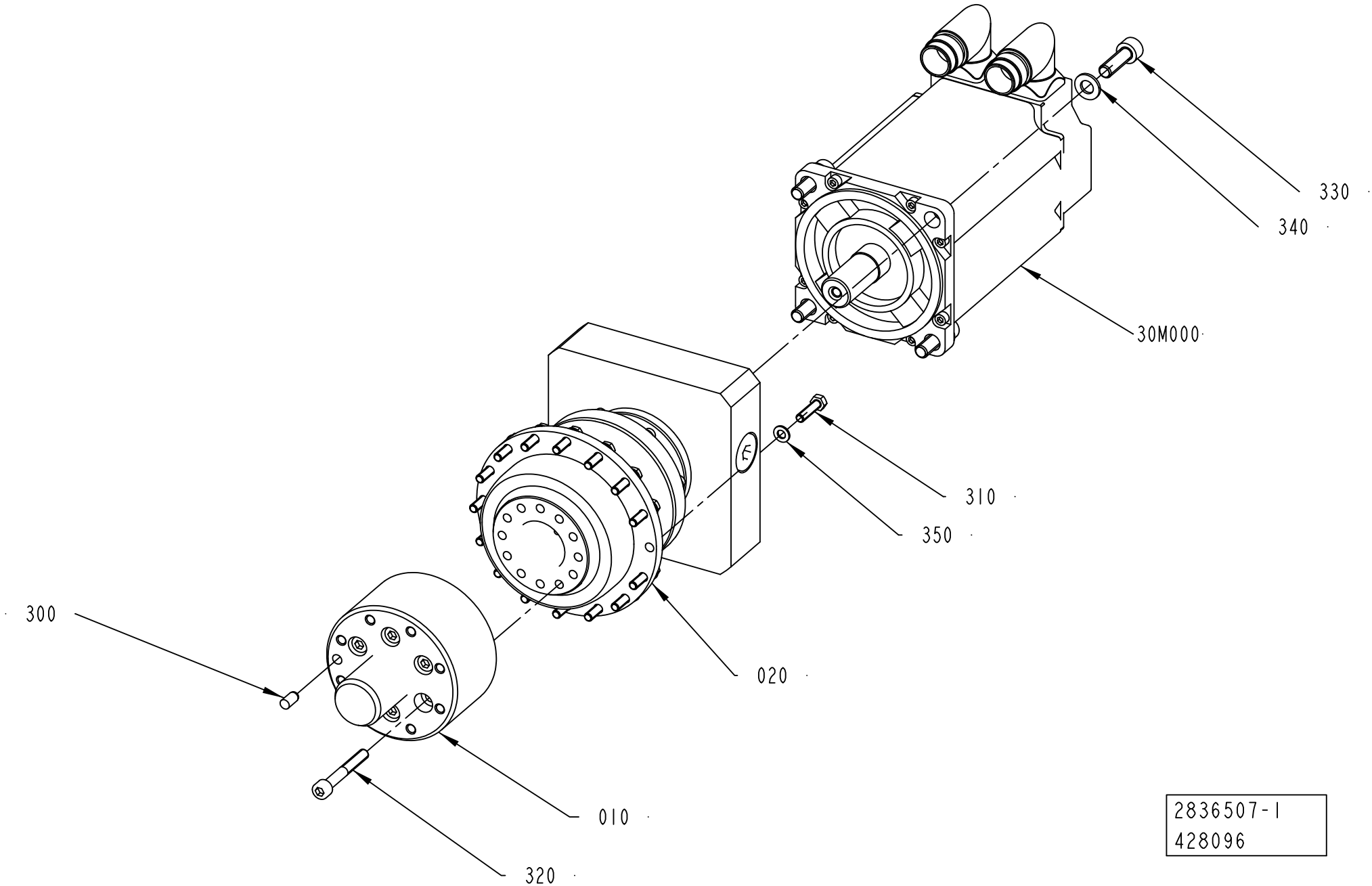
330
340
30M000
310
350
020
300
010
320
2836507-1
428096

ECM: 428939 - 20100401
Group number: 2836507-0100
Assembly Drawing: 2836507-1_1_AB

Pos	Part No	UN	Qty	Description	Page No
-					
010	2834311-0000		1	HUB	
020	90600-0761		1	GEARS,PLANETARY TP010S-MA3-66-0E1/MPL B4	
300	311103-0349		1	PARALLEL PIN ISO 2338 6M6X12 A1	
30M000	90601-1926		1	SERVO MOTOR MPL-B430P-MK72AA SERIES A	
310	312105-0331		16	SCREW M6S ISO 4017 M5X20 A480	
320	312115-0379		6	SCREW ISO4762 M6X45 A4 80	
330	312115-0453		4	SCREW ISO4762 M8X25 A4 80	
340	315106-0165		4	WASHER ISO 7089-8-200 HV A4	
350	315105-0146		16	WASHER BRB 5,3X10 RFR	

Pos	Part No	UN	Qty	Description	Page No

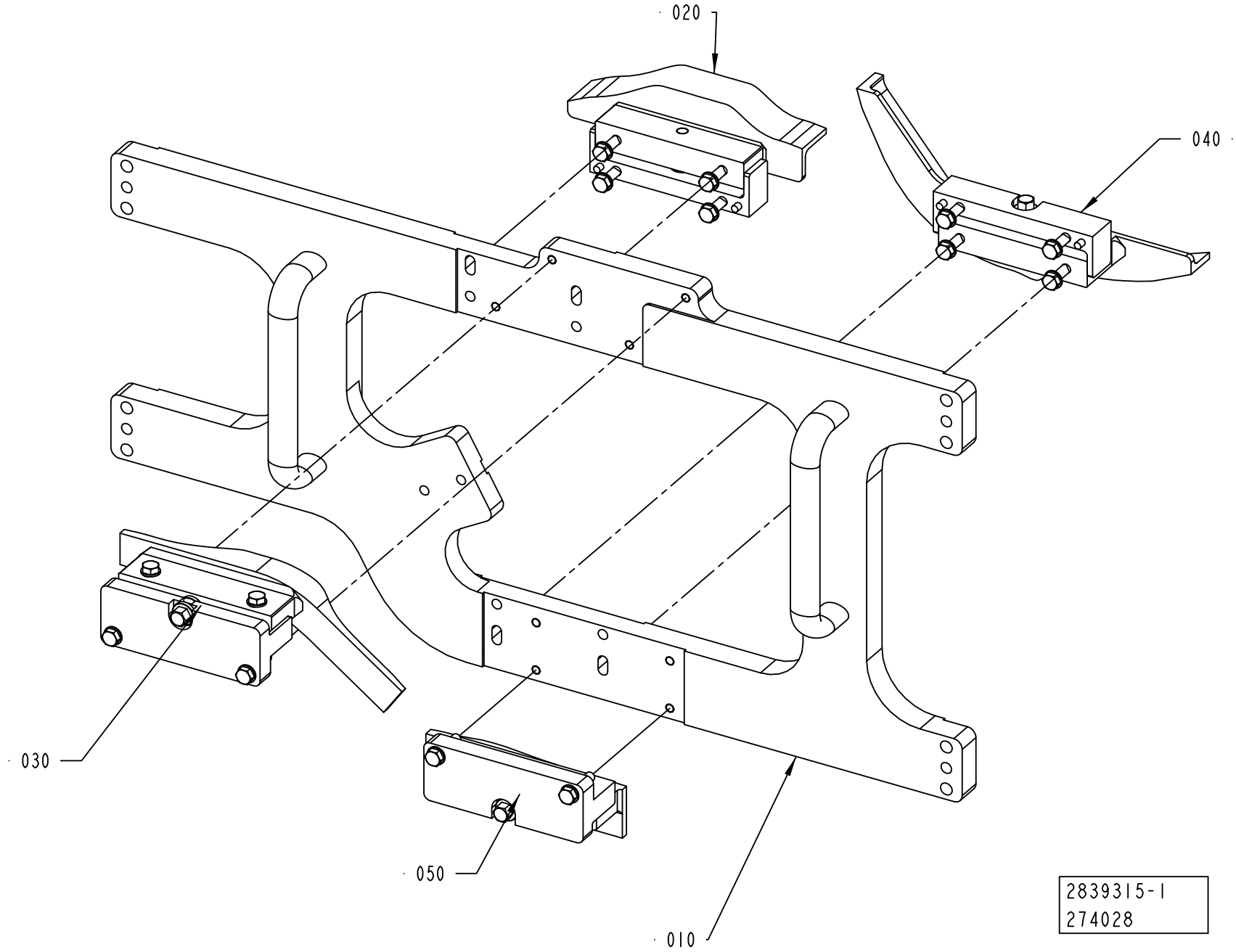
020
040
030
050
010
2839315-1
274028

Pos	Part No	UN	Qty	Description	Page No
TBA STREAMCAP 1000 NO POSITIONING DEVICE, TBA SLIMCAP 1000 NO POSITIONING DEVICE, TBA SLIMCAP 2000 NO POSITIONING DEVICE, TBA STREAMCAP 200 NO POSDEVICE (See drawing on page: 6-20)					
040	2839385-0100		1	CAM	**6-31**
050	2839386-0100		1	CAM	**6-33**
TBA STREAMCAP 1000 POSITIONING DEVICE, TPA STREAMCAP 330 POSDEVICE, TBA STREAMCAP 200 POSDEVICE, TBA HELICAP2 23 (See drawing on page: 6-26)					
110	2780425-0100		1	CAM	**6-35**
120	2780560-0100		1	DRIVE	**6-37, 6-39, 6-41**
TGA (See drawing on page: 6-22)					
070	2873914-0100		1	CAMMODULE	**6-43, 6-45**
080	2873915-0100		1	CAMMODULE	**6-47, 6-49**
090	2873916-0100		1	CAMMODULE	**6-51, 6-53**
100	2873917-0100		1	CAMMODULE	**6-55**
110	2780425-0100		1	CAM	**6-35**
120	2780560-0100		1	DRIVE	**6-37, 6-39, 6-41**
TPA DREAMCAP 26 POSITIONING DEVICE (See drawing on page: 6-28)					
070	2873914-0100		1	CAMMODULE	**6-43, 6-45**
080	2873915-0100		1	CAMMODULE	**6-47, 6-49**
090	2873916-0100		1	CAMMODULE	**6-51, 6-53**
100	2873917-0100		1	CAMMODULE	**6-55**
130	3088629-0100		1	CAMMODULE	**6-57**
TPA STREAMCAP 1000 POSITIONING DEVICE, TPA STREAMCAP 500 POSITIONING DEVICE (See drawing on page: 6-24)					
070	2873914-0100		1	CAMMODULE	**6-43, 6-45**
080	2873915-0100		1	CAMMODULE	**6-47, 6-49**
090	2873916-0100		1	CAMMODULE	**6-51, 6-53**
100	2873917-0100		1	CAMMODULE	**6-55**
110	2780425-0100		1	CAM	**6-35**
120	2780560-0100		1	DRIVE	**6-37, 6-39, 6-41**
Common Parts					
010	2839382-0100		1	MOUNTING PLATE	**6-59, 6-61**
020	2839383-0100		1	CAM	**6-63**
030	2839384-0100		1	CAM	**6-65**

Pos	Part No	UN	Qty	Description	Page No

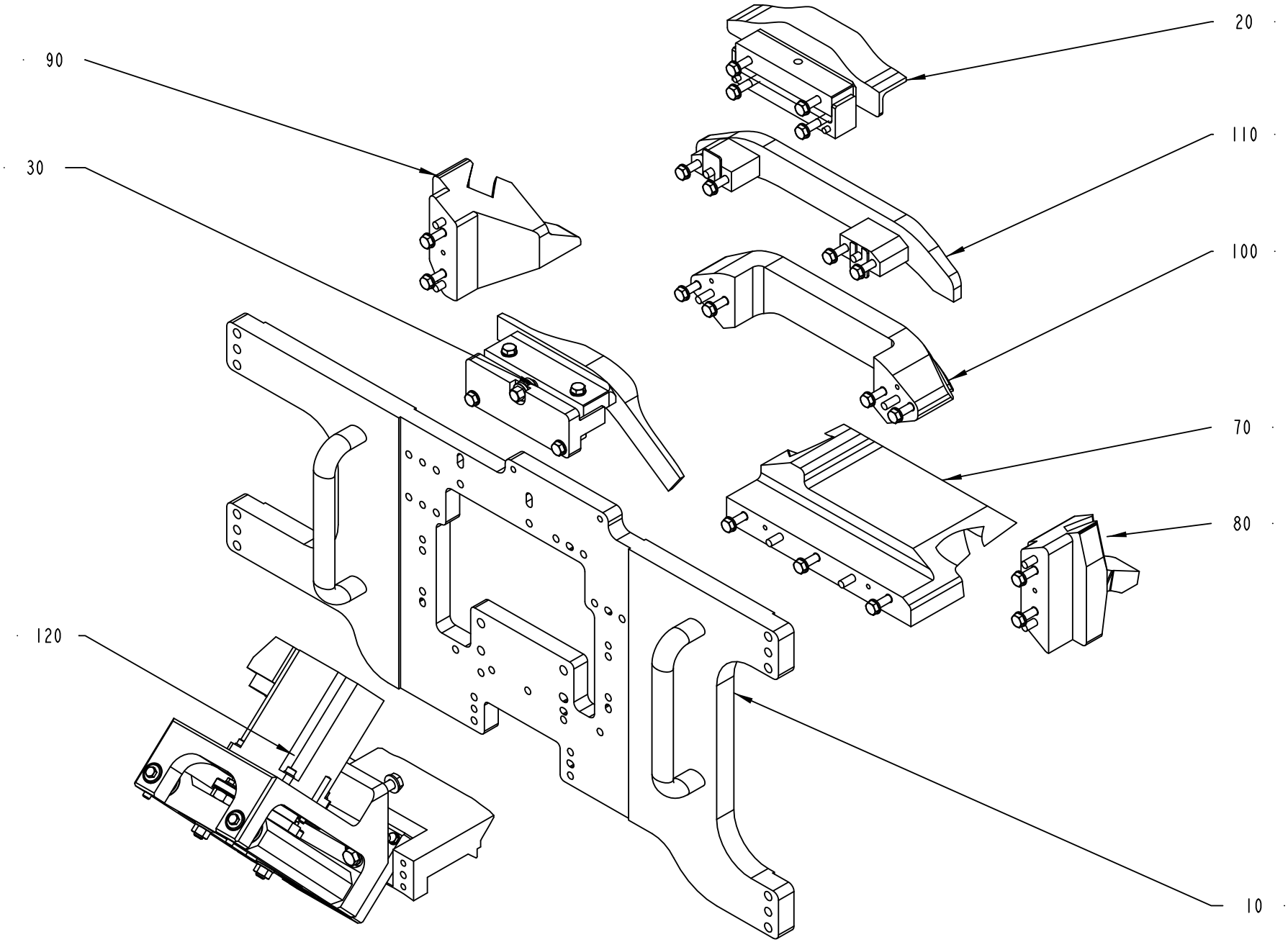

2839315-5
295283

Pos	Part No	UN	Qty	Description	Page No
TBA STREAMCAP 1000 NO POSITIONING DEVICE, TBA SLIMCAP 1000 NO POSITIONING DEVICE, TBA SLIMCAP 2000 NO POSITIONING DEVICE, TBA STREAMCAP 200 NO POSDEVICE (See drawing on page: 6-20)					
040	2839385-0100		1	CAM	**6-31**
050	2839386-0100		1	CAM	**6-33**
TBA STREAMCAP 1000 POSITIONING DEVICE, TPA STREAMCAP 330 POSDEVICE, TBA STREAMCAP 200 POSDEVICE, TBA HELICAP2 23 (See drawing on page: 6-26)					
110	2780425-0100		1	CAM	**6-35**
120	2780560-0100		1	DRIVE	**6-37, 6-39, 6-41**
TGA (See drawing on page: 6-22)					
070	2873914-0100		1	CAMMODULE	**6-43, 6-45**
080	2873915-0100		1	CAMMODULE	**6-47, 6-49**
090	2873916-0100		1	CAMMODULE	**6-51, 6-53**
100	2873917-0100		1	CAMMODULE	**6-55**
110	2780425-0100		1	CAM	**6-35**
120	2780560-0100		1	DRIVE	**6-37, 6-39, 6-41**
TPA DREAMCAP 26 POSITIONING DEVICE (See drawing on page: 6-28)					
070	2873914-0100		1	CAMMODULE	**6-43, 6-45**
080	2873915-0100		1	CAMMODULE	**6-47, 6-49**
090	2873916-0100		1	CAMMODULE	**6-51, 6-53**
100	2873917-0100		1	CAMMODULE	**6-55**
130	3088629-0100		1	CAMMODULE	**6-57**
TPA STREAMCAP 1000 POSITIONING DEVICE, TPA STREAMCAP 500 POSITIONING DEVICE (See drawing on page: 6-24)					
070	2873914-0100		1	CAMMODULE	**6-43, 6-45**
080	2873915-0100		1	CAMMODULE	**6-47, 6-49**
090	2873916-0100		1	CAMMODULE	**6-51, 6-53**
100	2873917-0100		1	CAMMODULE	**6-55**
110	2780425-0100		1	CAM	**6-35**
120	2780560-0100		1	DRIVE	**6-37, 6-39, 6-41**
Common Parts					
010	2839382-0100		1	MOUNTING PLATE	**6-59, 6-61**
020	2839383-0100		1	CAM	**6-63**
030	2839384-0100		1	CAM	**6-65**

Pos	Part No	UN	Qty	Description	Page No

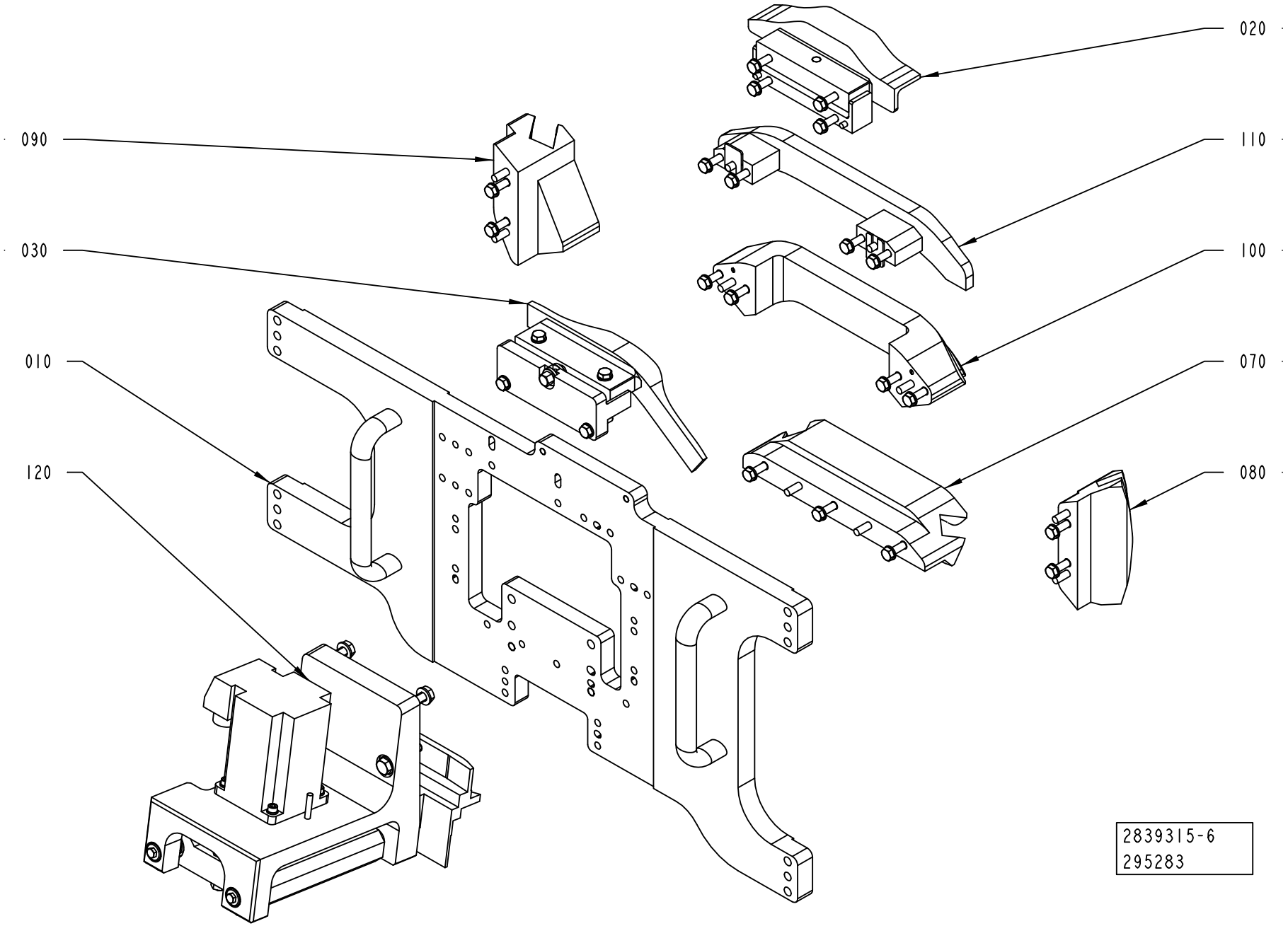
020
090
110
030
100
010
070
120
080
2839315-6
295283

Pos	Part No	UN	Qty	Description	Page No
TBA STREAMCAP 1000 NO POSITIONING DEVICE, TBA SLIMCAP 1000 NO POSITIONING DEVICE, TBA SLIMCAP 2000 NO POSITIONING DEVICE, TBA STREAMCAP 200 NO POSDEVICE (See drawing on page: 6-20)					
040	2839385-0100		1	CAM	**6-31**
050	2839386-0100		1	CAM	**6-33**
TBA STREAMCAP 1000 POSITIONING DEVICE, TPA STREAMCAP 330 POSDEVICE, TBA STREAMCAP 200 POSDEVICE, TBA HELICAP2 23 (See drawing on page: 6-26)					
110	2780425-0100		1	CAM	**6-35**
120	2780560-0100		1	DRIVE	**6-37, 6-39, 6-41**
TGA (See drawing on page: 6-22)					
070	2873914-0100		1	CAMMODULE	**6-43, 6-45**
080	2873915-0100		1	CAMMODULE	**6-47, 6-49**
090	2873916-0100		1	CAMMODULE	**6-51, 6-53**
100	2873917-0100		1	CAMMODULE	**6-55**
110	2780425-0100		1	CAM	**6-35**
120	2780560-0100		1	DRIVE	**6-37, 6-39, 6-41**
TPA DREAMCAP 26 POSITIONING DEVICE (See drawing on page: 6-28)					
070	2873914-0100		1	CAMMODULE	**6-43, 6-45**
080	2873915-0100		1	CAMMODULE	**6-47, 6-49**
090	2873916-0100		1	CAMMODULE	**6-51, 6-53**
100	2873917-0100		1	CAMMODULE	**6-55**
130	3088629-0100		1	CAMMODULE	**6-57**
TPA STREAMCAP 1000 POSITIONING DEVICE, TPA STREAMCAP 500 POSITIONING DEVICE (See drawing on page: 6-24)					
070	2873914-0100		1	CAMMODULE	**6-43, 6-45**
080	2873915-0100		1	CAMMODULE	**6-47, 6-49**
090	2873916-0100		1	CAMMODULE	**6-51, 6-53**
100	2873917-0100		1	CAMMODULE	**6-55**
110	2780425-0100		1	CAM	**6-35**
120	2780560-0100		1	DRIVE	**6-37, 6-39, 6-41**
Common Parts					
010	2839382-0100		1	MOUNTING PLATE	**6-59, 6-61**
020	2839383-0100		1	CAM	**6-63**
030	2839384-0100		1	CAM	**6-65**

Pos	Part No	UN	Qty	Description	Page No

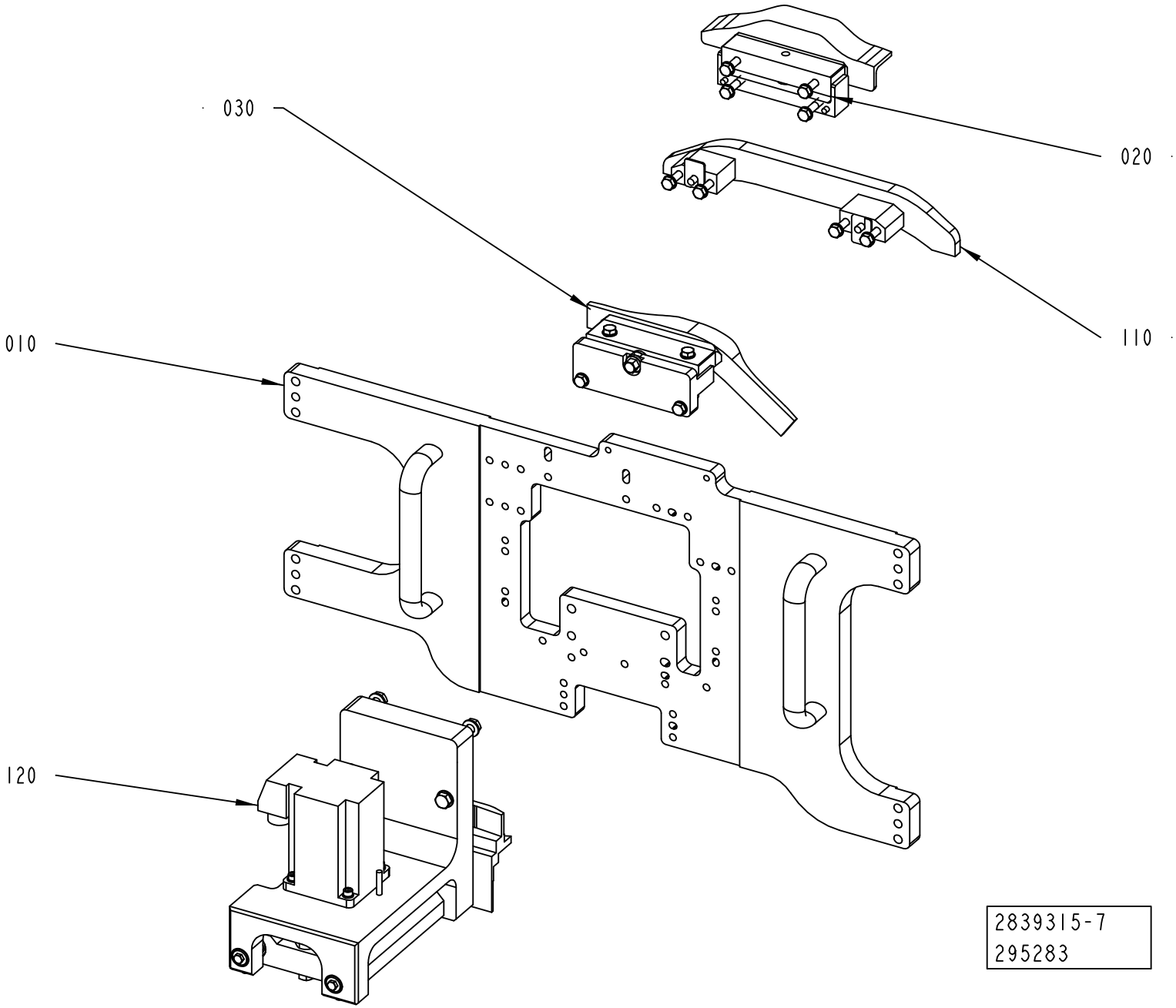
030
020
110
010
120
2839315-7
295283

Pos	Part No	UN	Qty	Description	Page No
TBA STREAMCAP 1000 NO POSITIONING DEVICE, TBA SLIMCAP 1000 NO POSITIONING DEVICE, TBA SLIMCAP 2000 NO POSITIONING DEVICE, TBA STREAMCAP 200 NO POSDEVICE (See drawing on page: 6-20)					
040	2839385-0100		1	CAM	**6-31**
050	2839386-0100		1	CAM	**6-33**
TBA STREAMCAP 1000 POSITIONING DEVICE, TPA STREAMCAP 330 POSDEVICE, TBA STREAMCAP 200 POSDEVICE, TBA HELICAP2 23 (See drawing on page: 6-26)					
110	2780425-0100		1	CAM	**6-35**
120	2780560-0100		1	DRIVE	**6-37, 6-39, 6-41**
TGA (See drawing on page: 6-22)					
070	2873914-0100		1	CAMMODULE	**6-43, 6-45**
080	2873915-0100		1	CAMMODULE	**6-47, 6-49**
090	2873916-0100		1	CAMMODULE	**6-51, 6-53**
100	2873917-0100		1	CAMMODULE	**6-55**
110	2780425-0100		1	CAM	**6-35**
120	2780560-0100		1	DRIVE	**6-37, 6-39, 6-41**
TPA DREAMCAP 26 POSITIONING DEVICE (See drawing on page: 6-28)					
070	2873914-0100		1	CAMMODULE	**6-43, 6-45**
080	2873915-0100		1	CAMMODULE	**6-47, 6-49**
090	2873916-0100		1	CAMMODULE	**6-51, 6-53**
100	2873917-0100		1	CAMMODULE	**6-55**
130	3088629-0100		1	CAMMODULE	**6-57**
TPA STREAMCAP 1000 POSITIONING DEVICE, TPA STREAMCAP 500 POSITIONING DEVICE (See drawing on page: 6-24)					
070	2873914-0100		1	CAMMODULE	**6-43, 6-45**
080	2873915-0100		1	CAMMODULE	**6-47, 6-49**
090	2873916-0100		1	CAMMODULE	**6-51, 6-53**
100	2873917-0100		1	CAMMODULE	**6-55**
110	2780425-0100		1	CAM	**6-35**
120	2780560-0100		1	DRIVE	**6-37, 6-39, 6-41**
Common Parts					
010	2839382-0100		1	MOUNTING PLATE	**6-59, 6-61**
020	2839383-0100		1	CAM	**6-63**
030	2839384-0100		1	CAM	**6-65**

Pos	Part No	UN	Qty	Description	Page No

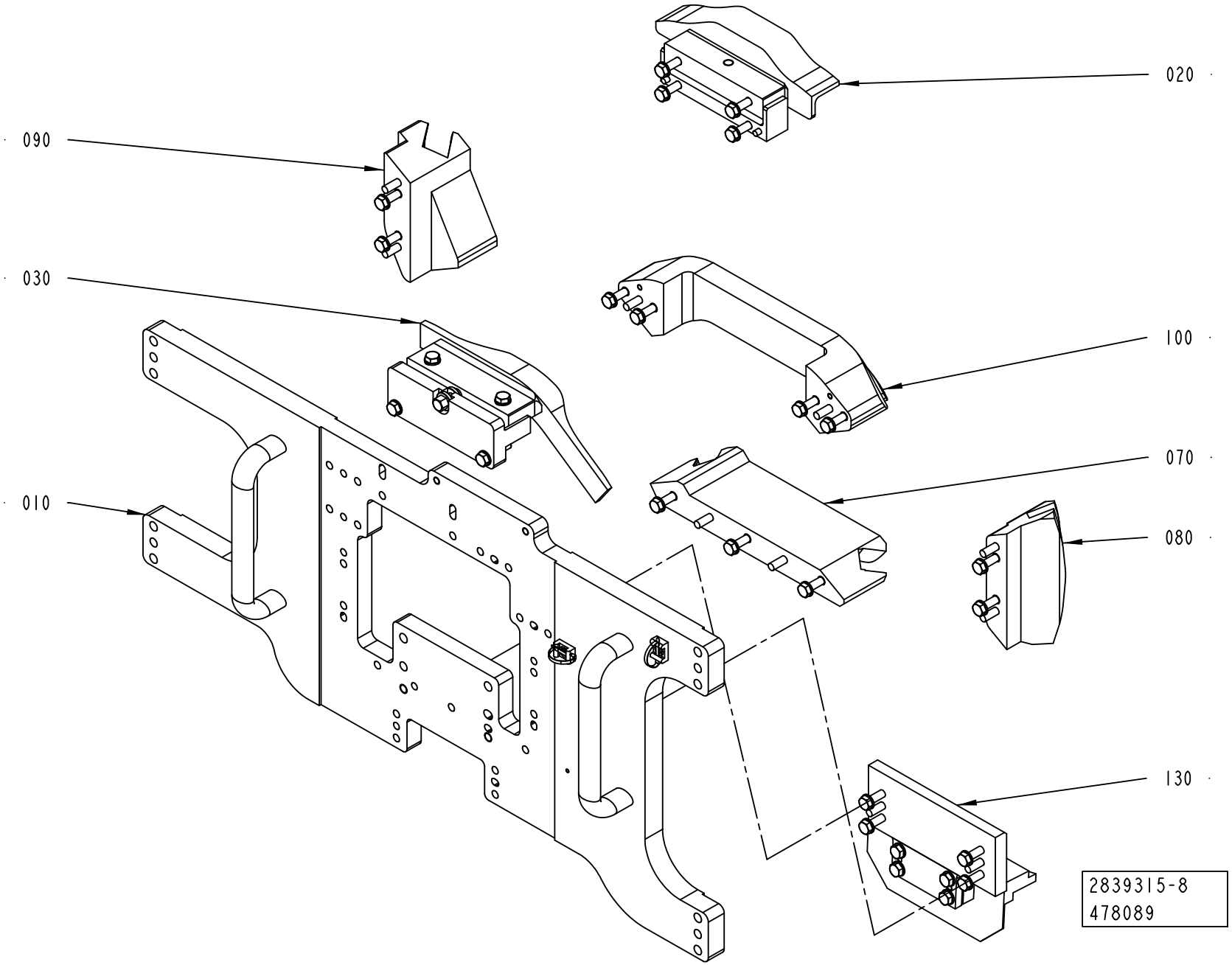
020
090
030
100
070
010
080
130
2839315-8
478089

Pos	Part No	UN	Qty	Description	Page No
TBA STREAMCAP 1000 NO POSITIONING DEVICE, TBA SLIMCAP 1000 NO POSITIONING DEVICE, TBA SLIMCAP 2000 NO POSITIONING DEVICE, TBA STREAMCAP 200 NO POSDEVICE (See drawing on page: 6-20)					
040	2839385-0100		1	CAM	**6-31**
050	2839386-0100		1	CAM	**6-33**
TBA STREAMCAP 1000 POSITIONING DEVICE, TPA STREAMCAP 330 POSDEVICE, TBA STREAMCAP 200 POSDEVICE, TBA HELICAP2 23 (See drawing on page: 6-26)					
110	2780425-0100		1	CAM	**6-35**
120	2780560-0100		1	DRIVE	**6-37, 6-39, 6-41**
TGA (See drawing on page: 6-22)					
070	2873914-0100		1	CAMMODULE	**6-43, 6-45**
080	2873915-0100		1	CAMMODULE	**6-47, 6-49**
090	2873916-0100		1	CAMMODULE	**6-51, 6-53**
100	2873917-0100		1	CAMMODULE	**6-55**
110	2780425-0100		1	CAM	**6-35**
120	2780560-0100		1	DRIVE	**6-37, 6-39, 6-41**
TPA DREAMCAP 26 POSITIONING DEVICE (See drawing on page: 6-28)					
070	2873914-0100		1	CAMMODULE	**6-43, 6-45**
080	2873915-0100		1	CAMMODULE	**6-47, 6-49**
090	2873916-0100		1	CAMMODULE	**6-51, 6-53**
100	2873917-0100		1	CAMMODULE	**6-55**
130	3088629-0100		1	CAMMODULE	**6-57**
TPA STREAMCAP 1000 POSITIONING DEVICE, TPA STREAMCAP 500 POSITIONING DEVICE (See drawing on page: 6-24)					
070	2873914-0100		1	CAMMODULE	**6-43, 6-45**
080	2873915-0100		1	CAMMODULE	**6-47, 6-49**
090	2873916-0100		1	CAMMODULE	**6-51, 6-53**
100	2873917-0100		1	CAMMODULE	**6-55**
110	2780425-0100		1	CAM	**6-35**
120	2780560-0100		1	DRIVE	**6-37, 6-39, 6-41**
Common Parts					
010	2839382-0100		1	MOUNTING PLATE	**6-59, 6-61**
020	2839383-0100		1	CAM	**6-63**
030	2839384-0100		1	CAM	**6-65**

Pos	Part No	UN	Qty	Description	Page No

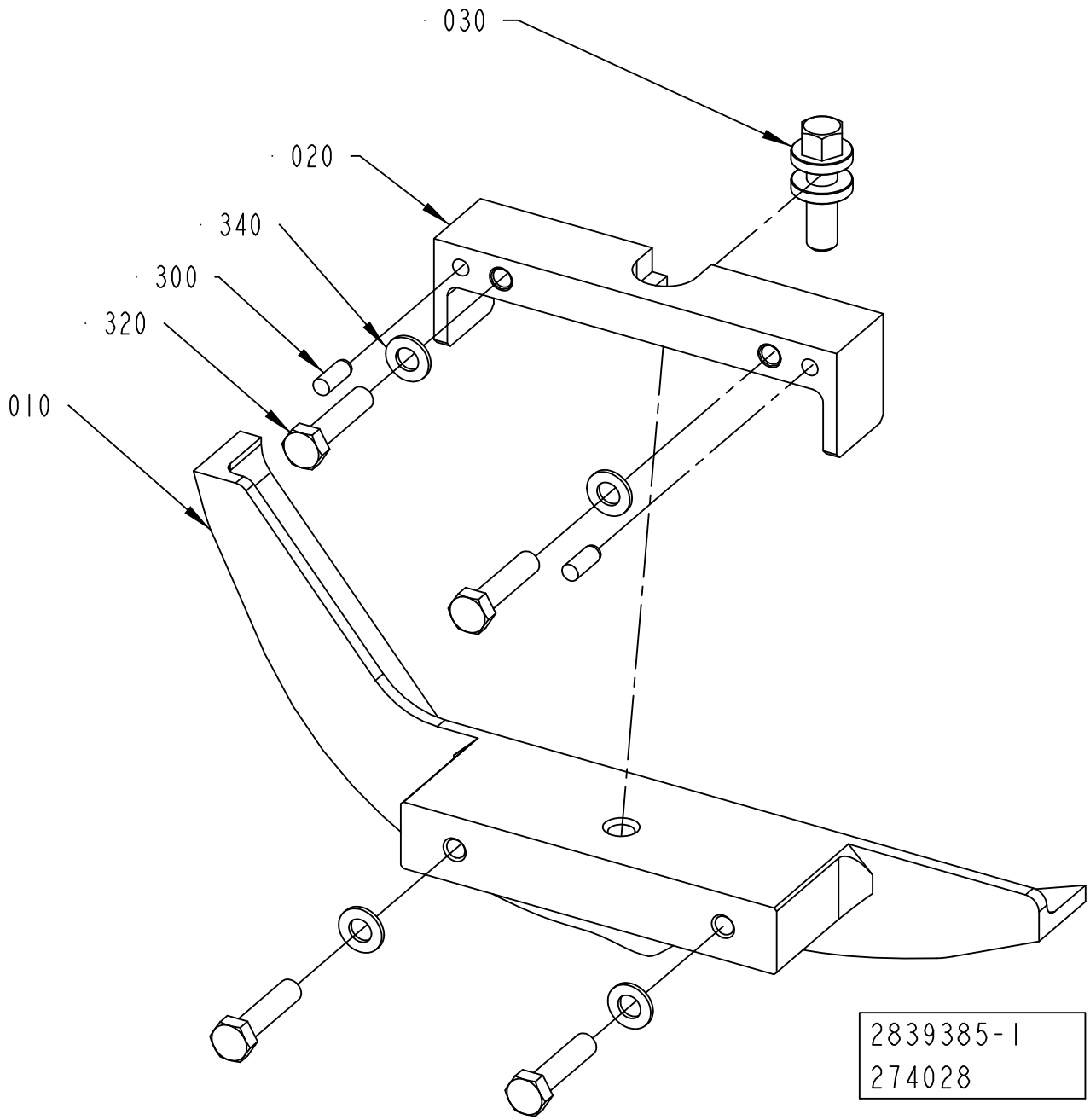
030
020
340
300
320
010
2839385-1
274028

ECM: 438906 - 20100701
Group number: 2839385-0100
Assembly Drawing: 2839385-1_1_AA

Pos	Part No	UN	Qty	Description	Page No
STREAMCAP1000, SLIMCAP 2000, SLIMCAP 1000, STREAMCAP200, HELICAP2 23					
010	2839393-0000		1	CAM	
Common Parts					
020	2838277-0000		1	BRACKET	
030	2703842-0000		1	ADJUSTING SCREW	
300	311103-0351		2	PARALLEL PIN ISO 2338 6M6X16 A1	
320	312105-0457		4	SCREW M6S ISO 4014 M8X35 A480	
340	315105-0165		4	WASHER BRB 8,4X16 RFR	

Pos	Part No	UN	Qty	Description	Page No

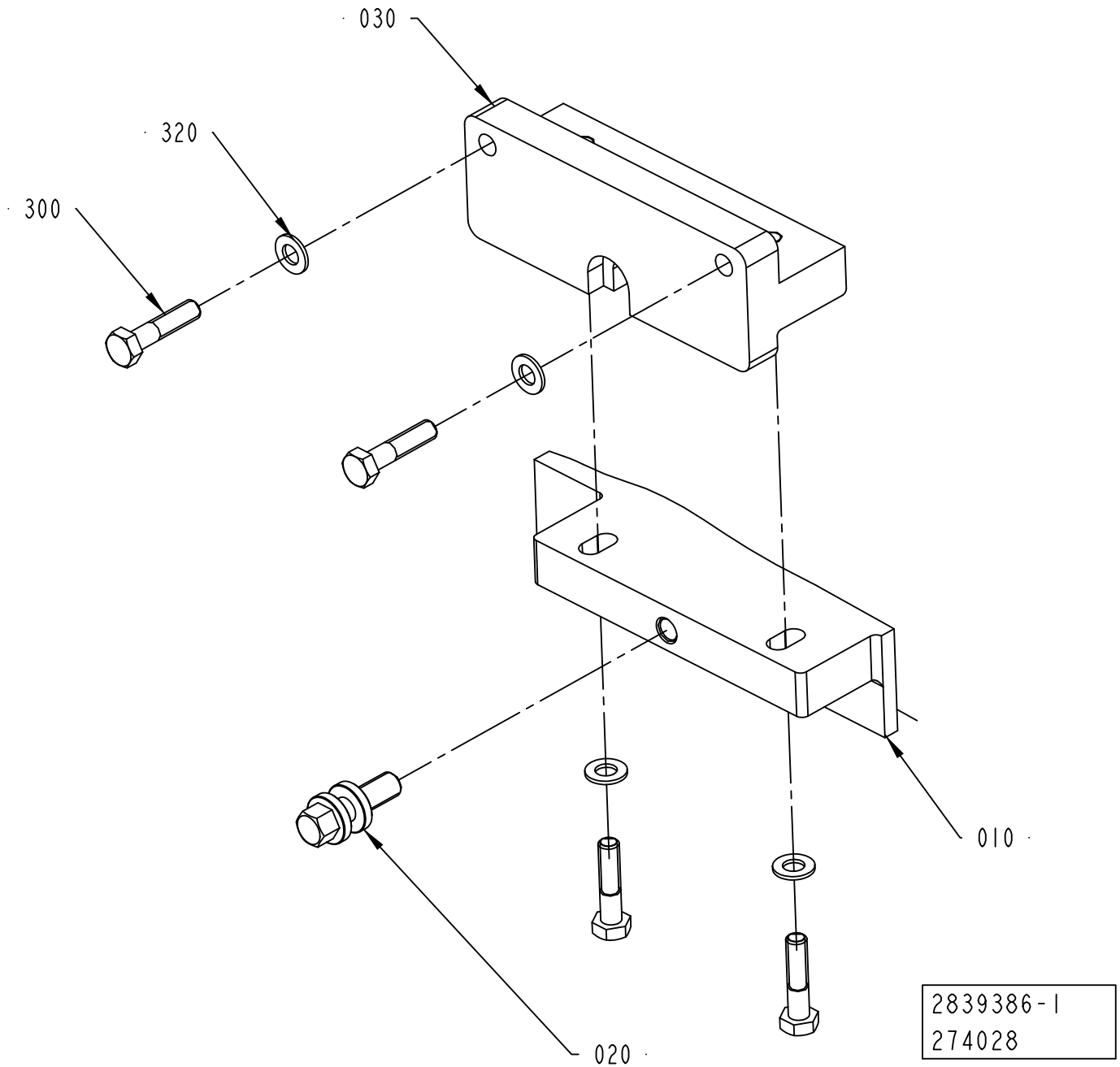
030
320
300
010
020
2839386-1
274028

ECM: 438907 - 20100701
Group number: 2839386-0100
Assembly Drawing: 2839386-1_1_AA

Pos	Part No	UN	Qty	Description	Page No
STREAMCAP1000, SLIMCAP 2000, SLIMCAP 1000, STREAMCAP200, HELICAP2 23					
010	2839409-0000		1	CAM	
030	2838156-0000		1	BRACKET	
Common Parts					
020	2703842-0000		1	ADJUSTING SCREW	
300	312105-0457		4	SCREW M6S ISO 4014 M8X35 A480	
320	315105-0165		4	WASHER BRB 8,4X16 RFR	

Pos	Part No	UN	Qty	Description	Page No

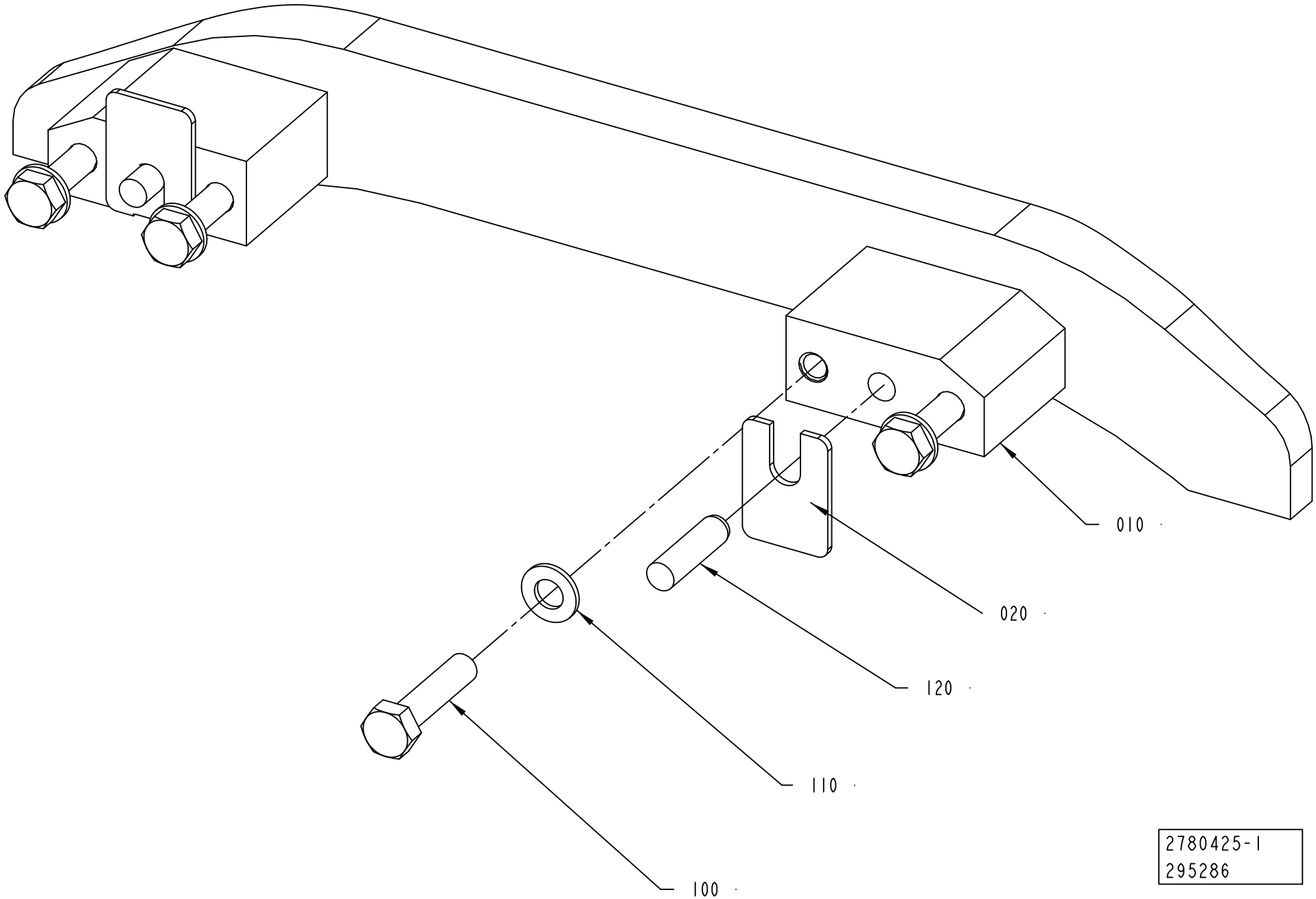
010
020
120
110
100
2780425-1
295286

ECM: 349995 - 20080701
Group number: 2780425-0100
Assembly Drawing: 2780425-1_1_AA

Pos	Part No	UN	Qty	Description	Page No
-					
010	2801048-0000		1	CAM	
020	2873892-0000		2	SHIM	
100	312105-0457		4	SCREW M6S ISO 4014 M8X35 A480	
110	315106-0165		4	WASHER ISO 7089-8-200 HV A4	
120	311103-0405		2	PARALLEL PIN ISO 2338 8M6X30 A1	

Pos	Part No	UN	Qty	Description	Page No

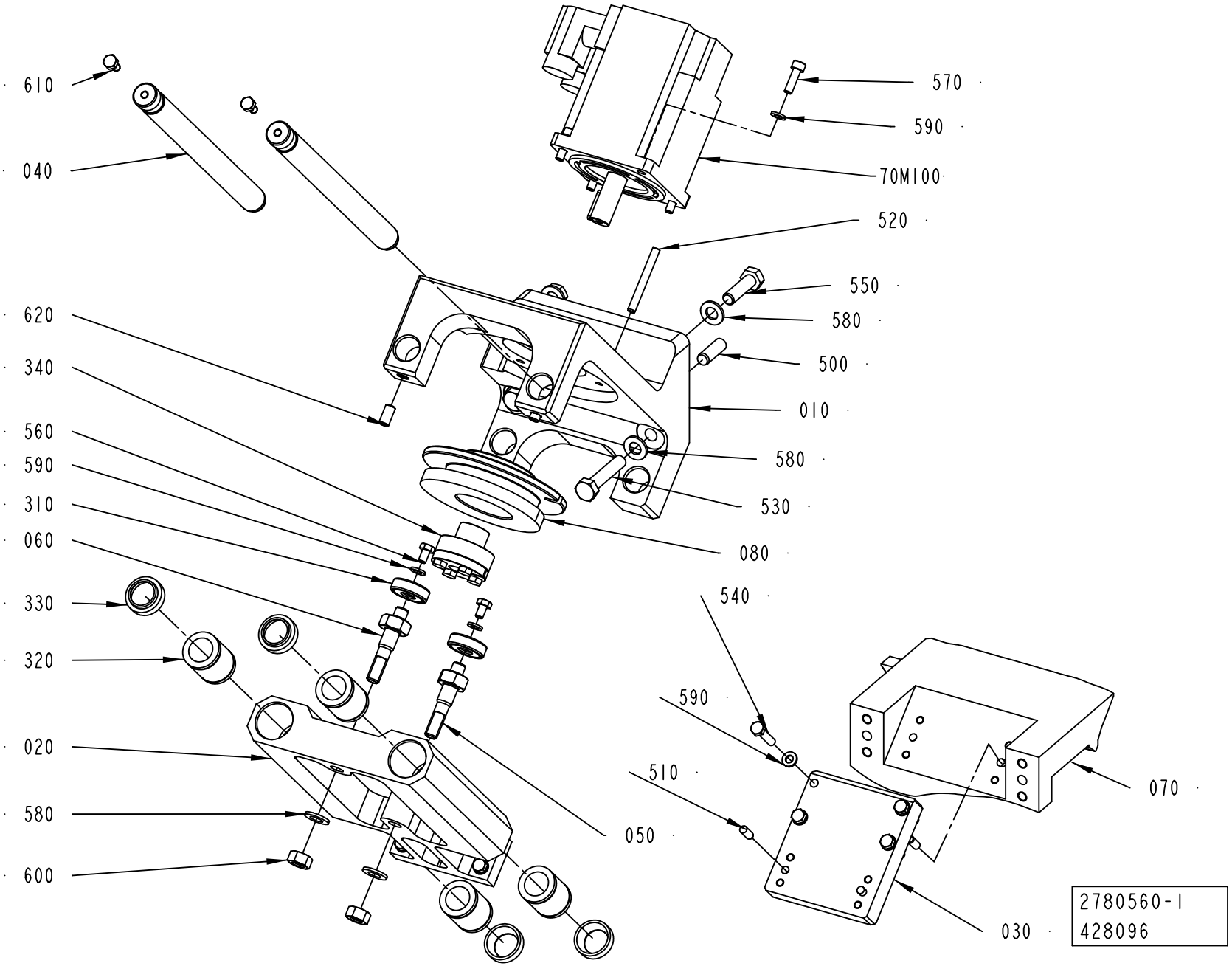
610
040
620
340
560
590
310
060
330
320
020
580
600
570
590
70M100
520
550
580
500
010
580
530
080
540
590
510
050
070
030
2780560-1
428096

Pos	Part No	UN	Qty	Description	Page No
TBA STREAMCAP1000, TBA STREAMCAP200, TPA STREAMCAP330, TBA HELICAP2 23 (See drawing on page: 6-40)					
010	2838722-0000		1	BRACKET	
070	2783479-0000		1	CAM	
510	311103-0351		2	PARALLEL PIN ISO 2338 6M6X16 A1	
540	312105-0374		4	SCREW M6S ISO 4014 M6X30 A480	
590	315106-0153		10	WASHER ISO 7089-6-200 HV A4	
TGA (See drawing on page: 6-36)					
010	2780526-0000		1	BRACKET	
030	2780529-0000		1	BRACKET	
070	2780521-0000		1	CAM	
510	311103-0351		4	PARALLEL PIN ISO 2338 6M6X16 A1	
540	312105-0374		8	SCREW M6S ISO 4014 M6X30 A480	
590	315106-0153		14	WASHER ISO 7089-6-200 HV A4	
TPA STREAMCAP 1000, TPA STREAMCAP 500 (See drawing on page: 6-38)					
010	2859960-0000		1	BRACKET	
070	2783479-0000		1	CAM	
510	311103-0351		2	PARALLEL PIN ISO 2338 6M6X16 A1	
540	312105-0374		4	SCREW M6S ISO 4014 M6X30 A480	
590	315106-0153		10	WASHER ISO 7089-6-200 HV A4	
Common Parts					
020	2780527-0000		1	CARRIAGE	
040	2783477-0000		2	GUIDE SHAFT	
050	2780531-0000		1	AXLE PIN	
060	2780532-0000		1	AXLE PIN	
080	2780533-0000		1	CAM	
310	90214-0123		2	BALL BEARING, 10X30X9 MM	
320	90189-0019		4	BALL BUSHING, 20X30X30 MM	
330	90091-0038		4	SCRAPER 20X30X10 MM	
340	90600-0454		1	CLAMPING ELEMENT WITH SLEEVE, 16X24 MM	
500	311103-0458		2	PARALLEL PIN ISO 2338 10M6X30 A1	
520	311103-0367		1	PARALLEL PIN ISO 2338 6M6X55 A1	
530	312105-0501		2	SCREW M6S ISO 4014 M10X50 A480	
550	312105-0497		2	SCREW M6S ISO 4017 M10X35 A480	
560	312105-0364		2	SCREW M6S ISO 4017 M6X10 A480	
570	312115-0370		4	SCREW ISO4762 M6X20 A4 80	
580	315106-0173		6	WASHER ISO 7089-10-200 HV A4	
600	312605-0320		2	HEXAGON NUT, M6M M10 A280	
610	312105-0366		2	SCREW M6S ISO 4017 M6X12 A480	
620	312318-0449		2	SCREW ISO4029 M8X16 A4	
70M100	90601-5090		1	SERVO MOTOR MPL-B310P-MK72AA SERIES A	

Pos	Part No	UN	Qty	Description	Page No

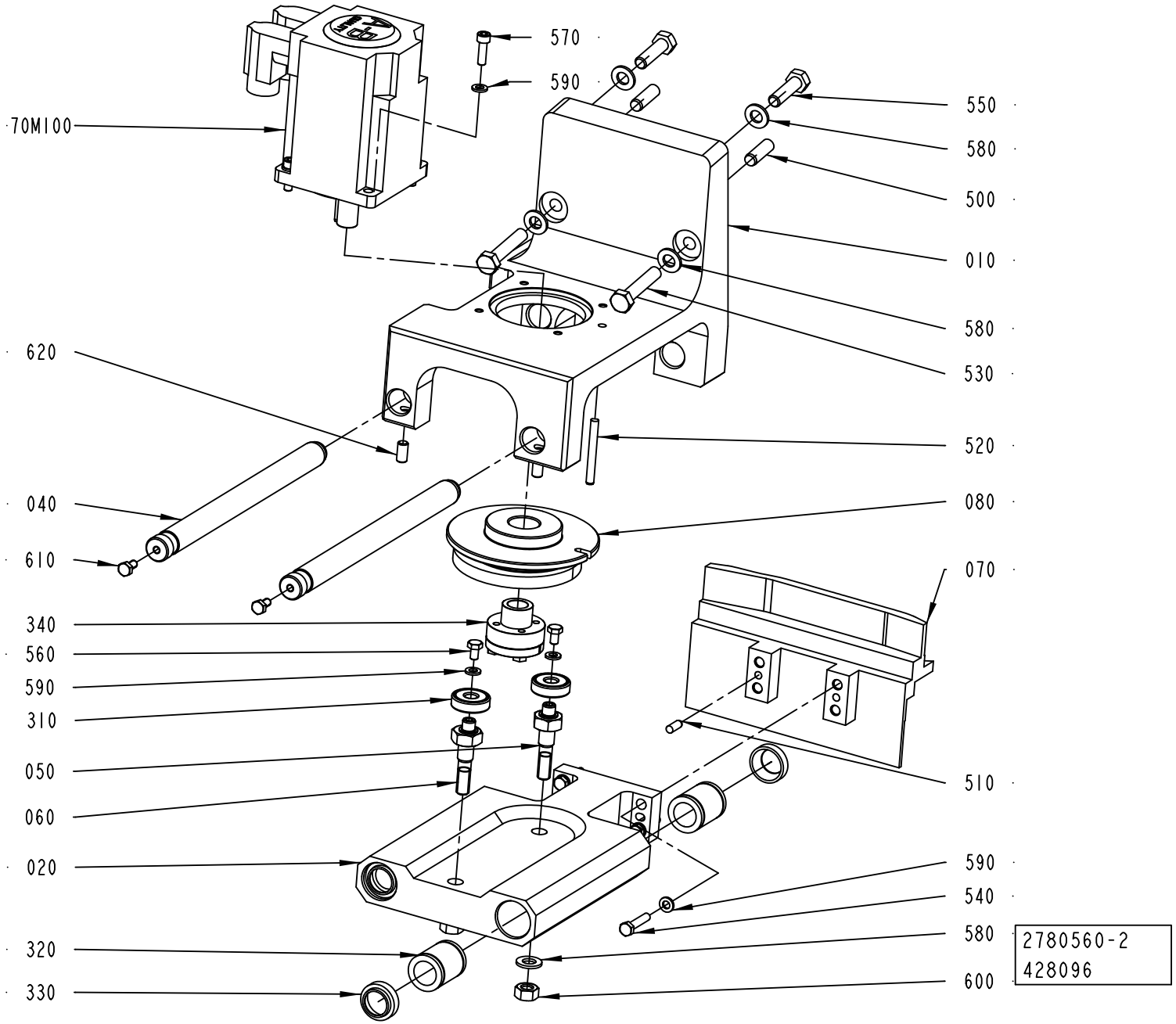
70M100
570
590
550
580
500
010
580
530
620
520
040
080
610
070
340
560
590
310
050
510
060
020
590
540
580
320
330
600
2780560-2
428096

Pos	Part No	UN	Qty	Description	Page No
TBA STREAMCAP1000, TBA STREAMCAP200, TPA STREAMCAP330, TBA HELICAP2 23 (See drawing on page: 6-40)					
010	2838722-0000		1	BRACKET	
070	2783479-0000		1	CAM	
510	311103-0351		2	PARALLEL PIN ISO 2338 6M6X16 A1	
540	312105-0374		4	SCREW M6S ISO 4014 M6X30 A480	
590	315106-0153		10	WASHER ISO 7089-6-200 HV A4	
TGA (See drawing on page: 6-36)					
010	2780526-0000		1	BRACKET	
030	2780529-0000		1	BRACKET	
070	2780521-0000		1	CAM	
510	311103-0351		4	PARALLEL PIN ISO 2338 6M6X16 A1	
540	312105-0374		8	SCREW M6S ISO 4014 M6X30 A480	
590	315106-0153		14	WASHER ISO 7089-6-200 HV A4	
TPA STREAMCAP 1000, TPA STREAMCAP 500 (See drawing on page: 6-38)					
010	2859960-0000		1	BRACKET	
070	2783479-0000		1	CAM	
510	311103-0351		2	PARALLEL PIN ISO 2338 6M6X16 A1	
540	312105-0374		4	SCREW M6S ISO 4014 M6X30 A480	
590	315106-0153		10	WASHER ISO 7089-6-200 HV A4	
Common Parts					
020	2780527-0000		1	CARRIAGE	
040	2783477-0000		2	GUIDE SHAFT	
050	2780531-0000		1	AXLE PIN	
060	2780532-0000		1	AXLE PIN	
080	2780533-0000		1	CAM	
310	90214-0123		2	BALL BEARING, 10X30X9 MM	
320	90189-0019		4	BALL BUSHING, 20X30X30 MM	
330	90091-0038		4	SCRAPER 20X30X10 MM	
340	90600-0454		1	CLAMPING ELEMENT WITH SLEEVE, 16X24 MM	
500	311103-0458		2	PARALLEL PIN ISO 2338 10M6X30 A1	
520	311103-0367		1	PARALLEL PIN ISO 2338 6M6X55 A1	
530	312105-0501		2	SCREW M6S ISO 4014 M10X50 A480	
550	312105-0497		2	SCREW M6S ISO 4017 M10X35 A480	
560	312105-0364		2	SCREW M6S ISO 4017 M6X10 A480	
570	312115-0370		4	SCREW ISO4762 M6X20 A4 80	
580	315106-0173		6	WASHER ISO 7089-10-200 HV A4	
600	312605-0320		2	HEXAGON NUT, M6M M10 A280	
610	312105-0366		2	SCREW M6S ISO 4017 M6X12 A480	
620	312318-0449		2	SCREW ISO4029 M8X16 A4	
70M100	90601-5090		1	SERVO MOTOR MPL-B310P-MK72AA SERIES A	

Pos	Part No	UN	Qty	Description	Page No

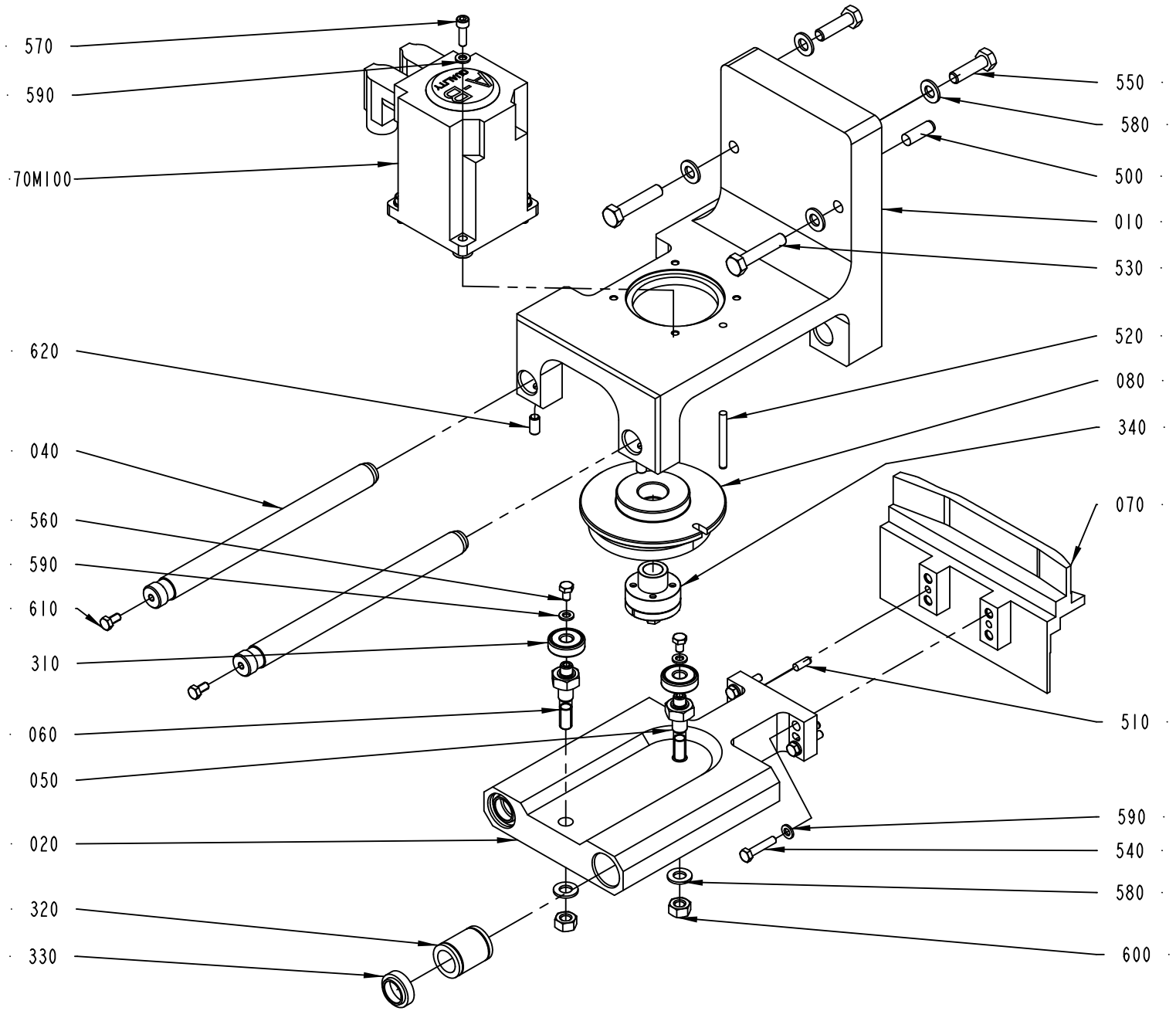
570
590
70M100
620
040
560
590
610
310
060
050
020
320
330
550
580
500
010
530
520
080
340
070
510
590
540
580
600
2780560-3
428096

Pos	Part No	UN	Qty	Description	Page No
TBA STREAMCAP1000, TBA STREAMCAP200, TPA STREAMCAP330, TBA HELICAP2 23 (See drawing on page: 6-40)					
010	2838722-0000		1	BRACKET	
070	2783479-0000		1	CAM	
510	311103-0351		2	PARALLEL PIN ISO 2338 6M6X16 A1	
540	312105-0374		4	SCREW M6S ISO 4014 M6X30 A480	
590	315106-0153		10	WASHER ISO 7089-6-200 HV A4	
TGA (See drawing on page: 6-36)					
010	2780526-0000		1	BRACKET	
030	2780529-0000		1	BRACKET	
070	2780521-0000		1	CAM	
510	311103-0351		4	PARALLEL PIN ISO 2338 6M6X16 A1	
540	312105-0374		8	SCREW M6S ISO 4014 M6X30 A480	
590	315106-0153		14	WASHER ISO 7089-6-200 HV A4	
TPA STREAMCAP 1000, TPA STREAMCAP 500 (See drawing on page: 6-38)					
010	2859960-0000		1	BRACKET	
070	2783479-0000		1	CAM	
510	311103-0351		2	PARALLEL PIN ISO 2338 6M6X16 A1	
540	312105-0374		4	SCREW M6S ISO 4014 M6X30 A480	
590	315106-0153		10	WASHER ISO 7089-6-200 HV A4	
Common Parts					
020	2780527-0000		1	CARRIAGE	
040	2783477-0000		2	GUIDE SHAFT	
050	2780531-0000		1	AXLE PIN	
060	2780532-0000		1	AXLE PIN	
080	2780533-0000		1	CAM	
310	90214-0123		2	BALL BEARING, 10X30X9 MM	
320	90189-0019		4	BALL BUSHING, 20X30X30 MM	
330	90091-0038		4	SCRAPER 20X30X10 MM	
340	90600-0454		1	CLAMPING ELEMENT WITH SLEEVE, 16X24 MM	
500	311103-0458		2	PARALLEL PIN ISO 2338 10M6X30 A1	
520	311103-0367		1	PARALLEL PIN ISO 2338 6M6X55 A1	
530	312105-0501		2	SCREW M6S ISO 4014 M10X50 A480	
550	312105-0497		2	SCREW M6S ISO 4017 M10X35 A480	
560	312105-0364		2	SCREW M6S ISO 4017 M6X10 A480	
570	312115-0370		4	SCREW ISO4762 M6X20 A4 80	
580	315106-0173		6	WASHER ISO 7089-10-200 HV A4	
600	312605-0320		2	HEXAGON NUT, M6M M10 A280	
610	312105-0366		2	SCREW M6S ISO 4017 M6X12 A480	
620	312318-0449		2	SCREW ISO4029 M8X16 A4	
70M100	90601-5090		1	SERVO MOTOR MPL-B310P-MK72AA SERIES A	

Pos	Part No	UN	Qty	Description	Page No

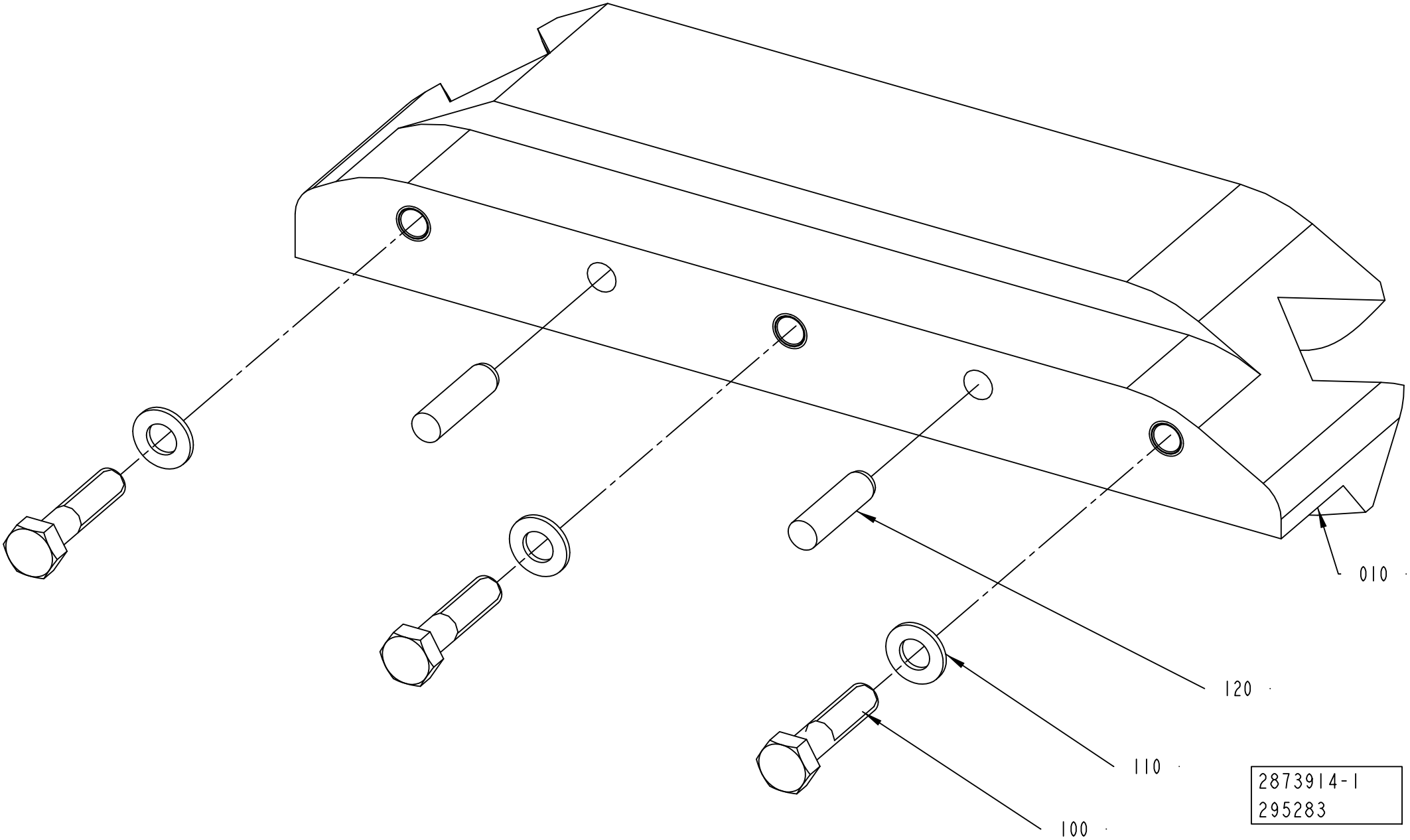
010
120
110
100
2873914-1
295283

Pos	Part No	UN	Qty	Description	Page No
TGA (See drawing on page: 6-44)					
010	2746982-0000		1	CAM	
TPA STREAMCAP 1000, TPA STREAMCAP 500 (See drawing on page: 6-42)					
010	2746950-0000		1	CAM	
Common Parts					
100	312105-0457		3	SCREW M6S ISO 4014 M8X35 A480	
110	315106-0165		3	WASHER ISO 7089-8-200 HV A4	
120	311103-0405		2	PARALLEL PIN ISO 2338 8M6X30 A1	

Pos	Part No	UN	Qty	Description	Page No

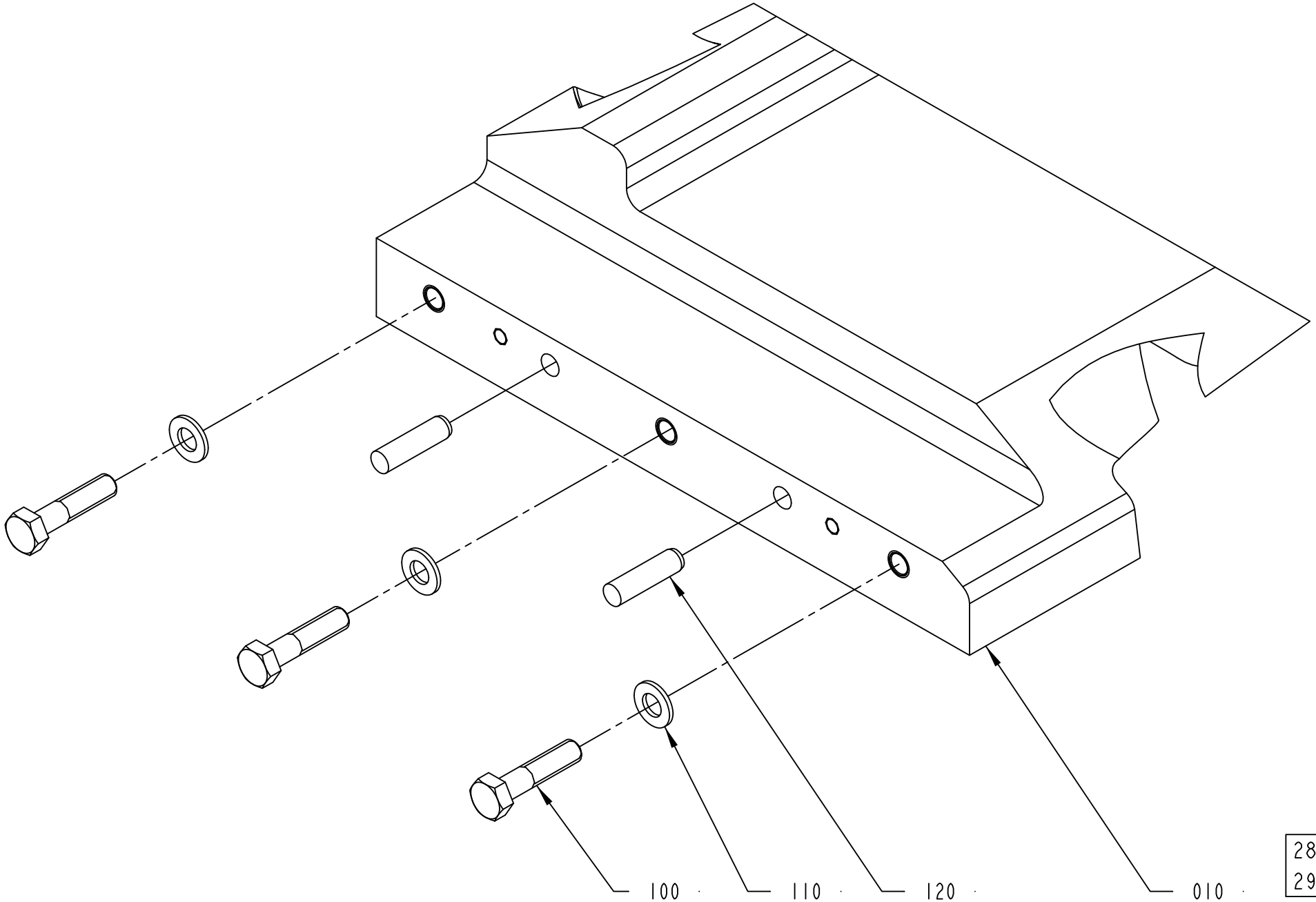
100
110
120
010
2873914-2
295283

ECM: 479894 - 20110401
Group number: 2873914-0100
Assembly Drawing: 2873914-2_1_AA

This list covers pages from 6-42 to 6-45

Pos	Part No	UN	Qty	Description	Page No
TGA (See drawing on page: 6-44)					
010	2746982-0000		1	CAM	
TPA STREAMCAP 1000, TPA STREAMCAP 500 (See drawing on page: 6-42)					
010	2746950-0000		1	CAM	
Common Parts					
100	312105-0457		3	SCREW M6S ISO 4014 M8X35 A480	
110	315106-0165		3	WASHER ISO 7089-8-200 HV A4	
120	311103-0405		2	PARALLEL PIN ISO 2338 8M6X30 A1	

Pos	Part No	UN	Qty	Description	Page No

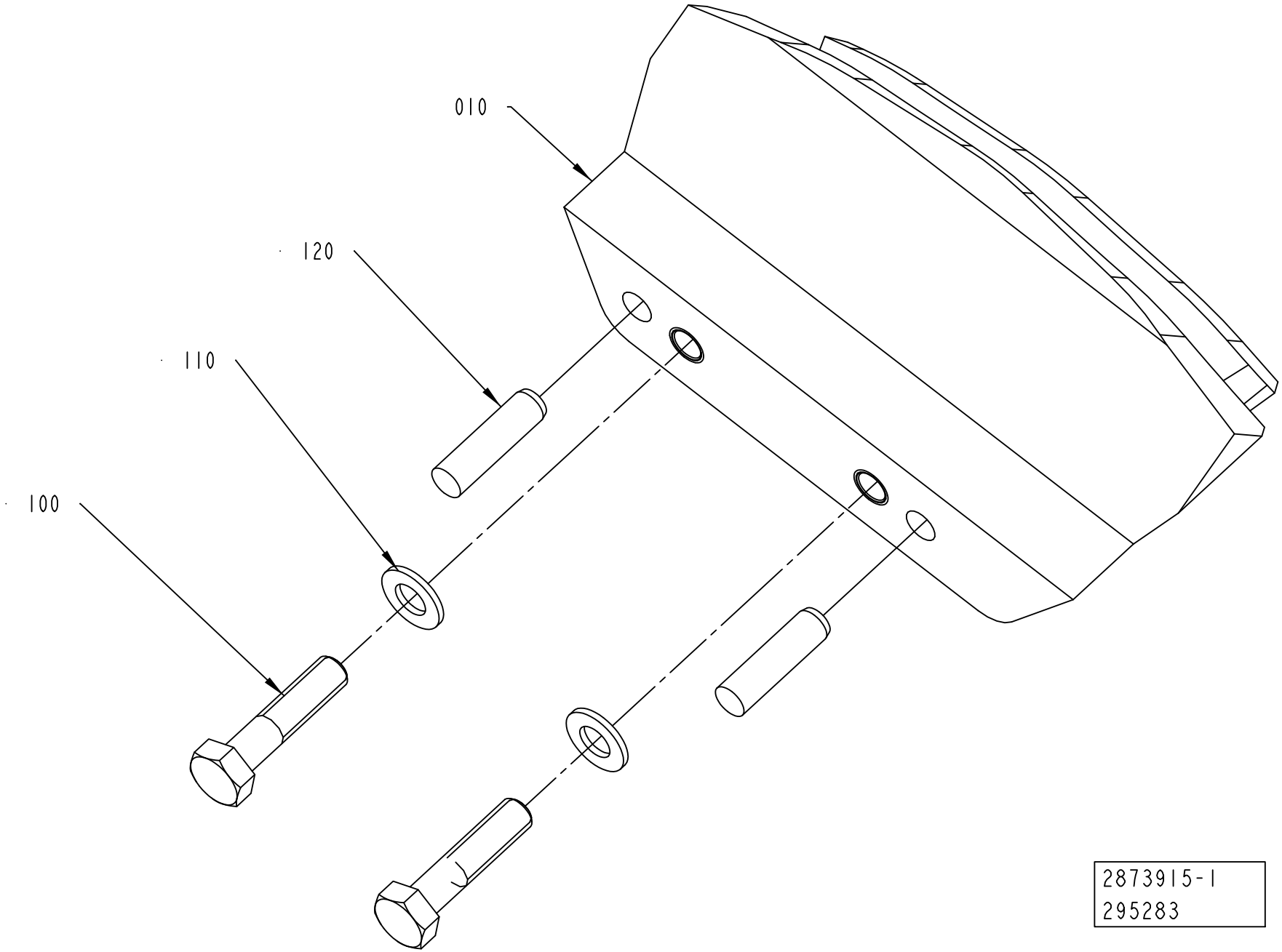
010
120
110
100
2873915-1
295283

ECM: 298782 - 20070323
Group number: 2873915-0100
Assembly Drawing: 2873915-1_1_AA

This list covers pages from 6-46 to 6-49

Pos	Part No	UN	Qty	Description	Page No
TGA (See drawing on page: 6-48)					
010	2746985-0000		1	CAM	
TPA STREAMCAP 1000, TPA STREAMCAP 500 (See drawing on page: 6-46)					
010	2746951-0000		1	CAM	
Common Parts					
100	312105-0457		2	SCREW M6S ISO 4014 M8X35 A480	
110	315106-0165		2	WASHER ISO 7089-8-200 HV A4	
120	311103-0405		2	PARALLEL PIN ISO 2338 8M6X30 A1	

Pos	Part No	UN	Qty	Description	Page No

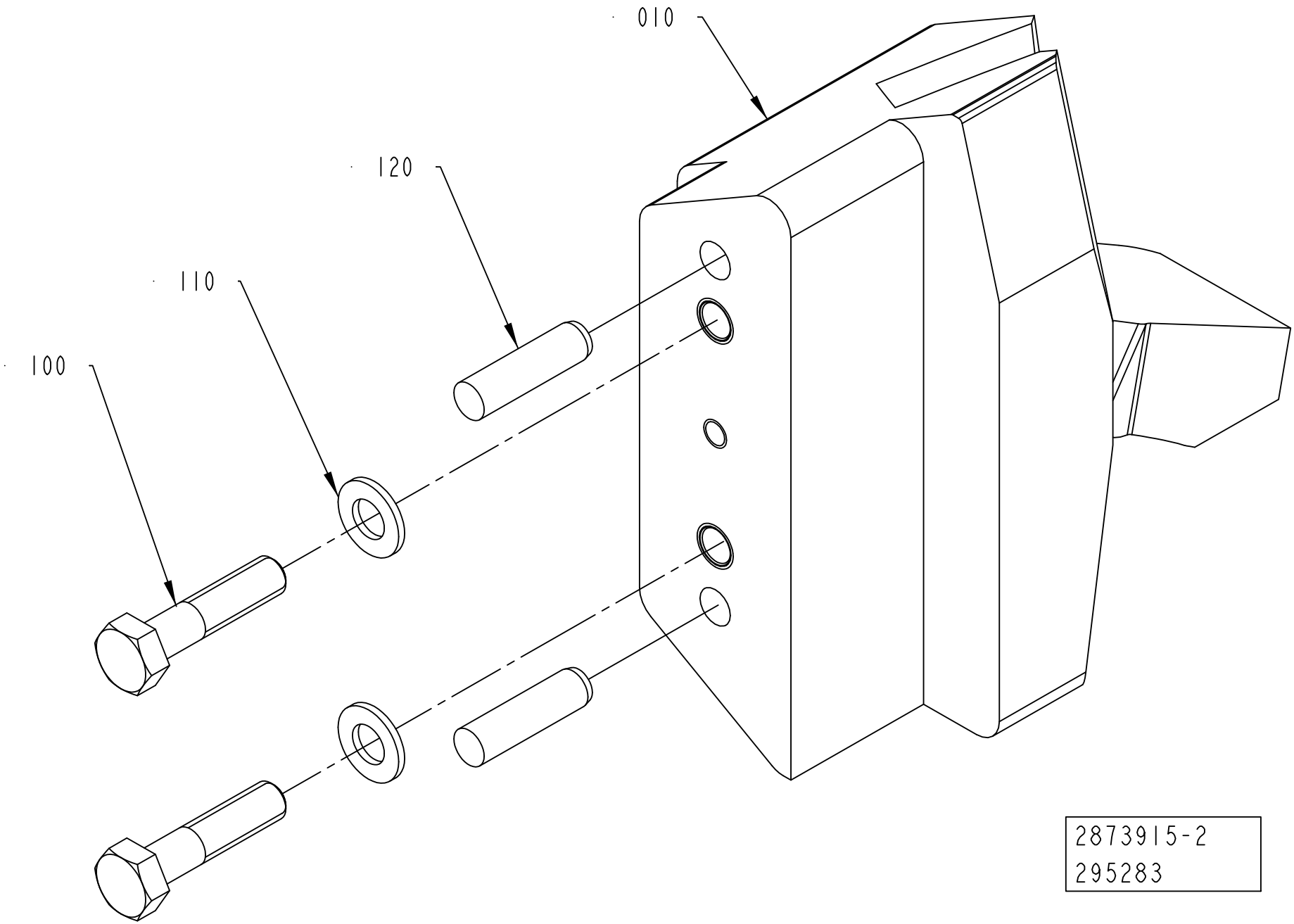
010
120
110
100
2873915-2
295283

Pos	Part No	UN	Qty	Description	Page No
TGA (See drawing on page: 6-48)					
010	2746985-0000		1	CAM	
TPA STREAMCAP 1000, TPA STREAMCAP 500 (See drawing on page: 6-46)					
010	2746951-0000		1	CAM	
Common Parts					
100	312105-0457		2	SCREW M6S ISO 4014 M8X35 A480	
110	315106-0165		2	WASHER ISO 7089-8-200 HV A4	
120	311103-0405		2	PARALLEL PIN ISO 2338 8M6X30 A1	

Pos	Part No	UN	Qty	Description	Page No

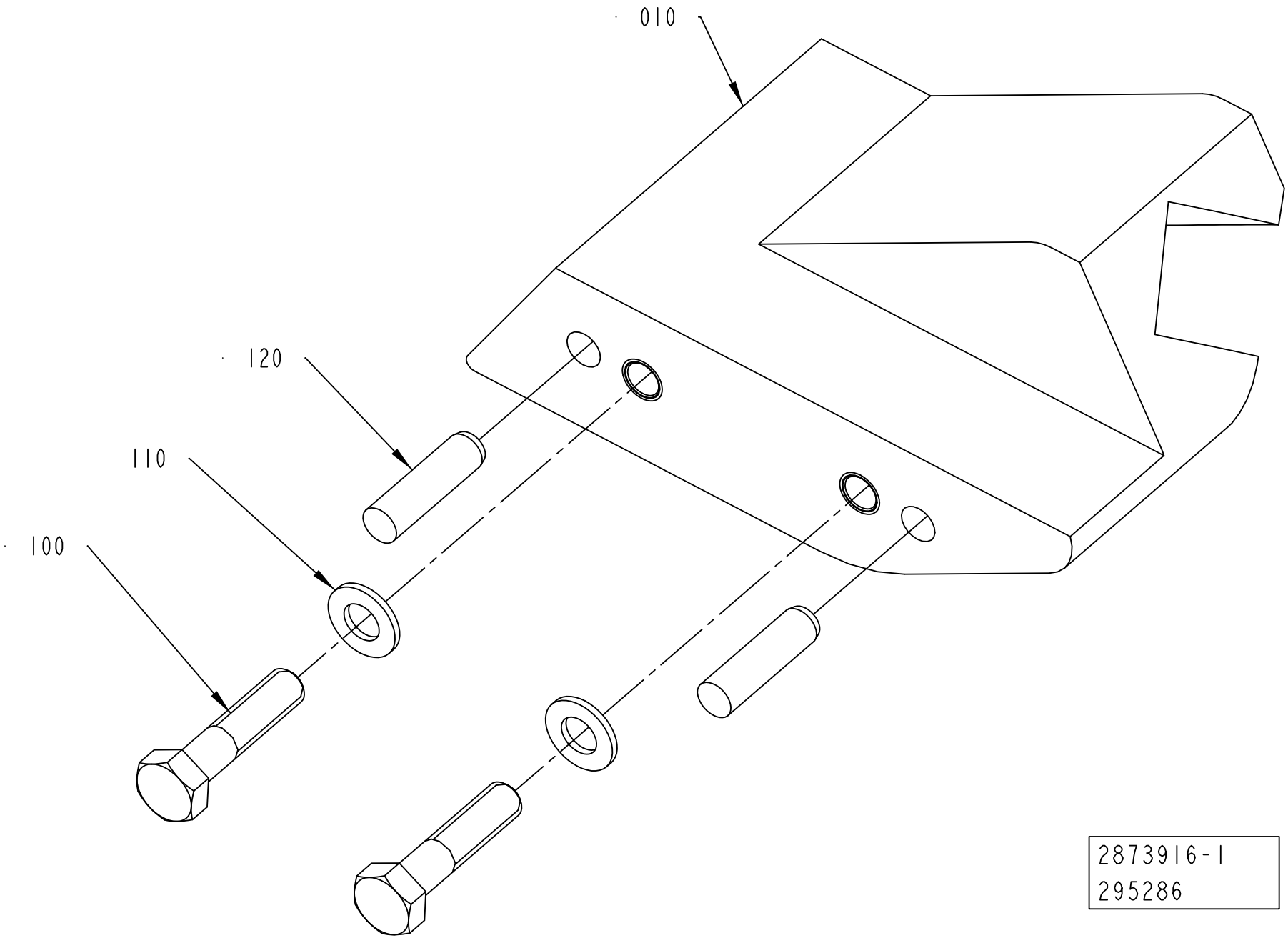
010
120
110
100
2873916-1
295286

ECM: 479895 - 20110401
Group number: 2873916-0100
Assembly Drawing: 2873916-1_1_AA

This list covers pages from 6-50 to 6-53

Pos	Part No	UN	Qty	Description	Page No
TGA (See drawing on page: 6-52)					
010	2746987-0000		1	CAM	
TPA STREAMCAP 1000, TPA STREAMCAP 500 (See drawing on page: 6-50)					
010	2746953-0000		1	CAM	
Common Parts					
100	312105-0457		2	SCREW M6S ISO 4014 M8X35 A480	
110	315106-0165		2	WASHER ISO 7089-8-200 HV A4	
120	311103-0405		2	PARALLEL PIN ISO 2338 8M6X30 A1	

Pos	Part No	UN	Qty	Description	Page No

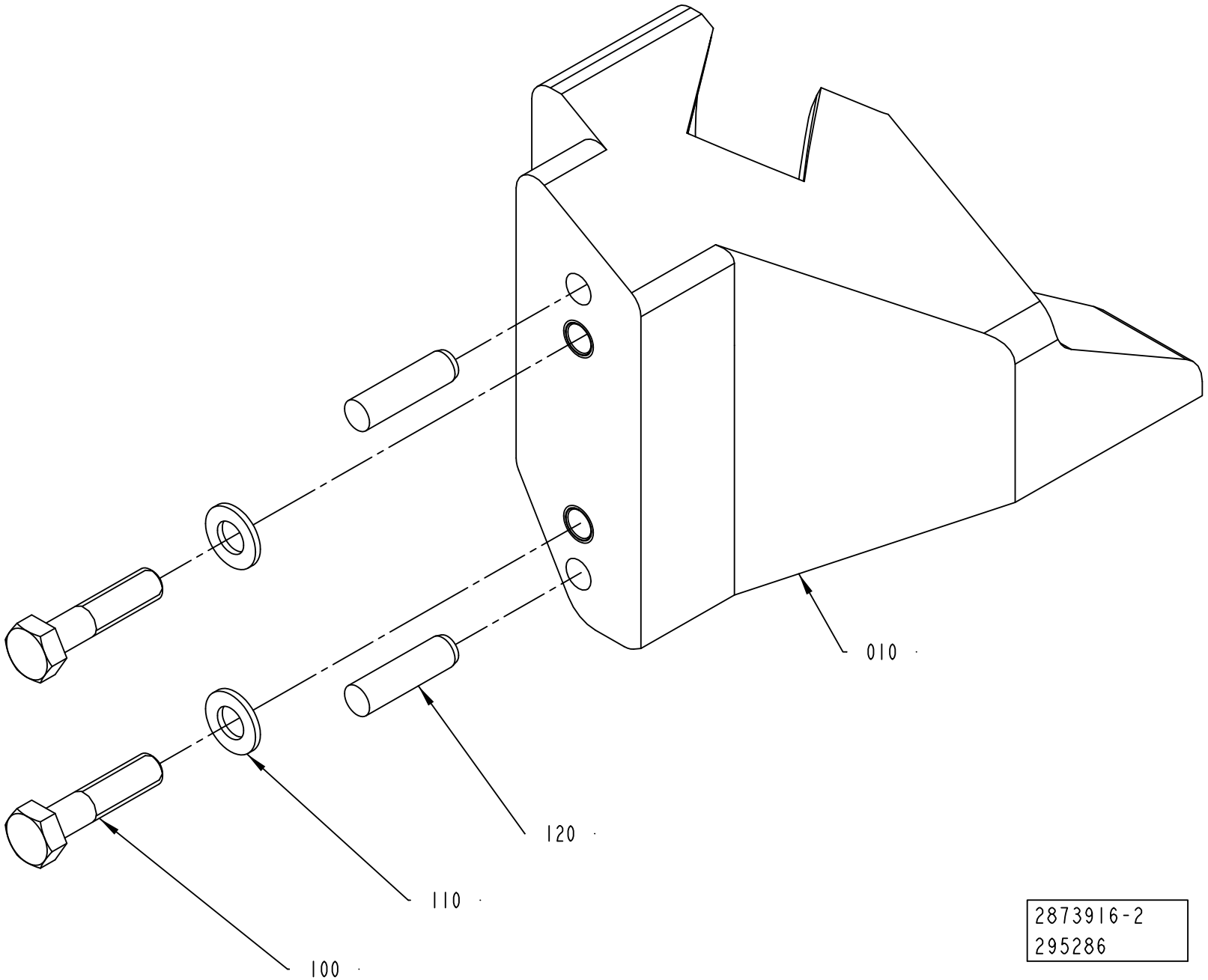
010
120
110
100
2873916-2
295286

ECM: 479895 - 20110401
Group number: 2873916-0100
Assembly Drawing: 2873916-2_1_AA

This list covers pages from 6-50 to 6-53

Pos	Part No	UN	Qty	Description	Page No
TGA (See drawing on page: 6-52)					
010	2746987-0000		1	CAM	
TPA STREAMCAP 1000, TPA STREAMCAP 500 (See drawing on page: 6-50)					
010	2746953-0000		1	CAM	
Common Parts					
100	312105-0457		2	SCREW M6S ISO 4014 M8X35 A480	
110	315106-0165		2	WASHER ISO 7089-8-200 HV A4	
120	311103-0405		2	PARALLEL PIN ISO 2338 8M6X30 A1	

Pos	Part No	UN	Qty	Description	Page No

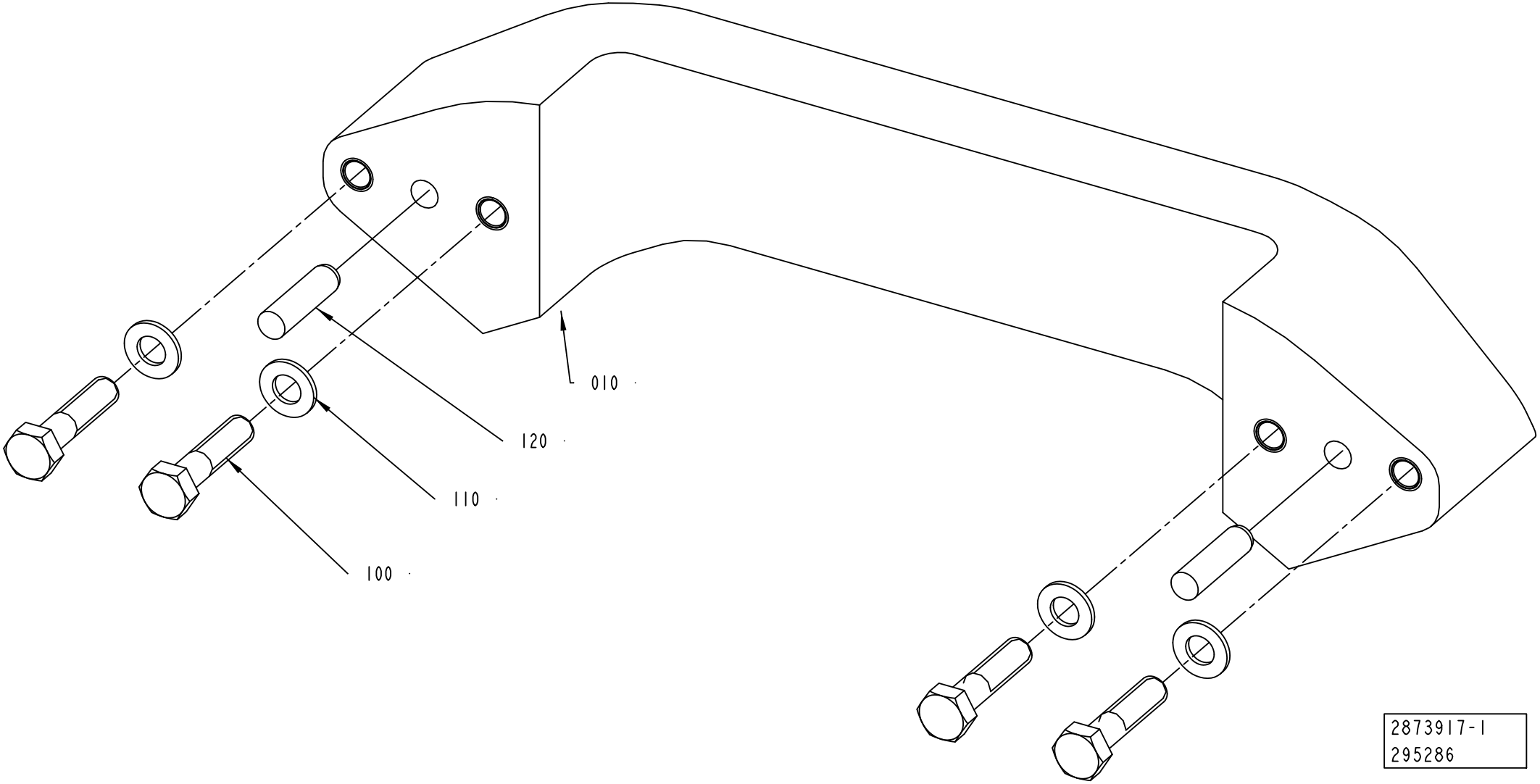
010
120
110
100
2873917-1
295286

ECM: 298771 - 20070323
Group number: 2873917-0100
Assembly Drawing: 2873917-1_1_AA

Pos	Part No	UN	Qty	Description	Page No
-					
010	2746952-0000		1	CAM	
100	312105-0457		4	SCREW M6S ISO 4014 M8X35 A480	
110	315106-0165		4	WASHER ISO 7089-8-200 HV A4	
120	311103-0405		2	PARALLEL PIN ISO 2338 8M6X30 A1	

Pos	Part No	UN	Qty	Description	Page No

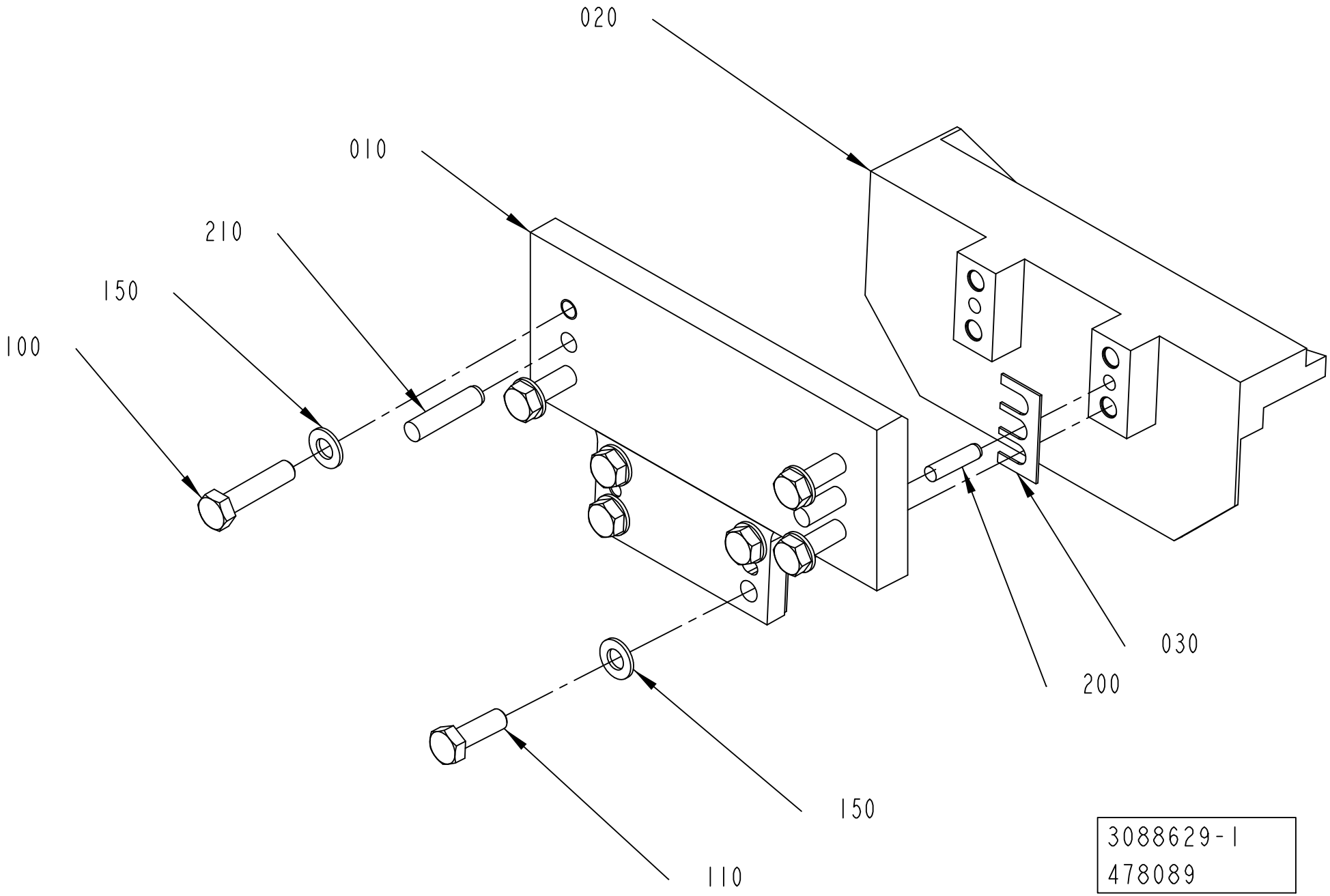
020
010
210
150
100
030
200
150
110
3088629-1
478089

ECM: 479896 - 20110401
Group number: 3088629-0100
Assembly Drawing: 3088629-1_1_AA

Pos	Part No	UN	Qty	Description	Page No
-					
010	3088841-0000		1	BRACKET	
020	3088630-0000		1	CAM	
030	3132972-0000		4	SHIM	
100	312109-0457		4	SCREW M6S ISO 4017 M8X35 A480	
110	312105-0453		4	SCREW M6S ISO 4017 M8X25 A480	
150	315105-0165		8	WASHER BRB 8,4X16 RFR	
200	311103-1355		2	PARALLEL PIN ISO 2338 6M6X24 A1	
210	311103-0407		2	PARALLEL PIN ISO 2338 8M6X35 A1	

Pos	Part No	UN	Qty	Description	Page No

MOUNTING PLATE

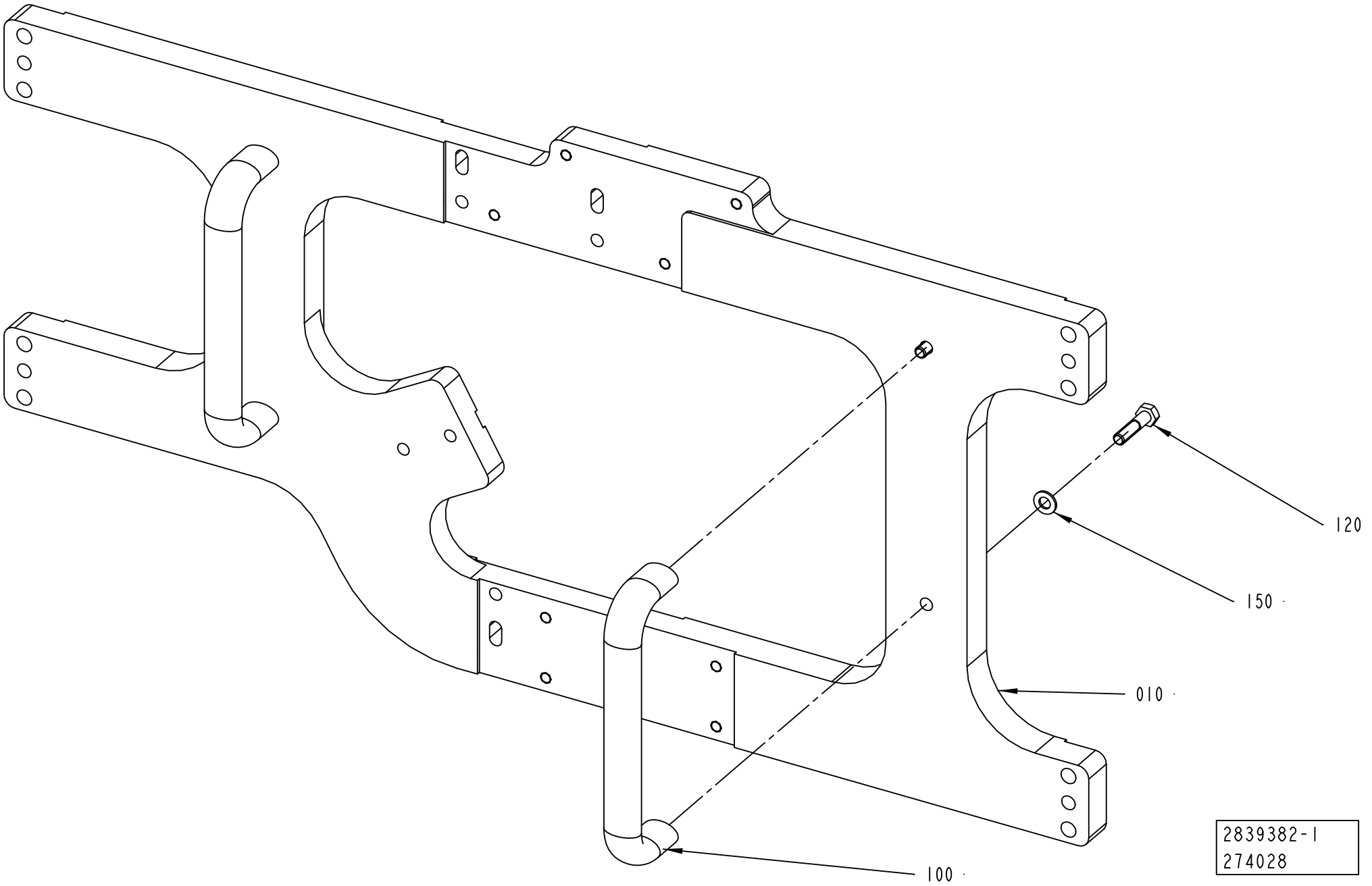

Pos	Part No	UN	Qty	Description	Page No
TBA STREAMCAP 1000 NO POSITIONING DEVICE, TBA SLIMCAP 1000 NO POSITIONING DEVICE, TBA SLIMCAP 2000 NO POSITIONING DEVICE, TBA STREAMCAP 200 NO POSDEVICE (See drawing on page: 6-58)					
010	2780379-0000		1	PLATE	
TPA, TGA, TBA STREAMCAP 1000 POSITIONING DEVICE, TBA STREAMCAP 200 POSDEVICE, TBA HELICAP2 23 (See drawing on page: 6-60)					
010	2780523-0000		1	PLATE	
130	312125-0287		2	SCREW ISO 1207 M4X8 A4	
160	352113-0203		2	ANCHOR PLATES FOR STRIPS, TM3S8-M0	
170	352113-0104		2	CABLE TIE, BLACK 300X4,8 MM	
Common Parts					
100	90459-3779		2	HANDLE, GN565 SW 192-M8	
120	312105-0457		4	SCREW M6S ISO 4014 M8X35 A480	
150	315105-0165		4	WASHER BRB 8,4X16 RFR	

Pos	Part No	UN	Qty	Description	Page No

MOUNTING PLATE

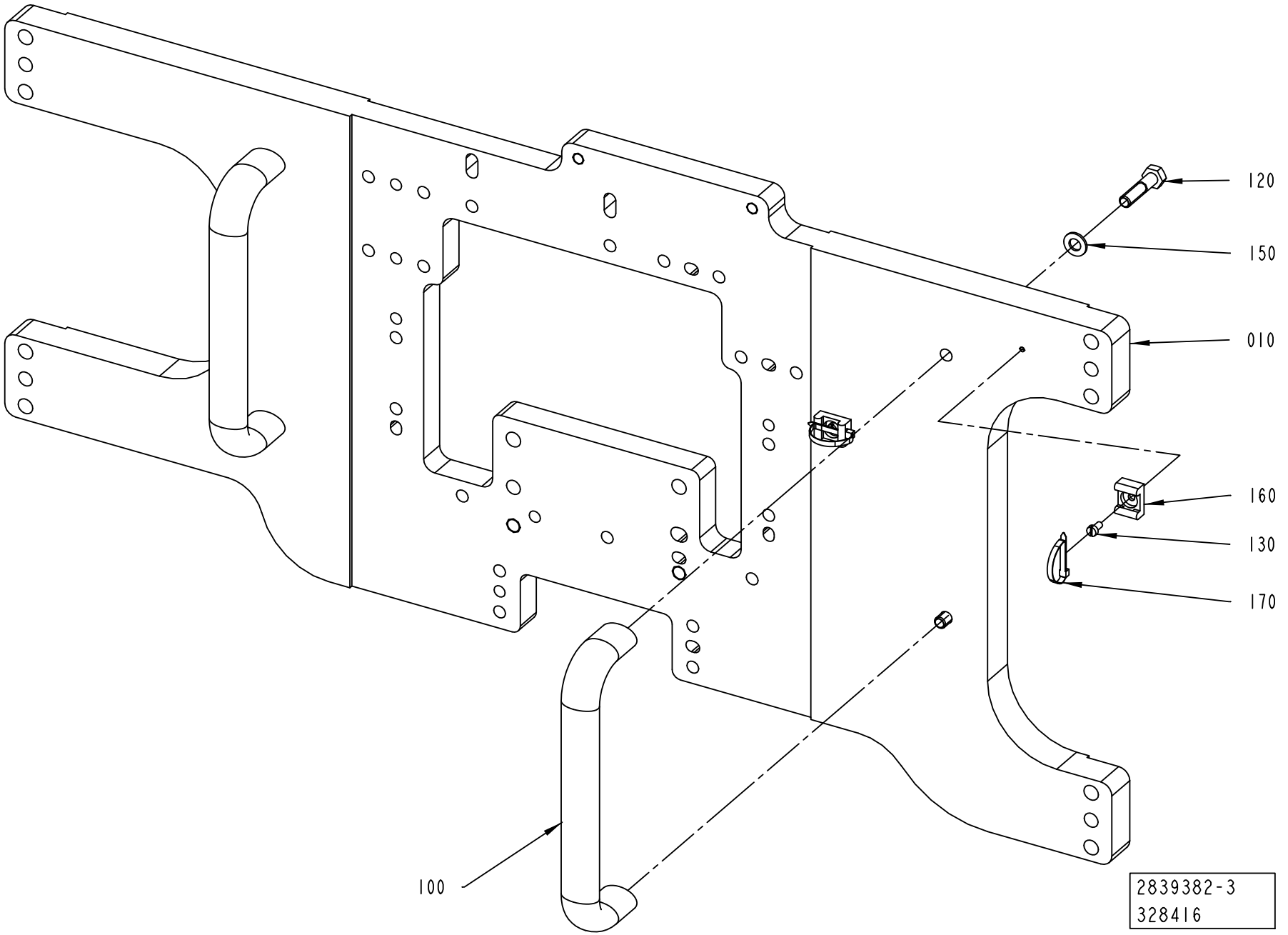

Pos	Part No	UN	Qty	Description	Page No
TBA STREAMCAP 1000 NO POSITIONING DEVICE, TBA SLIMCAP 1000 NO POSITIONING DEVICE, TBA SLIMCAP 2000 NO POSITIONING DEVICE, TBA STREAMCAP 200 NO POSDEVICE (See drawing on page: 6-58)					
010	2780379-0000		1	PLATE	
TPA, TGA, TBA STREAMCAP 1000 POSITIONING DEVICE, TBA STREAMCAP 200 POSDEVICE, TBA HELICAP2 23 (See drawing on page: 6-60)					
010	2780523-0000		1	PLATE	
130	312125-0287		2	SCREW ISO 1207 M4X8 A4	
160	352113-0203		2	ANCHOR PLATES FOR STRIPS, TM3S8-M0	
170	352113-0104		2	CABLE TIE, BLACK 300X4,8 MM	
Common Parts					
100	90459-3779		2	HANDLE, GN565 SW 192-M8	
120	312105-0457		4	SCREW M6S ISO 4014 M8X35 A480	
150	315105-0165		4	WASHER BRB 8,4X16 RFR	

Pos	Part No	UN	Qty	Description	Page No

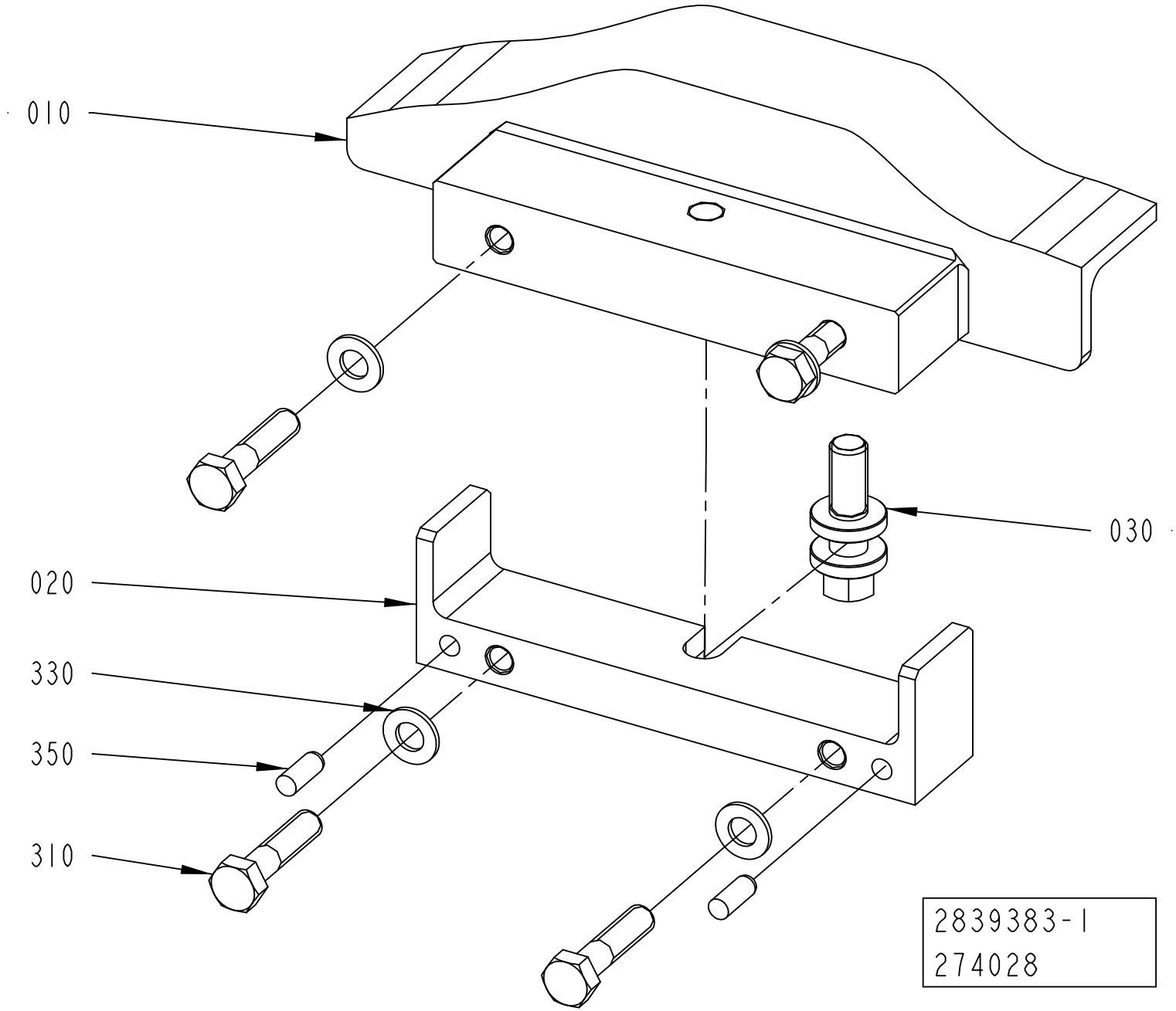
010
020
030
330
350
310
2839383-1
274028

ECM: 274028 - 20060921
Group number: 2839383-0100
Assembly Drawing: 2839383-1_1_AA

Pos	Part No	UN	Qty	Description	Page No
-					
010	2839392-0000		1	CAM	
020	2838277-0000		1	BRACKET	
030	2703842-0000		1	ADJUSTING SCREW	
310	312105-0457		4	SCREW M6S ISO 4014 M8X35 A480	
330	315105-0165		4	WASHER BRB 8,4X16 RFR	
350	311103-0351		2	PARALLEL PIN ISO 2338 6M6X16 A1	

Pos	Part No	UN	Qty	Description	Page No

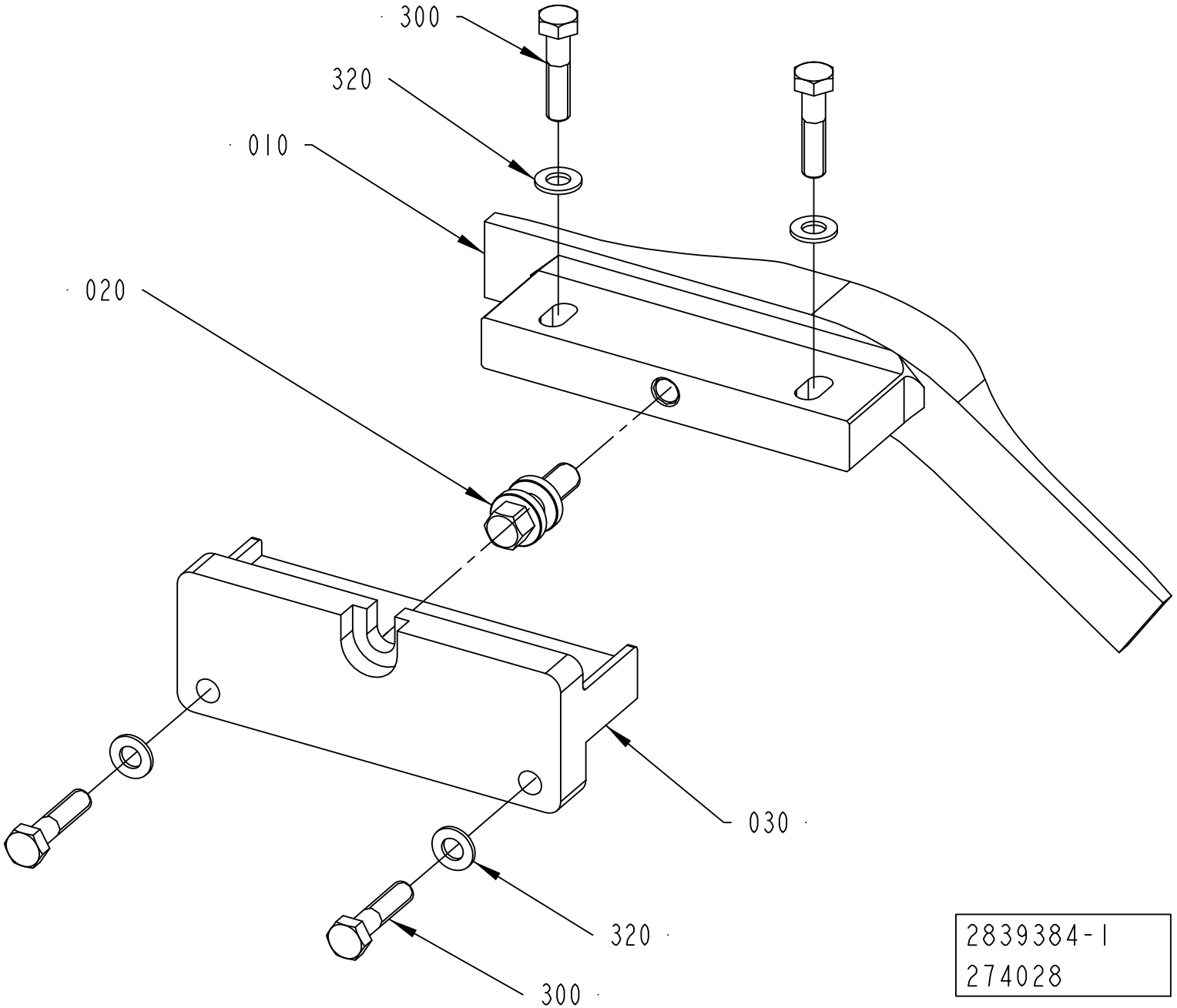
300
320
010
020
030
320
300
2839384-1
274028

ECM: 479893 - 20110401
Group number: 2839384-0100
Assembly Drawing: 2839384-1_1_AA

Pos	Part No	UN	Qty	Description	Page No
STREAMCAP500, STREAMCAP1000, SLIMCAP 2000, SLIMCAP 1000, STREAMCAP200, STREAMCAP330, HELICAP2 23					
010	2839412-0000		1	CAM	
030	2838156-0000		1	BRACKET	
Common Parts					
020	2703842-0000		1	ADJUSTING SCREW	
300	312105-0457		4	SCREW M6S ISO 4014 M8X35 A480	
320	315105-0165		4	WASHER BRB 8,4X16 RFR	

Pos	Part No	UN	Qty	Description	Page No

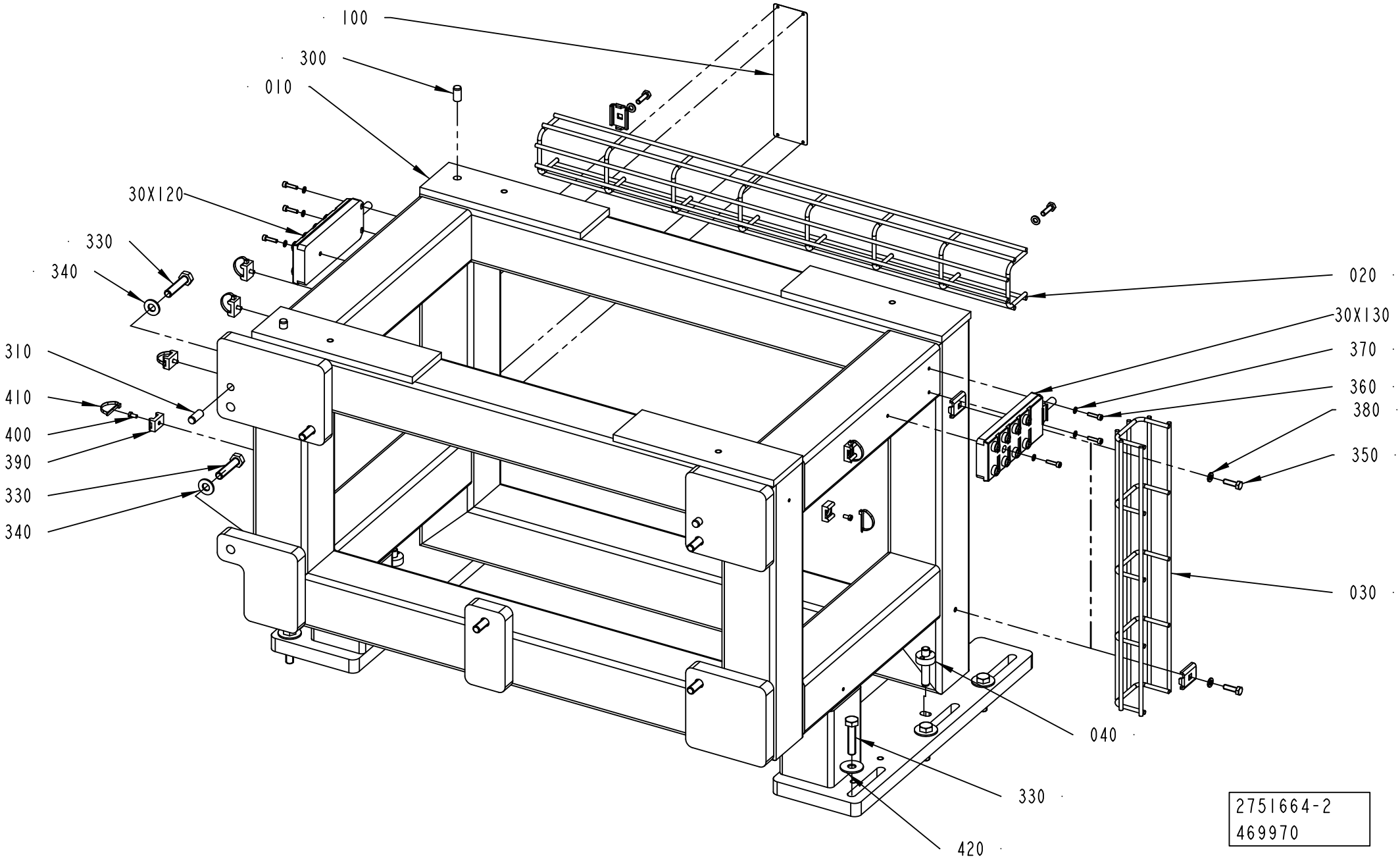
100
300
010
30X120
330
340
310
410
400
390
330
340
020
30X130
370
360
380
350
030
040
330
420
2751664-2
469970

ECM: 470144 - 20101109
Group number: 2751664-0200
Assembly Drawing: 2751664-2_1_AB

Pos	Part No	UN	Qty	Description	Page No
-					
010	3039024-0000		1	FRAME	
020	2838731-0000		1	CABLE	
030	2838732-0000		1	CABLE	
040	2944175-0000		2	PIN	
100	580923-0000		1	MACHINE SIGN CE	
220	90181-0183		4	CABLE DUCT, FITTING, B2	
300	311103-0454		2	PARALLEL PIN ISO 2338 10M6X20 A1	
30X120	90459-0839		1	DISTRIBUTION FRAME, ASBV 8 5-135/10M	
30X130	90459-0839		1	DISTRIBUTION FRAME, ASBV 8 5-135/10M	
310	311103-1456		2	PARALLEL PIN ISO 2338 10M6X24 A1	
330	312109-0500		12	SCREW M6S ISO 4017 M10X45 A480	
340	315105-0173		6	WASHER BRB 10,5X22 RFR	
350	312105-0370		4	SCREW M6S ISO 4017 M6X20 A480	
360	312115-0293		6	SCREW ISO4762 M4X16 A4 80	
370	315105-0136		6	WASHER BRB 4,3X8 RFR	
380	315105-0153		4	WASHER BRB 6,4X12 RFR	
390	352113-0203		6	ANCHOR PLATES FOR STRIPS, TM3S8-M0	
400	312125-0287		6	SCREW ISO 1207 M4X8 A4	
410	352113-0104		6	CABLE TIE, BLACK 300X4,8 MM	
420	90005-0140		6	WASHER PLAIN ROUND 10,5(M10)/30, H=2	

Pos	Part No	UN	Qty	Description	Page No

Machine Type | Group Description | Used-In | Group Number | Page No

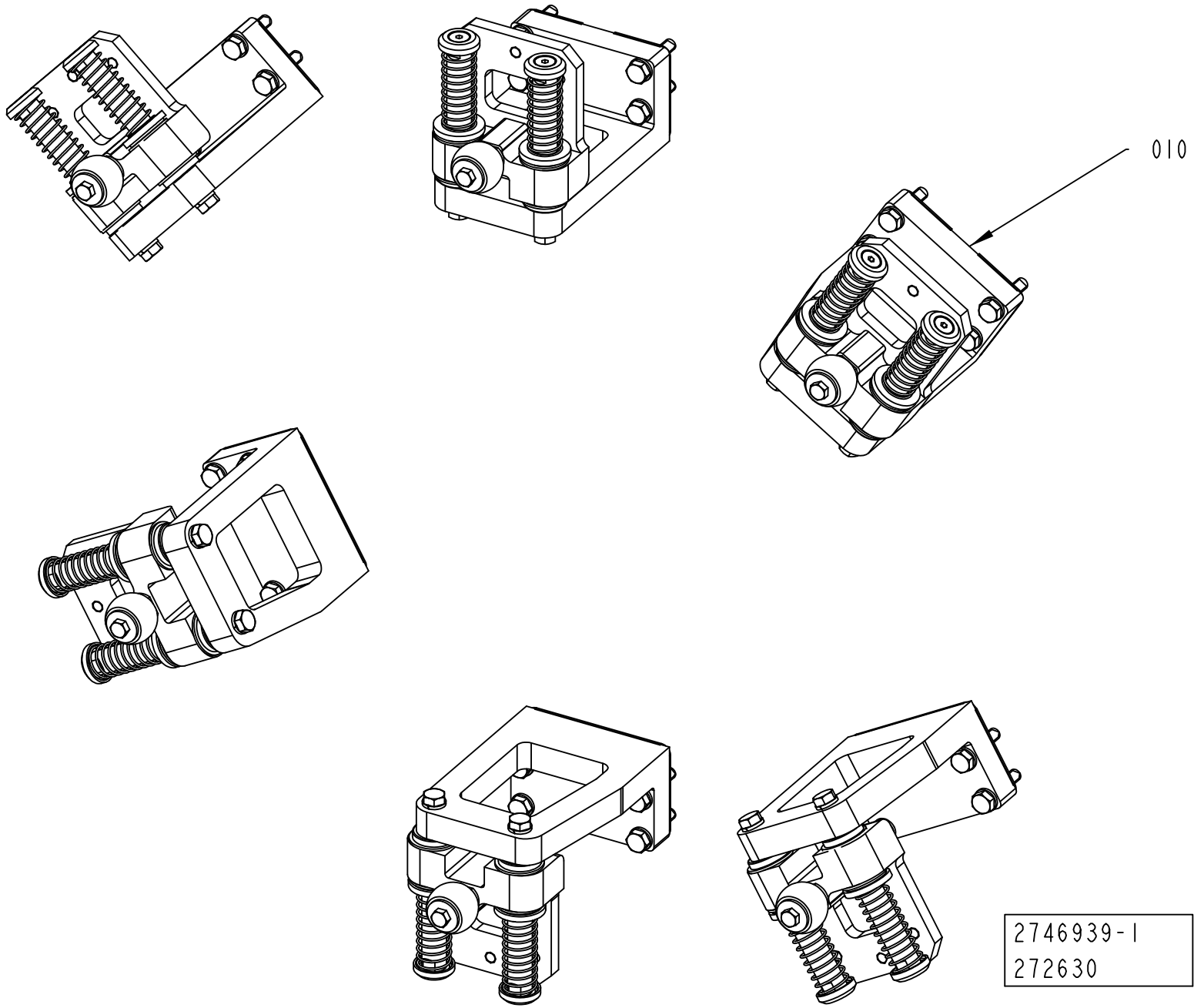
010
2746939-1
272630

ECM: 479890 - 20110401
Group number: 2746939-0100
Assembly Drawing: 2746939-1_1_AA

This list covers pages from 6-68 to 6-71

Pos	Part No	UN	Qty	Description	Page No
-					
010	2703700-0100		6	GUIDE BRACKET	**6-73, 6-75, 6-77, 6-79**

Pos	Part No	UN	Qty	Description	Page No

Machine Type	Group Description	Used-In	Group Number	Page No

CAP CARRIER GROUP

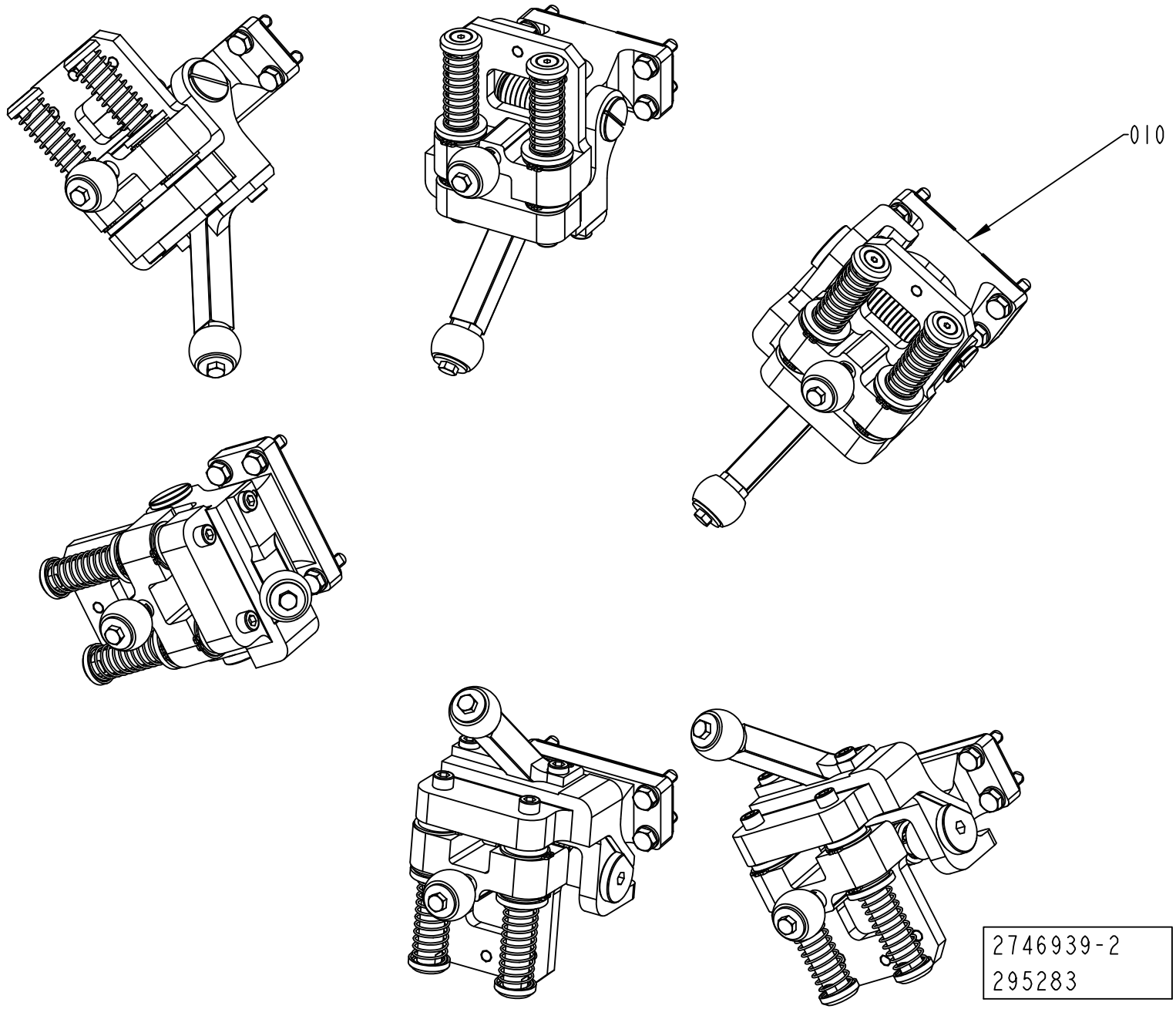

Pos	Part No	UN	Qty	Description	Page No
-					
010	2703700-0100		6	GUIDE BRACKET	**6-73, 6-75, 6-77, 6-79**

Pos	Part No	UN	Qty	Description	Page No

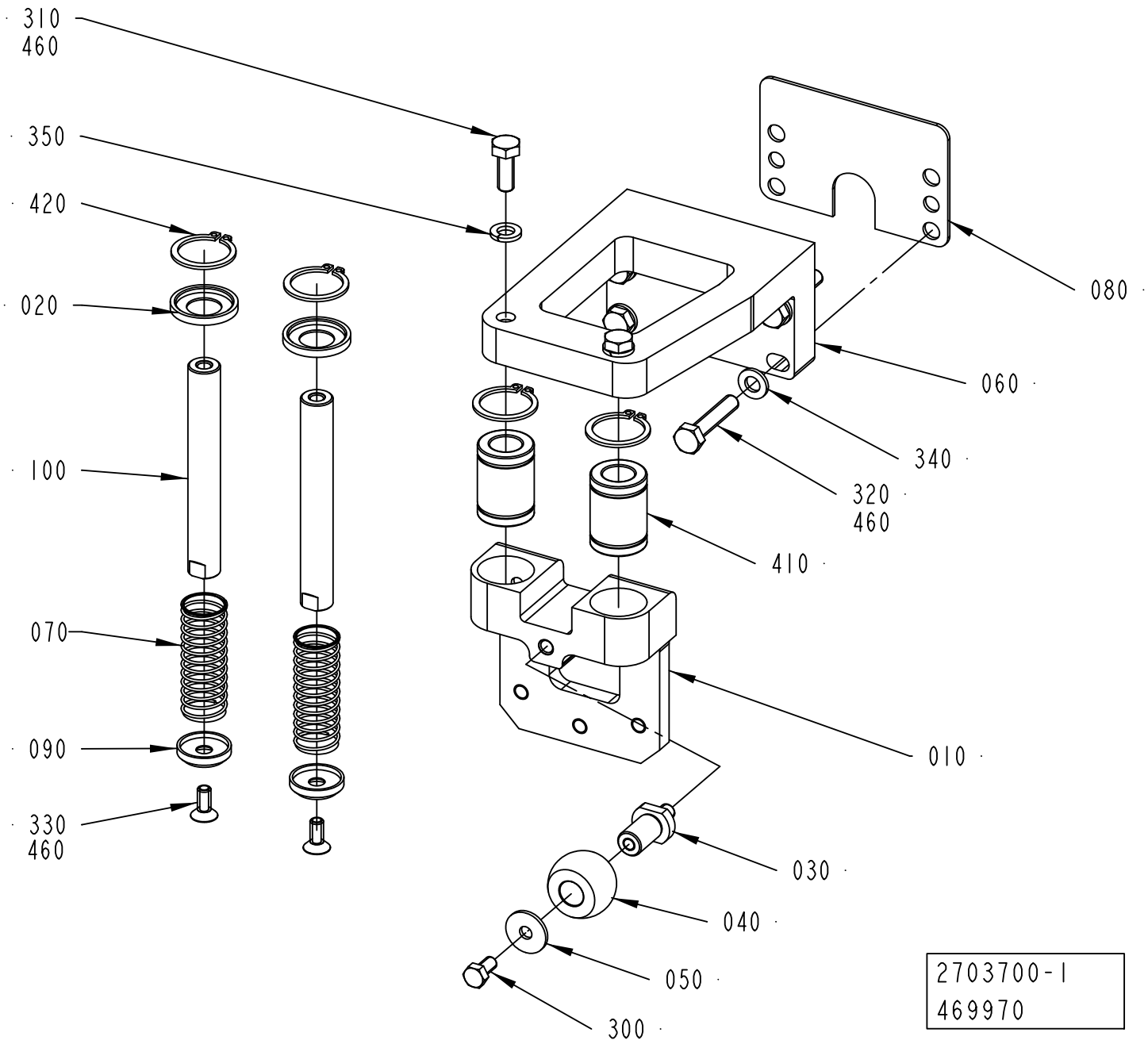
310
460
350
420
020
100
070
090
330
460
080
060
340
320
460
410
010
030
040
050
300
2703700-1
469970

ECM: 479889 - 20110401
Group number: 2703700-0100
Assembly Drawing: 2703700-1_1_AD

This list covers pages from 6-72 to 6-79

Pos	Part No	UN	Qty	Description	Page No
TBA STREAMCAP 1000 NO POSITIONING DEVICE, TBA SLIMCAP 1000 NO POSITIONING DEVICE, TBA SLIMCAP 2000 NO POSITIONING DEVICE, TBA STREAMCAP 200 NO POSDEVICE (See drawing on page: 6-72)					
020	2751686-0000		2	WASHER	
030	2703683-0000		1	SHAFT	
040	1556630-0000		1	WHEEL	
050	1556643-0000		1	WASHER	
060	2703692-0000		1	HOLDER	
080	2703702-0000		1	SHIM	
300	312105-0325		1	SCREW M6S ISO 4017 M5X10 A480	
310	312105-0368		2	SCREW M6S ISO 4017 M6X16 A480	
320	312109-0374		4	SCREW M6S ISO 4017 M6X30 A480	
350	315402-0156		2	LOCK WASHER FBB 6,5	
410	90600-0375		2	BALL BUSHING, 12X21X30 MM	
420	90600-0373		4	RETAINING RING FOR SHAFT DIN 471 21 SS	
TBA STREAMCAP 1000 POSITIONING DEVICE, TPA STREAMCAP 330 POSDEVICE, TBA STREAMCAP 200 POSDEVICE, TBA HELICAP2 23 (See drawing on page: 6-76)					
020	2751686-0000		4	WASHER	
040	1556630-0000		2	WHEEL	
050	1556643-0000		1	WASHER	
060	2838723-0000		1	HOLDER	
080	2780431-0000		1	SHIM	
120	2783461-0000		1	BRACKET	
170	2783465-0000		2	SHAFT	
180	3014020-0000		2	COMPRESSION SPRING	
200	2613995-0000		1	SPACER	
220	2746978-0000		1	SHAFT	
230	2811453-0000		2	SCREW	
300	312105-0325		1	SCREW M6S ISO 4017 M5X10 A480	
310	312115-0368		2	SCREW ISO4762 M6X16 A4 80	
320	312105-0372		4	SCREW M6S ISO 4017 M6X25 A480	
360	312105-0335		1	SCREW M6S ISO 4014 M5X30 A480	
370	312115-0366		2	SCREW ISO4762 M6X12 A4 80	
400	315105-0146		1	WASHER BRB 5,3X10 RFR	
410	90600-0375		4	BALL BUSHING, 12X21X30 MM	
420	90600-0373		4	RETAINING RING FOR SHAFT DIN 471 21 SS	
TGA, TPA STREAMCAP 1000 POSITIONING DEVICE, TPA STREAMCAP 500 POSITIONING DEVICE (See drawing on page: 6-74)					
020	2751686-0000		4	WASHER	
030	2703683-0000		1	SHAFT	
040	1556630-0000		3	WHEEL	
050	1556643-0000		2	WASHER	
060	2715699-0000		1	HOLDER	
080	2780431-0000		1	SHIM	
110	2783460-0000		1	GUIDE BRACKET	
120	2783461-0000		1	BRACKET	
130	2783462-0000		1	AXLE PIN	
140	2715701-0000		1	AXLE PIN	
150	2715704-0000		1	SLEEVE	
160	2715885-0000		1	TORSION SPRING	
170	2783465-0000		2	SHAFT	
180	3014020-0000		2	COMPRESSION SPRING	
190	2715826-0000		1	DAMPER	
200	2613995-0000		1	SPACER	
210	2783463-0000		1	ROLLER BRACKET	
220	2746978-0000		1	SHAFT	
230	2811453-0000		2	SCREW	
300	312105-0325		2	SCREW M6S ISO 4017 M5X10 A480	
310	312115-0368		2	SCREW ISO4762 M6X16 A4 80	
320	312105-0372		4	SCREW M6S ISO 4017 M6X25 A480	
360	312105-0335		1	SCREW M6S ISO 4014 M5X30 A480	
370	312115-0366		4	SCREW ISO4762 M6X12 A4 80	
380	312318-0285		2	SCREW ISO4029 M4X6 A4	
390	311103-0268		2	PARALLEL PIN ISO 2338 4M6X12 A1	
400	315105-0146		1	WASHER BRB 5,3X10 RFR	
410	90600-0375		4	BALL BUSHING, 12X21X30 MM	
420	90600-0373		8	RETAINING RING FOR SHAFT DIN 471 21 SS	
430	321154-0180		2	FLANGE BUSHING, IGLIDUR W300 12X14X12	
440	311112-0255		1	SPRING PIN, ISO 8752 4X18-C	
450	90153-0023		1	ADHESIVE, SILICON 251470 TUB 90CC(UN1993	
TPA DREAMCAP 26 POSITIONING DEVICE (See drawing on page: 6-78)					
020	2751686-0000		2	WASHER	
030	2703683-0000		1	SHAFT	
040	1556630-0000		2	WHEEL	
050	1556643-0000		2	WASHER	
060	2715699-0000		1	HOLDER	
080	2780431-0000		1	SHIM	
110	2811989-0000		1	GUIDE BRACKET	
130	2783462-0000		1	AXLE PIN	
140	2715701-0000		1	AXLE PIN	
150	2715704-0000		1	SLEEVE	
160	2715885-0000		1	TORSION SPRING	
190	2715826-0000		1	DAMPER	
210	2783463-0000		1	ROLLER BRACKET	

Machine Type | Group Description | Used-In | Group Number | Page No

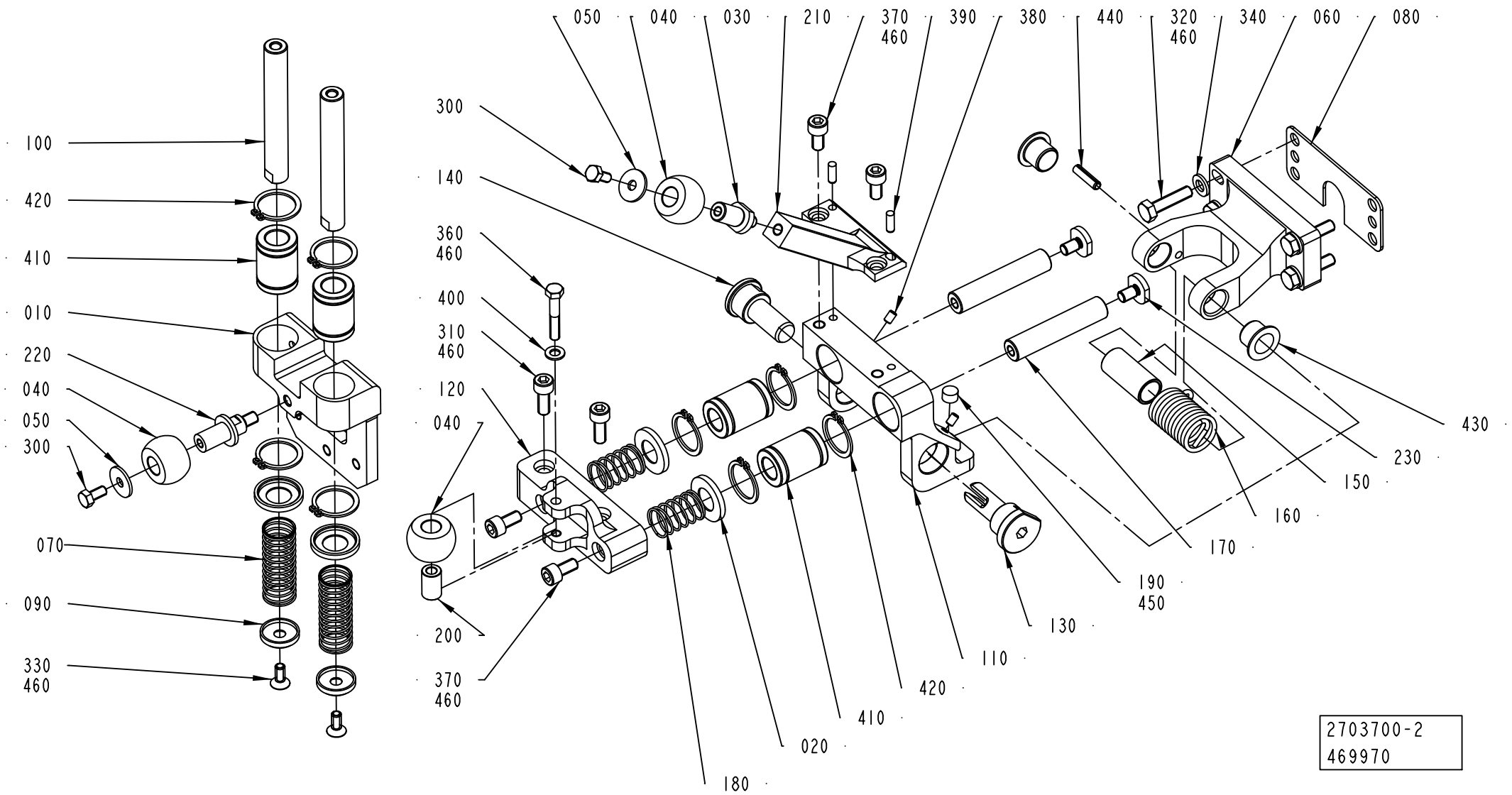
100
420
410
010
220
040
050
300
070
090
330
460
050
040
030
210
370
460
390
380
440
320
460
340
060
080
300
140
360
460
400
310
460
120
040
200
370
460
180
020
410
420
110
130
190
450
170
160
150
230
430
2703700-2
469970

Pos	Part No	UN	Qty	Description	Page No
TPA DREAMCAP 26 POSITIONING DEVICE (Cont'd) (See drawing on page: 6-78)					
220	2746978-0000		1	SHAFT	
300	312105-0325		2	SCREW M6S ISO 4017 M5X10 A480	
320	312105-0372		4	SCREW M6S ISO 4017 M6X25 A480	
370	312115-0366		2	SCREW ISO4762 M6X12 A4 80	
380	312318-0285		2	SCREW ISO4029 M4X6 A4	
390	311103-0268		2	PARALLEL PIN ISO 2338 4M6X12 A1	
410	90600-0375		2	BALL BUSHING, 12X21X30 MM	
420	90600-0373		4	RETAINING RING FOR SHAFT DIN 471 21 SS	
430	321154-0180		2	FLANGE BUSHING, IGLIDUR W300 12X14X12	
440	311112-0255		1	SPRING PIN, ISO 8752 4X18-C	
450	90153-0023		1	ADHESIVE, SILICON 251470 TUB 90CC(UN1993	
460	90602-4847		1	THREAD LOCKING, LOCTITE 243 50 ML	
Common Parts					
010	2716127-0000		1	SLIDER	
070	2703708-0000		2	SPRING	
090	2751687-0000		2	WASHER	
100	90600-0376		2	SHAFT, LM SHAFT 12 G6 89L M	
330	312155-0327		2	SCREW DIN 7991 MF6S M5X12 A4 70	
340	315105-0153		4	WASHER BRB 6,4X12 RFR	

Pos	Part No	UN	Qty	Description	Page No

GUIDE BRACKET

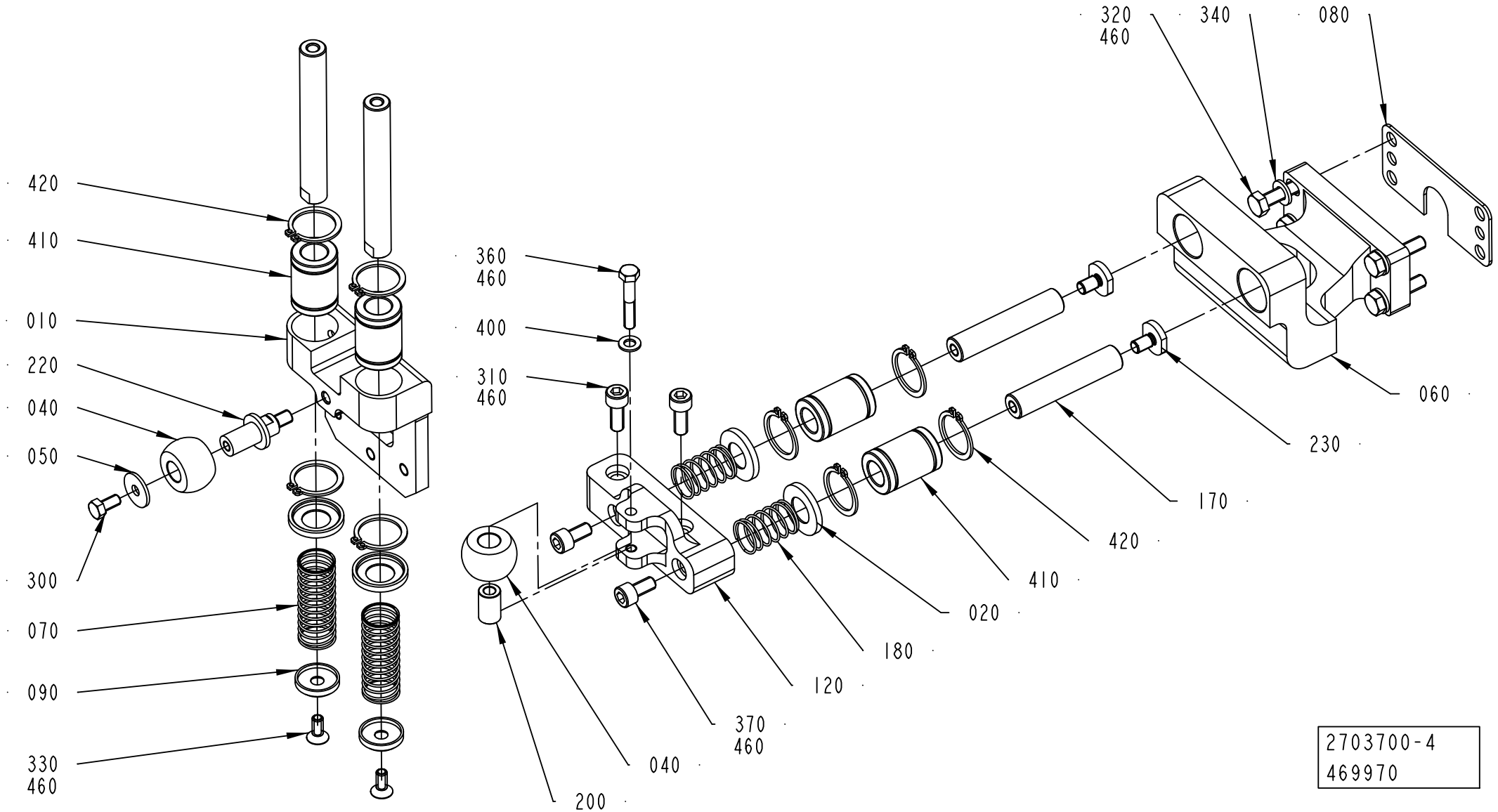

Pos	Part No	UN	Qty	Description	Page No
SEE PREVIOUS LISTS PAGES: 6-73, 6-75.					

Pos	Part No	UN	Qty	Description	Page No

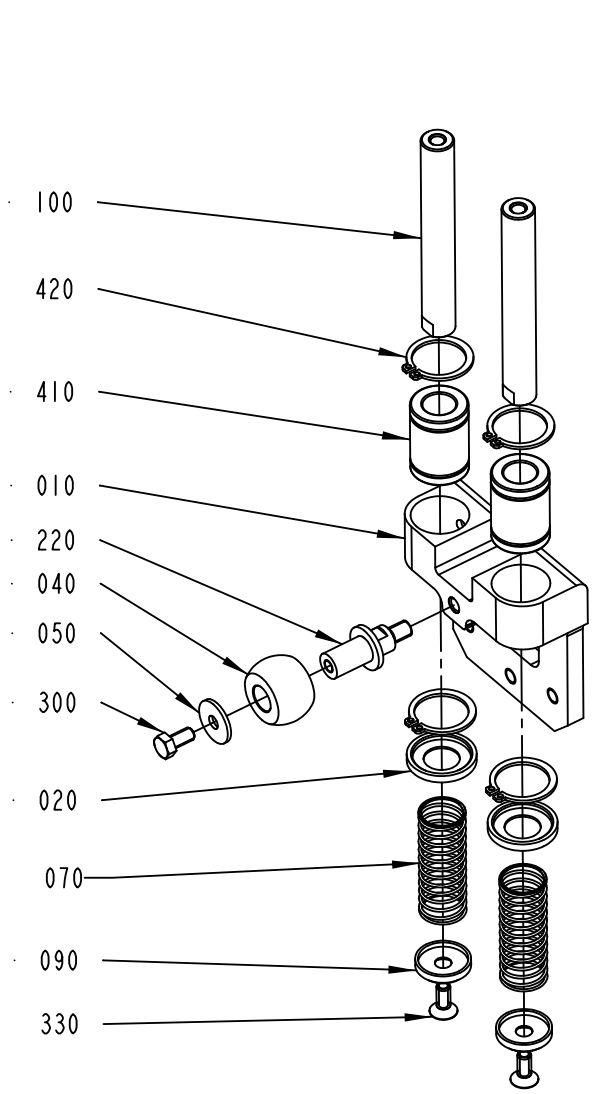
100
420
410
010
220
040
050
300
020
070
090
330

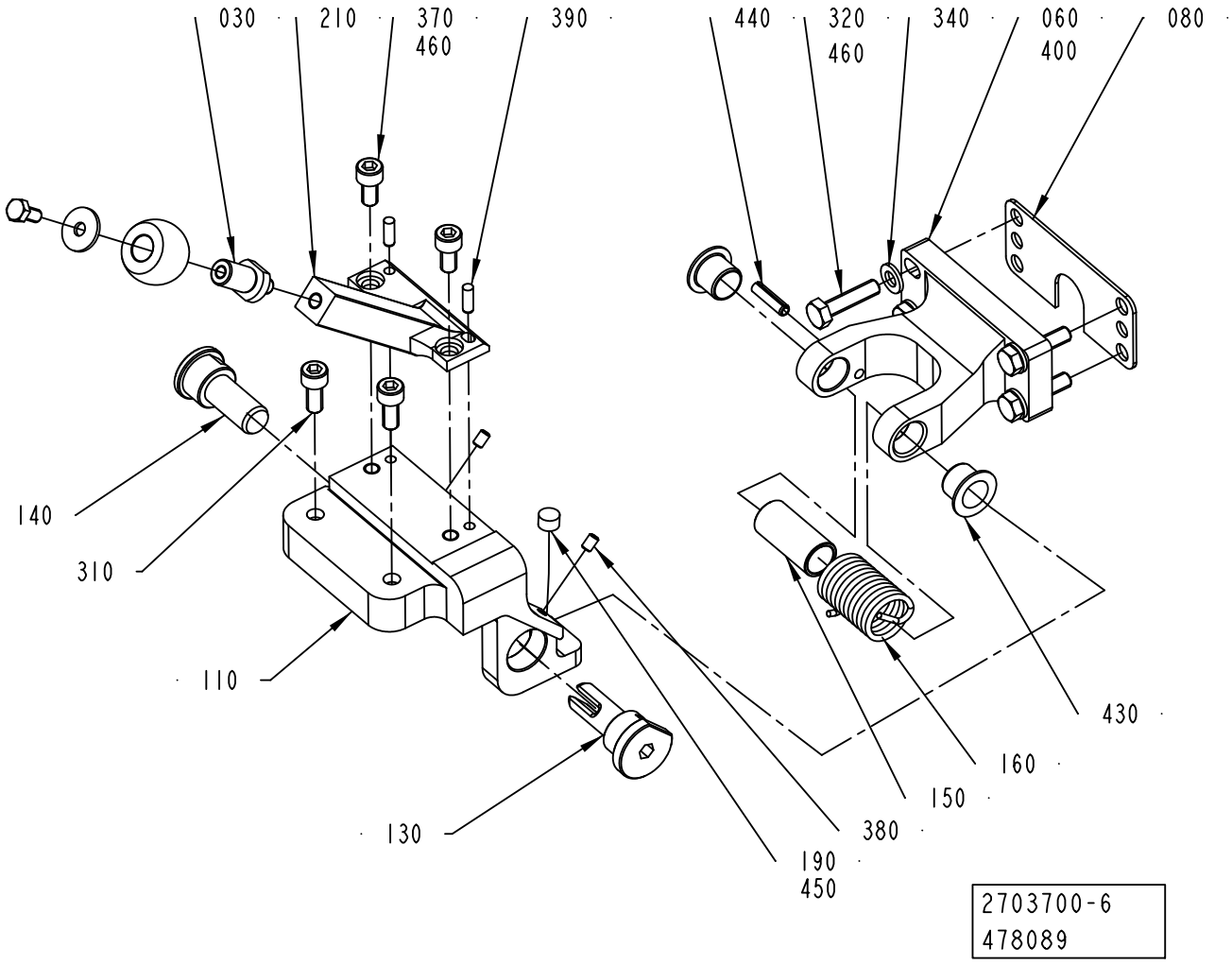
030
210
370
460
390
440
320
460
340
060
400
080
140
310
110
130
190
450
380
150
160
430
2703700-6
478089

Pos	Part No	UN	Qty	Description	Page No
SEE PREVIOUS LISTS PAGES: 6-73, 6-75.					

Pos	Part No	UN	Qty	Description	Page No

CAP HOLDERS GROUP

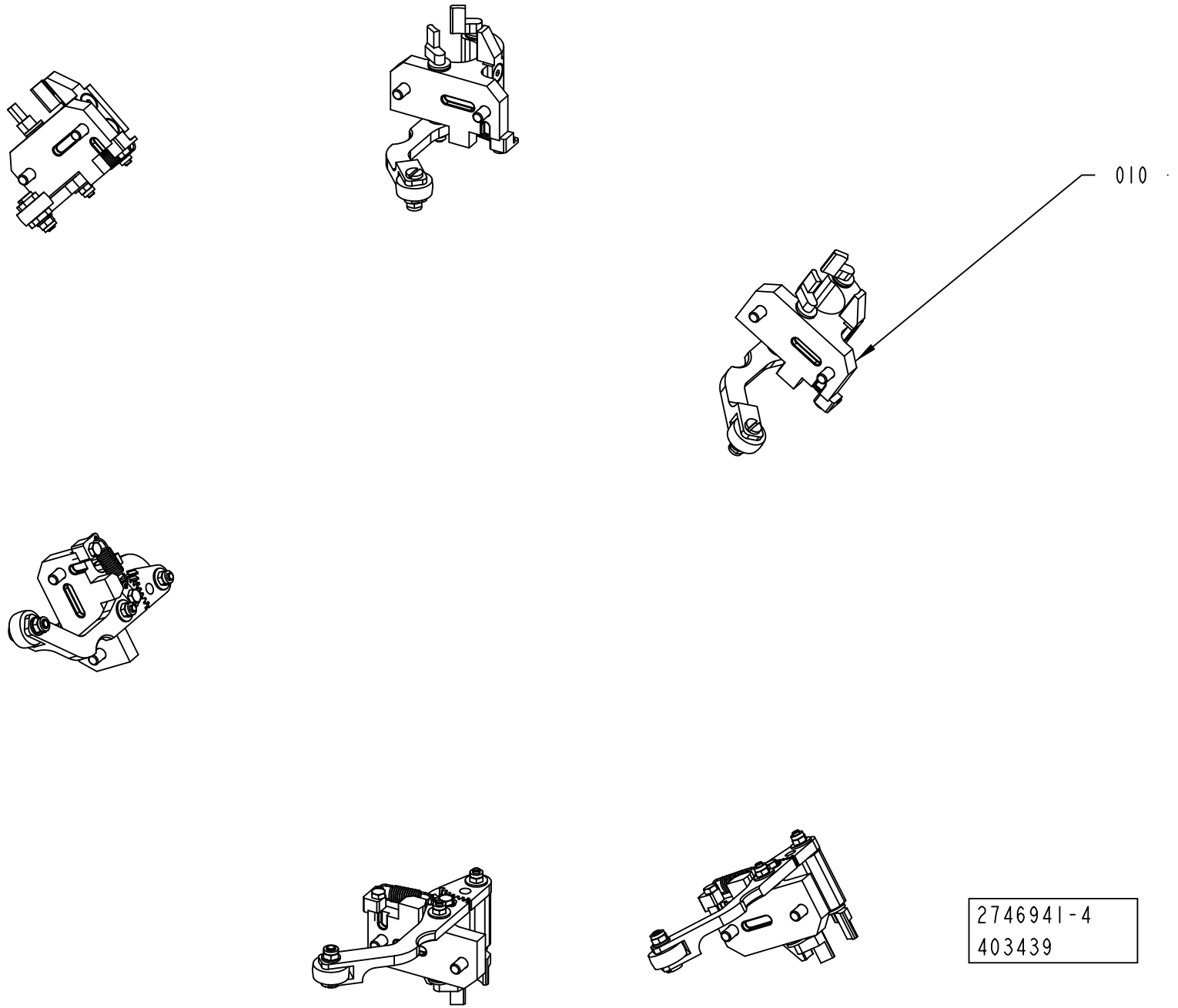

ECM: 479891 - 20110401
Group number: 2746941-0200
Assembly Drawing: 2746941-4_1_AA

Pos	Part No	UN	Qty	Description	Page No
STREAMCAP500, STREAMCAP1000, SLIMCAP 2000, SLIMCAP 1000, STREAMCAP200, STREAMCAP330, HELICAP2 23					
010	2703670-0100		6	CAP HOLDERS GROUP	**6-83**

Pos	Part No	UN	Qty	Description	Page No

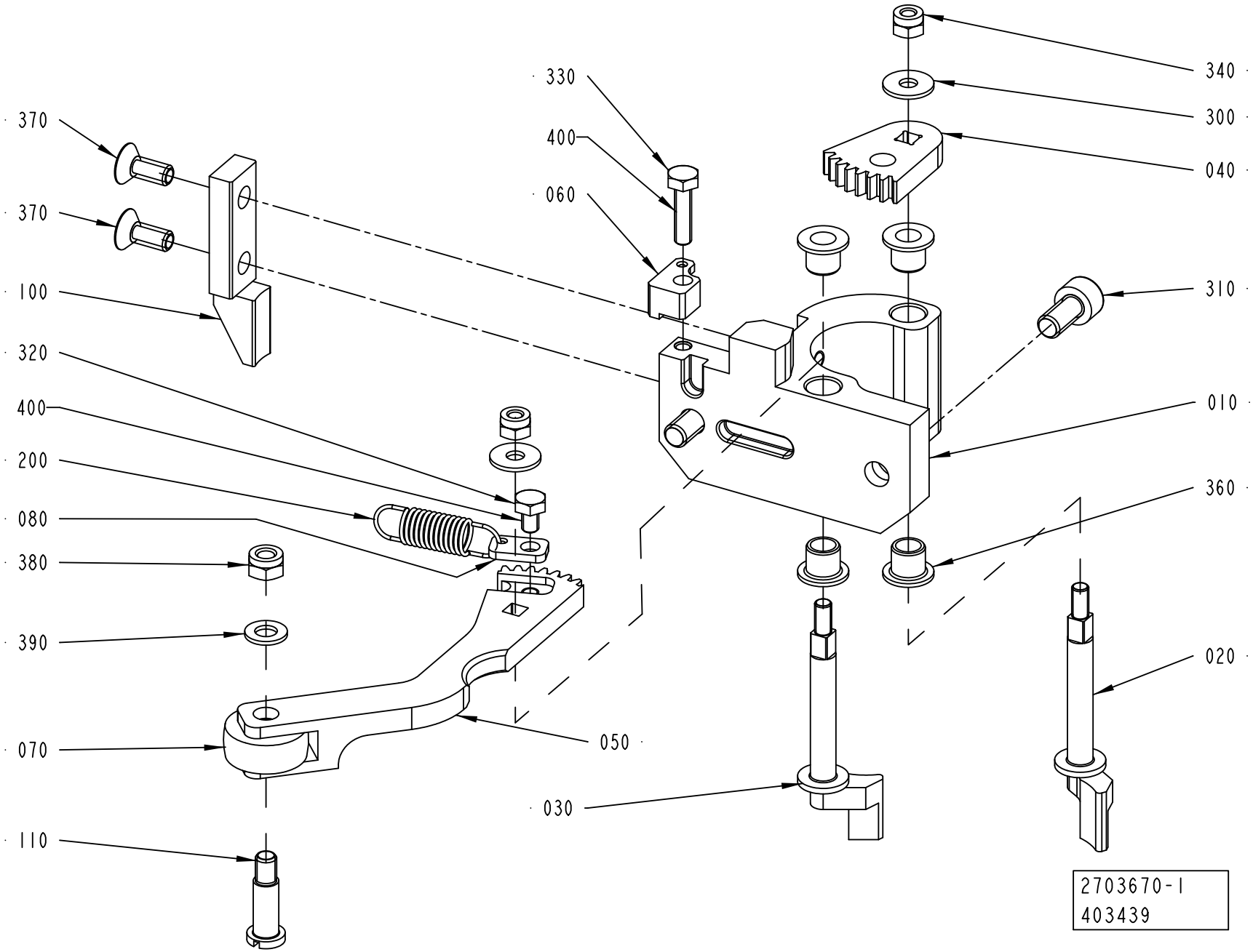
370
370
100
320
400
200
080
380
390
070
110
330
400
060
340
300
040
310
010
360
020
050
030
2703670-1
403439

ECM: 479888 - 20110401
Group number: 2703670-0100
Assembly Drawing: 2703670-1_1_AB

Pos	Part No	UN	Qty	Description	Page No
HELICAP2 23					
020	2930214-0000		1	CLAW	
030	2930215-0000		1	CLAW	
100	2930216-0000		1	PULLER	
SLIMCAP 1000					
020	2703671-0000		1	CLAW	
030	2703672-0000		1	CLAW	
100	2715887-0000		1	PULLER	
SLIMCAP 2000					
020	2838711-0000		1	CLAW	
030	2838712-0000		1	CLAW	
100	2838713-0000		1	PULLER	
STREAMCAP1000					
020	2715828-0000		1	CLAW	
030	2715829-0000		1	CLAW	
100	2768157-0000		1	PULLER	
STREAMCAP200					
020	2873973-0000		1	CLAW	
030	2873974-0000		1	CLAW	
100	2873975-0000		1	PULLER	
STREAMCAP330					
020	2873970-0000		1	CLAW	
030	2873971-0000		1	CLAW	
100	2873976-0000		1	PULLER	
STREAMCAP500					
020	2838715-0000		1	CLAW	
030	2838714-0000		1	LAW	
100	2838716-0000		1	PULLER	
Common Parts					
010	2715827-0000		1	HOLDER	
040	2703673-0000		1	TOOTHED DISC	
050	2983297-0000		1	FOLLOWER ARM	
060	2987971-0000		1	SPRING HOLDER	
070	1556626-0000		1	WHEEL	
080	2987967-0000		1	SPRING HOLDER	
110	2746922-0000		1	SHAFT	
200	3034434-0000		1	TENSION SPRING	
300	90005-0082		2	WASHER PLAIN ROUND 4,3(M4)/12,H=1	
310	312115-0366		2	SCREW ISO4762 M6X12 A4 80	
320	312105-0285		1	SCREW M6S ISO 4017 M4X6 A470	
330	312105-0293		1	SCREW M6S ISO 4017 M4X16 A470	
340	312812-0312		2	HEXAGON NUT, NY-LOCK M4 A480	
360	321155-0062		4	FLANGE BUSHING, IGLIDUR X 6X8X8	
370	312155-0327		2	SCREW DIN 7991 MF6S M5X12 A4 70	
380	312812-0314		1	HEXAGON NUT, NY-LOCK M5 A480	
390	315105-0146		1	WASHER BRB 5,3X10 RFR	
400	90600-0685		1	THREAD LOCKING, LOCTITE 2701 50 ML	

Machine Type	Group Description	Used-In	Group Number	Page No

Tetra Pak

SPC
Spare Parts Catalogue

CAP SEQUENCER

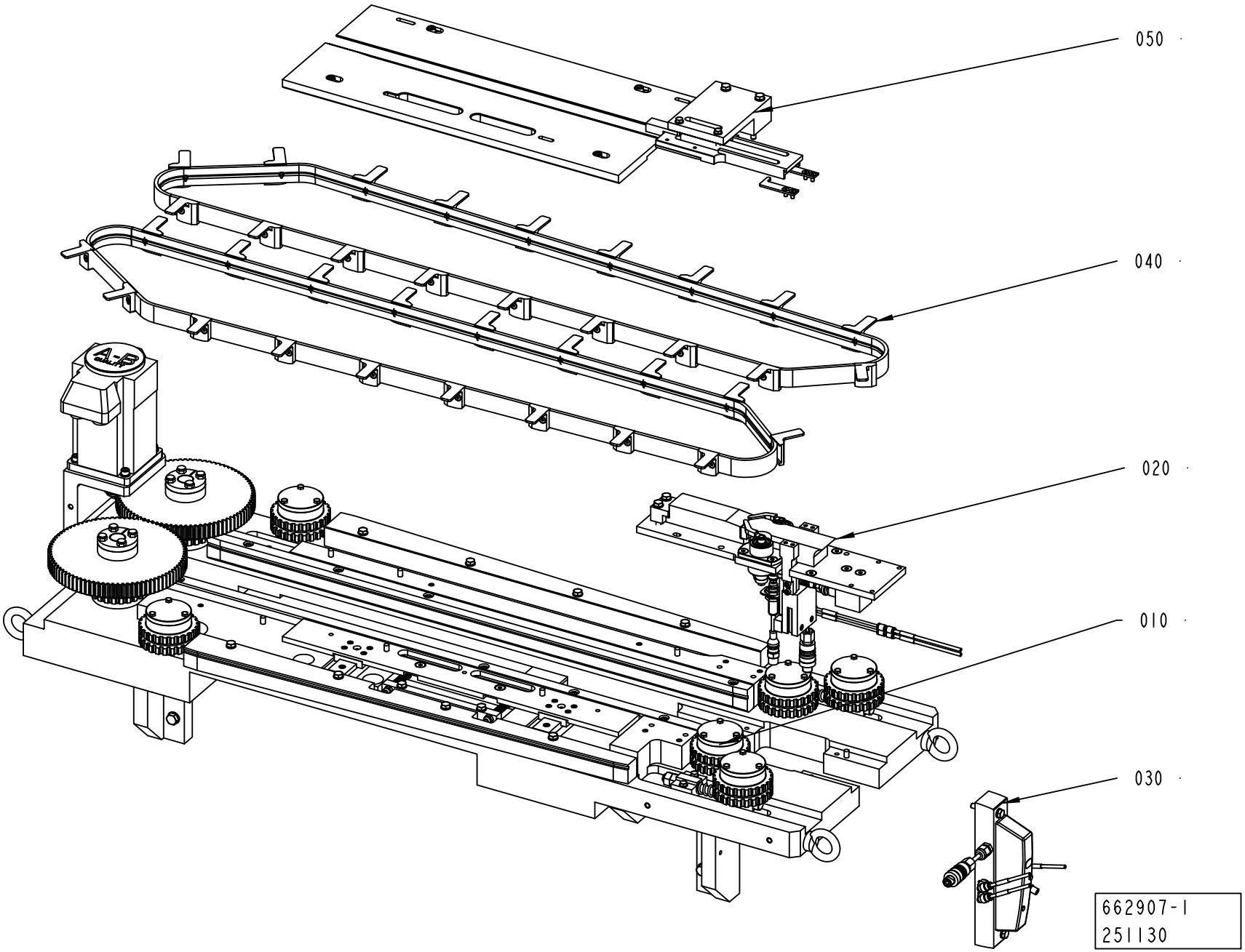

ECM: 271604 - 20060920
Group number: 662907-0100
Assembly Drawing: 662907-1_1_AA

Pos	Part No	UN	Qty	Description	Page No
-					
010	2746933-0100		1	BASE UNIT	**7-5**
020	2746934-0100		1	FEED UNIT	**7-19**
030	2746932-0100		1	PNEUMATIC UNIT	**7-29**
040	2746929-0100		1	CARRIER BELT	**7-31**
050	2746928-0100		1	CAP LINE	**7-37, 7-39, 7-41, 7-43**

Pos	Part No	UN	Qty	Description	Page No

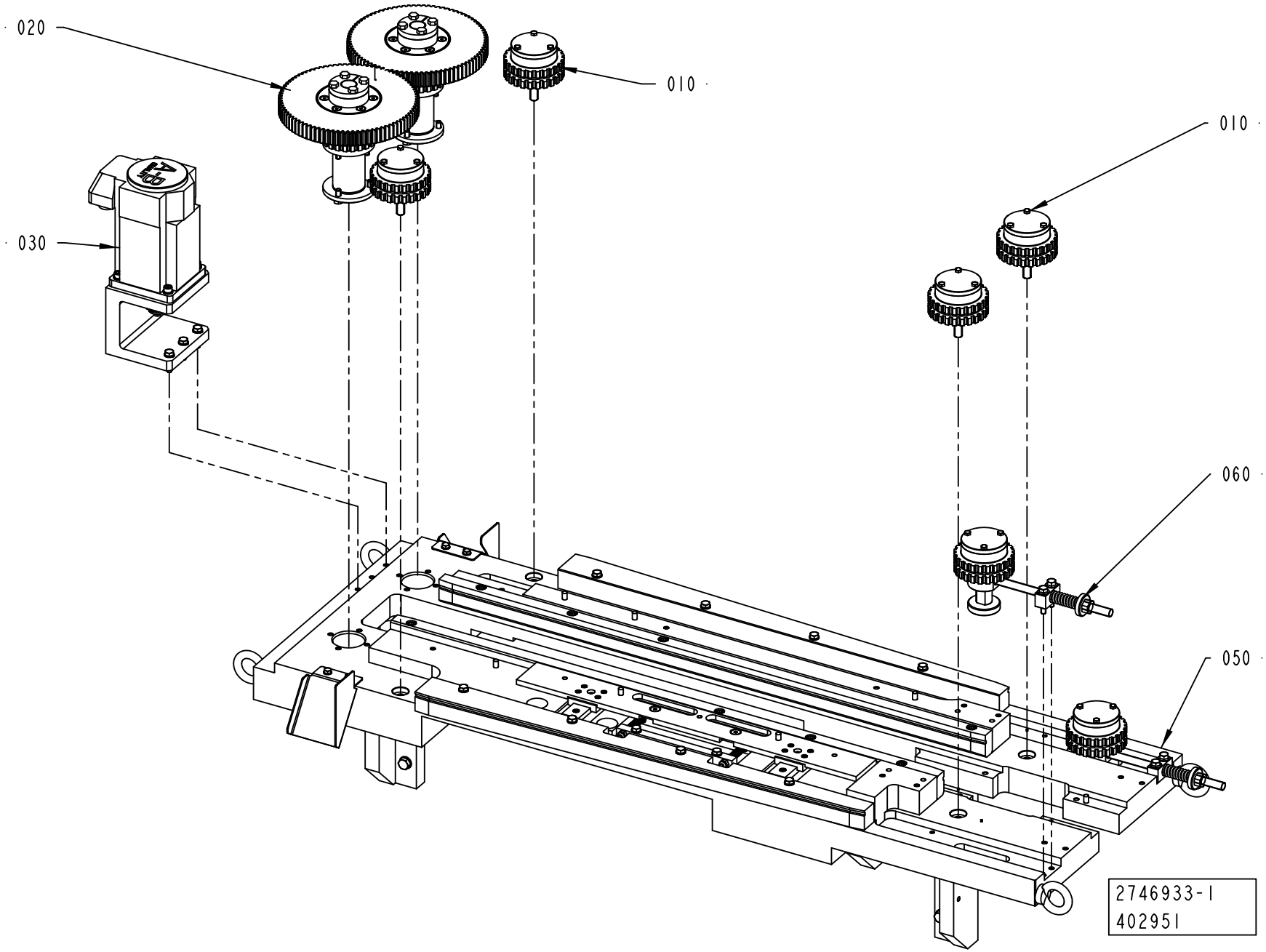
020
010
010
030
060
050
2746933-1
402951

ECM: 420557 - 20100110
Group number: 2746933-0100
Assembly Drawing: 2746933-1_1_AB

Pos	Part No	UN	Qty	Description	Page No
-					
010	2715669-0100		4	TOOTHED PULLEY	7-7
020	2715976-0100		2	TOOTHED PULLEY	7-9
030	2727407-0100		1	DRIVE PULLEY	7-11
050	2716049-0200		1	CAP LINE	7-13
060	3034438-0100		2	TOOTHED PULLEY	7-17

Pos	Part No	UN	Qty	Description	Page No

TOOTHED PULLEY

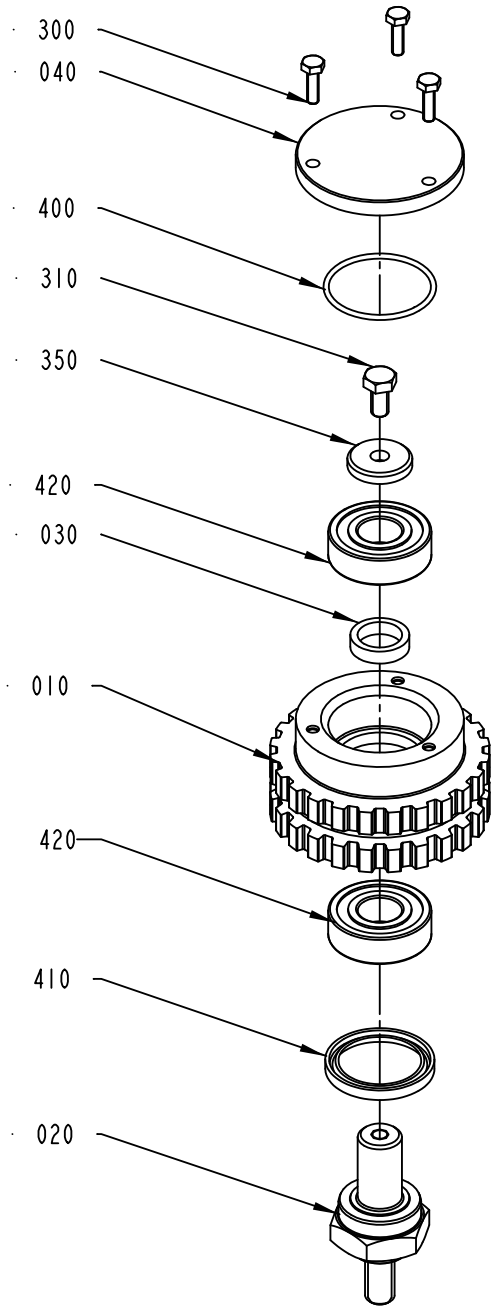

2715669-1
251129

ECM: 290142 - 20061221
Group number: 2715669-0100
Assembly Drawing: 2715669-1_1_AA

Pos	Part No	UN	Qty	Description	Page No
-					
010	2780452-0000		1	TOOTHED PULLEY	
020	2715978-0000		1	SHAFT	
030	2736447-0000		1	SPACER	
040	2736449-0000		1	COVER	
300	312105-0292		3	SCREW M6S ISO 4017 M4X14 A470	
310	312105-0366		1	SCREW M6S ISO 4017 M6X12 A480	
350	315125-0153		1	WASHER TBRSB 6,4X22X4 A4	
400	315202-0716		1	O-RING 34,65X1,78 MM	
410	315230-0330		1	SEAL RING G 28X37X4	
420	321309-0102		2	BALL BEARING 15/35X11	
430	90296-0068	G	50	SHELL ALVANIA GREASE EP 2	

Pos	Part No	UN	Qty	Description	Page No

TOOTHED PULLEY

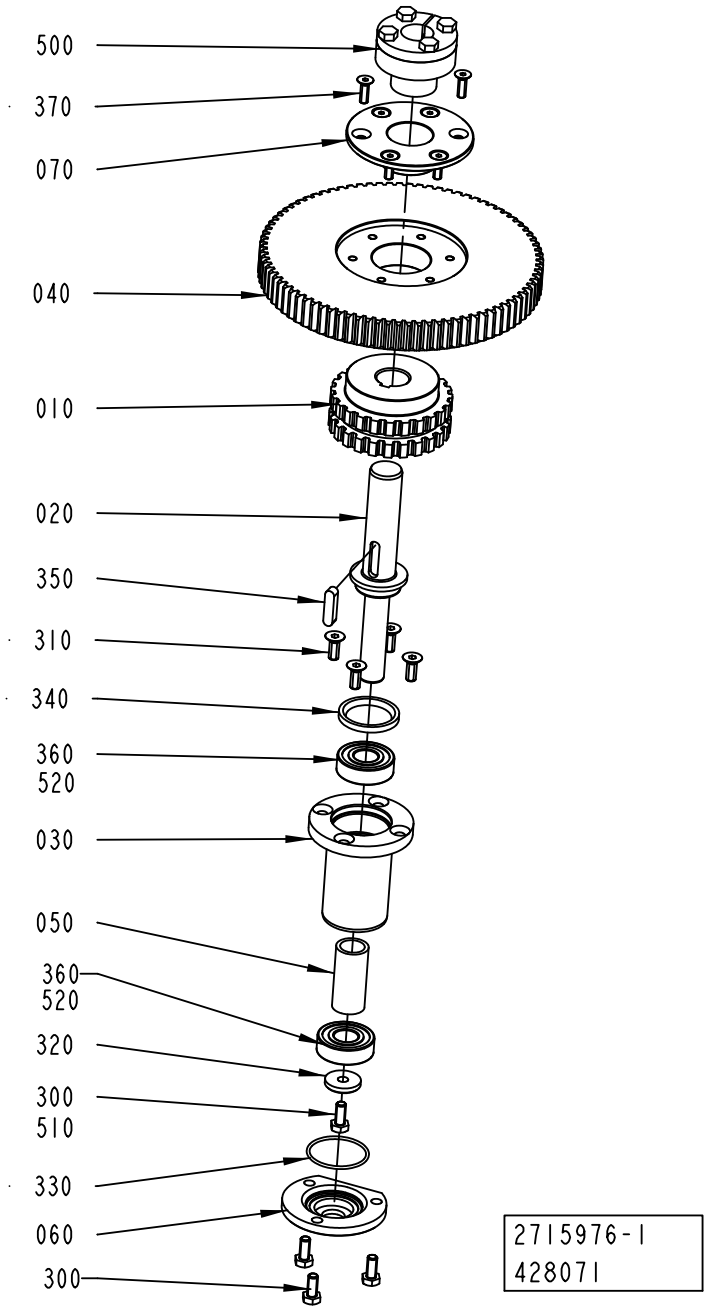

ECM: 428941 - 20100401
Group number: 2715976-0100
Assembly Drawing: 2715976-1_1_AC

Pos	Part No	UN	Qty	Description	Page No
-					
010	2780453-0000		1	TOOTHED PULLEY	
020	2727414-0000		1	SHAFT	
030	2715977-0000		1	LOCKING HUB	
040	2727426-0000		1	GEAR WHEEL	
050	2736446-0000		1	SPACER	
060	2736448-0000		1	COVER	
070	2856622-0000		1	BUSHING	
300	312105-0367		4	REW M6S ISO 4017 M6X14 A480	
310	312155-0368		4	SCREW DIN 7991 MF6S M6X16 A4 70	
320	315125-0153		1	WASHER TBRSB 6,4X22X4 A4	
330	315202-0716		1	O-RING 34,65X1,78 MM	
340	315230-0330		1	SEAL RING G 28X37X4	
350	315705-0234		1	PARALLEL KEY W. ROUND ENDS 6X6X25 MM	
360	321309-0102		2	BALL BEARING 15/35X11	
370	312155-0329		6	SCREW DIN 7991 MF6S M5X16 A4 70	
500	90208-0078		1	CLAMPING ELEMENT WITH SLEEVE, 20X28 MM	
510	90600-0685		1	THREAD LOCKING, LOCTITE 2701 50 ML	
520	90296-0068	G	50	SHELL ALVANIA GREASE EP 2	

Pos	Part No	UN	Qty	Description	Page No

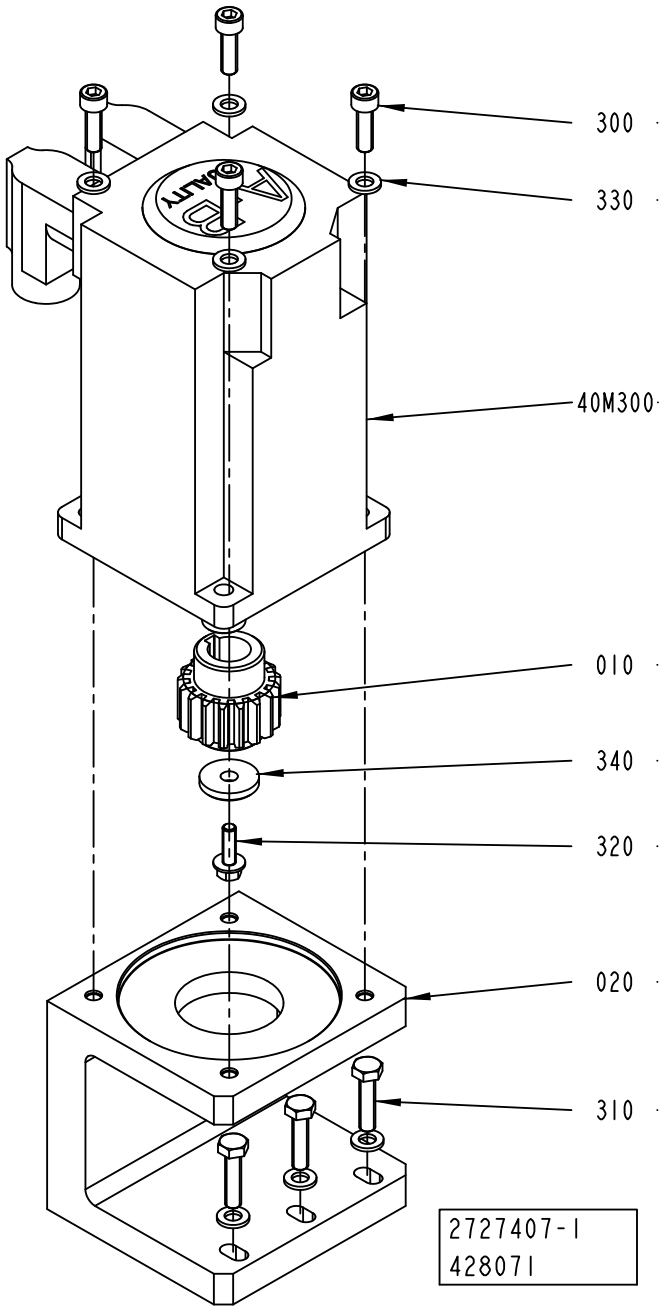
300
330
40M300
010
340
320
020
310
2727407-1
428071

ECM: 428949 - 20100401
Group number: 2727407-0100
Assembly Drawing: 2727407-1_1_AC

Pos	Part No	UN	Qty	Description	Page No
-					
010	2727427-0000		1	GEAR WHEEL	
020	2727408-0000		1	MOTOR BRACKET	
300	312115-0370		4	SCREW ISO4762 M6X20 A4 80	
310	312105-0372		3	SCREW M6S ISO 4017 M6X25 A480	
320	312108-0329		1	SCREW EN 1665 TYPE F M5X16 A270	
330	315105-0153		7	WASHER BRB 6,4X12 RFR	
340	315125-0153		1	WASHER TBRSB 6,4X22X4 A4	
40M300	90601-4430		1	SERVO MOTOR MPL-B320P-MJ72AA, SERIES A	

Pos	Part No	UN	Qty	Description	Page No

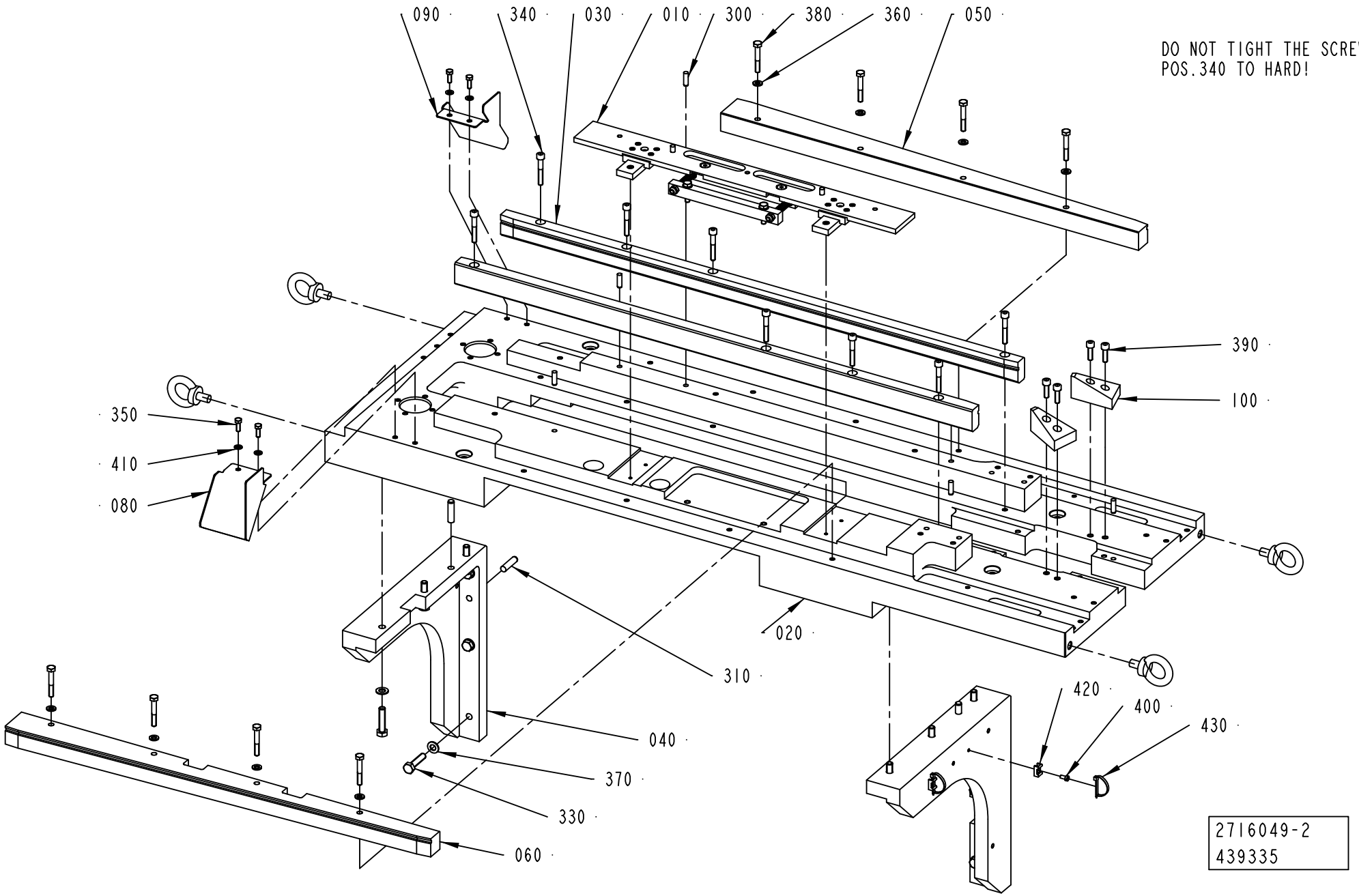
090
340
030
010
300
380
360
050
DO NOT TIGHT THE SCREW
POS.340 TO HARD!
390
100
350
410
080
020
310
420
400
430
040
370
330
060
2716049-2
439335

ECM: 444525 - 20100701
Group number: 2716049-0200
Assembly Drawing: 2716049-2_1_AE

Pos	Part No	UN	Qty	Description	Page No
-					
010	2716149-0200		1	STEERING DEVICE	**7-15**
020	2716015-0000		1	BRACKET	
030	2780454-0000		2	SLIDE RAIL	
040	2727420-0000		2	BRACKET	
050	2780455-0000		1	SLIDE RAIL	
060	2780456-0000		1	SLIDE RAIL	
080	2918904-0000		1	PLATE	
090	2918905-0000		1	PLATE	
100	3095787-0000		2	SLIDE	
300	311103-0353		6	PARALLEL PIN ISO 2338 6M6X20 A1	
310	311103-0406		4	PARALLEL PIN ISO 2338 8M6X32 A1	
330	312109-0457		12	SCREW M6S ISO 4017 M8X35 A480	
340	312115-0378		8	SCREW ISO4762 M6X40 A4 80	
350	312105-0328		4	SCREW M6S ISO 4017 M5X14 A480	
360	315105-0153		8	WASHER BRB 6,4X12 RFR	
370	315105-0165		12	WASHER BRB 8,4X16 RFR	
380	312105-0378		8	SCREW M6S ISO 4014 M6X40 A480	
390	312115-0370		4	SCREW ISO4762 M6X20 A4 80	
400	312125-0287		2	SCREW ISO 1207 M4X8 A4	
410	315105-0146		4	WASHER BRB 5,3X10 RFR	
420	352113-0205		2	ANCHOR PLATES FOR STRIPS, TM2S8-C100	
430	352113-0104		2	CABLE TIE, BLACK 300X4,8 MM	

Pos	Part No	UN	Qty	Description	Page No

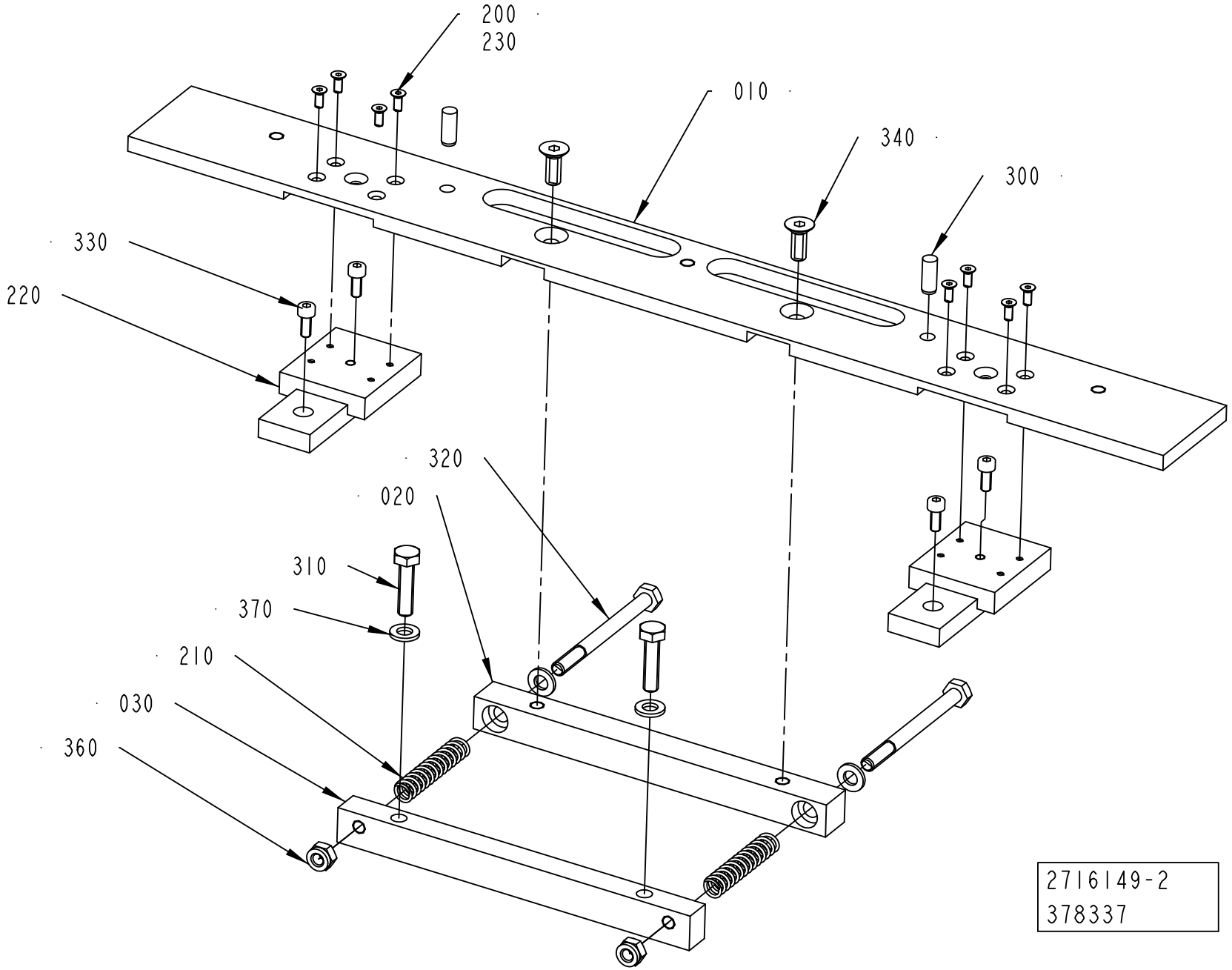
200
230
010
340
300
330
220
320
020
310
370
210
030
360
2716149-2
378337

ECM: 378337 - 20090406
Group number: 2716149-0200
Assembly Drawing: 2716149-2_1_AB

Pos	Part No	UN	Qty	Description	Page No
-					
010	2716152-0000		1	PLATE	
020	2716156-0000		1	BRACKET	
030	2716157-0000		1	BRACKET	
200	90287-0295		8	SCREW HEX.SOCK.COUNT.MF6S M3X8 A280	
210	90335-0082		2	COMP. SPRING 22180, 1,25X9,25X47,5	
220	90600-0350		2	LINEAR GUIDE, RSR12WVMUU+80LM G15/G25	
230	90600-0685		1	THREAD LOCKING, LOCTITE 2701 50 ML	
300	311103-0351		2	PARALLEL PIN ISO 2338 6M6X16 A1	
310	312105-0372		2	SCREW M6S ISO 4017 M6X25 A480	
320	312105-0384		2	SCREW M6S ISO 4014 M6X70 A480	
330	312115-0289		4	SCREW ISO4762 M4X10 A4 80	
340	312155-0368		2	SCREW DIN 7991 MF6S M6X16 A4 70	
360	312812-0316		2	HEXAGON NUT, NY-LOCK M6 A480	
370	315105-0153		4	WASHER BRB 6,4X12 RFR	

Pos	Part No	UN	Qty	Description	Page No

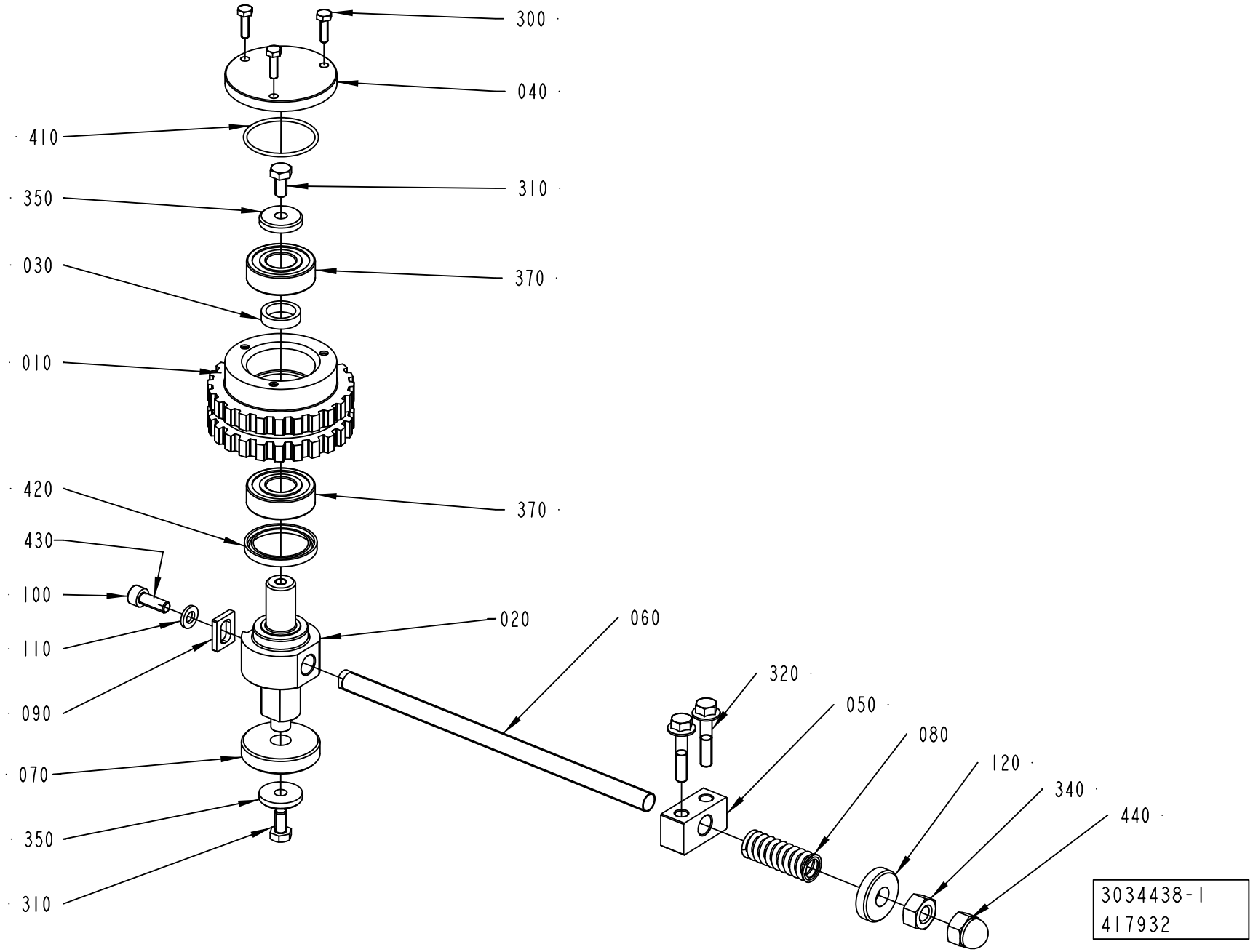
300
040
410
310
350
370
030
010
420
370
430
100
020
060
110
320
050
090
080
120
070
340
350
440
310
3034438-1
417932

ECM: 428950 - 20100401
Group number: 3034438-0100
Assembly Drawing: 3034438-1_1_AB

Pos	Part No	UN	Qty	Description	Page No
-					
010	2780452-0000		1	TOOTHED PULLEY	
020	2716019-0000		1	SHAFT	
030	2736447-0000		1	SPACER	
040	2736449-0000		1	COVER	
050	3024866-0000		1	SUPPORT	
060	2974857-0000		1	SCREW	
070	2716024-0000		1	WASHER	
080	2716021-0000		1	SPRING	
090	2974858-0000		1	NUT	
100	312115-0368		1	SCREW ISO4762 M6X16 A4 80	
110	315106-0153		1	WASHER ISO 7089-6-200 HV A4	
120	315125-0173		1	WASHER TBRSB 10,5X28X6 A4	
300	312105-0292		3	SCREW M6S ISO 4017 M4X14 A470	
310	312105-0366		2	SCREW M6S ISO 4017 M6X12 A480	
320	312108-0374		2	SCREW EN 1665 TYPE F M6X30 A270	
340	312605-0320		1	HEXAGON NUT, M6M M10 A280	
350	315125-0153		2	WASHER TBRSB 6,4X22X4 A4	
370	321309-0102		2	BALL BEARING 15/35X11	
410	315202-0716		1	O-RING 34,65X1,78 MM	
420	315230-0330		1	SEAL RING G 28X37X4	
430	90157-0012	G	10	LOCKING FLUID LOCTITE 242 50 ML	
440	312705-0320		1	NUT HEX. DOMED CAP MHM-6 M10 A280	

Pos	Part No	UN	Qty	Description	Page No

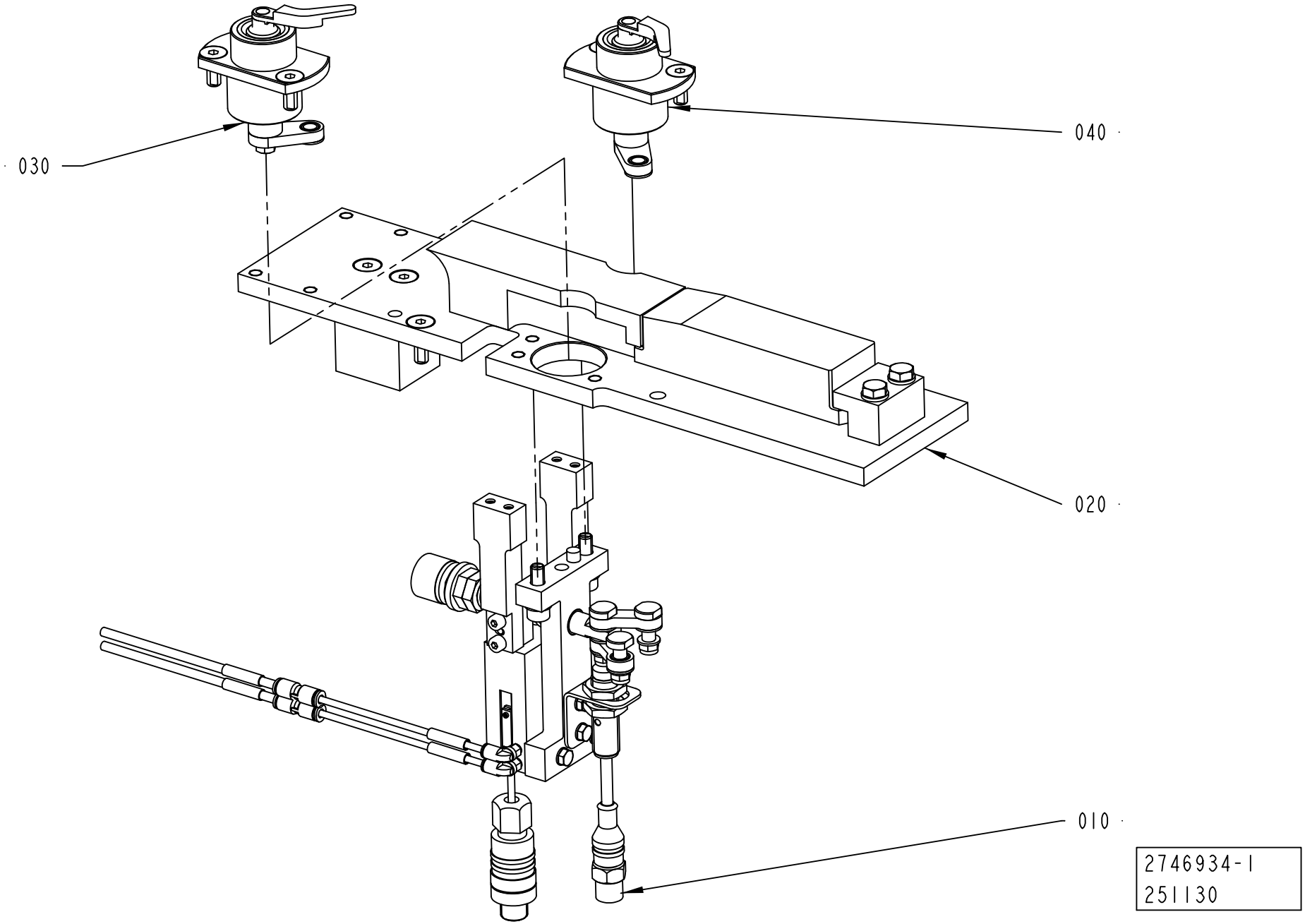
030
040
020
010
2746934-1
251130

ECM: 262938 - 20060920
Group number: 2746934-0100
Assembly Drawing: 2746934-1_1_AA

Pos	Part No	UN	Qty	Description	Page No
-					
010	2716046-0100		1	CLAMP UNIT	**7-21**
020	2716047-0100		1	HEIGHT ADJUSTMENT	**7-23**
030	2740299-0100		1	FINGER	**7-25**
040	2740371-0100		1	FINGER	**7-27**

Pos	Part No	UN	Qty	Description	Page No

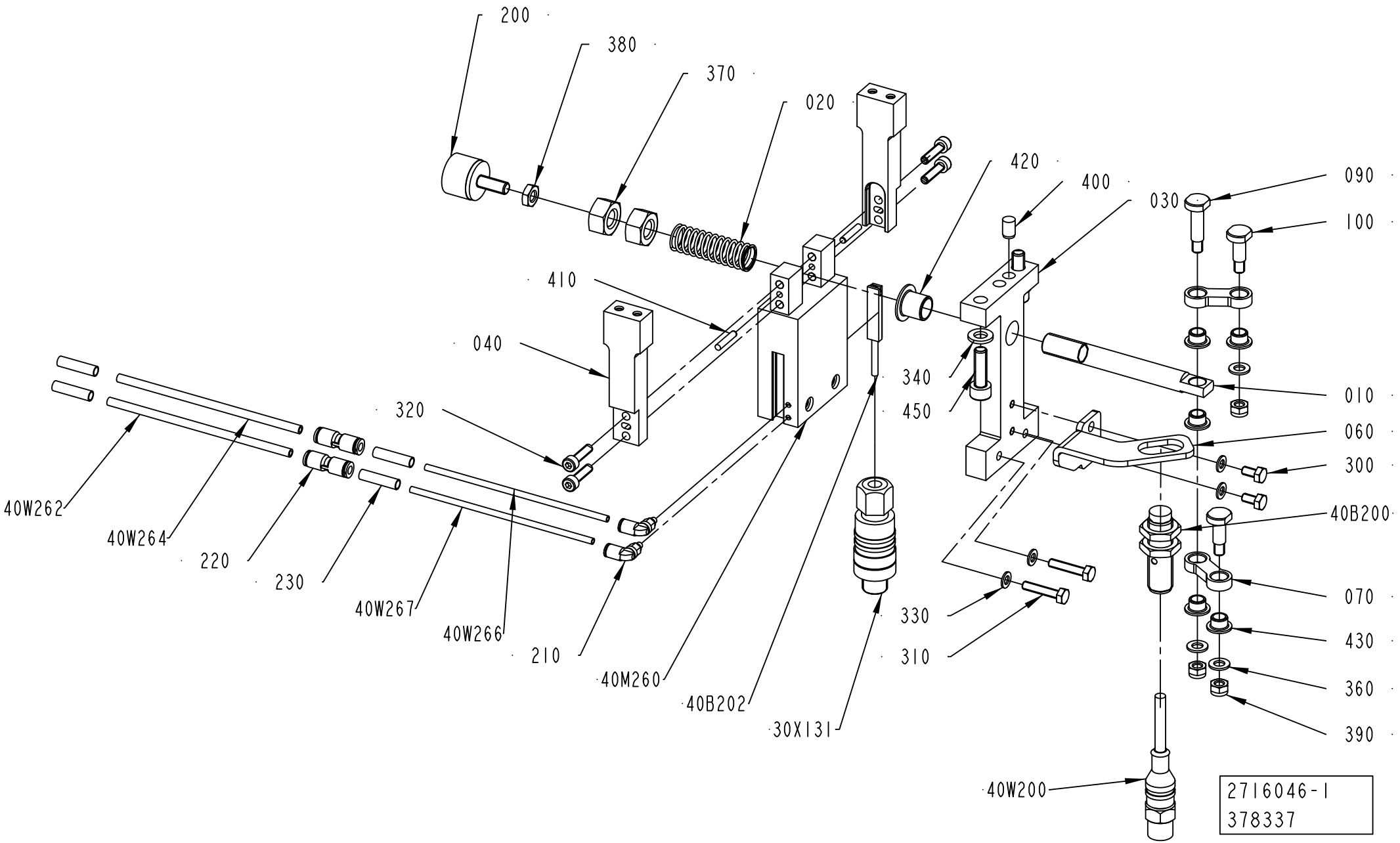
200
380
370
020
420
400
030
090
100
410
040
320
340
450
010
060
300
40B200
40W262
40W264
220
230
40W267
40W266
210
40M260
40B202
30X131
330
310
070
430
360
390
40W200
2716046-1
378337

ECM: 419492 - 20100110
Group number: 2716046-0100
Assembly Drawing: 2716046-1_1_AD

Pos	Part No	UN	Qty	Description	Page No
-					
010	2838763-0000		1	SHAFT	
020	3020132-0000		1	SPRING	
030	2740373-0000		1	BRACKET	
040	2740375-0000		2	BRACKET	
060	2973942-0000		1	BRACKET	
070	2730989-0000		2	LEVER	
090	2780361-0000		1	PIN	
100	2780362-0000		2	PIN	
200	90600-5547		1	VIBRATION DAMPER, D-TYPE 20X15 M6X15 NBR	
210	90459-7426		2	PUSH-IN L-FITTING QSML-M3-3	
220	90459-7427		2	PUSH-IN FITTING QSM-4-3	
230	90459-7368		4	MARKING FOR PNEUM. TUBING, PRZ04	
300	312105-0287		2	SCREW M6S ISO 4017 M4X8 A470	
30X131	90459-1663		1	CONNECTOR, 405204 RSC4/7	
310	312105-0295		2	SCREW M6S ISO 4017 M4X20 A470	
320	312115-0293		4	SCREW ISO4762 M4X16 A4 80	
330	315105-0136		4	WASHER BRB 4,3X8 RFR	
340	315105-0153		2	WASHER BRB 6,4X12 RFR	
360	315106-0146		3	WASHER ISO 7089-5-200 HV A4	
370	312635-0320		2	NUT M6M 10X1 STAINLESS A2 80	
380	312625-0316		1	HEXAGON THIN NUT, EN 24035 ML6M M6 A4	
390	312812-0314		3	HEXAGON NUT, NY-LOCK M5 A480	
400	311103-0348		1	PARALLEL PIN ISO 2338 6M6X10 A1	
40B200	90459-6948		1	PROX.SWITCH IFS206	
40B202	90600-3272		1	PROX. SENSOR, SMT-8M-PS-24V-K-5,0-OE	
40M260	90459-7429		1	CYLINDER, GRIPPER HGP-16-A-B	
40W200	351411-0010		1	ACTU/SENS. CABLE PRST 4-PRKT 4-07/1,0M	
40W262	315400-0016	M	10	TUBE PUN-H-4X0,75-BL	
40W264	315400-0016	M	10	TUBE PUN-H-4X0,75-BL	
40W266	90459-7428	M	1	TUBE PUN-H-3X0,5-BL	
40W267	90459-7428	M	1	TUBE PUN-H-3X0,5-BL	
410	311103-0236		2	PARALLEL PIN ISO 2338 3M6X16 A1	
420	321158-0142		1	FLANGE BUSHING, IGLIDUR J 10X12X12	
430	321158-0060		5	FLANGE BUSHING, IGLIDUR J 6X8X6	
450	312115-0370		2	SCREW ISO4762 M6X20 A4 80	

Pos	Part No	UN	Qty	Description	Page No

Machine Type | Group Description | Used-In | Group Number | Page No

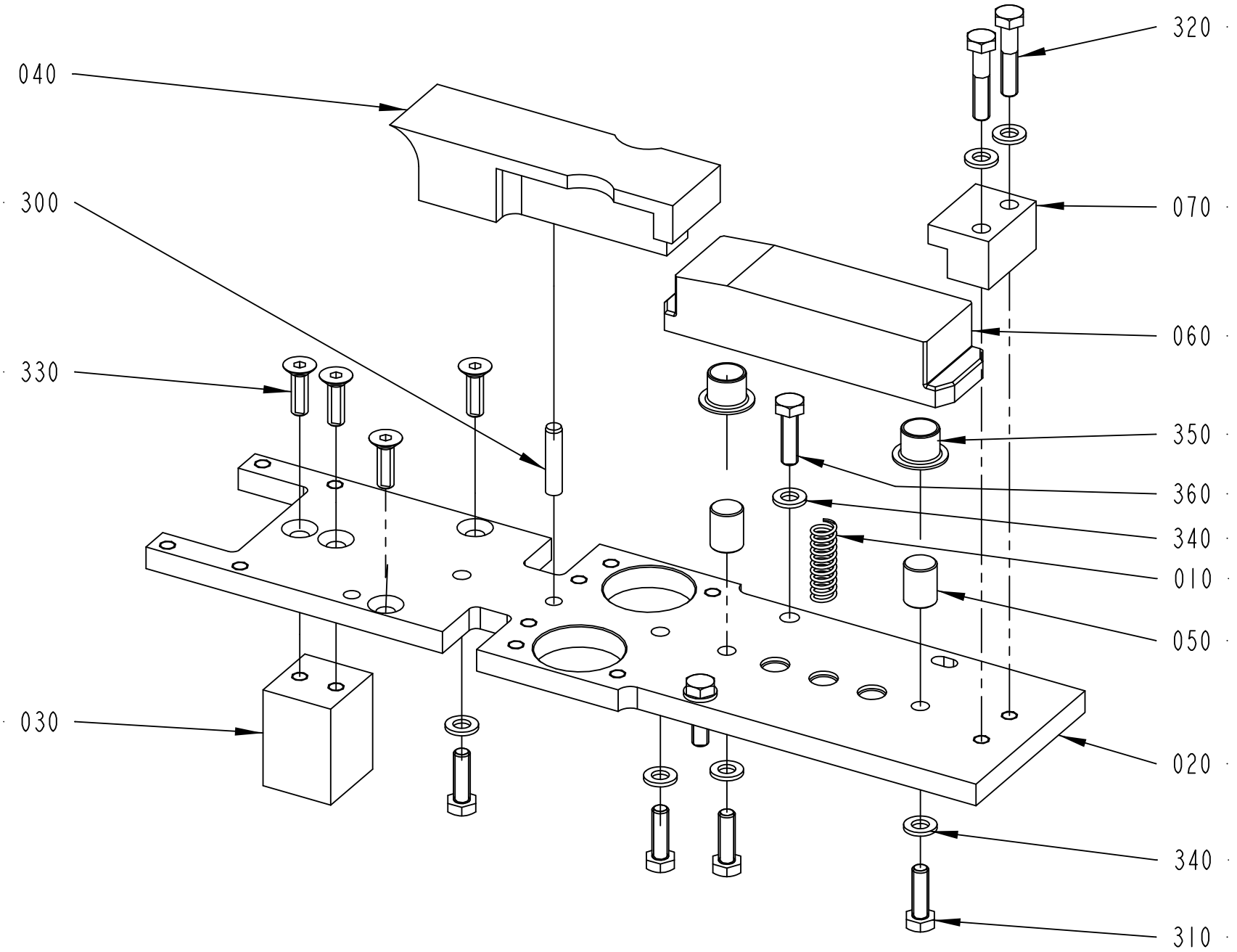
040
300
330
030
320
070
060
350
360
340
010
050
020
340
310
2716047-1
295765

ECM: 428942 - 20100401
Group number: 2716047-0100
Assembly Drawing: 2716047-1_1_AB

Pos	Part No	UN	Qty	Description	Page No
-					
010	90600-0351		1	COMP. SPRING 2489, 1,2X9,4X30	
020	2838765-0000		1	PLATE	
030	2838764-0000		1	BLOCK	
040	2727431-0000		1	SLIDE PLATE	
050	2727432-0000		2	SHAFT	
060	2727434-0000		1	SLIDE PLATE	
070	2727440-0000		1	END SUPPORT	
300	311103-0356		1	PARALLEL PIN ISO 2338 6M6X28 A1	
310	312105-0370		4	SCREW M6S ISO 4017 M6X20 A480	
320	312105-0374		2	SCREW M6S ISO 4014 M6X30 A480	
330	312155-0370		2	SCREW DIN 7991 MF6S M6X20 A4 70	
340	315105-0153		8	WASHER BRB 6,4X12 RFR	
350	321158-0180		2	FLANGE BUSHING, IGLIDUR J 12X14X12	
360	312105-0371		2	SCREW M6S ISO 4017 M6X22 A480	

Pos	Part No	UN	Qty	Description	Page No

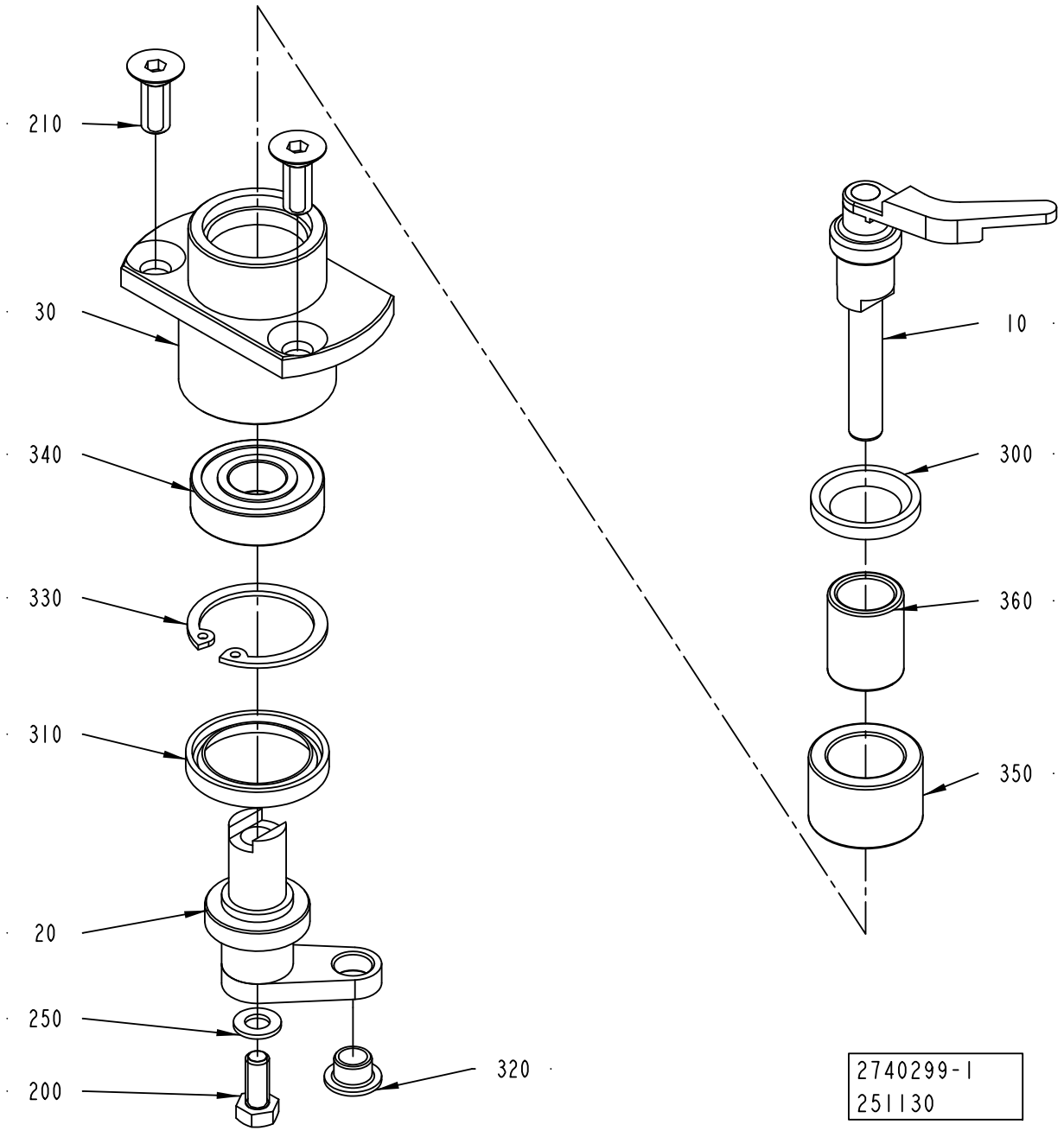
210
30
340
330
310
20
250
200
320
10
300
360
350
2740299-1
251130

ECM: 393039 - 20090701
Group number: 2740299-0100
Assembly Drawing: 2740299-1_1_AA

Pos	Part No	UN	Qty	Description	Page No
-					
010	2740300-0000		1	FINGER	
020	2470301-0000		1	LEVER	
030	2470302-0000		1	HUB	
200	312105-0327		1	SCREW M6S ISO 4017 M5X12 A480	
210	312155-0368		2	SCREW DIN 7991 MF6S M6X16 A4 70	
250	315105-0146		1	WASHER BRB 5,3X10 RFR	
300	315230-0193		1	BEARING SEAL G15X23X3 MM	
310	315230-0274		1	BEARING SEAL G22X30X4 MM	
320	321158-0060		1	FLANGE BUSHING, IGLIDUR J 6X8X6	
330	315753-0121		1	RETAINING RING FOR BORE DIN 472 28 SS	
340	321308-0101		1	BALL BEARING 12/28X8	
350	90600-0347		1	NEEDLE BEARING W/O CONE, 16X24X16MM	
360	90600-0349		1	INNER RING, IR12X16X20	

Pos	Part No	UN	Qty	Description	Page No

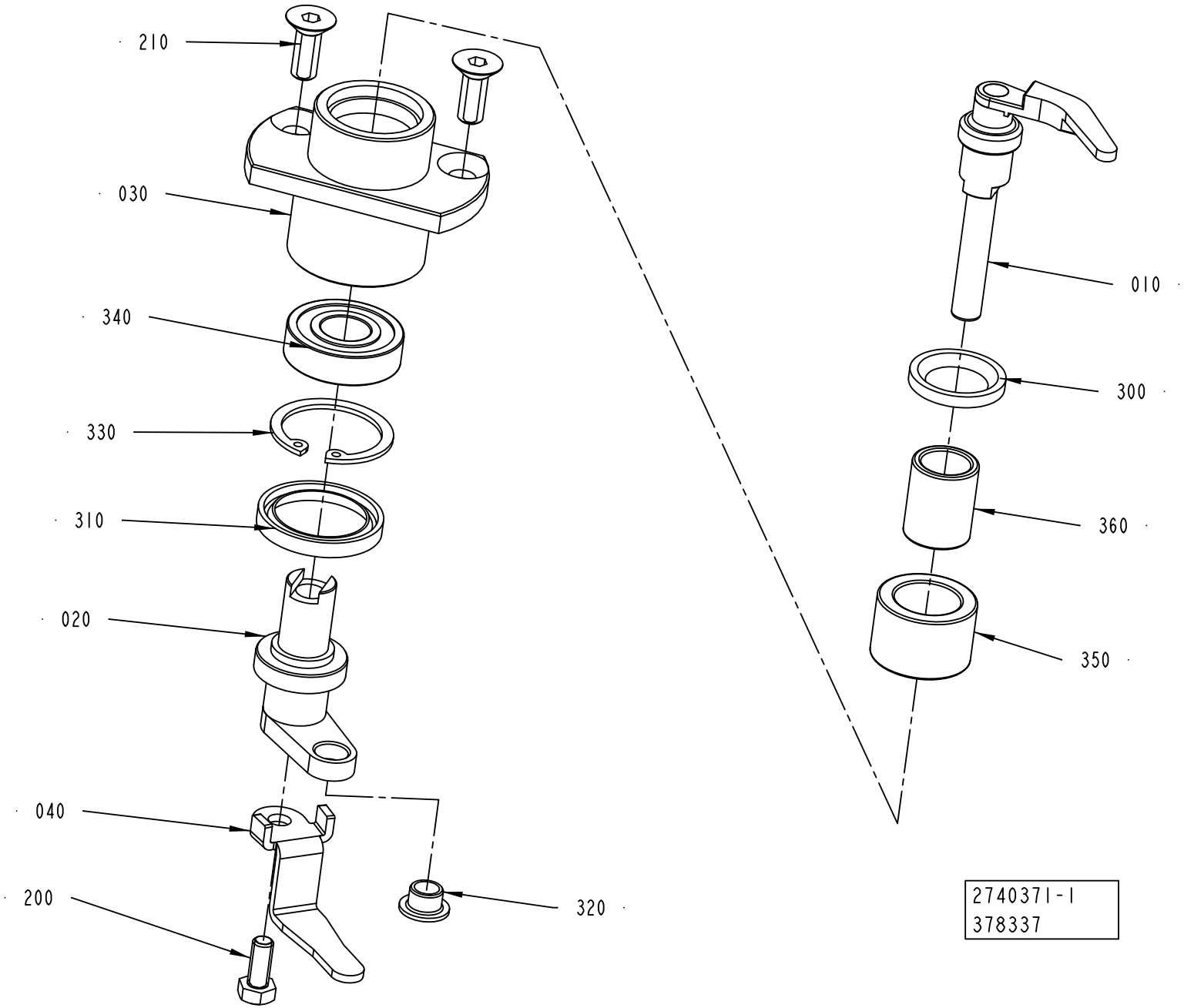
210
030
340
330
310
020
040
200
320
010
300
360
350
2740371-1
378337

ECM: 393040 - 20090701
Group number: 2740371-0100
Assembly Drawing: 2740371-1_1_AB

Pos	Part No	UN	Qty	Description	Page No
-					
010	2740372-0000		1	FINGER	
020	2470373-0000		1	LEVER	
030	2470302-0000		1	HUB	
040	2973943-0000		1	PLATE	
200	312105-0327		1	SCREW M6S ISO 4017 M5X12 A480	
210	312155-0368		2	SCREW DIN 7991 MF6S M6X16 A4 70	
300	315230-0193		1	BEARING SEAL G15X23X3 MM	
310	315230-0274		1	BEARING SEAL G22X30X4 MM	
320	321158-0060		1	FLANGE BUSHING, IGLIDUR J 6X8X6	
330	315753-0121		1	RETAINING RING FOR BORE DIN 472 28 SS	
340	321308-0101		1	BALL BEARING 12/28X8	
350	90600-0347		1	NEEDLE BEARING W/O CONE, 16X24X16MM	
360	90600-0349		1	INNER RING, IR12X16X20	

Pos	Part No	UN	Qty	Description	Page No

Machine Type	Group Description	Used-In	Group Number	Page No

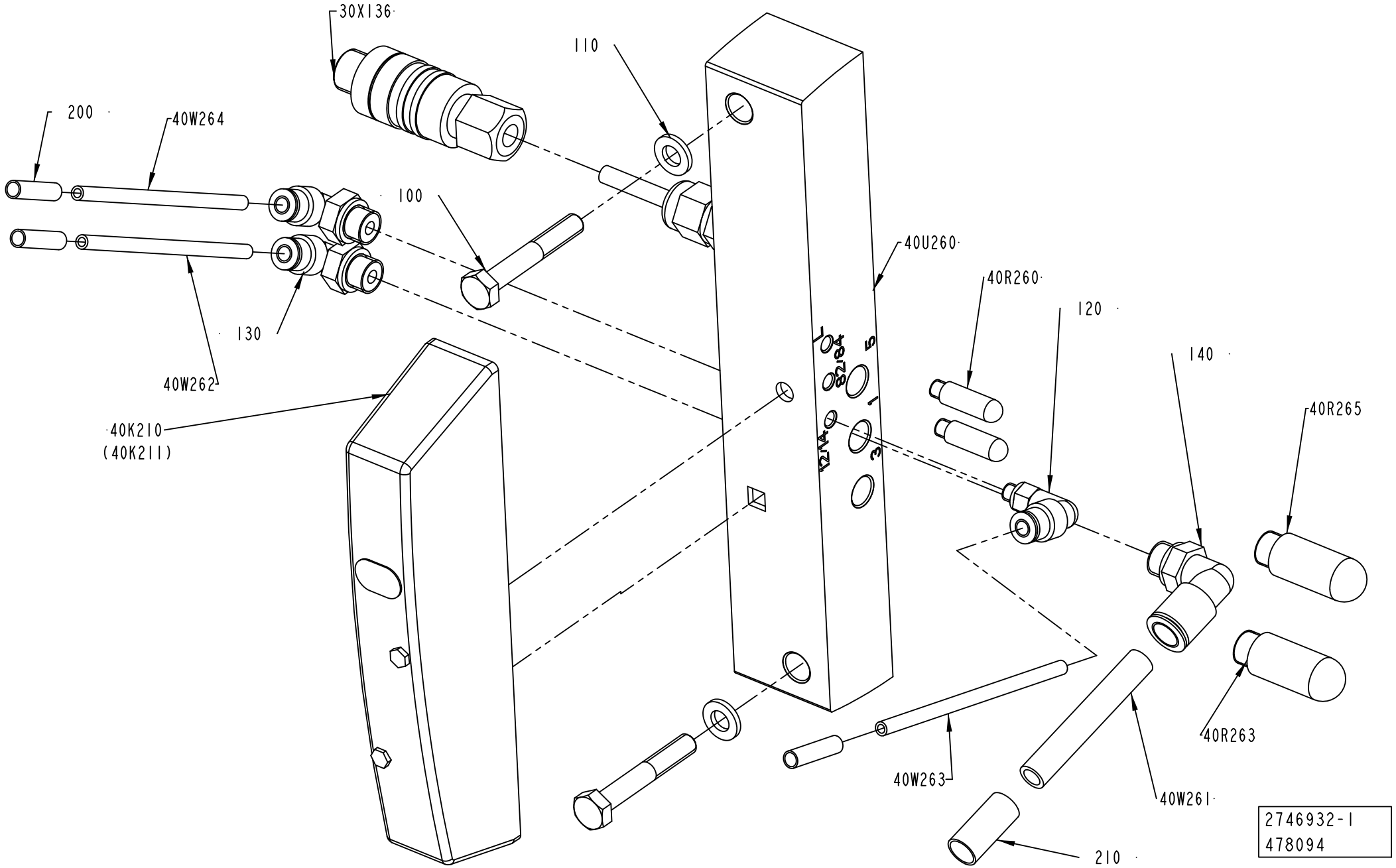
30X136
110
200
40W264
100
40U260
40R260
120
130
140
40R265
40W262
40K210
(40K211)
40W263
40W261
40R263
210
2746932-1
478094

ECM: 480495 - 20110401
Group number: 2746932-0100
Assembly Drawing: 2746932-1_1_AB

Pos	Part No	UN	Qty	Description	Page No
-					
100	312105-0378		2	SCREW M6S ISO 4014 M6X40 A480	
110	315106-0153		2	WASHER ISO 7089-6-200 HV A4	
120	350002-0001		1	PUSH-IN L-FITTING QSL-F-M5-4	
130	350002-0005		2	PUSH-IN L-FITTING QSL-F-G1/8-4	
140	350002-0007		1	PUSH-IN L-FITTING QSL-F-G1/8-8	
200	90459-7368		3	MARKING FOR PNEUM. TUBING, PRZ04	
210	90459-7370		1	MARKING FOR PNEUM. TUBING, PRZ08	
30X136	90459-1663		1	CONNECTOR, 405204 RSC4/7	
40K210	90458-1197		1	VALVE, 5/2 BISTABLE	
40R260	90328-0029		2	SILENCER M5	
40R263	90328-0047		1	SILENCER G1/8"	
40R265	90328-0047		1	SILENCER G1/8"	
40U260	90459-2591		1	SINGLE VALVE SUB-BASE CDSV5.0-AS-1/8	
40W261	315400-0004	M	1	TUBE PUN-H-8X1,25-BL	
40W262	315400-0016	M	10	TUBE PUN-H-4X0,75-BL	
40W263	315400-0016	M	10	TUBE PUN-H-4X0,75-BL	
40W264	315400-0016	M	10	TUBE PUN-H-4X0,75-BL	

Pos	Part No	UN	Qty	Description	Page No

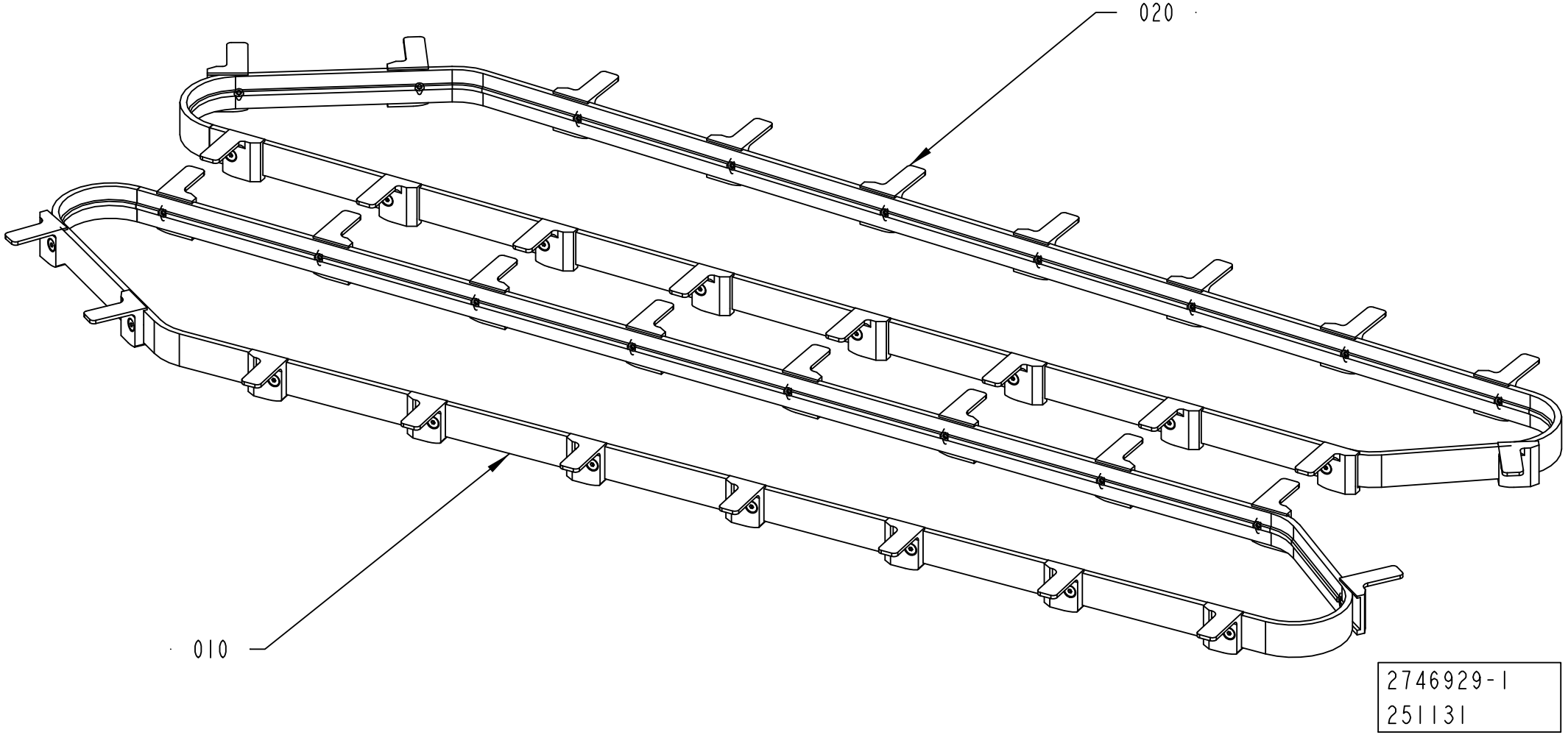
020
010
2746929-1
251131

ECM: 297333 - 20070323
Group number: 2746929-0100
Assembly Drawing: 2746929-1_1_AA

Pos	Part No	UN	Qty	Description	Page No
-					
010	2780509-0100		1	TIMING BELT	**7-33**
020	2780497-0100		1	TIMING BELT	**7-35**

Pos	Part No	UN	Qty	Description	Page No

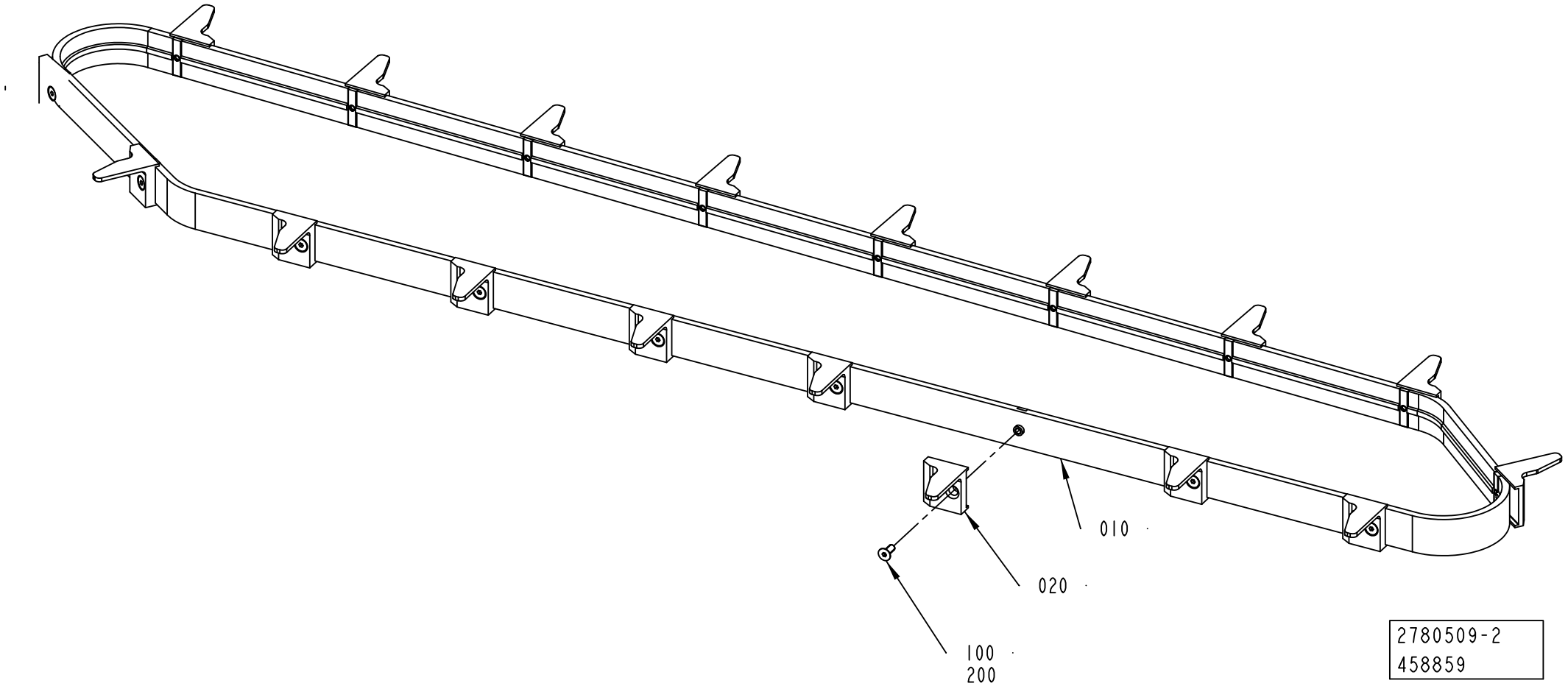
010
020
100
200
2780509-2
458859

ECM: 462612 - 20101001
Group number: 2780509-0100
Assembly Drawing: 2780509-2_1_AC

Pos	Part No	UN	Qty	Description	Page No
CAP 30/FLEX					
010	3117845-0000		1	TIMING BELT	
	3117847-0000		*1*	*TIMING BELT*	
	3117849-0000		*18*	*INSERT NUT*	
020	2715975-0000		18	FINGER	
100	312155-0289		18	SCREW DIN 7991 MF6S M4X10 A4 70	
Common Parts					
200	90602-4847		1	THREAD LOCKING, LOCTITE 243 50 ML	

Pos	Part No	UN	Qty	Description	Page No

Machine Type | Group Description | Used-In | Group Number | Page No

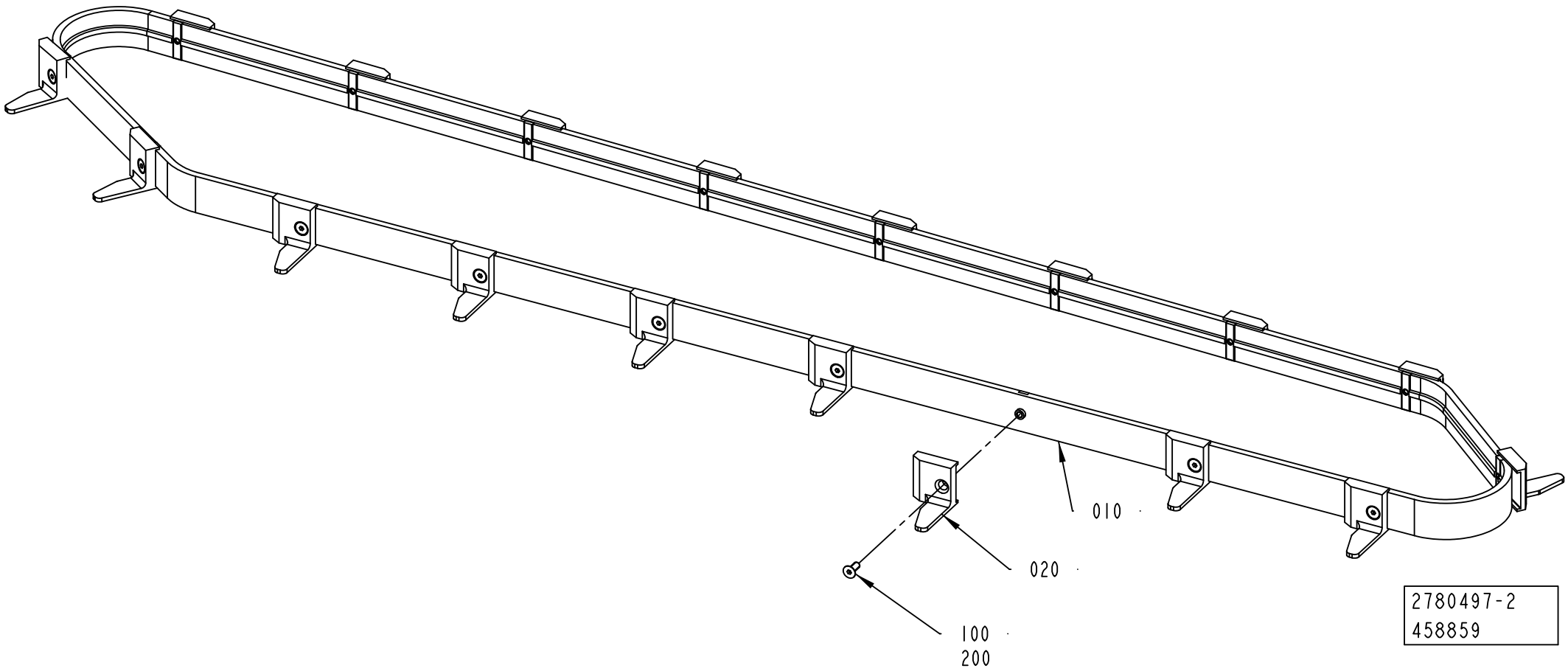
010
020
100
200
2780497-2
458859

ECM: 462611 - 20101001
Group number: 2780497-0100
Assembly Drawing: 2780497-2_1_AC

Pos	Part No	UN	Qty	Description	Page No
CAP 30/FLEX					
010	3117845-0000		1	TIMING BELT	
	3117847-0000		*1*	*TIMING BELT*	
	3117849-0000		*18*	*INSERT NUT*	
020	2715889-0000		18	FINGER	
100	312155-0289		18	SCREW DIN 7991 MF6S M4X10 A4 70	
Common Parts					
200	90602-4847		1	THREAD LOCKING, LOCTITE 243 50 ML	

Pos	Part No	UN	Qty	Description	Page No

Machine Type | Group Description | Used-In | Group Number | Page No

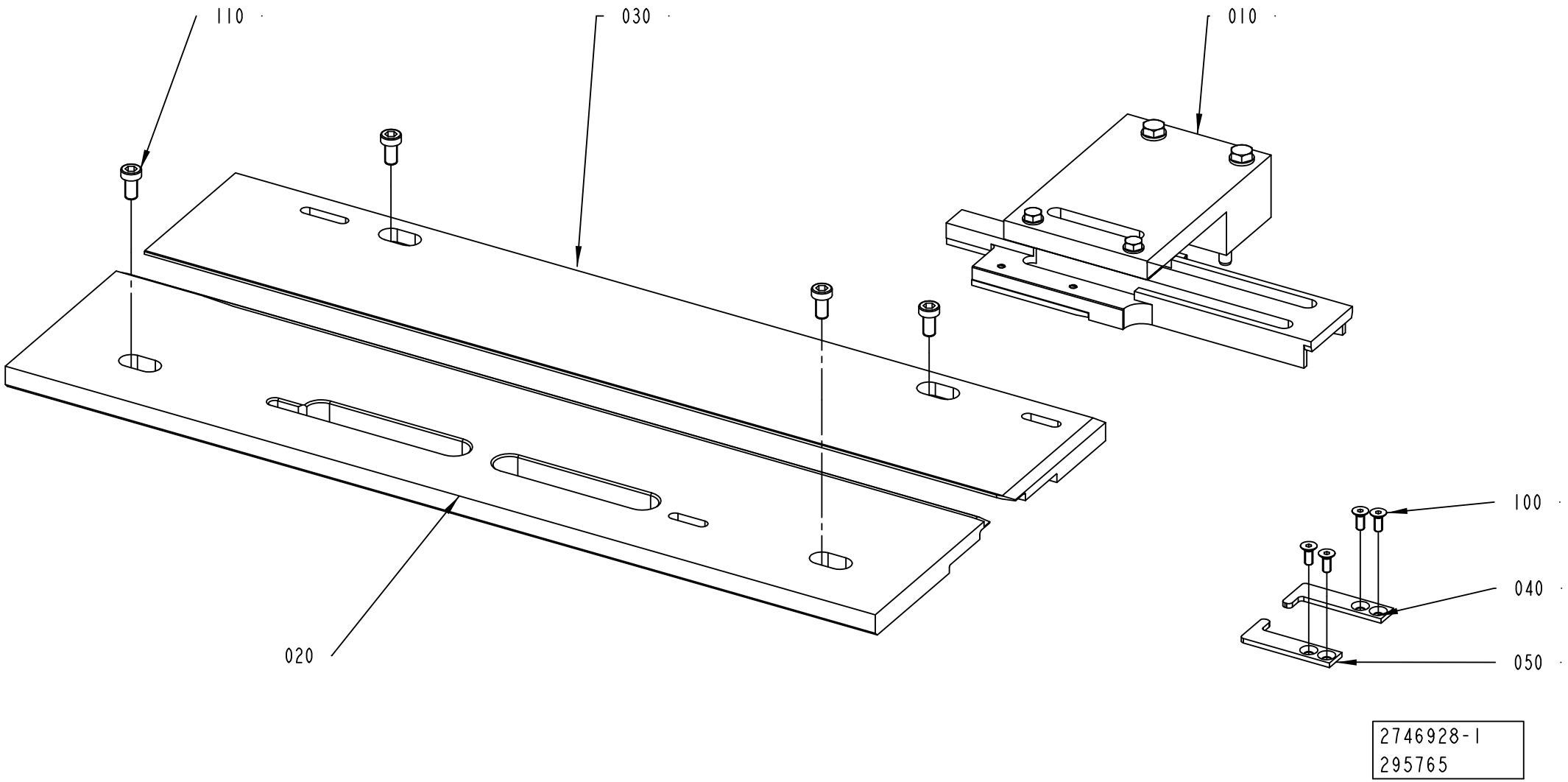

2746928-1
295765

ECM: 480494 - 20110401
Group number: 2746928-0100
Assembly Drawing: 2746928-1_1_AB

This list covers pages from 7-36 to 7-43

Pos	Part No	UN	Qty	Description	Page No
HELICAP2 23 (See drawing on page: 7-40)					
020	3077731-0000		1	GUIDE	
030	3077732-0000		1	GUIDE	
040	2970138-0000		1	CLAMPING PART	
050	2970139-0000		1	CLAMPING PART	
070	3141446-0000		2	GUIDE	
120	312105-0285		2	SCREW M6S ISO 4017 M4X6 A470	
130	315105-0136		2	WASHER BRB 4,3X8 RFR	
SLIMCAP 1000 (See drawing on page: 7-38)					
020	2716139-0000		1	GUIDE	
030	2716138-0000		1	GUIDE	
040	2727447-0000		1	CLAMPING PART	
050	2727446-0000		1	CLAMPING PART	
SLIMCAP 2000 (See drawing on page: 7-38)					
020	2867644-0000		1	GUIDE	
030	2867645-0000		1	GUIDE	
040	2893414-0000		1	CLAMPING PART	
050	2893415-0000		1	CLAMPING PART	
STREAMCAP1000 (See drawing on page: 7-36)					
020	2716067-0000		1	GUIDE	
030	2716068-0000		1	GUIDE	
040	2752107-0000		1	CLAMPING PART	
050	2752108-0000		1	CLAMPING PART	
STREAMCAP200 (See drawing on page: 7-36)					
020	2893416-0000		1	GUIDE	
030	2893417-0000		1	GUIDE	
040	2893420-0000		1	CLAMPING PART	
050	2893421-0000		1	CLAMPING PART	
STREAMCAP330 (See drawing on pages: 7-36, 7-42)					
020	2914953-0000		1	GUIDE	
030	2914954-0000		1	GUIDE	
040	2914957-0000		1	CLAMPING PART	
050	2914958-0000		1	CLAMPING PART	
060	2987993-0100		1	CAP FEEDER	**7-45**
STREAMCAP500 (See drawing on page: 7-36)					
020	2875596-0000		1	GUIDE	
030	2875597-0000		1	GUIDE	
040	2752107-0000		1	CLAMPING PART	
050	2752108-0000		1	CLAMPING PART	
Common Parts					
010	2716069-0100		1	GUIDE RAIL	**7-47, 7-49**
100	312155-0289		4	SCREW DIN 7991 MF6S M4X10 A4 70	
110	90600-1772		4	SCREW DIN7984 M6X12 AISI 304	

Machine Type	Group Description	Used-In	Group Number	Page No

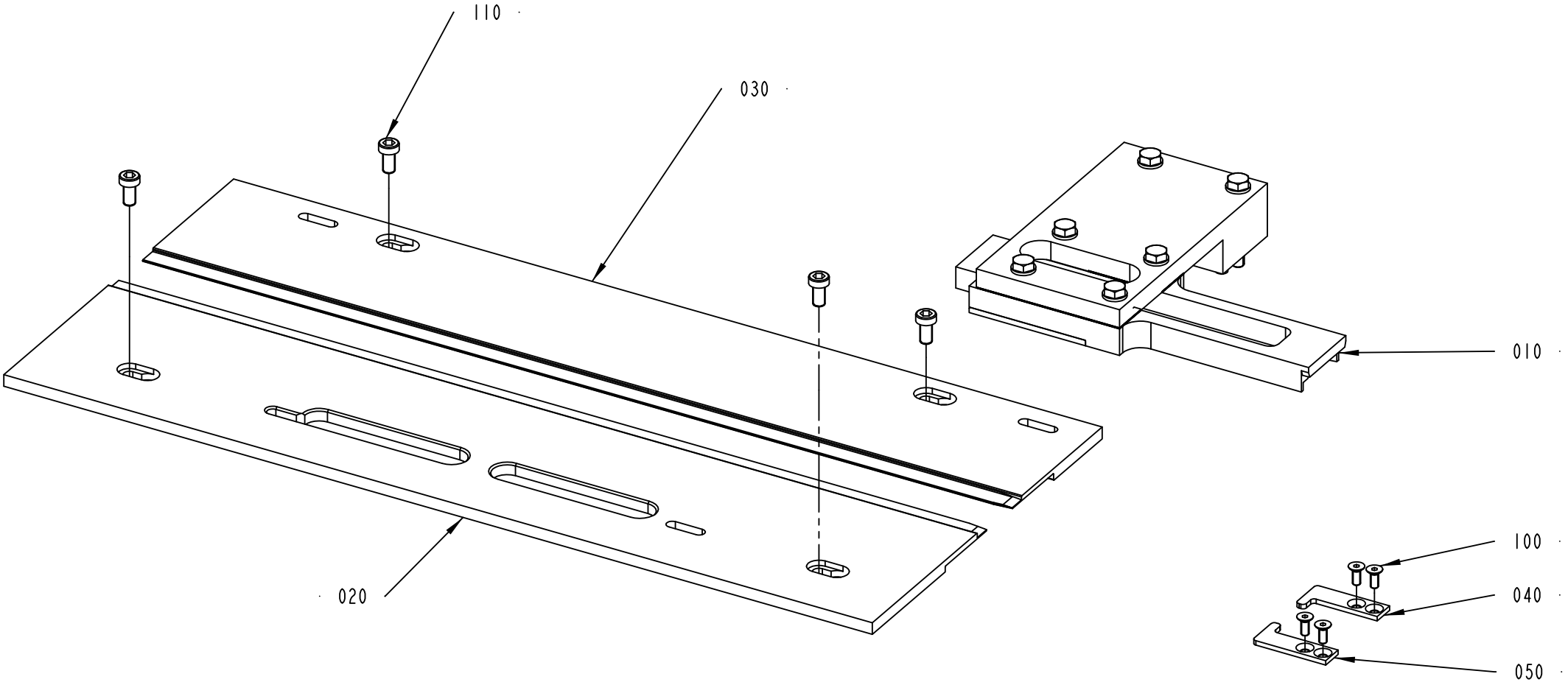

2746928-2
295765

ECM: 480494 - 20110401
Group number: 2746928-0100
Assembly Drawing: 2746928-2_1_AB

This list covers pages from 7-36 to 7-43

Pos	Part No	UN	Qty	Description	Page No
HELICAP2 23 (See drawing on page: 7-40)					
020	3077731-0000		1	GUIDE	
030	3077732-0000		1	GUIDE	
040	2970138-0000		1	CLAMPING PART	
050	2970139-0000		1	CLAMPING PART	
070	3141446-0000		2	GUIDE	
120	312105-0285		2	SCREW M6S ISO 4017 M4X6 A470	
130	315105-0136		2	WASHER BRB 4,3X8 RFR	
SLIMCAP 1000 (See drawing on page: 7-38)					
020	2716139-0000		1	GUIDE	
030	2716138-0000		1	GUIDE	
040	2727447-0000		1	CLAMPING PART	
050	2727446-0000		1	CLAMPING PART	
SLIMCAP 2000 (See drawing on page: 7-38)					
020	2867644-0000		1	GUIDE	
030	2867645-0000		1	GUIDE	
040	2893414-0000		1	CLAMPING PART	
050	2893415-0000		1	CLAMPING PART	
STREAMCAP1000 (See drawing on page: 7-36)					
020	2716067-0000		1	GUIDE	
030	2716068-0000		1	GUIDE	
040	2752107-0000		1	CLAMPING PART	
050	2752108-0000		1	CLAMPING PART	
STREAMCAP200 (See drawing on page: 7-36)					
020	2893416-0000		1	GUIDE	
030	2893417-0000		1	GUIDE	
040	2893420-0000		1	CLAMPING PART	
050	2893421-0000		1	CLAMPING PART	
STREAMCAP330 (See drawing on pages: 7-36, 7-42)					
020	2914953-0000		1	GUIDE	
030	2914954-0000		1	GUIDE	
040	2914957-0000		1	CLAMPING PART	
050	2914958-0000		1	CLAMPING PART	
060	2987993-0100		1	CAP FEEDER	**7-45**
STREAMCAP500 (See drawing on page: 7-36)					
020	2875596-0000		1	GUIDE	
030	2875597-0000		1	GUIDE	
040	2752107-0000		1	CLAMPING PART	
050	2752108-0000		1	CLAMPING PART	
Common Parts					
010	2716069-0100		1	GUIDE RAIL	**7-47, 7-49**
100	312155-0289		4	SCREW DIN 7991 MF6S M4X10 A4 70	
110	90600-1772		4	SCREW DIN7984 M6X12 AISI 304	

Machine Type	Group Description	Used-In	Group Number	Page No

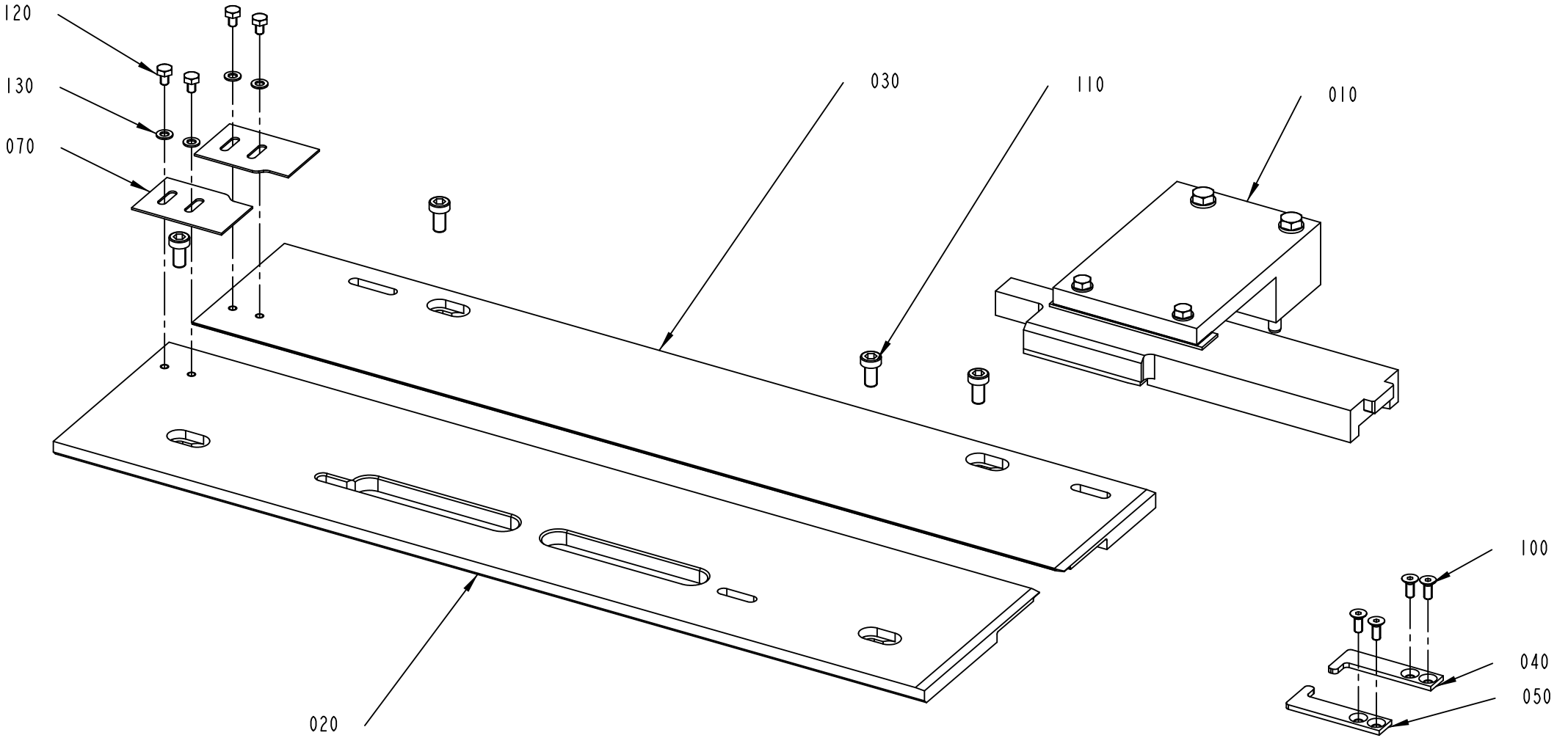
120
130
070
030
110
010
020
100
040
050
2746928-3
478094

Pos	Part No	UN	Qty	Description	Page No
HELICAP2 23 (See drawing on page: 7-40)					
020	3077731-0000		1	GUIDE	
030	3077732-0000		1	GUIDE	
040	2970138-0000		1	CLAMPING PART	
050	2970139-0000		1	CLAMPING PART	
070	3141446-0000		2	GUIDE	
120	312105-0285		2	SCREW M6S ISO 4017 M4X6 A470	
130	315105-0136		2	WASHER BRB 4,3X8 RFR	
SLIMCAP 1000 (See drawing on page: 7-38)					
020	2716139-0000		1	GUIDE	
030	2716138-0000		1	GUIDE	
040	2727447-0000		1	CLAMPING PART	
050	2727446-0000		1	CLAMPING PART	
SLIMCAP 2000 (See drawing on page: 7-38)					
020	2867644-0000		1	GUIDE	
030	2867645-0000		1	GUIDE	
040	2893414-0000		1	CLAMPING PART	
050	2893415-0000		1	CLAMPING PART	
STREAMCAP1000 (See drawing on page: 7-36)					
020	2716067-0000		1	GUIDE	
030	2716068-0000		1	GUIDE	
040	2752107-0000		1	CLAMPING PART	
050	2752108-0000		1	CLAMPING PART	
STREAMCAP200 (See drawing on page: 7-36)					
020	2893416-0000		1	GUIDE	
030	2893417-0000		1	GUIDE	
040	2893420-0000		1	CLAMPING PART	
050	2893421-0000		1	CLAMPING PART	
STREAMCAP330 (See drawing on pages: 7-36, 7-42)					
020	2914953-0000		1	GUIDE	
030	2914954-0000		1	GUIDE	
040	2914957-0000		1	CLAMPING PART	
050	2914958-0000		1	CLAMPING PART	
060	2987993-0100		1	CAP FEEDER	**7-45**
STREAMCAP500 (See drawing on page: 7-36)					
020	2875596-0000		1	GUIDE	
030	2875597-0000		1	GUIDE	
040	2752107-0000		1	CLAMPING PART	
050	2752108-0000		1	CLAMPING PART	
Common Parts					
010	2716069-0100		1	GUIDE RAIL	**7-47, 7-49**
100	312155-0289		4	SCREW DIN 7991 MF6S M4X10 A4 70	
110	90600-1772		4	SCREW DIN7984 M6X12 AISI 304	

Machine Type | Group Description | Used-In | Group Number | Page No

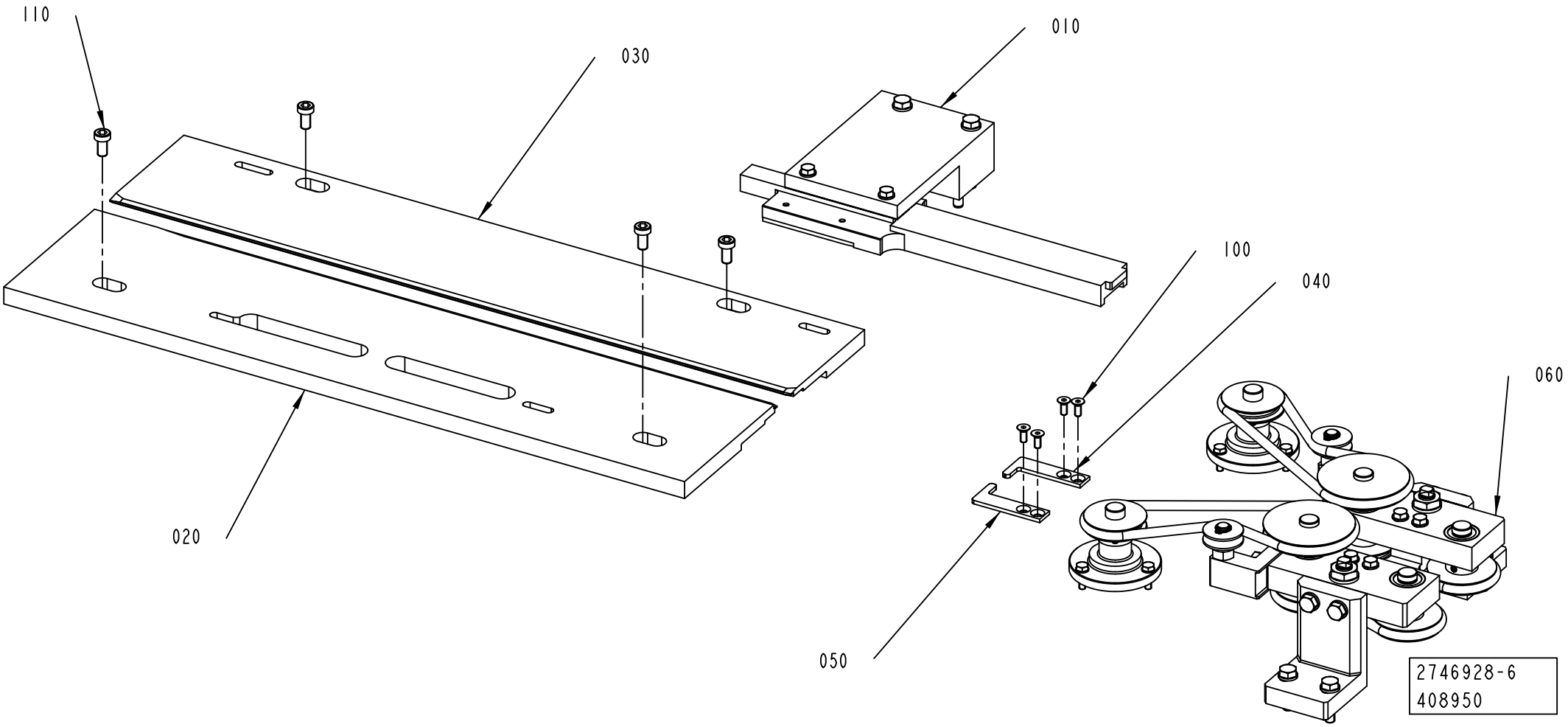
110
030
010
100
040
060
020
050
2746928-6
408950

Pos	Part No	UN	Qty	Description	Page No
HELICAP2 23 (See drawing on page: 7-40)					
020	3077731-0000		1	GUIDE	
030	3077732-0000		1	GUIDE	
040	2970138-0000		1	CLAMPING PART	
050	2970139-0000		1	CLAMPING PART	
070	3141446-0000		2	GUIDE	
120	312105-0285		2	SCREW M6S ISO 4017 M4X6 A470	
130	315105-0136		2	WASHER BRB 4,3X8 RFR	
SLIMCAP 1000 (See drawing on page: 7-38)					
020	2716139-0000		1	GUIDE	
030	2716138-0000		1	GUIDE	
040	2727447-0000		1	CLAMPING PART	
050	2727446-0000		1	CLAMPING PART	
SLIMCAP 2000 (See drawing on page: 7-38)					
020	2867644-0000		1	GUIDE	
030	2867645-0000		1	GUIDE	
040	2893414-0000		1	CLAMPING PART	
050	2893415-0000		1	CLAMPING PART	
STREAMCAP1000 (See drawing on page: 7-36)					
020	2716067-0000		1	GUIDE	
030	2716068-0000		1	GUIDE	
040	2752107-0000		1	CLAMPING PART	
050	2752108-0000		1	CLAMPING PART	
STREAMCAP200 (See drawing on page: 7-36)					
020	2893416-0000		1	GUIDE	
030	2893417-0000		1	GUIDE	
040	2893420-0000		1	CLAMPING PART	
050	2893421-0000		1	CLAMPING PART	
STREAMCAP330 (See drawing on pages: 7-36, 7-42)					
020	2914953-0000		1	GUIDE	
030	2914954-0000		1	GUIDE	
040	2914957-0000		1	CLAMPING PART	
050	2914958-0000		1	CLAMPING PART	
060	2987993-0100		1	CAP FEEDER	**7-45**
STREAMCAP500 (See drawing on page: 7-36)					
020	2875596-0000		1	GUIDE	
030	2875597-0000		1	GUIDE	
040	2752107-0000		1	CLAMPING PART	
050	2752108-0000		1	CLAMPING PART	
Common Parts					
010	2716069-0100		1	GUIDE RAIL	**7-47, 7-49**
100	312155-0289		4	SCREW DIN 7991 MF6S M4X10 A4 70	
110	90600-1772		4	SCREW DIN7984 M6X12 AISI 304	

Machine Type | Group Description | Used-In | Group Number | Page No

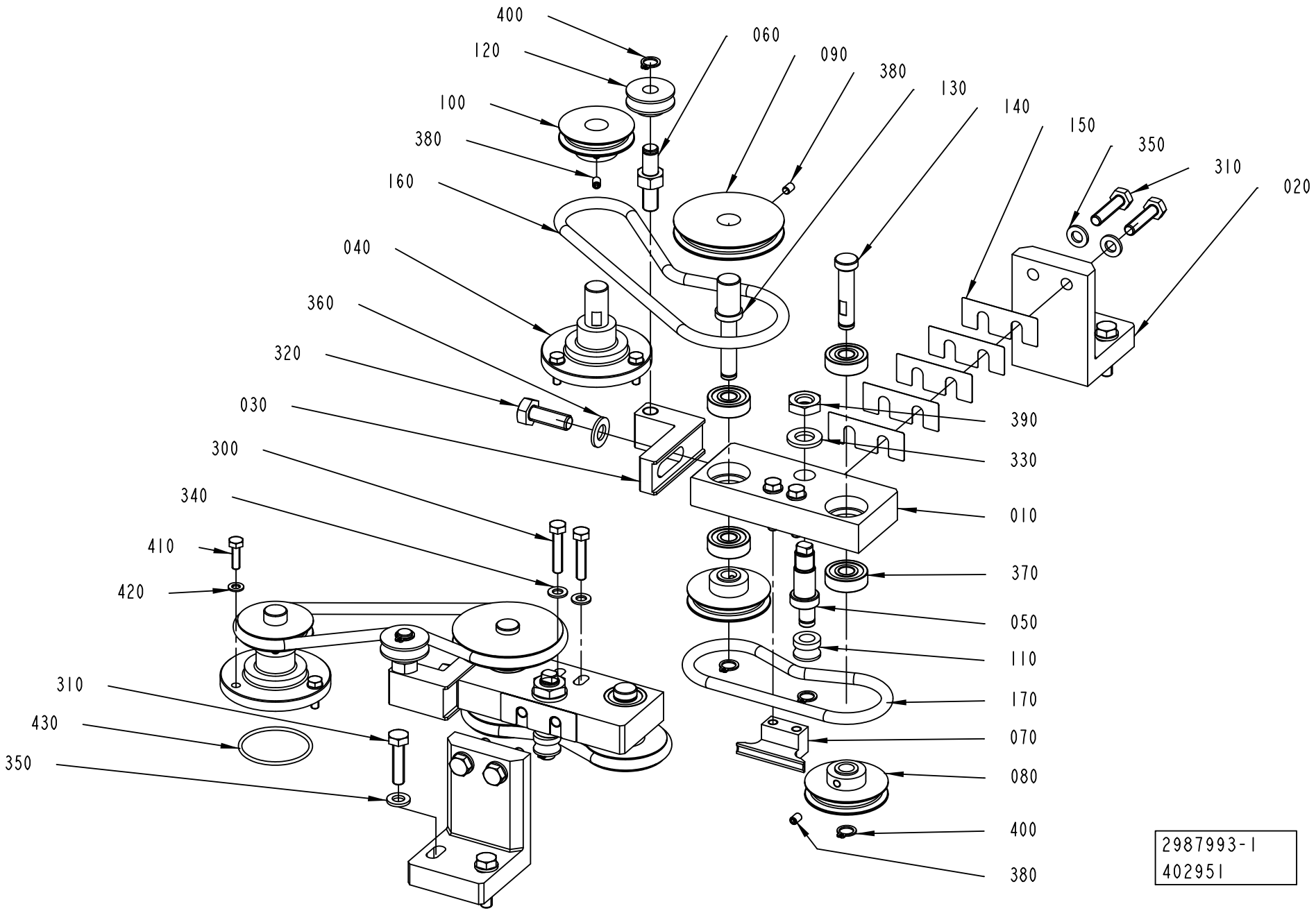
400
120
100
380
160
040
360
320
030
300
340
410
420
310
430
350
060
090
380
130
140
150
350
310
020
390
330
010
370
050
110
170
070
080
400
380
2987993-1
402951

ECM: 415660 - 20100902
Group number: 2987993-0100
Assembly Drawing: 2987993-1_1_AA

Pos	Part No	UN	Qty	Description	Page No
-					
010	2989220-0000		2	BEARING HOUSING	
020	3014012-0000		2	BRACKET	
030	3024856-0000		2	BRACKET	
040	3020137-0000		2	SHAFT	
050	3024851-0000		2	ECCENTRIC SHAFT	
060	3024855-0000		2	SHAFT	
070	3014023-0000		2	GUIDE	
080	2987996-0000		4	PULLEY	
090	3014011-0000		2	PULLEY	
100	3020144-0000		2	PULLEY	
110	3024852-0000		2	PULLEY	
120	3024853-0000		2	PULLEY	
130	2989223-0000		2	SHAFT	
140	2989224-0000		2	SHAFT	
150	3024841-0000		10	SHIM	
160	2985817-0000		2	BELT	
170	2989222-0000		2	BELT	
300	312105-0333		4	SCREW M6S ISO 4017 M5X25 A480	
310	312105-0372		8	SCREW M6S ISO 4017 M6X25 A480	
320	312105-0452		2	SCREW M6S ISO 4017 M8X22 A480	
330	315105-0171		2	WASHER BRB 10X18 RFR	
340	315105-0146		4	WASHER BRB 5,3X10 RFR	
350	315105-0153		8	WASHER BRB 6,4X12 RFR	
360	315105-0165		2	WASHER BRB 8,4X16 RFR	
370	321302-0298		8	BALL BEARING 8/22X7	
380	312318-0285		8	SCREW ISO4029 M4X6 A4	
390	312625-0320		2	HEXAGON THIN NUT, EN 24035 ML6M M10 A4	
400	90141-0015		8	RETAINING RING FOR SHAFT DIN 471 8 SS	
410	312105-0292		6	SCREW M6S ISO 4017 M4X14 A470	
420	315105-0136		6	WASHER BRB 4,3X8 RFR	
430	315202-0716		2	O-RING 34,65X1,78 MM	

Pos	Part No	UN	Qty	Description	Page No

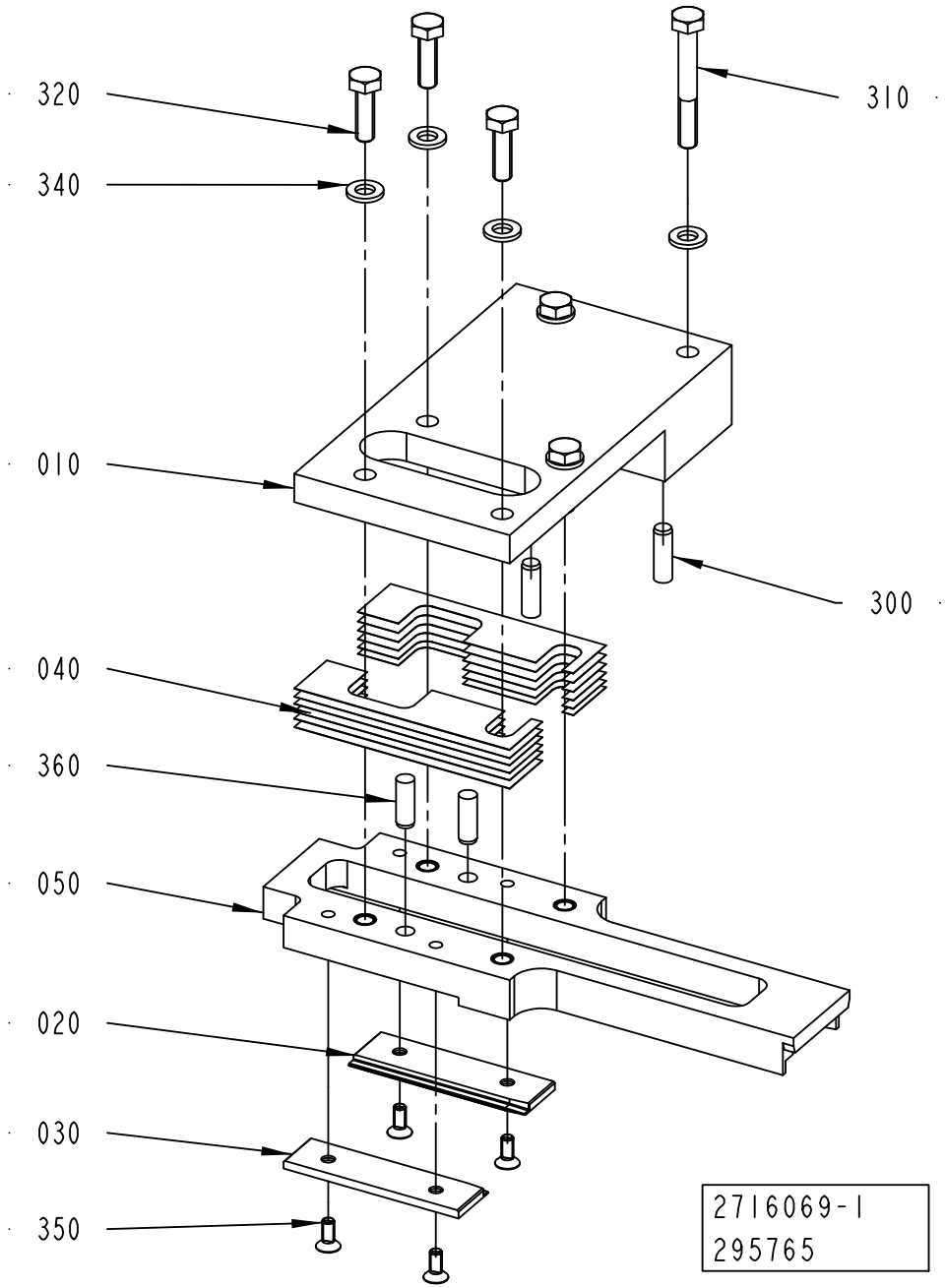
320
340
010
040
360
050
020
030
350
310
300
2716069-1
295765

ECM: 480493 - 20110401
Group number: 2716069-0100
Assembly Drawing: 2716069-1_1_AB

This list covers pages from 7-46 to 7-49

Pos	Part No	UN	Qty	Description	Page No
HELICAP2 23 (See drawing on page: 7-48)					
010	3077733-0000		1	BRACKET	
020	2970130-0000		1	GUIDE	
030	2970129-0000		1	GUIDE	
040	2751690-0000		6	SHIM	
050	2970131-0000		1	STEERING RAIL	
320	312105-0331		2	SCREW M6S ISO 4017 M5X20 A480	
330	315105-0146		2	WASHER BRB 5,3X10 RFR	
340	315105-0153		2	WASHER BRB 6,4X12 RFR	
360	311103-0349		2	PARALLEL PIN ISO 2338 6M6X12 A1	
SLIMCAP 1000 (See drawing on page: 7-46)					
010	2780458-0000		1	BRACKET	
020	2727448-0000		1	GUIDE	
030	2727442-0000		1	GUIDE	
040	2780459-0000		12	SHIM	
050	2727438-0000		1	STEERING RAIL	
320	312105-0370		4	SCREW M6S ISO 4017 M6X20 A480	
340	315105-0153		6	WASHER BRB 6,4X12 RFR	
360	311103-0352		2	PARALLEL PIN ISO 2338 6M6X18 A1	
SLIMCAP 2000 (See drawing on page: 7-46)					
010	2867648-0000		1	BRACKET	
020	2867647-0000		1	GUIDE	
030	2867649-0000		1	GUIDE	
040	2864281-0000		12	SHIM	
050	2867646-0000		1	STEERING RAIL	
320	312105-0370		4	SCREW M6S ISO 4017 M6X20 A480	
340	315105-0153		6	WASHER BRB 6,4X12 RFR	
360	311103-0352		2	PARALLEL PIN ISO 2338 6M6X18 A1	
STREAMCAP1000 (See drawing on page: 7-48)					
010	2751685-0000		1	BRACKET	
020	2752105-0000		1	GUIDE	
030	2752106-0000		1	GUIDE	
040	2751690-0000		6	SHIM	
050	2797440-0000		1	STEERING RAIL	
320	312105-0331		2	SCREW M6S ISO 4017 M5X20 A480	
330	315105-0146		2	WASHER BRB 5,3X10 RFR	
340	315105-0153		2	WASHER BRB 6,4X12 RFR	
360	311103-0349		2	PARALLEL PIN ISO 2338 6M6X12 A1	
STREAMCAP200 (See drawing on page: 7-48)					
010	2893418-0000		1	BRACKET	
020	2893423-0000		1	GUIDE	
030	2893422-0000		1	GUIDE	
040	2751690-0000		6	SHIM	
050	2893419-0000		1	STEERING RAIL	
320	312105-0331		2	SCREW M6S ISO 4017 M5X20 A480	
330	315105-0146		2	WASHER BRB 5,3X10 RFR	
340	315105-0153		2	WASHER BRB 6,4X12 RFR	
360	311103-0349		2	PARALLEL PIN ISO 2338 6M6X12 A1	
STREAMCAP330 (See drawing on page: 7-48)					
010	2914955-0000		1	BRACKET	
020	2914960-0000		1	GUIDE	
030	2914959-0000		1	GUIDE	
040	2751690-0000		6	SHIM	
050	2987984-0000		1	STEERING RAIL	
320	312105-0331		2	SCREW M6S ISO 4017 M5X20 A480	
330	315105-0146		2	WASHER BRB 5,3X10 RFR	
340	315105-0153		2	WASHER BRB 6,4X12 RFR	
360	311103-0349		2	PARALLEL PIN ISO 2338 6M6X12 A1	
STREAMCAP500 (See drawing on page: 7-48)					
010	2751685-0000		1	BRACKET	
020	2875598-0000		1	GUIDE	
030	2875599-0000		1	GUIDE	
040	2751690-0000		6	SHIM	
050	2875600-0000		1	STEERING RAIL	
320	312105-0331		2	SCREW M6S ISO 4017 M5X20 A480	
330	315105-0146		2	WASHER BRB 5,3X10 RFR	
340	315105-0153		2	WASHER BRB 6,4X12 RFR	
360	311103-0349		2	PARALLEL PIN ISO 2338 6M6X12 A1	
Common Parts					
300	311103-0353		2	PARALLEL PIN ISO 2338 6M6X20 A1	
310	312105-0379		2	SCREW M6S ISO 4014 M6X45 A480	
350	312155-0289		4	SCREW DIN 7991 MF6S M4X10 A4 70	

Machine Type	Group Description	Used-In	Group Number	Page No

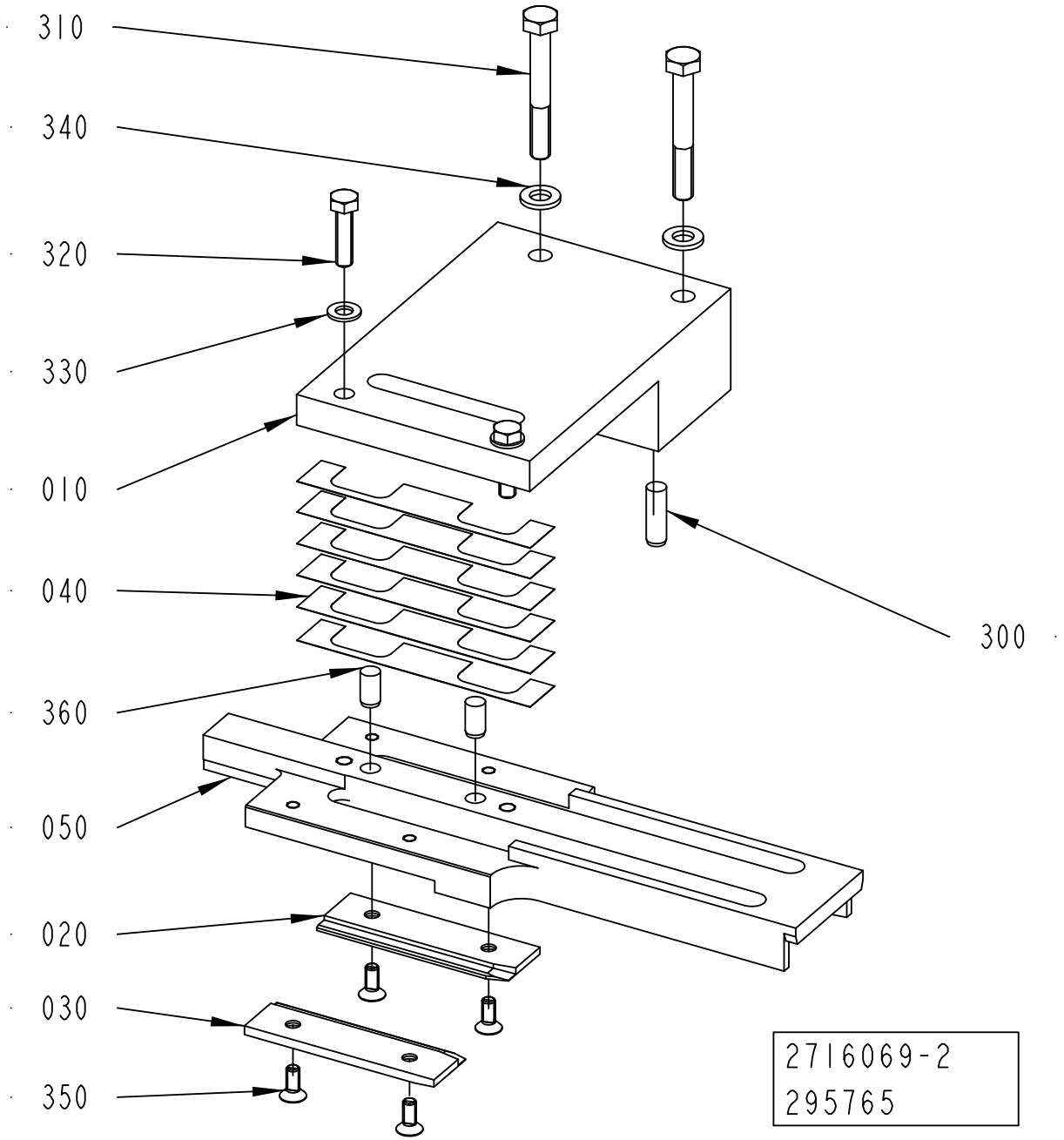
310
340
320
330
010
040
360
050
020
030
350
300
2716069-2
295765

ECM: 480493 - 20110401
Group number: 2716069-0100
Assembly Drawing: 2716069-2_1_AB

This list covers pages from 7-46 to 7-49

Pos	Part No	UN	Qty	Description	Page No
HELICAP2 23 (See drawing on page: 7-48)					
010	3077733-0000		1	BRACKET	
020	2970130-0000		1	GUIDE	
030	2970129-0000		1	GUIDE	
040	2751690-0000		6	SHIM	
050	2970131-0000		1	STEERING RAIL	
320	312105-0331		2	SCREW M6S ISO 4017 M5X20 A480	
330	315105-0146		2	WASHER BRB 5,3X10 RFR	
340	315105-0153		2	WASHER BRB 6,4X12 RFR	
360	311103-0349		2	PARALLEL PIN ISO 2338 6M6X12 A1	
SLIMCAP 1000 (See drawing on page: 7-46)					
010	2780458-0000		1	BRACKET	
020	2727448-0000		1	GUIDE	
030	2727442-0000		1	GUIDE	
040	2780459-0000		12	SHIM	
050	2727438-0000		1	STEERING RAIL	
320	312105-0370		4	SCREW M6S ISO 4017 M6X20 A480	
340	315105-0153		6	WASHER BRB 6,4X12 RFR	
360	311103-0352		2	PARALLEL PIN ISO 2338 6M6X18 A1	
SLIMCAP 2000 (See drawing on page: 7-46)					
010	2867648-0000		1	BRACKET	
020	2867647-0000		1	GUIDE	
030	2867649-0000		1	GUIDE	
040	2864281-0000		12	SHIM	
050	2867646-0000		1	STEERING RAIL	
320	312105-0370		4	SCREW M6S ISO 4017 M6X20 A480	
340	315105-0153		6	WASHER BRB 6,4X12 RFR	
360	311103-0352		2	PARALLEL PIN ISO 2338 6M6X18 A1	
STREAMCAP1000 (See drawing on page: 7-48)					
010	2751685-0000		1	BRACKET	
020	2752105-0000		1	GUIDE	
030	2752106-0000		1	GUIDE	
040	2751690-0000		6	SHIM	
050	2797440-0000		1	STEERING RAIL	
320	312105-0331		2	SCREW M6S ISO 4017 M5X20 A480	
330	315105-0146		2	WASHER BRB 5,3X10 RFR	
340	315105-0153		2	WASHER BRB 6,4X12 RFR	
360	311103-0349		2	PARALLEL PIN ISO 2338 6M6X12 A1	
STREAMCAP200 (See drawing on page: 7-48)					
010	2893418-0000		1	BRACKET	
020	2893423-0000		1	GUIDE	
030	2893422-0000		1	GUIDE	
040	2751690-0000		6	SHIM	
050	2893419-0000		1	STEERING RAIL	
320	312105-0331		2	SCREW M6S ISO 4017 M5X20 A480	
330	315105-0146		2	WASHER BRB 5,3X10 RFR	
340	315105-0153		2	WASHER BRB 6,4X12 RFR	
360	311103-0349		2	PARALLEL PIN ISO 2338 6M6X12 A1	
STREAMCAP330 (See drawing on page: 7-48)					
010	2914955-0000		1	BRACKET	
020	2914960-0000		1	GUIDE	
030	2914959-0000		1	GUIDE	
040	2751690-0000		6	SHIM	
050	2987984-0000		1	STEERING RAIL	
320	312105-0331		2	SCREW M6S ISO 4017 M5X20 A480	
330	315105-0146		2	WASHER BRB 5,3X10 RFR	
340	315105-0153		2	WASHER BRB 6,4X12 RFR	
360	311103-0349		2	PARALLEL PIN ISO 2338 6M6X12 A1	
STREAMCAP500 (See drawing on page: 7-48)					
010	2751685-0000		1	BRACKET	
020	2875598-0000		1	GUIDE	
030	2875599-0000		1	GUIDE	
040	2751690-0000		6	SHIM	
050	2875600-0000		1	STEERING RAIL	
320	312105-0331		2	SCREW M6S ISO 4017 M5X20 A480	
330	315105-0146		2	WASHER BRB 5,3X10 RFR	
340	315105-0153		2	WASHER BRB 6,4X12 RFR	
360	311103-0349		2	PARALLEL PIN ISO 2338 6M6X12 A1	
Common Parts					
300	311103-0353		2	PARALLEL PIN ISO 2338 6M6X20 A1	
310	312105-0379		2	SCREW M6S ISO 4014 M6X45 A480	
350	312155-0289		4	SCREW DIN 7991 MF6S M4X10 A4 70	

Machine Type	Group Description	Used-In	Group Number	Page No

Tetra Pak

SPC
Spare Parts Catalogue

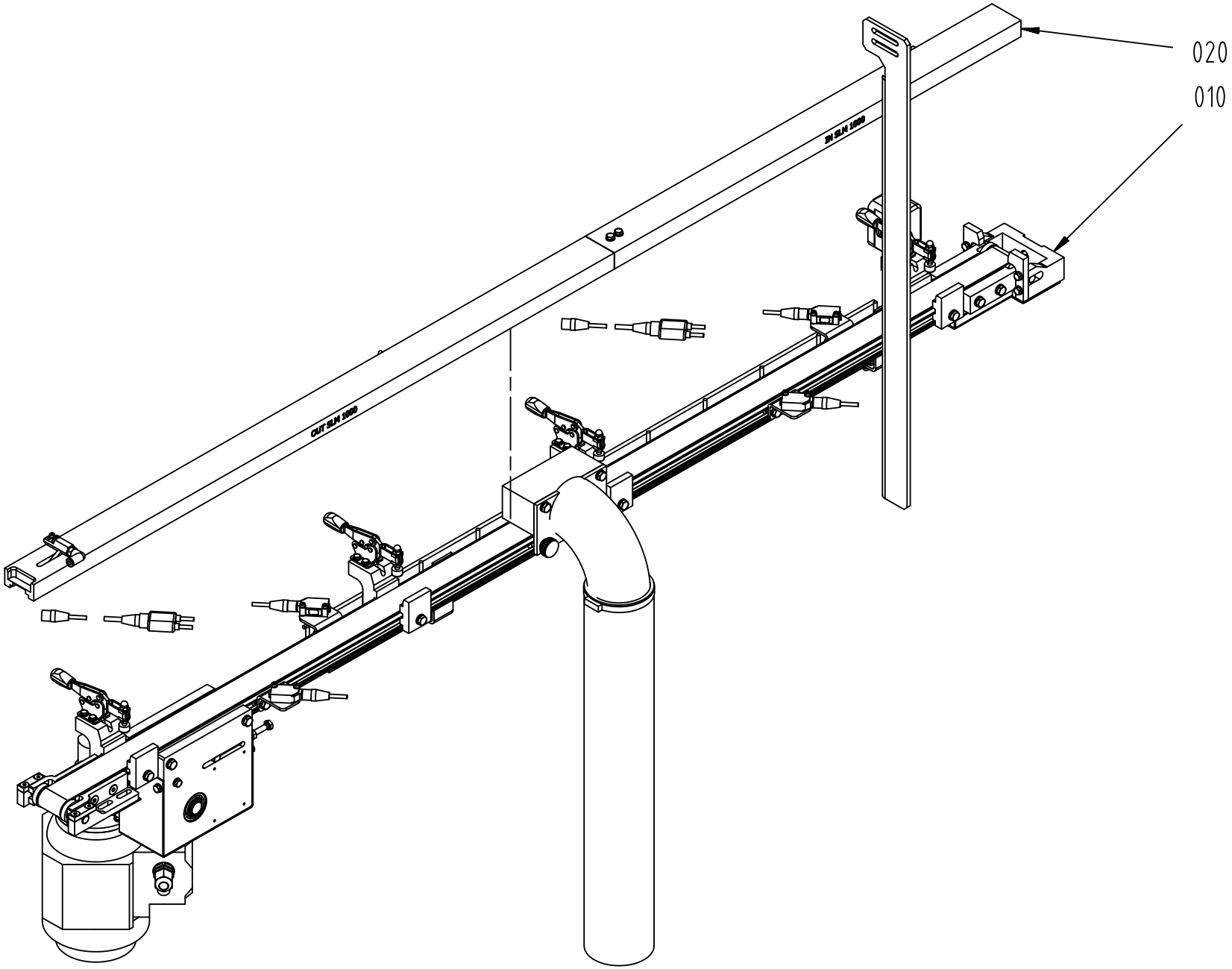
020
010
IN SLN 1000
OUT SLN 1000

ECM: 482334 - 20110401
Group number: 662908-0200
Assembly Drawing: 662908-3_1_AA

Pos	Part No	UN	Qty	Description	Page No
HELICAP2 23					
010	2846413-0200		1	CONVEYOR BELT	**8-5, 8-7**
020	3147222-0100		1	GUIDE RAIL	**8-11**
SLIMCAP 1000					
010	2846413-0200		1	CONVEYOR BELT	**8-5, 8-7**
020	3147216-0100		1	GUIDE RAIL	**8-13**
SLIMCAP 2000					
010	2846413-0200		1	CONVEYOR BELT	**8-5, 8-7**
020	3147217-0100		1	GUIDE RAIL	**8-15**
STREAMCAP1000					
010	2846413-0200		1	CONVEYOR BELT	**8-5, 8-7**
020	3147221-0100		1	GUIDE RAIL	**8-17**
STREAMCAP200					
010	3034439-0100		1	CONVEYOR BELT	**8-19, 8-21**
020	3147218-0100		1	GUIDE RAIL	**8-23**
STREAMCAP330					
010	3034440-0100		1	CONVEYOR BELT	**8-25, 8-27**
020	3147219-0100		1	GUIDE RAIL	**8-29**
STREAMCAP500					
010	2846413-0200		1	CONVEYOR BELT	**8-5, 8-7**
020	3147220-0100		1	GUIDE RAIL	**8-31**

Pos	Part No	UN	Qty	Description	Page No

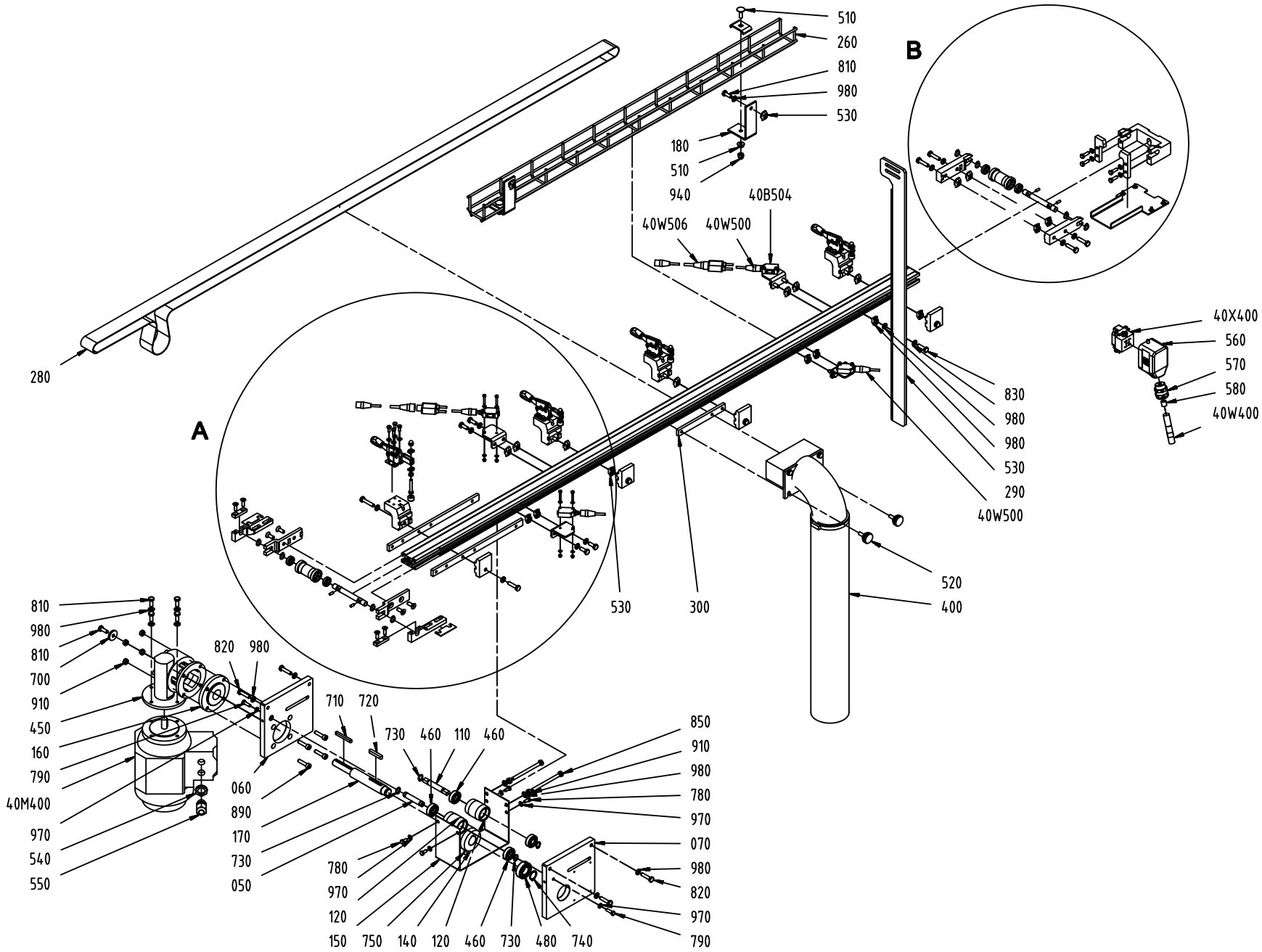
510
260
810
980
530
180
510
940
40B504
40W506
40W500
B
A
280
830
980
980
530
290
40W500
40X400
560
570
580
40W400
520
400
530
300
810
980
810
700
910
450
160
790
40M400
970
540
550
820
980
710
720
730
460
110
460
060
890
170
730
050
780
970
120
150
750
140
120
460
730
480
740
850
910
980
780
970
070
980
820
970
790

ECM: 482213 - 20110401
Group number: 2846413-0200
Assembly Drawing: 2846413-3_1_AA

This list covers pages from 8-4 to 8-7

Pos	Part No	UN	Qty	Description	Page No
-					
010	3108404-0000		2	SHAFT	
020	3108405-0000		2	ROLLER	
030	3108406-0000		4	BRACKET	
040	3108407-0000		2	BRACKET	
050	3108408-0000		1	SHAFT	
060	3108409-0000		1	PLATE	
070	3108410-0000		1	PLATE	
080	3108411-0000		1	PLATE	
090	3108412-0000		1	PLATE	
100	2885916-0000		2	PLATE	
110	3108414-0000		1	SHAFT	
120	3108415-0000		2	IDLER ROLLER	
130	3108416-0000		2	BRACKET	
140	3108417-0000		1	ROLLER	
150	3108418-0000		1	COVER	
160	3108419-0000		1	FLANGE	
170	3108420-0000		1	SHAFT	
180	3108421-0000		2	BRACKET	
190	3108422-0000		2	PLATE	
200	3108423-0000		2	BRACKET	
210	3108424-0000		1	BRACKET	
220	3108425-0000		4	ANCHOR	
230	3108426-0000		4	ANCHOR	
240	3108427-0000		2	PLATE	
250	3108428-0000		1	COVER	
260	3108429-0000		1	CABLE CONDUIT	
270	3108430-0000		1	PROFILE	
280	2852917-0000		1	BELT	
290	3108431-0000		1	BRACKET	
300	3108432-0000		1	BRACKET	
400	3108433-0100		1	DISCHARGE DEVICE	**8-9**
40B500	90459-5529		1	PH.CELL E3Z-T86A, SENDER+RECIEVER	
40B504	90459-5529		1	PH.CELL E3Z-T86A, SENDER+RECIEVER	
40M400	2856579-0000		1	MOTOR	
40W400	351150-0413	M	3	CABLE OLFLEX 4GX1,5 MM2 LIGHT/GREY	
40W500	90459-6586		2	ACT/SENS.Y-CABLE, ASBN 2-PRKMV 4-07/0,6M	
40W502	351405-0020		1	ACT/SENS. CABLE RSMVN 3-PRKT 4-3-06/2,0M	
40W506	351405-0010		1	ACT/SENS. CABLE RSMVN 3-PRKT 4-3-06/1,0M	
40X400	90110-0052		1	MALE INSERT, HAN E 06, 0933 0062 601	
450	2856578-0000		1	WORM GEAR	
460	321308-0200		4	BALL BEARING 10/26X8	
470	90458-1438		4	BALL BEARING 10/19X5	
480	321308-0203		1	BALL BEARING 17/35X10	
490	3108434-0000		4	LOCKING LEVER	
500	3108435-0000		4	CAP	
510	3108436-0000		2	CLAMP	
520	3108437-0000		2	HANDLE	
530	90013-0035		20	NUT GROOVE, HAMMER-HEAD M6 FE	
540	90458-0322		1	NUT, M16X1,5	
550	90458-0306		1	CABLE GLAND, M16X1,5, NO.5311 1010	
560	90459-1458		1	HOOD HAN 6 E 19 30 006 1540	
570	90458-0406		1	GLAND W/O INSERT M20 NORMAL	
580	353249-0004		1	INSERT, SINGLE HOLE, E152/13	
700	315125-0153		1	WASHER TBRSB 6,4X22X4 A4	
710	315701-0209		1	PARALLEL KEY W. ROUND ENDS 5X5X45 MM	
720	315701-0238		1	PARALLEL KEY W. ROUND ENDS 6X6X36 MM	
730	90141-0016		12	RETAINING RING FOR SHAFT DIN 471 10 SS	
740	90141-0017		1	RETAINING RING FOR SHAFT DIN 471 17 SS	
750	90459-5152		1	SCREW HEX.SOCK.SET CONEPT. MS6SS M6X10 A	
760	312318-0289		4	SCREW ISO4029 M4X10 A4	
770	312105-0289		16	SCREW M6S H4X10 A4 70 ISO4017/DIN933	
780	312105-0325		4	SCREW M6S ISO 4017 M5X10 A480	
790	312105-0329		6	SCREW M6S ISO 4017 M5X16 A480	
800	312109-0335		4	SCREW M6S ISO 4017 M5X30 A480	
810	312105-0368		15	SCREW M6S ISO 4017 M6X16 A480	
820	312105-0372		12	SCREW M6S ISO 4017 M6X25 A480	
830	312105-0370		1	SCREW M6S ISO 4017 M6X20 A480	
840	312109-0374		4	SCREW M6S ISO 4017 M6X30 A480	
850	312109-0386		2	SCREW M6S ISO 4017 M6X80 A480	
860	312155-0329		4	SCREW DIN 7991 MF6S M5X16 A4 70	
870	312155-0368		4	SCREW DIN 7991 MF6S M6X16 A4 70	
880	312115-0230		8	SCREW ISO4762 M3X20 A4 80	
890	312115-0372		4	SCREW ISO4762 M6X25 A4 80	
900	312605-0314		4	HEXAGON NUT, M6M M5 A280	
910	312605-0316		6	HEXAGON NUT, M6M M6 A280	
920	312810-0310		8	HEXAGON NUT, NY-LOCK M3 FZB	
930	312705-0314		4	NUT HEX. DOMED CAP MHM-6 M5 A280	
940	312705-0316		2	HEX. DOMED CAP MHM-6 M6 A280	
950	315103-0124		16	WASHER, BRB, 3,2/6,H=0,5 NI PL BR	
960	315103-0136		16	WASHER PLAIN, BRB, 4,3/8,H=0,8 NI PL BR	
970	315103-0146		10	WASHER, BRB, 5,3/10,H=1 NI PL BR	
980	315103-0153		34	WASHER, BRB, 6,4/12,H=1,5 NIPL BR	

Machine Type | Group Description | Used-In | Group Number | Page No

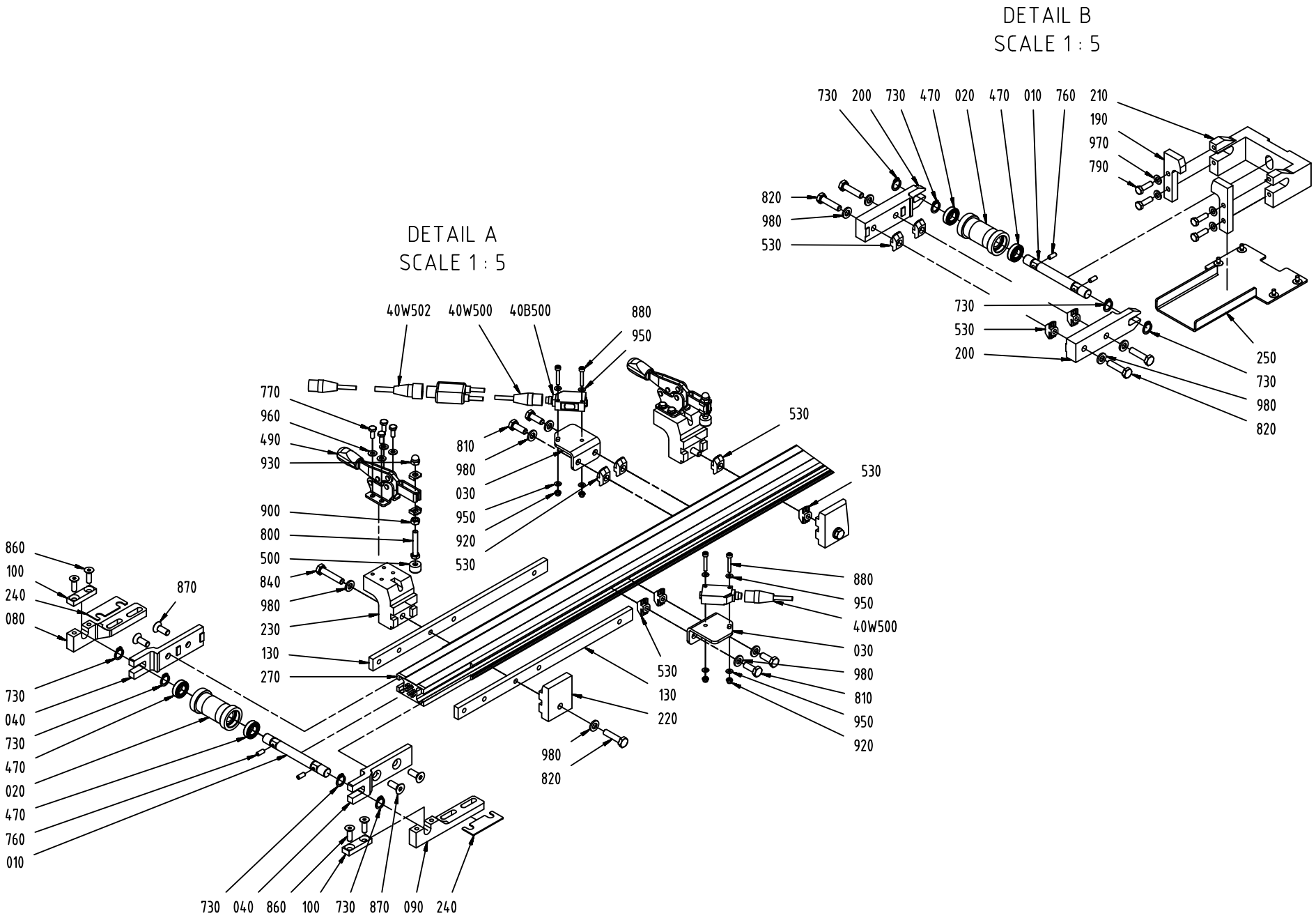
DETAIL B
SCALE 1 : 5
730 200 730 470 020 470 010 760 210
190
970
790
820
980
530
730
530
200
250
730
980
820
DETAIL A
SCALE 1 : 5
40W502 40W500 40B500
880
950
770
960
490
930
900
800
500
840
980
230
130
270
810
980
030
950
920
530
530
530
860
100
240
080
870
730
040
730
470
020
470
760
010
880
950
40W500
030
980
810
950
920
530
130
220
980
820
730 040 860 100 730 870 090 240

ECM: 482213 - 20110401
Group number: 2846413-0200
Assembly Drawing: 2846413-3_2_AA

This list covers pages from 8-4 to 8-7

Pos	Part No	UN	Qty	Description	Page No
-					
010	3108404-0000		2	SHAFT	
020	3108405-0000		2	ROLLER	
030	3108406-0000		4	BRACKET	
040	3108407-0000		2	BRACKET	
050	3108408-0000		1	SHAFT	
060	3108409-0000		1	PLATE	
070	3108410-0000		1	PLATE	
080	3108411-0000		1	PLATE	
090	3108412-0000		1	PLATE	
100	2885916-0000		2	PLATE	
110	3108414-0000		1	SHAFT	
120	3108415-0000		2	IDLER ROLLER	
130	3108416-0000		2	BRACKET	
140	3108417-0000		1	ROLLER	
150	3108418-0000		1	COVER	
160	3108419-0000		1	FLANGE	
170	3108420-0000		1	SHAFT	
180	3108421-0000		2	BRACKET	
190	3108422-0000		2	PLATE	
200	3108423-0000		2	BRACKET	
210	3108424-0000		1	BRACKET	
220	3108425-0000		4	ANCHOR	
230	3108426-0000		4	ANCHOR	
240	3108427-0000		2	PLATE	
250	3108428-0000		1	COVER	
260	3108429-0000		1	CABLE CONDUIT	
270	3108430-0000		1	PROFILE	
280	2852917-0000		1	BELT	
290	3108431-0000		1	BRACKET	
300	3108432-0000		1	BRACKET	
400	3108433-0100		1	DISCHARGE DEVICE	**8-9**
40B500	90459-5529		1	PH.CELL E3Z-T86A, SENDER+RECIEVER	
40B504	90459-5529		1	PH.CELL E3Z-T86A, SENDER+RECIEVER	
40M400	2856579-0000		1	MOTOR	
40W400	351150-0413	M	3	CABLE OLFLEX 4GX1,5 MM2 LIGHT/GREY	
40W500	90459-6586		2	ACT/SENS.Y-CABLE, ASBN 2-PRKMV 4-07/0,6M	
40W502	351405-0020		1	ACT/SENS. CABLE RSMVN 3-PRKT 4-3-06/2,0M	
40W506	351405-0010		1	ACT/SENS. CABLE RSMVN 3-PRKT 4-3-06/1,0M	
40X400	90110-0052		1	MALE INSERT, HAN E 06, 0933 0062 601	
450	2856578-0000		1	WORM GEAR	
460	321308-0200		4	BALL BEARING 10/26X8	
470	90458-1438		4	BALL BEARING 10/19X5	
480	321308-0203		1	BALL BEARING 17/35X10	
490	3108434-0000		4	LOCKING LEVER	
500	3108435-0000		4	CAP	
510	3108436-0000		2	CLAMP	
520	3108437-0000		2	HANDLE	
530	90013-0035		20	NUT GROOVE, HAMMER-HEAD M6 FE	
540	90458-0322		1	NUT, M16X1,5	
550	90458-0306		1	CABLE GLAND, M16X1,5, NO.5311 1010	
560	90459-1458		1	HOOD HAN 6 E 19 30 006 1540	
570	90458-0406		1	GLAND W/O INSERT M20 NORMAL	
580	353249-0004		1	INSERT, SINGLE HOLE, E152/13	
700	315125-0153		1	WASHER TBRSB 6,4X22X4 A4	
710	315701-0209		1	PARALLEL KEY W. ROUND ENDS 5X5X45 MM	
720	315701-0238		1	PARALLEL KEY W. ROUND ENDS 6X6X36 MM	
730	90141-0016		12	RETAINING RING FOR SHAFT DIN 471 10 SS	
740	90141-0017		1	RETAINING RING FOR SHAFT DIN 471 17 SS	
750	90459-5152		1	SCREW HEX.SOCK.SET CONEPT. MS6SS M6X10 A	
760	312318-0289		4	SCREW ISO4029 M4X10 A4	
770	312105-0289		16	SCREW M6S H4X10 A4 70 ISO4017/DIN933	
780	312105-0325		4	SCREW M6S ISO 4017 M5X10 A480	
790	312105-0329		6	SCREW M6S ISO 4017 M5X16 A480	
800	312109-0335		4	SCREW M6S ISO 4017 M5X30 A480	
810	312105-0368		15	SCREW M6S ISO 4017 M6X16 A480	
820	312105-0372		12	SCREW M6S ISO 4017 M6X25 A480	
830	312105-0370		1	SCREW M6S ISO 4017 M6X20 A480	
840	312109-0374		4	SCREW M6S ISO 4017 M6X30 A480	
850	312109-0386		2	SCREW M6S ISO 4017 M6X80 A480	
860	312155-0329		4	SCREW DIN 7991 MF6S M5X16 A4 70	
870	312155-0368		4	SCREW DIN 7991 MF6S M6X16 A4 70	
880	312115-0230		8	SCREW ISO4762 M3X20 A4 80	
890	312115-0372		4	SCREW ISO4762 M6X25 A4 80	
900	312605-0314		4	HEXAGON NUT, M6M M5 A280	
910	312605-0316		6	HEXAGON NUT, M6M M6 A280	
920	312810-0310		8	HEXAGON NUT, NY-LOCK M3 FZB	
930	312705-0314		4	NUT HEX. DOMED CAP MHM-6 M5 A280	
940	312705-0316		2	HEX. DOMED CAP MHM-6 M6 A280	
950	315103-0124		16	WASHER, BRB, 3,2/6,H=0,5 NI PL BR	
960	315103-0136		16	WASHER PLAIN, BRB, 4,3/8,H=0,8 NI PL BR	
970	315103-0146		10	WASHER, BRB, 5,3/10,H=1 NI PL BR	
980	315103-0153		34	WASHER, BRB, 6,4/12,H=1,5 NIPL BR	

Machine Type | Group Description | Used-In | Group Number | Page No

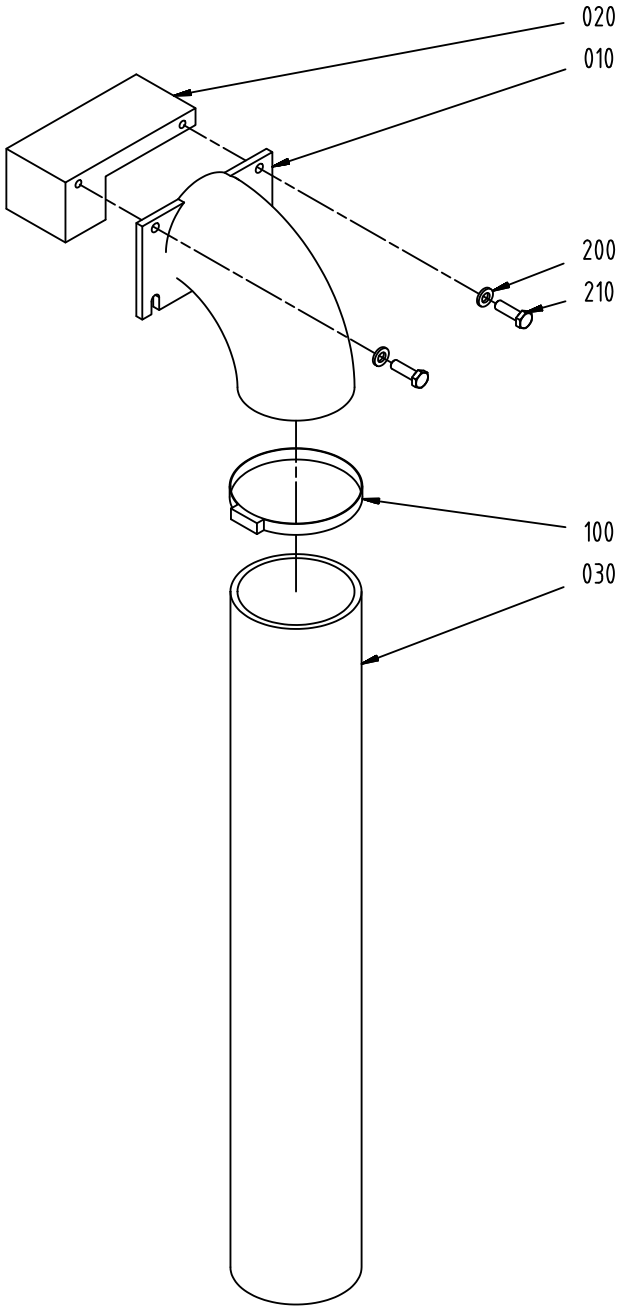
020
010
200
210
100
030

ECM: 482216 - 20110401
Group number: 3108433-0100
Assembly Drawing: 3108433-1_1_AA

Pos	Part No	UN	Qty	Description	Page No
-					
010	3108438-0000		1	CURVE	
020	3108439-0000		1	SUPPORT	
030	3108440-0000		1	TUBE	
100	3108441-0000		1	TIE	
200	315103-0153		2	WASHER, BRB, 6,4/12,H=1,5 NIPL BR	
210	312105-0370		2	SCREW M6S ISO 4017 M6X20 A480	

Pos	Part No	UN	Qty	Description	Page No

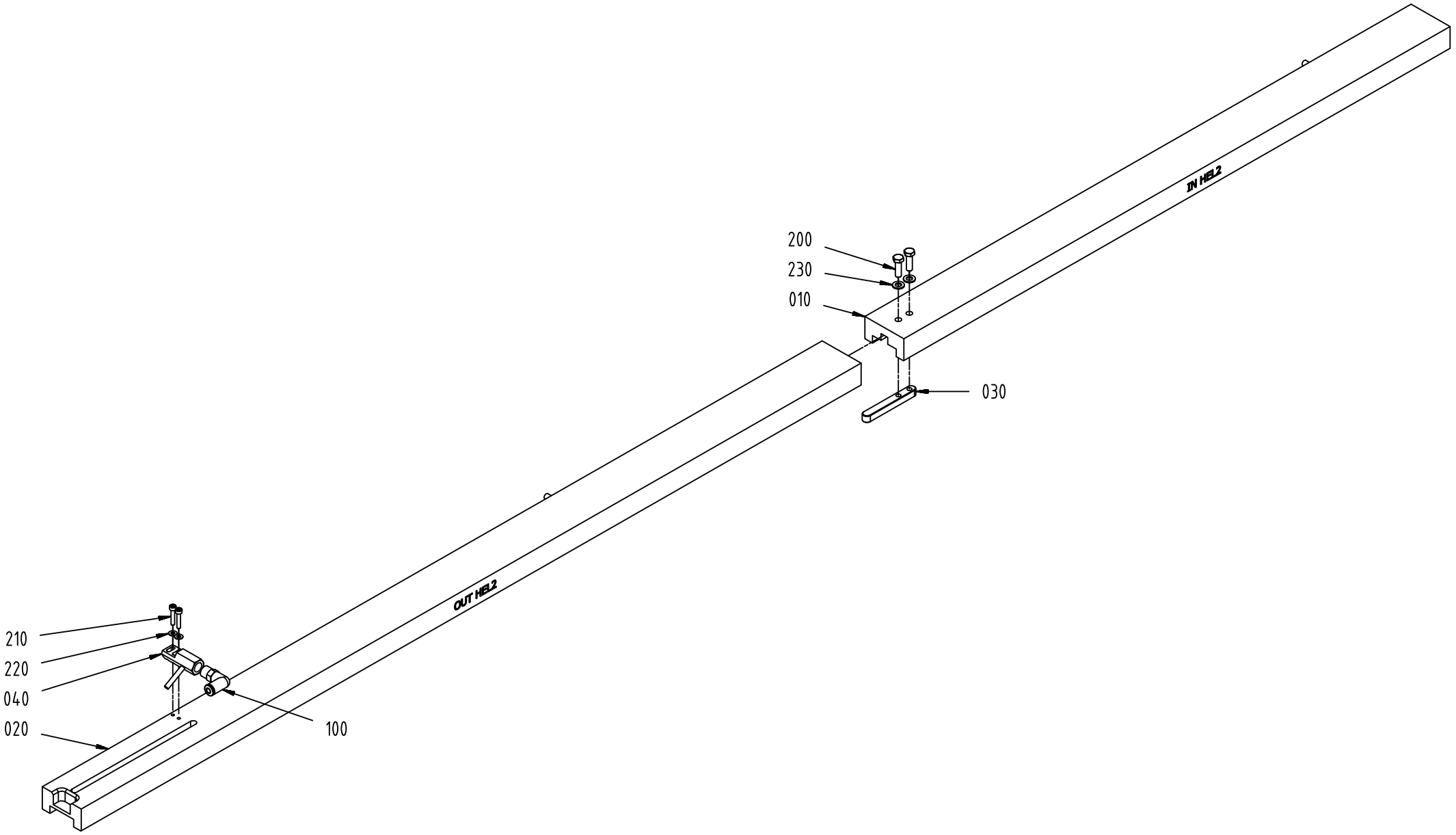
200
230
010
030
IN HEL2
210
220
040
020
100
OUT HEL2

ECM: 482329 - 20110401
Group number: 3147222-0100
Assembly Drawing: 3147222-1_1_AA

Pos	Part No	UN	Qty	Description	Page No
-					
010	3124375-0000		1	COVER	
020	3124376-0000		1	COVER	
030	3124377-0000		1	FLAP	
040	3124378-0000		1	AIR NOZZLE	
100	3124379-0000		1	FITTING	
200	312105-0329		2	SCREW M6S ISO 4017 M5X16 A480	
210	312115-0228		2	SCREW ISO4762 M3X16 A4 80	
220	315103-0124		2	WASHER, BRB, 3,2/6,H=0,5 NI PL BR	
230	315103-0146		2	WASHER, BRB, 5,3/10,H=1 NI PL BR	

Pos	Part No	UN	Qty	Description	Page No

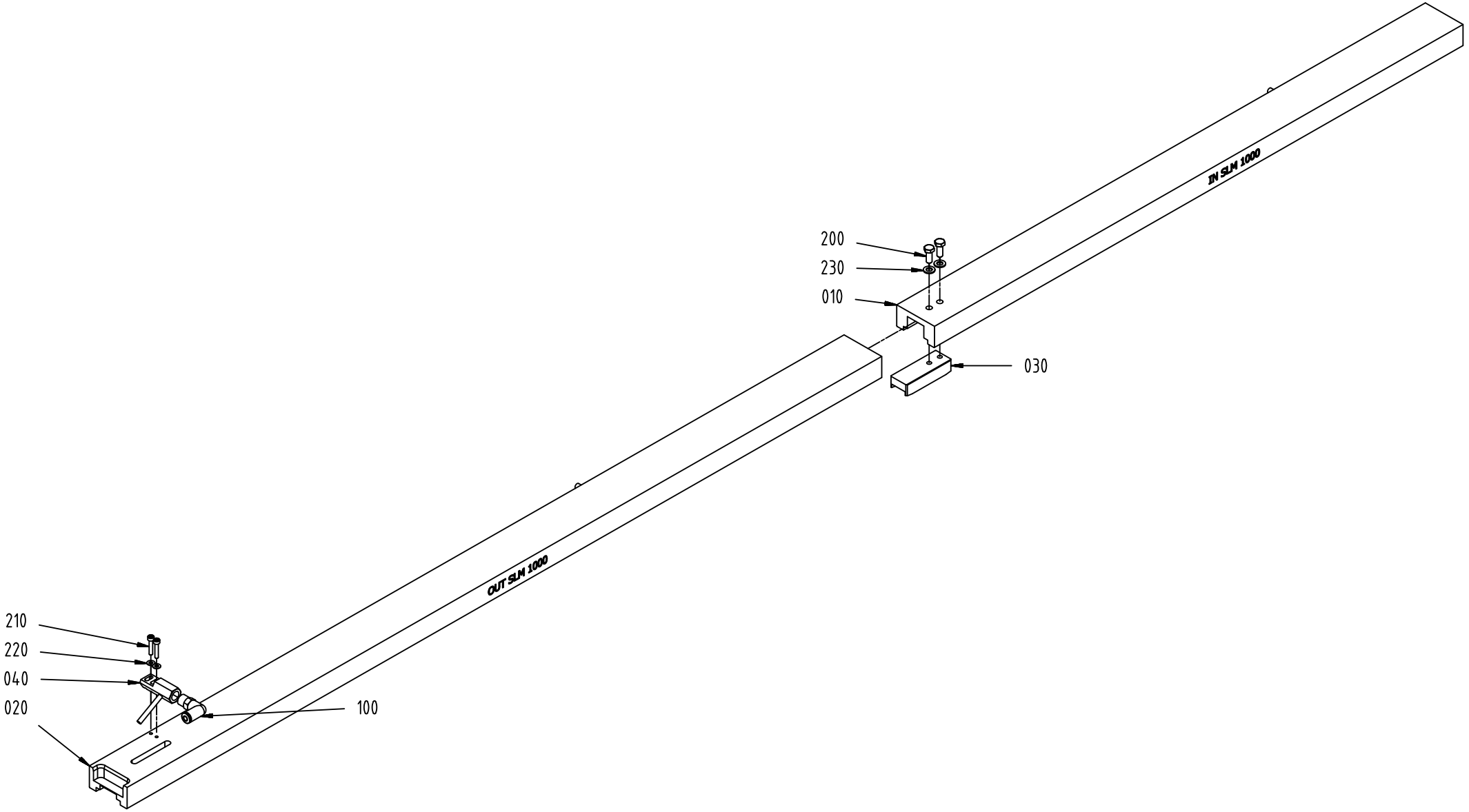
IN SLM 1000
OUT SLM 1000
200
230
010
030
210
220
040
020
100

ECM: 482323 - 20110401
Group number: 3147216-0100
Assembly Drawing: 3147216-1_1_AA

Pos	Part No	UN	Qty	Description	Page No
-					
010	3124380-0000		1	COVER	
020	3124381-0000		1	COVER	
030	3124382-0000		1	FLAP	
040	3124383-0000		1	AIR NOZZLE	
100	3124379-0000		1	FITTING	
200	312105-0327		2	SCREW M6S ISO 4017 M5X12 A480	
210	312115-0228		2	SCREW ISO4762 M3X16 A4 80	
220	315103-0124		2	WASHER, BRB, 3,2/6,H=0,5 NI PL BR	
230	315103-0146		2	WASHER, BRB, 5,3/10,H=1 NI PL BR	

Pos	Part No	UN	Qty	Description	Page No

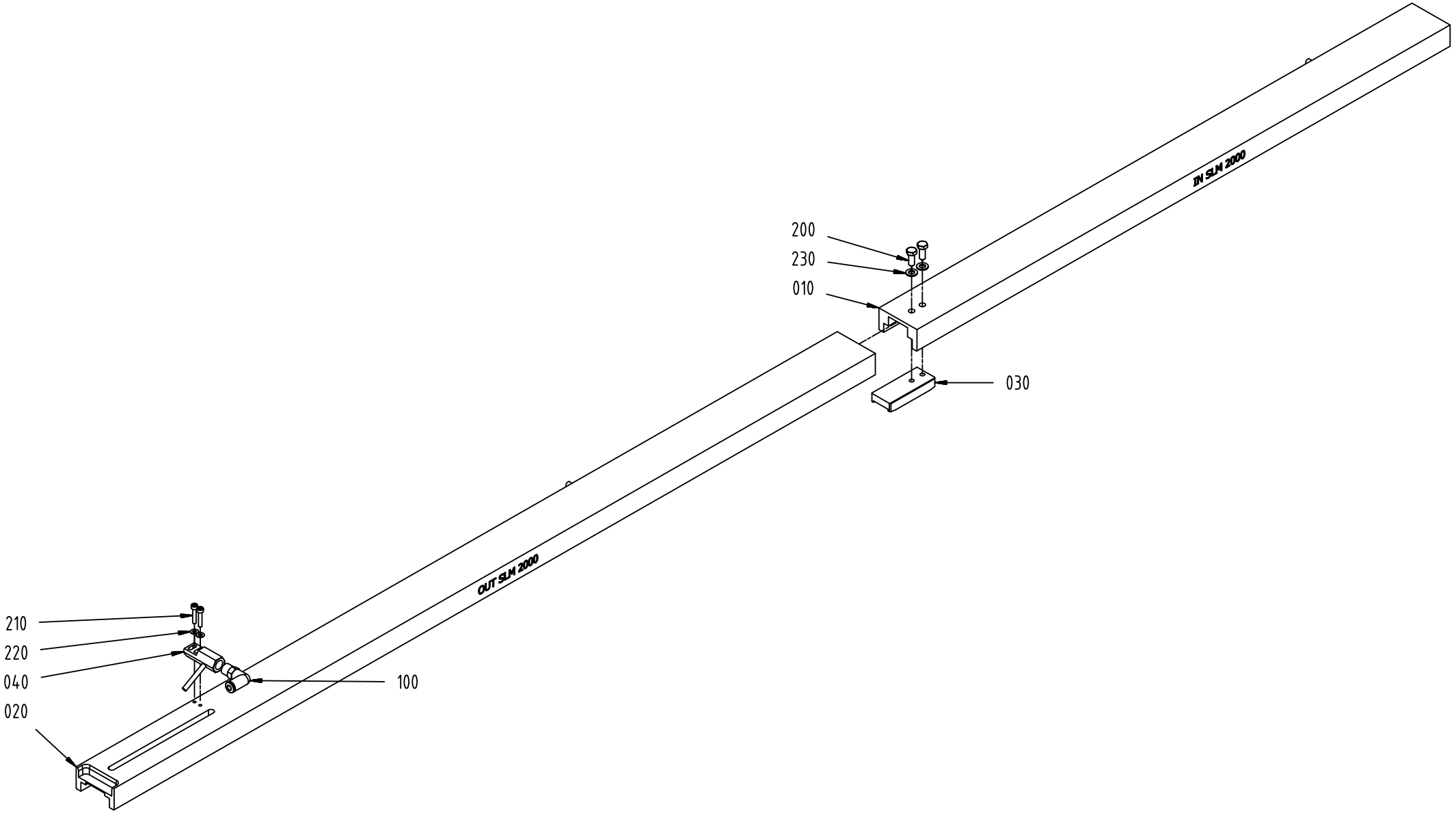
200
230
010
030
IN SLM 2000
OUT SLM 2000
210
220
040
020
100

ECM: 482324 - 20110401
Group number: 3147217-0100
Assembly Drawing: 3147217-1_1_AA

Pos	Part No	UN	Qty	Description	Page No
-					
010	3124384-0000		1	COVER	
020	3124385-0000		1	COVER	
030	3124386-0000		1	FLAP	
040	3124387-0000		1	AIR NOZZLE	
100	3124379-0000		1	FITTING	
200	312105-0327		2	SCREW M6S ISO 4017 M5X12 A480	
210	312115-0228		2	SCREW ISO4762 M3X16 A4 80	
220	315103-0124		2	WASHER, BRB, 3,2/6,H=0,5 NI PL BR	
230	315103-0146		2	WASHER, BRB, 5,3/10,H=1 NI PL BR	

Pos	Part No	UN	Qty	Description	Page No

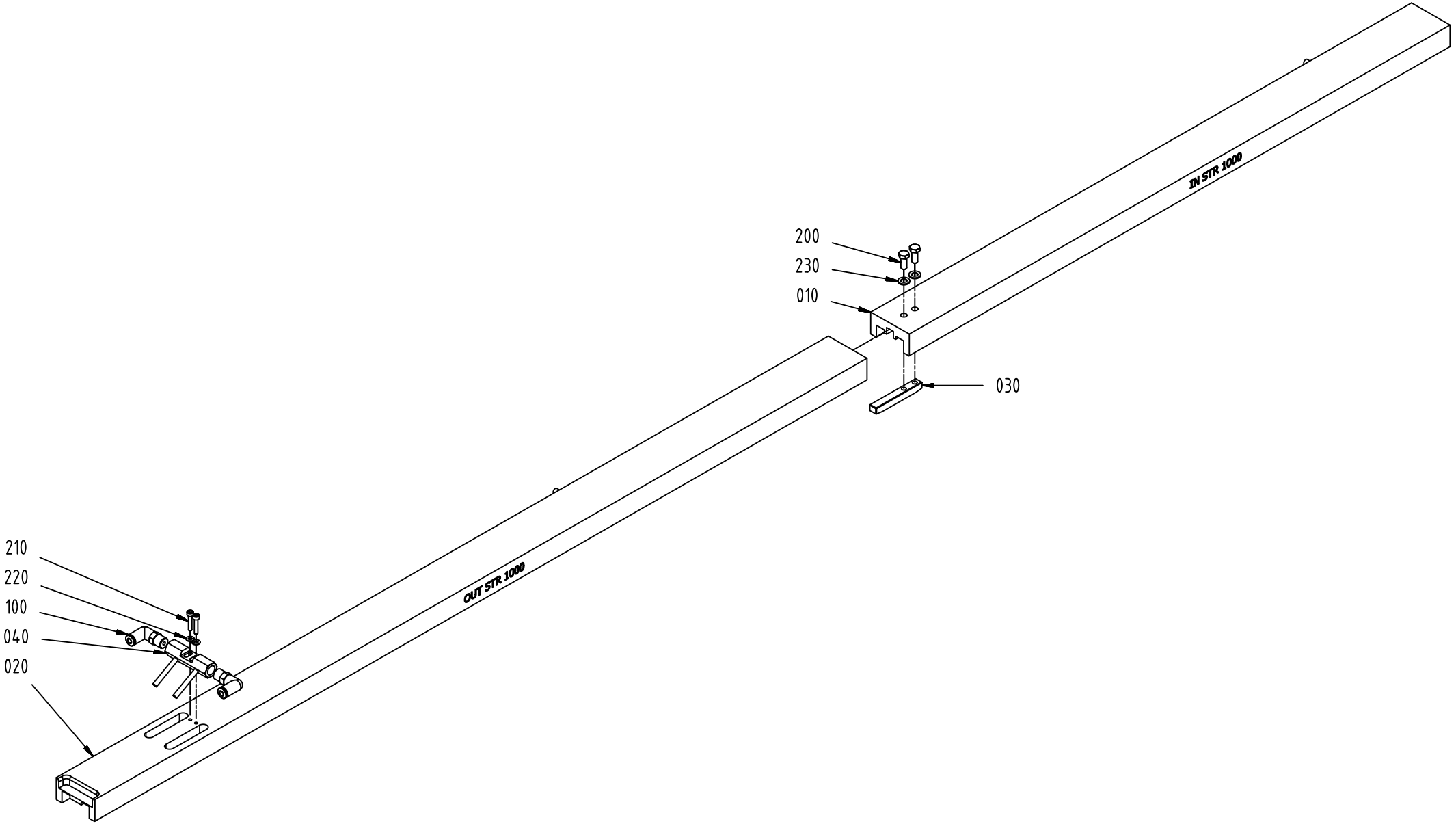
200
230
010
030
IN STR 1000
210
220
100
040
020
OUT STR 1000

ECM: 482328 - 20110401
Group number: 3147221-0100
Assembly Drawing: 3147221-1_1_AA

Pos	Part No	UN	Qty	Description	Page No
-					
010	3124398-0000		1	COVER	
020	3124399-0000		1	COVER	
030	3124400-0000		1	FLAP	
040	3124401-0000		1	AIR NOZZLE	
100	3124379-0000		2	FITTING	
200	312105-0327		2	SCREW M6S ISO 4017 M5X12 A480	
210	312115-0228		2	SCREW ISO4762 M3X16 A4 80	
220	315103-0124		2	WASHER, BRB, 3,2/6,H=0,5 NI PL BR	
230	315103-0146		2	WASHER, BRB, 5,3/10,H=1 NI PL BR	

Pos	Part No	UN	Qty	Description	Page No

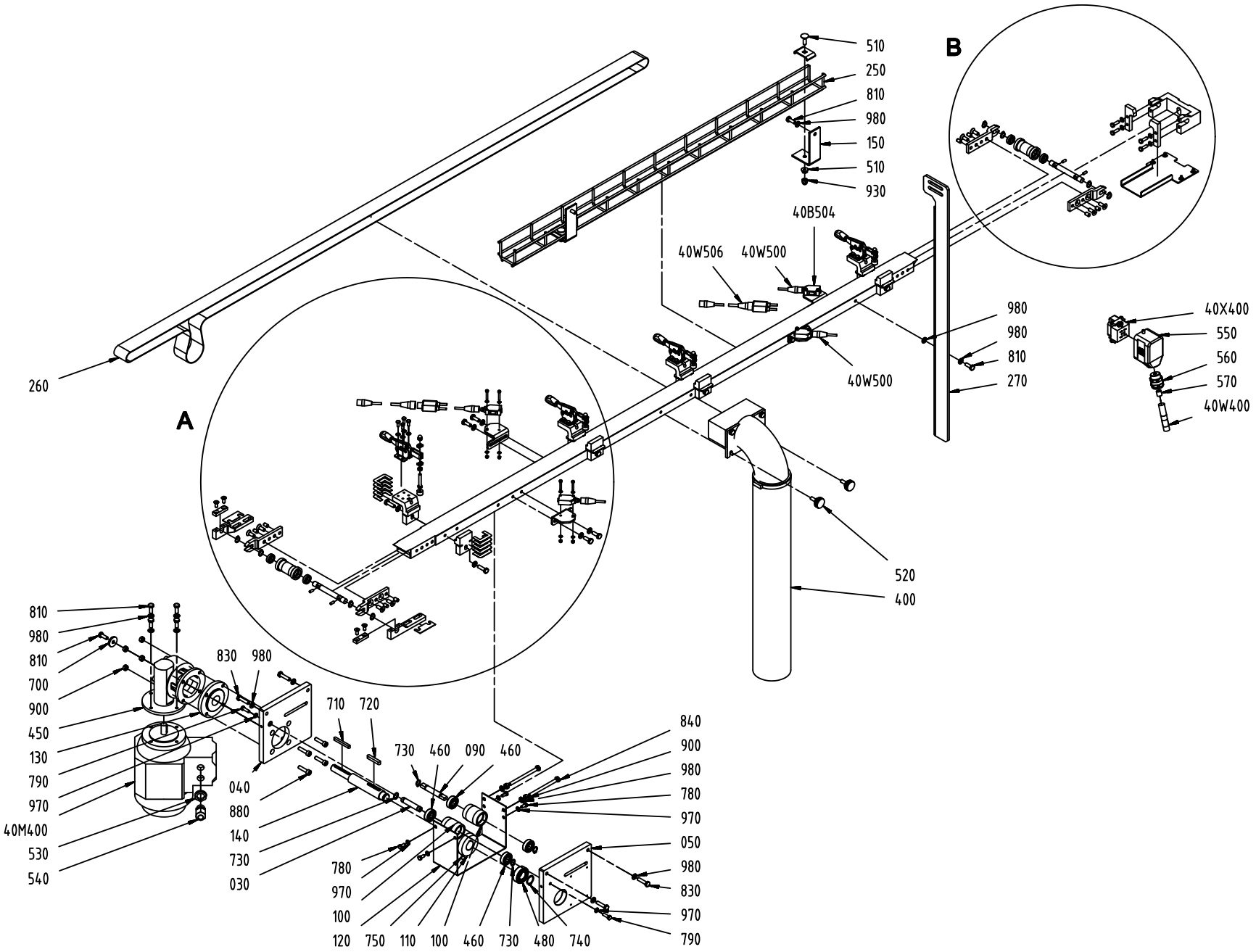
510
250
810
980
150
510
930
B
40B504
40W506
40W500
980
980
810
270
40W500
40X400
550
560
570
40W400
260
A
520
400
810
980
810
700
900
450
130
790
970
40M400
530
540
830
980
710
720
730
460
090
460
040
880
140
730
030
780
970
100
120
750
110
100
460
730
480
740
840
900
980
780
970
050
980
830
970
790

ECM: 482214 - 20110401
Group number: 3034439-0100
Assembly Drawing: 3034439-2_1_AA

This list covers pages from 8-18 to 8-21

Pos	Part No	UN	Qty	Description	Page No
-					
010	3108404-0000		2	SHAFT	
020	3108405-0000		2	ROLLER	
030	3108408-0000		1	SHAFT	
040	3108409-0000		1	PLATE	
050	3108410-0000		1	PLATE	
060	3108411-0000		1	PLATE	
070	3108412-0000		1	PLATE	
080	2885916-0000		2	PLATE	
090	3108414-0000		1	SHAFT	
100	3108415-0000		2	IDLER ROLLER	
110	3108417-0000		1	ROLLER	
120	3108418-0000		1	COVER	
130	3108419-0000		1	FLANGE	
140	3108420-0000		1	SHAFT	
150	3108421-0000		2	BRACKET	
160	3108422-0000		2	PLATE	
170	3108424-0000		1	BRACKET	
180	3108427-0000		2	PLATE	
190	3108428-0000		1	COVER	
200	2940040-0000		4	SUPPORT	
210	2940041-0000		4	LOCK HOLDER	
220	2940042-0000		40	SHIM	
230	2985757-0000		4	PHOTOCELL BRACKET	
240	2985759-0000		4	HOLDER	
250	3108429-0000		1	CABLE CONDUIT	
260	2852917-0000		1	BELT	
270	3108431-0000		1	BRACKET	
280	2987983-0000		1	PLATE	
400	3108433-0100		1	DISCHARGE DEVICE	**8-9**
40B500	90459-5529		1	PH.CELL E3Z-T86A, SENDER+RECIEVER	
40B504	90459-5529		1	PH.CELL E3Z-T86A, SENDER+RECIEVER	
40M400	2856579-0000		1	MOTOR	
40W400	351150-0413	M	3	CABLE OLFLEX 4GX1,5 MM2 LIGHT/GREY	
40W500	90459-6586		2	ACT/SENS.Y-CABLE, ASBN 2-PRKMV 4-07/0,6M	
40W502	351405-0020		1	ACT/SENS. CABLE RSMVN 3-PRKT 4-3-06/2,0M	
40W506	351405-0010		1	ACT/SENS. CABLE RSMVN 3-PRKT 4-3-06/1,0M	
40X400	90110-0052		1	MALE INSERT, HAN E 06, 0933 0062 601	
450	3095808-0000		1	WORM GEAR	
460	321308-0200		4	BALL BEARING 10/26X8	
470	90458-1438		4	BALL BEARING 10/19X5	
480	321308-0203		1	BALL BEARING 17/35X10	
490	3108434-0000		4	LOCKING LEVER	
500	3108435-0000		4	CAP	
510	3108436-0000		2	CLAMP	
520	3108437-0000		2	HANDLE	
530	90458-0322		1	NUT, M16X1,5	
540	90458-0306		1	CABLE GLAND, M16X1,5, NO.5311 1010	
550	90459-1458		1	HOOD HAN 6 E 19 30 006 1540	
560	90458-0406		1	GLAND W/O INSERT M20 NORMAL	
570	353249-0004		1	INSERT, SINGLE HOLE, E152/13	
700	315125-0153		1	WASHER TBRSB 6,4X22X4 A4	
710	315701-0209		1	PARALLEL KEY W. ROUND ENDS 5X5X45 MM	
720	315701-0238		1	PARALLEL KEY W. ROUND ENDS 6X6X36 MM	
730	90141-0016		12	RETAINING RING FOR SHAFT DIN 471 10 SS	
740	90141-0017		1	RETAINING RING FOR SHAFT DIN 471 17 SS	
750	90459-5152		1	SCREW HEX.SOCK.SET CONEPT. MS6SS M6X10 A	
760	312318-0289		4	SCREW ISO4029 M4X10 A4	
770	312105-0289		16	SCREW M6S H4X10 A4 70 ISO4017/DIN933	
780	312105-0325		4	SCREW M6S ISO 4017 M5X10 A480	
790	312105-0329		6	SCREW M6S ISO 4017 M5X16 A480	
800	312109-0335		4	SCREW M6S ISO 4017 M5X30 A480	
810	312105-0368		16	SCREW M6S ISO 4017 M6X16 A480	
820	312105-0370		8	SCREW M6S ISO 4017 M6X20 A480	
830	312105-0372		4	SCREW M6S ISO 4017 M6X25 A480	
840	312109-0386		2	SCREW M6S ISO 4017 M6X80 A480	
850	312155-0327		4	SCREW DIN 7991 MF6S M5X12 A4 70	
860	312155-0368		8	SCREW DIN 7991 MF6S M6X16 A4 70	
870	312115-0230		8	SCREW ISO4762 M3X20 A4 80	
880	312115-0372		4	SCREW ISO4762 M6X25 A4 80	
890	312605-0314		4	HEXAGON NUT, M6M M5 A280	
900	312605-0316		6	HEXAGON NUT, M6M M6 A280	
910	312810-0310		8	HEXAGON NUT, NY-LOCK M3 FZB	
920	312705-0314		4	NUT HEX. DOMED CAP MHM-6 M5 A280	
930	312705-0316		2	HEX. DOMED CAP MHM-6 M6 A280	
940	311103-0348		8	PARALLEL PIN ISO 2338 6M6X10 A1	
950	315103-0124		16	WASHER, BRB, 3,2/6,H=0,5 NI PL BR	
960	315103-0136		16	WASHER PLAIN, BRB, 4,3/8,H=0,8 NI PL BR	
970	315103-0146		10	WASHER, BRB, 5,3/10,H=1 NI PL BR	
980	315103-0153		30	WASHER, BRB, 6,4/12,H=1,5 NIPL BR	

Machine Type	Group Description	Used-In	Group Number	Page No

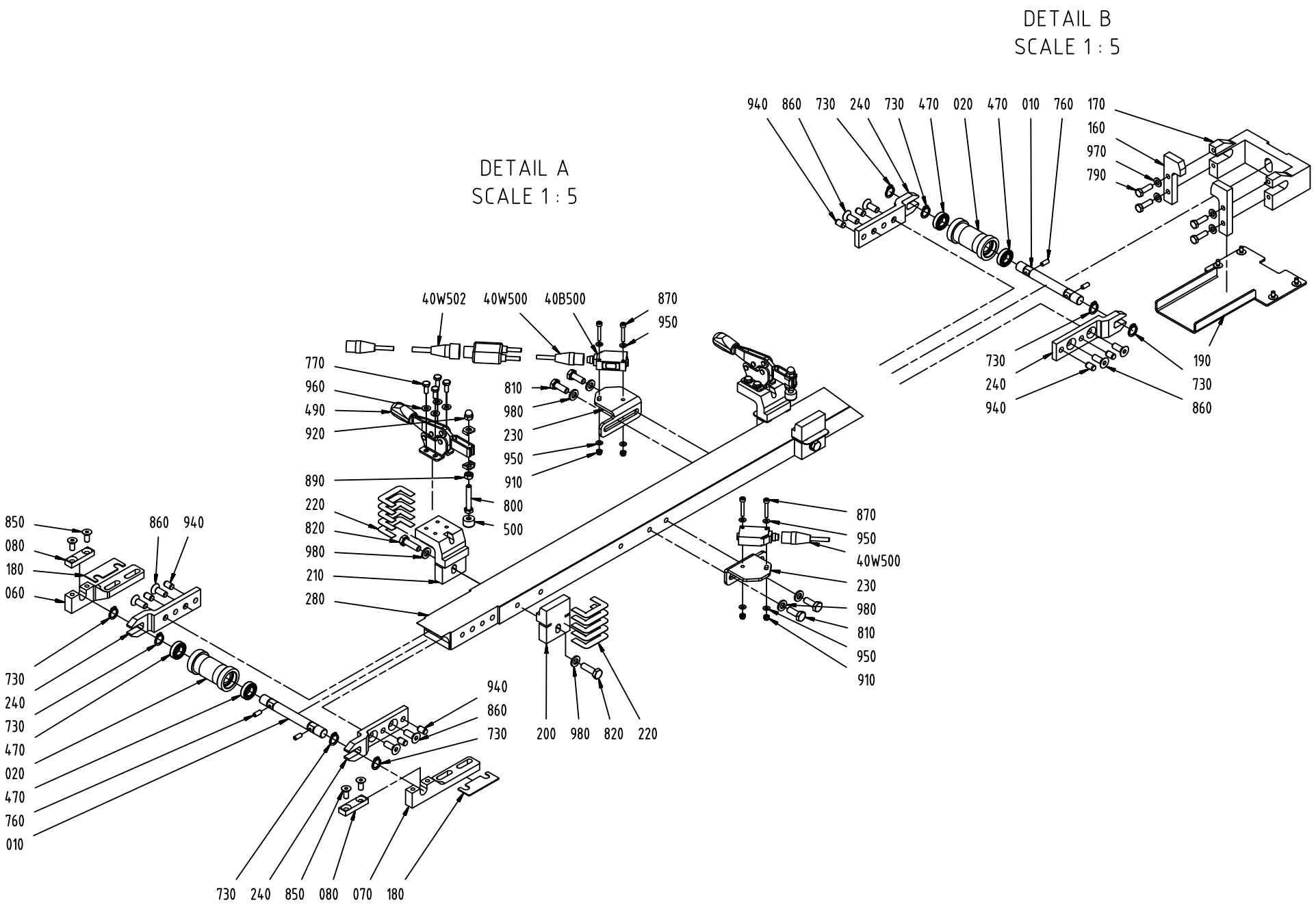
DETAIL B
SCALE 1 : 5
940 860 730 240 730 470 020 470 010 760 170
160
970
790
730
240
940
190
730
860
DETAIL A
SCALE 1 : 5
40W502 40W500 40B500 870 950
770 960 490 920
810 980 230 950 910
890 220 820 980 210 280
800 500
850 080 180 060
860 940
730 240 730 470 020 470 760 010
940 860 730
730 240 850 080 070 180
200 980 820 220
870 950 40W500 230 980 810 950 910

ECM: 482214 - 20110401
Group number: 3034439-0100
Assembly Drawing: 3034439-2_2_AA

This list covers pages from 8-18 to 8-21

Pos	Part No	UN	Qty	Description	Page No
-					
010	3108404-0000		2	SHAFT	
020	3108405-0000		2	ROLLER	
030	3108408-0000		1	SHAFT	
040	3108409-0000		1	PLATE	
050	3108410-0000		1	PLATE	
060	3108411-0000		1	PLATE	
070	3108412-0000		1	PLATE	
080	2885916-0000		2	PLATE	
090	3108414-0000		1	SHAFT	
100	3108415-0000		2	IDLER ROLLER	
110	3108417-0000		1	ROLLER	
120	3108418-0000		1	COVER	
130	3108419-0000		1	FLANGE	
140	3108420-0000		1	SHAFT	
150	3108421-0000		2	BRACKET	
160	3108422-0000		2	PLATE	
170	3108424-0000		1	BRACKET	
180	3108427-0000		2	PLATE	
190	3108428-0000		1	COVER	
200	2940040-0000		4	SUPPORT	
210	2940041-0000		4	LOCK HOLDER	
220	2940042-0000		40	SHIM	
230	2985757-0000		4	PHOTOCELL BRACKET	
240	2985759-0000		4	HOLDER	
250	3108429-0000		1	CABLE CONDUIT	
260	2852917-0000		1	BELT	
270	3108431-0000		1	BRACKET	
280	2987983-0000		1	PLATE	
400	3108433-0100		1	DISCHARGE DEVICE	**8-9**
40B500	90459-5529		1	PH.CELL E3Z-T86A, SENDER+RECIEVER	
40B504	90459-5529		1	PH.CELL E3Z-T86A, SENDER+RECIEVER	
40M400	2856579-0000		1	MOTOR	
40W400	351150-0413	M	3	CABLE OLFLEX 4GX1,5 MM2 LIGHT/GREY	
40W500	90459-6586		2	ACT/SENS.Y-CABLE, ASBN 2-PRKMV 4-07/0,6M	
40W502	351405-0020		1	ACT/SENS. CABLE RSMVN 3-PRKT 4-3-06/2,0M	
40W506	351405-0010		1	ACT/SENS. CABLE RSMVN 3-PRKT 4-3-06/1,0M	
40X400	90110-0052		1	MALE INSERT, HAN E 06, 0933 0062 601	
450	3095808-0000		1	WORM GEAR	
460	321308-0200		4	BALL BEARING 10/26X8	
470	90458-1438		4	BALL BEARING 10/19X5	
480	321308-0203		1	BALL BEARING 17/35X10	
490	3108434-0000		4	LOCKING LEVER	
500	3108435-0000		4	CAP	
510	3108436-0000		2	CLAMP	
520	3108437-0000		2	HANDLE	
530	90458-0322		1	NUT, M16X1,5	
540	90458-0306		1	CABLE GLAND, M16X1,5, NO.5311 1010	
550	90459-1458		1	HOOD HAN 6 E 19 30 006 1540	
560	90458-0406		1	GLAND W/O INSERT M20 NORMAL	
570	353249-0004		1	INSERT, SINGLE HOLE, E152/13	
700	315125-0153		1	WASHER TBRSB 6,4X22X4 A4	
710	315701-0209		1	PARALLEL KEY W. ROUND ENDS 5X5X45 MM	
720	315701-0238		1	PARALLEL KEY W. ROUND ENDS 6X6X36 MM	
730	90141-0016		12	RETAINING RING FOR SHAFT DIN 471 10 SS	
740	90141-0017		1	RETAINING RING FOR SHAFT DIN 471 17 SS	
750	90459-5152		1	SCREW HEX.SOCK.SET CONEPT. MS6SS M6X10 A	
760	312318-0289		4	SCREW ISO4029 M4X10 A4	
770	312105-0289		16	SCREW M6S H4X10 A4 70 ISO4017/DIN933	
780	312105-0325		4	SCREW M6S ISO 4017 M5X10 A480	
790	312105-0329		6	SCREW M6S ISO 4017 M5X16 A480	
800	312109-0335		4	SCREW M6S ISO 4017 M5X30 A480	
810	312105-0368		16	SCREW M6S ISO 4017 M6X16 A480	
820	312105-0370		8	SCREW M6S ISO 4017 M6X20 A480	
830	312105-0372		4	SCREW M6S ISO 4017 M6X25 A480	
840	312109-0386		2	SCREW M6S ISO 4017 M6X80 A480	
850	312155-0327		4	SCREW DIN 7991 MF6S M5X12 A4 70	
860	312155-0368		8	SCREW DIN 7991 MF6S M6X16 A4 70	
870	312115-0230		8	SCREW ISO4762 M3X20 A4 80	
880	312115-0372		4	SCREW ISO4762 M6X25 A4 80	
890	312605-0314		4	HEXAGON NUT, M6M M5 A280	
900	312605-0316		6	HEXAGON NUT, M6M M6 A280	
910	312810-0310		8	HEXAGON NUT, NY-LOCK M3 FZB	
920	312705-0314		4	NUT HEX. DOMED CAP MHM-6 M5 A280	
930	312705-0316		2	HEX. DOMED CAP MHM-6 M6 A280	
940	311103-0348		8	PARALLEL PIN ISO 2338 6M6X10 A1	
950	315103-0124		16	WASHER, BRB, 3,2/6,H=0,5 NI PL BR	
960	315103-0136		16	WASHER PLAIN, BRB, 4,3/8,H=0,8 NI PL BR	
970	315103-0146		10	WASHER, BRB, 5,3/10,H=1 NI PL BR	
980	315103-0153		30	WASHER, BRB, 6,4/12,H=1,5 NIPL BR	

Machine Type | Group Description | Used-In | Group Number | Page No

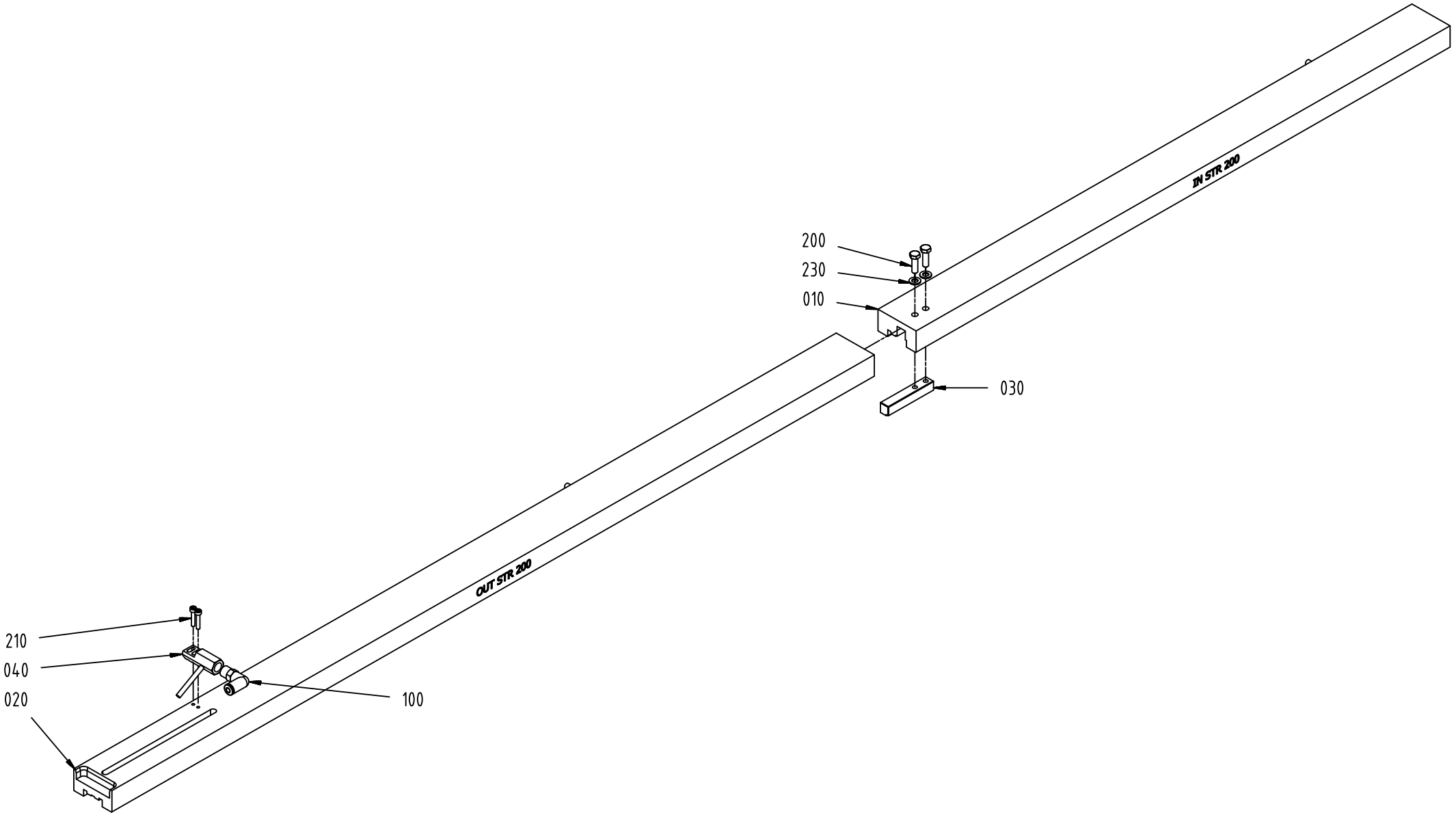
200
230
010
030
IN STR 200
OUT STR 200
210
040
020
100

ECM: 482325 - 20110401
Group number: 3147218-0100
Assembly Drawing: 3147218-1_1_AA

Pos	Part No	UN	Qty	Description	Page No
-					
010	3124388-0000		1	COVER	
020	3124389-0000		1	COVER	
030	3124390-0000		1	FLAP	
040	3124391-0000		1	AIR NOZZLE	
100	3124379-0000		1	FITTING	
200	312105-0329		2	SCREW M6S ISO 4017 M5X16 A480	
210	312115-0228		2	SCREW ISO4762 M3X16 A4 80	
230	315103-0146		2	WASHER, BRB, 5,3/10,H=1 NI PL BR	

Pos	Part No	UN	Qty	Description	Page No

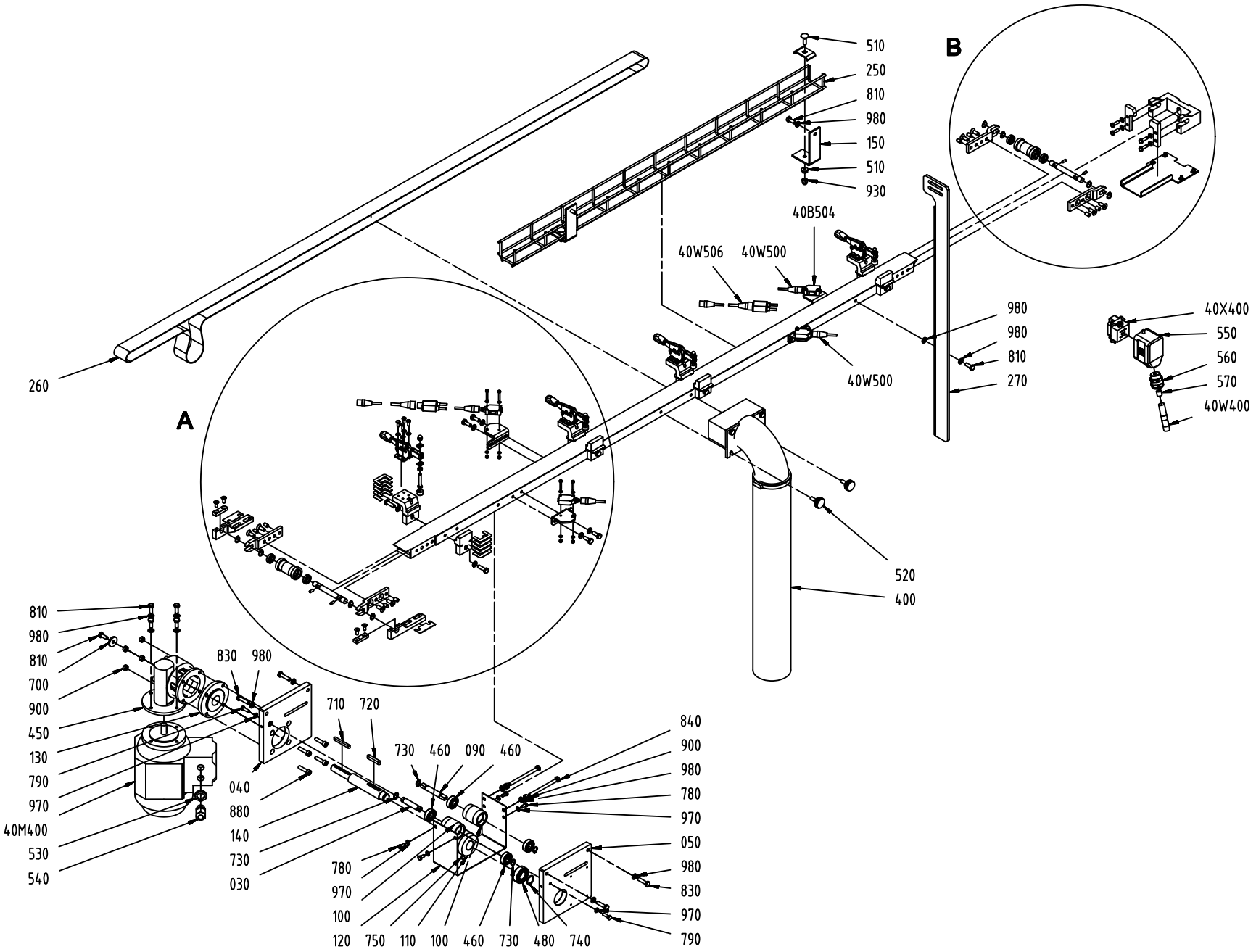
510
250
810
980
150
510
930
B
40B504
40W506
40W500
980
980
810
270
40W500
40X400
550
560
570
40W400
260
A
520
400
810
980
810
700
900
450
130
790
970
40M400
530
540
830
980
710
720
730
460
090
460
040
880
140
730
030
780
970
100
120
750
110
100
460
730
480
740
840
900
980
780
970
050
980
830
970
790

ECM: 482215 - 20110401
Group number: 3034440-0100
Assembly Drawing: 3034440-2_1_AA

This list covers pages from 8-24 to 8-27

Pos	Part No	UN	Qty	Description	Page No
-					
010	3108404-0000		2	SHAFT	
020	3108405-0000		2	ROLLER	
030	3108408-0000		1	SHAFT	
040	3108409-0000		1	PLATE	
050	3108410-0000		1	PLATE	
060	3108411-0000		1	PLATE	
070	3108412-0000		1	PLATE	
080	2885916-0000		2	PLATE	
090	3108414-0000		1	SHAFT	
100	3108415-0000		2	IDLER ROLLER	
110	3108417-0000		1	ROLLER	
120	3108418-0000		1	COVER	
130	3108419-0000		1	FLANGE	
140	3108420-0000		1	SHAFT	
150	3108421-0000		2	BRACKET	
160	3108422-0000		2	PLATE	
170	3108424-0000		1	BRACKET	
180	3108427-0000		2	PLATE	
190	3108428-0000		1	COVER	
200	2940040-0000		4	SUPPORT	
210	2940041-0000		4	LOCK HOLDER	
220	2940042-0000		40	SHIM	
230	2985757-0000		4	PHOTOCELL BRACKET	
240	2985759-0000		4	HOLDER	
250	3108429-0000		1	CABLE CONDUIT	
260	2852917-0000		1	BELT	
270	3108431-0000		1	BRACKET	
280	2987983-0000		1	PLATE	
400	3108433-0100		1	DISCHARGE DEVICE	**8-9**
40B500	90459-5529		1	PH.CELL E3Z-T86A, SENDER+RECIEVER	
40B504	90459-5529		1	PH.CELL E3Z-T86A, SENDER+RECIEVER	
40M400	2856579-0000		1	MOTOR	
40W400	351150-0413	M	3	CABLE OLFLEX 4GX1,5 MM2 LIGHT/GREY	
40W500	90459-6586		2	ACT/SENS.Y-CABLE, ASBN 2-PRKMV 4-07/0,6M	
40W502	351405-0020		1	ACT/SENS. CABLE RSMVN 3-PRKT 4-3-06/2,0M	
40W506	351405-0010		1	ACT/SENS. CABLE RSMVN 3-PRKT 4-3-06/1,0M	
40X400	90110-0052		1	MALE INSERT, HAN E 06, 0933 0062 601	
450	2856578-0000		1	WORM GEAR	
460	321308-0200		4	BALL BEARING 10/26X8	
470	90458-1438		4	BALL BEARING 10/19X5	
480	321308-0203		1	BALL BEARING 17/35X10	
490	3108434-0000		4	LOCKING LEVER	
500	3108435-0000		4	CAP	
510	3108436-0000		2	CLAMP	
520	3108437-0000		2	HANDLE	
530	90458-0322		1	NUT, M16X1,5	
540	90458-0306		1	CABLE GLAND, M16X1,5, NO.5311 1010	
550	90459-1458		1	HOOD HAN 6 E 19 30 006 1540	
560	90458-0406		1	GLAND W/O INSERT M20 NORMAL	
570	353249-0004		1	INSERT, SINGLE HOLE, E152/13	
700	315125-0153		1	WASHER TBRSB 6,4X22X4 A4	
710	315701-0209		1	PARALLEL KEY W. ROUND ENDS 5X5X45 MM	
720	315701-0238		1	PARALLEL KEY W. ROUND ENDS 6X6X36 MM	
730	90141-0016		12	RETAINING RING FOR SHAFT DIN 471 10 SS	
740	90141-0017		1	RETAINING RING FOR SHAFT DIN 471 17 SS	
750	90459-5152		1	SCREW HEX.SOCK.SET CONEPT. MS6SS M6X10 A	
760	312318-0289		4	SCREW ISO4029 M4X10 A4	
770	312105-0289		16	SCREW M6S H4X10 A4 70 ISO4017/DIN933	
780	312105-0325		4	SCREW M6S ISO 4017 M5X10 A480	
790	312105-0329		6	SCREW M6S ISO 4017 M5X16 A480	
800	312109-0335		4	SCREW M6S ISO 4017 M5X30 A480	
810	312105-0368		16	SCREW M6S ISO 4017 M6X16 A480	
820	312105-0370		8	SCREW M6S ISO 4017 M6X20 A480	
830	312105-0372		4	SCREW M6S ISO 4017 M6X25 A480	
840	312109-0386		2	SCREW M6S ISO 4017 M6X80 A480	
850	312155-0327		4	SCREW DIN 7991 MF6S M5X12 A4 70	
860	312155-0368		8	SCREW DIN 7991 MF6S M6X16 A4 70	
870	312115-0230		8	SCREW ISO4762 M3X20 A4 80	
880	312115-0372		4	SCREW ISO4762 M6X25 A4 80	
890	312605-0314		4	HEXAGON NUT, M6M M5 A280	
900	312605-0316		6	HEXAGON NUT, M6M M6 A280	
910	312810-0310		8	HEXAGON NUT, NY-LOCK M3 FZB	
920	312705-0314		4	NUT HEX. DOMED CAP MHM-6 M5 A280	
930	312705-0316		2	HEX. DOMED CAP MHM-6 M6 A280	
940	311103-0348		8	PARALLEL PIN ISO 2338 6M6X10 A1	
950	315103-0124		16	WASHER, BRB, 3,2/6,H=0,5 NI PL BR	
960	315103-0136		16	WASHER PLAIN, BRB, 4,3/8,H=0,8 NI PL BR	
970	315103-0146		10	WASHER, BRB, 5,3/10,H=1 NI PL BR	
980	315103-0153		30	WASHER, BRB, 6,4/12,H=1,5 NIPL BR	

Machine Type | Group Description | Used-In | Group Number | Page No

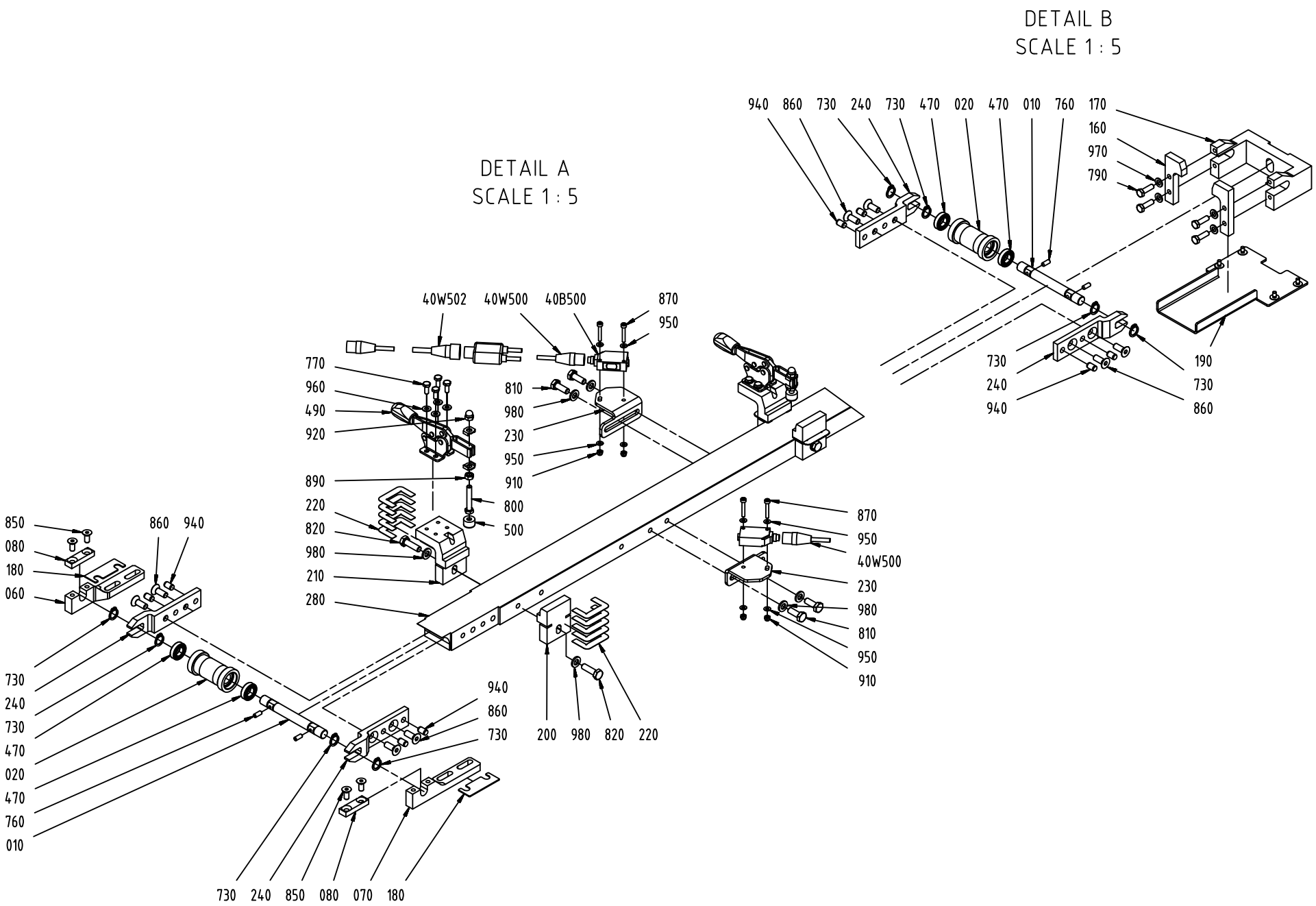
DETAIL B
SCALE 1 : 5
940 860 730 240 730 470 020 470 010 760 170
160
970
790
730
240
940
190
730
860
DETAIL A
SCALE 1 : 5
40W502 40W500 40B500 870 950
770 960 490 920
810 980 230 950 910 800 500
890 220 820 980 210 280
850 080 180 060
860 940
730 240 730 470 020 470 760 010
730 240 850 080 070 180
940 860 730
200 980 820 220
870 950 40W500 230 980 810 950 910

ECM: 482215 - 20110401
Group number: 3034440-0100
Assembly Drawing: 3034440-2_2_AA

This list covers pages from 8-24 to 8-27

Pos	Part No	UN	Qty	Description	Page No
-					
010	3108404-0000		2	SHAFT	
020	3108405-0000		2	ROLLER	
030	3108408-0000		1	SHAFT	
040	3108409-0000		1	PLATE	
050	3108410-0000		1	PLATE	
060	3108411-0000		1	PLATE	
070	3108412-0000		1	PLATE	
080	2885916-0000		2	PLATE	
090	3108414-0000		1	SHAFT	
100	3108415-0000		2	IDLER ROLLER	
110	3108417-0000		1	ROLLER	
120	3108418-0000		1	COVER	
130	3108419-0000		1	FLANGE	
140	3108420-0000		1	SHAFT	
150	3108421-0000		2	BRACKET	
160	3108422-0000		2	PLATE	
170	3108424-0000		1	BRACKET	
180	3108427-0000		2	PLATE	
190	3108428-0000		1	COVER	
200	2940040-0000		4	SUPPORT	
210	2940041-0000		4	LOCK HOLDER	
220	2940042-0000		40	SHIM	
230	2985757-0000		4	PHOTOCELL BRACKET	
240	2985759-0000		4	HOLDER	
250	3108429-0000		1	CABLE CONDUIT	
260	2852917-0000		1	BELT	
270	3108431-0000		1	BRACKET	
280	2987983-0000		1	PLATE	
400	3108433-0100		1	DISCHARGE DEVICE	**8-9**
40B500	90459-5529		1	PH.CELL E3Z-T86A, SENDER+RECIEVER	
40B504	90459-5529		1	PH.CELL E3Z-T86A, SENDER+RECIEVER	
40M400	2856579-0000		1	MOTOR	
40W400	351150-0413	M	3	CABLE OLFLEX 4GX1,5 MM2 LIGHT/GREY	
40W500	90459-6586		2	ACT/SENS.Y-CABLE, ASBN 2-PRKMV 4-07/0,6M	
40W502	351405-0020		1	ACT/SENS. CABLE RSMVN 3-PRKT 4-3-06/2,0M	
40W506	351405-0010		1	ACT/SENS. CABLE RSMVN 3-PRKT 4-3-06/1,0M	
40X400	90110-0052		1	MALE INSERT, HAN E 06, 0933 0062 601	
450	2856578-0000		1	WORM GEAR	
460	321308-0200		4	BALL BEARING 10/26X8	
470	90458-1438		4	BALL BEARING 10/19X5	
480	321308-0203		1	BALL BEARING 17/35X10	
490	3108434-0000		4	LOCKING LEVER	
500	3108435-0000		4	CAP	
510	3108436-0000		2	CLAMP	
520	3108437-0000		2	HANDLE	
530	90458-0322		1	NUT, M16X1,5	
540	90458-0306		1	CABLE GLAND, M16X1,5, NO.5311 1010	
550	90459-1458		1	HOOD HAN 6 E 19 30 006 1540	
560	90458-0406		1	GLAND W/O INSERT M20 NORMAL	
570	353249-0004		1	INSERT, SINGLE HOLE, E152/13	
700	315125-0153		1	WASHER TBRSB 6,4X22X4 A4	
710	315701-0209		1	PARALLEL KEY W. ROUND ENDS 5X5X45 MM	
720	315701-0238		1	PARALLEL KEY W. ROUND ENDS 6X6X36 MM	
730	90141-0016		12	RETAINING RING FOR SHAFT DIN 471 10 SS	
740	90141-0017		1	RETAINING RING FOR SHAFT DIN 471 17 SS	
750	90459-5152		1	SCREW HEX.SOCK.SET CONEPT. MS6SS M6X10 A	
760	312318-0289		4	SCREW ISO4029 M4X10 A4	
770	312105-0289		16	SCREW M6S H4X10 A4 70 ISO4017/DIN933	
780	312105-0325		4	SCREW M6S ISO 4017 M5X10 A480	
790	312105-0329		6	SCREW M6S ISO 4017 M5X16 A480	
800	312109-0335		4	SCREW M6S ISO 4017 M5X30 A480	
810	312105-0368		16	SCREW M6S ISO 4017 M6X16 A480	
820	312105-0370		8	SCREW M6S ISO 4017 M6X20 A480	
830	312105-0372		4	SCREW M6S ISO 4017 M6X25 A480	
840	312109-0386		2	SCREW M6S ISO 4017 M6X80 A480	
850	312155-0327		4	SCREW DIN 7991 MF6S M5X12 A4 70	
860	312155-0368		8	SCREW DIN 7991 MF6S M6X16 A4 70	
870	312115-0230		8	SCREW ISO4762 M3X20 A4 80	
880	312115-0372		4	SCREW ISO4762 M6X25 A4 80	
890	312605-0314		4	HEXAGON NUT, M6M M5 A280	
900	312605-0316		6	HEXAGON NUT, M6M M6 A280	
910	312810-0310		8	HEXAGON NUT, NY-LOCK M3 FZB	
920	312705-0314		4	NUT HEX. DOMED CAP MHM-6 M5 A280	
930	312705-0316		2	HEX. DOMED CAP MHM-6 M6 A280	
940	311103-0348		8	PARALLEL PIN ISO 2338 6M6X10 A1	
950	315103-0124		16	WASHER, BRB, 3,2/6,H=0,5 NI PL BR	
960	315103-0136		16	WASHER PLAIN, BRB, 4,3/8,H=0,8 NI PL BR	
970	315103-0146		10	WASHER, BRB, 5,3/10,H=1 NI PL BR	
980	315103-0153		30	WASHER, BRB, 6,4/12,H=1,5 NIPL BR	

Machine Type	Group Description	Used-In	Group Number	Page No

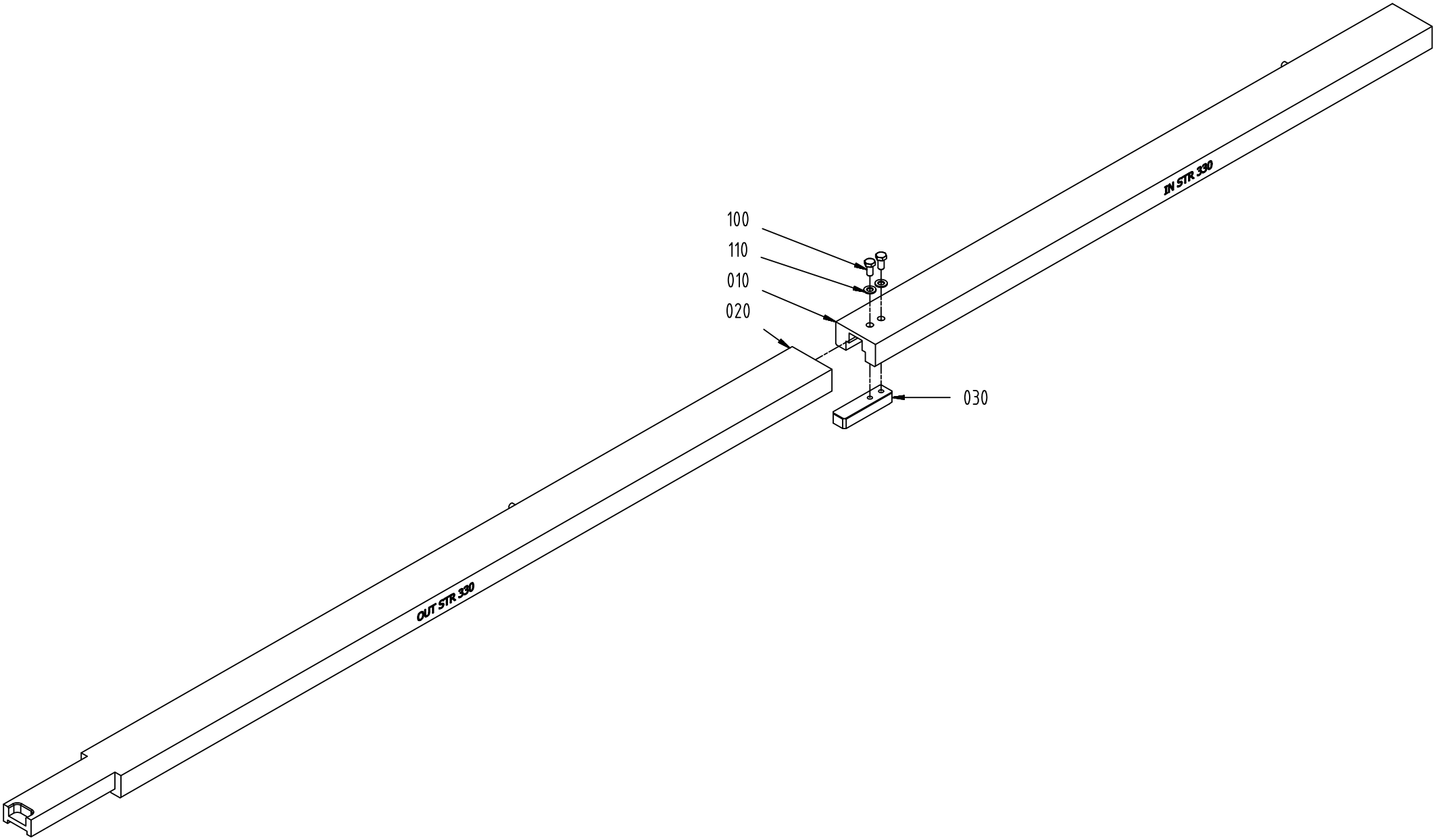
100
110
010
020
030
IN STR 330
OUT STR 330

ECM: 482326 - 20110401
Group number: 3147219-0100
Assembly Drawing: 3147219-1_1_AA

Pos	Part No	UN	Qty	Description	Page No
-					
010	3124392-0000		1	COVER	
020	2987985-0000		1	TOP COVER	
030	3124393-0000		1	FLAP	
100	312105-0325		2	SCREW M6S ISO 4017 M5X10 A480	
110	315103-0146		2	WASHER, BRB, 5,3/10,H=1 NI PL BR	

Pos	Part No	UN	Qty	Description	Page No

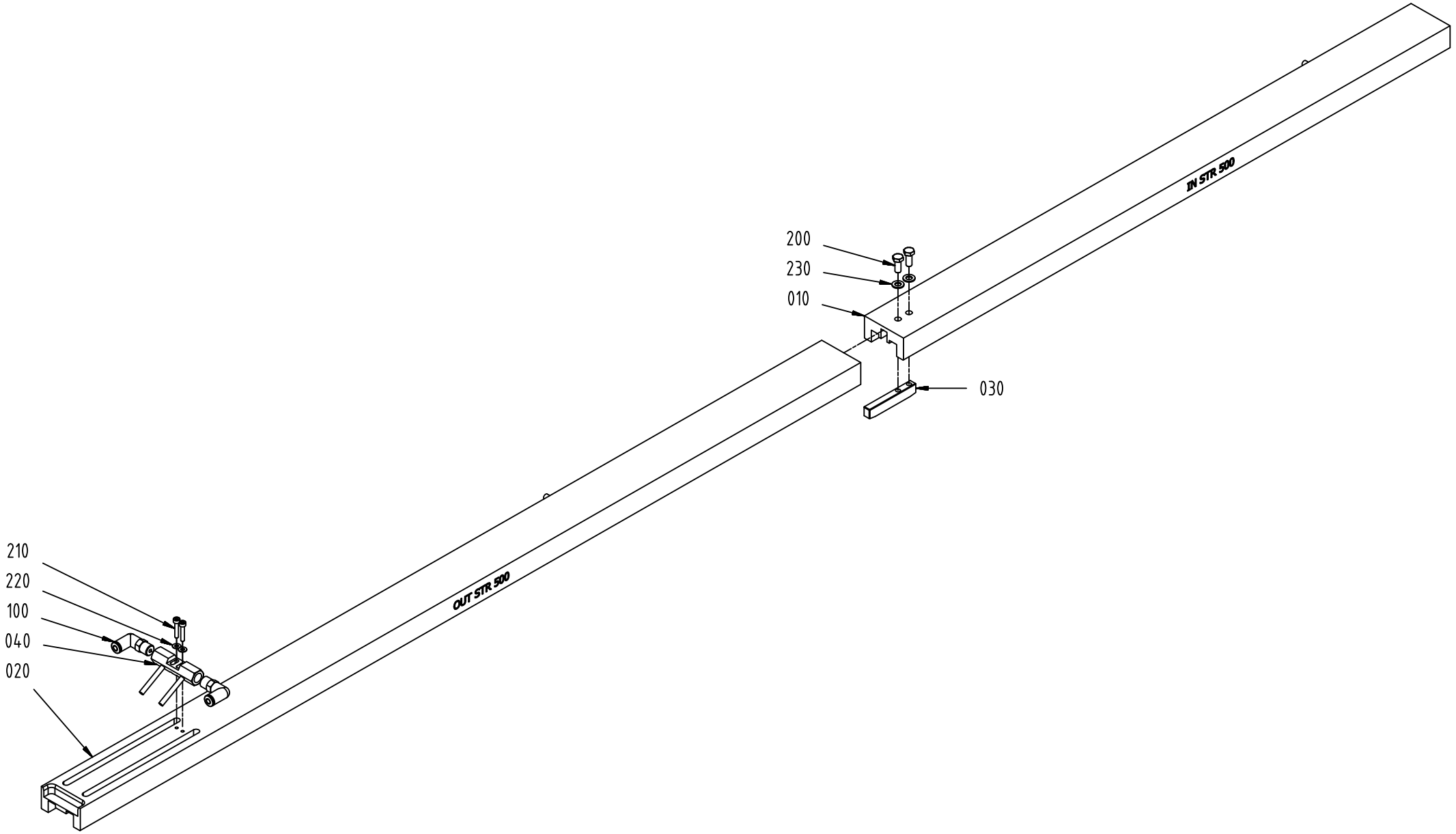
200
230
010
030
IN STR 500
210
220
100
040
020
OUT STR 500

ECM: 482327 - 20110401
Group number: 3147220-0100
Assembly Drawing: 3147220-1_1_AA

Pos	Part No	UN	Qty	Description	Page No
-					
010	3124394-0000		1	COVER	
020	3124395-0000		1	COVER	
030	3124396-0000		1	FLAP	
040	3124397-0000		1	AIR NOZZLE	
100	3124379-0000		2	FITTING	
200	312105-0327		2	SCREW M6S ISO 4017 M5X12 A480	
210	312115-0228		2	SCREW ISO4762 M3X16 A4 80	
220	315103-0124		2	WASHER, BRB, 3,2/6,H=0,5 NI PL BR	
230	315103-0146		2	WASHER, BRB, 5,3/10,H=1 NI PL BR	

Pos	Part No	UN	Qty	Description	Page No

Tetra Pak

SPC
Spare Parts Catalogue

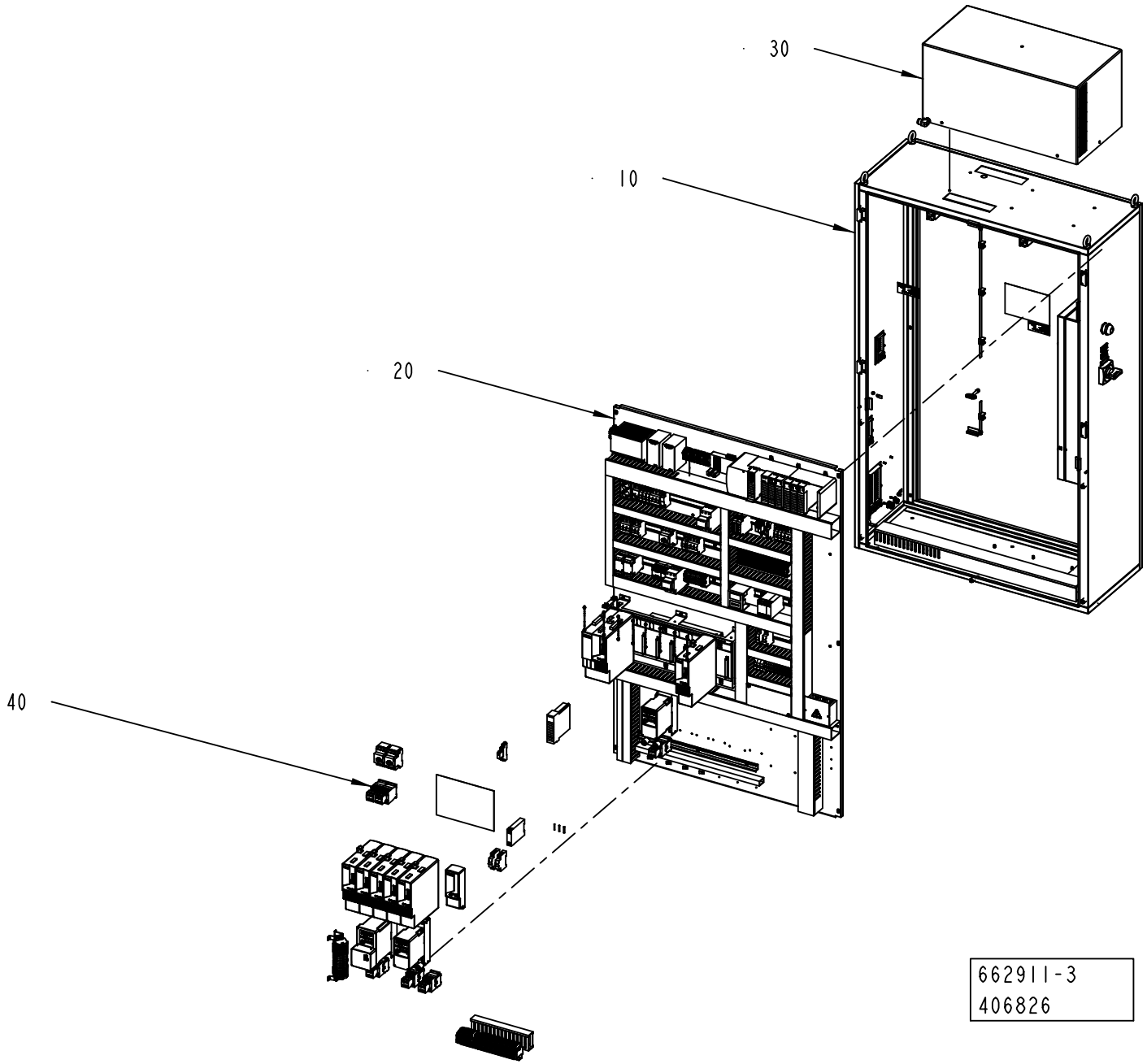
30
10
20
40
662911-3
406826

ECM: 406841 - 20091001
Group number: 662911-0200
Assembly Drawing: 662911-3_1_AA

Pos	Part No	UN	Qty	Description	Page No
-					
010	2833406-0200		1	CABINET	**9-5**
020	2833407-0200		1	CONTROL BOARD	**9-9**
030	2833408-0100		1	COOLING UNIT	**9-55**
040	2841404-0200		1	ELECTRICAL CONVERSION	**9-57, 9-59, 9-61**
050	2833409-0100		1	CABLE SET	**9-71**

Pos	Part No	UN	Qty	Description	Page No

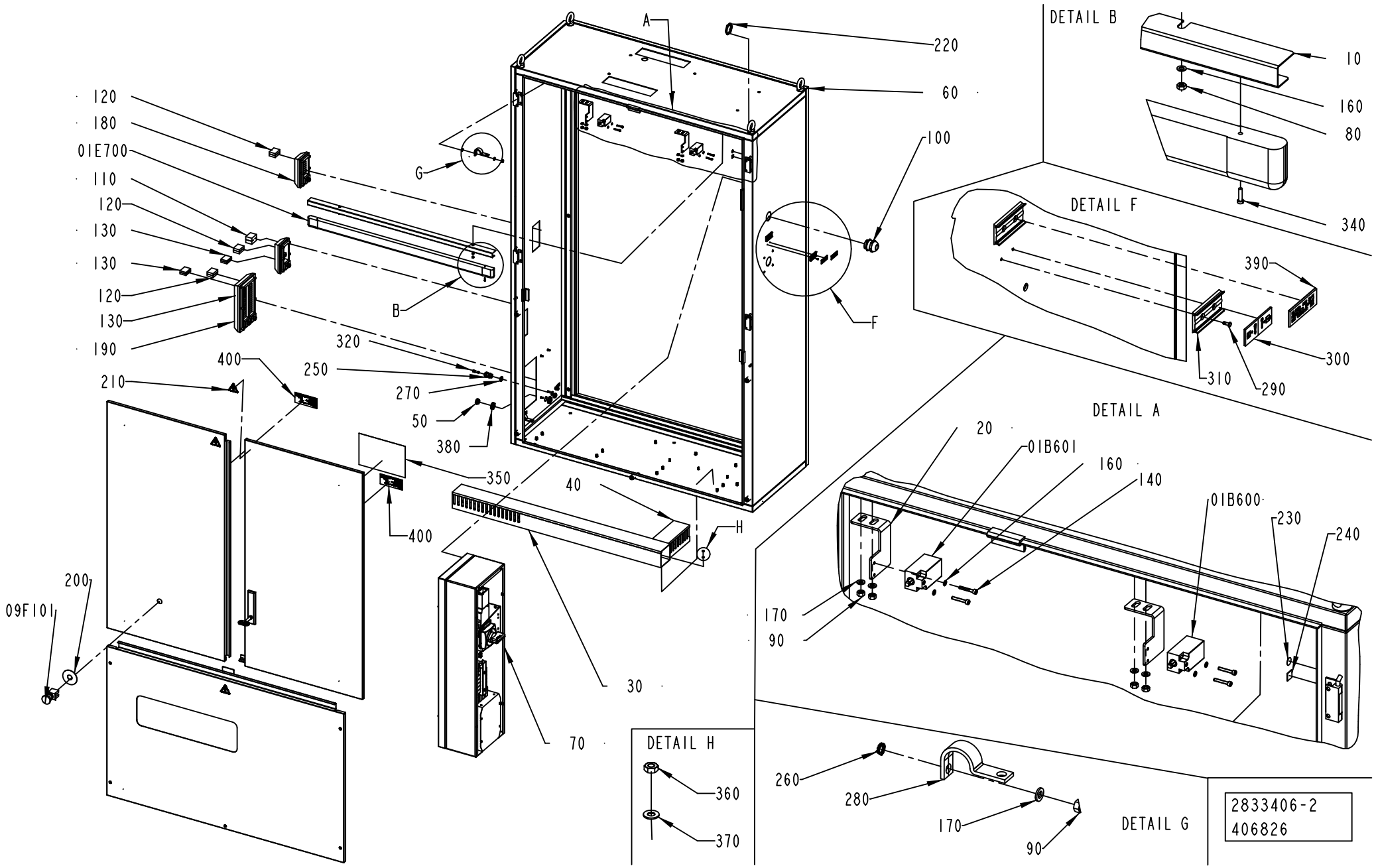
A
220
60
100
G
B
F
120
180
01E700
110
120
130
130
120
130
190
400
250
210
320
270
50
380
350
40
400
H
200
09F101
30
70
DETAIL B
10
160
80
340
DETAIL F
390
300
310
290
DETAIL A
20
01B601
160
140
01B600
230
240
170
90
DETAIL H
360
370
260
280
170
90
DETAIL G
2833406-2
406826

ECM: 406842 - 20091001
Group number: 2833406-0200
Assembly Drawing: 2833406-2_1_AA

Pos	Part No	UN	Qty	Description	Page No
-					
010	2947726-0000		1	SUPPORT	
01B600	90044-0192		1	LIMIT SW. SZ2586.000	
01B601	90044-0192		1	LIMIT SW. SZ2586.000	
01E700	90600-4049		1	LIGHT FIXTURE, TCH128 1XTL5-21W/830 HF	
	90600-4239		*1*	*FLUORESCENT TUBE, MASTER TL5 HE 21W/830.*	
020	2839225-0000		2	BRACKET	
030	2838459-0000		1	CABLE DUCT	
040	2838460-0000		1	CABLE DUCT	
050	90458-1308		2	BLIND PLUG CIRCULAR, M20X1,5 514GFK/220	
060	2833403-0000		1	WELDED CABINET	
	3117125-0001		*1*	*MODIFICATION DRAWING*	
	3117124-0001		*1*	*MODIFICATION DRAWING*	
070	2833410-0100		1	BOX	**9-7**
080	312605-0312		2	HEXAGON NUT, M6M M4 A280	
090	312605-0316		24	HEXAGON NUT, M6M M6 A280	
09F101	90458-1651		1	EMERGENCY STOP, ZB4-BS-844 ZB4-BZ-104	
100	90458-0310		1	CABLE GLAND, M40X1,5, NO.5311 1050	
110	90458-1173		1	MULTI DIAMETER MODULE, CM 30W40	
120	90458-1174		18	MULTI DIAMETER MODULE, CM 20W40	
130	90458-1175		6	MULTI DIAMETER MODULE, CM 15W40	
140	312115-0297		4	SCREW ISO4762 M4X25 A4 80	
160	315105-0136		6	WASHER BRB 4,3X8 RFR	
170	315105-0153		24	WASHER BRB 6,4X12 RFR	
180	90458-1178		2	FRAME, CF 8	
190	90458-1179		1	FRAME, CF 32	
200	486826-0001		1	SIGN "EMERGENCY STOP"	
210	359705-0015		3	WARNING SIGN ISO, RISK OF ELECTRIC SHOCK	
220	353250-0040		1	GLAND, LOCK NUT M40X1,5	
230	2608177-0000		20	SIGN	
240	90194-0152		20	SIGN, EARTH	
250	90458-0314		2	CABLE GLAND, M16X1,5, NO.5311 1110	
260	90062-0015		20	LOCK WASHER SERRAT.EXT.GEAR,6,4/11 H=0,7	
270	353250-0016		2	GLAND, LOCK NUT M16X1,5	
280	90600-2904		11	EARTH BRAID, 250/16/8,5	
290	311520-0320		4	RIVET, BLANK 2,4X6	
300	359241-0124		1	SIGN: MAIN SWITCH	
310	359240-0100		2	SIGN HOLDER FOR 359240-0001	
320	342715-0102		2	BLIND PLUG 6 MM	
340	312125-0226		2	SCREW ISO 1207 M3X12 A4	
350	90600-2068		1	DELIVERED DESIGN SIGN, 90600-2068	
360	90099-0191		46	HEXAGON NYLON NUT, M4X0,7	
370	90005-0064		15	WASHER PL.RND.NYL.4,3/9, H=0,8	
380	90458-0323		2	NUT, M20X1,5	
390	90600-5823		1	SIGN, MAIN POWER MACHINE LABEL	
400	90459-7229		2	IDENTIF. OF SINGLE CONDUCTORS, TEMPLATE	

Machine Type | Group Description | Used-In | Group Number | Page No

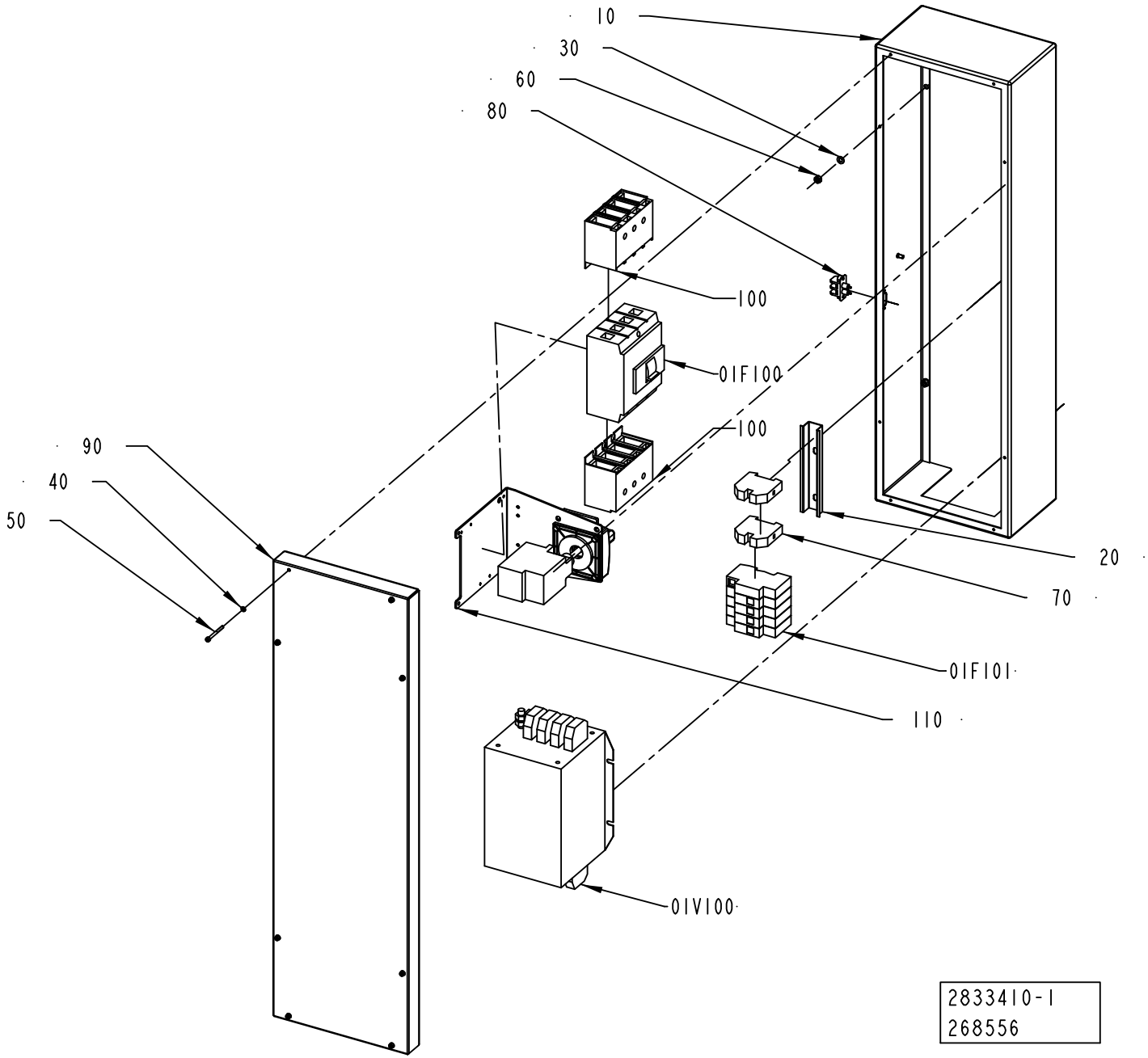
10
30
60
80
100
01F100
100
90
40
50
20
70
01F101
110
01V100
2833410-1
268556

ECM: 272039 - 20060925
Group number: 2833410-0100
Assembly Drawing: 2833410-1_1_AA

Pos	Part No	UN	Qty	Description	Page No
-					
010	2833411-0000		1	BOX	
01F100	90459-4181		1	CURR. LIM. CIRC. BREAKER, NZMB1-4-A40	
01F101	90082-0013		1	SURGE PROTECTION DEVICE PU4CR 8021520000	
	90082-0301		*3*	*OVER VOLT. PROTECT. PU 0 C 833951*	
01V100	90024-0060		1	FILTER 80 A 440/250 VAC, B84144-A0080R00	
020	2835456-0000		1	RAIL	
030	315105-0153		6	WASHER BRB 6,4X12 RFR	
040	315105-0136		8	WASHER BRB 4,3X8 RFR	
050	312115-0304		8	SCREW ISO4762 M4X45 A4 80	
060	312605-0316		6	HEXAGON NUT, M6M M6 A280	
070	353024-0209		2	EARTH TERMINAL WPE 35	
080	90024-0036		1	FEED THROUGH FILTER, 52-160-002-AD00	
090	2835450-0000		1	COVER	
100	90459-6617		2	COVER 4-POLE, NZM1-4-XKSA	
110	90600-1198		1	HANDLE, MZM1-XSM-R	

Pos	Part No	UN	Qty	Description	Page No

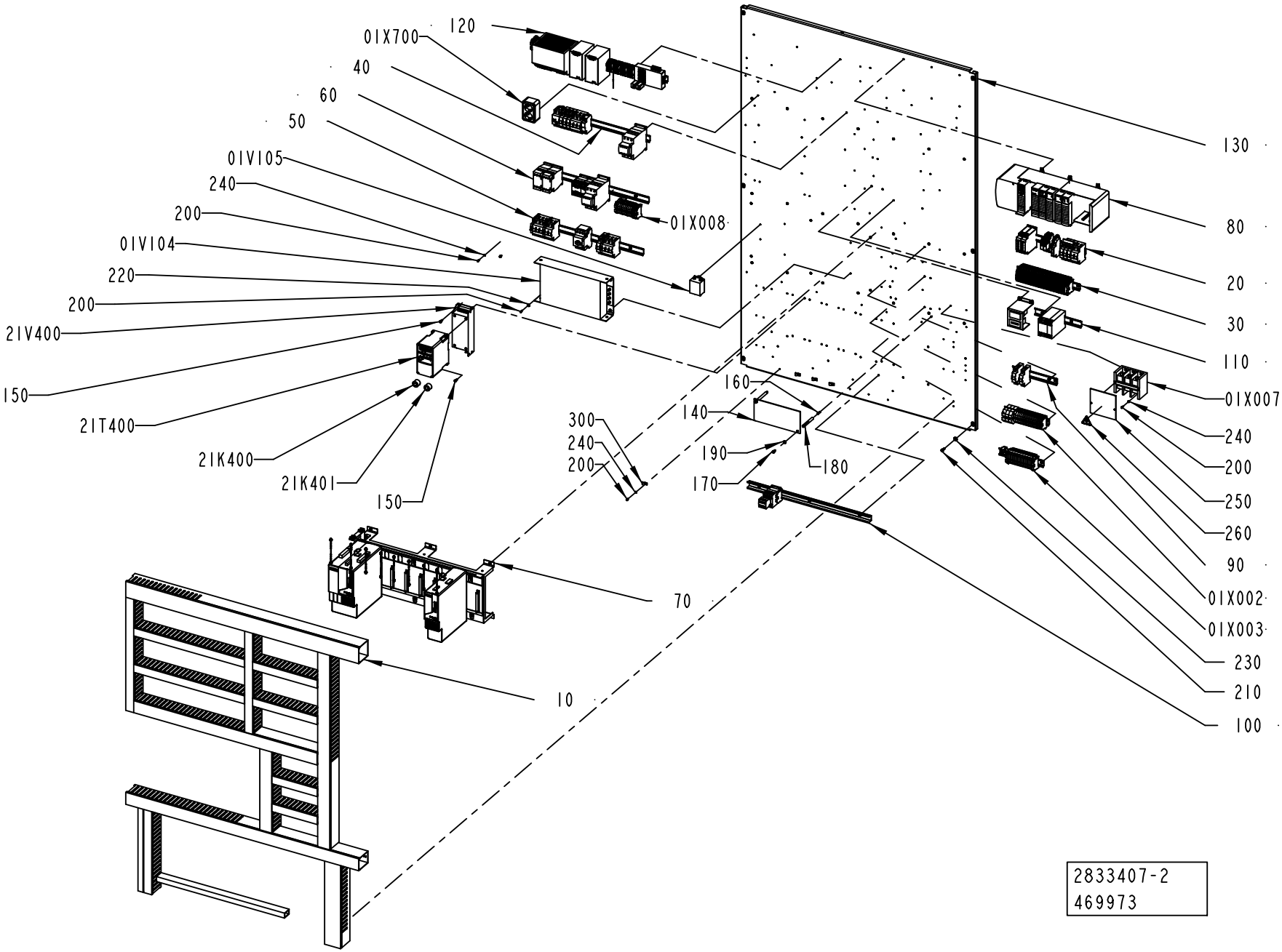
01X700
120
40
60
50
01V105
240
200
01V104
220
200
21V400
150
21T400
21K400
21K401
150
01X008
300
240
200
160
140
190
180
170
130
80
20
30
110
01X007
240
200
250
260
90
01X002
01X003
230
210
100
70
10
2833407-2
469973

ECM: 474060 - 20101109
Group number: 2833407-0200
Assembly Drawing: 2833407-2_1_AB

Pos	Part No	UN	Qty	Description	Page No
-					
010	2833412-0100		1	CABLE DUCT	**9-11**
01V104	90459-2549		1	AC LINE FILTER 3-PHASE 30A, 2090-XXLF-X3	
01V105	90600-5252		1	LINE FILTER, B84113HB30	
01X002	2839223-0100		1	PLINTH	**9-13**
01X003	2839224-0100		1	PLINTH	**9-15**
01X007	90459-0959		1	DISTRIBUTOR BLOCK 1492-PD3163	
01X008	3046886-0100		1	DISTRIBUTION TERMINAL	**9-17**
01X700	90001-0033		1	WALL SOCKET, E1834666	
020	2835464-0200		1	DISTRIBUTION TERMINAL	**9-19**
030	2839229-0100		1	DISTRIBUTION TERMINAL	**9-21**
040	2835459-0200		1	FUSE BOARD 1	**9-35**
050	2835460-0100		1	FUSE BOARD 2	**9-37**
060	2835461-0100		1	FUSE BOARD 3	**9-39**
070	2835462-0200		1	MOTOR DRIVE CONTROL	**9-41**
080	2835458-0200		1	PLC	**9-43**
090	2839222-0100		1	PLINTH	**9-45**
100	2835463-0100		1	PLINTH	**9-47**
110	2839221-0100		1	PLINTH	**9-49**
120	2835457-0100		1	POWER SUPPLY UNIT	**9-51**
130	2833404-0000		1	MOUNTING PLATE	
140	2845320-0000		1	PROTECTION	
150	312115-0327		8	SCREW ISO4762 M5X12 A4 80	
160	312318-0370		2	SCREW ISO4029 M6X20 A4	
170	312125-0366		2	SCREW ISO 1207 M6X12 A4	
180	1038275-0012		2	SPACER	
190	315105-0153		2	WASHER BRB 6,4X12 RFR	
200	312125-0289		14	SCREW ISO 1207 M4X10 A4	
210	312115-0368		6	SCREW ISO4762 M6X16 A4 80	
21K400	90600-5249		1	FERRITE, B64290L616X38	
21K401	90600-5249		1	FERRITE, B64290L616X38	
21T400	90459-3450		1	FREQ. CONV., 22A-A4P5N104	
21V400	90459-3460		1	FOOTPRINT FILTER 1 PHASE 10A	
220	90005-0082		4	WASHER PLAIN ROUND 4,3(M4)/12,H=1	
230	315105-0165		6	WASHER BRB 8,4X16 RFR	
240	315105-0136		10	WASHER BRB 4,3X8 RFR	
250	3047311-0000		1	PROTECTION	
260	359705-0015		1	WARNING SIGN ISO, RISK OF ELECTRIC SHOCK	
300	90165-0007		4	PIPE CLIP FOR TUBE D=8 MM	

Pos	Part No	UN	Qty	Description	Page No

Machine Type | Group Description | Used-In | Group Number | Page No

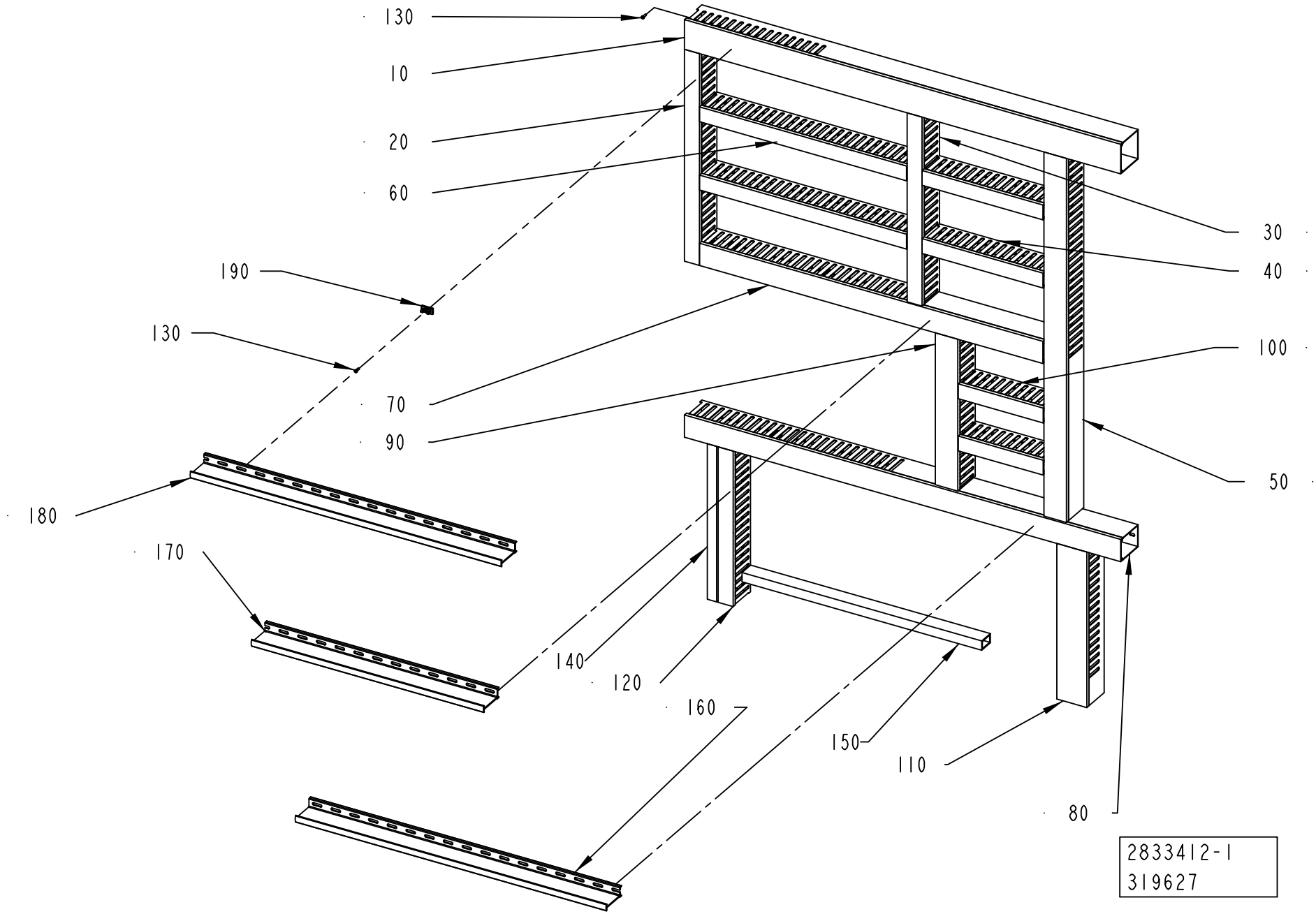
130
10
20
60
190
130
70
90
180
170
140
120
160
150
110
80
30
40
100
50
2833412-1
319627

ECM: 324219 - 20080407
Group number: 2833412-0100
Assembly Drawing: 2833412-1_1_AB

Pos	Part No	UN	Qty	Description	Page No
-					
010	2838462-0000		1	CABLE DUCT	
020	2838463-0000		1	CABLE DUCT	
030	2838464-0000		1	CABLE DUCT	
040	2838465-0000		2	CABLE DUCT	
050	2838466-0000		1	CABLE DUCT	
060	2838467-0000		2	CABLE DUCT	
070	2838468-0000		1	CABLE DUCT	
080	2838469-0000		1	CABLE DUCT	
090	2838470-0000		1	CABLE DUCT	
100	2838471-0000		2	CABLE DUCT	
110	2838472-0000		1	CABLE DUCT	
120	2838473-0000		1	CABLE DUCT	
130	90287-0124		67	SCREW PAN HEAD MSCS M4X12 NYLON	
140	2838474-0000		1	CABLE DUCT	
150	2838475-0000		1	CABLE DUCT	
160	2841405-0000		1	DIVIDER	
170	2841406-0000		1	DIVIDER	
180	2921902-0000		1	DIVIDER	
190	90600-2830		8	FASTENING ELEMENT, BLOCKSEP-E 01026	

Pos	Part No	UN	Qty	Description	Page No

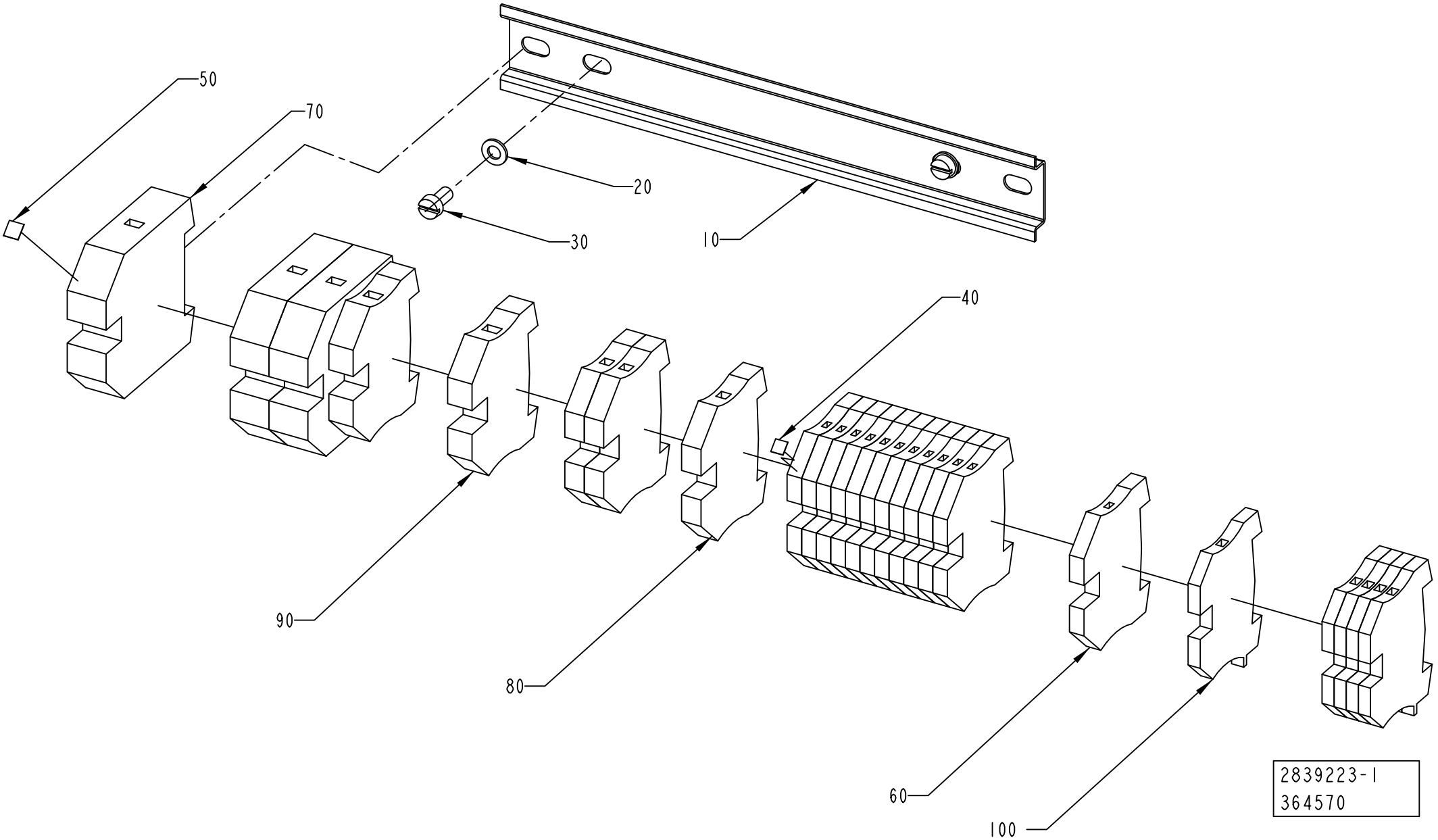
50
70
20
30
10
40
90
80
60
100
2839223-1
364570

ECM: 364722 - 20090101
Group number: 2839223-0100
Assembly Drawing: 2839223-1_1_AB

Pos	Part No	UN	Qty	Description	Page No
-					
010	2835454-0000		1	RAIL	
020	315105-0146		2	WASHER BRB 5,3X10 RFR	
030	312125-0325		2	SCREW ISO 1207 M5X10 A4	
040	359011-0807		1	MARKING, DEK 5 FW 1-50	
050	359011-0821		1	MARKING, DEK 6 FW 1-50	
060	353024-0205		12	EARTH TERMINAL WPE 4	
070	353024-0209		3	EARTH TERMINAL WPE 35	
080	353024-0206		3	EARTH TERMINAL WPE 6	
090	353024-0207		2	EARTH TERMINAL WPE 10	
100	353024-0204		5	EARTH TERMINAL WPE 2,5	

Pos	Part No	UN	Qty	Description	Page No

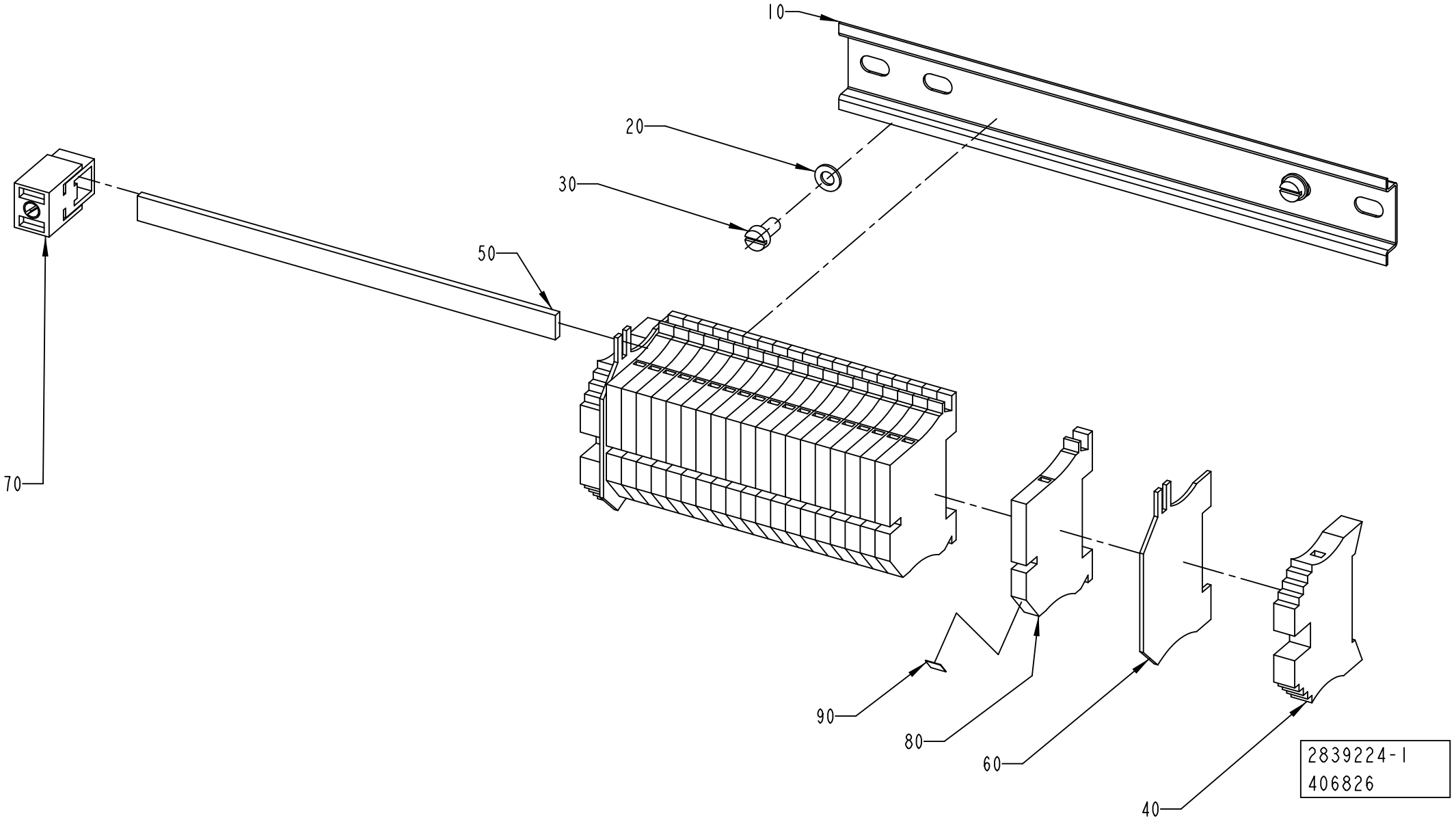
10
20
30
50
70
90
80
60
40
2839224-1
406826

ECM: 410056 - 20091001
Group number: 2839224-0100
Assembly Drawing: 2839224-1_1_AB

Pos	Part No	UN	Qty	Description	Page No
-					
010	2835454-0000		1	RAIL	
020	315105-0146		2	WASHER BRB 5,3X10 RFR	
030	312125-0325		2	SCREW ISO 1207 M5X10 A4	
040	353031-0203		2	END SUPPORT, WEW 35/2	
050	353041-0001	MM	165	BUS BAR RAIL 10X3MM SSCH	
060	353033-0104		2	END PLATE, 10502.8	
070	353041-0106		1	HOLDER ZB35 K 5026.8	
080	353022-0002		20	TERMINAL WNT 4 10X3	
090	359011-0821		1	MARKING, DEK 6 FW 1-50	

Pos	Part No	UN	Qty	Description	Page No

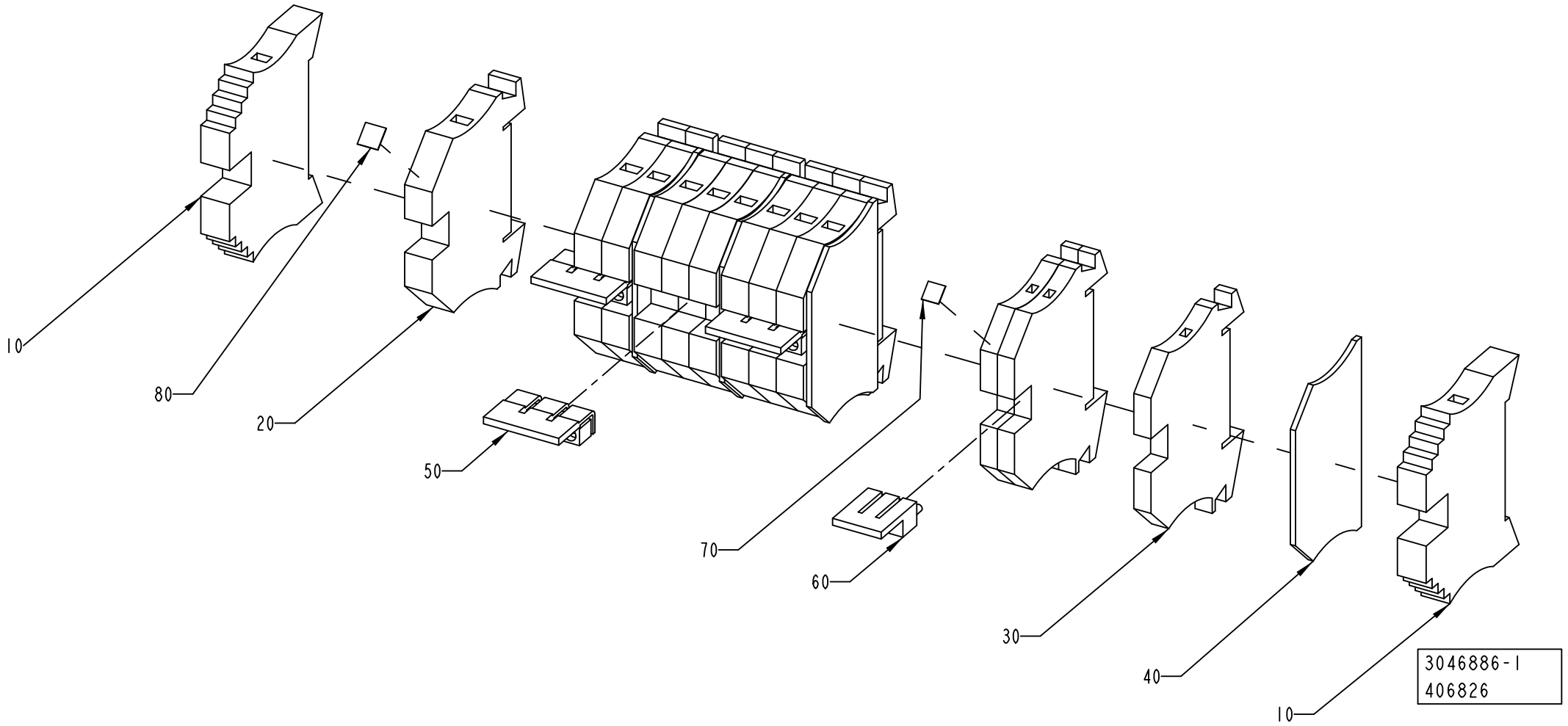
10
80
20
50
70
60
30
40
10
3046886-1
406826

ECM: 409316 - 20091001
Group number: 3046886-0100
Assembly Drawing: 3046886-1_1_AA

Pos	Part No	UN	Qty	Description	Page No
-					
010	353031-0203		2	END SUPPORT, WEW 35/2	
020	353021-0214		9	FEED THROUGH TERMINAL, 10202.0	
030	353021-0212		3	FEED THROUGH TERMINAL, 10200.0	
040	353032-0004		4	END PLATE WAP 2,5-10 BEIGE	
050	90600-5931		3	BRIDGE CONNECTOR WQV 6/3	
060	353034-0042		1	BRIDGE CONNECTOR WQV 2,5/3	
070	359011-0807		1	MARKING, DEK 5 FW 1-50	
080	359011-0821		1	MARKING, DEK 6 FW 1-50	

Pos	Part No	UN	Qty	Description	Page No

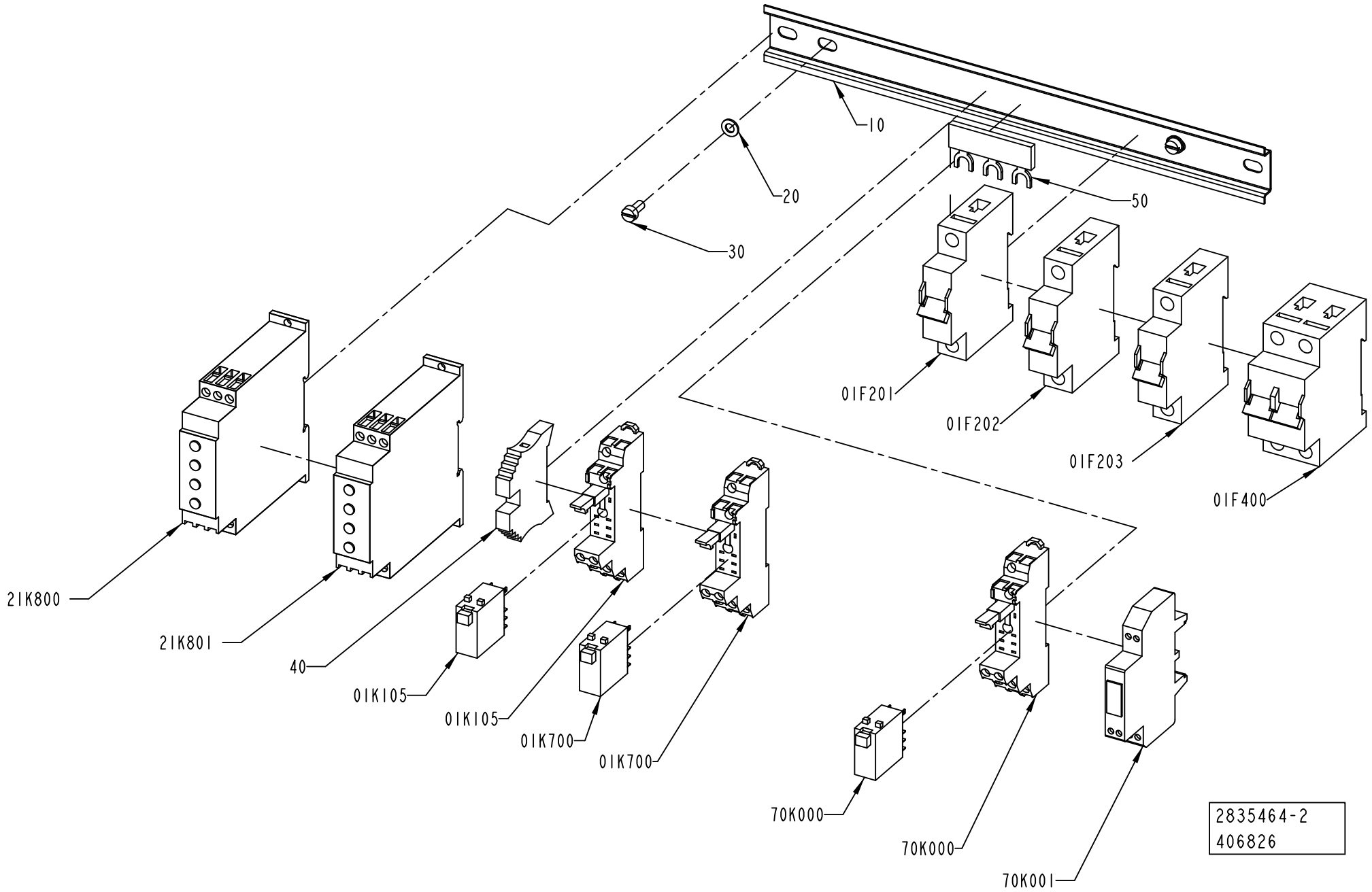
10
20
30
50
01F201
01F202
01F203
01F400
21K800
21K801
40
01K105
01K105
01K700
01K700
70K000
70K000
70K001
2835464-2
406826

ECM: 409327 - 20091001
Group number: 2835464-0200
Assembly Drawing: 2835464-2_1_AA

Pos	Part No	UN	Qty	Description	Page No
-					
010	2838478-0000		1	RAIL	
01F201	354000-0040		1	MINIATURE CIRCUIT BREAKER, FAZ-C4/1	
01F202	354000-0060		1	MINIATURE CIRCUIT BREAKER, FAZ-C6/1	
01F203	354000-0040		1	MINIATURE CIRCUIT BREAKER, FAZ-C4/1	
01F400	354001-0040		1	MINIATURE CIRCUIT BREAKER, FAZ-C4/2	
01K105	90129-0018		1	BASE, P2RF-08-E	
01K105	90119-0108		1	RELAY OMRON G2R-2-SNI-24DC	
	90129-0018		*1*	*BASE, P2RF-08-E*	
01K700	90129-0018		1	BASE, P2RF-08-E	
01K700	90119-0108		1	RELAY OMRON G2R-2-SNI-24DC	
	90129-0018		*1*	*BASE, P2RF-08-E*	
020	315105-0146		2	WASHER BRB 5,3X10 RFR	
030	312125-0325		2	SCREW ISO 1207 M5X10 A4	
040	353031-0203		1	END SUPPORT, WEW 35/2	
050	90600-0203		1	COMMONING BUSBAR, 1-PH 85A	
21K800	90600-4731		1	RELAY	
21K801	90600-4731		1	RELAY	
70K000	90129-0018		1	BASE, P2RF-08-E	
70K000	90119-0108		1	RELAY OMRON G2R-2-SNI-24DC	
	90129-0018		*1*	*BASE, P2RF-08-E*	
70K001	90459-2739		1	OPTO-RELAY 50085, IN / OUT 4-53VDC 1A	

Pos	Part No	UN	Qty	Description	Page No

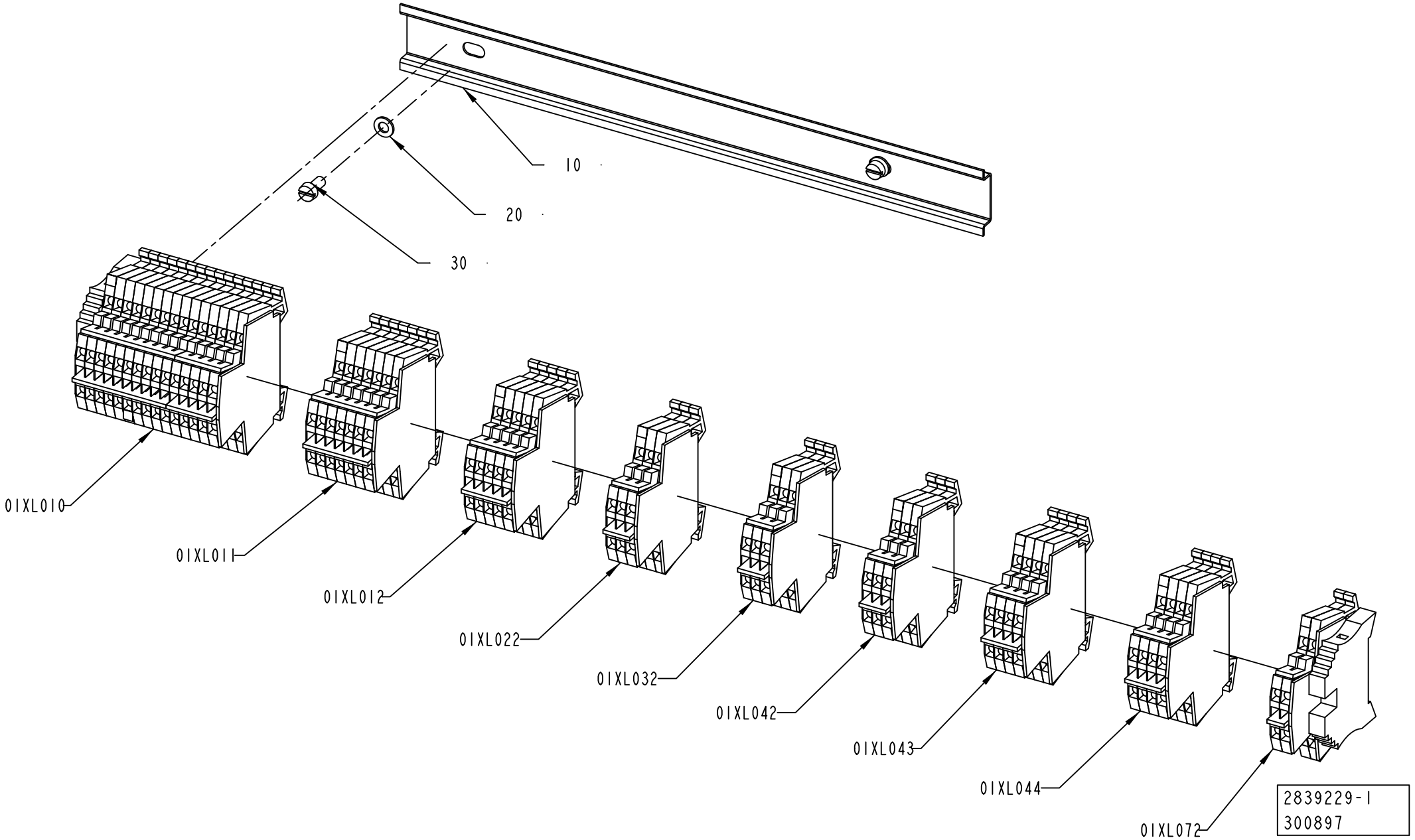
10
20
30
01XL010
01XL011
01XL012
01XL022
01XL032
01XL042
01XL043
01XL044
01XL072
2839229-1
300897

ECM: 302049 - 20070528
Group number: 2839229-0100
Assembly Drawing: 2839229-1_1_AB

Pos	Part No	UN	Qty	Description	Page No
-					
010	2838478-0000		1	RAIL	
01XL010	2839230-0100		1	PLINTH	**9-23**
01XL011	2840909-0100		1	PLINTH	**9-25**
01XL012	2840910-0100		1	PLINTH	**9-27**
01XL022	2840911-0100		1	PLINTH	**9-29**
01XL032	2840911-0100		1	PLINTH	**9-29**
01XL042	2840911-0100		1	PLINTH	**9-29**
01XL043	2840915-0100		1	PLINTH	**9-31**
01XL044	2840915-0100		1	PLINTH	**9-31**
01XL072	2840917-0100		1	PLINTH	**9-33**
020	315105-0146		2	WASHER BRB 5,3X10 RFR	
030	312125-0325		2	SCREW ISO 1207 M5X10 A4	

Pos	Part No	UN	Qty	Description	Page No

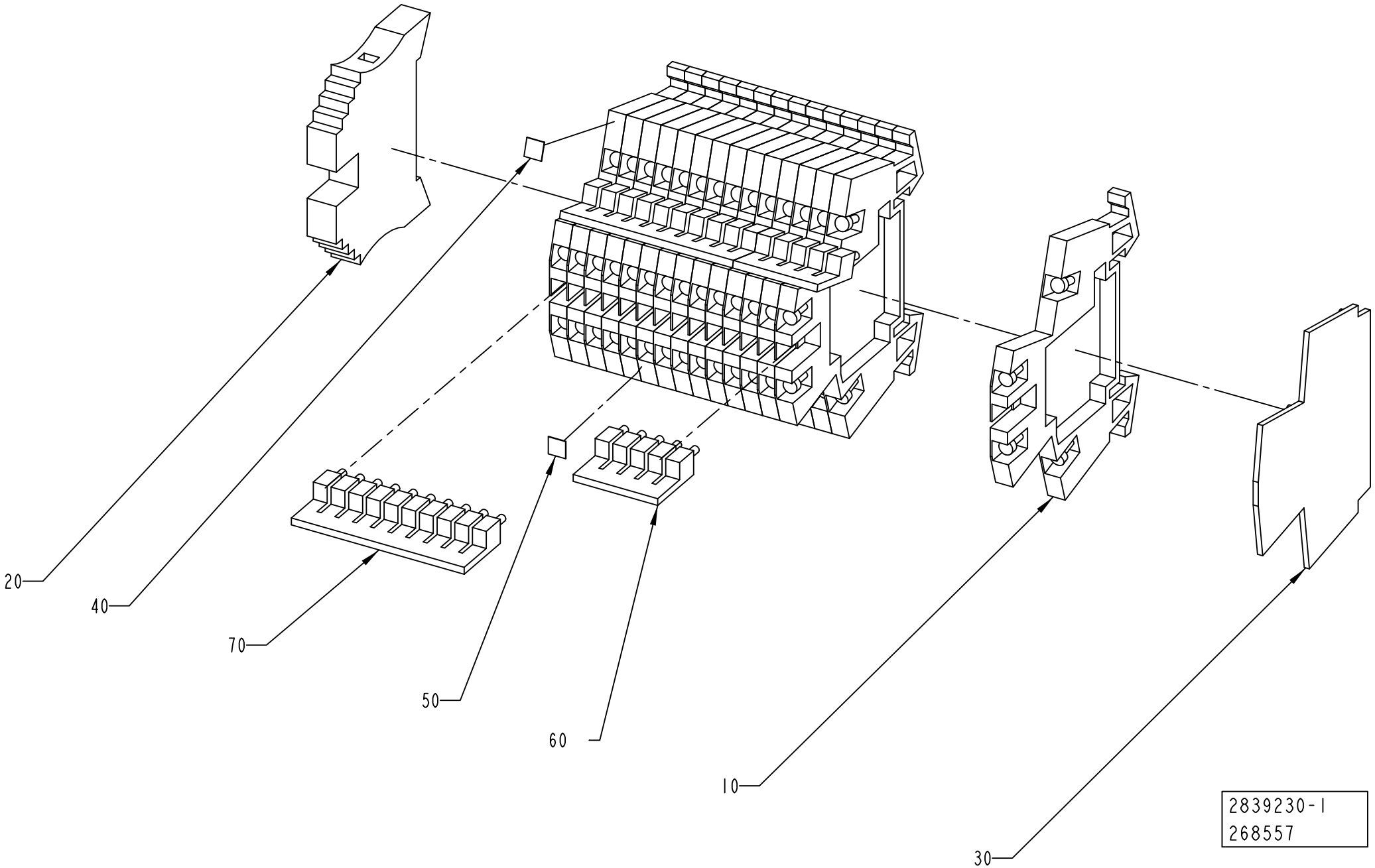
20
40
70
50
60
10
30
2839230-1
268557

ECM: 272043 - 20060925
Group number: 2839230-0100
Assembly Drawing: 2839230-1_1_AA

Pos	Part No	UN	Qty	Description	Page No
-					
010	90077-0113		15	TERMINAL BLOCK WDK 2.5	
020	353031-0203		1	END SUPPORT, WEW 35/2	
030	353032-0009		1	END PLATE, WAP FOR WDK	
040	359011-0807		1	MARKING, DEK 5 FW 1-50	
050	359011-0808		1	MARKING, DEK 5FW 51-100	
060	353034-0030		2	BRIDGE CONNECTOR WQV 2,5/10	
070	353034-0030		2	BRIDGE CONNECTOR WQV 2,5/10	

Pos	Part No	UN	Qty	Description	Page No

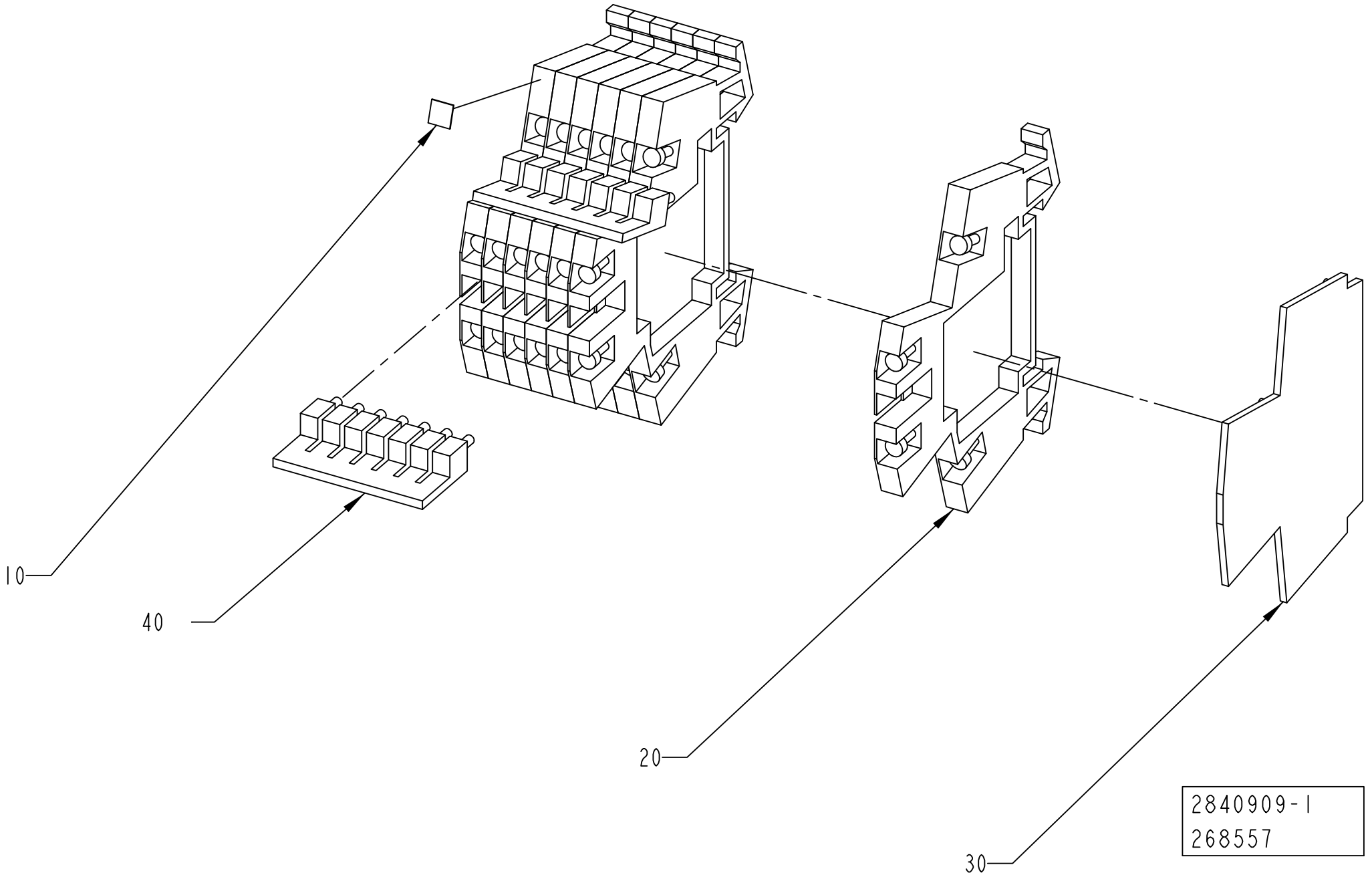
10
40
20
30
2840909-1
268557

ECM: 272044 - 20060925
Group number: 2840909-0100
Assembly Drawing: 2840909-1_1_AA

Pos	Part No	UN	Qty	Description	Page No
-					
010	359011-0807		1	MARKING, DEK 5 FW 1-50	
020	90077-0113		7	TERMINAL BLOCK WDK 2.5	
030	353032-0009		1	END PLATE, WAP FOR WDK	
040	353034-0030		2	BRIDGE CONNECTOR WQV 2,5/10	

Pos	Part No	UN	Qty	Description	Page No

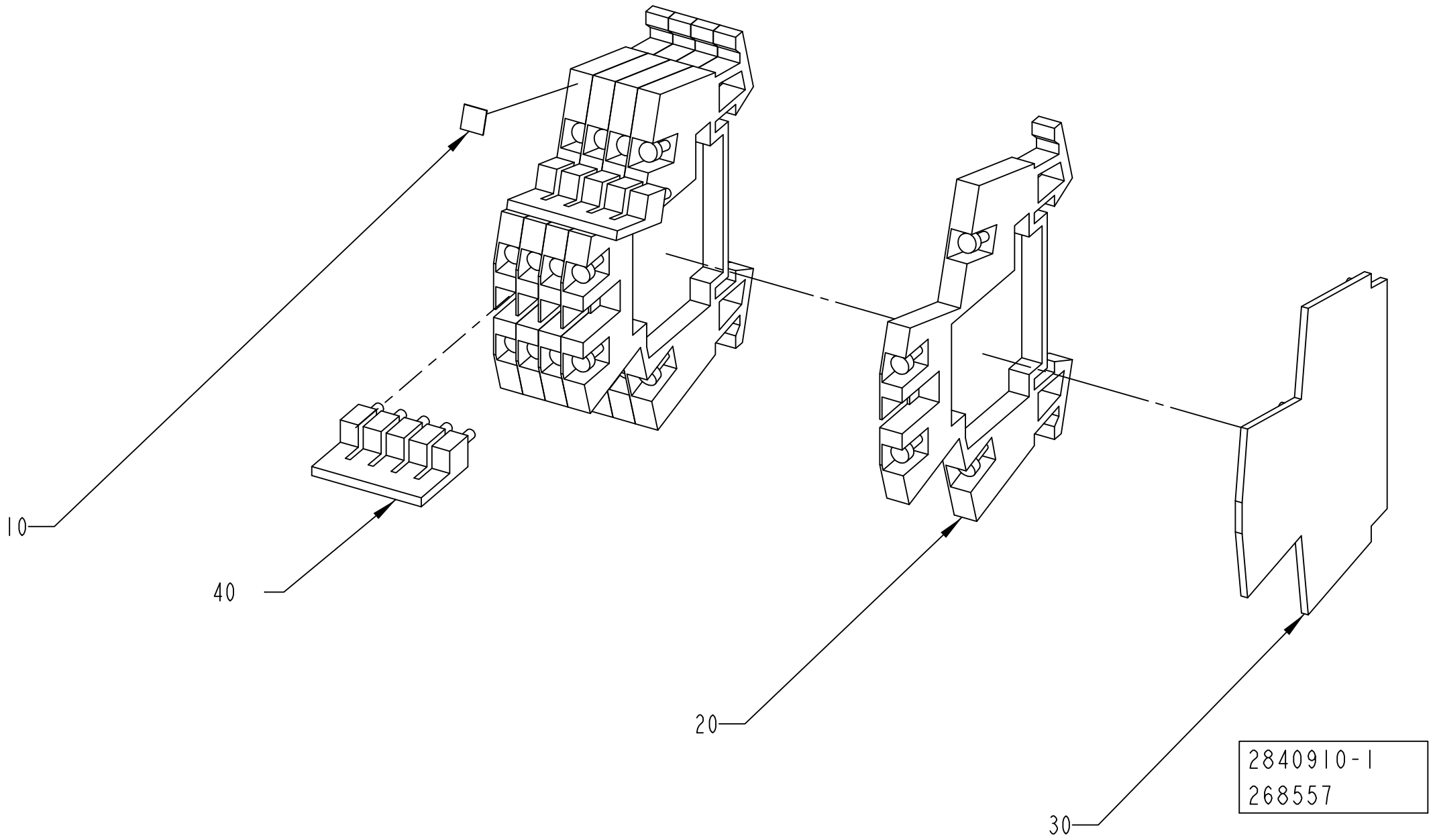
10
40
20
30
2840910-1
268557

ECM: 272045 - 20060925
Group number: 2840910-0100
Assembly Drawing: 2840910-1_1_AA

Pos	Part No	UN	Qty	Description	Page No
-					
010	359011-0807		1	MARKING, DEK 5 FW 1-50	
020	90077-0113		5	TERMINAL BLOCK WDK 2.5	
030	353032-0009		1	END PLATE, WAP FOR WDK	
040	353034-0030		2	BRIDGE CONNECTOR WQV 2,5/10	

Pos	Part No	UN	Qty	Description	Page No

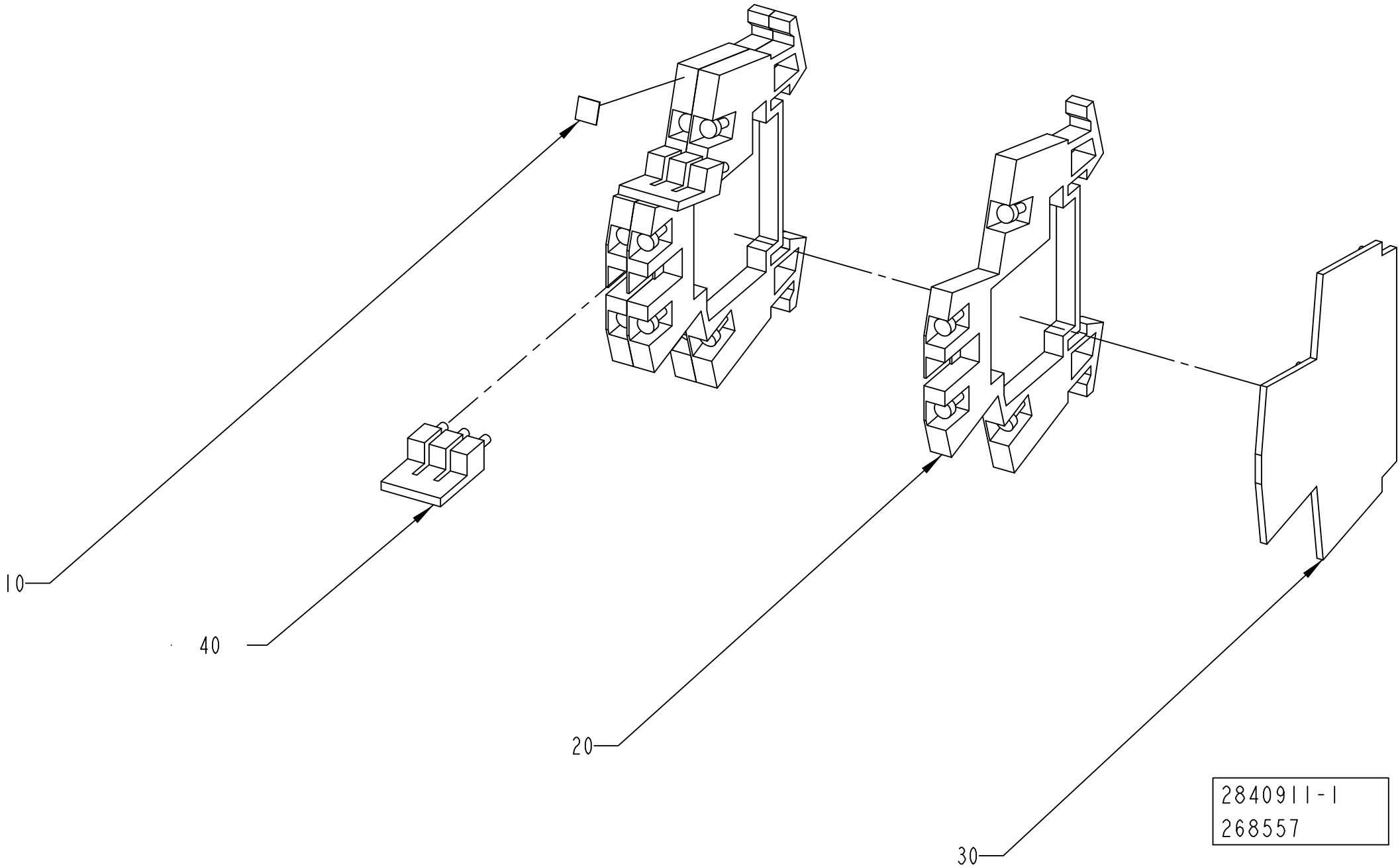
10
40
20
30
2840911-1
268557

ECM: 272046 - 20060925
Group number: 2840911-0100
Assembly Drawing: 2840911-1_1_AA

Pos	Part No	UN	Qty	Description	Page No
-					
010	359011-0807		1	MARKING, DEK 5 FW 1-50	
020	90077-0113		3	TERMINAL BLOCK WDK 2.5	
030	353032-0009		1	END PLATE, WAP FOR WDK	
040	353034-0030		2	BRIDGE CONNECTOR WQV 2,5/10	

Pos	Part No	UN	Qty	Description	Page No

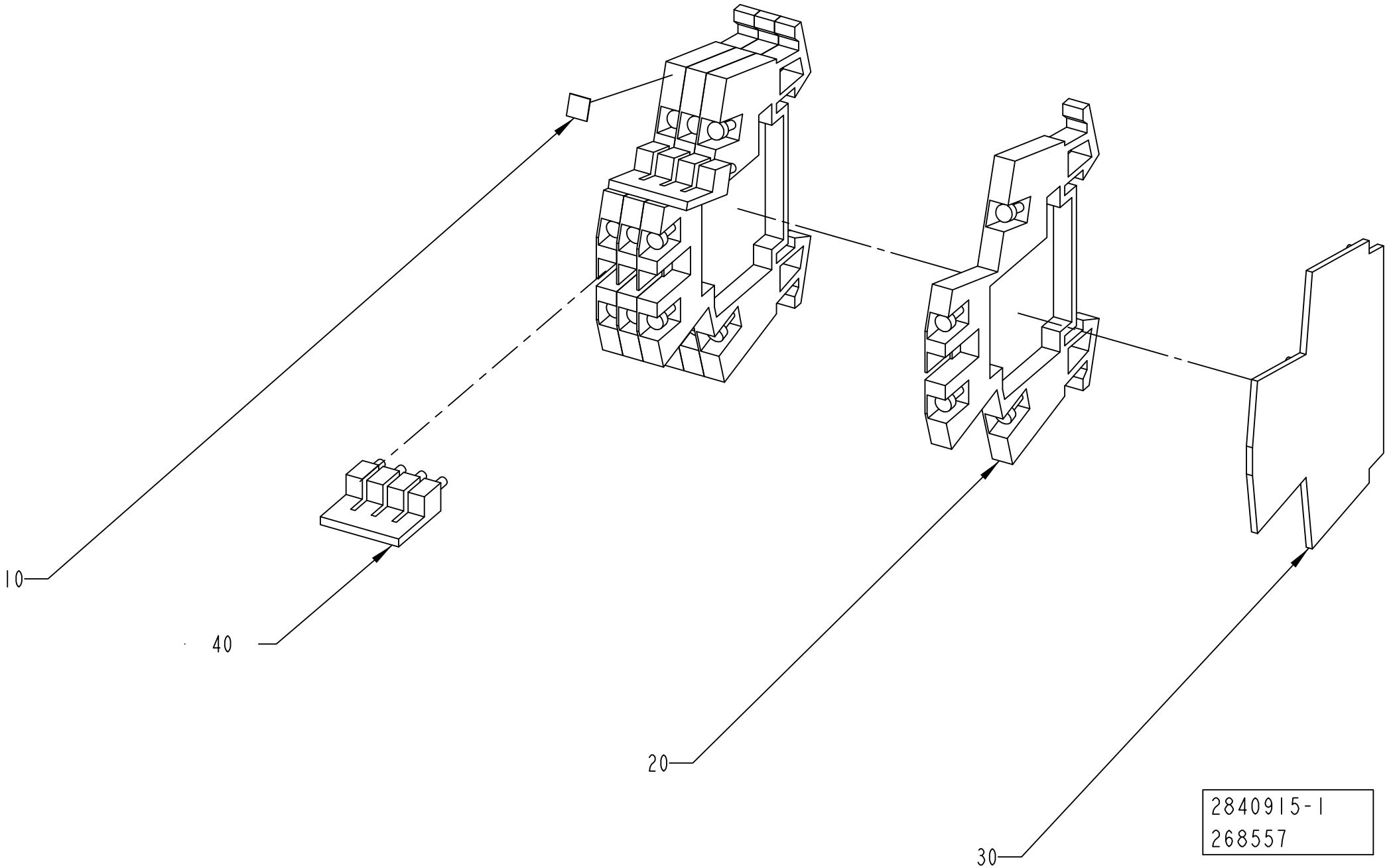
10
40
20
30
2840915-1
268557

ECM: 272047 - 20060925
Group number: 2840915-0100
Assembly Drawing: 2840915-1_1_AA

Pos	Part No	UN	Qty	Description	Page No
-					
010	359011-0807		1	MARKING, DEK 5 FW 1-50	
020	90077-0113		4	TERMINAL BLOCK WDK 2.5	
030	353032-0009		1	END PLATE, WAP FOR WDK	
040	353034-0030		2	BRIDGE CONNECTOR WQV 2,5/10	

Pos	Part No	UN	Qty	Description	Page No

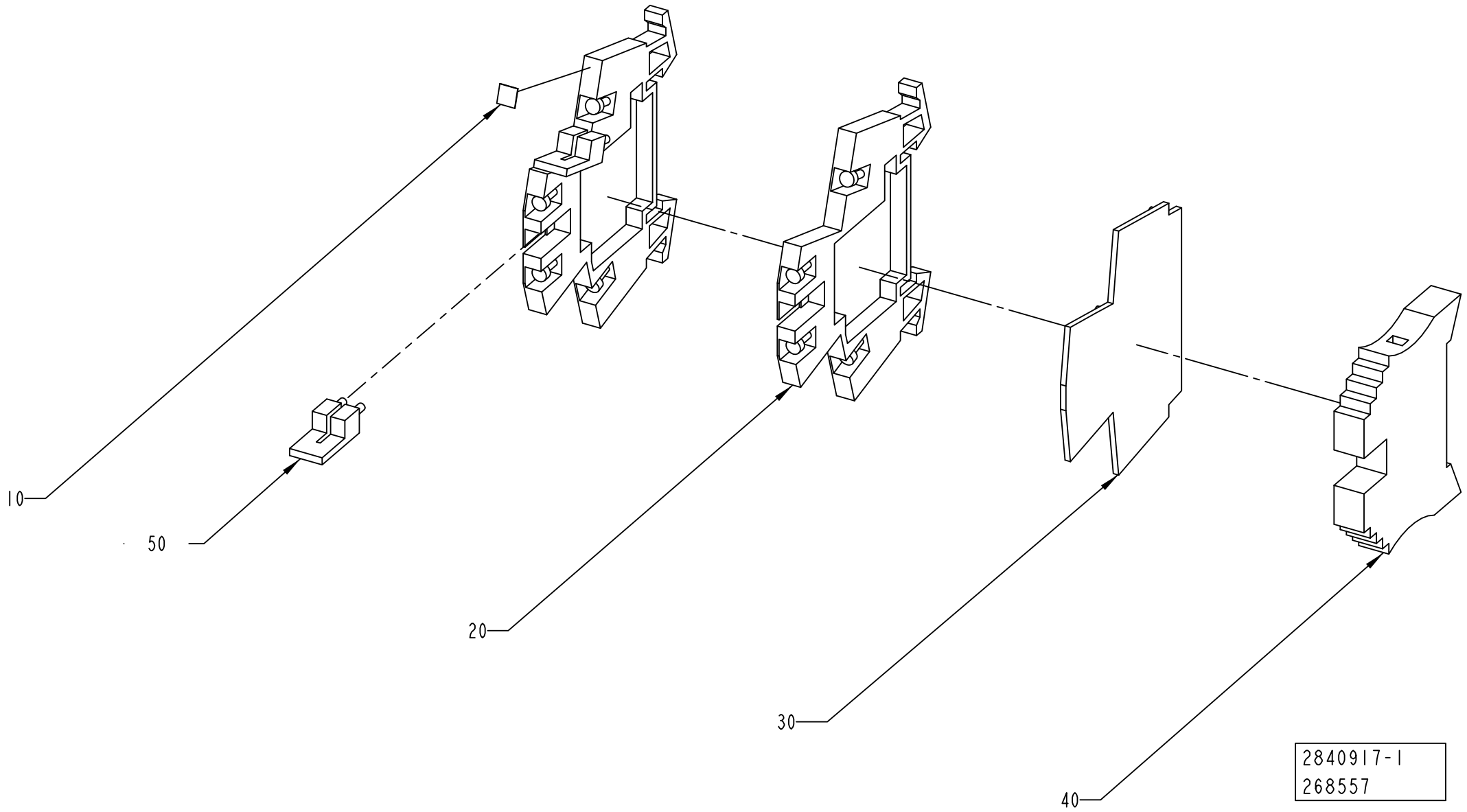
10
50
20
30
40
2840917-1
268557

ECM: 272048 - 20060925
Group number: 2840917-0100
Assembly Drawing: 2840917-1_1_AA

Pos	Part No	UN	Qty	Description	Page No
-					
010	359011-0807		1	MARKING, DEK 5 FW 1-50	
020	90077-0113		2	TERMINAL BLOCK WDK 2.5	
030	353032-0009		1	END PLATE, WAP FOR WDK	
040	353031-0203		1	END SUPPORT, WEW 35/2	
050	353034-0030		2	BRIDGE CONNECTOR WQV 2,5/10	

Pos	Part No	UN	Qty	Description	Page No

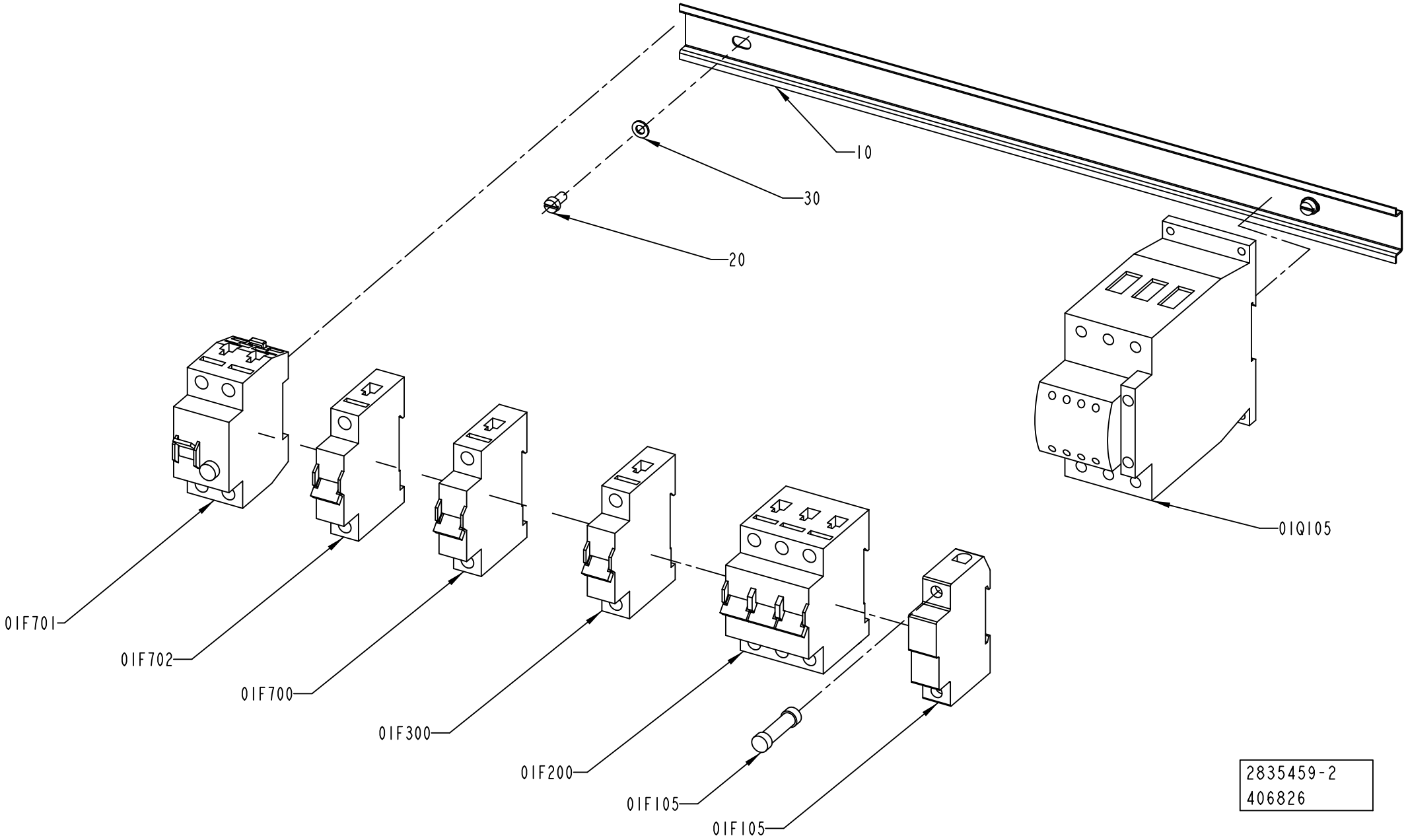
10
30
20
01Q105
01F701
01F702
01F700
01F300
01F200
01F105
01F105
2835459-2
406826

ECM: 406846 - 20091001
Group number: 2835459-0200
Assembly Drawing: 2835459-2_1_AA

Pos	Part No	UN	Qty	Description	Page No
-					
010	2838477-0000		1	RAIL	
01F105	90458-2507		1	FUSE HOLDER, USBCC1	
01F105	90458-2510		1	FUSE, ATDR6	
01F200	354002-0060		1	MINIATURE CIRCUIT BREAKER, FAZ-C6/3	
01F300	354000-0040		1	MINIATURE CIRCUIT BREAKER, FAZ-C4/1	
01F700	354000-0060		1	MINIATURE CIRCUIT BREAKER, FAZ-C6/1	
01F701	90459-5811		1	RESIDUAL CURRENT DEVICE, FI-25/2/003-A	
01F702	354000-0100		1	MINIATURE CIRCUIT BREAKER, FAZ-C10/1	
01Q105	90600-1759		1	CONTACTOR22KW24VDCDILM50-22+DILM65-XIP2X	
020	312125-0325		2	SCREW ISO 1207 M5X10 A4	
030	315105-0146		2	WASHER BRB 5,3X10 RFR	

Pos	Part No	UN	Qty	Description	Page No

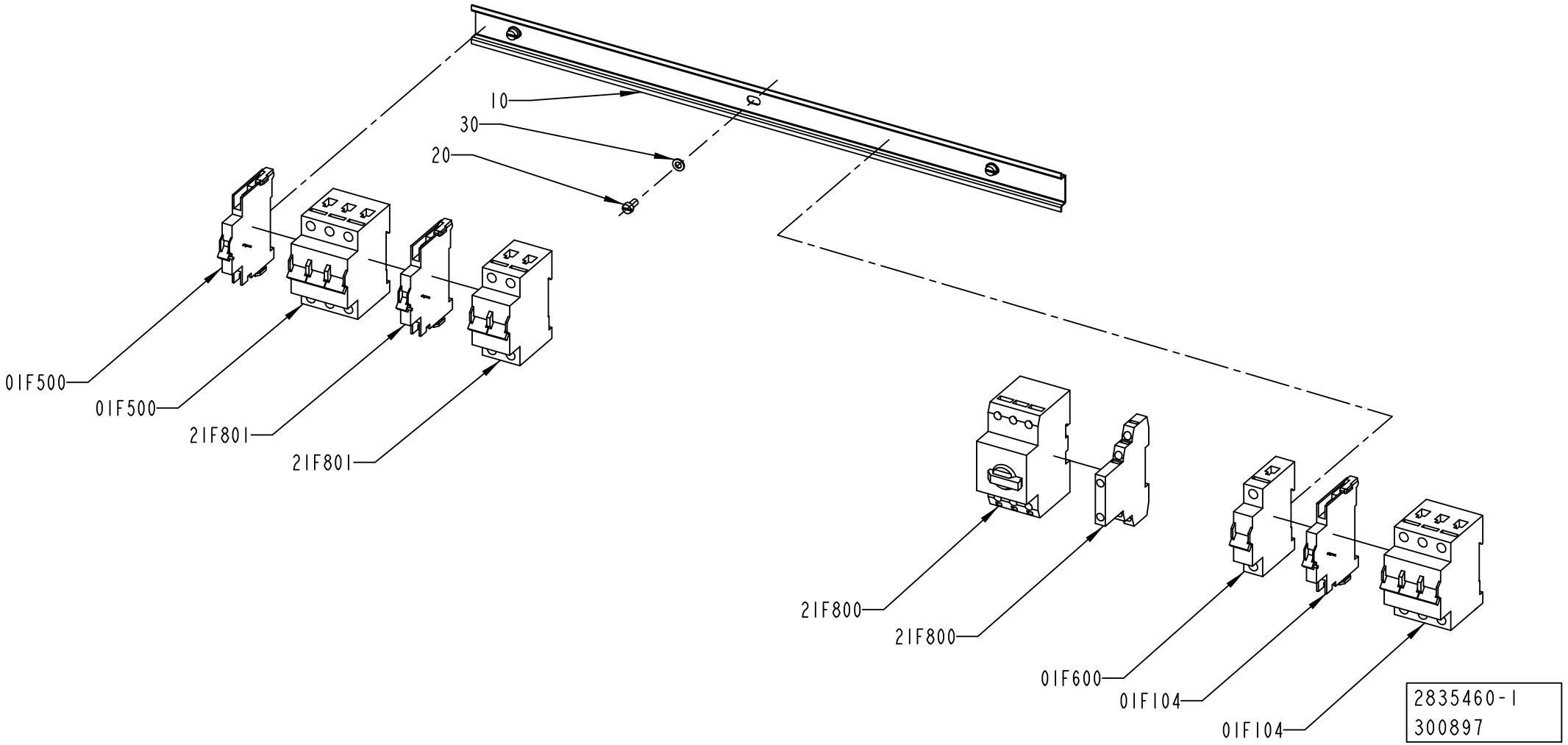
10
30
20
01F500
01F500
21F801
21F801
21F800
21F800
01F600
01F104
01F104
2835460-1
300897

ECM: 302046 - 20070528
Group number: 2835460-0100
Assembly Drawing: 2835460-1_1_AB

Pos	Part No	UN	Qty	Description	Page No
-					
010	2835452-0000		1	RAIL	
01F104	354002-0250		1	MINIATURE CIRCUIT BREAKER, FAZ-C25/3	
01F104	90459-5813		1	AUXILIARY CONTACT, FAZ-XHIN11	
01F500	90459-5813		1	AUXILIARY CONTACT, FAZ-XHIN11	
01F500	354002-0200		1	MINIATURE CIRCUIT BREAKER, FAZ-C20/3	
01F600	354000-0060		1	MINIATURE CIRCUIT BREAKER, FAZ-C6/1	
020	312125-0325		3	SCREW ISO 1207 M5X10 A4	
030	315105-0146		3	WASHER BRB 5,3X10 RFR	
21F800	90459-5326		1	OVERLOAD PROTECTION, PKZM0-4	
21F800	90259-0313		1	AUXILIARY CONTACT, NHI21-PKZ0	
21F801	354001-0100		1	MINIATURE CIRCUIT BREAKER, FAZ-C10/2	
21F801	90459-5813		1	AUXILIARY CONTACT, FAZ-XHIN11	

Pos	Part No	UN	Qty	Description	Page No

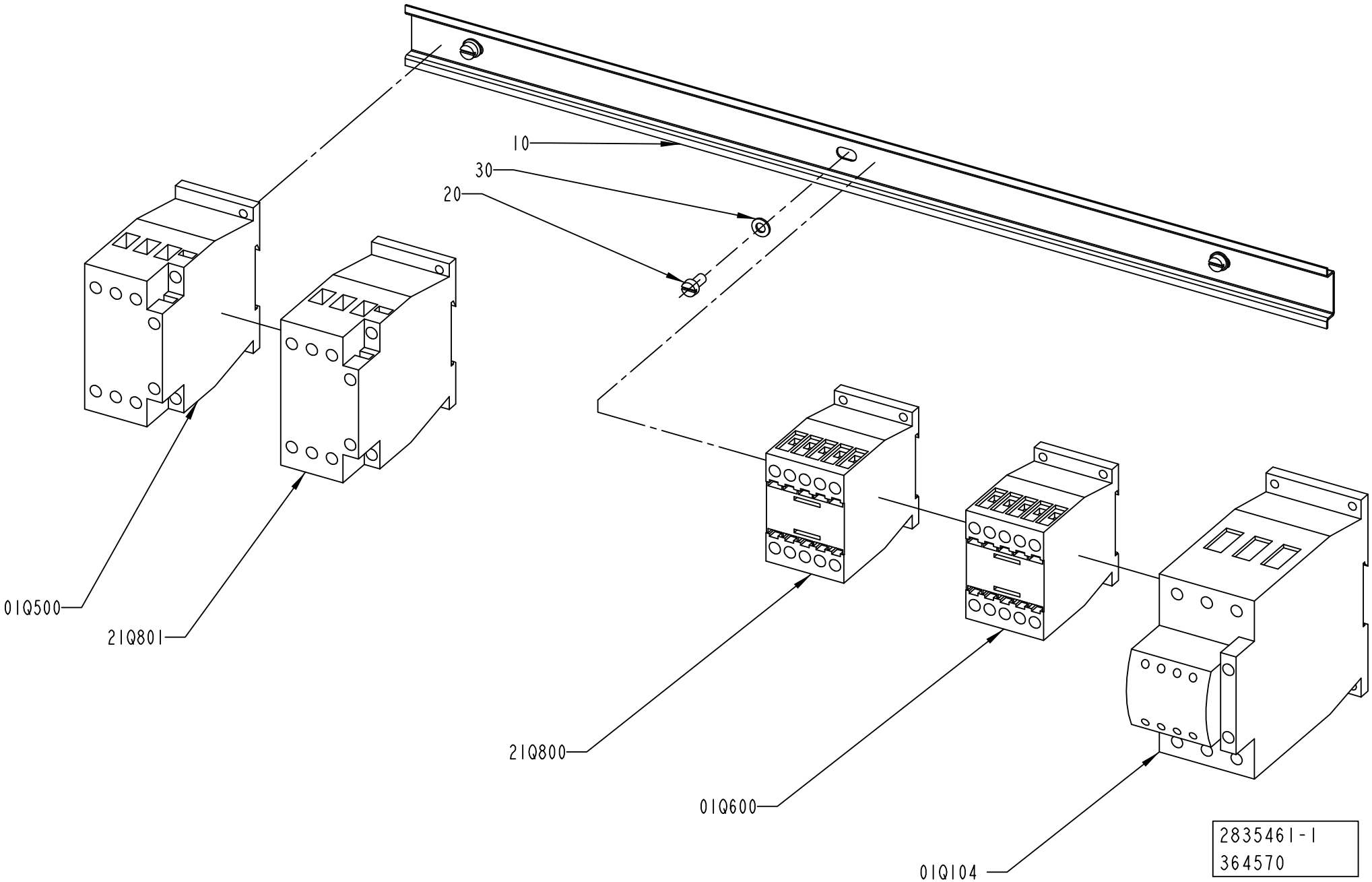
10
30
20
01Q500
21Q801
21Q800
01Q600
01Q104
2835461-1
364570

ECM: 364725 - 20090101
Group number: 2835461-0100
Assembly Drawing: 2835461-1_1_AC

Pos	Part No	UN	Qty	Description	Page No
-					
010	2835452-0000		1	RAIL	
01Q104	90600-1759		1	CONTACTOR22KW24VDCDILM50-22+DILM65-XIP2X	
01Q500	90459-5311		1	CONTACTOR 15KW 24VDC, DILM32-10	
01Q600	90459-5308		1	CONTACTOR 4KW 24VDC, DILM9-10	
020	312125-0325		3	SCREW ISO 1207 M5X10 A4	
030	315105-0146		3	WASHER BRB 5,3X10 RFR	
21Q800	90459-5308		1	CONTACTOR 4KW 24VDC, DILM9-10	
21Q801	90459-5309		1	CONTACTOR 7,5KW 24VDC, DILM17-10	

Pos	Part No	UN	Qty	Description	Page No

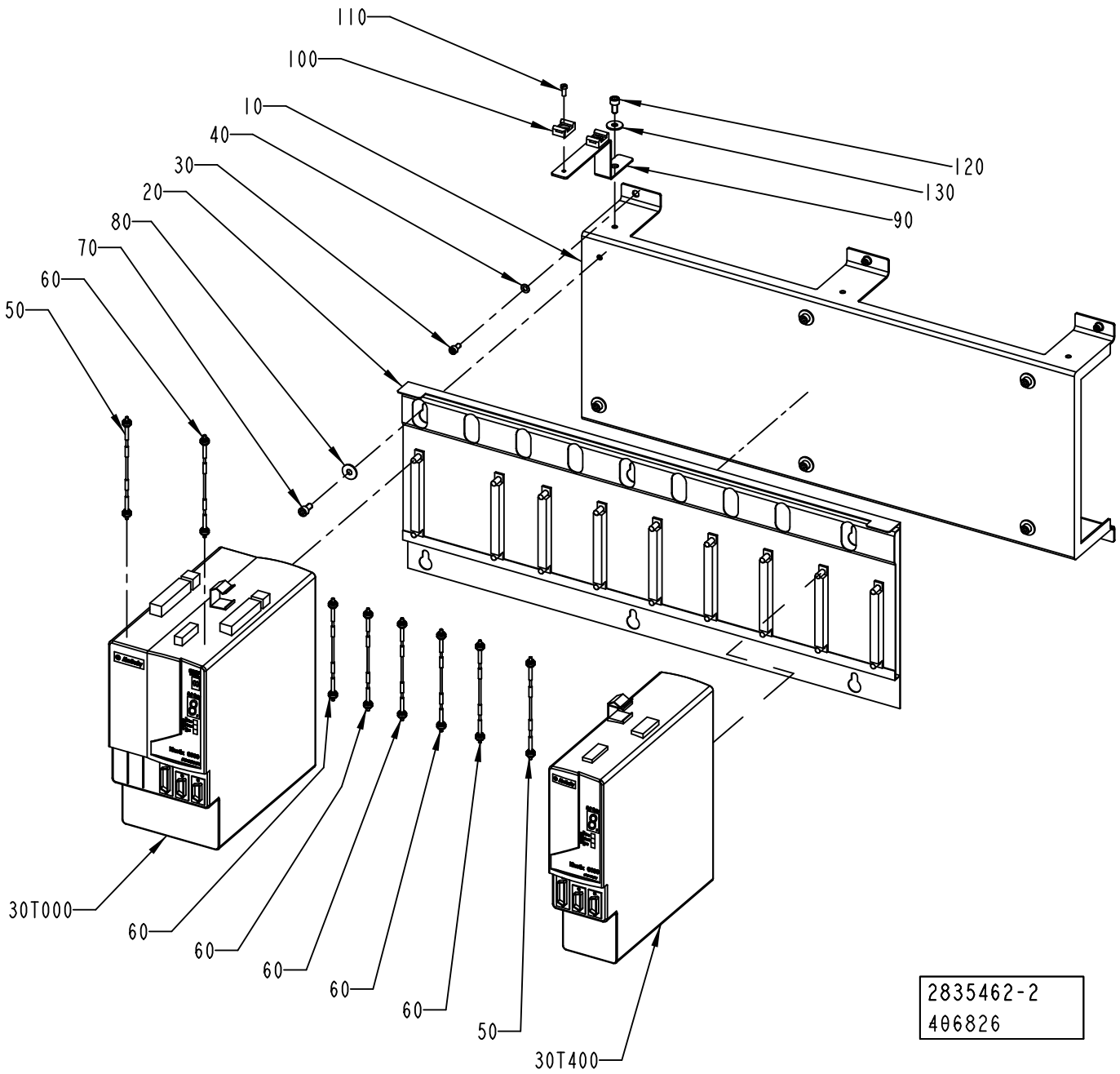
110
100
10
40
30
20
80
70
60
50
120
130
90
30T000
60
60
60
60
60
50
30T400
2835462-2
406826

ECM: 406845 - 20091001
Group number: 2835462-0200
Assembly Drawing: 2835462-2_1_AA

Pos	Part No	UN	Qty	Description	Page No
-					
010	2790710-0000		1	BRACKET	
020	90459-5195		1	SLIM POWER RAIL,KINETIX,8 AXIS,2094-PRS8	
030	312115-0325		6	SCREW ISO4762 M5X10 A4 80	
040	315105-0146		6	WASHER BRB 5,3X10 RFR	
050	90459-2540		2	SERCOS CABLE 3.0M, 2090-SCEP3-0	
060	90459-2536		6	SERCOS CABLE 0.1M, 2090-SCEP0-1	
070	312115-0366		6	SCREW ISO4762 M6X12 A4 80	
080	90005-0060		6	WASHER PLAIN, RBS 6,4/M6)/18,H=1,5	
090	2839226-0000		1	FLANGE	
100	352113-0203		2	ANCHOR PLATES FOR STRIPS, TM3S8-M0	
110	312125-0289		2	SCREW ISO 1207 M4X10 A4	
120	312115-0366		1	SCREW ISO4762 M6X12 A4 80	
130	90005-0060		1	WASHER PLAIN, RBS 6,4/M6)/18,H=1,5	
30T000	90600-5212		1	AXIS MOD. W. PS,2094-BC02-M02-S SERIES B	
30T400	90600-5214		1	AXIS MOD. KINETIX 6000,2094-BM01-S SER.B	

Pos	Part No	UN	Qty	Description	Page No

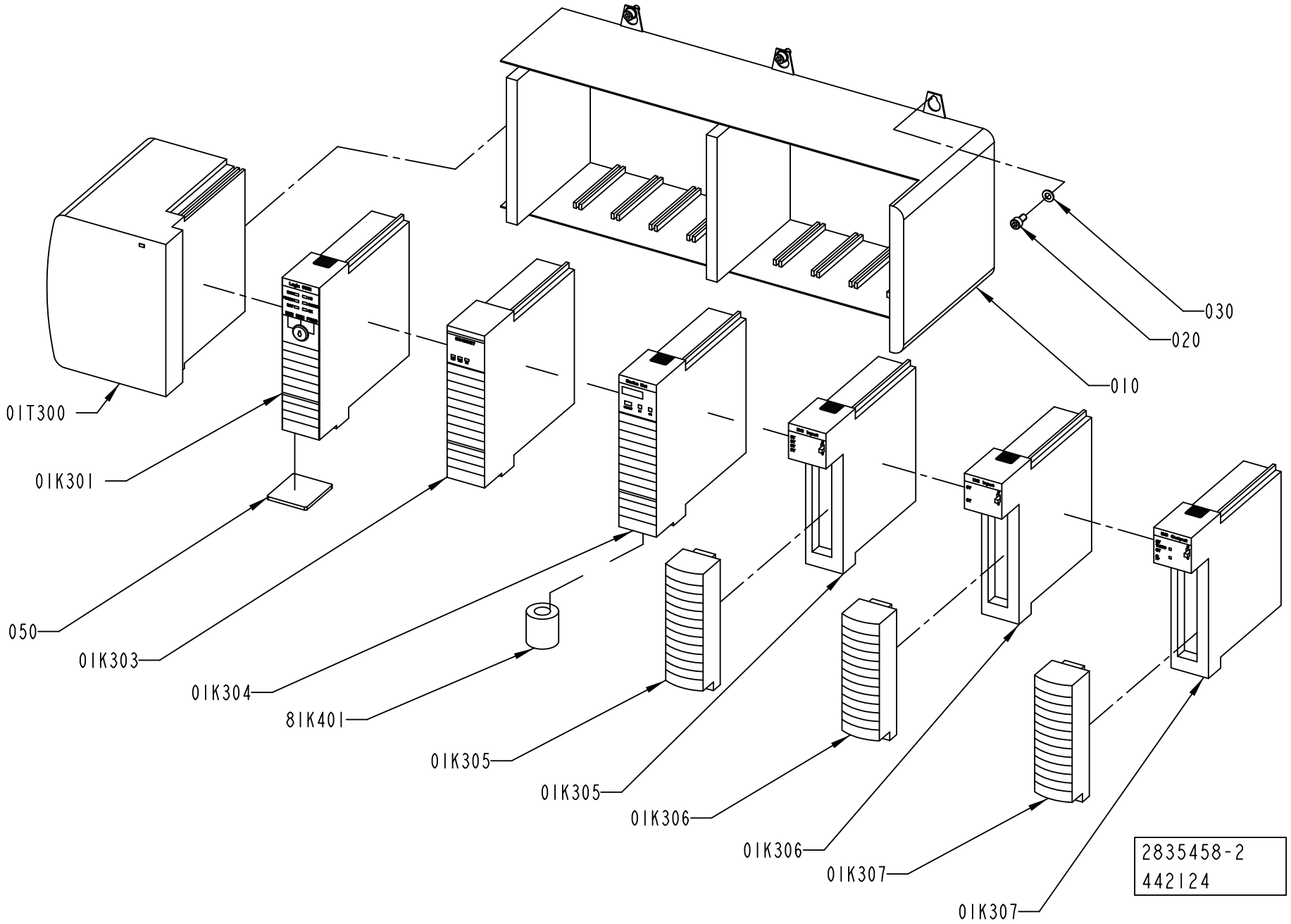
030
020
010
01T300
01K301
050
01K303
01K304
8IK401
01K305
01K305
01K306
01K306
01K307
01K307
2835458-2
442124

ECM: 445492 - 20100701
Group number: 2835458-0200
Assembly Drawing: 2835458-2_1_AB

Pos	Part No	UN	Qty	Description	Page No
-					
010	90459-2458		1	BASEPLATE, 10 SLOT CONTROLLOGIX CHASSIS	
01K301	90459-6557		1	PROCESSOR L61, SERIES B, 1756-L61/B	
	90459-6726		*1*	*SPARE BATTERY FOR CONTROLLOGIX, 1756-BA2*	
01K303	90459-2477		1	ETHERNET I/P BRIDGE MODULE, 1756-ENBT	
01K304	90600-5840		1	PLC DEVICEN. BR./SCAN MOD, 1756-DNB, D	
01K305	90459-2488		1	REMOVABLE TERMINAL BLOCK 36 POINTS	
01K305	90459-6556		1	PLC DIGITAL INPUT 32PTS, 1756-IB32/B	
01K306	90459-2413		1	PLC DIGITAL INPUT MODULE16 POINTS	
01K306	90459-2487		1	REMOVABLE TERMINAL BLOCK 20 POINTS	
01K307	90459-2474		1	PLC,DIGIT. OUTPUT MODULE 16 PTS 10-31VDC	
01K307	90459-2487		1	REMOVABLE TERMINAL BLOCK 20 POINTS	
01T300	90459-7267		1	POWER SUPPLY 24VDC, 1756-PB75/B	
020	312115-0325		6	SCREW ISO4762 M5X10 A4 80	
030	315105-0146		6	WASHER BRB 5,3X10 RFR	
050	90459-3145		1	FLASH MEMORY 64MBYTE, 1784-CF64	
81K401	90458-1140		1	FERRITE, RI-26-28-13	

Pos	Part No	UN	Qty	Description	Page No

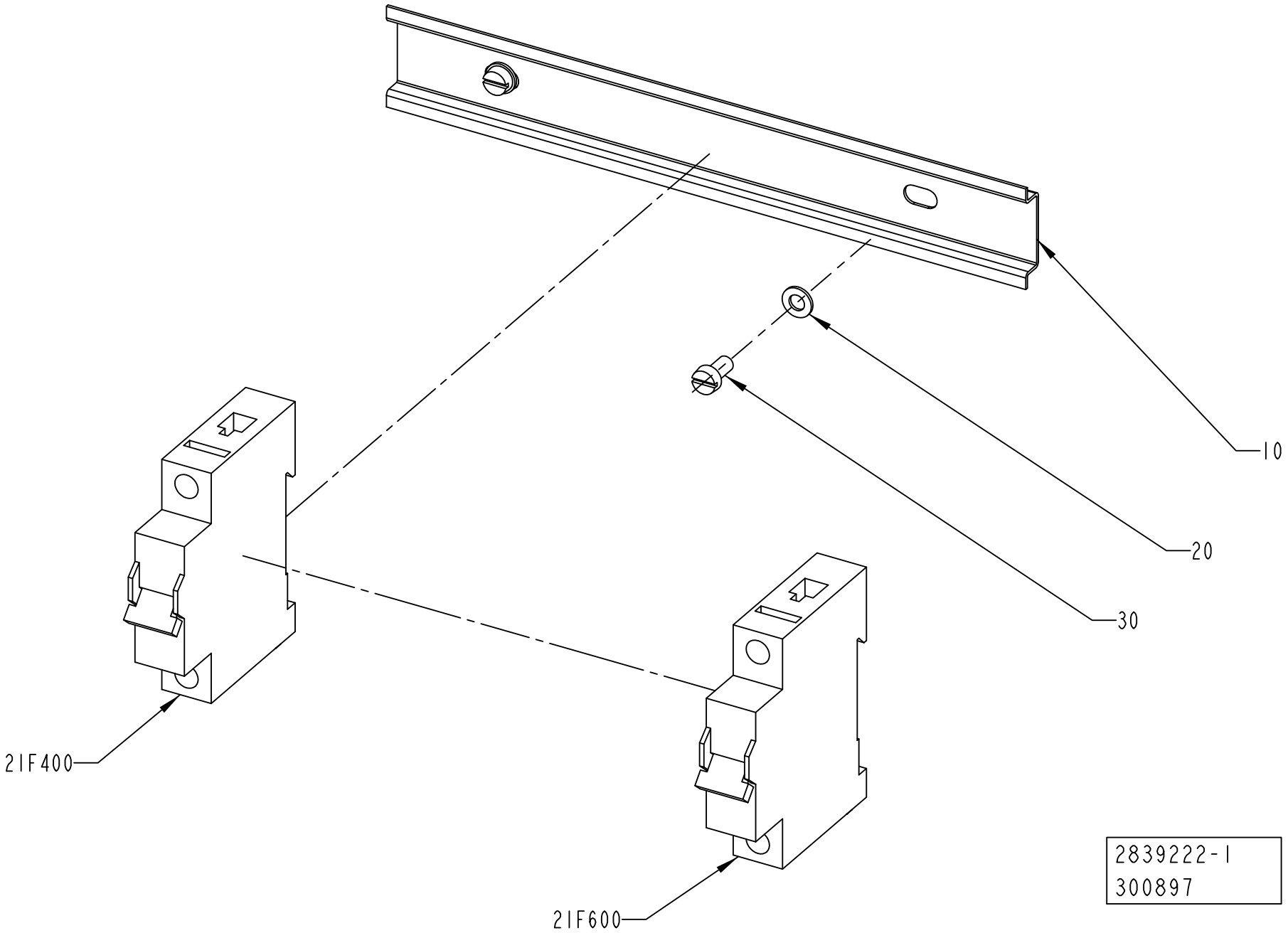
10
20
30
21F400
21F600
2839222-1
300897

ECM: 302048 - 20070528
Group number: 2839222-0100
Assembly Drawing: 2839222-1_1_AB

Pos	Part No	UN	Qty	Description	Page No
-					
010	2835454-0000		1	RAIL	
020	315105-0146		2	WASHER BRB 5,3X10 RFR	
030	312125-0325		2	SCREW ISO 1207 M5X10 A4	
21F400	354000-0100		1	MINIATURE CIRCUIT BREAKER, FAZ-C10/1	
21F600	354000-0100		1	MINIATURE CIRCUIT BREAKER, FAZ-C10/1	

Pos	Part No	UN	Qty	Description	Page No

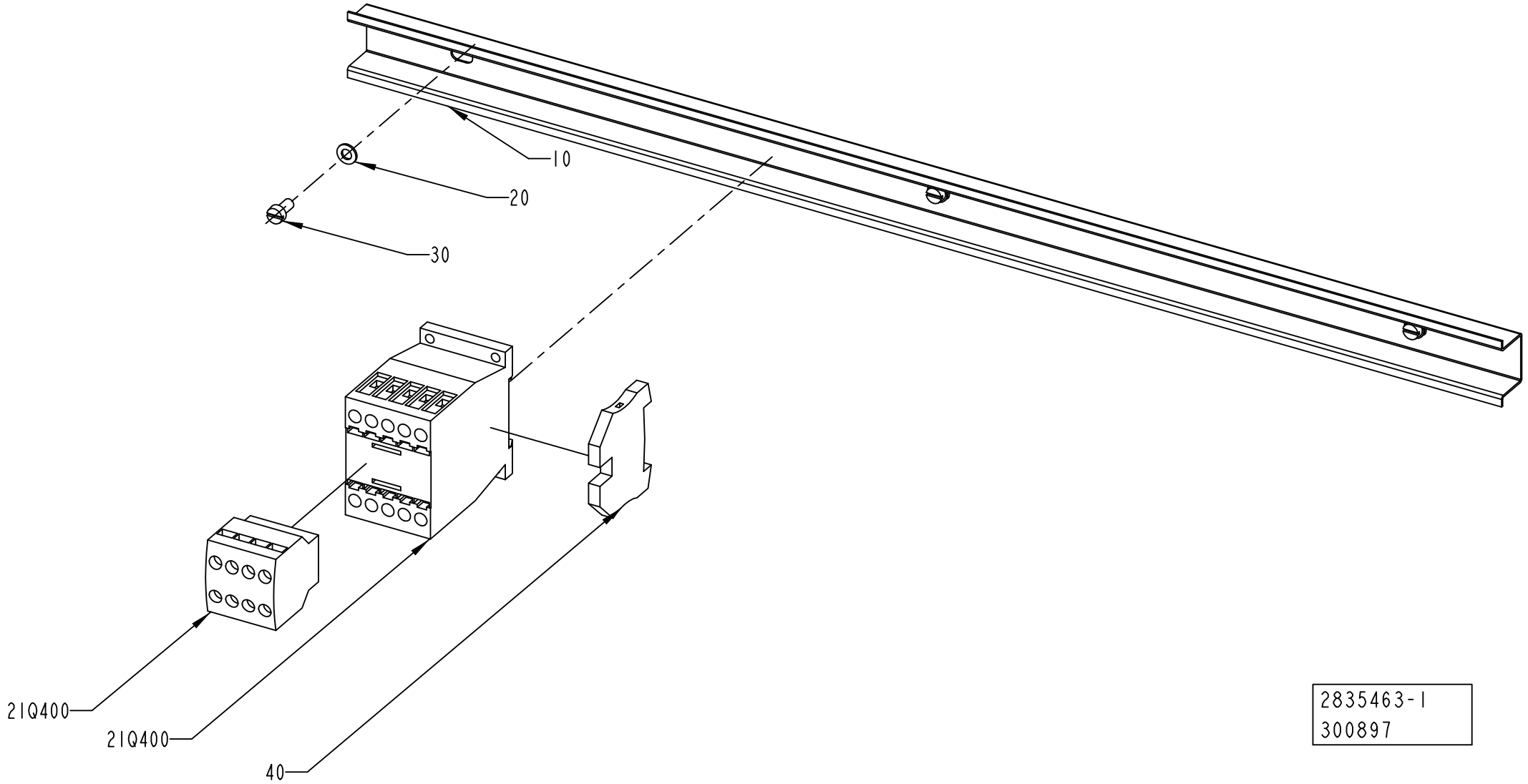
10
20
30
21Q400
21Q400
40
2835463-1
300897

ECM: 302044 - 20070528
Group number: 2835463-0100
Assembly Drawing: 2835463-1_1_AB

Pos	Part No	UN	Qty	Description	Page No
-					
010	2835455-0000		1	RAIL	
020	315105-0146		3	WASHER BRB 5,3X10 RFR	
030	312125-0325		3	SCREW ISO 1207 M5X10 A4	
040	353024-0205		1	EARTH TERMINAL WPE 4	
21Q400	90459-6852		1	AUXILIARY CONTACT, DILA-XHI22	
21Q400	90459-5308		1	CONTACTOR 4KW 24VDC, DILM9-10	

Pos	Part No	UN	Qty	Description	Page No

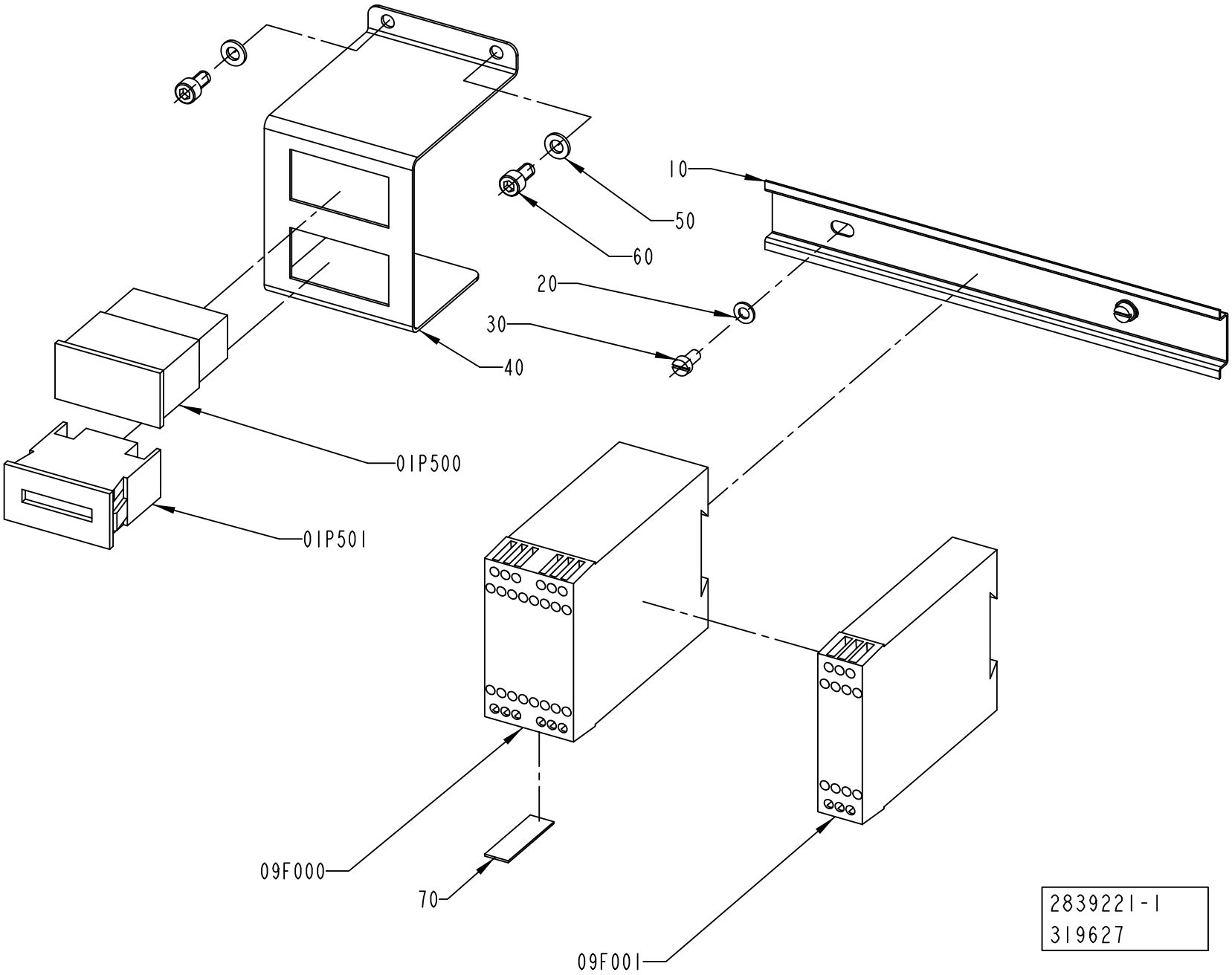
10
50
60
20
30
40
01P500
01P501
09F000
70
09F001
2839221-1
319627

ECM: 324218 - 20080407
Group number: 2839221-0100
Assembly Drawing: 2839221-1_1_AB

Pos	Part No	UN	Qty	Description	Page No
-					
010	2835453-0000		1	RAIL	
01P500	90053-0029		1	COUNTER, F524.800FA3C 24VDC	
01P501	90053-0031		1	HOUR COUNTER, B 609.10 10-50VDC	
020	315105-0146		2	WASHER BRB 5,3X10 RFR	
030	312125-0325		2	SCREW ISO 1207 M5X10 A4	
040	2839227-0000		1	SUPPORT	
050	315105-0153		2	WASHER BRB 6,4X12 RFR	
060	312115-0366		2	SCREW ISO4762 M6X12 A4 80	
070	90459-4891		1	PROGR. IDENTIFIER ID-FIX RW, 20-070-21	
09F000	90459-6692		1	SAFETY PLC, PLUTO B20 20-070-06	
09F001	90459-2291		1	SAFETY TIME RELAY, E1T-0.5S-24VDC	

Pos	Part No	UN	Qty	Description	Page No

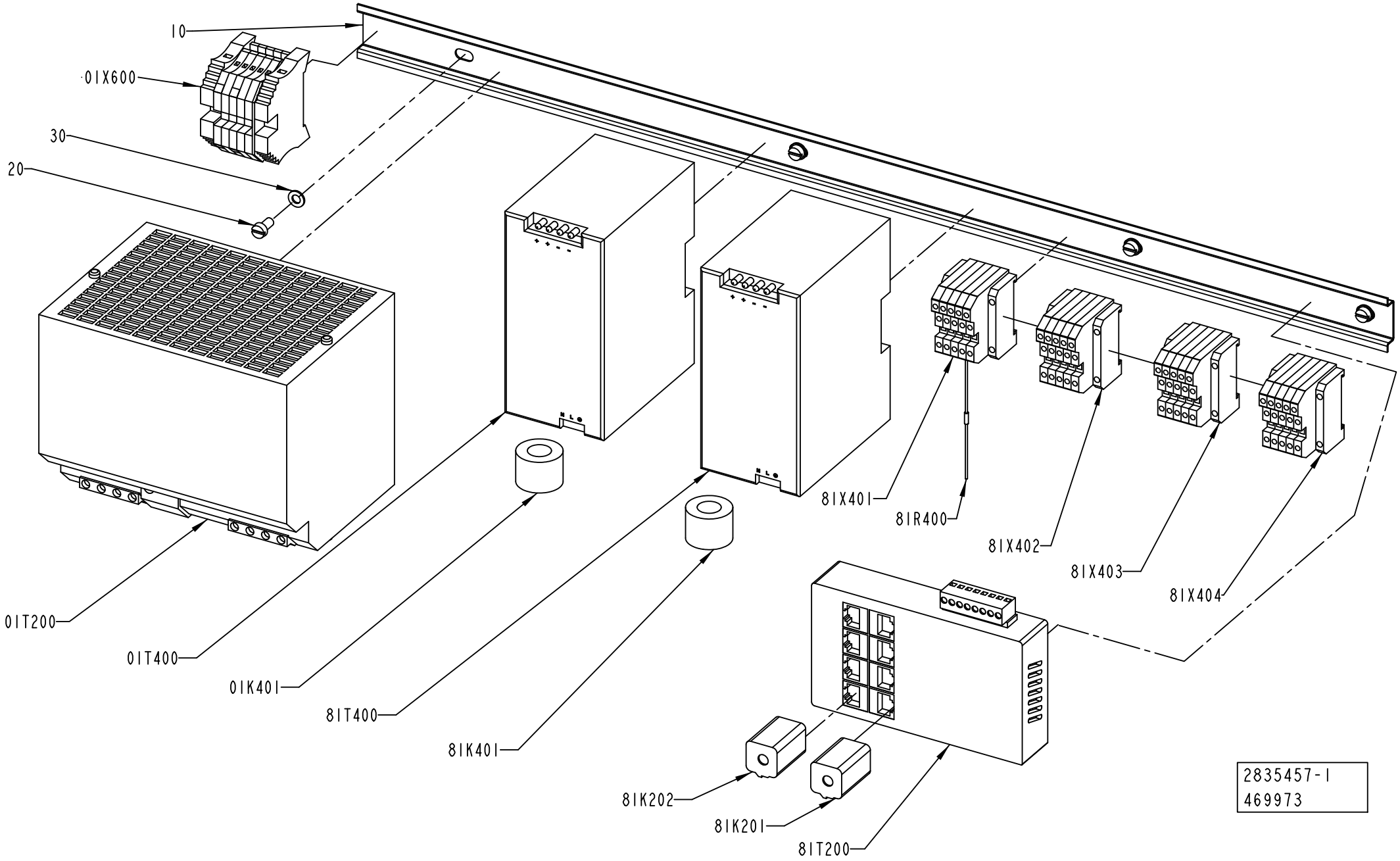
10
01X600
30
20
01T200
01T400
01K401
81T400
81K401
81X401
81R400
81X402
81X403
81X404
81K202
81K201
81T200
2835457-1
469973

ECM: 473874 - 20101109
Group number: 2835457-0100
Assembly Drawing: 2835457-1_1_AC

Pos	Part No	UN	Qty	Description	Page No
-					
010	2838476-0000		1	RAIL	
01K401	90600-5249		1	FERRITE, B64290L616X38	
01T200	90459-4133		1	POWER SUPPLY UNIT 6EP1 436-3BA00	
01T400	90459-5886		1	POWER SUPPLY UNIT 115-230 VAC/24VDC100W	
01X600	2890591-0100		1	PLINTH	**9-53**
020	312125-0325		4	SCREW ISO 1207 M5X10 A4	
030	315105-0146		4	WASHER BRB 5,3X10 RFR	
81K201	90458-1170		1	FERRITE, SFC-6	
81K202	90458-1170		1	FERRITE, SFC-6	
81K401	90600-5249		1	FERRITE, B64290L616X38	
81R400	90459-2523		1	TERMINATOR, OPEN STYLE, 1485A-C2	
81T200	90459-6858		1	ETHERNET SW, FL SWITCH SF 8TX FROM V 14	
81T400	90459-5886		1	POWER SUPPLY UNIT 115-230 VAC/24VDC100W	
81X401	90459-2519		1	TAP, OPEN STYLE	
81X402	90459-2519		1	TAP, OPEN STYLE	
81X403	90459-2519		1	TAP, OPEN STYLE	
81X404	90459-2519		1	TAP, OPEN STYLE	

Pos	Part No	UN	Qty	Description	Page No

Machine Type | Group Description | Used-In | Group Number | Page No

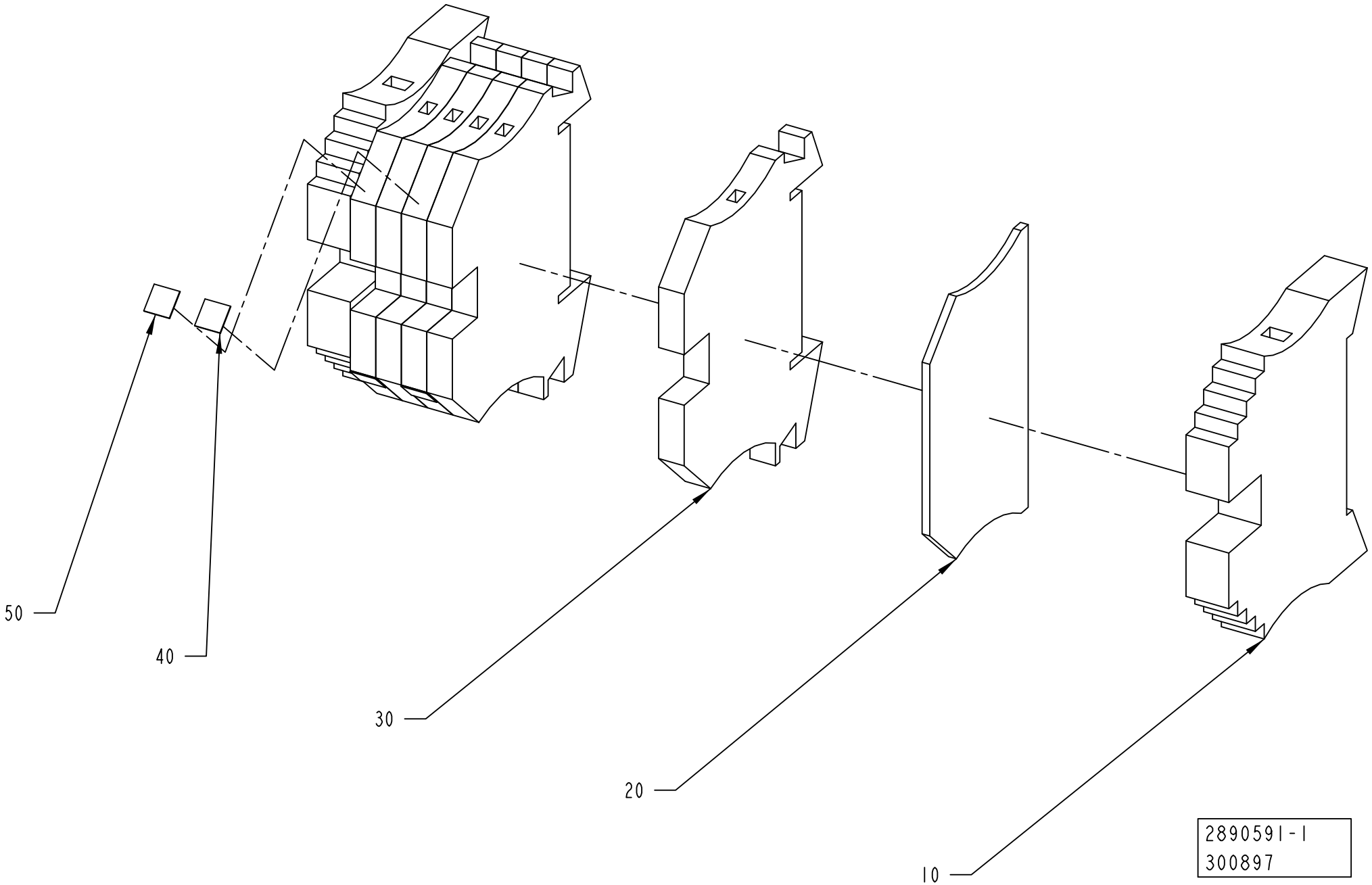
50
40
30
20
10
2890591-1
300897

ECM: 302775 - 20070528
Group number: 2890591-0100
Assembly Drawing: 2890591-1_1_AA

Pos	Part No	UN	Qty	Description	Page No
-					
010	353031-0203		2	END SUPPORT, WEW 35/2	
020	353032-0004		1	END PLATE WAP 2,5-10 BEIGE	
030	353021-0212		5	FEED THROUGH TERMINAL, 10200.0	
040	359011-0819		2	MARKING, EARTH, DEK 5 GW ERDE I.KR.	
050	359011-0807		2	MARKING, DEK 5 FW 1-50	

Pos	Part No	UN	Qty	Description	Page No

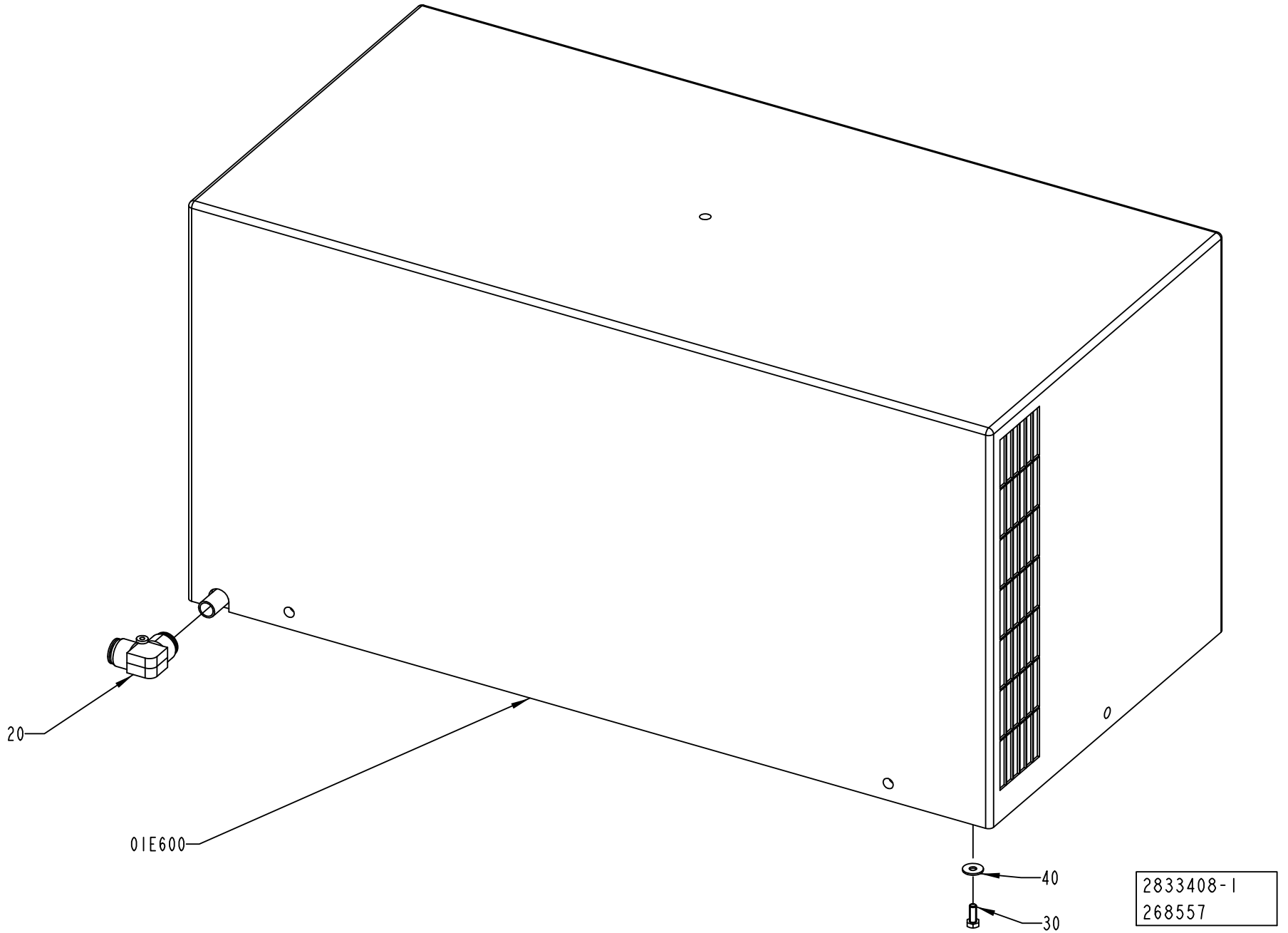
20
01E600
40
30
2833408-1
268557

ECM: 272447 - 20060925
Group number: 2833408-0100
Assembly Drawing: 2833408-1_1_AA

Pos	Part No	UN	Qty	Description	Page No
-					
01E600	90459-0813		1	COOLING UNIT, KB20A619.01	
	90459-0364		*1*	*FILTER KB20/30/40 POLYURETH. FILTER 2001*	
	90600-0672		*2*	*FAN, VBA0001499 , 50HZ_3UF , 60HZ_2UF*	
	90600-0673		*1*	*THERMOSTAT, KELVIN TMI0000218*	
	90600-0675		*1*	*GASKET, A6411AA*	
	90600-0676		*1*	*GRID, DISA1880AA*	
	90600-2822		*1*	*THERMOSTAT, TMI0000216*	
020	90459-2553		1	PUSH-IN L-FITTING QSL 16	
030	312105-0368		6	SCREW M6S ISO 4017 M6X16 A480	
040	90005-0060		6	WASHER PLAIN, RBS 6,4/M6)/18,H=1,5	

Pos	Part No	UN	Qty	Description	Page No

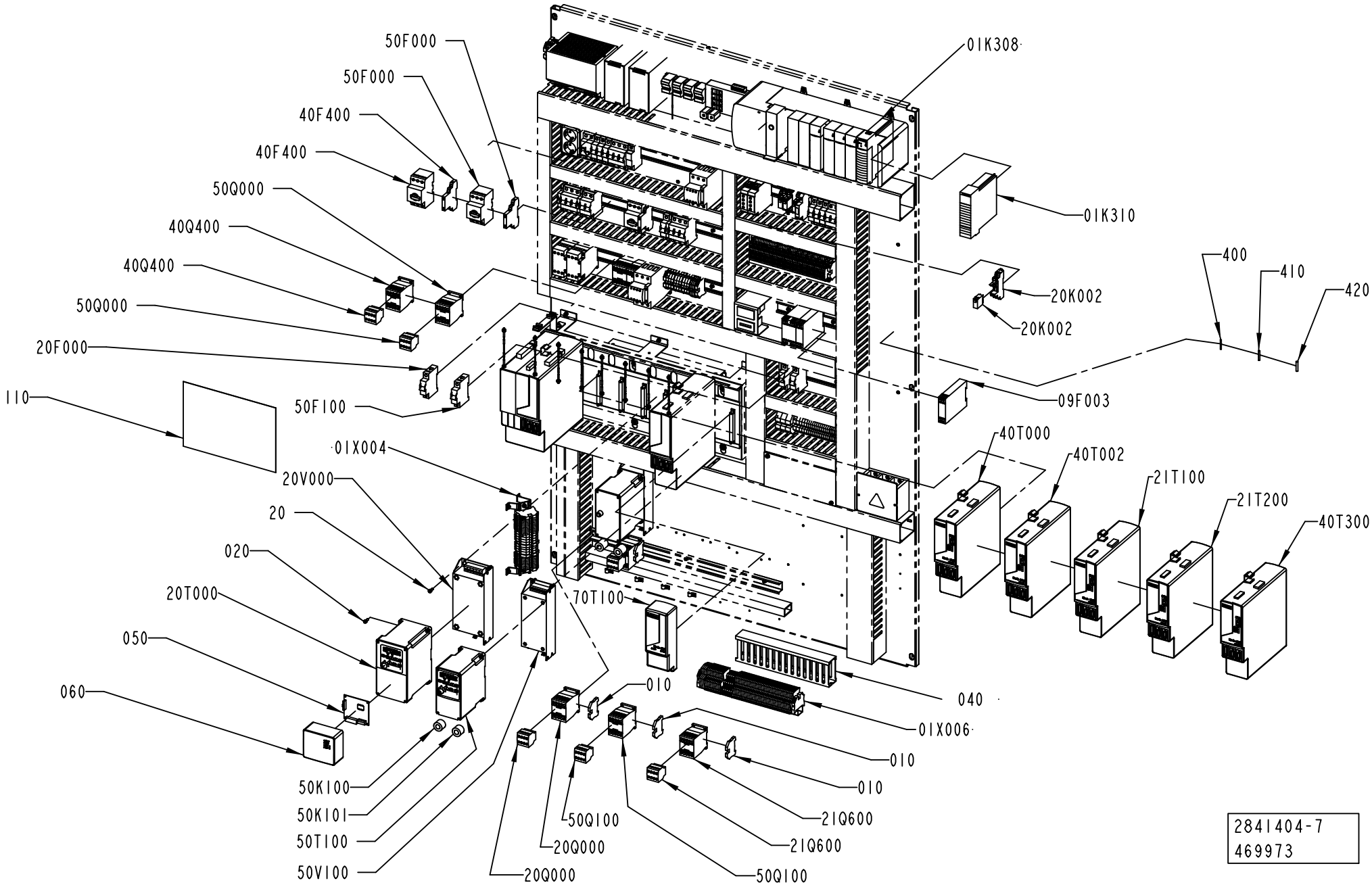
50F000
50F000
40F400
40F400
50Q000
40Q400
40Q400
50Q000
20F000
110
50F100
01X004
20V000
20
020
20T000
050
060
50K100
50K101
50T100
50V100
20Q000
50Q100
20Q000
50Q100
21Q600
21Q600
010
010
01X006
040
70T100
01K308
01K310
20K002
20K002
09F003
400
410
420
40T000
40T002
21T100
21T200
40T300
2841404-7
469973

Pos	Part No	UN	Qty	Description	Page No
CAP30/FLEX TPA STREAMCAP 1000, CAP30/FLEX TPA STREAMCAP 500, CAP30/FLEX TPA STREAMCAP 330 (See drawing on page: 9-58)					
010	353024-0205		3	EARTH TERMINAL WPE 4	
01K308	90459-2474		1	PLC,DIGIT. OUTPUT MODULE 16 PTS 10-31VDC	
01K308	90459-2487		1	REMOVABLE TERMINAL BLOCK 20 POINTS	
01K310	90459-2480		1	8-AXIS SERCOS MOTION MODULE	
020	312115-0327		16	SCREW ISO4762 M5X12 A4 80	
040	2838461-0000		1	CABLE DUCT	
09F003	90459-2291		1	SAFETY TIME RELAY, E1T-0.5S-24VDC	
110	3046437-0000		1	FUSE PANEL LABEL	
200	2895147-0100		1	PACKAGE ALIGNER	**9-63**
20F000	354000-0060		1	MINIATURE CIRCUIT BREAKER, FAZ-C6/1	
20K002	90129-0018		1	BASE, P2RF-08-E	
20K002	90119-0108		1	RELAY OMRON G2R-2-SNI-24DC	
	90129-0018		*1*	*BASE, P2RF-08-E*	
20Q000	90459-5308		1	CONTACTOR 4KW 24VDC, DILM9-10	
20Q000	90459-6852		1	AUXILIARY CONTACT, DILA-XHI22	
20T000	90459-3441		1	FREQ. CONV., 22B-A2P3N104	
20V000	90459-3454		1	FOOTPRINT FILTER 1 PHASE 18A	
300	2890014-0200		1	POSITIONING UNIT	**9-65, 12-41**
400	351160-0102	M	458	WIRE AWM 1X0,75 MM2 DARKBLUE	
40F400	90259-0313		1	AUXILIARY CONTACT, NHI21-PKZ0	
40F400	90459-5323		1	OVERLOAD PROTECTION, PKZM0-1	
40Q400	90459-5308		1	CONTACTOR 4KW 24VDC, DILM9-10	
40Q400	90459-6852		1	AUXILIARY CONTACT, DILA-XHI22	
40T000	90600-5216		1	AXIS MOD. KINETIX 6000,2094-BM02-S SER.B	
40T002	90600-5216		1	AXIS MOD. KINETIX 6000,2094-BM02-S SER.B	
40T300	90600-5214		1	AXIS MOD. KINETIX 6000,2094-BM01-S SER.B	
410	351164-0105	M	65	WIRE AWM 1X2,5 MM2 BLACK	
420	351164-0107	M	39	WIRE AWM 1X6 MM2 BLACK	
50F000	90459-5323		1	OVERLOAD PROTECTION, PKZM0-1	
50F000	90259-0313		1	AUXILIARY CONTACT, NHI21-PKZ0	
50F100	354000-0060		1	MINIATURE CIRCUIT BREAKER, FAZ-C6/1	
50K100	90600-5249		1	FERRITE, B64290L616X38	
50K101	90600-5249		1	FERRITE, B64290L616X38	
50Q000	90459-5308		1	CONTACTOR 4KW 24VDC, DILM9-10	
50Q000	90459-6852		1	AUXILIARY CONTACT, DILA-XHI22	
50Q100	90459-6852		1	AUXILIARY CONTACT, DILA-XHI22	
50Q100	90459-5308		1	CONTACTOR 4KW 24VDC, DILM9-10	
50T100	90459-3449		1	FREQ. CONV., 22A-A2P3N104	
50V100	90459-3460		1	FOOTPRINT FILTER 1 PHASE 10A	
CAP 30/FLEX TBA STREAMCAP1000, CAP 30/FLEX TBA SLIMCAP1000, CAP 30/FLEX TBA SLIMCAP2000, CAP 30/FLEX TBA STREAMCAP200, CAP 30/FLEX TBA STREAMCAP330, CAP 30/FLEX TBA HELICAP2 23 (See drawing on page: 9-56)					
010	353024-0205		3	EARTH TERMINAL WPE 4	
01K308	90459-2487		1	REMOVABLE TERMINAL BLOCK 20 POINTS	
01K308	90459-2474		1	PLC,DIGIT. OUTPUT MODULE 16 PTS 10-31VDC	
01K310	90459-2480		1	8-AXIS SERCOS MOTION MODULE	
020	312115-0327		16	SCREW ISO4762 M5X12 A4 80	
040	2838461-0000		1	CABLE DUCT	
09F003	90459-2291		1	SAFETY TIME RELAY, E1T-0.5S-24VDC	
110	3046433-0000		1	FUSE PANEL LABEL	
20F000	354000-0060		1	MINIATURE CIRCUIT BREAKER, FAZ-C6/1	
20K002	90129-0018		1	BASE, P2RF-08-E	
20K002	90119-0108		1	RELAY OMRON G2R-2-SNI-24DC	
	90129-0018		*1*	*BASE, P2RF-08-E*	
20Q000	90459-5308		1	CONTACTOR 4KW 24VDC, DILM9-10	
20Q000	90459-6852		1	AUXILIARY CONTACT, DILA-XHI22	
20T000	90459-3441		1	FREQ. CONV., 22B-A2P3N104	
20V000	90459-3454		1	FOOTPRINT FILTER 1 PHASE 18A	
400	351160-0102	M	458	WIRE AWM 1X0,75 MM2 DARKBLUE	
40F400	90259-0313		1	AUXILIARY CONTACT, NHI21-PKZ0	
40F400	90459-5323		1	OVERLOAD PROTECTION, PKZM0-1	
40Q400	90459-6852		1	AUXILIARY CONTACT, DILA-XHI22	
40Q400	90459-5308		1	CONTACTOR 4KW 24VDC, DILM9-10	
40T000	90600-5216		1	AXIS MOD. KINETIX 6000,2094-BM02-S SER.B	
40T002	90600-5216		1	AXIS MOD. KINETIX 6000,2094-BM02-S SER.B	
40T300	90600-5214		1	AXIS MOD. KINETIX 6000,2094-BM01-S SER.B	
410	351164-0105	M	65	WIRE AWM 1X2,5 MM2 BLACK	
420	351164-0107	M	39	WIRE AWM 1X6 MM2 BLACK	
50F000	90459-5323		1	OVERLOAD PROTECTION, PKZM0-1	
50F000	90259-0313		1	AUXILIARY CONTACT, NHI21-PKZ0	
50F100	354000-0060		1	MINIATURE CIRCUIT BREAKER, FAZ-C6/1	
50K100	90600-5249		1	FERRITE, B64290L616X38	
50K101	90600-5249		1	FERRITE, B64290L616X38	
50Q000	90459-6852		1	AUXILIARY CONTACT, DILA-XHI22	
50Q000	90459-5308		1	CONTACTOR 4KW 24VDC, DILM9-10	
50Q100	90459-5308		1	CONTACTOR 4KW 24VDC, DILM9-10	
50Q100	90459-6852		1	AUXILIARY CONTACT, DILA-XHI22	
50T100	90459-3449		1	FREQ. CONV., 22A-A2P3N104	
50V100	90459-3460		1	FOOTPRINT FILTER 1 PHASE 10A	
70T100	90459-2547		1	POWER RAIL SLOT FILLER, 2094-PRF	
CAP 30/FLEX TGA (See drawing on page: 9-60)					
010	353024-0205		3	EARTH TERMINAL WPE 4	

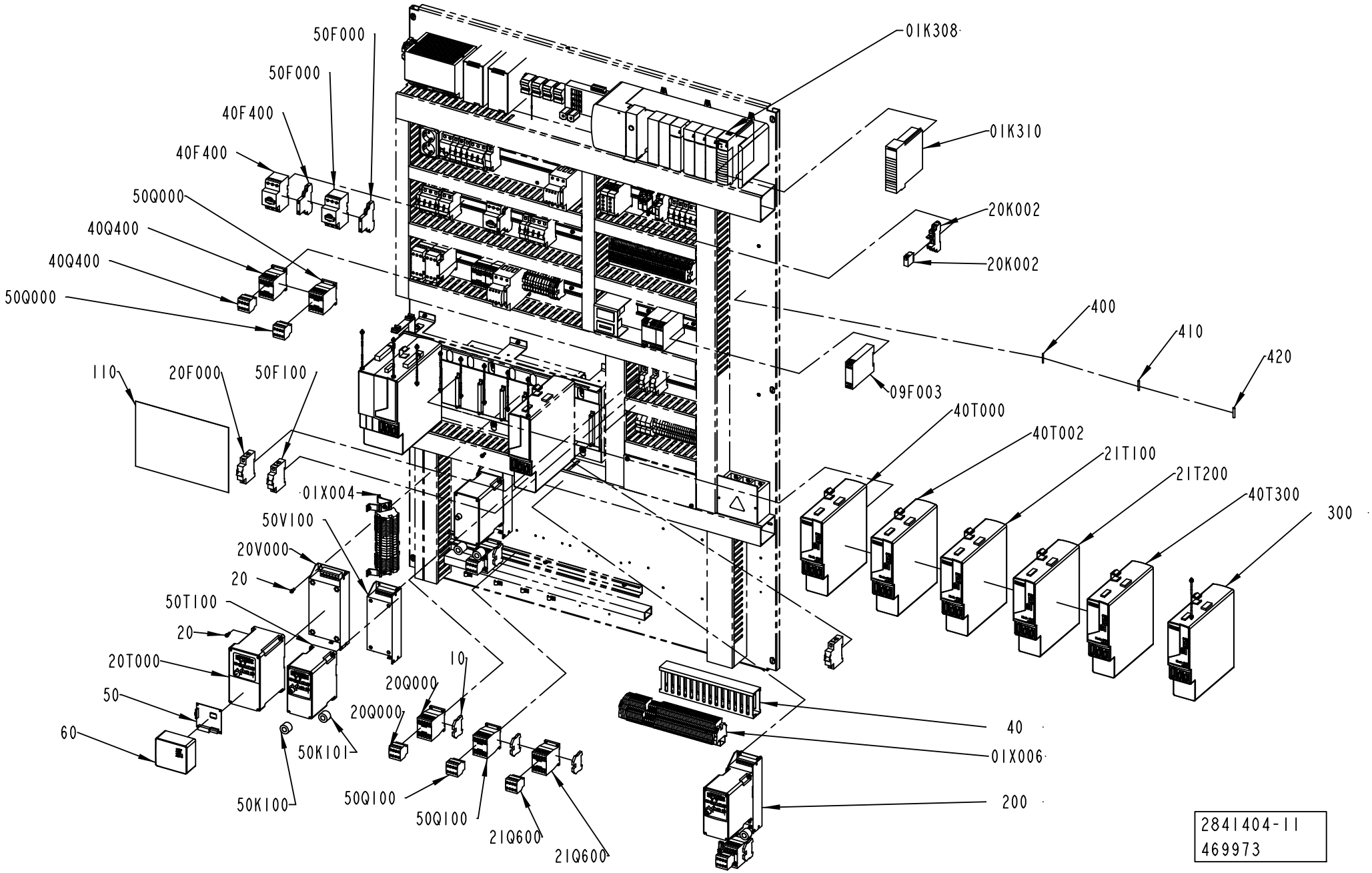
50F000
50F000
40F400
40F400
50Q000
40Q400
40Q400
50Q000
110
20F000
50F100
01X004
50V100
20V000
20
50T100
20
20T000
50
60
50K101
50K100
10
20Q000
20Q000
50Q100
50Q100
21Q600
21Q600
01K308
01K310
20K002
20K002
400
410
420
09F003
40T000
40T002
21T100
21T200
40T300
300
40
01X006
200
2841404-11
469973

Pos	Part No	UN	Qty	Description	Page No
CAP 30/FLEX TGA (Cont'd) (See drawing on page: 9-60)					
01K308	90459-2474		1	PLC,DIGIT. OUTPUT MODULE 16 PTS 10-31VDC	
01K308	90459-2487		1	REMOVABLE TERMINAL BLOCK 20 POINTS	
01K310	90459-2480		1	8-AXIS SERCOS MOTION MODULE	
020	312115-0327		16	SCREW ISO4762 M5X12 A4 80	
040	2838461-0000		1	CABLE DUCT	
09F003	90459-2291		1	SAFETY TIME RELAY, E1T-0.5S-24VDC	
110	3046433-0000		1	FUSE PANEL LABEL	
20F000	354000-0060		1	MINIATURE CIRCUIT BREAKER, FAZ-C6/1	
20K002	90119-0108		1	RELAY OMRON G2R-2-SNI-24DC	
	90129-0018		*1*	*BASE, P2RF-08-E*	
20K002	90129-0018		1	BASE, P2RF-08-E	
20Q000	90459-5308		1	CONTACTOR 4KW 24VDC, DILM9-10	
20Q000	90459-6852		1	AUXILIARY CONTACT, DILA-XHI22	
20T000	90459-3441		1	FREQ. CONV., 22B-A2P3N104	
20V000	90459-3454		1	FOOTPRINT FILTER 1 PHASE 18A	
300	2890014-0200		1	POSITIONING UNIT	**9-65, 12-41**
400	351160-0102	M	458	WIRE AWM 1X0,75 MM2 DARKBLUE	
40F400	90459-5323		1	OVERLOAD PROTECTION, PKZM0-1	
40F400	90259-0313		1	AUXILIARY CONTACT, NHI21-PKZ0	
40Q400	90459-6852		1	AUXILIARY CONTACT, DILA-XHI22	
40Q400	90459-5308		1	CONTACTOR 4KW 24VDC, DILM9-10	
40T000	90600-5216		1	AXIS MOD. KINETIX 6000,2094-BM02-S SER.B	
40T002	90600-5216		1	AXIS MOD. KINETIX 6000,2094-BM02-S SER.B	
40T300	90600-5214		1	AXIS MOD. KINETIX 6000,2094-BM01-S SER.B	
410	351164-0105	M	65	WIRE AWM 1X2,5 MM2 BLACK	
420	351164-0107	M	39	WIRE AWM 1X6 MM2 BLACK	
50F000	90459-5323		1	OVERLOAD PROTECTION, PKZM0-1	
50F000	90259-0313		1	AUXILIARY CONTACT, NHI21-PKZ0	
50F100	354000-0060		1	MINIATURE CIRCUIT BREAKER, FAZ-C6/1	
50K100	90600-5249		1	FERRITE, B64290L616X38	
50K101	90600-5249		1	FERRITE, B64290L616X38	
50Q000	90459-5308		1	CONTACTOR 4KW 24VDC, DILM9-10	
50Q000	90459-6852		1	AUXILIARY CONTACT, DILA-XHI22	
50Q100	90459-6852		1	AUXILIARY CONTACT, DILA-XHI22	
50Q100	90459-5308		1	CONTACTOR 4KW 24VDC, DILM9-10	
50T100	90459-3449		1	FREQ. CONV., 22A-A2P3N104	
50V100	90459-3460		1	FOOTPRINT FILTER 1 PHASE 10A	
Common Parts					
01X004	2840918-0100		1	PLINTH	**9-67**
01X006	2841403-0200		1	PLINTH	**9-69**
050	90459-2614		1	DEVICENET ADAPTER POWERFLEX 40 22-COMM-D	
060	90459-2795		1	FRONT LID FOR POWERFLEX 40, 22B-CCB	
21Q600	90459-5308		1	CONTACTOR 4KW 24VDC, DILM9-10	
21Q600	90459-6852		1	AUXILIARY CONTACT, DILA-XHI22	
21T100	90600-5216		1	AXIS MOD. KINETIX 6000,2094-BM02-S SER.B	
21T200	90600-5216		1	AXIS MOD. KINETIX 6000,2094-BM02-S SER.B	

Machine Type | Group Description | Used-In | Group Number | Page No

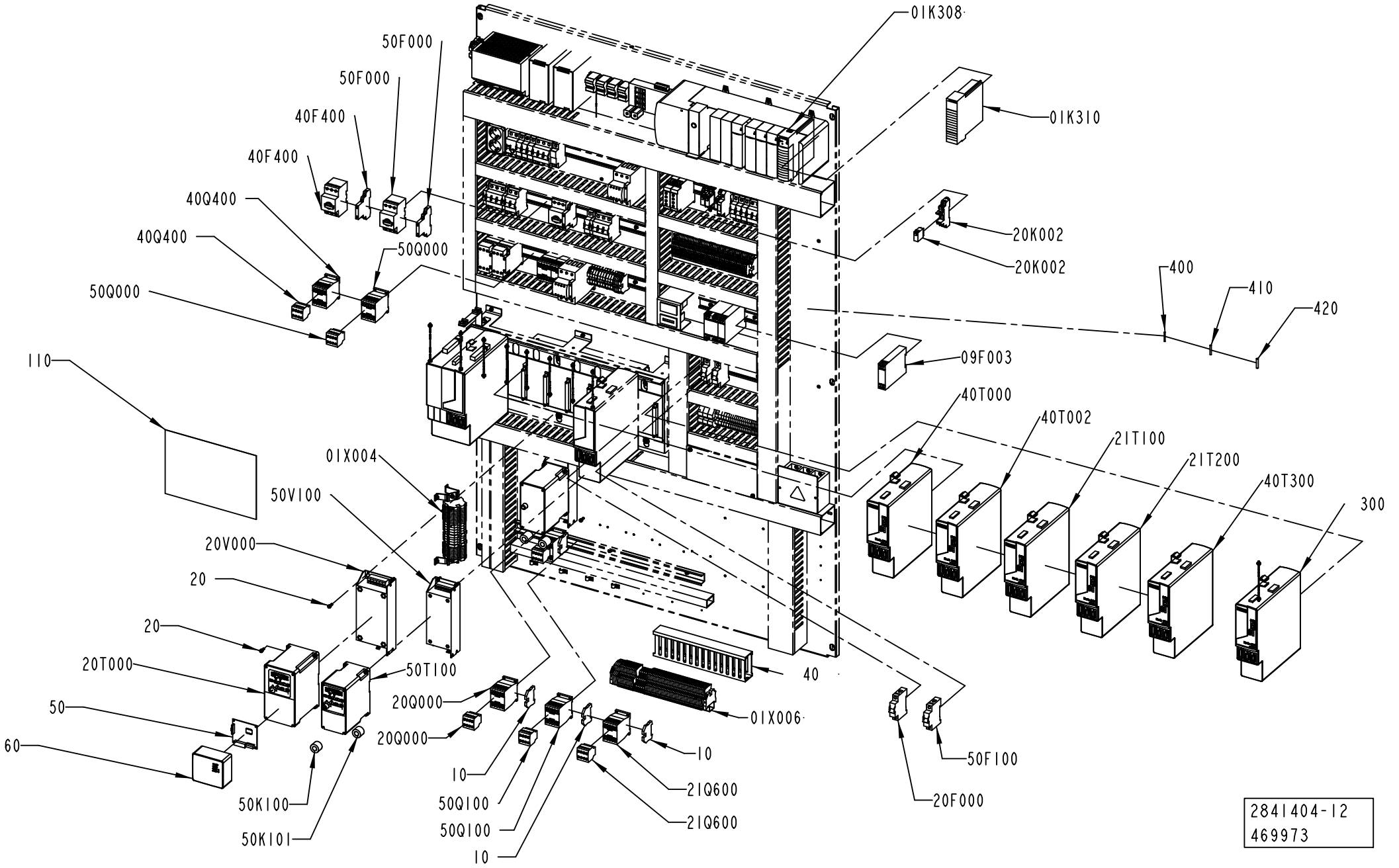
01K308
01K310
50F000
50F000
40F400
40F400
40Q400
40Q400
50Q000
50Q000
20K002
20K002
400
410
420
09F003
110
40T000
40T002
21T100
21T200
40T300
300
01X004
50V100
20V000
20
20
20T000
50
60
50T100
20Q000
20Q000
40
01X006
50F100
20F000
10
21Q600
21Q600
10
50Q100
50Q100
10
50K100
50K101
2841404-12
469973

Pos	Part No	UN	Qty	Description	Page No
SEE PREVIOUS LISTS PAGES: 9-57, 9-59.					

Pos	Part No	UN	Qty	Description	Page No

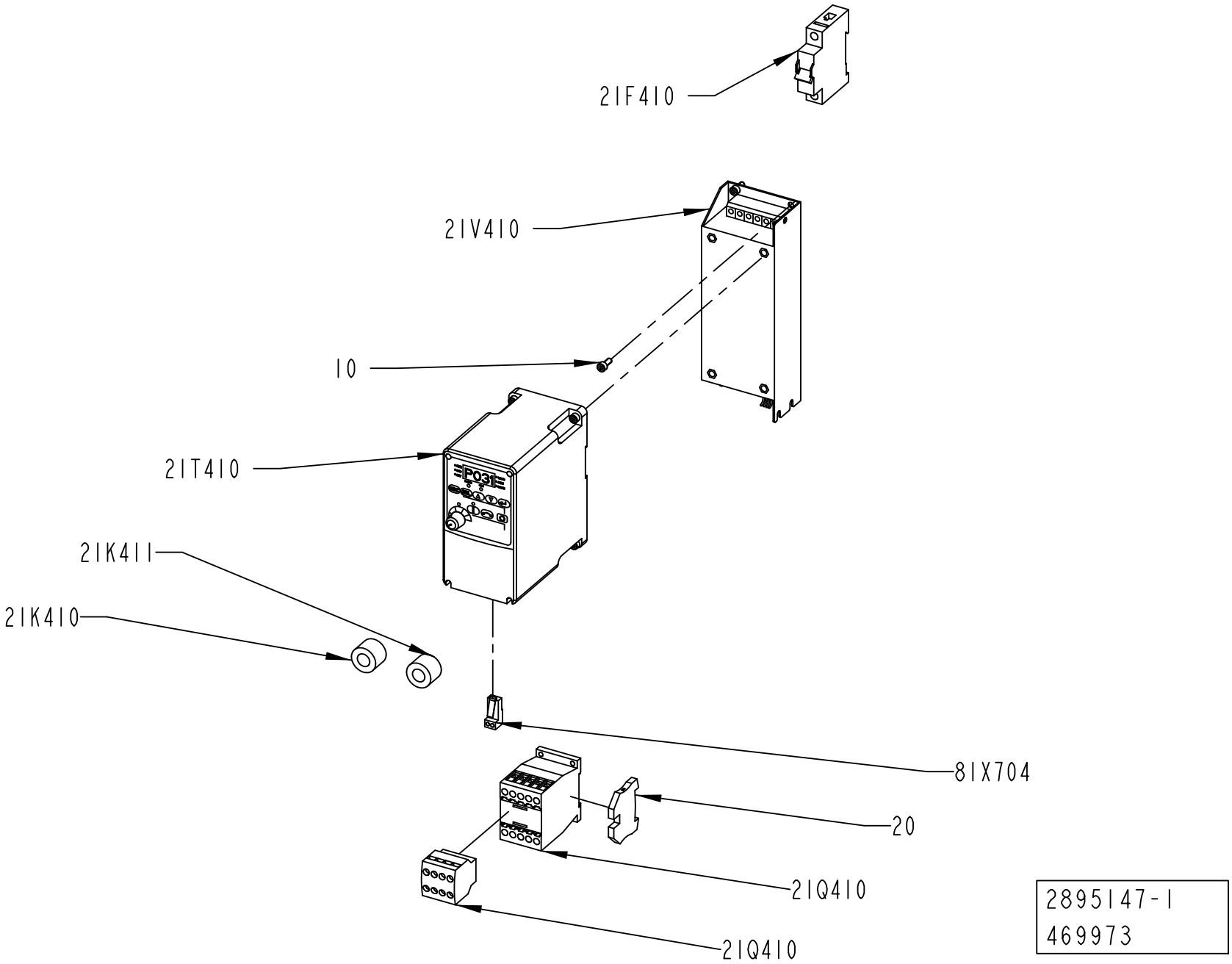
2IF410
2IV410
10
2IT410
2IK411
2IK410
8IX704
20
2IQ410
2IQ410
2895147-1
469973

ECM: 473875 - 20101109
Group number: 2895147-0100
Assembly Drawing: 2895147-1_1_AB

Pos	Part No	UN	Qty	Description	Page No
-					
010	312115-0327		8	SCREW ISO4762 M5X12 A4 80	
020	353024-0205		1	EARTH TERMINAL WPE 4	
21F410	354000-0060		1	MINIATURE CIRCUIT BREAKER, FAZ-C6/1	
21K410	90600-5249		1	FERRITE, B64290L616X38	
21K411	90600-5249		1	FERRITE, B64290L616X38	
21Q410	90459-5308		1	CONTACTOR 4KW 24VDC, DILM9-10	
21Q410	90459-6852		1	AUXILIARY CONTACT, DILA-XHI22	
21T410	90459-3449		1	FREQ. CONV., 22A-A2P3N104	
21V410	90459-3460		1	FOOTPRINT FILTER 1 PHASE 10A	
81X704	90459-6470		1	CONNECTOR RJ45 TER. BL., AK-U0-RJ45-TB2P	
	90459-2523		*2*	*TERMINATOR, OPEN STYLE, 1485A-C2*	

Pos	Part No	UN	Qty	Description	Page No

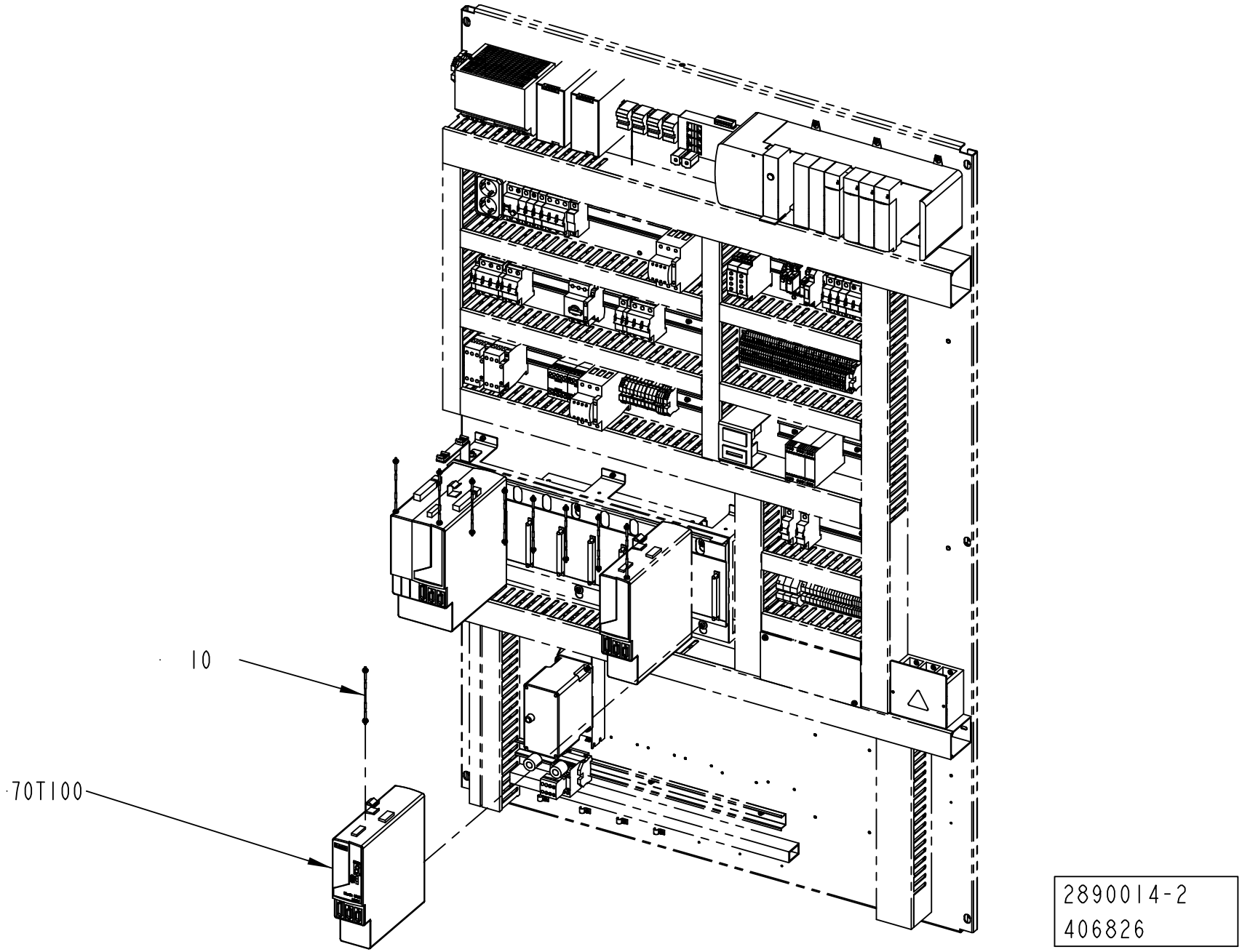
10
70T100
2890014-2
406826

ECM: 419541 - 20100110
Group number: 2890014-0200
Assembly Drawing: 2890014-2_1_AA

Pos	Part No	UN	Qty	Description	Page No
-					
010	90459-2536		1	SERCOS CABLE 0.1M, 2090-SCEP0-1	
70T100	90600-5214		1	AXIS MOD. KINETIX 6000,2094-BM01-S SER.B	

Pos	Part No	UN	Qty	Description	Page No

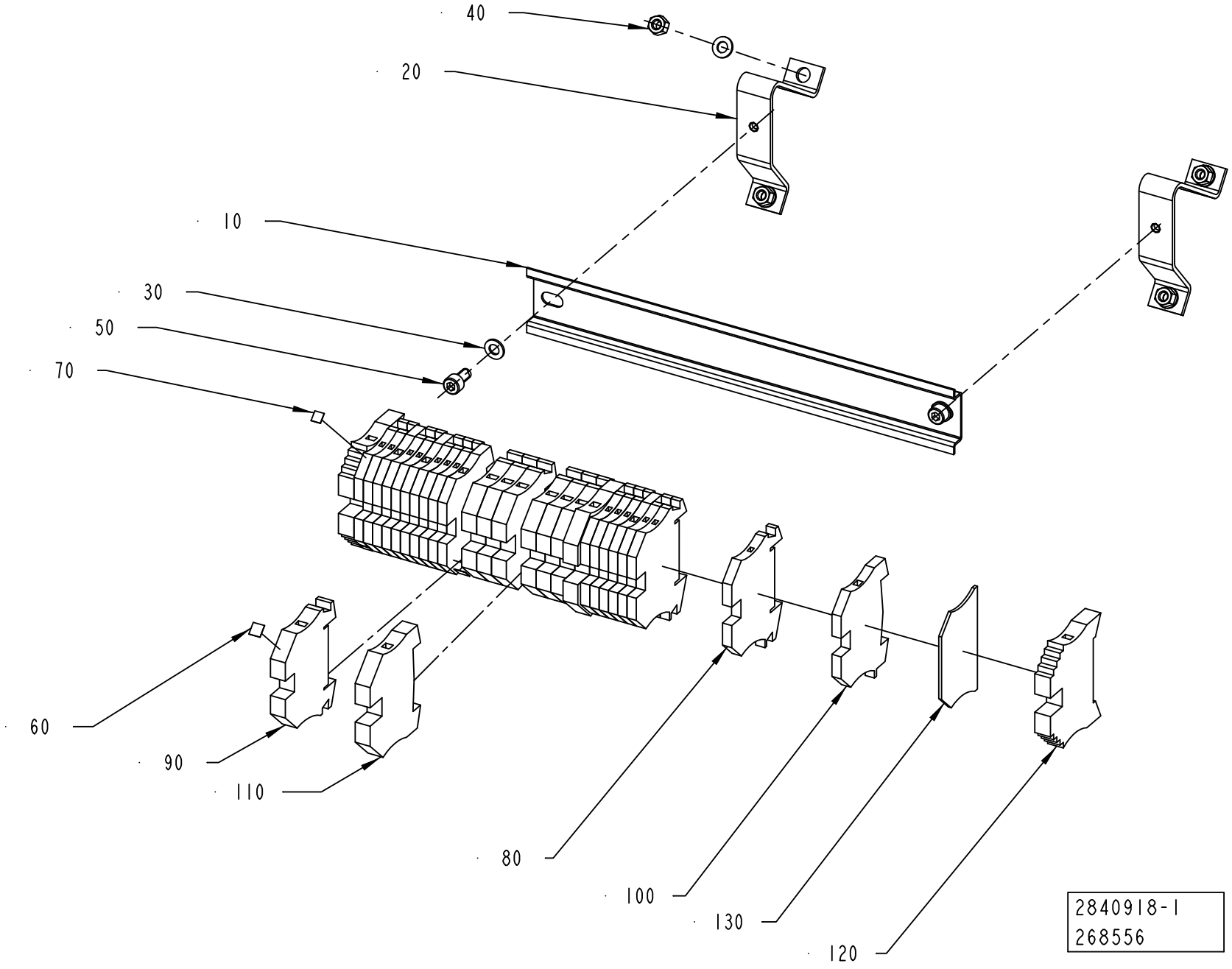
40
20
10
30
50
70
60
90
110
80
100
130
120
2840918-1
268556

ECM: 480658 - 20110401
Group number: 2840918-0100
Assembly Drawing: 2840918-1_1_AA

Pos	Part No	UN	Qty	Description	Page No
STREAMCAP500, STREAMCAP1000, SLIMCAP 2000, SLIMCAP 1000, STREAMCAP200, STREAMCAP330, HELICAP2 23					
080	353021-0212		13	FEED THROUGH TERMINAL, 10200.0	
100	353024-0204		5	EARTH TERMINAL WPE 2,5	
Common Parts					
010	2841402-0000		1	RAIL	
020	90099-0005		2	MOUNTING RAIL SUPPORT, TSTW 5/M5	
030	315105-0146		6	WASHER BRB 5,3X10 RFR	
040	312605-0314		4	HEXAGON NUT, M6M M5 A280	
050	312115-0325		2	SCREW ISO4762 M5X10 A4 80	
060	359011-0821		2	MARKING, DEK 6 FW 1-50	
070	359011-0807		2	MARKING, DEK 5 FW 1-50	
090	353021-0214		7	FEED THROUGH TERMINAL, 10202.0	
110	353024-0206		2	EARTH TERMINAL WPE 6	
120	353031-0203		2	END SUPPORT, WEW 35/2	
130	353032-0004		1	END PLATE WAP 2,5-10 BEIGE	

Pos	Part No	UN	Qty	Description	Page No

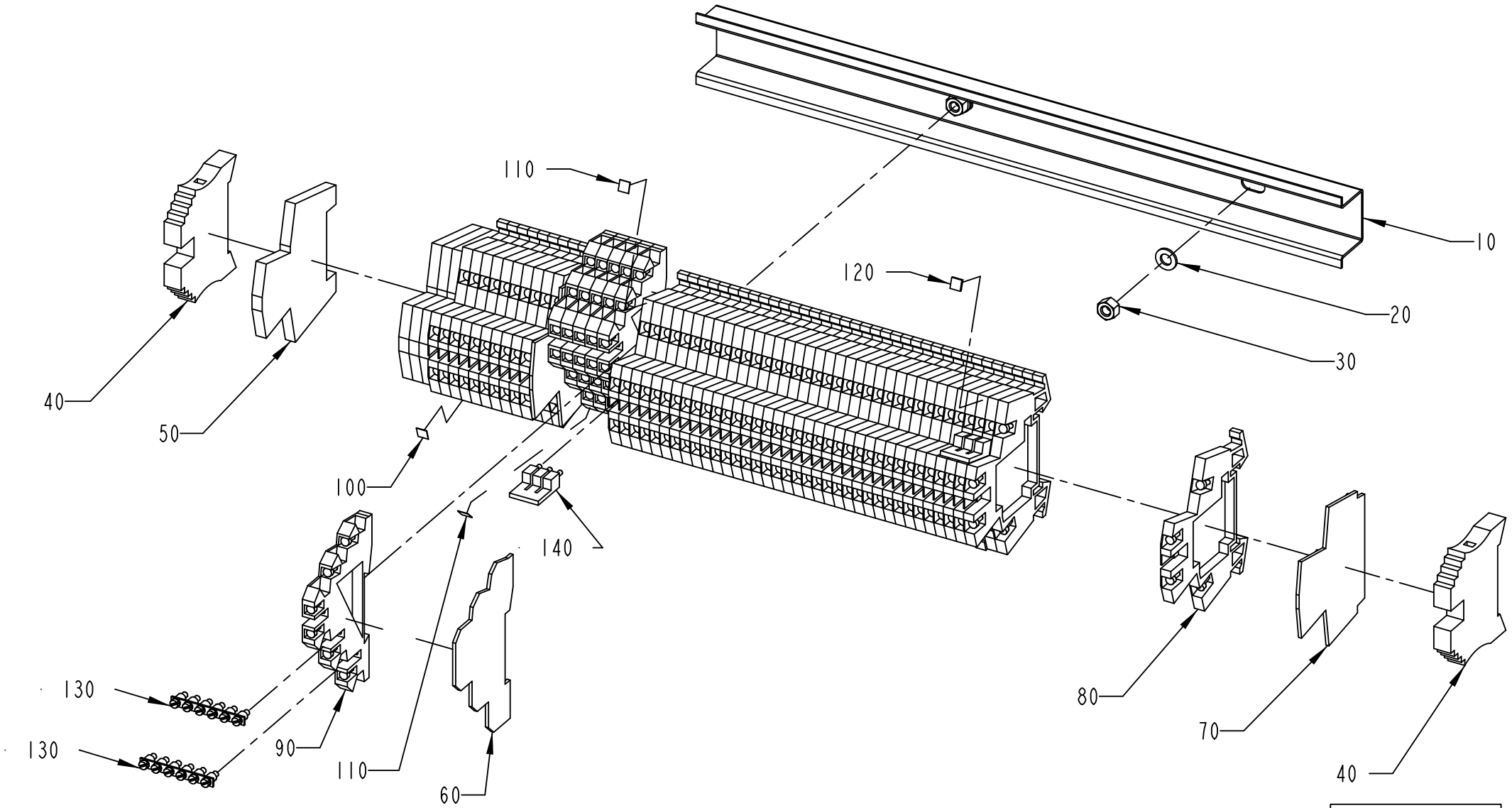
10
20
30
40
50
60
70
80
90
100
110
120
130
130
140
110
40
2841403-3
406826

ECM: 480659 - 20110401
Group number: 2841403-0200
Assembly Drawing: 2841403-3_1_AA

Pos	Part No	UN	Qty	Description	Page No
STREAMCAP500, STREAMCAP1000, SLIMCAP 2000, SLIMCAP 1000, STREAMCAP200, STREAMCAP330, HELICAP2 23					
010	2839228-0000		1	RAIL	
020	315105-0146		2	WASHER BRB 5,3X10 RFR	
030	312605-0314		2	HEXAGON NUT, M6M M5 A280	
080	90077-0113		47	TERMINAL BLOCK WDK 2.5	
Common Parts					
040	353031-0203		2	END SUPPORT, WEW 35/2	
050	353024-0212		4	EARTH TERMINAL WDK 2,5 PE	
060	353032-0302		1	END PLATE, AP DLD2,5 DB	
070	353032-0009		2	END PLATE, WAP FOR WDK	
090	353021-0302		6	TERMINAL, DLD 2,5/35	
100	359011-0807		1	MARKING, DEK 5 FW 1-50	
110	359011-0809		3	MARKING, DEK 5 FW 101-150	
120	359011-0806		2	MARKING, DEK 5 FW 1-200	
130	353034-0404		2	BRIDGE CONNECTOR Q 10 DLI	
140	353034-0030		2	BRIDGE CONNECTOR WQV 2,5/10	

Pos	Part No	UN	Qty	Description	Page No

This page is intentionally left blank.

ECM: 309363 - 20070528
Group number: 2833409-0100
Assembly Drawing:

Pos	Part No	UN	Qty	Description	Page No
-					
010	351160-0105	M	4	WIRE AWM 1X2,5 MM2 DARKBLUE	
020	351160-0106	M	5	WIRE AWM 1X4 MM2 DARKBLUE	
030	351161-0104	M	13	WIRE AWM 1X1,5 MM2 LIGHTBLUE	
040	351161-0105	M	20	WIRE AWM 1X2,5 MM2 LIGHTBLUE	
050	351161-0106	M	2.6	WIRE AWM 1X4 MM2 LIGHTBLUE	
060	351161-0107	M	2.6	WIRE AWM 1X6 MM2 LIGHTBLUE	
070	351161-0109	M	2.6	WIRE AWM 1X16 MM2 LIGHTBLUE	
080	351162-0102	M	26	WIRE AWM 1X0,75 MM2 YELLOW-GREEN	
090	351162-0104	M	13	WIRE AWM 1X1,5 MM2 YELLOW-GREEN	
100	351162-0105	M	29	WIRE AWM 1X2,5 MM2 YELLOW-GREEN	
110	351162-0106	M	6.5	WIRE AWM 1X4 MM2 YELLOW-GREEN	
120	351162-0107	M	2.6	WIRE AWM 1X6 MM2 YELLOW-GREEN	
130	351162-0108	M	3.9	WIRE AWM 1X10 MM2 YELLOW-GREEN	
140	351162-0109	M	3.9	WIRE AWM 1X16 MM2 YELLOW-GREEN	
150	351164-0104	M	32	WIRE AWM 1X1,5 MM2 BLACK	
160	351164-0106	M	13	WIRE AWM 1X4 MM2 BLACK	
170	351164-0108	M	29	WIRE AWM 1X10 MM2 BLACK	
180	351164-0109	M	4	WIRE AWM 1X16 MM2 BLACK	
81W200	90459-1621		1	CABLE, ETHERNET RJ 45 CONNECT. 1 M	
81W201	90459-6395		1	CABLE, ETHERNET RJ 45 STRAIGHT.10M	
81W400	90459-2530	MM	325	DEVICENET CABLE THIN	
81W401	90459-2530	M	1.3	DEVICENET CABLE THIN	
81W402	90459-2530	M	4.5	DEVICENET CABLE THIN	
81W403	90459-2530	M	13	DEVICENET CABLE THIN	
81W405	90459-2530	MM	260	DEVICENET CABLE THIN	
81W406	90459-2530	MM	260	DEVICENET CABLE THIN	
81W407	90459-2530	MM	260	DEVICENET CABLE THIN	
81W700	90220-0183	MM	325	SCR. CABLE 2X0,34MM2	
81W701	90220-0183	MM	325	SCR. CABLE 2X0,34MM2	
81W702	90220-0183	MM	325	SCR. CABLE 2X0,34MM2	

Pos	Part No	UN	Qty	Description	Page No

Machine Type | Group Description | Used-In | Group Number | Page No

Tetra Pak

SPC
Spare Parts Catalogue

This page is intentionally left blank.

ECM: 472987 - 20101109
Group number: 662913-0200
Assembly Drawing:

Pos	Part No	UN	Qty	Description	Page No
-					
	2838695-0000		1	INSTALLATION DRAWING	
010	2853706-0100		1	SETTING TOOL	**10-5**
020	2838693-0100		1	START-UP KIT	**10-13**
030	2986247-0100		1	CAP DETECTOR	**10-15**
040	3039029-0000		1	PNEUMATIC DIAGRAM	
050	2838680-0000		1	DIAGRAM	
060	2838684-0000		1	WATER DIAGRAM	
070	2873923-0100		1	POSITION TEMPLATE	**10-33**
080	2873953-0100		1	CAP	**10-37**

Pos	Part No	UN	Qty	Description	Page No

This page is intentionally left blank.

ECM: 481215 - 20110401
Group number: 2853706-0100
Assembly Drawing:

Pos	Part No	UN	Qty	Description	Page No
TBA STREAMCAP200					
040	2736458-0000		1	TEMPLATE	
060	2939208-0100		1	SETTING TOOL	**10-7**
100	3034465-0000		1	SETTING TOOL	
110	3047353-0000		1	GUIDE	
TGA, TBA SLIMCAP1000, TBA STREAMCAP1000, TBA SLIMCAP 2000, TBA HELICAP2 23					
040	2736458-0000		1	TEMPLATE	
070	2788137-0000		1	TEMPLATE	
110	3047353-0000		1	GUIDE	
TPA STREAMCAP330					
040	2736458-0000		1	TEMPLATE	
070	2873935-0000		1	TEMPLATE	
090	3020133-0000		1	SETTING TOOL	
100	3020134-0000		1	SETTING TOOL	
110	3047353-0000		1	GUIDE	
TPA STREAMCAP 1000, TPA STREAMCAP 500					
040	2736458-0000		1	TEMPLATE	
070	2873935-0000		1	TEMPLATE	
110	3047353-0000		1	GUIDE	
Common Parts					
010	2715750-0100		1	TEMPLATE	**10-9**
020	2716125-0100		1	SETTING TOOL	**10-11**
030	3044285-0000		2	TEMPLATE	

Pos	Part No	UN	Qty	Description	Page No

Machine Type | Group Description | Used-In | Group Number | Page No

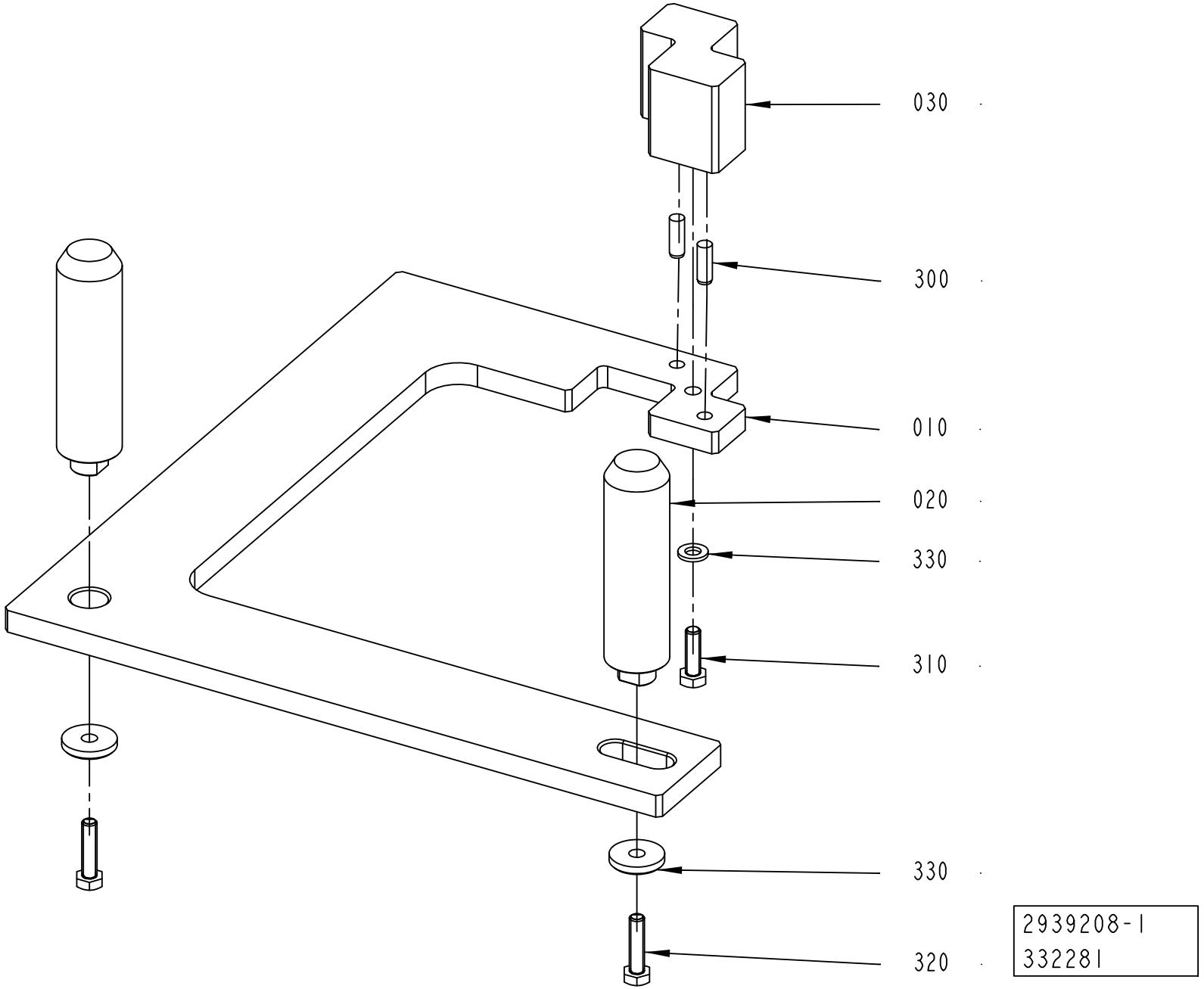
030
300
010
020
330
310
330
320
2939208-1
332281

ECM: 349976 - 20080701
Group number: 2939208-0100
Assembly Drawing: 2939208-1_1_AA

Pos	Part No	UN	Qty	Description	Page No
-					
010	2939164-0000		1	SETTING TOOL	
020	2939165-0000		2	SHAFT	
030	2939331-0000		1	TOOL	
300	311103-0352		2	PARALLEL PIN ISO 2338 6M6X18 A1	
310	312105-0370		1	SCREW M6S ISO 4017 M6X20 A480	
320	312105-0372		2	SCREW M6S ISO 4017 M6X25 A480	
330	315105-0153		1	WASHER BRB 6,4X12 RFR	
340	315121-0153		2	WASHER PLAIN, TBRSB 6,4/22 H=4	

Pos	Part No	UN	Qty	Description	Page No

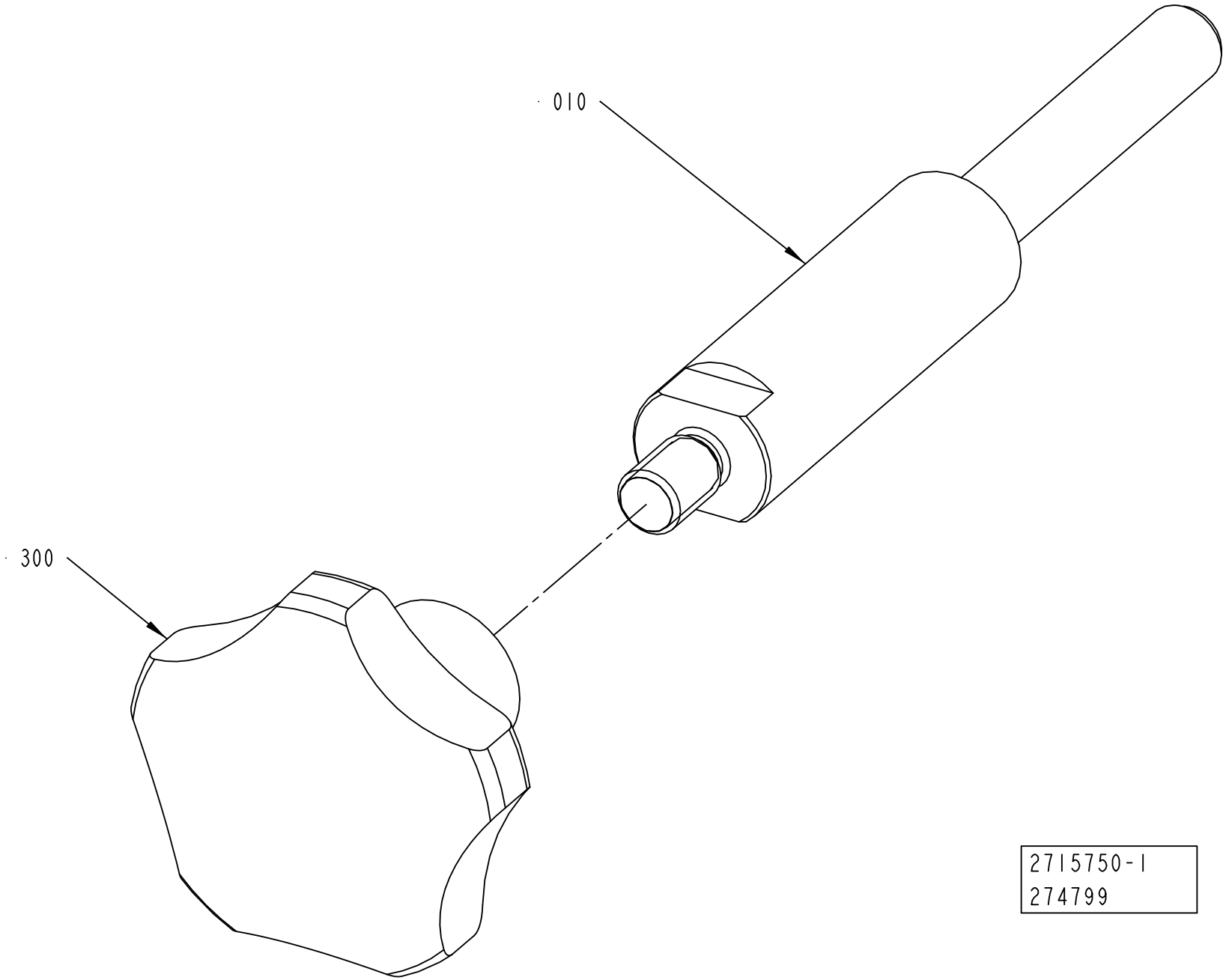
010
300
2715750-1
274799

ECM: 444700 - 20100701
Group number: 2715750-0100
Assembly Drawing: 2715750-1_1_AA

Pos	Part No	UN	Qty	Description	Page No
-					
010	2715751-0000		1	SHAFT	
300	90051-0054		1	STELLAR KNOB, INT. THREAD, NO. 8306-0340	

Pos	Part No	UN	Qty	Description	Page No

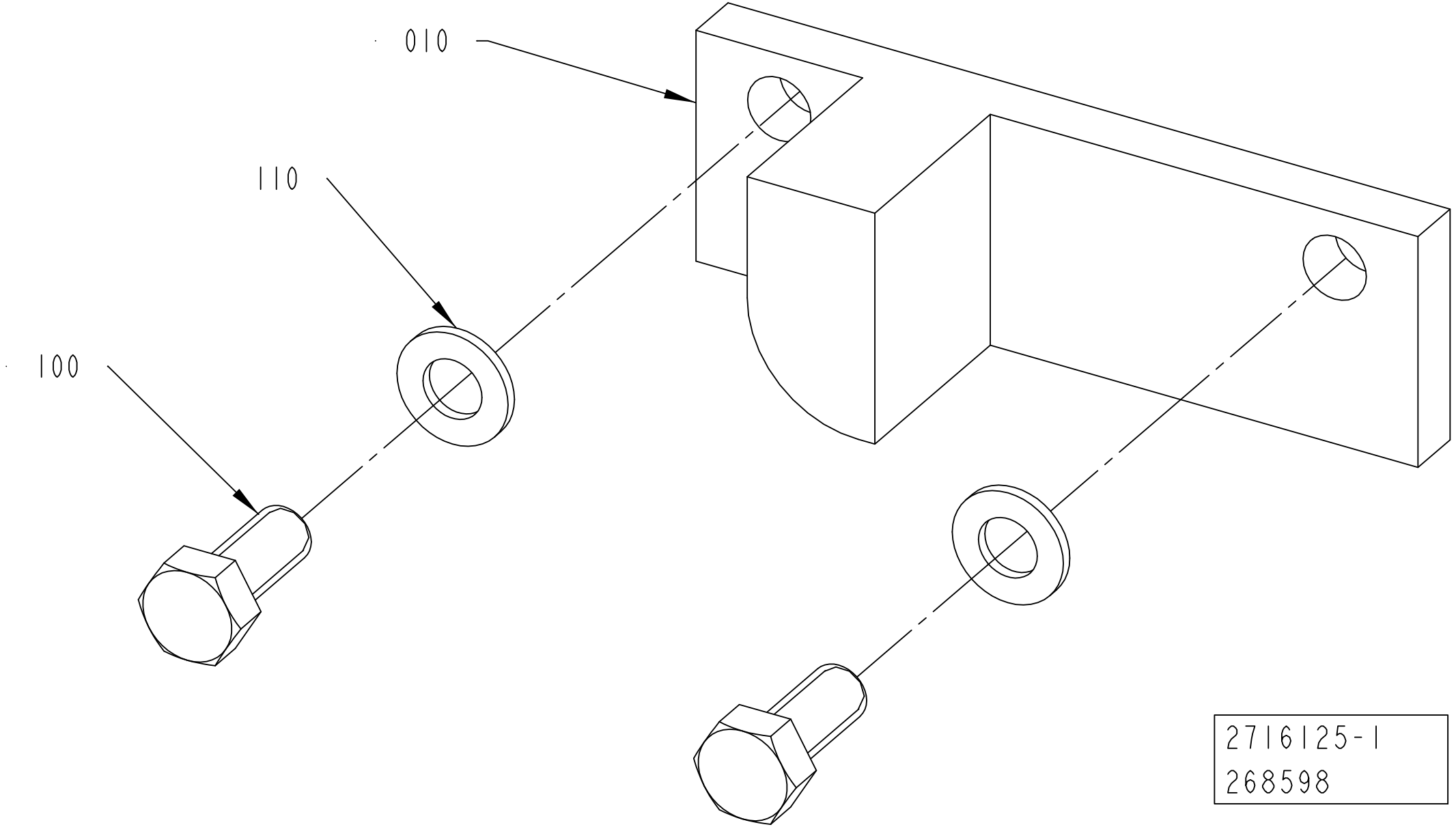
010
110
100
2716125-1
268598

ECM: 269065 - 20060920
Group number: 2716125-0100
Assembly Drawing: 2716125-1_1_AA

Pos	Part No	UN	Qty	Description	Page No
-					
010	2716154-0000		1	SETTING TEMPLATE	
100	312105-0327		2	SCREW M6S ISO 4017 M5X12 A480	
110	315105-0146		2	WASHER BRB 5,3X10 RFR	

Pos	Part No	UN	Qty	Description	Page No

This page is intentionally left blank.

ECM: 481214 - 20110401
Group number: 2838693-0100
Assembly Drawing:

Pos	Part No	UN	Qty	Description	Page No
CAP 30/FLEX HELICAP2 23					
020	90602-3790		1	ADHESIVE, HOTM. CAPFIX 100 134-477D 12KG	
030	90459-3197		4	HOT MELT NOZZLE, SATURN 322014	
040	3034434-0000		20	TENSION SPRING	
070	2985810-0000		1	BRUSH	
CAP 30/FLEX SLIMCAP1000					
020	90459-4083	KG	1	ADHESIVE, NATIONAL 134-135B	
030	90439-0155		4	PRECISION NOZZLE SATURN 322012	
040	3034434-0000		20	TENSION SPRING	
070	2985810-0000		1	BRUSH	
CAP 30/FLEX SLIMCAP2000					
020	90459-4083	KG	1	ADHESIVE, NATIONAL 134-135B	
030	90458-0651		4	PRECISION NOZZLE, PART NO. 322 010	
040	3034434-0000		20	TENSION SPRING	
070	2985810-0000		1	BRUSH	
CAP 30/FLEX STREAMCAP1000, CAP 30/FLEX STREAMCAP500					
020	90153-0059	KG	1	250.0 ADHESIVE, HOTMELT RECAP 12 KG	
030	90459-3197		4	HOT MELT NOZZLE, SATURN 322014	
040	3034434-0000		20	TENSION SPRING	
070	2985810-0000		1	BRUSH	
CAP 30/FLEX STREAMCAP200					
020	90153-0059	KG	1	250.0 ADHESIVE, HOTMELT RECAP 12 KG	
030	90439-0155		4	PRECISION NOZZLE SATURN 322012	
040	3034434-0000		20	TENSION SPRING	
070	2985810-0000		1	BRUSH	
CAP 30/FLEX STREAMCAP330					
020	90153-0059	KG	1	250.0 ADHESIVE, HOTMELT RECAP 12 KG	
030	90458-0651		4	PRECISION NOZZLE, PART NO. 322 010	
040	3034434-0000		20	TENSION SPRING	
070	2985810-0000		1	BRUSH	
Common Parts					
080	90458-2510		3	FUSE, ATDR6	

Pos	Part No	UN	Qty	Description	Page No

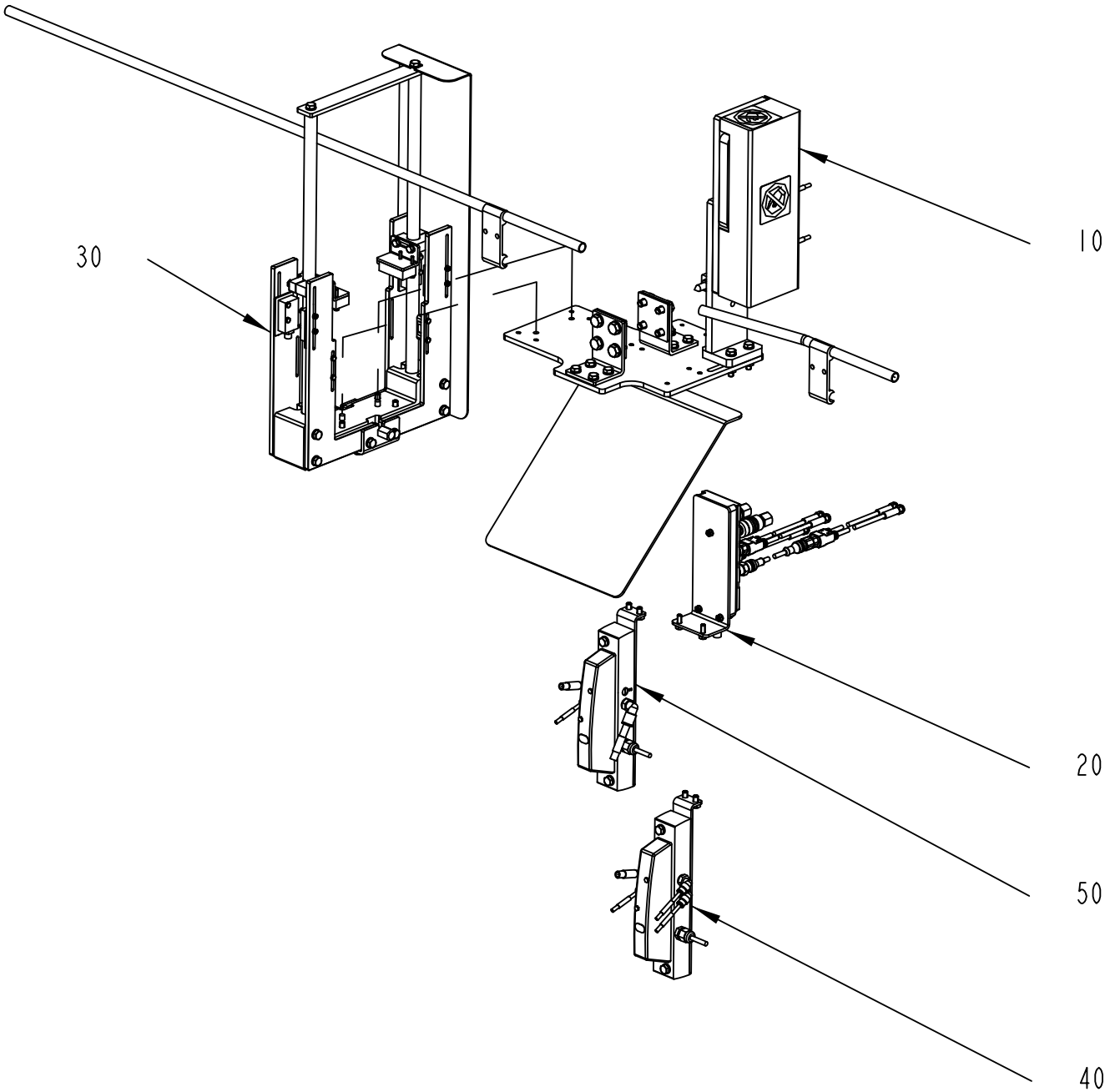

2986247-1
365294

ECM: 459268 - 20101001
Group number: 2986247-0100
Assembly Drawing: 2986247-1_1_AA

Pos	Part No	UN	Qty	Description	Page No
-					
010	2986246-0100		1	EJECTOR	**10-17**
020	2839195-0100		1	DISTRIBUTOR	**10-19**
030	2956718-0100		1	PHOTOCELL BRACKET	**10-21, 10-23, 10-25, 10-27**
040	2839074-0100		1	PNEUMATIC UNIT	**10-29**
050	2839194-0100		1	PNEUMATIC UNIT	**10-31**

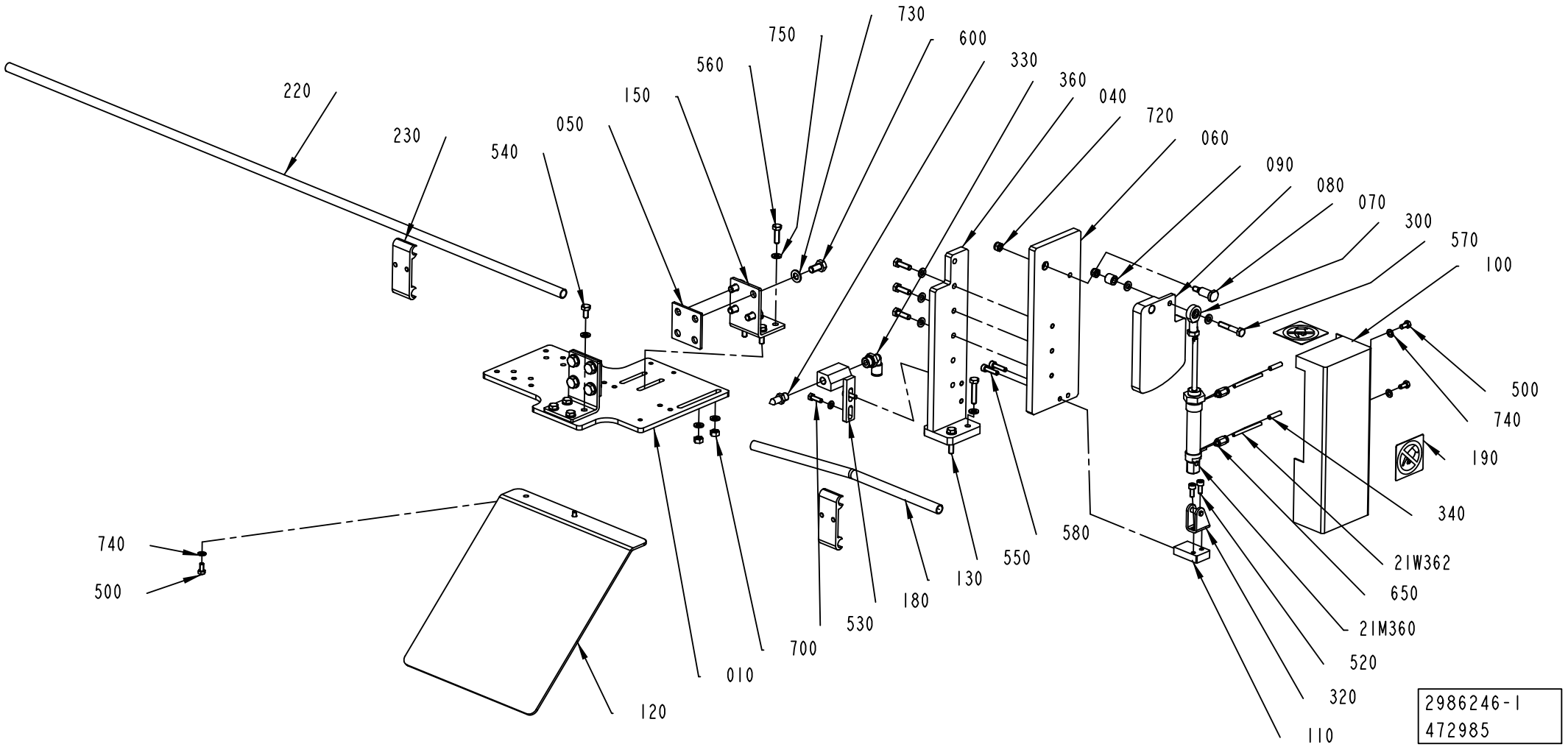
220
230
540
050
150
560
750
730
600
330
360
040
720
060
090
080
070
300
570
100
500
740
190
340
21W362
650
21M360
520
320
110
740
500
120
010
700
530
180
130
550
580
2986246-1
472985

ECM: 473912 - 20101109
Group number: 2986246-0100
Assembly Drawing: 2986246-1_1_AB

Pos	Part No	UN	Qty	Description	Page No
-					
010	2958971-0000		1	PLATE	
040	2873872-0000		1	BRACKET	
050	2815585-0000		2	SPACER	
060	2873876-0000		1	PLATE	
070	2817525-0000		1	SHAFT	
080	2817527-0000		1	PUSHER	
090	2817573-0000		1	SPACER	
100	2817578-0000		1	COVER	
110	2818204-0000		1	SUPPORT	
120	2818427-0000		1	SLIDE PLATE	
130	2818738-0000		1	RAILING	
150	2814679-0000		2	BRACKET	
180	2873866-0000		1	SUPPORT	
190	1128856-0000		2	PROHIBITION SIGN	
21M360	90457-0871		1	DOUBLE ACTING, MINI-ISO, CYL. 16-25	
21W362	315400-0016	MM	500	TUBE PUN-H-4X0,75-BL	
21W364	315400-0016	MM	500	TUBE PUN-H-4X0,75-BL	
220	476221-0013		1	PIPE	
230	1020637-0000		2	HOLDER	
300	90115-0163		1	ROD END, ID=6 MM, M6X1	
320	90459-3655		1	REAR CLEVIS FOOT MOUNTING, LBN-12/16	
330	90424-0087		1	AIR NOZZLE	
340	90459-7368		2	MARKING FOR PNEUM. TUBING, PRZ04	
360	350002-0009		1	PUSH-IN L-FITTING QSL-F-G1/4-8	
500	312105-0325		5	SCREW M6S ISO 4017 M5X10 A480	
520	312115-0327		2	SCREW ISO4762 M5X12 A4 80	
530	312105-0329		2	SCREW M6S ISO 4017 M5X16 A480	
540	312105-0366		4	SCREW M6S ISO 4017 M6X12 A480	
550	312109-0374		2	SCREW M6S ISO 4017 M6X30 A480	
560	312105-0370		7	SCREW M6S ISO 4017 M6X20 A480	
570	312105-0376		1	SCREW M6S ISO 4014 M6X35 A480	
580	312115-0331		2	SCREW ISO4762 M5X20 A4 80	
600	312105-0449		8	SCREW M6S ISO 4017 M8X16 A480	
650	350001-0001		2	PUSH-IN FITTING QS-F-M5-4	
700	312607-0316		6	HEXAGON NUT, EN 24032 M6M M6 A480	
720	312812-0316		2	HEXAGON NUT, NY-LOCK M6 A480	
730	315105-0165		8	WASHER BRB 8,4X16 RFR	
740	315105-0146		7	WASHER BRB 5,3X10 RFR	
750	315105-0153		21	WASHER BRB 6,4X12 RFR	

Pos	Part No	UN	Qty	Description	Page No

Machine Type	Group Description	Used-In	Group Number	Page No

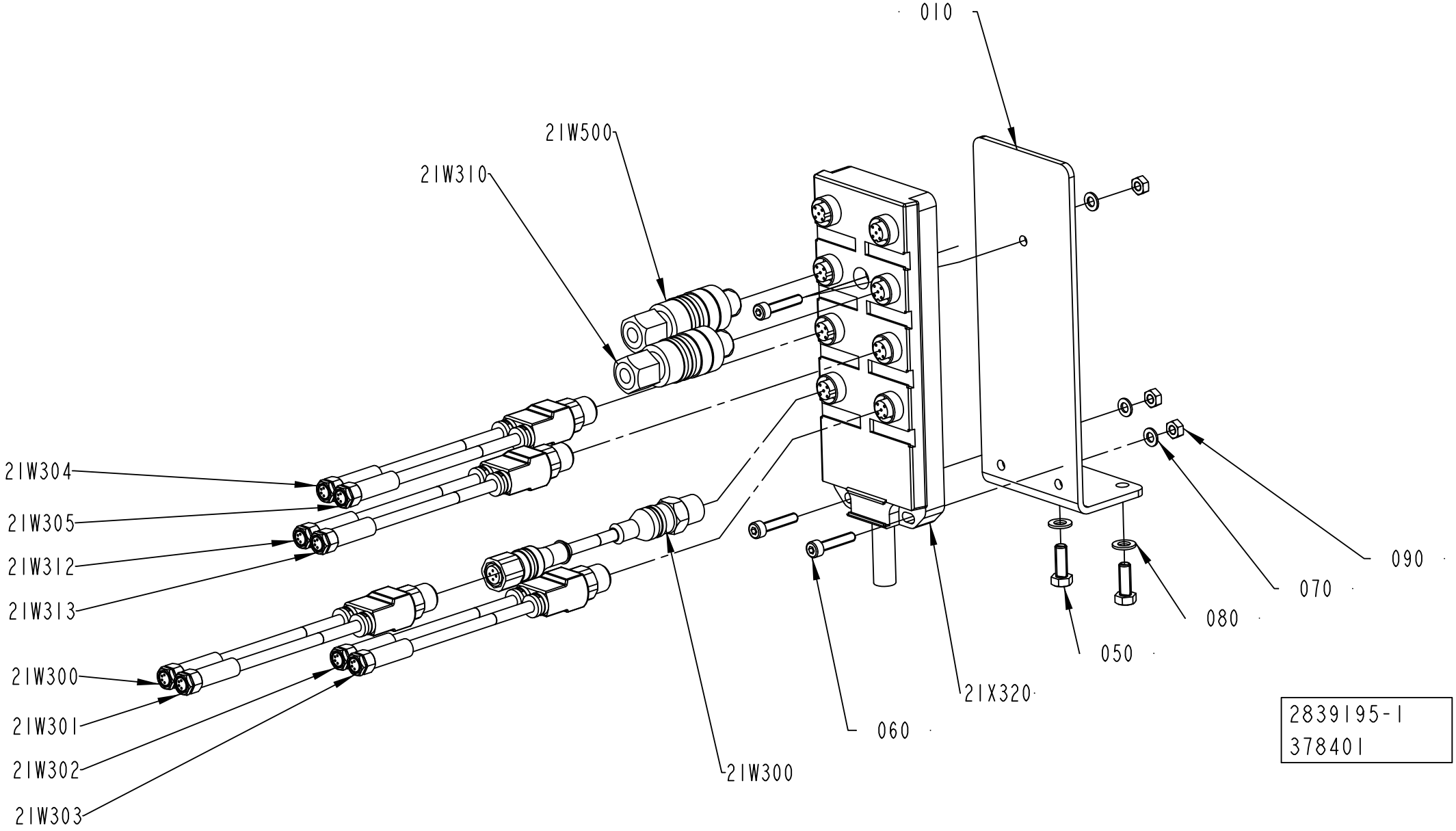
010
21W500
21W310
21W304
21W305
21W312
21W313
21W300
21W301
21W302
21W303
21W300
21X320
060
050
080
070
090
2839195-1
378401

ECM: 459266 - 20101001
Group number: 2839195-0100
Assembly Drawing: 2839195-1_1_AB

Pos	Part No	UN	Qty	Description	Page No
TPA, TGA, TBA SLIMCAP1000, TBA STREAMCAP1000, TBA SLIMCAP 2000, TBA STREAMCAP200, TBA HELICAP2 23					
21W300	90459-6586		1	ACT/SENS.Y-CABLE, ASBN 2-PRKMV 4-07/0,6M	
21W300	351411-0006		1	ACTU/SENS. CABLE PRST 4-PRKT 4-07/0,6M	
21W312	90459-6586		1	ACT/SENS.Y-CABLE, ASBN 2-PRKMV 4-07/0,6M	
Common Parts					
010	2827671-0000		1	BRACKET	
050	312105-0328		2	SCREW M6S ISO 4017 M5X14 A480	
060	312115-0295		3	SCREW ISO4762 M4X20 A4 80	
070	315105-0136		3	WASHER BRB 4,3X8 RFR	
080	315105-0146		2	WASHER BRB 5,3X10 RFR	
090	312607-0312		3	HEXAGON NUT, EN 24032 M6M M4 A480	
21W302	90459-6586		1	ACT/SENS.Y-CABLE, ASBN 2-PRKMV 4-07/0,6M	
21W304	90459-6586		1	ACT/SENS.Y-CABLE, ASBN 2-PRKMV 4-07/0,6M	
21W310	90459-1663		1	CONNECTOR, 405204 RSC4/7	
21W500	90459-1663		1	CONNECTOR, 405204 RSC4/7	
21X320	90459-0839		1	DISTRIBUTION FRAME, ASBV 8 5-135/10M	

Pos	Part No	UN	Qty	Description	Page No

PHOTOCELL BRACKET

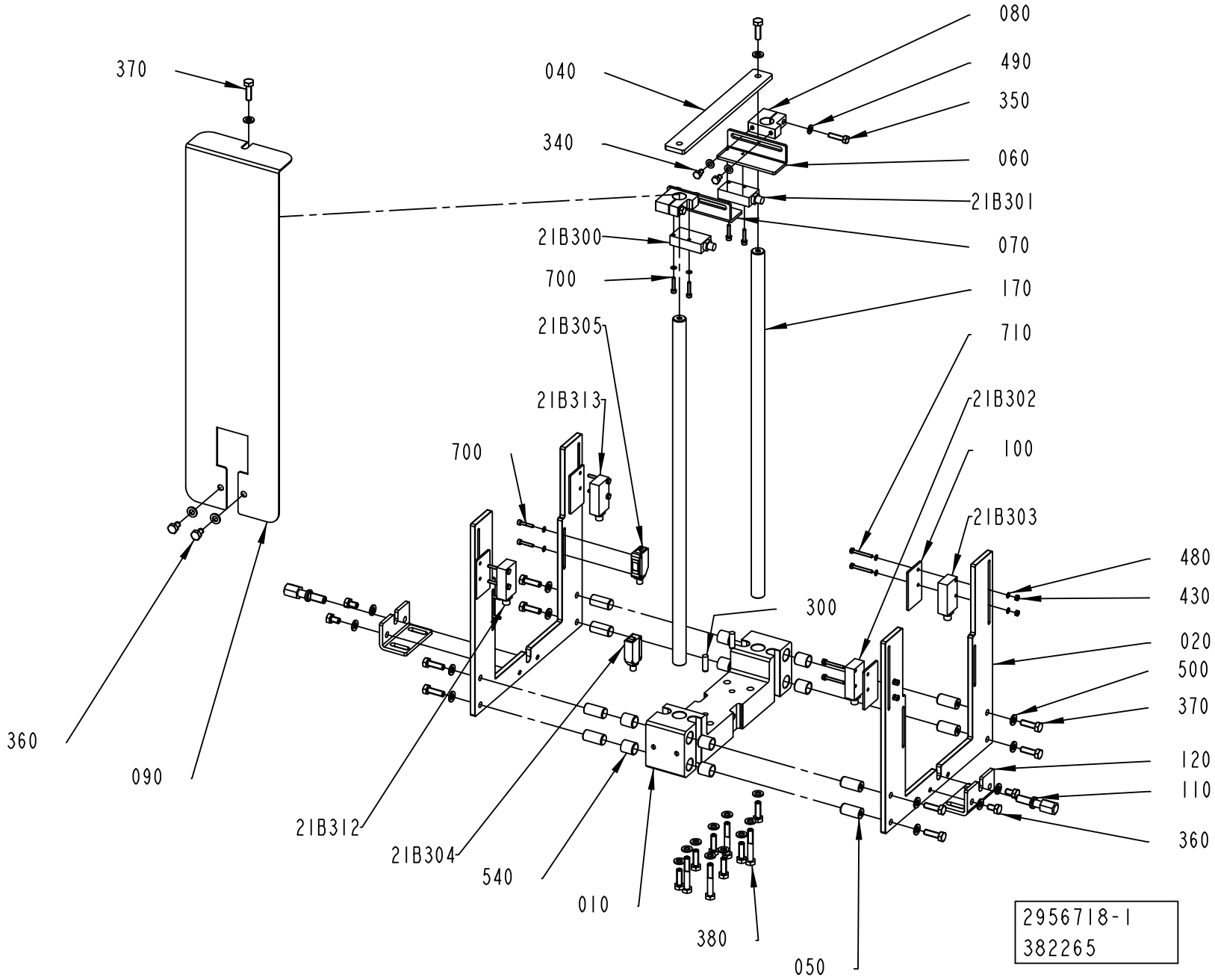

ECM: 459267 - 20101001
Group number: 2956718-0100
Assembly Drawing: 2956718-1_1_AB

This list covers pages from 10-20 to 10-27

Pos	Part No	UN	Qty	Description	Page No
TBA 1000S SLIMCAP1000, TBA 1000S HELICAP2 23, TBA 1500S SLIMCAP 1000 (See drawing on page: 10-24)					
010	2958205-0000		1	BRACKET	
020	2956734-0000		2	SUPPORT	
040	2957790-0000		1	BRACKET	
050	3007668-0000		4	AXLE PIN	
060	2958873-0000		1	BRACKET	
070	2960571-0000		1	BRACKET	
080	2957674-0000		2	CLAMP	
090	2963601-0000		1	COVER	
100	2960276-0000		4	PLATE	
110	2959224-0000		1	SCREW	
120	3007670-0000		1	SUPPORT	
130	2958892-0000		4	AXLE PIN	
140	2959689-0000		1	SCREW	
150	2959001-0000		1	SUPPORT	
160	2982300-0000		1	CLAMP	
170	2981402-0000		2	SHAFT	
180	2982402-0000		1	GUIDE	
21B300	90600-4732		1	LASER SENSOR, WS/WE9L-P330	
21B302	90600-4732		1	LASER SENSOR, WS/WE9L-P330	
21B312	90600-4732		1	LASER SENSOR, WS/WE9L-P330	
340	312105-0323		6	SCREW M6S ISO 4017 M5X8 A480	
350	312105-0331		3	SCREW M6S ISO 4017 M5X20 A480	
360	312105-0364		6	SCREW M6S ISO 4017 M6X10 A480	
370	312105-0370		16	SCREW M6S ISO 4017 M6X20 A480	
430	312605-0310		8	HEXAGON NUT, M6M M3 A280	
480	315105-0124		24	WASHER BRB 3,2X6 RFR	
490	315105-0146		9	WASHER BRB 5,3X10 RFR	
500	315105-0153		26	WASHER BRB 6,4X12 RFR	
540	321135-0183		8	BUSHING, IGLIDUR X 12X14X15	
700	312115-0228		8	SCREW ISO4762 M3X16 A4 80	
710	90287-0176		8	SCREW M6S M3X25 A470	
TBA 2000S SLIMCAP2000, TBA 1890S SLIMCAP2000 (See drawing on page: 10-26)					
010	2958205-0000		1	BRACKET	
020	2956734-0000		2	SUPPORT	
040	2957790-0000		1	BRACKET	
050	3007668-0000		4	AXLE PIN	
060	2958873-0000		1	BRACKET	
070	2960571-0000		1	BRACKET	
080	2957674-0000		2	CLAMP	
090	2963601-0000		1	COVER	
100	2960276-0000		4	PLATE	
110	2959224-0000		1	SCREW	
120	3007670-0000		1	SUPPORT	
130	2958892-0000		4	AXLE PIN	
140	2959689-0000		1	SCREW	
150	2959001-0000		1	SUPPORT	
160	2982300-0000		1	CLAMP	
170	2981402-0000		2	SHAFT	
180	2982402-0000		1	GUIDE	
21B300	90600-4732		1	LASER SENSOR, WS/WE9L-P330	
21B302	90600-4732		1	LASER SENSOR, WS/WE9L-P330	
21B312	90600-4732		1	LASER SENSOR, WS/WE9L-P330	
340	312105-0323		6	SCREW M6S ISO 4017 M5X8 A480	
350	312105-0331		3	SCREW M6S ISO 4017 M5X20 A480	
360	312105-0364		6	SCREW M6S ISO 4017 M6X10 A480	
370	312105-0370		16	SCREW M6S ISO 4017 M6X20 A480	
430	312605-0310		8	HEXAGON NUT, M6M M3 A280	
480	315105-0124		24	WASHER BRB 3,2X6 RFR	
490	315105-0146		9	WASHER BRB 5,3X10 RFR	
500	315105-0153		26	WASHER BRB 6,4X12 RFR	
540	321135-0183		8	BUSHING, IGLIDUR X 12X14X15	
700	312115-0228		8	SCREW ISO4762 M3X16 A4 80	
710	90287-0176		8	SCREW M6S M3X25 A470	
TGA (See drawing on page: 10-22)					
010	2958205-0000		1	BRACKET	
020	2956734-0000		2	SUPPORT	
030	2956908-0000		1	SHAFT	
040	2981403-0000		1	BRACKET	
050	2958439-0000		8	AXLE PIN	
060	2982201-0000		1	BRACKET	
070	2982202-0000		1	BRACKET	
080	2957674-0000		2	CLAMP	
090	2963601-0000		1	COVER	
100	2960276-0000		4	PLATE	
110	2959224-0000		2	SCREW	
120	3007670-0000		1	SUPPORT	
150	2956716-0000		1	SUPPORT	
160	2982300-0000		1	CLAMP	
170	2981402-0000		1	SHAFT	
180	2982402-0000		1	GUIDE	
21B300	90600-4732		1	LASER SENSOR, WS/WE9L-P330	
21B302	90600-4732		1	LASER SENSOR, WS/WE9L-P330	

PHOTOCELL BRACKET

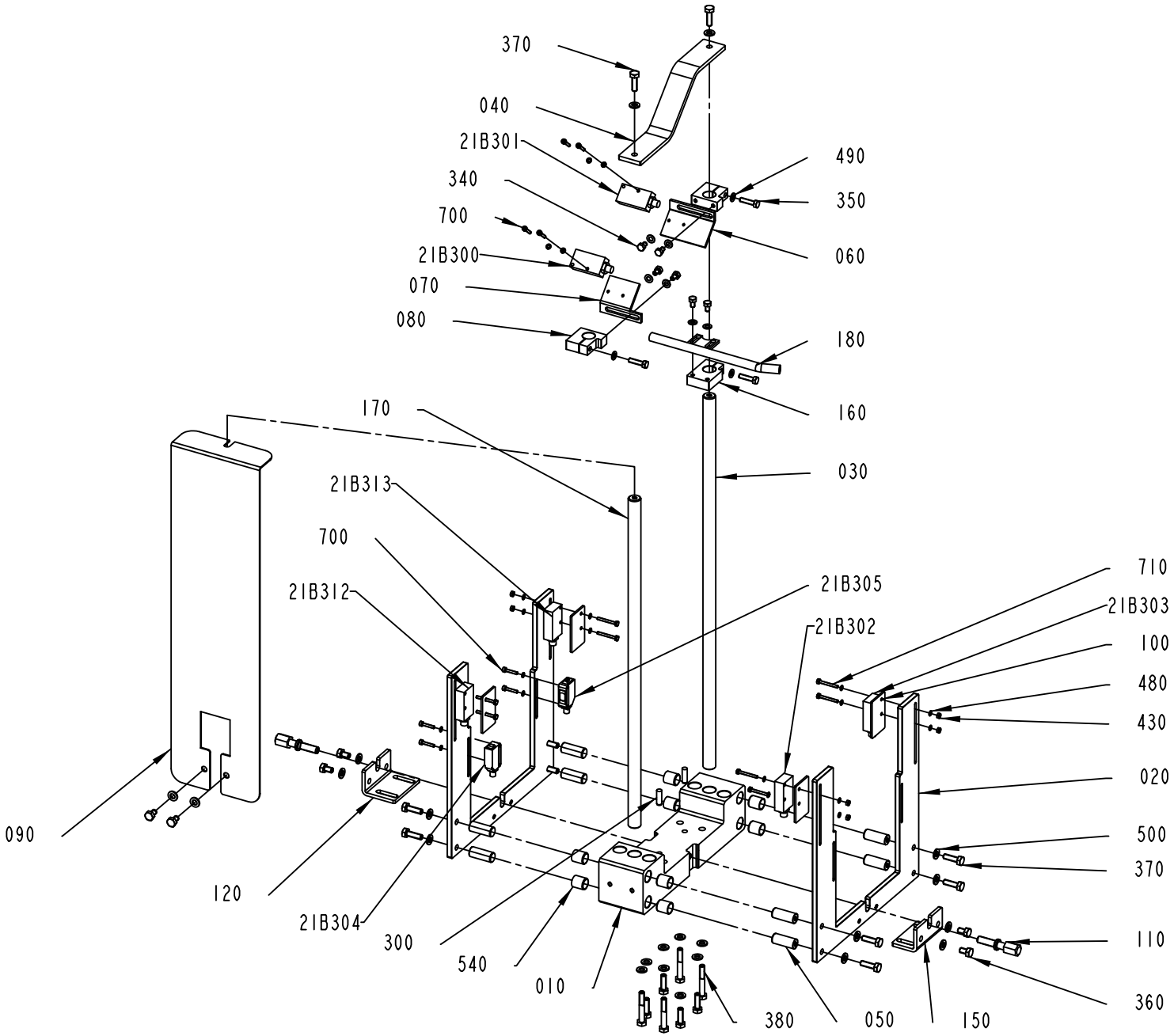

2956718-2
382265

ECM: 459267 - 20101001
Group number: 2956718-0100
Assembly Drawing: 2956718-2_1_AB

This list covers pages from 10-20 to 10-27

Pos	Part No	UN	Qty	Description	Page No
TGA (Cont'd) (See drawing on page: 10-22)					
21B312	90600-4732		1	LASER SENSOR, WS/WE9L-P330	
340	312105-0323		6	SCREW M6S ISO 4017 M5X8 A480	
350	312105-0331		3	SCREW M6S ISO 4017 M5X20 A480	
360	312105-0364		6	SCREW M6S ISO 4017 M6X10 A480	
370	312105-0370		16	SCREW M6S ISO 4017 M6X20 A480	
430	312605-0310		8	HEXAGON NUT, M6M M3 A280	
480	315105-0124		24	WASHER BRB 3,2X6 RFR	
490	315105-0146		9	WASHER BRB 5,3X10 RFR	
500	315105-0153		26	WASHER BRB 6,4X12 RFR	
540	321135-0183		8	BUSHING, IGLIDUR X 12X14X15	
700	312115-0228		8	SCREW ISO4762 M3X16 A4 80	
710	90287-0176		8	SCREW M6S M3X25 A470	
TPA 0330SQ, TBA 0200SQ STREAMCAP200, TBA 0250SQ STREAMCAP200 (See drawing on page: 10-20)					
010	2956717-0000		1	BRACKET	
020	2956734-0000		2	SUPPORT	
040	2957790-0000		1	BRACKET	
050	2956743-0000		8	AXLE PIN	
060	2958873-0000		1	BRACKET	
070	2960571-0000		1	BRACKET	
080	2957674-0000		2	CLAMP	
090	2963601-0000		1	COVER	
100	2960276-0000		4	PLATE	
110	2960528-0000		2	SCREW	
120	2956716-0000		2	SUPPORT	
170	2981402-0000		2	SHAFT	
21B300	90600-4732		1	LASER SENSOR, WS/WE9L-P330	
21B302	90600-4732		1	LASER SENSOR, WS/WE9L-P330	
21B312	90600-4732		1	LASER SENSOR, WS/WE9L-P330	
340	312105-0323		4	SCREW M6S ISO 4017 M5X8 A480	
350	312105-0331		2	SCREW M6S ISO 4017 M5X20 A480	
360	312105-0364		6	SCREW M6S ISO 4017 M6X10 A480	
370	312105-0370		16	SCREW M6S ISO 4017 M6X20 A480	
430	312605-0310		8	HEXAGON NUT, M6M M3 A280	
480	315105-0124		24	WASHER BRB 3,2X6 RFR	
490	315105-0146		6	WASHER BRB 5,3X10 RFR	
500	315105-0153		26	WASHER BRB 6,4X12 RFR	
540	321135-0183		8	BUSHING, IGLIDUR X 12X14X15	
700	312115-0228		8	SCREW ISO4762 M3X16 A4 80	
710	90287-0176		8	SCREW M6S M3X25 A470	
TPA 1000SQ, TPA 0500SQ, TPA 0750SQ, TBA 0500SQ STREAMCAP1000, TBA 1000SQ STREAMCAP1000 (See drawing on page: 10-22)					
010	2958205-0000		1	BRACKET	
020	2956734-0000		2	SUPPORT	
040	2957790-0000		1	BRACKET	
050	2956743-0000		8	AXLE PIN	
060	2958873-0000		1	BRACKET	
070	2960571-0000		1	BRACKET	
080	2957674-0000		2	CLAMP	
090	2963601-0000		1	COVER	
100	2960276-0000		4	PLATE	
110	2959224-0000		2	SCREW	
120	3007670-0000		1	SUPPORT	
150	2956716-0000		1	SUPPORT	
160	2982300-0000		1	CLAMP	
170	2981402-0000		2	SHAFT	
180	2982402-0000		1	GUIDE	
21B300	90600-4732		1	LASER SENSOR, WS/WE9L-P330	
21B302	90600-4732		1	LASER SENSOR, WS/WE9L-P330	
21B312	90600-4732		1	LASER SENSOR, WS/WE9L-P330	
340	312105-0323		6	SCREW M6S ISO 4017 M5X8 A480	
350	312105-0331		3	SCREW M6S ISO 4017 M5X20 A480	
360	312105-0364		6	SCREW M6S ISO 4017 M6X10 A480	
370	312105-0370		16	SCREW M6S ISO 4017 M6X20 A480	
430	312605-0310		8	HEXAGON NUT, M6M M3 A280	
480	315105-0124		24	WASHER BRB 3,2X6 RFR	
490	315105-0146		9	WASHER BRB 5,3X10 RFR	
500	315105-0153		26	WASHER BRB 6,4X12 RFR	
540	321135-0183		8	BUSHING, IGLIDUR X 12X14X15	
700	312115-0228		8	SCREW ISO4762 M3X16 A4 80	
710	90287-0176		8	SCREW M6S M3X25 A470	
Common Parts					
21B304	90459-5529		1	PH.CELL E3Z-T86A, SENDER+RECIEVER	
300	311103-0353		2	PARALLEL PIN ISO 2338 6M6X20 A1	
380	312105-0378		4	SCREW M6S ISO 4014 M6X40 A480	

Machine Type | Group Description | Used-In | Group Number | Page No

PHOTOCELL BRACKET

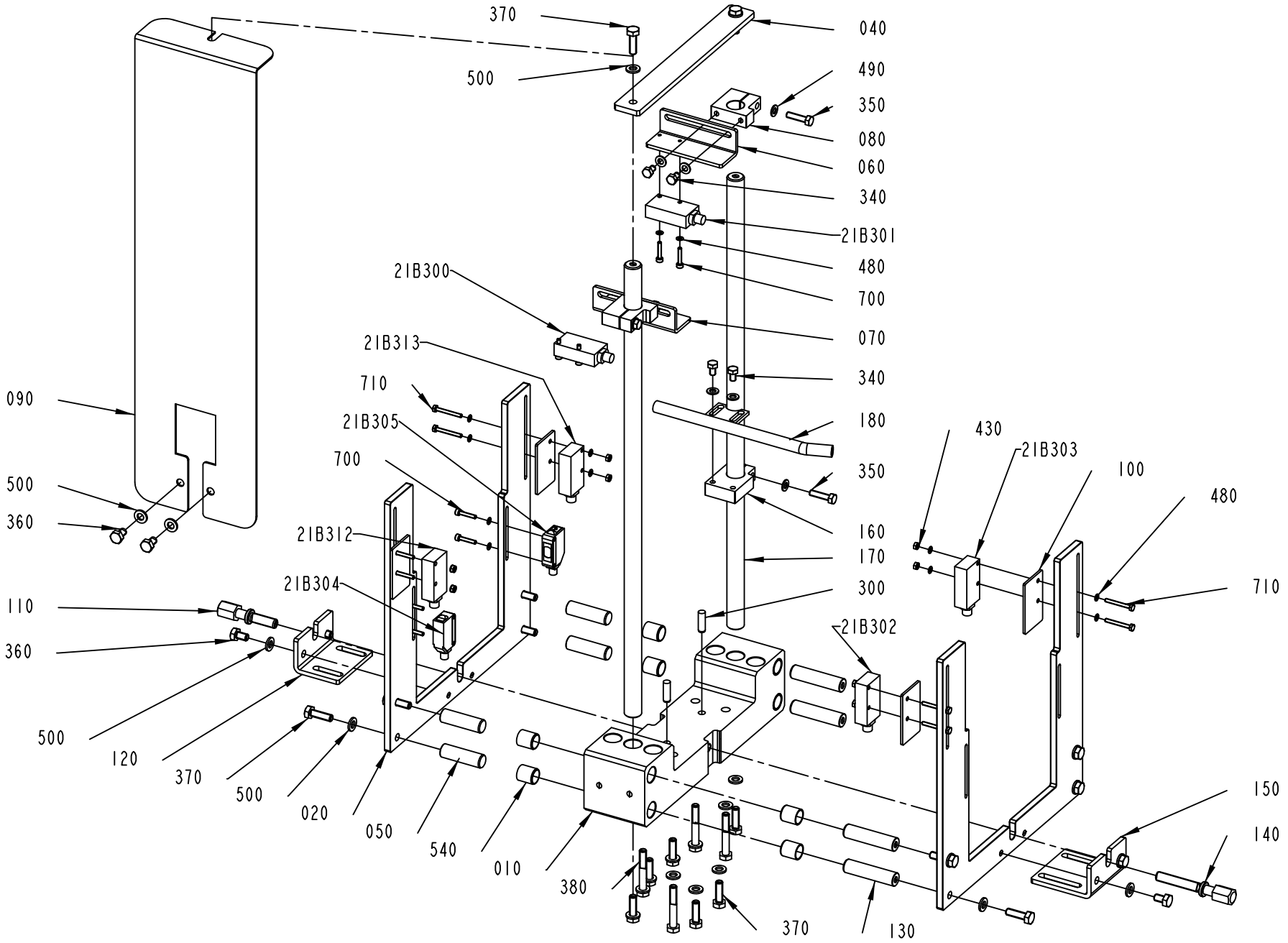

2956718-4
382265

ECM: 459267 - 20101001
Group number: 2956718-0100
Assembly Drawing: 2956718-4_1_AB

This list covers pages from 10-20 to 10-27

Pos	Part No	UN	Qty	Description	Page No
SEE PREVIOUS LISTS PAGES: 10-21, 10-23.					

Pos	Part No	UN	Qty	Description	Page No

PHOTOCELL BRACKET

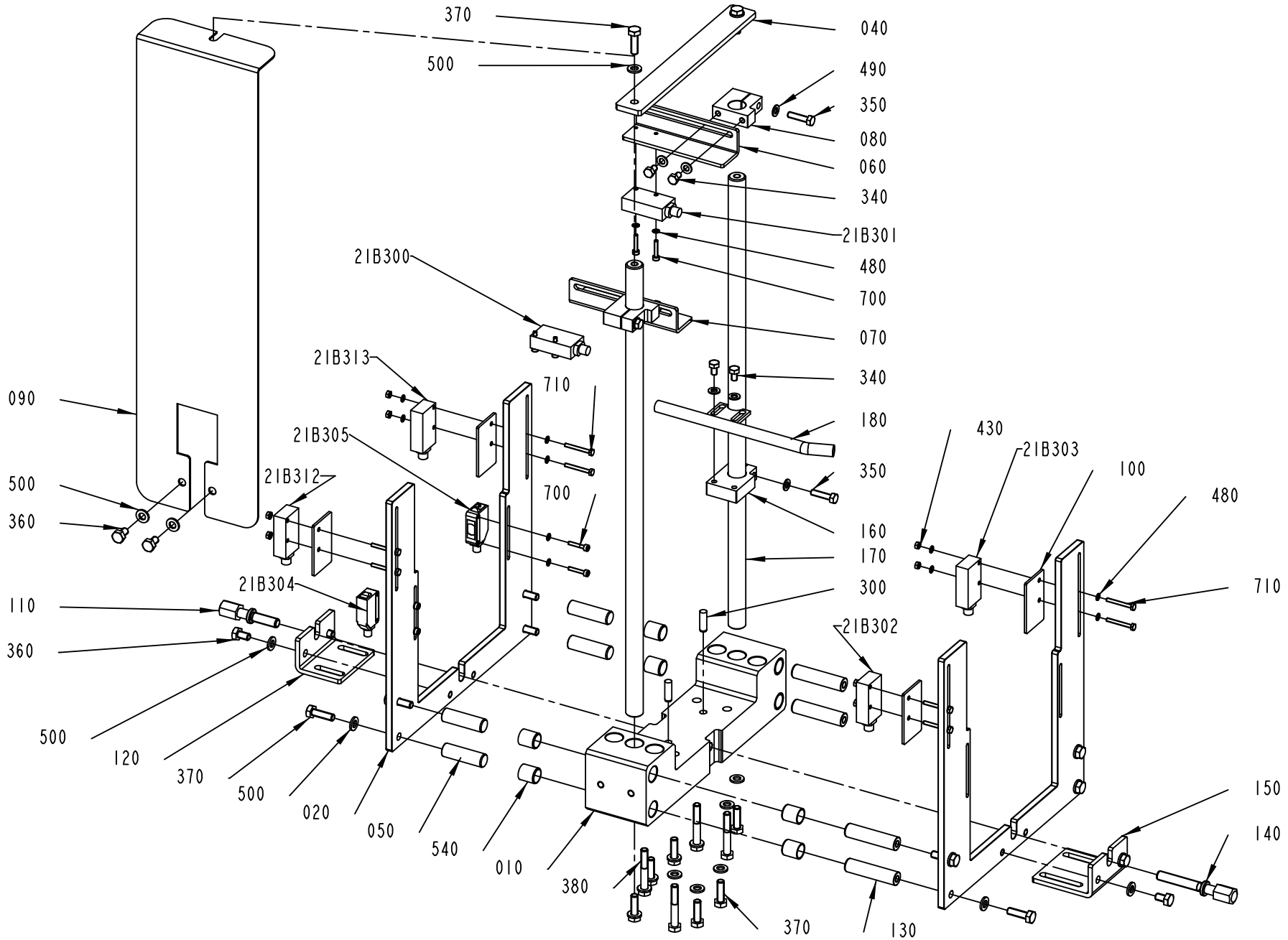

2956718-5
418805

ECM: 459267 - 20101001
Group number: 2956718-0100
Assembly Drawing: 2956718-5_1_AA

This list covers pages from 10-20 to 10-27

Pos	Part No	UN	Qty	Description	Page No
SEE PREVIOUS LISTS PAGES: 10-21, 10-23.					

Pos	Part No	UN	Qty	Description	Page No

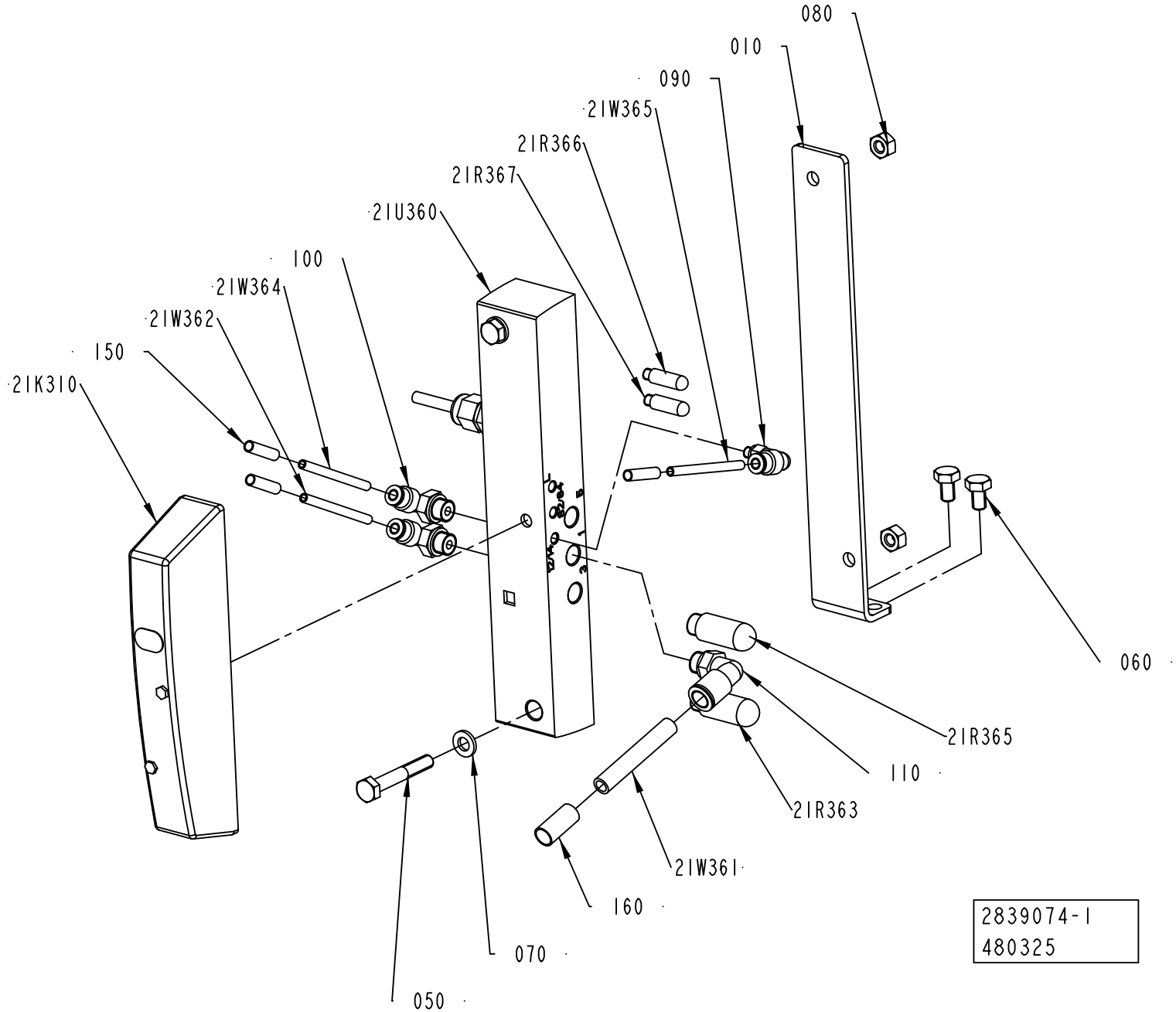
080
010
090
21W365
21R366
21R367
21U360
100
21W364
21W362
150
21K310
060
21R365
110
21R363
21W361
160
070
050
2839074-1
480325

ECM: 480325 - 20110401
Group number: 2839074-0100
Assembly Drawing: 2839074-1_1_AB

Pos	Part No	UN	Qty	Description	Page No
-					
010	2839073-0000		1	BRACKET	
050	312105-0378		2	SCREW M6S ISO 4014 M6X40 A480	
060	312105-0364		2	SCREW M6S ISO 4017 M6X10 A480	
070	315106-0153		2	WASHER ISO 7089-6-200 HV A4	
080	312605-0316		2	HEXAGON NUT, M6M M6 A280	
090	350002-0001		1	PUSH-IN L-FITTING QSL-F-M5-4	
100	350002-0005		2	PUSH-IN L-FITTING QSL-F-G1/8-4	
110	350002-0007		1	PUSH-IN L-FITTING QSL-F-G1/8-8	
150	90459-7368		3	MARKING FOR PNEUM. TUBING, PRZ04	
160	90459-7370		1	MARKING FOR PNEUM. TUBING, PRZ08	
21K310	90458-1197		1	VALVE, 5/2 BISTABLE	
21R363	90328-0047		1	SILENCER G1/8"	
21R365	90328-0047		1	SILENCER G1/8"	
21R366	90328-0029		1	SILENCER M5	
21R367	90328-0029		1	SILENCER M5	
21U360	90459-2591		1	SINGLE VALVE SUB-BASE CDSV5.0-AS-1/8	
21W361	315400-0004	M	4	TUBE PUN-H-8X1,25-BL	
21W362	315400-0016	M	0.5	TUBE PUN-H-4X0,75-BL	
21W364	315400-0016	M	0.5	TUBE PUN-H-4X0,75-BL	
21W365	315400-0016	M	0.5	TUBE PUN-H-4X0,75-BL	

Pos	Part No	UN	Qty	Description	Page No

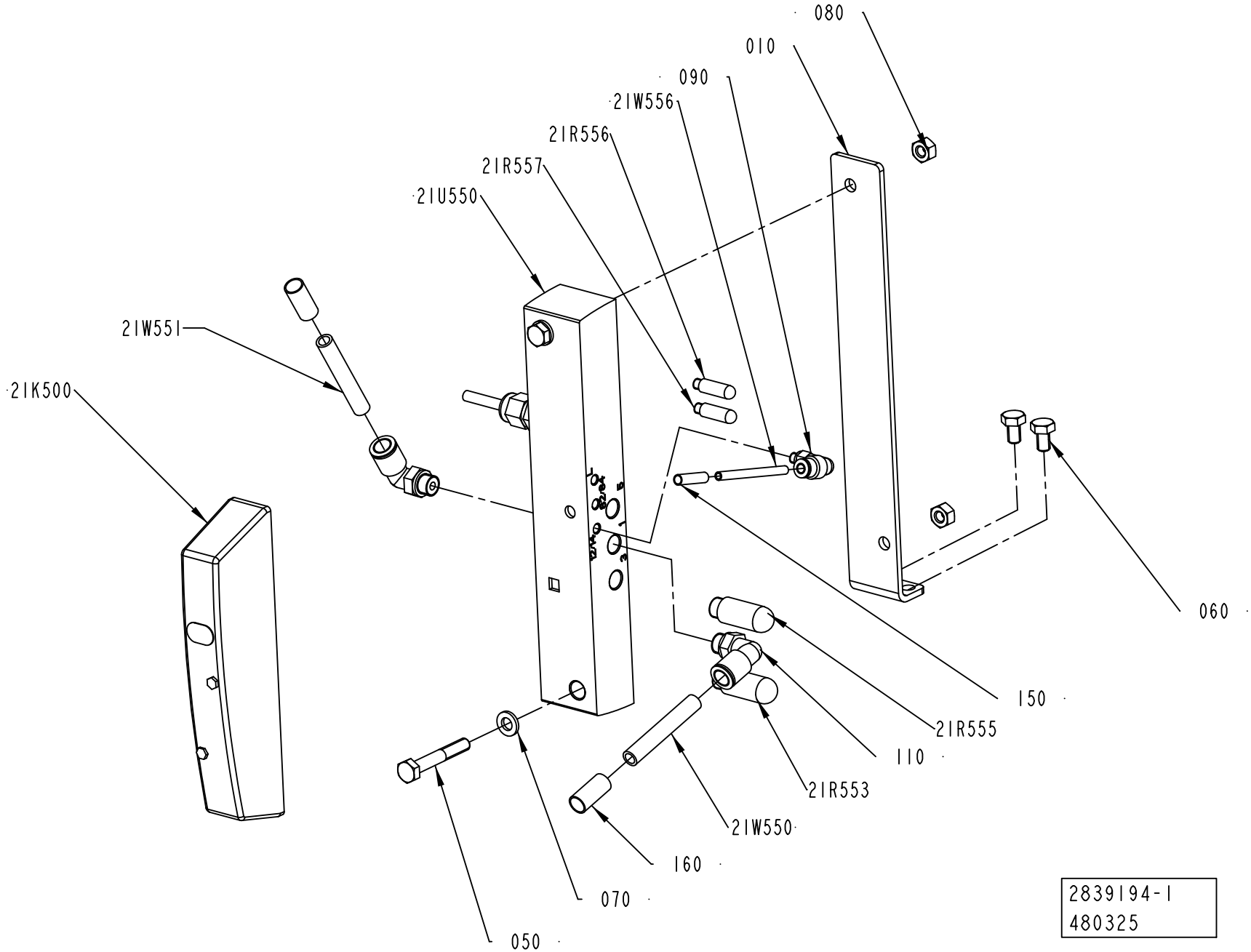
080
010
090
21W556
21R556
21R557
21U550
21W551
21K500
060
150
21R555
110
21R553
21W550
160
070
050
2839194-1
480325

ECM: 480325 - 20110401
Group number: 2839194-0100
Assembly Drawing: 2839194-1_1_AB

Pos	Part No	UN	Qty	Description	Page No
-					
010	2839073-0000		1	BRACKET	
050	312105-0378		2	SCREW M6S ISO 4014 M6X40 A480	
060	312105-0364		2	SCREW M6S ISO 4017 M6X10 A480	
070	315106-0153		2	WASHER ISO 7089-6-200 HV A4	
080	312605-0316		2	HEXAGON NUT, M6M M6 A280	
090	350002-0001		1	PUSH-IN L-FITTING QSL-F-M5-4	
110	350002-0007		2	PUSH-IN L-FITTING QSL-F-G1/8-8	
150	90459-7368		1	MARKING FOR PNEUM. TUBING, PRZ04	
160	90459-7370		2	MARKING FOR PNEUM. TUBING, PRZ08	
21K500	90458-1203		1	VALVE 2X3/2 1X OPEN 1X CLOSED	
21R553	90328-0047		1	SILENCER G1/8"	
21R555	90328-0047		1	SILENCER G1/8"	
21R556	90328-0029		1	SILENCER M5	
21R557	90328-0029		1	SILENCER M5	
21U550	90459-2591		1	SINGLE VALVE SUB-BASE CDSV5.0-AS-1/8	
21W550	315400-0004	M	4	TUBE PUN-H-8X1,25-BL	
21W551	315400-0004	M	4	TUBE PUN-H-8X1,25-BL	
21W556	315400-0016	M	0.5	TUBE PUN-H-4X0,75-BL	

Pos	Part No	UN	Qty	Description	Page No

This page is intentionally left blank.

ECM: 481216 - 20110401
Group number: 2873923-0100
Assembly Drawing:

Pos	Part No	UN	Qty	Description	Page No
TBA HELICAP2 23					
010	2985813-0000		1	TEMPLATE	
030	90459-4931		1	LENS WITH SCALE OF LENGTHS 10X	
040	3047350-0100		1	TOOL	**10-35**
TBA SLIMCAP1000					
010	2547954-0000		1	TEMPLATE	
TBA STREAMCAP200					
010	1548365-0000		1	TEMPLATE	
TBA STREAMCAP1000					
010	2506887-0000		1	TEMPLATE	
TBA SLIMCAP 2000					
010	2612679-0000		1	TEMPLATE	
TGA 1000SQ, TGA 0750SQ, TGA 0500SQ					
020	2873932-0000		1	TEMPLATE	
TGA 1500SQ					
020	3039015-0000		1	TEMPLATE	
TPA STREAMCAP330					
010	1497948-0000		1	TEMPLATE	
TPA STREAMCAP 1000					
010	2562134-0000		1	TEMPLATE	
020	2579622-0000		1	TEMPLATE	
TPA STREAMCAP 500					
010	2579623-0000		1	TEMPLATE	
020	2579624-0000		1	TEMPLATE	

Pos	Part No	UN	Qty	Description	Page No

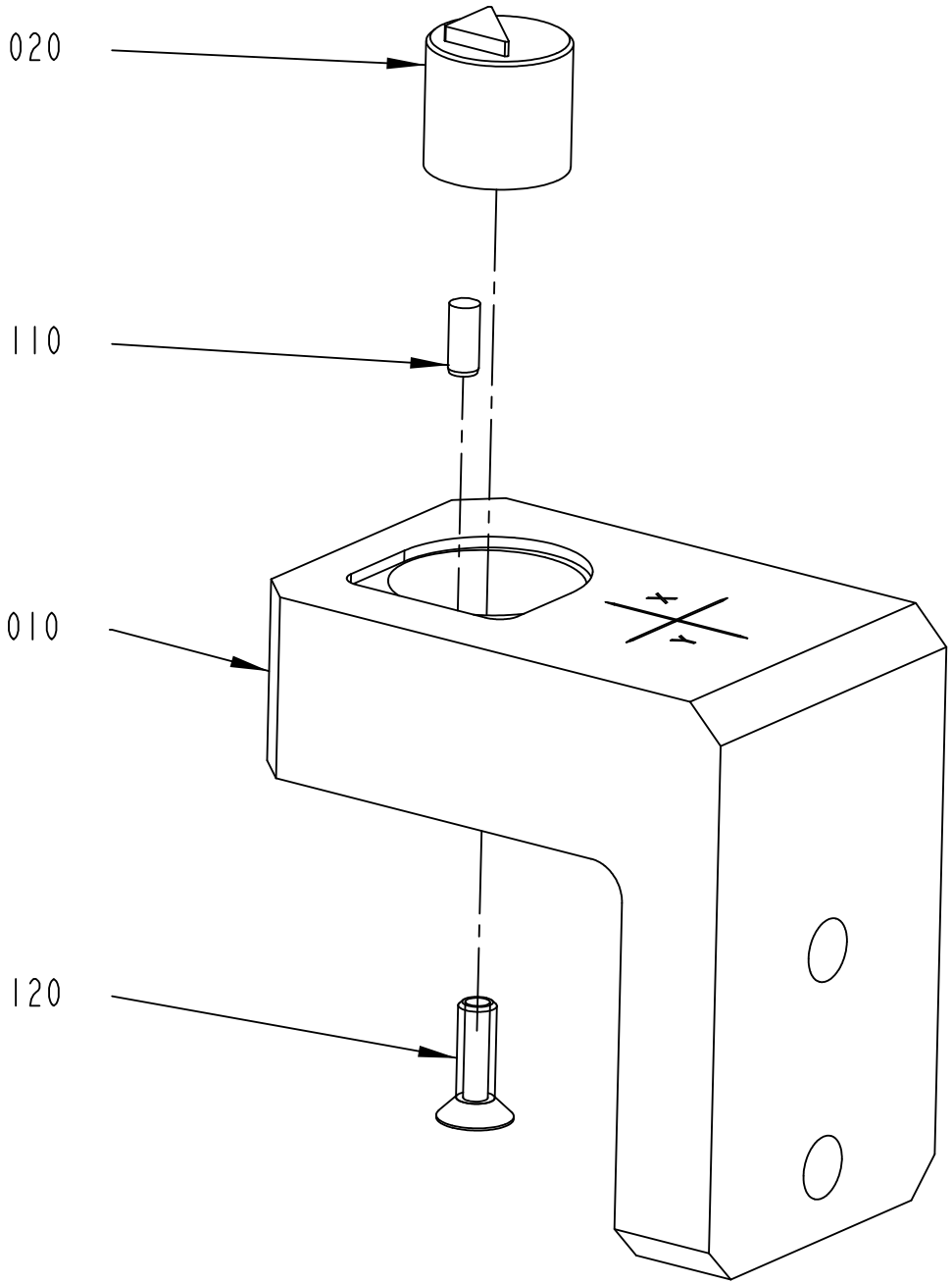

3047350-1
434659

ECM: 481217 - 20110401
Group number: 3047350-0100
Assembly Drawing: 3047350-1_1_AA

Pos	Part No	UN	Qty	Description	Page No
HELICAP2 23					
010	3077734-0000		1	TEMPLATE	
020	3047352-0000		1	TEMPLATE	
Common Parts					
110	311103-0267		1	PARALLEL PIN ISO 2338 4M6X10 A1	
120	312155-0329		1	SCREW DIN 7991 MF6S M5X16 A4 70	

Pos	Part No	UN	Qty	Description	Page No

This page is intentionally left blank.

ECM: 446886 - 20100701
Group number: 2873953-0100
Assembly Drawing:

Pos	Part No	UN	Qty	Description	Page No
HELICAP2 23					
010	A100000036	KPC	4.3	HELICAP2 23 MM WHITE	
040	2594996-0000		1	PLASTIC BAG	
SLIMCAP 1000					
010	A894400101	KPC	3.6	SLIMCAP1 A1 WHITE	
020	2529719-0005		1	BOX	
030	2529720-0037		4	LABEL	
040	2594996-0000		1	PLASTIC BAG	
SLIMCAP 2000					
010	A894400201	KPC	2	SLIMCAP1 A2 WHITE	
020	2529719-0006		1	BOX	
030	2529720-0044		4	LABEL	
040	2594996-0000		1	PLASTIC BAG	
STREAMCAP1000					
010	A895800101	KPC	3	STREAMCAP 1W A1 WHITE	
020	2529719-0004		1	BOX	
030	2529720-0024		4	LABEL	
040	2594996-0000		1	PLASTIC BAG	
STREAMCAP200					
010	A894709301	KPC	5	STREAMCAP2 A3 WHITE	
020	2529719-0001		1	BOX	
030	2529720-0001		1	LABEL	
040	2594996-0000		1	PLASTIC BAG	
STREAMCAP330					
010	A894840431	KPC	5	STREAMCAP3 A4 RED P1805C	
020	2529719-0002		1	BOX	
030	2529720-0010		1	LABEL	
040	2594996-0000		1	PLASTIC BAG	
STREAMCAP500					
010	A895900201	KPC	3.5	STREAMCAP4M A2 WHITE	
020	2529719-0003		1	BOX	
030	2529720-0016		4	LABEL	
040	2594996-0000		1	PLASTIC BAG	

Pos	Part No	UN	Qty	Description	Page No

Tetra Pak

SPC
Spare Parts Catalogue

This page is intentionally left blank.

ECM: 417927 - 20091015
Group number: 662914-0200
Assembly Drawing:

Pos	Part No	UN	Qty	Description	Page No
-					
0010	2879015-0200		1	ELECTRICAL DOCUMENT	**11-5**
0020	2861166-0200		1	SOFTWARE	**11-7**

Pos	Part No	UN	Qty	Description	Page No

This page is intentionally left blank.

ECM: 481625 - 20101115
Group number: 2879015-0200
Assembly Drawing:

Pos	Part No	UN	Qty	Description	Page No
CAP 30/FLEX SLIMCAP1000, CAP 30/FLEX STREAMCAP1000, CAP 30/FLEX SLIMCAP2000, CAP 30/FLEX STREAMCAP500, CAP 30/FLEX STREAMCAP200, CAP 30/FLEX STREAMCAP330, CAP 30/FLEX HELICAP223					
0010	2861169-0200		1	ELECTRICAL DOCUMENT	

Pos	Part No	UN	Qty	Description	Page No

This page is intentionally left blank.

ECM: 479350 - 20101115
Group number: 2861166-0200
Assembly Drawing:

Pos	Part No	UN	Qty	Description	Page No
CAP 30/FLEX SLIMCAP1000, CAP 30/FLEX SLIMCAP2000					
0010	3055062-0002		1	SOFTWARE CD	
CAP 30/FLEX STREAMCAP1000, CAP 30/FLEX STREAMCAP500, CAP 30/FLEX STREAMCAP200, CAP 30/FLEX STREAMCAP330, CAP 30/FLEX HELICAP2 23					
0010	3055062-0002		1	SOFTWARE CD	
0080	3009327-0001		1	SOFTWARE CD	
Common Parts					
0030	2869128-0008		1	SOFTWARE FIRMWARE CD	
0040	3009961-0003		1	COMPACT FLASH FW	
0050	3055078-0002		1	COMPACT FLASH SW	

Pos	Part No	UN	Qty	Description	Page No

Tetra Pak

SPC
Spare Parts Catalogue

This page is intentionally left blank.

ECM: 445517 - 20100701
Group number: 662916-0200
Assembly Drawing:

Pos	Part No	UN	Qty	Description	Page No
CONVEYOR CONTROL					
040	2873874-0100		1	AUTOMATION CONVEYOR CONTROL	**12-5**
LINE COMMUNICATION ETHERNET (ROCKWELL)					
030	2890013-0100		1	COMMUNICATION UNIT	**12-7**
GLUE SHELF					
010	2842806-0100		1	SHELF	**12-9**
PHOTOCELL UNIT					
080	2930179-0100		1	CONVEYOR CONTROL ACCESSORIES	**12-11**
POSITIONING DEVICE					
050	2873924-0200		1	POSITIONING DEVICE	**12-21**
POWER SUPPLY DEVICE					
090	2930182-0100		1	POWER SUPPLY DEVICE	**12-43**
LINE COMMUNICATION SNP					
020	2873925-0100		1	COMMUNICATION UNIT	**12-45**
FINAL DEST. USA					
070	2873930-0100		1	CAUTION SIGN LIST	**12-47**

Pos	Part No	UN	Qty	Description	Page No

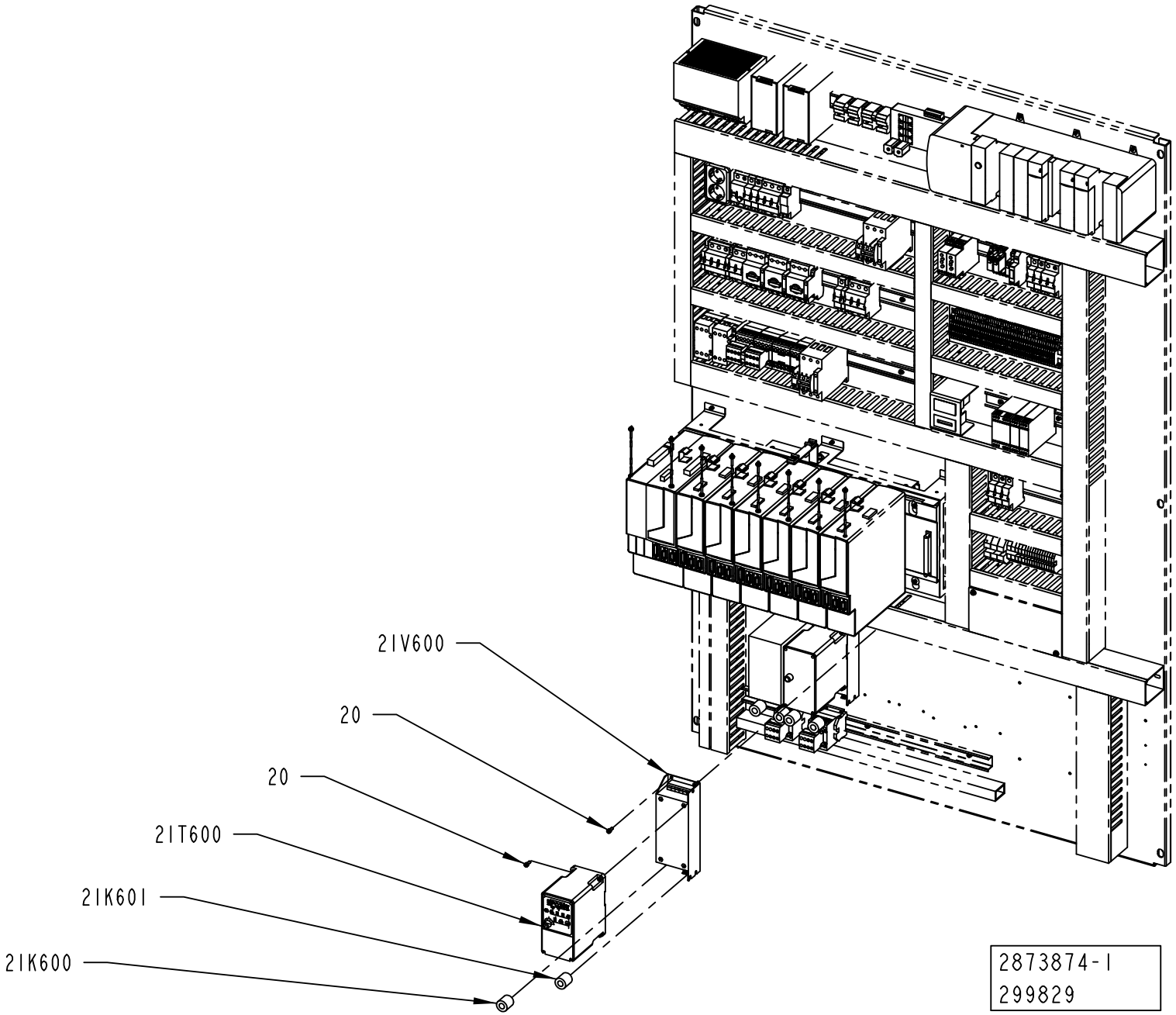
2IV600
20
20
2IT600
2IK601
2IK600
2873874-1
299829

ECM: 299829 - 20070528
Group number: 2873874-0100
Assembly Drawing: 2873874-1_1_AA

Pos	Part No	UN	Qty	Description	Page No
-					
020	312115-0327		8	SCREW ISO4762 M5X12 A4 80	
21K600	90458-1140		1	FERRITE, RI-26-28-13	
21K601	90458-1140		1	FERRITE, RI-26-28-13	
21T600	90459-3450		1	FREQ. CONV., 22A-A4P5N104	
21V600	90459-3460		1	FOOTPRINT FILTER 1 PHASE 10A	

Pos	Part No	UN	Qty	Description	Page No

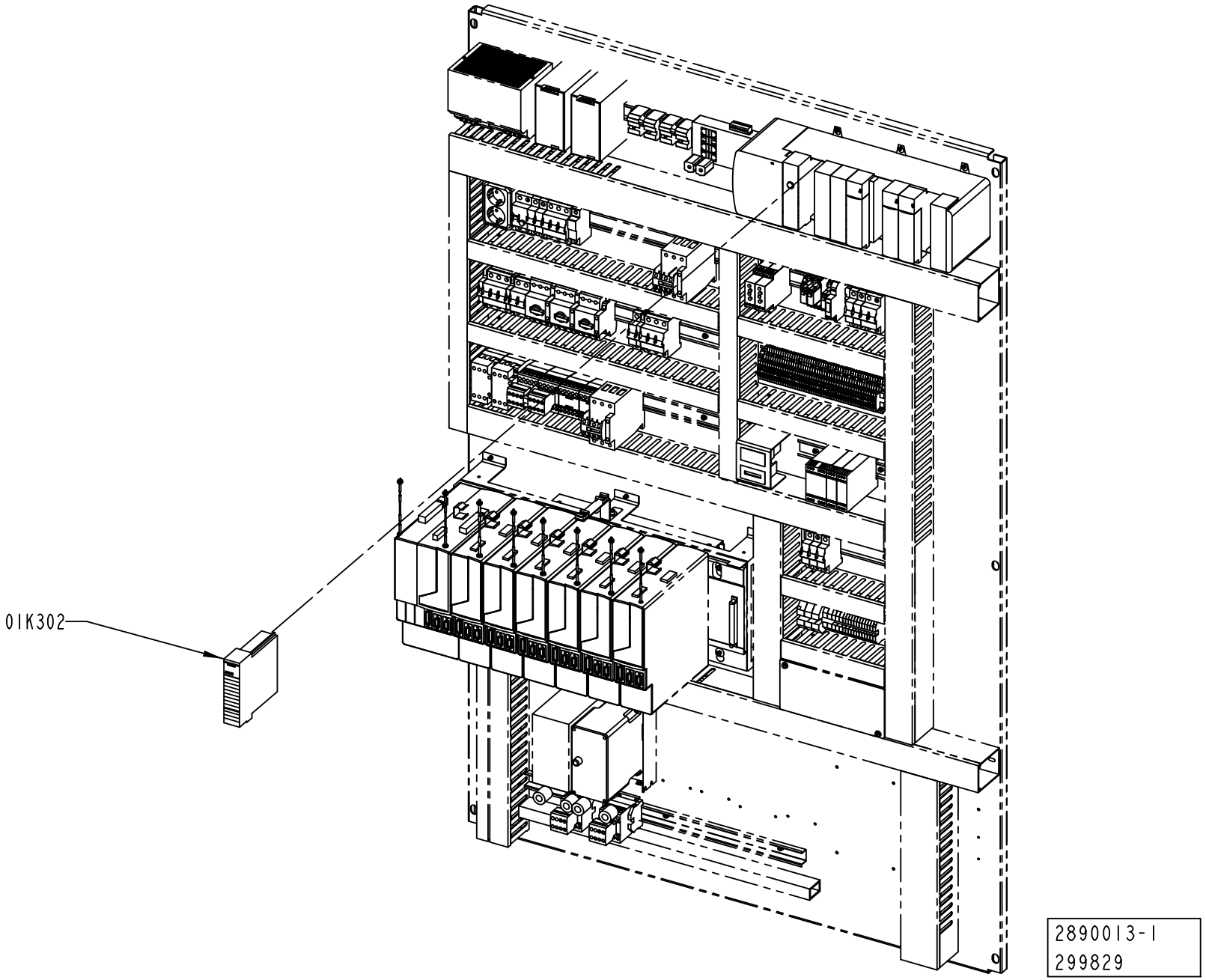
01K302
2890013-1
299829

ECM: 302635 - 20070528
Group number: 2890013-0100
Assembly Drawing: 2890013-1_1_AA

Pos	Part No	UN	Qty	Description	Page No	Pos	Part No	UN	Qty	Description	Page No
-											
01K302	90459-2477		1	ETHERNET I/P BRIDGE MODULE, 1756-ENBT							

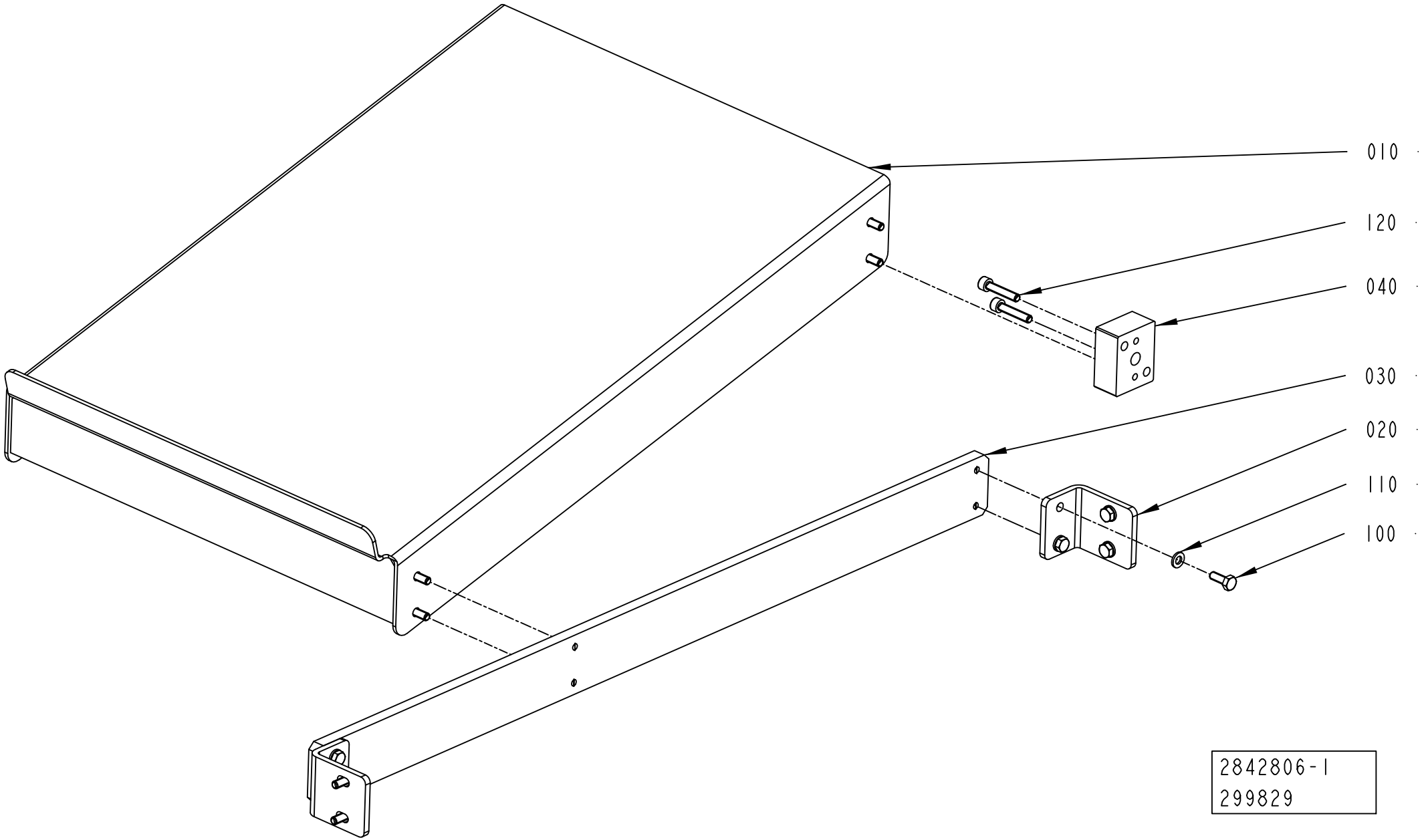
010
120
040
030
020
110
100
2842806-1
299829

ECM: 310549 - 20070528
Group number: 2842806-0100
Assembly Drawing: 2842806-1_1_AB

Pos	Part No	UN	Qty	Description	Page No
-					
010	2842800-0000		1	SHELF	
020	2842804-0000		2	BRACKET	
030	2842803-0000		1	PLATE	
040	2842805-0000		1	SPACER	
100	312105-0368		12	SCREW M6S ISO 4017 M6X16 A480	
110	315105-0153		12	WASHER BRB 6,4X12 RFR	
120	312115-0374		2	SCREW ISO4762 M6X30 A4 80	

Pos	Part No	UN	Qty	Description	Page No

This page is intentionally left blank.

ECM: 335433 - 20080407
Group number: 2930179-0100
Assembly Drawing:

Pos	Part No	UN	Qty	Description	Page No
-					
010	2930176-0100		1	SENSOR GROUP	**12-13**
020	2930177-0100		1	CABLE MARKING SET	**12-15**
030	2930178-0100		1	SENSOR GROUP	**12-17**

Pos	Part No	UN	Qty	Description	Page No

Machine Type | Group Description | Used-In | Group Number | Page No

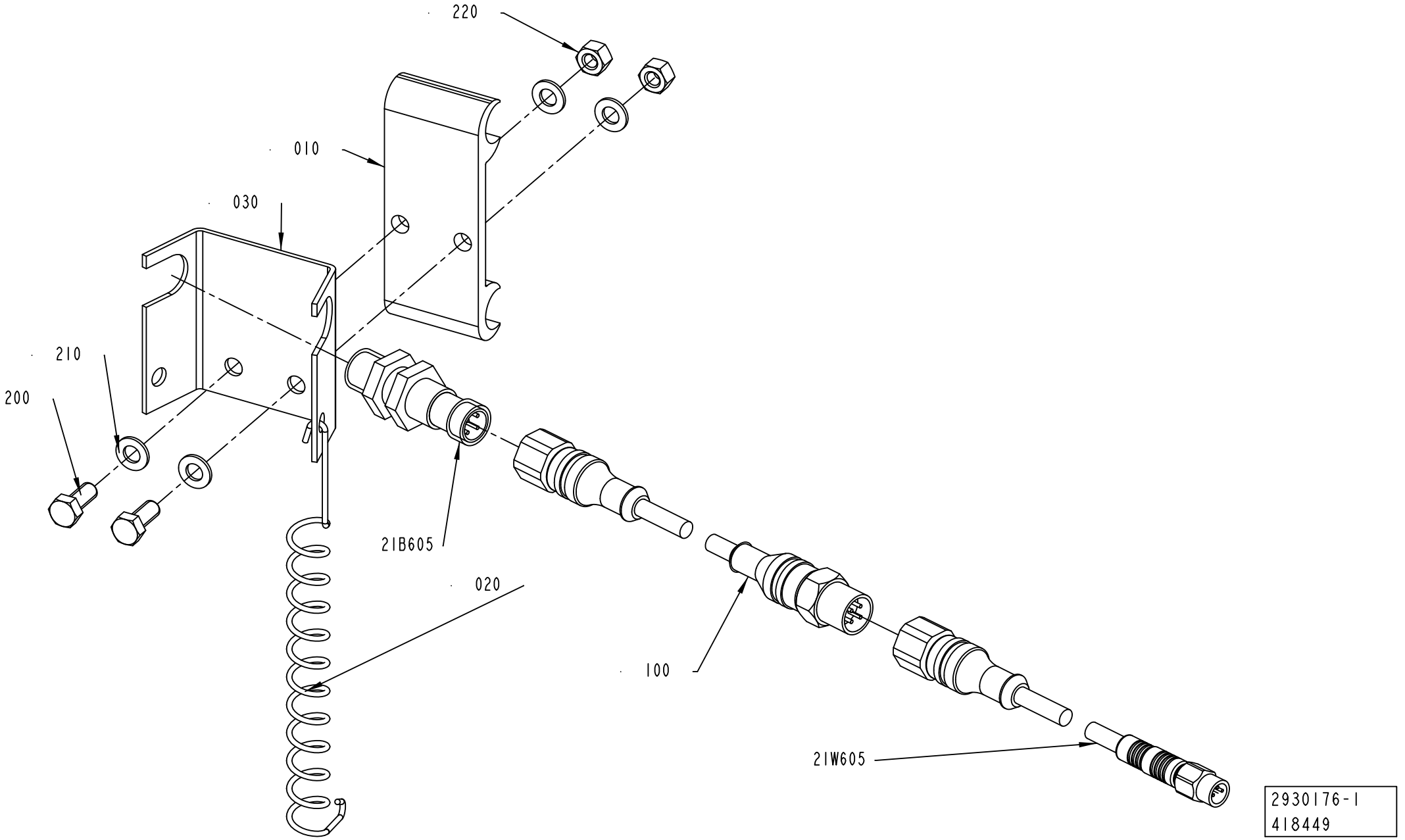
220
010
030
210
200
21B605
020
100
21W605
2930176-1
418449

ECM: 419543 - 20100110
Group number: 2930176-0100
Assembly Drawing: 2930176-1_1_AB

Pos	Part No	UN	Qty	Description	Page No
-					
010	1020637-0000		1	HOLDER	
020	532412-0000		1	SPRING	
030	545897-0000		1	BRACKET	
100	351411-0050		1	ACTU/SENS. CABLE PRST 4-PRKT 4-07/5,0	
200	312105-0327		2	SCREW M6S ISO 4017 M5X12 A480	
210	315105-0146		4	WASHER BRB 5,3X10 RFR	
21B605	90458-2907		1	PROX.SWITCH IFS204	
21W605	351405-0050		1	SENS. CABLE RSMVN 3-PRKT 4-3-06/5,0M	
220	312605-0314		2	HEXAGON NUT, M6M M5 A280	

Pos	Part No	UN	Qty	Description	Page No

This page is intentionally left blank.

ECM: 335431 - 20080407
Group number: 2930177-0100
Assembly Drawing:

Pos	Part No	UN	Qty	Description	Page No
-					
010	1497932-0000		1	SET OF SIGNS	
100	359009-0100		10	CABLE MARKING, YELLOW, PK2/4"0"	
110	359009-0101		10	CABLE MARKING, YELLOW, PK 2/4"1"	
120	359009-0102		10	CABLE MARKING, YELLOW, PK 2/4"2"	
130	359009-0103		10	CABLE MARKING, YELLOW, PK 2/4"3"	
140	359009-0104		10	CABLE MARKING, YELLOW, PK 2/4"4"	
150	359009-0105		10	CABLE MARKING, YELLOW, PK 2/4"5"	
160	359009-0106		10	CABLE MARKING, YELLOW, PK 2/4"6"	
170	359009-0107		10	CABLE MARKING, YELLOW, PK 2/4"7"	
180	359009-0108		10	CABLE MARKING, YELLOW, PK 2/4"8"	
190	359009-0109		10	CABLE MARKING, YELLOW, PK 2/4"9"	
200	359009-0222		10	CABLE MARKING, YELLOW, PK 2/4" W"	
210	352113-0101		10	CABLE TIE, BLACK 92X2,5 MM	
220	359009-0201		10	CABLE MARKING, YELLOW, PK 2/4" B"	

Pos	Part No	UN	Qty	Description	Page No

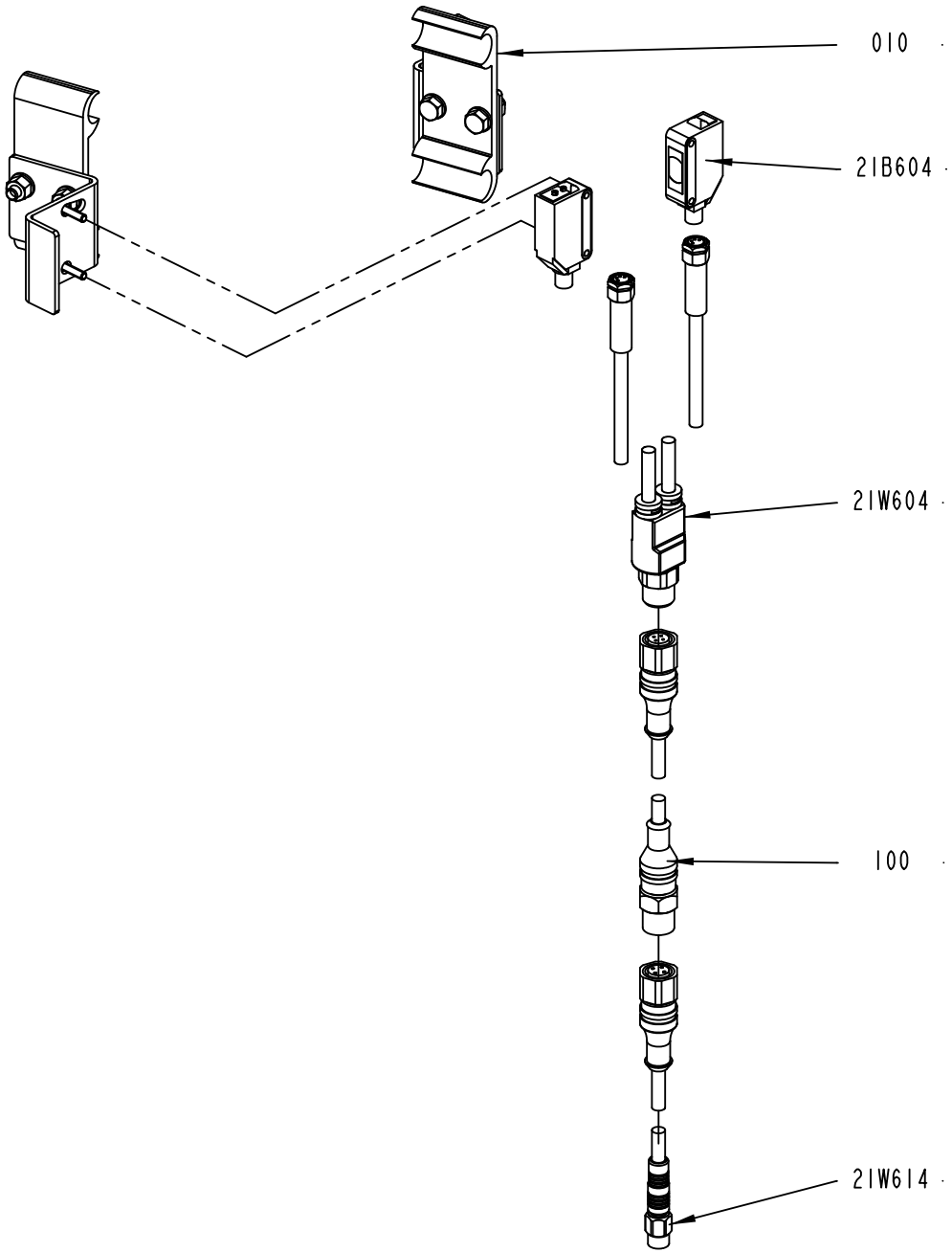

2930178-1
418449

ECM: 419544 - 20100110
Group number: 2930178-0100
Assembly Drawing: 2930178-1_1_AB

Pos	Part No	UN	Qty	Description	Page No
-					
010	2778586-0100		1	SENSOR	**5-39, 12-19**
100	351411-0050		1	ACTU/SENS. CABLE PRST 4-PRKT 4-07/5,0	
21B604	90459-5529		1	PH.CELL E3Z-T86A, SENDER+RECIEVER	
21W604	90459-6586		1	ACT/SENS.Y-CABLE, ASBN 2-PRKMV 4-07/0,6M	
21W614	351405-0050		1	SENS. CABLE RSMVN 3-PRKT 4-3-06/5,0M	

Pos	Part No	UN	Qty	Description	Page No

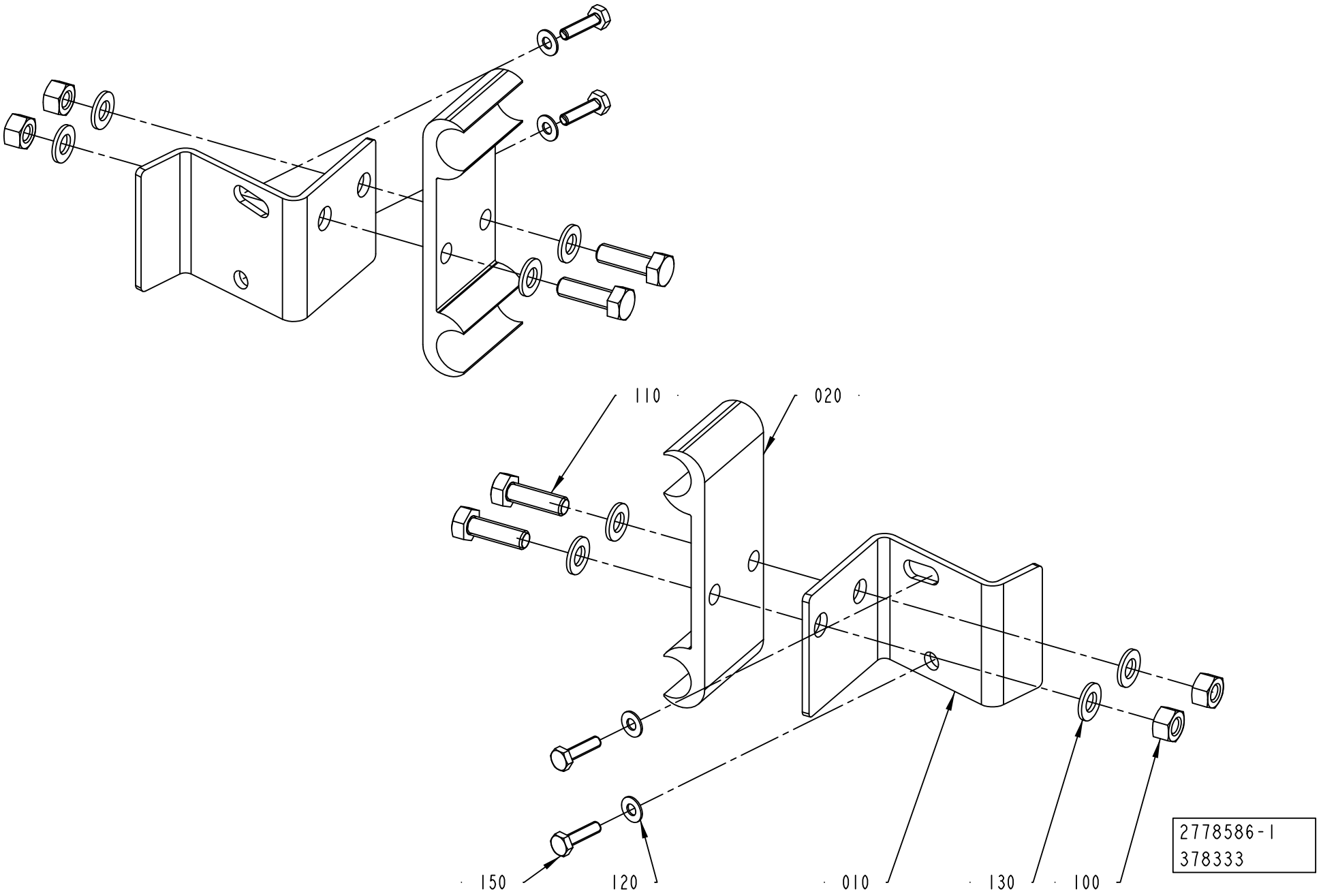
110
020
150
120
010
130
100
2778586-1
378333

ECM: 378333 - 20090406
Group number: 2778586-0100
Assembly Drawing: 2778586-1_1_AB

Pos	Part No	UN	Qty	Description	Page No
-					
010	2778580-0000		2	BRACKET	
020	1020637-0000		2	HOLDER	
100	312605-0314		4	HEXAGON NUT, M6M M5 A280	
110	312105-0329		4	SCREW M6S ISO 4017 M5X16 A480	
120	315106-0124		4	WASHER ISO 7089-3-200 HV A4	
130	315105-0146		8	WASHER BRB 5,3X10 RFR	
150	90287-0175		4	SCREW M6S M3X12 A480	

Pos	Part No	UN	Qty	Description	Page No

This page is intentionally left blank.

ECM: 484339 - 20110401
Group number: 2873924-0200
Assembly Drawing:

Pos	Part No	UN	Qty	Description	Page No
TBA					
010	2873873-0100		1	VISION SYSTEM	**5-53, 5-55, 5-57, 5-59, 12-23, 12-25, 12-27, 12-29**
030	2838718-0100		1	TRIGGER	**2-7, 12-35**
040	2873922-0100		1	CABLE	**5-99, 12-37**
Common Parts					
020	3087823-0100		1	TOOL	**12-39**
050	2890014-0200		1	POSITIONING UNIT	**9-65, 12-41**

Pos	Part No	UN	Qty	Description	Page No

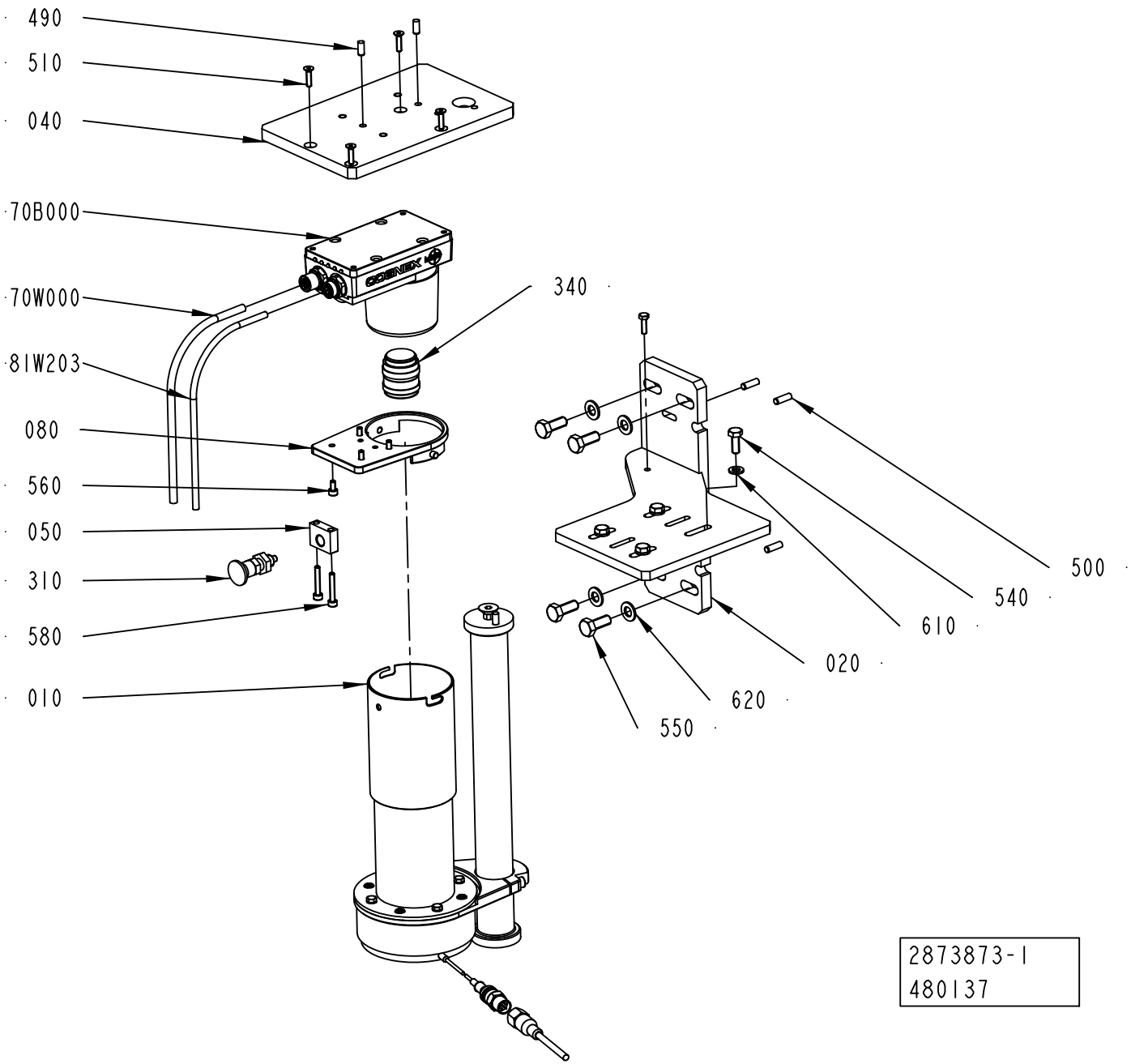
490
510
040
70B000
70W000
81W203
080
560
050
310
580
010
340
500
540
610
020
620
550
2873873-1
480137

ECM: 485907 - 20110401
Group number: 2873873-0100
Assembly Drawing: 2873873-1_1_AE

This list covers pages from 12-22 to 12-29

Pos	Part No	UN	Qty	Description	Page No
TBA RL MP, TPA RL MP (See drawing on pages: 5-56, 12-26)					
010	3149926-0100		1	RING LIGHT	**5-61, 12-31**
020	2792664-0000		1	BRACKET	
040	2873893-0000		1	BRACKET	
490	311103-0306		2	PARALLEL PIN ISO 2338 5M6X12 A1	
500	311103-0308		4	PARALLEL PIN ISO 2338 5M6X16 A1	
TBA RL STD, TPA RL STD (See drawing on pages: 5-52, 12-22)					
010	3052658-0100		1	RING LIGHT METALIZED PACK	**5-63, 12-33**
020	2792664-0000		1	BRACKET	
040	2873893-0000		1	BRACKET	
490	311103-0306		2	PARALLEL PIN ISO 2338 5M6X12 A1	
500	311103-0308		4	PARALLEL PIN ISO 2338 5M6X16 A1	
TGA RL MP (See drawing on pages: 5-58, 12-28)					
010	3149926-0100		1	RING LIGHT	**5-61, 12-31**
020	2780491-0000		1	BRACKET	
040	2780493-0000		1	PLATE	
500	311103-0308		2	PARALLEL PIN ISO 2338 5M6X16 A1	
TGA RL STD (See drawing on pages: 5-54, 12-24)					
010	3052658-0100		1	RING LIGHT METALIZED PACK	**5-63, 12-33**
020	2780491-0000		1	BRACKET	
040	2780493-0000		1	PLATE	
500	311103-0308		2	PARALLEL PIN ISO 2338 5M6X16 A1	
Common Parts					
030	2780492-0000		1	COLUMN	
050	2794721-0000		1	BLOCK	
060	2794790-0000		1	CLAMP	
070	2557544-0000		1	PROTECTION	
080	2792848-0000		1	SUPPORT	
090	2792879-0000		1	TUBE	
100	2873943-0000		1	CLAMP	
310	90051-0112		1	LOCK KNOB, NO. GN 617 NIK5	
340	90459-1180		1	LENS 16MM IN-SIGHT 4100, HF16HA-1B	
510	312155-0293		4	SCREW DIN 7991 MF6S M4X16 A4 70	
520	312155-0453		1	SCREW DIN 7991 MF6S M8X25 A4 70	
530	312105-0287		4	SCREW M6S ISO 4017 M4X8 A470	
540	312105-0368		4	SCREW M6S ISO 4017 M6X16 A480	
550	312105-0451		4	SCREW M6S ISO 4017 M8X20 A480	
560	312115-0287		4	SCREW ISO4762 M4X8 A4 80	
570	312115-0291		4	SCREW ISO4762 M4X12 A4 80	
580	312115-0297		2	SCREW ISO4762 M4X25 A4 80	
590	312115-0331		2	SCREW ISO4762 M5X20 A4 80	
600	315105-0136		4	WASHER BRB 4,3X8 RFR	
610	315105-0153		4	WASHER BRB 6,4X12 RFR	
620	315105-0165		4	WASHER BRB 8,4X16 RFR	
70B000	90600-1096		1	PROCESSOR UNIT IN-SIGHT 5100, IS-5100-00	
70E002	90459-2454		1	RING LIGHT ILLUMINATOR, CLK-003630-00	
70W000	90600-2102		1	POWER I/O CABLE, CCB-84901-0103-10	
70W002	351309-0050		1	'ACTUATOR/SENSOR CABLE PRKT 4-07/5M	
81W203	90600-2103		1	ETHERNET CABLE, CCB-84901-1004-10	

Machine Type | Group Description | Used-In | Group Number | Page No

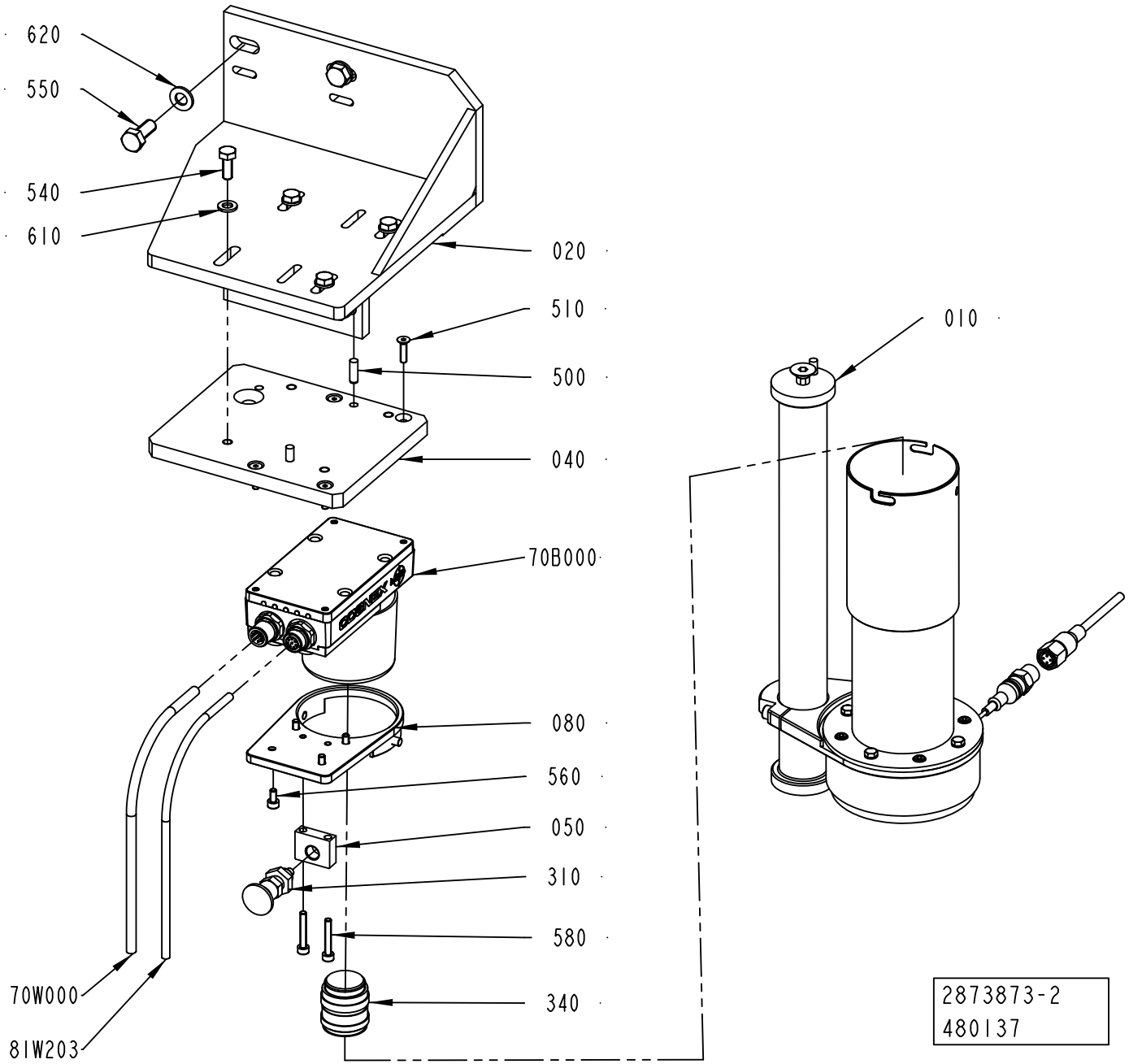
620
550
540
610
020
510
500
040
70B000
080
560
050
310
580
340
70W000
81W203
010
2873873-2
480137

ECM: 485907 - 20110401
Group number: 2873873-0100
Assembly Drawing: 2873873-2_1_AE

This list covers pages from 12-22 to 12-29

Pos	Part No	UN	Qty	Description	Page No
TBA RL MP, TPA RL MP (See drawing on pages: 5-56, 12-26)					
010	3149926-0100		1	RING LIGHT	**5-61, 12-31**
020	2792664-0000		1	BRACKET	
040	2873893-0000		1	BRACKET	
490	311103-0306		2	PARALLEL PIN ISO 2338 5M6X12 A1	
500	311103-0308		4	PARALLEL PIN ISO 2338 5M6X16 A1	
TBA RL STD, TPA RL STD (See drawing on pages: 5-52, 12-22)					
010	3052658-0100		1	RING LIGHT METALIZED PACK	**5-63, 12-33**
020	2792664-0000		1	BRACKET	
040	2873893-0000		1	BRACKET	
490	311103-0306		2	PARALLEL PIN ISO 2338 5M6X12 A1	
500	311103-0308		4	PARALLEL PIN ISO 2338 5M6X16 A1	
TGA RL MP (See drawing on pages: 5-58, 12-28)					
010	3149926-0100		1	RING LIGHT	**5-61, 12-31**
020	2780491-0000		1	BRACKET	
040	2780493-0000		1	PLATE	
500	311103-0308		2	PARALLEL PIN ISO 2338 5M6X16 A1	
TGA RL STD (See drawing on pages: 5-54, 12-24)					
010	3052658-0100		1	RING LIGHT METALIZED PACK	**5-63, 12-33**
020	2780491-0000		1	BRACKET	
040	2780493-0000		1	PLATE	
500	311103-0308		2	PARALLEL PIN ISO 2338 5M6X16 A1	
Common Parts					
030	2780492-0000		1	COLUMN	
050	2794721-0000		1	BLOCK	
060	2794790-0000		1	CLAMP	
070	2557544-0000		1	PROTECTION	
080	2792848-0000		1	SUPPORT	
090	2792879-0000		1	TUBE	
100	2873943-0000		1	CLAMP	
310	90051-0112		1	LOCK KNOB, NO. GN 617 NIK5	
340	90459-1180		1	LENS 16MM IN-SIGHT 4100, HF16HA-1B	
510	312155-0293		4	SCREW DIN 7991 MF6S M4X16 A4 70	
520	312155-0453		1	SCREW DIN 7991 MF6S M8X25 A4 70	
530	312105-0287		4	SCREW M6S ISO 4017 M4X8 A470	
540	312105-0368		4	SCREW M6S ISO 4017 M6X16 A480	
550	312105-0451		4	SCREW M6S ISO 4017 M8X20 A480	
560	312115-0287		4	SCREW ISO4762 M4X8 A4 80	
570	312115-0291		4	SCREW ISO4762 M4X12 A4 80	
580	312115-0297		2	SCREW ISO4762 M4X25 A4 80	
590	312115-0331		2	SCREW ISO4762 M5X20 A4 80	
600	315105-0136		4	WASHER BRB 4,3X8 RFR	
610	315105-0153		4	WASHER BRB 6,4X12 RFR	
620	315105-0165		4	WASHER BRB 8,4X16 RFR	
70B000	90600-1096		1	PROCESSOR UNIT IN-SIGHT 5100, IS-5100-00	
70E002	90459-2454		1	RING LIGHT ILLUMINATOR, CLK-003630-00	
70W000	90600-2102		1	POWER I/O CABLE, CCB-84901-0103-10	
70W002	351309-0050		1	'ACTUATOR/SENSOR CABLE PRKT 4-07/5M	
81W203	90600-2103		1	ETHERNET CABLE, CCB-84901-1004-10	

Machine Type | Group Description | Used-In | Group Number | Page No

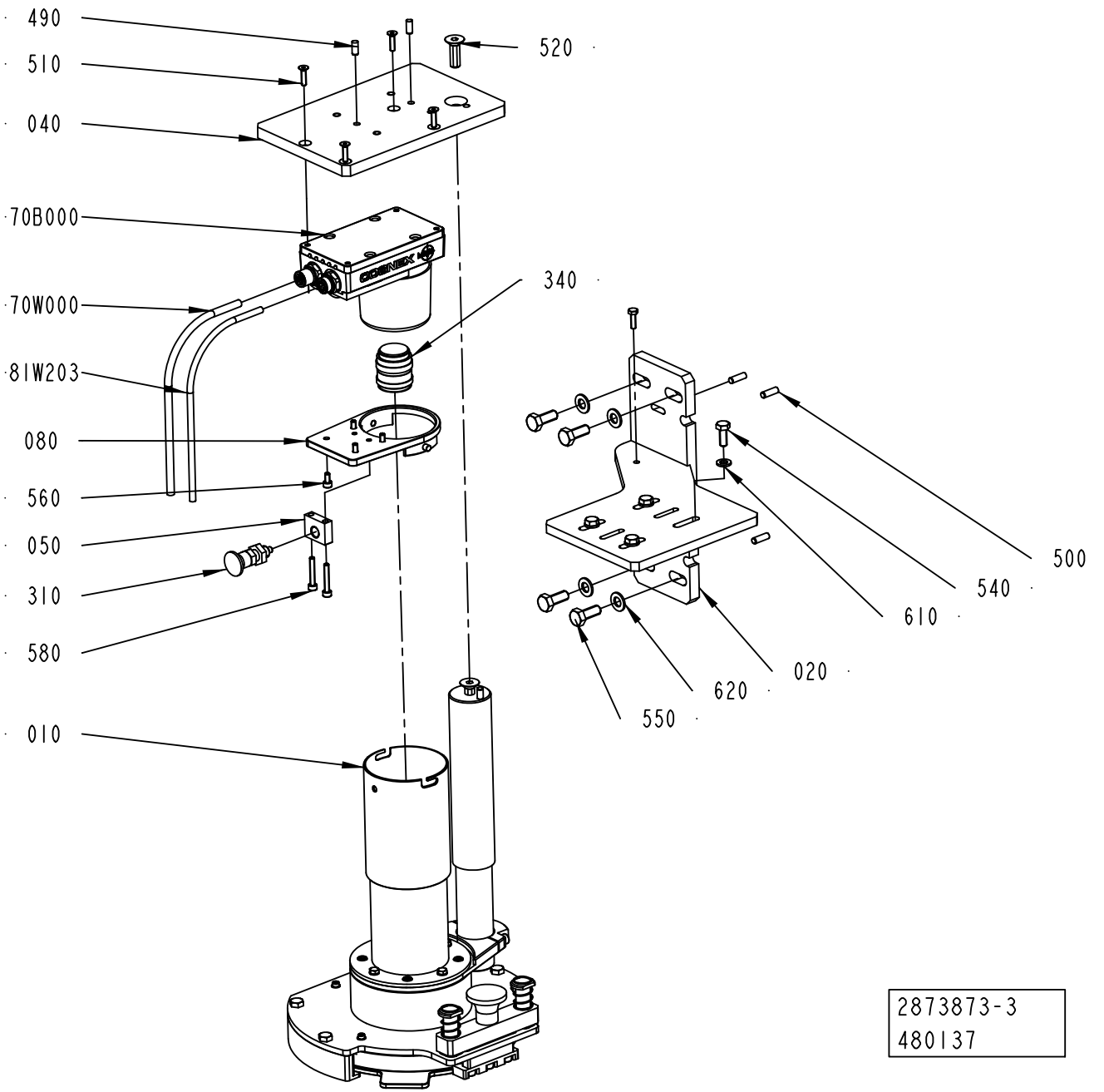
490
510
040
520
70B000
70W000
340
81W203
080
560
050
310
580
010
500
540
610
020
620
550
2873873-3
480137

ECM: 485907 - 20110401
Group number: 2873873-0100
Assembly Drawing: 2873873-3_1_AA

This list covers pages from 12-22 to 12-29

Pos	Part No	UN	Qty	Description	Page No
TBA RL MP, TPA RL MP (See drawing on pages: 5-56, 12-26)					
010	3149926-0100		1	RING LIGHT	**5-61, 12-31**
020	2792664-0000		1	BRACKET	
040	2873893-0000		1	BRACKET	
490	311103-0306		2	PARALLEL PIN ISO 2338 5M6X12 A1	
500	311103-0308		4	PARALLEL PIN ISO 2338 5M6X16 A1	
TBA RL STD, TPA RL STD (See drawing on pages: 5-52, 12-22)					
010	3052658-0100		1	RING LIGHT METALIZED PACK	**5-63, 12-33**
020	2792664-0000		1	BRACKET	
040	2873893-0000		1	BRACKET	
490	311103-0306		2	PARALLEL PIN ISO 2338 5M6X12 A1	
500	311103-0308		4	PARALLEL PIN ISO 2338 5M6X16 A1	
TGA RL MP (See drawing on pages: 5-58, 12-28)					
010	3149926-0100		1	RING LIGHT	**5-61, 12-31**
020	2780491-0000		1	BRACKET	
040	2780493-0000		1	PLATE	
500	311103-0308		2	PARALLEL PIN ISO 2338 5M6X16 A1	
TGA RL STD (See drawing on pages: 5-54, 12-24)					
010	3052658-0100		1	RING LIGHT METALIZED PACK	**5-63, 12-33**
020	2780491-0000		1	BRACKET	
040	2780493-0000		1	PLATE	
500	311103-0308		2	PARALLEL PIN ISO 2338 5M6X16 A1	
Common Parts					
030	2780492-0000		1	COLUMN	
050	2794721-0000		1	BLOCK	
060	2794790-0000		1	CLAMP	
070	2557544-0000		1	PROTECTION	
080	2792848-0000		1	SUPPORT	
090	2792879-0000		1	TUBE	
100	2873943-0000		1	CLAMP	
310	90051-0112		1	LOCK KNOB, NO. GN 617 NIK5	
340	90459-1180		1	LENS 16MM IN-SIGHT 4100, HF16HA-1B	
510	312155-0293		4	SCREW DIN 7991 MF6S M4X16 A4 70	
520	312155-0453		1	SCREW DIN 7991 MF6S M8X25 A4 70	
530	312105-0287		4	SCREW M6S ISO 4017 M4X8 A470	
540	312105-0368		4	SCREW M6S ISO 4017 M6X16 A480	
550	312105-0451		4	SCREW M6S ISO 4017 M8X20 A480	
560	312115-0287		4	SCREW ISO4762 M4X8 A4 80	
570	312115-0291		4	SCREW ISO4762 M4X12 A4 80	
580	312115-0297		2	SCREW ISO4762 M4X25 A4 80	
590	312115-0331		2	SCREW ISO4762 M5X20 A4 80	
600	315105-0136		4	WASHER BRB 4,3X8 RFR	
610	315105-0153		4	WASHER BRB 6,4X12 RFR	
620	315105-0165		4	WASHER BRB 8,4X16 RFR	
70B000	90600-1096		1	PROCESSOR UNIT IN-SIGHT 5100, IS-5100-00	
70E002	90459-2454		1	RING LIGHT ILLUMINATOR, CLK-003630-00	
70W000	90600-2102		1	POWER I/O CABLE, CCB-84901-0103-10	
70W002	351309-0050		1	'ACTUATOR/SENSOR CABLE PRKT 4-07/5M	
81W203	90600-2103		1	ETHERNET CABLE, CCB-84901-1004-10	

Machine Type | Group Description | Used-In | Group Number | Page No

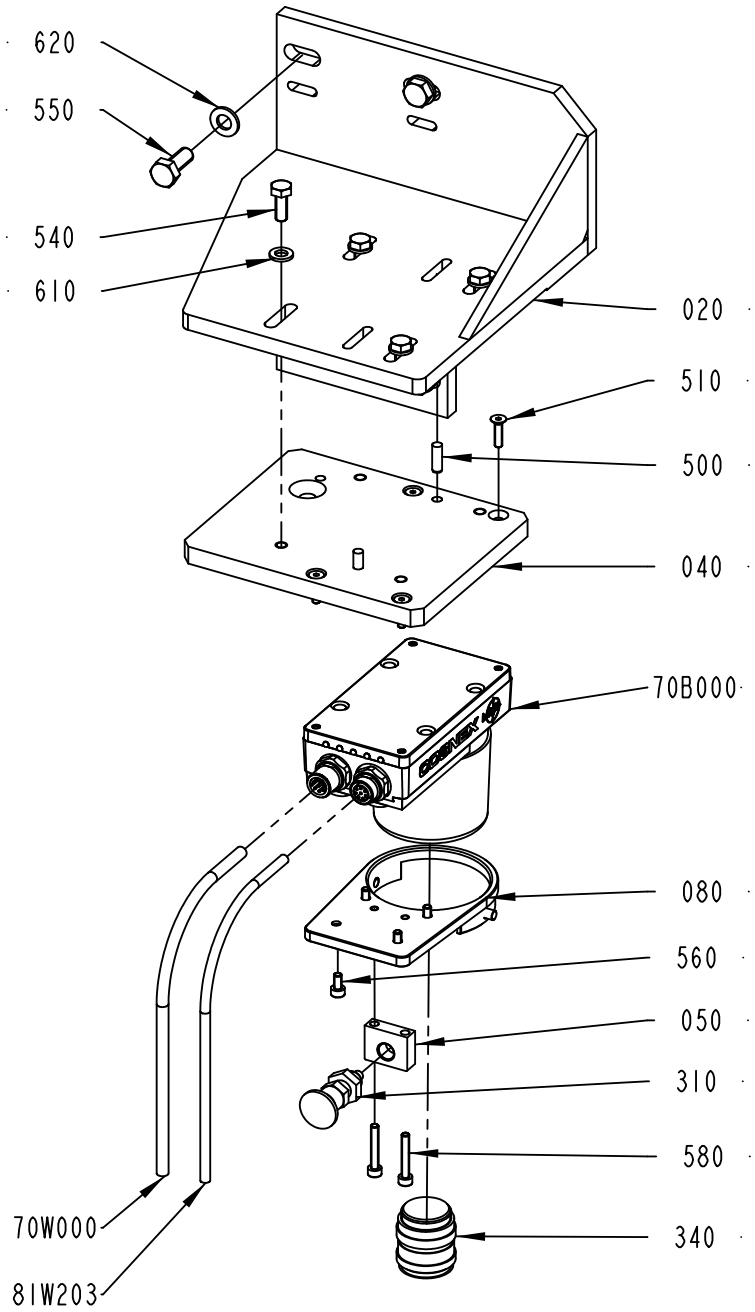

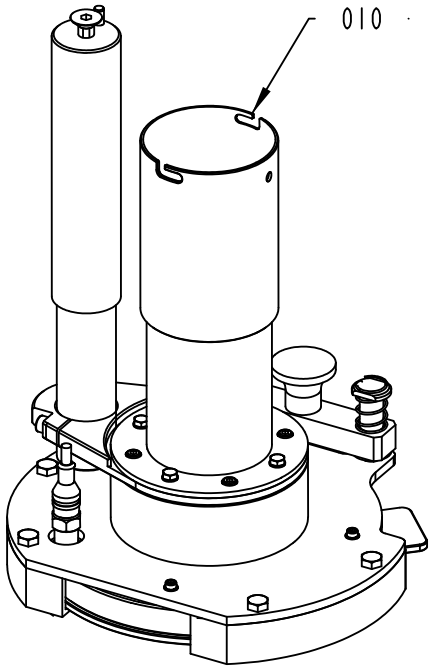

2873873-4
480137

ECM: 485907 - 20110401
Group number: 2873873-0100
Assembly Drawing: 2873873-4_1_AA

This list covers pages from 12-22 to 12-29

Pos	Part No	UN	Qty	Description	Page No
TBA RL MP, TPA RL MP (See drawing on pages: 5-56, 12-26)					
010	3149926-0100		1	RING LIGHT	**5-61, 12-31**
020	2792664-0000		1	BRACKET	
040	2873893-0000		1	BRACKET	
490	311103-0306		2	PARALLEL PIN ISO 2338 5M6X12 A1	
500	311103-0308		4	PARALLEL PIN ISO 2338 5M6X16 A1	
TBA RL STD, TPA RL STD (See drawing on pages: 5-52, 12-22)					
010	3052658-0100		1	RING LIGHT METALIZED PACK	**5-63, 12-33**
020	2792664-0000		1	BRACKET	
040	2873893-0000		1	BRACKET	
490	311103-0306		2	PARALLEL PIN ISO 2338 5M6X12 A1	
500	311103-0308		4	PARALLEL PIN ISO 2338 5M6X16 A1	
TGA RL MP (See drawing on pages: 5-58, 12-28)					
010	3149926-0100		1	RING LIGHT	**5-61, 12-31**
020	2780491-0000		1	BRACKET	
040	2780493-0000		1	PLATE	
500	311103-0308		2	PARALLEL PIN ISO 2338 5M6X16 A1	
TGA RL STD (See drawing on pages: 5-54, 12-24)					
010	3052658-0100		1	RING LIGHT METALIZED PACK	**5-63, 12-33**
020	2780491-0000		1	BRACKET	
040	2780493-0000		1	PLATE	
500	311103-0308		2	PARALLEL PIN ISO 2338 5M6X16 A1	
Common Parts					
030	2780492-0000		1	COLUMN	
050	2794721-0000		1	BLOCK	
060	2794790-0000		1	CLAMP	
070	2557544-0000		1	PROTECTION	
080	2792848-0000		1	SUPPORT	
090	2792879-0000		1	TUBE	
100	2873943-0000		1	CLAMP	
310	90051-0112		1	LOCK KNOB, NO. GN 617 NIK5	
340	90459-1180		1	LENS 16MM IN-SIGHT 4100, HF16HA-1B	
510	312155-0293		4	SCREW DIN 7991 MF6S M4X16 A4 70	
520	312155-0453		1	SCREW DIN 7991 MF6S M8X25 A4 70	
530	312105-0287		4	SCREW M6S ISO 4017 M4X8 A470	
540	312105-0368		4	SCREW M6S ISO 4017 M6X16 A480	
550	312105-0451		4	SCREW M6S ISO 4017 M8X20 A480	
560	312115-0287		4	SCREW ISO4762 M4X8 A4 80	
570	312115-0291		4	SCREW ISO4762 M4X12 A4 80	
580	312115-0297		2	SCREW ISO4762 M4X25 A4 80	
590	312115-0331		2	SCREW ISO4762 M5X20 A4 80	
600	315105-0136		4	WASHER BRB 4,3X8 RFR	
610	315105-0153		4	WASHER BRB 6,4X12 RFR	
620	315105-0165		4	WASHER BRB 8,4X16 RFR	
70B000	90600-1096		1	PROCESSOR UNIT IN-SIGHT 5100, IS-5100-00	
70E002	90459-2454		1	RING LIGHT ILLUMINATOR, CLK-003630-00	
70W000	90600-2102		1	POWER I/O CABLE, CCB-84901-0103-10	
70W002	351309-0050		1	'ACTUATOR/SENSOR CABLE PRKT 4-07/5M	
81W203	90600-2103		1	ETHERNET CABLE, CCB-84901-1004-10	

Machine Type	Group Description	Used-In	Group Number	Page No

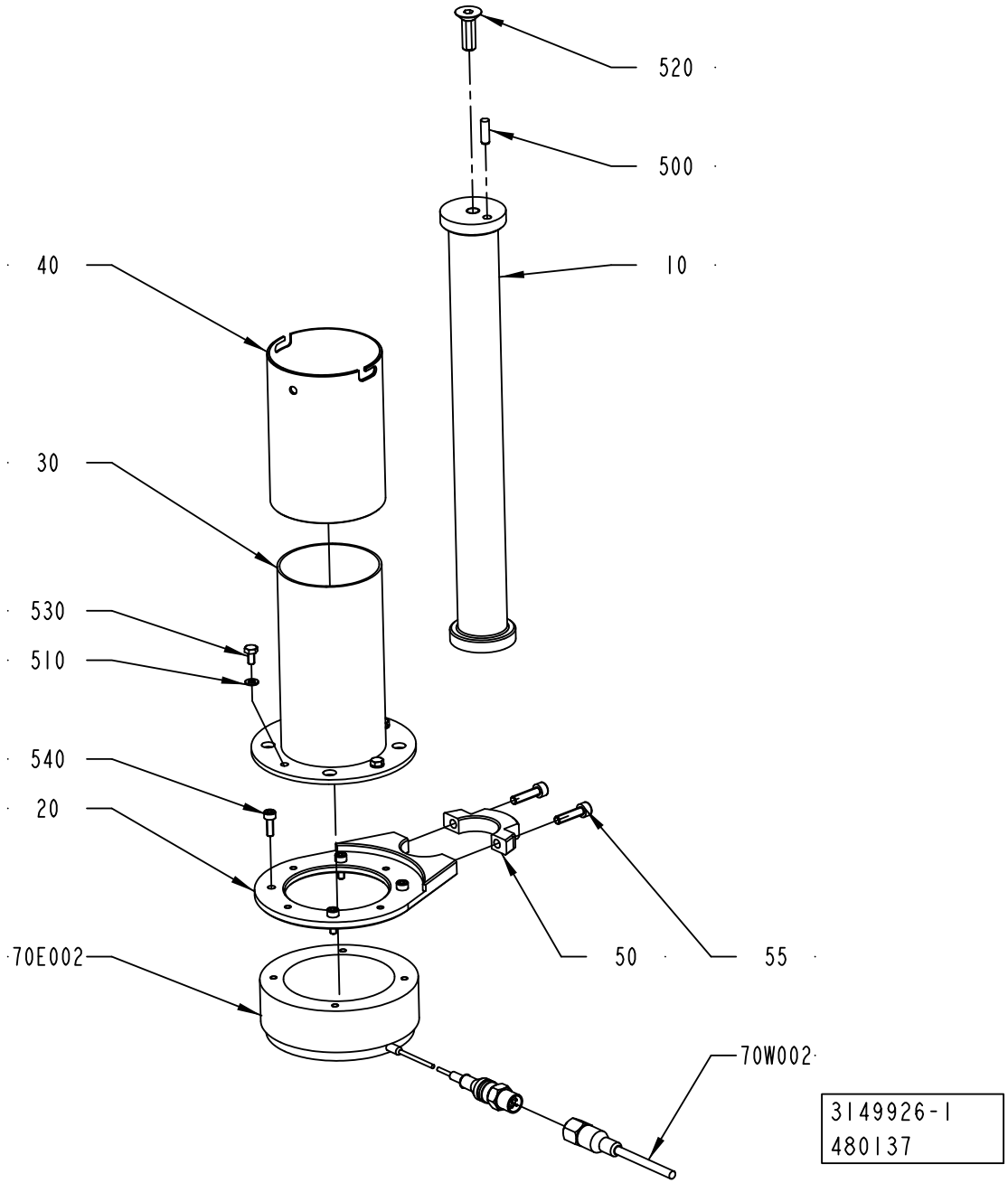
520
500
40
10
30
530
510
540
20
70E002
50
55
70W002
3149926-1
480137

ECM: 485908 - 20110401
Group number: 3149926-0100
Assembly Drawing: 3149926-1_1_AA

Pos	Part No	UN	Qty	Description	Page No
-					
010	2780492-0000		1	COLUMN	
020	2794790-0000		1	CLAMP	
030	2557544-0000		1	PROTECTION	
040	2792879-0000		1	TUBE	
050	2873943-0000		1	CLAMP	
055	312115-0331		1	SCREW ISO4762 M5X20 A4 80	
500	311103-0308		1	PARALLEL PIN ISO 2338 5M6X16 A1	
510	315105-0136		4	WASHER BRB 4,3X8 RFR	
520	312155-0453		1	SCREW DIN 7991 MF6S M8X25 A4 70	
530	312105-0287		4	SCREW M6S ISO 4017 M4X8 A470	
540	312115-0291		4	SCREW ISO4762 M4X12 A4 80	
550	312115-0331		1	SCREW ISO4762 M5X20 A4 80	
70E002	90459-2454		1	RING LIGHT ILLUMINATOR, CLK-003630-00	
70W002	351309-0050		1	ACTUATOR/SENSOR CABLE PRKT 4-07/5M	

Pos	Part No	UN	Qty	Description	Page No

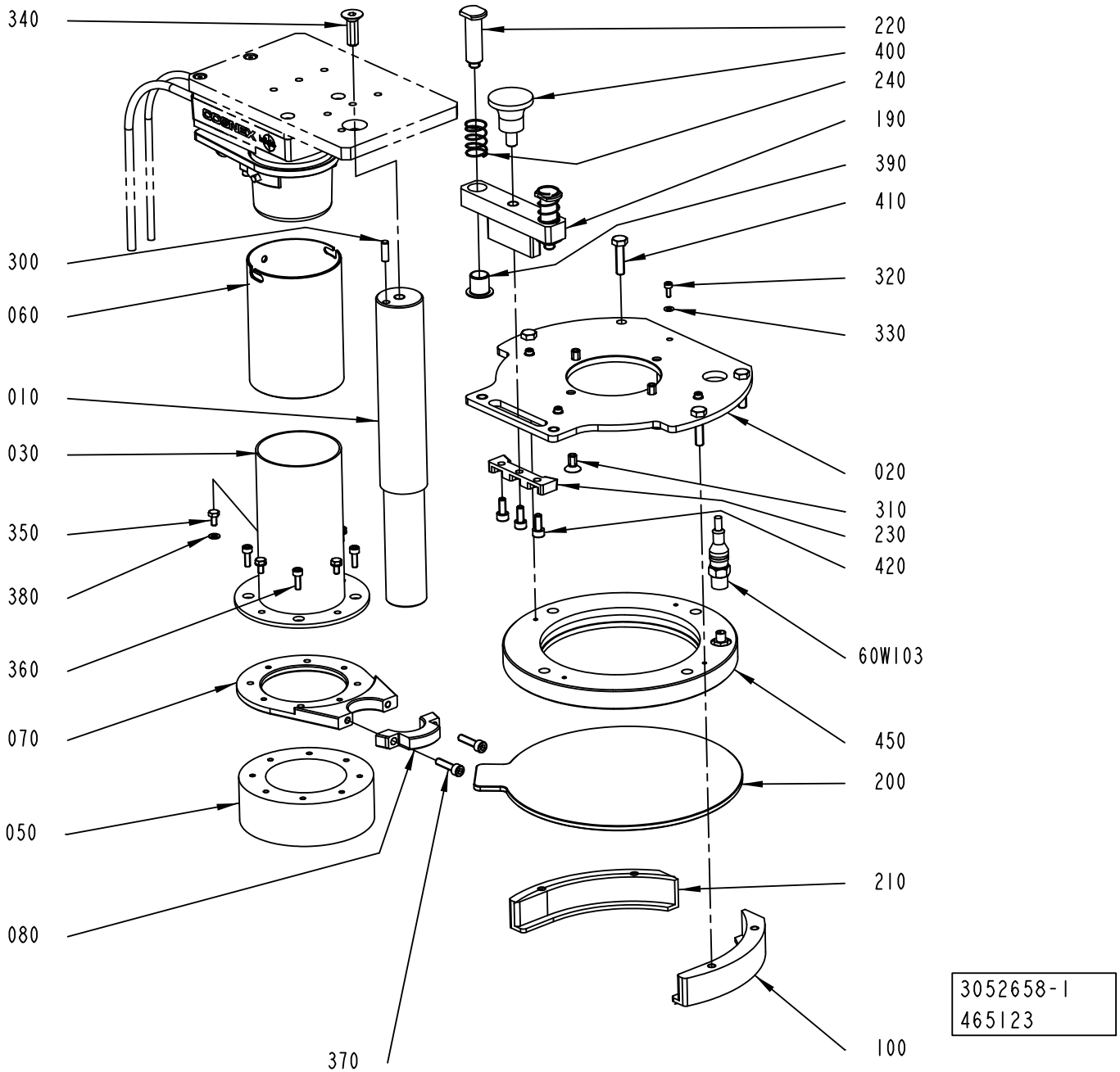
340
300
060
010
030
350
380
360
070
050
080
370
220
400
240
190
390
410
320
330
020
310
230
420
60W103
450
200
210
100
3052658-1
465123

ECM: 465123 - 20101001
Group number: 3052658-0100
Assembly Drawing: 3052658-1_1_AC

Pos	Part No	UN	Qty	Description	Page No
-					
010	2985768-0000		1	COLUMN	
020	3095791-0000		1	PLATE	
030	2557544-0000		1	PROTECTION	
050	3031442-0000		1	SPACER	
060	2792879-0000		1	TUBE	
070	2794790-0000		1	CLAMP	
080	2873943-0000		1	CLAMP	
100	3095796-0000		1	HOLDER	
190	3053477-0000		1	BRACKET	
200	3052393-0000		1	GLASS COVER	
210	3095790-0000		1	HOLDER	
220	3053471-0000		2	PIN	
230	3053478-0000		1	PUSHER	
240	3060116-0000		2	COMPRESSION SPRING	
300	311103-0308		1	PARALLEL PIN ISO 2338 5M6X16 A1	
310	312155-0366		4	SCREW DIN 7991 MF6S M6X12 A4 70	
320	312115-0222		4	SCREW ISO4762 M3X8 A4 80	
330	315106-0124		4	WASHER ISO 7089-3-200 HV A4	
340	312155-0453		1	SCREW DIN 7991 MF6S M8X25 A4 70	
350	312105-0287		4	SCREW M6S ISO 4017 M4X8 A470	
360	312115-0291		4	SCREW ISO4762 M4X12 A4 80	
370	312115-0331		2	SCREW ISO4762 M5X20 A4 80	
380	315105-0136		4	WASHER BRB 4,3X8 RFR	
390	321156-0188		2	FLANGE BUSHING, IGLIDUR H370 12X14X15	
400	318871-0105		1	KNOB CIRCULAR, EXT THREAD, NO. 8302-6150	
410	312105-0372		4	SCREW M6S ISO 4017 M6X25 A480	
420	312115-0327		3	SCREW ISO4762 M5X12 A4 80	
450	90602-3985		1	RING LIGHT ILLUMINATOR, TLD-150-617-C	
60W103	351407-0020		1	ACTU/SENS. CABLE PRST 3-PRKMV 3-06/2,0M	

Pos	Part No	UN	Qty	Description	Page No

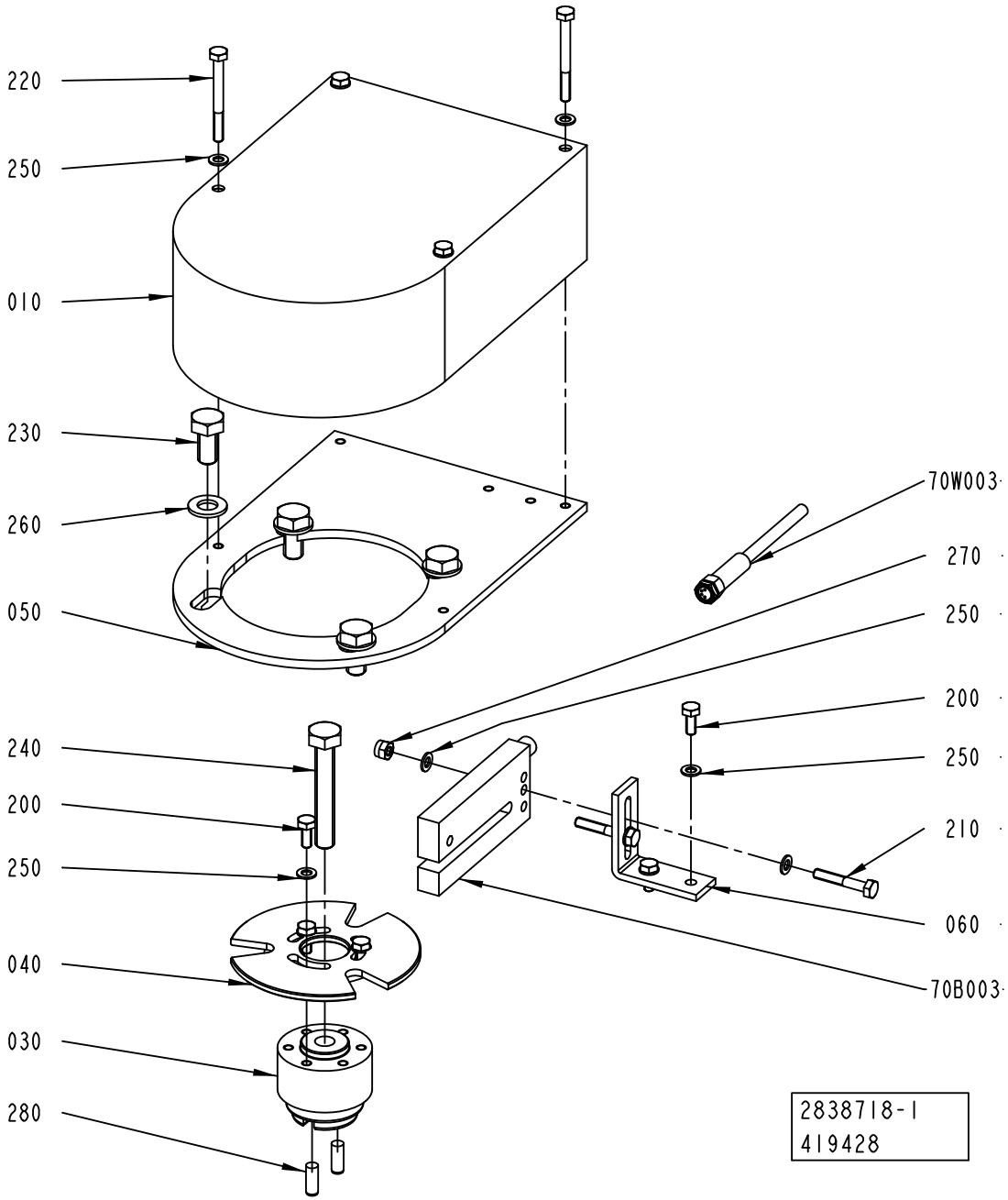
220
250
010
230
260
050
240
200
250
040
030
280
70W003
270
250
200
250
210
060
70B003
2838718-1
419428

ECM: 419446 - 20100110
Group number: 2838718-0100
Assembly Drawing: 2838718-1_1_AB

Pos	Part No	UN	Qty	Description	Page No
-					
010	2838719-0000		1	COVER	
030	2799864-0000		1	FLANGE	
040	2799865-0000		1	DISC	
050	2799866-0000		1	PLATE	
060	2799867-0000		1	ANGLE BRACKET	
200	312105-0289		5	SCREW M6S H4X10 A4 70 ISO4017/DIN933	
210	312105-0297		2	SCREW M6S ISO 4017 M4X25 A470	
220	312105-0303		4	SCREW M6S ISO 4017 M4X40 A470	
230	312105-0449		4	SCREW M6S ISO 4017 M8X16 A480	
240	312109-0461		1	SCREW M6S ISO 4017 M8X50 A480	
250	315105-0136		13	WASHER BRB 4,3X8 RFR	
260	315105-0165		4	WASHER BRB 8,4X16 RFR	
270	312812-0312		2	HEXAGON NUT, NY-LOCK M4 A480	
280	311103-0307		2	PARALLEL PIN ISO 2338 5M6X14 A1	
70B003	90600-2052		1	PHOTOCELL	
70B003	3039014-0000		1	SENSOR	
70B003	90601-6410		1	PHOTOCELL, WF 5-60 B410	
70W003	351305-0100		1	ACTUATOR/SENSOR CABLE PRKMV 4-07/10M	

Pos	Part No	UN	Qty	Description	Page No

This page is intentionally left blank.

ECM: 428930 - 20100401
Group number: 2873922-0100
Assembly Drawing:

Pos	Part No	UN	Qty	Description	Page No
-					
70W100	90459-2565		1	MOTOR CABLE 16 AWG 2090-XXNPMP-16S09	
70W100	90600-3293		1	MOTOR PWWER CABLE 2090-XXNPMF-16S09	
70W101	90459-7207		1	MOTOR FEEDBACK CABLE 2090-XXNFMP-S09/C	
70W101	90600-3294		1	MOTOR FEEDBACK CABLE 2090-XXNFMF-S09/C	
70X101	90459-2551		1	CONNECTOR, MOTOR FEEDBACK 15 PIN MALE	

Pos	Part No	UN	Qty	Description	Page No

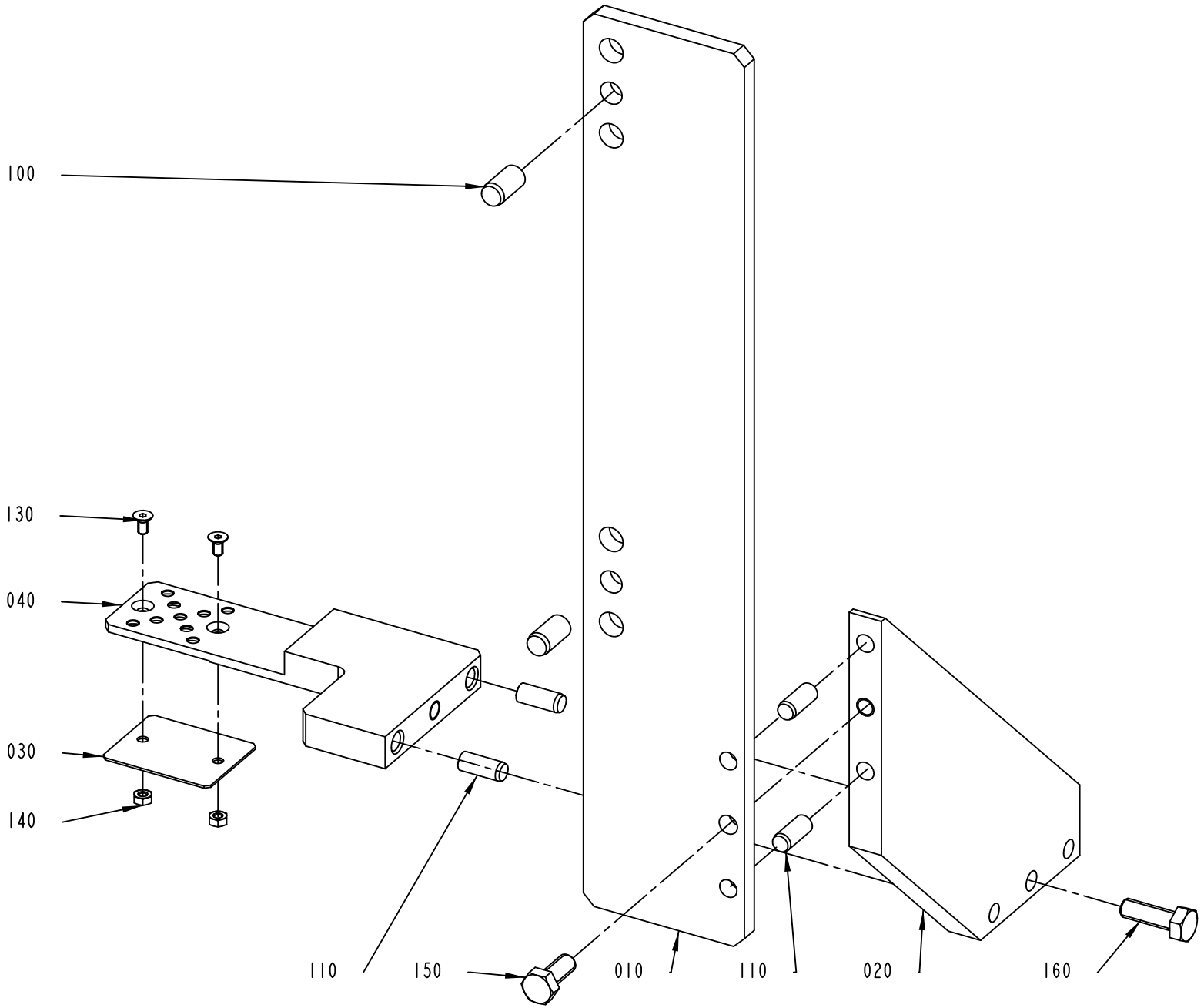
100
130
040
030
140
110
150
010
110
020
160
3087823-1
465123

ECM: 484330 - 20110401
Group number: 3087823-0100
Assembly Drawing: 3087823-1_1_AA

Pos	Part No	UN	Qty	Description	Page No
TBA SLIMCAP1000, TBA STREAMCAP1000, TBA SLIMCAP 2000, TBA STREAMCAP200, TPA STREAMCAP330, TBA HELICAP2 23					
020	3123927-0000		1	PLATE	
TGA					
020	3143918-0000		1	PLATE	
TPA STREAMCAP 1000, TPA STREAMCAP 500					
020	3089906-0000		1	PLATE	
Common Parts					
010	3087822-0000		1	PLATE	
030	2838782-0000		1	PLATE	
040	3087821-0000		1	TOOL	
100	311103-0454		2	PARALLEL PIN ISO 2338 10M6X20 A1	
110	311103-0401		4	PARALLEL PIN ISO 2338 8M6X20 A1	
130	312155-0287		2	SCREW DIN 7991 MF6S M4X8 A4 70	
140	312605-0312		2	HEXAGON NUT, M6M M4 A280	
150	312105-0451		1	SCREW M6S ISO 4017 M8X20 A480	
160	312105-0453		1	SCREW M6S ISO 4017 M8X25 A480	

Pos	Part No	UN	Qty	Description	Page No

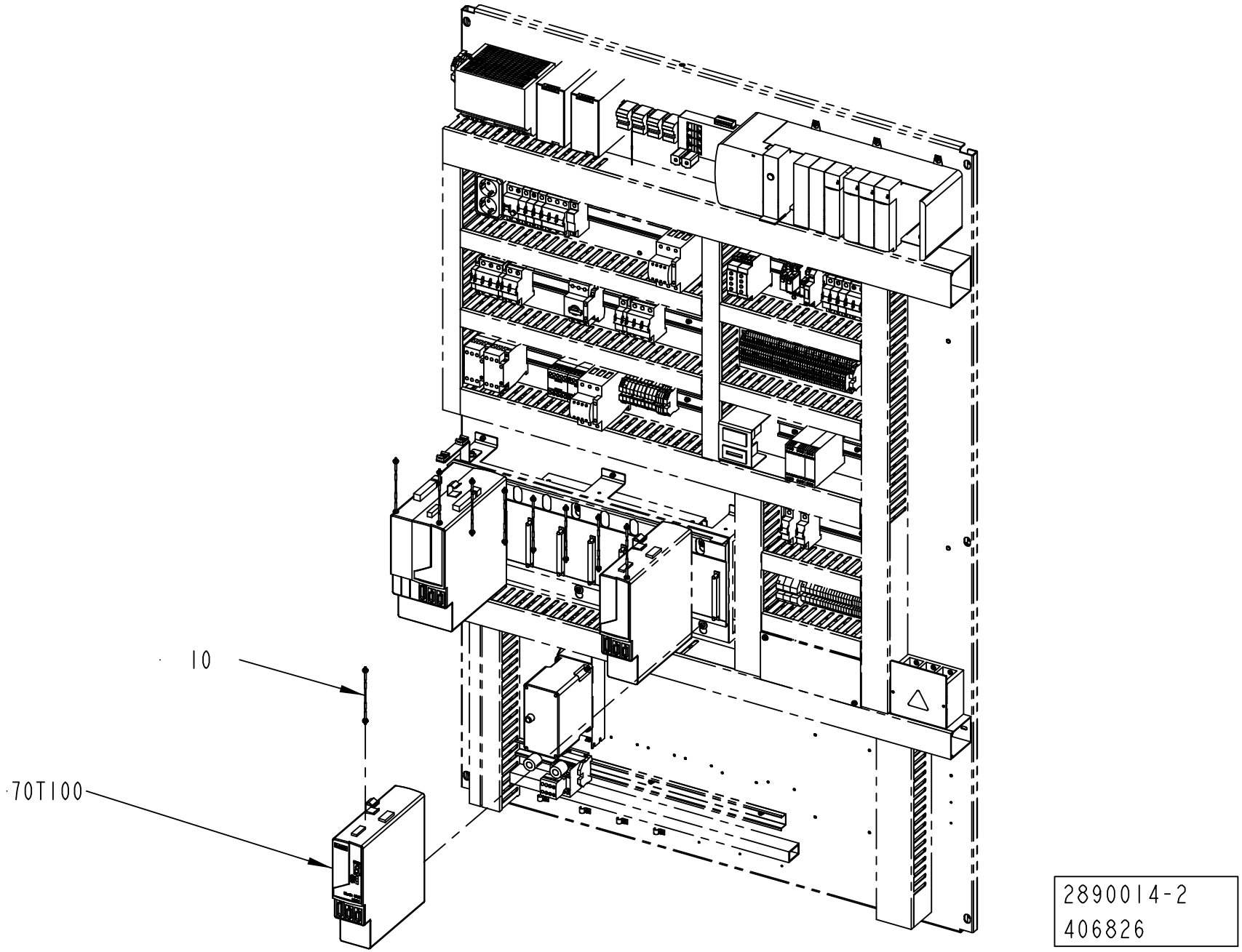
10
70T100
2890014-2
406826

ECM: 419541 - 20100110
Group number: 2890014-0200
Assembly Drawing: 2890014-2_1_AA

Pos	Part No	UN	Qty	Description	Page No
-					
010	90459-2536		1	SERCOS CABLE 0.1M, 2090-SCEP0-1	
70T100	90600-5214		1	AXIS MOD. KINETIX 6000,2094-BM01-S SER.B	

Pos	Part No	UN	Qty	Description	Page No

POWER SUPPLY DEVICE

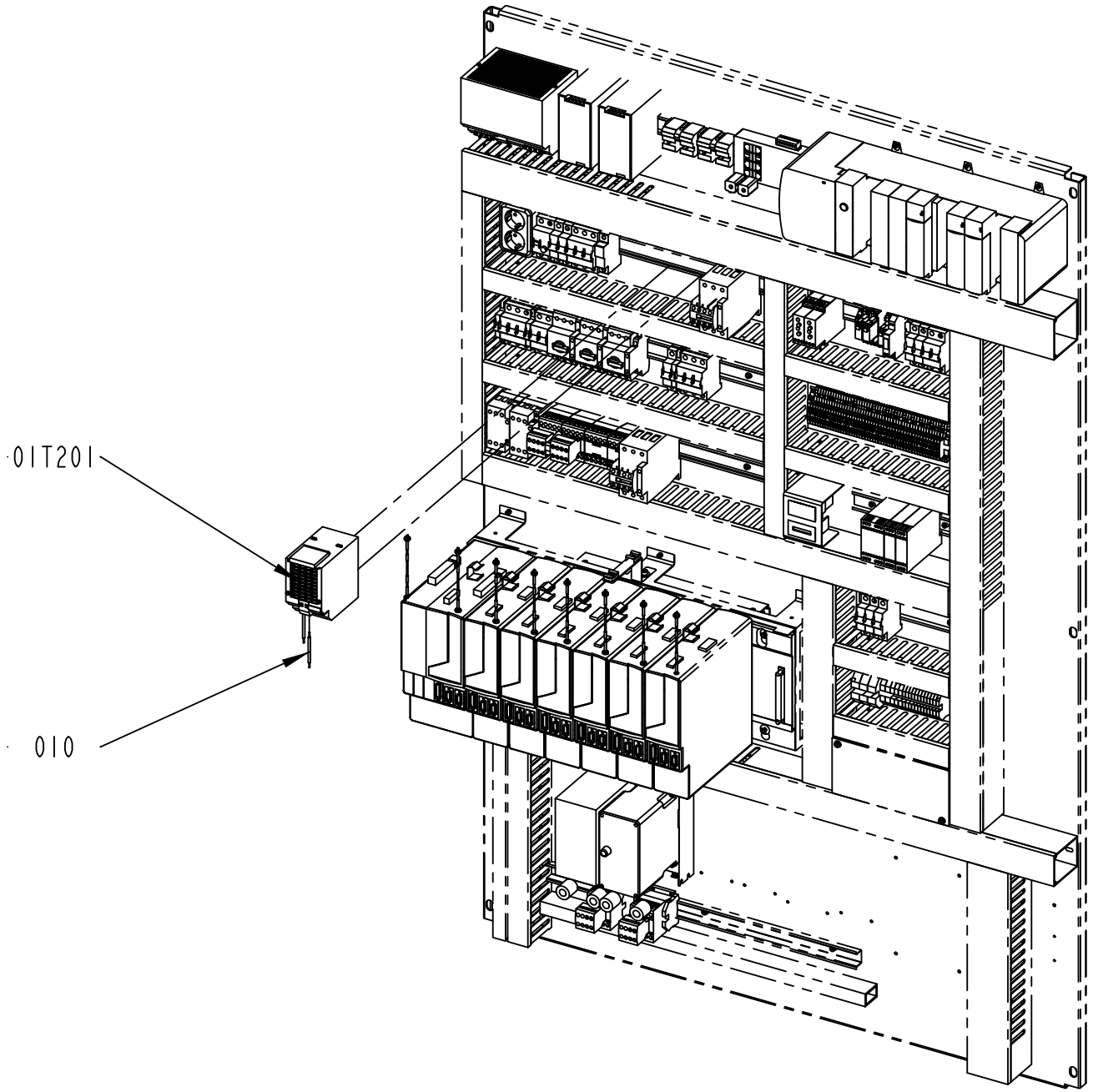

2930182-1
335187

ECM: 337066 - 20080407
Group number: 2930182-0100
Assembly Drawing: 2930182-1_1_AA

Pos	Part No	UN	Qty	Description	Page No
-					
010	351160-0105	M	5	WIRE AWM 1X2,5 MM2 DARKBLUE	
01T201	90459-2939		1	BUFFER UNIT, 6EP1961-3BA01	
100	353001-0115		10	END SLEEVE 2,5/14	
110	359000-0013		10	WIRE MARKING, YELLOW, PA1/3"+"	
120	359000-0023		10	WIRE MARKING, YELLOW, PA1/3"-"	
130	359000-0300		10	WIRE MARKING, YELLOW, PA1/3"0"	
140	359000-0301		10	WIRE MARKING, YELLOW, PA1/3"1"	
150	359000-0302		10	WIRE MARKING, YELLOW, PA1/3"2"	
160	359000-0303		10	WIRE MARKING, YELLOW, PA1/3"3"	
170	359000-0304		10	WIRE MARKING, YELLOW, PA1/3"4"	
180	359000-0305		10	WIRE MARKING, YELLOW, PA1/3"5"	
190	359000-0306		10	WIRE MARKING, YELLOW, PA1/3"6"	
200	359000-0307		10	WIRE MARKING, YELLOW, PA1/3"7"	
210	359000-0308		10	WIRE MARKING, YELLOW, PA1/3"8"	
220	359000-0309		10	WIRE MARKING, YELLOW, PA1/3"9"	

Pos	Part No	UN	Qty	Description	Page No

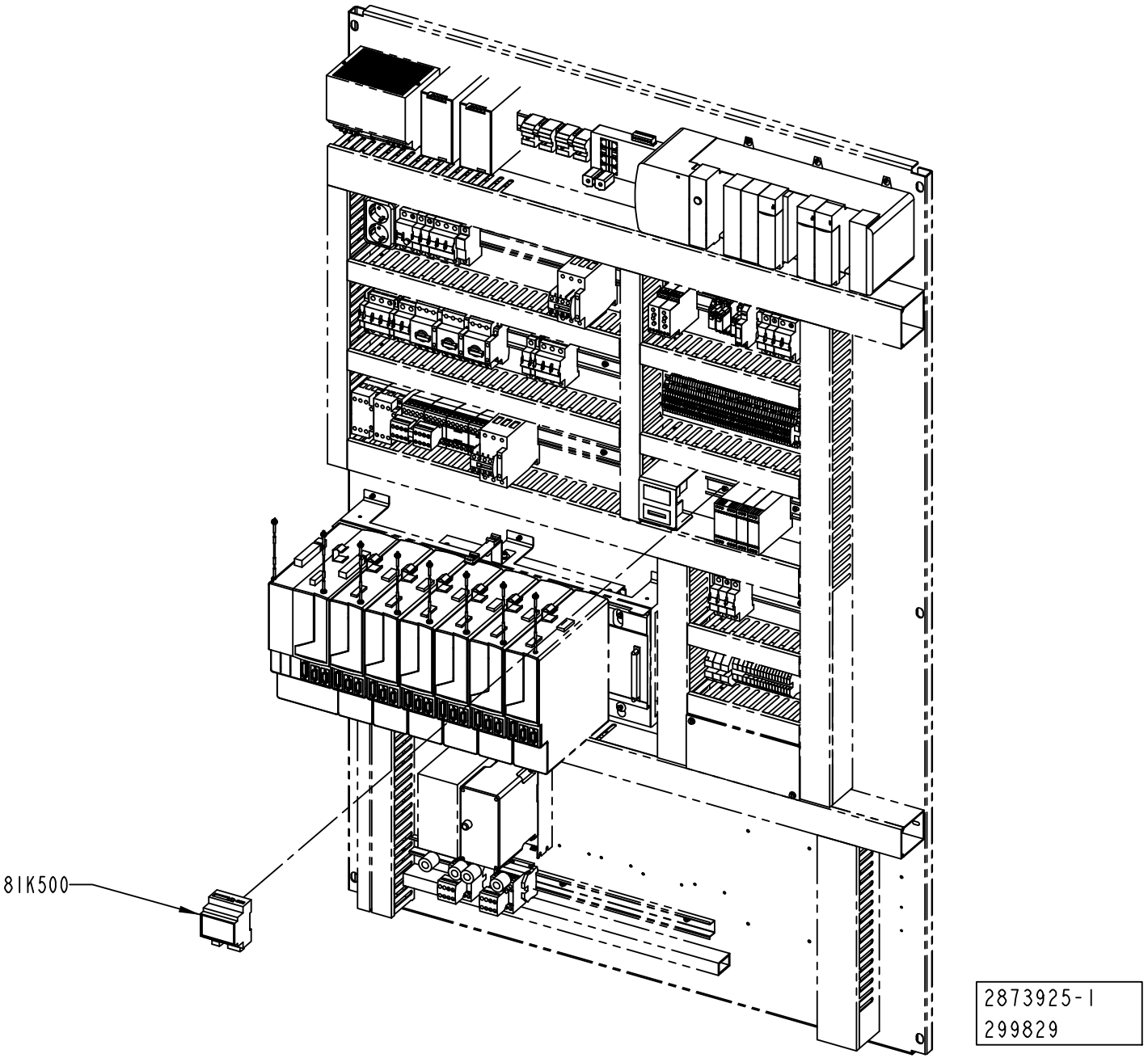
81K500
2873925-1
299829

ECM: 302633 - 20070528
Group number: 2873925-0100
Assembly Drawing: 2873925-1_1_AA

Pos	Part No	UN	Qty	Description	Page No	Pos	Part No	UN	Qty	Description	Page No
-											
81K500	90459-4235		1	SNP TO DF1 GATEWAY, 0220 1166 01 REV B							

Machine Type | Group Description | Used-In | Group Number | Page No

This page is intentionally left blank.

ECM: 444605 - 20100701
Group number: 2873930-0100
Assembly Drawing:

Pos	Part No	UN	Qty	Description	Page No
-					
010	359715-0100		7	WARNING SIGN ANSI (H), ELECTRIC SHOCK	
020	90459-2232		1	WARNING SIGN ANSI (H), DO NOT WASH	
040	90459-7458		3	WARNING SIGN ANSI (H), HOT SURFACE	
050	359725-0100		2	WARNING SIGN ANSI (H), ENTANGLEMENT	
060	90459-7228		1	ELECTRICAL EQUIPMENT SIGN, TEMPLATE	
70	359725-0125		2	WARNING SIGN ANSI (V), PNEUMATIC ENERGY	
80	359725-0108		1	WARNING SIGN ANSI (H), MOVING PART	

Pos	Part No	UN	Qty	Description	Page No

Tetra Pak

SPC
Spare Parts Catalogue

Part No	Description	Page No
A100000036 ...	HELICAP2 23 MM WHITE	10-37
6-4000 0006 08	SCREW M6S 10 X 110	4-5
90001-0033	WALL SOCKET, E1834666	9-9
90005-0060	WASHER PLAIN, RBS 6,4/M6)/18,H=1,5	9-41, 9-55
90005-0064	WASHER PL.RND.NYL.4,3/9, H=0,8	9-5
90005-0082	WASHER PLAIN ROUND 4,3(M4)/12,H=1	1-77, 6-83, 9-9
90005-0139	WASHER PLAIN ROUND 5,2(M5)/15, H=1,6	1-13
90005-0140	WASHER PLAIN ROUND 10,5(M10)/30, H=2	6-67
90013-0035	NUT GROOVE, HAMMER-HEAD M6 FE	8-5, 8-7
90015-0020	LEAD-IN, TET5-7, E-1458016	5-89
90015-0021	LEAD-IN, TET 10-14, E1458023	5-75, 5-77
90017-0029	LOCKING LEVER, NO. KR8X30-SUS	1-21, 1-61, 5-19, 5-21, 5-23
90024-0036	FEED THROUGH FILTER, 52-160-002-AD00	9-7
90024-0060	FILTER 80 A 440/250 VAC, B84144-A0080R00	9-7
90028-0020	CONE TUBE 2,5MM	5-91, 5-93, 5-95
90028-0021	CONE TUBE 4 MM	5-91, 5-93, 5-95
90028-0022	CONE TUBE 6 MM	5-89
90030-0200	CONN. ELBOW, WE06LM71	5-89, 5-91, 5-93, 5-95
90032-0038	BLOCK 2 WAYS	5-91, 5-93, 5-95
90032-0039	BLOCK 4 WAYS	5-91, 5-93, 5-95
90032-0043	DISTRIBUTION BLOCK 3 WAYS	5-89
90036-0057	LIGHT BULB, BA9S 28V	5-115
90036-0068	BULB 5W 24V, SL-L24 205348	5-101
90044-0192	LIMIT SW. SZ2586.000	9-5
90051-0054	STELLAR KNOB, INT. THREAD, NO. 8306-0340	10-9
90051-0112	LOCK KNOB, NO. GN 617 NIK5	5-53, 5-55, 5-57, 5-59, 12-23, 12-25, 12-27, 12-29
90053-0029	COUNTER, F524.800FA3C 24VDC	9-49
90053-0031	HOUR COUNTER, B 609.10 10-50VDC	9-49
90055-0222	ELBOW WITH TAILPIECE 6/6 MM	5-75, 5-77
90056-0177	WORM GEAR VF30 F1-7 P63 B14 B3	1-77
90056-0178	WORM GEAR VF 44 F1-70 P63 B5 B3	4-43, 4-45
90062-0015	LOCK WASHER SERRAT.EXT.GEAR,6,4/11 H=0,7	9-5
90062-0060	LOCK WASHER 5,3/10 H=0,6 FZB	5-51, 5-65
90064-0093	PUSH BUTTON, GREEN	5-115
90064-0098	PUSH BUTTON, CLEAR	5-115
90077-0113	TERMINAL BLOCK WDK 2.5	5-117, 5-119, 9-23, 9-25, 9-27, 9-29, 9-31, 9-33, 9-69
90077-0114	END PLATE, WAP/WDK 2,5	5-117, 5-119
90082-0013	SURGE PROTECTION DEVICE PU4CR 8021520000	9-7
90087-0019	PLUG M10X1 STAINLESS	5-91, 5-93, 5-95
90091-0038	SCRAPER 20X30X10 MM	6-37, 6-39, 6-41
90091-0304	RADIAL SEAL 45X65X8 MM DUST LIP	1-31, 1-35, 1-43, 1-47
90091-0322	RADIAL SEAL 25X42X7 MM DUST LIP	1-7, 1-9
90092-0052	METERING VALVE 10 MM3	5-91, 5-93, 5-95
90092-0054	METERING VALVE 50 MM3	5-91, 5-93, 5-95
90099-0005	MOUNTING RAIL SUPPORT, TSTW 5/M5	9-67
90099-0187	HEXAGON NUT, LOCK, M14, DIN985	4-9, 4-11
90099-0191	HEXAGON NYLON NUT, M4X0,7	9-5
90110-0052	MALE INSERT, HAN E 06, 0933 0062 6017	1-77, 4-9, 4-11, 4-43, 4-45, 8-5, 8-7, 8-19, 8-21, 8-25, 8-27
90110-0053	FEMALE INSERT HAN 6 E 09 33 006 2701	1-77, 5-7, 5-9
90110-0095	CONNECTOR 3 POLE + EARTH	5-83
90115-0134	ROD END, ID=10 MM, M10X1,25	1-13
90115-0137	ROD END, ID=6 MM, M6X1	3-17
90115-0163	ROD END, ID=6 MM, M6X1	10-17
90119-0108	RELAY OMRON G2R-2-SNI-24DC	5-117, 5-119, 9-19, 9-57, 9-59
90125-0020	PLATE COMPLETE	5-51, 5-65
90129-0018	BASE, P2RF-08-E	5-117, 5-119, 9-19, 9-57, 9-59
90134-0030	SLEEVE FOR PLASTIC TUBE	5-89, 5-91, 5-93, 5-95
90134-0031	SLEEVE FOR PLASTIC TUBE	5-91, 5-93, 5-95
90134-0039	BUSHING VALVE CONNECTION 2,5 MM	5-91, 5-93, 5-95
90134-0040	BUSHING VALVE CONNECTION 4 MM	5-91, 5-93, 5-95
90134-0051	SPACING COLLAR DOSING BLOCK	5-91, 5-93, 5-95
90134-0052	PLUG DOSING BLOCK	5-91, 5-93, 5-95
90134-0054	BLOCK CONNECTION M10X1	5-91, 5-93, 5-95
90134-0055	BUSHING/NUT INLET/OUTLET 6 MM	5-89
90134-0058	CONNECTION	2-17, 2-19, 5-91, 5-93, 5-95
90134-0068	CONNECTION	2-17, 5-91, 5-93, 5-95
90141-0015	RETAINING RING FOR SHAFT DIN 471 8 SS	7-45
90141-0016	RETAINING RING FOR SHAFT DIN 471 10 SS	8-5, 8-7, 8-19, 8-21, 8-25, 8-27
90141-0017	RETAINING RING FOR SHAFT DIN 471 17 SS	8-5, 8-7, 8-19, 8-21, 8-25, 8-27
90141-0020	RETAINING RING FOR BORE DIN 472 42 SS	4-43, 4-45
90143-0071	RUBBER STRIP 4X20MM	5-115
90143-0098	RUBBER STRIP, CLAMPING, NO. 1038-02	5-153
90152-0051	SPIRAL CONDUIT, 25X18, UL 1816	4-43, 4-45, 5-51, 5-65, 5-115
90152-0060	SPIRAL CONDUIT, 42X35, UL3529	5-115
90152-0070	METAL HOSE, 32,5X26, UL 2621	5-115
90152-0075	HOSE	5-51, 5-65
90153-0023	ADHESIVE, SILICON 251470 TUB 90CC(UN1993	6-73, 6-75
90153-0059	250.0 ADHESIVE, HOTMELT RECAP 12 KG	10-13
90157-0012	LOCKING FLUID LOCTITE 242 50 ML	7-17
90157-0037	THREAD SEALANT LOCTITE 542	1-7, 1-9, 1-49, 1-51, 1-53, 1-55
90157-0041	SEALING COMPOUND, RHODORSEAL 5651	5-133, 5-135, 5-149, 5-151, 5-157, 5-159, 5-161
90164-0015	LIGHT FIXTURE, RL70CV-111 / 230V 50HZ	5-103
90164-0303	LIGHT FIXTURE, BRACKET 70MM	5-103
90165-0007	PIPE CLIP FOR TUBE D=8 MM	9-9

Part No	Description	Page No
90166-0108	TUBE 6 MM PA TRANSP.	5-89, 5-91, 5-93, 5-95
90166-0109	TUBE 4 MM PA TRANSP.	5-91, 5-93, 5-95
90166-0113	HOSE	5-7, 5-9
90166-0126	TUBE 12 MM PA,TRANSP.	1-35, 1-47, 1-49, 1-51, 1-53, 1-55
90166-0132	TUBE 6 MM PA,TRANSP.	5-89, 5-91, 5-93, 5-95
90166-0143	TUBE 2,5 MM PA TRANSP.	5-91, 5-93, 5-95
90181-0038	CABLE DUCT 40X40MM	5-115
90181-0182	CABLE TRENCH PARTS	5-7, 5-9
90181-0183	CABLE DUCT, FITTING, B2	3-29, 5-7, 5-9, 6-67
90181-0184	CABLE TRENCH PARTS	5-7, 5-9
90181-0186	CABLE DUCT, ELBOW BRACKET, B27	5-7, 5-9
90181-0190	CABLE DUCT, WALL BRACKET, B4 MINI	5-7, 5-9
90181-0314	CABLE TRENCH PARTS	5-7, 5-9
90187-0045	BALL VALVE G1/4 CR PL	5-69
90187-0191	BALL VALVE R1/8, 6 MM	4-29, 5-75, 5-77
90189-0019	BALL BUSHING, 20X30X30 MM	6-37, 6-39, 6-41
90194-0152	SIGN, EARTH	9-5
90206-0124	HEATING ELEMENT 2X1500W 230V	5-51, 5-65
90208-0078	CLAMPING ELEMENT WITH SLEEVE, 20X28 MM	7-9
90214-0123	BALL BEARING, 10X30X9 MM	6-11, 6-13, 6-37, 6-39, 6-41
90214-0186	BALL BEARING 30/42X7	1-7, 1-9
90220-0183	SCR. CABLE 2X0,34MM2	9-71
90224-0031	CONN. ELBOW, ART.NO 3814	4-29
90224-0289	BUSHING, INT/EXT, R1/8-R1/4	4-21
90224-0314	DISTRIBUTOR BLOCK, FR-4-1/8-B	4-21
90224-0325	ELBOW 90 COUPL.,EXT.THREAD 10/8-G1/4"	5-69
90224-0372	NIPPLE, EXT.THREAD, HEXAGON, R1/4-R1/4	5-83
90226-0458	MOUNTING SCREW	5-113, 5-125, 5-127, 5-131, 5-137, 5-141, 5-143, 5-155, 5-157, 5-161
90235-0748	THROTTLE CHECK VALVE, GRA-1/4-B	5-75, 5-77
90237-0123	LOCK, 1121-U10C	5-133, 5-149, 5-151
90237-0128	LOCK CYLINDER, 1109-SU125	5-133, 5-149, 5-151
90237-0144	GUIDE, 1121-SU540	5-133, 5-149, 5-151
90237-0147	LOCKING LUG, NO. 1121-53-0P	5-133, 5-149, 5-151
90237-0175	TURNING HANDLE, 1125-U185-0A	5-133, 5-149, 5-151
90240-0262	FLANGE BUSHING, IGLIDUR X 12X14X12	2-13
90259-0313	AUXILIARY CONTACT, NHI21-PKZ0	9-37, 9-57, 9-59
90261-0025	PLUG, BLIND, PLASTIC GPN300F28	5-75, 5-77
90261-0060	PLUG, BLIND, PLASTIC, NO. IKPK25X1, 5	3-29
90261-0064	PLUG, BLIND, PLASTIC, NO. SFL42	1-29, 1-41
90274-0084	PRESSURE GUARD, 1800 KPA	5-89
90287-0124	SCREW PAN HEAD MSCS M4X12 NYLON	9-11
90287-0154	SCREW, SOCK.SET DOGPOINT M6X10	5-11, 5-13
90287-0175	SCREW M6S M3X12 A480	1-21, 5-11, 5-13, 5-39, 5-41, 5-43, 12-19
90287-0176	SCREW M6S M3X25 A470	10-21, 10-23
90287-0230	SCREW, HEX.SOCK.HEAD SHOULD. M5X6	1-67, 1-69, 1-71, 1-73
90287-0239	SCREW, HEX.SOCK.HEAD SHOULD. M5X6	3-17
90287-0295	SCREW HEX.SOCK.COUNT.MF6S M3X8 A280	7-15
90296-0068	SHELL ALVANIA GREASE EP 2	1-77, 6-13, 7-7, 7-9
90296-0075	SHELL OMALA OIL 320	5-89
90328-0013	SILENCER U-1/4, 2316	4-21
90328-0017	SILENCER, D=6 MM	1-13, 5-89
90328-0026	SILENCER G1/4"	5-83
90328-0029	SILENCER M5	5-75, 5-77, 7-29, 10-29, 10-31
90328-0047	SILENCER G1/8"	1-65, 5-75, 5-77, 7-29, 10-29, 10-31
90330-0026	PLUG, EXT. G-THREAD, G1/4	5-83
90330-0134	NIPPLES,REDUCING,INT THREAD, G1/4-G1/8	5-73
90335-0082	COMP. SPRING 22180, 1,25X9,25X47,5	7-15
90347-0011	VIBRATION DAMPER MEGI 781056	5-11, 5-13
90415-0030	OIL FILTER PN 100 ORD.NO 2.77 10 70.1	5-89
90424-0087	AIR NOZZLE	10-17
90424-0089	AIR NOZZLE, BSPT1/4, AAB727-1/4-15	5-73
90439-0155	PRECISION NOZZLE SATURN 322012	3-5, 3-7, 10-13
90439-0295	SERVICE KIT, NO. 111940	5-111
90457-0192	WASHER PLAIN ROUND, 6,5/18, H=1,5	5-21, 5-23
90457-0871	DOUBLE ACTING, MINI-ISO, CYL. 16-25	10-17
90458-0048	RETAINING RING FOR BORE DIN 472 62 SS	4-9, 4-11
90458-0181	RETAINING RING FOR BORE DIN 472 80 SS	1-49, 1-51, 1-53, 1-55
90458-0306	CABLE GLAND, M16X1,5, NO.5311 1010	4-43, 4-45, 8-5, 8-7, 8-19, 8-21, 8-25, 8-27
90458-0307	CABLE GLAND, M20X1,5, NO.5311 1020	1-77, 5-7, 5-9, 5-101
90458-0310	CABLE GLAND, M40X1,5, NO.5311 1050	9-5
90458-0314	CABLE GLAND, M16X1,5, NO.5311 1110	9-5
90458-0316	CABLE GLAND, M25X1,5, NO.5311 1130	5-67
90458-0321	NUT, M12X1,5	5-89
90458-0322	NUT, M16X1,5	4-43, 4-45, 8-5, 8-7, 8-19, 8-21, 8-25, 8-27
90458-0323	NUT, M20X1,5	5-7, 5-9, 5-51, 5-65, 5-101, 5-115, 9-5
90458-0324	NUT, M25X1,5	5-75, 5-77, 5-115
90458-0326	NUT, M40X1,5	5-7, 5-9, 5-115
90458-0406	GLAND W/O INSERT M20 NORMAL	4-9, 4-11, 8-5, 8-7, 8-19, 8-21, 8-25, 8-27
90458-0430	HOSE GLAND W/O INSERT M20 EXTENDED	4-43, 4-45, 5-7, 5-9, 5-51, 5-65, 5-115
90458-0432	HOSE GLAND W/O INSERT M25 EXTENDED	5-75, 5-77, 5-115
90458-0434	HOSE GLAND W/O INSERT M40 EXTENDED	5-7, 5-9, 5-115
90458-0438	GLAND, EXTENDED WITH INSERT, M20X1,5	1-15, 1-77, 4-9, 4-11
90458-0460	GLAND, LOCK NUT, M16X1,5	4-9, 4-11
90458-0499	HOLDER 12 MM NO. 82 66861	5-73

Part No	Description	Page No
90458-0507	PARALLEL KEY W. ROUND ENDS 6X6X60 MM	1-7, 1-9
90458-0651	PRECISION NOZZLE, PART NO. 322 010	3-5, 3-7, 10-13
90458-0745	Y-CONNECTION	4-37, 4-39
90458-1140	FERRITE, RI-26-28-13	9-43, 12-5
90458-1170	FERRITE, SFC-6	9-51
90458-1173	MULTI DIAMETER MODULE, CM 30W40	9-5
90458-1174	MULTI DIAMETER MODULE, CM 20W40	9-5
90458-1175	MULTI DIAMETER MODULE, CM 15W40	9-5
90458-1178	FRAME, CF 8	9-5
90458-1179	FRAME, CF 32	9-5
90458-1197	VALVE, 5/2 BISTABLE	7-29, 10-29
90458-1202	VALVES 2X3/2, CLOSED	5-75, 5-77
90458-1203	VALVE 2X3/2 1X OPEN 1X CLOSED	10-31
90458-1306	BLIND PLUG CIRCULAR, M12X1,5 514GFK/212	5-89
90458-1308	BLIND PLUG CIRCULAR, M20X1,5 514GFK/220	5-115, 9-5
90458-1309	BLIND PLUG CIRCULAR, M25X1,5 514GFK/225	5-115
90458-1438	BALL BEARING 10/19X5	8-5, 8-7, 8-19, 8-21, 8-25, 8-27
90458-1483	SPRAY GUN WATER G1/4	5-69
90458-1559	FLANGE BEARING 17X98X32,1 MM	4-43, 4-45
90458-1651	EMERGENCY STOP, ZB4-BS-844 ZB4-BZ-104	5-115, 5-147, 9-5
90458-1740	AIR GUN ASSEMBLY, CEJN 199589668	5-85
90458-1741	HOSE ASSEMBLY, CEJN 19 958 9669	5-69
90458-2170	BALL BEARING 20/52X15	3-13
90458-2370	DOUBLE ACTING, ROUND, CYL 32-150	1-65
90458-2483	MOTOR 3GVA062002-BSB	4-9, 4-11, 4-43, 4-45
90458-2507	FUSE HOLDER, USBCC1	9-35
90458-2510	FUSE, ATDR6	9-35, 10-13
90458-2837	CONNECTING CABLE KMEB-1-24-5-LED	5-83
90458-2907	PROX.SWITCH IFS204	1-59, 4-9, 4-11, 4-23, 6-17, 12-13
90458-2932	PLAIN BEARING, JUM-02-20	1-21, 1-61, 5-19
90459-0246	GREASE, KLüBERSYNTH UH1, ONLY IN BOM	4-5
90459-0290	NON-RETURN VALVE H-QS-6	5-75, 5-77
90459-0813	COOLING UNIT, KB20A619.01	9-55
90459-0839	DISTRIBUTION FRAME, ASBV 8 5-135/10M	6-67, 10-19
90459-0864	BULKHEAD CONNECTOR, 12 MM/M27X1,5	5-85
90459-0959	DISTRIBUTOR BLOCK 1492-PD3163	9-9
90459-1018	ROD END, BALL JOINT EYE M10X1,25	1-65
90459-1180	LENS 16MM IN-SIGHT 4100, HF16HA-1B	5-53, 5-55, 5-57, 5-59, 12-23, 12-25, 12-27, 12-29
90459-1395	SCREW HEX.SOCK.SET CONEPT.MS6SS M4X4 A2	6-11, 6-13
90459-1458	HOOD HAN 6 E 19 30 006 1540	1-77, 4-9, 4-11, 4-43, 4-45, 8-5, 8-7, 8-19, 8-21, 8-25, 8-27
90459-1461	HOUSING HAN 6 E 19 30 006 1255	1-77, 5-7, 5-9
90459-1621	CABLE, ETHERNET RJ 45 CONNECT. 1 M	9-71
90459-1663	CONNECTOR, 405204 RSC4/7	3-5, 3-7, 7-21, 7-29, 10-19
90459-1825	ELBOW WITH TAILPIECE 12/12 MM	5-75, 5-77
90459-1826	ELBOW PIPE JOINT, EXT.THREAD,D=16MM-G1/2	5-85
90459-1858	BRACKET, MS6-WP	5-81
90459-1991	HOT MELT UNIT, #1049296	5-111
90459-2133	PUSH-IN FITTING QSSF-1/2-12-B	5-7, 5-9
90459-2215	STRAIGHT COUPLING, D=16 MM - G1/2"	5-85
90459-2232	WARNING SIGN ANSI (H), DO NOT WASH	12-47
90459-2243	SHUT OFF VALVE, MS4-EE-1/4-10V24	5-83
90459-2245	DISTRIBUTOR, MS4-FRM-1/4	5-83
90459-2247	BRACKET, MS4-WP	5-83
90459-2248	BRACKET, MS4-MV	4-21, 5-83
90459-2265	PROHIBITION SIGN ISO, DO NOT WASH	5-111
90459-2291	SAFETY TIME RELAY, E1T-0.5S-24VDC	9-49, 9-57, 9-59
90459-2337	SHUT OFF VALVE, MS4-EM1-1/4	5-83
90459-2339	FILTER REGULATOR, MS4-LFR-1/4-D7-ERV-AS	5-83
90459-2389	BRACKET, MS4-LR-WR	4-21
90459-2413	PLC DIGITAL INPUT MODULE16 POINTS	9-43
90459-2454	RING LIGHT ILLUMINATOR, CLK-003630-00	5-53, 5-55, 5-57, 5-59, 5-61, 12-23, 12-25, 12-27, 12-29, 12-31
90459-2458	BASEPLATE, 10 SLOT CONTROLLOGIX CHASSIS	9-43
90459-2474	PLC,DIGIT. OUTPUT MODULE 16 PTS 10-31VDC	9-43, 9-57, 9-59
90459-2477	ETHERNET I/P BRIDGE MODULE, 1756-ENBT	9-43, 12-7
90459-2480	8-AXIS SERCOS MOTION MODULE	9-57, 9-59
90459-2487	REMOVABLE TERMINAL BLOCK 20 POINTS	9-43, 9-57, 9-59
90459-2488	REMOVABLE TERMINAL BLOCK 36 POINTS	9-43
90459-2494	DEVICENET I/O ADAPTER MODULE, 1734-ADN	5-117, 5-119
90459-2501	FIELD POWER DISTRIBUTOR, 1734-FPD	5-117, 5-119
90459-2503	DIGITAL INPUT 4 PTS SINK, 1734-IB4	5-117, 5-119
90459-2505	DIGITAL OUTPUT 4 PTS, 1734-OB4E	5-117, 5-119
90459-2519	TAP, OPEN STYLE	9-51
90459-2523	TERMINATOR, OPEN STYLE, 1485A-C2	9-51
90459-2526	REMOTE I/O BASE MODULE 8 POINTS, 1734-TB	5-117, 5-119
90459-2530	DEVICENET CABLE THIN	9-71
90459-2536	SERCOS CABLE 0.1M, 2090-SCEP0-1	9-41, 9-65, 12-41
90459-2540	SERCOS CABLE 3.0M, 2090-SCEP3-0	9-41
90459-2547	POWER RAIL SLOT FILLER, 2094-PRF	9-57, 9-59
90459-2549	AC LINE FILTER 3-PHASE 30A, 2090-XXLF-X3	9-9
90459-2551	CONNECTOR, MOTOR FEEDBACK 15 PIN MALE	5-99, 5-109, 12-37
90459-2553	PUSH-IN L-FITTING QSL 16	5-75, 5-77, 5-85, 9-55
90459-2565	MOTOR CABLE 16 AWG 2090-XXNPMP-16S09	5-99, 12-37
90459-2591	SINGLE VALVE SUB-BASE CDSV5.0-AS-1/8	5-75, 5-77, 7-29, 10-29, 10-31

Part No	Description	Page No
90459-2614	DEVICENET ADAPTER POWERFLEX 40 22-COMM-D	9-57, 9-59
90459-2644	NUT ROUND WITH SLOTS M30X1,5 SS	1-7, 1-9
90459-2739	OPTO-RELAY 50085, IN / OUT 4-53VDC 1A	9-19
90459-2771	FILTER, MS6-LFX-1/2-R	5-81
90459-2772	FILTER, MS6-LFM-1/2-ARV	5-81
90459-2773	FILTER, MS6-LFM-1/2-BRV	5-81
90459-2795	FRONT LID FOR POWERFLEX 40, 22B-CCB	9-57, 9-59
90459-2939	BUFFER UNIT, 6EP1961-3BA01	12-43
90459-3081	HOUSING HAN A 19 20 003 1250	5-7, 5-9
90459-3115	BRACKET, REAR, CLEVIS, ROUND, BORE 32	1-65
90459-3145	FLASH MEMORY 64MBYTE, 1784-CF64	9-43
90459-3197	HOT MELT NOZZLE, SATURN 322014	3-5, 3-7, 10-13
90459-3279	BLANK PLUG BLACK, SQUARE, PLASTIC ZB5SZ5	5-115
90459-3441	FREQ. CONV., 22B-A2P3N104	9-57, 9-59
90459-3449	FREQ. CONV., 22A-A2P3N104	9-57, 9-59, 9-63
90459-3450	FREQ. CONV., 22A-A4P5N104	9-9, 12-5
90459-3454	FOOTPRINT FILTER 1 PHASE 18A	9-57, 9-59
90459-3460	FOOTPRINT FILTER 1 PHASE 10A	9-9, 9-57, 9-59, 9-63, 12-5
90459-3603	PRESSURE GAUGE, MAP-40-6-1/8-EN	5-75, 5-77
90459-3604	FLOW CONTROL VALVE, GR-QS-6	5-75, 5-77
90459-3655	REAR CLEVIS FOOT MOUNTING, LBN-12/16	10-17
90459-3670	HOOD HAN 3A 19 20 003 1440	4-9, 4-11
90459-3779	HANDLE, GN565 SW 192-M8	6-59, 6-61
90459-4083	ADHESIVE, NATIONAL 134-135B	10-13
90459-4089	SAFETY SENSOR NON-CONTACT EVA E	4-13, 4-15, 5-105, 5-107
90459-4133	POWER SUPPLY UNIT 6EP1 436-3BA00	9-51
90459-4165	SAFETY SCREW SM4X25, 20-053-43	4-13, 4-19, 5-105, 5-107
90459-4181	CURR. LIM. CIRC. BREAKER, NZMB1-4-A40	9-7
90459-4235	SNP TO DF1 GATEWAY, 0220 1166 01 REV B	12-45
90459-4252	CABLE M12-C101, 20-056-10	5-109
90459-4588	RADIAL SEAL 60X85X8 MM DUST LIP	1-49, 1-51, 1-53, 1-55
90459-4727	STANDING BEARING, KSTM-20	1-61
90459-4735	SCREW M6S ISO 4017 M8X10 A480	4-9, 4-11, 5-25, 5-27, 5-29, 5-31
90459-4876	FOCUS JUMPER CABLE M12 5P 3M, 20-056-21	5-105, 5-107
90459-4891	PROGR. IDENTIFIER ID-FIX RW, 20-070-21	9-49
90459-4931	LENS WITH SCALE OF LENGTHS 10X	10-33
90459-5152	SCREW HEX.SOCK.SET CONEPT. MS6SS M6X10 A	8-5, 8-7, 8-19, 8-21, 8-25, 8-27
90459-5195	SLIM POWER RAIL,KINETIX,8 AXIS,2094-PRS8	9-41
90459-5308	CONTACTOR 4KW 24VDC, DILM9-10	9-39, 9-47, 9-57, 9-59, 9-63
90459-5309	CONTACTOR 7,5KW 24VDC, DILM17-10	9-39
90459-5311	CONTACTOR 15KW 24VDC, DILM32-10	9-39
90459-5323	OVERLOAD PROTECTION, PKZM0-1	9-57, 9-59
90459-5326	OVERLOAD PROTECTION, PKZM0-4	9-37
90459-5481	OIL PUMP 3L, 10P-P3	5-89
90459-5522	CONN. BANJO, COR8PB6M10	5-89
90459-5529	PH.CELL E3Z-T86A, SENDER+RECIEVER	4-43, 4-45, 5-21, 5-23, 8-5, 8-7, 8-19, 8-21, 8-25, 8-27, 10-21, 10-23, 12-17
90459-5627	CONNECTION TINA 1A, 20-054-00	5-105, 5-107
90459-5811	RESIDUAL CURRENT DEVICE, FI-25/2/003-A	9-35
90459-5813	AUXILIARY CONTACT, FAZ-XHIN11	9-37
90459-5817	REGULATOR, MS4-LR-1/4-D6-A8-AS	5-75, 5-77
90459-5863	PUSH-IN FITTING QS-12-8	3-5, 3-7
90459-5886	POWER SUPPLY UNIT 115-230 VAC/24VDC100W	9-51
90459-5949	REAR CLEVIS FOOT MOUNTING, CRLBN-32	1-65
90459-6062	ARMORBLOCK DIGITAL CONFIGURABLE I/O	4-9, 4-11, 5-7, 5-9
90459-6280	NUT GUK 5 M25 X 1.5 FZB	1-7, 1-9, 1-31, 1-35, 1-43, 1-47, 1-49, 1-51, 1-53, 1-55
90459-6395	CABLE, ETHERNET RJ 45 STRAIGHT.10M	9-71
90459-6426	PRESSURE GUARD PEV-1/4-B-OD	5-83
90459-6470	CONNECTOR RJ45 TER. BL., AK-U0-RJ45-TB2P	9-63
90459-6556	PLC DIGITAL INPUT 32PTS, 1756-IB32/B	9-43
90459-6557	PROCESSOR L61, SERIES B, 1756-L61/B	9-43
90459-6570	CONNECTOR M12 5-POLES MALE, RSCN5/7	4-9, 4-11
90459-6586	ACT/SENS.Y-CABLE, ASBN 2-PRKMV 4-07/0,6M	1-9, 4-43, 4-45, 5-21, 5-23, 8-5, 8-7, 8-19, 8-21, 8-25, 8-27, 10-19, 12-17
90459-6617	COVER 4-POLE, NZM1-4-XKSA	9-7
90459-6692	SAFETY PLC, PLUTO B20 20-070-06	9-49
90459-6768	FAN 2BH1300-7AV15	5-67
90459-6820	FEMALE INSERT HAN 4 A, 09 20 004 2711	5-7, 5-9
90459-6821	MALE INSERT, HAN 4A, 0920 0042 611	4-9, 4-11
90459-6852	AUXILIARY CONTACT, DILA-XHI22	9-47, 9-57, 9-59, 9-63
90459-6858	ETHERNET SW, FL SWITCH SF 8TX FROM V 14	9-51
90459-6913	ELECTROMAG. DOOR LOCK. DEV.,JSD-ZH-EM1-K	5-105, 5-107
90459-6948	PROX.SWITCH IFS206	3-27, 3-29, 7-21
90459-6961	SAFETY SENSOR, NON CONT. ADAM-E M12 0,5M	4-13, 4-19, 5-105, 5-107
90459-7107	SLEEVE QSH-16-12	5-75, 5-77
90459-7207	MOTOR FEEDBACK CABLE 2090-XXNFMP-S09/C	5-99, 12-37
90459-7228	ELECTRICAL EQUIPMENT SIGN, TEMPLATE	12-47
90459-7229	IDENTIF. OF SINGLE CONDUCTORS, TEMPLATE	9-5
90459-7267	POWER SUPPLY 24VDC, 1756-PB75/B	9-43
90459-7332	PUSH-IN FITTING QSSF-1/8-4-B	5-75, 5-77
90459-7333	PUSH-IN FITTING QSSF-1/4-4-B	5-75, 5-77
90459-7344	PRESSURE GAUGE, MA-40-6-R1/4-EN	5-75, 5-77
90459-7366	PHOTOCELL WTB4-3P3161 F20	4-27
90459-7368	MARKING FOR PNEUM. TUBING, PRZ04	5-75, 5-77, 7-21, 7-29, 10-17, 10-29, 10-31

Part No	Description	Page No
90459-7369	MARKING FOR PNEUM. TUBING, PRZ06	1-13, 1-65, 5-75, 5-77, 5-111
90459-7370	MARKING FOR PNEUM. TUBING, PRZ08	3-5, 3-7, 5-73, 5-75, 5-77, 7-29, 10-29, 10-31
90459-7372	MARKING FOR PNEUM. TUBING, PRZ12	5-75, 5-77
90459-7373	MARKING FOR PNEUM. TUBING, PRZ16	5-75, 5-77, 5-85
90459-7426	PUSH-IN L-FITTING QSML-M3-3	7-21
90459-7427	PUSH-IN FITTING QSM-4-3	7-21
90459-7428	TUBE PUN-H-3X0,5-BL	7-21
90459-7429	CYLINDER, GRIPPER HGP-16-A-B	7-21
90459-7458	WARNING SIGN ANSI (H), HOT SURFACE	12-47
90511-8563	STRIPE HEIGHT 70MM, ROLL LENGTH 25M	5-11, 5-13
90600-0203	COMMONING BUSBAR, 1-PH 85A	9-19
90600-0344	CARRIAGE, SSR 25 XWYQZSSHH M	3-5, 3-7, 3-15, 3-17, 3-25, 6-11
90600-0347	NEEDLE BEARING W/O CONE, 16X24X16MM	7-25, 7-27
90600-0349	INNER RING, IR12X16X20	7-25, 7-27
90600-0350	LINEAR GUIDE, RSR12WVMUU+80LM G15/G25	7-15
90600-0351	COMP. SPRING 2489, 1,2X9,4X30	7-23
90600-0373	RETAINING RING FOR SHAFT DIN 471 21 SS	6-73, 6-75
90600-0375	BALL BUSHING, 12X21X30 MM	6-73, 6-75
90600-0376	SHAFT, LM SHAFT 12 G6 89L M	6-73, 6-75
90600-0434	GUIDE BAR, SSR25-180L-YM G30/30	6-9
90600-0454	CLAMPING ELEMENT WITH SLEEVE, 16X24 MM	6-37, 6-39, 6-41
90600-0482	GUIDE BAR, SSR 25 305 LYM G32.5/32.5	3-15, 3-17, 3-27
90600-0483	GUIDE BAR, SSR 25-430LYM G35/35	3-15
90600-0484	GUIDE BAR, SSR 25 253L-YM G36.5/36.5	3-5, 3-7, 3-25
90600-0485	GUIDE BAR, SSR25 385L YM G42.5/42.5	3-17
90600-0486	TIMING BELT 50AT10/1120 PU	3-25
90600-0487	TIMING BELT 50AT10/1410 PU	3-15
90600-0656	COMP. SPRING 6777, 4X36X120	2-21
90600-0658	WORM GEAR SCREW JACK, TP00063000130	4-5, 5-17
90600-0683	COMP. SPRING 2496, 1,2X10,4X45	2-13
90600-0685	THREAD LOCKING, LOCTITE 2701 50 ML	6-83, 7-9, 7-15
90600-0761	GEARS,PLANETARY TP010S-MA3-66-0E1/MPL B4	6-19
90600-0773	AUTOMATIC GUN HOSE, #104008	5-111
90600-0798	BUSHING INSERT, JUM-02-30	1-33, 1-45
90600-0799	STANDING BEARING, KSTM-25	1-59
90600-0800	FLANGE BEARING 20X89X20 MM	1-61, 5-19
90600-0803	WORM GEAR MR V 63 UO3A-80B4 … B5/35	1-49, 1-51, 1-53, 1-55
90600-0804	WORM GEAR MR V 63 UO3A-80B4 … B5/140	2-15
90600-0812	GEAR BOX, TP00042000110	1-21
90600-0814	TIMING BELT AT10 5250X25 MM+35236050	1-67, 1-69, 1-71, 1-73
90600-0815	TIMING BELT 25AT10/4800 +32 2. 3.6.050	1-67, 1-69, 1-71, 1-73
90600-0825	GUIDE BAR, 4 RSR20VMUU+580LM	1-63
90600-0892	NEEDLE ROLLER BEARING, 50X80X28 MM	1-49, 1-51, 1-53, 1-55
90600-0961	ROLLER CHAIN, SIMPLEX 3/8 -159, SS	1-21
90600-0962	ROLLER CHAIN, SIMPLEX 3/8 -243, SS	1-21
90600-0964	ROLLER CHAIN, SIMPLEX 3/8 -333, SS	1-21
90600-0971	RACK, ZRR2-100	5-11, 5-13
90600-1001	CROSS CLAMP, 340/68385	5-73
90600-1002	FOOT 45000N, 297/63399N	4-5, 5-11, 5-13
90600-1005	WORM GEAR SCREW JACK, TR00042000130	1-61
90600-1080	DOUBLE ACTING, ROUND, CYL 32-80	1-13
90600-1096	PROCESSOR UNIT IN-SIGHT 5100, IS-5100-005	5-53, 5-55, 5-57, 5-59, 12-23, 12-25, 12-27, 12-29
90600-1159	ROLLER CHAIN, SIMPLEX 3/8 -290, SS	5-19
90600-1167	PLUG, EXT. R-THREAD, R1/4	4-21
90600-1175	ELBOW WITH TAILPIECE 8/8 MM	5-75, 5-77
90600-1198	HANDLE, MZM1-XSM-R	9-7
90600-1420	REGULATOR, MS4-LRB-1/4-D6-AS	4-21
90600-1759	CONTACTOR22KW24VDCDILM50-22+DILM65-XIP2X	9-35, 9-39
90600-1772	SCREW DIN7984 M6X12 AISI 304	7-37, 7-39, 7-41, 7-43
90600-2052	PHOTOCELL	2-7, 12-35
90600-2068	DELIVERED DESIGN SIGN, 90600-2068	9-5
90600-2102	POWER I/O CABLE, CCB-84901-0103-10	5-53, 5-55, 5-57, 5-59, 12-23, 12-25, 12-27, 12-29
90600-2103	ETHERNET CABLE, CCB-84901-1004-10	5-53, 5-55, 5-57, 5-59, 12-23, 12-25, 12-27, 12-29
90600-2560	COUPLING 14X20 MM, 727-38-4838	4-5
90600-2563	SCREW PANHEAD SNAKE EYE SPANNER, M6X12	5-105, 5-107
90600-2830	FASTENING ELEMENT, BLOCKSEP-E 01026	9-11
90600-2904	EARTH BRAID, 250/16/8,5	9-5
90600-3011	CONVEYOR BELT, -25 AT10/5250 +35 2.3.7.3	1-67, 1-69, 1-71, 1-73
90600-3012	TIMING BELT 25AT10/4800 PU	1-67, 1-69, 1-71, 1-73
90600-3272	PROX. SENSOR, SMT-8M-PS-24V-K-5,0-OE	7-21
90600-3293	MOTOR PWWER CABLE 2090-XXNPMF-16S09	5-99, 5-109, 12-37
90600-3294	MOTOR FEEDBACK CABLE 2090-XXNFMF-S09/C	5-99, 5-109, 12-37
90600-3573	SOCKET CONN. CABLE, KMEB-2-24-M12-0,5-LE	4-21
90600-4049	LIGHT FIXTURE, TCH128 1XTL5-21W/830 HF	9-5
90600-4731	RELAY	9-19
90600-4732	LASER SENSOR, WS/WE9L-P330	1-9, 10-21, 10-23
90600-4821	TIMING BELT 25AT10/4800 PU	1-67, 1-69, 1-71, 1-73
90600-4822	TIMING BELT 25AT10/5250+35 2.3.7.358	1-67, 1-69, 1-71, 1-73
90600-5135	BUSHING, 12X14X8 MM	2-13
90600-5212	AXIS MOD. W. PS,2094-BC02-M02-S SERIES B	9-41
90600-5214	AXIS MOD. KINETIX 6000,2094-BM01-S SER.B	9-41, 9-57, 9-59, 9-65, 12-41
90600-5216	AXIS MOD. KINETIX 6000,2094-BM02-S SER.B	9-57, 9-59
90600-5249	FERRITE, B64290L616X38	9-9, 9-51, 9-57, 9-59, 9-63
90600-5252	LINE FILTER, B84113HB30	9-9

Part No	Description	Page No
90600-5547	VIBRATION DAMPER, D-TYPE 20X15 M6X15 NBR	7-21
90600-5813	SOLENOID VALVE, CPE18-M1H-3GL-1/4	4-21
90600-5823	SIGN, MAIN POWER MACHINE LABEL	9-5
90600-5840	PLC DEVICEN. BR./SCAN MOD, 1756-DNB, D	9-43
90600-5931	BRIDGE CONNECTOR WQV 6/3	9-17
90600-6183	TUBULAR RIVET 3,5X6,2	5-25, 5-27, 5-29, 5-31
90600-8128	OPER. PANEL 15"PV+,2711P-T15C4D2TP SER.B	5-115
90601-0668	SERVO MOTOR MPL-B420P-MK72AA SERIES A	1-49, 1-51, 1-53, 1-55, 2-15
90601-1926	SERVO MOTOR MPL-B430P-MK72AA SERIES A	3-19, 3-21, 6-19
90601-2046	CAPTIVE SCREW M6, GUTBG 6-4-12	5-129, 5-141
90601-4430	SERVO MOTOR MPL-B320P-MJ72AA, SERIES A	7-11
90601-5090	SERVO MOTOR MPL-B310P-MK72AA SERIES A	6-37, 6-39, 6-41
90601-6410	PHOTOCELL, WF 5-60 B410	2-7, 12-35
90602-3390	GEARS, PLAN. MR 112 EC FO2C 00 / I = 10	3-19, 3-21
90602-3790	ADHESIVE, HOTM. CAPFIX 100 134-477D 12KG	10-13
90602-3985	RING LIGHT ILLUMINATOR, TLD-150-617-C	5-63, 12-33
90602-4058	CONNECTION BOX TINA 4A, 20-054-03	4-9, 4-11, 5-105, 5-107
90602-4060	LIGHT ELEMENT, BLUE, PSD-S OE LED BU	5-101
90602-4061	LIGHT ELEMENT, GREEN, PSD-S OE LED GN	5-101
90602-4062	LIGHT ELEMENT, RED, PSD-S OE LED RD	5-101
90602-4063	LIGHT ELEMENT, YELLOW, PSD-S OE LED YE	5-101
90602-4627	TERMINAL ELEMENT, PSD-S CE-TM SPRING	5-101
90602-4631	SIREN 100DB, PSD-S AE SM8-5 100DB/1	5-101
90602-4674	TIMING BELT 25T10/1150-DL PU	1-11
90602-4689	TIMING BELT 32T5/780 PU + SUPERGRIP	1-7, 1-9
90602-4847	THREAD LOCKING, LOCTITE 243 50 ML	1-75, 6-73, 6-75, 7-33, 7-35
205438-0000 ..	CABLE GLAND	5-51, 5-65
290027-0000 ..	WASHER	1-7, 1-9
311103-0236 ..	PARALLEL PIN ISO 2338 3M6X16 A1	7-21
311103-0267 ..	PARALLEL PIN ISO 2338 4M6X10 A1	10-35
311103-0268 ..	PARALLEL PIN ISO 2338 4M6X12 A1	4-29, 4-31, 4-33, 4-35, 4-37, 4-39, 4-41, 6-73, 6-75
311103-0278 ..	PARALLEL PIN ISO 2338 4M6X35 A1	4-23
311103-0306 ..	PARALLEL PIN ISO 2338 5M6X12 A1	4-29, 4-31, 4-33, 4-35, 4-39, 4-41, 5-53, 5-55, 5-57, 5-59, 12-23, 12-25, 12-27, 12-29
311103-0307 ..	PARALLEL PIN ISO 2338 5M6X14 A1	2-7, 12-35
311103-0308 ..	PARALLEL PIN ISO 2338 5M6X16 A1	5-53, 5-55, 5-57, 5-59, 5-61, 5-63, 5-65, 6-11, 12-23, 12-25, 12-27, 12-29, 12-31, 12-33
311103-0348 ..	PARALLEL PIN ISO 2338 6M6X10 A1	7-21, 8-19, 8-21, 8-25, 8-27
311103-0349 ..	PARALLEL PIN ISO 2338 6M6X12 A1	4-29, 4-31, 4-33, 4-35, 4-37, 4-39, 4-41, 6-19, 7-47, 7-49
311103-0351 ..	PARALLEL PIN ISO 2338 6M6X16 A1	1-41, 5-11, 5-13, 6-31, 6-37, 6-39, 6-41, 6-63, 7-15
311103-0352 ..	PARALLEL PIN ISO 2338 6M6X18 A1	7-47, 7-49, 10-7
311103-0353 ..	PARALLEL PIN ISO 2338 6M6X20 A1	1-35, 1-47, 1-49, 1-51, 1-53, 1-55, 1-63, 1-67, 1-69, 1-71, 1-73, 3-5, 3-7, 7-13, 7-47, 7-49, 10-21, 10-23
311103-0354 ..	PARALLEL PIN ISO 2338 6M6X22 A1	6-13
311103-0356 ..	PARALLEL PIN ISO 2338 6M6X28 A1	7-23
311103-0357 ..	PARALLEL PIN ISO 2338 6M6X30 A1	4-9, 4-11
311103-0361 ..	PARALLEL PIN ISO 2338 6M6X40 A1	4-29, 4-31, 4-33, 4-35, 4-37, 4-39, 4-41
311103-0365 ..	PARALLEL PIN ISO 2338 6M6X50 A1	4-5
311103-0367 ..	PARALLEL PIN ISO 2338 6M6X55 A1	6-37, 6-39, 6-41
311103-0401 ..	PARALLEL PIN ISO 2338 8M6X20 A1	3-17, 12-39
311103-0405 ..	PARALLEL PIN ISO 2338 8M6X30 A1	5-17, 6-35, 6-43, 6-45, 6-47, 6-49, 6-51, 6-53, 6-55
311103-0406 ..	PARALLEL PIN ISO 2338 8M6X32 A1	7-13
311103-0407 ..	PARALLEL PIN ISO 2338 8M6X35 A1	6-57
311103-0454 ..	PARALLEL PIN ISO 2338 10M6X20 A1	6-67, 12-39
311103-0458 ..	PARALLEL PIN ISO 2338 10M6X30 A1	6-7, 6-17, 6-37, 6-39, 6-41
311103-0464 ..	PARALLEL PIN ISO 2338 10M6X45 A1	3-23
311103-1274 ..	PARALLEL PIN ISO 2338 4M6X24 A1	4-9, 4-11
311103-1355 ..	PARALLEL PIN ISO 2338 6M6X24 A1	1-67, 1-69, 1-71, 1-73, 6-13, 6-57
311103-1456 ..	PARALLEL PIN ISO 2338 10M6X24 A1	3-29, 6-67
311112-0208 ..	SPRING PIN, ISO 8752 3X16-C	2-13
311112-0255 ..	SPRING PIN, ISO 8752 4X18-C	6-73, 6-75
311112-0256 ..	SPRING PIN, ISO 8752 4X20-C	2-13
311112-0312 ..	SPRING PIN, ISO 8752 5X28-C	1-61
311112-0345 ..	SPRING PIN, ISO 8752 6X32-C	1-23
311112-0347 ..	SPRING PIN, ISO 8752 6X40-C	1-59
311112-0349 ..	SPRING PIN, ISO 8752 6X50-C	5-17
311520-0320 ..	RIVET, BLANK 2,4X6	9-5
312104-0379 ..	SCREW M6S M6X45H FZB	1-49, 1-51, 1-53, 1-55
312105-0285 ..	SCREW M6S ISO 4017 M4X6 A470	6-83, 7-37, 7-39, 7-41, 7-43
312105-0287 ..	SCREW M6S ISO 4017 M4X8 A470	1-11, 4-23, 4-31, 4-33, 5-53, 5-55, 5-57, 5-59, 5-61, 5-63, 6-13, 7-21, 12-23, 12-25, 12-27, 12-29, 12-31, 12-33
312105-0289 ..	SCREW M6S H4X10 A4 70 ISO4017/DIN933	1-9, 1-29, 1-41, 2-7, 4-9, 4-11, 4-31, 4-33, 8-5, 8-7, 8-19, 8-21, 8-25, 8-27, 12-35
312105-0291 ..	SCREW M6S ISO 4017 M4X12 A470	1-77, 2-13, 2-15, 4-27, 5-51, 5-65
312105-0292 ..	SCREW M6S ISO 4017 M4X14 A470	7-7, 7-17, 7-45
312105-0293 ..	SCREW M6S ISO 4017 M4X16 A470	4-29, 4-31, 4-33, 4-35, 4-37, 4-39, 4-41, 6-83
312105-0295 ..	SCREW M6S ISO 4017 M4X20 A470	7-21
312105-0297 ..	SCREW M6S ISO 4017 M4X25 A470	2-7, 4-21, 12-35
312105-0303 ..	SCREW M6S ISO 4017 M4X40 A470	2-7, 12-35
312105-0323 ..	SCREW M6S ISO 4017 M5X8 A480	10-21, 10-23
312105-0325 ..	SCREW M6S ISO 4017 M5X10 A480	4-9, 4-11, 4-29, 4-31, 4-33, 4-35, 4-41, 6-73, 6-75, 8-5, 8-7, 8-19, 8-21, 8-25, 8-27, 8-29, 10-17
312105-0327 ..	SCREW M6S ISO 4017 M5X12 A480	1-7, 1-9, 1-59, 2-9, 2-11, 4-9, 4-11, 4-19, 4-21, 4-29, 4-31 ... 4-33, 4-35, 4-37, 4-39, 4-41, 4-43, 4-45, 5-147, 7-25, 7-27, 8-13, 8-15, 8-17, 8-31, 10-11, 12-13

Part No	Description	Page No
312105-0328 ..	SCREW M6S ISO 4017 M5X14 A480	5-41, 7-13, 10-19
312105-0329 ..	SCREW M6S ISO 4017 M5X16 A480	1-77, 2-9, 2-11, 3-29, 4-13, 4-21, 4-29, 4-31, 4-33, 4-35 . 4-37, 4-39, 4-41, 4-43, 4-45, 5-39, 5-43, 8-5, 8-7, 8-11, 8-19, 8-21, 8-23, 8-25, 8-27, 10-17, 12-19
312105-0331 ..	SCREW M6S ISO 4017 M5X20 A480	2-9, 2-11, 2-17, 3-25, 4-9, 4-11, 4-13, 4-29, 4-37, 5-41 ... 6-19, 7-47, 7-49, 10-21, 10-23
312105-0332 ..	SCREW M6S ISO 4017 M5X22 A470	4-5
312105-0333 ..	SCREW M6S ISO 4017 M5X25 A480	4-5, 4-15, 6-13, 7-45
312105-0335 ..	SCREW M6S ISO 4014 M5X30 A480	6-73, 6-75
312105-0337 ..	SCREW M6S ISO 4014 M5X35 A480	5-91, 5-93, 5-95
312105-0343 ..	SCREW M6S ISO 4014 M5X60 A480	1-13
312105-0364 ..	SCREW M6S ISO 4017 M6X10 A480	1-7, 1-9, 6-37, 6-39, 6-41, 10-21, 10-23, 10-29, 10-31
312105-0366 ..	SCREW M6S ISO 4017 M6X12 A480	1-29, 1-41, 2-13, 3-27, 4-9, 4-11, 4-29, 4-31, 4-33, 4-35 4-41, 5-7, 5-9, 5-11, 5-13, 5-35, 5-125, 5-127, 5-131, 5-141, 5-147, 6-17, 6-37, 6-39, 6-41, 7-7 ... 7-17, 10-17
312105-0367 ..	REW M6S ISO 4017 M6X14 A480	1-77, 5-21, 5-23, 7-9
312105-0368 ..	SCREW M6S ISO 4017 M6X16 A480	1-11, 1-77, 2-17, 2-19, 3-15, 4-9, 4-11, 4-19, 4-43, 4-45 5-7, 5-9, 5-11, 5-13, 5-19, 5-53, 5-55, 5-57, 5-59, 5-67, 5-101, 6-11, 6-73, 6-75, 8-5, 8-7, 8-19, 8-21 ... 8-25, 8-27, 9-55, 12-9, 12-23, 12-25, 12-27, 12-29
312105-0370 ..	SCREW M6S ISO 4017 M6X20 A480	1-7, 1-9, 1-33, 1-35, 1-45, 1-59, 1-61, 1-65, 1-67, 1-69 1-71, 1-73, 2-9, 2-11, 2-17, 2-19, 3-13, 3-15, 3-25, 4-29, 4-31, 4-33, 4-35, 4-37, 4-39, 4-41, 5-11 5-13, 5-15, 5-35, 5-103, 5-105, 5-107, 6-67, 7-23, 7-47, 7-49, 8-5, 8-7, 8-9, 8-19, 8-21, 8-25, 8-27 ... 10-7, 10-17, 10-21, 10-23
312105-0371 ..	SCREW M6S ISO 4017 M6X22 A480	3-5, 3-7, 7-23
312105-0372 ..	SCREW M6S ISO 4017 M6X25 A480	1-59, 1-77, 2-9, 2-11, 2-17, 3-15, 3-25, 3-27, 3-29, 5-7, 5-9 5-63, 5-65, 5-111, 5-153, 6-9, 6-73, 6-75, 7-11, 7-15, 7-45, 8-5, 8-7, 8-19, 8-21, 8-25, 8-27, 10-7, 12-33
312105-0374 ..	SCREW M6S ISO 4014 M6X30 A480	1-31, 1-35, 1-43, 1-47, 1-77, 3-9, 3-11, 3-23, 5-51, 6-37 ... 6-39, 6-41, 7-23
312105-0376 ..	SCREW M6S ISO 4014 M6X35 A480	1-77, 10-17
312105-0378 ..	SCREW M6S ISO 4014 M6X40 A480	2-17, 5-17, 7-13, 7-29, 10-21, 10-23, 10-29, 10-31
312105-0379 ..	SCREW M6S ISO 4014 M6X45 A480	1-59, 7-47, 7-49
312105-0382 ..	SCREW M6S ISO 4014 M6X60 A480	5-51, 5-65
312105-0384 ..	SCREW M6S ISO 4014 M6X70 A480	7-15
312105-0388 ..	SCREW M6S ISO 4014 M6X90 A480	5-11, 5-13
312105-0390 ..	SCREW M6S ISO 4014 M6X100 A480	4-5
312105-0447 ..	SCREW M6S ISO 4017 M8X12 A480	5-67
312105-0449 ..	SCREW M6S ISO 4017 M8X16 A480	2-7, 3-31, 5-19, 10-17, 12-35
312105-0451 ..	SCREW M6S ISO 4017 M8X20 A480	1-11, 1-67, 1-69, 1-71, 1-73, 2-15, 2-17, 3-11, 5-21, 5-23 ... 5-35, 5-53, 5-55, 5-57, 5-59, 5-65, 5-111, 12-23, 12-25, 12-27, 12-29, 12-39
312105-0452 ..	SCREW M6S ISO 4017 M8X22 A480	1-49, 1-51, 1-53, 1-55, 5-19, 7-45
312105-0453 ..	SCREW M6S ISO 4017 M8X25 A480	1-7, 1-21, 1-61, 1-67, 1-69, 1-71, 1-73, 1-77, 2-15, 3-11 ... 3-15, 3-17, 3-23, 3-27, 4-5, 4-43, 4-45, 5-51, 6-57, 12-39
312105-0455 ..	SCREW M6S ISO 4017 M8X30 A480	1-7, 1-49, 1-51, 1-53, 1-55, 1-59, 2-15, 3-11, 3-25, 3-29
		... 4-5, 4-43, 4-45, 5-17
312105-0457 ..	SCREW M6S ISO 4014 M8X35 A480	1-7, 1-31, 1-35, 1-43, 1-47, 6-31, 6-33, 6-35, 6-43, 6-45 ... 6-47, 6-49, 6-51, 6-53, 6-55, 6-59, 6-61, 6-63, 6-65
312105-0459 ..	SCREW M6S ISO 4014 M8X40 A480	1-31, 1-43, 1-49, 1-51, 1-53, 1-55, 1-59, 2-17, 3-23
312105-0460 ..	SCREW M6S ISO 4014 M8X45 A480	1-31, 1-43, 2-19
312105-0462 ..	SCREW M6S ISO 4014 M8X55 A480	5-131
312105-0465 ..	SCREW M6S ISO 4014 M8X70 A480	1-67, 1-69, 1-71, 1-73, 5-89
312105-0466 ..	SCREW M6S ISO 4014 M8X75 A480	5-21, 5-23
312105-0469 ..	SCREW M6S ISO 4014 M8X90 A480	1-21, 1-61
312105-0471 ..	SCREW M6S ISO 4014 M8X100 A480	5-17
312105-0473 ..	SCREW M6S ISO 4014 M8X110 A480	1-7, 1-9
312105-0475 ..	SCREW M6S ISO 4014 M8X120 A480	1-67, 1-69, 1-71, 1-73
312105-0493 ..	SCREW M6S ISO 4017 M10X25 A480	4-9, 4-11
312105-0495 ..	SCREW M6S ISO 4017 M10X30 A480	4-9, 4-11
312105-0497 ..	SCREW M6S ISO 4017 M10X35 A480	6-37, 6-39, 6-41
312105-0499 ..	SCREW M6S ISO 4014 M10X40 A480	6-17
312105-0500 ..	SCREW M6S ISO 4014 M10X45 A480	6-7, 6-17
312105-0501 ..	SCREW M6S ISO 4014 M10X50 A480	6-37, 6-39, 6-41
312105-0515 ..	SCREW M6S ISO 4014 M10X120 A480	2-15, 2-17
312105-0519 ..	SCREW M6S ISO 4014 M10X150 A480	4-5
312108-0329 ..	SCREW EN 1665 TYPE F M5X16 A270	7-11
312108-0370 ..	SCREW EN 1665 TYPE F M6X20 A270	3-9
312108-0372 ..	SCREW EN 1665 TYPE F M6X25 A270	3-9
312108-0374 ..	SCREW EN 1665 TYPE F M6X30 A270	7-17
312108-0455 ..	SCREW EN 1665 TYPE F M8X30 A270	3-9
312109-0335 ..	SCREW M6S ISO 4017 M5X30 A480	4-9, 4-11, 4-35, 8-5, 8-7, 8-19, 8-21, 8-25, 8-27
312109-0339 ..	SCREW M6S ISO 4017 M5X40 A480	4-29, 4-31, 4-33, 4-41
312109-0340 ..	SCREW M6S ISO 4017 M5X45 A480	1-75, 4-37, 4-39
312109-0374 ..	SCREW M6S ISO 4017 M6X30 A480	1-59, 3-29, 6-73, 6-75, 8-5, 8-7, 10-17
312109-0376 ..	SCREW M6S ISO 4017 M6X35 A480	2-9, 2-11, 2-17, 3-9
312109-0378 ..	SCREW M6S ISO 4017 M6X40 A480	4-5, 4-9, 4-11, 4-29, 4-31, 4-33, 4-35, 4-37, 4-39, 4-41
312109-0380 ..	SCREW M6S ISO 4017 M6X50 A480	3-23, 4-5
312109-0386 ..	SCREW M6S ISO 4017 M6X80 A480	8-5, 8-7, 8-19, 8-21, 8-25, 8-27
312109-0457 ..	SCREW M6S ISO 4017 M8X35 A480	2-15, 6-57, 7-13
312109-0459 ..	SCREW M6S ISO 4017 M8X40 A480	1-9, 2-15, 2-19
312109-0461 ..	SCREW M6S ISO 4017 M8X50 A480	2-7, 3-11, 12-35
312109-0463 ..	SCREW M6S ISO 4017 M8X60 A480	2-15, 3-23, 4-43, 4-45
312109-0467 ..	SCREW M6S ISO 4017 M8X80 A480	1-7, 1-9, 4-9, 4-11
312109-0500 ..	SCREW M6S ISO 4017 M10X45 A480	6-67
312109-0542 ..	SCREW M6S ISO 4017 M12X50 A280	1-35, 1-47
312109-0552 ..	SCREW M6S M12X100H A480	5-11, 5-13
312115-0222 ..	SCREW ISO4762 M3X8 A4 80	4-23, 4-43, 4-45, 5-63, 12-33

Part No	Description	Page No
312115-0228 ..	SCREW ISO4762 M3X16 A4 80	1-7, 1-9, 4-27, 8-11, 8-13, 8-15, 8-17, 8-23, 8-31, 10-21, 10-23
312115-0230 ..	SCREW ISO4762 M3X20 A4 80	4-43, 4-45, 5-11, 5-13, 8-5, 8-7, 8-19, 8-21, 8-25, 8-27
312115-0232 ..	SCREW ISO4762 M3X25 A4 80	4-9, 4-11
312115-0287 ..	SCREW ISO4762 M4X8 A4 80	4-31, 4-33, 4-43, 4-45, 5-53, 5-55, 5-57, 5-59, 12-23, 12-25, 12-27, 12-29
312115-0289 ..	SCREW ISO4762 M4X10 A4 80	5-7, 5-9, 7-15
312115-0291 ..	SCREW ISO4762 M4X12 A4 80	2-13, 2-15, 5-53, 5-55, 5-57, 5-59, 5-61, 5-63, 12-23, 12-25, 12-27, 12-29, 12-31, 12-33
312115-0293 ..	SCREW ISO4762 M4X16 A4 80	1-63, 4-9, 4-11, 4-43, 4-45, 6-67, 7-21
312115-0295 ..	SCREW ISO4762 M4X20 A4 80	4-23, 10-19
312115-0297 ..	SCREW ISO4762 M4X25 A4 80	3-5, 3-7, 4-9, 4-11, 5-53, 5-55, 5-57, 5-59, 5-89, 9-5, 12-23, 12-25, 12-27, 12-29
312115-0299 ..	SCREW ISO4762 M4X30 A4 80	4-9, 4-11, 5-89
312115-0304 ..	SCREW ISO4762 M4X45 A4 80	9-7
312115-0325 ..	SCREW ISO4762 M5X10 A4 80	9-41, 9-43, 9-67
312115-0327 ..	SCREW ISO4762 M5X12 A4 80	1-63, 5-51, 5-63, 5-65, 5-113, 5-121, 9-9, 9-57, 9-59, 9-63, 10-17, 12-5, 12-33
312115-0329 ..	SCREW ISO4762 M5X16 A4 80	4-15, 4-29, 4-31, 4-33, 4-35, 4-37, 4-39, 4-41
312115-0331 ..	SCREW ISO4762 M5X20 A4 80	4-5, 4-9, 4-11, 5-53, 5-55, 5-57, 5-59, 5-61, 5-63, 10-17, 12-23, 12-25, 12-27, 12-29, 12-31, 12-33
312115-0337 ..	SCREW ISO4762 M5X35 A4 80	5-89
312115-0364 ..	SCREW ISO4762 M6X10 A4 80	1-9
312115-0366 ..	SCREW ISO4762 M6X12 A4 80	1-65, 1-67, 1-69, 1-71, 1-73, 4-43, 4-45, 6-73, 6-75, 6-83, 9-41, 9-49
312115-0367 ..	SCREW ISO4762 M6X14 A4 80	1-29, 1-41, 5-113, 5-121
312115-0368 ..	SCREW ISO4762 M6X16 A4 80	3-5, 3-7, 3-15, 3-17, 3-27, 4-9, 4-11, 4-15, 6-73, 6-75, 7-17, 9-9
312115-0370 ..	SCREW ISO4762 M6X20 A4 80	2-15, 3-17, 3-25, 4-23, 6-9, 6-37, 6-39, 6-41, 7-11, 7-13, 7-21
312115-0372 ..	SCREW ISO4762 M6X25 A4 80	1-49, 1-51, 1-53, 1-55, 4-29, 4-31, 4-33, 4-35, 4-37, 4-39, 4-41, 4-43, 4-45, 8-5, 8-7, 8-19, 8-21, 8-25, 8-27
312115-0374 ..	SCREW ISO4762 M6X30 A4 80	1-49, 1-51, 1-53, 1-55, 3-17, 4-29, 4-31, 4-33, 4-35, 4-37, 4-39, 4-41, 5-131, 12-9
312115-0378 ..	SCREW ISO4762 M6X40 A4 80	7-13
312115-0379 ..	SCREW ISO4762 M6X45 A4 80	6-19
312115-0447 ..	SCREW ISO4762 M8X12 A4 80	1-35
312115-0449 ..	SCREW ISO4762 M8X16 A4 80	1-29, 1-33, 1-41, 1-45
312115-0451 ..	SCREW ISO4762 M8X20 A4 80	1-49, 1-51, 1-53, 1-55, 4-5, 4-9, 4-11, 4-29, 4-31, 4-33, 4-35, 4-37, 4-39, 4-41
312115-0453 ..	SCREW ISO4762 M8X25 A4 80	1-49, 1-51, 1-53, 1-55, 3-19, 3-21, 4-43, 4-45, 6-19
312115-0455 ..	SCREW ISO4762 M8X30 A4 80	2-19, 5-11, 5-13
312115-0457 ..	SCREW ISO4762 M8X35 A4 80	1-49, 1-51, 1-53, 1-55, 4-43, 4-45
312115-0459 ..	SCREW ISO4762 M8X40 A4 80	1-35, 1-47
312115-0460 ..	SCREW ISO4762 M8X45 A4 80	2-15
312115-0461 ..	SCREW ISO4762 M8X50 A4 80	1-35, 1-47
312115-0489 ..	SCREW ISO4762 M10X16 A4 80	1-35, 1-47, 4-29, 4-31, 4-33, 4-35, 4-37, 4-39, 4-41
312115-0493 ..	SCREW ISO4762 M10X25 A4 80	4-9, 4-11
312115-0495 ..	SCREW ISO4762 M10X30 A4 80	4-29, 4-31, 4-33, 4-35, 4-37, 4-39, 4-41
312115-0540 ..	SCREW ISO4762 M12X40 A4 80	5-11, 5-13
312122-0291 ..	SCREW ISO 1207 M4X12 NI PL BRASS	5-51, 5-65
312125-0222 ..	SCREW ISO 1207 M3X8 A4	5-7, 5-9
312125-0226 ..	SCREW ISO 1207 M3X12 A4	9-5
312125-0232 ..	SCREW ISO 1207 M3X25 A4	5-7, 5-9
312125-0287 ..	SCREW ISO 1207 M4X8 A4	2-19, 3-23, 3-27, 3-29, 5-7, 5-9, 6-17, 6-59, 6-61, 6-67, 7-13
312125-0289 ..	SCREW ISO 1207 M4X10 A4	1-7, 1-9, 5-69, 9-9, 9-41
312125-0291 ..	SCREW ISO 1207 M4X12 A4	4-5
312125-0323 ..	SCREW ISO 1207 M5X8 A4	1-31, 1-35, 1-43, 1-47, 1-49, 1-51, 1-53, 1-55, 5-11, 5-13
312125-0325 ..	SCREW ISO 1207 M5X10 A4	9-13, 9-15, 9-19, 9-21, 9-35, 9-37, 9-39, 9-45, 9-47, 9-49, 9-51
312125-0331 ..	SCREW ISO 1207 M5X20 A4	2-19
312125-0366 ..	SCREW ISO 1207 M6X12 A4	9-9
312155-0287 ..	SCREW DIN 7991 MF6S M4X8 A4 70	12-39
312155-0289 ..	SCREW DIN 7991 MF6S M4X10 A4 70	4-29, 4-31, 4-33, 4-35, 4-37, 4-39, 4-41, 4-43, 4-45, 7-33, 7-35, 7-37, 7-39, 7-41, 7-43, 7-47, 7-49
312155-0293 ..	SCREW DIN 7991 MF6S M4X16 A4 70	4-43, 4-45, 5-53, 5-55, 5-57, 5-59, 12-23, 12-25, 12-27, 12-29
312155-0295 ..	SCREW DIN 7991 MF6S M4X20 A4 70	4-29, 4-31, 4-33, 4-35, 4-37, 4-39, 4-41
312155-0297 ..	SCREW DIN 7991 MF6S M4X25 A4 70	4-29, 4-31, 4-33, 4-35, 4-37, 4-39, 4-41
312155-0327 ..	SCREW DIN 7991 MF6S M5X12 A4 70	2-9, 2-11, 6-9, 6-73, 6-75, 6-83, 8-19, 8-21, 8-25, 8-27
312155-0329 ..	SCREW DIN 7991 MF6S M5X16 A4 70	1-15, 2-19, 4-25, 4-43, 4-45, 6-11, 7-9, 8-5, 8-7, 10-35
312155-0331 ..	SCREW DIN 7991 MF6S M5X20 A4 70	4-15
312155-0335 ..	SCREW DIN 7991 MF6S M5X30 A4 70	4-25
312155-0366 ..	SCREW DIN 7991 MF6S M6X12 A4 70	4-15, 4-29, 4-31, 4-33, 4-35, 4-37, 4-39, 4-41, 5-63, 12-33
312155-0368 ..	SCREW DIN 7991 MF6S M6X16 A4 70	1-77, 4-15, 4-17, 4-29, 4-31, 4-33, 4-35, 4-37, 4-39, 4-41, 7-9, 7-15, 7-25, 7-27, 8-5, 8-7, 8-19, 8-21, 8-25, 8-27
312155-0370 ..	SCREW DIN 7991 MF6S M6X20 A4 70	2-9, 2-11, 4-15, 4-43, 4-45, 5-133, 5-149, 5-151, 7-23
312155-0372 ..	SCREW DIN 7991 MF6S M6X25 A4 70	4-43, 4-45
312155-0449 ..	SCREW DIN 7991 MF6S M8X16 A4 70	1-11
312155-0451 ..	SCREW DIN 7991 MF6S M8X20 A4 70	6-11
312155-0453 ..	SCREW DIN 7991 MF6S M8X25 A4 70	3-15, 3-25, 5-53, 5-55, 5-57, 5-59, 5-61, 5-63, 12-23, 12-25, 12-27, 12-29, 12-31, 12-33
312155-0491 ..	SCREW DIN 7991 MF6S M10X20 A4 70	4-9, 4-11
312155-0501 ..	SCREW DIN 7991 MF6S M10X50A4 70	4-9, 4-11
312318-0283 ..	SCREW ISO4029 M4X4 A4	1-61
312318-0285 ..	SCREW ISO4029 M4X6 A4	1-21, 6-73, 6-75, 7-45
312318-0287 ..	SCREW ISO4029 M4X8 A4	4-23, 5-19
312318-0289 ..	SCREW ISO4029 M4X10 A4	8-5, 8-7, 8-19, 8-21, 8-25, 8-27
312318-0323 ..	SCREW ISO4029 M5X8 A4	4-43, 4-45
312318-0360 ..	SCREW ISO4029 M6X6 A4	1-61, 5-19

Part No	Description	Page No
312318-0370 ..	SCREW ISO4029 M6X20 A4	9-9
312318-0449 ..	SCREW ISO4029 M8X16 A4	6-37, 6-39, 6-41
312605-0310 ..	HEXAGON NUT, M6M M3 A280	1-9, 1-21, 5-11, 5-13, 10-21, 10-23
312605-0312 ..	HEXAGON NUT, M6M M4 A280	4-29, 4-31, 4-33, 4-35, 4-41, 5-89, 5-159, 9-5, 12-39
312605-0314 ..	HEXAGON NUT, M6M M5 A280	4-5, 4-15, 5-39, 5-41, 5-43, 5-51, 5-65, 5-105, 5-107, 5-117, 5-119, 8-5, 8-7, 8-19, 8-21, 8-25, 8-27, 9-67, 9-69, 12-13, 12-19
312605-0316 ..	HEXAGON NUT, M6M M6 A280	1-59, 1-77, 3-9, 3-17, 4-9, 4-11, 4-43, 4-45, 5-7, 5-9, 5-111, 5-125, 5-127, 5-131, 5-141, 5-149, 8-5, 8-7, 8-19, 8-21, 8-25, 8-27, 9-5, 9-7, 10-29, 10-31
312605-0318 ..	HEXAGON NUT, M6M M8 A280	1-61, 3-11, 4-9, 4-11, 4-43, 4-45
312605-0320 ..	HEXAGON NUT, M6M M10 A280	4-5, 4-9, 4-11, 6-37, 6-39, 6-41, 7-17
312605-0326 ..	HEXAGON NUT, M6M M20 A280	4-43, 4-45
312607-0312 ..	HEXAGON NUT, EN 24032 M6M M4 A480	10-19
312607-0314 ..	HEXAGON NUT, EN 24032 M6M M5 A480	3-25
312607-0316 ..	HEXAGON NUT, EN 24032 M6M M6 A480	4-5, 10-17
312607-0318 ..	HEXAGON NUT, EN 24032 M6M M8 A480	3-23, 5-21, 5-23
312607-0326 ..	HEXAGON NUT, EN 24032 M6M M20 A480	1-35
312607-0332 ..	HEXAGON NUT, EN 24032 M6M M30 A480	4-5, 5-11, 5-13
312625-0316 ..	HEXAGON THIN NUT, EN 24035 ML6M M6 A4	7-21
312625-0318 ..	HEXAGON THIN NUT, EN 24035 ML6M M8 A4	1-7
312625-0320 ..	HEXAGON THIN NUT, EN 24035 ML6M M10 A4	7-45
312625-0326 ..	HEXAGON THIN NUT, EN 24035 ML6M M20 A4	1-15
312625-0330 ..	HEXAGON THIN NUT, EN 24035 ML6M M27 A4	1-49, 1-51, 1-53, 1-55
312635-0320 ..	NUT M6M 10X1 STAINLESS A2 80	7-21
312705-0310 ..	NUT HEX. DOMED CAP MHM-6 M3 A2	4-43, 4-45
312705-0312 ..	NUT HEX. DOMED CAP MHM-6 M4 A280	4-29, 4-31, 4-33, 4-35, 4-37, 4-39, 4-41
312705-0314 ..	NUT HEX. DOMED CAP MHM-6 M5 A280	4-9, 4-11, 4-19, 4-43, 4-45, 8-5, 8-7, 8-19, 8-21, 8-25, 8-27
312705-0316 ..	HEX. DOMED CAP MHM-6 M6 A280	8-5, 8-7, 8-19, 8-21, 8-25, 8-27
312705-0318 ..	NUT HEX. DOMED CAP MHM-6 M8 A280	1-7, 4-43, 4-45
312705-0320 ..	NUT HEX. DOMED CAP MHM-6 M10 A280	7-17
312810-0310 ..	HEXAGON NUT, NY-LOCK M3 FZB	4-43, 4-45, 8-5, 8-7, 8-19, 8-21, 8-25, 8-27
312810-0312 ..	HEXAGON NUT, NY-LOCK M4 FZB	4-15, 4-27, 4-29, 4-31, 4-33, 4-35, 4-37, 4-39, 4-41, 4-43, 4-45
312810-0314 ..	HEXAGON NUT, NY-LOCK M5 FZB	4-15, 4-17, 4-19, 4-21, 4-43, 4-45
312810-0316 ..	HEXAGON NUT, NY-LOCK M6 FZB	4-15, 4-43, 4-45
312812-0312 ..	HEXAGON NUT, NY-LOCK M4 A480	2-7, 6-83, 12-35
312812-0314 ..	HEXAGON NUT, NY-LOCK M5 A480	2-9, 2-11, 2-13, 2-19, 5-89, 5-133, 5-149, 5-151, 6-83, 7-21
312812-0316 ..	HEXAGON NUT, NY-LOCK M6 A480	2-9, 2-11, 2-17, 3-17, 5-11, 5-13, 5-115, 5-153, 7-15, 10-17
312812-0318 ..	HEXAGON NUT, NY-LOCK M8 A480	1-13, 1-49, 1-51, 1-53, 1-55, 5-11, 5-13, 5-19, 5-89, 5-111
312812-0320 ..	HEXAGON NUT, NY-LOCK M10 A480	1-13
312812-0322 ..	HEXAGON NUT, NY-LOCK M12 A480	2-21
315103-0124 ..	WASHER, BRB, 3,2/6,H=0,5 NI PL BR	4-27, 4-43, 4-45, 8-5, 8-7, 8-11, 8-13, 8-15, 8-17, 8-19, 8-21, 8-25, 8-27, 8-31
315103-0136 ..	WASHER PLAIN, BRB, 4,3/8,H=0,8 NI PL BR	4-9, 4-11, 4-13, 4-21, 4-23, 4-27, 4-29, 4-31, 4-33, 4-35, 4-37, 4-39, 4-41, 4-43, 4-45, 8-5, 8-7, 8-19, 8-21, 8-25, 8-27
315103-0146 ..	WASHER, BRB, 5,3/10,H=1 NI PL BR	4-9, 4-11, 4-13, 4-15, 4-19, 4-21, 4-29, 4-31, 4-33, 4-35 4-37, 4-39, 4-41, 4-43, 4-45, 8-5, 8-7, 8-11, 8-13, 8-15, 8-17, 8-19, 8-21, 8-23, 8-25, 8-27, 8-29, 8-31
315103-0153 ..	WASHER, BRB, 6,4/12,H=1,5 NIPL BR	4-9, 4-11, 4-15, 4-19, 4-43, 4-45, 8-5, 8-7, 8-9, 8-19, 8-21, 8-25, 8-27
315103-0165 ..	WASHER PLAIN, BRB, 8,4/16,H=1,5 NIPL BR	4-9, 4-11, 4-43, 4-45
315103-0173 ..	WASHER PLAIN, BRB, 10,5/22,H=2 NI PL BR	4-9, 4-11
315105-0124 ..	WASHER BRB 3,2X6 RFR	1-7, 1-9, 5-7, 5-9, 10-21, 10-23
315105-0136 ..	WASHER BRB 4,3X8 RFR	1-9, 1-11, 1-29, 1-41, 2-7, 2-13, 2-15, 3-5, 3-7, 5-7, 5-9, 5-51, 5-53 5-55, 5-57, 5-59, 5-61, 5-63, 5-65, 5-89, 5-159, 6-13, 6-67, 7-21, 7-37, 7-39, 7-41, 7-43, 7-45, 9-5 9-7, 9-9, 10-19, 12-23, 12-25, 12-27, 12-29, 12-31, 12-33, 12-35
315105-0146 ..	WASHER BRB 5,3X10 RFR	1-7, 1-9, 1-59, 1-63, 2-9, 2-11, 2-13, 2-17, 2-19, 3-29, 4-5, 5-39 5-41, 5-43, 5-51, 5-65, 5-89, 5-91, 5-93, 5-95, 5-105, 5-107, 5-117, 5-119, 5-133, 5-147, 5-151 6-13, 6-19, 6-73, 6-75, 6-83, 7-13, 7-25, 7-45, 7-47, 7-49, 9-13, 9-15, 9-19, 9-21, 9-35, 9-37, 9-39 9-41, 9-43, 9-45, 9-47, 9-49, 9-51, 9-67, 9-69, 10-11, 10-17, 10-19, 10-21, 10-23, 12-13, 12-19
315105-0153 ..	WASHER BRB 6,4X12 RFR	1-7, 1-9, 1-11, 1-29, 1-31, 1-33, 1-35, 1-41, 1-43, 1-45, 1-47, 1-49 1-51, 1-53, 1-55, 1-59, 1-61, 1-65, 1-77, 2-9, 2-11, 2-17, 2-19, 3-5, 3-7, 3-11, 3-25, 3-27, 3-29, 4-5 5-7, 5-9, 5-11, 5-13, 5-15, 5-17, 5-19, 5-51, 5-53, 5-55, 5-57, 5-59, 5-65, 5-67, 5-101, 5-103, 5-105 5-107, 5-111, 5-113, 5-115, 5-121, 5-125, 5-127, 5-131, 5-141, 5-147, 5-149, 5-153, 6-11, 6-17 6-67, 6-73, 6-75, 7-11, 7-13, 7-15, 7-21, 7-23, 7-45, 7-47, 7-49, 9-5, 9-7, 9-9, 9-49, 10-7, 10-17 10-21, 10-23, 12-9, 12-23, 12-25, 12-27, 12-29
315105-0156 ..	WASHER BRB 6,7X14 RFR	1-77, 5-11, 5-13
315105-0165 ..	WASHER BRB 8,4X16 RFR	1-7, 1-11, 1-13, 1-21, 1-31, 1-35, 1-43, 1-47, 1-49, 1-51, 1-53, 1-55 1-59, 1-61, 1-67, 1-69, 1-71, 1-73, 1-77, 2-7, 2-15, 2-19, 3-11, 3-15, 3-23, 3-25, 3-27, 3-29, 3-31 4-5, 5-17, 5-19, 5-35, 5-53, 5-55, 5-57, 5-59, 5-67, 5-111, 6-31, 6-33, 6-57, 6-59, 6-61, 6-63, 6-65 7-13, 7-45, 9-9, 10-17, 12-23, 12-25, 12-27, 12-29, 12-35
315105-0171 ..	WASHER BRB 10X18 RFR	7-45
315105-0173 ..	WASHER BRB 10,5X22 RFR	1-13, 2-15, 6-67
315105-0178 ..	WASHER BRB 13X24 RFR	1-31, 1-35, 1-43, 1-47, 2-21, 3-23
315105-0186 ..	WASHER BRB 17X30 RFR	1-31, 1-43
315105-0192 ..	WASHER BRB 21X36 RFR	1-35
315105-0203 ..	WASHER BRB 30X52 RFR	1-49, 1-51, 1-53, 1-55
315106-0124 ..	WASHER ISO 7089-3-200 HV A4	5-39, 5-41, 5-43, 5-63, 12-19, 12-33
315106-0146 ..	WASHER ISO 7089-5-200 HV A4	1-75, 7-21
315106-0153 ..	WASHER ISO 7089-6-200 HV A4	1-77, 3-9, 3-13, 3-15, 3-17, 6-9, 6-37, 6-39, 6-41, 7-17, 7-29 10-29, 10-31
315106-0165 ..	WASHER ISO 7089-8-200 HV A4	1-67, 1-69, 1-71, 1-73, 3-17, 5-65, 6-19, 6-35, 6-43, 6-45, 6-47 6-49, 6-51, 6-53, 6-55
315106-0173 ..	WASHER ISO 7089-10-200 HV A4	6-7, 6-17, 6-37, 6-39, 6-41
315106-0192 ..	WASHER ISO 7089-20-200 HV A4	1-15
315115-0165 ..	WASHER PLAIN, TBRB 8,4/16 H=3	1-49, 1-51, 1-53, 1-55, 1-59, 1-61, 2-19, 5-17, 5-19, 5-89
315115-0173 ..	WASHER PLAIN, TBRB 10,5/22 H=4	2-17

Part No	Description	Page No
315121-0153 ..	WASHER PLAIN, TBRSB 6,4/22 H=4	10-7
315125-0146 ..	WASHER TBRSB 5.3X15X1 A4	4-9, 4-11, 4-17, 4-19
315125-0153 ..	WASHER TBRSB 6,4X22X4 A4	1-77, 2-9, 2-11, 2-13, 5-7, 5-9, 5-51, 5-65, 5-153, 7-7, 7-9, 7-11, 7-17, 8-5, 8-7, 8-19, 8-21, 8-25, 8-27
315125-0165 ..	WASHER TBRSB 8,4X26X5 A4	1-7, 1-9, 2-17, 3-23, 4-5, 5-11, 5-13, 5-21, 5-23, 5-131
315125-0173 ..	WASHER TBRSB 10,5X28X6 A4	1-35, 1-47, 7-17
315202-0602 ..	O-RING 44,04X3,53 MM	1-49, 1-51, 1-53, 1-55
315202-0702 ..	O-RING 12,42X1,78 MM	1-77, 2-19
315202-0705 ..	O-RING 17,17X1,78 MM	1-7, 1-9
315202-0710 ..	O-RING 25,12X1,78 MM	2-17
315202-0716 ..	O-RING 34,65X1,78 MM	1-77, 6-13, 7-7, 7-9, 7-17, 7-45
315202-0717 ..	O-RING 20,29X2,62 MM	1-49, 1-51, 1-53, 1-55
315202-0732 ..	O-RING 44,12X2,62 MM	1-33, 1-45
315202-0733 ..	O-RING 45,69X2,62 MM	1-7, 1-9
315202-0741 ..	O-RING 58,42X2,62 MM	1-49, 1-51, 1-53, 1-55
315221-0169 ..	RADIAL SEAL 30X47X7 MM	2-17
315221-0175 ..	RADIAL SEAL 35X47X7 MM	2-17
315221-0192 ..	RADIAL SEAL 45X62X8 MM	1-7, 1-9
315221-0198 ..	RADIAL SEAL 50X65X8 MM	1-49, 1-51, 1-53, 1-55
315230-0193 ..	BEARING SEAL G15X23X3 MM	7-25, 7-27
315230-0252 ..	BEARING SEAL G20X28X4 MM	1-77
315230-0274 ..	BEARING SEAL G22X30X4 MM	7-25, 7-27
315230-0330 ..	SEAL RING G 28X37X4	1-77, 7-7, 7-9, 7-17
315239-0110 ..	NYLON WASHER G1/4, 1/4RRP	5-69
315400-0001 ..	TUBE PUN-H-6X1-BL	1-13, 1-65, 5-75, 5-77, 5-89, 5-111
315400-0004 ..	TUBE PUN-H-8X1,25-BL	3-5, 3-7, 5-73, 5-75, 5-77, 5-83, 5-85, 7-29, 10-29, 10-31
315400-0009 ..	TUBE PUN-H-10X1,5-SW	5-69
315400-0010 ..	TUBE PUN-H-12X2-BL	5-75, 5-77
315400-0013 ..	TUBE PUN-H-16-2,5-BL	5-75, 5-77, 5-85
315400-0016 ..	TUBE PUN-H-4X0,75-BL	5-75, 5-77, 7-21, 7-29, 10-17, 10-29, 10-31
315402-0156 ..	LOCK WASHER FBB 6,5	6-73, 6-75
315701-0208 ..	PARALLEL KEY W. ROUND ENDS 5X5X40 MM	1-77
315701-0209 ..	PARALLEL KEY W. ROUND ENDS 5X5X45 MM	8-5, 8-7, 8-19, 8-21, 8-25, 8-27
315701-0238 ..	PARALLEL KEY W. ROUND ENDS 6X6X36 MM	8-5, 8-7, 8-19, 8-21, 8-25, 8-27
315701-0241 ..	PARALLEL KEY W. ROUND ENDS 6X6X50 MM	4-43, 4-45
315701-0267 ..	PARALLEL KEY W. ROUND ENDS 8X7X30 MM	4-9, 4-11
315701-0371 ..	PARALLEL KEY W. ROUND ENDS 14X9X90 MM	1-35, 1-47
315705-0201 ..	PARALLEL KEY W. ROUND ENDS 5X5X20 MM	1-77
315705-0232 ..	PARALLEL KEY W. ROUND ENDS 6X6X20 MM	1-7, 1-9, 5-19
315705-0234 ..	PARALLEL KEY W. ROUND ENDS 6X6X25 MM	1-15, 7-9
315705-0237 ..	PARALLEL KEY W. ROUND ENDS 6X6X32 MM	4-5
315705-0239 ..	PARALLEL KEY W. ROUND ENDS 6X6X40 MM	1-21, 1-61, 1-67, 1-69, 1-71, 1-73
315705-0267 ..	PARALLEL KEY W. ROUND ENDS 8X7X30 MM	1-59
315705-0303 ..	PARALLEL KEY W. ROUND ENDS 10X8X50 MM	1-31, 1-43, 1-49, 1-51, 1-53, 1-55
315705-0307 ..	PARALLEL KEY W. ROUND ENDS 10X8X70 MM	1-49, 1-51, 1-53, 1-55, 2-15
315741-0216 ..	RETAINING RING DIN 705 A4 20	1-61, 5-19
315751-0116 ..	RETAINING RING FOR SHAFT DIN 471 20 SS	1-13, 1-15, 3-13
315751-0130 ..	RETAINING RING FOR SHAFT DIN 471 50 SS	1-49, 1-51, 1-53, 1-55
315752-0136 ..	RETAINING RING FOR BORE DIN 472 62	1-31, 1-35, 1-43, 1-47
315753-0121 ..	RETAINING RING FOR BORE DIN 472 28 SS	7-25, 7-27
315753-0123 ..	RETAINING RING FOR BORE DIN 472 32 SS	4-43, 4-45
315753-0130 ..	RETAINING RING FOR BORE DIN 472 47 SS	2-17
315755-0106 ..	RETAINING RING SHAFT DIN 6799 4 SS	2-9, 2-11
315755-0109 ..	RETAINING RING SHAFT DIN 6799 7 SS	6-13
318871-0105 ..	KNOB CIRCULAR, EXT THREAD, NO. 8302-6150	5-63, 12-33
321133-0260 ..	BUSHING IGLIDUR G 20X23X20	4-5
321133-0420 ..	BUSHING IGLIDUR G 40X44X40	4-5
321135-0183 ..	BUSHING, IGLIDUR X 12X14X15	10-21, 10-23
321153-0500 ..	FLANGE BUSHING, IGLIDUR G 70X75X50	5-17
321154-0180 ..	FLANGE BUSHING, IGLIDUR W300 12X14X12	6-73, 6-75
321155-0062 ..	FLANGE BUSHING, IGLIDUR X 6X8X8	6-83
321156-0188 ..	FLANGE BUSHING, IGLIDUR H370 12X14X15	5-63, 12-33
321158-0060 ..	FLANGE BUSHING, IGLIDUR J 6X8X6	7-21, 7-25, 7-27
321158-0142 ..	FLANGE BUSHING, IGLIDUR J 10X12X12	7-21
321158-0180 ..	FLANGE BUSHING, IGLIDUR J 12X14X12	7-23
321302-0298 ..	BALL BEARING 8/22X7	7-45
321306-0104 ..	BALL BEARING 20/42X12	1-7, 1-9
321306-0105 ..	BALL BEARING 25/47X12	2-17
321308-0101 ..	BALL BEARING 12/28X8	7-25, 7-27
321308-0200 ..	BALL BEARING 10/26X8	8-5, 8-7, 8-19, 8-21, 8-25, 8-27
321308-0202 ..	BALL BEARING 15/32X9	4-43, 4-45
321308-0203 ..	BALL BEARING 17/35X10	6-13, 8-5, 8-7, 8-19, 8-21, 8-25, 8-27
321308-0204 ..	BALL BEARING 20/42X12	1-13, 4-43, 4-45
321308-0207 ..	BALL BEARING 35/62X14	4-9, 4-11
321309-0102 ..	BALL BEARING 15/35X11	7-7, 7-9, 7-17
321309-0105 ..	BALL BEARING 25/52X15	1-31, 1-35, 1-43, 1-47
321313-0102 ..	BALL BEARING 15/35X11	1-77
321314-0105 ..	BALL BEARING 25/62X17	1-31, 1-35, 1-43, 1-47
321330-0105 ..	ANG. BALL BEAR 25/52X20,6	1-49, 1-51, 1-53, 1-55
342700-0109 ..	NIPPLE, EXT.THREAD, HEXAGON, G1/8-G1/8	4-21
342706-0130 ..	STIFFNER SLEEVE FOR HOSE 6X1	5-91, 5-93, 5-95
342713-0209 ..	PLUG, EXT THREAD HEX SOCKET 8638-00-180	4-31
342715-0102 ..	BLIND PLUG 6 MM	9-5
342767-0104 ..	BULKHEAD LEAD-IN, G1/4	5-69, 5-85

Part No	Description	Page No
342921-0132 ..	STRAIGHT COUPL.,EXT.THREADED 10/8-G1/4"	5-69
342923-0132 ..	STRAIGHT COUPL.,INT.THREADED 10/8-G1/4"	5-69
342991-0108 ..	HOSE CLIP,WORM DRIVE TYPE (38)-50	5-51, 5-65
350001-0001 ..	PUSH-IN FITTING QS-F-M5-4	4-21, 10-17
350001-0006 ..	PUSH-IN FITTING QS-F-G1/8-6	5-75, 5-77
350001-0007 ..	PUSH-IN FITTING QS-F-G1/8-8	5-75, 5-77
350001-0009 ..	PUSH-IN FITTING QS-F-G1/4-8	4-21
350001-0011 ..	PUSH-IN FITTING QS-F-G1/4-12	5-75, 5-77
350001-0016 ..	PUSH-IN FITTING QS-F-G1/2-12	5-7, 5-9
350002-0001 ..	PUSH-IN L-FITTING QSL-F-M5-4	7-29, 10-29, 10-31
350002-0002 ..	PUSH-IN L-FITTING QSL-F-M5-6	5-75, 5-77
350002-0005 ..	PUSH-IN L-FITTING QSL-F-G1/8-4	4-21, 4-33, 4-35, 4-39, 4-41, 5-75, 5-77, 7-29, 10-29
350002-0006 ..	PUSH-IN L-FITTING QSL-F-G1/8-6	1-13, 1-65, 4-29, 4-37
350002-0007 ..	PUSH-IN L-FITTING QSL-F-G1/8-8	5-73, 5-75, 5-77, 7-29, 10-29, 10-31
350002-0008 ..	PUSH-IN L-FITTING QSL-F-G1/4-6	5-89
350002-0009 ..	PUSH-IN L-FITTING QSL-F-G1/4-8	5-75, 5-77, 5-83, 5-85, 10-17
350002-0011 ..	PUSH-IN L-FITTING QSL-F-G1/4-12	4-21, 5-83
350002-0016 ..	PUSH-IN L-FITTING QSL-F-G1/2-12	5-81
350003-0007 ..	USH-IN FITTING QS-F-G1/4-8-I	3-5, 3-7
350004-0005 ..	PUSH-IN L-FITTING QSL-F-12	5-75, 5-77
350005-0002 ..	PUSH-IN T-FITTING QST-F-6	5-75, 5-77
350005-0003 ..	PUSH-IN T-FITTING QST-F-8	5-75, 5-77
350005-0005 ..	PUSH-IN T-FITTING QST-F-12	5-75, 5-77
350006-0008 ..	PUSH-IN FITTING QS-F-12H-8	5-75, 5-77
350007-0005 ..	PUSH-IN T-FITTING QST-F-G1/8-4	4-21
350011-0002 ..	PUSH-IN T-FITTING QST-F-8-6	5-75, 5-77
350015-0003 ..	PUSH-IN Y-CONNECTOR QSY-F-8	3-5, 3-7
351120-0266 ..	CABLE ÖLFLEX HEAT 180 SIHF 4X4	5-109
351150-0187 ..	CABLE OLFLEX 5X6 MM2 LIGHT/GREY	5-109
351150-0403 ..	CABLE OLFLEX 3X0,75 MM2 LIGHT/GREY	3-5, 3-7, 5-109
351150-0405 ..	CABLE OLFLEX 5X0,75 MM2 LIGHT/GREY	5-109
351150-0406 ..	CABLE OLFLEX 7X0,75 MM2 LIGHT/GREY	5-109
351150-0407 ..	CABLE OLFLEX 12X0,75 MM2 LIGHT/GREY	5-109
351150-0412 ..	CABLE OLFLEX 3X1,5 MM2 LIGHT/GREY	5-109
351150-0413 ..	CABLE OLFLEX 4GX1,5 MM2 LIGHT/GREY	4-43, 4-45, 5-109, 8-5, 8-7, 8-19, 8-21, 8-25, 8-27
351160-0102 ..	WIRE AWM 1X0,75 MM2 DARKBLUE	9-57, 9-59
351160-0105 ..	WIRE AWM 1X2,5 MM2 DARKBLUE	9-71, 12-43
351160-0106 ..	WIRE AWM 1X4 MM2 DARKBLUE	9-71
351161-0104 ..	WIRE AWM 1X1,5 MM2 LIGHTBLUE	9-71
351161-0105 ..	WIRE AWM 1X2,5 MM2 LIGHTBLUE	9-71
351161-0106 ..	WIRE AWM 1X4 MM2 LIGHTBLUE	9-71
351161-0107 ..	WIRE AWM 1X6 MM2 LIGHTBLUE	9-71
351161-0109 ..	WIRE AWM 1X16 MM2 LIGHTBLUE	9-71
351162-0102 ..	WIRE AWM 1X0,75 MM2 YELLOW-GREEN	9-71
351162-0104 ..	WIRE AWM 1X1,5 MM2 YELLOW-GREEN	9-71
351162-0105 ..	WIRE AWM 1X2,5 MM2 YELLOW-GREEN	9-71
351162-0106 ..	WIRE AWM 1X4 MM2 YELLOW-GREEN	9-71
351162-0107 ..	WIRE AWM 1X6 MM2 YELLOW-GREEN	9-71
351162-0108 ..	WIRE AWM 1X10 MM2 YELLOW-GREEN	9-71
351162-0109 ..	WIRE AWM 1X16 MM2 YELLOW-GREEN	9-71
351164-0104 ..	WIRE AWM 1X1,5 MM2 BLACK	9-71
351164-0105 ..	WIRE AWM 1X2,5 MM2 BLACK	9-57, 9-59
351164-0106 ..	WIRE AWM 1X4 MM2 BLACK	9-71
351164-0107 ..	WIRE AWM 1X6 MM2 BLACK	9-57, 9-59
351164-0108 ..	WIRE AWM 1X10 MM2 BLACK	9-71
351164-0109 ..	WIRE AWM 1X16 MM2 BLACK	9-71
351305-0100 ..	ACTUATOR/SENSOR CABLE PRKMV 4-07/10M	2-7, 12-35
351309-0050 ..	ACTUATOR/SENSOR CABLE PRKT 4-07/5M	4-9, 4-11, 5-21, 5-23, 5-53, 5-55, 5-57, 5-59, 5-61, 12-23, 12-25, 12-27, 12-29, 12-31
351309-0100 ..	ACTUATOR/SENSOR CABLE PRKT 4-07/10M	1-9, 5-7, 5-9, 5-21, 5-23, 5-105, 5-107
351401-0006 ..	ACTU/SENS CABLE RSMVN 3-PRKMV 3-06/0,6M	4-9, 4-11
351401-0050 ..	ACTU/SENS CABLE RSMVN 3-PRKMV 3-06/5,0M	5-89
351405-0006 ..	ACT/SENS. CABLE RSMVN 3-PRKT 4-3-06/0,6M	4-9, 4-11, 5-21, 5-23
351405-0010 ..	ACT/SENS. CABLE RSMVN 3-PRKT 4-3-06/1,0M	8-5, 8-7, 8-19, 8-21, 8-25, 8-27
351405-0020 ..	ACT/SENS. CABLE RSMVN 3-PRKT 4-3-06/2,0M	8-5, 8-7, 8-19, 8-21, 8-25, 8-27
351405-0050 ..	SENS. CABLE RSMVN 3-PRKT 4-3-06/5,0M	1-59, 4-43, 4-45, 5-21, 5-23, 12-13, 12-17
351406-0015 ..	ACT/SENS.CABLE RSMVN 3-PRKWT 4-3-06/1,5M	4-9, 4-11
351407-0020 ..	ACTU/SENS. CABLE PRST 3-PRKMV 3-06/2,0M	5-63, 12-33
351411-0006 ..	ACTU/SENS. CABLE PRST 4-PRKT 4-07/0,6M	10-19
351411-0010 ..	ACTU/SENS. CABLE PRST 4-PRKT 4-07/1,0M	3-29, 6-17, 7-21
351411-0050 ..	ACTU/SENS. CABLE PRST 4-PRKT 4-07/5,0	5-21, 5-23, 12-13, 12-17
351412-0015 ..	ACTU/SENS. CABLE PRST 4-PRKWT 4-07/1,5M	3-27
351413-0030 ..	DEVICENET CONN. CABLE, 0935 361 103/3M	4-9, 4-11
351415-0100 ..	DEVICENET CONN. CABLE, 0935 361 105/10M	5-7, 5-9
351422-0203 ..	CABLE ÖLFLEX 150CY QUATTRO 4X1,5	4-9, 4-11, 5-109
351423-0006 ..	CABLE UNITRONIC LICY 5X0,34	5-109
352103-0110 ..	CABLE GLAND, STR 16, PR22,5/PG16	5-147
352113-0101 ..	CABLE TIE, BLACK 92X2,5 MM	5-69, 12-15
352113-0102 ..	CABLE TIE, BLACK 188X4,8 MM	4-5
352113-0104 ..	CABLE TIE, BLACK 300X4,8 MM	2-19, 3-23, 3-27, 3-29, 6-17, 6-59, 6-61, 6-67, 7-13
352113-0203 ..	ANCHOR PLATES FOR STRIPS, TM3S8-M20	2-19, 3-23, 3-27, 3-29, 4-5, 6-17, 6-59, 6-61, 6-67, 9-41
352113-0204 ..	ANCHOR PLATES FOR STRIPS, TM3S25-M	1-31, 1-35, 1-43, 1-47, 1-49, 1-51, 1-53, 1-55, 5-11, 5-13, 5-159
352113-0205 ..	ANCHOR PLATES FOR STRIPS, TM2S8-C100	1-7, 1-9, 5-69, 6-17, 7-13

Part No	Description	Page No
352113-0206 ..	ANCHOR PLATES FOR STRIPS, ABM100-AT	5-115
353001-0115 ..	END SLEEVE 2,5/14	12-43
353021-0212 ..	FEED THROUGH TERMINAL, 10200.0	9-17, 9-53, 9-67
353021-0214 ..	FEED THROUGH TERMINAL, 10202.0	9-17, 9-67
353021-0302 ..	TERMINAL, DLD 2,5/35	9-69
353022-0002 ..	TERMINAL WNT 4 10X3	9-15
353024-0204 ..	EARTH TERMINAL WPE 2,5	9-13, 9-67
353024-0205 ..	EARTH TERMINAL WPE 4	5-117, 5-119, 9-13, 9-47, 9-57, 9-59, 9-63
353024-0206 ..	EARTH TERMINAL WPE 6	9-13, 9-67
353024-0207 ..	EARTH TERMINAL WPE 10	9-13
353024-0209 ..	EARTH TERMINAL WPE 35	9-7, 9-13
353024-0212 ..	EARTH TERMINAL WDK 2,5 PE	9-69
353031-0203 ..	END SUPPORT, WEW 35/2	9-15, 9-17, 9-19, 9-23, 9-33, 9-53, 9-67, 9-69
353032-0004 ..	END PLATE WAP 2,5-10 BEIGE	9-17, 9-53, 9-67
353032-0009 ..	END PLATE, WAP FOR WDK	9-23, 9-25, 9-27, 9-29, 9-31, 9-33, 9-69
353032-0302 ..	END PLATE, AP DLD2,5 DB	9-69
353033-0104 ..	END PLATE, 10502.8	9-15
353034-0030 ..	BRIDGE CONNECTOR WQV 2,5/10	5-117, 5-119, 9-23, 9-25, 9-27, 9-29, 9-31, 9-33, 9-69
353034-0042 ..	BRIDGE CONNECTOR WQV 2,5/3	9-17
353034-0404 ..	BRIDGE CONNECTOR Q 10 DLI	9-69
353041-0001 ..	BUS BAR RAIL 10X3MM SSCH	9-15
353041-0106 ..	HOLDER ZB35 K 5026.8	9-15
353101-0122 ..	CABLE SHOE 0,5-1,5MM2 M5 RED	5-51, 5-65
353249-0004 ..	INSERT, SINGLE HOLE, E152/13	4-9, 4-11, 8-5, 8-7, 8-19, 8-21, 8-25, 8-27
353249-0012 ..	INSERT, SINGLE HOLE, EK 154/11	4-43, 4-45, 5-7, 5-9, 5-51, 5-65, 5-115
353249-0015 ..	INSERT, SINGLE HOLE, EK 155/16	5-75, 5-77, 5-115
353249-0041 ..	INSERT, SOLID, E151G	4-9, 4-11
353249-0054 ..	INSERT, SINGLE HOLE, EK 156/25	5-7, 5-9, 5-115
353250-0016 ..	GLAND, LOCK NUT M16X1,5	9-5
353250-0020 ..	GLAND, LOCK NUT M20X1,5	5-75, 5-77
353250-0040 ..	GLAND, LOCK NUT M40X1,5	9-5
354000-0040 ..	MINIATURE CIRCUIT BREAKER, FAZ-C4/1	9-19, 9-35
354000-0060 ..	MINIATURE CIRCUIT BREAKER, FAZ-C6/1	9-19, 9-35, 9-37, 9-57, 9-59, 9-63
354000-0100 ..	MINIATURE CIRCUIT BREAKER, FAZ-C10/1	9-35, 9-45
354001-0040 ..	MINIATURE CIRCUIT BREAKER, FAZ-C4/2	9-19
354001-0100 ..	MINIATURE CIRCUIT BREAKER, FAZ-C10/2	9-37
354002-0060 ..	MINIATURE CIRCUIT BREAKER, FAZ-C6/3	9-35
354002-0200 ..	MINIATURE CIRCUIT BREAKER, FAZ-C20/3	9-37
354002-0250 ..	MINIATURE CIRCUIT BREAKER, FAZ-C25/3	9-37
359000-0013 ..	WIRE MARKING, YELLOW, PA1/3"+"	12-43
359000-0023 ..	WIRE MARKING, YELLOW, PA1/3"-"	12-43
359000-0300 ..	WIRE MARKING, YELLOW, PA1/3"0"	12-43
359000-0301 ..	WIRE MARKING, YELLOW, PA1/3"1"	12-43
359000-0302 ..	WIRE MARKING, YELLOW, PA1/3"2"	12-43
359000-0303 ..	WIRE MARKING, YELLOW, PA1/3"3"	12-43
359000-0304 ..	WIRE MARKING, YELLOW, PA1/3"4"	12-43
359000-0305 ..	WIRE MARKING, YELLOW, PA1/3"5"	12-43
359000-0306 ..	WIRE MARKING, YELLOW, PA1/3"6"	12-43
359000-0307 ..	WIRE MARKING, YELLOW, PA1/3"7"	12-43
359000-0308 ..	WIRE MARKING, YELLOW, PA1/3"8"	12-43
359000-0309 ..	WIRE MARKING, YELLOW, PA1/3"9"	12-43
359009-0100 ..	CABLE MARKING, YELLOW, PK2/4"0"	12-15
359009-0101 ..	CABLE MARKING, YELLOW, PK 2/4"1"	12-15
359009-0102 ..	CABLE MARKING, YELLOW, PK 2/4"2"	12-15
359009-0103 ..	CABLE MARKING, YELLOW, PK 2/4"3"	12-15
359009-0104 ..	CABLE MARKING, YELLOW, PK 2/4"4"	12-15
359009-0105 ..	CABLE MARKING, YELLOW, PK 2/4"5"	12-15
359009-0106 ..	CABLE MARKING, YELLOW, PK 2/4"6"	12-15
359009-0107 ..	CABLE MARKING, YELLOW, PK 2/4"7"	12-15
359009-0108 ..	CABLE MARKING, YELLOW, PK 2/4"8"	12-15
359009-0109 ..	CABLE MARKING, YELLOW, PK 2/4"9"	12-15
359009-0201 ..	CABLE MARKING, YELLOW, PK 2/4" B"	12-15
359009-0222 ..	CABLE MARKING, YELLOW, PK 2/4" W"	12-15
359011-0806 ..	MARKING, DEK 5 FW 1-200	9-69
359011-0807 ..	MARKING, DEK 5 FW 1-50	9-13, 9-17, 9-23, 9-25, 9-27, 9-29, 9-31, 9-33, 9-53, 9-67, 9-69
359011-0808 ..	MARKING, DEK 5FW 51-100	9-23
359011-0809 ..	MARKING, DEK 5 FW 101-150	9-69
359011-0819 ..	MARKING, EARTH, DEK 5 GW ERDE I.KR.	9-53
359011-0821 ..	MARKING, DEK 6 FW 1-50	9-13, 9-15, 9-17, 9-67
359240-0100 ..	SIGN HOLDER FOR 359240-0001	9-5
359241-0124 ..	SIGN: MAIN SWITCH	9-5
359301-0001 ..	BUTTON SIGN, UP	5-115
359301-0005 ..	BUTTON SIGN, DOWN	5-115
359301-0090 ..	BUTTON SIGN, INCHING	5-115
359301-0105 ..	BUTTON SIGN, ALARM STOP	5-115
359705-0015 ..	WARNING SIGN ISO, RISK OF ELECTRIC SHOCK	5-113, 5-115, 9-5, 9-9
359705-0021 ..	WARNING SIGN ISO, PNEUMATIC ENERGY	1-11
359710-0001 ..	WARNING SIGN ISO, HOT SURFACE	3-9, 5-51, 5-65
359715-0100 ..	WARNING SIGN ANSI (H), ELECTRIC SHOCK	12-47
359725-0100 ..	WARNING SIGN ANSI (H), ENTANGLEMENT	12-47
359725-0108 ..	WARNING SIGN ANSI (H), MOVING PART	12-47
359725-0125 ..	WARNING SIGN ANSI (V), PNEUMATIC ENERGY	12-47
476221-0002 ..	PIPE	5-33, 5-37
476221-0003 ..	PIPE	5-33, 5-37

Part No	Description	Page No
476221-0013 ..	PIPE	10-17
486826-0001 ..	SIGN "EMERGENCY STOP"	5-147, 9-5
531616-0000 ..	HOLDER	5-111
532412-0000 ..	SPRING	12-13
545897-0000 ..	BRACKET	12-13
575034-0000 ..	ROUND NUT	4-19, 5-105, 5-107
580923-0000 ..	MACHINE SIGN CE	6-67
988685-0000 ..	PIN	5-113, 5-121
1020637-0000 .	HOLDER	5-39, 5-41, 5-43, 10-17, 12-13, 12-19
1021990-0000 .	SIGN 356X70MM HOUSE MARK TEXT TETRA PAK	5-11, 5-13
1030335-0000 .	FILTER HOLDER	5-67
1030338-0000 .	NET	5-67
1030874-0000 .	THROTTLE WASHER	5-67
1030878-0000 .	GASKET	5-67
1035792-0000 .	E-HINGE	5-113, 5-121
1037130-0000 .	,CONNECTION BOX	5-147
1038275-0012 .	SPACER	9-9
1128856-0000 .	PROHIBITION SIGN	5-129, 5-143, 5-145, 10-17
1129770-0000 .	BLOCKING PIECE	5-113, 5-121
1188609-0000 .	FLANGE SEAL	5-51, 5-65
1188610-0000 .	FLANGE SEAL	5-51, 5-65
1359565-0000 .	NUT	5-35
1366727-0000 .	CLAMP	5-35
1497932-0000 .	SET OF SIGNS	12-15
1497948-0000 .	TEMPLATE	10-33
1539391-0000 .	ROUND NUT	4-15, 4-19, 5-105, 5-107
1548365-0000 .	TEMPLATE	10-33
1550595-2460 .	SLIDING STRIP	5-25, 5-27, 5-29, 5-31
1550595-4960 .	SLIDING STRIP	5-25, 5-27, 5-29, 5-31
1550595-9960 .	SLIDING STRIP	5-25, 5-27, 5-29, 5-31
1550743-0200 .	RAIL HOLDER	5-21, 5-23, 5-33, 5-37
1550772-0000 .	HOLDER	5-35
1556626-0000 .	WHEEL	6-83
1556630-0000 .	WHEEL	6-73, 6-75
1556643-0000 .	WASHER	6-73, 6-75
2470301-0000 .	LEVER	7-25
2470302-0000 .	HUB	7-25, 7-27
2470373-0000 .	LEVER	7-27
2504290-0000 .	PLATE	5-41
2506887-0000 .	TEMPLATE	10-33
2506940-0000 .	NOZZLE	5-69
2529719-0001 .	BOX	10-37
2529719-0002 .	BOX	10-37
2529719-0003 .	BOX	10-37
2529719-0004 .	BOX	10-37
2529719-0005 .	BOX	10-37
2529719-0006 .	BOX	10-37
2529720-0001 .	LABEL	10-37
2529720-0010 .	LABEL	10-37
2529720-0016 .	LABEL	10-37
2529720-0024 .	LABEL	10-37
2529720-0037 .	LABEL	10-37
2529720-0044 .	LABEL	10-37
2547915-0000 .	HEATING CHAMBER	5-51
2547954-0000 .	TEMPLATE	10-33
2551030-0000 .	STRUT	5-133, 5-151
2551031-0000 .	STRUT	5-133
2557544-0000 .	PROTECTION	5-53, 5-55, 5-57, 5-59, 5-61, 5-63, 12-23, 12-25, 12-27, 12-29, 12-31, 12-33
2561206-0000 .	SPACER	5-25, 5-27, 5-29, 5-31
2561274-0102 .	RAILING	5-21, 5-23
2561274-0103 .	RAILING	5-21, 5-23
2562134-0000 .	TEMPLATE	10-33
2563891-0000 .	STRUT	5-149
2563892-0000 .	STRUT	5-149
2579622-0000 .	TEMPLATE	10-33
2579623-0000 .	TEMPLATE	10-33
2579624-0000 .	TEMPLATE	10-33
2594996-0000 .	PLASTIC BAG	10-37
2595618-0000 .	BRACKET	5-133, 5-151
2608177-0000 .	SIGN	9-5
2612679-0000 .	TEMPLATE	10-33
2613995-0000 .	SPACER	6-73, 6-75
2618350-0000 .	WORM GEAR	4-9, 4-11
2662760-0000 .	HEATING CHAMBER	5-51, 5-65
2663999-0000 .	NIPPLE	5-67
2684864-0000 .	SHAFT	2-13
2695133-0000 .	TOOTHED PULLEY	3-13
2695134-0000 .	SHAFT	3-13
2695135-0100 .	PULLEY	3-3
2695610-0000 .	CLAMP BRACKET	3-15
2695629-0000 .	BRACKET	3-27
2696481-0000 .	BLOCK	3-11
2699305-1996 .	SLIDING STRIP	5-25, 5-27, 5-29, 5-31
2699436-0000 .	SPACER	5-35

Part No	Description	Page No
2699437-0000	.RAIL HOLDER	5-35
2699680-0000	.SCREW	6-11, 6-13
2699681-0000	.SPACER	6-11, 6-13
2699682-0000	.SPACER	6-13
2699683-0000	.WASHER	6-11
2703670-0100	.CAP HOLDERS GROUP	6-81
2703671-0000	.CLAW	6-83
2703672-0000	.CLAW	6-83
2703673-0000	.TOOTHED DISC	6-83
2703683-0000	.SHAFT	6-73, 6-75
2703692-0000	.HOLDER	6-73, 6-75
2703696-0000	.PROTECTIVE COVER	6-13
2703697-0000	.SIDE	6-11
2703700-0100	.GUIDE BRACKET	6-69, 6-71
2703702-0000	.SHIM	6-73, 6-75
2703704-0000	.SPACER STRUT	6-17
2703708-0000	.SPRING	6-73, 6-75
2703711-0000	.HOLDER	2-15
2703714-0000	.HOLDER	2-13
2703715-0000	.SHAFT	2-13
2703725-0000	.ROLLER	2-13
2703842-0000	.ADJUSTING SCREW	2-17, 2-19, 6-31, 6-33, 6-63, 6-65
2710819-0000	.LID	5-51, 5-65
2712603-0000	.PLATE	1-61
2715666-0000	.BRACKET	2-9, 2-11
2715669-0100	.TOOTHED PULLEY	7-5
2715671-0000	.BRACKET	2-9, 2-11
2715695-0000	.SLEEVE	2-13
2715699-0000	.HOLDER	6-73, 6-75
2715701-0000	.AXLE PIN	6-73, 6-75
2715704-0000	.SLEEVE	6-73, 6-75
2715750-0100	.TEMPLATE	10-5
2715751-0000	.SHAFT	10-9
2715794-0000	.ARM	2-13
2715797-0000	.BUSHING	2-13
2715798-0000	.TURN SPRING	2-13
2715804-0000	.SCREW	2-9, 2-11
2715807-0000	.SPACER	2-9, 2-11
2715813-0000	.BRACKET	2-13
2715826-0000	.DAMPER	6-73, 6-75
2715827-0000	.HOLDER	6-83
2715828-0000	.CLAW	6-83
2715829-0000	.CLAW	6-83
2715837-0000	.KEY	2-15
2715885-0000	.TORSION SPRING	6-73, 6-75
2715887-0000	.PULLER	6-83
2715889-0000	.FINGER	7-35
2715975-0000	.FINGER	7-33
2715976-0100	.TOOTHED PULLEY	7-5
2715977-0000	.LOCKING HUB	7-9
2715978-0000	.SHAFT	7-7
2716015-0000	.BRACKET	7-13
2716019-0000	.SHAFT	7-17
2716021-0000	.SPRING	7-17
2716024-0000	.WASHER	7-17
2716041-0000	.BRACKET	2-15
2716046-0100	.CLAMP UNIT	7-19
2716047-0100	.HEIGHT ADJUSTMENT	7-19
2716049-0200	.CAP LINE	7-5
2716056-0000	.ARM	2-13
2716067-0000	.GUIDE	7-37, 7-39, 7-41, 7-43
2716068-0000	.GUIDE	7-37, 7-39, 7-41, 7-43
2716069-0100	.GUIDE RAIL	7-37, 7-39, 7-41, 7-43
2716073-0000	.BELT HOLDER	3-15, 3-25
2716074-0000	.BRACKET	3-15, 3-25
2716075-0000	.COUNTERWEIGHT	3-15, 3-25
2716083-0000	.BRACKET	3-15
2716085-0000	.COUNTERWEIGHT	3-15, 3-25
2716089-0000	.FASTENING BRACKET	3-17
2716090-0100	.MOTION CONTROL	3-3
2716091-0300	.HOTMELT GUN	3-3
2716092-0100	.TRANSMISSION RAIL	3-3
2716097-0100	.MOTION CONTROL	3-3
2716112-0000	.BRACKET	3-29
2716116-0000	.CAM	6-7
2716125-0100	.SETTING TOOL	10-5
2716127-0000	.SLIDER	6-73, 6-75
2716138-0000	.GUIDE	7-37, 7-39, 7-41, 7-43
2716139-0000	.GUIDE	7-37, 7-39, 7-41, 7-43
2716149-0200	.STEERING DEVICE	7-13
2716152-0000	.PLATE	7-15
2716154-0000	.SETTING TEMPLATE	10-11
2716156-0000	.BRACKET	7-15
2716157-0000	.BRACKET	7-15

Part No	Description	Page No
2727407-0100	.DRIVE PULLEY	7-5
2727408-0000	.MOTOR BRACKET	7-11
2727414-0000	.SHAFT	7-9
2727420-0000	.BRACKET	7-13
2727426-0000	.GEAR WHEEL	7-9
2727427-0000	.GEAR WHEEL	7-11
2727431-0000	.SLIDE PLATE	7-23
2727432-0000	.SHAFT	7-23
2727434-0000	.SLIDE PLATE	7-23
2727438-0000	.STEERING RAIL	7-47, 7-49
2727440-0000	.END SUPPORT	7-23
2727442-0000	.GUIDE	7-47, 7-49
2727446-0000	.CLAMPING PART	7-37, 7-39, 7-41, 7-43
2727447-0000	.CLAMPING PART	7-37, 7-39, 7-41, 7-43
2727448-0000	.GUIDE	7-47, 7-49
2730989-0000	.LEVER	7-21
2736446-0000	.SPACER	7-9
2736447-0000	.SPACER	7-7, 7-17
2736448-0000	.COVER	7-9
2736449-0000	.COVER	7-7, 7-17
2736458-0000	.TEMPLATE	10-5
2740299-0100	.FINGER	7-19
2740300-0000	.FINGER	7-25
2740371-0100	.FINGER	7-19
2740372-0000	.FINGER	7-27
2740373-0000	.BRACKET	7-21
2740375-0000	.BRACKET	7-21
2746903-0000	.CABLE DUCT	5-7, 5-9
2746904-0000	.BOX	5-115
2746909-0000	.RAIL	5-117, 5-119
2746920-0000	.FOIL	5-113
2746922-0000	.SHAFT	6-83
2746928-0100	.CAP LINE	7-3
2746929-0100	.CARRIER BELT	7-3
2746932-0100	.PNEUMATIC UNIT	7-3
2746933-0100	.BASE UNIT	7-3
2746934-0100	.FEED UNIT	7-3
2746938-0100	.TRANSFER UNIT	6-3
2746939-0100	.CAP CARRIER GROUP	6-3
2746941-0200	.CAP HOLDERS GROUP	6-3
2746950-0000	.CAM	6-43, 6-45
2746951-0000	.CAM	6-47, 6-49
2746952-0000	.CAM	6-55
2746953-0000	.CAM	6-51, 6-53
2746978-0000	.SHAFT	6-73, 6-75
2746982-0000	.CAM	6-43, 6-45
2746985-0000	.CAM	6-47, 6-49
2746987-0000	.CAM	6-51, 6-53
2751655-0100	.CAM	6-5
2751656-0100	.STAR WHEEL	6-5
2751657-0100	.SLIDER	6-5
2751658-0100	.FOLLOWER CAM	6-5
2751664-0200	.FRAME	6-3
2751667-0100	.PRESSURE FINGER	2-9, 2-11
2751685-0000	.BRACKET	7-47, 7-49
2751686-0000	.WASHER	6-73, 6-75
2751687-0000	.WASHER	6-73, 6-75
2751690-0000	.SHIM	7-47, 7-49
2751692-0000	.BRACKET	2-17
2751693-0000	.STEERING	2-17
2751695-0000	.STEERING	2-9, 2-11
2751698-0000	.ECCENTRIC SHAFT	6-13
2751699-0000	.WASHER	6-13
2751700-0000	.BOW CLAMP	2-15
2751702-0000	.STAR WHEEL	6-9
2751703-0000	.BRACKET	6-11
2751704-0000	.PIVOT BRACKET	6-13
2751705-0000	.SHAFT	6-13
2751706-0000	.FLAG	6-9
2751708-0000	.CURVE	2-9, 2-11
2751710-0000	.SUPPORT PLATE	2-15
2751712-0000	.TOOTHED PULLEY	2-17
2751714-0000	.SUPPORT PLATE	2-17
2751721-0000	.SPACER	2-9, 2-11
2751722-0000	.CURVE	2-9, 2-11
2751725-0000	.BOW CLAMP	2-17
2751732-0000	.BRACKET	2-13
2751733-0000	.CURVE	2-9, 2-11
2751739-0000	.BRACKET	6-11
2751741-0000	.BRACKET	6-17
2751742-0000	.BRACKET	2-9, 2-11
2751747-0000	.SPACER	2-17
2751748-0000	.SLEEVE	2-17
2752105-0000	.GUIDE	7-47, 7-49

Part No	Description	Page No
2752106-0000	.GUIDE	7-47, 7-49
2752107-0000	.CLAMPING PART	7-37, 7-39, 7-41, 7-43
2752108-0000	.CLAMPING PART	7-37, 7-39, 7-41, 7-43
2758505-0200	.MACHINE BODY	5-3
2758507-0200	.PACKAGE CONVEYOR	5-3
2758511-0100	.HOTMELT UNIT	5-3
2758512-0100	.BLOWING SYSTEM	5-71
2758513-0100	.AIR SUPPLY	5-3
2758514-0100	.WATER CONNECTION	5-3
2758515-0200	.CABLE DUCT	5-5
2758522-0100	.LUBRICATION UNIT	5-3
2763616-0101	.CONVEYOR BODY	5-21, 5-23
2763616-0102	.CONVEYOR BODY	5-21, 5-23
2763616-0103	.CONVEYOR BODY	5-21, 5-23
2763616-0104	.CONVEYOR BODY	5-21, 5-23
2763617-0001	.SIDE PLATE	5-25, 5-27, 5-29, 5-31
2763617-0002	.SIDE PLATE	5-25, 5-27, 5-29, 5-31
2763617-0003	.SIDE PLATE	5-25, 5-27, 5-29, 5-31
2763617-0004	.SIDE PLATE	5-25, 5-27, 5-29, 5-31
2766610-0000	.FRAME	1-33
2766611-0000	.GUIDE	1-29
2766615-0000	.FRAME	1-29
2766927-0000	.PILLAR	1-29, 1-41
2766939-0000	.SUPPORT	5-111
2766944-0000	.BRACKET	1-59
2766950-0000	.SHAFT	1-61
2766953-0000	.PLATE	1-31, 1-43
2766954-0100	.BELT STRETCHER	1-29
2766958-0000	.SHAFT	1-31, 1-35, 1-43, 1-47
2766959-0000	.SPACER	1-31, 1-35, 1-43, 1-47
2766962-0000	.BLOCK	1-31, 1-43
2766963-0000	.BRACKET	1-31, 1-43
2766964-0000	.FLANGE	4-5, 5-17
2766968-0000	.SHAFT	5-17
2766972-0000	.SHAFT	5-19
2766973-0100	.TRANSMISSION	5-17
2766974-0000	.SLEEVE	1-33, 1-45
2766975-0000	.FRAME	5-11, 5-13
2766976-0000	.FLANGE	1-33, 1-45
2766980-0100	.BELT STRETCHER	1-33
2766981-0000	.TOOTHED PULLEY	1-31, 1-35, 1-43, 1-47
2766989-0000	.BRACKET	1-35, 1-47
2766990-0100	.BRAKE UNIT	1-5
2766991-0100	.BRAKE UNIT	1-5
2766994-0200	.DRIVE	1-5
2768157-0000	.PULLER	6-83
2769679-0000	.DRIVE SHAFT	1-7, 1-9
2769682-0000	.SHAFT	1-7, 1-9
2769686-0000	.COVER	1-7, 1-9
2769695-0000	.BRACKET	1-59
2769709-0000	.FRAME	5-17
2769713-0000	.CYLINDRICAL PIN	5-17
2769717-0000	.FLANGE	5-17
2769718-0100	.PNEUMATIC CYLINDER	1-57
2769726-0000	.BRACKET	1-21, 1-61, 5-19
2769729-0000	.SHAFT	1-21, 1-61
2769738-0100	.HEIGHT ADJUSTMENT	5-5
2769739-0000	.DISC	4-5, 5-17
2769741-0000	.SPACER	1-7, 1-9
2769743-0100	.BELT STRETCHER	1-45
2769746-0000	.FRAME	1-35
2769754-0200	.ELECTRIC EQUIPMENT	5-3
2769757-0100	.LAMP	5-97
2769760-0100	.EMERGENCY STOP	5-121
2769761-0200	.MACHINE BODY	5-5
2769763-0100	.OIL PIPE	5-87
2769773-0000	.SPACER	1-11
2773600-0000	.SPACER	1-7, 1-9
2773601-0000	.SPACER	1-11
2773604-0000	.PLATE	1-13
2773615-0000	.ROLLER	1-13
2773616-0000	.GUIDE	1-29, 1-33
2773622-0100	.LINE HEATER	5-3
2773623-0100	.FAN SYSTEM	5-45, 5-47, 5-49
2773627-0000	.HEAT GUARD	5-51, 5-65
2773630-0000	.HEAT GUARD	5-51, 5-65
2773632-0000	.SPACER	1-59
2773636-0100	.BELT STRETCHER	1-11
2773637-0000	.BRACKET	1-13
2773638-0000	.PLATE	1-13
2773639-0000	.SHAFT	1-13
2775398-0000	.PIN	1-13
2775403-0000	.PIPE	5-73
2775404-0000	.PIPE	5-73

Machine Type Group Description Page No

Part No	Description	Page No
2775412-0000	.PLATE	1-11
2775417-0000	.BRACKET	1-35, 1-47
2775418-0000	.SHAFT	1-7
2775420-0000	.SLIDE	1-35
2775421-0000	.SCREW	1-35
2775423-0000	.PLATE	1-35
2775427-0000	.BRACKET	1-7
2775437-0000	.TOOTHED PULLEY	1-49, 1-51, 1-53, 1-55
2775438-0000	.PLATE	1-49, 1-51, 1-53, 1-55
2775439-0000	.BUSHING	1-49, 1-51, 1-53, 1-55
2775442-0000	.TOOTHED PULLEY	1-49, 1-51, 1-53, 1-55
2775443-0000	.SPACER	1-49, 1-51, 1-53, 1-55
2775445-0000	.SPACER	1-49, 1-51, 1-53, 1-55
2775446-0000	.SHAFT	1-49, 1-51, 1-53, 1-55
2775447-0000	.BRACKET	5-11, 5-13
2778564-0000	.WASHER	1-7, 1-9
2778566-0000	.BELLOWS	1-49, 1-51, 1-53, 1-55
2778567-0000	.BEAM	5-11, 5-13
2778568-0000	.FRAME UPPER	5-11, 5-13
2778570-0000	.FRAME	1-45
2778571-0000	.FRAME	1-47
2778572-0100	.BELT STRETCHER	1-41
2778576-0000	.BEAM	5-11, 5-13
2778580-0000	.BRACKET	5-39, 5-41, 12-19
2778584-0000	.BRACKET	5-41
2778585-0000	.PILLAR	1-67, 1-69, 1-71, 1-73
2778586-0100	.SENSOR	5-21, 5-23, 12-17
2778587-0100	.SENSOR	5-21, 5-23
2778588-0000	.FRAME	1-41
2778592-0000	.PLATE	1-67, 1-69, 1-71, 1-73
2778594-0000	.PLATE	1-21, 1-61
2778595-0100	.ANGLE	5-11, 5-13
2779008-0000	.BRACKET	5-15
2779009-0000	.BEAM	5-11, 5-13
2779011-0000	.BEAM	5-11, 5-13
2779012-0000	.BEAM	5-11, 5-13
2779013-0000	.CAM	1-61
2779014-0000	.PLATE	1-61
2779057-0000	.PLATE	1-59
2779062-0000	.SPROCKET	1-21
2779063-0000	.PLATE	1-21
2779070-0200	.OPERATOR INTERFACE	5-3
2779748-0100	.GLASS DOOR	5-121
2779749-0000	.DOOR	5-133
2779756-0000	.SHAFT	1-21
2779759-0000	.PLATE	1-21
2779763-0000	.COVER	5-147
2779764-0200	.WARNING LAMP	5-97
2779765-0000	.BRACKET	5-101
2779768-0000	.DOOR	5-113
2779769-0000	.SPROCKET	5-19
2779771-0000	.SPACER	5-147
2779772-0000	.BRACKET	5-67
2779774-0000	.GUIDE	1-41
2779775-0000	.GUIDE	1-41, 1-45
2779776-0000	.PLATE	5-11, 5-13
2779786-0000	.PLATE	5-11, 5-13
2779800-0000	.PLATE	5-7, 5-9
2779811-0000	.BEAM	5-11, 5-13
2779821-0000	.PLATE	5-153
2779823-0000	.BRACKET	5-153
2779824-0000	.BRACKET	5-153
2779825-0000	.PLATE	5-153
2779831-0000	.PIPE	1-67, 1-69, 1-71, 1-73, 5-21, 5-23
2779832-0100	.GLASS DOOR	5-121
2779833-0100	.GLASS DOOR	5-121
2779834-0100	.GLASS DOOR	5-121
2779835-0200	.DOOR	5-121
2779838-0000	.DOOR	5-149
2779839-0000	.GLASS	5-149
2779840-0000	.DOOR	5-135
2780337-0000	.CURVE	2-9, 2-11
2780338-0000	.BRACKET	2-9, 2-11
2780339-0000	.BRACKET	2-9, 2-11
2780341-0000	.CURVE	2-9, 2-11
2780342-0000	.CURVE	2-9, 2-11
2780343-0000	.CURVE	2-9, 2-11
2780344-0000	.BRACKET	2-9, 2-11
2780346-0000	.ARM	2-13
2780352-0000	.HOLDER	2-13
2780353-0000	.BRACKET	2-13
2780361-0000	.PIN	7-21
2780362-0000	.PIN	7-21
2780379-0000	.PLATE	6-59, 6-61

Part No	Description	Page No
2780391-0000	.HOLDER	2-13
2780393-0000	.SHAFT	2-13
2780394-0000	.ARM	2-13
2780425-0100	.CAM	6-21, 6-23, 6-25, 6-27, 6-29
2780431-0000	.SHIM	6-73, 6-75
2780452-0000	.TOOTHED PULLEY	7-7, 7-17
2780453-0000	.TOOTHED PULLEY	7-9
2780454-0000	.SLIDE RAIL	7-13
2780455-0000	.SLIDE RAIL	7-13
2780456-0000	.SLIDE RAIL	7-13
2780458-0000	.BRACKET	7-47, 7-49
2780459-0000	.SHIM	7-47, 7-49
2780469-0000	.BRACKET	2-9, 2-11
2780487-0000	.NUT PLATE	5-65
2780488-0000	.BRACKET	5-65
2780489-0000	.PRE-HEATER	5-65
2780491-0000	.BRACKET	5-53, 5-55, 5-57, 5-59, 12-23, 12-25, 12-27, 12-29
2780492-0000	.COLUMN	5-53, 5-55, 5-57, 5-59, 5-61, 12-23, 12-25, 12-27, 12-29, 12-31
2780493-0000	.PLATE	5-53, 5-55, 5-57, 5-59, 12-23, 12-25, 12-27, 12-29
2780497-0100	.TIMING BELT	7-31
2780509-0100	.TIMING BELT	7-31
2780521-0000	.CAM	6-37, 6-39, 6-41
2780523-0000	.PLATE	6-59, 6-61
2780526-0000	.BRACKET	6-37, 6-39, 6-41
2780527-0000	.CARRIAGE	6-37, 6-39, 6-41
2780529-0000	.BRACKET	6-37, 6-39, 6-41
2780531-0000	.AXLE PIN	6-37, 6-39, 6-41
2780532-0000	.AXLE PIN	6-37, 6-39, 6-41
2780533-0000	.CAM	6-37, 6-39, 6-41
2780551-0100	.HEATING ELEMENT	5-45, 5-47, 5-49
2780560-0100	.DRIVE	6-21, 6-23, 6-25, 6-27, 6-29
2781278-0000	.GLASS	5-135, 5-151
2781279-0000	.DOOR	5-151
2781283-0000	.BRACKET	5-105, 5-107
2781285-0000	.STRUT	5-151
2781286-0000	.HAND WHEEL	1-23
2781292-0000	.SHAFT	1-13
2783460-0000	.GUIDE BRACKET	6-73, 6-75
2783461-0000	.BRACKET	6-73, 6-75
2783462-0000	.AXLE PIN	6-73, 6-75
2783463-0000	.ROLLER BRACKET	6-73, 6-75
2783465-0000	.SHAFT	6-73, 6-75
2783477-0000	.GUIDE SHAFT	6-37, 6-39, 6-41
2783479-0000	.CAM	6-37, 6-39, 6-41
2787230-0100	.TOP SECTION	5-121
2787232-0000	.PLATE	5-153
2788134-0000	.COVER	1-29, 1-41
2788137-0000	.TEMPLATE	10-5
2788144-0000	.SHAFT	1-23
2788154-0000	.BLOCK	5-11, 5-13
2788155-0000	.ANGLE	5-11, 5-13
2788168-0000	.PLATE	1-63
2788169-0000	.PLATE	1-67, 1-69, 1-71, 1-73
2788174-0000	.LEVER	1-59
2788176-0000	.PIPE	5-73
2790710-0000	.BRACKET	9-41
2792664-0000	.BRACKET	5-53, 5-55, 5-57, 5-59, 12-23, 12-25, 12-27, 12-29
2792848-0000	.SUPPORT	5-53, 5-55, 5-57, 5-59, 12-23, 12-25, 12-27, 12-29
2792879-0000	.TUBE	5-53, 5-55, 5-57, 5-59, 5-61, 5-63, 12-23, 12-25, 12-27, 12-29, 12-31, 12-33
2794721-0000	.BLOCK	5-53, 5-55, 5-57, 5-59, 12-23, 12-25, 12-27, 12-29
2794790-0000	.CLAMP	5-53, 5-55, 5-57, 5-59, 5-61, 5-63, 12-23, 12-25, 12-27, 12-29, 12-31, 12-33
2796055-0000	.BRACKET	3-27
2797440-0000	.STEERING RAIL	7-47, 7-49
2799864-0000	.FLANGE	2-7, 12-35
2799865-0000	.DISC	2-7, 12-35
2799866-0000	.PLATE	2-7, 12-35
2799867-0000	.ANGLE BRACKET	2-7, 12-35
2801048-0000	.CAM	6-35
2802375-0000	.COVER	1-63
2802376-0000	.COVER	1-63
2802386-0200	.OPERATOR INTERFACE	5-113
2802392-0000	.PILLAR	1-49, 1-51, 1-53, 1-55
2802404-0100	.HANDLE	1-21
2802405-0000	.STOP ARM	1-61
2802417-0000	.PLATE	5-7, 5-9
2802423-0000	.PLATE	5-7, 5-9
2802629-0000	.BRACKET	2-17
2802635-0000	.SUPPORT	2-17, 2-19
2802637-0000	.MOUNTING SHEET	2-19
2802644-0000	.SPACER	2-19
2802645-0100	.BELT STRETCHER	2-3, 2-5
2802646-0100	.FRAME SECTION	2-3, 2-5
2802647-0100	.DRIVE	2-3, 2-5
2802648-0100	.CAP HOLDERS GROUP	2-3, 2-5

Part No	Description	Page No
2805461-0000	.GUIDE	1-67, 1-69, 1-71, 1-73
2805467-0000	.SCREW	1-35, 1-47
2805468-0000	.SCREW	1-7
2805493-0200	.TUNNEL	5-139
2805686-0000	.BEAM	5-11, 5-13
2805687-0100	.GLASS DOOR	5-121
2805688-0000	.DOOR	5-157
2805691-0000	.GLASS	5-133, 5-157, 5-159, 5-161
2805692-0000	.COVER	5-155
2805693-0100	.DOOR	5-121
2805694-0100	.GLASS DOOR	5-121
2805695-0000	.DOOR	5-159
2805696-0000	.SUPPORT	5-11, 5-13
2805697-0000	.SUPPORT	5-11, 5-13
2805698-0000	.BEAM	5-11, 5-13
2805700-0200	.DOOR SAFETY SWITCH	5-97
2807095-0000	.BEAM	5-11, 5-13
2807104-0000	.BEAM	5-11, 5-13
2811453-0000	.SCREW	6-73, 6-75
2811989-0000	.GUIDE BRACKET	6-73, 6-75
2812005-0200	.ELEVATOR	4-3
2814679-0000	.BRACKET	10-17
2815585-0000	.SPACER	10-17
2817525-0000	.SHAFT	10-17
2817527-0000	.PUSHER	10-17
2817573-0000	.SPACER	10-17
2817578-0000	.COVER	10-17
2817774-0000	.SUPPORT	5-105, 5-107
2817775-0000	.SUPPORT	5-105, 5-107
2817783-0100	.PLINTH	5-115
2817784-0000	.SCREW	1-31, 1-43
2818204-0000	.SUPPORT	10-17
2818427-0000	.SLIDE PLATE	10-17
2818738-0000	.RAILING	10-17
2826728-0000	.DRIVE PULLEY	1-7, 1-9
2826729-0000	.PULLEY	1-7, 1-9
2826737-0000	.GUIDE	1-7, 1-9
2826741-0200	.DOORS AND COVERS	5-3
2826742-0200	.COVER	5-121
2826743-0200	.COVER	5-121
2826744-0200	.COVER	5-139
2827671-0000	.BRACKET	10-19
2830220-0000	.BEAM	5-11, 5-13
2830225-0000	.SPACER	1-7, 1-9
2833403-0000	.WELDED CABINET	9-5
2833404-0000	.MOUNTING PLATE	9-9
2833406-0200	.CABINET	9-3
2833407-0200	.CONTROL BOARD	9-3
2833408-0100	.COOLING UNIT	9-3
2833409-0100	.CABLE SET	9-3
2833410-0100	.BOX	9-5
2833411-0000	.BOX	9-7
2833412-0100	.CABLE DUCT	9-9
2834311-0000	.HUB	6-19
2835450-0000	.COVER	9-7
2835452-0000	.RAIL	9-37, 9-39
2835453-0000	.RAIL	9-49
2835454-0000	.RAIL	9-13, 9-15, 9-45
2835455-0000	.RAIL	9-47
2835456-0000	.RAIL	9-7
2835457-0100	.POWER SUPPLY UNIT	9-9
2835458-0200	.PLC	9-9
2835459-0200	.FUSE BOARD 1	9-9
2835460-0100	.FUSE BOARD 2	9-9
2835461-0100	.FUSE BOARD 3	9-9
2835462-0200	.MOTOR DRIVE CONTROL	9-9
2835463-0100	.PLINTH	9-9
2835464-0200	.DISTRIBUTION TERMINAL	9-9
2835939-0000	.PLATE	6-17
2836263-0000	.HEAT GUARD	5-51, 5-65
2836266-0000	.PIPE	5-21, 5-23
2836507-0100	.DRIVE MOTOR	6-15
2837072-0100	.DRIVE UNIT	6-3
2837073-0100	.PLATE	6-15
2837175-0000	.BEARING HALF	2-15
2837191-0000	.TOOTHED PULLEY	2-15
2837255-0000	.WASHER	2-15, 2-17
2837623-0000	.BRACKET	1-49, 1-51, 1-53, 1-55
2837624-0000	.SHAFT	1-49, 1-51, 1-53, 1-55
2837625-0000	.COVER	1-53, 1-55
2837626-0000	.BRACKET	1-49, 1-51, 1-53, 1-55
2837627-0000	.FLANGE	1-49, 1-51, 1-53, 1-55
2837628-0000	.SPACER	1-49, 1-51, 1-53, 1-55
2837630-0000	.COVER	1-49, 1-51

Part No	Description	Page No
2837631-0000	.SPACER	2-19
2838156-0000	.BRACKET	6-33, 6-65
2838277-0000	.BRACKET	6-31, 6-63
2838459-0000	.CABLE DUCT	9-5
2838460-0000	.CABLE DUCT	9-5
2838461-0000	.CABLE DUCT	9-57, 9-59
2838462-0000	.CABLE DUCT	9-11
2838463-0000	.CABLE DUCT	9-11
2838464-0000	.CABLE DUCT	9-11
2838465-0000	.CABLE DUCT	9-11
2838466-0000	.CABLE DUCT	9-11
2838467-0000	.CABLE DUCT	9-11
2838468-0000	.CABLE DUCT	9-11
2838469-0000	.CABLE DUCT	9-11
2838470-0000	.CABLE DUCT	9-11
2838471-0000	.CABLE DUCT	9-11
2838472-0000	.CABLE DUCT	9-11
2838473-0000	.CABLE DUCT	9-11
2838474-0000	.CABLE DUCT	9-11
2838475-0000	.CABLE DUCT	9-11
2838476-0000	.RAIL	9-51
2838477-0000	.RAIL	9-35
2838478-0000	.RAIL	9-19, 9-21
2838633-0200	.PACKAGE HANDLING	1-3
2838639-0200	.PACKAGE POSITIONER	1-17, 1-19
2838640-0100	.BELT UNIT	1-25, 1-27
2838641-0200	.BELT	1-25, 1-27
2838643-0200	.PACKAGE POSITIONER	1-3
2838644-0200	.PACKAGE POSITIONER	1-17, 1-19
2838645-0200	.BELT	1-37, 1-39
2838646-0100	.BELT UNIT	1-37, 1-39
2838647-0100	.SLIDING RACK	1-17, 1-19
2838648-0200	.DRIVE	1-17, 1-19
2838649-0200	.DRIVE	1-17, 1-19
2838650-0100	.SLIDING RACK	1-17, 1-19
2838652-0100	.SETTING ARM	1-57
2838653-0100	.GUIDE RAIL	1-57
2838654-0200	.BELT BRAKE	1-3
2838669-0100	.SETTING ARM	1-57
2838672-0100	.PNEUMATIC PANEL	5-71
2838673-0100	.SERVICE UNIT	5-75, 5-77
2838674-0100	.SERVICE UNIT	5-75, 5-77
2838676-0000	.BRACKET	5-75, 5-77
2838677-0100	.CENTRAL LUBRICATION	5-87
2838678-0000	.BRACKET	5-89
2838679-0000	.SHAFT	5-73
2838680-0000	.DIAGRAM	10-3
2838683-0000	.PLATE	1-59
2838684-0000	.WATER DIAGRAM	10-3
2838686-0100	.AIR JET GUN	5-71
2838690-0000	.WHEEL	1-61
2838693-0100	.START-UP KIT	10-3
2838695-0000	.INSTALLATION DRAWING	10-3
2838701-0000	.HOLDER	5-75, 5-77
2838710-0200	.WORM GEAR MOTOR	1-11
2838711-0000	.CLAW	6-83
2838712-0000	.CLAW	6-83
2838713-0000	.PULLER	6-83
2838714-0000	.LAW	6-83
2838715-0000	.CLAW	6-83
2838716-0000	.PULLER	6-83
2838718-0100	.TRIGGER	2-3, 2-5, 12-21
2838719-0000	.COVER	2-7, 12-35
2838721-0000	.SHAFT	2-15
2838722-0000	.BRACKET	6-37, 6-39, 6-41
2838723-0000	.HOLDER	6-73, 6-75
2838727-0000	.CURVE	2-9, 2-11
2838728-0000	.ADJUSTMENT BRACKET	2-9, 2-11
2838731-0000	.CABLE	6-67
2838732-0000	.CABLE	6-67
2838737-0000	.CURVE	2-9, 2-11
2838753-0000	.FRAME	3-29
2838763-0000	.SHAFT	7-21
2838764-0000	.BLOCK	7-23
2838765-0000	.PLATE	7-23
2838781-0000	.STEERING	2-9, 2-11
2838782-0000	.PLATE	12-39
2838783-0000	.PLATE	2-19
2838784-0000	.SLIDING STRIP	2-19
2838815-0000	.SHAFT	2-17
2839073-0000	.BRACKET	10-29, 10-31
2839074-0100	.PNEUMATIC UNIT	10-15
2839194-0100	.PNEUMATIC UNIT	10-15
2839195-0100	.DISTRIBUTOR	10-15

Part No	Description	Page No
2839221-0100	.PLINTH	9-9
2839222-0100	.PLINTH	9-9
2839223-0100	.PLINTH	9-9
2839224-0100	.PLINTH	9-9
2839225-0000	.BRACKET	9-5
2839226-0000	.FLANGE	9-41
2839227-0000	.SUPPORT	9-49
2839228-0000	.RAIL	9-69
2839229-0100	.DISTRIBUTION TERMINAL	9-9
2839230-0100	.PLINTH	9-21
2839315-0100	.CAMMODULE	6-3
2839382-0100	.MOUNTING PLATE	6-21, 6-23, 6-25, 6-27, 6-29
2839383-0100	.CAM	6-21, 6-23, 6-25, 6-27, 6-29
2839384-0100	.CAM	6-21, 6-23, 6-25, 6-27, 6-29
2839385-0100	.CAM	6-21, 6-23, 6-25, 6-27, 6-29
2839386-0100	.CAM	6-21, 6-23, 6-25, 6-27, 6-29
2839392-0000	.CAM	6-63
2839393-0000	.CAM	6-31
2839409-0000	.CAM	6-33
2839412-0000	.CAM	6-65
2840143-0100	.SERVO MOTOR	3-3
2840144-0100	.SERVO MOTOR	3-3
2840145-0100	.MOTOR BRACKET	3-3
2840146-0100	.MOTOR BRACKET	3-3
2840147-0100	.FASTENING BRACKET	3-3
2840680-0000	.ASSEMBLY PLATE	3-27
2840851-0000	.BLOCK	3-23
2840909-0100	.PLINTH	9-21
2840910-0100	.PLINTH	9-21
2840911-0100	.PLINTH	9-21
2840915-0100	.PLINTH	9-21
2840917-0100	.PLINTH	9-21
2840918-0100	.PLINTH	9-57, 9-59
2841344-0000	.PLATE	3-11
2841345-0000	.COLUMN	3-11
2841346-0000	.BLOCK	3-11
2841402-0000	.RAIL	9-67
2841403-0200	.PLINTH	9-57, 9-59
2841404-0200	.ELECTRICAL CONVERSION	9-3
2841405-0000	.DIVIDER	9-11
2841406-0000	.DIVIDER	9-11
2841501-0100	.FRAME	3-3
2842793-0200	.DOOR	5-139
2842794-0200	.COVER	5-123
2842795-0100	.COVER	5-123
2842799-0000	.COVER	5-125
2842800-0000	.SHELF	12-9
2842801-0000	.COVER	5-141
2842803-0000	.PLATE	12-9
2842804-0000	.BRACKET	12-9
2842805-0000	.SPACER	5-131, 12-9
2842806-0100	.SHELF	12-3
2842807-0200	.COVER	5-123
2842830-0100	.SUPPORT	4-3
2842831-0000	.ROD	4-5
2842832-0000	.BRACKET	4-5
2842834-0000	.FLANGE	4-5
2842835-0000	.COLUMN	4-5
2842837-0000	.PLATE	4-5
2842838-0000	.BLOCK	4-5
2843157-0100	.CLAMPING ELEMENT	2-3, 2-5
2843158-0000	.FLANGE	2-21
2843159-0000	.SHAFT	2-21
2844501-0000	.PROFILE	5-127
2844525-0000	.CABLE DUCT	4-5
2844526-0000	.PLATE	4-5
2844527-0000	.PLATE	4-5
2845097-0000	.SPACER	4-5
2845320-0000	.PROTECTION	9-9
2846399-0200	.TUNNEL	5-123
2846403-0000	.ROLLER	5-19
2846405-0000	.PIVOT ARM	5-19
2846406-0200	.CAP SORTER	4-7
2846407-0200	.VOLUME KIT	4-7
2846408-0200	.VOLUME KIT	4-7
2846413-0200	.CONVEYOR BELT	8-3
2846416-0200	.FEEDER	4-3
2852912-0000	.CONNECTION PIPE	4-3
2852913-0000	.CONNECTION PIPE	4-3
2852914-0000	.CONVEYOR BELT	4-43, 4-45
2852917-0000	.BELT	8-5, 8-7, 8-19, 8-21, 8-25, 8-27
2853706-0100	.SETTING TOOL	10-3
2856578-0000	.WORM GEAR	8-5, 8-7, 8-25, 8-27
2856579-0000	.MOTOR	8-5, 8-7, 8-19, 8-21, 8-25, 8-27

Part No	Description	Page No
2856622-0000	.BUSHING	7-9
2857743-0000	.BRUSH	4-29, 4-31, 4-33, 4-35, 4-41
2857744-0000	.GUIDE	4-31
2857745-0000	.GUIDE	4-35
2859960-0000	.BRACKET	6-37, 6-39, 6-41
2861166-0200	.SOFTWARE	11-3
2861169-0200	.ELECTRICAL DOCUMENT	11-5
2864281-0000	.SHIM	7-47, 7-49
2867644-0000	.GUIDE	7-37, 7-39, 7-41, 7-43
2867645-0000	.GUIDE	7-37, 7-39, 7-41, 7-43
2867646-0000	.STEERING RAIL	7-47, 7-49
2867647-0000	.GUIDE	7-47, 7-49
2867648-0000	.BRACKET	7-47, 7-49
2867649-0000	.GUIDE	7-47, 7-49
2869128-0008	.SOFTWARE FIRMWARE CD	11-7
2873857-0000	.CAM	2-9, 2-11
2873859-0000	.BRACKET	2-9, 2-11
2873860-0000	.CURVE	2-9, 2-11
2873862-0100	.HEATING ELEMENT	5-45, 5-47, 5-49
2873864-0000	.CAM	2-9, 2-11
2873865-0000	.PRE-HEATER	5-51
2873866-0000	.SUPPORT	10-17
2873867-0000	.PLATE	5-51
2873868-0000	.BRACKET	2-9, 2-11
2873869-0000	.CURVE	2-9, 2-11
2873870-0000	.ADJUSTMENT BRACKET	2-9, 2-11
2873871-0000	.BRACKET	2-9, 2-11
2873872-0000	.BRACKET	10-17
2873873-0100	.VISION SYSTEM	5-45, 5-47, 5-49, 12-21
2873874-0100	.AUTOMATION CONVEYOR CONTROL	12-3
2873876-0000	.PLATE	10-17
2873878-0000	.GUIDE	1-45
2873879-0000	.GUIDE	1-33
2873892-0000	.SHIM	6-35
2873893-0000	.BRACKET	5-53, 5-55, 5-57, 5-59, 12-23, 12-25, 12-27, 12-29
2873895-0000	.CURVE	2-9, 2-11
2873896-0000	.CABLE TRAY	3-29
2873914-0100	.CAMMODULE	6-21, 6-23, 6-25, 6-27, 6-29
2873915-0100	.CAMMODULE	6-21, 6-23, 6-25, 6-27, 6-29
2873916-0100	.CAMMODULE	6-21, 6-23, 6-25, 6-27, 6-29
2873917-0100	.CAMMODULE	6-21, 6-23, 6-25, 6-27, 6-29
2873921-0000	.BLOCK	3-11
2873922-0100	.CABLE	5-97, 12-21
2873923-0100	.POSITION TEMPLATE	10-3
2873924-0200	.POSITIONING DEVICE	12-3
2873925-0100	.COMMUNICATION UNIT	12-3
2873928-0000	.CABLE DUCT	5-7, 5-9
2873930-0100	.CAUTION SIGN LIST	12-3
2873932-0000	.TEMPLATE	10-33
2873935-0000	.TEMPLATE	10-5
2873941-0000	.SIGN	1-21, 5-11, 5-13
2873943-0000	.CLAMP	5-53, 5-55, 5-57, 5-59, 5-61, 5-63, 12-23, 12-25, 12-27, 12-29, 12-31, 12-33
2873950-0100	.CABLE SET	5-97
2873951-0000	.COVER	1-75
2873952-0100	.COVER	1-67, 1-69, 1-71, 1-73
2873953-0100	.CAP	10-3
2873966-0000	.COVER	1-75
2873970-0000	.CLAW	6-83
2873971-0000	.CLAW	6-83
2873973-0000	.CLAW	6-83
2873974-0000	.CLAW	6-83
2873975-0000	.PULLER	6-83
2873976-0000	.PULLER	6-83
2873977-0200	.VOLUME KIT	4-7
2873978-0200	.VOLUME KIT	4-7
2873979-0000	.GUIDE	4-33
2873980-0000	.GUIDE	4-41
2874001-0200	.VOLUME KIT	4-7
2874002-0200	.VOLUME KIT	4-7
2874003-0000	.GUIDE	4-37
2874004-0000	.GUIDE	4-39
2874024-0000	.BRACKET	5-111
2875596-0000	.GUIDE	7-37, 7-39, 7-41, 7-43
2875597-0000	.GUIDE	7-37, 7-39, 7-41, 7-43
2875598-0000	.GUIDE	7-47, 7-49
2875599-0000	.GUIDE	7-47, 7-49
2875600-0000	.STEERING RAIL	7-47, 7-49
2879015-0200	.ELECTRICAL DOCUMENT	11-3
2880018-0100	.PACKAGE ALIGNER	1-67, 1-69, 1-71, 1-73
2880023-0000	.SHAFT	1-77
2880024-0000	.SPACER	1-77
2880025-0000	.SPACER	1-77
2880026-0000	.PULLEY	1-77
2880027-0000	.COVER	1-77

Part No	Description	Page No
2880028-0000	.FLANGE	1-77
2880031-0000	.SPACER	1-77
2885916-0000	.PLATE	8-5, 8-7, 8-19, 8-21, 8-25, 8-27
2890013-0100	.COMMUNICATION UNIT	12-3
2890014-0200	.POSITIONING UNIT	9-57, 9-59, 12-21
2890591-0100	.PLINTH	9-51
2893414-0000	.CLAMPING PART	7-37, 7-39, 7-41, 7-43
2893415-0000	.CLAMPING PART	7-37, 7-39, 7-41, 7-43
2893416-0000	.GUIDE	7-37, 7-39, 7-41, 7-43
2893417-0000	.GUIDE	7-37, 7-39, 7-41, 7-43
2893418-0000	.BRACKET	7-47, 7-49
2893419-0000	.STEERING RAIL	7-47, 7-49
2893420-0000	.CLAMPING PART	7-37, 7-39, 7-41, 7-43
2893421-0000	.CLAMPING PART	7-37, 7-39, 7-41, 7-43
2893422-0000	.GUIDE	7-47, 7-49
2893423-0000	.GUIDE	7-47, 7-49
2895147-0100	.PACKAGE ALIGNER	9-57, 9-59
2901692-0000	.GUIDE	1-77
2901693-0000	.COVER	1-77
2901694-0000	.MOTOR	1-77
2901708-0100	.MOTOR BRACKET	3-3
2901711-0000	.SUPPORT	3-31
2902792-0000	.SPACER	1-77
2907981-0000	.NUT	1-49, 1-51, 1-53, 1-55
2909155-0000	.STRIP HOLDER	3-31
2909473-0000	.PLATE	3-23
2911985-0000	.LOCKING LEVER	3-9
2914953-0000	.GUIDE	7-37, 7-39, 7-41, 7-43
2914954-0000	.GUIDE	7-37, 7-39, 7-41, 7-43
2914955-0000	.BRACKET	7-47, 7-49
2914957-0000	.CLAMPING PART	7-37, 7-39, 7-41, 7-43
2914958-0000	.CLAMPING PART	7-37, 7-39, 7-41, 7-43
2914959-0000	.GUIDE	7-47, 7-49
2914960-0000	.GUIDE	7-47, 7-49
2918904-0000	.PLATE	7-13
2918905-0000	.PLATE	7-13
2921902-0000	.DIVIDER	9-11
2930176-0100	.SENSOR GROUP	12-11
2930177-0100	.CABLE MARKING SET	12-11
2930178-0100	.SENSOR GROUP	12-11
2930179-0100	.CONVEYOR CONTROL ACCESSORIES	12-3
2930182-0100	.POWER SUPPLY DEVICE	12-3
2930210-0000	.PLATE	5-21, 5-23
2930211-0000	.PLATE	5-21, 5-23
2930214-0000	.CLAW	6-83
2930215-0000	.CLAW	6-83
2930216-0000	.PULLER	6-83
2930228-0000	.AIR NOZZLE	4-29, 4-31, 4-33, 4-35, 4-37, 4-39, 4-41
2930229-0000	.AIR NOZZLE	4-29, 4-31, 4-33, 4-35, 4-37, 4-39, 4-41
2930230-0000	.AIR NOZZLE	4-33, 4-35, 4-41
2931768-0000	.CABLE DUCT	5-7, 5-9
2931769-0000	.CABLE DUCT	5-7, 5-9
2931770-0000	.DIVIDER	5-7, 5-9
2931771-0000	.CABLE DUCT	5-7, 5-9
2931772-0000	.CABLE DUCT	5-7, 5-9
2931773-0000	.CABLE DUCT	5-7, 5-9
2931774-0000	.CABLE DUCT	5-7, 5-9
2931775-0000	.CABLE DUCT	5-7, 5-9
2931776-0000	.CABLE DUCT	5-7, 5-9
2931777-0000	.CABLE DUCT	5-7, 5-9
2931778-0000	.CABLE DUCT	5-7, 5-9
2931779-0000	.CABLE DUCT	5-7, 5-9
2931780-0000	.CABLE DUCT	5-7, 5-9
2931781-0000	.CABLE DUCT	5-7, 5-9
2931782-0000	.CABLE DUCT	5-7, 5-9
2931783-0000	.PLATE	5-7, 5-9
2931784-0000	.DIVIDER	5-7, 5-9
2931785-0000	.ANGLE	5-7, 5-9
2931786-0000	.ANGLE	5-7, 5-9
2931787-0000	.ANGLE	5-7, 5-9
2931788-0000	.DIVIDER	5-7, 5-9
2934904-0000	.RAIL BRACKET	5-7, 5-9
2934905-0000	.SUPPORT	5-51
2936120-0000	.BRACKET	1-7
2936506-0000	.BRACKET	1-9
2936740-0000	.BRACKET	1-7
2937337-0000	.SPACER	1-35, 1-47
2939164-0000	.SETTING TOOL	10-7
2939165-0000	.SHAFT	10-7
2939208-0100	.SETTING TOOL	10-5
2939331-0000	.TOOL	10-7
2940040-0000	.SUPPORT	8-19, 8-21, 8-25, 8-27
2940041-0000	.LOCK HOLDER	8-19, 8-21, 8-25, 8-27
2940042-0000	.SHIM	8-19, 8-21, 8-25, 8-27

Part No	Description	Page No
2940569-0000	.GUIDE	1-67, 1-69, 1-71, 1-73
2940677-0000	.GUIDE	1-67, 1-69, 1-71, 1-73
2943597-0000	.PLATE	1-9
2944164-0000	.PLATE	1-9
2944175-0000	.PIN	6-67
2947726-0000	.SUPPORT	9-5
2956716-0000	.SUPPORT	10-21, 10-23
2956717-0000	.BRACKET	10-21, 10-23
2956718-0100	.PHOTOCELL BRACKET	10-15
2956734-0000	.SUPPORT	10-21, 10-23
2956743-0000	.AXLE PIN	10-21, 10-23
2956908-0000	.SHAFT	10-21, 10-23
2957674-0000	.CLAMP	10-21, 10-23
2957790-0000	.BRACKET	10-21, 10-23
2958205-0000	.BRACKET	10-21, 10-23
2958439-0000	.AXLE PIN	10-21, 10-23
2958873-0000	.BRACKET	10-21, 10-23
2958892-0000	.AXLE PIN	10-21, 10-23
2958971-0000	.PLATE	10-17
2959001-0000	.SUPPORT	10-21, 10-23
2959224-0000	.SCREW	10-21, 10-23
2959689-0000	.SCREW	10-21, 10-23
2960276-0000	.PLATE	10-21, 10-23
2960528-0000	.SCREW	10-21, 10-23
2960571-0000	.BRACKET	10-21, 10-23
2963601-0000	.COVER	10-21, 10-23
2964292-0000	.BEAM	5-11, 5-13
2964293-0000	.BEAM	5-11, 5-13
2965155-0000	.SUPPORT	5-21, 5-23
2966581-0000	.COVER	5-143
2970129-0000	.GUIDE	7-47, 7-49
2970130-0000	.GUIDE	7-47, 7-49
2970131-0000	.STEERING RAIL	7-47, 7-49
2970138-0000	.CLAMPING PART	7-37, 7-39, 7-41, 7-43
2970139-0000	.CLAMPING PART	7-37, 7-39, 7-41, 7-43
2973942-0000	.BRACKET	7-21
2973943-0000	.PLATE	7-27
2974857-0000	.SCREW	7-17
2974858-0000	.NUT	7-17
2981402-0000	.SHAFT	10-21, 10-23
2981403-0000	.BRACKET	10-21, 10-23
2981405-0000	.AIR NOZZLE	4-31, 4-33, 4-35, 4-37, 4-41
2981406-0000	.AIR BLOW REGULATOR	4-29, 4-31, 4-33, 4-35, 4-37, 4-39, 4-41
2981407-0000	.SCRAPER	4-31, 4-33
2981409-0000	.CAM	4-37
2981410-0000	.CAM	4-29, 4-31, 4-33, 4-35, 4-41
2981411-0000	.CAM	4-29, 4-31, 4-33, 4-35, 4-41
2981412-0000	.CAM	4-39
2981418-0000	.AIR NOZZLE	4-29, 4-37
2982201-0000	.BRACKET	10-21, 10-23
2982202-0000	.BRACKET	10-21, 10-23
2982300-0000	.CLAMP	10-21, 10-23
2982402-0000	.GUIDE	10-21, 10-23
2982989-0000	.GUIDE	1-67, 1-69, 1-71, 1-73
2983297-0000	.FOLLOWER ARM	6-83
2985757-0000	.PHOTOCELL BRACKET	8-19, 8-21, 8-25, 8-27
2985759-0000	.HOLDER	8-19, 8-21, 8-25, 8-27
2985768-0000	.COLUMN	5-63, 12-33
2985770-0000	.FLANGE	3-23
2985771-0000	.PLATE	3-29
2985772-0000	.BRACKET	3-25
2985773-0000	.BRACKET	5-41
2985774-0000	.BRACKET	5-43
2985775-0100	.SENSOR	5-21, 5-23
2985781-0000	.PLATE	1-49, 1-51, 1-53, 1-55
2985804-0000	.TUNNEL	5-145
2985809-0000	.HOUSING	1-59
2985810-0000	.BRUSH	10-13
2985813-0000	.TEMPLATE	10-33
2985817-0000	.BELT	7-45
2985832-0000	.COVER	1-11
2985833-0000	.WORM GEAR MOTOR	1-15
2985842-0000	.TUNNEL	5-129
2985843-0000	.COVER	5-131
2985844-0000	.COVER	5-127
2985846-0000	.PLATE	1-49, 1-51, 1-53, 1-55
2985847-0000	.PLATE	1-11
2986246-0100	.EJECTOR	10-15
2986247-0100	.CAP DETECTOR	10-3
2987967-0000	.SPRING HOLDER	6-83
2987971-0000	.SPRING HOLDER	6-83
2987983-0000	.PLATE	8-19, 8-21, 8-25, 8-27
2987984-0000	.STEERING RAIL	7-47, 7-49
2987985-0000	.TOP COVER	8-29

Part No	Description	Page No
2987993-0100	.CAP FEEDER	7-37, 7-39, 7-41, 7-43
2987996-0000	.PULLEY	7-45
2989220-0000	.BEARING HOUSING	7-45
2989222-0000	.BELT	7-45
2989223-0000	.SHAFT	7-45
2989224-0000	.SHAFT	7-45
2991257-0000	.COVER	1-75
3007668-0000	.AXLE PIN	10-21, 10-23
3007670-0000	.SUPPORT	10-21, 10-23
3009327-0001	.SOFTWARE CD	11-7
3009961-0003	.COMPACT FLASH FW	11-7
3010622-0000	.CANTILEVER	1-7
3010624-0000	.CANTILEVER	1-9
3014011-0000	.PULLEY	7-45
3014012-0000	.BRACKET	7-45
3014020-0000	.COMPRESSION SPRING	6-73, 6-75
3014023-0000	.GUIDE	7-45
3016909-0000	.DRIVE SHAFT	1-15
3017287-0000	.PLATE	1-11
3017300-0000	.FLANGE	1-15
3018759-0000	.CLAMPING ELEMENT	3-19, 3-21
3018761-0000	.TOOTHED PULLEY	3-19
3018762-0000	.TOOTHED PULLEY	3-21
3020132-0000	.SPRING	7-21
3020133-0000	.SETTING TOOL	10-5
3020134-0000	.SETTING TOOL	10-5
3020137-0000	.SHAFT	7-45
3020144-0000	.PULLEY	7-45
3021525-0000	.PLATE	1-59
3022021-0000	.HOUSING	1-59
3022022-0000	.SHAFT	1-59
3022023-0000	.SHAFT	1-59
3022488-0000	.CAM	1-59
3022796-0000	.BELLOWS	1-31, 1-35, 1-43, 1-47
3024841-0000	.SHIM	7-45
3024851-0000	.ECCENTRIC SHAFT	7-45
3024852-0000	.PULLEY	7-45
3024853-0000	.PULLEY	7-45
3024855-0000	.SHAFT	7-45
3024856-0000	.BRACKET	7-45
3024866-0000	.SUPPORT	7-17
3031442-0000	.SPACER	5-63, 12-33
3034434-0000	.TENSION SPRING	6-83, 10-13
3034438-0100	.TOOTHED PULLEY	7-5
3034439-0100	.CONVEYOR BELT	8-3
3034440-0100	.CONVEYOR BELT	8-3
3034454-0000	.ADJUSTING SCREW	3-9
3034455-0000	.SUPPORT	3-9
3034465-0000	.SETTING TOOL	10-5
3039014-0000	.SENSOR	2-7, 12-35
3039015-0000	.TEMPLATE	10-33
3039024-0000	.FRAME	6-67
3039027-0000	.PLATE	5-11, 5-13
3039029-0000	.PNEUMATIC DIAGRAM	10-3
3039030-0000	.TOOTHED PULLEY	1-7, 1-9, 1-15
3039032-0000	.LINK ATTACHMENT	3-17
3039040-0000	.SPACER	5-11, 5-13
3043254-0000	.COVER	1-29, 1-41, 1-49, 1-51, 1-53, 1-55
3044285-0000	.TEMPLATE	10-5
3046433-0000	.FUSE PANEL LABEL	9-57, 9-59
3046437-0000	.FUSE PANEL LABEL	9-57, 9-59
3046886-0100	.DISTRIBUTION TERMINAL	9-9
3047311-0000	.PROTECTION	9-9
3047341-0000	.ANGLE BRACKET	5-7, 5-9
3047348-0100	.GLASS DOOR	5-121
3047349-0000	.DOOR	5-161
3047350-0100	.TOOL	10-33
3047352-0000	.TEMPLATE	10-35
3047353-0000	.GUIDE	10-5
3052393-0000	.GLASS COVER	5-63, 12-33
3052658-0100	.RING LIGHT METALIZED PACK	5-53, 5-55, 5-57, 5-59, 12-23, 12-25, 12-27, 12-29
3053471-0000	.PIN	5-63, 12-33
3053477-0000	.BRACKET	5-63, 12-33
3053478-0000	.PUSHER	5-63, 12-33
3053815-0000	.COVER	1-49, 1-51
3053816-0000	.COVER	1-53, 1-55
3054997-0000	.SUPPORT	5-105, 5-107
3055062-0002	.SOFTWARE CD	11-7
3055078-0002	.COMPACT FLASH SW	11-7
3056497-0000	.DOOR	5-141
3058564-0000	.ROLLER	4-43, 4-45
3058565-0000	.SHAFT	4-43, 4-45
3058858-0000	.DOOR	5-137
3058859-0000	.BEAM	5-11, 5-13

Part No	Description	Page No
3058864-0000	.COMPRESSION SPRING	2-13
3060116-0000	.COMPRESSION SPRING	5-63, 12-33
3068593-0000	.SCREW	4-5
3068594-0000	.BLOCK	4-5
3068595-0000	.BLOCK	4-5
3068596-0000	.COVER	4-5
3068597-0000	.PLATE	4-5
3068598-0000	.FRAME	4-5
3068599-0000	.PIPE	5-21, 5-23
3068635-0100	.VOLUME KIT	4-7
3068636-0000	.GUIDE	4-29
3068637-0000	.HOTMELT UNIT	5-111
3073387-0000	.PLATE	3-9
3073391-0000	.COVER	3-9
3073395-0100	.ADJUSTMENT BRACKET	3-5, 3-7
3077731-0000	.GUIDE	7-37, 7-39, 7-41, 7-43
3077732-0000	.GUIDE	7-37, 7-39, 7-41, 7-43
3077733-0000	.BRACKET	7-47, 7-49
3077734-0000	.TEMPLATE	10-35
3086231-0000	.SCREW	1-59
3086233-0000	.BRACKET	1-59
3087821-0000	.TOOL	12-39
3087822-0000	.PLATE	12-39
3087823-0100	.TOOL	12-21
3088629-0100	.CAMMODULE	6-21, 6-23, 6-25, 6-27, 6-29
3088630-0000	.CAM	6-57
3088841-0000	.BRACKET	6-57
3089906-0000	.PLATE	12-39
3093726-0000	.PLATE	5-67
3095787-0000	.SLIDE	7-13
3095790-0000	.HOLDER	5-63, 12-33
3095791-0000	.PLATE	5-63, 12-33
3095793-0000	.PLATE	2-19
3095794-0000	.ANGLE BRACKET	2-19
3095795-0000	.SLIDING STRIP	2-19
3095796-0000	.HOLDER	5-63, 12-33
3095808-0000	.WORM GEAR	8-19, 8-21
3096118-0000	.PLATE	3-9
3098039-0000	.HOTMELT GUN	3-5, 3-7
3108404-0000	.SHAFT	8-5, 8-7, 8-19, 8-21, 8-25, 8-27
3108405-0000	.ROLLER	8-5, 8-7, 8-19, 8-21, 8-25, 8-27
3108406-0000	.BRACKET	8-5, 8-7
3108407-0000	.BRACKET	8-5, 8-7
3108408-0000	.SHAFT	8-5, 8-7, 8-19, 8-21, 8-25, 8-27
3108409-0000	.PLATE	8-5, 8-7, 8-19, 8-21, 8-25, 8-27
3108410-0000	.PLATE	8-5, 8-7, 8-19, 8-21, 8-25, 8-27
3108411-0000	.PLATE	8-5, 8-7, 8-19, 8-21, 8-25, 8-27
3108412-0000	.PLATE	8-5, 8-7, 8-19, 8-21, 8-25, 8-27
3108413-0100	.PULLER	4-9, 4-11
3108414-0000	.SHAFT	8-5, 8-7, 8-19, 8-21, 8-25, 8-27
3108415-0000	.IDLER ROLLER	8-5, 8-7, 8-19, 8-21, 8-25, 8-27
3108416-0000	.BRACKET	8-5, 8-7
3108417-0000	.ROLLER	8-5, 8-7, 8-19, 8-21, 8-25, 8-27
3108418-0000	.COVER	8-5, 8-7, 8-19, 8-21, 8-25, 8-27
3108419-0000	.FLANGE	8-5, 8-7, 8-19, 8-21, 8-25, 8-27
3108420-0000	.SHAFT	8-5, 8-7, 8-19, 8-21, 8-25, 8-27
3108421-0000	.BRACKET	8-5, 8-7, 8-19, 8-21, 8-25, 8-27
3108422-0000	.PLATE	8-5, 8-7, 8-19, 8-21, 8-25, 8-27
3108423-0000	.BRACKET	8-5, 8-7
3108424-0000	.BRACKET	8-5, 8-7, 8-19, 8-21, 8-25, 8-27
3108425-0000	.ANCHOR	8-5, 8-7
3108426-0000	.ANCHOR	8-5, 8-7
3108427-0000	.PLATE	8-5, 8-7, 8-19, 8-21, 8-25, 8-27
3108428-0000	.COVER	8-5, 8-7, 8-19, 8-21, 8-25, 8-27
3108429-0000	.CABLE CONDUIT	8-5, 8-7, 8-19, 8-21, 8-25, 8-27
3108430-0000	.PROFILE	8-5, 8-7
3108431-0000	.BRACKET	8-5, 8-7, 8-19, 8-21, 8-25, 8-27
3108432-0000	.BRACKET	8-5, 8-7
3108433-0100	.DISCHARGE DEVICE	8-5, 8-7, 8-19, 8-21, 8-25, 8-27
3108434-0000	.LOCKING LEVER	8-5, 8-7, 8-19, 8-21, 8-25, 8-27
3108435-0000	.CAP	8-5, 8-7, 8-19, 8-21, 8-25, 8-27
3108436-0000	.CLAMP	8-5, 8-7, 8-19, 8-21, 8-25, 8-27
3108437-0000	.HANDLE	8-5, 8-7, 8-19, 8-21, 8-25, 8-27
3108438-0000	.CURVE	8-9
3108439-0000	.SUPPORT	8-9
3108440-0000	.TUBE	8-9
3108441-0000	.TIE	8-9
3108442-0100	.COVER	4-9, 4-11
3108443-0100	.RAKE	4-9, 4-11
3108444-0100	.BODY	4-9, 4-11
3108445-0100	.PNEUMATIC COMPONENT	4-9, 4-11
3108446-0100	.SENSOR	4-9, 4-11
3108447-0100	.HARD DISK	4-9, 4-11
3108448-0100	.PHOTOCELL UNIT	4-9, 4-11

Part No	Description	Page No
3108449-0000	.WASHER	4-9, 4-11
3108450-0000	.WASHER	4-23, 4-27
3108451-0000	.WASHER	4-9, 4-11, 4-13, 4-21, 4-23, 4-31, 4-33, 4-43, 4-45
3108452-0000	.WASHER	4-9, 4-11, 4-13, 4-19, 4-21, 4-29, 4-31, 4-33, 4-35, 4-37, 4-39, 4-41, 4-43, 4-45
3108453-0000	.WASHER	4-9, 4-11, 4-19, 4-29, 4-31, 4-33, 4-35, 4-37, 4-39, 4-41, 4-43, 4-45
3108454-0000	.WASHER	4-9, 4-11, 4-29, 4-31, 4-33, 4-35, 4-37, 4-39, 4-41, 4-43, 4-45
3108455-0000	.WASHER	4-9, 4-11
3108456-0000	.SCREW	4-15
3108457-0000	.SCREW	4-17
3108458-0000	.WASHER	4-15
3108459-0000	.WASHER	4-43, 4-45
3108460-0000	.WASHER	4-43, 4-45
3108461-0000	.KEY	4-43, 4-45
3108462-0000	.SCREW	4-19, 4-43, 4-45
3108463-0000	.TAPER PIN	4-29, 4-31, 4-33, 4-35, 4-37, 4-39, 4-41
3108464-0000	.STUD BOLT	4-25, 4-43, 4-45
3108465-0000	.SECTOR	4-25
3108466-0000	.RING	4-25
3108471-0000	.PROTECTION RING	4-9, 4-11, 4-19
3108472-0000	.SUPPORT	4-43, 4-45
3108473-0000	.COVER	4-43, 4-45
3108474-0000	.COVER	4-43, 4-45
3108475-0000	.PLATE	4-43, 4-45
3108476-0000	.CARRIER	4-43, 4-45
3108477-0000	.COVER	4-43, 4-45
3108478-0000	.COVER	4-43, 4-45
3108479-0000	.COVER	4-43, 4-45
3108480-0000	.PLATE	4-43, 4-45
3108481-0000	.BED	4-43, 4-45
3108482-0000	.UNIT CONVERGER	4-43, 4-45
3108483-0000	.COVER	4-43, 4-45
3108484-0000	.WASHER	4-43, 4-45
3108485-0000	.WASHER	4-43, 4-45
3108486-0000	.SPACER	4-43, 4-45
3108487-0000	.PIN	4-43, 4-45
3108488-0000	.GUIDE	4-43, 4-45
3108489-0000	.GUIDE	4-43, 4-45
3108490-0000	.COVER	4-43, 4-45
3108491-0000	.PLATE	4-43, 4-45
3108492-0000	.CABLE CONDUIT	4-43, 4-45
3108493-0000	.WASHER	4-43, 4-45
3108494-0000	.PLATE	4-43, 4-45
3108495-0000	.ROLLER	4-43, 4-45
3108496-0000	.PLATE	4-43, 4-45
3108497-0000	.GASKET	4-43, 4-45
3108498-0000	.GASKET	4-43, 4-45
3108499-0000	.ANCHOR	4-43, 4-45
3108500-0000	.SHAFT	4-43, 4-45
3108501-0000	.PLUG	4-43, 4-45
3115097-0000	.FLANGE BUSHING	1-77
3115101-0000	.WASHER	1-77
3115224-0000	.FLANGE	4-43, 4-45
3115225-0000	.PLATE	4-43, 4-45
3115226-0000	.THREADED ROD	4-43, 4-45
3115227-0000	.BAR	4-43, 4-45
3115228-0000	.COUPLING	4-43, 4-45
3115229-0000	.WASHER	4-43, 4-45
3115230-0000	.FOOT	4-43, 4-45
3115231-0000	.HANDLE	4-43, 4-45
3115232-0000	.HINGE	4-15, 4-43, 4-45
3115233-0000	.CLAMP	4-9, 4-11, 4-43, 4-45
3115234-0000	.CAP	4-9, 4-11, 4-43, 4-45
3115235-0000	.MAGNET	4-43, 4-45
3115237-0000	.CABLE	4-43, 4-45
3115238-0000	.AIR NOZZLE	4-29
3115239-0000	.SHAFT	4-9, 4-11
3115240-0000	.REDUCER	4-9, 4-11
3115241-0000	.CAP	4-9, 4-11
3115242-0000	.BUSHING	4-9, 4-11
3115243-0000	.SCREW	4-9, 4-11
3115244-0000	.PROTECTIVE COVER	4-9, 4-11
3115245-0000	.SUPPORT	4-9, 4-11
3115246-0000	.BRACKET	4-9, 4-11
3115247-0000	.ARM	4-9, 4-11
3115248-0000	.CENTERING	4-9, 4-11
3115249-0000	.CONNECTION BOX	4-9, 4-11
3115250-0000	.BLOCK	4-9, 4-11
3115251-0000	.BRACKET	4-9, 4-11
3115252-0000	.CAP	4-9, 4-11
3115253-0000	.SUPPORT	4-9, 4-11
3115254-0000	.SUPPORT	4-9, 4-11
3115255-0000	.BASE	4-9, 4-11
3115256-0000	.BASE	4-9, 4-11
3115257-0000	.CONNECTION	4-9, 4-11

Part No	Description	Page No
3115258-0000	.CONNECTION	4-9, 4-11
3115259-0000	.COVER	4-9, 4-11
3115260-0000	.LOCKING LEVER	4-9, 4-11
3115261-0000	.STOP SCREW	4-9, 4-11
3115263-0000	.CLAMP	4-9, 4-11, 4-23
3115264-0000	.CABLE	4-9, 4-11
3115265-0000	.CABLE	4-9, 4-11
3115266-0000	.REDUCTION	4-9, 4-11
3115267-0000	.PHOTOCELL	4-27
3115268-0000	.BUSHING	4-13
3115269-0000	.WASHER	4-13
3115270-0000	.PIN	4-13
3115271-0000	.SPRING	4-13
3115272-0000	.PLATE	4-13
3115273-0000	.GUIDE	4-13
3115274-0000	.SCREW	4-13, 4-19
3115275-0000	.COVER	4-19
3115276-0000	.BRACKET	4-19
3115277-0000	.SUPPORT	4-19
3115278-0000	.PLATE	4-19
3115279-0000	.COVERING	4-19
3115280-0000	.STRIP	4-19
3115281-0000	.LABEL TAPE	4-19
3115282-0000	.FOOT	4-19
3115283-0000	.CLAMP	4-19
3115284-0000	.RING	4-17
3115285-0000	.PLATE	4-17
3115286-0000	.PLATE	4-17
3115287-0000	.PLATE	4-15
3115288-0000	.CLAMP	4-15
3115289-0000	.FUNNEL	4-15
3115290-0000	.DAMPING ELEMENT	4-15
3115291-0000	.PLATE	4-15
3115292-0000	.PLATE	4-15
3115293-0000	.CROSS BAR	4-15
3115294-0000	.CROSS BAR	4-15
3115295-0000	.CROSS BAR	4-15
3115296-0000	.PANEL	4-15
3115297-0000	.PANEL	4-15
3115298-0000	.PANEL	4-15
3115299-0000	.PANEL	4-15
3115300-0000	.HANDLE	4-15, 4-29, 4-31, 4-33, 4-35, 4-37, 4-39, 4-41
3115301-0000	.SCREW	4-15
3115302-0000	.BRACKET	4-23
3115303-0000	.DIP STICK	4-23
3115304-0000	.PIPE	4-23
3115305-0000	.BRACKET	4-23
3115306-0000	.PIN	4-23
3115307-0000	.CLAMP	4-23
3115308-0000	.PLATE	4-23
3115309-0000	.BEARING	4-23
3115343-0000	.GUIDE	4-31
3115344-0000	.GUIDE	4-31
3115345-0000	.SUPPORT	4-31, 4-33
3115346-0000	.CARRIER	4-29, 4-31, 4-33, 4-35, 4-37, 4-39, 4-41
3115347-0000	.PLATE	4-29, 4-31, 4-33, 4-35, 4-37, 4-39, 4-41
3115348-0000	.WASHER	4-29, 4-31, 4-33, 4-35, 4-37, 4-39, 4-41
3115349-0000	.PIN	4-29, 4-31, 4-33, 4-35, 4-37, 4-39, 4-41
3115350-0000	.PIN	4-29, 4-31, 4-33, 4-35, 4-37, 4-39, 4-41
3115351-0000	.PIN	4-29, 4-31, 4-33, 4-35, 4-37, 4-39, 4-41
3115352-0000	.BASE	4-31
3115353-0000	.PULLER	4-31
3115354-0000	.PLATE	4-29, 4-31
3115355-0000	.BRUSH	4-29, 4-31
3115356-0000	.CENTERING	4-29, 4-31, 4-33, 4-35, 4-37, 4-39, 4-41
3115357-0000	.SCRAPER	4-31, 4-33
3115358-0000	.AIR NOZZLE	4-29, 4-31, 4-33, 4-35, 4-37, 4-39, 4-41
3115359-0000	.GUIDE	4-33
3115360-0000	.BASE	4-33
3115361-0000	.PULLER	4-33
3115362-0000	.PLATE	4-33
3115363-0000	.HOLDER	4-33
3115364-0000	.GUIDE	4-33
3115365-0000	.GUIDE	4-37
3115366-0000	.GUIDE	4-37
3115367-0000	.PULLER	4-37
3115368-0000	.BASE	4-29, 4-35, 4-37, 4-39, 4-41
3115369-0000	.GUIDE	4-39
3115370-0000	.GUIDE	4-39
3115371-0000	.PULLER	4-39
3115372-0000	.PLATE	4-39
3115373-0000	.AIR NOZZLE	4-39
3117845-0000	.TIMING BELT	7-33, 7-35
3117862-0000	.TIMING BELT	2-15

Part No	Description	Page No
3117867-0000	.PLASTIC PLUG	5-111
3123206-0000	.PLATE	3-5, 3-7
3123920-0000	.TENSION SPRING	1-31, 1-35, 1-43, 1-47
3123927-0000	.PLATE	12-39
3124360-0000	.REDUCTION SLEEVE	4-29, 4-37
3124361-0000	.PULLER	4-41
3124362-0000	.GUIDE	4-41
3124363-0000	.GUIDE	4-41
3124364-0000	.PLATE	4-35, 4-41
3124365-0000	.BOX	4-35, 4-41
3124366-0000	.GUIDE	4-35
3124367-0000	.GUIDE	4-35
3124368-0000	.PULLER	4-35
3124369-0000	.CAM	4-39
3124370-0000	.GUIDE	4-29
3124371-0000	.GUIDE	4-29
3124373-0000	.PULLER	4-29
3124375-0000	.COVER	8-11
3124376-0000	.COVER	8-11
3124377-0000	.FLAP	8-11
3124378-0000	.AIR NOZZLE	8-11
3124379-0000	.FITTING	8-11, 8-13, 8-15, 8-17, 8-23, 8-31
3124380-0000	.COVER	8-13
3124381-0000	.COVER	8-13
3124382-0000	.FLAP	8-13
3124383-0000	.AIR NOZZLE	8-13
3124384-0000	.COVER	8-15
3124385-0000	.COVER	8-15
3124386-0000	.FLAP	8-15
3124387-0000	.AIR NOZZLE	8-15
3124388-0000	.COVER	8-23
3124389-0000	.COVER	8-23
3124390-0000	.FLAP	8-23
3124391-0000	.AIR NOZZLE	8-23
3124392-0000	.COVER	8-29
3124393-0000	.FLAP	8-29
3124394-0000	.COVER	8-31
3124395-0000	.COVER	8-31
3124396-0000	.FLAP	8-31
3124397-0000	.AIR NOZZLE	8-31
3124398-0000	.COVER	8-17
3124399-0000	.COVER	8-17
3124400-0000	.FLAP	8-17
3124401-0000	.AIR NOZZLE	8-17
3124420-0000	.BRACKET	4-21
3132972-0000	.SHIM	6-57
3141446-0000	.GUIDE	7-37, 7-39, 7-41, 7-43
3143918-0000	.PLATE	12-39
3147216-0100	.GUIDE RAIL	8-3
3147217-0100	.GUIDE RAIL	8-3
3147218-0100	.GUIDE RAIL	8-3
3147219-0100	.GUIDE RAIL	8-3
3147220-0100	.GUIDE RAIL	8-3
3147221-0100	.GUIDE RAIL	8-3
3147222-0100	.GUIDE RAIL	8-3
3149897-0000	.SHAFT	1-77
3149898-0000	.SHAFT	1-77
3149899-0000	.WHEEL	1-77
3149903-0000	.PLATE	1-77
3149904-0000	.PLATE	1-77
3149905-0000	.BELT	1-77
3149926-0100	.RING LIGHT	5-53, 5-55, 5-57, 5-59, 12-23, 12-25, 12-27, 12-29

Part No	Description	Page No	Part No	Description	Page No

Machine Type	Group Description	Page No

Part No	Description	Page No	Part No	Description	Page No

Part No	Description	Page No	Part No	Description	Page No

Tetra Pak

SPC
Spare Parts Catalogue

Pos	Part No	Description	Page No
0			
01XL010	2839230-0100 ..	PLINTH	9-21
01XL011	2840909-0100 ..	PLINTH	9-21
01XL012	2840910-0100 ..	PLINTH	9-21
01XL022	2840911-0100 ..	PLINTH	9-21
01XL032	2840911-0100 ..	PLINTH	9-21
01XL042	2840911-0100 ..	PLINTH	9-21
01XL043	2840915-0100 ..	PLINTH	9-21
01XL044	2840915-0100 ..	PLINTH	9-21
01XL072	2840917-0100 ..	PLINTH	9-21
5			
50W164X	3115373-0000 ..	AIR NOZZLE	4-39
A			
01A400	90600-8128	OPER. PANEL 15"PV+,2711P-T15C4D2TP SER.B	5-115
B			
01B600	90044-0192	LIMIT SW. SZ2586.000	9-5
01B601	90044-0192	LIMIT SW. SZ2586.000	9-5
01B801	90459-6426	PRESSURE GUARD PEV-1/4-B-OD	5-83
01B901	90459-5481	OIL PUMP 3L, 10P-P3	5-89
01B902	90274-0084	PRESSURE GUARD, 1800 KPA	5-89
20B003	90600-4732	LASER SENSOR, WS/WE9L-P330	1-9
21B000	90458-2907	PROX.SWITCH IFS204	1-59
21B300	90600-4732	LASER SENSOR, WS/WE9L-P330	10-21, 10-23
21B302	90600-4732	LASER SENSOR, WS/WE9L-P330	10-21, 10-23
21B304	90459-5529	PH.CELL E3Z-T86A, SENDER+RECIEVER	10-21, 10-23
21B312	90600-4732	LASER SENSOR, WS/WE9L-P330	10-21, 10-23
21B402	90459-5529	PH.CELL E3Z-T86A, SENDER+RECIEVER	5-21, 5-23
21B404	90459-5529	PH.CELL E3Z-T86A, SENDER+RECIEVER	5-21, 5-23
21B406	90459-5529	PH.CELL E3Z-T86A, SENDER+RECIEVER	5-21, 5-23
21B408	90459-5529	PH.CELL E3Z-T86A, SENDER+RECIEVER	5-21, 5-23
21B424	90459-5529	PH.CELL E3Z-T86A, SENDER+RECIEVER	5-21, 5-23
21B602	90459-5529	PH.CELL E3Z-T86A, SENDER+RECIEVER	5-21, 5-23
21B604	90459-5529	PH.CELL E3Z-T86A, SENDER+RECIEVER	12-17
21B605	90458-2907	PROX.SWITCH IFS204	12-13
30B102	90458-2907	PROX.SWITCH IFS204	6-17
40B010	90459-6948	PROX.SWITCH IFS206	3-29
40B011	90459-6948	PROX.SWITCH IFS206	3-29
40B012	90459-6948	PROX.SWITCH IFS206	3-27
40B013	90459-6948	PROX.SWITCH IFS206	3-27
40B200	90459-6948	PROX.SWITCH IFS206	7-21
40B202	90600-3272	PROX. SENSOR, SMT-8M-PS-24V-K-5,0-OE	7-21
40B500	90459-5529	PH.CELL E3Z-T86A, SENDER+RECIEVER	8-5, 8-7, 8-19, 8-21, 8-25, 8-27
40B504	90459-5529	PH.CELL E3Z-T86A, SENDER+RECIEVER	8-5, 8-7, 8-19, 8-21, 8-25, 8-27
50B013	90459-5529	PH.CELL E3Z-T86A, SENDER+RECIEVER	4-43, 4-45
50B101	90458-2907	PROX.SWITCH IFS204	4-9, 4-11
50B102	90458-2907	PROX.SWITCH IFS204	4-9, 4-11
50B105	90458-2907	PROX.SWITCH IFS204	4-23
50B200	90459-7366	PHOTOCELL WTB4-3P3161 F20	4-27
70B000	90600-1096	PROCESSOR UNIT IN-SIGHT 5100, IS-5100-00	5-53, 5-55, 5-57, 5-59, 12-23, 12-25, 12-27, 12-29
70B003	90600-2052	PHOTOCELL	2-7, 12-35
70B003	90601-6410	PHOTOCELL, WF 5-60 B410	2-7, 12-35
70B003	3039014-0000 ..	SENSOR	2-7, 12-35
E			
01E600	90459-0813	COOLING UNIT, KB20A619.01	9-55
01E700	90600-4049	LIGHT FIXTURE, TCH128 1XTL5-21W/830 HF	9-5
01E701	2769757-0100 ..	LAMP	5-97
01E702	2769757-0100 ..	LAMP	5-97
70E002	90459-2454	RING LIGHT ILLUMINATOR, CLK-003630-00	5-53, 5-55, 5-57, 5-59, 5-61, 12-23, 12-25, 12-27, 12-29, 12-31
F			
01F100	90459-4181	CURR. LIM. CIRC. BREAKER, NZMB1-4-A40	9-7
01F101	90082-0013	SURGE PROTECTION DEVICE PU4CR 8021520000	9-7
01F104	90459-5813	AUXILIARY CONTACT, FAZ-XHIN11	9-37
01F104	354002-0250 ..	MINIATURE CIRCUIT BREAKER, FAZ-C25/3	9-37
01F105	90458-2507	FUSE HOLDER, USBCC1	9-35
01F105	90458-2510	FUSE, ATDR6	9-35
01F200	354002-0060 ..	MINIATURE CIRCUIT BREAKER, FAZ-C6/3	9-35
01F201	354000-0040 ..	MINIATURE CIRCUIT BREAKER, FAZ-C4/1	9-19
01F202	354000-0060 ..	MINIATURE CIRCUIT BREAKER, FAZ-C6/1	9-19
01F203	354000-0040 ..	MINIATURE CIRCUIT BREAKER, FAZ-C4/1	9-19
01F300	354000-0040 ..	MINIATURE CIRCUIT BREAKER, FAZ-C4/1	9-35
01F400	354001-0040 ..	MINIATURE CIRCUIT BREAKER, FAZ-C4/2	9-19
01F500	90459-5813	AUXILIARY CONTACT, FAZ-XHIN11	9-37
01F500	354002-0200 ..	MINIATURE CIRCUIT BREAKER, FAZ-C20/3	9-37
01F600	354000-0060 ..	MINIATURE CIRCUIT BREAKER, FAZ-C6/1	9-37
01F700	354000-0060 ..	MINIATURE CIRCUIT BREAKER, FAZ-C6/1	9-35
01F701	90459-5811	RESIDUAL CURRENT DEVICE, FI-25/2/003-A	9-35
01F702	354000-0100 ..	MINIATURE CIRCUIT BREAKER, FAZ-C10/1	9-35
09F000	90459-6692	SAFETY PLC, PLUTO B20 20-070-06	9-49
09F001	90459-2291	SAFETY TIME RELAY, E1T-0.5S-24VDC	9-49
09F003	90459-2291	SAFETY TIME RELAY, E1T-0.5S-24VDC	9-57, 9-59
09F101	90458-1651	EMERGENCY STOP, ZB4-BS-844 ZB4-BZ-104	9-5

Pos	Part No	Description	Page No
F			
09F102	90458-1651	EMERGENCY STOP, ZB4-BS-844 ZB4-BZ-104	5-115
09F103	90458-1651	EMERGENCY STOP, ZB4-BS-844 ZB4-BZ-104	5-147
09F201	90602-4058	CONNECTION BOX TINA 4A, 20-054-03	5-105, 5-107
09F202	90602-4058	CONNECTION BOX TINA 4A, 20-054-03	5-105, 5-107
09F210	90459-6961	SAFETY SENSOR, NON CONT. ADAM-E M12 0,5M	5-105, 5-107
09F211	90459-4089	SAFETY SENSOR NON-CONTACT EVA E	5-105, 5-107
09F212	90459-6961	SAFETY SENSOR, NON CONT. ADAM-E M12 0,5M	5-105, 5-107
09F213	90459-4089	SAFETY SENSOR NON-CONTACT EVA E	5-105, 5-107
09F214	90459-6961	SAFETY SENSOR, NON CONT. ADAM-E M12 0,5M	5-105, 5-107
09F215	90459-4089	SAFETY SENSOR NON-CONTACT EVA E	5-105, 5-107
09F216	90459-6961	SAFETY SENSOR, NON CONT. ADAM-E M12 0,5M	5-105, 5-107
09F217	90459-4089	SAFETY SENSOR NON-CONTACT EVA E	5-105, 5-107
09F230	90459-6961	SAFETY SENSOR, NON CONT. ADAM-E M12 0,5M	5-105, 5-107
09F231	90459-4089	SAFETY SENSOR NON-CONTACT EVA E	5-105, 5-107
09F232	90459-6961	SAFETY SENSOR, NON CONT. ADAM-E M12 0,5M	5-105, 5-107
09F233	90459-4089	SAFETY SENSOR NON-CONTACT EVA E	5-105, 5-107
09F234	90459-6961	SAFETY SENSOR, NON CONT. ADAM-E M12 0,5M	5-105, 5-107
09F235	90459-4089	SAFETY SENSOR NON-CONTACT EVA E	5-105, 5-107
09F236	90459-5627	CONNECTION TINA 1A, 20-054-00	5-105, 5-107
09F310	90459-6961	SAFETY SENSOR, NON CONT. ADAM-E M12 0,5M	4-19
09F311	90459-4089	SAFETY SENSOR NON-CONTACT EVA E	4-15
09F312	90459-6961	SAFETY SENSOR, NON CONT. ADAM-E M12 0,5M	4-19
09F313	90459-4089	SAFETY SENSOR NON-CONTACT EVA E	4-15
09F314	90459-6961	SAFETY SENSOR, NON CONT. ADAM-E M12 0,5M	4-19
09F315	90459-4089	SAFETY SENSOR NON-CONTACT EVA E	4-15
09F316	90459-6961	SAFETY SENSOR, NON CONT. ADAM-E M12 0,5M	4-13
09F317	90459-4089	SAFETY SENSOR NON-CONTACT EVA E	4-13
20F000	354000-0060	MINIATURE CIRCUIT BREAKER, FAZ-C6/1	9-57, 9-59
21F400	354000-0100	MINIATURE CIRCUIT BREAKER, FAZ-C10/1	9-45
21F410	354000-0060	MINIATURE CIRCUIT BREAKER, FAZ-C6/1	9-63
21F600	354000-0100	MINIATURE CIRCUIT BREAKER, FAZ-C10/1	9-45
21F800	90259-0313	AUXILIARY CONTACT, NHI21-PKZ0	9-37
21F800	90459-5326	OVERLOAD PROTECTION, PKZM0-4	9-37
21F801	90459-5813	AUXILIARY CONTACT, FAZ-XHIN11	9-37
21F801	354001-0100	MINIATURE CIRCUIT BREAKER, FAZ-C10/2	9-37
40F400	90259-0313	AUXILIARY CONTACT, NHI21-PKZ0	9-57, 9-59
40F400	90459-5323	OVERLOAD PROTECTION, PKZM0-1	9-57, 9-59
50F000	90259-0313	AUXILIARY CONTACT, NHI21-PKZ0	9-57, 9-59
50F000	90459-5323	OVERLOAD PROTECTION, PKZM0-1	9-57, 9-59
50F100	354000-0060	MINIATURE CIRCUIT BREAKER, FAZ-C6/1	9-57, 9-59

Pos	Part No	Description	Page No
K			
01K105	90119-0108	RELAY OMRON G2R-2-SNI-24DC	9-19
01K105	90129-0018	BASE, P2RF-08-E	9-19
01K301	90459-6557	PROCESSOR L61, SERIES B, 1756-L61/B	9-43
01K302	90459-2477	ETHERNET I/P BRIDGE MODULE, 1756-ENBT	12-7
01K303	90459-2477	ETHERNET I/P BRIDGE MODULE, 1756-ENBT	9-43
01K304	90600-5840	PLC DEVICEN. BR./SCAN MOD, 1756-DNB, D	9-43
01K305	90459-2488	REMOVABLE TERMINAL BLOCK 36 POINTS	9-43
01K305	90459-6556	PLC DIGITAL INPUT 32PTS, 1756-IB32/B	9-43
01K306	90459-2413	PLC DIGITAL INPUT MODULE16 POINTS	9-43
01K306	90459-2487	REMOVABLE TERMINAL BLOCK 20 POINTS	9-43
01K307	90459-2474	PLC,DIGIT. OUTPUT MODULE 16 PTS 10-31VDC	9-43
01K307	90459-2487	REMOVABLE TERMINAL BLOCK 20 POINTS	9-43
01K308	90459-2474	PLC,DIGIT. OUTPUT MODULE 16 PTS 10-31VDC	9-57, 9-59
01K308	90459-2487	REMOVABLE TERMINAL BLOCK 20 POINTS	9-57, 9-59
01K310	90459-2480	8-AXIS SERCOS MOTION MODULE	9-57, 9-59
01K320	90459-2494	DEVICENET I/O ADAPTER MODULE, 1734-ADN	5-117, 5-119
01K321	90459-2503	DIGITAL INPUT 4 PTS SINK, 1734-IB4	5-117, 5-119
01K322	90459-2503	DIGITAL INPUT 4 PTS SINK, 1734-IB4	5-117, 5-119
01K323	90459-2503	DIGITAL INPUT 4 PTS SINK, 1734-IB4	5-117, 5-119
01K324	90459-2503	DIGITAL INPUT 4 PTS SINK, 1734-IB4	5-117, 5-119
01K325	90459-2503	DIGITAL INPUT 4 PTS SINK, 1734-IB4	5-117, 5-119
01K326	90459-2501	FIELD POWER DISTRIBUTOR, 1734-FPD	5-117, 5-119
01K327	90459-2505	DIGITAL OUTPUT 4 PTS, 1734-OB4E	5-117, 5-119
01K328	90459-2505	DIGITAL OUTPUT 4 PTS, 1734-OB4E	5-117, 5-119
01K329	90459-2505	DIGITAL OUTPUT 4 PTS, 1734-OB4E	5-117, 5-119
01K330	90459-2501	FIELD POWER DISTRIBUTOR, 1734-FPD	5-117, 5-119
01K331	90459-2505	DIGITAL OUTPUT 4 PTS, 1734-OB4E	5-117, 5-119
01K332	90459-2505	DIGITAL OUTPUT 4 PTS, 1734-OB4E	5-117, 5-119
01K335	90119-0108	RELAY OMRON G2R-2-SNI-24DC	5-117, 5-119
01K336	90119-0108	RELAY OMRON G2R-2-SNI-24DC	5-117, 5-119
01K340	90459-6062	ARMORBLOCK DIGITAL CONFIGURABLE I/O	4-9, 4-11
01K401	90600-5249	FERRITE, B64290L616X38	9-51
01K420	90459-6062	ARMORBLOCK DIGITAL CONFIGURABLE I/O	5-7, 5-9
01K700	90119-0108	RELAY OMRON G2R-2-SNI-24DC	9-19
01K700	90129-0018	BASE, P2RF-08-E	9-19
01K800	90459-2243	SHUT OFF VALVE, MS4-EE-1/4-10V24	5-83
09K241	90459-6913	ELECTROMAG. DOOR LOCK. DEV.,JSD-ZH-EM1-K	5-105, 5-107
09K242	90459-6913	ELECTROMAG. DOOR LOCK. DEV.,JSD-ZH-EM1-K	5-105, 5-107
09K316	90602-4058	CONNECTION BOX TINA 4A, 20-054-03	4-9, 4-11
20K002	90119-0108	RELAY OMRON G2R-2-SNI-24DC	9-57, 9-59
20K002	90129-0018	BASE, P2RF-08-E	9-57, 9-59

Pos	Part No	Description	Page No
K			
21K000	90458-1202	VALVES 2X3/2, CLOSED	5-75, 5-77
21K310	90458-1197	VALVE, 5/2 BISTABLE	10-29
21K400	90600-5249	FERRITE, B64290L616X38	9-9
21K401	90600-5249	FERRITE, B64290L616X38	9-9
21K410	90600-5249	FERRITE, B64290L616X38	9-63
21K411	90600-5249	FERRITE, B64290L616X38	9-63
21K500	90458-1203	VALVE 2X3/2 1X OPEN 1X CLOSED	10-31
21K600	90458-1140	FERRITE, RI-26-28-13	12-5
21K601	90458-1140	FERRITE, RI-26-28-13	12-5
21K800	90600-4731	RELAY	9-19
21K801	90600-4731	RELAY	9-19
40K100	3098039-0000	HOTMELT GUN	3-5, 3-7
40K203	90458-1202	VALVES 2X3/2, CLOSED	5-75, 5-77
40K210	90458-1197	VALVE, 5/2 BISTABLE	7-29
50K100	90600-5249	FERRITE, B64290L616X38	9-57, 9-59
50K101	90600-5249	FERRITE, B64290L616X38	9-57, 9-59
70K000	90119-0108	RELAY OMRON G2R-2-SNI-24DC	9-19
70K000	90129-0018	BASE, P2RF-08-E	9-19
70K001	90459-2739	OPTO-RELAY 50085, IN / OUT 4-53VDC 1A	9-19
81K201	90458-1170	FERRITE, SFC-6	9-51
81K202	90458-1170	FERRITE, SFC-6	9-51
81K401	90458-1140	FERRITE, RI-26-28-13	9-43
81K401	90600-5249	FERRITE, B64290L616X38	9-51
81K500	90459-4235	SNP TO DF1 GATEWAY, 0220 1166 01 REV B	12-45
M			
20M000	2838710-0200	WORM GEAR MOTOR	1-11
20M050	90600-1080	DOUBLE ACTING, ROUND, CYL 32-80	1-13
21M051	2769718-0100	PNEUMATIC CYLINDER	1-57
21M052	2769718-0100	PNEUMATIC CYLINDER	1-57
21M100	90601-0668	SERVO MOTOR MPL-B420P-MK72AA SERIES A	1-49, 1-51
21M200	90601-0668	SERVO MOTOR MPL-B420P-MK72AA SERIES A	1-53, 1-55
21M360	90457-0871	DOUBLE ACTING, MINI-ISO, CYL. 16-25	10-17
21M410	2901694-0000	MOTOR	1-77
21M800	90459-6768	FAN 2BH1300-7AV15	5-67
30M000	90601-1926	SERVO MOTOR MPL-B430P-MK72AA SERIES A	6-19
30M400	90601-0668	SERVO MOTOR MPL-B420P-MK72AA SERIES A	2-15
40M000	90601-1926	SERVO MOTOR MPL-B430P-MK72AA SERIES A	3-19
40M002	90601-1926	SERVO MOTOR MPL-B430P-MK72AA SERIES A	3-21
40M260	90459-7429	CYLINDER, GRIPPER HGP-16-A-B	7-21
40M300	90601-4430	SERVO MOTOR MPL-B320P-MJ72AA, SERIES A	7-11
40M400	2856579-0000	MOTOR	8-5, 8-7, 8-19, 8-21, 8-25, 8-27
50M000	90458-2483	MOTOR 3GVA062002-BSB	4-43, 4-45
50M100	90458-2483	MOTOR 3GVA062002-BSB	4-9, 4-11
70M100	90601-5090	SERVO MOTOR MPL-B310P-MK72AA SERIES A	6-37, 6-39, 6-41
P			
01P500	90053-0029	COUNTER, F524.800FA3C 24VDC	9-49
01P500	90459-3603	PRESSURE GAUGE, MAP-40-6-1/8-EN	5-75, 5-77
01P501	90053-0031	HOUR COUNTER, B 609.10 10-50VDC	9-49
01P511	90602-4062	LIGHT ELEMENT, RED, PSD-S OE LED RD	5-101
01P512	90602-4063	LIGHT ELEMENT, YELLOW, PSD-S OE LED YE	5-101
01P513	90602-4631	SIREN 100DB, PSD-S AE SM8-5 100DB/1	5-101
01P514	90602-4060	LIGHT ELEMENT, BLUE, PSD-S OE LED BU	5-101
01P515	90602-4061	LIGHT ELEMENT, GREEN, PSD-S OE LED GN	5-101
40P150	90459-7344	PRESSURE GAUGE, MA-40-6-R1/4-EN	5-75, 5-77
50P150	90600-1420	REGULATOR, MS4-LRB-1/4-D6-AS	4-21
50P153	90600-1420	REGULATOR, MS4-LRB-1/4-D6-AS	4-21
50P154	90600-1420	REGULATOR, MS4-LRB-1/4-D6-AS	4-21
Q			
01Q104	90600-1759	CONTACTOR22KW24VDCDILM50-22+DILM65-XIP2X	9-39
01Q105	90600-1759	CONTACTOR22KW24VDCDILM50-22+DILM65-XIP2X	9-35
01Q500	90459-5311	CONTACTOR 15KW 24VDC, DILM32-10	9-39
01Q600	90459-5308	CONTACTOR 4KW 24VDC, DILM9-10	9-39
01Q850	90459-2337	SHUT OFF VALVE, MS4-EM1-1/4	5-83
20Q000	90459-5308	CONTACTOR 4KW 24VDC, DILM9-10	9-57, 9-59
20Q000	90459-6852	AUXILIARY CONTACT, DILA-XHI22	9-57, 9-59
20Q051	90459-0290	NON-RETURN VALVE H-QS-6	5-75, 5-77
20Q052	90187-0191	BALL VALVE R1/8, 6 MM	5-75, 5-77
21Q400	90459-5308	CONTACTOR 4KW 24VDC, DILM9-10	9-47
21Q400	90459-6852	AUXILIARY CONTACT, DILA-XHI22	9-47
21Q410	90459-5308	CONTACTOR 4KW 24VDC, DILM9-10	9-63
21Q410	90459-6852	AUXILIARY CONTACT, DILA-XHI22	9-63
21Q600	90459-5308	CONTACTOR 4KW 24VDC, DILM9-10	9-57, 9-59
21Q600	90459-6852	AUXILIARY CONTACT, DILA-XHI22	9-57, 9-59
21Q800	90459-5308	CONTACTOR 4KW 24VDC, DILM9-10	9-39
21Q801	90459-5309	CONTACTOR 7,5KW 24VDC, DILM17-10	9-39
40Q400	90459-5308	CONTACTOR 4KW 24VDC, DILM9-10	9-57, 9-59
40Q400	90459-6852	AUXILIARY CONTACT, DILA-XHI22	9-57, 9-59
50Q000	90459-5308	CONTACTOR 4KW 24VDC, DILM9-10	9-57, 9-59
50Q000	90459-6852	AUXILIARY CONTACT, DILA-XHI22	9-57, 9-59
50Q100	90459-5308	CONTACTOR 4KW 24VDC, DILM9-10	9-57, 9-59
50Q100	90459-6852	AUXILIARY CONTACT, DILA-XHI22	9-57, 9-59
80Q051	90187-0045	BALL VALVE G1/4 CR PL	5-69

Pos	Part No	Description	Page No
R			
01R340	90459-6570	CONNECTOR M12 5-POLES MALE, RSCN5/7	4-9, 4-11
01R500	90459-5817	REGULATOR, MS4-LR-1/4-D6-A8-AS	5-75, 5-77
01R852	90328-0026	SILENCER G1/4"	5-83
01R853	90328-0026	SILENCER G1/4"	5-83
01R951	90328-0047	SILENCER G1/8"	5-75, 5-77
01R953	90328-0047	SILENCER G1/8"	5-75, 5-77
01R954	90328-0029	SILENCER M5	5-75, 5-77
01R955	90328-0029	SILENCER M5	5-75, 5-77
20R051	90328-0017	SILENCER, D=6 MM	1-13
20R352	90328-0047	SILENCER G1/8"	5-75, 5-77
20R353	90328-0047	SILENCER G1/8"	5-75, 5-77
20R354	90328-0029	SILENCER M5	5-75, 5-77
20R355	90328-0029	SILENCER M5	5-75, 5-77
21R054	90459-3604	FLOW CONTROL VALVE, GR-QS-6	5-75, 5-77
21R354	90235-0748	THROTTLE CHECK VALVE, GRA-1/4-B	5-75, 5-77
21R363	90328-0047	SILENCER G1/8"	10-29
21R365	90328-0047	SILENCER G1/8"	10-29
21R366	90328-0029	SILENCER M5	10-29
21R367	90328-0029	SILENCER M5	10-29
21R553	90328-0047	SILENCER G1/8"	10-31
21R555	90328-0047	SILENCER G1/8"	10-31
21R556	90328-0029	SILENCER M5	10-31
21R557	90328-0029	SILENCER M5	10-31
21R801	90206-0124	HEATING ELEMENT 2X1500W 230V	5-51
40R150	90459-5817	REGULATOR, MS4-LR-1/4-D6-A8-AS	5-75, 5-77
40R260	90328-0029	SILENCER M5	7-29
40R263	90328-0047	SILENCER G1/8"	7-29
40R265	90328-0047	SILENCER G1/8"	7-29
81R400	90459-2523	TERMINATOR, OPEN STYLE, 1485A-C2	9-51
R102	90206-0124	HEATING ELEMENT 2X1500W 230V	5-65
S			
01S400	90064-0093	PUSH BUTTON, GREEN	5-115
01S401	90064-0098	PUSH BUTTON, CLEAR	5-115
01S402	90064-0093	PUSH BUTTON, GREEN	5-115
01S404	90064-0098	PUSH BUTTON, CLEAR	5-115
T			
01T200	90459-4133	POWER SUPPLY UNIT 6EP1 436-3BA00	9-51
01T201	90459-2939	BUFFER UNIT, 6EP1961-3BA01	12-43
01T300	90459-7267	POWER SUPPLY 24VDC, 1756-PB75/B	9-43
01T400	90459-5886	POWER SUPPLY UNIT 115-230 VAC/24VDC100W	9-51
20T000	90459-3441	FREQ. CONV., 22B-A2P3N104	9-57, 9-59
21T100	90600-5216	AXIS MOD. KINETIX 6000,2094-BM02-S SER.B	9-57, 9-59
21T200	90600-5216	AXIS MOD. KINETIX 6000,2094-BM02-S SER.B	9-57, 9-59
21T400	90459-3450	FREQ. CONV., 22A-A4P5N104	9-9
21T410	90459-3449	FREQ. CONV., 22A-A2P3N104	9-63
21T600	90459-3450	FREQ. CONV., 22A-A4P5N104	12-5
30T000	90600-5212	AXIS MOD. W. PS,2094-BC02-M02-S SERIES B	9-41
30T400	90600-5214	AXIS MOD. KINETIX 6000,2094-BM01-S SER.B	9-41
40T000	90600-5216	AXIS MOD. KINETIX 6000,2094-BM02-S SER.B	9-57, 9-59
40T002	90600-5216	AXIS MOD. KINETIX 6000,2094-BM02-S SER.B	9-57, 9-59
40T300	90600-5214	AXIS MOD. KINETIX 6000,2094-BM01-S SER.B	9-57, 9-59
50T100	90459-3449	FREQ. CONV., 22A-A2P3N104	9-57, 9-59
70T100	90459-2547	POWER RAIL SLOT FILLER, 2094-PRF	9-57, 9-59
70T100	90600-5214	AXIS MOD. KINETIX 6000,2094-BM01-S SER.B	9-65, 12-41
81T200	90459-6858	ETHERNET SW, FL SWITCH SF 8TX FROM V 14	9-51
81T400	90459-5886	POWER SUPPLY UNIT 115-230 VAC/24VDC100W	9-51
U			
01U950	90459-2591	SINGLE VALVE SUB-BASE CDSV5.0-AS-1/8	5-75, 5-77
01U951	90032-0038	BLOCK 2 WAYS	5-91, 5-93, 5-95
01U952	90032-0038	BLOCK 2 WAYS	5-91, 5-93, 5-95
01U953	90032-0038	BLOCK 2 WAYS	5-91, 5-93, 5-95
01U954	90032-0039	BLOCK 4 WAYS	5-91, 5-93, 5-95
01U955	90032-0039	BLOCK 4 WAYS	5-91, 5-93, 5-95
01U956	90032-0039	BLOCK 4 WAYS	5-91, 5-93, 5-95
01U957	90032-0039	BLOCK 4 WAYS	5-91, 5-93, 5-95
01U958	90032-0039	BLOCK 4 WAYS	5-91, 5-93, 5-95
01U959	90032-0038	BLOCK 2 WAYS	5-91, 5-93, 5-95
01U960	90032-0038	BLOCK 2 WAYS	5-91, 5-93, 5-95
20U350	90459-2591	SINGLE VALVE SUB-BASE CDSV5.0-AS-1/8	5-75, 5-77
21U360	90459-2591	SINGLE VALVE SUB-BASE CDSV5.0-AS-1/8	10-29
21U550	90459-2591	SINGLE VALVE SUB-BASE CDSV5.0-AS-1/8	10-31
40U260	90459-2591	SINGLE VALVE SUB-BASE CDSV5.0-AS-1/8	7-29
50U103	90600-5813	SOLENOID VALVE, CPE18-M1H-3GL-1/4	4-21
V			
01V100	90024-0060	FILTER 80 A 440/250 VAC, B84144-A0080R00	9-7
01V104	90459-2549	AC LINE FILTER 3-PHASE 30A, 2090-XXLF-X3	9-9
01V105	90600-5252	LINE FILTER, B84113HB30	9-9
01V500	90459-1991	HOT MELT UNIT, #1049296	5-111
01V500	3068637-0000	HOTMELT UNIT	5-111
01V850	90459-2339	FILTER REGULATOR, MS4-LFR-1/4-D7-ERV-AS	5-83
01V852	90459-2773	FILTER, MS6-LFM-1/2-BRV	5-81
01V853	90459-2772	FILTER, MS6-LFM-1/2-ARV	5-81

Pos	Part No	Description	Page No
V			
01V854	90459-2771	FILTER, MS6-LFX-1/2-R	5-81
01V902	90415-0030	OIL FILTER PN 100 ORD.NO 2.77 10 70.1	5-89
20V000	90459-3454	FOOTPRINT FILTER 1 PHASE 18A	9-57, 9-59
21V400	90459-3460	FOOTPRINT FILTER 1 PHASE 10A	9-9
21V410	90459-3460	FOOTPRINT FILTER 1 PHASE 10A	9-63
21V600	90459-3460	FOOTPRINT FILTER 1 PHASE 10A	12-5
50V100	90459-3460	FOOTPRINT FILTER 1 PHASE 10A	9-57, 9-59
W			
01W340	351309-0050	ACTUATOR/SENSOR CABLE PRKT 4-07/5M	4-9, 4-11
01W400	351150-0403	CABLE OLFLEX 3X0,75 MM2 LIGHT/GREY	5-109
01W401	351150-0407	CABLE OLFLEX 12X0,75 MM2 LIGHT/GREY	5-109
01W500	351150-0187	CABLE OLFLEX 5X6 MM2 LIGHT/GREY	5-109
01W501	351150-0406	CABLE OLFLEX 7X0,75 MM2 LIGHT/GREY	5-109
01W510	351150-0406	CABLE OLFLEX 7X0,75 MM2 LIGHT/GREY	5-109
01W701	351150-0403	CABLE OLFLEX 3X0,75 MM2 LIGHT/GREY	5-109
01W702	351150-0403	CABLE OLFLEX 3X0,75 MM2 LIGHT/GREY	5-109
01W800	351150-0403	CABLE OLFLEX 3X0,75 MM2 LIGHT/GREY	5-109
01W801	351150-0403	CABLE OLFLEX 3X0,75 MM2 LIGHT/GREY	5-109
01W851	315400-0010	TUBE PUN-H-12X2-BL	5-75, 5-77
01W852	315400-0004	TUBE PUN-H-8X1,25-BL	5-83, 5-85
01W853	315400-0001	TUBE PUN-H-6X1-BL	5-75, 5-77
01W854	315400-0010	TUBE PUN-H-12X2-BL	5-75, 5-77
01W855	315400-0010	TUBE PUN-H-12X2-BL	5-75, 5-77
01W856	315400-0010	TUBE PUN-H-12X2-BL	5-75, 5-77
01W857	315400-0004	TUBE PUN-H-8X1,25-BL	5-75, 5-77
01W858	315400-0001	TUBE PUN-H-6X1-BL	5-111
01W858	315400-0010	TUBE PUN-H-12X2-BL	5-75, 5-77
01W859	315400-0001	TUBE PUN-H-6X1-BL	5-75, 5-77
01W860	315400-0013	TUBE PUN-H-16-2,5-BL	5-75, 5-77, 5-85
01W861	315400-0004	TUBE PUN-H-8X1,25-BL	5-75, 5-77
01W862	315400-0010	TUBE PUN-H-12X2-BL	5-75, 5-77
01W863	315400-0010	TUBE PUN-H-12X2-BL	5-75, 5-77
01W864	315400-0010	TUBE PUN-H-12X2-BL	5-75, 5-77
01W865	315400-0010	TUBE PUN-H-12X2-BL	5-75, 5-77
01W867	315400-0016	TUBE PUN-H-4X0,75-BL	5-75, 5-77
01W868	315400-0001	TUBE PUN-H-6X1-BL	5-75, 5-77
01W875	315400-0004	TUBE PUN-H-8X1,25-BL	5-75, 5-77
01W901	351401-0050	ACTU/SENS CABLE RSMVN 3-PRKMV 3-06/5,0M	5-89
01W902	351401-0050	ACTU/SENS CABLE RSMVN 3-PRKMV 3-06/5,0M	5-89
01W951	90166-0132	TUBE 6 MM PA,TRANSP.	5-89, 5-91, 5-93, 5-95
01W952	90166-0108	TUBE 6 MM PA TRANSP.	5-89
01W953	90166-0108	TUBE 6 MM PA TRANSP.	5-89
01W954	315400-0001	TUBE PUN-H-6X1-BL	5-75, 5-77, 5-89
01W955	90166-0108	TUBE 6 MM PA TRANSP.	5-89, 5-91, 5-93, 5-95
01W956	90166-0108	TUBE 6 MM PA TRANSP.	5-89, 5-91, 5-93, 5-95
01W956	315400-0001	TUBE PUN-H-6X1-BL	5-75, 5-77
01W958	90166-0108	TUBE 6 MM PA TRANSP.	5-91, 5-93, 5-95
01W960	90166-0108	TUBE 6 MM PA TRANSP.	5-91, 5-93, 5-95
01W961	90166-0108	TUBE 6 MM PA TRANSP.	5-91, 5-93, 5-95
01W962	90166-0132	TUBE 6 MM PA,TRANSP.	5-91, 5-93, 5-95
01W963	90166-0109	TUBE 4 MM PA TRANSP.	5-91, 5-93, 5-95
01W964	90166-0109	TUBE 4 MM PA TRANSP.	5-91, 5-93, 5-95
01W965	90166-0109	TUBE 4 MM PA TRANSP.	5-91, 5-93, 5-95
01W966	90166-0109	TUBE 4 MM PA TRANSP.	5-91, 5-93, 5-95
01W967	90166-0109	TUBE 4 MM PA TRANSP.	5-91, 5-93, 5-95
01W968	90166-0109	TUBE 4 MM PA TRANSP.	5-91, 5-93, 5-95
01W969	90166-0143	TUBE 2,5 MM PA TRANSP.	5-91, 5-93, 5-95
01W971	90166-0143	TUBE 2,5 MM PA TRANSP.	5-91, 5-93, 5-95
01W972	90166-0143	TUBE 2,5 MM PA TRANSP.	5-91, 5-93, 5-95
01W973	90166-0143	TUBE 2,5 MM PA TRANSP.	5-91, 5-93, 5-95
01W974	90166-0143	TUBE 2,5 MM PA TRANSP.	5-91, 5-93, 5-95
01W975	90166-0109	TUBE 4 MM PA TRANSP.	5-91, 5-93, 5-95
01W976	90166-0109	TUBE 4 MM PA TRANSP.	5-91, 5-93, 5-95
01W977	90166-0132	TUBE 6 MM PA,TRANSP.	5-91, 5-93, 5-95
01W978	90166-0109	TUBE 4 MM PA TRANSP.	5-91, 5-93, 5-95
01W979	90166-0109	TUBE 4 MM PA TRANSP.	5-91, 5-93, 5-95
01W980	90166-0143	TUBE 2,5 MM PA TRANSP.	5-91, 5-93, 5-95
01W981	90166-0143	TUBE 2,5 MM PA TRANSP.	5-91, 5-93, 5-95
01W982	90166-0143	TUBE 2,5 MM PA TRANSP.	5-91, 5-93, 5-95
01W983	90166-0143	TUBE 2,5 MM PA TRANSP.	5-91, 5-93, 5-95
01W984	90166-0109	TUBE 4 MM PA TRANSP.	5-91, 5-93, 5-95
01W990	90166-0143	TUBE 2,5 MM PA TRANSP.	5-91, 5-93, 5-95
01W991	90166-0143	TUBE 2,5 MM PA TRANSP.	5-91, 5-93, 5-95
01W992	90166-0143	TUBE 2,5 MM PA TRANSP.	5-91, 5-93, 5-95
01W993	90166-0143	TUBE 2,5 MM PA TRANSP.	5-91, 5-93, 5-95
01W994	90166-0143	TUBE 2,5 MM PA TRANSP.	5-91, 5-93, 5-95
01W995	90166-0143	TUBE 2,5 MM PA TRANSP.	5-91, 5-93, 5-95
01W996	90166-0143	TUBE 2,5 MM PA TRANSP.	5-91, 5-93, 5-95
01W997	90166-0143	TUBE 2,5 MM PA TRANSP.	5-91, 5-93, 5-95
01W998	90166-0109	TUBE 4 MM PA TRANSP.	5-91, 5-93, 5-95
09W103	351150-0405	CABLE OLFLEX 5X0,75 MM2 LIGHT/GREY	5-109
09W201	351423-0006	CABLE UNITRONIC LICY 5X0,34	5-109

Pos	Part No	Description	Page No
W			
09W202	351423-0006	CABLE UNITRONIC LICY 5X0,34	5-109
09W203	90459-4252	CABLE M12-C101, 20-056-10	5-109
09W203	3115264-0000	CABLE	4-9, 4-11
09W214	90459-4876	FOCUS JUMPER CABLE M12 5P 3M, 20-056-21	5-105, 5-107
09W216	90459-4876	FOCUS JUMPER CABLE M12 5P 3M, 20-056-21	5-105, 5-107
09W230	90459-4876	FOCUS JUMPER CABLE M12 5P 3M, 20-056-21	5-105, 5-107
09W232	90459-4876	FOCUS JUMPER CABLE M12 5P 3M, 20-056-21	5-105, 5-107
09W234	90459-4876	FOCUS JUMPER CABLE M12 5P 3M, 20-056-21	5-105, 5-107
09W241	351309-0100	ACTUATOR/SENSOR CABLE PRKT 4-07/10M	5-105, 5-107
09W242	351309-0100	ACTUATOR/SENSOR CABLE PRKT 4-07/10M	5-105, 5-107
09W312	3115265-0000	CABLE	4-9, 4-11
09W314	3115265-0000	CABLE	4-9, 4-11
09W316	3115265-0000	CABLE	4-9, 4-11
20W000	351422-0203	CABLE ÖLFLEX 150CY QUATTRO 4X1,5	5-109
20W003	90459-6586	ACT/SENS.Y-CABLE, ASBN 2-PRKMV 4-07/0,6M	1-9
20W030	351309-0100	ACTUATOR/SENSOR CABLE PRKT 4-07/10M	1-9
20W050	315400-0001	TUBE PUN-H-6X1-BL	5-75, 5-77
20W051	315400-0001	TUBE PUN-H-6X1-BL	1-13, 5-75, 5-77
20W052	315400-0001	TUBE PUN-H-6X1-BL	5-75, 5-77
20W053	315400-0001	TUBE PUN-H-6X1-BL	5-75, 5-77
20W351	315400-0004	TUBE PUN-H-8X1,25-BL	5-75, 5-77
20W354	315400-0004	TUBE PUN-H-8X1,25-BL	5-75, 5-77
20W355	315400-0004	TUBE PUN-H-8X1,25-BL	5-73, 5-75, 5-77
20W356	315400-0001	TUBE PUN-H-6X1-BL	5-75, 5-77
21W000	351405-0050	SENS. CABLE RSMVN 3-PRKT 4-3-06/5,0M	1-59
21W051	315400-0004	TUBE PUN-H-8X1,25-BL	5-75, 5-77
21W054	315400-0001	TUBE PUN-H-6X1-BL	5-75, 5-77
21W055	315400-0001	TUBE PUN-H-6X1-BL	5-75, 5-77
21W100	90600-3293	MOTOR PWWER CABLE 2090-XXNPMF-16S09	5-109
21W101	90600-3294	MOTOR FEEDBACK CABLE 2090-XXNFMF-S09/C	5-109
21W200	90600-3293	MOTOR PWWER CABLE 2090-XXNPMF-16S09	5-109
21W201	90600-3294	MOTOR FEEDBACK CABLE 2090-XXNFMF-S09/C	5-109
21W300	90459-6586	ACT/SENS.Y-CABLE, ASBN 2-PRKMV 4-07/0,6M	10-19
21W300	351411-0006	ACTU/SENS. CABLE PRST 4-PRKT 4-07/0,6M	10-19
21W302	90459-6586	ACT/SENS.Y-CABLE, ASBN 2-PRKMV 4-07/0,6M	10-19
21W304	90459-6586	ACT/SENS.Y-CABLE, ASBN 2-PRKMV 4-07/0,6M	10-19
21W310	90459-1663	CONNECTOR, 405204 RSC4/7	10-19
21W312	90459-6586	ACT/SENS.Y-CABLE, ASBN 2-PRKMV 4-07/0,6M	10-19
21W361	315400-0004	TUBE PUN-H-8X1,25-BL	10-29
21W362	315400-0016	TUBE PUN-H-4X0,75-BL	10-17, 10-29
21W364	315400-0016	TUBE PUN-H-4X0,75-BL	10-17, 10-29
21W365	315400-0016	TUBE PUN-H-4X0,75-BL	10-29
21W400	351422-0203	CABLE ÖLFLEX 150CY QUATTRO 4X1,5	5-109
21W402	90459-6586	ACT/SENS.Y-CABLE, ASBN 2-PRKMV 4-07/0,6M	5-21, 5-23
21W404	90459-6586	ACT/SENS.Y-CABLE, ASBN 2-PRKMV 4-07/0,6M	5-21, 5-23
21W406	90459-6586	ACT/SENS.Y-CABLE, ASBN 2-PRKMV 4-07/0,6M	5-21, 5-23
21W408	90459-6586	ACT/SENS.Y-CABLE, ASBN 2-PRKMV 4-07/0,6M	5-21, 5-23
21W410	351422-0203	CABLE ÖLFLEX 150CY QUATTRO 4X1,5	5-109
21W412	351309-0050	ACTUATOR/SENSOR CABLE PRKT 4-07/5M	5-21, 5-23
21W414	351309-0050	ACTUATOR/SENSOR CABLE PRKT 4-07/5M	5-21, 5-23
21W416	351309-0050	ACTUATOR/SENSOR CABLE PRKT 4-07/5M	5-21, 5-23
21W418	351309-0100	ACTUATOR/SENSOR CABLE PRKT 4-07/10M	5-21, 5-23
21W422	351405-0006	ACT/SENS. CABLE RSMVN 3-PRKT 4-3-06/0,6M	5-21, 5-23
21W424	90459-6586	ACT/SENS.Y-CABLE, ASBN 2-PRKMV 4-07/0,6M	5-21, 5-23
21W500	90459-1663	CONNECTOR, 405204 RSC4/7	10-19
21W550	315400-0004	TUBE PUN-H-8X1,25-BL	10-31
21W551	315400-0004	TUBE PUN-H-8X1,25-BL	10-31
21W556	315400-0016	TUBE PUN-H-4X0,75-BL	10-31
21W602	90459-6586	ACT/SENS.Y-CABLE, ASBN 2-PRKMV 4-07/0,6M	5-21, 5-23
21W604	90459-6586	ACT/SENS.Y-CABLE, ASBN 2-PRKMV 4-07/0,6M	12-17
21W605	351405-0050	SENS. CABLE RSMVN 3-PRKT 4-3-06/5,0M	12-13
21W612	351405-0050	SENS. CABLE RSMVN 3-PRKT 4-3-06/5,0M	5-21, 5-23
21W614	351405-0050	SENS. CABLE RSMVN 3-PRKT 4-3-06/5,0M	12-17
21W800	351150-0412	CABLE OLFLEX 3X1,5 MM2 LIGHT/GREY	5-109
21W801	351120-0266	CABLE ÖLFLEX HEAT 180 SIHF 4X4	5-109
30W000	90600-3293	MOTOR PWWER CABLE 2090-XXNPMF-16S09	5-109
30W001	90600-3294	MOTOR FEEDBACK CABLE 2090-XXNFMF-S09/C	5-109
30W102	351411-0010	ACTU/SENS. CABLE PRST 4-PRKT 4-07/1,0M	6-17
30W400	90600-3293	MOTOR PWWER CABLE 2090-XXNPMF-16S09	5-109
30W401	90600-3294	MOTOR FEEDBACK CABLE 2090-XXNFMF-S09/C	5-109
40W000	90600-3293	MOTOR PWWER CABLE 2090-XXNPMF-16S09	5-109
40W001	90600-3294	MOTOR FEEDBACK CABLE 2090-XXNFMF-S09/C	5-109
40W002	90600-3293	MOTOR PWWER CABLE 2090-XXNPMF-16S09	5-109
40W003	90600-3294	MOTOR FEEDBACK CABLE 2090-XXNFMF-S09/C	5-109
40W010	351411-0010	ACTU/SENS. CABLE PRST 4-PRKT 4-07/1,0M	3-29
40W011	351411-0010	ACTU/SENS. CABLE PRST 4-PRKT 4-07/1,0M	3-29
40W012	351412-0015	ACTU/SENS. CABLE PRST 4-PRKWT 4-07/1,5M	3-27
40W013	351412-0015	ACTU/SENS. CABLE PRST 4-PRKWT 4-07/1,5M	3-27
40W100	351150-0403	CABLE OLFLEX 3X0,75 MM2 LIGHT/GREY	3-5, 3-7
40W101	351150-0403	CABLE OLFLEX 3X0,75 MM2 LIGHT/GREY	3-5, 3-7
40W150	315400-0004	TUBE PUN-H-8X1,25-BL	3-5, 3-7
40W150	315400-0010	TUBE PUN-H-12X2-BL	5-75, 5-77

Pos	Part No	Description	Page No
W			
40W151	315400-0004	TUBE PUN-H-8X1,25-BL	3-5, 3-7
40W151	315400-0016	TUBE PUN-H-4X0,75-BL	5-75, 5-77
40W152	315400-0004	TUBE PUN-H-8X1,25-BL	5-75, 5-77
40W161	315400-0004	TUBE PUN-H-8X1,25-BL	3-5, 3-7
40W200	351411-0010	ACTU/SENS. CABLE PRST 4-PRKT 4-07/1,0M	7-21
40W254	315400-0016	TUBE PUN-H-4X0,75-BL	5-75, 5-77
40W261	315400-0004	TUBE PUN-H-8X1,25-BL	7-29
40W262	315400-0016	TUBE PUN-H-4X0,75-BL	7-21, 7-29
40W263	315400-0016	TUBE PUN-H-4X0,75-BL	7-29
40W264	315400-0016	TUBE PUN-H-4X0,75-BL	7-21, 7-29
40W266	90459-7428	TUBE PUN-H-3X0,5-BL	7-21
40W267	90459-7428	TUBE PUN-H-3X0,5-BL	7-21
40W300	90600-3293	MOTOR PWWER CABLE 2090-XXNPMF-16S09	5-109
40W301	90600-3294	MOTOR FEEDBACK CABLE 2090-XXNFMF-S09/C	5-109
40W400	351150-0413	CABLE OLFLEX 4GX1,5 MM2 LIGHT/GREY	8-5, 8-7, 8-19, 8-21, 8-25, 8-27
40W410	351150-0413	CABLE OLFLEX 4GX1,5 MM2 LIGHT/GREY	5-109
40W500	90459-6586	ACT/SENS.Y-CABLE, ASBN 2-PRKMV 4-07/0,6M	8-5, 8-7, 8-19, 8-21, 8-25, 8-27
40W502	351405-0020	ACT/SENS. CABLE RSMVN 3-PRKT 4-3-06/2,0M	8-5, 8-7, 8-19, 8-21, 8-25, 8-27
40W506	351405-0010	ACT/SENS. CABLE RSMVN 3-PRKT 4-3-06/1,0M	8-5, 8-7, 8-19, 8-21, 8-25, 8-27
50W000	351150-0413	CABLE OLFLEX 4GX1,5 MM2 LIGHT/GREY	4-43, 4-45
50W004	351150-0405	CABLE OLFLEX 5X0,75 MM2 LIGHT/GREY	5-109
50W010	351150-0413	CABLE OLFLEX 4GX1,5 MM2 LIGHT/GREY	5-109
50W012	351405-0050	SENS. CABLE RSMVN 3-PRKT 4-3-06/5,0M	4-43, 4-45
50W013	90459-6586	ACT/SENS.Y-CABLE, ASBN 2-PRKMV 4-07/0,6M	4-43, 4-45
50W100	351422-0203	CABLE ÖLFLEX 150CY QUATTRO 4X1,5	4-9, 4-11
50W101	351405-0006	ACT/SENS. CABLE RSMVN 3-PRKT 4-3-06/0,6M	4-9, 4-11
50W102	351405-0006	ACT/SENS. CABLE RSMVN 3-PRKT 4-3-06/0,6M	4-9, 4-11
50W104	90600-3573	SOCKET CONN. CABLE, KMEB-2-24-M12-0,5-LE	4-21
50W104	351309-0050	ACTUATOR/SENSOR CABLE PRKT 4-07/5M	4-9, 4-11
50W105	351406-0015	ACT/SENS.CABLE RSMVN 3-PRKWT 4-3-06/1,5M	4-9, 4-11
50W110	351422-0203	CABLE ÖLFLEX 150CY QUATTRO 4X1,5	5-109
50W154	350002-0011	PUSH-IN L-FITTING QSL-F-G1/4-12	4-21
50W164	350002-0005	PUSH-IN L-FITTING QSL-F-G1/8-4	4-21
50W164	3115358-0000	AIR NOZZLE	4-29, 4-31, 4-33, 4-35, 4-37, 4-39, 4-41
50W165	350007-0005	PUSH-IN T-FITTING QST-F-G1/8-4	4-21
50W165	2930228-0000	AIR NOZZLE	4-29, 4-31, 4-33, 4-35, 4-37, 4-39, 4-41
50W166	2930229-0000	AIR NOZZLE	4-29, 4-31, 4-33, 4-35, 4-37, 4-39, 4-41
50W167	350002-0005	PUSH-IN L-FITTING QSL-F-G1/8-4	4-21
50W167	2930228-0000	AIR NOZZLE	4-39
50W167	2930230-0000	AIR NOZZLE	4-33, 4-35, 4-41
50W167	2981405-0000	AIR NOZZLE	4-31, 4-37
50W167	3115238-0000	AIR NOZZLE	4-29
50W168	350002-0005	PUSH-IN L-FITTING QSL-F-G1/8-4	4-21
50W168	2930228-0000	AIR NOZZLE	4-39
50W168	2930230-0000	AIR NOZZLE	4-33, 4-35, 4-41
50W168	2981405-0000	AIR NOZZLE	4-31, 4-37
50W168	3115238-0000	AIR NOZZLE	4-29
50W169	2930228-0000	AIR NOZZLE	4-39
50W169	2981405-0000	AIR NOZZLE	4-33, 4-35, 4-41
50W170	2981418-0000	AIR NOZZLE	4-29, 4-37
50W200	351401-0006	ACTU/SENS CABLE RSMVN 3-PRKMV 3-06/0,6M	4-9, 4-11
60W103	351407-0020	ACTU/SENS. CABLE PRST 3-PRKMV 3-06/2,0M	5-63, 12-33
70W000	90600-2102	POWER I/O CABLE, CCB-84901-0103-10	5-53, 5-55, 5-57, 5-59, 12-23, 12-25, 12-27, 12-29
70W002	351309-0050	'ACTUATOR/SENSOR CABLE PRKT 4-07/5M	5-53, 5-55, 5-57, 5-59, 5-61, 12-23, 12-25, 12-27, 12-29, 12-31
70W003	351305-0100	ACTUATOR/SENSOR CABLE PRKMV 4-07/10M	2-7, 12-35
70W100	90459-2565	MOTOR CABLE 16 AWG 2090-XXNPMP-16S09	5-99, 12-37
70W100	90600-3293	MOTOR PWWER CABLE 2090-XXNPMF-16S09	5-99, 12-37
70W101	90459-7207	MOTOR FEEDBACK CABLE 2090-XXNFMP-S09/C	5-99, 12-37
70W101	90600-3294	MOTOR FEEDBACK CABLE 2090-XXNFMF-S09/C	5-99, 12-37
80W051	315400-0009	TUBE PUN-H-10X1,5-SW	5-69
81W200	90459-1621	CABLE, ETHERNET RJ 45 CONNECT. 1 M	9-71
81W201	90459-6395	CABLE, ETHERNET RJ 45 STRAIGHT.10M	9-71
81W203	90600-2103	ETHERNET CABLE, CCB-84901-1004-10	5-53, 5-55, 5-57, 5-59, 12-23, 12-25, 12-27, 12-29
81W400	90459-2530	DEVICENET CABLE THIN	9-71
81W401	90459-2530	DEVICENET CABLE THIN	9-71
81W402	90459-2530	DEVICENET CABLE THIN	9-71
81W403	90459-2530	DEVICENET CABLE THIN	9-71
81W404	351415-0100	DEVICENET CONN. CABLE, 0935 361 105/10M	5-7, 5-9
81W405	90459-2530	DEVICENET CABLE THIN	9-71
81W406	90459-2530	DEVICENET CABLE THIN	9-71
81W407	90459-2530	DEVICENET CABLE THIN	9-71
81W420	351309-0100	ACTUATOR/SENSOR CABLE PRKT 4-07/10M	5-7, 5-9
81W421	351413-0030	DEVICENET CONN. CABLE, 0935 361 103/3M	4-9, 4-11
81W700	90220-0183	SCR. CABLE 2X0,34MM2	9-71
81W701	90220-0183	SCR. CABLE 2X0,34MM2	9-71
81W702	90220-0183	SCR. CABLE 2X0,34MM2	9-71
X			
01X002	2839223-0100	PLINTH	9-9
01X003	2839224-0100	PLINTH	9-9

Pos	Part No	Description	Page No
X			
01X004	2840918-0100	PLINTH	9-57, 9-59
01X006	2841403-0200	PLINTH	9-57, 9-59
01X007	90459-0959	DISTRIBUTOR BLOCK 1492-PD3163	9-9
01X008	3046886-0100	DISTRIBUTION TERMINAL	9-9
01X600	2890591-0100	PLINTH	9-51
01X700	90001-0033	WALL SOCKET, E1834666	9-9
21X101	90459-2551	CONNECTOR, MOTOR FEEDBACK 15 PIN MALE	5-109
21X201	90459-2551	CONNECTOR, MOTOR FEEDBACK 15 PIN MALE	5-109
21X320	90459-0839	DISTRIBUTION FRAME, ASBV 8 5-135/10M	10-19
30X001	90459-2551	CONNECTOR, MOTOR FEEDBACK 15 PIN MALE	5-109
30X120	90459-0839	DISTRIBUTION FRAME, ASBV 8 5-135/10M	6-67
30X130	90459-0839	DISTRIBUTION FRAME, ASBV 8 5-135/10M	6-67
30X131	90459-1663	CONNECTOR, 405204 RSC4/7	7-21
30X136	90459-1663	CONNECTOR, 405204 RSC4/7	7-29
30X401	90459-2551	CONNECTOR, MOTOR FEEDBACK 15 PIN MALE	5-109
40X001	90459-2551	CONNECTOR, MOTOR FEEDBACK 15 PIN MALE	5-109
40X003	90459-2551	CONNECTOR, MOTOR FEEDBACK 15 PIN MALE	5-109
40X301	90459-2551	CONNECTOR, MOTOR FEEDBACK 15 PIN MALE	5-109
40X400	90110-0052	MALE INSERT, HAN E 06, 0933 0062 601	8-5, 8-7, 8-19, 8-21, 8-25, 8-27
40X400	90110-0053	FEMALE INSERT HAN 6 E 09 33 006 2701	5-7, 5-9
50X000	90110-0052	MALE INSERT, HAN E 06, 0933 0062 601	4-43, 4-45
50X000	90110-0053	FEMALE INSERT HAN 6 E 09 33 006 2701	5-7, 5-9
50X001	90459-6820	FEMALE INSERT HAN 4 A, 09 20 004 2711	5-7, 5-9
50X001	90459-6821	MALE INSERT, HAN 4A, 0920 0042 611	4-9, 4-11
50X110	90110-0052	MALE INSERT, HAN E 06, 0933 0062 601	4-9, 4-11
50X110	90110-0053	FEMALE INSERT HAN 6 E 09 33 006 2701	5-7, 5-9
70X101	90459-2551	CONNECTOR, MOTOR FEEDBACK 15 PIN MALE	5-99, 12-37
81X401	90459-2519	TAP, OPEN STYLE	9-51
81X704	90459-6470	CONNECTOR RJ45 TER. BL., AK-U0-RJ45-TB2P	9-63

Tetra Pak

SPC binder labels. 40 mm Full width
using the **variable definitions** *made in the* **front page** *file!!*

Note! This page is generated **automatically.**

CAP 30/Flex ScrewCap

662950-0200

Issue: 2011-03 Doc No: SPC-3022047-0107

CAP 30/Flex ScrewCap 020V

662950-0200

Issue: 2011-03 Doc No: SPC-3022047-0107

CAP 30/Flex ScrewCap

662950-0200

Issue: 2011-03 Doc No: SPC-3022047-0107

CAP 30/Flex ScrewCap 020V

662950-0200

Issue: 2011-03 Doc No: SPC-3022047-0107

CAP 30/Flex ScrewCap

662950-0200

Issue: 2011-03 Doc No: SPC-3022047-0107

CAP 30/Flex ScrewCap 020V

662950-0200

Issue: 2011-03 Doc No: SPC-3022047-0107

CAP 30/Flex ScrewCap

662950-0200

Issue: 2011-03 Doc No: SPC-3022047-0107

CAP 30/Flex ScrewCap 020V

662950-0200

Issue: 2011-03 Doc No: SPC-3022047-0107

CAP 30/Flex ScrewCap

662950-0200

Issue: 2011-03 Doc No: SPC-3022047-0107

CAP 30/Flex ScrewCap 020V

662950-0200

Issue: 2011-03 Doc No: SPC-3022047-0107

CAP 30/Flex ScrewCap

662950-0200

Issue: 2011-03 Doc No: SPC-3022047-0107

CAP 30/Flex ScrewCap 020V

662950-0200

Issue: 2011-03 Doc No: SPC-3022047-0107

SPC binder labels. 30 mm Half width *Note! This page is generated* **automatically.**
using the **variable definitions** *made in the* **front page** *file!!*

CAP 30/Flex ScrewCap
662950-0200
Issue: 2011-03 Doc No: SPC-3022047-0107

CAP 30/Flex ScrewCap 020V
662950-0200
Issue: 2011-03 Doc No: SPC-3022047-0107

CAP 30/Flex ScrewCap
662950-0200
Issue: 2011-03 Doc No: SPC-3022047-0107

CAP 30/Flex ScrewCap 020V
662950-0200
Issue: 2011-03 Doc No: SPC-3022047-0107

CAP 30/Flex ScrewCap
662950-0200
Issue: 2011-03 Doc No: SPC-3022047-0107

CAP 30/Flex ScrewCap 020V
662950-0200
Issue: 2011-03 Doc No: SPC-3022047-0107

CAP 30/Flex ScrewCap
662950-0200
Issue: 2011-03 Doc No: SPC-3022047-0107

CAP 30/Flex ScrewCap 020V
662950-0200
Issue: 2011-03 Doc No: SPC-3022047-0107

CAP 30/Flex ScrewCap
662950-0200
Issue: 2011-03 Doc No: SPC-3022047-0107

CAP 30/Flex ScrewCap 020V
662950-0200
Issue: 2011-03 Doc No: SPC-3022047-0107

CAP 30/Flex ScrewCap
662950-0200
Issue: 2011-03 Doc No: SPC-3022047-0107

CAP 30/Flex ScrewCap 020V
662950-0200
Issue: 2011-03 Doc No: SPC-3022047-0107

CAP 30/Flex ScrewCap
662950-0200
Issue: 2011-03 Doc No: SPC-3022047-0107

CAP 30/Flex ScrewCap 020V
662950-0200
Issue: 2011-03 Doc No: SPC-3022047-0107

CAP 30/Flex ScrewCap
662950-0200
Issue: 2011-03 Doc No: SPC-3022047-0107

CAP 30/Flex ScrewCap 020V
662950-0200
Issue: 2011-03 Doc No: SPC-3022047-0107