# SPC

## Spare Parts Catalogue

## CAP 30/Flex ReCap

**662950-0200**

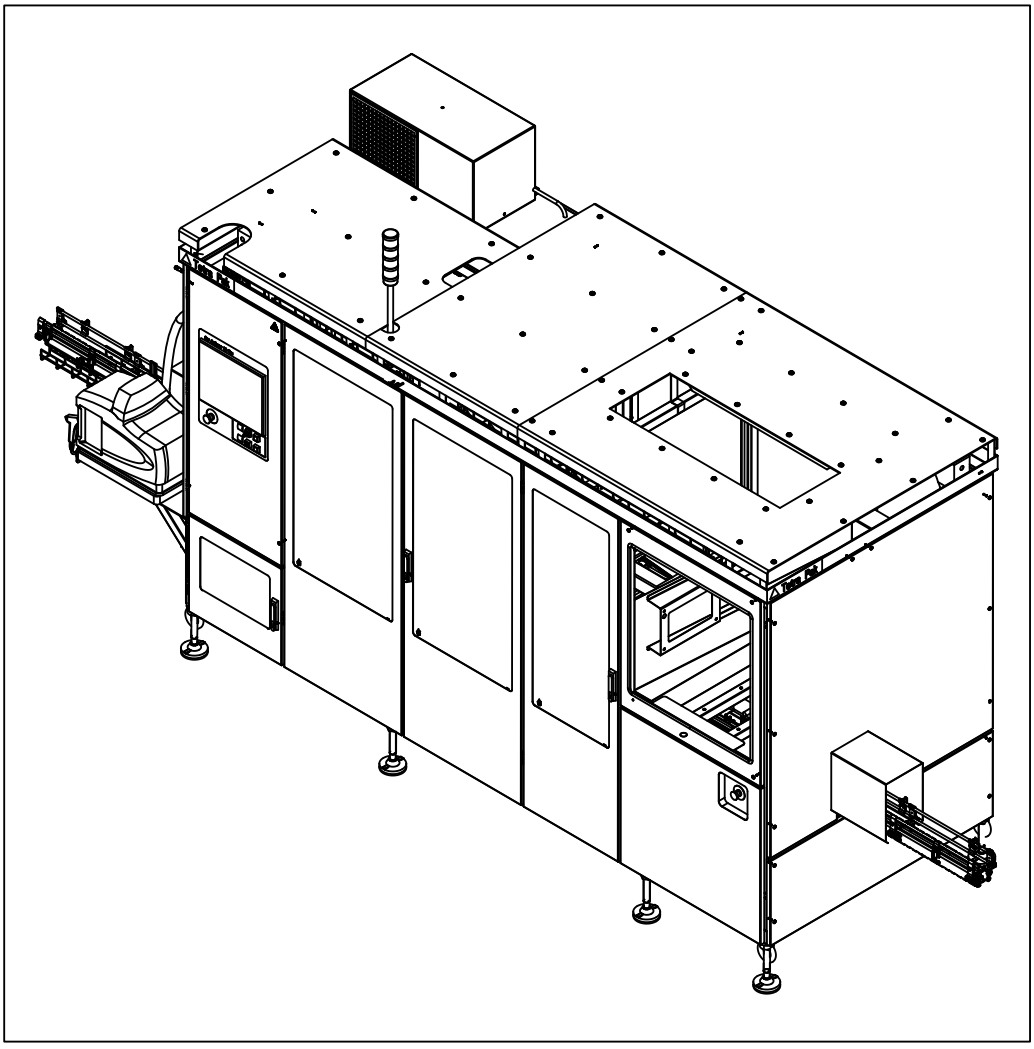

Tetra Pak

Doc. No: SPC-3047194-0104

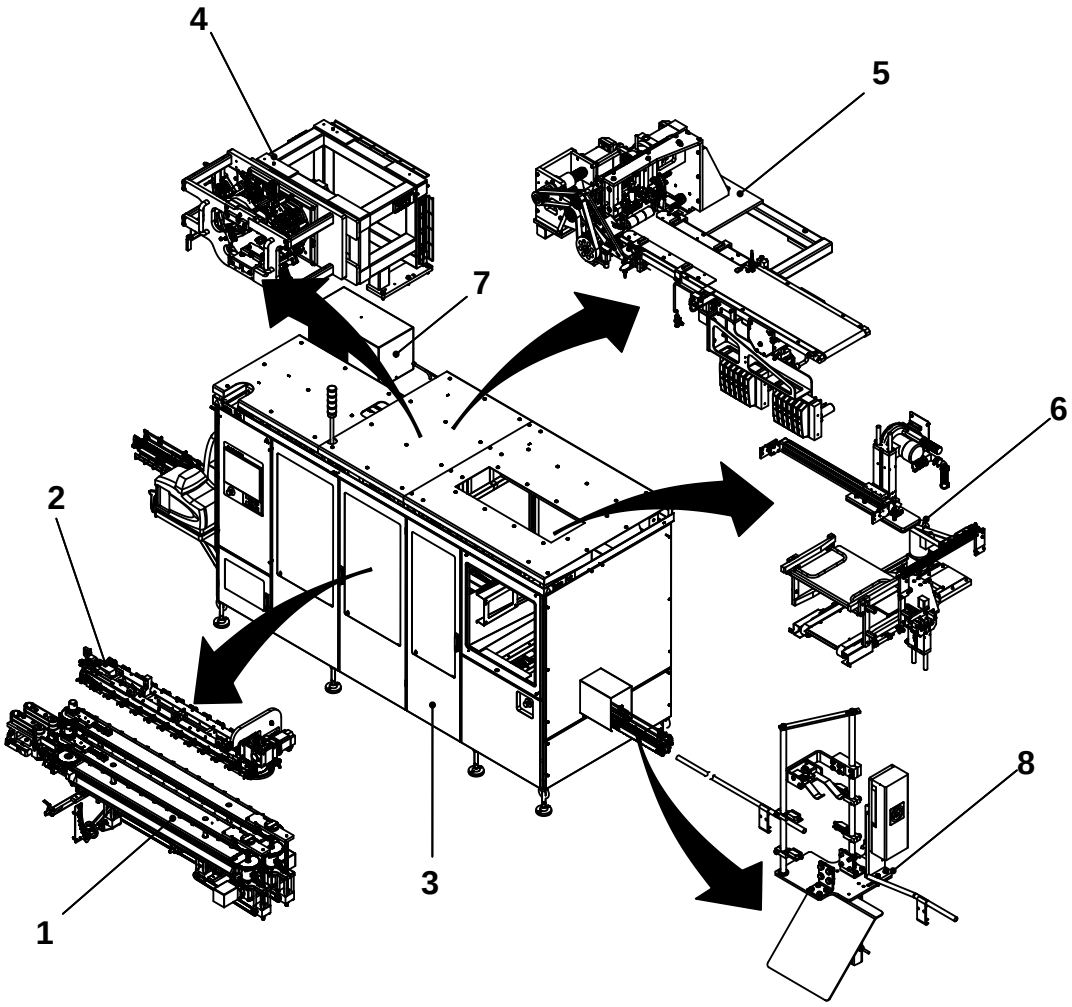


The position numbers in the illustration correspond with the chapter numbers listed on the next page.

Copyright © 2010 Tetra Pak Group

All rights reserved. No part of this document may be reproduced or copied in any form or by any means without written permission from Tetra Pak Packaging Solutions .

Tetra Pak and all Tetra Pak products are trademarks belonging to the Tetra Pak Group.

The content of this manual is in accordance with the design and construction of the machine or equipment at the time of publishing. Tetra Pak reserves the right to introduce design modifications without prior notice.

This document was produced by:

Tetra Pak Packaging Solutions
Via Delfini 1
41123 Modena
ITALY

Additional copies can be ordered from Tetra Pak. When ordering additional copies, always provide the document number.

Doc. No. SPC-3047194-0104

Issue 2010-07

This document is valid from:

| 75721/00096 |
|---|

Series No/Machine No Sign.

# SPC

## Spare Parts Catalogue

CAP 30/Flex ReCap
662950-0200

Machine or equipment configurations that this catalogue is valid for are described on the next page.


i Introduction

1 Package Line

2 Push Down

3 Machine Body

4 Applicator Unit

5 ReCap Cutting & Feedi.

6 Recap Magazine

7 Electrical Cabinet

8 Regular Accessories

9 Electric Equipment

10 Optional Equipment

ii Part Number Index

iii Ref. Des. Parts Index



Doc. No: SPC-3047194-0104

Issue 2010-07


Tetra Pak

**Tetra Pak Packaging Solutions**

# Valid for:

| Name | Drawing Specification and Development Step | Additional Information |
|---|---|---|
| CAP 30/Flex ReCap | 662950-0200 | Volume and Package Shape<br>TBA 500 S ReCap 2 A3<br>TBA 1000 S ReCap 3<br>TBA 1000 B ReCap 3<br>TBA 1000 Sq ReCap 3<br>TBA 1500 S ReCap 3<br>TBA 1890 S ReCap 3<br>TBA 2000 S ReCap 3 |

# Update Log for Doc. No. SPC-3047194-0104

This table shows all changes made to this catalogue, including installed rebuilding kits, added or removed pages.

| Date | Installed Kit | Added Pages (Doc. No.) | Removed Pages | Signature |
|---|---|---|---|---|
| | | | | |
| | | | | |
| | | | | |
| | | | | |
| | | | | |
| | | | | |
| | | | | |
| | | | | |
| | | | | |
| | | | | |
| | | | | |
| | | | | |
| | | | | |
| | | | | |
| | | | | |
| | | | | |
| | | | | |
| | | | | |
| | | | | |
| | | | | |
| | | | | |

| Date | Installed Kit | Added Pages (Doc. No.) | Removed Pages | Signature |
|---|---|---|---|---|
| | | | | |
| | | | | |
| | | | | |
| | | | | |
| | | | | |
| | | | | |
| | | | | |
| | | | | |
| | | | | |
| | | | | |
| | | | | |
| | | | | |
| | | | | |
| | | | | |
| | | | | |
| | | | | |
| | | | | |
| | | | | |
| | | | | |
| | | | | |
| | | | | |
| | | | | |
| | | | | |
| | | | | |

# i Introduction

**en** About the Introduction Chapter
This chapter contains basic information about this catalogue and related Tetra Pak equipment.

**bg** За уводната глава
Тази глава съдържа основна информация за този каталог и приложимото Tetra Pak оборудване.

**cs** O kapitole Úvod
Tato kapitola obsahuje základní informace o této příručce a souvisejícím zařízení Tetra Pak.

**da** Om indledningen
Kapitlet indeholder grundlæggende oplysninger om dette katalog og tilhørende Tetra Pak-udstyr.

**de** Über das Einleitungskapitel
Diese Kapitel enthält grundlegende Informationen über diesen Katalog und die zugehörige Tetra Pak-Ausrüstung

**el** Σχετικά με το Κεφάλαιο 'Εισαγωγή'
Αυτό το κεφάλαιο περιέχει βασικές πληροφορίες για τον παρόντα κατάλογο και τον σχετικό εξοπλισμό της Tetra Pak.

**es** Acerca del capítulo Introducción
Este capítulo contiene información básica sobre este catálogo y el equipo Tetra Pak relacionado.

**et** Sissejuhatava peatüki kohta
See peatükk sisaldab teavet käesoleva kataloogi ja sellega seonduva Tetra Paki seadme kohta.

**fi** Tietoja Johdanto-luvusta
Tässä luvussa on perustietoja tästä luettelosta ja Tetra Pak -laitteesta.

**fr** À propos du chapitre Introduction
Ce chapitre contient les informations de base à propos de ce catalogue et de l'équipement Tetra Pak concerné.

**hu** A Bevezetés fejezetről
Ez a fejezet alapvető információkat tartalmaz a katalógusról és a hozzá tartozó Tetra Pak berendezésről.

**is** Um inngangskaflann
Þessi kafli inniheldur grundvallarupplýsingar um þennan vörulista og tengdan Tetra Pak búnað.

**it** Informazioni sul capitolo Introduzione
Questo capitolo contiene informazioni generali sul presente catalogo e sulla relativa macchina Tetra Pak.

**lt** Apie įvadinį skyrių
Šiame skyriuje pateikta pagrindinė informacija apie šį katalogą ir su juo susijusią "Tetra Pak" įrangą.

**lv** Par Ievada nodaļu
Šī nodaļa ietver galveno informāciju par šo katalogu un saistītajām Tetra Pak iekārtām.

**nl** Over de inleiding
Dit hoofdstuk bevat basisinformatie omtrent deze catalogus en aanverwante Tetra Pak-installatie.

**no** Om kapitlet Introduksjon
Dette kapitlet inneholder grunnleggende informasjon om denne katalogen og relatert Tetra Pak-utstyr.

**pl** Informacje na temat rozdziału wprowadzającego
Rozdział wprowadzający zawiera podstawowe informacje dotyczące niniejszego katalogu i związanej z nim maszyny Tetra Pak.

**pt** Acerca do Capítulo de Introdução
Este capítulo contém informações básicas sobre este catálogo e os equipamentos relacionados da Tetra Pak.

**ro** Despre capitolul introductiv
Acest capitol conține informații de bază despre acest catalog și despre echipamentul Tetra Pak corelat.

**sk** O kapitole Úvod
Táto kapitola obsahuje základné informácie o tomto návode a informácie súvisiace so zariadením Tetra Pak.

**sl** O uvodnem poglavju
To poglavje vsebuje osnovne informacije o tem katalogu in opremi Tetra Pak.

**sv** Om inledningskapitlet
Det här kapitlet innehåller grundläggande information om katalogen och Tetra Pak-utrustningen.

## Introduction

Illustrations . . . . . i - 5
English Text . . . . . i - 7

## Увод

Илюстрации . . . . . i - 5
Текст на български език . . . . . i -11

## Úvod

Obrázky . . . . . i -5
Český text . . . . . i - 15

## Indledning

Illustrationer . . . . . i - 5
Dansk tekst . . . . . i - 19

## Einleitung

Abbildungen . . . . . i - 5
Deutscher Text . . . . . i - 23

## Εισαγωγή

Εικόνες . . . . . i - 5
Ελληνικό Κείμενο . . . . . i - 27

## Introducción

Ilustraciones . . . . . i - 5
Texto en español . . . . . i - 31

## Sissejuhatus

Joonised . . . . . i - 5
Eestikeelne tekst . . . . . i - 35

## Johdanto

Kuvat . . . . . i - 5
Suomenkielinen teksti . . . . . i - 39

## Introduction

Illustrations . . . . . i - 5
Texte français . . . . . i - 43

## Bevezetés

Ábrák . . . . . i - 5
Magyar szöveg . . . . . i - 47

## Inngangur

Skýringarmyndir . . . . . i - 5
Íslenskur texti . . . . . i - 51

## Introduzione

Figure . . . . . i - 5
Testo in italiano . . . . . i - 55

## Įvadas

Paveikslėliai . . . . . i - 5
Lietuviškas tekstas . . . . . i - 59

## Ievads

Ilustrācijas . . . . . i - 5
Teksts latviešu valodā . . . . . i - 63

## Inleiding

Afbeeldingen . . . . . i - 5
Nederlands tekst . . . . . i - 67

## Introduksjon

Illustrasjoner . . . . . i - 5
Norsk tekst . . . . . i - 71

## Wprowadzenie

Rysunki . . . . . i - 5
Tekst polski . . . . . i - 75

## Introdução

Ilustrações . . . . . i - 5
Texto em português . . . . . i - 79

## Introducere

Ilustrații . . . . . i - 5
Text în limba română . . . . . i - 83

## Úvod

Ilustrácie . . . . . i – 5
Slovenský text . . . . . i - 87

## Uvod

Slike . . . . . i - 5
Slovensko besedilo . . . . . i - 91

## Inledning

Bilder . . . . . i - 5
Svensk text . . . . . i - 95

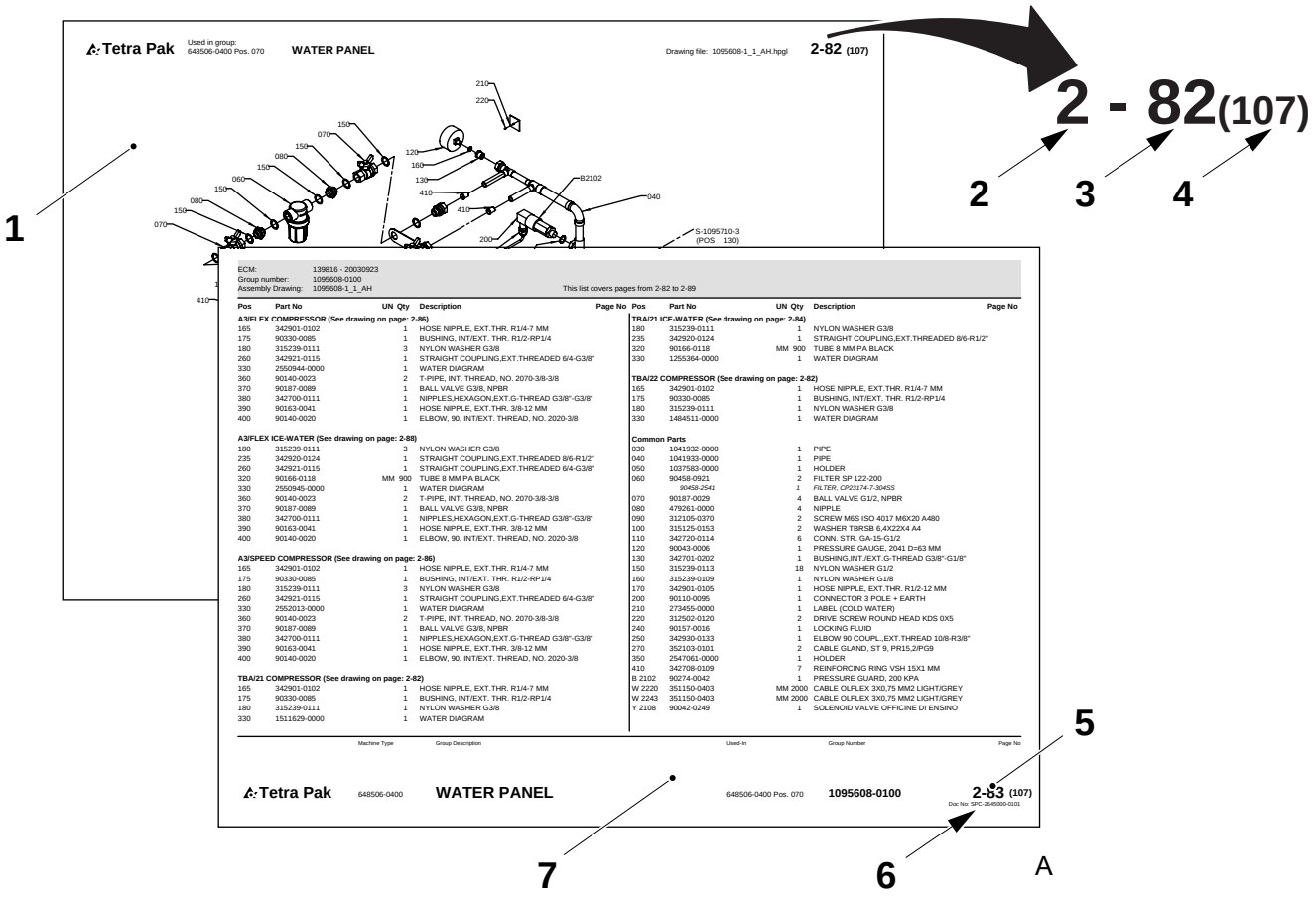
Tetra Pak
Used in group: 648506-0400 Pos. 070
WATER PANEL
Drawing file: 1095608-1_1_AH.hpgl
2-82 (107)
2 - 82(107)
1
2
3
4
5
6
7
A
ECM: 139816 - 20030923
Group number: 1095608-0100
Assembly Drawing: 1095608-1_1_AH
This list covers pages from 2-82 to 2-89
Tetra Pak
648506-0400
WATER PANEL
648506-0400 Pos. 070
1095608-0100
2-83 (107)

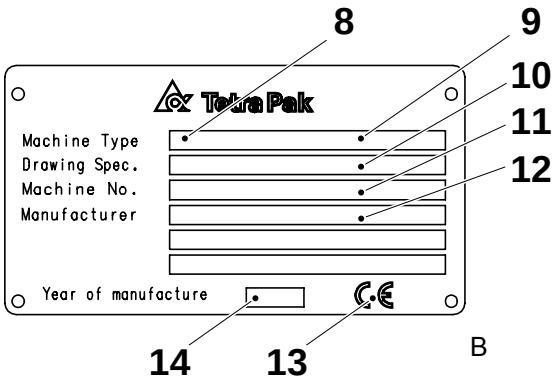
8
9
10
11
12
Tetra Pak
Machine Type
Drawing Spec.
Machine No.
Manufacturer
Year of manufacture
14
13
B

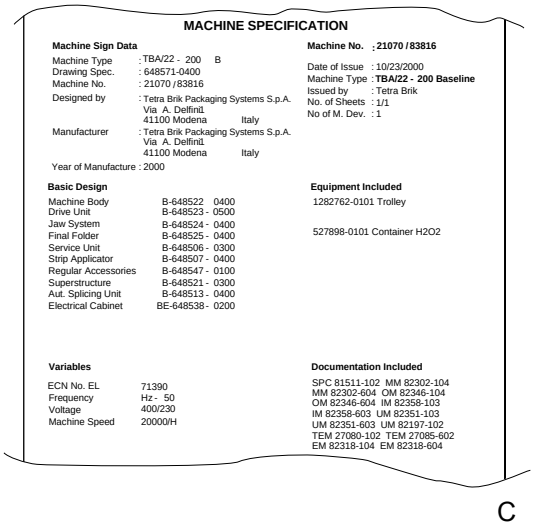
MACHINE SPECIFICATION
Machine Sign Data
Machine Type : TBA/22 - 200 B
Drawing Spec. : 648571-0400
Machine No. : 21070 / 83816
Designed by : Tetra Brik Packaging Systems S.p.A. Via A. Delfini1 41100 Modena Italy
Manufacturer : Tetra Brik Packaging Systems S.p.A. Via A. Delfini1 41100 Modena Italy
Year of Manufacture : 2000
Machine No. ; 21070 / 83816
Date of Issue : 10/23/2000
Machine Type : TBA/22 - 200 Baseline
Issued by : Tetra Brik
No. of Sheets : 1/1
No of M. Dev. : 1
Basic Design
Machine Body B-648522 0400
Drive Unit B-648523 - 0500
Jaw System B-648524 - 0400
Final Folder B-648525 - 0400
Service Unit B-648506 - 0300
Strip Applicator B-648507 - 0400
Regular Accessories B-648547 - 0100
Superstructure B-648521 - 0300
Aut. Splicing Unit B-648513 - 0400
Electrical Cabinet BE-648538 - 0200
Equipment Included
1282762-0101 Trolley
527898-0101 Container H2O2
Variables
ECN No. EL 71390
Frequency Hz - 50
Voltage 400/230
Machine Speed 20000/H
Documentation Included
SPC 81511-102 MM 82302-104
MM 82302-604 OM 82346-104
OM 82346-604 IM 82358-103
IM 82358-603 UM 82351-103
UM 82351-603 UM 82197-102
TEM 27080-102 TEM 27085-602
EM 82318-104 EM 82318-604
C

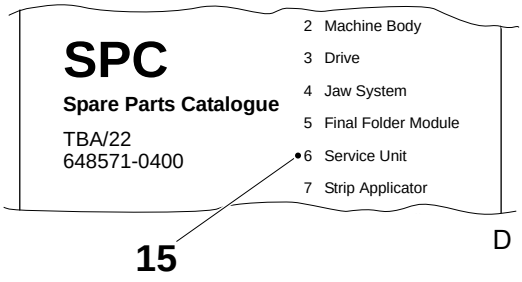
SPC
Spare Parts Catalogue
TBA/22
648571-0400
2 Machine Body
3 Drive
4 Jaw System
5 Final Folder Module
6 Service Unit
7 Strip Applicator
15
D

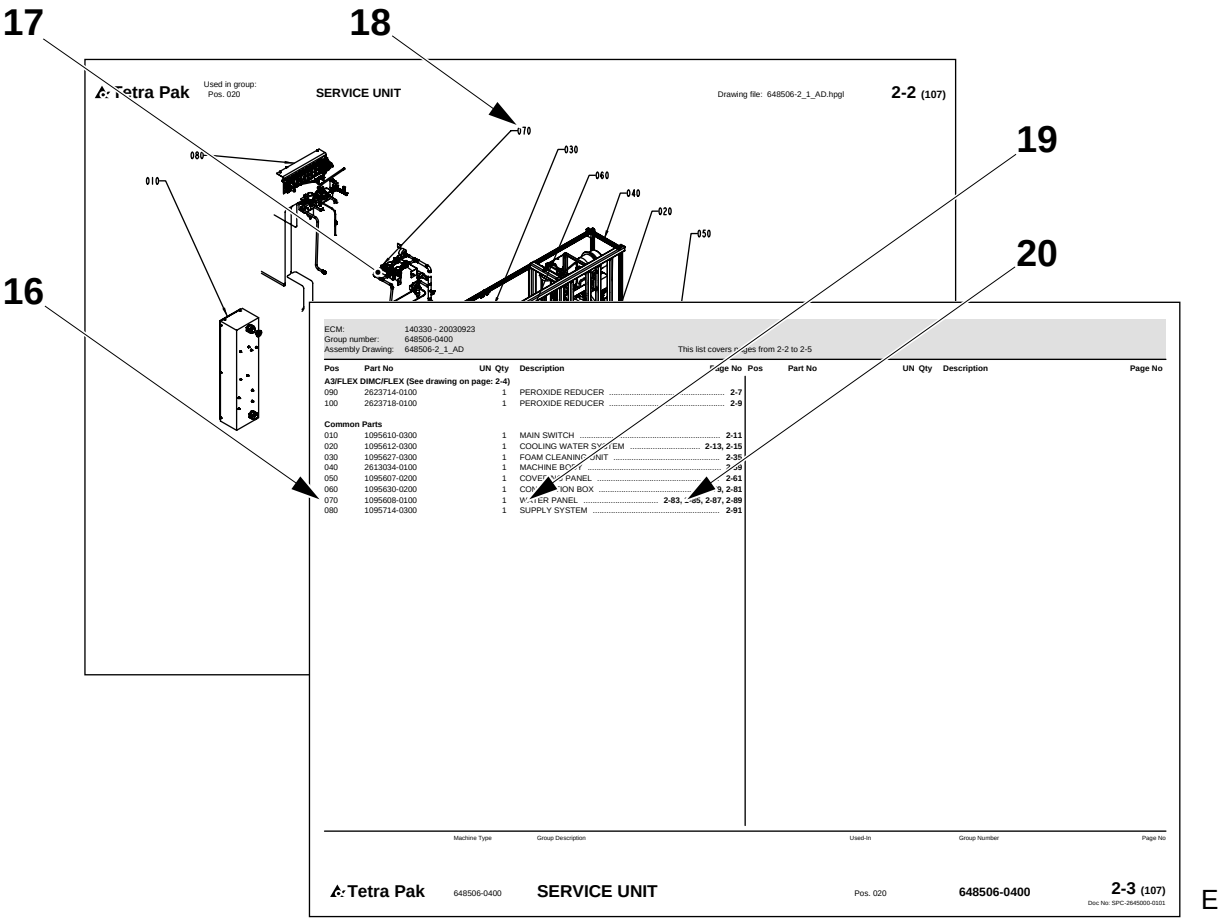
17
18
19
20
16
Tetra Pak
Used in group:
Pos. 020
SERVICE UNIT
Drawing file: 648506-2_1_AD.hpgl
2-2 (107)
070
030
080
060
010
040
020
050
ECM: 140330 - 20030923
Group number: 648506-0400
Assembly Drawing: 648506-2_1_AD
This list covers pages from 2-2 to 2-5
Pos Part No UN Qty Description Page No
A3/FLEX DIMC/FLEX (See drawing on page: 2-4)
090 2623714-0100 1 PEROXIDE REDUCER 2-7
100 2623718-0100 1 PEROXIDE REDUCER 2-9
Common Parts
010 1095610-0300 1 MAIN SWITCH 2-11
020 1095612-0300 1 COOLING WATER SYSTEM 2-13, 2-15
030 1095627-0300 1 FOAM CLEANING UNIT 2-35
040 2613034-0100 1 MACHINE BODY 2-39
050 1095607-0200 1 COVERING PANEL 2-61
060 1095630-0200 1 CONNECTION BOX 2-79, 2-81
070 1095608-0100 1 WATER PANEL 2-83, 2-85, 2-87, 2-89
080 1095714-0300 1 SUPPLY SYSTEM 2-91
Pos Part No UN Qty Description Page No
Machine Type Group Description Used-In Group Number Page No
Tetra Pak 648506-0400 SERVICE UNIT Pos. 020 648506-0400 2-3 (107)
Doc No: SPC-2645000-0101
E

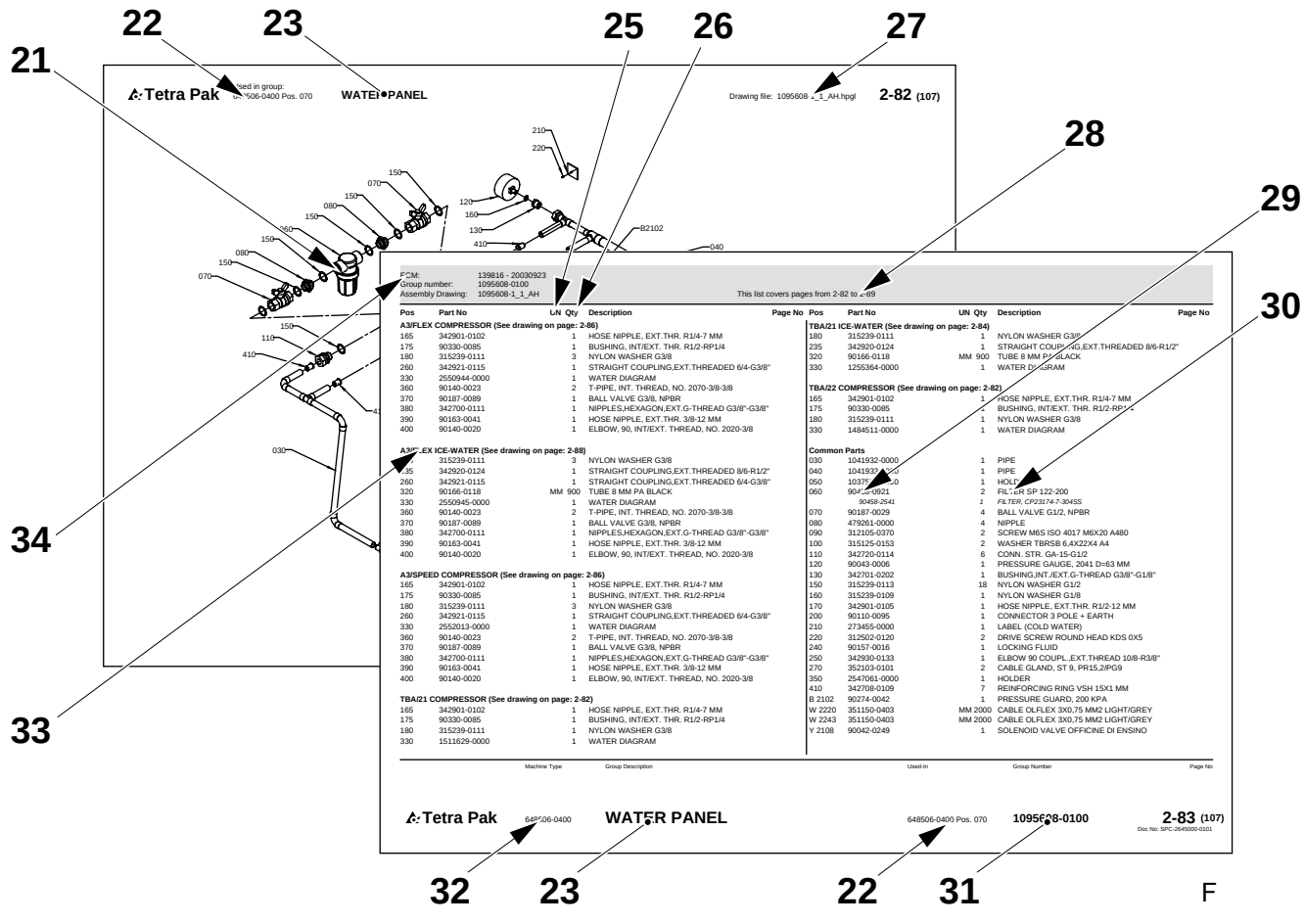
22
23
25
26
27
21
28
29
30
34
33
Tetra Pak
Used in group:
Pos. 070
WATER PANEL
Drawing file: 1095608-1_1_AH.hpgl
2-82 (107)
210
220
150
070
080
150
150
080
150
070
120
160
130
410
B2102
040
030
110
410
ECM: 139816 - 20030923
Group number: 1095608-0100
Assembly Drawing: 1095608-1_1_AH
This list covers pages from 2-82 to 2-89
Pos Part No UN Qty Description Page No
A3/FLEX COMPRESSOR (See drawing on page: 2-86)
165 342901-0102 1 HOSE NIPPLE, EXT.THR. R1/4-7 MM
175 90330-0085 1 BUSHING, INT/EXT. THR. R1/2-RP1/4
180 315239-0111 3 NYLON WASHER G3/8
260 342921-0115 1 STRAIGHT COUPLING,EXT.THREADED 6/4-G3/8"
330 2550944-0000 1 WATER DIAGRAM
360 90140-0023 2 T-PIPE, INT. THREAD, NO. 2070-3/8-3/8
370 90187-0089 1 BALL VALVE G3/8, NPBR
380 342700-0111 1 NIPPLES,HEXAGON,EXT.G-THREAD G3/8"-G3/8"
390 90163-0041 1 HOSE NIPPLE, EXT.THR. 3/8-12 MM
400 90140-0020 1 ELBOW, 90, INT/EXT. THREAD, NO. 2020-3/8
A3/FLEX ICE-WATER (See drawing on page: 2-88)
235 315239-0111 3 NYLON WASHER G3/8
235 342920-0124 1 STRAIGHT COUPLING,EXT.THREADED 8/6-R1/2"
260 342921-0115 1 STRAIGHT COUPLING,EXT.THREADED 6/4-G3/8"
320 90166-0118 MM 900 TUBE 8 MM PA BLACK
330 2550945-0000 1 WATER DIAGRAM
360 90140-0023 2 T-PIPE, INT. THREAD, NO. 2070-3/8-3/8
370 90187-0089 1 BALL VALVE G3/8, NPBR
380 342700-0111 1 NIPPLES,HEXAGON,EXT.G-THREAD G3/8"-G3/8"
390 90163-0041 1 HOSE NIPPLE, EXT.THR. 3/8-12 MM
400 90140-0020 1 ELBOW, 90, INT/EXT. THREAD, NO. 2020-3/8
A3/SPEED COMPRESSOR (See drawing on page: 2-86)
165 342901-0102 1 HOSE NIPPLE, EXT.THR. R1/4-7 MM
175 90330-0085 1 BUSHING, INT/EXT. THR. R1/2-RP1/4
180 315239-0111 3 NYLON WASHER G3/8
260 342921-0115 1 STRAIGHT COUPLING,EXT.THREADED 6/4-G3/8"
330 2552013-0000 1 WATER DIAGRAM
360 90140-0023 2 T-PIPE, INT. THREAD, NO. 2070-3/8-3/8
370 90187-0089 1 BALL VALVE G3/8, NPBR
380 342700-0111 1 NIPPLES,HEXAGON,EXT.G-THREAD G3/8"-G3/8"
390 90163-0041 1 HOSE NIPPLE, EXT.THR. 3/8-12 MM
400 90140-0020 1 ELBOW, 90, INT/EXT. THREAD, NO. 2020-3/8
TBA/21 COMPRESSOR (See drawing on page: 2-82)
165 342901-0102 1 HOSE NIPPLE, EXT.THR. R1/4-7 MM
175 90330-0085 1 BUSHING, INT/EXT. THR. R1/2-RP1/4
180 315239-0111 1 NYLON WASHER G3/8
330 1511629-0000 1 WATER DIAGRAM
TBA/21 ICE-WATER (See drawing on page: 2-84)
180 315239-0111 1 NYLON WASHER G3/8
235 342920-0124 1 STRAIGHT COUPLING,EXT.THREADED 8/6-R1/2"
320 90166-0118 MM 900 TUBE 8 MM PA BLACK
330 1255364-0000 1 WATER DIAGRAM
TBA/22 COMPRESSOR (See drawing on page: 2-82)
165 342901-0102 1 HOSE NIPPLE, EXT.THR. R1/4-7 MM
175 90330-0085 1 BUSHING, INT/EXT. THR. R1/2-RP1/4
180 315239-0111 1 NYLON WASHER G3/8
330 1484511-0000 1 WATER DIAGRAM
Common Parts
030 1041932-0000 1 PIPE
040 1041933-0000 1 PIPE
050 1037[illegible]-0000 1 HOLDER
060 90458-0921 2 FILTER SP 122-200
90458-2541 FILTER, CP23174-7-304SS
070 90187-0029 4 BALL VALVE G1/2, NPBR
080 479261-0000 4 NIPPLE
090 312105-0370 2 SCREW M6S ISO 4017 M6X20 A480
100 315125-0153 2 WASHER TBRSB 6,4X22X4 A4
110 342720-0114 6 CONN. STR. GA-15-G1/2
120 90043-0006 1 PRESSURE GAUGE, 2041 D=63 MM
130 342701-0202 1 BUSHING,INT./EXT.G-THREAD G3/8"-G1/8"
150 315239-0113 18 NYLON WASHER G1/2
160 315239-0109 1 NYLON WASHER G1/8
170 342901-0105 1 HOSE NIPPLE, EXT.THR. R1/2-12 MM
200 90110-0095 1 CONNECTOR 3 POLE + EARTH
210 273455-0000 1 LABEL (COLD WATER)
220 312502-0120 2 DRIVE SCREW ROUND HEAD KDS 0X5
240 90157-0016 1 LOCKING FLUID
250 342930-0133 1 ELBOW 90 COUPL.,EXT.THREAD 10/8-R3/8"
270 352103-0101 2 CABLE GLAND, ST 9, PR15,2/PG9
350 2547061-0000 1 HOLDER
410 342708-0109 7 REINFORCING RING VSH 15X1 MM
B 2102 90274-0042 1 PRESSURE GUARD, 200 KPA
W 2220 351150-0403 MM 2000 CABLE OLFLEX 3X0,75 MM2 LIGHT/GREY
W 2243 351150-0403 MM 2000 CABLE OLFLEX 3X0,75 MM2 LIGHT/GREY
Y 2108 90042-0249 1 SOLENOID VALVE OFFICINE DI ENSINO
Pos Part No UN Qty Description Page No
Machine Type Group Description Used-In Group Number Page No
Tetra Pak 648506-0400 WATER PANEL 648506-0400 Pos. 070 1095608-0100 2-83 (107)
Doc No: SPC-2645000-0101
32 23 22 31
F

# Introduction

## Manual Information

Tetra Pak recommends reading all delivered manuals carefully. Make sure that the delivered manuals are available to personnel who operate or maintain the equipment.

It is important to keep this catalogue for the lifetime of the equipment and to pass the catalogue on to any subsequent holder or user.

Tetra Pak will not be held responsible for any damage to the equipment caused by not following the instructions given in the manuals that accompany this equipment.

### Delivered Manuals

Manuals delivered with this equipment may include

- CM
  The Conversion Manual provides technicians with information on converting the equipment between different production modes.
- EM
  The Electrical Manual provides technicians with information about the equipment's electrical system.
- IM
  The Installation Manual provides technicians with information required to safely install the equipment.
- MM
  The Maintenance Manual provides technicians with information on maintaining the equipment.
- OM
  The Operation Manual manual provides the operator with information on handling and operating the equipment before, during, and after production.
- SPC
  The Spare Parts Catalogue provides the information necessary to order spare parts from Tetra Pak
- TeM
  The Technical Manual
  - provides technicians with information required to safely install the equipment
  - provides technicians with information on maintaining the equipment
  - provides technicians with information about the machine's/ equipment's electrical system
  - provides the information necessary to order spare parts from Tetra Pak.

### Page Layout

Refer to the illustration (A) on page i-5: The main pages in a Spare Parts Catalogue consist of an illustration page (1) and a corresponding list page (7). The page number (5) is shown in the header of an illustration page and in the footer of a list page. The document number (6) is shown in the footer of a list page.

### Page Numbering

Refer to the illustration (A) on page i-5: A page number (5) has three parts:

- chapter number (2)
- consecutive page number within the chapter (3)
- total number of pages in the chapter (4)

## Machine Introduction

### Manufacturer

For the manufacturer's name and address, see the second page of this catalogue.

### Service

To order spare parts for this machine, or to report problems associated with operating this machine, contact the nearest Tetra Pak office.

Contact the Liaison with other inquiries, comments, or suggestions for improvement regarding the equipment and its documentation.

## Identification

### CE Classification

This equipment complies with the basic health and safety regulations of the European Economic Area (EEA).

### Machine Plate

The illustration (B) on page i-5 shows an example of a machine plate. An illustration of the valid machine plate and its location on the equipment is shown in the Introduction chapter of the manuals delivered with this equipment. The machine plate contains the data listed below, needed when contacting Tetra Pak concerning this specific equipment.

- Machine type (8)
- Volume (9)
- Drawing specifications (10)
- Machine serial number (11)
- Manufacturer (12)
- CE mark (13)
- Year of manufacture (14)

The illustration (C) on page i-5 shows an example of a machine specification. Make sure that the equipment data listed in the front pages of this manual corresponds to the machine plate data and the machine specification.

## How to Use This Spare Parts Catalogue

### Locate a Spare Part Number

a) Refer to the illustration (D) on page i-5: Go to the chapter number (15) indicated beside the main group that contains the part you want to locate.

Items b) and c) refer to the illustration (E) on page i-6.

b) On the main group illustration, look for the machine subgroup (17) that contains the part or subgroup you are looking for. Note the position number (18) and go to the list page that follows the illustration.

c) Look for the position number/reference designation (16) or the subgroup name (19). Go to the corresponding page number (20) listed in the right-hand column. Tetra Pak has chosen to always use the function oriented structure for reference designation. The prefix indicating function oriented structure (=) is not shown in the reference designation.

Items d) and e) refer to the illustration (F) on page i-6.

d) Locate the part (21) that you are looking for on the subgroup illustration and note the part's position number.

e) The part number (29) and part description (30) are listed beside the position number on the list page.

## Information Listed in a Spare Parts Catalogue

The list below refers to the illustration (F) on page i-6. A Spare Parts Catalogue contains the following information about groups, subgroups, and spare parts for the equipment:

- Group structure reference (22). Indicates the next higher group in the equipment list structure.
- Group name (23)
- Unit of measure (25)
- Quantity (26)
- Assembly drawing number (27)
- List page range (28). Included if there are multiple pages in the group illustration or list.
- Part or subgroup number (29)
- Subgroup name or part description (30)
- Group number (31)
- Equipment number (32)
- Group information heading (33). Indicates if the section below the heading is for a specific machine variant or if it is a list of common parts. If a list has more than one variant and each variant has its own assembly drawing, a page reference to the variant's assembly drawing is shown.
- Internal information (34)

# Увод

## Информация за ръководството

Tetra Pak Ви препоръчва да прочетете внимателно всички доставени ръководства. Проверете дали доставените ръководства са достъпни за служителите, които поддържат или работят с оборудването.

Важно е да запазите този каталог през целия живот на оборудването и да го предадете на трети лица, които ще използват или съхраняват оборудването.

Tetra Pak не може да бъде държана под отговорност за щети върху оборудването, причинени от неспазване на даденте инструкции в ръководствата, които съпровождат оборудването.

### Доставени ръководства

Ръководствата, доставени с това оборудване, могат да включват

- CM
  Ръководството за приспособяване осигурява на техническите лица информация за приспособяването на оборудване към различни производствени режими.
- EM
  Електрическото ръководство осигурява на техническите лица информация за електрическата система на оборудването.
- IM
  Ръководството за инсталиране предоставя на техническите лица информацията, която е необходима за безопасно инсталиране на оборудването.
- MM
  Ръководството за поддръжка предоставя на техническите лица информация относно поддържането на оборудването.
- OM
  Ръководството за операции предоставя на операторите информация за това, как да боравят и функционират с оборудването преди, по време на и след производство.
- SPC
  Каталогът с резервни части предоставя необходимата информация за поръчка на резервни части от Tetra Pak
- TeM
  Техническото ръководство
  - предоставя на техническите лица необходимата информация за безопасно инсталиране на оборудването
  - предоставя на техническите лица информация за поддръжка на оборудването
  - предоставя на техническите лица информация за електрическата система на машината/оборудването
  - предоставя необходимата информация за поръчка на резервни части от Tetra Pak.





### Формат на страниците

Разгледайте илюстрация (A) на страница i-5: Главните страници в Каталога с резервни части се състоят от страница с илюстрация (1) и прилежаща страница със списък (7). Номерът на страницата (5) е посочен в горната част на страницата с илюстрация и в долната част на страницата със списъка. Номерът на документа (6) е показан в долната част на страницата със списъка.

### Номериране на страници

Разгледайте илюстрация (A) на страница i-5: Един номер на страница (5) има три части:

- номер на глава (2)
- последователен номер на страница в една глава (3)
- общ брой страници в главата (4)

## Машини Увод

### Производител

Вижте втората страница на този каталог, за да проверите името и адреса на производителя.

### Обслужване

За да поръчате резервни части за тази машина или да докладвате за проблеми, свързани с работата с тази машина, се свържете с най-близкия офис на Tetra Pak.

Свържете се с отдела за контакти с клиенти за други запитвания, коментари и предложения за подобрение по отношение на оборудването и прилежащата му документация.

## Идентификация

### Класификация на ЦЕ

Това оборудване отговаря на основните наредби, свързани с опазване на здравето и безопасността на Европейската Икономическа Общност (ЕИО).





### Табелка на машина

Илюстрация (B) на страница i-5 показва пример с табелка на машина. В уводната глава на ръководствата, доставени с това оборудване, е показана илюстрация с валидната табелка на машината и нейното положение върху оборудването. Табелката на машината съдържа посочените по-долу данни, които Ви трябват, когато се свързвате с Tetra Pak относно това специфично оборудване.

- Тип машина (8)
- Обем (9)
- Спесификации за чертане (10)
- Сериен номер на машината (11)
- Производител (12)
- CE печат (13)
- Година на производство (14)

Илюстрация (C) на страница i-5 показва пример със спесификация за машина. Проверете дали данните за оборудването, изброени на предните страници в това ръководство отговарят на данните от табелката на машината и на спесификацията на машината.

## Как да използвате този Каталог за резервни части

### Намерете Номер на резервна част

a) Разгледайте илюстрация (D) на страница i-5: Отидете в глава номер (15) посочена до главната група, която съдържа частта, която искате да намерите.

Артикули b) и c) се отнасят до илюстрация (E) на страница i-6.

b) На главната обща илюстрация вижте подгрупата на машината (17), която съдържа частта или подгрупата, която търсите. Намерете номера на позицията (18) и отворете на страницата със списъка, която е след илюстрацията.

c) Намерете номера на позицията/референцията (16) или името на подгрупата (19). Отворете съответстващия номер на страница (20) в дясната колона. Tetra Pak е избрала да използва винаги функционално-ориентирана структура при обозначаване на референциите. Префиксът, който показва функционално-ориентирана структура (=) не е посочен в обозначаването на референциите.

Артикули d) и e) се отнасят до илюстрация (F) на страница i-6.

d) Намерете частта (21), която търсите в илюстрацията на подгрупата и запомнете номера на частта.

e) Номерът на частта (29) и описанието на частта (30) са изброени до номера на позицията на страницата със списъка.





### Изброена информация в Каталога с резервни части

По-долу посоченият списък се отнася до илюстрация (F) на страница i-6. Каталогът с резервни части съдържа следната информация за групи, подгрупи и резервни части за оборудването:

- Референция за структурата (22). Показва следващата по-голяма група в структурата със списъка на оборудването.
- Име на група (23)
- Единица мярка (25)
- Количество (26)
- Номер за монтажен чертеж (27)
- Обхват на страницата със списък (28). Включен, ако има няколко страници в илюстрацията на групата или списъка.
- Номер на част или подгрупа (29)
- Име на подгрупа или описание на част (30)
- Номер на група (31)
- Номер на оборудване (32)
- Референция за информацията за групата (33). Показва дали частта под заглавието е за специфична версия на машината или е списък с общи части. Ако един списък има повече от един вариант и всеки вариант има собствен монтажен чертеж, се показва референцията на страницата към монтажния чертеж на варианта.
- Вътрешна информация (34)

# Úvod

## Informace o manuálu

Tetra Pak doporučuje, abyste si pozorně přečetli všechny dodané příručky. Přesvědčte se, že dodané manuály jsou k dispozici personálu, který obsluhuje nebo provádí údržbu zařízení.

Je důležité ponechat si tuto příručku po celou dobu životnosti zařízení a předat ho jakémukoliv následujícímu vlastníkovi nebo uživateli.

Tetra Pak nebude odpovídat za žádné škody zařízení, způsobené nedodržováním pokynů uvedených v této příručce.

### Dodané příručky

Příručky dodané s tímto zařízením mohou obsahovat

- CM
  Konverzní manuál (CM) poskytuje technikům informace o konverzi zařízení mezi různými výrobními režimy.
- EM
  Elektrický manuál (EM) poskytuje technikům informace o elektrickém systému tohoto zařízení.
- IM
  Instalační manuál (IM) poskytuje technikům informace potřebné k bezpečné instalaci zařízení.
- MM
  Údržbový manuál (MM) poskytuje technikům informace o údržbě tohoto zařízení.
- OM
  Provozní manuál (OM) poskytuje operátorovi informace o manipulaci s tímto zařízením a provozu před, během a po výrobě.
- SPC
  Katalog náhradních dílů (SPC) poskytuje informace potřebné pro objednávání náhradních dílů od společnosti Tetra Pak
- TeM
  Technický manuál
  - poskytuje technikům informace potřebné k bezpečné instalaci tohoto zařízení
  - poskytuje technikům informace o údržbě tohoto zařízení
  - poskytuje technikům informace o elektrickém systému tohoto zařízení
  - poskytuje informace potřebné pro objednávání náhradních dílů od společnosti Tetra Pak





### Rozvržení stránky

Viz obrázek (A) na straně i-5: Hlavní strany Katalogu náhradních dílů obsahují stranu s obrázky (1) a odpovídající stranu seznamu (7). Číslo strany (5) je uvedeno v záhlaví strany s obrázky a v zápatí strany seznamu. Číslo dokumentu (6) je uvedeno v zápatí strany seznamu.

### Číslování stran

Viz obrázek (A) na straně i-5: Číslo strany (5) sestává ze tří částí:

- číslo kapitoly (2)
- pořadové číslo strany (3) v kapitole
- celkový počet stránek (4) v kapitole

## Úvod ke stroji

### Výrobce

Název a adresa výrobce je uvedena na druhé straně tohoto katalogu.

### Servis

Chcete-li objednat náhradní díly nebo ohlásit problémy související s provozem tohoto stroje, kontaktujte nejbližší kancelář Tetra Pak.

S dalšími dotazy, připomínkami nebo náměty na vylepšení ohledně zařízení a této dokumentace se obracejte na kontaktní osobu.

## Identifikace

### Klasifikace CE

Toto zařízení splňuje základní zdravotní a bezpečnostní předpisy Evropského hospodářského prostoru (EEA).





### Štítek na stroji

Obrázek (B) na straně i-5 znázorňuje příklad štítku na stroji. Obrázek platného štítku na stroji a jeho umístění na zařízení je uveden v příručkách dodaných s tímto strojem v kapitole Úvod. Na štítku jsou uvedeny údaje potřebné při kontaktování společnosti Tetra Pak, týkající se tohoto specifického zařízení.

- Typ stroje (8)
- Objem (9)
- Výkresové specifikace (10)
- Výrobní číslo stroje (11)
- Výrobce (12)
- Označení CE (13)
- Rok výroby (14)

Obrázek (C) na straně i-5 zobrazuje příklad specifikace stroje. Přesvědčte se, že údaje o zařízení uvedená v seznamu na předních stranách tohoto manuálu odpovídají údajům štítku na stroji a specifikaci stroje.

## Jak používat tento Katalog náhradních dílů

### Vyhledejte číslo náhradního dílu

a) Viz obrázek (D) na straně i-5: Přejděte na číslo kapitoly (15) uvedené vedle hlavní skupiny, která obsahuje hledaný díl.

Položky b) a c) odkazují na obrázek (E) na straně i-6.

b) Na vyobrazení hlavní skupiny vyhledejte strojní podskupinu (17), která obsahuje hledaný díl nebo podskupinu. Poznamenejte si číslo pozice (18) a přejděte na stranu seznamu vyplývající z obrázku.

c) Vyhledejte číslo pozice/označení odkazu (16) nebo název podskupiny (19). Přejděte na odpovídající číslo strany (20) v seznamu v pravém sloupci. Tetra Pak zvolil pro označování odkazu používat vždy uspořádání orientované na funkci. Prefix indikující uspořádání orientované na funkci (=) není uveden v označení odkazu.

Položky d) a e) odkazují na obrázek (F) na straně i-6.

d) Vyhledejte díl (21), který hledáte na vyobrazení podskupiny a poznamenejte si číslo pozice dílu.

e) Číslo dílu (29) a popis dílu (30) jsou uvedeny v seznamu vedle čísla pozice na straně seznamu.





### Informace uvedené v seznamu v Katalogu náhradních dílů

Níže uvedený seznam odkazuje na obrázek (F) na straně i-6. Katalog náhradních dílů obsahuje následující informace o skupinách, podskupinách a náhradních dílech pro toto zařízení:

- Odkaz na uspořádání skupiny (22). Indikuje další vyšší skupinu v uspořádání seznamu zařízení.
- Název skupiny (23)
- Měrná jednotka (25)
- Množství (26)
- Číslo montážního výkresu (27)
- Rozsah stran seznamu (28). Včetně toho, zda existuje více stran v obrázku skupiny nebo seznamu.
- Díl nebo číslo podskupiny (29)
- Název podskupiny nebo popis dílu (30)
- Číslo skupiny (31)
- Číslo zařízení (32)
- Záhlaví informace o skupině (33). Indikuje, že oddíl pod záhlavím je pro specifickou variantu stroje nebo jde-li o seznam běžných dílů. Jestliže seznam obsahuje více než jednu variantu a každá varianta má svůj vlastní montážní výkres, pak je uveden odkaz na stranu montážního výkresu této varianty.
- Interní informace (34)

# Indledning

## Oplysninger om manualen

Tetra Pak anbefaler, at alle leverede manualer læses omhyggeligt. Sørg for, at de udleverede manualer er til rådighed for personale, som arbejder med eller vedligeholder udstyret.

Det er vigtigt at opbevare dette katalog hele udstyrets levetid og give kataloget videre til eventuelt kommende ejere eller brugere.

Tetra Pak kan ikke holdes ansvarlig for eventuel beskadigelse af udstyr, der opstår, fordi instruktionerne i manualerne til dette udstyr ikke følges.

### Udleverede manualer

De manualer, der leveres sammen med dette udstyr, kan omfatte

- CM
  Denne konverteringsmanual forsyner teknikere med oplysninger om konvertering af udstyret mellem forskellige produktionstilstande.
- EM
  Denne elektriske manual forsyner teknikere med informationer om udstyrets elektriske system.
- IM
  Denne installationsmanual forsyner teknikere med nødvendig information i forbindelse med sikker installation af udstyret.
- MM
  Denne vedligeholdelsesmanual forsyner teknikere med information om vedligeholdelse af udstyret.
- OM
  Denne betjeningsmanual giver operatøren oplysninger om betjening af udstyret før, under og efter produktion.
- SPC
  Denne reservedelskatalog indeholder oplysninger, der er nødvendig for at bestille reservedele fra Tetra Pak
- TeM
  Den tekniske manual
  – forsyner teknikere med information, der er nødvendig for en sikker installation af udstyret.
  – forsyner teknikere med information om vedligeholdelse af udstyret.
  – forsyner teknikere med information om maskinens/udstyrets elektriske system.
  – indeholder de informationer, der er nødvendige for at kunne bestille reservedele fra Tetra Pak.





### Sidelayout

Se illustration (A) på side i-5: Hovedsiderne i et reservedelskatalog består af en illustrationsside (1) og en tilsvarende listeside (7). Sidenummeret (5) vises i sidehovedet på en illlustrationsside og i sidefoden på en listeside. Dokumentnummeret (6) vises i sidefoden på en listeside.

### Sidenummerering

Se illustrationen (A) på side i-5: Et sidenummer (5) har tre dele:

- kapitelnummer (2)
- fortløbende sidenummer i kapitlet (3)
- samlet sideantal i kapitlet (4)

## Præsentation af maskinen

### Producent

Producentens navn og adresse findes på side to i dette katalog.

### Service

Kontakt nærmeste Tetra Pak-kontor for at bestille reservedele eller rapportere problemer i forbindelse med betjening af denne maskine.

Henvendelse til vores kontaktperson med andre forespørgsler, kommentarer eller forslag til forbedring angående udstyr og dokumentation.

## Identificering

### CE-klassificering

Dette udstyr lever op til de grundlæggende regulativer for sundhed og sikkerhed indenfor den Europæiske Økonomiske Samarbejdsområde (EØS).





### Maskinskilt

Illustrationen (B) på side i-5 viser et eksempel på et maskinskilt.
En illustration af et gyldigt maskinskilt og dets placering på udstyret er vist i indledningskapitlet i de manualer, der leveres med dette udstyr. Maskinskiltet indeholder nedennævnte data. Disse er nødvendige ved kontakt med Tetra Pak vedrørende dette specifikke udstyr.

- Maskintype (8)
- Volumen (9)
- Tegningsspecifikationer (10)
- Maskinens serienummer (11)
- Producent (12)
- CE-mærke (13)
- Produktionsår (14)

Illustrationen (C) på side i-5 viser et eksempel på en maskinspecifikation. Kontroller, at de udstyrsdata, der er anført på de første sider i denne manual, svarer til maskinskiltsdataene og maskinspecifikationen.

## Sådan bruges dette reservedelskatalog.

### Find et reservedelsnummer

a) Se illustrationen (D) på side i-5: Gå til kapitelnummeret (15), der er angivet ved siden af hovedgruppen, der indeholder den del, der ønskes fundet.

Punkterne b) og c) refererer til illustrationen (E) på side i-6.

b) I hovedgruppeillustrationen skal man se efter maskinundergruppen (17), som indeholder den del eller undergruppe, der søges. Bemærk placeringsnummeret (18), og gå til listesiden, som følger illustrationen.

c) Se efter placeringsnummeret/henvisningsbetegnelse (16) eller undergruppens navn (19). Gå til det tilsvarende sidenummer (20) angivet i den højre kolonne. Tetra Pak har valgt altid at anvende den funktionsorienterede struktur til henvisningsbetegnelse. Præfikset angiver funktionsorienteret struktur (=) ikke vist i henvisningsbetegnelsen.

Punkterne d) og e) refererer til illustrationen (F) på side i-6.

d) Find den del (21), du søger i undergruppeillustrationen, og notér delens placeringsnummer.

e) Reservedelsnummeret (29) og -beskrivelsen (30) er angivet ved siden af placeringsnummeret på listesiden.





### Informationer der er angivet i et reservedelskatalog

Listen nedenfor refererer til illustrationen (F) på side i-6. Et reservedelskatalog indeholder følgende informationer om grupper, undergrupper og reservedele til udstyret:

- Gruppestrukturreference (22). Angiver næste overordnede gruppe i udstyrslistestrukturen.
- Gruppenavn (23)
- Måleenhed (25)
- Antal (26)
- Samletegningsnummer (27)
- Listens sideområde (28). Er angivet, hvis gruppeillustrationen eller -listen inkluderer mange sider.
- Del- eller undergruppenummer (29)
- Undergruppens navn eller delsbeskrivelse (30)
- Gruppenummer (31)
- Udstyrsnummer (32)
- Overskrift for gruppeinformation (33). Angiver, om afsnittet under overskriften er for en specifik maskinvariant, eller om det er en liste over fælles dele. Hvis en liste har mere end én variant, og hver variant har sin egen samletegning, vises en sidereference til variantens samletegning.
- Intern information (34)

# Einleitung

## Informationen über das Handbuch

Tetra Pak empfiehlt, alle mitgelieferten Handbücher sorgfältig durchzulesen. Stellen Sie sicher, dass die Handbücher dem Personal, das die Ausrüstung betreibt oder wartet, zur Verfügung steht.

Es ist wichtig, dass Sie diesen Katalog für die gesamte Lebensdauer der Ausrüstung vorliegen haben und einem etwaigen Nachbesitzer oder -betreiber übergeben.

Tetra Pak haftet nicht für Schäden an der Ausrüstung, die aufgrund von Nichtbeachtung der Anweisungen aus den Handbüchern, die mit diesem Gerät geliefert werden, entstehen.

### Gelieferte Handbücher

Die Handbücher, die mit dieser Ausrüstung geliefert wird, können Folgendes beinhalten

- CM
  Das Umbauhandbuch gibt den Technikern Informationen über den Umbau der Ausrüstung zwischen verschiedenen Produktionsweisen.
- EM
  Das Elektrohandbuch gibt den Technikern Informationen zum Elektrosystem der Ausrüstung.
- IM
  Das Installationshandbuch gibt den Technikern Informationen für die sichere Installation der Ausrüstung.
- MM
  Das Wartungshandbuch gibt den Technikern Informationen für die Wartung der Ausrüstung.
- OM
  Das Betriebshandbuch gibt dem Bediener Informationen über die Bedienung und den Betrieb der Ausrüstung vor, während und nach der Produktion.
- SPC
  Der Ersatzteilkatalog liefert die Informationen, die für die Bestellung von Ersatzteilen bei Tetra Pak erforderlich sind.
- TeM
  Das technische Handbuch
  - gibt den Technikern Informationen für die sichere Installation der Ausrüstung
  - gibt den Technikern Informationen für die Wartung der Ausrüstung
  - gibt den Techniker Informationen zum Elektrosystem der Ausrüstung/der Maschine
  - liefert die Informationen, die für die Bestellung von Ersatzteilen bei Tetra Pak erforderlich sind.





### Seitenlayout

Bezugnahme auf Abbildung (A) auf Seite i-5: Die Hauptseiten in einem Ersatzteilkatalog bestehen aus einer Abbildungsseite (1) und einer entsprechenden Listenseite (7). Die Seitennummer (5) wird in der Kopfzeile einer Abbildungsseite und in der Fußzeile einer Listenseite aufgeführt. Die Dokumentennummer (6) wird in der Fußzeile einer Listenseite aufgeführt.

### Seitennummerierung

Bezugnahme auf Abbildung (A) auf Seite i-5: Eine Seitennummer (5) besteht aus drei Teilen:

- Kapitelnummer (2)
- Fortlaufende Seitennummer innerhalb des Kapitels (3)
- Gesamtzahl der Seiten im Kapitel (4)

## Einführung zur Maschine

### Hersteller

Bitte entnehmen Sie den Namen und die Adresse des Herstellers der zweiten Seite dieses Katalogs.

### Service

Zur Bestellung von Ersatzteilen für diese Maschine oder um Probleme im Zusammenhang mit dem Betrieb dieser Maschine zu melden, wenden Sie sich bitte an das nächstgelegene Büro von Tetra Pak.

Wenden Sie sich bei anderen Anfragen, Kommentaren oder Verbesserungsvorschlägen mit Bezug auf die Ausrüstung und seine Dokumentation an die Verbindungsstelle.

## Identifizierung

### CE-Klassifizierung

Diese Ausrüstung erfüllt die wesentlichen Anforderungen des Europäischen Wirtschaftsraum (EWR) für Gesundheitsschutz und die Sicherheit.





### Maschinenschild

Die Abbildung (B) auf Seite i-5 zeigt ein Beispiel eines Maschinenschilds. Die Abbildung eines gültigen Maschinenschildes und seine Position auf der Ausrüstung wird im Einleitungskapitel der mit dieser Ausrüstung gelieferten Handbücher gezeigt. Das Maschinenschild enthält die Daten, die erforderlich sind, wenn Sie sich bezüglich dieser speziallen Ausrüstung an Tetra Pak wenden.

- Maschinentyp (8)
- Volumen (9)
- Zeichnungsspezifikationen (10)
- Seriennummer der Maschine (11)
- Hersteller (12)
- CE-Zeichen (13)
- Baujahr (14)

Die Abbildung (C) auf Seite i-5 zeigt ein Beispiel einer Maschinenspezifikation. Stellen Sie sicher, dass die Ausrüstungsdaten, die in den vorderen Seiten dieses Handbuchs aufgelistet sind, mit den Maschinenschilddaten und der Maschinenspezifikation übereinstimmen.

## Benutzung dieses Ersatzteilkatalogs

### Finden einer Ersatzteilnummer

a) Bezugnahme auf Abbildung (D) auf Seite i-5: Weiter zur Kapitel nummer (15), die neben der Hauptgruppe angegeben ist, die das entsprechende Teil enthält.

Die Positionen b) und c) beziehen sich auf die Abbildung (E) auf Seite i-6.

b) Suchen Sie auf der Hauptgruppenillustration nach der Maschinen-Untergruppe (17), die das gesuchte Teil oder die Untergruppe enthält. Notieren Sie die Positionsnummer (18) und gehen Sie dann zur Listenseite, die der Abbildung folgt.

c) Suchen Sie nach der Positionsnummer/Referenzbezeichnung (16) oder dem Namen der Untergruppe (19). Gehen Sie zur entsprechenden Seitennummer (20), die in der rechten Spalte aufgelistet ist. Tetra Pak hat sich dazu entschieden, stets eine funktionsorientierte Struktur für die Referenzbezeichnung zu verwenden. Die vorangestellte Kennzeichnung, welche die funktionsorientierte Struktur angibt (=), wird in der Referenzbezeichnung nicht angezeigt.

Die Positionen d) und e) beziehen sich auf die Abbildung (F) auf Seite i-6.

d) Finden Sie das gesuchte Teil (21) auf der Abbildung der Untergruppe und notieren Sie die Positionsnummer des Teils.

e) Die Teilenummer (29) und die Teilebeschreibung (30) werden neben der Positionsnummer auf der Listenseite aufgelistet.





### In einem Ersatzteilkatalog aufgelistete Informationen

Die folgende Liste bezieht sich auf die Abbildung (F) auf Seite i-6. Ein Ersatzteilkatalog enthält folgende Informationen über Gruppen, Untergruppen und Ersatzteile für die Ausrüstung:

- Gruppenstrukturreferenz (22). Sie gibt die nächst höhere Gruppe in der Ausrüstungslistenstruktur an.
- Gruppenname (23)
- Maßeinheit (25)
- Menge (26)
- Nummer der Zusammenbauzeichnung (27)
- Listenseitenbereich (28). Enthalten, wenn es mehrere Seiten in der Gruppenabbildung oder Liste gibt.
- Teile- oder Untergruppennummer (29)
- Untergruppenname oder Teilebeschreibung (30)
- Gruppennummer (31)
- Ausrüstungsnummer (32)
- Gruppeninformationsüberschrift (33). Gibt an, ob sich der Abschnitt unter der Überschrift auf eine spezifische Maschinenvariante bezieht oder ob es sich um eine Liste der allgemeinen Teile handelt. Wenn eine Liste mehr als eine Variante hat und jede Variante über eine eigene Zusammenbauzeichnung verfügt, wird eine Seitenreferenz zur Zusammenbauzeichnung angezeigt.
- Interne Informationen (34)

# Εισαγωγή

## Πληροφορίες για το Εγχειρίδιο

Η Tetra Pak σάς συνιστά να διαβάζετε προσεκτικά όλα τα παρεχόμενα εγχειρίδια. Εξασφαλίζετε ότι όλα τα παρεχόμενα εγχειρίδια διατίθενται στο προσωπικό που χειρίζεται ή συντηρεί τον εξοπλισμό.

Είναι σημαντικό να διατηρείτε αυτό τον κατάλογο καθ' όλη τη διάρκεια ζωής του εξοπλισμού καθώς και να παραδίδετε τον κατάλογο στον τυχόν επόμενο ιδιοκτήτη ή χρήστη του εξοπλισμού.

Η Tetra Pak δεν πρόκειται να αναλάβει καμία ευθύνη για οποιαδήποτε ζημιά που μπορεί να προκληθεί στον εξοπλισμό εξαιτίας της μη τήρησης των οδηγιών οι οποίες παρέχονται στα εγχειρίδια που συνοδεύουν αυτό τον εξοπλισμό.

### Παρεχόμενα Εγχειρίδια

Στα εγχειρίδια που παρέχονται μαζί μ' αυτό τον εξοπλισμό, μπορεί να περιλαμβάνονται τα εξής:

- CM
  Αυτό το Εγχειρίδιο Μετατροπής παρέχει στους τεχνικούς πληροφορίες για τη μετατροπή του εξοπλισμού μεταξύ των διάφορων λειτουργιών παραγωγής.
- EM
  Αυτό το Ηλεκτρικό Εγχειρίδιο παρέχει στους τεχνικούς πληροφορίες για το ηλεκτρικό σύστημα του εξοπλισμού.
- IM
  Αυτό το Εγχειρίδιο Εγκατάστασης παρέχει στους τεχνικούς τις απαιτούμενες πληροφορίες για την ασφαλή εγκατάσταση του εξοπλισμού.
- MM
  Αυτό το Εγχειρίδιο Συντήρησης παρέχει στους τεχνικούς πληροφορίες για τη συντήρηση του εξοπλισμού.
- OM
  Αυτό το Εγχειρίδιο Χειρισμού παρέχει στο χειριστή πληροφορίες για το χειρισμό και τη λειτουργία του εξοπλισμού πριν, κατά τη διάρκεια και μετά την παραγωγή.
- SPC
  Αυτός ο Κατάλογος Ανταλλακτικών παρέχει τις απαραίτητες πληροφορίες για την παραγγελία ανταλλακτικών από την Tetra Pak.
- TeM
  Το Τεχνικό Εγχειρίδιο
  - παρέχει στους τεχνικούς τις απαιτούμενες πληροφορίες για την ασφαλή εγκατάσταση του εξοπλισμού
  - παρέχει στους τεχνικούς πληροφορίες για τη συντήρηση του εξοπλισμού
  - παρέχει στους τεχνικούς πληροφορίες για το ηλεκτρικό σύστημα του εξοπλισμού/μηχανής
  - παρέχει τις απαραίτητες πληροφορίες για την παραγγελία ανταλλακτικών από την Tetra Pak.





### Διάταξη Σελίδων

Ανατρέξτε στην εικόν (A) της σελίδας i-5: Οι κύριες σελίδες ενός Καταλόγου Ανταλλακτικών αποτελούνται από μία εικονογραφημένη σελίδα (1) και από μία αντίστοιχη σελίδα λίστας (7). Ο αριθμός σελίδας (5) εμφανίζεται στην κεφαλίδα μιας εικονογραφημένης σελίδας και στο υποσέλιδο μιας σελίδας λίστας. Ο αριθμός εγγράφου (6) εμφανίζεται στο υποσέλιδο μιας σελίδας λίστας.

### Αρίθμηση Σελίδων

Ανατρέξτε στην εικόνα (A) της σελίδας i-5: Ένας αριθμός σελίδας (5) αποτελείται από τα εξής τρία μέρη:

- αριθμός κεφαλαίου (2)
- αύξων αριθμός σελίδας του κεφαλαίου (3)
- συνολικός αριθμός σελίδων του κεφαλαίου (4)

## Παρουσίαση Μηχανής

### Κατασκευαστής

Για το όνομα και τη διεύθυνση του κατασκευαστή, ανατρέξτε στη δεύτερη σελίδα αυτού του καταλόγου.

### Τεχνική Εξυπηρέτηση

Για να παραγγείλετε ανταλλακτικά για τη συγκεκριμένη μηχανή ή για να αναφέρετε προβλήματα που σχετίζονται με τη λειτουργία αυτής της μηχανής, επικοινωνήστε με το πλησιέστερο γραφείο της Tetra Pak.

Εάν έχετε άλλου είδους ερωτήσεις, σχόλια ή προτάσεις βελτίωσης σχετικά με τον εξοπλισμό και την έγγραφη τεκμηρίωσή του, επικοινωνήστε με το Τμήμα Σχέσεων.

## Στοιχεία Ταυτότητας

### Σήμανση CE

Αυτός ο εξοπλισμός συμμορφώνεται με τους βασικούς κανονισμούς υγείας και ασφάλειας του Ευρωπαϊκού Οικονομικού Χώρου (ΕΟΧ).





### Πινακίδα Αναγνώρισης Μηχανής

Η εικόνα (B) της σελίδας i-5 δείχνει ένα παράδειγμα μιας πινακίδας αναγνώρισης μηχανής.
Μια εικόνα που δείχνει την ενδεδειγμένη μορφή και θέση της πινακίδας αναγνώρισης μηχανής στον εξοπλισμό, παρουσιάζεται στο κεφάλαιο 'Εισαγωγή' των εγχειριδίων που παρέχονται μ' αυτόν τον εξοπλισμό.
Η πινακίδα αναγνώρισης μηχανής αναγράφει τα δεδομένα που παρατίθενται στη συνέχεια, τα οποία είναι απαραίτητα όταν επικοινωνείτε με την Tetra Pak για θέματα που αφορούν αυτό το συγκεκριμένο εξοπλισμό.

- Τύπος μηχανής (8)
- Χωρητικότητα (9)
- Στοιχεία σχεδίου (10)
- Αριθμός σειράς μηχανής (11)
- Κατασκευαστής (12)
- Σήμανση CE (13)
- Έτος κατασκευής (14)

Η εικόνα (Γ) της σελίδας i-5 δείχνει ένα παράδειγμα τεχνικών χαρακτηριστικών μηχανής. Βεβαιωθείτε ότι τα δεδομένα εξοπλισμού που παρατίθενται στις πρώτες σελίδες αυτού του εγχειριδίου συμφωνούν με τα δεδομένα της πινακίδας αναγνώρισης μηχανής και των τεχνικών χαρακτηριστικών μηχανής.

## Πώς Χρησιμοποιείται Αυτός ο Κατάλογος Ανταλλακτικών

### Εύρεση ενός Αριθμού Ανταλλακτικού

a) Ανατρέξτε στην εικόνα (Δ) της σελίδας i-5: Πηγαίνετε στον αριθμό κεφαλαίου (15) που υποδεικνύεται δίπλα από την κύρια ομάδα της μηχανής η οποία περιλαμβάνει το εξάρτημα που θέλετε να βρείτε.

Τα βήματα b) και c) αναφέρονται στην εικόνα (Ε) της σελίδας i-6.

b) Στην εικόνα της κύριας ομάδας μηχανής, αναζητήστε την υποομάδα μηχανής (17) η οποία περιλαμβάνει το εξάρτημα ή την υποομάδα που αναζητάτε. Σημειώστε τον αριθμό θέσης (18) και πηγαίνετε στη σελίδα λίστας που ακολουθεί την εικόνα.

c) Αναζητήστε τον αριθμό θέσης/ονομασία αναφοράς (16) ή το όνομα υποομάδας (19). Πηγαίνετε στον αντίστοιχο αριθμό σελίδας (20) που αναγράφεται στη δεξιά στήλη. Η Tetra Pak έχει επιλέξει να χρησιμοποιεί πάντα δομή ονομασίας αναφοράς με βάση τη λειτουργία. Το πρόθεμα που υποδεικνύει τη δομή με βάση τη λειτουργία (=) δε φαίνεται στο διάγραμμα αναφοράς.

Τα βήματα d) και e) αναφέρονται στην εικόνα (ΣΤ) της σελίδας i-6.

d) Βρείτε το εξάρτημα (21) που αναζητάτε στην εικόνα υποομάδας μηχανής και σημειώστε τον αριθμό θέσης του εξαρτήματος.

e) Ο αριθμός του εξαρτήματος (29) και η περιγραφή του εξαρτήματος (30) παρατίθενται δίπλα στον αριθμό θέσης στη σελίδα λίστας.





### Πληροφορίες που Περιέχονται σε έναν Κατάλογο Ανταλλακτικών

Η λίστα που ακολουθεί αναφέρεται στην εικόνα (F) της σελίδας i-6. Ένας Κατάλογος Ανταλλακτικών περιέχει τις παρακάτω πληροφορίες σχετικά με τις ομάδες, τις υποομάδες και τα ανταλλακτικά του εξοπλισμού:

- Αναφορά δομής ομάδας (22). Υποδηλώνει την επόμενη μεγαλύτερη ομάδα στη δομή λίστας του εξοπλισμού.
- Όνομα ομάδας (23)
- Μονάδα μέτρησης (25)
- Ποσότητα (26)
- Αριθμός σχεδίου συγκροτήματος (27)
- Περιοχή σελίδων λίστας (28). Περιλαμβάνεται εφόσον η εικόνα ή η λίστα μιας ομάδας εκτίθεται σε περισσότερες από μία σελίδες.
- Αριθμός εξαρτήματος ή υποομάδας (29)
- Αριθμός υποομάδας ή περιγραφή εξαρτήματος (30)
- Αριθμός ομάδας (31)
- Αριθμός εξοπλισμού (32)
- Επικεφαλίδα πληροφοριών ομάδας (33). Υποδεικνύει εάν η ενότητα κάτω από την επικεφαλίδα αφορά μια συγκεκριμένη παραλλαγή μηχανής ή αποτελεί μια λίστα κοινών εξαρτημάτων. Σε περίπτωση που μια λίστα περιέχει περισσότερες από μία παραλλαγές και κάθε παραλλαγή έχει ξεχωριστό σχέδιο συγκροτήματος, εμφανίζεται μια παραπομπή προς τη σελίδα όπου βρίσκεται το σχέδιο συγκροτήματος της παραλλαγής.
- Εσωτερικές πληροφορίες (34)

# Introducción

## Información sobre el manual

Tetra Pak recomienda leer atentamente todos los manuales suministrados. Asegúrese de que los manuales están disponibles para el personal que opera o mantiene el equipo.

Es importante conservar este catálogo durante la vida útil del equipo, así como facilitárselo a cualquier propietario o usuario posterior.

Tetra Pak no se responsabilizará de daños en el equipo por no seguir las instrucciones proporcionadas en los manuales que acompañan este equipo.

### Manuales entregados

Los manuales entregados con este equipo pueden incluir:

- CM
  El Manual de conversión proporciona a los técnicos información sobre cómo convertir el equipo a diferentes modos de producción.
- EM
  El Manual eléctrico proporciona a los técnicos información sobre el sistema eléctrico del equipo.
- IM
  El Manual de instalación proporciona a los técnicos la información necesaria para instalar el equipo de manera segura.
- MM
  El Manual de mantenimiento proporciona a los técnicos información sobre el mantenimiento del equipo.
- OM
  El Manual de funcionamiento proporciona al operador información sobre el manejo y el funcionamiento del equipo antes, durante y después de la producción.
- SPC
  El Catálogo de recambios proporciona la información necesaria para pedir las piezas de recambio a Tetra Pak.
- TeM
  El Manual técnico
  - proporciona a los técnicos la información necesaria para instalar de manera segura el equipo
  - proporciona a los técnicos información sobre el mantenimiento del equipo
  - proporciona a los técnicos información sobre el sistema eléctrico de la máquina/equipo
  - proporciona la información necesaria para pedir las piezas de recambio a Tetra Pak.





### Organización de las páginas

Consultar la ilustración (A) en la página i-5: Las páginas principales en un Catálogo de recambios se componen de una página de ilustración (1) y una página de lista correspondiente (7). El número de la página (5) se muestra en el encabezado de una página de ilustración y en el pie de página de una página de lista. El número del documento (6) se muestra en el pie de página de una página de lista.

### Numeración de las páginas

Consulte la ilustración (A) en la página i-5: Un número de página (5) consta de tres partes:

- número de capítulo (2)
- número de página consecutivo dentro del capítulo (3)
- número total de páginas del capítulo (4)

## Introducción a la máquina

### Fabricante

Para obtener el nombre y la dirección del fabricante, véase la segunda página de este catálogo.

### Servicio

Para pedir recambios para esta máquina o informar de problemas asociados con el funcionamiento de la misma, póngase en contacto con la oficina de Tetra Pak más cercana.

Póngase en contacto con el representante para otras consultas, comentarios o consejos sobre mejoras referidos al equipo y su documentación.

## Identificación

### Clasificación de la CE

Este equipo cumple con la normativa básica sobre salud y seguridad del Espacio Económico Europeo (EEE).





### Placa de máquina

La ilustración (B) en la página i-5 muestra un ejemplo de una placa de máquina.
En el capítulo Introducción de los manuales entregados con este equipo, se muestra una ilustración de la placa de máquina válida y su ubicación en el equipo. La placa de máquina contiene los datos que se enumeran a continuación, requeridos al ponerse en contacto con Tetra Pak en relación con este equipo específico.

- Tipo de máquina (8)
- Volumen (9)
- Especificaciones de plano (10)
- Número de serie de la máquina (11)
- Fabricante (12)
- Marca de la CE (13)
- Año de fabricación (14)

La ilustración (C) en la página i-5 muestra un ejemplo de especificación de la máquina. Asegúrese de que los datos de equipo que se enumeran en las páginas de la cubierta de este manual corresponden a los datos de la placa y las especificaciones de la máquina.

## Cómo utilizar este Catálogo de recambios

### Localizar un número de recambio

a) Consulte la ilustración (D) en la página i-5: Vaya al número de capítulo (15) indicado junto al grupo principal que contiene la pieza que desea localizar.

Los puntos b) y c) hacen referencia a la ilustración (E) en la página i-6.

b) En la ilustración del grupo principal, busque el subgrupo de la máquina (17) que contiene la pieza o el subgrupo que busca. Anote el número de posición (18) y vaya a la página de lista que sigue a la ilustración.

c) Busque el número de posición/denominación de referencia (16) o el nombre del subgrupo (19). Vaya al número de página correspondiente (20) que aparece en la columna de la derecha. Tetra Pak ha elegido utilizar siempre la estructura orientada a la función para la denominación de referencia. El prefijo que indica la estructura orientada a la función (=) no aparece en la denominación de referencia.

Los puntos d) y e) hacen referencia a la ilustración (F) en la página i-6.

d) Localice la pieza (21) que busca en la ilustración del subgrupo y anote el número de posición de la pieza.

e) El número de pieza (29) y la descripción de la misma (30) aparecen junto al número de posición en la página de lista.





### Información que contiene un Catálogo de recambios

La lista que aparece a continuación hace referencia a la ilustración (F) en la página i-6. Un Catálogo de recambios contiene la siguiente información sobre grupos, subgrupos y recambios para el equipo:

- Referencia de estructura de grupo (22). Indica el siguiente grupo más alto en la estructura de lista del equipo.
- Nombre del grupo (23)
- Unidad de medida (25)
- Cantidad (26)
- Número de dibujo del conjunto (27)
- Intervalo de página de lista (28). Incluido si hay varias páginas en la ilustración o lista de grupo.
- Número de pieza o subgrupo (29)
- Nombre de subgrupo o descripción de pieza (30)
- Número de grupo (31)
- Número de equipo (32)
- Encabezado de información de grupo (33). Indica si la sección que aparece debajo del encabezado corresponde a una variante específica de la máquina o si es una lista de piezas comunes. Si la lista tiene más de una variante y cada variante tiene su propio dibujo de conjunto, se muestra una referencia de página al dibujo de conjunto de la variante.
- Información interna (34)

# Sissejuhatus

## Juhendi teave

Tetra Pak soovitab kõik juhendid hoolikalt läbi lugeda. Kontrollige, et juhendid oleksid seadmetega töötavatele ja neid hooldavatele isikutele kättesaadavad.

Kataloog tuleb seadme kasutusaja vältel alles hoida ning järgmisele omanikule või kasutajale edasi anda.

Tetra Pak ei vastuta seadme vigastuste eest, mis on tekkinud seadmega kaasnevate juhendite mittejärgimise tõttu.

### Kaasaolevad juhendid

Seadmega kaasasolevad juhendid võivad sisaldada järgmist:

- CM
  Ümberseadistusjuhend annab tehnikutele teavet seadme ümber seadistamise kohta eri tootmisrežiimide korral.
- EM
  Elektrijuhend annab tehnikutele informatsiooni seadme elektrisüsteemi kohta.
- IM
  Paigaldusjuhend annab tehnikutele vajalikku teavet seadme ohutu paigaldamise kohta.
- MM
  Hooldusjuhend annab tehnikutele teavet seadme hoolduse kohta.
- OM
  Kasutusjuhend annab operaatorile teavet seadme käsitsemise ja kasutamise kohta enne tootmist, selle ajal ja pärast seda.
- SPC
  Varuosade kataloog annab vajalikku teavet Tetra Pakilt varuosade tellimiseks
- TeM
  Tehniline juhend
  - annab tehnikutele vajalikku teavet seadme ohutuks paigaldamiseks
  - annab tehnikutele teavet seadme hooldamise kohta
  - annab tehnikutele teavet masina/seadme elektrisüsteemi kohta
  - annab vajalikku teavet Tetra Pakilt varuosade tellimiseks.





### Lehekülje kujundus

Vt joonist (A) lk i-5: Varuosade kataloogi põhilehtedeks on jooniste lehekülg (1) ja vastav loeteluleht (7). Lehekülje number (5) on toodud joonistelehe päises ja loetelulehe jaluses. Dokumendi number (6) on toodud loetelulehe jaluses.

### Lehekülje nummerdus

Vt joonist (A) lk i-5: Lehekülje number (5) koosneb kolmest osast:

- peatüki number (2)
- järgneva lehekülje number (3) peatükis
- lehekülgede koguarv peatükis (4)

## Sissejuhatus masina kohta

### Tootja

Tootja nimi ja aadress on toodud kataloogi teisel lehel.

### Teenindus

Masina varuosade tellimiseks või masina kasutamisega seonduvate probleemide teatamiseks võtke ühendust lähima Tetra Pak kontoriga.

Seadme ja dokumendiga seonduvate küsimuste, kommentaaride ja parandusettepanekute puhul võtke ühendust ettevõtte esindajaga.

## Identifikatsioon

### CE klassifikatsioon

Seade on kooskõlas Euroopa Majanduspiirkonna (EEA) tervishoiu- ja ohutusnõuetega.





### Masina andmeplaat

Joonisel (B) leheküljel i-5 on kujutatud masina andmeplaati. Masina andmeplaadi joonis ja selle asukoht seadmel on toodud seadmega kaasasoleva juhendi sissejuhatavas peatükis. Masina andmeplaadil on toodud allpool loetletud andmed, mida vajate antud konkreetse seadmega seoses Tetra Paki poole pöördudes.

- Masina tüüp (8)
- Maht (9)
- Joonisspetsifikatsioonid (10)
- Masina seerianumber (11)
- Tootja (12)
- CE tähis (13)
- Tootmisaasta (14)

Joonisel (C) leheküljel i-5 on kujutatud näide masina spetsifikatsioonist. Veenduge, et juhendi esimestel lehekülgedel toodud andmed seadme kohta vastavad masina andmesildil olevatele andmetele ja masina spetsifikatsioonile.

## Kuidas varuosade kataloogi kasutada

### Leidke varuosa number

a) Vt joonist (D) lk i-5: Leidke peatükk, mille number (15) on toodud selle põhirühma juures, mis sisaldab otsitavat varuosa.

Punktid b) ja c) viitavad joonisele (E) lk i-6.

b) Põhirühma joonisel leidke masina alamrühm (17), mis sisaldab otsitavat osa või alamrühma. Leidke positsiooninumber (18) ja avage joonisele järgnev loeteluleht.

c) Leidke positsiooninumber/viite tähis (16) või alamgrupi nimetus (19). Avage parempoolses veerus loetletud vastav lehekülje number (20). Tetra Pak on valinud viite tähise puhul alatiseks kasutamiseks funktsioonile suunatud struktuuri. Funktsioonile suunatud struktuuri prefiks (=) pole viite tähises näidatud.

Punktid d) ja e) viitavad jooniselerefer (F) lk i-6.

d) Leidke otsitav osa (21) alamrühma joonisel ja seejärel osa positsioonnumber.

e) Osa number (29) ja osa kirjeldus (30) on toodud loetelulehel positsioonnumbri kõrval.





### Varuosade kataloogis toodud teave

Allpool toodud loetelui viitab joonisele (F) lk i-6. Varuosade kataloog sisaldab järgmist teavet seadme rühmade, alamrühmade ja varuosade kohta:

- Rühmastruktuuri viide (22). Märgib seadme loetelu struktuuris järgmist kõrgemat rühma.
- Rühma nimetus (23)
- Mõõtühik (25)
- Kogus (26)
- Koostejoonise number (27)
- Loetelu lehekülgede vahemik (28). Kaasatud kui rühma joonised või loetelu on toodud mitmel lehel.
- Osa või alamrühma number (29)
- Alamrühma nimetus või osa kirjeldus (30)
- Rühma number (31)
- Seadme number (32)
- Rühma teabe pealkiri (33). Näitab, kas pealkirja all toodud jaotis on konkreetse masinavariandi kohta või on tegemist tavaliste varuosade loeteluga. Kui loetelus on toodud rohkem kui üks variant ja iga variandi jaoks on oma koostejoonis, esitatakse viide selle variandi koostejoonise leheküljele.
- Siseteave (34)

# Johdanto

## Tietoja käsikirjasta

Tetra Pak suosittelee kaikkien toimitettavien oppaiden lukemista huolellisesti. Varmista, että toimitetut oppaat ovat laitetta käyttävän tai huoltavan henkilökunnan saatavilla.

Tämä luettelo on säilytettävä laitteen käyttöiän ajan ja toimitettava edelleen mahdolliselle seuraavalle omistajalle tai käyttäjälle.

Tetra Pak ei vastaa laitevaurioista, jotka aiheutuvat laitteen mukana tulevissa oppaissa annettujen ohjeiden noudattamatta jättämisestä.

### Toimitettavat ohjeet

Tämän laitteen mukana toimitettaviin ohjeisiin kuuluvat:

- CM
  Muunnoskirjassa on teknikoille tarkoitettuja ohjeita laitteiston muuttamisesta eri tuotantotiloihin.
- EM
  Sähkökirjassa on teknikoille tarkoitettuja tietoja laitteen sähköjärjestelmästä.
- IM
  Asennuskäsikirjassa on teknikoille tarkoitettuja tietoja, jotka tarvitaan laitteen turvallista asentamista varten.
- MM
  Huoltokäsikirjassa on teknikoille tarkoitettuja tietoja tämän laitteen huoltamisesta.
- OM
  Käyttäjän käsikirjassa on käyttäjälle tarkoitettuja tietoja laitteen käsittelystä ja käyttämisestä ennen tuotantoa, tuotannon aikana ja sen jälkeen.
- SPC
  Varaosaluettelossa on tietoja, joita tarvitaan varaosien tilaamiseen Tetra Pakilta.
- TeM
  Tekninen käsikirja
  - sisältää teknikoille tarkoitettuja tietoja, joita tarvitaan laitteen turvallista asentamista varten
  - sisältää teknikoille tarkoitettuja tietoja laitteen huoltamisesta
  - sisältää teknikoille tarkoitettuja tietoja koneen/laitteen sähköjärjestelmästä
  - sisältää tietoja, joita tarvitaan varaosien tilaamiseen Tetra Pakilta.





### Sivujen asettelu

Katso kuva (A) sivulla i-5: Varaosaluettelon pääsivut koostuvat kuvasivusta (1) ja sitä vastaavasta luettelosivusta (7). Sivunumero (5) näytetään kuvasivun ylätunnisteessa ja luettelosivun alatunnisteessa. Asiakirjan numero (6) näytetään luettelosivun alatunnisteessa.

### Sivunumerointi

Katso kuva (A) sivulla i-5: Sivunumerossa (5) on kolme osaa:

- luvun numero (2)
- perättäinen sivunumero (3) luvun sisällä
- luvun kokonaissivumäärä (4).

## Koneen esittely

### Valmistaja

Valmistajan nimi ja osoite on ilmoitettu tämän luettelon toisella sivulla.

### Huolto

Jos haluat tilata tähän koneeseen varaosia tai jos tämän koneen käytössä ilmenee ongelmia, jotka haluat raportoida, ota yhteyttä lähimpään Tetra Pakin toimistoon.

Jos sinulla on muuta kysyttävää, huomautettavaa tai ehdotuksia ja sen asiakirjoja koskevista parannuksista, ota yhteys yhteyshenkilöön.

## Tunnistetiedot

### CE-luokitus

Tämä laite vastaa Euroopan talousalueen (ETA) terveyttä ja turvallisuutta koskevia perusvaatimuksia.





### Koneen tyyppikilpi

Kuvassa (B) sivulla i-5 on esimerkki koneen tyyppikilvestä. Voimassa olevan tyyppikilven kuva ja sen sijainti koneessa käy ilmi laitteiston mukana tulleiden ohjeiden Johdanto-luvusta. Tyyppikilvessä on tarvitsemasi Tetra Pakin voimassa olevat yhteystiedot, kun on kyseessä tämä nimenomainen laite.

- Konetyyppi (8)
- Tilavuus (9)
- Piirustuserittely (10)
- Koneen sarjanumero (11)
- Valmistaja (12)
- CE-merkki (13)
- Valmistusvuosi (14)

Kuvassa (C) sivulla i-5 on esimerkki koneen erittelystä. Varmista, että tämän ohjeen etusivuilla ilmoitetut laitetiedot vastaavat tyyppikilven ja kone-erittelyn tietoja.

## Tämän varaosaluettelon käyttäminen

### Etsi varaosan numero

a) Katso kuva (D) sivulla i-5: Siirry lukuun (15), joka on ilmoitettu etsittävän osan pääryhmän vieressä.

Kohdat b) ja c) viittaavat kuvaan (E) sivulla i-6.

b) Etsi pääryhmän kuvasta koneen alaryhmä (17), joka sisältää etsimäsi osan tai alaryhmän. Merkitse muistiin paikkanumero (18) ja siirry luettelosivulle, joka seuraa kuvaa.

c) Etsi paikkanumero (16) tai alaryhmän nimi (19). Siirry vastaavalle sivunumerolle (20), joka on ilmoitettu oikeassa sarakkeessa. Tetra Pak on päättänyt aina noudattaa toimintoperusteista rakennetta viitemerkinnöissä. Viitemerkinnässä ei esitetä toimintoperusteisen rakenteen osoittavaa etuliitettä (=).

Kohdat d) ja e) viittaavat kuvaan (F) sivulla i-6.

d) Hae etsittävä osa (21) alaryhmän kuvasta ja merkitse osan paikkanumero muistiin.

e) Osanumero (29) ja osan kuvaus (30) on annettu paikkanumeron vieressä luettelosivulla.





### Varaosaluettelossa olevat tiedot

Alla oleva luettelo viittaa kuvaan (F) sivulla i-6. Varaosaluettelo sisältää seuraavat tiedot ryhmistä, alaryhmistä ja laitteen varaosista:

- Ryhmärakenneviite (22). Osoittaa seuraavaksi ylemmän ryhmän laiteluettelorakenteessa.
- Ryhmän nimi (23)
- Mittayksikkö (25)
- Määrä (26)
- Kokoonpanopiirustuksen numero (27)
- Luettelon sivualue (28). Tämä on mukana, jos ryhmäkuvassa tai luettelossa on useita sivuja.
- Osan tai alaryhmän numero (29)
- Alaryhmän nimi tai osan kuvaus (30)
- Ryhmän numero (31)
- Laitteen numero (32)
- Ryhmätietojen otsikko (33). Osoittaa, koskeeko alla oleva osio tiettyä koneversiota vai onko kyseessä yhteisten osien luettelo. Jos luettelolla on useampi kuin yksi versio ja kullakin versiolla on oma kokoonpanopiirustuksensa, näytetään version kokoonpanopiirustuksen sivuviittaus.
- Sisäiset tiedot (34)

# Introduction

## Informations sur ce manuel

Tetra Pak recommande de lire attentivement tous les manuels remis. S'assurer que ceux-ci sont accessibles au personnel d'exploitation et de maintenance de l'équipement.

Il est important de conserver ce catalogue pendant la durée de vie de l'équipement et de le transmettre à tout détenteur ou à tout utilisateur ultérieur de l'équipement.

Tetra Pak ne pourra être tenu responsable d'aucun dommage causé à l'équipement suite au non respect des instructions fournies dans les manuels remis avec cet équipement.

### Manuels remis

Les manuels remis avec cet équipement peuvent comprendre

- CM
  Le Manuel de Conversion contient les informations destinées aux techniciens pour la conversion de l'équipement en vue des différents modes de production.
- EM
  Le Manuel Electrique fournit aux techniciens des informations sur le système électrique de l'équipement.
- IM
  Le Manuel d'Installation fournit les informations nécessaires aux techniciens pour installer l'équipement en toute sécurité.
- MM
  Le Manuel d'Entretien contient les informations nécessaires aux techniciens pour la maintenance de l'équipement.
- OM
  Le Manuel d'Utilisation fournit à l'opérateur les informations nécessaires à la manutention et à l'exploitation de l'équipement, avant, pendant et après la production.
- SPC
  Le Catalogue des Pièces de Rechange contient les informations permettant de commander des pièces de rechange auprès de Tetra Pak
- TeM
  Le Manuel Technique
  - contient les informations nécessaires aux techniciens pour installer l'équipement en toute sécurité.
  - contient les informations nécessaires aux techniciens pour la maintenance de l'équipement.
  - fournit aux techniciens des informations sur le système électrique de la machine/de l'équipement.
  - fournit les informations permettant de commander des pièces de rechange auprès de Tetra Pak.





### Mise en page

Reportez-vous au schéma (A) page i-5 : Dans un catalogue de Pièces de Rechange, les pages principales sont les pages de schémas (1) et les pages de listes correspondantes (7). Le numéro de page (5) est indiqué en en-tête sur une page de schéma et en bas de page sur une page de liste. Le numéro de document (6) est indiqué au bas d'une page de liste.

### Numérotation des pages

Reportez-vous au schéma (A) page i-5 : Un numéro de page (5) se compose de trois éléments :

- numéro du chapitre (2)
- numéro de page séquentiel à l'intérieur du chapitre (3)
- nombre total de pages du chapitre (4)

## Présentation de la machine

### Fabricant

Les nom et adresse du fabricant sont donnés en deuxième page de ce catalogue.

### Assistance technique

Pour commander des pièces de rechange pour cette machine ou signaler un problème lié à son fonctionnement, contactez l'agence Tetra Pak la plus proche.

Contactez le responsable de liaison pour tout autre renseignement, commentaire ou suggestion d'amélioration relatifs à l'équipement et à sa documentation.

## Identification

### Certification CE

Cet équipement est conforme aux réglementations essentielles en matière d'hygiène et de sécurité de l'Espace économique européen (EEE).





### Plaque signalétique de la machine

Le schéma (B) de la page i-5 reproduit un exemple de plaque signalétique de la machine.
Le chapitre Introduction des manuels remis avec cet équipement comprend une reproduction de la plaque signalétique valide de la machine et indique son emplacement sur l'équipement. La plaque comporte les caractéristiques indiquées ci-dessous, nécessaires pour prendre contact avec Tetra Pak à propos de cet équipement spécifique.

- Type de la machine (8)
- Volume (9)
- Caractéristiques schéma (10)
- Numéro de série de la machine (11)
- Fabricant (12)
- Marquage CE (13)
- Année de fabrication (14)

Le schéma (C) de la page i-5 reproduit un exemple de plaque signalétique de la machine. Assurez-vous que les données relatives à l'équipement qui se trouvent au début de ce manuel correspondent bien aux données figurant sur la plaque signalétique de la machine et à ses spécifications.

## Comment utiliser ce Catalogue des Pièces de Rechange

### Trouver un numéro de pièce de rechange

a) Reportez-vous au schéma (D) page i-5 : Allez au numéro de chapitre (15) indiqué à côté du groupe principal contenant la pièce que vous recherchez.

Les éléments b) et c) se rapportent au schéma (E) de la page i-6.

b) Sur le schéma du groupe principal, recherchez le sous-groupe de la machine (17) contenant la pièce ou le sous-groupe que vous recherchez. Notez le numéro de position (18) et reportez-vous à la page de liste suivant le schéma.

c) Recherchez le numéro de position/la désignation de référence (16) ou le nom du sous-groupe (19). Allez au numéro de page correspondant (20) figurant dans la liste de la colonne de droite. Tetra Pak a pris le parti de toujours utiliser la structure de la fonction pour la désignation de la référence. Le préfixe indiquant la structure de la fonction (=) ne figure pas dans la désignation de la référence.

Les éléments d) et e) se rapportent au schéma (F) de la page i-6.

d) Repérez la pièce (21) que vous recherchez dans le schéma du sous-groupe et notez le numéro de position de la pièce.

e) Le numéro de la pièce (29) et sa description (30) figurent à côté du numéro de position sur la page de liste.





### Informations données dans un Catalogue de Pièces de Rechange

La liste ci-dessous se rapporte au schéma (F) de la page i-6. Un Catalogue de Pièces de Rechange contient les informations suivantes concernant les groupes, sous-groupes et pièces de rechange de l'équipement :

- Référence de structure de groupe (22). Indique le groupe immédiatement supérieur dans la structure de liste de l'équipement.
- Nom du groupe (23)
- Unité de mesure (25)
- Quantité (26)
- Numéro de plan de montage (27)
- Groupe de pages de liste (28). Indiqué si la liste ou l'illustration du groupe comporte plusieurs pages.
- Numéro de pièce ou de sous-groupe (29)
- Nom du sous-groupe ou description de la pièce (30)
- Numéro de groupe (31)
- Numéro de l'équipement (32)
- Titre information du groupe (33) Indique si la section en-dessous du titre est destinée à une variante spécifique de la machine ou s'il s'agit d'une liste de pièces communes. Si une liste comprend plus d'une variante et que chaque variante a son propre plan de montage, une référence de page est donnée pour le plan de montage de la variante.
- Information interne (34)

# Bevezetés

## Kézikönyvre vonatkozó információk

A Tetra Pak javasolja, hogy az összes kapott kézikönyvet gondosan olvassa el. Gondoskodjon róla, hogy a kézikönyvek a berendezést üzemeltető és karbantartó személyzet számára elérhetők legyenek.

Fontos, hogy megőrizzék ezt a katalógust a berendezés élettartama alatt, és átadják a következő tulajdonosoknak és felhasználóknak.

A Tetra Pak nem vállal felelősséget a berendezés semmilyen megrongálódása esetén, ha nem követték a berendezéshez tartozó kézikönyvekben leírt utasításokat.

### Szállított kézikönyvek

A berendezéssel szállított kézikönyvek az alábbiak lehetnek

- CM
  Az Átállási kézikönyv a műszaki szakemberek számára a berendezés különböző gyártási módjai közötti átállásra vonatkozó információkat tartalmaz.
- EM
  A Villamossági kézikönyv a berendezés elektronikai rendszerére vonatkozó információkat szolgáltat a műszaki szakemberek részére.
- IM
  Az Üzembe helyezési kézikönyv a berendezés biztonságos üzembe helyezésére vonatkozó információkat biztosít a technikai szakemberek részére.
- MM
  A Karbantartási kézikönyv a berendezés karbantartására vonatkozó információkat biztosít a technikai szakemberek részére.
- OM
  Az Üzemeltetési kézikönyv az üzemeltető személyzetnek szolgáltat a berendezés kezelésére és üzemeltetésére, a feldolgozás előtti, közbeni és utáni teendőkre vonatkozó információkat.
- SPC
  A Tartalékalkatrész-katalógus információt biztosít a pótalkatrészek Tetra Pak-tól történő megrendeléséhez.
- TeM
  A Technikai kézikönyv
  – a berendezés biztonságos üzembe helyezésére vonatkozó információkat biztosít a technikai szakemberek részére.
  – a berendezés karbantartására vonatkozó információkat biztosít a technikai szakemberek részére.
  – a gép/berendezés elektromos rendszerére vonatkotó információkat szolgáltat a technikai szakemberek számára.
  – információkat biztosít a pótalkatrészek Tetra Pak-tól történő megrendeléséhez.





### Oldalelrendezés

Tekintse meg az i-5 oldalon lévő (A) ábrát: A Tartalékalkatrész-katalógus főoldalai egy rajzoldalból (1) és egy hozzá tartozó listaoldalból (7) állnak. Az oldalszám (5) a rajzoldal fejlécében és a listaoldal láblécében látható. A dokumentum száma (6) a listaoldal láblécében jelenik meg.

### Oldalszámozás

Tekintse meg az i-5 oldalon lévő (A) ábrát: Az oldalszám (5) három részből áll:

- fejezetszám (2)
- folyamatos oldalszám (3) a fejezeten belül
- összes oldalszám (4) a fejezeten belül.

## Bevezetés

### Gyártó

A gyártó neve és címe a katalógus második oldalán található.

### Szerviz

A gép valamely pótalkatrészének megrendelése vagy a berendezés működésével kapcsolatos zavarok bejelentése végett forduljon a legközelebbi Tetra Pak képviselethez.

Bármilyen más, a berendezésre illetve a dokumentációra vonatkozó kérdéseivel, megjegyzéseivel vagy javaslataival forduljon területi képviselőjéhez.

## Azonosítás

### CE besorolás

Ez a berendezés megfelel az Európai Gazdasági Régió (EEA) alapvető egészségügyi és biztonsági előírásainak.





### Gépcímke

A(z) i-5 oldalon található (B) ábra a gépcímke egy példáját mutatja be. Egy érvényes gépcímkét és megfelelő elhelyezését ábrázoló rajz látható a berendezéssel szállított kézikönyv Bevezetés fejezetében. A gépcímke azokat az alább felsorolt adatokat tartalmazza, amelyek a Tetra Pak-kal történő, a berendezésre vonatkozó kommunikációhoz szükségesek.

- Géptípus (8)
- Térfogat (9)
- Tervrajzok (10)
- A gép sorozatszáma (11)
- Gyártó (12)
- CE jelzés (13)
- Gyártási év (14)

A(z) i-5 oldalon található (C) ábra a gép műszaki specifikációjának egy példáját mutatja be. Győződjön meg róla, hogy a kézikönyv első lapjain közölt berendezésadatok megegyeznek a gép adattábláján és a gép műszaki leírásában megjelenő információkkal.

## A Tartalékalkatrész-katalógus használata

### A tartalékalkatrész számának kikeresése

a) Tekintse meg a(z) i-5 oldalon lévő (D) ábrát: Lapozzon a keresett alkatrészt tartalmazó főcsoport mellett feltüntetett (15) számú fejezetre.

A b) és c) elemek az i-6 oldalon található ábrára vonatkoznak.

b) A főcsoport-ábrán keresse meg azt az alcsoportot (17), amelyik a keresett alkatrészt vagy alcsoportot tartalmazza. Jegyezze meg a pozíciószámot (18), majd lapozzon az ábrát követő listaoldalra.

c) Keresse meg a lejegyzett pozíciószámot/hivatkozási megjelölést (16) vagy a keresett alcsoport nevét (19). Lapozzon a jobb oldali oszlopban feltüntetett számú (20) oldalra. A Tetra Pak a hivatkozási jelöléseket mindig funkció-orientált struktúra alapján végzi el. Az előtaggal jelölt funkció-orientált struktúra (=) nem jelenik meg a hivatkozási jelölésben.

A d) és e) elemek az i-6 oldalon található (F) ábrára vonatkoznak.

d) Az alcsoport ábrán keresse meg a kívánt alkatrészt (21), és jegyezze meg az alkatrész pozíciószámát.

e) Az alkatrész száma (29) és leírása (30) a listaoldalon, a pozíciószám mellett látható.





### A Tartalékalkatrész-katalógusban megtalálható információk

Az alábbi lista az i-6 oldalon található (F) ábrára vonatkozik.
A Tartalékalkatrész-katalógus a következő, csoportokra, alcsoportokra és pótalkatrészekre vonatkozó adatokat tartalmazza:

- Csoportstruktúra-hivatkozás (22). A berendezés listás struktúrájában közvetlenül az aktuális csoport fölött álló csoportot jelöli.
- Csoportnév (23)
- Mértékegység (25)
- Mennyiség (26)
- Összeszerelési rajzszám (27)
- Lista oldaltartománya (28). Abban az esetben jelenik meg, ha a csoport ábrája vagy listája többoldalas.
- Alkatrész vagy alcsoport száma (29)
- Alcsoport neve vagy alkatrész leírása (30)
- Csoportszám (31)
- Berendezésszám (32)
- Csoportinformáció fejléce (33). Azt mutatja, hogy a fejléc után következő rész egy speciális gépváltozatra vonatkozik vagy az általános pótalkatrészek listája. Ha a listának több változata van, és mindegyikhez saját összeszerelési rajz tartozik, az illető összeszerelési rajz oldalhivatkozása is megjelenik.
- Belső információ (34)

# Inngangur

## Upplýsingar um handbók

Tetra Pak mælir með því að allar handbækur sem afhentar eru séu lesnar vandlega. Gætið þess að afhentar handbækur séu tiltækar fyrir starfsfólk sem vinnur við eða viðheldur tækjabúnaðinum.

Það er mikilvægt að halda upp á þennan vörulista allan líftíma tækjabúnaðarins og að láta síðari eiganda eða notanda hafa vörulistann.

Ekki er hægt að gera Tetra Pak ábyrgt fyrir neinum skemmdum sem verða á tækjabúnaðinum vegna þess að ekki er farið eftir leiðbeiningunum í þeim handbókum sem fylgja tækjabúnaðinum.

### Afhentar handbækur

Handbækur sem afhentar eru með þessum tækjabúnaði geta verið

- CM
  Breytingahandbók, sem veitir tæknimönnum upplýsingar um breytingar á tækjabúnaðinum milli mismunandi framleiðsluhama.
- EM
  Rafmagnshandbók, sem veitir tæknimönnum upplýsingar um rafkerfi tækjabúnaðarins.
- IM
  Uppsetningarhandbók, sem veitir tæknimönnum nauðsynlegar upplýsingar til að setja tækjabúnaðinn upp á öruggan hátt.
- MM
  Viðhaldshandbók, sem eitir tæknimönnum upplýsingar um viðhald tækjabúnaðarins.
- OM
  Notkunarhandbók, sem veitir stjórnandanum upplýsingar um meðhöndlun og notkun tækjabúnaðarins, fyrir, eftir og meðan á framleiðslu stendur.
- SPC
  Varahlutavörulisti, sem veitir nauðsynlegar upplýsingar til pöntunar varahluta frá Tetra Pak.
- TeM
  Tæknihandbók
  - sem veitir tæknimönnum nauðsynlegar upplýsingar til að setja tækjabúnaðinn upp á öruggan hátt
  - sem veitir tæknimönnum upplýsingar um viðhald tækjabúnaðarins
  - sem veitir tæknimönnum upplýsingar um rafkerfi vélarinnar/ tækjabúnaðarins
  - sem veitir nauðsynlegar upplýsingar til pöntunar varahluta frá Tetra Pak.





### Umbrot

Sjá skýringarmynd (A) á síðu i-5: Aðalsíðurnar í Varahlutavörulistanum samanstanda af skýringarsíðu (1) og samsvarandi listasíðu (7). Síðunúmerið (5) er sýnt í haus síðunnar með skýringarmyndinni og í fæti listasíðunnar. Skjalnúmerið (6) er sýnt í fæti listasíðunnar.

### Númerun síðu

Sjá skýringarmynd (A) á síðu i-5: Síðunúmer (5) er í þremur hlutum:

- kaflanúmer (2)
- samfellt síðunúmer innan kaflans (3)
- heildarfjölda blaðsíðna í kaflanum (4)

## Kynning á vél

### Framleiðandi

Fyrir nafn og heimilisfang framleiðanda, sjá síðu tvö í þessum vörulista.

### Þjónusta

Til að panta varahluti fyrir þessa vél, eða til að tilkynna vandamál sem tengjast notkun þessarar vélar, skal hafa samband við næstu Tetra Pak skrifstofu.

Hafðu samband við Samskiptatengsl með aðrar fyrirspurnir, athugasemdir eða uppástungur varðandi tækjabúnaðinn og fylgiskjöl hans.

## Kennsl

### CE flokkun

Þessi tækjabúnaður er í samræmi við grundvallar heilbrigðis- og öryggisreglugerðir á Evrópska efnahags svæðinu (EES).





### Nafnplata

Skýringarmynd (B) á síðu i-5 sýnir dæmi um nafnplötu.
Skýringarmynd af gildri nafnplötu og staðsetningu hennar á tækjabúnaðinum er sýnd í Inngangskafla handbókanna sem afhentar eru með þessum tækjabúnaði. Á nafnplötunni eru upplýsingarnar sem taldar eru upp hér að neðan, sem þörf er á þegar haft er samband við Tetra Pak varðandi þennan tiltekna tækjabúnað.

- Vélartegund (8)
- Fjöldi (9)
- Teikniupplýsingar (10)
- Raðnúmer vélar (11)
- Framleiðandi (12)
- CE merki (13)
- Framleiðsluár (14)

Skýringarmynd (C) á síðu i-5 sýnir dæmi um tæknilýsingu vélar. Gættu þess að upplýsingar um tækjabúnað sem talinn er upp á fremstu síðum þessarar handbóka samsvari upplýsingum á nafnplötu og tæknilýsingu vélar.

## Hvernig nota á þennan Varahlutavörulista

### Finndu varahlutarnúmer

a) Sjá skýringarmynd (D) á síðu i-5: Farðu í kaflanúmerið (15) sem gefið er til kynna við hlið aðalflokksins sem inniheldur hlutinn sem þú vilt finna.

Atriði b) og c) vísa til skýringarmyndar (E) á síðu i-6:

b) Á skýringarmynd aðalflokksins skaltu leita að undirflokki (17) vélarinnar, sem inniheldur hlutinn eða undirflokkinn sem þú ert að leita að. Taktu eftir stöðunúmerinu (18) og farðu á listasíðuna sem fylgir skýringarmyndinni.

c) Leitaðu að stöðunúmeri/tilvísunartitli (16) eða heiti undirflokksins (19). Farðu á samsvarandi síðunúmer (20) sem sýnt er í hægri dálkinum. Tetra Pak hefur kosið að nota alltaf sérhæfða skipan fyrir tilvísunartitla. Forskeytið sem gefur til kynna sérhæfða skipan (=) er ekki sýnt í tilvísunartitlinum.

Atriði d) og e) vísa til skýringarmyndar (F) á síðu i-6:

d) Finndu hlutinn (21) sem þú ert að leita að á undirflokksskýringarmyndinni og taktu eftir stöðunúmeri hlutarins.

e) Hlutarnúmerið (29) og lýsing hlutar (30) eru skráð hjá stöðunúmerinu á listasíðunni.





### Upplýsingar skráðar í Varahlutavörulista

Listinn að neðan vísar til skýringarmyndar (F) á síðu i-6: Varahlutavörulisti inniheldur eftirfarandi upplýsingar um flokka, undirflokka og varahluti fyrir tækjabúnaðinn:

- Tilvísun flokkaskipunar (22). Gefur til kynna næsta flokk fyrir ofan í listaskipan tækjabúnaðarins.
- Heiti flokks (23)
- Mælieining (25)
- Magn (26)
- Númer samsetningarteikningar (27)
- Röð listasíðu (28). Fylgir með ef það eru margar blaðsíður í skýringarmynd eða lista flokksins.
- Númer hlutar eða undirflokks (29)
- Heiti undirflokks eða lýsing hlutar (30)
- Númer flokks (31)
- Númer tækjabúnaðar (32)
- Fyrirsögn flokkaskipunar (33). Gefur til kynna ef kaflinn fyrir neðan fyrirsögnina er fyrir sérstakt afbrigði vélar eða ef hann er listi yfir algenga hluti. Ef listi er með meira en eitt afbrigði og hvert afbrigði á sína eigin samsetningarteikningu, er sýnd blaðsíðutilvísun til samsetningarteikningar afbrigðisins.
- Innri upplýsingar (34)

# Introduzione

## Informazioni sul manuale

Tetra Pak consiglia di leggere con attenzione tutti i manuali forniti in dotazione. Assicurarsi che tutti i manuali in dotazione siano disponibili per il personale addetto al funzionamento o alla manutenzione della macchina.

È importante conservare il presente catalogo per tutta la durata della macchina e consegnarlo al successivo proprietario o utilizzatore.

Tetra Pak non sarà da ritenersi responsabile per eventuali danni alla macchina causati dal mancato rispetto delle istruzioni fornite nei manuali che accompagnano questa macchina.

### Manuali in dotazione

I manuali consegnati con la presente macchina possono comprendere:

- CM (Manuale di conversione)
  Questo manuale fornisce ai tecnici le informazioni necessarie per la conversione della macchina da una modalità di produzione a un'altra.
- EM (Manuale elettrico)
  Questo manuale fornisce ai tecnici informazioni sull'impianto elettrico della macchina.
- IM (Manuale d'installazione)
  Questo manuale fornisce ai tecnici le informazioni necessarie per installare in sicurezza la macchina.
- MM (Manuale di manutenzione)
  Questo manuale fornisce ai tecnici le informazioni sulla manutenzione della macchina.
- OM (Manuale operativo)
  Questo manuale fornisce all'operatore le informazioni sull'utilizzo e il funzionamento della macchina prima, durante e dopo la produzione.
- SPC (Catalogo dei pezzi di ricambio)
  Questo catalogo fornisce le informazioni necessarie per ordinare i pezzi di ricambio a Tetra Pak.
- TeM (Manuale tecnico)
  Questo manuale:
  - fornisce ai tecnici le informazioni necessarie per installare in sicurezza la macchina
  - fornisce ai tecnici le informazioni sulla manutenzione della macchina
  - fornisce ai tecnici informazioni sull'impianto elettrico della macchina
  - fornisce le informazioni necessarie per ordinare i pezzi di ricambio a Tetra Pak.





### Schema delle pagine

Consultare la figura (A) a pagina i-5: Le pagine principali di un Catalogo dei pezzi di ricambio sono costituite da una pagina con la figura (1) e una pagina elenco corrispondente (7). Il numero di pagina (5) è indicato nell'intestazione delle pagine con le figure e nel piè di pagina delle pagine elenco. Il codice del documento (6) è indicato nel piè di pagina delle pagine elenco.

### Numerazione delle pagine

Consultare la figura (A) a pagina i-5: Il numero di pagina (5) è suddiviso in tre parti:

- numero del capitolo (2)
- numero progressivo di pagina all'interno del capitolo (3)
- numero totale di pagine nel capitolo (4)

## Introduzione alla macchina

### Fabbricante

Il nome e l'indirizzo del fabbricante sono riportati sulla seconda pagina del presente catalogo.

### Assistenza

Per ordinare i pezzi di ricambio per questa macchina oppure per riferire problemi associati al funzionamento della macchina, contattare l'ufficio Tetra Pak più vicino.

Per tutte le altre richieste, commenti o suggerimenti per eventuali miglioramenti da apportare alla macchina e alla relativa documentazione, contattare il responsabile di collegamento.

## Identificazione

### Classificazione CE

Questa macchina è conforme alle principali norme sanitarie e di sicurezza dell'Area Economica Europea (EEA).





### Targhetta della macchina

La figura (B) a pagina i-5 mostra un esempio di targhetta della macchina. Il capitolo Introduzione di tutti i manuali consegnati con la presente macchina contiene invece la figura della targhetta della macchina valida e la sua posizione sulla macchina. La targhetta riporta i dati elencati qui sotto, che sono necessari per contattare Tetra Pak in relazione a questa macchina specifica.

- Tipo di macchina (8)
- Volume (9)
- Specifiche disegno (10)
- Numero di matricola della macchina (11)
- Fabbricante (12)
- Marchio CE (13)
- Anno di fabbricazione (14)

La figura (C) a pagina i-5 mostra un esempio delle specifiche di una macchina. Verificare che i dati relativi alla macchina elencati nelle pagine iniziali del presente manuale corrispondano ai dati riportati sulla targhetta della macchina e nelle specifiche della macchina.

## Come usare questo Catalogo dei pezzi di ricambio

### Individuare il numero del pezzo di ricambio

a) Consultare la figura (D) a pagina i-5: andare al numero del capitolo (15) indicato accanto al gruppo principale che contiene il pezzo che si desidera individuare.

I punti b) e c) fanno riferimento alla figura (E) a pagina i-6.

b) Nella figura del gruppo principale, identificare il sottogruppo della macchina (17) che contiene il pezzo o il sottogruppo cercato. Annotare il numero di posizione (18) e andare alla pagina elenco che segue la figura.

c) Identificare il numero di posizione/l'indicazione di riferimento (16) o il nome del sottogruppo (19). Andare al numero di pagina corrispondente (20) indicato nella colonna di destra. Per le indicazioni di riferimento, Tetra Pak ha scelto di usare sempre la struttura "function-oriented". Il prefisso che indica la struttura "function-oriented" (=) non è mostrato nell'indicazione di riferimento.

I punti d) e e) fanno riferimento alla figura (F) a pagina i-6.

d) Individuare il pezzo (21) cercato sulla figura del sottogruppo e annotare il numero di posizione del pezzo.

e) Il numero del pezzo (29) e la descrizione del pezzo (30) sono indicati accanto al numero di posizione sulla pagina elenco.





### Informazioni contenute nel Catalogo dei pezzi di ricambio

L'elenco seguente fa riferimento alla figura (F) a pagina i-6. Il Catalogo dei pezzi di ricambio contiene le seguenti informazioni sui gruppi, i sottogruppi e i pezzi di ricambio della macchina:

- Riferimento struttura gruppo (22). Indica il gruppo superiore successivo nella struttura elenco della macchina.
- Nome gruppo (23)
- Unità di misura (25)
- Quantità (26)
- Numero disegno di assemblaggio (27)
- Intervallo delle pagine elenco (28). Questa informazione è presente se la figura o l'elenco relativi al gruppo occupano più di una pagina del manuale.
- Numero pezzo o sottogruppo (29)
- Nome sottogruppo o descrizione pezzo (30)
- Numero gruppo (31)
- Numero macchina (32)
- Intestazione informazioni gruppo (33). Indica se la sezione che segue l'intestazione si riferisce a una variante di macchina specifica oppure se si tratta di un elenco di parti comuni. Se un elenco contiene più di una variante ed esiste un disegno di assemblaggio specifico per ogni variante, viene fornito il riferimento alla pagina in cui è mostrato il disegno di assemblaggio relativo alla variante.
- Informazioni interne (34)

# Įvadas

## Informacija apie instrukciją

"Tetra Pak" rekomenduoja atidžiai perskaityti visas pateiktas instrukcijas. Pasirūpinkite, kad instrukcijos būtų prieinamos darbuotojams, kurie eksploatuoja arba prižiūri įrangą.

Svarbu šį katalogą išsaugoti visą įrangos tarnavimo laiką ir perduoti jį kitam įrangos savininkui arba naudotojui.

"Tetra Pak" neprisiima atsakomybės už įrangos sugadinimą, jei nesilaikoma nurodymų, pateiktų prie šios įrangos pridedamuose kataloguose.

### Pateikiamos instrukcijos

Su šia įranga pateikiamose instrukcijose gali būti

- CM
  Transformacijos instrukcija, suteikianti technikams informaciją apie įrangos transformavimą skirtingiems gamybos režimams.
- EM
  Elektrinės dalies instrukcija, suteikianti technikams informaciją apie įrangos elektros sistemą.
- IM
  Įrengimo instrukcija, suteikianti technikams informaciją, reikalingą norint saugiai sumontuoti įrangą.
- MM
  Techninės priežiūros instrukcija, suteikianti technikams informaciją apie įrangos priežiūrą.
- OM
  Eksploatavimo instrukcijos paskirtis yra suteikti informaciją operatoriui, kaip naudoti ir valdyti įrangą prieš gamybos procesą, jo metu ir po jo.
- SPC
  Atsarginių dalių katalogas, kuriame yra informacija, reikalinga atsarginėms dalims iš "Tetra Pak" užsakyti
- TeM
  Techninė instrukcija
  – suteikia technikams informaciją, reikalingą saugiai sumontuoti įrangą
  – suteikia technikams informaciją apie įrangos priežiūrą
  – suteikia technikams informaciją apie įrangos elektros sistemą
  – suteikia informaciją, reikalingą užsakyti iš "Tetra Pak" atsargines dalis





### Puslapių išdėstymas

Žr. paveikslėlį (A) puslapyje i-5. Pagrindiniai atsarginių dalių katalogo puslapiai sudaryti iš paveikslėlio puslapio (1) ir atitinkamo sąrašo puslapio (7). Puslapio numeris (5) nurodomas paveikslėlio puslapio viršuje ir sąrašo puslapio apačioje. Dokumento numeris (6) nurodomas sąrašo puslapio apačioje.

### Puslapių numeravimas

Žr. iliustraciją (A) puslapyje i-5. Puslapio numerį (5) sudaro trys dalys:

- skyriaus numeris (2)
- puslapio eilės numeris (3) skyriuje
- bendras puslapių skaičius (4) skyriuje

## Įrenginio pristatymas

### Gamintojas

Gamintojo pavadinimas ir adresas pateikti antrajame šio katalogo puslapyje.

### Aptarnavimas

Jei reikia šiai įrangai užsakyti atsarginių dalių arba pranešti apie jos eksploatavimo nesklandumus, kreipkitės į artimiausią "Tetra Pak" biurą.

Su kitais klausimais, pastabomis ar įrangos ir jos dokumentacijos tobulinimo pasiūlymais kreipkitės į savo kontaktinį asmenį.

## Identifikavimas

### CE klasifikacija

Šis įrenginys atitinka esminius Europos ekonominės erdvės (EEE) sveikatos ir saugumo reikalavimus.





### Vardinė plokštelė

Puslapyje i-5 pateiktame paveikslėlyje (B) parodytas įrangos vardinės plokštelės pavyzdys.
Atitinkamos įrangos vardinė plokštelė ir jos vieta ant įrangos parodoma su šia įranga pateikiamų instrukcijų įvade. Įrangos vardinėje plokštelėje pateikiami žemiau nurodyti duomenys, kurie reikalingi kreipiantis į "Tetra Pak" dėl konkretaus įrenginio.

- Mašinos tipas (8)
- Tomas (9)
- Brėžinių specifikacijos (10)
- Įrangos serijos numeris (11)
- Gamintojas (12)
- CE ženklas (13)
- Pagaminimo metai (14)

Paveikslėlyje (C) puslapyje i-5 parodytas įrangos specifikacijos pavyzdys. Patikrinkite, ar šios instrukcijos pirmuosiuose puslapiuose nurodyti duomenys atitinka duomenis vardinėje plokštelėje ir įrangos specifikaciją.

## Kaip naudotis atsarginių dalių katalogu

### Atsarginės dalies numerio suradimas

a) Žr. iliustraciją (D) puslapyje i-5. Atsiverskite skyrių (15), nurodytą šalia pagrindinio mazgo, kuriame yra jūsų ieškoma dalis.

Punktai b) ir c) atitinka paveikslėlį (E) puslapyje i-6.

b) Pagrindinio mazgo paveikslėlyje suraskite smulkesnį įrangos mazgą (17), kuriame yra jūsų ieškoma dalis arba mazgas. Pasižiūrėkite pozicijos numerį (18) ir suraskite jį toliau pateiktame sąraše.

c) Suraskite pozicijos numerį/pavadinimą (16) arba smulkesnio mazgo pavadinimą (19). Atsiverskite dešiniajame stulpelyje nurodytą puslapį (20). "Tetra Pak" nusprendė pavadinimuose visada naudoti paskirtį atitinkančią struktūrą. Pavadinimuose nepateikiamas paskirtį atitinkančios struktūros prefiksas (=).

Punktai d) ir e) atitinka paveikslėlį (F) puslapyje i-6.

d) Suraskite ieškomą dalį (21) smulkesnio mazgo paveikslėlyje ir pasižiūrėkite dalies pozicijos numerį.

e) Dalies numeris (29) ir dalies aprašymas (30) sąrašo puslapyje nurodyti šalia pozicijos numerio.





### Atsarginių dalių kataloge pateikiama informacija

Žemiau pateiktas sąrašas atitinka paveikslėlį (F) puslapyje i-6. Atsarginių dalių kataloge apie įrangos mazgus, smulkesnius mazgus ir atsargines dalis pateikiama tokia informacija:

- Struktūrinė mazgo nuoroda (22). Nurodo stambesnį mazgą įrangos sąrašo struktūroje.
- Mazgo pavadinimas (23)
- Matavimo vienetai (25)
- Kiekis (26)
- Surinkimo brėžinio numeris (27)
- Sąrašo puslapių intervalas (28) Pateikiamas, jei mazgo paveikslėlis arba sąrašas užima kelis puslapius.
- Dalies arba smulkesnio mazgo numeris (29)
- Smulkesnio mazgo arba dalies aprašymas (30)
- Mazgo numeris (31)
- Įrangos numeris (32)
- Informacijos apie mazgą puslapio antraštė (33). Nurodo, ar po antrašte pateikta informacija yra specifinio įrangos varianto, ar tai paprastų dalių sąrašas. Jei yra daugiau kaip vienas sąrašo variantas ir kiekvienam variantui yra atskiras surinkimo brėžinys, nurodomas puslapis, kuriame pateiktas konkretaus varianto surinkimo brėžinys.
- Vidinė informacija (34)

# Ievads

## Informācija par rokasgrāmatu

Tetra Pak iesaka rūpīgi izlasīt visas piegādātās rokasgrāmatas. Jānodrošina, lai piegādātas rokasgrāmatas būtu pieejamas personālam, kas apkalpo iekārtas vai veic to apkopi.

Šo katalogu ir nepieciešams saglabāt visu laiku, kamēr iekārtas tiek izmantotas, un nodot katalogu nākamajam īpašniekam vai lietotājam.

Tetra Pak neatbild par jebkuriem iekārtas bojājumiem, kuri rodas līdz ar iekārtu piegādāto instrukciju neievērošanas rezultātā.

### Piegādātas rokasgrāmatas

Līdz ar iekārtu var tikt piegādātas šādas rokasgrāmatas

- CM
  Pārslēgšanas rokasgrāmata sniedz tehniķiem informāciju par iekārtas pārslēgšanu dažādos atšķirīgos ražošanas režīmos.
- EM
  Elektriskās instalācijas rokasgrāmata sniedz tehniķiem informāciju par iekārtas elektriskās instalācijas sistēmu.
- IM
  Uzstādīšanas rokasgrāmata sniedz tehniķiem informāciju, kas nepieciešama drošai iekārtas uzstādīšanai.
- MM
  Apkopes rokasgrāmata sniedz tehniķiem informāciju par iekārtas apkopi.
- OM
  Ekspluatācijas rokasgrāmata sniedz apkalpojošajam personālam informāciju par iekārtas apkalpošanu un ekspluatēšanu pirms darba sākuma, darba laikā un pēc darba beigām.
- SPC
  Rezerves daļu katalogs sniedz informāciju, kas nepieciešama, lai pasūtītu rezerves daļas no Tetra Pak
- TeM
  Tehniskā rokasgrāmata
  - sniedz tehniķiem informāciju, kas nepieciešama drošai iekārtas uzstādīšanai
  - sniedz tehniķiem informāciju par iekārtas apkopi
  - sniedz tehniķiem informāciju par mašīnas/iekārtas elektrisko instalāciju
  - sniedz informāciju, kas nepieciešama, lai pasūtītu rezerves daļas no Tetra Pak.





### Lappuses izkārtojums

Skatīt ilustrāciju (A) i-5 lappusē: Galvenās lappuses Rezerves daļu katalogā sastāv no ilustrāciju lapas (1) un atbilstīgās saraksta lapas (7). Lappuses numurs (5) ir norādīts ilustrāciju lapas galvenē un saraksta lapas kājenē. Dokumenta numurs (6) ir norādīts saraksta lapas kājenē.

### Lappušu numerācija

Skatīt ilustrāciju (A) lappusē i-5: Lappuses numurs (5) sastāv no trim daļām:

- nodaļas numura (2)
- secīga lappuses numura nodaļas ietvaros (3)
- kopējā lappušu skaita nodaļā (3)

## Iepazīstināšana ar iekārtu

### Ražotājs

Ražotāja nosaukumu un adresi skatīt šī kataloga otrajā lappusē.

### Serviss

Lai pasūtītu rezerves daļas šai mašīnai vai lai ziņotu par problēmām saistībā ar šīs mašīnas ekspluatāciju, sazinieties ar tuvāko Tetra Pak pārstāvniecību.

Ja Jums ir citi jautājumi, piezīmes vai ieteikumi par iekārtas un tās dokumentācijas uzlabošanu, tad lūdzam sazināties ar Sakaru biroju.

## Identifikācija

### EK klasifikācija

Šī iekārta atbilst galvenajām Eiropas Ekonomiskās Zonas (EEA) regulām, kuras attiecas uz veselību un drošību.





### Mašīnas tipa plāksnīte

Ilustrācijā (B) i-5 lappusē ir redzams mašīnas tipa plāksnītes paraugs. Aktuālās mašīnas tipa plāksnīte un tās atrašanās vieta uz iekārtas ir parādīta līdz ar šo iekārtu piegādāto rokasgrāmatu Ievada nodaļā. Mašīnas tipa plāksnīte ietver turpmāk uzskaitīto informāciju, kura ir nepieciešama, sazinoties ar Tetra Pak par šo konkrēto iekārtu.

- Mašīnas tips (8)
- Daudzums (9)
- Rasējuma specifikācijas (10)
- Mašīnas sērijas numurs (11)
- Ražotājs (12)
- CE apzīmējums (13)
- Izgatavošanas gads (14)

Ilustrācijā (C) lappusē i-5 ir parādīts mašīnas specifikācijas paraugs. Pārliecinieties, ka šīs rokasgrāmatas titullapās minētā informācija par iekārtu atbilst tai, kas norādīta uz mašīnas tipa plāksnītes un mašīnas specifikācijā.

## Rezerves daļu kataloga lietošana

### Vajadzīgās rezerves daļas numura atrašana

a) Skatiet ilustrāciju (D) lappusē i-5: Atrodiet nodaļas numuru (15), kas norādīts līdzās galvenajai grupai, kurā ietilpst Jūsu meklētā rezerves daļa.

Pozīcijas b) un c) skatiet ilustrāciju (E) lappusē i-6.

b) Galvenās grupas ilustrācijā atrodiet mašīnas apakšgrupu (17), kurā ietilpst Jūsu meklētā detaļa vai apakšgrupa. Atzīmējiet pozīcijas numuru (18) un pievērsieties saraksta lappusei, kura seko šai ilustrācijai.

c) Sameklējiet atbilstīgo pozīcijas numuru (16) vai apakšgrupas nosaukumu (19). Pievērsieties atbilstīgajam lappuses numuram (20), kas norādīts ailē pa labi. Tetra Pak norādes apzīmēšanai ir izvēlējies vienmēr izmantot uz funkciju orientētu struktūru. Priedēklis, kas norāda uz funkciju orientētu struktūru (=), norādes apzīmējumā nav parādīts.

Pozīcijas d) un e) skatiet ilustrāciju (F) lappusē i-6.

d) Atrodiet vajadzīgo rezerves daļu (21) apakšgrupas ilustrācijā un atzīmējiet šīs detaļas pozīcijas numuru.

e) Šīs detaļas numurs (29) un apraksts (30) atrodas saraksta lapā līdzās pozīcijas numuram.





### Rezerves daļu katalogā sniegtā informācija

Šis saraksts attiecas uz ilustrāciju (F) lappusē i-6. Rezerves daļu katalogs satur šādu informāciju par grupām, apakšgrupām un iekārtas rezerves daļām:

- Grupas struktūras norāde (22). Norāda nākamo augstāko grupu iekārtas saraksta struktūrā.
- Grupas nosaukums (23)
- Mērvienība (25)
- Skaits (26)
- Montāžas rasējuma numurs (27)
- Saraksta lappuses zona (28). Tiek izmantota tad, ja grupas ilustrācija vai saraksts ir uz vairākām lappusēm.
- Daļas vai apakšgrupas numurs (29)
- Apakšgrupas nosaukums vai daļas apraksts (30)
- Grupas numurs (31)
- Iekārtas numurs (32)
- Grupas informācijas iedaļas apzīmējums (33). Norāda, vai iedaļa zem šī apzīmējuma attiecas uz noteiktu mašīnas variantu, vai arī tas ir kopējo rezerves daļu saraksts. Ja sarakstam ir vairāk nekā viens variants un katram variantam ir savs montāžas rasējums, tad tiek dota atsauce uz lappusi, kur atrodams katra varianta montāžas rasējums.
- Iekšējā informācija (34)

# Inleiding

## Informatiehandboek

Tetra Pak adviseert alle meegeleverde handboeken zorgvuldig te lezen. Controleer of het bedienende of onderhoudspersoneel van de machine de beschikking heeft over de meegeleverde handboeken

Het is belangrijk deze catalogus tijdens de levensduur van de machine te bewaren en de catalogus door te geven aan iedere volgende eigenaar of gebruiker.

Tetra Pak stelt zich niet aansprakelijk voor eventuele schade aan de installatie als gevolg van het niet naleven van de instructies die in de meegeleverde handboeken worden gegeven.

### Meegeleverde handboeken

De bij deze installatie meegeleverde handboeken omvatten

- CM
  Het conversiehandboek geeft technici informatie met betrekking tot de ombouw van de installatie tussen verschillende productiemodi.
- EM
  Het elektriciteitshandboek informeerttechnici omtrent het elektrischesysteem van de installatie.
- IM
  Het installatiehandboek informeert technici hoe men de installatie op veilige wijze installeert.
- MM
  Het onderhoudshandboek geeft technici informatie over het onderhoud van de installatie.
- OM
  Het bedieningshandboek informeert de operator betreffende het omgaan met en het bedienen van de installatie voor, tijdens en na de productie.
- SPC
  De reserveonderdelencatalogus geeft de nodige informatie omtrent het bestellen van reserveonderdelen bij Tetra Pak
- TeM
  Het technische handboek
  - informeert technici hoe men de installatie op veilige wijze installeert
  - informeert technici omtrent het onderhoud van de installatie
  - informeert technici omtrent het elektrische systeem van de machine/ installatie
  - informeert over welke informatie men nodig heeft om reserveonderdelen bij Tetra Pak te bestellen.





### Pagina layout

Zie afbeelding (A) op pagina i-5: De belangrijkste bladzijden van een reserveonderdelencatalogus bestaan uit een bladzijde met afbeeldingen (1) en een bladzijde met een corresponderende lijst (7). Het bladzijde-nummer (5) is te vinden in de kop van een bladzijde met een afbeelding en in de voetnoot van een lijstbladzijde. Het documentennummer (6) is te vinden in de voetnoot van een lijstbladzijde.

### Bladzijdenummering

Zie afbeelding (A) op pagina: i-5: Een bladzijdenummer (5) bestaat uit drie delen:

- hoofdstuknummer (2)
- opeenvolgend bladzijdenummer in het hoofdstuk (3)
- totaal aantal bladzijden in het hoofdstuk (4)

## Introductie van de machine

### Fabrikant

Zie de tweede bladzijde van deze catalogus voor naam en adres van de fabrikant.

### Service

Neem voor het bestellen van reserveonderdelen voor deze machine, of om bedieningsproblemen met betrekking tot deze machine te melden, contact op met de dichtstbijzijnde Tetra Pak vestiging.

Neem contact op met de contactpersoon voor verdere informatie, opmerkingen of suggesties ter verbetering van de installatie en de bijbehorende documentatie.

## Identificatie

### CE-classificatie

Deze installatie voldoet aan de basisvoorschriften voor gezondheid en veiligheid voor het Europese Economische Gebied (EEG).





### Machineplaatje

Afbeelding (B) op bladzijde i-5 toont een voorbeeld van een machineplaatje. Een afbeelding van het geldige machineplaatje en de plaatsing ervan worden getoond in de Inleiding van de handboeken, die bij deze installatie worden meegeleverd. Het machineplaatje bevat onderstaande gegevens, die men nodig heeft wanneer men omtrent de desbetreffende installatie contact opneemt met Tetra Pak.

- Machinetype (8)
- Volume (9)
- Specificatietekeningen (10)
- Serienummer van de machine (11)
- Fabrikant (12)
- CE-markering (13)
- Jaar van fabrikage (14)

Afbeelding (C) op pagina i-5 toont een voorbeeld van een machinespecificatie. Controleer of de gegevens betreffende de installatie op de eerste bladzijden van dit handboek overeenkomen met de gegevens op het machineplaatje en de machinespecificatie.

## Gebruik van de reserveonderdelencatalogus

### Vinden van het bestelnummer van een reserveonderdeel

a) Zie afbeelding (D) op pagina i-5: Ga naar het hoofdstuknummer (15) dat wordt aangeven naast de hoofdgroep waarin zich het door u gezochte onderdeel bevindt.

Items b) en c) verwijzen naar afbeelding (E) op pagina i-6.

b) Op de afbeelding van de hoofdgroep zoekt u de machinesubgroep (17), die het gezochte onderdeel of de gezochte subgroep bevat. Noteer het positienummer (18) en ga naar de lijstbladzijde die op de afbeelding volgt.

c) Zoek naar het positienummer/de referentie (16) of de subgroep-naam (19). Ga naar de corresponderende bladzijde (20) die in de rechterkolom staat vermeld. Tetra Pak heeft voor de benoeming van de referenties gekozen voor de functiegeoriënteerde structuur. De prefixaanduidende functiegeoriënteerde structuur (=) wordt niet in de referentie getoond.

Items d) en e) verwijzen naar afbeelding (F) op pagina i-6.

d) Zoek het gewenste deel (21) op de subgroepafbeelding en noteer het positienummer van het onderdeel.

e) Het bestelnummer (29) en de omschrijving (30) van het onderdeel staan naast het positienummer op de lijstbladzijde.





### Informatie die in een reserveonderdelencatalogus wordt gegeven

De onderstaande lijst verwijst naar afbeelding (F) op bladzijde i-6. Een reserveonderdelencatalogus bevat de volgende informatie over groepen, subgroepen en reserveronderdelen voor de installatie:

- Referentie groepstructuur (22). Geeft de volgende hogere groep in de lijststructuur van de installatie aan.
- Groepsnaam (23)
- Meeteenheid (25)
- Hoeveelheid (26)
- Nummer montagetekening (27)
- Lijst bladzijdenreeks (28). Wordt vermeld wanneer er meerdere bladzijden in de groepsafbeelding of -lijst voorkomen.
- Deel- of subgroepnummer (29)
- Subgroepnaam of onderdeelbeschrijving (30)
- Groepsnummer (31)
- Machinenummer (32)
- Titel groepsinformatie (33). Geeft aan of het gedeelte onder de titel voor een specifieke machinesoort is of dat het een lijst met gebruikelijke onderdelen is. Indien een lijst meer dan één type bevat en ieder type zijn eigen montagetekening heeft, wordt een bladzijdereferentie getoond voor de montagetekening van het type.
- Interne informatie (34)

# Introduksjon

## Informasjon om manualen

Tetra Pak anbefaler at du leser nøye gjennom alle leverte manualer. Sørg for at manualene er tilgjengelige for alle som betjener eller vedlikeholder utstyret.

Det er viktig at du tar vare på denne katalogen under hele levetiden til utstyret og at du gir den videre til eventuelle nye eiere eller brukere.

Tetra Pak vil ikke være ansvarlig for skader på utstyret som oppstår fordi brukeren ikke følger instruksjonene i manualene som følger med utstyret.

### Leverte manualer

Manualene som leveres med dette utstyret, kan inkludere

- CM
  Konverteringsmanualen gir teknikere informasjon om hvordan de konverterer utstyret mellom ulike produksjonsmodi.
- EM
  Den elektriske manualen gir teknikere informasjon om utstyrets elektriske system.
- IM
  Installasjonsmanualen gir teknikere informasjon som kreves for å kunne installere utstyret på en sikker måte.
- MM
  Vedlikeholdsmanualen gir teknikere informasjon om vedlikehold av utstyret.
- OM
  Driftsmanualen gir operatøren informasjon om hvordan han håndterer og bruker utstyret før, under og etter produksjon.
- SPC
  Reservedelskatalogen inneholder informasjon som du trenger for å bestille reservedeler fra Tetra Pak
- TeM
  Den tekniske manualen
  – gir teknikere informasjon om sikker installasjon av utstyret
  – gir teknikere informasjon om vedlikehold av utstyret
  – gir teknikere informasjon om maskinens/utstyrets elektriske system
  – inneholder informasjon som du trenger for å bestille reservedeler fra Tetra Pak.





### Sideoppsett

Se illustrasjonen (A) på side i-5: Hovedsidene i reservedelskatalogen består av en illustrasjonsside (1) og en korresponderende listeside (7). Sidenummeret (5) vises i topteksten på illustrasjonssiden og i bunnteksten på listesiden. Dokumentnummeret (6) vises i bunnteksten på listesiden.

### Sidenummerering

Se illustrasjonen (A) på side i-5: Et sidenummer (5) består av tre deler:

- kapittelnummer (2)
- etterfølgende sidenummer i kapitlet (3)
- det totale antall sider i kapitlet (4)

## Introduksjon av maskinen

### Produsent

Hvis du ønsker produsentens navn og adresse, kan du se side to i denne katalogen.

### Service

Når du skal bestille reservedeler til denne maskinen eller rapportere problemer forbundet med driften av denne maskinen, må du kontakte ditt nærmeste Tetra Pak-kontor.

Når det gjelder andre forespørsler, kommentarer eller forslag til forbedringer av utstyret og dets dokumentasjon, kan du ta kontakt med din kontaktperson.

## Identifisering

### CE-klassifisering

Dette utstyret er i overensstemmelse med de grunnleggende helse- og sikkerhetsforskriftene i Det europeiske økonomiske samarbeidsområdet (EØS).





### Maskinplate

Illustrasjonen (B) på side i-5 viser et eksempel på en maskinplate.
En illustrasjon av en gyldig maskinplate og hvor denne er plassert på utstyret, er vist i introduksjonskapitlet i manualene som følger med dette utstyret. Maskinplaten inneholder nedenstående data, som du trenger når du skal kontakte Tetra Pak angående dette bestemte utstyret.

- Maskintype (8)
- Volum (9)
- Tegningsspesifikasjoner (10)
- Maskin-serienummer (11)
- Produsent (12)
- CE-merke (13)
- Produksjonsår (14)

Illustrasjonen (C) på side i-5 viser et eksempel på en maskinspesifikasjon. Sørg for at utstyrsdataene som står oppført foran i denne manualen, samsvarer med dataene på maskinplaten og maskinspesifikasjonen.

## Hvordan bruke denne reservedelskatalogen

### Finn et reservedelsnummer

a) Se illustrasjonen (D) på side i-5: Gå til kapittelnummeret (15) som er angitt ved siden av hovedgruppen som inneholder delen du vil finne.

Punkt b) og c) viser til illustrasjonen (E) på side i-6.

b) På hovedgruppeillustrasjonen ser du etter maskinundergruppen (17) som inneholder delen eller undergruppen du ser etter. Merk deg posisjonsnummeret (18), og gå til listesiden som kommer etter illustrasjonen.

c) Se etter posisjonsnummeret/referansebetegnelsen (16) eller undergruppenavnet (19). Gå til det korresponderende sidenummeret (20) som står oppført i høyre kolonne. Tetra Pak har valgt å alltid bruke den funksjonsorienterte inndelingen for referansebetegnelse. Prefiksen som angir funksjonsorientert inndeling (=), er ikke vist i referansebetegnelsen.

Punkt d) og e) viser til illustrasjonen (F) på side i-6.

d) Finn delen (21) du ser etter på undergruppeillustrasjonen, og merk deg delens posisjonsnummer.

e) Delenummeret (29) og delebeskrivelsen (30) finner du ved siden av posisjonsnummeret på listesiden.





### Informasjon i en reservedelskatalog

Listen nedenfor viser til illustrasjonen (F) på side i-6. En reservedelskatalog inneholder følgende informasjon om grupper, undergrupper og reservedeler for utstyret:

- Gruppeinndelingsreferanse (22). Angir den neste gruppen opp i inndelingen av utstyrslisten.
- Gruppenavn (23)
- Målenhet (25)
- Antall (26)
- Tegningsnummer (27)
- Listesideområde (28). Inkludert hvis det er flere sider i gruppe-illustrasjonen eller listen.
- Dele- eller undergruppenummer (29)
- Undergruppenavn eller delebeskrivelse (30)
- Gruppenummer (31)
- Utstyrsnummer (32)
- Gruppeinformasjonsoverskrift (33). Angir om avsnittet under overskriften er for en bestemt maskinvariant eller om det er en liste over vanlige deler. Hvis en liste har flere varianter og hver variant har sin egen sammenstillingstegning, vises det en sidereferanse til variantens sammenstillingstegning.
- Intern informasjon (34)

# Wprowadzenie

## Informacje na temat instrukcji

Firma Tetra Pak zaleca dokładne przeczytanie wszystkich dostarczonych instrukcji. Należy upewnić się, że dostarczone instrukcje są dostępne dla personelu, który obsługuje lub konserwuje maszynę.

Należy przechowywać ten katalog przez cały okres użytkowania maszyny i przekazać go kolejnemu właścicielowi lub użytkownikowi.

Firma Tetra Pak nie będzie ponosić odpowiedzialności za jakiekolwiek uszkodzenia maszyny spowodowane niestosowaniem się do zaleceń zawartych w instrukcjach dostarczonych z maszyną.

### Dostarczone instrukcje

W skład dokumentacji dostarczonej z maszyną wchodzą:

- Instrukcja konwersji (CM)
  W tej instrukcji zawarte są informacje dotyczące dostosowania maszyny do różnych trybów produkcji.
- Instrukcja dotycząca wyposażenia elektrycznego (EM)
  W tej instrukcji zawarte są informacje dotyczące układu elektrycznego maszyny.
- Instrukcja instalacji (IM)
  W tej instrukcji zawarte są informacje niezbędne do bezpiecznego zainstalowania maszyny.
- Instrukcja konserwacji (MM)
  W tej instrukcji zawarte są informacje dotyczące konserwacji maszyny.
- Instrukcja obsługi (OM)
  W tej instrukcji zawarte są informacje dotyczące obsługi maszyny przed rozpoczęciem produkcji, w jej trakcie oraz po jej zakończeniu.
- Katalog części zamiennych (SPC)
  W katalogu zawarte są informacje dotyczące zamawiania części zamiennych w firmie Tetra Pak.
- Instrukcja techniczna (TeM)
  Instrukcja techniczna zawiera informacje:
  - dotyczące bezpiecznego instalowania maszyny,
  - dotyczące konserwacji maszyny,
  - dotyczące układu elektrycznego maszyny,
  - dotyczące zamawiania części zamiennych w firmie Tetra Pak.





### Układ strony

Patrz rysunek (A) na stronie i-5: Główne strony w Katalogu części zamiennych składają się ze strony zawierającej rysunek (1) i odpowiadającej jej strony zawierającej listę (7). Numer strony (5) znajduje się w nagłówku strony zawierającej rysunek i w stopce strony zawierającej listę. Numer dokumentu (6) znajduje się w stopce strony zawierającej listę.

### Numeracja stron

Patrz rysunek (A) na stronie i-5: Numer strony (5) składa się z trzech części:

- numeru rozdziału (2),
- kolejnego numeru strony w rozdziale (3),
- całkowitej liczby stron w rozdziale (4).

## Ogólne informacje o maszynie

### Producent

Nazwę i adres producenta można znaleźć na drugiej stronie niniejszego katalogu.

### Serwis

Aby zamówić części zapasowe do tej maszyny lub zgłosić problemy związane z jej pracą, należy skontaktować się z najbliższym biurem Tetra Pak.

Można kontaktować się także w przypadku innych zapytań, uwag lub sugestii dotyczących udoskonalenia urządzenia i dokumentacji.

## Identyfikacja

### Klasyfikacja CE

Maszyna spełnia podstawowe wymogi z zakresu bezpieczeństwa i ochrony zdrowia obowiązujące w Europejskiej Strefie Ekonomicznej (EEA).





### Tabliczka znamionowa

Na rysunku (B), znajdującym się na stronie i-5, pokazano przykładową tabliczkę znamionową.
Rysunek prawidłowej tabliczki znamionowej oraz jej umiejscowienie na maszynie pokazano w rozdziale Wprowadzenie zawartym w instrukcjach dostarczonych z maszyną. Tabliczka znamionowa zawiera następujące dane potrzebne w przypadku kontaktowania się z firmą Tetra Pak w sprawie dotyczącej danej maszyny:

- typ maszyny (8),
- objętość (9),
- specyfikacje rysunkowe (10),
- numer seryjny maszyny (11),
- nazwę producenta (12),
- oznaczenie CE (13),
- rok produkcji (14).

Na rysunku (C) zamieszczonym na stronie i-5 pokazano przykład specyfikacji maszyny. Należy sprawdzić, czy dane dotyczące maszyny przedstawione na pierwszej stronie tej instrukcji odpowiadają danym zawartym na tabliczce znamionowej maszyny oraz specyfikacji maszyny.

## Jak korzystać z niniejszego Katalogu części zamiennych

### Należy odnaleźć numer części zamiennej

a) Zapoznaj się z rysunkiem (D) na stronie i-5: przejdź do numeru rozdziału (15) pokazanego obok głównej grupy zawierającej część, którą chcesz odszukać.

Punkty b) i c) odnoszą się do rysunku (E) na stronie i-6.

b) Na rysunku grupy głównej odszukaj podgrupę maszyny (17), która zawiera odpowiednią część lub podgrupę, której szukasz. Zanotuj numer pozycji (18) i przejdź do strony z listą odpowiadającą rysunkowi.

c) Odszukaj numer pozycji/oznaczenie odnośnika (16) lub nazwę podgrupy (19). Przejdź do odpowiedniego numeru strony (20) podanego w kolumnie umieszczonej po prawej stronie. Firma Tetra Pak w przypadku oznaczenia odnośnika korzysta ze struktury ukierunkowanej na funkcję. Przedrostek wskazujący strukturę ukierunkowaną na funkcję (=) nie jest pokazany w oznaczeniu odnośnika.

Punkty d) i e) odnoszą się do rysunku (F) na stronie i-6.

d) Na rysunku podgrupyodszukaj odpowiednią część (21) i zanotuj numer pozycji części.

e) Numer części (29) oraz jej opis (30) podano na stronie zawierającej listę obok numeru pozycji.





### Informacje zawarte w Katalogu części zamiennych

Poniższa lista odnosi się do rysunku (F), znajdującego się na stronie i-6. Katalog części zamiennych zawiera następujące informacje o grupach, podgrupach oraz częściach zamiennych maszyny:

- Odnośnik struktury grup (22). Wskazuje następną wyższą grupę zawartą w strukturze listy maszyny.
- Nazwa grupy (23).
- Jednostka miary (25).
- Liczba (26).
- Numer rysunku złożeniowego (27).
- Zakres stron zawierających listę (28). Podany w przypadku występowania wielu stron zawierających rysunek grupy lub listę.
- Numer części lub podgrupy (29).
- Nazwa podgrupy lub opis części (30).
- Numer grupy (31).
- Numer maszyny (32).
- Nagłówek informacyjny grupy (33). Wskazuje, czy sekcja umieszczona pod nagłówkiem dotyczy określonego wariantu maszyny, czy też jest to lista wspólna dla wszystkich wariantów. Jeśli lista występuje w wielu wariantach i dla każdego z nich dostępny jest osobny rysunek złożeniowy, podany jest odnośnik strony do rysunku złożeniowego dla danego wariantu.
- Informacje wewnętrzne (34).

# Introdução

## Informações sobre o Manual

A Tetra Pak recomenda que leia atentamente todos os manuais incluídos. Certifique-se de que os manuais incluídos estão disponíveis para o pessoal que utiliza ou faz a manutenção do equipamento.

É importante que mantenha este catálogo durante toda a vida útil do equipamento, devendo ainda ser fornecido a quaisquer proprietários e operadores subsequentes do mesmo.

A Tetra Pak não será responsável por quaisquer danos no equipamento provocados pelo não seguimento das instruções fornecidas nos manuais que acompanham este equipamento.

### Manuais Fornecidos

Os manuais fornecidos com este equipamento podem incluir

- CM
  O Manual de Conversão (Conversion Manual) fornece aos técnicos informações sobre a conversão do equipamento entre modos de produção diferentes.
- EM
  O Manual Eléctrico (Electrical Manual) fornece aos técnicos informações sobre o sistema eléctrico do equipamento.
- IM
  O Manual de Instalação (Installation Manual) fornece aos técnicos as informações necessárias à instalação do equipamento em segurança.
- MM
  O Manual de Manutenção (Maintenance Manual) fornece aos técnicos informações sobre como realizar a manutenção do equipamento.
- OM
  O Manual de Funcionamento (Operation Manual) fornece ao operador informações sobre o manuseamento e funcionamento do equipamento antes, durante e após a produção.
- SPC
  O Spare Parts Catalogue (Catálogo das Peças Sobressalentes) fornece as informações necessárias para encomendar peças sobressalentes à Tetra Pak
- TeM
  O Manual Técnico (Technical Manual)
  - fornece aos técnicos as informações necessárias à instalação do equipamento em segurança
  - fornece aos técnicos informações sobre a manutenção do equipamento
  - fornece aos técnicos informações sobre o sistema eléctrico da máquina/equipamento
  - fornece as informações necessárias para encomendar peças sobressalentes à Tetra Pak.





### Desenho da Página

Consulte a ilustração (A) na página i-5: As páginas principais num Catálogo de Peças Sobressalentes são constituídas por uma página de ilustração (1) e uma página de lista correspondente (7). O número de página (5) é apresentado no cabeçalho de uma página de ilustração e no rodapé de uma página de lista. O número do documento (6) é apresentado no rodapé de uma página de lista.

### Numeração das Páginas

Consulte a ilustração (A) na página i-5: Um número de página (5) tem três partes:

- número do capítulo (2)
- número das páginas consecutivas dentro do capítulo (3)
- número de páginas total no capítulo (4)

## Introdução da Máquina

### Fabricante

Quanto ao nome e endereço do fabricante, consulte a segunda página deste catálogo.

### Manutenção

Para encomendar peças sobressalentes para esta máquina ou para apresentar relatórios de problemas associados com o funcionamento desta máquina, contacte os escritórios mais próximos da Tetra Pak.

Contacte a Ligação com outras questões, comentários ou sugestões para melhoria referentes ao equipamento e à sua documentação.

## Identificação

### Classificação da CE

Este equipamento está em conformidade com as regulamentações básicas da saúde e segurança da Área Económica Europeia (AEE).





### Chapa de Identificação da Máquina

A ilustração (B) na página i-5 mostra um exemplo de uma chapa de identificação da máquina.
No capítulo Introdução dos manuais entregues com este equipamento é apresentada uma ilustração da chapa de identificação válida da máquina e a sua localização no equipamento. A chapa de identificação da máquina contém os dados listados em baixo, necessários quando contactar a Tetra Pak em relação a este equipamento específico.

- Tipo de máquina (8)
- Volume (9)
- Especificações do desenho (10)
- Número de série da máquina (11)
- Fabricante (12)
- Marca da CE (13)
- Ano de fabricação (14)

A ilustração (C) na página i-5 mostra um exemplo de uma especificação da máquina. Certifique-se de que os dados do equipamento listados nas primeiras páginas deste manual correspondem aos dados indicados na chapa de identificação da máquina e às especificações da máquina.

## Como utilizar este Catálogo de Peças Sobressalentes

### Localize o Número da Peça Sobressalente

a) Consulte a ilustração (D) na página i-5: Vá para o número do capítulo (15) indicado no grupo principal que contém a peça que pretende localizar.

Os itens b) e c) referem-se à ilustração (E) na página i-6:

b) Na ilustração do grupo principal, procure o subgrupo da máquina (17) que contém a peça ou o subgrupo que procura. Tome nota do número de posição (18) e vá para a página de lista a seguir à ilustração.

c) Procure o número de posição/designação de referência (16) ou o nome do subgrupo (19). Vá para o número de página correspondente (20) indicado na coluna do lado direito. A Tetra Pak preferiu utilizar sempre a estrutura orientada para a função como designação de referência. O prefixo que inicia a estrutura orientada para a função (=) não está indicada na designação de referência.

Os itens d) e e) referem-se à ilustração (F) na página i-6:

d) Localize a peça (21) que procura na ilustração do subgrupo e tome nota do número de posição da peça.

e) O número de peça (29) e a descrição da peça (30) são apresentados ao lado do número da posição na página de lista.





### Informações listadas num Catálogo de Peças Sobressalentes

A lista em baixo refere-se à ilustração (F) na página i-6: Um Catálogo de Peças Sobressalentes contém as seguintes informações sobre grupos, subgrupos e peças sobressalentes para o equipamento:

- Referência da estrutura do grupo (22). Indica o grupo mais elevado seguinte na estrutura da lista do equipamento.
- Nome do grupo (23)
- Unidade de medida (25)
- Quantidade (26)
- Número de série do conjunto (27)
- Intervalo de páginas da lista (28). Incluído se existirem várias páginas na ilustração ou na lista do grupo.
- Número de peça ou subgrupo (29)
- Nome do subgrupo ou descrição da peça (30)
- Número do grupo (31)
- Número do equipamento (32)
- Cabeçalho das informações do grupo (33). Indica se a secção em baixo do cabeçalho é de uma variante específica da máquina ou se é uma lista de peças comuns. Se uma lista tiver mais de uma variante e cada variante tiver o seu próprio desenho de conjunto, é apresentada uma referência de página ao desenho do conjunto da variante.
- Informações internas (34)

# Introducere

## Informații despre manual

Tetra Pak recomandă citirea cu atenție a tuturor manualelor livrate. Asigurați-vă că manualele livrate sunt puse la îndemâna personalului care exploatează sau întreține echipamentul.

Este important să păstrați acest catalog pe întreaga durată de viață a echipamentului și să transmiteți catalogul deținătorilor sau utilizatorilor ulteriori.

Tetra Pak nu va fi răspunzător pentru niciun defect al echipamentului cauzat prin nerespectarea instrucțiunilor date în manualele care însoțesc acest echipament.

### Manuale livrate

Manualele livrate cu acest echipament pot include

- CM
  Manualul de conversie furnizează tehnicienilor informații despre conversia echipamentului între diferite moduri de producție.
- EM
  Manualul electric furnizează tehnicienilor informații despre sistemul electric al echipamentului.
- IM
  Manualul de instalare furnizează tehnicienilor informații necesare pentru instalarea în siguranță a echipamentului.
- MM
  Manualul de întreținere furnizează tehnicienilor informații cu privire la întreținerea echipamentului.
- OM
  Manualul de exploatare pune la dispoziție operatorilor informații despre manevrarea și exploatarea echipamentului înainte, în timpul și după producție.
- SPC
  Catalogul pieselor de schimb furnizează informații necesare pentru comandarea pieselor de schimb de la Tetra Pak.
- TeM
  Manualul tehnic
  – furnizează tehnicienilor informații necesare pentru instalarea în siguranță a echipamentului
  – furnizează tehnicienilor informații necesare cu privire la întreținerea echipamentului
  – furnizează tehnicienilor informații despre sistemul electric al mașinii/echipamentului
  – furnizează informații necesare pentru comandarea pieselor de schimb de la Tetra Pak.





### Configurația paginilor

Examinați ilustrația (A) de pe pagina i-5: Paginile principale dintr-un catalog de piese de schimb constau dintr-o pagină de ilustrare (1) și o pagină de liste corespunzătoare (7). Numărul paginii (5) apare în antetul unei pagini de ilustrare și în subsolul unei pagini de liste. Numărul documentului (6) apare în subsolul unei pagini de liste.

### Numerotarea paginilor

Examinați ilustrația (A) de la pagina i-5: Un număr de pagină (5) are trei părți:

- numărul capitolului (2)
- numărul paginii consecutive din cadrul capitolului (3)
- număr total de pagini din capitol (4)

## Prezentare introductivă a mașinii

### Producător

Pentru numele și adresa producătorului, consultați pagina a doua a acestui catalog.

### Service

Pentru comandarea pieselor de schimb pentru această mașină sau pentru a raporta problemele asociate cu exploatarea acestei mașini, contactați cel mai apropiat birou Tetra Pak.

Contactați Liaison cu privire la alte întrebări, comentarii sau sugestii legate de îmbunătățirea echipamentului și a documentației acestuia.

## Identificare

### Clasificare CE

Acest echipament este fabricat în conformitate cu reglementările de bază cu privire la sănătate și siguranță din Zona economică europeană (EEA).





### Plăcuța mașinii

Ilustrația (B) de la pagina i-5 arată un exemplu al unei plăcuțe de mașină. O ilustrație a plăcuței valide a mașinii și a poziției acesteia pe echipament este arătată în capitolul introductiv al manualelor livrate împreună cu acest echipament. Plăcuța mașinii conține datele listate mai jos, necesare în cazul în care contactați Tetra Pak în legătură cu acest echipament specific.

- Tip mașină (8)
- Volum (9)
- Specificații de desen (10)
- Număr de serie al mașinii (11)
- Producător (12)
- Marcaj CE (13)
- Anul fabricației (14)

Ilustrația (C) de la pagina i-5 arată un exemplu al unei specificații de mașină. Asigurați-vă că datele specifice echipamentului, listate în paginile din față ale acestui manual, corespund cu datele de pe plăcuța mașinii și cu specificațiile mașinii.

## Cum se utilizează acest catalog de piese de schimb

### Localizarea unui număr de piesă de schimb

a) Examinați ilustrația (D) de la pagina i-5: Treceți la numărul de capitol (15) indicat lângă grupa principală care conține piesa pe care doriți să o localizați.

Articolele b) și c) se referă la ilustrația (E) de la pagina i-6.

b) Pe ilustrația grupei principale, căutați subgrupa aferentă mașinii (17) care conține piesa sau subgrupa pe care o căutați. Notați numărul poziției (18) și treceți la pagina de liste care urmează după ilustrație.

c) Căutați numărul poziției/marcarea de referință (16) sau numele subgrupei (19). Treceți la numărul de pagină corespunzător (20) listat în coloana din partea dreaptă. Tetra Pak a optat ca întotdeauna să utilizeze structura orientată pe funcție pentru marcarea de referință. Prefixul care indică structura orientată pe funcție (=) nu este arătat în marcarea de referință.

Articolele d) și e) se referă la ilustrația (F) de la pagina i-6.

d) Localizați piesa (21) pe care o căutați pe ilustrația subgrupei și notați numărul de poziție al piesei.

e) Numărul piesei (29) și descrierea piesei (30) sunt listate lângă numărul de poziție de pe pagina de liste.





### Informațiile listate într-un catalog de piese de schimb

Lista de mai jos se referă la ilustrația (F) de la pagina i-6. Un catalog de piese de schimb conține următoarele informații despre grupe, subgrupe și piese de schimb pentru echipament:

- Referința despre structura grupelor (22). Indică următoarea grupă superioară din structura de liste a echipamentului.
- Numele grupei (23)
- Unitatea de măsură (25)
- Cantitatea (26)
- Numărul de desen de ansamblu (27)
- Intervalul de pagini de liste (28). Inclus dacă există mai multe pagini în ilustrația sau lista grupei.
- Numărul piesei sau al subgrupei (29)
- Numele subgrupei sau descrierea piesei (30)
- Numărul grupei (31)
- Numărul echipamentului (32)
- Antet cu informații despre grupă (33). Indică dacă secțiunea de sub antet se referă la o anumită variantă de mașină sau este o listă de piese comune. Dacă o listă are mai multe variante și fiecare variantă are propriul său desen de ansamblu, este arătată o referință de pagină pentru desenul de ansamblu al variantei.
- Informații interne (34)

# Úvod

## Informácie o návode

Spoločnosť Tetra Pak odporúča, starostlivo si prečítať všetky dodané návody. Dbajte, aby pracovníci, obsluhujúci zariadenie alebo zabezpečujúci jeho údržbu, mali vždy dodané návody k dispozícii.

Je dôležité, aby bol tento katalóg k dispozícii počas celého času životnosti zariadenia, a aby sa katalóg dostal aj k jeho prípadnému ďalšiemu držiteľovi alebo používateľovi.

Spoločnosť Tetra Pak nepreberá zodpovednosť za akékoľvek poškodenie zariadenia spôsobené nedodržaním pokynov uvedených v návodoch dodávaných s týmto zariadením.

### Dodané návody

S týmto zariadením vám mohli byť dodané nasledujúce návody:

- CM
  Návod na prestavovanie poskytuje technikom informácie o prestavovaní zariadenia do rôznych výrobných režimov.
- EM
  Elektrotechnický návod poskytujetechnikom informácie o elektrickom systéme zariadenia.
- IM
  Návod na inštaláciu poskytuje technikom informácie potrebné na bezpečnú inštaláciu zariadenia.
- MM
  Návod na údržbu poskytujetechnikom informácie o údržbe zariadenia.
- OM
  Návod na obsluhu poskytuje obsluhe informácie o zaobchádzaní a obsluhe zariadenia pred, počas a po prevádzke.
- SPC
  Katalóg náhradných dielcov poskytuje informácie potrebné na objednávanie náhradných dielcov od spoločnosti Tetra Pak
- TeM
  Technický návod
  - poskytuje technikom informácie potrebné na bezpečnú inštaláciu zariadenia
  - poskytuje technikom informácie o údržbe zariadenia
  - poskytuje technikom informácie o elektrickom systéme stroja/ zariadenia
  - poskytuje informácie potrebné na objednávanie náhradných dielcov od spoločnosti Tetra Pak.





### Rozloženie strany

Pozri ilustráciu (A) na strane i-5: Hlavné strany Katalógu náhradných dielcov obsahujú stránku s ilustráciami (1) a príslušnú stranu so zoznamom (7). Číslo strany (5) sa uvádza v záhlaví na strane s ilustráciami a v päte strany so zoznamom. Číslo dokumentu (6) sa uvádza v päte strany so zoznamom.

### Číslovanie strán

Pozri ilustráciu (A) na strane i-5: Číslo strany (5) má tri časti:

- číslo kapitoly (2)
- poradové číslo strany v rámci kapitoly (3)
- celkový počet strán v kapitole (4)

## Základné informácie o stroji

### Výrobca

Meno a adresa výrobcu sa uvádza na druhej strane tohto katalógu.

### Servis

Pri objednávaní náhradných dielcov pre tento stroj alebo na nahlasovanie problémov súvisiacich s prevádzkou tohto stroja sa obráťte na najbližšie zastúpenie spoločnosti Tetra Pak.

S ostatnými otázkami, pripomienkami a podnetmi na vylepšenie stroja alebo zariadenia a jeho dokumentácie sa obracajte na kontaktnú osobu.

## Identifikácia

### Klasifikácia CE

Toto zariadenie spĺňa základné predpisy o ochrane zdravia a bezpečnosti Európskeho hospodárskeho priestoru (EEA).





### Typový štítok stroja

Na ilustrácii (B) na strane i-5 uvádzame príklad typového štítku. Ilustrácia platného typového štítku stroja a jeho umiestnenia na zariadení sa uvádza v kapitole Úvod v návodoch, dodaných s týmto zariadením. Typový štítok obsahuje dolu údaje uvedené, potrebné pri kontaktoch so spoločnosťou Tetra Pak ohľadom tohto špecifického zariadenia.

- Typ stroja (8)
- Objem (9)
- Údaje o výkrese (10)
- Výrobné číslo stroja (11)
- Výrobca (12)
- Značka CE (13)
- Rok výroby (14)

Ilustrácia (C) na strane i-5 zobrazuje príklad špecifikácie stroja. Presvedčite sa, že údaje zariadenia uvedené na predných stranách tohto návodu zodpovedajú údajom na typovom štítku a v špecifikácii stroja.

## Ako sa tento Katalóg náhradných dielcov používa

### Vyhľadanie čísla náhradného dielca

a) Pozri ilustráciu (D) na strane i-5: Prejdite na číslo kapitoly (15) uvedené vedľa hlavnej skupiny obsahujúcej dielec, ktorý chcete vyhľadať.

Položky b) a c) odkazujú na ilustráciu (E) na strane i-6.

b) Na ilustrácii hlavnej skupiny hľadajte podskupinu stroja (17), ktorý obsahuje dielec alebo podskupinu, ktorú hľadáte. Poznamenajte si číslo položky (18) a prejdite stranu so zoznamom nasledujúcu po ilustrácii.

c) Vyhľadajte číslo položky/referenčné označenie (16) alebo názov podskupiny (19). Prejdite na príslušné číslo strany (20) uvedené v zozname v pravom stĺpci. Spoločnosť Tetra Pak sa rozhodla vždy používať funkčne zameranú štruktúru na referenčné označovanie. Predčíslie udávajúce funkčne orientovanú štruktúra (=) sa v referenčnom označení nezobrazuje.

Položky d) a e) odkazujú na ilustráciu (F) na strane i-6.

d) Nájdite dielec (21), ktorý hľadáte, na ilustrácii podskupiny a poznamenajte si číslo položky daného dielca.

e) Číslo dielca (29) a popis dielca (30) sa uvádza vedľa čísla položky na stránke so zoznamom.





### Informácie uvádzané v Katalógu náhradných dielcov

Dolu uvedený zoznam odkazuje na ilustráciu (F) na strane i-6. Katalóg náhradných dielcov obsahuje nasledujúce informácia o skupinách, podskupinách a náhradných dielcov zariadenia:

- Referenčná štruktúrna skupina (22). Označuje najbližšiu vyššiu skupinu v štruktúre zoznamu zariadenia.
- Názobv skupiny (23)
- Jednotka merania (25)
- Množstvo (26)
- Číslo výkresu celkovej zostavy (27)
- Rozsah strán zoznamu (28). Uvádza sa, ak má ilustrácia alebo zoznam skupiny viac strán.
- Číslo dielca alebo podskupiny (29)
- Názov podskupiny alebo popis dielca (30)
- Číslo skupiny (31)
- Číslo zariadenia (32)
- Záhlavie informácií o skupine (33). Uvádza, či je časť nasledujúca pod záhlavím určená pre špecifický variant stroja, alebo či ide o zoznam spoločných dielcov. Ak má zoznam viac ako jeden variant a každý z variantov má vlastný výkres celkovej zostavy, uvádza sa odkaz na stranu s výkresom zostavy daného variantu.
- Interné informácie (34)

# Uvod

## Informacije o priročnikih

Tetra Pak priporoča, da natančno preberete vse priložene priročnike. Osebje, ki upravlja in vzdržuje opremo mora imeti dostop do priloženih priročnikov.

Katalog hranite v celotnem času uporabe opreme. V primeru, ko opremo pridobi drug imetnik ali uporabnik, mu obenem izročite tudi katalog.

Podjetje Tetra Pak ne prevzema odgovornosti za poškodbe na opremi, ki nastanejo zaradi neupoštevanja navodil iz priročnikov, ki so priloženi opremi.

### Priloženi priročniki

Priročniki, ki so priloženi tej opremi, lahko vključujejo

- Priročnik za zamenjavo (CM)
  V tem priročniku so podatki, ki tehnikom omogočajo izvesti zamenjavo opreme med različnimi načini proizvodnje.
- Elektrotehnični priročnik (EM)
  Priročnik vsebuje podatke za tehnike o električnem sistemu opreme.
- Priročnik za montažo (IM)
  Priročnik vsebuje podatke, ki jih tehniki potrebujejo za varno montažo opreme.
- Priročnik za vzdrževanje (MM)
  Priročnik vsebuje podatke za tehnike o vzdrževanju opreme.
- Priročnik za obratovanje (OM)
  Priročnik je namenjen informiranju za pravilno rokovanje in upravljanje s strojem pred, med in po proizvodnem postopku.
- Katalog nadomestnih delov (SPC)
  Katalog vsebuje potrebne podatke za naročilo nadomestnih delov pri podjetju Tetra Pak.
- Tehnični priročnik (TeM)
  Priročnik
  - vsebuje podatke, ki jih tehniki potrebujejo za varno montažo opreme;
  - vsebuje podatke za tehnike o vzdrževanju opreme;
  - vsebuje podatke za tehnike o električnem sistemu stroja/opreme;
  - vsebuje potrebne podatke za naročilo nadomestnih delov pri podjetju Tetra Pak.





### Postavitev strani

Poglejte sliko (A) na strani i-5: Glavne strani v Katalogu nadomestnih delov sestavljata stran s sliko (1) in ustrezna stran s seznamom (7). Številka strani (5) je prikazana na vrhu strani s sliko in na dnu strani s seznamom. Številka dokumenta (6) je prikazana na dnu strani s seznamom.

### Številčenje strani

Oglejte si sliko (A) na strani i-5: Številka strani (5) ima tri dele:

- številko poglavja (2);
- zaporedno številko strani v poglavju (3);
- število vseh strani v poglavju (4).

## Predstavitev stroja

### Proizvajalec

Ime in naslov proizvajalca najdete na drugi strani kataloga.

### Servisiranje

Za naročanje nadomestnih delov za stroj ter za sporočanje motenj pri delovanju stroja se obrnite na najbližjo servisno službo podjetja Tetra Pak.

V primeru drugih zahtev, komentarjev, predlogov za izboljšavo opreme ali dokumentacije se obrnite na odgovorno osebo.

## Identifikacijska oznaka

### CE-klasifikacija

Oprema je izdelana v skladu z osnovnimi zdravstvenimi in varnostnimi predpisi Evropskega gospodarskega prostora (EGS).





### Napisna ploščica

Slika (B) na strani i-5 prikazuje primer napisne ploščice.
Sliko veljavne napisne ploščice in njeno mesto na opremi najdete v uvodnem poglavju priloženih priročnikov. Ploščica vsebuje spodaj navedene podatke, ki jih potrebujete, ko se v zvezi z določeno opremo obrnete na podjetje Tetra Pak:

- tip stroja (8);
- prostornino (9);
- specifikacije risbe (10);
- serijsko številko stroja (11);
- proizvajalca (12);
- oznako CE (13);
- leto izdelave (14).

Slika (C) na strani i-5 prikazuje primer specifikacije stroja. Podatki o opremi, navedeni na prvih straneh tega priročnika, se morajo ujemati s podatki o stroju, navedenimi na napisni ploščici in v specifikacijah.

## Uporaba Kataloga nadomestnih delov

### Iskanje številke nadomestnega dela

a) Oglejte si sliko (D) na strani i-5: Poiščite številko poglavja (15), navedeno poleg glavne skupine, ki vsebuje iskani del.

Točki b) in c) se nanašata na sliko (E) na strani i-6.

b) Na sliki glavne skupine poiščite podskupino stroja (17), ki vsebuje iskani del ali podskupino. Zapomnite si pozicijsko številko (18) in poiščite stran s seznamom, ki pripada sliki.

c) Poiščite pozicijsko številko/referenčno oznako (16) ali ime podskupine (19). Pojdite na stran (20), navedeno v desnem stolpcu. Tetra Pak za referenčno označevanje vedno uporablja funkcijsko strukturo. Predpona, ki označuje funkcijsko strukturo (=), ni prikazana v referenčni oznaki.

Točki d) in e) se nanašata na sliko (F) na strani i-6.

d) Na sliki podskupine poiščite del (21), ki ga iščete, in si zapomnite njegovo pozicijsko številko.

e) Številka (29) in opis dela (30) sta navedena poleg pozicijske številke na strani s seznamom.





### Informacije v Katalogu nadomestnih delov

Spodnji seznam se nanaša na sliko (F) na strani i-6. Katalog nadomestnih delov vsebuje naslednje informacije o skupinah, podskupinah in nadomestnih delih za opremo:

- referenco strukture skupine (22); Označuje naslednjo višjo skupino v strukturi seznamov opreme.
- ime skupine (23);
- mersko enoto (25);
- količino (26);
- številko sestavne risbe (27);
- število strani seznama (28); Če je slika ali seznam skupine sestavljen iz več strani.
- številko dela ali podskupine (29);
- ime podskupine ali opis dela (30);
- številko skupine (31);
- številko opreme (32);
- naslov z informacijami o skupini (33). Označuje, ali je razdelek pod naslovom namenjen specifični izvedbi stroja ali gre za seznam skupnih delov. Če ima seznam več izvedb in če ima vsaka od njih svojo sestavno risbo, je ob vsaki izvedbi navedena referenčna stran s sestavno risbo.
- interne informacije (34).

# Inledning

## Information om manualen

Tetra Pak rekommenderar att alla manualer läses noggrant. Se till att manualerna är tillgängliga för personalen som använder eller underhåller utrustningen.

Det är viktigt att denna katalog behålls under utrustningens livslängd, och att den överlämnas till varje efterföljande innehavare eller användare av utrustningen.

Tetra Pak tar inte ansvar för någon skada på utrustningen som orsakats av att instruktionerna i medföljande manualer inte har följts.

### Medföljande manualer

Följande manualer kan levereras tillsammans med utrustningen:

- CM
  Konverteringsmanualen (CM) innehåller information för tekniker om hur man konverterar utrustningen mellan olika produktionslägen.
- EM
  Den elektriska manualen (EM) innehåller information för tekniker om utrustningens elektriska system.
- IM
  Installationsmanualen (IM) innehåller information för tekniker om hur utrustningen installeras på ett säkert sätt.
- MM
  Underhållsmanualen (MM) innehåller information för tekniker om hur utrustningen underhålls.
- OM
  Driftsmanualen (OM) innehåller information för operatören om hur utrustningen ska hanteras före, under och efter produktion.
- SPC
  Reservdelskatalogen (SPC) innehåller den information som behövs för att beställa reservdelar från Tetra Pak.
- TeM
  Den tekniska manualen (TeM)
  - innehåller information för tekniker om hur utrustningen installeras på ett säkert sätt.
  - innehåller information för tekniker om hur utrustningen underhålls.
  - innehåller information för tekniker om maskinens/utrustningens elektriska system.
  - innehåller den information som behövs för att beställa reservdelar från Tetra Pak.





### Sidlayout

Se bild (A) på sidan i-5: Huvudsidorna i reservdelskatalogen består av en bildsida (1) och en motsvarande listsida (7). Sidnumret (5) visas i sidhuvudet på bildsidan och i sidfoten på listsidan. Dokumentnumret (6) visas i sidfoten på listsidan.

### Sidnumrering

Se bild (A) på sidan i-5: Ett sidnummer (5) består av tre delar:

- kapitlets nummer (2)
- löpande sidnummer inom kapitlet (3)
- totalt sidantal i kapitlet (4)

## Introduktion till maskinen

### Tillverkare

Tillverkarens namn och adress finns på sidan 2 i katalogen.

### Service

För att beställa reservdelar till denna maskin eller för att rapportera problem som uppstått i samband med driften kontaktar du närmaste Tetra Pak-kontor.

Om du har andra frågor, kommentarer eller förslag till förbättringar av utrustningen och dokumentationen vänder du dig till din kontaktperson på Tetra Pak.

## Identifiering

### CE-märkning

Denna utrustning överensstämmer med den grundläggande hälso- och säkerhetslagstiftningen inom Europeiska ekonomiska samarbetsområdet (EES).





### Maskinskylt

Bild (B) på sidan i-5 visar ett exempel på en maskinskylt.
En bild på giltig maskinskylt och dess placering på utrustningen visas i inledningskapitlet som medföljer utrustningen. Skylten innehåller de uppgifter som listas nedan och som behövs vid kontakt med Tetra Pak angående utrustningen.

- Maskintyp (8)
- Volym (9)
- Ritningsspecifikationer (10)
- Maskinnummer (11)
- Tillverkare (12)
- CE-märkning (13)
- Tillverkningsår (14)

Bild (C) på sidan i-5 visar ett exempel på en maskinspecifikation. Kontrollera att informationen om utrustningen som listas på de första sidorna i manualen motsvarar informationen på maskinskylten och i maskinspecifikationen.

## Använda reservdelskatalogen

### Hitta ett reservdelsnummer

a) Se bild (D) på sidan i-5: Gå till kapitelnumret (15) som står vid sidan om huvudgruppen som innehåller den del du vill hitta.

Punkt b) och c) hänvisar till bild (E) på sidan i-6.

b) På huvudgruppsbilden letar du efter den maskinundergrupp (17) som innehåller delen eller undergruppen du letar efter. Notera positionsnumret (18) och gå till listsidan som anges efter bilden.

c) Leta efter positionsnumret/referensbeteckningen (16) eller undergruppsnamnet (19). Gå till motsvarande sidnummer (20) som listas i den högra kolumnen. Tetra Pak har valt allt alltid använda en funktionsorienterad struktur för referensbeteckningarna. Prefixet för funktionsorienterad struktur (=) visas inte i referensbeteckningen.

Punkt d) och e) hänvisar till bild (F) på sidan i-6.

d) Leta reda på delen (21) i undergruppsbilden och notera delens positionsnummer.

e) Reservdelsnumret (29) och reservdelsbeskrivningen (30) står bredvid positionsnumret på listsidan.





### Information i reservdelskatalogen

Listan nedan hänvisar till bild (F) på sidan i-6. Reservdelskatalogen innehåller följande information om grupper, undergrupper och reservdelar för utrustningen:

- Gruppstrukturreferens (22). Anger nästa högre grupp i utrustningslistans struktur.
- Gruppnamn (23)
- Måttenhet (25)
- Kvantitet (26)
- Monteringsritningsnummer (27)
- Listsideintervall (28). Anges om det finns flera sidor i gruppbilden eller grupplistan.
- Reservdels- eller undergruppsnummer (29)
- Undergruppsnamn eller reservdelsbeskrivning (30)
- Gruppnummer (31)
- Utrustningsnummer (32)
- Gruppinformationsrubrik (33). Anger om avsnittet under rubriken gäller en viss maskinvariant eller om det är en lista över allmänna delar. Om en lista har fler än en variant och varje variant har sin egen monteringsritning visas en sidhänvisning till variantens monteringsritning.
- Intern information (34)

# SPC
## Spare Parts Catalogue

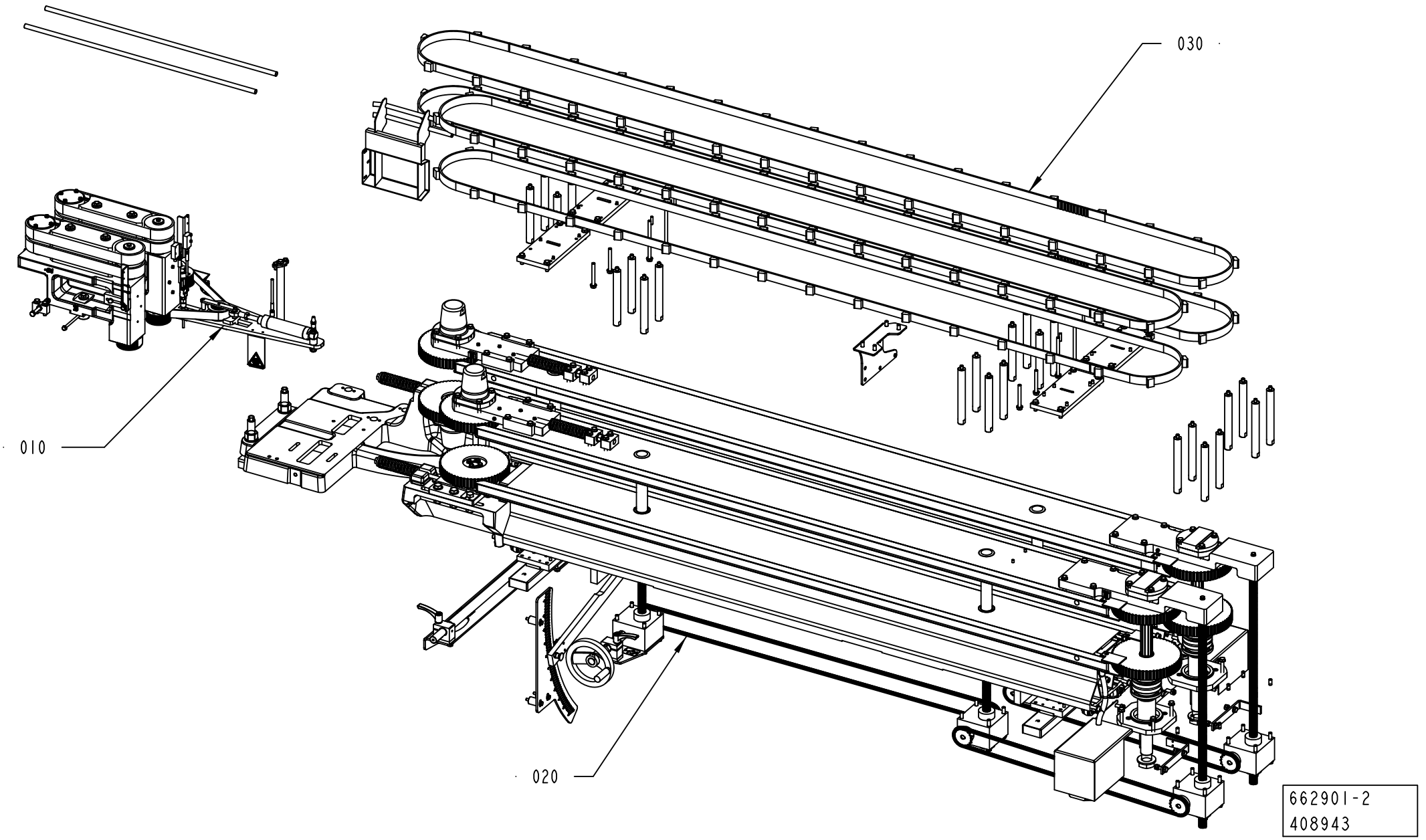
030
010
020
662901-2
408943

ECM: 408943 - 20091001
Group number: 662901-0200
Assembly Drawing: 662901-2_1_AA

| Pos | Part No | UN | Qty | Description | Page No |
|---|---|---|---|---|---|
| - | | | | | |
| 010 | 2838654-0200 | | 1 | BELT BRAKE | **1-5** |
| 020 | 2838643-0200 | | 1 | PACKAGE POSITIONER | **1-17** |
| 030 | 2838633-0200 | | 1 | PACKAGE HANDLING | **1-57** |

| Pos | Part No | UN | Qty | Description | Page No |
|---|---|---|---|---|---|

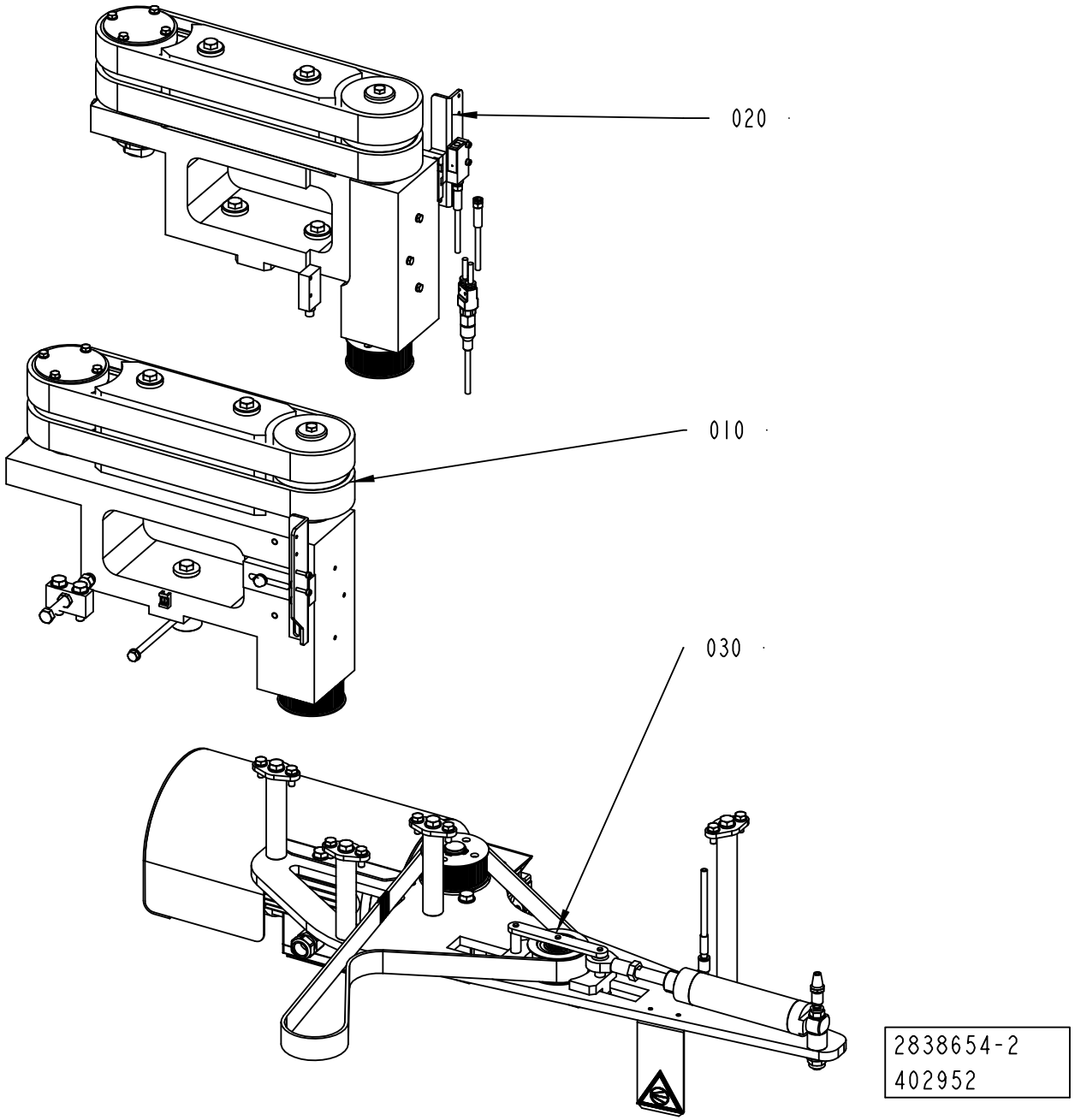
020
010
030
2838654-2
402952

ECM: 407693 - 20091001
Group number: 2838654-0200
Assembly Drawing: 2838654-2_1_AA


| Pos | Part No | UN | Qty | Description | Page No |
|---|---|---|---|---|---|
| - | | | | | |
| 010 | 2766990-0100 | | 1 | BRAKE UNIT | **1-7** |
| 020 | 2766991-0100 | | 1 | BRAKE UNIT | **1-9** |
| 030 | 2766994-0200 | | 1 | DRIVE | **1-11** |

| Pos | Part No | UN | Qty | Description | Page No |
|---|---|---|---|---|---|

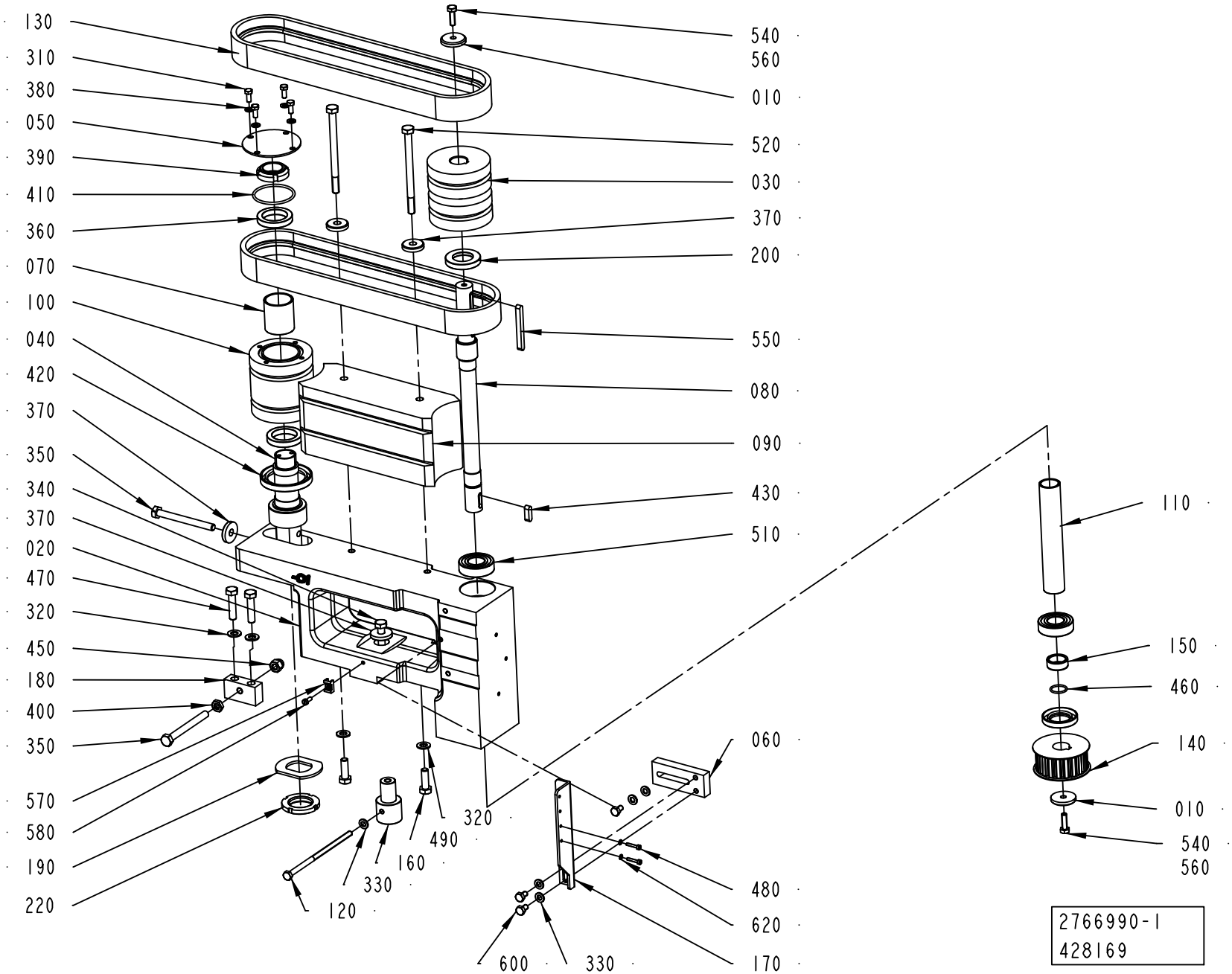
130
310
380
050
390
410
360
070
100
040
420
370
350
340
370
020
470
320
450
180
400
350
570
580
190
220
120
330
160
490
320
540
560
010
520
030
370
200
550
080
090
430
510
060
480
620
170
600
330
110
150
460
140
010
540
560
2766990-1
428169

ECM: 428896 - 20100401
Group number: 2766990-0100
Assembly Drawing: 2766990-1_1_AE

| Pos | Part No | UN | Qty | Description | Page No |
|---|---|---|---|---|---|
| - | | | | | |
| 010 | 290027-0000 | | 2 | WASHER | |
| 020 | 3010622-0000 | | 1 | CANTILEVER | |
| 030 | 2826728-0000 | | 1 | DRIVE PULLEY | |
| 040 | 2769682-0000 | | 1 | ,HAFT | |
| 050 | 2769686-0000 | | 1 | COVER | |
| 060 | 2936120-0000 | | 1 | BRACKET | |
| 070 | 2769741-0000 | | 1 | SPACER | |
| 080 | 2769679-0000 | | 1 | .DRIVE SHAFT | |
| 090 | 2826737-0000 | | 1 | GUIDE | |
| 100 | 2826729-0000 | | 1 | PULLEY | |
| 110 | 2830225-0000 | | 1 | SPACER | |
| 120 | 2805468-0000 | | 1 | SCREW | |
| 130 | 2693990-0000 | | 2 | TIMING BELT | |
| 140 | 3039030-0000 | | 1 | TOOTHED PULLEY | |
| 150 | 2773600-0000 | | 1 | SPACER | |
| 160 | 2775418-0000 | | 1 | SHAFT | |
| 170 | 2936740-0000 | | 1 | BRACKET | |
| 180 | 2775427-0000 | | 1 | BRACKET | |
| 190 | 2778564-0000 | | 1 | WASHER | |
| 200 | 90091-0322 | | 2 | RADIAL SEAL 25X42X7 MM DUST LIP | |
| 220 | 90459-2644 | | 1 | NUT ROUND WITH SLOTS M30X1,5 SS | |
| 310 | 312105-0327 | | 4 | SCREW M6S ISO 4017 M5X12 A480 | |
| 320 | 315105-0165 | | 4 | WASHER BRB 8,4X16 RFR | |
| 330 | 315105-0153 | | 5 | WASHER BRB 6,4X12 RFR | |
| 340 | 312105-0455 | | 1 | SCREW M6S ISO 4017 M8X30 A480 | |
| 350 | 312109-0467 | | 2 | SCREW M6S ISO 4017 M8X80 A480 | |
| 360 | 90214-0186 | | 2 | BALL BEARING 30/42X7 | |
| 370 | 315125-0165 | | 4 | WASHER TBRSB 8,4X26X5 A4 | |
| 380 | 315105-0146 | | 4 | WASHER BRB 5,3X10 RFR | |
| 390 | 90459-6280 | | 1 | NUT GUK 5 M25 X 1.5 FZB | |
| 400 | 312625-0318 | | 1 | HEXAGON THIN NUT, EN 24035 ML6M M8 A4 | |
| 410 | 315202-0733 | | 1 | O-RING 45,69X2,62 MM | |
| 420 | 315221-0192 | | 1 | RADIAL SEAL 45X62X8 MM | |
| 430 | 315705-0232 | | 1 | PARALLEL KEY W. ROUND ENDS 6X6X20 MM | |
| 450 | 312705-0318 | | 1 | NUT HEX. DOMED CAP MHM-6 M8 A280 | |
| 460 | 315202-0705 | | 1 | O-RING 17,17X1,78 MM | |
| 470 | 312105-0457 | | 2 | SCREW M6S ISO 4014 M8X35 A480 | |
| 480 | 312115-0228 | | 2 | SCREW ISO4762 M3X16 A4 80 | |
| 490 | 312105-0453 | | 2 | SCREW M6S ISO 4017 M8X25 A480 | |
| 510 | 321306-0104 | | 2 | BALL BEARING 20/42X12 | |
| 520 | 312105-0473 | | 2 | SCREW M6S ISO 4014 M8X110 A480 | |
| 540 | 312105-0370 | | 2 | SCREW M6S ISO 4017 M6X20 A480 | |
| 550 | 90458-0507 | | 1 | PARALLEL KEY W. ROUND ENDS 6X6X60 MM | |
| 560 | 90157-0037 | ML | 1 | THREAD SEALANT LOCTITE 542 | |
| 570 | 352113-0205 | | 1 | ANCHOR PLATES FOR STRIPS, TYPE TM2S8-C10 | |
| 580 | 312125-0289 | | 1 | SCREW ISO 1207 M4X10 A4 | |
| 600 | 312105-0364 | | 3 | SCREW M6S ISO 4017 M6X10 A480 | |
| 620 | 315105-0124 | | 2 | WASHER BRB 3,2X6 RFR | |

Machine Type | Group Description | Used-In | Group Number | Page No

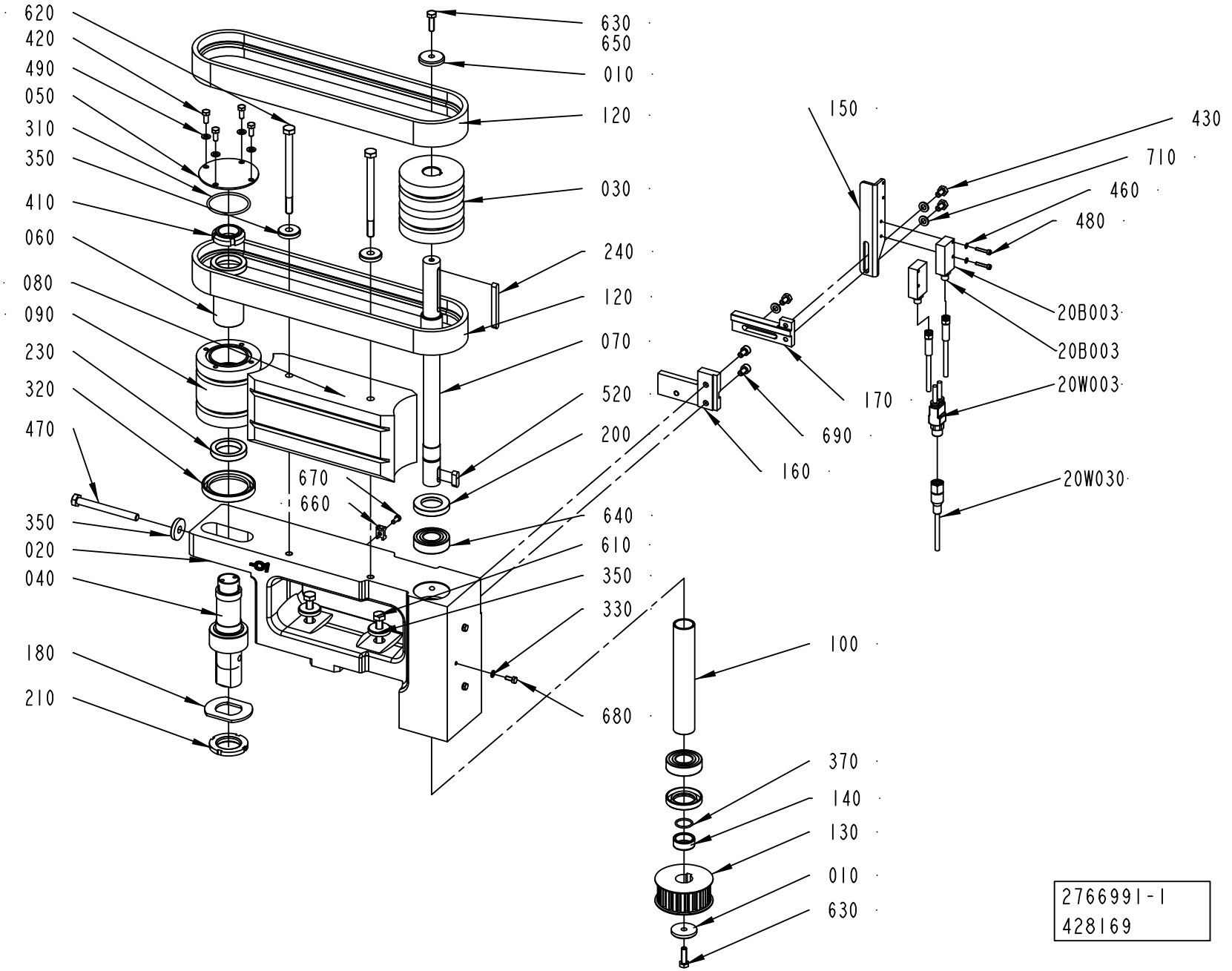
620
420
490
050
310
350
410
060
080
090
230
320
470
350
020
040
180
210
630
650
010
120
030
240
120
070
520
200
670
660
640
610
350
330
680
150
430
710
460
480
20B003
20B003
20W003
20W030
170
690
160
100
370
140
130
010
630
2766991-1
428169

ECM: 428897 - 20100401
Group number: 2766991-0100
Assembly Drawing: 2766991-1_1_AD

| Pos | Part No | UN | Qty | Description | Page No |
|---|---|---|---|---|---|
| - | | | | | |
| 010 | 290027-0000 | | 2 | WASHER | |
| 020 | 3010624-0000 | | 1 | CANTILEVER | |
| 030 | 2826728-0000 | | 1 | DRIVE PULLEY | |
| 040 | 2769682-0000 | | 1 | ,HAFT | |
| 050 | 2769686-0000 | | 1 | COVER | |
| 060 | 2769741-0000 | | 1 | SPACER | |
| 070 | 2769679-0000 | | 1 | .DRIVE SHAFT | |
| 080 | 2826737-0000 | | 1 | GUIDE | |
| 090 | 2826729-0000 | | 1 | PULLEY | |
| 100 | 2830225-0000 | | 1 | SPACER | |
| 120 | 2693990-0000 | | 2 | TIMING BELT | |
| 130 | 3039030-0000 | | 1 | TOOTHED PULLEY | |
| 140 | 2773600-0000 | | 1 | SPACER | |
| 150 | 2936506-0000 | | 1 | BRACKET | |
| 160 | 2943597-0000 | | 1 | PLATE | |
| 170 | 2944164-0000 | | 1 | PLATE | |
| 180 | 2778564-0000 | | 1 | WASHER | |
| 200 | 90091-0322 | | 2 | RADIAL SEAL 25X42X7 MM DUST LIP | |
| 210 | 90459-2644 | | 1 | NUT ROUND WITH SLOTS M30X1,5 SS | |
| 230 | 90214-0186 | | 2 | BALL BEARING 30/42X7 | |
| 240 | 90458-0507 | | 1 | PARALLEL KEY W. ROUND ENDS 6X6X60 MM | |
| 310 | 315202-0733 | | 1 | O-RING 45,69X2,62 MM | |
| 320 | 315221-0192 | | 1 | RADIAL SEAL 45X62X8 MM | |
| 330 | 315105-0136 | | 3 | WASHER BRB 4,3X8 RFR | |
| 350 | 315125-0165 | | 5 | WASHER TBRSB 8,4X26X5 A4 | |
| 370 | 315202-0705 | | 1 | O-RING 17,17X1,78 MM | |
| 410 | 90459-6280 | | 1 | NUT GUK 5 M25 X 1.5 FZB | |
| 420 | 312105-0327 | | 4 | SCREW M6S ISO 4017 M5X12 A480 | |
| 430 | 312105-0364 | | 3 | SCREW M6S ISO 4017 M6X10 A480 | |
| 460 | 315105-0124 | | 2 | WASHER BRB 3,2X6 RFR | |
| 470 | 312109-0467 | | 1 | SCREW M6S ISO 4017 M8X80 A480 | |
| 480 | 312115-0228 | | 2 | SCREW ISO4762 M3X16 A4 80 | |
| 490 | 315105-0146 | | 4 | WASHER BRB 5,3X10 RFR | |
| 520 | 315705-0232 | | 1 | PARALLEL KEY W. ROUND ENDS 6X6X20 MM | |
| 550 | 312605-0310 | | 2 | HEXAGON NUT, M6M M3 A280 | |
| 610 | 312109-0459 | | 2 | SCREW M6S ISO 4017 M8X40 A480 | |
| 620 | 312105-0473 | | 2 | SCREW M6S ISO 4014 M8X110 A480 | |
| 630 | 312105-0370 | | 2 | SCREW M6S ISO 4017 M6X20 A480 | |
| 640 | 321306-0104 | | 2 | BALL BEARING 20/42X12 | |
| 650 | 90157-0037 | ML | 1 | THREAD SEALANT LOCTITE 542 | |
| 660 | 352113-0205 | | 1 | ANCHOR PLATES FOR STRIPS, TYPE TM2S8-C10 | |
| 670 | 312125-0289 | | 1 | SCREW ISO 1207 M4X10 A4 | |
| 680 | 312105-0289 | | 3 | SCREW M6S H4X10 A4 70 ISO4017/DIN933 | |
| 690 | 312115-0364 | | 2 | SCREW ISO4762 M6X10 A4 80 | |
| 710 | 315105-0153 | | 3 | WASHER BRB 6,4X12 RFR | |
| 20B003 | 90600-4732 | | 1 | LASER SENSOR, WS/WE9L-P330 | |
| 20W003 | 90459-6586 | | 1 | ACT/SENS.Y-CABLE, ASBN 2-PRKMV 4-07/0,6M | |
| 20W030 | 351309-0100 | | 1 | ACTUATOR/SENSOR CABLE PRKT 4-07/10M | |

| Machine Type | Group Description | Used-In | Group Number | Page No |
|---|---|---|---|---|

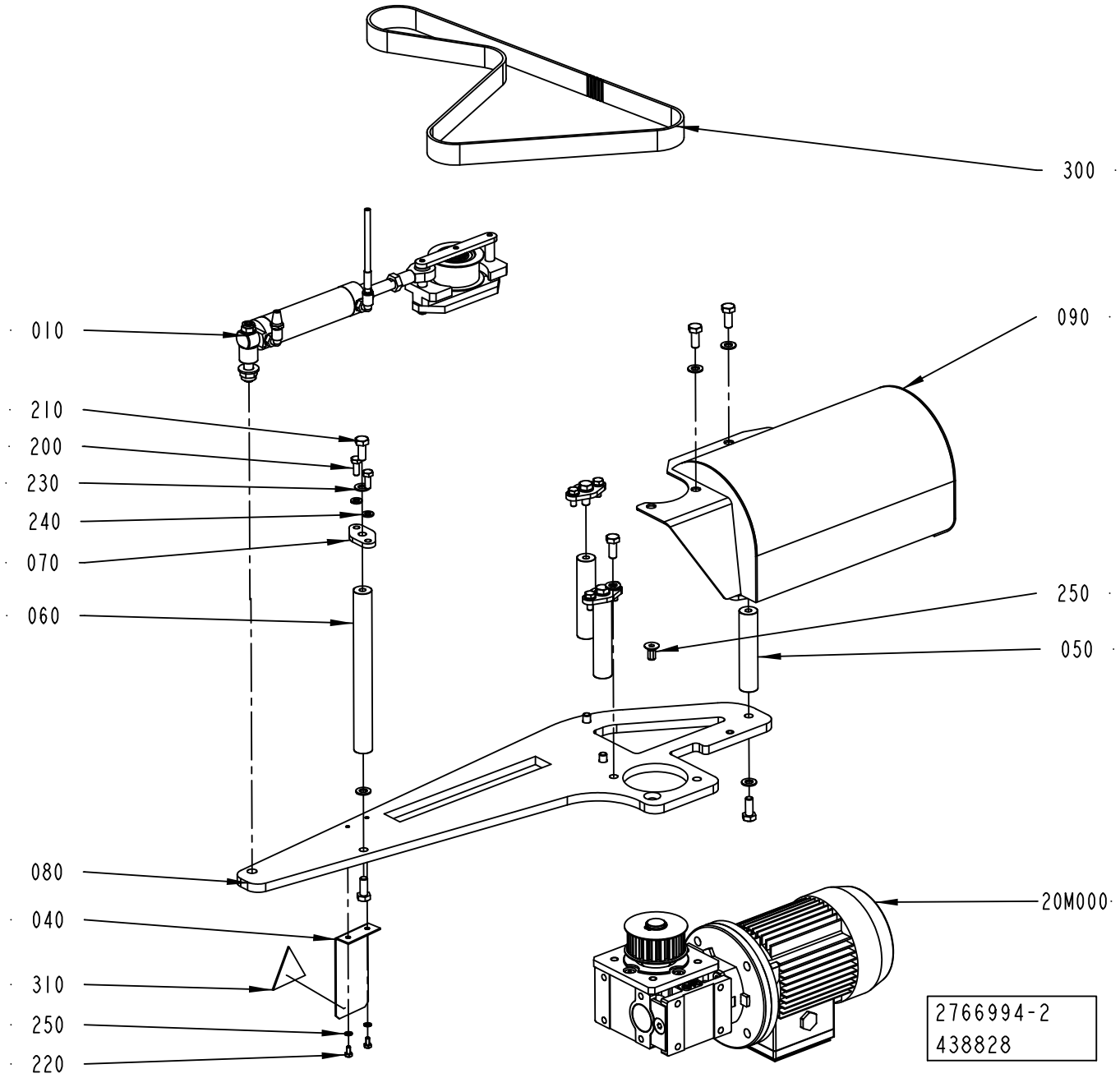
300
010
210
200
230
240
070
060
090
250
050
080
040
310
250
220
20M000
2766994-2
438828

ECM: 438860 - 20100701
Group number: 2766994-0200
Assembly Drawing: 2766994-2_1_AC

| Pos | Part No | UN | Qty | Description | Page No |
|---|---|---|---|---|---|
| - | | | | | |
| 010 | 2773636-0100 | | 1 | BELT STRETCHER | **1-13** |
| 040 | 2985847-0000 | | 1 | PLATE | |
| 050 | 2769773-0000 | | 3 | SPACER | |
| 060 | 2773601-0000 | | 1 | SPACER | |
| 070 | 2775412-0000 | | 4 | PLATE | |
| 080 | 3017287-0000 | | 1 | PLATE | |
| 090 | 2985832-0000 | | 1 | COVER | |
| 200 | 312105-0368 | | 8 | SCREW M6S ISO 4017 M6X16 A480 | |
| 210 | 312105-0451 | | 11 | SCREW M6S ISO 4017 M8X20 A480 | |
| 220 | 312105-0287 | | 2 | SCREW M6S ISO 4017 M4X8 A470 | |
| 230 | 315105-0165 | | 12 | WASHER BRB 8,4X16 RFR | |
| 240 | 315105-0153 | | 8 | WASHER BRB 6,4X12 RFR | |
| 250 | 315105-0136 | | 2 | WASHER BRB 4,3X8 RFR | |
| 260 | 312155-0449 | | 1 | SCREW DIN 7991 MF6S M8X16 A4 70 | |
| 300 | 90602-4674 | | 1 | TIMING BELT 25T10/1150-DL PU | |
| 310 | 359705-0021 | | 1 | WARNING SIGN ISO, PNEUMATIC ENERGY | |
| 20M000 | 2838710-0200 | | 1 | WORM GEAR MOTOR | **1-15** |

| Pos | Part No | UN | Qty | Description | Page No |
|---|---|---|---|---|---|

Machine Type | Group Description | Used-In | Group Number | Page No

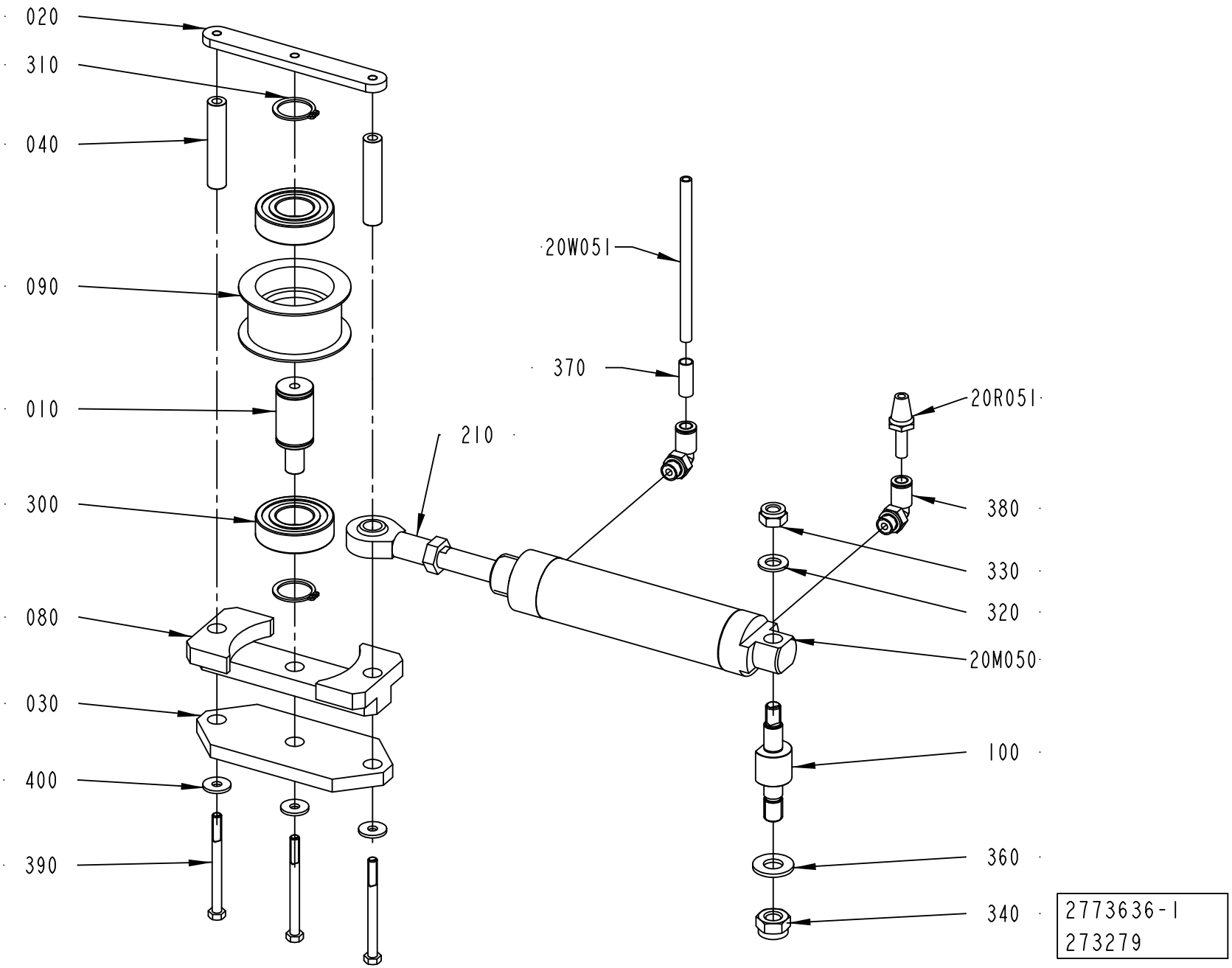
020
310
040
090
010
300
080
030
400
390
20W051
370
210
20R051
380
330
320
20M050
100
360
340
2773636-1
273279

ECM: 273309 - 20060921
Group number: 2773636-0100
Assembly Drawing: 2773636-1_1_AA

| Pos | Part No | UN | Qty | Description | Page No |
|---|---|---|---|---|---|
| - | | | | | |
| 010 | 2775398-0000 | | 1 | PIN | |
| 020 | 2773604-0000 | | 1 | PLATE | |
| 030 | 2773638-0000 | | 1 | PLATE | |
| 040 | 2773639-0000 | | 2 | SHAFT | |
| 080 | 2773637-0000 | | 1 | BRACKET | |
| 090 | 2773615-0000 | | 1 | ROLLER | |
| 100 | 2781292-0000 | | 1 | SHAFT | |
| 210 | 90115-0134 | | 1 | ROD END, ID=10 MM, M10X1,25 | |
| 300 | 321308-0204 | | 2 | BALL BEARING 20/42X12 | |
| 310 | 315751-0116 | | 2 | RETAINING RING FOR SHAFT DIN 471 20 SS | |
| 320 | 315105-0165 | | 1 | WASHER BRB 8,4X16 RFR | |
| 330 | 312812-0318 | | 1 | HEXAGON NUT, NY-LOCK M8 A480 | |
| 340 | 312812-0320 | | 1 | HEXAGON NUT, NY-LOCK M10 A480 | |
| 360 | 315105-0173 | | 1 | WASHER BRB 10,5X22 RFR | |
| 370 | 90459-7369 | | 1 | MARKING FOR PNEUM. TUBING, PRZ06 | |
| 380 | 350002-0006 | | 2 | PUSH-IN L-FITTING QSL-F-G1/8-6 | |
| 390 | 312105-0343 | | 3 | SCREW M6S ISO 4014 M5X60 A480 | |
| 400 | 90005-0139 | | 3 | WASHER PLAIN ROUND 5,2(M5)/15, H=1,6 | |
| 20M050 | 90600-1080 | | 1 | DOUBLE ACTING, ROUND, CYL 32-80 | |
| 20R051 | 90328-0017 | | 1 | SILENCER, D=6 MM | |
| 20W051 | 315400-0001 | M | 3 | TUBE PUN-H-6X1-BL | |

| Pos | Part No | UN | Qty | Description | Page No |
|---|---|---|---|---|---|

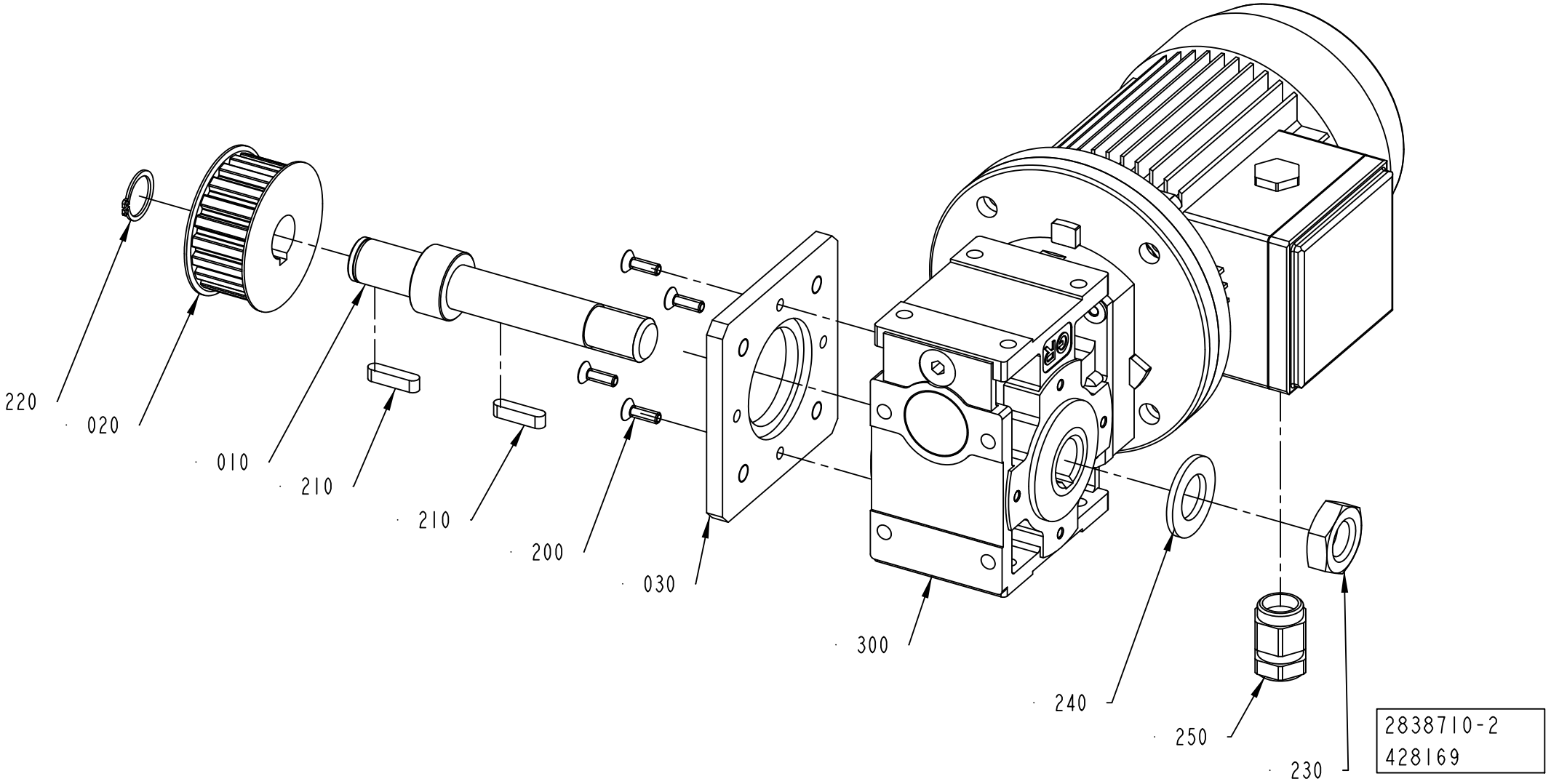
220
020
010
210
210
200
030
300
240
250
230
2838710-2
428169

ECM: 433239 - 20100401
Group number: 2838710-0200
Assembly Drawing: 2838710-2_1_AC

| Pos | Part No | UN | Qty | Description | Page No |
|---|---|---|---|---|---|
| - | | | | | |
| 010 | 3016909-0000 | | 1 | DRIVE SHAFT | |
| 020 | 3039030-0000 | | 1 | TOOTHED PULLEY | |
| 030 | 3017300-0000 | | 1 | FLANGE | |
| 200 | 312155-0329 | | 4 | SCREW DIN 7991 MF6S M5X16 A4 70 | |
| 210 | 315705-0234 | | 2 | PARALLEL KEY W. ROUND ENDS 6X6X25 MM | |
| 220 | 315751-0116 | | 1 | RETAINING RING FOR SHAFT DIN 471 20 SS | |
| 230 | 312625-0326 | | 1 | HEXAGON THIN NUT, EN 24035 ML6M M20 A4 | |
| 240 | 315106-0192 | | 1 | WASHER ISO 7089-20-200 HV A4 | |
| 250 | 90458-0438 | | 1 | GLAND, EXTENDED WITH INSERT, M20X1,5 | |
| 300 | 2985833-0000 | | 1 | WORM GEAR MOTOR | |

| Pos | Part No | UN | Qty | Description | Page No |
|---|---|---|---|---|---|

# PACKAGE POSITIONER



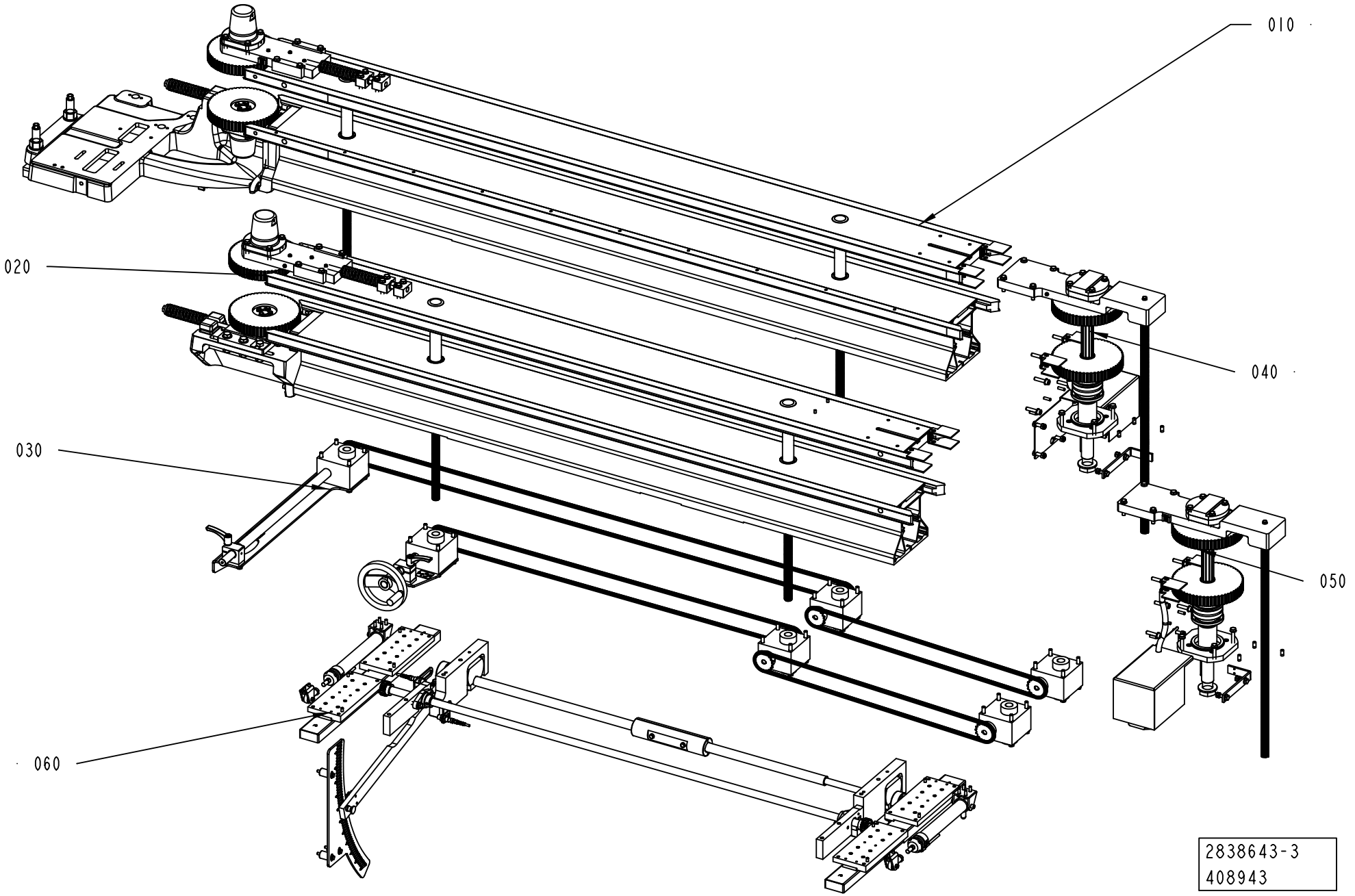

ECM: 408943 - 20091001
Group number: 2838643-0200
Assembly Drawing: 2838643-3_1_AA

| Pos | Part No | UN | Qty | Description | Page No |
|---|---|---|---|---|---|
| **TBA 1000B, TBA 1000SQ, TBA 1000S, TBA 1500S, TBA 1890S, TBA 2000S** | | | | | |
| 030 | 2838647-0100 | | 1 | SLIDING RACK | **1-19** |
| **Common Parts** | | | | | |
| 010 | 2838639-0200 | | 1 | PACKAGE POSITIONER | **1-23** |
| 020 | 2838644-0200 | | 1 | PACKAGE POSITIONER | **1-33** |
| 040 | 2838648-0200 | | 1 | DRIVE | **1-43** |
| 050 | 2838649-0200 | | 1 | DRIVE | **1-45** |
| 060 | 2838650-0100 | | 1 | SLIDING RACK | **1-47** |

| Pos | Part No | UN | Qty | Description | Page No |
|---|---|---|---|---|---|

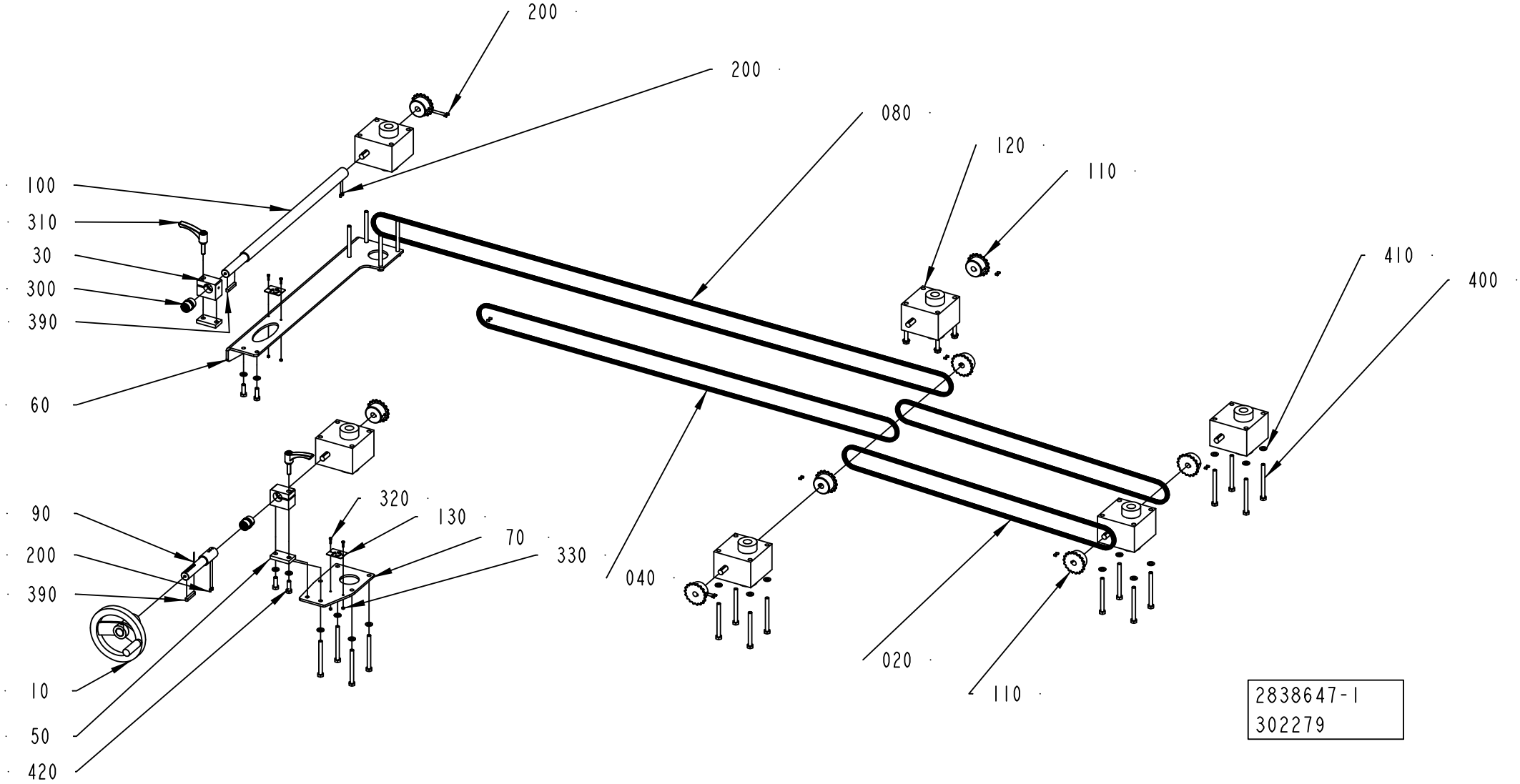
200
200
080
120
110
100
310
30
300
390
60
410
400
90
200
390
320
130
70
330
040
020
10
50
420
110
2838647-1
302279

ECM: 308667 - 20070525
Group number: 2838647-0100
Assembly Drawing: 2838647-1_1_AB

| Pos | Part No | UN | Qty | Description | Page No |
|---|---|---|---|---|---|
| - | | | | | |
| 010 | 2802404-0100 | | 1 | HANDLE ..... | **1-21** |
| 020 | 90600-0961 | | 2 | ROLLER CHAIN, SINGLE 3/8 -159 | |
| 030 | 2769726-0000 | | 2 | BRACKET | |
| 040 | 90600-0962 | | 1 | ROLLER CHAIN, SINGLE 3/8 -243 | |
| 050 | 2778594-0000 | | 2 | PLATE | |
| 060 | 2779063-0000 | | 1 | PLATE | |
| 070 | 2779759-0000 | | 1 | PLATE | |
| 080 | 90600-0964 | | 1 | ROLLER CHAIN, SINGLE 3/8 -333 | |
| 090 | 2769729-0000 | | 1 | SHAFT | |
| 100 | 2779756-0000 | | 1 | SHAFT | |
| 110 | 2779062-0000 | | 8 | SPROCKET | |
| 120 | 90600-0812 | | 6 | GEAR BOX, TP00042000110 | |
| 130 | 2873941-0000 | | 2 | SIGN | |
| 200 | 312318-0285 | | 20 | SCREW ISO4029 M4X6 A4 | |
| 300 | 90458-2932 | | 2 | PLAIN BEARING, JUM-02-20 | |
| 310 | 90017-0029 | | 2 | LOCKING LEVER, NO. KR8X30-SUS | |
| 320 | 90287-0175 | | 4 | SCREW M6S M3X12 A480 | |
| 330 | 312605-0310 | | 4 | HEXAGON NUT, M6M M3 A280 | |
| 390 | 315705-0239 | | 2 | PARALLEL KEY W. ROUND ENDS 6X6X40 MM | |
| 400 | 312105-0469 | | 24 | SCREW M6S ISO 4014 M8X90 A480 | |
| 410 | 315105-0165 | | 28 | WASHER BRB 8,4X16 RFR | |
| 420 | 312105-0453 | | 4 | SCREW M6S ISO 4017 M8X25 A480 | |

| Pos | Part No | UN | Qty | Description | Page No |
|---|---|---|---|---|---|

Machine Type | Group Description | Used-In | Group Number | Page No

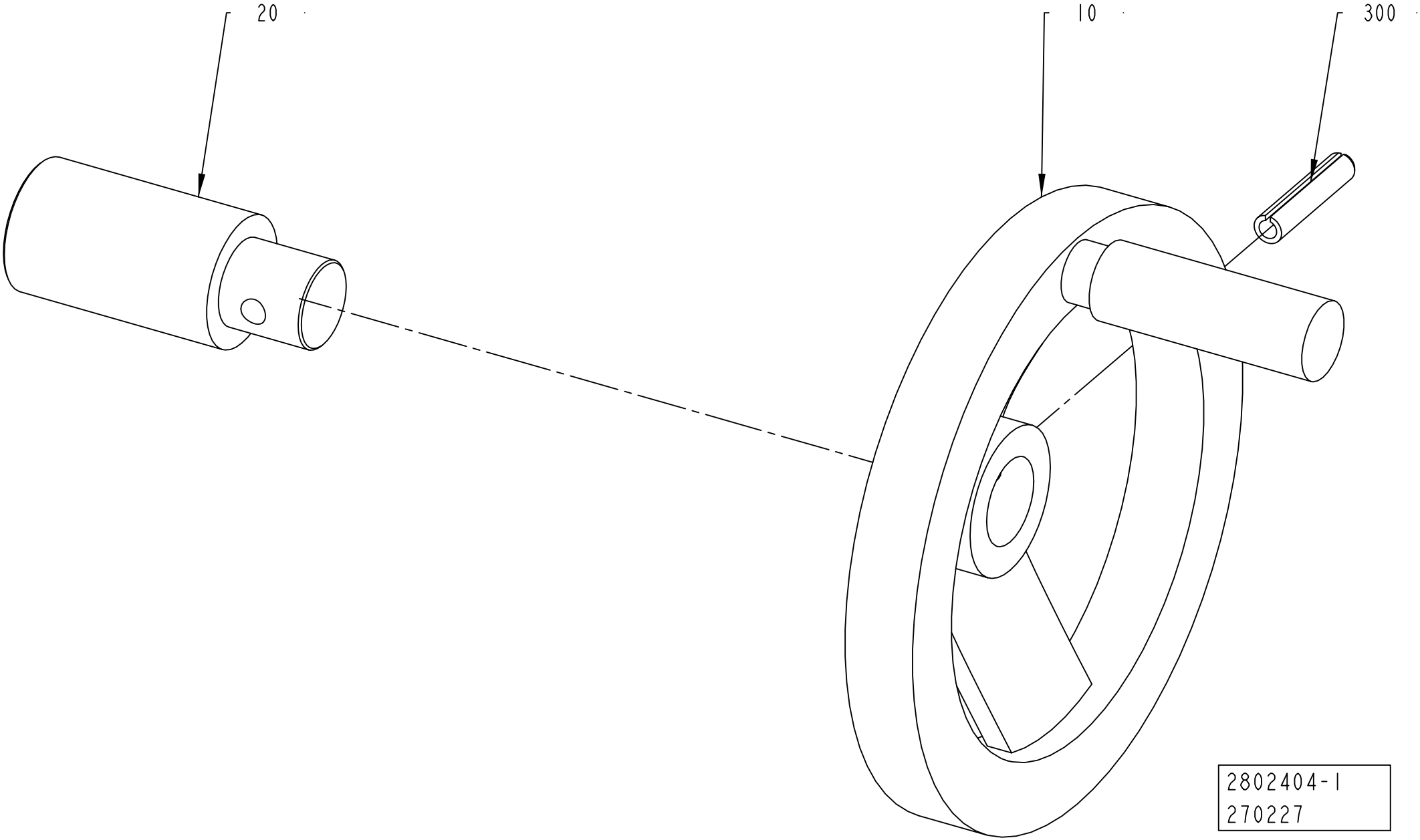
20
10
300
2802404-1
270227

ECM: 273295 - 20060921
Group number: 2802404-0100
Assembly Drawing: 2802404-1_1_AA

| Pos | Part No | UN | Qty | Description | Page No |
|---|---|---|---|---|---|
| - | | | | | |
| 010 | 2781286-0000 | | 1 | HAND WHEEL | |
| 020 | 2788144-0000 | | 1 | SHAFT | |
| 300 | 311112-0345 | | 1 | SPRING PIN, ISO 8752 6X32-C | |

| Pos | Part No | UN | Qty | Description | Page No |
|---|---|---|---|---|---|

# PACKAGE POSITIONER



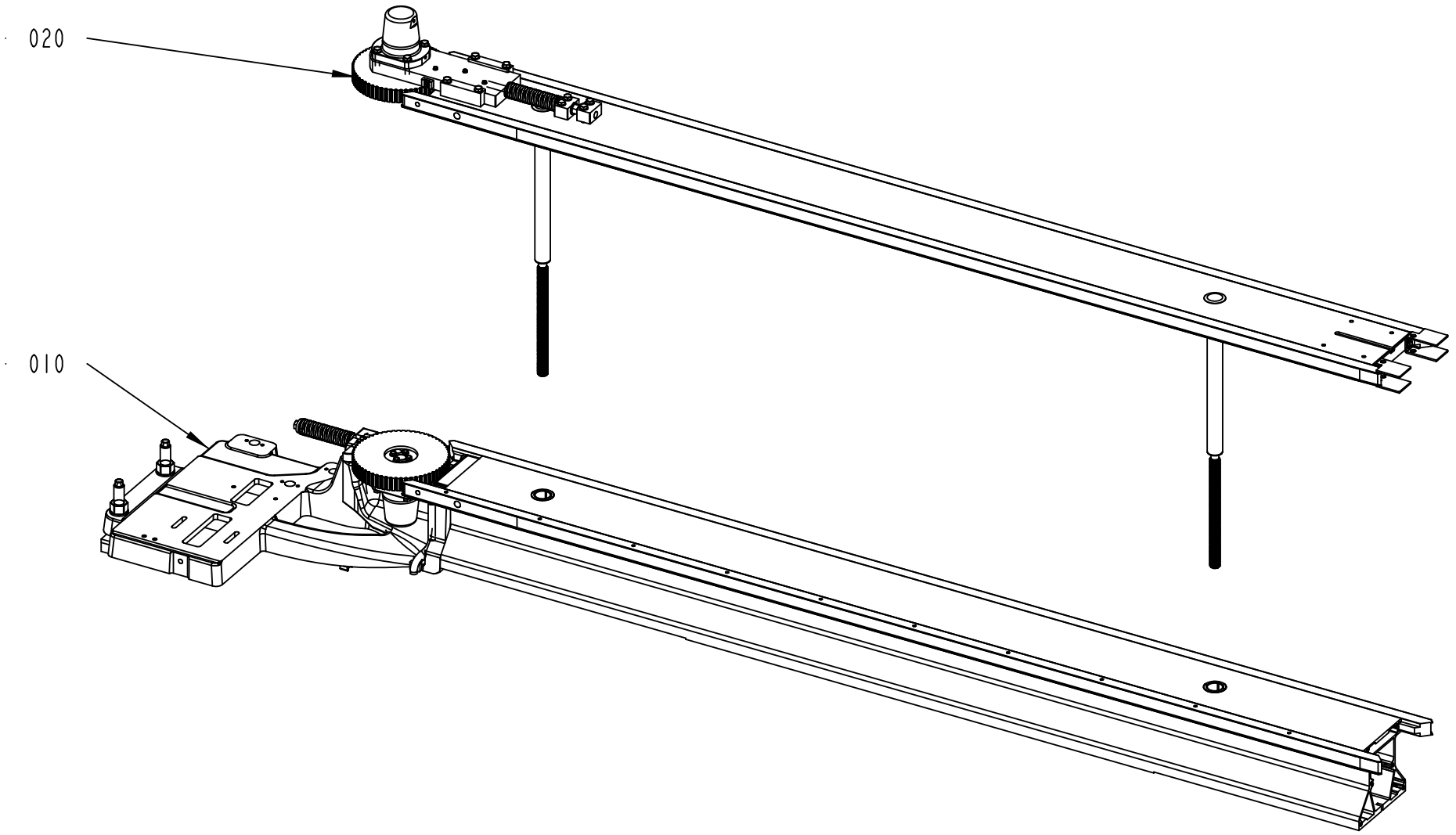


2838639-3
402952

ECM: 407686 - 20091001
Group number: 2838639-0200
Assembly Drawing: 2838639-3_1_AA

| Pos | Part No | UN | Qty | Description | Page No |
|---|---|---|---|---|---|
| **TBA 1000B, TBA 1000SQ, TBA 1000S, TBA 1500S, TBA 1890S, TBA 2000S** | | | | | |
| 020 | 2838641-0200 | | 1 | BELT | **1-25** |
| **Common Parts** | | | | | |
| 010 | 2838640-0100 | | 1 | BELT UNIT | **1-29** |

| Pos | Part No | UN | Qty | Description | Page No |
|---|---|---|---|---|---|

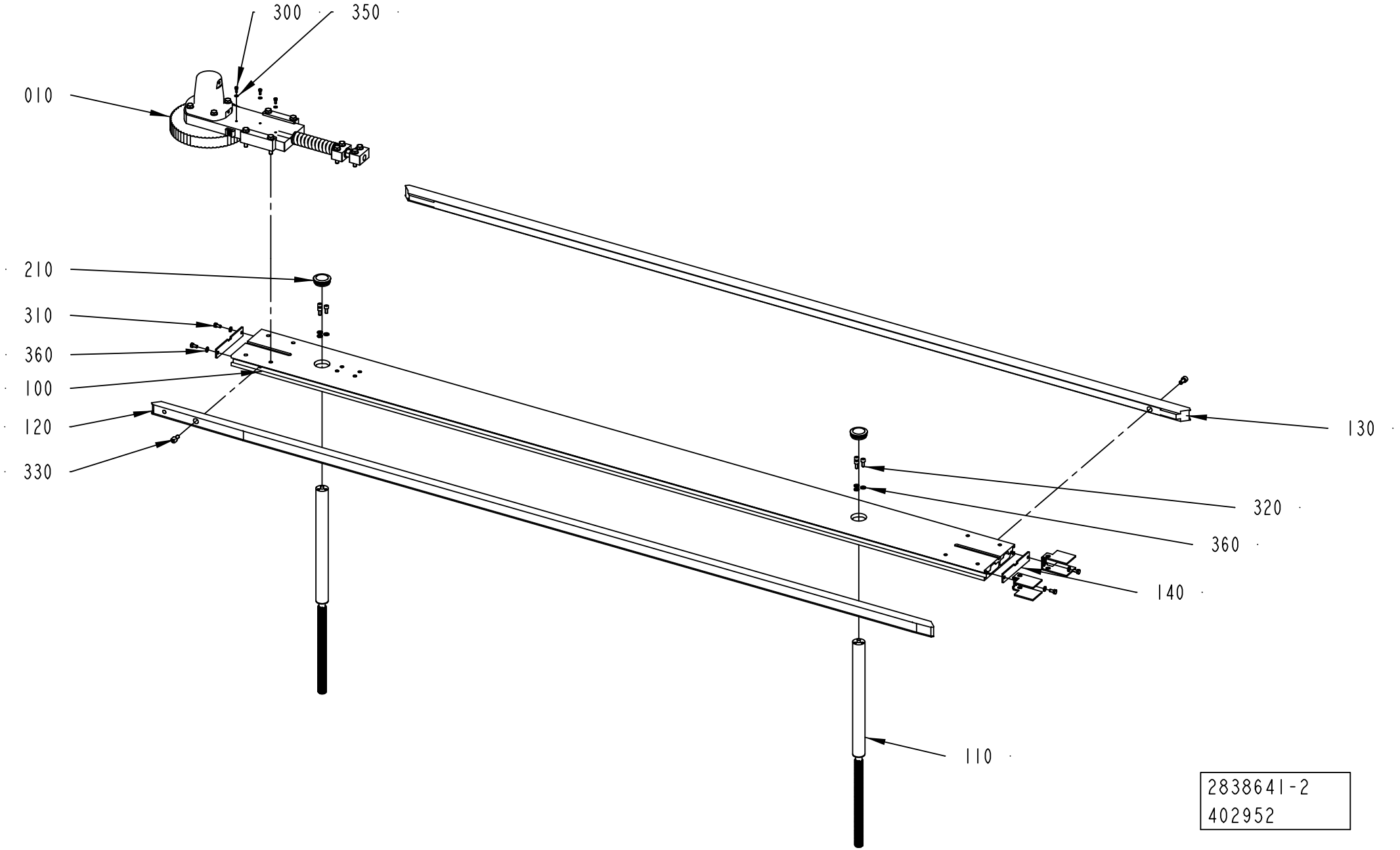
300
350
010
210
310
360
100
120
330
130
320
360
140
110
2838641-2
402952

ECM: 407687 - 20091001
Group number: 2838641-0200
Assembly Drawing: 2838641-2_1_AA

| Pos | Part No | UN | Qty | Description | Page No |
|---|---|---|---|---|---|
| - | | | | | |
| 010 | 2766954-0100 | | 1 | BELT STRETCHER ..... | **1-27** |
| 100 | 2766615-0000 | | 1 | FRAME | |
| 110 | 2766927-0000 | | 2 | PILLAR | |
| 120 | 2766611-0000 | | 1 | GUIDE | |
| 130 | 2773616-0000 | | 1 | GUIDE | |
| 140 | 2788134-0000 | | 2 | COVER | |
| 150 | 3043254-0000 | | 2 | COVER | |
| 210 | 90261-0064 | | 2 | PLUG, BLIND, PLASTIC, NO. SFL42 | |
| 300 | 312105-0289 | | 3 | SCREW M6S H4X10 A4 70 ISO4017/DIN933 | |
| 310 | 312105-0366 | | 4 | SCREW M6S ISO 4017 M6X12 A480 | |
| 320 | 312115-0367 | | 6 | SCREW ISO4762 M6X14 A4 80 | |
| 330 | 312115-0449 | | 2 | SCREW ISO4762 M8X16 A4 80 | |
| 350 | 315105-0136 | | 3 | WASHER BRB 4,3X8 RFR | |
| 360 | 315105-0153 | | 10 | WASHER BRB 6,4X12 RFR | |

| Pos | Part No | UN | Qty | Description | Page No |
|---|---|---|---|---|---|

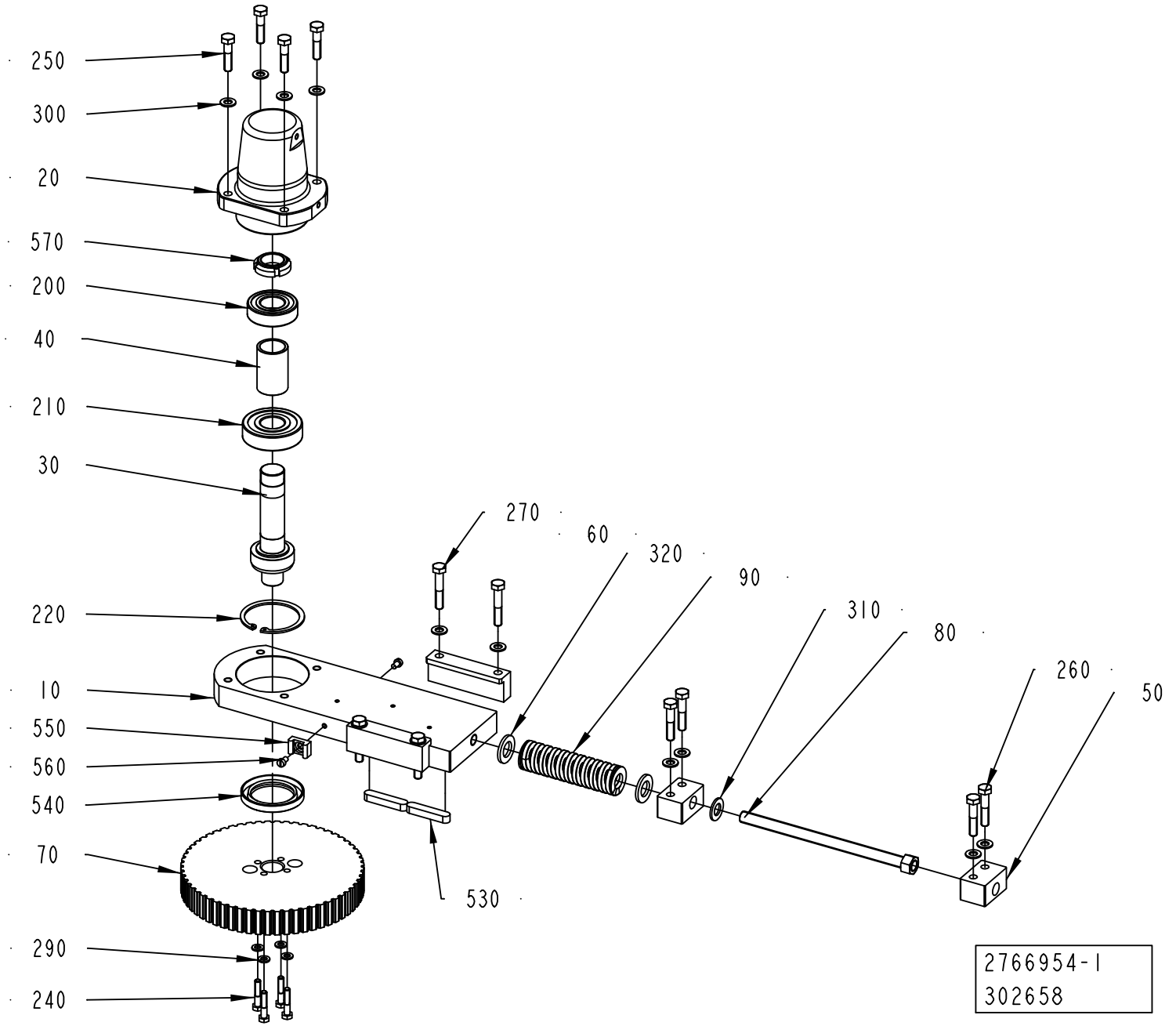
250
300
20
570
200
40
210
30
220
10
550
560
540
70
290
240
270
60
320
90
310
80
260
50
530
2766954-1
302658

ECM: 394267 - 20090701
Group number: 2766954-0100
Assembly Drawing: 2766954-1_1_AB

| Pos | Part No | UN | Qty | Description | Page No |
|---|---|---|---|---|---|
| - | | | | | |
| 010 | 2766953-0000 | | 1 | PLATE | |
| 020 | 3022796-0000 | | 1 | BELLOWS | |
| 030 | 2766958-0000 | | 1 | SHAFT | |
| 040 | 2766959-0000 | | 1 | SPACER | |
| 050 | 2766962-0000 | | 2 | BLOCK | |
| 060 | 2766963-0000 | | 2 | BRACKET | |
| 070 | 2766981-0000 | | 1 | TOOTHED PULLEY | |
| 080 | 2817784-0000 | | 1 | SCREW | |
| 090 | 2830224-0000 | | 1 | TENSION SPRING | |
| 200 | 321309-0105 | | 1 | BALL BEARING 25/52X15 | |
| 210 | 321314-0105 | | 1 | BALL BEARING 25/62X17 | |
| 220 | 315752-0136 | | 1 | RETAINING RING FOR BORE DIN 472 62 | |
| 240 | 312105-0374 | | 4 | SCREW M6S ISO 4014 M6X30 A480 | |
| 250 | 312105-0457 | | 4 | SCREW M6S ISO 4014 M8X35 A480 | |
| 260 | 312105-0459 | | 4 | SCREW M6S ISO 4014 M8X40 A480 | |
| 270 | 312105-0460 | | 4 | SCREW M6S ISO 4014 M8X45 A480 | |
| 290 | 315105-0153 | | 4 | WASHER BRB 6,4X12 RFR | |
| 300 | 315105-0165 | | 12 | WASHER BRB 8,4X16 RFR | |
| 310 | 315105-0178 | | 1 | WASHER BRB 13X24 RFR | |
| 320 | 315105-0186 | | 2 | WASHER BRB 17X30 RFR | |
| 530 | 315705-0303 | | 2 | PARALLEL KEY W. ROUND ENDS 10X8X50 MM | |
| 540 | 90091-0304 | | 1 | RADIAL SEAL 45X65X8 MM DUST LIP | |
| 550 | 352113-0204 | | 1 | ANCHOR PLATES FOR STRIPS, TYPE TM3S25-M | |
| 560 | 312125-0323 | | 2 | SCREW ISO 1207 M5X8 A4 | |
| 570 | 90459-6280 | | 1 | NUT GUK 5 M25 X 1.5 FZB | |

| Pos | Part No | UN | Qty | Description | Page No |
|---|---|---|---|---|---|

| Machine Type | Group Description | Used-In | Group Number | Page No |
|---|---|---|---|---|

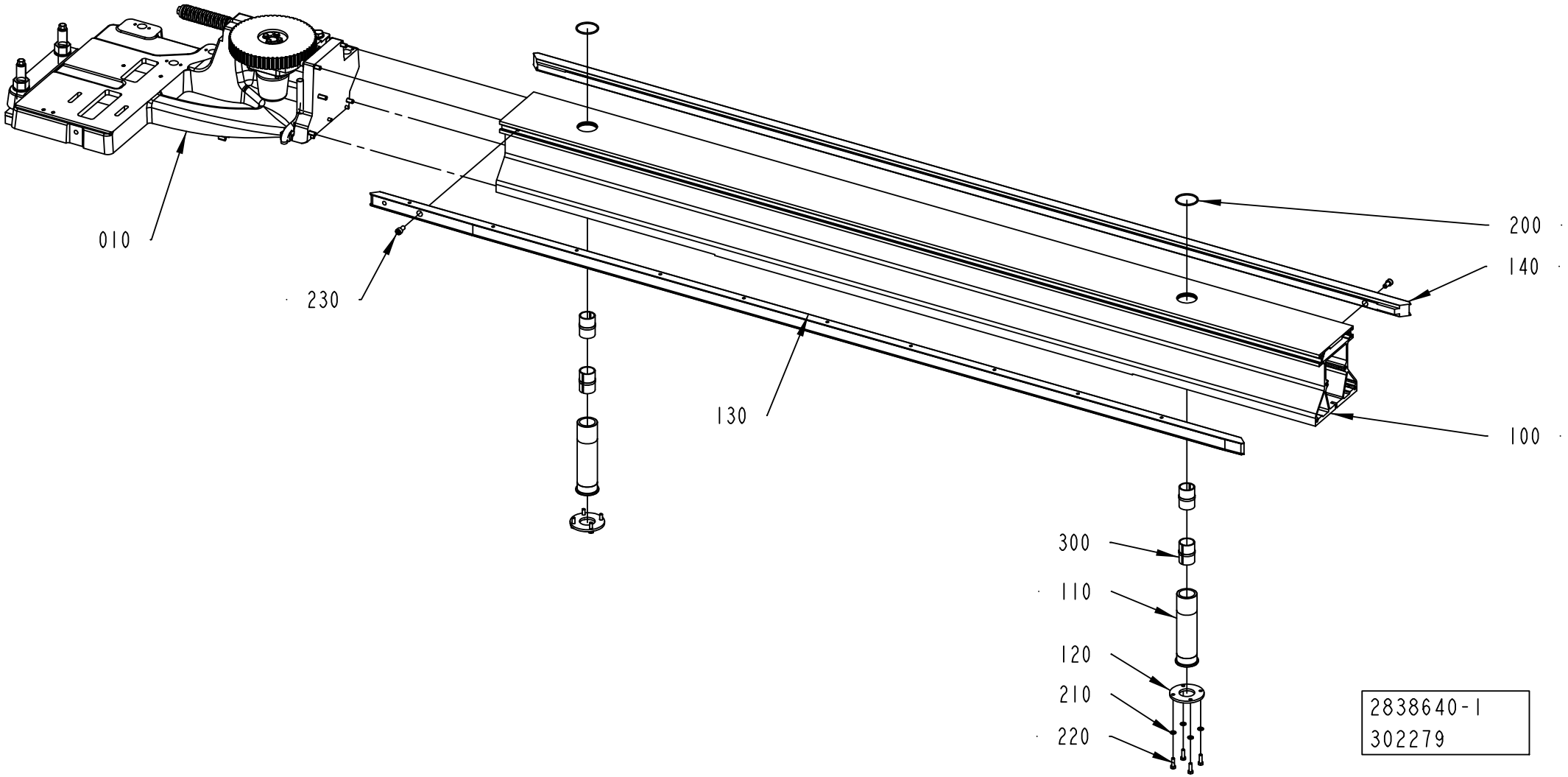
010
230
130
200
140
100
300
110
120
210
220
2838640-1
302279

ECM: 308663 - 20070525
Group number: 2838640-0100
Assembly Drawing: 2838640-1_1_AB

| Pos | Part No | UN | Qty | Description | Page No |
|---|---|---|---|---|---|
| - | | | | | |
| 010 | 2766980-0100 | | 1 | BELT STRETCHER ..... | **1-31** |
| 100 | 2766610-0000 | | 1 | FRAME | |
| 110 | 2766974-0000 | | 2 | SLEEVE | |
| 120 | 2766976-0000 | | 2 | FLANGE | |
| 130 | 2873879-0000 | | 1 | GUIDE | |
| 140 | 2773616-0000 | | 1 | GUIDE | |
| 200 | 315202-0732 | | 2 | O-RING 44,12X2,62 MM | |
| 210 | 315105-0153 | | 8 | WASHER BRB 6,4X12 RFR | |
| 220 | 312105-0370 | | 8 | SCREW M6S ISO 4017 M6X20 A480 | |
| 230 | 312115-0449 | | 2 | SCREW ISO4762 M8X16 A4 80 | |
| 300 | 90600-0798 | | 4 | BUSHING INSERT, JUM-02-30 | |

| Pos | Part No | UN | Qty | Description | Page No |
|---|---|---|---|---|---|

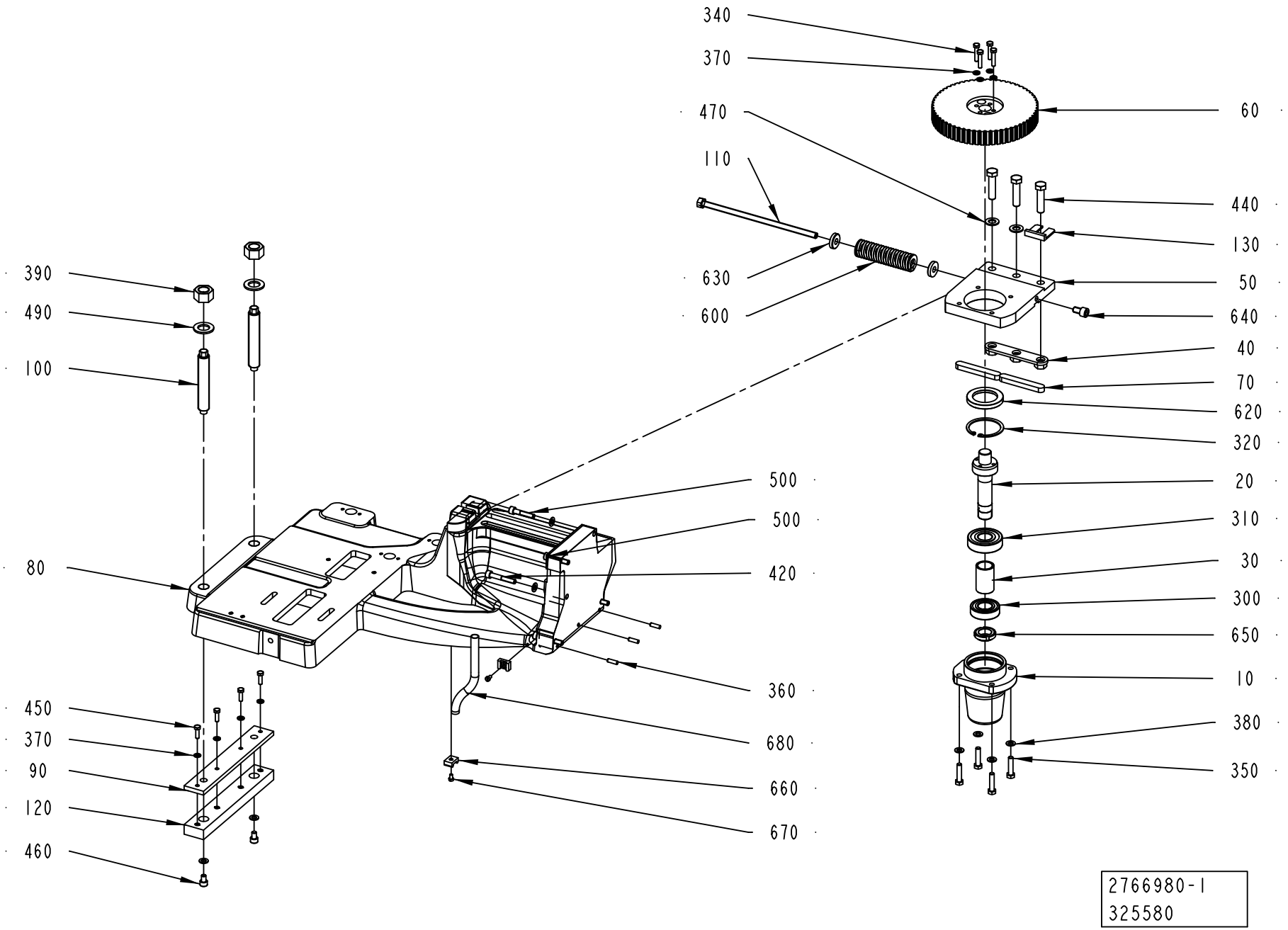
340
370
470
110
630
600
60
440
130
50
640
40
70
620
320
20
310
30
300
650
10
380
350
390
490
100
80
450
370
90
120
460
500
500
420
360
680
660
670
2766980-1
325580

ECM: 394268 - 20090701
Group number: 2766980-0100
Assembly Drawing: 2766980-1_1_AC

| Pos | Part No | UN | Qty | Description | Page No |
|---|---|---|---|---|---|
| - | | | | | |
| 010 | 3022796-0000 | | 1 | BELLOWS | |
| 020 | 2766958-0000 | | 1 | SHAFT | |
| 030 | 2766959-0000 | | 1 | SPACER | |
| 040 | 2775417-0000 | | 1 | BRACKET | |
| 050 | 2766989-0000 | | 1 | BRACKET | |
| 060 | 2766981-0000 | | 1 | TOOTHED PULLEY | |
| 070 | 315701-0371 | | 2 | PARALLEL KEY W. ROUND ENDS 14X9X90 MM | |
| 080 | 2769746-0000 | | 1 | FRAME | |
| 090 | 2775423-0000 | | 1 | PLATE | |
| 100 | 2775421-0000 | | 2 | SCREW | |
| 110 | 2805467-0000 | | 1 | SCREW | |
| 120 | 2775420-0000 | | 1 | SLIDE | |
| 130 | 2937337-0000 | | 1 | SPACER | |
| 300 | 321309-0105 | | 1 | BALL BEARING 25/52X15 | |
| 310 | 321314-0105 | | 1 | BALL BEARING 25/62X17 | |
| 320 | 315752-0136 | | 1 | RETAINING RING FOR BORE DIN 472 62 | |
| 340 | 312105-0374 | | 4 | SCREW M6S ISO 4014 M6X30 A480 | |
| 350 | 312105-0457 | | 4 | SCREW M6S ISO 4014 M8X35 A480 | |
| 360 | 311103-0353 | | 3 | PARALLEL PIN ISO 2338 6M6X20 A1 | |
| 370 | 315105-0153 | | 8 | WASHER BRB 6,4X12 RFR | |
| 380 | 315105-0165 | | 11 | WASHER BRB 8,4X16 RFR | |
| 390 | 312607-0326 | | 2 | HEXAGON NUT, EN 24032 M6M M20 A480 | |
| 420 | 312115-0461 | | 2 | SCREW ISO4762 M8X50 A4 80 | |
| 440 | 312109-0542 | | 3 | SCREW M6S ISO 4017 M12X50 A280 | |
| 450 | 312105-0370 | | 4 | SCREW M6S ISO 4017 M6X20 A480 | |
| 460 | 312115-0447 | | 2 | SCREW ISO4762 M8X12 A4 80 | |
| 470 | 315105-0178 | | 2 | WASHER BRB 13X24 RFR | |
| 490 | 315105-0192 | | 2 | WASHER BRB 21X36 RFR | |
| 500 | 312115-0459 | | 3 | SCREW ISO4762 M8X40 A4 80 | |
| 600 | 2830224-0000 | | 1 | TENSION SPRING | |
| 620 | 90091-0304 | | 1 | RADIAL SEAL 45X65X8 MM DUST LIP | |
| 630 | 315125-0173 | | 2 | WASHER TBRSB 10,5X28X6 A4 | |
| 640 | 312115-0489 | | 1 | SCREW ISO4762 M10X16 A4 80 | |
| 650 | 90459-6280 | | 1 | NUT GUK 5 M25 X 1.5 FZB | |
| 660 | 352113-0204 | | 2 | ANCHOR PLATES FOR STRIPS, TYPE TM3S25-M | |
| 670 | 312125-0323 | | 2 | SCREW ISO 1207 M5X8 A4 | |
| 680 | 90166-0126 | M | 3 | TUBE 12 MM PA,TRANSP. | |

| Pos | Part No | UN | Qty | Description | Page No |
|---|---|---|---|---|---|

| Machine Type | Group Description | Used-In | Group Number | Page No |
|---|---|---|---|---|

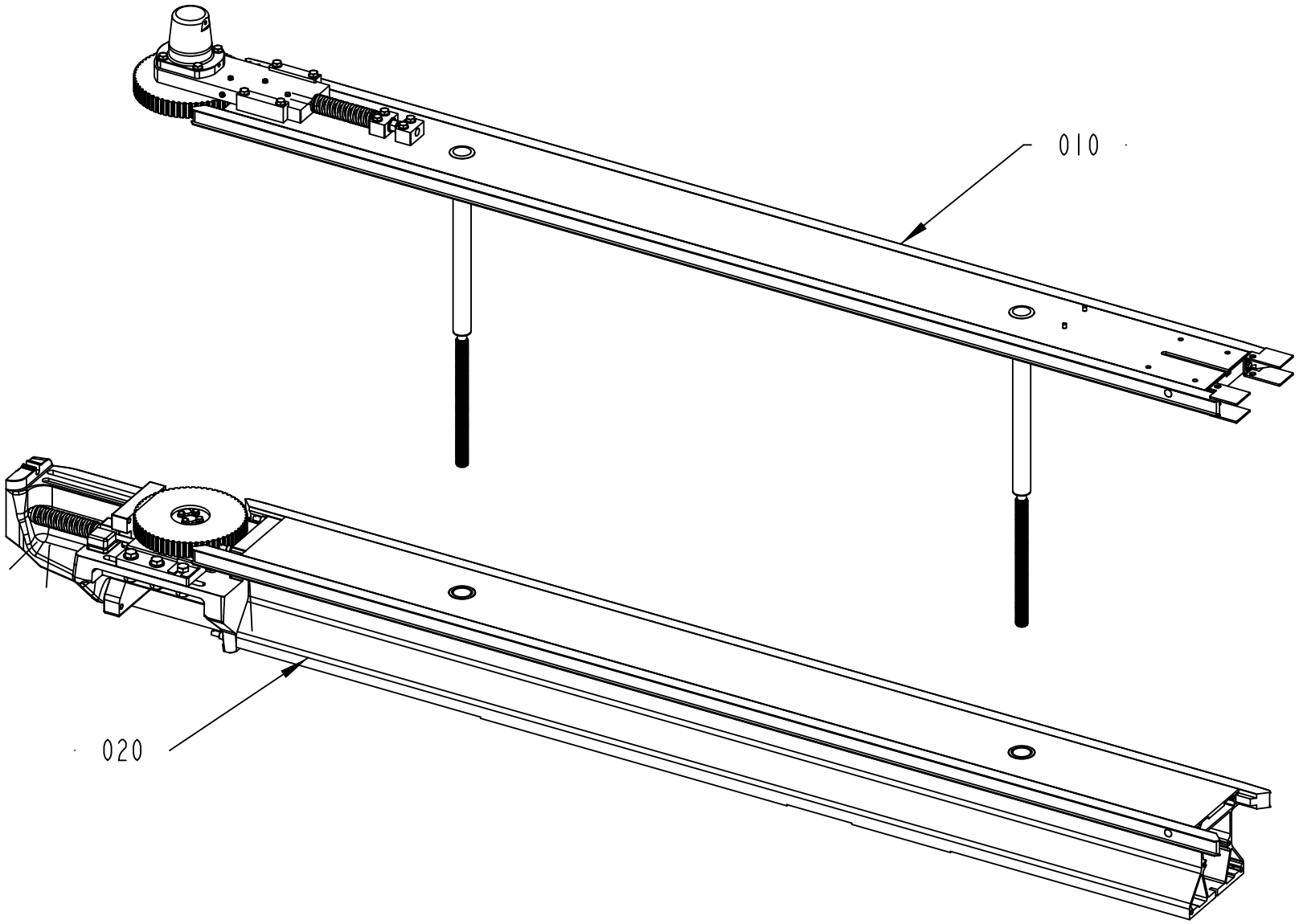
010
020
2838644-3
402952

ECM: 407689 - 20091001
Group number: 2838644-0200
Assembly Drawing: 2838644-3_1_AA

| Pos | Part No | UN | Qty | Description | Page No |
|---|---|---|---|---|---|
| **TBA 1000B, TBA 1000SQ, TBA 1000S, TBA 1500S, TBA 1890S, TBA 2000S** | | | | | |
| 010 | 2838645-0200 | | 1 | BELT | **1-35** |
| **Common Parts** | | | | | |
| 020 | 2838646-0100 | | 1 | BELT UNIT | **1-39** |

| Pos | Part No | UN | Qty | Description | Page No |
|---|---|---|---|---|---|

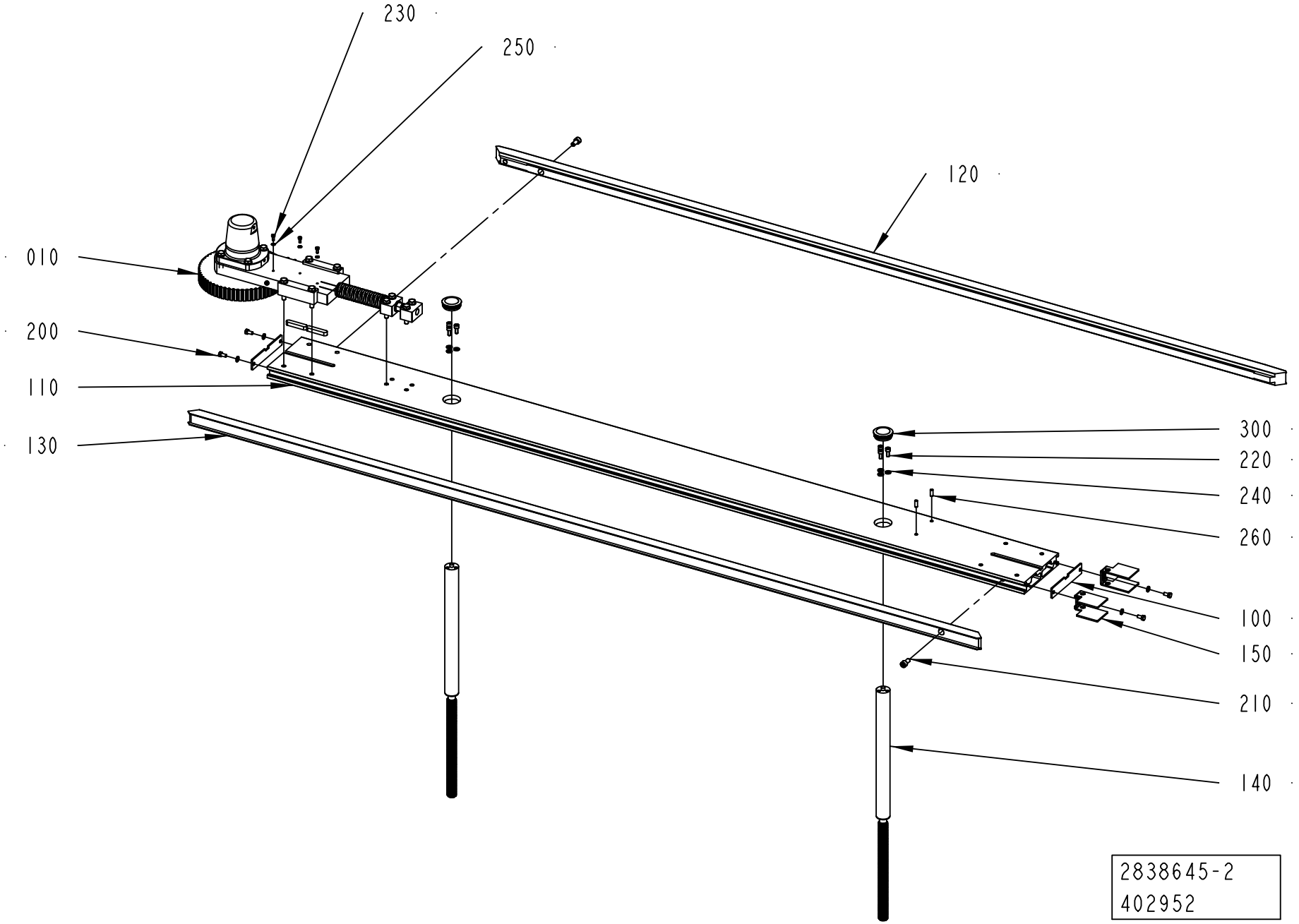
230
250
120
010
200
110
130
300
220
240
260
100
150
210
140
2838645-2
402952

ECM: 407690 - 20091001
Group number: 2838645-0200
Assembly Drawing: 2838645-2_1_AA

| Pos | Part No | UN | Qty | Description | Page No |
|---|---|---|---|---|---|
| - | | | | | |
| 010 | 2778572-0100 | | 1 | BELT STRETCHER ..... | **1-37** |
| 100 | 2788134-0000 | | 2 | COVER | |
| 110 | 2778588-0000 | | 1 | FRAME | |
| 120 | 2779774-0000 | | 1 | GUIDE | |
| 130 | 2779775-0000 | | 1 | GUIDE | |
| 140 | 2766927-0000 | | 2 | PILLAR | |
| 150 | 3043254-0000 | | 2 | COVER | |
| 200 | 312105-0366 | | 4 | SCREW M6S ISO 4017 M6X12 A480 | |
| 210 | 312115-0449 | | 2 | SCREW ISO4762 M8X16 A4 80 | |
| 220 | 312115-0367 | | 6 | SCREW ISO4762 M6X14 A4 80 | |
| 230 | 312105-0289 | | 3 | SCREW M6S H4X10 A4 70 ISO4017/DIN933 | |
| 240 | 315105-0153 | | 10 | WASHER BRB 6,4X12 RFR | |
| 250 | 315105-0136 | | 3 | WASHER BRB 4,3X8 RFR | |
| 260 | 311103-0351 | | 2 | PARALLEL PIN ISO 2338 6M6X16 A1 | |
| 300 | 90261-0064 | | 2 | PLUG, BLIND, PLASTIC, NO. SFL42 | |

| Pos | Part No | UN | Qty | Description | Page No |
|---|---|---|---|---|---|

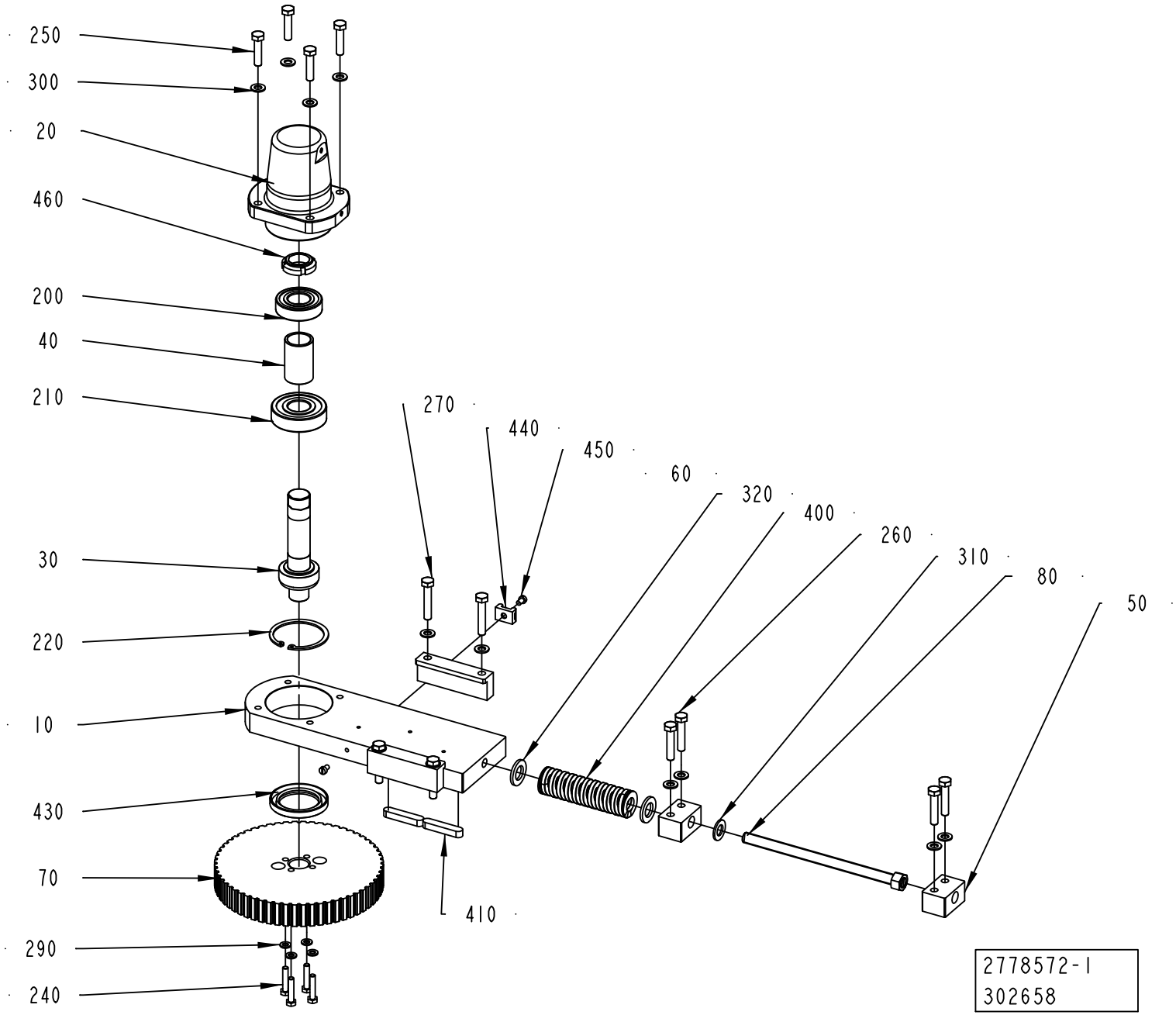
250
300
20
460
200
40
210
30
220
10
430
70
290
240
270
440
450
60
320
400
260
310
80
50
410
2778572-1
302658

ECM: 394270 - 20090701
Group number: 2778572-0100
Assembly Drawing: 2778572-1_1_AB

| Pos | Part No | UN | Qty | Description | Page No |
|---|---|---|---|---|---|
| - | | | | | |
| 010 | 2766953-0000 | | 1 | PLATE | |
| 020 | 3022796-0000 | | 1 | BELLOWS | |
| 030 | 2766958-0000 | | 1 | SHAFT | |
| 040 | 2766959-0000 | | 1 | SPACER | |
| 050 | 2766962-0000 | | 2 | BLOCK | |
| 060 | 2766963-0000 | | 2 | BRACKET | |
| 070 | 2766981-0000 | | 1 | TOOTHED PULLEY | |
| 080 | 2817784-0000 | | 1 | SCREW | |
| 200 | 321309-0105 | | 1 | BALL BEARING 25/52X15 | |
| 210 | 321314-0105 | | 1 | BALL BEARING 25/62X17 | |
| 220 | 315752-0136 | | 1 | RETAINING RING FOR BORE DIN 472 62 | |
| 240 | 312105-0374 | | 4 | SCREW M6S ISO 4014 M6X30 A480 | |
| 250 | 312105-0457 | | 4 | SCREW M6S ISO 4014 M8X35 A480 | |
| 260 | 312105-0459 | | 4 | SCREW M6S ISO 4014 M8X40 A480 | |
| 270 | 312105-0460 | | 4 | SCREW M6S ISO 4014 M8X45 A480 | |
| 290 | 315105-0153 | | 4 | WASHER BRB 6,4X12 RFR | |
| 300 | 315105-0165 | | 12 | WASHER BRB 8,4X16 RFR | |
| 310 | 315105-0178 | | 1 | WASHER BRB 13X24 RFR | |
| 320 | 315105-0186 | | 2 | WASHER BRB 17X30 RFR | |
| 400 | 2830224-0000 | | 1 | TENSION SPRING | |
| 410 | 315705-0303 | | 2 | PARALLEL KEY W. ROUND ENDS 10X8X50 MM | |
| 430 | 90091-0304 | | 1 | RADIAL SEAL 45X65X8 MM DUST LIP | |
| 440 | 352113-0204 | | 1 | ANCHOR PLATES FOR STRIPS, TYPE TM3S25-M | |
| 450 | 312125-0323 | | 2 | SCREW ISO 1207 M5X8 A4 | |
| 460 | 90459-6280 | | 1 | NUT GUK 5 M25 X 1.5 FZB | |

| Pos | Part No | UN | Qty | Description | Page No |
|---|---|---|---|---|---|

Machine Type | Group Description | Used-In | Group Number | Page No

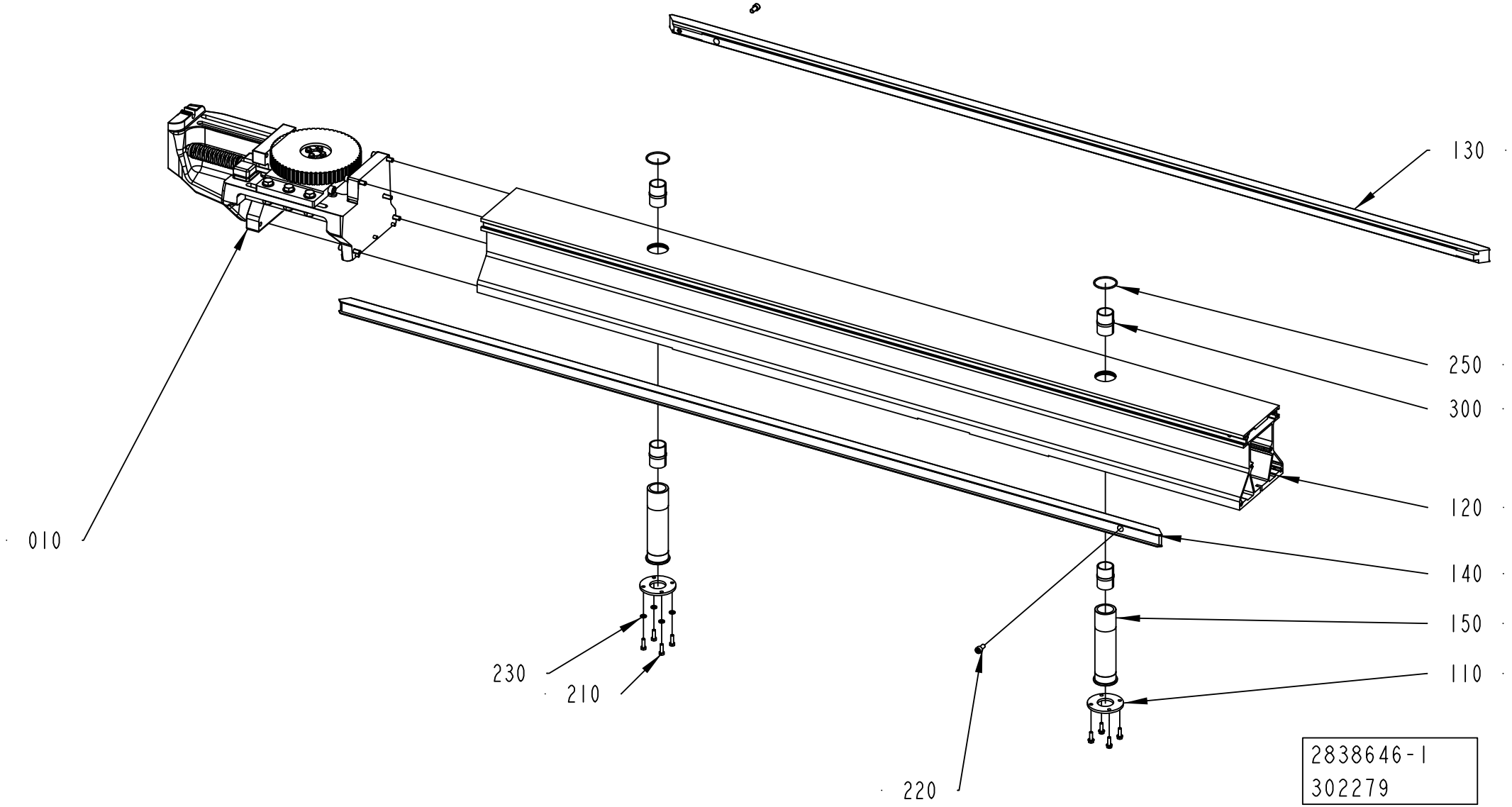
130
250
300
120
140
150
110
010
230
210
220
2838646-1
302279

ECM: 308666 - 20070525
Group number: 2838646-0100
Assembly Drawing: 2838646-1_1_AB

| Pos | Part No | UN | Qty | Description | Page No |
|---|---|---|---|---|---|
| - | | | | | |
| 010 | 2769743-0100 | | 1 | BELT STRETCHER ..... | **1-41** |
| 110 | 2766976-0000 | | 2 | FLANGE | |
| 120 | 2778570-0000 | | 1 | FRAME | |
| 130 | 2873878-0000 | | 1 | GUIDE | |
| 140 | 2779775-0000 | | 1 | GUIDE | |
| 150 | 2766974-0000 | | 2 | SLEEVE | |
| 210 | 312105-0370 | | 8 | SCREW M6S ISO 4017 M6X20 A480 | |
| 220 | 312115-0449 | | 2 | SCREW ISO4762 M8X16 A4 80 | |
| 230 | 315105-0153 | | 8 | WASHER BRB 6,4X12 RFR | |
| 250 | 315202-0732 | | 2 | O-RING 44,12X2,62 MM | |
| 300 | 90600-0798 | | 4 | BUSHING INSERT, JUM-02-30 | |

| Pos | Part No | UN | Qty | Description | Page No |
|---|---|---|---|---|---|

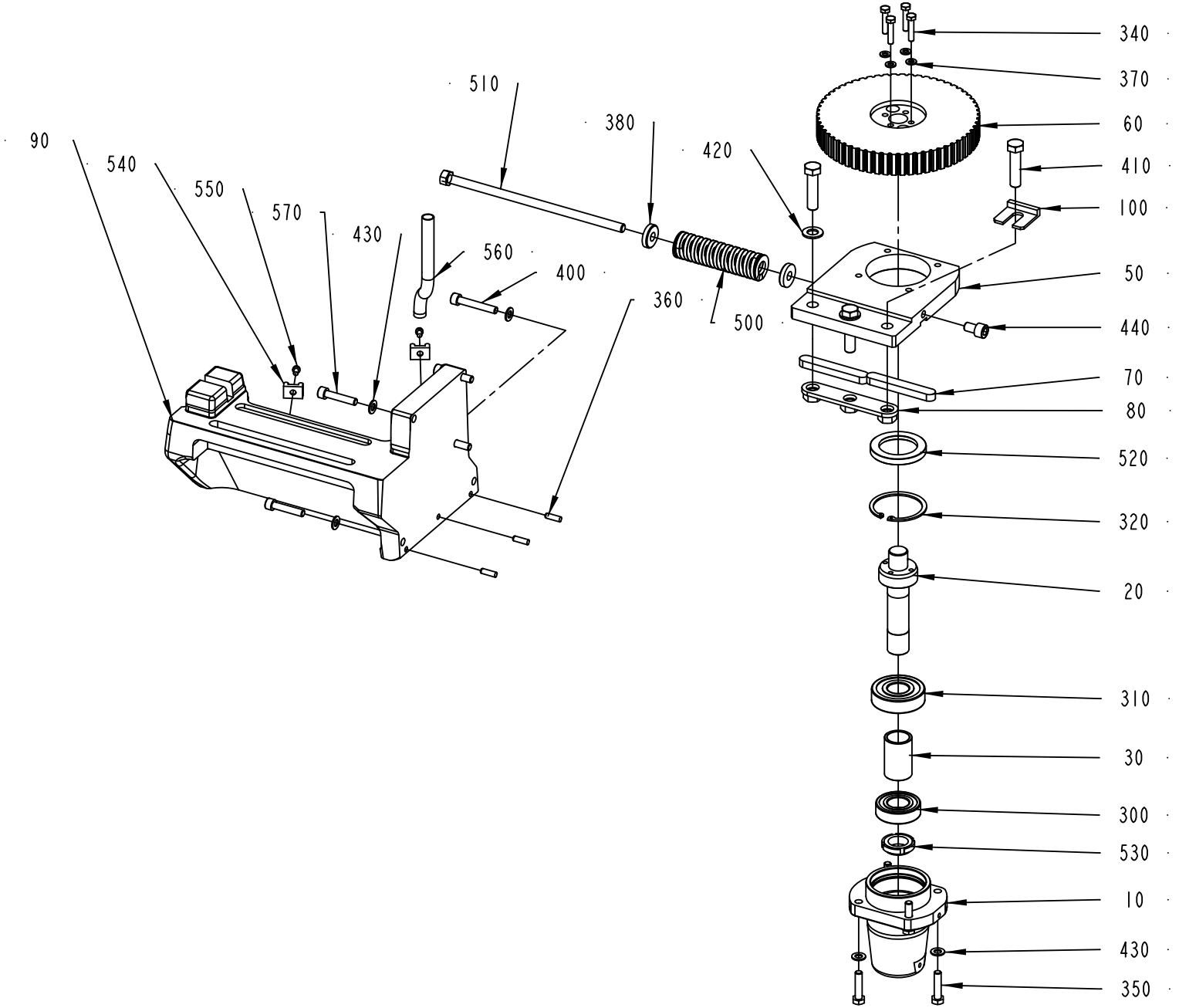
90
540
550
570
430
560
400
510
380
420
360
500
340
370
60
410
100
50
440
70
80
520
320
20
310
30
300
530
10
430
350
2769743-1
325580

ECM: 433236 - 20100401
Group number: 2769743-0100
Assembly Drawing: 2769743-1_1_AC

| Pos | Part No | UN | Qty | Description | Page No |
|---|---|---|---|---|---|
| - | | | | | |
| 010 | 3022796-0000 | | 1 | BELLOWS | |
| 020 | 2766958-0000 | | 1 | SHAFT | |
| 030 | 2766959-0000 | | 1 | SPACER | |
| 050 | 2766989-0000 | | 1 | BRACKET | |
| 060 | 2766981-0000 | | 1 | TOOTHED PULLEY | |
| 070 | 315701-0371 | | 2 | PARALLEL KEY W. ROUND ENDS 14X9X90 MM | |
| 080 | 2775417-0000 | | 1 | BRACKET | |
| 090 | 2778571-0000 | | 1 | FRAME | |
| 100 | 2937337-0000 | | 1 | SPACER | |
| 300 | 321309-0105 | | 1 | BALL BEARING 25/52X15 | |
| 310 | 321314-0105 | | 1 | BALL BEARING 25/62X17 | |
| 320 | 315752-0136 | | 1 | RETAINING RING FOR BORE DIN 472 62 | |
| 340 | 312105-0374 | | 4 | SCREW M6S ISO 4014 M6X30 A480 | |
| 350 | 312105-0457 | | 4 | SCREW M6S ISO 4014 M8X35 A480 | |
| 360 | 311103-0353 | | 3 | PARALLEL PIN ISO 2338 6M6X20 A1 | |
| 370 | 315105-0153 | | 4 | WASHER BRB 6,4X12 RFR | |
| 380 | 315125-0173 | | 2 | WASHER TBRSB 10,5X28X6 A4 | |
| 400 | 312115-0461 | | 2 | SCREW ISO4762 M8X50 A4 80 | |
| 410 | 312109-0542 | | 3 | SCREW M6S ISO 4017 M12X50 A280 | |
| 420 | 315105-0178 | | 2 | WASHER BRB 13X24 RFR | |
| 430 | 315105-0165 | | 9 | WASHER BRB 8,4X16 RFR | |
| 440 | 312115-0489 | | 1 | SCREW ISO4762 M10X16 A4 80 | |
| 500 | 2830224-0000 | | 1 | TENSION SPRING | |
| 510 | 2805467-0000 | | 1 | SCREW | |
| 520 | 90091-0304 | | 1 | RADIAL SEAL 45X65X8 MM DUST LIP | |
| 530 | 90459-6280 | | 1 | NUT GUK 5 M25 X 1.5 FZB | |
| 540 | 352113-0204 | | 2 | ANCHOR PLATES FOR STRIPS, TYPE TM3S25-M | |
| 550 | 312125-0323 | | 2 | SCREW ISO 1207 M5X8 A4 | |
| 560 | 90166-0126 | M | 1 | TUBE 12 MM PA,TRANSP. | |
| 570 | 312115-0459 | | 3 | SCREW ISO4762 M8X40 A4 80 | |

| Pos | Part No | UN | Qty | Description | Page No |
|---|---|---|---|---|---|

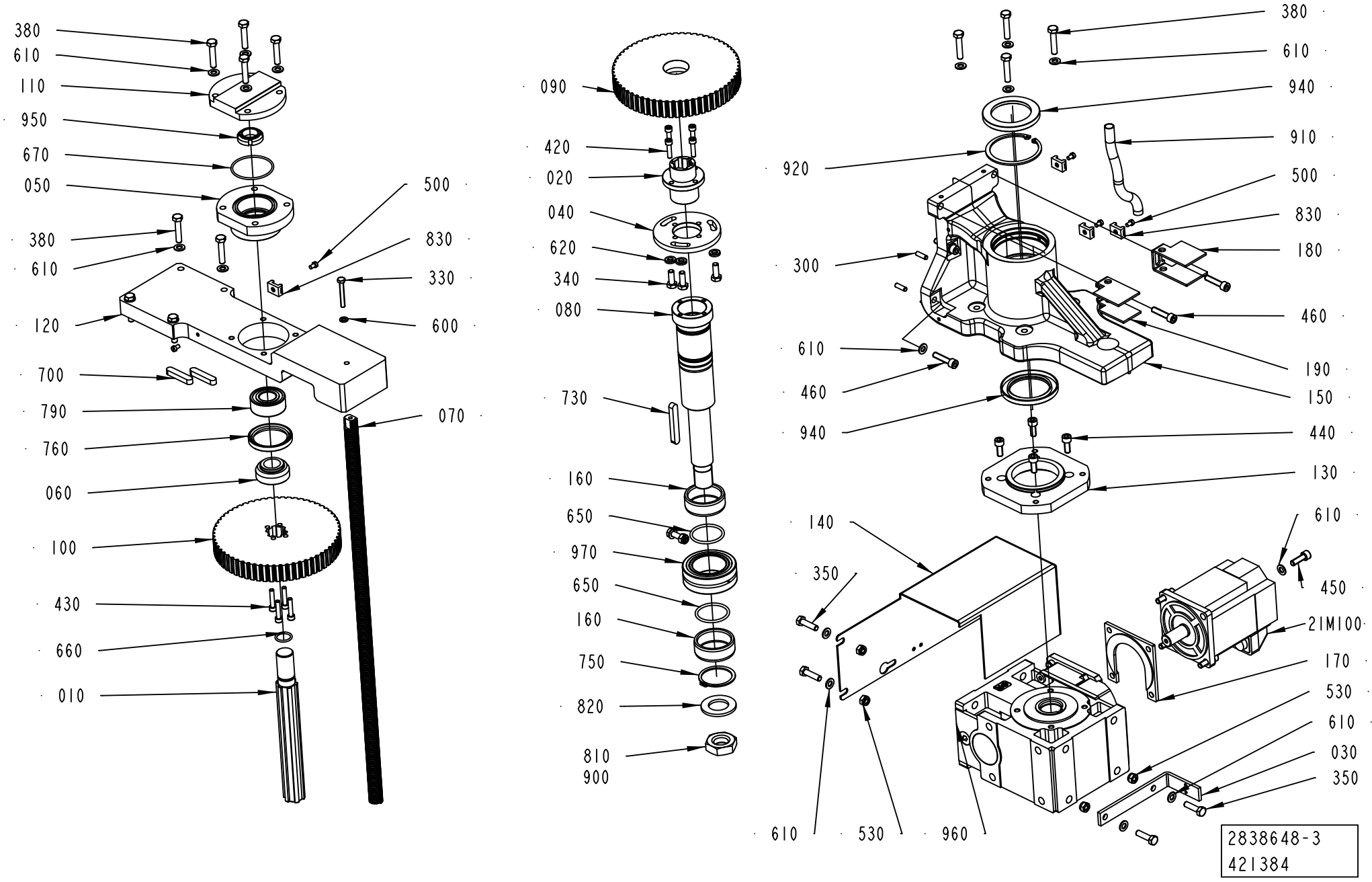
380
610
110
950
670
050
380
610
120
700
790
760
060
100
430
660
010
500
830
330
600
070
090
420
020
040
620
340
080
730
160
650
970
650
160
750
820
810
900
380
610
940
910
920
500
830
180
300
460
610
460
940
190
150
440
130
140
610
350
450
21M100
170
530
610
030
350
610
530
960
2838648-3
421384

ECM: 433237 - 20100401
Group number: 2838648-0200
Assembly Drawing: 2838648-3_1_AC

| Pos | Part No | UN | Qty | Description | Page No |
|---|---|---|---|---|---|
| **TBA 1000B, TBA 1000SQ, TBA 1000S, TBA 1500S, TBA 1890S, TBA 2000S** | | | | | |
| 010 | 2775446-0000 | | 1 | SHAFT | |
| 050 | 2775445-0000 | | 1 | SPACER | |
| 060 | 2775443-0000 | | 1 | SPACER | |
| 070 | 2802392-0000 | | 1 | PILLAR | |
| 100 | 2775442-0000 | | 1 | TOOTHED PULLEY | |
| 110 | 2778566-0000 | | 1 | BELLOWS | |
| 120 | 2985846-0000 | | 1 | PLATE | |
| 330 | 312104-0379 | | 1 | SCREW M6S M6X45H FZB | |
| 380 | 312105-0459 | | 12 | SCREW M6S ISO 4014 M8X40 A480 | |
| 430 | 312115-0374 | | 4 | SCREW ISO4762 M6X30 A4 80 | |
| 500 | 312125-0323 | | 5 | SCREW ISO 1207 M5X8 A4 | |
| 600 | 315105-0153 | | 1 | WASHER BRB 6,4X12 RFR | |
| 610 | 315105-0165 | | 25 | WASHER BRB 8,4X16 RFR | |
| 660 | 315202-0717 | | 1 | O-RING 20,29X2,62 MM | |
| 670 | 315202-0741 | | 1 | O-RING 58,42X2,62 MM | |
| 700 | 315705-0303 | | 2 | PARALLEL KEY W. ROUND ENDS 10X8X50 MM | |
| 760 | 315221-0198 | | 1 | RADIAL SEAL 50X65X8 MM | |
| 790 | 321330-0105 | | 1 | ANG. BALL BEAR 25/52X20,6 | |
| 830 | 352113-0204 | | 4 | ANCHOR PLATES FOR STRIPS, TYPE TM3S25-M | |
| 950 | 90459-6280 | | 1 | NUT GUK 5 M25 X 1.5 FZB | |
| **Common Parts** | | | | | |
| 020 | 2775439-0000 | | 1 | BUSHING | |
| 030 | 2837626-0000 | | 1 | BRACKET | |
| 040 | 2775438-0000 | | 1 | PLATE | |
| 080 | 2837624-0000 | | 1 | SHAFT | |
| 090 | 2775437-0000 | | 1 | TOOTHED PULLEY | |
| 130 | 2837627-0000 | | 1 | FLANGE | |
| 140 | 2837630-0000 | | 1 | COVER | |
| 150 | 2837623-0000 | | 1 | BRACKET | |
| 160 | 2837628-0000 | | 2 | SPACER | |
| 170 | 2985781-0000 | | 1 | PLATE | |
| 180 | 3043254-0000 | | 1 | COVER | |
| 190 | 3053815-0000 | | 1 | COVER | |
| 300 | 311103-0353 | | 3 | PARALLEL PIN ISO 2338 6M6X20 A1 | |
| 340 | 312105-0452 | | 3 | SCREW M6S ISO 4017 M8X22 A480 | |
| 350 | 312105-0455 | | 5 | SCREW M6S ISO 4017 M8X30 A480 | |
| 420 | 312115-0372 | | 4 | SCREW ISO4762 M6X25 A4 80 | |
| 440 | 312115-0451 | | 8 | SCREW ISO4762 M8X20 A4 80 | |
| 450 | 312115-0453 | | 4 | SCREW ISO4762 M8X25 A4 80 | |
| 460 | 312115-0457 | | 6 | SCREW ISO4762 M8X35 A4 80 | |
| 530 | 312812-0318 | | 5 | HEXAGON NUT, NY-LOCK M8 A480 | |
| 620 | 315115-0165 | | 3 | WASHER PLAIN, TBRB 8,4/16 H=3 | |
| 650 | 315202-0602 | | 2 | O-RING 44,04X3,53 MM | |
| 730 | 315705-0307 | | 1 | PARALLEL KEY W. ROUND ENDS 10X8X70 MM | |
| 750 | 315751-0130 | | 1 | RETAINING RING FOR SHAFT DIN 471 50 SS | |
| 810 | 312625-0330 | | 1 | HEXAGON THIN NUT, EN 24035 ML6M M27 A4 | |
| 820 | 315105-0203 | | 1 | WASHER BRB 30X52 RFR | |
| 900 | 90157-0037 | ML | 1 | THREAD SEALANT LOCTITE 542 | |
| 910 | 90166-0126 | M | 3 | TUBE 12 MM PA,TRANSP. | |
| 920 | 90458-0181 | | 1 | RETAINING RING FOR BORE DIN 472 80 SS | |
| 940 | 90459-4588 | | 2 | RADIAL SEAL 60X85X8 MM DUST LIP | |
| 960 | 90600-0803 | | 1 | WORM GEAR MR V 63 UO3A-80B4 … B5/35 | |
| 970 | 90600-0892 | | 1 | NEEDLE BEARING, 50X80X28 MM | |
| 21M100 | 90601-0668 | | 1 | SERVO MOTOR MPL-B420P-MK72AA SERIES A | |

| Machine Type | Group Description | Used-In | Group Number | Page No |
|---|---|---|---|---|

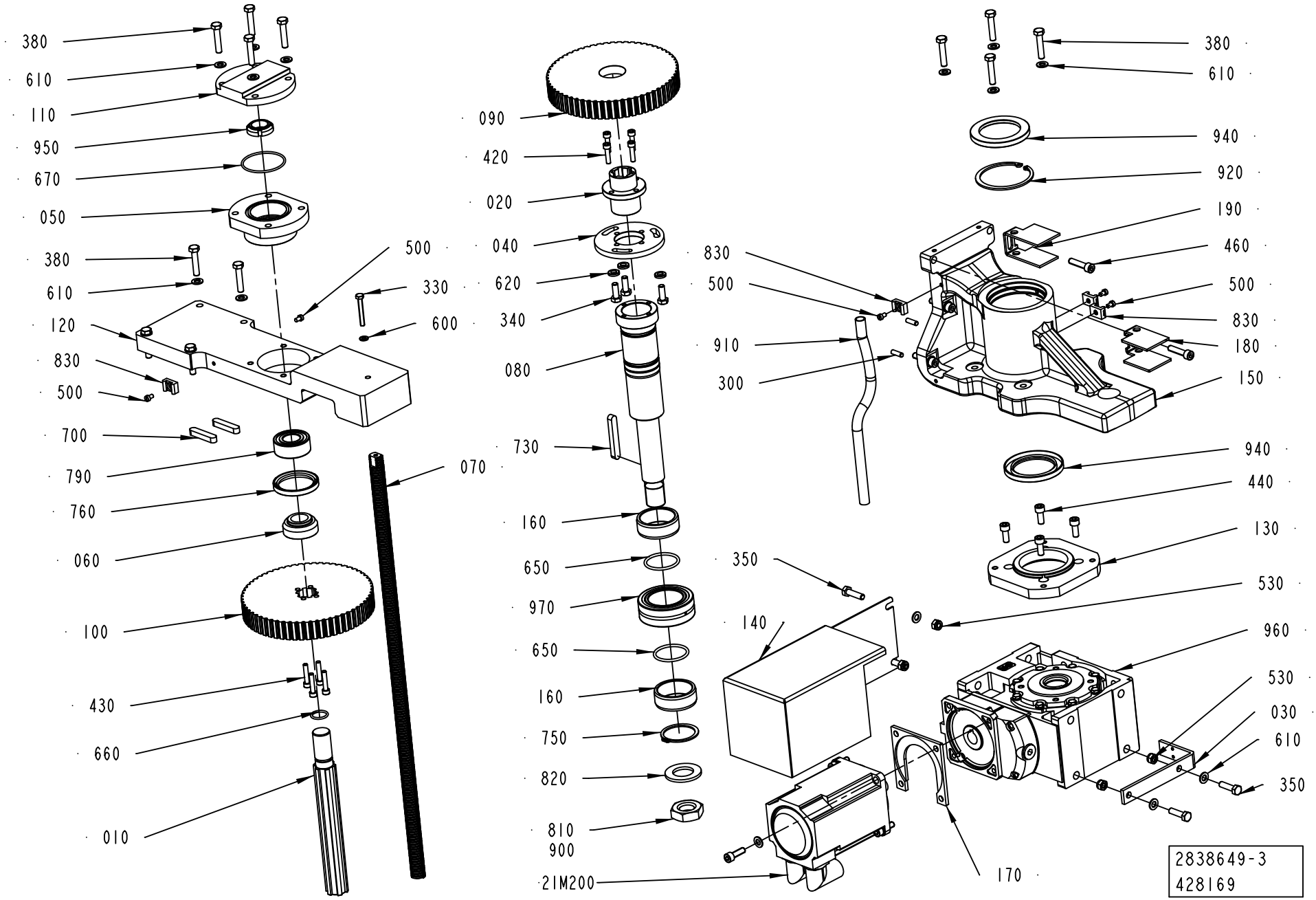
380
610
110
950
670
050
380
610
120
830
500
700
790
760
060
100
430
660
010
500
330
600
070
090
420
020
040
620
340
080
730
160
650
970
650
160
750
820
810
900
21M200
830
500
910
300
380
610
940
920
190
460
500
830
180
150
940
440
130
530
350
140
960
530
030
610
350
170
2838649-3
428169

ECM: 433238 - 20100401
Group number: 2838649-0200
Assembly Drawing: 2838649-3_1_AC

| Pos | Part No | UN | Qty | Description | Page No |
|---|---|---|---|---|---|
| **TBA 1000B, TBA 1000SQ, TBA 1000S, TBA 1500S, TBA 1890S, TBA 2000S** | | | | | |
| 010 | 2775446-0000 | | 1 | SHAFT | |
| 050 | 2775445-0000 | | 1 | SPACER | |
| 060 | 2775443-0000 | | 1 | SPACER | |
| 070 | 2802392-0000 | | 1 | PILLAR | |
| 100 | 2775442-0000 | | 1 | TOOTHED PULLEY | |
| 110 | 2778566-0000 | | 1 | BELLOWS | |
| 120 | 2985846-0000 | | 1 | PLATE | |
| 330 | 312104-0379 | | 1 | SCREW M6S M6X45H FZB | |
| 380 | 312105-0459 | | 12 | SCREW M6S ISO 4014 M8X40 A480 | |
| 430 | 312115-0374 | | 4 | SCREW ISO4762 M6X30 A4 80 | |
| 500 | 312125-0323 | | 5 | SCREW ISO 1207 M5X8 A4 | |
| 600 | 315105-0153 | | 1 | WASHER BRB 6,4X12 RFR | |
| 610 | 315105-0165 | | 25 | WASHER BRB 8,4X16 RFR | |
| 660 | 315202-0717 | | 1 | O-RING 20,29X2,62 MM | |
| 670 | 315202-0741 | | 1 | O-RING 58,42X2,62 MM | |
| 700 | 315705-0303 | | 2 | PARALLEL KEY W. ROUND ENDS 10X8X50 MM | |
| 760 | 315221-0198 | | 1 | RADIAL SEAL 50X65X8 MM | |
| 790 | 321330-0105 | | 1 | ANG. BALL BEAR 25/52X20,6 | |
| 830 | 352113-0204 | | 4 | ANCHOR PLATES FOR STRIPS, TYPE TM3S25-M | |
| 950 | 90459-6280 | | 1 | NUT GUK 5 M25 X 1.5 FZB | |
| **Common Parts** | | | | | |
| 020 | 2775439-0000 | | 1 | BUSHING | |
| 030 | 2837626-0000 | | 1 | BRACKET | |
| 040 | 2775438-0000 | | 1 | PLATE | |
| 080 | 2837624-0000 | | 1 | SHAFT | |
| 090 | 2775437-0000 | | 1 | TOOTHED PULLEY | |
| 130 | 2837627-0000 | | 1 | FLANGE | |
| 140 | 2837625-0000 | | 1 | COVER | |
| 150 | 2837623-0000 | | 1 | BRACKET | |
| 160 | 2837628-0000 | | 2 | SPACER | |
| 170 | 2985781-0000 | | 1 | PLATE | |
| 180 | 3043254-0000 | | 1 | COVER | |
| 190 | 3053816-0000 | | 1 | COVER | |
| 300 | 311103-0353 | | 3 | PARALLEL PIN ISO 2338 6M6X20 A1 | |
| 340 | 312105-0452 | | 3 | SCREW M6S ISO 4017 M8X22 A480 | |
| 350 | 312105-0455 | | 6 | SCREW M6S ISO 4017 M8X30 A480 | |
| 420 | 312115-0372 | | 4 | SCREW ISO4762 M6X25 A4 80 | |
| 440 | 312115-0451 | | 8 | SCREW ISO4762 M8X20 A4 80 | |
| 450 | 312115-0453 | | 4 | SCREW ISO4762 M8X25 A4 80 | |
| 460 | 312115-0457 | | 6 | SCREW ISO4762 M8X35 A4 80 | |
| 530 | 312812-0318 | | 6 | HEXAGON NUT, NY-LOCK M8 A480 | |
| 620 | 315115-0165 | | 3 | WASHER PLAIN, TBRB 8,4/16 H=3 | |
| 650 | 315202-0602 | | 2 | O-RING 44,04X3,53 MM | |
| 730 | 315705-0307 | | 1 | PARALLEL KEY W. ROUND ENDS 10X8X70 MM | |
| 750 | 315751-0130 | | 1 | RETAINING RING FOR SHAFT DIN 471 50 SS | |
| 810 | 312625-0330 | | 1 | HEXAGON THIN NUT, EN 24035 ML6M M27 A4 | |
| 820 | 315105-0203 | | 1 | WASHER BRB 30X52 RFR | |
| 900 | 90157-0037 | ML | 1 | THREAD SEALANT LOCTITE 542 | |
| 910 | 90166-0126 | M | 3 | TUBE 12 MM PA,TRANSP. | |
| 920 | 90458-0181 | | 1 | RETAINING RING FOR BORE DIN 472 80 SS | |
| 940 | 90459-4588 | | 2 | RADIAL SEAL 60X85X8 MM DUST LIP | |
| 960 | 90600-0803 | | 1 | WORM GEAR MR V 63 UO3A-80B4 … B5/35 | |
| 970 | 90600-0892 | | 1 | NEEDLE BEARING, 50X80X28 MM | |
| 21M200 | 90601-0668 | | 1 | SERVO MOTOR MPL-B420P-MK72AA SERIES A | |

Machine Type | Group Description | Used-In | Group Number | Page No

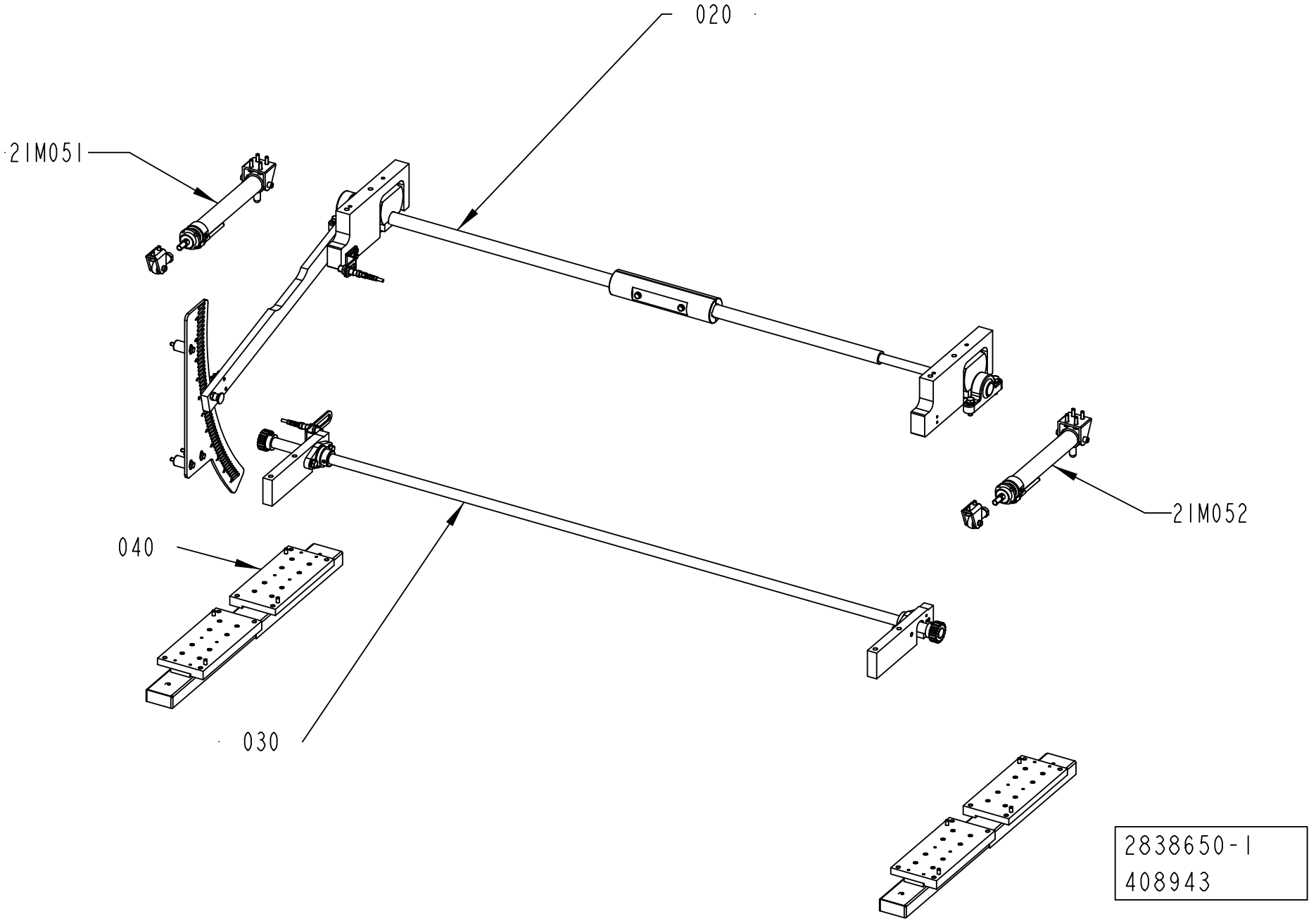
020
21M051
21M052
040
030
2838650-1
408943

ECM: 419435 - 20100110
Group number: 2838650-0100
Assembly Drawing: 2838650-1_1_AB

| Pos | Part No | UN | Qty | Description | Page No |
|---|---|---|---|---|---|
| - | | | | | |
| 020 | 2838669-0100 | | 1 | SETTING ARM | **1-49** |
| 030 | 2838652-0100 | | 1 | SETTING ARM | **1-51** |
| 040 | 2838653-0100 | | 1 | GUIDE RAIL | **1-53** |
| 21M051 | 2769718-0100 | | 1 | PNEUMATIC CYLINDER | **1-55** |
| 21M052 | 2769718-0100 | | 1 | PNEUMATIC CYLINDER | **1-55** |

| Pos | Part No | UN | Qty | Description | Page No |
|---|---|---|---|---|---|

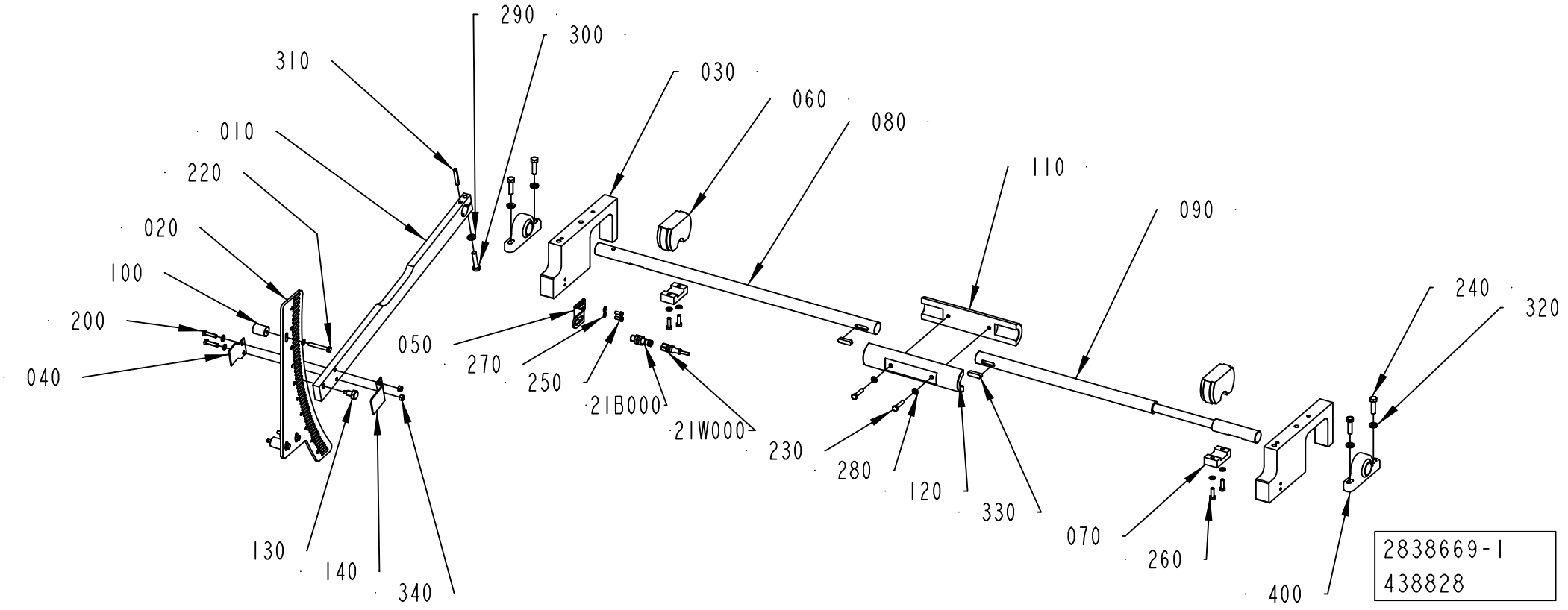
290
300
310
030
060
080
010
220
110
090
020
100
240
320
200
040
050
270
250
21B000
21W000
230
280
120
330
070
260
130
140
340
400
2838669-1
438828

ECM: 438861 - 20100701
Group number: 2838669-0100
Assembly Drawing: 2838669-1_1_AF

| Pos | Part No | UN | Qty | Description | Page No |
|---|---|---|---|---|---|
| - | | | | | |
| 010 | 2788174-0000 | | 1 | LEVER | |
| 020 | 3021525-0000 | | 1 | PLATE | |
| 030 | 2766944-0000 | | 2 | BRACKET | |
| 040 | 2769695-0000 | | 1 | BRACKET | |
| 050 | 2779057-0000 | | 1 | PLATE | |
| 060 | 3022488-0000 | | 2 | CAM | |
| 070 | 2838683-0000 | | 2 | PLATE | |
| 080 | 3022022-0000 | | 1 | SHAFT | |
| 090 | 3022023-0000 | | 1 | SHAFT | |
| 100 | 2773632-0000 | | 3 | SPACER | |
| 110 | 2985809-0000 | | 1 | HOUSING | |
| 120 | 3022021-0000 | | 1 | HOUSING | |
| 130 | 3086231-0000 | | 1 | SCREW | |
| 140 | 3086233-0000 | | 1 | BRACKET | |
| 200 | 312105-0372 | | 2 | SCREW M6S ISO 4017 M6X25 A480 | |
| 220 | 312105-0379 | | 3 | SCREW M6S ISO 4014 M6X45 A480 | |
| 230 | 312109-0374 | | 2 | SCREW M6S ISO 4017 M6X30 A480 | |
| 240 | 312105-0455 | | 4 | SCREW M6S ISO 4017 M8X30 A480 | |
| 250 | 312105-0327 | | 2 | SCREW M6S ISO 4017 M5X12 A480 | |
| 260 | 312105-0370 | | 4 | SCREW M6S ISO 4017 M6X20 A480 | |
| 270 | 315105-0146 | | 2 | WASHER BRB 5,3X10 RFR | |
| 280 | 315105-0153 | | 11 | WASHER BRB 6,4X12 RFR | |
| 290 | 315105-0165 | | 1 | WASHER BRB 8,4X16 RFR | |
| 300 | 312105-0459 | | 1 | SCREW M6S ISO 4014 M8X40 A480 | |
| 310 | 311112-0347 | | 1 | SPRING PIN, ISO 8752 6X40-C | |
| 320 | 315115-0165 | | 4 | WASHER PLAIN, TBRB 8,4/16 H=3 | |
| 330 | 315705-0267 | | 2 | PARALLEL KEY W. ROUND ENDS 8X7X30 MM | |
| 340 | 312605-0316 | | 2 | HEXAGON NUT, M6M M6 A280 | |
| 400 | 90600-0799 | | 2 | STANDING BEARING, KSTM-25 | |
| 21B000 | 90458-2907 | | 1 | PROX.SWITCH IFS204 | |
| 21W000 | 351405-0050 | | 1 | SENS. CABLE RSMVN 3-PRKT 4-3-06/5,0M | |

| Pos | Part No | UN | Qty | Description | Page No |
|---|---|---|---|---|---|

Machine Type | Group Description | Used-In | Group Number | Page No

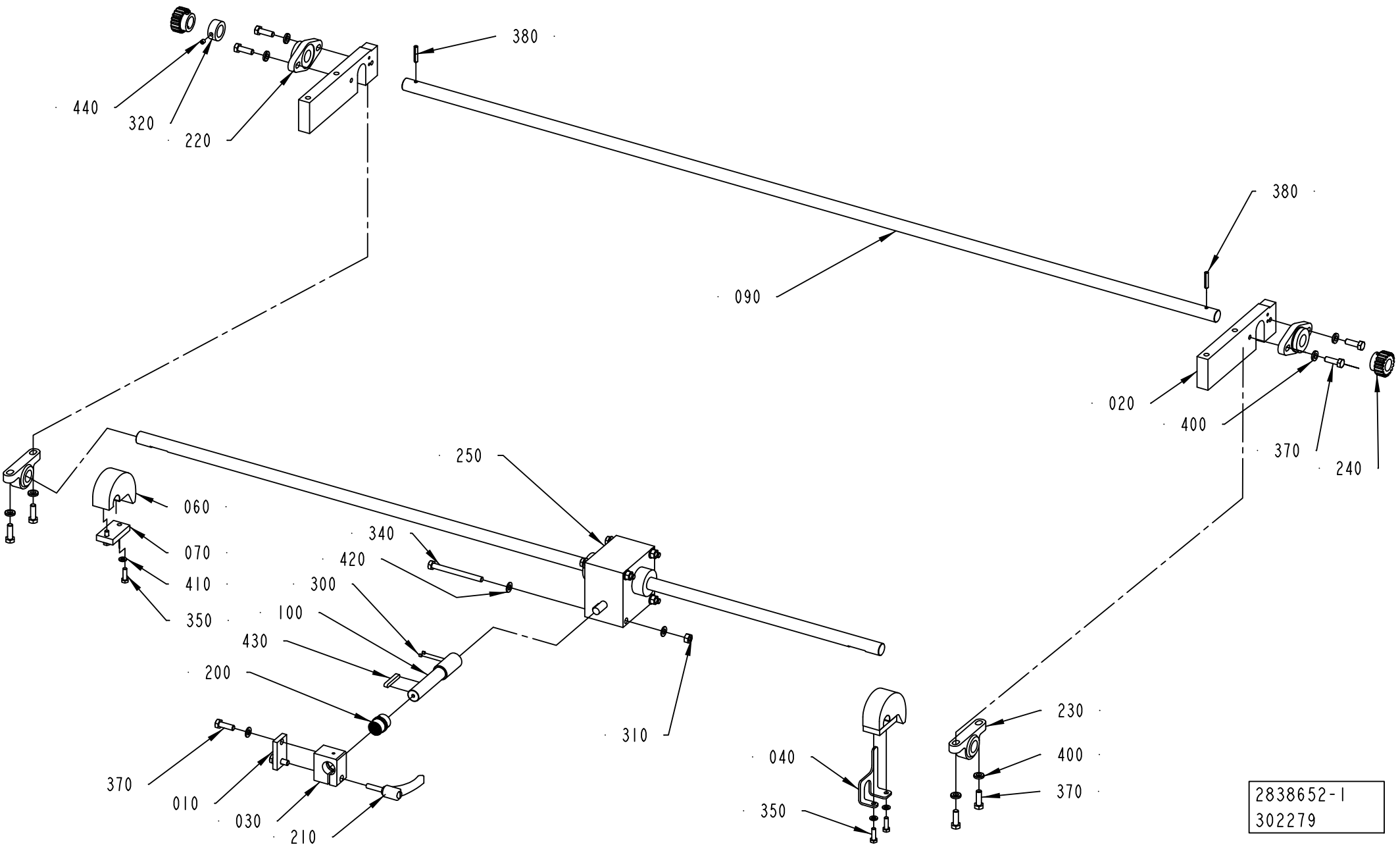
440
320
220
380
090
380
020
400
370
240
250
060
070
410
350
340
420
300
100
430
200
310
370
010
030
210
040
350
230
400
370
2838652-1
302279

ECM: 328412 - 20080407
Group number: 2838652-0100
Assembly Drawing: 2838652-1_1_AB

| Pos | Part No | UN | Qty | Description | Page No |
|---|---|---|---|---|---|
| - | | | | | |
| 010 | 2778594-0000 | | 1 | PLATE | |
| 020 | 2779014-0000 | | 2 | PLATE | |
| 030 | 2769726-0000 | | 1 | BRACKET | |
| 040 | 2802405-0000 | | 1 | STOP ARM | |
| 060 | 2779013-0000 | | 2 | CAM | |
| 070 | 2712603-0000 | | 2 | PLATE | |
| 090 | 2766950-0000 | | 1 | SHAFT | |
| 100 | 2769729-0000 | | 1 | SHAFT | |
| 200 | 90458-2932 | | 1 | PLAIN BEARING, JUM-02-20 | |
| 210 | 90017-0029 | | 1 | LOCKING LEVER, NO. KR8X30-SUS | |
| 220 | 90600-0800 | | 2 | FLANGE BEARING 20X89X20 MM | |
| 230 | 90459-4727 | | 2 | STANDING BEARING, KSTM-20 | |
| 240 | 2838690-0000 | | 2 | WHEEL | |
| 250 | 90600-1005 | | 1 | WORM GEAR SCREW JACK, TR00042000130 | |
| 300 | 312318-0283 | | 2 | SCREW ISO4029 M4X4 A4 | |
| 310 | 312605-0318 | | 4 | HEXAGON NUT, M6M M8 A280 | |
| 320 | 315741-0216 | | 1 | RETAINING RING DIN 705 A4 20 | |
| 340 | 312105-0469 | | 4 | SCREW M6S ISO 4014 M8X90 A480 | |
| 350 | 312105-0370 | | 4 | SCREW M6S ISO 4017 M6X20 A480 | |
| 370 | 312105-0453 | | 10 | SCREW M6S ISO 4017 M8X25 A480 | |
| 380 | 311112-0312 | | 2 | SPRING PIN, ISO 8752 5X28-C | |
| 400 | 315115-0165 | | 8 | WASHER PLAIN, TBRB 8,4/16 H=3 | |
| 410 | 315105-0153 | | 4 | WASHER BRB 6,4X12 RFR | |
| 420 | 315105-0165 | | 10 | WASHER BRB 8,4X16 RFR | |
| 430 | 315705-0239 | | 1 | PARALLEL KEY W. ROUND ENDS 6X6X40 MM | |
| 440 | 312318-0360 | | 1 | SCREW ISO4029 M6X6 A4 | |

| Pos | Part No | UN | Qty | Description | Page No |
|---|---|---|---|---|---|

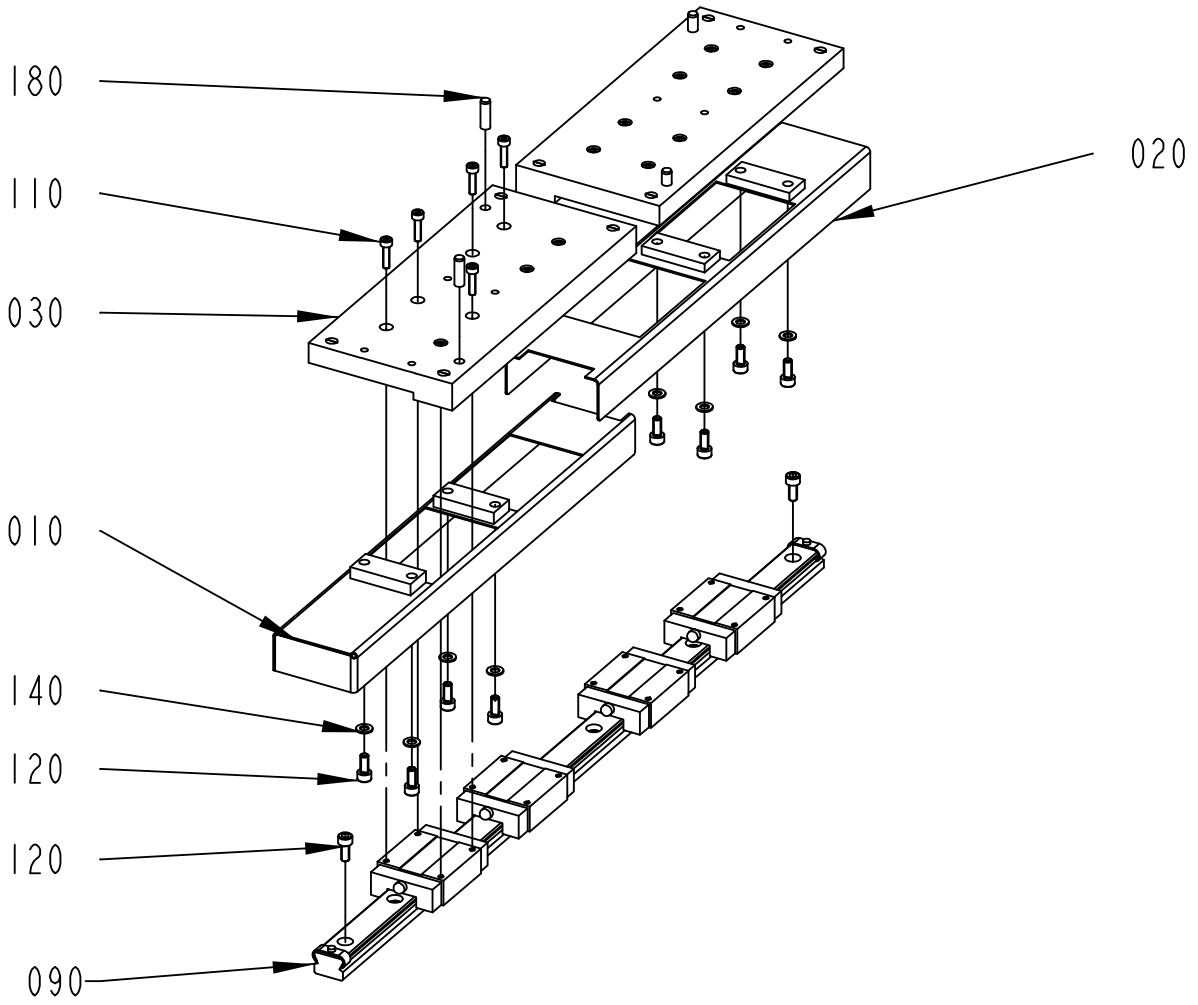


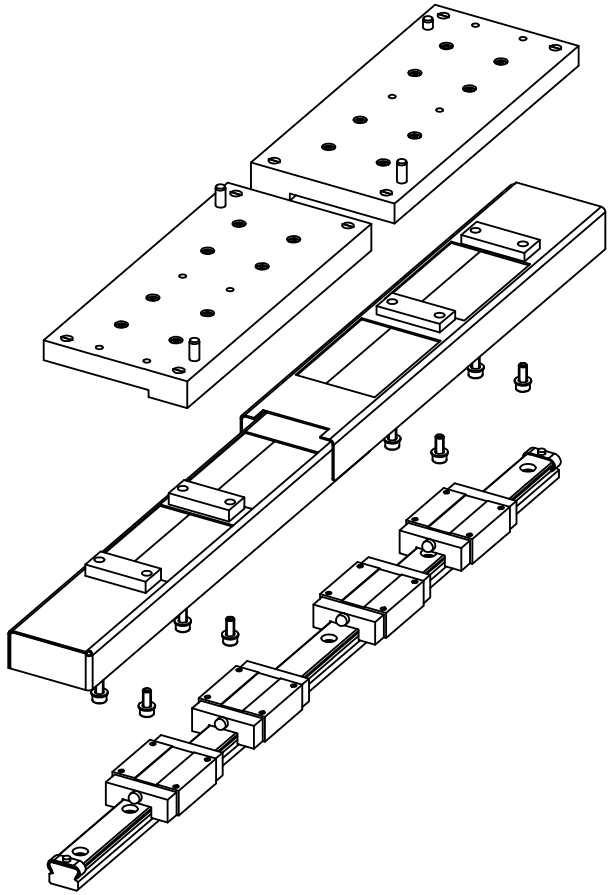

2838653-1
302279

ECM: 308942 - 20070525
Group number: 2838653-0100
Assembly Drawing: 2838653-1_1_AB

| Pos | Part No | UN | Qty | Description | Page No |
|---|---|---|---|---|---|
| - | | | | | |
| 010 | 2802375-0000 | | 2 | COVER | |
| 020 | 2802376-0000 | | 2 | COVER | |
| 030 | 2788168-0000 | | 4 | PLATE | |
| 090 | 90600-0825 | | 2 | GUIDE BAR, 4 RSR20VMUU+580LM | |
| | *90600-0826* | | *4* | *CARRIAGE, RSR20VMUU* | |
| 110 | 312115-0293 | | 32 | SCREW ISO4762 M4X16 A4 80 | |
| 120 | 312115-0327 | | 36 | Z3REW ISO4762 M5X12 A4 80 | |
| 140 | 315105-0146 | | 16 | WASHER BRB 5,3X10 RFR | |
| 180 | 311103-0353 | | 8 | PARALLEL PIN ISO 2338 6M6X20 A1 | |

| Pos | Part No | UN | Qty | Description | Page No |
|---|---|---|---|---|---|

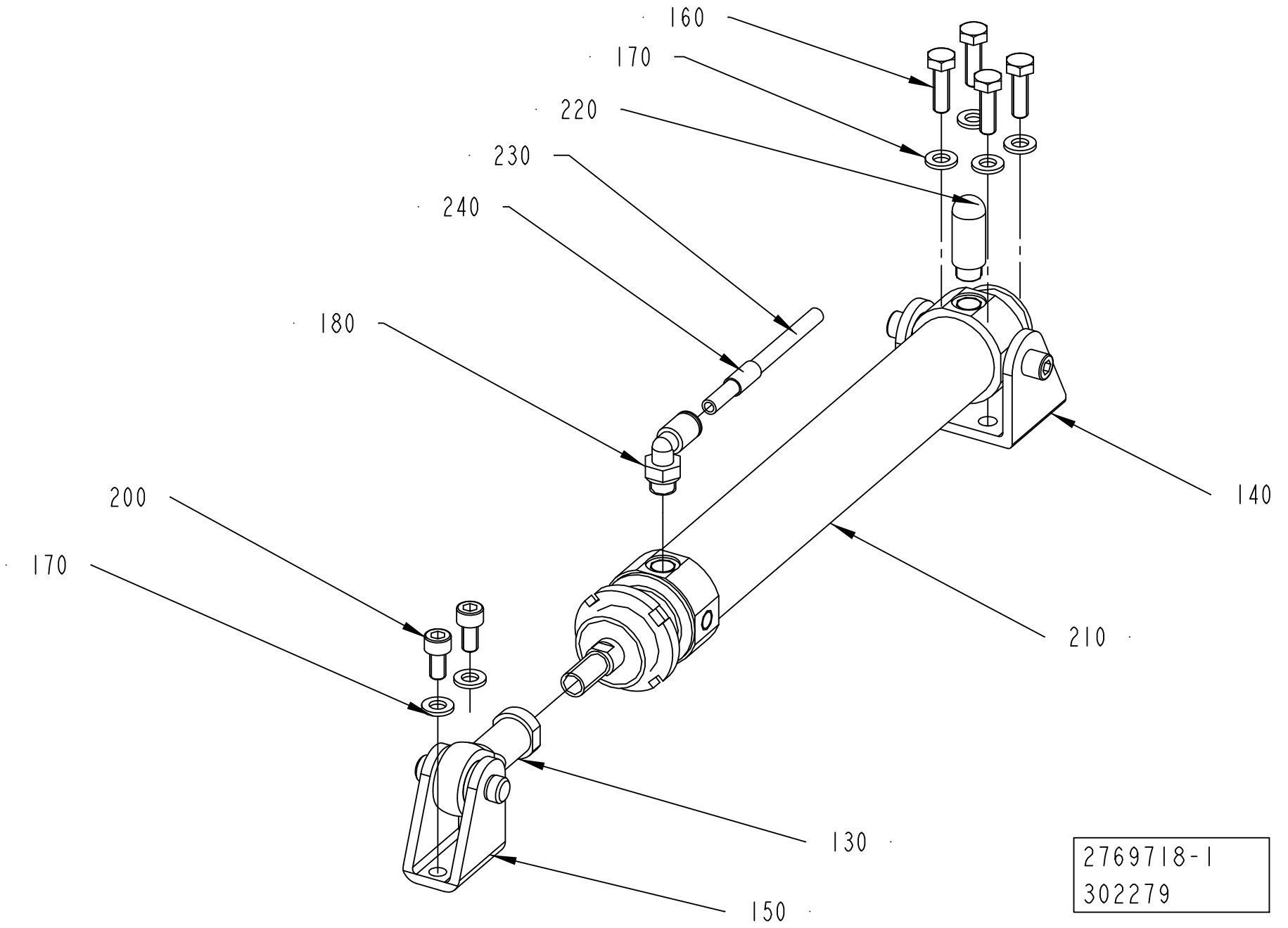
160
170
220
230
240
180
200
170
140
210
130
150
2769718-1
302279

ECM: 308945 - 20070525
Group number: 2769718-0100
Assembly Drawing: 2769718-1_1_AB

| Pos | Part No | UN | Qty | Description | Page No |
|---|---|---|---|---|---|
| - | | | | | |
| 130 | 90459-1018 | | 1 | ROD END,BALL JOINT EYE M10X1,25 | |
| 140 | 90459-3115 | | 1 | BRACKET, REAR, CLEVIS, ROUND, BORE 32 | |
| 150 | 90459-5949 | | 1 | REAR CLEVIS FOOT MOUNTING , CRLBN-32 | |
| 160 | 312105-0370 | | 4 | SCREW M6S ISO 4017 M6X20 A480 | |
| 170 | 315105-0153 | | 6 | WASHER BRB 6,4X12 RFR | |
| 180 | 350002-0006 | | 1 | PUSH-IN L-FITTING QSL-F-G1/8-6 | |
| 200 | 312115-0366 | | 2 | SCREW ISO4762 M6X12 A4 80 | |
| 210 | 90458-2370 | | 1 | DOUBLE ACTING, ROUND, CYL 32-150 | |
| 220 | 90328-0047 | | 1 | SILENCER G1/8" | |
| 230 | 315400-0001 | MM | 200 | TUBE PUN-H-6X1-BL | |
| 240 | 90459-7369 | | 1 | MARKING FOR PNEUM. TUBING, PRZ06 | |

| Pos | Part No | UN | Qty | Description | Page No |
|---|---|---|---|---|---|

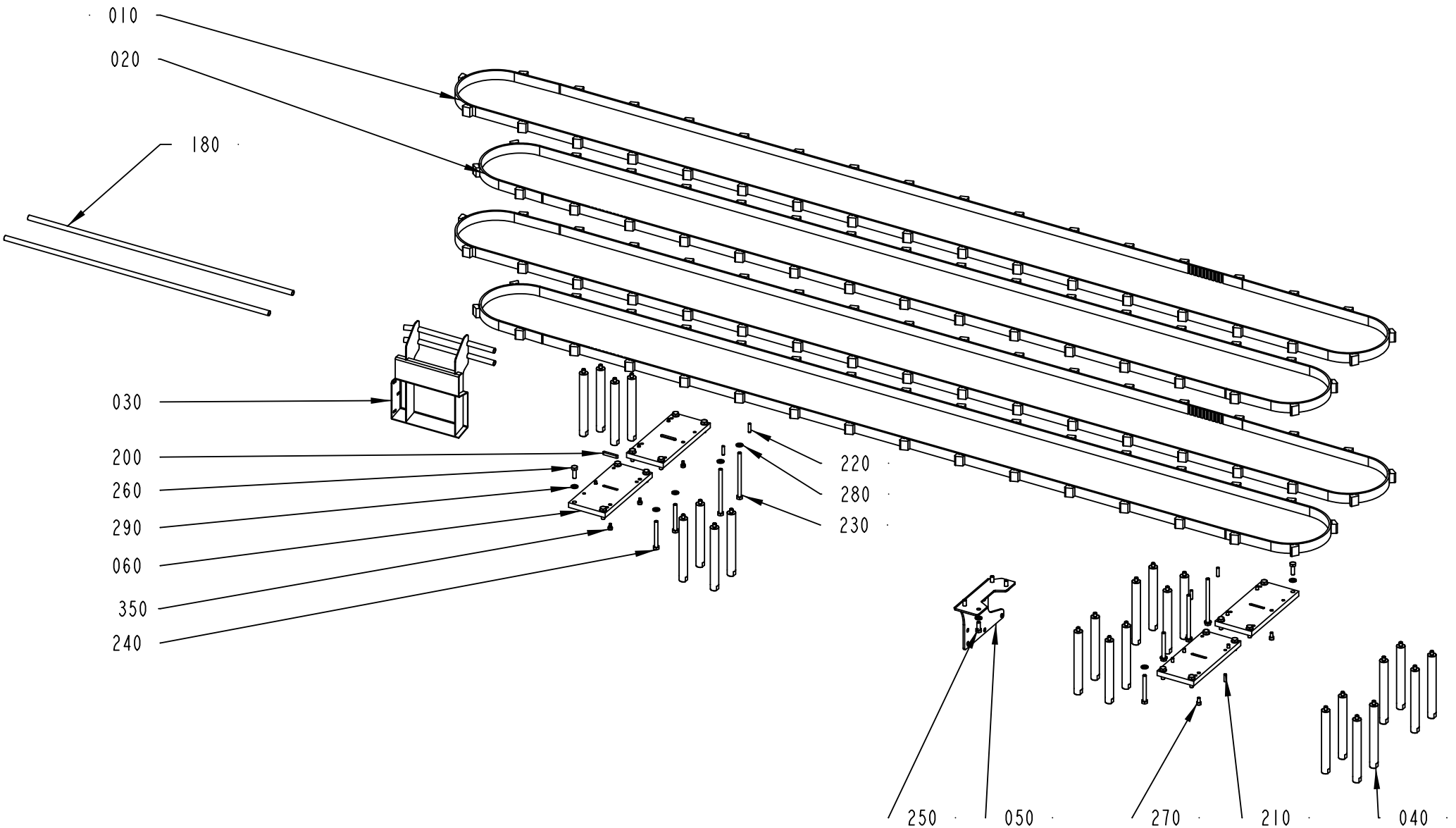


2838633-5
408943

ECM: 408943 - 20091001
Group number: 2838633-0200
Assembly Drawing: 2838633-5_1_AA

| Pos | Part No | UN | Qty | Description | Page No |
|---|---|---|---|---|---|
| **TBA 1000B, TBA 1000SQ, TBA 1000S, TBA 1500S, TBA 1890S, TBA 2000S** | | | | | |
| 010 | 90600-0814 | | 2 | TIMING BELT AT10 5250X25 MM+35236050 | |
| 020 | 90600-0815 | | 2 | TIMING BELT 25AT10/4800 +32 2. 3.6.050 | |
| 030 | 2805461-0000 | | 1 | GUIDE | |
| 040 | 2778585-0000 | | 24 | PILLAR | |
| 180 | 2779831-0000 | | 2 | PIPE | |
| 360 | 312105-0370 | | 4 | SCREW M6S ISO 4017 M6X20 A480 | |
| **Common Parts** | | | | | |
| 050 | 2778592-0000 | | 1 | PLATE | |
| 060 | 2788169-0000 | | 4 | PLATE | |
| 200 | 315705-0239 | | 2 | PARALLEL KEY W. ROUND ENDS 6X6X40 MM | |
| 210 | 311103-0353 | | 2 | PARALLEL PIN ISO 2338 6M6X20 A1 | |
| 220 | 311103-1355 | | 4 | PARALLEL PIN ISO 2338 6M6X24 A1 | |
| 230 | 312105-0475 | | 4 | SCREW M6S ISO 4014 M8X120 A480 | |
| 240 | 312105-0465 | | 4 | SCREW M6S ISO 4014 M8X70 A480 | |
| 250 | 312105-0451 | | 4 | SCREW M6S ISO 4017 M8X20 A480 | |
| 260 | 312105-0453 | | 16 | SCREW M6S ISO 4017 M8X25 A480 | |
| 270 | 312115-0366 | | 6 | SCREW ISO4762 M6X12 A4 80 | |
| 280 | 315105-0165 | | 12 | WASHER BRB 8,4X16 RFR | |
| 290 | 315106-0165 | | 16 | WASHER ISO 7089-8-200 HV A4 | |
| 350 | 90287-0230 | | 6 | SCREW, HEX.SOCK.HEAD SHOULD. M5X6 | |

| Pos | Part No | UN | Qty | Description | Page No |
|---|---|---|---|---|---|

Tetra Pak

# SPC
## Spare Parts Catalogue

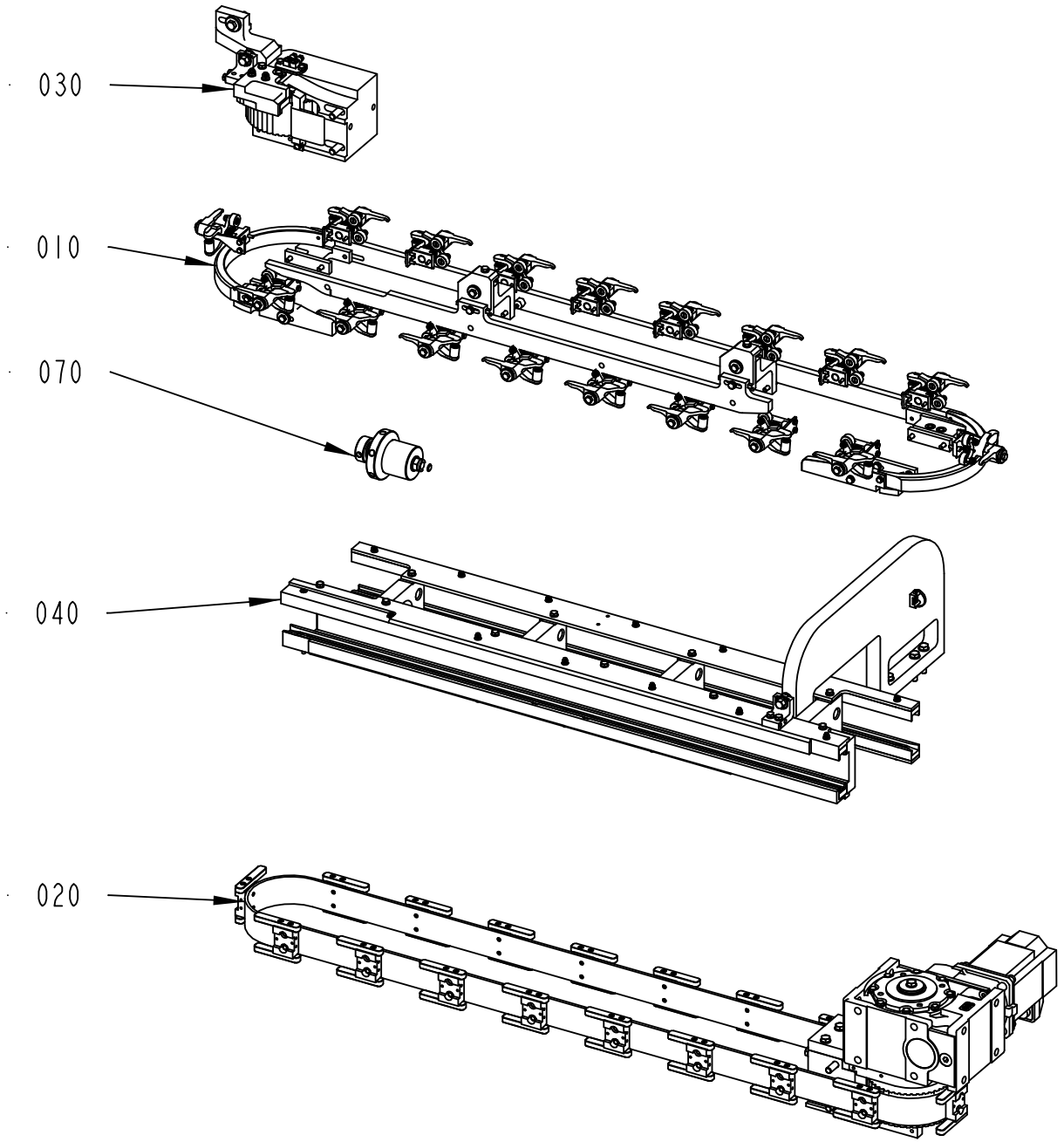


662902-1
287784

ECM: 444319 - 20100701
Group number: 662902-0100
Assembly Drawing: 662902-1_1_AB


| Pos | Part No | UN | Qty | Description | Page No |
|---|---|---|---|---|---|
| - | | | | | |
| 010 | 2802648-0100 | | 1 | CAP HOLDERS GROUP | **2-5** |
| 020 | 2802647-0100 | | 1 | DRIVE | **2-9** |
| 030 | 2802645-0100 | | 1 | BELT STRETCHER | **2-11** |
| 040 | 2802646-0100 | | 1 | FRAME SECTION | **2-13** |
| 070 | 2843157-0100 | | 1 | CLAMPING ELEMENT | **2-15** |

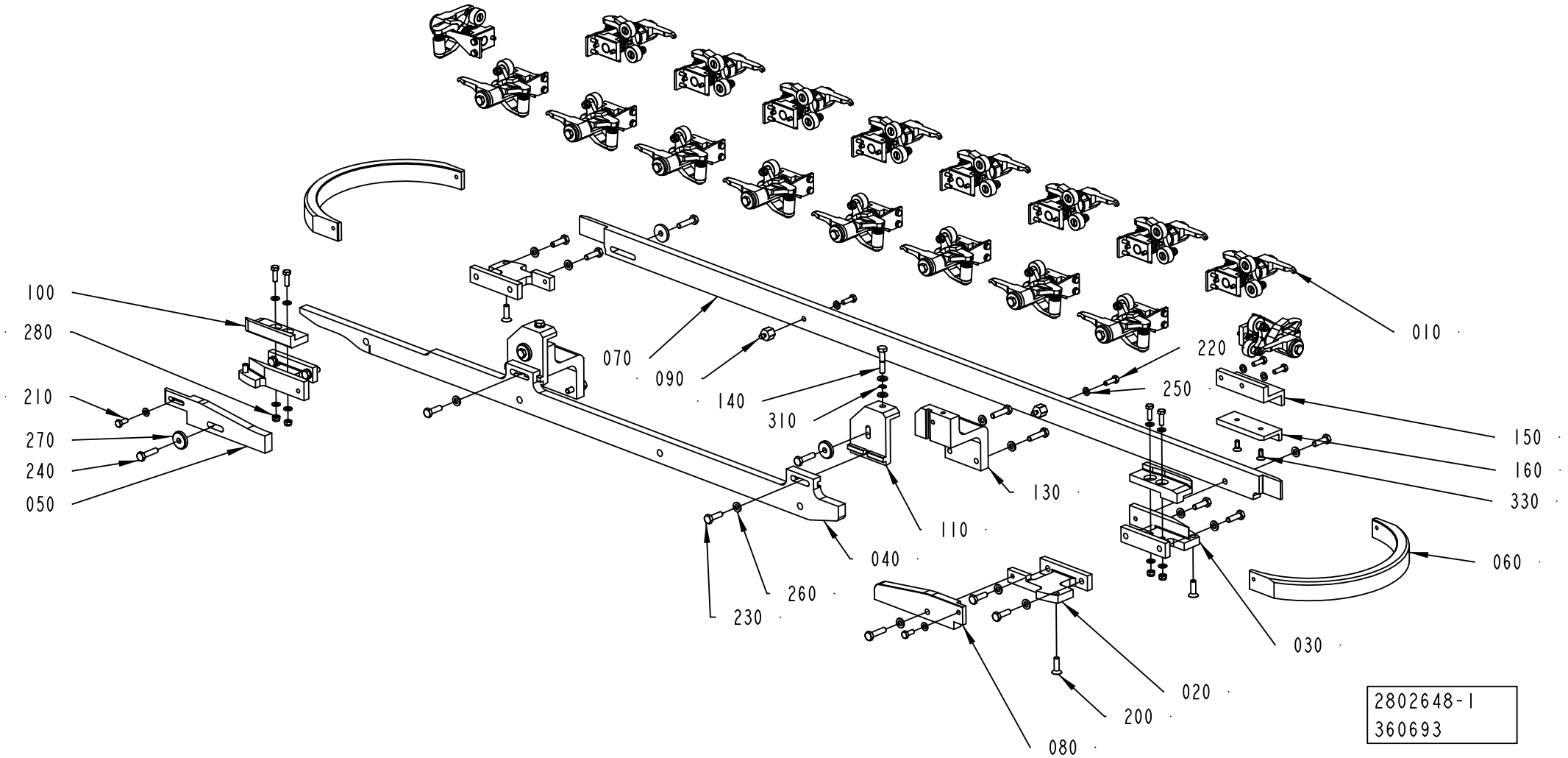
100
280
210
270
240
050
070
090
140
310
110
040
260
230
130
220
250
010
150
160
330
060
030
020
200
080
2802648-1
360693

ECM: 444293 - 20100701
Group number: 2802648-0100
Assembly Drawing: 2802648-1_1_AC

| Pos | Part No | UN | Qty | Description | Page No |
|---|---|---|---|---|---|
| **RECAP3, RECAP2 A3** | | | | | |
| 020 | 2715666-0000 | | 2 | BRACKET | |
| 030 | 2715671-0000 | | 2 | BRACKET | |
| 040 | 2873894-0000 | | 1 | CAM | |
| 050 | 2780334-0000 | | 1 | CURVE | |
| 060 | 2780331-0000 | | 2 | CURVE | |
| 070 | 2780332-0000 | | 1 | CURVE | |
| 080 | 2780333-0000 | | 1 | CURVE | |
| 090 | 2751721-0000 | | 2 | SPACER | |
| 110 | 2838728-0000 | | 2 | ADJUSTMENT BRACKET | |
| 130 | 2751742-0000 | | 2 | BRACKET | |
| 200 | 312155-0370 | | 4 | SCREW DIN 7991 MF6S M6X20 A4 70 | |
| 210 | 312105-0327 | | 2 | SCREW M6S ISO 4017 M5X12 A480 | |
| 220 | 312105-0329 | | 6 | SCREW M6S ISO 4017 M5X16 A480 | |
| 230 | 312105-0370 | | 13 | SCREW M6S ISO 4017 M6X20 A480 | |
| 240 | 312105-0372 | | 9 | SCREW M6S ISO 4017 M6X25 A480 | |
| 250 | 315105-0146 | | 14 | WASHER BRB 5,3X10 RFR | |
| 260 | 315105-0153 | | 20 | WASHER BRB 6,4X12 RFR | |
| 270 | 315125-0153 | | 4 | WASHER TBRSB 6,4X22X4 A4 | |
| **Common Parts** | | | | | |
| 010 | 2751667-0100 | | 18 | PRESSURE FINGER ..... | **2-7** |
| 100 | 2751695-0000 | | 2 | STEERING | |
| 140 | 2715804-0000 | | 2 | SCREW | |
| 150 | 2873871-0000 | | 1 | BRACKET | |
| 160 | 2838781-0000 | | 1 | STEERING | |
| 280 | 312812-0314 | | 4 | HEXAGON NUT, NY-LOCK M5 A480 | |
| 310 | 315755-0106 | | 2 | RETAINING RING SHAFT DIN 6799 4 SS | |
| 330 | 312155-0327 | | 2 | SCREW DIN 7991 MF6S M5X12 A4 70 | |

| Pos | Part No | UN | Qty | Description | Page No |
|---|---|---|---|---|---|

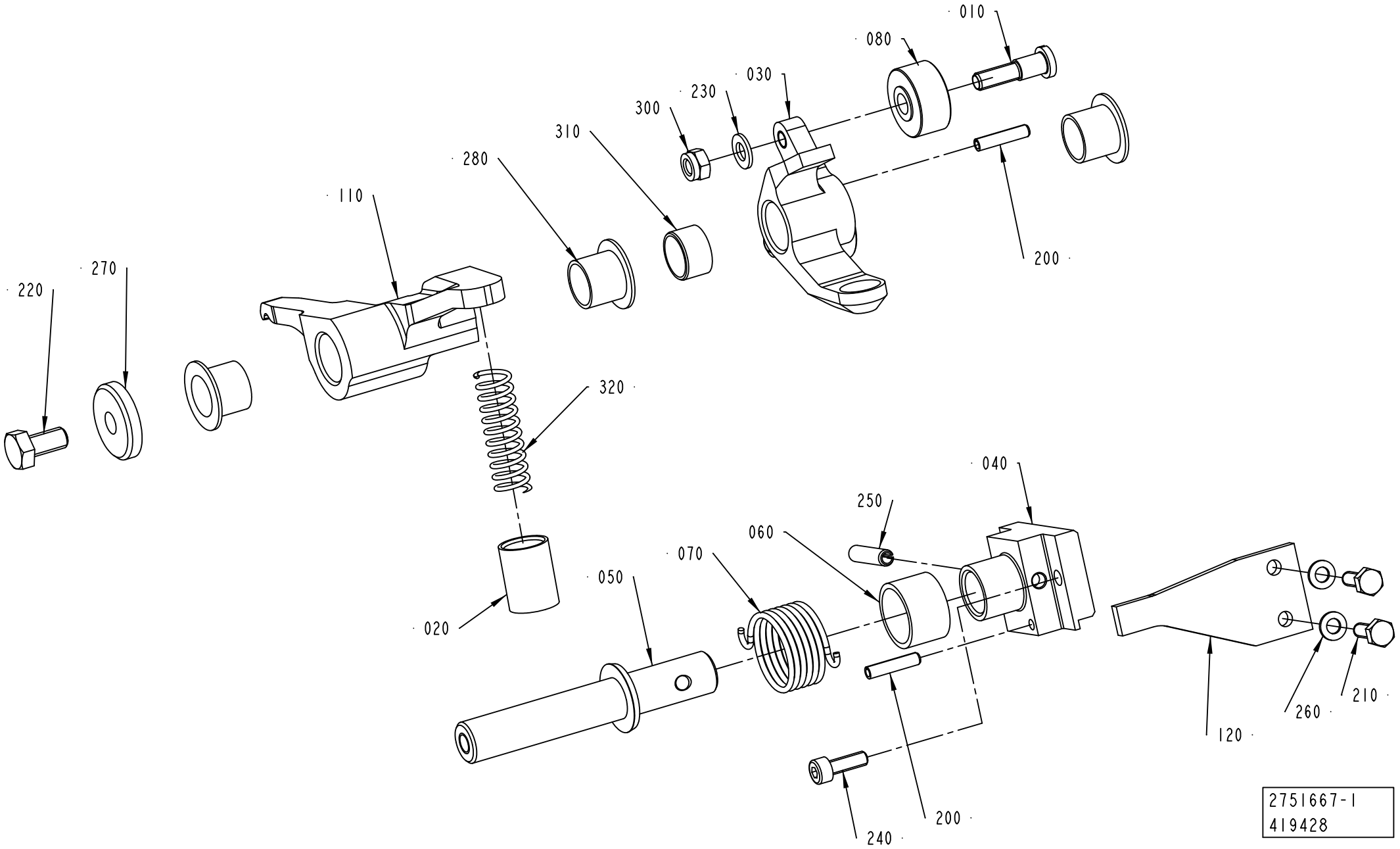
010
080
030
230
300
310
280
110
270
220
200
320
040
250
060
070
050
020
120
260
210
240
200
2751667-1
419428

ECM: 448521 - 20100702
Group number: 2751667-0100
Assembly Drawing: 2751667-1_1_AD

| Pos | Part No | UN | Qty | Description | Page No |
|---|---|---|---|---|---|
| **RECAP2 A3** | | | | | |
| 040 | 2715843-0000 | | 1 | HOLDER | |
| 050 | 2703715-0000 | | 1 | SHAFT | |
| 110 | 2911986-0000 | | 1 | ARM | |
| 120 | 2715844-0000 | | 1 | BRACKET | |
| 320 | 90600-0683 | | 1 | COMP. SPRING 2496, 1,2X10,4X45 | |
| **RECAP3** | | | | | |
| 040 | 2715843-0000 | | 1 | HOLDER | |
| 050 | 2703715-0000 | | 1 | SHAFT | |
| 110 | 2715842-0000 | | 1 | ARM | |
| 120 | 2715844-0000 | | 1 | BRACKET | |
| 320 | 90600-0683 | | 1 | COMP. SPRING 2496, 1,2X10,4X45 | |
| **Common Parts** | | | | | |
| 010 | 2684864-0000 | | 2 | SHAFT | |
| 020 | 2715695-0000 | | 1 | SLEEVE | |
| 030 | 2715794-0000 | | 1 | ARM | |
| 060 | 2715797-0000 | | 1 | BUSHING | |
| 070 | 2715798-0000 | | 1 | TURN SPRING | |
| 080 | 2703725-0000 | | 2 | ROLLER | |
| 200 | 311112-0208 | | 2 | SPRING PIN, ISO 8752 3X16-C | |
| 210 | 312105-0291 | | 2 | SCREW M6S ISO 4017 M4X12 A470 | |
| 220 | 312105-0366 | | 1 | SCREW M6S ISO 4017 M6X12 A480 | |
| 230 | 315105-0146 | | 2 | WASHER BRB 5,3X10 RFR | |
| 240 | 312115-0291 | | 2 | SCREW ISO4762 M4X12 A4 80 | |
| 250 | 311112-0256 | | 1 | SPRING PIN, ISO 8752 4X20-C | |
| 260 | 315105-0136 | | 2 | WASHER BRB 4,3X8 RFR | |
| 270 | 315125-0153 | | 1 | WASHER TBRSB 6,4X22X4 A4 | |
| 280 | 90240-0262 | | 3 | FLANGE BUSHING, IGLIDUR X 12X14X12 | |
| 300 | 312812-0314 | | 2 | HEXAGON NUT, NY-LOCK M5 A480 | |
| 310 | 90600-5135 | | 1 | BUSHING, 12X14X8 MM | |

| Pos | Part No | UN | Qty | Description | Page No |
|---|---|---|---|---|---|

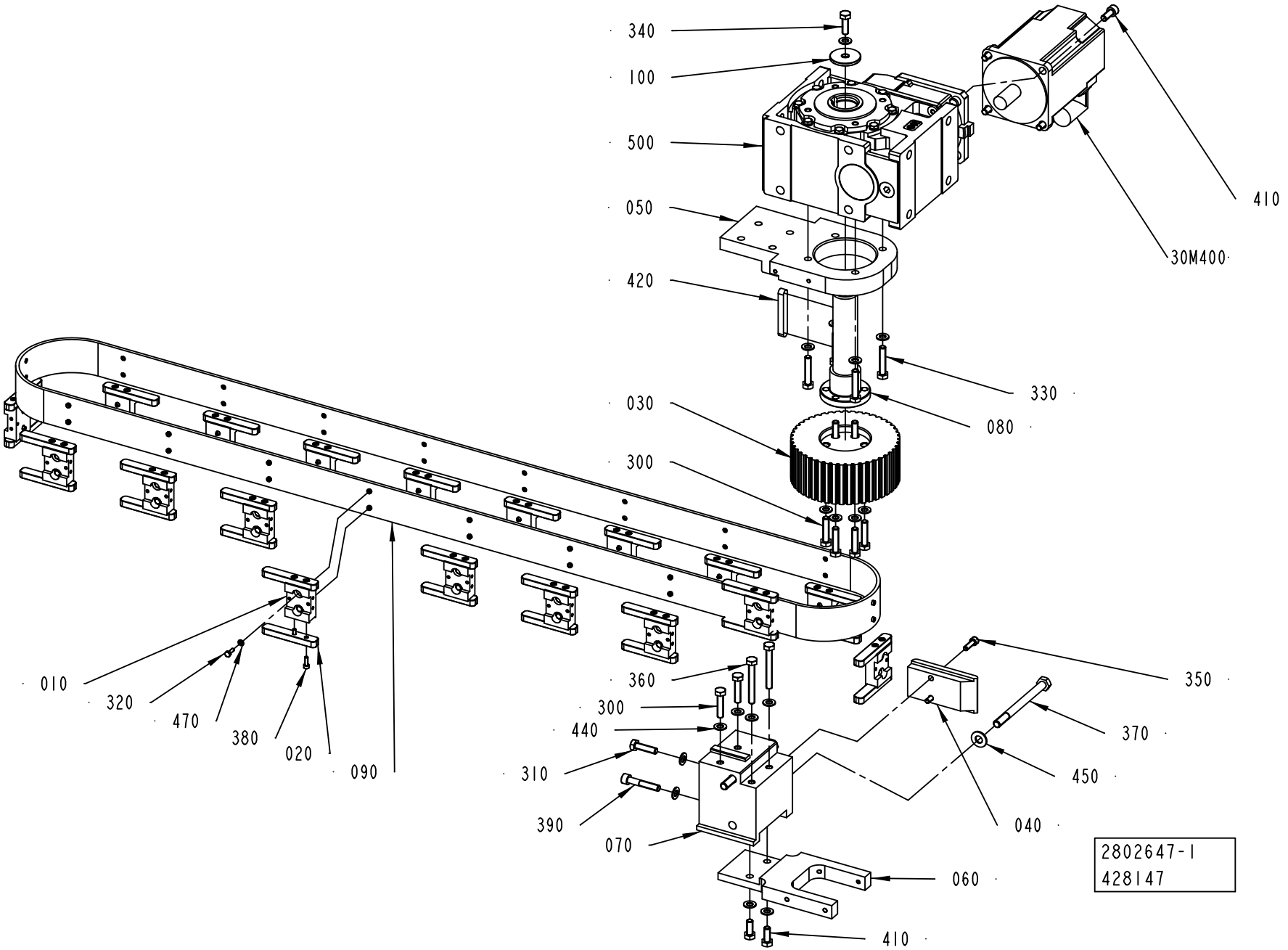
340
100
500
050
420
030
300
010
320
470
380
020
090
360
300
440
310
390
070
060
410
350
370
450
040
410
30M400
330
080
2802647-1
428147

ECM: 428916 - 20100401
Group number: 2802647-0100
Assembly Drawing: 2802647-1_1_AC

| Pos | Part No | UN | Qty | Description | Page No |
|---|---|---|---|---|---|
| - | | | | | |
| 010 | 2703711-0000 | | 18 | HOLDER | |
| 020 | 2715837-0000 | | 36 | KEY | |
| 030 | 2837191-0000 | | 1 | TOOTHED PULLEY | |
| 040 | 2751710-0000 | | 1 | SUPPORT PLATE | |
| 050 | 2837175-0000 | | 1 | BEARING HALF | |
| 060 | 2716041-0000 | | 1 | BRACKET | |
| 070 | 2751700-0000 | | 1 | BOW CLAMP | |
| 080 | 2838721-0000 | | 1 | SHAFT | |
| 090 | 2751709-0000 | | 1 | TIMING BELT | |
| 100 | 2837255-0000 | | 1 | WASHER | |
| 300 | 312109-0457 | | 8 | SCREW M6S ISO 4017 M8X35 A480 | |
| 310 | 312105-0455 | | 1 | SCREW M6S ISO 4017 M8X30 A480 | |
| 320 | 312105-0291 | | 36 | SCREW M6S ISO 4017 M4X12 A470 | |
| 330 | 312109-0459 | | 4 | SCREW M6S ISO 4017 M8X40 A480 | |
| 340 | 312105-0453 | | 1 | SCREW M6S ISO 4017 M8X25 A480 | |
| 350 | 312115-0370 | | 2 | SCREW ISO4762 M6X20 A4 80 | |
| 360 | 312109-0463 | | 2 | SCREW M6S ISO 4017 M8X60 A480 | |
| 370 | 312105-0515 | | 2 | SCREW M6S ISO 4014 M10X120 A480 | |
| 380 | 312115-0291 | | 72 | SCREW ISO4762 M4X12 A4 80 | |
| 390 | 312115-0460 | | 1 | SCREW ISO4762 M8X45 A4 80 | |
| 410 | 312105-0451 | | 6 | SCREW M6S ISO 4017 M8X20 A480 | |
| 420 | 315705-0307 | | 1 | PARALLEL KEY W. ROUND ENDS 10X8X70 MM | |
| 440 | 315105-0165 | | 19 | WASHER BRB 8,4X16 RFR | |
| 450 | 315105-0173 | | 2 | WASHER BRB 10,5X22 RFR | |
| 470 | 315105-0136 | | 36 | WASHER BRB 4,3X8 RFR | |
| 500 | 90600-0804 | | 1 | WORM GEAR MR V 63 UO3A-80B4 … B5/140 | |
| 30M400 | 90601-0668 | | 1 | SERVO MOTOR MPL-B420P-MK72AA SERIES A | |

| Pos | Part No | UN | Qty | Description | Page No |
|---|---|---|---|---|---|

Machine Type | Group Description | Used-In | Group Number | Page No

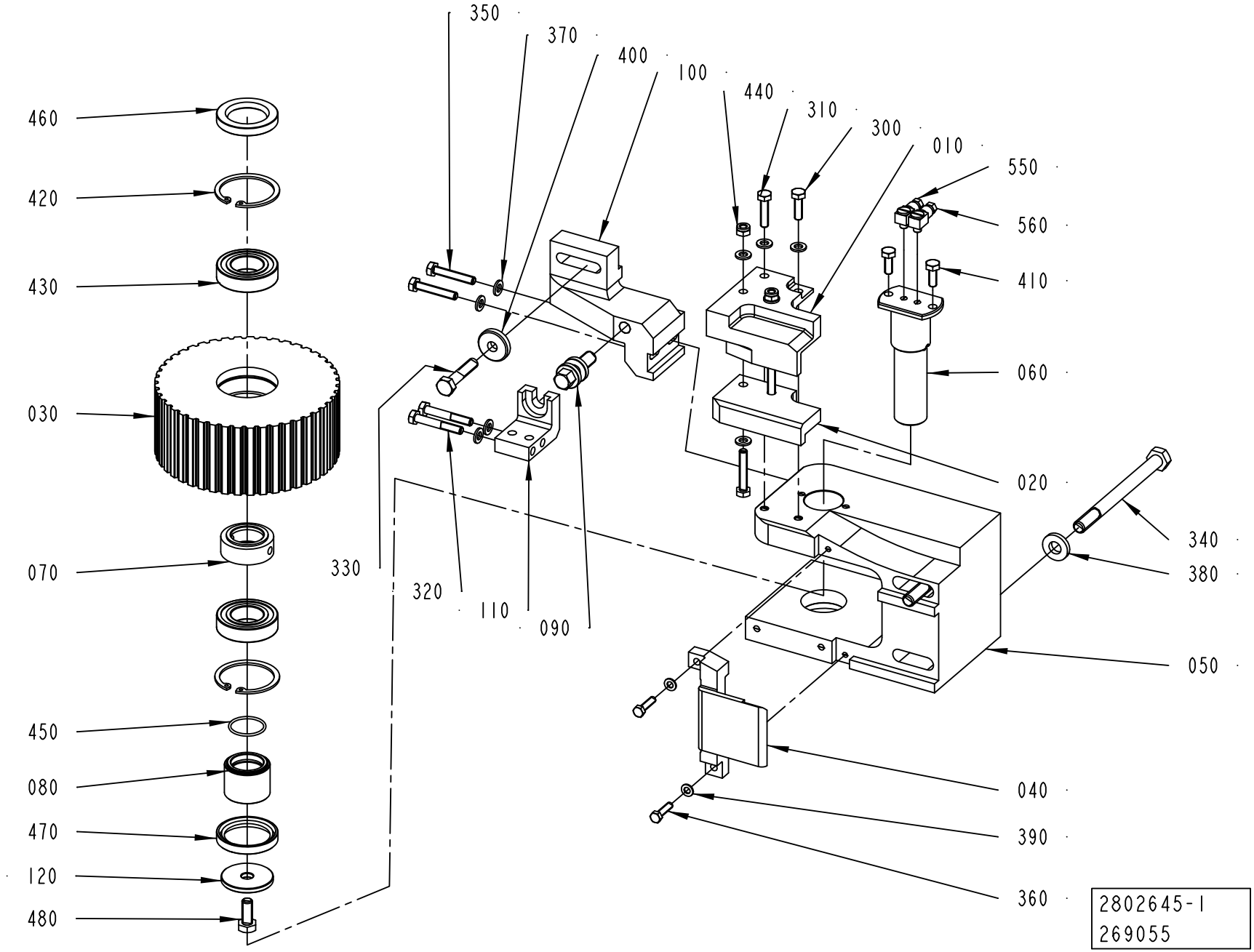
350
370
400
100
440
310
300
010
550
560
410
060
020
340
380
050
040
390
360
460
420
430
030
070
450
080
470
120
480
330
320
110
090
2802645-1
269055

ECM: 290201 - 20061221
Group number: 2802645-0100
Assembly Drawing: 2802645-1_1_AA

| Pos | Part No | UN | Qty | Description | Page No |
|---|---|---|---|---|---|
| - | | | | | |
| 010 | 2751692-0000 | | 1 | BRACKET | |
| 020 | 2751693-0000 | | 1 | STEERING | |
| 030 | 2751712-0000 | | 1 | TOOTHED PULLEY | |
| 040 | 2751714-0000 | | 1 | SUPPORT PLATE | |
| 050 | 2751725-0000 | | 1 | BOW CLAMP | |
| 060 | 2838815-0000 | | 1 | SHAFT | |
| 070 | 2751747-0000 | | 1 | SPACER | |
| 080 | 2751748-0000 | | 1 | SLEEVE | |
| 090 | 2703842-0000 | | 1 | ADJUSTING SCREW | |
| 100 | 2802629-0000 | | 1 | BRACKET | |
| 110 | 2802635-0000 | | 1 | SUPPORT | |
| 120 | 2837255-0000 | | 1 | WASHER | |
| 300 | 312105-0370 | | 1 | SCREW M6S ISO 4017 M6X20 A480 | |
| 310 | 312105-0372 | | 1 | SCREW M6S ISO 4017 M6X25 A480 | |
| 320 | 312105-0378 | | 2 | SCREW M6S ISO 4014 M6X40 A480 | |
| 330 | 312105-0459 | | 1 | SCREW M6S ISO 4014 M8X40 A480 | |
| 340 | 312105-0515 | | 2 | SCREW M6S ISO 4014 M10X120 A480 | |
| 350 | 312109-0376 | | 4 | SCREW M6S ISO 4017 M6X35 A480 | |
| 360 | 312105-0331 | | 2 | SCREW M6S ISO 4017 M5X20 A480 | |
| 370 | 315105-0153 | | 10 | WASHER BRB 6,4X12 RFR | |
| 380 | 315115-0173 | | 2 | WASHER PLAIN, TBRB 10,5/22 H=4 | |
| 390 | 315105-0146 | | 2 | WASHER BRB 5,3X10 RFR | |
| 400 | 315125-0165 | | 1 | WASHER TBRSB 8,4X26X5 A4 | |
| 410 | 312105-0368 | | 2 | SCREW M6S ISO 4017 M6X16 A480 | |
| 420 | 315753-0130 | | 2 | RETAINING RING FOR BORE DIN 472 47 SS | |
| 430 | 321306-0105 | | 2 | BALL BEARING 25/47X12 | |
| 440 | 312812-0316 | | 2 | HEXAGON NUT, NY-LOCK M6 A480 | |
| 450 | 315202-0710 | | 1 | O-RING 25,12X1,78 MM | |
| 460 | 315221-0169 | | 1 | RADIAL SEAL 30X47X7 MM | |
| 470 | 315221-0175 | | 1 | RADIAL SEAL 35X47X7 MM | |
| 480 | 312105-0451 | | 1 | SCREW M6S ISO 4017 M8X20 A480 | |
| 550 | 90134-0058 | | 1 | CONNECTION | |
| 560 | 90134-0068 | | 1 | CONNECTION | |

| Pos | Part No | UN | Qty | Description | Page No |
|---|---|---|---|---|---|

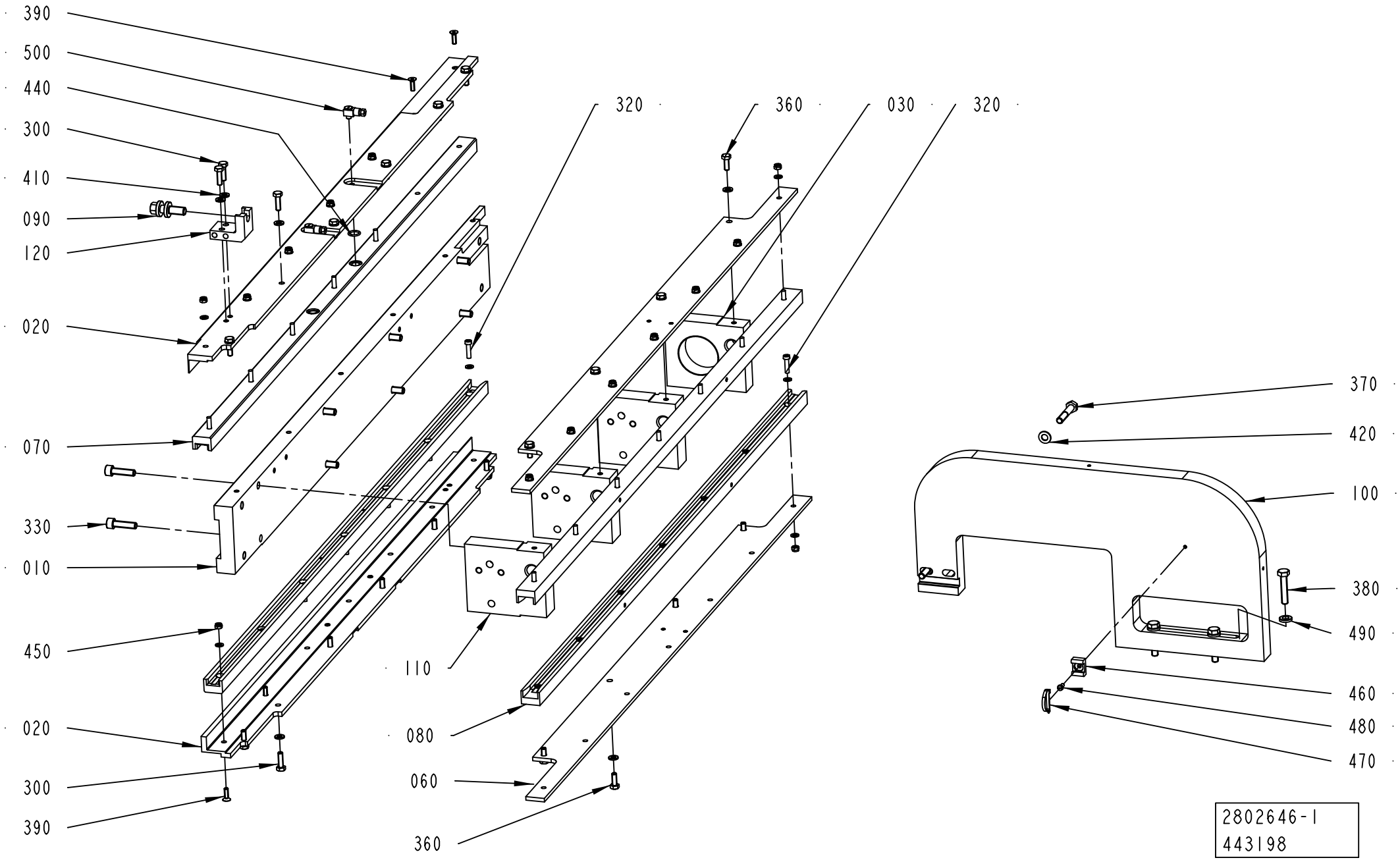
390
500
440
300
410
090
120
020
070
330
010
450
020
300
390
320
360
030
320
110
080
060
360
370
420
100
380
490
460
480
470
2802646-1
443198

ECM: 444292 - 20100701
Group number: 2802646-0100
Assembly Drawing: 2802646-1_1_AD

| Pos | Part No | UN | Qty | Description | Page No |
|---|---|---|---|---|---|
| - | | | | | |
| 010 | 3095793-0000 | | 1 | PLATE | |
| 020 | 3095794-0000 | | 2 | ANGLE BRACKET | |
| 030 | 2837631-0000 | | 1 | SPACER | |
| 060 | 2838783-0000 | | 2 | PLATE | |
| 070 | 3095795-0000 | | 2 | SLIDING STRIP | |
| 080 | 2838784-0000 | | 2 | SLIDING STRIP | |
| 090 | 2703842-0000 | | 1 | ADJUSTING SCREW | |
| 100 | 2802637-0000 | | 1 | MOUNTING SHEET | |
| 110 | 2802644-0000 | | 3 | SPACER | |
| 120 | 2802635-0000 | | 1 | SUPPORT | |
| 300 | 312105-0370 | | 15 | SCREW M6S ISO 4017 M6X20 A480 | |
| 320 | 312125-0331 | | 24 | SCREW ISO 1207 M5X20 A4 | |
| 330 | 312115-0455 | | 8 | SCREW ISO4762 M8X30 A4 80 | |
| 360 | 312105-0368 | | 8 | SCREW M6S ISO 4017 M6X16 A480 | |
| 370 | 312105-0460 | | 2 | SCREW M6S ISO 4014 M8X45 A480 | |
| 380 | 312109-0459 | | 3 | SCREW M6S ISO 4017 M8X40 A480 | |
| 390 | 312155-0329 | | 4 | SCREW DIN 7991 MF6S M5X16 A4 70 | |
| 400 | 315105-0146 | | 52 | WASHER BRB 5,3X10 RFR | |
| 410 | 315105-0153 | | 23 | WASHER BRB 6,4X12 RFR | |
| 420 | 315105-0165 | | 2 | WASHER BRB 8,4X16 RFR | |
| 440 | 315202-0702 | | 4 | O-RING 12,42X1,78 MM | |
| 450 | 312812-0314 | | 28 | HEXAGON NUT, NY-LOCK M5 A480 | |
| 460 | 352113-0203 | | 1 | ANCHOR PLATES FOR STRIPS, TYPE TM3S8-M0 | |
| 470 | 352113-0104 | | 1 | CABLE TIE, BLACK 300X4,8 MM | |
| 480 | 312125-0287 | | 1 | SCREW ISO 1207 M4X8 A4 | |
| 490 | 315115-0165 | | 3 | WASHER PLAIN, TBRB 8,4/16 H=3 | |
| 500 | 90134-0058 | | 4 | CONNECTION | |

| Pos | Part No | UN | Qty | Description | Page No |
|---|---|---|---|---|---|

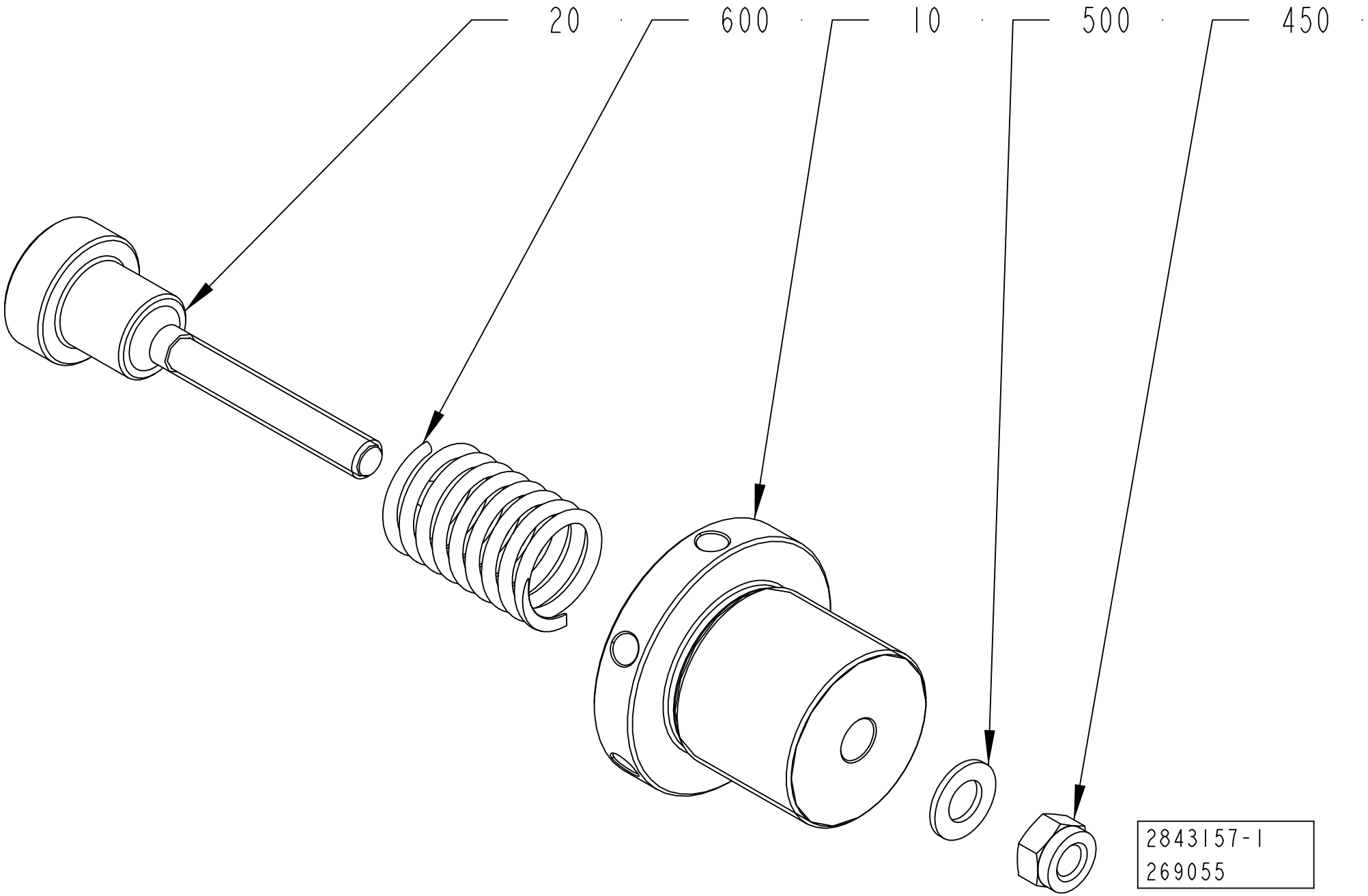
20
600
10
500
450
2843157-1
269055

ECM: 350651 - 20080701
Group number: 2843157-0100
Assembly Drawing: 2843157-1_1_AA

| Pos | Part No | UN | Qty | Description | Page No |
|---|---|---|---|---|---|
| - | | | | | |
| 010 | 2843158-0000 | | 1 | FLANGE | |
| 020 | 2843159-0000 | | 1 | SHAFT | |
| 450 | 312812-0322 | | 1 | HEXAGON NUT, NY-LOCK M12 A480 | |
| 500 | 315105-0178 | | 1 | WASHER BRB 13X24 RFR | |
| 600 | 90600-0656 | | 1 | COMP. SPRING 6777, 4X36X120 | |

| Pos | Part No | UN | Qty | Description | Page No |
|---|---|---|---|---|---|

Tetra Pak

# SPC
## Spare Parts Catalogue

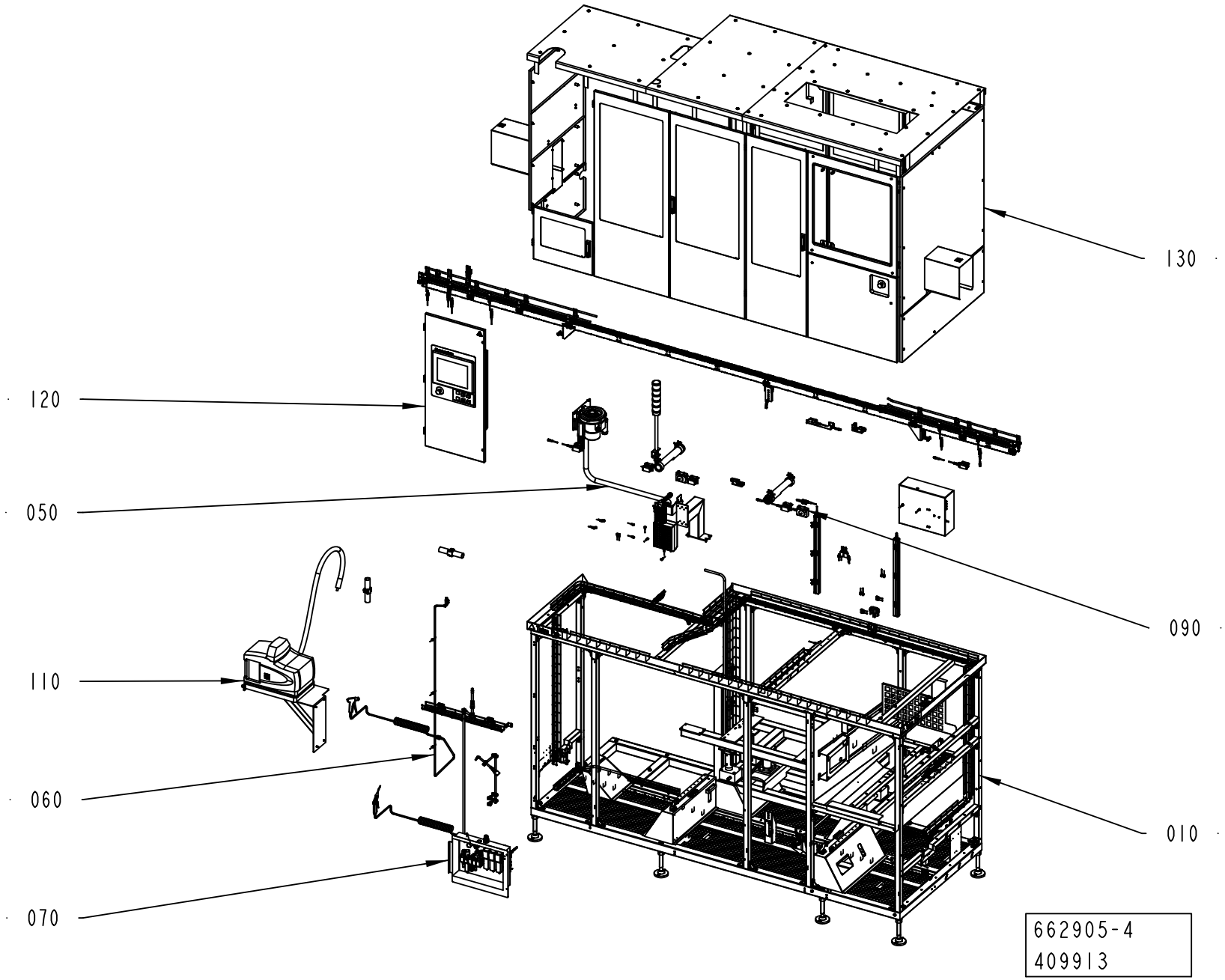
130
120
050
090
110
060
010
070
662905-4
409913

ECM: 438889 - 20100701
Group number: 662905-0200
Assembly Drawing: 662905-4_1_AA

| Pos | Part No | UN | Qty | Description | Page No |
|---|---|---|---|---|---|
| - | | | | | |
| 010 | 2758505-0200 | | 1 | MACHINE BODY | **3-5** |
| 040 | 2758507-0200 | | 1 | PACKAGE CONVEYOR | **3-21, 3-23** |
| 050 | 2773622-0100 | | 1 | LINE HEATER | **3-45** |
| 060 | 2758514-0100 | | 1 | WATER CONNECTION | **3-51** |
| 070 | 2758513-0100 | | 1 | AIR SUPPLY | **3-53** |
| 080 | 2758522-0100 | | 1 | LUBRICATION UNIT | **3-69** |
| 090 | 2769754-0200 | | 1 | ELECTRIC EQUIPMENT | **3-79** |
| 110 | 2758511-0100 | | 1 | HOTMELT UNIT | **3-91** |
| 120 | 2779070-0200 | | 1 | OPERATOR INTERFACE | **3-93** |
| 130 | 2826741-0200 | | 1 | DOORS AND COVERS | **3-101** |

| Pos | Part No | UN | Qty | Description | Page No |
|---|---|---|---|---|---|

Machine Type | Group Description | Used-In | Group Number | Page No

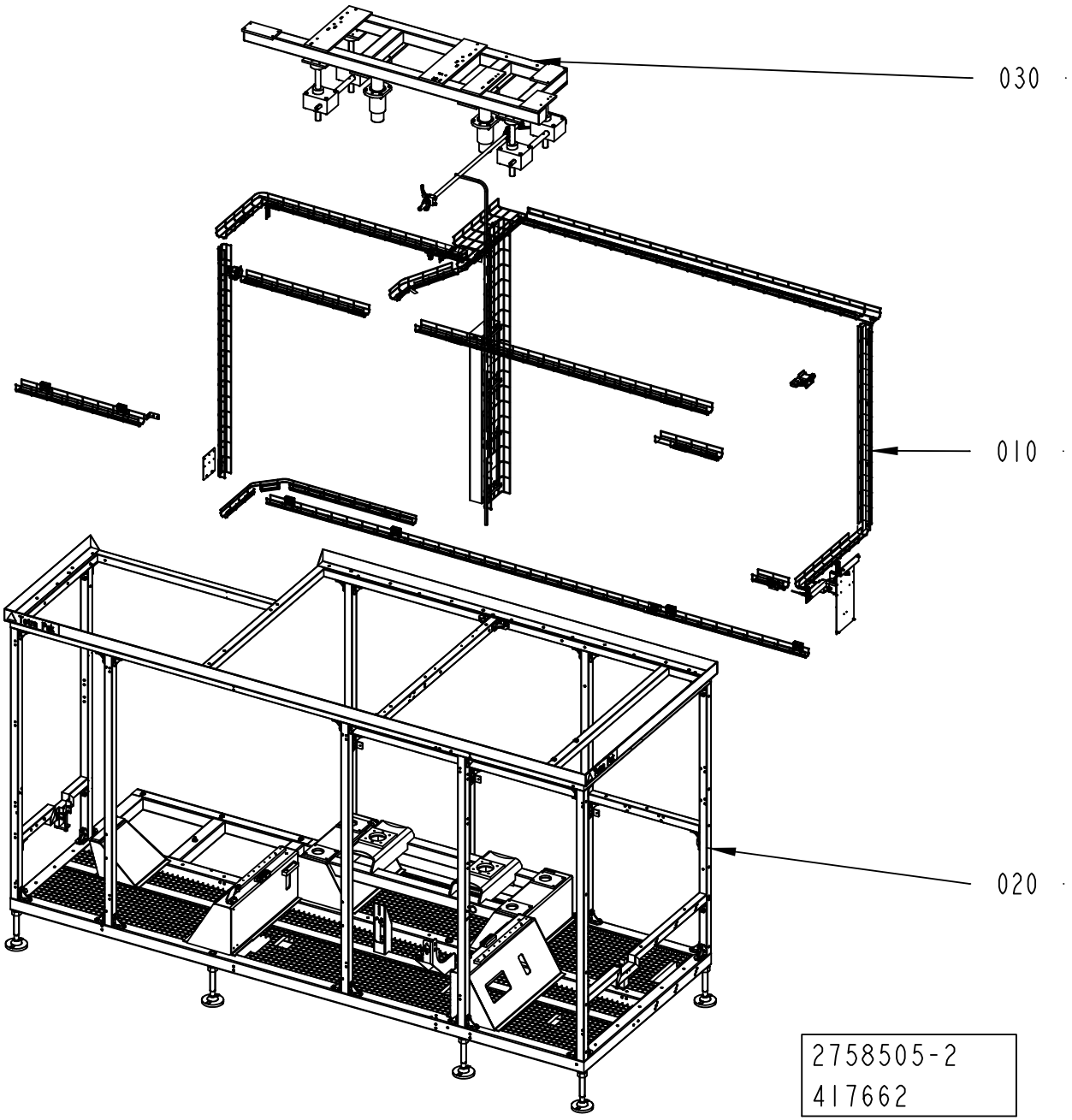
030
010
020
2758505-2
417662

ECM: 417669 - 20100110
Group number: 2758505-0200
Assembly Drawing: 2758505-2_1_AB

| Pos | Part No | UN | Qty | Description | Page No |
|---|---|---|---|---|---|
| - | | | | | |
| 010 | 2758515-0200 | | 1 | CABLE DUCT | **3-7, 3-9** |
| 020 | 2769761-0200 | | 1 | MACHINE BODY | **3-11, 3-13** |
| 030 | 2769738-0100 | | 1 | HEIGHT ADJUSTMENT | **3-17** |

| Pos | Part No | UN | Qty | Description | Page No |
|---|---|---|---|---|---|

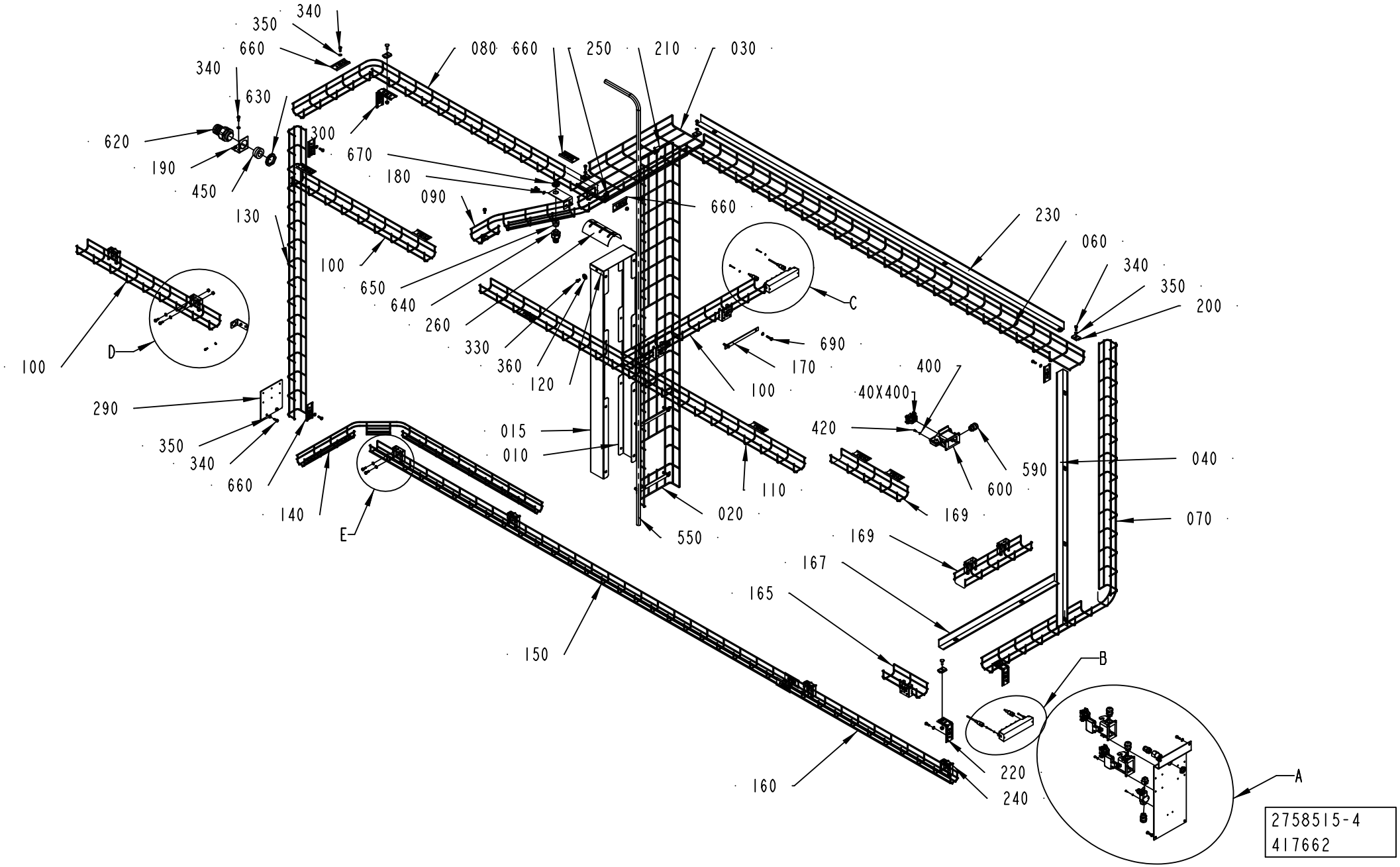
340
350
660
340
630
620
190
450
130
300
670
180
090
080
660
250
210
030
660
230
060
340
350
200
C
690
170
400
40X400
420
590
600
040
070
169
167
165
B
A
220
240
160
150
550
020
110
100
015
010
120
360
330
260
640
650
100
D
100
290
350
340
660
140
E
2758515-4
417662

ECM: 438891 - 20100701
Group number: 2758515-0200
Assembly Drawing: 2758515-4_1_AA

This list covers pages from 3-6 to 3-9

| Pos | Part No | UN | Qty | Description | Page No |
|---|---|---|---|---|---|
| **RECAP3, RECAP2 A3 (See drawing on pages: 3-6, 3-8)** | | | | | |
| 100 | 2931775-0000 | | 3 | CABLE DUCT | |
| 169 | 2931782-0000 | | 2 | CABLE DUCT | |
| 240 | 90181-0190 | | 11 | CABLE DUCT, WALL BRACKET, B4 MINI | |
| 320 | 312125-0232 | | 4 | SCREW ISO 1207 M3X25 A4 | |
| 340 | 312105-0368 | | 49 | SCREW M6S ISO 4017 M6X16 A480 | |
| 350 | 315105-0153 | | 57 | WASHER BRB 6,4X12 RFR | |
| 390 | 315105-0124 | | 6 | WASHER BRB 3,2X6 RFR | |
| 01K340 | 90459-6062 | | 1 | REMOTE I/O, IP67 8PTS IN/OUT SELF-CONFIG | |
| 01W340 | 351309-0100 | | 1 | ACTUATOR/SENSOR CABLE PRKT 4-07/10M | |
| 81W421 | 351415-0100 | | 1 | DEVICENET CONN. CABLE, 0935 361 105/10M | |
| **Common Parts** | | | | | |
| 010 | 2746903-0000 | | 1 | CABLE DUCT | |
| 015 | 2873928-0000 | | 1 | CABLE DUCT | |
| 020 | 2931768-0000 | | 1 | CABLE DUCT | |
| 030 | 2931769-0000 | | 1 | CABLE DUCT | |
| 040 | 2931770-0000 | | 1 | DIVIDER | |
| 050 | 3047341-0000 | | 1 | ANGLE BRACKET | |
| 060 | 2931771-0000 | | 1 | CABLE DUCT | |
| 070 | 2931772-0000 | | 1 | CABLE DUCT | |
| 080 | 2931773-0000 | | 1 | CABLE DUCT | |
| 090 | 2931774-0000 | | 1 | CABLE DUCT | |
| 110 | 2931776-0000 | | 1 | CABLE DUCT | |
| 120 | 2779800-0000 | | 1 | PLATE | |
| 130 | 2931777-0000 | | 1 | CABLE DUCT | |
| 140 | 2931778-0000 | | 1 | CABLE DUCT | |
| 150 | 2931779-0000 | | 1 | CABLE DUCT | |
| 160 | 2931780-0000 | | 1 | CABLE DUCT | |
| 165 | 2931781-0000 | | 1 | CABLE DUCT | |
| 167 | 2931784-0000 | | 1 | DIVIDER | |
| 170 | 2931783-0000 | | 4 | PLATE | |
| 180 | 2931785-0000 | | 1 | ANGLE | |
| 190 | 2931786-0000 | | 1 | ANGLE | |
| 200 | 90181-0183 | | 13 | CABLE DUCT, FITTING, B2 | |
| 210 | 90181-0184 | | 1 | CABLE TRENCH PARTS | |
| 220 | 2931787-0000 | | 2 | ANGLE | |
| 230 | 2931788-0000 | | 1 | DIVIDER | |
| 250 | 90181-0314 | | 6 | CABLE TRENCH PARTS | |
| 260 | 2934904-0000 | | 1 | RAIL BRACKET | |
| 285 | 2802417-0000 | | 1 | PLATE | |
| 290 | 2802423-0000 | | 1 | PLATE | |
| 300 | 90181-0186 | | 1 | CABLE DUCT, ELBOW BRACKET, B27 | |
| 310 | 312115-0289 | | 2 | SCREW ISO4762 M4X10 A4 80 | |
| 330 | 312105-0366 | | 2 | SCREW M6S ISO 4017 M6X12 A480 | |
| 360 | 315125-0153 | | 2 | WASHER TBRSB 6,4X22X4 A4 | |
| 400 | 315105-0136 | | 14 | WASHER BRB 4,3X8 RFR | |
| 410 | 312125-0222 | | 2 | SCREW ISO 1207 M3X8 A4 | |
| 420 | 312125-0287 | | 12 | SCREW ISO 1207 M4X8 A4 | |
| 430 | 312605-0316 | | 6 | HEXAGON NUT, M6M M6 A280 | |
| 450 | 353249-0054 | | 1 | INSERT, SINGLE HOLE, EK 156/25 | |
| 550 | 90166-0113 | MM | 2500 | HOSE | |
| 570 | 90459-2133 | | 1 | PUSH-IN FITTING QSSF-1/2-12-B | |
| 580 | 350001-0016 | | 1 | PUSH-IN FITTING QS-F-G1/2-12 | |
| 590 | 90458-0307 | | 4 | CABLE GLAND, M20X1,5, NO.5311 1020 | |
| 600 | 90459-1461 | | 3 | HOUSING HAN 6 E 19 30 006 1255 | |
| 610 | 90459-3081 | | 1 | HOUSING HAN A 19 20 003 1250 | |
| 620 | 90458-0434 | | 1 | HOSE GLAND W/O INSERT M40 EXTENDED | |
| 630 | 90458-0326 | | 1 | NUT, M40X1,5 | |
| 640 | 90458-0430 | | 1 | HOSE GLAND W/O INSERT M20 EXTENDED | |
| 650 | 353249-0012 | | 1 | INSERT, SINGLE HOLE, EK 154/11 | |
| 660 | 90181-0182 | | 14 | CABLE TRENCH PARTS | |
| 670 | 90458-0323 | | 1 | NUT, M20X1,5 | |
| 690 | 312105-0372 | | 8 | SCREW M6S ISO 4017 M6X25 A480 | |
| 01K420 | 90459-6062 | | 1 | REMOTE I/O, IP67 8PTS IN/OUT SELF-CONFIG | |
| 81W404 | 351415-0100 | | 1 | DEVICENET CONN. CABLE, 0935 361 105/10M | |
| 81W420 | 351309-0100 | | 1 | ACTUATOR/SENSOR CABLE PRKT 4-07/10M | |
| 40X400 | 90110-0053 | | 1 | FEMALE INSERT HAN 6 E 09 33 006 2701 | |
| 50X000 | 90110-0053 | | 1 | FEMALE INSERT HAN 6 E 09 33 006 2701 | |
| 50X001 | 90459-6820 | | 1 | FEMALE INSERT HAN 4 A, 09 20 004 2711 | |
| 50X110 | 90110-0053 | | 1 | FEMALE INSERT HAN 6 E 09 33 006 2701 | |

Machine Type | Group Description | Used-In | Group Number | Page No

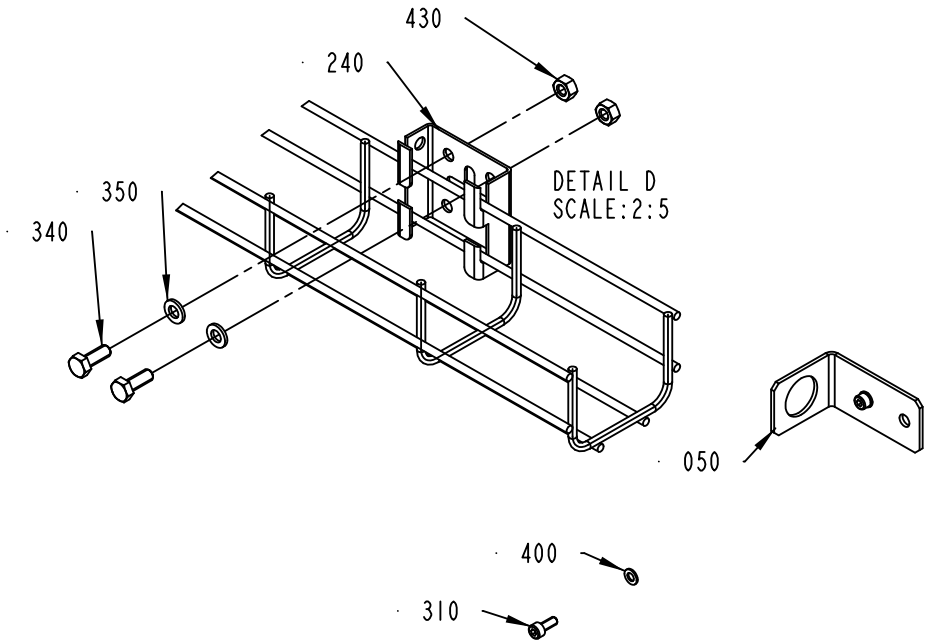


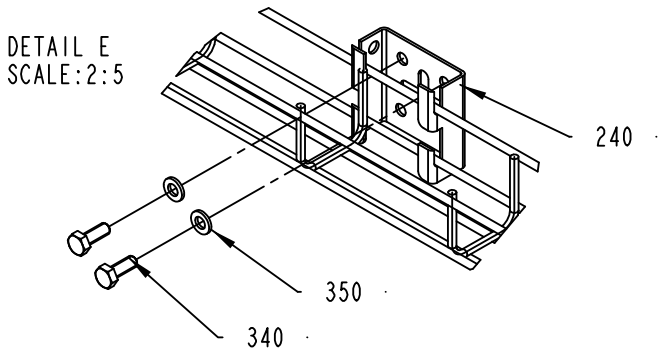


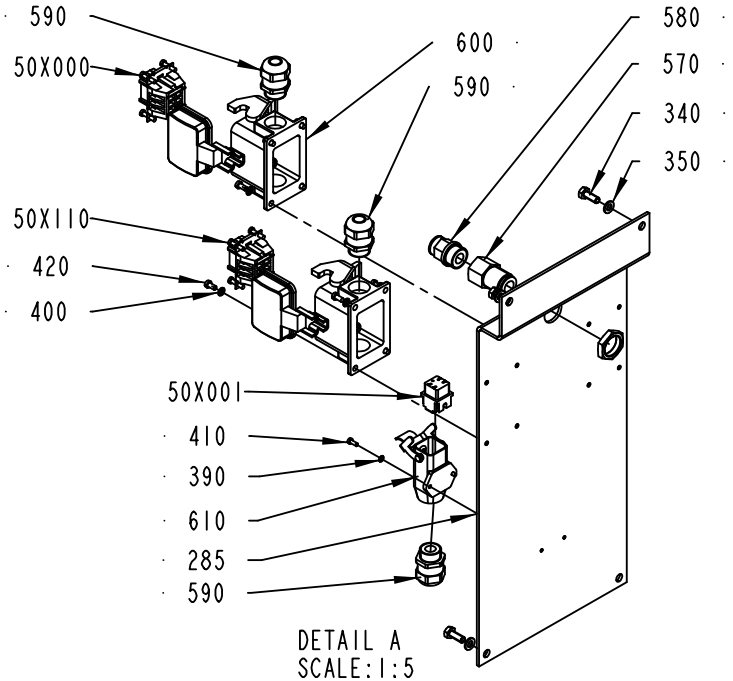


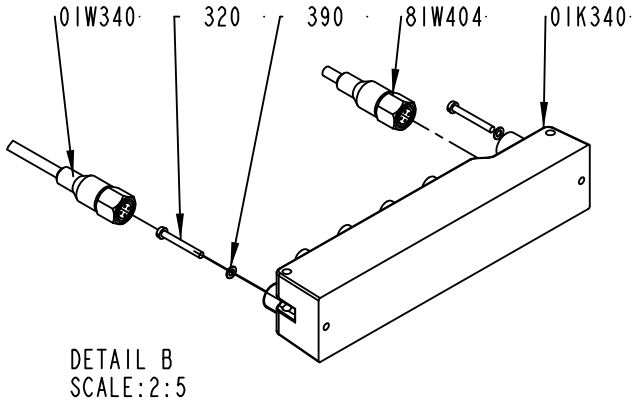


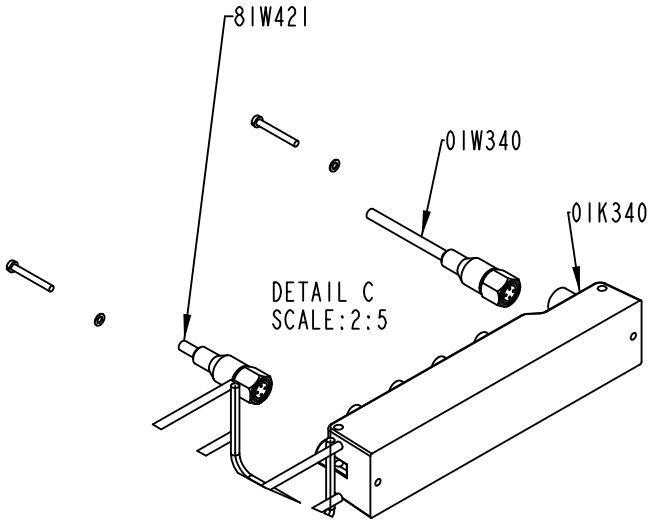


2758515-4
417662

ECM: 438891 - 20100701
Group number: 2758515-0200
Assembly Drawing: 2758515-4_2_AA

This list covers pages from 3-6 to 3-9

| Pos | Part No | UN | Qty | Description | Page No |
|---|---|---|---|---|---|
| **RECAP3, RECAP2 A3 (See drawing on pages: 3-6, 3-8)** | | | | | |
| 100 | 2931775-0000 | | 3 | CABLE DUCT | |
| 169 | 2931782-0000 | | 2 | CABLE DUCT | |
| 240 | 90181-0190 | | 11 | CABLE DUCT, WALL BRACKET, B4 MINI | |
| 320 | 312125-0232 | | 4 | SCREW ISO 1207 M3X25 A4 | |
| 340 | 312105-0368 | | 49 | SCREW M6S ISO 4017 M6X16 A480 | |
| 350 | 315105-0153 | | 57 | WASHER BRB 6,4X12 RFR | |
| 390 | 315105-0124 | | 6 | WASHER BRB 3,2X6 RFR | |
| 01K340 | 90459-6062 | | 1 | REMOTE I/O, IP67 8PTS IN/OUT SELF-CONFIG | |
| 01W340 | 351309-0100 | | 1 | ACTUATOR/SENSOR CABLE PRKT 4-07/10M | |
| 81W421 | 351415-0100 | | 1 | DEVICENET CONN. CABLE, 0935 361 105/10M | |
| **Common Parts** | | | | | |
| 010 | 2746903-0000 | | 1 | CABLE DUCT | |
| 015 | 2873928-0000 | | 1 | CABLE DUCT | |
| 020 | 2931768-0000 | | 1 | CABLE DUCT | |
| 030 | 2931769-0000 | | 1 | CABLE DUCT | |
| 040 | 2931770-0000 | | 1 | DIVIDER | |
| 050 | 3047341-0000 | | 1 | ANGLE BRACKET | |
| 060 | 2931771-0000 | | 1 | CABLE DUCT | |
| 070 | 2931772-0000 | | 1 | CABLE DUCT | |
| 080 | 2931773-0000 | | 1 | CABLE DUCT | |
| 090 | 2931774-0000 | | 1 | CABLE DUCT | |
| 110 | 2931776-0000 | | 1 | CABLE DUCT | |
| 120 | 2779800-0000 | | 1 | PLATE | |
| 130 | 2931777-0000 | | 1 | CABLE DUCT | |
| 140 | 2931778-0000 | | 1 | CABLE DUCT | |
| 150 | 2931779-0000 | | 1 | CABLE DUCT | |
| 160 | 2931780-0000 | | 1 | CABLE DUCT | |
| 165 | 2931781-0000 | | 1 | CABLE DUCT | |
| 167 | 2931784-0000 | | 1 | DIVIDER | |
| 170 | 2931783-0000 | | 4 | PLATE | |
| 180 | 2931785-0000 | | 1 | ANGLE | |
| 190 | 2931786-0000 | | 1 | ANGLE | |
| 200 | 90181-0183 | | 13 | CABLE DUCT, FITTING, B2 | |
| 210 | 90181-0184 | | 1 | CABLE TRENCH PARTS | |
| 220 | 2931787-0000 | | 2 | ANGLE | |
| 230 | 2931788-0000 | | 1 | DIVIDER | |
| 250 | 90181-0314 | | 6 | CABLE TRENCH PARTS | |
| 260 | 2934904-0000 | | 1 | RAIL BRACKET | |
| 285 | 2802417-0000 | | 1 | PLATE | |
| 290 | 2802423-0000 | | 1 | PLATE | |
| 300 | 90181-0186 | | 1 | CABLE DUCT, ELBOW BRACKET, B27 | |
| 310 | 312115-0289 | | 2 | SCREW ISO4762 M4X10 A4 80 | |
| 330 | 312105-0366 | | 2 | SCREW M6S ISO 4017 M6X12 A480 | |
| 360 | 315125-0153 | | 2 | WASHER TBRSB 6,4X22X4 A4 | |
| 400 | 315105-0136 | | 14 | WASHER BRB 4,3X8 RFR | |
| 410 | 312125-0222 | | 2 | SCREW ISO 1207 M3X8 A4 | |
| 420 | 312125-0287 | | 12 | SCREW ISO 1207 M4X8 A4 | |
| 430 | 312605-0316 | | 6 | HEXAGON NUT, M6M M6 A280 | |
| 450 | 353249-0054 | | 1 | INSERT, SINGLE HOLE, EK 156/25 | |
| 550 | 90166-0113 | MM | 2500 | HOSE | |
| 570 | 90459-2133 | | 1 | PUSH-IN FITTING QSSF-1/2-12-B | |
| 580 | 350001-0016 | | 1 | PUSH-IN FITTING QS-F-G1/2-12 | |
| 590 | 90458-0307 | | 4 | CABLE GLAND, M20X1,5, NO.5311 1020 | |
| 600 | 90459-1461 | | 3 | HOUSING HAN 6 E 19 30 006 1255 | |
| 610 | 90459-3081 | | 1 | HOUSING HAN A 19 20 003 1250 | |
| 620 | 90458-0434 | | 1 | HOSE GLAND W/O INSERT M40 EXTENDED | |
| 630 | 90458-0326 | | 1 | NUT, M40X1,5 | |
| 640 | 90458-0430 | | 1 | HOSE GLAND W/O INSERT M20 EXTENDED | |
| 650 | 353249-0012 | | 1 | INSERT, SINGLE HOLE, EK 154/11 | |
| 660 | 90181-0182 | | 14 | CABLE TRENCH PARTS | |
| 670 | 90458-0323 | | 1 | NUT, M20X1,5 | |
| 690 | 312105-0372 | | 8 | SCREW M6S ISO 4017 M6X25 A480 | |
| 01K420 | 90459-6062 | | 1 | REMOTE I/O, IP67 8PTS IN/OUT SELF-CONFIG | |
| 81W404 | 351415-0100 | | 1 | DEVICENET CONN. CABLE, 0935 361 105/10M | |
| 81W420 | 351309-0100 | | 1 | ACTUATOR/SENSOR CABLE PRKT 4-07/10M | |
| 40X400 | 90110-0053 | | 1 | FEMALE INSERT HAN 6 E 09 33 006 2701 | |
| 50X000 | 90110-0053 | | 1 | FEMALE INSERT HAN 6 E 09 33 006 2701 | |
| 50X001 | 90459-6820 | | 1 | FEMALE INSERT HAN 4 A, 09 20 004 2711 | |
| 50X110 | 90110-0053 | | 1 | FEMALE INSERT HAN 6 E 09 33 006 2701 | |

| Machine Type | Group Description | Used-In | Group Number | Page No |
|---|---|---|---|---|

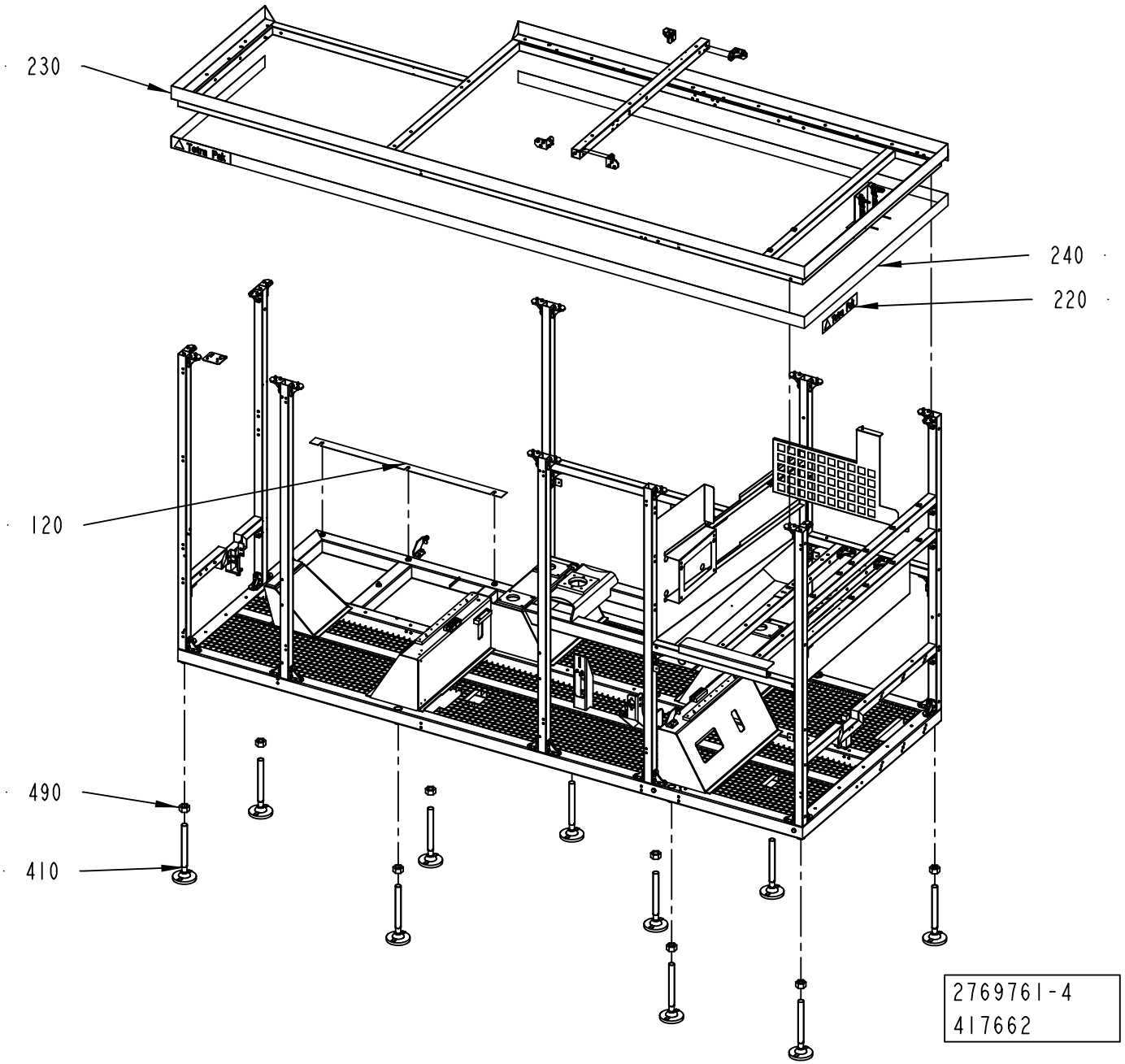
230
240
220
120
490
410
2769761-4
417662

ECM: 438892 - 20100701
Group number: 2769761-0200
Assembly Drawing: 2769761-4_1_AB

This list covers pages from 3-10 to 3-13

| Pos | Part No | UN | Qty | Description | Page No |
|---|---|---|---|---|---|
| **RECAP3, RECAP2 A3 (See drawing on pages: 3-10, 3-12)** | | | | | |
| 010 | 2778595-0100 | | 59 | ANGLE ..... | **3-15** |
| 020 | 2779818-0000 | | 1 | BEAM | |
| 140 | 2807101-0000 | | 2 | BEAM | |
| 160 | 2807105-0000 | | 1 | PLATE | |
| 170 | 2807102-0000 | | 1 | COVER | |
| 180 | 2807106-0000 | | 1 | COVER | |
| 280 | 2805697-0000 | | 8 | SUPPORT | |
| 290 | 2805696-0000 | | 8 | SUPPORT | |
| 310 | 2778574-0000 | | 2 | BEAM | |
| 350 | 2864915-0000 | | 1 | PLATE | |
| 390 | 3022734-0000 | | 1 | COVER | |
| 450 | 315105-0156 | | 18 | WASHER BRB 6,7X14 RFR | |
| 530 | 312105-0368 | | 22 | SCREW M6S ISO 4017 M6X16 A480 | |
| 540 | 312105-0370 | | 21 | SCREW M6S ISO 4017 M6X20 A480 | |
| 560 | 315105-0153 | | 32 | WASHER BRB 6,4X12 RFR | |
| 570 | 352113-0204 | | 17 | ANCHOR PLATES FOR STRIPS, TYPE TM3S25-M | |
| 580 | 312125-0323 | | 17 | SCREW ISO 1207 M5X8 A4 | |
| 01K350 | 90459-6062 | | 1 | REMOTE I/O, IP67 8PTS IN/OUT SELF-CONFIG | |
| 01K360 | 90459-6062 | | 1 | REMOTE I/O, IP67 8PTS IN/OUT SELF-CONFIG | |
| 01R360 | 90459-6847 | | 1 | DEVICENET TERM. RESISTOR, 0939 CTX 101 | |
| 01W341 | 351413-0050 | | 1 | DEVICENET CONN. CABLE, 0935 361 103/5M | |
| 01W350 | 351309-0100 | | 1 | ACTUATOR/SENSOR CABLE PRKT 4-07/10M | |
| 01W351 | 351413-0003 | | 1 | DEVICENET CONN. CABLE, 0935 361 103/0,3M | |
| 01W360 | 351309-0100 | | 1 | ACTUATOR/SENSOR CABLE PRKT 4-07/10M | |
| **Common Parts** | | | | | |
| 030 | 2807095-0000 | | 1 | BEAM | |
| 040 | 2778576-0000 | | 1 | BEAM | |
| 050 | 2964293-0000 | | 1 | BEAM | |
| 060 | 2964292-0000 | | 1 | BEAM | |
| 070 | 2779009-0000 | | 2 | BEAM | |
| 080 | 2779011-0000 | | 1 | BEAM | |
| 090 | 2779012-0000 | | 1 | BEAM | |
| 100 | 2830220-0000 | | 1 | BEAM | |
| 110 | 2779811-0000 | | 1 | BEAM | |
| 120 | 3039040-0000 | | 1 | SPACER | |
| 130 | 2778567-0000 | | 1 | BEAM | |
| 150 | 2766975-0000 | | 1 | FRAME | |
| 190 | 2775447-0000 | | 2 | BRACKET | |
| 200 | 2779776-0000 | | 2 | PLATE | |
| 210 | 2779786-0000 | | 1 | PLATE | |
| 220 | 1021990-0000 | | 4 | SIGN 356X70MM HOUSE MARK TEXT TETRA PAK | |
| 230 | 2778568-0000 | | 1 | FRAME UPPER | |
| 240 | 1021991-0000 | | 1 | STRIPE TETRA PAK BLUE B=70MM, ROLL L=25M | |
| 250 | 2805686-0000 | | 1 | BEAM | |
| 260 | 2805698-0000 | | 1 | BEAM | |
| 270 | 3058859-0000 | | 1 | BEAM | |
| 300 | 2807104-0000 | | 1 | BEAM | |
| 320 | 2788155-0000 | | 4 | ANGLE | |
| 330 | 2788154-0000 | | 1 | BLOCK | |
| 340 | 3039027-0000 | | 2 | PLATE | |
| 380 | 2873941-0000 | | 1 | SIGN | |
| 400 | 90347-0011 | | 2 | VIBRATION DAMPER MEGI 781056 | |
| 410 | 90600-1002 | | 10 | FOOT 45000N, 297/63399N | |
| 420 | 312812-0318 | | 6 | HEXAGON NUT, NY-LOCK M8 A480 | |
| 430 | 312115-0455 | | 6 | SCREW ISO4762 M8X30 A4 80 | |
| 440 | 315125-0165 | | 12 | WASHER TBRSB 8,4X26X5 A4 | |
| 480 | 90287-0154 | | 6 | SCREW, SOCK.SET DOGPOINT M6X10 | |
| 490 | 312607-0332 | | 10 | HEXAGON NUT, EN 24032 M6M M30 A480 | |
| 500 | 311103-0351 | | 4 | PARALLEL PIN ISO 2338 6M6X16 A1 | |
| 510 | 312105-0366 | | 2 | SCREW M6S ISO 4017 M6X12 A480 | |
| 550 | 312115-0540 | | 1 | SCREW ISO4762 M12X40 A4 80 | |
| 600 | 90600-0971 | | 2 | RACK, ZRR2-100 | |
| 630 | 90287-0175 | | 2 | SCREW M6S M3X12 A480 | |
| 640 | 312605-0310 | | 2 | HEXAGON NUT, M6M M3 A280 | |
| 650 | 312105-0388 | | 4 | SCREW M6S ISO 4014 M6X90 A480 | |
| 660 | 312109-0552 | | 2 | SCREW M6S M12X100H A480 | |

Machine Type | Group Description | Used-In | Group Number | Page No

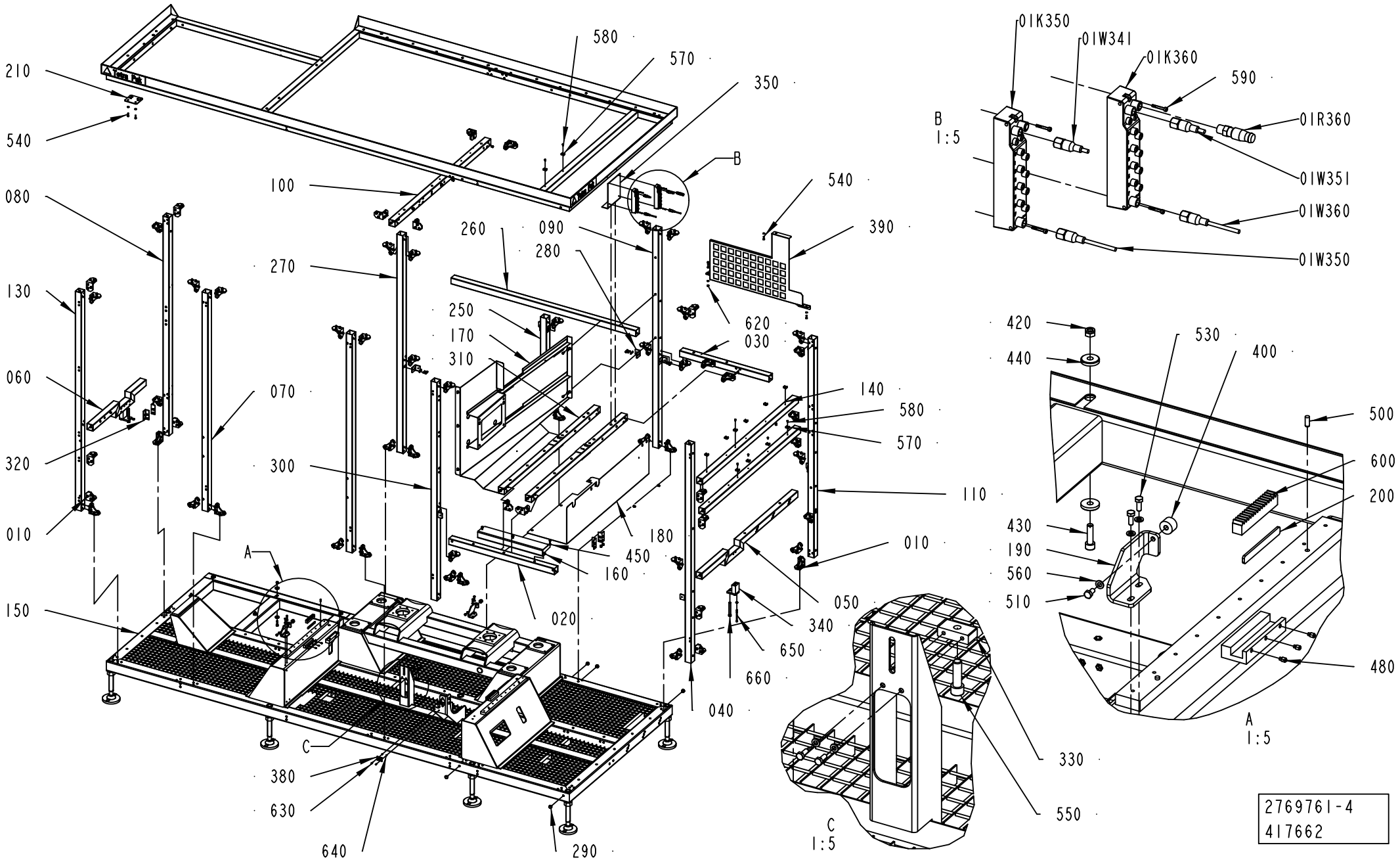
210
540
080
130
060
320
010
150
580
570
350
100
B
540
390
260
090
280
270
250
170
310
620
030
070
300
140
580
570
110
010
180
450
160
020
050
340
650
660
040
A
C
380
630
640
290
01K350
01W341
01K360
590
01R360
01W351
01W360
01W350
B
1:5
420
440
530
400
500
600
200
430
190
560
510
480
A
1:5
330
550
C
1:5
2769761-4
417662

ECM: 438892 - 20100701
Group number: 2769761-0200
Assembly Drawing: 2769761-4_2_AB

This list covers pages from 3-10 to 3-13

| Pos | Part No | UN | Qty | Description | Page No |
|---|---|---|---|---|---|
| **RECAP3, RECAP2 A3 (See drawing on pages: 3-10, 3-12)** | | | | | |
| 010 | 2778595-0100 | | 59 | ANGLE ..... | **3-15** |
| 020 | 2779818-0000 | | 1 | BEAM | |
| 140 | 2807101-0000 | | 2 | BEAM | |
| 160 | 2807105-0000 | | 1 | PLATE | |
| 170 | 2807102-0000 | | 1 | COVER | |
| 180 | 2807106-0000 | | 1 | COVER | |
| 280 | 2805697-0000 | | 8 | SUPPORT | |
| 290 | 2805696-0000 | | 8 | SUPPORT | |
| 310 | 2778574-0000 | | 2 | BEAM | |
| 350 | 2864915-0000 | | 1 | PLATE | |
| 390 | 3022734-0000 | | 1 | COVER | |
| 450 | 315105-0156 | | 18 | WASHER BRB 6,7X14 RFR | |
| 530 | 312105-0368 | | 22 | SCREW M6S ISO 4017 M6X16 A480 | |
| 540 | 312105-0370 | | 21 | SCREW M6S ISO 4017 M6X20 A480 | |
| 560 | 315105-0153 | | 32 | WASHER BRB 6,4X12 RFR | |
| 570 | 352113-0204 | | 17 | ANCHOR PLATES FOR STRIPS, TYPE TM3S25-M | |
| 580 | 312125-0323 | | 17 | SCREW ISO 1207 M5X8 A4 | |
| 01K350 | 90459-6062 | | 1 | REMOTE I/O, IP67 8PTS IN/OUT SELF-CONFIG | |
| 01K360 | 90459-6062 | | 1 | REMOTE I/O, IP67 8PTS IN/OUT SELF-CONFIG | |
| 01R360 | 90459-6847 | | 1 | DEVICENET TERM. RESISTOR, 0939 CTX 101 | |
| 01W341 | 351413-0050 | | 1 | DEVICENET CONN. CABLE, 0935 361 103/5M | |
| 01W350 | 351309-0100 | | 1 | ACTUATOR/SENSOR CABLE PRKT 4-07/10M | |
| 01W351 | 351413-0003 | | 1 | DEVICENET CONN. CABLE, 0935 361 103/0,3M | |
| 01W360 | 351309-0100 | | 1 | ACTUATOR/SENSOR CABLE PRKT 4-07/10M | |
| **Common Parts** | | | | | |
| 030 | 2807095-0000 | | 1 | BEAM | |
| 040 | 2778576-0000 | | 1 | BEAM | |
| 050 | 2964293-0000 | | 1 | BEAM | |
| 060 | 2964292-0000 | | 1 | BEAM | |
| 070 | 2779009-0000 | | 2 | BEAM | |
| 080 | 2779011-0000 | | 1 | BEAM | |
| 090 | 2779012-0000 | | 1 | BEAM | |
| 100 | 2830220-0000 | | 1 | BEAM | |
| 110 | 2779811-0000 | | 1 | BEAM | |
| 120 | 3039040-0000 | | 1 | SPACER | |
| 130 | 2778567-0000 | | 1 | BEAM | |
| 150 | 2766975-0000 | | 1 | FRAME | |
| 190 | 2775447-0000 | | 2 | BRACKET | |
| 200 | 2779776-0000 | | 2 | PLATE | |
| 210 | 2779786-0000 | | 1 | PLATE | |
| 220 | 1021990-0000 | | 4 | SIGN 356X70MM HOUSE MARK TEXT TETRA PAK | |
| 230 | 2778568-0000 | | 1 | FRAME UPPER | |
| 240 | 1021991-0000 | | 1 | STRIPE TETRA PAK BLUE B=70MM, ROLL L=25M | |
| 250 | 2805686-0000 | | 1 | BEAM | |
| 260 | 2805698-0000 | | 1 | BEAM | |
| 270 | 3058859-0000 | | 1 | BEAM | |
| 300 | 2807104-0000 | | 1 | BEAM | |
| 320 | 2788155-0000 | | 4 | ANGLE | |
| 330 | 2788154-0000 | | 1 | BLOCK | |
| 340 | 3039027-0000 | | 2 | PLATE | |
| 380 | 2873941-0000 | | 1 | SIGN | |
| 400 | 90347-0011 | | 2 | VIBRATION DAMPER MEGI 781056 | |
| 410 | 90600-1002 | | 10 | FOOT 45000N, 297/63399N | |
| 420 | 312812-0318 | | 6 | HEXAGON NUT, NY-LOCK M8 A480 | |
| 430 | 312115-0455 | | 6 | SCREW ISO4762 M8X30 A4 80 | |
| 440 | 315125-0165 | | 12 | WASHER TBRSB 8,4X26X5 A4 | |
| 480 | 90287-0154 | | 6 | SCREW, SOCK.SET DOGPOINT M6X10 | |
| 490 | 312607-0332 | | 10 | HEXAGON NUT, EN 24032 M6M M30 A480 | |
| 500 | 311103-0351 | | 4 | PARALLEL PIN ISO 2338 6M6X16 A1 | |
| 510 | 312105-0366 | | 2 | SCREW M6S ISO 4017 M6X12 A480 | |
| 550 | 312115-0540 | | 1 | SCREW ISO4762 M12X40 A4 80 | |
| 600 | 90600-0971 | | 2 | RACK, ZRR2-100 | |
| 630 | 90287-0175 | | 2 | SCREW M6S M3X12 A480 | |
| 640 | 312605-0310 | | 2 | HEXAGON NUT, M6M M3 A280 | |
| 650 | 312105-0388 | | 4 | SCREW M6S ISO 4014 M6X90 A480 | |
| 660 | 312109-0552 | | 2 | SCREW M6S M12X100H A480 | |

| Machine Type | Group Description | Used-In | Group Number | Page No |
|---|---|---|---|---|

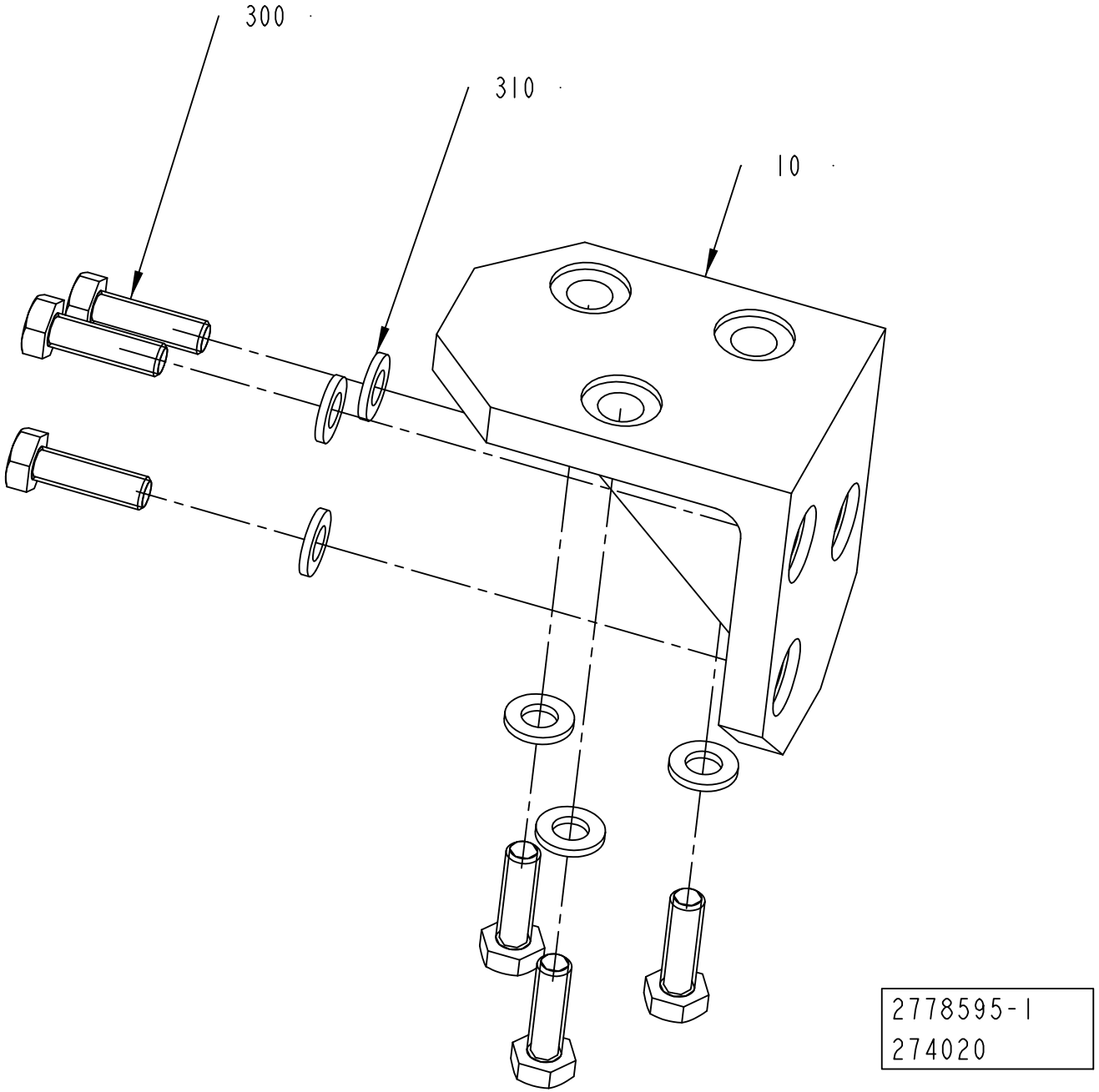
300
310
10
2778595-1
274020

ECM: 274440 - 20060921
Group number: 2778595-0100
Assembly Drawing: 2778595-1_1_AA

| Pos | Part No | UN | Qty | Description | Page No |
|---|---|---|---|---|---|
| - | | | | | |
| 010 | 2779008-0000 | | 1 | BRACKET | |
| 300 | 312105-0370 | | 6 | SCREW M6S ISO 4017 M6X20 A480 | |
| 310 | 315105-0153 | | 6 | WASHER BRB 6,4X12 RFR | |

| Pos | Part No | UN | Qty | Description | Page No |
|---|---|---|---|---|---|

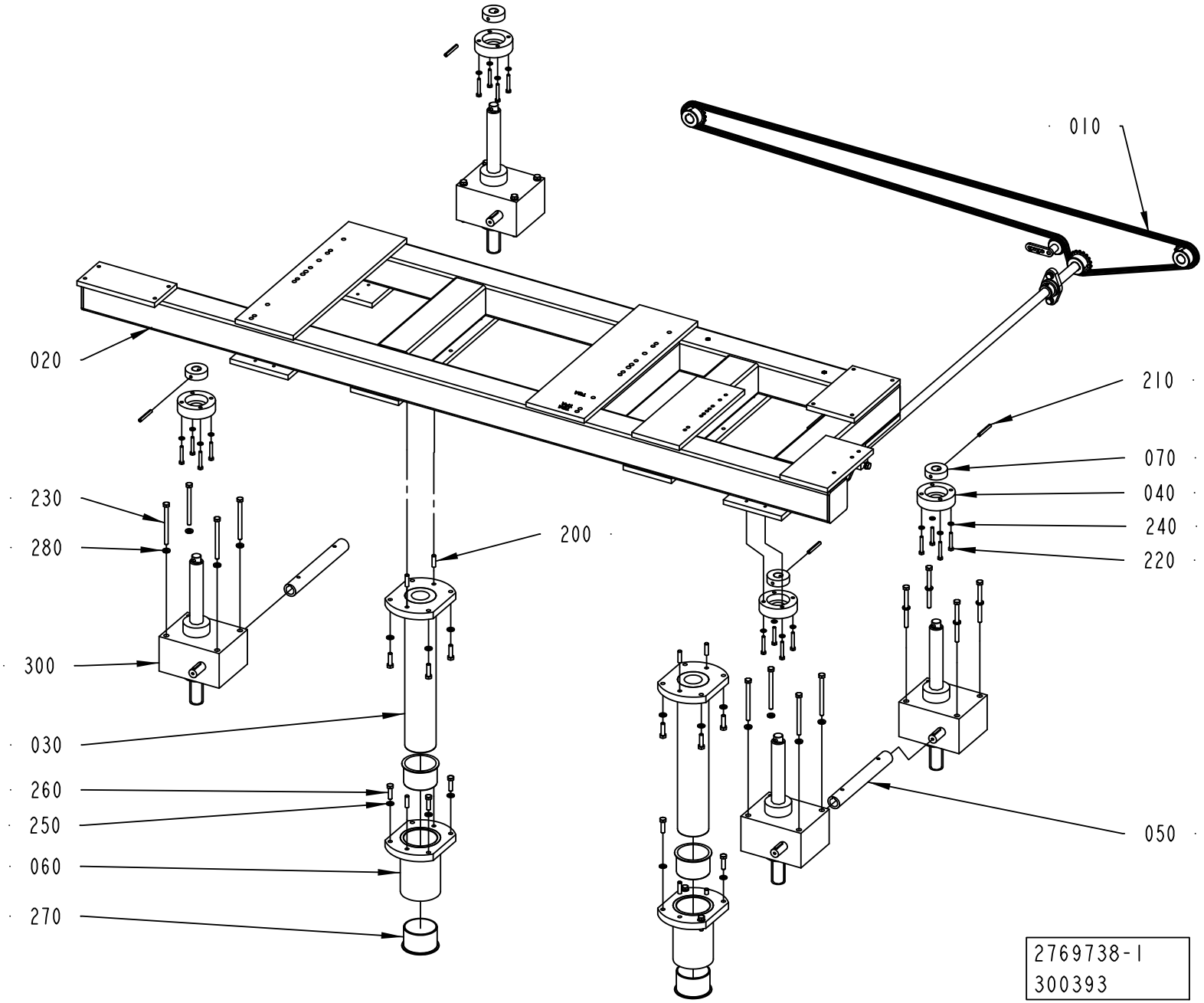
010
020
210
070
040
240
220
230
280
200
300
030
260
250
060
270
050
2769738-1
300393

ECM: 303510 - 20070517
Group number: 2769738-0100
Assembly Drawing: 2769738-1_1_AB

| Pos | Part No | UN | Qty | Description | Page No |
|---|---|---|---|---|---|
| - | | | | | |
| 010 | 2766973-0100 | | 1 | TRANSMISSION ..... | **3-19** |
| 020 | 2769709-0000 | | 1 | FRAME | |
| 030 | 2769713-0000 | | 2 | CYLINDRICAL PIN | |
| 040 | 2766964-0000 | | 4 | FLANGE | |
| 050 | 2766968-0000 | | 2 | SHAFT | |
| 060 | 2769717-0000 | | 2 | FLANGE | |
| 070 | 2769739-0000 | | 4 | DISC | |
| 200 | 311103-0405 | | 8 | PARALLEL PIN ISO 2338 8M6X30 A1 | |
| 210 | 311112-0349 | | 4 | SPRING PIN, ISO 8752 6X50-C | |
| 220 | 312105-0378 | | 16 | SCREW M6S ISO 4014 M6X40 A480 | |
| 230 | 312105-0471 | | 16 | SCREW M6S ISO 4014 M8X100 A480 | |
| 240 | 315105-0153 | | 16 | WASHER BRB 6,4X12 RFR | |
| 250 | 315105-0165 | | 16 | WASHER BRB 8,4X16 RFR | |
| 260 | 312105-0455 | | 16 | SCREW M6S ISO 4017 M8X30 A480 | |
| 270 | 321153-0500 | | 4 | FLANGE BUSHING, IGLIDUR G 70X75X50 | |
| 280 | 315115-0165 | | 16 | WASHER PLAIN, TBRB 8,4/16 H=3 | |
| 300 | 90600-0658 | | 4 | WORM GEAR SCREW JACK, TP00063000130 | |

| Pos | Part No | UN | Qty | Description | Page No |
|---|---|---|---|---|---|

Machine Type | Group Description | Used-In | Group Number | Page No

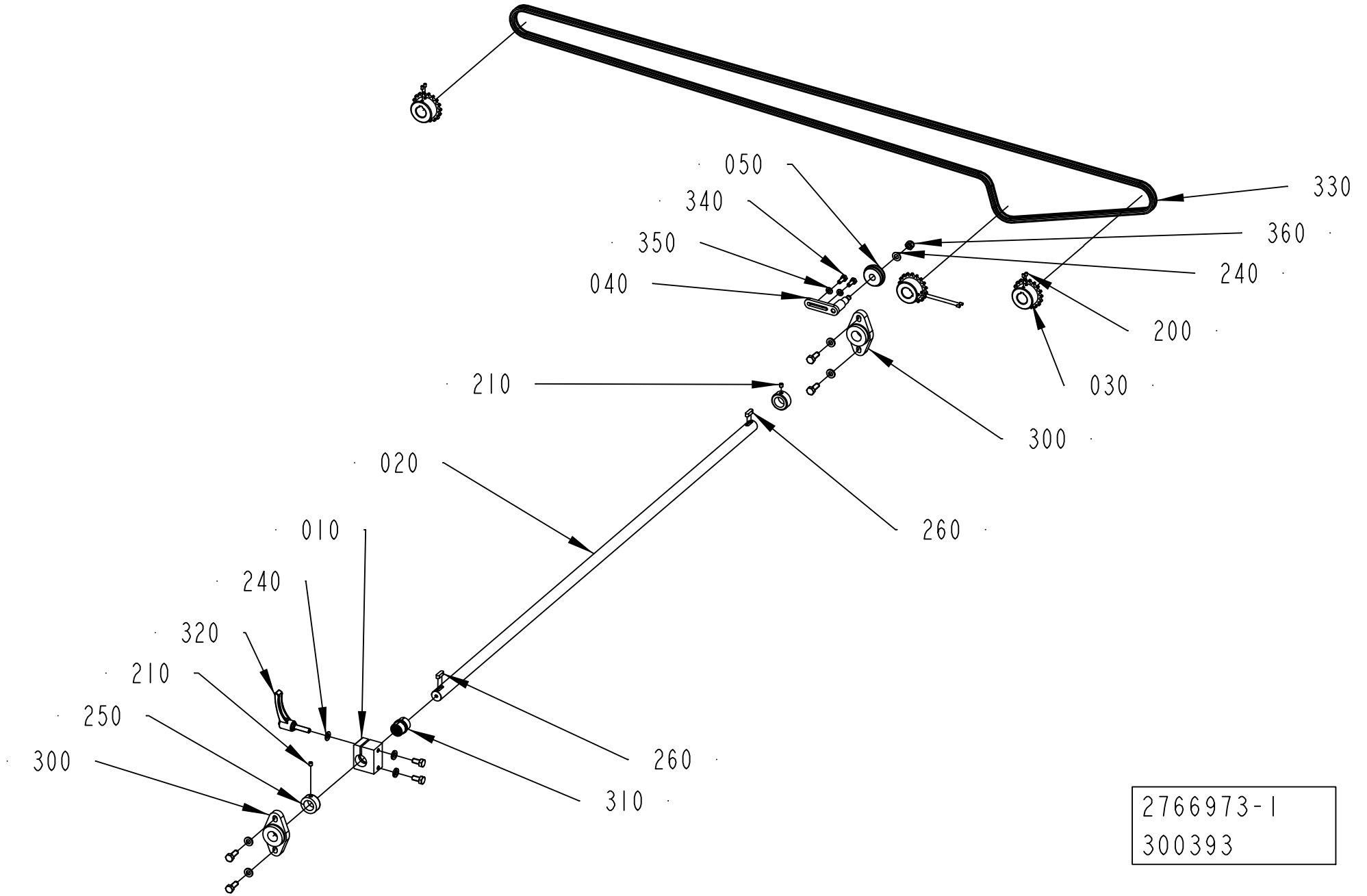
050
340
350
040
330
360
240
200
030
210
300
020
260
010
240
320
210
250
300
260
310
2766973-1
300393

ECM: 349023 - 20080701
Group number: 2766973-0100
Assembly Drawing: 2766973-1_1_AB

| Pos | Part No | UN | Qty | Description | Page No |
|---|---|---|---|---|---|
| - | | | | | |
| 010 | 2769726-0000 | | 1 | BRACKET | |
| 020 | 2766972-0000 | | 1 | SHAFT | |
| 030 | 2779769-0000 | | 3 | SPROCKET | |
| 040 | 2846405-0000 | | 1 | PIVOT ARM | |
| 050 | 2846403-0000 | | 1 | ROLLER | |
| 200 | 312318-0287 | | 6 | SCREW ISO4029 M4X8 A4 | |
| 210 | 312318-0360 | | 2 | SCREW ISO4029 M6X6 A4 | |
| 220 | 312105-0452 | | 4 | SCREW M6S ISO 4017 M8X22 A480 | |
| 230 | 312105-0449 | | 2 | SCREW M6S ISO 4017 M8X16 A480 | |
| 240 | 315105-0165 | | 2 | WASHER BRB 8,4X16 RFR | |
| 250 | 315741-0216 | | 2 | RETAINING RING DIN 705 A4 20 | |
| 260 | 315705-0232 | | 2 | PARALLEL KEY W. ROUND ENDS 6X6X20 MM | |
| 270 | 315115-0165 | | 6 | WASHER PLAIN, TBRB 8,4/16 H=3 | |
| 300 | 90600-0800 | | 2 | FLANGE BEARING 20X89X20 MM | |
| 310 | 90458-2932 | | 1 | PLAIN BEARING, JUM-02-20 | |
| 320 | 90017-0029 | | 1 | LOCKING LEVER, NO. KR8X30-SUS | |
| 330 | 90600-1159 | | 1 | ROLLER CHAIN, SINGLE 3/8 -290 | |
| 340 | 312105-0368 | | 2 | SCREW M6S ISO 4017 M6X16 A480 | |
| 350 | 315105-0153 | | 2 | WASHER BRB 6,4X12 RFR | |
| 360 | 312812-0318 | | 1 | HEXAGON NUT, NY-LOCK M8 A480 | |

| Pos | Part No | UN | Qty | Description | Page No |
|---|---|---|---|---|---|

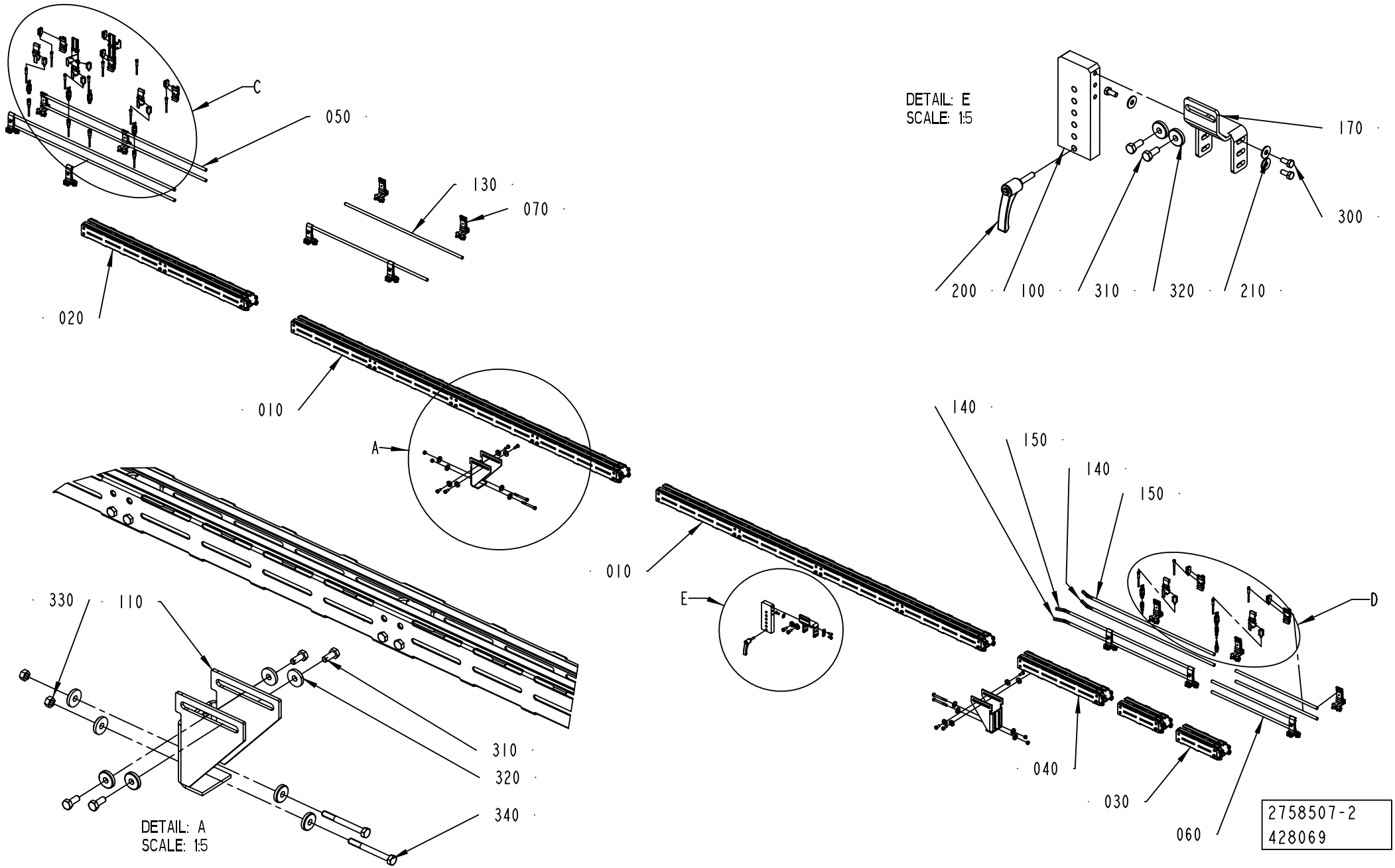
C
050
130
070
020
010
A
330
110
310
320
340
DETAIL: A
SCALE: 1:5
DETAIL: E
SCALE: 1:5
170
300
200
100
310
320
210
140
150
140
150
010
E
D
040
030
060
2758507-2
428069

ECM: 428924 - 20100401
Group number: 2758507-0200
Assembly Drawing: 2758507-2_1_AC

This list covers pages from 3-20 to 3-23

| Pos | Part No | UN | Qty | Description | Page No |
|---|---|---|---|---|---|
| - | | | | | |
| 010 | 2763616-0104 | | 2 | CONVEYOR BODY | **3-25** |
| 020 | 2763616-0103 | | 1 | CONVEYOR BODY | **3-27** |
| 030 | 2763616-0102 | | 1 | CONVEYOR BODY | **3-29** |
| 040 | 2763616-0101 | | 2 | CONVEYOR BODY | **3-31** |
| 050 | 2561274-0103 | | 1 | RAILING | **3-33** |
| 060 | 2561274-0102 | | 1 | RAILING | **3-37** |
| 070 | 1550743-0200 | | 8 | RAIL HOLDER | **3-35** |
| 080 | 2778586-0100 | | 3 | SENSOR | **3-39, 10-19** |
| 090 | 2778587-0100 | | 1 | SENSOR | **3-41** |
| 100 | 2930211-0000 | | 1 | PLATE | |
| 110 | 2965155-0000 | | 2 | SUPPORT | |
| 120 | 2985775-0100 | | 1 | SENSOR | **3-43** |
| 130 | 2779831-0000 | | 2 | PIPE | |
| 140 | 2836266-0000 | | 2 | PIPE | |
| 150 | 3068599-0000 | | 2 | PIPE | |
| 170 | 2930210-0000 | | 1 | PLATE | |
| 200 | 90017-0029 | | 1 | LOCKING LEVER, NO. KR8X30-SUS | |
| 210 | 90457-0192 | | 4 | WASHER PLAIN ROUND, 6,5/18, H=1,5 | |
| 300 | 312105-0367 | | 4 | SCREW M6S ISO 4017 M6X14 A480 | |
| 310 | 312105-0451 | | 16 | SCREW M6S ISO 4017 M8X20 A480 | |
| 320 | 315125-0165 | | 16 | WASHER TBRSB 8,4X26X5 A4 | |
| 330 | 312607-0318 | | 4 | HEXAGON NUT, EN 24032 M6M M8 A480 | |
| 340 | 312105-0466 | | 4 | SCREW M6S ISO 4014 M8X75 A480 | |
| 350 | 351411-0050 | | 1 | ACTU/SENS. CABLE PRST 4-PRKT 4-07/5,0 | |
| 21B402 | 90459-5529 | | 1 | PH.CELL E3Z-T86A, SENDER+RECIEVER | |
| 21B404 | 90459-5529 | | 1 | PH.CELL E3Z-T86A, SENDER+RECIEVER | |
| 21B406 | 90459-5529 | | 1 | PH.CELL E3Z-T86A, SENDER+RECIEVER | |
| 21B408 | 90459-5529 | | 1 | PH.CELL E3Z-T86A, SENDER+RECIEVER | |
| 21B424 | 90459-5529 | | 1 | PH.CELL E3Z-T86A, SENDER+RECIEVER | |
| 21B602 | 90459-5529 | | 1 | PH.CELL E3Z-T86A, SENDER+RECIEVER | |
| 21W402 | 90459-6586 | | 1 | ACT/SENS.Y-CABLE, ASBN 2-PRKMV 4-07/0,6M | |
| 21W404 | 90459-6586 | | 1 | ACT/SENS.Y-CABLE, ASBN 2-PRKMV 4-07/0,6M | |
| 21W406 | 90459-6586 | | 1 | ACT/SENS.Y-CABLE, ASBN 2-PRKMV 4-07/0,6M | |
| 21W408 | 90459-6586 | | 1 | ACT/SENS.Y-CABLE, ASBN 2-PRKMV 4-07/0,6M | |
| 21W412 | 351309-0050 | | 1 | 'ACTUATOR/SENSOR CABLE PRKT 4-07/5M | |
| 21W414 | 351309-0050 | | 1 | 'ACTUATOR/SENSOR CABLE PRKT 4-07/5M | |
| 21W416 | 351309-0050 | | 1 | 'ACTUATOR/SENSOR CABLE PRKT 4-07/5M | |
| 21W418 | 351309-0100 | | 1 | ACTUATOR/SENSOR CABLE PRKT 4-07/10M | |
| 21W422 | 351405-0006 | | 1 | ACT/SENS. CABLE RSMVN 3-PRKT 4-3-06/0,6M | |
| 21W424 | 90459-6586 | | 1 | ACT/SENS.Y-CABLE, ASBN 2-PRKMV 4-07/0,6M | |
| 21W602 | 90459-6586 | | 1 | ACT/SENS.Y-CABLE, ASBN 2-PRKMV 4-07/0,6M | |
| 21W612 | 351405-0050 | | 1 | SENS. CABLE RSMVN 3-PRKT 4-3-06/5,0M | |

| Machine Type | Group Description | Used-In | Group Number | Page No |
|---|---|---|---|---|

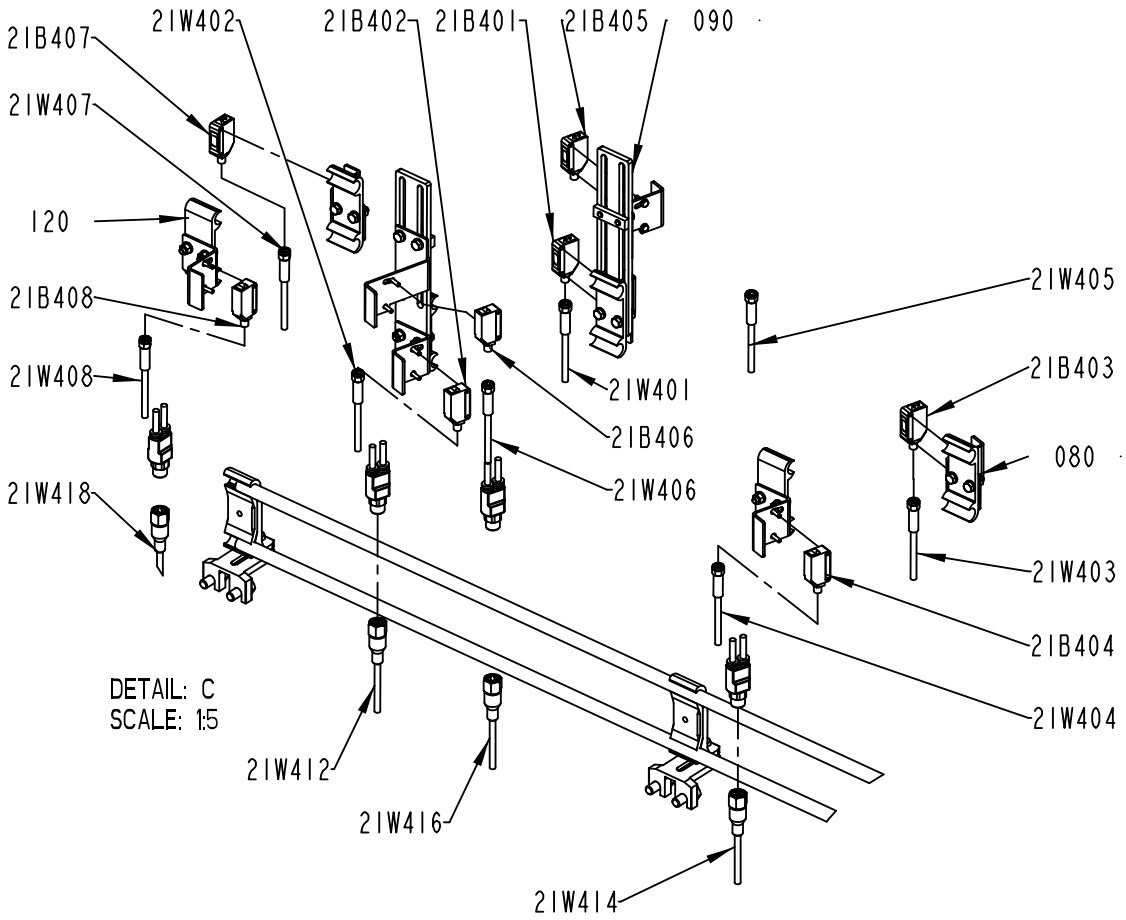


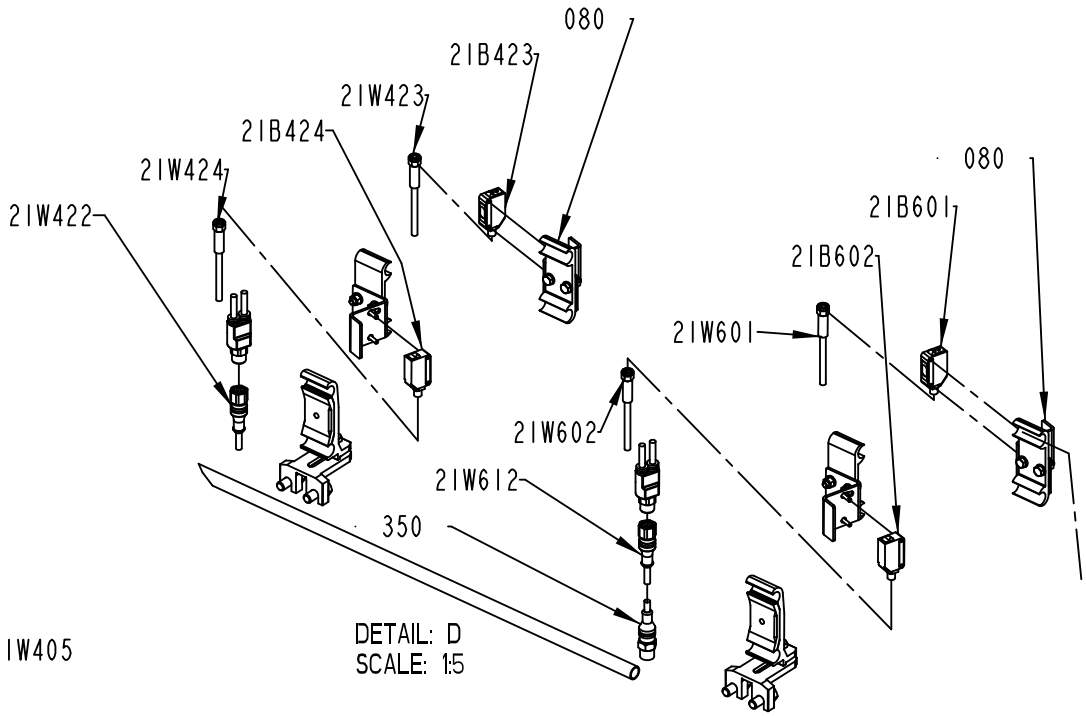


2758507-2
428069

ECM: 428924 - 20100401
Group number: 2758507-0200
Assembly Drawing: 2758507-2_2_AC

This list covers pages from 3-20 to 3-23

| Pos | Part No | UN | Qty | Description | Page No |
|---|---|---|---|---|---|
| - | | | | | |
| 010 | 2763616-0104 | | 2 | CONVEYOR BODY | **3-25** |
| 020 | 2763616-0103 | | 1 | CONVEYOR BODY | **3-27** |
| 030 | 2763616-0102 | | 1 | CONVEYOR BODY | **3-29** |
| 040 | 2763616-0101 | | 2 | CONVEYOR BODY | **3-31** |
| 050 | 2561274-0103 | | 1 | RAILING | **3-33** |
| 060 | 2561274-0102 | | 1 | RAILING | **3-37** |
| 070 | 1550743-0200 | | 8 | RAIL HOLDER | **3-35** |
| 080 | 2778586-0100 | | 3 | SENSOR | **3-39, 10-19** |
| 090 | 2778587-0100 | | 1 | SENSOR | **3-41** |
| 100 | 2930211-0000 | | 1 | PLATE | |
| 110 | 2965155-0000 | | 2 | SUPPORT | |
| 120 | 2985775-0100 | | 1 | SENSOR | **3-43** |
| 130 | 2779831-0000 | | 2 | PIPE | |
| 140 | 2836266-0000 | | 2 | PIPE | |
| 150 | 3068599-0000 | | 2 | PIPE | |
| 170 | 2930210-0000 | | 1 | PLATE | |
| 200 | 90017-0029 | | 1 | LOCKING LEVER, NO. KR8X30-SUS | |
| 210 | 90457-0192 | | 4 | WASHER PLAIN ROUND, 6,5/18, H=1,5 | |
| 300 | 312105-0367 | | 4 | SCREW M6S ISO 4017 M6X14 A480 | |
| 310 | 312105-0451 | | 16 | SCREW M6S ISO 4017 M8X20 A480 | |
| 320 | 315125-0165 | | 16 | WASHER TBRSB 8,4X26X5 A4 | |
| 330 | 312607-0318 | | 4 | HEXAGON NUT, EN 24032 M6M M8 A480 | |
| 340 | 312105-0466 | | 4 | SCREW M6S ISO 4014 M8X75 A480 | |
| 350 | 351411-0050 | | 1 | ACTU/SENS. CABLE PRST 4-PRKT 4-07/5,0 | |
| 21B402 | 90459-5529 | | 1 | PH.CELL E3Z-T86A, SENDER+RECIEVER | |
| 21B404 | 90459-5529 | | 1 | PH.CELL E3Z-T86A, SENDER+RECIEVER | |
| 21B406 | 90459-5529 | | 1 | PH.CELL E3Z-T86A, SENDER+RECIEVER | |
| 21B408 | 90459-5529 | | 1 | PH.CELL E3Z-T86A, SENDER+RECIEVER | |
| 21B424 | 90459-5529 | | 1 | PH.CELL E3Z-T86A, SENDER+RECIEVER | |
| 21B602 | 90459-5529 | | 1 | PH.CELL E3Z-T86A, SENDER+RECIEVER | |
| 21W402 | 90459-6586 | | 1 | ACT/SENS.Y-CABLE, ASBN 2-PRKMV 4-07/0,6M | |
| 21W404 | 90459-6586 | | 1 | ACT/SENS.Y-CABLE, ASBN 2-PRKMV 4-07/0,6M | |
| 21W406 | 90459-6586 | | 1 | ACT/SENS.Y-CABLE, ASBN 2-PRKMV 4-07/0,6M | |
| 21W408 | 90459-6586 | | 1 | ACT/SENS.Y-CABLE, ASBN 2-PRKMV 4-07/0,6M | |
| 21W412 | 351309-0050 | | 1 | 'ACTUATOR/SENSOR CABLE PRKT 4-07/5M | |
| 21W414 | 351309-0050 | | 1 | 'ACTUATOR/SENSOR CABLE PRKT 4-07/5M | |
| 21W416 | 351309-0050 | | 1 | 'ACTUATOR/SENSOR CABLE PRKT 4-07/5M | |
| 21W418 | 351309-0100 | | 1 | ACTUATOR/SENSOR CABLE PRKT 4-07/10M | |
| 21W422 | 351405-0006 | | 1 | ACT/SENS. CABLE RSMVN 3-PRKT 4-3-06/0,6M | |
| 21W424 | 90459-6586 | | 1 | ACT/SENS.Y-CABLE, ASBN 2-PRKMV 4-07/0,6M | |
| 21W602 | 90459-6586 | | 1 | ACT/SENS.Y-CABLE, ASBN 2-PRKMV 4-07/0,6M | |
| 21W612 | 351405-0050 | | 1 | SENS. CABLE RSMVN 3-PRKT 4-3-06/5,0M | |

| Machine Type | Group Description | Used-In | Group Number | Page No |
|---|---|---|---|---|

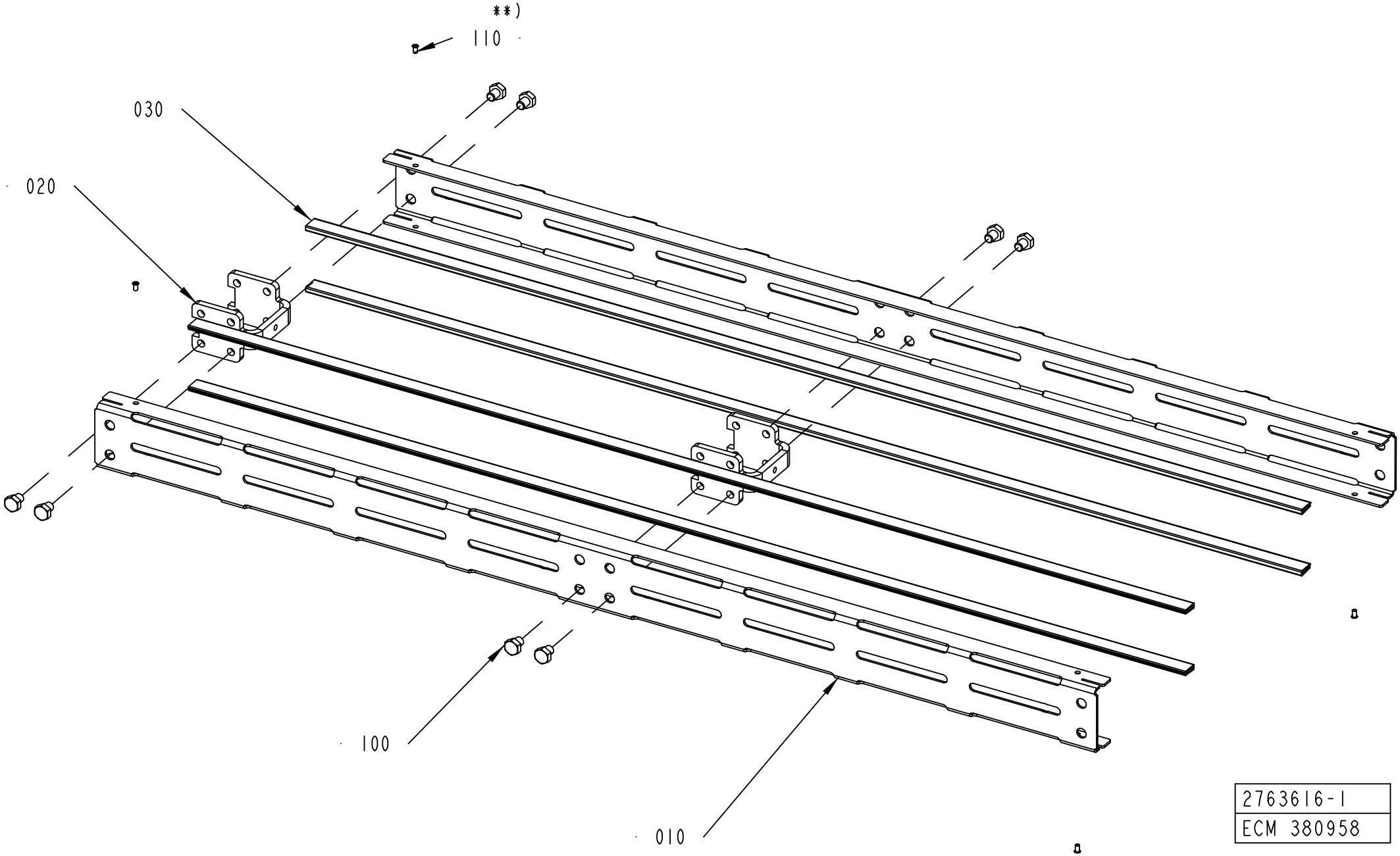
**)
110
030
020
100
010
2763616-1
ECM 380958

ECM: 380958 -
Group number: 2763616-0104
Assembly Drawing: 2763616-1_1_AB

| Pos | Part No | UN | Qty | Description | Page No |
|---|---|---|---|---|---|
| **L 2000** | | | | | |
| 010 | 2763617-0004 | | 2 | SIDE PLATE | |
| 020 | 2561206-0000 | | 4 | SPACER | |
| 030 | 2699305-1996 | | 4 | SLIDING STRIP | |
| 100 | 90459-4735 | | 16 | SCREW M6S ISO 4017 M8X10 A480 | |
| **Common Parts** | | | | | |
| 010 | 2763617-0001 | | 2 | SIDE PLATE | |
| 010 | 2763617-0002 | | 2 | SIDE PLATE | |
| 010 | 2763617-0003 | | 2 | SIDE PLATE | |
| 020 | 2561206-0000 | | 1 | SPACER | |
| 030 | 1550595-2460 | | 4 | SLIDING STRIP | |
| 030 | 1550595-4960 | | 4 | SLIDING STRIP | |
| 030 | 1550595-9960 | | 4 | SLIDING STRIP | |
| 100 | 90459-4735 | | 4 | SCREW M6S ISO 4017 M8X10 A480 | |
| 110 | 90600-6183 | | 4 | TUBULAR RIVET 3,5X6,2 | |

| Pos | Part No | UN | Qty | Description | Page No |
|---|---|---|---|---|---|

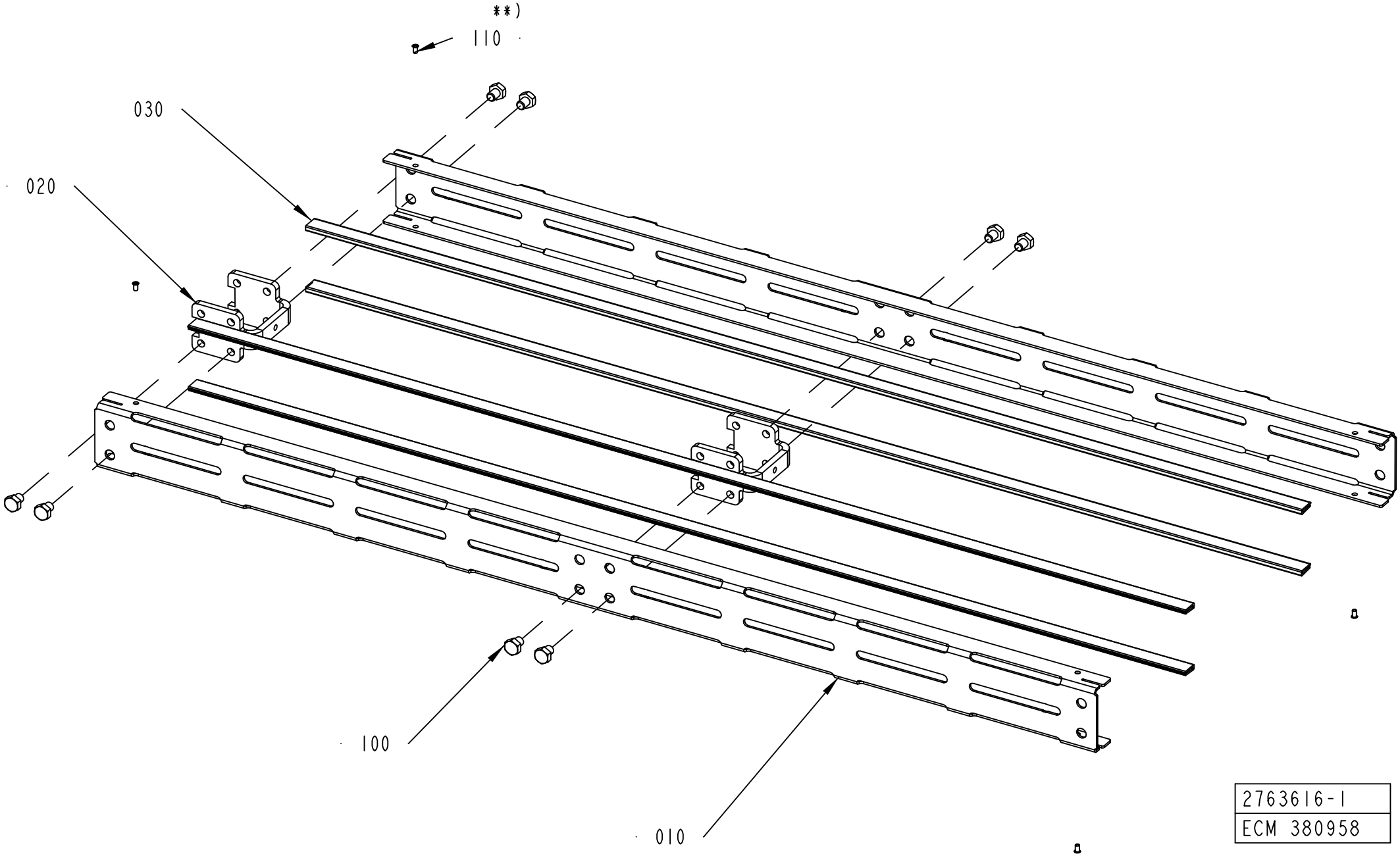


| 2763616-1 |
| --- |
| ECM 380958 |

ECM: 380958 -
Group number: 2763616-0103
Assembly Drawing: 2763616-1_1_AB

| Pos | Part No | UN | Qty | Description | Page No |
|---|---|---|---|---|---|
| **L 1000** | | | | | |
| 010 | 2763617-0003 | | 2 | SIDE PLATE | |
| 020 | 2561206-0000 | | 2 | SPACER | |
| 030 | 1550595-9960 | | 4 | SLIDING STRIP | |
| 100 | 90459-4735 | | 8 | SCREW M6S ISO 4017 M8X10 A480 | |
| **Common Parts** | | | | | |
| 010 | 2763617-0004 | | 2 | SIDE PLATE | |
| 010 | 2763617-0002 | | 2 | SIDE PLATE | |
| 010 | 2763617-0001 | | 2 | SIDE PLATE | |
| 020 | 2561206-0000 | | 1 | SPACER | |
| 030 | 1550595-2460 | | 4 | SLIDING STRIP | |
| 030 | 1550595-4960 | | 4 | SLIDING STRIP | |
| 030 | 2699305-1996 | | 4 | SLIDING STRIP | |
| 100 | 90459-4735 | | 16 | SCREW M6S ISO 4017 M8X10 A480 | |
| 110 | 90600-6183 | | 4 | TUBULAR RIVET 3,5X6,2 | |

| Pos | Part No | UN | Qty | Description | Page No |
|---|---|---|---|---|---|

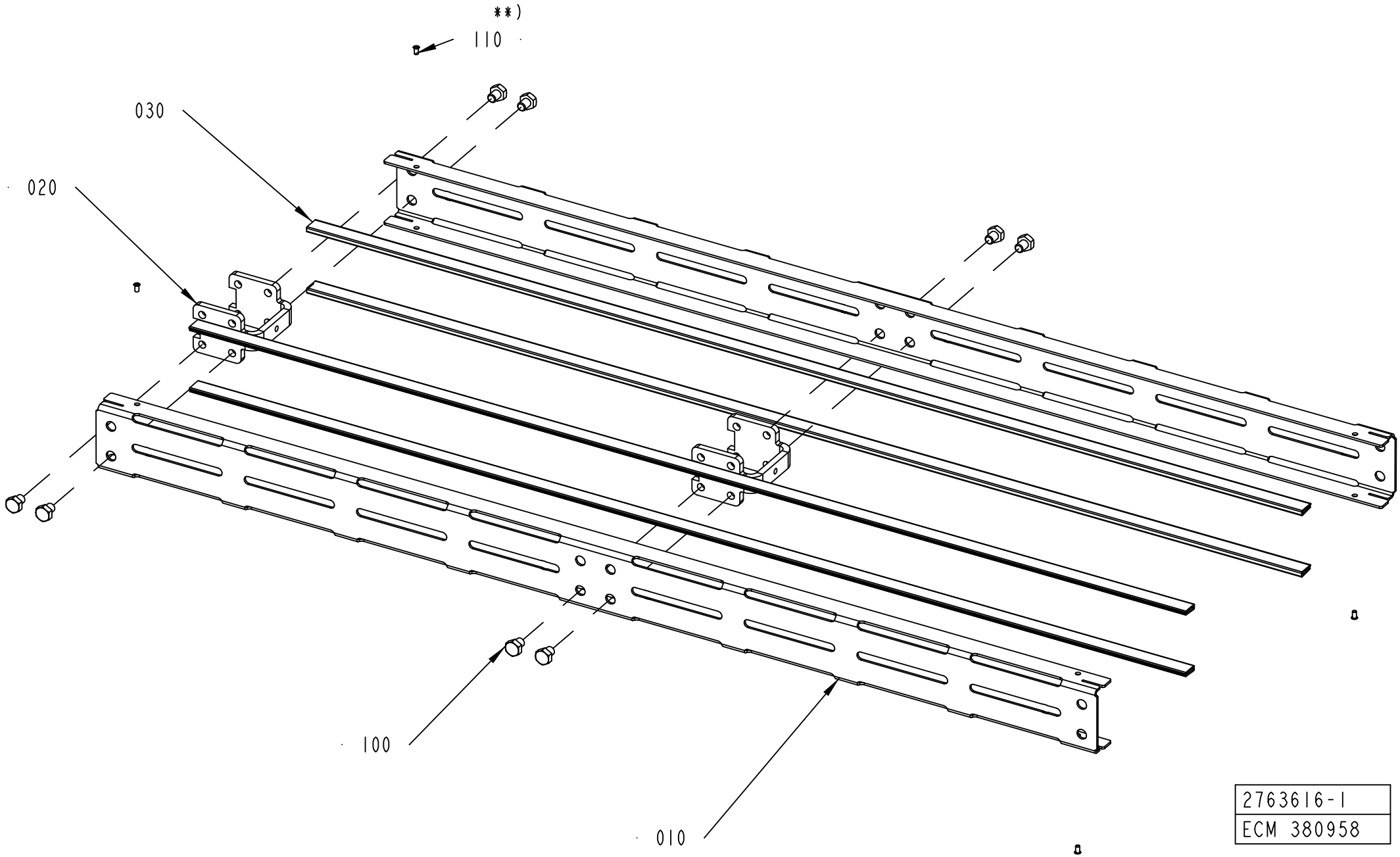
**)
110
030
020
100
010
2763616-1
ECM 380958

ECM: 380958 -
Group number: 2763616-0102
Assembly Drawing: 2763616-1_1_AB

| Pos | Part No | UN | Qty | Description | Page No |
|---|---|---|---|---|---|
| **L 0250** | | | | | |
| 010 | 2763617-0001 | | 2 | SIDE PLATE | |
| 020 | 2561206-0000 | | 1 | SPACER | |
| 030 | 1550595-2460 | | 4 | SLIDING STRIP | |
| 100 | 90459-4735 | | 4 | SCREW M6S ISO 4017 M8X10 A480 | |
| **L 0500** | | | | | |
| 010 | 2763617-0002 | | 2 | SIDE PLATE | |
| 020 | 2561206-0000 | | 1 | SPACER | |
| 030 | 1550595-4960 | | 4 | SLIDING STRIP | |
| 100 | 90459-4735 | | 4 | SCREW M6S ISO 4017 M8X10 A480 | |
| **Common Parts** | | | | | |
| 010 | 2763617-0003 | | 2 | SIDE PLATE | |
| 010 | 2763617-0004 | | 2 | SIDE PLATE | |
| 020 | 2561206-0000 | | 2 | SPACER | |
| 030 | 2699305-1996 | | 4 | SLIDING STRIP | |
| 030 | 1550595-9960 | | 4 | SLIDING STRIP | |
| 100 | 90459-4735 | | 16 | SCREW M6S ISO 4017 M8X10 A480 | |
| 110 | 90600-6183 | | 4 | TUBULAR RIVET 3,5X6,2 | |

| Pos | Part No | UN | Qty | Description | Page No |
|---|---|---|---|---|---|

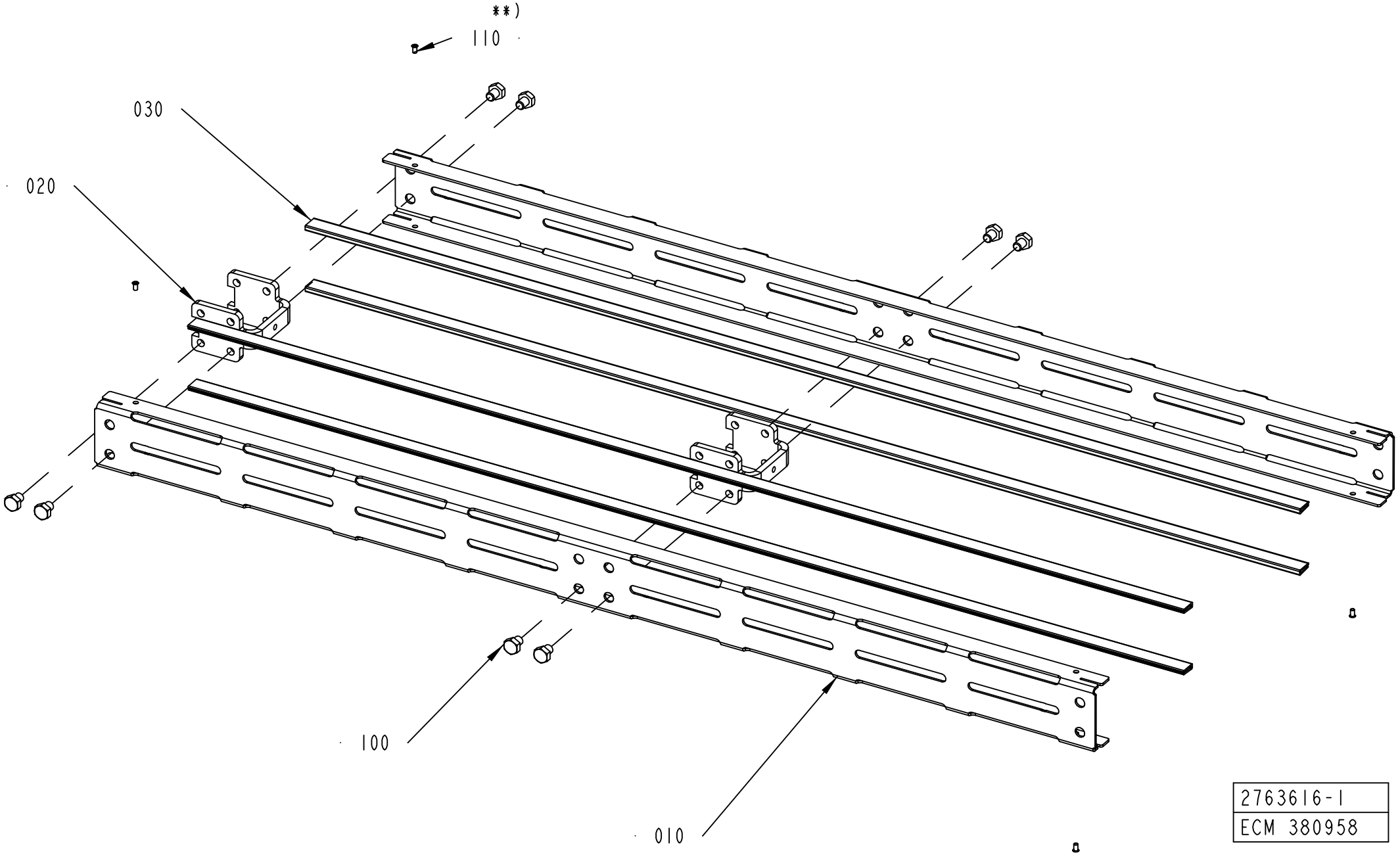


| 2763616-1 |
| --- |
| ECM 380958 |

ECM: 380958 -
Group number: 2763616-0101
Assembly Drawing: 2763616-1_1_AB

| Pos | Part No | UN | Qty | Description | Page No |
|---|---|---|---|---|---|
| **L 0250** | | | | | |
| 010 | 2763617-0001 | | 2 | SIDE PLATE | |
| 020 | 2561206-0000 | | 1 | SPACER | |
| 030 | 1550595-2460 | | 4 | SLIDING STRIP | |
| 100 | 90459-4735 | | 4 | SCREW M6S ISO 4017 M8X10 A480 | |
| **L 0500** | | | | | |
| 010 | 2763617-0002 | | 2 | SIDE PLATE | |
| 020 | 2561206-0000 | | 1 | SPACER | |
| 030 | 1550595-4960 | | 4 | SLIDING STRIP | |
| 100 | 90459-4735 | | 4 | SCREW M6S ISO 4017 M8X10 A480 | |
| **Common Parts** | | | | | |
| 010 | 2763617-0004 | | 2 | SIDE PLATE | |
| 010 | 2763617-0003 | | 2 | SIDE PLATE | |
| 020 | 2561206-0000 | | 2 | SPACER | |
| 030 | 1550595-9960 | | 4 | SLIDING STRIP | |
| 030 | 2699305-1996 | | 4 | SLIDING STRIP | |
| 100 | 90459-4735 | | 16 | SCREW M6S ISO 4017 M8X10 A480 | |
| 110 | 90600-6183 | | 4 | TUBULAR RIVET 3,5X6,2 | |

| Pos | Part No | UN | Qty | Description | Page No |
|---|---|---|---|---|---|

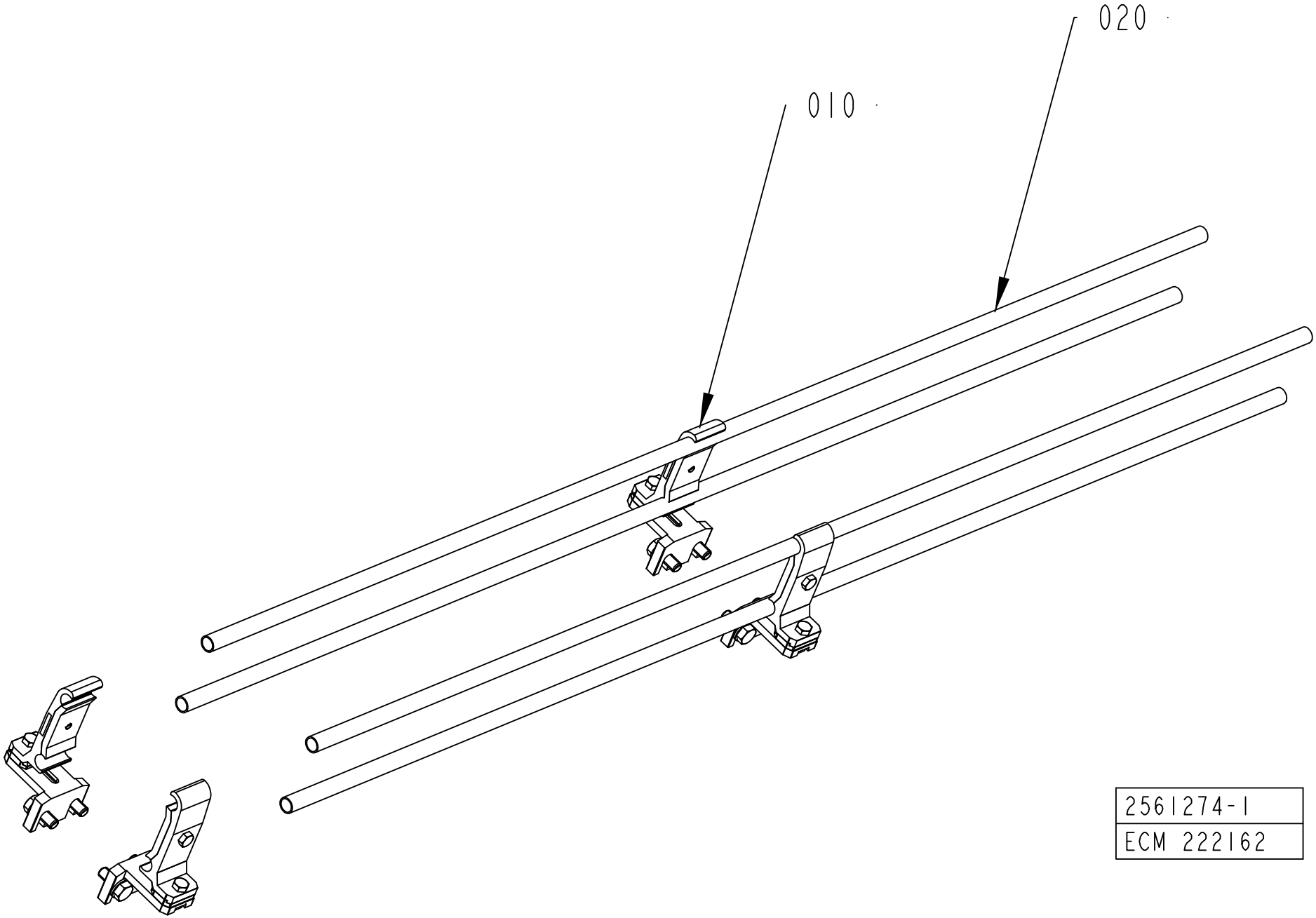
020
010
2561274-1
ECM 222162

ECM: 222162 -
Group number: 2561274-0103
Assembly Drawing: 2561274-1_1_AB

| Pos | Part No | UN | Qty | Description | Page No |
|---|---|---|---|---|---|
| **L 1000** | | | | | |
| 010 | 1550743-0200 | | 4 | RAIL HOLDER | **3-35** |
| 020 | 476221-0003 | | 4 | PIPE | |
| **Common Parts** | | | | | |
| 010 | 1550743-0200 | | 2 | RAIL HOLDER | **3-35** |
| 020 | 476221-0002 | | 4 | PIPE | |

| Pos | Part No | UN | Qty | Description | Page No |
|---|---|---|---|---|---|

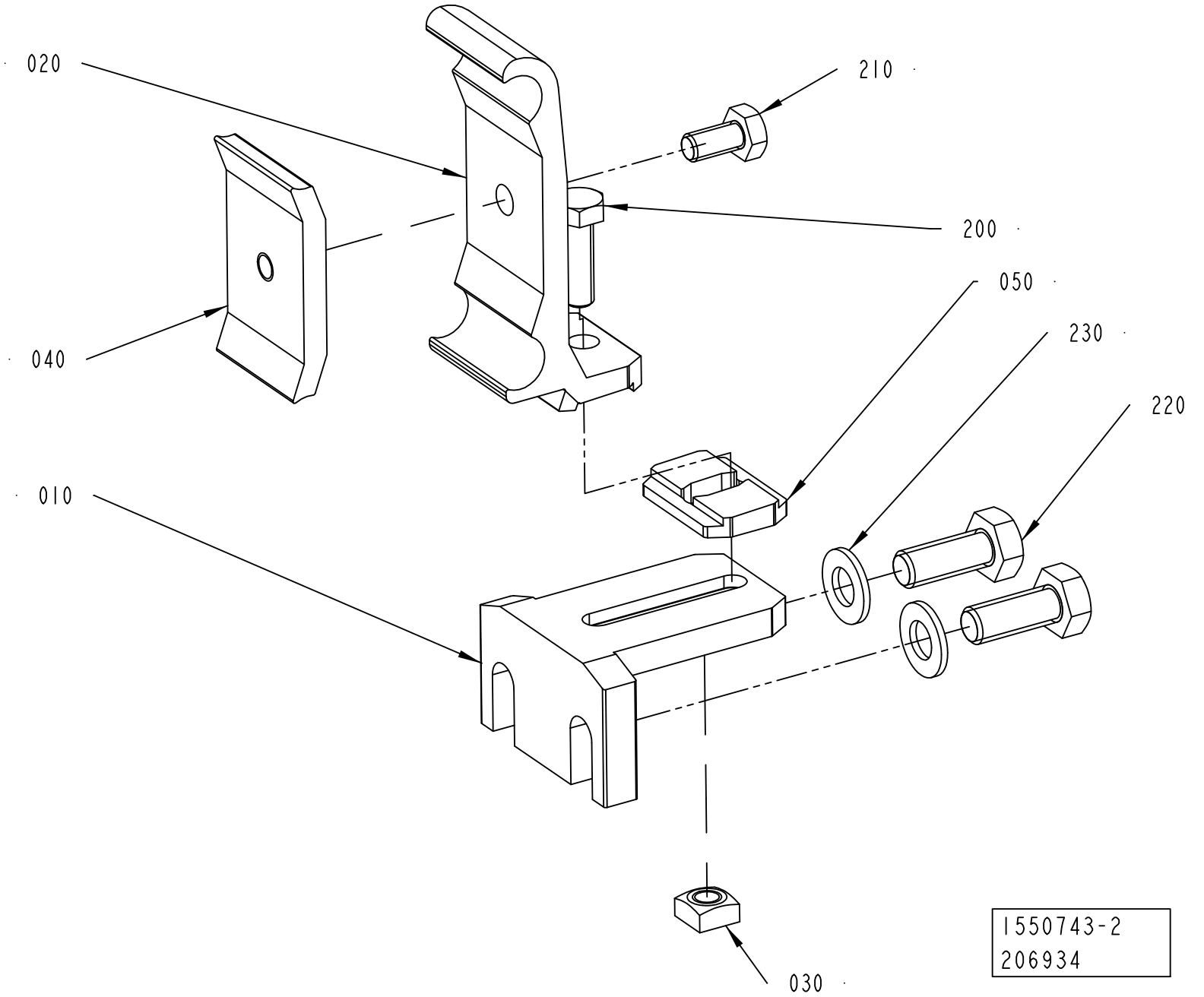
020
210
200
040
050
230
220
010
030
1550743-2
206934

ECM: 429045 - 20091201
Group number: 1550743-0200
Assembly Drawing: 1550743-2_1_AA

| Pos | Part No | UN | Qty | Description | Page No |
|---|---|---|---|---|---|
| - | | | | | |
| 010 | 1550772-0000 | | 1 | HOLDER | |
| 020 | 2699437-0000 | | 1 | RAIL HOLDER | |
| 030 | 1359565-0000 | | 1 | NUT | |
| 040 | 1366727-0000 | | 1 | CLAMP | |
| 050 | 2699436-0000 | | 1 | SPACER | |
| 200 | 312105-0370 | | 1 | SCREW M6S ISO 4017 M6X20 A480 | |
| 210 | 312105-0366 | | 1 | SCREW M6S ISO 4017 M6X12 A480 | |
| 220 | 312105-0451 | | 2 | SCREW M6S ISO 4017 M8X20 A480 | |
| 230 | 315105-0165 | | 2 | WASHER BRB 8,4X16 RFR | |

| Pos | Part No | UN | Qty | Description | Page No |
|---|---|---|---|---|---|

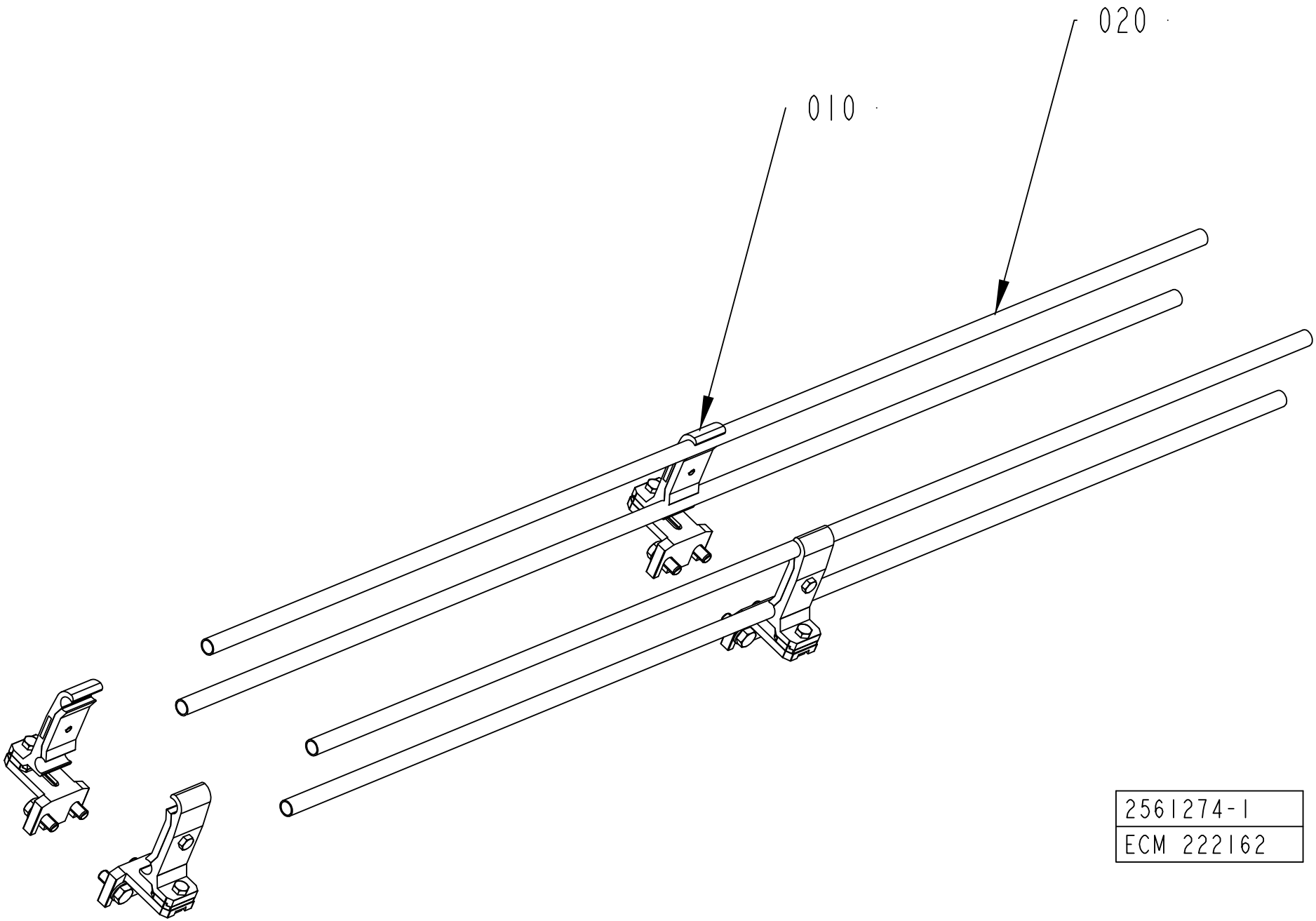
020
010
2561274-1
ECM 222162

ECM: 222162 -
Group number: 2561274-0102
Assembly Drawing: 2561274-1_1_AB

| Pos | Part No | UN | Qty | Description | Page No |
|---|---|---|---|---|---|
| **L 0250** | | | | | |
| 010 | 1550743-0200 | | 2 | RAIL HOLDER | **3-35** |
| **L 0500** | | | | | |
| 010 | 1550743-0200 | | 2 | RAIL HOLDER | **3-35** |
| 020 | 476221-0002 | | 4 | PIPE | |
| **Common Parts** | | | | | |
| 010 | 1550743-0200 | | 4 | RAIL HOLDER | **3-35** |
| 020 | 476221-0003 | | 4 | PIPE | |

| Pos | Part No | UN | Qty | Description | Page No |
|---|---|---|---|---|---|

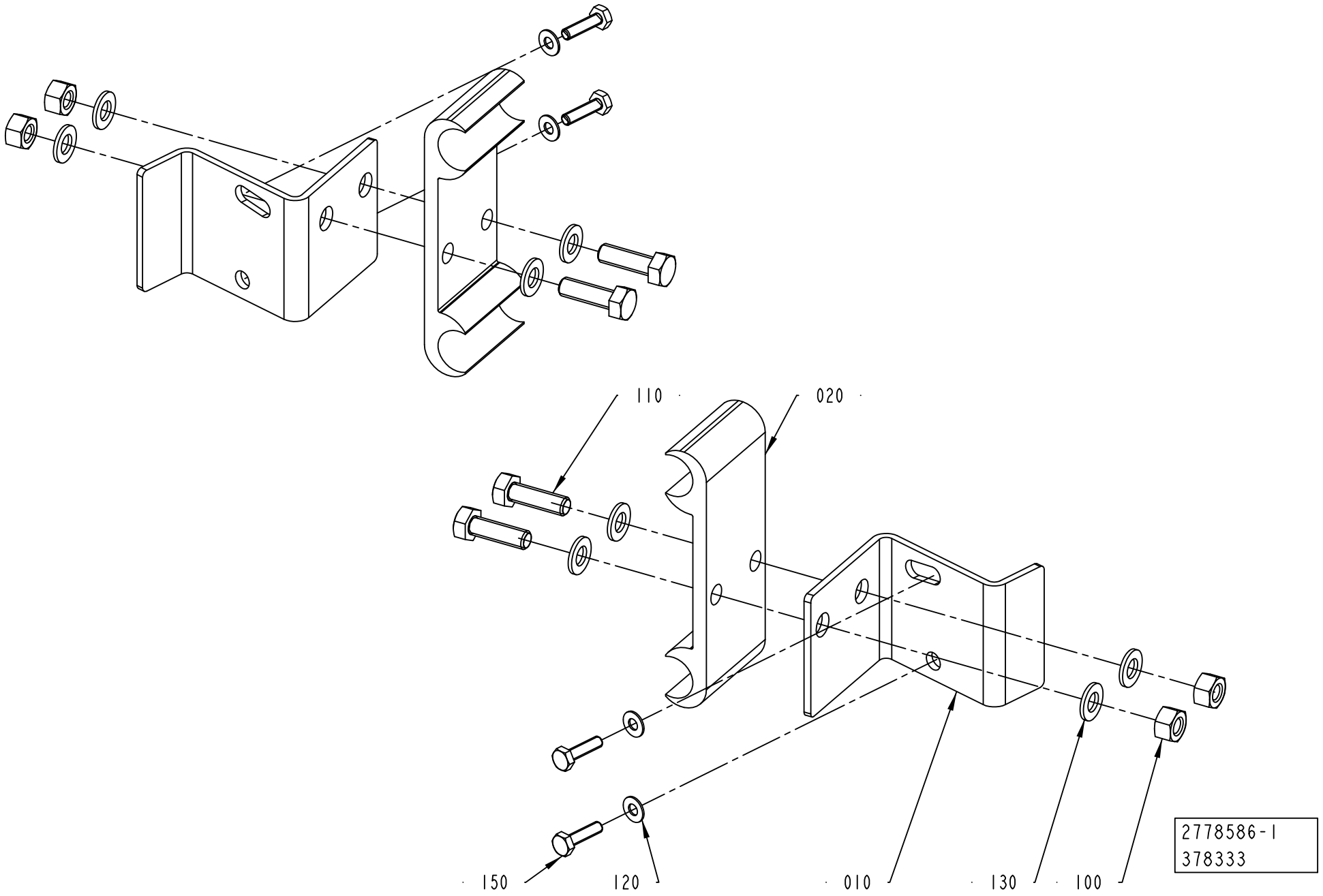
110
020
150
120
010
130
100
2778586-1
378333

ECM: 378333 - 20090406
Group number: 2778586-0100
Assembly Drawing: 2778586-1_1_AB

| Pos | Part No | UN | Qty | Description | Page No |
|---|---|---|---|---|---|
| - | | | | | |
| 010 | 2778580-0000 | | 2 | BRACKET | |
| 020 | 1020637-0000 | | 2 | HOLDER | |
| 100 | 312605-0314 | | 4 | HEXAGON NUT, M6M M5 A280 | |
| 110 | 312105-0329 | | 4 | SCREW M6S ISO 4017 M5X16 A480 | |
| 120 | 315106-0124 | | 4 | WASHER ISO 7089-3-200 HV A4 | |
| 130 | 315105-0146 | | 8 | WASHER BRB 5,3X10 RFR | |
| 150 | 90287-0175 | | 4 | SCREW M6S M3X12 A480 | |

| Pos | Part No | UN | Qty | Description | Page No |
|---|---|---|---|---|---|

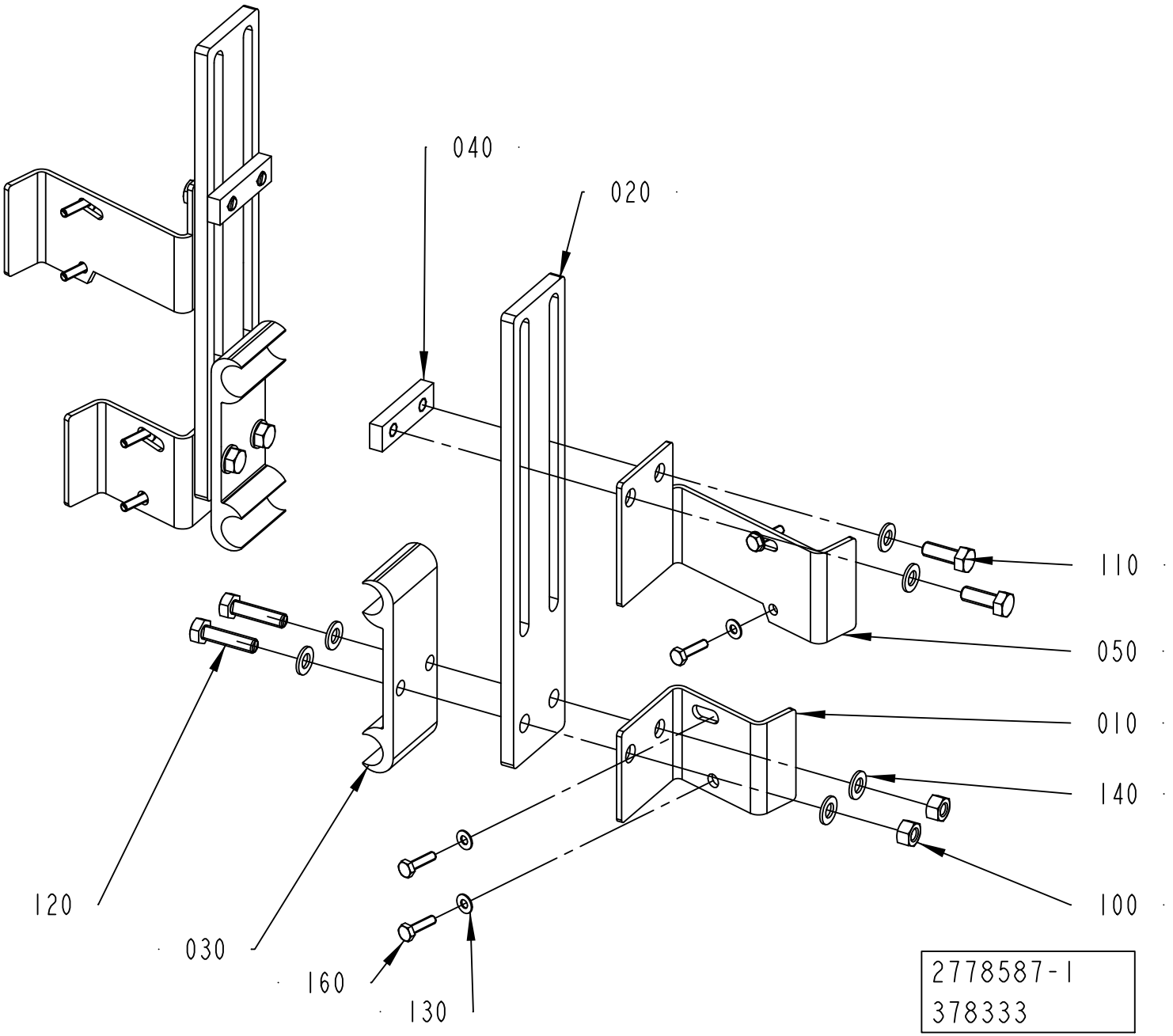
040
020
110
050
010
140
100
120
030
160
130
2778587-1
378333

ECM: 378333 - 20090406
Group number: 2778587-0100
Assembly Drawing: 2778587-1_1_AB

| Pos | Part No | UN | Qty | Description | Page No |
|---|---|---|---|---|---|
| - | | | | | |
| 010 | 2778580-0000 | | 2 | BRACKET | |
| 020 | 2778584-0000 | | 2 | BRACKET | |
| 030 | 1020637-0000 | | 2 | HOLDER | |
| 040 | 2504290-0000 | | 2 | PLATE | |
| 050 | 2985773-0000 | | 2 | BRACKET | |
| 100 | 312605-0314 | | 4 | HEXAGON NUT, M6M M5 A280 | |
| 110 | 312105-0328 | | 4 | SCREW M6S ISO 4017 M5X14 A480 | |
| 120 | 312105-0331 | | 4 | SCREW M6S ISO 4017 M5X20 A480 | |
| 130 | 315106-0124 | | 8 | WASHER ISO 7089-3-200 HV A4 | |
| 140 | 315105-0146 | | 12 | WASHER BRB 5,3X10 RFR | |
| 160 | 90287-0175 | | 8 | SCREW M6S M3X12 A480 | |

| Pos | Part No | UN | Qty | Description | Page No |
|---|---|---|---|---|---|

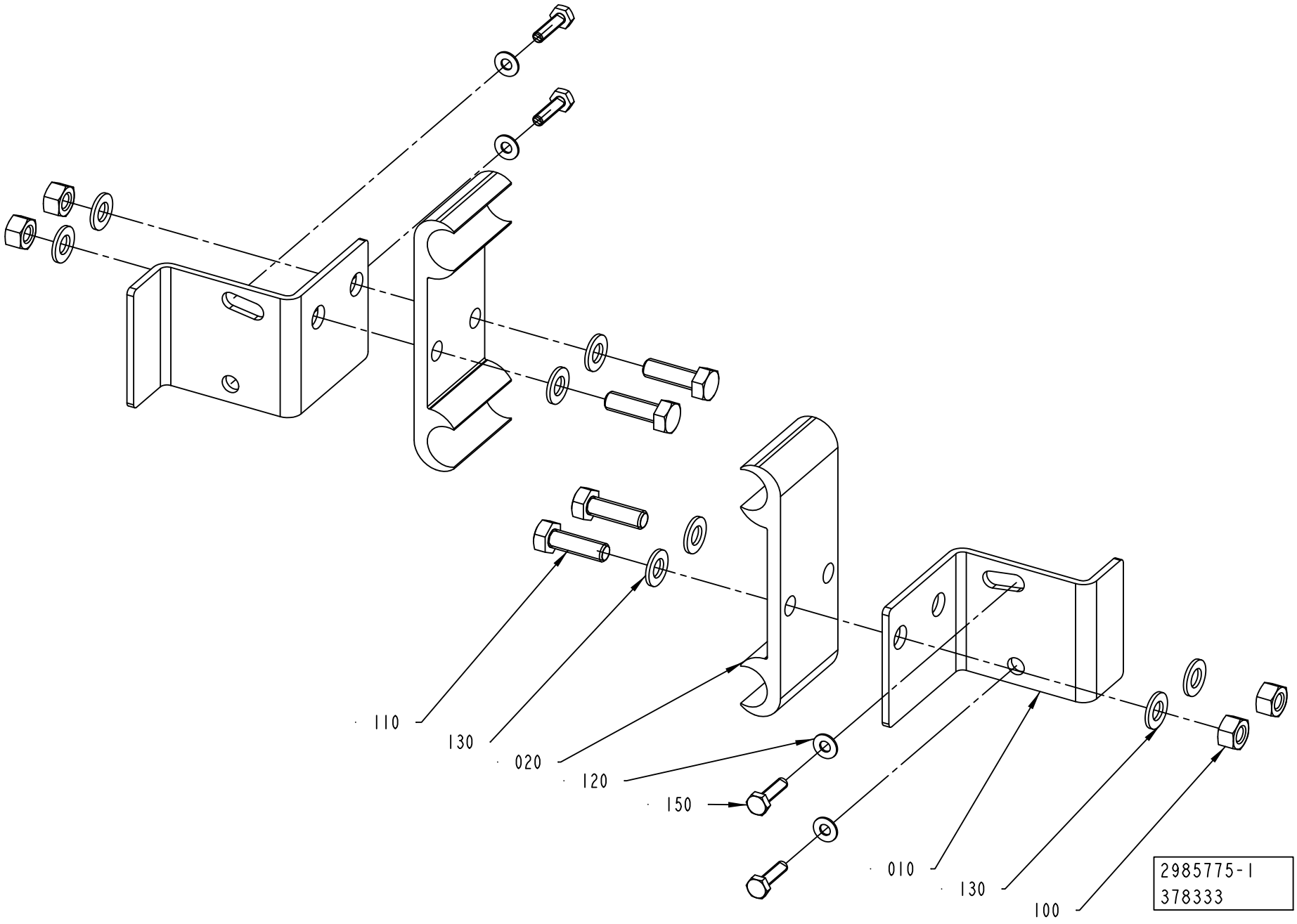
110
130
020
120
150
010
130
100
2985775-1
378333

ECM: 380457 - 20090406
Group number: 2985775-0100
Assembly Drawing: 2985775-1_1_AA

| Pos | Part No | UN | Qty | Description | Page No |
|---|---|---|---|---|---|
| - | | | | | |
| 010 | 2985774-0000 | | 2 | BRACKET | |
| 020 | 1020637-0000 | | 2 | HOLDER | |
| 100 | 312605-0314 | | 4 | HEXAGON NUT, M6M M5 A280 | |
| 110 | 312105-0329 | | 4 | SCREW M6S ISO 4017 M5X16 A480 | |
| 120 | 315106-0124 | | 4 | WASHER ISO 7089-3-200 HV A4 | |
| 130 | 315105-0146 | | 8 | WASHER BRB 5,3X10 RFR | |
| 150 | 90287-0175 | | 4 | SCREW M6S M3X12 A480 | |

| Pos | Part No | UN | Qty | Description | Page No |
|---|---|---|---|---|---|

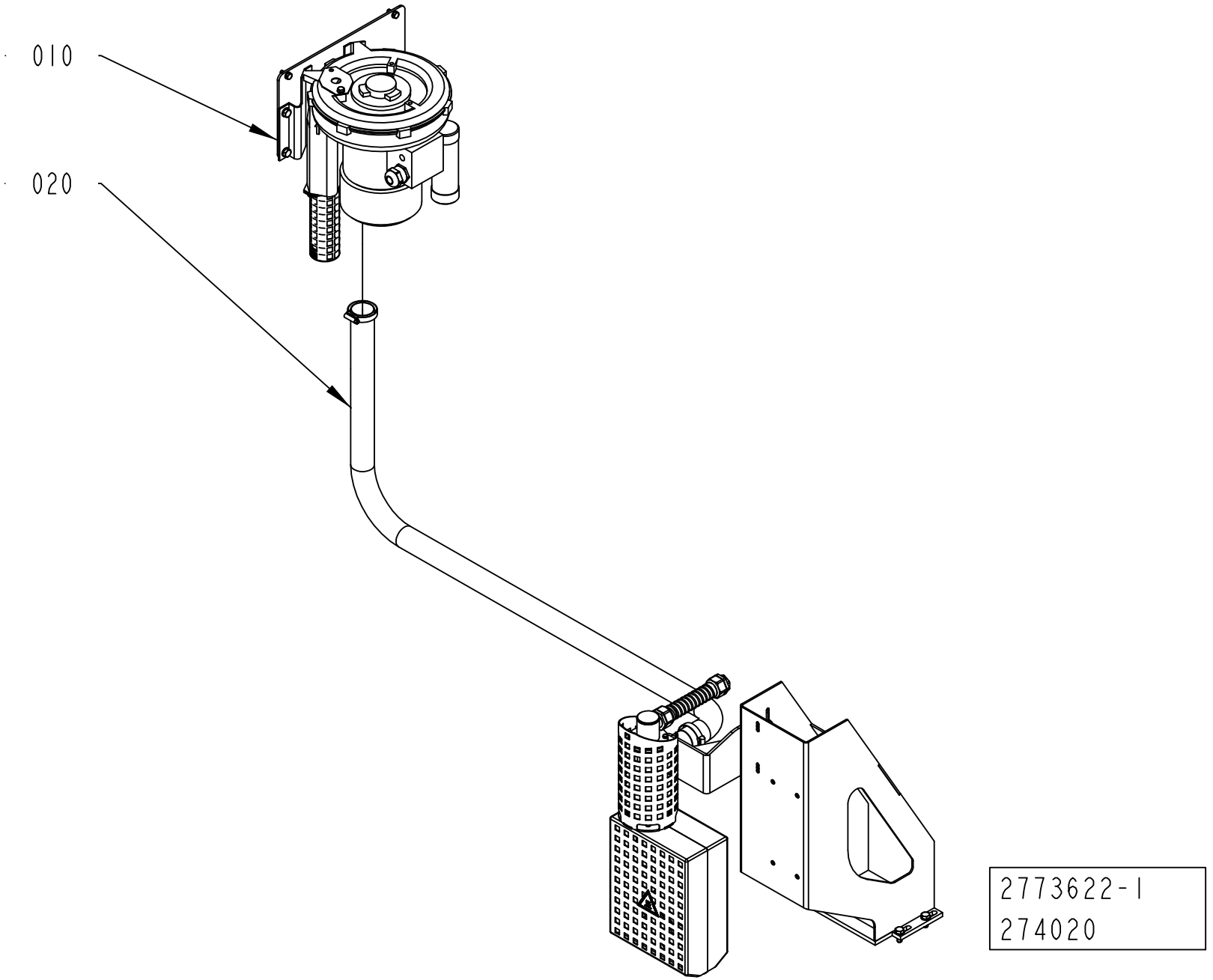
010
020
2773622-1
274020

ECM: 438893 - 20100701
Group number: 2773622-0100
Assembly Drawing: 2773622-1_1_AA

| Pos | Part No | UN | Qty | Description | Page No |
|---|---|---|---|---|---|
| **CAP 30/FLEX RECAP3, CAP 30/FLEX RECAP2 A3** | | | | | |
| 020 | 2873862-0100 | | 1 | HEATING ELEMENT | **3-47** |
| **Common Parts** | | | | | |
| 010 | 2773623-0100 | | 1 | FAN SYSTEM | **3-49** |

| Pos | Part No | UN | Qty | Description | Page No |
|---|---|---|---|---|---|

# HEATING ELEMENT



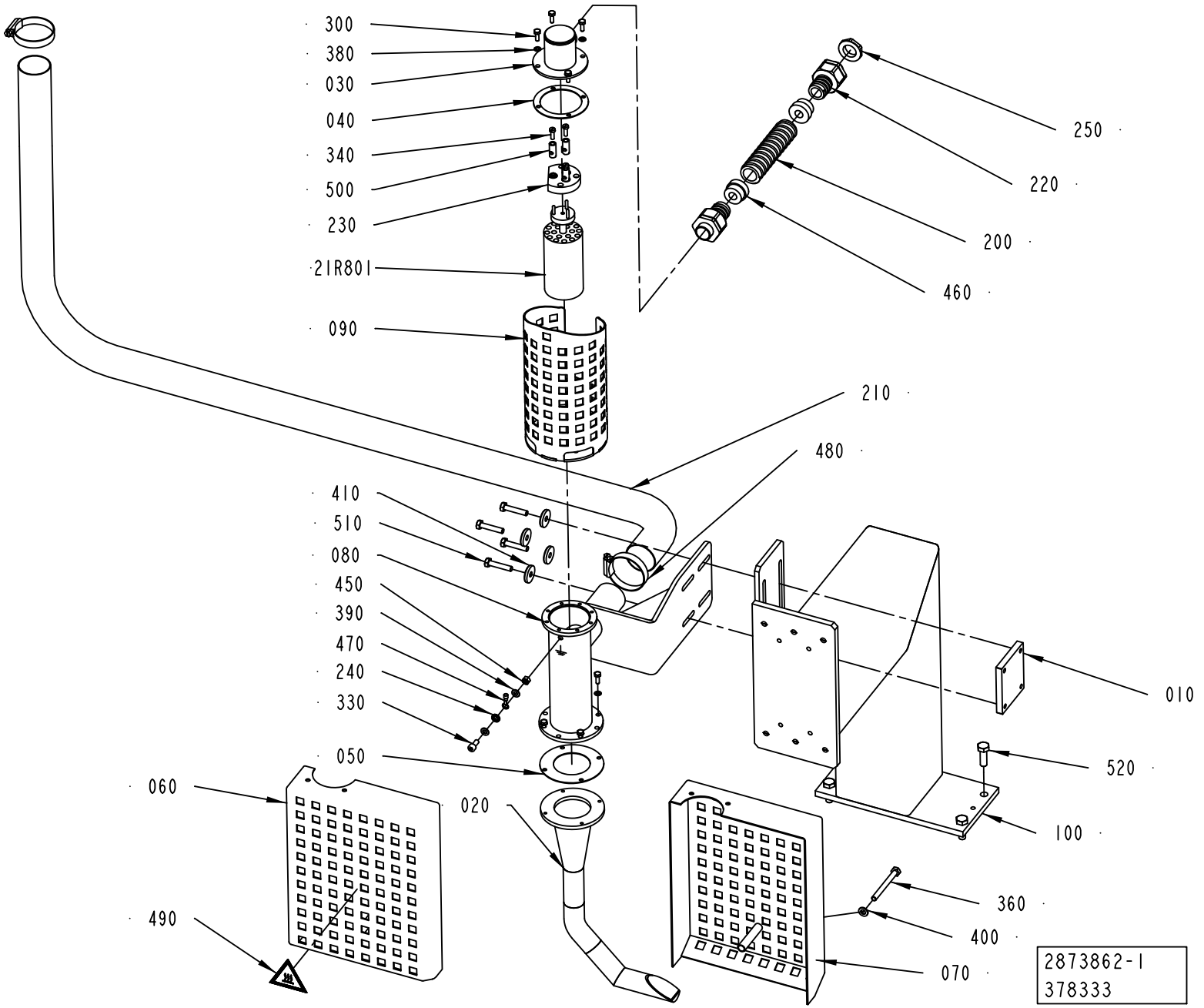

ECM: 436062 - 20100701
Group number: 2873862-0100
Assembly Drawing: 2873862-1_1_AB

| Pos | Part No | UN | Qty | Description | Page No |
|---|---|---|---|---|---|
| **CAP 30/FLEX RECAP3, CAP 30/FLEX RECAP2 A3** | | | | | |
| 020 | 2547915-0000 | | 1 | HEATING CHAMBER | |
| **Common Parts** | | | | | |
| 010 | 2873867-0000 | | 1 | PLATE | |
| 030 | 2710819-0000 | | 1 | LID | |
| 040 | 1188609-0000 | | 1 | FLANGE SEAL | |
| 050 | 1188610-0000 | | 1 | FLANGE SEAL | |
| 060 | 2773627-0000 | | 1 | HEAT GUARD | |
| 070 | 2773630-0000 | | 1 | HEAT GUARD | |
| 080 | 2873865-0000 | | 1 | PRE-HEATER | |
| 090 | 2836263-0000 | | 1 | HEAT GUARD | |
| 100 | 2934905-0000 | | 1 | SUPPORT | |
| 200 | 90152-0051 | M | 1 | SPIRAL CONDUIT, 25X18, UL 1816 | |
| 210 | 90152-0075 | M | 2350 | HOSE | |
| 220 | 90458-0430 | | 2 | HOSE GLAND W/O INSERT M20 EXTENDED | |
| 230 | 90125-0020 | | 1 | PLATE COMPLETE | |
| | *270926-0000* | | *6* | *NUT* | |
| | *270927-0000* | | *3* | *SCREW* | |
| | *294464-0000* | | *1* | *BASE PLATE* | |
| 240 | 90062-0060 | | 1 | LOCK WASHER 5,3/10 H=0,6 FZB | |
| 250 | 90458-0323 | | 1 | NUT, M20X1,5 | |
| 300 | 312105-0291 | | 8 | SCREW M6S ISO 4017 M4X12 A470 | |
| 330 | 312115-0327 | | 1 | Z3REW ISO4762 M5X12 A4 80 | |
| 340 | 312122-0291 | | 3 | SCREW ISO 1207 M4X12 NI PL BRASS | |
| 360 | 312105-0382 | | 1 | SCREW M6S ISO 4014 M6X60 A480 | |
| 380 | 315105-0136 | | 8 | WASHER BRB 4,3X8 RFR | |
| 390 | 315105-0146 | | 2 | WASHER BRB 5,3X10 RFR | |
| 400 | 315105-0153 | | 1 | WASHER BRB 6,4X12 RFR | |
| 410 | 315125-0153 | | 4 | WASHER TBRSB 6,4X22X4 A4 | |
| 450 | 312605-0314 | | 1 | HEXAGON NUT, M6M M5 A280 | |
| 460 | 353249-0012 | | 2 | INSERT, SINGLE HOLE, EK 154/11 | |
| 470 | 353101-0122 | | 1 | CABLE SHOE 0,5-1,5MM2 M5 RED | |
| 480 | 342991-0108 | | 2 | HOSE CLIP,WORM DRIVE TYPE (38)-50 | |
| 490 | 359710-0001 | | 1 | WARNING SIGN ISO, HOT SURFACE | |
| 500 | 205438-0000 | | 3 | CABLE GLAND | |
| 510 | 312105-0374 | | 4 | SCREW M6S ISO 4014 M6X30 A480 | |
| 520 | 312105-0453 | | 4 | SCREW M6S ISO 4017 M8X25 A480 | |
| 21R801 | 90206-0124 | | 1 | HEATING ELEMENT 2X1500W 230V | |

| Pos | Part No | UN | Qty | Description | Page No |
|---|---|---|---|---|---|

Machine Type | Group Description | Used-In | Group Number | Page No

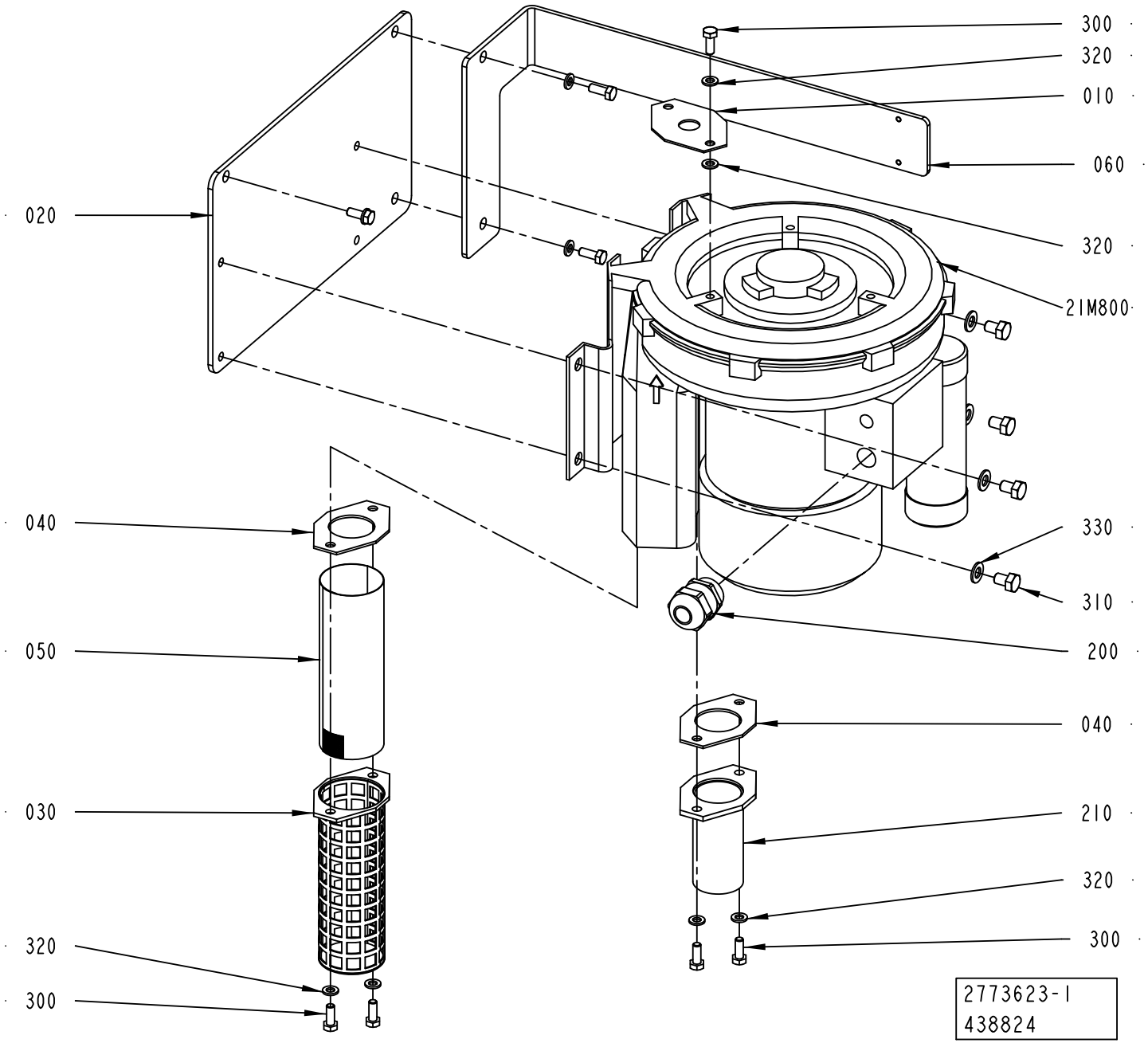
300
320
010
060
020
320
21M800
040
330
310
050
200
040
030
210
320
320
300
300
2773623-1
438824

ECM: 446239 - 20100701
Group number: 2773623-0100
Assembly Drawing: 2773623-1_1_AC

| Pos | Part No | UN | Qty | Description | Page No |
|---|---|---|---|---|---|
| - | | | | | |
| 010 | 1030874-0000 | | 1 | THROTTLE WASHER | |
| 020 | 2779772-0000 | | 1 | BRACKET | |
| 030 | 1030335-0000 | | 1 | FILTER HOLDER | |
| 040 | 1030878-0000 | | 2 | GASKET | |
| 050 | 1030338-0000 | | 1 | NET | |
| 060 | 3093726-0000 | | 1 | PLATE | |
| 200 | 90458-0316 | | 1 | CABLE GLAND, M25X1,5, NO.5311 1130 | |
| 210 | 2663999-0000 | | 1 | NIPPLE | |
| 300 | 312105-0368 | | 8 | SCREW M6S ISO 4017 M6X16 A480 | |
| 310 | 312105-0447 | | 4 | SCREW M6S ISO 4017 M8X12 A480 | |
| 320 | 315105-0153 | | 9 | WASHER BRB 6,4X12 RFR | |
| 330 | 315105-0165 | | 4 | WASHER BRB 8,4X16 RFR | |
| 21M800 | 90459-6768 | | 1 | FAN 2BH1300-7AV15 | |

| Pos | Part No | UN | Qty | Description | Page No |
|---|---|---|---|---|---|

# WATER CONNECTION



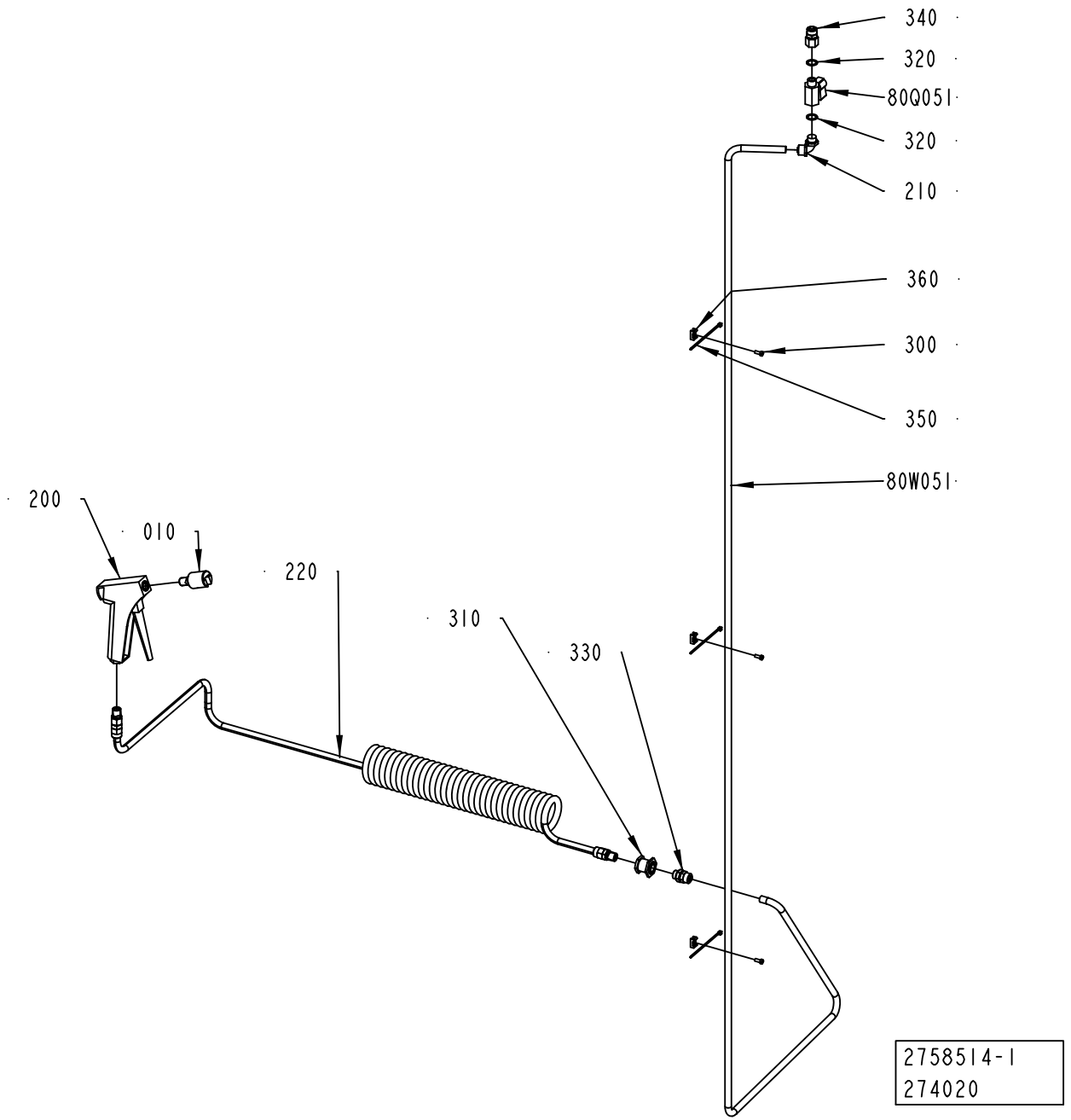

ECM: 274446 - 20060921
Group number: 2758514-0100
Assembly Drawing: 2758514-1_1_AA

| Pos | Part No | UN | Qty | Description | Page No |
|---|---|---|---|---|---|
| - | | | | | |
| 010 | 2506940-0000 | | 1 | NOZZLE | |
| 200 | 90458-1483 | | 1 | SPRAY GUN WATER G1/4 | |
| 210 | 90224-0325 | | 1 | ELBOW 90 COUPL.,EXT.THREAD 10/8-G1/4" | |
| 220 | 90458-1741 | | 1 | HOSE ASSEMBLY, CEJN 19 958 9669 | |
| 300 | 312125-0289 | | 3 | SCREW ISO 1207 M4X10 A4 | |
| 310 | 342767-0104 | | 1 | BULKHEAD LEAD-IN, G1/4 | |
| 320 | 315239-0110 | | 2 | NYLON WASHER G1/4, 1/4RRP | |
| 330 | 342921-0132 | | 1 | STRAIGHT COUPL.,EXT.THREADED 10/8-G1/4" | |
| 340 | 342923-0132 | | 1 | STRAIGHT COUPL.,INT.THREADED 10/8-G1/4" | |
| 350 | 352113-0101 | | 3 | CABLE TIE, BLACK 92X2,5 MM | |
| 360 | 352113-0205 | | 3 | ANCHOR PLATES FOR STRIPS, TYPE TM2S8-C10 | |
| 80Q051 | 90187-0045 | | 1 | BALL VALVE G1/4 CR PL | |
| 80W051 | 315400-0009 | MM | 2800 | TUBE PUN-H-10X1,5-SW | |

| Pos | Part No | UN | Qty | Description | Page No |
|---|---|---|---|---|---|

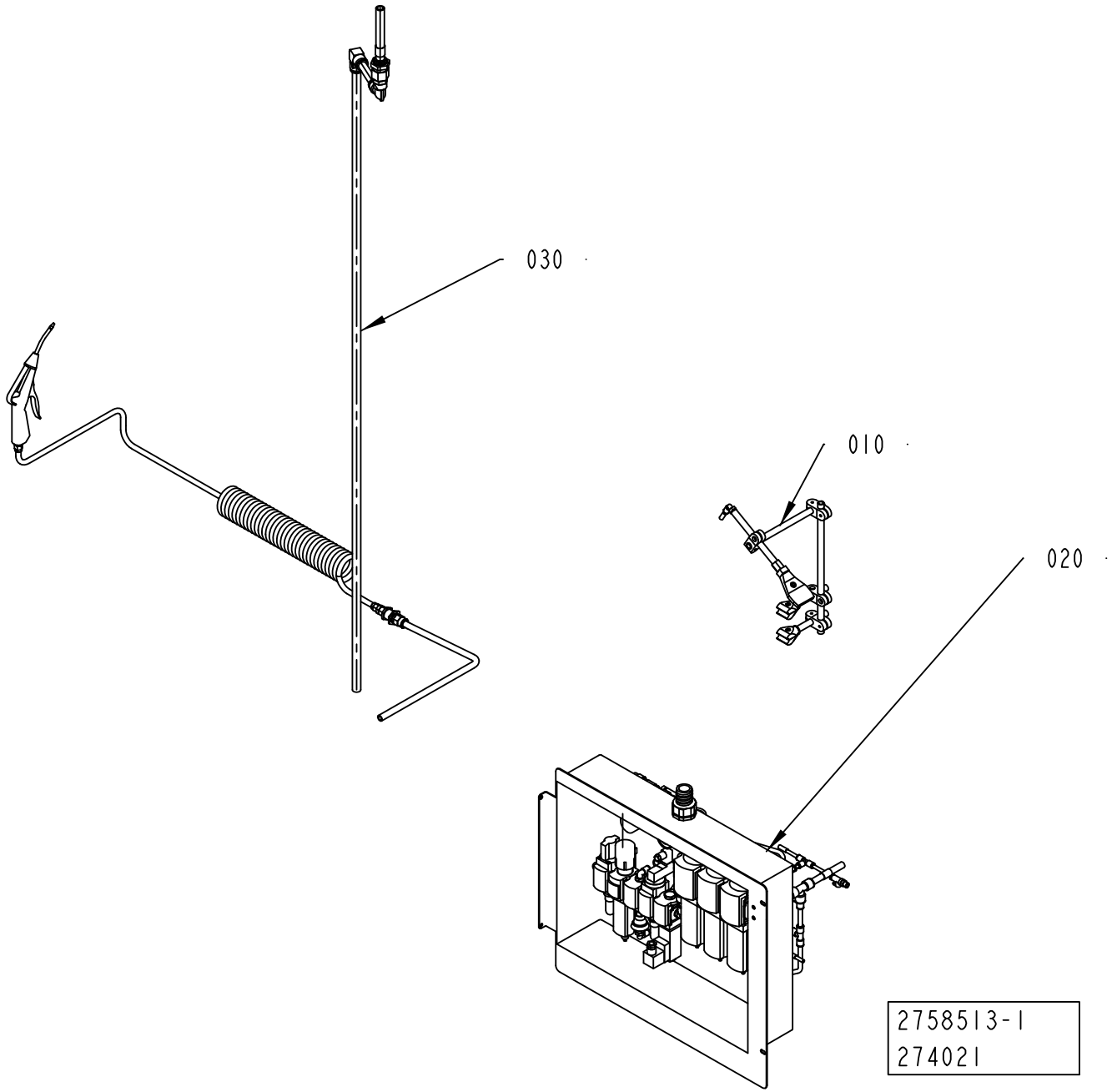
030
010
020
2758513-1
274021

ECM: 274471 - 20060921
Group number: 2758513-0100
Assembly Drawing: 2758513-1_1_AA

| Pos | Part No | UN | Qty | Description | Page No |
|---|---|---|---|---|---|
| - | | | | | |
| 010 | 2758512-0100 | | 1 | BLOWING SYSTEM | **3-55** |
| 020 | 2838672-0100 | | 1 | PNEUMATIC PANEL | **3-57, 3-59, 3-61** |
| 030 | 2838686-0100 | | 1 | AIR JET GUN | **3-67** |

| Pos | Part No | UN | Qty | Description | Page No |
|---|---|---|---|---|---|

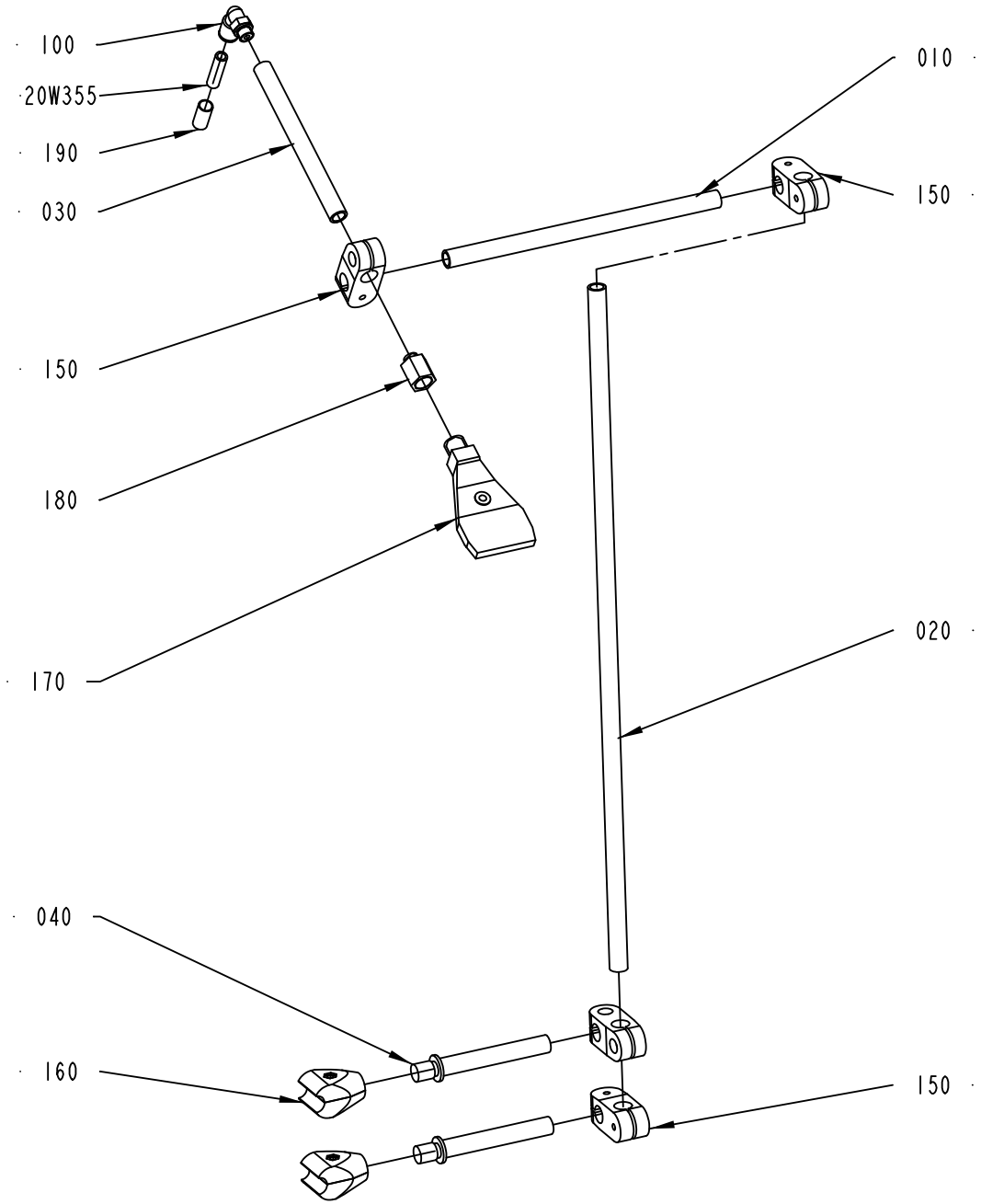
100
20W355
190
030
150
180
170
040
160
010
150
020
150
2758512-1
300393

ECM: 303456 - 20070517
Group number: 2758512-0100
Assembly Drawing: 2758512-1_1_AB

| Pos | Part No | UN | Qty | Description | Page No |
|---|---|---|---|---|---|
| - | | | | | |
| 010 | 2775403-0000 | | 1 | PIPE | |
| 020 | 2775404-0000 | | 1 | PIPE | |
| 030 | 2788176-0000 | | 1 | PIPE | |
| 040 | 2838679-0000 | | 2 | SHAFT | |
| 100 | 350002-0007 | | 1 | PUSH-IN L-FITTING QSL-F-G1/8-8 | |
| 150 | 90600-1001 | | 4 | CROSS CLAMP, 340/68385 | |
| 160 | 90458-0499 | | 2 | HOLDER 12 MM NO. 82 66861 | |
| 170 | 90424-0089 | | 1 | AIR NOZZLE, BSPT1/4, AAB727-1/4-15 | |
| 180 | 90330-0134 | | 1 | NIPPLES,REDUCING,INT THREAD, G1/4-G1/8 | |
| 190 | 90459-7370 | | 1 | MARKING FOR PNEUM. TUBING, PRZ08 | |
| 20W355 | 315400-0004 | MM | 3000 | TUBE PUN-H-8X1,25-BL | |

| Pos | Part No | UN | Qty | Description | Page No |
|---|---|---|---|---|---|

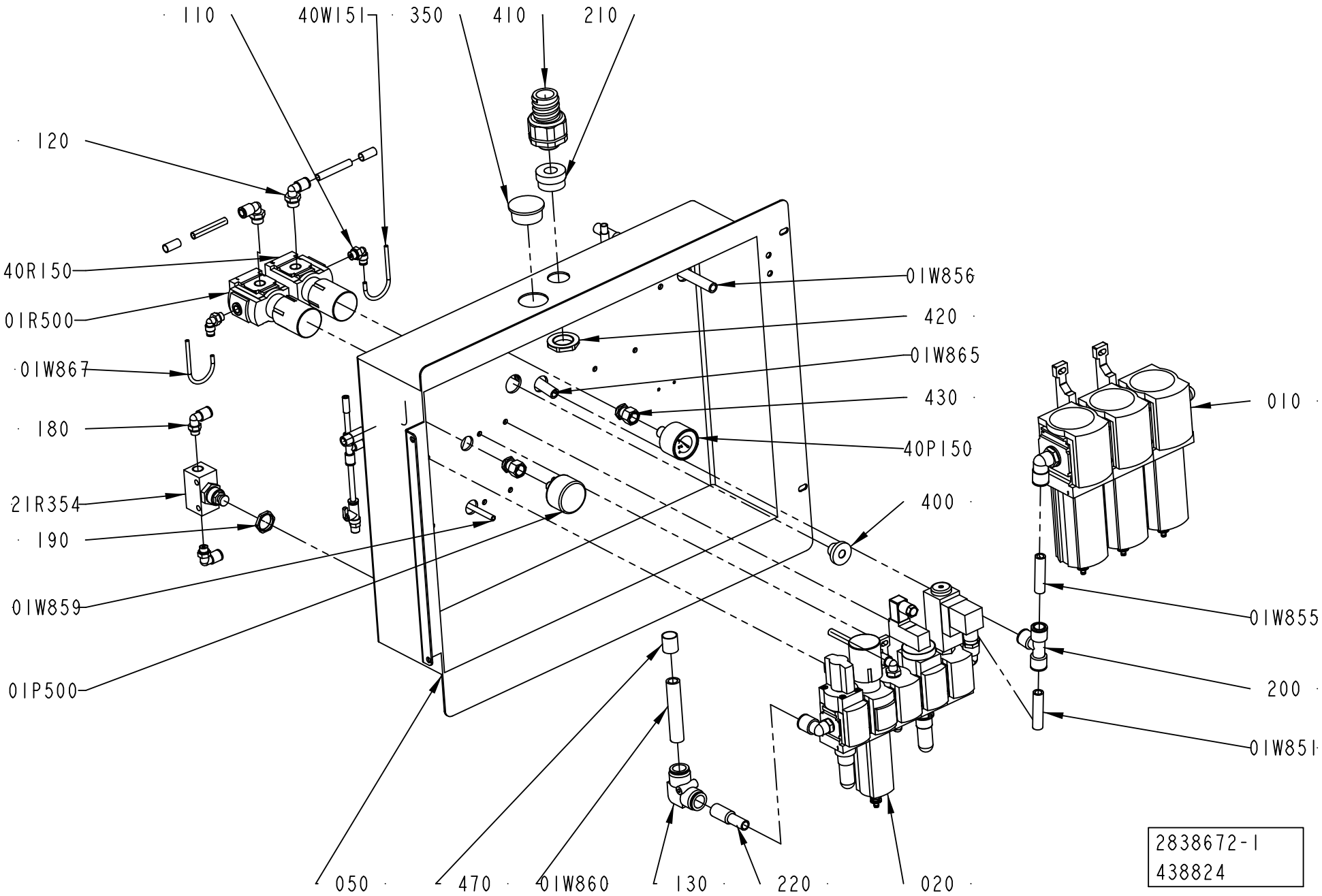
110
40W151
350
410
210
120
40R150
01R500
01W867
180
21R354
190
01W859
01P500
01W856
420
01W865
430
40P150
400
010
01W855
200
01W851
050
470
01W860
130
220
020
2838672-1
438824

ECM: 438895 - 20100701
Group number: 2838672-0100
Assembly Drawing: 2838672-1_1_AD

This list covers pages from 3-56 to 3-61

| Pos | Part No | UN | Qty | Description | Page No |
|---|---|---|---|---|---|
| - | | | | | |
| 010 | 2838673-0100 | | 1 | SERVICE UNIT | 3-63 |
| 020 | 2838674-0100 | | 1 | SERVICE UNIT | 3-65 |
| 050 | 2838676-0000 | | 1 | BRACKET | |
| 100 | 2838701-0000 | | 1 | HOLDER | |
| 110 | 350002-0005 | | 2 | PUSH-IN L-FITTING QSL-F-G1/8-4 | |
| 120 | 350002-0009 | | 2 | PUSH-IN L-FITTING QSL-F-G1/4-8 | |
| 130 | 90459-2553 | | 1 | PUSH-IN L-FITTING QSL 16 | |
| 140 | 350005-0002 | | 3 | PUSH-IN T-FITTING QST-F-6 | |
| 150 | 350006-0008 | | 1 | PUSH-IN FITTING QS-F-12H-8 | |
| 160 | 350005-0003 | | 1 | PUSH-IN T-FITTING QST-F-8 | |
| 170 | 350001-0011 | | 2 | PUSH-IN FITTING QS-F-G1/4-12 | |
| 180 | 350002-0007 | | 2 | PUSH-IN L-FITTING QSL-F-G1/8-8 | |
| 190 | 353250-0020 | | 1 | GLAND, LOCK NUT M20X1,5 | |
| 200 | 350005-0005 | | 4 | PUSH-IN T-FITTING QST-F-12 | |
| 210 | 353249-0015 | | 1 | INSERT, SINGLE HOLE, EK 155/16 | |
| 220 | 90459-7107 | | 1 | SLEEVE QSH-16-12 | |
| 230 | 350001-0007 | | 4 | PUSH-IN FITTING QS-F-G1/8-8 | |
| 240 | 350001-0002 | | 2 | PUSH-IN FITTING QS-F-M5-6 | |
| 250 | 350001-0006 | | 2 | PUSH-IN FITTING QS-F-G1/8-6 | |
| 260 | 350011-0002 | | 1 | PUSH-IN T-FITTING QST-F-8-6 | |
| 270 | 350004-0005 | | 1 | PUSH-IN L-FITTING QSL-F-12 | |
| 350 | 90261-0025 | | 1 | PLUG, BLIND, PLASTIC GPN300F28 | |
| 400 | 90015-0021 | | 1 | LEAD-IN, TET10-14, E-1458023 | |
| 410 | 90458-0432 | | 1 | HOSE GLAND W/O INSERT M25 EXTENDED | |
| 420 | 90458-0324 | | 1 | NUT, M25X1,5 | |
| 430 | 90459-7333 | | 2 | PUSH-IN FITTING QSSF-1/4-4-B | |
| 440 | 90459-7369 | | 4 | MARKING FOR PNEUM. TUBING, PRZ06 | |
| 450 | 90459-7370 | | 5 | MARKING FOR PNEUM. TUBING, PRZ08 | |
| 460 | 90459-7372 | | 2 | MARKING FOR PNEUM. TUBING, PRZ12 | |
| 470 | 90459-7373 | | 1 | MARKING FOR PNEUM. TUBING, PRZ16 | |
| 21K000 | 90458-1202 | | 1 | VALVES 2X3/2, CLOSED | |
| 40K203 | 90458-1202 | | 1 | VALVES 2X3/2, CLOSED | |
| 01P500 | 90459-3603 | | 1 | PRESSURE GAUGE, MAP-40-6-1/8-EN | |
| 40P150 | 90459-7344 | | 1 | PRESSURE GAUGE, MA-40-6-R1/4-EN | |
| 20Q051 | 90459-0290 | | 1 | NON-RETURN VALVE H-QS-6 | |
| 20Q052 | 90187-0191 | | 1 | BALL VALVE R1/8, 6 MM | |
| 01R500 | 90459-5817 | | 1 | REGULATOR, MS4-LR-1/4-D6-A8-AS | |
| 01R951 | 90328-0047 | | 1 | SILENCER G1/8" | |
| 01R953 | 90328-0047 | | 1 | SILENCER G1/8" | |
| 01R954 | 90328-0029 | | 1 | SILENCER M5 | |
| 01R955 | 90328-0029 | | 1 | SILENCER M5 | |
| 20R352 | 90328-0047 | | 1 | SILENCER G1/8" | |
| 20R353 | 90328-0047 | | 1 | SILENCER G1/8" | |
| 20R354 | 90328-0029 | | 1 | SILENCER M5 | |
| 20R355 | 90328-0029 | | 1 | SILENCER M5 | |
| 21R054 | 90459-3604 | | 1 | FLOW CONTROL VALVE, GR-QS-6 | |
| 21R354 | 90235-0748 | | 1 | THROTTLE CHECK VALVE, GRA-1/4-B | |
| 40R150 | 90459-5817 | | 1 | REGULATOR, MS4-LR-1/4-D6-A8-AS | |
| 01U950 | 90459-2591 | | 1 | SINGLE VALVE SUB-BASE CDSV5.0-AS-1/8 | |
| 20U350 | 90459-2591 | | 1 | SINGLE VALVE SUB-BASE CDSV5.0-AS-1/8 | |
| 01W851 | 315400-0010 | MM | 300 | TUBE PUN-H-12X2-BL | |
| 01W853 | 315400-0001 | MM | 300 | TUBE PUN-H-6X1-BL | |
| 01W854 | 315400-0010 | MM | 300 | TUBE PUN-H-12X2-BL | |
| 01W855 | 315400-0010 | MM | 300 | TUBE PUN-H-12X2-BL | |
| 01W856 | 315400-0010 | MM | 300 | TUBE PUN-H-12X2-BL | |
| 01W857 | 315400-0004 | MM | 300 | TUBE PUN-H-8X1,25-BL | |
| 01W858 | 315400-0010 | MM | 300 | TUBE PUN-H-12X2-BL | |
| 01W859 | 315400-0001 | MM | 300 | TUBE PUN-H-6X1-BL | |
| 01W860 | 315400-0013 | MM | 300 | TUBE PUN-H-16-2,5-BL | |
| 01W861 | 315400-0004 | MM | 300 | TUBE PUN-H-8X1,25-BL | |
| 01W862 | 315400-0010 | MM | 300 | TUBE PUN-H-12X2-BL | |
| 01W863 | 315400-0010 | MM | 300 | TUBE PUN-H-12X2-BL | |
| 01W864 | 315400-0010 | MM | 300 | TUBE PUN-H-12X2-BL | |
| 01W865 | 315400-0010 | MM | 300 | TUBE PUN-H-12X2-BL | |
| 01W867 | 315400-0016 | MM | 300 | TUBE PUN-H-4X0,75-BL | |
| 01W868 | 315400-0001 | MM | 300 | TUBE PUN-H-6X1-BL | |
| 01W875 | 315400-0004 | MM | 300 | TUBE PUN-H-8X1,25-BL | |
| 01W954 | 315400-0001 | MM | 300 | TUBE PUN-H-6X1-BL | |
| 01W956 | 315400-0001 | MM | 300 | TUBE PUN-H-6X1-BL | |
| 20W050 | 315400-0001 | MM | 300 | TUBE PUN-H-6X1-BL | |
| 20W051 | 315400-0001 | MM | 300 | TUBE PUN-H-6X1-BL | |
| 20W052 | 315400-0001 | MM | 300 | TUBE PUN-H-6X1-BL | |
| 20W053 | 315400-0001 | MM | 300 | TUBE PUN-H-6X1-BL | |
| 20W351 | 315400-0004 | MM | 300 | TUBE PUN-H-8X1,25-BL | |
| 20W354 | 315400-0004 | MM | 300 | TUBE PUN-H-8X1,25-BL | |
| 20W355 | 315400-0004 | MM | 300 | TUBE PUN-H-8X1,25-BL | |
| 20W356 | 315400-0001 | MM | 300 | TUBE PUN-H-6X1-BL | |
| 21W051 | 315400-0004 | MM | 300 | TUBE PUN-H-8X1,25-BL | |
| 21W054 | 315400-0001 | MM | 300 | TUBE PUN-H-6X1-BL | |
| 21W055 | 315400-0001 | MM | 300 | TUBE PUN-H-6X1-BL | |
| 40W150 | 315400-0010 | MM | 300 | TUBE PUN-H-12X2-BL | |
| 40W151 | 315400-0016 | MM | 300 | TUBE PUN-H-4X0,75-BL | |
| 40W152 | 315400-0004 | MM | 300 | TUBE PUN-H-8X1,25-BL | |

Machine Type | Group Description | Used-In | Group Number | Page No

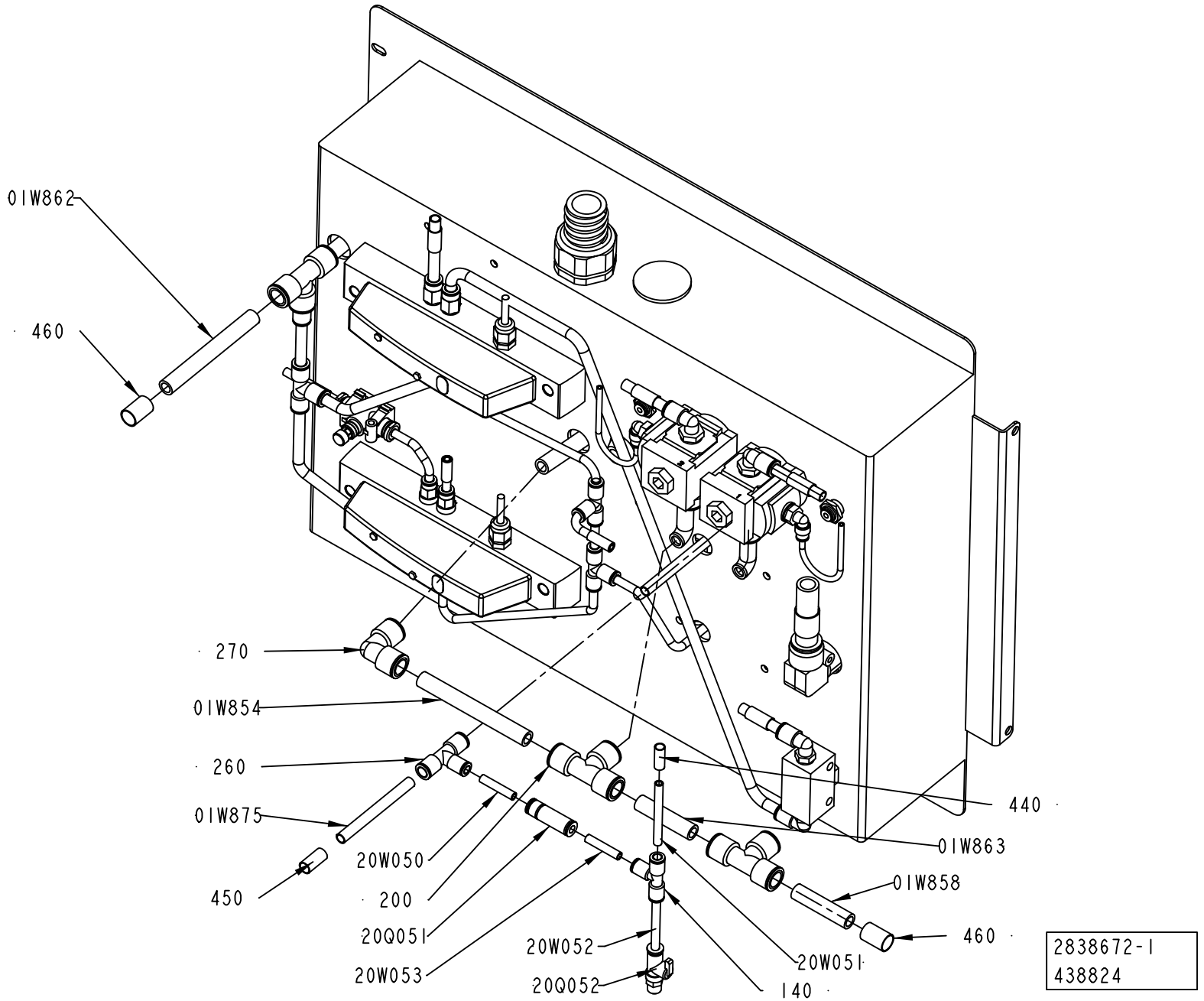
01W862
460
270
01W854
260
01W875
450
20W050
200
20Q051
20W053
20W052
20Q052
140
440
01W863
01W858
460
20W051
2838672-1
438824

| Pos | Part No | UN | Qty | Description | Page No |
|---|---|---|---|---|---|
| **- (Cont'd)** | | | | | |
| 40W254 | 315400-0004 | MM | 300 | TUBE PUN-H-8X1,25-BL | |

| Pos | Part No | UN | Qty | Description | Page No |
|---|---|---|---|---|---|

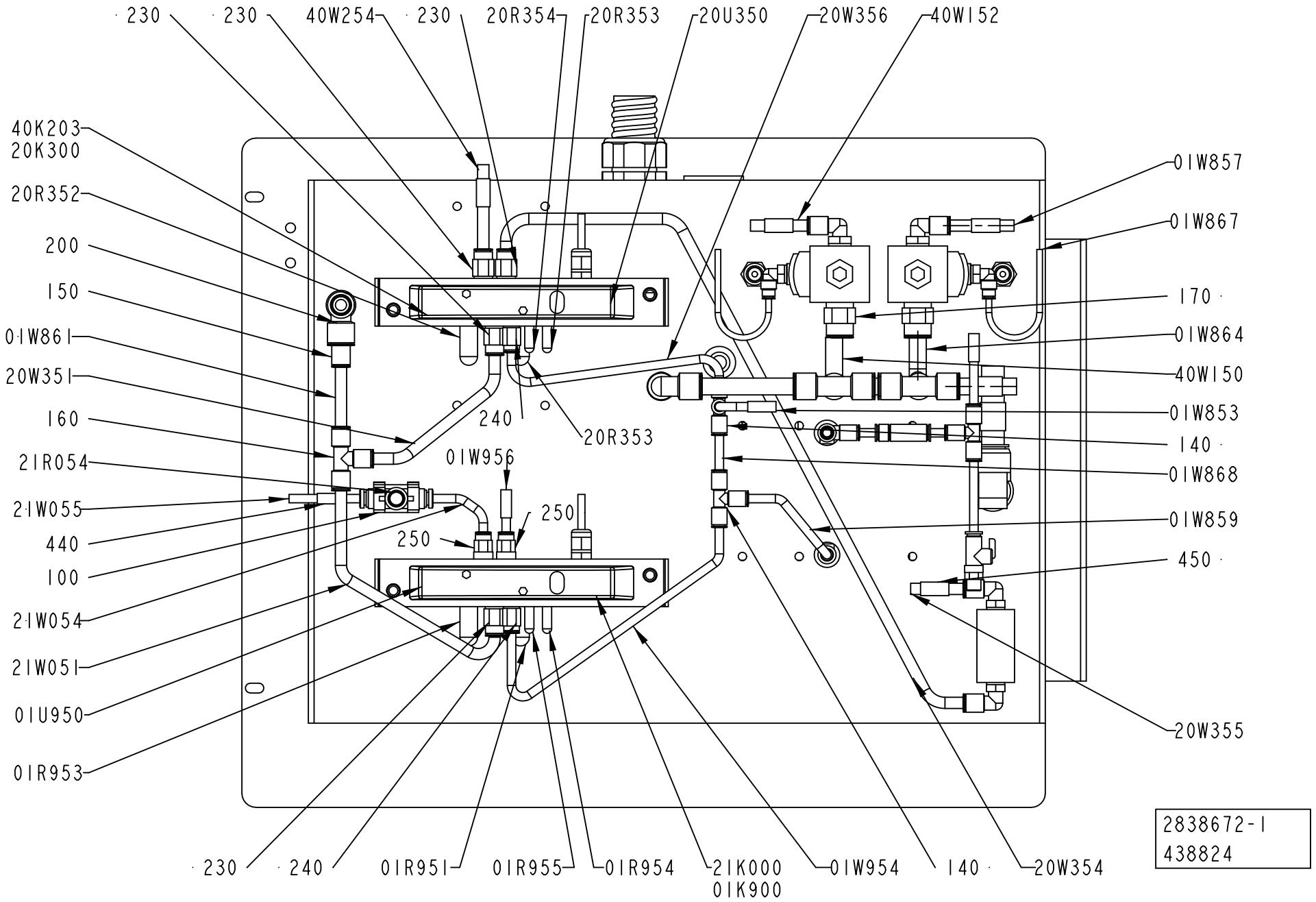
230
230
40W254
230
20R354
20R353
20U350
20W356
40W152
40K203
20K300
20R352
200
150
01W861
20W351
160
21R054
21W055
440
100
21W054
21W051
01U950
01R953
01W857
01W867
170
01W864
40W150
01W853
140
01W868
01W859
450
20W355
240
20R353
01W956
250
250
230
240
01R951
01R955
01R954
21K000
01K900
01W954
140
20W354
2838672-1
438824

| Pos | Part No | UN | Qty | Description | Page No |
|---|---|---|---|---|---|
| **SEE PREVIOUS LISTS PAGES: 3-57, 3-59.** | | | | | |

| Pos | Part No | UN | Qty | Description | Page No |
|---|---|---|---|---|---|

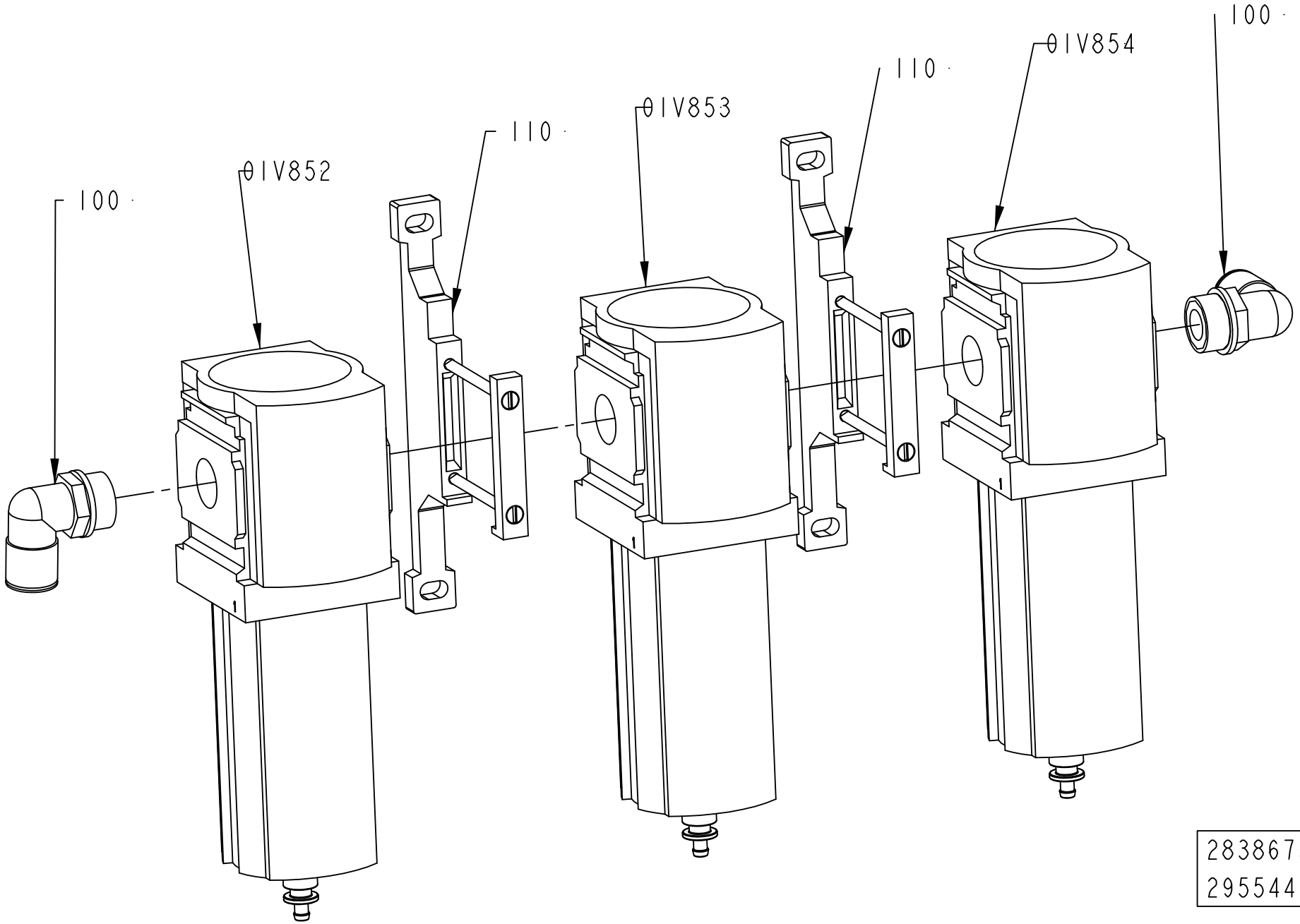
100
01V852
110
01V853
110
01V854
100
2838673-1
295544

ECM: 303486 - 20070517
Group number: 2838673-0100
Assembly Drawing: 2838673-1_1_AB

| Pos | Part No | UN | Qty | Description | Page No |
|---|---|---|---|---|---|
| - | | | | | |
| 100 | 350002-0016 | | 2 | PUSH-IN L-FITTING QSL-F-G1/2-12 | |
| 110 | 90459-1858 | | 2 | BRACKET, MS6-WP | |
| 01V852 | 90459-2773 | | 1 | FILTER, MS6-LFM-1/2-BRV | |
| | *90459-3812* | | *1* | *FILTER CARTRIDGE, MS6-LFM-B* | |
| 01V853 | 90459-2772 | | 1 | FILTER, MS6-LFM-1/2-ARV | |
| | *90459-3811* | | *1* | *FILTER CARTRIDGE MS6-LFM-A* | |
| 01V854 | 90459-2771 | | 1 | FILTER, MS6-LFX-1/2-R | |
| | *90459-3810* | | *1* | *FILTER CARTRIDGE, MS6-LFX* | |

| Pos | Part No | UN | Qty | Description | Page No |
|---|---|---|---|---|---|

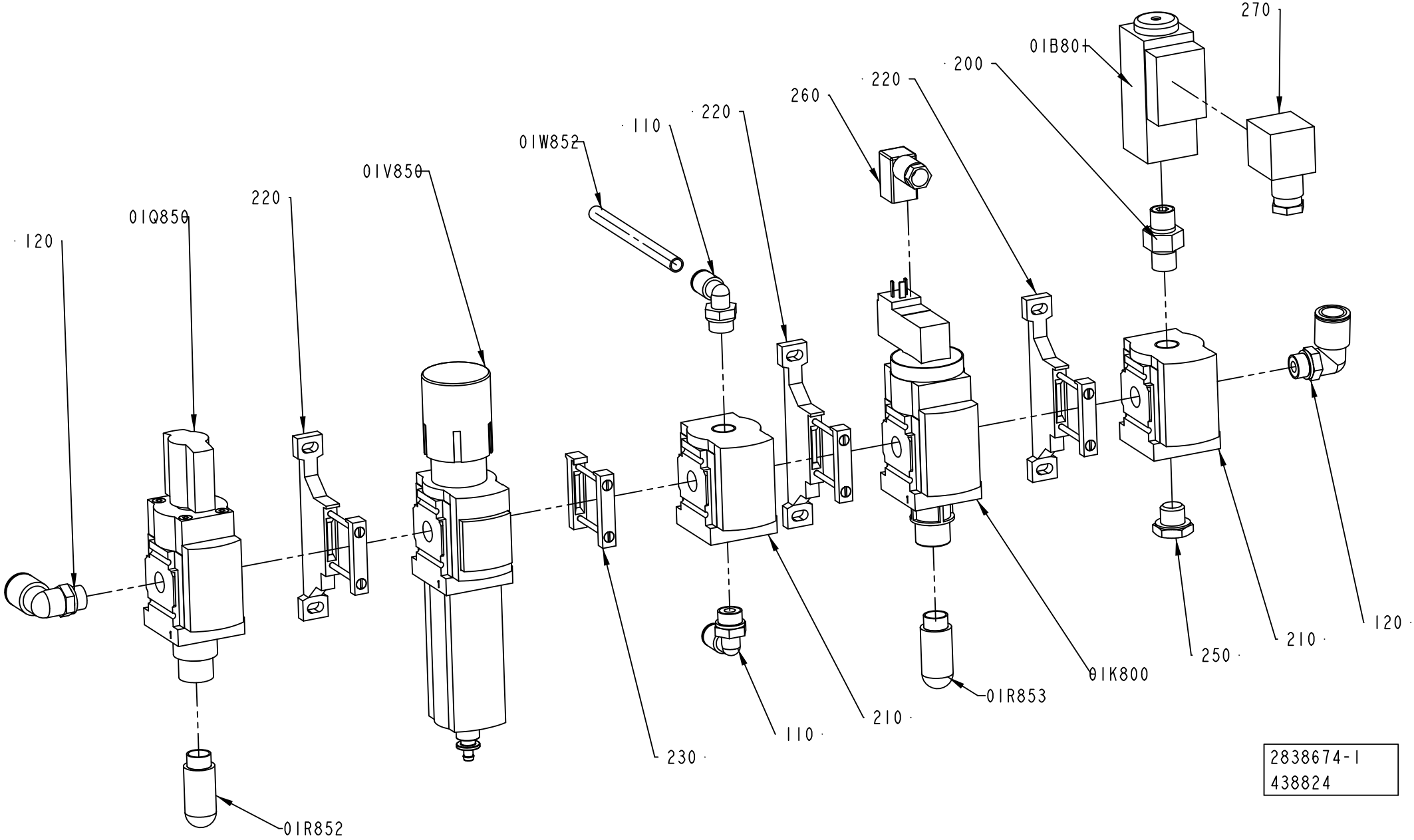
270
01B801
200
220
260
220
110
01W852
01V850
220
01Q850
120
01K800
01R853
250
210
120
110
210
230
01R852
2838674-1
438824

ECM: 438824 - 20100701
Group number: 2838674-0100
Assembly Drawing: 2838674-1_1_AD

| Pos | Part No | UN | Qty | Description | Page No |
|---|---|---|---|---|---|
| - | | | | | |
| 110 | 350002-0009 | | 2 | PUSH-IN L-FITTING QSL-F-G1/4-8 | |
| 120 | 350002-0011 | | 2 | PUSH-IN L-FITTING QSL-F-G1/4-12 | |
| 200 | 90224-0372 | | 1 | CONN. STRAIGHT ESK-1/4-1/4 151521 | |
| 210 | 90459-2245 | | 2 | DISTRIBUTOR, MS4-FRM-1/4 | |
| 220 | 90459-2247 | | 3 | BRACKET, MS4-WP | |
| 230 | 90459-2248 | | 1 | BRACKET, MS4-MV | |
| 240 | 90224-0372 | | 1 | CONN. STRAIGHT ESK-1/4-1/4 151521 | |
| 250 | 90330-0026 | | 1 | PLUG, EXT. G-THREAD, G1/4 | |
| 260 | 90458-2837 | | 1 | PLUG SOCKET, KMEB-1-24-5-LED | |
| 270 | 90110-0095 | | 1 | CONNECTOR 3 POLE + EARTH | |
| 01B801 | 90459-6426 | | 1 | PRESSURE GUARD PEV-1/4-B-OD | |
| 01K800 | 90459-2243 | | 1 | SHUT OFF VALVE, MS4-EE-1/4-10V24 | |
| 01Q850 | 90459-2337 | | 1 | SHUT OFF VALVE, MS4-EM1-1/4 | |
| 01R852 | 90328-0026 | | 1 | SILENCER G1/4" | |
| 01R853 | 90328-0026 | | 1 | SILENCER G1/4" | |
| 01V850 | 90459-2339 | | 1 | FILTER REGULATOR, MS4-LFR-1/4-D7-ERV-AS | |
| | *90459-3814* | | *1* | *FILTER CARTRIDGE, MS4-LFP-E* | |
| 01W852 | 315400-0004 | MM | 1000 | TUBE PUN-H-8X1,25-BL | |

| Pos | Part No | UN | Qty | Description | Page No |
|---|---|---|---|---|---|

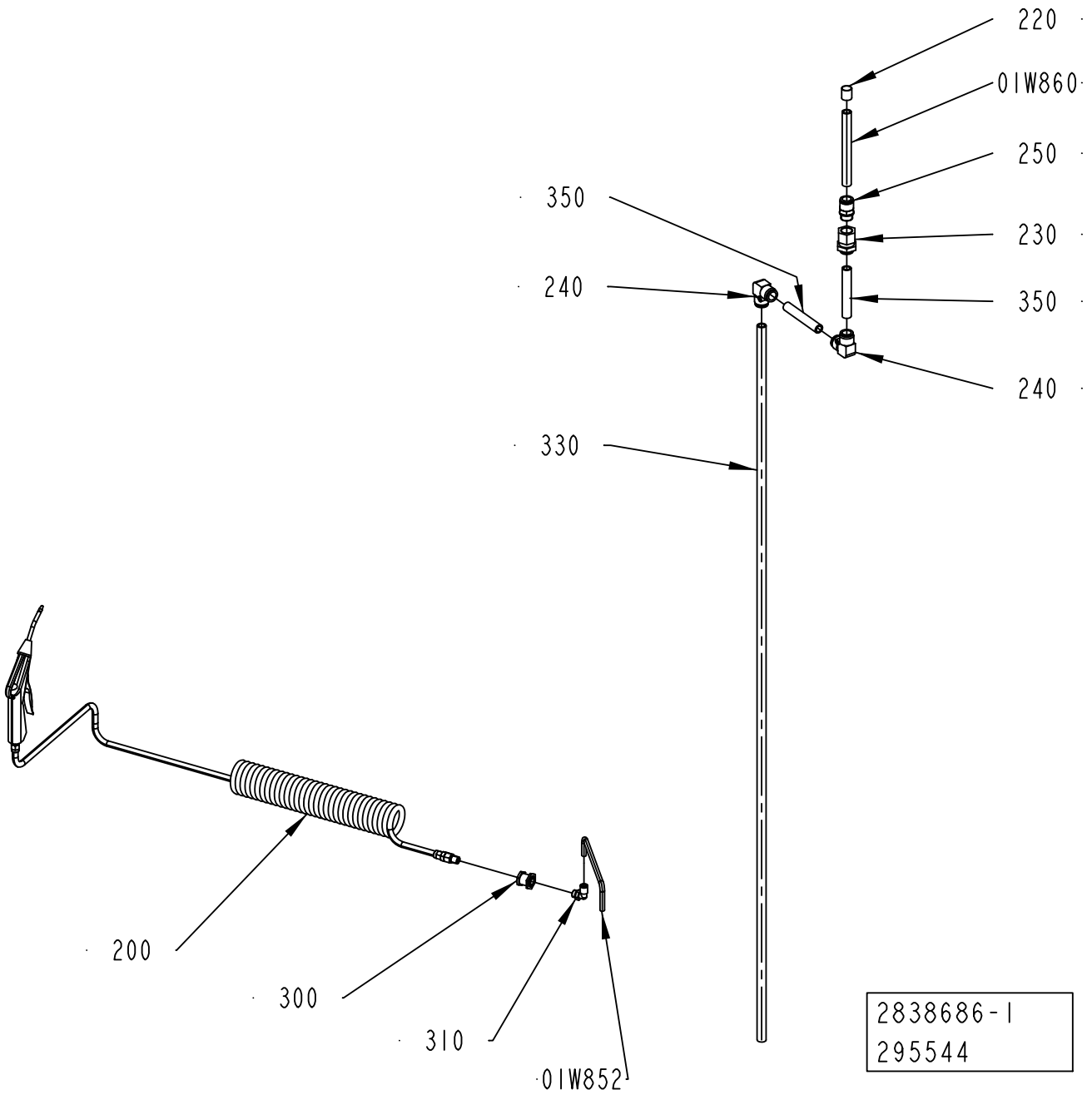
220
01W860
250
350
230
240
350
240
330
200
300
310
01W852
2838686-1
295544

ECM: 303489 - 20070517
Group number: 2838686-0100
Assembly Drawing: 2838686-1_1_AB

| Pos | Part No | UN | Qty | Description | Page No |
|---|---|---|---|---|---|
| - | | | | | |
| 200 | 90458-1740 | | 1 | AIR GUN ASSEMBLY, CEJN 199589668 | |
| 210 | 90459-1826 | | 1 | ELBOW PIPE JOINT, EXT.THREAD,D=16MM-G1/2 | |
| 220 | 90459-7373 | | 1 | MARKING FOR PNEUM. TUBING, PRZ16 | |
| 230 | 90459-0864 | | 1 | BULKHEAD CONNECTOR, 12 MM/M27X1,5 | |
| 240 | 90459-2553 | | 2 | PUSH-IN L-FITTING QSL 16 | |
| 250 | 90459-2215 | | 1 | STRAIGHT COUPLING, D=16 MM - G1/2" | |
| 300 | 342767-0104 | | 1 | BULKHEAD LEAD-IN, G1/4 | |
| 310 | 350002-0009 | | 1 | PUSH-IN L-FITTING QSL-F-G1/4-8 | |
| 330 | 315400-0013 | MM | 2000 | TUBE PUN-H-16-2,5-BL | |
| 340 | 315400-0013 | MM | 200 | TUBE PUN-H-16-2,5-BL | |
| 350 | 315400-0013 | MM | 500 | TUBE PUN-H-16-2,5-BL | |
| 01W852 | 315400-0004 | MM | 1800 | TUBE PUN-H-8X1,25-BL | |
| 01W860 | 315400-0013 | MM | 500 | TUBE PUN-H-16-2,5-BL | |

| Pos | Part No | UN | Qty | Description | Page No |
|---|---|---|---|---|---|

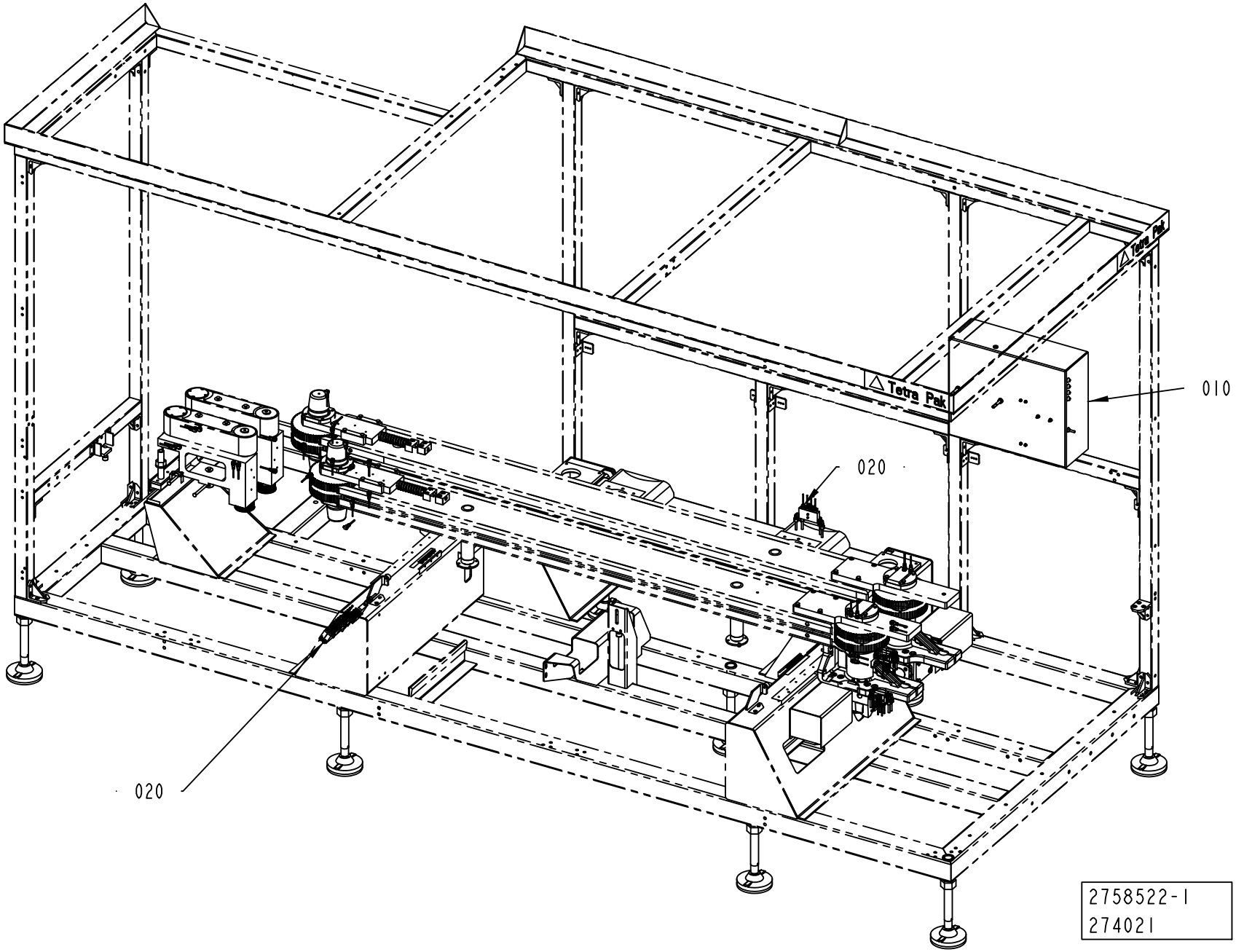
010
020
020
2758522-1
274021

ECM: 274475 - 20060921
Group number: 2758522-0100
Assembly Drawing: 2758522-1_1_AA

| Pos | Part No | UN | Qty | Description | Page No |
|---|---|---|---|---|---|
| - | | | | | |
| 010 | 2838677-0100 | | 1 | CENTRAL LUBRICATION | **3-71** |
| 020 | 2769763-0100 | | 1 | OIL PIPE | **3-73, 3-75, 3-77** |

| Pos | Part No | UN | Qty | Description | Page No |
|---|---|---|---|---|---|

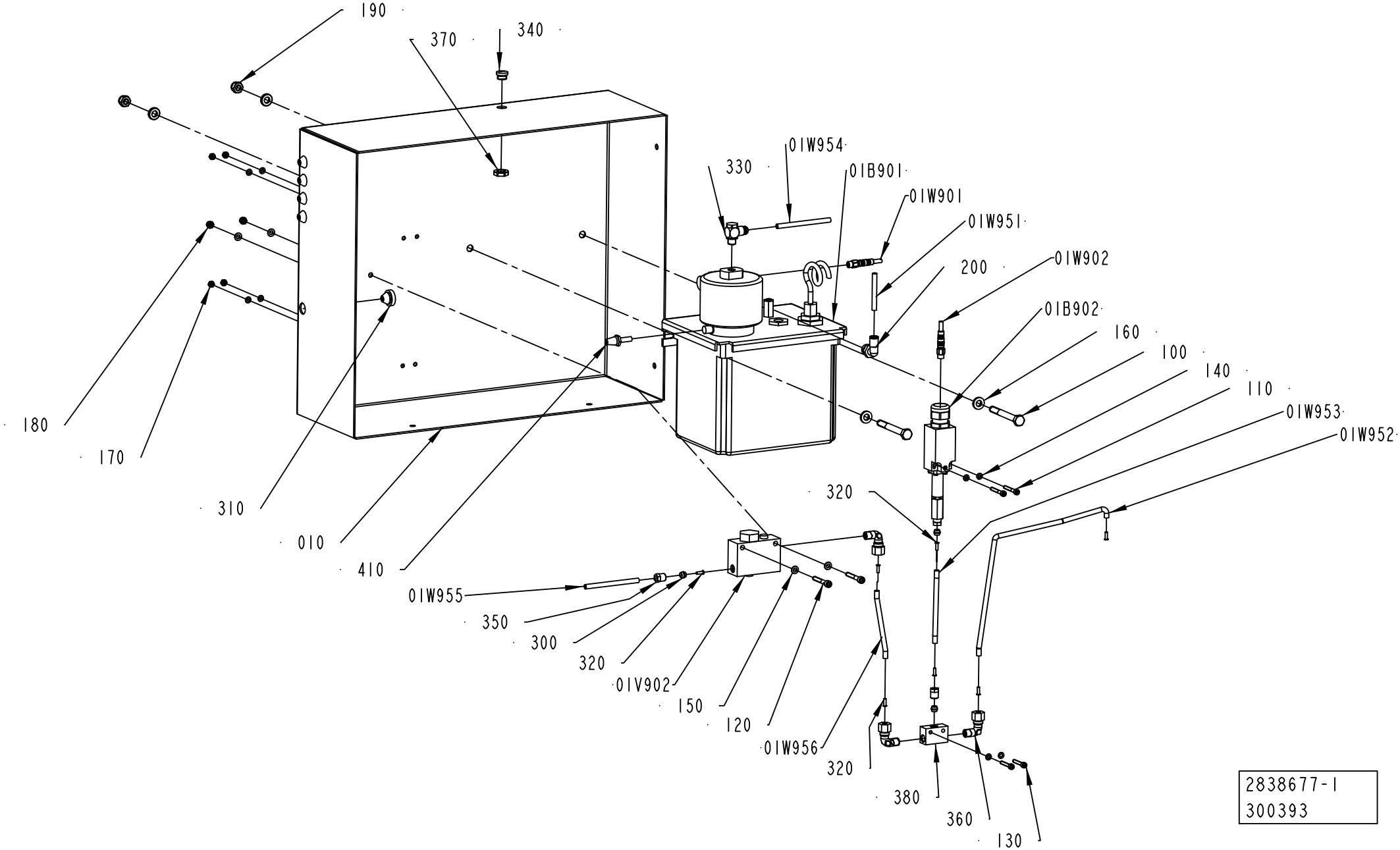
190
370
340
330
01W954
01B901
01W901
01W951
200
01W902
01B902
160
100
140
110
01W953
01W952
180
170
310
010
410
320
01W955
350
300
320
01V902
150
120
01W956
320
380
360
130
2838677-1
300393

ECM: 303488 - 20070517
Group number: 2838677-0100
Assembly Drawing: 2838677-1_1_AB

| Pos | Part No | UN | Qty | Description | Page No |
|---|---|---|---|---|---|
| - | | | | | |
| 010 | 2838678-0000 | | 1 | BRACKET | |
| 100 | 312105-0465 | | 2 | SCREW M6S ISO 4014 M8X70 A480 | |
| 110 | 312115-0299 | | 2 | SCREW ISO4762 M4X30 A4 80 | |
| 120 | 312115-0337 | | 2 | SCREW ISO4762 M5X35 A4 80 | |
| 130 | 312115-0297 | | 2 | SCREW ISO4762 M4X25 A4 80 | |
| 140 | 315105-0136 | | 8 | WASHER BRB 4,3X8 RFR | |
| 150 | 315105-0146 | | 4 | WASHER BRB 5,3X10 RFR | |
| 160 | 315115-0165 | | 4 | WASHER PLAIN, TBRB 8,4/16 H=3 | |
| 170 | 312605-0312 | | 4 | HEXAGON NUT, M6M M4 A280 | |
| 180 | 312812-0314 | | 2 | HEXAGON NUT, NY-LOCK M5 A480 | |
| 190 | 312812-0318 | | 2 | HEXAGON NUT, NY-LOCK M8 A480 | |
| 200 | 350002-0008 | | 1 | PUSH-IN L-FITTING QSL-F-G1/4-6 | |
| 300 | 90028-0022 | | 3 | CONE TUBE 6 MM | |
| 310 | 90015-0020 | | 5 | LEAD-IN, TET5-7, E-1458016 | |
| 320 | 90134-0030 | | 1 | SLEEVE FOR PLASTIC TUBE | |
| 330 | 90459-5522 | | 1 | CONN. BANJO, COR8PB6M10 | |
| 340 | 90458-1306 | | 1 | BLIND PLUG CIRCULAR, M12X1,5 514GFK/212 | |
| 350 | 90134-0055 | | 2 | BUSHING/NUT INLET/OUTLET 6 MM | |
| 360 | 90030-0200 | | 3 | CONN. ELBOW, WE06LM71 | |
| 370 | 90458-0321 | | 1 | NUT, M12X1,5 | |
| 380 | 90032-0043 | | 1 | DISTRIBUTION BLOCK 3 WAYS | |
| 390 | 90134-0030 | | 6 | SLEEVE FOR PLASTIC TUBE | |
| 400 | 90296-0075 | L | 4 | SHELL OMALA OIL 320, DRUM 208 LITRES | |
| 410 | 90328-0017 | | 1 | SILENCER, D=6 MM | |
| 01B901 | 90459-5481 | | 1 | OIL PUMP 3L, 10P-P3 | |
| | *90048-0450* | | *1* | *SPARE PARTS KIT* | |
| | *90274-0052* | | *1* | *LEVEL GUARD, 10VA/250VDC/0,5A* | |
| 01B902 | 90274-0084 | | 1 | PRESSURE GUARD, 1800 KPA | |
| 01V902 | 90415-0030 | | 1 | OIL FILTER PN 100 ORD.NO 2.77 10 70.1 | |
| | *90415-0326* | | *1* | *FILTER INSERT* | |
| 01W901 | 351401-0050 | | 1 | ACTU/SENS CABLE RSMVN 3-PRKMV 3-06/5,0M | |
| 01W902 | 351401-0050 | | 1 | ACTU/SENS CABLE RSMVN 3-PRKMV 3-06/5,0M | |
| 01W951 | 90166-0132 | MM | 1000 | TUBE 6 MM PA,TRANSP. | |
| 01W952 | 90166-0108 | MM | 200 | TUBE 6 MM PA TRANSP. | |
| 01W953 | 90166-0108 | MM | 200 | TUBE 6 MM PA TRANSP. | |
| 01W954 | 315400-0001 | MM | 1000 | TUBE PUN-H-6X1-BL | |
| 01W955 | 90166-0108 | MM | 1000 | TUBE 6 MM PA TRANSP. | |
| 01W956 | 90166-0108 | MM | 200 | TUBE 6 MM PA TRANSP. | |

| Pos | Part No | UN | Qty | Description | Page No |
|---|---|---|---|---|---|

Machine Type | Group Description | Used-In | Group Number | Page No

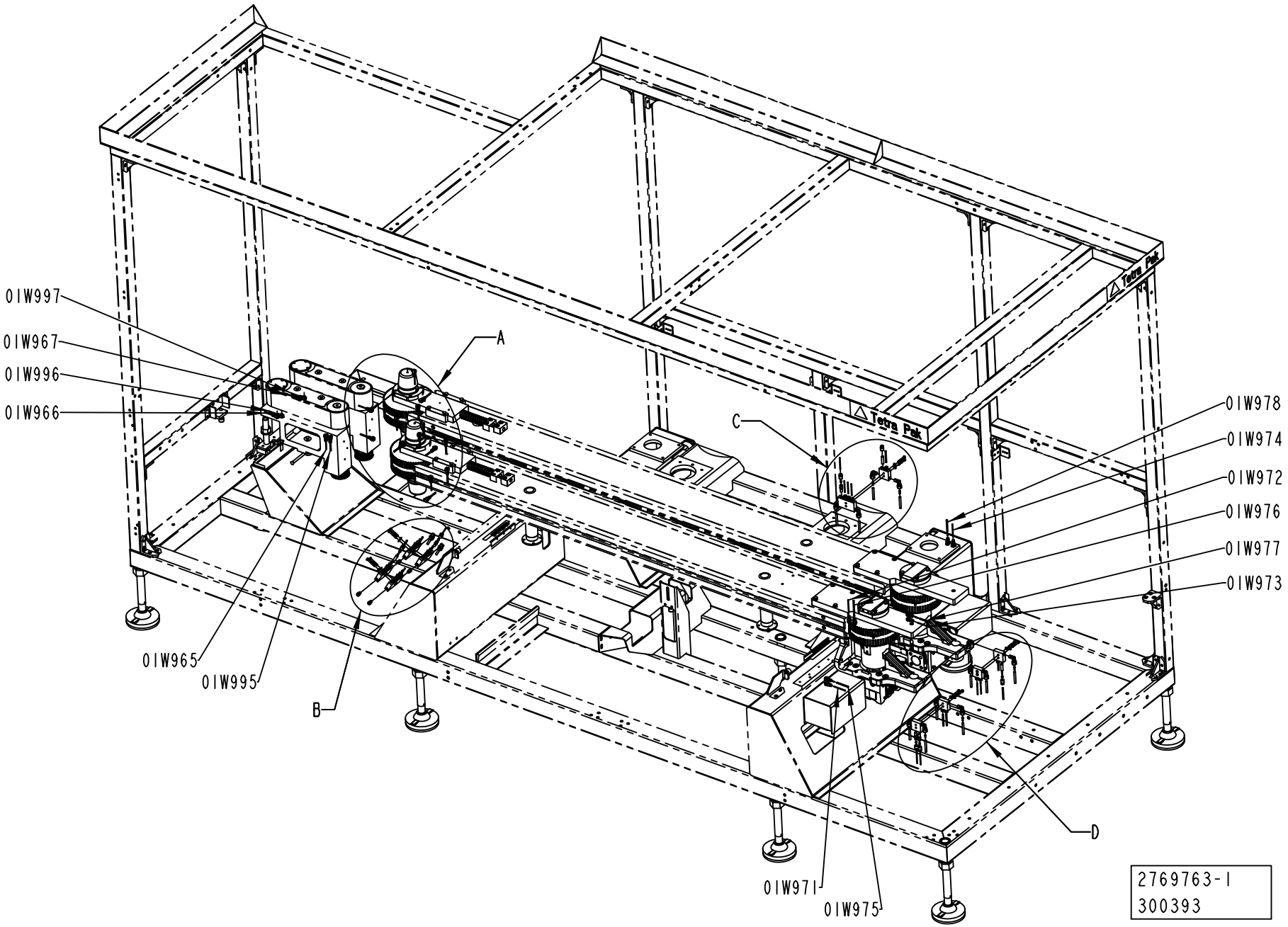
0IW997
0IW967
0IW996
0IW966
0IW965
0IW995
A
B
C
D
0IW978
0IW974
0IW972
0IW976
0IW977
0IW973
0IW971
0IW975
2769763-1
300393

ECM: 303482 - 20070517
Group number: 2769763-0100
Assembly Drawing: 2769763-1_1_AB

This list covers pages from 3-72 to 3-77

| Pos | Part No | UN | Qty | Description | Page No |
|---|---|---|---|---|---|
| **CAP 30/FLEX (See drawing on pages: 3-72, 3-74, 3-76)** | | | | | |
| 110 | 312105-0337 | | 10 | SCREW M6S ISO 4014 M5X35 A480 | |
| 120 | 315105-0146 | | 10 | WASHER BRB 5,3X10 RFR | |
| 200 | 90134-0058 | | 12 | CONNECTION | |
| 210 | 90134-0068 | | 16 | CONNECTION | |
| 220 | 90134-0039 | | 17 | BUSHING VALVE CONNECTION 2,5 MM | |
| 230 | 90028-0020 | | 16 | CONE TUBE 2,5MM | |
| 240 | 90134-0040 | | 13 | BUSHING VALVE CONNECTION 4 MM | |
| 250 | 90028-0021 | | 13 | CONE TUBE 4 MM | |
| 260 | 90134-0054 | | 2 | BLOCK CONNECTION M10X1 | |
| 290 | 90030-0200 | | 14 | CONN. ELBOW, WE06LM71 | |
| 320 | 90134-0051 | | 13 | SPACING COLLAR DOSING BLOCK | |
| 330 | 90092-0054 | | 13 | METERING VALVE 50 MM3 | |
| 340 | 90134-0031 | | 29 | SLEEVE FOR PLASTIC TUBE | |
| **Common Parts** | | | | | |
| 130 | 342706-0130 | | 7 | STIFFNER SLEEVE FOR HOSE 6X1 | |
| 270 | 90134-0030 | | 7 | SLEEVE FOR PLASTIC TUBE | |
| 280 | 90092-0052 | | 3 | METERING VALVE 10 MM3 | |
| 300 | 90087-0019 | | 2 | PLUG M10X1 STAINLESS | |
| 310 | 90134-0052 | | 1 | PLUG DOSING BLOCK | |
| 01U951 | 90032-0038 | | 1 | BLOCK 2 WAYS | |
| 01U952 | 90032-0038 | | 1 | BLOCK 2 WAYS | |
| 01U953 | 90032-0038 | | 1 | BLOCK 2 WAYS | |
| 01U954 | 90032-0039 | | 1 | BLOCK 4 WAYS | |
| 01U955 | 90032-0039 | | 1 | BLOCK 4 WAYS | |
| 01U956 | 90032-0039 | | 1 | BLOCK 4 WAYS | |
| 01U957 | 90032-0039 | | 1 | BLOCK 4 WAYS | |
| 01U958 | 90032-0039 | | 1 | BLOCK 4 WAYS | |
| 01U959 | 90032-0038 | | 1 | BLOCK 2 WAYS | |
| 01U960 | 90032-0038 | | 1 | BLOCK 2 WAYS | |
| 01W951 | 90166-0132 | MM | 3000 | TUBE 6 MM PA,TRANSP. | |
| 01W955 | 90166-0108 | MM | 3000 | TUBE 6 MM PA TRANSP. | |
| 01W956 | 90166-0108 | MM | 3000 | TUBE 6 MM PA TRANSP. | |
| 01W958 | 90166-0108 | MM | 3000 | TUBE 6 MM PA TRANSP. | |
| 01W960 | 90166-0108 | MM | 3000 | TUBE 6 MM PA TRANSP. | |
| 01W961 | 90166-0108 | MM | 3000 | TUBE 6 MM PA TRANSP. | |
| 01W962 | 90166-0132 | MM | 3000 | TUBE 6 MM PA,TRANSP. | |
| 01W963 | 90166-0109 | MM | 3000 | TUBE 4 MM PA TRANSP. | |
| 01W964 | 90166-0109 | MM | 3000 | TUBE 4 MM PA TRANSP. | |
| 01W965 | 90166-0109 | MM | 3000 | TUBE 4 MM PA TRANSP. | |
| 01W966 | 90166-0109 | MM | 3000 | TUBE 4 MM PA TRANSP. | |
| 01W967 | 90166-0109 | MM | 3000 | TUBE 4 MM PA TRANSP. | |
| 01W968 | 90166-0109 | MM | 3000 | TUBE 4 MM PA TRANSP. | |
| 01W969 | 90166-0143 | MM | 3000 | TUBE 2,5 MM PA TRANSP. | |
| 01W971 | 90166-0143 | MM | 3000 | TUBE 2,5 MM PA TRANSP. | |
| 01W972 | 90166-0143 | MM | 3000 | TUBE 2,5 MM PA TRANSP. | |
| 01W973 | 90166-0143 | MM | 3000 | TUBE 2,5 MM PA TRANSP. | |
| 01W974 | 90166-0143 | MM | 3000 | TUBE 2,5 MM PA TRANSP. | |
| 01W975 | 90166-0109 | MM | 3000 | TUBE 4 MM PA TRANSP. | |
| 01W976 | 90166-0109 | MM | 3000 | TUBE 4 MM PA TRANSP. | |
| 01W977 | 90166-0132 | MM | 3000 | TUBE 6 MM PA,TRANSP. | |
| 01W978 | 90166-0109 | MM | 3000 | TUBE 4 MM PA TRANSP. | |
| 01W979 | 90166-0109 | MM | 3000 | TUBE 4 MM PA TRANSP. | |
| 01W980 | 90166-0143 | MM | 3000 | TUBE 2,5 MM PA TRANSP. | |
| 01W981 | 90166-0143 | MM | 3000 | TUBE 2,5 MM PA TRANSP. | |
| 01W982 | 90166-0143 | MM | 3000 | TUBE 2,5 MM PA TRANSP. | |
| 01W983 | 90166-0143 | MM | 3000 | TUBE 2,5 MM PA TRANSP. | |
| 01W984 | 90166-0109 | MM | 3000 | TUBE 4 MM PA TRANSP. | |
| 01W990 | 90166-0143 | MM | 3000 | TUBE 2,5 MM PA TRANSP. | |
| 01W991 | 90166-0143 | MM | 3000 | TUBE 2,5 MM PA TRANSP. | |
| 01W992 | 90166-0143 | MM | 3000 | TUBE 2,5 MM PA TRANSP. | |
| 01W993 | 90166-0143 | MM | 3000 | TUBE 2,5 MM PA TRANSP. | |
| 01W994 | 90166-0143 | MM | 3000 | TUBE 2,5 MM PA TRANSP. | |
| 01W995 | 90166-0143 | MM | 3000 | TUBE 2,5 MM PA TRANSP. | |
| 01W996 | 90166-0143 | MM | 3000 | TUBE 2,5 MM PA TRANSP. | |
| 01W997 | 90166-0143 | MM | 3000 | TUBE 2,5 MM PA TRANSP. | |
| 01W998 | 90166-0109 | MM | 3000 | TUBE 4 MM PA TRANSP. | |

Machine Type | Group Description | Used-In | Group Number | Page No

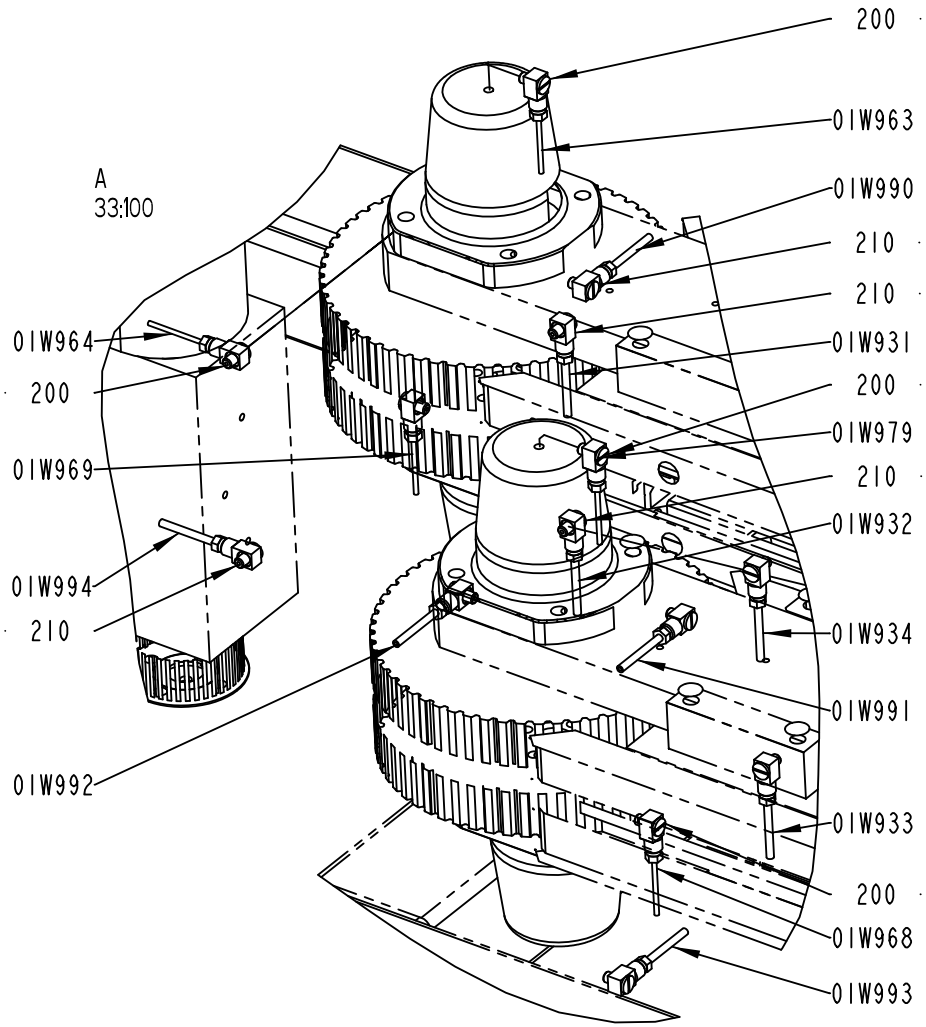
A
33:100
200
01W963
01W990
210
210
01W931
200
01W979
210
01W932
01W934
01W991
01W933
200
01W968
01W993
01W964
200
01W969
01W994
210
01W992

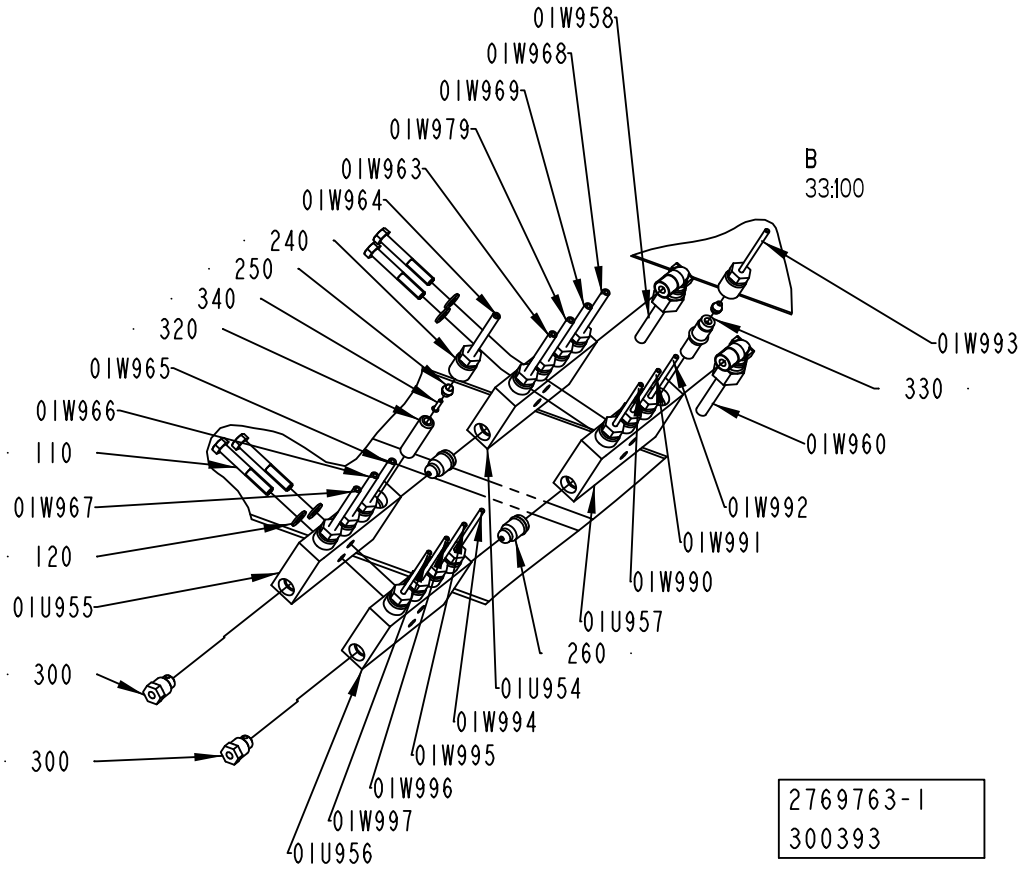
B
33:100
01W958
01W968
01W969
01W979
01W963
01W964
240
250
340
320
01W965
01W966
110
01W967
120
01U955
300
300
01W993
330
01W960
01W992
01W991
01W990
01U957
260
01U954
01W994
01W995
01W996
01W997
01U956
2769763-1
300393

ECM: 303482 - 20070517
Group number: 2769763-0100
Assembly Drawing: 2769763-1_2_AB

This list covers pages from 3-72 to 3-77

| Pos | Part No | UN | Qty | Description | Page No |
|---|---|---|---|---|---|
| **CAP 30/FLEX (See drawing on pages: 3-72, 3-74, 3-76)** | | | | | |
| 110 | 312105-0337 | | 10 | SCREW M6S ISO 4014 M5X35 A480 | |
| 120 | 315105-0146 | | 10 | WASHER BRB 5,3X10 RFR | |
| 200 | 90134-0058 | | 12 | CONNECTION | |
| 210 | 90134-0068 | | 16 | CONNECTION | |
| 220 | 90134-0039 | | 17 | BUSHING VALVE CONNECTION 2,5 MM | |
| 230 | 90028-0020 | | 16 | CONE TUBE 2,5MM | |
| 240 | 90134-0040 | | 13 | BUSHING VALVE CONNECTION 4 MM | |
| 250 | 90028-0021 | | 13 | CONE TUBE 4 MM | |
| 260 | 90134-0054 | | 2 | BLOCK CONNECTION M10X1 | |
| 290 | 90030-0200 | | 14 | CONN. ELBOW, WE06LM71 | |
| 320 | 90134-0051 | | 13 | SPACING COLLAR DOSING BLOCK | |
| 330 | 90092-0054 | | 13 | METERING VALVE 50 MM3 | |
| 340 | 90134-0031 | | 29 | SLEEVE FOR PLASTIC TUBE | |
| **Common Parts** | | | | | |
| 130 | 342706-0130 | | 7 | STIFFNER SLEEVE FOR HOSE 6X1 | |
| 270 | 90134-0030 | | 7 | SLEEVE FOR PLASTIC TUBE | |
| 280 | 90092-0052 | | 3 | METERING VALVE 10 MM3 | |
| 300 | 90087-0019 | | 2 | PLUG M10X1 STAINLESS | |
| 310 | 90134-0052 | | 1 | PLUG DOSING BLOCK | |
| 01U951 | 90032-0038 | | 1 | BLOCK 2 WAYS | |
| 01U952 | 90032-0038 | | 1 | BLOCK 2 WAYS | |
| 01U953 | 90032-0038 | | 1 | BLOCK 2 WAYS | |
| 01U954 | 90032-0039 | | 1 | BLOCK 4 WAYS | |
| 01U955 | 90032-0039 | | 1 | BLOCK 4 WAYS | |
| 01U956 | 90032-0039 | | 1 | BLOCK 4 WAYS | |
| 01U957 | 90032-0039 | | 1 | BLOCK 4 WAYS | |
| 01U958 | 90032-0039 | | 1 | BLOCK 4 WAYS | |
| 01U959 | 90032-0038 | | 1 | BLOCK 2 WAYS | |
| 01U960 | 90032-0038 | | 1 | BLOCK 2 WAYS | |
| 01W951 | 90166-0132 | MM | 3000 | TUBE 6 MM PA,TRANSP. | |
| 01W955 | 90166-0108 | MM | 3000 | TUBE 6 MM PA TRANSP. | |
| 01W956 | 90166-0108 | MM | 3000 | TUBE 6 MM PA TRANSP. | |
| 01W958 | 90166-0108 | MM | 3000 | TUBE 6 MM PA TRANSP. | |
| 01W960 | 90166-0108 | MM | 3000 | TUBE 6 MM PA TRANSP. | |
| 01W961 | 90166-0108 | MM | 3000 | TUBE 6 MM PA TRANSP. | |
| 01W962 | 90166-0132 | MM | 3000 | TUBE 6 MM PA,TRANSP. | |
| 01W963 | 90166-0109 | MM | 3000 | TUBE 4 MM PA TRANSP. | |
| 01W964 | 90166-0109 | MM | 3000 | TUBE 4 MM PA TRANSP. | |
| 01W965 | 90166-0109 | MM | 3000 | TUBE 4 MM PA TRANSP. | |
| 01W966 | 90166-0109 | MM | 3000 | TUBE 4 MM PA TRANSP. | |
| 01W967 | 90166-0109 | MM | 3000 | TUBE 4 MM PA TRANSP. | |
| 01W968 | 90166-0109 | MM | 3000 | TUBE 4 MM PA TRANSP. | |
| 01W969 | 90166-0143 | MM | 3000 | TUBE 2,5 MM PA TRANSP. | |
| 01W971 | 90166-0143 | MM | 3000 | TUBE 2,5 MM PA TRANSP. | |
| 01W972 | 90166-0143 | MM | 3000 | TUBE 2,5 MM PA TRANSP. | |
| 01W973 | 90166-0143 | MM | 3000 | TUBE 2,5 MM PA TRANSP. | |
| 01W974 | 90166-0143 | MM | 3000 | TUBE 2,5 MM PA TRANSP. | |
| 01W975 | 90166-0109 | MM | 3000 | TUBE 4 MM PA TRANSP. | |
| 01W976 | 90166-0109 | MM | 3000 | TUBE 4 MM PA TRANSP. | |
| 01W977 | 90166-0132 | MM | 3000 | TUBE 6 MM PA,TRANSP. | |
| 01W978 | 90166-0109 | MM | 3000 | TUBE 4 MM PA TRANSP. | |
| 01W979 | 90166-0109 | MM | 3000 | TUBE 4 MM PA TRANSP. | |
| 01W980 | 90166-0143 | MM | 3000 | TUBE 2,5 MM PA TRANSP. | |
| 01W981 | 90166-0143 | MM | 3000 | TUBE 2,5 MM PA TRANSP. | |
| 01W982 | 90166-0143 | MM | 3000 | TUBE 2,5 MM PA TRANSP. | |
| 01W983 | 90166-0143 | MM | 3000 | TUBE 2,5 MM PA TRANSP. | |
| 01W984 | 90166-0109 | MM | 3000 | TUBE 4 MM PA TRANSP. | |
| 01W990 | 90166-0143 | MM | 3000 | TUBE 2,5 MM PA TRANSP. | |
| 01W991 | 90166-0143 | MM | 3000 | TUBE 2,5 MM PA TRANSP. | |
| 01W992 | 90166-0143 | MM | 3000 | TUBE 2,5 MM PA TRANSP. | |
| 01W993 | 90166-0143 | MM | 3000 | TUBE 2,5 MM PA TRANSP. | |
| 01W994 | 90166-0143 | MM | 3000 | TUBE 2,5 MM PA TRANSP. | |
| 01W995 | 90166-0143 | MM | 3000 | TUBE 2,5 MM PA TRANSP. | |
| 01W996 | 90166-0143 | MM | 3000 | TUBE 2,5 MM PA TRANSP. | |
| 01W997 | 90166-0143 | MM | 3000 | TUBE 2,5 MM PA TRANSP. | |
| 01W998 | 90166-0109 | MM | 3000 | TUBE 4 MM PA TRANSP. | |

Machine Type | Group Description | Used-In | Group Number | Page No

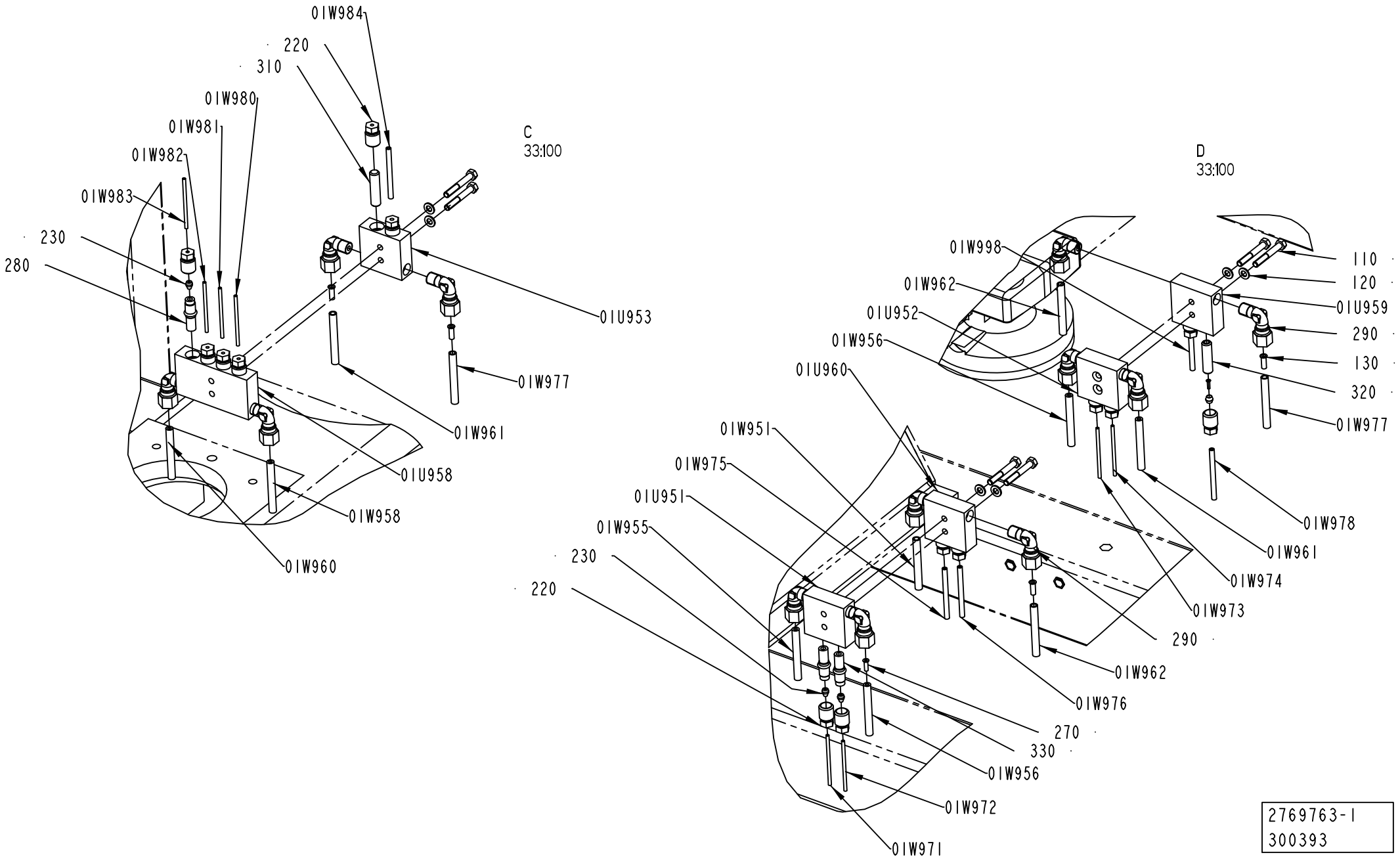
01W984
220
310
01W980
01W981
01W982
01W983
230
280
C
33:100
01U953
01W977
01W961
01U958
01W958
01W960
D
33:100
01W998
01W962
01U952
01W956
01U960
01W951
01W975
01U951
01W955
230
220
110
120
01U959
290
130
320
01W977
01W978
01W961
01W974
01W973
290
01W962
01W976
270
330
01W956
01W972
01W971
2769763-1
300393

ECM: 303482 - 20070517
Group number: 2769763-0100
Assembly Drawing: 2769763-1_3_AB

This list covers pages from 3-72 to 3-77

| Pos | Part No | UN | Qty | Description | Page No |
|---|---|---|---|---|---|
| **CAP 30/FLEX (See drawing on pages: 3-72, 3-74, 3-76)** | | | | | |
| 110 | 312105-0337 | | 10 | SCREW M6S ISO 4014 M5X35 A480 | |
| 120 | 315105-0146 | | 10 | WASHER BRB 5,3X10 RFR | |
| 200 | 90134-0058 | | 12 | CONNECTION | |
| 210 | 90134-0068 | | 16 | CONNECTION | |
| 220 | 90134-0039 | | 17 | BUSHING VALVE CONNECTION 2,5 MM | |
| 230 | 90028-0020 | | 16 | CONE TUBE 2,5MM | |
| 240 | 90134-0040 | | 13 | BUSHING VALVE CONNECTION 4 MM | |
| 250 | 90028-0021 | | 13 | CONE TUBE 4 MM | |
| 260 | 90134-0054 | | 2 | BLOCK CONNECTION M10X1 | |
| 290 | 90030-0200 | | 14 | CONN. ELBOW, WE06LM71 | |
| 320 | 90134-0051 | | 13 | SPACING COLLAR DOSING BLOCK | |
| 330 | 90092-0054 | | 13 | METERING VALVE 50 MM3 | |
| 340 | 90134-0031 | | 29 | SLEEVE FOR PLASTIC TUBE | |
| **Common Parts** | | | | | |
| 130 | 342706-0130 | | 7 | STIFFNER SLEEVE FOR HOSE 6X1 | |
| 270 | 90134-0030 | | 7 | SLEEVE FOR PLASTIC TUBE | |
| 280 | 90092-0052 | | 3 | METERING VALVE 10 MM3 | |
| 300 | 90087-0019 | | 2 | PLUG M10X1 STAINLESS | |
| 310 | 90134-0052 | | 1 | PLUG DOSING BLOCK | |
| 01U951 | 90032-0038 | | 1 | BLOCK 2 WAYS | |
| 01U952 | 90032-0038 | | 1 | BLOCK 2 WAYS | |
| 01U953 | 90032-0038 | | 1 | BLOCK 2 WAYS | |
| 01U954 | 90032-0039 | | 1 | BLOCK 4 WAYS | |
| 01U955 | 90032-0039 | | 1 | BLOCK 4 WAYS | |
| 01U956 | 90032-0039 | | 1 | BLOCK 4 WAYS | |
| 01U957 | 90032-0039 | | 1 | BLOCK 4 WAYS | |
| 01U958 | 90032-0039 | | 1 | BLOCK 4 WAYS | |
| 01U959 | 90032-0038 | | 1 | BLOCK 2 WAYS | |
| 01U960 | 90032-0038 | | 1 | BLOCK 2 WAYS | |
| 01W951 | 90166-0132 | MM | 3000 | TUBE 6 MM PA,TRANSP. | |
| 01W955 | 90166-0108 | MM | 3000 | TUBE 6 MM PA TRANSP. | |
| 01W956 | 90166-0108 | MM | 3000 | TUBE 6 MM PA TRANSP. | |
| 01W958 | 90166-0108 | MM | 3000 | TUBE 6 MM PA TRANSP. | |
| 01W960 | 90166-0108 | MM | 3000 | TUBE 6 MM PA TRANSP. | |
| 01W961 | 90166-0108 | MM | 3000 | TUBE 6 MM PA TRANSP. | |
| 01W962 | 90166-0132 | MM | 3000 | TUBE 6 MM PA,TRANSP. | |
| 01W963 | 90166-0109 | MM | 3000 | TUBE 4 MM PA TRANSP. | |
| 01W964 | 90166-0109 | MM | 3000 | TUBE 4 MM PA TRANSP. | |
| 01W965 | 90166-0109 | MM | 3000 | TUBE 4 MM PA TRANSP. | |
| 01W966 | 90166-0109 | MM | 3000 | TUBE 4 MM PA TRANSP. | |
| 01W967 | 90166-0109 | MM | 3000 | TUBE 4 MM PA TRANSP. | |
| 01W968 | 90166-0109 | MM | 3000 | TUBE 4 MM PA TRANSP. | |
| 01W969 | 90166-0143 | MM | 3000 | TUBE 2,5 MM PA TRANSP. | |
| 01W971 | 90166-0143 | MM | 3000 | TUBE 2,5 MM PA TRANSP. | |
| 01W972 | 90166-0143 | MM | 3000 | TUBE 2,5 MM PA TRANSP. | |
| 01W973 | 90166-0143 | MM | 3000 | TUBE 2,5 MM PA TRANSP. | |
| 01W974 | 90166-0143 | MM | 3000 | TUBE 2,5 MM PA TRANSP. | |
| 01W975 | 90166-0109 | MM | 3000 | TUBE 4 MM PA TRANSP. | |
| 01W976 | 90166-0109 | MM | 3000 | TUBE 4 MM PA TRANSP. | |
| 01W977 | 90166-0132 | MM | 3000 | TUBE 6 MM PA,TRANSP. | |
| 01W978 | 90166-0109 | MM | 3000 | TUBE 4 MM PA TRANSP. | |
| 01W979 | 90166-0109 | MM | 3000 | TUBE 4 MM PA TRANSP. | |
| 01W980 | 90166-0143 | MM | 3000 | TUBE 2,5 MM PA TRANSP. | |
| 01W981 | 90166-0143 | MM | 3000 | TUBE 2,5 MM PA TRANSP. | |
| 01W982 | 90166-0143 | MM | 3000 | TUBE 2,5 MM PA TRANSP. | |
| 01W983 | 90166-0143 | MM | 3000 | TUBE 2,5 MM PA TRANSP. | |
| 01W984 | 90166-0109 | MM | 3000 | TUBE 4 MM PA TRANSP. | |
| 01W990 | 90166-0143 | MM | 3000 | TUBE 2,5 MM PA TRANSP. | |
| 01W991 | 90166-0143 | MM | 3000 | TUBE 2,5 MM PA TRANSP. | |
| 01W992 | 90166-0143 | MM | 3000 | TUBE 2,5 MM PA TRANSP. | |
| 01W993 | 90166-0143 | MM | 3000 | TUBE 2,5 MM PA TRANSP. | |
| 01W994 | 90166-0143 | MM | 3000 | TUBE 2,5 MM PA TRANSP. | |
| 01W995 | 90166-0143 | MM | 3000 | TUBE 2,5 MM PA TRANSP. | |
| 01W996 | 90166-0143 | MM | 3000 | TUBE 2,5 MM PA TRANSP. | |
| 01W997 | 90166-0143 | MM | 3000 | TUBE 2,5 MM PA TRANSP. | |
| 01W998 | 90166-0109 | MM | 3000 | TUBE 4 MM PA TRANSP. | |

Machine Type | Group Description | Used-In | Group Number | Page No

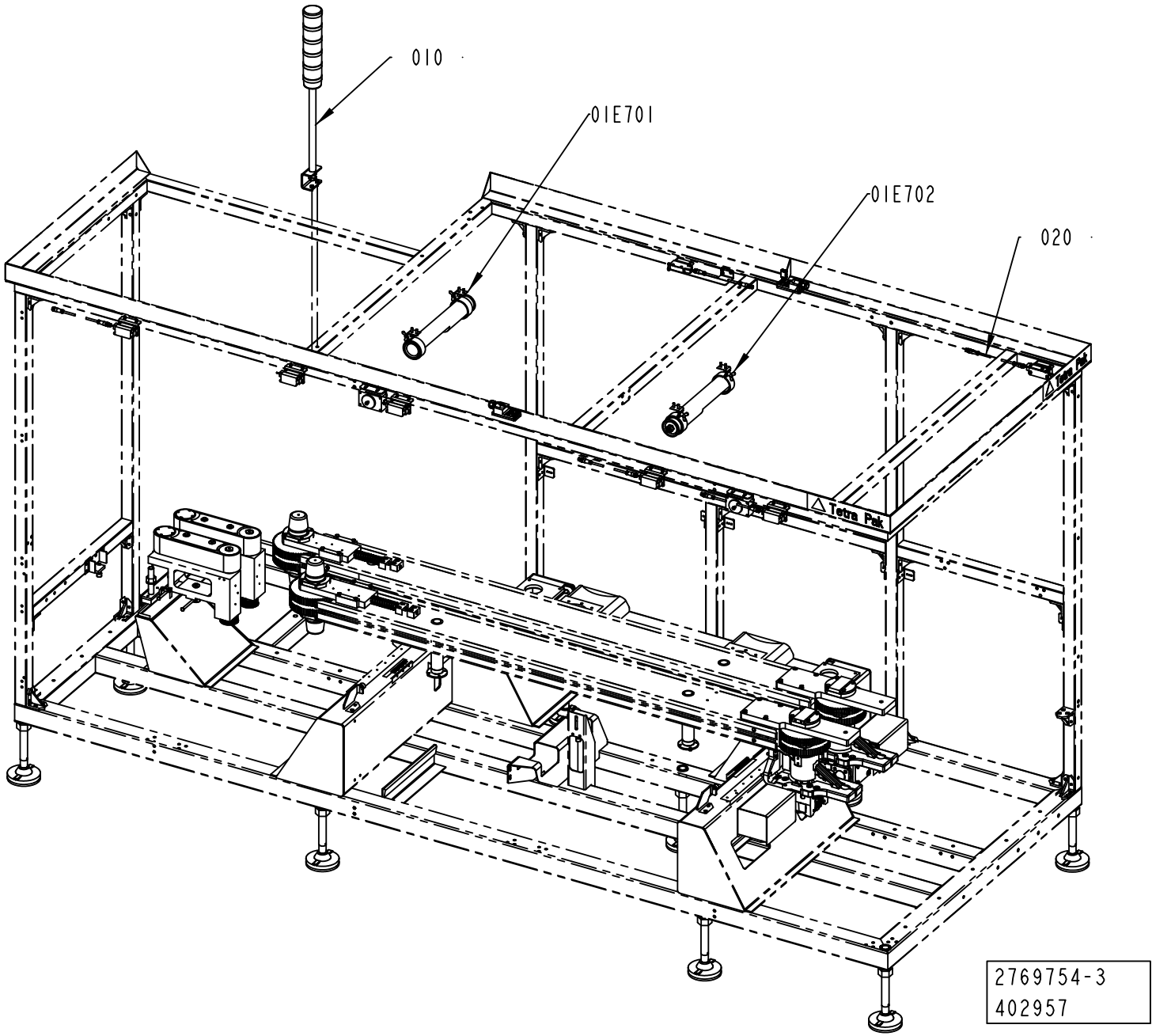
010
01E701
01E702
020
Tetra Pak
2769754-3
402957

ECM: 407735 - 20091001
Group number: 2769754-0200
Assembly Drawing: 2769754-3_1_AA

| Pos | Part No | UN | Qty | Description | Page No |
|---|---|---|---|---|---|
| - | | | | | |
| 010 | 2779764-0200 | | 1 | WARNING LAMP | **3-81** |
| 020 | 2805700-0200 | | 1 | DOOR SAFETY SWITCH | **3-83, 3-85** |
| 030 | 2873950-0100 | | 1 | CABLE SET | **3-87** |
| 01E701 | 2769757-0100 | | 1 | LAMP | **3-89** |
| 01E702 | 2769757-0100 | | 1 | LAMP | **3-89** |

| Pos | Part No | UN | Qty | Description | Page No |
|---|---|---|---|---|---|

# WARNING LAMP



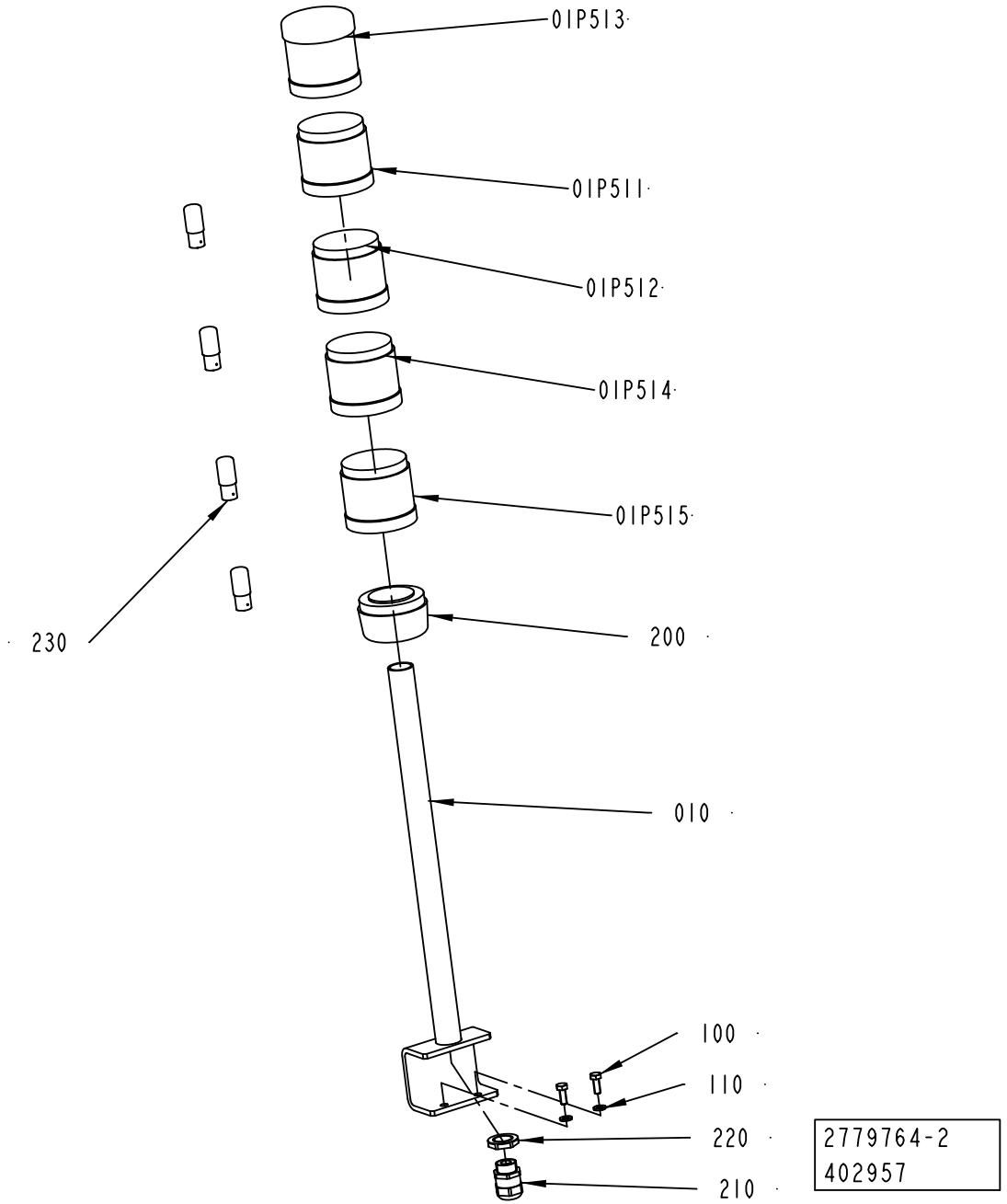

ECM: 417672 - 20100110
Group number: 2779764-0200
Assembly Drawing: 2779764-2_1_AA

| Pos | Part No | UN | Qty | Description | Page No |
|---|---|---|---|---|---|
| - | | | | | |
| 010 | 2779765-0000 | | 1 | BRACKET | |
| 100 | 312105-0368 | | 2 | SCREW M6S ISO 4017 M6X16 A480 | |
| 110 | 315105-0153 | | 2 | WASHER BRB 6,4X12 RFR | |
| 200 | 90458-0292 | | 1 | TERMINAL ELEMENT, PSD-S CE-TM SCREW/W | |
| 210 | 90458-0307 | | 1 | CABLE GLAND, M20X1,5, NO.5311 1020 | |
| 220 | 90458-0323 | | 1 | NUT, M20X1,5 | |
| 230 | 90036-0068 | | 4 | BULB 5W 24V, SL-L24 205348 | |
| 01P511 | 90458-0293 | | 1 | LIGHT ELEMENT, RED, PSD-S OE RD/W | |
| 01P512 | 90458-0294 | | 1 | LIGHT ELEMENT, YELLOW, PSD-S OE YE/W | |
| 01P513 | 90458-0302 | | 1 | SIREN ELEMENT, PSD-S AE SM8-5 100DB/1/W | |
| 01P514 | 90458-0295 | | 1 | LIGHT ELEMENT, BLUE, PSD-S OE BU/W | |
| 01P515 | 90458-0296 | | 1 | LIGHT ELEMENT, GREEN, PSD-S OE GN/W | |

| Pos | Part No | UN | Qty | Description | Page No |
|---|---|---|---|---|---|

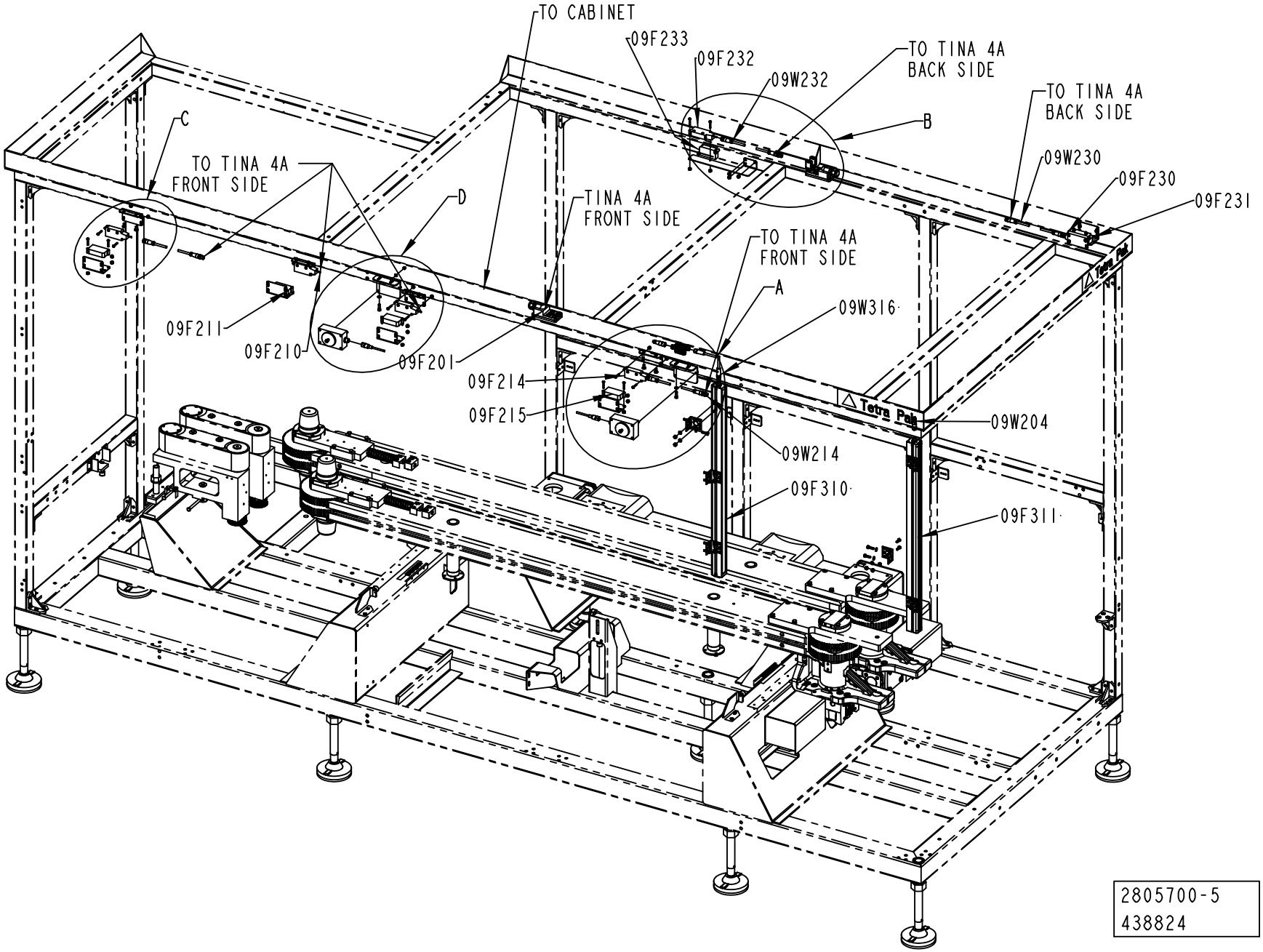
TO CABINET
09F233
09F232
09W232
TO TINA 4A BACK SIDE
TO TINA 4A BACK SIDE
B
09W230
09F230
09F231
C
TO TINA 4A FRONT SIDE
D
TINA 4A FRONT SIDE
TO TINA 4A FRONT SIDE
A
09W316
09F211
09F210
09F201
09F214
09F215
09W204
09W214
09F310
09F311
2805700-5
438824

ECM: 438886 - 20100701
Group number: 2805700-0200
Assembly Drawing: 2805700-5_1_AD

This list covers pages from 3-82 to 3-85

| Pos | Part No | UN | Qty | Description | Page No |
|---|---|---|---|---|---|
| **RECAP3, RECAP2 A3 (See drawing on pages: 3-82, 3-84)** | | | | | |
| 020 | 2817774-0000 | | 5 | SUPPORT | |
| 040 | 3054997-0000 | | 5 | SUPPORT | |
| 300 | 1539391-0000 | | 44 | ROUND NUT | |
| 310 | 90459-4165 | | 22 | SAFETY SCREW SM4X25, 20-053-43 | |
| 330 | 312105-0370 | | 16 | SCREW M6S ISO 4017 M6X20 A480 | |
| 350 | 315105-0153 | | 16 | WASHER BRB 6,4X12 RFR | |
| 370 | 90459-4871 | | 6 | BRACKET, FOCUS LIGHT BARRIER, 22-090-11 | |
| 380 | 90600-2563 | | 10 | SCREW PANHEAD SNAKE EYE SPANNER, M6X12 | |
| 09F234 | 90459-5627 | | 1 | CONNECTION TINA 1A, 20-054-00 | |
| 09F310 | 90600-4796 | | 1 | SAFETY LIGHT BARRIER,TRANSM. FT4-35-750 | |
| 09F311 | 90600-4797 | | 1 | SAFETY LIGHT BARRIER,TRANSM. FR4-35-750 | |
| 09F316 | 90600-4810 | | 1 | ADAPTER LIGHT BARR. TINA 10A, 20-054-12 | |
| 09W203 | 90459-4252 | | 1 | CABLE M12-C101, 20-056-10 | |
| 09W204 | 90459-4252 | | 1 | CABLE M12-C101, 20-056-10 | |
| 09W316 | 90459-4872 | | 1 | FOCUS JUMPER CABLE M12 8P 3M, 20-056-51 | |
| **Common Parts** | | | | | |
| 010 | 2781283-0000 | | 2 | BRACKET | |
| 030 | 2817775-0000 | | 1 | SUPPORT | |
| 320 | 312605-0314 | | 4 | HEXAGON NUT, M6M M5 A280 | |
| 360 | 315105-0146 | | 4 | WASHER BRB 5,3X10 RFR | |
| 390 | 575034-0000 | | 3 | ROUND NUT | |
| 09F201 | 90459-4254 | | 1 | CONNECTION BLOCK TINA 4A, 20-054-03 | |
| 09F202 | 90459-4254 | | 1 | CONNECTION BLOCK TINA 4A, 20-054-03 | |
| 09F210 | 90459-6961 | | 1 | SAFETY SENSOR, NON CONT. ADAM-E M12 0,5M | |
| 09F211 | 90459-4089 | | 1 | SAFETY SENSOR NON-CONTACT EVA E | |
| 09F212 | 90459-6961 | | 1 | SAFETY SENSOR, NON CONT. ADAM-E M12 0,5M | |
| 09F213 | 90459-4089 | | 1 | SAFETY SENSOR NON-CONTACT EVA E | |
| 09F214 | 90459-6961 | | 1 | SAFETY SENSOR, NON CONT. ADAM-E M12 0,5M | |
| 09F215 | 90459-4089 | | 1 | SAFETY SENSOR NON-CONTACT EVA E | |
| 09F216 | 90459-6961 | | 1 | SAFETY SENSOR, NON CONT. ADAM-E M12 0,5M | |
| 09F217 | 90459-4089 | | 1 | SAFETY SENSOR NON-CONTACT EVA E | |
| 09F230 | 90459-6961 | | 1 | SAFETY SENSOR, NON CONT. ADAM-E M12 0,5M | |
| 09F231 | 90459-4089 | | 1 | SAFETY SENSOR NON-CONTACT EVA E | |
| 09F232 | 90459-6961 | | 1 | SAFETY SENSOR, NON CONT. ADAM-E M12 0,5M | |
| 09F233 | 90459-4089 | | 1 | SAFETY SENSOR NON-CONTACT EVA E | |
| 09F236 | 90459-5627 | | 1 | CONNECTION TINA 1A, 20-054-00 | |
| 09K241 | 90459-6913 | | 1 | ELECTROMAG. DOOR LOCK. DEV.,JSD-ZH-EM1-K | |
| 09K242 | 90459-6913 | | 1 | ELECTROMAG. DOOR LOCK. DEV.,JSD-ZH-EM1-K | |
| 09W214 | 90459-4876 | | 1 | FOCUS JUMPER CABLE M12 5P 3M, 20-056-21 | |
| 09W216 | 90459-4876 | | 1 | FOCUS JUMPER CABLE M12 5P 3M, 20-056-21 | |
| 09W230 | 90459-4876 | | 1 | FOCUS JUMPER CABLE M12 5P 3M, 20-056-21 | |
| 09W232 | 90459-4876 | | 1 | FOCUS JUMPER CABLE M12 5P 3M, 20-056-21 | |
| 09W241 | 351309-0100 | | 1 | ACTUATOR/SENSOR CABLE PRKT 4-07/10M | |
| 09W242 | 351309-0100 | | 1 | ACTUATOR/SENSOR CABLE PRKT 4-07/10M | |

Machine Type | Group Description | Used-In | Group Number | Page No

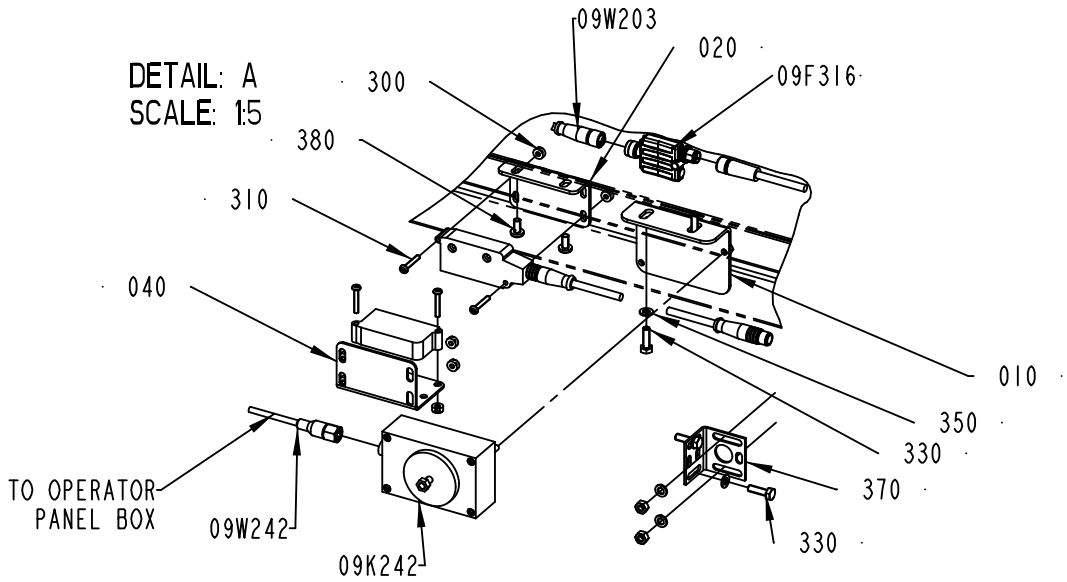


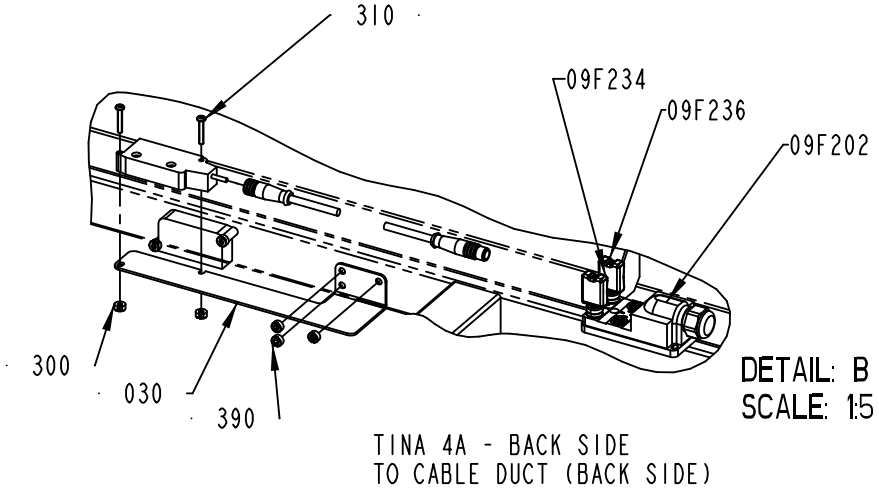


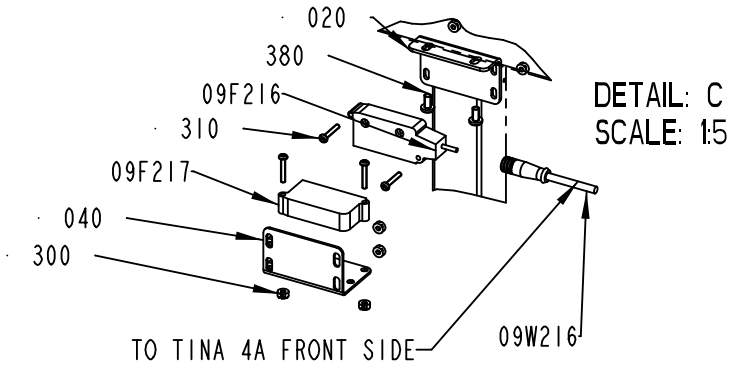


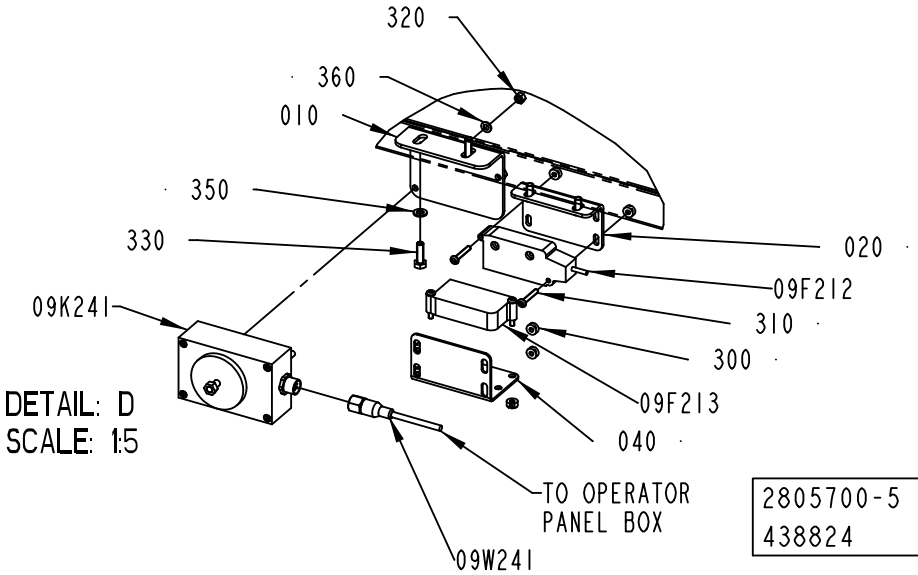


2805700-5
438824

ECM: 438886 - 20100701
Group number: 2805700-0200
Assembly Drawing: 2805700-5_2_AD

This list covers pages from 3-82 to 3-85

| Pos | Part No | UN | Qty | Description | Page No |
|---|---|---|---|---|---|
| **RECAP3, RECAP2 A3 (See drawing on pages: 3-82, 3-84)** | | | | | |
| 020 | 2817774-0000 | | 5 | SUPPORT | |
| 040 | 3054997-0000 | | 5 | SUPPORT | |
| 300 | 1539391-0000 | | 44 | ROUND NUT | |
| 310 | 90459-4165 | | 22 | SAFETY SCREW SM4X25, 20-053-43 | |
| 330 | 312105-0370 | | 16 | SCREW M6S ISO 4017 M6X20 A480 | |
| 350 | 315105-0153 | | 16 | WASHER BRB 6,4X12 RFR | |
| 370 | 90459-4871 | | 6 | BRACKET, FOCUS LIGHT BARRIER, 22-090-11 | |
| 380 | 90600-2563 | | 10 | SCREW PANHEAD SNAKE EYE SPANNER, M6X12 | |
| 09F234 | 90459-5627 | | 1 | CONNECTION TINA 1A, 20-054-00 | |
| 09F310 | 90600-4796 | | 1 | SAFETY LIGHT BARRIER,TRANSM. FT4-35-750 | |
| 09F311 | 90600-4797 | | 1 | SAFETY LIGHT BARRIER,TRANSM. FR4-35-750 | |
| 09F316 | 90600-4810 | | 1 | ADAPTER LIGHT BARR. TINA 10A, 20-054-12 | |
| 09W203 | 90459-4252 | | 1 | CABLE M12-C101, 20-056-10 | |
| 09W204 | 90459-4252 | | 1 | CABLE M12-C101, 20-056-10 | |
| 09W316 | 90459-4872 | | 1 | FOCUS JUMPER CABLE M12 8P 3M, 20-056-51 | |
| **Common Parts** | | | | | |
| 010 | 2781283-0000 | | 2 | BRACKET | |
| 030 | 2817775-0000 | | 1 | SUPPORT | |
| 320 | 312605-0314 | | 4 | HEXAGON NUT, M6M M5 A280 | |
| 360 | 315105-0146 | | 4 | WASHER BRB 5,3X10 RFR | |
| 390 | 575034-0000 | | 3 | ROUND NUT | |
| 09F201 | 90459-4254 | | 1 | CONNECTION BLOCK TINA 4A, 20-054-03 | |
| 09F202 | 90459-4254 | | 1 | CONNECTION BLOCK TINA 4A, 20-054-03 | |
| 09F210 | 90459-6961 | | 1 | SAFETY SENSOR, NON CONT. ADAM-E M12 0,5M | |
| 09F211 | 90459-4089 | | 1 | SAFETY SENSOR NON-CONTACT EVA E | |
| 09F212 | 90459-6961 | | 1 | SAFETY SENSOR, NON CONT. ADAM-E M12 0,5M | |
| 09F213 | 90459-4089 | | 1 | SAFETY SENSOR NON-CONTACT EVA E | |
| 09F214 | 90459-6961 | | 1 | SAFETY SENSOR, NON CONT. ADAM-E M12 0,5M | |
| 09F215 | 90459-4089 | | 1 | SAFETY SENSOR NON-CONTACT EVA E | |
| 09F216 | 90459-6961 | | 1 | SAFETY SENSOR, NON CONT. ADAM-E M12 0,5M | |
| 09F217 | 90459-4089 | | 1 | SAFETY SENSOR NON-CONTACT EVA E | |
| 09F230 | 90459-6961 | | 1 | SAFETY SENSOR, NON CONT. ADAM-E M12 0,5M | |
| 09F231 | 90459-4089 | | 1 | SAFETY SENSOR NON-CONTACT EVA E | |
| 09F232 | 90459-6961 | | 1 | SAFETY SENSOR, NON CONT. ADAM-E M12 0,5M | |
| 09F233 | 90459-4089 | | 1 | SAFETY SENSOR NON-CONTACT EVA E | |
| 09F236 | 90459-5627 | | 1 | CONNECTION TINA 1A, 20-054-00 | |
| 09K241 | 90459-6913 | | 1 | ELECTROMAG. DOOR LOCK. DEV.,JSD-ZH-EM1-K | |
| 09K242 | 90459-6913 | | 1 | ELECTROMAG. DOOR LOCK. DEV.,JSD-ZH-EM1-K | |
| 09W214 | 90459-4876 | | 1 | FOCUS JUMPER CABLE M12 5P 3M, 20-056-21 | |
| 09W216 | 90459-4876 | | 1 | FOCUS JUMPER CABLE M12 5P 3M, 20-056-21 | |
| 09W230 | 90459-4876 | | 1 | FOCUS JUMPER CABLE M12 5P 3M, 20-056-21 | |
| 09W232 | 90459-4876 | | 1 | FOCUS JUMPER CABLE M12 5P 3M, 20-056-21 | |
| 09W241 | 351309-0100 | | 1 | ACTUATOR/SENSOR CABLE PRKT 4-07/10M | |
| 09W242 | 351309-0100 | | 1 | ACTUATOR/SENSOR CABLE PRKT 4-07/10M | |

Machine Type | Group Description | Used-In | Group Number | Page No

**This page is intentionally left blank.**

ECM: 438888 - 20100701
Group number: 2873950-0100
Assembly Drawing:

| Pos | Part No | UN | Qty | Description | Page No |
|---|---|---|---|---|---|
| **RECAP3, RECAP2 A3** | | | | | |
| 30W300 | 90220-0104 | M | 6 | SCR. CABLE 4X1,5MM2 | |
| 30W303 | 90600-1984 | | 1 | ACTUATOR/SENSOR CABLE PRKT 5/56-10M | |
| 60W011 | 351150-0413 | M | 7 | CABLE OLFLEX 4GX1,5 MM2 LIGHT/GREY | |
| 60W110 | 90600-3293 | | 1 | MOTOR POWER CABLE 2090-XXNPMF-16S09 | |
| 60W111 | 90600-3294 | | 1 | MOTOR FEEDBACK CABLE 2090-XXNFMF-S09/C | |
| 60W210 | 90600-3293 | | 1 | MOTOR POWER CABLE 2090-XXNPMF-16S09 | |
| 60W211 | 90600-3294 | | 1 | MOTOR FEEDBACK CABLE 2090-XXNFMF-S09/C | |
| 60W310 | 90600-3293 | | 1 | MOTOR POWER CABLE 2090-XXNPMF-16S09 | |
| 60W311 | 90600-3294 | | 1 | MOTOR FEEDBACK CABLE 2090-XXNFMF-S09/C | |
| 60W421 | 351150-0413 | M | 9 | CABLE OLFLEX 4GX1,5 MM2 LIGHT/GREY | |
| 60W611 | 351150-0405 | M | 9 | CABLE OLFLEX 5X0,75 MM2 LIGHT/GREY | |
| 60X111 | 90459-2551 | | 1 | CONNECTOR, MOTOR FEEDBACK 15 PIN MALE | |
| 60X211 | 90459-2551 | | 1 | CONNECTOR, MOTOR FEEDBACK 15 PIN MALE | |
| 60X311 | 90459-2551 | | 1 | CONNECTOR, MOTOR FEEDBACK 15 PIN MALE | |
| **Common Parts** | | | | | |
| 01W400 | 351150-0403 | M | 8 | CABLE OLFLEX 3X0,75 MM2 LIGHT/GREY | |
| 01W401 | 351150-0407 | M | 8 | CABLE OLFLEX 12X0,75 MM2 LIGHT/GREY | |
| 01W500 | 351150-0187 | M | 8 | CABLE OLFLEX 5X6 MM2 LIGHT/GREY | |
| 01W501 | 351150-0406 | M | 2 | CABLE OLFLEX 7X0,75 MM2 LIGHT/GREY | |
| 01W510 | 351150-0406 | M | 5.5 | CABLE OLFLEX 7X0,75 MM2 LIGHT/GREY | |
| 01W701 | 351150-0403 | M | 5 | CABLE OLFLEX 3X0,75 MM2 LIGHT/GREY | |
| 01W702 | 351150-0403 | M | 9 | CABLE OLFLEX 3X0,75 MM2 LIGHT/GREY | |
| 01W800 | 351150-0403 | M | 2 | CABLE OLFLEX 3X0,75 MM2 LIGHT/GREY | |
| 01W801 | 351150-0403 | M | 2 | CABLE OLFLEX 3X0,75 MM2 LIGHT/GREY | |
| 09W103 | 351150-0405 | M | 11 | CABLE OLFLEX 5X0,75 MM2 LIGHT/GREY | |
| 09W201 | 90220-0165 | M | 8 | SCR. CABLE 5X0,34MM2 | |
| 09W202 | 90220-0165 | M | 5 | SCR. CABLE 5X0,34MM2 | |
| 20W000 | 90220-0104 | M | 10 | SCR. CABLE 4X1,5MM2 | |
| 21W100 | 90600-3293 | | 1 | MOTOR POWER CABLE 2090-XXNPMF-16S09 | |
| 21W101 | 90600-3294 | | 1 | MOTOR FEEDBACK CABLE 2090-XXNFMF-S09/C | |
| 21W200 | 90600-3293 | | 1 | MOTOR POWER CABLE 2090-XXNPMF-16S09 | |
| 21W201 | 90600-3294 | | 1 | MOTOR FEEDBACK CABLE 2090-XXNFMF-S09/C | |
| 21W400 | 90220-0104 | M | 18 | SCR. CABLE 4X1,5MM2 | |
| 21W800 | 351150-0412 | M | 6 | CABLE OLFLEX 3X1,5 MM2 LIGHT/GREY | |
| 21W801 | 351120-0266 | M | 5 | CABLE ÖLFLEX HEAT 180 SIHF 4X4 | |
| 30W000 | 90600-3293 | | 1 | MOTOR POWER CABLE 2090-XXNPMF-16S09 | |
| 30W001 | 90600-3294 | | 1 | MOTOR FEEDBACK CABLE 2090-XXNFMF-S09/C | |
| 30W400 | 90600-3293 | | 1 | MOTOR POWER CABLE 2090-XXNPMF-16S09 | |
| 30W401 | 90600-3294 | | 1 | MOTOR FEEDBACK CABLE 2090-XXNFMF-S09/C | |
| 21X101 | 90459-2551 | | 1 | CONNECTOR, MOTOR FEEDBACK 15 PIN MALE | |
| 21X201 | 90459-2551 | | 1 | CONNECTOR, MOTOR FEEDBACK 15 PIN MALE | |
| 30X001 | 90459-2551 | | 1 | CONNECTOR, MOTOR FEEDBACK 15 PIN MALE | |
| 30X401 | 90459-2551 | | 1 | CONNECTOR, MOTOR FEEDBACK 15 PIN MALE | |

Machine Type | Group Description | Used-In | Group Number | Page No

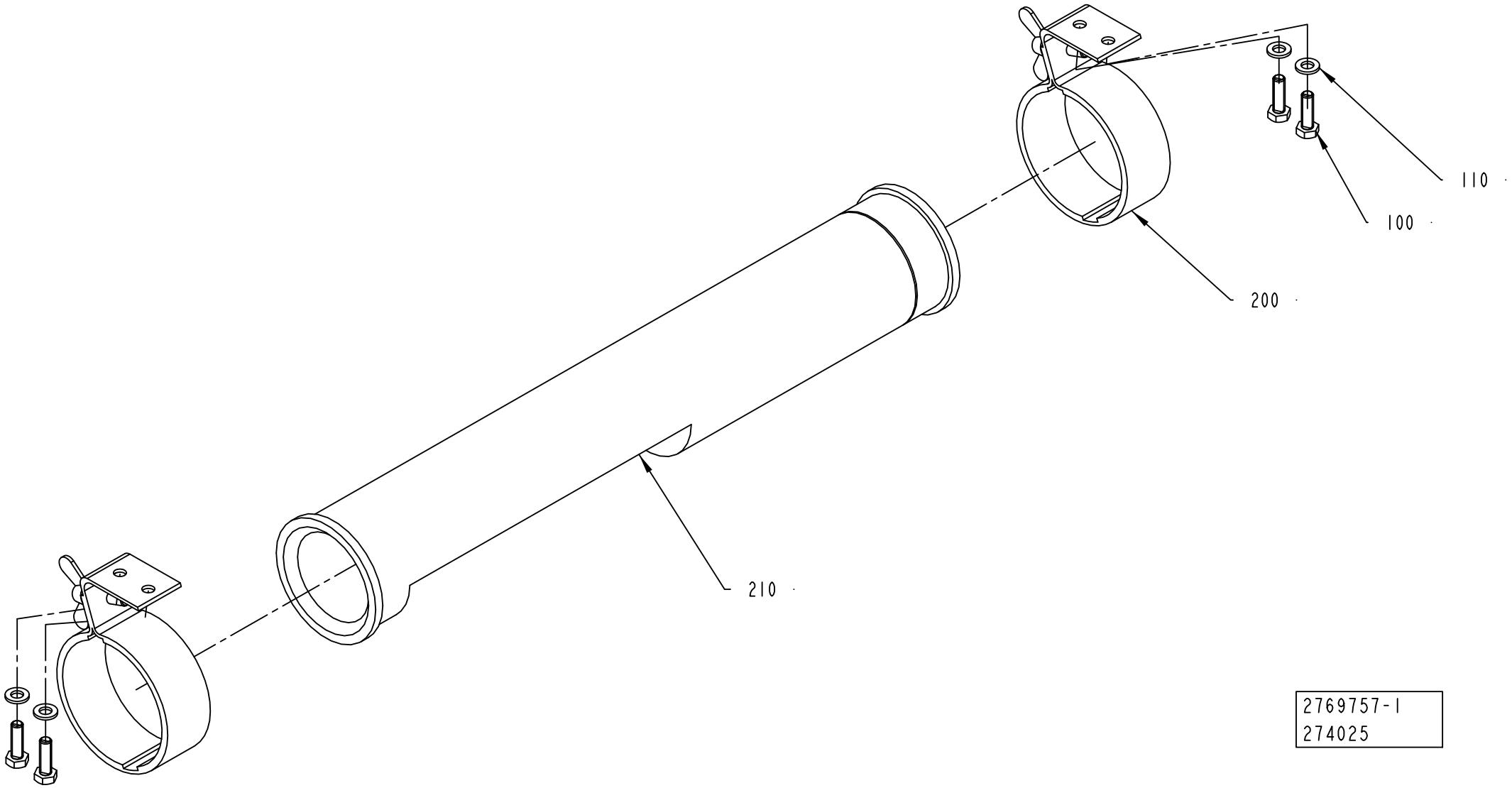
110
100
200
210
2769757-1
274025

ECM: 274503 - 20060921
Group number: 2769757-0100
Assembly Drawing: 2769757-1_1_AA

| Pos | Part No | UN | Qty | Description | Page No |
|---|---|---|---|---|---|
| - | | | | | |
| 100 | 312105-0370 | | 4 | SCREW M6S ISO 4017 M6X20 A480 | |
| 110 | 315105-0153 | | 4 | WASHER BRB 6,4X12 RFR | |
| 200 | 90164-0303 | | 2 | LIGHT FIXTURE, BRACKET 70MM | |
| 210 | 90164-0015 | | 1 | LIGHT FIXTURE, RL70CV-111 / 230V 50HZ | |
| | *92297-0301* | | *1* | *STARTER 4-65W S\10, E 8219023* | |
| | *90297-0007* | | *1* | *FLUORESCENT TUBE, PLS 11* | |

| Pos | Part No | UN | Qty | Description | Page No |
|---|---|---|---|---|---|

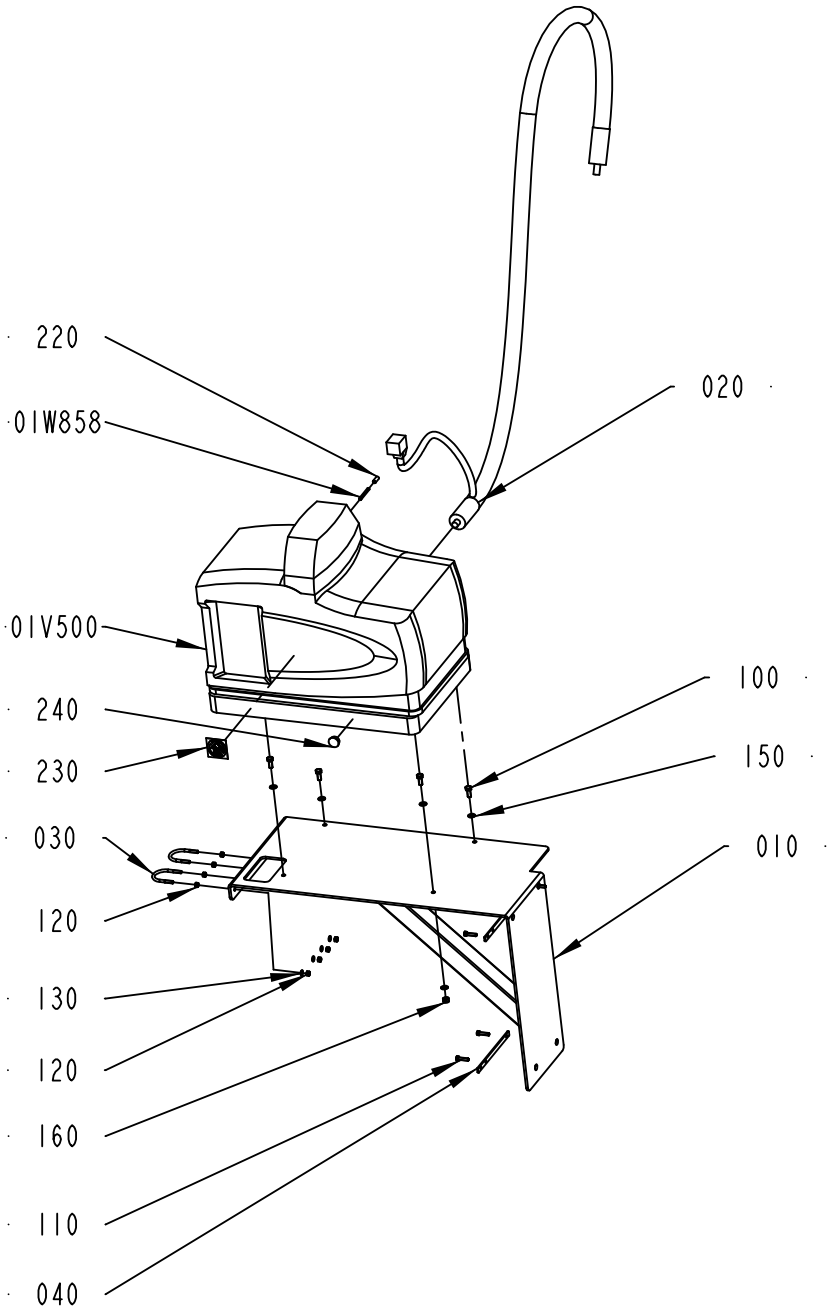
220
01W858
020
01V500
100
240
150
230
030
010
120
130
120
160
110
040

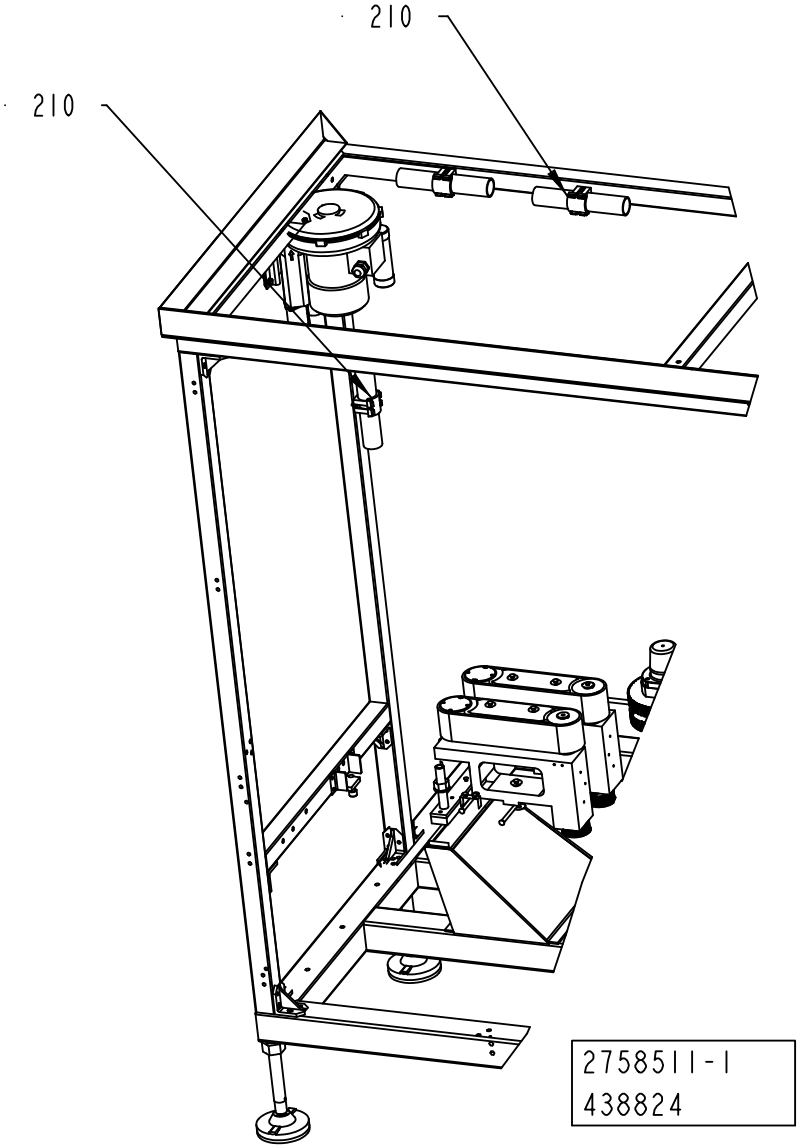
210
210
2758511-1
438824

ECM: 438890 - 20100701
Group number: 2758511-0100
Assembly Drawing: 2758511-1_1_AE

| Pos | Part No | UN | Qty | Description | Page No |
|---|---|---|---|---|---|
| **RECAP3, RECAP2 A3** | | | | | |
| 01V500 | 90459-1991 | | 1 | HOT MELT UNIT, #1049296 | |
| | *90459-1979* | | *1* | *THERMOSTAT SERV. KIT(P4,P7,P10) #1028321* | |
| | *90459-1978* | | *1* | *RTD SERVICE KIT (P4,P7,P10) #1028320* | |
| | *90459-1977* | | *1* | *WELDMENT, TANK, P4 #1051033* | |
| | *90459-1976* | | *1* | *OPER. PANEL/ENCL.SERV.KIT(P4/7)#1028326* | |
| | *90459-1975* | | *1* | *CPU CONT.BOARD SERV.KIT(P4/7/10)#1028325* | |
| | *90459-1974* | | *1* | *FUSE KIT,MAIN CIRC.B.(P4/7/10),#1028329* | |
| | *90459-1973* | | *1* | *MAIN CIRC.BOARD SERV.KIT(P4,P7),#1028322* | |
| | *90459-1972* | | *1* | *FUSE KIT,HOSE/GUN (P4,P7,P10)),#1028331* | |
| | *90459-1971* | | *1* | *HOSE/GUN MODULE KIT(P4,P7,P10),#1028328* | |
| | *90439-0241* | | *1* | *ANGLE NIPPLE* | |
| | *90459-1989* | | *1* | *COVERS,FRAME,CHASSIS, P4 #1021660* | |
| | *90459-1988* | | *1* | *COV.,FRAME,SUBBASE MOUNT.PL.(P4)#1021661* | |
| | *90459-1987* | | *1* | *PNEUM. PANEL ASS. (P4/7/10) #1028307* | |
| | *90459-1986* | | *1* | *REPL. SATURN® FILTER, 100 MESH #1028305* | |
| | *90459-1985* | | *1* | *PUMP SERVICE KIT (P4,P7,P10) #1028304* | |
| | *90459-1984* | | *1* | *PUMP ASS. SERV. KIT (P4/7/10) #102830* | |
| | *90459-1983* | | *1* | *HEATER-BLOCK KIT, #1064649* | |
| | *90459-1982* | | *1* | *AUTO. PR. DIS. VALVE (P4/7/10)#1028308* | |
| | *90459-1981* | | *1* | *MANIFOLD SERVICE KIT (P4,P7,P10)#1028309* | |
| | *90459-1980* | | *1* | *MANIFOLD ASSEMBLY, 4-HOSE #1064651* | |
| **Common Parts** | | | | | |
| 010 | 2766939-0000 | | 1 | SUPPORT | |
| 020 | 90600-0773 | | 1 | AUTOMATIC GUN HOSE, #104008 | |
| 030 | 531616-0000 | | 2 | HOLDER | |
| 040 | 2874024-0000 | | 2 | BRACKET | |
| 100 | 312105-0451 | | 4 | SCREW M6S ISO 4017 M8X20 A480 | |
| 110 | 312105-0372 | | 4 | SCREW M6S ISO 4017 M6X25 A480 | |
| 120 | 312605-0316 | | 8 | HEXAGON NUT, M6M M6 A280 | |
| 130 | 315105-0153 | | 4 | WASHER BRB 6,4X12 RFR | |
| 150 | 315105-0165 | | 8 | WASHER BRB 8,4X16 RFR | |
| 160 | 312812-0318 | | 4 | HEXAGON NUT, NY-LOCK M8 A480 | |
| 210 | 90439-0295 | | 3 | SERVICE KIT, NO. 111940 | |
| 220 | 90459-7369 | | 1 | MARKING FOR PNEUM. TUBING, PRZ06 | |
| 230 | 90459-2265 | | 1 | PROHIBITION SIGN ISO, DO NOT WASH | |
| 240 | 90261-0033 | | 1 | PLUG, BLIND, PLASTIC GPN300F182 | |
| 01W858 | 315400-0001 | MM | 3000 | TUBE PUN-H-6X1-BL | |

| Pos | Part No | UN | Qty | Description | Page No |
|---|---|---|---|---|---|

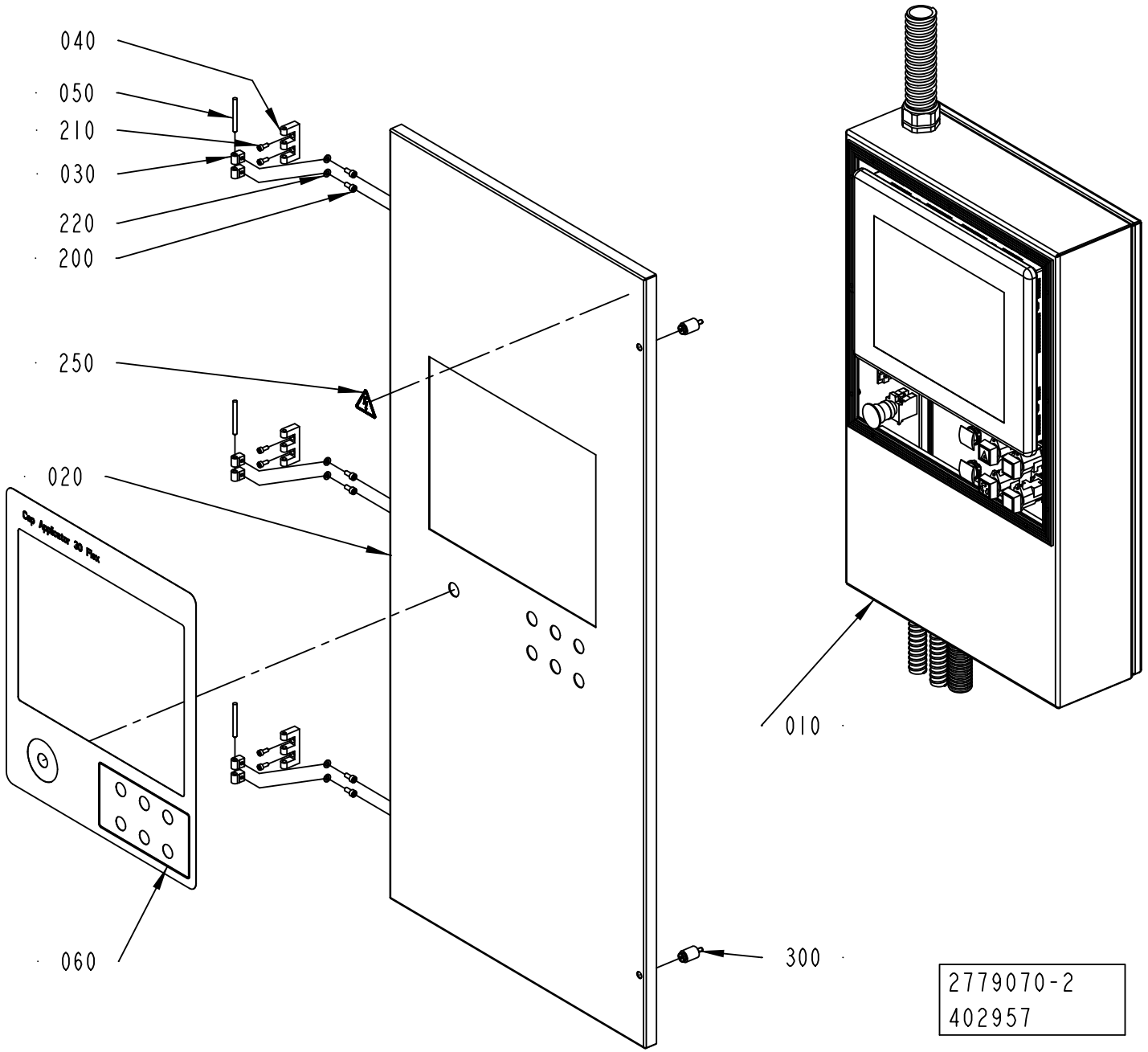
040
050
210
030
220
200
250
020
060
300
010
2779070-2
402957

ECM: 407737 - 20091001
Group number: 2779070-0200
Assembly Drawing: 2779070-2_1_AA

| Pos | Part No | UN | Qty | Description | Page No |
|---|---|---|---|---|---|
| **CAP 30/FLEX** | | | | | |
| 060 | 2746920-0000 | | 1 | FOIL | |
| **Common Parts** | | | | | |
| 010 | 2802386-0200 | | 1 | OPERATOR INTERFACE ..... | **3-95** |
| 020 | 2779768-0000 | | 1 | DOOR | |
| 030 | 1129770-0000 | | 6 | BLOCKING PIECE | |
| 040 | 1035792-0000 | | 3 | E-HINGE | |
| 050 | 988685-0000 | | 3 | PIN | |
| 200 | 312115-0367 | | 6 | SCREW ISO4762 M6X14 A4 80 | |
| 210 | 312115-0327 | | 6 | Z3REW ISO4762 M5X12 A4 80 | |
| 220 | 315105-0153 | | 6 | WASHER BRB 6,4X12 RFR | |
| 250 | 359705-0015 | | 1 | WARNING SIGN ISO, RISK OF ELECTRIC SHOCK | |
| 300 | 90226-0458 | | 2 | MOUNTING SCREW | |

| Pos | Part No | UN | Qty | Description | Page No |
|---|---|---|---|---|---|

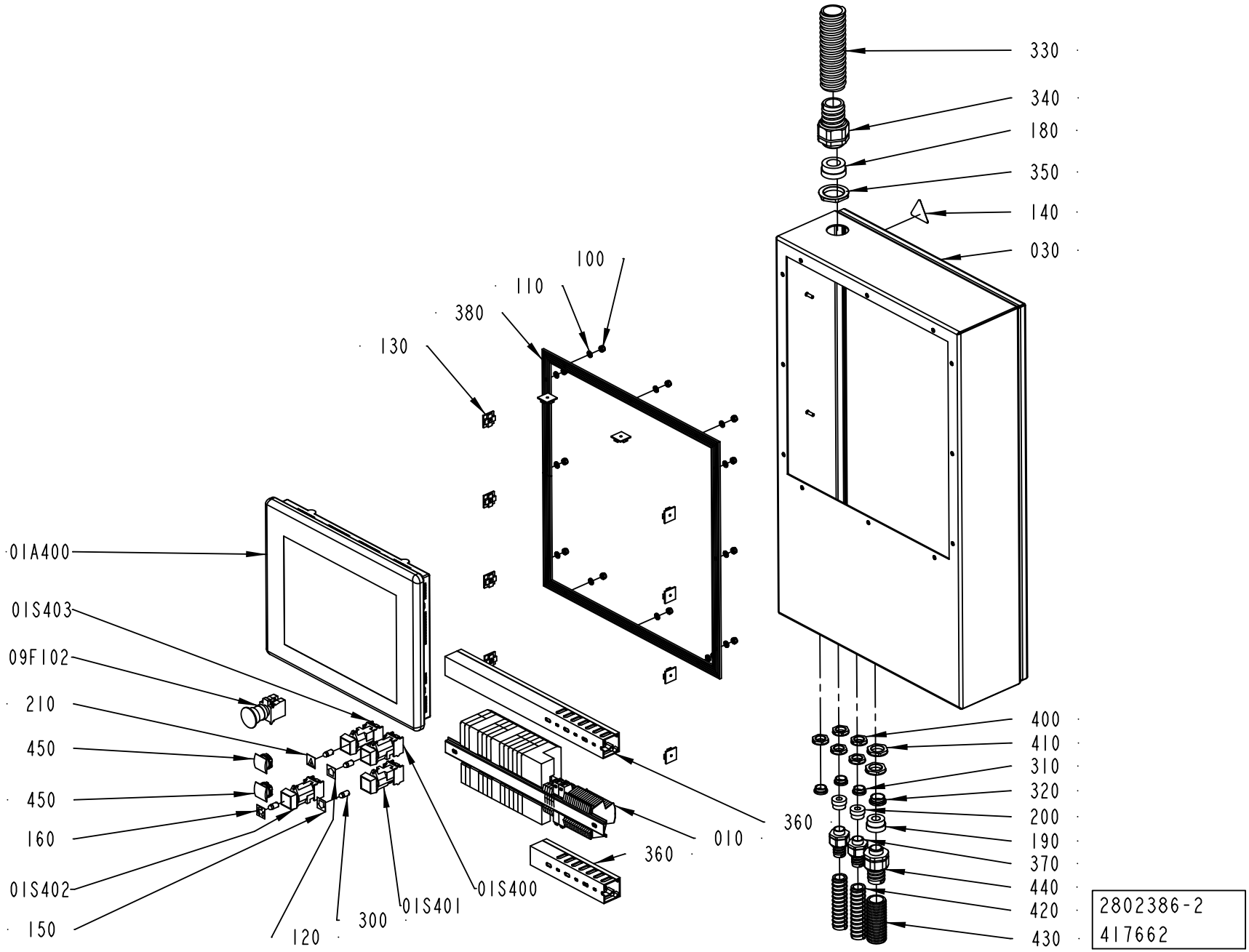
330
340
180
350
140
030
100
110
380
130
01A400
01S403
09F102
210
450
450
160
01S402
150
120
300
01S401
01S400
010
360
360
400
410
310
320
200
190
370
440
420
430
2802386-2
417662

ECM: 428926 - 20100401
Group number: 2802386-0200
Assembly Drawing: 2802386-2_1_AB

| Pos | Part No | UN | Qty | Description | Page No |
|---|---|---|---|---|---|
| - | | | | | |
| 010 | 2817783-0100 | | 1 | PLINTH ..... | **3-97, 3-99** |
| 030 | 2746904-0000 | | 1 | BOX | |
| 100 | 312812-0316 | | 12 | HEXAGON NUT, NY-LOCK M6 A480 | |
| 110 | 315105-0153 | | 12 | WASHER BRB 6,4X12 RFR | |
| 120 | 359301-0001 | | 1 | BUTTON SIGN, UP | |
| 130 | 352113-0206 | | 10 | ANCHOR PLATES FOR STRIPS, TYPE ABM100-AT | |
| 140 | 359705-0015 | | 1 | WARNING SIGN ISO, RISK OF ELECTRIC SHOCK | |
| 150 | 359301-0005 | | 1 | BUTTON SIGN, DOWN | |
| 160 | 359301-0090 | | 1 | BUTTON SIGN, INCHING | |
| 180 | 353249-0054 | | 1 | INSERT, SINGLE HOLE, EK 156/25 | |
| 190 | 353249-0015 | | 1 | INSERT, SINGLE HOLE, EK 155/16 | |
| 200 | 353249-0012 | | 2 | INSERT, SINGLE HOLE, EK 154/11 | |
| 210 | 359301-0105 | | 1 | BUTTON SIGN, ALARM STOP | |
| 300 | 90036-0057 | | 4 | LIGHT BULB, BA9S 28V | |
| 310 | 90458-1308 | | 3 | BLIND PLUG CIRCULAR, M20X1,5 514GFK/220 | |
| 320 | 90458-1309 | | 1 | BLIND PLUG CIRCULAR, M25X1,5 514GFK/225 | |
| 330 | 90152-0060 | MM | 1000 | SPIRAL CONDUIT, 42X35, UL3529 | |
| 340 | 90458-0434 | | 1 | HOSE GLAND W/O INSERT M40 EXTENDED | |
| 350 | 90458-0326 | | 1 | NUT, M40X1,5 | |
| 360 | 90181-0038 | MM | 1100 | CABLE DUCT 40X40MM | |
| 370 | 90458-0430 | | 2 | HOSE GLAND W/O INSERT M20 EXTENDED | |
| 380 | 90143-0071 | MM | 2000 | RUBBER STRIP 4X20MM | |
| 390 | 90152-0051 | MM | 1800 | SPIRAL CONDUIT, 25X18, UL 1816 | |
| 400 | 90458-0323 | | 5 | NUT, M20X1,5 | |
| 410 | 90458-0324 | | 2 | NUT, M25X1,5 | |
| 420 | 90152-0051 | MM | 1500 | SPIRAL CONDUIT, 25X18, UL 1816 | |
| 430 | 90152-0070 | MM | 700 | METAL HOSE, 32,5X26, UL 2621 | |
| 440 | 90458-0432 | | 1 | HOSE GLAND W/O INSERT M25 EXTENDED | |
| 450 | 90459-3279 | | 3 | BLANK PLUG BLACK, SQUARE, PLASTIC ZB5SZ5 | |
| 01A400 | 90600-8128 | | 1 | OPER. PANEL 15"PV+,2711P-T15C4D2TP SER.B | |
| 09F102 | 90458-1651 | | 1 | EMERGENCY STOP, ZB4-BS-844 ZB4-BZ-104 | |
| 01S400 | 90064-0093 | | 1 | PUSH BUTTON, GREEN | |
| | *90036-0057* | | *1* | *LIGHT BULB, BA9S 28V* | |
| 01S401 | 90064-0098 | | 1 | PUSH BUTTON, CLEAR | |
| 01S402 | 90064-0093 | | 1 | PUSH BUTTON, GREEN | |
| | *90036-0057* | | *1* | *LIGHT BULB, BA9S 28V* | |
| 01S404 | 90064-0098 | | 1 | PUSH BUTTON, CLEAR | |

| Pos | Part No | UN | Qty | Description | Page No |
|---|---|---|---|---|---|

Machine Type | Group Description | Used-In | Group Number | Page No

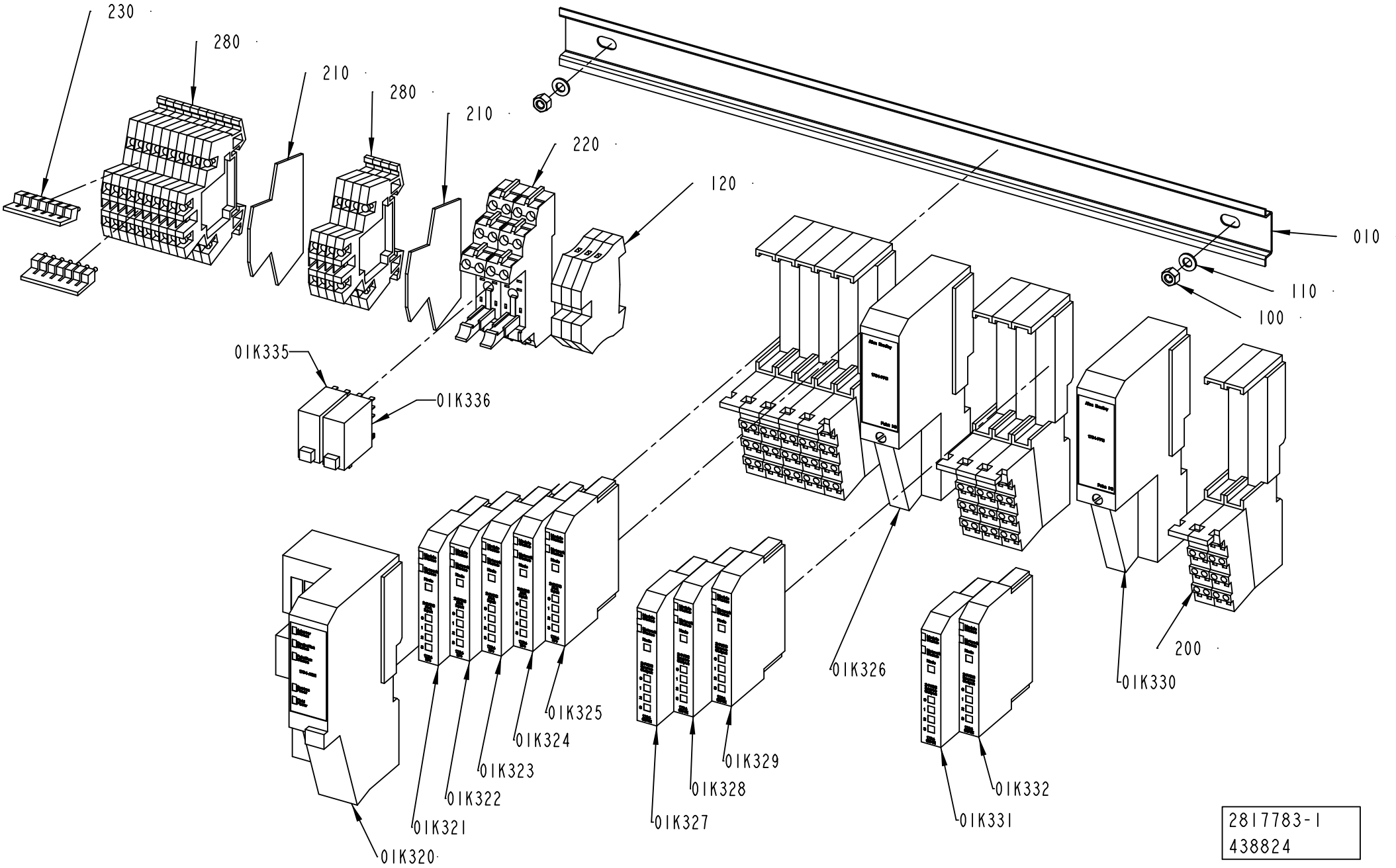
230
280
210
280
210
220
120
010
110
100
01K335
01K336
01K326
01K330
200
01K325
01K324
01K323
01K322
01K321
01K320
01K329
01K328
01K327
01K332
01K331
2817783-1
438824

ECM: 438887 - 20100701
Group number: 2817783-0100
Assembly Drawing: 2817783-1_1_AC

This list covers pages from 3-96 to 3-99

| Pos | Part No | UN | Qty | Description | Page No |
|---|---|---|---|---|---|
| **CAP 30/FLEX (See drawing on pages: 3-96, 3-98)** | | | | | |
| 200 | 90459-2526 | | 10 | REMOTE I/O BASE MODULE 8 POINTS, 1734-TB | |
| 210 | 90077-0114 | | 2 | END PLATE, WAP/WDK 2,5 | |
| 220 | 90129-0018 | | 2 | BASE, P2RF-08-E | |
| 280 | 90077-0113 | | 14 | FEED THROUGH TERMINAL, 10-00102150-1 | |
| 01K325 | 90459-2503 | | 1 | DIGITAL INPUT 4 PTS SINK, 1734-IB4 | |
| 01K335 | 90119-0108 | | 1 | RELAY OMRON G2R-2-SNI-24DC | |
| | *90129-0018* | | *1* | *BASE, P2RF-08-E* | |
| 01K336 | 90119-0108 | | 1 | RELAY OMRON G2R-2-SNI-24DC | |
| | *90129-0018* | | *1* | *BASE, P2RF-08-E* | |
| **Common Parts** | | | | | |
| 010 | 2746909-0000 | | 1 | RAIL | |
| 100 | 312605-0314 | | 2 | HEXAGON NUT, M6M M5 A280 | |
| 110 | 315105-0146 | | 2 | WASHER BRB 5,3X10 RFR | |
| 120 | 353024-0205 | | 3 | EARTH TERMINAL, 1010.1 | |
| 230 | 353034-0030 | | 2 | BRIDGE CONNECTOR WQV 2,5/10, 10544.6 | |
| 01K320 | 90459-2494 | | 1 | DEVICENET I/O ADAPTER MODULE, 1734-ADN | |
| 01K321 | 90459-2503 | | 1 | DIGITAL INPUT 4 PTS SINK, 1734-IB4 | |
| 01K322 | 90459-2503 | | 1 | DIGITAL INPUT 4 PTS SINK, 1734-IB4 | |
| 01K323 | 90459-2503 | | 1 | DIGITAL INPUT 4 PTS SINK, 1734-IB4 | |
| 01K324 | 90459-2503 | | 1 | DIGITAL INPUT 4 PTS SINK, 1734-IB4 | |
| 01K326 | 90459-2501 | | 1 | FIELD POWER DISTRIBUTOR, 1734-FPD | |
| 01K327 | 90459-2505 | | 1 | DIGITAL OUTPUT 4 PTS, 1734-OB4E | |
| 01K328 | 90459-2505 | | 1 | DIGITAL OUTPUT 4 PTS, 1734-OB4E | |
| 01K329 | 90459-2505 | | 1 | DIGITAL OUTPUT 4 PTS, 1734-OB4E | |
| 01K330 | 90459-2501 | | 1 | FIELD POWER DISTRIBUTOR, 1734-FPD | |
| 01K331 | 90459-2505 | | 1 | DIGITAL OUTPUT 4 PTS, 1734-OB4E | |
| 01K332 | 90459-2505 | | 1 | DIGITAL OUTPUT 4 PTS, 1734-OB4E | |

| Pos | Part No | UN | Qty | Description | Page No |
|---|---|---|---|---|---|

Machine Type | Group Description | Used-In | Group Number | Page No

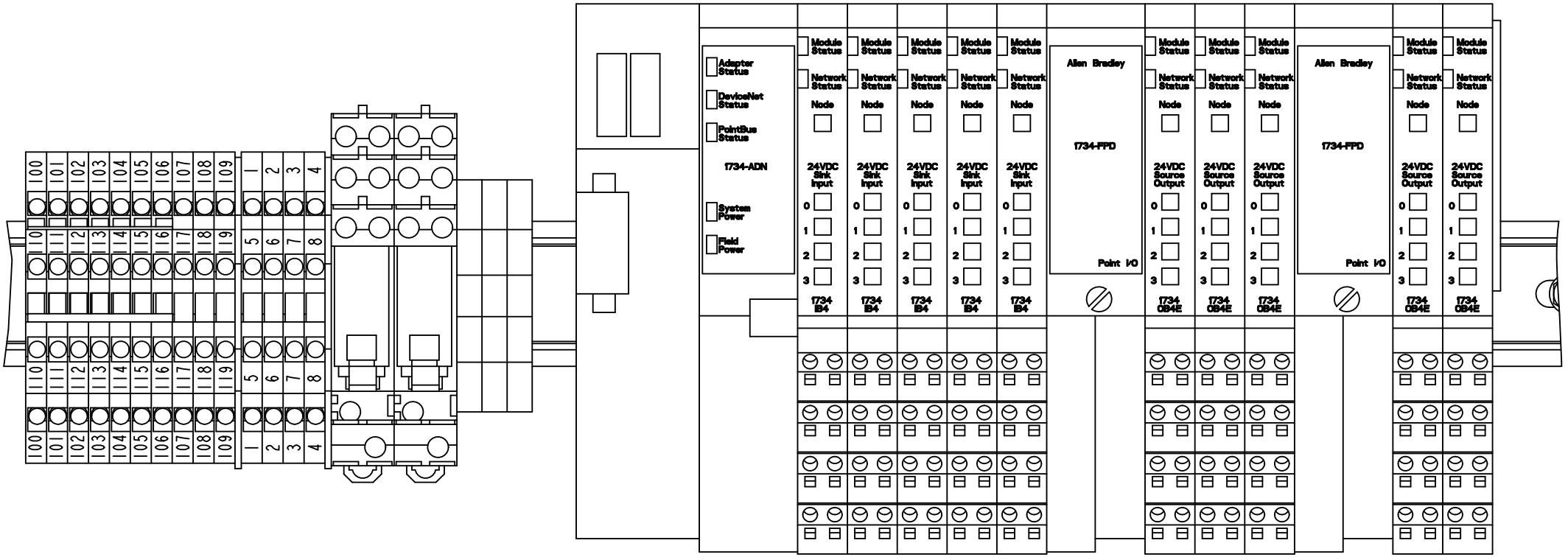


2817783-1
438824

| Pos | Part No | UN | Qty | Description | Page No |
|---|---|---|---|---|---|
| **CAP 30/FLEX (See drawing on pages: 3-96, 3-98)** | | | | | |
| 200 | 90459-2526 | | 10 | REMOTE I/O BASE MODULE 8 POINTS, 1734-TB | |
| 210 | 90077-0114 | | 2 | END PLATE, WAP/WDK 2,5 | |
| 220 | 90129-0018 | | 2 | BASE, P2RF-08-E | |
| 280 | 90077-0113 | | 14 | FEED THROUGH TERMINAL, 10-00102150-1 | |
| 01K325 | 90459-2503 | | 1 | DIGITAL INPUT 4 PTS SINK, 1734-IB4 | |
| 01K335 | 90119-0108 | | 1 | RELAY OMRON G2R-2-SNI-24DC | |
| | *90129-0018* | | *1* | *BASE, P2RF-08-E* | |
| 01K336 | 90119-0108 | | 1 | RELAY OMRON G2R-2-SNI-24DC | |
| | *90129-0018* | | *1* | *BASE, P2RF-08-E* | |
| **Common Parts** | | | | | |
| 010 | 2746909-0000 | | 1 | RAIL | |
| 100 | 312605-0314 | | 2 | HEXAGON NUT, M6M M5 A280 | |
| 110 | 315105-0146 | | 2 | WASHER BRB 5,3X10 RFR | |
| 120 | 353024-0205 | | 3 | EARTH TERMINAL, 1010.1 | |
| 230 | 353034-0030 | | 2 | BRIDGE CONNECTOR WQV 2,5/10, 10544.6 | |
| 01K320 | 90459-2494 | | 1 | DEVICENET I/O ADAPTER MODULE, 1734-ADN | |
| 01K321 | 90459-2503 | | 1 | DIGITAL INPUT 4 PTS SINK, 1734-IB4 | |
| 01K322 | 90459-2503 | | 1 | DIGITAL INPUT 4 PTS SINK, 1734-IB4 | |
| 01K323 | 90459-2503 | | 1 | DIGITAL INPUT 4 PTS SINK, 1734-IB4 | |
| 01K324 | 90459-2503 | | 1 | DIGITAL INPUT 4 PTS SINK, 1734-IB4 | |
| 01K326 | 90459-2501 | | 1 | FIELD POWER DISTRIBUTOR, 1734-FPD | |
| 01K327 | 90459-2505 | | 1 | DIGITAL OUTPUT 4 PTS, 1734-OB4E | |
| 01K328 | 90459-2505 | | 1 | DIGITAL OUTPUT 4 PTS, 1734-OB4E | |
| 01K329 | 90459-2505 | | 1 | DIGITAL OUTPUT 4 PTS, 1734-OB4E | |
| 01K330 | 90459-2501 | | 1 | FIELD POWER DISTRIBUTOR, 1734-FPD | |
| 01K331 | 90459-2505 | | 1 | DIGITAL OUTPUT 4 PTS, 1734-OB4E | |
| 01K332 | 90459-2505 | | 1 | DIGITAL OUTPUT 4 PTS, 1734-OB4E | |

| Pos | Part No | UN | Qty | Description | Page No |
|---|---|---|---|---|---|

# DOORS AND COVERS



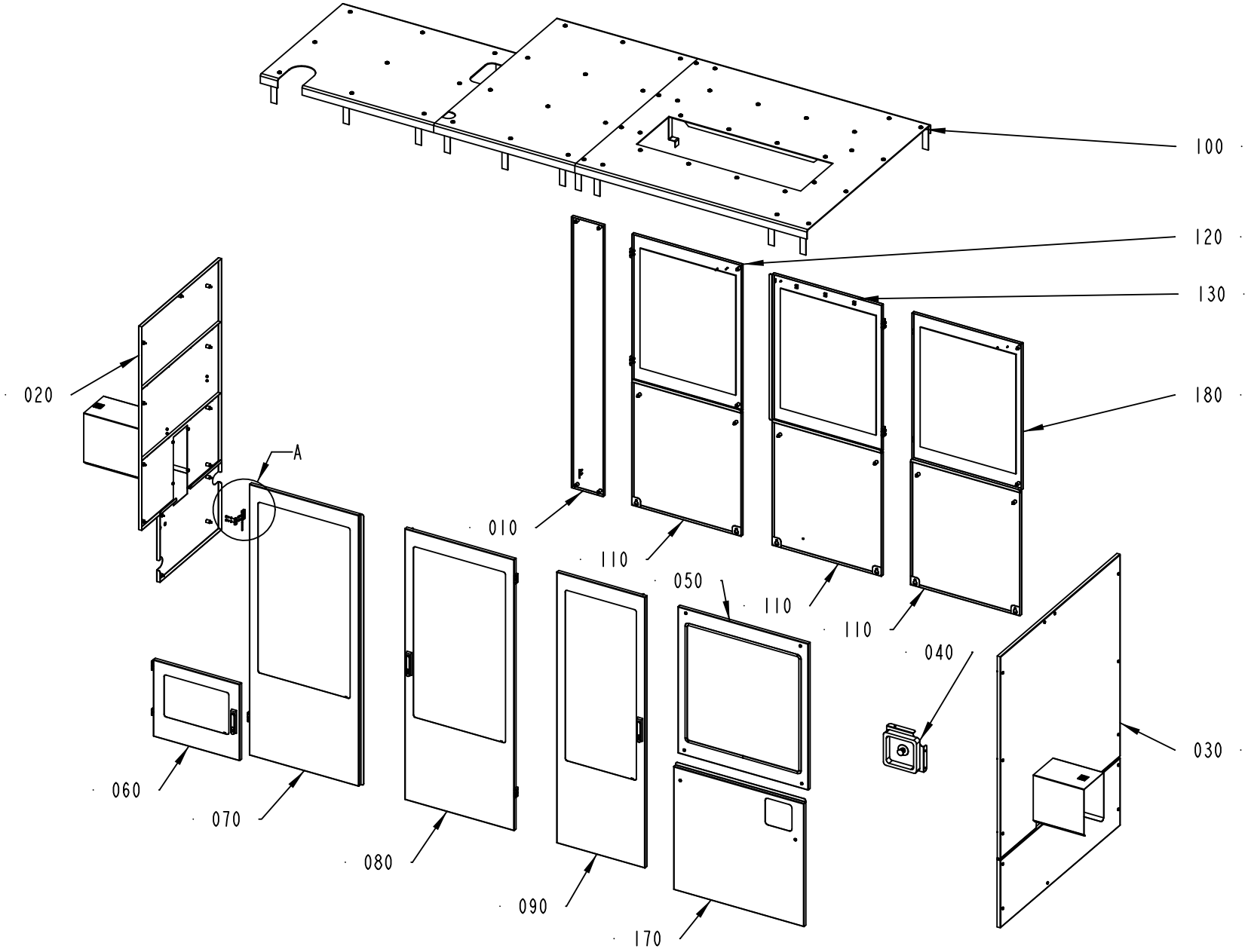


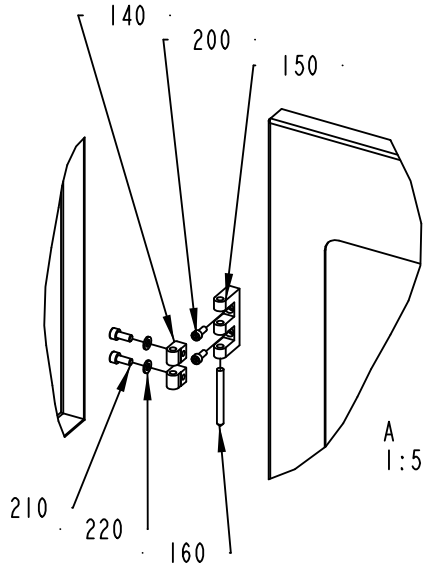


2826741-4
417662

ECM: 438894 - 20100701
Group number: 2826741-0200
Assembly Drawing: 2826741-4_1_AB

| Pos | Part No | UN | Qty | Description | Page No |
|---|---|---|---|---|---|
| **RECAP3, RECAP2 A3** | | | | | |
| 030 | 2805494-0200 | | 1 | COVER | **3-103** |
| 050 | 2807108-0100 | | 1 | GLASS DOOR | **3-111** |
| 070 | 2779833-0100 | | 1 | GLASS DOOR | **3-113** |
| 090 | 2807110-0100 | | 1 | GLASS DOOR | **3-115** |
| 140 | 1129770-0000 | | 20 | BLOCKING PIECE | |
| 150 | 1035792-0000 | | 10 | E-HINGE | |
| 160 | 988685-0000 | | 10 | PIN | |
| 170 | 2807109-0100 | | 1 | DOOR | **3-117** |
| 200 | 312115-0327 | | 20 | Z3REW ISO4762 M5X12 A4 80 | |
| 210 | 312115-0367 | | 20 | SCREW ISO4762 M6X14 A4 80 | |
| 220 | 315105-0153 | | 20 | WASHER BRB 6,4X12 RFR | |
| **Common Parts** | | | | | |
| 010 | 2779835-0200 | | 1 | DOOR | **3-119** |
| 020 | 2826742-0200 | | 1 | COVER | **3-121** |
| 040 | 2769760-0100 | | 1 | EMERGENCY STOP | **3-129** |
| 060 | 2779832-0100 | | 1 | GLASS DOOR | **3-131** |
| 080 | 2779834-0100 | | 1 | GLASS DOOR | **3-133** |
| 100 | 2787230-0100 | | 1 | TOP SECTION | **3-135** |
| 110 | 2805693-0100 | | 3 | DOOR | **3-137** |
| 120 | 2805687-0100 | | 1 | GLASS DOOR | **3-139** |
| 130 | 2805694-0100 | | 1 | GLASS DOOR | **3-141** |
| 180 | 3047348-0100 | | 1 | GLASS DOOR | **3-143** |

| Pos | Part No | UN | Qty | Description | Page No |
|---|---|---|---|---|---|

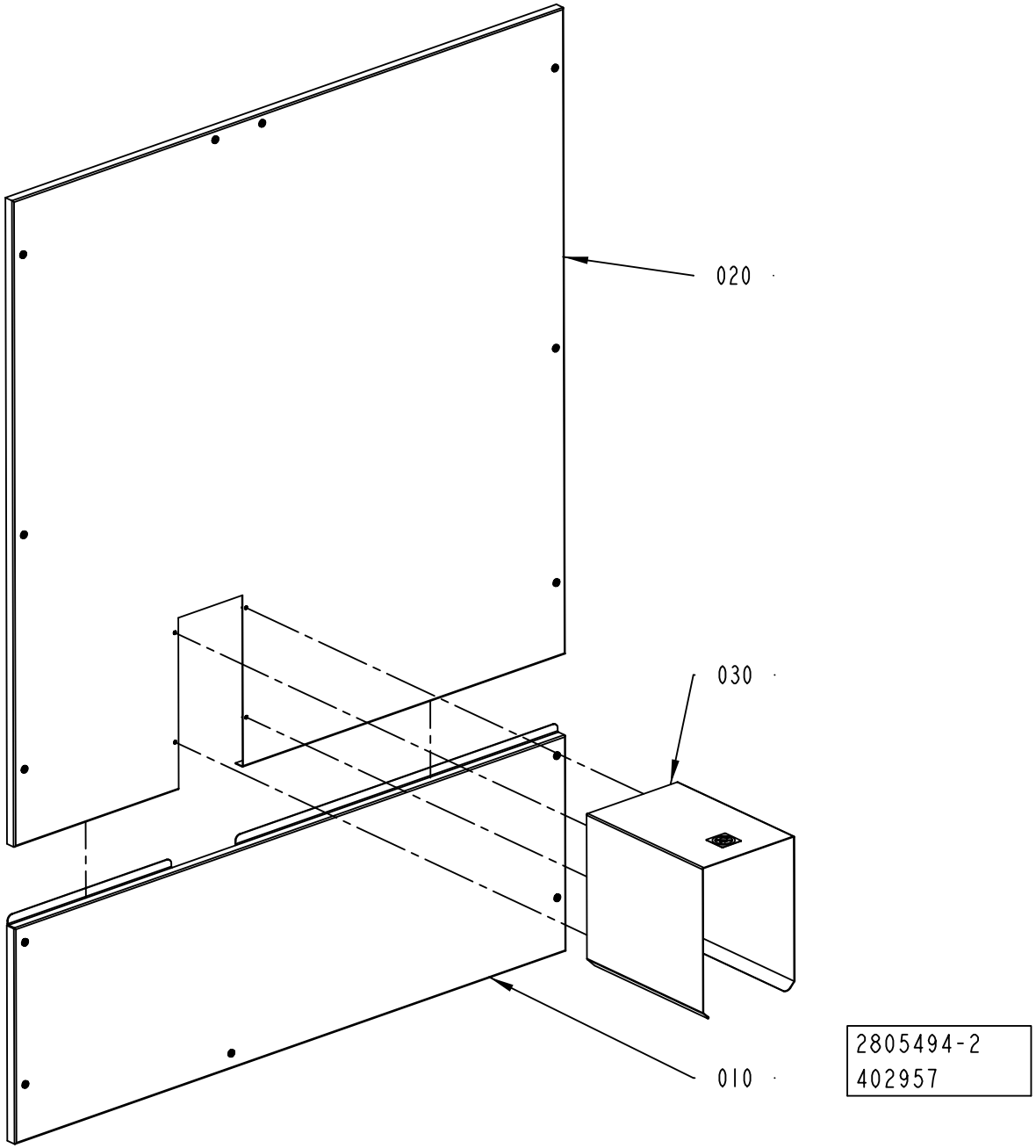
020
030
010
2805494-2
402957

ECM: 407754 - 20091001
Group number: 2805494-0200
Assembly Drawing: 2805494-2_1_AA

| Pos | Part No | UN | Qty | Description | Page No |
|---|---|---|---|---|---|
| - | | | | | |
| 010 | 2805495-0100 | | 1 | DOOR | **3-105** |
| 020 | 2805497-0200 | | 1 | COVER | **3-107** |
| 030 | 2805499-0200 | | 1 | TUNNEL | **3-109** |

| Pos | Part No | UN | Qty | Description | Page No |
|---|---|---|---|---|---|

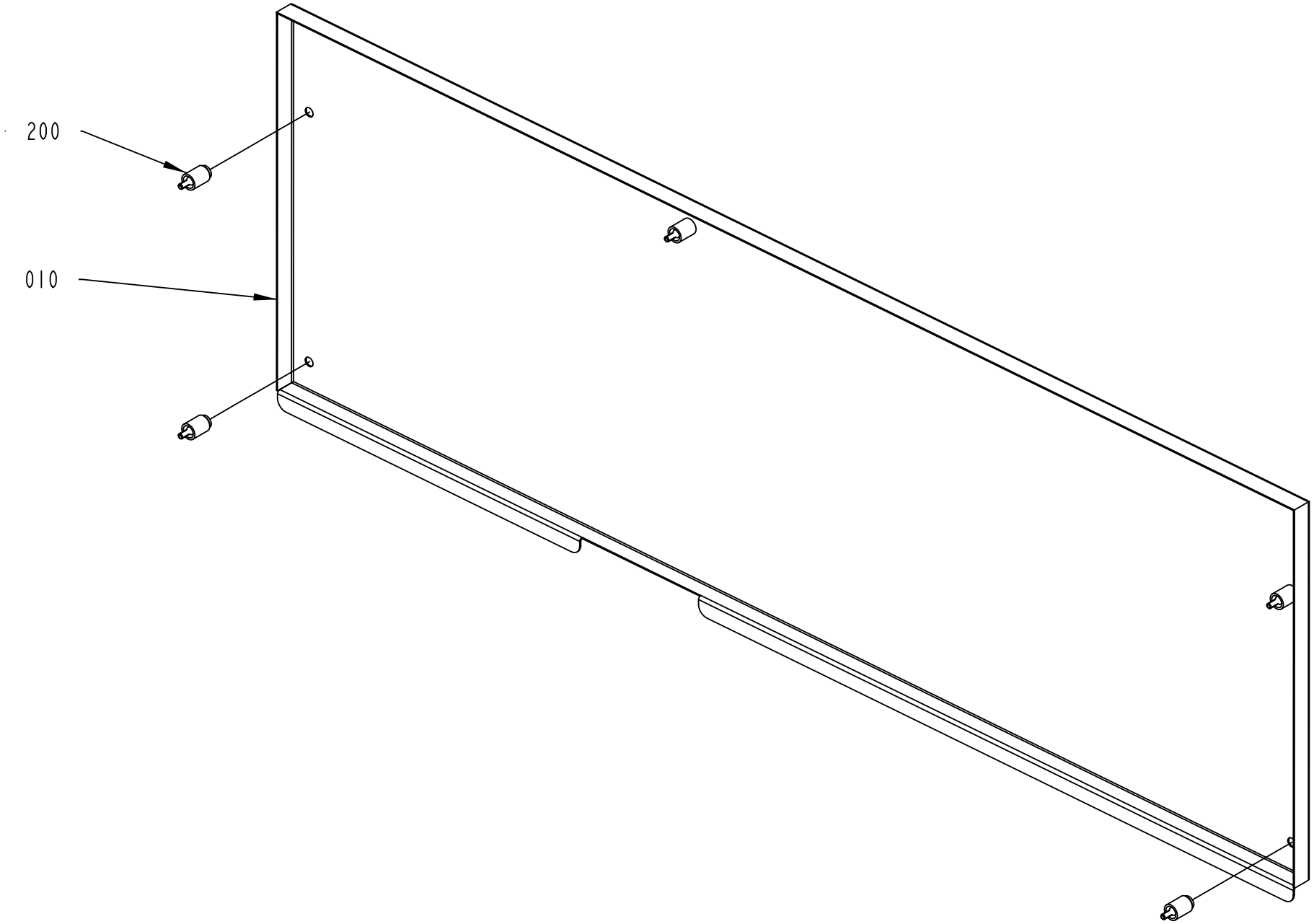


2805495-1
295540

ECM: 350253 - 20080701
Group number: 2805495-0100
Assembly Drawing: 2805495-1_1_AA

| Pos | Part No | UN | Qty | Description | Page No |
|---|---|---|---|---|---|
| - | | | | | |
| 010 | 2805496-0000 | | 1 | COVER | |
| 020 | 90226-0458 | | 5 | MOUNTING SCREW | |

| Pos | Part No | UN | Qty | Description | Page No |
|---|---|---|---|---|---|

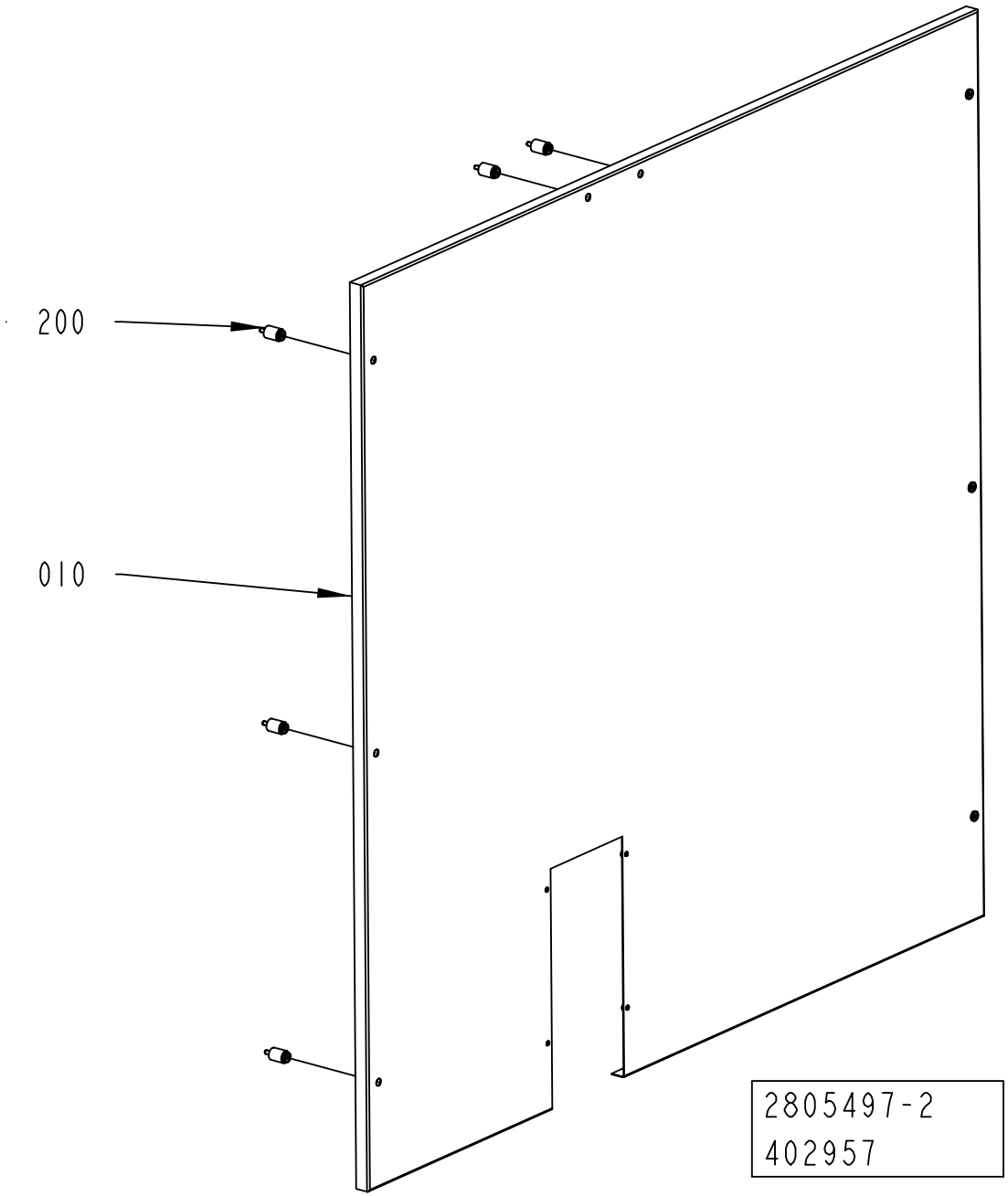
200
010
2805497-2
402957

ECM: 407755 - 20091001
Group number: 2805497-0200
Assembly Drawing: 2805497-2_1_AA

| Pos | Part No | UN | Qty | Description | Page No |
|---|---|---|---|---|---|
| - | | | | | |
| 010 | 3039013-0000 | | 1 | COVER | |
| 020 | 90226-0458 | | 8 | MOUNTING SCREW | |

| Pos | Part No | UN | Qty | Description | Page No |
|---|---|---|---|---|---|

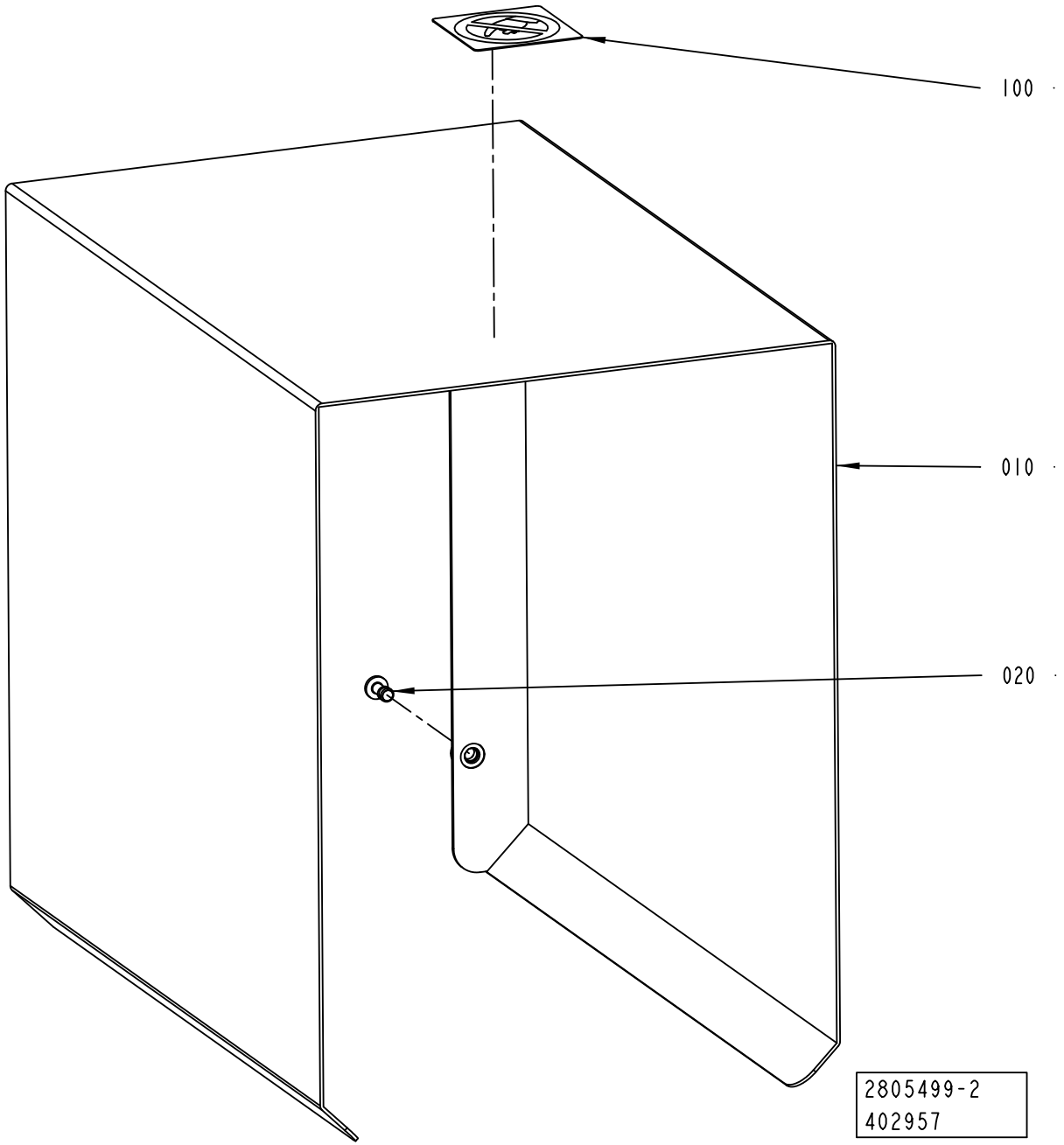
100
010
020
2805499-2
402957

ECM: 419447 - 20100110
Group number: 2805499-0200
Assembly Drawing: 2805499-2_1_AA

| Pos | Part No | UN | Qty | Description | Page No |
|---|---|---|---|---|---|
| - | | | | | |
| 010 | 2985853-0000 | | 1 | TUNNEL | |
| 020 | 90601-2046 | | 4 | CAPTIVE SCREW M6, GUTBG 6-4-12 | |
| 100 | 1128856-0000 | | 1 | PROHIBITION SIGN | |

| Pos | Part No | UN | Qty | Description | Page No |
|---|---|---|---|---|---|

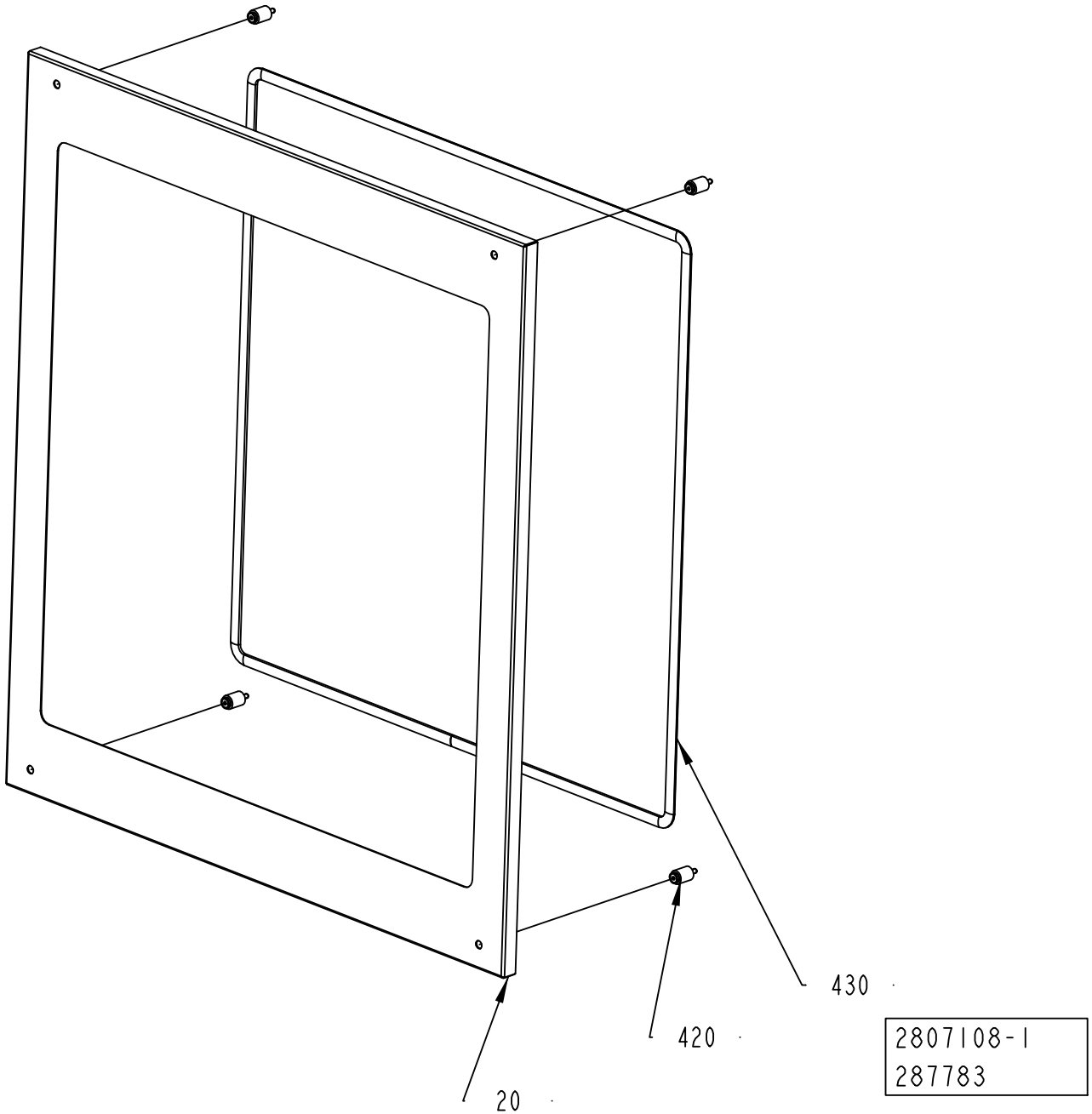
430
420
20
2807108-1
287783

ECM: 350256 - 20080701
Group number: 2807108-0100
Assembly Drawing: 2807108-1_1_AA

| Pos | Part No | UN | Qty | Description | Page No |
|---|---|---|---|---|---|
| - | | | | | |
| 020 | 2807111-0000 | | 1 | DOOR | |
| 410 | 90157-0041 | | 1 | SEALING COMPOUND, RHODORSEAL 5651 | |
| 420 | 90226-0458 | | 4 | MOUNTING SCREW | |
| 430 | 90143-0098 | MM | 600 | RUBBER STRIP, CLAMPING, NO. 1038-02 | |

| Pos | Part No | UN | Qty | Description | Page No |
|---|---|---|---|---|---|

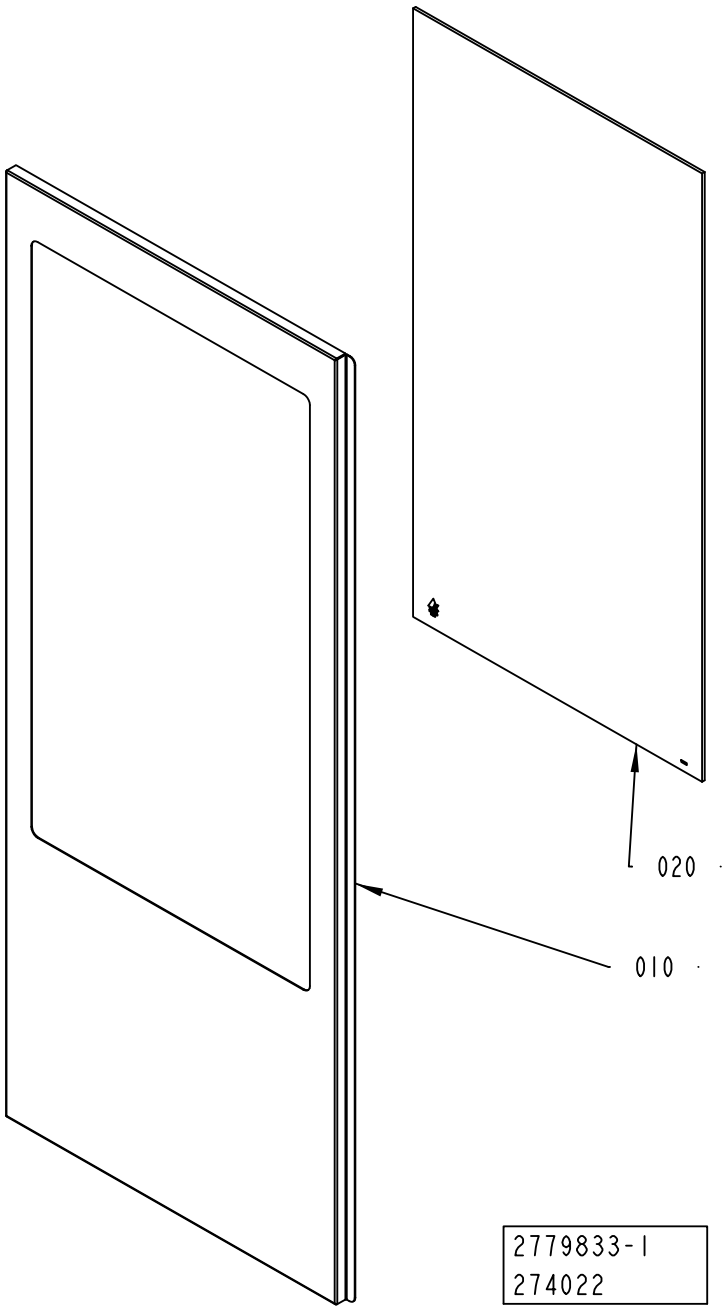
020
010
2779833-1
274022

ECM: 305564 - 20070517
Group number: 2779833-0100
Assembly Drawing: 2779833-1_1_AA

| Pos | Part No | UN | Qty | Description | Page No |
|---|---|---|---|---|---|
| - | | | | | |
| 010 | 2779840-0000 | | 1 | DOOR | |
| 020 | 2781278-0000 | | 1 | GLASS | |
| 110 | 90157-0041 | | 1 | SEALING COMPOUND, RHODORSEAL 5651 | |

| Pos | Part No | UN | Qty | Description | Page No |
|---|---|---|---|---|---|

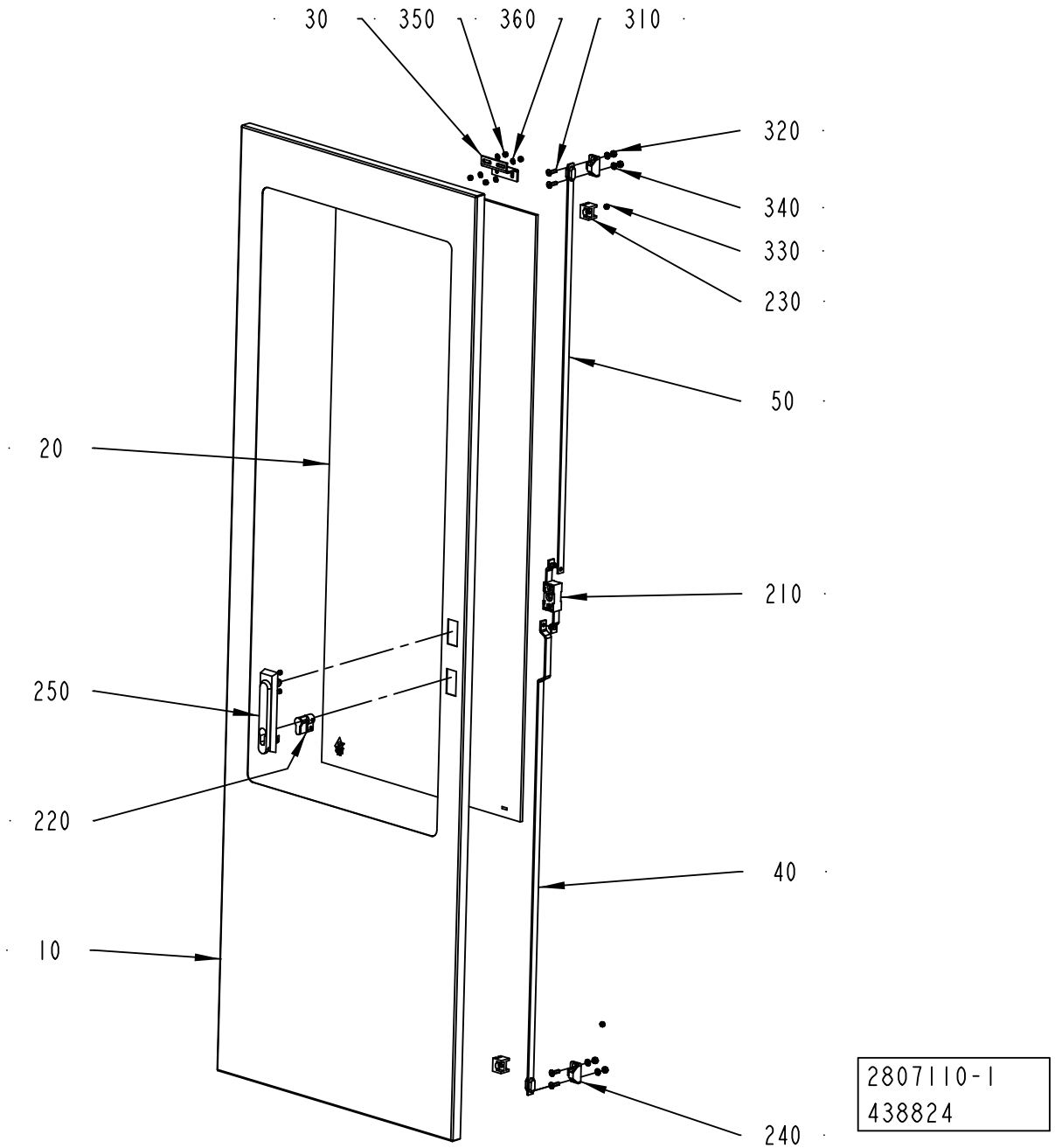
30
350
360
310
320
340
330
230
50
20
210
250
220
40
10
240
2807110-1
438824

ECM: 445109 - 20100701
Group number: 2807110-0100
Assembly Drawing: 2807110-1_1_AC

| Pos | Part No | UN | Qty | Description | Page No |
|---|---|---|---|---|---|
| - | | | | | |
| 010 | 2817767-0000 | | 1 | DOOR | |
| 020 | 2817768-0000 | | 1 | GLASS | |
| 030 | 2595618-0000 | | 1 | BRACKET | |
| 040 | 2551030-0000 | | 1 | STRUT | |
| 050 | 2781285-0000 | | 1 | STRUT | |
| 210 | 90237-0123 | | 1 | LOCK, 1121-U10C | |
| 220 | 90237-0128 | | 1 | LOCK CYLINDER, 1109-SU125 | |
| 230 | 90237-0144 | | 2 | GUIDE, 1121-SU540 | |
| 240 | 90237-0147 | | 2 | LOCKING LUG, NO. 1121-53-0P | |
| 250 | 90237-0175 | | 1 | TURNING HANDLE, 1125-U185-0A | |
| 310 | 312155-0370 | | 4 | SCREW DIN 7991 MF6S M6X20 A4 70 | |
| 320 | 312605-0316 | | 4 | HEXAGON NUT, M6M M6 A280 | |
| 330 | 312605-0314 | | 2 | HEXAGON NUT, M6M M5 A280 | |
| 340 | 315105-0153 | | 4 | WASHER BRB 6,4X12 RFR | |
| 350 | 312812-0314 | | 4 | HEXAGON NUT, NY-LOCK M5 A480 | |
| 360 | 315105-0146 | | 4 | WASHER BRB 5,3X10 RFR | |
| 410 | 90157-0041 | | 1 | SEALING COMPOUND, RHODORSEAL 5651 | |

| Pos | Part No | UN | Qty | Description | Page No |
|---|---|---|---|---|---|

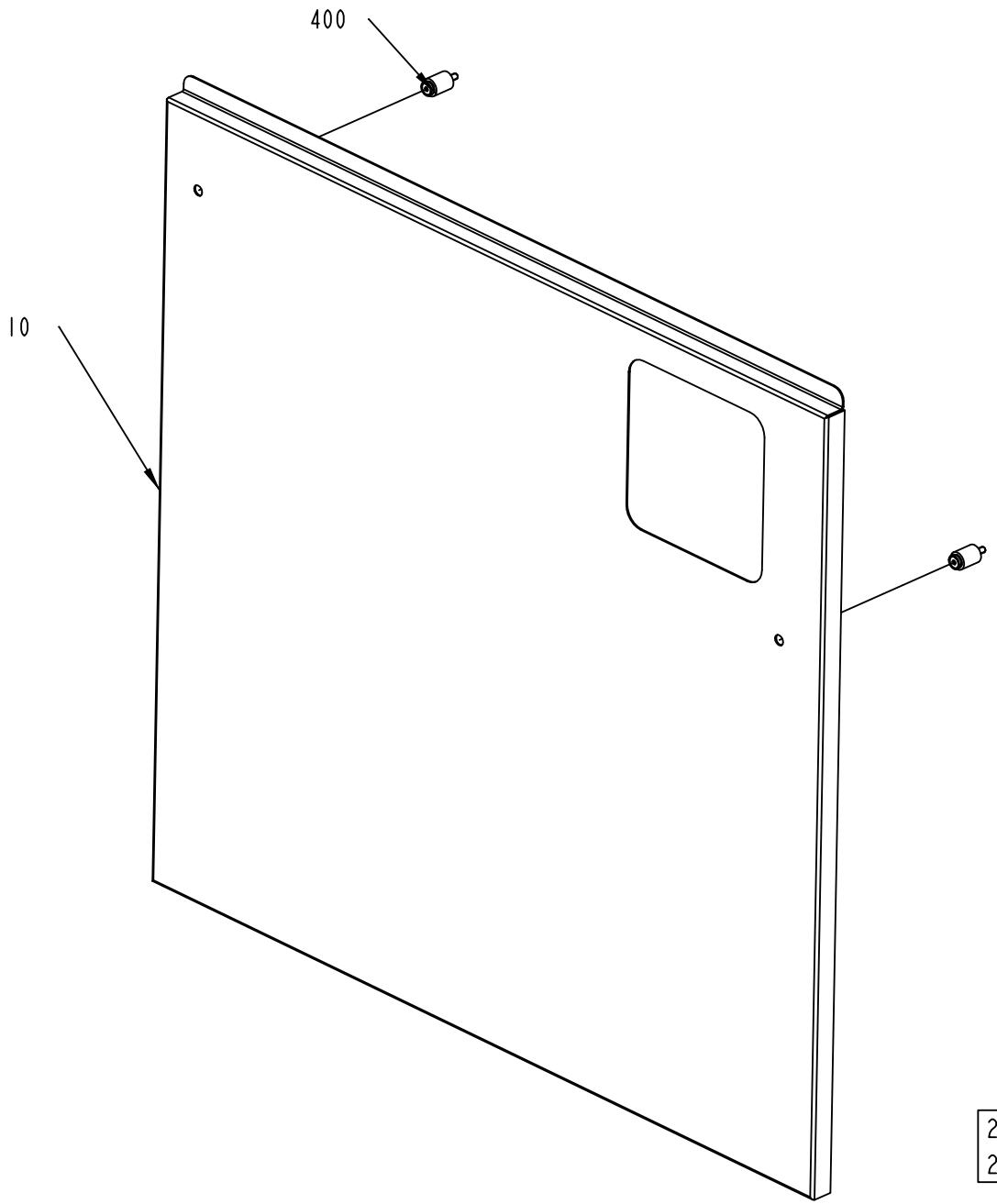
400
10
2807109-1
287783

ECM: 350257 - 20080701
Group number: 2807109-0100
Assembly Drawing: 2807109-1_1_AA

| Pos | Part No | UN | Qty | Description | Page No |
|---|---|---|---|---|---|
| - | | | | | |
| 010 | 2807112-0000 | | 1 | COVER | |
| 400 | 90226-0458 | | 2 | MOUNTING SCREW | |

| Pos | Part No | UN | Qty | Description | Page No |
|---|---|---|---|---|---|

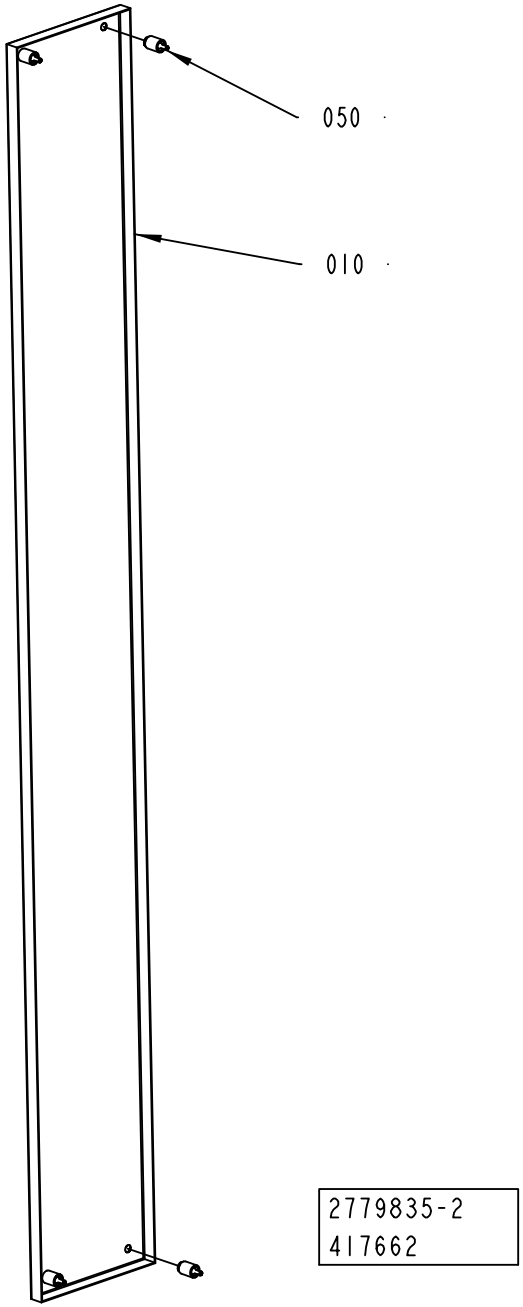
050
010
2779835-2
417662

ECM: 419448 - 20100110
Group number: 2779835-0200
Assembly Drawing: 2779835-2_1_AA

| Pos | Part No | UN | Qty | Description | Page No |
|---|---|---|---|---|---|
| - | | | | | |
| 010 | 3058858-0000 | | 1 | DOOR | |
| 050 | 90226-0458 | | 4 | MOUNTING SCREW | |

| Pos | Part No | UN | Qty | Description | Page No |
|---|---|---|---|---|---|

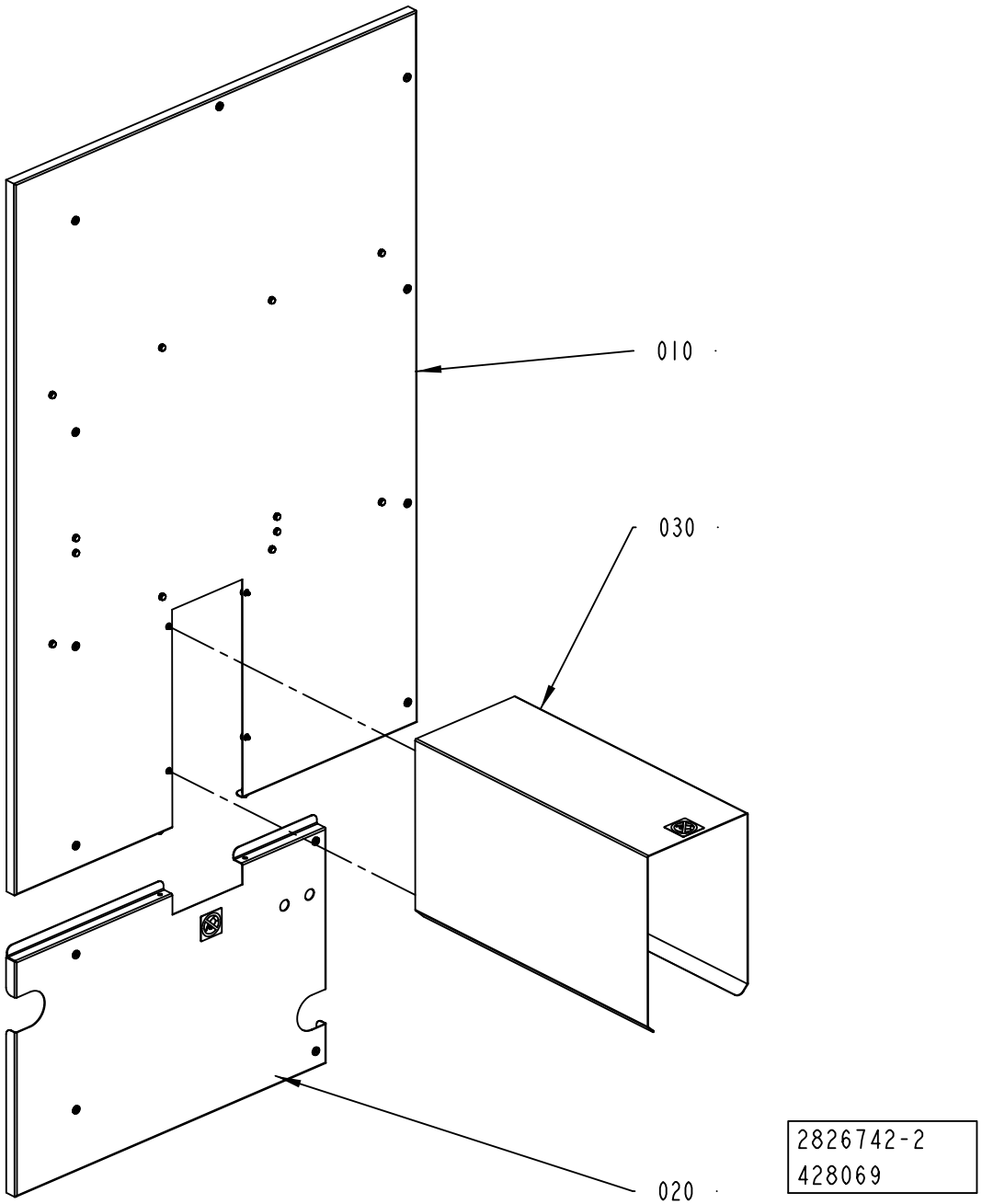
010
030
020
2826742-2
428069

ECM: 428928 - 20100401
Group number: 2826742-0200
Assembly Drawing: 2826742-2_1_AB

| Pos | Part No | UN | Qty | Description | Page No |
|---|---|---|---|---|---|
| - | | | | | |
| 010 | 2826744-0200 | | 1 | COVER | **3-123** |
| 020 | 2842793-0200 | | 1 | DOOR | **3-125** |
| 030 | 2805493-0200 | | 1 | TUNNEL | **3-127** |

| Pos | Part No | UN | Qty | Description | Page No |
|---|---|---|---|---|---|

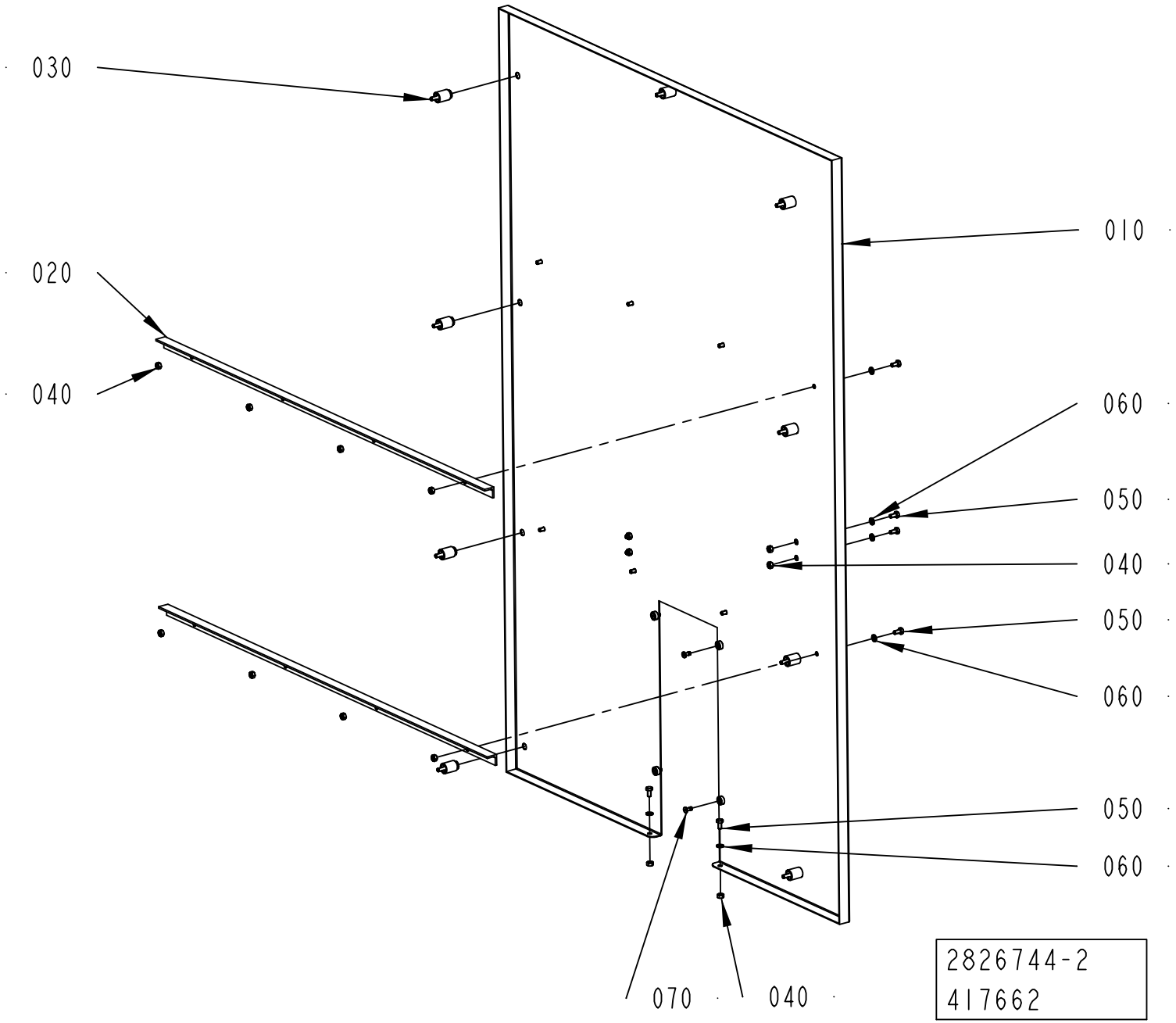
030
020
040
010
060
050
040
050
060
050
060
070
040
2826744-2
417662

ECM: 428929 - 20100401
Group number: 2826744-0200
Assembly Drawing: 2826744-2_1_AA

| Pos | Part No | UN | Qty | Description | Page No |
|---|---|---|---|---|---|
| - | | | | | |
| 010 | 3056497-0000 | | 1 | DOOR | |
| 020 | 2842801-0000 | | 2 | COVER | |
| 030 | 90226-0458 | | 9 | MOUNTING SCREW | |
| 040 | 312605-0316 | | 14 | HEXAGON NUT, M6M M6 A280 | |
| 050 | 312105-0366 | | 14 | SCREW M6S ISO 4017 M6X12 A480 | |
| 060 | 315105-0153 | | 14 | WASHER BRB 6,4X12 RFR | |
| 070 | 90601-2046 | | 4 | CAPTIVE SCREW M6, GUTBG 6-4-12 | |

| Pos | Part No | UN | Qty | Description | Page No |
|---|---|---|---|---|---|

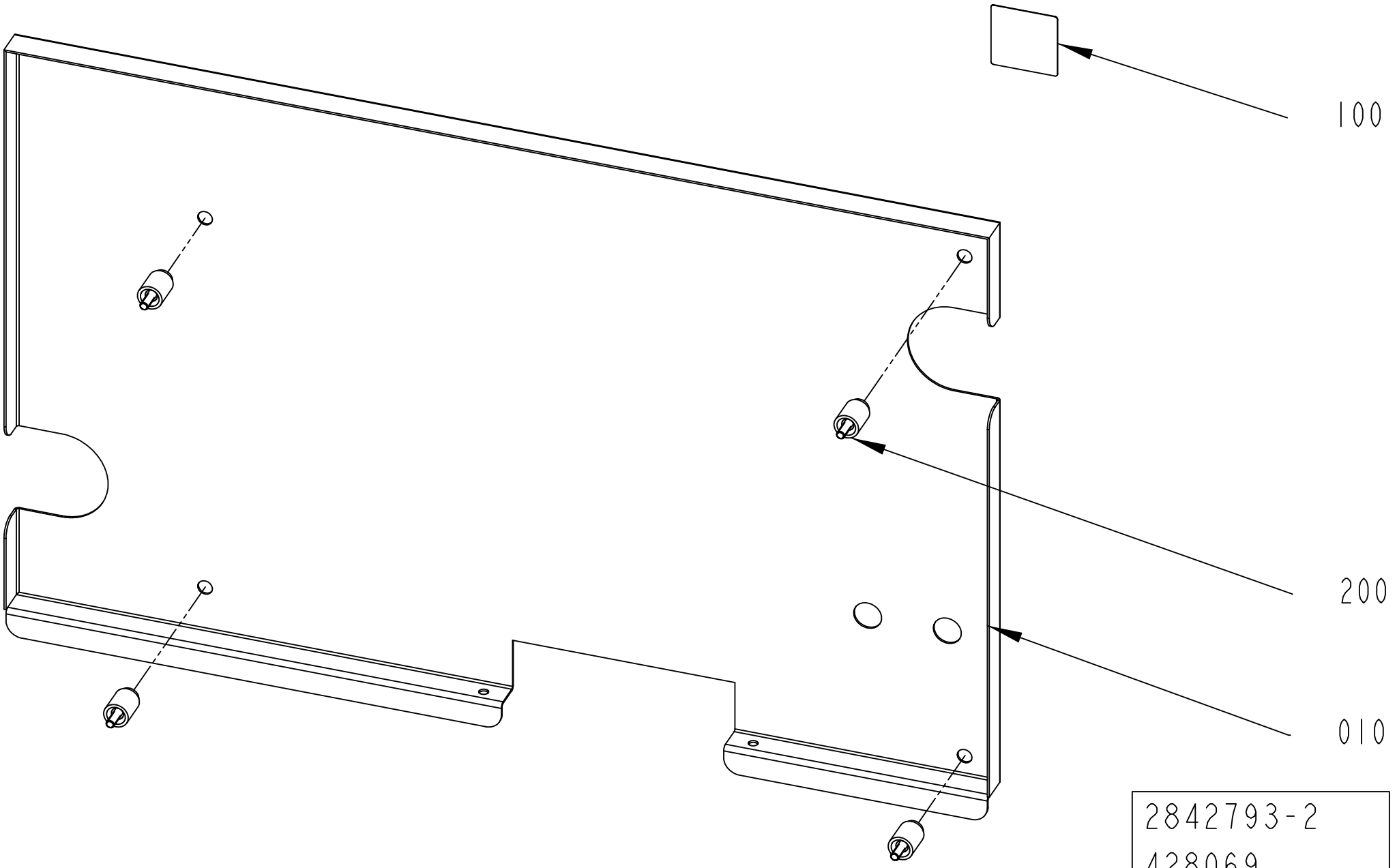
100
200
010
2842793-2
428069

ECM: 430662 - 20100401
Group number: 2842793-0200
Assembly Drawing: 2842793-2_1_AA

| Pos | Part No | UN | Qty | Description | Page No |
|---|---|---|---|---|---|
| - | | | | | |
| 010 | 2966581-0000 | | 1 | COVER | |
| 100 | 1128856-0000 | | 1 | PROHIBITION SIGN | |
| 200 | 90226-0458 | | 4 | MOUNTING SCREW | |

| Pos | Part No | UN | Qty | Description | Page No |
|---|---|---|---|---|---|

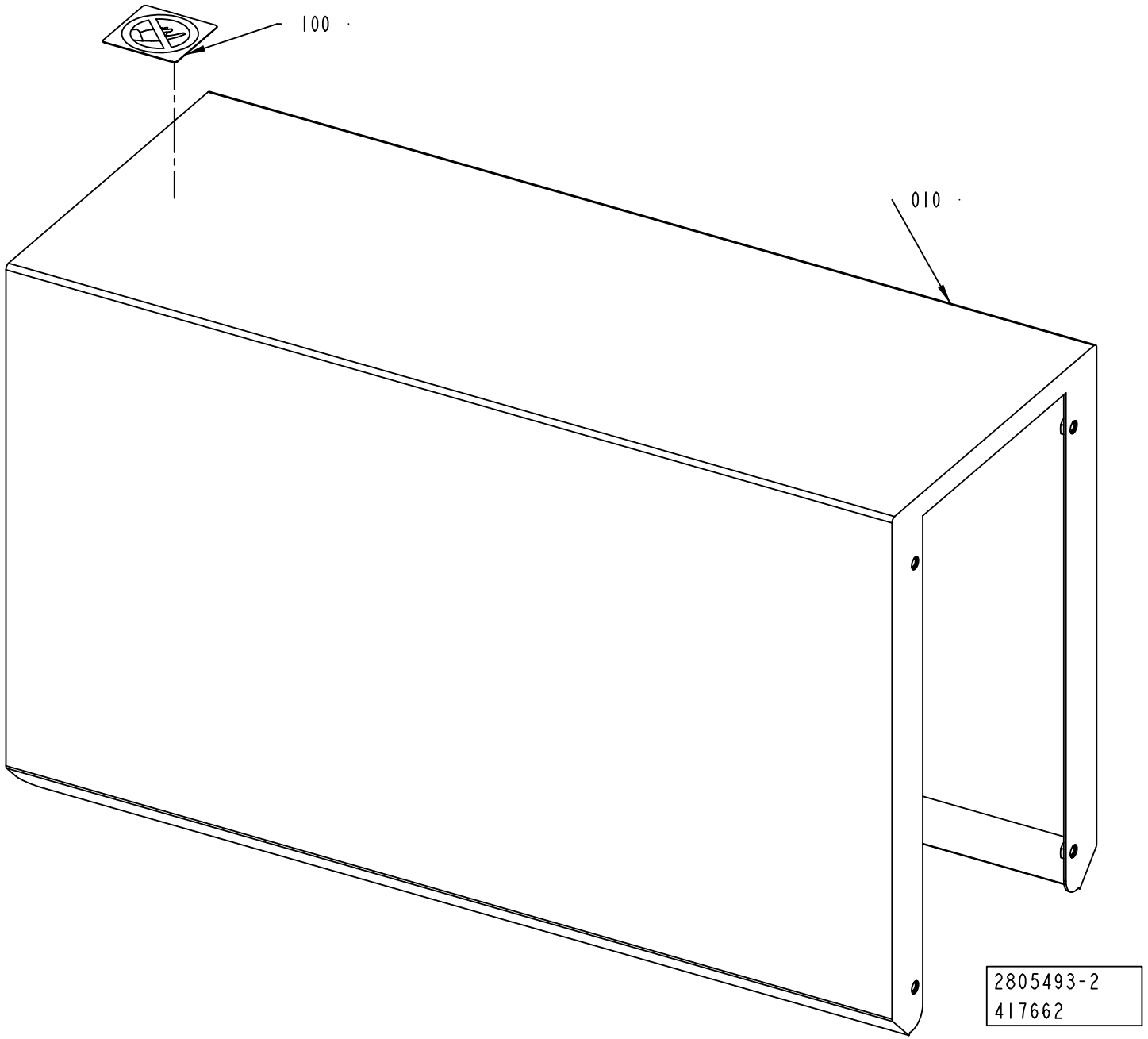
100
010
2805493-2
417662

ECM: 419450 - 20100110
Group number: 2805493-0200
Assembly Drawing: 2805493-2_1_AA

| Pos | Part No | UN | Qty | Description | Page No |
|---|---|---|---|---|---|
| - | | | | | |
| 010 | 2985804-0000 | | 1 | TUNNEL | |
| 100 | 1128856-0000 | | 1 | PROHIBITION SIGN | |

| Pos | Part No | UN | Qty | Description | Page No |
|---|---|---|---|---|---|

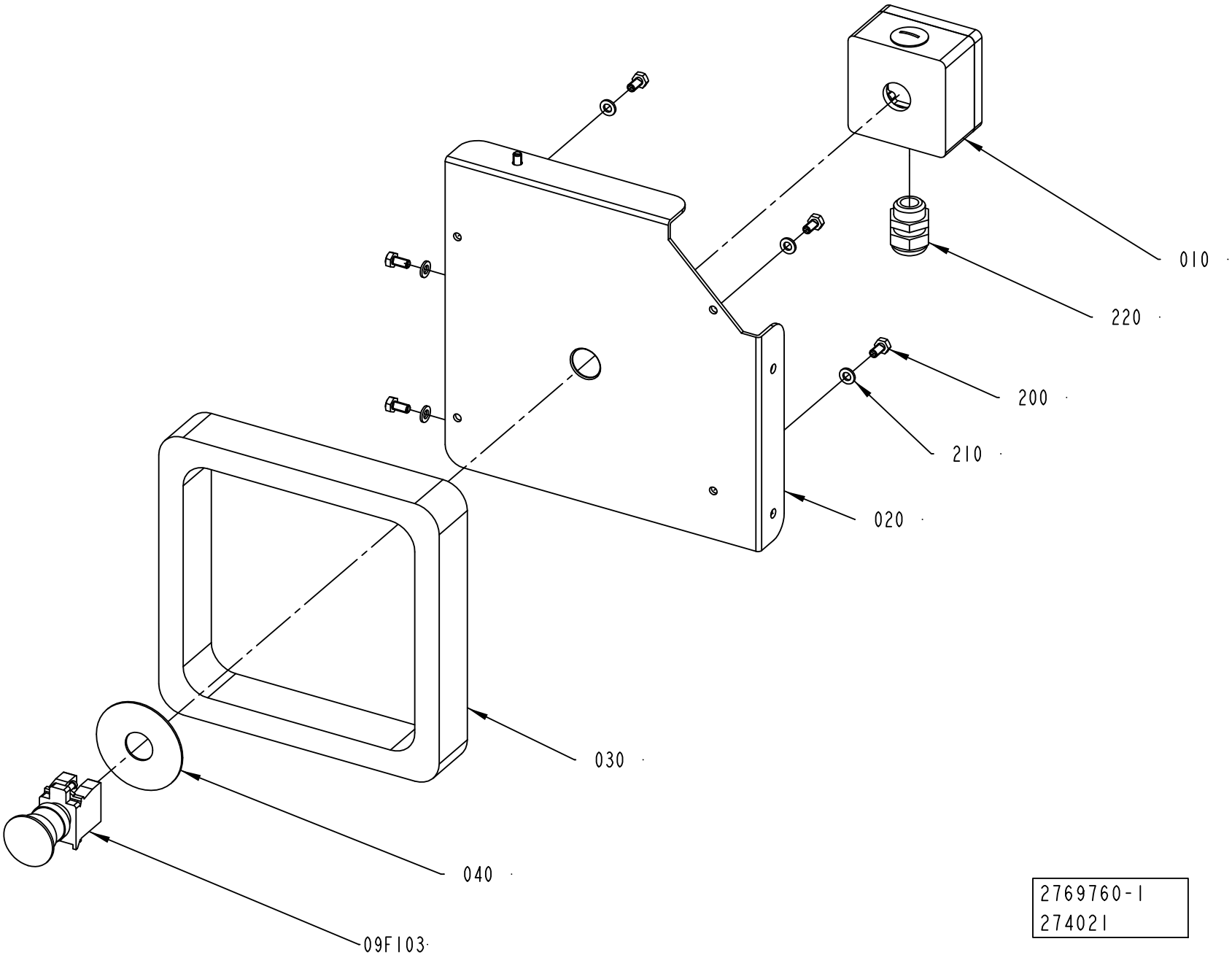
010
220
200
210
020
030
040
09F103
2769760-1
274021

ECM: 350251 - 20080701
Group number: 2769760-0100
Assembly Drawing: 2769760-1_1_AA

| Pos | Part No | UN | Qty | Description | Page No |
|---|---|---|---|---|---|
| - | | | | | |
| 010 | 1037130-0000 | | 1 | ,CONNECTION BOX | |
| 020 | 2779763-0000 | | 1 | COVER | |
| 030 | 2779771-0000 | | 1 | SPACER | |
| 040 | 486826-0001 | | 1 | 11"SIGN ""EMERGENCY STOP""" | |
| 200 | 312105-0366 | | 7 | SCREW M6S ISO 4017 M6X12 A480 | |
| 210 | 315105-0153 | | 7 | WASHER BRB 6,4X12 RFR | |
| 220 | 352103-0110 | | 1 | CABLE GLAND, STR 16, PR22,5/PG16 | |
| 09F103 | 90458-1651 | | 1 | EMERGENCY STOP, ZB4-BS-844 ZB4-BZ-104 | |

| Pos | Part No | UN | Qty | Description | Page No |
|---|---|---|---|---|---|

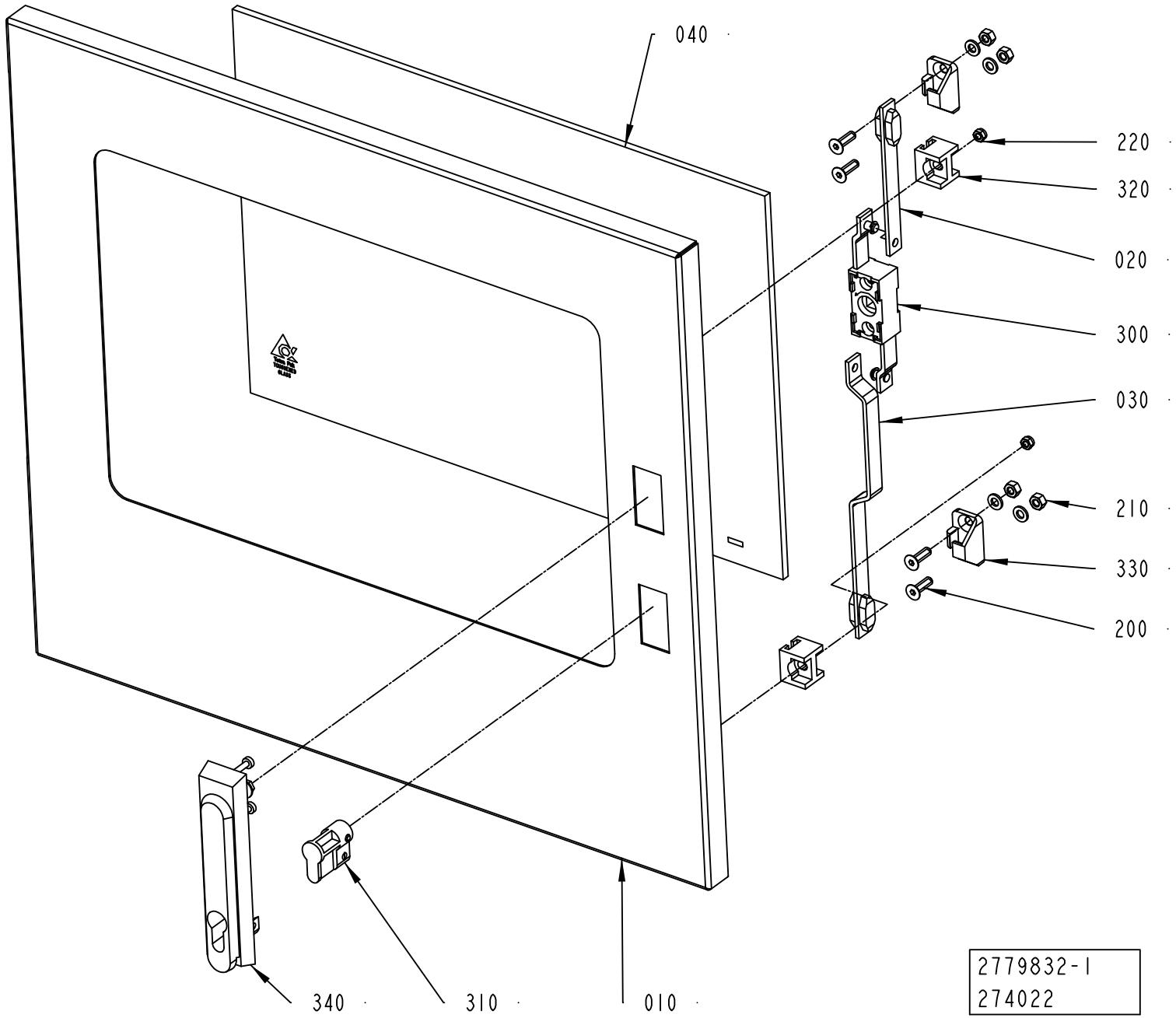
040
220
320
020
300
030
210
330
200
340
310
010
2779832-1
274022

ECM: 274522 - 20060921
Group number: 2779832-0100
Assembly Drawing: 2779832-1_1_AA

| Pos | Part No | UN | Qty | Description | Page No |
|---|---|---|---|---|---|
| - | | | | | |
| 010 | 2779838-0000 | | 1 | DOOR | |
| 020 | 2563891-0000 | | 1 | STRUT | |
| 030 | 2563892-0000 | | 1 | STRUT | |
| 040 | 2779839-0000 | | 1 | GLASS | |
| 200 | 312155-0370 | | 4 | SCREW DIN 7991 MF6S M6X20 A4 70 | |
| 210 | 312605-0316 | | 4 | HEXAGON NUT, M6M M6 A280 | |
| 220 | 312812-0314 | | 2 | HEXAGON NUT, NY-LOCK M5 A480 | |
| 230 | 315105-0153 | | 4 | WASHER BRB 6,4X12 RFR | |
| 300 | 90237-0123 | | 1 | LOCK, 1121-U10C | |
| 310 | 90237-0128 | | 1 | LOCK CYLINDER, 1109-SU125 | |
| 320 | 90237-0144 | | 2 | GUIDE, 1121-SU540 | |
| 330 | 90237-0147 | | 2 | LOCKING LUG, NO. 1121-53-0P | |
| 340 | 90237-0175 | | 1 | TURNING HANDLE, 1125-U185-0A | |
| 360 | 90157-0041 | | 1 | SEALING COMPOUND, RHODORSEAL 5651 | |

| Pos | Part No | UN | Qty | Description | Page No |
|---|---|---|---|---|---|

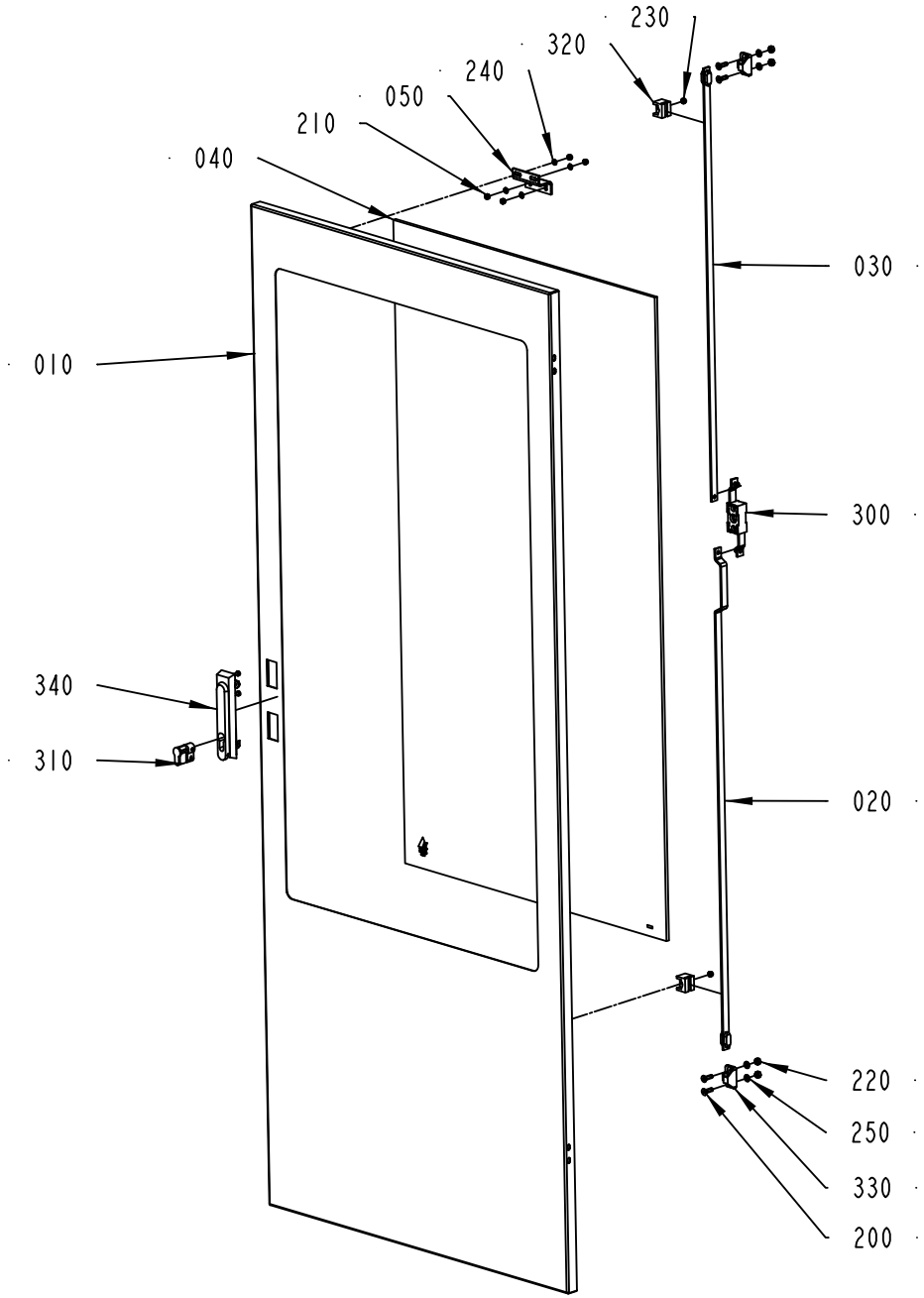
230
320
240
050
210
040
030
010
300
340
310
020
220
250
330
200
2779834-1
274022

ECM: 445108 - 20100701
Group number: 2779834-0100
Assembly Drawing: 2779834-1_1_AA

| Pos | Part No | UN | Qty | Description | Page No |
|---|---|---|---|---|---|
| - | | | | | |
| 010 | 2781279-0000 | | 1 | DOOR | |
| 020 | 2551030-0000 | | 1 | STRUT | |
| 030 | 2781285-0000 | | 1 | STRUT | |
| 040 | 2781278-0000 | | 1 | GLASS | |
| 050 | 2595618-0000 | | 1 | BRACKET | |
| 200 | 312155-0370 | | 4 | SCREW DIN 7991 MF6S M6X20 A4 70 | |
| 210 | 312605-0314 | | 2 | HEXAGON NUT, M6M M5 A280 | |
| 220 | 312605-0316 | | 4 | HEXAGON NUT, M6M M6 A280 | |
| 230 | 312812-0314 | | 4 | HEXAGON NUT, NY-LOCK M5 A480 | |
| 240 | 315105-0146 | | 4 | WASHER BRB 5,3X10 RFR | |
| 250 | 315105-0153 | | 4 | WASHER BRB 6,4X12 RFR | |
| 300 | 90237-0123 | | 1 | LOCK, 1121-U10C | |
| 310 | 90237-0128 | | 1 | LOCK CYLINDER, 1109-SU125 | |
| 320 | 90237-0144 | | 2 | GUIDE, 1121-SU540 | |
| 330 | 90237-0147 | | 2 | LOCKING LUG, NO. 1121-53-0P | |
| 340 | 90237-0175 | | 1 | TURNING HANDLE, 1125-U185-0A | |
| 360 | 90157-0041 | | 1 | SEALING COMPOUND, RHODORSEAL 5651 | |

| Pos | Part No | UN | Qty | Description | Page No |
|---|---|---|---|---|---|

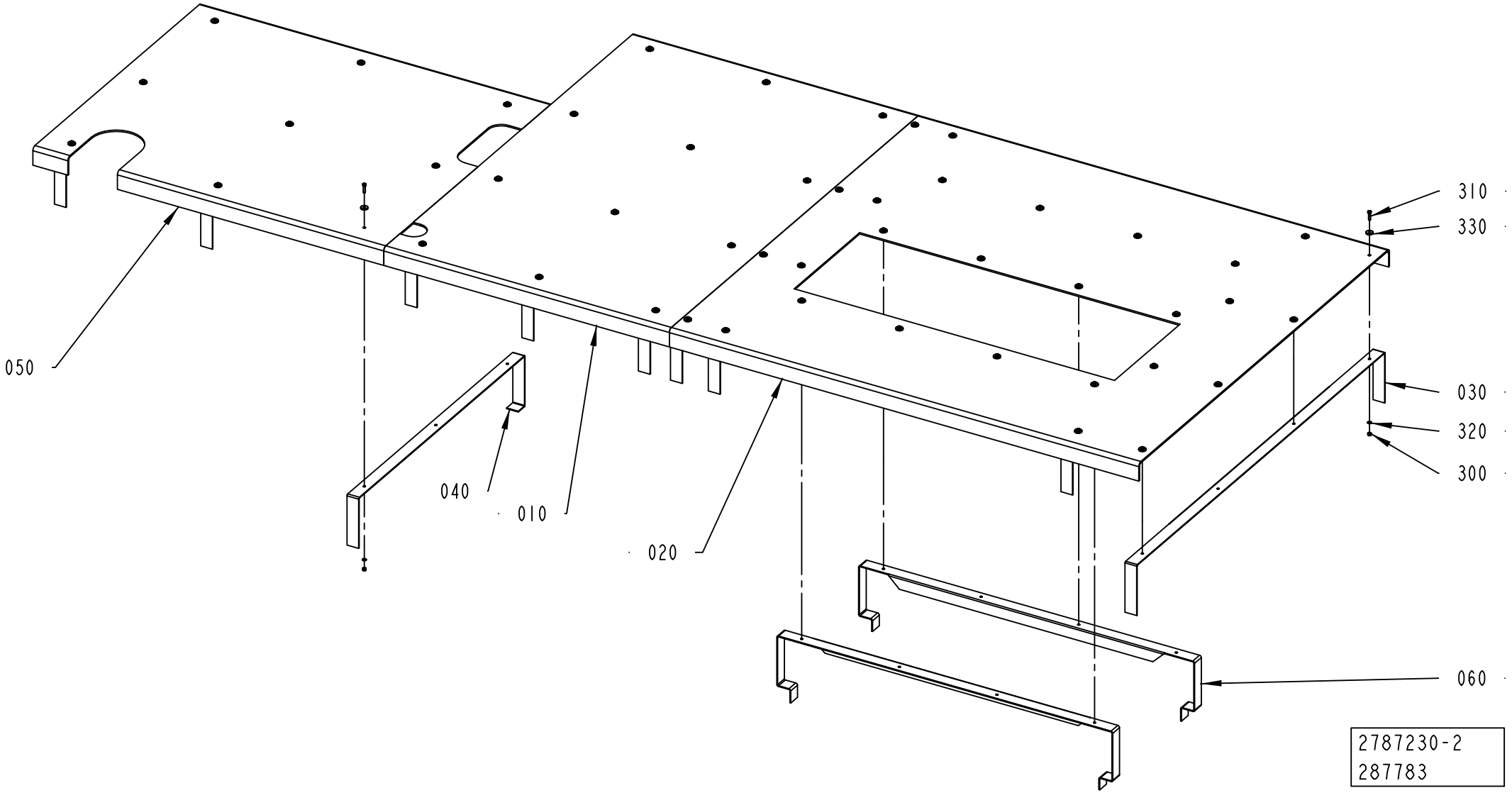
310
330
050
030
320
040
010
300
020
060
2787230-2
287783

ECM: 446240 - 20100701
Group number: 2787230-0100
Assembly Drawing: 2787230-2_1_AA

| Pos | Part No | UN | Qty | Description | Page No |
|---|---|---|---|---|---|
| **RECAP3, RECAP2 A3** | | | | | |
| 010 | 2817780-0000 | | 1 | PLATE | |
| 020 | 2817781-0000 | | 1 | PLATE | |
| 060 | 2817782-0000 | | 3 | BRACKET | |
| 300 | 312812-0316 | | 49 | HEXAGON NUT, NY-LOCK M6 A480 | |
| 310 | 312105-0372 | | 49 | SCREW M6S ISO 4017 M6X25 A480 | |
| 320 | 315105-0153 | | 49 | WASHER BRB 6,4X12 RFR | |
| 330 | 315125-0153 | | 49 | WASHER TBRSB 6,4X22X4 A4 | |
| **Common Parts** | | | | | |
| 030 | 2779823-0000 | | 7 | BRACKET | |
| 040 | 2779824-0000 | | 3 | BRACKET | |
| 050 | 2779825-0000 | | 1 | PLATE | |

| Pos | Part No | UN | Qty | Description | Page No |
|---|---|---|---|---|---|

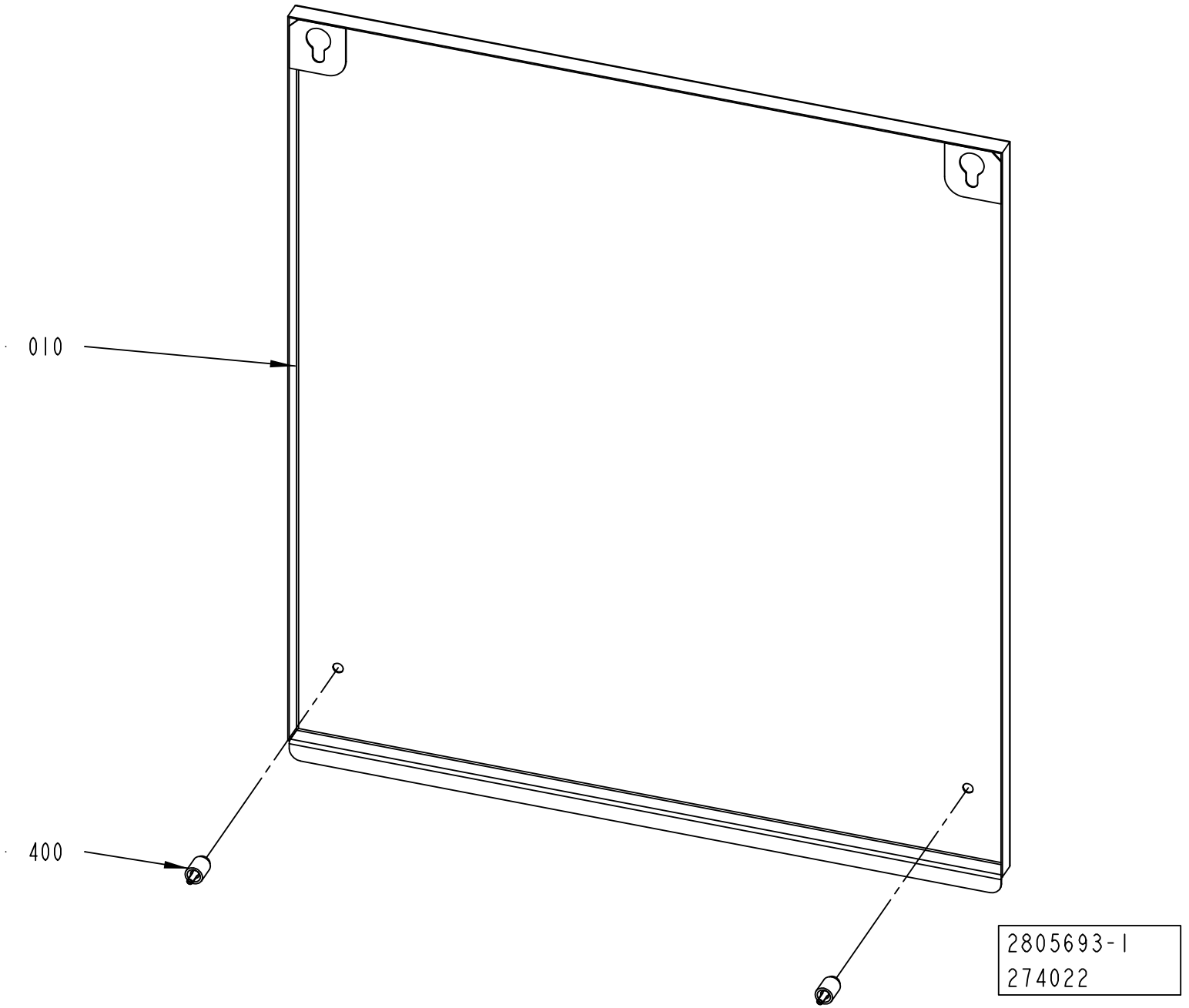
010
400
2805693-1
274022

ECM: 274542 - 20060921
Group number: 2805693-0100
Assembly Drawing: 2805693-1_1_AA

| Pos | Part No | UN | Qty | Description | Page No |
|---|---|---|---|---|---|
| - | | | | | |
| 010 | 2805692-0000 | | 1 | COVER | |
| 400 | 90226-0458 | | 2 | MOUNTING SCREW | |

| Pos | Part No | UN | Qty | Description | Page No |
|---|---|---|---|---|---|

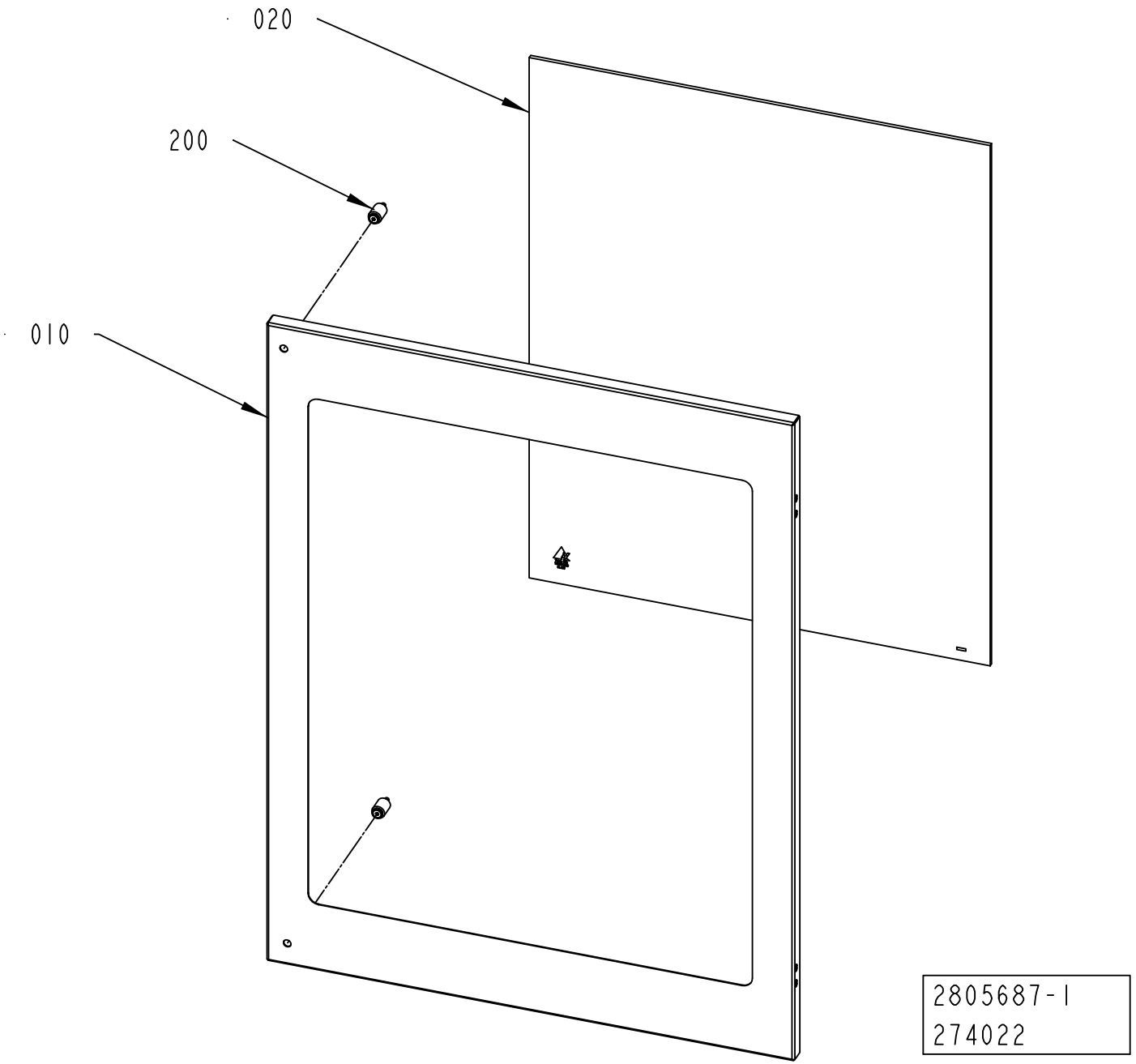
020
200
010
2805687-1
274022

ECM: 274543 - 20060921
Group number: 2805687-0100
Assembly Drawing: 2805687-1_1_AA

| Pos | Part No | UN | Qty | Description | Page No |
|---|---|---|---|---|---|
| - | | | | | |
| 010 | 2805688-0000 | | 1 | DOOR | |
| 020 | 2805691-0000 | | 1 | GLASS | |
| 200 | 90226-0458 | | 2 | MOUNTING SCREW | |
| 220 | 90157-0041 | | 1 | SEALING COMPOUND, RHODORSEAL 5651 | |

| Pos | Part No | UN | Qty | Description | Page No |
|---|---|---|---|---|---|

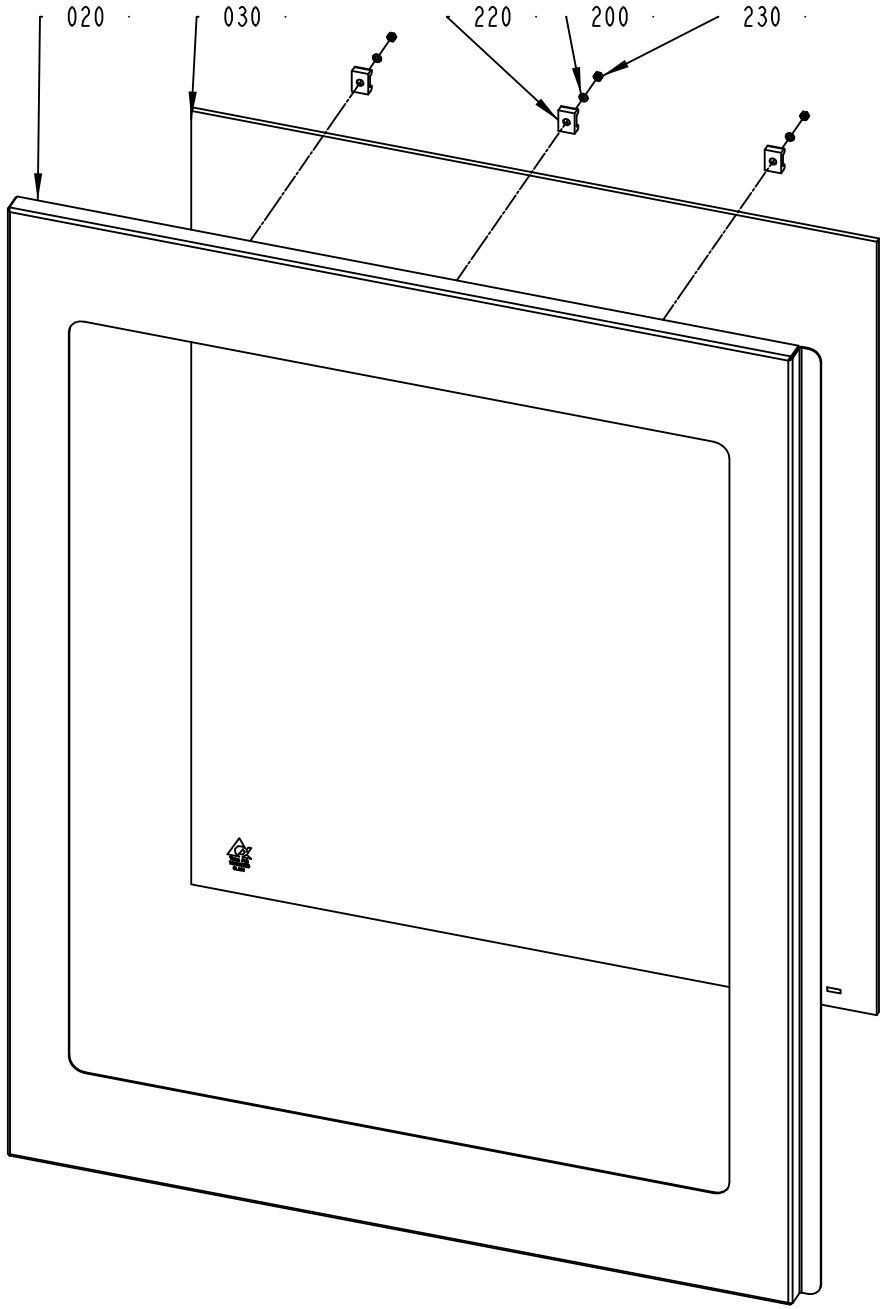
020
030
220
200
230
2805694-1
300393

ECM: 303484 - 20070517
Group number: 2805694-0100
Assembly Drawing: 2805694-1_1_AB

| Pos | Part No | UN | Qty | Description | Page No |
|---|---|---|---|---|---|
| - | | | | | |
| 020 | 2805695-0000 | | 1 | DOOR | |
| 030 | 2805691-0000 | | 1 | GLASS | |
| 110 | 90157-0041 | | 1 | SEALING COMPOUND, RHODORSEAL 5651 | |
| 200 | 315105-0136 | | 3 | WASHER BRB 4,3X8 RFR | |
| 220 | 352113-0204 | | 3 | ANCHOR PLATES FOR STRIPS, TYPE TM3S25-M | |
| 230 | 312605-0312 | | 3 | HEXAGON NUT, M6M M4 A280 | |

| Pos | Part No | UN | Qty | Description | Page No |
|---|---|---|---|---|---|

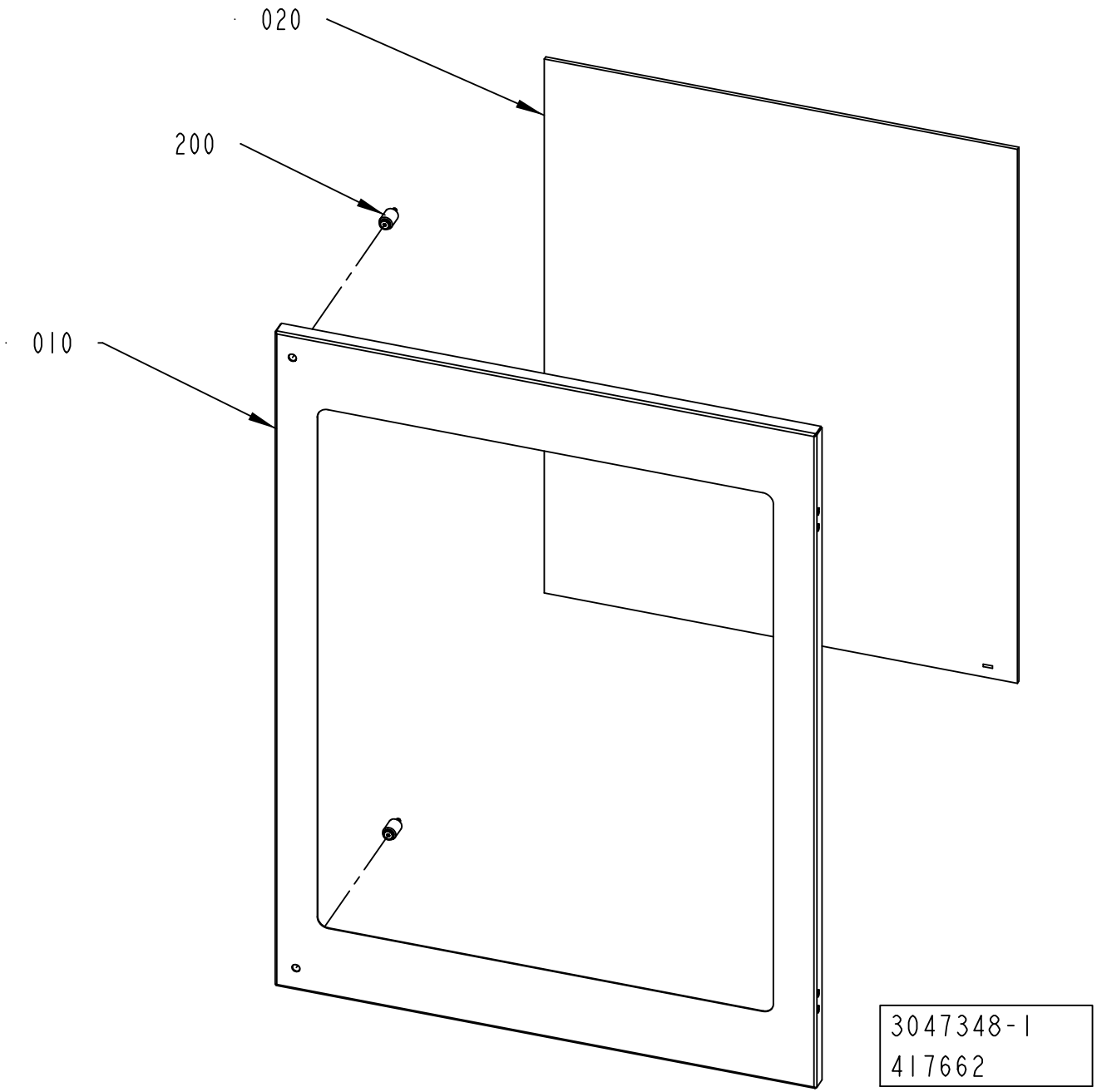
020
200
010
3047348-1
417662

ECM: 419452 - 20100110
Group number: 3047348-0100
Assembly Drawing: 3047348-1_1_AA

| Pos | Part No | UN | Qty | Description | Page No |
|---|---|---|---|---|---|
| - | | | | | |
| 010 | 3047349-0000 | | 1 | DOOR | |
| 020 | 2805691-0000 | | 1 | GLASS | |
| 200 | 90226-0458 | | 2 | MOUNTING SCREW | |
| 220 | 90157-0041 | | 1 | SEALING COMPOUND, RHODORSEAL 5651 | |

| Pos | Part No | UN | Qty | Description | Page No |
|---|---|---|---|---|---|

Tetra Pak

# SPC
## Spare Parts Catalogue

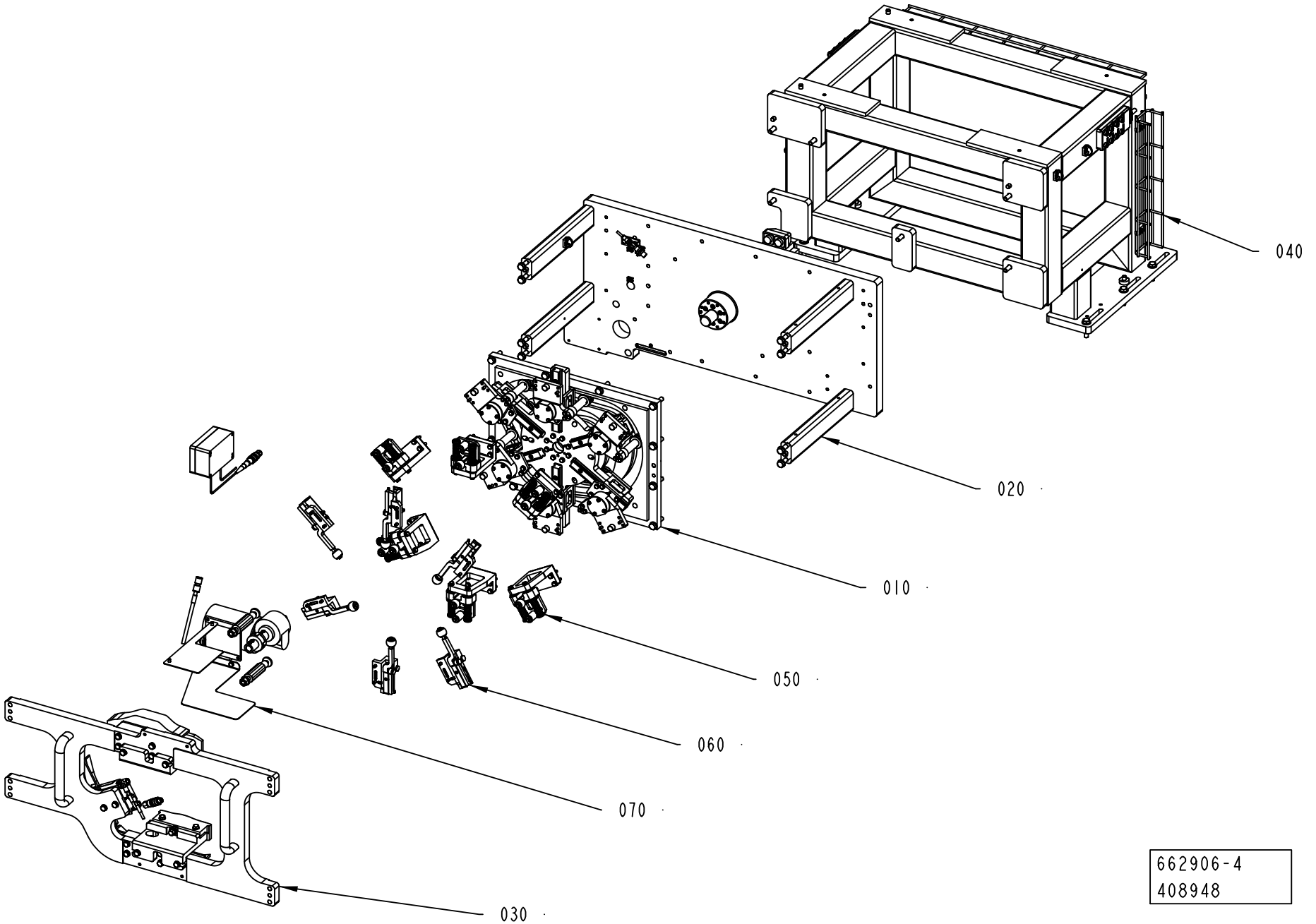
040
020
010
050
060
070
030
662906-4
408948

ECM: 438897 - 20100701
Group number: 662906-0200
Assembly Drawing: 662906-4_1_AA

| Pos | Part No | UN | Qty | Description | Page No |
|---|---|---|---|---|---|
| **RECAP3, RECAP2 A3** | | | | | |
| 070 | 2703755-0100 | | 1 | WHEEL | **4-5** |
| **Common Parts** | | | | | |
| 010 | 2746938-0100 | | 1 | TRANSFER UNIT | **4-7** |
| 020 | 2837072-0100 | | 1 | DRIVE UNIT | **4-17** |
| 030 | 2839315-0100 | | 1 | CAMMODULE | **4-23** |
| 040 | 2751664-0200 | | 1 | FRAME | **4-37** |
| 050 | 2746939-0100 | | 1 | CAP CARRIER GROUP | **4-39** |
| 060 | 2746941-0200 | | 1 | CAP HOLDERS GROUP | **4-43** |

| Pos | Part No | UN | Qty | Description | Page No |
|---|---|---|---|---|---|

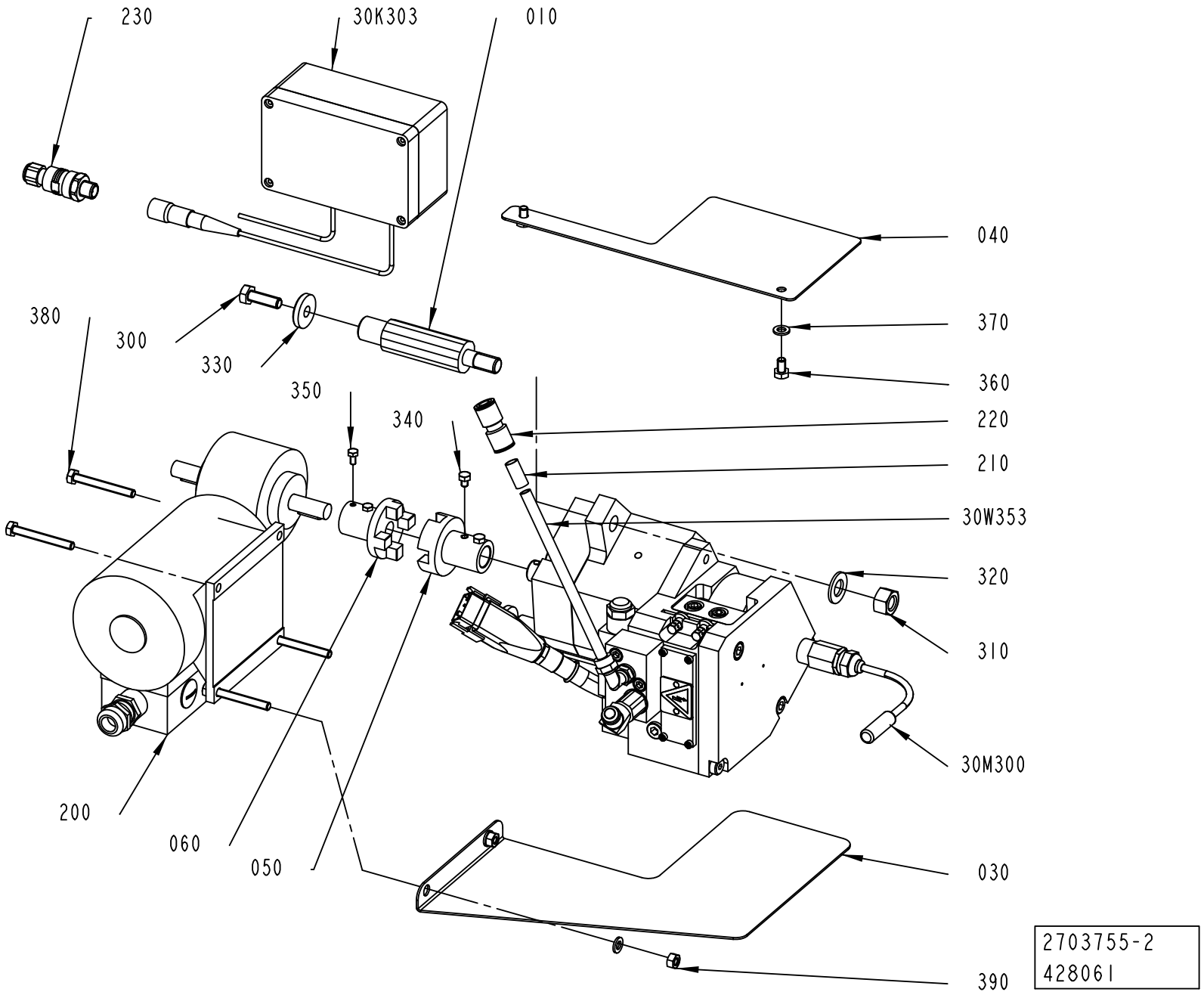
230
30K303
010
040
380
300
330
350
370
360
340
220
210
30W353
320
310
30M300
200
060
050
030
390
2703755-2
428061

ECM: 428954 - 20100401
Group number: 2703755-0100
Assembly Drawing: 2703755-2_1_AC

| Pos | Part No | UN | Qty | Description | Page No |
|---|---|---|---|---|---|
| **CAP 30/FLEX** | | | | | |
| 030 | 2937267-0000 | | 1 | COVER | |
| 040 | 2937266-0000 | | 1 | COVER | |
| 360 | 312105-0364 | | 2 | SCREW M6S ISO 4017 M6X10 A480 | |
| 390 | 312605-0316 | | 2 | HEXAGON NUT, M6M M6 A280 | |
| **Common Parts** | | | | | |
| 010 | 2870089-0000 | | 2 | SHAFT | |
| 050 | 2994043-0000 | | 1 | JOINT | |
| 060 | 2994044-0000 | | 1 | JOINT | |
| 200 | 90458-0755 | | 1 | GEARS, WORM MOTOR 1600079 | |
| 210 | 90459-7370 | | 1 | MARKING FOR PNEUM. TUBING, PRZ08 | |
| 220 | 350009-0003 | | 1 | PUSH-IN FITTING QS-F-8 | |
| 230 | 90459-6570 | | 1 | CONNECTOR M12 5-POLES MALE, RSCN5/7 | |
| 300 | 312105-0453 | | 2 | SCREW M6S ISO 4017 M8X25 A480 | |
| 310 | 312605-0322 | | 2 | HEXAGON NUT, M6M M12 A280 | |
| 320 | 315105-0178 | | 2 | WASHER BRB 13X24 RFR | |
| 330 | 315125-0165 | | 2 | WASHER TBRSB 8,4X26X5 A4 | |
| 340 | 90287-0199 | | 2 | SCREW M6S ISO 4017 M5X6 A480 | |
| 350 | 312105-0287 | | 2 | SCREW M6S ISO 4017 M4X8 A470 | |
| 370 | 315105-0153 | | 4 | WASHER BRB 6,4X12 RFR | |
| 380 | 312109-0380 | | 4 | SCREW M6S ISO 4017 M6X50 A480 | |
| 30K303 | 90600-2067 | | 1 | LEVEL CONTROL LC25, #7125832 | |
| 30K353 | 90600-0553 | MM | 500 | TUBE, 8X1 MM PTFE | |
| 30M300 | 90600-0440 | | 1 | WHEEL APPLICATOR 60 PLATFORM, #7132058 | |
| | *90459-6657* | | *1* | *MODULE, NORDSON #1051725* | |
| | *90459-6046* | | *1* | *SENSOR, NORDSON LC25 #783199* | |

| Pos | Part No | UN | Qty | Description | Page No |
|---|---|---|---|---|---|

Machine Type | Group Description | Used-In | Group Number | Page No

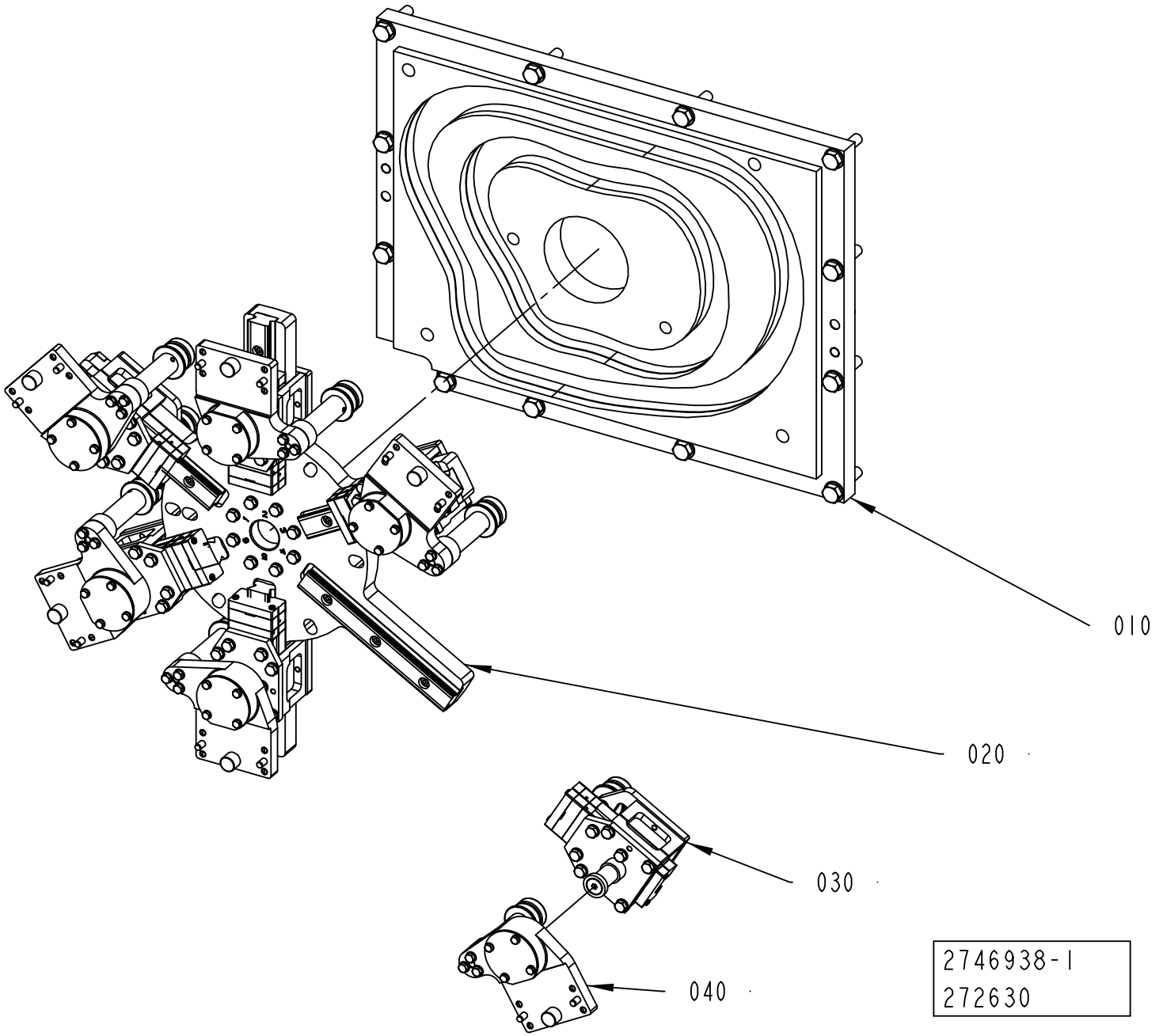
010
020
030
040
2746938-1
272630

ECM: 272707 - 20060921
Group number: 2746938-0100
Assembly Drawing: 2746938-1_1_AA

| Pos | Part No | UN | Qty | Description | Page No |
|---|---|---|---|---|---|
| - | | | | | |
| 010 | 2751655-0100 | | 1 | CAM | **4-9** |
| 020 | 2751656-0100 | | 1 | STAR WHEEL | **4-11** |
| 030 | 2751657-0100 | | 6 | SLIDER | **4-13** |
| 040 | 2751658-0100 | | 6 | FOLLOWER CAM | **4-15** |

| Pos | Part No | UN | Qty | Description | Page No |
|---|---|---|---|---|---|

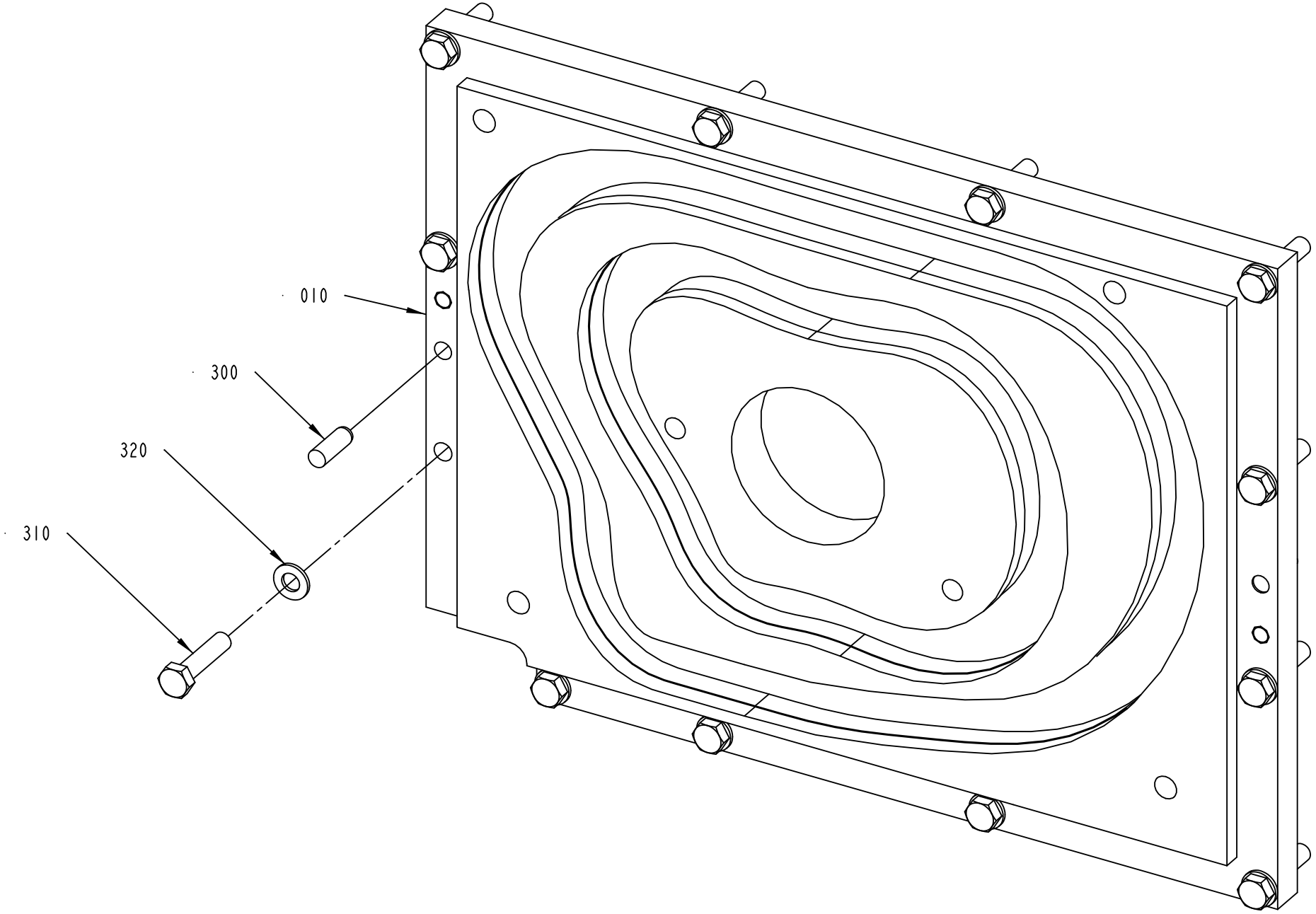


2751655-1
272630

ECM: 272706 - 20060921
Group number: 2751655-0100
Assembly Drawing: 2751655-1_1_AA

| Pos | Part No | UN | Qty | Description | Page No |
|---|---|---|---|---|---|
| - | | | | | |
| 010 | 2716116-0000 | | 1 | CAM | |
| 300 | 311103-0458 | | 2 | PARALLEL PIN ISO 2338 10M6X30 A1 | |
| 310 | 312105-0500 | | 12 | SCREW M6S ISO 4014 M10X45 A480 | |
| 320 | 315106-0173 | | 12 | WASHER ISO 7089-10-200 HV A4 | |

| Pos | Part No | UN | Qty | Description | Page No |
|---|---|---|---|---|---|

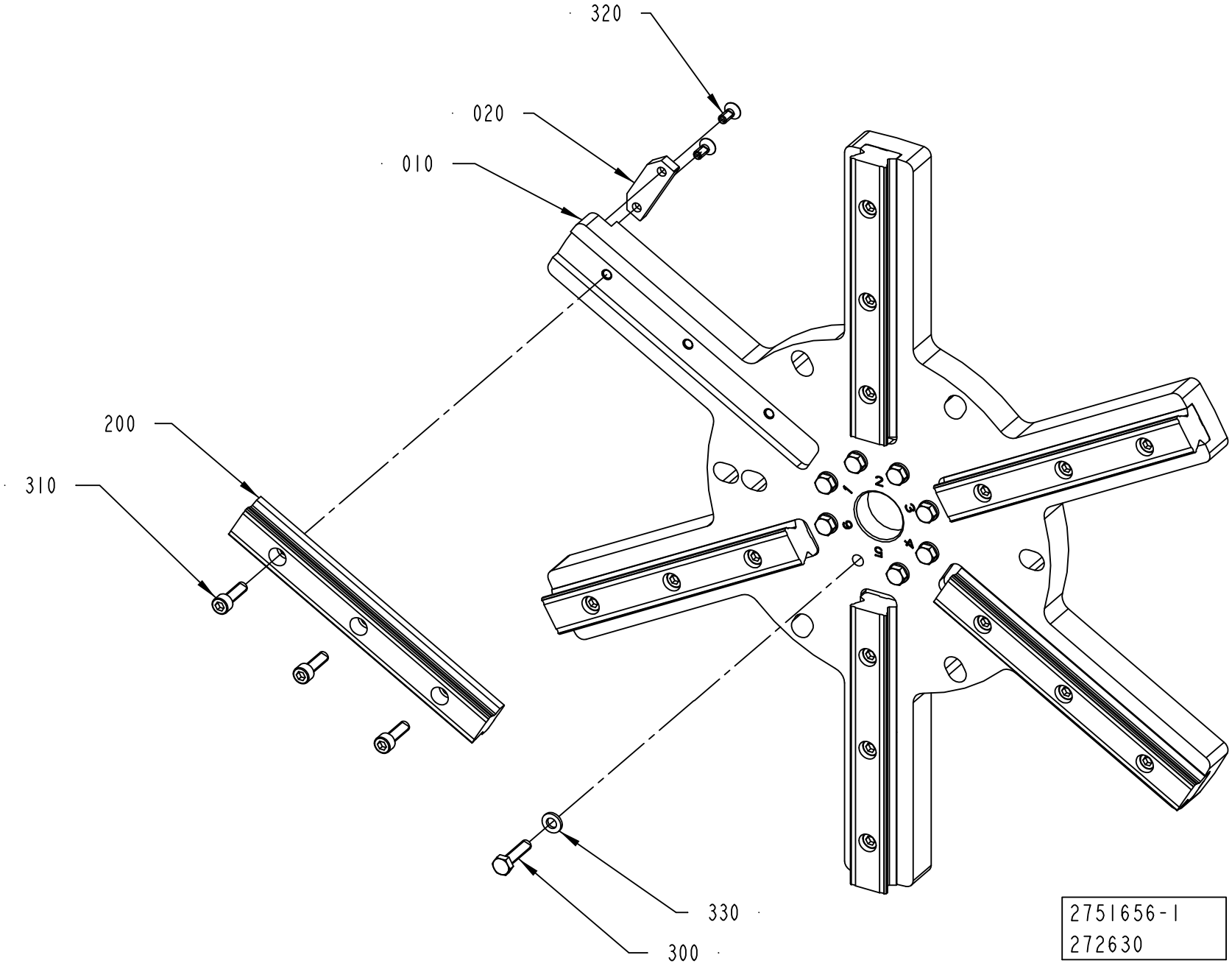
320
020
010
200
310
330
300
2751656-1
272630

ECM: 290152 - 20061221
Group number: 2751656-0100
Assembly Drawing: 2751656-1_1_AA

| Pos | Part No | UN | Qty | Description | Page No |
|---|---|---|---|---|---|
| - | | | | | |
| 010 | 2751702-0000 | | 1 | STAR WHEEL | |
| 020 | 2751706-0000 | | 1 | FLAG | |
| 200 | 90600-0434 | | 6 | GUIDE BAR, SSR25-180L-YM G30/30 | |
| 300 | 312105-0372 | | 8 | SCREW M6S ISO 4017 M6X25 A480 | |
| 310 | 312115-0370 | | 18 | SCREW ISO4762 M6X20 A4 80 | |
| 320 | 312155-0327 | | 2 | SCREW DIN 7991 MF6S M5X12 A4 70 | |
| 330 | 315106-0153 | | 8 | WASHER ISO 7089-6-200 HV A4 | |

| Pos | Part No | UN | Qty | Description | Page No |
|---|---|---|---|---|---|

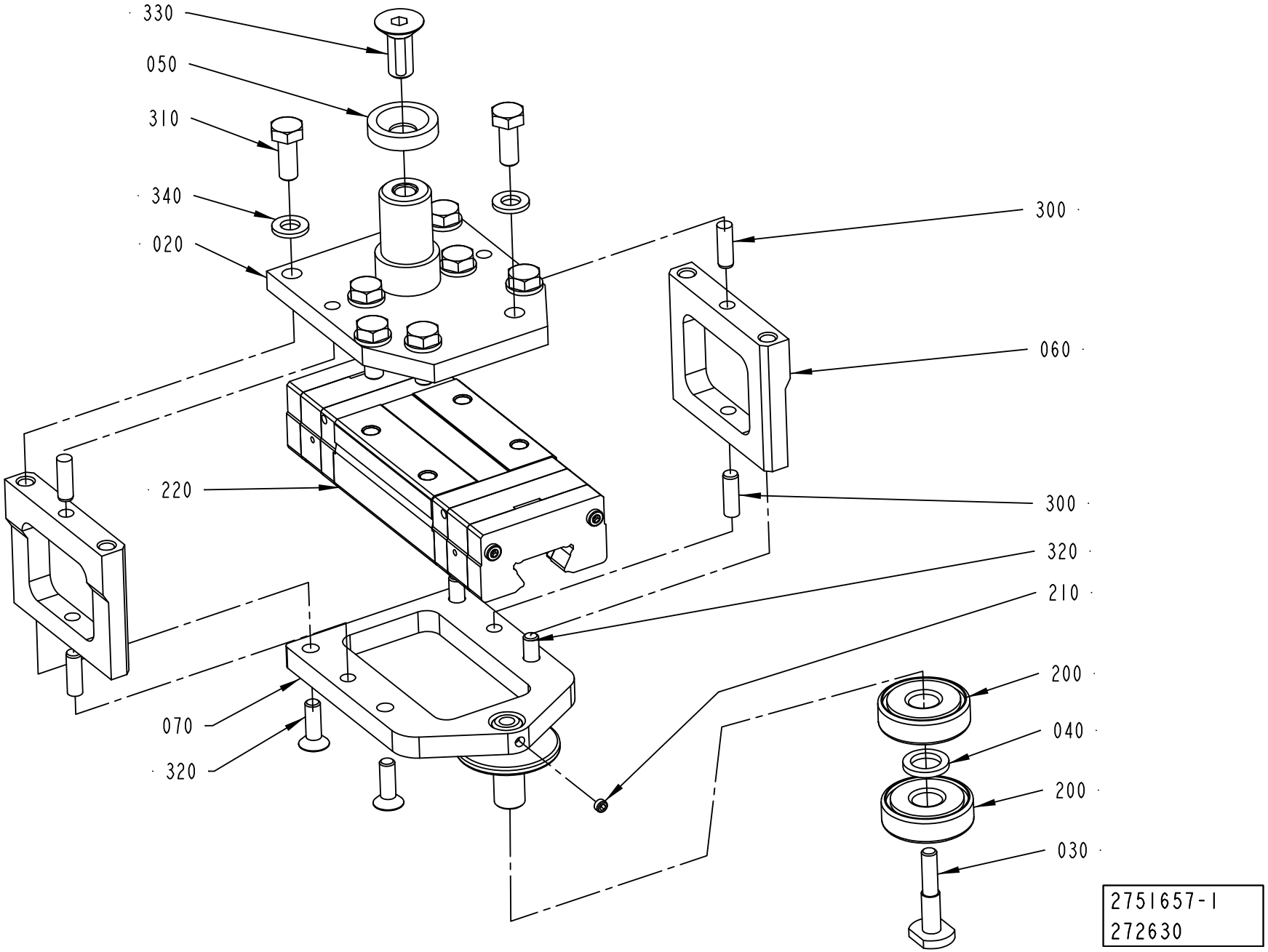
330
050
310
340
020
300
060
220
300
320
210
200
040
200
030
070
320
2751657-1
272630

ECM: 349992 - 20080701
Group number: 2751657-0100
Assembly Drawing: 2751657-1_1_AA

| Pos | Part No | UN | Qty | Description | Page No |
|---|---|---|---|---|---|
| - | | | | | |
| 020 | 2751739-0000 | | 1 | BRACKET | |
| 030 | 2699680-0000 | | 1 | SCREW | |
| 040 | 2699681-0000 | | 1 | SPACER | |
| 050 | 2699683-0000 | | 1 | WASHER | |
| 060 | 2703697-0000 | | 2 | SIDE | |
| 070 | 2751703-0000 | | 1 | BRACKET | |
| 200 | 90214-0123 | | 2 | BALL BEARING, 10X30X9 MM | |
| 210 | 90459-1395 | | 1 | SCREW HEX.SOCK.SET CONEPT.MS6SS M4X4 A2 | |
| 220 | 90600-0344 | | 1 | CARRIAGE, SSR 25 XWYQZSSHH M | |
| 300 | 311103-0308 | | 4 | PARALLEL PIN ISO 2338 5M6X16 A1 | |
| 310 | 312105-0368 | | 8 | SCREW M6S ISO 4017 M6X16 A480 | |
| 320 | 312155-0329 | | 4 | SCREW DIN 7991 MF6S M5X16 A4 70 | |
| 330 | 312155-0451 | | 1 | SCREW DIN 7991 MF6S M8X20 A4 70 | |
| 340 | 315105-0153 | | 8 | WASHER BRB 6,4X12 RFR | |

| Pos | Part No | UN | Qty | Description | Page No |
|---|---|---|---|---|---|

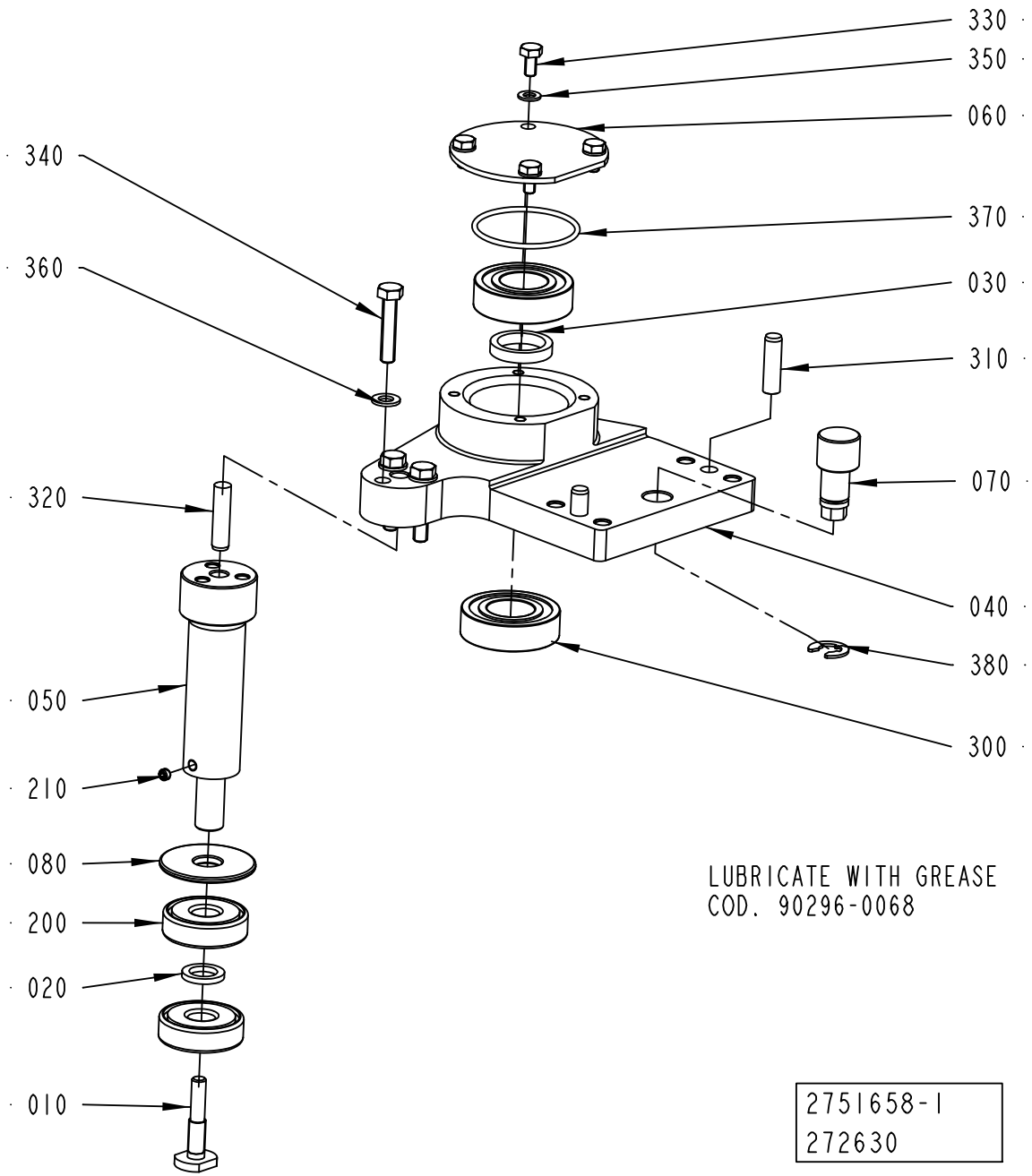
330
350
060
340
370
360
030
310
070
320
040
380
050
300
210
080
200
020
010
LUBRICATE WITH GREASE
COD. 90296-0068
2751658-1
272630

ECM: 290153 - 20061221
Group number: 2751658-0100
Assembly Drawing: 2751658-1_1_AA

| Pos | Part No | UN | Qty | Description | Page No |
|---|---|---|---|---|---|
| - | | | | | |
| 010 | 2699680-0000 | | 1 | SCREW | |
| 020 | 2699681-0000 | | 1 | SPACER | |
| 030 | 2699682-0000 | | 1 | SPACER | |
| 040 | 2751704-0000 | | 1 | PIVOT BRACKET | |
| 050 | 2751705-0000 | | 1 | SHAFT | |
| 060 | 2703696-0000 | | 1 | PROTECTIVE COVER | |
| 070 | 2751698-0000 | | 1 | ECCENTRIC SHAFT | |
| 080 | 2751699-0000 | | 1 | WASHER | |
| 200 | 90214-0123 | | 2 | BALL BEARING, 10X30X9 MM | |
| 210 | 90459-1395 | | 1 | SCREW HEX.SOCK.SET CONEPT.MS6SS M4X4 A2 | |
| 300 | 321308-0203 | | 2 | BALL BEARING 17/35X10 | |
| 310 | 311103-0354 | | 2 | PARALLEL PIN ISO 2338 6M6X22 A1 | |
| 320 | 311103-0355 | | 1 | PARALLEL PIN ISO 2338 6M6X25 A1 | |
| 330 | 312105-0287 | | 4 | SCREW M6S ISO 4017 M4X8 A470 | |
| 340 | 312105-0333 | | 3 | SCREW M6S ISO 4017 M5X25 A480 | |
| 350 | 315105-0136 | | 4 | WASHER BRB 4,3X8 RFR | |
| 360 | 315105-0146 | | 3 | WASHER BRB 5,3X10 RFR | |
| 370 | 315202-0716 | | 1 | O-RING 34,65X1,78 MM | |
| 380 | 315755-0109 | | 1 | RETAINING RING SHAFT DIN 6799 7 SS | |
| 390 | 90296-0068 | | 1 | SHELL ALVANIA GREASE EP 2 | |

| Pos | Part No | UN | Qty | Description | Page No |
|---|---|---|---|---|---|

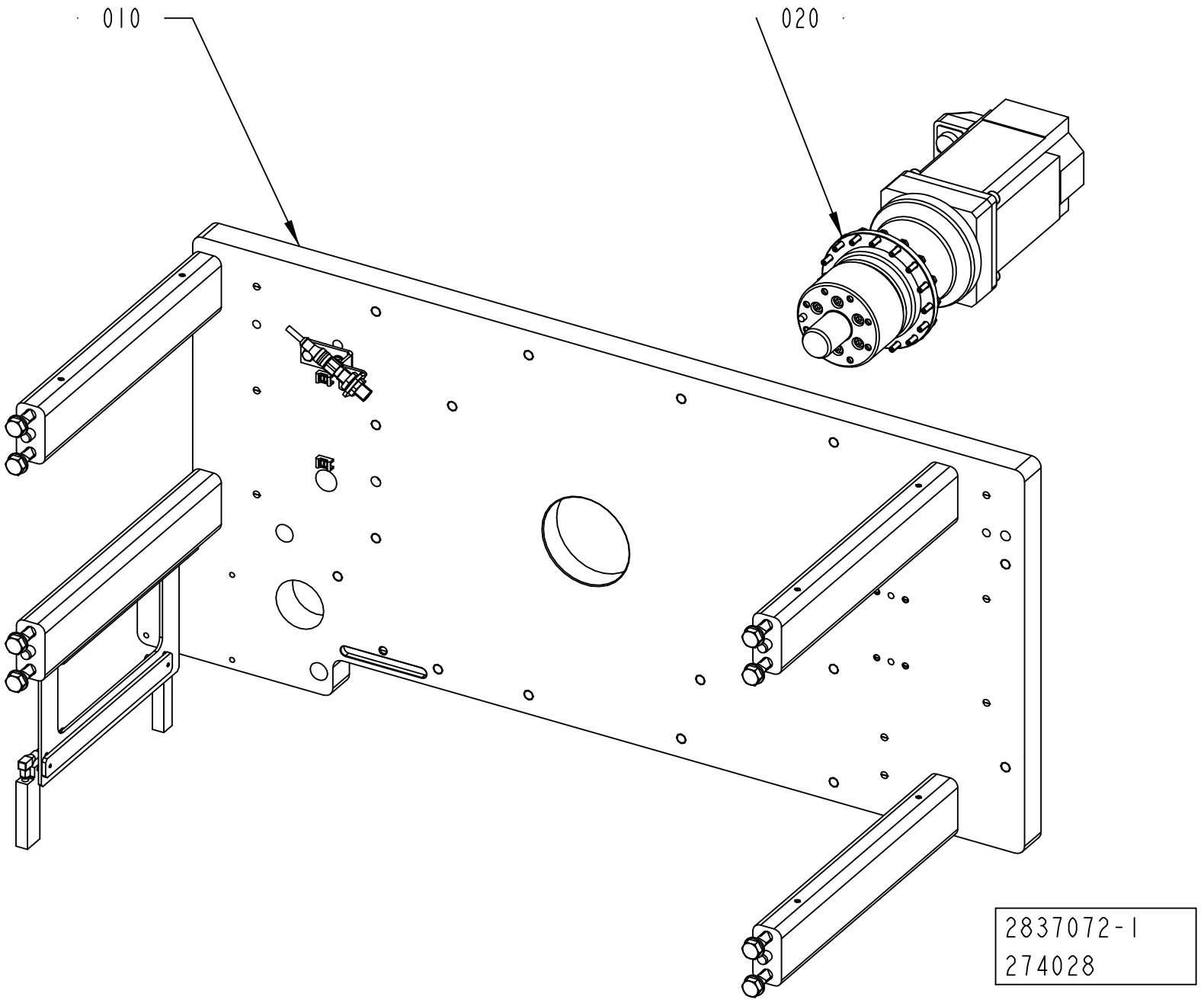
010
020
2837072-1
274028

ECM: 274028 - 20060921
Group number: 2837072-0100
Assembly Drawing: 2837072-1_1_AA

| Pos | Part No | UN | Qty | Description | Page No |
|---|---|---|---|---|---|
| - | | | | | |
| 010 | 2837073-0100 | | 1 | PLATE | **4-19** |
| 020 | 2836507-0100 | | 1 | DRIVE MOTOR | **4-21** |

| Pos | Part No | UN | Qty | Description | Page No |
|---|---|---|---|---|---|

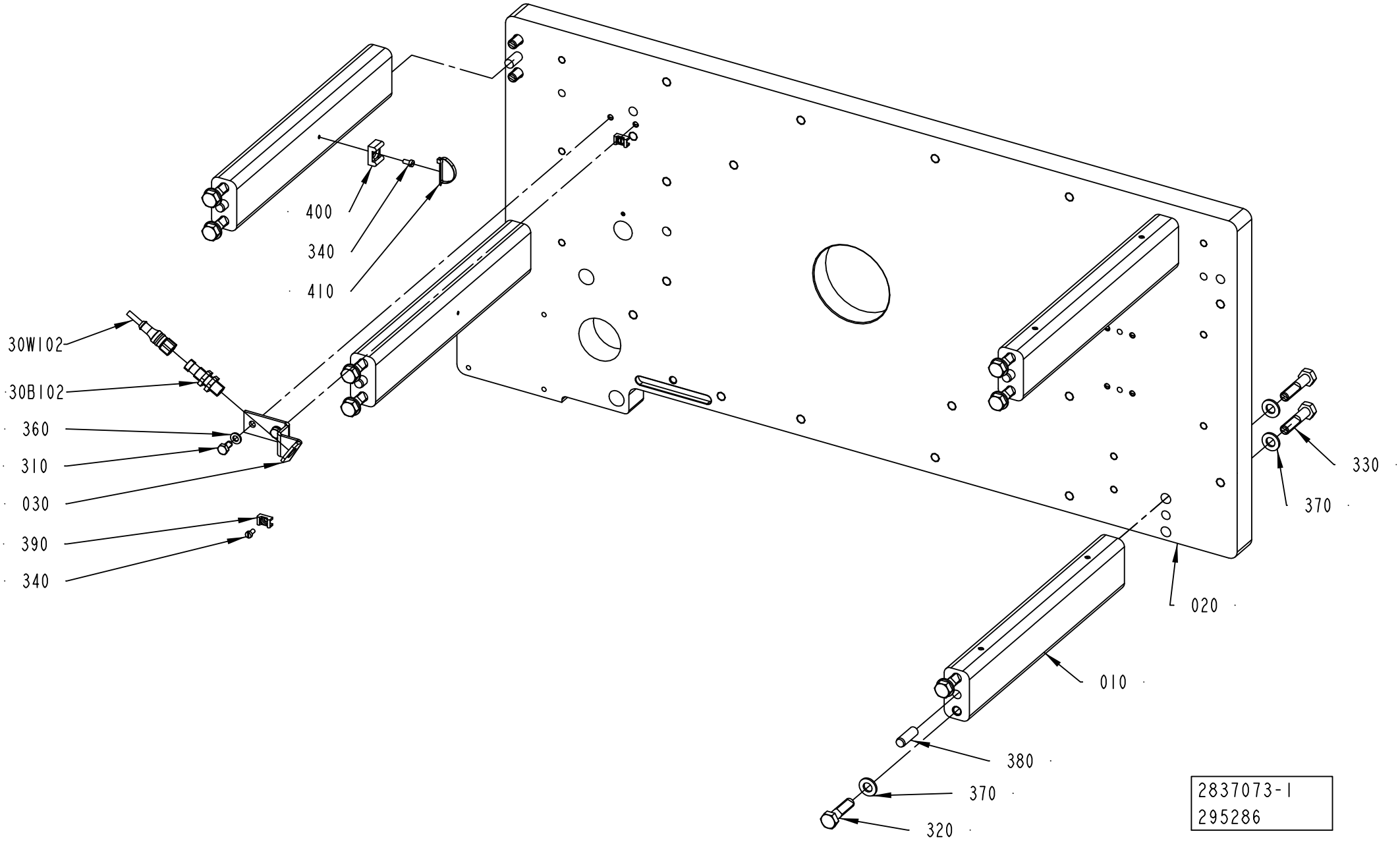
400
340
410
30W102
30B102
360
310
030
390
340
330
370
020
010
380
370
320
2837073-1
295286

ECM: 298769 - 20070323
Group number: 2837073-0100
Assembly Drawing: 2837073-1_1_AB

| Pos | Part No | UN | Qty | Description | Page No |
|---|---|---|---|---|---|
| - | | | | | |
| 010 | 2703704-0000 | | 4 | SPACER STRUT | |
| 020 | 2835939-0000 | | 1 | PLATE | |
| 030 | 2751741-0000 | | 1 | BRACKET | |
| 310 | 312105-0366 | | 2 | SCREW M6S ISO 4017 M6X12 A480 | |
| 320 | 312105-0499 | | 8 | SCREW M6S ISO 4014 M10X40 A480 | |
| 330 | 312105-0500 | | 8 | SCREW M6S ISO 4014 M10X45 A480 | |
| 340 | 312125-0287 | | 3 | SCREW ISO 1207 M4X8 A4 | |
| 360 | 315105-0153 | | 2 | WASHER BRB 6,4X12 RFR | |
| 370 | 315106-0173 | | 16 | WASHER ISO 7089-10-200 HV A4 | |
| 380 | 311103-0458 | | 8 | PARALLEL PIN ISO 2338 10M6X30 A1 | |
| 390 | 352113-0205 | | 2 | ANCHOR PLATES FOR STRIPS, TYPE TM2S8-C10 | |
| 400 | 352113-0203 | | 1 | ANCHOR PLATES FOR STRIPS, TYPE TM3S8-M0 | |
| 410 | 352113-0104 | | 1 | CABLE TIE, BLACK 300X4,8 MM | |
| 30B102 | 90458-2907 | | 1 | PROX.SWITCH IFS204 | |
| 30W102 | 351411-0010 | | 1 | ACTU/SENS. CABLE PRST 4-PRKT 4-07/1,0M | |

| Pos | Part No | UN | Qty | Description | Page No |
|---|---|---|---|---|---|

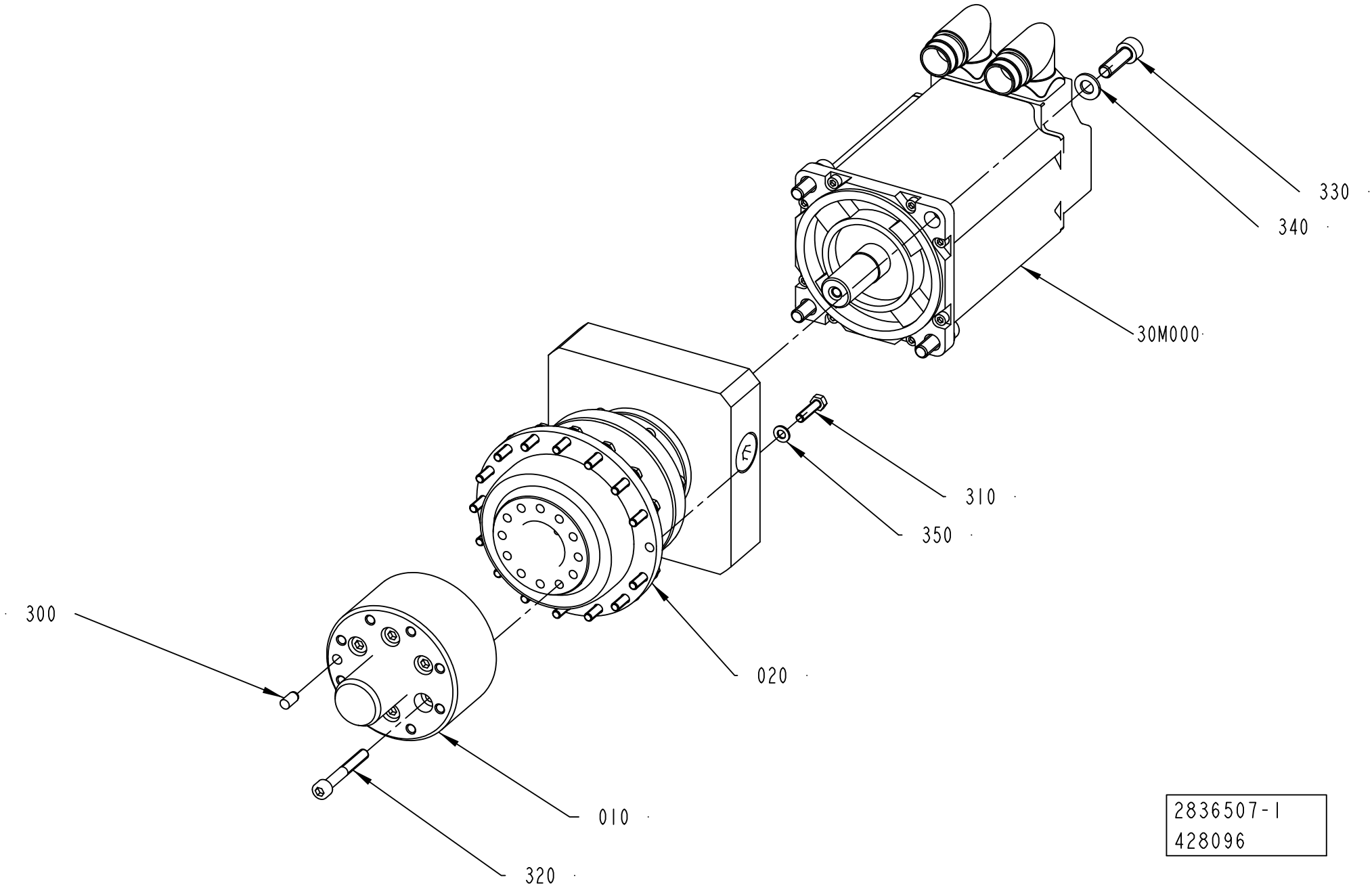
330
340
30M000
310
350
020
300
010
320
2836507-1
428096

ECM: 428939 - 20100401
Group number: 2836507-0100
Assembly Drawing: 2836507-1_1_AB

| Pos | Part No | UN | Qty | Description | Page No |
|---|---|---|---|---|---|
| - | | | | | |
| 010 | 2834311-0000 | | 1 | HUB | |
| 020 | 90600-0761 | | 1 | GEARS,PLANETARY TP010S-MA3-66-0E1/MPL B4 | |
| 300 | 311103-0349 | | 1 | PARALLEL PIN ISO 2338 6M6X12 A1 | |
| 310 | 312105-0331 | | 16 | SCREW M6S ISO 4017 M5X20 A480 | |
| 320 | 312115-0379 | | 6 | SCREW ISO4762 M6X45 A4 80 | |
| 330 | 312115-0453 | | 4 | SCREW ISO4762 M8X25 A4 80 | |
| 340 | 315106-0165 | | 4 | WASHER ISO 7089-8-200 HV A4 | |
| 350 | 315105-0146 | | 16 | WASHER BRB 5,3X10 RFR | |
| 30M000 | 90601-1926 | | 1 | SERVO MOTOR MPL-B430P-MK72AA SERIES A | |

| Pos | Part No | UN | Qty | Description | Page No |
|---|---|---|---|---|---|

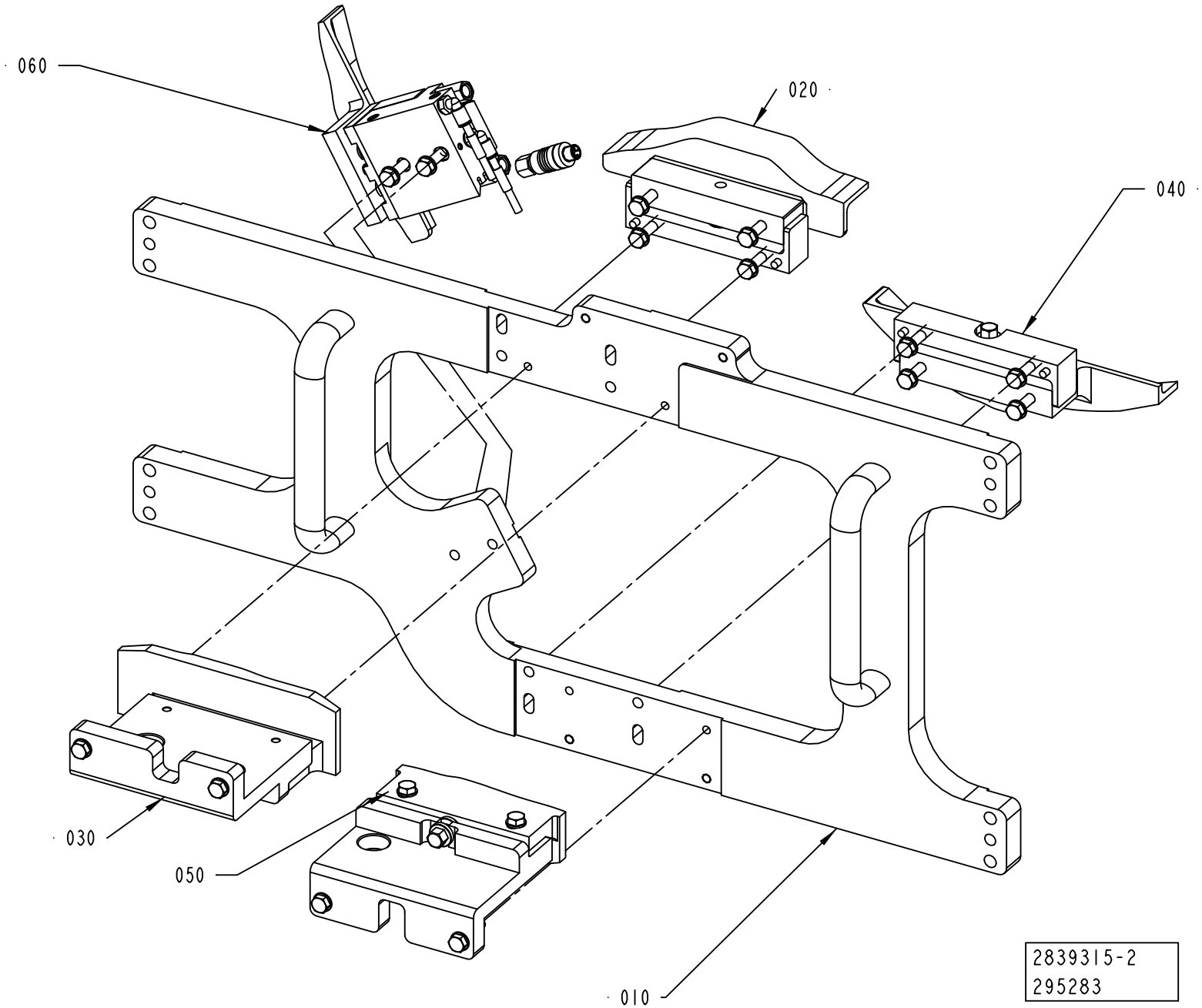
060
020
040
030
050
010
2839315-2
295283

ECM: 438903 - 20100701
Group number: 2839315-0100
Assembly Drawing: 2839315-2_1_AA

| Pos | Part No | UN | Qty | Description | Page No |
|---|---|---|---|---|---|
| **RECAP3, RECAP2 A3** | | | | | |
| 040 | 2839385-0100 | | 1 | CAM | **4-25** |
| 050 | 2839386-0100 | | 1 | CAM | **4-27** |
| 060 | 2780369-0100 | | 1 | CAM | **4-29** |
| **Common Parts** | | | | | |
| 010 | 2839382-0100 | | 1 | MOUNTING PLATE | **4-31** |
| 020 | 2839383-0100 | | 1 | CAM | **4-33** |
| 030 | 2839384-0100 | | 1 | CAM | **4-35** |

| Pos | Part No | UN | Qty | Description | Page No |
|---|---|---|---|---|---|

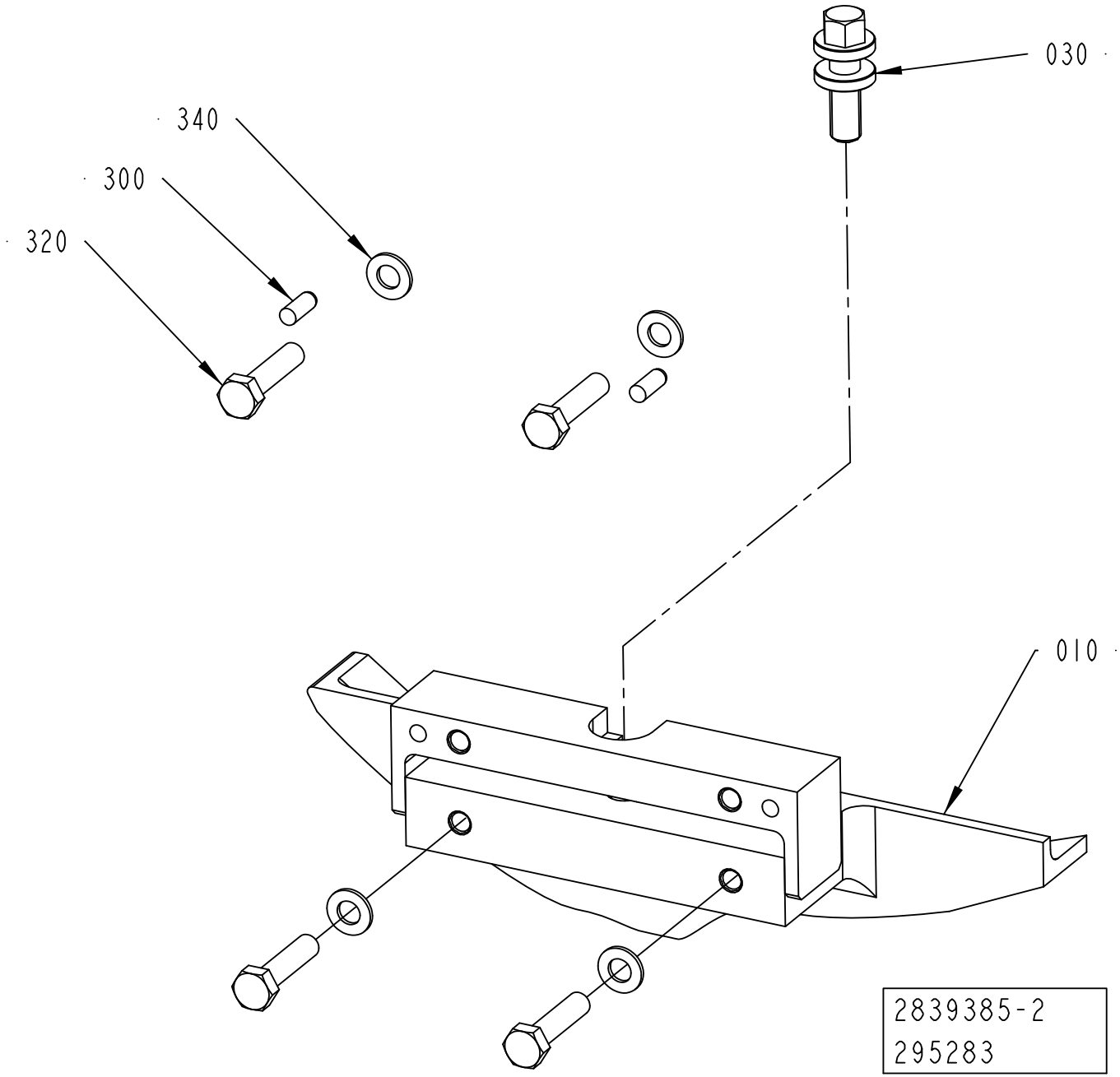
030
340
300
320
010
2839385-2
295283

ECM: 438906 - 20100701
Group number: 2839385-0100
Assembly Drawing: 2839385-2_1_AA

| Pos | Part No | UN | Qty | Description | Page No |
|---|---|---|---|---|---|
| **RECAP3, RECAP2 A3** | | | | | |
| 010 | 2839487-0000 | | 1 | CAM | |
| **Common Parts** | | | | | |
| 020 | 2838277-0000 | | 1 | BRACKET | |
| 030 | 2703842-0000 | | 1 | ADJUSTING SCREW | |
| 300 | 311103-0351 | | 2 | PARALLEL PIN ISO 2338 6M6X16 A1 | |
| 320 | 312105-0457 | | 4 | SCREW M6S ISO 4014 M8X35 A480 | |
| 340 | 315105-0165 | | 4 | WASHER BRB 8,4X16 RFR | |

| Pos | Part No | UN | Qty | Description | Page No |
|---|---|---|---|---|---|

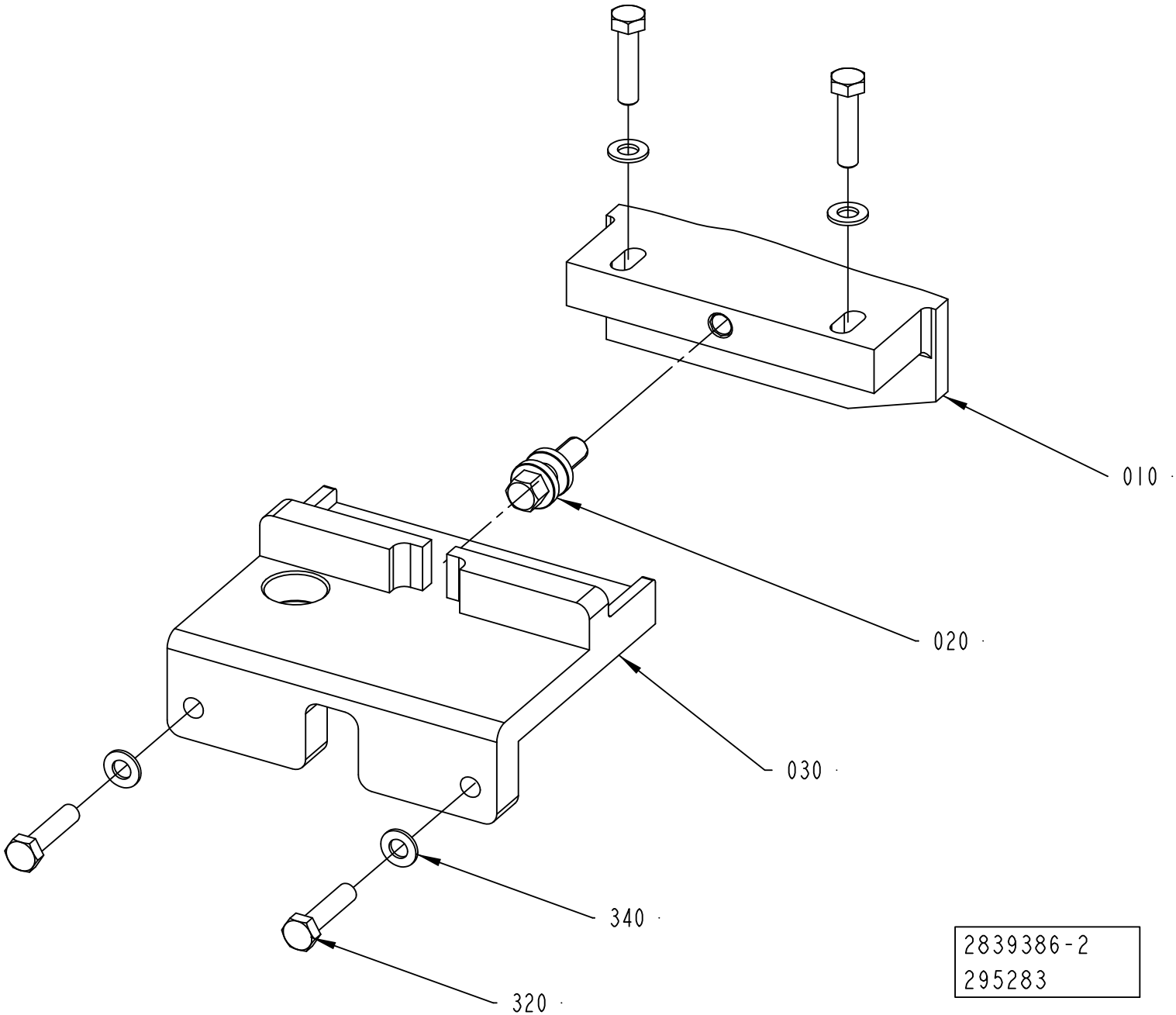
010
020
030
340
320
2839386-2
295283

ECM: 438907 - 20100701
Group number: 2839386-0100
Assembly Drawing: 2839386-2_1_AA

| Pos | Part No | UN | Qty | Description | Page No |
|---|---|---|---|---|---|
| **RECAP3, RECAP2 A3** | | | | | |
| 010 | 2839485-0000 | | 1 | CAM | |
| 030 | 2838385-0000 | | 1 | BRACKET | |
| **Common Parts** | | | | | |
| 020 | 2703842-0000 | | 1 | ADJUSTING SCREW | |
| 300 | 312105-0457 | | 4 | SCREW M6S ISO 4014 M8X35 A480 | |
| 320 | 315105-0165 | | 4 | WASHER BRB 8,4X16 RFR | |

| Pos | Part No | UN | Qty | Description | Page No |
|---|---|---|---|---|---|

Machine Type | Group Description | Used-In | Group Number | Page No

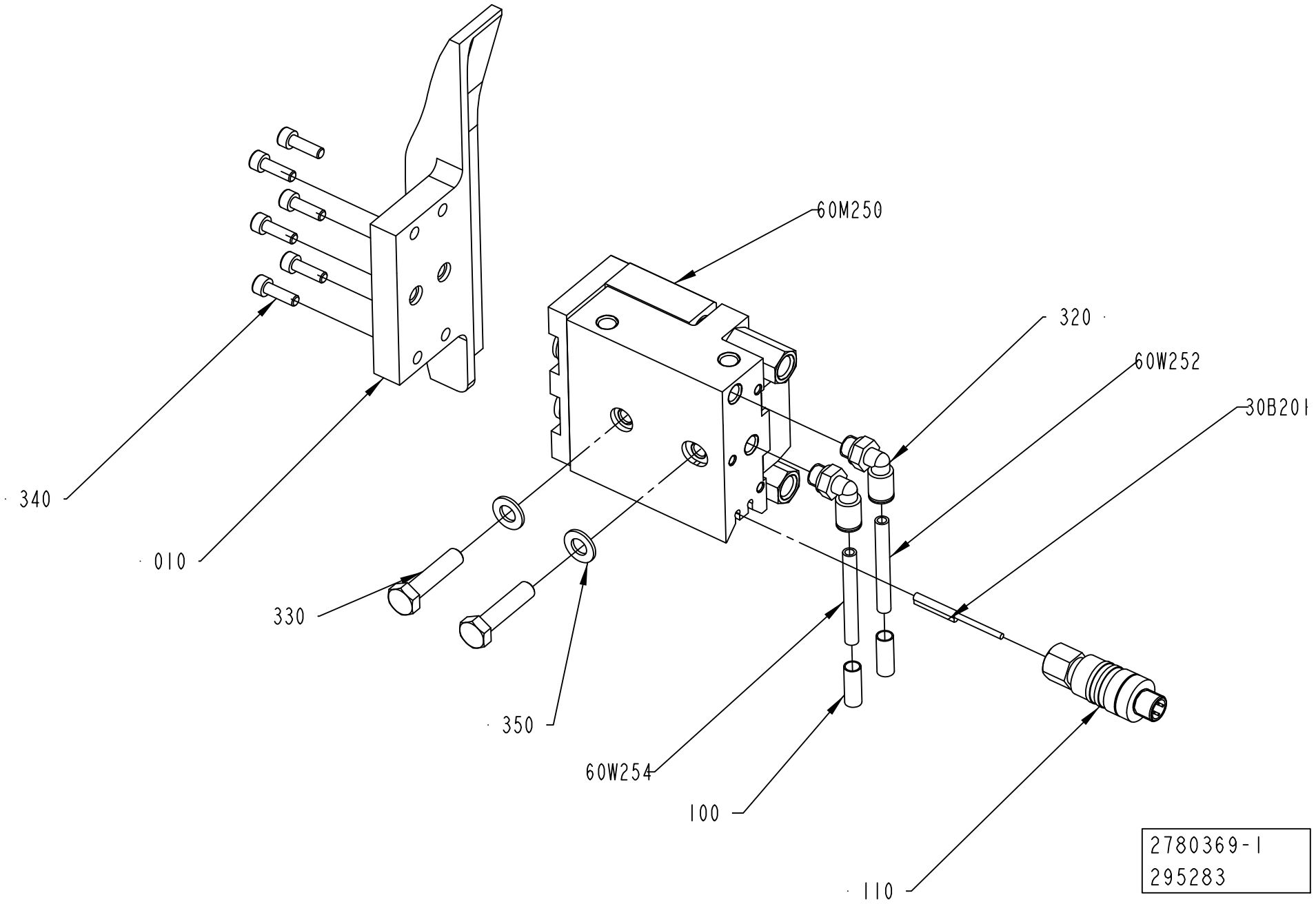
60M250
320
60W252
30B201
340
010
330
350
60W254
100
110
2780369-1
295283

ECM: 349993 - 20080701
Group number: 2780369-0100
Assembly Drawing: 2780369-1_1_AA

| Pos | Part No | UN | Qty | Description | Page No |
|---|---|---|---|---|---|
| - | | | | | |
| 010 | 2780374-0000 | | 1 | CAM | |
| 100 | 90459-7369 | | 2 | MARKING FOR PNEUM. TUBING, PRZ06 | |
| 110 | 90459-1663 | | 1 | CONNECTOR, 405204 RSC4/7 | |
| 320 | 350002-0006 | | 2 | PUSH-IN L-FITTING QSL-F-G1/8-6 | |
| 330 | 312105-0457 | | 2 | SCREW M6S ISO 4014 M8X35 A480 | |
| 340 | 312115-0329 | | 6 | SCREW ISO4762 M5X16 A4 80 | |
| 350 | 315105-0165 | | 2 | WASHER BRB 8,4X16 RFR | |
| 30B201 | 90458-2748 | | 2 | PROX.SENSOR SMT-10-PS-KL-5-LED-24 | |
| 60M250 | 90600-2073 | | 1 | CYLINDER, SLT-20-10-P-A | |
| 60W252 | 315400-0001 | M | 1 | TUBE PUN-H-6X1-BL | |
| 60W254 | 315400-0001 | M | 1 | TUBE PUN-H-6X1-BL | |

| Pos | Part No | UN | Qty | Description | Page No |
|---|---|---|---|---|---|

# MOUNTING PLATE



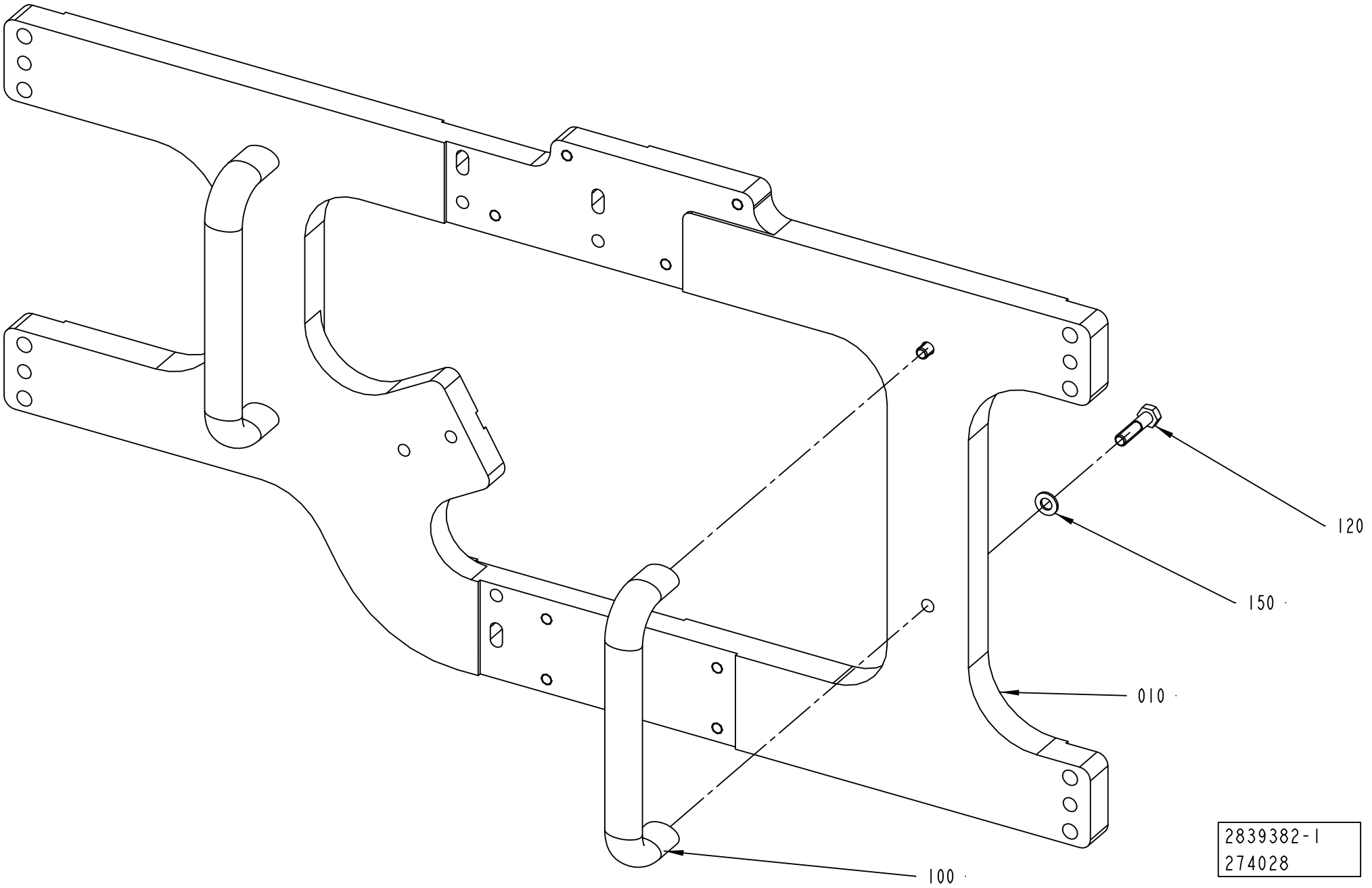

ECM: 438904 - 20100701
Group number: 2839382-0100
Assembly Drawing: 2839382-1_1_AA

| Pos | Part No | UN | Qty | Description | Page No |
|---|---|---|---|---|---|
| **RECAP3, RECAP2 A3** | | | | | |
| 010 | 2780379-0000 | | 1 | PLATE | |
| **Common Parts** | | | | | |
| 100 | 90459-3779 | | 2 | HANDLE, GN565 SW 192-M8 | |
| 120 | 312105-0457 | | 4 | SCREW M6S ISO 4014 M8X35 A480 | |
| 150 | 315105-0165 | | 4 | WASHER BRB 8,4X16 RFR | |

| Pos | Part No | UN | Qty | Description | Page No |
|---|---|---|---|---|---|

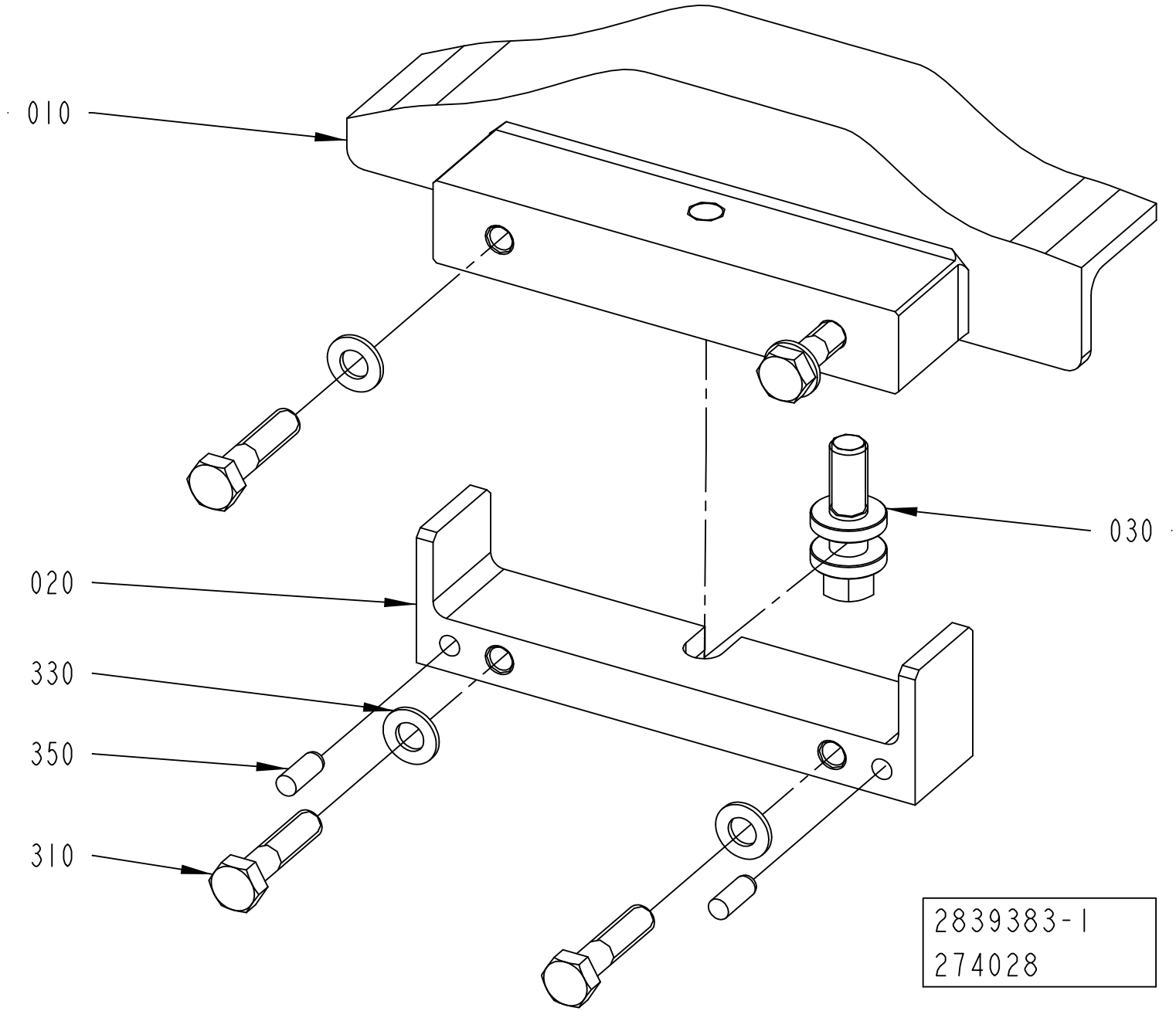
010
020
030
330
350
310
2839383-1
274028

ECM: 274028 - 20060921
Group number: 2839383-0100
Assembly Drawing: 2839383-1_1_AA

| Pos | Part No | UN | Qty | Description | Page No |
|---|---|---|---|---|---|
| - | | | | | |
| 010 | 2839392-0000 | | 1 | CAM | |
| 020 | 2838277-0000 | | 1 | BRACKET | |
| 030 | 2703842-0000 | | 1 | ADJUSTING SCREW | |
| 310 | 312105-0457 | | 4 | SCREW M6S ISO 4014 M8X35 A480 | |
| 330 | 315105-0165 | | 4 | WASHER BRB 8,4X16 RFR | |
| 350 | 311103-0351 | | 2 | PARALLEL PIN ISO 2338 6M6X16 A1 | |

| Pos | Part No | UN | Qty | Description | Page No |
|---|---|---|---|---|---|

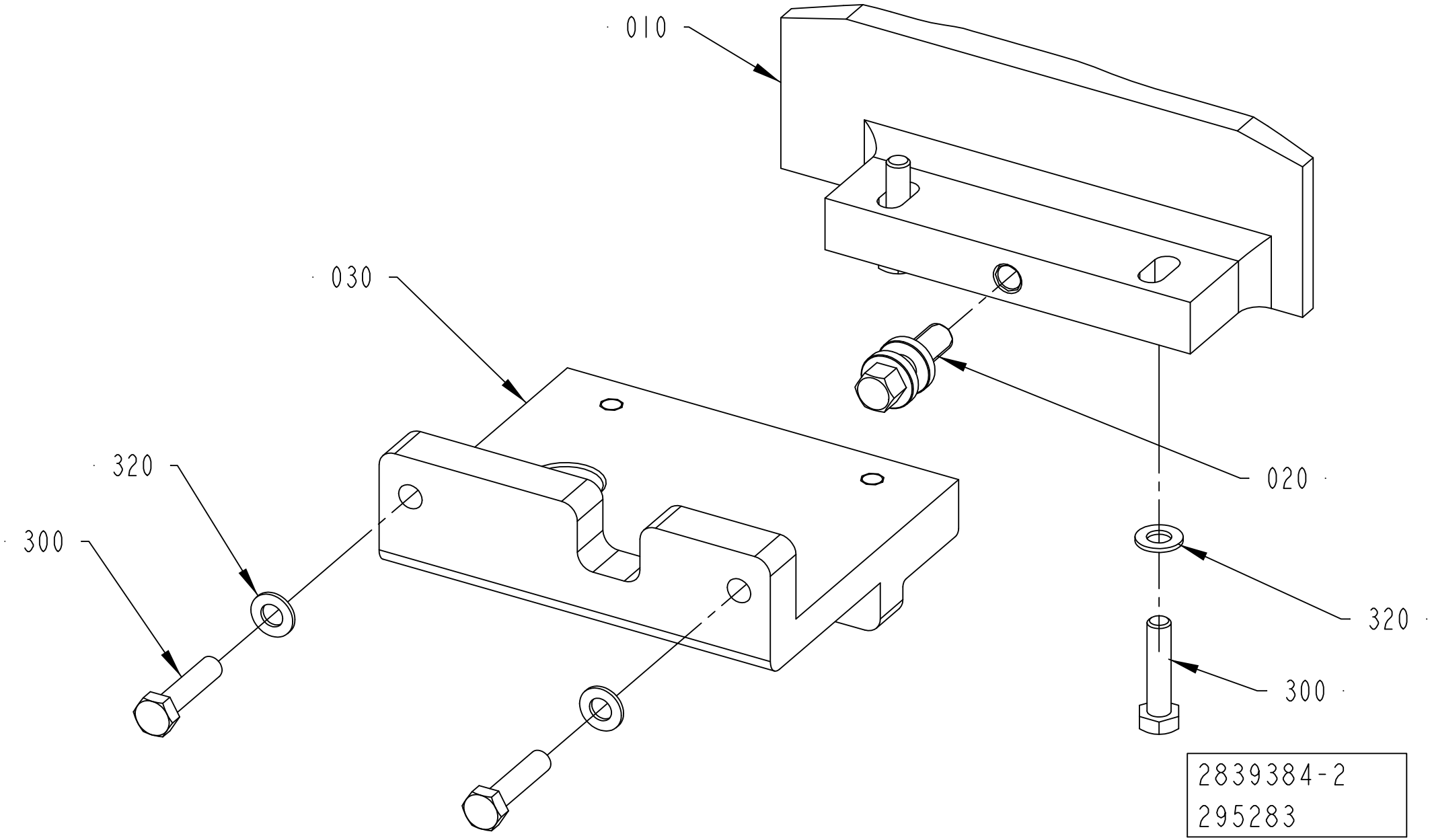
010
030
020
320
300
320
300
2839384-2
295283

ECM: 438905 - 20100701
Group number: 2839384-0100
Assembly Drawing: 2839384-2_1_AA

| Pos | Part No | UN | Qty | Description | Page No |
|---|---|---|---|---|---|
| **RECAP3, RECAP2 A3** | | | | | |
| 010 | 2839484-0000 | | 1 | CAM | |
| 030 | 2715781-0000 | | 1 | BRACKET | |
| **Common Parts** | | | | | |
| 020 | 2703842-0000 | | 1 | ADJUSTING SCREW | |
| 300 | 312105-0457 | | 4 | SCREW M6S ISO 4014 M8X35 A480 | |
| 320 | 315105-0165 | | 4 | WASHER BRB 8,4X16 RFR | |

| Pos | Part No | UN | Qty | Description | Page No |
|---|---|---|---|---|---|

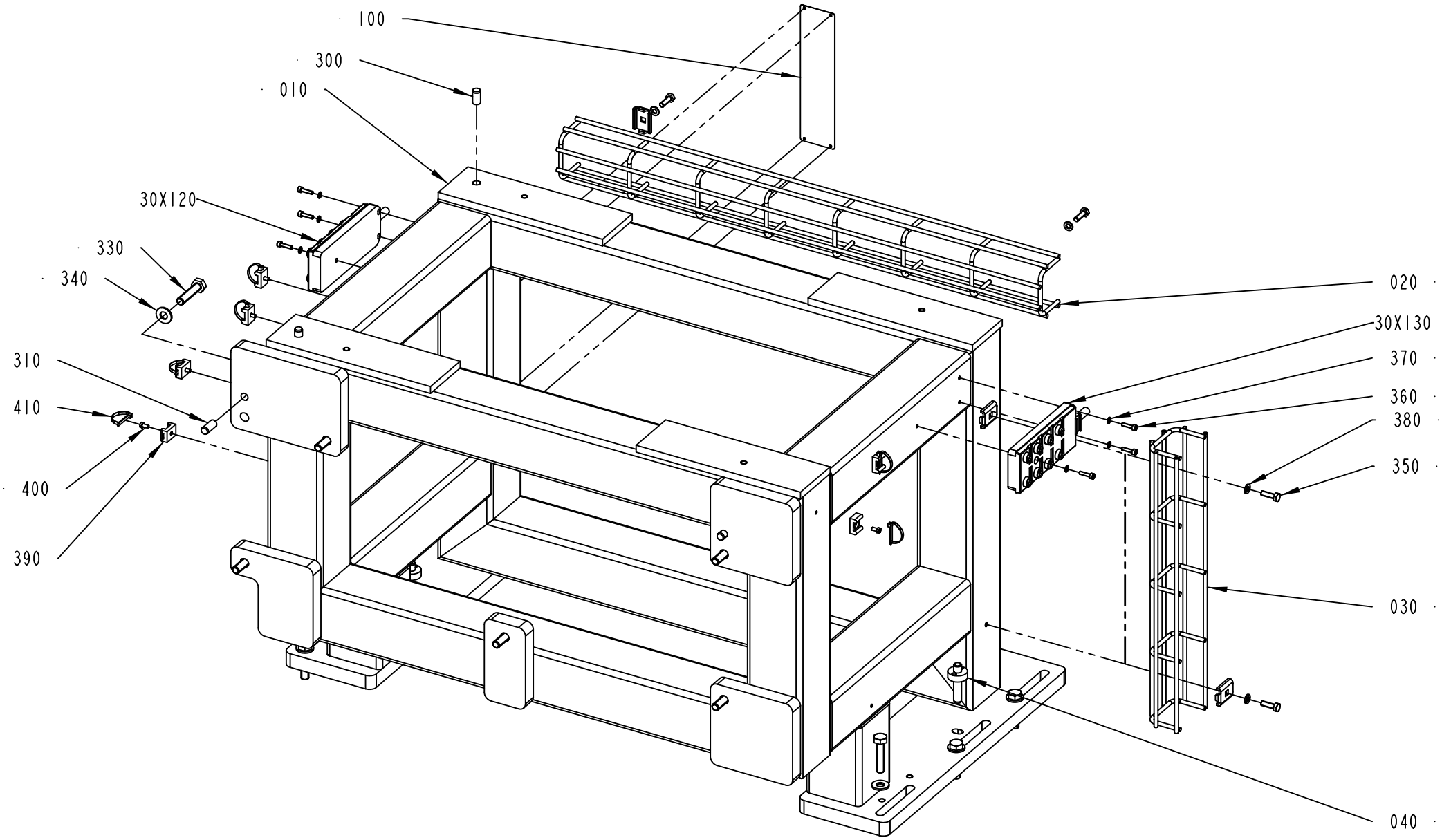
100
300
010
30X120
330
340
310
410
400
390
020
30X130
370
360
380
350
030
040
2751664-2
403439

ECM: 407780 - 20091001
Group number: 2751664-0200
Assembly Drawing: 2751664-2_1_AA

| Pos | Part No | UN | Qty | Description | Page No |
|---|---|---|---|---|---|
| - | | | | | |
| 010 | 3039024-0000 | | 1 | FRAME | |
| 020 | 2838731-0000 | | 1 | CABLE | |
| 030 | 2838732-0000 | | 1 | CABLE | |
| 040 | 2944175-0000 | | 2 | PIN | |
| 100 | 580923-0000 | | 1 | MACHINE SIGN CE | |
| 220 | 90181-0183 | | 4 | CABLE DUCT, FITTING, B2 | |
| 300 | 311103-0454 | | 2 | PARALLEL PIN ISO 2338 10M6X20 A1 | |
| 310 | 311103-1456 | | 2 | PARALLEL PIN ISO 2338 10M6X24 A1 | |
| 330 | 312109-0500 | | 12 | SCREW M6S ISO 4017 M10X45 A480 | |
| 340 | 315105-0173 | | 12 | WASHER BRB 10,5X22 RFR | |
| 350 | 312105-0370 | | 4 | SCREW M6S ISO 4017 M6X20 A480 | |
| 360 | 312115-0293 | | 6 | SCREW ISO4762 M4X16 A4 80 | |
| 370 | 315105-0136 | | 6 | WASHER BRB 4,3X8 RFR | |
| 380 | 315105-0153 | | 4 | WASHER BRB 6,4X12 RFR | |
| 390 | 352113-0203 | | 6 | ANCHOR PLATES FOR STRIPS, TYPE TM3S8-M0 | |
| 400 | 312125-0287 | | 6 | SCREW ISO 1207 M4X8 A4 | |
| 410 | 352113-0104 | | 6 | CABLE TIE, BLACK 300X4,8 MM | |
| 30X120 | 90459-0839 | | 1 | DISTRIBUTION FRAME, ASBV 8 5-135/10M | |
| 30X130 | 90459-0839 | | 1 | DISTRIBUTION FRAME, ASBV 8 5-135/10M | |

| Pos | Part No | UN | Qty | Description | Page No |
|---|---|---|---|---|---|

**This page is intentionally left blank.**

ECM: 438900 - 20100701
Group number: 2746939-0100
Assembly Drawing:

| Pos | Part No | UN | Qty | Description | Page No |
|---|---|---|---|---|---|
| - | | | | | |
| 010 | 2703700-0100 | | 6 | GUIDE BRACKET ..... | **4-41** |

| Pos | Part No | UN | Qty | Description | Page No |
|---|---|---|---|---|---|

Machine Type | Group Description | Used-In | Group Number | Page No

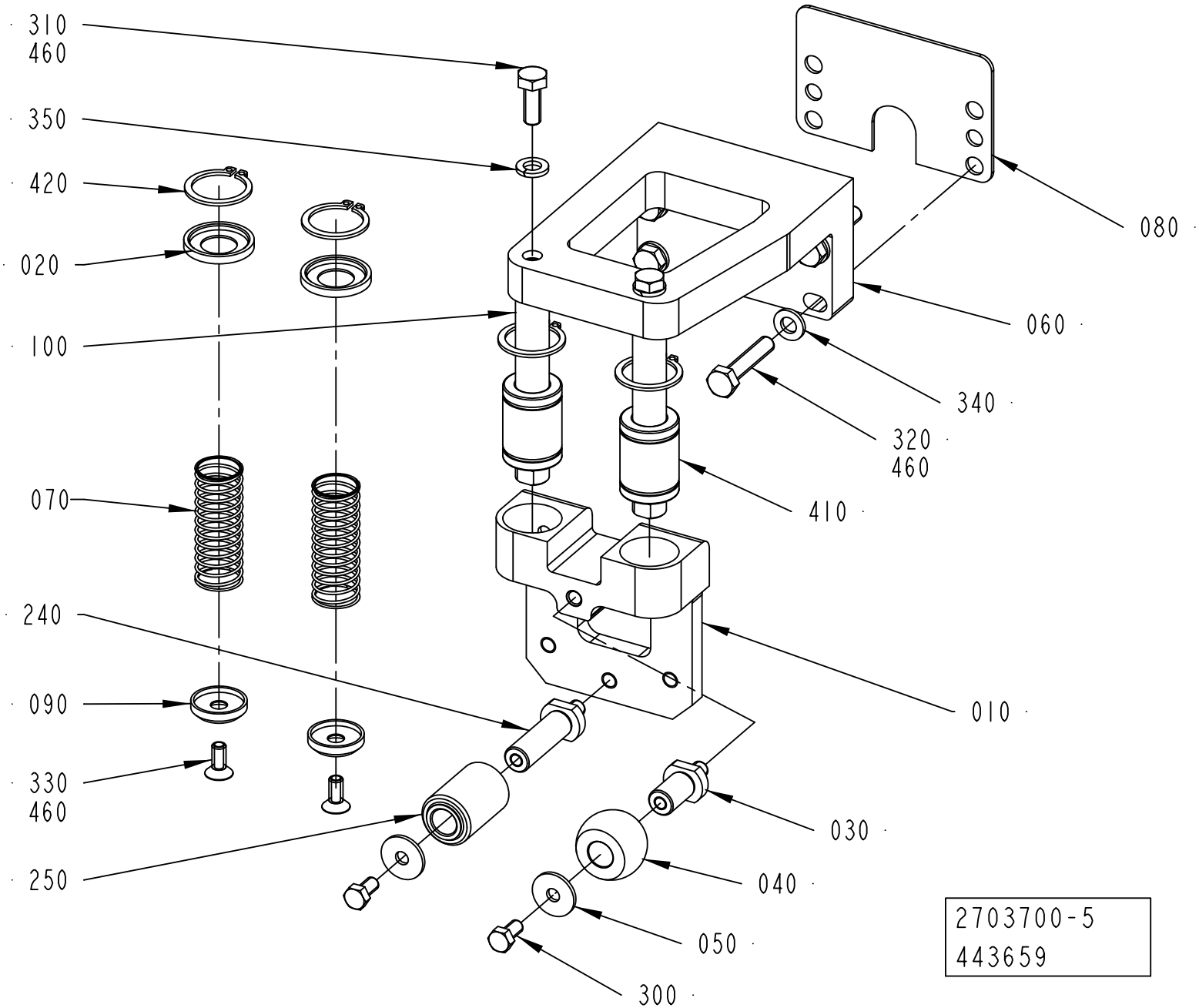
310
460
350
420
020
100
070
240
090
330
460
250
080
060
340
320
460
410
010
030
040
050
300
2703700-5
443659

ECM: 443659 - 20100701
Group number: 2703700-0100
Assembly Drawing: 2703700-5_1_AB

| Pos | Part No | UN | Qty | Description | Page No |
|---|---|---|---|---|---|
| **RECAP3, RECAP2 A3** | | | | | |
| 020 | 2751686-0000 | | 2 | WASHER | |
| 030 | 2703683-0000 | | 1 | SHAFT | |
| 040 | 1556630-0000 | | 1 | WHEEL | |
| 050 | 1556643-0000 | | 2 | WASHER | |
| 060 | 2703692-0000 | | 1 | HOLDER | |
| 080 | 2703702-0000 | | 1 | SHIM | |
| 240 | 2834018-0000 | | 1 | SHAFT | |
| 250 | 2834034-0000 | | 1 | WHEEL | |
| 300 | 312105-0325 | | 2 | SCREW M6S ISO 4017 M5X10 A480 | |
| 310 | 312105-0368 | | 2 | SCREW M6S ISO 4017 M6X16 A480 | |
| 320 | 312109-0374 | | 4 | SCREW M6S ISO 4017 M6X30 A480 | |
| 350 | 315402-0156 | | 2 | LOCK WASHER FBB 6,5 | |
| 410 | 90600-0375 | | 2 | BALL BUSHING, 12X21X30 MM | |
| 420 | 90600-0373 | | 4 | RETAINING RING FOR SHAFT DIN 471 21 SS | |
| **Common Parts** | | | | | |
| 010 | 2716127-0000 | | 1 | SLIDER | |
| 070 | 2703708-0000 | | 2 | SPRING | |
| 090 | 2751687-0000 | | 2 | WASHER | |
| 100 | 2703679-0000 | | 2 | SHAFT | |
| 330 | 312155-0327 | | 2 | SCREW DIN 7991 MF6S M5X12 A4 70 | |
| 340 | 315105-0153 | | 4 | WASHER BRB 6,4X12 RFR | |
| 460 | 90157-0016 | ML | 10 | THREAD LOCKING, LOCTITE 242 50 ML | |

| Pos | Part No | UN | Qty | Description | Page No |
|---|---|---|---|---|---|

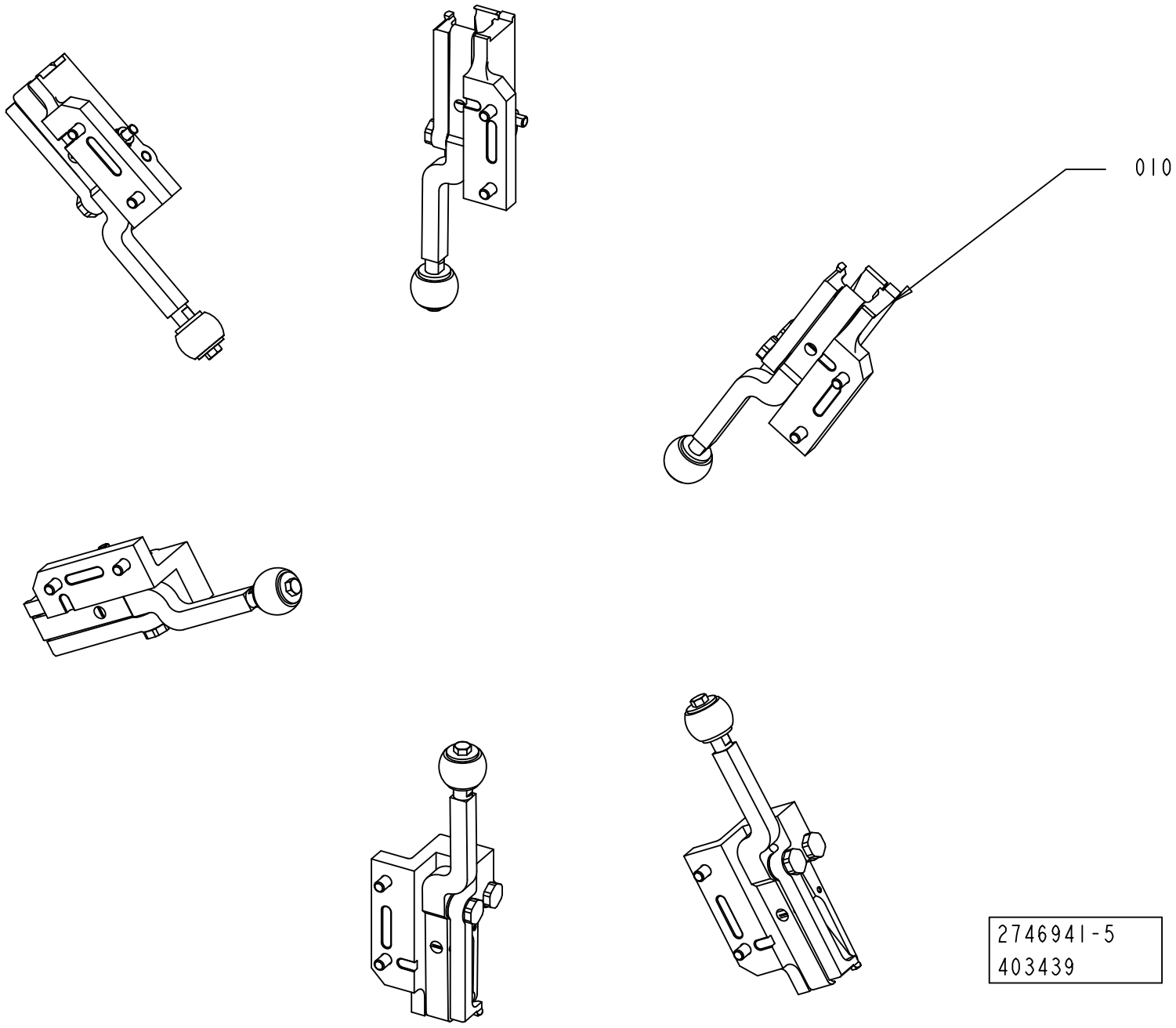
010
2746941-5
403439

ECM: 438901 - 20100701
Group number: 2746941-0200
Assembly Drawing: 2746941-5_1_AA

| Pos | Part No | UN | Qty | Description | Page No |
|---|---|---|---|---|---|
| **RECAP3, RECAP2 A3** | | | | | |
| 010 | 2895163-0200 | | 6 | CAP HOLDERS GROUP ..... | **4-45** |

| Pos | Part No | UN | Qty | Description | Page No |
|---|---|---|---|---|---|

Machine Type | Group Description | Used-In | Group Number | Page No

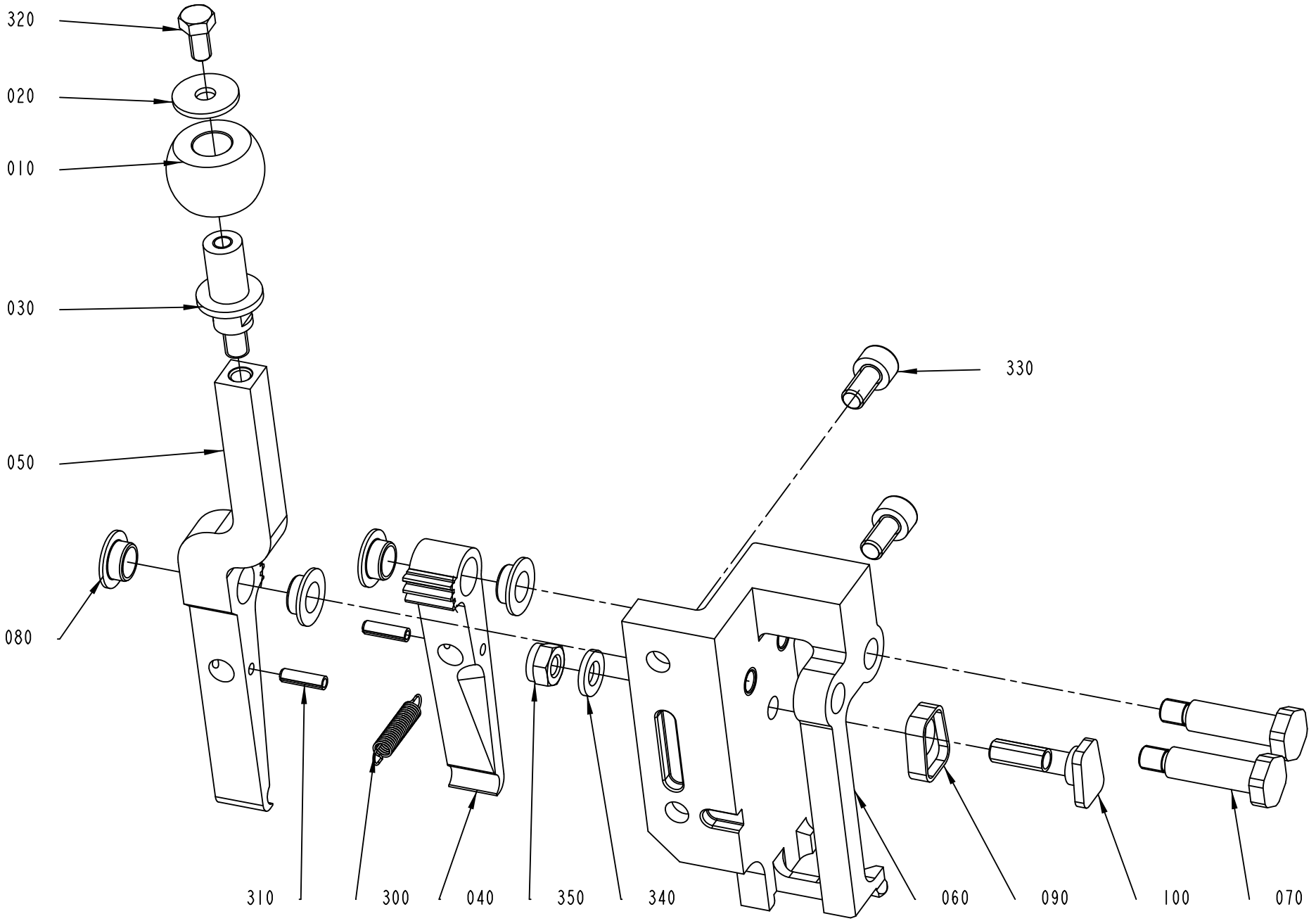
320
020
010
030
050
080
330
310
300
040
350
340
060
090
100
070
2895163-2
403439

ECM: 407781 - 20091001
Group number: 2895163-0200
Assembly Drawing: 2895163-2_1_AA

| Pos | Part No | UN | Qty | Description | Page No |
|---|---|---|---|---|---|
| **RECAP2 A3** | | | | | |
| 040 | 2982532-0000 | | 1 | CLAW | |
| 050 | 2982531-0000 | | 1 | CLAW | |
| 060 | 2923557-0000 | | 1 | PULLER | |
| **RECAP3** | | | | | |
| 040 | 2912629-0000 | | 1 | CLAW | |
| 050 | 2912630-0000 | | 1 | CLAW | |
| 060 | 3009996-0000 | | 1 | PULLER | |
| 090 | 3015035-0000 | | 1 | PUSHER | |
| 100 | 3015036-0000 | | 1 | PIN | |
| 340 | 315106-0153 | | 1 | WASHER ISO 7089-6-200 HV A4 | |
| 350 | 312812-0316 | | 1 | HEXAGON NUT, NY-LOCK M6 A480 | |
| **Common Parts** | | | | | |
| 010 | 1556630-0000 | | 1 | WHEEL | |
| 020 | 1556643-0000 | | 1 | WASHER | |
| 030 | 2746978-0000 | | 1 | SHAFT | |
| 070 | 2895215-0000 | | 2 | SHAFT | |
| 080 | 2914796-0000 | | 4 | BUSHING | |
| 300 | 90335-0252 | | 1 | TENSION SPRING | |
| 310 | 311112-0206 | | 2 | SPRING PIN, ISO 8752 3X12-C | |
| 320 | 312105-0325 | | 1 | SCREW M6S ISO 4017 M5X10 A480 | |
| 330 | 312115-0366 | | 2 | SCREW ISO4762 M6X12 A4 80 | |

| Pos | Part No | UN | Qty | Description | Page No |
|---|---|---|---|---|---|

Tetra Pak

# SPC
## Spare Parts Catalogue

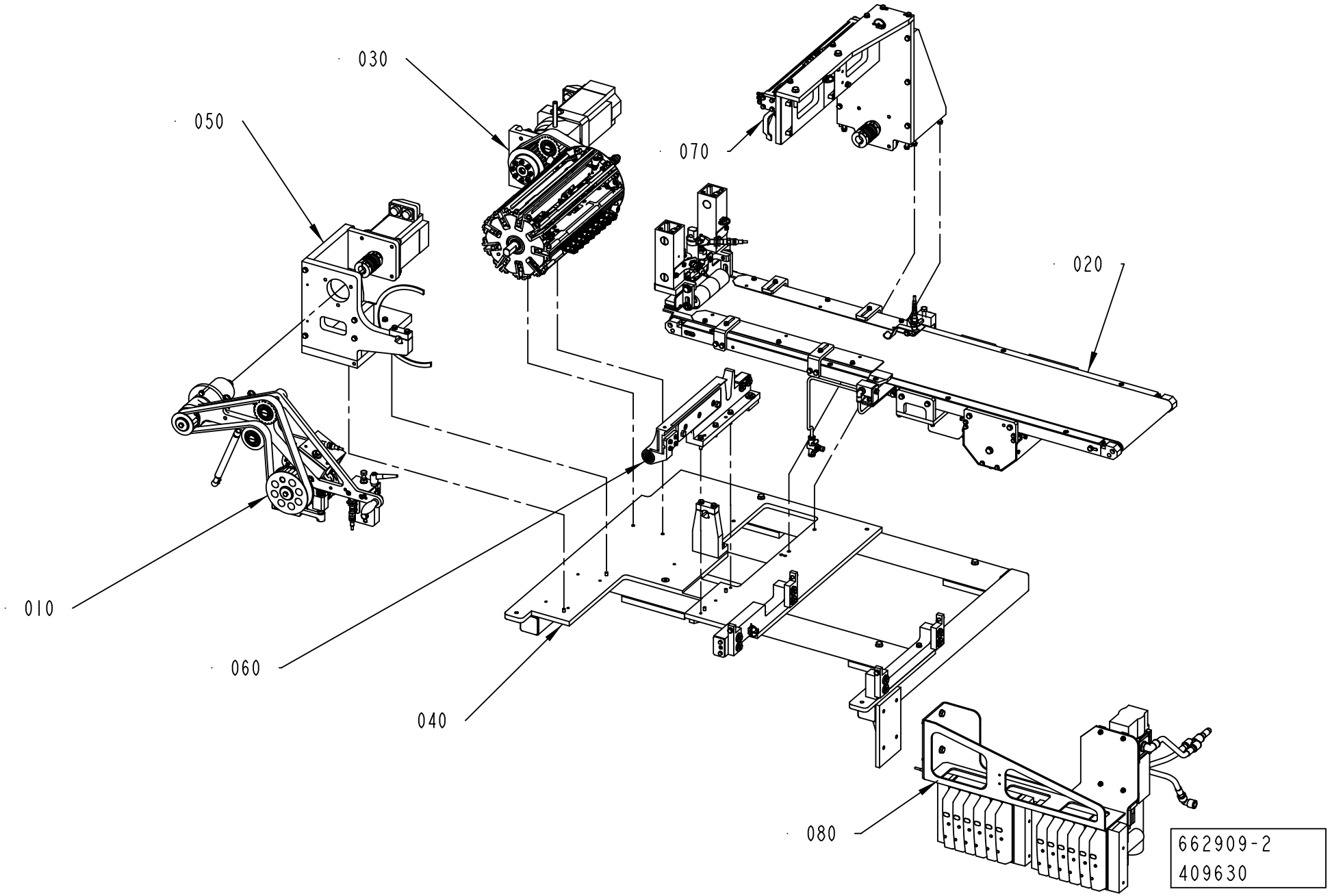
030
050
070
020
010
060
040
080
662909-2
409630

ECM: 409630 - 20091001
Group number: 662909-0200
Assembly Drawing: 662909-2_1_AA

| Pos | Part No | UN | Qty | Description | Page No |
|---|---|---|---|---|---|
| - | | | | | |
| 010 | 2835403-0200 | | 1 | CUTTING UNIT | **5-5** |
| 020 | 2703794-0100 | | 1 | CONVEYOR | **5-11** |
| 030 | 2703800-0100 | | 1 | ROW CUTTER | **5-35** |
| 040 | 2715705-0200 | | 1 | FRAME | **5-43** |
| 050 | 2715714-0100 | | 1 | DRIVE UNIT | **5-45** |
| 060 | 2715730-0200 | | 1 | INDEXING UNIT | **5-47** |
| 070 | 2715770-0100 | | 1 | DRIVE UNIT | **5-49** |
| 080 | 2812002-0200 | | 1 | PNEUMATIC UNIT | **5-51** |

| Pos | Part No | UN | Qty | Description | Page No |
|---|---|---|---|---|---|

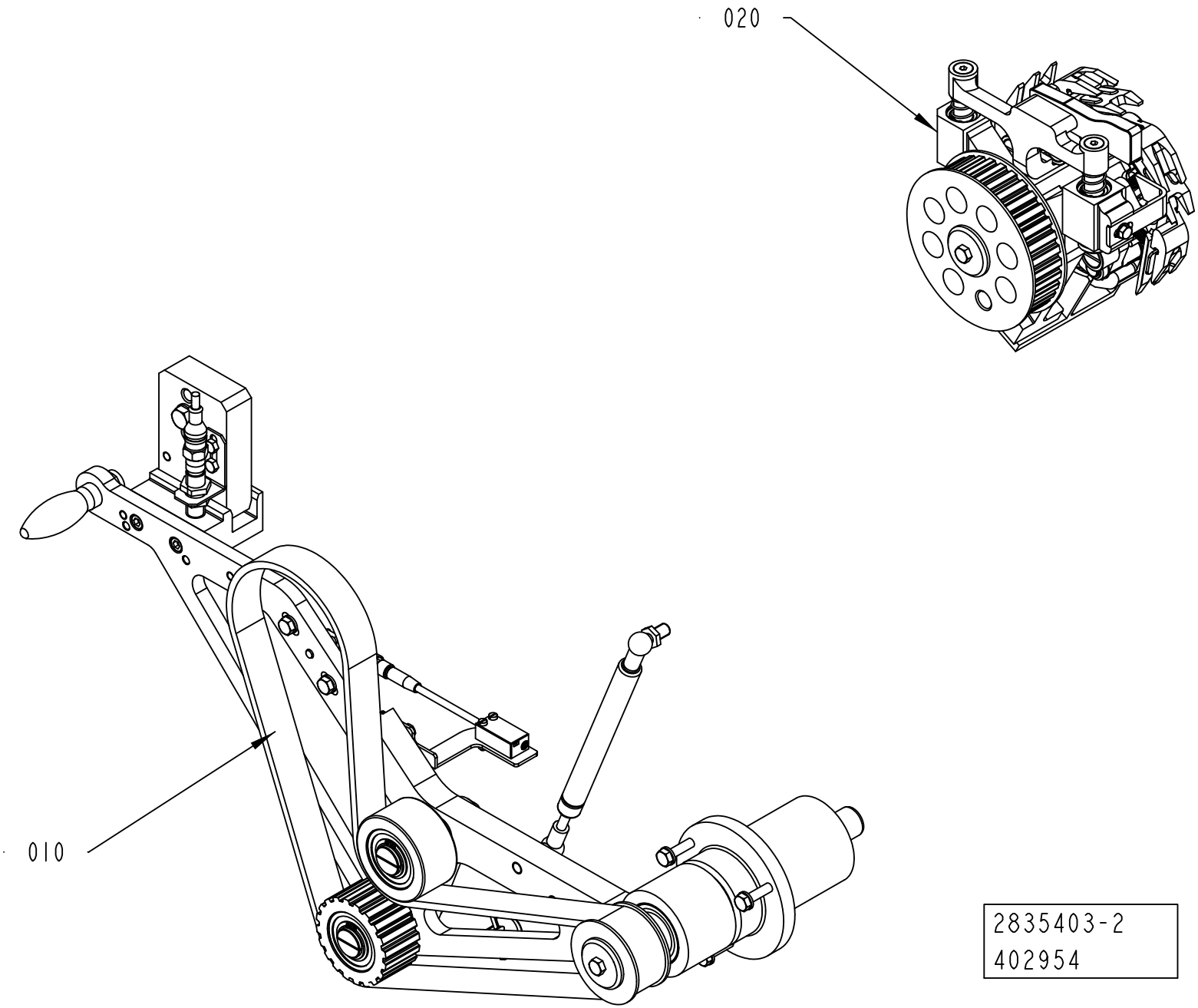
020
010
2835403-2
402954

ECM: 407816 - 20091001
Group number: 2835403-0200
Assembly Drawing: 2835403-2_1_AA

| Pos | Part No | UN | Qty | Description | Page No |
|---|---|---|---|---|---|
| - | | | | | |
| 010 | 2835404-0200 | | 1 | SUPPORT | **5-7** |
| 020 | 2833343-0100 | | 1 | CUTTING WHEEL | **5-9** |

| Pos | Part No | UN | Qty | Description | Page No |
|---|---|---|---|---|---|

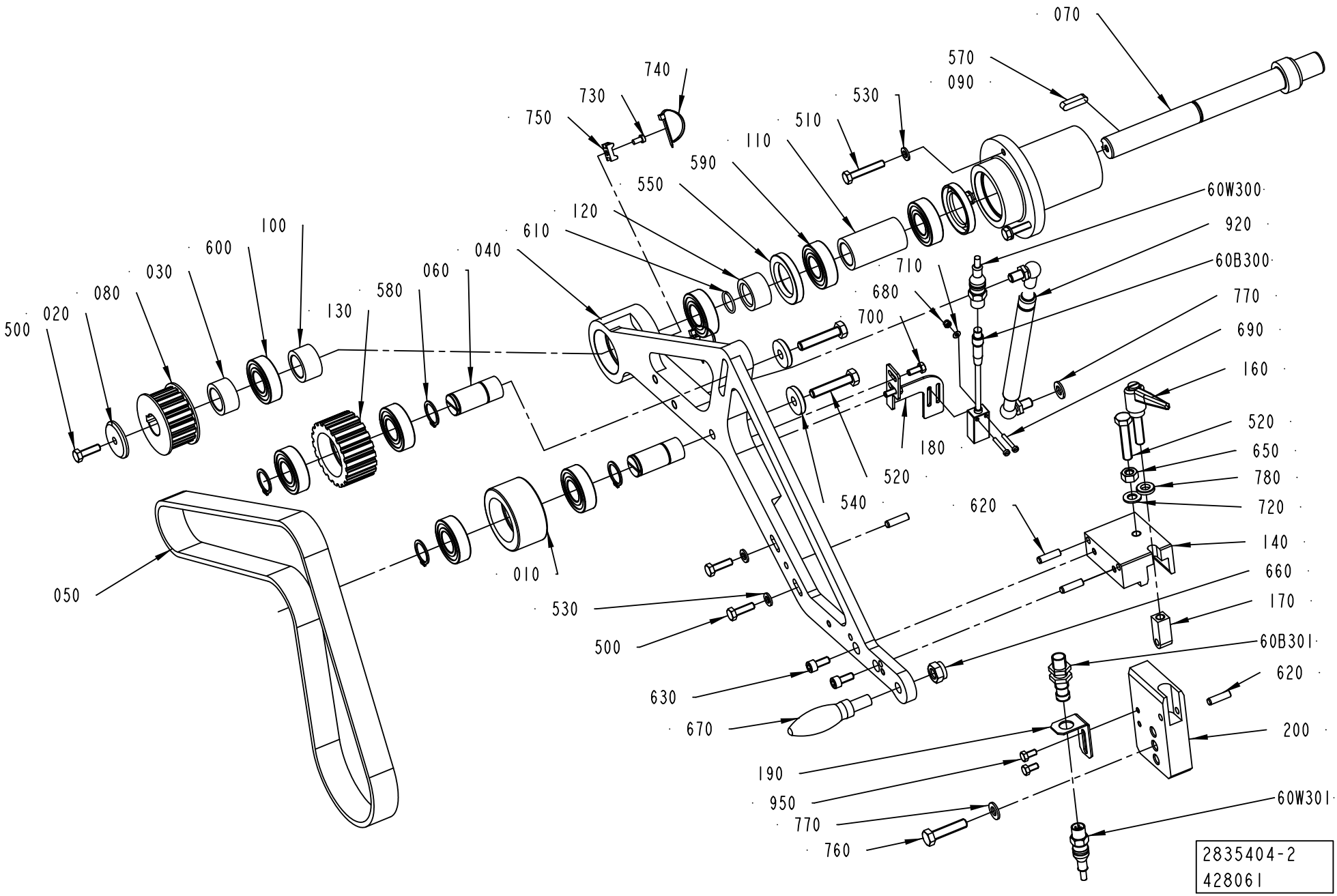
070
570
090
740
730
750
530
510
110
590
550
120
610
040
100
600
030
080
020
500
130
580
060
710
680
700
60W300
920
60B300
770
690
160
520
650
780
720
140
660
170
60B301
620
200
60W301
180
520
540
620
010
050
530
500
630
670
190
950
770
760
2835404-2
428061

ECM: 431475 - 20100401
Group number: 2835404-0200
Assembly Drawing: 2835404-2_1_AB

| Pos | Part No | UN | Qty | Description | Page No |
|---|---|---|---|---|---|
| - | | | | | |
| 010 | 1030627-0000 | | 1 | ROLL | |
| 020 | 2703774-0000 | | 1 | WASHER | |
| 030 | 2703775-0000 | | 1 | SPACER | |
| 040 | 2835402-0000 | | 1 | BRACKET | |
| 050 | 318174-0162 | | 1 | TIMING BELT 25T10/1150 PU | |
| 060 | 2703783-0000 | | 2 | AXLE PIN | |
| 070 | 2703784-0000 | | 1 | SHAFT | |
| 080 | 2703786-0000 | | 1 | TOOTHED PULLEY | |
| 090 | 2703788-0000 | | 1 | HOUSING | |
| 100 | 2703803-0000 | | 1 | SPACER | |
| 110 | 2703804-0000 | | 1 | SPACER | |
| 120 | 2703789-0000 | | 1 | SPACER | |
| 130 | 2605621-0000 | | 1 | TOOTHED PULLEY | |
| 140 | 2837616-0000 | | 1 | BLOCK | |
| 160 | 2715778-0000 | | 1 | LOCKING ARM | |
| 170 | 2837617-0000 | | 1 | AXLE PIN | |
| 180 | 2878496-0000 | | 1 | BRACKET | |
| 190 | 2882297-0000 | | 1 | BRACKET | |
| 200 | 2933730-0000 | | 1 | BRACKET | |
| 500 | 312105-0370 | | 3 | SCREW M6S ISO 4017 M6X20 A480 | |
| 510 | 312109-0376 | | 2 | SCREW M6S ISO 4017 M6X35 A480 | |
| 520 | 312109-0459 | | 3 | SCREW M6S ISO 4017 M8X40 A480 | |
| 530 | 315105-0153 | | 5 | WASHER BRB 6,4X12 RFR | |
| 540 | 315125-0165 | | 2 | WASHER TBRSB 8,4X26X5 A4 | |
| 550 | 315221-0169 | | 2 | RADIAL SEAL 30X47X7 MM | |
| 570 | 315705-0234 | | 1 | PARALLEL KEY W. ROUND ENDS 6X6X25 MM | |
| 580 | 315751-0116 | | 4 | RETAINING RING FOR SHAFT DIN 471 20 SS | |
| 590 | 321306-0104 | | 2 | BALL BEARING 20/42X12 | |
| 600 | 321308-0204 | | 6 | BALL BEARING 20/42X12 | |
| 610 | 315206-0705 | | 1 | O-RING 17,17X1,78 MM | |
| 620 | 311103-0354 | | 4 | PARALLEL PIN ISO 2338 6M6X22 A1 | |
| 630 | 312115-0367 | | 2 | SCREW ISO4762 M6X14 A4 80 | |
| 650 | 312605-0318 | | 1 | HEXAGON NUT, M6M M8 A280 | |
| 660 | 312812-0320 | | 1 | HEXAGON NUT, NY-LOCK M10 A480 | |
| 670 | 318801-0109 | | 1 | HANDLE, THREADED TAP. NO. 8304-929 | |
| 680 | 312812-0310 | | 2 | HEXAGON NUT, NY-LOCK M3 A480 | |
| 690 | 312125-0230 | | 2 | SCREW ISO 1207 M3X20 A4 | |
| 700 | 312105-0327 | | 2 | SCREW M6S ISO 4017 M5X12 A480 | |
| 710 | 315106-0124 | | 2 | WASHER ISO 7089-3-200 HV A4 | |
| 720 | 315105-0165 | | 1 | WASHER BRB 8,4X16 RFR | |
| 730 | 312125-0287 | | 2 | SCREW ISO 1207 M4X8 A4 | |
| 740 | 352113-0104 | | 2 | CABLE TIE, BLACK 300X4,8 MM | |
| 750 | 352113-0205 | | 2 | ANCHOR PLATES FOR STRIPS, TYPE TM2S8-C10 | |
| 760 | 312109-0457 | | 1 | SCREW M6S ISO 4017 M8X35 A480 | |
| 770 | 315106-0165 | | 2 | WASHER ISO 7089-8-200 HV A4 | |
| 780 | 315115-0165 | | 1 | WASHER PLAIN, TBRB 8,4/16 H=3 | |
| 800 | 90296-0068 | G | 50 | SHELL ALVANIA GREASE EP 2 | |
| 920 | 90458-2975 | | 1 | GAS SPRING NO. G15-120-150-01 | |
| 950 | 312105-0325 | | 2 | SCREW M6S ISO 4017 M5X10 A480 | |
| 60B300 | 90459-7366 | | 1 | PHOTOCELL WTB4-3P3161 F20 | |
| 60B301 | 90458-2907 | | 1 | PROX.SWITCH IFS204 | |
| 60W300 | 351408-0020 | | 1 | ACTU/SENS. CABLE PRST 3-PRKMWV 3-06/2,0M | |
| 60W301 | 351411-0015 | | 1 | ACTU/SENS. CABLE PRST 4-PRKT 4-07/1,5M | |

Machine Type | Group Description | Used-In | Group Number | Page No

# CUTTING WHEEL



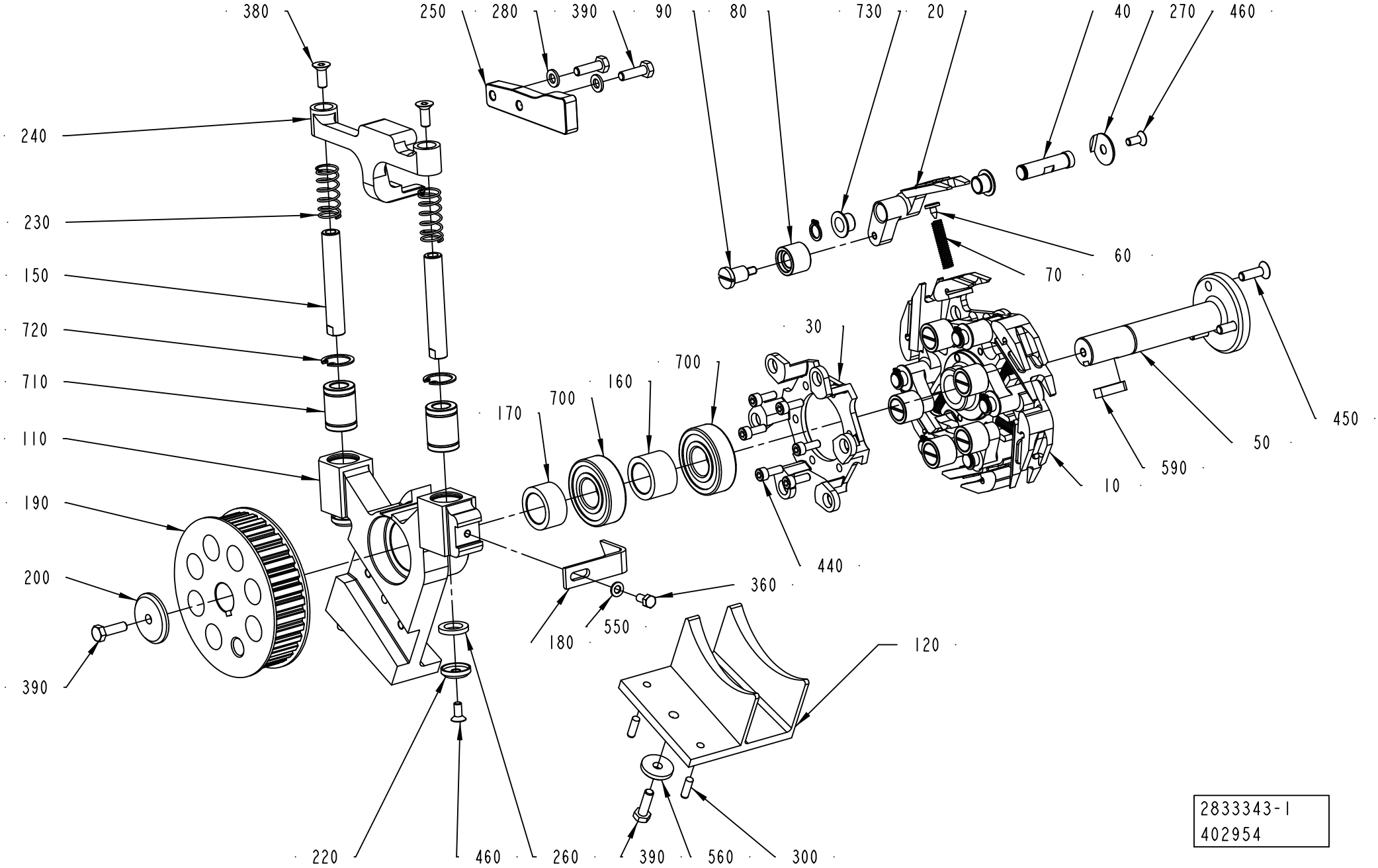

ECM: 408623 - 20091001
Group number: 2833343-0100
Assembly Drawing: 2833343-1_1_AB

| Pos | Part No | UN | Qty | Description | Page No |
|---|---|---|---|---|---|
| **CAP 30/FLEX RECAP2 A3** | | | | | |
| 010 | 2925333-0000 | | 1 | WHEEL | |
| 020 | 2924097-0000 | | 6 | PRESSURE FINGER | |
| 120 | 2980667-0000 | | 1 | GUIDE | |
| 250 | 2863988-0000 | | 1 | CAM | |
| **CAP 30/FLEX RECAP3** | | | | | |
| 010 | 2812009-0000 | | 1 | WHEEL | |
| 020 | 2812010-0000 | | 6 | PRESSURE FINGER | |
| 120 | 2792462-0000 | | 1 | GUIDE | |
| 250 | 2863988-0000 | | 1 | CAM | |
| **Common Parts** | | | | | |
| 030 | 2812011-0000 | | 1 | PLATE | |
| 040 | 3010007-0000 | | 6 | AXLE PIN | |
| 050 | 2703764-0000 | | 1 | SHAFT | |
| 060 | 2703763-0000 | | 6 | PLATE | |
| 070 | 2703765-0000 | | 6 | COMPRESSION SPRING | |
| 080 | 2703769-0000 | | 6 | WHEEL | |
| 090 | 2703770-0000 | | 6 | SCREW | |
| 110 | 2833344-0000 | | 1 | BRACKET | |
| 150 | 2834049-0000 | | 2 | SHAFT | |
| 160 | 2703772-0000 | | 1 | SPACER | |
| 170 | 2703775-0000 | | 1 | SPACER | |
| 180 | 2837618-0000 | | 1 | STOP | |
| 190 | 2703787-0000 | | 1 | TOOTHED PULLEY | |
| 200 | 2703774-0000 | | 1 | WASHER | |
| 220 | 2751687-0000 | | 2 | WASHER | |
| 230 | 90600-0891 | | 2 | COMP. SPRING 2520, 1,2X16,4X35 | |
| 240 | 2863769-0000 | | 1 | CAM | |
| 260 | 2871097-0000 | | 2 | DAMPER | |
| 270 | 3025697-0000 | | 6 | WASHER | |
| 280 | 315103-0153 | | 2 | WASHER, BRB, 6,4/12,H=1,5 NIPL BR | |
| 300 | 311103-0308 | | 2 | PARALLEL PIN ISO 2338 5M6X16 A1 | |
| 360 | 312105-0325 | | 1 | SCREW M6S ISO 4017 M5X10 A480 | |
| 380 | 312155-0368 | | 2 | SCREW DIN 7991 MF6S M6X16 A4 70 | |
| 390 | 312105-0370 | | 4 | SCREW M6S ISO 4017 M6X20 A480 | |
| 440 | 312115-0328 | | 6 | SCREW ISO4762 M5X14 A4 80 | |
| 450 | 312155-0370 | | 3 | SCREW DIN 7991 MF6S M6X20 A4 70 | |
| 460 | 312155-0327 | | 8 | SCREW DIN 7991 MF6S M5X12 A4 70 | |
| 550 | 315105-0146 | | 1 | WASHER BRB 5,3X10 RFR | |
| 560 | 315125-0153 | | 1 | WASHER TBRSB 6,4X22X4 A4 | |
| 590 | 315705-0234 | | 1 | PARALLEL KEY W. ROUND ENDS 6X6X25 MM | |
| 700 | 321313-0104 | | 2 | BALL BEARING 20/47X14 | |
| 710 | 90600-0375 | | 2 | BALL BUSHING, 12X21X30 MM | |
| 720 | 90458-1095 | | 2 | RETAINING RING FOR BORE DIN 472 21 SS | |
| 730 | 321155-0139 | | 12 | FLANGE BUSHING, IGLIDUR X 10X12X9 | |
| 740 | 90141-0016 | | 6 | RETAINING RING FOR SHAFT DIN 471 10 SS | |

Machine Type | Group Description | Used-In | Group Number | Page No

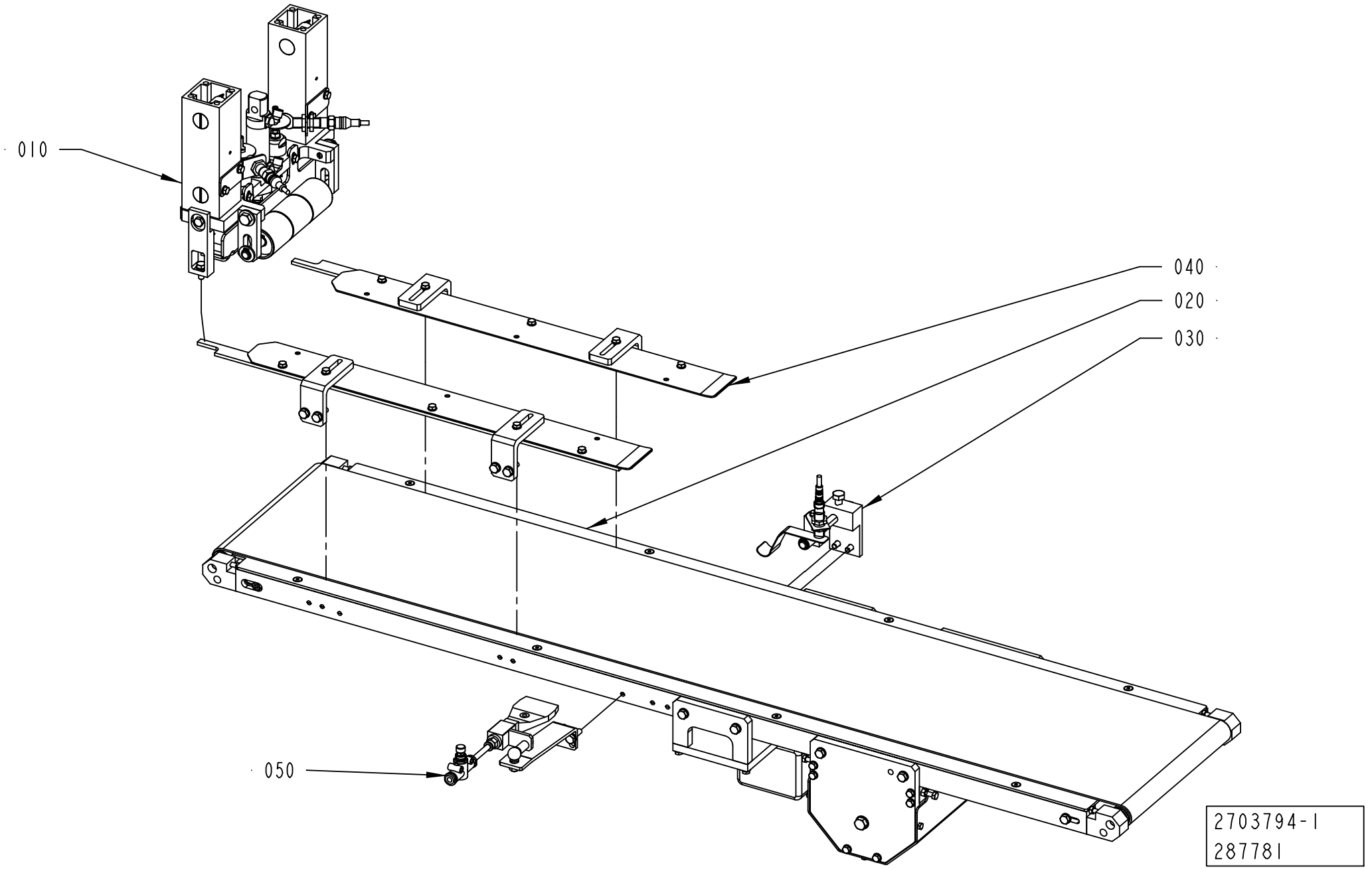
010
040
020
030
050
2703794-1
287781

ECM: 295900 - 20070606
Group number: 2703794-0100
Assembly Drawing: 2703794-1_1_AA

| Pos | Part No | UN | Qty | Description | Page No |
|---|---|---|---|---|---|
| **CAP 30/FLEX** | | | | | |
| 040 | 2780525-0100 | | 1 | GUIDE | **5-13** |
| **Common Parts** | | | | | |
| 010 | 2703785-0100 | | 1 | HOLDER | **5-15** |
| 020 | 2811583-0100 | | 1 | CONVEYOR | **5-17** |
| 030 | 2703805-0100 | | 1 | CAP DETECTOR | **5-31** |
| 050 | 2888723-0100 | | 1 | AIR SYSTEM | **5-33** |

| Pos | Part No | UN | Qty | Description | Page No |
|---|---|---|---|---|---|

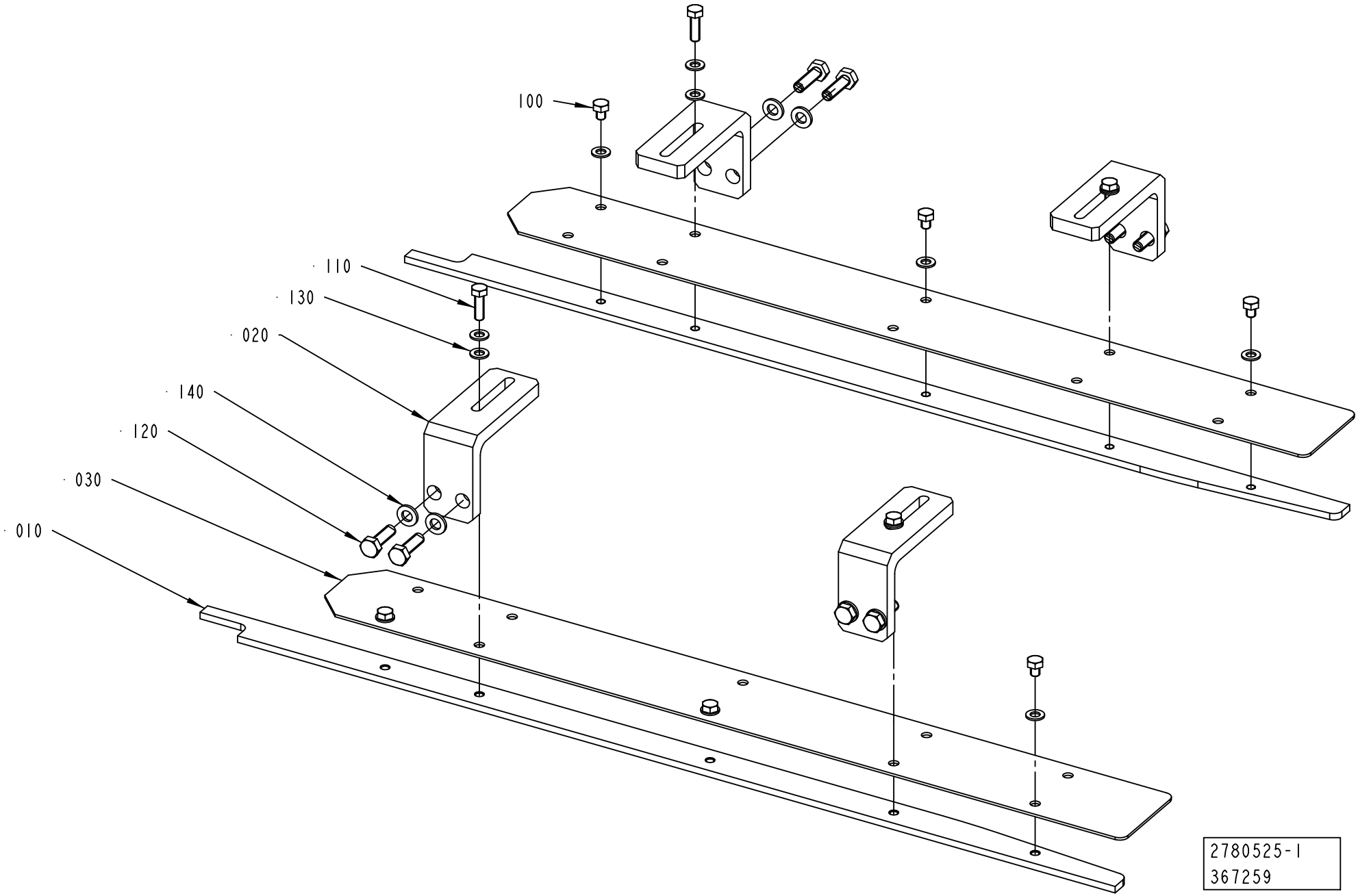
100
110
130
020
140
120
030
010
2780525-1
367259

ECM: 373810 - 20090101
Group number: 2780525-0100
Assembly Drawing: 2780525-1_1_AB

| Pos | Part No | UN | Qty | Description | Page No |
|---|---|---|---|---|---|
| - | | | | | |
| 010 | 2882488-0000 | | 2 | GUIDE | |
| 020 | 2715728-0000 | | 4 | BRACKET | |
| 030 | 2882489-0000 | | 2 | GUIDE | |
| 100 | 90287-0199 | | 6 | SCREW M6S ISO 4017 M5X6 A480 | |
| 110 | 312105-0329 | | 4 | SCREW M6S ISO 4017 M5X16 A480 | |
| 120 | 312105-0370 | | 8 | SCREW M6S ISO 4017 M6X20 A480 | |
| 130 | 315105-0146 | | 14 | WASHER BRB 5,3X10 RFR | |
| 140 | 315105-0153 | | 8 | WASHER BRB 6,4X12 RFR | |

| Pos | Part No | UN | Qty | Description | Page No |
|---|---|---|---|---|---|

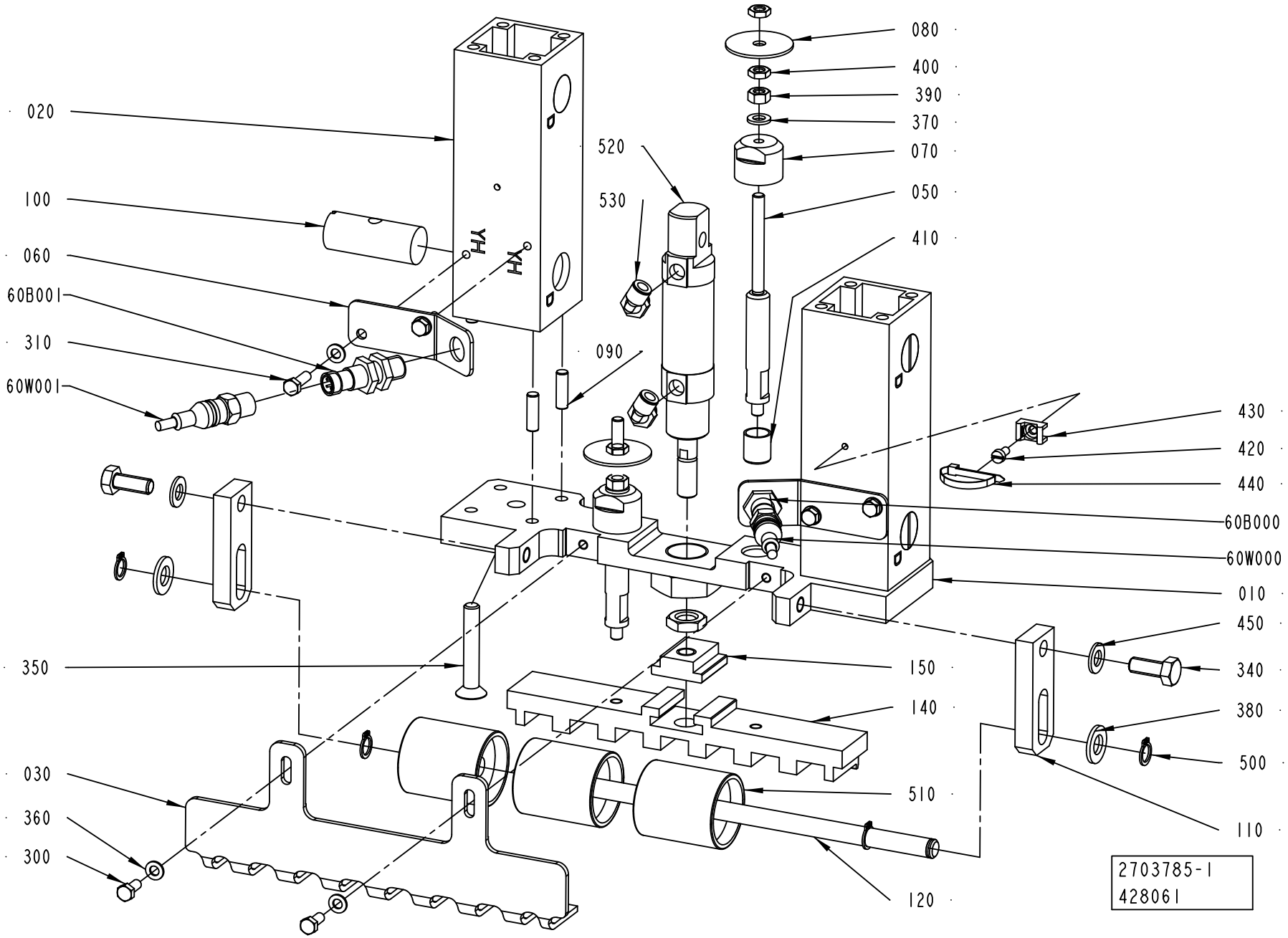
080
400
390
370
070
050
410
520
530
090
020
100
060
60B001
310
60W001
YH
YH
430
420
440
60B000
60W000
010
450
340
380
500
110
150
140
510
120
350
030
360
300
2703785-1
428061

ECM: 428955 - 20100401
Group number: 2703785-0100
Assembly Drawing: 2703785-1_1_AD

| Pos | Part No | UN | Qty | Description | Page No |
|---|---|---|---|---|---|
| **RECAP2 A3** | | | | | |
| 030 | 3007826-0000 | | 1 | GUIDE | |
| 140 | 3007773-0000 | | 1 | PLATE | |
| **RECAP3** | | | | | |
| 030 | 2780404-0000 | | 1 | GUIDE | |
| 140 | 3005237-0000 | | 1 | PLATE | |
| **Common Parts** | | | | | |
| 010 | 2828666-0000 | | 1 | BRACKET | |
| 020 | 2715742-0000 | | 2 | PROFILE | |
| 050 | 2715743-0000 | | 2 | SHAFT | |
| 060 | 2715744-0000 | | 2 | BRACKET | |
| 070 | 2715740-0000 | | 2 | STOP | |
| 080 | 2715739-0000 | | 2 | FLAG | |
| 090 | 1065410-0000 | | 8 | SLOTTED PIN | |
| 100 | 486268-0000 | | 4 | NUT | |
| 110 | 2826560-0000 | | 2 | PLATE | |
| 120 | 2826563-0000 | | 1 | SHAFT | |
| 150 | 3007680-0000 | | 1 | SPACER | |
| 300 | 312105-0327 | | 2 | SCREW M6S ISO 4017 M5X12 A480 | |
| 310 | 312105-0329 | | 4 | SCREW M6S ISO 4017 M5X16 A480 | |
| 340 | 312105-0451 | | 2 | SCREW M6S ISO 4017 M8X20 A480 | |
| 350 | 312155-0461 | | 2 | SCREW DIN 7991 MF6S M8X50A4 70 | |
| 360 | 315105-0146 | | 6 | WASHER BRB 5,3X10 RFR | |
| 370 | 315105-0153 | | 2 | WASHER BRB 6,4X12 RFR | |
| 380 | 315106-0173 | | 2 | WASHER ISO 7089-10-200 HV A4 | |
| 390 | 312605-0316 | | 2 | HEXAGON NUT, M6M M6 A280 | |
| 400 | 312625-0316 | | 4 | HEXAGON THIN NUT, EN 24035 ML6M M6 A4 | |
| 410 | 321136-0183 | | 2 | BUSHING, IGLIDUR H370 12X14X15 | |
| 420 | 312125-0287 | | 1 | SCREW ISO 1207 M4X8 A4 | |
| 430 | 352113-0205 | | 1 | ANCHOR PLATES FOR STRIPS, TYPE TM2S8-C10 | |
| 440 | 352113-0104 | | 1 | CABLE TIE, BLACK 300X4,8 MM | |
| 450 | 315105-0165 | | 2 | WASHER BRB 8,4X16 RFR | |
| 500 | 90141-0016 | | 4 | RETAINING RING FOR SHAFT DIN 471 10 SS | |
| 510 | 90191-0069 | | 3 | WHEEL, NO. RSER 40X45 | |
| 520 | 90459-4126 | | 1 | DOUBLE ACTING, MINI-ISO, CYL. 25-12 | |
| 530 | 90458-2956 | | 2 | ELBOW PIPE JOINT, EXT.THREAD, D=6MM-G1/8 | |
| 60B000 | 90458-2907 | | 1 | PROX.SWITCH IFS204 | |
| 60B001 | 90458-2907 | | 1 | PROX.SWITCH IFS204 | |
| 60W000 | 351411-0015 | | 1 | ACTU/SENS. CABLE PRST 4-PRKT 4-07/1,5M | |
| 60W001 | 351411-0015 | | 1 | ACTU/SENS. CABLE PRST 4-PRKT 4-07/1,5M | |

| Pos | Part No | UN | Qty | Description | Page No |
|---|---|---|---|---|---|

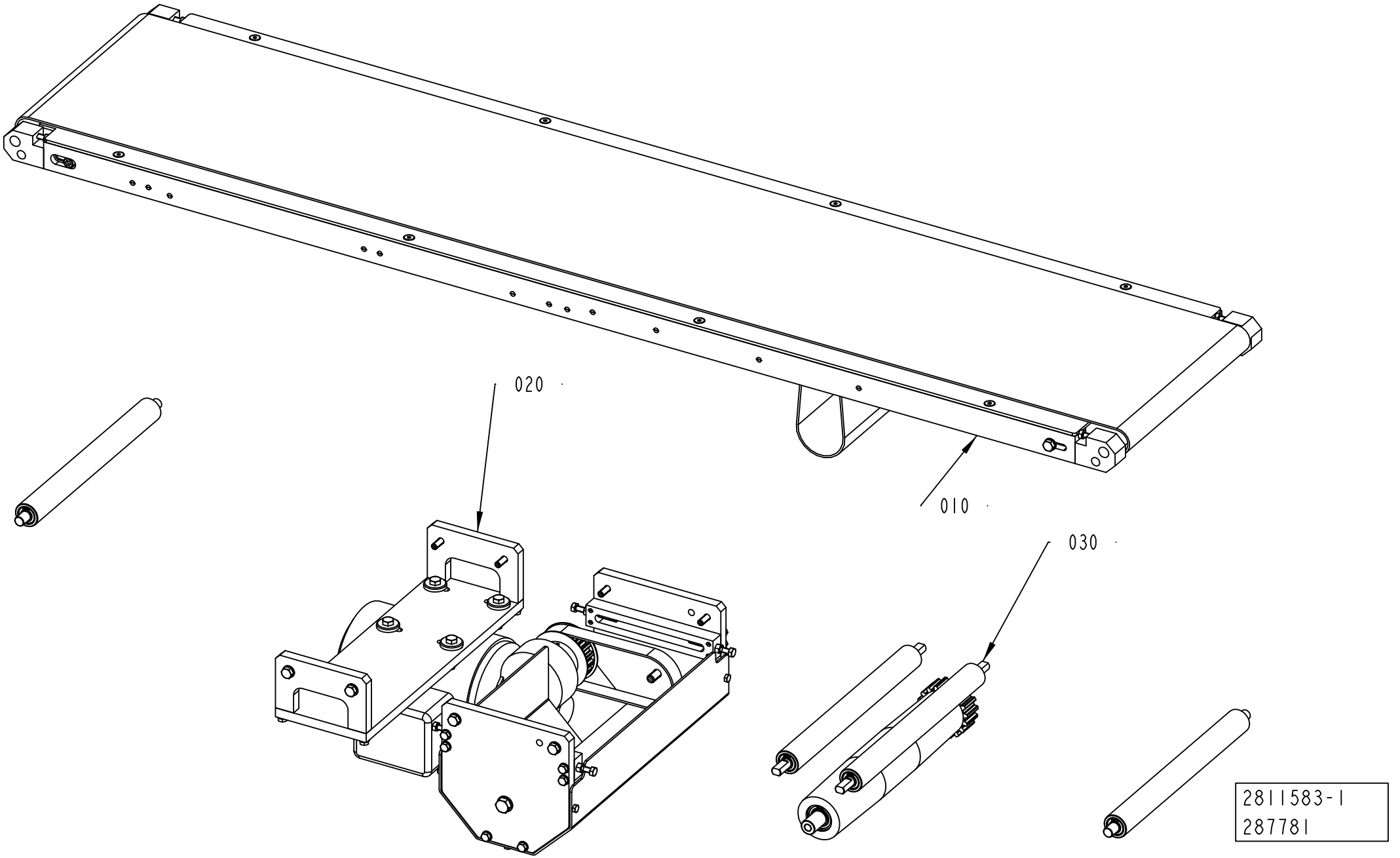
020
010
030
2811583-1
287781

ECM: 295901 - 20070606
Group number: 2811583-0100
Assembly Drawing: 2811583-1_1_AA

| Pos | Part No | UN | Qty | Description | Page No |
|---|---|---|---|---|---|
| - | | | | | |
| 010 | 2811482-0100 | | 1 | FRAMEWORK | **5-19** |
| 020 | 2811470-0100 | | 1 | DRIVE UNIT | **5-21** |
| 030 | 2811472-0100 | | 1 | ROLLER UNIT | **5-23** |

| Pos | Part No | UN | Qty | Description | Page No |
|---|---|---|---|---|---|

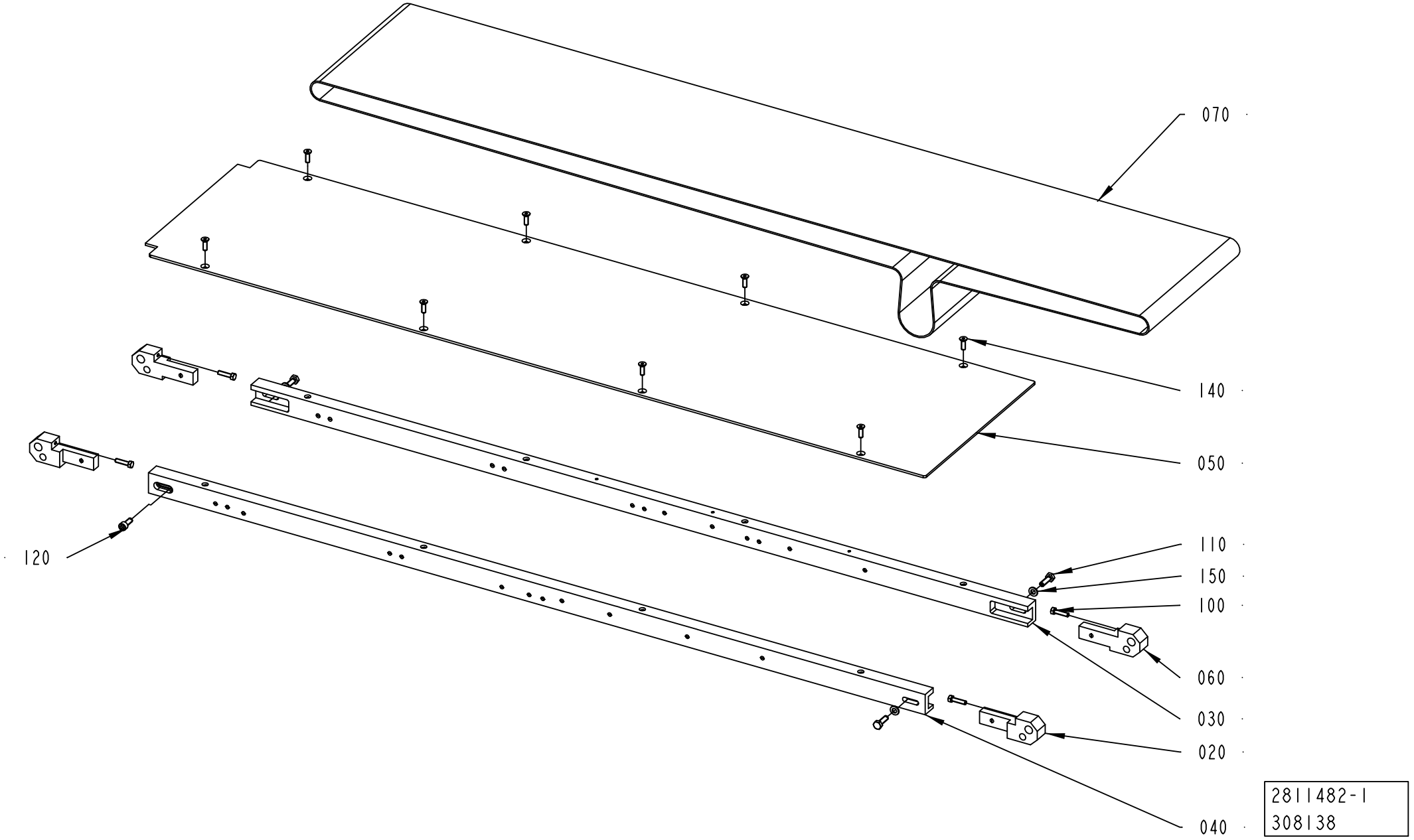
070
140
050
120
110
150
100
060
030
020
040
2811482-1
308138

ECM: 308138 - 20070606
Group number: 2811482-0100
Assembly Drawing: 2811482-1_1_AA

| Pos | Part No | UN | Qty | Description | Page No |
|---|---|---|---|---|---|
| **CAP 30/FLEX** | | | | | |
| 030 | 2811582-0000 | | 1 | FRAME UNION GIRDER | |
| 040 | 2811483-0000 | | 1 | FRAME UNION GIRDER | |
| 050 | 2811581-0000 | | 1 | SLIDE SHEET | |
| 070 | 2811579-0000 | | 1 | CONVEYOR BELT | |
| 140 | 312155-0329 | | 8 | SCREW DIN 7991 MF6S M5X16 A4 70 | |
| **Common Parts** | | | | | |
| 020 | 2737295-0000 | | 2 | SLIDE | |
| 060 | 2737409-0000 | | 2 | SLIDE | |
| 100 | 312105-0331 | | 4 | SCREW M6S ISO 4017 M5X20 A480 | |
| 110 | 312105-0370 | | 3 | SCREW M6S ISO 4017 M6X20 A480 | |
| 120 | 312115-0368 | | 1 | SCREW ISO4762 M6X16 A4 80 | |
| 150 | 315105-0153 | | 3 | WASHER BRB 6,4X12 RFR | |

| Pos | Part No | UN | Qty | Description | Page No |
|---|---|---|---|---|---|

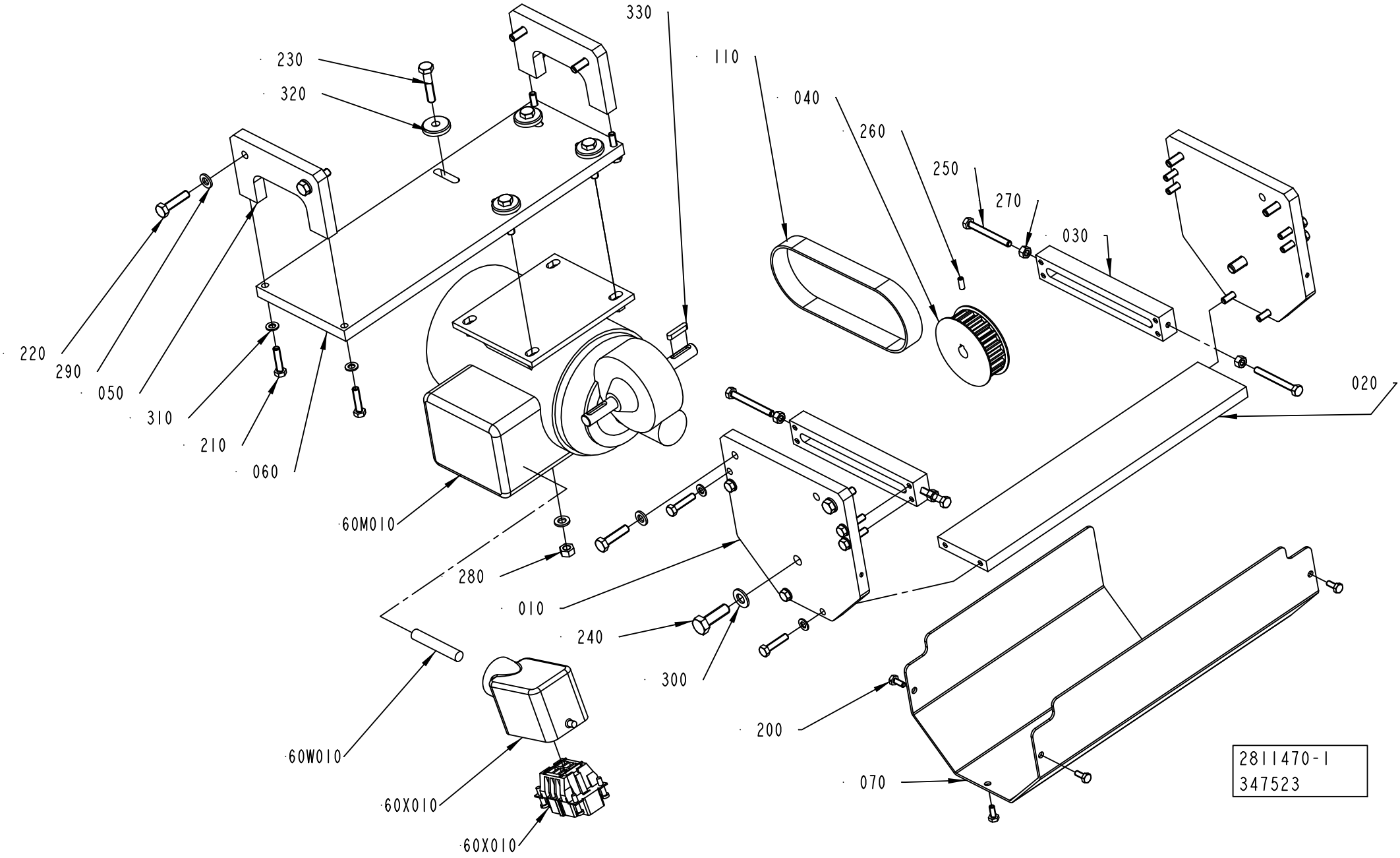
330
230
320
110
040
260
250
270
030
220
290
050
310
210
060
020
60M010
280
010
240
300
200
60W010
60X010
60X010
070
2811470-1
347523

ECM: 349794 - 20080701
Group number: 2811470-0100
Assembly Drawing: 2811470-1_1_AB

| Pos | Part No | UN | Qty | Description | Page No |
|---|---|---|---|---|---|
| - | | | | | |
| 010 | 2737419-0000 | | 2 | GABLE PLATE | |
| 020 | 2811471-0000 | | 1 | PLATE | |
| 030 | 2737421-0000 | | 2 | HEAD PLATE | |
| 040 | 2968615-0000 | | 1 | DRIVE WHEEL | |
| 050 | 2737423-0000 | | 2 | PLATE | |
| 060 | 2811468-0000 | | 1 | PLATE | |
| 070 | 2811469-0000 | | 1 | PROTECTION PLATE | |
| 110 | 90417-0337 | | 1 | TIMING BELT 16T10/370 PU | |
| 200 | 312105-0289 | | 5 | SCREW M6S H4X10 A4 70 ISO4017/DIN933 | |
| 210 | 312105-0332 | | 16 | SCREW M6S ISO 4017 M5X22 A470 | |
| 220 | 312105-0372 | | 8 | SCREW M6S ISO 4017 M6X25 A480 | |
| 230 | 312105-0374 | | 4 | SCREW M6S ISO 4014 M6X30 A480 | |
| 240 | 312105-0453 | | 2 | SCREW M6S ISO 4017 M8X25 A480 | |
| 250 | 312109-0340 | | 4 | SCREW M6S ISO 4017 M5X45 A480 | |
| 260 | 312318-0289 | | 1 | SCREW ISO4029 M4X10 A4 | |
| 270 | 312605-0314 | | 4 | HEXAGON NUT, M6M M5 A280 | |
| 280 | 312607-0316 | | 4 | HEXAGON NUT, EN 24032 M6M M6 A480 | |
| 290 | 315105-0153 | | 12 | WASHER BRB 6,4X12 RFR | |
| 300 | 315105-0165 | | 2 | WASHER BRB 8,4X16 RFR | |
| 310 | 315106-0146 | | 16 | WASHER ISO 7089-5-200 HV A4 | |
| 320 | 315125-0153 | | 4 | WASHER TBRSB 6,4X22X4 A4 | |
| 330 | 315701-0170 | | 1 | PARALLEL KEY W. ROUND ENDS 4X4X20 MM | |
| 60M010 | 90069-0254 | | 1 | GEARS, WORM MOTOR SN5D56A-4 | |
| 60W010 | 351150-0413 | M | 5 | CABLE OLFLEX 4GX1,5 MM2 LIGHT/GREY | |
| 60X010 | 90110-0052 | | 1 | MALE INSERT HAN 6E 09 33 006 2601 | |
| 60X010 | 90459-1458 | | 1 | HOOD HAN 6 E 19 30 006 1540 | |

| Pos | Part No | UN | Qty | Description | Page No |
|---|---|---|---|---|---|

Machine Type | Group Description | Used-In | Group Number | Page No

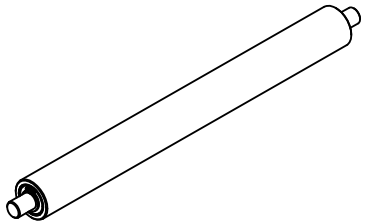

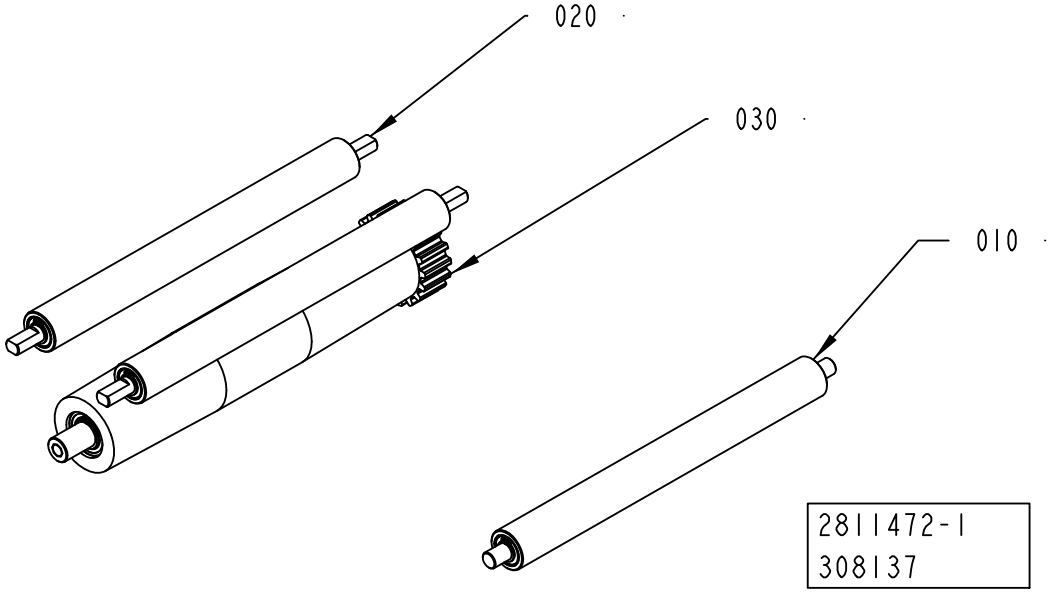
020
030
010
2811472-1
308137

ECM: 308137 - 20070606
Group number: 2811472-0100
Assembly Drawing: 2811472-1_1_AA

| Pos | Part No | UN | Qty | Description | Page No |
|---|---|---|---|---|---|
| - | | | | | |
| 010 | 2811473-0100 | | 2 | ROLL | **5-25** |
| 020 | 2811481-0100 | | 2 | ROLL | **5-27** |
| 030 | 2811476-0100 | | 1 | DRIVE ROLLER | **5-29** |

| Pos | Part No | UN | Qty | Description | Page No |
|---|---|---|---|---|---|

Machine Type | Group Description | Used-In | Group Number | Page No

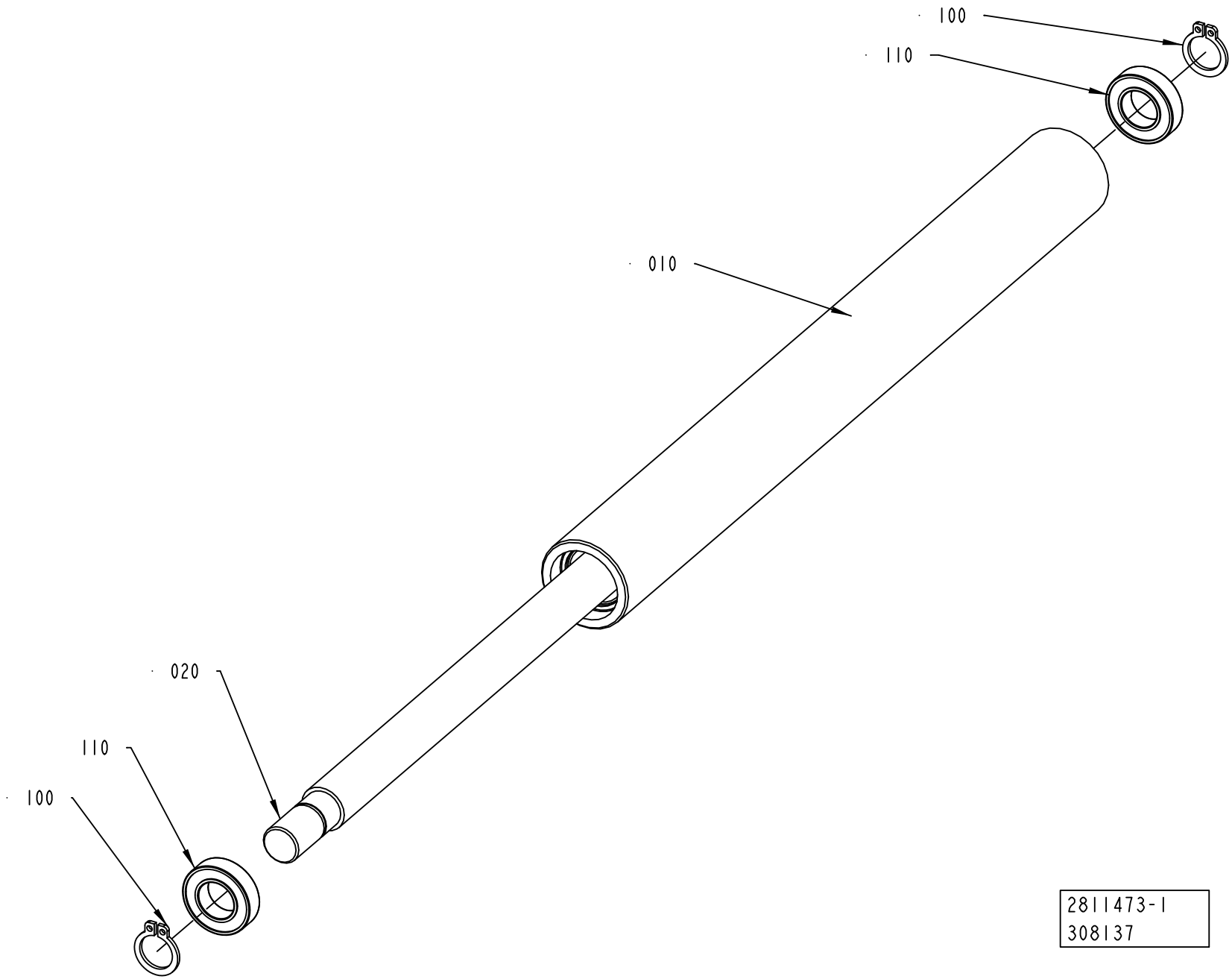
100
110
010
020
110
100
2811473-1
308137

ECM: 308137 - 20070606
Group number: 2811473-0100
Assembly Drawing: 2811473-1_1_AA

| Pos | Part No | UN | Qty | Description | Page No |
|---|---|---|---|---|---|
| - | | | | | |
| 010 | 2811479-0000 | | 1 | JACKET | |
| 020 | 2811475-0000 | | 1 | SHAFT | |
| 100 | 90141-0016 | | 2 | RETAINING RING FOR SHAFT DIN 471 10 SS | |
| 110 | 90458-1438 | | 2 | BALL BEARING 10/19X5 | |

| Pos | Part No | UN | Qty | Description | Page No |
|---|---|---|---|---|---|

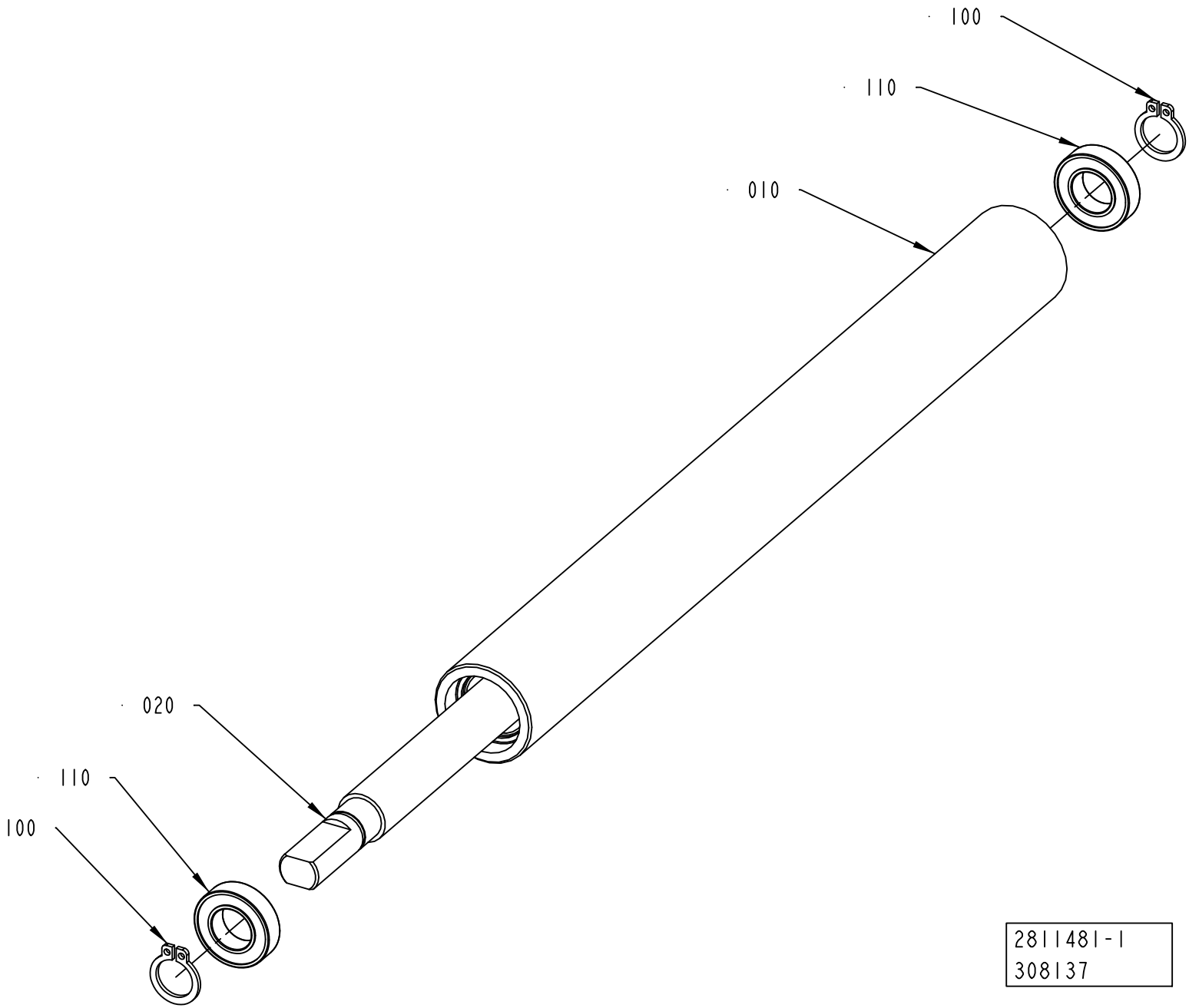
100
110
010
020
110
100
2811481-1
308137

ECM: 308137 - 20070606
Group number: 2811481-0100
Assembly Drawing: 2811481-1_1_AA

| Pos | Part No | UN | Qty | Description | Page No |
|---|---|---|---|---|---|
| - | | | | | |
| 010 | 2811479-0000 | | 1 | JACKET | |
| 020 | 2811480-0000 | | 1 | SHAFT | |
| 100 | 90141-0016 | | 2 | RETAINING RING FOR SHAFT DIN 471 10 SS | |
| 110 | 90458-1438 | | 2 | BALL BEARING 10/19X5 | |

| Pos | Part No | UN | Qty | Description | Page No |
|---|---|---|---|---|---|

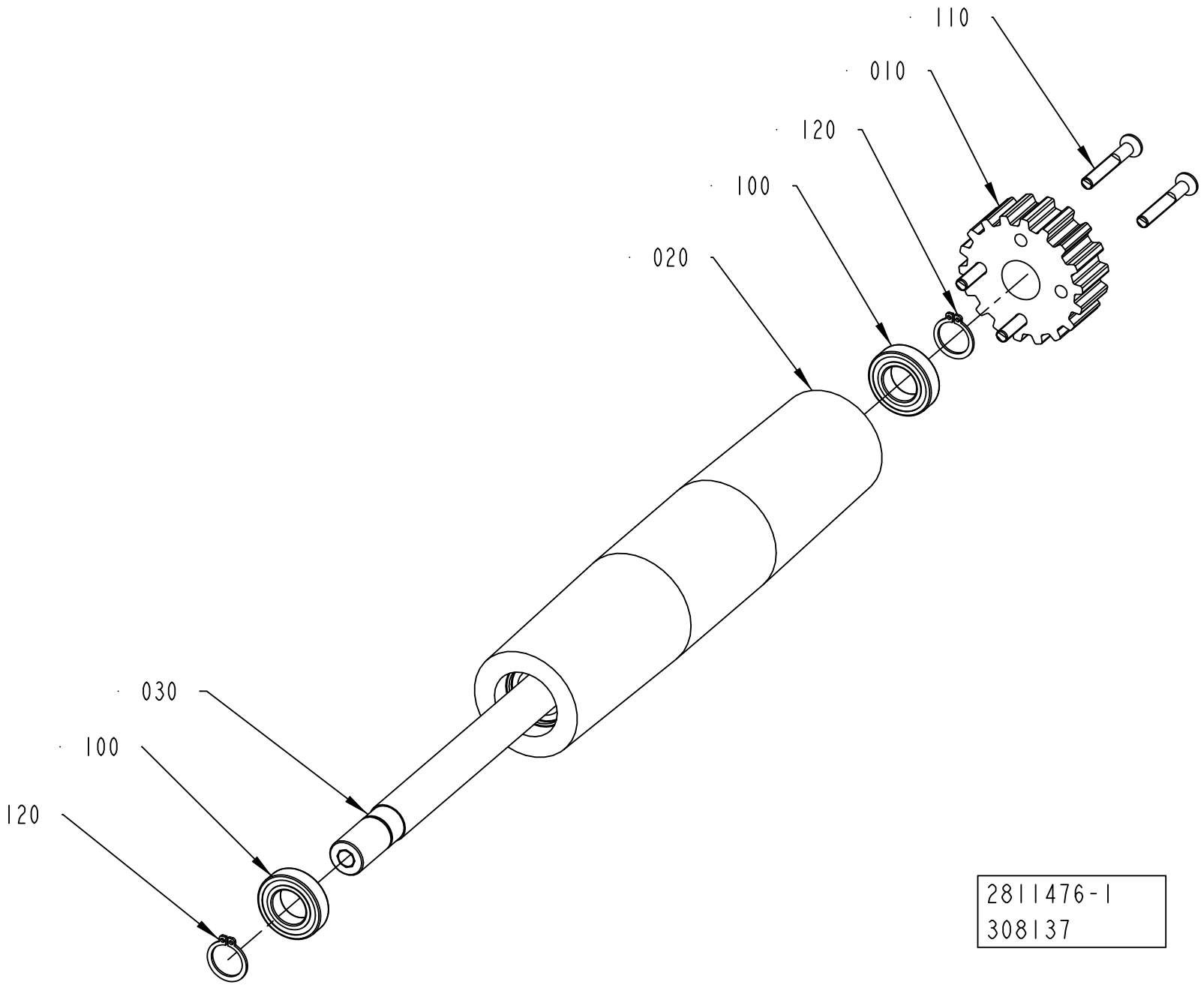
110
010
120
100
020
030
100
120
2811476-1
308137

ECM: 308137 - 20070606
Group number: 2811476-0100
Assembly Drawing: 2811476-1_1_AA

| Pos | Part No | UN | Qty | Description | Page No |
|---|---|---|---|---|---|
| - | | | | | |
| 010 | 2737413-0000 | | 1 | TOOTHED PULLEY | |
| 020 | 2811477-0000 | | 1 | JACKET | |
| 030 | 2811478-0000 | | 1 | SHAFT | |
| 100 | 90459-4616 | | 2 | BALL BEARING 15/28X7 | |
| 110 | 312155-0337 | | 4 | SCREW DIN 7991 MF6S M5X35 A4 70 | |
| 120 | 315751-0112 | | 2 | RETAINING RING FOR SHAFT DIN 471 15 SS | |

| Pos | Part No | UN | Qty | Description | Page No |
|---|---|---|---|---|---|

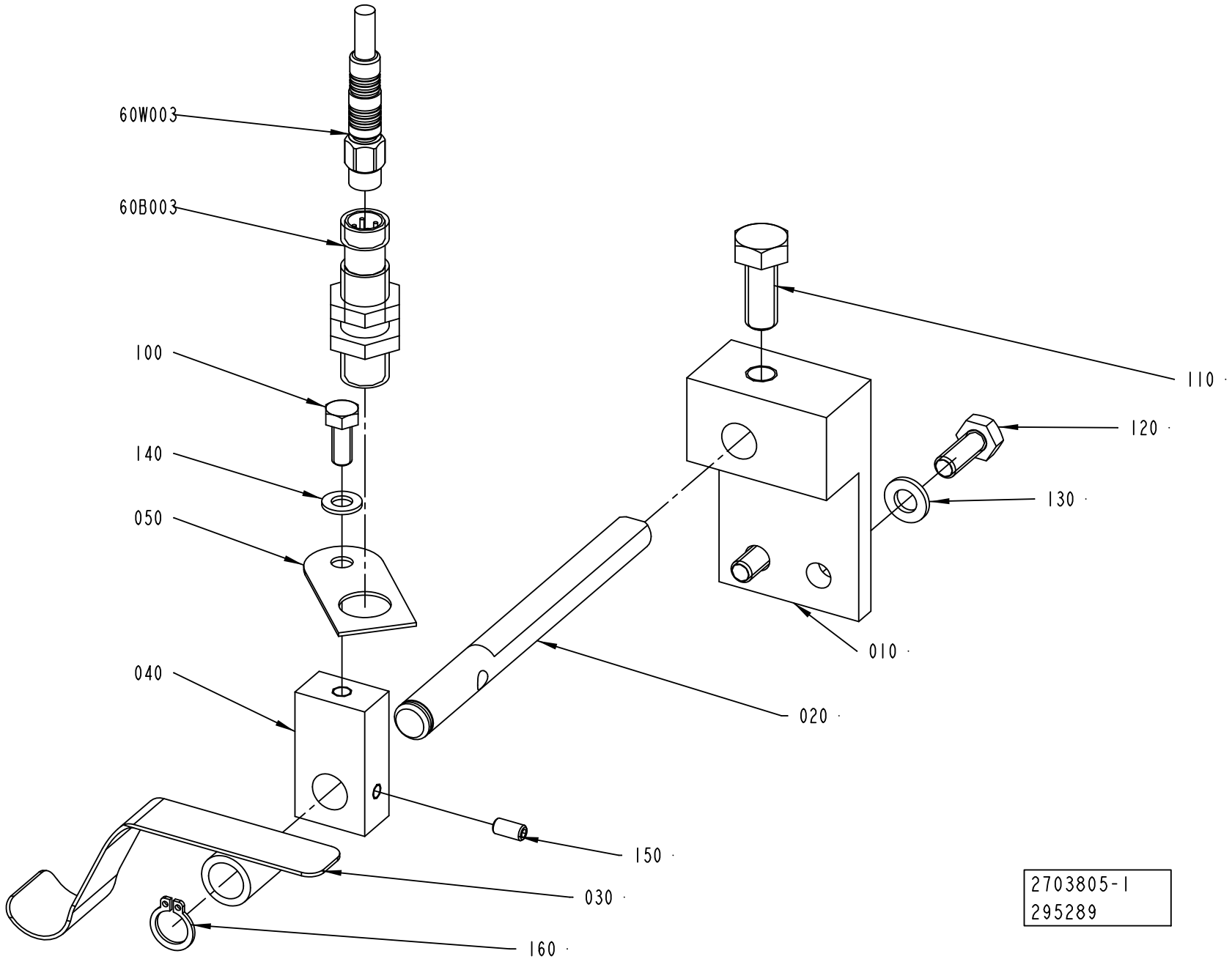
60W003
60B003
100
140
050
040
110
120
130
010
020
150
030
160
2703805-1
295289

ECM: 331251 - 20080407
Group number: 2703805-0100
Assembly Drawing: 2703805-1_1_AB

| Pos | Part No | UN | Qty | Description | Page No |
|---|---|---|---|---|---|
| - | | | | | |
| 010 | 1189461-0000 | | 1 | BRACKET | |
| 020 | 2562219-0000 | | 1 | SHAFT | |
| 030 | 1189457-0000 | | 1 | METAL FLAG | |
| 040 | 2562171-0000 | | 1 | BRACKET | |
| 050 | 1133251-0000 | | 1 | PLATE | |
| 100 | 312105-0327 | | 1 | SCREW M6S ISO 4017 M5X12 A480 | |
| 110 | 312105-0451 | | 1 | SCREW M6S ISO 4017 M8X20 A480 | |
| 120 | 312105-0368 | | 2 | SCREW M6S ISO 4017 M6X16 A480 | |
| 130 | 315105-0153 | | 2 | WASHER BRB 6,4X12 RFR | |
| 140 | 315105-0146 | | 1 | WASHER BRB 5,3X10 RFR | |
| 150 | 312318-0287 | | 1 | SCREW ISO4029 M4X8 A4 | |
| 160 | 90141-0016 | | 1 | RETAINING RING FOR SHAFT DIN 471 10 SS | |
| 60B003 | 90458-2907 | | 1 | PROX.SWITCH IFS204 | |
| 60W003 | 351405-0050 | | 1 | SENS. CABLE RSMVN 3-PRKT 4-3-06/5,0M | |

| Pos | Part No | UN | Qty | Description | Page No |
|---|---|---|---|---|---|

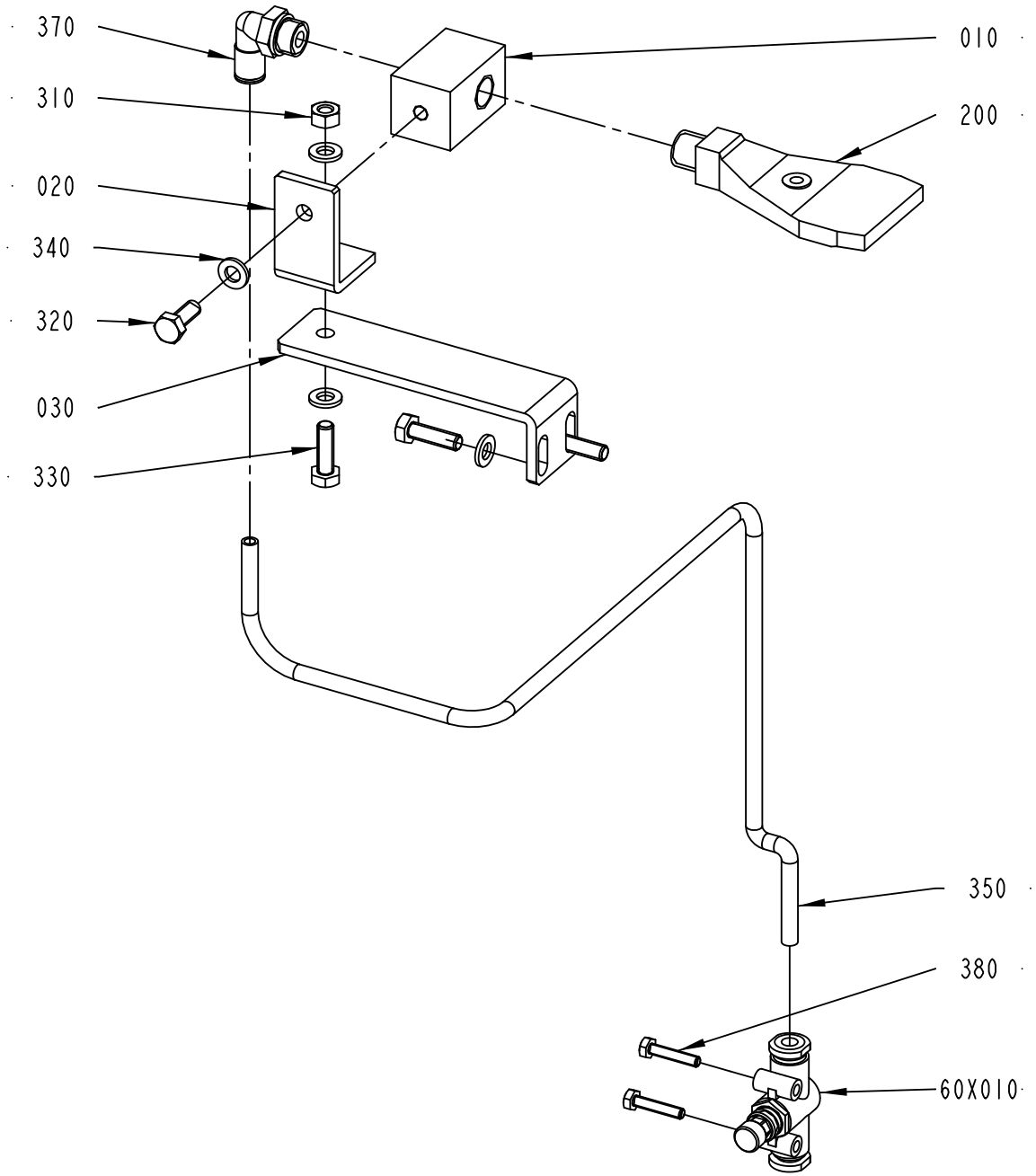
370
310
020
340
320
030
330
010
200
350
380
60X010
2888723-1
295289

ECM: 331258 - 20080407
Group number: 2888723-0100
Assembly Drawing: 2888723-1_1_AB

| Pos | Part No | UN | Qty | Description | Page No |
|---|---|---|---|---|---|
| - | | | | | |
| 010 | 2905379-0000 | | 1 | BRACKET | |
| 020 | 2905380-0000 | | 1 | BRACKET | |
| 030 | 2905381-0000 | | 1 | BRACKET | |
| 200 | 90424-0089 | | 1 | AIR NOZZLE, BSPT1/4, AAB727-1/4-15 | |
| 300 | 350001-0008 | | 1 | PUSH-IN FITTING QS-F-G1/4-6 | |
| 310 | 312605-0316 | | 1 | HEXAGON NUT, M6M M6 A280 | |
| 320 | 312105-0368 | | 1 | SCREW M6S ISO 4017 M6X16 A480 | |
| 330 | 312105-0370 | | 3 | SCREW M6S ISO 4017 M6X20 A480 | |
| 340 | 315105-0153 | | 5 | WASHER BRB 6,4X12 RFR | |
| 350 | 315400-0001 | MM | 5000 | TUBE PUN-H-6X1-BL | |
| 380 | 312105-0295 | | 2 | SCREW M6S ISO 4017 M4X20 A470 | |
| 60X010 | 90459-3604 | | 1 | FLOW CONTROL VALVE, GR-QS-6 | |

| Pos | Part No | UN | Qty | Description | Page No |
|---|---|---|---|---|---|

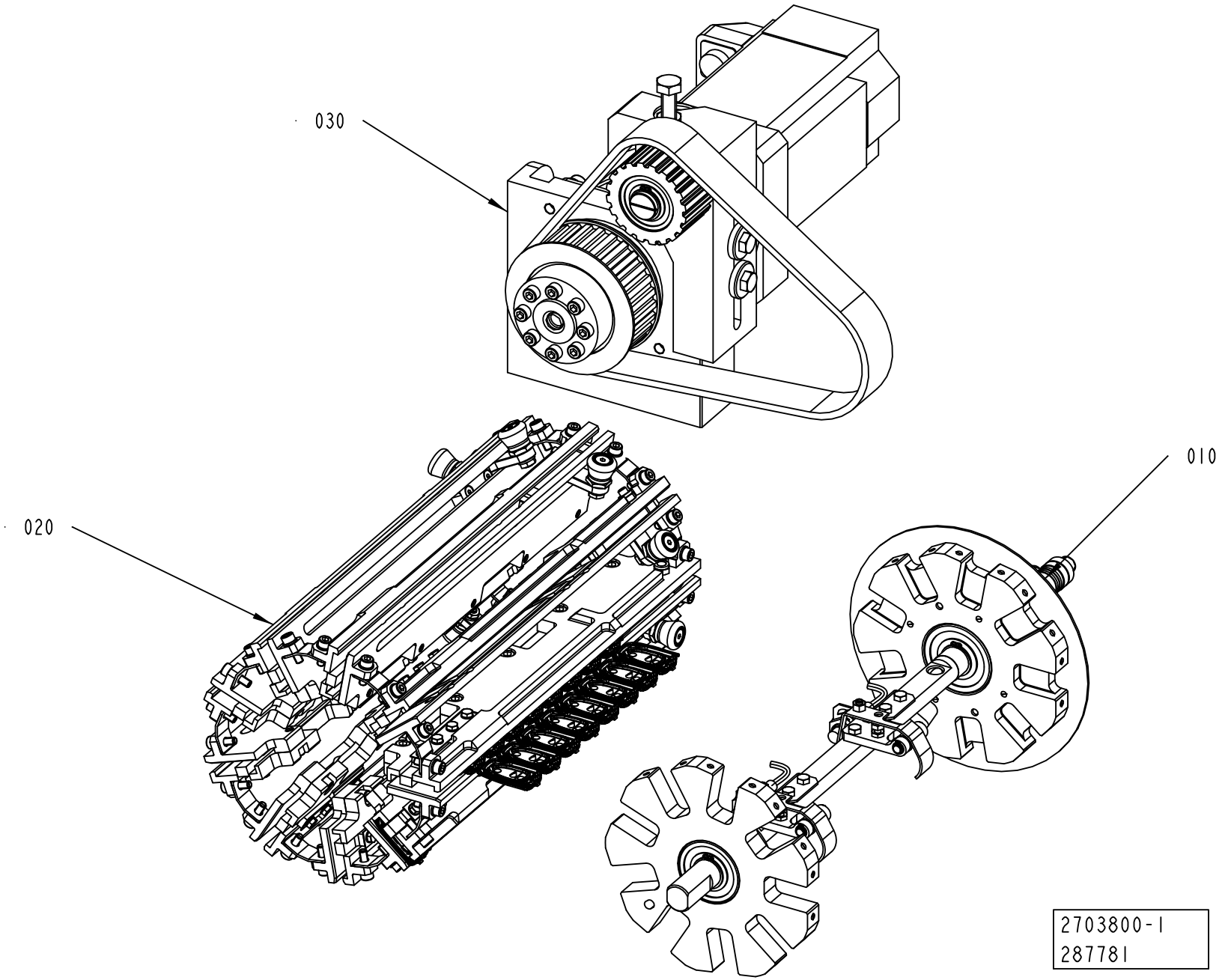
030
020
010
2703800-1
287781

ECM: 292544 - 20070606
Group number: 2703800-0100
Assembly Drawing: 2703800-1_1_AA

| Pos | Part No | UN | Qty | Description | Page No |
|---|---|---|---|---|---|
| - | | | | | |
| 010 | 2703810-0100 | | 1 | CUTTING MECHANISM BODY | **5-37** |
| 020 | 2703820-0100 | | 9 | CUTTING UNIT | **5-39** |
| 030 | 2715713-0100 | | 1 | DRIVE UNIT | **5-41** |

| Pos | Part No | UN | Qty | Description | Page No |
|---|---|---|---|---|---|

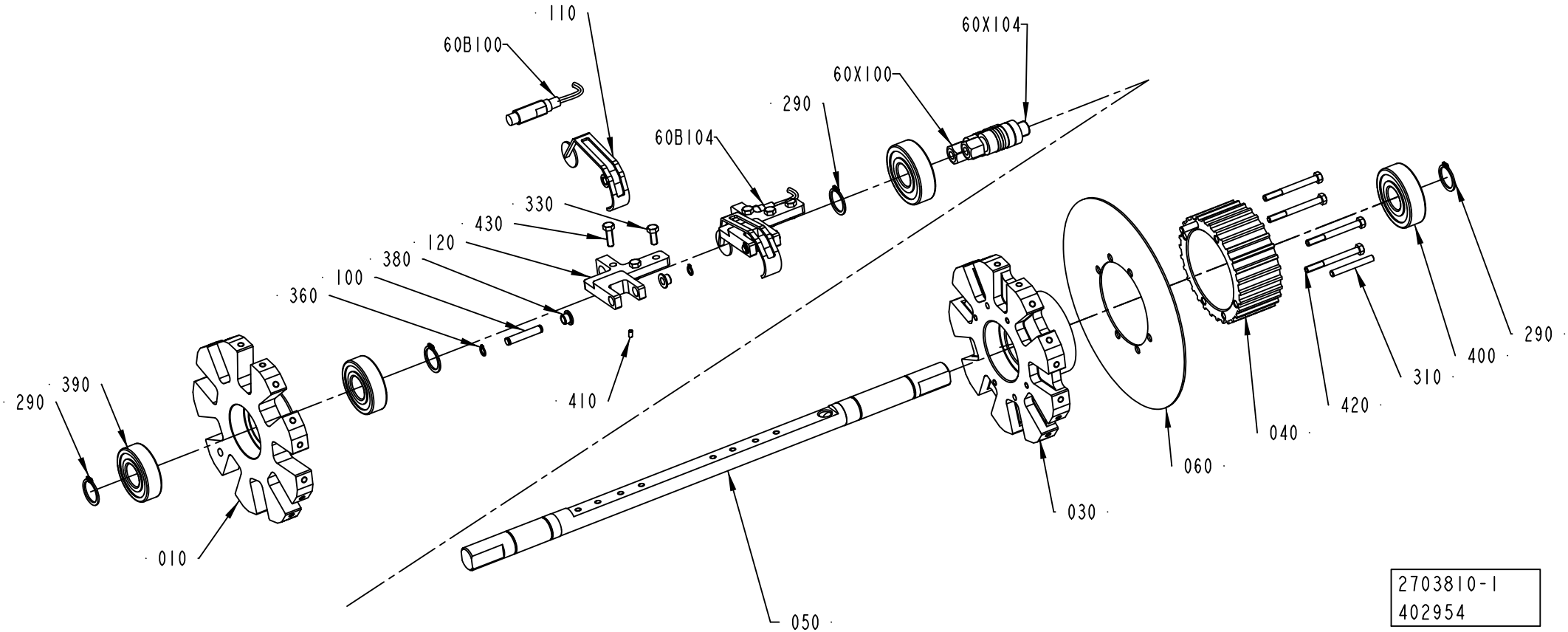
110
60B100
60X104
60X100
290
60B104
330
430
120
380
100
360
390
290
410
010
050
030
060
040
420
310
400
290
2703810-1
402954

ECM: 419495 - 20100110
Group number: 2703810-0100
Assembly Drawing: 2703810-1_1_AB

| Pos | Part No | UN | Qty | Description | Page No |
|---|---|---|---|---|---|
| **RECAP2 A3** | | | | | |
| 110 | 3039026-0000 | | 2 | FLAG | |
| **RECAP3** | | | | | |
| 110 | 3011464-0000 | | 2 | FLAG | |
| **Common Parts** | | | | | |
| 010 | 2703811-0000 | | 1 | END SECTION | |
| 030 | 2703813-0000 | | 1 | END SECTION | |
| 040 | 2869635-0000 | | 1 | TOOTHED PULLEY | |
| 050 | 2869634-0000 | | 1 | SHAFT | |
| 060 | 2715752-0000 | | 1 | PLATE | |
| 100 | 2716004-0000 | | 2 | SHAFT | |
| 120 | 3011782-0000 | | 2 | HOLDER | |
| 290 | 315751-0116 | | 4 | RETAINING RING FOR SHAFT DIN 471 20 SS | |
| 310 | 311103-0318 | | 2 | PARALLEL PIN ISO 2338 5M6X40 A1 | |
| 330 | 312105-0327 | | 6 | SCREW M6S ISO 4017 M5X12 A480 | |
| 360 | 315751-0103 | | 4 | RETAINING RING FOR SHAFT DIN 471 6 SS | |
| 380 | 321154-0060 | | 4 | FLANGE BUSHING, IGLIDUR W300 6X8X6 | |
| 390 | 321313-0104 | | 2 | BALL BEARING 20/47X14 | |
| 400 | 321316-0204 | | 2 | BALL BEARING 20/52X15 | |
| 410 | 312318-0220 | | 2 | SCREW ISO4029 M3X6 A4 | |
| 420 | 312105-0341 | | 4 | SCREW M6S ISO 4014 M5X50 A480 | |
| 430 | 312105-0329 | | 2 | SCREW M6S ISO 4017 M5X16 A480 | |
| 60B100 | 90600-0459 | | 1 | INDUCTIVE SWITCH, E2A-M12KN05-WP-B1 5M | |
| 60B104 | 90600-0459 | | 1 | INDUCTIVE SWITCH, E2A-M12KN05-WP-B1 5M | |
| 60X100 | 90459-1663 | | 1 | CONNECTOR, 405204 RSC4/7 | |
| 60X104 | 90459-1663 | | 1 | CONNECTOR, 405204 RSC4/7 | |

| Pos | Part No | UN | Qty | Description | Page No |
|---|---|---|---|---|---|

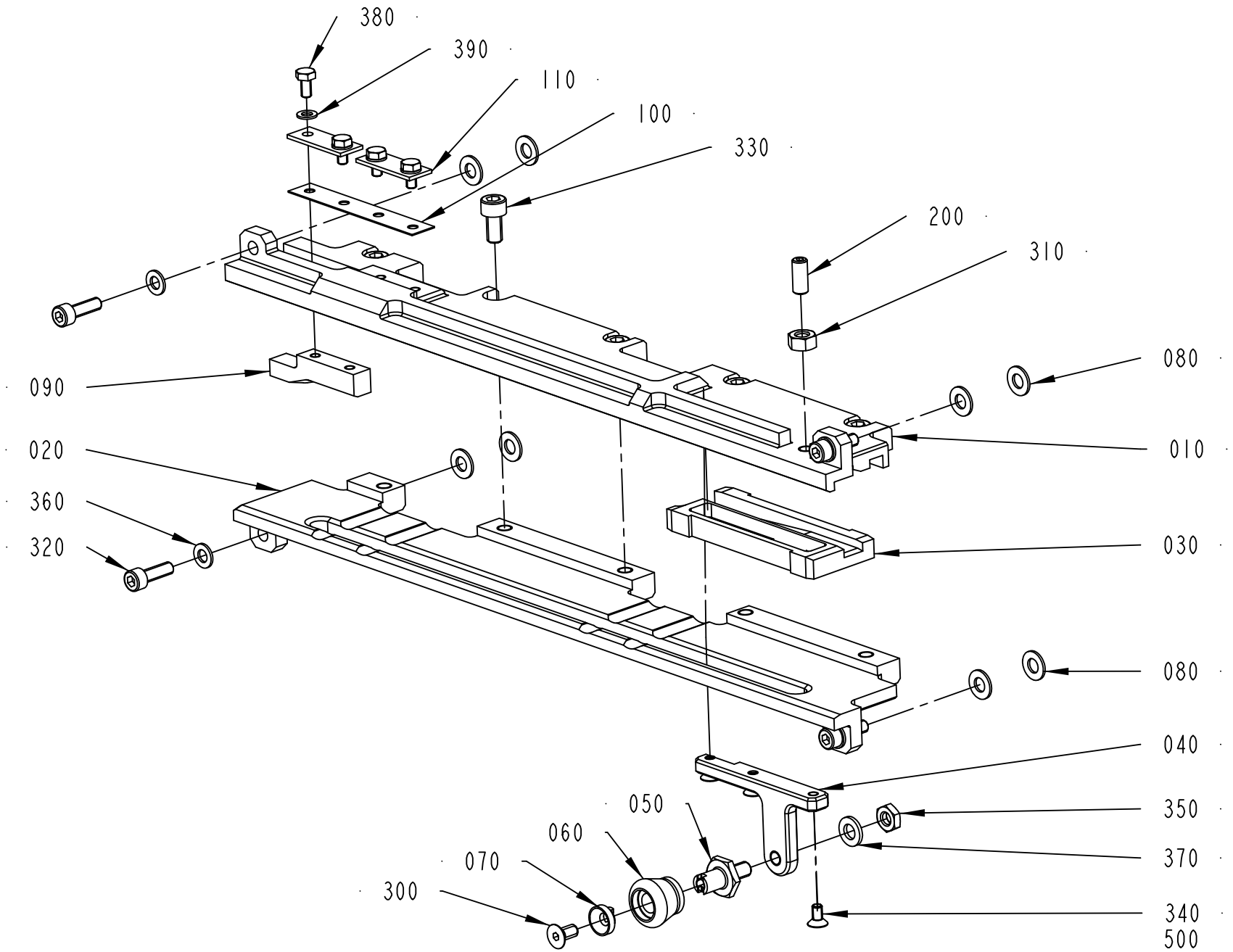
380
390
110
100
330
200
310
080
090
010
020
360
320
030
080
040
050
350
060
370
070
300
340
500
2703820-1
428061

ECM: 428956 - 20100401
Group number: 2703820-0100
Assembly Drawing: 2703820-1_1_AE

| Pos | Part No | UN | Qty | Description | Page No |
|---|---|---|---|---|---|
| **RECAP2 A3** | | | | | |
| 010 | 2923857-0000 | | 1 | SUPERSTRUCTURE | |
| 020 | 2923858-0000 | | 1 | LOWER SECTION | |
| 030 | 2923894-0000 | | 1 | SLIDER | |
| 060 | 3004039-0000 | | 1 | WHEEL | |
| 090 | 2924076-0000 | | 1 | GUIDE | |
| **RECAP3** | | | | | |
| 010 | 2887113-0000 | | 1 | SUPERSTRUCTURE | |
| 020 | 2703822-0000 | | 1 | LOWER SECTION | |
| 030 | 2862624-0000 | | 1 | SLIDER | |
| 060 | 2703828-0000 | | 1 | WHEEL | |
| 090 | 2887115-0000 | | 1 | GUIDE | |
| **Common Parts** | | | | | |
| 040 | 2862625-0000 | | 1 | ARM | |
| 050 | 2811990-0000 | | 1 | SCREW | |
| 070 | 2811991-0000 | | 1 | WASHER | |
| 080 | 2982736-0000 | | 8 | WASHER | |
| 100 | 2887618-0000 | | 1 | SPRING PLATE | |
| 110 | 2918456-0000 | | 2 | PLATE | |
| 200 | 90287-0163 | | 1 | SCREW SPRINGLOAD. SLOTTED HEAD M6X14 | |
| 300 | 312155-0325 | | 1 | SCREW DIN 7991 MF6S M5X10 A4 70 | |
| 310 | 312605-0316 | | 1 | HEXAGON NUT, M6M M6 A280 | |
| 320 | 312115-0329 | | 4 | SCREW ISO4762 M5X16 A4 80 | |
| 330 | 312115-0366 | | 5 | SCREW ISO4762 M6X12 A4 80 | |
| 340 | 312155-0287 | | 3 | SCREW DIN 7991 MF6S M4X8 A4 70 | |
| 350 | 312625-0316 | | 1 | HEXAGON THIN NUT, EN 24035 ML6M M6 A4 | |
| 360 | 315105-0146 | | 4 | WASHER BRB 5,3X10 RFR | |
| 370 | 315105-0153 | | 1 | WASHER BRB 6,4X12 RFR | |
| 380 | 312105-0287 | | 4 | SCREW M6S ISO 4017 M4X8 A470 | |
| 390 | 315105-0136 | | 4 | WASHER BRB 4,3X8 RFR | |
| 500 | 90157-0016 | ML | 1 | THREAD LOCKING, LOCTITE 242 50 ML | |

| Pos | Part No | UN | Qty | Description | Page No |
|---|---|---|---|---|---|

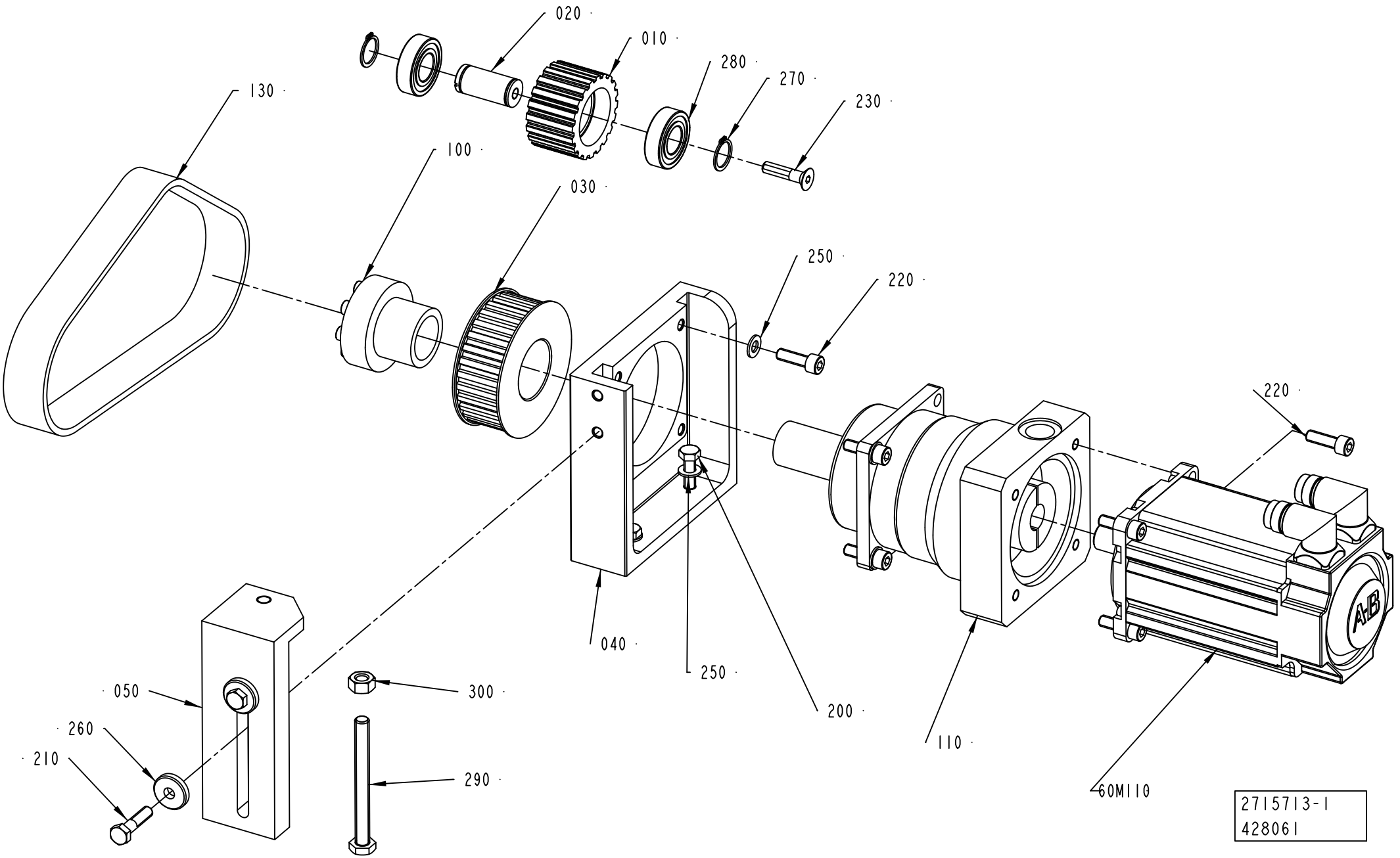
020
010
280
270
230
130
100
030
250
220
220
040
250
200
110
60M110
050
260
210
300
290
2715713-1
428061

ECM: 428958 - 20100401
Group number: 2715713-0100
Assembly Drawing: 2715713-1_1_AD

| Pos | Part No | UN | Qty | Description | Page No |
|---|---|---|---|---|---|
| - | | | | | |
| 010 | 2869636-0000 | | 1 | TOOTHED PULLEY | |
| 020 | 2869637-0000 | | 1 | SHAFT | |
| 030 | 2869638-0000 | | 1 | TOOTHED PULLEY | |
| 040 | 2869639-0000 | | 1 | MOTOR BRACKET | |
| 050 | 2869805-0000 | | 1 | BRACKET | |
| 100 | 90458-2029 | | 1 | CLAMPING ELEMENT WITH SLEEVE, 32X43 MM | |
| 110 | 90459-4009 | | 1 | GEARS, PLAN SP100S-MF1-10-0E1/BAUTZW508 | |
| 130 | 2911322-0000 | | 1 | TIMING BELT | |
| 200 | 312105-0453 | | 2 | SCREW M6S ISO 4017 M8X25 A480 | |
| 210 | 312105-0457 | | 2 | SCREW M6S ISO 4014 M8X35 A480 | |
| 220 | 312115-0453 | | 8 | SCREW ISO4762 M8X25 A4 80 | |
| 230 | 312155-0457 | | 1 | SCREW DIN 7991 MF6S M8X35 A4 70 | |
| 250 | 315105-0165 | | 6 | WASHER BRB 8,4X16 RFR | |
| 260 | 315125-0165 | | 2 | WASHER TBRSB 8,4X26X5 A4 | |
| 270 | 315751-0116 | | 2 | RETAINING RING FOR SHAFT DIN 471 20 SS | |
| 280 | 321308-0204 | | 2 | BALL BEARING 20/42X12 | |
| 290 | 2973959-0000 | | 1 | SCREW | |
| 300 | 312605-0320 | | 1 | HEXAGON NUT, M6M M10 A280 | |
| 60M100 | 90601-1926 | | 1 | SERVO MOTOR MPL-B430P-MK72AA SERIES A | |

| Pos | Part No | UN | Qty | Description | Page No |
|---|---|---|---|---|---|

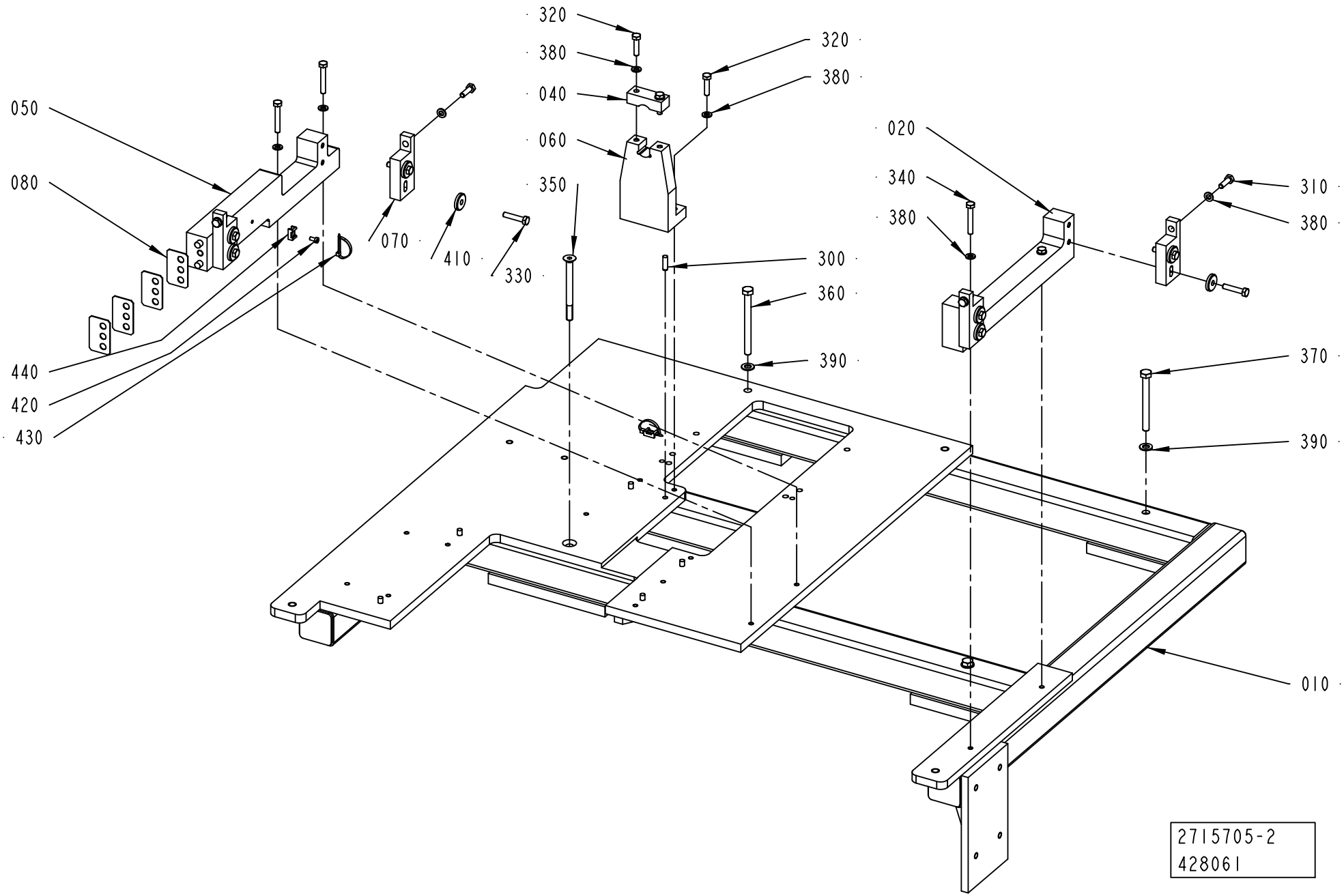
320
380
040
060
350
320
380
050
080
070
410
330
300
360
390
020
340
380
310
380
370
390
440
420
430
010
2715705-2
428061

ECM: 428957 - 20100401
Group number: 2715705-0200
Assembly Drawing: 2715705-2_1_AB

| Pos | Part No | UN | Qty | Description | Page No |
|---|---|---|---|---|---|
| - | | | | | |
| 010 | 2715706-0000 | | 1 | FRAME | |
| 020 | 2715709-0000 | | 1 | CONVEYOR SUPPORT | |
| 040 | 2715712-0000 | | 1 | AXLE SUPPORT | |
| 050 | 3010670-0000 | | 1 | CONVEYOR SUPPORT | |
| 060 | 2715711-0000 | | 1 | AXLE SUPPORT | |
| 070 | 2703799-0000 | | 4 | BRACKET | |
| 080 | 2933777-0000 | | 4 | SHIM | |
| 300 | 311103-0353 | | 6 | PARALLEL PIN ISO 2338 6M6X20 A1 | |
| 310 | 312105-0370 | | 4 | SCREW M6S ISO 4017 M6X20 A480 | |
| 320 | 312105-0372 | | 4 | SCREW M6S ISO 4017 M6X25 A480 | |
| 330 | 312105-0374 | | 8 | SCREW M6S ISO 4014 M6X30 A480 | |
| 340 | 312105-0378 | | 4 | SCREW M6S ISO 4014 M6X40 A480 | |
| 350 | 2911848-0000 | | 1 | SCREW | |
| 360 | 312105-0469 | | 1 | SCREW M6S ISO 4014 M8X90 A480 | |
| 370 | 312105-0467 | | 2 | SCREW M6S ISO 4014 M8X80 A480 | |
| 380 | 315105-0153 | | 12 | WASHER BRB 6,4X12 RFR | |
| 390 | 315105-0165 | | 3 | WASHER BRB 8,4X16 RFR | |
| 410 | 315125-0153 | | 8 | WASHER TBRSB 6,4X22X4 A4 | |
| 420 | 312125-0287 | | 2 | SCREW ISO 1207 M4X8 A4 | |
| 430 | 352113-0104 | | 2 | CABLE TIE, BLACK 300X4,8 MM | |
| 440 | 352113-0205 | | 2 | ANCHOR PLATES FOR STRIPS, TYPE TM2S8-C10 | |

| Pos | Part No | UN | Qty | Description | Page No |
|---|---|---|---|---|---|

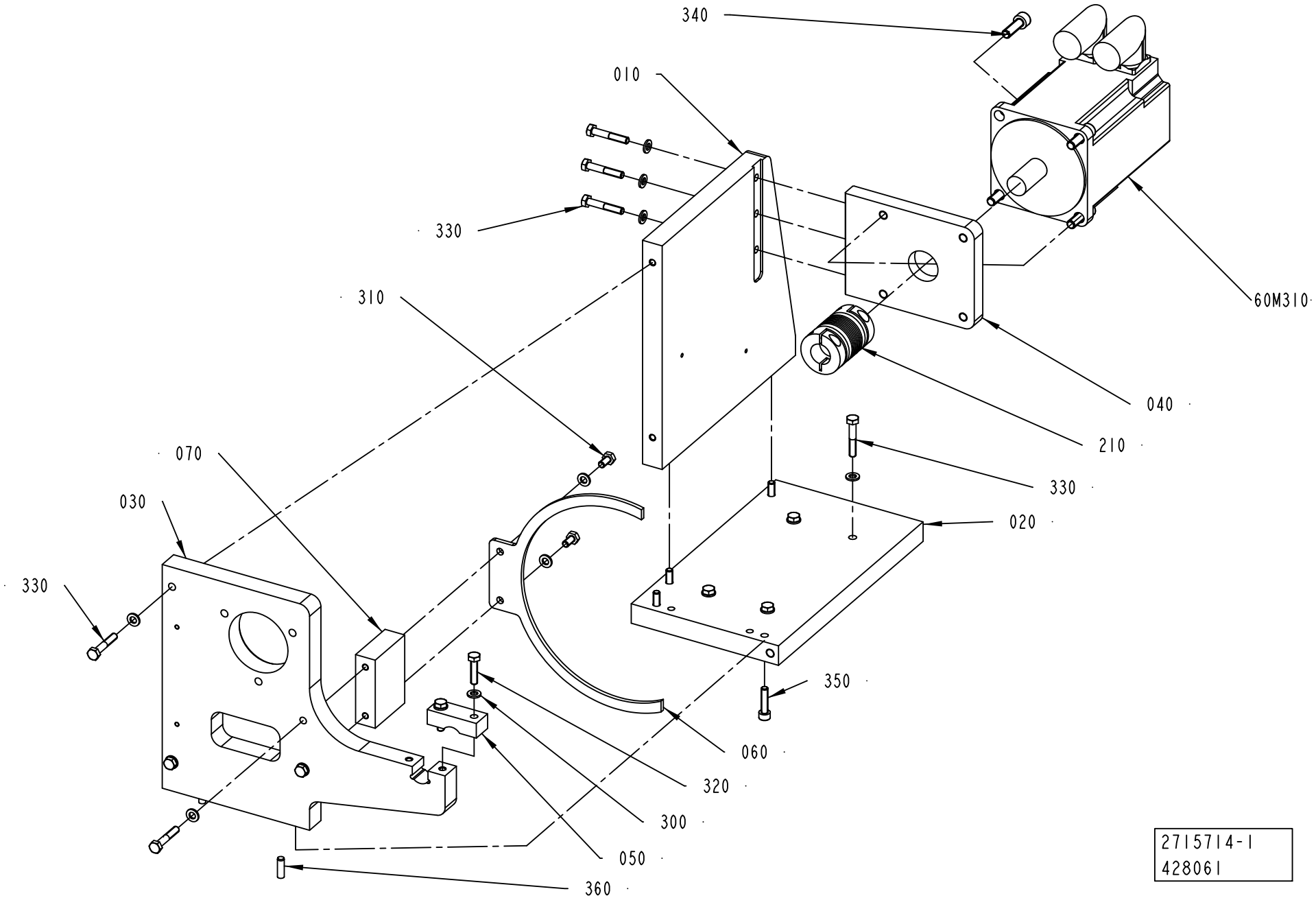
340
010
330
310
60M310
040
210
070
330
030
020
330
350
060
320
300
050
360
2715714-1
428061

ECM: 428959 - 20100401
Group number: 2715714-0100
Assembly Drawing: 2715714-1_1_AD

| Pos | Part No | UN | Qty | Description | Page No |
|---|---|---|---|---|---|
| - | | | | | |
| 010 | 2715715-0000 | | 1 | PLATE | |
| 020 | 2715716-0000 | | 1 | PLATE | |
| 030 | 2715717-0000 | | 1 | AXLE SUPPORT | |
| 040 | 2715718-0000 | | 1 | PLATE | |
| 050 | 2715712-0000 | | 1 | AXLE SUPPORT | |
| 060 | 2703816-0000 | | 1 | GUIDE | |
| 070 | 2715762-0000 | | 1 | MOUNTING BLOCK | |
| 210 | 90600-0831 | | 1 | TORQUE RIGID COUPLING, 19X20 MM | |
| 300 | 315105-0153 | | 14 | WASHER BRB 6,4X12 RFR | |
| 310 | 312105-0366 | | 2 | SCREW M6S ISO 4017 M6X12 A480 | |
| 320 | 312105-0372 | | 2 | SCREW M6S ISO 4017 M6X25 A480 | |
| 330 | 312105-0376 | | 11 | SCREW M6S ISO 4014 M6X35 A480 | |
| 340 | 312115-0453 | | 4 | SCREW ISO4762 M8X25 A4 80 | |
| 350 | 312115-0372 | | 4 | SCREW ISO4762 M6X25 A4 80 | |
| 360 | 311103-0353 | | 2 | PARALLEL PIN ISO 2338 6M6X20 A1 | |
| 60M310 | 90601-0668 | | 1 | SERVO MOTOR MPL-B420P-MK72AA SERIES A | |

| Pos | Part No | UN | Qty | Description | Page No |
|---|---|---|---|---|---|

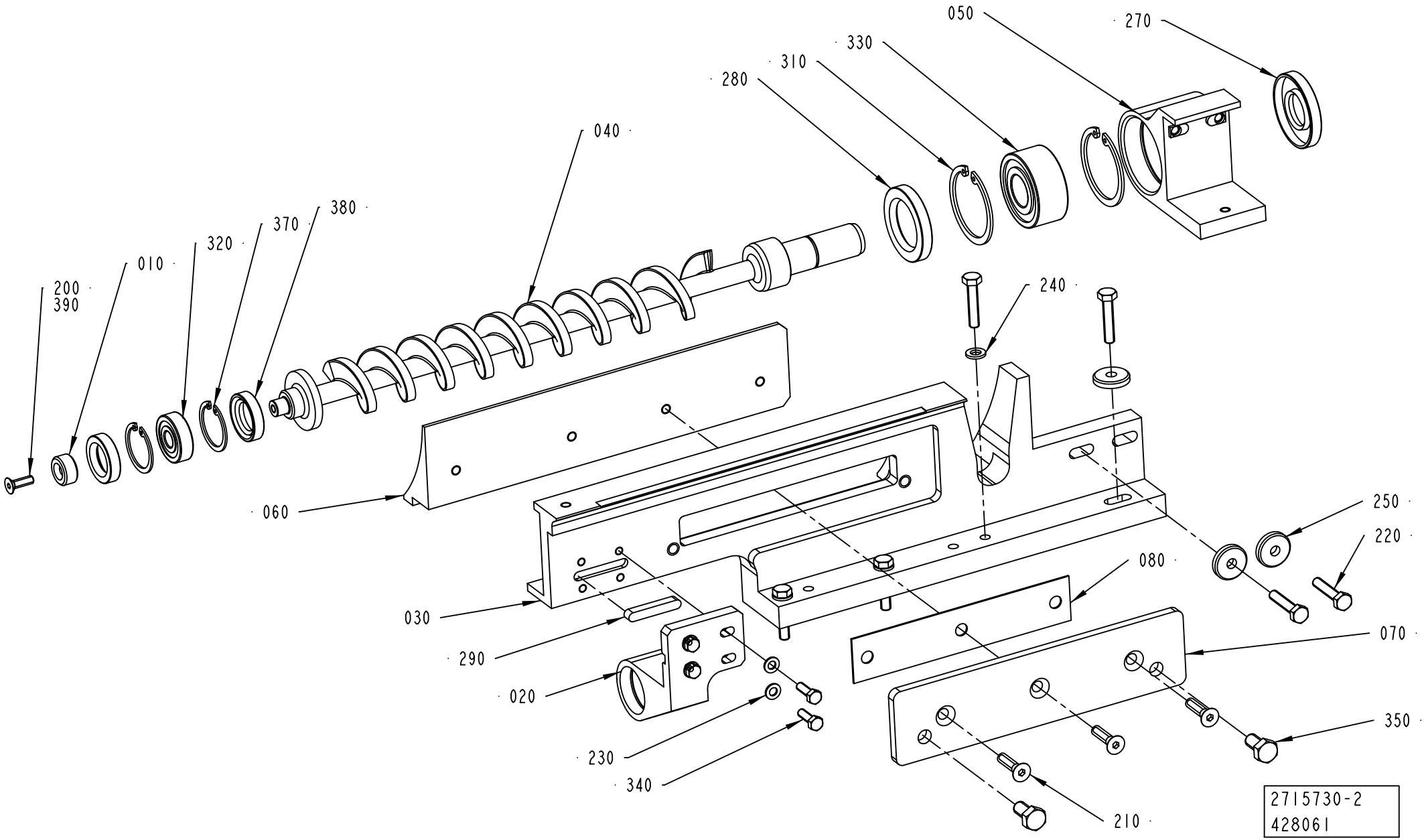
050
270
330
310
280
040
380
370
320
010
200
390
240
250
220
080
060
030
290
020
230
340
070
350
210
2715730-2
428061

ECM: 431466 - 20100401
Group number: 2715730-0200
Assembly Drawing: 2715730-2_1_AB

| Pos | Part No | UN | Qty | Description | Page No |
|---|---|---|---|---|---|
| **RECAP2 A3** | | | | | |
| 040 | 3003859-0000 | | 1 | SCREW | |
| **RECAP3** | | | | | |
| 040 | 2715732-0000 | | 1 | SCREW | |
| 080 | 2981083-0000 | | 1 | SHIM | |
| **Common Parts** | | | | | |
| 010 | 3011412-0000 | | 1 | WASHER | |
| 020 | 3011410-0000 | | 1 | BRACKET | |
| 030 | 2890803-0000 | | 1 | BRACKET | |
| 050 | 3011411-0000 | | 1 | BRACKET | |
| 060 | 2890804-0000 | | 1 | SLIDER | |
| 070 | 2930247-0000 | | 1 | PLATE | |
| 200 | 312155-0329 | | 1 | SCREW DIN 7991 MF6S M5X16 A4 70 | |
| 210 | 312155-0372 | | 3 | SCREW DIN 7991 MF6S M6X25 A4 70 | |
| 220 | 312109-0374 | | 6 | SCREW M6S ISO 4017 M6X30 A480 | |
| 230 | 315105-0146 | | 4 | WASHER BRB 5,3X10 RFR | |
| 240 | 315105-0153 | | 3 | WASHER BRB 6,4X12 RFR | |
| 250 | 315125-0153 | | 3 | WASHER TBRSB 6,4X22X4 A4 | |
| 260 | 315221-0139 | | 1 | RADIAL SEAL 18X30X7 MM | |
| 270 | 315221-0147 | | 1 | RADIAL SEAL 20X47X7 MM | |
| 280 | 315221-0169 | | 1 | RADIAL SEAL 30X47X7 MM | |
| 290 | 315705-0238 | | 1 | PARALL KEY W. ROUND ENDS 6X6X36 MM | |
| 310 | 315753-0130 | | 2 | RETAINING RING FOR BORE DIN 472 47 SS | |
| 320 | 321309-0100 | | 1 | BALL BEARING 10/30X9 | |
| 330 | 321330-0104 | | 1 | ANG. BALL BEAR 20/47X20,6 | |
| 340 | 312105-0329 | | 4 | SCREW M6S ISO 4017 M5X16 A480 | |
| 350 | 312105-0449 | | 2 | SCREW M6S ISO 4017 M8X16 A480 | |
| 360 | 90296-0068 | G | 50 | SHELL ALVANIA GREASE EP 2 | |
| 370 | 315753-0122 | | 2 | RETAINING RING FOR BORE DIN 472 30 SS | |
| 380 | 315221-0139 | | 2 | RADIAL SEAL 18X30X7 MM | |
| 390 | 90157-0016 | | 1 | THREAD LOCKING, LOCTITE 242 50 ML | |

| Pos | Part No | UN | Qty | Description | Page No |
|---|---|---|---|---|---|

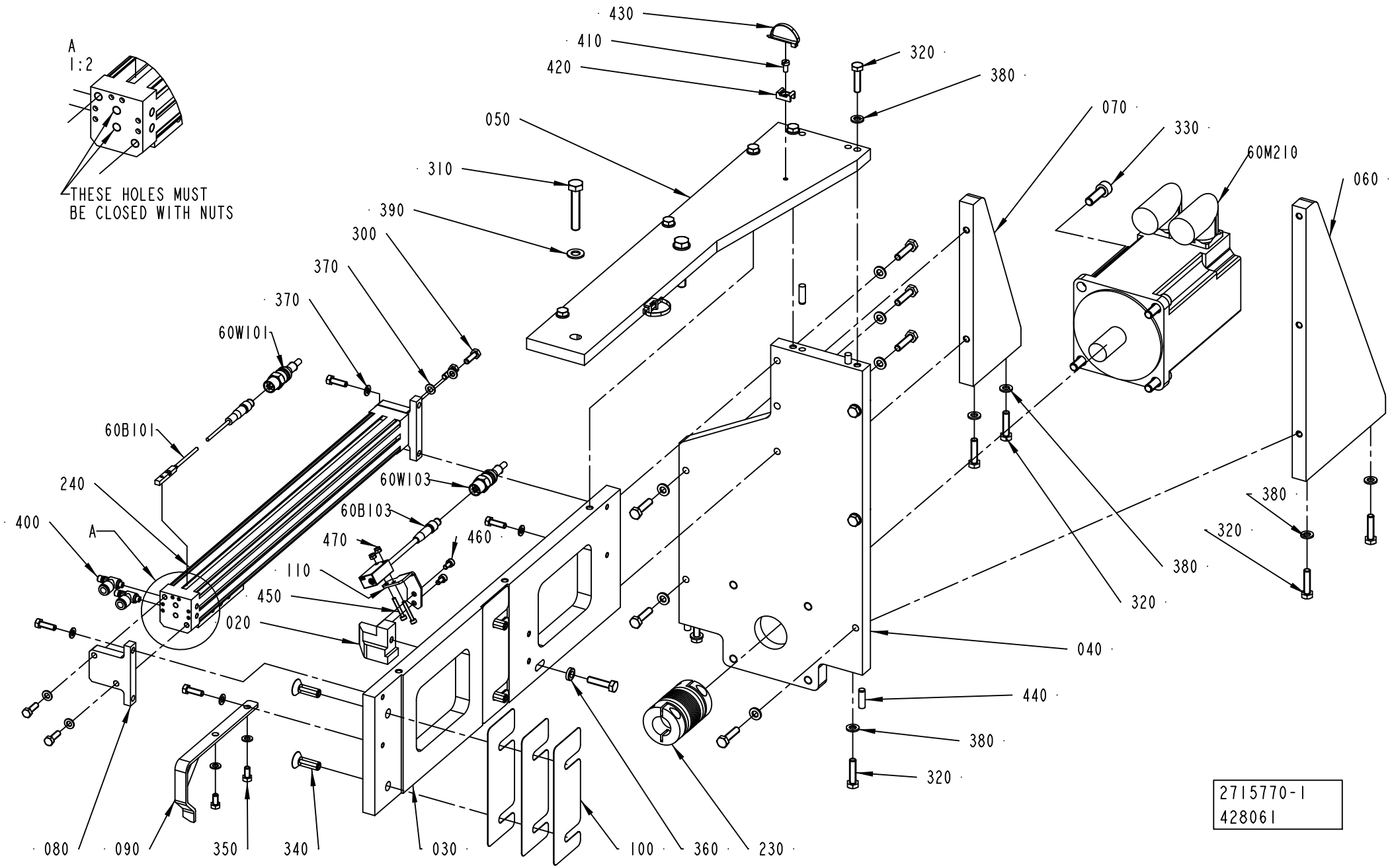
A
1:2
THESE HOLES MUST
BE CLOSED WITH NUTS
430
410
420
320
380
050
070
330
60M210
060
310
390
300
370
370
60W101
60B101
240
60W103
60B103
400
A
470
460
110
450
020
380
320
040
440
380
320
080
090
350
340
030
100
360
230
2715770-1
428061

ECM: 431472 - 20100401
Group number: 2715770-0100
Assembly Drawing: 2715770-1_1_AG

| Pos | Part No | UN | Qty | Description | Page No |
|---|---|---|---|---|---|
| - | | | | | |
| 020 | 2715738-0000 | | 1 | BLOCKING PIECE | |
| 030 | 2715768-0000 | | 1 | PLATE | |
| 040 | 2715769-0000 | | 1 | PLATE | |
| 050 | 2715773-0000 | | 1 | PLATE | |
| 060 | 2715779-0000 | | 1 | PLATE | |
| 070 | 2715775-0000 | | 1 | PLATE | |
| 080 | 2703818-0000 | | 2 | BRACKET | |
| 090 | 2868538-0000 | | 1 | FINGER | |
| 100 | 2985739-0000 | | 6 | SHIM | |
| 110 | 3003834-0000 | | 1 | BRACKET | |
| 230 | 90600-0831 | | 1 | TORQUE RIGID COUPLING, 19X20 MM | |
| 240 | 90600-2159 | | 1 | DOUBLE ACTING, SHUTTLE, CYL. 18-260 | |
| 300 | 312105-0329 | | 8 | SCREW M6S ISO 4017 M5X16 A480 | |
| 310 | 312109-0460 | | 2 | SCREW M6S ISO 4017 M8X45 A480 | |
| 320 | 312105-0372 | | 20 | SCREW M6S ISO 4017 M6X25 A480 | |
| 330 | 312115-0453 | | 4 | SCREW ISO4762 M8X25 A4 80 | |
| 340 | 312155-0453 | | 4 | SCREW DIN 7991 MF6S M8X25 A4 70 | |
| 350 | 312105-0325 | | 2 | SCREW M6S ISO 4017 M5X10 A480 | |
| 360 | 315115-0153 | | 1 | WASHER PLAIN, TBRB 6,4/12 H=3 | |
| 370 | 315105-0146 | | 10 | WASHER BRB 5,3X10 RFR | |
| 380 | 315105-0153 | | 19 | WASHER BRB 6,4X12 RFR | |
| 390 | 315105-0165 | | 2 | WASHER BRB 8,4X16 RFR | |
| 400 | 90235-0844 | | 2 | THROTTLE CHECK VALVE M5, MANUAL, 6MM | |
| 410 | 312125-0287 | | 2 | SCREW ISO 1207 M4X8 A4 | |
| 420 | 352113-0205 | | 2 | ANCHOR PLATES FOR STRIPS, TYPE TM2S8-C10 | |
| 430 | 352113-0104 | | 2 | CABLE TIE, BLACK 300X4,8 MM | |
| 440 | 311103-0353 | | 4 | PARALLEL PIN ISO 2338 6M6X20 A1 | |
| 450 | 312115-0230 | | 2 | SCREW ISO4762 M3X20 A4 80 | |
| 460 | 312115-0287 | | 2 | SCREW ISO4762 M4X8 A4 80 | |
| 470 | 312812-0310 | | 2 | HEXAGON NUT, NY-LOCK M3 A480 | |
| 60B101 | 90600-3276 | | 1 | PROXIMITY SENS. SME-8M-DS-24V-K-0,3-M8D | |
| 60B103 | 90459-7366 | | 1 | PHOTOCELL WTB4-3P3161 F20 | |
| 60M210 | 90601-0668 | | 1 | SERVO MOTOR MPL-B420P-MK72AA SERIES A | |
| 60W101 | 351407-0015 | | 1 | ACTU/SENS. CABLE PRST 3-PRKMV 3-06/1,5M | |
| 60W103 | 351407-0020 | | 1 | ACTU/SENS. CABLE PRST 3-PRKMV 3-06/2,0M | |

| Pos | Part No | UN | Qty | Description | Page No |
|---|---|---|---|---|---|

Machine Type | Group Description | Used-In | Group Number | Page No

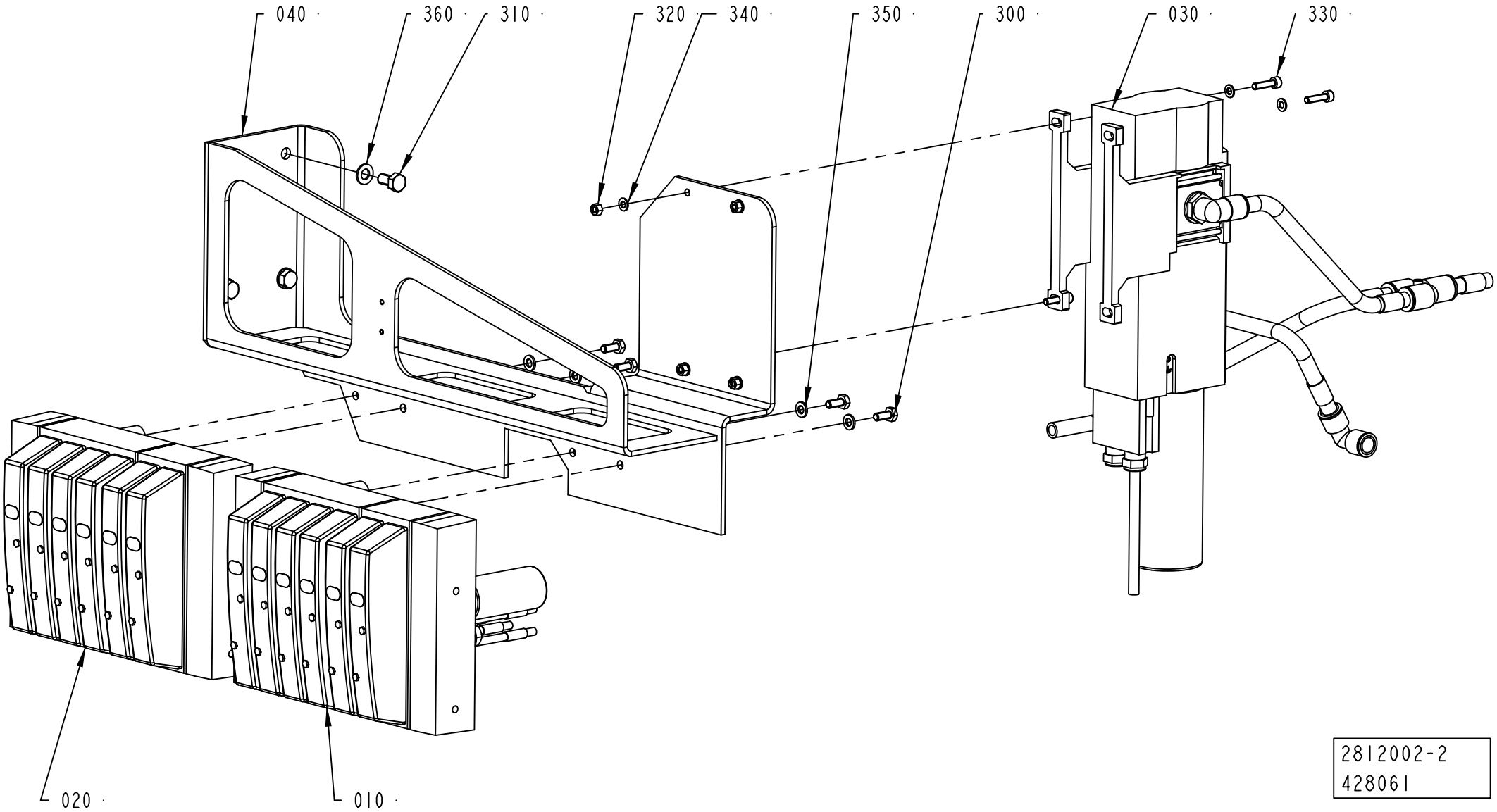
040
360
310
320
340
350
300
030
330
020
010
2812002-2
428061

ECM: 431473 - 20100401
Group number: 2812002-0200
Assembly Drawing: 2812002-2_1_AB

| Pos | Part No | UN | Qty | Description | Page No |
|---|---|---|---|---|---|
| - | | | | | |
| 010 | 2812003-0100 | | 1 | PNEUMATIC PANEL ..... | **5-53** |
| 020 | 2873954-0100 | | 1 | PNEUMATIC PANEL ..... | **5-55** |
| 030 | 2873955-0200 | | 1 | SHUT-OFF VALVE ..... | **5-57** |
| 040 | 3039150-0000 | | 1 | PNEUMATIC PANEL | |
| 300 | 312105-0367 | | 4 | SCREW M6S ISO 4017 M6X14 A480 | |
| 310 | 312105-0449 | | 4 | SCREW M6S ISO 4017 M8X16 A480 | |
| 320 | 312605-0314 | | 4 | HEXAGON NUT, M6M M5 A280 | |
| 330 | 312115-0331 | | 4 | SCREW ISO4762 M5X20 A4 80 | |
| 340 | 315105-0146 | | 8 | WASHER BRB 5,3X10 RFR | |
| 350 | 315105-0153 | | 4 | WASHER BRB 6,4X12 RFR | |
| 360 | 315105-0165 | | 4 | WASHER BRB 8,4X16 RFR | |

| Pos | Part No | UN | Qty | Description | Page No |
|---|---|---|---|---|---|

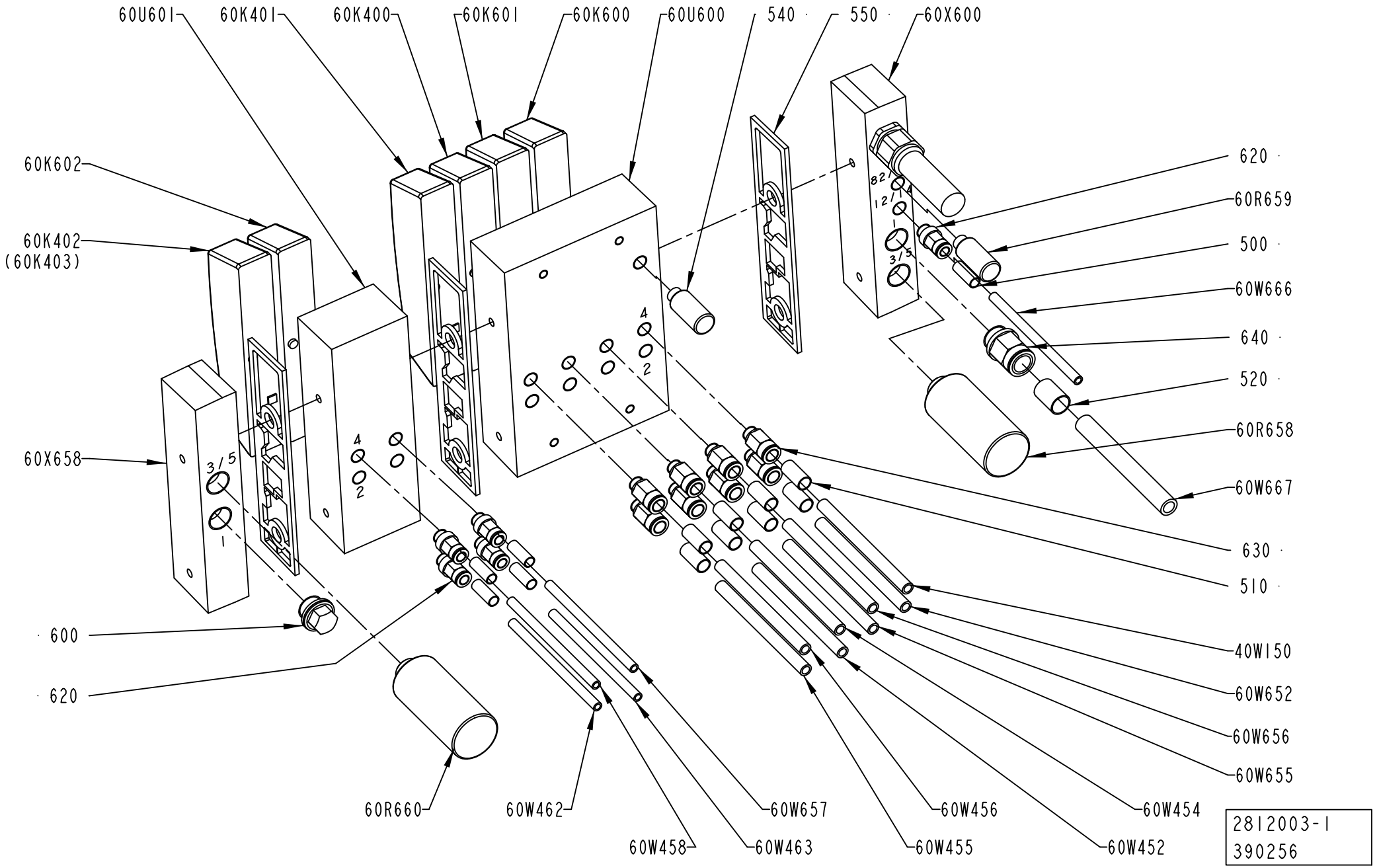
60U601
60K401
60K400
60K601
60K600
60U600
540
550
60X600
60K602
60K402
(60K403)
60X658
600
620
60R660
60W462
60W458
60W463
60W657
60W455
60W456
60W452
60W454
60W655
60W656
60W652
40W150
630
510
60W667
60R658
520
640
60W666
500
60R659
620
2812003-1
390256

ECM: 390322 - 20090701
Group number: 2812003-0100
Assembly Drawing: 2812003-1_1_AC

| Pos | Part No | UN | Qty | Description | Page No |
|---|---|---|---|---|---|
| - | | | | | |
| 500 | 90459-7369 | | 5 | MARKING FOR PNEUM. TUBING, PRZ06 | |
| 510 | 90459-7370 | | 8 | MARKING FOR PNEUM. TUBING, PRZ08 | |
| 520 | 90459-7372 | | 1 | MARKING FOR PNEUM. TUBING, PRZ12 | |
| 540 | 90328-0012 | | 1 | SILENCER U-1/8 | |
| 550 | 90458-1207 | | 3 | SEALING, STANDARD | |
| 600 | 90459-0699 | | 1 | BLANKING PLUG, CDVI5.0-B-G3/8 | |
| 620 | 350001-0006 | | 5 | PUSH-IN FITTING QS-F-G1/8-6 | |
| 630 | 350001-0007 | | 8 | PUSH-IN FITTING QS-F-G1/8-8 | |
| 640 | 350001-0014 | | 1 | PUSH-IN FITTING QS-F-G3/8-12 | |
| 60K400 | 90458-1194 | | 1 | MONOSTABLE VALVE 5/2 | |
| 60K401 | 90458-1194 | | 1 | MONOSTABLE VALVE 5/2 | |
| 60K402 | 90458-1194 | | 1 | MONOSTABLE VALVE 5/2 | |
| 60K600 | 90458-1199 | | 1 | VALVE CLOSED IN MID-POSITION, 5/3 | |
| 60K601 | 90458-1194 | | 1 | MONOSTABLE VALVE 5/2 | |
| 60K602 | 90458-1202 | | 1 | VALVES 2X3/2, CLOSED | |
| 60R658 | 90458-2838 | | 1 | SILENCER U-3/8 | |
| 60R659 | 90328-0012 | | 1 | SILENCER U-1/8 | |
| 60R660 | 90458-2838 | | 1 | SILENCER U-3/8 | |
| 60U600 | 90458-1204 | | 1 | BASIC SUB-BASE 4 VALVES, CDVI5.0-GB4-MP | |
| 60U601 | 90458-1206 | | 1 | EXP. SUB-BASE 2 VALVES, CDVI5.0-EB | |
| 40W150 | 315400-0004 | MM | 500 | TUBE PUN-H-8X1,25-BL | |
| 60W452 | 315400-0004 | MM | 500 | TUBE PUN-H-8X1,25-BL | |
| 60W454 | 315400-0004 | MM | 500 | TUBE PUN-H-8X1,25-BL | |
| 60W455 | 315400-0004 | MM | 500 | TUBE PUN-H-8X1,25-BL | |
| 60W456 | 315400-0004 | MM | 500 | TUBE PUN-H-8X1,25-BL | |
| 60W458 | 315400-0001 | MM | 500 | TUBE PUN-H-6X1-BL | |
| 60W462 | 315400-0001 | MM | 500 | TUBE PUN-H-6X1-BL | |
| 60W463 | 315400-0001 | MM | 500 | TUBE PUN-H-6X1-BL | |
| 60W652 | 315400-0004 | MM | 500 | TUBE PUN-H-8X1,25-BL | |
| 60W655 | 315400-0004 | MM | 500 | TUBE PUN-H-8X1,25-BL | |
| 60W656 | 315400-0004 | MM | 500 | TUBE PUN-H-8X1,25-BL | |
| 60W657 | 315400-0001 | MM | 500 | TUBE PUN-H-6X1-BL | |
| 60W666 | 315400-0001 | MM | 500 | TUBE PUN-H-6X1-BL | |
| 60W667 | 315400-0010 | MM | 500 | TUBE PUN-H-12X2-BL | |
| 60X600 | 90458-1212 | | 1 | LEFT ENDPLATE INCL. 10M CABLE | |
| 60X658 | 90458-1214 | | 1 | RIGHT ENDPL EXT. PILOT AIR,CDVI5.0-EPR-S | |

| Pos | Part No | UN | Qty | Description | Page No |
|---|---|---|---|---|---|

Machine Type | Group Description | Used-In | Group Number | Page No

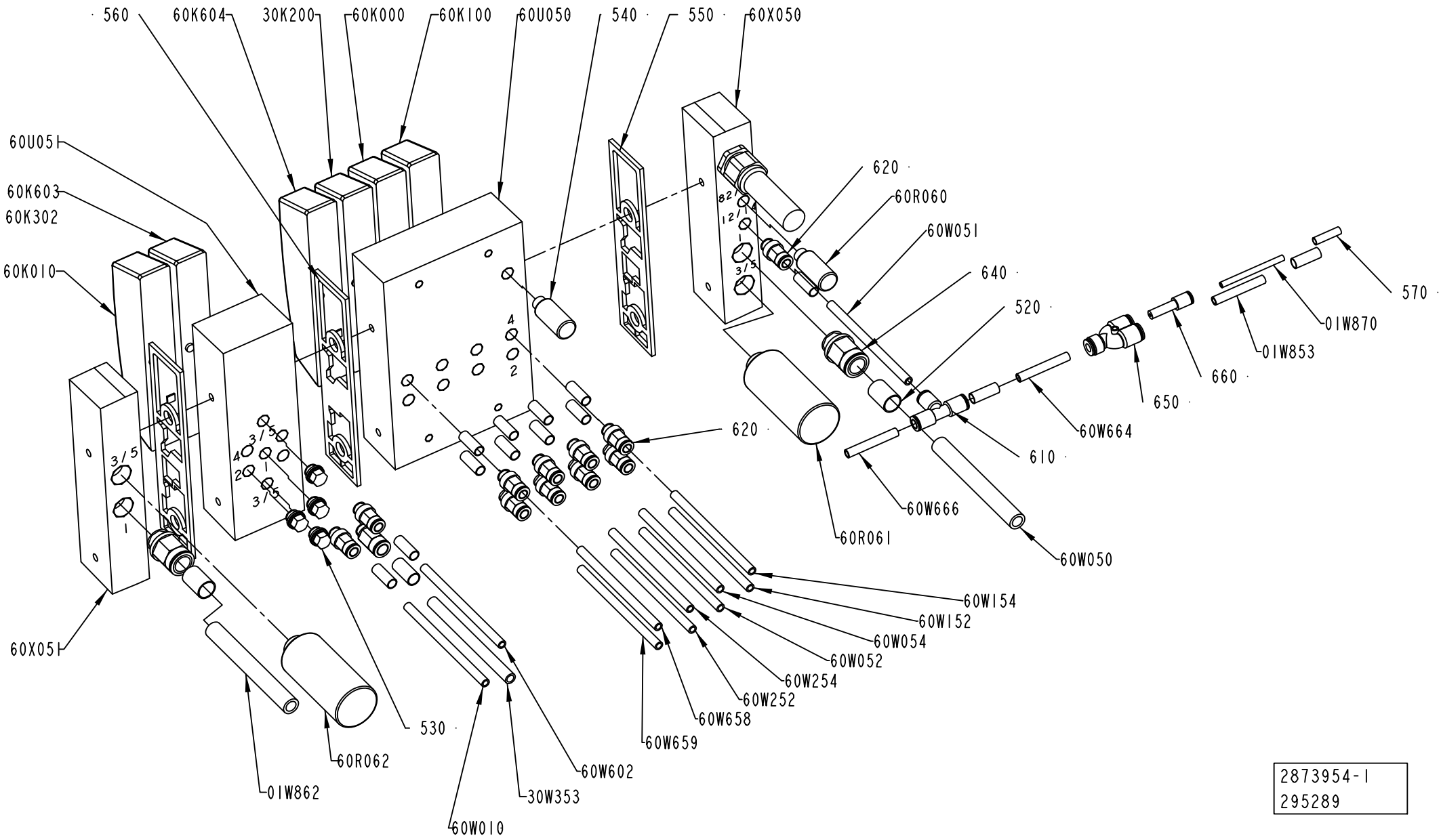
560
60K604
30K200
60K000
60K100
60U050
540
550
60X050
60U051
60K603
60K302
60K010
620
60R060
60W051
640
520
570
01W870
01W853
660
650
60W664
610
60W666
60R061
60W050
620
60W154
60W152
60W054
60W052
60W254
60W252
60W658
60W659
60X051
530
60R062
01W862
60W010
30W353
60W602
2873954-1
295289

ECM: 349966 - 20080701
Group number: 2873954-0100
Assembly Drawing: 2873954-1_1_AB

| Pos | Part No | UN | Qty | Description | Page No |
|---|---|---|---|---|---|
| - | | | | | |
| 500 | 90459-7369 | | 13 | MARKING FOR PNEUM. TUBING, PRZ06 | |
| 510 | 90459-7370 | | 1 | MARKING FOR PNEUM. TUBING, PRZ08 | |
| 520 | 90459-7372 | | 2 | MARKING FOR PNEUM. TUBING, PRZ12 | |
| 530 | 90459-0698 | | 4 | PLUG, EXT. G-THREAD, G1/8 | |
| 540 | 90328-0012 | | 1 | SILENCER U-1/8 | |
| 550 | 90458-1207 | | 2 | SEALING, STANDARD | |
| 560 | 90458-1208 | | 1 | SEALING, CHANNEL 1 BLOCKED | |
| 570 | 90459-7368 | | 1 | MARKING FOR PNEUM. TUBING, PRZ04 | |
| 610 | 350005-0002 | | 1 | PUSH-IN T-FITTING QST-F-6 | |
| 620 | 350001-0006 | | 11 | PUSH-IN FITTING QS-F-G1/8-6 | |
| 630 | 350001-0007 | | 1 | PUSH-IN FITTING QS-F-G1/8-8 | |
| 640 | 350001-0014 | | 2 | PUSH-IN FITTING QS-F-G3/8-12 | |
| 650 | 90055-0257 | | 1 | PUSH-IN Y-CONNECTOR QSY-6 | |
| 660 | 350006-0001 | | 1 | PUSH-IN FITTING QS-F-6H-4 | |
| 30K200 | 90458-1194 | | 1 | MONOSTABLE VALVE 5/2 | |
| 60K000 | 90458-1194 | | 1 | MONOSTABLE VALVE 5/2 | |
| 60K010 | 90458-1194 | | 1 | MONOSTABLE VALVE 5/2 | |
| 60K100 | 90458-1194 | | 1 | MONOSTABLE VALVE 5/2 | |
| 60K603 | 90458-1202 | | 1 | VALVES 2X3/2, CLOSED | |
| 60K604 | 90458-1194 | | 1 | MONOSTABLE VALVE 5/2 | |
| 60R060 | 90328-0012 | | 1 | SILENCER U-1/8 | |
| 60R061 | 90458-2838 | | 1 | SILENCER U-3/8 | |
| 60R062 | 90458-2838 | | 1 | SILENCER U-3/8 | |
| 60U050 | 90458-1204 | | 1 | BASIC SUB-BASE 4 VALVES, CDVI5.0-GB4-MP | |
| 60U051 | 90458-2596 | | 1 | EXPANSION MODULE EXTRA SUPPLY 2 VALVES | |
| 01W853 | 315400-0001 | M | 3 | TUBE PUN-H-6X1-BL | |
| 01W862 | 315400-0010 | MM | 1 | TUBE PUN-H-12X2-BL | |
| 01W870 | 315400-0016 | M | 3 | TUBE PUN-H-4X0,75-BL | |
| 30W353 | 315400-0004 | MM | 1 | TUBE PUN-H-8X1,25-BL | |
| 30W659 | 315400-0001 | MM | 1 | TUBE PUN-H-6X1-BL | |
| 60W010 | 315400-0001 | MM | 1 | TUBE PUN-H-6X1-BL | |
| 60W050 | 315400-0010 | MM | 1 | TUBE PUN-H-12X2-BL | |
| 60W051 | 315400-0001 | MM | 1 | TUBE PUN-H-6X1-BL | |
| 60W052 | 315400-0001 | MM | 1 | TUBE PUN-H-6X1-BL | |
| 60W054 | 315400-0001 | MM | 1 | TUBE PUN-H-6X1-BL | |
| 60W152 | 315400-0001 | MM | 1 | TUBE PUN-H-6X1-BL | |
| 60W154 | 315400-0001 | MM | 1 | TUBE PUN-H-6X1-BL | |
| 60W252 | 315400-0001 | MM | 1 | TUBE PUN-H-6X1-BL | |
| 60W254 | 315400-0001 | MM | 1 | TUBE PUN-H-6X1-BL | |
| 60W602 | 315400-0001 | MM | 1 | TUBE PUN-H-6X1-BL | |
| 60W658 | 315400-0001 | MM | 1 | TUBE PUN-H-6X1-BL | |
| 60W666 | 315400-0001 | MM | 1 | TUBE PUN-H-6X1-BL | |
| 60X050 | 90458-1212 | | 1 | LEFT ENDPLATE INCL. 10M CABLE | |
| 60X051 | 90458-1214 | | 1 | RIGHT ENDPL EXT. PILOT AIR,CDVI5.0-EPR-S | |

Machine Type | Group Description | Used-In | Group Number | Page No

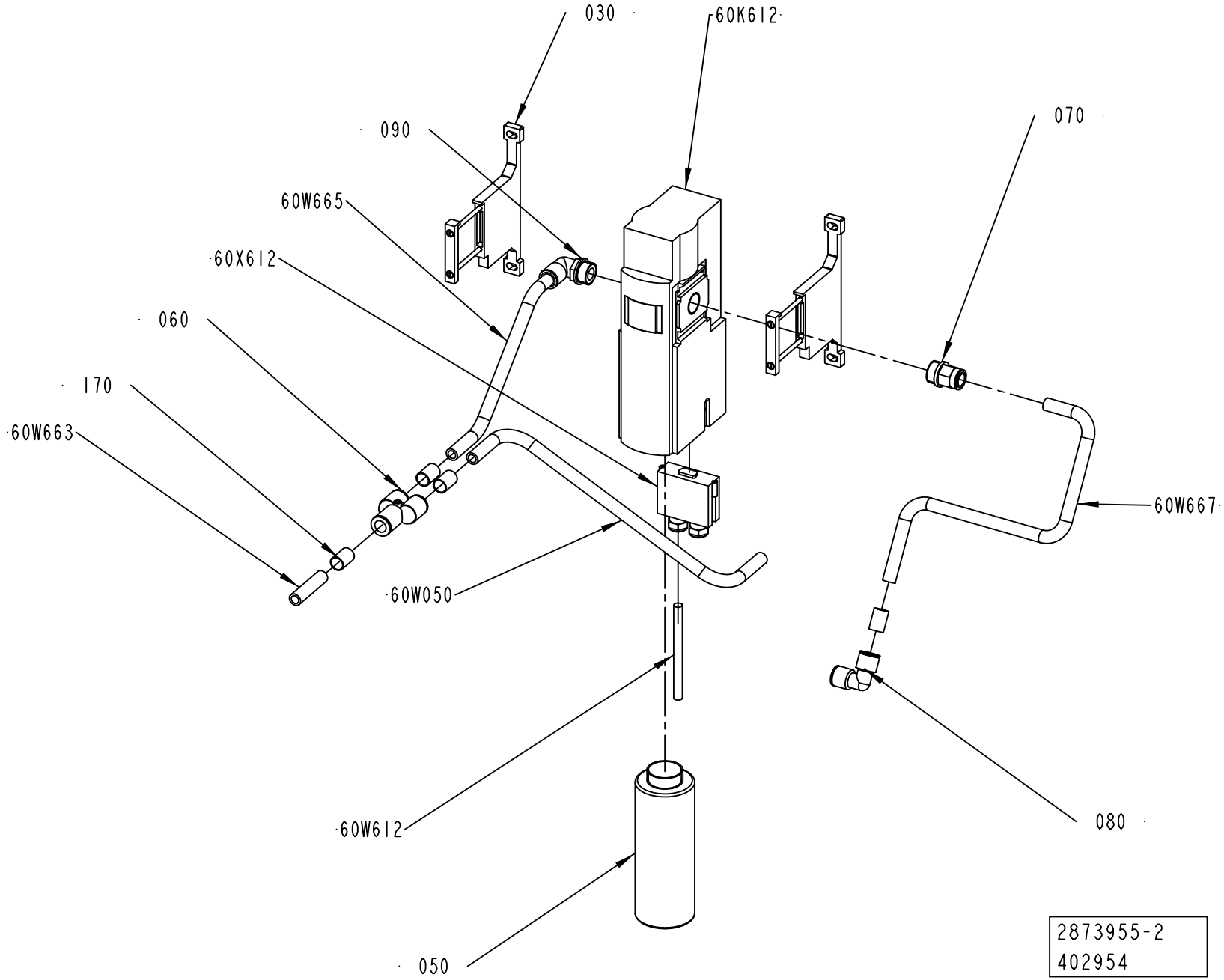
030
60K612
070
090
60W665
60X612
060
170
60W663
60W667
60W050
60W612
080
050
2873955-2
402954

ECM: 444501 - 20100701
Group number: 2873955-0200
Assembly Drawing: 2873955-2_1_AA

| Pos | Part No | UN | Qty | Description | Page No |
|---|---|---|---|---|---|
| - | | | | | |
| 030 | 90601-1587 | | 2 | BRACKET, MS6-WPB | |
| 050 | 90601-1586 | | 1 | SILENCER G1" | |
| 060 | 90055-0147 | | 1 | PUSH-IN Y-CONNECTOR QSY-12 | |
| 070 | 350001-0016 | | 1 | PUSH-IN FITTING QS-F-G1/2-12 | |
| 080 | 350004-0005 | | 1 | PUSH-IN L-FITTING QSL-F-12 | |
| 090 | 350002-0016 | | 1 | PUSH-IN L-FITTING QSL-F-G1/2-12 | |
| 170 | 90459-7372 | | 4 | MARKING FOR PNEUM. TUBING, PRZ12 | |
| 60K612 | 90601-1126 | | 1 | SAFETY VALVE, MS6-SV-1/2-D-10V24-AG | |
| 60W050 | 315400-0010 | M | 1 | TUBE PUN-H-12X2-BL | |
| 60W612 | 351150-0406 | M | 10 | CABLE OLFLEX 7X0,75 MM2 LIGHT/GREY | |
| 60W663 | 315400-0010 | M | 1 | TUBE PUN-H-12X2-BL | |
| 60W665 | 315400-0010 | M | 1 | TUBE PUN-H-12X2-BL | |
| 60W667 | 315400-0010 | M | 1 | TUBE PUN-H-12X2-BL | |
| 60X612 | 90601-1168 | | 1 | SOCKET CONNECTOR, NECA-S1G9-P9-MP3 | |

| Pos | Part No | UN | Qty | Description | Page No |
|---|---|---|---|---|---|

Tetra Pak

# SPC
## Spare Parts Catalogue

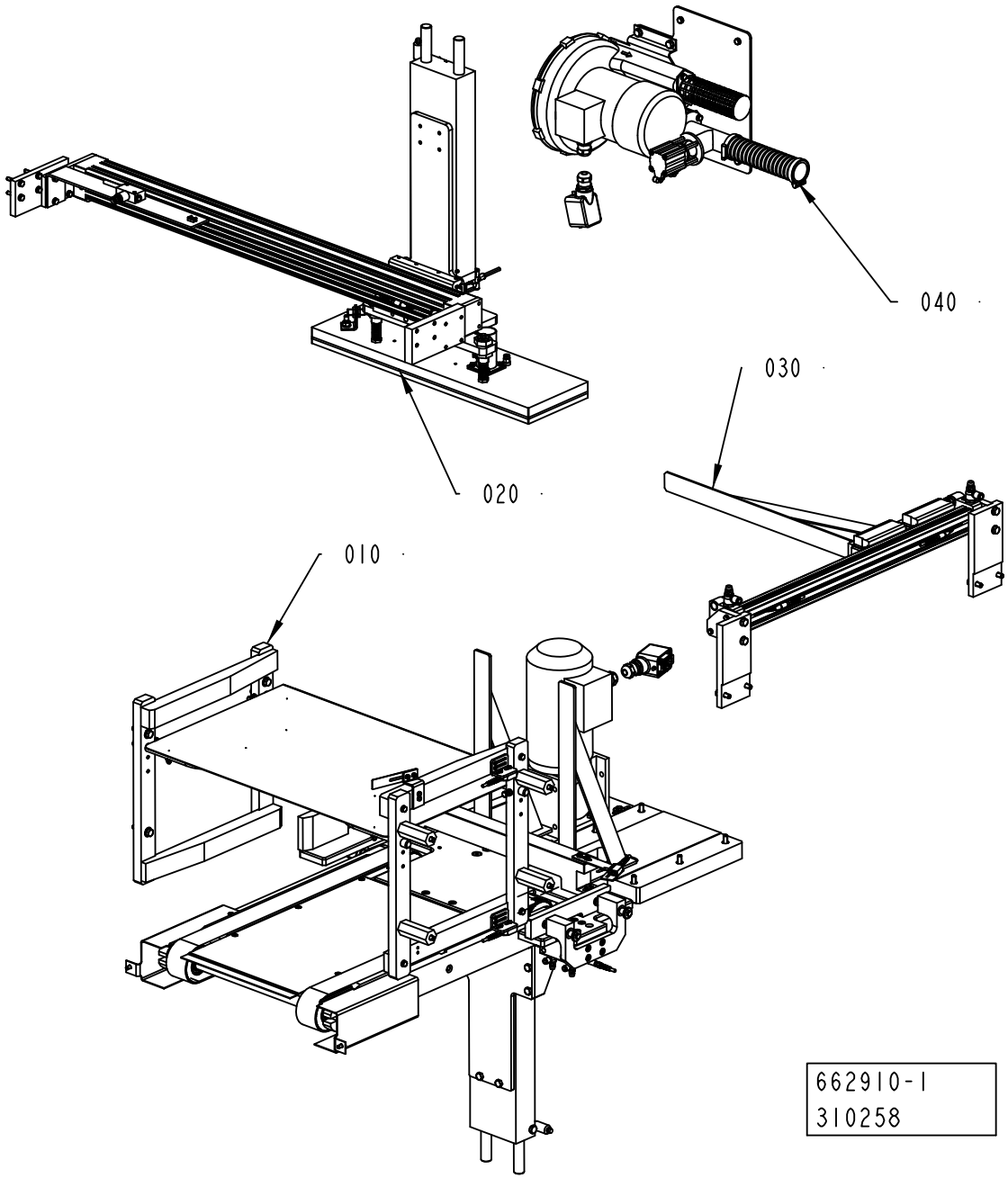
040
030
020
010
662910-1
310258

ECM: 310258 - 20070622
Group number: 662910-0100
Assembly Drawing: 662910-1_1_AA

| Pos | Part No | UN | Qty | Description | Page No |
|---|---|---|---|---|---|
| - | | | | | |
| 010 | 2792484-0100 | | 1 | LIFT | **6-5** |
| 020 | 2715960-0100 | | 1 | POSITIONING UNIT | **6-15** |
| 030 | 2792486-0100 | | 1 | PUSHER | **6-21** |
| 040 | 2715970-0100 | | 1 | VACUUM SYSTEM | **6-23** |

| Pos | Part No | UN | Qty | Description | Page No |
|---|---|---|---|---|---|

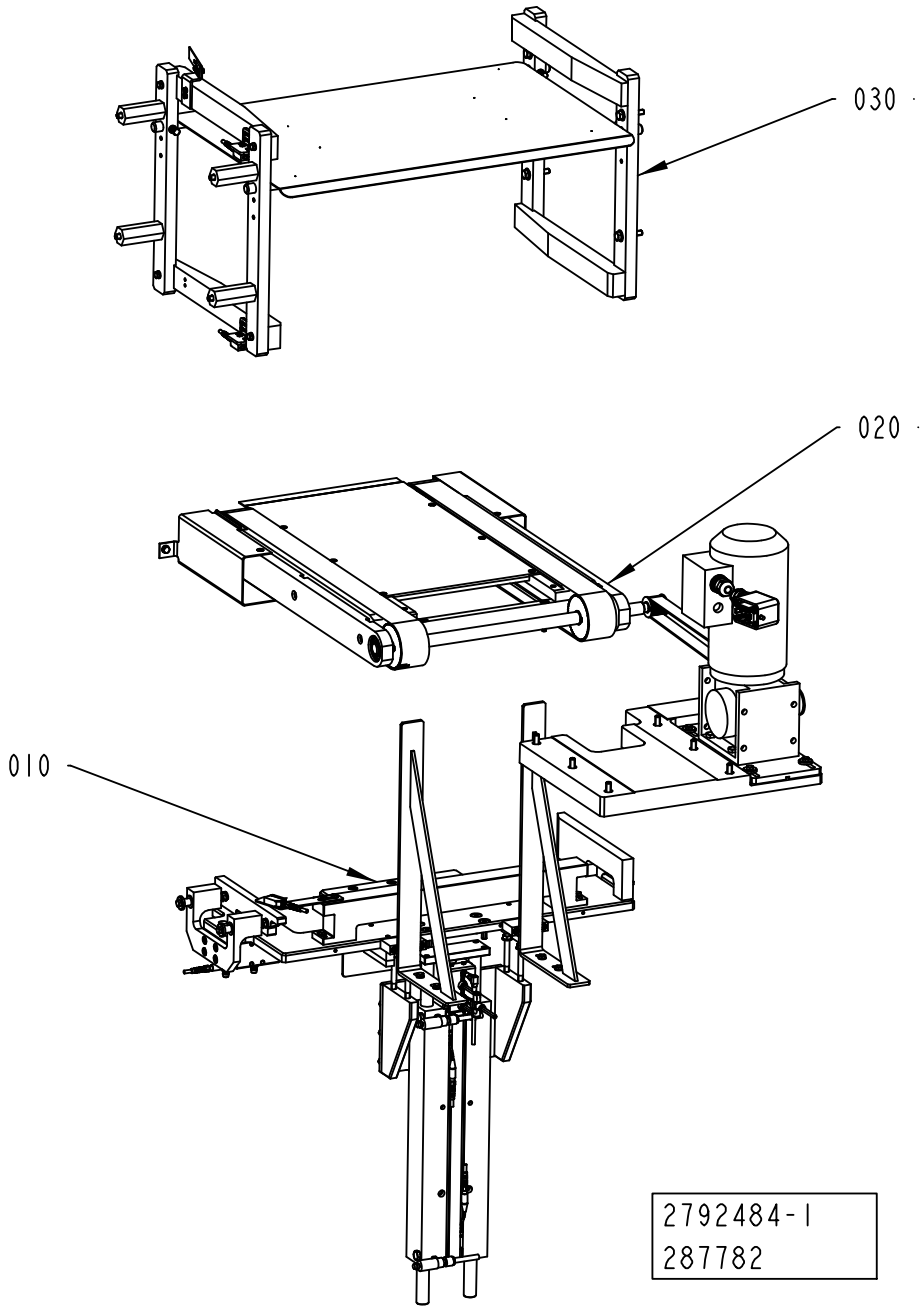
030
020
010
2792484-1
287782

ECM: 292541 - 20070622
Group number: 2792484-0100
Assembly Drawing: 2792484-1_1_AA

| Pos | Part No | UN | Qty | Description | Page No |
|---|---|---|---|---|---|
| - | | | | | |
| 010 | 2792485-0100 | | 1 | ELEVATOR | **6-7** |
| 020 | 2792487-0100 | | 1 | CONVEYOR | **6-9** |
| 030 | 2792488-0100 | | 1 | GUIDE | **6-11, 6-13** |

| Pos | Part No | UN | Qty | Description | Page No |
|---|---|---|---|---|---|

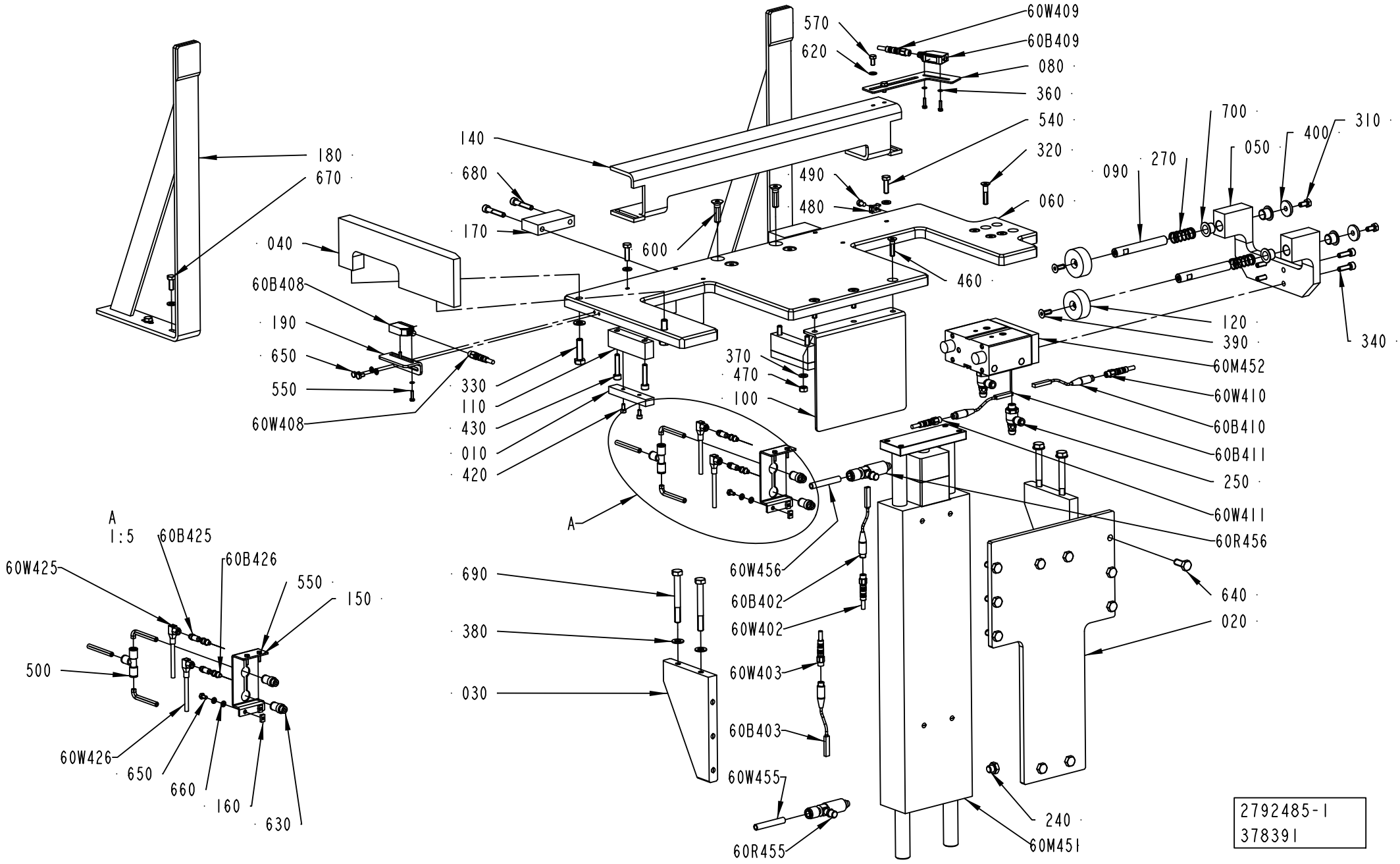
180
670
040
60B408
190
650
550
60W408
140
680
170
600
570
620
60W409
60B409
080
360
540
320
490
480
060
460
700
310
090
270
400
050
340
120
390
60M452
60W410
60B410
60B411
250
60W411
60R456
640
020
370
470
100
330
110
430
010
420
A
1:5
60B425
60W425
60B426
550
150
500
60W426
650
660
160
630
690
380
030
60W456
60B402
60W402
60W403
60B403
60W455
60R455
240
60M451
2792485-1
378391

ECM: 407821 - 20091001
Group number: 2792485-0100
Assembly Drawing: 2792485-1_1_AD

| Pos | Part No | UN | Qty | Description | Page No |
|---|---|---|---|---|---|
| **RECAP2 A3** | | | | | |
| 090 | 2930902-0000 | | 2 | SHAFT | |
| 270 | 2930901-0000 | | 2 | COMPRESSION SPRING | |
| **RECAP3** | | | | | |
| 090 | 2780402-0000 | | 2 | SHAFT | |
| 270 | 90600-0891 | | 2 | COMP. SPRING 2520, 1,2X16,4X35 | |
| **Common Parts** | | | | | |
| 010 | 2715892-0000 | | 2 | STOP | |
| 020 | 2897147-0000 | | 1 | PLATE | |
| 030 | 2897148-0000 | | 2 | BRACKET | |
| 040 | 2715917-0000 | | 1 | GUIDE | |
| 050 | 2780399-0000 | | 1 | GUIDE | |
| 060 | 2898046-0000 | | 1 | PLATE | |
| 080 | 2898138-0000 | | 1 | SUPPORT | |
| 100 | 2869808-0000 | | 1 | PLATE | |
| 110 | 2792496-0000 | | 2 | PLATE | |
| 120 | 2985766-0000 | | 2 | WASHER | |
| 140 | 2931767-0000 | | 1 | BLOCK | |
| 150 | 2898508-0000 | | 1 | BRACKET | |
| 160 | 2909507-0000 | | 2 | PLATE | |
| 170 | 2910645-0000 | | 2 | SLIDE | |
| 180 | 2910646-0000 | | 2 | SUPPORT | |
| 190 | 2911865-0000 | | 1 | SUPPORT | |
| 240 | 90330-0066 | | 2 | PLUG, EXT. G-THREAD, G1/8 | |
| 250 | 90235-0846 | | 2 | THROTTLE CHECK VALVE G1/8", MANUAL, 6 | |
| 310 | 312105-0366 | | 2 | SCREW M6S ISO 4017 M6X12 A480 | |
| 320 | 312155-0374 | | 4 | SCREW DIN 7991 MF6S M6X30 A4 70 | |
| 330 | 312105-0455 | | 2 | SCREW M6S ISO 4017 M8X30 A480 | |
| 340 | 312115-0370 | | 4 | SCREW ISO4762 M6X20 A4 80 | |
| 360 | 315105-0124 | | 4 | WASHER BRB 3,2X6 RFR | |
| 380 | 315105-0165 | | 6 | WASHER BRB 8,4X16 RFR | |
| 390 | 312155-0368 | | 2 | SCREW DIN 7991 MF6S M6X16 A4 70 | |
| 400 | 315125-0153 | | 2 | WASHER TBRSB 6,4X22X4 A4 | |
| 420 | 312115-0287 | | 4 | SCREW ISO4762 M4X8 A4 80 | |
| 430 | 312115-0374 | | 4 | SCREW ISO4762 M6X30 A4 80 | |
| 460 | 312155-0372 | | 3 | SCREW DIN 7991 MF6S M6X25 A4 70 | |
| 470 | 312605-0316 | | 3 | HEXAGON NUT, M6M M6 A280 | |
| 480 | 352113-0205 | | 10 | ANCHOR PLATES FOR STRIPS, TYPE TM2S8-C10 | |
| 490 | 312125-0323 | | 10 | SCREW ISO 1207 M5X8 A4 | |
| 500 | 350005-0002 | | 1 | PUSH-IN T-FITTING QST-F-6 | |
| 540 | 312105-0370 | | 2 | SCREW M6S ISO 4017 M6X20 A480 | |
| 550 | 90287-0175 | | 6 | SCREW M6S M3X12 A480 | |
| 570 | 312105-0325 | | 2 | SCREW M6S ISO 4017 M5X10 A480 | |
| 600 | 312155-0455 | | 4 | SCREW DIN 7991 MF6S M8X30 A4 70 | |
| 620 | 315105-0146 | | 2 | WASHER BRB 5,3X10 RFR | |
| 630 | 350003-0005 | | 2 | PUSH-IN FITTING QS-F-G1/8-6-I | |
| 640 | 312105-0451 | | 10 | SCREW M6S ISO 4017 M8X20 A480 | |
| 650 | 312105-0287 | | 4 | SCREW M6S ISO 4017 M4X8 A470 | |
| 660 | 315105-0136 | | 6 | WASHER BRB 4,3X8 RFR | |
| 670 | 312105-0368 | | 4 | SCREW M6S ISO 4017 M6X16 A480 | |
| 680 | 312115-0376 | | 4 | SCREW ISO4762 M6X35 A4 80 | |
| 690 | 312105-0465 | | 4 | SCREW M6S ISO 4014 M8X70 A480 | |
| 700 | 321154-0180 | | 4 | FLANGE BUSHING, IGLIDUR W300 12X14X12 | |
| 60B402 | 90600-3276 | | 1 | PROXIMITY SENS. SME-8M-DS-24V-K-0,3-M8D | |
| 60B403 | 90600-3276 | | 1 | PROXIMITY SENS. SME-8M-DS-24V-K-0,3-M8D | |
| 60B408 | 90459-7272 | | 1 | PHOTOCELL E3Z-LS88 | |
| 60B409 | 90459-7272 | | 1 | PHOTOCELL E3Z-LS88 | |
| 60B410 | 90600-3276 | | 1 | PROXIMITY SENS. SME-8M-DS-24V-K-0,3-M8D | |
| 60B411 | 90600-3276 | | 1 | PROXIMITY SENS. SME-8M-DS-24V-K-0,3-M8D | |
| 60B425 | 90459-4788 | | 1 | PROX.SENSOR SEIN-M5B-PS-S-L | |
| 60B426 | 90459-4788 | | 1 | PROX.SENSOR SEIN-M5B-PS-S-L | |
| 60M451 | 90600-3010 | | 1 | CYLINDER WITH INT. GUIDING BORE 40 | |
| 60M452 | 90459-3245 | | 1 | CYLINDER WITH INT. GUIDING BORE 25 | |
| 60R455 | 2911337-0000 | | 1 | QUIC EXHAUST VALVE | |
| 60R456 | 2911337-0000 | | 1 | QUIC EXHAUST VALVE | |
| 60W402 | 351401-0020 | | 1 | ACTU/SENS CABLE RSMVN 3-PRKMV 3-06/2,0M | |
| 60W403 | 351401-0020 | | 1 | ACTU/SENS CABLE RSMVN 3-PRKMV 3-06/2,0M | |
| 60W408 | 351403-0020 | | 1 | ACTU/SENS. CABLE RSMVN 3-PRKMV 4-06/2,0M | |
| 60W409 | 351403-0020 | | 1 | ACTU/SENS. CABLE RSMVN 3-PRKMV 4-06/2,0M | |
| 60W410 | 351401-0020 | | 1 | ACTU/SENS CABLE RSMVN 3-PRKMV 3-06/2,0M | |
| 60W411 | 351401-0020 | | 1 | ACTU/SENS CABLE RSMVN 3-PRKMV 3-06/2,0M | |
| 60W425 | 351402-0050 | | 1 | ACTU/SENS CABLE RSMVN 3-PRKMWV 3-06/5,0M | |
| 60W426 | 351402-0050 | | 1 | ACTU/SENS CABLE RSMVN 3-PRKMWV 3-06/5,0M | |
| 60W455 | 315400-0004 | M | 1 | TUBE PUN-H-8X1,25-BL | |
| 60W456 | 315400-0004 | M | 1 | TUBE PUN-H-8X1,25-BL | |
| 60W463 | 315400-0001 | M | 1 | TUBE PUN-H-6X1-BL | |
| 60W464 | 315400-0001 | M | 1 | TUBE PUN-H-6X1-BL | |
| 60W465 | 315400-0001 | M | 1 | TUBE PUN-H-6X1-BL | |

Machine Type | Group Description | Used-In | Group Number | Page No

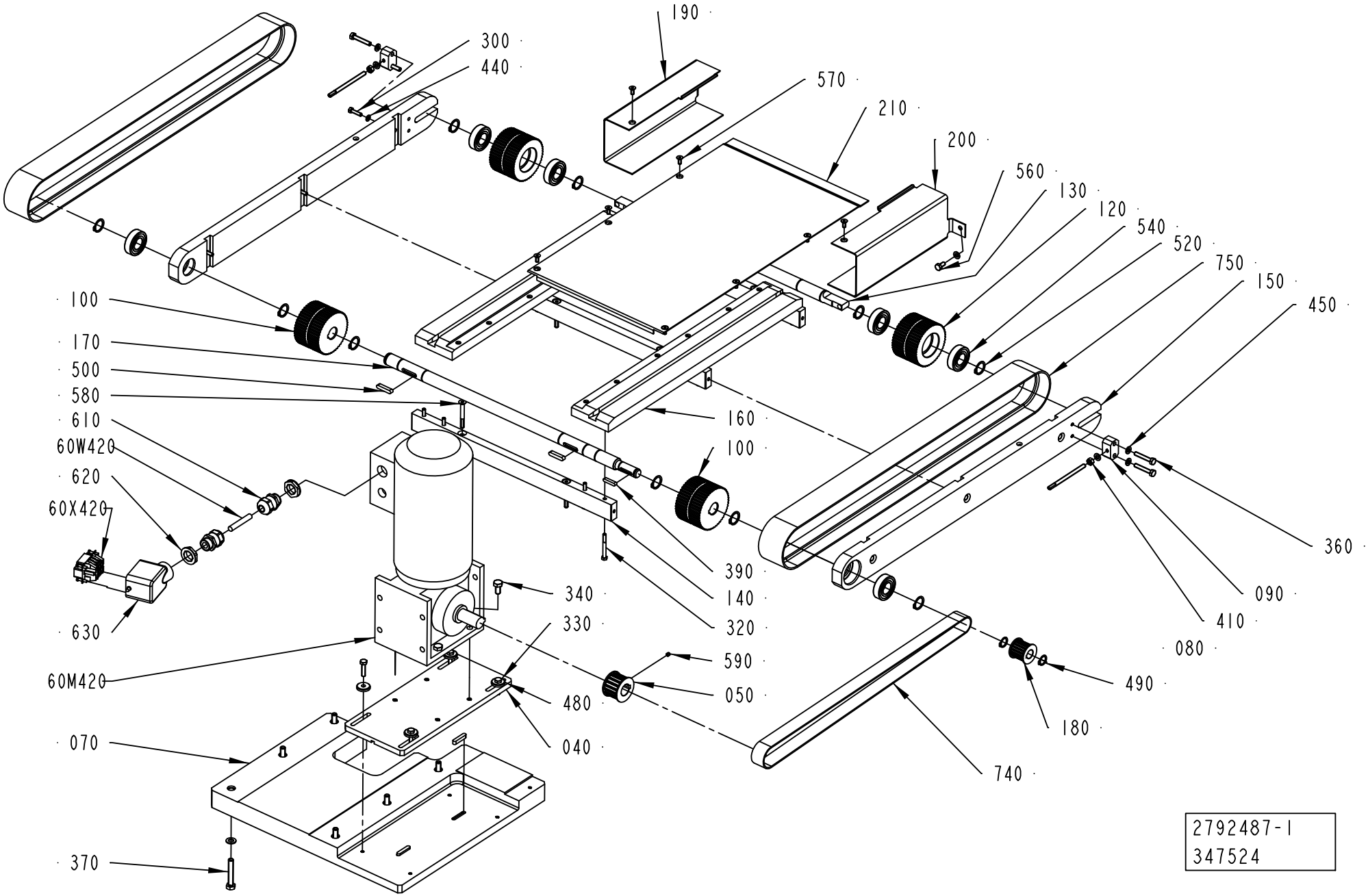
190
300
440
570
210
200
560
130
120
540
520
750
150
450
100
170
500
580
610
60W420
620
60X420
630
60M420
070
370
160
100
390
140
320
340
330
590
050
480
040
740
180
490
080
410
090
360
2792487-1
347524

ECM: 349803 - 20080701
Group number: 2792487-0100
Assembly Drawing: 2792487-1_1_AB

| Pos | Part No | UN | Qty | Description | Page No |
|---|---|---|---|---|---|
| - | | | | | |
| 040 | 2715902-0000 | | 1 | PLATE | |
| 050 | 2780476-0000 | | 1 | TOOTHED PULLEY | |
| 070 | 2715906-0000 | | 1 | PLATE | |
| 080 | 2715907-0000 | | 2 | SCREW | |
| 090 | 2715908-0000 | | 2 | BRACKET | |
| 100 | 2792489-0000 | | 2 | PULLEY | |
| 120 | 2792491-0000 | | 2 | PULLEY | |
| 130 | 2715924-0000 | | 1 | SHAFT | |
| 140 | 2792494-0000 | | 3 | PLATE | |
| 150 | 2792492-0000 | | 2 | PLATE | |
| 160 | 2792493-0000 | | 2 | GUIDE | |
| 170 | 2715929-0000 | | 1 | SHAFT | |
| 180 | 2780477-0000 | | 1 | TOOTHED PULLEY | |
| 190 | 2780436-0000 | | 1 | PLATE | |
| 200 | 2780437-0000 | | 1 | PLATE | |
| 210 | 2780441-0000 | | 1 | PLATE | |
| 300 | 312105-0331 | | 6 | SCREW M6S ISO 4017 M5X20 A480 | |
| 320 | 312105-0340 | | 12 | SCREW M6S ISO 4014 M5X45 A480 | |
| 330 | 312105-0372 | | 4 | SCREW M6S ISO 4017 M6X25 A480 | |
| 340 | 312105-0449 | | 4 | SCREW M6S ISO 4017 M8X16 A480 | |
| 360 | 312109-0376 | | 4 | SCREW M6S ISO 4017 M6X35 A480 | |
| 370 | 312109-0461 | | 6 | SCREW M6S ISO 4017 M8X50 A480 | |
| 390 | 315705-0202 | | 1 | PARALLEL KEY W ROUND ENDS 5X5X25MM | |
| 410 | 312605-0316 | | 2 | HEXAGON NUT, M6M M6 A280 | |
| 440 | 315105-0146 | | 6 | WASHER BRB 5,3X10 RFR | |
| 450 | 315105-0153 | | 8 | WASHER BRB 6,4X12 RFR | |
| 460 | 315105-0165 | | 6 | WASHER BRB 8,4X16 RFR | |
| 480 | 315125-0153 | | 4 | WASHER TBRSB 6,4X22X4 A4 | |
| 490 | 315751-0112 | | 2 | RETAINING RING FOR SHAFT DIN 471 15 SS | |
| 500 | 315705-0236 | | 4 | PARALLEL KEY W. ROUND ENDS 6X6X30 MM | |
| 520 | 315751-0116 | | 10 | RETAINING RING FOR SHAFT DIN 471 20 SS | |
| 540 | 321308-0204 | | 6 | BALL BEARING 20/42X12 | |
| 560 | 312105-0366 | | 2 | SCREW M6S ISO 4017 M6X12 A480 | |
| 570 | 312155-0327 | | 8 | SCREW DIN 7991 MF6S M5X12 A4 70 | |
| 580 | 312155-0380 | | 6 | SCREW DIN 7991 MF6S M6X50 A4 70 | |
| 590 | 90459-5068 | | 1 | SET SCREW ISO4027 M5X6 HRC 45 | |
| 610 | 90458-0307 | | 2 | CABLE GLAND, M20X1,5, NO.5311 1020 | |
| 620 | 90458-0323 | | 2 | NUT, M20X1,5 | |
| 630 | 90459-1458 | | 1 | HOOD HAN 6 E 19 30 006 1540 | |
| 740 | 90600-0828 | | 1 | TIMING BELT 25T5/1075 PU | |
| 750 | 90600-0830 | | 2 | TIMING BELT 25 ATK5/1440 PU | |
| 60M420 | 90458-0965 | | 1 | GEARS, WORM MOTOR S37 DT 63 L4 | |
| 60W420 | 351150-0413 | M | 2 | CABLE OLFLEX 4GX1,5 MM2 LIGHT/GREY | |
| 60X420 | 90110-0052 | | 1 | MALE INSERT HAN 6E 09 33 006 2601 | |

Machine Type | Group Description | Used-In | Group Number | Page No

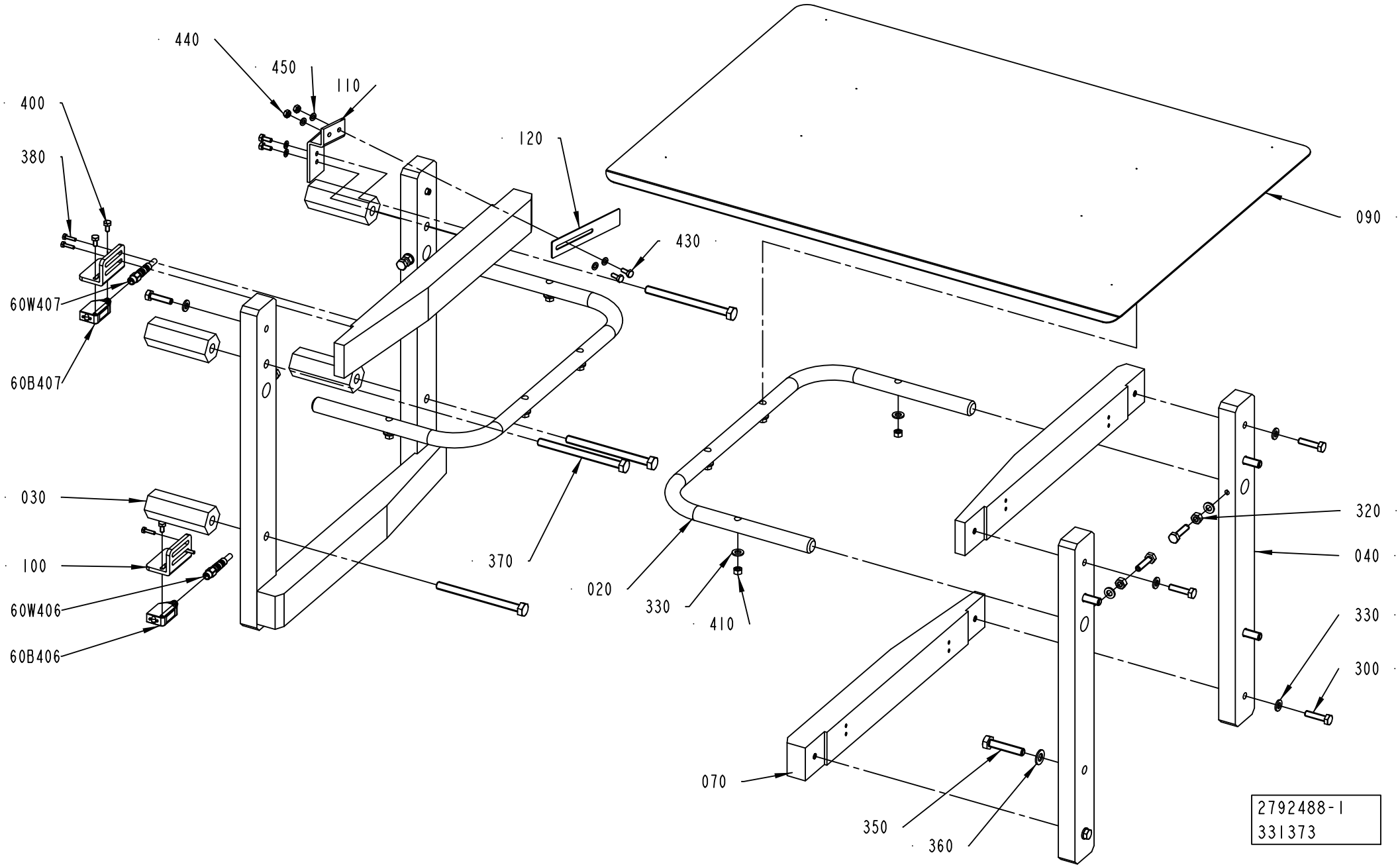
440
450
110
400
380
120
090
430
60W407
60B407
030
100
60W406
60B406
370
020
330
410
320
040
330
300
070
350
360
2792488-1
331373

ECM: 370208 - 20090101
Group number: 2792488-0100
Assembly Drawing: 2792488-1_1_AB

This list covers pages from 6-10 to 6-13

| Pos | Part No | UN | Qty | Description | Page No |
|---|---|---|---|---|---|
| **RECAP2 A3 (See drawing on page: 6-12)** | | | | | |
| 130 | 2977814-0000 | | 4 | SHIM | |
| 300 | 312105-0372 | | 8 | SCREW M6S ISO 4017 M6X25 A480 | |
| 310 | 312109-0382 | | 4 | SCREW M6S ISO 4017 M6X60 A480 | |
| **RECAP3 (See drawing on page: 6-10)** | | | | | |
| 300 | 312105-0372 | | 12 | SCREW M6S ISO 4017 M6X25 A480 | |
| **Common Parts** | | | | | |
| 020 | 2715914-0000 | | 2 | GUIDE | |
| 030 | 2780462-0000 | | 4 | SPACER | |
| 040 | 2715921-0000 | | 4 | HOLDER | |
| 070 | 2780472-0000 | | 4 | STEERING RAIL | |
| 090 | 2867583-0000 | | 1 | PLATE | |
| 100 | 2833240-0000 | | 2 | HOLDER | |
| 110 | 2889892-0000 | | 1 | BRACKET | |
| 120 | 2889893-0000 | | 1 | GUIDE | |
| 320 | 312605-0316 | | 4 | HEXAGON NUT, M6M M6 A280 | |
| 330 | 315105-0153 | | 21 | WASHER BRB 6,4X12 RFR | |
| 350 | 312109-0459 | | 4 | SCREW M6S ISO 4017 M8X40 A480 | |
| 360 | 315105-0165 | | 4 | WASHER BRB 8,4X16 RFR | |
| 370 | 90458-1886 | | 4 | SCREW M6S ISO 4017 M8X100 A480 | |
| 380 | 90287-0175 | | 4 | SCREW M6S M3X12 A480 | |
| 400 | 312105-0287 | | 4 | SCREW M6S ISO 4017 M4X8 A470 | |
| 410 | 312605-0314 | | 8 | HEXAGON NUT, M6M M5 A280 | |
| 430 | 312105-0289 | | 4 | SCREW M6S H4X10 A4 70 ISO4017/DIN933 | |
| 440 | 312605-0312 | | 2 | HEXAGON NUT, M6M M4 A280 | |
| 450 | 315105-0136 | | 6 | WASHER BRB 4,3X8 RFR | |
| 60B406 | 90459-7272 | | 1 | PHOTOCELL E3Z-LS88 | |
| 60B407 | 90459-7272 | | 1 | PHOTOCELL E3Z-LS88 | |
| 60W406 | 351403-0020 | | 1 | ACTU/SENS. CABLE RSMVN 3-PRKMV 4-06/2,0M | |
| 60W407 | 351403-0020 | | 1 | ACTU/SENS. CABLE RSMVN 3-PRKMV 4-06/2,0M | |

| Pos | Part No | UN | Qty | Description | Page No |
|---|---|---|---|---|---|

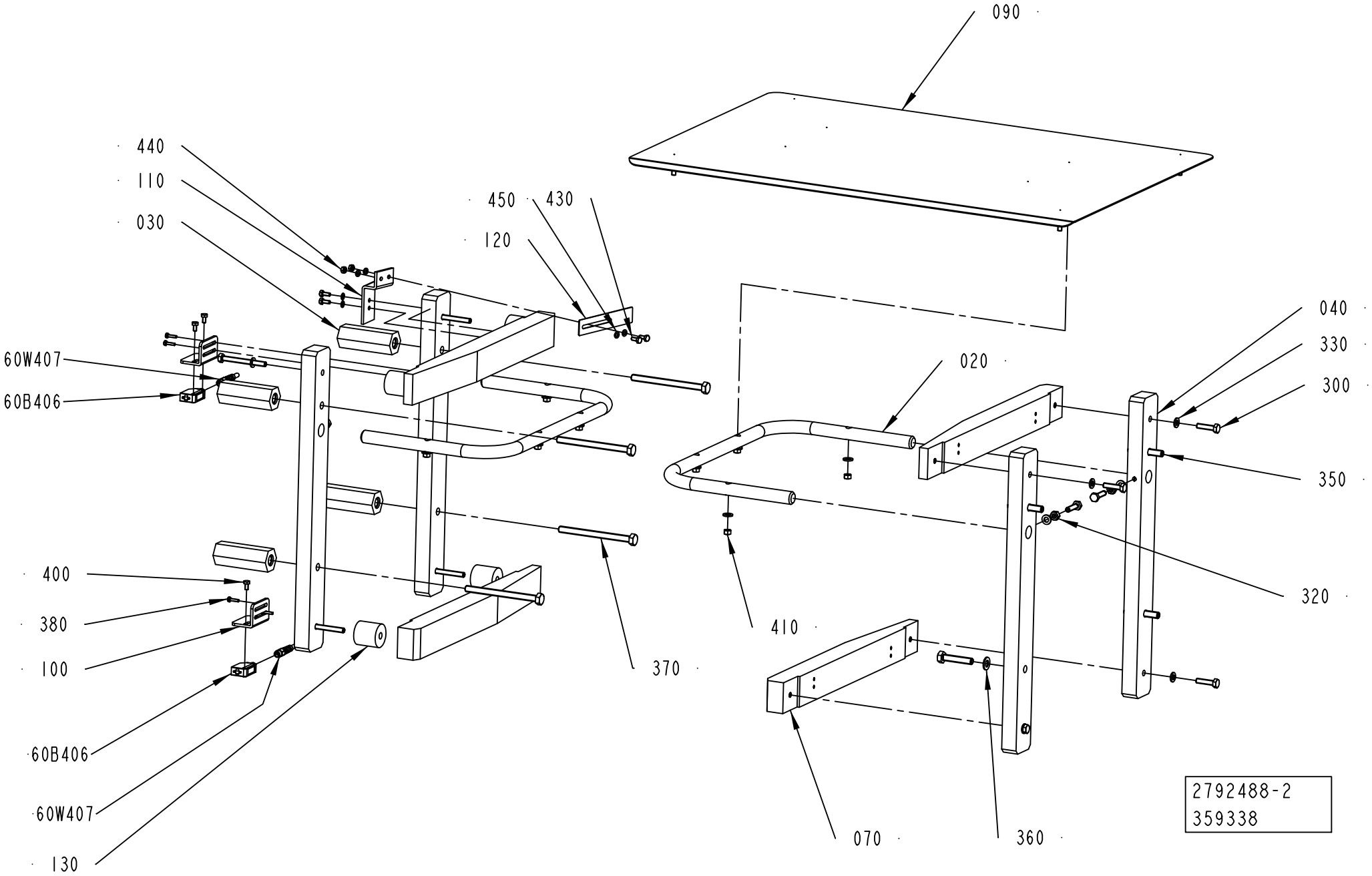
090
440
110
030
450
430
120
60W407
60B406
040
330
300
020
350
400
380
100
320
410
370
60B406
60W407
130
070
360
2792488-2
359338

ECM: 370208 - 20090101
Group number: 2792488-0100
Assembly Drawing: 2792488-2_1_AA

This list covers pages from 6-10 to 6-13

| Pos | Part No | UN | Qty | Description | Page No |
|---|---|---|---|---|---|
| **RECAP2 A3 (See drawing on page: 6-12)** | | | | | |
| 130 | 2977814-0000 | | 4 | SHIM | |
| 300 | 312105-0372 | | 8 | SCREW M6S ISO 4017 M6X25 A480 | |
| 310 | 312109-0382 | | 4 | SCREW M6S ISO 4017 M6X60 A480 | |
| **RECAP3 (See drawing on page: 6-10)** | | | | | |
| 300 | 312105-0372 | | 12 | SCREW M6S ISO 4017 M6X25 A480 | |
| **Common Parts** | | | | | |
| 020 | 2715914-0000 | | 2 | GUIDE | |
| 030 | 2780462-0000 | | 4 | SPACER | |
| 040 | 2715921-0000 | | 4 | HOLDER | |
| 070 | 2780472-0000 | | 4 | STEERING RAIL | |
| 090 | 2867583-0000 | | 1 | PLATE | |
| 100 | 2833240-0000 | | 2 | HOLDER | |
| 110 | 2889892-0000 | | 1 | BRACKET | |
| 120 | 2889893-0000 | | 1 | GUIDE | |
| 320 | 312605-0316 | | 4 | HEXAGON NUT, M6M M6 A280 | |
| 330 | 315105-0153 | | 21 | WASHER BRB 6,4X12 RFR | |
| 350 | 312109-0459 | | 4 | SCREW M6S ISO 4017 M8X40 A480 | |
| 360 | 315105-0165 | | 4 | WASHER BRB 8,4X16 RFR | |
| 370 | 90458-1886 | | 4 | SCREW M6S ISO 4017 M8X100 A480 | |
| 380 | 90287-0175 | | 4 | SCREW M6S M3X12 A480 | |
| 400 | 312105-0287 | | 4 | SCREW M6S ISO 4017 M4X8 A470 | |
| 410 | 312605-0314 | | 8 | HEXAGON NUT, M6M M5 A280 | |
| 430 | 312105-0289 | | 4 | SCREW M6S H4X10 A4 70 ISO4017/DIN933 | |
| 440 | 312605-0312 | | 2 | HEXAGON NUT, M6M M4 A280 | |
| 450 | 315105-0136 | | 6 | WASHER BRB 4,3X8 RFR | |
| 60B406 | 90459-7272 | | 1 | PHOTOCELL E3Z-LS88 | |
| 60B407 | 90459-7272 | | 1 | PHOTOCELL E3Z-LS88 | |
| 60W406 | 351403-0020 | | 1 | ACTU/SENS. CABLE RSMVN 3-PRKMV 4-06/2,0M | |
| 60W407 | 351403-0020 | | 1 | ACTU/SENS. CABLE RSMVN 3-PRKMV 4-06/2,0M | |

| Pos | Part No | UN | Qty | Description | Page No |
|---|---|---|---|---|---|

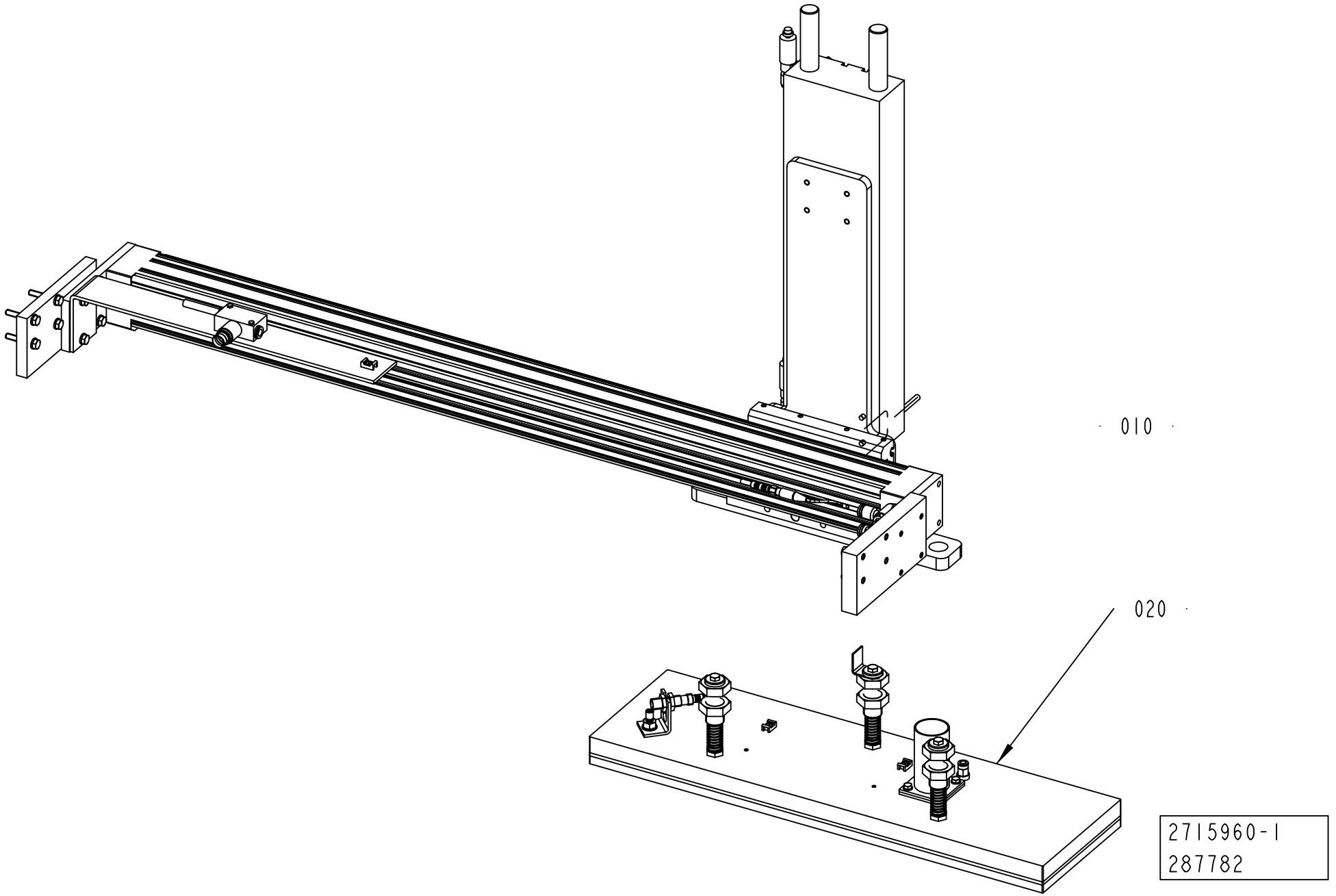
010
020
2715960-1
287782

ECM: 292534 - 20070622
Group number: 2715960-0100
Assembly Drawing: 2715960-1_1_AA

| Pos | Part No | UN | Qty | Description | Page No |
|---|---|---|---|---|---|
| - | | | | | |
| 010 | 2897952-0100 | | 1 | DRIVE UNIT | **6-17** |
| 020 | 2780415-0100 | | 1 | SHEET CARRIER | **6-19** |

| Pos | Part No | UN | Qty | Description | Page No |
|---|---|---|---|---|---|

Machine Type | Group Description | Used-In | Group Number | Page No

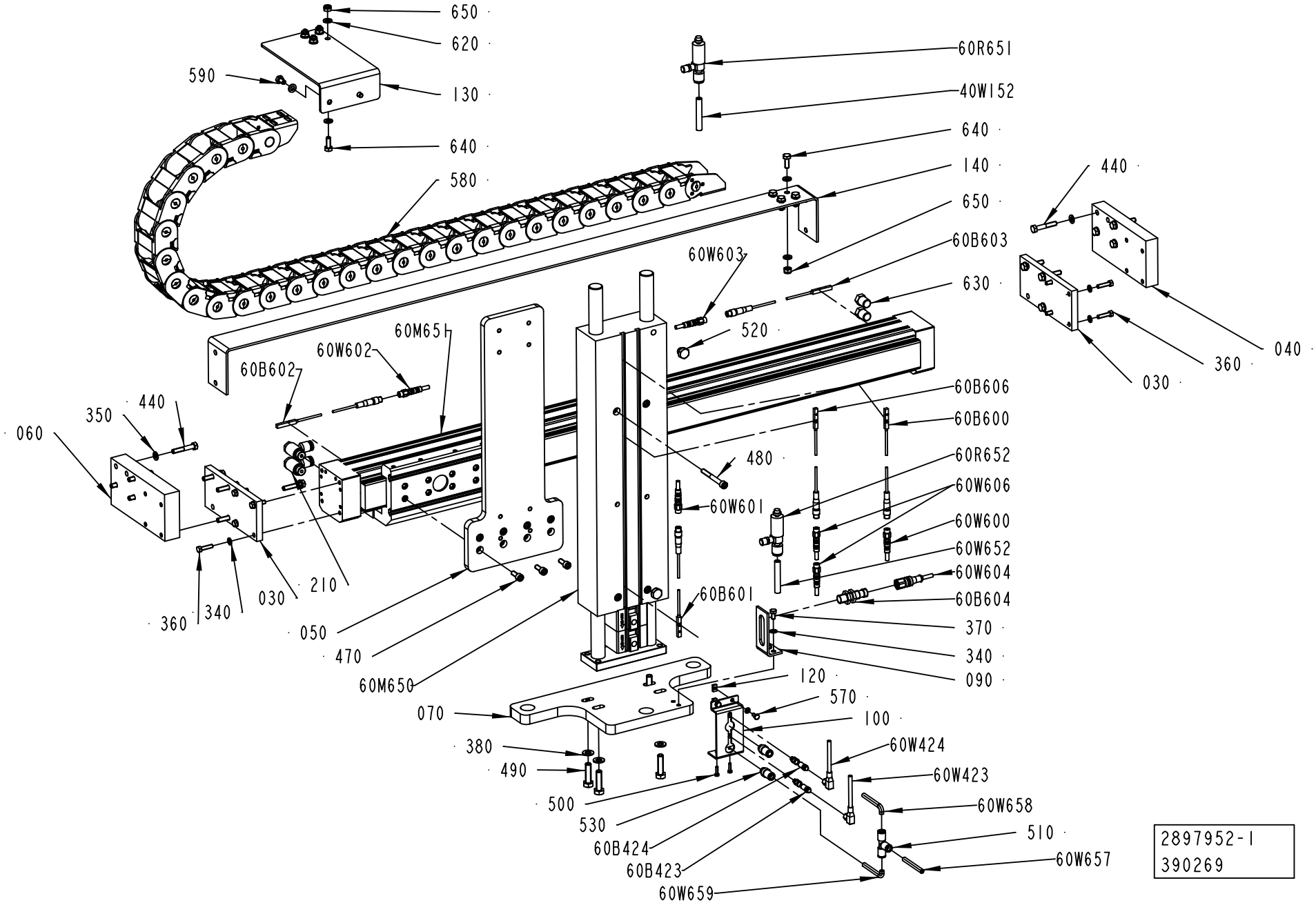
650
620
590
130
640
580
60R651
40W152
640
140
650
60B603
630
60W603
520
60M651
60W602
60B602
440
350
060
480
60W601
60B601
210
030
360
340
050
470
60M650
070
380
490
500
530
60B424
60B423
60W659
120
570
100
60W424
60W423
60W658
510
60W657
60B606
60B600
60R652
60W606
60W600
60W652
60W604
60B604
370
340
090
440
360
040
030
2897952-1
390269

ECM: 407823 - 20091001
Group number: 2897952-0100
Assembly Drawing: 2897952-1_1_AE

| Pos | Part No | UN | Qty | Description | Page No |
|---|---|---|---|---|---|
| - | | | | | |
| 030 | 2868165-0000 | | 2 | BRACKET | |
| 040 | 2868166-0000 | | 1 | PLATE | |
| 050 | 2897953-0000 | | 1 | PLATE | |
| 060 | 2868170-0000 | | 1 | PLATE | |
| 070 | 2897954-0000 | | 1 | PLATE | |
| 090 | 2715945-0000 | | 1 | BRACKET | |
| 100 | 2899500-0000 | | 1 | BRACKET | |
| 120 | 2909507-0000 | | 2 | PLATE | |
| 130 | 2955524-0000 | | 1 | PLATE | |
| 140 | 2955525-0000 | | 1 | PLATE | |
| 210 | 90459-3685 | | 2 | FLOW CONTROL VALVE, GRLA-1/4-QS-8-D | |
| 340 | 315105-0146 | | 10 | WASHER BRB 5,3X10 RFR | |
| 350 | 315105-0153 | | 18 | WASHER BRB 6,4X12 RFR | |
| 360 | 312105-0331 | | 8 | SCREW M6S ISO 4017 M5X20 A480 | |
| 370 | 312105-0325 | | 2 | SCREW M6S ISO 4017 M5X10 A480 | |
| 380 | 315106-0165 | | 4 | WASHER ISO 7089-8-200 HV A4 | |
| 390 | 315105-0136 | | 2 | WASHER BRB 4,3X8 RFR | |
| 420 | 312109-0374 | | 8 | SCREW M6S ISO 4017 M6X30 A480 | |
| 440 | 312105-0376 | | 8 | SCREW M6S ISO 4014 M6X35 A480 | |
| 470 | 312115-0368 | | 8 | SCREW ISO4762 M6X16 A4 80 | |
| 480 | 312111-0381 | | 4 | SCREW HEX.SOCK.HD.MC6S-TT 6X55 88 FZB | |
| 490 | 312105-0455 | | 4 | SCREW M6S ISO 4017 M8X30 A480 | |
| 500 | 90287-0175 | | 2 | SCREW M6S M3X12 A480 | |
| 510 | 350005-0002 | | 1 | PUSH-IN T-FITTING QST-F-6 | |
| 520 | 90330-0066 | | 2 | PLUG, EXT. G-THREAD, G1/8 | |
| 530 | 350003-0005 | | 2 | PUSH-IN FITTING QS-F-G1/8-6-I | |
| 570 | 312105-0287 | | 2 | SCREW M6S ISO 4017 M4X8 A470 | |
| 580 | 2958122-0000 | | 1 | CHAIN | |
| 590 | 312105-0364 | | 2 | SCREW M6S ISO 4017 M6X10 A480 | |
| 620 | 315106-0153 | | 16 | WASHER ISO 7089-6-200 HV A4 | |
| 630 | 90457-0008 | | 2 | PLUG, EXT. G-THREAD, 4PH-SS | |
| 640 | 312105-0368 | | 8 | SCREW M6S ISO 4017 M6X16 A480 | |
| 650 | 312812-0316 | | 8 | HEXAGON NUT, NY-LOCK M6 A480 | |
| 60B423 | 90459-4788 | | 1 | PROX.SENSOR SEIN-M5B-PS-S-L | |
| 60B424 | 90459-4788 | | 1 | PROX.SENSOR SEIN-M5B-PS-S-L | |
| 60B600 | 90600-3276 | | 1 | PROXIMITY SENS. SME-8M-DS-24V-K-0,3-M8D | |
| 60B601 | 90600-3276 | | 1 | PROXIMITY SENS. SME-8M-DS-24V-K-0,3-M8D | |
| 60B602 | 90600-3276 | | 1 | PROXIMITY SENS. SME-8M-DS-24V-K-0,3-M8D | |
| 60B603 | 90600-3276 | | 1 | PROXIMITY SENS. SME-8M-DS-24V-K-0,3-M8D | |
| 60B604 | 90458-2907 | | 1 | PROX.SWITCH IFS204 | |
| 60B606 | 90600-3276 | | 1 | PROXIMITY SENS. SME-8M-DS-24V-K-0,3-M8D | |
| 60M650 | 90600-3009 | | 1 | CYLINDER WITH INT. GUIDING BORE 40 | |
| 60M651 | 90600-1077 | | 1 | DOUBLE ACTING, SHUTTLE, CYL. 40-700 | |
| 60R651 | 2911337-0000 | | 1 | QUIC EXHAUST VALVE | |
| 60R652 | 2911337-0000 | | 1 | QUIC EXHAUST VALVE | |
| 60W423 | 351402-0050 | | 1 | ACTU/SENS CABLE RSMVN 3-PRKMWV 3-06/5,0M | |
| 60W424 | 351402-0050 | | 1 | ACTU/SENS CABLE RSMVN 3-PRKMWV 3-06/5,0M | |
| 60W600 | 351401-0050 | | 1 | ACTU/SENS CABLE RSMVN 3-PRKMV 3-06/5,0M | |
| 60W601 | 351401-0050 | | 1 | ACTU/SENS CABLE RSMVN 3-PRKMV 3-06/5,0M | |
| 60W602 | 351401-0050 | | 1 | ACTU/SENS CABLE RSMVN 3-PRKMV 3-06/5,0M | |
| 60W603 | 351401-0020 | | 1 | ACTU/SENS CABLE RSMVN 3-PRKMV 3-06/2,0M | |
| 60W604 | 351405-0050 | | 1 | SENS. CABLE RSMVN 3-PRKT 4-3-06/5,0M | |
| 60W606 | 351401-0050 | | 2 | ACTU/SENS CABLE RSMVN 3-PRKMV 3-06/5,0M | |
| 60W652 | 315400-0004 | M | 1 | TUBE PUN-H-8X1,25-BL | |
| 60W655 | 315400-0004 | M | 1 | TUBE PUN-H-8X1,25-BL | |
| 60W657 | 315400-0001 | M | 1 | TUBE PUN-H-6X1-BL | |
| 60W658 | 315400-0001 | M | 1 | TUBE PUN-H-6X1-BL | |
| 60W659 | 315400-0001 | M | 1 | TUBE PUN-H-6X1-BL | |

Machine Type | Group Description | Used-In | Group Number | Page No

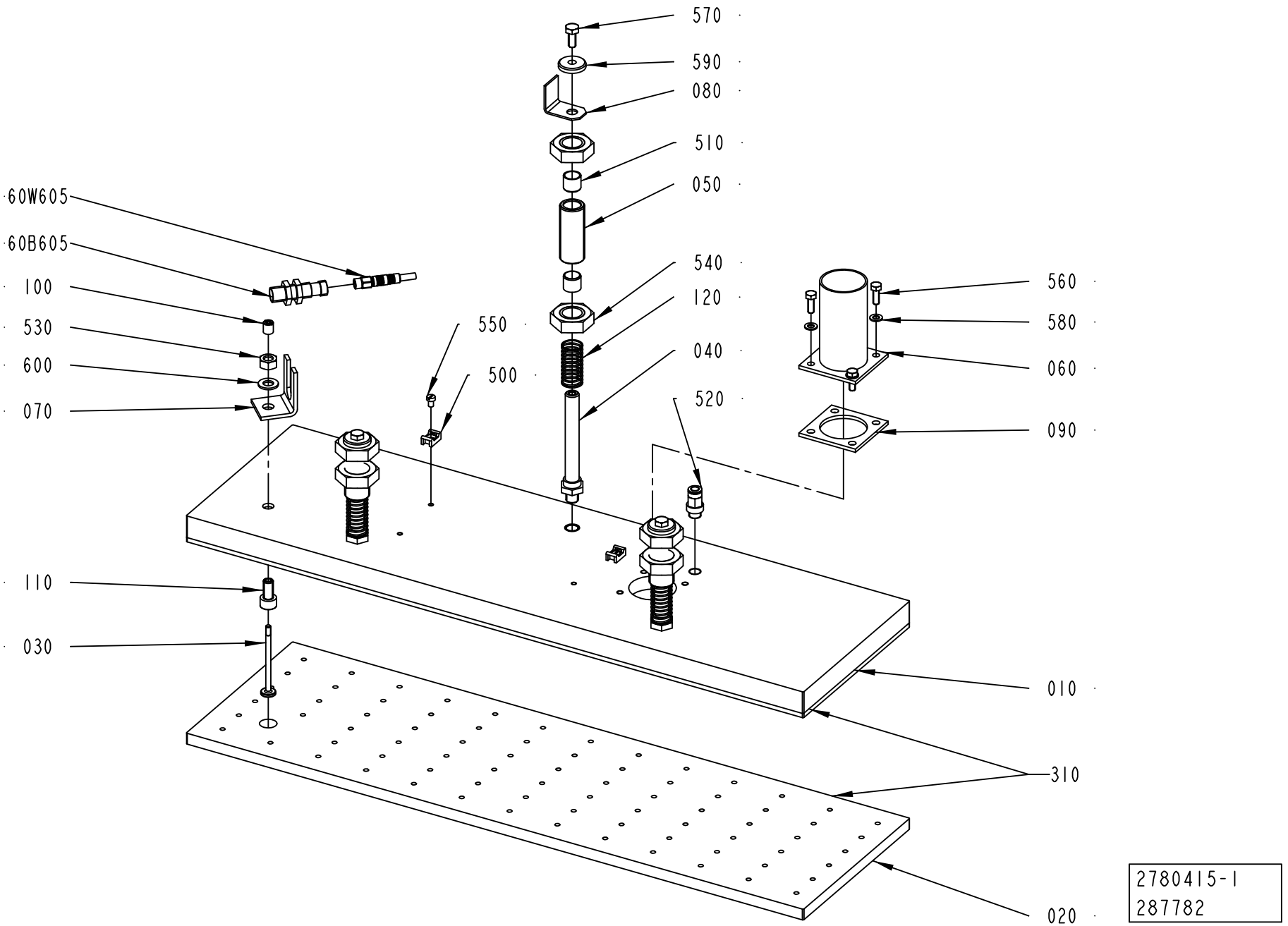
570
590
080
510
050
540
120
040
520
550
500
60W605
60B605
100
530
600
070
560
580
060
090
110
030
010
310
020
2780415-1
287782

ECM: 359104 - 20080924
Group number: 2780415-0100
Assembly Drawing: 2780415-1_1_AA

| Pos | Part No | UN | Qty | Description | Page No |
|---|---|---|---|---|---|
| **RECAP2 A3** | | | | | |
| 010 | 2927543-0000 | | 1 | PLATE | |
| 020 | 2927545-0000 | | 1 | RUBBER MAT | |
| **RECAP3** | | | | | |
| 010 | 2869126-0000 | | 1 | PLATE | |
| 020 | 2869127-0000 | | 1 | RUBBER MAT | |
| **Common Parts** | | | | | |
| 030 | 2780412-0000 | | 1 | INDICATOR | |
| 040 | 2715873-0000 | | 3 | SHAFT | |
| 050 | 2715874-0000 | | 3 | SHAFT | |
| 060 | 2867529-0000 | | 1 | BRACKET | |
| 070 | 1189198-0000 | | 1 | FASTENING BRACKET | |
| 080 | 2780413-0000 | | 1 | FLAG | |
| 090 | 1133029-0000 | | 1 | GASKET | |
| 100 | 1188818-0000 | | 1 | NUT | |
| 110 | 1133148-0000 | | 1 | SCREW | |
| 120 | 2703708-0000 | | 3 | SPRING | |
| 310 | 90153-0023 | | 1 | ADHESIVE, SILICON 251470 TUB 90CC(UN1993 | |
| 500 | 352113-0205 | | 2 | ANCHOR PLATES FOR STRIPS, TYPE TM2S8-C10 | |
| 510 | 321133-0180 | | 6 | BUSHING IGLIDUR G 12X14X12 | |
| 520 | 350001-0006 | | 1 | PUSH-IN FITTING QS-F-G1/8-6 | |
| 530 | 312605-0318 | | 1 | HEXAGON NUT, M6M M8 A280 | |
| 540 | 312632-0326 | | 6 | HEX.TH.NUT FINE,EN24035 ML6M M20X1,5 A4 | |
| 550 | 312125-0285 | | 2 | SCREW ISO 1207 M4X6 A4 | |
| 560 | 312105-0328 | | 4 | SCREW M6S ISO 4017 M5X14 A480 | |
| 570 | 312105-0367 | | 3 | SCREW M6S ISO 4017 M6X14 A480 | |
| 580 | 315105-0146 | | 4 | WASHER BRB 5,3X10 RFR | |
| 590 | 315125-0153 | | 3 | WASHER TBRSB 6,4X22X4 A4 | |
| 600 | 315105-0165 | | 1 | WASHER BRB 8,4X16 RFR | |
| 60B605 | 90458-2907 | | 1 | PROX.SWITCH IFS204 | |
| 60W605 | 351405-0050 | | 1 | SENS. CABLE RSMVN 3-PRKT 4-3-06/5,0M | |

| Pos | Part No | UN | Qty | Description | Page No |
|---|---|---|---|---|---|

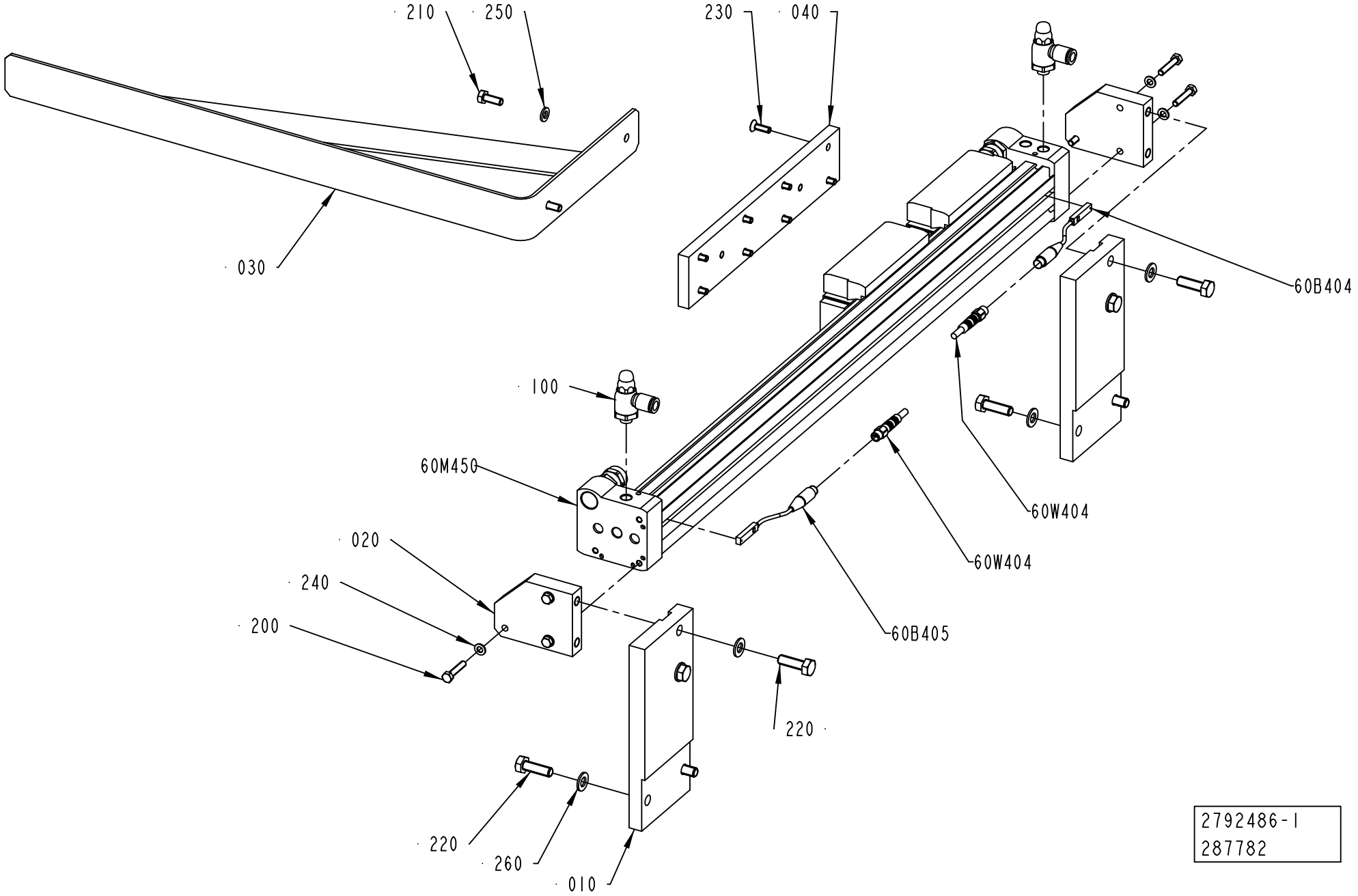
210
250
230
040
030
60B404
100
60M450
60W404
60W404
020
240
200
60B405
220
220
260
010
2792486-1
287782

ECM: 407822 - 20091001
Group number: 2792486-0100
Assembly Drawing: 2792486-1_1_AA

| Pos | Part No | UN | Qty | Description | Page No |
|---|---|---|---|---|---|
| - | | | | | |
| 010 | 2780464-0000 | | 2 | BRACKET | |
| 020 | 2780467-0000 | | 2 | BRACKET | |
| 030 | 2780468-0000 | | 1 | ARM | |
| 040 | 2780478-0000 | | 1 | PLATE | |
| 100 | 90235-0848 | | 2 | THROTTLE CHECK VALVE G1/8", MANUAL,8 | |
| 200 | 312105-0333 | | 6 | SCREW M6S ISO 4017 M5X25 A480 | |
| 210 | 312105-0368 | | 2 | SCREW M6S ISO 4017 M6X16 A480 | |
| 220 | 312105-0453 | | 8 | SCREW M6S ISO 4017 M8X25 A480 | |
| 230 | 312155-0329 | | 8 | SCREW DIN 7991 MF6S M5X16 A4 70 | |
| 240 | 315105-0146 | | 6 | WASHER BRB 5,3X10 RFR | |
| 250 | 315105-0153 | | 2 | WASHER BRB 6,4X12 RFR | |
| 260 | 315105-0165 | | 8 | WASHER BRB 8,4X16 RFR | |
| 270 | 312607-0316 | | 2 | HEXAGON NUT, EN 24032 M6M M6 A480 | |
| 60B404 | 90459-1967 | | 1 | PROX.SENSOR SME-8-S-LED-24 | |
| 60B404 | 90600-3276 | | 1 | PROXIMITY SENS. SME-8M-DS-24V-K-0,3-M8D | |
| 60B405 | 90459-1967 | | 1 | PROX.SENSOR SME-8-S-LED-24 | |
| 60B405 | 90600-3276 | | 1 | PROXIMITY SENS. SME-8M-DS-24V-K-0,3-M8D | |
| 60M450 | 90600-1078 | | 1 | DOUBLE ACTING, SHUTTLE, CYL. 25-500 | |
| 60W404 | 351401-0020 | | 1 | ACTU/SENS CABLE RSMVN 3-PRKMV 3-06/2,0M | |
| 60W405 | 351401-0020 | | 1 | ACTU/SENS CABLE RSMVN 3-PRKMV 3-06/2,0M | |

| Pos | Part No | UN | Qty | Description | Page No |
|---|---|---|---|---|---|

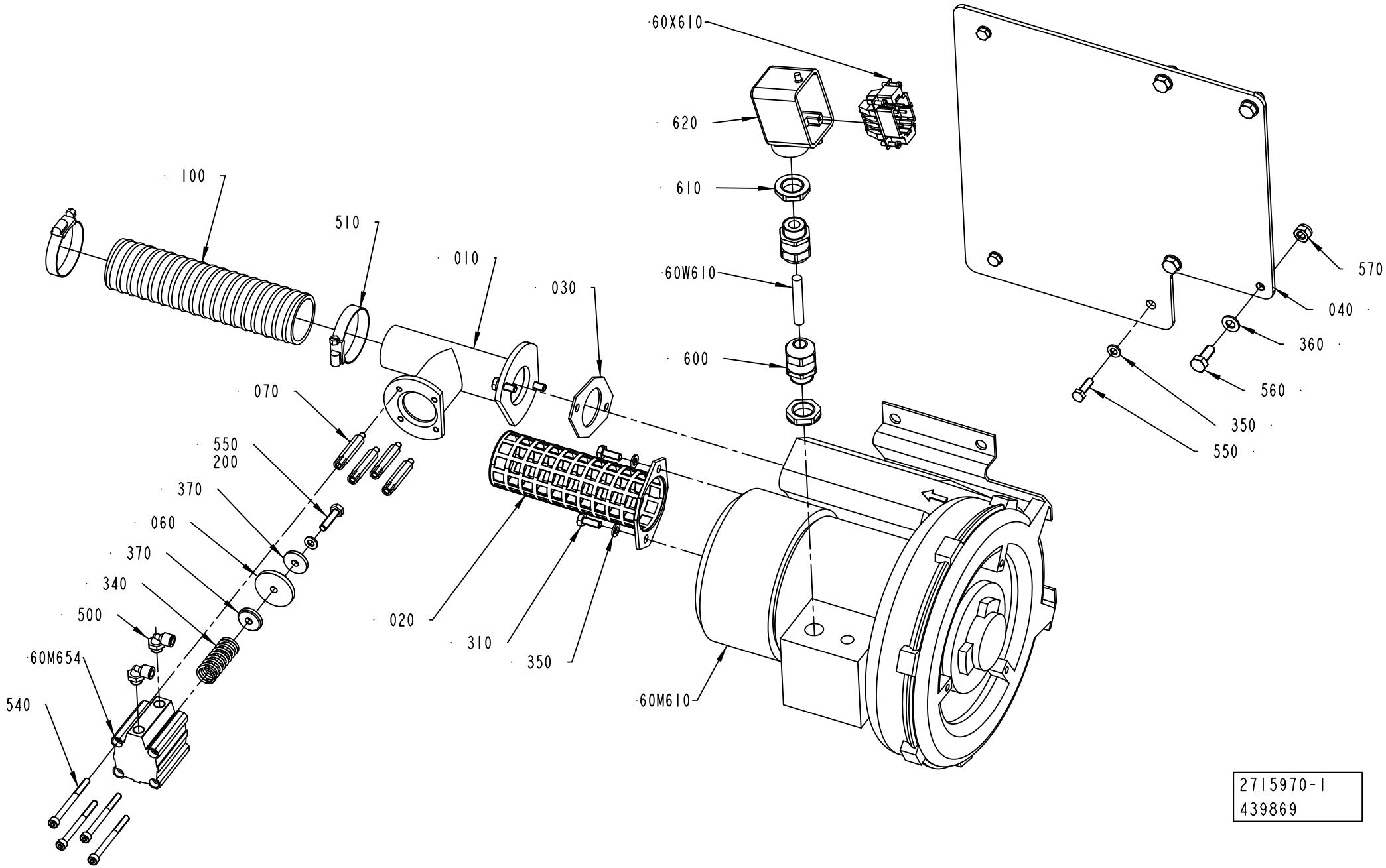
60X610
620
610
60W610
600
100
510
010
030
070
550
200
370
060
370
340
500
60M654
540
020
310
350
60M610
570
040
360
560
350
550
2715970-1
439869

ECM: 444505 - 20100701
Group number: 2715970-0100
Assembly Drawing: 2715970-1_1_AD

| Pos | Part No | UN | Qty | Description | Page No |
|---|---|---|---|---|---|
| - | | | | | |
| 010 | 2562202-0000 | | 1 | ATTACHMENT PIPE | |
| 020 | 1030335-0000 | | 1 | FILTER HOLDER | |
| 030 | 1030878-0000 | | 1 | GASKET | |
| 040 | 2868608-0000 | | 1 | BRACKET | |
| 060 | 1133035-0000 | | 1 | LID | |
| 070 | 2562203-0000 | | 4 | SPACER | |
| 100 | 90457-0203 | M | 1.3 | FLEXIBLE CONDUIT PVC | |
| 200 | 90157-0016 | ML | 1 | THREAD LOCKING, LOCTITE 242 50 ML | |
| 310 | 312105-0368 | | 4 | SCREW M6S ISO 4017 M6X16 A480 | |
| 340 | 90600-1869 | | 1 | COMP. SPRING 2634, 2X15X45 | |
| 350 | 315105-0153 | | 8 | WASHER BRB 6,4X12 RFR | |
| 360 | 315105-0165 | | 4 | WASHER BRB 8,4X16 RFR | |
| 370 | 315125-0153 | | 2 | WASHER TBRSB 6,4X22X4 A4 | |
| 500 | 90458-2956 | | 2 | ELBOW PIPE JOINT, EXT.THREAD, D=6MM-G1/8 | |
| 510 | 342991-0108 | | 2 | HOSE CLIP,WORM DRIVE TYPE (38)-50 | |
| 520 | 90459-1458 | | 1 | HOOD HAN 6 E 19 30 006 1540 | |
| 530 | 90458-0323 | | 2 | NUT, M20X1,5 | |
| 540 | 90458-0058 | | 4 | SCREW M5X60 A280 | |
| 550 | 312105-0370 | | 4 | SCREW M6S ISO 4017 M6X20 A480 | |
| 560 | 312105-0451 | | 4 | SCREW M6S ISO 4017 M8X20 A480 | |
| 570 | 312812-0318 | | 4 | HEXAGON NUT, NY-LOCK M8 A480 | |
| 600 | 90458-0307 | | 2 | CABLE GLAND, M20X1,5, NO.5311 1020 | |
| 60M610 | 90264-0078 | | 1 | FAN, 2BH1300-7AH16 | |
| 60M654 | 90450-0513 | | 1 | DOUBLE ACTING, COMPACT, CYL 32-25 | |
| 60W610 | 351150-0413 | M | 2 | CABLE OLFLEX 4GX1,5 MM2 LIGHT/GREY | |
| 60X610 | 90110-0052 | | 1 | MALE INSERT HAN 6E 09 33 006 2601 | |

| Pos | Part No | UN | Qty | Description | Page No |
|---|---|---|---|---|---|

Tetra Pak

# SPC
## Spare Parts Catalogue

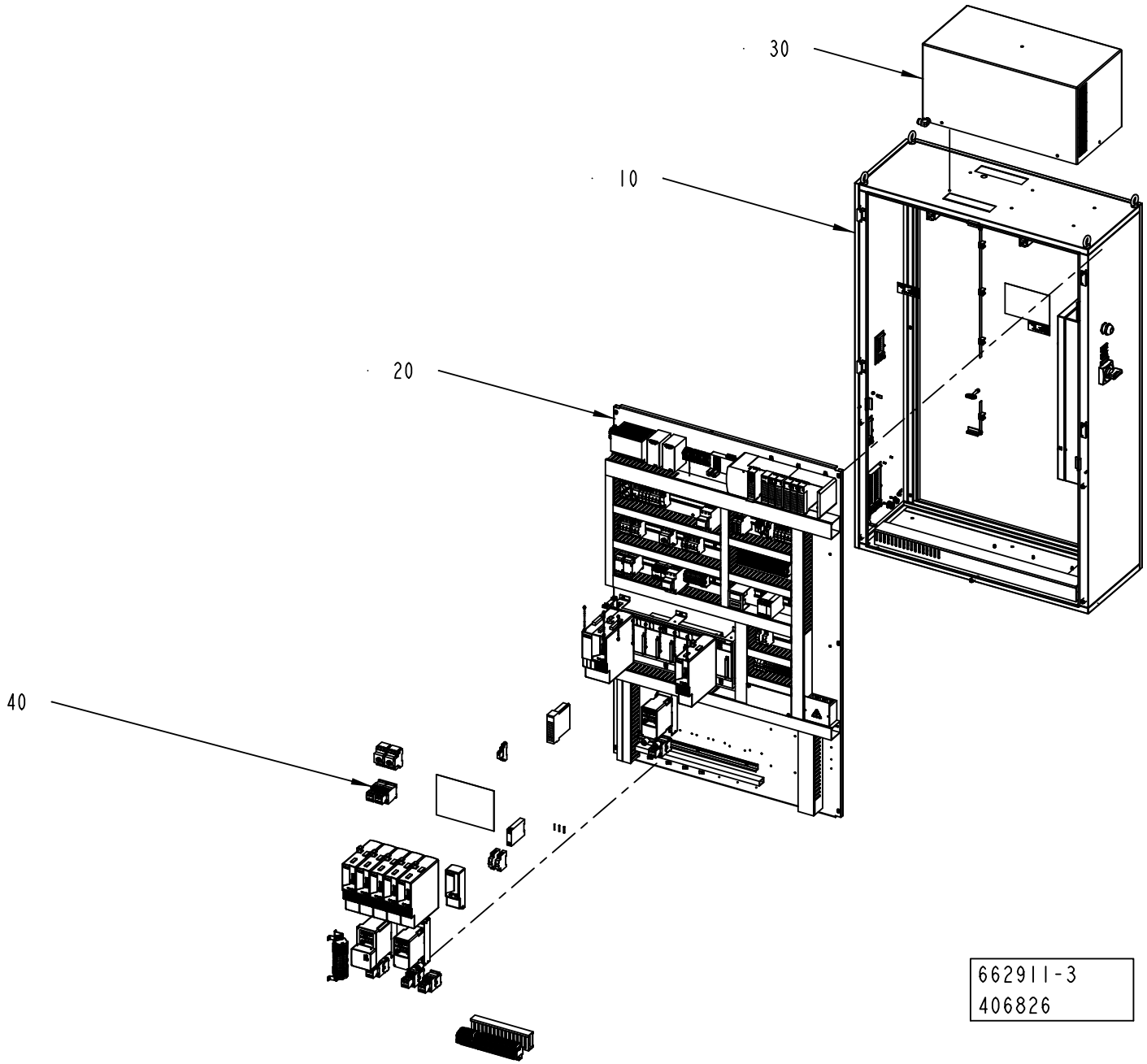
30
10
20
40
662911-3
406826

ECM: 406841 - 20091001
Group number: 662911-0200
Assembly Drawing: 662911-3_1_AA


| Pos | Part No | UN | Qty | Description | Page No |
|---|---|---|---|---|---|
| - | | | | | |
| 010 | 2833406-0200 | | 1 | CABINET | 7-5 |
| 020 | 2833407-0200 | | 1 | CONTROL BOARD | 7-9 |
| 030 | 2833408-0100 | | 1 | COOLING UNIT | 7-55 |
| 040 | 2841404-0200 | | 1 | ELECTRICAL CONVERSION | 7-57 |
| 050 | 2833409-0100 | | 1 | CABLE SET | 7-63 |


| Pos | Part No | UN | Qty | Description | Page No |
|---|---|---|---|---|---|

Machine Type | Group Description | Used-In | Group Number | Page No

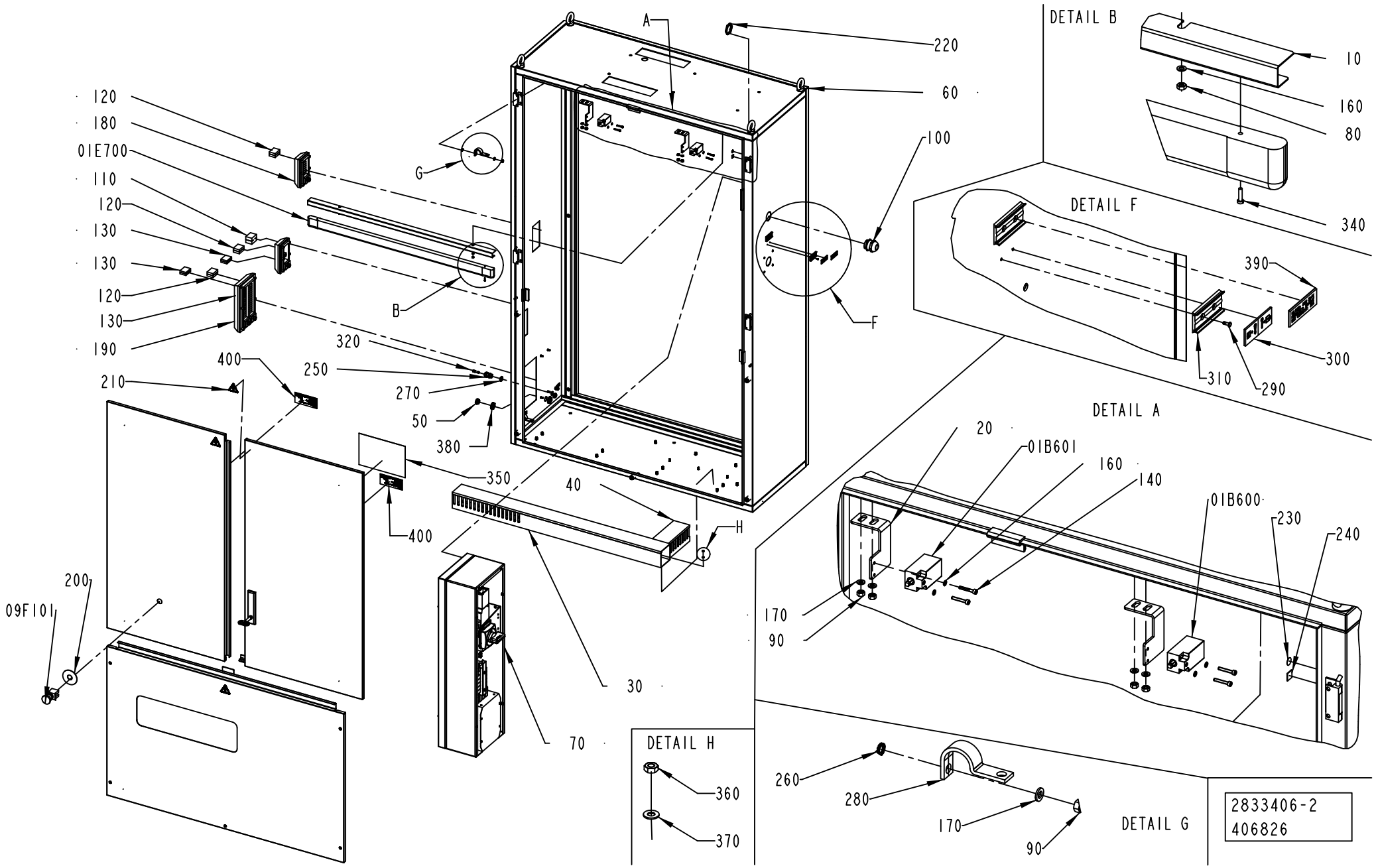
A
220
60
100
G
B
F
120
180
01E700
110
120
130
130
120
130
190
400
250
210
320
270
50
380
350
40
400
H
30
70
200
09F101
DETAIL B
10
160
80
340
DETAIL F
390
300
310
290
DETAIL A
20
01B601
160
140
01B600
230
240
170
90
DETAIL H
360
370
260
280
170
90
DETAIL G
2833406-2
406826

ECM: 406842 - 20091001
Group number: 2833406-0200
Assembly Drawing: 2833406-2_1_AA

| Pos | Part No | UN | Qty | Description | Page No |
|---|---|---|---|---|---|
| - | | | | | |
| 010 | 2947726-0000 | | 1 | SUPPORT | |
| 020 | 2839225-0000 | | 2 | BRACKET | |
| 030 | 2838459-0000 | | 1 | CABLE DUCT | |
| 040 | 2838460-0000 | | 1 | CABLE DUCT | |
| 050 | 90458-1308 | | 2 | BLIND PLUG CIRCULAR, M20X1,5 514GFK/220 | |
| 060 | 2833403-0000 | | 1 | WELDED CABINET | |
| 070 | 2833410-0100 | | 1 | BOX ..... | 7-7 |
| 080 | 312605-0312 | | 2 | HEXAGON NUT, M6M M4 A280 | |
| 090 | 312605-0316 | | 24 | HEXAGON NUT, M6M M6 A280 | |
| 100 | 90458-0310 | | 1 | CABLE GLAND, M40X1,5, NO.5311 1050 | |
| 110 | 90458-1173 | | 1 | MULTI DIAMETER MODULE, CM 30W40 | |
| 120 | 90458-1174 | | 18 | MULTI DIAMETER MODULE, CM 20W40 | |
| 130 | 90458-1175 | | 6 | MULTI DIAMETER MODULE, CM 15W40 | |
| 140 | 312115-0297 | | 4 | SCREW ISO4762 M4X25 A4 80 | |
| 160 | 315105-0136 | | 6 | WASHER BRB 4,3X8 RFR | |
| 170 | 315105-0153 | | 24 | WASHER BRB 6,4X12 RFR | |
| 180 | 90458-1178 | | 2 | FRAME CF 8 | |
| 190 | 90458-1179 | | 1 | FRAME CF 32 | |
| 200 | 486826-0001 | | 1 | 11"SIGN ""EMERGENCY STOP""" | |
| 210 | 359705-0015 | | 3 | WARNING SIGN ISO, RISK OF ELECTRIC SHOCK | |
| 220 | 353250-0040 | | 1 | GLAND, LOCK NUT M40X1,5 | |
| 230 | 2608177-0000 | | 20 | SIGN | |
| 240 | 90194-0152 | | 20 | SIGN, EARTH | |
| 250 | 90458-0314 | | 2 | CABLE GLAND, M16X1,5, NO.5311 1110 | |
| 260 | 90062-0015 | | 20 | LOCK WASHER SERRAT.EXT.GEAR,6,4/11 H=0,7 | |
| 270 | 353250-0016 | | 2 | GLAND, LOCK NUT M16X1,5 | |
| 280 | 90600-2904 | | 11 | EARTH BRAID, 250/16/8,5 | |
| 290 | 311520-0320 | | 4 | RIVET, BLANK 2,4X6 | |
| 300 | 359241-0124 | | 1 | "SIGN: "" MAIN SWITCH""" | |
| 310 | 359240-0100 | | 2 | SIGN HOLDER FOR 359240-0001 | |
| 320 | 342715-0102 | | 2 | BLIND PLUG 6 MM | |
| 340 | 312125-0226 | | 2 | SCREW ISO 1207 M3X12 A4 | |
| 350 | 90600-2068 | | 1 | DELIVERED DESIGN SIGN, 90600-2068 | |
| 360 | 90099-0191 | | 46 | HEXAGON NYLON NUT, M4X0,7 | |
| 370 | 90005-0064 | | 15 | WASHER PL.RND.NYL.4,3/9, H=0,8 | |
| 380 | 90458-0323 | | 2 | NUT, M20X1,5 | |
| 390 | 90600-5823 | | 1 | SIGN, MAIN POWER MACHINE LABEL | |
| 400 | 90459-7229 | | 2 | IDENTIF. OF SINGLE CONDUCTORS, TEMPLATE | |
| 01B600 | 90044-0192 | | 1 | LIMIT SW. SZ2586.000 | |
| 01B601 | 90044-0192 | | 1 | LIMIT SW. SZ2586.000 | |
| 01E700 | 90600-4049 | | 1 | LIGHT FIXTURE, TCH128 1XTL5-21W/830 HF | |
| | *90600-4239* | | *1* | *FLUORESC. TUBE,MASTER TL5 HE 21W/830 SLV* | |
| 09F101 | 90458-1651 | | 1 | EMERGENCY STOP, ZB4-BS-844 ZB4-BZ-104 | |

| Machine Type | Group Description | Used-In | Group Number | Page No |
|---|---|---|---|---|

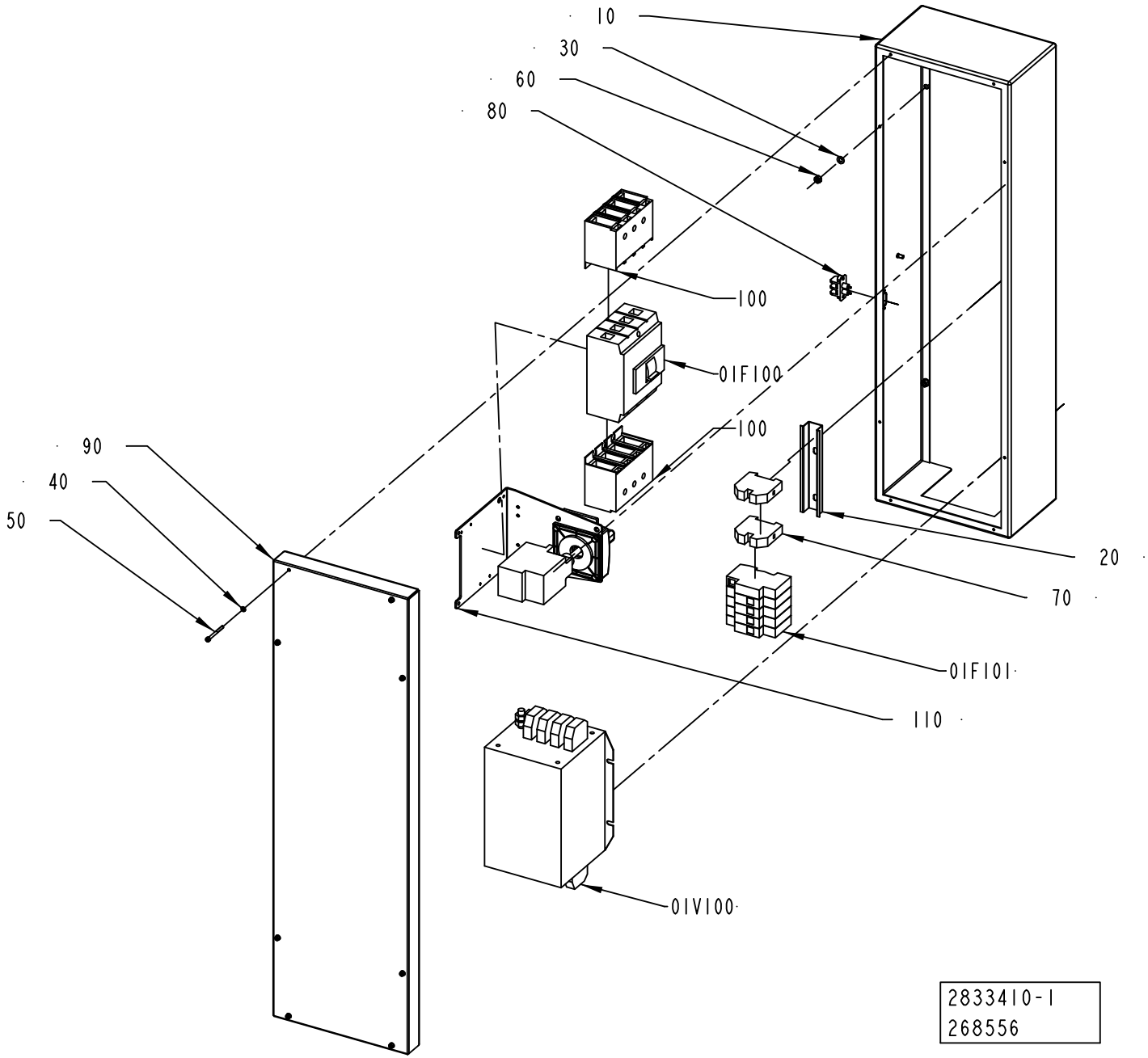
10
30
60
80
100
01F100
100
90
40
50
20
70
01F101
110
01V100
2833410-1
268556

ECM: 272039 - 20060925
Group number: 2833410-0100
Assembly Drawing: 2833410-1_1_AA

| Pos | Part No | UN | Qty | Description | Page No |
|---|---|---|---|---|---|
| - | | | | | |
| 010 | 2833411-0000 | | 1 | BOX | |
| 020 | 2835456-0000 | | 1 | RAIL | |
| 030 | 315105-0153 | | 6 | WASHER BRB 6,4X12 RFR | |
| 040 | 315105-0136 | | 8 | WASHER BRB 4,3X8 RFR | |
| 050 | 312115-0304 | | 8 | SCREW ISO4762 M4X45 A4 80 | |
| 060 | 312605-0316 | | 6 | HEXAGON NUT, M6M M6 A280 | |
| 070 | 353024-0209 | | 2 | EARTH TERMINAL, 1010.5 | |
| 080 | 90024-0036 | | 1 | FEED THROUGH FILTER, 52-160-002-AD00 | |
| 090 | 2835450-0000 | | 1 | COVER | |
| 100 | 90459-6617 | | 2 | COVER 4-POLE, NZM1-4-XKSA | |
| 110 | 90600-1198 | | 1 | HANDLE, MZM1-XSM-R | |
| 01F100 | 90459-4181 | | 1 | CURR. LIM. CIRC. BREAKER, NZMB1-4-A40 | |
| 01F101 | 90082-0013 | | 1 | SURGE PROTECTION DEVICE PU4CR 8021520000 | |
| | *90082-0301* | | *3* | *OVER VOLT. PROTECT. PU 0 C 833951* | |
| 01V100 | 90024-0060 | | 1 | FILTER 80 A 440/250 VAC, B84144-A0080R00 | |

| Pos | Part No | UN | Qty | Description | Page No |
|---|---|---|---|---|---|

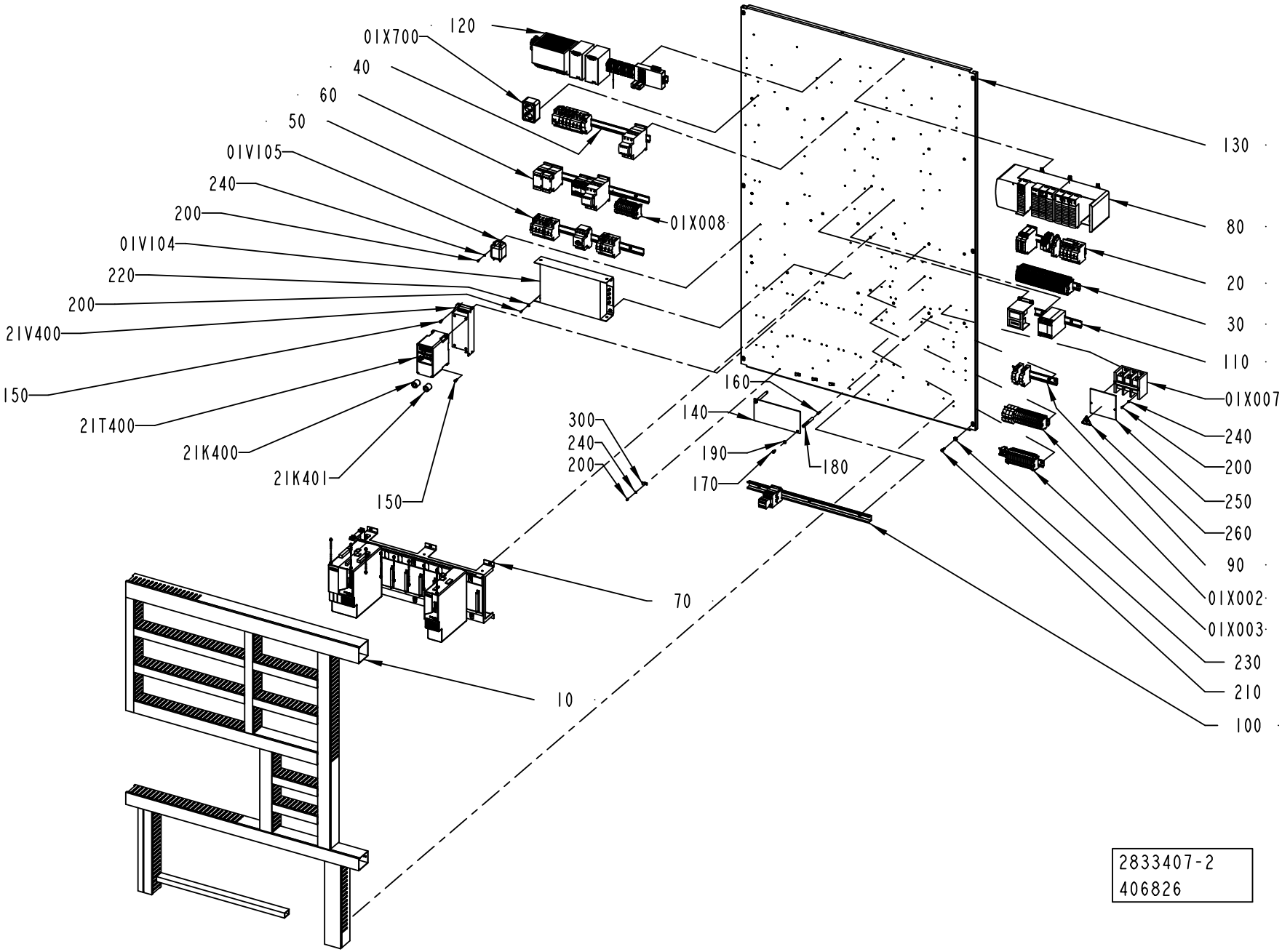
01X700
120
40
60
50
01V105
240
200
01V104
220
200
21V400
150
21T400
21K400
21K401
150
01X008
300
240
200
160
140
190
180
170
130
80
20
30
110
01X007
240
200
250
260
90
01X002
01X003
230
210
100
70
10
2833407-2
406826

ECM: 406843 - 20091001
Group number: 2833407-0200
Assembly Drawing: 2833407-2_1_AA

| Pos | Part No | UN | Qty | Description | Page No |
|---|---|---|---|---|---|
| - | | | | | |
| 010 | 2833412-0100 | | 1 | CABLE DUCT | **7-11** |
| 020 | 2835464-0200 | | 1 | DISTRIBUTION TERMINAL | **7-13** |
| 030 | 2839229-0100 | | 1 | DISTRIBUTION TERMINAL | **7-15** |
| 040 | 2835459-0200 | | 1 | FUSE BOARD 1 | **7-29** |
| 050 | 2835460-0100 | | 1 | FUSE BOARD 2 | **7-31** |
| 060 | 2835461-0100 | | 1 | FUSE BOARD 3 | **7-33** |
| 070 | 2835462-0200 | | 1 | MOTOR DRIVE CONTROL | **7-35** |
| 080 | 2835458-0200 | | 1 | PLC | **7-37** |
| 090 | 2839222-0100 | | 1 | PLINTH | **7-39** |
| 100 | 2835463-0100 | | 1 | PLINTH | **7-41** |
| 110 | 2839221-0100 | | 1 | PLINTH | **7-43** |
| 120 | 2835457-0100 | | 1 | POWER SUPPLY UNIT | **7-45** |
| 130 | 2833404-0000 | | 1 | MOUNTING PLATE | |
| 140 | 2845320-0000 | | 1 | PROTECTION | |
| 150 | 312115-0327 | | 8 | Z3REW ISO4762 M5X12 A4 80 | |
| 160 | 312318-0370 | | 2 | SCREW ISO4029 M6X20 A4 | |
| 170 | 312125-0366 | | 2 | SCREW ISO 1207 M6X12 A4 | |
| 180 | 1038275-0012 | | 2 | SPACER | |
| 190 | 315105-0153 | | 2 | WASHER BRB 6,4X12 RFR | |
| 200 | 312125-0289 | | 14 | SCREW ISO 1207 M4X10 A4 | |
| 210 | 312115-0368 | | 6 | SCREW ISO4762 M6X16 A4 80 | |
| 220 | 90005-0082 | | 4 | WASHER PLAIN ROUND 4,3(M4)/12,H=1 | |
| 230 | 315105-0165 | | 6 | WASHER BRB 8,4X16 RFR | |
| 240 | 315105-0136 | | 10 | WASHER BRB 4,3X8 RFR | |
| 250 | 3047311-0000 | | 1 | PROTECTION | |
| 260 | 359705-0015 | | 1 | WARNING SIGN ISO, RISK OF ELECTRIC SHOCK | |
| 300 | 90165-0007 | | 4 | PIPE CLIP FOR TUBE D=8 MM | |
| 21K400 | 90458-1140 | | 1 | FERRITE, RI-26-28-13 | |
| 21K401 | 90458-1140 | | 1 | FERRITE, RI-26-28-13 | |
| 21T400 | 90459-3450 | | 1 | VARIABLE FREQUENCY DRIVE 22A-A4P5N104 | |
| 01V104 | 90459-2549 | | 1 | AC LINE FILTER 3-PHASE 30A, 2090-XXLF-X3 | |
| 01V105 | 90459-3931 | | 1 | LINE FILTER, 3EP1, 3A 120/250 VAC | |
| 21V400 | 90459-3460 | | 1 | FOOTPRINT FILTER 22-RF010-AL | |
| 01X002 | 2839223-0100 | | 1 | PLINTH | **7-49** |
| 01X003 | 2839224-0100 | | 1 | PLINTH | **7-51** |
| 01X007 | 90459-0959 | | 1 | DISTRIBUTOR BLOCK 1492-PD3163 | |
| 01X008 | 3046886-0100 | | 1 | DISTRIBUTION TERMINAL | **7-53** |
| 01X700 | 90001-0033 | | 1 | WALL SOCKET, E1834666 | |

| Pos | Part No | UN | Qty | Description | Page No |
|---|---|---|---|---|---|

Machine Type | Group Description | Used-In | Group Number | Page No

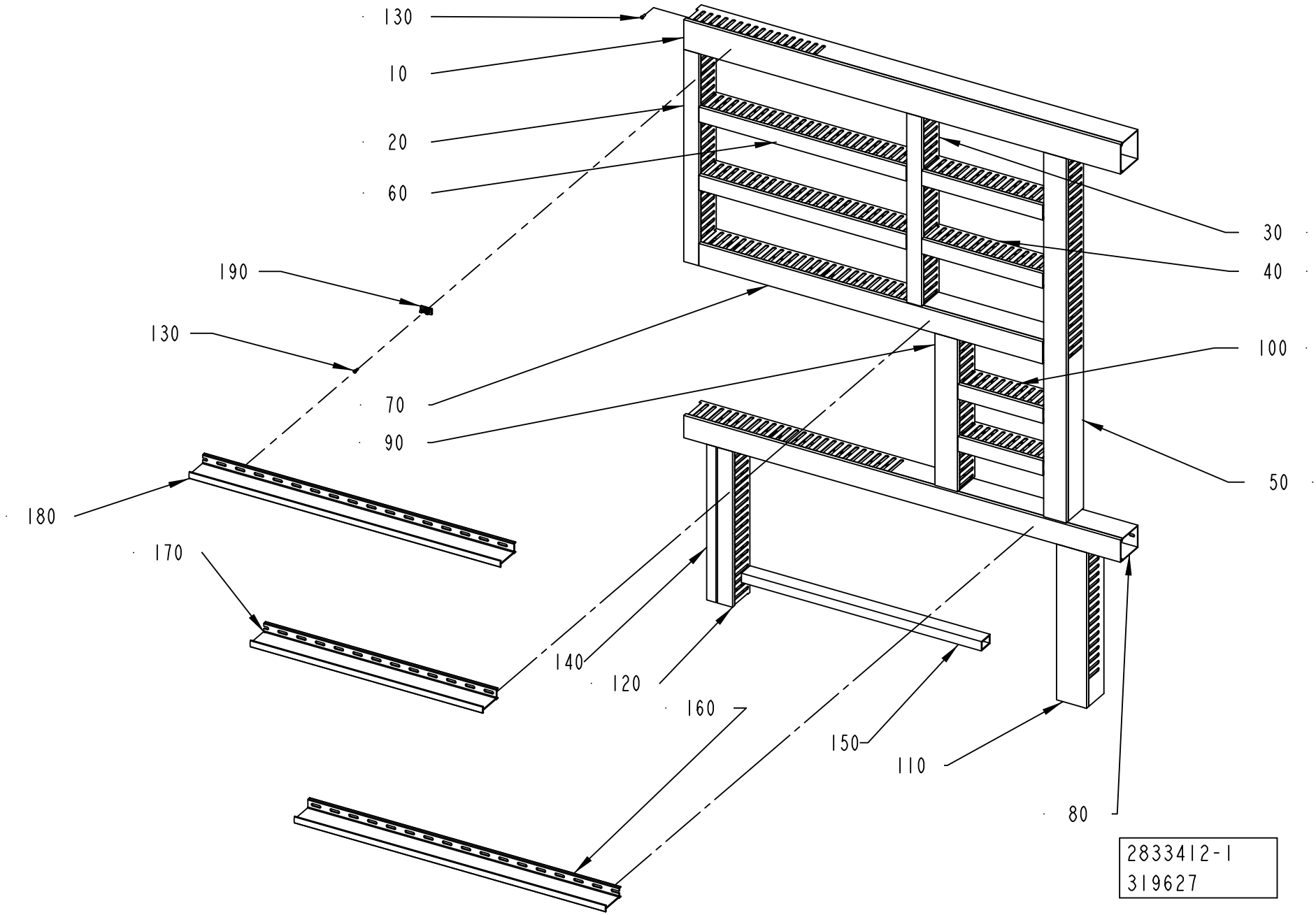
130
10
20
60
190
130
70
90
180
170
140
120
160
150
110
80
30
40
100
50
2833412-1
319627

ECM: 324219 - 20080407
Group number: 2833412-0100
Assembly Drawing: 2833412-1_1_AB

| Pos | Part No | UN | Qty | Description | Page No |
|---|---|---|---|---|---|
| - | | | | | |
| 010 | 2838462-0000 | | 1 | CABLE DUCT | |
| 020 | 2838463-0000 | | 1 | CABLE DUCT | |
| 030 | 2838464-0000 | | 1 | CABLE DUCT | |
| 040 | 2838465-0000 | | 2 | CABLE DUCT | |
| 050 | 2838466-0000 | | 1 | CABLE DUCT | |
| 060 | 2838467-0000 | | 2 | CABLE DUCT | |
| 070 | 2838468-0000 | | 1 | CABLE DUCT | |
| 080 | 2838469-0000 | | 1 | CABLE DUCT | |
| 090 | 2838470-0000 | | 1 | CABLE DUCT | |
| 100 | 2838471-0000 | | 2 | CABLE DUCT | |
| 110 | 2838472-0000 | | 1 | CABLE DUCT | |
| 120 | 2838473-0000 | | 1 | CABLE DUCT | |
| 130 | 90287-0124 | | 67 | SCREW PAN HEAD MSCS M4X12 NYLON | |
| 140 | 2838474-0000 | | 1 | CABLE DUCT | |
| 150 | 2838475-0000 | | 1 | CABLE DUCT | |
| 160 | 2841405-0000 | | 1 | DIVIDER | |
| 170 | 2841406-0000 | | 1 | DIVIDER | |
| 180 | 2921902-0000 | | 1 | DIVIDER | |
| 190 | 90600-2830 | | 8 | FASTENING ELEMENT, BLOCKSEP-E 01026 | |

| Pos | Part No | UN | Qty | Description | Page No |
|---|---|---|---|---|---|

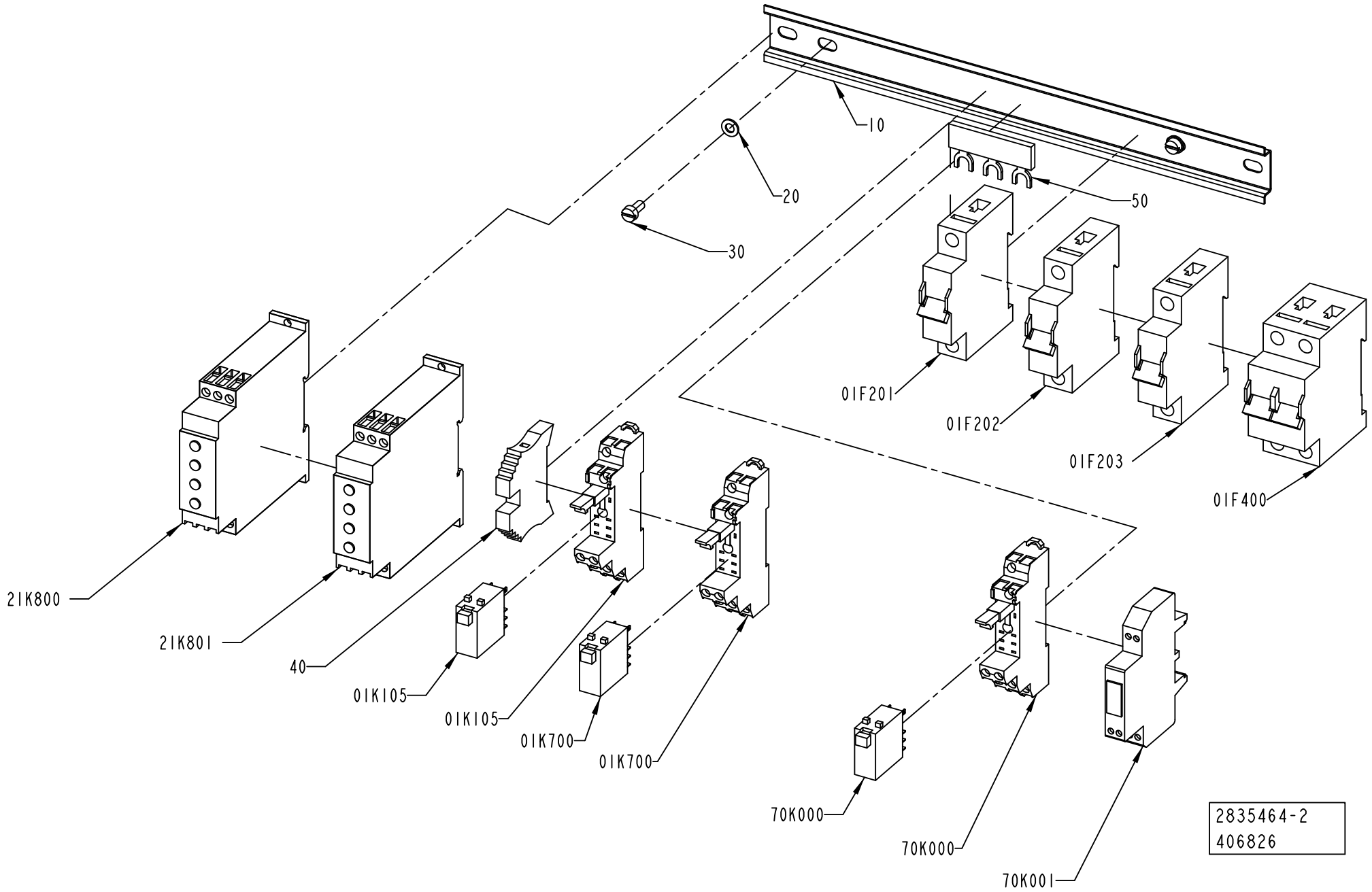
10
20
30
50
01F201
01F202
01F203
01F400
21K800
21K801
40
01K105
01K105
01K700
01K700
70K000
70K000
70K001
2835464-2
406826

ECM: 409327 - 20091001
Group number: 2835464-0200
Assembly Drawing: 2835464-2_1_AA

| Pos | Part No | UN | Qty | Description | Page No |
|---|---|---|---|---|---|
| - | | | | | |
| 010 | 2838478-0000 | | 1 | RAIL | |
| 020 | 315105-0146 | | 2 | WASHER BRB 5,3X10 RFR | |
| 030 | 312125-0325 | | 2 | SCREW ISO 1207 M5X10 A4 | |
| 040 | 353031-0203 | | 1 | END SUPPORT, WEW 35/2 | |
| 050 | 90600-0203 | | 1 | COMMONING BUSBAR, 1-PH 85A | |
| 01F201 | 354000-0040 | | 1 | MINIATURE CIRCUIT BREAKER, FAZ-C4/1 | |
| 01F202 | 354000-0060 | | 1 | MINIATURE CIRCUIT BREAKER, FAZ-C6/1 | |
| 01F203 | 354000-0040 | | 1 | MINIATURE CIRCUIT BREAKER, FAZ-C4/1 | |
| 01F400 | 354001-0040 | | 1 | MINIATURE CIRCUIT BREAKER, FAZ-C4/2 | |
| 01K105 | 90119-0108 | | 1 | RELAY OMRON G2R-2-SNI-24DC | |
| | *90129-0018* | | *1* | *BASE, P2RF-08-E* | |
| 01K105 | 90129-0018 | | 1 | BASE, P2RF-08-E | |
| 01K700 | 90119-0108 | | 1 | RELAY OMRON G2R-2-SNI-24DC | |
| | *90129-0018* | | *1* | *BASE, P2RF-08-E* | |
| 01K700 | 90129-0018 | | 1 | BASE, P2RF-08-E | |
| 21K800 | 90600-4731 | | 1 | RELAY | |
| 21K801 | 90600-4731 | | 1 | RELAY | |
| 70K000 | 90119-0108 | | 1 | RELAY OMRON G2R-2-SNI-24DC | |
| | *90129-0018* | | *1* | *BASE, P2RF-08-E* | |
| 70K000 | 90129-0018 | | 1 | BASE, P2RF-08-E | |
| 70K001 | 90459-2739 | | 1 | OPTO-RELAY 50085, IN / OUT 4-53VDC 1A | |

| Pos | Part No | UN | Qty | Description | Page No |
|---|---|---|---|---|---|

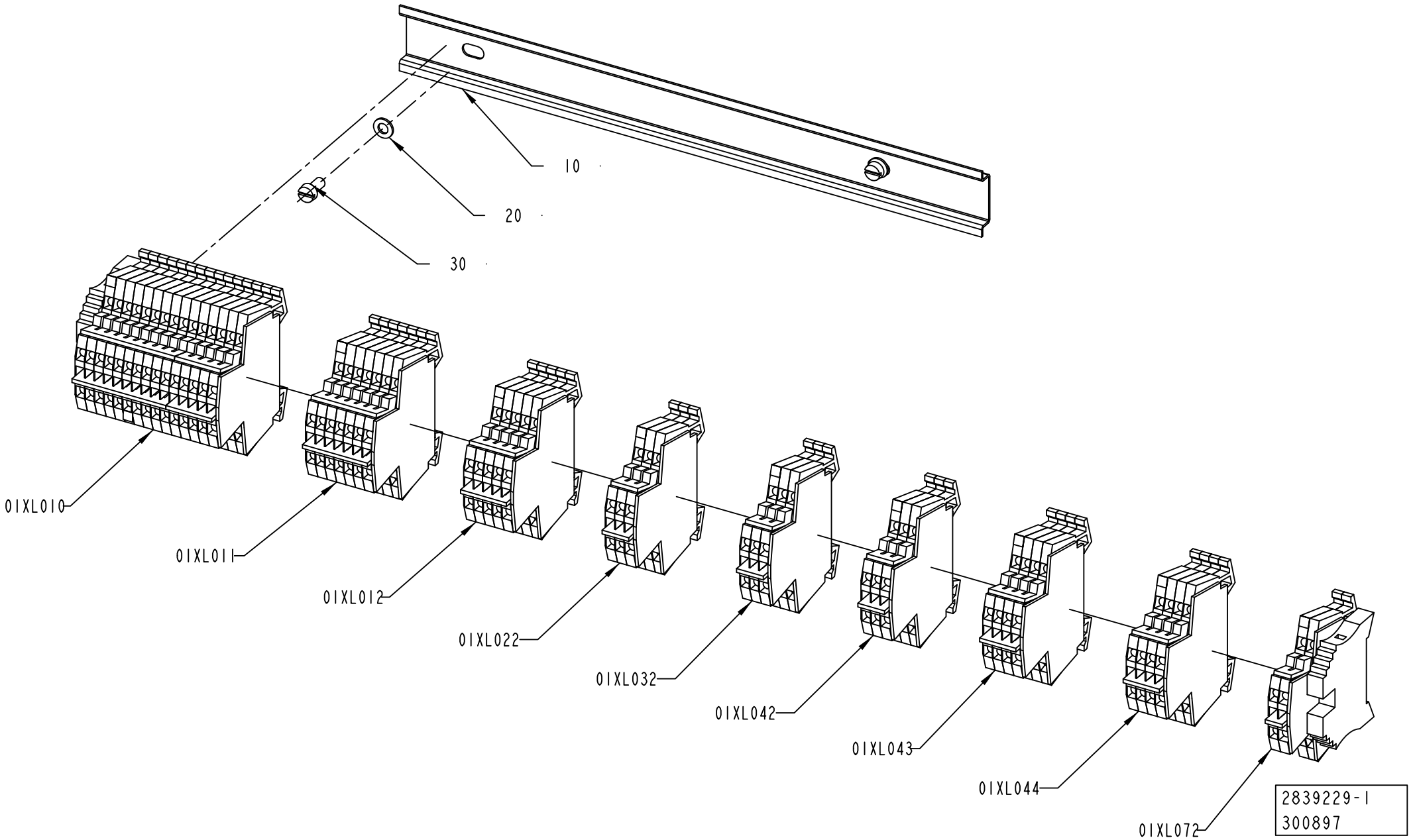
10
20
30
01XL010
01XL011
01XL012
01XL022
01XL032
01XL042
01XL043
01XL044
01XL072
2839229-1
300897

ECM: 302049 - 20070528
Group number: 2839229-0100
Assembly Drawing: 2839229-1_1_AB

| Pos | Part No | UN | Qty | Description | Page No |
|---|---|---|---|---|---|
| - | | | | | |
| 010 | 2838478-0000 | | 1 | RAIL | |
| 020 | 315105-0146 | | 2 | WASHER BRB 5,3X10 RFR | |
| 030 | 312125-0325 | | 2 | SCREW ISO 1207 M5X10 A4 | |
| 01XL072 | 2840917-0100 | | 1 | PLINTH | **7-17** |
| 01XL044 | 2840915-0100 | | 1 | PLINTH | **7-19** |
| 01XL043 | 2840915-0100 | | 1 | PLINTH | **7-19** |
| 01XL042 | 2840911-0100 | | 1 | PLINTH | **7-21** |
| 01XL032 | 2840911-0100 | | 1 | PLINTH | **7-21** |
| 01XL022 | 2840911-0100 | | 1 | PLINTH | **7-21** |
| 01XL012 | 2840910-0100 | | 1 | PLINTH | **7-23** |
| 01XL011 | 2840909-0100 | | 1 | PLINTH | **7-25** |
| 01XL010 | 2839230-0100 | | 1 | PLINTH | **7-27** |

| Pos | Part No | UN | Qty | Description | Page No |
|---|---|---|---|---|---|

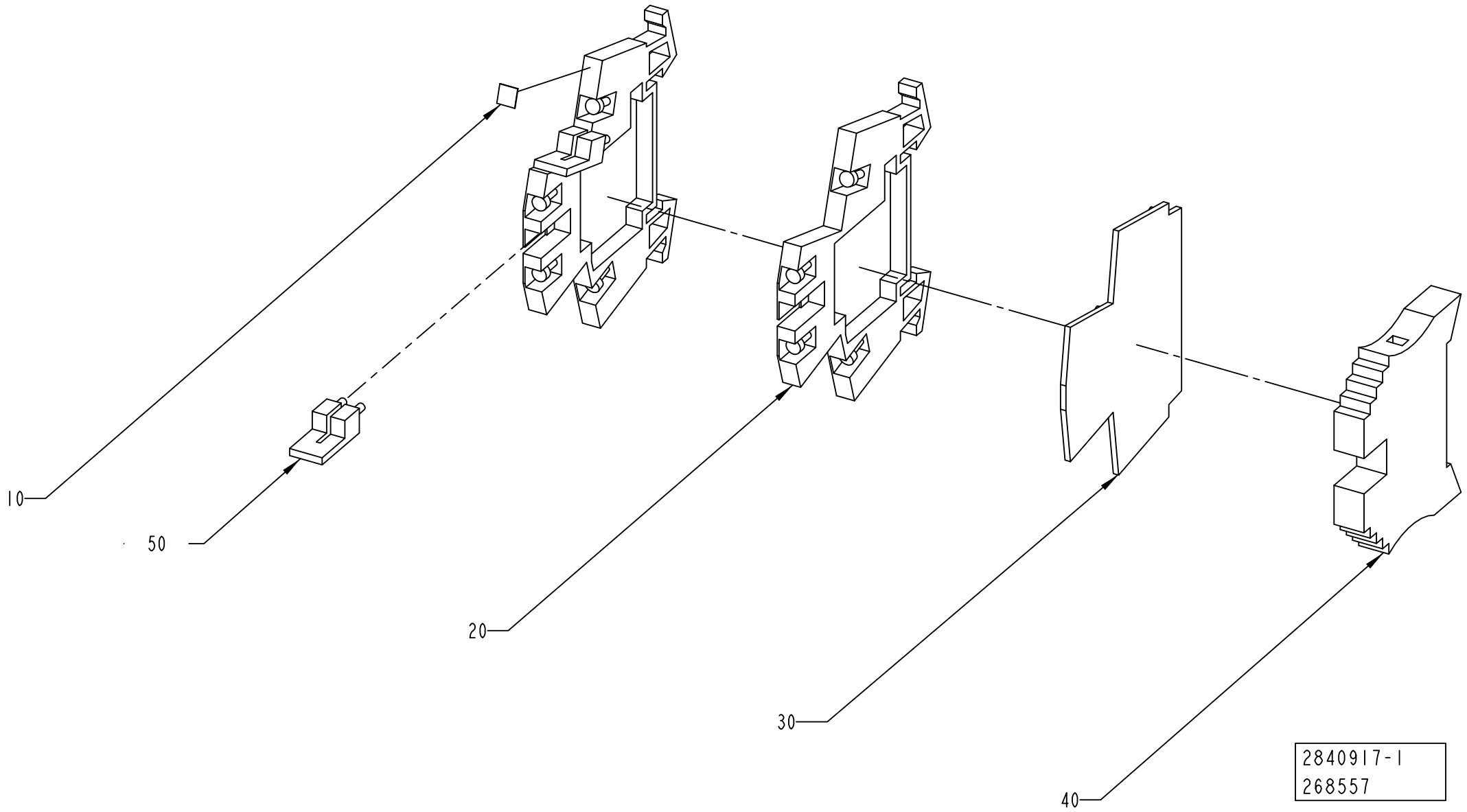
10
50
20
30
40
2840917-1
268557

ECM: 272048 - 20060925
Group number: 2840917-0100
Assembly Drawing: 2840917-1_1_AA

| Pos | Part No | UN | Qty | Description | Page No |
|---|---|---|---|---|---|
| - | | | | | |
| 010 | 359011-0807 | | 1 | MARKING, DEK 5 FW 1-50 | |
| 020 | 90077-0113 | | 2 | FEED THROUGH TERMINAL, 10-00102150-1 | |
| 030 | 353032-0009 | | 1 | END PLATE, WAP FOR WDK | |
| 040 | 353031-0203 | | 1 | END SUPPORT, WEW 35/2 | |
| 050 | 353034-0030 | | 2 | BRIDGE CONNECTOR WQV 2,5/10, 10544.6 | |

| Pos | Part No | UN | Qty | Description | Page No |
|---|---|---|---|---|---|

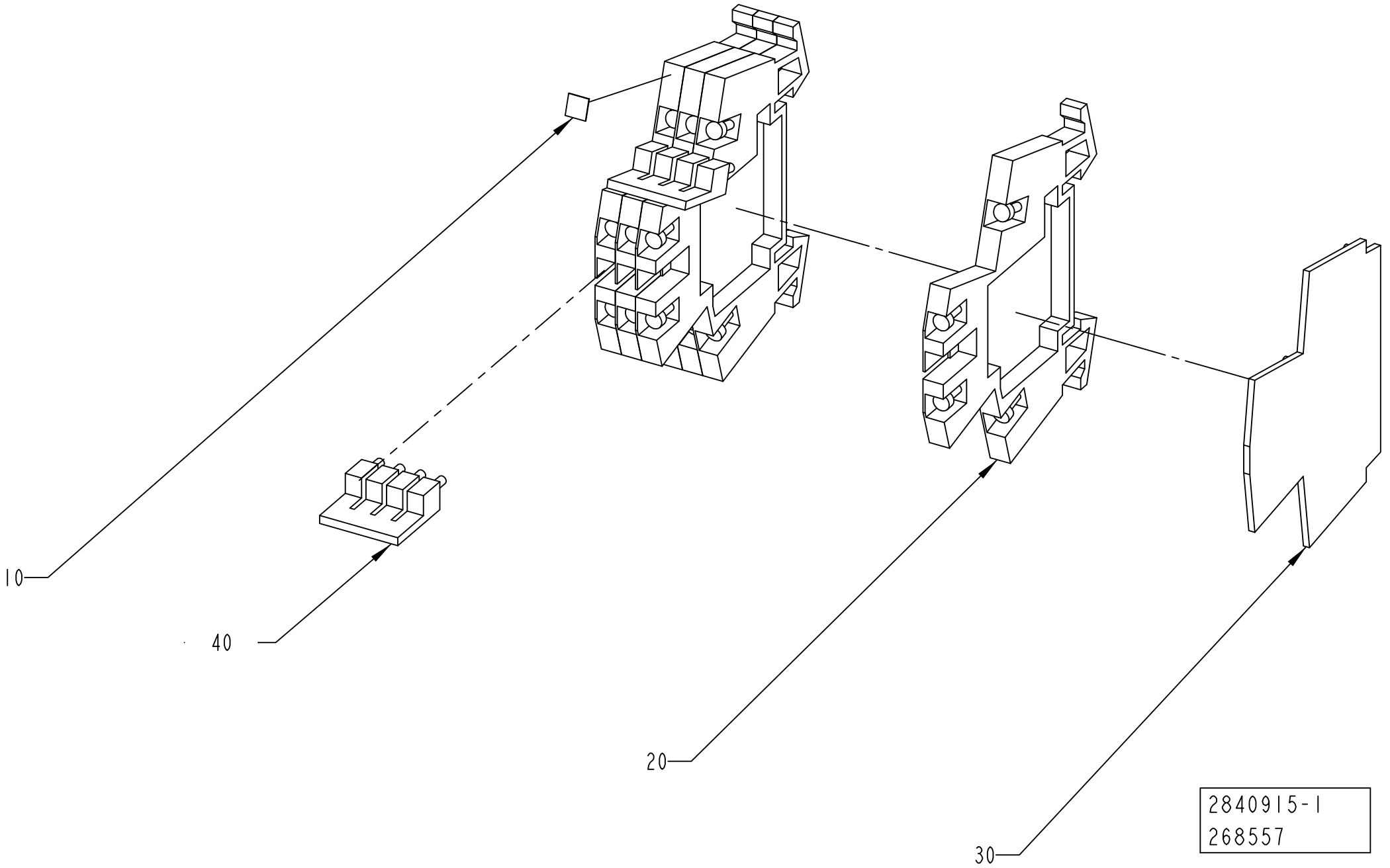
10
40
20
30
2840915-1
268557

ECM: 272047 - 20060925
Group number: 2840915-0100
Assembly Drawing: 2840915-1_1_AA

| Pos | Part No | UN | Qty | Description | Page No |
|---|---|---|---|---|---|
| - | | | | | |
| 010 | 359011-0807 | | 1 | MARKING, DEK 5 FW 1-50 | |
| 020 | 90077-0113 | | 4 | FEED THROUGH TERMINAL, 10-00102150-1 | |
| 030 | 353032-0009 | | 1 | END PLATE, WAP FOR WDK | |
| 040 | 353034-0030 | | 2 | BRIDGE CONNECTOR WQV 2,5/10, 10544.6 | |

| Pos | Part No | UN | Qty | Description | Page No |
|---|---|---|---|---|---|

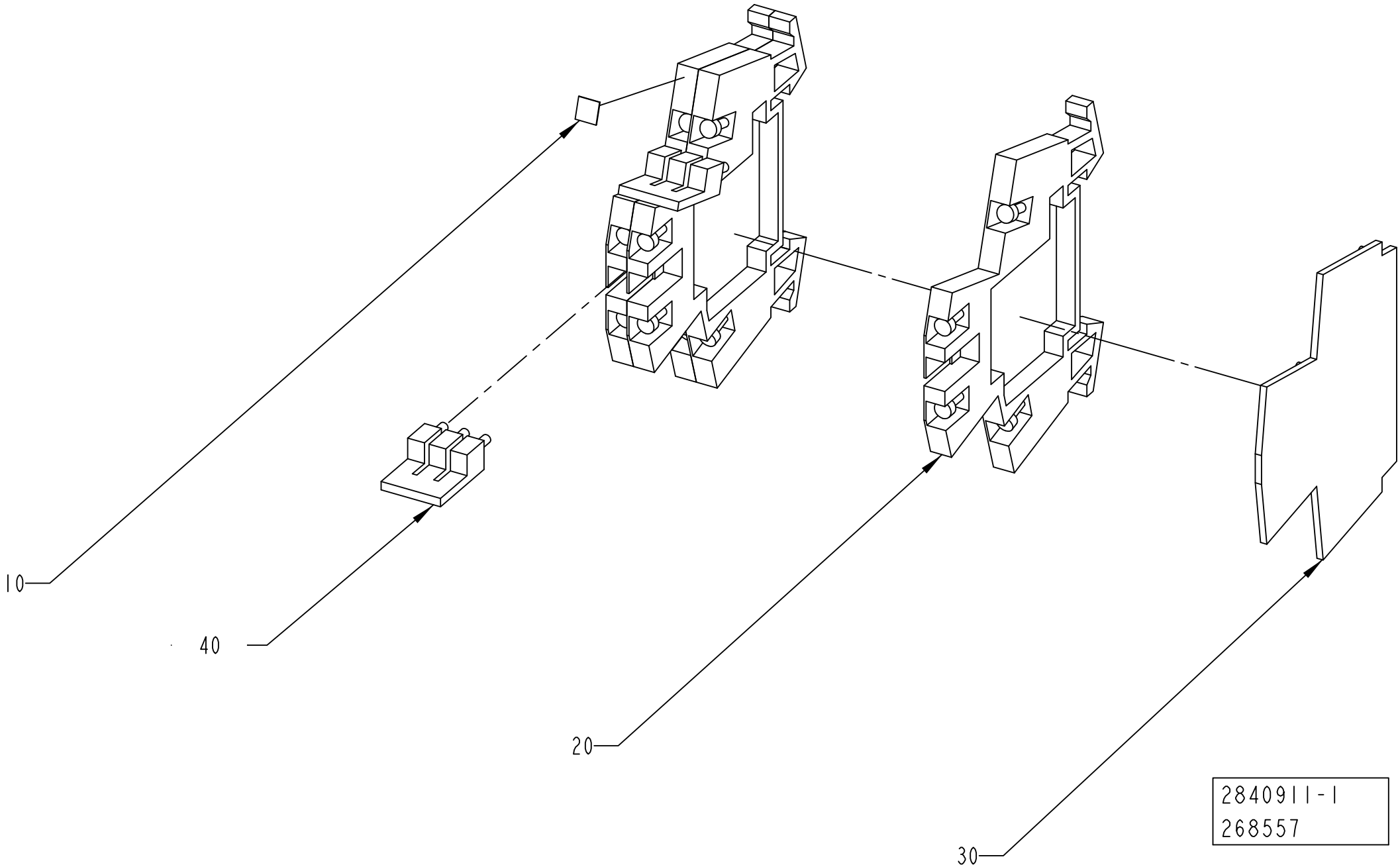
10
40
20
30
2840911-1
268557

ECM: 272046 - 20060925
Group number: 2840911-0100
Assembly Drawing: 2840911-1_1_AA

| Pos | Part No | UN | Qty | Description | Page No |
|---|---|---|---|---|---|
| - | | | | | |
| 010 | 359011-0807 | | 1 | MARKING, DEK 5 FW 1-50 | |
| 020 | 90077-0113 | | 3 | FEED THROUGH TERMINAL, 10-00102150-1 | |
| 030 | 353032-0009 | | 1 | END PLATE, WAP FOR WDK | |
| 040 | 353034-0030 | | 2 | BRIDGE CONNECTOR WQV 2,5/10, 10544.6 | |

| Pos | Part No | UN | Qty | Description | Page No |
|---|---|---|---|---|---|

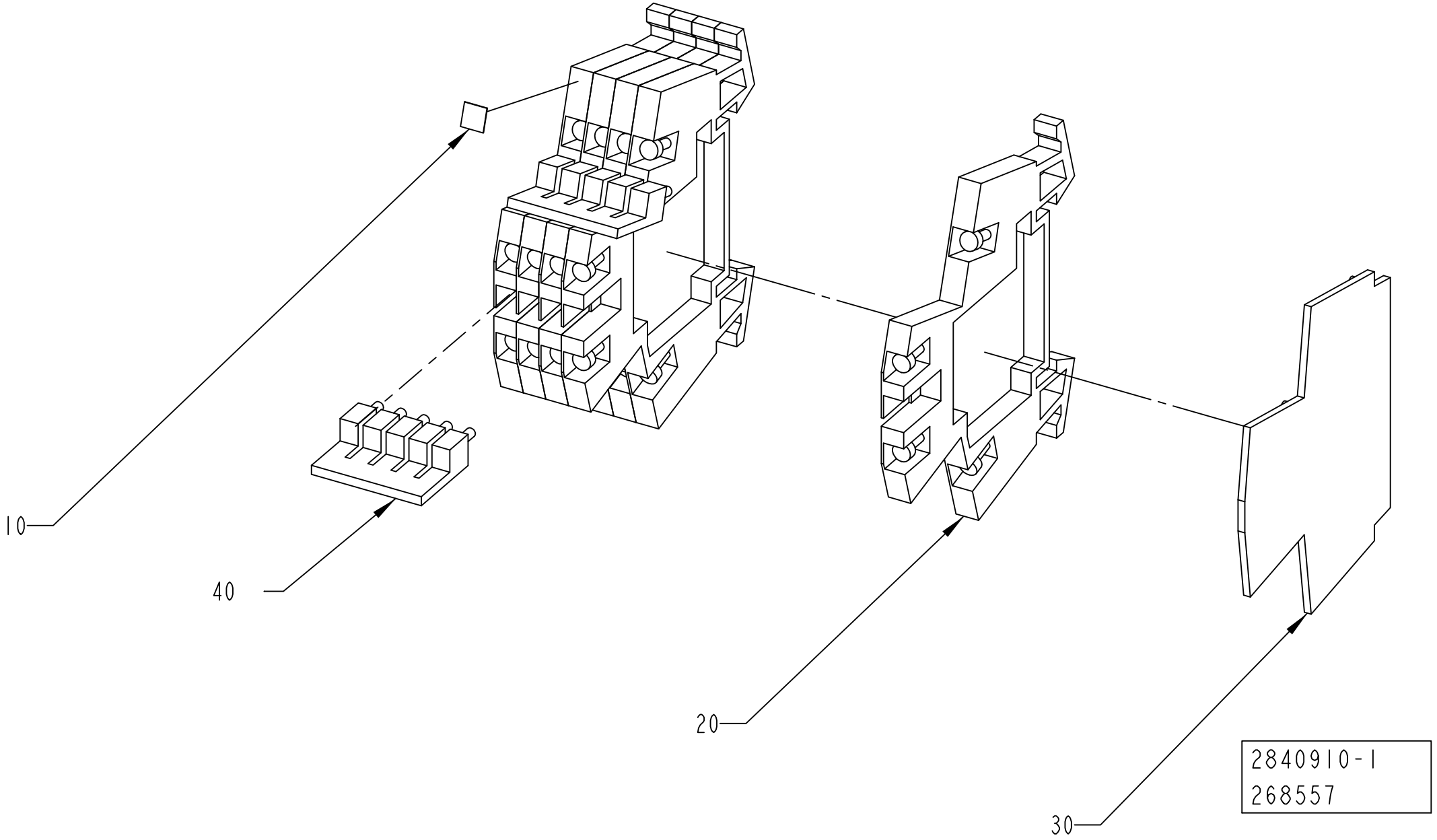
10
40
20
30
2840910-1
268557

ECM: 272045 - 20060925
Group number: 2840910-0100
Assembly Drawing: 2840910-1_1_AA

| Pos | Part No | UN | Qty | Description | Page No |
|---|---|---|---|---|---|
| - | | | | | |
| 010 | 359011-0807 | | 1 | MARKING, DEK 5 FW 1-50 | |
| 020 | 90077-0113 | | 5 | FEED THROUGH TERMINAL, 10-00102150-1 | |
| 030 | 353032-0009 | | 1 | END PLATE, WAP FOR WDK | |
| 040 | 353034-0030 | | 2 | BRIDGE CONNECTOR WQV 2,5/10, 10544.6 | |

| Pos | Part No | UN | Qty | Description | Page No |
|---|---|---|---|---|---|

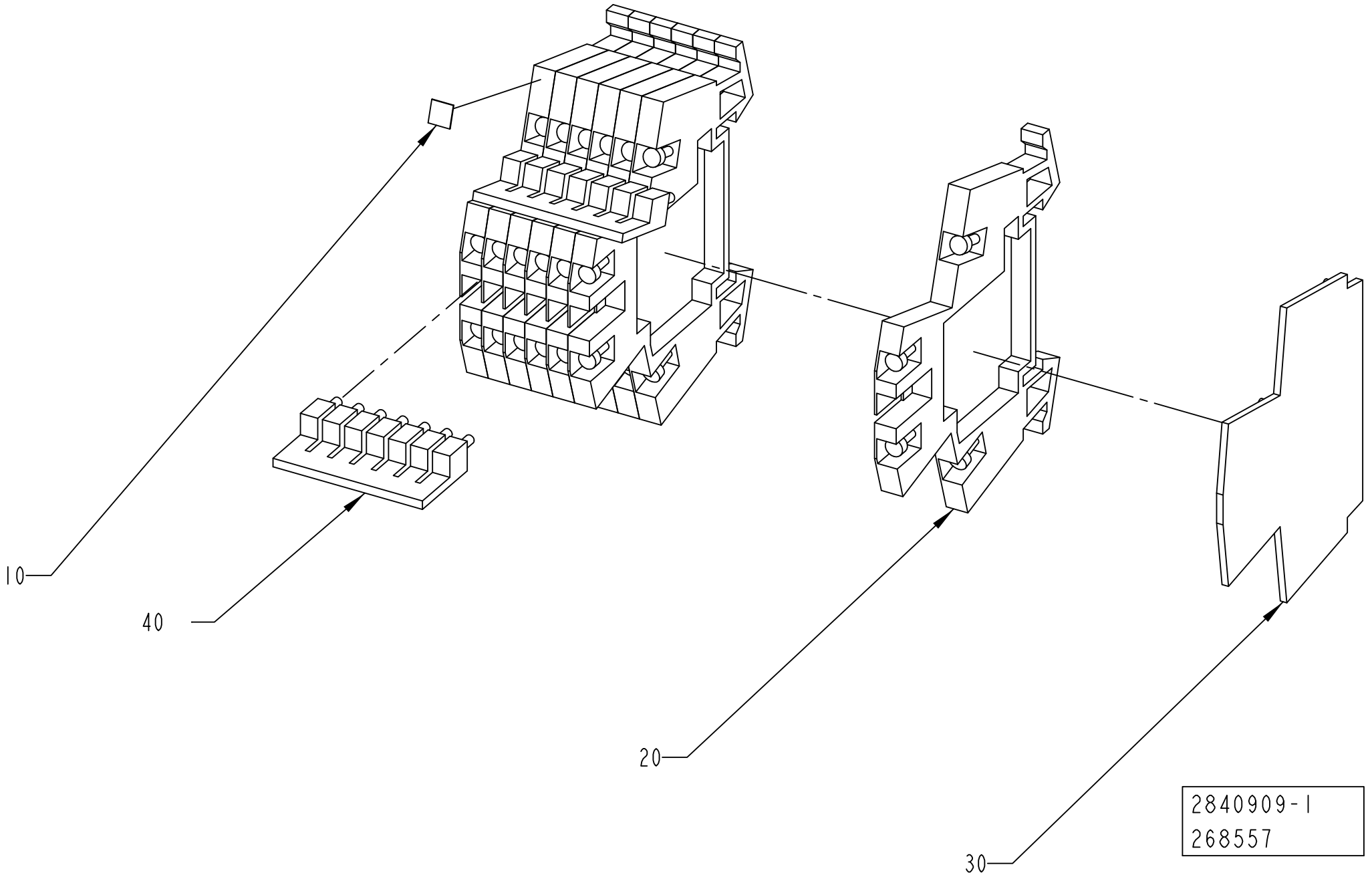
10
40
20
30
2840909-1
268557

ECM: 272044 - 20060925
Group number: 2840909-0100
Assembly Drawing: 2840909-1_1_AA

| Pos | Part No | UN | Qty | Description | Page No |
|---|---|---|---|---|---|
| - | | | | | |
| 010 | 359011-0807 | | 1 | MARKING, DEK 5 FW 1-50 | |
| 020 | 90077-0113 | | 7 | FEED THROUGH TERMINAL, 10-00102150-1 | |
| 030 | 353032-0009 | | 1 | END PLATE, WAP FOR WDK | |
| 040 | 353034-0030 | | 2 | BRIDGE CONNECTOR WQV 2,5/10, 10544.6 | |

| Pos | Part No | UN | Qty | Description | Page No |
|---|---|---|---|---|---|

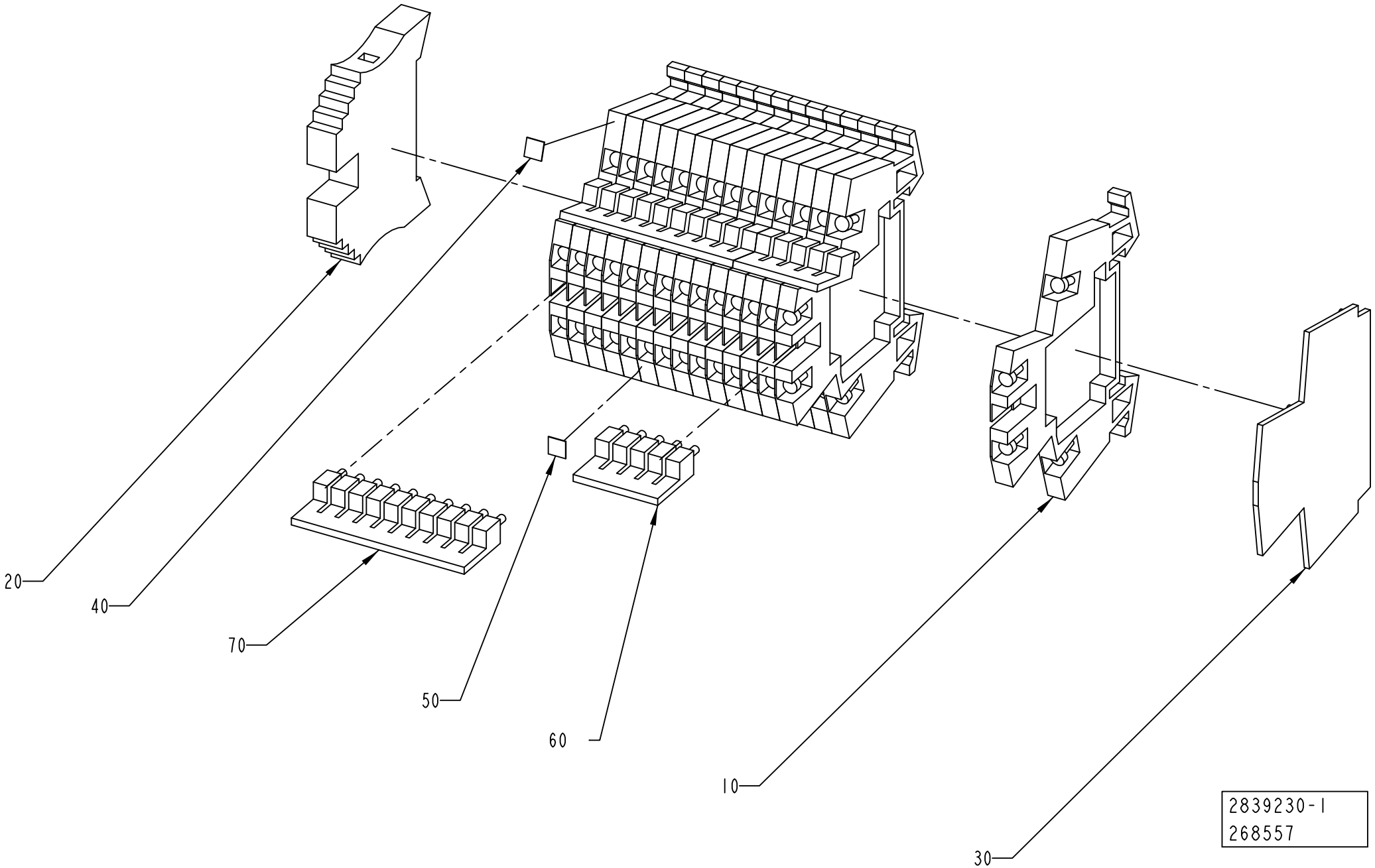
20
40
70
50
60
10
30
2839230-1
268557

ECM: 272043 - 20060925
Group number: 2839230-0100
Assembly Drawing: 2839230-1_1_AA

| Pos | Part No | UN | Qty | Description | Page No |
|---|---|---|---|---|---|
| - | | | | | |
| 010 | 90077-0113 | | 15 | FEED THROUGH TERMINAL, 10-00102150-1 | |
| 020 | 353031-0203 | | 1 | END SUPPORT, WEW 35/2 | |
| 030 | 353032-0009 | | 1 | END PLATE, WAP FOR WDK | |
| 040 | 359011-0807 | | 1 | MARKING, DEK 5 FW 1-50 | |
| 050 | 359011-0808 | | 1 | MARKING, DEK 5FW 51-100 | |
| 060 | 353034-0030 | | 2 | BRIDGE CONNECTOR WQV 2,5/10, 10544.6 | |
| 070 | 353034-0030 | | 2 | BRIDGE CONNECTOR WQV 2,5/10, 10544.6 | |

| Pos | Part No | UN | Qty | Description | Page No |
|---|---|---|---|---|---|

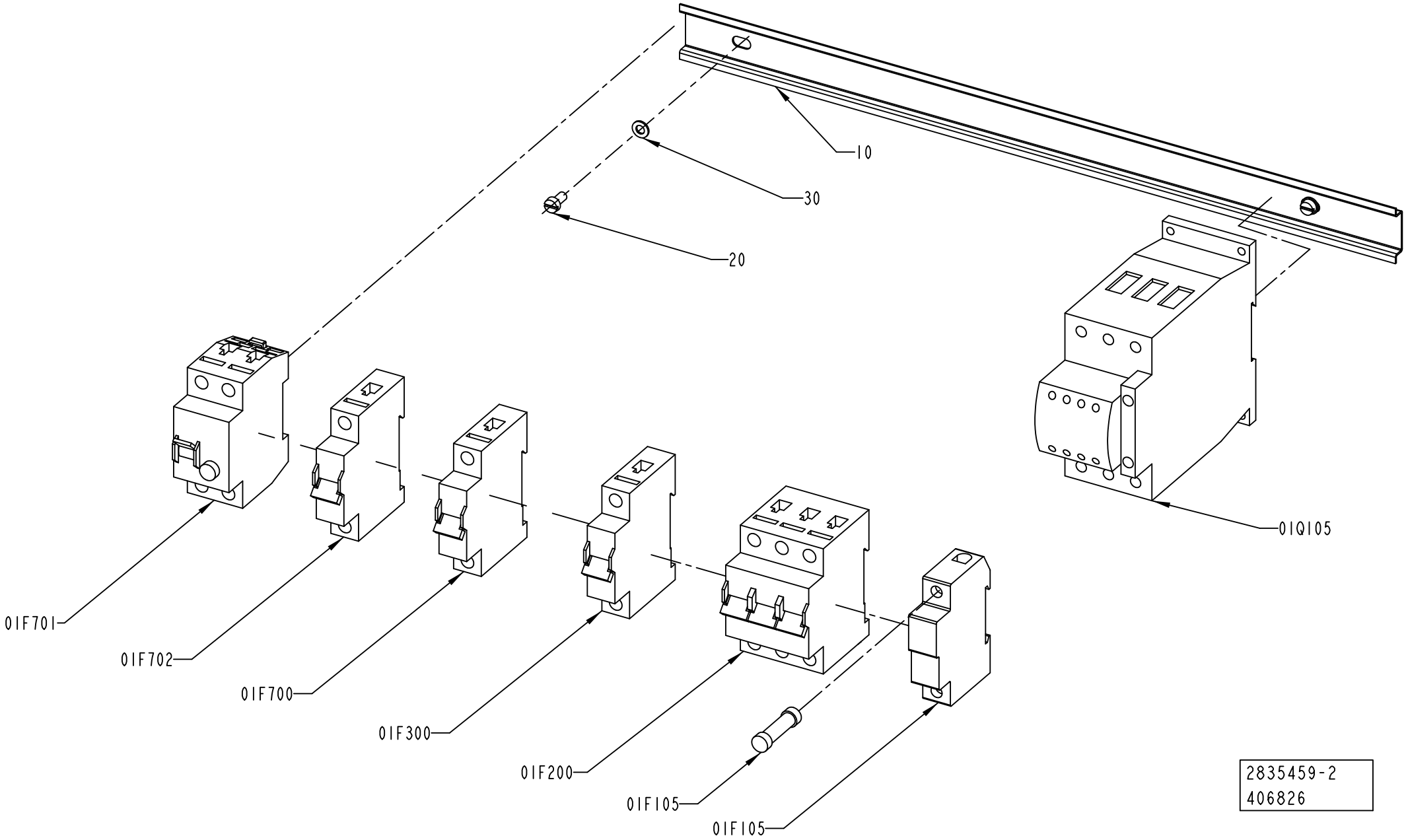


2835459-2
406826

ECM: 406846 - 20091001
Group number: 2835459-0200
Assembly Drawing: 2835459-2_1_AA

| Pos | Part No | UN | Qty | Description | Page No |
|---|---|---|---|---|---|
| - | | | | | |
| 010 | 2838477-0000 | | 1 | RAIL | |
| 020 | 312125-0325 | | 2 | SCREW ISO 1207 M5X10 A4 | |
| 030 | 315105-0146 | | 2 | WASHER BRB 5,3X10 RFR | |
| 01F105 | 90458-2510 | | 1 | FUSE, ATDR6 | |
| 01F105 | 90458-2507 | | 1 | FUSE HOLDER, USBCC1 | |
| 01F200 | 354002-0060 | | 1 | MINIATURE CIRCUIT BREAKER, FAZ-C6/3 | |
| 01F300 | 354000-0040 | | 1 | MINIATURE CIRCUIT BREAKER, FAZ-C4/1 | |
| 01F700 | 354000-0060 | | 1 | MINIATURE CIRCUIT BREAKER, FAZ-C6/1 | |
| 01F701 | 90459-5811 | | 1 | RESIDUAL CURRENT DEVICE, FI-25/2/003-A | |
| 01F702 | 354000-0100 | | 1 | MINIATURE CIRCUIT BREAKER, FAZ-C10/1 | |
| 01Q105 | 90600-1759 | | 1 | CONTACTOR22KW24VDCDILM50-22+DILM65-XIP2X | |

| Pos | Part No | UN | Qty | Description | Page No |
|---|---|---|---|---|---|

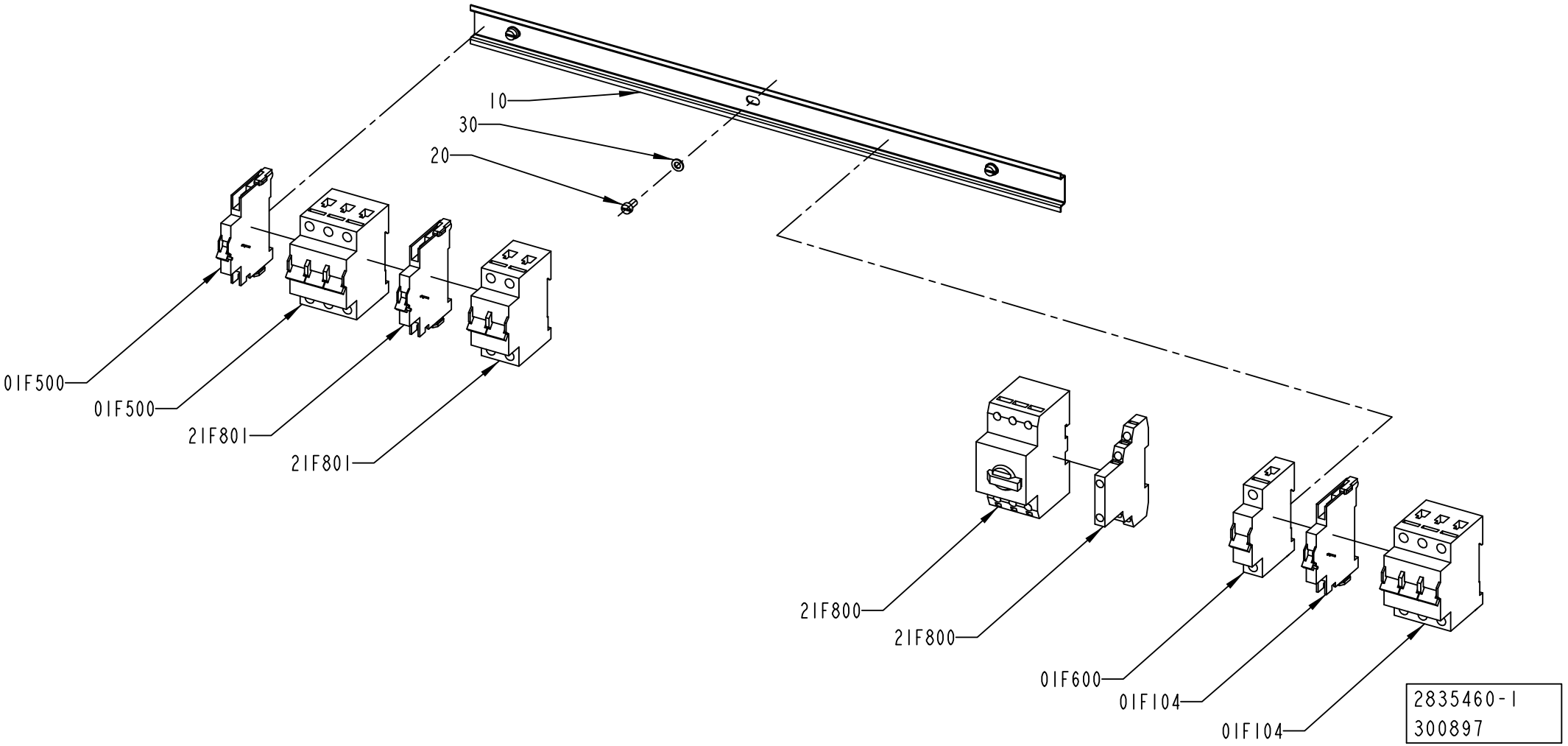
10
30
20
01F500
01F500
21F801
21F801
21F800
21F800
01F600
01F104
01F104
2835460-1
300897

ECM: 302046 - 20070528
Group number: 2835460-0100
Assembly Drawing: 2835460-1_1_AB

| Pos | Part No | UN | Qty | Description | Page No |
|---|---|---|---|---|---|
| - | | | | | |
| 010 | 2835452-0000 | | 1 | RAIL | |
| 020 | 312125-0325 | | 3 | SCREW ISO 1207 M5X10 A4 | |
| 030 | 315105-0146 | | 3 | WASHER BRB 5,3X10 RFR | |
| 01F104 | 90459-5813 | | 1 | AUXILIARY CONTACT, FAZ-XHIN11 | |
| 01F104 | 354002-0250 | | 1 | MINIATURE CIRCUIT BREAKER, FAZ-C25/3 | |
| 01F500 | 354002-0200 | | 1 | MINIATURE CIRCUIT BREAKER, FAZ-C20/3 | |
| 01F500 | 90459-5813 | | 1 | AUXILIARY CONTACT, FAZ-XHIN11 | |
| 01F600 | 354000-0060 | | 1 | MINIATURE CIRCUIT BREAKER, FAZ-C6/1 | |
| 21F800 | 90259-0313 | | 1 | AUXILIARY CONTACT, NHI21-PKZ0 | |
| 21F800 | 90459-5326 | | 1 | OVERLOAD PROTECTION, PKZM0-4 | |
| 21F801 | 90459-5813 | | 1 | AUXILIARY CONTACT, FAZ-XHIN11 | |
| 21F801 | 354001-0100 | | 1 | MINIATURE CIRCUIT BREAKER, FAZ-C10/2 | |

| Pos | Part No | UN | Qty | Description | Page No |
|---|---|---|---|---|---|

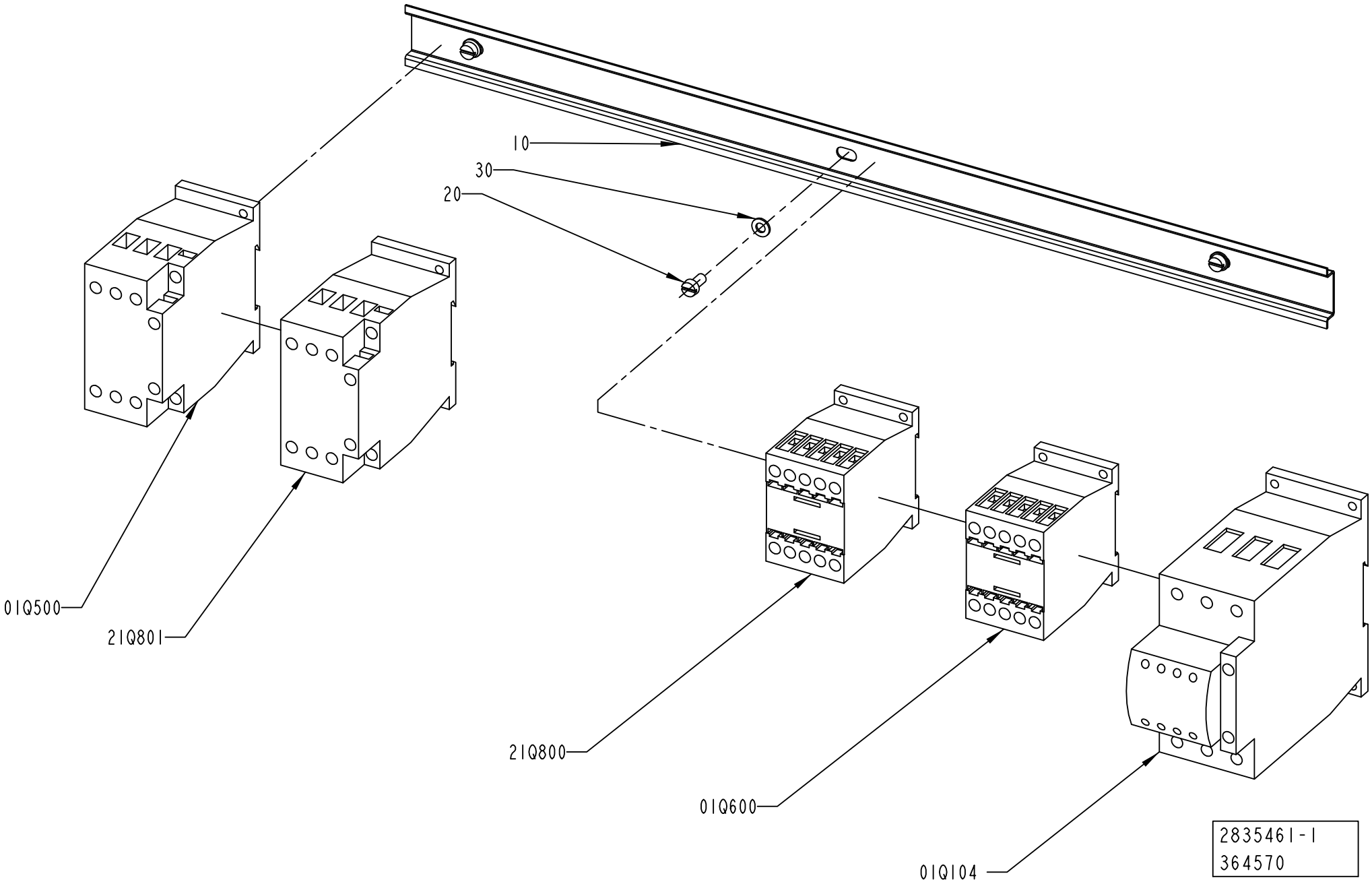
10
30
20
01Q500
21Q801
21Q800
01Q600
01Q104
2835461-1
364570

ECM: 364725 - 20090101
Group number: 2835461-0100
Assembly Drawing: 2835461-1_1_AC

| Pos | Part No | UN | Qty | Description | Page No |
|---|---|---|---|---|---|
| - | | | | | |
| 010 | 2835452-0000 | | 1 | RAIL | |
| 020 | 312125-0325 | | 3 | SCREW ISO 1207 M5X10 A4 | |
| 030 | 315105-0146 | | 3 | WASHER BRB 5,3X10 RFR | |
| 01Q104 | 90600-1759 | | 1 | CONTACTOR22KW24VDCDILM50-22+DILM65-XIP2X | |
| 01Q500 | 90459-5311 | | 1 | CONTACTOR 15KW 24VDC, DILM32-10 | |
| 01Q600 | 90459-5308 | | 1 | CONTACTOR 4KW 24VDC, DILM9-10 | |
| 21Q800 | 90459-5308 | | 1 | CONTACTOR 4KW 24VDC, DILM9-10 | |
| 21Q801 | 90459-5309 | | 1 | CONTACTOR 7,5KW 24VDC, DILM17-10 | |

| Pos | Part No | UN | Qty | Description | Page No |
|---|---|---|---|---|---|

# MOTOR DRIVE CONTROL



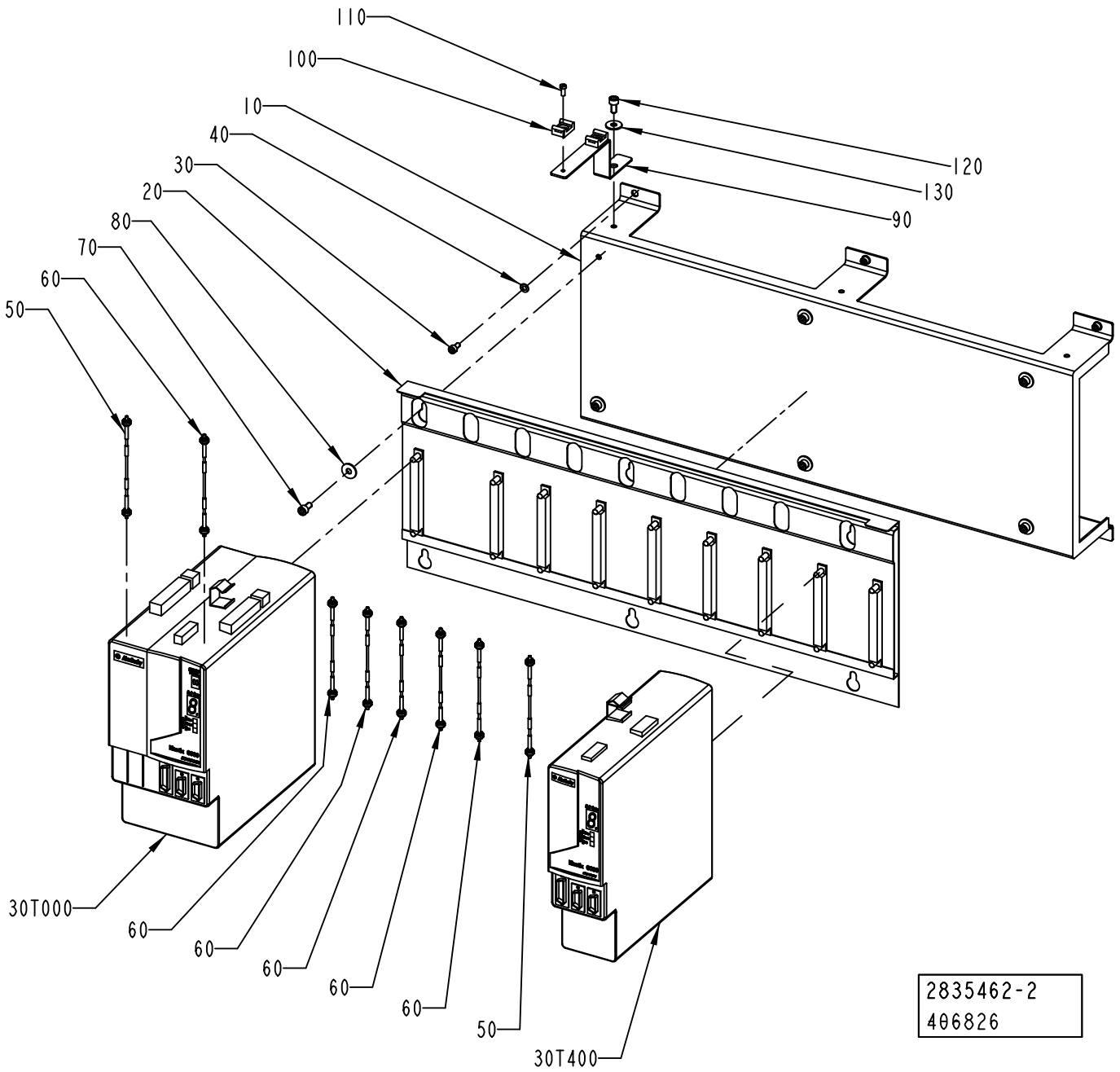

ECM: 406845 - 20091001
Group number: 2835462-0200
Assembly Drawing: 2835462-2_1_AA

| Pos | Part No | UN | Qty | Description | Page No |
|---|---|---|---|---|---|
| - | | | | | |
| 010 | 2790710-0000 | | 1 | BRACKET | |
| 020 | 90459-5195 | | 1 | SLIM POWER RAIL,KINETIX,8 AXIS,2094-PRS8 | |
| 030 | 312115-0325 | | 6 | SCREW ISO4762 M5X10 A4 80 | |
| 040 | 315105-0146 | | 6 | WASHER BRB 5,3X10 RFR | |
| 050 | 90459-2540 | | 2 | SERCOS CABLE 3.0M, 2090-SCEP3-0 | |
| 060 | 90459-2536 | | 6 | SERCOS CABLE 0.1M, 2090-SCEP0-1 | |
| 070 | 312115-0366 | | 6 | SCREW ISO4762 M6X12 A4 80 | |
| 080 | 90005-0060 | | 6 | WASHER PLAIN, RBS 6,4/M6)/18,H=1,5 | |
| 090 | 2839226-0000 | | 1 | FLANGE | |
| 100 | 352113-0203 | | 2 | ANCHOR PLATES FOR STRIPS, TYPE TM3S8-M0 | |
| 110 | 312125-0289 | | 2 | SCREW ISO 1207 M4X10 A4 | |
| 120 | 312115-0366 | | 1 | SCREW ISO4762 M6X12 A4 80 | |
| 130 | 90005-0060 | | 1 | WASHER PLAIN, RBS 6,4/M6)/18,H=1,5 | |
| 30T000 | 90600-5212 | | 1 | AXIS MOD. W. PS,2094-BC02-M02-S SERIES B | |
| 30T400 | 90600-5214 | | 1 | AXIS MOD. KINETIX 6000,2094-BM01-S SER.B | |

| Pos | Part No | UN | Qty | Description | Page No |
|---|---|---|---|---|---|

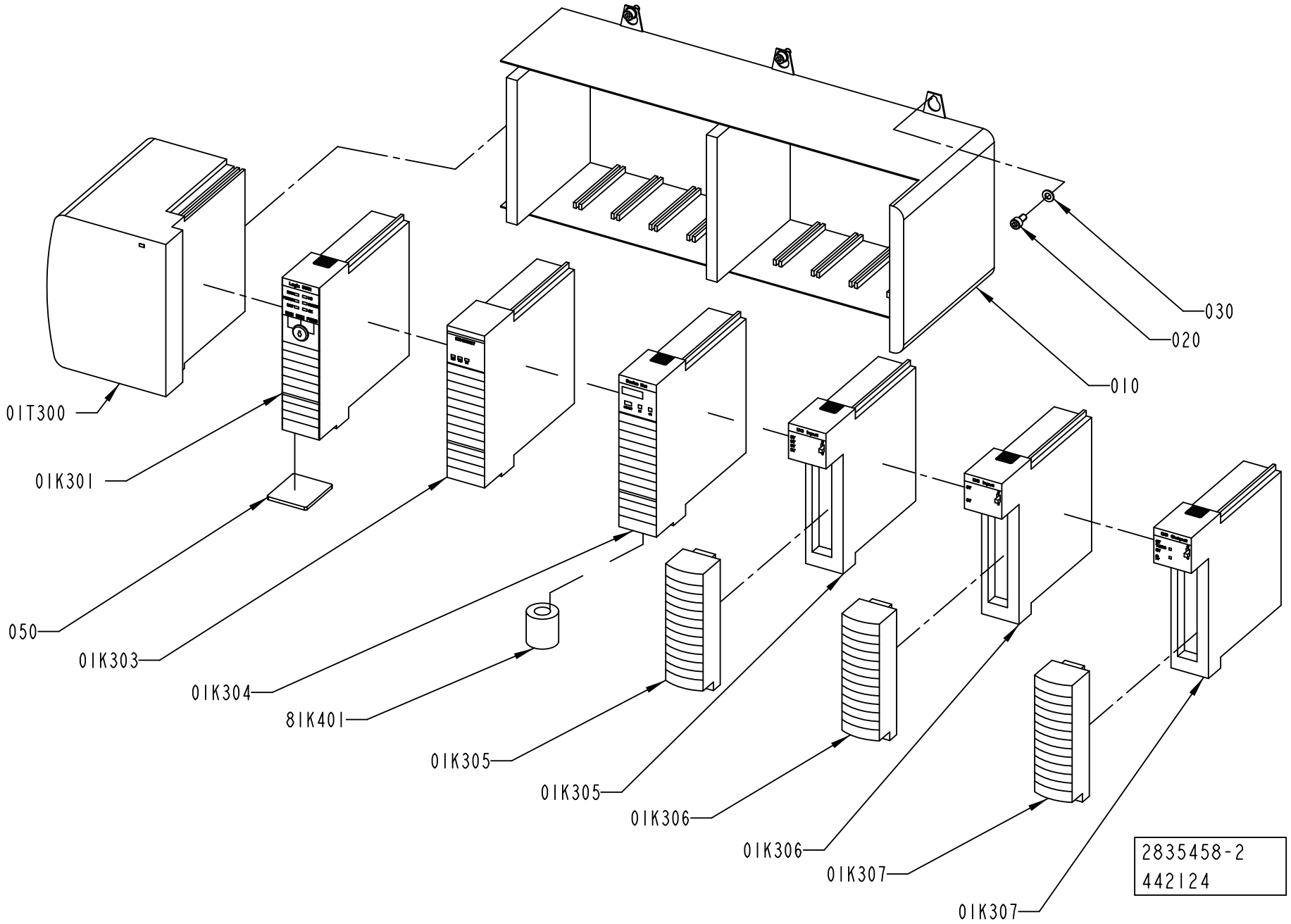
030
020
010
01T300
01K301
050
01K303
01K304
8IK401
01K305
01K305
01K306
01K306
01K307
01K307
2835458-2
442124

ECM: 445492 - 20100701
Group number: 2835458-0200
Assembly Drawing: 2835458-2_1_AB

| Pos | Part No | UN | Qty | Description | Page No |
|---|---|---|---|---|---|
| - | | | | | |
| 010 | 90459-2458 | | 1 | BASEPLATE, 10 SLOT CONTROLLOGIX CHASSIS | |
| 020 | 312115-0325 | | 6 | SCREW ISO4762 M5X10 A4 80 | |
| 030 | 315105-0146 | | 6 | WASHER BRB 5,3X10 RFR | |
| 050 | 90459-3145 | | 1 | FLASH MEMORY 64MBYTE, 1784-CF64 | |
| 01K301 | 90459-6557 | | 1 | PROCESSOR L61, SERIES B, 1756-L61/B | |
| | *90459-6726* | | *1* | *SPARE BATTERY FOR CONTROLLOGIX, 1756-BA2* | |
| 01K303 | 90459-2477 | | 1 | ETHERNET I/P BRIDGE MODULE, 1756-ENBT | |
| 01K304 | 90600-5840 | | 1 | PLC DEVICEN. BR./SCAN MOD, 1756-DNB, D | |
| 01K305 | 90459-2488 | | 1 | REMOVABLE TERMINAL BLOCK 36 POINTS | |
| 01K305 | 90459-6556 | | 1 | PLC DIGITAL INPUT 32PTS, 1756-IB32/B | |
| 01K306 | 90459-2413 | | 1 | PLC DIGITAL INPUT MODULE16 POINTS | |
| 01K306 | 90459-2487 | | 1 | REMOVABLE TERMINAL BLOCK 20 POINTS | |
| 01K307 | 90459-2474 | | 1 | PLC,DIGIT. OUTPUT MODULE 16 PTS 10-31VDC | |
| 01K307 | 90459-2487 | | 1 | REMOVABLE TERMINAL BLOCK 20 POINTS | |
| 81K401 | 90458-1140 | | 1 | FERRITE, RI-26-28-13 | |
| 01T300 | 90459-7267 | | 1 | POWER SUPPLY 24VDC, 1756-PB75/B | |

| Pos | Part No | UN | Qty | Description | Page No |
|---|---|---|---|---|---|

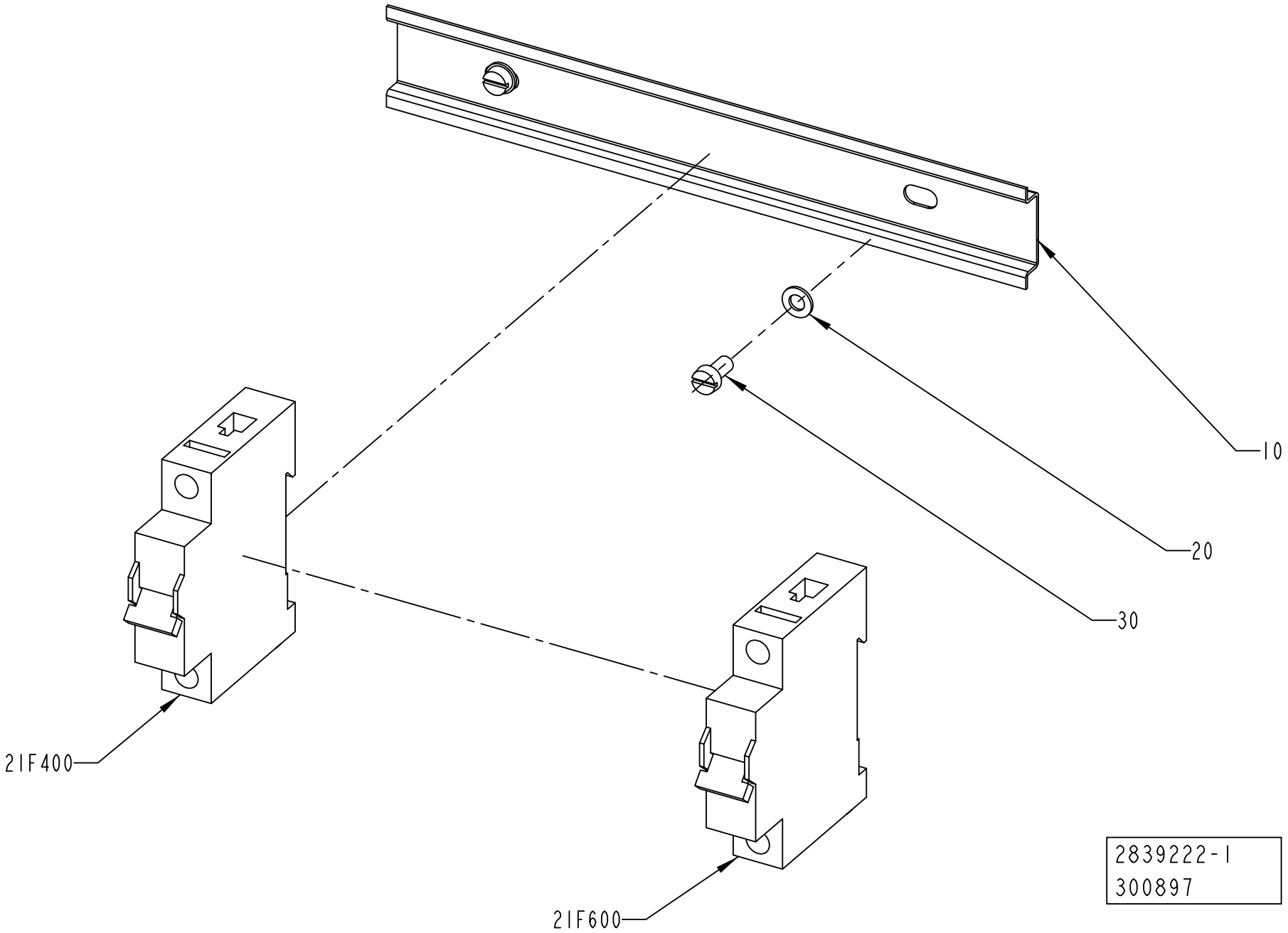
10
20
30
21F400
21F600
2839222-1
300897

ECM: 302048 - 20070528
Group number: 2839222-0100
Assembly Drawing: 2839222-1_1_AB

| Pos | Part No | UN | Qty | Description | Page No |
|---|---|---|---|---|---|
| - | | | | | |
| 010 | 2835454-0000 | | 1 | RAIL | |
| 020 | 315105-0146 | | 2 | WASHER BRB 5,3X10 RFR | |
| 030 | 312125-0325 | | 2 | SCREW ISO 1207 M5X10 A4 | |
| 21F400 | 354000-0100 | | 1 | MINIATURE CIRCUIT BREAKER, FAZ-C10/1 | |
| 21F600 | 354000-0100 | | 1 | MINIATURE CIRCUIT BREAKER, FAZ-C10/1 | |

| Pos | Part No | UN | Qty | Description | Page No |
|---|---|---|---|---|---|

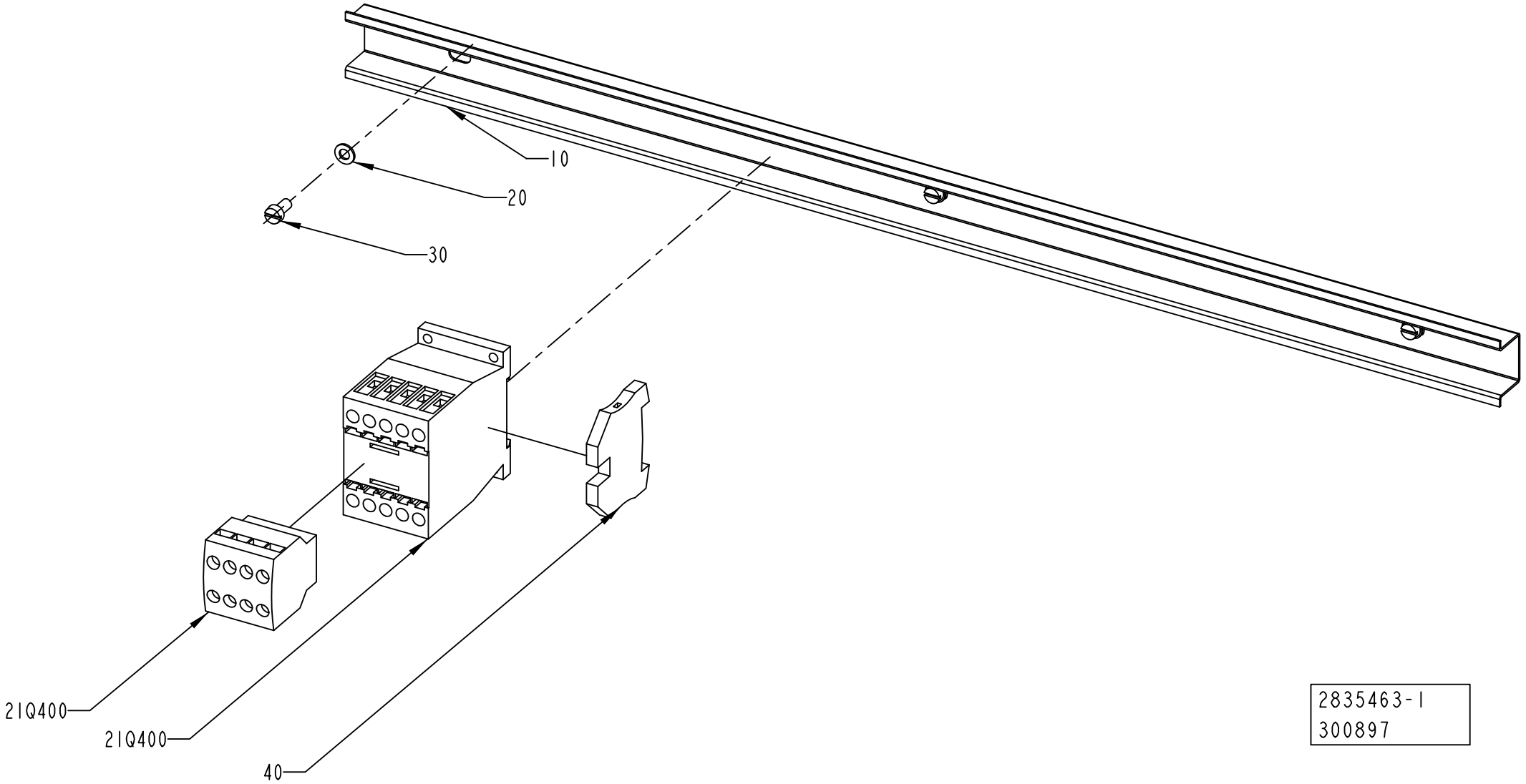
10
20
30
21Q400
21Q400
40
2835463-1
300897

ECM: 302044 - 20070528
Group number: 2835463-0100
Assembly Drawing: 2835463-1_1_AB

| Pos | Part No | UN | Qty | Description | Page No |
|---|---|---|---|---|---|
| - | | | | | |
| 010 | 2835455-0000 | | 1 | RAIL | |
| 020 | 315105-0146 | | 3 | WASHER BRB 5,3X10 RFR | |
| 030 | 312125-0325 | | 3 | SCREW ISO 1207 M5X10 A4 | |
| 040 | 353024-0205 | | 1 | EARTH TERMINAL, 1010.1 | |
| 21Q400 | 90459-5308 | | 1 | CONTACTOR 4KW 24VDC, DILM9-10 | |
| 21Q400 | 90459-6852 | | 1 | AUXILIARY CONTACT, DILA-XHI22 | |

| Pos | Part No | UN | Qty | Description | Page No |
|---|---|---|---|---|---|

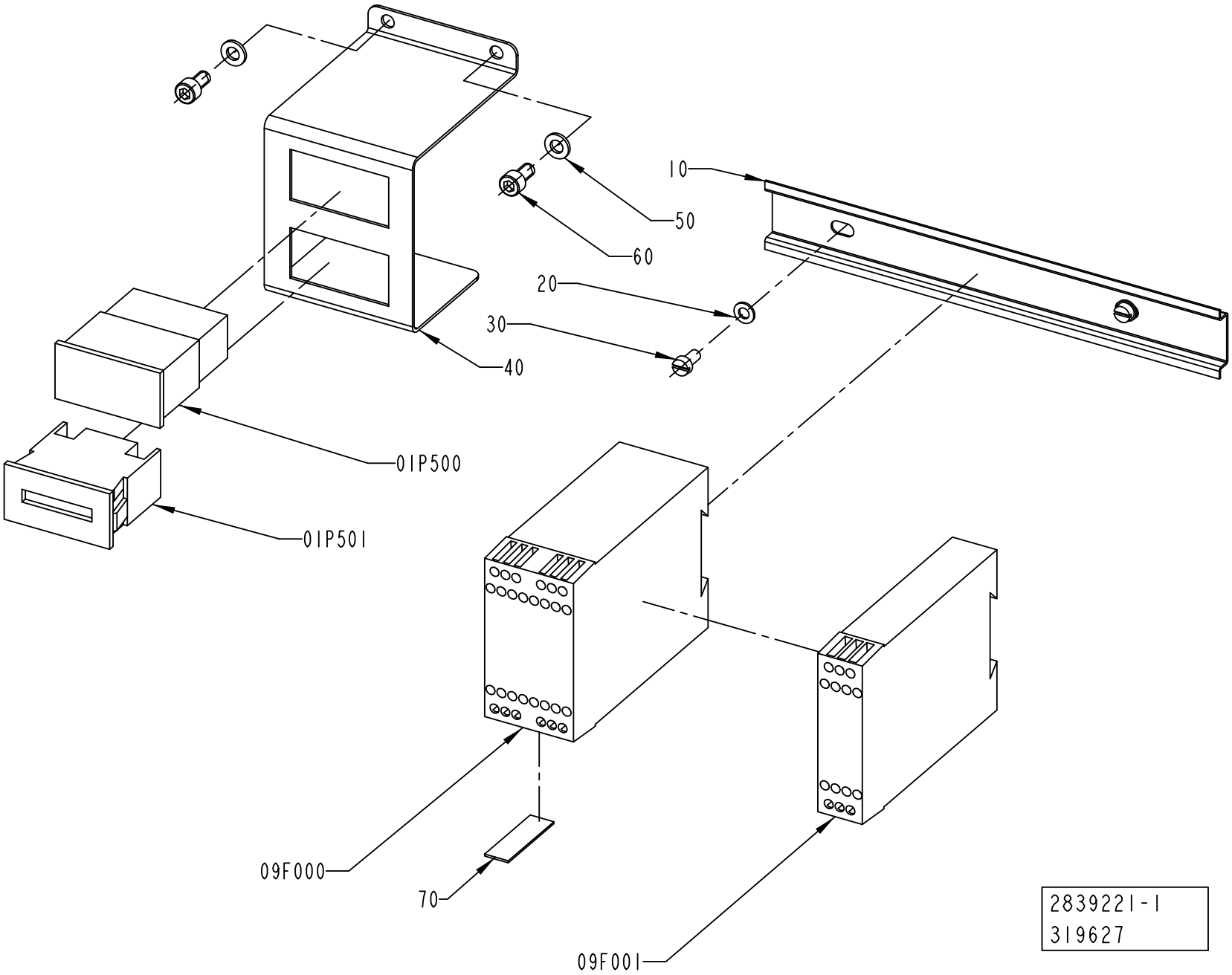
10
50
60
20
30
40
01P500
01P501
09F000
70
09F001
2839221-1
319627

ECM: 324218 - 20080407
Group number: 2839221-0100
Assembly Drawing: 2839221-1_1_AB

| Pos | Part No | UN | Qty | Description | Page No |
|---|---|---|---|---|---|
| - | | | | | |
| 010 | 2835453-0000 | | 1 | RAIL | |
| 020 | 315105-0146 | | 2 | WASHER BRB 5,3X10 RFR | |
| 030 | 312125-0325 | | 2 | SCREW ISO 1207 M5X10 A4 | |
| 040 | 2839227-0000 | | 1 | SUPPORT | |
| 050 | 315105-0153 | | 2 | WASHER BRB 6,4X12 RFR | |
| 060 | 312115-0366 | | 2 | SCREW ISO4762 M6X12 A4 80 | |
| 070 | 90459-4891 | | 1 | PROGR. IDENTIFIER ID-FIX RW, 20-070-21 | |
| 09F000 | 90459-6692 | | 1 | SAFETY PLC, PLUTO B20 20-070-06 | |
| 09F001 | 90459-2291 | | 1 | SAFETY TIME RELAY, E1T-0.5S-24VDC | |
| 01P500 | 90053-0029 | | 1 | COUNTER, F524.800FA3C 24VDC | |
| 01P501 | 90053-0031 | | 1 | HOUR COUNTER, B 609.10 10-50VDC | |

| Pos | Part No | UN | Qty | Description | Page No |
|---|---|---|---|---|---|

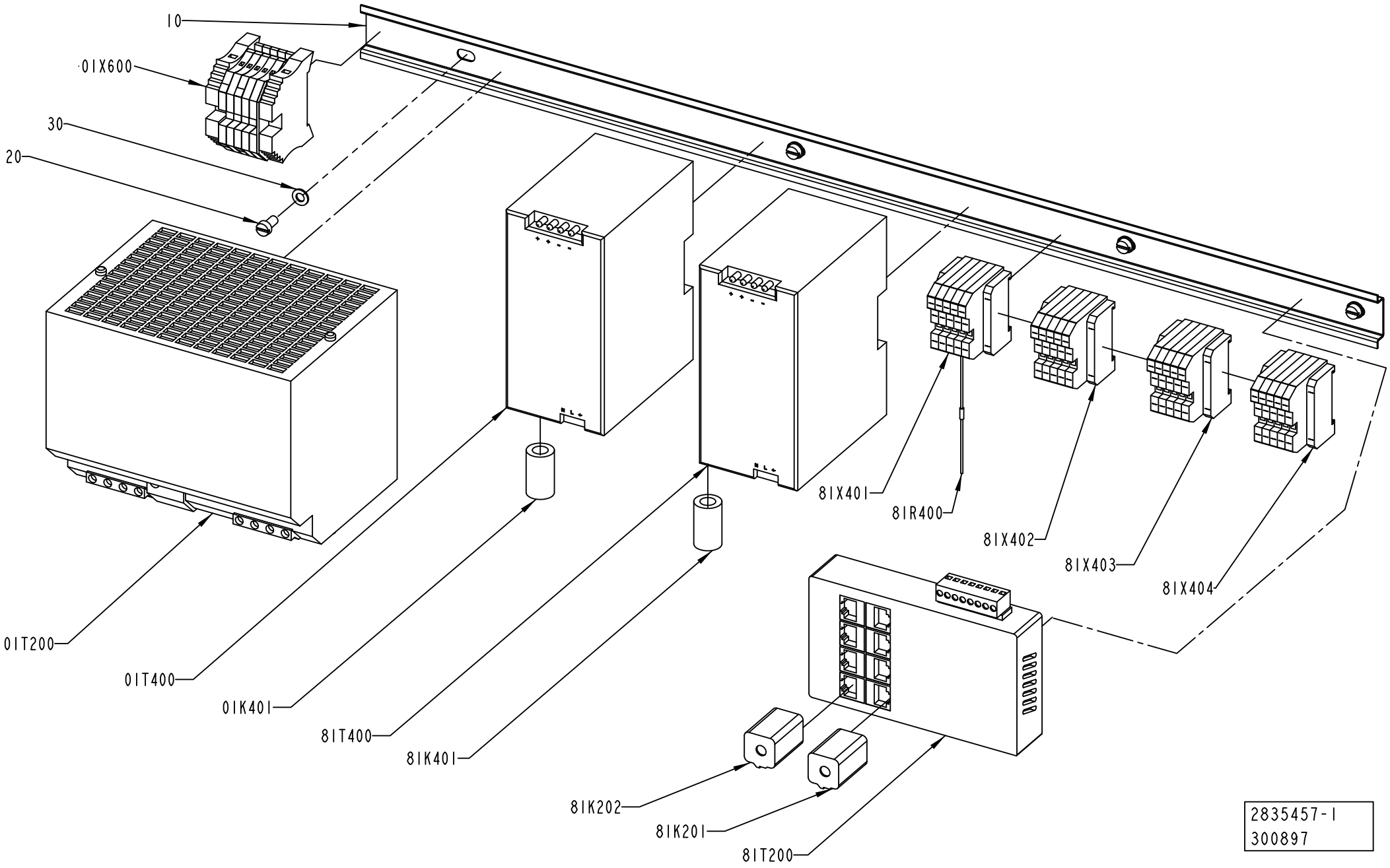
10
01X600
30
20
01T200
01T400
01K401
81T400
81K401
81X401
81R400
81X402
81X403
81X404
81K202
81K201
81T200
2835457-1
300897

ECM: 302776 - 20070528
Group number: 2835457-0100
Assembly Drawing: 2835457-1_1_AB

| Pos | Part No | UN | Qty | Description | Page No |
|---|---|---|---|---|---|
| - | | | | | |
| 010 | 2838476-0000 | | 1 | RAIL | |
| 020 | 312125-0325 | | 4 | SCREW ISO 1207 M5X10 A4 | |
| 030 | 315105-0146 | | 4 | WASHER BRB 5,3X10 RFR | |
| 01K401 | 90458-1141 | | 1 | FERRITE, RI-16-28-9 | |
| 81K201 | 90458-1170 | | 1 | FERRITE, SFC-6 | |
| 81K202 | 90458-1170 | | 1 | FERRITE, SFC-6 | |
| 81K401 | 90458-1141 | | 1 | FERRITE, RI-16-28-9 | |
| 81R400 | 90459-2523 | | 1 | OPEN STYLE TERMINATOR, 1485A-C2 | |
| 01T200 | 90459-4133 | | 1 | POWER SUPPLY UNIT 6EP1 436-3BA00 | |
| 01T400 | 90459-5886 | | 1 | POWER SUPPLY UNIT 115-230 VAC/24VDC100W | |
| 81T200 | 90459-6858 | | 1 | ETHERNET SW, FL SWITCH SF 8TX FROM V 14 | |
| 81T400 | 90459-5886 | | 1 | POWER SUPPLY UNIT 115-230 VAC/24VDC100W | |
| 01X600 | 2890591-0100 | | 1 | PLINTH ..... | **7-47** |
| 81X401 | 90459-2519 | | 1 | OPEN STYLE TAP | |
| 81X402 | 90459-2519 | | 1 | OPEN STYLE TAP | |
| 81X403 | 90459-2519 | | 1 | OPEN STYLE TAP | |
| 81X404 | 90459-2519 | | 1 | OPEN STYLE TAP | |

| Pos | Part No | UN | Qty | Description | Page No |
|---|---|---|---|---|---|

Machine Type | Group Description | Used-In | Group Number | Page No

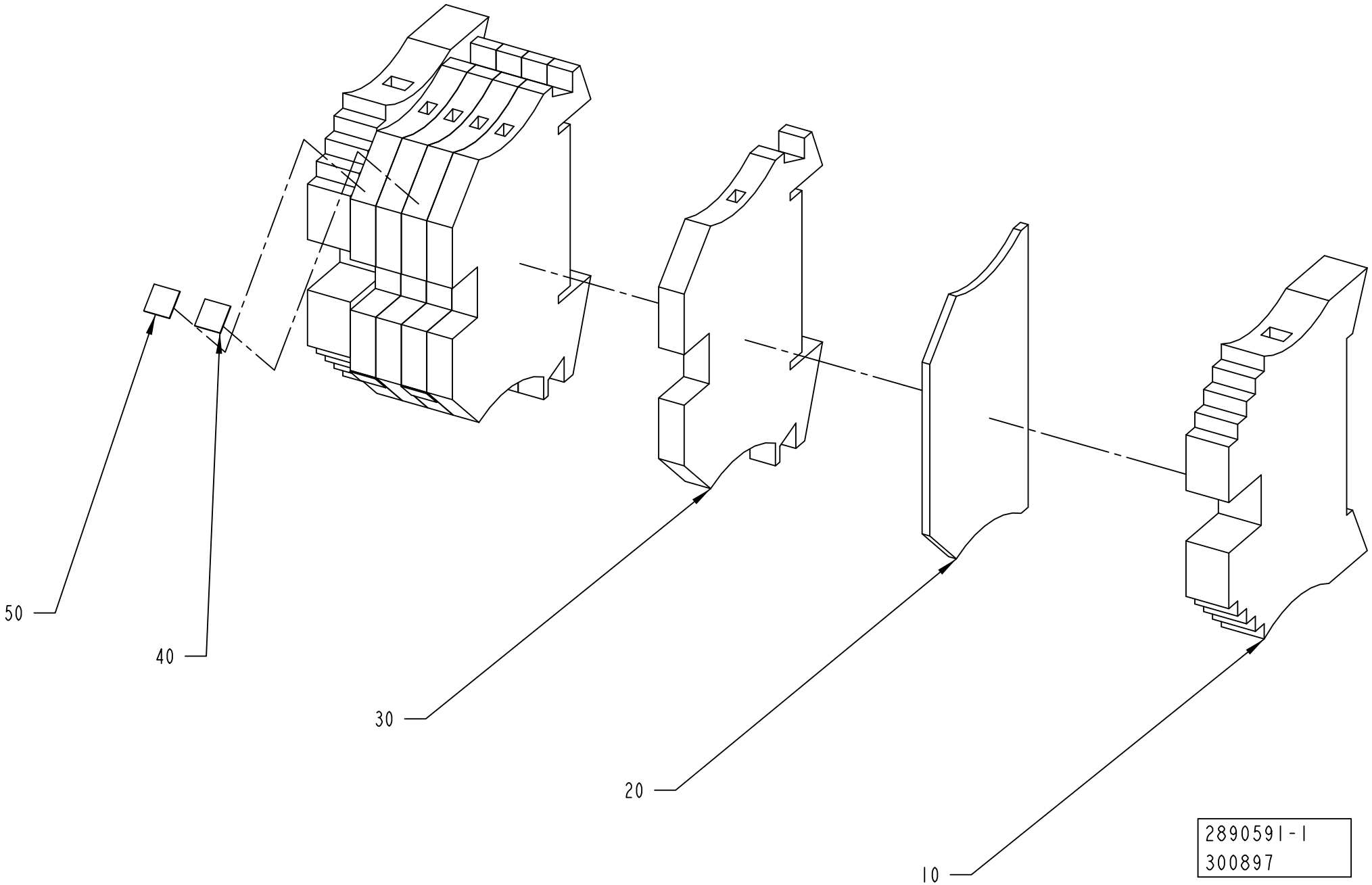
50
40
30
20
10
2890591-1
300897

ECM: 302775 - 20070528
Group number: 2890591-0100
Assembly Drawing: 2890591-1_1_AA

| Pos | Part No | UN | Qty | Description | Page No |
|---|---|---|---|---|---|
| - | | | | | |
| 010 | 353031-0203 | | 2 | END SUPPORT, WEW 35/2 | |
| 020 | 353032-0004 | | 1 | END PLATE WAP 2,5-10 BEIGE | |
| 030 | 353021-0212 | | 5 | FEED THROUGH TERMINAL, 10200.0 | |
| 040 | 359011-0819 | | 2 | MARKING, EARTH, DEK 5 GW ERDE I.KR. | |
| 050 | 359011-0807 | | 2 | MARKING, DEK 5 FW 1-50 | |

| Pos | Part No | UN | Qty | Description | Page No |
|---|---|---|---|---|---|

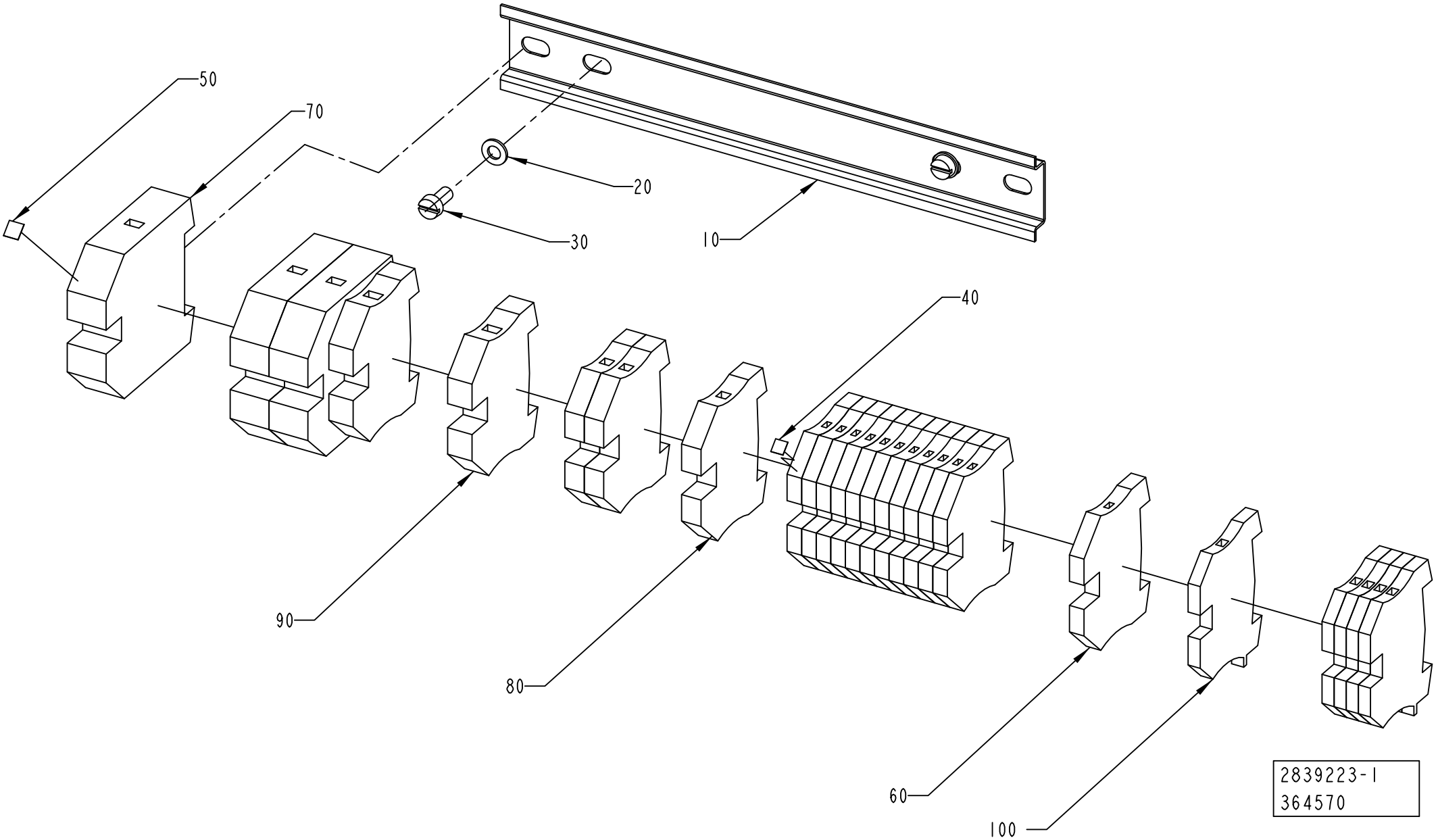
50
70
20
30
10
40
90
80
60
100
2839223-1
364570

ECM: 364722 - 20090101
Group number: 2839223-0100
Assembly Drawing: 2839223-1_1_AB

| Pos | Part No | UN | Qty | Description | Page No |
|---|---|---|---|---|---|
| - | | | | | |
| 010 | 2835454-0000 | | 1 | RAIL | |
| 020 | 315105-0146 | | 2 | WASHER BRB 5,3X10 RFR | |
| 030 | 312125-0325 | | 2 | SCREW ISO 1207 M5X10 A4 | |
| 040 | 359011-0807 | | 1 | MARKING, DEK 5 FW 1-50 | |
| 050 | 359011-0821 | | 1 | MARKING, DEK 6 FW 1-50 | |
| 060 | 353024-0205 | | 12 | EARTH TERMINAL, 1010.1 | |
| 070 | 353024-0209 | | 3 | EARTH TERMINAL, 1010.5 | |
| 080 | 353024-0206 | | 3 | EARTH TERMINAL, 1010.2 | |
| 090 | 353024-0207 | | 2 | EARTH TERMINAL, 1010.3 | |
| 100 | 353024-0204 | | 5 | EARTH TERMINAL WPE 2,5 | |

| Pos | Part No | UN | Qty | Description | Page No |
|---|---|---|---|---|---|

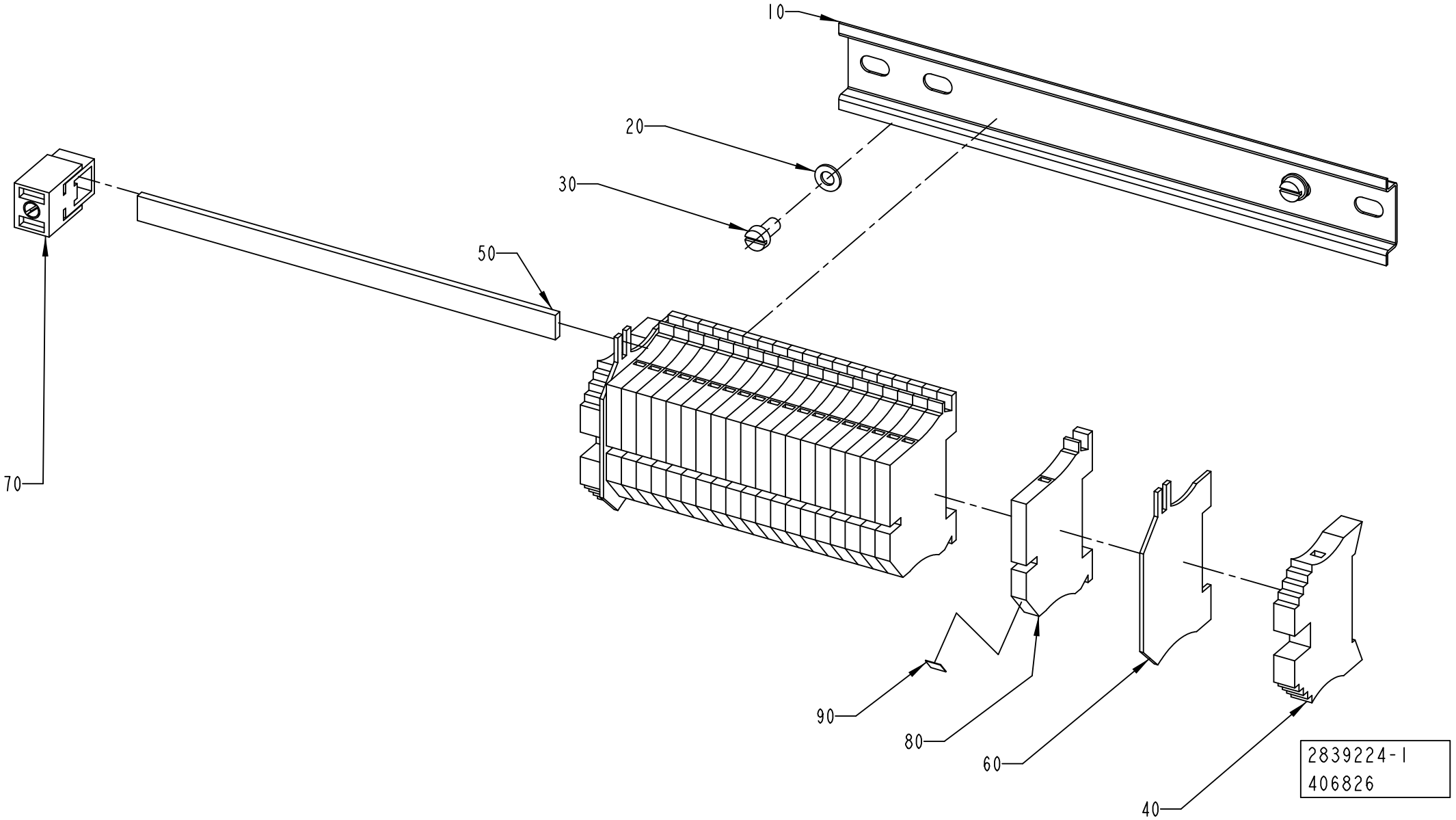
10
20
30
50
70
90
80
60
40
2839224-1
406826

ECM: 410056 - 20091001
Group number: 2839224-0100
Assembly Drawing: 2839224-1_1_AB

| Pos | Part No | UN | Qty | Description | Page No |
|---|---|---|---|---|---|
| - | | | | | |
| 010 | 2835454-0000 | | 1 | RAIL | |
| 020 | 315105-0146 | | 2 | WASHER BRB 5,3X10 RFR | |
| 030 | 312125-0325 | | 2 | SCREW ISO 1207 M5X10 A4 | |
| 040 | 353031-0203 | | 2 | END SUPPORT, WEW 35/2 | |
| 050 | 353041-0001 | MM | 165 | BUS BAR RAIL 10X3MM SSCH | |
| 060 | 353033-0104 | | 2 | END PLATE, 10502.8 | |
| 070 | 353041-0106 | | 1 | HOLDER ZB35 K 5026.8 | |
| 080 | 353022-0002 | | 20 | NEUTRAL TERMINAL, 10107.8 | |
| 090 | 359011-0821 | | 1 | MARKING, DEK 6 FW 1-50 | |

| Pos | Part No | UN | Qty | Description | Page No |
|---|---|---|---|---|---|

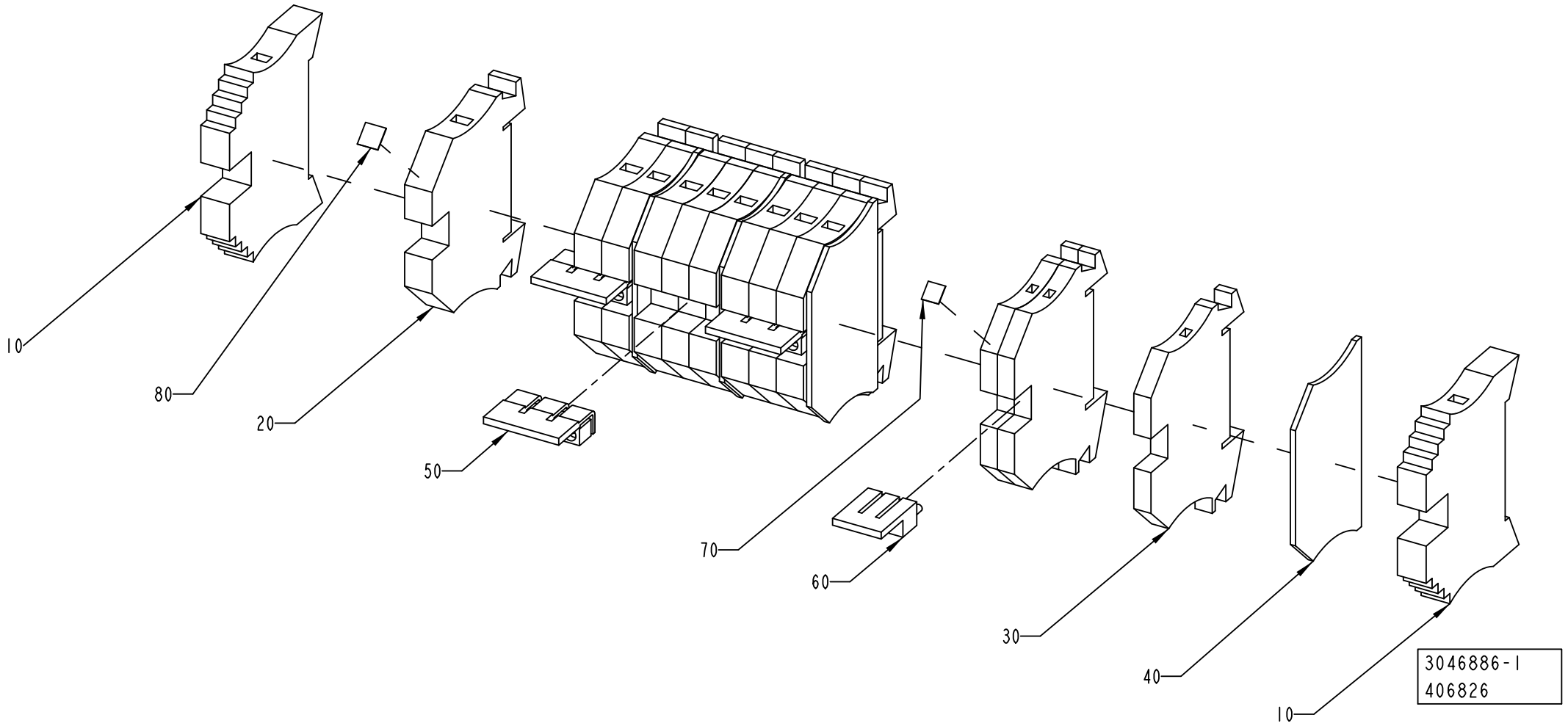
10
80
20
50
70
60
30
40
10
3046886-1
406826

ECM: 409316 - 20091001
Group number: 3046886-0100
Assembly Drawing: 3046886-1_1_AA

| Pos | Part No | UN | Qty | Description | Page No |
|---|---|---|---|---|---|
| - | | | | | |
| 010 | 353031-0203 | | 2 | END SUPPORT, WEW 35/2 | |
| 020 | 353021-0214 | | 9 | FEED THROUGH TERMINAL, 10202.0 | |
| 030 | 353021-0212 | | 3 | FEED THROUGH TERMINAL, 10200.0 | |
| 040 | 353032-0004 | | 4 | END PLATE WAP 2,5-10 BEIGE | |
| 050 | 90600-5931 | | 3 | BRIDGE CONNECTOR, WQV 6/3, 1054760000 | |
| 060 | 353034-0042 | | 1 | BRIDGE CONNECTOR WQV 2,5/3 | |
| 070 | 359011-0807 | | 1 | MARKING, DEK 5 FW 1-50 | |
| 080 | 359011-0821 | | 1 | MARKING, DEK 6 FW 1-50 | |

| Pos | Part No | UN | Qty | Description | Page No |
|---|---|---|---|---|---|

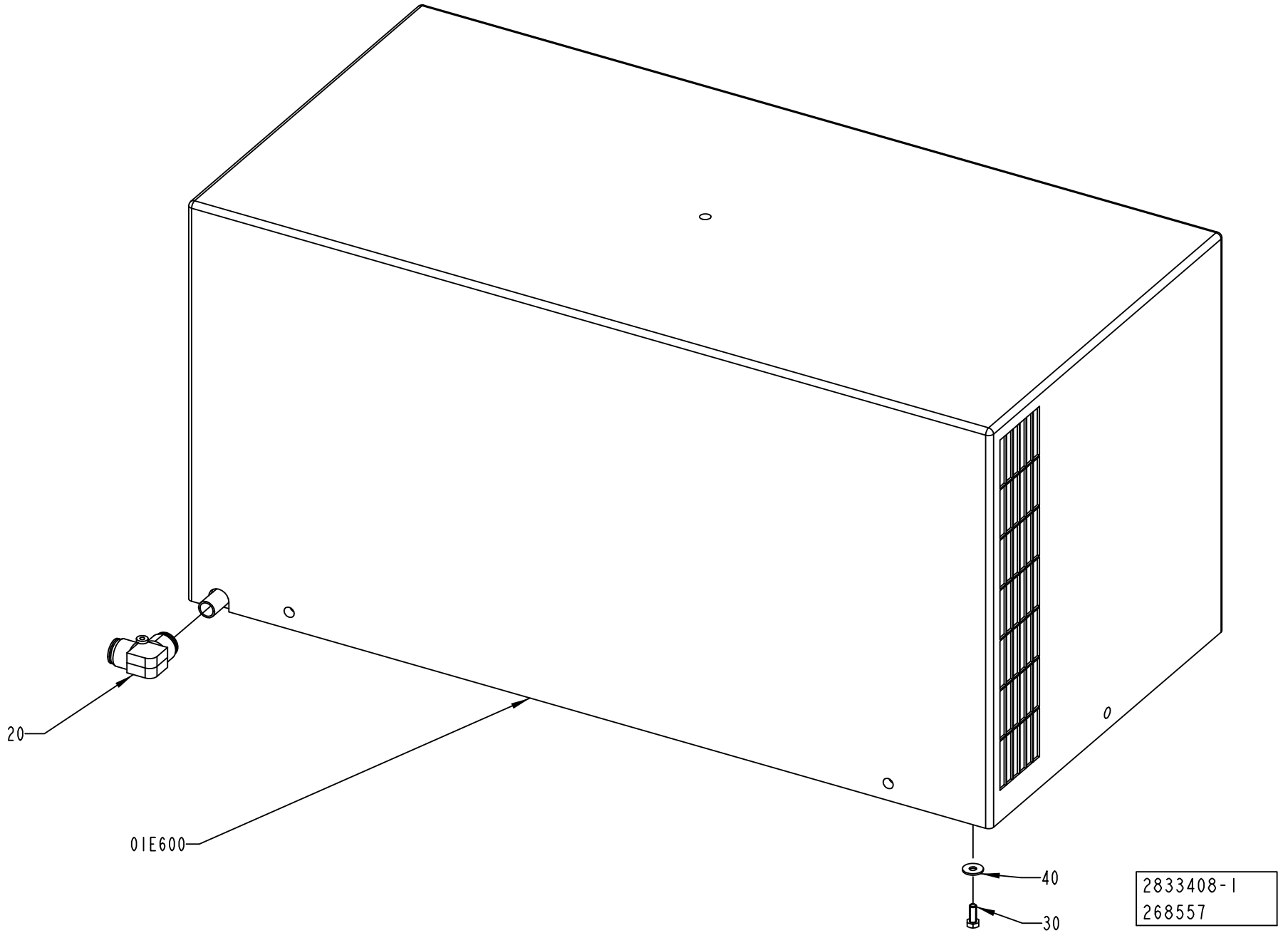
20
01E600
40
30
2833408-1
268557

ECM: 272447 - 20060925
Group number: 2833408-0100
Assembly Drawing: 2833408-1_1_AA

| Pos | Part No | UN | Qty | Description | Page No |
|---|---|---|---|---|---|
| - | | | | | |
| 020 | 90459-2553 | | 1 | PUSH-IN L-FITTING QSL 16 | |
| 030 | 312105-0368 | | 6 | SCREW M6S ISO 4017 M6X16 A480 | |
| 040 | 90005-0060 | | 6 | WASHER PLAIN, RBS 6,4/M6)/18,H=1,5 | |
| 01E600 | 90459-0813 | | 1 | COOLING UNIT, KB20A619.01 | |
| | *90459-0364* | | *1* | *FILTER KB20/30/40 POLYURETH. FILTER 2001* | |
| | *90600-0672* | | *2* | *FAN, VBA0001499 , 50HZ_3UF , 60HZ_2UF* | |
| | *90600-0673* | | *1* | *THERMOSTAT, KELVIN TMI0000218* | |
| | *90600-0675* | | *1* | *GASKET, A6411AA* | |
| | *90600-0676* | | *1* | *GRID, DISA1880AA* | |
| | *90600-2822* | | *1* | *THERMOSTAT, TMI0000216* | |

| Pos | Part No | UN | Qty | Description | Page No |
|---|---|---|---|---|---|

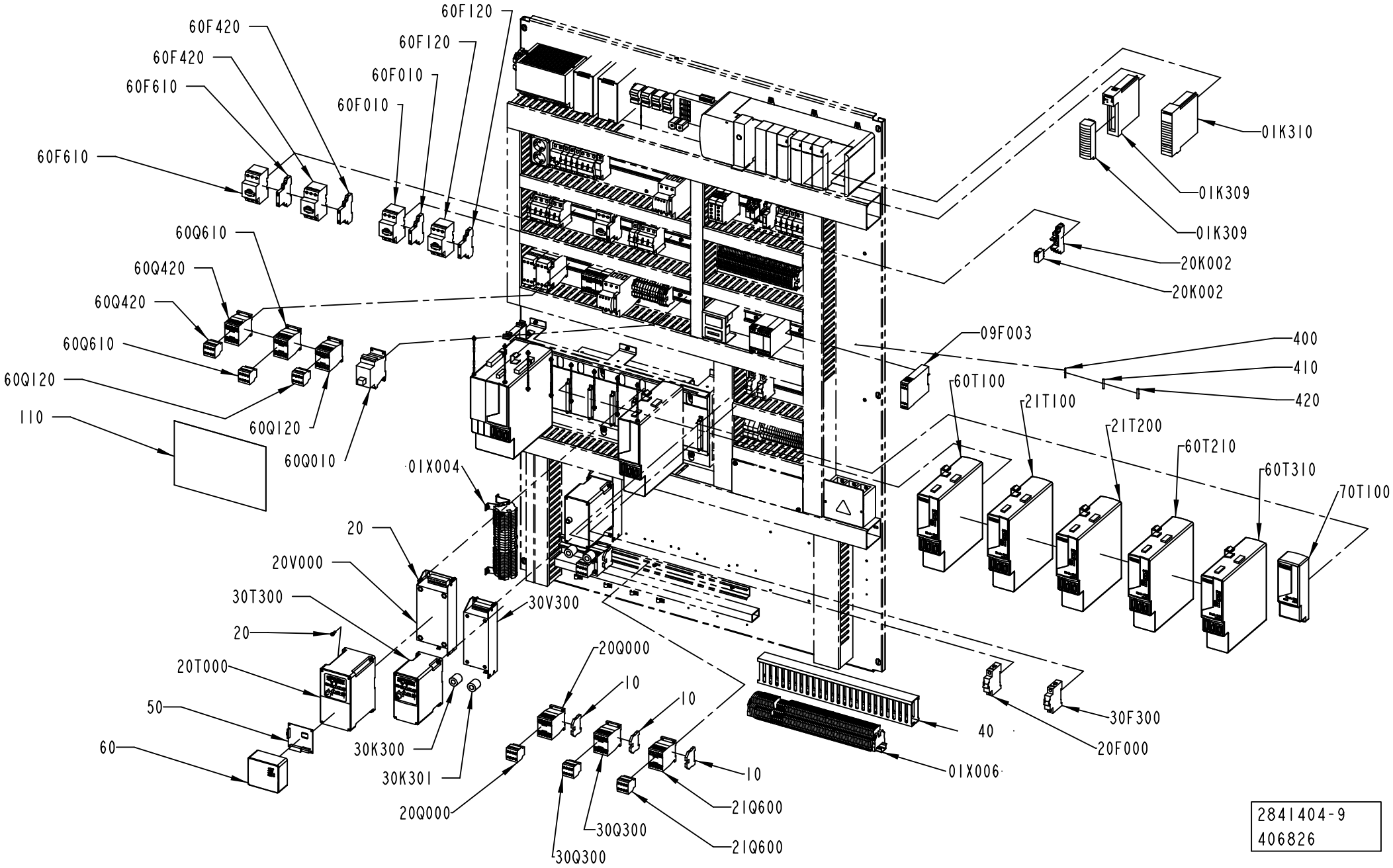


2841404-9
406826

ECM: 442126 - 20100701
Group number: 2841404-0200
Assembly Drawing: 2841404-9_1_AA

| Pos | Part No | UN | Qty | Description | Page No |
|---|---|---|---|---|---|
| **CAP 30/FLEX TBA RECAP3, CAP 30/FLEX TBA RECAP2 A3** | | | | | |
| 010 | 353024-0205 | | 3 | EARTH TERMINAL, 1010.1 | |
| 020 | 312115-0327 | | 16 | Z3REW ISO4762 M5X12 A4 80 | |
| 040 | 2890590-0000 | | 1 | CABLE DUCT | |
| 110 | 3046435-0000 | | 1 | FUSE PANEL LABEL | |
| 400 | 351160-0102 | M | 458 | WIRE AWM 1X0,75 MM2 DARKBLUE | |
| 410 | 351164-0105 | M | 65 | WIRE AWM 1X2,5 MM2 BLACK | |
| 420 | 351164-0107 | M | 39 | WIRE AWM 1X6 MM2 BLACK | |
| 09F003 | 90459-1131 | | 1 | SAFETY RELAY, E1T 0SEC | |
| 20F000 | 354000-0060 | | 1 | MINIATURE CIRCUIT BREAKER, FAZ-C6/1 | |
| 30F300 | 354000-0060 | | 1 | MINIATURE CIRCUIT BREAKER, FAZ-C6/1 | |
| 60F010 | 90459-5321 | | 1 | OVERLOAD PROTECTION, PKZM0-0,4 | |
| 60F010 | 90259-0313 | | 1 | AUXILIARY CONTACT, NHI21-PKZ0 | |
| 60F120 | 90259-0313 | | 1 | AUXILIARY CONTACT, NHI21-PKZ0 | |
| 60F120 | 90459-5324 | | 1 | OVERLOAD PROTECTION, PKZM0-1,6 | |
| 60F420 | 90459-5323 | | 1 | OVERLOAD PROTECTION, PKZM0-1 | |
| 60F420 | 90259-0313 | | 1 | AUXILIARY CONTACT, NHI21-PKZ0 | |
| 60F610 | 90459-5324 | | 1 | OVERLOAD PROTECTION, PKZM0-1,6 | |
| 60F610 | 90259-0313 | | 1 | AUXILIARY CONTACT, NHI21-PKZ0 | |
| 01K308 | 90459-2474 | | 1 | PLC,DIGIT. OUTPUT MODULE 16 PTS 10-31VDC | |
| 01K308 | 90459-2487 | | 1 | REMOVABLE TERMINAL BLOCK 20 POINTS | |
| 01K309 | 90459-2474 | | 1 | PLC,DIGIT. OUTPUT MODULE 16 PTS 10-31VDC | |
| 01K309 | 90459-2487 | | 1 | REMOVABLE TERMINAL BLOCK 20 POINTS | |
| 01K310 | 90459-2480 | | 1 | 8-AXIS SERCOS MOTION MODULE | |
| 20K002 | 90119-0108 | | 1 | RELAY OMRON G2R-2-SNI-24DC | |
| | *90129-0018* | | *1* | *BASE, P2RF-08-E* | |
| 20K002 | 90129-0018 | | 1 | BASE, P2RF-08-E | |
| 30K300 | 90458-1140 | | 1 | FERRITE, RI-26-28-13 | |
| 30K301 | 90458-1140 | | 1 | FERRITE, RI-26-28-13 | |
| 20Q000 | 90459-6852 | | 1 | AUXILIARY CONTACT, DILA-XHI22 | |
| 20Q000 | 90459-5308 | | 1 | CONTACTOR 4KW 24VDC, DILM9-10 | |
| 30Q300 | 90459-6852 | | 1 | AUXILIARY CONTACT, DILA-XHI22 | |
| 30Q300 | 90459-5308 | | 1 | CONTACTOR 4KW 24VDC, DILM9-10 | |
| 60Q010 | 90600-2048 | | 1 | SOLID STATE RELAY, 3RF2403-1BD04 | |
| 60Q120 | 90459-6852 | | 1 | AUXILIARY CONTACT, DILA-XHI22 | |
| 60Q120 | 90459-5308 | | 1 | CONTACTOR 4KW 24VDC, DILM9-10 | |
| 60Q420 | 90459-5308 | | 1 | CONTACTOR 4KW 24VDC, DILM9-10 | |
| 60Q420 | 90459-6852 | | 1 | AUXILIARY CONTACT, DILA-XHI22 | |
| 60Q610 | 90459-6852 | | 1 | AUXILIARY CONTACT, DILA-XHI22 | |
| 60Q610 | 90459-5308 | | 1 | CONTACTOR 4KW 24VDC, DILM9-10 | |
| 20T000 | 90459-3441 | | 1 | FREQUENCY CONVERTER 0,37 KW | |
| 30T300 | 90459-3449 | | 1 | VARIABLE FREQUENCY DRIVE 22A-A2P3N104 | |
| 60T100 | 90600-5216 | | 1 | AXIS MOD. KINETIX 6000,2094-BM02-S SER.B | |
| 60T210 | 90600-5214 | | 1 | AXIS MOD. KINETIX 6000,2094-BM01-S SER.B | |
| 60T310 | 90600-5214 | | 1 | AXIS MOD. KINETIX 6000,2094-BM01-S SER.B | |
| 70T100 | 90459-2547 | | 1 | POWER RAIL SLOT FILLER MODULE, 2094-PRF | |
| 20V000 | 90459-3454 | | 1 | FOOTPRINT FILTER, 22-RF018-BL | |
| 30V300 | 90459-3460 | | 1 | FOOTPRINT FILTER 22-RF010-AL | |
| **Common Parts** | | | | | |
| 050 | 90459-2614 | | 1 | DEVICENET ADAPTER POWERFLEX 40 22-COMM-D | |
| 060 | 90459-2795 | | 1 | FRONT LID FOR POWERFLEX 40, 22B-CCB | |
| 21Q600 | 90459-6852 | | 1 | AUXILIARY CONTACT, DILA-XHI22 | |
| 21Q600 | 90459-5308 | | 1 | CONTACTOR 4KW 24VDC, DILM9-10 | |
| 21T100 | 90600-5216 | | 1 | AXIS MOD. KINETIX 6000,2094-BM02-S SER.B | |
| 21T200 | 90600-5216 | | 1 | AXIS MOD. KINETIX 6000,2094-BM02-S SER.B | |
| 01X004 | 2840918-0100 | | 1 | PLINTH | **7-59** |
| 01X006 | 2841403-0200 | | 1 | PLINTH | **7-61** |

Machine Type | Group Description | Used-In | Group Number | Page No

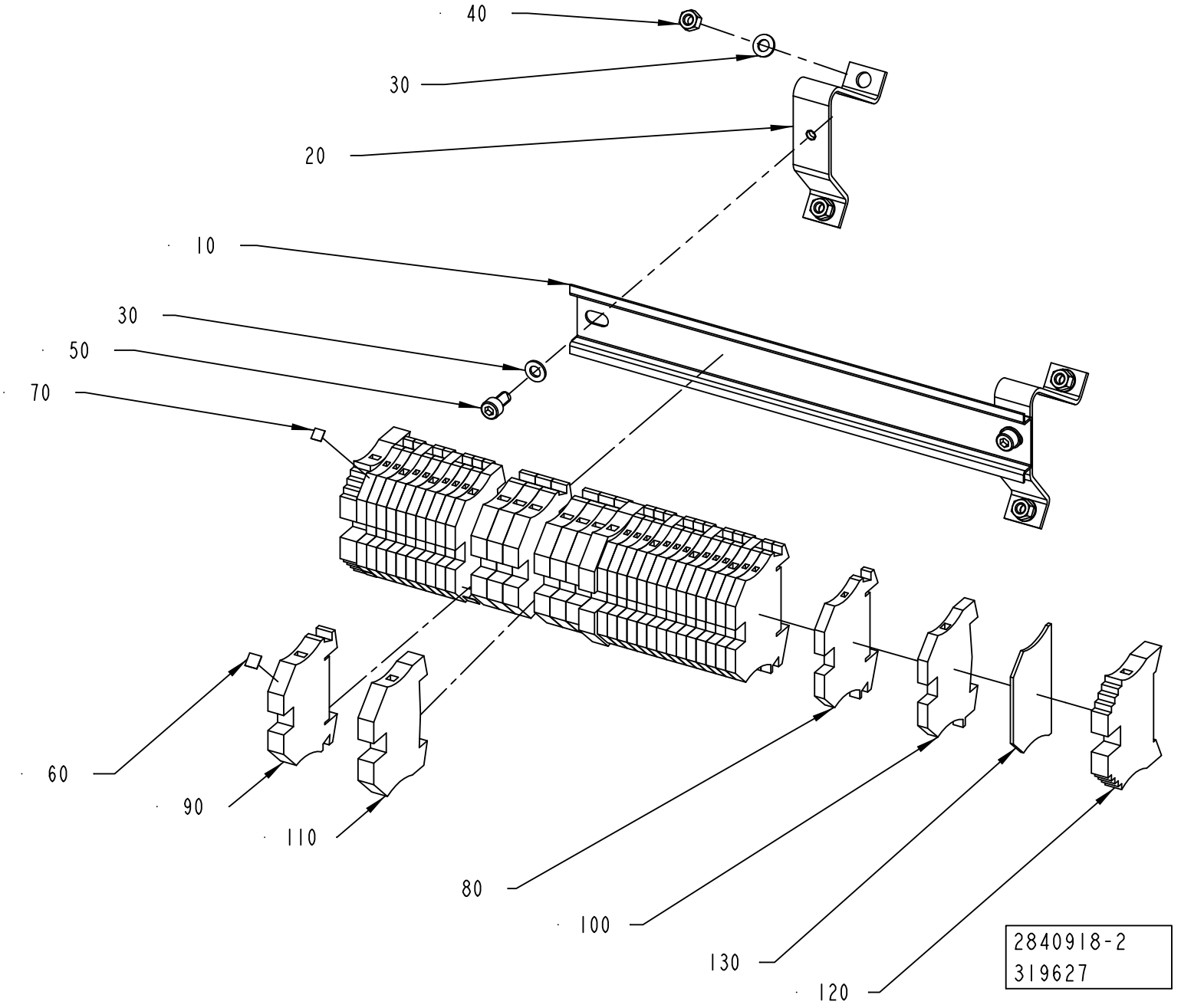
40
30
20
10
30
50
70
60
90
110
80
100
130
120
2840918-2
319627

ECM: 362281 - 20080924
Group number: 2840918-0100
Assembly Drawing: 2840918-2_1_AB

| Pos | Part No | UN | Qty | Description | Page No |
|---|---|---|---|---|---|
| **RECAP3, RECAP2 A3** | | | | | |
| 080 | 353021-0212 | | 19 | FEED THROUGH TERMINAL, 10200.0 | |
| 100 | 353024-0204 | | 7 | EARTH TERMINAL WPE 2,5 | |
| **Common Parts** | | | | | |
| 010 | 2841402-0000 | | 1 | RAIL | |
| 020 | 90099-0005 | | 2 | MOUNTING RAIL SUPPORT, ANGLED, TSTW 5/M5 | |
| 030 | 315105-0146 | | 6 | WASHER BRB 5,3X10 RFR | |
| 040 | 312605-0314 | | 4 | HEXAGON NUT, M6M M5 A280 | |
| 050 | 312115-0325 | | 2 | SCREW ISO4762 M5X10 A4 80 | |
| 060 | 359011-0821 | | 2 | MARKING, DEK 6 FW 1-50 | |
| 070 | 359011-0807 | | 2 | MARKING, DEK 5 FW 1-50 | |
| 090 | 353021-0214 | | 7 | FEED THROUGH TERMINAL, 10202.0 | |
| 110 | 353024-0206 | | 2 | EARTH TERMINAL, 1010.2 | |
| 120 | 353031-0203 | | 2 | END SUPPORT, WEW 35/2 | |
| 130 | 353032-0004 | | 1 | END PLATE WAP 2,5-10 BEIGE | |

| Pos | Part No | UN | Qty | Description | Page No |
|---|---|---|---|---|---|

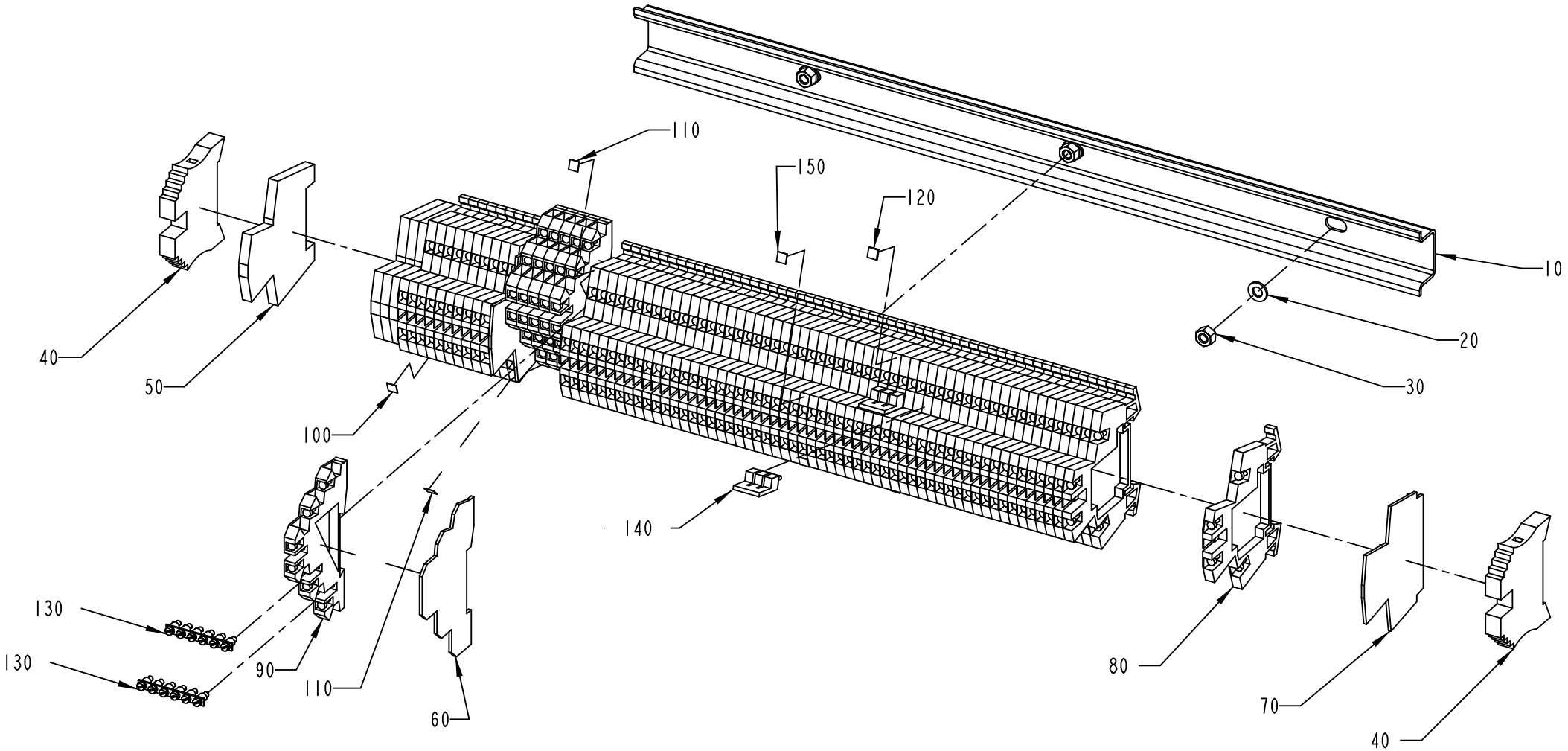
110
150
120
10
20
30
40
50
100
140
130
130
90
110
60
80
70
40
2841403-4
406826

ECM: 406848 - 20091001
Group number: 2841403-0200
Assembly Drawing: 2841403-4_1_AA

| Pos | Part No | UN | Qty | Description | Page No |
|---|---|---|---|---|---|
| **RECAP3, RECAP2 A3** | | | | | |
| 010 | 2890015-0000 | | 1 | RAIL | |
| 020 | 315105-0146 | | 3 | WASHER BRB 5,3X10 RFR | |
| 030 | 312605-0314 | | 3 | HEXAGON NUT, M6M M5 A280 | |
| 080 | 90077-0113 | | 67 | FEED THROUGH TERMINAL, 10-00102150-1 | |
| 150 | 359011-0811 | | 2 | MARKING, DEK 5 FW 201-250 | |
| **Common Parts** | | | | | |
| 040 | 353031-0203 | | 2 | END SUPPORT, WEW 35/2 | |
| 050 | 353024-0212 | | 4 | EARTH TERMINAL, 10363.0 | |
| 060 | 353032-0302 | | 1 | END PLATE, AP DLD2,5 DB | |
| 070 | 353032-0009 | | 2 | END PLATE, WAP FOR WDK | |
| 090 | 353021-0302 | | 6 | TERMINALS,TRIPLE-LEVEL, DLD 2,5/35 PA | |
| 100 | 359011-0807 | | 1 | MARKING, DEK 5 FW 1-50 | |
| 110 | 359011-0809 | | 3 | MARKING, DEK 5 FW 101-150 | |
| 120 | 359011-0806 | | 2 | MARKING, DEK 5 FW 1-200 | |
| 130 | 353034-0404 | | 2 | BRIDGE CONNECTOR Q10, 13131.0 | |
| 140 | 353034-0030 | | 2 | BRIDGE CONNECTOR WQV 2,5/10, 10544.6 | |

| Pos | Part No | UN | Qty | Description | Page No |
|---|---|---|---|---|---|

**This page is intentionally left blank.**

ECM: 309363 - 20070528
Group number: 2833409-0100
Assembly Drawing:

| Pos | Part No | UN | Qty | Description | Page No |
|---|---|---|---|---|---|
| - | | | | | |
| 010 | 351160-0105 | M | 4 | WIRE AWM 1X2,5 MM2 DARKBLUE | |
| 020 | 351160-0106 | M | 5 | WIRE AWM 1X4 MM2 DARKBLUE | |
| 030 | 351161-0104 | M | 13 | WIRE AWM 1X1,5 MM2 LIGHTBLUE | |
| 040 | 351161-0105 | M | 20 | WIRE AWM 1X2,5 MM2 LIGHTBLUE | |
| 050 | 351161-0106 | M | 2.6 | WIRE AWM 1X4 MM2 LIGHTBLUE | |
| 060 | 351161-0107 | M | 2.6 | WIRE AWM 1X6 MM2 LIGHTBLUE | |
| 070 | 351161-0109 | M | 2.6 | WIRE AWM 1X16 MM2 LIGHTBLUE | |
| 080 | 351162-0102 | M | 26 | WIRE AWM 1X0,75 MM2 YELLOW-GREEN | |
| 090 | 351162-0104 | M | 13 | WIRE AWM 1X1,5 MM2 YELLOW-GREEN | |
| 100 | 351162-0105 | M | 29 | WIRE AWM 1X2,5 MM2 YELLOW-GREEN | |
| 110 | 351162-0106 | M | 6.5 | WIRE AWM 1X4 MM2 YELLOW-GREEN | |
| 120 | 351162-0107 | M | 2.6 | WIRE AWM 1X6 MM2 YELLOW-GREEN | |
| 130 | 351162-0108 | M | 3.9 | WIRE AWM 1X10 MM2 YELLOW-GREEN | |
| 140 | 351162-0109 | M | 3.9 | WIRE AWM 1X16 MM2 YELLOW-GREEN | |
| 150 | 351164-0104 | M | 32 | WIRE AWM 1X1,5 MM2 BLACK | |
| 160 | 351164-0106 | M | 13 | WIRE AWM 1X4 MM2 BLACK | |
| 170 | 351164-0108 | M | 29 | WIRE AWM 1X10 MM2 BLACK | |
| 180 | 351164-0109 | M | 4 | WIRE AWM 1X16 MM2 BLACK | |
| 81W200 | 90459-1621 | | 1 | CABLE, ETHERNET RJ 45 CONNECT. 1 M | |
| 81W201 | 90459-6395 | | 1 | CABLE, ETHERNET RJ 45 STRAIGHT.10M | |
| 81W400 | 90459-2530 | MM | 325 | DEVICENET CABLE THIN | |
| 81W401 | 90459-2530 | M | 1.3 | DEVICENET CABLE THIN | |
| 81W402 | 90459-2530 | M | 4.5 | DEVICENET CABLE THIN | |
| 81W403 | 90459-2530 | M | 13 | DEVICENET CABLE THIN | |
| 81W405 | 90459-2530 | MM | 260 | DEVICENET CABLE THIN | |
| 81W406 | 90459-2530 | MM | 260 | DEVICENET CABLE THIN | |
| 81W407 | 90459-2530 | MM | 260 | DEVICENET CABLE THIN | |
| 81W700 | 90220-0183 | MM | 325 | SCR. CABLE 2X0,34MM2 | |
| 81W701 | 90220-0183 | MM | 325 | SCR. CABLE 2X0,34MM2 | |
| 81W702 | 90220-0183 | MM | 325 | SCR. CABLE 2X0,34MM2 | |

| Pos | Part No | UN | Qty | Description | Page No |
|---|---|---|---|---|---|

Machine Type | Group Description | Used-In | Group Number | Page No

Tetra Pak

# SPC
## Spare Parts Catalogue

**This page is intentionally left blank.**

ECM: 407843 - 20091001
Group number: 662913-0200
Assembly Drawing:

| Pos | Part No | UN | Qty | Description | Page No |
|---|---|---|---|---|---|
| - | | | | | |
| 010 | 2853706-0100 | | 1 | SETTING TOOL | **8-5** |
| 020 | 2838693-0100 | | 1 | START-UP KIT | **8-13** |
| 030 | 2986247-0100 | | 1 | CAP DETECTOR | **8-15, 8-17** |
| 040 | 3039029-0000 | | 1 | PNEUMATIC DIAGRAM | |
| 050 | 2838680-0000 | | 1 | DIAGRAM | |
| 060 | 2838684-0000 | | 1 | WATER DIAGRAM | |
| 070 | 2873923-0100 | | 1 | POSITION TEMPLATE | **8-41** |
| 080 | 2873953-0100 | | 1 | CAP | **8-43** |

| Pos | Part No | UN | Qty | Description | Page No |
|---|---|---|---|---|---|

Machine Type | Group Description | Used-In | Group Number | Page No

**This page is intentionally left blank.**

ECM: 448823 - 20100702
Group number: 2853706-0100
Assembly Drawing:

| Pos | Part No | UN | Qty | Description | Page No |
|---|---|---|---|---|---|
| **RECAP3, RECAP2 A3** | | | | | |
| 050 | 2873956-0100 | | 1 | BELT TIGHTENER | **8-7** |
| 070 | 2788137-0000 | | 1 | TEMPLATE | |
| 080 | 2911910-0000 | | 1 | TEMPLATE | |
| **Common Parts** | | | | | |
| 010 | 2715750-0100 | | 1 | TEMPLATE | **8-9** |
| 020 | 2716125-0100 | | 1 | SETTING TOOL | **8-11** |
| 030 | 3044285-0000 | | 2 | TEMPLATE | |

| Pos | Part No | UN | Qty | Description | Page No |
|---|---|---|---|---|---|

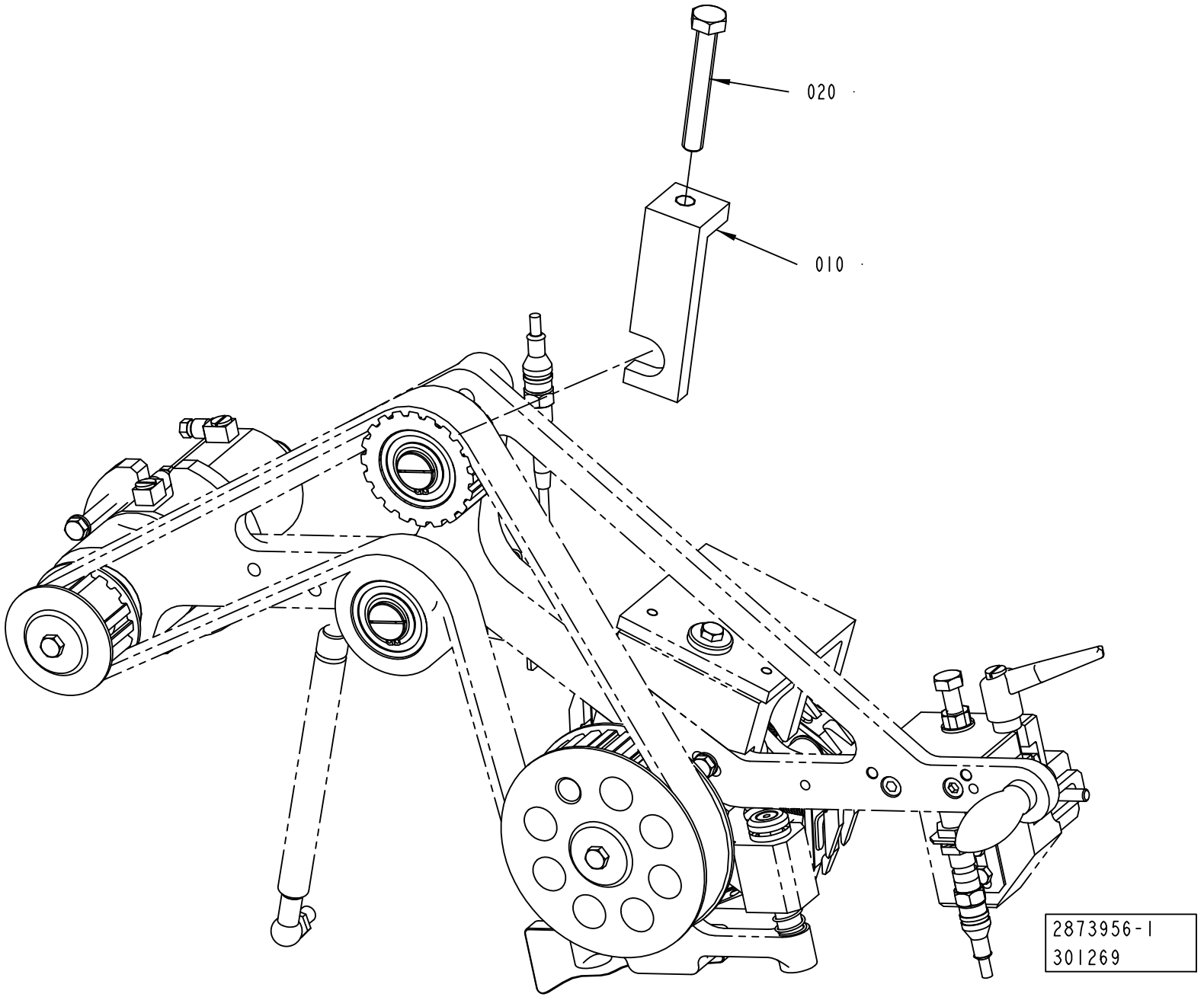
020
010
2873956-1
301269

ECM: 310668 - 20070528
Group number: 2873956-0100
Assembly Drawing: 2873956-1_1_AA

| Pos | Part No | UN | Qty | Description | Page No |
|---|---|---|---|---|---|
| - | | | | | |
| 010 | 2873948-0000 | | 1 | BRACKET | |
| 020 | 90287-0330 | | 1 | SCREW M6S ISO 4017 M10X70 A480 | |

| Pos | Part No | UN | Qty | Description | Page No |
|---|---|---|---|---|---|

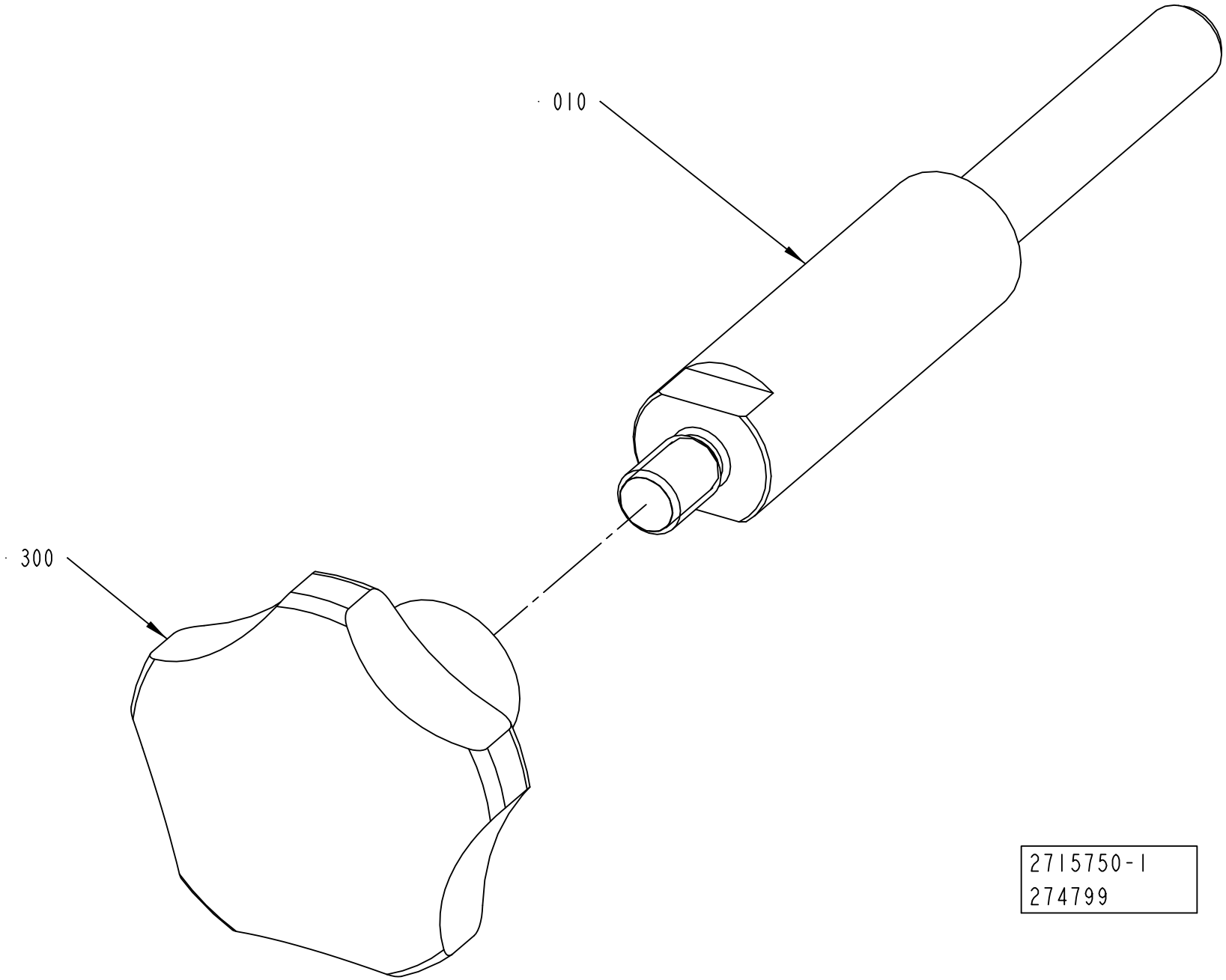
010
300
2715750-1
274799

ECM: 444700 - 20100701
Group number: 2715750-0100
Assembly Drawing: 2715750-1_1_AA

| Pos | Part No | UN | Qty | Description | Page No |
|---|---|---|---|---|---|
| - | | | | | |
| 010 | 2715751-0000 | | 1 | SHAFT | |
| 300 | 90051-0054 | | 1 | STELLAR KNOB, INT. THREAD, NO. 8306-0340 | |

| Pos | Part No | UN | Qty | Description | Page No |
|---|---|---|---|---|---|

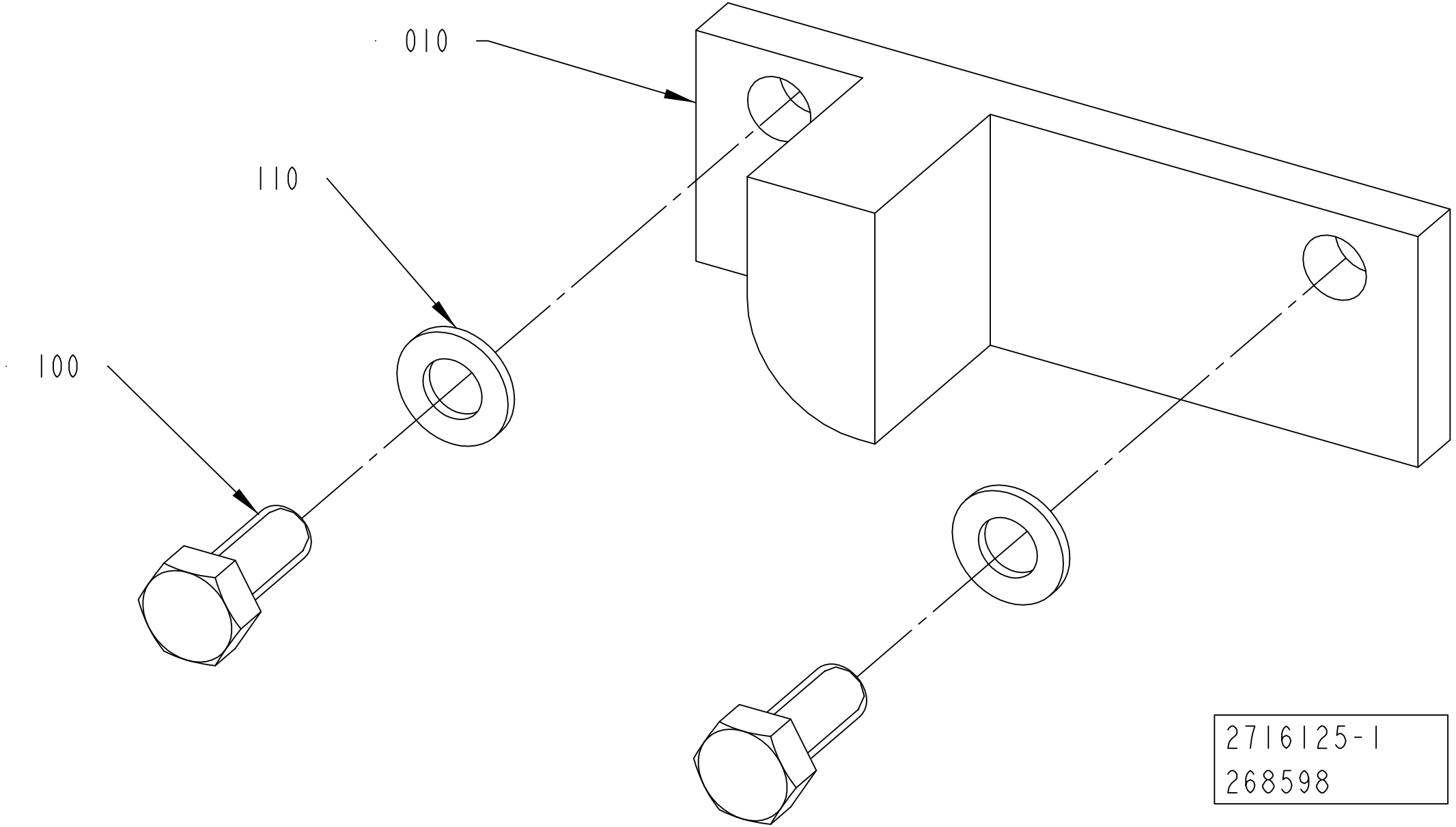
010
110
100
2716125-1
268598

ECM: 269065 - 20060920
Group number: 2716125-0100
Assembly Drawing: 2716125-1_1_AA

| Pos | Part No | UN | Qty | Description | Page No |
|---|---|---|---|---|---|
| - | | | | | |
| 010 | 2716154-0000 | | 1 | SETTING TEMPLATE | |
| 100 | 312105-0327 | | 2 | SCREW M6S ISO 4017 M5X12 A480 | |
| 110 | 315105-0146 | | 2 | WASHER BRB 5,3X10 RFR | |

| Pos | Part No | UN | Qty | Description | Page No |
|---|---|---|---|---|---|

**This page is intentionally left blank.**

ECM: 446884 - 20100701
Group number: 2838693-0100
Assembly Drawing:

| Pos | Part No | UN | Qty | Description | Page No |
|---|---|---|---|---|---|
| **RECAP2 A3** | | | | | |
| 020 | 90153-0059 | KG | 1 | 250.0 ADHESIVE, HOTMELT RECAP 12 KG | |
| 040 | 90335-0252 | | 20 | TENSION SPRING | |
| 050 | 2911986-0000 | | 3 | ARM | |
| 060 | 321154-0180 | | 6 | FLANGE BUSHING, IGLIDUR W300 12X14X12 | |
| **RECAP3** | | | | | |
| 020 | 90153-0059 | KG | 1 | 250.0 ADHESIVE, HOTMELT RECAP 12 KG | |
| 040 | 90335-0252 | | 20 | TENSION SPRING | |

| Pos | Part No | UN | Qty | Description | Page No |
|---|---|---|---|---|---|

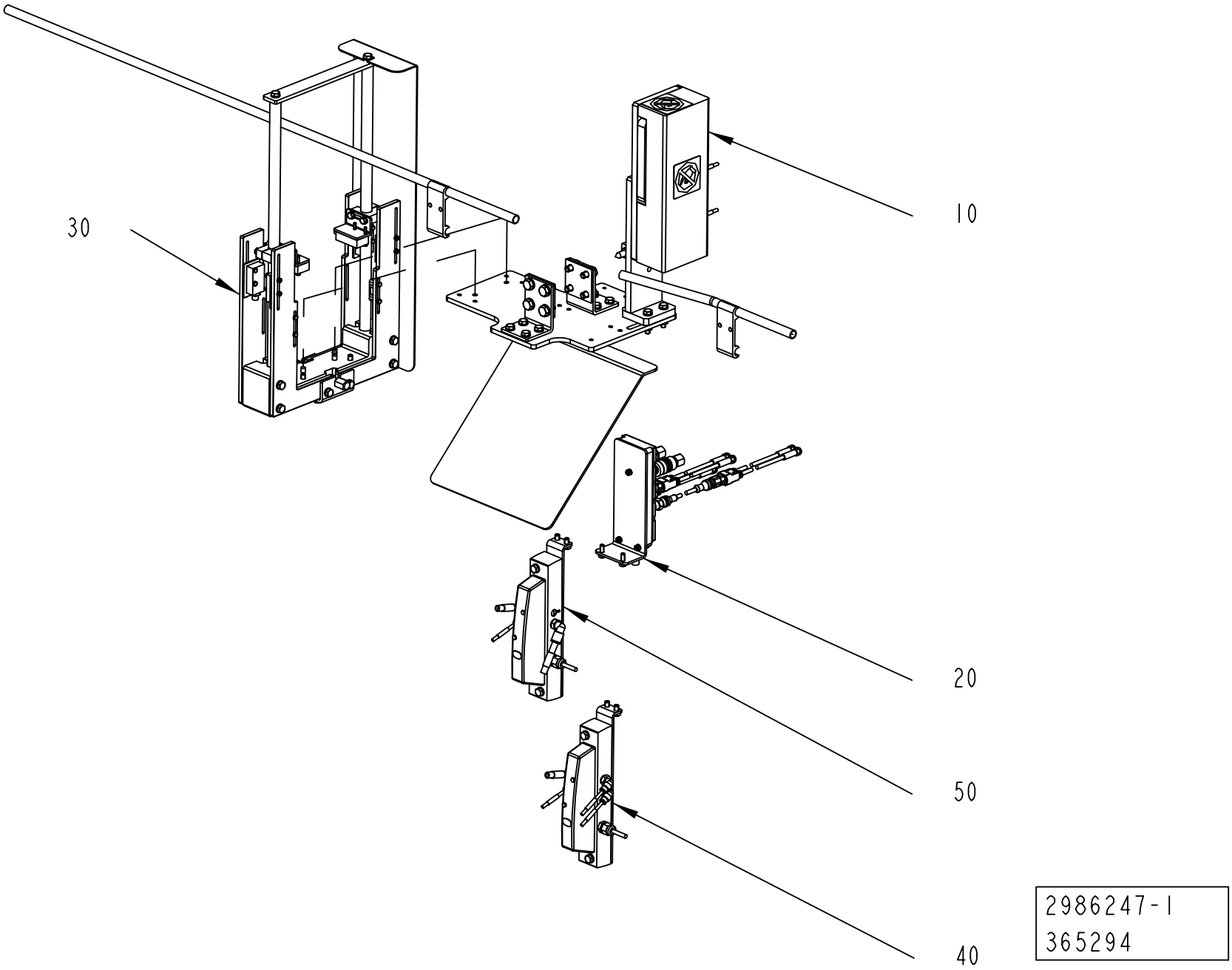
30
10
20
50
40
2986247-1
365294

ECM: 431953 - 20100401
Group number: 2986247-0100
Assembly Drawing: 2986247-1_1_AA

This list covers pages from 8-14 to 8-17

| Pos | Part No | UN | Qty | Description | Page No |
|---|---|---|---|---|---|
| **RECAP2 A3 (See drawing on page: 8-16)** | | | | | |
| 060 | 2819144-0100 | | 1 | ALARM DEVICE | **8-19, 8-21** |
| **RECAP3 (See drawing on page: 8-16)** | | | | | |
| 060 | 2819144-0100 | | 1 | ALARM DEVICE | **8-19, 8-21** |
| **Common Parts** | | | | | |
| 010 | 2986246-0100 | | 1 | EJECTOR | **8-23** |
| 020 | 2839195-0100 | | 1 | DISTRIBUTOR | **8-25, 8-27** |
| 030 | 2956718-0100 | | 1 | PHOTOCELL BRACKET | **8-29, 8-31, 8-33, 8-35** |
| 040 | 2839074-0100 | | 1 | PNEUMATIC UNIT | **8-37** |
| 050 | 2839194-0100 | | 1 | PNEUMATIC UNIT | **8-39** |

| Pos | Part No | UN | Qty | Description | Page No |
|---|---|---|---|---|---|

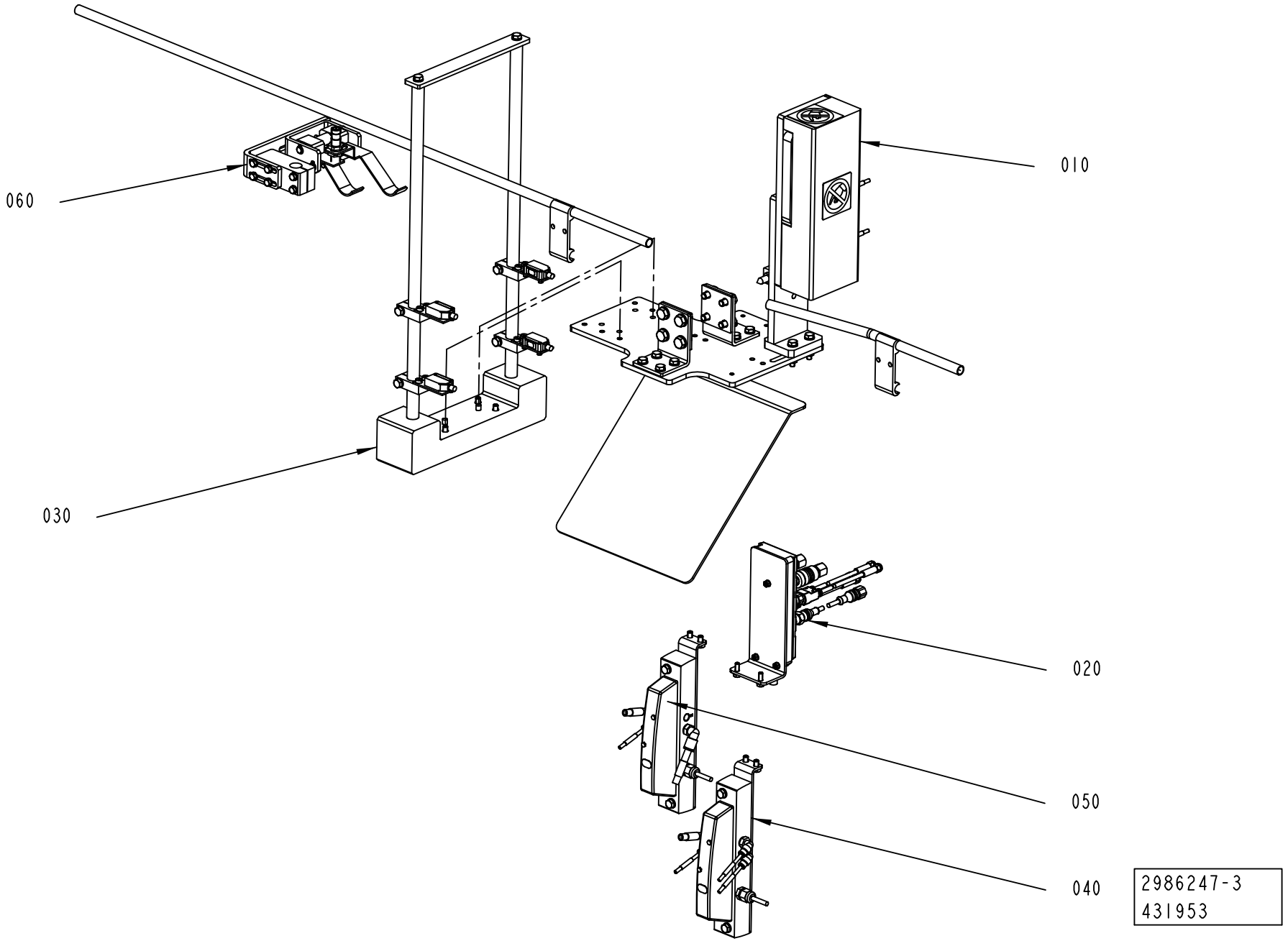
060
010
030
020
050
040
2986247-3
431953

ECM: 431953 - 20100401
Group number: 2986247-0100
Assembly Drawing: 2986247-3_1_AB

This list covers pages from 8-14 to 8-17

| Pos | Part No | UN | Qty | Description | Page No |
|---|---|---|---|---|---|
| **RECAP2 A3 (See drawing on page: 8-16)** | | | | | |
| 060 | 2819144-0100 | | 1 | ALARM DEVICE | **8-19, 8-21** |
| **RECAP3 (See drawing on page: 8-16)** | | | | | |
| 060 | 2819144-0100 | | 1 | ALARM DEVICE | **8-19, 8-21** |
| **Common Parts** | | | | | |
| 010 | 2986246-0100 | | 1 | EJECTOR | **8-23** |
| 020 | 2839195-0100 | | 1 | DISTRIBUTOR | **8-25, 8-27** |
| 030 | 2956718-0100 | | 1 | PHOTOCELL BRACKET | **8-29, 8-31, 8-33, 8-35** |
| 040 | 2839074-0100 | | 1 | PNEUMATIC UNIT | **8-37** |
| 050 | 2839194-0100 | | 1 | PNEUMATIC UNIT | **8-39** |

| Pos | Part No | UN | Qty | Description | Page No |
|---|---|---|---|---|---|

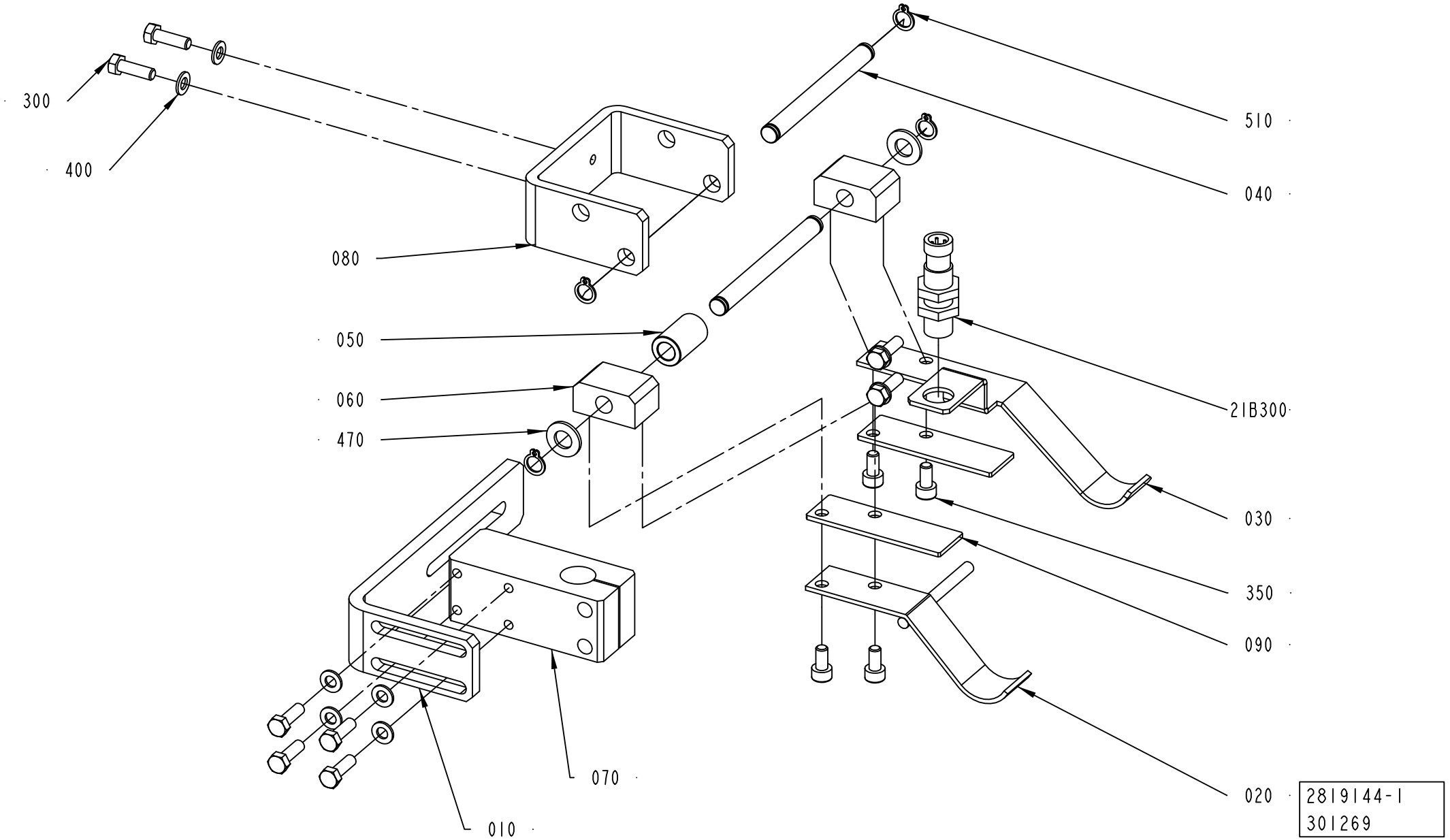
300
400
080
050
060
470
010
070
510
040
21B300
030
350
090
020
2819144-1
301269

ECM: 444702 - 20100701
Group number: 2819144-0100
Assembly Drawing: 2819144-1_1_AB

This list covers pages from 8-18 to 8-21

| Pos | Part No | UN | Qty | Description | Page No |
|---|---|---|---|---|---|
| **RECAP2 A3 (See drawing on page: 8-20)** | | | | | |
| 100 | 2983415-0000 | | 1 | SPACER | |
| 110 | 2983438-0000 | | 1 | SPACER | |
| **RECAP3 (See drawing on page: 8-18)** | | | | | |
| 050 | 2819081-0000 | | 1 | SPACER | |
| **Common Parts** | | | | | |
| 010 | 2887994-0000 | | 1 | BRACKET | |
| 020 | 2819036-0000 | | 1 | LEVER | |
| 030 | 2819093-0000 | | 1 | LEVER | |
| 040 | 2819079-0000 | | 2 | SHAFT | |
| 060 | 2819037-0000 | | 2 | SUPPORT | |
| 070 | 2887950-0000 | | 1 | SUPPORT | |
| 080 | 2825844-0000 | | 1 | SUPPORT | |
| 090 | 2890547-0000 | | 2 | PLATE | |
| 300 | 312105-0329 | | 8 | SCREW M6S ISO 4017 M5X16 A480 | |
| 350 | 312115-0325 | | 4 | SCREW ISO4762 M5X10 A4 80 | |
| 400 | 315105-0146 | | 8 | WASHER BRB 5,3X10 RFR | |
| 470 | 315105-0165 | | 2 | WASHER BRB 8,4X16 RFR | |
| 510 | 90141-0015 | | 4 | RETAINING RING FOR SHAFT DIN 471 8 SS | |
| 21B300 | 90458-2907 | | 1 | PROX.SWITCH IFS204 | |

| Pos | Part No | UN | Qty | Description | Page No |
|---|---|---|---|---|---|

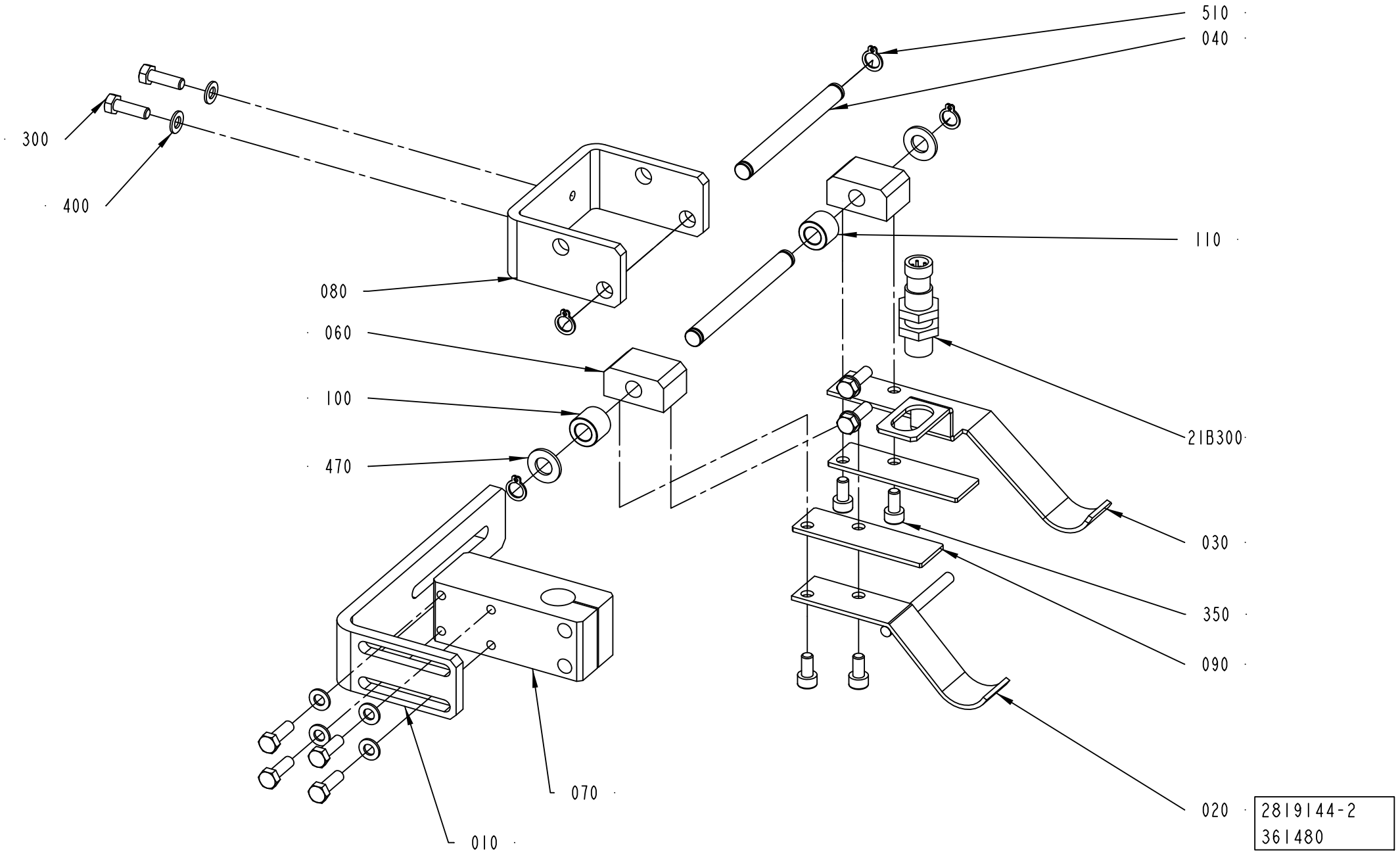


2819144-2
361480

ECM: 444702 - 20100701
Group number: 2819144-0100
Assembly Drawing: 2819144-2_1_AA

This list covers pages from 8-18 to 8-21

| Pos | Part No | UN | Qty | Description | Page No |
|---|---|---|---|---|---|
| **RECAP2 A3 (See drawing on page: 8-20)** | | | | | |
| 100 | 2983415-0000 | | 1 | SPACER | |
| 110 | 2983438-0000 | | 1 | SPACER | |
| **RECAP3 (See drawing on page: 8-18)** | | | | | |
| 050 | 2819081-0000 | | 1 | SPACER | |
| **Common Parts** | | | | | |
| 010 | 2887994-0000 | | 1 | BRACKET | |
| 020 | 2819036-0000 | | 1 | LEVER | |
| 030 | 2819093-0000 | | 1 | LEVER | |
| 040 | 2819079-0000 | | 2 | SHAFT | |
| 060 | 2819037-0000 | | 2 | SUPPORT | |
| 070 | 2887950-0000 | | 1 | SUPPORT | |
| 080 | 2825844-0000 | | 1 | SUPPORT | |
| 090 | 2890547-0000 | | 2 | PLATE | |
| 300 | 312105-0329 | | 8 | SCREW M6S ISO 4017 M5X16 A480 | |
| 350 | 312115-0325 | | 4 | SCREW ISO4762 M5X10 A4 80 | |
| 400 | 315105-0146 | | 8 | WASHER BRB 5,3X10 RFR | |
| 470 | 315105-0165 | | 2 | WASHER BRB 8,4X16 RFR | |
| 510 | 90141-0015 | | 4 | RETAINING RING FOR SHAFT DIN 471 8 SS | |
| 21B300 | 90458-2907 | | 1 | PROX.SWITCH IFS204 | |

| Pos | Part No | UN | Qty | Description | Page No |
|---|---|---|---|---|---|

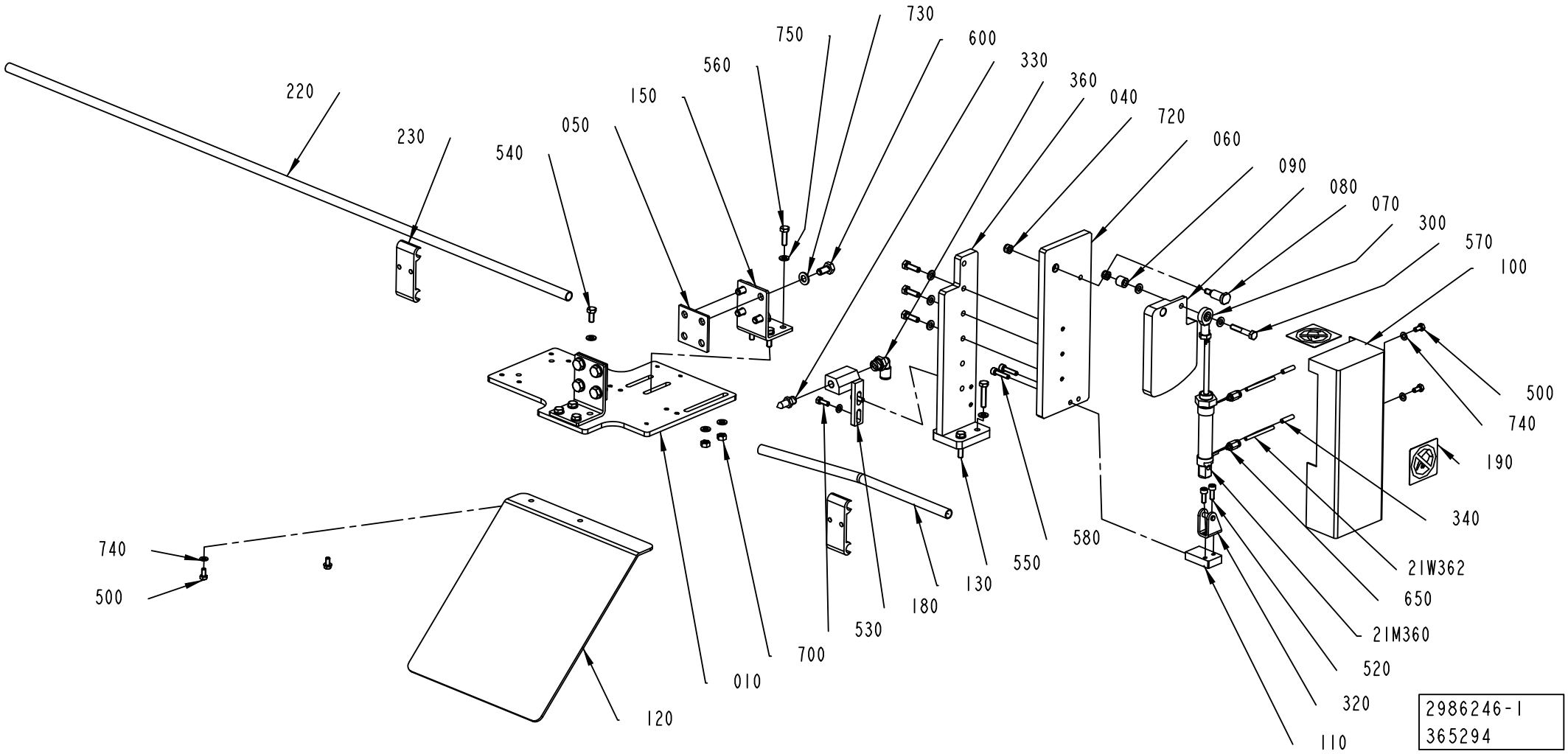
220
230
540
050
150
560
750
730
600
330
360
040
720
060
090
080
070
300
570
100
500
740
190
340
21W362
650
21M360
520
320
110
580
550
130
180
530
700
010
120
740
500
2986246-1
365294

ECM: 428975 - 20100401
Group number: 2986246-0100
Assembly Drawing: 2986246-1_1_AA

| Pos | Part No | UN | Qty | Description | Page No |
|---|---|---|---|---|---|
| - | | | | | |
| 010 | 2958971-0000 | | 1 | PLATE | |
| 040 | 2873872-0000 | | 1 | BRACKET | |
| 050 | 2815585-0000 | | 2 | SPACER | |
| 060 | 2873876-0000 | | 1 | PLATE | |
| 070 | 2817525-0000 | | 1 | SHAFT | |
| 080 | 2817527-0000 | | 1 | PUSHER | |
| 090 | 2817573-0000 | | 1 | SPACER | |
| 100 | 2817578-0000 | | 1 | COVER | |
| 110 | 2818204-0000 | | 1 | SUPPORT | |
| 120 | 2818427-0000 | | 1 | SLIDE PLATE | |
| 130 | 2818738-0000 | | 1 | RAILING | |
| 150 | 2814679-0000 | | 2 | BRACKET | |
| 180 | 2873866-0000 | | 1 | SUPPORT | |
| 190 | 1128856-0000 | | 2 | PROHIBITION SIGN | |
| 220 | 476221-0013 | | 1 | PIPE | |
| 230 | 1020637-0000 | | 2 | HOLDER | |
| 300 | 90115-0163 | | 1 | ROD END, ID=6 MM, M6X1 | |
| 320 | 90459-3655 | | 1 | REAR CLEVIS FOOT MOUNTING, LBN-12/16 | |
| 330 | 90424-0087 | | 1 | AIR NOZZLE | |
| 340 | 90459-7368 | | 2 | MARKING FOR PNEUM. TUBING, PRZ04 | |
| 360 | 350002-0009 | | 1 | PUSH-IN L-FITTING QSL-F-G1/4-8 | |
| 500 | 312105-0325 | | 5 | SCREW M6S ISO 4017 M5X10 A480 | |
| 520 | 312115-0328 | | 2 | SCREW ISO4762 M5X14 A4 80 | |
| 530 | 312105-0328 | | 2 | SCREW M6S ISO 4017 M5X14 A480 | |
| 540 | 312105-0367 | | 4 | SCREW M6S ISO 4017 M6X14 A480 | |
| 550 | 312109-0374 | | 2 | SCREW M6S ISO 4017 M6X30 A480 | |
| 560 | 312105-0370 | | 7 | SCREW M6S ISO 4017 M6X20 A480 | |
| 570 | 312105-0376 | | 1 | SCREW M6S ISO 4014 M6X35 A480 | |
| 580 | 312115-0332 | | 2 | SCREW ISO4762 M5X22 A4 80 | |
| 600 | 312105-0449 | | 8 | SCREW M6S ISO 4017 M8X16 A480 | |
| 650 | 350001-0001 | | 2 | PUSH-IN FITTING QS-F-M5-4 | |
| 700 | 312607-0316 | | 6 | HEXAGON NUT, EN 24032 M6M M6 A480 | |
| 720 | 312812-0316 | | 2 | HEXAGON NUT, NY-LOCK M6 A480 | |
| 730 | 315105-0165 | | 8 | WASHER BRB 8,4X16 RFR | |
| 740 | 315105-0146 | | 7 | WASHER BRB 5,3X10 RFR | |
| 750 | 315105-0153 | | 21 | WASHER BRB 6,4X12 RFR | |
| 21M360 | 90457-0871 | | 1 | DOUBLE ACTING, MINI-ISO, CYL. 16-25 | |
| 21W362 | 315400-0016 | MM | 500 | TUBE PUN-H-4X0,75-BL | |
| 21W364 | 315400-0016 | MM | 500 | TUBE PUN-H-4X0,75-BL | |

| Pos | Part No | UN | Qty | Description | Page No |
|---|---|---|---|---|---|

Machine Type | Group Description | Used-In | Group Number | Page No

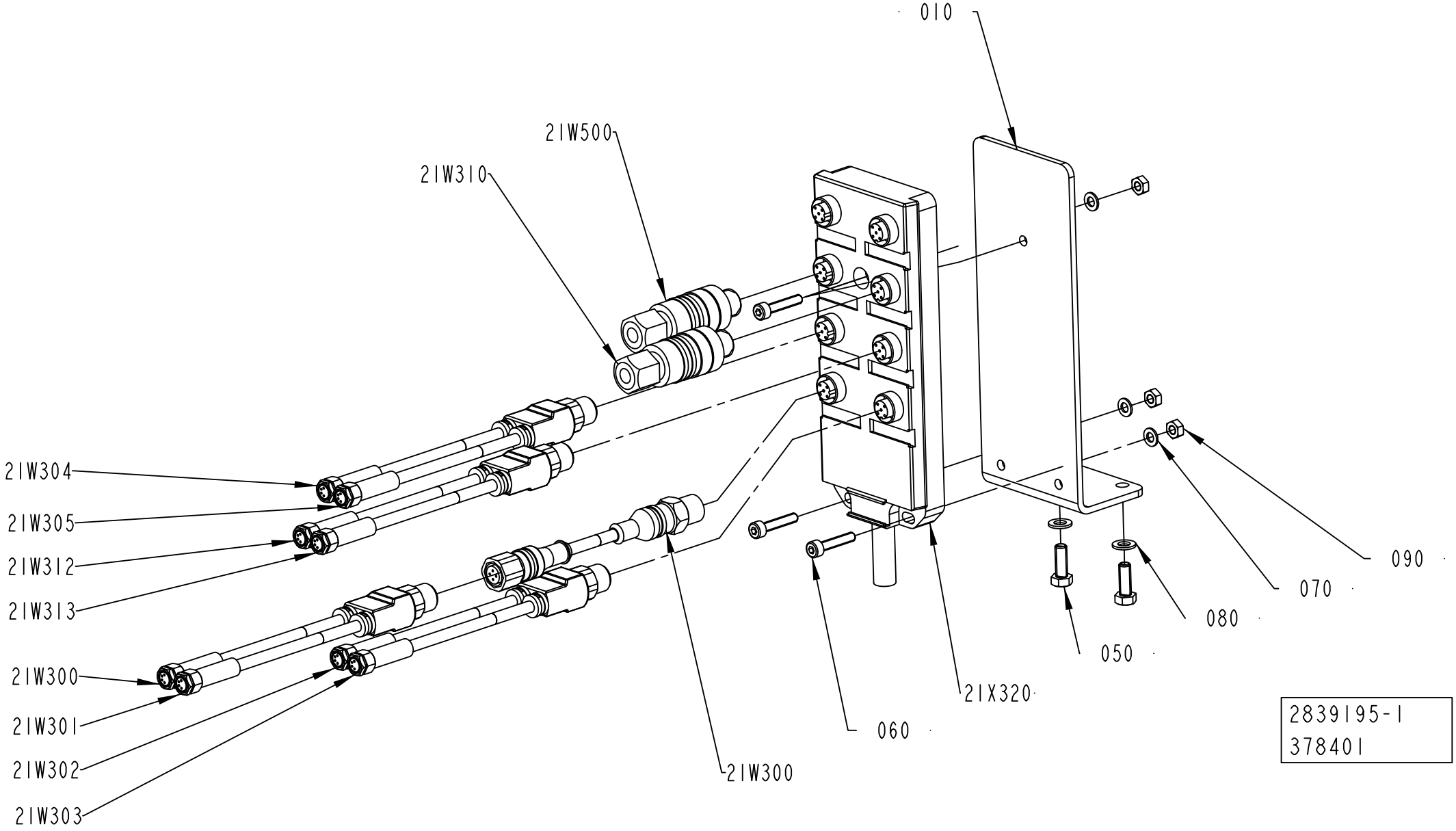
010
21W500
21W310
21W304
21W305
21W312
21W313
21W300
21W301
21W302
21W303
21W300
060
21X320
050
080
070
090
2839195-1
378401

ECM: 381188 - 20090102
Group number: 2839195-0100
Assembly Drawing: 2839195-1_1_AB

This list covers pages from 8-24 to 8-27

| Pos | Part No | UN | Qty | Description | Page No |
|---|---|---|---|---|---|
| **RECAP3, RECAP2 A3 (See drawing on page: 8-26)** | | | | | |
| 21W300 | 351411-0010 | | 1 | ACTU/SENS. CABLE PRST 4-PRKT 4-07/1,0M | |
| **TBA (See drawing on page: 8-24)** | | | | | |
| 21W300 | 90459-6586 | | 1 | ACT/SENS.Y-CABLE, ASBN 2-PRKMV 4-07/0,6M | |
| 21W300 | 351411-0006 | | 1 | ACTU/SENS. CABLE PRST 4-PRKT 4-07/0,6M | |
| 21W312 | 90459-6586 | | 1 | ACT/SENS.Y-CABLE, ASBN 2-PRKMV 4-07/0,6M | |
| **Common Parts** | | | | | |
| 010 | 2827671-0000 | | 1 | BRACKET | |
| 050 | 312105-0328 | | 2 | SCREW M6S ISO 4017 M5X14 A480 | |
| 060 | 312115-0295 | | 3 | SCREW ISO4762 M4X20 A4 80 | |
| 070 | 315105-0136 | | 3 | WASHER BRB 4,3X8 RFR | |
| 080 | 315105-0146 | | 2 | WASHER BRB 5,3X10 RFR | |
| 090 | 312607-0312 | | 3 | HEXAGON NUT, EN 24032 M6M M4 A480 | |
| 21W302 | 90459-6586 | | 1 | ACT/SENS.Y-CABLE, ASBN 2-PRKMV 4-07/0,6M | |
| 21W304 | 90459-6586 | | 1 | ACT/SENS.Y-CABLE, ASBN 2-PRKMV 4-07/0,6M | |
| 21W310 | 90459-1663 | | 1 | CONNECTOR, 405204 RSC4/7 | |
| 21W500 | 90459-1663 | | 1 | CONNECTOR, 405204 RSC4/7 | |
| 21X320 | 90459-0839 | | 1 | DISTRIBUTION FRAME, ASBV 8 5-135/10M | |

| Pos | Part No | UN | Qty | Description | Page No |
|---|---|---|---|---|---|

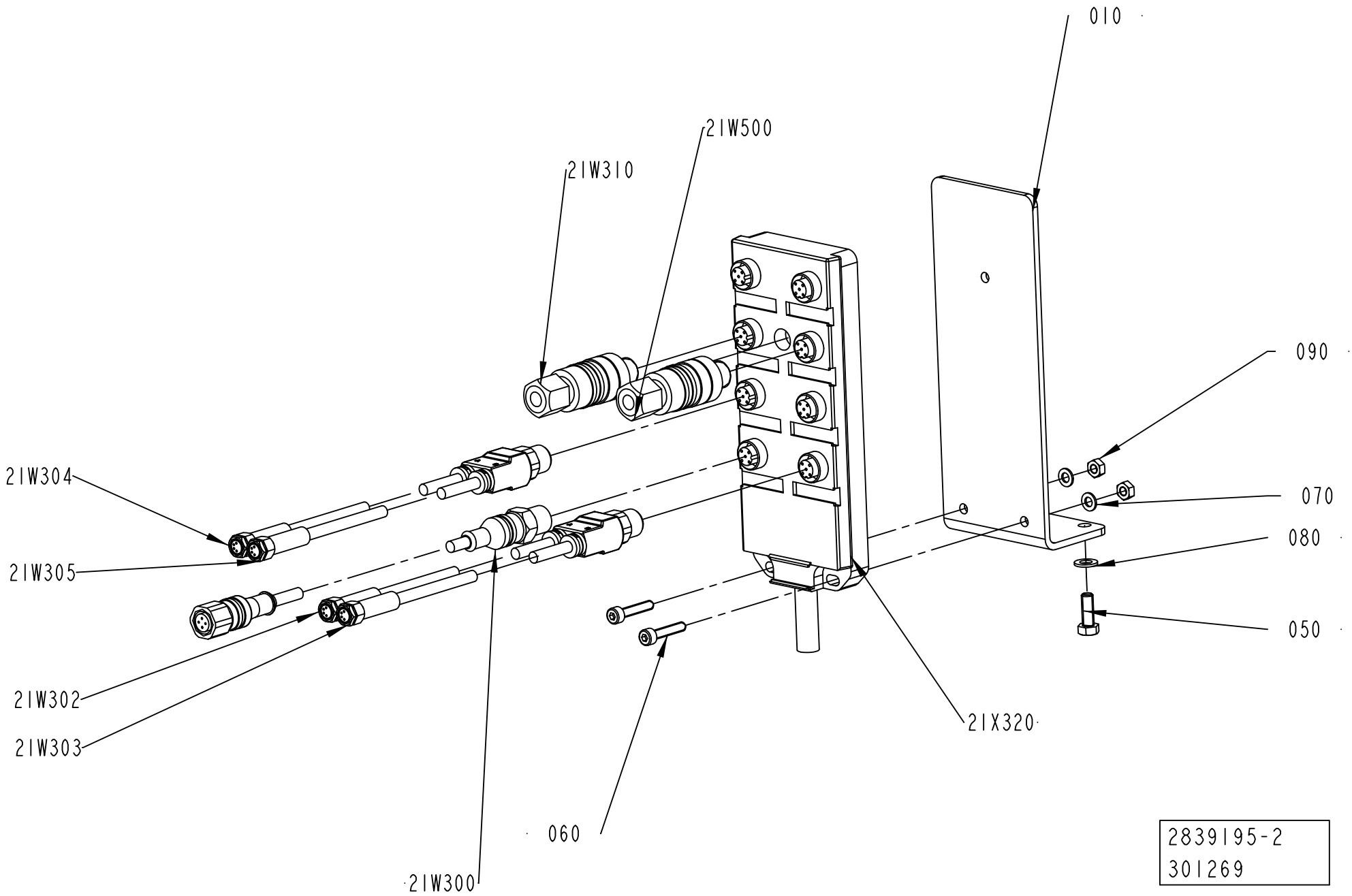
010
21W500
21W310
090
21W304
070
21W305
080
050
21W302
21W303
21X320
060
21W300
2839195-2
301269

ECM: 381188 - 20090102
Group number: 2839195-0100
Assembly Drawing: 2839195-2_1_AA

This list covers pages from 8-24 to 8-27

| Pos | Part No | UN | Qty | Description | Page No |
|---|---|---|---|---|---|
| **RECAP3, RECAP2 A3 (See drawing on page: 8-26)** | | | | | |
| 21W300 | 351411-0010 | | 1 | ACTU/SENS. CABLE PRST 4-PRKT 4-07/1,0M | |
| **TBA (See drawing on page: 8-24)** | | | | | |
| 21W300 | 90459-6586 | | 1 | ACT/SENS.Y-CABLE, ASBN 2-PRKMV 4-07/0,6M | |
| 21W300 | 351411-0006 | | 1 | ACTU/SENS. CABLE PRST 4-PRKT 4-07/0,6M | |
| 21W312 | 90459-6586 | | 1 | ACT/SENS.Y-CABLE, ASBN 2-PRKMV 4-07/0,6M | |
| **Common Parts** | | | | | |
| 010 | 2827671-0000 | | 1 | BRACKET | |
| 050 | 312105-0328 | | 2 | SCREW M6S ISO 4017 M5X14 A480 | |
| 060 | 312115-0295 | | 3 | SCREW ISO4762 M4X20 A4 80 | |
| 070 | 315105-0136 | | 3 | WASHER BRB 4,3X8 RFR | |
| 080 | 315105-0146 | | 2 | WASHER BRB 5,3X10 RFR | |
| 090 | 312607-0312 | | 3 | HEXAGON NUT, EN 24032 M6M M4 A480 | |
| 21W302 | 90459-6586 | | 1 | ACT/SENS.Y-CABLE, ASBN 2-PRKMV 4-07/0,6M | |
| 21W304 | 90459-6586 | | 1 | ACT/SENS.Y-CABLE, ASBN 2-PRKMV 4-07/0,6M | |
| 21W310 | 90459-1663 | | 1 | CONNECTOR, 405204 RSC4/7 | |
| 21W500 | 90459-1663 | | 1 | CONNECTOR, 405204 RSC4/7 | |
| 21X320 | 90459-0839 | | 1 | DISTRIBUTION FRAME, ASBV 8 5-135/10M | |

| Pos | Part No | UN | Qty | Description | Page No |
|---|---|---|---|---|---|

# PHOTOCELL BRACKET



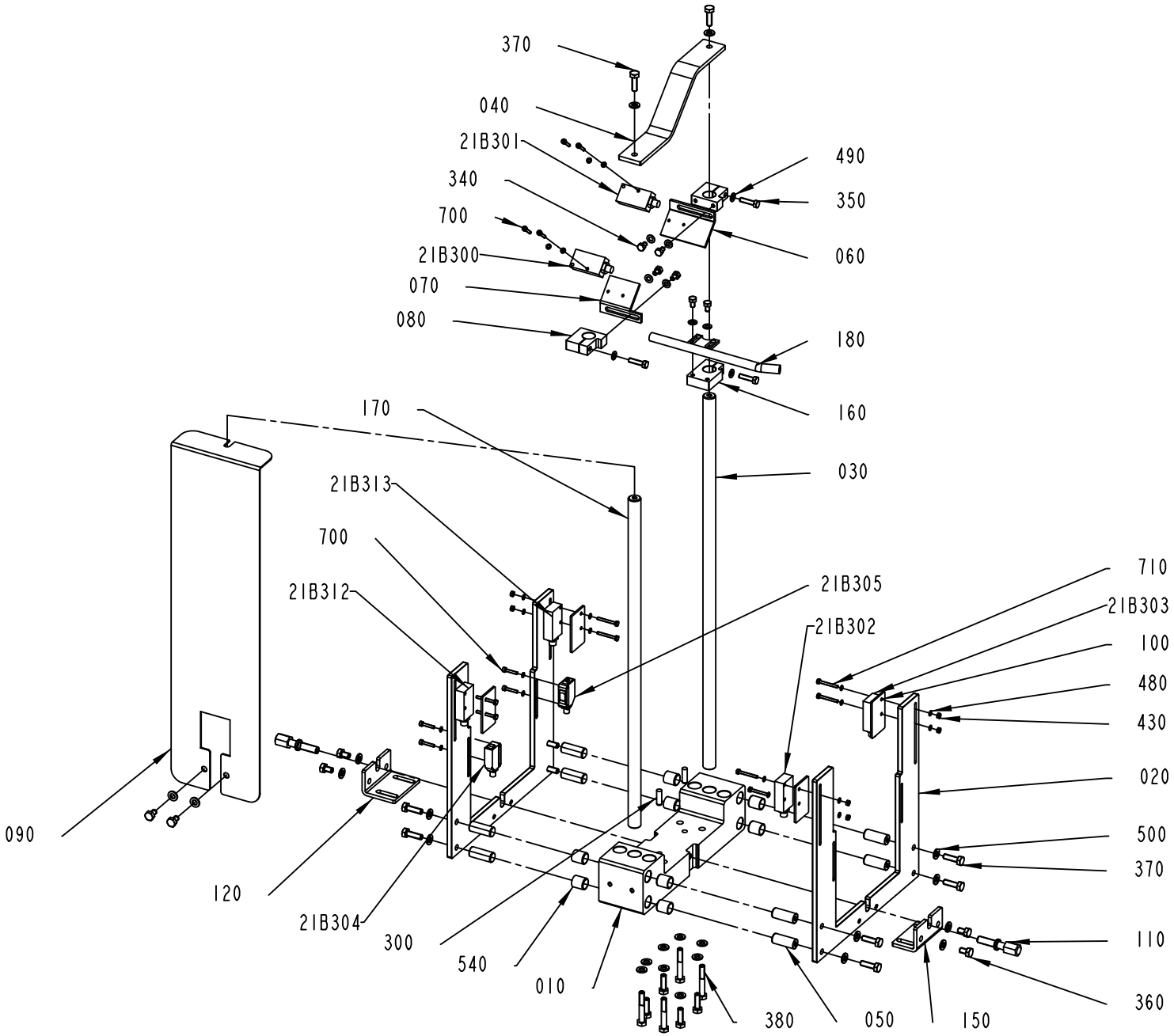


2956718-2
382265

ECM: 420023 - 20100110
Group number: 2956718-0100
Assembly Drawing: 2956718-2_1_AB

This list covers pages from 8-28 to 8-35

| Pos | Part No | UN | Qty | Description | Page No |
|---|---|---|---|---|---|
| **RECAP3, RECAP2 A3 (See drawing on page: 8-30)** | | | | | |
| 010 | 2986316-0000 | | 1 | BRACKET | |
| 030 | 2956908-0000 | | 2 | SHAFT | |
| 040 | 2957790-0000 | | 1 | BRACKET | |
| 060 | 2826483-0000 | | 4 | BRACKET | |
| 080 | 1189007-0000 | | 4 | CLAMP BLOCK | |
| 310 | 312125-0327 | | 8 | SCREW ISO 1207 M5X12 A4 | |
| 330 | 312109-0374 | | 4 | SCREW M6S ISO 4017 M6X30 A480 | |
| 340 | 312115-0222 | | 8 | SCREW ISO4762 M3X8 A4 80 | |
| 370 | 312105-0370 | | 4 | SCREW M6S ISO 4017 M6X20 A480 | |
| 500 | 315105-0153 | | 12 | WASHER BRB 6,4X12 RFR | |
| 21B300 | 90459-5529 | | 1 | PH.CELL E3Z-T86A, SENDER+RECIEVER | |
| **TBA 1000SQ (See drawing on page: 8-28)** | | | | | |
| 010 | 2958205-0000 | | 1 | BRACKET | |
| 020 | 2956734-0000 | | 2 | SUPPORT | |
| 040 | 2957790-0000 | | 1 | BRACKET | |
| 050 | 2956743-0000 | | 8 | AXLE PIN | |
| 060 | 2958873-0000 | | 1 | BRACKET | |
| 070 | 2960571-0000 | | 1 | BRACKET | |
| 080 | 2957674-0000 | | 2 | CLAMP | |
| 090 | 2963601-0000 | | 1 | COVER | |
| 100 | 2960276-0000 | | 4 | PLATE | |
| 110 | 2959224-0000 | | 2 | SCREW | |
| 120 | 3007670-0000 | | 1 | SUPPORT | |
| 150 | 2956716-0000 | | 1 | SUPPORT | |
| 160 | 2982300-0000 | | 1 | CLAMP | |
| 170 | 2981402-0000 | | 2 | SHAFT | |
| 180 | 2982402-0000 | | 1 | GUIDE | |
| 340 | 312105-0323 | | 6 | SCREW M6S ISO 4017 M5X8 A480 | |
| 350 | 312105-0331 | | 3 | SCREW M6S ISO 4017 M5X20 A480 | |
| 360 | 312105-0364 | | 6 | SCREW M6S ISO 4017 M6X10 A480 | |
| 370 | 312105-0370 | | 16 | SCREW M6S ISO 4017 M6X20 A480 | |
| 430 | 312605-0310 | | 8 | HEXAGON NUT, M6M M3 A280 | |
| 480 | 315105-0124 | | 24 | WASHER BRB 3,2X6 RFR | |
| 490 | 315105-0146 | | 9 | WASHER BRB 5,3X10 RFR | |
| 500 | 315105-0153 | | 26 | WASHER BRB 6,4X12 RFR | |
| 540 | 321135-0183 | | 8 | BUSHING, IGLIDUR X 12X14X15 | |
| 700 | 312115-0228 | | 8 | SCREW ISO4762 M3X16 A4 80 | |
| 710 | 90287-0176 | | 8 | SCREW M6S M3X25 A470 | |
| 21B300 | 90600-4732 | | 1 | LASER SENSOR, WS/WE9L-P330 | |
| 21B302 | 90600-4732 | | 1 | LASER SENSOR, WS/WE9L-P330 | |
| 21B312 | 90600-4732 | | 1 | LASER SENSOR, WS/WE9L-P330 | |
| **TBA 1000B, TBA 1000S, TBA 1500S (See drawing on page: 8-32)** | | | | | |
| 010 | 2958205-0000 | | 1 | BRACKET | |
| 020 | 2956734-0000 | | 2 | SUPPORT | |
| 040 | 2957790-0000 | | 1 | BRACKET | |
| 050 | 3007668-0000 | | 4 | AXLE PIN | |
| 060 | 2958873-0000 | | 1 | BRACKET | |
| 070 | 2960571-0000 | | 1 | BRACKET | |
| 080 | 2957674-0000 | | 2 | CLAMP | |
| 090 | 2963601-0000 | | 1 | COVER | |
| 100 | 2960276-0000 | | 4 | PLATE | |
| 110 | 2959224-0000 | | 1 | SCREW | |
| 120 | 3007670-0000 | | 1 | SUPPORT | |
| 130 | 2958892-0000 | | 4 | AXLE PIN | |
| 140 | 2959689-0000 | | 1 | SCREW | |
| 150 | 2959001-0000 | | 1 | SUPPORT | |
| 160 | 2982300-0000 | | 1 | CLAMP | |
| 170 | 2981402-0000 | | 2 | SHAFT | |
| 180 | 2982402-0000 | | 1 | GUIDE | |
| 340 | 312105-0323 | | 6 | SCREW M6S ISO 4017 M5X8 A480 | |
| 350 | 312105-0331 | | 3 | SCREW M6S ISO 4017 M5X20 A480 | |
| 360 | 312105-0364 | | 6 | SCREW M6S ISO 4017 M6X10 A480 | |
| 370 | 312105-0370 | | 16 | SCREW M6S ISO 4017 M6X20 A480 | |
| 430 | 312605-0310 | | 8 | HEXAGON NUT, M6M M3 A280 | |
| 480 | 315105-0124 | | 24 | WASHER BRB 3,2X6 RFR | |
| 490 | 315105-0146 | | 9 | WASHER BRB 5,3X10 RFR | |
| 500 | 315105-0153 | | 26 | WASHER BRB 6,4X12 RFR | |
| 540 | 321135-0183 | | 8 | BUSHING, IGLIDUR X 12X14X15 | |
| 700 | 312115-0228 | | 8 | SCREW ISO4762 M3X16 A4 80 | |
| 710 | 90287-0176 | | 8 | SCREW M6S M3X25 A470 | |
| 21B300 | 90600-4732 | | 1 | LASER SENSOR, WS/WE9L-P330 | |
| 21B302 | 90600-4732 | | 1 | LASER SENSOR, WS/WE9L-P330 | |
| 21B312 | 90600-4732 | | 1 | LASER SENSOR, WS/WE9L-P330 | |
| **TBA 1890S, TBA 2000S (See drawing on page: 8-34)** | | | | | |
| 010 | 2958205-0000 | | 1 | BRACKET | |
| 020 | 2956734-0000 | | 2 | SUPPORT | |
| 040 | 2957790-0000 | | 1 | BRACKET | |
| 050 | 3007668-0000 | | 4 | AXLE PIN | |
| 060 | 2958873-0000 | | 1 | BRACKET | |
| 070 | 2960571-0000 | | 1 | BRACKET | |
| 080 | 2957674-0000 | | 2 | CLAMP | |
| 090 | 2963601-0000 | | 1 | COVER | |
| 100 | 2960276-0000 | | 4 | PLATE | |

Machine Type | Group Description | Used-In | Group Number | Page No

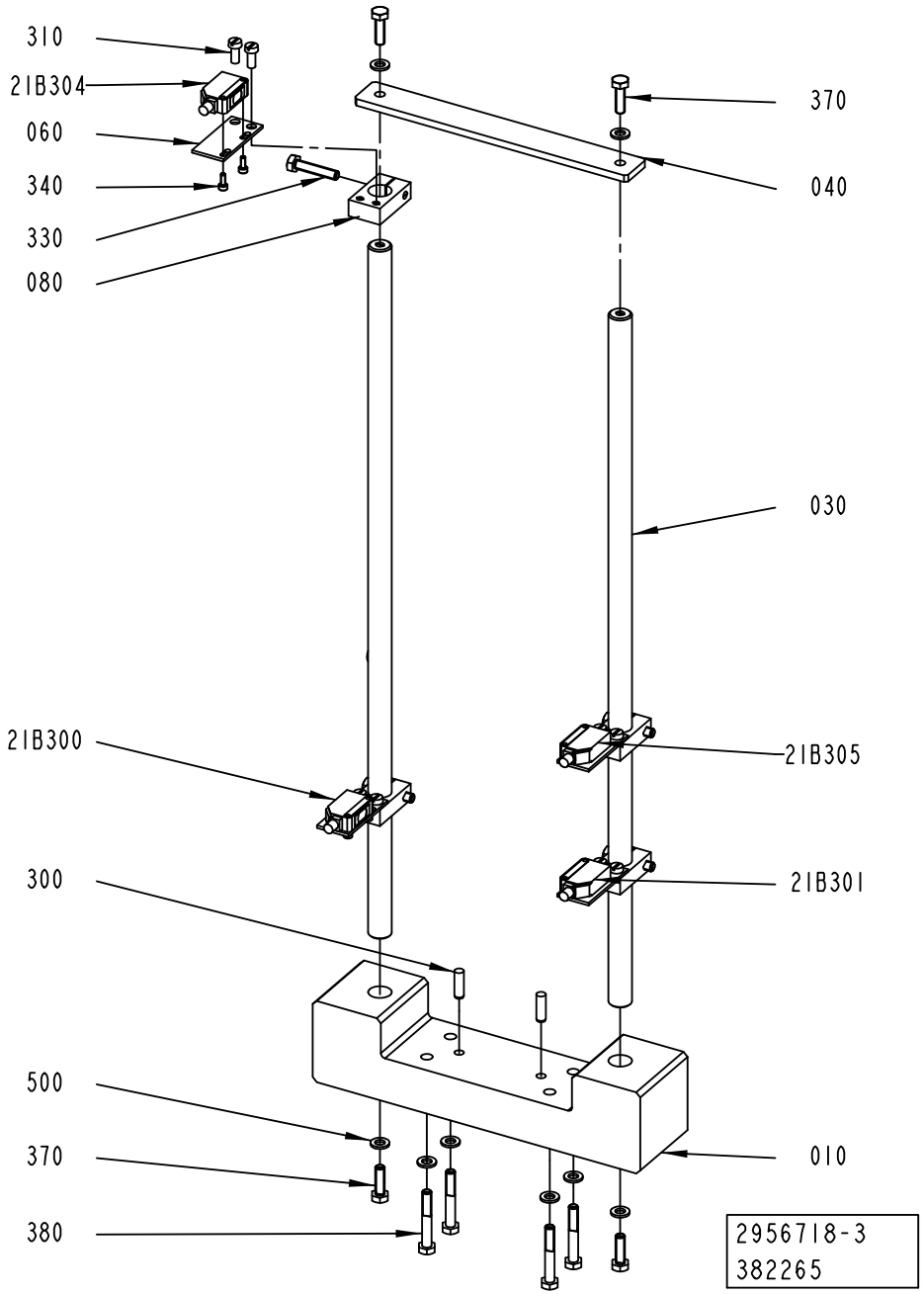
310
21B304
060
340
330
080
370
040
030
21B300
21B305
21B301
300
500
370
380
010
2956718-3
382265

| Pos | Part No | UN | Qty | Description | Page No |
|---|---|---|---|---|---|
| **TBA 1890S, TBA 2000S (Cont'd) (See drawing on page: 8-34)** | | | | | |
| 110 | 2959224-0000 | | 1 | SCREW | |
| 120 | 3007670-0000 | | 1 | SUPPORT | |
| 130 | 2958892-0000 | | 4 | AXLE PIN | |
| 140 | 2959689-0000 | | 1 | SCREW | |
| 150 | 2959001-0000 | | 1 | SUPPORT | |
| 160 | 2982300-0000 | | 1 | CLAMP | |
| 170 | 2981402-0000 | | 2 | SHAFT | |
| 180 | 2982402-0000 | | 1 | GUIDE | |
| 340 | 312105-0323 | | 6 | SCREW M6S ISO 4017 M5X8 A480 | |
| 350 | 312105-0331 | | 3 | SCREW M6S ISO 4017 M5X20 A480 | |
| 360 | 312105-0364 | | 6 | SCREW M6S ISO 4017 M6X10 A480 | |
| 370 | 312105-0370 | | 16 | SCREW M6S ISO 4017 M6X20 A480 | |
| 430 | 312605-0310 | | 8 | HEXAGON NUT, M6M M3 A280 | |
| 480 | 315105-0124 | | 24 | WASHER BRB 3,2X6 RFR | |
| 490 | 315105-0146 | | 9 | WASHER BRB 5,3X10 RFR | |
| 500 | 315105-0153 | | 26 | WASHER BRB 6,4X12 RFR | |
| 540 | 321135-0183 | | 8 | BUSHING, IGLIDUR X 12X14X15 | |
| 700 | 312115-0228 | | 8 | SCREW ISO4762 M3X16 A4 80 | |
| 710 | 90287-0176 | | 8 | SCREW M6S M3X25 A470 | |
| 21B300 | 90600-4732 | | 1 | LASER SENSOR, WS/WE9L-P330 | |
| 21B302 | 90600-4732 | | 1 | LASER SENSOR, WS/WE9L-P330 | |
| 21B312 | 90600-4732 | | 1 | LASER SENSOR, WS/WE9L-P330 | |
| **Common Parts** | | | | | |
| 300 | 311103-0353 | | 2 | PARALLEL PIN ISO 2338 6M6X20 A1 | |
| 380 | 312105-0378 | | 4 | SCREW M6S ISO 4014 M6X40 A480 | |
| 21B304 | 90459-5529 | | 1 | PH.CELL E3Z-T86A, SENDER+RECIEVER | |

| Pos | Part No | UN | Qty | Description | Page No |
|---|---|---|---|---|---|

# PHOTOCELL BRACKET



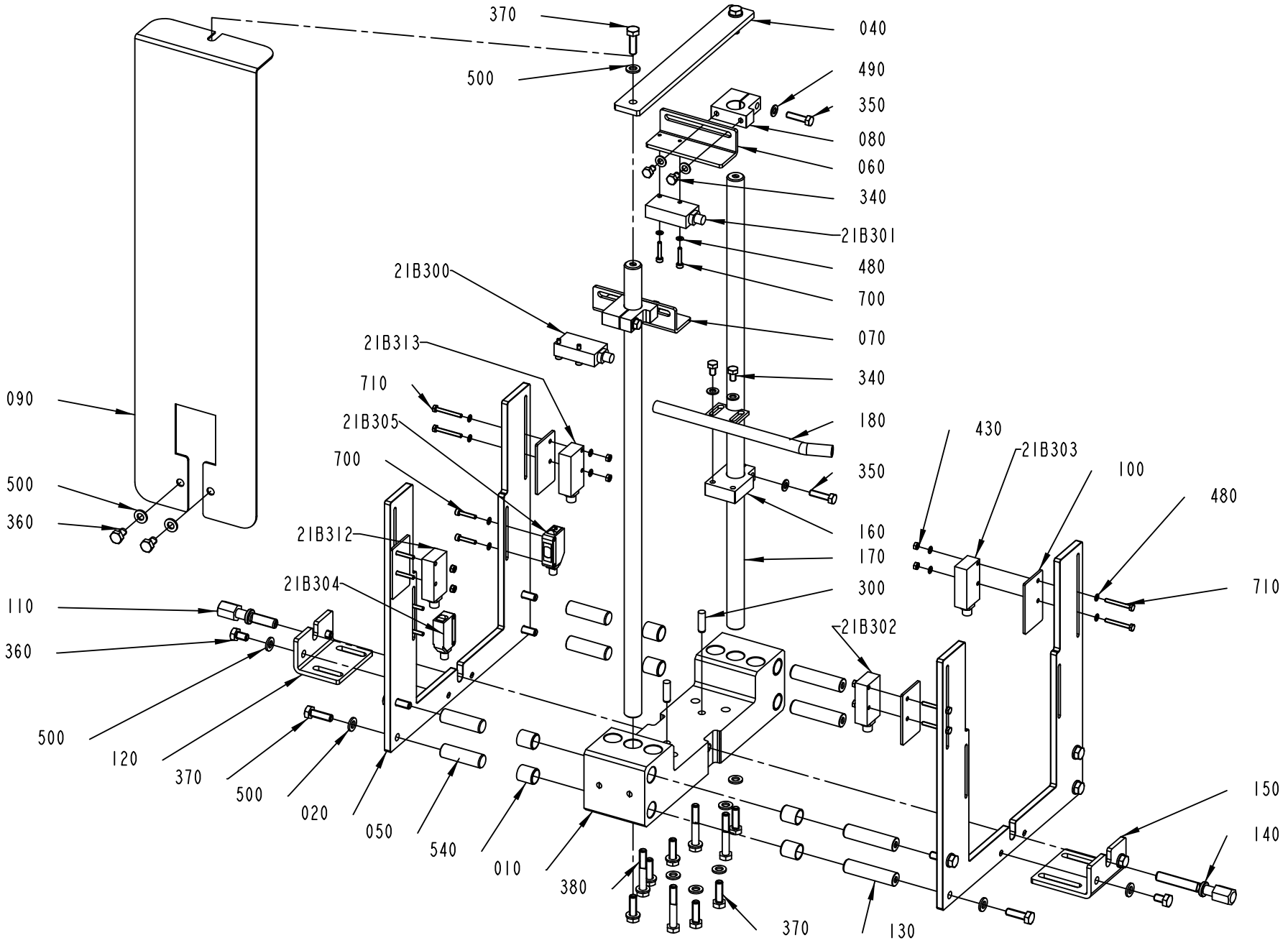


2956718-4
382265

| Pos | Part No | UN | Qty | Description | Page No |
|---|---|---|---|---|---|

**SEE PREVIOUS LISTS PAGES: 8-29, 8-31.**

| Pos | Part No | UN | Qty | Description | Page No |
|---|---|---|---|---|---|

# PHOTOCELL BRACKET



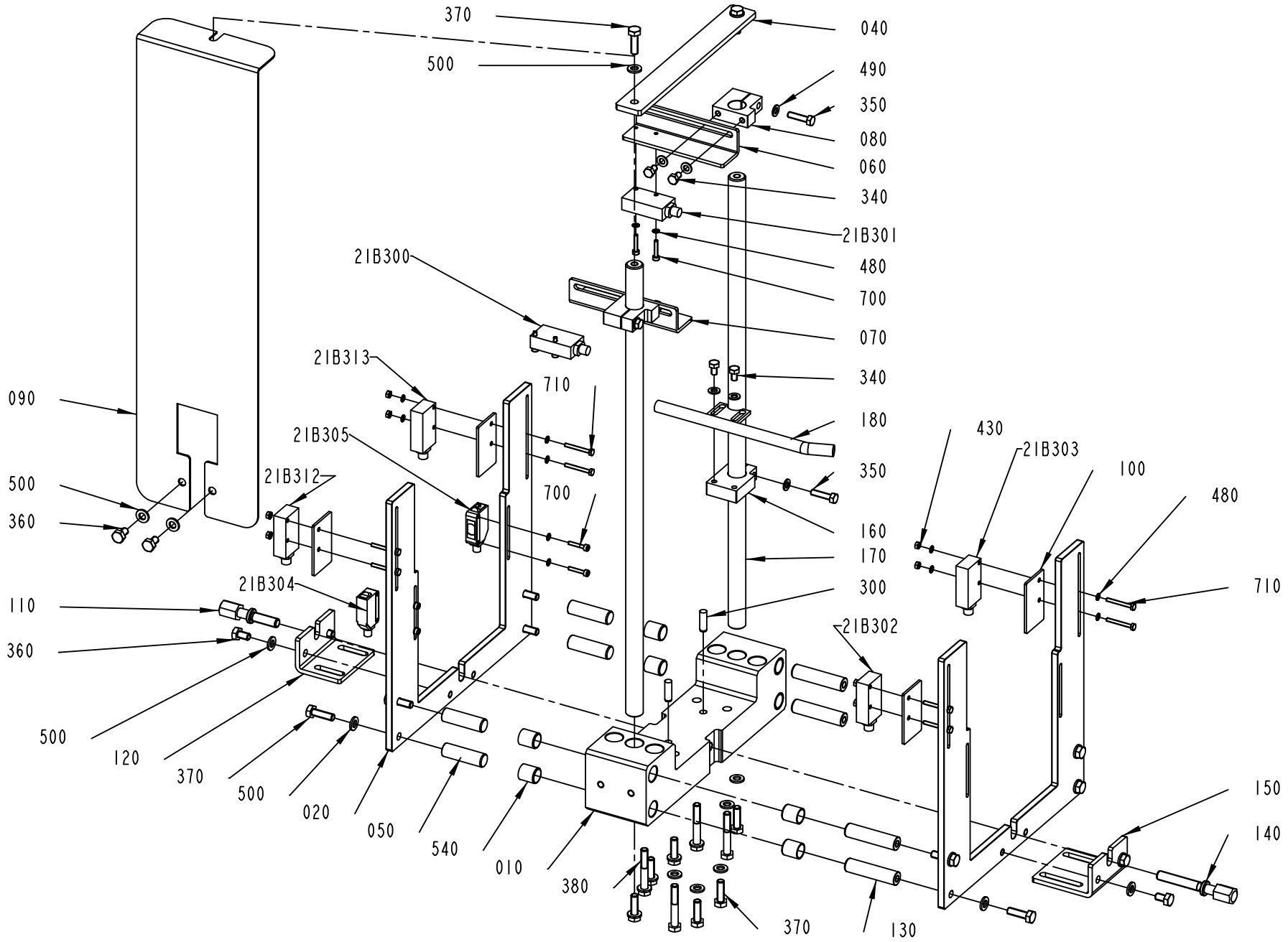


2956718-5
418805

| Pos | Part No | UN | Qty | Description | Page No |
|---|---|---|---|---|---|

**SEE PREVIOUS LISTS PAGES: 8-29, 8-31.**

| Pos | Part No | UN | Qty | Description | Page No |
|---|---|---|---|---|---|

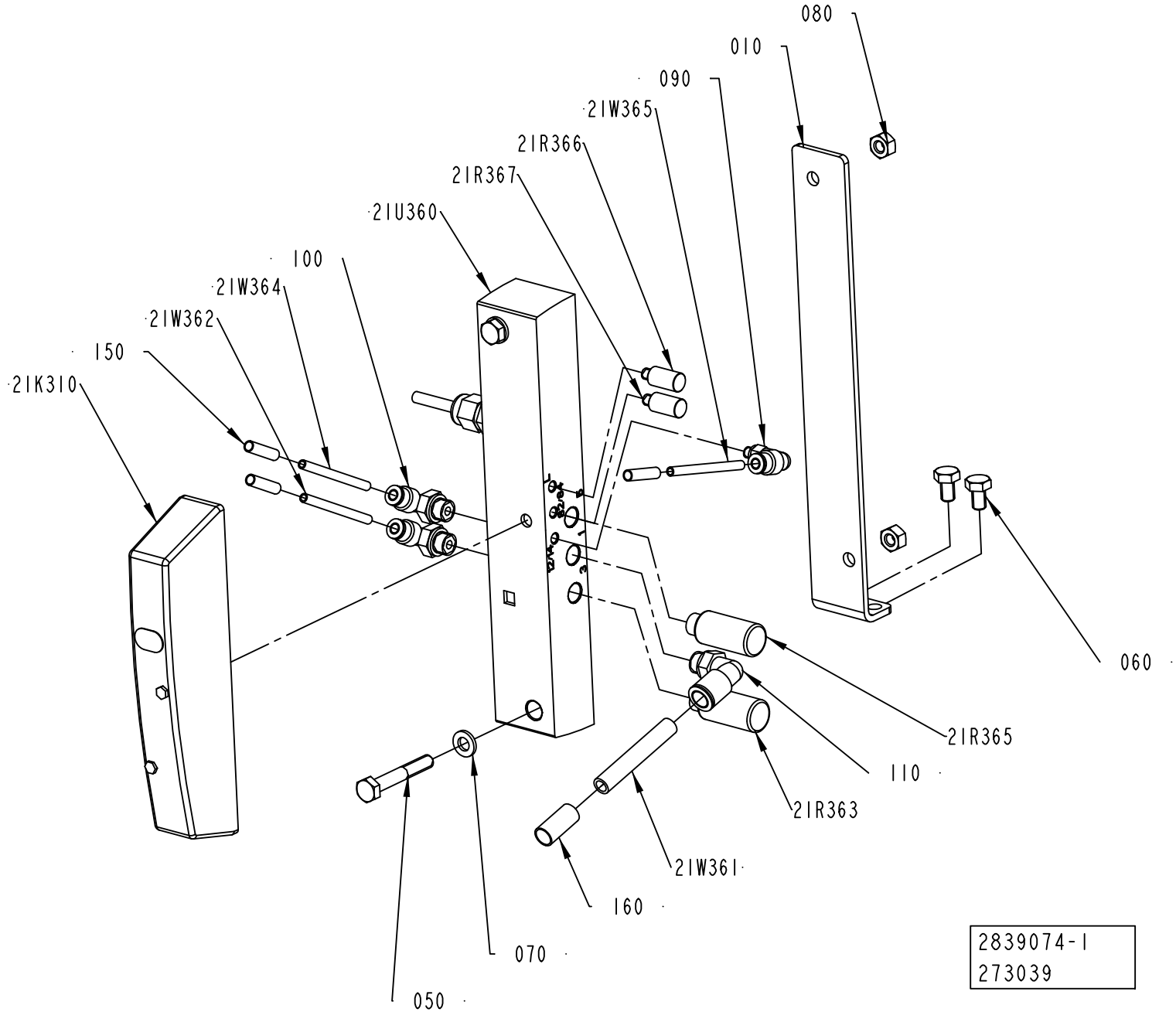
080
010
090
21W365
21R366
21R367
21U360
100
21W364
21W362
150
21K310
060
21R365
110
21R363
21W361
160
070
050
2839074-1
273039

ECM: 428973 - 20100401
Group number: 2839074-0100
Assembly Drawing: 2839074-1_1_AA

| Pos | Part No | UN | Qty | Description | Page No |
|---|---|---|---|---|---|
| - | | | | | |
| 010 | 2839073-0000 | | 1 | BRACKET | |
| 050 | 312105-0378 | | 2 | SCREW M6S ISO 4014 M6X40 A480 | |
| 060 | 312105-0364 | | 2 | SCREW M6S ISO 4017 M6X10 A480 | |
| 070 | 315106-0153 | | 2 | WASHER ISO 7089-6-200 HV A4 | |
| 080 | 312605-0316 | | 2 | HEXAGON NUT, M6M M6 A280 | |
| 090 | 350002-0001 | | 1 | PUSH-IN L-FITTING QSL-F-M5-4 | |
| 100 | 350002-0005 | | 2 | PUSH-IN L-FITTING QSL-F-G1/8-4 | |
| 110 | 350002-0007 | | 1 | PUSH-IN L-FITTING QSL-F-G1/8-8 | |
| 150 | 90459-7368 | | 3 | MARKING FOR PNEUM. TUBING, PRZ04 | |
| 160 | 90459-7370 | | 1 | MARKING FOR PNEUM. TUBING, PRZ08 | |
| 21K310 | 90458-1197 | | 1 | BISTABLE VALVE 5/2 | |
| 21R363 | 90328-0012 | | 1 | SILENCER U-1/8 | |
| 21R365 | 90328-0012 | | 1 | SILENCER U-1/8 | |
| 21R366 | 90328-0020 | | 1 | SILENCER, U-M5 | |
| 21R367 | 90328-0020 | | 1 | SILENCER, U-M5 | |
| 21U360 | 90459-2591 | | 1 | SINGLE VALVE SUB-BASE CDSV5.0-AS-1/8 | |
| 21W361 | 315400-0004 | M | 4 | TUBE PUN-H-8X1,25-BL | |
| 21W362 | 315400-0016 | M | 0.5 | TUBE PUN-H-4X0,75-BL | |
| 21W364 | 315400-0016 | M | 0.5 | TUBE PUN-H-4X0,75-BL | |
| 21W365 | 315400-0016 | M | 0.5 | TUBE PUN-H-4X0,75-BL | |

| Pos | Part No | UN | Qty | Description | Page No |
|---|---|---|---|---|---|

Machine Type | Group Description | Used-In | Group Number | Page No

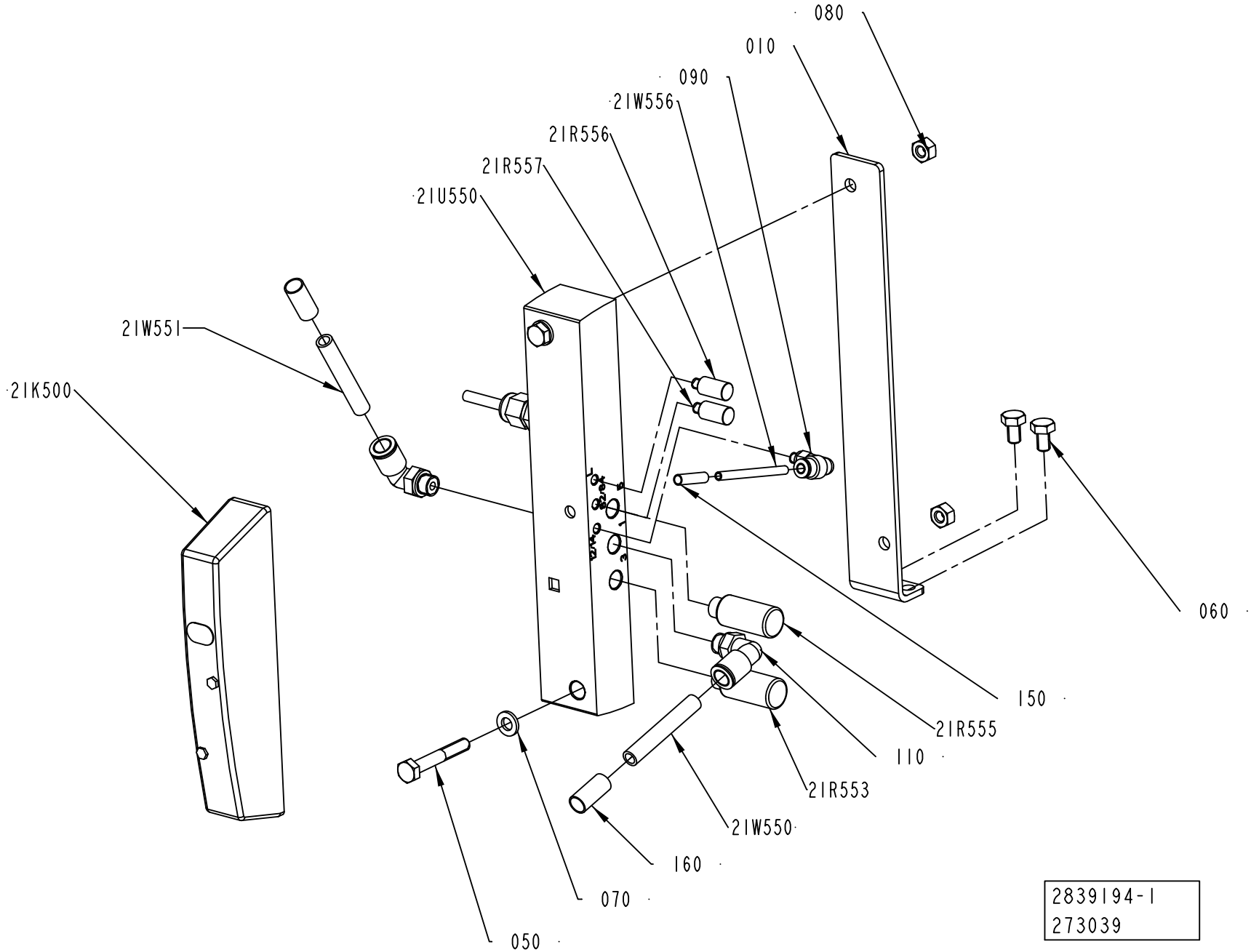
080
010
090
21W556
21R556
21R557
21U550
21W551
21K500
060
150
21R555
110
21R553
21W550
160
070
050
2839194-1
273039

ECM: 428974 - 20100401
Group number: 2839194-0100
Assembly Drawing: 2839194-1_1_AA

| Pos | Part No | UN | Qty | Description | Page No |
|---|---|---|---|---|---|
| - | | | | | |
| 010 | 2839073-0000 | | 1 | BRACKET | |
| 050 | 312105-0378 | | 2 | SCREW M6S ISO 4014 M6X40 A480 | |
| 060 | 312105-0364 | | 2 | SCREW M6S ISO 4017 M6X10 A480 | |
| 070 | 315106-0153 | | 2 | WASHER ISO 7089-6-200 HV A4 | |
| 080 | 312605-0316 | | 2 | HEXAGON NUT, M6M M6 A280 | |
| 090 | 350002-0001 | | 1 | PUSH-IN L-FITTING QSL-F-M5-4 | |
| 110 | 350002-0007 | | 2 | PUSH-IN L-FITTING QSL-F-G1/8-8 | |
| 150 | 90459-7368 | | 1 | MARKING FOR PNEUM. TUBING, PRZ04 | |
| 160 | 90459-7370 | | 2 | MARKING FOR PNEUM. TUBING, PRZ08 | |
| 21K500 | 90458-1203 | | 1 | VALVE 2X3/2 1X OPEN 1X CLOSED | |
| 21R553 | 90328-0012 | | 1 | SILENCER U-1/8 | |
| 21R555 | 90328-0012 | | 1 | SILENCER U-1/8 | |
| 21R556 | 90328-0020 | | 1 | SILENCER, U-M5 | |
| 21R557 | 90328-0020 | | 1 | SILENCER, U-M5 | |
| 21U550 | 90459-2591 | | 1 | SINGLE VALVE SUB-BASE CDSV5.0-AS-1/8 | |
| 21W550 | 315400-0004 | M | 4 | TUBE PUN-H-8X1,25-BL | |
| 21W551 | 315400-0004 | M | 4 | TUBE PUN-H-8X1,25-BL | |
| 21W556 | 315400-0016 | M | 0.5 | TUBE PUN-H-4X0,75-BL | |

| Pos | Part No | UN | Qty | Description | Page No |
|---|---|---|---|---|---|

Machine Type | Group Description | Used-In | Group Number | Page No

**This page is intentionally left blank.**

ECM: 444704 - 20100701
Group number: 2873923-0100
Assembly Drawing:

| Pos | Part No | UN | Qty | Description | Page No |
|---|---|---|---|---|---|
| **TBA 1000B RECAP3** | | | | | |
| 010 | 1482064-0000 | | 1 | POSITION TEMPLATE | |
| **TBA 1000S RECAP3** | | | | | |
| 010 | 1482063-0000 | | 1 | POSITION TEMPLATE | |
| **TBA 1000SQ RECAP3** | | | | | |
| 010 | 1482065-0000 | | 1 | POSITION TEMPLATE | |
| **TBA 1500S RECAP3** | | | | | |
| 010 | 1500071-0000 | | 1 | POSITION TEMPLATE | |
| **TBA 2000S RECAP3, TBA 1890S RECAP3** | | | | | |
| 010 | 2636293-0000 | | 1 | POSITION TEMPLATE | |

| Pos | Part No | UN | Qty | Description | Page No |
|---|---|---|---|---|---|

**This page is intentionally left blank.**

ECM: 446886 - 20100701
Group number: 2873953-0100
Assembly Drawing:

| Pos | Part No | UN | Qty | Description | Page No |
|---|---|---|---|---|---|
| **RECAP2 A3** | | | | | |
| 010 | A893009301 | KPC | 8.28 | RECAP2 A3 WHITE | |
| 020 | 1143130-0003 | | 1 | BOX | |
| 030 | 2529720-0062 | | 4 | LABEL | |
| **RECAP3** | | | | | |
| 010 | A894000101 | KPC | 5.93 | RECAP3 A1 WHITE | |
| 020 | 1350910-0000 | | 1 | BOX | |
| 030 | 2529720-0109 | | 4 | LABEL | |

| Pos | Part No | UN | Qty | Description | Page No |
|---|---|---|---|---|---|

Tetra Pak

# SPC
## Spare Parts Catalogue

**This page is intentionally left blank.**

ECM: 407049 - 20091001
Group number: 662914-0200
Assembly Drawing:

| Pos | Part No | UN | Qty | Description | Page No |
|---|---|---|---|---|---|
| - | | | | | |
| 0010 | 2879015-0200 | | 1 | ELECTRICAL DOCUMENT | **9-5** |

| Pos | Part No | UN | Qty | Description | Page No |
|---|---|---|---|---|---|

Machine Type | Group Description | Used-In | Group Number | Page No

**This page is intentionally left blank.**

ECM: 407048 - 20091001
Group number: 2879015-0200
Assembly Drawing:

| Pos | Part No | UN | Qty | Description | Page No | Pos | Part No | UN | Qty | Description | Page No |
|---|---|---|---|---|---|---|---|---|---|---|---|
| **CAP 30/FLEX RECAP3, CAP 30/FLEX RECAP2 A3** | | | | | | | | | | | |
| 0040 | 2913432-0200 | | 1 | ELECTRICAL DOCUMENT | | | | | | | |

Tetra Pak

# SPC
## Spare Parts Catalogue

**This page is intentionally left blank.**

ECM: 445517 - 20100701
Group number: 662916-0200
Assembly Drawing:


| Pos | Part No | UN | Qty | Description | Page No |
|---|---|---|---|---|---|
| **CONVEYOR CONTROL** | | | | | |
| 040 | 2873874-0100 | | 1 | AUTOMATION CONVEYOR CONTROL | **10-5** |
| **LINE COMMUNICATION ETHERNET (ROCKWELL)** | | | | | |
| 030 | 2890013-0100 | | 1 | COMMUNICATION UNIT | **10-7** |
| **GLUE SHELF** | | | | | |
| 010 | 2842806-0100 | | 1 | SHELF | **10-9** |
| **PHOTOCELL UNIT** | | | | | |
| 080 | 2930179-0100 | | 1 | CONVEYOR CONTROL ACCESSORIES | **10-11** |
| **POWER SUPPLY DEVICE** | | | | | |
| 090 | 2930182-0100 | | 1 | POWER SUPPLY DEVICE | **10-21** |
| **LINE COMMUNICATION SNP** | | | | | |
| 020 | 2873925-0100 | | 1 | COMMUNICATION UNIT | **10-23** |
| **FINAL DEST. USA** | | | | | |
| 070 | 2873930-0100 | | 1 | CAUTION SIGN LIST | **10-25** |


| Pos | Part No | UN | Qty | Description | Page No |
|---|---|---|---|---|---|

Machine Type | Group Description | Used-In | Group Number | Page No

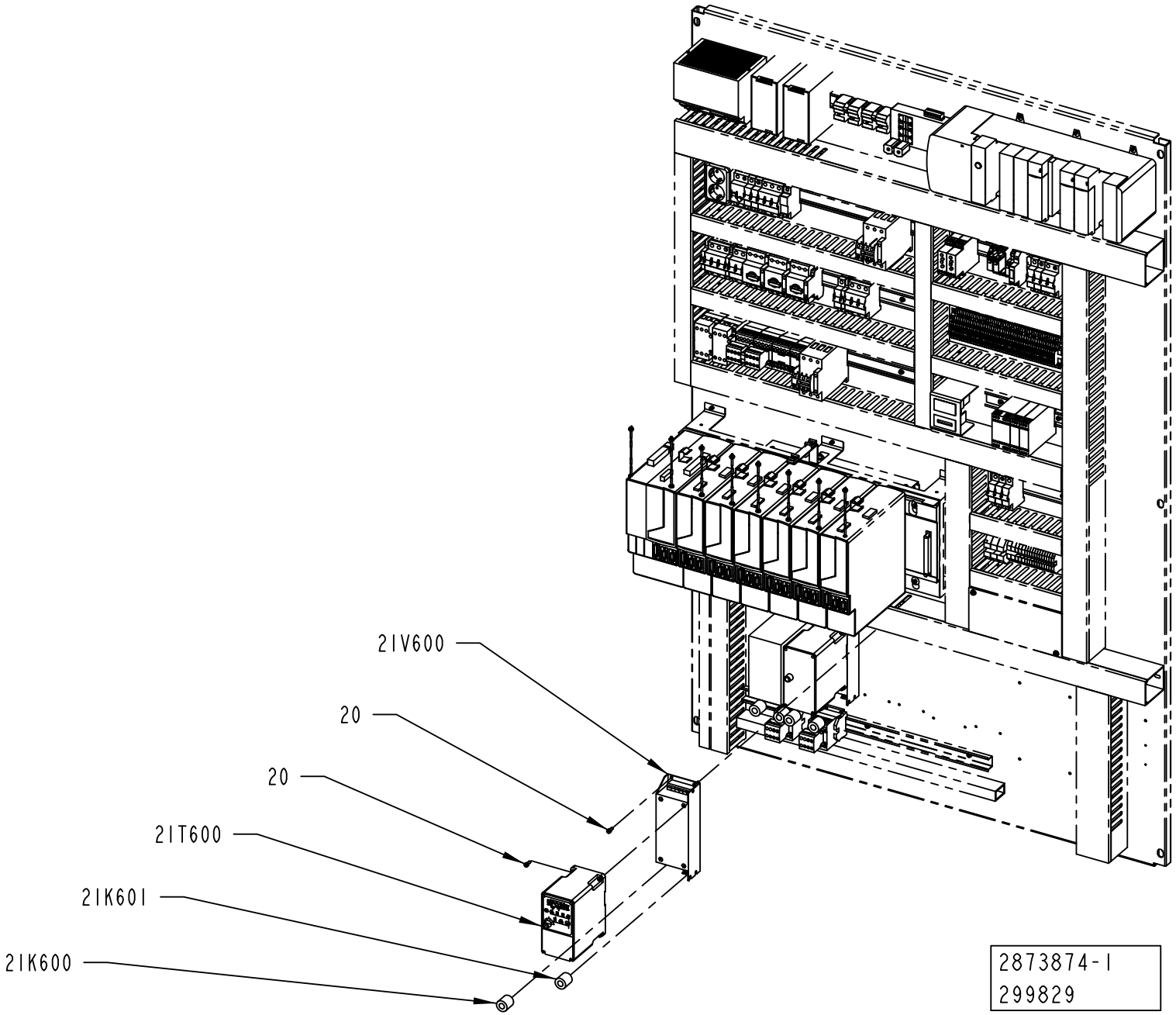
21V600
20
20
21T600
21K601
21K600
2873874-1
299829

ECM: 299829 - 20070528
Group number: 2873874-0100
Assembly Drawing: 2873874-1_1_AA

| Pos | Part No | UN | Qty | Description | Page No |
|---|---|---|---|---|---|
| - | | | | | |
| 020 | 312115-0327 | | 8 | Z3REW ISO4762 M5X12 A4 80 | |
| 21K600 | 90458-1140 | | 1 | FERRITE, RI-26-28-13 | |
| 21K601 | 90458-1140 | | 1 | FERRITE, RI-26-28-13 | |
| 21T600 | 90459-3450 | | 1 | VARIABLE FREQUENCY DRIVE 22A-A4P5N104 | |
| 21V600 | 90459-3460 | | 1 | FOOTPRINT FILTER 22-RF010-AL | |

| Pos | Part No | UN | Qty | Description | Page No |
|---|---|---|---|---|---|

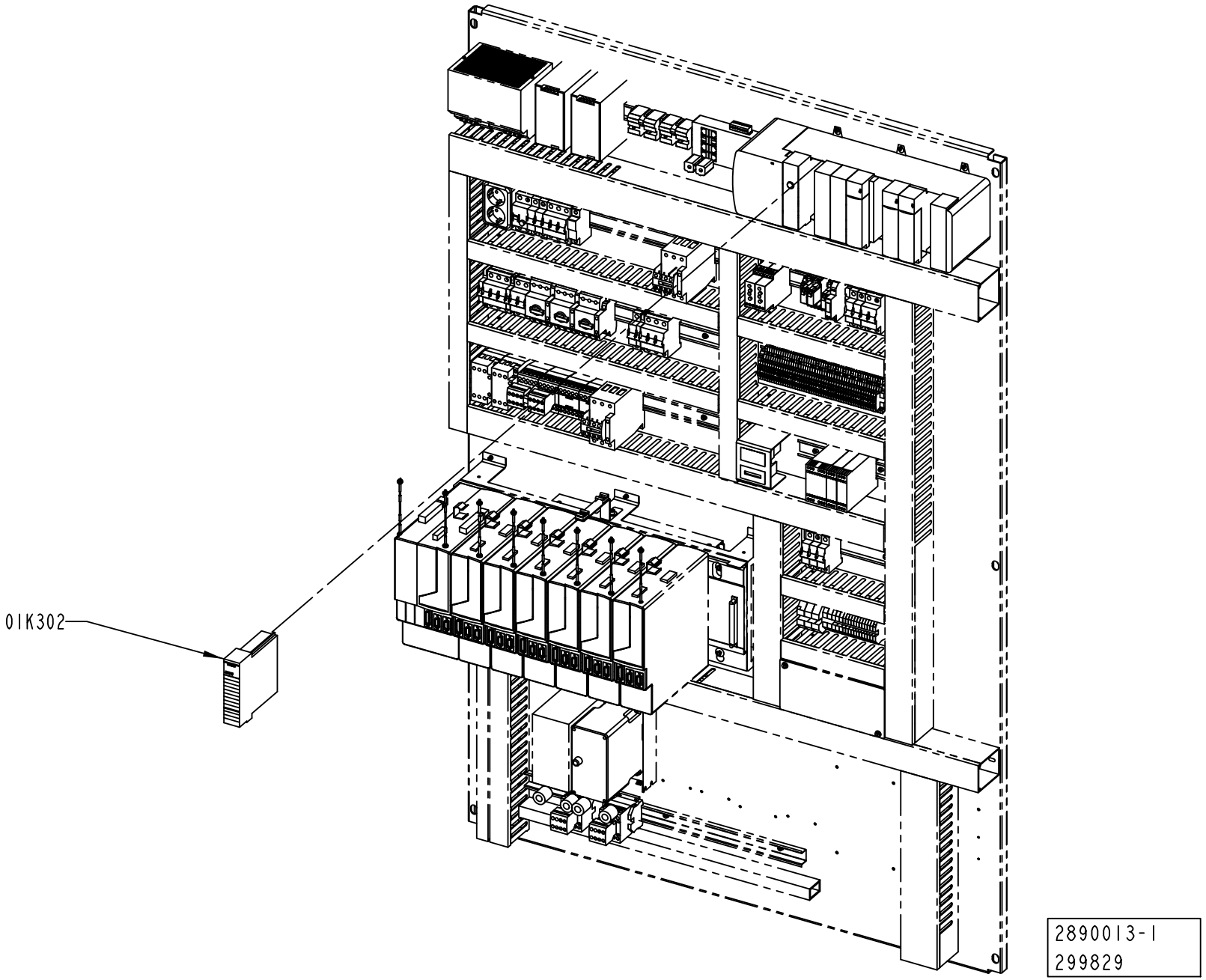
01K302
2890013-1
299829

ECM: 302635 - 20070528
Group number: 2890013-0100
Assembly Drawing: 2890013-1_1_AA

| Pos | Part No | UN | Qty | Description | Page No | Pos | Part No | UN | Qty | Description | Page No |
|---|---|---|---|---|---|---|---|---|---|---|---|
| - | | | | | | | | | | | |
| 01K302 | 90459-2477 | | 1 | ETHERNET I/P BRIDGE MODULE, 1756-ENBT | | | | | | | |

Machine Type | Group Description | Used-In | Group Number | Page No

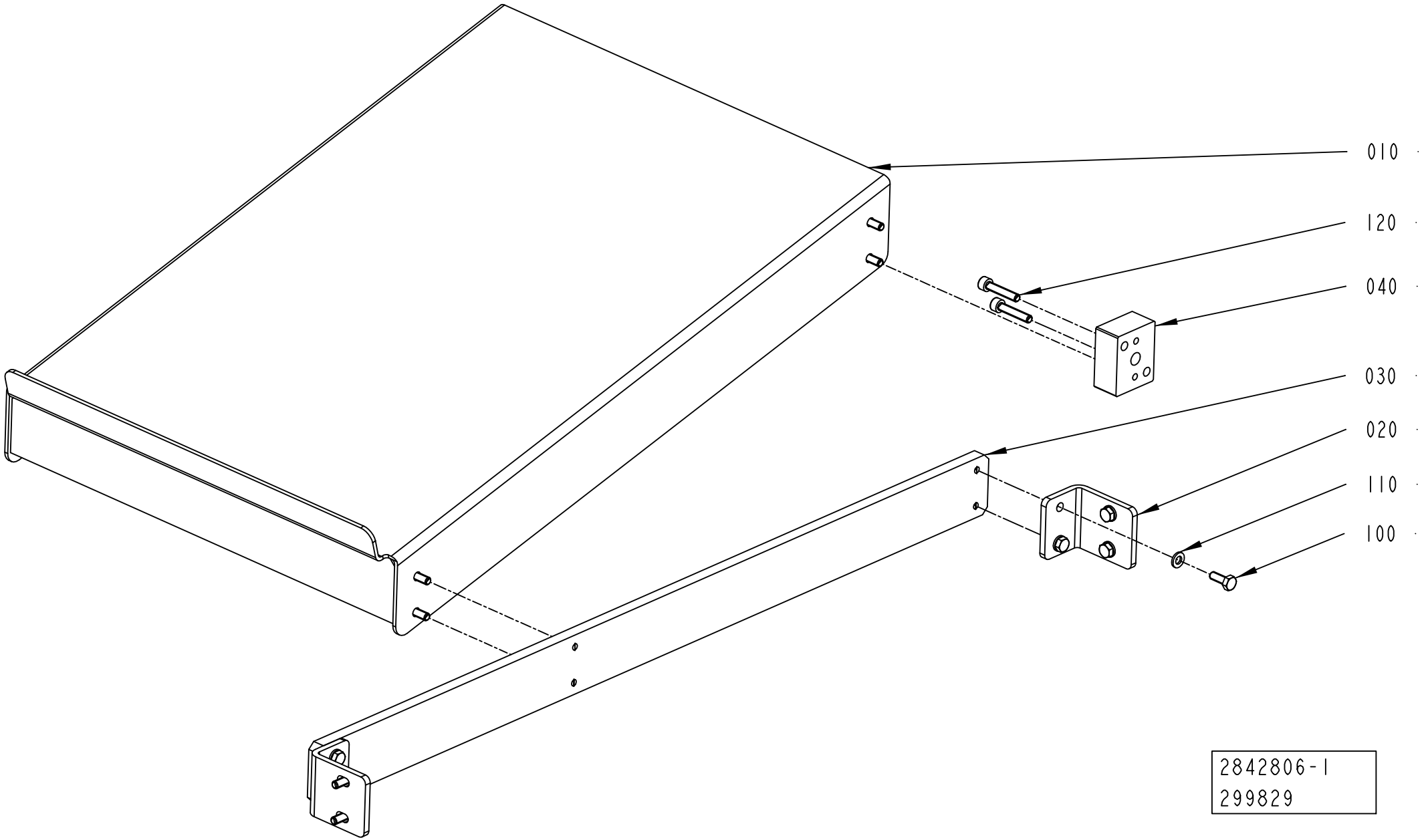
010
120
040
030
020
110
100
2842806-1
299829

ECM: 310549 - 20070528
Group number: 2842806-0100
Assembly Drawing: 2842806-1_1_AB

| Pos | Part No | UN | Qty | Description | Page No |
|---|---|---|---|---|---|
| - | | | | | |
| 010 | 2842800-0000 | | 1 | SHELF | |
| 020 | 2842804-0000 | | 2 | BRACKET | |
| 030 | 2842803-0000 | | 1 | PLATE | |
| 040 | 2842805-0000 | | 1 | SPACER | |
| 100 | 312105-0368 | | 12 | SCREW M6S ISO 4017 M6X16 A480 | |
| 110 | 315105-0153 | | 12 | WASHER BRB 6,4X12 RFR | |
| 120 | 312115-0374 | | 2 | SCREW ISO4762 M6X30 A4 80 | |

| Pos | Part No | UN | Qty | Description | Page No |
|---|---|---|---|---|---|

**This page is intentionally left blank.**

ECM: 335433 - 20080407
Group number: 2930179-0100
Assembly Drawing:

| Pos | Part No | UN | Qty | Description | Page No |
|---|---|---|---|---|---|
| - | | | | | |
| 010 | 2930176-0100 | | 1 | SENSOR GROUP | **10-13** |
| 020 | 2930177-0100 | | 1 | CABLE MARKING SET | **10-15** |
| 030 | 2930178-0100 | | 1 | SENSOR GROUP | **10-17** |

| Pos | Part No | UN | Qty | Description | Page No |
|---|---|---|---|---|---|

Machine Type | Group Description | Used-In | Group Number | Page No

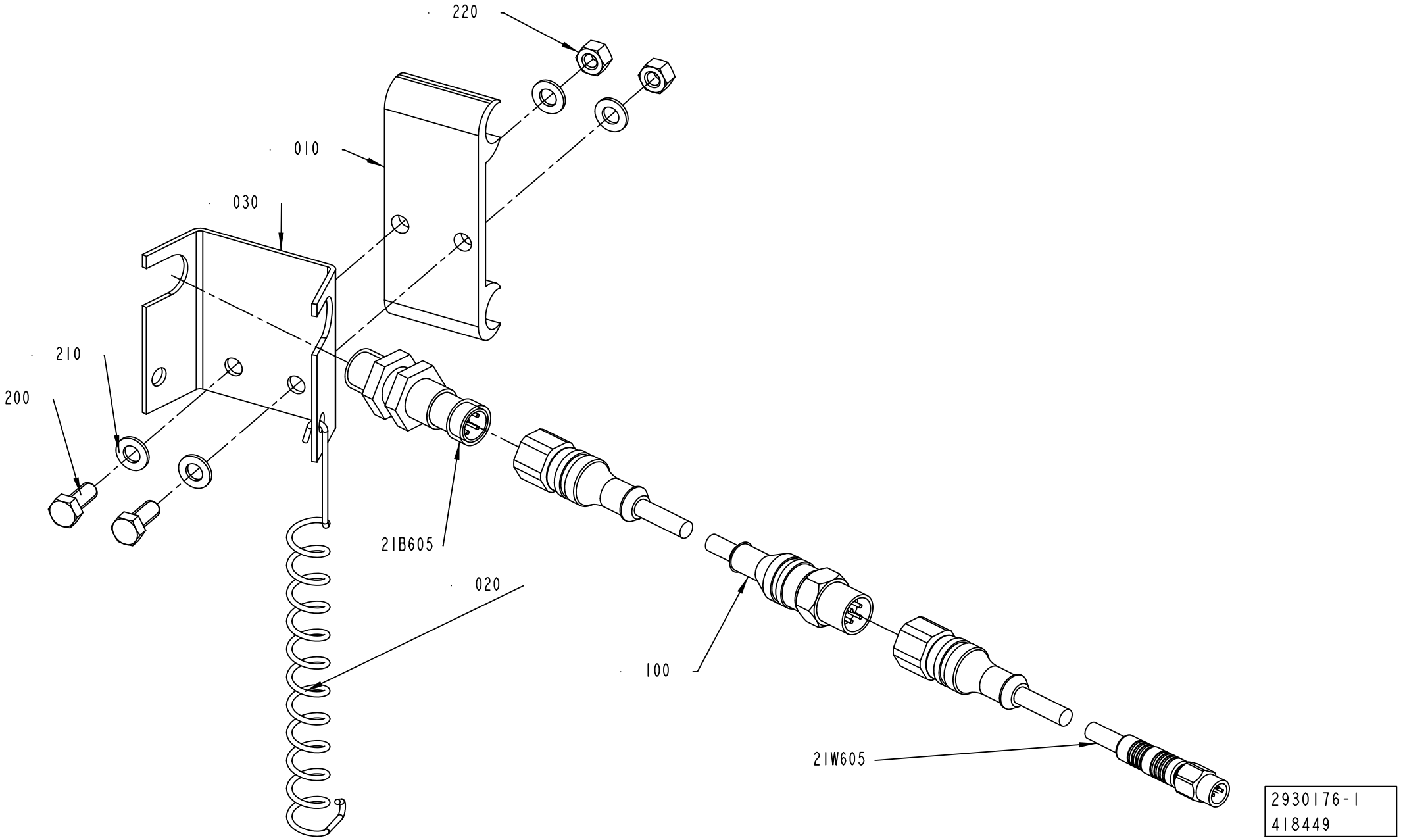
220
010
030
210
200
21B605
020
100
21W605
2930176-1
418449

ECM: 419543 - 20100110
Group number: 2930176-0100
Assembly Drawing: 2930176-1_1_AB

| Pos | Part No | UN | Qty | Description | Page No |
|---|---|---|---|---|---|
| - | | | | | |
| 010 | 1020637-0000 | | 1 | HOLDER | |
| 020 | 532412-0000 | | 1 | SPRING | |
| 030 | 545897-0000 | | 1 | BRACKET | |
| 100 | 351411-0050 | | 1 | ACTU/SENS. CABLE PRST 4-PRKT 4-07/5,0 | |
| 200 | 312105-0327 | | 2 | SCREW M6S ISO 4017 M5X12 A480 | |
| 210 | 315105-0146 | | 4 | WASHER BRB 5,3X10 RFR | |
| 220 | 312605-0314 | | 2 | HEXAGON NUT, M6M M5 A280 | |
| 21B605 | 90458-2907 | | 1 | PROX.SWITCH IFS204 | |
| 21W605 | 351405-0050 | | 1 | SENS. CABLE RSMVN 3-PRKT 4-3-06/5,0M | |

| Pos | Part No | UN | Qty | Description | Page No |
|---|---|---|---|---|---|

**This page is intentionally left blank.**

ECM: 335431 - 20080407
Group number: 2930177-0100
Assembly Drawing:

| Pos | Part No | UN | Qty | Description | Page No |
|---|---|---|---|---|---|
| - | | | | | |
| 010 | 1497932-0000 | | 1 | SET OF SIGNS | |
| 100 | 359009-0100 | | 10 | CABLE MARKING, YELLOW, PK2/4"0" | |
| 110 | 359009-0101 | | 10 | CABLE MARKING, YELLOW, PK 2/4"1" | |
| 120 | 359009-0102 | | 10 | CABLE MARKING, YELLOW, PK 2/4"2" | |
| 130 | 359009-0103 | | 10 | CABLE MARKING, YELLOW, PK 2/4"3" | |
| 140 | 359009-0104 | | 10 | CABLE MARKING, YELLOW, PK 2/4"4" | |
| 150 | 359009-0105 | | 10 | CABLE MARKING, YELLOW, PK 2/4"5" | |
| 160 | 359009-0106 | | 10 | CABLE MARKING, YELLOW, PK 2/4"6" | |
| 170 | 359009-0107 | | 10 | CABLE MARKING, YELLOW, PK 2/4"7" | |
| 180 | 359009-0108 | | 10 | CABLE MARKING, YELLOW, PK 2/4"8" | |
| 190 | 359009-0109 | | 10 | CABLE MARKING, YELLOW, PK 2/4"9" | |
| 200 | 359009-0222 | | 10 | CABLE MARKING, YELLOW, PK 2/4"W" | |
| 210 | 352113-0101 | | 10 | CABLE TIE, BLACK 92X2,5 MM | |
| 220 | 359009-0201 | | 10 | CABLE MARKING, YELLOW, PK 2/4"B" | |

| Pos | Part No | UN | Qty | Description | Page No |
|---|---|---|---|---|---|

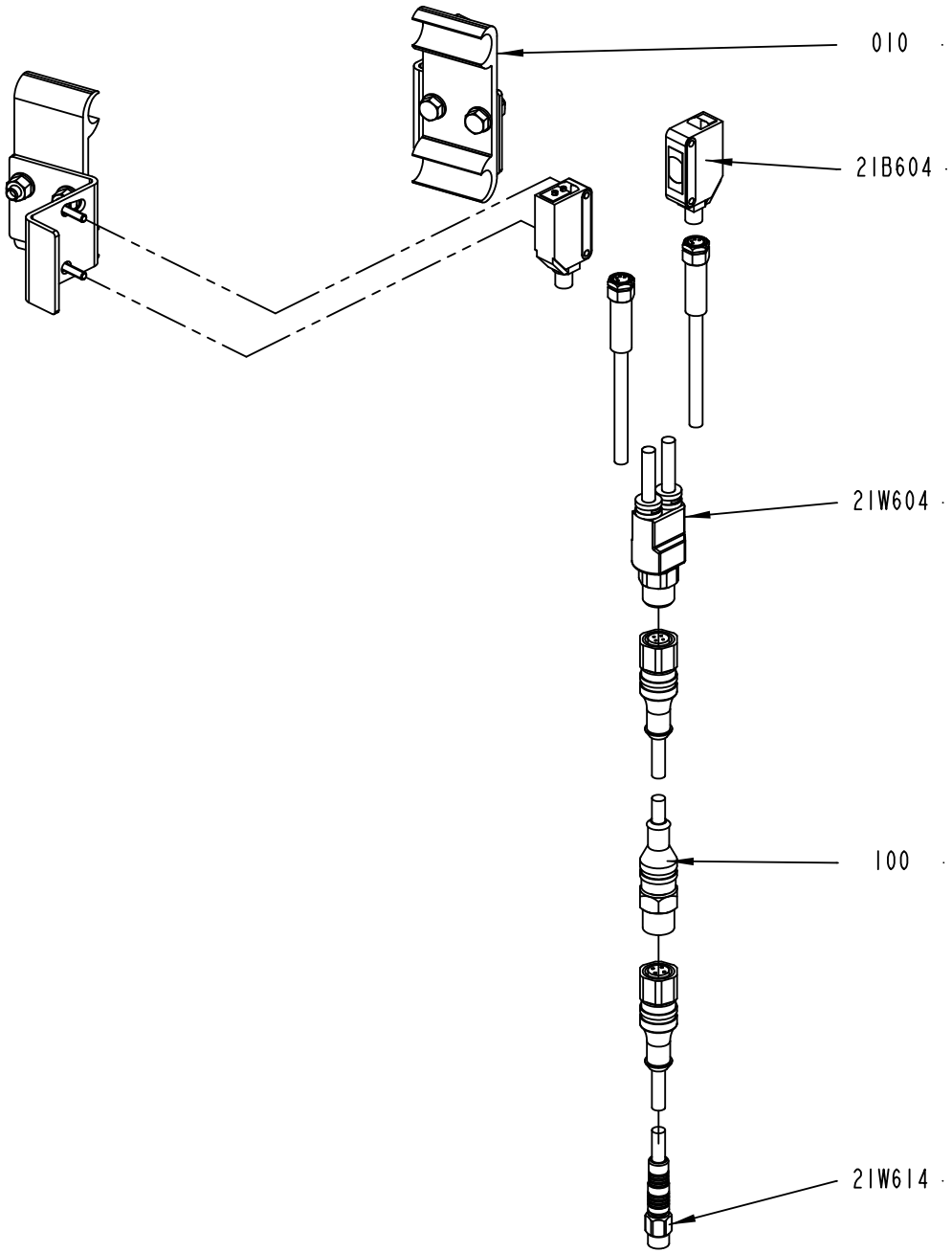


2930178-1
418449

ECM: 419544 - 20100110
Group number: 2930178-0100
Assembly Drawing: 2930178-1_1_AB

| Pos | Part No | UN | Qty | Description | Page No |
|---|---|---|---|---|---|
| - | | | | | |
| 010 | 2778586-0100 | | 1 | SENSOR ..... | **3-39, 10-19** |
| 100 | 351411-0050 | | 1 | ACTU/SENS. CABLE PRST 4-PRKT 4-07/5,0 | |
| 21B604 | 90459-5529 | | 1 | PH.CELL E3Z-T86A, SENDER+RECIEVER | |
| 21W604 | 90459-6586 | | 1 | ACT/SENS.Y-CABLE, ASBN 2-PRKMV 4-07/0,6M | |
| 21W614 | 351405-0050 | | 1 | SENS. CABLE RSMVN 3-PRKT 4-3-06/5,0M | |

| Pos | Part No | UN | Qty | Description | Page No |
|---|---|---|---|---|---|

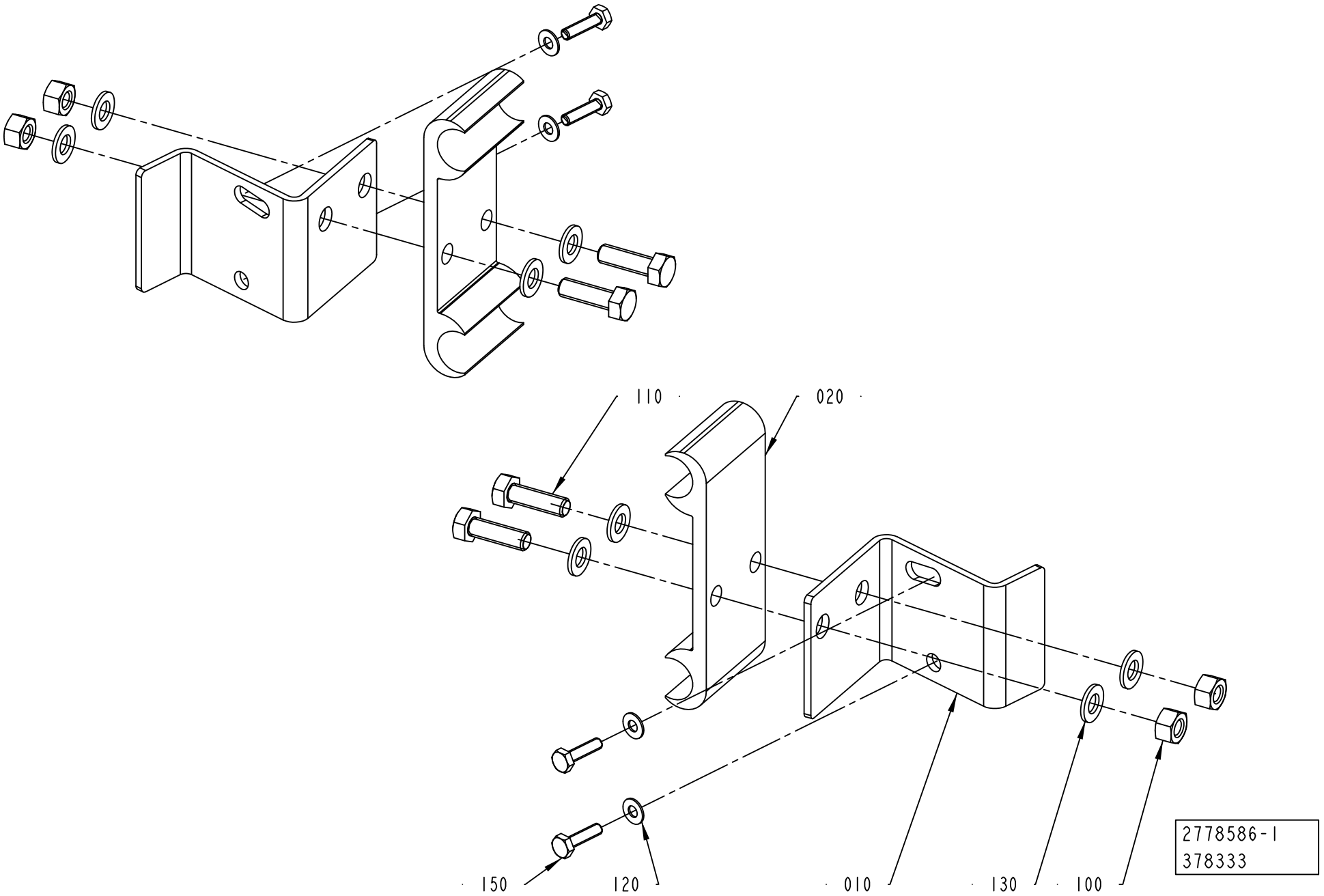
110
020
150
120
010
130
100
2778586-1
378333

ECM: 378333 - 20090406
Group number: 2778586-0100
Assembly Drawing: 2778586-1_1_AB

| Pos | Part No | UN | Qty | Description | Page No |
|---|---|---|---|---|---|
| - | | | | | |
| 010 | 2778580-0000 | | 2 | BRACKET | |
| 020 | 1020637-0000 | | 2 | HOLDER | |
| 100 | 312605-0314 | | 4 | HEXAGON NUT, M6M M5 A280 | |
| 110 | 312105-0329 | | 4 | SCREW M6S ISO 4017 M5X16 A480 | |
| 120 | 315106-0124 | | 4 | WASHER ISO 7089-3-200 HV A4 | |
| 130 | 315105-0146 | | 8 | WASHER BRB 5,3X10 RFR | |
| 150 | 90287-0175 | | 4 | SCREW M6S M3X12 A480 | |

| Pos | Part No | UN | Qty | Description | Page No |
|---|---|---|---|---|---|

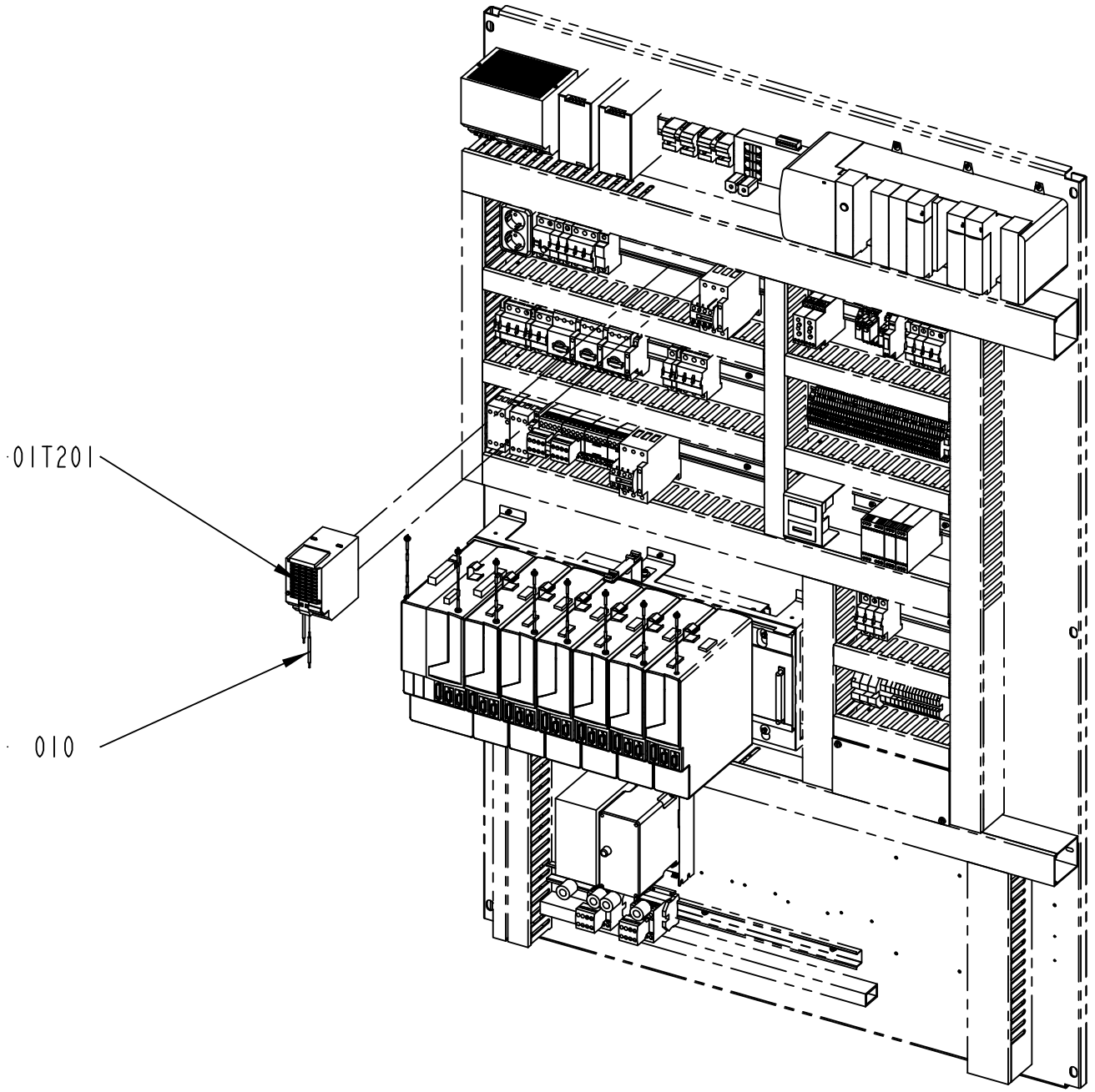


2930182-1
335187

ECM: 337066 - 20080407
Group number: 2930182-0100
Assembly Drawing: 2930182-1_1_AA

| Pos | Part No | UN | Qty | Description | Page No |
|---|---|---|---|---|---|
| - | | | | | |
| 010 | 351160-0105 | M | 5 | WIRE AWM 1X2,5 MM2 DARKBLUE | |
| 100 | 353001-0115 | | 10 | END SLEEVE 2,5/14 | |
| 110 | 359000-0013 | | 10 | WIRE MARKING, YELLOW, PA1/3"+" | |
| 120 | 359000-0023 | | 10 | WIRE MARKING, YELLOW, PA1/3"-" | |
| 130 | 359000-0300 | | 10 | WIRE MARKING, YELLOW, PA1/3"0" | |
| 140 | 359000-0301 | | 10 | WIRE MARKING, YELLOW, PA1/3"1" | |
| 150 | 359000-0302 | | 10 | WIRE MARKING, YELLOW, PA1/3"2" | |
| 160 | 359000-0303 | | 10 | WIRE MARKING, YELLOW, PA1/3"3" | |
| 170 | 359000-0304 | | 10 | WIRE MARKING, YELLOW, PA1/3"4" | |
| 180 | 359000-0305 | | 10 | WIRE MARKING, YELLOW, PA1/3"5" | |
| 190 | 359000-0306 | | 10 | WIRE MARKING, YELLOW, PA1/3"6" | |
| 200 | 359000-0307 | | 10 | WIRE MARKING, YELLOW, PA1/3"7" | |
| 210 | 359000-0308 | | 10 | WIRE MARKING, YELLOW, PA1/3"8" | |
| 220 | 359000-0309 | | 10 | WIRE MARKING, YELLOW, PA1/3"9" | |
| 01T201 | 90459-2939 | | 1 | POWER SUPPLY UNIT 6EP1 961-3BA00 | |

| Pos | Part No | UN | Qty | Description | Page No |
|---|---|---|---|---|---|

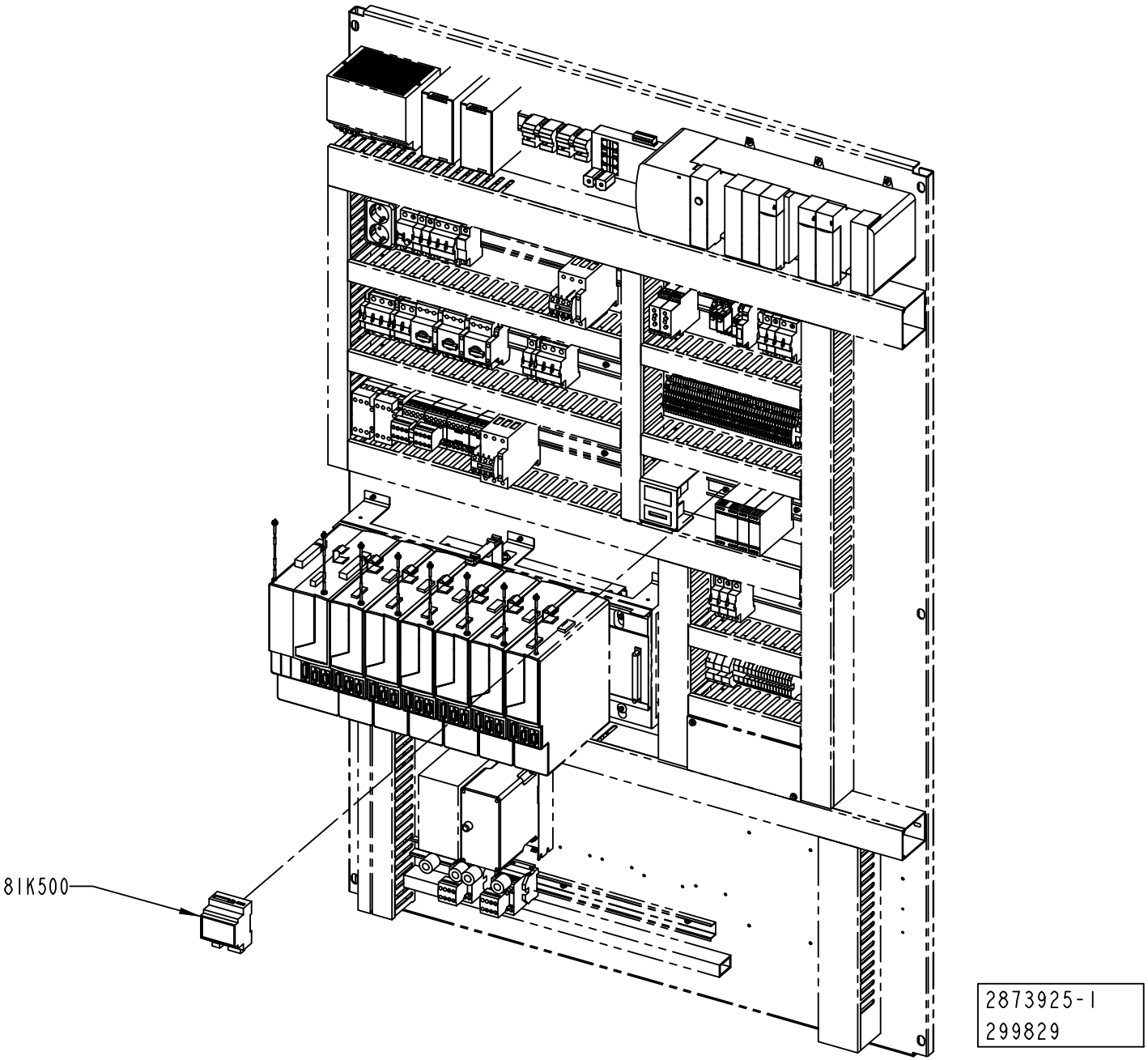
81K500
2873925-1
299829

ECM: 302633 - 20070528
Group number: 2873925-0100
Assembly Drawing: 2873925-1_1_AA

| Pos | Part No | UN | Qty | Description | Page No |
|---|---|---|---|---|---|
| - | | | | | |
| 81K500 | 90459-4235 | | 1 | SNP TO DF1 GATEWAY, 0220 1166 01 REV B | |

| Pos | Part No | UN | Qty | Description | Page No |
|---|---|---|---|---|---|

Machine Type | Group Description | Used-In | Group Number | Page No

**This page is intentionally left blank.**

ECM: 444605 - 20100701
Group number: 2873930-0100
Assembly Drawing:

| Pos | Part No | UN | Qty | Description | Page No |
|---|---|---|---|---|---|
| - | | | | | |
| 010 | 359715-0100 | | 7 | WARNING SIGN ANSI (H), ELECTRIC SHOCK | |
| 020 | 90459-2232 | | 1 | WARNING SIGN ANSI (H), DO NOT WASH | |
| 040 | 90459-7458 | | 3 | WARNING SIGN ANSI (H), HOT SURFACE | |
| 050 | 359725-0100 | | 2 | WARNING SIGN ANSI (H), ENTANGLEMENT | |
| 060 | 90459-7228 | | 1 | ELECTRICAL EQUIPMENT SIGN, TEMPLATE | |
| 70 | 359725-0125 | | 2 | WARNING SIGN ANSI (V), PNEUMATIC ENERGY | |
| 80 | 359725-0108 | | 1 | WARNING SIGN ANSI (H), MOVING PART | |

| Pos | Part No | UN | Qty | Description | Page No |
|---|---|---|---|---|---|

Tetra Pak

# SPC
## Spare Parts Catalogue

| Part No | Description | Page No |
|---|---|---|
| A893009301 | RECAP2 A3 WHITE | 8-43 |
| 90001-0033 | WALL SOCKET, E1834666 | 7-9 |
| 90005-0060 | WASHER PLAIN, RBS 6,4/M6)/18,H=1,5 | 7-35, 7-55 |
| 90005-0064 | WASHER PL.RND.NYL.4,3/9, H=0,8 | 7-5 |
| 90005-0082 | WASHER PLAIN ROUND 4,3(M4)/12,H=1 | 7-9 |
| 90005-0139 | WASHER PLAIN ROUND 5,2(M5)/15, H=1,6 | 1-13 |
| 90015-0020 | LEAD-IN, TET5-7, E-1458016 | 3-71 |
| 90015-0021 | LEAD-IN, TET10-14, E-1458023 | 3-57, 3-59 |
| 90017-0029 | LOCKING LEVER, NO. KR8X30-SUS | 1-19, 1-51, 3-19, 3-21, 3-23 |
| 90024-0036 | FEED THROUGH FILTER, 52-160-002-AD00 | 7-7 |
| 90024-0060 | FILTER 80 A 440/250 VAC, B84144-A0080R00 | 7-7 |
| 90028-0020 | CONE TUBE 2,5MM | 3-73, 3-75, 3-77 |
| 90028-0021 | CONE TUBE 4 MM | 3-73, 3-75, 3-77 |
| 90028-0022 | CONE TUBE 6 MM | 3-71 |
| 90030-0200 | CONN. ELBOW, WE06LM71 | 3-71, 3-73, 3-75, 3-77 |
| 90032-0038 | BLOCK 2 WAYS | 3-73, 3-75, 3-77 |
| 90032-0039 | BLOCK 4 WAYS | 3-73, 3-75, 3-77 |
| 90032-0043 | DISTRIBUTION BLOCK 3 WAYS | 3-71 |
| 90036-0057 | LIGHT BULB, BA9S 28V | 3-95 |
| 90036-0068 | BULB 5W 24V, SL-L24 205348 | 3-81 |
| 90044-0192 | LIMIT SW. SZ2586.000 | 7-5 |
| 90051-0054 | STELLAR KNOB, INT. THREAD, NO. 8306-0340 | 8-9 |
| 90053-0029 | COUNTER, F524.800FA3C 24VDC | 7-43 |
| 90053-0031 | HOUR COUNTER, B 609.10 10-50VDC | 7-43 |
| 90055-0147 | PUSH-IN Y-CONNECTOR QSY-12 | 5-57 |
| 90055-0257 | PUSH-IN Y-CONNECTOR QSY-6 | 5-55 |
| 90062-0015 | LOCK WASHER SERRAT.EXT.GEAR,6,4/11 H=0,7 | 7-5 |
| 90062-0060 | LOCK WASHER 5,3/10 H=0,6 FZB | 3-47 |
| 90064-0093 | PUSH BUTTON, GREEN | 3-95 |
| 90064-0098 | PUSH BUTTON, CLEAR | 3-95 |
| 90069-0254 | GEARS, WORM MOTOR SN5D56A-4 | 5-21 |
| 90077-0113 | FEED THROUGH TERMINAL, 10-00102150-1 | 3-97, 3-99, 7-17, 7-19, 7-21, 7-23, 7-25, 7-27, 7-61 |
| 90077-0114 | END PLATE, WAP/WDK 2,5 | 3-97, 3-99 |
| 90082-0013 | SURGE PROTECTION DEVICE PU4CR 8021520000 | 7-7 |
| 90087-0019 | PLUG M10X1 STAINLESS | 3-73, 3-75, 3-77 |
| 90091-0304 | RADIAL SEAL 45X65X8 MM DUST LIP | 1-27, 1-31, 1-37, 1-41 |
| 90091-0322 | RADIAL SEAL 25X42X7 MM DUST LIP | 1-7, 1-9 |
| 90092-0052 | METERING VALVE 10 MM3 | 3-73, 3-75, 3-77 |
| 90092-0054 | METERING VALVE 50 MM3 | 3-73, 3-75, 3-77 |
| 90099-0005 | MOUNTING RAIL SUPPORT, ANGLED, TSTW 5/M5 | 7-59 |
| 90099-0191 | HEXAGON NYLON NUT, M4X0,7 | 7-5 |
| 90110-0052 | MALE INSERT HAN 6E 09 33 006 2601 | 5-21, 6-9, 6-23 |
| 90110-0053 | FEMALE INSERT HAN 6 E 09 33 006 2701 | 3-7, 3-9 |
| 90110-0095 | CONNECTOR 3 POLE + EARTH | 3-65 |
| 90115-0134 | ROD END, ID=10 MM, M10X1,25 | 1-13 |
| 90115-0163 | ROD END, ID=6 MM, M6X1 | 8-23 |
| 90119-0108 | RELAY OMRON G2R-2-SNI-24DC | 3-97, 3-99, 7-13, 7-57 |
| 90125-0020 | PLATE COMPLETE | 3-47 |
| 90129-0018 | BASE, P2RF-08-E | 3-97, 3-99, 7-13, 7-57 |
| 90134-0030 | SLEEVE FOR PLASTIC TUBE | 3-71, 3-73, 3-75, 3-77 |
| 90134-0031 | SLEEVE FOR PLASTIC TUBE | 3-73, 3-75, 3-77 |
| 90134-0039 | BUSHING VALVE CONNECTION 2,5 MM | 3-73, 3-75, 3-77 |
| 90134-0040 | BUSHING VALVE CONNECTION 4 MM | 3-73, 3-75, 3-77 |
| 90134-0051 | SPACING COLLAR DOSING BLOCK | 3-73, 3-75, 3-77 |
| 90134-0052 | PLUG DOSING BLOCK | 3-73, 3-75, 3-77 |
| 90134-0054 | BLOCK CONNECTION M10X1 | 3-73, 3-75, 3-77 |
| 90134-0055 | BUSHING/NUT INLET/OUTLET 6 MM | 3-71 |
| 90134-0058 | CONNECTION | 2-11, 2-13, 3-73, 3-75, 3-77 |
| 90134-0068 | CONNECTION | 2-11, 3-73, 3-75, 3-77 |
| 90141-0015 | RETAINING RING FOR SHAFT DIN 471 8 SS | 8-19, 8-21 |
| 90141-0016 | RETAINING RING FOR SHAFT DIN 471 10 SS | 5-9, 5-15, 5-25, 5-27, 5-31 |
| 90143-0071 | RUBBER STRIP 4X20MM | 3-95 |
| 90143-0098 | RUBBER STRIP, CLAMPING, NO. 1038-02 | 3-111 |
| 90152-0051 | SPIRAL CONDUIT, 25X18, UL 1816 | 3-47, 3-95 |
| 90152-0060 | SPIRAL CONDUIT, 42X35, UL3529 | 3-95 |
| 90152-0070 | METAL HOSE, 32,5X26, UL 2621 | 3-95 |
| 90152-0075 | HOSE | 3-47 |
| 90153-0023 | ADHESIVE, SILICON 251470 TUB 90CC(UN1993 | 6-19 |
| 90153-0059 | 250.0 ADHESIVE, HOTMELT RECAP 12 KG | 8-13 |
| 90157-0016 | THREAD LOCKING, LOCTITE 242 50 ML | 4-41, 5-39, 5-47, 6-23 |
| 90157-0037 | THREAD SEALANT LOCTITE 542 | 1-7, 1-9, 1-43, 1-45 |
| 90157-0041 | SEALING COMPOUND, RHODORSEAL 5611 | 3-111, 3-113, 3-115, 3-131, 3-133, 3-139, 3-141, 3-143 |
| 90164-0015 | LIGHT FIXTURE, RL70CV-111 / 230V 50HZ | 3-89 |
| 90164-0303 | LIGHT FIXTURE, BRACKET 70MM | 3-89 |
| 90165-0007 | PIPE CLIP FOR TUBE D=8 MM | 7-9 |
| 90166-0108 | TUBE 6 MM PA TRANSP. | 3-71, 3-73, 3-75, 3-77 |
| 90166-0109 | TUBE 4 MM PA TRANSP. | 3-73, 3-75, 3-77 |
| 90166-0113 | HOSE | 3-7, 3-9 |
| 90166-0126 | TUBE 12 MM PA,TRANSP. | 1-31, 1-41, 1-43, 1-45 |
| 90166-0132 | TUBE 6 MM PA,TRANSP. | 3-71, 3-73, 3-75, 3-77 |
| 90166-0143 | TUBE 2,5 MM PA TRANSP. | 3-73, 3-75, 3-77 |
| 90181-0038 | CABLE DUCT 40X40MM | 3-95 |
| 90181-0182 | CABLE TRENCH PARTS | 3-7, 3-9 |
| 90181-0183 | CABLE DUCT, FITTING, B2 | 3-7, 3-9, 4-37 |

| Part No | Description | Page No |
|---|---|---|
| 90181-0184 | CABLE TRENCH PARTS | 3-7, 3-9 |
| 90181-0186 | CABLE DUCT, ELBOW BRACKET, B27 | 3-7, 3-9 |
| 90181-0190 | CABLE DUCT, WALL BRACKET, B4 MINI | 3-7, 3-9 |
| 90181-0314 | CABLE TRENCH PARTS | 3-7, 3-9 |
| 90187-0045 | BALL VALVE G1/4 CR PL | 3-51 |
| 90187-0191 | BALL VALVE R1/8, 6 MM | 3-57, 3-59 |
| 90191-0069 | WHEEL, NO. RSER 40X45 | 5-15 |
| 90194-0152 | SIGN, EARTH | 7-5 |
| 90206-0124 | HEATING ELEMENT 2X1500W 230V | 3-47 |
| 90214-0123 | BALL BEARING, 10X30X9 MM | 4-13, 4-15 |
| 90214-0186 | BALL BEARING 30/42X7 | 1-7, 1-9 |
| 90220-0104 | SCR. CABLE 4X1,5MM2 | 3-87 |
| 90220-0165 | SCR. CABLE 5X0,34MM2 | 3-87 |
| 90220-0183 | SCR. CABLE 2X0,34MM2 | 7-63 |
| 90224-0325 | ELBOW 90 COUPL.,EXT.THREAD 10/8-G1/4" | 3-51 |
| 90224-0372 | CONN. STRAIGHT ESK-1/4-1/4 151521 | 3-65 |
| 90226-0458 | MOUNTING SCREW | 3-93, 3-105, 3-107, 3-111, 3-117, 3-119, 3-123, 3-125, 3-137, 3-139, 3-143 |
| 90235-0748 | THROTTLE CHECK VALVE, GRA-1/4-B | 3-57, 3-59 |
| 90235-0844 | THROTTLE CHECK VALVE M5, MANUAL, 6MM | 5-49 |
| 90235-0846 | THROTTLE CHECK VALVE G1/8", MANUAL, 6 | 6-7 |
| 90235-0848 | THROTTLE CHECK VALVE G1/8", MANUAL,8 | 6-21 |
| 90237-0123 | LOCK, 1121-U10C | 3-115, 3-131, 3-133 |
| 90237-0128 | LOCK CYLINDER, 1109-SU125 | 3-115, 3-131, 3-133 |
| 90237-0144 | GUIDE, 1121-SU540 | 3-115, 3-131, 3-133 |
| 90237-0147 | LOCKING LUG, NO. 1121-53-0P | 3-115, 3-131, 3-133 |
| 90237-0175 | TURNING HANDLE, 1125-U185-0A | 3-115, 3-131, 3-133 |
| 90240-0262 | FLANGE BUSHING, IGLIDUR X 12X14X12 | 2-7 |
| 90259-0313 | AUXILIARY CONTACT, NHI21-PKZ0 | 7-31, 7-57 |
| 90261-0025 | PLUG, BLIND, PLASTIC GPN300F28 | 3-57, 3-59 |
| 90261-0033 | PLUG, BLIND, PLASTIC GPN300F182 | 3-91 |
| 90261-0064 | PLUG, BLIND, PLASTIC, NO. SFL42 | 1-25, 1-35 |
| 90264-0078 | FAN, 2BH1300-7AH16 | 6-23 |
| 90274-0084 | PRESSURE GUARD, 1800 KPA | 3-71 |
| 90287-0124 | SCREW PAN HEAD MSCS M4X12 NYLON | 7-11 |
| 90287-0154 | SCREW, SOCK.SET DOGPOINT M6X10 | 3-11, 3-13 |
| 90287-0163 | SCREW SPRINGLOAD. SLOTTED HEAD M6X14 | 5-39 |
| 90287-0175 | SCREW M6S M3X12 A480 | 1-19, 3-11, 3-13, 3-39, 3-41, 3-43, 6-7, 6-11, 6-13, 6-17, 10-19 |
| 90287-0176 | SCREW M6S M3X25 A470 | 8-29, 8-31 |
| 90287-0199 | SCREW M6S ISO 4017 M5X6 A480 | 4-5, 5-13 |
| 90287-0230 | SCREW, HEX.SOCK.HEAD SHOULD. M5X6 | 1-57 |
| 90287-0330 | SCREW M6S ISO 4017 M10X70 A480 | 8-7 |
| 90296-0068 | SHELL ALVANIA GREASE EP 2 | 4-15, 5-7, 5-47 |
| 90296-0075 | SHELL OMALA OIL 320, DRUM 208 LITRES | 3-71 |
| 90328-0012 | SILENCER U-1/8 | 5-53, 5-55, 8-37, 8-39 |
| 90328-0017 | SILENCER, D=6 MM | 1-13, 3-71 |
| 90328-0020 | SILENCER, U-M5 | 8-37, 8-39 |
| 90328-0026 | SILENCER G1/4" | 3-65 |
| 90328-0029 | SILENCER M5 | 3-57, 3-59 |
| 90328-0047 | SILENCER G1/8" | 1-55, 3-57, 3-59 |
| 90330-0026 | PLUG, EXT. G-THREAD, G1/4 | 3-65 |
| 90330-0066 | PLUG, EXT. G-THREAD, G1/8 | 6-7, 6-17 |
| 90330-0134 | NIPPLES,REDUCING,INT THREAD, G1/4-G1/8 | 3-55 |
| 90335-0252 | TENSION SPRING | 4-45, 8-13 |
| 90347-0011 | VIBRATION DAMPER MEGI 781056 | 3-11, 3-13 |
| 90415-0030 | OIL FILTER PN 100 ORD.NO 2.77 10 70.1 | 3-71 |
| 90417-0337 | TIMING BELT 16T10/370 PU | 5-21 |
| 90424-0087 | AIR NOZZLE | 8-23 |
| 90424-0089 | AIR NOZZLE, BSPT1/4, AAB727-1/4-15 | 3-55, 5-33 |
| 90439-0295 | SERVICE KIT, NO. 111940 | 3-91 |
| 90450-0513 | DOUBLE ACTING, COMPACT, CYL 32-25 | 6-23 |
| 90457-0008 | PLUG, EXT. G-THREAD, 4PH-SS | 6-17 |
| 90457-0192 | WASHER PLAIN ROUND, 6,5/18, H=1,5 | 3-21, 3-23 |
| 90457-0203 | FLEXIBLE CONDUIT PVC | 6-23 |
| 90457-0871 | DOUBLE ACTING, MINI-ISO, CYL. 16-25 | 8-23 |
| 90458-0058 | SCREW M5X60 A280 | 6-23 |
| 90458-0181 | RETAINING RING FOR BORE DIN 472 80 SS | 1-43, 1-45 |
| 90458-0292 | TERMINAL ELEMENT, PSD-S CE-TM SCREW/W | 3-81 |
| 90458-0293 | LIGHT ELEMENT, RED, PSD-S OE RD/W | 3-81 |
| 90458-0294 | LIGHT ELEMENT, YELLOW, PSD-S OE YE/W | 3-81 |
| 90458-0295 | LIGHT ELEMENT, BLUE, PSD-S OE BU/W | 3-81 |
| 90458-0296 | LIGHT ELEMENT, GREEN, PSD-S OE GN/W | 3-81 |
| 90458-0302 | SIREN ELEMENT, PSD-S AE SM8-5 100DB/1/W | 3-81 |
| 90458-0307 | CABLE GLAND, M20X1,5, NO.5311 1020 | 3-7, 3-9, 3-81, 6-9, 6-23 |
| 90458-0310 | CABLE GLAND, M40X1,5, NO.5311 1050 | 7-5 |
| 90458-0314 | CABLE GLAND, M16X1,5, NO.5311 1110 | 7-5 |
| 90458-0316 | CABLE GLAND, M25X1,5, NO.5311 1130 | 3-49 |
| 90458-0321 | NUT, M12X1,5 | 3-71 |
| 90458-0323 | NUT, M20X1,5 | 3-7, 3-9, 3-47, 3-81, 3-95, 6-9, 6-23, 7-5 |
| 90458-0324 | NUT, M25X1,5 | 3-57, 3-59, 3-95 |
| 90458-0326 | NUT, M40X1,5 | 3-7, 3-9, 3-95 |
| 90458-0430 | HOSE GLAND W/O INSERT M20 EXTENDED | 3-7, 3-9, 3-47, 3-95 |
| 90458-0432 | HOSE GLAND W/O INSERT M25 EXTENDED | 3-57, 3-59, 3-95 |
| 90458-0434 | HOSE GLAND W/O INSERT M40 EXTENDED | 3-7, 3-9, 3-95 |
| 90458-0438 | GLAND, EXTENDED WITH INSERT, M20X1,5 | 1-15 |

| Part No | Description | Page No |
|---|---|---|
| 90458-0499 | HOLDER 12 MM NO. 82 66861 | 3-55 |
| 90458-0507 | PARALLEL KEY W. ROUND ENDS 6X6X60 MM | 1-7, 1-9 |
| 90458-0755 | GEARS, WORM MOTOR 1600079 | 4-5 |
| 90458-0965 | GEARS, WORM MOTOR S37 DT 63 L4 | 6-9 |
| 90458-1095 | RETAINING RING FOR BORE DIN 472 21 SS | 5-9 |
| 90458-1140 | FERRITE, RI-26-28-13 | 7-9, 7-37, 7-57, 10-5 |
| 90458-1141 | FERRITE, RI-16-28-9 | 7-45 |
| 90458-1170 | FERRITE, SFC-6 | 7-45 |
| 90458-1173 | MULTI DIAMETER MODULE, CM 30W40 | 7-5 |
| 90458-1174 | MULTI DIAMETER MODULE, CM 20W40 | 7-5 |
| 90458-1175 | MULTI DIAMETER MODULE, CM 15W40 | 7-5 |
| 90458-1178 | FRAME CF 8 | 7-5 |
| 90458-1179 | FRAME CF 32 | 7-5 |
| 90458-1194 | MONOSTABLE VALVE 5/2 | 5-53, 5-55 |
| 90458-1197 | BISTABLE VALVE 5/2 | 8-37 |
| 90458-1199 | VALVE CLOSED IN MID-POSITION, 5/3 | 5-53 |
| 90458-1202 | VALVES 2X3/2, CLOSED | 3-57, 3-59, 5-53, 5-55 |
| 90458-1203 | VALVE 2X3/2 1X OPEN 1X CLOSED | 8-39 |
| 90458-1204 | BASIC SUB-BASE 4 VALVES, CDVI5.0-GB4-MP | 5-53, 5-55 |
| 90458-1206 | EXP. SUB-BASE 2 VALVES, CDVI5.0-EB | 5-53 |
| 90458-1207 | SEALING, STANDARD | 5-53, 5-55 |
| 90458-1208 | SEALING, CHANNEL 1 BLOCKED | 5-55 |
| 90458-1212 | LEFT ENDPLATE INCL. 10M CABLE | 5-53, 5-55 |
| 90458-1214 | RIGHT ENDPL EXT. PILOT AIR,CDVI5.0-EPR-S | 5-53, 5-55 |
| 90458-1306 | BLIND PLUG CIRCULAR, M12X1,5 514GFK/212 | 3-71 |
| 90458-1308 | BLIND PLUG CIRCULAR, M20X1,5 514GFK/220 | 3-95, 7-5 |
| 90458-1309 | BLIND PLUG CIRCULAR, M25X1,5 514GFK/225 | 3-95 |
| 90458-1438 | BALL BEARING 10/19X5 | 5-25, 5-27 |
| 90458-1483 | SPRAY GUN WATER G1/4 | 3-51 |
| 90458-1651 | EMERGENCY STOP, ZB4-BS-844 ZB4-BZ-104 | 3-95, 3-129, 7-5 |
| 90458-1740 | AIR GUN ASSEMBLY, CEJN 199589668 | 3-67 |
| 90458-1741 | HOSE ASSEMBLY, CEJN 19 958 9669 | 3-51 |
| 90458-1886 | SCREW M6S ISO 4017 M8X100 A480 | 6-11, 6-13 |
| 90458-2029 | CLAMPING ELEMENT WITH SLEEVE, 32X43 MM | 5-41 |
| 90458-2370 | DOUBLE ACTING, ROUND, CYL 32-150 | 1-55 |
| 90458-2507 | FUSE HOLDER, USBCC1 | 7-29 |
| 90458-2510 | FUSE, ATDR6 | 7-29 |
| 90458-2596 | EXPANSION MODULE EXTRA SUPPLY 2 VALVES | 5-55 |
| 90458-2748 | PROX.SENSOR SMT-10-PS-KL-5-LED-24 | 4-29 |
| 90458-2837 | PLUG SOCKET, KMEB-1-24-5-LED | 3-65 |
| 90458-2838 | SILENCER U-3/8 | 5-53, 5-55 |
| 90458-2907 | PROX.SWITCH IFS204 | 1-49, 4-19, 5-7, 5-15, 5-31, 6-17, 6-19, 8-19, 8-21, 10-13 |
| 90458-2932 | PLAIN BEARING, JUM-02-20 | 1-19, 1-51, 3-19 |
| 90458-2956 | ELBOW PIPE JOINT, EXT.THREAD, D=6MM-G1/8 | 5-15, 6-23 |
| 90458-2975 | GAS SPRING NO. G15-120-150-01 | 5-7 |
| 90459-0290 | NON-RETURN VALVE H-QS-6 | 3-57, 3-59 |
| 90459-0698 | PLUG, EXT. G-THREAD, G1/8 | 5-55 |
| 90459-0699 | BLANKING PLUG, CDVI5.0-B-G3/8 | 5-53 |
| 90459-0813 | COOLING UNIT, KB20A619.01 | 7-55 |
| 90459-0839 | DISTRIBUTION FRAME, ASBV 8 5-135/10M | 4-37, 8-25, 8-27 |
| 90459-0864 | BULKHEAD CONNECTOR, 12 MM/M27X1,5 | 3-67 |
| 90459-0959 | DISTRIBUTOR BLOCK 1492-PD3163 | 7-9 |
| 90459-1018 | ROD END,BALL JOINT EYE M10X1,25 | 1-55 |
| 90459-1131 | SAFETY RELAY, E1T 0SEC | 7-57 |
| 90459-1395 | SCREW HEX.SOCK.SET CONEPT.MS6SS M4X4 A2 | 4-13, 4-15 |
| 90459-1458 | HOOD HAN 6 E 19 30 006 1540 | 5-21, 6-9, 6-23 |
| 90459-1461 | HOUSING HAN 6 E 19 30 006 1255 | 3-7, 3-9 |
| 90459-1621 | CABLE, ETHERNET RJ 45 CONNECT. 1 M | 7-63 |
| 90459-1663 | CONNECTOR, 405204 RSC4/7 | 4-29, 5-37, 8-25, 8-27 |
| 90459-1826 | ELBOW PIPE JOINT, EXT.THREAD,D=16MM-G1/2 | 3-67 |
| 90459-1858 | BRACKET, MS6-WP | 3-63 |
| 90459-1967 | PROX.SENSOR SME-8-S-LED-24 | 6-21 |
| 90459-1991 | HOT MELT UNIT, #1049296 | 3-91 |
| 90459-2133 | PUSH-IN FITTING QSSF-1/2-12-B | 3-7, 3-9 |
| 90459-2215 | STRAIGHT COUPLING, D=16 MM - G1/2" | 3-67 |
| 90459-2232 | WARNING SIGN ANSI (H), DO NOT WASH | 10-25 |
| 90459-2243 | SHUT OFF VALVE, MS4-EE-1/4-10V24 | 3-65 |
| 90459-2245 | DISTRIBUTOR, MS4-FRM-1/4 | 3-65 |
| 90459-2247 | BRACKET, MS4-WP | 3-65 |
| 90459-2248 | BRACKET, MS4-MV | 3-65 |
| 90459-2265 | PROHIBITION SIGN ISO, DO NOT WASH | 3-91 |
| 90459-2291 | SAFETY TIME RELAY, E1T-0.5S-24VDC | 7-43 |
| 90459-2337 | SHUT OFF VALVE, MS4-EM1-1/4 | 3-65 |
| 90459-2339 | FILTER REGULATOR, MS4-LFR-1/4-D7-ERV-AS | 3-65 |
| 90459-2413 | PLC DIGITAL INPUT MODULE16 POINTS | 7-37 |
| 90459-2458 | BASEPLATE, 10 SLOT CONTROLLOGIX CHASSIS | 7-37 |
| 90459-2474 | PLC,DIGIT. OUTPUT MODULE 16 PTS 10-31VDC | 7-37, 7-57 |
| 90459-2477 | ETHERNET I/P BRIDGE MODULE, 1756-ENBT | 7-37, 10-7 |
| 90459-2480 | 8-AXIS SERCOS MOTION MODULE | 7-57 |
| 90459-2487 | REMOVABLE TERMINAL BLOCK 20 POINTS | 7-37, 7-57 |
| 90459-2488 | REMOVABLE TERMINAL BLOCK 36 POINTS | 7-37 |
| 90459-2494 | DEVICENET I/O ADAPTER MODULE, 1734-ADN | 3-97, 3-99 |
| 90459-2501 | FIELD POWER DISTRIBUTOR, 1734-FPD | 3-97, 3-99 |
| 90459-2503 | DIGITAL INPUT 4 PTS SINK, 1734-IB4 | 3-97, 3-99 |

| Part No | Description | Page No |
|---|---|---|
| 90459-2505 | DIGITAL OUTPUT 4 PTS, 1734-OB4E | 3-97, 3-99 |
| 90459-2519 | OPEN STYLE TAP | 7-45 |
| 90459-2523 | OPEN STYLE TERMINATOR, 1485A-C2 | 7-45 |
| 90459-2526 | REMOTE I/O BASE MODULE 8 POINTS, 1734-TB | 3-97, 3-99 |
| 90459-2530 | DEVICENET CABLE THIN | 7-63 |
| 90459-2536 | SERCOS CABLE 0.1M, 2090-SCEP0-1 | 7-35 |
| 90459-2540 | SERCOS CABLE 3.0M, 2090-SCEP3-0 | 7-35 |
| 90459-2547 | POWER RAIL SLOT FILLER MODULE, 2094-PRF | 7-57 |
| 90459-2549 | AC LINE FILTER 3-PHASE 30A, 2090-XXLF-X3 | 7-9 |
| 90459-2551 | CONNECTOR, MOTOR FEEDBACK 15 PIN MALE | 3-87 |
| 90459-2553 | PUSH-IN L-FITTING QSL 16 | 3-57, 3-59, 3-67, 7-55 |
| 90459-2591 | SINGLE VALVE SUB-BASE CDSV5.0-AS-1/8 | 3-57, 3-59, 8-37, 8-39 |
| 90459-2614 | DEVICENET ADAPTER POWERFLEX 40 22-COMM-D | 7-57 |
| 90459-2644 | NUT ROUND WITH SLOTS M30X1,5 SS | 1-7, 1-9 |
| 90459-2739 | OPTO-RELAY 50085, IN / OUT 4-53VDC 1A | 7-13 |
| 90459-2771 | FILTER, MS6-LFX-1/2-R | 3-63 |
| 90459-2772 | FILTER, MS6-LFM-1/2-ARV | 3-63 |
| 90459-2773 | FILTER, MS6-LFM-1/2-BRV | 3-63 |
| 90459-2795 | FRONT LID FOR POWERFLEX 40, 22B-CCB | 7-57 |
| 90459-2939 | POWER SUPPLY UNIT 6EP1 961-3BA00 | 10-21 |
| 90459-3081 | HOUSING HAN A 19 20 003 1250 | 3-7, 3-9 |
| 90459-3115 | BRACKET, REAR, CLEVIS, ROUND, BORE 32 | 1-55 |
| 90459-3145 | FLASH MEMORY 64MBYTE, 1784-CF64 | 7-37 |
| 90459-3245 | CYLINDER WITH INT. GUIDING BORE 25 | 6-7 |
| 90459-3279 | BLANK PLUG BLACK, SQUARE, PLASTIC ZB5SZ5 | 3-95 |
| 90459-3441 | FREQUENCY CONVERTER 0,37 KW | 7-57 |
| 90459-3449 | VARIABLE FREQUENCY DRIVE 22A-A2P3N104 | 7-57 |
| 90459-3450 | VARIABLE FREQUENCY DRIVE 22A-A4P5N104 | 7-9, 10-5 |
| 90459-3454 | FOOTPRINT FILTER, 22-RF018-BL | 7-57 |
| 90459-3460 | FOOTPRINT FILTER 22-RF010-AL | 7-9, 7-57, 10-5 |
| 90459-3603 | PRESSURE GAUGE, MAP-40-6-1/8-EN | 3-57, 3-59 |
| 90459-3604 | FLOW CONTROL VALVE, GR-QS-6 | 3-57, 3-59, 5-33 |
| 90459-3655 | REAR CLEVIS FOOT MOUNTING, LBN-12/16 | 8-23 |
| 90459-3685 | FLOW CONTROL VALVE, GRLA-1/4-QS-8-D | 6-17 |
| 90459-3779 | HANDLE, GN565 SW 192-M8 | 4-31 |
| 90459-3931 | LINE FILTER, 3EP1, 3A 120/250 VAC | 7-9 |
| 90459-4009 | GEARS, PLAN SP100S-MF1-10-0E1/BAUTZW508 | 5-41 |
| 90459-4089 | SAFETY SENSOR NON-CONTACT EVA E | 3-83, 3-85 |
| 90459-4126 | DOUBLE ACTING, MINI-ISO, CYL. 25-12 | 5-15 |
| 90459-4133 | POWER SUPPLY UNIT 6EP1 436-3BA00 | 7-45 |
| 90459-4165 | SAFETY SCREW SM4X25, 20-053-43 | 3-83, 3-85 |
| 90459-4181 | CURR. LIM. CIRC. BREAKER, NZMB1-4-A40 | 7-7 |
| 90459-4235 | SNP TO DF1 GATEWAY, 0220 1166 01 REV B | 10-23 |
| 90459-4252 | CABLE M12-C101, 20-056-10 | 3-83, 3-85 |
| 90459-4254 | CONNECTION BLOCK TINA 4A, 20-054-03 | 3-83, 3-85 |
| 90459-4588 | RADIAL SEAL 60X85X8 MM DUST LIP | 1-43, 1-45 |
| 90459-4616 | BALL BEARING 15/28X7 | 5-29 |
| 90459-4727 | STANDING BEARING, KSTM-20 | 1-51 |
| 90459-4735 | SCREW M6S ISO 4017 M8X10 A480 | 3-25, 3-27, 3-29, 3-31 |
| 90459-4788 | PROX.SENSOR SEIN-M5B-PS-S-L | 6-7, 6-17 |
| 90459-4871 | BRACKET, FOCUS LIGHT BARRIER, 22-090-11 | 3-83, 3-85 |
| 90459-4872 | FOCUS JUMPER CABLE M12 8P 3M, 20-056-51 | 3-83, 3-85 |
| 90459-4876 | FOCUS JUMPER CABLE M12 5P 3M, 20-056-21 | 3-83, 3-85 |
| 90459-4891 | PROGR. IDENTIFIER ID-FIX RW, 20-070-21 | 7-43 |
| 90459-5068 | SET SCREW ISO4027 M5X6 HRC 45 | 6-9 |
| 90459-5195 | SLIM POWER RAIL,KINETIX,8 AXIS,2094-PRS8 | 7-35 |
| 90459-5308 | CONTACTOR 4KW 24VDC, DILM9-10 | 7-33, 7-41, 7-57 |
| 90459-5309 | CONTACTOR 7,5KW 24VDC, DILM17-10 | 7-33 |
| 90459-5311 | CONTACTOR 15KW 24VDC, DILM32-10 | 7-33 |
| 90459-5321 | OVERLOAD PROTECTION, PKZM0-0,4 | 7-57 |
| 90459-5323 | OVERLOAD PROTECTION, PKZM0-1 | 7-57 |
| 90459-5324 | OVERLOAD PROTECTION, PKZM0-1,6 | 7-57 |
| 90459-5326 | OVERLOAD PROTECTION, PKZM0-4 | 7-31 |
| 90459-5481 | OIL PUMP 3L, 10P-P3 | 3-71 |
| 90459-5522 | CONN. BANJO, COR8PB6M10 | 3-71 |
| 90459-5529 | PH.CELL E3Z-T86A, SENDER+RECIEVER | 3-21, 3-23, 8-29, 8-31, 10-17 |
| 90459-5627 | CONNECTION TINA 1A, 20-054-00 | 3-83, 3-85 |
| 90459-5811 | RESIDUAL CURRENT DEVICE, FI-25/2/003-A | 7-29 |
| 90459-5813 | AUXILIARY CONTACT, FAZ-XHIN11 | 7-31 |
| 90459-5817 | REGULATOR, MS4-LR-1/4-D6-A8-AS | 3-57, 3-59 |
| 90459-5886 | POWER SUPPLY UNIT 115-230 VAC/24VDC100W | 7-45 |
| 90459-5949 | REAR CLEVIS FOOT MOUNTING , CRLBN-32 | 1-55 |
| 90459-6062 | REMOTE I/O, IP67 8PTS IN/OUT SELF-CONFIG | 3-7, 3-9, 3-11, 3-13 |
| 90459-6280 | NUT GUK 5 M25 X 1.5 FZB | 1-7, 1-9, 1-27, 1-31, 1-37, 1-41, 1-43, 1-45 |
| 90459-6395 | CABLE, ETHERNET RJ 45 STRAIGHT.10M | 7-63 |
| 90459-6426 | PRESSURE GUARD PEV-1/4-B-OD | 3-65 |
| 90459-6556 | PLC DIGITAL INPUT 32PTS, 1756-IB32/B | 7-37 |
| 90459-6557 | PROCESSOR L61, SERIES B, 1756-L61/B | 7-37 |
| 90459-6570 | CONNECTOR M12 5-POLES MALE, RSCN5/7 | 4-5 |
| 90459-6586 | ACT/SENS.Y-CABLE, ASBN 2-PRKMV 4-07/0,6M | 1-9, 3-21, 3-23, 8-25, 8-27, 10-17 |
| 90459-6617 | COVER 4-POLE, NZM1-4-XKSA | 7-7 |
| 90459-6692 | SAFETY PLC, PLUTO B20 20-070-06 | 7-43 |
| 90459-6768 | FAN 2BH1300-7AV15 | 3-49 |
| 90459-6820 | FEMALE INSERT HAN 4 A, 09 20 004 2711 | 3-7, 3-9 |

| Part No | Description | Page No |
|---|---|---|
| 90459-6847 | DEVICENET TERM. RESISTOR, 0939 CTX 101 | 3-11, 3-13 |
| 90459-6852 | AUXILIARY CONTACT, DILA-XHI22 | 7-41, 7-57 |
| 90459-6858 | ETHERNET SW, FL SWITCH SF 8TX FROM V 14 | 7-45 |
| 90459-6913 | ELECTROMAG. DOOR LOCK. DEV.,JSD-ZH-EM1-K | 3-83, 3-85 |
| 90459-6961 | SAFETY SENSOR, NON CONT. ADAM-E M12 0,5M | 3-83, 3-85 |
| 90459-7107 | SLEEVE QSH-16-12 | 3-57, 3-59 |
| 90459-7228 | ELECTRICAL EQUIPMENT SIGN, TEMPLATE | 10-25 |
| 90459-7229 | IDENTIF. OF SINGLE CONDUCTORS, TEMPLATE | 7-5 |
| 90459-7267 | POWER SUPPLY 24VDC, 1756-PB75/B | 7-37 |
| 90459-7272 | PHOTOCELL E3Z-LS88 | 6-7, 6-11, 6-13 |
| 90459-7333 | PUSH-IN FITTING QSSF-1/4-4-B | 3-57, 3-59 |
| 90459-7344 | PRESSURE GAUGE, MA-40-6-R1/4-EN | 3-57, 3-59 |
| 90459-7366 | PHOTOCELL WTB4-3P3161 F20 | 5-7, 5-49 |
| 90459-7368 | MARKING FOR PNEUM. TUBING, PRZ04 | 5-55, 8-23, 8-37, 8-39 |
| 90459-7369 | MARKING FOR PNEUM. TUBING, PRZ06 | 1-13, 1-55, 3-57, 3-59, 3-91, 4-29, 5-53, 5-55 |
| 90459-7370 | MARKING FOR PNEUM. TUBING, PRZ08 | 3-55, 3-57, 3-59, 4-5, 5-53, 5-55, 8-37, 8-39 |
| 90459-7372 | MARKING FOR PNEUM. TUBING, PRZ12 | 3-57, 3-59, 5-53, 5-55, 5-57 |
| 90459-7373 | MARKING FOR PNEUM. TUBING, PRZ16 | 3-57, 3-59, 3-67 |
| 90459-7458 | WARNING SIGN ANSI (H), HOT SURFACE | 10-25 |
| 90600-0203 | COMMONING BUSBAR, 1-PH 85A | 7-13 |
| 90600-0344 | CARRIAGE, SSR 25 XWYQZSSHH M | 4-13 |
| 90600-0373 | RETAINING RING FOR SHAFT DIN 471 21 SS | 4-41 |
| 90600-0375 | BALL BUSHING, 12X21X30 MM | 4-41, 5-9 |
| 90600-0434 | GUIDE BAR, SSR25-180L-YM G30/30 | 4-11 |
| 90600-0440 | WHEEL APPLICATOR 60 PLATFORM, #7132058 | 4-5 |
| 90600-0459 | INDUCTIVE SWITCH, E2A-M12KN05-WP-B1 5M | 5-37 |
| 90600-0553 | TUBE, 8X1 MM PTFE | 4-5 |
| 90600-0656 | COMP. SPRING 6777, 4X36X120 | 2-15 |
| 90600-0658 | WORM GEAR SCREW JACK, TP00063000130 | 3-17 |
| 90600-0683 | COMP. SPRING 2496, 1,2X10,4X45 | 2-7 |
| 90600-0761 | GEARS,PLANETARY TP010S-MA3-66-0E1/MPL B4 | 4-21 |
| 90600-0773 | AUTOMATIC GUN HOSE, #104008 | 3-91 |
| 90600-0798 | BUSHING INSERT, JUM-02-30 | 1-29, 1-39 |
| 90600-0799 | STANDING BEARING, KSTM-25 | 1-49 |
| 90600-0800 | FLANGE BEARING 20X89X20 MM | 1-51, 3-19 |
| 90600-0803 | WORM GEAR MR V 63 UO3A-80B4 … B5/35 | 1-43, 1-45 |
| 90600-0804 | WORM GEAR MR V 63 UO3A-80B4 … B5/140 | 2-9 |
| 90600-0812 | GEAR BOX, TP00042000110 | 1-19 |
| 90600-0814 | TIMING BELT AT10 5250X25 MM+35236050 | 1-57 |
| 90600-0815 | TIMING BELT 25AT10/4800 +32 2. 3.6.050 | 1-57 |
| 90600-0825 | GUIDE BAR, 4 RSR20VMUU+580LM | 1-53 |
| 90600-0828 | TIMING BELT 25T5/1075 PU | 6-9 |
| 90600-0830 | TIMING BELT 25 ATK5/1440 PU | 6-9 |
| 90600-0831 | TORQUE RIGID COUPLING, 19X20 MM | 5-45, 5-49 |
| 90600-0891 | COMP. SPRING 2520, 1,2X16,4X35 | 5-9, 6-7 |
| 90600-0892 | NEEDLE BEARING, 50X80X28 MM | 1-43, 1-45 |
| 90600-0961 | ROLLER CHAIN, SINGLE 3/8 -159 | 1-19 |
| 90600-0962 | ROLLER CHAIN, SINGLE 3/8 -243 | 1-19 |
| 90600-0964 | ROLLER CHAIN, SINGLE 3/8 -333 | 1-19 |
| 90600-0971 | RACK, ZRR2-100 | 3-11, 3-13 |
| 90600-1001 | CROSS CLAMP, 340/68385 | 3-55 |
| 90600-1002 | FOOT 45000N, 297/63399N | 3-11, 3-13 |
| 90600-1005 | WORM GEAR SCREW JACK, TR00042000130 | 1-51 |
| 90600-1077 | DOUBLE ACTING, SHUTTLE, CYL. 40-700 | 6-17 |
| 90600-1078 | DOUBLE ACTING, SHUTTLE, CYL. 25-500 | 6-21 |
| 90600-1080 | DOUBLE ACTING, ROUND, CYL 32-80 | 1-13 |
| 90600-1159 | ROLLER CHAIN, SINGLE 3/8 -290 | 3-19 |
| 90600-1198 | HANDLE, MZM1-XSM-R | 7-7 |
| 90600-1759 | CONTACTOR22KW24VDCDILM50-22+DILM65-XIP2X | 7-29, 7-33 |
| 90600-1869 | COMP. SPRING 2634, 2X15X45 | 6-23 |
| 90600-1984 | ACTUATOR/SENSOR CABLE PRKT 5/56-10M | 3-87 |
| 90600-2048 | SOLID STATE RELAY, 3RF2403-1BD04 | 7-57 |
| 90600-2067 | LEVEL CONTROL LC25, #7125832 | 4-5 |
| 90600-2068 | DELIVERED DESIGN SIGN, 90600-2068 | 7-5 |
| 90600-2073 | CYLINDER, SLT-20-10-P-A | 4-29 |
| 90600-2159 | DOUBLE ACTING, SHUTTLE, CYL. 18-260 | 5-49 |
| 90600-2563 | SCREW PANHEAD SNAKE EYE SPANNER, M6X12 | 3-83, 3-85 |
| 90600-2830 | FASTENING ELEMENT, BLOCKSEP-E 01026 | 7-11 |
| 90600-2904 | EARTH BRAID, 250/16/8,5 | 7-5 |
| 90600-3009 | CYLINDER WITH INT. GUIDING BORE 40 | 6-17 |
| 90600-3010 | CYLINDER WITH INT. GUIDING BORE 40 | 6-7 |
| 90600-3276 | PROXIMITY SENS. SME-8M-DS-24V-K-0,3-M8D | 5-49, 6-7, 6-17, 6-21 |
| 90600-3293 | MOTOR POWER CABLE 2090-XXNPMF-16S09 | 3-87 |
| 90600-3294 | MOTOR FEEDBACK CABLE 2090-XXNFMF-S09/C | 3-87 |
| 90600-4049 | LIGHT FIXTURE, TCH128 1XTL5-21W/830 HF | 7-5 |
| 90600-4731 | RELAY | 7-13 |
| 90600-4732 | LASER SENSOR, WS/WE9L-P330 | 1-9, 8-29, 8-31 |
| 90600-4796 | SAFETY LIGHT BARRIER,TRANSM. FT4-35-750 | 3-83, 3-85 |
| 90600-4797 | SAFETY LIGHT BARRIER,TRANSM. FR4-35-750 | 3-83, 3-85 |
| 90600-4810 | ADAPTER LIGHT BARR. TINA 10A, 20-054-12 | 3-83, 3-85 |
| 90600-5135 | BUSHING, 12X14X8 MM | 2-7 |
| 90600-5212 | AXIS MOD. W. PS,2094-BC02-M02-S SERIES B | 7-35 |
| 90600-5214 | AXIS MOD. KINETIX 6000,2094-BM01-S SER.B | 7-35, 7-57 |
| 90600-5216 | AXIS MOD. KINETIX 6000,2094-BM02-S SER.B | 7-57 |

| Part No | Description | Page No |
|---|---|---|
| 90600-5823 | SIGN, MAIN POWER MACHINE LABEL | 7-5 |
| 90600-5840 | PLC DEVICEN. BR./SCAN MOD, 1756-DNB, D | 7-37 |
| 90600-5931 | BRIDGE CONNECTOR, WQV 6/3, 1054760000 | 7-53 |
| 90600-6183 | TUBULAR RIVET 3,5X6,2 | 3-25, 3-27, 3-29, 3-31 |
| 90600-8128 | OPER. PANEL 15"PV+,2711P-T15C4D2TP SER.B | 3-95 |
| 90601-0668 | SERVO MOTOR MPL-B420P-MK72AA SERIES A | 1-43, 1-45, 2-9, 5-45, 5-49 |
| 90601-1126 | SAFETY VALVE, MS6-SV-1/2-D-10V24-AG | 5-57 |
| 90601-1168 | SOCKET CONNECTOR, NECA-S1G9-P9-MP3 | 5-57 |
| 90601-1586 | SILENCER G1" | 5-57 |
| 90601-1587 | BRACKET, MS6-WPB | 5-57 |
| 90601-1926 | SERVO MOTOR MPL-B430P-MK72AA SERIES A | 4-21, 5-41 |
| 90601-2046 | CAPTIVE SCREW M6, GUTBG 6-4-12 | 3-109, 3-123 |
| 90602-4674 | TIMING BELT 25T10/1150-DL PU | 1-11 |
| 205438-0000 | CABLE GLAND | 3-47 |
| 290027-0000 | WASHER | 1-7, 1-9 |
| 311103-0308 | PARALLEL PIN ISO 2338 5M6X16 A1 | 4-13, 5-9 |
| 311103-0318 | PARALLEL PIN ISO 2338 5M6X40 A1 | 5-37 |
| 311103-0349 | PARALLEL PIN ISO 2338 6M6X12 A1 | 4-21 |
| 311103-0351 | PARALLEL PIN ISO 2338 6M6X16 A1 | 1-35, 3-11, 3-13, 4-25, 4-33 |
| 311103-0353 | PARALLEL PIN ISO 2338 6M6X20 A1 | 1-31, 1-41, 1-43, 1-45, 1-53, 1-57, 5-43, 5-45, 5-49, 8-29, 8-31 |
| 311103-0354 | PARALLEL PIN ISO 2338 6M6X22 A1 | 4-15, 5-7 |
| 311103-0355 | PARALLEL PIN ISO 2338 6M6X25 A1 | 4-15 |
| 311103-0405 | PARALLEL PIN ISO 2338 8M6X30 A1 | 3-17 |
| 311103-0454 | PARALLEL PIN ISO 2338 10M6X20 A1 | 4-37 |
| 311103-0458 | PARALLEL PIN ISO 2338 10M6X30 A1 | 4-9, 4-19 |
| 311103-1355 | PARALLEL PIN ISO 2338 6M6X24 A1 | 1-57 |
| 311103-1456 | PARALLEL PIN ISO 2338 10M6X24 A1 | 4-37 |
| 311112-0206 | SPRING PIN, ISO 8752 3X12-C | 4-45 |
| 311112-0208 | SPRING PIN, ISO 8752 3X16-C | 2-7 |
| 311112-0256 | SPRING PIN, ISO 8752 4X20-C | 2-7 |
| 311112-0312 | SPRING PIN, ISO 8752 5X28-C | 1-51 |
| 311112-0345 | SPRING PIN, ISO 8752 6X32-C | 1-21 |
| 311112-0347 | SPRING PIN, ISO 8752 6X40-C | 1-49 |
| 311112-0349 | SPRING PIN, ISO 8752 6X50-C | 3-17 |
| 311520-0320 | RIVET, BLANK 2,4X6 | 7-5 |
| 312104-0379 | SCREW M6S M6X45H FZB | 1-43, 1-45 |
| 312105-0287 | SCREW M6S ISO 4017 M4X8 A470 | 1-11, 4-5, 4-15, 5-39, 6-7, 6-11, 6-13, 6-17 |
| 312105-0289 | SCREW M6S H4X10 A4 70 ISO4017/DIN933 | 1-9, 1-25, 1-35, 5-21, 6-11, 6-13 |
| 312105-0291 | SCREW M6S ISO 4017 M4X12 A470 | 2-7, 2-9, 3-47 |
| 312105-0295 | SCREW M6S ISO 4017 M4X20 A470 | 5-33 |
| 312105-0323 | SCREW M6S ISO 4017 M5X8 A480 | 8-29, 8-31 |
| 312105-0325 | SCREW M6S ISO 4017 M5X10 A480 | 4-41, 4-45, 5-7, 5-9, 5-49, 6-7, 6-17, 8-23 |
| 312105-0327 | SCREW M6S ISO 4017 M5X12 A480 | 1-7, 1-9, 1-49, 2-5, 5-7, 5-15, 5-31, 5-37, 8-11, 10-13 |
| 312105-0328 | SCREW M6S ISO 4017 M5X14 A480 | 3-41, 6-19, 8-23, 8-25, 8-27 |
| 312105-0329 | SCREW M6S ISO 4017 M5X16 A480 | 2-5, 3-39, 3-43, 5-13, 5-15, 5-37, 5-47, 5-49, 8-19, 8-21, 10-19 |
| 312105-0331 | SCREW M6S ISO 4017 M5X20 A480 | 2-11, 3-41, 4-21, 5-19, 6-9, 6-17, 8-29, 8-31 |
| 312105-0332 | SCREW M6S ISO 4017 M5X22 A470 | 5-21 |
| 312105-0333 | SCREW M6S ISO 4017 M5X25 A480 | 4-15, 6-21 |
| 312105-0337 | SCREW M6S ISO 4014 M5X35 A480 | 3-73, 3-75, 3-77 |
| 312105-0340 | SCREW M6S ISO 4014 M5X45 A480 | 6-9 |
| 312105-0341 | SCREW M6S ISO 4014 M5X50 A480 | 5-37 |
| 312105-0343 | SCREW M6S ISO 4014 M5X60 A480 | 1-13 |
| 312105-0364 | SCREW M6S ISO 4017 M6X10 A480 | 1-7, 1-9, 4-5, 6-17, 8-29, 8-31, 8-37, 8-39 |
| 312105-0366 | SCREW M6S ISO 4017 M6X12 A480 | 1-25, 1-35, 2-7, 3-7, 3-9, 3-11, 3-13, 3-35, 3-123, 3-129 4-19, 5-45, 6-7, 6-9 |
| 312105-0367 | SCREW M6S ISO 4017 M6X14 A480 | 3-21, 3-23, 5-51, 6-19, 8-23 |
| 312105-0368 | SCREW M6S ISO 4017 M6X16 A480 | 1-11, 2-11, 2-13, 3-7, 3-9, 3-11, 3-13, 3-19, 3-49, 3-81 4-13, 4-41, 5-31, 5-33, 6-7, 6-17, 6-21, 6-23, 7-55, 10-9 |
| 312105-0370 | SCREW M6S ISO 4017 M6X20 A480 | 1-7, 1-9, 1-29, 1-31, 1-39, 1-49, 1-51, 1-55, 1-57, 2-5, 2-11 2-13, 3-11, 3-13, 3-15, 3-35, 3-83, 3-85, 3-89, 4-37, 5-7, 5-9, 5-13, 5-19, 5-33, 5-43, 6-7, 6-23 8-23, 8-29, 8-31 |
| 312105-0372 | SCREW M6S ISO 4017 M6X25 A480 | 1-49, 2-5, 2-11, 3-7, 3-9, 3-91, 3-135, 4-11, 5-21, 5-43 5-45, 5-49, 6-9, 6-11, 6-13 |
| 312105-0374 | SCREW M6S ISO 4014 M6X30 A480 | 1-27, 1-31, 1-37, 1-41, 3-47, 5-21, 5-43 |
| 312105-0376 | SCREW M6S ISO 4014 M6X35 A480 | 5-45, 6-17, 8-23 |
| 312105-0378 | SCREW M6S ISO 4014 M6X40 A480 | 2-11, 3-17, 5-43, 8-29, 8-31, 8-37, 8-39 |
| 312105-0379 | SCREW M6S ISO 4014 M6X45 A480 | 1-49 |
| 312105-0382 | SCREW M6S ISO 4014 M6X60 A480 | 3-47 |
| 312105-0388 | SCREW M6S ISO 4014 M6X90 A480 | 3-11, 3-13 |
| 312105-0447 | SCREW M6S ISO 4017 M8X12 A480 | 3-49 |
| 312105-0449 | SCREW M6S ISO 4017 M8X16 A480 | 3-19, 5-47, 5-51, 6-9, 8-23 |
| 312105-0451 | SCREW M6S ISO 4017 M8X20 A480 | 1-11, 1-57, 2-9, 2-11, 3-21, 3-23, 3-35, 3-91, 5-15, 5-31 6-7, 6-23 |
| 312105-0452 | SCREW M6S ISO 4017 M8X22 A480 | 1-43, 1-45, 3-19 |
| 312105-0453 | SCREW M6S ISO 4017 M8X25 A480 | 1-7, 1-19, 1-51, 1-57, 2-9, 3-47, 4-5, 5-21, 5-41, 6-21 |
| 312105-0455 | SCREW M6S ISO 4017 M8X30 A480 | 1-7, 1-43, 1-45, 1-49, 2-9, 3-17, 6-7, 6-17 |
| 312105-0457 | SCREW M6S ISO 4014 M8X35 A480 | 1-7, 1-27, 1-31, 1-37, 1-41, 4-25, 4-27, 4-29, 4-31, 4-33 4-35, 5-41 |
| 312105-0459 | SCREW M6S ISO 4014 M8X40 A480 | 1-27, 1-37, 1-43, 1-45, 1-49, 2-11 |
| 312105-0460 | SCREW M6S ISO 4014 M8X45 A480 | 1-27, 1-37, 2-13 |
| 312105-0465 | SCREW M6S ISO 4014 M8X70 A480 | 1-57, 3-71, 6-7 |
| 312105-0466 | SCREW M6S ISO 4014 M8X75 A480 | 3-21, 3-23 |
| 312105-0467 | SCREW M6S ISO 4014 M8X80 A480 | 5-43 |
| 312105-0469 | SCREW M6S ISO 4014 M8X90 A480 | 1-19, 1-51, 5-43 |

| Part No | Description | Page No |
|---|---|---|
| 312105-0471 .. | SCREW M6S ISO 4014 M8X100 A480 | 3-17 |
| 312105-0473 .. | SCREW M6S ISO 4014 M8X110 A480 | 1-7, 1-9 |
| 312105-0475 .. | SCREW M6S ISO 4014 M8X120 A480 | 1-57 |
| 312105-0499 .. | SCREW M6S ISO 4014 M10X40 A480 | 4-19 |
| 312105-0500 .. | SCREW M6S ISO 4014 M10X45 A480 | 4-9, 4-19 |
| 312105-0515 .. | SCREW M6S ISO 4014 M10X120 A480 | 2-9, 2-11 |
| 312109-0340 .. | SCREW M6S ISO 4017 M5X45 A480 | 5-21 |
| 312109-0374 .. | SCREW M6S ISO 4017 M6X30 A480 | 1-49, 4-41, 5-47, 6-17, 8-23, 8-29, 8-31 |
| 312109-0376 .. | SCREW M6S ISO 4017 M6X35 A480 | 2-11, 5-7, 6-9 |
| 312109-0380 .. | SCREW M6S ISO 4017 M6X50 A480 | 4-5 |
| 312109-0382 .. | SCREW M6S ISO 4017 M6X60 A480 | 6-11, 6-13 |
| 312109-0457 .. | SCREW M6S ISO 4017 M8X35 A480 | 2-9, 5-7 |
| 312109-0459 .. | SCREW M6S ISO 4017 M8X40 A480 | 1-9, 2-9, 2-13, 5-7, 6-11, 6-13 |
| 312109-0460 .. | SCREW M6S ISO 4017 M8X45 A480 | 5-49 |
| 312109-0461 .. | SCREW M6S ISO 4017 M8X50 A480 | 6-9 |
| 312109-0463 .. | SCREW M6S ISO 4017 M8X60 A480 | 2-9 |
| 312109-0467 .. | SCREW M6S ISO 4017 M8X80 A480 | 1-7, 1-9 |
| 312109-0500 .. | SCREW M6S ISO 4017 M10X45 A480 | 4-37 |
| 312109-0542 .. | SCREW M6S ISO 4017 M12X50 A280 | 1-31, 1-41 |
| 312109-0552 .. | SCREW M6S M12X100H A480 | 3-11, 3-13 |
| 312111-0381 .. | SCREW HEX.SOCK.HD.MC6S-TT 6X55 88 FZB | 6-17 |
| 312115-0222 .. | SCREW ISO4762 M3X8 A4 80 | 8-29, 8-31 |
| 312115-0228 .. | SCREW ISO4762 M3X16 A4 80 | 1-7, 1-9, 8-29, 8-31 |
| 312115-0230 .. | SCREW ISO4762 M3X20 A4 80 | 5-49 |
| 312115-0287 .. | SCREW ISO4762 M4X8 A4 80 | 5-49, 6-7 |
| 312115-0289 .. | SCREW ISO4762 M4X10 A4 80 | 3-7, 3-9 |
| 312115-0291 .. | SCREW ISO4762 M4X12 A4 80 | 2-7, 2-9 |
| 312115-0293 .. | SCREW ISO4762 M4X16 A4 80 | 1-53, 4-37 |
| 312115-0295 .. | SCREW ISO4762 M4X20 A4 80 | 8-25, 8-27 |
| 312115-0297 .. | SCREW ISO4762 M4X25 A4 80 | 3-71, 7-5 |
| 312115-0299 .. | SCREW ISO4762 M4X30 A4 80 | 3-71 |
| 312115-0304 .. | SCREW ISO4762 M4X45 A4 80 | 7-7 |
| 312115-0325 .. | SCREW ISO4762 M5X10 A4 80 | 7-35, 7-37, 7-59, 8-19, 8-21 |
| 312115-0327 .. | Z3REW ISO4762 M5X12 A4 80 | 1-53, 3-47, 3-93, 3-101, 7-9, 7-57, 10-5 |
| 312115-0328 .. | SCREW ISO4762 M5X14 A4 80 | 5-9, 8-23 |
| 312115-0329 .. | SCREW ISO4762 M5X16 A4 80 | 4-29, 5-39 |
| 312115-0331 .. | SCREW ISO4762 M5X20 A4 80 | 5-51 |
| 312115-0332 .. | SCREW ISO4762 M5X22 A4 80 | 8-23 |
| 312115-0337 .. | SCREW ISO4762 M5X35 A4 80 | 3-71 |
| 312115-0364 .. | SCREW ISO4762 M6X10 A4 80 | 1-9 |
| 312115-0366 .. | SCREW ISO4762 M6X12 A4 80 | 1-55, 1-57, 4-45, 5-39, 7-35, 7-43 |
| 312115-0367 .. | SCREW ISO4762 M6X14 A4 80 | 1-25, 1-35, 3-93, 3-101, 5-7 |
| 312115-0368 .. | SCREW ISO4762 M6X16 A4 80 | 5-19, 6-17, 7-9 |
| 312115-0370 .. | SCREW ISO4762 M6X20 A4 80 | 2-9, 4-11, 6-7 |
| 312115-0372 .. | SCREW ISO4762 M6X25 A4 80 | 1-43, 1-45, 5-45 |
| 312115-0374 .. | SCREW ISO4762 M6X30 A4 80 | 1-43, 1-45, 6-7, 10-9 |
| 312115-0376 .. | SCREW ISO4762 M6X35 A4 80 | 6-7 |
| 312115-0379 .. | SCREW ISO4762 M6X45 A4 80 | 4-21 |
| 312115-0447 .. | SCREW ISO4762 M8X12 A4 80 | 1-31 |
| 312115-0449 .. | SCREW ISO4762 M8X16 A4 80 | 1-25, 1-29, 1-35, 1-39 |
| 312115-0451 .. | SCREW ISO4762 M8X20 A4 80 | 1-43, 1-45 |
| 312115-0453 .. | SCREW ISO4762 M8X25 A4 80 | 1-43, 1-45, 4-21, 5-41, 5-45, 5-49 |
| 312115-0455 .. | SCREW ISO4762 M8X30 A4 80 | 2-13, 3-11, 3-13 |
| 312115-0457 .. | SCREW ISO4762 M8X35 A4 80 | 1-43, 1-45 |
| 312115-0459 .. | SCREW ISO4762 M8X40 A4 80 | 1-31, 1-41 |
| 312115-0460 .. | SCREW ISO4762 M8X45 A4 80 | 2-9 |
| 312115-0461 .. | SCREW ISO4762 M8X50 A4 80 | 1-31, 1-41 |
| 312115-0489 .. | SCREW ISO4762 M10X16 A4 80 | 1-31, 1-41 |
| 312115-0540 .. | SCREW ISO4762 M12X40 A4 80 | 3-11, 3-13 |
| 312122-0291 .. | SCREW ISO 1207 M4X12 NI PL BRASS | 3-47 |
| 312125-0222 .. | SCREW ISO 1207 M3X8 A4 | 3-7, 3-9 |
| 312125-0226 .. | SCREW ISO 1207 M3X12 A4 | 7-5 |
| 312125-0230 .. | SCREW ISO 1207 M3X20 A4 | 5-7 |
| 312125-0232 .. | SCREW ISO 1207 M3X25 A4 | 3-7, 3-9 |
| 312125-0285 .. | SCREW ISO 1207 M4X6 A4 | 6-19 |
| 312125-0287 .. | SCREW ISO 1207 M4X8 A4 | 2-13, 3-7, 3-9, 4-19, 4-37, 5-7, 5-15, 5-43, 5-49 |
| 312125-0289 .. | SCREW ISO 1207 M4X10 A4 | 1-7, 1-9, 3-51, 7-9, 7-35 |
| 312125-0323 .. | SCREW ISO 1207 M5X8 A4 | 1-27, 1-31, 1-37, 1-41, 1-43, 1-45, 3-11, 3-13, 6-7 |
| 312125-0325 .. | SCREW ISO 1207 M5X10 A4 | 7-13, 7-15, 7-29, 7-31, 7-33, 7-39, 7-41, 7-43, 7-45, 7-49, 7-51 |
| 312125-0327 .. | SCREW ISO 1207 M5X12 A4 | 8-29, 8-31 |
| 312125-0331 .. | SCREW ISO 1207 M5X20 A4 | 2-13 |
| 312125-0366 .. | SCREW ISO 1207 M6X12 A4 | 7-9 |
| 312155-0287 .. | SCREW DIN 7991 MF6S M4X8 A4 70 | 5-39 |
| 312155-0325 .. | SCREW DIN 7991 MF6S M5X10 A4 70 | 5-39 |
| 312155-0327 .. | SCREW DIN 7991 MF6S M5X12 A4 70 | 2-5, 4-11, 4-41, 5-9, 6-9 |
| 312155-0329 .. | SCREW DIN 7991 MF6S M5X16 A4 70 | 1-15, 2-13, 4-13, 5-19, 5-47, 6-21 |
| 312155-0337 .. | SCREW DIN 7991 MF6S M5X35 A4 70 | 5-29 |
| 312155-0368 .. | SCREW DIN 7991 MF6S M6X16 A4 70 | 5-9, 6-7 |
| 312155-0370 .. | SCREW DIN 7991 MF6S M6X20 A4 70 | 2-5, 3-115, 3-131, 3-133, 5-9 |
| 312155-0372 .. | SCREW DIN 7991 MF6S M6X25 A4 70 | 5-47, 6-7 |
| 312155-0374 .. | SCREW DIN 7991 MF6S M6X30 A4 70 | 6-7 |
| 312155-0380 .. | SCREW DIN 7991 MF6S M6X50 A4 70 | 6-9 |
| 312155-0449 .. | SCREW DIN 7991 MF6S M8X16 A4 70 | 1-11 |
| 312155-0451 .. | SCREW DIN 7991 MF6S M8X20 A4 70 | 4-13 |

| Part No | Description | Page No |
|---|---|---|
| 312155-0453 .. | SCREW DIN 7991 MF6S M8X25 A4 70 | 5-49 |
| 312155-0455 .. | SCREW DIN 7991 MF6S M8X30 A4 70 | 6-7 |
| 312155-0457 .. | SCREW DIN 7991 MF6S M8X35 A4 70 | 5-41 |
| 312155-0461 .. | SCREW DIN 7991 MF6S M8X50A4 70 | 5-15 |
| 312318-0220 .. | SCREW ISO4029 M3X6 A4 | 5-37 |
| 312318-0283 .. | SCREW ISO4029 M4X4 A4 | 1-51 |
| 312318-0285 .. | SCREW ISO4029 M4X6 A4 | 1-19 |
| 312318-0287 .. | SCREW ISO4029 M4X8 A4 | 3-19, 5-31 |
| 312318-0289 .. | SCREW ISO4029 M4X10 A4 | 5-21 |
| 312318-0360 .. | SCREW ISO4029 M6X6 A4 | 1-51, 3-19 |
| 312318-0370 .. | SCREW ISO4029 M6X20 A4 | 7-9 |
| 312605-0310 .. | HEXAGON NUT, M6M M3 A280 | 1-9, 1-19, 3-11, 3-13, 8-29, 8-31 |
| 312605-0312 .. | HEXAGON NUT, M6M M4 A280 | 3-71, 3-141, 6-11, 6-13, 7-5 |
| 312605-0314 .. | HEXAGON NUT, M6M M5 A280 | 3-39, 3-41, 3-43, 3-47, 3-83, 3-85, 3-97, 3-99, 3-115, 3-133, 5-21, 5-51, 6-11, 6-13, 7-59, 7-61, 10-13, 10-19 |
| 312605-0316 .. | HEXAGON NUT, M6M M6 A280 | 1-49, 3-7, 3-9, 3-91, 3-115, 3-123, 3-131, 3-133, 4-5, 5-15, 5-33, 5-39, 6-7, 6-9, 6-11, 6-13, 7-5, 7-7, 8-37, 8-39 |
| 312605-0318 .. | HEXAGON NUT, M6M M8 A280 | 1-51, 5-7, 6-19 |
| 312605-0320 .. | HEXAGON NUT, M6M M10 A280 | 5-41 |
| 312605-0322 .. | HEXAGON NUT, M6M M12 A280 | 4-5 |
| 312607-0312 .. | HEXAGON NUT, EN 24032 M6M M4 A480 | 8-25, 8-27 |
| 312607-0316 .. | HEXAGON NUT, EN 24032 M6M M6 A480 | 5-21, 6-21, 8-23 |
| 312607-0318 .. | HEXAGON NUT, EN 24032 M6M M8 A480 | 3-21, 3-23 |
| 312607-0326 .. | HEXAGON NUT, EN 24032 M6M M20 A480 | 1-31 |
| 312607-0332 .. | HEXAGON NUT, EN 24032 M6M M30 A480 | 3-11, 3-13 |
| 312625-0316 .. | HEXAGON THIN NUT, EN 24035 ML6M M6 A4 | 5-15, 5-39 |
| 312625-0318 .. | HEXAGON THIN NUT, EN 24035 ML6M M8 A4 | 1-7 |
| 312625-0326 .. | HEXAGON THIN NUT, EN 24035 ML6M M20 A4 | 1-15 |
| 312625-0330 .. | HEXAGON THIN NUT, EN 24035 ML6M M27 A4 | 1-43, 1-45 |
| 312632-0326 .. | HEX.TH.NUT FINE,EN24035 ML6M M20X1,5 A4 | 6-19 |
| 312705-0318 .. | NUT HEX. DOMED CAP MHM-6 M8 A280 | 1-7 |
| 312812-0310 .. | HEXAGON NUT, NY-LOCK M3 A480 | 5-7, 5-49 |
| 312812-0314 .. | HEXAGON NUT, NY-LOCK M5 A480 | 2-5, 2-7, 2-13, 3-71, 3-115, 3-131, 3-133 |
| 312812-0316 .. | HEXAGON NUT, NY-LOCK M6 A480 | 2-11, 3-95, 3-135, 4-45, 6-17, 8-23 |
| 312812-0318 .. | HEXAGON NUT, NY-LOCK M8 A480 | 1-13, 1-43, 1-45, 3-11, 3-13, 3-19, 3-71, 3-91, 6-23 |
| 312812-0320 .. | HEXAGON NUT, NY-LOCK M10 A480 | 1-13, 5-7 |
| 312812-0322 .. | HEXAGON NUT, NY-LOCK M12 A480 | 2-15 |
| 315103-0153 .. | WASHER, BRB, 6,4/12,H=1,5 NIPL BR | 5-9 |
| 315105-0124 .. | WASHER BRB 3,2X6 RFR | 1-7, 1-9, 3-7, 3-9, 6-7, 8-29, 8-31 |
| 315105-0136 .. | WASHER BRB 4,3X8 RFR | 1-9, 1-11, 1-25, 1-35, 2-7, 2-9, 3-7, 3-9, 3-47, 3-71, 3-141, 4-15, 4-37, 5-39, 6-7, 6-11, 6-13, 6-17, 7-5, 7-7, 7-9, 8-25, 8-27 |
| 315105-0146 .. | WASHER BRB 5,3X10 RFR | 1-7, 1-9, 1-49, 1-53, 2-5, 2-7, 2-11, 2-13, 3-39, 3-41, 3-43, 3-47, 3-71, 3-73, 3-75, 3-77, 3-83, 3-85, 3-97, 3-99, 3-115, 3-133, 4-15, 4-21, 5-9, 5-13, 5-15, 5-31, 5-39, 5-47, 5-49, 5-51, 6-7, 6-9, 6-17, 6-19, 6-21, 7-13, 7-15, 7-29, 7-31, 7-33, 7-35, 7-37, 7-39, 7-41, 7-43, 7-45, 7-49, 7-51, 7-59, 7-61, 8-11, 8-19, 8-21, 8-23, 8-25, 8-27, 8-29, 8-31, 10-13, 10-19 |
| 315105-0153 .. | WASHER BRB 6,4X12 RFR | 1-7, 1-9, 1-11, 1-25, 1-27, 1-29, 1-31, 1-35, 1-37, 1-39, 1-41, 1-43, 1-45, 1-49, 1-51, 1-55, 2-5, 2-11, 2-13, 3-7, 3-9, 3-11, 3-13, 3-15, 3-17, 3-19, 3-47, 3-49, 3-81, 3-83, 3-85, 3-89, 3-91, 3-93, 3-95, 3-101, 3-115, 3-123, 3-129, 3-131, 3-133, 3-135, 4-5, 4-13, 4-19, 4-37, 4-41, 5-7, 5-13, 5-15, 5-19, 5-21, 5-31, 5-33, 5-39, 5-43, 5-45, 5-47, 5-49, 5-51, 6-9, 6-11, 6-13, 6-17, 6-21, 6-23, 7-5, 7-7, 7-9, 7-43, 8-23, 8-29, 8-31, 10-9 |
| 315105-0156 .. | WASHER BRB 6,7X14 RFR | 3-11, 3-13 |
| 315105-0165 .. | WASHER BRB 8,4X16 RFR | 1-7, 1-11, 1-13, 1-19, 1-27, 1-31, 1-37, 1-41, 1-43, 1-45, 1-49, 1-51, 1-57, 2-9, 2-13, 3-17, 3-19, 3-35, 3-49, 3-91, 4-25, 4-27, 4-29, 4-31, 4-33, 4-35, 5-7, 5-15, 5-21, 5-41, 5-43, 5-49, 5-51, 6-7, 6-9, 6-11, 6-13, 6-19, 6-21, 6-23, 7-9, 8-19, 8-21, 8-23 |
| 315105-0173 .. | WASHER BRB 10,5X22 RFR | 1-13, 2-9, 4-37 |
| 315105-0178 .. | WASHER BRB 13X24 RFR | 1-27, 1-31, 1-37, 1-41, 2-15, 4-5 |
| 315105-0186 .. | WASHER BRB 17X30 RFR | 1-27, 1-37 |
| 315105-0192 .. | WASHER BRB 21X36 RFR | 1-31 |
| 315105-0203 .. | WASHER BRB 30X52 RFR | 1-43, 1-45 |
| 315106-0124 .. | WASHER ISO 7089-3-200 HV A4 | 3-39, 3-41, 3-43, 5-7, 10-19 |
| 315106-0146 .. | WASHER ISO 7089-5-200 HV A4 | 5-21 |
| 315106-0153 .. | WASHER ISO 7089-6-200 HV A4 | 4-11, 4-45, 6-17, 8-37, 8-39 |
| 315106-0165 .. | WASHER ISO 7089-8-200 HV A4 | 1-57, 4-21, 5-7, 6-17 |
| 315106-0173 .. | WASHER ISO 7089-10-200 HV A4 | 4-9, 4-19, 5-15 |
| 315106-0192 .. | WASHER ISO 7089-20-200 HV A4 | 1-15 |
| 315115-0153 .. | WASHER PLAIN, TBRB 6,4/12 H=3 | 5-49 |
| 315115-0165 .. | WASHER PLAIN, TBRB 8,4/16 H=3 | 1-43, 1-45, 1-49, 1-51, 2-13, 3-17, 3-19, 3-71, 5-7 |
| 315115-0173 .. | WASHER PLAIN, TBRB 10,5/22 H=4 | 2-11 |
| 315125-0153 .. | WASHER TBRSB 6,4X22X4 A4 | 2-5, 2-7, 3-7, 3-9, 3-47, 3-135, 5-9, 5-21, 5-43, 5-47, 6-7, 6-9, 6-19, 6-23 |
| 315125-0165 .. | WASHER TBRSB 8,4X26X5 A4 | 1-7, 1-9, 2-11, 3-11, 3-13, 3-21, 3-23, 4-5, 5-7, 5-41 |
| 315125-0173 .. | WASHER TBRSB 10,5X28X6 A4 | 1-31, 1-41 |
| 315202-0602 .. | O-RING 44,04X3,53 MM | 1-43, 1-45 |
| 315202-0702 .. | O-RING 12,42X1,78 MM | 2-13 |
| 315202-0705 .. | O-RING 17,17X1,78 MM | 1-7, 1-9 |
| 315202-0710 .. | O-RING 25,12X1,78 MM | 2-11 |
| 315202-0716 .. | O-RING 34,65X1,78 MM | 4-15 |
| 315202-0717 .. | O-RING 20,29X2,62 MM | 1-43, 1-45 |
| 315202-0732 .. | O-RING 44,12X2,62 MM | 1-29, 1-39 |
| 315202-0733 .. | O-RING 45,69X2,62 MM | 1-7, 1-9 |
| 315202-0741 .. | O-RING 58,42X2,62 MM | 1-43, 1-45 |
| 315206-0705 .. | O-RING 17,17X1,78 MM | 5-7 |
| 315221-0139 .. | RADIAL SEAL 18X30X7 MM | 5-47 |
| 315221-0147 .. | RADIAL SEAL 20X47X7 MM | 5-47 |

| Part No | Description | Page No |
|---|---|---|
| 315221-0169 .. | RADIAL SEAL 30X47X7 MM | 2-11, 5-7, 5-47 |
| 315221-0175 .. | RADIAL SEAL 35X47X7 MM | 2-11 |
| 315221-0192 .. | RADIAL SEAL 45X62X8 MM | 1-7, 1-9 |
| 315221-0198 .. | RADIAL SEAL 50X65X8 MM | 1-43, 1-45 |
| 315239-0110 .. | NYLON WASHER G1/4, 1/4RRP | 3-51 |
| 315400-0001 .. | TUBE PUN-H-6X1-BL | 1-13, 1-55, 3-57, 3-59, 3-71, 3-91, 4-29, 5-33, 5-53, 5-55, 6-7, 6-17 |
| 315400-0004 .. | TUBE PUN-H-8X1,25-BL | 3-55, 3-57, 3-59, 3-65, 3-67, 5-53, 5-55, 6-7, 6-17, 8-37, 8-39 |
| 315400-0009 .. | TUBE PUN-H-10X1,5-SW | 3-51 |
| 315400-0010 .. | TUBE PUN-H-12X2-BL | 3-57, 3-59, 5-53, 5-55, 5-57 |
| 315400-0013 .. | TUBE PUN-H-16-2,5-BL | 3-57, 3-59, 3-67 |
| 315400-0016 .. | TUBE PUN-H-4X0,75-BL | 3-57, 3-59, 5-55, 8-23, 8-37, 8-39 |
| 315402-0156 .. | LOCK WASHER FBB 6,5 | 4-41 |
| 315701-0170 .. | PARALLEL KEY W. ROUND ENDS 4X4X20 MM | 5-21 |
| 315701-0371 .. | PARALLEL KEY W. ROUND ENDS 14X9X90 MM | 1-31, 1-41 |
| 315705-0202 .. | PARALLEL KEY W ROUND ENDS 5X5X25MM | 6-9 |
| 315705-0232 .. | PARALLEL KEY W. ROUND ENDS 6X6X20 MM | 1-7, 1-9, 3-19 |
| 315705-0234 .. | PARALLEL KEY W. ROUND ENDS 6X6X25 MM | 1-15, 5-7, 5-9 |
| 315705-0236 .. | PARALLEL KEY W. ROUND ENDS 6X6X30 MM | 6-9 |
| 315705-0238 .. | PARALL KEY W. ROUND ENDS 6X6X36 MM | 5-47 |
| 315705-0239 .. | PARALLEL KEY W. ROUND ENDS 6X6X40 MM | 1-19, 1-51, 1-57 |
| 315705-0267 .. | PARALLEL KEY W. ROUND ENDS 8X7X30 MM | 1-49 |
| 315705-0303 .. | PARALLEL KEY W. ROUND ENDS 10X8X50 MM | 1-27, 1-37, 1-43, 1-45 |
| 315705-0307 .. | PARALLEL KEY W. ROUND ENDS 10X8X70 MM | 1-43, 1-45, 2-9 |
| 315741-0216 .. | RETAINING RING DIN 705 A4 20 | 1-51, 3-19 |
| 315751-0103 .. | RETAINING RING FOR SHAFT DIN 471 6 SS | 5-37 |
| 315751-0112 .. | RETAINING RING FOR SHAFT DIN 471 15 SS | 5-29, 6-9 |
| 315751-0116 .. | RETAINING RING FOR SHAFT DIN 471 20 SS | 1-13, 1-15, 5-7, 5-37, 5-41, 6-9 |
| 315751-0130 .. | RETAINING RING FOR SHAFT DIN 471 50 SS | 1-43, 1-45 |
| 315752-0136 .. | RETAINING RING FOR BORE DIN 472 62 | 1-27, 1-31, 1-37, 1-41 |
| 315753-0122 .. | RETAINING RING FOR BORE DIN 472 30 SS | 5-47 |
| 315753-0130 .. | RETAINING RING FOR BORE DIN 472 47 SS | 2-11, 5-47 |
| 315755-0106 .. | RETAINING RING SHAFT DIN 6799 4 SS | 2-5 |
| 315755-0109 .. | RETAINING RING SHAFT DIN 6799 7 SS | 4-15 |
| 318174-0162 .. | TIMING BELT 25T10/1150 PU | 5-7 |
| 318801-0109 .. | HANDLE, THREADED TAP. NO. 8304-929 | 5-7 |
| 321133-0180 .. | BUSHING IGLIDUR G 12X14X12 | 6-19 |
| 321135-0183 .. | BUSHING, IGLIDUR X 12X14X15 | 8-29, 8-31 |
| 321136-0183 .. | BUSHING, IGLIDUR H370 12X14X15 | 5-15 |
| 321153-0500 .. | FLANGE BUSHING, IGLIDUR G 70X75X50 | 3-17 |
| 321154-0060 .. | FLANGE BUSHING, IGLIDUR W300 6X8X6 | 5-37 |
| 321154-0180 .. | FLANGE BUSHING, IGLIDUR W300 12X14X12 | 6-7, 8-13 |
| 321155-0139 .. | FLANGE BUSHING, IGLIDUR X 10X12X9 | 5-9 |
| 321306-0104 .. | BALL BEARING 20/42X12 | 1-7, 1-9, 5-7 |
| 321306-0105 .. | BALL BEARING 25/47X12 | 2-11 |
| 321308-0203 .. | BALL BEARING 17/35X10 | 4-15 |
| 321308-0204 .. | BALL BEARING 20/42X12 | 1-13, 5-7, 5-41, 6-9 |
| 321309-0100 .. | BALL BEARING 10/30X9 | 5-47 |
| 321309-0105 .. | BALL BEARING 25/52X15 | 1-27, 1-31, 1-37, 1-41 |
| 321313-0104 .. | BALL BEARING 20/47X14 | 5-9, 5-37 |
| 321314-0105 .. | BALL BEARING 25/62X17 | 1-27, 1-31, 1-37, 1-41 |
| 321316-0204 .. | BALL BEARING 20/52X15 | 5-37 |
| 321330-0104 .. | ANG. BALL BEAR 20/47X20,6 | 5-47 |
| 321330-0105 .. | ANG. BALL BEAR 25/52X20,6 | 1-43, 1-45 |
| 342706-0130 .. | STIFFNER SLEEVE FOR HOSE 6X1 | 3-73, 3-75, 3-77 |
| 342715-0102 .. | BLIND PLUG 6 MM | 7-5 |
| 342767-0104 .. | BULKHEAD LEAD-IN, G1/4 | 3-51, 3-67 |
| 342921-0132 .. | STRAIGHT COUPL.,EXT.THREADED 10/8-G1/4" | 3-51 |
| 342923-0132 .. | STRAIGHT COUPL.,INT.THREADED 10/8-G1/4" | 3-51 |
| 342991-0108 .. | HOSE CLIP,WORM DRIVE TYPE (38)-50 | 3-47, 6-23 |
| 350001-0001 .. | PUSH-IN FITTING QS-F-M5-4 | 8-23 |
| 350001-0002 .. | PUSH-IN FITTING QS-F-M5-6 | 3-57, 3-59 |
| 350001-0006 .. | PUSH-IN FITTING QS-F-G1/8-6 | 3-57, 3-59, 5-53, 5-55, 6-19 |
| 350001-0007 .. | PUSH-IN FITTING QS-F-G1/8-8 | 3-57, 3-59, 5-53, 5-55 |
| 350001-0008 .. | PUSH-IN FITTING QS-F-G1/4-6 | 5-33 |
| 350001-0011 .. | PUSH-IN FITTING QS-F-G1/4-12 | 3-57, 3-59 |
| 350001-0014 .. | PUSH-IN FITTING QS-F-G3/8-12 | 5-53, 5-55 |
| 350001-0016 .. | PUSH-IN FITTING QS-F-G1/2-12 | 3-7, 3-9, 5-57 |
| 350002-0001 .. | PUSH-IN L-FITTING QSL-F-M5-4 | 8-37, 8-39 |
| 350002-0005 .. | PUSH-IN L-FITTING QSL-F-G1/8-4 | 3-57, 3-59, 8-37 |
| 350002-0006 .. | PUSH-IN L-FITTING QSL-F-G1/8-6 | 1-13, 1-55, 4-29 |
| 350002-0007 .. | PUSH-IN L-FITTING QSL-F-G1/8-8 | 3-55, 3-57, 3-59, 8-37, 8-39 |
| 350002-0008 .. | PUSH-IN L-FITTING QSL-F-G1/4-6 | 3-71 |
| 350002-0009 .. | PUSH-IN L-FITTING QSL-F-G1/4-8 | 3-57, 3-59, 3-65, 3-67, 8-23 |
| 350002-0011 .. | PUSH-IN L-FITTING QSL-F-G1/4-12 | 3-65 |
| 350002-0016 .. | PUSH-IN L-FITTING QSL-F-G1/2-12 | 3-63, 5-57 |
| 350003-0005 .. | PUSH-IN FITTING QS-F-G1/8-6-I | 6-7, 6-17 |
| 350004-0005 .. | PUSH-IN L-FITTING QSL-F-12 | 3-57, 3-59, 5-57 |
| 350005-0002 .. | PUSH-IN T-FITTING QST-F-6 | 3-57, 3-59, 5-55, 6-7, 6-17 |
| 350005-0003 .. | PUSH-IN T-FITTING QST-F-8 | 3-57, 3-59 |
| 350005-0005 .. | PUSH-IN T-FITTING QST-F-12 | 3-57, 3-59 |
| 350006-0001 .. | PUSH-IN FITTING QS-F-6H-4 | 5-55 |
| 350006-0008 .. | PUSH-IN FITTING QS-F-12H-8 | 3-57, 3-59 |
| 350009-0003 .. | PUSH-IN FITTING QS-F-8 | 4-5 |
| 350011-0002 .. | PUSH-IN T-FITTING QST-F-8-6 | 3-57, 3-59 |

| Part No | Description | Page No |
|---|---|---|
| 351120-0266 .. | CABLE ÖLFLEX HEAT 180 SIHF 4X4 | 3-87 |
| 351150-0187 .. | CABLE OLFLEX 5X6 MM2 LIGHT/GREY | 3-87 |
| 351150-0403 .. | CABLE OLFLEX 3X0,75 MM2 LIGHT/GREY | 3-87 |
| 351150-0405 .. | CABLE OLFLEX 5X0,75 MM2 LIGHT/GREY | 3-87 |
| 351150-0406 .. | CABLE OLFLEX 7X0,75 MM2 LIGHT/GREY | 3-87, 5-57 |
| 351150-0407 .. | CABLE OLFLEX 12X0,75 MM2 LIGHT/GREY | 3-87 |
| 351150-0412 .. | CABLE OLFLEX 3X1,5 MM2 LIGHT/GREY | 3-87 |
| 351150-0413 .. | CABLE OLFLEX 4GX1,5 MM2 LIGHT/GREY | 3-87, 5-21, 6-9, 6-23 |
| 351160-0102 .. | WIRE AWM 1X0,75 MM2 DARKBLUE | 7-57 |
| 351160-0105 .. | WIRE AWM 1X2,5 MM2 DARKBLUE | 7-63, 10-21 |
| 351160-0106 .. | WIRE AWM 1X4 MM2 DARKBLUE | 7-63 |
| 351161-0104 .. | WIRE AWM 1X1,5 MM2 LIGHTBLUE | 7-63 |
| 351161-0105 .. | WIRE AWM 1X2,5 MM2 LIGHTBLUE | 7-63 |
| 351161-0106 .. | WIRE AWM 1X4 MM2 LIGHTBLUE | 7-63 |
| 351161-0107 .. | WIRE AWM 1X6 MM2 LIGHTBLUE | 7-63 |
| 351161-0109 .. | WIRE AWM 1X16 MM2 LIGHTBLUE | 7-63 |
| 351162-0102 .. | WIRE AWM 1X0,75 MM2 YELLOW-GREEN | 7-63 |
| 351162-0104 .. | WIRE AWM 1X1,5 MM2 YELLOW-GREEN | 7-63 |
| 351162-0105 .. | WIRE AWM 1X2,5 MM2 YELLOW-GREEN | 7-63 |
| 351162-0106 .. | WIRE AWM 1X4 MM2 YELLOW-GREEN | 7-63 |
| 351162-0107 .. | WIRE AWM 1X6 MM2 YELLOW-GREEN | 7-63 |
| 351162-0108 .. | WIRE AWM 1X10 MM2 YELLOW-GREEN | 7-63 |
| 351162-0109 .. | WIRE AWM 1X16 MM2 YELLOW-GREEN | 7-63 |
| 351164-0104 .. | WIRE AWM 1X1,5 MM2 BLACK | 7-63 |
| 351164-0105 .. | WIRE AWM 1X2,5 MM2 BLACK | 7-57 |
| 351164-0106 .. | WIRE AWM 1X4 MM2 BLACK | 7-63 |
| 351164-0107 .. | WIRE AWM 1X6 MM2 BLACK | 7-57 |
| 351164-0108 .. | WIRE AWM 1X10 MM2 BLACK | 7-63 |
| 351164-0109 .. | WIRE AWM 1X16 MM2 BLACK | 7-63 |
| 351309-0050 .. | 'ACTUATOR/SENSOR CABLE PRKT 4-07/5M | 3-21, 3-23 |
| 351309-0100 .. | ACTUATOR/SENSOR CABLE PRKT 4-07/10M | 1-9, 3-7, 3-9, 3-11, 3-13, 3-21, 3-23, 3-83, 3-85 |
| 351401-0020 .. | ACTU/SENS CABLE RSMVN 3-PRKMV 3-06/2,0M | 6-7, 6-17, 6-21 |
| 351401-0050 .. | ACTU/SENS CABLE RSMVN 3-PRKMV 3-06/5,0M | 3-71, 6-17 |
| 351402-0050 .. | ACTU/SENS CABLE RSMVN 3-PRKMWV 3-06/5,0M | 6-7, 6-17 |
| 351403-0020 .. | ACTU/SENS. CABLE RSMVN 3-PRKMV 4-06/2,0M | 6-7, 6-11, 6-13 |
| 351405-0006 .. | ACT/SENS. CABLE RSMVN 3-PRKT 4-3-06/0,6M | 3-21, 3-23 |
| 351405-0050 .. | SENS. CABLE RSMVN 3-PRKT 4-3-06/5,0M | 1-49, 3-21, 3-23, 5-31, 6-17, 6-19, 10-13, 10-17 |
| 351407-0015 .. | ACTU/SENS. CABLE PRST 3-PRKMV 3-06/1,5M | 5-49 |
| 351407-0020 .. | ACTU/SENS. CABLE PRST 3-PRKMV 3-06/2,0M | 5-49 |
| 351408-0020 .. | ACTU/SENS. CABLE PRST 3-PRKMWV 3-06/2,0M | 5-7 |
| 351411-0006 .. | ACTU/SENS. CABLE PRST 4-PRKT 4-07/0,6M | 8-25, 8-27 |
| 351411-0010 .. | ACTU/SENS. CABLE PRST 4-PRKT 4-07/1,0M | 4-19, 8-25, 8-27 |
| 351411-0015 .. | ACTU/SENS. CABLE PRST 4-PRKT 4-07/1,5M | 5-7, 5-15 |
| 351411-0050 .. | ACTU/SENS. CABLE PRST 4-PRKT 4-07/5,0 | 3-21, 3-23, 10-13, 10-17 |
| 351413-0003 .. | DEVICENET CONN. CABLE, 0935 361 103/0,3M | 3-11, 3-13 |
| 351413-0050 .. | DEVICENET CONN. CABLE, 0935 361 103/5M | 3-11, 3-13 |
| 351415-0100 .. | DEVICENET CONN. CABLE, 0935 361 105/10M | 3-7, 3-9 |
| 352103-0110 .. | CABLE GLAND, STR 16, PR22,5/PG16 | 3-129 |
| 352113-0101 .. | CABLE TIE, BLACK 92X2,5 MM | 3-51, 10-15 |
| 352113-0104 .. | CABLE TIE, BLACK 300X4,8 MM | 2-13, 4-19, 4-37, 5-7, 5-15, 5-43, 5-49 |
| 352113-0203 .. | ANCHOR PLATES FOR STRIPS, TYPE TM3S8-M0 | 2-13, 4-19, 4-37, 7-35 |
| 352113-0204 .. | ANCHOR PLATES FOR STRIPS, TYPE TM3S25-M | 1-27, 1-31, 1-37, 1-41, 1-43, 1-45, 3-11, 3-13, 3-141 |
| 352113-0205 .. | ANCHOR PLATES FOR STRIPS, TYPE TM2S8-C10 | 1-7, 1-9, 3-51, 4-19, 5-7, 5-15, 5-43, 5-49, 6-7, 6-19 |
| 352113-0206 .. | ANCHOR PLATES FOR STRIPS, TYPE ABM100-AT | 3-95 |
| 353001-0115 .. | END SLEEVE 2,5/14 | 10-21 |
| 353021-0212 .. | FEED THROUGH TERMINAL, 10200.0 | 7-47, 7-53, 7-59 |
| 353021-0214 .. | FEED THROUGH TERMINAL, 10202.0 | 7-53, 7-59 |
| 353021-0302 .. | TERMINALS,TRIPLE-LEVEL, DLD 2,5/35 PA | 7-61 |
| 353022-0002 .. | NEUTRAL TERMINAL, 10107.8 | 7-51 |
| 353024-0204 .. | EARTH TERMINAL WPE 2,5 | 7-49, 7-59 |
| 353024-0205 .. | EARTH TERMINAL, 1010.1 | 3-97, 3-99, 7-41, 7-49, 7-57 |
| 353024-0206 .. | EARTH TERMINAL, 1010.2 | 7-49, 7-59 |
| 353024-0207 .. | EARTH TERMINAL, 1010.3 | 7-49 |
| 353024-0209 .. | EARTH TERMINAL, 1010.5 | 7-7, 7-49 |
| 353024-0212 .. | EARTH TERMINAL, 10363.0 | 7-61 |
| 353031-0203 .. | END SUPPORT, WEW 35/2 | 7-13, 7-17, 7-27, 7-47, 7-51, 7-53, 7-59, 7-61 |
| 353032-0004 .. | END PLATE WAP 2,5-10 BEIGE | 7-47, 7-53, 7-59 |
| 353032-0009 .. | END PLATE, WAP FOR WDK | 7-17, 7-19, 7-21, 7-23, 7-25, 7-27, 7-61 |
| 353032-0302 .. | END PLATE, AP DLD2,5 DB | 7-61 |
| 353033-0104 .. | END PLATE, 10502.8 | 7-51 |
| 353034-0030 .. | BRIDGE CONNECTOR WQV 2,5/10, 10544.6 | 3-97, 3-99, 7-17, 7-19, 7-21, 7-23, 7-25, 7-27, 7-61 |
| 353034-0042 .. | BRIDGE CONNECTOR WQV 2,5/3 | 7-53 |
| 353034-0404 .. | BRIDGE CONNECTOR Q10, 13131.0 | 7-61 |
| 353041-0001 .. | BUS BAR RAIL 10X3MM SSCH | 7-51 |
| 353041-0106 .. | HOLDER ZB35 K 5026.8 | 7-51 |
| 353101-0122 .. | CABLE SHOE 0,5-1,5MM2 M5 RED | 3-47 |
| 353249-0012 .. | INSERT, SINGLE HOLE, EK 154/11 | 3-7, 3-9, 3-47, 3-95 |
| 353249-0015 .. | INSERT, SINGLE HOLE, EK 155/16 | 3-57, 3-59, 3-95 |
| 353249-0054 .. | INSERT, SINGLE HOLE, EK 156/25 | 3-7, 3-9, 3-95 |
| 353250-0016 .. | GLAND, LOCK NUT M16X1,5 | 7-5 |
| 353250-0020 .. | GLAND, LOCK NUT M20X1,5 | 3-57, 3-59 |
| 353250-0040 .. | GLAND, LOCK NUT M40X1,5 | 7-5 |

| Part No | Description | Page No |
|---|---|---|
| 354000-0040 .. | MINIATURE CIRCUIT BREAKER, FAZ-C4/1 | 7-13, 7-29 |
| 354000-0060 .. | MINIATURE CIRCUIT BREAKER, FAZ-C6/1 | 7-13, 7-29, 7-31, 7-57 |
| 354000-0100 .. | MINIATURE CIRCUIT BREAKER, FAZ-C10/1 | 7-29, 7-39 |
| 354001-0040 .. | MINIATURE CIRCUIT BREAKER, FAZ-C4/2 | 7-13 |
| 354001-0100 .. | MINIATURE CIRCUIT BREAKER, FAZ-C10/2 | 7-31 |
| 354002-0060 .. | MINIATURE CIRCUIT BREAKER, FAZ-C6/3 | 7-29 |
| 354002-0200 .. | MINIATURE CIRCUIT BREAKER, FAZ-C20/3 | 7-31 |
| 354002-0250 .. | MINIATURE CIRCUIT BREAKER, FAZ-C25/3 | 7-31 |
| 359000-0013 .. | WIRE MARKING, YELLOW, PA1/3"+" | 10-21 |
| 359000-0023 .. | WIRE MARKING, YELLOW, PA1/3"-" | 10-21 |
| 359000-0300 .. | WIRE MARKING, YELLOW, PA1/3"0" | 10-21 |
| 359000-0301 .. | WIRE MARKING, YELLOW, PA1/3"1" | 10-21 |
| 359000-0302 .. | WIRE MARKING, YELLOW, PA1/3"2" | 10-21 |
| 359000-0303 .. | WIRE MARKING, YELLOW, PA1/3"3" | 10-21 |
| 359000-0304 .. | WIRE MARKING, YELLOW, PA1/3"4" | 10-21 |
| 359000-0305 .. | WIRE MARKING, YELLOW, PA1/3"5" | 10-21 |
| 359000-0306 .. | WIRE MARKING, YELLOW, PA1/3"6" | 10-21 |
| 359000-0307 .. | WIRE MARKING, YELLOW, PA1/3"7" | 10-21 |
| 359000-0308 .. | WIRE MARKING, YELLOW, PA1/3"8" | 10-21 |
| 359000-0309 .. | WIRE MARKING, YELLOW, PA1/3"9" | 10-21 |
| 359009-0100 .. | CABLE MARKING, YELLOW, PK2/4"0" | 10-15 |
| 359009-0101 .. | CABLE MARKING, YELLOW, PK 2/4"1" | 10-15 |
| 359009-0102 .. | CABLE MARKING, YELLOW, PK 2/4"2" | 10-15 |
| 359009-0103 .. | CABLE MARKING, YELLOW, PK 2/4"3" | 10-15 |
| 359009-0104 .. | CABLE MARKING, YELLOW, PK 2/4"4" | 10-15 |
| 359009-0105 .. | CABLE MARKING, YELLOW, PK 2/4"5" | 10-15 |
| 359009-0106 .. | CABLE MARKING, YELLOW, PK 2/4"6" | 10-15 |
| 359009-0107 .. | CABLE MARKING, YELLOW, PK 2/4"7" | 10-15 |
| 359009-0108 .. | CABLE MARKING, YELLOW, PK 2/4"8" | 10-15 |
| 359009-0109 .. | CABLE MARKING, YELLOW, PK 2/4"9" | 10-15 |
| 359009-0201 .. | CABLE MARKING, YELLOW, PK 2/4"B" | 10-15 |
| 359009-0222 .. | CABLE MARKING, YELLOW, PK 2/4"W" | 10-15 |
| 359011-0806 .. | MARKING, DEK 5 FW 1-200 | 7-61 |
| 359011-0807 .. | MARKING, DEK 5 FW 1-50 | 7-17, 7-19, 7-21, 7-23, 7-25, 7-27, 7-47, 7-49, 7-53, 7-59, 7-61 |
| 359011-0808 .. | MARKING, DEK 5FW 51-100 | 7-27 |
| 359011-0809 .. | MARKING, DEK 5 FW 101-150 | 7-61 |
| 359011-0811 .. | MARKING, DEK 5 FW 201-250 | 7-61 |
| 359011-0819 .. | MARKING, EARTH, DEK 5 GW ERDE I.KR. | 7-47 |
| 359011-0821 .. | MARKING, DEK 6 FW 1-50 | 7-49, 7-51, 7-53, 7-59 |
| 359240-0100 .. | SIGN HOLDER FOR 359240-0001 | 7-5 |
| 359241-0124 .. | "SIGN: "" MAIN SWITCH""" | 7-5 |
| 359301-0001 .. | BUTTON SIGN, UP | 3-95 |
| 359301-0005 .. | BUTTON SIGN, DOWN | 3-95 |
| 359301-0090 .. | BUTTON SIGN, INCHING | 3-95 |
| 359301-0105 .. | BUTTON SIGN, ALARM STOP | 3-95 |
| 359705-0015 .. | WARNING SIGN ISO, RISK OF ELECTRIC SHOCK | 3-93, 3-95, 7-5, 7-9 |
| 359705-0021 .. | WARNING SIGN ISO, PNEUMATIC ENERGY | 1-11 |
| 359710-0001 .. | WARNING SIGN ISO, HOT SURFACE | 3-47 |
| 359715-0100 .. | WARNING SIGN ANSI (H), ELECTRIC SHOCK | 10-25 |
| 359725-0100 .. | WARNING SIGN ANSI (H), ENTANGLEMENT | 10-25 |
| 359725-0108 .. | WARNING SIGN ANSI (H), MOVING PART | 10-25 |
| 359725-0125 .. | WARNING SIGN ANSI (V), PNEUMATIC ENERGY | 10-25 |
| 476221-0002 .. | PIPE | 3-33, 3-37 |
| 476221-0003 .. | PIPE | 3-33, 3-37 |
| 476221-0013 .. | PIPE | 8-23 |
| 486268-0000 .. | NUT | 5-15 |
| 486826-0001 .. | 11"SIGN ""EMERGENCY STOP""" | 3-129, 7-5 |
| 531616-0000 .. | HOLDER | 3-91 |
| 532412-0000 .. | SPRING | 10-13 |
| 545897-0000 .. | BRACKET | 10-13 |
| 575034-0000 .. | ROUND NUT | 3-83, 3-85 |
| 580923-0000 .. | MACHINE SIGN CE | 4-37 |
| 988685-0000 .. | PIN | 3-93, 3-101 |
| 1020637-0000 . | HOLDER | 3-39, 3-41, 3-43, 8-23, 10-13, 10-19 |
| 1021990-0000 . | SIGN 356X70MM HOUSE MARK TEXT TETRA PAK | 3-11, 3-13 |
| 1021991-0000 . | STRIPE TETRA PAK BLUE B=70MM, ROLL L=25M | 3-11, 3-13 |
| 1030335-0000 . | FILTER HOLDER | 3-49, 6-23 |
| 1030338-0000 . | NET | 3-49 |
| 1030627-0000 . | ROLL | 5-7 |
| 1030874-0000 . | THROTTLE WASHER | 3-49 |
| 1030878-0000 . | GASKET | 3-49, 6-23 |
| 1035792-0000 . | E-HINGE | 3-93, 3-101 |
| 1037130-0000 . | ,CONNECTION BOX | 3-129 |
| 1038275-0012 . | SPACER | 7-9 |
| 1065410-0000 . | SLOTTED PIN | 5-15 |
| 1128856-0000 . | PROHIBITION SIGN | 3-109, 3-125, 3-127, 8-23 |
| 1129770-0000 . | BLOCKING PIECE | 3-93, 3-101 |
| 1133029-0000 . | GASKET | 6-19 |
| 1133035-0000 . | LID | 6-23 |
| 1133148-0000 . | SCREW | 6-19 |
| 1133251-0000 . | PLATE | 5-31 |
| 1143130-0003 . | BOX | 8-43 |
| 1188609-0000 . | FLANGE SEAL | 3-47 |
| 1188610-0000 . | FLANGE SEAL | 3-47 |

| Part No | Description | Page No |
|---|---|---|
| 1188818-0000 | .NUT | 6-19 |
| 1189007-0000 | .CLAMP BLOCK | 8-29, 8-31 |
| 1189198-0000 | .FASTENING BRACKET | 6-19 |
| 1189457-0000 | .METAL FLAG | 5-31 |
| 1189461-0000 | .BRACKET | 5-31 |
| 1350910-0000 | .BOX | 8-43 |
| 1359565-0000 | .NUT | 3-35 |
| 1366727-0000 | .CLAMP | 3-35 |
| 1482063-0000 | .POSITION TEMPLATE | 8-41 |
| 1482064-0000 | .POSITION TEMPLATE | 8-41 |
| 1482065-0000 | .POSITION TEMPLATE | 8-41 |
| 1497932-0000 | .SET OF SIGNS | 10-15 |
| 1500071-0000 | .POSITION TEMPLATE | 8-41 |
| 1539391-0000 | .ROUND NUT | 3-83, 3-85 |
| 1550595-2460 | .SLIDING STRIP | 3-25, 3-27, 3-29, 3-31 |
| 1550595-4960 | .SLIDING STRIP | 3-25, 3-27, 3-29, 3-31 |
| 1550595-9960 | .SLIDING STRIP | 3-25, 3-27, 3-29, 3-31 |
| 1550743-0200 | .RAIL HOLDER | 3-21, 3-23, 3-33, 3-37 |
| 1550772-0000 | .HOLDER | 3-35 |
| 1556630-0000 | .WHEEL | 4-41, 4-45 |
| 1556643-0000 | .WASHER | 4-41, 4-45 |
| 2504290-0000 | .PLATE | 3-41 |
| 2506940-0000 | .NOZZLE | 3-51 |
| 2529720-0062 | .LABEL | 8-43 |
| 2529720-0109 | .LABEL | 8-43 |
| 2547915-0000 | .HEATING CHAMBER | 3-47 |
| 2551030-0000 | .STRUT | 3-115, 3-133 |
| 2561206-0000 | .SPACER | 3-25, 3-27, 3-29, 3-31 |
| 2561274-0102 | .RAILING | 3-21, 3-23 |
| 2561274-0103 | .RAILING | 3-21, 3-23 |
| 2562171-0000 | .BRACKET | 5-31 |
| 2562202-0000 | .ATTACHMENT PIPE | 6-23 |
| 2562203-0000 | .SPACER | 6-23 |
| 2562219-0000 | .SHAFT | 5-31 |
| 2563891-0000 | .STRUT | 3-131 |
| 2563892-0000 | .STRUT | 3-131 |
| 2595618-0000 | .BRACKET | 3-115, 3-133 |
| 2605621-0000 | .TOOTHED PULLEY | 5-7 |
| 2608177-0000 | .SIGN | 7-5 |
| 2636293-0000 | .POSITION TEMPLATE | 8-41 |
| 2663999-0000 | .NIPPLE | 3-49 |
| 2684864-0000 | .SHAFT | 2-7 |
| 2693990-0000 | .TIMING BELT | 1-7, 1-9 |
| 2699305-1996 | .SLIDING STRIP | 3-25, 3-27, 3-29, 3-31 |
| 2699436-0000 | .SPACER | 3-35 |
| 2699437-0000 | .RAIL HOLDER | 3-35 |
| 2699680-0000 | .SCREW | 4-13, 4-15 |
| 2699681-0000 | .SPACER | 4-13, 4-15 |
| 2699682-0000 | .SPACER | 4-15 |
| 2699683-0000 | .WASHER | 4-13 |
| 2703679-0000 | .SHAFT | 4-41 |
| 2703683-0000 | .SHAFT | 4-41 |
| 2703692-0000 | .HOLDER | 4-41 |
| 2703696-0000 | .PROTECTIVE COVER | 4-15 |
| 2703697-0000 | .SIDE | 4-13 |
| 2703700-0100 | .GUIDE BRACKET | 4-39 |
| 2703702-0000 | .SHIM | 4-41 |
| 2703704-0000 | .SPACER STRUT | 4-19 |
| 2703708-0000 | .SPRING | 4-41, 6-19 |
| 2703711-0000 | .HOLDER | 2-9 |
| 2703715-0000 | .SHAFT | 2-7 |
| 2703725-0000 | .ROLLER | 2-7 |
| 2703755-0100 | .WHEEL | 4-3 |
| 2703763-0000 | .PLATE | 5-9 |
| 2703764-0000 | .SHAFT | 5-9 |
| 2703765-0000 | .COMPRESSION SPRING | 5-9 |
| 2703769-0000 | .WHEEL | 5-9 |
| 2703770-0000 | .SCREW | 5-9 |
| 2703772-0000 | .SPACER | 5-9 |
| 2703774-0000 | .WASHER | 5-7, 5-9 |
| 2703775-0000 | .SPACER | 5-7, 5-9 |
| 2703783-0000 | .AXLE PIN | 5-7 |
| 2703784-0000 | .SHAFT | 5-7 |
| 2703785-0100 | .HOLDER | 5-11 |
| 2703786-0000 | .TOOTHED PULLEY | 5-7 |
| 2703787-0000 | .TOOTHED PULLEY | 5-9 |
| 2703788-0000 | .HOUSING | 5-7 |
| 2703789-0000 | .SPACER | 5-7 |
| 2703794-0100 | .CONVEYOR | 5-3 |
| 2703799-0000 | .BRACKET | 5-43 |
| 2703800-0100 | .ROW CUTTER | 5-3 |
| 2703803-0000 | .SPACER | 5-7 |
| 2703804-0000 | .SPACER | 5-7 |
| 2703805-0100 | .CAP DETECTOR | 5-11 |

| Part No | Description | Page No |
|---|---|---|
| 2703810-0100 | .CUTTING MECHANISM BODY | 5-35 |
| 2703811-0000 | .END SECTION | 5-37 |
| 2703813-0000 | .END SECTION | 5-37 |
| 2703816-0000 | .GUIDE | 5-45 |
| 2703818-0000 | .BRACKET | 5-49 |
| 2703820-0100 | .CUTTING UNIT | 5-35 |
| 2703822-0000 | .LOWER SECTION | 5-39 |
| 2703828-0000 | .WHEEL | 5-39 |
| 2703842-0000 | .ADJUSTING SCREW | 2-11, 2-13, 4-25, 4-27, 4-33, 4-35 |
| 2710819-0000 | .LID | 3-47 |
| 2712603-0000 | .PLATE | 1-51 |
| 2715666-0000 | .BRACKET | 2-5 |
| 2715671-0000 | .BRACKET | 2-5 |
| 2715695-0000 | .SLEEVE | 2-7 |
| 2715705-0200 | .FRAME | 5-3 |
| 2715706-0000 | .FRAME | 5-43 |
| 2715709-0000 | .CONVEYOR SUPPORT | 5-43 |
| 2715711-0000 | .AXLE SUPPORT | 5-43 |
| 2715712-0000 | .AXLE SUPPORT | 5-43, 5-45 |
| 2715713-0100 | .DRIVE UNIT | 5-35 |
| 2715714-0100 | .DRIVE UNIT | 5-3 |
| 2715715-0000 | .PLATE | 5-45 |
| 2715716-0000 | .PLATE | 5-45 |
| 2715717-0000 | .AXLE SUPPORT | 5-45 |
| 2715718-0000 | .PLATE | 5-45 |
| 2715728-0000 | .BRACKET | 5-13 |
| 2715730-0200 | .INDEXING UNIT | 5-3 |
| 2715732-0000 | .SCREW | 5-47 |
| 2715738-0000 | .BLOCKING PIECE | 5-49 |
| 2715739-0000 | .FLAG | 5-15 |
| 2715740-0000 | .STOP | 5-15 |
| 2715742-0000 | .PROFILE | 5-15 |
| 2715743-0000 | .SHAFT | 5-15 |
| 2715744-0000 | .BRACKET | 5-15 |
| 2715750-0100 | .TEMPLATE | 8-5 |
| 2715751-0000 | .SHAFT | 8-9 |
| 2715752-0000 | .PLATE | 5-37 |
| 2715762-0000 | .MOUNTING BLOCK | 5-45 |
| 2715768-0000 | .PLATE | 5-49 |
| 2715769-0000 | .PLATE | 5-49 |
| 2715770-0100 | .DRIVE UNIT | 5-3 |
| 2715773-0000 | .PLATE | 5-49 |
| 2715775-0000 | .PLATE | 5-49 |
| 2715778-0000 | .LOCKING ARM | 5-7 |
| 2715779-0000 | .PLATE | 5-49 |
| 2715781-0000 | .BRACKET | 4-35 |
| 2715794-0000 | .ARM | 2-7 |
| 2715797-0000 | .BUSHING | 2-7 |
| 2715798-0000 | .TURN SPRING | 2-7 |
| 2715804-0000 | .SCREW | 2-5 |
| 2715837-0000 | .KEY | 2-9 |
| 2715842-0000 | .ARM | 2-7 |
| 2715843-0000 | .HOLDER | 2-7 |
| 2715844-0000 | .BRACKET | 2-7 |
| 2715873-0000 | .SHAFT | 6-19 |
| 2715874-0000 | .SHAFT | 6-19 |
| 2715892-0000 | .STOP | 6-7 |
| 2715902-0000 | .PLATE | 6-9 |
| 2715906-0000 | .PLATE | 6-9 |
| 2715907-0000 | .SCREW | 6-9 |
| 2715908-0000 | .BRACKET | 6-9 |
| 2715914-0000 | .GUIDE | 6-11, 6-13 |
| 2715917-0000 | .GUIDE | 6-7 |
| 2715921-0000 | .HOLDER | 6-11, 6-13 |
| 2715924-0000 | .SHAFT | 6-9 |
| 2715929-0000 | .SHAFT | 6-9 |
| 2715945-0000 | .BRACKET | 6-17 |
| 2715960-0100 | .POSITIONING UNIT | 6-3 |
| 2715970-0100 | .VACUUM SYSTEM | 6-3 |
| 2716004-0000 | .SHAFT | 5-37 |
| 2716041-0000 | .BRACKET | 2-9 |
| 2716116-0000 | .CAM | 4-9 |
| 2716125-0100 | .SETTING TOOL | 8-5 |
| 2716127-0000 | .SLIDER | 4-41 |
| 2716154-0000 | .SETTING TEMPLATE | 8-11 |
| 2737295-0000 | .SLIDE | 5-19 |
| 2737409-0000 | .SLIDE | 5-19 |
| 2737413-0000 | .TOOTHED PULLEY | 5-29 |
| 2737419-0000 | .GABLE PLATE | 5-21 |
| 2737421-0000 | .HEAD PLATE | 5-21 |
| 2737423-0000 | .PLATE | 5-21 |
| 2746903-0000 | .CABLE DUCT | 3-7, 3-9 |
| 2746904-0000 | .BOX | 3-95 |
| 2746909-0000 | .RAIL | 3-97, 3-99 |

| Part No | Description | Page No |
|---|---|---|
| 2746920-0000 | .FOIL | 3-93 |
| 2746938-0100 | .TRANSFER UNIT | 4-3 |
| 2746939-0100 | .CAP CARRIER GROUP | 4-3 |
| 2746941-0200 | .CAP HOLDERS GROUP | 4-3 |
| 2746978-0000 | .SHAFT | 4-45 |
| 2751655-0100 | .CAM | 4-7 |
| 2751656-0100 | .STAR WHEEL | 4-7 |
| 2751657-0100 | .SLIDER | 4-7 |
| 2751658-0100 | .FOLLOWER CAM | 4-7 |
| 2751664-0200 | .FRAME | 4-3 |
| 2751667-0100 | .PRESSURE FINGER | 2-5 |
| 2751686-0000 | .WASHER | 4-41 |
| 2751687-0000 | .WASHER | 4-41, 5-9 |
| 2751692-0000 | .BRACKET | 2-11 |
| 2751693-0000 | .STEERING | 2-11 |
| 2751695-0000 | .STEERING | 2-5 |
| 2751698-0000 | .ECCENTRIC SHAFT | 4-15 |
| 2751699-0000 | .WASHER | 4-15 |
| 2751700-0000 | .BOW CLAMP | 2-9 |
| 2751702-0000 | .STAR WHEEL | 4-11 |
| 2751703-0000 | .BRACKET | 4-13 |
| 2751704-0000 | .PIVOT BRACKET | 4-15 |
| 2751705-0000 | .SHAFT | 4-15 |
| 2751706-0000 | .FLAG | 4-11 |
| 2751709-0000 | .TIMING BELT | 2-9 |
| 2751710-0000 | .SUPPORT PLATE | 2-9 |
| 2751712-0000 | .TOOTHED PULLEY | 2-11 |
| 2751714-0000 | .SUPPORT PLATE | 2-11 |
| 2751721-0000 | .SPACER | 2-5 |
| 2751725-0000 | .BOW CLAMP | 2-11 |
| 2751739-0000 | .BRACKET | 4-13 |
| 2751741-0000 | .BRACKET | 4-19 |
| 2751742-0000 | .BRACKET | 2-5 |
| 2751747-0000 | .SPACER | 2-11 |
| 2751748-0000 | .SLEEVE | 2-11 |
| 2758505-0200 | .MACHINE BODY | 3-3 |
| 2758507-0200 | .PACKAGE CONVEYOR | 3-3 |
| 2758511-0100 | .HOTMELT UNIT | 3-3 |
| 2758512-0100 | .BLOWING SYSTEM | 3-53 |
| 2758513-0100 | .AIR SUPPLY | 3-3 |
| 2758514-0100 | .WATER CONNECTION | 3-3 |
| 2758515-0200 | .CABLE DUCT | 3-5 |
| 2758522-0100 | .LUBRICATION UNIT | 3-3 |
| 2763616-0101 | .CONVEYOR BODY | 3-21, 3-23 |
| 2763616-0102 | .CONVEYOR BODY | 3-21, 3-23 |
| 2763616-0103 | .CONVEYOR BODY | 3-21, 3-23 |
| 2763616-0104 | .CONVEYOR BODY | 3-21, 3-23 |
| 2763617-0001 | .SIDE PLATE | 3-25, 3-27, 3-29, 3-31 |
| 2763617-0002 | .SIDE PLATE | 3-25, 3-27, 3-29, 3-31 |
| 2763617-0003 | .SIDE PLATE | 3-25, 3-27, 3-29, 3-31 |
| 2763617-0004 | .SIDE PLATE | 3-25, 3-27, 3-29, 3-31 |
| 2766610-0000 | .FRAME | 1-29 |
| 2766611-0000 | .GUIDE | 1-25 |
| 2766615-0000 | .FRAME | 1-25 |
| 2766927-0000 | .PILLAR | 1-25, 1-35 |
| 2766939-0000 | .SUPPORT | 3-91 |
| 2766944-0000 | .BRACKET | 1-49 |
| 2766950-0000 | .SHAFT | 1-51 |
| 2766953-0000 | .PLATE | 1-27, 1-37 |
| 2766954-0100 | .BELT STRETCHER | 1-25 |
| 2766958-0000 | .SHAFT | 1-27, 1-31, 1-37, 1-41 |
| 2766959-0000 | .SPACER | 1-27, 1-31, 1-37, 1-41 |
| 2766962-0000 | .BLOCK | 1-27, 1-37 |
| 2766963-0000 | .BRACKET | 1-27, 1-37 |
| 2766964-0000 | .FLANGE | 3-17 |
| 2766968-0000 | .SHAFT | 3-17 |
| 2766972-0000 | .SHAFT | 3-19 |
| 2766973-0100 | .TRANSMISSION | 3-17 |
| 2766974-0000 | .SLEEVE | 1-29, 1-39 |
| 2766975-0000 | .FRAME | 3-11, 3-13 |
| 2766976-0000 | .FLANGE | 1-29, 1-39 |
| 2766980-0100 | .BELT STRETCHER | 1-29 |
| 2766981-0000 | .TOOTHED PULLEY | 1-27, 1-31, 1-37, 1-41 |
| 2766989-0000 | .BRACKET | 1-31, 1-41 |
| 2766990-0100 | .BRAKE UNIT | 1-5 |
| 2766991-0100 | .BRAKE UNIT | 1-5 |
| 2766994-0200 | .DRIVE | 1-5 |
| 2769679-0000 | ..DRIVE SHAFT | 1-7, 1-9 |
| 2769682-0000 | .,HAFT | 1-7, 1-9 |
| 2769686-0000 | .COVER | 1-7, 1-9 |
| 2769695-0000 | .BRACKET | 1-49 |
| 2769709-0000 | .FRAME | 3-17 |
| 2769713-0000 | .CYLINDRICAL PIN | 3-17 |
| 2769717-0000 | .FLANGE | 3-17 |

| Part No | Description | Page No |
|---|---|---|
| 2769718-0100 | .PNEUMATIC CYLINDER | 1-47 |
| 2769726-0000 | .BRACKET | 1-19, 1-51, 3-19 |
| 2769729-0000 | .SHAFT | 1-19, 1-51 |
| 2769738-0100 | .HEIGHT ADJUSTMENT | 3-5 |
| 2769739-0000 | .DISC | 3-17 |
| 2769741-0000 | .SPACER | 1-7, 1-9 |
| 2769743-0100 | .BELT STRETCHER | 1-39 |
| 2769746-0000 | .FRAME | 1-31 |
| 2769754-0200 | .ELECTRIC EQUIPMENT | 3-3 |
| 2769757-0100 | .LAMP | 3-79 |
| 2769760-0100 | .EMERGENCY STOP | 3-101 |
| 2769761-0200 | .MACHINE BODY | 3-5 |
| 2769763-0100 | .OIL PIPE | 3-69 |
| 2769773-0000 | .SPACER | 1-11 |
| 2773600-0000 | .SPACER | 1-7, 1-9 |
| 2773601-0000 | .SPACER | 1-11 |
| 2773604-0000 | .PLATE | 1-13 |
| 2773615-0000 | .ROLLER | 1-13 |
| 2773616-0000 | .GUIDE | 1-25, 1-29 |
| 2773622-0100 | .LINE HEATER | 3-3 |
| 2773623-0100 | .FAN SYSTEM | 3-45 |
| 2773627-0000 | .HEAT GUARD | 3-47 |
| 2773630-0000 | .HEAT GUARD | 3-47 |
| 2773632-0000 | .SPACER | 1-49 |
| 2773636-0100 | .BELT STRETCHER | 1-11 |
| 2773637-0000 | .BRACKET | 1-13 |
| 2773638-0000 | .PLATE | 1-13 |
| 2773639-0000 | .SHAFT | 1-13 |
| 2775398-0000 | .PIN | 1-13 |
| 2775403-0000 | .PIPE | 3-55 |
| 2775404-0000 | .PIPE | 3-55 |
| 2775412-0000 | .PLATE | 1-11 |
| 2775417-0000 | .BRACKET | 1-31, 1-41 |
| 2775418-0000 | .SHAFT | 1-7 |
| 2775420-0000 | .SLIDE | 1-31 |
| 2775421-0000 | .SCREW | 1-31 |
| 2775423-0000 | .PLATE | 1-31 |
| 2775427-0000 | .BRACKET | 1-7 |
| 2775437-0000 | .TOOTHED PULLEY | 1-43, 1-45 |
| 2775438-0000 | .PLATE | 1-43, 1-45 |
| 2775439-0000 | .BUSHING | 1-43, 1-45 |
| 2775442-0000 | .TOOTHED PULLEY | 1-43, 1-45 |
| 2775443-0000 | .SPACER | 1-43, 1-45 |
| 2775445-0000 | .SPACER | 1-43, 1-45 |
| 2775446-0000 | .SHAFT | 1-43, 1-45 |
| 2775447-0000 | .BRACKET | 3-11, 3-13 |
| 2778564-0000 | .WASHER | 1-7, 1-9 |
| 2778566-0000 | .BELLOWS | 1-43, 1-45 |
| 2778567-0000 | .BEAM | 3-11, 3-13 |
| 2778568-0000 | .FRAME UPPER | 3-11, 3-13 |
| 2778570-0000 | .FRAME | 1-39 |
| 2778571-0000 | .FRAME | 1-41 |
| 2778572-0100 | .BELT STRETCHER | 1-35 |
| 2778574-0000 | .BEAM | 3-11, 3-13 |
| 2778576-0000 | .BEAM | 3-11, 3-13 |
| 2778580-0000 | .BRACKET | 3-39, 3-41, 10-19 |
| 2778584-0000 | .BRACKET | 3-41 |
| 2778585-0000 | .PILLAR | 1-57 |
| 2778586-0100 | .SENSOR | 3-21, 3-23, 10-17 |
| 2778587-0100 | .SENSOR | 3-21, 3-23 |
| 2778588-0000 | .FRAME | 1-35 |
| 2778592-0000 | .PLATE | 1-57 |
| 2778594-0000 | .PLATE | 1-19, 1-51 |
| 2778595-0100 | .ANGLE | 3-11, 3-13 |
| 2779008-0000 | .BRACKET | 3-15 |
| 2779009-0000 | .BEAM | 3-11, 3-13 |
| 2779011-0000 | .BEAM | 3-11, 3-13 |
| 2779012-0000 | .BEAM | 3-11, 3-13 |
| 2779013-0000 | .CAM | 1-51 |
| 2779014-0000 | .PLATE | 1-51 |
| 2779057-0000 | .PLATE | 1-49 |
| 2779062-0000 | .SPROCKET | 1-19 |
| 2779063-0000 | .PLATE | 1-19 |
| 2779070-0200 | .OPERATOR INTERFACE | 3-3 |
| 2779756-0000 | .SHAFT | 1-19 |
| 2779759-0000 | .PLATE | 1-19 |
| 2779763-0000 | .COVER | 3-129 |
| 2779764-0200 | .WARNING LAMP | 3-79 |
| 2779765-0000 | .BRACKET | 3-81 |
| 2779768-0000 | .DOOR | 3-93 |
| 2779769-0000 | .SPROCKET | 3-19 |
| 2779771-0000 | .SPACER | 3-129 |
| 2779772-0000 | .BRACKET | 3-49 |
| 2779774-0000 | .GUIDE | 1-35 |

| Part No | Description | Page No |
|---|---|---|
| 2779775-0000 | .GUIDE | 1-35, 1-39 |
| 2779776-0000 | .PLATE | 3-11, 3-13 |
| 2779786-0000 | .PLATE | 3-11, 3-13 |
| 2779800-0000 | .PLATE | 3-7, 3-9 |
| 2779811-0000 | .BEAM | 3-11, 3-13 |
| 2779818-0000 | .BEAM | 3-11, 3-13 |
| 2779823-0000 | .BRACKET | 3-135 |
| 2779824-0000 | .BRACKET | 3-135 |
| 2779825-0000 | .PLATE | 3-135 |
| 2779831-0000 | .PIPE | 1-57, 3-21, 3-23 |
| 2779832-0100 | .GLASS DOOR | 3-101 |
| 2779833-0100 | .GLASS DOOR | 3-101 |
| 2779834-0100 | .GLASS DOOR | 3-101 |
| 2779835-0200 | .DOOR | 3-101 |
| 2779838-0000 | .DOOR | 3-131 |
| 2779839-0000 | .GLASS | 3-131 |
| 2779840-0000 | .DOOR | 3-113 |
| 2780331-0000 | .CURVE | 2-5 |
| 2780332-0000 | .CURVE | 2-5 |
| 2780333-0000 | .CURVE | 2-5 |
| 2780334-0000 | .CURVE | 2-5 |
| 2780369-0100 | .CAM | 4-23 |
| 2780374-0000 | .CAM | 4-29 |
| 2780379-0000 | .PLATE | 4-31 |
| 2780399-0000 | .GUIDE | 6-7 |
| 2780402-0000 | .SHAFT | 6-7 |
| 2780404-0000 | .GUIDE | 5-15 |
| 2780412-0000 | .INDICATOR | 6-19 |
| 2780413-0000 | .FLAG | 6-19 |
| 2780415-0100 | .SHEET CARRIER | 6-15 |
| 2780436-0000 | .PLATE | 6-9 |
| 2780437-0000 | .PLATE | 6-9 |
| 2780441-0000 | .PLATE | 6-9 |
| 2780462-0000 | .SPACER | 6-11, 6-13 |
| 2780464-0000 | .BRACKET | 6-21 |
| 2780467-0000 | .BRACKET | 6-21 |
| 2780468-0000 | .ARM | 6-21 |
| 2780472-0000 | .STEERING RAIL | 6-11, 6-13 |
| 2780476-0000 | .TOOTHED PULLEY | 6-9 |
| 2780477-0000 | .TOOTHED PULLEY | 6-9 |
| 2780478-0000 | .PLATE | 6-21 |
| 2780525-0100 | .GUIDE | 5-11 |
| 2781278-0000 | .GLASS | 3-113, 3-133 |
| 2781279-0000 | .DOOR | 3-133 |
| 2781283-0000 | .BRACKET | 3-83, 3-85 |
| 2781285-0000 | .STRUT | 3-115, 3-133 |
| 2781286-0000 | .HAND WHEEL | 1-21 |
| 2781292-0000 | .SHAFT | 1-13 |
| 2787230-0100 | .TOP SECTION | 3-101 |
| 2788134-0000 | .COVER | 1-25, 1-35 |
| 2788137-0000 | .TEMPLATE | 8-5 |
| 2788144-0000 | .SHAFT | 1-21 |
| 2788154-0000 | .BLOCK | 3-11, 3-13 |
| 2788155-0000 | .ANGLE | 3-11, 3-13 |
| 2788168-0000 | .PLATE | 1-53 |
| 2788169-0000 | .PLATE | 1-57 |
| 2788174-0000 | .LEVER | 1-49 |
| 2788176-0000 | .PIPE | 3-55 |
| 2790710-0000 | .BRACKET | 7-35 |
| 2792462-0000 | .GUIDE | 5-9 |
| 2792484-0100 | .LIFT | 6-3 |
| 2792485-0100 | .ELEVATOR | 6-5 |
| 2792486-0100 | .PUSHER | 6-3 |
| 2792487-0100 | .CONVEYOR | 6-5 |
| 2792488-0100 | .GUIDE | 6-5 |
| 2792489-0000 | .PULLEY | 6-9 |
| 2792491-0000 | .PULLEY | 6-9 |
| 2792492-0000 | .PLATE | 6-9 |
| 2792493-0000 | .GUIDE | 6-9 |
| 2792494-0000 | .PLATE | 6-9 |
| 2792496-0000 | .PLATE | 6-7 |
| 2802375-0000 | .COVER | 1-53 |
| 2802376-0000 | .COVER | 1-53 |
| 2802386-0200 | .OPERATOR INTERFACE | 3-93 |
| 2802392-0000 | .PILLAR | 1-43, 1-45 |
| 2802404-0100 | .HANDLE | 1-19 |
| 2802405-0000 | .STOP ARM | 1-51 |
| 2802417-0000 | .PLATE | 3-7, 3-9 |
| 2802423-0000 | .PLATE | 3-7, 3-9 |
| 2802629-0000 | .BRACKET | 2-11 |
| 2802635-0000 | .SUPPORT | 2-11, 2-13 |
| 2802637-0000 | .MOUNTING SHEET | 2-13 |
| 2802644-0000 | .SPACER | 2-13 |
| 2802645-0100 | .BELT STRETCHER | 2-3 |

| Part No | Description | Page No |
|---|---|---|
| 2802646-0100 | .FRAME SECTION | 2-3 |
| 2802647-0100 | .DRIVE | 2-3 |
| 2802648-0100 | .CAP HOLDERS GROUP | 2-3 |
| 2805461-0000 | .GUIDE | 1-57 |
| 2805467-0000 | .SCREW | 1-31, 1-41 |
| 2805468-0000 | .SCREW | 1-7 |
| 2805493-0200 | .TUNNEL | 3-121 |
| 2805494-0200 | .COVER | 3-101 |
| 2805495-0100 | .DOOR | 3-103 |
| 2805496-0000 | .COVER | 3-105 |
| 2805497-0200 | .COVER | 3-103 |
| 2805499-0200 | .TUNNEL | 3-103 |
| 2805686-0000 | .BEAM | 3-11, 3-13 |
| 2805687-0100 | .GLASS DOOR | 3-101 |
| 2805688-0000 | .DOOR | 3-139 |
| 2805691-0000 | .GLASS | 3-139, 3-141, 3-143 |
| 2805692-0000 | .COVER | 3-137 |
| 2805693-0100 | .DOOR | 3-101 |
| 2805694-0100 | .GLASS DOOR | 3-101 |
| 2805695-0000 | .DOOR | 3-141 |
| 2805696-0000 | .SUPPORT | 3-11, 3-13 |
| 2805697-0000 | .SUPPORT | 3-11, 3-13 |
| 2805698-0000 | .BEAM | 3-11, 3-13 |
| 2805700-0200 | .DOOR SAFETY SWITCH | 3-79 |
| 2807095-0000 | .BEAM | 3-11, 3-13 |
| 2807101-0000 | .BEAM | 3-11, 3-13 |
| 2807102-0000 | .COVER | 3-11, 3-13 |
| 2807104-0000 | .BEAM | 3-11, 3-13 |
| 2807105-0000 | .PLATE | 3-11, 3-13 |
| 2807106-0000 | .COVER | 3-11, 3-13 |
| 2807108-0100 | .GLASS DOOR | 3-101 |
| 2807109-0100 | .DOOR | 3-101 |
| 2807110-0100 | .GLASS DOOR | 3-101 |
| 2807111-0000 | .DOOR | 3-111 |
| 2807112-0000 | .COVER | 3-117 |
| 2811468-0000 | .PLATE | 5-21 |
| 2811469-0000 | .PROTECTION PLATE | 5-21 |
| 2811470-0100 | .DRIVE UNIT | 5-17 |
| 2811471-0000 | .PLATE | 5-21 |
| 2811472-0100 | .ROLLER UNIT | 5-17 |
| 2811473-0100 | .ROLL | 5-23 |
| 2811475-0000 | .SHAFT | 5-25 |
| 2811476-0100 | .DRIVE ROLLER | 5-23 |
| 2811477-0000 | .JACKET | 5-29 |
| 2811478-0000 | .SHAFT | 5-29 |
| 2811479-0000 | .JACKET | 5-25, 5-27 |
| 2811480-0000 | .SHAFT | 5-27 |
| 2811481-0100 | .ROLL | 5-23 |
| 2811482-0100 | .FRAMEWORK | 5-17 |
| 2811483-0000 | .FRAME UNION GIRDER | 5-19 |
| 2811579-0000 | .CONVEYOR BELT | 5-19 |
| 2811581-0000 | .SLIDE SHEET | 5-19 |
| 2811582-0000 | .FRAME UNION GIRDER | 5-19 |
| 2811583-0100 | .CONVEYOR | 5-11 |
| 2811990-0000 | .SCREW | 5-39 |
| 2811991-0000 | .WASHER | 5-39 |
| 2812002-0200 | .PNEUMATIC UNIT | 5-3 |
| 2812003-0100 | .PNEUMATIC PANEL | 5-51 |
| 2812009-0000 | .WHEEL | 5-9 |
| 2812010-0000 | .PRESSURE FINGER | 5-9 |
| 2812011-0000 | .PLATE | 5-9 |
| 2814679-0000 | .BRACKET | 8-23 |
| 2815585-0000 | .SPACER | 8-23 |
| 2817525-0000 | .SHAFT | 8-23 |
| 2817527-0000 | .PUSHER | 8-23 |
| 2817573-0000 | .SPACER | 8-23 |
| 2817578-0000 | .COVER | 8-23 |
| 2817767-0000 | .DOOR | 3-115 |
| 2817768-0000 | .GLASS | 3-115 |
| 2817774-0000 | .SUPPORT | 3-83, 3-85 |
| 2817775-0000 | .SUPPORT | 3-83, 3-85 |
| 2817780-0000 | .PLATE | 3-135 |
| 2817781-0000 | .PLATE | 3-135 |
| 2817782-0000 | .BRACKET | 3-135 |
| 2817783-0100 | .PLINTH | 3-95 |
| 2817784-0000 | .SCREW | 1-27, 1-37 |
| 2818204-0000 | .SUPPORT | 8-23 |
| 2818427-0000 | .SLIDE PLATE | 8-23 |
| 2818738-0000 | .RAILING | 8-23 |
| 2819036-0000 | .LEVER | 8-19, 8-21 |
| 2819037-0000 | .SUPPORT | 8-19, 8-21 |
| 2819079-0000 | .SHAFT | 8-19, 8-21 |
| 2819081-0000 | .SPACER | 8-19, 8-21 |
| 2819093-0000 | .LEVER | 8-19, 8-21 |

| Part No | Description | Page No |
|---|---|---|
| 2819144-0100 | .ALARM DEVICE | 8-15, 8-17 |
| 2825844-0000 | .SUPPORT | 8-19, 8-21 |
| 2826483-0000 | .BRACKET | 8-29, 8-31 |
| 2826560-0000 | .PLATE | 5-15 |
| 2826563-0000 | .SHAFT | 5-15 |
| 2826728-0000 | .DRIVE PULLEY | 1-7, 1-9 |
| 2826729-0000 | .PULLEY | 1-7, 1-9 |
| 2826737-0000 | .GUIDE | 1-7, 1-9 |
| 2826741-0200 | .DOORS AND COVERS | 3-3 |
| 2826742-0200 | .COVER | 3-101 |
| 2826744-0200 | .COVER | 3-121 |
| 2827671-0000 | .BRACKET | 8-25, 8-27 |
| 2828666-0000 | .BRACKET | 5-15 |
| 2830220-0000 | .BEAM | 3-11, 3-13 |
| 2830224-0000 | .TENSION SPRING | 1-27, 1-31, 1-37, 1-41 |
| 2830225-0000 | .SPACER | 1-7, 1-9 |
| 2833240-0000 | .HOLDER | 6-11, 6-13 |
| 2833343-0100 | .CUTTING WHEEL | 5-5 |
| 2833344-0000 | .BRACKET | 5-9 |
| 2833403-0000 | .WELDED CABINET | 7-5 |
| 2833404-0000 | .MOUNTING PLATE | 7-9 |
| 2833406-0200 | .CABINET | 7-3 |
| 2833407-0200 | .CONTROL BOARD | 7-3 |
| 2833408-0100 | .COOLING UNIT | 7-3 |
| 2833409-0100 | .CABLE SET | 7-3 |
| 2833410-0100 | .BOX | 7-5 |
| 2833411-0000 | .BOX | 7-7 |
| 2833412-0100 | .CABLE DUCT | 7-9 |
| 2834018-0000 | .SHAFT | 4-41 |
| 2834034-0000 | .WHEEL | 4-41 |
| 2834049-0000 | .SHAFT | 5-9 |
| 2834311-0000 | .HUB | 4-21 |
| 2835402-0000 | .BRACKET | 5-7 |
| 2835403-0200 | .CUTTING UNIT | 5-3 |
| 2835404-0200 | .SUPPORT | 5-5 |
| 2835450-0000 | .COVER | 7-7 |
| 2835452-0000 | .RAIL | 7-31, 7-33 |
| 2835453-0000 | .RAIL | 7-43 |
| 2835454-0000 | .RAIL | 7-39, 7-49, 7-51 |
| 2835455-0000 | .RAIL | 7-41 |
| 2835456-0000 | .RAIL | 7-7 |
| 2835457-0100 | .POWER SUPPLY UNIT | 7-9 |
| 2835458-0200 | .PLC | 7-9 |
| 2835459-0200 | .FUSE BOARD 1 | 7-9 |
| 2835460-0100 | .FUSE BOARD 2 | 7-9 |
| 2835461-0100 | .FUSE BOARD 3 | 7-9 |
| 2835462-0200 | .MOTOR DRIVE CONTROL | 7-9 |
| 2835463-0100 | .PLINTH | 7-9 |
| 2835464-0200 | .DISTRIBUTION TERMINAL | 7-9 |
| 2835939-0000 | .PLATE | 4-19 |
| 2836263-0000 | .HEAT GUARD | 3-47 |
| 2836266-0000 | .PIPE | 3-21, 3-23 |
| 2836507-0100 | .DRIVE MOTOR | 4-17 |
| 2837072-0100 | .DRIVE UNIT | 4-3 |
| 2837073-0100 | .PLATE | 4-17 |
| 2837175-0000 | .BEARING HALF | 2-9 |
| 2837191-0000 | .TOOTHED PULLEY | 2-9 |
| 2837255-0000 | .WASHER | 2-9, 2-11 |
| 2837616-0000 | .BLOCK | 5-7 |
| 2837617-0000 | .AXLE PIN | 5-7 |
| 2837618-0000 | .STOP | 5-9 |
| 2837623-0000 | .BRACKET | 1-43, 1-45 |
| 2837624-0000 | .SHAFT | 1-43, 1-45 |
| 2837625-0000 | .COVER | 1-45 |
| 2837626-0000 | .BRACKET | 1-43, 1-45 |
| 2837627-0000 | .FLANGE | 1-43, 1-45 |
| 2837628-0000 | .SPACER | 1-43, 1-45 |
| 2837630-0000 | .COVER | 1-43 |
| 2837631-0000 | .SPACER | 2-13 |
| 2838277-0000 | .BRACKET | 4-25, 4-33 |
| 2838385-0000 | .BRACKET | 4-27 |
| 2838459-0000 | .CABLE DUCT | 7-5 |
| 2838460-0000 | .CABLE DUCT | 7-5 |
| 2838462-0000 | .CABLE DUCT | 7-11 |
| 2838463-0000 | .CABLE DUCT | 7-11 |
| 2838464-0000 | .CABLE DUCT | 7-11 |
| 2838465-0000 | .CABLE DUCT | 7-11 |
| 2838466-0000 | .CABLE DUCT | 7-11 |
| 2838467-0000 | .CABLE DUCT | 7-11 |
| 2838468-0000 | .CABLE DUCT | 7-11 |
| 2838469-0000 | .CABLE DUCT | 7-11 |
| 2838470-0000 | .CABLE DUCT | 7-11 |
| 2838471-0000 | .CABLE DUCT | 7-11 |
| 2838472-0000 | .CABLE DUCT | 7-11 |

| Part No | Description | Page No |
|---|---|---|
| 2838473-0000 | .CABLE DUCT | 7-11 |
| 2838474-0000 | .CABLE DUCT | 7-11 |
| 2838475-0000 | .CABLE DUCT | 7-11 |
| 2838476-0000 | .RAIL | 7-45 |
| 2838477-0000 | .RAIL | 7-29 |
| 2838478-0000 | .RAIL | 7-13, 7-15 |
| 2838633-0200 | .PACKAGE HANDLING | 1-3 |
| 2838639-0200 | .PACKAGE POSITIONER | 1-17 |
| 2838640-0100 | .BELT UNIT | 1-23 |
| 2838641-0200 | .BELT | 1-23 |
| 2838643-0200 | .PACKAGE POSITIONER | 1-3 |
| 2838644-0200 | .PACKAGE POSITIONER | 1-17 |
| 2838645-0200 | .BELT | 1-33 |
| 2838646-0100 | .BELT UNIT | 1-33 |
| 2838647-0100 | .SLIDING RACK | 1-17 |
| 2838648-0200 | .DRIVE | 1-17 |
| 2838649-0200 | .DRIVE | 1-17 |
| 2838650-0100 | .SLIDING RACK | 1-17 |
| 2838652-0100 | .SETTING ARM | 1-47 |
| 2838653-0100 | .GUIDE RAIL | 1-47 |
| 2838654-0200 | .BELT BRAKE | 1-3 |
| 2838669-0100 | .SETTING ARM | 1-47 |
| 2838672-0100 | .PNEUMATIC PANEL | 3-53 |
| 2838673-0100 | .SERVICE UNIT | 3-57, 3-59 |
| 2838674-0100 | .SERVICE UNIT | 3-57, 3-59 |
| 2838676-0000 | .BRACKET | 3-57, 3-59 |
| 2838677-0100 | .CENTRAL LUBRICATION | 3-69 |
| 2838678-0000 | .BRACKET | 3-71 |
| 2838679-0000 | .SHAFT | 3-55 |
| 2838680-0000 | .DIAGRAM | 8-3 |
| 2838683-0000 | .PLATE | 1-49 |
| 2838684-0000 | .WATER DIAGRAM | 8-3 |
| 2838686-0100 | .AIR JET GUN | 3-53 |
| 2838690-0000 | .WHEEL | 1-51 |
| 2838693-0100 | .START-UP KIT | 8-3 |
| 2838701-0000 | .HOLDER | 3-57, 3-59 |
| 2838710-0200 | .WORM GEAR MOTOR | 1-11 |
| 2838721-0000 | .SHAFT | 2-9 |
| 2838728-0000 | .ADJUSTMENT BRACKET | 2-5 |
| 2838731-0000 | .CABLE | 4-37 |
| 2838732-0000 | .CABLE | 4-37 |
| 2838781-0000 | .STEERING | 2-5 |
| 2838783-0000 | .PLATE | 2-13 |
| 2838784-0000 | .SLIDING STRIP | 2-13 |
| 2838815-0000 | .SHAFT | 2-11 |
| 2839073-0000 | .BRACKET | 8-37, 8-39 |
| 2839074-0100 | .PNEUMATIC UNIT | 8-15, 8-17 |
| 2839194-0100 | .PNEUMATIC UNIT | 8-15, 8-17 |
| 2839195-0100 | .DISTRIBUTOR | 8-15, 8-17 |
| 2839221-0100 | .PLINTH | 7-9 |
| 2839222-0100 | .PLINTH | 7-9 |
| 2839223-0100 | .PLINTH | 7-9 |
| 2839224-0100 | .PLINTH | 7-9 |
| 2839225-0000 | .BRACKET | 7-5 |
| 2839226-0000 | .FLANGE | 7-35 |
| 2839227-0000 | .SUPPORT | 7-43 |
| 2839229-0100 | .DISTRIBUTION TERMINAL | 7-9 |
| 2839230-0100 | .PLINTH | 7-15 |
| 2839315-0100 | .CAMMODULE | 4-3 |
| 2839382-0100 | .MOUNTING PLATE | 4-23 |
| 2839383-0100 | .CAM | 4-23 |
| 2839384-0100 | .CAM | 4-23 |
| 2839385-0100 | .CAM | 4-23 |
| 2839386-0100 | .CAM | 4-23 |
| 2839392-0000 | .CAM | 4-33 |
| 2839484-0000 | .CAM | 4-35 |
| 2839485-0000 | .CAM | 4-27 |
| 2839487-0000 | .CAM | 4-25 |
| 2840909-0100 | .PLINTH | 7-15 |
| 2840910-0100 | .PLINTH | 7-15 |
| 2840911-0100 | .PLINTH | 7-15 |
| 2840915-0100 | .PLINTH | 7-15 |
| 2840917-0100 | .PLINTH | 7-15 |
| 2840918-0100 | .PLINTH | 7-57 |
| 2841402-0000 | .RAIL | 7-59 |
| 2841403-0200 | .PLINTH | 7-57 |
| 2841404-0200 | .ELECTRICAL CONVERSION | 7-3 |
| 2841405-0000 | .DIVIDER | 7-11 |
| 2841406-0000 | .DIVIDER | 7-11 |
| 2842793-0200 | .DOOR | 3-121 |
| 2842800-0000 | .SHELF | 10-9 |
| 2842801-0000 | .COVER | 3-123 |
| 2842803-0000 | .PLATE | 10-9 |
| 2842804-0000 | .BRACKET | 10-9 |

| Part No | Description | Page No |
|---|---|---|
| 2842805-0000 | .SPACER | 10-9 |
| 2842806-0100 | .SHELF | 10-3 |
| 2843157-0100 | .CLAMPING ELEMENT | 2-3 |
| 2843158-0000 | .FLANGE | 2-15 |
| 2843159-0000 | .SHAFT | 2-15 |
| 2845320-0000 | .PROTECTION | 7-9 |
| 2846403-0000 | .ROLLER | 3-19 |
| 2846405-0000 | .PIVOT ARM | 3-19 |
| 2853706-0100 | .SETTING TOOL | 8-3 |
| 2862624-0000 | .SLIDER | 5-39 |
| 2862625-0000 | .ARM | 5-39 |
| 2863769-0000 | .CAM | 5-9 |
| 2863988-0000 | .CAM | 5-9 |
| 2864915-0000 | .PLATE | 3-11, 3-13 |
| 2867529-0000 | .BRACKET | 6-19 |
| 2867583-0000 | .PLATE | 6-11, 6-13 |
| 2868165-0000 | .BRACKET | 6-17 |
| 2868166-0000 | .PLATE | 6-17 |
| 2868170-0000 | .PLATE | 6-17 |
| 2868538-0000 | .FINGER | 5-49 |
| 2868608-0000 | .BRACKET | 6-23 |
| 2869126-0000 | .PLATE | 6-19 |
| 2869127-0000 | .RUBBER MAT | 6-19 |
| 2869634-0000 | .SHAFT | 5-37 |
| 2869635-0000 | .TOOTHED PULLEY | 5-37 |
| 2869636-0000 | .TOOTHED PULLEY | 5-41 |
| 2869637-0000 | .SHAFT | 5-41 |
| 2869638-0000 | .TOOTHED PULLEY | 5-41 |
| 2869639-0000 | .MOTOR BRACKET | 5-41 |
| 2869805-0000 | .BRACKET | 5-41 |
| 2869808-0000 | .PLATE | 6-7 |
| 2870089-0000 | .SHAFT | 4-5 |
| 2871097-0000 | .DAMPER | 5-9 |
| 2873862-0100 | .HEATING ELEMENT | 3-45 |
| 2873865-0000 | .PRE-HEATER | 3-47 |
| 2873866-0000 | .SUPPORT | 8-23 |
| 2873867-0000 | .PLATE | 3-47 |
| 2873871-0000 | .BRACKET | 2-5 |
| 2873872-0000 | .BRACKET | 8-23 |
| 2873874-0100 | .AUTOMATION CONVEYOR CONTROL | 10-3 |
| 2873876-0000 | .PLATE | 8-23 |
| 2873878-0000 | .GUIDE | 1-39 |
| 2873879-0000 | .GUIDE | 1-29 |
| 2873894-0000 | .CAM | 2-5 |
| 2873923-0100 | .POSITION TEMPLATE | 8-3 |
| 2873925-0100 | .COMMUNICATION UNIT | 10-3 |
| 2873928-0000 | .CABLE DUCT | 3-7, 3-9 |
| 2873930-0100 | .CAUTION SIGN LIST | 10-3 |
| 2873941-0000 | .SIGN | 1-19, 3-11, 3-13 |
| 2873948-0000 | .BRACKET | 8-7 |
| 2873950-0100 | .CABLE SET | 3-79 |
| 2873953-0100 | .CAP | 8-3 |
| 2873954-0100 | .PNEUMATIC PANEL | 5-51 |
| 2873955-0200 | .SHUT-OFF VALVE | 5-51 |
| 2873956-0100 | .BELT TIGHTENER | 8-5 |
| 2874024-0000 | .BRACKET | 3-91 |
| 2878496-0000 | .BRACKET | 5-7 |
| 2879015-0200 | .ELECTRICAL DOCUMENT | 9-3 |
| 2882297-0000 | .BRACKET | 5-7 |
| 2882488-0000 | .GUIDE | 5-13 |
| 2882489-0000 | .GUIDE | 5-13 |
| 2887113-0000 | .SUPERSTRUCTURE | 5-39 |
| 2887115-0000 | .GUIDE | 5-39 |
| 2887618-0000 | .SPRING PLATE | 5-39 |
| 2887950-0000 | .SUPPORT | 8-19, 8-21 |
| 2887994-0000 | .BRACKET | 8-19, 8-21 |
| 2888723-0100 | .AIR SYSTEM | 5-11 |
| 2889892-0000 | .BRACKET | 6-11, 6-13 |
| 2889893-0000 | .GUIDE | 6-11, 6-13 |
| 2890013-0100 | .COMMUNICATION UNIT | 10-3 |
| 2890015-0000 | .RAIL | 7-61 |
| 2890547-0000 | .PLATE | 8-19, 8-21 |
| 2890590-0000 | .CABLE DUCT | 7-57 |
| 2890591-0100 | .PLINTH | 7-45 |
| 2890803-0000 | .BRACKET | 5-47 |
| 2890804-0000 | .SLIDER | 5-47 |
| 2895163-0200 | .CAP HOLDERS GROUP | 4-43 |
| 2895215-0000 | .SHAFT | 4-45 |
| 2897147-0000 | .PLATE | 6-7 |
| 2897148-0000 | .BRACKET | 6-7 |
| 2897952-0100 | .DRIVE UNIT | 6-15 |
| 2897953-0000 | .PLATE | 6-17 |
| 2897954-0000 | .PLATE | 6-17 |
| 2898046-0000 | .PLATE | 6-7 |

| Part No | Description | Page No |
|---|---|---|
| 2898138-0000 | .SUPPORT | 6-7 |
| 2898508-0000 | .BRACKET | 6-7 |
| 2899500-0000 | .BRACKET | 6-17 |
| 2905379-0000 | .BRACKET | 5-33 |
| 2905380-0000 | .BRACKET | 5-33 |
| 2905381-0000 | .BRACKET | 5-33 |
| 2909507-0000 | .PLATE | 6-7, 6-17 |
| 2910645-0000 | .SLIDE | 6-7 |
| 2910646-0000 | .SUPPORT | 6-7 |
| 2911322-0000 | .TIMING BELT | 5-41 |
| 2911337-0000 | .QUIC EXHAUST VALVE | 6-7, 6-17 |
| 2911848-0000 | .SCREW | 5-43 |
| 2911865-0000 | .SUPPORT | 6-7 |
| 2911910-0000 | .TEMPLATE | 8-5 |
| 2911986-0000 | .ARM | 2-7, 8-13 |
| 2912629-0000 | .CLAW | 4-45 |
| 2912630-0000 | .CLAW | 4-45 |
| 2913432-0200 | .ELECTRICAL DOCUMENT | 9-5 |
| 2914796-0000 | .BUSHING | 4-45 |
| 2918456-0000 | .PLATE | 5-39 |
| 2921902-0000 | .DIVIDER | 7-11 |
| 2923557-0000 | .PULLER | 4-45 |
| 2923857-0000 | .SUPERSTRUCTURE | 5-39 |
| 2923858-0000 | .LOWER SECTION | 5-39 |
| 2923894-0000 | .SLIDER | 5-39 |
| 2924076-0000 | .GUIDE | 5-39 |
| 2924097-0000 | .PRESSURE FINGER | 5-9 |
| 2925333-0000 | .WHEEL | 5-9 |
| 2927543-0000 | .PLATE | 6-19 |
| 2927545-0000 | .RUBBER MAT | 6-19 |
| 2930176-0100 | .SENSOR GROUP | 10-11 |
| 2930177-0100 | .CABLE MARKING SET | 10-11 |
| 2930178-0100 | .SENSOR GROUP | 10-11 |
| 2930179-0100 | .CONVEYOR CONTROL ACCESSORIES | 10-3 |
| 2930182-0100 | .POWER SUPPLY DEVICE | 10-3 |
| 2930210-0000 | .PLATE | 3-21, 3-23 |
| 2930211-0000 | .PLATE | 3-21, 3-23 |
| 2930247-0000 | .PLATE | 5-47 |
| 2930901-0000 | .COMPRESSION SPRING | 6-7 |
| 2930902-0000 | .SHAFT | 6-7 |
| 2931767-0000 | .BLOCK | 6-7 |
| 2931768-0000 | .CABLE DUCT | 3-7, 3-9 |
| 2931769-0000 | .CABLE DUCT | 3-7, 3-9 |
| 2931770-0000 | .DIVIDER | 3-7, 3-9 |
| 2931771-0000 | .CABLE DUCT | 3-7, 3-9 |
| 2931772-0000 | .CABLE DUCT | 3-7, 3-9 |
| 2931773-0000 | .CABLE DUCT | 3-7, 3-9 |
| 2931774-0000 | .CABLE DUCT | 3-7, 3-9 |
| 2931775-0000 | .CABLE DUCT | 3-7, 3-9 |
| 2931776-0000 | .CABLE DUCT | 3-7, 3-9 |
| 2931777-0000 | .CABLE DUCT | 3-7, 3-9 |
| 2931778-0000 | .CABLE DUCT | 3-7, 3-9 |
| 2931779-0000 | .CABLE DUCT | 3-7, 3-9 |
| 2931780-0000 | .CABLE DUCT | 3-7, 3-9 |
| 2931781-0000 | .CABLE DUCT | 3-7, 3-9 |
| 2931782-0000 | .CABLE DUCT | 3-7, 3-9 |
| 2931783-0000 | .PLATE | 3-7, 3-9 |
| 2931784-0000 | .DIVIDER | 3-7, 3-9 |
| 2931785-0000 | .ANGLE | 3-7, 3-9 |
| 2931786-0000 | .ANGLE | 3-7, 3-9 |
| 2931787-0000 | .ANGLE | 3-7, 3-9 |
| 2931788-0000 | .DIVIDER | 3-7, 3-9 |
| 2933730-0000 | .BRACKET | 5-7 |
| 2933777-0000 | .SHIM | 5-43 |
| 2934904-0000 | .RAIL BRACKET | 3-7, 3-9 |
| 2934905-0000 | .SUPPORT | 3-47 |
| 2936120-0000 | .BRACKET | 1-7 |
| 2936506-0000 | .BRACKET | 1-9 |
| 2936740-0000 | .BRACKET | 1-7 |
| 2937266-0000 | .COVER | 4-5 |
| 2937267-0000 | .COVER | 4-5 |
| 2937337-0000 | .SPACER | 1-31, 1-41 |
| 2943597-0000 | .PLATE | 1-9 |
| 2944164-0000 | .PLATE | 1-9 |
| 2944175-0000 | .PIN | 4-37 |
| 2947726-0000 | .SUPPORT | 7-5 |
| 2955524-0000 | .PLATE | 6-17 |
| 2955525-0000 | .PLATE | 6-17 |
| 2956716-0000 | .SUPPORT | 8-29, 8-31 |
| 2956718-0100 | .PHOTOCELL BRACKET | 8-15, 8-17 |
| 2956734-0000 | .SUPPORT | 8-29, 8-31 |
| 2956743-0000 | .AXLE PIN | 8-29, 8-31 |
| 2956908-0000 | .SHAFT | 8-29, 8-31 |
| 2957674-0000 | .CLAMP | 8-29, 8-31 |

| Part No | Description | Page No |
|---|---|---|
| 2957790-0000 | .BRACKET | 8-29, 8-31 |
| 2958122-0000 | .CHAIN | 6-17 |
| 2958205-0000 | .BRACKET | 8-29, 8-31 |
| 2958873-0000 | .BRACKET | 8-29, 8-31 |
| 2958892-0000 | .AXLE PIN | 8-29, 8-31 |
| 2958971-0000 | .PLATE | 8-23 |
| 2959001-0000 | .SUPPORT | 8-29, 8-31 |
| 2959224-0000 | .SCREW | 8-29, 8-31 |
| 2959689-0000 | .SCREW | 8-29, 8-31 |
| 2960276-0000 | .PLATE | 8-29, 8-31 |
| 2960571-0000 | .BRACKET | 8-29, 8-31 |
| 2963601-0000 | .COVER | 8-29, 8-31 |
| 2964292-0000 | .BEAM | 3-11, 3-13 |
| 2964293-0000 | .BEAM | 3-11, 3-13 |
| 2965155-0000 | .SUPPORT | 3-21, 3-23 |
| 2966581-0000 | .COVER | 3-125 |
| 2968615-0000 | .DRIVE WHEEL | 5-21 |
| 2973959-0000 | .SCREW | 5-41 |
| 2977814-0000 | .SHIM | 6-11, 6-13 |
| 2980667-0000 | .GUIDE | 5-9 |
| 2981083-0000 | .SHIM | 5-47 |
| 2981402-0000 | .SHAFT | 8-29, 8-31 |
| 2982300-0000 | .CLAMP | 8-29, 8-31 |
| 2982402-0000 | .GUIDE | 8-29, 8-31 |
| 2982531-0000 | .CLAW | 4-45 |
| 2982532-0000 | .CLAW | 4-45 |
| 2982736-0000 | .WASHER | 5-39 |
| 2983415-0000 | .SPACER | 8-19, 8-21 |
| 2983438-0000 | .SPACER | 8-19, 8-21 |
| 2985739-0000 | .SHIM | 5-49 |
| 2985766-0000 | .WASHER | 6-7 |
| 2985773-0000 | .BRACKET | 3-41 |
| 2985774-0000 | .BRACKET | 3-43 |
| 2985775-0100 | .SENSOR | 3-21, 3-23 |
| 2985781-0000 | .PLATE | 1-43, 1-45 |
| 2985804-0000 | .TUNNEL | 3-127 |
| 2985809-0000 | .HOUSING | 1-49 |
| 2985832-0000 | .COVER | 1-11 |
| 2985833-0000 | .WORM GEAR MOTOR | 1-15 |
| 2985846-0000 | .PLATE | 1-43, 1-45 |
| 2985847-0000 | .PLATE | 1-11 |
| 2985853-0000 | .TUNNEL | 3-109 |
| 2986246-0100 | .EJECTOR | 8-15, 8-17 |
| 2986247-0100 | .CAP DETECTOR | 8-3 |
| 2986316-0000 | .BRACKET | 8-29, 8-31 |
| 2994043-0000 | .JOINT | 4-5 |
| 2994044-0000 | .JOINT | 4-5 |
| 3003834-0000 | .BRACKET | 5-49 |
| 3003859-0000 | .SCREW | 5-47 |
| 3004039-0000 | .WHEEL | 5-39 |
| 3005237-0000 | .PLATE | 5-15 |
| 3007668-0000 | .AXLE PIN | 8-29, 8-31 |
| 3007670-0000 | .SUPPORT | 8-29, 8-31 |
| 3007680-0000 | .SPACER | 5-15 |
| 3007773-0000 | .PLATE | 5-15 |
| 3007826-0000 | .GUIDE | 5-15 |
| 3009996-0000 | .PULLER | 4-45 |
| 3010007-0000 | .AXLE PIN | 5-9 |
| 3010622-0000 | .CANTILEVER | 1-7 |
| 3010624-0000 | .CANTILEVER | 1-9 |
| 3010670-0000 | .CONVEYOR SUPPORT | 5-43 |
| 3011410-0000 | .BRACKET | 5-47 |
| 3011411-0000 | .BRACKET | 5-47 |
| 3011412-0000 | .WASHER | 5-47 |
| 3011464-0000 | .FLAG | 5-37 |
| 3011782-0000 | .HOLDER | 5-37 |
| 3015035-0000 | .PUSHER | 4-45 |
| 3015036-0000 | .PIN | 4-45 |
| 3016909-0000 | .DRIVE SHAFT | 1-15 |
| 3017287-0000 | .PLATE | 1-11 |
| 3017300-0000 | .FLANGE | 1-15 |
| 3021525-0000 | .PLATE | 1-49 |
| 3022021-0000 | .HOUSING | 1-49 |
| 3022022-0000 | .SHAFT | 1-49 |
| 3022023-0000 | .SHAFT | 1-49 |
| 3022488-0000 | .CAM | 1-49 |
| 3022734-0000 | .COVER | 3-11, 3-13 |
| 3022796-0000 | .BELLOWS | 1-27, 1-31, 1-37, 1-41 |
| 3025697-0000 | .WASHER | 5-9 |
| 3039013-0000 | .COVER | 3-107 |
| 3039024-0000 | .FRAME | 4-37 |
| 3039026-0000 | .FLAG | 5-37 |
| 3039027-0000 | .PLATE | 3-11, 3-13 |
| 3039029-0000 | .PNEUMATIC DIAGRAM | 8-3 |

| Part No | Description | Page No |
|---|---|---|
| 3039030-0000 | .TOOTHED PULLEY | 1-7, 1-9, 1-15 |
| 3039040-0000 | .SPACER | 3-11, 3-13 |
| 3039150-0000 | .PNEUMATIC PANEL | 5-51 |
| 3043254-0000 | .COVER | 1-25, 1-35, 1-43, 1-45 |
| 3044285-0000 | .TEMPLATE | 8-5 |
| 3046435-0000 | .FUSE PANEL LABEL | 7-57 |
| 3046886-0100 | .DISTRIBUTION TERMINAL | 7-9 |
| 3047311-0000 | .PROTECTION | 7-9 |
| 3047341-0000 | .ANGLE BRACKET | 3-7, 3-9 |
| 3047348-0100 | .GLASS DOOR | 3-101 |
| 3047349-0000 | .DOOR | 3-143 |
| 3053815-0000 | .COVER | 1-43 |
| 3053816-0000 | .COVER | 1-45 |
| 3054997-0000 | .SUPPORT | 3-83, 3-85 |
| 3056497-0000 | .DOOR | 3-123 |
| 3058858-0000 | .DOOR | 3-119 |
| 3058859-0000 | .BEAM | 3-11, 3-13 |
| 3068599-0000 | .PIPE | 3-21, 3-23 |
| 3086231-0000 | .SCREW | 1-49 |
| 3086233-0000 | .BRACKET | 1-49 |
| 3093726-0000 | .PLATE | 3-49 |
| 3095793-0000 | .PLATE | 2-13 |
| 3095794-0000 | .ANGLE BRACKET | 2-13 |
| 3095795-0000 | .SLIDING STRIP | 2-13 |

| Part No | Description | Page No |
|---|---|---|

| Part No | Description | Page No | Part No | Description | Page No |
|---|---|---|---|---|---|

Tetra Pak

# SPC
## Spare Parts Catalogue

| Pos | Part No | Description | Page No |
|---|---|---|---|
| **0** | | | |
| 01XL010 | 2839230-0100 .. | PLINTH | 7-15 |
| 01XL011 | 2840909-0100 .. | PLINTH | 7-15 |
| 01XL012 | 2840910-0100 .. | PLINTH | 7-15 |
| 01XL022 | 2840911-0100 .. | PLINTH | 7-15 |
| 01XL032 | 2840911-0100 .. | PLINTH | 7-15 |
| 01XL042 | 2840911-0100 .. | PLINTH | 7-15 |
| 01XL043 | 2840915-0100 .. | PLINTH | 7-15 |
| 01XL044 | 2840915-0100 .. | PLINTH | 7-15 |
| 01XL072 | 2840917-0100 .. | PLINTH | 7-15 |
| **A** | | | |
| 01A400 | 90600-8128 | OPER. PANEL 15"PV+,2711P-T15C4D2TP SER.B | 3-95 |
| **B** | | | |
| 01B600 | 90044-0192 | LIMIT SW. SZ2586.000 | 7-5 |
| 01B601 | 90044-0192 | LIMIT SW. SZ2586.000 | 7-5 |
| 01B801 | 90459-6426 | PRESSURE GUARD PEV-1/4-B-OD | 3-65 |
| 01B901 | 90459-5481 | OIL PUMP 3L, 10P-P3 | 3-71 |
| 01B902 | 90274-0084 | PRESSURE GUARD, 1800 KPA | 3-71 |
| 20B003 | 90600-4732 | LASER SENSOR, WS/WE9L-P330 | 1-9 |
| 21B000 | 90458-2907 | PROX.SWITCH IFS204 | 1-49 |
| 21B300 | 90458-2907 | PROX.SWITCH IFS204 | 8-19, 8-21 |
| 21B300 | 90459-5529 | PH.CELL E3Z-T86A, SENDER+RECIEVER | 8-29, 8-31 |
| 21B300 | 90600-4732 | LASER SENSOR, WS/WE9L-P330 | 8-29, 8-31 |
| 21B302 | 90600-4732 | LASER SENSOR, WS/WE9L-P330 | 8-29, 8-31 |
| 21B304 | 90459-5529 | PH.CELL E3Z-T86A, SENDER+RECIEVER | 8-29, 8-31 |
| 21B312 | 90600-4732 | LASER SENSOR, WS/WE9L-P330 | 8-29, 8-31 |
| 21B402 | 90459-5529 | PH.CELL E3Z-T86A, SENDER+RECIEVER | 3-21, 3-23 |
| 21B404 | 90459-5529 | PH.CELL E3Z-T86A, SENDER+RECIEVER | 3-21, 3-23 |
| 21B406 | 90459-5529 | PH.CELL E3Z-T86A, SENDER+RECIEVER | 3-21, 3-23 |
| 21B408 | 90459-5529 | PH.CELL E3Z-T86A, SENDER+RECIEVER | 3-21, 3-23 |
| 21B424 | 90459-5529 | PH.CELL E3Z-T86A, SENDER+RECIEVER | 3-21, 3-23 |
| 21B602 | 90459-5529 | PH.CELL E3Z-T86A, SENDER+RECIEVER | 3-21, 3-23 |
| 21B604 | 90459-5529 | PH.CELL E3Z-T86A, SENDER+RECIEVER | 10-17 |
| 21B605 | 90458-2907 | PROX.SWITCH IFS204 | 10-13 |
| 30B102 | 90458-2907 | PROX.SWITCH IFS204 | 4-19 |
| 30B201 | 90458-2748 | PROX.SENSOR SMT-10-PS-KL-5-LED-24 | 4-29 |
| 60B000 | 90458-2907 | PROX.SWITCH IFS204 | 5-15 |
| 60B001 | 90458-2907 | PROX.SWITCH IFS204 | 5-15 |
| 60B003 | 90458-2907 | PROX.SWITCH IFS204 | 5-31 |
| 60B100 | 90600-0459 | INDUCTIVE SWITCH, E2A-M12KN05-WP-B1 5M | 5-37 |
| 60B101 | 90600-3276 | PROXIMITY SENS. SME-8M-DS-24V-K-0,3-M8D | 5-49 |
| 60B103 | 90459-7366 | PHOTOCELL WTB4-3P3161 F20 | 5-49 |
| 60B104 | 90600-0459 | INDUCTIVE SWITCH, E2A-M12KN05-WP-B1 5M | 5-37 |
| 60B300 | 90459-7366 | PHOTOCELL WTB4-3P3161 F20 | 5-7 |
| 60B301 | 90458-2907 | PROX.SWITCH IFS204 | 5-7 |
| 60B402 | 90600-3276 | PROXIMITY SENS. SME-8M-DS-24V-K-0,3-M8D | 6-7 |
| 60B403 | 90600-3276 | PROXIMITY SENS. SME-8M-DS-24V-K-0,3-M8D | 6-7 |
| 60B404 | 90459-1967 | PROX.SENSOR SME-8-S-LED-24 | 6-21 |
| 60B404 | 90600-3276 | PROXIMITY SENS. SME-8M-DS-24V-K-0,3-M8D | 6-21 |
| 60B405 | 90459-1967 | PROX.SENSOR SME-8-S-LED-24 | 6-21 |
| 60B405 | 90600-3276 | PROXIMITY SENS. SME-8M-DS-24V-K-0,3-M8D | 6-21 |
| 60B406 | 90459-7272 | PHOTOCELL E3Z-LS88 | 6-11, 6-13 |
| 60B407 | 90459-7272 | PHOTOCELL E3Z-LS88 | 6-11, 6-13 |
| 60B408 | 90459-7272 | PHOTOCELL E3Z-LS88 | 6-7 |
| 60B409 | 90459-7272 | PHOTOCELL E3Z-LS88 | 6-7 |
| 60B410 | 90600-3276 | PROXIMITY SENS. SME-8M-DS-24V-K-0,3-M8D | 6-7 |
| 60B411 | 90600-3276 | PROXIMITY SENS. SME-8M-DS-24V-K-0,3-M8D | 6-7 |
| 60B423 | 90459-4788 | PROX.SENSOR SEIN-M5B-PS-S-L | 6-17 |
| 60B424 | 90459-4788 | PROX.SENSOR SEIN-M5B-PS-S-L | 6-17 |
| 60B425 | 90459-4788 | PROX.SENSOR SEIN-M5B-PS-S-L | 6-7 |
| 60B426 | 90459-4788 | PROX.SENSOR SEIN-M5B-PS-S-L | 6-7 |
| 60B600 | 90600-3276 | PROXIMITY SENS. SME-8M-DS-24V-K-0,3-M8D | 6-17 |
| 60B601 | 90600-3276 | PROXIMITY SENS. SME-8M-DS-24V-K-0,3-M8D | 6-17 |
| 60B602 | 90600-3276 | PROXIMITY SENS. SME-8M-DS-24V-K-0,3-M8D | 6-17 |
| 60B603 | 90600-3276 | PROXIMITY SENS. SME-8M-DS-24V-K-0,3-M8D | 6-17 |
| 60B604 | 90458-2907 | PROX.SWITCH IFS204 | 6-17 |
| 60B605 | 90458-2907 | PROX.SWITCH IFS204 | 6-19 |
| 60B606 | 90600-3276 | PROXIMITY SENS. SME-8M-DS-24V-K-0,3-M8D | 6-17 |
| **E** | | | |
| 01E600 | 90459-0813 | COOLING UNIT, KB20A619.01 | 7-55 |
| 01E700 | 90600-4049 | LIGHT FIXTURE, TCH128 1XTL5-21W/830 HF | 7-5 |
| 01E701 | 2769757-0100 .. | LAMP | 3-79 |
| 01E702 | 2769757-0100 .. | LAMP | 3-79 |
| **F** | | | |
| 01F100 | 90459-4181 | CURR. LIM. CIRC. BREAKER, NZMB1-4-A40 | 7-7 |
| 01F101 | 90082-0013 | SURGE PROTECTION DEVICE PU4CR 8021520000 | 7-7 |
| 01F104 | 90459-5813 | AUXILIARY CONTACT, FAZ-XHIN11 | 7-31 |
| 01F104 | 354002-0250 .... | MINIATURE CIRCUIT BREAKER, FAZ-C25/3 | 7-31 |
| 01F105 | 90458-2507 | FUSE HOLDER, USBCC1 | 7-29 |
| 01F105 | 90458-2510 | FUSE, ATDR6 | 7-29 |
| 01F200 | 354002-0060 .... | MINIATURE CIRCUIT BREAKER, FAZ-C6/3 | 7-29 |
| 01F201 | 354000-0040 .... | MINIATURE CIRCUIT BREAKER, FAZ-C4/1 | 7-13 |
| 01F202 | 354000-0060 .... | MINIATURE CIRCUIT BREAKER, FAZ-C6/1 | 7-13 |

| Pos | Part No | Description | Page No |
|---|---|---|---|
| **F** | | | |
| 01F203 | 354000-0040 | MINIATURE CIRCUIT BREAKER, FAZ-C4/1 | 7-13 |
| 01F300 | 354000-0040 | MINIATURE CIRCUIT BREAKER, FAZ-C4/1 | 7-29 |
| 01F400 | 354001-0040 | MINIATURE CIRCUIT BREAKER, FAZ-C4/2 | 7-13 |
| 01F500 | 90459-5813 | AUXILIARY CONTACT, FAZ-XHIN11 | 7-31 |
| 01F500 | 354002-0200 | MINIATURE CIRCUIT BREAKER, FAZ-C20/3 | 7-31 |
| 01F600 | 354000-0060 | MINIATURE CIRCUIT BREAKER, FAZ-C6/1 | 7-31 |
| 01F700 | 354000-0060 | MINIATURE CIRCUIT BREAKER, FAZ-C6/1 | 7-29 |
| 01F701 | 90459-5811 | RESIDUAL CURRENT DEVICE, FI-25/2/003-A | 7-29 |
| 01F702 | 354000-0100 | MINIATURE CIRCUIT BREAKER, FAZ-C10/1 | 7-29 |
| 09F000 | 90459-6692 | SAFETY PLC, PLUTO B20 20-070-06 | 7-43 |
| 09F001 | 90459-2291 | SAFETY TIME RELAY, E1T-0.5S-24VDC | 7-43 |
| 09F003 | 90459-1131 | SAFETY RELAY, E1T 0SEC | 7-57 |
| 09F101 | 90458-1651 | EMERGENCY STOP, ZB4-BS-844 ZB4-BZ-104 | 7-5 |
| 09F102 | 90458-1651 | EMERGENCY STOP, ZB4-BS-844 ZB4-BZ-104 | 3-95 |
| 09F103 | 90458-1651 | EMERGENCY STOP, ZB4-BS-844 ZB4-BZ-104 | 3-129 |
| 09F201 | 90459-4254 | CONNECTION BLOCK TINA 4A, 20-054-03 | 3-83, 3-85 |
| 09F202 | 90459-4254 | CONNECTION BLOCK TINA 4A, 20-054-03 | 3-83, 3-85 |
| 09F210 | 90459-6961 | SAFETY SENSOR, NON CONT. ADAM-E M12 0,5M | 3-83, 3-85 |
| 09F211 | 90459-4089 | SAFETY SENSOR NON-CONTACT EVA E | 3-83, 3-85 |
| 09F212 | 90459-6961 | SAFETY SENSOR, NON CONT. ADAM-E M12 0,5M | 3-83, 3-85 |
| 09F213 | 90459-4089 | SAFETY SENSOR NON-CONTACT EVA E | 3-83, 3-85 |
| 09F214 | 90459-6961 | SAFETY SENSOR, NON CONT. ADAM-E M12 0,5M | 3-83, 3-85 |
| 09F215 | 90459-4089 | SAFETY SENSOR NON-CONTACT EVA E | 3-83, 3-85 |
| 09F216 | 90459-6961 | SAFETY SENSOR, NON CONT. ADAM-E M12 0,5M | 3-83, 3-85 |
| 09F217 | 90459-4089 | SAFETY SENSOR NON-CONTACT EVA E | 3-83, 3-85 |
| 09F230 | 90459-6961 | SAFETY SENSOR, NON CONT. ADAM-E M12 0,5M | 3-83, 3-85 |
| 09F231 | 90459-4089 | SAFETY SENSOR NON-CONTACT EVA E | 3-83, 3-85 |
| 09F232 | 90459-6961 | SAFETY SENSOR, NON CONT. ADAM-E M12 0,5M | 3-83, 3-85 |
| 09F233 | 90459-4089 | SAFETY SENSOR NON-CONTACT EVA E | 3-83, 3-85 |
| 09F234 | 90459-5627 | CONNECTION TINA 1A, 20-054-00 | 3-83, 3-85 |
| 09F236 | 90459-5627 | CONNECTION TINA 1A, 20-054-00 | 3-83, 3-85 |
| 09F310 | 90600-4796 | SAFETY LIGHT BARRIER,TRANSM. FT4-35-750 | 3-83, 3-85 |
| 09F311 | 90600-4797 | SAFETY LIGHT BARRIER,TRANSM. FR4-35-750 | 3-83, 3-85 |
| 09F316 | 90600-4810 | ADAPTER LIGHT BARR. TINA 10A, 20-054-12 | 3-83, 3-85 |
| 20F000 | 354000-0060 | MINIATURE CIRCUIT BREAKER, FAZ-C6/1 | 7-57 |
| 21F400 | 354000-0100 | MINIATURE CIRCUIT BREAKER, FAZ-C10/1 | 7-39 |
| 21F600 | 354000-0100 | MINIATURE CIRCUIT BREAKER, FAZ-C10/1 | 7-39 |
| 21F800 | 90259-0313 | AUXILIARY CONTACT, NHI21-PKZ0 | 7-31 |
| 21F800 | 90459-5326 | OVERLOAD PROTECTION, PKZM0-4 | 7-31 |
| 21F801 | 90459-5813 | AUXILIARY CONTACT, FAZ-XHIN11 | 7-31 |
| 21F801 | 354001-0100 | MINIATURE CIRCUIT BREAKER, FAZ-C10/2 | 7-31 |
| 30F300 | 354000-0060 | MINIATURE CIRCUIT BREAKER, FAZ-C6/1 | 7-57 |
| 60F010 | 90259-0313 | AUXILIARY CONTACT, NHI21-PKZ0 | 7-57 |
| 60F010 | 90459-5321 | OVERLOAD PROTECTION, PKZM0-0,4 | 7-57 |
| 60F120 | 90259-0313 | AUXILIARY CONTACT, NHI21-PKZ0 | 7-57 |
| 60F120 | 90459-5324 | OVERLOAD PROTECTION, PKZM0-1,6 | 7-57 |
| 60F420 | 90259-0313 | AUXILIARY CONTACT, NHI21-PKZ0 | 7-57 |
| 60F420 | 90459-5323 | OVERLOAD PROTECTION, PKZM0-1 | 7-57 |
| 60F610 | 90259-0313 | AUXILIARY CONTACT, NHI21-PKZ0 | 7-57 |
| 60F610 | 90459-5324 | OVERLOAD PROTECTION, PKZM0-1,6 | 7-57 |
| **K** | | | |
| 01K105 | 90119-0108 | RELAY OMRON G2R-2-SNI-24DC | 7-13 |
| 01K105 | 90129-0018 | BASE, P2RF-08-E | 7-13 |
| 01K301 | 90459-6557 | PROCESSOR L61, SERIES B, 1756-L61/B | 7-37 |
| 01K302 | 90459-2477 | ETHERNET I/P BRIDGE MODULE, 1756-ENBT | 10-7 |
| 01K303 | 90459-2477 | ETHERNET I/P BRIDGE MODULE, 1756-ENBT | 7-37 |
| 01K304 | 90600-5840 | PLC DEVICEN. BR./SCAN MOD, 1756-DNB, D | 7-37 |
| 01K305 | 90459-2488 | REMOVABLE TERMINAL BLOCK 36 POINTS | 7-37 |
| 01K305 | 90459-6556 | PLC DIGITAL INPUT 32PTS, 1756-IB32/B | 7-37 |
| 01K306 | 90459-2413 | PLC DIGITAL INPUT MODULE16 POINTS | 7-37 |
| 01K306 | 90459-2487 | REMOVABLE TERMINAL BLOCK 20 POINTS | 7-37 |
| 01K307 | 90459-2474 | PLC,DIGIT. OUTPUT MODULE 16 PTS 10-31VDC | 7-37 |
| 01K307 | 90459-2487 | REMOVABLE TERMINAL BLOCK 20 POINTS | 7-37 |
| 01K308 | 90459-2474 | PLC,DIGIT. OUTPUT MODULE 16 PTS 10-31VDC | 7-57 |
| 01K308 | 90459-2487 | REMOVABLE TERMINAL BLOCK 20 POINTS | 7-57 |
| 01K309 | 90459-2474 | PLC,DIGIT. OUTPUT MODULE 16 PTS 10-31VDC | 7-57 |
| 01K309 | 90459-2487 | REMOVABLE TERMINAL BLOCK 20 POINTS | 7-57 |
| 01K310 | 90459-2480 | 8-AXIS SERCOS MOTION MODULE | 7-57 |
| 01K320 | 90459-2494 | DEVICENET I/O ADAPTER MODULE, 1734-ADN | 3-97, 3-99 |
| 01K321 | 90459-2503 | DIGITAL INPUT 4 PTS SINK, 1734-IB4 | 3-97, 3-99 |
| 01K322 | 90459-2503 | DIGITAL INPUT 4 PTS SINK, 1734-IB4 | 3-97, 3-99 |
| 01K323 | 90459-2503 | DIGITAL INPUT 4 PTS SINK, 1734-IB4 | 3-97, 3-99 |
| 01K324 | 90459-2503 | DIGITAL INPUT 4 PTS SINK, 1734-IB4 | 3-97, 3-99 |
| 01K325 | 90459-2503 | DIGITAL INPUT 4 PTS SINK, 1734-IB4 | 3-97, 3-99 |
| 01K326 | 90459-2501 | FIELD POWER DISTRIBUTOR, 1734-FPD | 3-97, 3-99 |
| 01K327 | 90459-2505 | DIGITAL OUTPUT 4 PTS, 1734-OB4E | 3-97, 3-99 |
| 01K328 | 90459-2505 | DIGITAL OUTPUT 4 PTS, 1734-OB4E | 3-97, 3-99 |
| 01K329 | 90459-2505 | DIGITAL OUTPUT 4 PTS, 1734-OB4E | 3-97, 3-99 |
| 01K330 | 90459-2501 | FIELD POWER DISTRIBUTOR, 1734-FPD | 3-97, 3-99 |
| 01K331 | 90459-2505 | DIGITAL OUTPUT 4 PTS, 1734-OB4E | 3-97, 3-99 |
| 01K332 | 90459-2505 | DIGITAL OUTPUT 4 PTS, 1734-OB4E | 3-97, 3-99 |
| 01K335 | 90119-0108 | RELAY OMRON G2R-2-SNI-24DC | 3-97, 3-99 |

| Pos | Part No | Description | Page No |
|---|---|---|---|
| **K** | | | |
| 01K336 | 90119-0108 | RELAY OMRON G2R-2-SNI-24DC | 3-97, 3-99 |
| 01K340 | 90459-6062 | REMOTE I/O, IP67 8PTS IN/OUT SELF-CONFIG | 3-7, 3-9 |
| 01K350 | 90459-6062 | REMOTE I/O, IP67 8PTS IN/OUT SELF-CONFIG | 3-11, 3-13 |
| 01K360 | 90459-6062 | REMOTE I/O, IP67 8PTS IN/OUT SELF-CONFIG | 3-11, 3-13 |
| 01K401 | 90458-1141 | FERRITE, RI-16-28-9 | 7-45 |
| 01K420 | 90459-6062 | REMOTE I/O, IP67 8PTS IN/OUT SELF-CONFIG | 3-7, 3-9 |
| 01K700 | 90119-0108 | RELAY OMRON G2R-2-SNI-24DC | 7-13 |
| 01K700 | 90129-0018 | BASE, P2RF-08-E | 7-13 |
| 01K800 | 90459-2243 | SHUT OFF VALVE, MS4-EE-1/4-10V24 | 3-65 |
| 09K241 | 90459-6913 | ELECTROMAG. DOOR LOCK. DEV.,JSD-ZH-EM1-K | 3-83, 3-85 |
| 09K242 | 90459-6913 | ELECTROMAG. DOOR LOCK. DEV.,JSD-ZH-EM1-K | 3-83, 3-85 |
| 20K002 | 90119-0108 | RELAY OMRON G2R-2-SNI-24DC | 7-57 |
| 20K002 | 90129-0018 | BASE, P2RF-08-E | 7-57 |
| 21K000 | 90458-1202 | VALVES 2X3/2, CLOSED | 3-57, 3-59 |
| 21K310 | 90458-1197 | BISTABLE VALVE 5/2 | 8-37 |
| 21K400 | 90458-1140 | FERRITE, RI-26-28-13 | 7-9 |
| 21K401 | 90458-1140 | FERRITE, RI-26-28-13 | 7-9 |
| 21K500 | 90458-1203 | VALVE 2X3/2 1X OPEN 1X CLOSED | 8-39 |
| 21K600 | 90458-1140 | FERRITE, RI-26-28-13 | 10-5 |
| 21K601 | 90458-1140 | FERRITE, RI-26-28-13 | 10-5 |
| 21K800 | 90600-4731 | RELAY | 7-13 |
| 21K801 | 90600-4731 | RELAY | 7-13 |
| 30K200 | 90458-1194 | MONOSTABLE VALVE 5/2 | 5-55 |
| 30K300 | 90458-1140 | FERRITE, RI-26-28-13 | 7-57 |
| 30K301 | 90458-1140 | FERRITE, RI-26-28-13 | 7-57 |
| 30K303 | 90600-2067 | LEVEL CONTROL LC25, #7125832 | 4-5 |
| 30K353 | 90600-0553 | TUBE, 8X1 MM PTFE | 4-5 |
| 40K203 | 90458-1202 | VALVES 2X3/2, CLOSED | 3-57, 3-59 |
| 60K000 | 90458-1194 | MONOSTABLE VALVE 5/2 | 5-55 |
| 60K010 | 90458-1194 | MONOSTABLE VALVE 5/2 | 5-55 |
| 60K100 | 90458-1194 | MONOSTABLE VALVE 5/2 | 5-55 |
| 60K400 | 90458-1194 | MONOSTABLE VALVE 5/2 | 5-53 |
| 60K401 | 90458-1194 | MONOSTABLE VALVE 5/2 | 5-53 |
| 60K402 | 90458-1194 | MONOSTABLE VALVE 5/2 | 5-53 |
| 60K600 | 90458-1199 | VALVE CLOSED IN MID-POSITION, 5/3 | 5-53 |
| 60K601 | 90458-1194 | MONOSTABLE VALVE 5/2 | 5-53 |
| 60K602 | 90458-1202 | VALVES 2X3/2, CLOSED | 5-53 |
| 60K603 | 90458-1202 | VALVES 2X3/2, CLOSED | 5-55 |
| 60K604 | 90458-1194 | MONOSTABLE VALVE 5/2 | 5-55 |
| 60K612 | 90601-1126 | SAFETY VALVE, MS6-SV-1/2-D-10V24-AG | 5-57 |
| 70K000 | 90119-0108 | RELAY OMRON G2R-2-SNI-24DC | 7-13 |
| 70K000 | 90129-0018 | BASE, P2RF-08-E | 7-13 |
| 70K001 | 90459-2739 | OPTO-RELAY 50085, IN / OUT 4-53VDC 1A | 7-13 |
| 81K201 | 90458-1170 | FERRITE, SFC-6 | 7-45 |
| 81K202 | 90458-1170 | FERRITE, SFC-6 | 7-45 |
| 81K401 | 90458-1140 | FERRITE, RI-26-28-13 | 7-37 |
| 81K401 | 90458-1141 | FERRITE, RI-16-28-9 | 7-45 |
| 81K500 | 90459-4235 | SNP TO DF1 GATEWAY, 0220 1166 01 REV B | 10-23 |
| **M** | | | |
| 20M000 | 2838710-0200 | WORM GEAR MOTOR | 1-11 |
| 20M050 | 90600-1080 | DOUBLE ACTING, ROUND, CYL 32-80 | 1-13 |
| 21M051 | 2769718-0100 | PNEUMATIC CYLINDER | 1-47 |
| 21M052 | 2769718-0100 | PNEUMATIC CYLINDER | 1-47 |
| 21M100 | 90601-0668 | SERVO MOTOR MPL-B420P-MK72AA SERIES A | 1-43 |
| 21M200 | 90601-0668 | SERVO MOTOR MPL-B420P-MK72AA SERIES A | 1-45 |
| 21M360 | 90457-0871 | DOUBLE ACTING, MINI-ISO, CYL. 16-25 | 8-23 |
| 21M800 | 90459-6768 | FAN 2BH1300-7AV15 | 3-49 |
| 30M000 | 90601-1926 | SERVO MOTOR MPL-B430P-MK72AA SERIES A | 4-21 |
| 30M300 | 90600-0440 | WHEEL APPLICATOR 60 PLATFORM, #7132058 | 4-5 |
| 30M400 | 90601-0668 | SERVO MOTOR MPL-B420P-MK72AA SERIES A | 2-9 |
| 60M010 | 90069-0254 | GEARS, WORM MOTOR SN5D56A-4 | 5-21 |
| 60M100 | 90601-1926 | SERVO MOTOR MPL-B430P-MK72AA SERIES A | 5-41 |
| 60M210 | 90601-0668 | SERVO MOTOR MPL-B420P-MK72AA SERIES A | 5-49 |
| 60M250 | 90600-2073 | CYLINDER, SLT-20-10-P-A | 4-29 |
| 60M310 | 90601-0668 | SERVO MOTOR MPL-B420P-MK72AA SERIES A | 5-45 |
| 60M420 | 90458-0965 | GEARS, WORM MOTOR S37 DT 63 L4 | 6-9 |
| 60M450 | 90600-1078 | DOUBLE ACTING, SHUTTLE, CYL. 25-500 | 6-21 |
| 60M451 | 90600-3010 | CYLINDER WITH INT. GUIDING BORE 40 | 6-7 |
| 60M452 | 90459-3245 | CYLINDER WITH INT. GUIDING BORE 25 | 6-7 |
| 60M610 | 90264-0078 | FAN, 2BH1300-7AH16 | 6-23 |
| 60M650 | 90600-3009 | CYLINDER WITH INT. GUIDING BORE 40 | 6-17 |
| 60M651 | 90600-1077 | DOUBLE ACTING, SHUTTLE, CYL. 40-700 | 6-17 |
| 60M654 | 90450-0513 | DOUBLE ACTING, COMPACT, CYL 32-25 | 6-23 |
| **P** | | | |
| 01P500 | 90053-0029 | COUNTER, F524.800FA3C 24VDC | 7-43 |
| 01P500 | 90459-3603 | PRESSURE GAUGE, MAP-40-6-1/8-EN | 3-57, 3-59 |
| 01P501 | 90053-0031 | HOUR COUNTER, B 609.10 10-50VDC | 7-43 |
| 01P511 | 90458-0293 | LIGHT ELEMENT, RED, PSD-S OE RD/W | 3-81 |
| 01P512 | 90458-0294 | LIGHT ELEMENT, YELLOW, PSD-S OE YE/W | 3-81 |
| 01P513 | 90458-0302 | SIREN ELEMENT, PSD-S AE SM8-5 100DB/1/W | 3-81 |
| 01P514 | 90458-0295 | LIGHT ELEMENT, BLUE, PSD-S OE BU/W | 3-81 |
| 01P515 | 90458-0296 | LIGHT ELEMENT, GREEN, PSD-S OE GN/W | 3-81 |

| Pos | Part No | Description | Page No |
|---|---|---|---|
| **P** | | | |
| 40P150 | 90459-7344 | PRESSURE GAUGE, MA-40-6-R1/4-EN | 3-57, 3-59 |
| **Q** | | | |
| 01Q104 | 90600-1759 | CONTACTOR22KW24VDCDILM50-22+DILM65-XIP2X | 7-33 |
| 01Q105 | 90600-1759 | CONTACTOR22KW24VDCDILM50-22+DILM65-XIP2X | 7-29 |
| 01Q500 | 90459-5311 | CONTACTOR 15KW 24VDC, DILM32-10 | 7-33 |
| 01Q600 | 90459-5308 | CONTACTOR 4KW 24VDC, DILM9-10 | 7-33 |
| 01Q850 | 90459-2337 | SHUT OFF VALVE, MS4-EM1-1/4 | 3-65 |
| 20Q000 | 90459-5308 | CONTACTOR 4KW 24VDC, DILM9-10 | 7-57 |
| 20Q000 | 90459-6852 | AUXILIARY CONTACT, DILA-XHI22 | 7-57 |
| 20Q051 | 90459-0290 | NON-RETURN VALVE H-QS-6 | 3-57, 3-59 |
| 20Q052 | 90187-0191 | BALL VALVE R1/8, 6 MM | 3-57, 3-59 |
| 21Q400 | 90459-5308 | CONTACTOR 4KW 24VDC, DILM9-10 | 7-41 |
| 21Q400 | 90459-6852 | AUXILIARY CONTACT, DILA-XHI22 | 7-41 |
| 21Q600 | 90459-5308 | CONTACTOR 4KW 24VDC, DILM9-10 | 7-57 |
| 21Q600 | 90459-6852 | AUXILIARY CONTACT, DILA-XHI22 | 7-57 |
| 21Q800 | 90459-5308 | CONTACTOR 4KW 24VDC, DILM9-10 | 7-33 |
| 21Q801 | 90459-5309 | CONTACTOR 7,5KW 24VDC, DILM17-10 | 7-33 |
| 30Q300 | 90459-5308 | CONTACTOR 4KW 24VDC, DILM9-10 | 7-57 |
| 30Q300 | 90459-6852 | AUXILIARY CONTACT, DILA-XHI22 | 7-57 |
| 60Q010 | 90600-2048 | SOLID STATE RELAY, 3RF2403-1BD04 | 7-57 |
| 60Q120 | 90459-5308 | CONTACTOR 4KW 24VDC, DILM9-10 | 7-57 |
| 60Q120 | 90459-6852 | AUXILIARY CONTACT, DILA-XHI22 | 7-57 |
| 60Q420 | 90459-5308 | CONTACTOR 4KW 24VDC, DILM9-10 | 7-57 |
| 60Q420 | 90459-6852 | AUXILIARY CONTACT, DILA-XHI22 | 7-57 |
| 60Q610 | 90459-5308 | CONTACTOR 4KW 24VDC, DILM9-10 | 7-57 |
| 60Q610 | 90459-6852 | AUXILIARY CONTACT, DILA-XHI22 | 7-57 |
| 80Q051 | 90187-0045 | BALL VALVE G1/4 CR PL | 3-51 |
| **R** | | | |
| 01R360 | 90459-6847 | DEVICENET TERM. RESISTOR, 0939 CTX 101 | 3-11, 3-13 |
| 01R500 | 90459-5817 | REGULATOR, MS4-LR-1/4-D6-A8-AS | 3-57, 3-59 |
| 01R852 | 90328-0026 | SILENCER G1/4" | 3-65 |
| 01R853 | 90328-0026 | SILENCER G1/4" | 3-65 |
| 01R951 | 90328-0047 | SILENCER G1/8" | 3-57, 3-59 |
| 01R953 | 90328-0047 | SILENCER G1/8" | 3-57, 3-59 |
| 01R954 | 90328-0029 | SILENCER M5 | 3-57, 3-59 |
| 01R955 | 90328-0029 | SILENCER M5 | 3-57, 3-59 |
| 20R051 | 90328-0017 | SILENCER, D=6 MM | 1-13 |
| 20R352 | 90328-0047 | SILENCER G1/8" | 3-57, 3-59 |
| 20R353 | 90328-0047 | SILENCER G1/8" | 3-57, 3-59 |
| 20R354 | 90328-0029 | SILENCER M5 | 3-57, 3-59 |
| 20R355 | 90328-0029 | SILENCER M5 | 3-57, 3-59 |
| 21R054 | 90459-3604 | FLOW CONTROL VALVE, GR-QS-6 | 3-57, 3-59 |
| 21R354 | 90235-0748 | THROTTLE CHECK VALVE, GRA-1/4-B | 3-57, 3-59 |
| 21R363 | 90328-0012 | SILENCER U-1/8 | 8-37 |
| 21R365 | 90328-0012 | SILENCER U-1/8 | 8-37 |
| 21R366 | 90328-0020 | SILENCER, U-M5 | 8-37 |
| 21R367 | 90328-0020 | SILENCER, U-M5 | 8-37 |
| 21R553 | 90328-0012 | SILENCER U-1/8 | 8-39 |
| 21R555 | 90328-0012 | SILENCER U-1/8 | 8-39 |
| 21R556 | 90328-0020 | SILENCER, U-M5 | 8-39 |
| 21R557 | 90328-0020 | SILENCER, U-M5 | 8-39 |
| 21R801 | 90206-0124 | HEATING ELEMENT 2X1500W 230V | 3-47 |
| 40R150 | 90459-5817 | REGULATOR, MS4-LR-1/4-D6-A8-AS | 3-57, 3-59 |
| 60R060 | 90328-0012 | SILENCER U-1/8 | 5-55 |
| 60R061 | 90458-2838 | SILENCER U-3/8 | 5-55 |
| 60R062 | 90458-2838 | SILENCER U-3/8 | 5-55 |
| 60R455 | 2911337-0000 | QUIC EXHAUST VALVE | 6-7 |
| 60R456 | 2911337-0000 | QUIC EXHAUST VALVE | 6-7 |
| 60R651 | 2911337-0000 | QUIC EXHAUST VALVE | 6-17 |
| 60R652 | 2911337-0000 | QUIC EXHAUST VALVE | 6-17 |
| 60R658 | 90458-2838 | SILENCER U-3/8 | 5-53 |
| 60R659 | 90328-0012 | SILENCER U-1/8 | 5-53 |
| 60R660 | 90458-2838 | SILENCER U-3/8 | 5-53 |
| 81R400 | 90459-2523 | OPEN STYLE TERMINATOR, 1485A-C2 | 7-45 |
| **S** | | | |
| 01S400 | 90064-0093 | PUSH BUTTON, GREEN | 3-95 |
| 01S401 | 90064-0098 | PUSH BUTTON, CLEAR | 3-95 |
| 01S402 | 90064-0093 | PUSH BUTTON, GREEN | 3-95 |
| 01S404 | 90064-0098 | PUSH BUTTON, CLEAR | 3-95 |
| **T** | | | |
| 01T200 | 90459-4133 | POWER SUPPLY UNIT 6EP1 436-3BA00 | 7-45 |
| 01T201 | 90459-2939 | POWER SUPPLY UNIT 6EP1 961-3BA00 | 10-21 |
| 01T300 | 90459-7267 | POWER SUPPLY 24VDC, 1756-PB75/B | 7-37 |
| 01T400 | 90459-5886 | POWER SUPPLY UNIT 115-230 VAC/24VDC100W | 7-45 |
| 20T000 | 90459-3441 | FREQUENCY CONVERTER 0,37 KW | 7-57 |
| 21T100 | 90600-5216 | AXIS MOD. KINETIX 6000,2094-BM02-S SER.B | 7-57 |
| 21T200 | 90600-5216 | AXIS MOD. KINETIX 6000,2094-BM02-S SER.B | 7-57 |
| 21T400 | 90459-3450 | VARIABLE FREQUENCY DRIVE 22A-A4P5N104 | 7-9 |
| 21T600 | 90459-3450 | VARIABLE FREQUENCY DRIVE 22A-A4P5N104 | 10-5 |
| 30T000 | 90600-5212 | AXIS MOD. W. PS,2094-BC02-M02-S SERIES B | 7-35 |
| 30T300 | 90459-3449 | VARIABLE FREQUENCY DRIVE 22A-A2P3N104 | 7-57 |
| 30T400 | 90600-5214 | AXIS MOD. KINETIX 6000,2094-BM01-S SER.B | 7-35 |

| Pos | Part No | Description | Page No |
|---|---|---|---|
| **T** | | | |
| 60T100 | 90600-5216 | AXIS MOD. KINETIX 6000,2094-BM02-S SER.B | 7-57 |
| 60T210 | 90600-5214 | AXIS MOD. KINETIX 6000,2094-BM01-S SER.B | 7-57 |
| 60T310 | 90600-5214 | AXIS MOD. KINETIX 6000,2094-BM01-S SER.B | 7-57 |
| 70T100 | 90459-2547 | POWER RAIL SLOT FILLER MODULE, 2094-PRF | 7-57 |
| 81T200 | 90459-6858 | ETHERNET SW, FL SWITCH SF 8TX FROM V 14 | 7-45 |
| 81T400 | 90459-5886 | POWER SUPPLY UNIT 115-230 VAC/24VDC100W | 7-45 |
| **U** | | | |
| 01U950 | 90459-2591 | SINGLE VALVE SUB-BASE CDSV5.0-AS-1/8 | 3-57, 3-59 |
| 01U951 | 90032-0038 | BLOCK 2 WAYS | 3-73, 3-75, 3-77 |
| 01U952 | 90032-0038 | BLOCK 2 WAYS | 3-73, 3-75, 3-77 |
| 01U953 | 90032-0038 | BLOCK 2 WAYS | 3-73, 3-75, 3-77 |
| 01U954 | 90032-0039 | BLOCK 4 WAYS | 3-73, 3-75, 3-77 |
| 01U955 | 90032-0039 | BLOCK 4 WAYS | 3-73, 3-75, 3-77 |
| 01U956 | 90032-0039 | BLOCK 4 WAYS | 3-73, 3-75, 3-77 |
| 01U957 | 90032-0039 | BLOCK 4 WAYS | 3-73, 3-75, 3-77 |
| 01U958 | 90032-0039 | BLOCK 4 WAYS | 3-73, 3-75, 3-77 |
| 01U959 | 90032-0038 | BLOCK 2 WAYS | 3-73, 3-75, 3-77 |
| 01U960 | 90032-0038 | BLOCK 2 WAYS | 3-73, 3-75, 3-77 |
| 20U350 | 90459-2591 | SINGLE VALVE SUB-BASE CDSV5.0-AS-1/8 | 3-57, 3-59 |
| 21U360 | 90459-2591 | SINGLE VALVE SUB-BASE CDSV5.0-AS-1/8 | 8-37 |
| 21U550 | 90459-2591 | SINGLE VALVE SUB-BASE CDSV5.0-AS-1/8 | 8-39 |
| 60U050 | 90458-1204 | BASIC SUB-BASE 4 VALVES, CDVI5.0-GB4-MP | 5-55 |
| 60U051 | 90458-2596 | EXPANSION MODULE EXTRA SUPPLY 2 VALVES | 5-55 |
| 60U600 | 90458-1204 | BASIC SUB-BASE 4 VALVES, CDVI5.0-GB4-MP | 5-53 |
| 60U601 | 90458-1206 | EXP. SUB-BASE 2 VALVES, CDVI5.0-EB | 5-53 |
| **V** | | | |
| 01V100 | 90024-0060 | FILTER 80 A 440/250 VAC, B84144-A0080R00 | 7-7 |
| 01V104 | 90459-2549 | AC LINE FILTER 3-PHASE 30A, 2090-XXLF-X3 | 7-9 |
| 01V105 | 90459-3931 | LINE FILTER, 3EP1, 3A 120/250 VAC | 7-9 |
| 01V500 | 90459-1991 | HOT MELT UNIT, #1049296 | 3-91 |
| 01V850 | 90459-2339 | FILTER REGULATOR, MS4-LFR-1/4-D7-ERV-AS | 3-65 |
| 01V852 | 90459-2773 | FILTER, MS6-LFM-1/2-BRV | 3-63 |
| 01V853 | 90459-2772 | FILTER, MS6-LFM-1/2-ARV | 3-63 |
| 01V854 | 90459-2771 | FILTER, MS6-LFX-1/2-R | 3-63 |
| 01V902 | 90415-0030 | OIL FILTER PN 100 ORD.NO 2.77 10 70.1 | 3-71 |
| 20V000 | 90459-3454 | FOOTPRINT FILTER, 22-RF018-BL | 7-57 |
| 21V400 | 90459-3460 | FOOTPRINT FILTER 22-RF010-AL | 7-9 |
| 21V600 | 90459-3460 | FOOTPRINT FILTER 22-RF010-AL | 10-5 |
| 30V300 | 90459-3460 | FOOTPRINT FILTER 22-RF010-AL | 7-57 |
| **W** | | | |
| 01W340 | 351309-0100 | ACTUATOR/SENSOR CABLE PRKT 4-07/10M | 3-7, 3-9 |
| 01W341 | 351413-0050 | DEVICENET CONN. CABLE, 0935 361 103/5M | 3-11, 3-13 |
| 01W350 | 351309-0100 | ACTUATOR/SENSOR CABLE PRKT 4-07/10M | 3-11, 3-13 |
| 01W351 | 351413-0003 | DEVICENET CONN. CABLE, 0935 361 103/0,3M | 3-11, 3-13 |
| 01W360 | 351309-0100 | ACTUATOR/SENSOR CABLE PRKT 4-07/10M | 3-11, 3-13 |
| 01W400 | 351150-0403 | CABLE OLFLEX 3X0,75 MM2 LIGHT/GREY | 3-87 |
| 01W401 | 351150-0407 | CABLE OLFLEX 12X0,75 MM2 LIGHT/GREY | 3-87 |
| 01W500 | 351150-0187 | CABLE OLFLEX 5X6 MM2 LIGHT/GREY | 3-87 |
| 01W501 | 351150-0406 | CABLE OLFLEX 7X0,75 MM2 LIGHT/GREY | 3-87 |
| 01W510 | 351150-0406 | CABLE OLFLEX 7X0,75 MM2 LIGHT/GREY | 3-87 |
| 01W701 | 351150-0403 | CABLE OLFLEX 3X0,75 MM2 LIGHT/GREY | 3-87 |
| 01W702 | 351150-0403 | CABLE OLFLEX 3X0,75 MM2 LIGHT/GREY | 3-87 |
| 01W800 | 351150-0403 | CABLE OLFLEX 3X0,75 MM2 LIGHT/GREY | 3-87 |
| 01W801 | 351150-0403 | CABLE OLFLEX 3X0,75 MM2 LIGHT/GREY | 3-87 |
| 01W851 | 315400-0010 | TUBE PUN-H-12X2-BL | 3-57, 3-59 |
| 01W852 | 315400-0004 | TUBE PUN-H-8X1,25-BL | 3-65, 3-67 |
| 01W853 | 315400-0001 | TUBE PUN-H-6X1-BL | 3-57, 3-59, 5-55 |
| 01W854 | 315400-0010 | TUBE PUN-H-12X2-BL | 3-57, 3-59 |
| 01W855 | 315400-0010 | TUBE PUN-H-12X2-BL | 3-57, 3-59 |
| 01W856 | 315400-0010 | TUBE PUN-H-12X2-BL | 3-57, 3-59 |
| 01W857 | 315400-0004 | TUBE PUN-H-8X1,25-BL | 3-57, 3-59 |
| 01W858 | 315400-0001 | TUBE PUN-H-6X1-BL | 3-91 |
| 01W858 | 315400-0010 | TUBE PUN-H-12X2-BL | 3-57, 3-59 |
| 01W859 | 315400-0001 | TUBE PUN-H-6X1-BL | 3-57, 3-59 |
| 01W860 | 315400-0013 | TUBE PUN-H-16-2,5-BL | 3-57, 3-59, 3-67 |
| 01W861 | 315400-0004 | TUBE PUN-H-8X1,25-BL | 3-57, 3-59 |
| 01W862 | 315400-0010 | TUBE PUN-H-12X2-BL | 3-57, 3-59, 5-55 |
| 01W863 | 315400-0010 | TUBE PUN-H-12X2-BL | 3-57, 3-59 |
| 01W864 | 315400-0010 | TUBE PUN-H-12X2-BL | 3-57, 3-59 |
| 01W865 | 315400-0010 | TUBE PUN-H-12X2-BL | 3-57, 3-59 |
| 01W867 | 315400-0016 | TUBE PUN-H-4X0,75-BL | 3-57, 3-59 |
| 01W868 | 315400-0001 | TUBE PUN-H-6X1-BL | 3-57, 3-59 |
| 01W870 | 315400-0016 | TUBE PUN-H-4X0,75-BL | 5-55 |
| 01W875 | 315400-0004 | TUBE PUN-H-8X1,25-BL | 3-57, 3-59 |
| 01W901 | 351401-0050 | ACTU/SENS CABLE RSMVN 3-PRKMV 3-06/5,0M | 3-71 |
| 01W902 | 351401-0050 | ACTU/SENS CABLE RSMVN 3-PRKMV 3-06/5,0M | 3-71 |
| 01W951 | 90166-0132 | TUBE 6 MM PA,TRANSP. | 3-71, 3-73, 3-75, 3-77 |
| 01W952 | 90166-0108 | TUBE 6 MM PA TRANSP. | 3-71 |
| 01W953 | 90166-0108 | TUBE 6 MM PA TRANSP. | 3-71 |
| 01W954 | 315400-0001 | TUBE PUN-H-6X1-BL | 3-57, 3-59, 3-71 |
| 01W955 | 90166-0108 | TUBE 6 MM PA TRANSP. | 3-71, 3-73, 3-75, 3-77 |
| 01W956 | 90166-0108 | TUBE 6 MM PA TRANSP. | 3-71, 3-73, 3-75, 3-77 |

| Pos | Part No | Description | Page No |
|---|---|---|---|
| **W** | | | |
| 01W956 | 315400-0001 | TUBE PUN-H-6X1-BL | 3-57, 3-59 |
| 01W958 | 90166-0108 | TUBE 6 MM PA TRANSP. | 3-73, 3-75, 3-77 |
| 01W960 | 90166-0108 | TUBE 6 MM PA TRANSP. | 3-73, 3-75, 3-77 |
| 01W961 | 90166-0108 | TUBE 6 MM PA TRANSP. | 3-73, 3-75, 3-77 |
| 01W962 | 90166-0132 | TUBE 6 MM PA,TRANSP. | 3-73, 3-75, 3-77 |
| 01W963 | 90166-0109 | TUBE 4 MM PA TRANSP. | 3-73, 3-75, 3-77 |
| 01W964 | 90166-0109 | TUBE 4 MM PA TRANSP. | 3-73, 3-75, 3-77 |
| 01W965 | 90166-0109 | TUBE 4 MM PA TRANSP. | 3-73, 3-75, 3-77 |
| 01W966 | 90166-0109 | TUBE 4 MM PA TRANSP. | 3-73, 3-75, 3-77 |
| 01W967 | 90166-0109 | TUBE 4 MM PA TRANSP. | 3-73, 3-75, 3-77 |
| 01W968 | 90166-0109 | TUBE 4 MM PA TRANSP. | 3-73, 3-75, 3-77 |
| 01W969 | 90166-0143 | TUBE 2,5 MM PA TRANSP. | 3-73, 3-75, 3-77 |
| 01W971 | 90166-0143 | TUBE 2,5 MM PA TRANSP. | 3-73, 3-75, 3-77 |
| 01W972 | 90166-0143 | TUBE 2,5 MM PA TRANSP. | 3-73, 3-75, 3-77 |
| 01W973 | 90166-0143 | TUBE 2,5 MM PA TRANSP. | 3-73, 3-75, 3-77 |
| 01W974 | 90166-0143 | TUBE 2,5 MM PA TRANSP. | 3-73, 3-75, 3-77 |
| 01W975 | 90166-0109 | TUBE 4 MM PA TRANSP. | 3-73, 3-75, 3-77 |
| 01W976 | 90166-0109 | TUBE 4 MM PA TRANSP. | 3-73, 3-75, 3-77 |
| 01W977 | 90166-0132 | TUBE 6 MM PA,TRANSP. | 3-73, 3-75, 3-77 |
| 01W978 | 90166-0109 | TUBE 4 MM PA TRANSP. | 3-73, 3-75, 3-77 |
| 01W979 | 90166-0109 | TUBE 4 MM PA TRANSP. | 3-73, 3-75, 3-77 |
| 01W980 | 90166-0143 | TUBE 2,5 MM PA TRANSP. | 3-73, 3-75, 3-77 |
| 01W981 | 90166-0143 | TUBE 2,5 MM PA TRANSP. | 3-73, 3-75, 3-77 |
| 01W982 | 90166-0143 | TUBE 2,5 MM PA TRANSP. | 3-73, 3-75, 3-77 |
| 01W983 | 90166-0143 | TUBE 2,5 MM PA TRANSP. | 3-73, 3-75, 3-77 |
| 01W984 | 90166-0109 | TUBE 4 MM PA TRANSP. | 3-73, 3-75, 3-77 |
| 01W990 | 90166-0143 | TUBE 2,5 MM PA TRANSP. | 3-73, 3-75, 3-77 |
| 01W991 | 90166-0143 | TUBE 2,5 MM PA TRANSP. | 3-73, 3-75, 3-77 |
| 01W992 | 90166-0143 | TUBE 2,5 MM PA TRANSP. | 3-73, 3-75, 3-77 |
| 01W993 | 90166-0143 | TUBE 2,5 MM PA TRANSP. | 3-73, 3-75, 3-77 |
| 01W994 | 90166-0143 | TUBE 2,5 MM PA TRANSP. | 3-73, 3-75, 3-77 |
| 01W995 | 90166-0143 | TUBE 2,5 MM PA TRANSP. | 3-73, 3-75, 3-77 |
| 01W996 | 90166-0143 | TUBE 2,5 MM PA TRANSP. | 3-73, 3-75, 3-77 |
| 01W997 | 90166-0143 | TUBE 2,5 MM PA TRANSP. | 3-73, 3-75, 3-77 |
| 01W998 | 90166-0109 | TUBE 4 MM PA TRANSP. | 3-73, 3-75, 3-77 |
| 09W103 | 351150-0405 | CABLE OLFLEX 5X0,75 MM2 LIGHT/GREY | 3-87 |
| 09W201 | 90220-0165 | SCR. CABLE 5X0,34MM2 | 3-87 |
| 09W202 | 90220-0165 | SCR. CABLE 5X0,34MM2 | 3-87 |
| 09W203 | 90459-4252 | CABLE M12-C101, 20-056-10 | 3-83, 3-85 |
| 09W204 | 90459-4252 | CABLE M12-C101, 20-056-10 | 3-83, 3-85 |
| 09W214 | 90459-4876 | FOCUS JUMPER CABLE M12 5P 3M, 20-056-21 | 3-83, 3-85 |
| 09W216 | 90459-4876 | FOCUS JUMPER CABLE M12 5P 3M, 20-056-21 | 3-83, 3-85 |
| 09W230 | 90459-4876 | FOCUS JUMPER CABLE M12 5P 3M, 20-056-21 | 3-83, 3-85 |
| 09W232 | 90459-4876 | FOCUS JUMPER CABLE M12 5P 3M, 20-056-21 | 3-83, 3-85 |
| 09W241 | 351309-0100 | ACTUATOR/SENSOR CABLE PRKT 4-07/10M | 3-83, 3-85 |
| 09W242 | 351309-0100 | ACTUATOR/SENSOR CABLE PRKT 4-07/10M | 3-83, 3-85 |
| 09W316 | 90459-4872 | FOCUS JUMPER CABLE M12 8P 3M, 20-056-51 | 3-83, 3-85 |
| 20W000 | 90220-0104 | SCR. CABLE 4X1,5MM2 | 3-87 |
| 20W003 | 90459-6586 | ACT/SENS.Y-CABLE, ASBN 2-PRKMV 4-07/0,6M | 1-9 |
| 20W030 | 351309-0100 | ACTUATOR/SENSOR CABLE PRKT 4-07/10M | 1-9 |
| 20W050 | 315400-0001 | TUBE PUN-H-6X1-BL | 3-57, 3-59 |
| 20W051 | 315400-0001 | TUBE PUN-H-6X1-BL | 1-13, 3-57, 3-59 |
| 20W052 | 315400-0001 | TUBE PUN-H-6X1-BL | 3-57, 3-59 |
| 20W053 | 315400-0001 | TUBE PUN-H-6X1-BL | 3-57, 3-59 |
| 20W351 | 315400-0004 | TUBE PUN-H-8X1,25-BL | 3-57, 3-59 |
| 20W354 | 315400-0004 | TUBE PUN-H-8X1,25-BL | 3-57, 3-59 |
| 20W355 | 315400-0004 | TUBE PUN-H-8X1,25-BL | 3-55, 3-57, 3-59 |
| 20W356 | 315400-0001 | TUBE PUN-H-6X1-BL | 3-57, 3-59 |
| 21W000 | 351405-0050 | SENS. CABLE RSMVN 3-PRKT 4-3-06/5,0M | 1-49 |
| 21W051 | 315400-0004 | TUBE PUN-H-8X1,25-BL | 3-57, 3-59 |
| 21W054 | 315400-0001 | TUBE PUN-H-6X1-BL | 3-57, 3-59 |
| 21W055 | 315400-0001 | TUBE PUN-H-6X1-BL | 3-57, 3-59 |
| 21W100 | 90600-3293 | MOTOR POWER CABLE 2090-XXNPMF-16S09 | 3-87 |
| 21W101 | 90600-3294 | MOTOR FEEDBACK CABLE 2090-XXNFMF-S09/C | 3-87 |
| 21W200 | 90600-3293 | MOTOR POWER CABLE 2090-XXNPMF-16S09 | 3-87 |
| 21W201 | 90600-3294 | MOTOR FEEDBACK CABLE 2090-XXNFMF-S09/C | 3-87 |
| 21W300 | 90459-6586 | ACT/SENS.Y-CABLE, ASBN 2-PRKMV 4-07/0,6M | 8-25, 8-27 |
| 21W300 | 351411-0006 | ACTU/SENS. CABLE PRST 4-PRKT 4-07/0,6M | 8-25, 8-27 |
| 21W300 | 351411-0010 | ACTU/SENS. CABLE PRST 4-PRKT 4-07/1,0M | 8-25, 8-27 |
| 21W302 | 90459-6586 | ACT/SENS.Y-CABLE, ASBN 2-PRKMV 4-07/0,6M | 8-25, 8-27 |
| 21W304 | 90459-6586 | ACT/SENS.Y-CABLE, ASBN 2-PRKMV 4-07/0,6M | 8-25, 8-27 |
| 21W310 | 90459-1663 | CONNECTOR, 405204 RSC4/7 | 8-25, 8-27 |
| 21W312 | 90459-6586 | ACT/SENS.Y-CABLE, ASBN 2-PRKMV 4-07/0,6M | 8-25, 8-27 |
| 21W361 | 315400-0004 | TUBE PUN-H-8X1,25-BL | 8-37 |
| 21W362 | 315400-0016 | TUBE PUN-H-4X0,75-BL | 8-23, 8-37 |
| 21W364 | 315400-0016 | TUBE PUN-H-4X0,75-BL | 8-23, 8-37 |
| 21W365 | 315400-0016 | TUBE PUN-H-4X0,75-BL | 8-37 |
| 21W400 | 90220-0104 | SCR. CABLE 4X1,5MM2 | 3-87 |
| 21W402 | 90459-6586 | ACT/SENS.Y-CABLE, ASBN 2-PRKMV 4-07/0,6M | 3-21, 3-23 |
| 21W404 | 90459-6586 | ACT/SENS.Y-CABLE, ASBN 2-PRKMV 4-07/0,6M | 3-21, 3-23 |
| 21W406 | 90459-6586 | ACT/SENS.Y-CABLE, ASBN 2-PRKMV 4-07/0,6M | 3-21, 3-23 |
| 21W408 | 90459-6586 | ACT/SENS.Y-CABLE, ASBN 2-PRKMV 4-07/0,6M | 3-21, 3-23 |

| Pos | Part No | Description | Page No |
|---|---|---|---|
| **W** | | | |
| 21W412 | 351309-0050 | 'ACTUATOR/SENSOR CABLE PRKT 4-07/5M | 3-21, 3-23 |
| 21W414 | 351309-0050 | 'ACTUATOR/SENSOR CABLE PRKT 4-07/5M | 3-21, 3-23 |
| 21W416 | 351309-0050 | 'ACTUATOR/SENSOR CABLE PRKT 4-07/5M | 3-21, 3-23 |
| 21W418 | 351309-0100 | ACTUATOR/SENSOR CABLE PRKT 4-07/10M | 3-21, 3-23 |
| 21W422 | 351405-0006 | ACT/SENS. CABLE RSMVN 3-PRKT 4-3-06/0,6M | 3-21, 3-23 |
| 21W424 | 90459-6586 | ACT/SENS.Y-CABLE, ASBN 2-PRKMV 4-07/0,6M | 3-21, 3-23 |
| 21W500 | 90459-1663 | CONNECTOR, 405204 RSC4/7 | 8-25, 8-27 |
| 21W550 | 315400-0004 | TUBE PUN-H-8X1,25-BL | 8-39 |
| 21W551 | 315400-0004 | TUBE PUN-H-8X1,25-BL | 8-39 |
| 21W556 | 315400-0016 | TUBE PUN-H-4X0,75-BL | 8-39 |
| 21W602 | 90459-6586 | ACT/SENS.Y-CABLE, ASBN 2-PRKMV 4-07/0,6M | 3-21, 3-23 |
| 21W604 | 90459-6586 | ACT/SENS.Y-CABLE, ASBN 2-PRKMV 4-07/0,6M | 10-17 |
| 21W605 | 351405-0050 | SENS. CABLE RSMVN 3-PRKT 4-3-06/5,0M | 10-13 |
| 21W612 | 351405-0050 | SENS. CABLE RSMVN 3-PRKT 4-3-06/5,0M | 3-21, 3-23 |
| 21W614 | 351405-0050 | SENS. CABLE RSMVN 3-PRKT 4-3-06/5,0M | 10-17 |
| 21W800 | 351150-0412 | CABLE OLFLEX 3X1,5 MM2 LIGHT/GREY | 3-87 |
| 21W801 | 351120-0266 | CABLE ÖLFLEX HEAT 180 SIHF 4X4 | 3-87 |
| 30W000 | 90600-3293 | MOTOR POWER CABLE 2090-XXNPMF-16S09 | 3-87 |
| 30W001 | 90600-3294 | MOTOR FEEDBACK CABLE 2090-XXNFMF-S09/C | 3-87 |
| 30W102 | 351411-0010 | ACTU/SENS. CABLE PRST 4-PRKT 4-07/1,0M | 4-19 |
| 30W300 | 90220-0104 | SCR. CABLE 4X1,5MM2 | 3-87 |
| 30W303 | 90600-1984 | ACTUATOR/SENSOR CABLE PRKT 5/56-10M | 3-87 |
| 30W353 | 315400-0004 | TUBE PUN-H-8X1,25-BL | 5-55 |
| 30W400 | 90600-3293 | MOTOR POWER CABLE 2090-XXNPMF-16S09 | 3-87 |
| 30W401 | 90600-3294 | MOTOR FEEDBACK CABLE 2090-XXNFMF-S09/C | 3-87 |
| 30W659 | 315400-0001 | TUBE PUN-H-6X1-BL | 5-55 |
| 40W150 | 315400-0004 | TUBE PUN-H-8X1,25-BL | 5-53 |
| 40W150 | 315400-0010 | TUBE PUN-H-12X2-BL | 3-57, 3-59 |
| 40W151 | 315400-0016 | TUBE PUN-H-4X0,75-BL | 3-57, 3-59 |
| 40W152 | 315400-0004 | TUBE PUN-H-8X1,25-BL | 3-57, 3-59 |
| 40W254 | 315400-0004 | TUBE PUN-H-8X1,25-BL | 3-57, 3-59 |
| 60W000 | 351411-0015 | ACTU/SENS. CABLE PRST 4-PRKT 4-07/1,5M | 5-15 |
| 60W001 | 351411-0015 | ACTU/SENS. CABLE PRST 4-PRKT 4-07/1,5M | 5-15 |
| 60W003 | 351405-0050 | SENS. CABLE RSMVN 3-PRKT 4-3-06/5,0M | 5-31 |
| 60W010 | 315400-0001 | TUBE PUN-H-6X1-BL | 5-55 |
| 60W010 | 351150-0413 | CABLE OLFLEX 4GX1,5 MM2 LIGHT/GREY | 5-21 |
| 60W011 | 351150-0413 | CABLE OLFLEX 4GX1,5 MM2 LIGHT/GREY | 3-87 |
| 60W050 | 315400-0010 | TUBE PUN-H-12X2-BL | 5-55, 5-57 |
| 60W051 | 315400-0001 | TUBE PUN-H-6X1-BL | 5-55 |
| 60W052 | 315400-0001 | TUBE PUN-H-6X1-BL | 5-55 |
| 60W054 | 315400-0001 | TUBE PUN-H-6X1-BL | 5-55 |
| 60W101 | 351407-0015 | ACTU/SENS. CABLE PRST 3-PRKMV 3-06/1,5M | 5-49 |
| 60W103 | 351407-0020 | ACTU/SENS. CABLE PRST 3-PRKMV 3-06/2,0M | 5-49 |
| 60W110 | 90600-3293 | MOTOR POWER CABLE 2090-XXNPMF-16S09 | 3-87 |
| 60W111 | 90600-3294 | MOTOR FEEDBACK CABLE 2090-XXNFMF-S09/C | 3-87 |
| 60W152 | 315400-0001 | TUBE PUN-H-6X1-BL | 5-55 |
| 60W154 | 315400-0001 | TUBE PUN-H-6X1-BL | 5-55 |
| 60W210 | 90600-3293 | MOTOR POWER CABLE 2090-XXNPMF-16S09 | 3-87 |
| 60W211 | 90600-3294 | MOTOR FEEDBACK CABLE 2090-XXNFMF-S09/C | 3-87 |
| 60W252 | 315400-0001 | TUBE PUN-H-6X1-BL | 4-29, 5-55 |
| 60W254 | 315400-0001 | TUBE PUN-H-6X1-BL | 4-29, 5-55 |
| 60W300 | 351408-0020 | ACTU/SENS. CABLE PRST 3-PRKMWV 3-06/2,0M | 5-7 |
| 60W301 | 351411-0015 | ACTU/SENS. CABLE PRST 4-PRKT 4-07/1,5M | 5-7 |
| 60W310 | 90600-3293 | MOTOR POWER CABLE 2090-XXNPMF-16S09 | 3-87 |
| 60W311 | 90600-3294 | MOTOR FEEDBACK CABLE 2090-XXNFMF-S09/C | 3-87 |
| 60W402 | 351401-0020 | ACTU/SENS CABLE RSMVN 3-PRKMV 3-06/2,0M | 6-7 |
| 60W403 | 351401-0020 | ACTU/SENS CABLE RSMVN 3-PRKMV 3-06/2,0M | 6-7 |
| 60W404 | 351401-0020 | ACTU/SENS CABLE RSMVN 3-PRKMV 3-06/2,0M | 6-21 |
| 60W405 | 351401-0020 | ACTU/SENS CABLE RSMVN 3-PRKMV 3-06/2,0M | 6-21 |
| 60W406 | 351403-0020 | ACTU/SENS. CABLE RSMVN 3-PRKMV 4-06/2,0M | 6-11, 6-13 |
| 60W407 | 351403-0020 | ACTU/SENS. CABLE RSMVN 3-PRKMV 4-06/2,0M | 6-11, 6-13 |
| 60W408 | 351403-0020 | ACTU/SENS. CABLE RSMVN 3-PRKMV 4-06/2,0M | 6-7 |
| 60W409 | 351403-0020 | ACTU/SENS. CABLE RSMVN 3-PRKMV 4-06/2,0M | 6-7 |
| 60W410 | 351401-0020 | ACTU/SENS CABLE RSMVN 3-PRKMV 3-06/2,0M | 6-7 |
| 60W411 | 351401-0020 | ACTU/SENS CABLE RSMVN 3-PRKMV 3-06/2,0M | 6-7 |
| 60W420 | 351150-0413 | CABLE OLFLEX 4GX1,5 MM2 LIGHT/GREY | 6-9 |
| 60W421 | 351150-0413 | CABLE OLFLEX 4GX1,5 MM2 LIGHT/GREY | 3-87 |
| 60W423 | 351402-0050 | ACTU/SENS CABLE RSMVN 3-PRKMWV 3-06/5,0M | 6-17 |
| 60W424 | 351402-0050 | ACTU/SENS CABLE RSMVN 3-PRKMWV 3-06/5,0M | 6-17 |
| 60W425 | 351402-0050 | ACTU/SENS CABLE RSMVN 3-PRKMWV 3-06/5,0M | 6-7 |
| 60W426 | 351402-0050 | ACTU/SENS CABLE RSMVN 3-PRKMWV 3-06/5,0M | 6-7 |
| 60W452 | 315400-0004 | TUBE PUN-H-8X1,25-BL | 5-53 |
| 60W454 | 315400-0004 | TUBE PUN-H-8X1,25-BL | 5-53 |
| 60W455 | 315400-0004 | TUBE PUN-H-8X1,25-BL | 5-53, 6-7 |
| 60W456 | 315400-0004 | TUBE PUN-H-8X1,25-BL | 5-53, 6-7 |
| 60W458 | 315400-0001 | TUBE PUN-H-6X1-BL | 5-53 |
| 60W462 | 315400-0001 | TUBE PUN-H-6X1-BL | 5-53 |
| 60W463 | 315400-0001 | TUBE PUN-H-6X1-BL | 5-53, 6-7 |
| 60W464 | 315400-0001 | TUBE PUN-H-6X1-BL | 6-7 |
| 60W465 | 315400-0001 | TUBE PUN-H-6X1-BL | 6-7 |
| 60W600 | 351401-0050 | ACTU/SENS CABLE RSMVN 3-PRKMV 3-06/5,0M | 6-17 |
| 60W601 | 351401-0050 | ACTU/SENS CABLE RSMVN 3-PRKMV 3-06/5,0M | 6-17 |

| Pos | Part No | Description | Page No |
|---|---|---|---|
| **W** | | | |
| 60W602 | 315400-0001 | TUBE PUN-H-6X1-BL | 5-55 |
| 60W602 | 351401-0050 | ACTU/SENS CABLE RSMVN 3-PRKMV 3-06/5,0M | 6-17 |
| 60W603 | 351401-0020 | ACTU/SENS CABLE RSMVN 3-PRKMV 3-06/2,0M | 6-17 |
| 60W604 | 351405-0050 | SENS. CABLE RSMVN 3-PRKT 4-3-06/5,0M | 6-17 |
| 60W605 | 351405-0050 | SENS. CABLE RSMVN 3-PRKT 4-3-06/5,0M | 6-19 |
| 60W606 | 351401-0050 | ACTU/SENS CABLE RSMVN 3-PRKMV 3-06/5,0M | 6-17 |
| 60W610 | 351150-0413 | CABLE OLFLEX 4GX1,5 MM2 LIGHT/GREY | 6-23 |
| 60W611 | 351150-0405 | CABLE OLFLEX 5X0,75 MM2 LIGHT/GREY | 3-87 |
| 60W612 | 351150-0406 | CABLE OLFLEX 7X0,75 MM2 LIGHT/GREY | 5-57 |
| 60W652 | 315400-0004 | TUBE PUN-H-8X1,25-BL | 5-53, 6-17 |
| 60W655 | 315400-0004 | TUBE PUN-H-8X1,25-BL | 5-53, 6-17 |
| 60W656 | 315400-0004 | TUBE PUN-H-8X1,25-BL | 5-53 |
| 60W657 | 315400-0001 | TUBE PUN-H-6X1-BL | 5-53, 6-17 |
| 60W658 | 315400-0001 | TUBE PUN-H-6X1-BL | 5-55, 6-17 |
| 60W659 | 315400-0001 | TUBE PUN-H-6X1-BL | 6-17 |
| 60W663 | 315400-0010 | TUBE PUN-H-12X2-BL | 5-57 |
| 60W665 | 315400-0010 | TUBE PUN-H-12X2-BL | 5-57 |
| 60W666 | 315400-0001 | TUBE PUN-H-6X1-BL | 5-53, 5-55 |
| 60W667 | 315400-0010 | TUBE PUN-H-12X2-BL | 5-53, 5-57 |
| 80W051 | 315400-0009 | TUBE PUN-H-10X1,5-SW | 3-51 |
| 81W200 | 90459-1621 | CABLE, ETHERNET RJ 45 CONNECT. 1 M | 7-63 |
| 81W201 | 90459-6395 | CABLE, ETHERNET RJ 45 STRAIGHT.10M | 7-63 |
| 81W400 | 90459-2530 | DEVICENET CABLE THIN | 7-63 |
| 81W401 | 90459-2530 | DEVICENET CABLE THIN | 7-63 |
| 81W402 | 90459-2530 | DEVICENET CABLE THIN | 7-63 |
| 81W403 | 90459-2530 | DEVICENET CABLE THIN | 7-63 |
| 81W404 | 351415-0100 | DEVICENET CONN. CABLE, 0935 361 105/10M | 3-7, 3-9 |
| 81W405 | 90459-2530 | DEVICENET CABLE THIN | 7-63 |
| 81W406 | 90459-2530 | DEVICENET CABLE THIN | 7-63 |
| 81W407 | 90459-2530 | DEVICENET CABLE THIN | 7-63 |
| 81W420 | 351309-0100 | ACTUATOR/SENSOR CABLE PRKT 4-07/10M | 3-7, 3-9 |
| 81W421 | 351415-0100 | DEVICENET CONN. CABLE, 0935 361 105/10M | 3-9 |
| 81W700 | 90220-0183 | SCR. CABLE 2X0,34MM2 | 7-63 |
| 81W701 | 90220-0183 | SCR. CABLE 2X0,34MM2 | 7-63 |
| 81W702 | 90220-0183 | SCR. CABLE 2X0,34MM2 | 7-63 |
| **X** | | | |
| 01X002 | 2839223-0100 | PLINTH | 7-9 |
| 01X003 | 2839224-0100 | PLINTH | 7-9 |
| 01X004 | 2840918-0100 | PLINTH | 7-57 |
| 01X006 | 2841403-0200 | PLINTH | 7-57 |
| 01X007 | 90459-0959 | DISTRIBUTOR BLOCK 1492-PD3163 | 7-9 |
| 01X008 | 3046886-0100 | DISTRIBUTION TERMINAL | 7-9 |
| 01X600 | 2890591-0100 | PLINTH | 7-45 |
| 01X700 | 90001-0033 | WALL SOCKET, E1834666 | 7-9 |
| 21X101 | 90459-2551 | CONNECTOR, MOTOR FEEDBACK 15 PIN MALE | 3-87 |
| 21X201 | 90459-2551 | CONNECTOR, MOTOR FEEDBACK 15 PIN MALE | 3-87 |
| 21X320 | 90459-0839 | DISTRIBUTION FRAME, ASBV 8 5-135/10M | 8-25, 8-27 |
| 30X001 | 90459-2551 | CONNECTOR, MOTOR FEEDBACK 15 PIN MALE | 3-87 |
| 30X120 | 90459-0839 | DISTRIBUTION FRAME, ASBV 8 5-135/10M | 4-37 |
| 30X130 | 90459-0839 | DISTRIBUTION FRAME, ASBV 8 5-135/10M | 4-37 |
| 30X401 | 90459-2551 | CONNECTOR, MOTOR FEEDBACK 15 PIN MALE | 3-87 |
| 40X400 | 90110-0053 | FEMALE INSERT HAN 6 E 09 33 006 2701 | 3-7, 3-9 |
| 50X000 | 90110-0053 | FEMALE INSERT HAN 6 E 09 33 006 2701 | 3-9 |
| 50X001 | 90459-6820 | FEMALE INSERT HAN 4 A, 09 20 004 2711 | 3-7, 3-9 |
| 50X110 | 90110-0053 | FEMALE INSERT HAN 6 E 09 33 006 2701 | 3-7, 3-9 |
| 60X010 | 90110-0052 | MALE INSERT HAN 6E 09 33 006 2601 | 5-21 |
| 60X010 | 90459-1458 | HOOD HAN 6 E 19 30 006 1540 | 5-21 |
| 60X010 | 90459-3604 | FLOW CONTROL VALVE, GR-QS-6 | 5-33 |
| 60X050 | 90458-1212 | LEFT ENDPLATE INCL. 10M CABLE | 5-55 |
| 60X051 | 90458-1214 | RIGHT ENDPL EXT. PILOT AIR,CDVI5.0-EPR-S | 5-55 |
| 60X100 | 90459-1663 | CONNECTOR, 405204 RSC4/7 | 5-37 |
| 60X104 | 90459-1663 | CONNECTOR, 405204 RSC4/7 | 5-37 |
| 60X111 | 90459-2551 | CONNECTOR, MOTOR FEEDBACK 15 PIN MALE | 3-87 |
| 60X420 | 90110-0052 | MALE INSERT HAN 6E 09 33 006 2601 | 6-9 |
| 60X600 | 90458-1212 | LEFT ENDPLATE INCL. 10M CABLE | 5-53 |
| 60X610 | 90110-0052 | MALE INSERT HAN 6E 09 33 006 2601 | 6-23 |
| 60X612 | 90601-1168 | SOCKET CONNECTOR, NECA-S1G9-P9-MP3 | 5-57 |
| 60X658 | 90458-1214 | RIGHT ENDPL EXT. PILOT AIR,CDVI5.0-EPR-S | 5-53 |
| 81X401 | 90459-2519 | OPEN STYLE TAP | 7-45 |

Tetra Pak

*SPC binder labels. 40 mm Full width* *Note! This page is generated* **automatically.**
*using the* **variable definitions** *made in the* **front page** *file!!*

# CAP 30/Flex ReCap
**662950-0200**
Issue: 2010-07 Doc No: SPC-3047194-0104


# CAP 30/Flex ReCap
**662950-0200**
Issue: 2010-07 Doc No: SPC-3047194-0104

# CAP 30/Flex ReCap
**662950-0200**
Issue: 2010-07 Doc No: SPC-3047194-0104

# CAP 30/Flex ReCap
**662950-0200**
Issue: 2010-07 Doc No: SPC-3047194-0104

# CAP 30/Flex ReCap
**662950-0200**
Issue: 2010-07 Doc No: SPC-3047194-0104

# CAP 30/Flex ReCap
**662950-0200**
Issue: 2010-07 Doc No: SPC-3047194-0104

# CAP 30/Flex ReCap
**662950-0200**
Issue: 2010-07 Doc No: SPC-3047194-0104

# CAP 30/Flex ReCap
**662950-0200**
Issue: 2010-07 Doc No: SPC-3047194-0104

# CAP 30/Flex ReCap
**662950-0200**
Issue: 2010-07 Doc No: SPC-3047194-0104

# CAP 30/Flex ReCap
**662950-0200**
Issue: 2010-07 Doc No: SPC-3047194-0104

# CAP 30/Flex ReCap
**662950-0200**
Issue: 2010-07 Doc No: SPC-3047194-0104

*SPC binder labels. 30 mm Half width* *Note! This page is generated* **automatically.**
*using the* **variable definitions** *made in the* **front page** *file!!*

# CAP 30/Flex ReCap
**662950-0200**
Issue: 2010-07 Doc No: SPC-3047194-0104


# CAP 30/Flex ReCap
**662950-0200**
Issue: 2010-07 Doc No: SPC-3047194-0104

# CAP 30/Flex ReCap
**662950-0200**
Issue: 2010-07 Doc No: SPC-3047194-0104

# CAP 30/Flex ReCap
**662950-0200**
Issue: 2010-07 Doc No: SPC-3047194-0104

# CAP 30/Flex ReCap
**662950-0200**
Issue: 2010-07 Doc No: SPC-3047194-0104

# CAP 30/Flex ReCap
**662950-0200**
Issue: 2010-07 Doc No: SPC-3047194-0104

# CAP 30/Flex ReCap
**662950-0200**
Issue: 2010-07 Doc No: SPC-3047194-0104

# CAP 30/Flex ReCap
**662950-0200**
Issue: 2010-07 Doc No: SPC-3047194-0104

# CAP 30/Flex ReCap
**662950-0200**
Issue: 2010-07 Doc No: SPC-3047194-0104

# CAP 30/Flex ReCap
**662950-0200**
Issue: 2010-07 Doc No: SPC-3047194-0104

# CAP 30/Flex ReCap
**662950-0200**
Issue: 2010-07 Doc No: SPC-3047194-0104

# CAP 30/Flex ReCap
**662950-0200**
Issue: 2010-07 Doc No: SPC-3047194-0104

# CAP 30/Flex ReCap
**662950-0200**
Issue: 2010-07 Doc No: SPC-3047194-0104