SPC

Spare Parts Catalogue

CAP 30/Flex ReCap

662950-0200

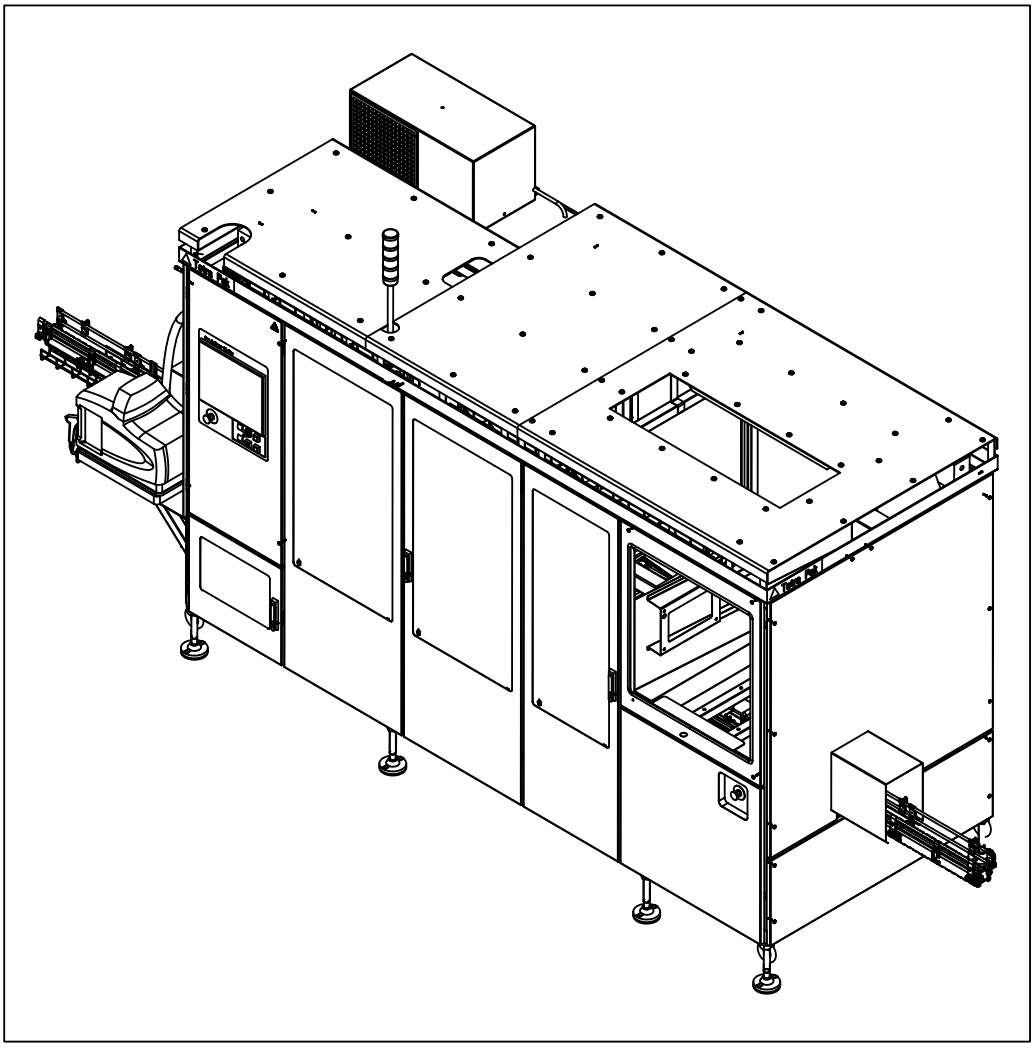

Tetra Pak

Doc. No: SPC-3047194-0108

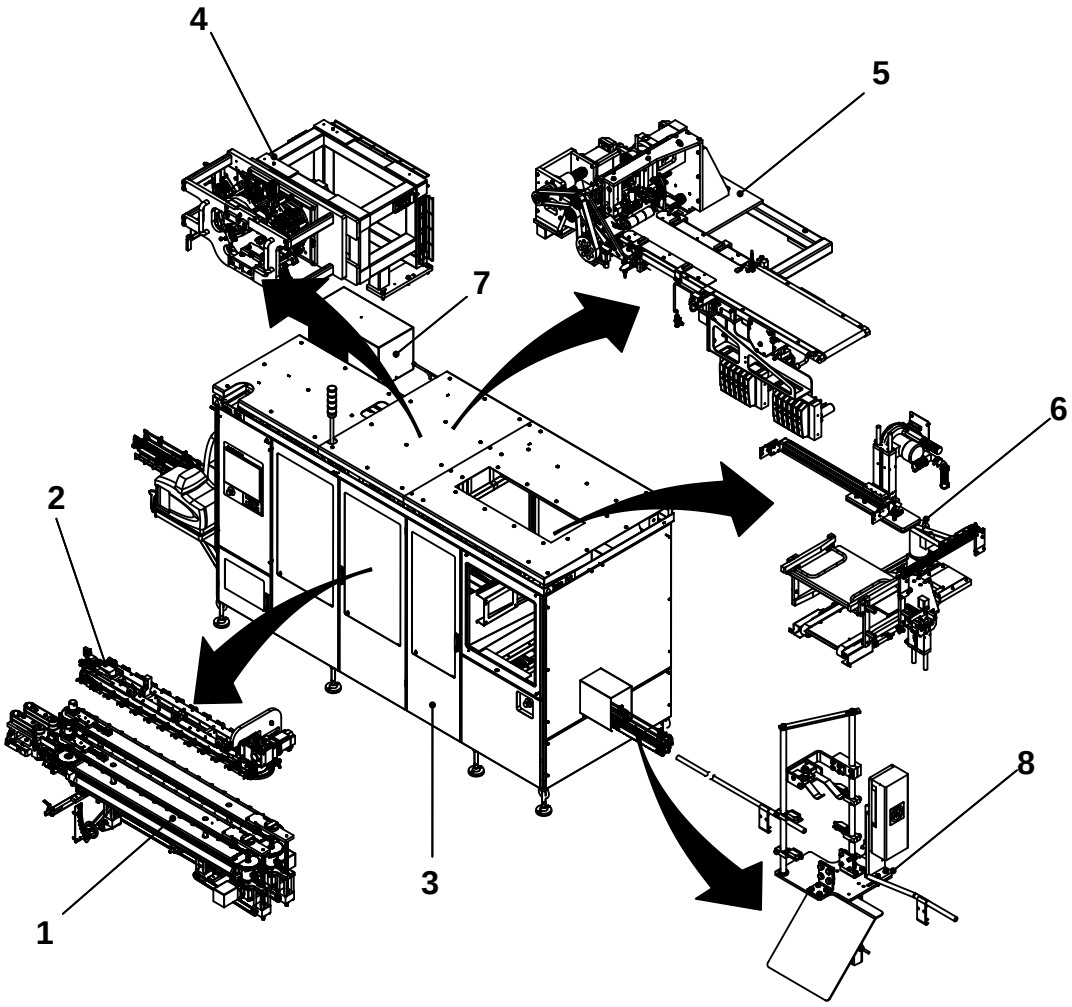

The position numbers in the illustration correspond with the chapter numbers listed on the next page.

Copyright © 2011 Tetra Pak Group

All rights reserved. No part of this document may be reproduced or copied in any form or by any means without written permission from Tetra Pak Packaging Solutions .

Tetra Pak and all Tetra Pak products are trademarks belonging to the Tetra Pak Group.

The content of this manual is in accordance with the design and construction of the machine or equipment at the time of publishing. Tetra Pak reserves the right to introduce design modifications without prior notice.

This document was produced by:

Tetra Pak Packaging Solutions
Via Delfini 1
41123 Modena
ITALY

Additional copies can be ordered from Tetra Pak. When ordering additional copies, always provide the document number.

Doc. No. SPC-3047194-0108

Issue 2011-06

This document is valid for:

Series No/Machine No Sign.

SPC

Spare Parts Catalogue

CAP 30/Flex ReCap
662950-0200

Machine or equipment configurations that this catalogue is valid for are described on the next page.

i Introduction

1 Package Line

2 Push Down

3 Machine Body

4 Applicator Unit

5 ReCap Cutting & Feedi.

6 ReCap Magazine

7 Electrical Cabinet

8 Regular Accessories

9 Electric Equipment

10 Optional Equipment

ii Part Number Index

iii Ref. Des. Parts Index

Doc. No: SPC-3047194-0108

Issue 2011-06

Tetra Pak

Tetra Pak Packaging Solutions

Valid for:

Name	Drawing Specification and Development Step	Additional Information
CAP 30/Flex ReCap	662950-0200	Volume and Package Shape TBA 500 S ReCap 2 A3 TBA 1000 S ReCap 3 TBA 1000 B ReCap 3 TBA 1000 Sq ReCap 3 TBA 1500 S ReCap 3 TBA 1890 S ReCap 3 TBA 2000 S ReCap 3

Update Log for Doc. No. SPC-3047194-0108

This table shows all changes made to this catalogue, including installed rebuilding kits, added or removed pages.

Date	Installed Kit	Added Pages (Doc. No.)	Removed Pages	Signature

Date	Installed Kit	Added Pages (Doc. No.)	Removed Pages	Signature

i Introduction

en About the Introduction Chapter
This chapter contains basic information about this catalogue and related Tetra Pak equipment.

bg За уводната глава
Тази глава съдържа основна информация за този каталог и приложимото Tetra Pak оборудване.

cs O kapitole Úvod
Tato kapitola obsahuje základní informace o této příručce a souvisejícím zařízení Tetra Pak.

da Om indledningen
Kapitlet indeholder grundlæggende oplysninger om dette katalog og tilhørende Tetra Pak-udstyr.

de Über das Einleitungskapitel
Diese Kapitel enthält grundlegende Informationen über diesen Katalog und die zugehörige Tetra Pak-Ausrüstung

el Σχετικά με το Κεφάλαιο 'Εισαγωγή'
Αυτό το κεφάλαιο περιέχει βασικές πληροφορίες για τον παρόντα κατάλογο και τον σχετικό εξοπλισμό της Tetra Pak.

es Acerca del capítulo Introducción
Este capítulo contiene información básica sobre este catálogo y el equipo Tetra Pak relacionado.

et Sissejuhatava peatüki kohta
See peatükk sisaldab teavet käesoleva kataloogi ja sellega seonduva Tetra Paki seadme kohta.

fi Tietoja Johdanto-luvusta
Tässä luvussa on perustietoja tästä luettelosta ja Tetra Pak -laitteesta.

fr À propos du chapitre Introduction
Ce chapitre contient les informations de base à propos de ce catalogue et de l'équipement Tetra Pak concerné.

hu A Bevezetés fejezetről
Ez a fejezet alapvető információkat tartalmaz a katalógusról és a hozzá tartozó Tetra Pak berendezésről.

is Um inngangskaflann
Þessi kafli inniheldur grundvallarupplýsingar um þennan vörulista og tengdan Tetra Pak búnað.

it Informazioni sul capitolo Introduzione
Questo capitolo contiene informazioni generali sul presente catalogo e sulla relativa macchina Tetra Pak.

lt Apie įvadinį skyrių
Šiame skyriuje pateikta pagrindinė informacija apie šį katalogą ir su juo susijusią "Tetra Pak" įrangą.

lv Par Ievada nodaļu
Šī nodaļa ietver galveno informāciju par šo katalogu un saistītajām Tetra Pak iekārtām.

nl Over de inleiding
Dit hoofdstuk bevat basisinformatie omtrent deze catalogus en aanverwante Tetra Pak-installatie.

no Om kapitlet Introduksjon
Dette kapitlet inneholder grunnleggende informasjon om denne katalogen og relatert Tetra Pak-utstyr.

pl Informacje na temat rozdziału wprowadzającego
Rozdział wprowadzający zawiera podstawowe informacje dotyczące niniejszego katalogu i związanej z nim maszyny Tetra Pak.

pt Acerca do Capítulo de Introdução
Este capítulo contém informações básicas sobre este catálogo e os equipamentos relacionados da Tetra Pak.

ro Despre capitolul introductiv
Acest capitol conține informații de bază despre acest catalog și despre echipamentul Tetra Pak corelat.

sk O kapitole Úvod
Táto kapitola obsahuje základné informácie o tomto návode a informácie súvisiace so zariadením Tetra Pak.

sl O uvodnem poglavju
To poglavje vsebuje osnovne informacije o tem katalogu in opremi Tetra Pak.

sv Om inledningskapitlet
Det här kapitlet innehåller grundläggande information om katalogen och Tetra Pak-utrustningen.

Introduction

Illustrations . . . . . i - 5
English Text . . . . . i - 7

Увод

Илюстрации . . . . . i - 5
Текст на български език . . . . . i -11

Úvod

Obrázky . . . . . i -5
Český text . . . . . i - 15

Indledning

Illustrationer . . . . . i - 5
Dansk tekst . . . . . i - 19

Einleitung

Abbildungen . . . . . i - 5
Deutscher Text . . . . . i - 23

Εισαγωγή

Εικόνες . . . . . i - 5
Ελληνικό Κείμενο . . . . . i - 27

Introducción

Ilustraciones . . . . . i - 5
Texto en español . . . . . i - 31

Sissejuhatus

Joonised . . . . . i - 5
Eestikeelne tekst . . . . . i - 35

Johdanto

Kuvat . . . . . i - 5
Suomenkielinen teksti . . . . . i - 39

Introduction

Illustrations . . . . . i - 5
Texte français . . . . . i - 43

Bevezetés

Ábrák . . . . . i - 5
Magyar szöveg . . . . . i - 47

Inngangur

Skýringarmyndir . . . . . i - 5
Íslenskur texti . . . . . i - 51

Introduzione

Figure . . . . . i - 5
Testo in italiano . . . . . i - 55

Įvadas

Paveikslėliai . . . . . i - 5
Lietuviškas tekstas . . . . . i - 59

Ievads

Ilustrācijas . . . . . i - 5
Teksts latviešu valodā . . . . . i - 63

Inleiding

Afbeeldingen . . . . . i - 5
Nederlands tekst . . . . . i - 67

Introduksjon

Illustrasjoner . . . . . i - 5
Norsk tekst . . . . . i - 71

Wprowadzenie

Rysunki . . . . . i - 5
Tekst polski . . . . . i - 75

Introdução

Ilustrações . . . . . i - 5
Texto em português . . . . . i - 79

Introducere

Ilustrații . . . . . i - 5
Text în limba română . . . . . i - 83

Úvod

Ilustrácie . . . . . i – 5
Slovenský text . . . . . i - 87

Uvod

Slike . . . . . i - 5
Slovensko besedilo . . . . . i - 91

Inledning

Bilder . . . . . i - 5
Svensk text . . . . . i - 95

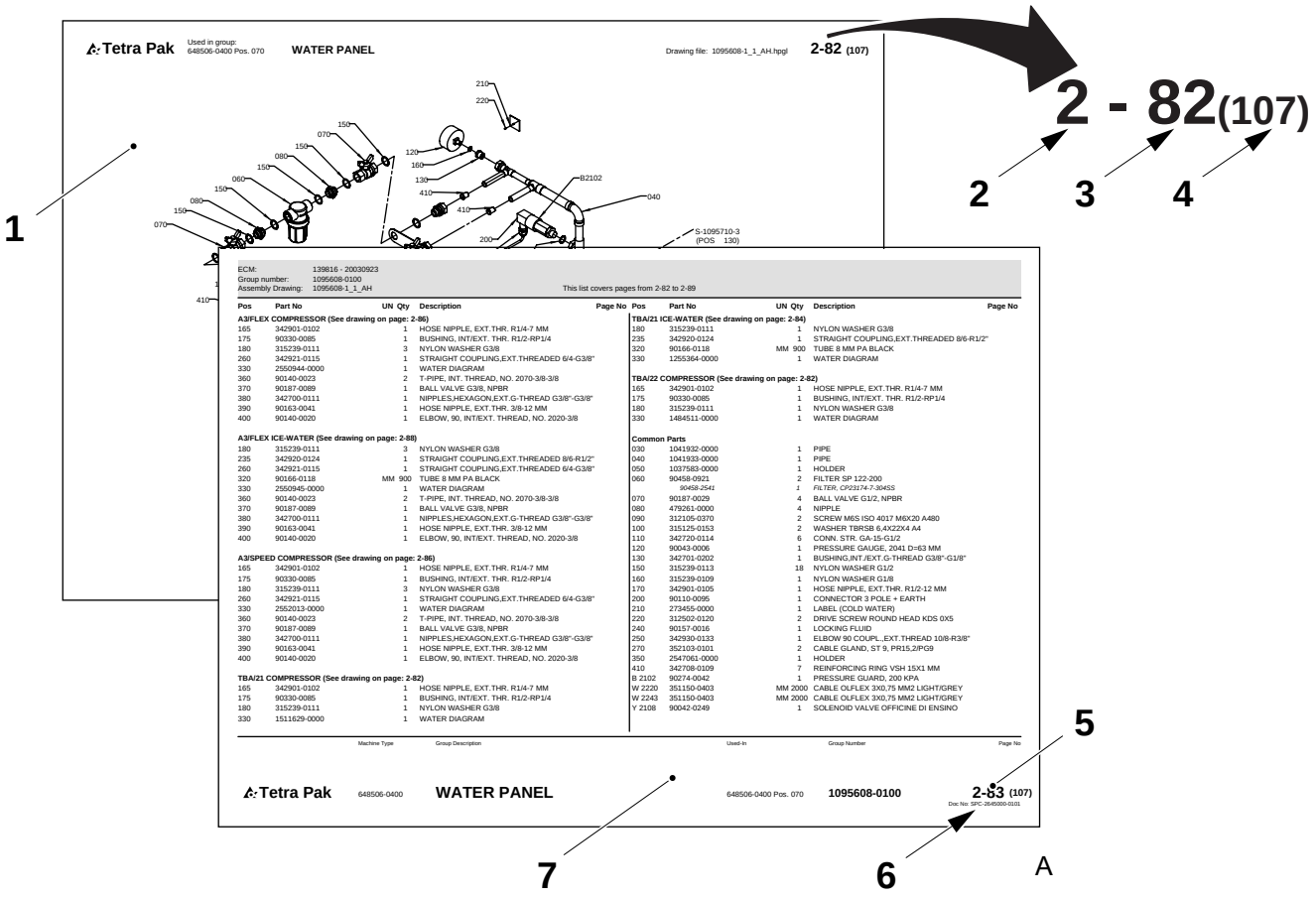
Tetra Pak
Used in group: 648506-0400 Pos. 070
WATER PANEL
Drawing file: 1095608-1_1_AH.hpgl
2-82 (107)
2 - 82(107)
1
2
3
4
5
6
7
A
ECM: 139816 - 20030923
Group number: 1095608-0100
Assembly Drawing: 1095608-1_1_AH
This list covers pages from 2-82 to 2-89
Tetra Pak
648506-0400
WATER PANEL
648506-0400 Pos. 070
1095608-0100
2-83 (107)

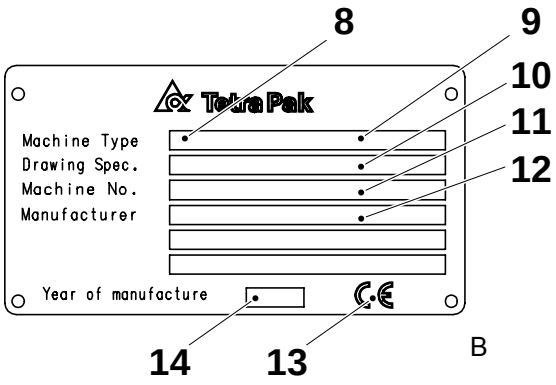
8
9
10
11
12
Tetra Pak
Machine Type
Drawing Spec.
Machine No.
Manufacturer
Year of manufacture
14
13
B

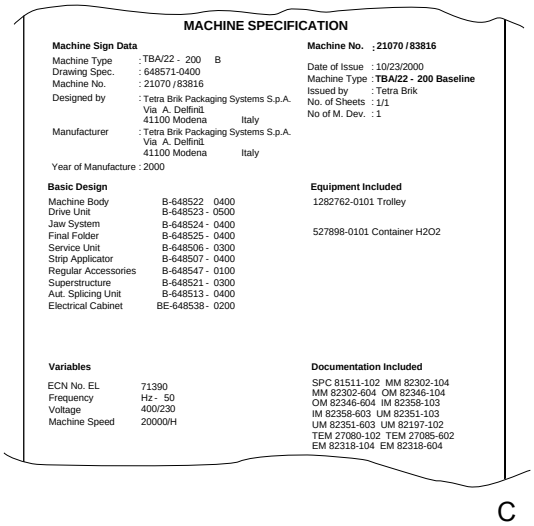
MACHINE SPECIFICATION
Machine Sign Data
Machine Type : TBA/22 - 200 B
Drawing Spec. : 648571-0400
Machine No. : 21070 / 83816
Designed by : Tetra Brik Packaging Systems S.p.A. Via A. Delfini1 41100 Modena Italy
Manufacturer : Tetra Brik Packaging Systems S.p.A. Via A. Delfini1 41100 Modena Italy
Year of Manufacture : 2000
Machine No. ; 21070 / 83816
Date of Issue : 10/23/2000
Machine Type : TBA/22 - 200 Baseline
Issued by : Tetra Brik
No. of Sheets : 1/1
No of M. Dev. : 1
Basic Design
Machine Body B-648522 0400
Drive Unit B-648523 - 0500
Jaw System B-648524 - 0400
Final Folder B-648525 - 0400
Service Unit B-648506 - 0300
Strip Applicator B-648507 - 0400
Regular Accessories B-648547 - 0100
Superstructure B-648521 - 0300
Aut. Splicing Unit B-648513 - 0400
Electrical Cabinet BE-648538 - 0200
Equipment Included
1282762-0101 Trolley
527898-0101 Container H2O2
Variables
ECN No. EL 71390
Frequency Hz - 50
Voltage 400/230
Machine Speed 20000/H
Documentation Included
SPC 81511-102 MM 82302-104
MM 82302-604 OM 82346-104
OM 82346-604 IM 82358-103
IM 82358-603 UM 82351-103
UM 82351-603 UM 82197-102
TEM 27080-102 TEM 27085-602
EM 82318-104 EM 82318-604
C

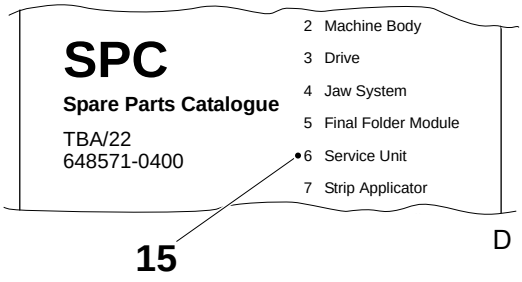
SPC
Spare Parts Catalogue
TBA/22
648571-0400
2 Machine Body
3 Drive
4 Jaw System
5 Final Folder Module
6 Service Unit
7 Strip Applicator
15
D

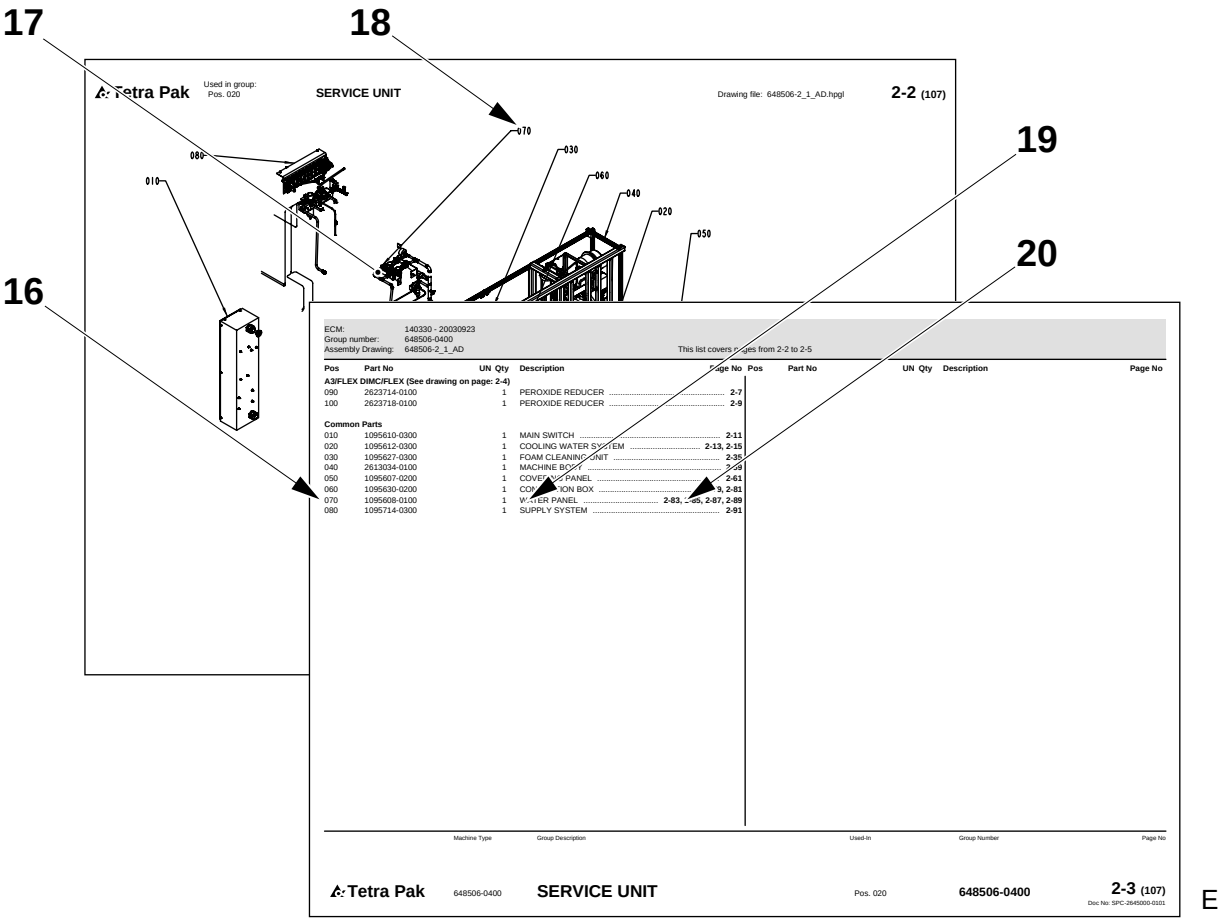
17
18
19
20
16
Tetra Pak
Used in group:
Pos. 020
SERVICE UNIT
Drawing file: 648506-2_1_AD.hpgl
2-2 (107)
070
030
080
060
010
040
020
050
ECM: 140330 - 20030923
Group number: 648506-0400
Assembly Drawing: 648506-2_1_AD
This list covers pages from 2-2 to 2-5
Pos Part No UN Qty Description Page No
A3/FLEX DIMC/FLEX (See drawing on page: 2-4)
090 2623714-0100 1 PEROXIDE REDUCER 2-7
100 2623718-0100 1 PEROXIDE REDUCER 2-9
Common Parts
010 1095610-0300 1 MAIN SWITCH 2-11
020 1095612-0300 1 COOLING WATER SYSTEM 2-13, 2-15
030 1095627-0300 1 FOAM CLEANING UNIT 2-35
040 2613034-0100 1 MACHINE BODY 2-39
050 1095607-0200 1 COVERING PANEL 2-61
060 1095630-0200 1 CONNECTION BOX 2-79, 2-81
070 1095608-0100 1 WATER PANEL 2-83, 2-85, 2-87, 2-89
080 1095714-0300 1 SUPPLY SYSTEM 2-91
Pos Part No UN Qty Description Page No
Machine Type Group Description Used-In Group Number Page No
Tetra Pak 648506-0400 SERVICE UNIT Pos. 020 648506-0400 2-3 (107)
Doc No: SPC-2645000-0101
E

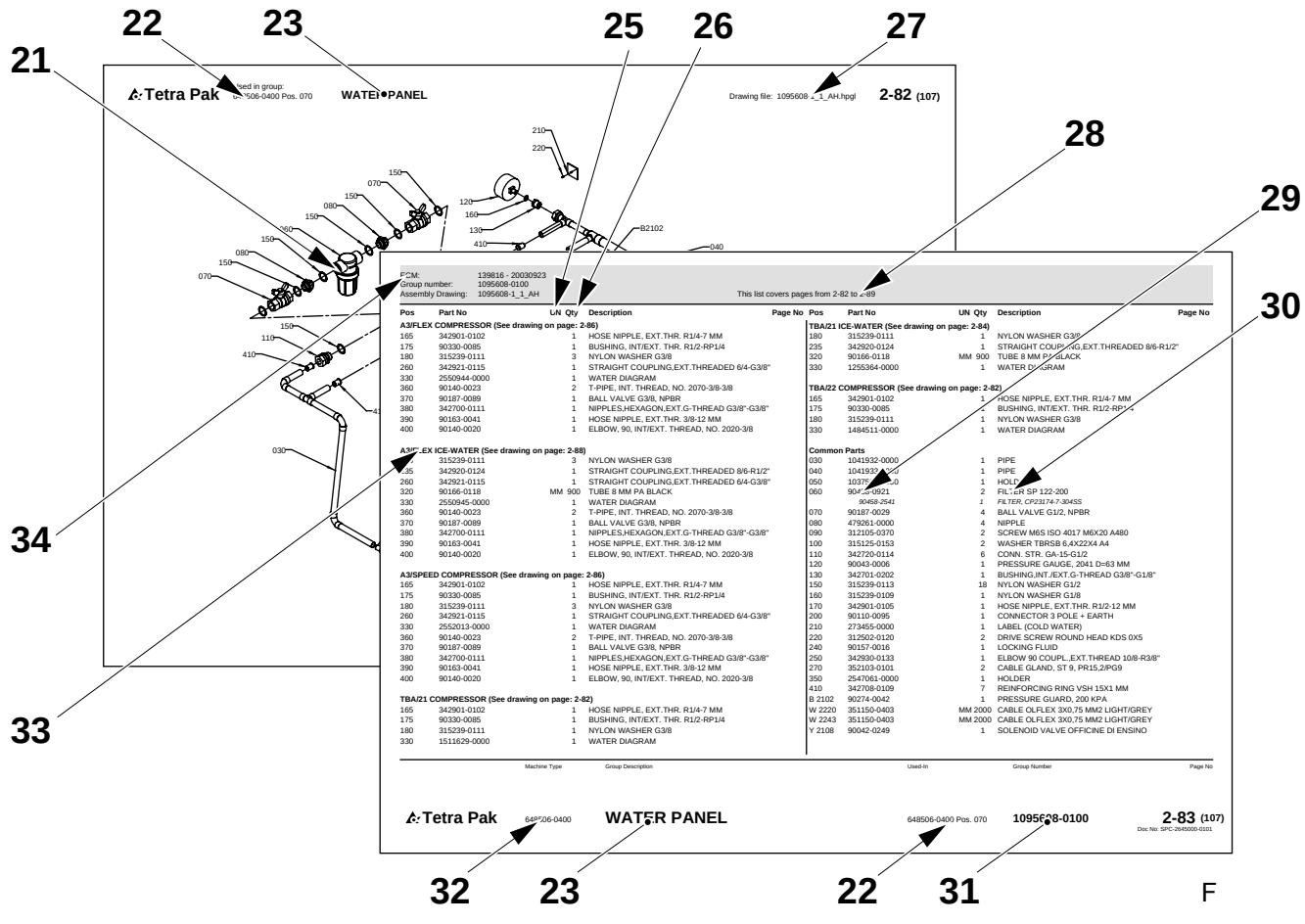
22
23
25
26
27
21
28
29
30
34
33
Tetra Pak
Used in group:
Pos. 070
WATER PANEL
Drawing file: 1095608-1_1_AH.hpgl
2-82 (107)
210
220
150
070
080
150
150
080
150
070
120
160
130
410
B2102
040
030
110
410
ECM: 139816 - 20030923
Group number: 1095608-0100
Assembly Drawing: 1095608-1_1_AH
This list covers pages from 2-82 to 2-89
Pos Part No UN Qty Description Page No
A3/FLEX COMPRESSOR (See drawing on page: 2-86)
165 342901-0102 1 HOSE NIPPLE, EXT.THR. R1/4-7 MM
175 90330-0085 1 BUSHING, INT/EXT. THR. R1/2-RP1/4
180 315239-0111 3 NYLON WASHER G3/8
260 342921-0115 1 STRAIGHT COUPLING,EXT.THREADED 6/4-G3/8"
330 2550944-0000 1 WATER DIAGRAM
360 90140-0023 2 T-PIPE, INT. THREAD, NO. 2070-3/8-3/8
370 90187-0089 1 BALL VALVE G3/8, NPBR
380 342700-0111 1 NIPPLES,HEXAGON,EXT.G-THREAD G3/8"-G3/8"
390 90163-0041 1 HOSE NIPPLE, EXT.THR. 3/8-12 MM
400 90140-0020 1 ELBOW, 90, INT/EXT. THREAD, NO. 2020-3/8
A3/FLEX ICE-WATER (See drawing on page: 2-88)
235 315239-0111 3 NYLON WASHER G3/8
235 342920-0124 1 STRAIGHT COUPLING,EXT.THREADED 8/6-R1/2"
260 342921-0115 1 STRAIGHT COUPLING,EXT.THREADED 6/4-G3/8"
320 90166-0118 MM 900 TUBE 8 MM PA BLACK
330 2550945-0000 1 WATER DIAGRAM
360 90140-0023 2 T-PIPE, INT. THREAD, NO. 2070-3/8-3/8
370 90187-0089 1 BALL VALVE G3/8, NPBR
380 342700-0111 1 NIPPLES,HEXAGON,EXT.G-THREAD G3/8"-G3/8"
390 90163-0041 1 HOSE NIPPLE, EXT.THR. 3/8-12 MM
400 90140-0020 1 ELBOW, 90, INT/EXT. THREAD, NO. 2020-3/8
A3/SPEED COMPRESSOR (See drawing on page: 2-86)
165 342901-0102 1 HOSE NIPPLE, EXT.THR. R1/4-7 MM
175 90330-0085 1 BUSHING, INT/EXT. THR. R1/2-RP1/4
180 315239-0111 3 NYLON WASHER G3/8
260 342921-0115 1 STRAIGHT COUPLING,EXT.THREADED 6/4-G3/8"
330 2552013-0000 1 WATER DIAGRAM
360 90140-0023 2 T-PIPE, INT. THREAD, NO. 2070-3/8-3/8
370 90187-0089 1 BALL VALVE G3/8, NPBR
380 342700-0111 1 NIPPLES,HEXAGON,EXT.G-THREAD G3/8"-G3/8"
390 90163-0041 1 HOSE NIPPLE, EXT.THR. 3/8-12 MM
400 90140-0020 1 ELBOW, 90, INT/EXT. THREAD, NO. 2020-3/8
TBA/21 COMPRESSOR (See drawing on page: 2-82)
165 342901-0102 1 HOSE NIPPLE, EXT.THR. R1/4-7 MM
175 90330-0085 1 BUSHING, INT/EXT. THR. R1/2-RP1/4
180 315239-0111 1 NYLON WASHER G3/8
330 1511629-0000 1 WATER DIAGRAM
TBA/21 ICE-WATER (See drawing on page: 2-84)
180 315239-0111 1 NYLON WASHER G3/8
235 342920-0124 1 STRAIGHT COUPLING,EXT.THREADED 8/6-R1/2"
320 90166-0118 MM 900 TUBE 8 MM PA BLACK
330 1255364-0000 1 WATER DIAGRAM
TBA/22 COMPRESSOR (See drawing on page: 2-82)
165 342901-0102 1 HOSE NIPPLE, EXT.THR. R1/4-7 MM
175 90330-0085 1 BUSHING, INT/EXT. THR. R1/2-RP1/4
180 315239-0111 1 NYLON WASHER G3/8
330 1484511-0000 1 WATER DIAGRAM
Common Parts
030 1041932-0000 1 PIPE
040 1041933-0000 1 PIPE
050 1037[illegible]-0000 1 HOLDER
060 90458-0921 2 FILTER SP 122-200
90458-2541 FILTER, CP23174-7-304SS
070 90187-0029 4 BALL VALVE G1/2, NPBR
080 479261-0000 4 NIPPLE
090 312105-0370 2 SCREW M6S ISO 4017 M6X20 A480
100 315125-0153 2 WASHER TBRSB 6,4X22X4 A4
110 342720-0114 6 CONN. STR. GA-15-G1/2
120 90043-0006 1 PRESSURE GAUGE, 2041 D=63 MM
130 342701-0202 1 BUSHING,INT./EXT.G-THREAD G3/8"-G1/8"
150 315239-0113 18 NYLON WASHER G1/2
160 315239-0109 1 NYLON WASHER G1/8
170 342901-0105 1 HOSE NIPPLE, EXT.THR. R1/2-12 MM
200 90110-0095 1 CONNECTOR 3 POLE + EARTH
210 273455-0000 1 LABEL (COLD WATER)
220 312502-0120 2 DRIVE SCREW ROUND HEAD KDS 0X5
240 90157-0016 1 LOCKING FLUID
250 342930-0133 1 ELBOW 90 COUPL.,EXT.THREAD 10/8-R3/8"
270 352103-0101 2 CABLE GLAND, ST 9, PR15,2/PG9
350 2547061-0000 1 HOLDER
410 342708-0109 7 REINFORCING RING VSH 15X1 MM
B 2102 90274-0042 1 PRESSURE GUARD, 200 KPA
W 2220 351150-0403 MM 2000 CABLE OLFLEX 3X0,75 MM2 LIGHT/GREY
W 2243 351150-0403 MM 2000 CABLE OLFLEX 3X0,75 MM2 LIGHT/GREY
Y 2108 90042-0249 1 SOLENOID VALVE OFFICINE DI ENSINO
Pos Part No UN Qty Description Page No
Machine Type Group Description Used-In Group Number Page No
Tetra Pak 648506-0400 WATER PANEL 648506-0400 Pos. 070 1095608-0100 2-83 (107)
Doc No: SPC-2645000-0101
32 23 22 31
F

Introduction

Manual Information

Tetra Pak recommends reading all delivered manuals carefully. Make sure that the delivered manuals are available to personnel who operate or maintain the equipment.

It is important to keep this catalogue for the lifetime of the equipment and to pass the catalogue on to any subsequent holder or user.

Tetra Pak will not be held responsible for any damage to the equipment caused by not following the instructions given in the manuals that accompany this equipment.

Delivered Manuals

Manuals delivered with this equipment may include

- CM
  The Conversion Manual provides technicians with information on converting the equipment between different production modes.
- EM
  The Electrical Manual provides technicians with information about the equipment's electrical system.
- IM
  The Installation Manual provides technicians with information required to safely install the equipment.
- MM
  The Maintenance Manual provides technicians with information on maintaining the equipment.
- OM
  The Operation Manual manual provides the operator with information on handling and operating the equipment before, during, and after production.
- SPC
  The Spare Parts Catalogue provides the information necessary to order spare parts from Tetra Pak
- TeM
  The Technical Manual
  - provides technicians with information required to safely install the equipment
  - provides technicians with information on maintaining the equipment
  - provides technicians with information about the machine's/ equipment's electrical system
  - provides the information necessary to order spare parts from Tetra Pak.

Page Layout

Refer to the illustration (A) on page i-5: The main pages in a Spare Parts Catalogue consist of an illustration page (1) and a corresponding list page (7). The page number (5) is shown in the header of an illustration page and in the footer of a list page. The document number (6) is shown in the footer of a list page.

Page Numbering

Refer to the illustration (A) on page i-5: A page number (5) has three parts:

- chapter number (2)
- consecutive page number within the chapter (3)
- total number of pages in the chapter (4)

Machine Introduction

Manufacturer

For the manufacturer's name and address, see the second page of this catalogue.

Service

To order spare parts for this machine, or to report problems associated with operating this machine, contact the nearest Tetra Pak office.

Contact the Liaison with other inquiries, comments, or suggestions for improvement regarding the equipment and its documentation.

Identification

CE Classification

This equipment complies with the basic health and safety regulations of the European Economic Area (EEA).

Machine Plate

The illustration (B) on page i-5 shows an example of a machine plate. An illustration of the valid machine plate and its location on the equipment is shown in the Introduction chapter of the manuals delivered with this equipment. The machine plate contains the data listed below, needed when contacting Tetra Pak concerning this specific equipment.

- Machine type (8)
- Volume (9)
- Drawing specifications (10)
- Machine serial number (11)
- Manufacturer (12)
- CE mark (13)
- Year of manufacture (14)

The illustration (C) on page i-5 shows an example of a machine specification. Make sure that the equipment data listed in the front pages of this manual corresponds to the machine plate data and the machine specification.

How to Use This Spare Parts Catalogue

Locate a Spare Part Number

a) Refer to the illustration (D) on page i-5: Go to the chapter number (15) indicated beside the main group that contains the part you want to locate.

Items b) and c) refer to the illustration (E) on page i-6.

b) On the main group illustration, look for the machine subgroup (17) that contains the part or subgroup you are looking for. Note the position number (18) and go to the list page that follows the illustration.

c) Look for the position number/reference designation (16) or the subgroup name (19). Go to the corresponding page number (20) listed in the right-hand column. Tetra Pak has chosen to always use the function oriented structure for reference designation. The prefix indicating function oriented structure (=) is not shown in the reference designation.

Items d) and e) refer to the illustration (F) on page i-6.

d) Locate the part (21) that you are looking for on the subgroup illustration and note the part's position number.

e) The part number (29) and part description (30) are listed beside the position number on the list page.

Information Listed in a Spare Parts Catalogue

The list below refers to the illustration (F) on page i-6. A Spare Parts Catalogue contains the following information about groups, subgroups, and spare parts for the equipment:

- Group structure reference (22). Indicates the next higher group in the equipment list structure.
- Group name (23)
- Unit of measure (25)
- Quantity (26)
- Assembly drawing number (27)
- List page range (28). Included if there are multiple pages in the group illustration or list.
- Part or subgroup number (29)
- Subgroup name or part description (30)
- Group number (31)
- Equipment number (32)
- Group information heading (33). Indicates if the section below the heading is for a specific machine variant or if it is a list of common parts. If a list has more than one variant and each variant has its own assembly drawing, a page reference to the variant's assembly drawing is shown.
- Internal information (34)

Увод

Информация за ръководството

Tetra Pak Ви препоръчва да прочетете внимателно всички доставени ръководства. Проверете дали доставените ръководства са достъпни за служителите, които поддържат или работят с оборудването.

Важно е да запазите този каталог през целия живот на оборудването и да го предадете на трети лица, които ще използват или съхраняват оборудването.

Tetra Pak не може да бъде държана под отговорност за щети върху оборудването, причинени от неспазване на даденте инструкции в ръководствата, които съпровождат оборудването.

Доставени ръководства

Ръководствата, доставени с това оборудване, могат да включват

- CM
  Ръководството за приспособяване осигурява на техническите лица информация за приспособяването на оборудване към различни производствени режими.
- EM
  Електрическото ръководство осигурява на техническите лица информация за електрическата система на оборудването.
- IM
  Ръководството за инсталиране предоставя на техническите лица информацията, която е необходима за безопасно инсталиране на оборудването.
- MM
  Ръководството за поддръжка предоставя на техническите лица информация относно поддържането на оборудването.
- OM
  Ръководството за операции предоставя на операторите информация за това, как да боравят и функционират с оборудването преди, по време на и след производство.
- SPC
  Каталогът с резервни части предоставя необходимата информация за поръчка на резервни части от Tetra Pak
- TeM
  Техническото ръководство
  - предоставя на техническите лица необходимата информация за безопасно инсталиране на оборудването
  - предоставя на техническите лица информация за поддръжка на оборудването
  - предоставя на техническите лица информация за електрическата система на машината/оборудването
  - предоставя необходимата информация за поръчка на резервни части от Tetra Pak.

Формат на страниците

Разгледайте илюстрация (A) на страница i-5: Главните страници в Каталога с резервни части се състоят от страница с илюстрация (1) и прилежаща страница със списък (7). Номерът на страницата (5) е посочен в горната част на страницата с илюстрация и в долната част на страницата със списъка. Номерът на документа (6) е показан в долната част на страницата със списъка.

Номериране на страници

Разгледайте илюстрация (A) на страница i-5: Един номер на страница (5) има три части:

- номер на глава (2)
- последователен номер на страница в една глава (3)
- общ брой страници в главата (4)

Машини Увод

Производител

Вижте втората страница на този каталог, за да проверите името и адреса на производителя.

Обслужване

За да поръчате резервни части за тази машина или да докладвате за проблеми, свързани с работата с тази машина, се свържете с най-близкия офис на Tetra Pak.

Свържете се с отдела за контакти с клиенти за други запитвания, коментари и предложения за подобрение по отношение на оборудването и прилежащата му документация.

Идентификация

Класификация на ЦЕ

Това оборудване отговаря на основните наредби, свързани с опазване на здравето и безопасността на Европейската Икономическа Общност (ЕИО).

Табелка на машина

Илюстрация (B) на страница i-5 показва пример с табелка на машина. В уводната глава на ръководствата, доставени с това оборудване, е показана илюстрация с валидната табелка на машината и нейното положение върху оборудването. Табелката на машината съдържа посочените по-долу данни, които Ви трябват, когато се свързвате с Tetra Pak относно това специфично оборудване.

- Тип машина (8)
- Обем (9)
- Спесификации за чертане (10)
- Сериен номер на машината (11)
- Производител (12)
- CE печат (13)
- Година на производство (14)

Илюстрация (C) на страница i-5 показва пример със спесификация за машина. Проверете дали данните за оборудването, изброени на предните страници в това ръководство отговарят на данните от табелката на машината и на спесификацията на машината.

Как да използвате този Каталог за резервни части

Намерете Номер на резервна част

a) Разгледайте илюстрация (D) на страница i-5: Отидете в глава номер (15) посочена до главната група, която съдържа частта, която искате да намерите.

Артикули b) и c) се отнасят до илюстрация (E) на страница i-6.

b) На главната обща илюстрация вижте подгрупата на машината (17), която съдържа частта или подгрупата, която търсите. Намерете номера на позицията (18) и отворете на страницата със списъка, която е след илюстрацията.

c) Намерете номера на позицията/референцията (16) или името на подгрупата (19). Отворете съответстващия номер на страница (20) в дясната колона. Tetra Pak е избрала да използва винаги функционално-ориентирана структура при обозначаване на референциите. Префиксът, който показва функционално-ориентирана структура (=) не е посочен в обозначаването на референциите.

Артикули d) и e) се отнасят до илюстрация (F) на страница i-6.

d) Намерете частта (21), която търсите в илюстрацията на подгрупата и запомнете номера на частта.

e) Номерът на частта (29) и описанието на частта (30) са изброени до номера на позицията на страницата със списъка.

Изброена информация в Каталога с резервни части

По-долу посоченият списък се отнася до илюстрация (F) на страница i-6. Каталогът с резервни части съдържа следната информация за групи, подгрупи и резервни части за оборудването:

- Референция за структурата (22). Показва следващата по-голяма група в структурата със списъка на оборудването.
- Име на група (23)
- Единица мярка (25)
- Количество (26)
- Номер за монтажен чертеж (27)
- Обхват на страницата със списък (28). Включен, ако има няколко страници в илюстрацията на групата или списъка.
- Номер на част или подгрупа (29)
- Име на подгрупа или описание на част (30)
- Номер на група (31)
- Номер на оборудване (32)
- Референция за информацията за групата (33). Показва дали частта под заглавието е за специфична версия на машината или е списък с общи части. Ако един списък има повече от един вариант и всеки вариант има собствен монтажен чертеж, се показва референцията на страницата към монтажния чертеж на варианта.
- Вътрешна информация (34)

Úvod

Informace o manuálu

Tetra Pak doporučuje, abyste si pozorně přečetli všechny dodané příručky. Přesvědčte se, že dodané manuály jsou k dispozici personálu, který obsluhuje nebo provádí údržbu zařízení.

Je důležité ponechat si tuto příručku po celou dobu životnosti zařízení a předat ho jakémukoliv následujícímu vlastníkovi nebo uživateli.

Tetra Pak nebude odpovídat za žádné škody zařízení, způsobené nedodržováním pokynů uvedených v této příručce.

Dodané příručky

Příručky dodané s tímto zařízením mohou obsahovat

- CM
  Konverzní manuál (CM) poskytuje technikům informace o konverzi zařízení mezi různými výrobními režimy.
- EM
  Elektrický manuál (EM) poskytuje technikům informace o elektrickém systému tohoto zařízení.
- IM
  Instalační manuál (IM) poskytuje technikům informace potřebné k bezpečné instalaci zařízení.
- MM
  Údržbový manuál (MM) poskytuje technikům informace o údržbě tohoto zařízení.
- OM
  Provozní manuál (OM) poskytuje operátorovi informace o manipulaci s tímto zařízením a provozu před, během a po výrobě.
- SPC
  Katalog náhradních dílů (SPC) poskytuje informace potřebné pro objednávání náhradních dílů od společnosti Tetra Pak
- TeM
  Technický manuál
  - poskytuje technikům informace potřebné k bezpečné instalaci tohoto zařízení
  - poskytuje technikům informace o údržbě tohoto zařízení
  - poskytuje technikům informace o elektrickém systému tohoto zařízení
  - poskytuje informace potřebné pro objednávání náhradních dílů od společnosti Tetra Pak

Rozvržení stránky

Viz obrázek (A) na straně i-5: Hlavní strany Katalogu náhradních dílů obsahují stranu s obrázky (1) a odpovídající stranu seznamu (7). Číslo strany (5) je uvedeno v záhlaví strany s obrázky a v zápatí strany seznamu. Číslo dokumentu (6) je uvedeno v zápatí strany seznamu.

Číslování stran

Viz obrázek (A) na straně i-5: Číslo strany (5) sestává ze tří částí:

- číslo kapitoly (2)
- pořadové číslo strany (3) v kapitole
- celkový počet stránek (4) v kapitole

Úvod ke stroji

Výrobce

Název a adresa výrobce je uvedena na druhé straně tohoto katalogu.

Servis

Chcete-li objednat náhradní díly nebo ohlásit problémy související s provozem tohoto stroje, kontaktujte nejbližší kancelář Tetra Pak.

S dalšími dotazy, připomínkami nebo náměty na vylepšení ohledně zařízení a této dokumentace se obracejte na kontaktní osobu.

Identifikace

Klasifikace CE

Toto zařízení splňuje základní zdravotní a bezpečnostní předpisy Evropského hospodářského prostoru (EEA).

Štítek na stroji

Obrázek (B) na straně i-5 znázorňuje příklad štítku na stroji. Obrázek platného štítku na stroji a jeho umístění na zařízení je uveden v příručkách dodaných s tímto strojem v kapitole Úvod. Na štítku jsou uvedeny údaje potřebné při kontaktování společnosti Tetra Pak, týkající se tohoto specifického zařízení.

- Typ stroje (8)
- Objem (9)
- Výkresové specifikace (10)
- Výrobní číslo stroje (11)
- Výrobce (12)
- Označení CE (13)
- Rok výroby (14)

Obrázek (C) na straně i-5 zobrazuje příklad specifikace stroje. Přesvědčte se, že údaje o zařízení uvedená v seznamu na předních stranách tohoto manuálu odpovídají údajům štítku na stroji a specifikaci stroje.

Jak používat tento Katalog náhradních dílů

Vyhledejte číslo náhradního dílu

a) Viz obrázek (D) na straně i-5: Přejděte na číslo kapitoly (15) uvedené vedle hlavní skupiny, která obsahuje hledaný díl.

Položky b) a c) odkazují na obrázek (E) na straně i-6.

b) Na vyobrazení hlavní skupiny vyhledejte strojní podskupinu (17), která obsahuje hledaný díl nebo podskupinu. Poznamenejte si číslo pozice (18) a přejděte na stranu seznamu vyplývající z obrázku.

c) Vyhledejte číslo pozice/označení odkazu (16) nebo název podskupiny (19). Přejděte na odpovídající číslo strany (20) v seznamu v pravém sloupci. Tetra Pak zvolil pro označování odkazu používat vždy uspořádání orientované na funkci. Prefix indikující uspořádání orientované na funkci (=) není uveden v označení odkazu.

Položky d) a e) odkazují na obrázek (F) na straně i-6.

d) Vyhledejte díl (21), který hledáte na vyobrazení podskupiny a poznamenejte si číslo pozice dílu.

e) Číslo dílu (29) a popis dílu (30) jsou uvedeny v seznamu vedle čísla pozice na straně seznamu.

Informace uvedené v seznamu v Katalogu náhradních dílů

Níže uvedený seznam odkazuje na obrázek (F) na straně i-6. Katalog náhradních dílů obsahuje následující informace o skupinách, podskupinách a náhradních dílech pro toto zařízení:

- Odkaz na uspořádání skupiny (22). Indikuje další vyšší skupinu v uspořádání seznamu zařízení.
- Název skupiny (23)
- Měrná jednotka (25)
- Množství (26)
- Číslo montážního výkresu (27)
- Rozsah stran seznamu (28). Včetně toho, zda existuje více stran v obrázku skupiny nebo seznamu.
- Díl nebo číslo podskupiny (29)
- Název podskupiny nebo popis dílu (30)
- Číslo skupiny (31)
- Číslo zařízení (32)
- Záhlaví informace o skupině (33). Indikuje, že oddíl pod záhlavím je pro specifickou variantu stroje nebo jde-li o seznam běžných dílů. Jestliže seznam obsahuje více než jednu variantu a každá varianta má svůj vlastní montážní výkres, pak je uveden odkaz na stranu montážního výkresu této varianty.
- Interní informace (34)

Indledning

Oplysninger om manualen

Tetra Pak anbefaler, at alle leverede manualer læses omhyggeligt. Sørg for, at de udleverede manualer er til rådighed for personale, som arbejder med eller vedligeholder udstyret.

Det er vigtigt at opbevare dette katalog hele udstyrets levetid og give kataloget videre til eventuelt kommende ejere eller brugere.

Tetra Pak kan ikke holdes ansvarlig for eventuel beskadigelse af udstyr, der opstår, fordi instruktionerne i manualerne til dette udstyr ikke følges.

Udleverede manualer

De manualer, der leveres sammen med dette udstyr, kan omfatte

- CM
  Denne konverteringsmanual forsyner teknikere med oplysninger om konvertering af udstyret mellem forskellige produktionstilstande.
- EM
  Denne elektriske manual forsyner teknikere med informationer om udstyrets elektriske system.
- IM
  Denne installationsmanual forsyner teknikere med nødvendig information i forbindelse med sikker installation af udstyret.
- MM
  Denne vedligeholdelsesmanual forsyner teknikere med information om vedligeholdelse af udstyret.
- OM
  Denne betjeningsmanual giver operatøren oplysninger om betjening af udstyret før, under og efter produktion.
- SPC
  Denne reservedelskatalog indeholder oplysninger, der er nødvendig for at bestille reservedele fra Tetra Pak
- TeM
  Den tekniske manual
  – forsyner teknikere med information, der er nødvendig for en sikker installation af udstyret.
  – forsyner teknikere med information om vedligeholdelse af udstyret.
  – forsyner teknikere med information om maskinens/udstyrets elektriske system.
  – indeholder de informationer, der er nødvendige for at kunne bestille reservedele fra Tetra Pak.

Sidelayout

Se illustration (A) på side i-5: Hovedsiderne i et reservedelskatalog består af en illustrationsside (1) og en tilsvarende listeside (7). Sidenummeret (5) vises i sidehovedet på en illlustrationsside og i sidefoden på en listeside. Dokumentnummeret (6) vises i sidefoden på en listeside.

Sidenummerering

Se illustrationen (A) på side i-5: Et sidenummer (5) har tre dele:

- kapitelnummer (2)
- fortløbende sidenummer i kapitlet (3)
- samlet sideantal i kapitlet (4)

Præsentation af maskinen

Producent

Producentens navn og adresse findes på side to i dette katalog.

Service

Kontakt nærmeste Tetra Pak-kontor for at bestille reservedele eller rapportere problemer i forbindelse med betjening af denne maskine.

Henvendelse til vores kontaktperson med andre forespørgsler, kommentarer eller forslag til forbedring angående udstyr og dokumentation.

Identificering

CE-klassificering

Dette udstyr lever op til de grundlæggende regulativer for sundhed og sikkerhed indenfor den Europæiske Økonomiske Samarbejdsområde (EØS).

Maskinskilt

Illustrationen (B) på side i-5 viser et eksempel på et maskinskilt.
En illustration af et gyldigt maskinskilt og dets placering på udstyret er vist i indledningskapitlet i de manualer, der leveres med dette udstyr. Maskinskiltet indeholder nedennævnte data. Disse er nødvendige ved kontakt med Tetra Pak vedrørende dette specifikke udstyr.

- Maskintype (8)
- Volumen (9)
- Tegningsspecifikationer (10)
- Maskinens serienummer (11)
- Producent (12)
- CE-mærke (13)
- Produktionsår (14)

Illustrationen (C) på side i-5 viser et eksempel på en maskinspecifikation. Kontroller, at de udstyrsdata, der er anført på de første sider i denne manual, svarer til maskinskiltsdataene og maskinspecifikationen.

Sådan bruges dette reservedelskatalog.

Find et reservedelsnummer

a) Se illustrationen (D) på side i-5: Gå til kapitelnummeret (15), der er angivet ved siden af hovedgruppen, der indeholder den del, der ønskes fundet.

Punkterne b) og c) refererer til illustrationen (E) på side i-6.

b) I hovedgruppeillustrationen skal man se efter maskinundergruppen (17), som indeholder den del eller undergruppe, der søges. Bemærk placeringsnummeret (18), og gå til listesiden, som følger illustrationen.

c) Se efter placeringsnummeret/henvisningsbetegnelse (16) eller undergruppens navn (19). Gå til det tilsvarende sidenummer (20) angivet i den højre kolonne. Tetra Pak har valgt altid at anvende den funktionsorienterede struktur til henvisningsbetegnelse. Præfikset angiver funktionsorienteret struktur (=) ikke vist i henvisningsbetegnelsen.

Punkterne d) og e) refererer til illustrationen (F) på side i-6.

d) Find den del (21), du søger i undergruppeillustrationen, og notér delens placeringsnummer.

e) Reservedelsnummeret (29) og -beskrivelsen (30) er angivet ved siden af placeringsnummeret på listesiden.

Informationer der er angivet i et reservedelskatalog

Listen nedenfor refererer til illustrationen (F) på side i-6. Et reservedelskatalog indeholder følgende informationer om grupper, undergrupper og reservedele til udstyret:

- Gruppestrukturreference (22). Angiver næste overordnede gruppe i udstyrslistestrukturen.
- Gruppenavn (23)
- Måleenhed (25)
- Antal (26)
- Samletegningsnummer (27)
- Listens sideområde (28). Er angivet, hvis gruppeillustrationen eller -listen inkluderer mange sider.
- Del- eller undergruppenummer (29)
- Undergruppens navn eller delsbeskrivelse (30)
- Gruppenummer (31)
- Udstyrsnummer (32)
- Overskrift for gruppeinformation (33). Angiver, om afsnittet under overskriften er for en specifik maskinvariant, eller om det er en liste over fælles dele. Hvis en liste har mere end én variant, og hver variant har sin egen samletegning, vises en sidereference til variantens samletegning.
- Intern information (34)

Einleitung

Informationen über das Handbuch

Tetra Pak empfiehlt, alle mitgelieferten Handbücher sorgfältig durchzulesen. Stellen Sie sicher, dass die Handbücher dem Personal, das die Ausrüstung betreibt oder wartet, zur Verfügung steht.

Es ist wichtig, dass Sie diesen Katalog für die gesamte Lebensdauer der Ausrüstung vorliegen haben und einem etwaigen Nachbesitzer oder -betreiber übergeben.

Tetra Pak haftet nicht für Schäden an der Ausrüstung, die aufgrund von Nichtbeachtung der Anweisungen aus den Handbüchern, die mit diesem Gerät geliefert werden, entstehen.

Gelieferte Handbücher

Die Handbücher, die mit dieser Ausrüstung geliefert wird, können Folgendes beinhalten

- CM
  Das Umbauhandbuch gibt den Technikern Informationen über den Umbau der Ausrüstung zwischen verschiedenen Produktionsweisen.
- EM
  Das Elektrohandbuch gibt den Technikern Informationen zum Elektrosystem der Ausrüstung.
- IM
  Das Installationshandbuch gibt den Technikern Informationen für die sichere Installation der Ausrüstung.
- MM
  Das Wartungshandbuch gibt den Technikern Informationen für die Wartung der Ausrüstung.
- OM
  Das Betriebshandbuch gibt dem Bediener Informationen über die Bedienung und den Betrieb der Ausrüstung vor, während und nach der Produktion.
- SPC
  Der Ersatzteilkatalog liefert die Informationen, die für die Bestellung von Ersatzteilen bei Tetra Pak erforderlich sind.
- TeM
  Das technische Handbuch
  - gibt den Technikern Informationen für die sichere Installation der Ausrüstung
  - gibt den Technikern Informationen für die Wartung der Ausrüstung
  - gibt den Techniker Informationen zum Elektrosystem der Ausrüstung/der Maschine
  - liefert die Informationen, die für die Bestellung von Ersatzteilen bei Tetra Pak erforderlich sind.

Seitenlayout

Bezugnahme auf Abbildung (A) auf Seite i-5: Die Hauptseiten in einem Ersatzteilkatalog bestehen aus einer Abbildungsseite (1) und einer entsprechenden Listenseite (7). Die Seitennummer (5) wird in der Kopfzeile einer Abbildungsseite und in der Fußzeile einer Listenseite aufgeführt. Die Dokumentennummer (6) wird in der Fußzeile einer Listenseite aufgeführt.

Seitennummerierung

Bezugnahme auf Abbildung (A) auf Seite i-5: Eine Seitennummer (5) besteht aus drei Teilen:

- Kapitelnummer (2)
- Fortlaufende Seitennummer innerhalb des Kapitels (3)
- Gesamtzahl der Seiten im Kapitel (4)

Einführung zur Maschine

Hersteller

Bitte entnehmen Sie den Namen und die Adresse des Herstellers der zweiten Seite dieses Katalogs.

Service

Zur Bestellung von Ersatzteilen für diese Maschine oder um Probleme im Zusammenhang mit dem Betrieb dieser Maschine zu melden, wenden Sie sich bitte an das nächstgelegene Büro von Tetra Pak.

Wenden Sie sich bei anderen Anfragen, Kommentaren oder Verbesserungsvorschlägen mit Bezug auf die Ausrüstung und seine Dokumentation an die Verbindungsstelle.

Identifizierung

CE-Klassifizierung

Diese Ausrüstung erfüllt die wesentlichen Anforderungen des Europäischen Wirtschaftsraum (EWR) für Gesundheitsschutz und die Sicherheit.

Maschinenschild

Die Abbildung (B) auf Seite i-5 zeigt ein Beispiel eines Maschinenschilds. Die Abbildung eines gültigen Maschinenschildes und seine Position auf der Ausrüstung wird im Einleitungskapitel der mit dieser Ausrüstung gelieferten Handbücher gezeigt. Das Maschinenschild enthält die Daten, die erforderlich sind, wenn Sie sich bezüglich dieser speziallen Ausrüstung an Tetra Pak wenden.

- Maschinentyp (8)
- Volumen (9)
- Zeichnungsspezifikationen (10)
- Seriennummer der Maschine (11)
- Hersteller (12)
- CE-Zeichen (13)
- Baujahr (14)

Die Abbildung (C) auf Seite i-5 zeigt ein Beispiel einer Maschinenspezifikation. Stellen Sie sicher, dass die Ausrüstungsdaten, die in den vorderen Seiten dieses Handbuchs aufgelistet sind, mit den Maschinenschilddaten und der Maschinenspezifikation übereinstimmen.

Benutzung dieses Ersatzteilkatalogs

Finden einer Ersatzteilnummer

a) Bezugnahme auf Abbildung (D) auf Seite i-5: Weiter zur Kapitel nummer (15), die neben der Hauptgruppe angegeben ist, die das entsprechende Teil enthält.

Die Positionen b) und c) beziehen sich auf die Abbildung (E) auf Seite i-6.

b) Suchen Sie auf der Hauptgruppenillustration nach der Maschinen-Untergruppe (17), die das gesuchte Teil oder die Untergruppe enthält. Notieren Sie die Positionsnummer (18) und gehen Sie dann zur Listenseite, die der Abbildung folgt.

c) Suchen Sie nach der Positionsnummer/Referenzbezeichnung (16) oder dem Namen der Untergruppe (19). Gehen Sie zur entsprechenden Seitennummer (20), die in der rechten Spalte aufgelistet ist. Tetra Pak hat sich dazu entschieden, stets eine funktionsorientierte Struktur für die Referenzbezeichnung zu verwenden. Die vorangestellte Kennzeichnung, welche die funktionsorientierte Struktur angibt (=), wird in der Referenzbezeichnung nicht angezeigt.

Die Positionen d) und e) beziehen sich auf die Abbildung (F) auf Seite i-6.

d) Finden Sie das gesuchte Teil (21) auf der Abbildung der Untergruppe und notieren Sie die Positionsnummer des Teils.

e) Die Teilenummer (29) und die Teilebeschreibung (30) werden neben der Positionsnummer auf der Listenseite aufgelistet.

In einem Ersatzteilkatalog aufgelistete Informationen

Die folgende Liste bezieht sich auf die Abbildung (F) auf Seite i-6. Ein Ersatzteilkatalog enthält folgende Informationen über Gruppen, Untergruppen und Ersatzteile für die Ausrüstung:

- Gruppenstrukturreferenz (22). Sie gibt die nächst höhere Gruppe in der Ausrüstungslistenstruktur an.
- Gruppenname (23)
- Maßeinheit (25)
- Menge (26)
- Nummer der Zusammenbauzeichnung (27)
- Listenseitenbereich (28). Enthalten, wenn es mehrere Seiten in der Gruppenabbildung oder Liste gibt.
- Teile- oder Untergruppennummer (29)
- Untergruppenname oder Teilebeschreibung (30)
- Gruppennummer (31)
- Ausrüstungsnummer (32)
- Gruppeninformationsüberschrift (33). Gibt an, ob sich der Abschnitt unter der Überschrift auf eine spezifische Maschinenvariante bezieht oder ob es sich um eine Liste der allgemeinen Teile handelt. Wenn eine Liste mehr als eine Variante hat und jede Variante über eine eigene Zusammenbauzeichnung verfügt, wird eine Seitenreferenz zur Zusammenbauzeichnung angezeigt.
- Interne Informationen (34)

Εισαγωγή

Πληροφορίες για το Εγχειρίδιο

Η Tetra Pak σάς συνιστά να διαβάζετε προσεκτικά όλα τα παρεχόμενα εγχειρίδια. Εξασφαλίζετε ότι όλα τα παρεχόμενα εγχειρίδια διατίθενται στο προσωπικό που χειρίζεται ή συντηρεί τον εξοπλισμό.

Είναι σημαντικό να διατηρείτε αυτό τον κατάλογο καθ' όλη τη διάρκεια ζωής του εξοπλισμού καθώς και να παραδίδετε τον κατάλογο στον τυχόν επόμενο ιδιοκτήτη ή χρήστη του εξοπλισμού.

Η Tetra Pak δεν πρόκειται να αναλάβει καμία ευθύνη για οποιαδήποτε ζημιά που μπορεί να προκληθεί στον εξοπλισμό εξαιτίας της μη τήρησης των οδηγιών οι οποίες παρέχονται στα εγχειρίδια που συνοδεύουν αυτό τον εξοπλισμό.

Παρεχόμενα Εγχειρίδια

Στα εγχειρίδια που παρέχονται μαζί μ' αυτό τον εξοπλισμό, μπορεί να περιλαμβάνονται τα εξής:

- CM
  Αυτό το Εγχειρίδιο Μετατροπής παρέχει στους τεχνικούς πληροφορίες για τη μετατροπή του εξοπλισμού μεταξύ των διάφορων λειτουργιών παραγωγής.
- EM
  Αυτό το Ηλεκτρικό Εγχειρίδιο παρέχει στους τεχνικούς πληροφορίες για το ηλεκτρικό σύστημα του εξοπλισμού.
- IM
  Αυτό το Εγχειρίδιο Εγκατάστασης παρέχει στους τεχνικούς τις απαιτούμενες πληροφορίες για την ασφαλή εγκατάσταση του εξοπλισμού.
- MM
  Αυτό το Εγχειρίδιο Συντήρησης παρέχει στους τεχνικούς πληροφορίες για τη συντήρηση του εξοπλισμού.
- OM
  Αυτό το Εγχειρίδιο Χειρισμού παρέχει στο χειριστή πληροφορίες για το χειρισμό και τη λειτουργία του εξοπλισμού πριν, κατά τη διάρκεια και μετά την παραγωγή.
- SPC
  Αυτός ο Κατάλογος Ανταλλακτικών παρέχει τις απαραίτητες πληροφορίες για την παραγγελία ανταλλακτικών από την Tetra Pak.
- TeM
  Το Τεχνικό Εγχειρίδιο
  - παρέχει στους τεχνικούς τις απαιτούμενες πληροφορίες για την ασφαλή εγκατάσταση του εξοπλισμού
  - παρέχει στους τεχνικούς πληροφορίες για τη συντήρηση του εξοπλισμού
  - παρέχει στους τεχνικούς πληροφορίες για το ηλεκτρικό σύστημα του εξοπλισμού/μηχανής
  - παρέχει τις απαραίτητες πληροφορίες για την παραγγελία ανταλλακτικών από την Tetra Pak.

Διάταξη Σελίδων

Ανατρέξτε στην εικόν (A) της σελίδας i-5: Οι κύριες σελίδες ενός Καταλόγου Ανταλλακτικών αποτελούνται από μία εικονογραφημένη σελίδα (1) και από μία αντίστοιχη σελίδα λίστας (7). Ο αριθμός σελίδας (5) εμφανίζεται στην κεφαλίδα μιας εικονογραφημένης σελίδας και στο υποσέλιδο μιας σελίδας λίστας. Ο αριθμός εγγράφου (6) εμφανίζεται στο υποσέλιδο μιας σελίδας λίστας.

Αρίθμηση Σελίδων

Ανατρέξτε στην εικόνα (A) της σελίδας i-5: Ένας αριθμός σελίδας (5) αποτελείται από τα εξής τρία μέρη:

- αριθμός κεφαλαίου (2)
- αύξων αριθμός σελίδας του κεφαλαίου (3)
- συνολικός αριθμός σελίδων του κεφαλαίου (4)

Παρουσίαση Μηχανής

Κατασκευαστής

Για το όνομα και τη διεύθυνση του κατασκευαστή, ανατρέξτε στη δεύτερη σελίδα αυτού του καταλόγου.

Τεχνική Εξυπηρέτηση

Για να παραγγείλετε ανταλλακτικά για τη συγκεκριμένη μηχανή ή για να αναφέρετε προβλήματα που σχετίζονται με τη λειτουργία αυτής της μηχανής, επικοινωνήστε με το πλησιέστερο γραφείο της Tetra Pak.

Εάν έχετε άλλου είδους ερωτήσεις, σχόλια ή προτάσεις βελτίωσης σχετικά με τον εξοπλισμό και την έγγραφη τεκμηρίωσή του, επικοινωνήστε με το Τμήμα Σχέσεων.

Στοιχεία Ταυτότητας

Σήμανση CE

Αυτός ο εξοπλισμός συμμορφώνεται με τους βασικούς κανονισμούς υγείας και ασφάλειας του Ευρωπαϊκού Οικονομικού Χώρου (ΕΟΧ).

Πινακίδα Αναγνώρισης Μηχανής

Η εικόνα (B) της σελίδας i-5 δείχνει ένα παράδειγμα μιας πινακίδας αναγνώρισης μηχανής.
Μια εικόνα που δείχνει την ενδεδειγμένη μορφή και θέση της πινακίδας αναγνώρισης μηχανής στον εξοπλισμό, παρουσιάζεται στο κεφάλαιο 'Εισαγωγή' των εγχειριδίων που παρέχονται μ' αυτόν τον εξοπλισμό.
Η πινακίδα αναγνώρισης μηχανής αναγράφει τα δεδομένα που παρατίθενται στη συνέχεια, τα οποία είναι απαραίτητα όταν επικοινωνείτε με την Tetra Pak για θέματα που αφορούν αυτό το συγκεκριμένο εξοπλισμό.

- Τύπος μηχανής (8)
- Χωρητικότητα (9)
- Στοιχεία σχεδίου (10)
- Αριθμός σειράς μηχανής (11)
- Κατασκευαστής (12)
- Σήμανση CE (13)
- Έτος κατασκευής (14)

Η εικόνα (Γ) της σελίδας i-5 δείχνει ένα παράδειγμα τεχνικών χαρακτηριστικών μηχανής. Βεβαιωθείτε ότι τα δεδομένα εξοπλισμού που παρατίθενται στις πρώτες σελίδες αυτού του εγχειριδίου συμφωνούν με τα δεδομένα της πινακίδας αναγνώρισης μηχανής και των τεχνικών χαρακτηριστικών μηχανής.

Πώς Χρησιμοποιείται Αυτός ο Κατάλογος Ανταλλακτικών

Εύρεση ενός Αριθμού Ανταλλακτικού

a) Ανατρέξτε στην εικόνα (Δ) της σελίδας i-5: Πηγαίνετε στον αριθμό κεφαλαίου (15) που υποδεικνύεται δίπλα από την κύρια ομάδα της μηχανής η οποία περιλαμβάνει το εξάρτημα που θέλετε να βρείτε.

Τα βήματα b) και c) αναφέρονται στην εικόνα (Ε) της σελίδας i-6.

b) Στην εικόνα της κύριας ομάδας μηχανής, αναζητήστε την υποομάδα μηχανής (17) η οποία περιλαμβάνει το εξάρτημα ή την υποομάδα που αναζητάτε. Σημειώστε τον αριθμό θέσης (18) και πηγαίνετε στη σελίδα λίστας που ακολουθεί την εικόνα.

c) Αναζητήστε τον αριθμό θέσης/ονομασία αναφοράς (16) ή το όνομα υποομάδας (19). Πηγαίνετε στον αντίστοιχο αριθμό σελίδας (20) που αναγράφεται στη δεξιά στήλη. Η Tetra Pak έχει επιλέξει να χρησιμοποιεί πάντα δομή ονομασίας αναφοράς με βάση τη λειτουργία. Το πρόθεμα που υποδεικνύει τη δομή με βάση τη λειτουργία (=) δε φαίνεται στο διάγραμμα αναφοράς.

Τα βήματα d) και e) αναφέρονται στην εικόνα (ΣΤ) της σελίδας i-6.

d) Βρείτε το εξάρτημα (21) που αναζητάτε στην εικόνα υποομάδας μηχανής και σημειώστε τον αριθμό θέσης του εξαρτήματος.

e) Ο αριθμός του εξαρτήματος (29) και η περιγραφή του εξαρτήματος (30) παρατίθενται δίπλα στον αριθμό θέσης στη σελίδα λίστας.

Πληροφορίες που Περιέχονται σε έναν Κατάλογο Ανταλλακτικών

Η λίστα που ακολουθεί αναφέρεται στην εικόνα (F) της σελίδας i-6. Ένας Κατάλογος Ανταλλακτικών περιέχει τις παρακάτω πληροφορίες σχετικά με τις ομάδες, τις υποομάδες και τα ανταλλακτικά του εξοπλισμού:

- Αναφορά δομής ομάδας (22). Υποδηλώνει την επόμενη μεγαλύτερη ομάδα στη δομή λίστας του εξοπλισμού.
- Όνομα ομάδας (23)
- Μονάδα μέτρησης (25)
- Ποσότητα (26)
- Αριθμός σχεδίου συγκροτήματος (27)
- Περιοχή σελίδων λίστας (28). Περιλαμβάνεται εφόσον η εικόνα ή η λίστα μιας ομάδας εκτίθεται σε περισσότερες από μία σελίδες.
- Αριθμός εξαρτήματος ή υποομάδας (29)
- Αριθμός υποομάδας ή περιγραφή εξαρτήματος (30)
- Αριθμός ομάδας (31)
- Αριθμός εξοπλισμού (32)
- Επικεφαλίδα πληροφοριών ομάδας (33). Υποδεικνύει εάν η ενότητα κάτω από την επικεφαλίδα αφορά μια συγκεκριμένη παραλλαγή μηχανής ή αποτελεί μια λίστα κοινών εξαρτημάτων. Σε περίπτωση που μια λίστα περιέχει περισσότερες από μία παραλλαγές και κάθε παραλλαγή έχει ξεχωριστό σχέδιο συγκροτήματος, εμφανίζεται μια παραπομπή προς τη σελίδα όπου βρίσκεται το σχέδιο συγκροτήματος της παραλλαγής.
- Εσωτερικές πληροφορίες (34)

Introducción

Información sobre el manual

Tetra Pak recomienda leer atentamente todos los manuales suministrados. Asegúrese de que los manuales están disponibles para el personal que opera o mantiene el equipo.

Es importante conservar este catálogo durante la vida útil del equipo, así como facilitárselo a cualquier propietario o usuario posterior.

Tetra Pak no se responsabilizará de daños en el equipo por no seguir las instrucciones proporcionadas en los manuales que acompañan este equipo.

Manuales entregados

Los manuales entregados con este equipo pueden incluir:

- CM
  El Manual de conversión proporciona a los técnicos información sobre cómo convertir el equipo a diferentes modos de producción.
- EM
  El Manual eléctrico proporciona a los técnicos información sobre el sistema eléctrico del equipo.
- IM
  El Manual de instalación proporciona a los técnicos la información necesaria para instalar el equipo de manera segura.
- MM
  El Manual de mantenimiento proporciona a los técnicos información sobre el mantenimiento del equipo.
- OM
  El Manual de funcionamiento proporciona al operador información sobre el manejo y el funcionamiento del equipo antes, durante y después de la producción.
- SPC
  El Catálogo de recambios proporciona la información necesaria para pedir las piezas de recambio a Tetra Pak.
- TeM
  El Manual técnico
  - proporciona a los técnicos la información necesaria para instalar de manera segura el equipo
  - proporciona a los técnicos información sobre el mantenimiento del equipo
  - proporciona a los técnicos información sobre el sistema eléctrico de la máquina/equipo
  - proporciona la información necesaria para pedir las piezas de recambio a Tetra Pak.

Organización de las páginas

Consultar la ilustración (A) en la página i-5: Las páginas principales en un Catálogo de recambios se componen de una página de ilustración (1) y una página de lista correspondiente (7). El número de la página (5) se muestra en el encabezado de una página de ilustración y en el pie de página de una página de lista. El número del documento (6) se muestra en el pie de página de una página de lista.

Numeración de las páginas

Consulte la ilustración (A) en la página i-5: Un número de página (5) consta de tres partes:

- número de capítulo (2)
- número de página consecutivo dentro del capítulo (3)
- número total de páginas del capítulo (4)

Introducción a la máquina

Fabricante

Para obtener el nombre y la dirección del fabricante, véase la segunda página de este catálogo.

Servicio

Para pedir recambios para esta máquina o informar de problemas asociados con el funcionamiento de la misma, póngase en contacto con la oficina de Tetra Pak más cercana.

Póngase en contacto con el representante para otras consultas, comentarios o consejos sobre mejoras referidos al equipo y su documentación.

Identificación

Clasificación de la CE

Este equipo cumple con la normativa básica sobre salud y seguridad del Espacio Económico Europeo (EEE).

Placa de máquina

La ilustración (B) en la página i-5 muestra un ejemplo de una placa de máquina.
En el capítulo Introducción de los manuales entregados con este equipo, se muestra una ilustración de la placa de máquina válida y su ubicación en el equipo. La placa de máquina contiene los datos que se enumeran a continuación, requeridos al ponerse en contacto con Tetra Pak en relación con este equipo específico.

- Tipo de máquina (8)
- Volumen (9)
- Especificaciones de plano (10)
- Número de serie de la máquina (11)
- Fabricante (12)
- Marca de la CE (13)
- Año de fabricación (14)

La ilustración (C) en la página i-5 muestra un ejemplo de especificación de la máquina. Asegúrese de que los datos de equipo que se enumeran en las páginas de la cubierta de este manual corresponden a los datos de la placa y las especificaciones de la máquina.

Cómo utilizar este Catálogo de recambios

Localizar un número de recambio

a) Consulte la ilustración (D) en la página i-5: Vaya al número de capítulo (15) indicado junto al grupo principal que contiene la pieza que desea localizar.

Los puntos b) y c) hacen referencia a la ilustración (E) en la página i-6.

b) En la ilustración del grupo principal, busque el subgrupo de la máquina (17) que contiene la pieza o el subgrupo que busca. Anote el número de posición (18) y vaya a la página de lista que sigue a la ilustración.

c) Busque el número de posición/denominación de referencia (16) o el nombre del subgrupo (19). Vaya al número de página correspondiente (20) que aparece en la columna de la derecha. Tetra Pak ha elegido utilizar siempre la estructura orientada a la función para la denominación de referencia. El prefijo que indica la estructura orientada a la función (=) no aparece en la denominación de referencia.

Los puntos d) y e) hacen referencia a la ilustración (F) en la página i-6.

d) Localice la pieza (21) que busca en la ilustración del subgrupo y anote el número de posición de la pieza.

e) El número de pieza (29) y la descripción de la misma (30) aparecen junto al número de posición en la página de lista.

Información que contiene un Catálogo de recambios

La lista que aparece a continuación hace referencia a la ilustración (F) en la página i-6. Un Catálogo de recambios contiene la siguiente información sobre grupos, subgrupos y recambios para el equipo:

- Referencia de estructura de grupo (22). Indica el siguiente grupo más alto en la estructura de lista del equipo.
- Nombre del grupo (23)
- Unidad de medida (25)
- Cantidad (26)
- Número de dibujo del conjunto (27)
- Intervalo de página de lista (28). Incluido si hay varias páginas en la ilustración o lista de grupo.
- Número de pieza o subgrupo (29)
- Nombre de subgrupo o descripción de pieza (30)
- Número de grupo (31)
- Número de equipo (32)
- Encabezado de información de grupo (33). Indica si la sección que aparece debajo del encabezado corresponde a una variante específica de la máquina o si es una lista de piezas comunes. Si la lista tiene más de una variante y cada variante tiene su propio dibujo de conjunto, se muestra una referencia de página al dibujo de conjunto de la variante.
- Información interna (34)

Sissejuhatus

Juhendi teave

Tetra Pak soovitab kõik juhendid hoolikalt läbi lugeda. Kontrollige, et juhendid oleksid seadmetega töötavatele ja neid hooldavatele isikutele kättesaadavad.

Kataloog tuleb seadme kasutusaja vältel alles hoida ning järgmisele omanikule või kasutajale edasi anda.

Tetra Pak ei vastuta seadme vigastuste eest, mis on tekkinud seadmega kaasnevate juhendite mittejärgimise tõttu.

Kaasaolevad juhendid

Seadmega kaasasolevad juhendid võivad sisaldada järgmist:

- CM
  Ümberseadistusjuhend annab tehnikutele teavet seadme ümber seadistamise kohta eri tootmisrežiimide korral.
- EM
  Elektrijuhend annab tehnikutele informatsiooni seadme elektrisüsteemi kohta.
- IM
  Paigaldusjuhend annab tehnikutele vajalikku teavet seadme ohutu paigaldamise kohta.
- MM
  Hooldusjuhend annab tehnikutele teavet seadme hoolduse kohta.
- OM
  Kasutusjuhend annab operaatorile teavet seadme käsitsemise ja kasutamise kohta enne tootmist, selle ajal ja pärast seda.
- SPC
  Varuosade kataloog annab vajalikku teavet Tetra Pakilt varuosade tellimiseks
- TeM
  Tehniline juhend
  - annab tehnikutele vajalikku teavet seadme ohutuks paigaldamiseks
  - annab tehnikutele teavet seadme hooldamise kohta
  - annab tehnikutele teavet masina/seadme elektrisüsteemi kohta
  - annab vajalikku teavet Tetra Pakilt varuosade tellimiseks.

Lehekülje kujundus

Vt joonist (A) lk i-5: Varuosade kataloogi põhilehtedeks on jooniste lehekülg (1) ja vastav loeteluleht (7). Lehekülje number (5) on toodud joonistelehe päises ja loetelulehe jaluses. Dokumendi number (6) on toodud loetelulehe jaluses.

Lehekülje nummerdus

Vt joonist (A) lk i-5: Lehekülje number (5) koosneb kolmest osast:

- peatüki number (2)
- järgneva lehekülje number (3) peatükis
- lehekülgede koguarv peatükis (4)

Sissejuhatus masina kohta

Tootja

Tootja nimi ja aadress on toodud kataloogi teisel lehel.

Teenindus

Masina varuosade tellimiseks või masina kasutamisega seonduvate probleemide teatamiseks võtke ühendust lähima Tetra Pak kontoriga.

Seadme ja dokumendiga seonduvate küsimuste, kommentaaride ja parandusettepanekute puhul võtke ühendust ettevõtte esindajaga.

Identifikatsioon

CE klassifikatsioon

Seade on kooskõlas Euroopa Majanduspiirkonna (EEA) tervishoiu- ja ohutusnõuetega.

Masina andmeplaat

Joonisel (B) leheküljel i-5 on kujutatud masina andmeplaati. Masina andmeplaadi joonis ja selle asukoht seadmel on toodud seadmega kaasasoleva juhendi sissejuhatavas peatükis. Masina andmeplaadil on toodud allpool loetletud andmed, mida vajate antud konkreetse seadmega seoses Tetra Paki poole pöördudes.

- Masina tüüp (8)
- Maht (9)
- Joonisspetsifikatsioonid (10)
- Masina seerianumber (11)
- Tootja (12)
- CE tähis (13)
- Tootmisaasta (14)

Joonisel (C) leheküljel i-5 on kujutatud näide masina spetsifikatsioonist. Veenduge, et juhendi esimestel lehekülgedel toodud andmed seadme kohta vastavad masina andmesildil olevatele andmetele ja masina spetsifikatsioonile.

Kuidas varuosade kataloogi kasutada

Leidke varuosa number

a) Vt joonist (D) lk i-5: Leidke peatükk, mille number (15) on toodud selle põhirühma juures, mis sisaldab otsitavat varuosa.

Punktid b) ja c) viitavad joonisele (E) lk i-6.

b) Põhirühma joonisel leidke masina alamrühm (17), mis sisaldab otsitavat osa või alamrühma. Leidke positsiooninumber (18) ja avage joonisele järgnev loeteluleht.

c) Leidke positsiooninumber/viite tähis (16) või alamgrupi nimetus (19). Avage parempoolses veerus loetletud vastav lehekülje number (20). Tetra Pak on valinud viite tähise puhul alatiseks kasutamiseks funktsioonile suunatud struktuuri. Funktsioonile suunatud struktuuri prefiks (=) pole viite tähises näidatud.

Punktid d) ja e) viitavad jooniselerefer (F) lk i-6.

d) Leidke otsitav osa (21) alamrühma joonisel ja seejärel osa positsioonnumber.

e) Osa number (29) ja osa kirjeldus (30) on toodud loetelulehel positsioonnumbri kõrval.

Varuosade kataloogis toodud teave

Allpool toodud loetelui viitab joonisele (F) lk i-6. Varuosade kataloog sisaldab järgmist teavet seadme rühmade, alamrühmade ja varuosade kohta:

- Rühmastruktuuri viide (22). Märgib seadme loetelu struktuuris järgmist kõrgemat rühma.
- Rühma nimetus (23)
- Mõõtühik (25)
- Kogus (26)
- Koostejoonise number (27)
- Loetelu lehekülgede vahemik (28). Kaasatud kui rühma joonised või loetelu on toodud mitmel lehel.
- Osa või alamrühma number (29)
- Alamrühma nimetus või osa kirjeldus (30)
- Rühma number (31)
- Seadme number (32)
- Rühma teabe pealkiri (33). Näitab, kas pealkirja all toodud jaotis on konkreetse masinavariandi kohta või on tegemist tavaliste varuosade loeteluga. Kui loetelus on toodud rohkem kui üks variant ja iga variandi jaoks on oma koostejoonis, esitatakse viide selle variandi koostejoonise leheküljele.
- Siseteave (34)

Johdanto

Tietoja käsikirjasta

Tetra Pak suosittelee kaikkien toimitettavien oppaiden lukemista huolellisesti. Varmista, että toimitetut oppaat ovat laitetta käyttävän tai huoltavan henkilökunnan saatavilla.

Tämä luettelo on säilytettävä laitteen käyttöiän ajan ja toimitettava edelleen mahdolliselle seuraavalle omistajalle tai käyttäjälle.

Tetra Pak ei vastaa laitevaurioista, jotka aiheutuvat laitteen mukana tulevissa oppaissa annettujen ohjeiden noudattamatta jättämisestä.

Toimitettavat ohjeet

Tämän laitteen mukana toimitettaviin ohjeisiin kuuluvat:

- CM
  Muunnoskirjassa on teknikoille tarkoitettuja ohjeita laitteiston muuttamisesta eri tuotantotiloihin.
- EM
  Sähkökirjassa on teknikoille tarkoitettuja tietoja laitteen sähköjärjestelmästä.
- IM
  Asennuskäsikirjassa on teknikoille tarkoitettuja tietoja, jotka tarvitaan laitteen turvallista asentamista varten.
- MM
  Huoltokäsikirjassa on teknikoille tarkoitettuja tietoja tämän laitteen huoltamisesta.
- OM
  Käyttäjän käsikirjassa on käyttäjälle tarkoitettuja tietoja laitteen käsittelystä ja käyttämisestä ennen tuotantoa, tuotannon aikana ja sen jälkeen.
- SPC
  Varaosaluettelossa on tietoja, joita tarvitaan varaosien tilaamiseen Tetra Pakilta.
- TeM
  Tekninen käsikirja
  - sisältää teknikoille tarkoitettuja tietoja, joita tarvitaan laitteen turvallista asentamista varten
  - sisältää teknikoille tarkoitettuja tietoja laitteen huoltamisesta
  - sisältää teknikoille tarkoitettuja tietoja koneen/laitteen sähköjärjestelmästä
  - sisältää tietoja, joita tarvitaan varaosien tilaamiseen Tetra Pakilta.

Sivujen asettelu

Katso kuva (A) sivulla i-5: Varaosaluettelon pääsivut koostuvat kuvasivusta (1) ja sitä vastaavasta luettelosivusta (7). Sivunumero (5) näytetään kuvasivun ylätunnisteessa ja luettelosivun alatunnisteessa. Asiakirjan numero (6) näytetään luettelosivun alatunnisteessa.

Sivunumerointi

Katso kuva (A) sivulla i-5: Sivunumerossa (5) on kolme osaa:

- luvun numero (2)
- perättäinen sivunumero (3) luvun sisällä
- luvun kokonaissivumäärä (4).

Koneen esittely

Valmistaja

Valmistajan nimi ja osoite on ilmoitettu tämän luettelon toisella sivulla.

Huolto

Jos haluat tilata tähän koneeseen varaosia tai jos tämän koneen käytössä ilmenee ongelmia, jotka haluat raportoida, ota yhteyttä lähimpään Tetra Pakin toimistoon.

Jos sinulla on muuta kysyttävää, huomautettavaa tai ehdotuksia ja sen asiakirjoja koskevista parannuksista, ota yhteys yhteyshenkilöön.

Tunnistetiedot

CE-luokitus

Tämä laite vastaa Euroopan talousalueen (ETA) terveyttä ja turvallisuutta koskevia perusvaatimuksia.

Koneen tyyppikilpi

Kuvassa (B) sivulla i-5 on esimerkki koneen tyyppikilvestä. Voimassa olevan tyyppikilven kuva ja sen sijainti koneessa käy ilmi laitteiston mukana tulleiden ohjeiden Johdanto-luvusta. Tyyppikilvessä on tarvitsemasi Tetra Pakin voimassa olevat yhteystiedot, kun on kyseessä tämä nimenomainen laite.

- Konetyyppi (8)
- Tilavuus (9)
- Piirustuserittely (10)
- Koneen sarjanumero (11)
- Valmistaja (12)
- CE-merkki (13)
- Valmistusvuosi (14)

Kuvassa (C) sivulla i-5 on esimerkki koneen erittelystä. Varmista, että tämän ohjeen etusivuilla ilmoitetut laitetiedot vastaavat tyyppikilven ja kone-erittelyn tietoja.

Tämän varaosaluettelon käyttäminen

Etsi varaosan numero

a) Katso kuva (D) sivulla i-5: Siirry lukuun (15), joka on ilmoitettu etsittävän osan pääryhmän vieressä.

Kohdat b) ja c) viittaavat kuvaan (E) sivulla i-6.

b) Etsi pääryhmän kuvasta koneen alaryhmä (17), joka sisältää etsimäsi osan tai alaryhmän. Merkitse muistiin paikkanumero (18) ja siirry luettelosivulle, joka seuraa kuvaa.

c) Etsi paikkanumero (16) tai alaryhmän nimi (19). Siirry vastaavalle sivunumerolle (20), joka on ilmoitettu oikeassa sarakkeessa. Tetra Pak on päättänyt aina noudattaa toimintoperusteista rakennetta viitemerkinnöissä. Viitemerkinnässä ei esitetä toimintoperusteisen rakenteen osoittavaa etuliitettä (=).

Kohdat d) ja e) viittaavat kuvaan (F) sivulla i-6.

d) Hae etsittävä osa (21) alaryhmän kuvasta ja merkitse osan paikkanumero muistiin.

e) Osanumero (29) ja osan kuvaus (30) on annettu paikkanumeron vieressä luettelosivulla.

Varaosaluettelossa olevat tiedot

Alla oleva luettelo viittaa kuvaan (F) sivulla i-6. Varaosaluettelo sisältää seuraavat tiedot ryhmistä, alaryhmistä ja laitteen varaosista:

- Ryhmärakenneviite (22). Osoittaa seuraavaksi ylemmän ryhmän laiteluettelorakenteessa.
- Ryhmän nimi (23)
- Mittayksikkö (25)
- Määrä (26)
- Kokoonpanopiirustuksen numero (27)
- Luettelon sivualue (28). Tämä on mukana, jos ryhmäkuvassa tai luettelossa on useita sivuja.
- Osan tai alaryhmän numero (29)
- Alaryhmän nimi tai osan kuvaus (30)
- Ryhmän numero (31)
- Laitteen numero (32)
- Ryhmätietojen otsikko (33). Osoittaa, koskeeko alla oleva osio tiettyä koneversiota vai onko kyseessä yhteisten osien luettelo. Jos luettelolla on useampi kuin yksi versio ja kullakin versiolla on oma kokoonpanopiirustuksensa, näytetään version kokoonpanopiirustuksen sivuviittaus.
- Sisäiset tiedot (34)

Introduction

Informations sur ce manuel

Tetra Pak recommande de lire attentivement tous les manuels remis. S'assurer que ceux-ci sont accessibles au personnel d'exploitation et de maintenance de l'équipement.

Il est important de conserver ce catalogue pendant la durée de vie de l'équipement et de le transmettre à tout détenteur ou à tout utilisateur ultérieur de l'équipement.

Tetra Pak ne pourra être tenu responsable d'aucun dommage causé à l'équipement suite au non respect des instructions fournies dans les manuels remis avec cet équipement.

Manuels remis

Les manuels remis avec cet équipement peuvent comprendre

- CM
  Le Manuel de Conversion contient les informations destinées aux techniciens pour la conversion de l'équipement en vue des différents modes de production.
- EM
  Le Manuel Electrique fournit aux techniciens des informations sur le système électrique de l'équipement.
- IM
  Le Manuel d'Installation fournit les informations nécessaires aux techniciens pour installer l'équipement en toute sécurité.
- MM
  Le Manuel d'Entretien contient les informations nécessaires aux techniciens pour la maintenance de l'équipement.
- OM
  Le Manuel d'Utilisation fournit à l'opérateur les informations nécessaires à la manutention et à l'exploitation de l'équipement, avant, pendant et après la production.
- SPC
  Le Catalogue des Pièces de Rechange contient les informations permettant de commander des pièces de rechange auprès de Tetra Pak
- TeM
  Le Manuel Technique
  - contient les informations nécessaires aux techniciens pour installer l'équipement en toute sécurité.
  - contient les informations nécessaires aux techniciens pour la maintenance de l'équipement.
  - fournit aux techniciens des informations sur le système électrique de la machine/de l'équipement.
  - fournit les informations permettant de commander des pièces de rechange auprès de Tetra Pak.

Mise en page

Reportez-vous au schéma (A) page i-5 : Dans un catalogue de Pièces de Rechange, les pages principales sont les pages de schémas (1) et les pages de listes correspondantes (7). Le numéro de page (5) est indiqué en en-tête sur une page de schéma et en bas de page sur une page de liste. Le numéro de document (6) est indiqué au bas d'une page de liste.

Numérotation des pages

Reportez-vous au schéma (A) page i-5 : Un numéro de page (5) se compose de trois éléments :

- numéro du chapitre (2)
- numéro de page séquentiel à l'intérieur du chapitre (3)
- nombre total de pages du chapitre (4)

Présentation de la machine

Fabricant

Les nom et adresse du fabricant sont donnés en deuxième page de ce catalogue.

Assistance technique

Pour commander des pièces de rechange pour cette machine ou signaler un problème lié à son fonctionnement, contactez l'agence Tetra Pak la plus proche.

Contactez le responsable de liaison pour tout autre renseignement, commentaire ou suggestion d'amélioration relatifs à l'équipement et à sa documentation.

Identification

Certification CE

Cet équipement est conforme aux réglementations essentielles en matière d'hygiène et de sécurité de l'Espace économique européen (EEE).

Plaque signalétique de la machine

Le schéma (B) de la page i-5 reproduit un exemple de plaque signalétique de la machine.
Le chapitre Introduction des manuels remis avec cet équipement comprend une reproduction de la plaque signalétique valide de la machine et indique son emplacement sur l'équipement. La plaque comporte les caractéristiques indiquées ci-dessous, nécessaires pour prendre contact avec Tetra Pak à propos de cet équipement spécifique.

- Type de la machine (8)
- Volume (9)
- Caractéristiques schéma (10)
- Numéro de série de la machine (11)
- Fabricant (12)
- Marquage CE (13)
- Année de fabrication (14)

Le schéma (C) de la page i-5 reproduit un exemple de plaque signalétique de la machine. Assurez-vous que les données relatives à l'équipement qui se trouvent au début de ce manuel correspondent bien aux données figurant sur la plaque signalétique de la machine et à ses spécifications.

Comment utiliser ce Catalogue des Pièces de Rechange

Trouver un numéro de pièce de rechange

a) Reportez-vous au schéma (D) page i-5 : Allez au numéro de chapitre (15) indiqué à côté du groupe principal contenant la pièce que vous recherchez.

Les éléments b) et c) se rapportent au schéma (E) de la page i-6.

b) Sur le schéma du groupe principal, recherchez le sous-groupe de la machine (17) contenant la pièce ou le sous-groupe que vous recherchez. Notez le numéro de position (18) et reportez-vous à la page de liste suivant le schéma.

c) Recherchez le numéro de position/la désignation de référence (16) ou le nom du sous-groupe (19). Allez au numéro de page correspondant (20) figurant dans la liste de la colonne de droite. Tetra Pak a pris le parti de toujours utiliser la structure de la fonction pour la désignation de la référence. Le préfixe indiquant la structure de la fonction (=) ne figure pas dans la désignation de la référence.

Les éléments d) et e) se rapportent au schéma (F) de la page i-6.

d) Repérez la pièce (21) que vous recherchez dans le schéma du sous-groupe et notez le numéro de position de la pièce.

e) Le numéro de la pièce (29) et sa description (30) figurent à côté du numéro de position sur la page de liste.

Informations données dans un Catalogue de Pièces de Rechange

La liste ci-dessous se rapporte au schéma (F) de la page i-6. Un Catalogue de Pièces de Rechange contient les informations suivantes concernant les groupes, sous-groupes et pièces de rechange de l'équipement :

- Référence de structure de groupe (22). Indique le groupe immédiatement supérieur dans la structure de liste de l'équipement.
- Nom du groupe (23)
- Unité de mesure (25)
- Quantité (26)
- Numéro de plan de montage (27)
- Groupe de pages de liste (28). Indiqué si la liste ou l'illustration du groupe comporte plusieurs pages.
- Numéro de pièce ou de sous-groupe (29)
- Nom du sous-groupe ou description de la pièce (30)
- Numéro de groupe (31)
- Numéro de l'équipement (32)
- Titre information du groupe (33) Indique si la section en-dessous du titre est destinée à une variante spécifique de la machine ou s'il s'agit d'une liste de pièces communes. Si une liste comprend plus d'une variante et que chaque variante a son propre plan de montage, une référence de page est donnée pour le plan de montage de la variante.
- Information interne (34)

Bevezetés

Kézikönyvre vonatkozó információk

A Tetra Pak javasolja, hogy az összes kapott kézikönyvet gondosan olvassa el. Gondoskodjon róla, hogy a kézikönyvek a berendezést üzemeltető és karbantartó személyzet számára elérhetők legyenek.

Fontos, hogy megőrizzék ezt a katalógust a berendezés élettartama alatt, és átadják a következő tulajdonosoknak és felhasználóknak.

A Tetra Pak nem vállal felelősséget a berendezés semmilyen megrongálódása esetén, ha nem követték a berendezéshez tartozó kézikönyvekben leírt utasításokat.

Szállított kézikönyvek

A berendezéssel szállított kézikönyvek az alábbiak lehetnek

- CM
  Az Átállási kézikönyv a műszaki szakemberek számára a berendezés különböző gyártási módjai közötti átállásra vonatkozó információkat tartalmaz.
- EM
  A Villamossági kézikönyv a berendezés elektronikai rendszerére vonatkozó információkat szolgáltat a műszaki szakemberek részére.
- IM
  Az Üzembe helyezési kézikönyv a berendezés biztonságos üzembe helyezésére vonatkozó információkat biztosít a technikai szakemberek részére.
- MM
  A Karbantartási kézikönyv a berendezés karbantartására vonatkozó információkat biztosít a technikai szakemberek részére.
- OM
  Az Üzemeltetési kézikönyv az üzemeltető személyzetnek szolgáltat a berendezés kezelésére és üzemeltetésére, a feldolgozás előtti, közbeni és utáni teendőkre vonatkozó információkat.
- SPC
  A Tartalékalkatrész-katalógus információt biztosít a pótalkatrészek Tetra Pak-tól történő megrendeléséhez.
- TeM
  A Technikai kézikönyv
  – a berendezés biztonságos üzembe helyezésére vonatkozó információkat biztosít a technikai szakemberek részére.
  – a berendezés karbantartására vonatkozó információkat biztosít a technikai szakemberek részére.
  – a gép/berendezés elektromos rendszerére vonatkotó információkat szolgáltat a technikai szakemberek számára.
  – információkat biztosít a pótalkatrészek Tetra Pak-tól történő megrendeléséhez.

Oldalelrendezés

Tekintse meg az i-5 oldalon lévő (A) ábrát: A Tartalékalkatrész-katalógus főoldalai egy rajzoldalból (1) és egy hozzá tartozó listaoldalból (7) állnak. Az oldalszám (5) a rajzoldal fejlécében és a listaoldal láblécében látható. A dokumentum száma (6) a listaoldal láblécében jelenik meg.

Oldalszámozás

Tekintse meg az i-5 oldalon lévő (A) ábrát: Az oldalszám (5) három részből áll:

- fejezetszám (2)
- folyamatos oldalszám (3) a fejezeten belül
- összes oldalszám (4) a fejezeten belül.

Bevezetés

Gyártó

A gyártó neve és címe a katalógus második oldalán található.

Szerviz

A gép valamely pótalkatrészének megrendelése vagy a berendezés működésével kapcsolatos zavarok bejelentése végett forduljon a legközelebbi Tetra Pak képviselethez.

Bármilyen más, a berendezésre illetve a dokumentációra vonatkozó kérdéseivel, megjegyzéseivel vagy javaslataival forduljon területi képviselőjéhez.

Azonosítás

CE besorolás

Ez a berendezés megfelel az Európai Gazdasági Régió (EEA) alapvető egészségügyi és biztonsági előírásainak.

Gépcímke

A(z) i-5 oldalon található (B) ábra a gépcímke egy példáját mutatja be. Egy érvényes gépcímkét és megfelelő elhelyezését ábrázoló rajz látható a berendezéssel szállított kézikönyv Bevezetés fejezetében. A gépcímke azokat az alább felsorolt adatokat tartalmazza, amelyek a Tetra Pak-kal történő, a berendezésre vonatkozó kommunikációhoz szükségesek.

- Géptípus (8)
- Térfogat (9)
- Tervrajzok (10)
- A gép sorozatszáma (11)
- Gyártó (12)
- CE jelzés (13)
- Gyártási év (14)

A(z) i-5 oldalon található (C) ábra a gép műszaki specifikációjának egy példáját mutatja be. Győződjön meg róla, hogy a kézikönyv első lapjain közölt berendezésadatok megegyeznek a gép adattábláján és a gép műszaki leírásában megjelenő információkkal.

A Tartalékalkatrész-katalógus használata

A tartalékalkatrész számának kikeresése

a) Tekintse meg a(z) i-5 oldalon lévő (D) ábrát: Lapozzon a keresett alkatrészt tartalmazó főcsoport mellett feltüntetett (15) számú fejezetre.

A b) és c) elemek az i-6 oldalon található ábrára vonatkoznak.

b) A főcsoport-ábrán keresse meg azt az alcsoportot (17), amelyik a keresett alkatrészt vagy alcsoportot tartalmazza. Jegyezze meg a pozíciószámot (18), majd lapozzon az ábrát követő listaoldalra.

c) Keresse meg a lejegyzett pozíciószámot/hivatkozási megjelölést (16) vagy a keresett alcsoport nevét (19). Lapozzon a jobb oldali oszlopban feltüntetett számú (20) oldalra. A Tetra Pak a hivatkozási jelöléseket mindig funkció-orientált struktúra alapján végzi el. Az előtaggal jelölt funkció-orientált struktúra (=) nem jelenik meg a hivatkozási jelölésben.

A d) és e) elemek az i-6 oldalon található (F) ábrára vonatkoznak.

d) Az alcsoport ábrán keresse meg a kívánt alkatrészt (21), és jegyezze meg az alkatrész pozíciószámát.

e) Az alkatrész száma (29) és leírása (30) a listaoldalon, a pozíciószám mellett látható.

A Tartalékalkatrész-katalógusban megtalálható információk

Az alábbi lista az i-6 oldalon található (F) ábrára vonatkozik.
A Tartalékalkatrész-katalógus a következő, csoportokra, alcsoportokra és pótalkatrészekre vonatkozó adatokat tartalmazza:

- Csoportstruktúra-hivatkozás (22). A berendezés listás struktúrájában közvetlenül az aktuális csoport fölött álló csoportot jelöli.
- Csoportnév (23)
- Mértékegység (25)
- Mennyiség (26)
- Összeszerelési rajzszám (27)
- Lista oldaltartománya (28). Abban az esetben jelenik meg, ha a csoport ábrája vagy listája többoldalas.
- Alkatrész vagy alcsoport száma (29)
- Alcsoport neve vagy alkatrész leírása (30)
- Csoportszám (31)
- Berendezésszám (32)
- Csoportinformáció fejléce (33). Azt mutatja, hogy a fejléc után következő rész egy speciális gépváltozatra vonatkozik vagy az általános pótalkatrészek listája. Ha a listának több változata van, és mindegyikhez saját összeszerelési rajz tartozik, az illető összeszerelési rajz oldalhivatkozása is megjelenik.
- Belső információ (34)

Inngangur

Upplýsingar um handbók

Tetra Pak mælir með því að allar handbækur sem afhentar eru séu lesnar vandlega. Gætið þess að afhentar handbækur séu tiltækar fyrir starfsfólk sem vinnur við eða viðheldur tækjabúnaðinum.

Það er mikilvægt að halda upp á þennan vörulista allan líftíma tækjabúnaðarins og að láta síðari eiganda eða notanda hafa vörulistann.

Ekki er hægt að gera Tetra Pak ábyrgt fyrir neinum skemmdum sem verða á tækjabúnaðinum vegna þess að ekki er farið eftir leiðbeiningunum í þeim handbókum sem fylgja tækjabúnaðinum.

Afhentar handbækur

Handbækur sem afhentar eru með þessum tækjabúnaði geta verið

- CM
  Breytingahandbók, sem veitir tæknimönnum upplýsingar um breytingar á tækjabúnaðinum milli mismunandi framleiðsluhama.
- EM
  Rafmagnshandbók, sem veitir tæknimönnum upplýsingar um rafkerfi tækjabúnaðarins.
- IM
  Uppsetningarhandbók, sem veitir tæknimönnum nauðsynlegar upplýsingar til að setja tækjabúnaðinn upp á öruggan hátt.
- MM
  Viðhaldshandbók, sem eitir tæknimönnum upplýsingar um viðhald tækjabúnaðarins.
- OM
  Notkunarhandbók, sem veitir stjórnandanum upplýsingar um meðhöndlun og notkun tækjabúnaðarins, fyrir, eftir og meðan á framleiðslu stendur.
- SPC
  Varahlutavörulisti, sem veitir nauðsynlegar upplýsingar til pöntunar varahluta frá Tetra Pak.
- TeM
  Tæknihandbók
  - sem veitir tæknimönnum nauðsynlegar upplýsingar til að setja tækjabúnaðinn upp á öruggan hátt
  - sem veitir tæknimönnum upplýsingar um viðhald tækjabúnaðarins
  - sem veitir tæknimönnum upplýsingar um rafkerfi vélarinnar/ tækjabúnaðarins
  - sem veitir nauðsynlegar upplýsingar til pöntunar varahluta frá Tetra Pak.

Umbrot

Sjá skýringarmynd (A) á síðu i-5: Aðalsíðurnar í Varahlutavörulistanum samanstanda af skýringarsíðu (1) og samsvarandi listasíðu (7). Síðunúmerið (5) er sýnt í haus síðunnar með skýringarmyndinni og í fæti listasíðunnar. Skjalnúmerið (6) er sýnt í fæti listasíðunnar.

Númerun síðu

Sjá skýringarmynd (A) á síðu i-5: Síðunúmer (5) er í þremur hlutum:

- kaflanúmer (2)
- samfellt síðunúmer innan kaflans (3)
- heildarfjölda blaðsíðna í kaflanum (4)

Kynning á vél

Framleiðandi

Fyrir nafn og heimilisfang framleiðanda, sjá síðu tvö í þessum vörulista.

Þjónusta

Til að panta varahluti fyrir þessa vél, eða til að tilkynna vandamál sem tengjast notkun þessarar vélar, skal hafa samband við næstu Tetra Pak skrifstofu.

Hafðu samband við Samskiptatengsl með aðrar fyrirspurnir, athugasemdir eða uppástungur varðandi tækjabúnaðinn og fylgiskjöl hans.

Kennsl

CE flokkun

Þessi tækjabúnaður er í samræmi við grundvallar heilbrigðis- og öryggisreglugerðir á Evrópska efnahags svæðinu (EES).

Nafnplata

Skýringarmynd (B) á síðu i-5 sýnir dæmi um nafnplötu.
Skýringarmynd af gildri nafnplötu og staðsetningu hennar á tækjabúnaðinum er sýnd í Inngangskafla handbókanna sem afhentar eru með þessum tækjabúnaði. Á nafnplötunni eru upplýsingarnar sem taldar eru upp hér að neðan, sem þörf er á þegar haft er samband við Tetra Pak varðandi þennan tiltekna tækjabúnað.

- Vélartegund (8)
- Fjöldi (9)
- Teikniupplýsingar (10)
- Raðnúmer vélar (11)
- Framleiðandi (12)
- CE merki (13)
- Framleiðsluár (14)

Skýringarmynd (C) á síðu i-5 sýnir dæmi um tæknilýsingu vélar. Gættu þess að upplýsingar um tækjabúnað sem talinn er upp á fremstu síðum þessarar handbóka samsvari upplýsingum á nafnplötu og tæknilýsingu vélar.

Hvernig nota á þennan Varahlutavörulista

Finndu varahlutarnúmer

a) Sjá skýringarmynd (D) á síðu i-5: Farðu í kaflanúmerið (15) sem gefið er til kynna við hlið aðalflokksins sem inniheldur hlutinn sem þú vilt finna.

Atriði b) og c) vísa til skýringarmyndar (E) á síðu i-6:

b) Á skýringarmynd aðalflokksins skaltu leita að undirflokki (17) vélarinnar, sem inniheldur hlutinn eða undirflokkinn sem þú ert að leita að. Taktu eftir stöðunúmerinu (18) og farðu á listasíðuna sem fylgir skýringarmyndinni.

c) Leitaðu að stöðunúmeri/tilvísunartitli (16) eða heiti undirflokksins (19). Farðu á samsvarandi síðunúmer (20) sem sýnt er í hægri dálkinum. Tetra Pak hefur kosið að nota alltaf sérhæfða skipan fyrir tilvísunartitla. Forskeytið sem gefur til kynna sérhæfða skipan (=) er ekki sýnt í tilvísunartitlinum.

Atriði d) og e) vísa til skýringarmyndar (F) á síðu i-6:

d) Finndu hlutinn (21) sem þú ert að leita að á undirflokksskýringarmyndinni og taktu eftir stöðunúmeri hlutarins.

e) Hlutarnúmerið (29) og lýsing hlutar (30) eru skráð hjá stöðunúmerinu á listasíðunni.

Upplýsingar skráðar í Varahlutavörulista

Listinn að neðan vísar til skýringarmyndar (F) á síðu i-6: Varahlutavörulisti inniheldur eftirfarandi upplýsingar um flokka, undirflokka og varahluti fyrir tækjabúnaðinn:

- Tilvísun flokkaskipunar (22). Gefur til kynna næsta flokk fyrir ofan í listaskipan tækjabúnaðarins.
- Heiti flokks (23)
- Mælieining (25)
- Magn (26)
- Númer samsetningarteikningar (27)
- Röð listasíðu (28). Fylgir með ef það eru margar blaðsíður í skýringarmynd eða lista flokksins.
- Númer hlutar eða undirflokks (29)
- Heiti undirflokks eða lýsing hlutar (30)
- Númer flokks (31)
- Númer tækjabúnaðar (32)
- Fyrirsögn flokkaskipunar (33). Gefur til kynna ef kaflinn fyrir neðan fyrirsögnina er fyrir sérstakt afbrigði vélar eða ef hann er listi yfir algenga hluti. Ef listi er með meira en eitt afbrigði og hvert afbrigði á sína eigin samsetningarteikningu, er sýnd blaðsíðutilvísun til samsetningarteikningar afbrigðisins.
- Innri upplýsingar (34)

Introduzione

Informazioni sul manuale

Tetra Pak consiglia di leggere con attenzione tutti i manuali forniti in dotazione. Assicurarsi che tutti i manuali in dotazione siano disponibili per il personale addetto al funzionamento o alla manutenzione della macchina.

È importante conservare il presente catalogo per tutta la durata della macchina e consegnarlo al successivo proprietario o utilizzatore.

Tetra Pak non sarà da ritenersi responsabile per eventuali danni alla macchina causati dal mancato rispetto delle istruzioni fornite nei manuali che accompagnano questa macchina.

Manuali in dotazione

I manuali consegnati con la presente macchina possono comprendere:

- CM (Manuale di conversione)
  Questo manuale fornisce ai tecnici le informazioni necessarie per la conversione della macchina da una modalità di produzione a un'altra.
- EM (Manuale elettrico)
  Questo manuale fornisce ai tecnici informazioni sull'impianto elettrico della macchina.
- IM (Manuale d'installazione)
  Questo manuale fornisce ai tecnici le informazioni necessarie per installare in sicurezza la macchina.
- MM (Manuale di manutenzione)
  Questo manuale fornisce ai tecnici le informazioni sulla manutenzione della macchina.
- OM (Manuale operativo)
  Questo manuale fornisce all'operatore le informazioni sull'utilizzo e il funzionamento della macchina prima, durante e dopo la produzione.
- SPC (Catalogo dei pezzi di ricambio)
  Questo catalogo fornisce le informazioni necessarie per ordinare i pezzi di ricambio a Tetra Pak.
- TeM (Manuale tecnico)
  Questo manuale:
  - fornisce ai tecnici le informazioni necessarie per installare in sicurezza la macchina
  - fornisce ai tecnici le informazioni sulla manutenzione della macchina
  - fornisce ai tecnici informazioni sull'impianto elettrico della macchina
  - fornisce le informazioni necessarie per ordinare i pezzi di ricambio a Tetra Pak.

Schema delle pagine

Consultare la figura (A) a pagina i-5: Le pagine principali di un Catalogo dei pezzi di ricambio sono costituite da una pagina con la figura (1) e una pagina elenco corrispondente (7). Il numero di pagina (5) è indicato nell'intestazione delle pagine con le figure e nel piè di pagina delle pagine elenco. Il codice del documento (6) è indicato nel piè di pagina delle pagine elenco.

Numerazione delle pagine

Consultare la figura (A) a pagina i-5: Il numero di pagina (5) è suddiviso in tre parti:

- numero del capitolo (2)
- numero progressivo di pagina all'interno del capitolo (3)
- numero totale di pagine nel capitolo (4)

Introduzione alla macchina

Fabbricante

Il nome e l'indirizzo del fabbricante sono riportati sulla seconda pagina del presente catalogo.

Assistenza

Per ordinare i pezzi di ricambio per questa macchina oppure per riferire problemi associati al funzionamento della macchina, contattare l'ufficio Tetra Pak più vicino.

Per tutte le altre richieste, commenti o suggerimenti per eventuali miglioramenti da apportare alla macchina e alla relativa documentazione, contattare il responsabile di collegamento.

Identificazione

Classificazione CE

Questa macchina è conforme alle principali norme sanitarie e di sicurezza dell'Area Economica Europea (EEA).

Targhetta della macchina

La figura (B) a pagina i-5 mostra un esempio di targhetta della macchina. Il capitolo Introduzione di tutti i manuali consegnati con la presente macchina contiene invece la figura della targhetta della macchina valida e la sua posizione sulla macchina. La targhetta riporta i dati elencati qui sotto, che sono necessari per contattare Tetra Pak in relazione a questa macchina specifica.

- Tipo di macchina (8)
- Volume (9)
- Specifiche disegno (10)
- Numero di matricola della macchina (11)
- Fabbricante (12)
- Marchio CE (13)
- Anno di fabbricazione (14)

La figura (C) a pagina i-5 mostra un esempio delle specifiche di una macchina. Verificare che i dati relativi alla macchina elencati nelle pagine iniziali del presente manuale corrispondano ai dati riportati sulla targhetta della macchina e nelle specifiche della macchina.

Come usare questo Catalogo dei pezzi di ricambio

Individuare il numero del pezzo di ricambio

a) Consultare la figura (D) a pagina i-5: andare al numero del capitolo (15) indicato accanto al gruppo principale che contiene il pezzo che si desidera individuare.

I punti b) e c) fanno riferimento alla figura (E) a pagina i-6.

b) Nella figura del gruppo principale, identificare il sottogruppo della macchina (17) che contiene il pezzo o il sottogruppo cercato. Annotare il numero di posizione (18) e andare alla pagina elenco che segue la figura.

c) Identificare il numero di posizione/l'indicazione di riferimento (16) o il nome del sottogruppo (19). Andare al numero di pagina corrispondente (20) indicato nella colonna di destra. Per le indicazioni di riferimento, Tetra Pak ha scelto di usare sempre la struttura "function-oriented". Il prefisso che indica la struttura "function-oriented" (=) non è mostrato nell'indicazione di riferimento.

I punti d) e e) fanno riferimento alla figura (F) a pagina i-6.

d) Individuare il pezzo (21) cercato sulla figura del sottogruppo e annotare il numero di posizione del pezzo.

e) Il numero del pezzo (29) e la descrizione del pezzo (30) sono indicati accanto al numero di posizione sulla pagina elenco.

Informazioni contenute nel Catalogo dei pezzi di ricambio

L'elenco seguente fa riferimento alla figura (F) a pagina i-6. Il Catalogo dei pezzi di ricambio contiene le seguenti informazioni sui gruppi, i sottogruppi e i pezzi di ricambio della macchina:

- Riferimento struttura gruppo (22). Indica il gruppo superiore successivo nella struttura elenco della macchina.
- Nome gruppo (23)
- Unità di misura (25)
- Quantità (26)
- Numero disegno di assemblaggio (27)
- Intervallo delle pagine elenco (28). Questa informazione è presente se la figura o l'elenco relativi al gruppo occupano più di una pagina del manuale.
- Numero pezzo o sottogruppo (29)
- Nome sottogruppo o descrizione pezzo (30)
- Numero gruppo (31)
- Numero macchina (32)
- Intestazione informazioni gruppo (33). Indica se la sezione che segue l'intestazione si riferisce a una variante di macchina specifica oppure se si tratta di un elenco di parti comuni. Se un elenco contiene più di una variante ed esiste un disegno di assemblaggio specifico per ogni variante, viene fornito il riferimento alla pagina in cui è mostrato il disegno di assemblaggio relativo alla variante.
- Informazioni interne (34)

Įvadas

Informacija apie instrukciją

"Tetra Pak" rekomenduoja atidžiai perskaityti visas pateiktas instrukcijas. Pasirūpinkite, kad instrukcijos būtų prieinamos darbuotojams, kurie eksploatuoja arba prižiūri įrangą.

Svarbu šį katalogą išsaugoti visą įrangos tarnavimo laiką ir perduoti jį kitam įrangos savininkui arba naudotojui.

"Tetra Pak" neprisiima atsakomybės už įrangos sugadinimą, jei nesilaikoma nurodymų, pateiktų prie šios įrangos pridedamuose kataloguose.

Pateikiamos instrukcijos

Su šia įranga pateikiamose instrukcijose gali būti

- CM
  Transformacijos instrukcija, suteikianti technikams informaciją apie įrangos transformavimą skirtingiems gamybos režimams.
- EM
  Elektrinės dalies instrukcija, suteikianti technikams informaciją apie įrangos elektros sistemą.
- IM
  Įrengimo instrukcija, suteikianti technikams informaciją, reikalingą norint saugiai sumontuoti įrangą.
- MM
  Techninės priežiūros instrukcija, suteikianti technikams informaciją apie įrangos priežiūrą.
- OM
  Eksploatavimo instrukcijos paskirtis yra suteikti informaciją operatoriui, kaip naudoti ir valdyti įrangą prieš gamybos procesą, jo metu ir po jo.
- SPC
  Atsarginių dalių katalogas, kuriame yra informacija, reikalinga atsarginėms dalims iš "Tetra Pak" užsakyti
- TeM
  Techninė instrukcija
  – suteikia technikams informaciją, reikalingą saugiai sumontuoti įrangą
  – suteikia technikams informaciją apie įrangos priežiūrą
  – suteikia technikams informaciją apie įrangos elektros sistemą
  – suteikia informaciją, reikalingą užsakyti iš "Tetra Pak" atsargines dalis

Puslapių išdėstymas

Žr. paveikslėlį (A) puslapyje i-5. Pagrindiniai atsarginių dalių katalogo puslapiai sudaryti iš paveikslėlio puslapio (1) ir atitinkamo sąrašo puslapio (7). Puslapio numeris (5) nurodomas paveikslėlio puslapio viršuje ir sąrašo puslapio apačioje. Dokumento numeris (6) nurodomas sąrašo puslapio apačioje.

Puslapių numeravimas

Žr. iliustraciją (A) puslapyje i-5. Puslapio numerį (5) sudaro trys dalys:

- skyriaus numeris (2)
- puslapio eilės numeris (3) skyriuje
- bendras puslapių skaičius (4) skyriuje

Įrenginio pristatymas

Gamintojas

Gamintojo pavadinimas ir adresas pateikti antrajame šio katalogo puslapyje.

Aptarnavimas

Jei reikia šiai įrangai užsakyti atsarginių dalių arba pranešti apie jos eksploatavimo nesklandumus, kreipkitės į artimiausią "Tetra Pak" biurą.

Su kitais klausimais, pastabomis ar įrangos ir jos dokumentacijos tobulinimo pasiūlymais kreipkitės į savo kontaktinį asmenį.

Identifikavimas

CE klasifikacija

Šis įrenginys atitinka esminius Europos ekonominės erdvės (EEE) sveikatos ir saugumo reikalavimus.

Vardinė plokštelė

Puslapyje i-5 pateiktame paveikslėlyje (B) parodytas įrangos vardinės plokštelės pavyzdys.
Atitinkamos įrangos vardinė plokštelė ir jos vieta ant įrangos parodoma su šia įranga pateikiamų instrukcijų įvade. Įrangos vardinėje plokštelėje pateikiami žemiau nurodyti duomenys, kurie reikalingi kreipiantis į "Tetra Pak" dėl konkretaus įrenginio.

- Mašinos tipas (8)
- Tomas (9)
- Brėžinių specifikacijos (10)
- Įrangos serijos numeris (11)
- Gamintojas (12)
- CE ženklas (13)
- Pagaminimo metai (14)

Paveikslėlyje (C) puslapyje i-5 parodytas įrangos specifikacijos pavyzdys. Patikrinkite, ar šios instrukcijos pirmuosiuose puslapiuose nurodyti duomenys atitinka duomenis vardinėje plokštelėje ir įrangos specifikaciją.

Kaip naudotis atsarginių dalių katalogu

Atsarginės dalies numerio suradimas

a) Žr. iliustraciją (D) puslapyje i-5. Atsiverskite skyrių (15), nurodytą šalia pagrindinio mazgo, kuriame yra jūsų ieškoma dalis.

Punktai b) ir c) atitinka paveikslėlį (E) puslapyje i-6.

b) Pagrindinio mazgo paveikslėlyje suraskite smulkesnį įrangos mazgą (17), kuriame yra jūsų ieškoma dalis arba mazgas. Pasižiūrėkite pozicijos numerį (18) ir suraskite jį toliau pateiktame sąraše.

c) Suraskite pozicijos numerį/pavadinimą (16) arba smulkesnio mazgo pavadinimą (19). Atsiverskite dešiniajame stulpelyje nurodytą puslapį (20). "Tetra Pak" nusprendė pavadinimuose visada naudoti paskirtį atitinkančią struktūrą. Pavadinimuose nepateikiamas paskirtį atitinkančios struktūros prefiksas (=).

Punktai d) ir e) atitinka paveikslėlį (F) puslapyje i-6.

d) Suraskite ieškomą dalį (21) smulkesnio mazgo paveikslėlyje ir pasižiūrėkite dalies pozicijos numerį.

e) Dalies numeris (29) ir dalies aprašymas (30) sąrašo puslapyje nurodyti šalia pozicijos numerio.

Atsarginių dalių kataloge pateikiama informacija

Žemiau pateiktas sąrašas atitinka paveikslėlį (F) puslapyje i-6. Atsarginių dalių kataloge apie įrangos mazgus, smulkesnius mazgus ir atsargines dalis pateikiama tokia informacija:

- Struktūrinė mazgo nuoroda (22). Nurodo stambesnį mazgą įrangos sąrašo struktūroje.
- Mazgo pavadinimas (23)
- Matavimo vienetai (25)
- Kiekis (26)
- Surinkimo brėžinio numeris (27)
- Sąrašo puslapių intervalas (28) Pateikiamas, jei mazgo paveikslėlis arba sąrašas užima kelis puslapius.
- Dalies arba smulkesnio mazgo numeris (29)
- Smulkesnio mazgo arba dalies aprašymas (30)
- Mazgo numeris (31)
- Įrangos numeris (32)
- Informacijos apie mazgą puslapio antraštė (33). Nurodo, ar po antrašte pateikta informacija yra specifinio įrangos varianto, ar tai paprastų dalių sąrašas. Jei yra daugiau kaip vienas sąrašo variantas ir kiekvienam variantui yra atskiras surinkimo brėžinys, nurodomas puslapis, kuriame pateiktas konkretaus varianto surinkimo brėžinys.
- Vidinė informacija (34)

Ievads

Informācija par rokasgrāmatu

Tetra Pak iesaka rūpīgi izlasīt visas piegādātās rokasgrāmatas. Jānodrošina, lai piegādātas rokasgrāmatas būtu pieejamas personālam, kas apkalpo iekārtas vai veic to apkopi.

Šo katalogu ir nepieciešams saglabāt visu laiku, kamēr iekārtas tiek izmantotas, un nodot katalogu nākamajam īpašniekam vai lietotājam.

Tetra Pak neatbild par jebkuriem iekārtas bojājumiem, kuri rodas līdz ar iekārtu piegādāto instrukciju neievērošanas rezultātā.

Piegādātas rokasgrāmatas

Līdz ar iekārtu var tikt piegādātas šādas rokasgrāmatas

- CM
  Pārslēgšanas rokasgrāmata sniedz tehniķiem informāciju par iekārtas pārslēgšanu dažādos atšķirīgos ražošanas režīmos.
- EM
  Elektriskās instalācijas rokasgrāmata sniedz tehniķiem informāciju par iekārtas elektriskās instalācijas sistēmu.
- IM
  Uzstādīšanas rokasgrāmata sniedz tehniķiem informāciju, kas nepieciešama drošai iekārtas uzstādīšanai.
- MM
  Apkopes rokasgrāmata sniedz tehniķiem informāciju par iekārtas apkopi.
- OM
  Ekspluatācijas rokasgrāmata sniedz apkalpojošajam personālam informāciju par iekārtas apkalpošanu un ekspluatēšanu pirms darba sākuma, darba laikā un pēc darba beigām.
- SPC
  Rezerves daļu katalogs sniedz informāciju, kas nepieciešama, lai pasūtītu rezerves daļas no Tetra Pak
- TeM
  Tehniskā rokasgrāmata
  - sniedz tehniķiem informāciju, kas nepieciešama drošai iekārtas uzstādīšanai
  - sniedz tehniķiem informāciju par iekārtas apkopi
  - sniedz tehniķiem informāciju par mašīnas/iekārtas elektrisko instalāciju
  - sniedz informāciju, kas nepieciešama, lai pasūtītu rezerves daļas no Tetra Pak.

Lappuses izkārtojums

Skatīt ilustrāciju (A) i-5 lappusē: Galvenās lappuses Rezerves daļu katalogā sastāv no ilustrāciju lapas (1) un atbilstīgās saraksta lapas (7). Lappuses numurs (5) ir norādīts ilustrāciju lapas galvenē un saraksta lapas kājenē. Dokumenta numurs (6) ir norādīts saraksta lapas kājenē.

Lappušu numerācija

Skatīt ilustrāciju (A) lappusē i-5: Lappuses numurs (5) sastāv no trim daļām:

- nodaļas numura (2)
- secīga lappuses numura nodaļas ietvaros (3)
- kopējā lappušu skaita nodaļā (3)

Iepazīstināšana ar iekārtu

Ražotājs

Ražotāja nosaukumu un adresi skatīt šī kataloga otrajā lappusē.

Serviss

Lai pasūtītu rezerves daļas šai mašīnai vai lai ziņotu par problēmām saistībā ar šīs mašīnas ekspluatāciju, sazinieties ar tuvāko Tetra Pak pārstāvniecību.

Ja Jums ir citi jautājumi, piezīmes vai ieteikumi par iekārtas un tās dokumentācijas uzlabošanu, tad lūdzam sazināties ar Sakaru biroju.

Identifikācija

EK klasifikācija

Šī iekārta atbilst galvenajām Eiropas Ekonomiskās Zonas (EEA) regulām, kuras attiecas uz veselību un drošību.

Mašīnas tipa plāksnīte

Ilustrācijā (B) i-5 lappusē ir redzams mašīnas tipa plāksnītes paraugs. Aktuālās mašīnas tipa plāksnīte un tās atrašanās vieta uz iekārtas ir parādīta līdz ar šo iekārtu piegādāto rokasgrāmatu Ievada nodaļā. Mašīnas tipa plāksnīte ietver turpmāk uzskaitīto informāciju, kura ir nepieciešama, sazinoties ar Tetra Pak par šo konkrēto iekārtu.

- Mašīnas tips (8)
- Daudzums (9)
- Rasējuma specifikācijas (10)
- Mašīnas sērijas numurs (11)
- Ražotājs (12)
- CE apzīmējums (13)
- Izgatavošanas gads (14)

Ilustrācijā (C) lappusē i-5 ir parādīts mašīnas specifikācijas paraugs. Pārliecinieties, ka šīs rokasgrāmatas titullapās minētā informācija par iekārtu atbilst tai, kas norādīta uz mašīnas tipa plāksnītes un mašīnas specifikācijā.

Rezerves daļu kataloga lietošana

Vajadzīgās rezerves daļas numura atrašana

a) Skatiet ilustrāciju (D) lappusē i-5: Atrodiet nodaļas numuru (15), kas norādīts līdzās galvenajai grupai, kurā ietilpst Jūsu meklētā rezerves daļa.

Pozīcijas b) un c) skatiet ilustrāciju (E) lappusē i-6.

b) Galvenās grupas ilustrācijā atrodiet mašīnas apakšgrupu (17), kurā ietilpst Jūsu meklētā detaļa vai apakšgrupa. Atzīmējiet pozīcijas numuru (18) un pievērsieties saraksta lappusei, kura seko šai ilustrācijai.

c) Sameklējiet atbilstīgo pozīcijas numuru (16) vai apakšgrupas nosaukumu (19). Pievērsieties atbilstīgajam lappuses numuram (20), kas norādīts ailē pa labi. Tetra Pak norādes apzīmēšanai ir izvēlējies vienmēr izmantot uz funkciju orientētu struktūru. Priedēklis, kas norāda uz funkciju orientētu struktūru (=), norādes apzīmējumā nav parādīts.

Pozīcijas d) un e) skatiet ilustrāciju (F) lappusē i-6.

d) Atrodiet vajadzīgo rezerves daļu (21) apakšgrupas ilustrācijā un atzīmējiet šīs detaļas pozīcijas numuru.

e) Šīs detaļas numurs (29) un apraksts (30) atrodas saraksta lapā līdzās pozīcijas numuram.

Rezerves daļu katalogā sniegtā informācija

Šis saraksts attiecas uz ilustrāciju (F) lappusē i-6. Rezerves daļu katalogs satur šādu informāciju par grupām, apakšgrupām un iekārtas rezerves daļām:

- Grupas struktūras norāde (22). Norāda nākamo augstāko grupu iekārtas saraksta struktūrā.
- Grupas nosaukums (23)
- Mērvienība (25)
- Skaits (26)
- Montāžas rasējuma numurs (27)
- Saraksta lappuses zona (28). Tiek izmantota tad, ja grupas ilustrācija vai saraksts ir uz vairākām lappusēm.
- Daļas vai apakšgrupas numurs (29)
- Apakšgrupas nosaukums vai daļas apraksts (30)
- Grupas numurs (31)
- Iekārtas numurs (32)
- Grupas informācijas iedaļas apzīmējums (33). Norāda, vai iedaļa zem šī apzīmējuma attiecas uz noteiktu mašīnas variantu, vai arī tas ir kopējo rezerves daļu saraksts. Ja sarakstam ir vairāk nekā viens variants un katram variantam ir savs montāžas rasējums, tad tiek dota atsauce uz lappusi, kur atrodams katra varianta montāžas rasējums.
- Iekšējā informācija (34)

Inleiding

Informatiehandboek

Tetra Pak adviseert alle meegeleverde handboeken zorgvuldig te lezen. Controleer of het bedienende of onderhoudspersoneel van de machine de beschikking heeft over de meegeleverde handboeken

Het is belangrijk deze catalogus tijdens de levensduur van de machine te bewaren en de catalogus door te geven aan iedere volgende eigenaar of gebruiker.

Tetra Pak stelt zich niet aansprakelijk voor eventuele schade aan de installatie als gevolg van het niet naleven van de instructies die in de meegeleverde handboeken worden gegeven.

Meegeleverde handboeken

De bij deze installatie meegeleverde handboeken omvatten

- CM
  Het conversiehandboek geeft technici informatie met betrekking tot de ombouw van de installatie tussen verschillende productiemodi.
- EM
  Het elektriciteitshandboek informeerttechnici omtrent het elektrischesysteem van de installatie.
- IM
  Het installatiehandboek informeert technici hoe men de installatie op veilige wijze installeert.
- MM
  Het onderhoudshandboek geeft technici informatie over het onderhoud van de installatie.
- OM
  Het bedieningshandboek informeert de operator betreffende het omgaan met en het bedienen van de installatie voor, tijdens en na de productie.
- SPC
  De reserveonderdelencatalogus geeft de nodige informatie omtrent het bestellen van reserveonderdelen bij Tetra Pak
- TeM
  Het technische handboek
  - informeert technici hoe men de installatie op veilige wijze installeert
  - informeert technici omtrent het onderhoud van de installatie
  - informeert technici omtrent het elektrische systeem van de machine/ installatie
  - informeert over welke informatie men nodig heeft om reserveonderdelen bij Tetra Pak te bestellen.

Pagina layout

Zie afbeelding (A) op pagina i-5: De belangrijkste bladzijden van een reserveonderdelencatalogus bestaan uit een bladzijde met afbeeldingen (1) en een bladzijde met een corresponderende lijst (7). Het bladzijde-nummer (5) is te vinden in de kop van een bladzijde met een afbeelding en in de voetnoot van een lijstbladzijde. Het documentennummer (6) is te vinden in de voetnoot van een lijstbladzijde.

Bladzijdenummering

Zie afbeelding (A) op pagina: i-5: Een bladzijdenummer (5) bestaat uit drie delen:

- hoofdstuknummer (2)
- opeenvolgend bladzijdenummer in het hoofdstuk (3)
- totaal aantal bladzijden in het hoofdstuk (4)

Introductie van de machine

Fabrikant

Zie de tweede bladzijde van deze catalogus voor naam en adres van de fabrikant.

Service

Neem voor het bestellen van reserveonderdelen voor deze machine, of om bedieningsproblemen met betrekking tot deze machine te melden, contact op met de dichtstbijzijnde Tetra Pak vestiging.

Neem contact op met de contactpersoon voor verdere informatie, opmerkingen of suggesties ter verbetering van de installatie en de bijbehorende documentatie.

Identificatie

CE-classificatie

Deze installatie voldoet aan de basisvoorschriften voor gezondheid en veiligheid voor het Europese Economische Gebied (EEG).

Machineplaatje

Afbeelding (B) op bladzijde i-5 toont een voorbeeld van een machineplaatje. Een afbeelding van het geldige machineplaatje en de plaatsing ervan worden getoond in de Inleiding van de handboeken, die bij deze installatie worden meegeleverd. Het machineplaatje bevat onderstaande gegevens, die men nodig heeft wanneer men omtrent de desbetreffende installatie contact opneemt met Tetra Pak.

- Machinetype (8)
- Volume (9)
- Specificatietekeningen (10)
- Serienummer van de machine (11)
- Fabrikant (12)
- CE-markering (13)
- Jaar van fabrikage (14)

Afbeelding (C) op pagina i-5 toont een voorbeeld van een machinespecificatie. Controleer of de gegevens betreffende de installatie op de eerste bladzijden van dit handboek overeenkomen met de gegevens op het machineplaatje en de machinespecificatie.

Gebruik van de reserveonderdelencatalogus

Vinden van het bestelnummer van een reserveonderdeel

a) Zie afbeelding (D) op pagina i-5: Ga naar het hoofdstuknummer (15) dat wordt aangeven naast de hoofdgroep waarin zich het door u gezochte onderdeel bevindt.

Items b) en c) verwijzen naar afbeelding (E) op pagina i-6.

b) Op de afbeelding van de hoofdgroep zoekt u de machinesubgroep (17), die het gezochte onderdeel of de gezochte subgroep bevat. Noteer het positienummer (18) en ga naar de lijstbladzijde die op de afbeelding volgt.

c) Zoek naar het positienummer/de referentie (16) of de subgroep-naam (19). Ga naar de corresponderende bladzijde (20) die in de rechterkolom staat vermeld. Tetra Pak heeft voor de benoeming van de referenties gekozen voor de functiegeoriënteerde structuur. De prefixaanduidende functiegeoriënteerde structuur (=) wordt niet in de referentie getoond.

Items d) en e) verwijzen naar afbeelding (F) op pagina i-6.

d) Zoek het gewenste deel (21) op de subgroepafbeelding en noteer het positienummer van het onderdeel.

e) Het bestelnummer (29) en de omschrijving (30) van het onderdeel staan naast het positienummer op de lijstbladzijde.

Informatie die in een reserveonderdelencatalogus wordt gegeven

De onderstaande lijst verwijst naar afbeelding (F) op bladzijde i-6. Een reserveonderdelencatalogus bevat de volgende informatie over groepen, subgroepen en reserveronderdelen voor de installatie:

- Referentie groepstructuur (22). Geeft de volgende hogere groep in de lijststructuur van de installatie aan.
- Groepsnaam (23)
- Meeteenheid (25)
- Hoeveelheid (26)
- Nummer montagetekening (27)
- Lijst bladzijdenreeks (28). Wordt vermeld wanneer er meerdere bladzijden in de groepsafbeelding of -lijst voorkomen.
- Deel- of subgroepnummer (29)
- Subgroepnaam of onderdeelbeschrijving (30)
- Groepsnummer (31)
- Machinenummer (32)
- Titel groepsinformatie (33). Geeft aan of het gedeelte onder de titel voor een specifieke machinesoort is of dat het een lijst met gebruikelijke onderdelen is. Indien een lijst meer dan één type bevat en ieder type zijn eigen montagetekening heeft, wordt een bladzijdereferentie getoond voor de montagetekening van het type.
- Interne informatie (34)

Introduksjon

Informasjon om manualen

Tetra Pak anbefaler at du leser nøye gjennom alle leverte manualer. Sørg for at manualene er tilgjengelige for alle som betjener eller vedlikeholder utstyret.

Det er viktig at du tar vare på denne katalogen under hele levetiden til utstyret og at du gir den videre til eventuelle nye eiere eller brukere.

Tetra Pak vil ikke være ansvarlig for skader på utstyret som oppstår fordi brukeren ikke følger instruksjonene i manualene som følger med utstyret.

Leverte manualer

Manualene som leveres med dette utstyret, kan inkludere

- CM
  Konverteringsmanualen gir teknikere informasjon om hvordan de konverterer utstyret mellom ulike produksjonsmodi.
- EM
  Den elektriske manualen gir teknikere informasjon om utstyrets elektriske system.
- IM
  Installasjonsmanualen gir teknikere informasjon som kreves for å kunne installere utstyret på en sikker måte.
- MM
  Vedlikeholdsmanualen gir teknikere informasjon om vedlikehold av utstyret.
- OM
  Driftsmanualen gir operatøren informasjon om hvordan han håndterer og bruker utstyret før, under og etter produksjon.
- SPC
  Reservedelskatalogen inneholder informasjon som du trenger for å bestille reservedeler fra Tetra Pak
- TeM
  Den tekniske manualen
  – gir teknikere informasjon om sikker installasjon av utstyret
  – gir teknikere informasjon om vedlikehold av utstyret
  – gir teknikere informasjon om maskinens/utstyrets elektriske system
  – inneholder informasjon som du trenger for å bestille reservedeler fra Tetra Pak.

Sideoppsett

Se illustrasjonen (A) på side i-5: Hovedsidene i reservedelskatalogen består av en illustrasjonsside (1) og en korresponderende listeside (7). Sidenummeret (5) vises i topteksten på illustrasjonssiden og i bunnteksten på listesiden. Dokumentnummeret (6) vises i bunnteksten på listesiden.

Sidenummerering

Se illustrasjonen (A) på side i-5: Et sidenummer (5) består av tre deler:

- kapittelnummer (2)
- etterfølgende sidenummer i kapitlet (3)
- det totale antall sider i kapitlet (4)

Introduksjon av maskinen

Produsent

Hvis du ønsker produsentens navn og adresse, kan du se side to i denne katalogen.

Service

Når du skal bestille reservedeler til denne maskinen eller rapportere problemer forbundet med driften av denne maskinen, må du kontakte ditt nærmeste Tetra Pak-kontor.

Når det gjelder andre forespørsler, kommentarer eller forslag til forbedringer av utstyret og dets dokumentasjon, kan du ta kontakt med din kontaktperson.

Identifisering

CE-klassifisering

Dette utstyret er i overensstemmelse med de grunnleggende helse- og sikkerhetsforskriftene i Det europeiske økonomiske samarbeidsområdet (EØS).

Maskinplate

Illustrasjonen (B) på side i-5 viser et eksempel på en maskinplate.
En illustrasjon av en gyldig maskinplate og hvor denne er plassert på utstyret, er vist i introduksjonskapitlet i manualene som følger med dette utstyret. Maskinplaten inneholder nedenstående data, som du trenger når du skal kontakte Tetra Pak angående dette bestemte utstyret.

- Maskintype (8)
- Volum (9)
- Tegningsspesifikasjoner (10)
- Maskin-serienummer (11)
- Produsent (12)
- CE-merke (13)
- Produksjonsår (14)

Illustrasjonen (C) på side i-5 viser et eksempel på en maskinspesifikasjon. Sørg for at utstyrsdataene som står oppført foran i denne manualen, samsvarer med dataene på maskinplaten og maskinspesifikasjonen.

Hvordan bruke denne reservedelskatalogen

Finn et reservedelsnummer

a) Se illustrasjonen (D) på side i-5: Gå til kapittelnummeret (15) som er angitt ved siden av hovedgruppen som inneholder delen du vil finne.

Punkt b) og c) viser til illustrasjonen (E) på side i-6.

b) På hovedgruppeillustrasjonen ser du etter maskinundergruppen (17) som inneholder delen eller undergruppen du ser etter. Merk deg posisjonsnummeret (18), og gå til listesiden som kommer etter illustrasjonen.

c) Se etter posisjonsnummeret/referansebetegnelsen (16) eller undergruppenavnet (19). Gå til det korresponderende sidenummeret (20) som står oppført i høyre kolonne. Tetra Pak har valgt å alltid bruke den funksjonsorienterte inndelingen for referansebetegnelse. Prefiksen som angir funksjonsorientert inndeling (=), er ikke vist i referansebetegnelsen.

Punkt d) og e) viser til illustrasjonen (F) på side i-6.

d) Finn delen (21) du ser etter på undergruppeillustrasjonen, og merk deg delens posisjonsnummer.

e) Delenummeret (29) og delebeskrivelsen (30) finner du ved siden av posisjonsnummeret på listesiden.

Informasjon i en reservedelskatalog

Listen nedenfor viser til illustrasjonen (F) på side i-6. En reservedelskatalog inneholder følgende informasjon om grupper, undergrupper og reservedeler for utstyret:

- Gruppeinndelingsreferanse (22). Angir den neste gruppen opp i inndelingen av utstyrslisten.
- Gruppenavn (23)
- Målenhet (25)
- Antall (26)
- Tegningsnummer (27)
- Listesideområde (28). Inkludert hvis det er flere sider i gruppe-illustrasjonen eller listen.
- Dele- eller undergruppenummer (29)
- Undergruppenavn eller delebeskrivelse (30)
- Gruppenummer (31)
- Utstyrsnummer (32)
- Gruppeinformasjonsoverskrift (33). Angir om avsnittet under overskriften er for en bestemt maskinvariant eller om det er en liste over vanlige deler. Hvis en liste har flere varianter og hver variant har sin egen sammenstillingstegning, vises det en sidereferanse til variantens sammenstillingstegning.
- Intern informasjon (34)

Wprowadzenie

Informacje na temat instrukcji

Firma Tetra Pak zaleca dokładne przeczytanie wszystkich dostarczonych instrukcji. Należy upewnić się, że dostarczone instrukcje są dostępne dla personelu, który obsługuje lub konserwuje maszynę.

Należy przechowywać ten katalog przez cały okres użytkowania maszyny i przekazać go kolejnemu właścicielowi lub użytkownikowi.

Firma Tetra Pak nie będzie ponosić odpowiedzialności za jakiekolwiek uszkodzenia maszyny spowodowane niestosowaniem się do zaleceń zawartych w instrukcjach dostarczonych z maszyną.

Dostarczone instrukcje

W skład dokumentacji dostarczonej z maszyną wchodzą:

- Instrukcja konwersji (CM)
  W tej instrukcji zawarte są informacje dotyczące dostosowania maszyny do różnych trybów produkcji.
- Instrukcja dotycząca wyposażenia elektrycznego (EM)
  W tej instrukcji zawarte są informacje dotyczące układu elektrycznego maszyny.
- Instrukcja instalacji (IM)
  W tej instrukcji zawarte są informacje niezbędne do bezpiecznego zainstalowania maszyny.
- Instrukcja konserwacji (MM)
  W tej instrukcji zawarte są informacje dotyczące konserwacji maszyny.
- Instrukcja obsługi (OM)
  W tej instrukcji zawarte są informacje dotyczące obsługi maszyny przed rozpoczęciem produkcji, w jej trakcie oraz po jej zakończeniu.
- Katalog części zamiennych (SPC)
  W katalogu zawarte są informacje dotyczące zamawiania części zamiennych w firmie Tetra Pak.
- Instrukcja techniczna (TeM)
  Instrukcja techniczna zawiera informacje:
  - dotyczące bezpiecznego instalowania maszyny,
  - dotyczące konserwacji maszyny,
  - dotyczące układu elektrycznego maszyny,
  - dotyczące zamawiania części zamiennych w firmie Tetra Pak.

Układ strony

Patrz rysunek (A) na stronie i-5: Główne strony w Katalogu części zamiennych składają się ze strony zawierającej rysunek (1) i odpowiadającej jej strony zawierającej listę (7). Numer strony (5) znajduje się w nagłówku strony zawierającej rysunek i w stopce strony zawierającej listę. Numer dokumentu (6) znajduje się w stopce strony zawierającej listę.

Numeracja stron

Patrz rysunek (A) na stronie i-5: Numer strony (5) składa się z trzech części:

- numeru rozdziału (2),
- kolejnego numeru strony w rozdziale (3),
- całkowitej liczby stron w rozdziale (4).

Ogólne informacje o maszynie

Producent

Nazwę i adres producenta można znaleźć na drugiej stronie niniejszego katalogu.

Serwis

Aby zamówić części zapasowe do tej maszyny lub zgłosić problemy związane z jej pracą, należy skontaktować się z najbliższym biurem Tetra Pak.

Można kontaktować się także w przypadku innych zapytań, uwag lub sugestii dotyczących udoskonalenia urządzenia i dokumentacji.

Identyfikacja

Klasyfikacja CE

Maszyna spełnia podstawowe wymogi z zakresu bezpieczeństwa i ochrony zdrowia obowiązujące w Europejskiej Strefie Ekonomicznej (EEA).

Tabliczka znamionowa

Na rysunku (B), znajdującym się na stronie i-5, pokazano przykładową tabliczkę znamionową.
Rysunek prawidłowej tabliczki znamionowej oraz jej umiejscowienie na maszynie pokazano w rozdziale Wprowadzenie zawartym w instrukcjach dostarczonych z maszyną. Tabliczka znamionowa zawiera następujące dane potrzebne w przypadku kontaktowania się z firmą Tetra Pak w sprawie dotyczącej danej maszyny:

- typ maszyny (8),
- objętość (9),
- specyfikacje rysunkowe (10),
- numer seryjny maszyny (11),
- nazwę producenta (12),
- oznaczenie CE (13),
- rok produkcji (14).

Na rysunku (C) zamieszczonym na stronie i-5 pokazano przykład specyfikacji maszyny. Należy sprawdzić, czy dane dotyczące maszyny przedstawione na pierwszej stronie tej instrukcji odpowiadają danym zawartym na tabliczce znamionowej maszyny oraz specyfikacji maszyny.

Jak korzystać z niniejszego Katalogu części zamiennych

Należy odnaleźć numer części zamiennej

a) Zapoznaj się z rysunkiem (D) na stronie i-5: przejdź do numeru rozdziału (15) pokazanego obok głównej grupy zawierającej część, którą chcesz odszukać.

Punkty b) i c) odnoszą się do rysunku (E) na stronie i-6.

b) Na rysunku grupy głównej odszukaj podgrupę maszyny (17), która zawiera odpowiednią część lub podgrupę, której szukasz. Zanotuj numer pozycji (18) i przejdź do strony z listą odpowiadającą rysunkowi.

c) Odszukaj numer pozycji/oznaczenie odnośnika (16) lub nazwę podgrupy (19). Przejdź do odpowiedniego numeru strony (20) podanego w kolumnie umieszczonej po prawej stronie. Firma Tetra Pak w przypadku oznaczenia odnośnika korzysta ze struktury ukierunkowanej na funkcję. Przedrostek wskazujący strukturę ukierunkowaną na funkcję (=) nie jest pokazany w oznaczeniu odnośnika.

Punkty d) i e) odnoszą się do rysunku (F) na stronie i-6.

d) Na rysunku podgrupyodszukaj odpowiednią część (21) i zanotuj numer pozycji części.

e) Numer części (29) oraz jej opis (30) podano na stronie zawierającej listę obok numeru pozycji.

Informacje zawarte w Katalogu części zamiennych

Poniższa lista odnosi się do rysunku (F), znajdującego się na stronie i-6. Katalog części zamiennych zawiera następujące informacje o grupach, podgrupach oraz częściach zamiennych maszyny:

- Odnośnik struktury grup (22). Wskazuje następną wyższą grupę zawartą w strukturze listy maszyny.
- Nazwa grupy (23).
- Jednostka miary (25).
- Liczba (26).
- Numer rysunku złożeniowego (27).
- Zakres stron zawierających listę (28). Podany w przypadku występowania wielu stron zawierających rysunek grupy lub listę.
- Numer części lub podgrupy (29).
- Nazwa podgrupy lub opis części (30).
- Numer grupy (31).
- Numer maszyny (32).
- Nagłówek informacyjny grupy (33). Wskazuje, czy sekcja umieszczona pod nagłówkiem dotyczy określonego wariantu maszyny, czy też jest to lista wspólna dla wszystkich wariantów. Jeśli lista występuje w wielu wariantach i dla każdego z nich dostępny jest osobny rysunek złożeniowy, podany jest odnośnik strony do rysunku złożeniowego dla danego wariantu.
- Informacje wewnętrzne (34).

Introdução

Informações sobre o Manual

A Tetra Pak recomenda que leia atentamente todos os manuais incluídos. Certifique-se de que os manuais incluídos estão disponíveis para o pessoal que utiliza ou faz a manutenção do equipamento.

É importante que mantenha este catálogo durante toda a vida útil do equipamento, devendo ainda ser fornecido a quaisquer proprietários e operadores subsequentes do mesmo.

A Tetra Pak não será responsável por quaisquer danos no equipamento provocados pelo não seguimento das instruções fornecidas nos manuais que acompanham este equipamento.

Manuais Fornecidos

Os manuais fornecidos com este equipamento podem incluir

- CM
  O Manual de Conversão (Conversion Manual) fornece aos técnicos informações sobre a conversão do equipamento entre modos de produção diferentes.
- EM
  O Manual Eléctrico (Electrical Manual) fornece aos técnicos informações sobre o sistema eléctrico do equipamento.
- IM
  O Manual de Instalação (Installation Manual) fornece aos técnicos as informações necessárias à instalação do equipamento em segurança.
- MM
  O Manual de Manutenção (Maintenance Manual) fornece aos técnicos informações sobre como realizar a manutenção do equipamento.
- OM
  O Manual de Funcionamento (Operation Manual) fornece ao operador informações sobre o manuseamento e funcionamento do equipamento antes, durante e após a produção.
- SPC
  O Spare Parts Catalogue (Catálogo das Peças Sobressalentes) fornece as informações necessárias para encomendar peças sobressalentes à Tetra Pak
- TeM
  O Manual Técnico (Technical Manual)
  - fornece aos técnicos as informações necessárias à instalação do equipamento em segurança
  - fornece aos técnicos informações sobre a manutenção do equipamento
  - fornece aos técnicos informações sobre o sistema eléctrico da máquina/equipamento
  - fornece as informações necessárias para encomendar peças sobressalentes à Tetra Pak.

Desenho da Página

Consulte a ilustração (A) na página i-5: As páginas principais num Catálogo de Peças Sobressalentes são constituídas por uma página de ilustração (1) e uma página de lista correspondente (7). O número de página (5) é apresentado no cabeçalho de uma página de ilustração e no rodapé de uma página de lista. O número do documento (6) é apresentado no rodapé de uma página de lista.

Numeração das Páginas

Consulte a ilustração (A) na página i-5: Um número de página (5) tem três partes:

- número do capítulo (2)
- número das páginas consecutivas dentro do capítulo (3)
- número de páginas total no capítulo (4)

Introdução da Máquina

Fabricante

Quanto ao nome e endereço do fabricante, consulte a segunda página deste catálogo.

Manutenção

Para encomendar peças sobressalentes para esta máquina ou para apresentar relatórios de problemas associados com o funcionamento desta máquina, contacte os escritórios mais próximos da Tetra Pak.

Contacte a Ligação com outras questões, comentários ou sugestões para melhoria referentes ao equipamento e à sua documentação.

Identificação

Classificação da CE

Este equipamento está em conformidade com as regulamentações básicas da saúde e segurança da Área Económica Europeia (AEE).

Chapa de Identificação da Máquina

A ilustração (B) na página i-5 mostra um exemplo de uma chapa de identificação da máquina.
No capítulo Introdução dos manuais entregues com este equipamento é apresentada uma ilustração da chapa de identificação válida da máquina e a sua localização no equipamento. A chapa de identificação da máquina contém os dados listados em baixo, necessários quando contactar a Tetra Pak em relação a este equipamento específico.

- Tipo de máquina (8)
- Volume (9)
- Especificações do desenho (10)
- Número de série da máquina (11)
- Fabricante (12)
- Marca da CE (13)
- Ano de fabricação (14)

A ilustração (C) na página i-5 mostra um exemplo de uma especificação da máquina. Certifique-se de que os dados do equipamento listados nas primeiras páginas deste manual correspondem aos dados indicados na chapa de identificação da máquina e às especificações da máquina.

Como utilizar este Catálogo de Peças Sobressalentes

Localize o Número da Peça Sobressalente

a) Consulte a ilustração (D) na página i-5: Vá para o número do capítulo (15) indicado no grupo principal que contém a peça que pretende localizar.

Os itens b) e c) referem-se à ilustração (E) na página i-6:

b) Na ilustração do grupo principal, procure o subgrupo da máquina (17) que contém a peça ou o subgrupo que procura. Tome nota do número de posição (18) e vá para a página de lista a seguir à ilustração.

c) Procure o número de posição/designação de referência (16) ou o nome do subgrupo (19). Vá para o número de página correspondente (20) indicado na coluna do lado direito. A Tetra Pak preferiu utilizar sempre a estrutura orientada para a função como designação de referência. O prefixo que inicia a estrutura orientada para a função (=) não está indicada na designação de referência.

Os itens d) e e) referem-se à ilustração (F) na página i-6:

d) Localize a peça (21) que procura na ilustração do subgrupo e tome nota do número de posição da peça.

e) O número de peça (29) e a descrição da peça (30) são apresentados ao lado do número da posição na página de lista.

Informações listadas num Catálogo de Peças Sobressalentes

A lista em baixo refere-se à ilustração (F) na página i-6: Um Catálogo de Peças Sobressalentes contém as seguintes informações sobre grupos, subgrupos e peças sobressalentes para o equipamento:

- Referência da estrutura do grupo (22). Indica o grupo mais elevado seguinte na estrutura da lista do equipamento.
- Nome do grupo (23)
- Unidade de medida (25)
- Quantidade (26)
- Número de série do conjunto (27)
- Intervalo de páginas da lista (28). Incluído se existirem várias páginas na ilustração ou na lista do grupo.
- Número de peça ou subgrupo (29)
- Nome do subgrupo ou descrição da peça (30)
- Número do grupo (31)
- Número do equipamento (32)
- Cabeçalho das informações do grupo (33). Indica se a secção em baixo do cabeçalho é de uma variante específica da máquina ou se é uma lista de peças comuns. Se uma lista tiver mais de uma variante e cada variante tiver o seu próprio desenho de conjunto, é apresentada uma referência de página ao desenho do conjunto da variante.
- Informações internas (34)

Introducere

Informații despre manual

Tetra Pak recomandă citirea cu atenție a tuturor manualelor livrate. Asigurați-vă că manualele livrate sunt puse la îndemâna personalului care exploatează sau întreține echipamentul.

Este important să păstrați acest catalog pe întreaga durată de viață a echipamentului și să transmiteți catalogul deținătorilor sau utilizatorilor ulteriori.

Tetra Pak nu va fi răspunzător pentru niciun defect al echipamentului cauzat prin nerespectarea instrucțiunilor date în manualele care însoțesc acest echipament.

Manuale livrate

Manualele livrate cu acest echipament pot include

- CM
  Manualul de conversie furnizează tehnicienilor informații despre conversia echipamentului între diferite moduri de producție.
- EM
  Manualul electric furnizează tehnicienilor informații despre sistemul electric al echipamentului.
- IM
  Manualul de instalare furnizează tehnicienilor informații necesare pentru instalarea în siguranță a echipamentului.
- MM
  Manualul de întreținere furnizează tehnicienilor informații cu privire la întreținerea echipamentului.
- OM
  Manualul de exploatare pune la dispoziție operatorilor informații despre manevrarea și exploatarea echipamentului înainte, în timpul și după producție.
- SPC
  Catalogul pieselor de schimb furnizează informații necesare pentru comandarea pieselor de schimb de la Tetra Pak.
- TeM
  Manualul tehnic
  – furnizează tehnicienilor informații necesare pentru instalarea în siguranță a echipamentului
  – furnizează tehnicienilor informații necesare cu privire la întreținerea echipamentului
  – furnizează tehnicienilor informații despre sistemul electric al mașinii/echipamentului
  – furnizează informații necesare pentru comandarea pieselor de schimb de la Tetra Pak.

Configurația paginilor

Examinați ilustrația (A) de pe pagina i-5: Paginile principale dintr-un catalog de piese de schimb constau dintr-o pagină de ilustrare (1) și o pagină de liste corespunzătoare (7). Numărul paginii (5) apare în antetul unei pagini de ilustrare și în subsolul unei pagini de liste. Numărul documentului (6) apare în subsolul unei pagini de liste.

Numerotarea paginilor

Examinați ilustrația (A) de la pagina i-5: Un număr de pagină (5) are trei părți:

- numărul capitolului (2)
- numărul paginii consecutive din cadrul capitolului (3)
- număr total de pagini din capitol (4)

Prezentare introductivă a mașinii

Producător

Pentru numele și adresa producătorului, consultați pagina a doua a acestui catalog.

Service

Pentru comandarea pieselor de schimb pentru această mașină sau pentru a raporta problemele asociate cu exploatarea acestei mașini, contactați cel mai apropiat birou Tetra Pak.

Contactați Liaison cu privire la alte întrebări, comentarii sau sugestii legate de îmbunătățirea echipamentului și a documentației acestuia.

Identificare

Clasificare CE

Acest echipament este fabricat în conformitate cu reglementările de bază cu privire la sănătate și siguranță din Zona economică europeană (EEA).

Plăcuța mașinii

Ilustrația (B) de la pagina i-5 arată un exemplu al unei plăcuțe de mașină. O ilustrație a plăcuței valide a mașinii și a poziției acesteia pe echipament este arătată în capitolul introductiv al manualelor livrate împreună cu acest echipament. Plăcuța mașinii conține datele listate mai jos, necesare în cazul în care contactați Tetra Pak în legătură cu acest echipament specific.

- Tip mașină (8)
- Volum (9)
- Specificații de desen (10)
- Număr de serie al mașinii (11)
- Producător (12)
- Marcaj CE (13)
- Anul fabricației (14)

Ilustrația (C) de la pagina i-5 arată un exemplu al unei specificații de mașină. Asigurați-vă că datele specifice echipamentului, listate în paginile din față ale acestui manual, corespund cu datele de pe plăcuța mașinii și cu specificațiile mașinii.

Cum se utilizează acest catalog de piese de schimb

Localizarea unui număr de piesă de schimb

a) Examinați ilustrația (D) de la pagina i-5: Treceți la numărul de capitol (15) indicat lângă grupa principală care conține piesa pe care doriți să o localizați.

Articolele b) și c) se referă la ilustrația (E) de la pagina i-6.

b) Pe ilustrația grupei principale, căutați subgrupa aferentă mașinii (17) care conține piesa sau subgrupa pe care o căutați. Notați numărul poziției (18) și treceți la pagina de liste care urmează după ilustrație.

c) Căutați numărul poziției/marcarea de referință (16) sau numele subgrupei (19). Treceți la numărul de pagină corespunzător (20) listat în coloana din partea dreaptă. Tetra Pak a optat ca întotdeauna să utilizeze structura orientată pe funcție pentru marcarea de referință. Prefixul care indică structura orientată pe funcție (=) nu este arătat în marcarea de referință.

Articolele d) și e) se referă la ilustrația (F) de la pagina i-6.

d) Localizați piesa (21) pe care o căutați pe ilustrația subgrupei și notați numărul de poziție al piesei.

e) Numărul piesei (29) și descrierea piesei (30) sunt listate lângă numărul de poziție de pe pagina de liste.

Informațiile listate într-un catalog de piese de schimb

Lista de mai jos se referă la ilustrația (F) de la pagina i-6. Un catalog de piese de schimb conține următoarele informații despre grupe, subgrupe și piese de schimb pentru echipament:

- Referința despre structura grupelor (22). Indică următoarea grupă superioară din structura de liste a echipamentului.
- Numele grupei (23)
- Unitatea de măsură (25)
- Cantitatea (26)
- Numărul de desen de ansamblu (27)
- Intervalul de pagini de liste (28). Inclus dacă există mai multe pagini în ilustrația sau lista grupei.
- Numărul piesei sau al subgrupei (29)
- Numele subgrupei sau descrierea piesei (30)
- Numărul grupei (31)
- Numărul echipamentului (32)
- Antet cu informații despre grupă (33). Indică dacă secțiunea de sub antet se referă la o anumită variantă de mașină sau este o listă de piese comune. Dacă o listă are mai multe variante și fiecare variantă are propriul său desen de ansamblu, este arătată o referință de pagină pentru desenul de ansamblu al variantei.
- Informații interne (34)

Úvod

Informácie o návode

Spoločnosť Tetra Pak odporúča, starostlivo si prečítať všetky dodané návody. Dbajte, aby pracovníci, obsluhujúci zariadenie alebo zabezpečujúci jeho údržbu, mali vždy dodané návody k dispozícii.

Je dôležité, aby bol tento katalóg k dispozícii počas celého času životnosti zariadenia, a aby sa katalóg dostal aj k jeho prípadnému ďalšiemu držiteľovi alebo používateľovi.

Spoločnosť Tetra Pak nepreberá zodpovednosť za akékoľvek poškodenie zariadenia spôsobené nedodržaním pokynov uvedených v návodoch dodávaných s týmto zariadením.

Dodané návody

S týmto zariadením vám mohli byť dodané nasledujúce návody:

- CM
  Návod na prestavovanie poskytuje technikom informácie o prestavovaní zariadenia do rôznych výrobných režimov.
- EM
  Elektrotechnický návod poskytujetechnikom informácie o elektrickom systéme zariadenia.
- IM
  Návod na inštaláciu poskytuje technikom informácie potrebné na bezpečnú inštaláciu zariadenia.
- MM
  Návod na údržbu poskytujetechnikom informácie o údržbe zariadenia.
- OM
  Návod na obsluhu poskytuje obsluhe informácie o zaobchádzaní a obsluhe zariadenia pred, počas a po prevádzke.
- SPC
  Katalóg náhradných dielcov poskytuje informácie potrebné na objednávanie náhradných dielcov od spoločnosti Tetra Pak
- TeM
  Technický návod
  - poskytuje technikom informácie potrebné na bezpečnú inštaláciu zariadenia
  - poskytuje technikom informácie o údržbe zariadenia
  - poskytuje technikom informácie o elektrickom systéme stroja/ zariadenia
  - poskytuje informácie potrebné na objednávanie náhradných dielcov od spoločnosti Tetra Pak.

Rozloženie strany

Pozri ilustráciu (A) na strane i-5: Hlavné strany Katalógu náhradných dielcov obsahujú stránku s ilustráciami (1) a príslušnú stranu so zoznamom (7). Číslo strany (5) sa uvádza v záhlaví na strane s ilustráciami a v päte strany so zoznamom. Číslo dokumentu (6) sa uvádza v päte strany so zoznamom.

Číslovanie strán

Pozri ilustráciu (A) na strane i-5: Číslo strany (5) má tri časti:

- číslo kapitoly (2)
- poradové číslo strany v rámci kapitoly (3)
- celkový počet strán v kapitole (4)

Základné informácie o stroji

Výrobca

Meno a adresa výrobcu sa uvádza na druhej strane tohto katalógu.

Servis

Pri objednávaní náhradných dielcov pre tento stroj alebo na nahlasovanie problémov súvisiacich s prevádzkou tohto stroja sa obráťte na najbližšie zastúpenie spoločnosti Tetra Pak.

S ostatnými otázkami, pripomienkami a podnetmi na vylepšenie stroja alebo zariadenia a jeho dokumentácie sa obracajte na kontaktnú osobu.

Identifikácia

Klasifikácia CE

Toto zariadenie spĺňa základné predpisy o ochrane zdravia a bezpečnosti Európskeho hospodárskeho priestoru (EEA).

Typový štítok stroja

Na ilustrácii (B) na strane i-5 uvádzame príklad typového štítku. Ilustrácia platného typového štítku stroja a jeho umiestnenia na zariadení sa uvádza v kapitole Úvod v návodoch, dodaných s týmto zariadením. Typový štítok obsahuje dolu údaje uvedené, potrebné pri kontaktoch so spoločnosťou Tetra Pak ohľadom tohto špecifického zariadenia.

- Typ stroja (8)
- Objem (9)
- Údaje o výkrese (10)
- Výrobné číslo stroja (11)
- Výrobca (12)
- Značka CE (13)
- Rok výroby (14)

Ilustrácia (C) na strane i-5 zobrazuje príklad špecifikácie stroja. Presvedčite sa, že údaje zariadenia uvedené na predných stranách tohto návodu zodpovedajú údajom na typovom štítku a v špecifikácii stroja.

Ako sa tento Katalóg náhradných dielcov používa

Vyhľadanie čísla náhradného dielca

a) Pozri ilustráciu (D) na strane i-5: Prejdite na číslo kapitoly (15) uvedené vedľa hlavnej skupiny obsahujúcej dielec, ktorý chcete vyhľadať.

Položky b) a c) odkazujú na ilustráciu (E) na strane i-6.

b) Na ilustrácii hlavnej skupiny hľadajte podskupinu stroja (17), ktorý obsahuje dielec alebo podskupinu, ktorú hľadáte. Poznamenajte si číslo položky (18) a prejdite stranu so zoznamom nasledujúcu po ilustrácii.

c) Vyhľadajte číslo položky/referenčné označenie (16) alebo názov podskupiny (19). Prejdite na príslušné číslo strany (20) uvedené v zozname v pravom stĺpci. Spoločnosť Tetra Pak sa rozhodla vždy používať funkčne zameranú štruktúru na referenčné označovanie. Predčíslie udávajúce funkčne orientovanú štruktúra (=) sa v referenčnom označení nezobrazuje.

Položky d) a e) odkazujú na ilustráciu (F) na strane i-6.

d) Nájdite dielec (21), ktorý hľadáte, na ilustrácii podskupiny a poznamenajte si číslo položky daného dielca.

e) Číslo dielca (29) a popis dielca (30) sa uvádza vedľa čísla položky na stránke so zoznamom.

Informácie uvádzané v Katalógu náhradných dielcov

Dolu uvedený zoznam odkazuje na ilustráciu (F) na strane i-6. Katalóg náhradných dielcov obsahuje nasledujúce informácia o skupinách, podskupinách a náhradných dielcov zariadenia:

- Referenčná štruktúrna skupina (22). Označuje najbližšiu vyššiu skupinu v štruktúre zoznamu zariadenia.
- Názobv skupiny (23)
- Jednotka merania (25)
- Množstvo (26)
- Číslo výkresu celkovej zostavy (27)
- Rozsah strán zoznamu (28). Uvádza sa, ak má ilustrácia alebo zoznam skupiny viac strán.
- Číslo dielca alebo podskupiny (29)
- Názov podskupiny alebo popis dielca (30)
- Číslo skupiny (31)
- Číslo zariadenia (32)
- Záhlavie informácií o skupine (33). Uvádza, či je časť nasledujúca pod záhlavím určená pre špecifický variant stroja, alebo či ide o zoznam spoločných dielcov. Ak má zoznam viac ako jeden variant a každý z variantov má vlastný výkres celkovej zostavy, uvádza sa odkaz na stranu s výkresom zostavy daného variantu.
- Interné informácie (34)

Uvod

Informacije o priročnikih

Tetra Pak priporoča, da natančno preberete vse priložene priročnike. Osebje, ki upravlja in vzdržuje opremo mora imeti dostop do priloženih priročnikov.

Katalog hranite v celotnem času uporabe opreme. V primeru, ko opremo pridobi drug imetnik ali uporabnik, mu obenem izročite tudi katalog.

Podjetje Tetra Pak ne prevzema odgovornosti za poškodbe na opremi, ki nastanejo zaradi neupoštevanja navodil iz priročnikov, ki so priloženi opremi.

Priloženi priročniki

Priročniki, ki so priloženi tej opremi, lahko vključujejo

- Priročnik za zamenjavo (CM)
  V tem priročniku so podatki, ki tehnikom omogočajo izvesti zamenjavo opreme med različnimi načini proizvodnje.
- Elektrotehnični priročnik (EM)
  Priročnik vsebuje podatke za tehnike o električnem sistemu opreme.
- Priročnik za montažo (IM)
  Priročnik vsebuje podatke, ki jih tehniki potrebujejo za varno montažo opreme.
- Priročnik za vzdrževanje (MM)
  Priročnik vsebuje podatke za tehnike o vzdrževanju opreme.
- Priročnik za obratovanje (OM)
  Priročnik je namenjen informiranju za pravilno rokovanje in upravljanje s strojem pred, med in po proizvodnem postopku.
- Katalog nadomestnih delov (SPC)
  Katalog vsebuje potrebne podatke za naročilo nadomestnih delov pri podjetju Tetra Pak.
- Tehnični priročnik (TeM)
  Priročnik
  - vsebuje podatke, ki jih tehniki potrebujejo za varno montažo opreme;
  - vsebuje podatke za tehnike o vzdrževanju opreme;
  - vsebuje podatke za tehnike o električnem sistemu stroja/opreme;
  - vsebuje potrebne podatke za naročilo nadomestnih delov pri podjetju Tetra Pak.

Postavitev strani

Poglejte sliko (A) na strani i-5: Glavne strani v Katalogu nadomestnih delov sestavljata stran s sliko (1) in ustrezna stran s seznamom (7). Številka strani (5) je prikazana na vrhu strani s sliko in na dnu strani s seznamom. Številka dokumenta (6) je prikazana na dnu strani s seznamom.

Številčenje strani

Oglejte si sliko (A) na strani i-5: Številka strani (5) ima tri dele:

- številko poglavja (2);
- zaporedno številko strani v poglavju (3);
- število vseh strani v poglavju (4).

Predstavitev stroja

Proizvajalec

Ime in naslov proizvajalca najdete na drugi strani kataloga.

Servisiranje

Za naročanje nadomestnih delov za stroj ter za sporočanje motenj pri delovanju stroja se obrnite na najbližjo servisno službo podjetja Tetra Pak.

V primeru drugih zahtev, komentarjev, predlogov za izboljšavo opreme ali dokumentacije se obrnite na odgovorno osebo.

Identifikacijska oznaka

CE-klasifikacija

Oprema je izdelana v skladu z osnovnimi zdravstvenimi in varnostnimi predpisi Evropskega gospodarskega prostora (EGS).

Napisna ploščica

Slika (B) na strani i-5 prikazuje primer napisne ploščice.
Sliko veljavne napisne ploščice in njeno mesto na opremi najdete v uvodnem poglavju priloženih priročnikov. Ploščica vsebuje spodaj navedene podatke, ki jih potrebujete, ko se v zvezi z določeno opremo obrnete na podjetje Tetra Pak:

- tip stroja (8);
- prostornino (9);
- specifikacije risbe (10);
- serijsko številko stroja (11);
- proizvajalca (12);
- oznako CE (13);
- leto izdelave (14).

Slika (C) na strani i-5 prikazuje primer specifikacije stroja. Podatki o opremi, navedeni na prvih straneh tega priročnika, se morajo ujemati s podatki o stroju, navedenimi na napisni ploščici in v specifikacijah.

Uporaba Kataloga nadomestnih delov

Iskanje številke nadomestnega dela

a) Oglejte si sliko (D) na strani i-5: Poiščite številko poglavja (15), navedeno poleg glavne skupine, ki vsebuje iskani del.

Točki b) in c) se nanašata na sliko (E) na strani i-6.

b) Na sliki glavne skupine poiščite podskupino stroja (17), ki vsebuje iskani del ali podskupino. Zapomnite si pozicijsko številko (18) in poiščite stran s seznamom, ki pripada sliki.

c) Poiščite pozicijsko številko/referenčno oznako (16) ali ime podskupine (19). Pojdite na stran (20), navedeno v desnem stolpcu. Tetra Pak za referenčno označevanje vedno uporablja funkcijsko strukturo. Predpona, ki označuje funkcijsko strukturo (=), ni prikazana v referenčni oznaki.

Točki d) in e) se nanašata na sliko (F) na strani i-6.

d) Na sliki podskupine poiščite del (21), ki ga iščete, in si zapomnite njegovo pozicijsko številko.

e) Številka (29) in opis dela (30) sta navedena poleg pozicijske številke na strani s seznamom.

Informacije v Katalogu nadomestnih delov

Spodnji seznam se nanaša na sliko (F) na strani i-6. Katalog nadomestnih delov vsebuje naslednje informacije o skupinah, podskupinah in nadomestnih delih za opremo:

- referenco strukture skupine (22); Označuje naslednjo višjo skupino v strukturi seznamov opreme.
- ime skupine (23);
- mersko enoto (25);
- količino (26);
- številko sestavne risbe (27);
- število strani seznama (28); Če je slika ali seznam skupine sestavljen iz več strani.
- številko dela ali podskupine (29);
- ime podskupine ali opis dela (30);
- številko skupine (31);
- številko opreme (32);
- naslov z informacijami o skupini (33). Označuje, ali je razdelek pod naslovom namenjen specifični izvedbi stroja ali gre za seznam skupnih delov. Če ima seznam več izvedb in če ima vsaka od njih svojo sestavno risbo, je ob vsaki izvedbi navedena referenčna stran s sestavno risbo.
- interne informacije (34).

Inledning

Information om manualen

Tetra Pak rekommenderar att alla manualer läses noggrant. Se till att manualerna är tillgängliga för personalen som använder eller underhåller utrustningen.

Det är viktigt att denna katalog behålls under utrustningens livslängd, och att den överlämnas till varje efterföljande innehavare eller användare av utrustningen.

Tetra Pak tar inte ansvar för någon skada på utrustningen som orsakats av att instruktionerna i medföljande manualer inte har följts.

Medföljande manualer

Följande manualer kan levereras tillsammans med utrustningen:

- CM
  Konverteringsmanualen (CM) innehåller information för tekniker om hur man konverterar utrustningen mellan olika produktionslägen.
- EM
  Den elektriska manualen (EM) innehåller information för tekniker om utrustningens elektriska system.
- IM
  Installationsmanualen (IM) innehåller information för tekniker om hur utrustningen installeras på ett säkert sätt.
- MM
  Underhållsmanualen (MM) innehåller information för tekniker om hur utrustningen underhålls.
- OM
  Driftsmanualen (OM) innehåller information för operatören om hur utrustningen ska hanteras före, under och efter produktion.
- SPC
  Reservdelskatalogen (SPC) innehåller den information som behövs för att beställa reservdelar från Tetra Pak.
- TeM
  Den tekniska manualen (TeM)
  - innehåller information för tekniker om hur utrustningen installeras på ett säkert sätt.
  - innehåller information för tekniker om hur utrustningen underhålls.
  - innehåller information för tekniker om maskinens/utrustningens elektriska system.
  - innehåller den information som behövs för att beställa reservdelar från Tetra Pak.

Sidlayout

Se bild (A) på sidan i-5: Huvudsidorna i reservdelskatalogen består av en bildsida (1) och en motsvarande listsida (7). Sidnumret (5) visas i sidhuvudet på bildsidan och i sidfoten på listsidan. Dokumentnumret (6) visas i sidfoten på listsidan.

Sidnumrering

Se bild (A) på sidan i-5: Ett sidnummer (5) består av tre delar:

- kapitlets nummer (2)
- löpande sidnummer inom kapitlet (3)
- totalt sidantal i kapitlet (4)

Introduktion till maskinen

Tillverkare

Tillverkarens namn och adress finns på sidan 2 i katalogen.

Service

För att beställa reservdelar till denna maskin eller för att rapportera problem som uppstått i samband med driften kontaktar du närmaste Tetra Pak-kontor.

Om du har andra frågor, kommentarer eller förslag till förbättringar av utrustningen och dokumentationen vänder du dig till din kontaktperson på Tetra Pak.

Identifiering

CE-märkning

Denna utrustning överensstämmer med den grundläggande hälso- och säkerhetslagstiftningen inom Europeiska ekonomiska samarbetsområdet (EES).

Maskinskylt

Bild (B) på sidan i-5 visar ett exempel på en maskinskylt.
En bild på giltig maskinskylt och dess placering på utrustningen visas i inledningskapitlet som medföljer utrustningen. Skylten innehåller de uppgifter som listas nedan och som behövs vid kontakt med Tetra Pak angående utrustningen.

- Maskintyp (8)
- Volym (9)
- Ritningsspecifikationer (10)
- Maskinnummer (11)
- Tillverkare (12)
- CE-märkning (13)
- Tillverkningsår (14)

Bild (C) på sidan i-5 visar ett exempel på en maskinspecifikation. Kontrollera att informationen om utrustningen som listas på de första sidorna i manualen motsvarar informationen på maskinskylten och i maskinspecifikationen.

Använda reservdelskatalogen

Hitta ett reservdelsnummer

a) Se bild (D) på sidan i-5: Gå till kapitelnumret (15) som står vid sidan om huvudgruppen som innehåller den del du vill hitta.

Punkt b) och c) hänvisar till bild (E) på sidan i-6.

b) På huvudgruppsbilden letar du efter den maskinundergrupp (17) som innehåller delen eller undergruppen du letar efter. Notera positionsnumret (18) och gå till listsidan som anges efter bilden.

c) Leta efter positionsnumret/referensbeteckningen (16) eller undergruppsnamnet (19). Gå till motsvarande sidnummer (20) som listas i den högra kolumnen. Tetra Pak har valt allt alltid använda en funktionsorienterad struktur för referensbeteckningarna. Prefixet för funktionsorienterad struktur (=) visas inte i referensbeteckningen.

Punkt d) och e) hänvisar till bild (F) på sidan i-6.

d) Leta reda på delen (21) i undergruppsbilden och notera delens positionsnummer.

e) Reservdelsnumret (29) och reservdelsbeskrivningen (30) står bredvid positionsnumret på listsidan.

Information i reservdelskatalogen

Listan nedan hänvisar till bild (F) på sidan i-6. Reservdelskatalogen innehåller följande information om grupper, undergrupper och reservdelar för utrustningen:

- Gruppstrukturreferens (22). Anger nästa högre grupp i utrustningslistans struktur.
- Gruppnamn (23)
- Måttenhet (25)
- Kvantitet (26)
- Monteringsritningsnummer (27)
- Listsideintervall (28). Anges om det finns flera sidor i gruppbilden eller grupplistan.
- Reservdels- eller undergruppsnummer (29)
- Undergruppsnamn eller reservdelsbeskrivning (30)
- Gruppnummer (31)
- Utrustningsnummer (32)
- Gruppinformationsrubrik (33). Anger om avsnittet under rubriken gäller en viss maskinvariant eller om det är en lista över allmänna delar. Om en lista har fler än en variant och varje variant har sin egen monteringsritning visas en sidhänvisning till variantens monteringsritning.
- Intern information (34)

SPC
Spare Parts Catalogue

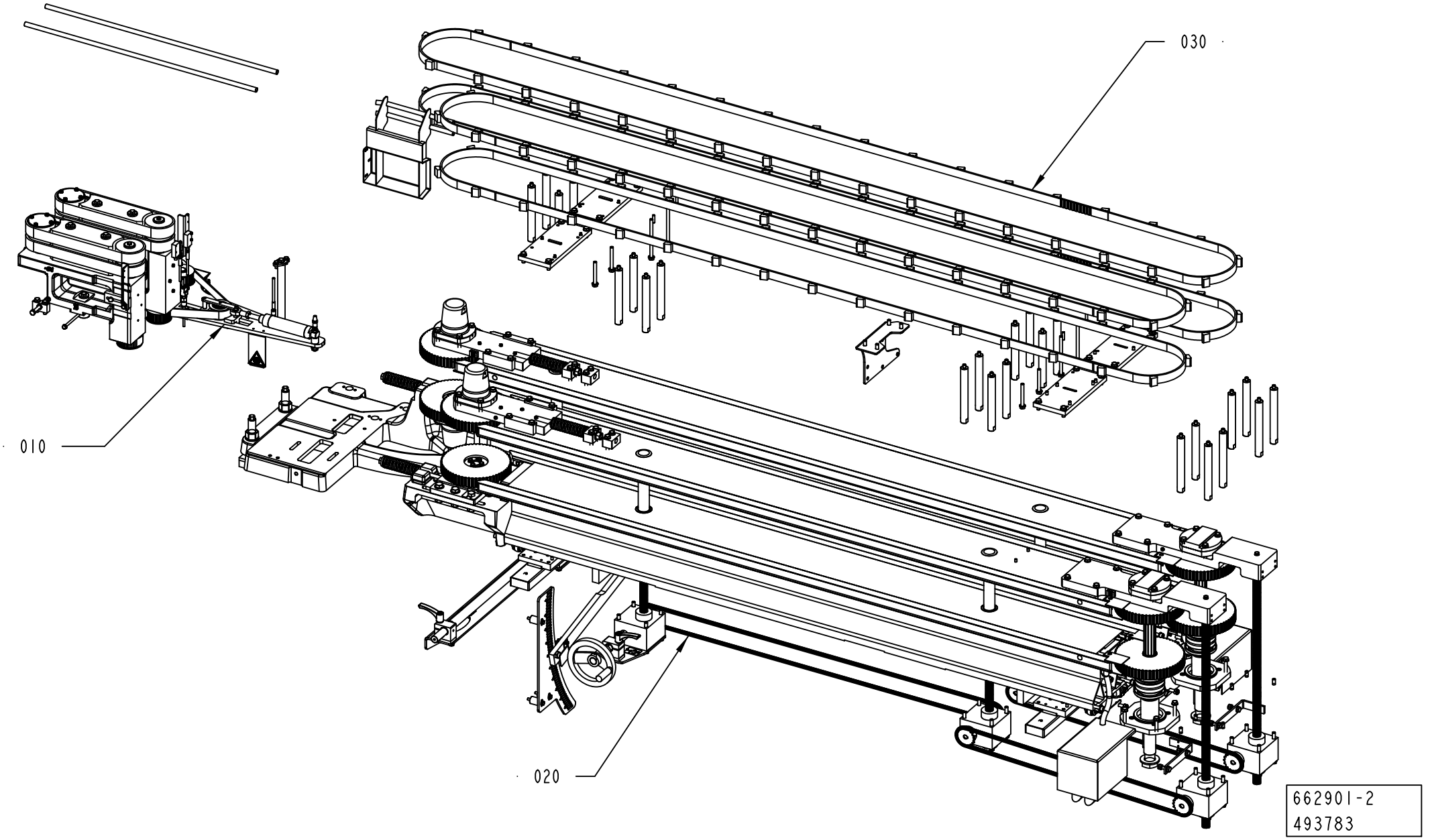
030
010
020
662901-2
493783

ECM: 493783 - 20110701
Group number: 662901-0200
Assembly Drawing: 662901-2_1_AB

Pos	Part No	UN	Qty	Description	Page No
-					
010	2838654-0200		1	BELT BRAKE	**1-5**
020	2838643-0200		1	PACKAGE POSITIONER	**1-17**
030	2838633-0200		1	PACKAGE HANDLING	**1-57**

Pos	Part No	UN	Qty	Description	Page No

Machine Type | Group Description | Used-In | Group Number | Page No

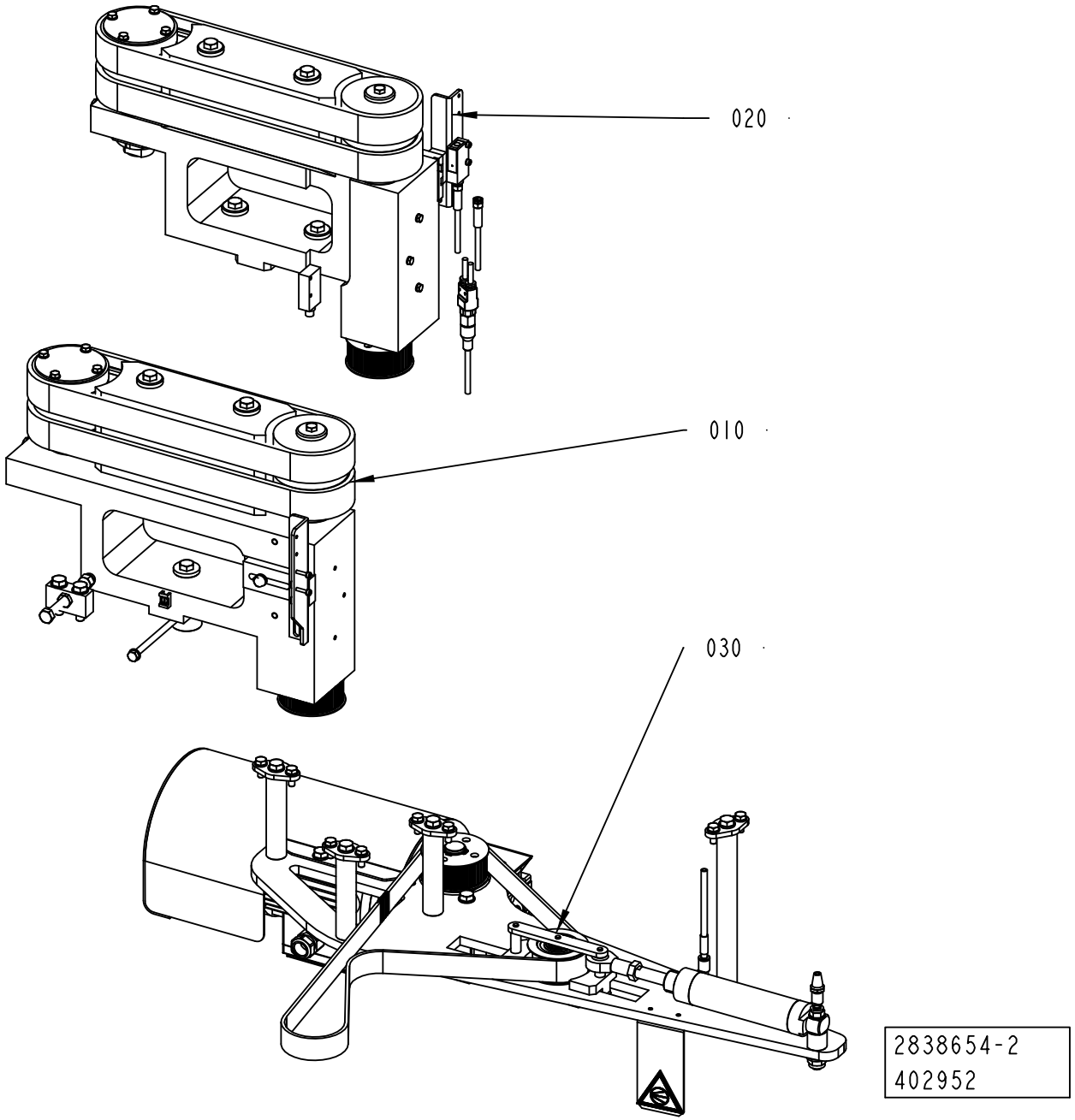
020
010
030
2838654-2
402952

ECM: 407693 - 20091001
Group number: 2838654-0200
Assembly Drawing: 2838654-2_1_AA

Pos	Part No	UN	Qty	Description	Page No
-					
010	2766990-0100		1	BRAKE UNIT	**1-7**
020	2766991-0100		1	BRAKE UNIT	**1-9**
030	2766994-0200		1	DRIVE	**1-11**

Pos	Part No	UN	Qty	Description	Page No

BRAKE UNIT

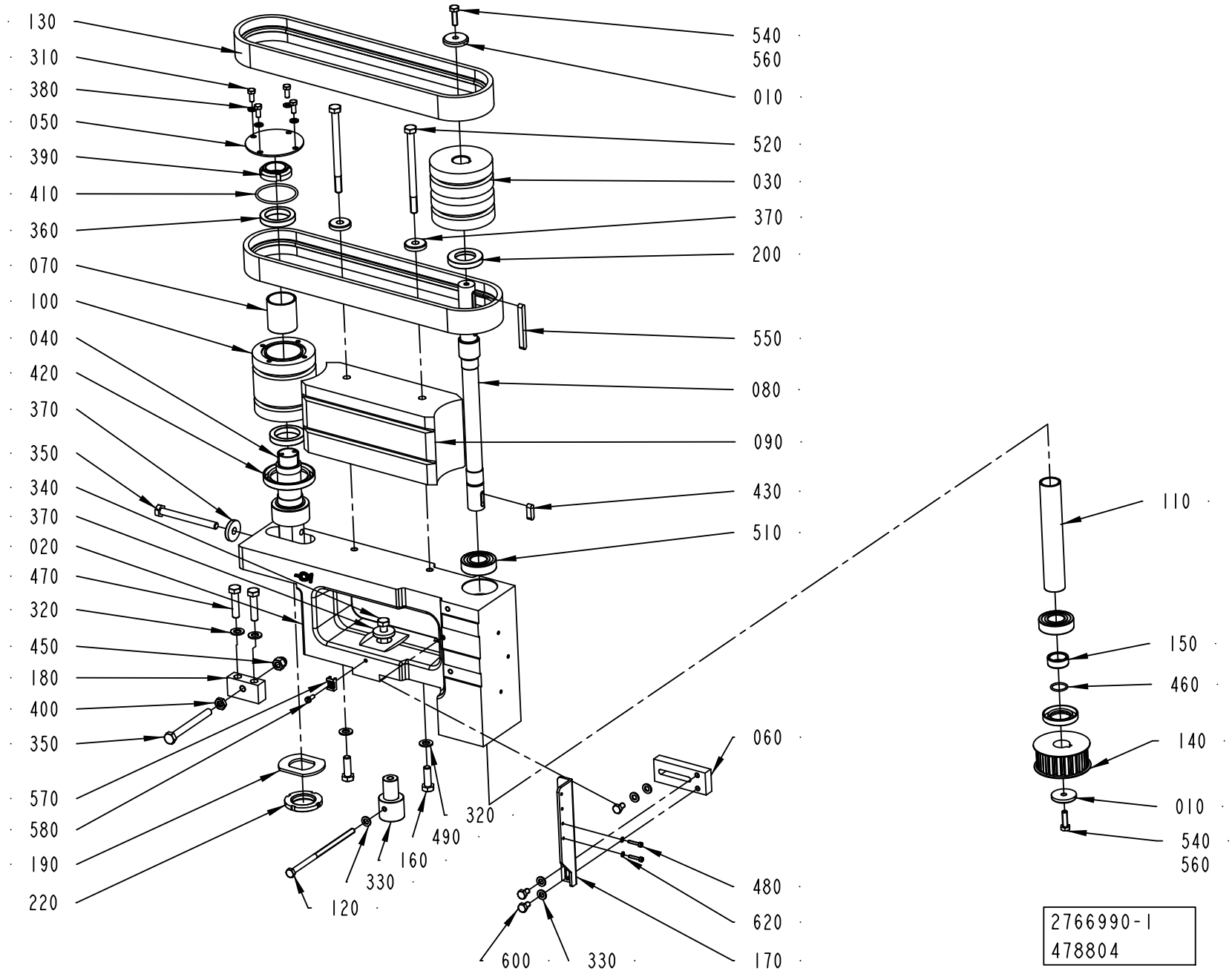
130
310
380
050
390
410
360
070
100
040
420
370
350
340
370
020
470
320
450
180
400
350
570
580
190
220
120
330
160
490
320
540
560
010
520
030
370
200
550
080
090
430
510
060
480
620
170
600
330
110
150
460
140
010
540
560
2766990-1
478804

ECM: 484896 - 20110401
Group number: 2766990-0100
Assembly Drawing: 2766990-1_1_AF

Pos	Part No	UN	Qty	Description	Page No
-					
010	290027-0000		2	WASHER	
020	3010622-0000		1	CANTILEVER	
030	2826728-0000		1	DRIVE PULLEY	
040	2769682-0000		1	SHAFT	
050	2769686-0000		1	COVER	
060	2936120-0000		1	BRACKET	
070	2769741-0000		1	SPACER	
080	2769679-0000		1	DRIVE SHAFT	
090	2826737-0000		1	GUIDE	
100	2826729-0000		1	PULLEY	
110	2830225-0000		1	SPACER	
120	2805468-0000		1	SCREW	
130	90602-4689		2	TIMING BELT 32T5/780 PU + SUPERGRIP	
140	3039030-0000		1	TOOTHED PULLEY	
150	2773600-0000		1	SPACER	
160	2775418-0000		1	SHAFT	
170	2936740-0000		1	BRACKET	
180	2775427-0000		1	BRACKET	
190	2778564-0000		1	WASHER	
200	90091-0322		2	RADIAL SEAL 25X42X7 MM DUST LIP	
220	90459-2644		1	NUT ROUND WITH SLOTS M30X1,5 SS	
310	312105-0327		4	SCREW M6S ISO 4017 M5X12 A480	
320	315105-0165		4	WASHER BRB 8,4X16 RFR	
330	315105-0153		5	WASHER BRB 6,4X12 RFR	
340	312105-0455		1	SCREW M6S ISO 4017 M8X30 A480	
350	312109-0467		2	SCREW M6S ISO 4017 M8X80 A480	
360	90214-0186		2	BALL BEARING 30/42X7	
370	315125-0165		4	WASHER TBRSB 8,4X26X5 A4	
380	315105-0146		4	WASHER BRB 5,3X10 RFR	
390	90459-6280		1	NUT GUK 5 M25 X 1.5 FZB	
400	312625-0318		1	HEXAGON THIN NUT, EN 24035 ML6M M8 A4	
410	315202-0733		1	O-RING 45,69X2,62 MM	
420	315221-0192		1	RADIAL SEAL 45X62X8 MM	
430	315705-0232		1	PARALLEL KEY W. ROUND ENDS, 6X6X20 MM	
450	312705-0318		1	NUT HEX. DOMED CAP MHM-6 M8 A280	
460	315202-0705		1	O-RING 17,17X1,78 MM	
470	312105-0457		2	SCREW M6S ISO 4014 M8X35 A480	
480	312115-0228		2	SCREW ISO4762 M3X16 A4 80	
490	312105-0453		2	SCREW M6S ISO 4017 M8X25 A480	
510	321306-0104		2	BALL BEARING 20/42X12	
520	312105-0473		2	SCREW M6S ISO 4014 M8X110 A480	
540	312105-0370		2	SCREW M6S ISO 4017 M6X20 A480	
550	90458-0507		1	PARALLEL KEY W. ROUND ENDS 6X6X60 MM	
560	90157-0037	ML	1	THREAD SEALANT LOCTITE 542	
570	352113-0205		1	ANCHOR PLATES FOR STRIPS, TM2S8-C100	
580	312125-0289		1	SCREW ISO 1207 M4X10 A4	
600	312105-0364		3	SCREW M6S ISO 4017 M6X10 A480	
620	315105-0124		2	WASHER BRB 3,2X6 RFR	

Machine Type Group Description Used-In Group Number Page No

BRAKE UNIT

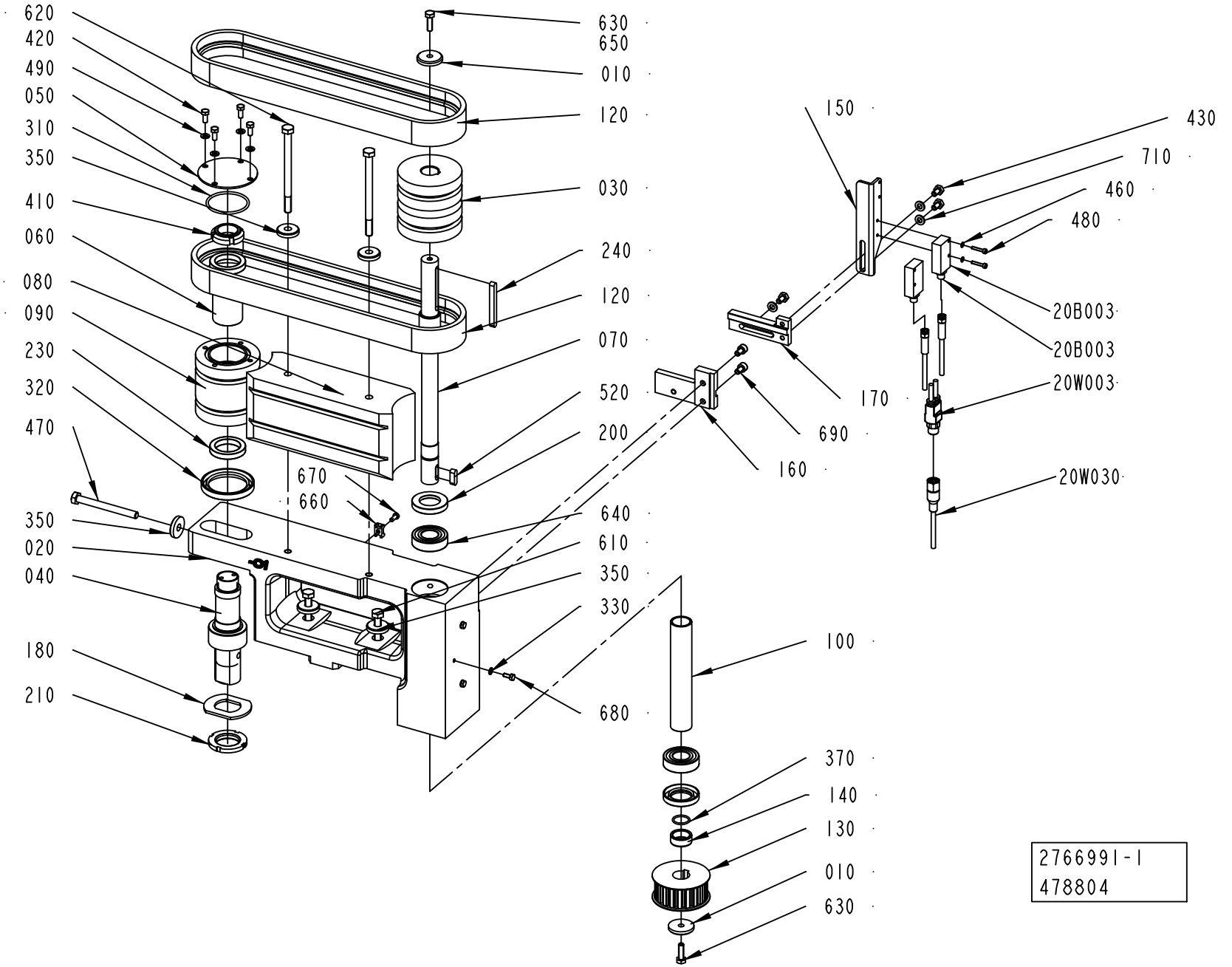
620
420
490
050
310
350
410
060
080
090
230
320
470
350
020
040
180
210
630
650
010
120
030
240
120
070
520
200
670
660
640
610
350
330
680
150
430
710
460
480
20B003
20B003
20W003
20W030
170
690
160
100
370
140
130
010
630
2766991-1
478804

ECM: 484897 - 20110401
Group number: 2766991-0100
Assembly Drawing: 2766991-1_1_AE

Pos	Part No	UN	Qty	Description	Page No
-					
010	290027-0000		2	WASHER	
020	3010624-0000		1	CANTILEVER	
030	2826728-0000		1	DRIVE PULLEY	
040	2769682-0000		1	SHAFT	
050	2769686-0000		1	COVER	
060	2769741-0000		1	SPACER	
070	2769679-0000		1	DRIVE SHAFT	
080	2826737-0000		1	GUIDE	
090	2826729-0000		1	PULLEY	
100	2830225-0000		1	SPACER	
120	90602-4689		2	TIMING BELT 32T5/780 PU + SUPERGRIP	
130	3039030-0000		1	TOOTHED PULLEY	
140	2773600-0000		1	SPACER	
150	2936506-0000		1	BRACKET	
160	2943597-0000		1	PLATE	
170	2944164-0000		1	PLATE	
180	2778564-0000		1	WASHER	
200	90091-0322		2	RADIAL SEAL 25X42X7 MM DUST LIP	
210	90459-2644		1	NUT ROUND WITH SLOTS M30X1,5 SS	
230	90214-0186		2	BALL BEARING 30/42X7	
240	90458-0507		1	PARALLEL KEY W. ROUND ENDS 6X6X60 MM	
310	315202-0733		1	O-RING 45,69X2,62 MM	
320	315221-0192		1	RADIAL SEAL 45X62X8 MM	
330	315105-0136		3	WASHER BRB 4,3X8 RFR	
350	315125-0165		5	WASHER TBRSB 8,4X26X5 A4	
370	315202-0705		1	O-RING 17,17X1,78 MM	
410	90459-6280		1	NUT GUK 5 M25 X 1.5 FZB	
420	312105-0327		4	SCREW M6S ISO 4017 M5X12 A480	
430	312105-0364		3	SCREW M6S ISO 4017 M6X10 A480	
460	315105-0124		2	WASHER BRB 3,2X6 RFR	
470	312109-0467		1	SCREW M6S ISO 4017 M8X80 A480	
480	312115-0228		2	SCREW ISO4762 M3X16 A4 80	
490	315105-0146		4	WASHER BRB 5,3X10 RFR	
520	315705-0232		1	PARALLEL KEY W. ROUND ENDS, 6X6X20 MM	
550	312605-0310		2	HEXAGON NUT, M6M M3 A280	
610	312109-0459		2	SCREW M6S ISO 4017 M8X40 A480	
620	312105-0473		2	SCREW M6S ISO 4014 M8X110 A480	
630	312105-0370		2	SCREW M6S ISO 4017 M6X20 A480	
640	321306-0104		2	BALL BEARING 20/42X12	
650	90157-0037	ML	1	THREAD SEALANT LOCTITE 542	
660	352113-0205		1	ANCHOR PLATES FOR STRIPS, TM2S8-C100	
670	312125-0289		1	SCREW ISO 1207 M4X10 A4	
680	312105-0289		3	SCREW M6S H4X10 A4 70 ISO4017/DIN933	
690	312115-0364		2	SCREW ISO4762 M6X10 A4 80	
710	315105-0153		3	WASHER BRB 6,4X12 RFR	
20B003	90600-4732		1	LASER SENSOR, WS/WE9L-P330	
20W003	90459-6586		1	ACT/SENS.Y-CABLE, ASBN 2-PRKMV 4-07/0,6M	
20W030	351309-0100		1	ACTUATOR/SENSOR CABLE PRKT 4-07/10M	

Machine Type	Group Description	Used-In	Group Number	Page No

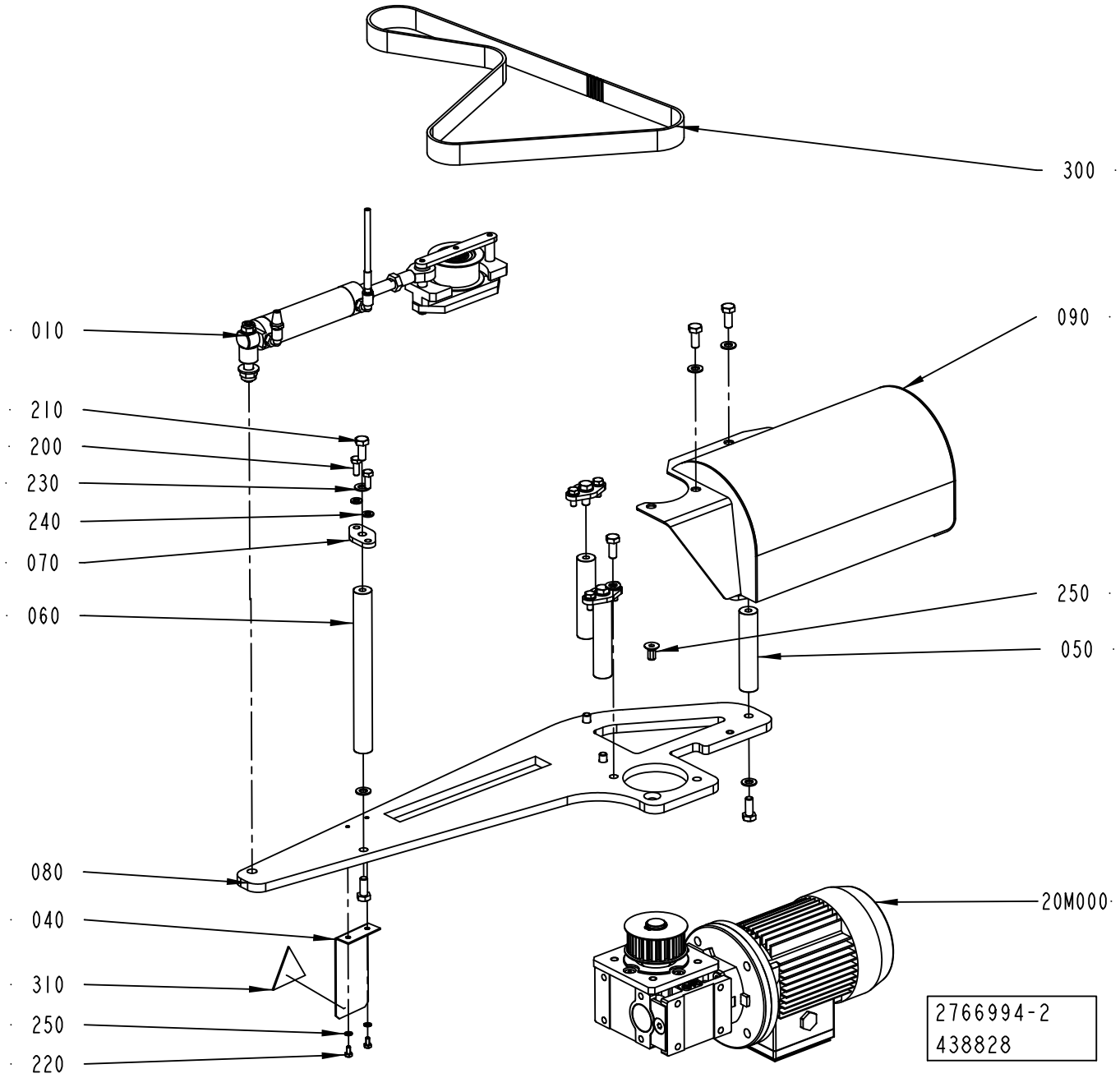
300
010
210
200
230
240
070
060
090
250
050
080
040
310
250
220
20M000
2766994-2
438828

ECM: 438860 - 20100701
Group number: 2766994-0200
Assembly Drawing: 2766994-2_1_AC

Pos	Part No	UN	Qty	Description	Page No
-					
010	2773636-0100		1	BELT STRETCHER	1-13
040	2985847-0000		1	PLATE	
050	2769773-0000		3	SPACER	
060	2773601-0000		1	SPACER	
070	2775412-0000		4	PLATE	
080	3017287-0000		1	PLATE	
090	2985832-0000		1	COVER	
200	312105-0368		8	SCREW M6S ISO 4017 M6X16 A480	
210	312105-0451		11	SCREW M6S ISO 4017 M8X20 A480	
220	312105-0287		2	SCREW M6S ISO 4017 M4X8 A470	
230	315105-0165		12	WASHER BRB 8,4X16 RFR	
240	315105-0153		8	WASHER BRB 6,4X12 RFR	
250	315105-0136		2	WASHER BRB 4,3X8 RFR	
260	312155-0449		1	SCREW DIN 7991 MF6S M8X16 A4 70	
300	90602-4674		1	TIMING BELT 25T10/1150-DL PU	
310	359705-0021		1	WARNING SIGN ISO, PNEUMATIC ENERGY	
20M000	2838710-0200		1	WORM GEAR MOTOR	1-15

Pos	Part No	UN	Qty	Description	Page No

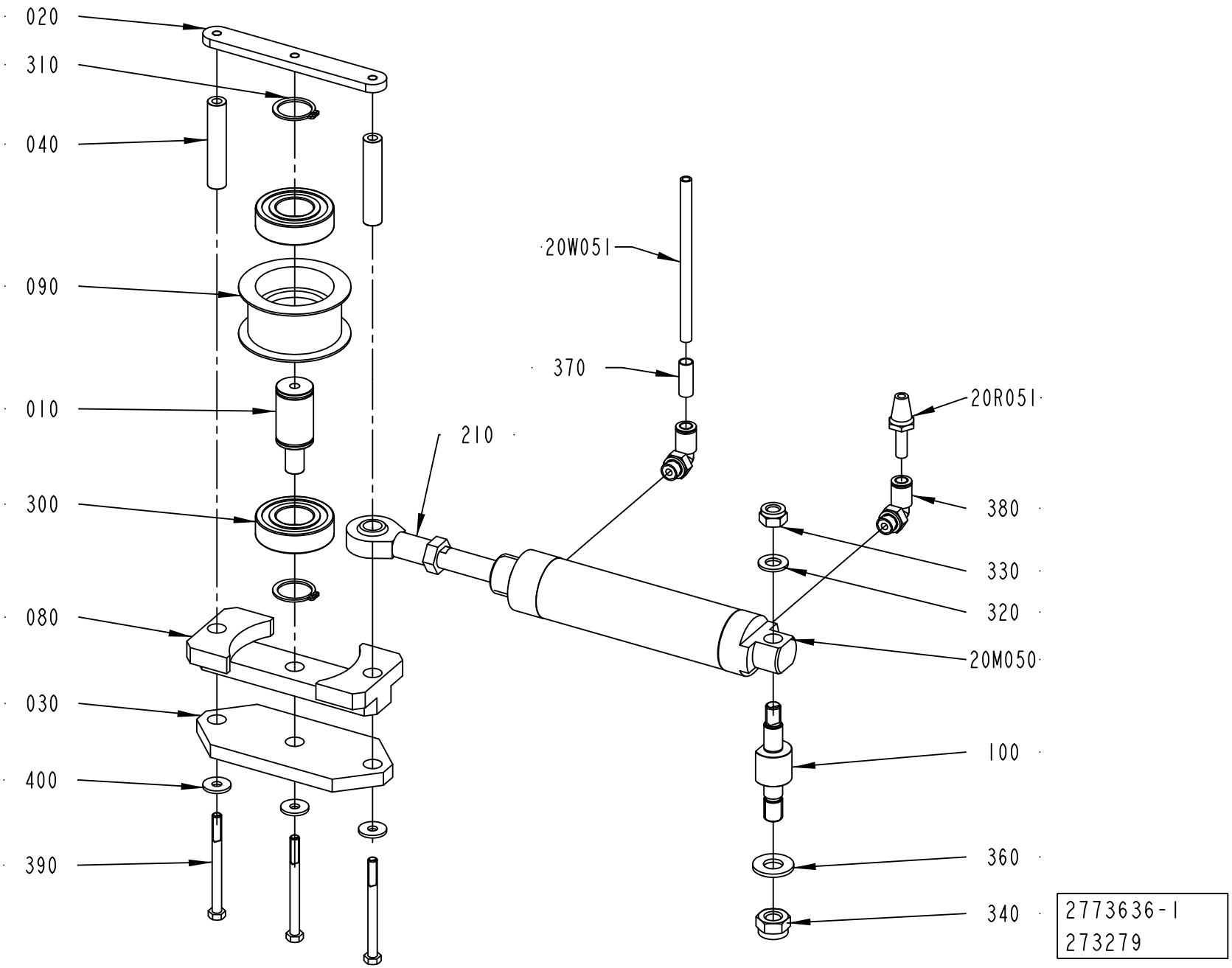
020
310
040
090
010
300
080
030
400
390
20W051
370
210
20R051
380
330
320
20M050
100
360
340
2773636-1
273279

ECM: 273309 - 20060921
Group number: 2773636-0100
Assembly Drawing: 2773636-1_1_AA

Pos	Part No	UN	Qty	Description	Page No
-					
010	2775398-0000		1	PIN	
020	2773604-0000		1	PLATE	
030	2773638-0000		1	PLATE	
040	2773639-0000		2	SHAFT	
080	2773637-0000		1	BRACKET	
090	2773615-0000		1	ROLLER	
100	2781292-0000		1	SHAFT	
210	90115-0134		1	ROD END, ID=10 MM, M10X1,25	
300	321308-0204		2	BALL BEARING 20/42X12	
310	315751-0116		2	RETAINING RING FOR SHAFT DIN 471 20 SS	
320	315105-0165		1	WASHER BRB 8,4X16 RFR	
330	312812-0318		1	HEXAGON NUT, NY-LOCK M8 A480	
340	312812-0320		1	HEXAGON NUT, NY-LOCK M10 A480	
360	315105-0173		1	WASHER BRB 10,5X22 RFR	
370	90459-7369		1	MARKING FOR PNEUM. TUBING, PRZ06	
380	350002-0006		2	PUSH-IN L-FITTING QSL-F-G1/8-6	
390	312105-0343		3	SCREW M6S ISO 4014 M5X60 A480	
400	90005-0139		3	WASHER PLAIN ROUND 5,2(M5)/15, H=1,6	
20M050	90600-1080		1	DOUBLE ACTING, ROUND, CYL 32-80	
20R051	90328-0017		1	SILENCER, D=6 MM	
20W051	315400-0001	M	3	TUBE PUN-H-6X1-BL	

Pos	Part No	UN	Qty	Description	Page No

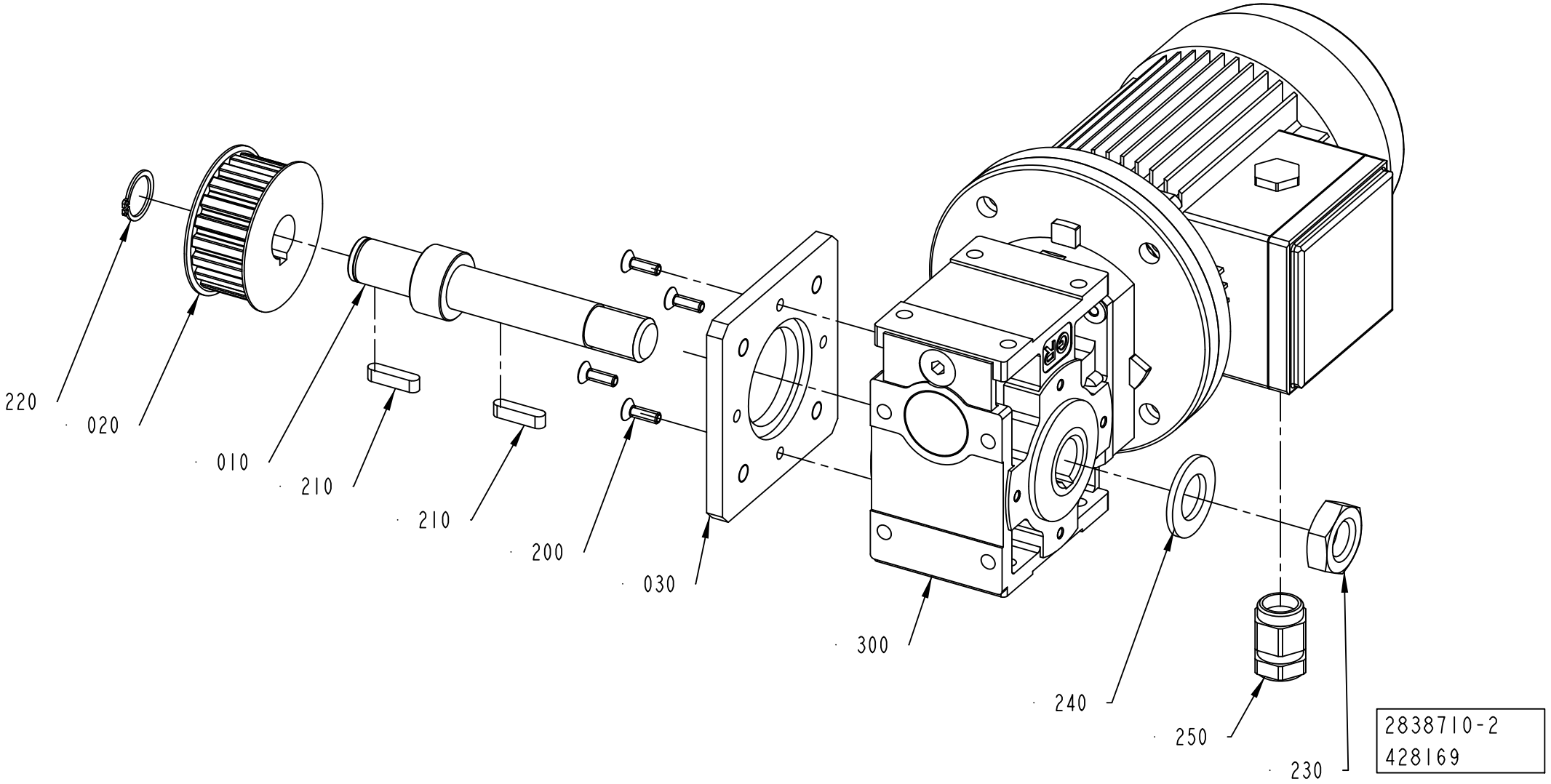
220
020
010
210
210
200
030
300
240
250
230
2838710-2
428169

ECM: 433239 - 20100401
Group number: 2838710-0200
Assembly Drawing: 2838710-2_1_AC

Pos	Part No	UN	Qty	Description	Page No
-					
010	3016909-0000		1	DRIVE SHAFT	
020	3039030-0000		1	TOOTHED PULLEY	
030	3017300-0000		1	FLANGE	
200	312155-0329		4	SCREW DIN 7991 MF6S M5X16 A4 70	
210	315705-0234		2	PARALLEL KEY W. ROUND ENDS, 6X6X25 MM	
220	315751-0116		1	RETAINING RING FOR SHAFT DIN 471 20 SS	
230	312625-0326		1	HEXAGON THIN NUT, EN 24035 ML6M M20 A4	
240	315106-0192		1	WASHER ISO 7089-20-200 HV A4	
250	90458-0438		1	GLAND, EXTENDED WITH INSERT, M20X1,5	
300	2985833-0000		1	WORM GEAR MOTOR	

Pos	Part No	UN	Qty	Description	Page No

PACKAGE POSITIONER

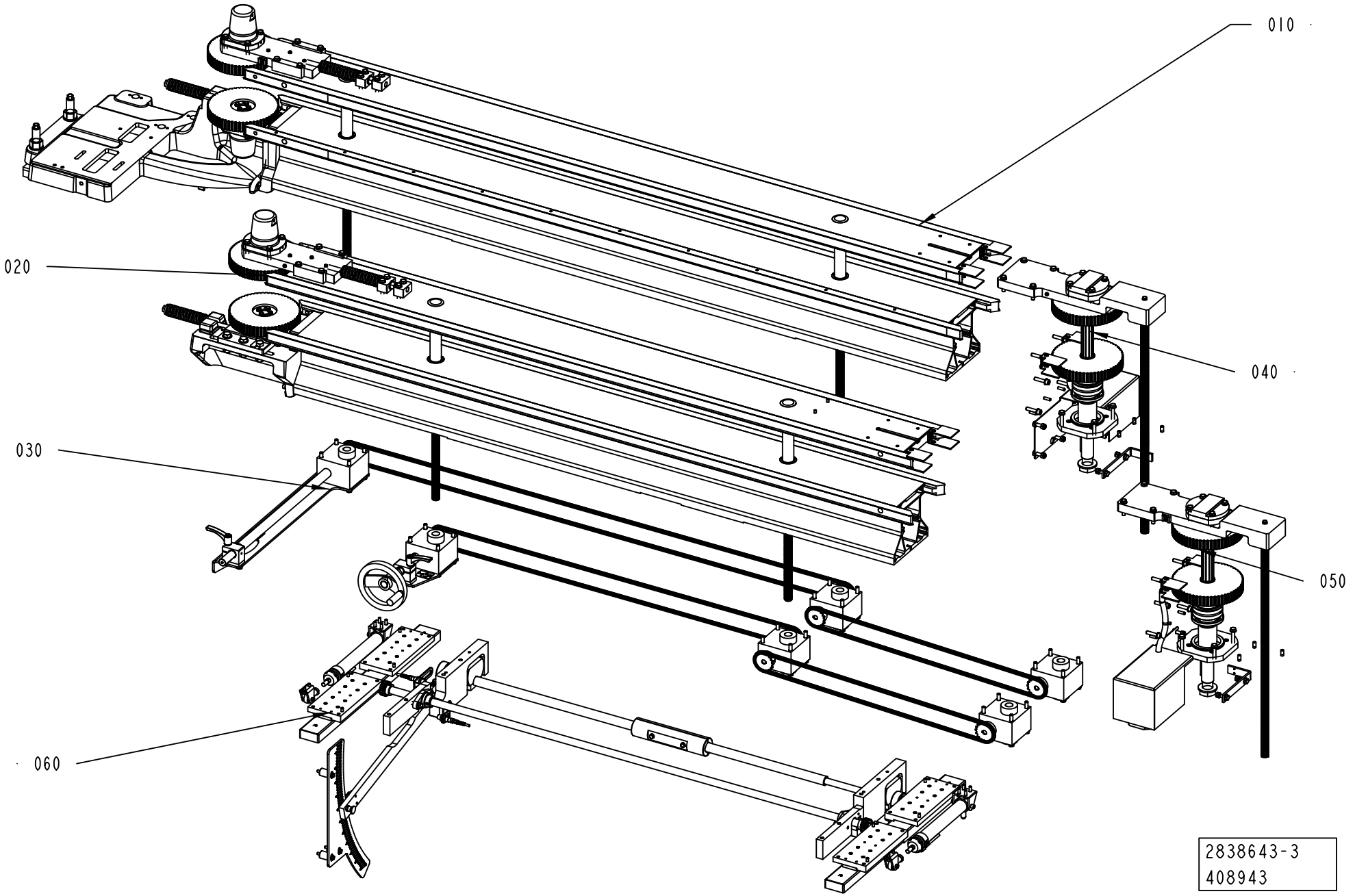

ECM: 494252 - 20110701
Group number: 2838643-0200
Assembly Drawing: 2838643-3_1_AA

Pos	Part No	UN	Qty	Description	Page No
TBA 1000B, TBA 1000SQ, TBA 1000S, TBA 1500S, TBA 1890S, TBA 2000S					
030	2838647-0100		1	SLIDING RACK	**1-19**
Common Parts					
010	2838639-0200		1	PACKAGE POSITIONER	**1-23**
020	2838644-0200		1	PACKAGE POSITIONER	**1-33**
040	2838648-0200		1	DRIVE	**1-43**
050	2838649-0200		1	DRIVE	**1-45**
060	2838650-0100		1	SLIDING RACK	**1-47**

Pos	Part No	UN	Qty	Description	Page No

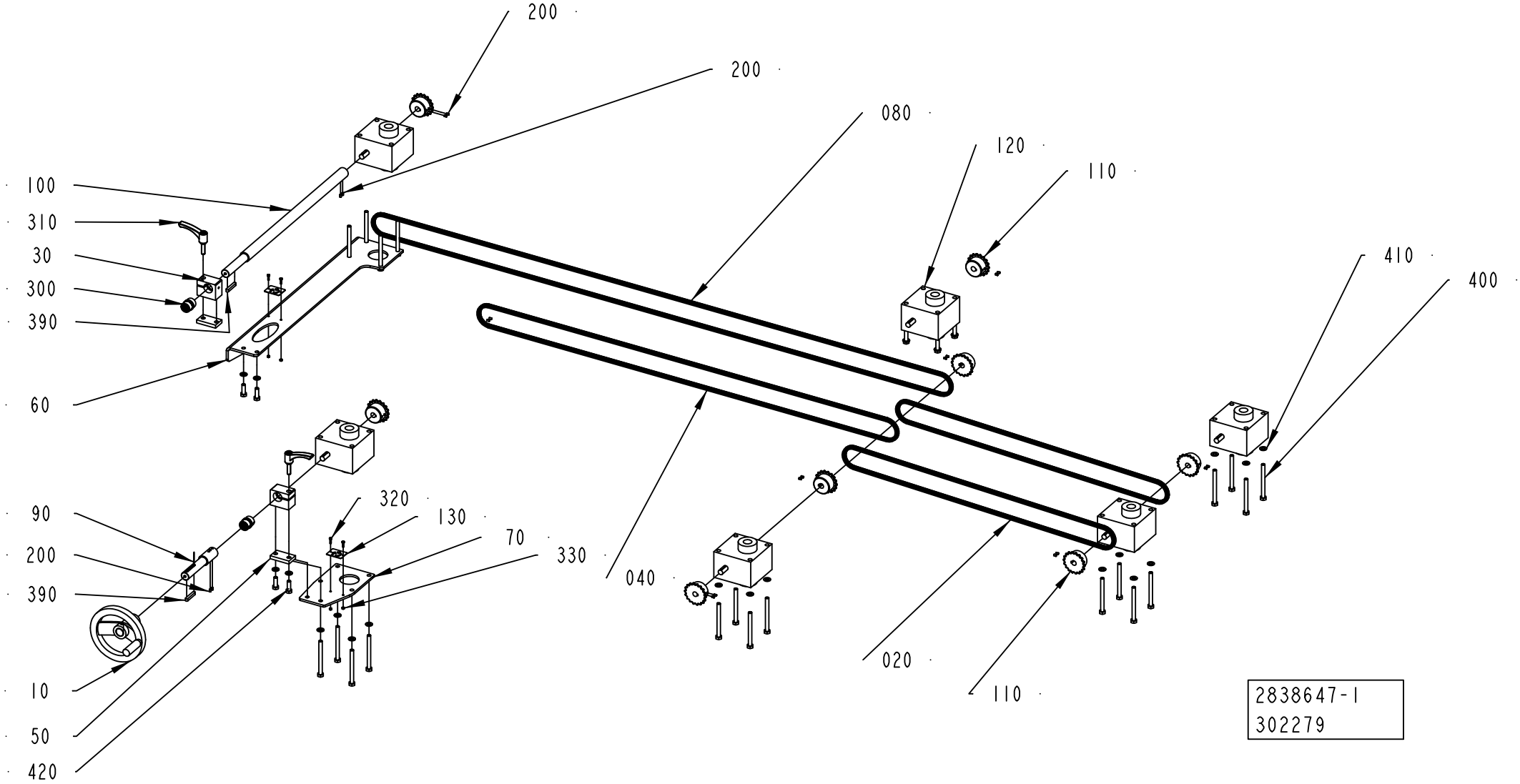
200
200
080
120
110
100
310
30
300
390
60
410
400
90
200
390
320
130
70
330
040
020
10
50
420
110
2838647-1
302279

ECM: 308667 - 20070525
Group number: 2838647-0100
Assembly Drawing: 2838647-1_1_AB

Pos	Part No	UN	Qty	Description	Page No
-					
010	2802404-0100		1	HANDLE	**1-21**
020	90600-0961		2	ROLLER CHAIN, SIMPLEX 3/8 -159, SS	
030	2769726-0000		2	BRACKET	
040	90600-0962		1	ROLLER CHAIN, SIMPLEX 3/8 -243, SS	
050	2778594-0000		2	PLATE	
060	2779063-0000		1	PLATE	
070	2779759-0000		1	PLATE	
080	90600-0964		1	ROLLER CHAIN, SIMPLEX 3/8 -333, SS	
090	2769729-0000		1	SHAFT	
100	2779756-0000		1	SHAFT	
110	2779062-0000		8	SPROCKET	
120	90600-0812		6	GEAR BOX, TP00042000110	
130	2873941-0000		2	SIGN	
200	312318-0285		20	SCREW ISO4029 M4X6 A4	
300	90458-2932		2	PLAIN BEARING, JUM-02-20	
310	90017-0029		2	LOCKING LEVER, NO. KR8X30-SUS	
320	90287-0175		4	SCREW M6S M3X12 A480	
330	312605-0310		4	HEXAGON NUT, M6M M3 A280	
390	315705-0239		2	PARALLEL KEY W. ROUND ENDS, 6X6X40 MM	
400	312105-0469		24	SCREW M6S ISO 4014 M8X90 A480	
410	315105-0165		28	WASHER BRB 8,4X16 RFR	
420	312105-0453		4	SCREW M6S ISO 4017 M8X25 A480	

Pos	Part No	UN	Qty	Description	Page No

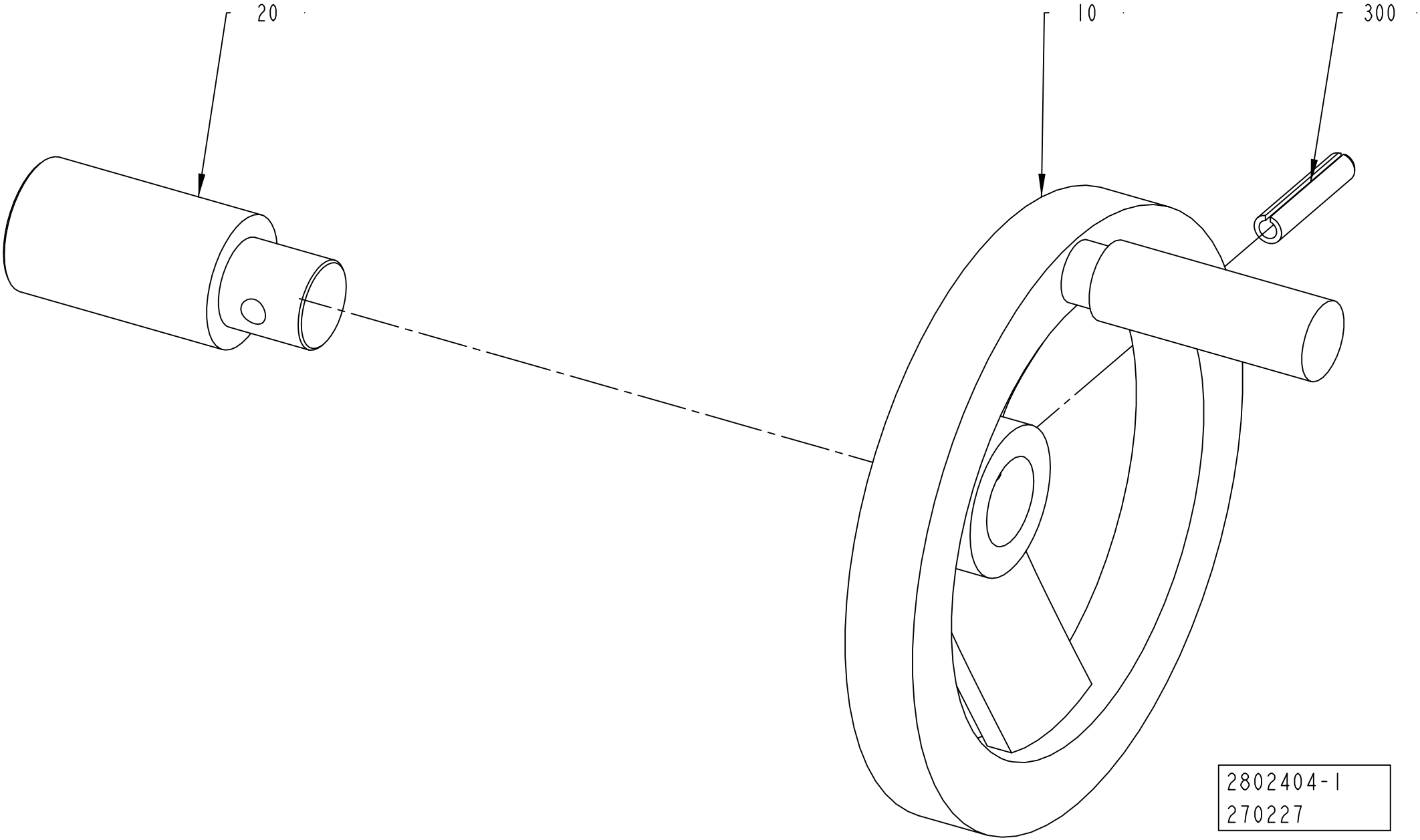
20
10
300
2802404-1
270227

ECM: 273295 - 20060921
Group number: 2802404-0100
Assembly Drawing: 2802404-1_1_AA

Pos	Part No	UN	Qty	Description	Page No
-					
010	2781286-0000		1	HAND WHEEL	
020	2788144-0000		1	SHAFT	
300	311112-0345		1	SPRING PIN, ISO 8752 6X32-C	

Pos	Part No	UN	Qty	Description	Page No

PACKAGE POSITIONER

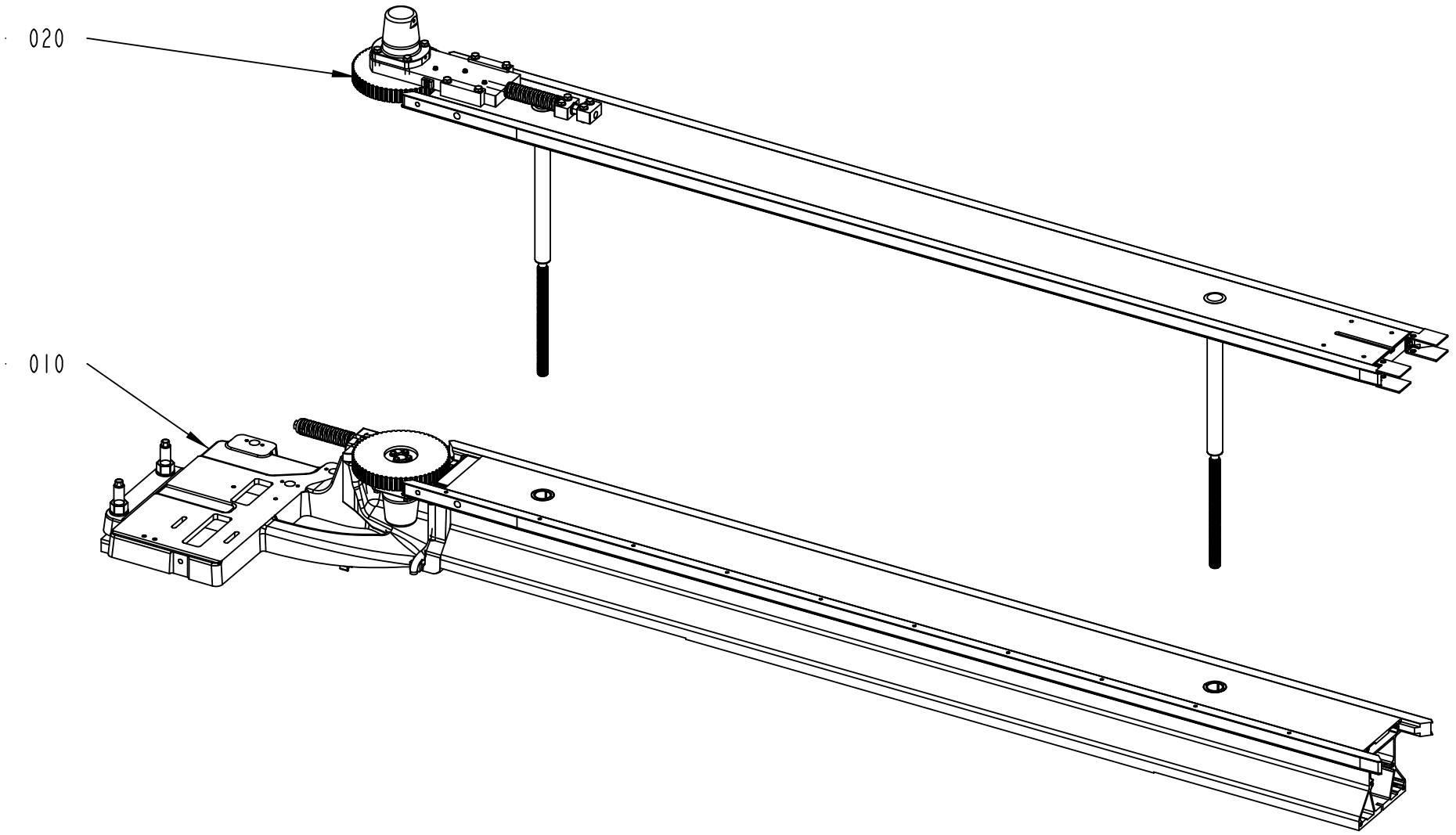

2838639-3
402952

ECM: 493752 - 20110701
Group number: 2838639-0200
Assembly Drawing: 2838639-3_1_AA

Pos	Part No	UN	Qty	Description	Page No
TBA 1000B, TBA 1000SQ, TBA 1000S, TBA 1500S, TBA 1890S, TBA 2000S					
020	2838641-0200		1	BELT	**1-25**
Common Parts					
010	2838640-0100		1	BELT UNIT	**1-29**

Pos	Part No	UN	Qty	Description	Page No

Machine Type | Group Description | Used-In | Group Number | Page No

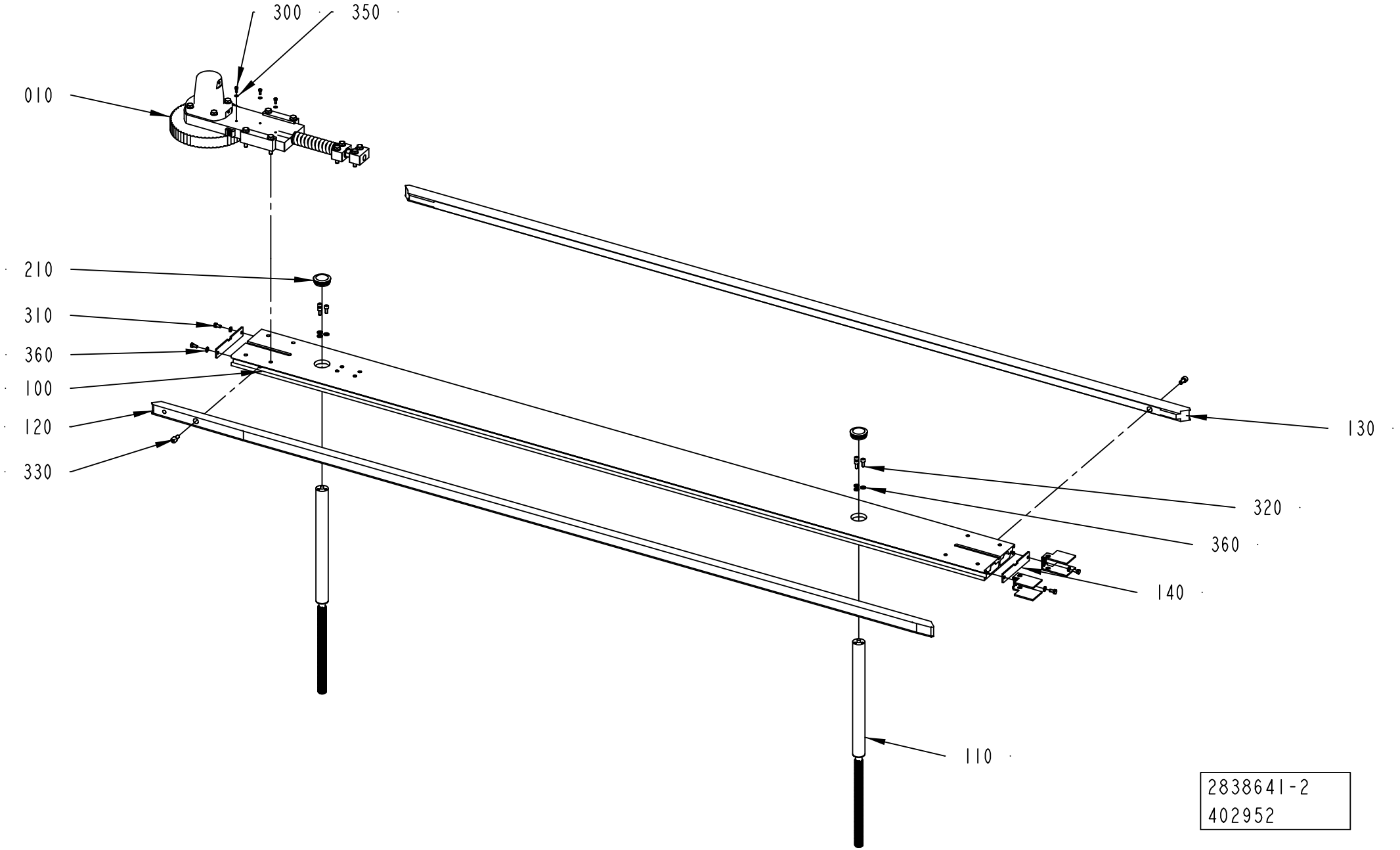
300
350
010
210
310
360
100
120
330
130
320
360
140
110
2838641-2
402952

ECM: 407687 - 20091001
Group number: 2838641-0200
Assembly Drawing: 2838641-2_1_AA

Pos	Part No	UN	Qty	Description	Page No
-					
010	2766954-0100		1	BELT STRETCHER	**1-27**
100	2766615-0000		1	FRAME	
110	2766927-0000		2	PILLAR	
120	2766611-0000		1	GUIDE	
130	2773616-0000		1	GUIDE	
140	2788134-0000		2	COVER	
150	3043254-0000		2	COVER	
210	90261-0064		2	PLUG, BLIND, PLASTIC, NO. SFL42	
300	312105-0289		3	SCREW M6S H4X10 A4 70 ISO4017/DIN933	
310	312105-0366		4	SCREW M6S ISO 4017 M6X12 A480	
320	312115-0367		6	SCREW ISO4762 M6X14 A4 80	
330	312115-0449		2	SCREW ISO4762 M8X16 A4 80	
350	315105-0136		3	WASHER BRB 4,3X8 RFR	
360	315105-0153		10	WASHER BRB 6,4X12 RFR	

Pos	Part No	UN	Qty	Description	Page No

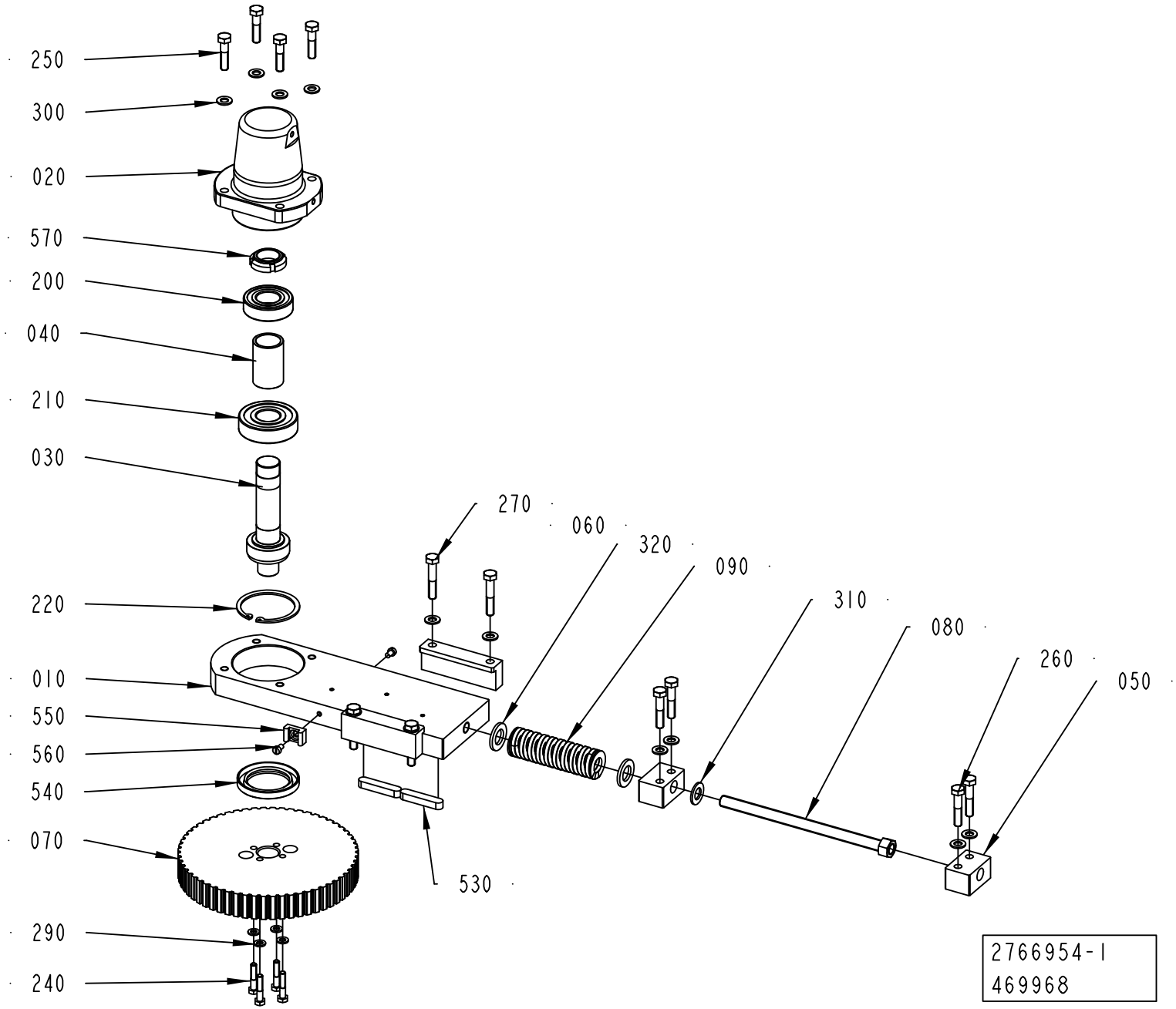
250
300
020
570
200
040
210
030
220
010
550
560
540
070
290
240
270
060
320
090
310
080
260
050
530
2766954-1
469968

ECM: 471862 - 20101109
Group number: 2766954-0100
Assembly Drawing: 2766954-1_1_AC

Pos	Part No	UN	Qty	Description	Page No
-					
010	2766953-0000		1	PLATE	
020	3022796-0000		1	BELLOWS	
030	2766958-0000		1	SHAFT	
040	2766959-0000		1	SPACER	
050	2766962-0000		2	BLOCK	
060	2766963-0000		2	BRACKET	
070	2766981-0000		1	TOOTHED PULLEY	
080	2817784-0000		1	SCREW	
090	3123920-0000		1	TENSION SPRING	
200	321309-0105		1	BALL BEARING 25/52X15	
210	321314-0105		1	BALL BEARING 25/62X17	
220	315752-0136		1	RETAINING RING FOR BORE DIN 472 62	
240	312105-0374		4	SCREW M6S ISO 4014 M6X30 A480	
250	312105-0457		4	SCREW M6S ISO 4014 M8X35 A480	
260	312105-0459		4	SCREW M6S ISO 4014 M8X40 A480	
270	312105-0460		4	SCREW M6S ISO 4014 M8X45 A480	
290	315105-0153		4	WASHER BRB 6,4X12 RFR	
300	315105-0165		12	WASHER BRB 8,4X16 RFR	
310	315105-0178		1	WASHER BRB 13X24 RFR	
320	315105-0186		2	WASHER BRB 17X30 RFR	
530	315705-0303		2	PARALLEL KEY W. ROUND ENDS, 10X8X50 MM	
540	90091-0304		1	RADIAL SEAL 45X65X8 MM DUST LIP	
550	352113-0204		1	ANCHOR PLATES FOR STRIPS, TM3S25-M	
560	312125-0323		2	SCREW ISO 1207 M5X8 A4	
570	90459-6280		1	NUT GUK 5 M25 X 1.5 FZB	

Pos	Part No	UN	Qty	Description	Page No

Machine Type | Group Description | Used-In | Group Number | Page No

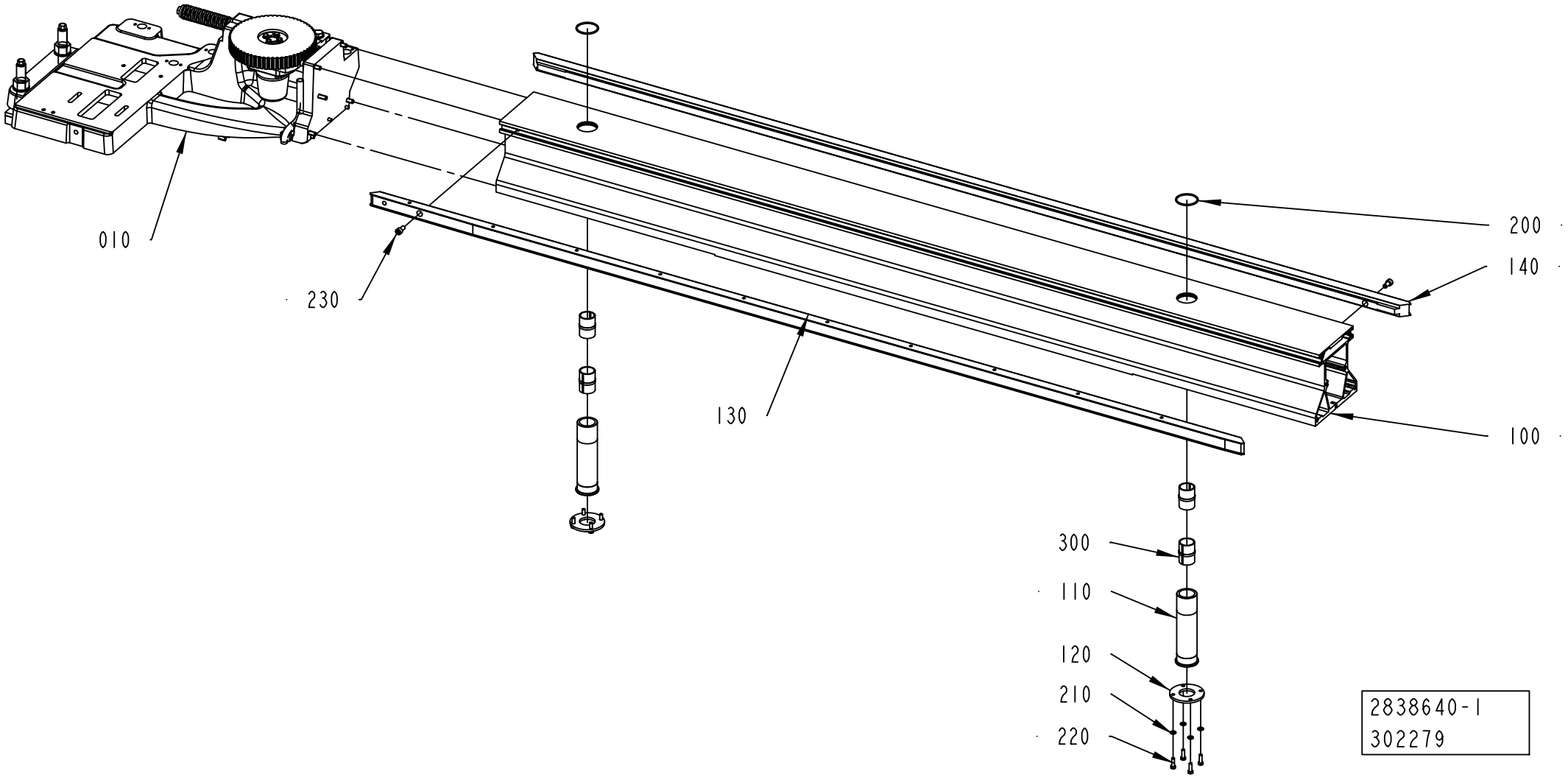
010
230
130
200
140
100
300
110
120
210
220
2838640-1
302279

ECM: 308663 - 20070525
Group number: 2838640-0100
Assembly Drawing: 2838640-1_1_AB

Pos	Part No	UN	Qty	Description	Page No
-					
010	2766980-0100		1	BELT STRETCHER	**1-31**
100	2766610-0000		1	FRAME	
110	2766974-0000		2	SLEEVE	
120	2766976-0000		2	FLANGE	
130	2873879-0000		1	GUIDE	
140	2773616-0000		1	GUIDE	
200	315202-0732		2	O-RING 44,12X2,62 MM	
210	315105-0153		8	WASHER BRB 6,4X12 RFR	
220	312105-0370		8	SCREW M6S ISO 4017 M6X20 A480	
230	312115-0449		2	SCREW ISO4762 M8X16 A4 80	
300	90600-0798		4	BUSHING INSERT, JUM-02-30	

Pos	Part No	UN	Qty	Description	Page No

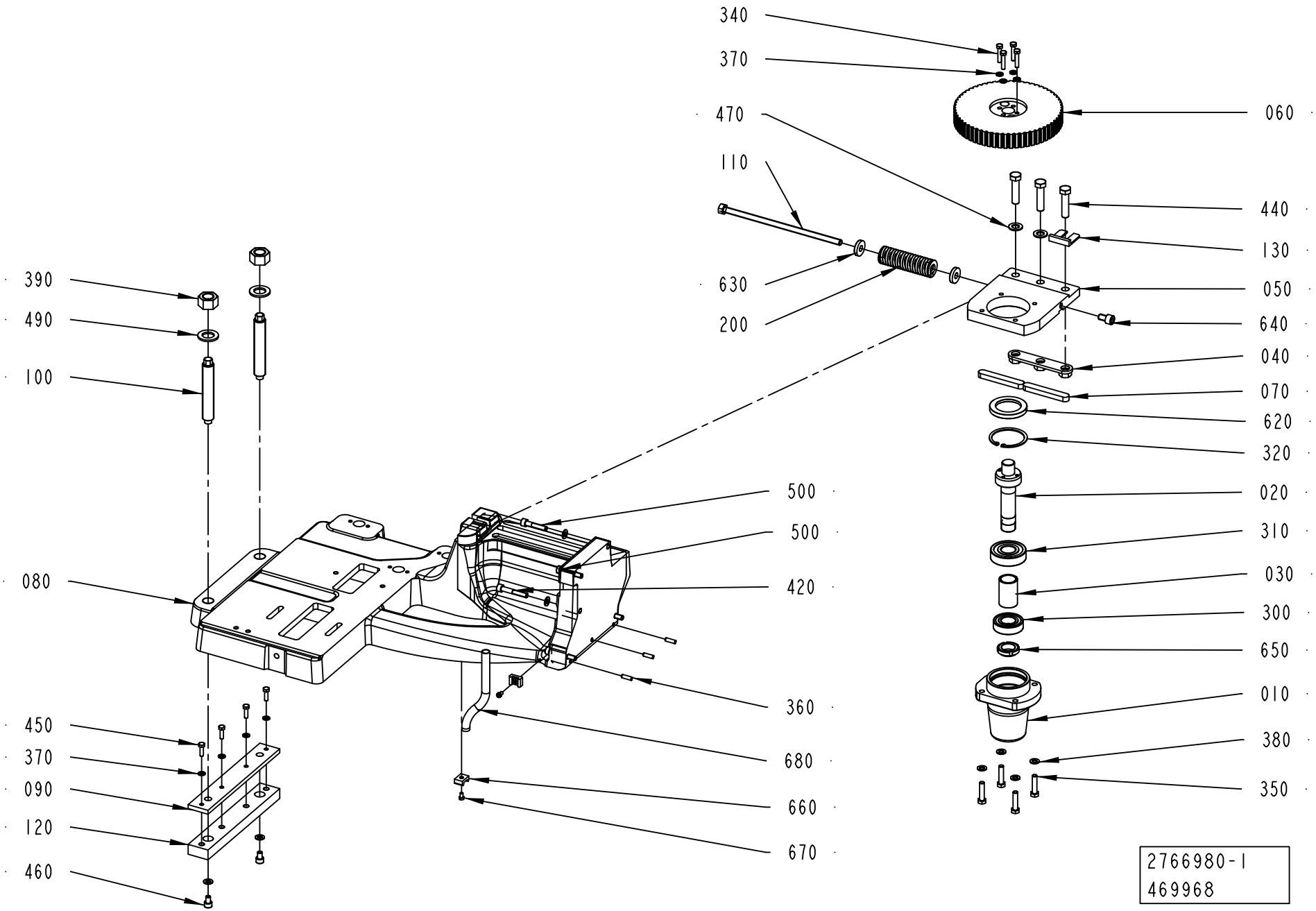
340
370
470
110
630
200
390
490
100
080
450
370
090
120
460
500
500
420
360
680
660
670
060
440
130
050
640
040
070
620
320
020
310
030
300
650
010
380
350
2766980-1
469968

ECM: 471863 - 20101109
Group number: 2766980-0100
Assembly Drawing: 2766980-1_1_AD

Pos	Part No	UN	Qty	Description	Page No
-					
010	3022796-0000		1	BELLOWS	
020	2766958-0000		1	SHAFT	
030	2766959-0000		1	SPACER	
040	2775417-0000		1	BRACKET	
050	2766989-0000		1	BRACKET	
060	2766981-0000		1	TOOTHED PULLEY	
070	315701-0371		2	PARALLEL KEY W. ROUND ENDS, 14X9X90 MM	
080	2769746-0000		1	FRAME	
090	2775423-0000		1	PLATE	
100	2775421-0000		2	SCREW	
110	2805467-0000		1	SCREW	
120	2775420-0000		1	SLIDE	
130	2937337-0000		1	SPACER	
200	3123920-0000		1	TENSION SPRING	
300	321309-0105		1	BALL BEARING 25/52X15	
310	321314-0105		1	BALL BEARING 25/62X17	
320	315752-0136		1	RETAINING RING FOR BORE DIN 472 62	
340	312105-0374		4	SCREW M6S ISO 4014 M6X30 A480	
350	312105-0457		4	SCREW M6S ISO 4014 M8X35 A480	
360	311103-0353		3	PARALLEL PIN ISO 2338 6M6X20 A1	
370	315105-0153		8	WASHER BRB 6,4X12 RFR	
380	315105-0165		11	WASHER BRB 8,4X16 RFR	
390	312607-0326		2	HEXAGON NUT, EN 24032 M6M M20 A480	
420	312115-0461		2	SCREW ISO4762 M8X50 A4 80	
440	312109-0542		3	SCREW M6S ISO 4017 M12X50 A280	
450	312105-0370		4	SCREW M6S ISO 4017 M6X20 A480	
460	312115-0447		2	SCREW ISO4762 M8X12 A4 80	
470	315105-0178		2	WASHER BRB 13X24 RFR	
490	315105-0192		2	WASHER BRB 21X36 RFR	
500	312115-0459		3	SCREW ISO4762 M8X40 A4 80	
620	90091-0304		1	RADIAL SEAL 45X65X8 MM DUST LIP	
630	315125-0173		2	WASHER TBRSB 10,5X28X6 A4	
640	312115-0489		1	SCREW ISO4762 M10X16 A4 80	
650	90459-6280		1	NUT GUK 5 M25 X 1.5 FZB	
660	352113-0204		2	ANCHOR PLATES FOR STRIPS, TM3S25-M	
670	312125-0323		2	SCREW ISO 1207 M5X8 A4	
680	90166-0126	M	3	TUBE 12 MM PA,TRANSP.	

Pos	Part No	UN	Qty	Description	Page No

Machine Type | Group Description | Used-In | Group Number | Page No

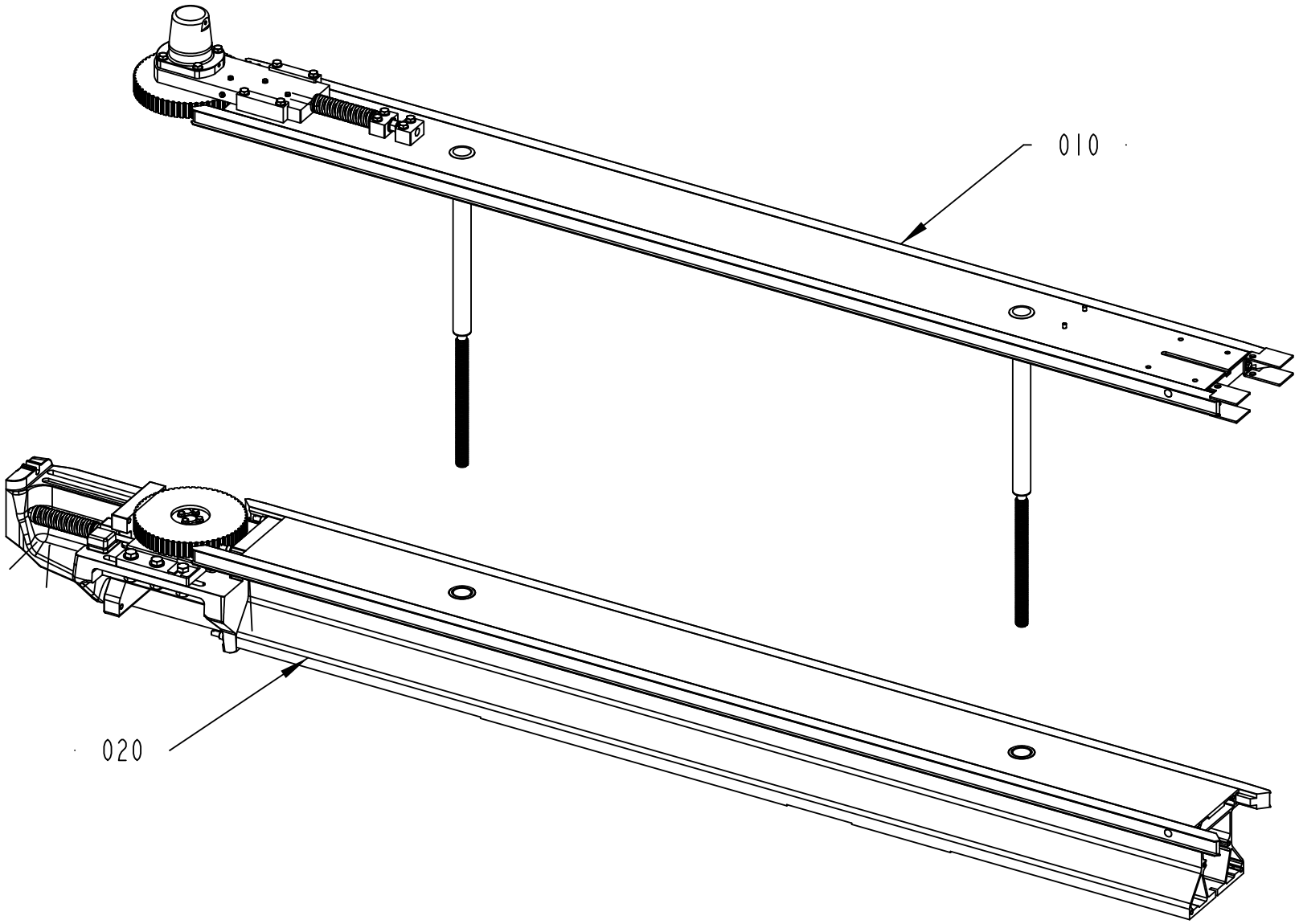
010
020
2838644-3
402952

ECM: 494253 - 20110701
Group number: 2838644-0200
Assembly Drawing: 2838644-3_1_AA

Pos	Part No	UN	Qty	Description	Page No
TBA 1000B, TBA 1000SQ, TBA 1000S, TBA 1500S, TBA 1890S, TBA 2000S					
010	2838645-0200		1	BELT	**1-35**
Common Parts					
020	2838646-0100		1	BELT UNIT	**1-39**

Pos	Part No	UN	Qty	Description	Page No

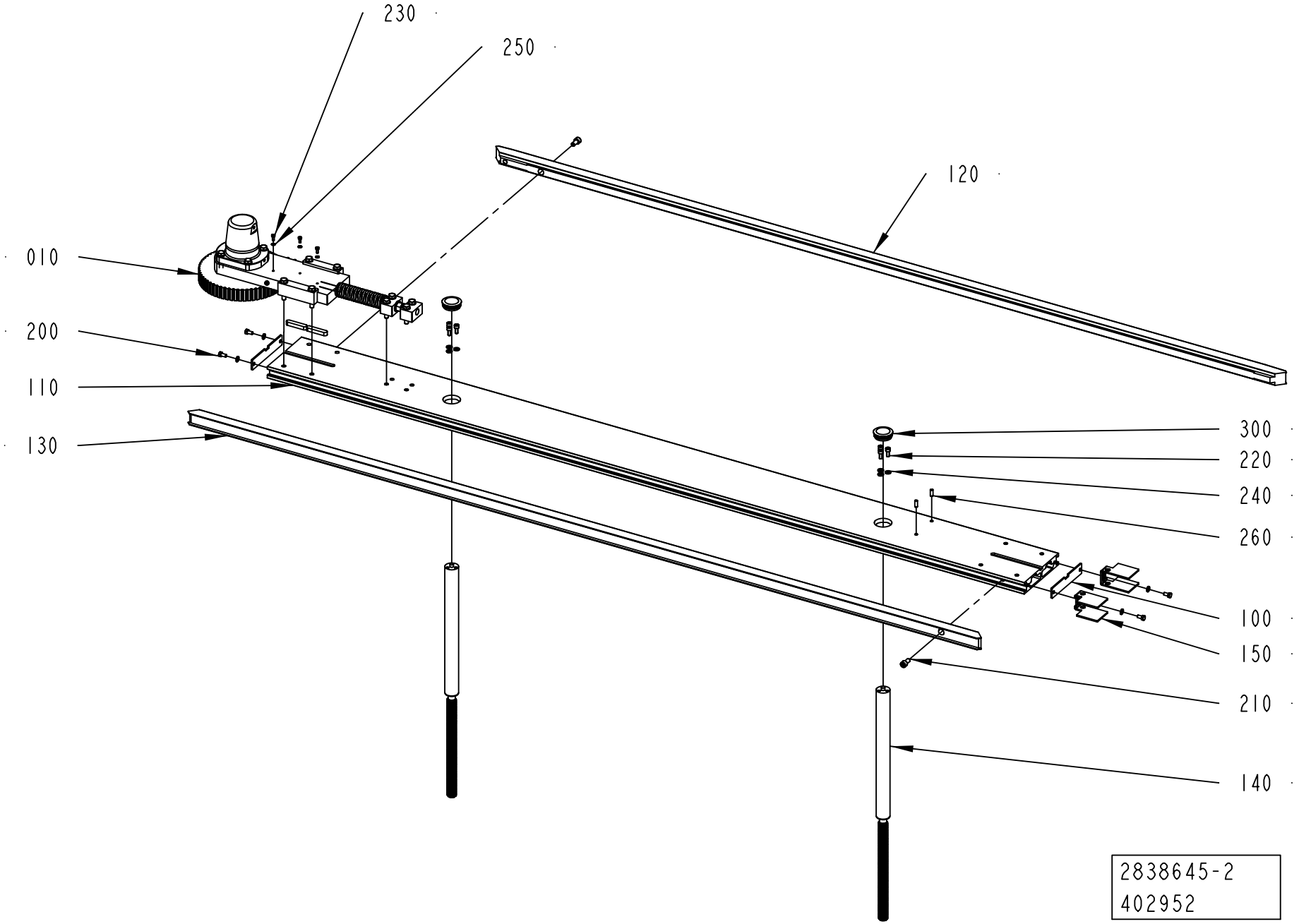
230
250
120
010
200
110
130
300
220
240
260
100
150
210
140
2838645-2
402952

ECM: 407690 - 20091001
Group number: 2838645-0200
Assembly Drawing: 2838645-2_1_AA

Pos	Part No	UN	Qty	Description	Page No
-					
010	2778572-0100		1	BELT STRETCHER	**1-37**
100	2788134-0000		2	COVER	
110	2778588-0000		1	FRAME	
120	2779774-0000		1	GUIDE	
130	2779775-0000		1	GUIDE	
140	2766927-0000		2	PILLAR	
150	3043254-0000		2	COVER	
200	312105-0366		4	SCREW M6S ISO 4017 M6X12 A480	
210	312115-0449		2	SCREW ISO4762 M8X16 A4 80	
220	312115-0367		6	SCREW ISO4762 M6X14 A4 80	
230	312105-0289		3	SCREW M6S H4X10 A4 70 ISO4017/DIN933	
240	315105-0153		10	WASHER BRB 6,4X12 RFR	
250	315105-0136		3	WASHER BRB 4,3X8 RFR	
260	311103-0351		2	PARALLEL PIN ISO 2338 6M6X16 A1	
300	90261-0064		2	PLUG, BLIND, PLASTIC, NO. SFL42	

Pos	Part No	UN	Qty	Description	Page No

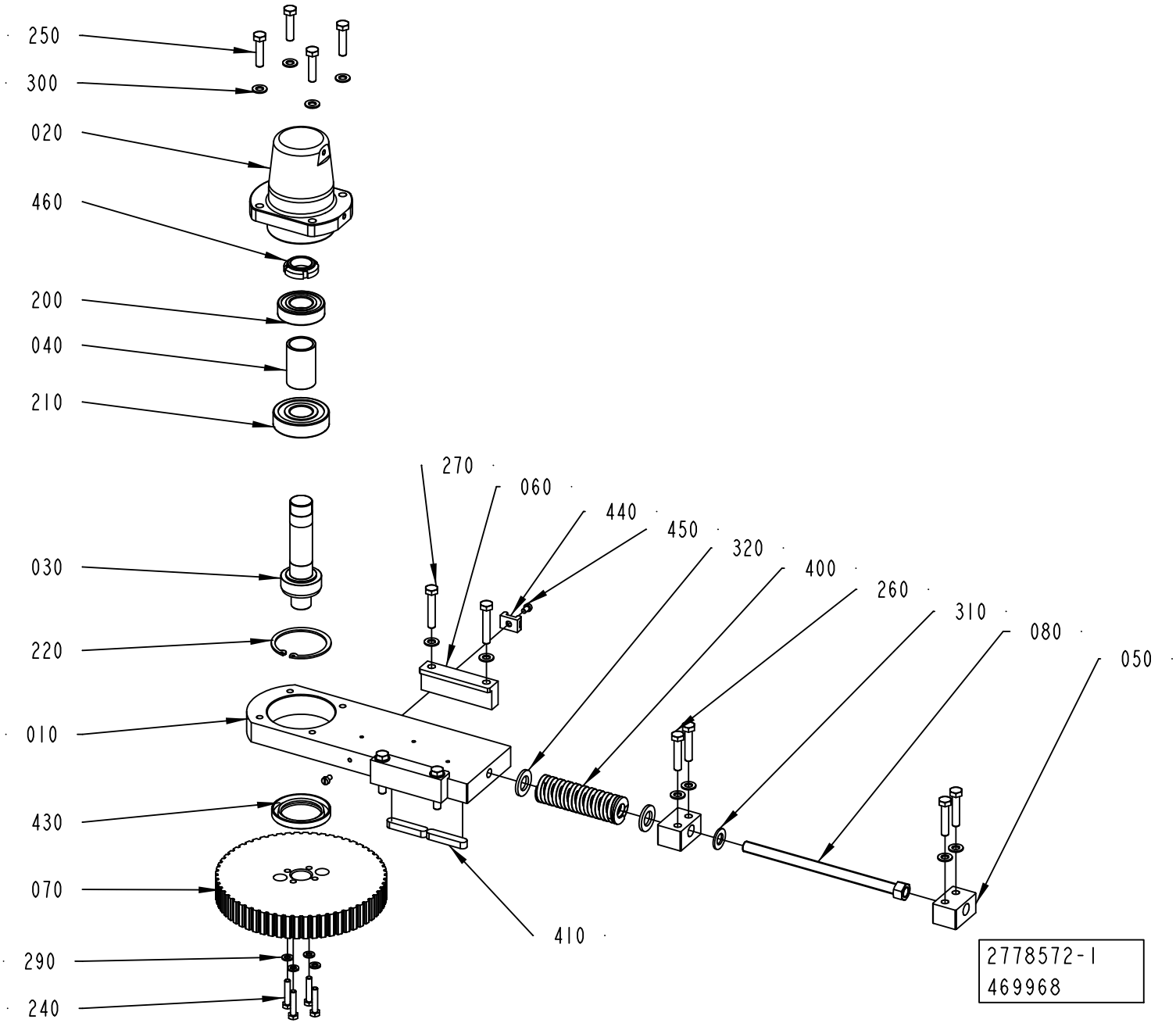
250
300
020
460
200
040
210
270
060
440
450
320
400
260
310
080
050
030
220
010
430
070
290
240
410
2778572-1
469968

ECM: 471865 - 20101109
Group number: 2778572-0100
Assembly Drawing: 2778572-1_1_AC

Pos	Part No	UN	Qty	Description	Page No
-					
010	2766953-0000		1	PLATE	
020	3022796-0000		1	BELLOWS	
030	2766958-0000		1	SHAFT	
040	2766959-0000		1	SPACER	
050	2766962-0000		2	BLOCK	
060	2766963-0000		2	BRACKET	
070	2766981-0000		1	TOOTHED PULLEY	
080	2817784-0000		1	SCREW	
200	321309-0105		1	BALL BEARING 25/52X15	
210	321314-0105		1	BALL BEARING 25/62X17	
220	315752-0136		1	RETAINING RING FOR BORE DIN 472 62	
240	312105-0374		4	SCREW M6S ISO 4014 M6X30 A480	
250	312105-0457		4	SCREW M6S ISO 4014 M8X35 A480	
260	312105-0459		4	SCREW M6S ISO 4014 M8X40 A480	
270	312105-0460		4	SCREW M6S ISO 4014 M8X45 A480	
290	315105-0153		4	WASHER BRB 6,4X12 RFR	
300	315105-0165		12	WASHER BRB 8,4X16 RFR	
310	315105-0178		1	WASHER BRB 13X24 RFR	
320	315105-0186		2	WASHER BRB 17X30 RFR	
400	3123920-0000		1	TENSION SPRING	
410	315705-0303		2	PARALLEL KEY W. ROUND ENDS, 10X8X50 MM	
430	90091-0304		1	RADIAL SEAL 45X65X8 MM DUST LIP	
440	352113-0204		1	ANCHOR PLATES FOR STRIPS, TM3S25-M	
450	312125-0323		2	SCREW ISO 1207 M5X8 A4	
460	90459-6280		1	NUT GUK 5 M25 X 1.5 FZB	

Pos	Part No	UN	Qty	Description	Page No

Machine Type | Group Description | Used-In | Group Number | Page No

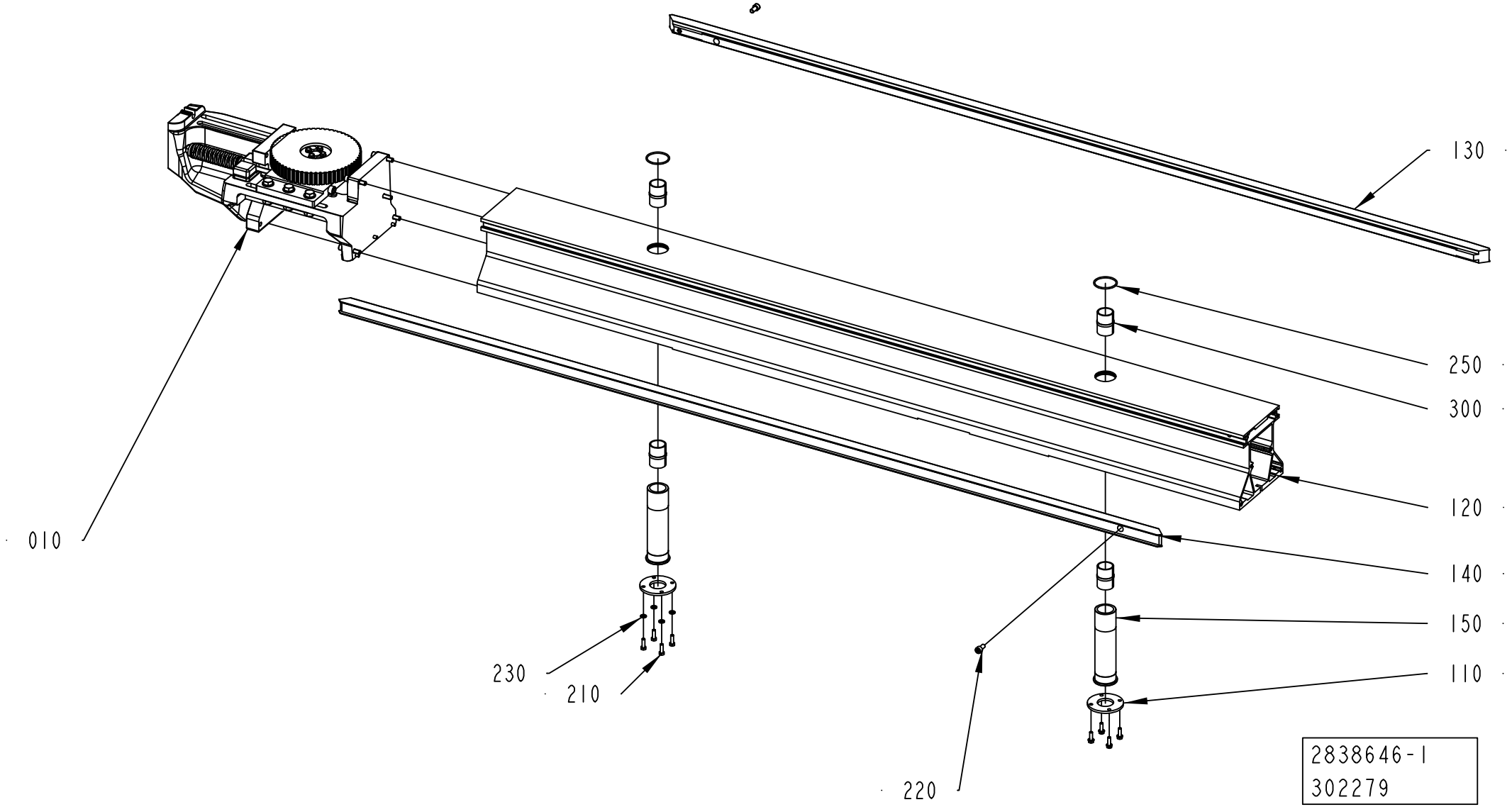
130
250
300
120
140
150
110
010
230
210
220
2838646-1
302279

ECM: 308666 - 20070525
Group number: 2838646-0100
Assembly Drawing: 2838646-1_1_AB

Pos	Part No	UN	Qty	Description	Page No
-					
010	2769743-0100		1	BELT STRETCHER	**1-41**
110	2766976-0000		2	FLANGE	
120	2778570-0000		1	FRAME	
130	2873878-0000		1	GUIDE	
140	2779775-0000		1	GUIDE	
150	2766974-0000		2	SLEEVE	
210	312105-0370		8	SCREW M6S ISO 4017 M6X20 A480	
220	312115-0449		2	SCREW ISO4762 M8X16 A4 80	
230	315105-0153		8	WASHER BRB 6,4X12 RFR	
250	315202-0732		2	O-RING 44,12X2,62 MM	
300	90600-0798		4	BUSHING INSERT, JUM-02-30	

Pos	Part No	UN	Qty	Description	Page No

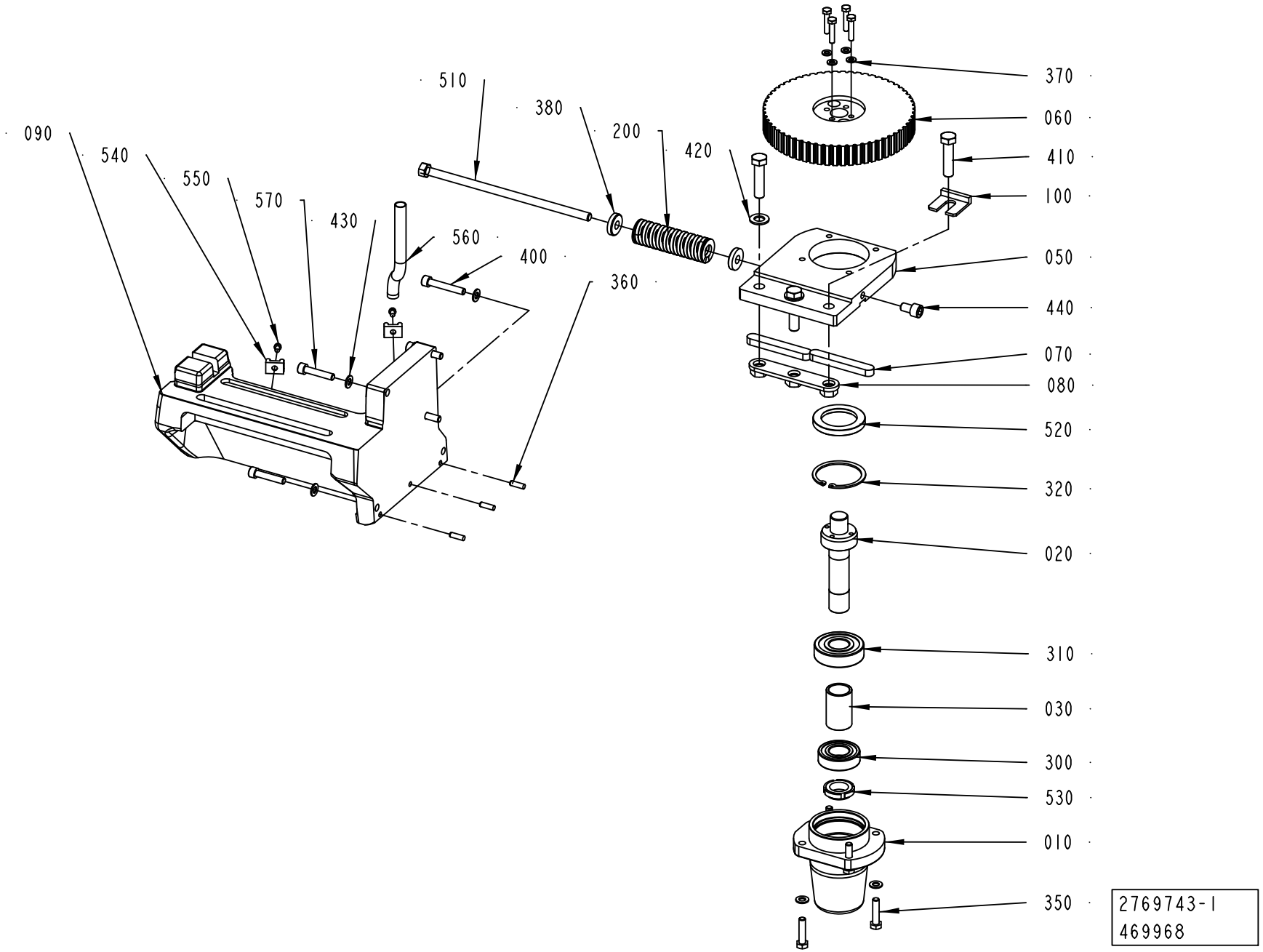
090
540
550
570
430
560
400
510
380
200
420
360
370
060
410
100
050
440
070
080
520
320
020
310
030
300
530
010
350
2769743-1
469968

ECM: 471864 - 20101109
Group number: 2769743-0100
Assembly Drawing: 2769743-1_1_AD

Pos	Part No	UN	Qty	Description	Page No
-					
010	3022796-0000		1	BELLOWS	
020	2766958-0000		1	SHAFT	
030	2766959-0000		1	SPACER	
050	2766989-0000		1	BRACKET	
060	2766981-0000		1	TOOTHED PULLEY	
070	315701-0371		2	PARALLEL KEY W. ROUND ENDS, 14X9X90 MM	
080	2775417-0000		1	BRACKET	
090	2778571-0000		1	FRAME	
100	2937337-0000		1	SPACER	
200	3123920-0000		1	TENSION SPRING	
300	321309-0105		1	BALL BEARING 25/52X15	
310	321314-0105		1	BALL BEARING 25/62X17	
320	315752-0136		1	RETAINING RING FOR BORE DIN 472 62	
340	312105-0374		4	SCREW M6S ISO 4014 M6X30 A480	
350	312105-0457		4	SCREW M6S ISO 4014 M8X35 A480	
360	311103-0353		3	PARALLEL PIN ISO 2338 6M6X20 A1	
370	315105-0153		4	WASHER BRB 6,4X12 RFR	
380	315125-0173		2	WASHER TBRSB 10,5X28X6 A4	
400	312115-0461		2	SCREW ISO4762 M8X50 A4 80	
410	312109-0542		3	SCREW M6S ISO 4017 M12X50 A280	
420	315105-0178		2	WASHER BRB 13X24 RFR	
430	315105-0165		9	WASHER BRB 8,4X16 RFR	
440	312115-0489		1	SCREW ISO4762 M10X16 A4 80	
510	2805467-0000		1	SCREW	
520	90091-0304		1	RADIAL SEAL 45X65X8 MM DUST LIP	
530	90459-6280		1	NUT GUK 5 M25 X 1.5 FZB	
540	352113-0204		2	ANCHOR PLATES FOR STRIPS, TM3S25-M	
550	312125-0323		2	SCREW ISO 1207 M5X8 A4	
560	90166-0126	M	1	TUBE 12 MM PA,TRANSP.	
570	312115-0459		3	SCREW ISO4762 M8X40 A4 80	

Pos	Part No	UN	Qty	Description	Page No

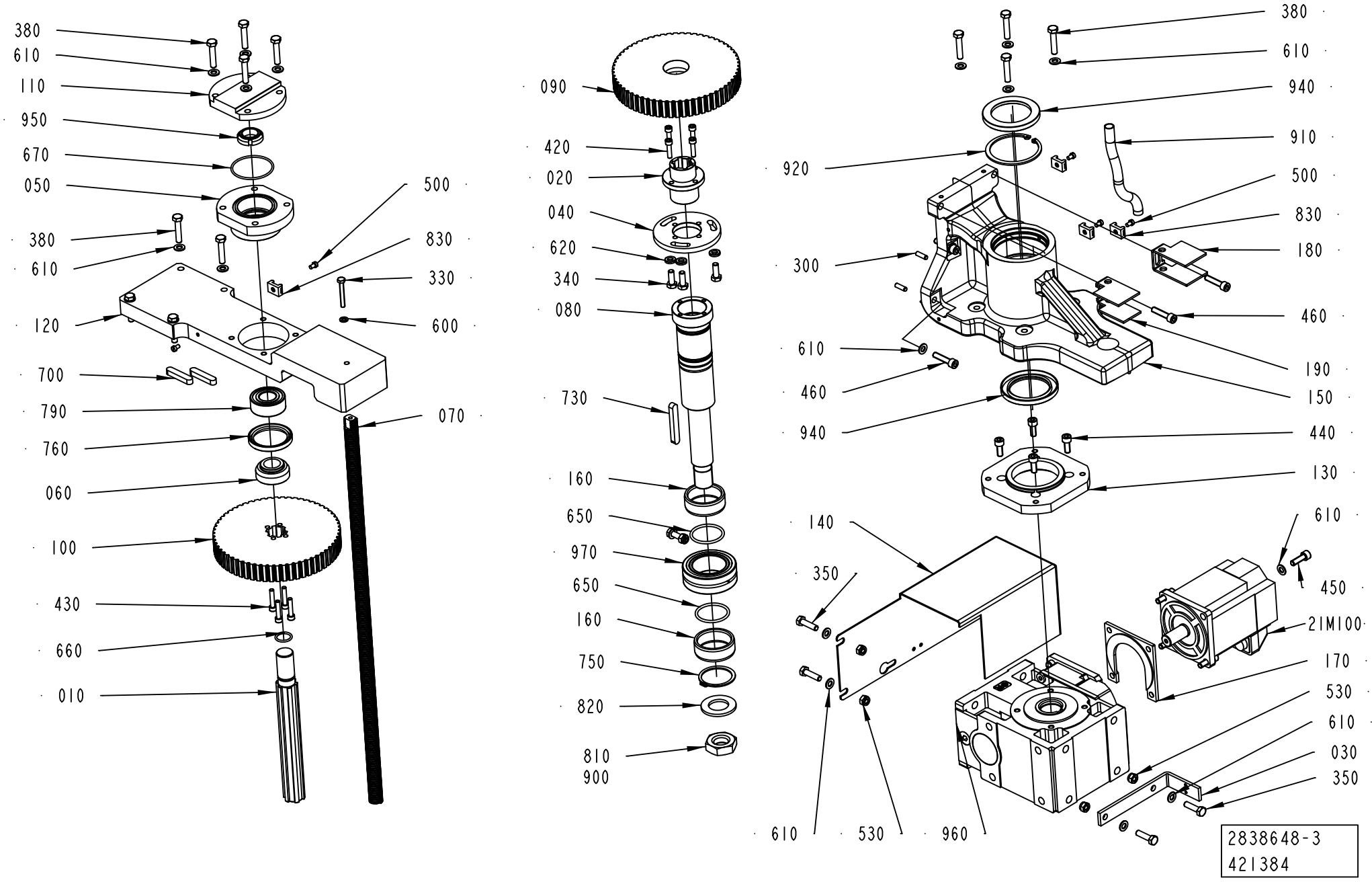
380
610
110
950
670
050
380
610
120
700
790
760
060
100
430
660
010
500
830
330
600
070
090
420
020
040
620
340
080
730
160
650
970
650
160
750
820
810
900
380
610
940
910
920
500
830
180
300
460
610
460
940
190
150
440
130
140
610
350
450
21M100
170
530
610
030
350
610
530
960
2838648-3
421384

ECM: 493748 - 20110701
Group number: 2838648-0200
Assembly Drawing: 2838648-3_1_AC

Pos	Part No	UN	Qty	Description	Page No
TBA 1000B, TBA 1000SQ, TBA 1000S, TBA 1500S, TBA 1890S, TBA 2000S					
010	2775446-0000		1	SHAFT	
050	2775445-0000		1	SPACER	
060	2775443-0000		1	SPACER	
070	2802392-0000		1	PILLAR	
100	2775442-0000		1	TOOTHED PULLEY	
110	2778566-0000		1	BELLOWS	
120	2985846-0000		1	PLATE	
330	312104-0379		1	SCREW M6S M6X45H FZB	
380	312105-0459		12	SCREW M6S ISO 4014 M8X40 A480	
430	312115-0374		4	SCREW ISO4762 M6X30 A4 80	
500	312125-0323		5	SCREW ISO 1207 M5X8 A4	
600	315105-0153		1	WASHER BRB 6,4X12 RFR	
610	315105-0165		25	WASHER BRB 8,4X16 RFR	
660	315202-0717		1	O-RING 20,29X2,62 MM	
670	315202-0741		1	O-RING 58,42X2,62 MM	
700	315705-0303		2	PARALLEL KEY W. ROUND ENDS, 10X8X50 MM	
760	315221-0198		1	RADIAL SEAL 50X65X8 MM	
790	321330-0105		1	ANG. BALL BEAR 25/52X20,6	
830	352113-0204		4	ANCHOR PLATES FOR STRIPS, TM3S25-M	
950	90459-6280		1	NUT GUK 5 M25 X 1.5 FZB	
Common Parts					
020	2775439-0000		1	BUSHING	
030	2837626-0000		1	BRACKET	
040	2775438-0000		1	PLATE	
080	2837624-0000		1	SHAFT	
090	2775437-0000		1	TOOTHED PULLEY	
130	2837627-0000		1	FLANGE	
140	2837630-0000		1	COVER	
150	2837623-0000		1	BRACKET	
160	2837628-0000		2	SPACER	
170	2985781-0000		1	PLATE	
180	3043254-0000		1	COVER	
190	3053815-0000		1	COVER	
300	311103-0353		3	PARALLEL PIN ISO 2338 6M6X20 A1	
340	312105-0452		3	SCREW M6S ISO 4017 M8X22 A480	
350	312105-0455		5	SCREW M6S ISO 4017 M8X30 A480	
420	312115-0372		4	SCREW ISO4762 M6X25 A4 80	
440	312115-0451		8	SCREW ISO4762 M8X20 A4 80	
450	312115-0453		4	SCREW ISO4762 M8X25 A4 80	
460	312115-0457		6	SCREW ISO4762 M8X35 A4 80	
530	312812-0318		5	HEXAGON NUT, NY-LOCK M8 A480	
620	315115-0165		3	WASHER PLAIN, TBRB 8,4/16 H=3	
650	315202-0602		2	O-RING 44,04X3,53 MM	
730	315705-0307		1	PARALLEL KEY W. ROUND ENDS, 10X8X70 MM	
750	315751-0130		1	RETAINING RING FOR SHAFT DIN 471 50 SS	
810	312625-0330		1	HEXAGON THIN NUT, EN 24035 ML6M M27 A4	
820	315105-0203		1	WASHER BRB 30X52 RFR	
900	90157-0037	ML	1	THREAD SEALANT LOCTITE 542	
910	90166-0126	M	3	TUBE 12 MM PA,TRANSP.	
920	90458-0181		1	RETAINING RING FOR BORE DIN 472 80 SS	
940	90459-4588		2	RADIAL SEAL 60X85X8 MM DUST LIP	
960	90600-0803		1	WORM GEAR MR V 63 UO3A-80B4 … B5/35	
970	90600-0892		1	NEEDLE ROLLER BEARING, 50X80X28 MM	
21M100	90601-0668		1	SERVO MOTOR, MPL-B420P-MK72AA SERIES A	

Machine Type	Group Description	Used-In	Group Number	Page No

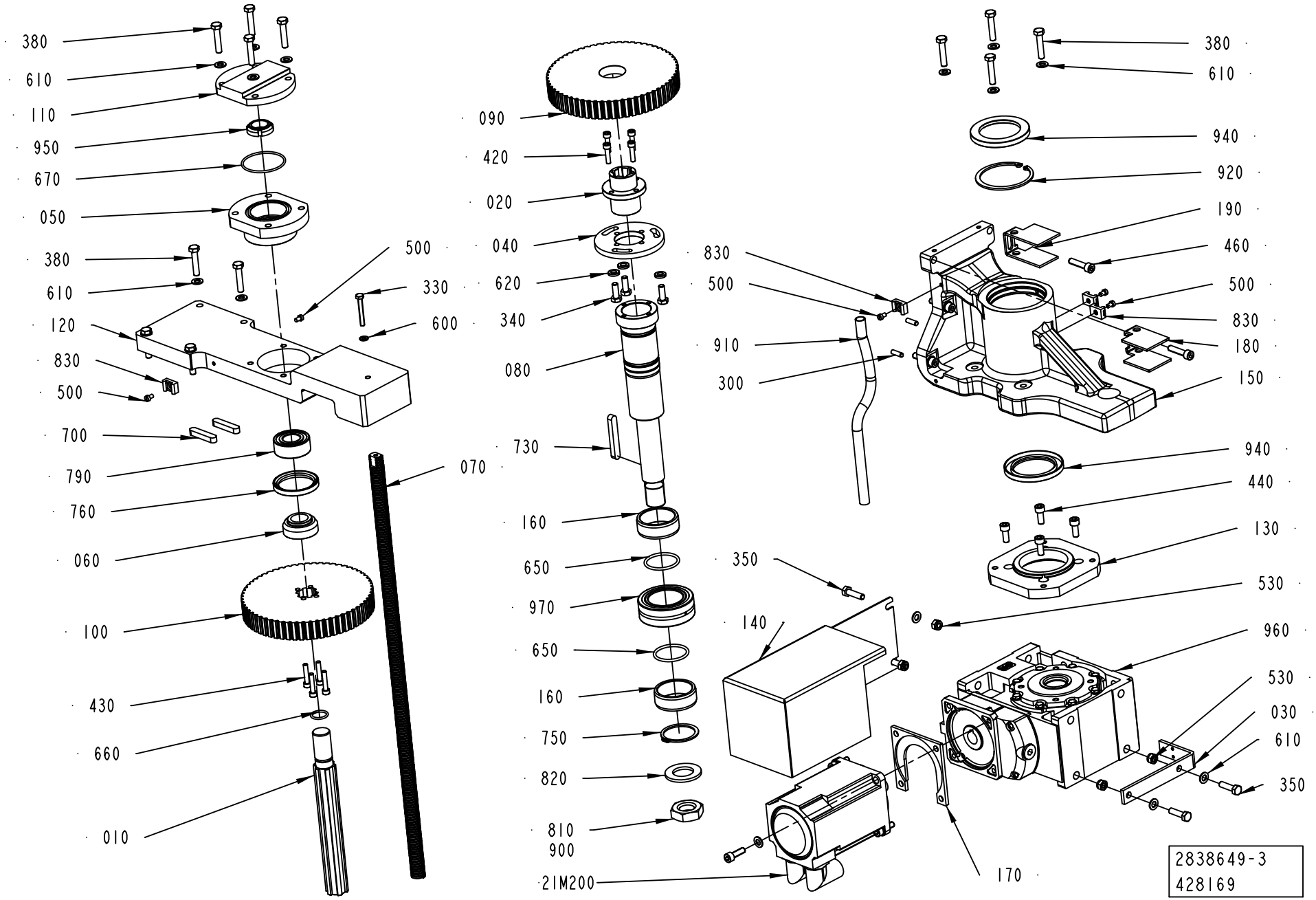
380
610
110
950
670
050
380
610
120
830
500
700
790
760
060
100
430
660
010
500
330
600
070
090
420
020
040
620
340
080
730
160
650
970
650
160
750
820
810
900
21M200
830
500
910
300
380
610
940
920
190
460
500
830
180
150
940
440
130
530
350
140
960
530
030
610
350
170
2838649-3
428169

ECM: 493749 - 20110701
Group number: 2838649-0200
Assembly Drawing: 2838649-3_1_AC

Pos	Part No	UN	Qty	Description	Page No
TBA 1000B, TBA 1000SQ, TBA 1000S, TBA 1500S, TBA 1890S, TBA 2000S					
010	2775446-0000		1	SHAFT	
050	2775445-0000		1	SPACER	
060	2775443-0000		1	SPACER	
070	2802392-0000		1	PILLAR	
100	2775442-0000		1	TOOTHED PULLEY	
110	2778566-0000		1	BELLOWS	
120	2985846-0000		1	PLATE	
330	312104-0379		1	SCREW M6S M6X45H FZB	
380	312105-0459		12	SCREW M6S ISO 4014 M8X40 A480	
430	312115-0374		4	SCREW ISO4762 M6X30 A4 80	
500	312125-0323		5	SCREW ISO 1207 M5X8 A4	
600	315105-0153		1	WASHER BRB 6,4X12 RFR	
610	315105-0165		25	WASHER BRB 8,4X16 RFR	
660	315202-0717		1	O-RING 20,29X2,62 MM	
670	315202-0741		1	O-RING 58,42X2,62 MM	
700	315705-0303		2	PARALLEL KEY W. ROUND ENDS, 10X8X50 MM	
760	315221-0198		1	RADIAL SEAL 50X65X8 MM	
790	321330-0105		1	ANG. BALL BEAR 25/52X20,6	
830	352113-0204		4	ANCHOR PLATES FOR STRIPS, TM3S25-M	
950	90459-6280		1	NUT GUK 5 M25 X 1.5 FZB	
Common Parts					
020	2775439-0000		1	BUSHING	
030	2837626-0000		1	BRACKET	
040	2775438-0000		1	PLATE	
080	2837624-0000		1	SHAFT	
090	2775437-0000		1	TOOTHED PULLEY	
130	2837627-0000		1	FLANGE	
140	2837625-0000		1	COVER	
150	2837623-0000		1	BRACKET	
160	2837628-0000		2	SPACER	
170	2985781-0000		1	PLATE	
180	3043254-0000		1	COVER	
190	3053816-0000		1	COVER	
300	311103-0353		3	PARALLEL PIN ISO 2338 6M6X20 A1	
340	312105-0452		3	SCREW M6S ISO 4017 M8X22 A480	
350	312105-0455		6	SCREW M6S ISO 4017 M8X30 A480	
420	312115-0372		4	SCREW ISO4762 M6X25 A4 80	
440	312115-0451		8	SCREW ISO4762 M8X20 A4 80	
450	312115-0453		4	SCREW ISO4762 M8X25 A4 80	
460	312115-0457		6	SCREW ISO4762 M8X35 A4 80	
530	312812-0318		6	HEXAGON NUT, NY-LOCK M8 A480	
620	315115-0165		3	WASHER PLAIN, TBRB 8,4/16 H=3	
650	315202-0602		2	O-RING 44,04X3,53 MM	
730	315705-0307		1	PARALLEL KEY W. ROUND ENDS, 10X8X70 MM	
750	315751-0130		1	RETAINING RING FOR SHAFT DIN 471 50 SS	
810	312625-0330		1	HEXAGON THIN NUT, EN 24035 ML6M M27 A4	
820	315105-0203		1	WASHER BRB 30X52 RFR	
900	90157-0037	ML	1	THREAD SEALANT LOCTITE 542	
910	90166-0126	M	3	TUBE 12 MM PA,TRANSP.	
920	90458-0181		1	RETAINING RING FOR BORE DIN 472 80 SS	
940	90459-4588		2	RADIAL SEAL 60X85X8 MM DUST LIP	
960	90600-0803		1	WORM GEAR MR V 63 UO3A-80B4 … B5/35	
970	90600-0892		1	NEEDLE ROLLER BEARING, 50X80X28 MM	
21M200	90601-0668		1	SERVO MOTOR, MPL-B420P-MK72AA SERIES A	

Machine Type	Group Description	Used-In	Group Number	Page No

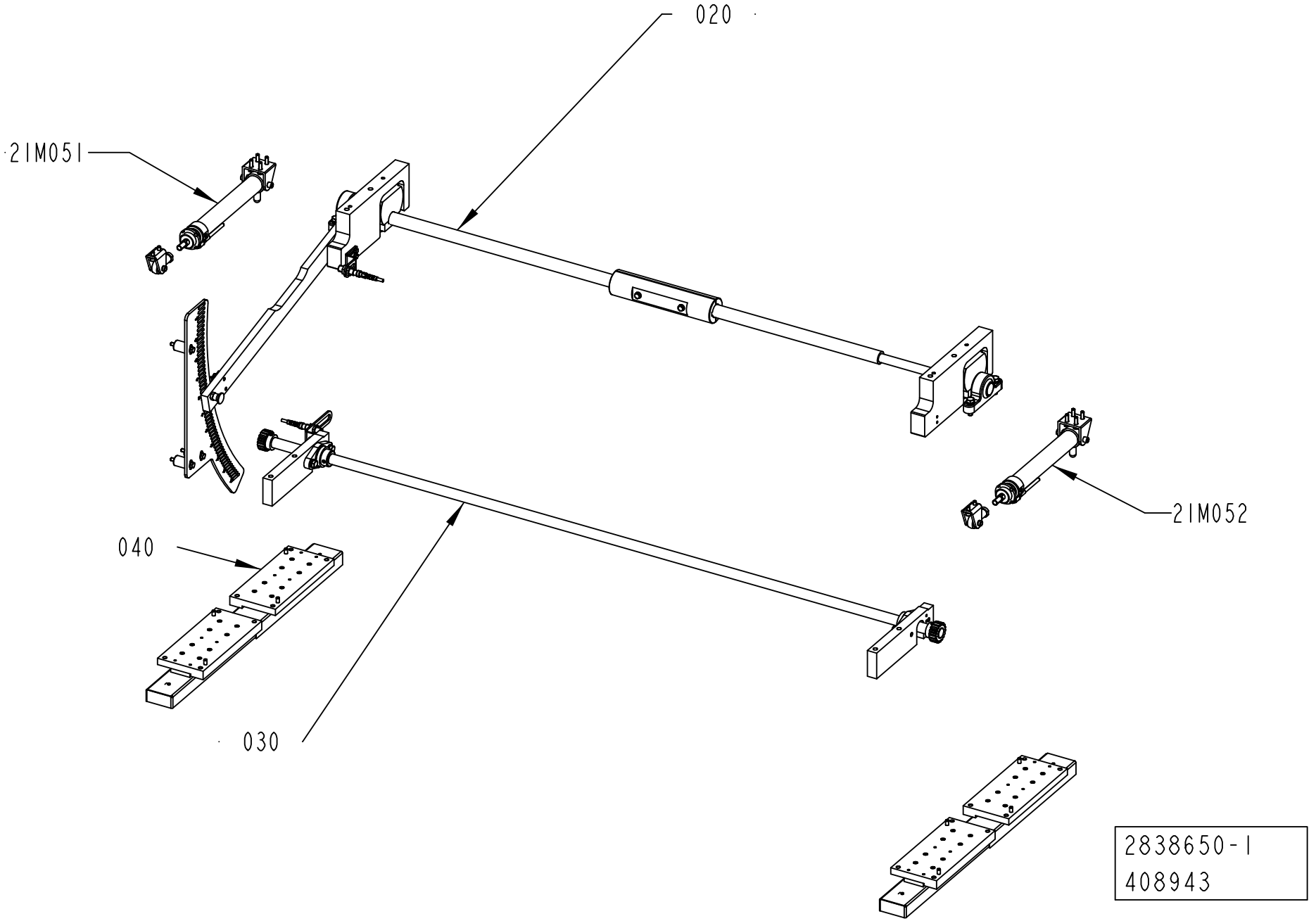
020
21M051
21M052
040
030
2838650-1
408943

ECM: 419435 - 20100110
Group number: 2838650-0100
Assembly Drawing: 2838650-1_1_AB

Pos	Part No	UN	Qty	Description	Page No
-					
020	2838669-0100		1	SETTING ARM	**1-49**
030	2838652-0100		1	SETTING ARM	**1-51**
040	2838653-0100		1	GUIDE RAIL	**1-53**
21M051	2769718-0100		1	PNEUMATIC CYLINDER	**1-55**
21M052	2769718-0100		1	PNEUMATIC CYLINDER	**1-55**

Pos	Part No	UN	Qty	Description	Page No

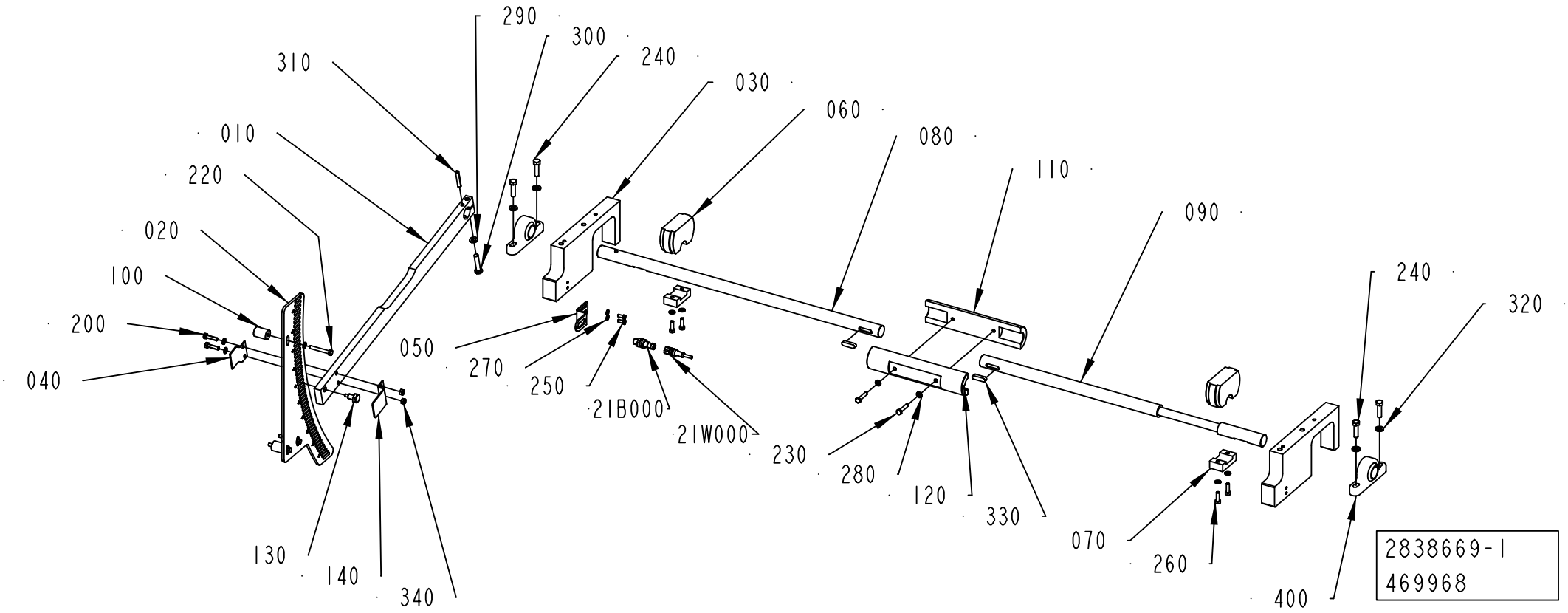
290
300
240
310
030
060
010
080
110
220
090
020
240
100
320
200
050
270
250
040
21B000
21W000
230
280
120
330
070
260
130
140
340
400
2838669-1
469968

ECM: 471139 - 20101109
Group number: 2838669-0100
Assembly Drawing: 2838669-1_1_AH

Pos	Part No	UN	Qty	Description	Page No
-					
010	2788174-0000		1	LEVER	
020	3021525-0000		1	PLATE	
030	2766944-0000		2	BRACKET	
040	2769695-0000		1	BRACKET	
050	2779057-0000		1	PLATE	
060	3022488-0000		2	CAM	
070	2838683-0000		2	PLATE	
080	3022022-0000		1	SHAFT	
090	3022023-0000		1	SHAFT	
100	2773632-0000		3	SPACER	
110	2985809-0000		1	HOUSING	
120	3022021-0000		1	HOUSING	
130	3086231-0000		1	SCREW	
140	3086233-0000		1	BRACKET	
200	312105-0372		2	SCREW M6S ISO 4017 M6X25 A480	
220	312105-0379		3	SCREW M6S ISO 4014 M6X45 A480	
230	312109-0374		2	SCREW M6S ISO 4017 M6X30 A480	
240	312105-0455		4	SCREW M6S ISO 4017 M8X30 A480	
250	312105-0327		2	SCREW M6S ISO 4017 M5X12 A480	
260	312105-0370		4	SCREW M6S ISO 4017 M6X20 A480	
270	315105-0146		2	WASHER BRB 5,3X10 RFR	
280	315105-0153		11	WASHER BRB 6,4X12 RFR	
290	315105-0165		1	WASHER BRB 8,4X16 RFR	
300	312105-0459		1	SCREW M6S ISO 4014 M8X40 A480	
310	311112-0347		1	SPRING PIN, ISO 8752 6X40-C	
320	315115-0165		4	WASHER PLAIN, TBRB 8,4/16 H=3	
330	315705-0267		2	PARALLEL KEY W. ROUND ENDS, 8X7X30 MM	
340	312605-0316		2	HEXAGON NUT, M6M M6 A280	
400	90600-0799		2	STANDING BEARING, KSTM-25	
21B000	90458-2907		1	PROX.SWITCH IFS204	
21W000	351405-0050		1	SENS. CABLE RSMVN 3-PRKT 4-3-06/5,0M	

Pos	Part No	UN	Qty	Description	Page No

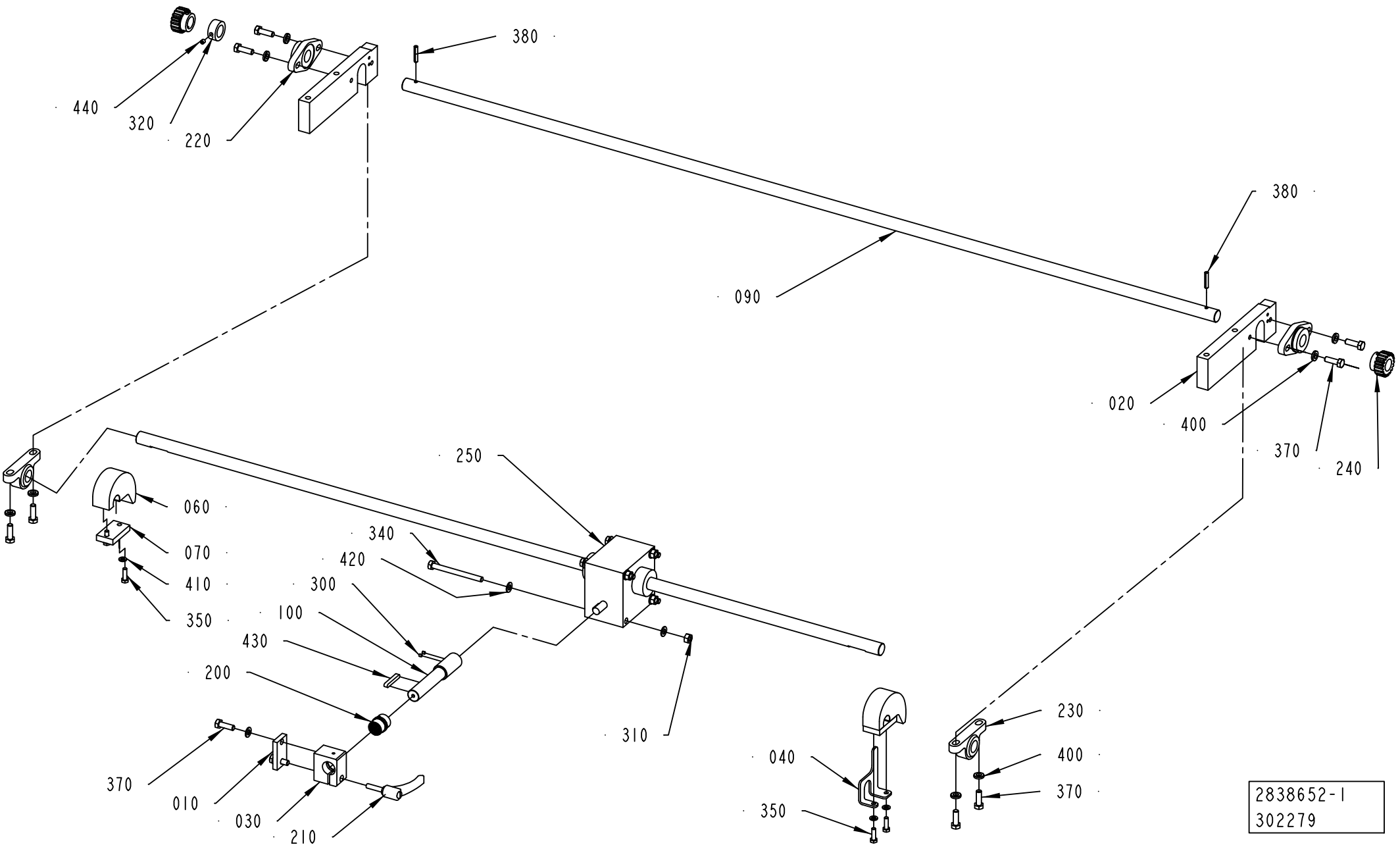
440
320
220
380
090
380
020
400
370
240
250
060
070
410
350
340
420
300
100
430
200
310
370
010
030
210
040
350
230
400
370
2838652-1
302279

ECM: 328412 - 20080407
Group number: 2838652-0100
Assembly Drawing: 2838652-1_1_AB

Pos	Part No	UN	Qty	Description	Page No
-					
010	2778594-0000		1	PLATE	
020	2779014-0000		2	PLATE	
030	2769726-0000		1	BRACKET	
040	2802405-0000		1	STOP ARM	
060	2779013-0000		2	CAM	
070	2712603-0000		2	PLATE	
090	2766950-0000		1	SHAFT	
100	2769729-0000		1	SHAFT	
200	90458-2932		1	PLAIN BEARING, JUM-02-20	
210	90017-0029		1	LOCKING LEVER, NO. KR8X30-SUS	
220	90600-0800		2	FLANGE BEARING 20X89X20 MM	
230	90459-4727		2	STANDING BEARING, KSTM-20	
240	2838690-0000		2	WHEEL	
250	90600-1005		1	WORM GEAR SCREW JACK, TR00042000130	
300	312318-0283		2	SCREW ISO4029 M4X4 A4	
310	312605-0318		4	HEXAGON NUT, M6M M8 A280	
320	315741-0216		1	RETAINING RING DIN 705 A4 20	
340	312105-0469		4	SCREW M6S ISO 4014 M8X90 A480	
350	312105-0370		4	SCREW M6S ISO 4017 M6X20 A480	
370	312105-0453		10	SCREW M6S ISO 4017 M8X25 A480	
380	311112-0312		2	SPRING PIN, ISO 8752 5X28-C	
400	315115-0165		8	WASHER PLAIN, TBRB 8,4/16 H=3	
410	315105-0153		4	WASHER BRB 6,4X12 RFR	
420	315105-0165		10	WASHER BRB 8,4X16 RFR	
430	315705-0239		1	PARALLEL KEY W. ROUND ENDS, 6X6X40 MM	
440	312318-0360		1	SCREW ISO4029 M6X6 A4	

Pos	Part No	UN	Qty	Description	Page No

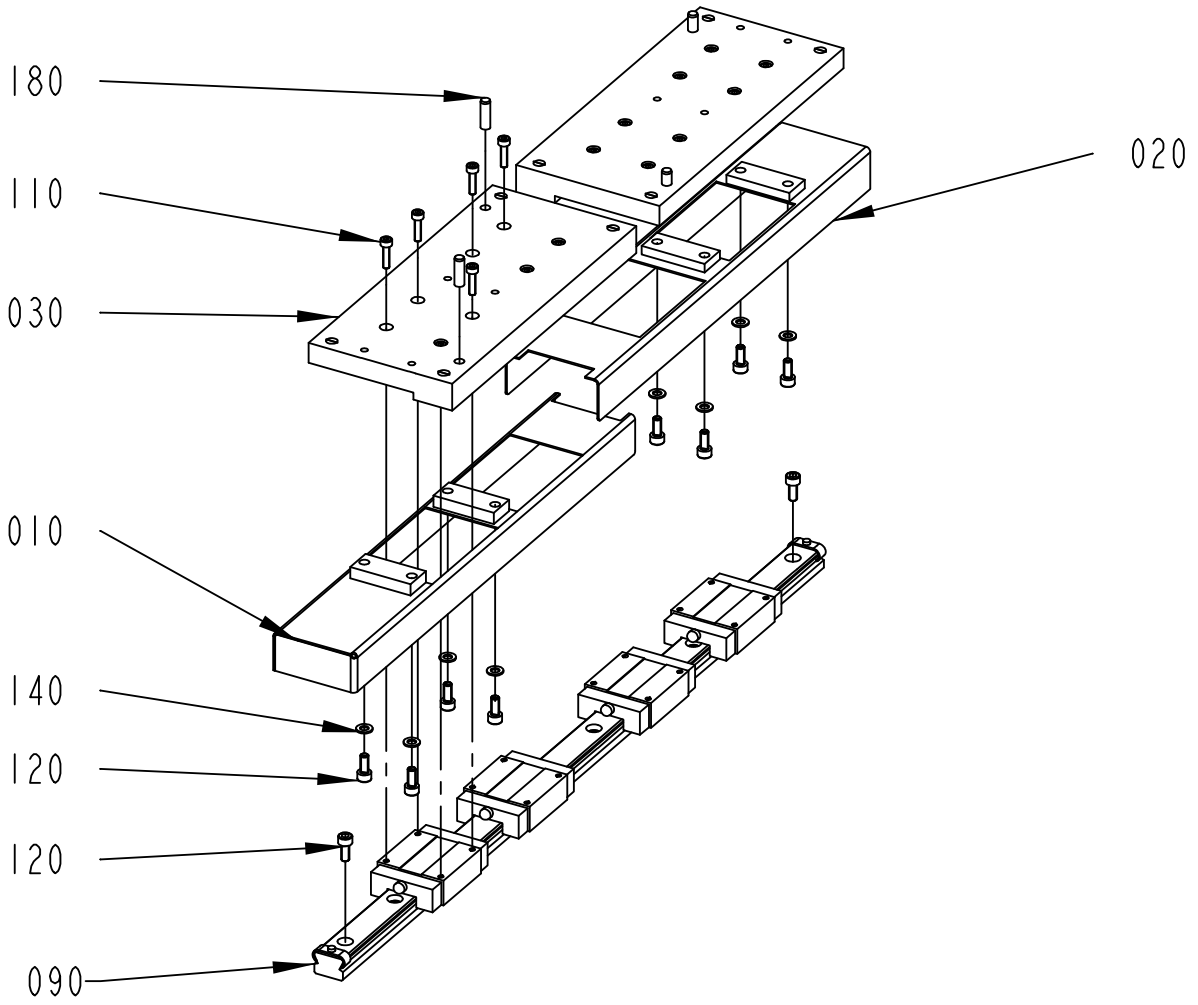

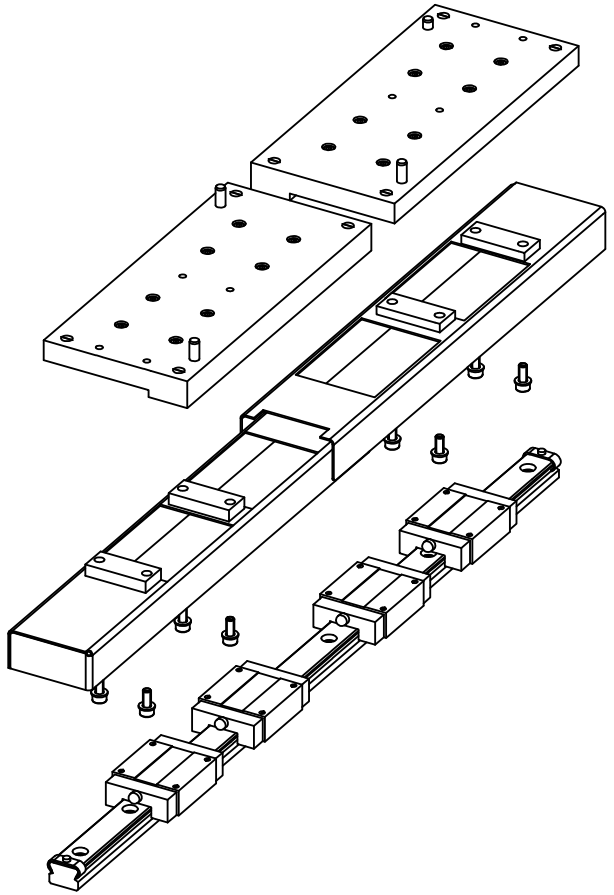

2838653-1
302279

ECM: 308942 - 20070525
Group number: 2838653-0100
Assembly Drawing: 2838653-1_1_AB

Pos	Part No	UN	Qty	Description	Page No
-					
010	2802375-0000		2	COVER	
020	2802376-0000		2	COVER	
030	2788168-0000		4	PLATE	
090	90600-0825		2	GUIDE BAR, 4 RSR20VMUU+580LM	
	90600-0826		*4*	*CARRIAGE, RSR20VMUU*	
110	312115-0293		32	SCREW ISO4762 M4X16 A4 80	
120	312115-0327		36	SCREW ISO4762 M5X12 A4 80	
140	315105-0146		16	WASHER BRB 5,3X10 RFR	
180	311103-0353		8	PARALLEL PIN ISO 2338 6M6X20 A1	

Pos	Part No	UN	Qty	Description	Page No

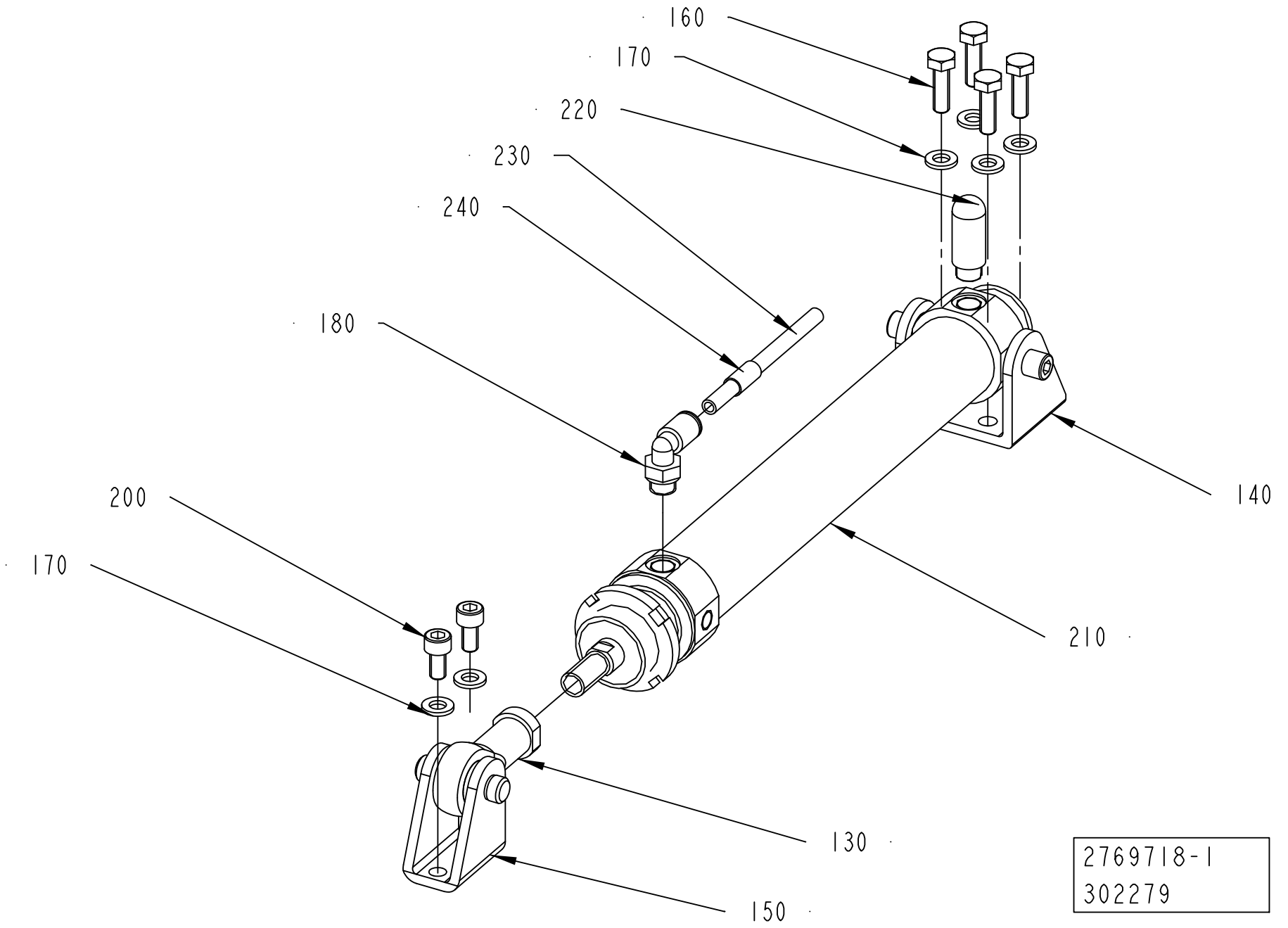
160
170
220
230
240
180
200
170
140
210
130
150
2769718-1
302279

ECM: 308945 - 20070525
Group number: 2769718-0100
Assembly Drawing: 2769718-1_1_AB

Pos	Part No	UN	Qty	Description	Page No
-					
130	90459-1018		1	ROD END, BALL JOINT EYE M10X1,25	
140	90459-3115		1	BRACKET, REAR, CLEVIS, ROUND, BORE 32	
150	90459-5949		1	REAR CLEVIS FOOT MOUNTING, CRLBN-32	
160	312105-0370		4	SCREW M6S ISO 4017 M6X20 A480	
170	315105-0153		6	WASHER BRB 6,4X12 RFR	
180	350002-0006		1	PUSH-IN L-FITTING QSL-F-G1/8-6	
200	312115-0366		2	SCREW ISO4762 M6X12 A4 80	
210	90458-2370		1	DOUBLE ACTING, ROUND, CYL 32-150	
220	90328-0047		1	SILENCER G1/8"	
230	315400-0001	MM	200	TUBE PUN-H-6X1-BL	
240	90459-7369		1	MARKING FOR PNEUM. TUBING, PRZ06	

Pos	Part No	UN	Qty	Description	Page No

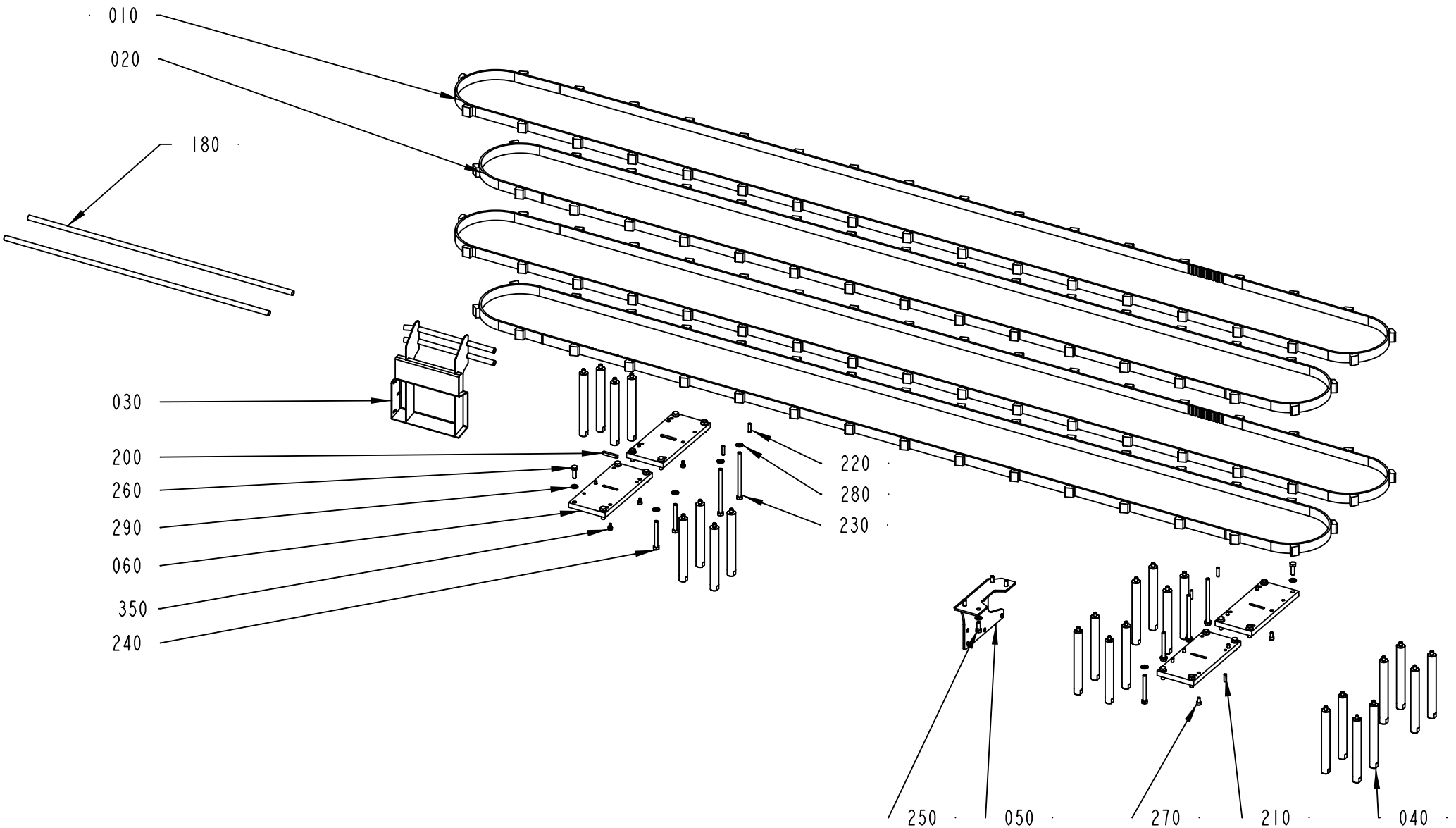

2838633-5
408943

ECM: 493783 - 20110701
Group number: 2838633-0200
Assembly Drawing: 2838633-5_1_AA

Pos	Part No	UN	Qty	Description	Page No
TBA 1000B, TBA 1000SQ, TBA 1000S, TBA 1500S, TBA 1890S, TBA 2000S					
010	90600-0814		2	TIMING BELT AT10 5250X25 MM+35236050	
020	90600-0815		2	TIMING BELT 25AT10/4800 +32 2. 3.6.050	
030	2805461-0000		1	GUIDE	
040	2778585-0000		24	PILLAR	
180	2779831-0000		2	PIPE	
360	312105-0370		4	SCREW M6S ISO 4017 M6X20 A480	
Common Parts					
050	2778592-0000		1	PLATE	
060	2788169-0000		4	PLATE	
200	315705-0239		2	PARALLEL KEY W. ROUND ENDS, 6X6X40 MM	
210	311103-0353		2	PARALLEL PIN ISO 2338 6M6X20 A1	
220	311103-1355		4	PARALLEL PIN ISO 2338 6M6X24 A1	
230	312105-0475		4	SCREW M6S ISO 4014 M8X120 A480	
240	312105-0465		4	SCREW M6S ISO 4014 M8X70 A480	
250	312105-0451		4	SCREW M6S ISO 4017 M8X20 A480	
260	312105-0453		16	SCREW M6S ISO 4017 M8X25 A480	
270	312115-0366		6	SCREW ISO4762 M6X12 A4 80	
280	315105-0165		12	WASHER BRB 8,4X16 RFR	
290	315106-0165		16	WASHER ISO 7089-8-200 HV A4	
350	90287-0230		6	SCREW, HEX.SOCK.HEAD SHOULD. M5X6	

Pos	Part No	UN	Qty	Description	Page No

Tetra Pak

SPC
Spare Parts Catalogue

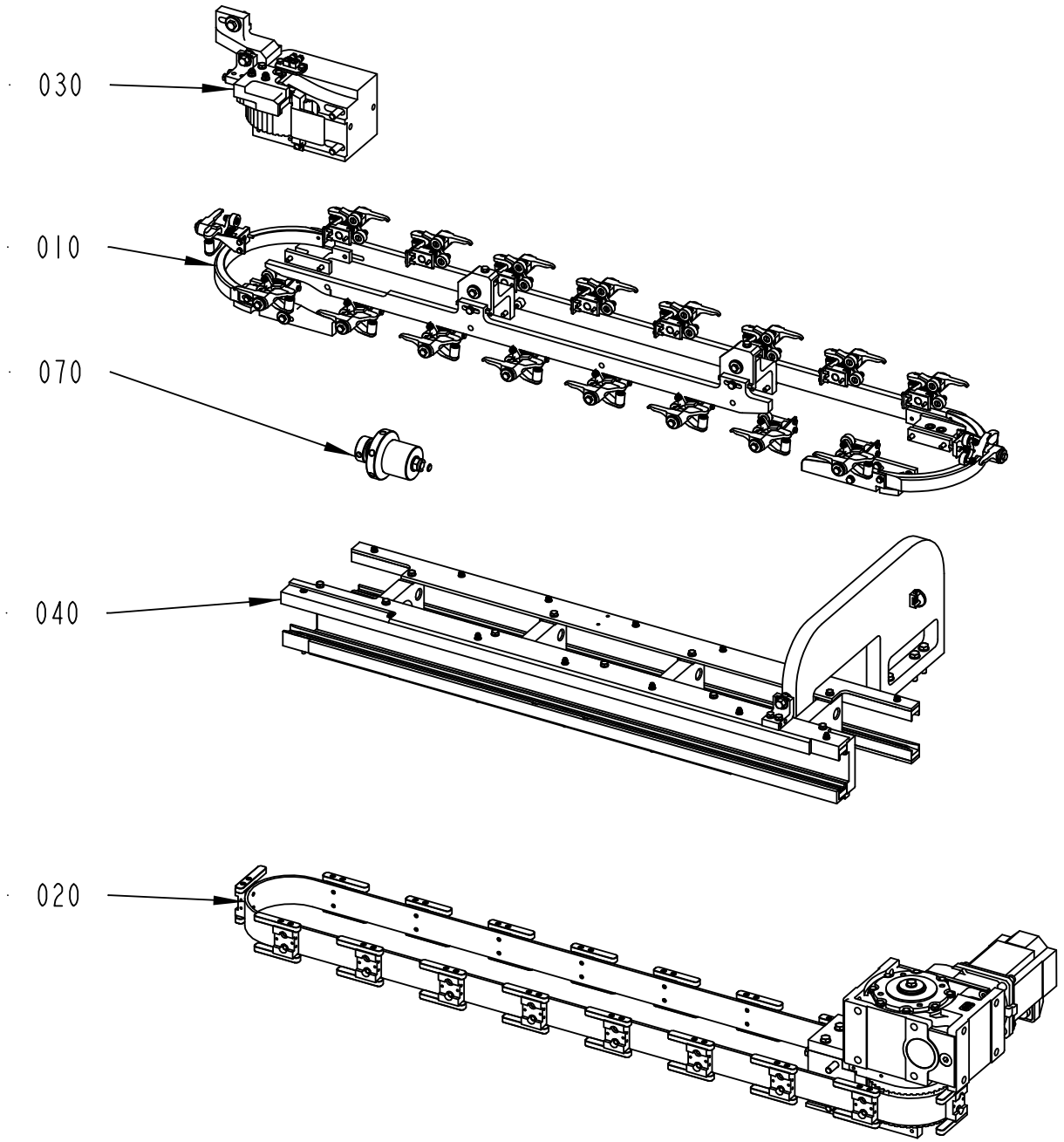

662902-1
287784

ECM: 444319 - 20100701
Group number: 662902-0100
Assembly Drawing: 662902-1_1_AB

Pos	Part No	UN	Qty	Description	Page No
-					
010	2802648-0100		1	CAP HOLDERS GROUP	2-5
020	2802647-0100		1	DRIVE	2-9
030	2802645-0100		1	BELT STRETCHER	2-11
040	2802646-0100		1	FRAME SECTION	2-13
070	2843157-0100		1	CLAMPING ELEMENT	2-15

Pos	Part No	UN	Qty	Description	Page No

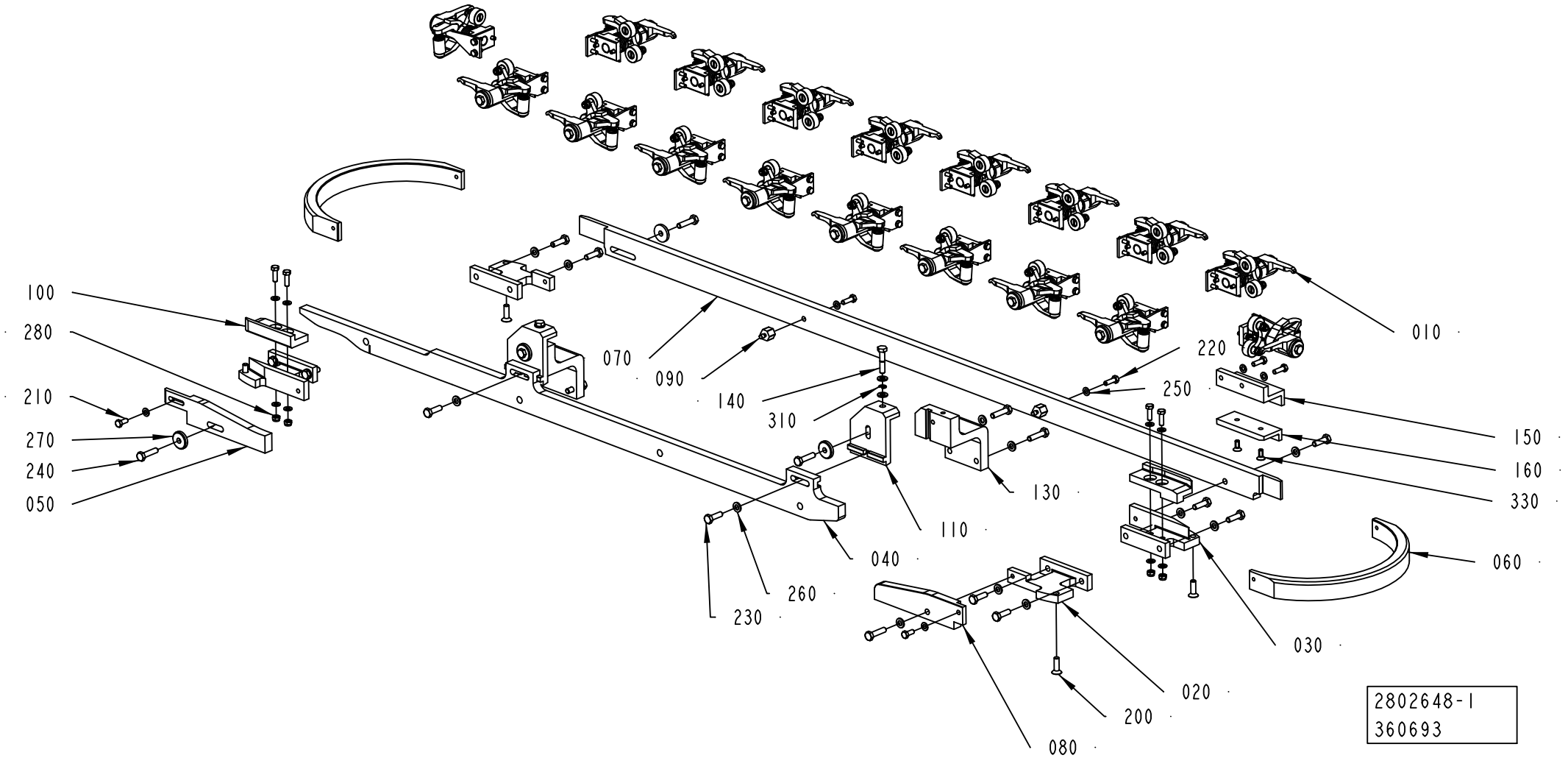
100
280
210
270
240
050
070
090
140
310
110
040
260
230
130
220
250
010
150
160
330
060
030
020
200
080
2802648-1
360693

ECM: 492940 - 20110701
Group number: 2802648-0100
Assembly Drawing: 2802648-1_1_AC

Pos	Part No	UN	Qty	Description	Page No
RECAP3, RECAP2 A3					
020	2715666-0000		2	BRACKET	
030	2715671-0000		2	BRACKET	
040	2873894-0000		1	CAM	
050	2780334-0000		1	CURVE	
060	2780331-0000		2	CURVE	
070	2780332-0000		1	CURVE	
080	2780333-0000		1	CURVE	
090	2751721-0000		2	SPACER	
110	2838728-0000		2	ADJUSTMENT BRACKET	
130	2751742-0000		2	BRACKET	
200	312155-0370		4	SCREW DIN 7991 MF6S M6X20 A4 70	
210	312105-0327		2	SCREW M6S ISO 4017 M5X12 A480	
220	312105-0329		6	SCREW M6S ISO 4017 M5X16 A480	
230	312105-0370		13	SCREW M6S ISO 4017 M6X20 A480	
240	312105-0372		9	SCREW M6S ISO 4017 M6X25 A480	
250	315105-0146		14	WASHER BRB 5,3X10 RFR	
260	315105-0153		20	WASHER BRB 6,4X12 RFR	
270	315125-0153		4	WASHER TBRSB 6,4X22X4 A4	
Common Parts					
010	2751667-0100		18	PRESSURE FINGER	**2-7**
100	2751695-0000		2	STEERING	
140	2715804-0000		2	SCREW	
150	2873871-0000		1	BRACKET	
160	2838781-0000		1	STEERING	
280	312812-0314		4	HEXAGON NUT, NY-LOCK M5 A480	
310	315755-0106		2	RETAINING RING SHAFT DIN 6799 4 SS	
330	312155-0327		2	SCREW DIN 7991 MF6S M5X12 A4 70	

Pos	Part No	UN	Qty	Description	Page No

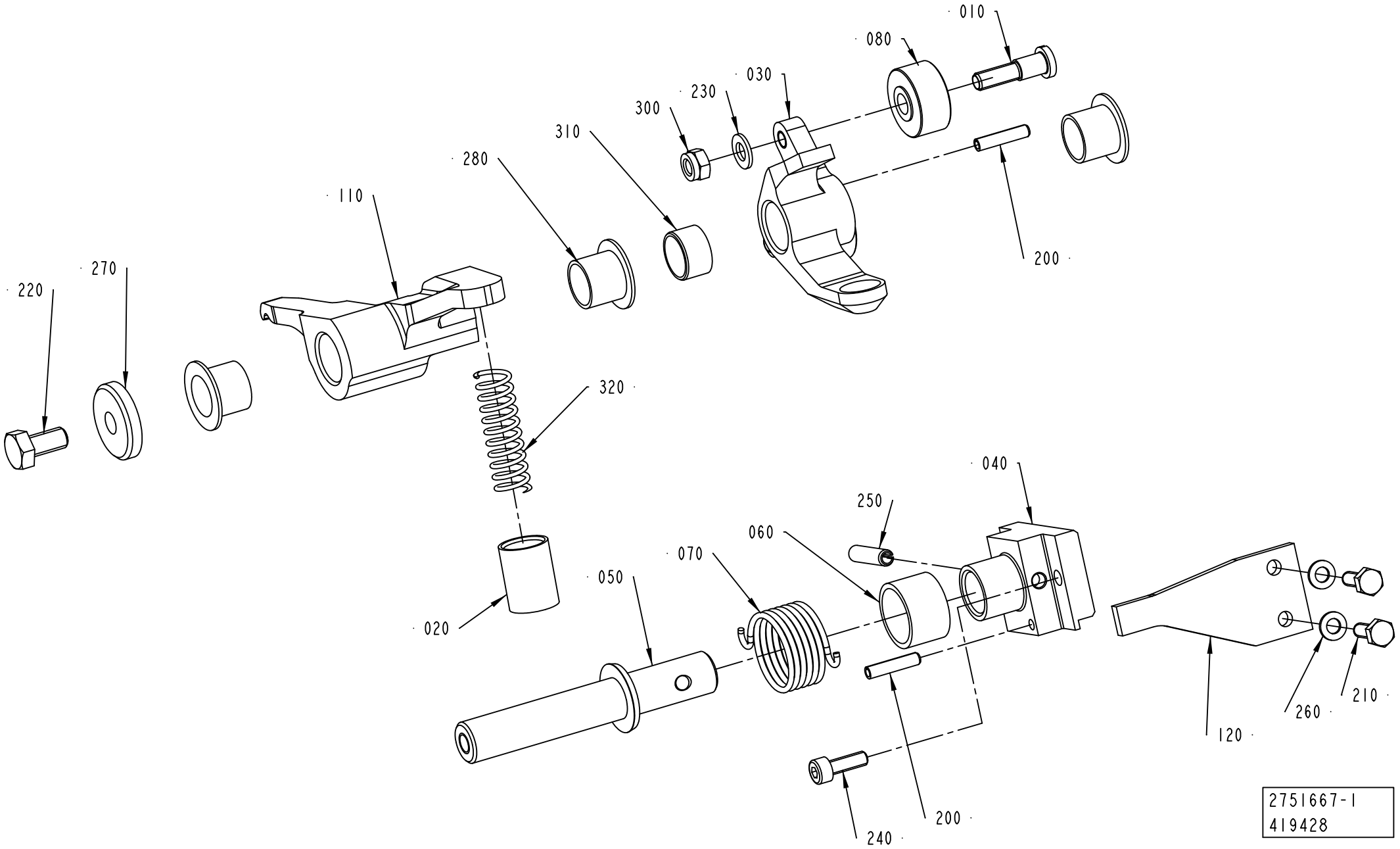
010
080
030
230
300
310
280
110
270
220
200
320
040
250
060
070
050
020
120
260
210
240
200
2751667-1
419428

ECM: 493784 - 20110701
Group number: 2751667-0100
Assembly Drawing: 2751667-1_1_AD

Pos	Part No	UN	Qty	Description	Page No
RECAP2 A3 (See drawing on page: 2-6)					
040	2715843-0000		1	HOLDER	
050	2703715-0000		1	SHAFT	
110	2911986-0000		1	ARM	
120	2715844-0000		1	BRACKET	
230	315105-0146		2	WASHER BRB 5,3X10 RFR	
250	311112-0256		1	SPRING PIN, ISO 8752 4X20-C	
270	315125-0153		1	WASHER TBRSB 6,4X22X4 A4	
300	312812-0314		2	HEXAGON NUT, NY-LOCK M5 A480	
310	90600-5135		1	BUSHING, 12X14X8 MM	
320	90600-0683		1	COMP. SPRING 2496, 1,2X10,4X45	
RECAP3 (See drawing on page: 2-6)					
040	2715843-0000		1	HOLDER	
050	2703715-0000		1	SHAFT	
110	2715842-0000		1	ARM	
120	2715844-0000		1	BRACKET	
230	315105-0146		2	WASHER BRB 5,3X10 RFR	
250	311112-0256		1	SPRING PIN, ISO 8752 4X20-C	
270	315125-0153		1	WASHER TBRSB 6,4X22X4 A4	
300	312812-0314		2	HEXAGON NUT, NY-LOCK M5 A480	
310	90600-5135		1	BUSHING, 12X14X8 MM	
320	90600-0683		1	COMP. SPRING 2496, 1,2X10,4X45	
Common Parts					
010	2684864-0000		2	SHAFT	
020	2715695-0000		1	SLEEVE	
030	2715794-0000		1	ARM	
060	2715797-0000		1	BUSHING	
070	2715798-0000		1	TURN SPRING	
080	2703725-0000		2	ROLLER	
200	311112-0208		2	SPRING PIN, ISO 8752 3X16-C	
210	312105-0291		2	SCREW M6S ISO 4017 M4X12 A470	
220	312105-0366		1	SCREW M6S ISO 4017 M6X12 A480	
240	312115-0291		2	SCREW ISO4762 M4X12 A4 80	
260	315105-0136		2	WASHER BRB 4,3X8 RFR	
280	90240-0262		3	FLANGE BUSHING, IGLIDUR X 12X14X12	

Pos	Part No	UN	Qty	Description	Page No

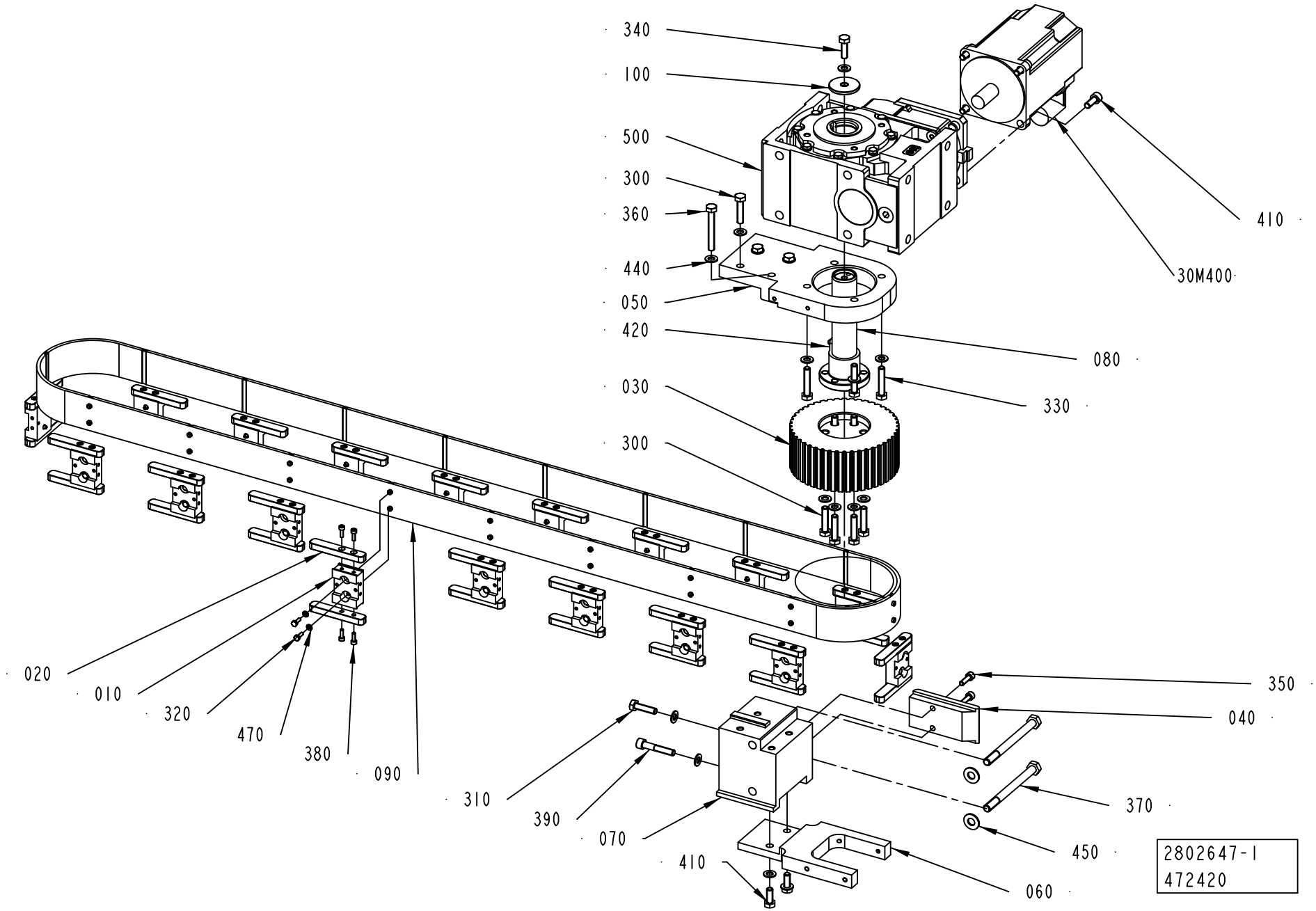
340
100
500
300
360
440
050
420
030
300
020
010
320
470
380
090
310
390
070
410
410
30M400
080
330
350
040
370
450
060
2802647-1
472420

ECM: 472477 - 20101109
Group number: 2802647-0100
Assembly Drawing: 2802647-1_1_AD

Pos	Part No	UN	Qty	Description	Page No
-					
010	2703711-0000		18	HOLDER	
020	2715837-0000		36	KEY	
030	2837191-0000		1	TOOTHED PULLEY	
040	2751710-0000		1	SUPPORT PLATE	
050	2837175-0000		1	BEARING HALF	
060	2716041-0000		1	BRACKET	
070	2751700-0000		1	BOW CLAMP	
080	2838721-0000		1	SHAFT	
090	3117862-0000		1	TIMING BELT	
010	*3117863-0000*		*1*	*TIMING BELT*	
020	*3117864-0000*		*18*	*INSERT NUT*	
100	2837255-0000		1	WASHER	
300	312109-0457		8	SCREW M6S ISO 4017 M8X35 A480	
310	312105-0455		1	SCREW M6S ISO 4017 M8X30 A480	
320	312105-0291		36	SCREW M6S ISO 4017 M4X12 A470	
330	312109-0459		4	SCREW M6S ISO 4017 M8X40 A480	
340	312105-0453		1	SCREW M6S ISO 4017 M8X25 A480	
350	312115-0370		2	SCREW ISO4762 M6X20 A4 80	
360	312109-0463		2	SCREW M6S ISO 4017 M8X60 A480	
370	312105-0515		2	SCREW M6S ISO 4014 M10X120 A480	
380	312115-0291		72	SCREW ISO4762 M4X12 A4 80	
390	312115-0460		1	SCREW ISO4762 M8X45 A4 80	
410	312105-0451		6	SCREW M6S ISO 4017 M8X20 A480	
420	315705-0307		1	PARALLEL KEY W. ROUND ENDS, 10X8X70 MM	
440	315105-0165		19	WASHER BRB 8,4X16 RFR	
450	315105-0173		2	WASHER BRB 10,5X22 RFR	
470	315105-0136		36	WASHER BRB 4,3X8 RFR	
500	90600-0804		1	WORM GEAR MR V 63 UO3A-80B4 … B5/140	
30M400	90601-0668		1	SERVO MOTOR, MPL-B420P-MK72AA SERIES A	

Pos	Part No	UN	Qty	Description	Page No

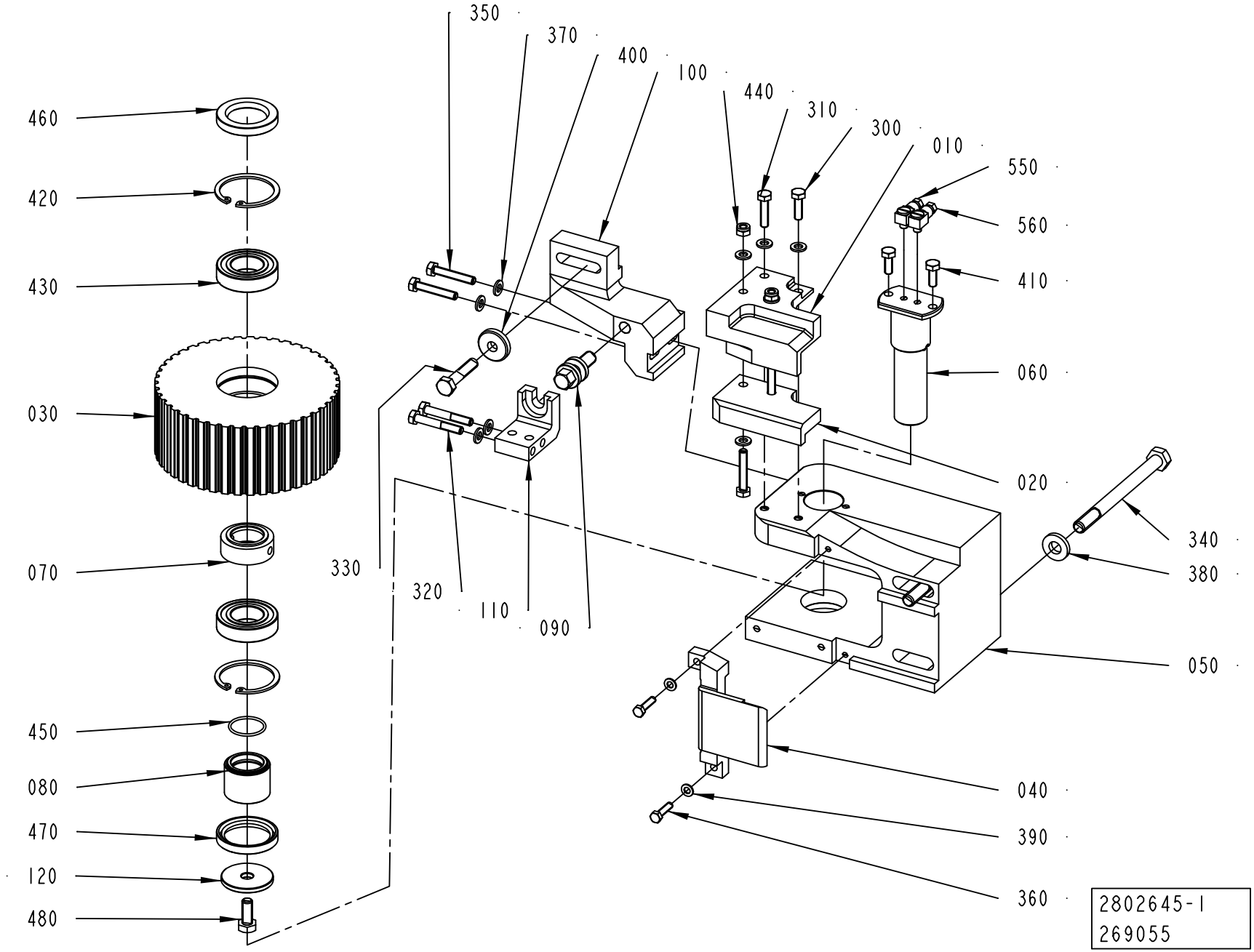
350
370
400
100
440
310
300
010
550
560
410
060
020
340
380
050
040
390
360
460
420
430
030
070
450
080
470
120
480
330
320
110
090
2802645-1
269055

ECM: 494346 - 20110701
Group number: 2802645-0100
Assembly Drawing: 2802645-1_1_AA

Pos	Part No	UN	Qty	Description	Page No
RECAP					
010	2751692-0000		1	BRACKET	
100	2802629-0000		1	BRACKET	
310	312105-0372		1	SCREW M6S ISO 4017 M6X25 A480	
350	312109-0376		4	SCREW M6S ISO 4017 M6X35 A480	
370	315105-0153		10	WASHER BRB 6,4X12 RFR	
Common Parts					
020	2751693-0000		1	STEERING	
030	2751712-0000		1	TOOTHED PULLEY	
040	2751714-0000		1	SUPPORT PLATE	
050	2751725-0000		1	BOW CLAMP	
060	2838815-0000		1	SHAFT	
070	2751747-0000		1	SPACER	
080	2751748-0000		1	SLEEVE	
090	2703842-0000		1	ADJUSTING SCREW	
110	2802635-0000		1	SUPPORT	
120	2837255-0000		1	WASHER	
300	312105-0370		1	SCREW M6S ISO 4017 M6X20 A480	
320	312105-0378		2	SCREW M6S ISO 4014 M6X40 A480	
330	312105-0459		1	SCREW M6S ISO 4014 M8X40 A480	
340	312105-0515		2	SCREW M6S ISO 4014 M10X120 A480	
360	312105-0331		2	SCREW M6S ISO 4017 M5X20 A480	
380	315115-0173		2	WASHER PLAIN, TBRB 10,5/22 H=4	
390	315105-0146		2	WASHER BRB 5,3X10 RFR	
400	315125-0165		1	WASHER TBRSB 8,4X26X5 A4	
410	312105-0368		2	SCREW M6S ISO 4017 M6X16 A480	
420	315753-0130		2	RETAINING RING FOR BORE DIN 472 47 SS	
430	321306-0105		2	BALL BEARING 25/47X12	
440	312812-0316		2	HEXAGON NUT, NY-LOCK M6 A480	
450	315202-0710		1	O-RING 25,12X1,78 MM	
460	315221-0169		1	RADIAL SEAL 30X47X7 MM	
470	315221-0175		1	RADIAL SEAL 35X47X7 MM	
480	312105-0451		1	SCREW M6S ISO 4017 M8X20 A480	
550	90134-0058		1	CONNECTION	
560	90134-0068		1	CONNECTION	

Pos	Part No	UN	Qty	Description	Page No

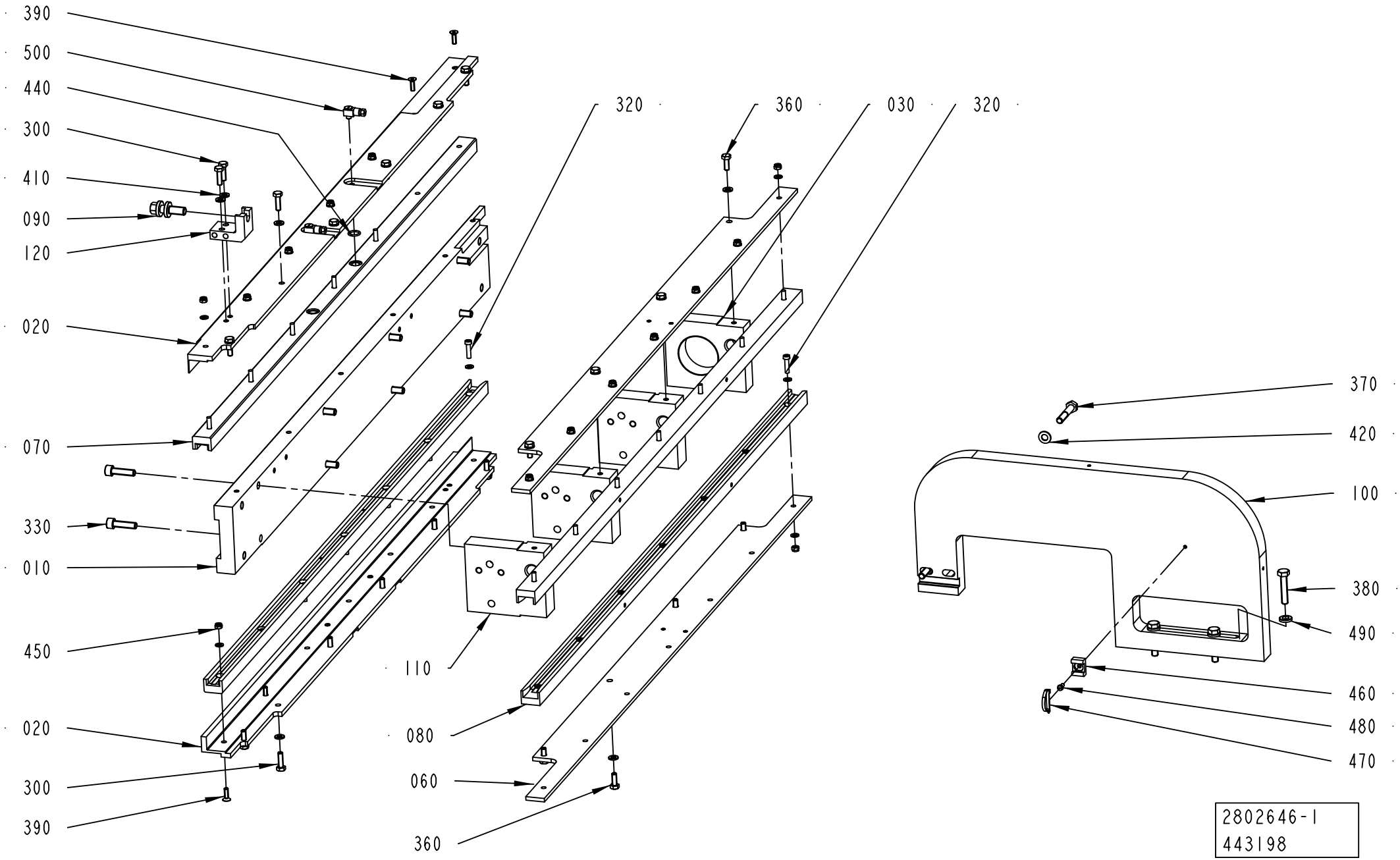
390
500
440
300
410
090
120
020
070
330
010
450
020
300
390
320
360
030
320
110
080
060
360
370
420
100
380
490
460
480
470
2802646-1
443198

ECM: 494347 - 20110701
Group number: 2802646-0100
Assembly Drawing: 2802646-1_1_AD

Pos	Part No	UN	Qty	Description	Page No
RECAP					
010	3095793-0000		1	PLATE	
020	3095794-0000		2	ANGLE BRACKET	
070	3095795-0000		2	SLIDING STRIP	
100	2802637-0000		1	MOUNTING SHEET	
320	312125-0331		24	SCREW ISO 1207 M5X20 A4	
390	312155-0329		4	SCREW DIN 7991 MF6S M5X16 A4 70	
400	315105-0146		52	WASHER BRB 5,3X10 RFR	
410	315105-0153		23	WASHER BRB 6,4X12 RFR	
Common Parts					
030	2837631-0000		1	SPACER	
060	2838783-0000		2	PLATE	
080	2838784-0000		2	SLIDING STRIP	
090	2703842-0000		1	ADJUSTING SCREW	
110	2802644-0000		3	SPACER	
120	2802635-0000		1	SUPPORT	
300	312105-0370		15	SCREW M6S ISO 4017 M6X20 A480	
330	312115-0455		8	SCREW ISO4762 M8X30 A4 80	
360	312105-0368		8	SCREW M6S ISO 4017 M6X16 A480	
370	312105-0460		2	SCREW M6S ISO 4014 M8X45 A480	
380	312109-0459		3	SCREW M6S ISO 4017 M8X40 A480	
420	315105-0165		2	WASHER BRB 8,4X16 RFR	
440	315202-0702		4	O-RING 12,42X1,78 MM	
450	312812-0314		28	HEXAGON NUT, NY-LOCK M5 A480	
460	352113-0203		1	ANCHOR PLATES FOR STRIPS, TM3S8-M0	
470	352113-0104		1	CABLE TIE, BLACK 300X4,8 MM	
480	312125-0287		1	SCREW ISO 1207 M4X8 A4	
490	315115-0165		3	WASHER PLAIN, TBRB 8,4/16 H=3	
500	90134-0058		3	CONNECTION	

Pos	Part No	UN	Qty	Description	Page No

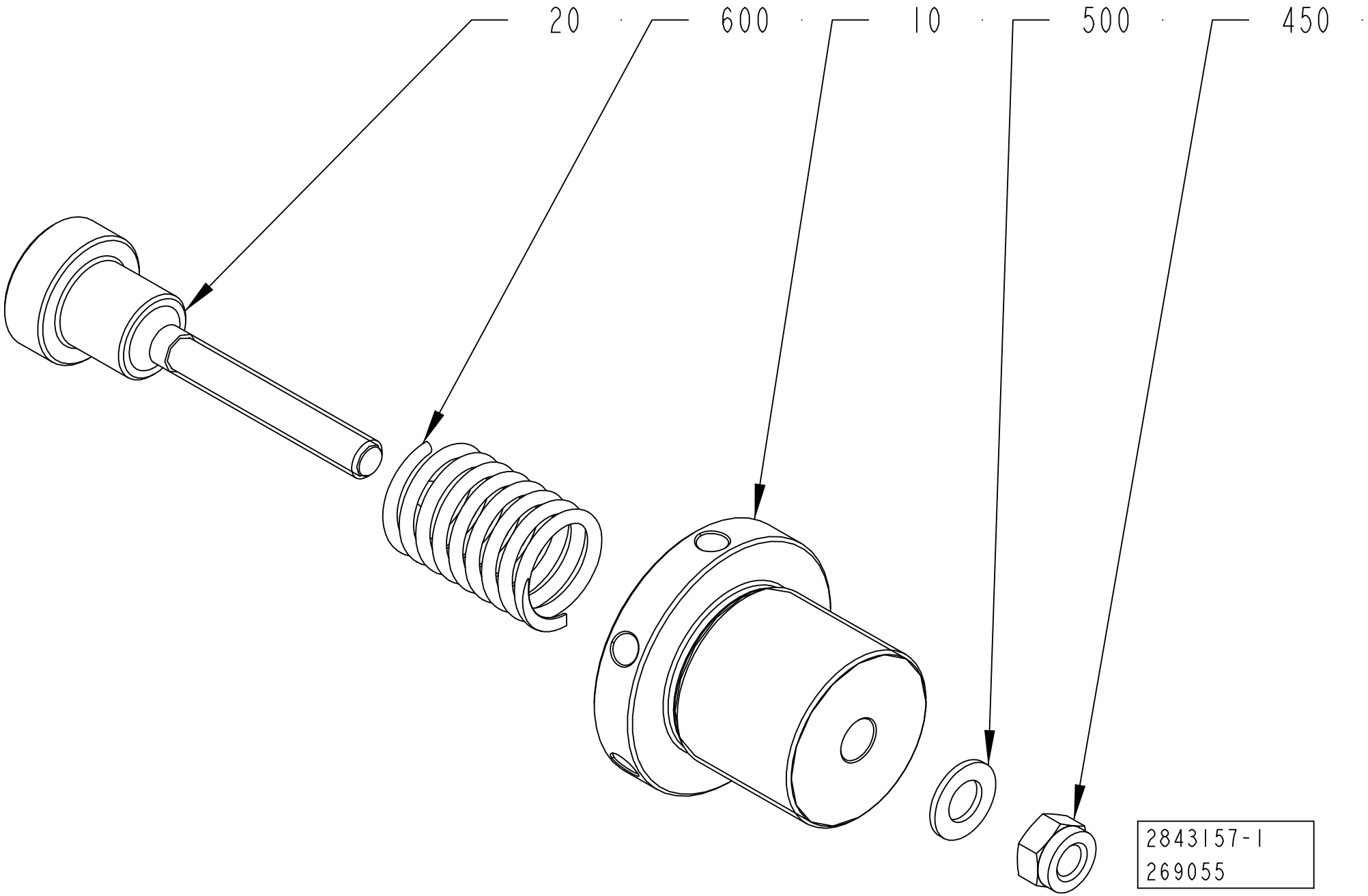
20
600
10
500
450
2843157-1
269055

ECM: 350651 - 20080701
Group number: 2843157-0100
Assembly Drawing: 2843157-1_1_AA

Pos	Part No	UN	Qty	Description	Page No
-					
010	2843158-0000		1	FLANGE	
020	2843159-0000		1	SHAFT	
450	312812-0322		1	HEXAGON NUT, NY-LOCK M12 A480	
500	315105-0178		1	WASHER BRB 13X24 RFR	
600	90600-0656		1	COMP. SPRING 6777, 4X36X120	

Pos	Part No	UN	Qty	Description	Page No

Tetra Pak

SPC
Spare Parts Catalogue

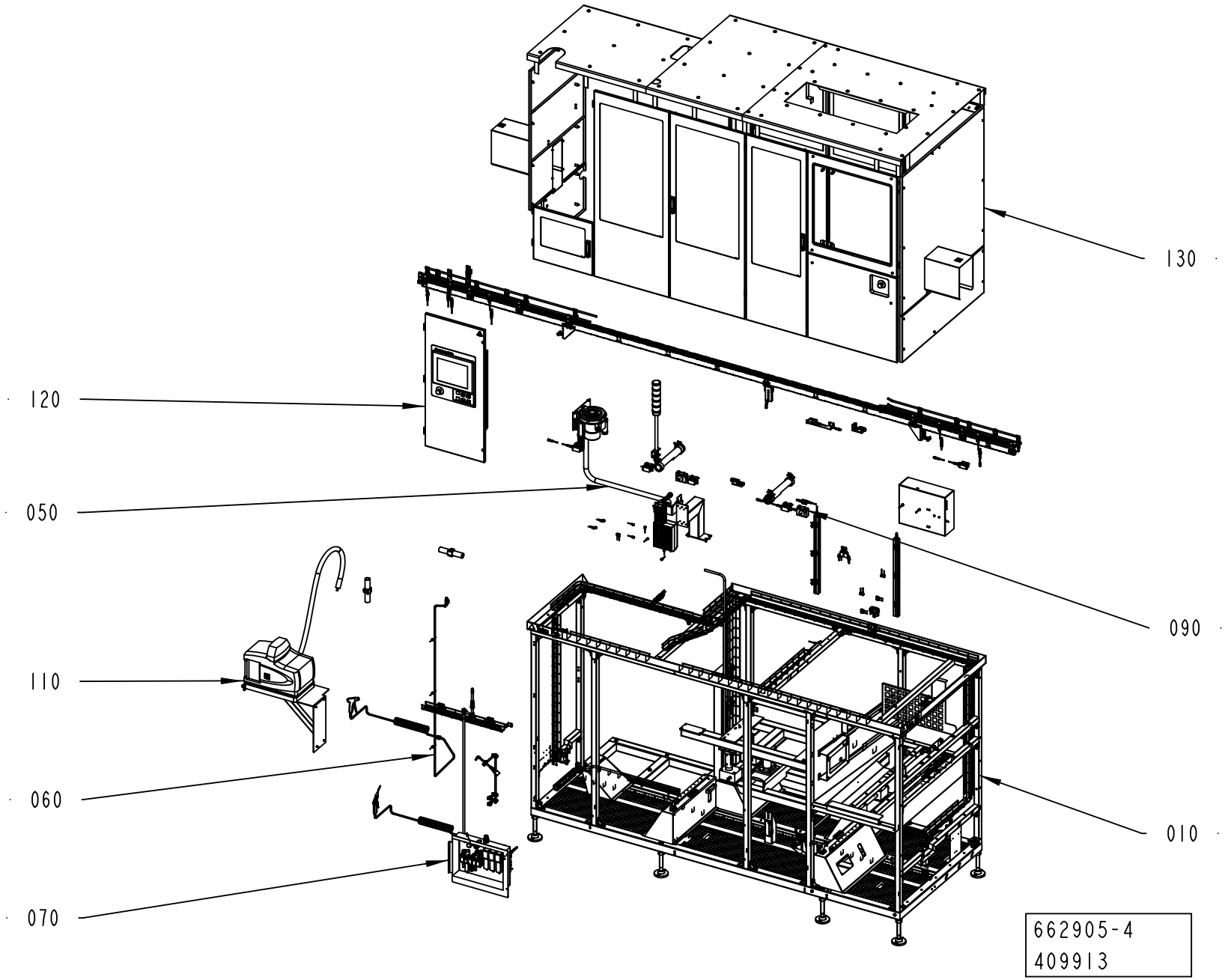
130
120
050
090
110
060
010
070
662905-4
409913

ECM: 494338 - 20110701
Group number: 662905-0200
Assembly Drawing: 662905-4_1_AA

Pos	Part No	UN	Qty	Description	Page No
-					
010	2758505-0200		1	MACHINE BODY	**3-5**
040	2758507-0200		1	PACKAGE CONVEYOR	**3-19, 3-21**
050	2773622-0100		1	LINE HEATER	**3-43**
060	2758514-0100		1	WATER CONNECTION	**3-49**
070	2758513-0100		1	AIR SUPPLY	**3-51**
080	2758522-0100		1	LUBRICATION UNIT	**3-67**
090	2769754-0200		1	ELECTRIC EQUIPMENT	**3-77**
110	2758511-0100		1	HOTMELT UNIT	**3-89**
120	2779070-0200		1	OPERATOR INTERFACE	**3-91**
130	2826741-0200		1	DOORS AND COVERS	**3-99**

Pos	Part No	UN	Qty	Description	Page No

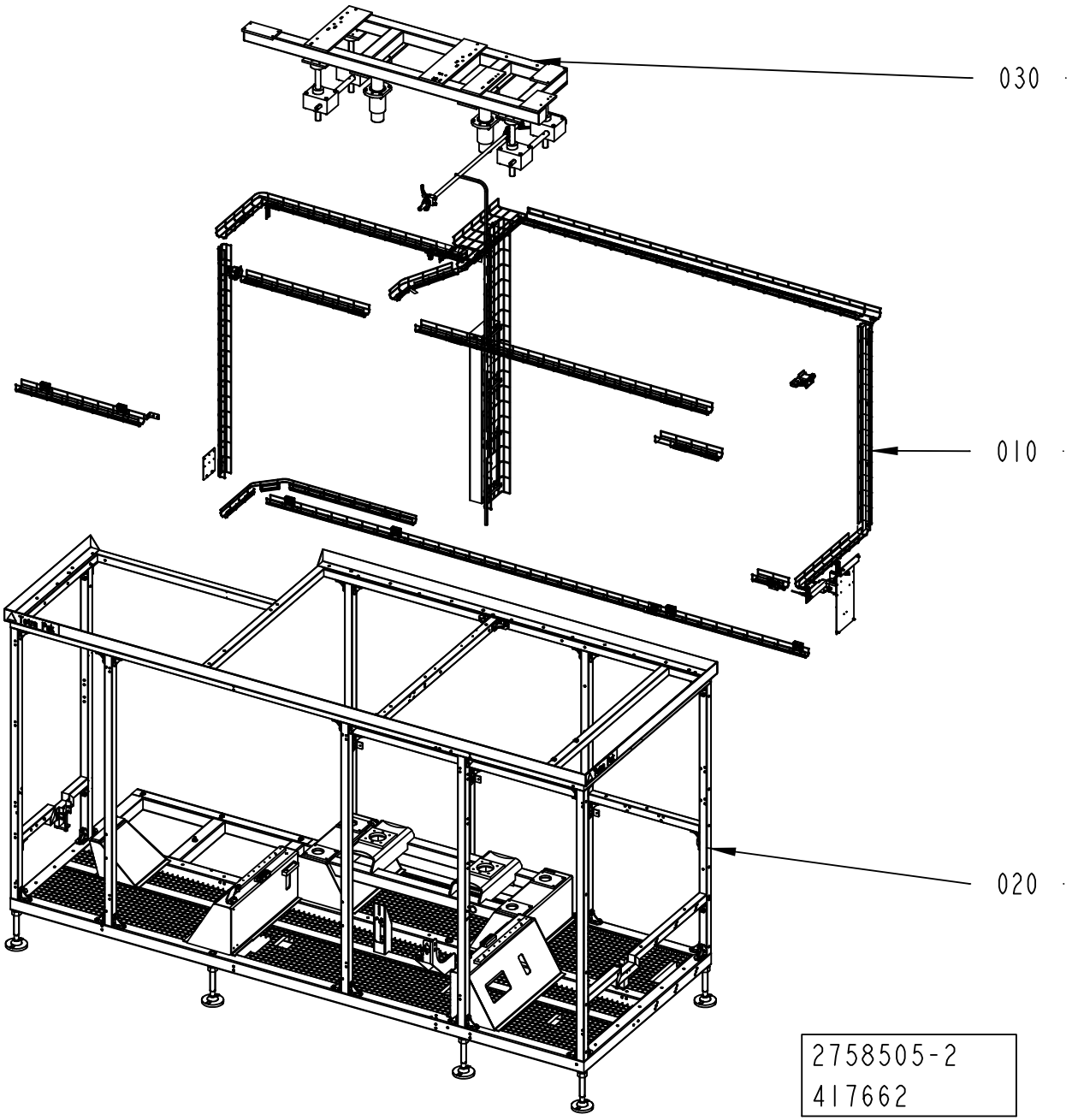
030
010
020
2758505-2
417662

ECM: 417669 - 20100110
Group number: 2758505-0200
Assembly Drawing: 2758505-2_1_AB

Pos	Part No	UN	Qty	Description	Page No
-					
010	2758515-0200		1	CABLE DUCT	**3-7, 3-9**
020	2769761-0200		1	MACHINE BODY	**3-11**
030	2769738-0100		1	HEIGHT ADJUSTMENT	**3-15**

Pos	Part No	UN	Qty	Description	Page No

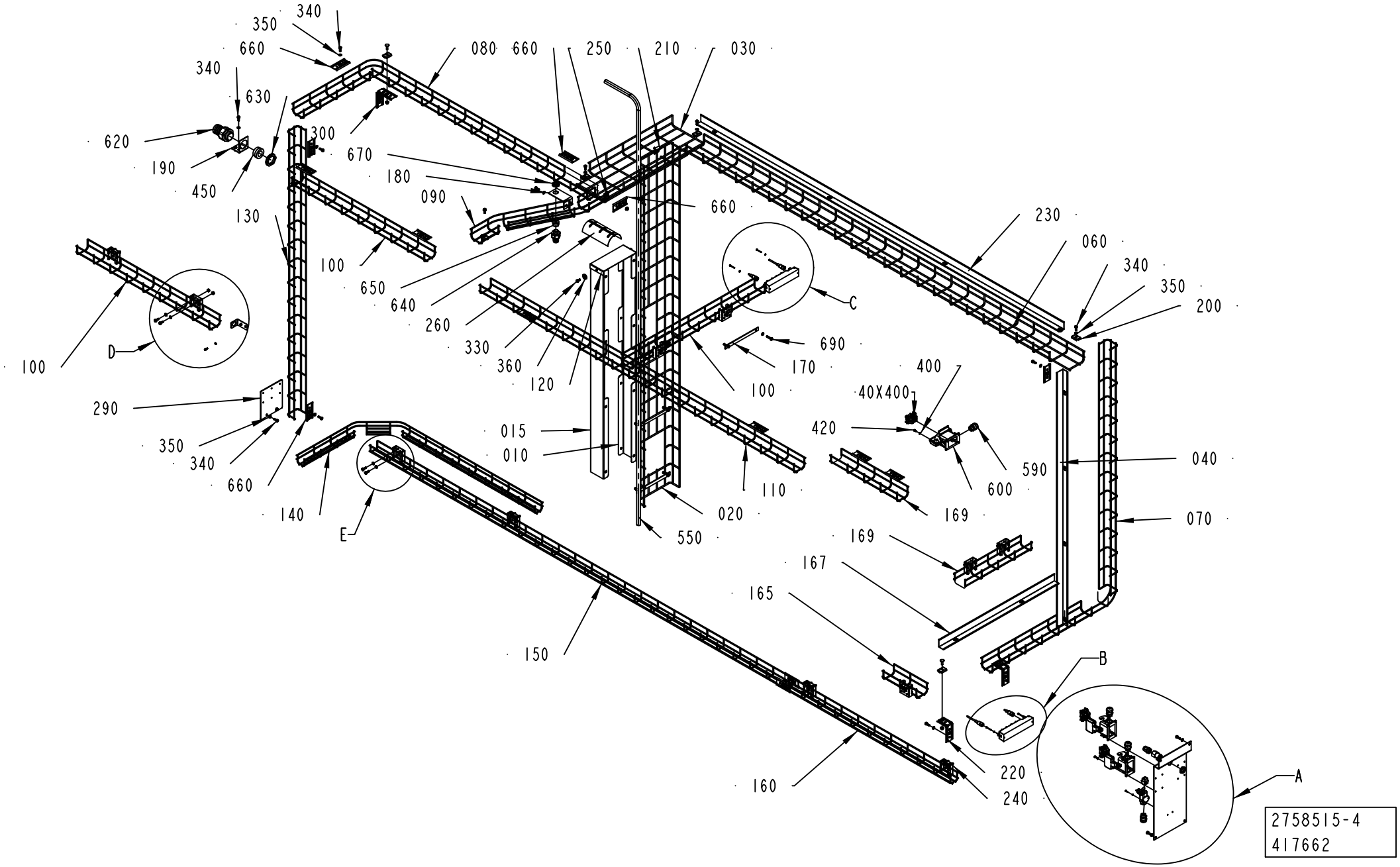
340
350
660
340
630
620
190
450
130
080
660
250
210
030
300
670
180
090
660
230
060
340
350
200
100
650
640
260
330
360
120
C
690
170
400
40X400
420
590
600
040
070
100
D
290
350
340
660
140
E
015
010
110
020
550
169
167
165
150
160
220
240
B
A
2758515-4
417662

ECM: 494332 - 20110701
Group number: 2758515-0200
Assembly Drawing: 2758515-4_1_AA

This list covers pages from 3-6 to 3-9

Pos	Part No	UN	Qty	Description	Page No
RECAP3, RECAP2 A3 (See drawing on pages: 3-6, 3-8)					
100	2931775-0000		3	CABLE DUCT	
169	2931782-0000		2	CABLE DUCT	
240	90181-0190		11	CABLE DUCT, WALL BRACKET, B4 MINI	
320	312125-0232		4	SCREW ISO 1207 M3X25 A4	
340	312105-0368		49	SCREW M6S ISO 4017 M6X16 A480	
350	315105-0153		57	WASHER BRB 6,4X12 RFR	
390	315105-0124		6	WASHER BRB 3,2X6 RFR	
01K340	90459-6062		1	ARMORBLOCK DIGITAL CONFIGURABLE I/O	
01W340	351309-0100		1	ACTUATOR/SENSOR CABLE PRKT 4-07/10M	
81W421	351415-0100		1	DEVICENET CONN. CABLE, 0935 361 105/10M	
Common Parts					
010	2746903-0000		1	CABLE DUCT	
015	2873928-0000		1	CABLE DUCT	
020	2931768-0000		1	CABLE DUCT	
030	2931769-0000		1	CABLE DUCT	
040	2931770-0000		1	DIVIDER	
050	3047341-0000		1	ANGLE BRACKET	
060	2931771-0000		1	CABLE DUCT	
070	2931772-0000		1	CABLE DUCT	
080	2931773-0000		1	CABLE DUCT	
090	2931774-0000		1	CABLE DUCT	
110	2931776-0000		1	CABLE DUCT	
120	2779800-0000		1	PLATE	
130	2931777-0000		1	CABLE DUCT	
140	2931778-0000		1	CABLE DUCT	
150	2931779-0000		1	CABLE DUCT	
160	2931780-0000		1	CABLE DUCT	
165	2931781-0000		1	CABLE DUCT	
167	2931784-0000		1	DIVIDER	
170	2931783-0000		4	PLATE	
180	2931785-0000		1	ANGLE	
190	2931786-0000		1	ANGLE	
200	90181-0183		13	CABLE DUCT, FITTING, B2	
210	90181-0184		1	CABLE TRENCH PARTS	
220	2931787-0000		2	ANGLE	
230	2931788-0000		1	DIVIDER	
250	90181-0314		6	CABLE TRENCH PARTS	
260	2934904-0000		1	RAIL BRACKET	
285	2802417-0000		1	PLATE	
290	2802423-0000		1	PLATE	
300	90181-0186		1	CABLE DUCT, ELBOW BRACKET, B27	
310	312115-0289		2	SCREW ISO4762 M4X10 A4 80	
330	312105-0366		2	SCREW M6S ISO 4017 M6X12 A480	
360	315125-0153		2	WASHER TBRSB 6,4X22X4 A4	
400	315105-0136		14	WASHER BRB 4,3X8 RFR	
410	312125-0222		2	SCREW ISO 1207 M3X8 A4	
420	312125-0287		12	SCREW ISO 1207 M4X8 A4	
430	312605-0316		6	HEXAGON NUT, M6M M6 A280	
450	353249-0054		1	INSERT, SINGLE HOLE, EK156 25	
550	90166-0113	MM	2500	HOSE	
570	90459-2133		1	PUSH-IN FITTING QSSF-1/2-12-B	
580	350001-0016		1	PUSH-IN FITTING QS-F-G1/2-12	
590	90458-0307		4	CABLE GLAND, M20X1,5, 5311 1020	
600	90459-1461		3	HOUSING, 19 30 006 1255	
610	90459-3081		1	HOUSING, 19 20 003 1250	
620	90458-0434		1	GLAND FITTING, VK 24056YUL29	
630	90458-0326		1	NUT, M40X1,5	
640	90458-0430		1	GLAND FITTING, VK 22054YUL16	
650	353249-0012		1	INSERT, SINGLE HOLE, EK154 11	
660	90181-0182		14	CABLE TRENCH PARTS	
670	90458-0323		1	NUT, M20X1,5	
690	312105-0372		8	SCREW M6S ISO 4017 M6X25 A480	
01K420	90459-6062		1	ARMORBLOCK DIGITAL CONFIGURABLE I/O	
81W404	351415-0100		1	DEVICENET CONN. CABLE, 0935 361 105/10M	
81W420	351309-0100		1	ACTUATOR/SENSOR CABLE PRKT 4-07/10M	
40X400	90110-0053		1	FEMALE INSERT HAN 6 E 09 33 006 2701	
50X000	90110-0053		1	FEMALE INSERT HAN 6 E 09 33 006 2701	
50X001	90459-6820		1	FEMALE INSERT HAN 4 A, 09 20 004 2711	
50X110	90110-0053		1	FEMALE INSERT HAN 6 E 09 33 006 2701	

Machine Type | Group Description | Used-In | Group Number | Page No

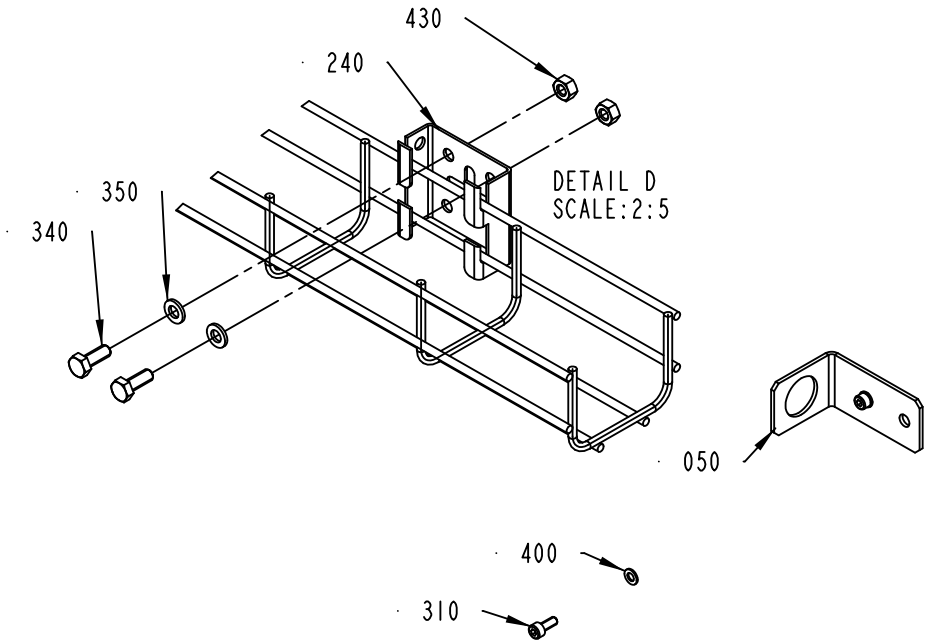

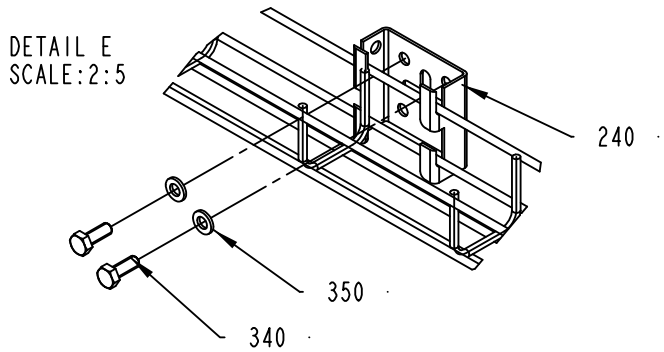

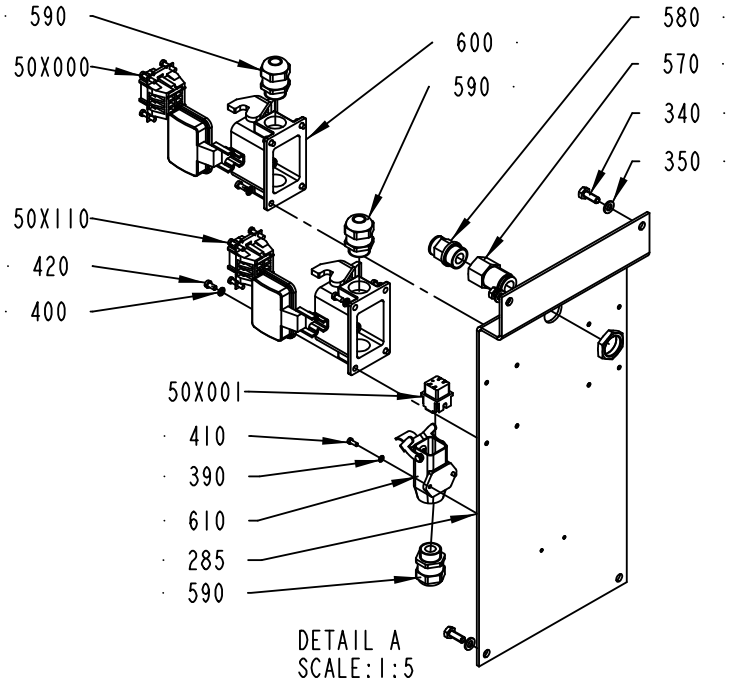

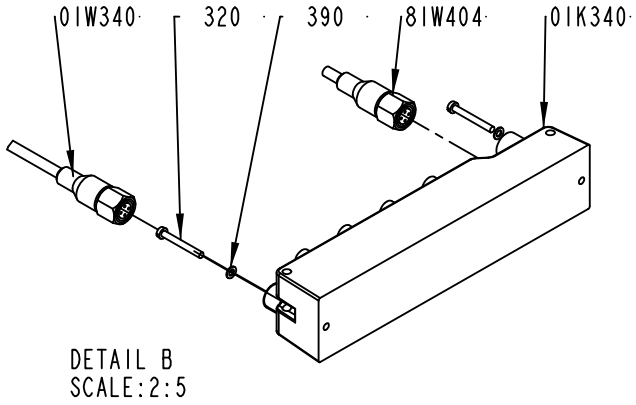

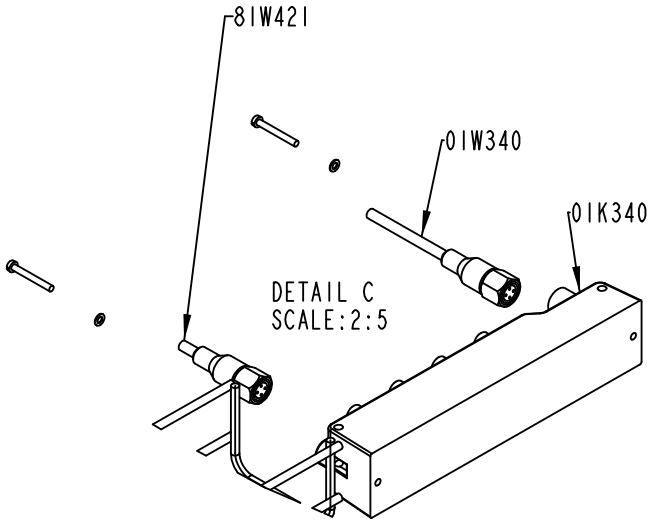

2758515-4
417662

ECM: 494332 - 20110701
Group number: 2758515-0200
Assembly Drawing: 2758515-4_2_AA

This list covers pages from 3-6 to 3-9

Pos	Part No	UN	Qty	Description	Page No
RECAP3, RECAP2 A3 (See drawing on pages: 3-6, 3-8)					
100	2931775-0000		3	CABLE DUCT	
169	2931782-0000		2	CABLE DUCT	
240	90181-0190		11	CABLE DUCT, WALL BRACKET, B4 MINI	
320	312125-0232		4	SCREW ISO 1207 M3X25 A4	
340	312105-0368		49	SCREW M6S ISO 4017 M6X16 A480	
350	315105-0153		57	WASHER BRB 6,4X12 RFR	
390	315105-0124		6	WASHER BRB 3,2X6 RFR	
01K340	90459-6062		1	ARMORBLOCK DIGITAL CONFIGURABLE I/O	
01W340	351309-0100		1	ACTUATOR/SENSOR CABLE PRKT 4-07/10M	
81W421	351415-0100		1	DEVICENET CONN. CABLE, 0935 361 105/10M	
Common Parts					
010	2746903-0000		1	CABLE DUCT	
015	2873928-0000		1	CABLE DUCT	
020	2931768-0000		1	CABLE DUCT	
030	2931769-0000		1	CABLE DUCT	
040	2931770-0000		1	DIVIDER	
050	3047341-0000		1	ANGLE BRACKET	
060	2931771-0000		1	CABLE DUCT	
070	2931772-0000		1	CABLE DUCT	
080	2931773-0000		1	CABLE DUCT	
090	2931774-0000		1	CABLE DUCT	
110	2931776-0000		1	CABLE DUCT	
120	2779800-0000		1	PLATE	
130	2931777-0000		1	CABLE DUCT	
140	2931778-0000		1	CABLE DUCT	
150	2931779-0000		1	CABLE DUCT	
160	2931780-0000		1	CABLE DUCT	
165	2931781-0000		1	CABLE DUCT	
167	2931784-0000		1	DIVIDER	
170	2931783-0000		4	PLATE	
180	2931785-0000		1	ANGLE	
190	2931786-0000		1	ANGLE	
200	90181-0183		13	CABLE DUCT, FITTING, B2	
210	90181-0184		1	CABLE TRENCH PARTS	
220	2931787-0000		2	ANGLE	
230	2931788-0000		1	DIVIDER	
250	90181-0314		6	CABLE TRENCH PARTS	
260	2934904-0000		1	RAIL BRACKET	
285	2802417-0000		1	PLATE	
290	2802423-0000		1	PLATE	
300	90181-0186		1	CABLE DUCT, ELBOW BRACKET, B27	
310	312115-0289		2	SCREW ISO4762 M4X10 A4 80	
330	312105-0366		2	SCREW M6S ISO 4017 M6X12 A480	
360	315125-0153		2	WASHER TBRSB 6,4X22X4 A4	
400	315105-0136		14	WASHER BRB 4,3X8 RFR	
410	312125-0222		2	SCREW ISO 1207 M3X8 A4	
420	312125-0287		12	SCREW ISO 1207 M4X8 A4	
430	312605-0316		6	HEXAGON NUT, M6M M6 A280	
450	353249-0054		1	INSERT, SINGLE HOLE, EK156 25	
550	90166-0113	MM	2500	HOSE	
570	90459-2133		1	PUSH-IN FITTING QSSF-1/2-12-B	
580	350001-0016		1	PUSH-IN FITTING QS-F-G1/2-12	
590	90458-0307		4	CABLE GLAND, M20X1,5, 5311 1020	
600	90459-1461		3	HOUSING, 19 30 006 1255	
610	90459-3081		1	HOUSING, 19 20 003 1250	
620	90458-0434		1	GLAND FITTING, VK 24056YUL29	
630	90458-0326		1	NUT, M40X1,5	
640	90458-0430		1	GLAND FITTING, VK 22054YUL16	
650	353249-0012		1	INSERT, SINGLE HOLE, EK154 11	
660	90181-0182		14	CABLE TRENCH PARTS	
670	90458-0323		1	NUT, M20X1,5	
690	312105-0372		8	SCREW M6S ISO 4017 M6X25 A480	
01K420	90459-6062		1	ARMORBLOCK DIGITAL CONFIGURABLE I/O	
81W404	351415-0100		1	DEVICENET CONN. CABLE, 0935 361 105/10M	
81W420	351309-0100		1	ACTUATOR/SENSOR CABLE PRKT 4-07/10M	
40X400	90110-0053		1	FEMALE INSERT HAN 6 E 09 33 006 2701	
50X000	90110-0053		1	FEMALE INSERT HAN 6 E 09 33 006 2701	
50X001	90459-6820		1	FEMALE INSERT HAN 4 A, 09 20 004 2711	
50X110	90110-0053		1	FEMALE INSERT HAN 6 E 09 33 006 2701	

Machine Type | Group Description | Used-In | Group Number | Page No

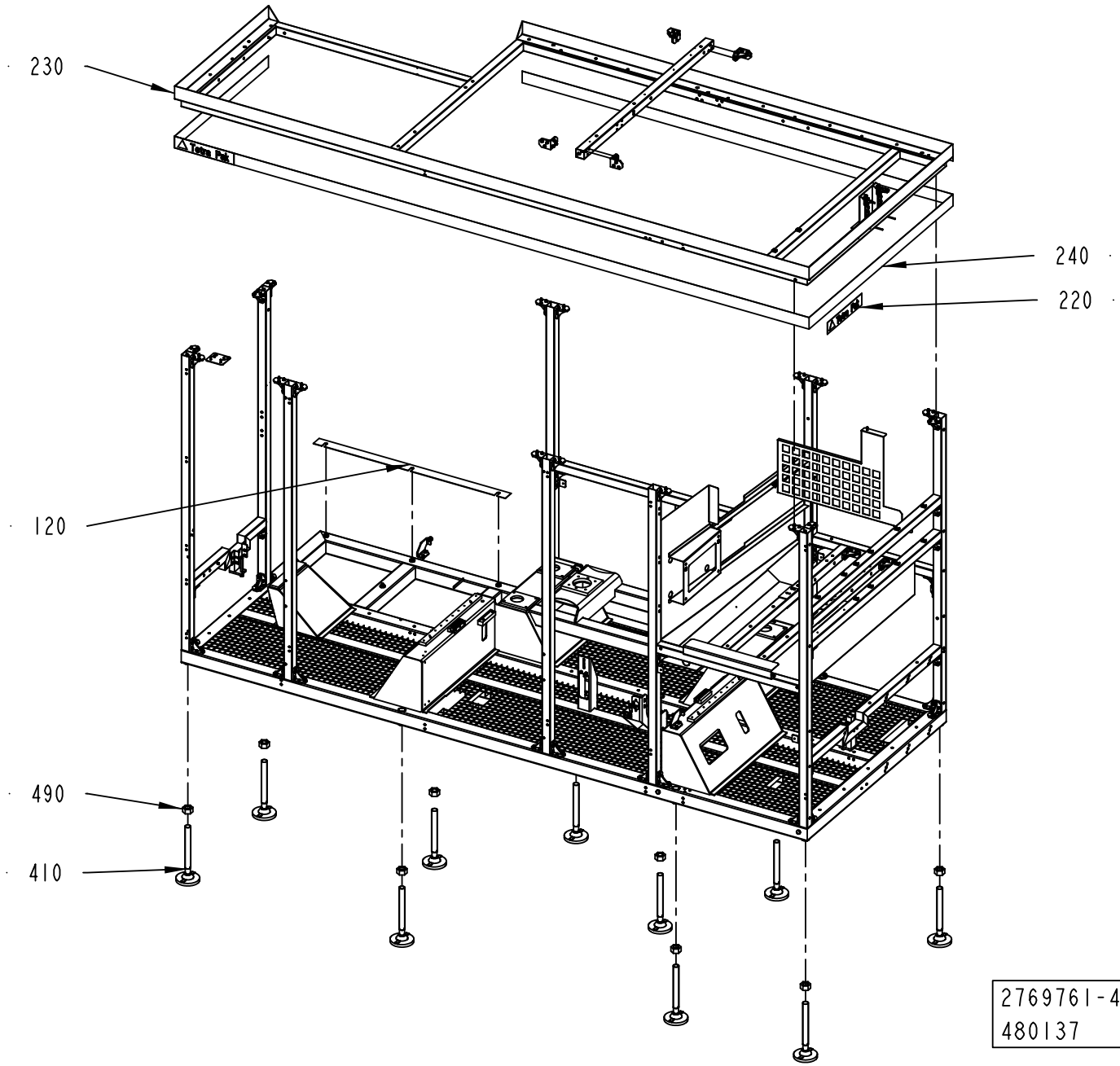
230
240
220
120
490
410
2769761-4
480137

ECM: 494333 - 20110701
Group number: 2769761-0200
Assembly Drawing: 2769761-4_1_AC

Pos	Part No	UN	Qty	Description	Page No
RECAP3, RECAP2 A3					
010	2778595-0100		59	ANGLE	**3-13**
020	2779818-0000		1	BEAM	
140	2807101-0000		2	BEAM	
160	2807105-0000		1	PLATE	
170	2807102-0000		1	COVER	
180	2807106-0000		1	COVER	
280	2805697-0000		8	SUPPORT	
290	2805696-0000		8	SUPPORT	
310	2778574-0000		2	BEAM	
350	2864915-0000		1	PLATE	
390	3022734-0000		1	COVER	
450	315105-0156		18	WASHER BRB 6,7X14 RFR	
530	312105-0368		22	SCREW M6S ISO 4017 M6X16 A480	
540	312105-0370		21	SCREW M6S ISO 4017 M6X20 A480	
560	315105-0153		32	WASHER BRB 6,4X12 RFR	
570	352113-0204		17	ANCHOR PLATES FOR STRIPS, TM3S25-M	
580	312125-0323		17	SCREW ISO 1207 M5X8 A4	
01K350	90459-6062		1	ARMORBLOCK DIGITAL CONFIGURABLE I/O	
01K360	90459-6062		1	ARMORBLOCK DIGITAL CONFIGURABLE I/O	
01R360	90459-6847		1	RESISTOR, 0939 CTX 101	
01W341	351413-0050		1	DEVICENET CONN. CABLE, 0935 361 103/5M	
01W350	351309-0100		1	ACTUATOR/SENSOR CABLE PRKT 4-07/10M	
01W351	351413-0003		1	DEVICENET CONN. CABLE, 0935 361 103/0,3M	
01W360	351309-0100		1	ACTUATOR/SENSOR CABLE PRKT 4-07/10M	
Common Parts					
030	2807095-0000		1	BEAM	
040	2778576-0000		1	BEAM	
050	2964293-0000		1	BEAM	
060	2964292-0000		1	BEAM	
070	2779009-0000		2	BEAM	
080	2779011-0000		1	BEAM	
090	2779012-0000		1	BEAM	
100	2830220-0000		1	BEAM	
110	2779811-0000		1	BEAM	
120	3039040-0000		1	SPACER	
130	2778567-0000		1	BEAM	
150	2766975-0000		1	FRAME	
190	2775447-0000		2	BRACKET	
200	2779776-0000		2	PLATE	
210	2779786-0000		1	PLATE	
220	1021990-0000		4	SIGN 356X70MM HOUSE MARK TEXT TETRA PAK	
230	2778568-0000		1	FRAME UPPER	
240	90511-8563	M	10	STRIPE HEIGHT 70MM, ROLL LENGTH 25M	
250	2805686-0000		1	BEAM	
260	2805698-0000		1	BEAM	
270	3058859-0000		1	BEAM	
300	2807104-0000		1	BEAM	
320	2788155-0000		4	ANGLE	
330	2788154-0000		1	BLOCK	
340	3039027-0000		2	PLATE	
380	2873941-0000		1	SIGN	
400	90347-0011		2	VIBRATION DAMPER MEGI 781056	
410	90600-1002		10	FOOT 45000N, 297/63399N	
420	312812-0318		6	HEXAGON NUT, NY-LOCK M8 A480	
430	312115-0455		6	SCREW ISO4762 M8X30 A4 80	
440	315125-0165		12	WASHER TBRSB 8,4X26X5 A4	
480	90287-0154		6	SCREW, SOCK.SET DOGPOINT M6X10	
490	312607-0332		10	HEXAGON NUT, EN 24032 M6M M30 A480	
500	311103-0351		4	PARALLEL PIN ISO 2338 6M6X16 A1	
510	312105-0366		2	SCREW M6S ISO 4017 M6X12 A480	
550	312115-0540		1	SCREW ISO4762 M12X40 A4 80	
600	90600-0971		2	RACK, ZRR2-100	
630	90287-0175		2	SCREW M6S M3X12 A480	
640	312605-0310		2	HEXAGON NUT, M6M M3 A280	
650	312105-0388		4	SCREW M6S ISO 4014 M6X90 A480	
660	312109-0552		2	SCREW M6S M12X100H A480	

Machine Type | Group Description | Used-In | Group Number | Page No

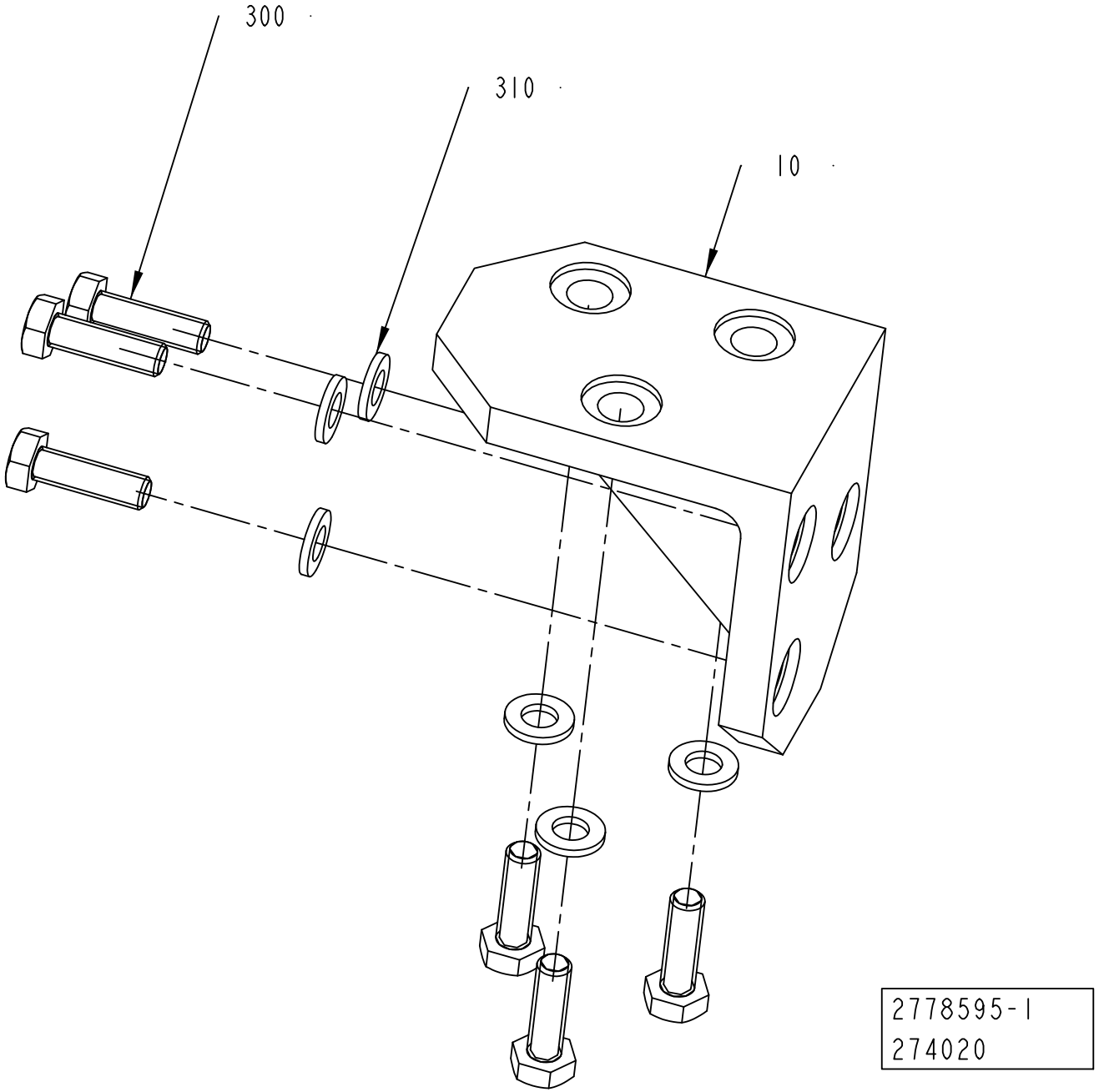
300
310
10
2778595-1
274020

ECM: 274440 - 20060921
Group number: 2778595-0100
Assembly Drawing: 2778595-1_1_AA

Pos	Part No	UN	Qty	Description	Page No
-					
010	2779008-0000		1	BRACKET	
300	312105-0370		6	SCREW M6S ISO 4017 M6X20 A480	
310	315105-0153		6	WASHER BRB 6,4X12 RFR	

Pos	Part No	UN	Qty	Description	Page No

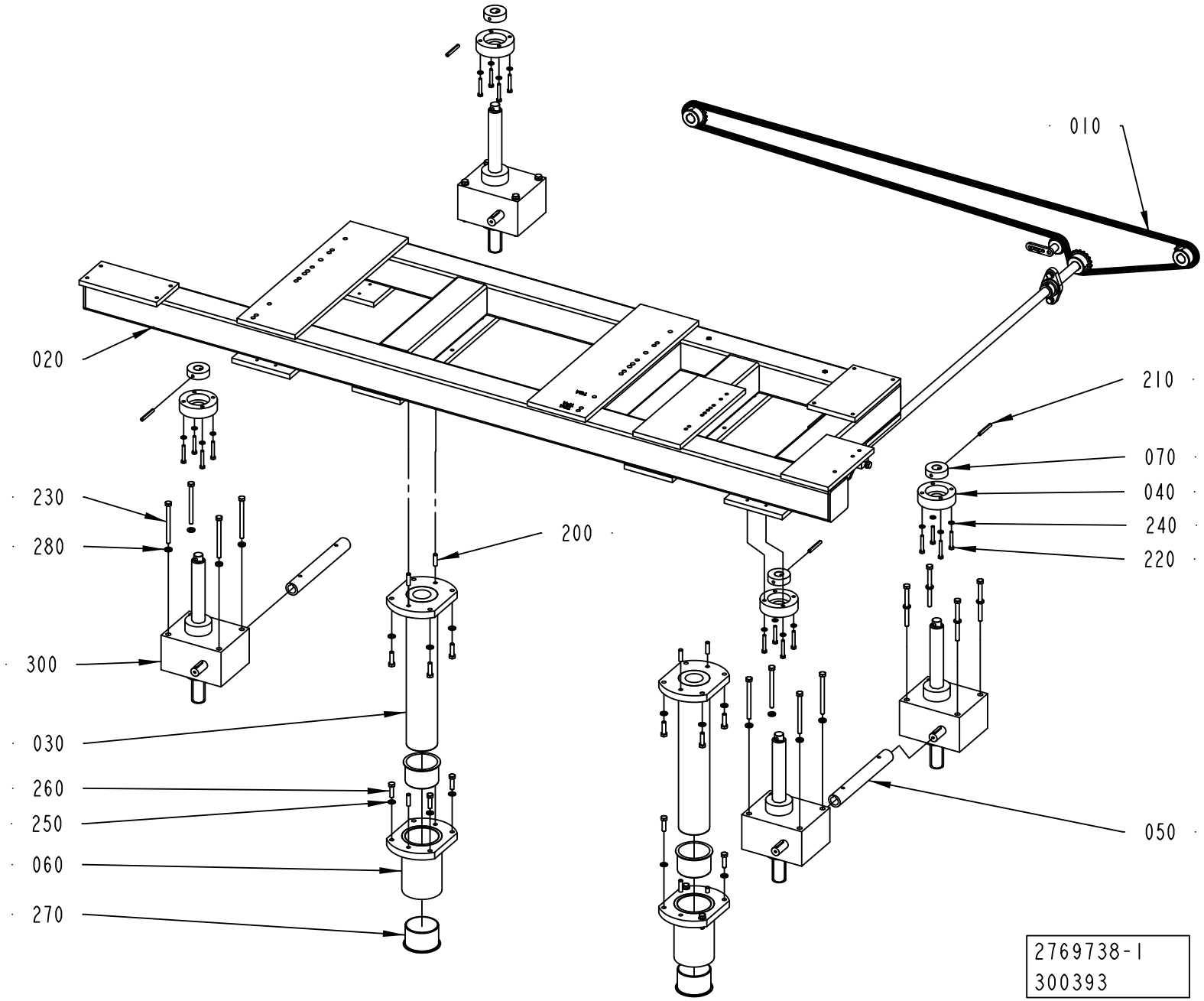
010
020
210
070
040
240
220
230
280
200
300
030
260
250
060
270
050
2769738-1
300393

ECM: 303510 - 20070517
Group number: 2769738-0100
Assembly Drawing: 2769738-1_1_AB

Pos	Part No	UN	Qty	Description	Page No
-					
010	2766973-0100		1	TRANSMISSION	**3-17**
020	2769709-0000		1	FRAME	
030	2769713-0000		2	CYLINDRICAL PIN	
040	2766964-0000		4	FLANGE	
050	2766968-0000		2	SHAFT	
060	2769717-0000		2	FLANGE	
070	2769739-0000		4	DISC	
200	311103-0405		8	PARALLEL PIN ISO 2338 8M6X30 A1	
210	311112-0349		4	SPRING PIN, ISO 8752 6X50-C	
220	312105-0378		16	SCREW M6S ISO 4014 M6X40 A480	
230	312105-0471		16	SCREW M6S ISO 4014 M8X100 A480	
240	315105-0153		16	WASHER BRB 6,4X12 RFR	
250	315105-0165		16	WASHER BRB 8,4X16 RFR	
260	312105-0455		16	SCREW M6S ISO 4017 M8X30 A480	
270	321153-0500		4	FLANGE BUSHING, IGLIDUR G 70X75X50	
280	315115-0165		16	WASHER PLAIN, TBRB 8,4/16 H=3	
300	90600-0658		4	WORM GEAR SCREW JACK, TP00063000130	

Pos	Part No	UN	Qty	Description	Page No

Machine Type | Group Description | Used-In | Group Number | Page No

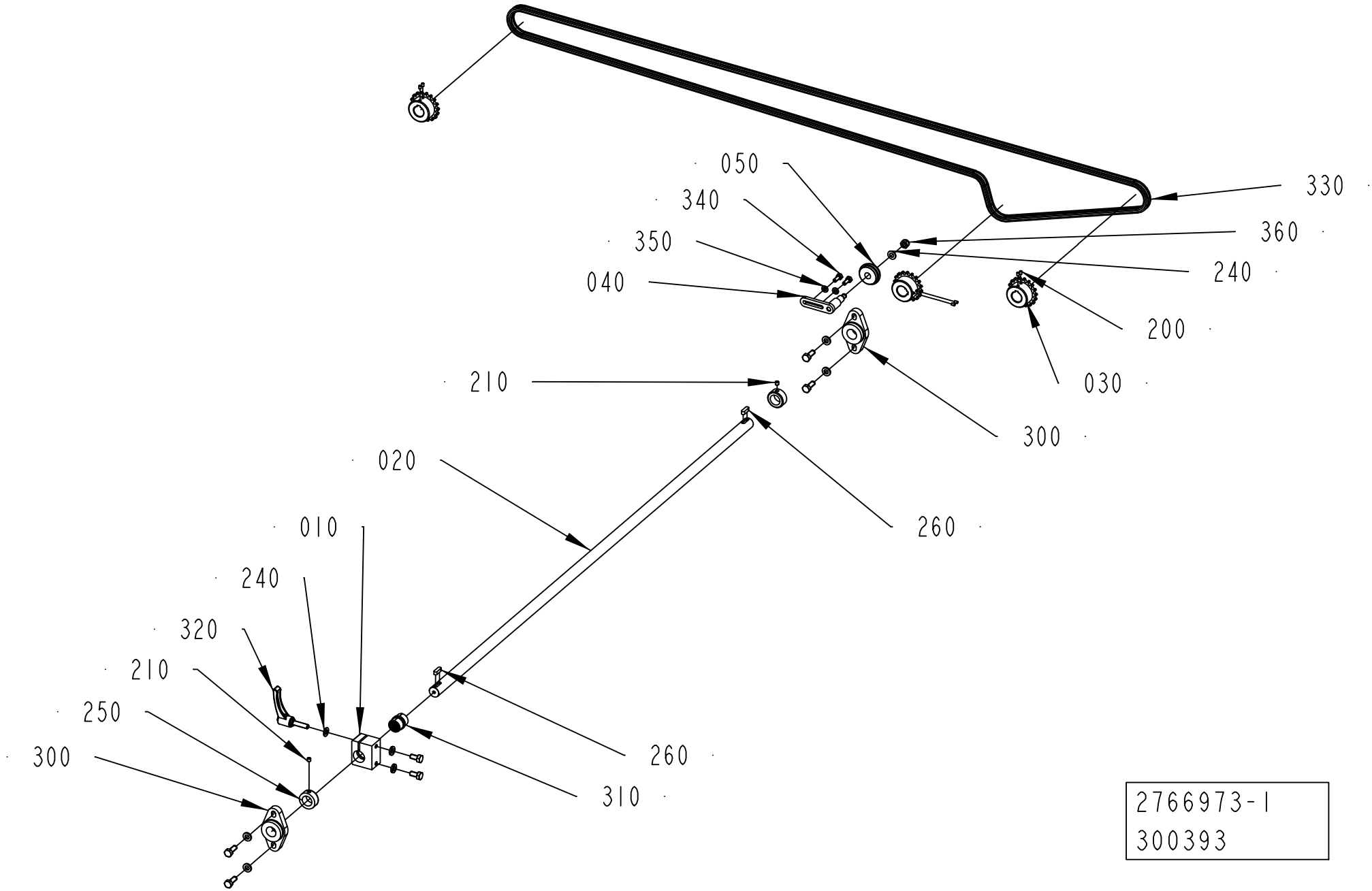
050
340
350
040
330
360
240
200
030
210
300
020
260
010
240
320
210
250
300
260
310
2766973-1
300393

ECM: 349023 - 20080701
Group number: 2766973-0100
Assembly Drawing: 2766973-1_1_AB

Pos	Part No	UN	Qty	Description	Page No
-					
010	2769726-0000		1	BRACKET	
020	2766972-0000		1	SHAFT	
030	2779769-0000		3	SPROCKET	
040	2846405-0000		1	PIVOT ARM	
050	2846403-0000		1	ROLLER	
200	312318-0287		6	SCREW ISO4029 M4X8 A4	
210	312318-0360		2	SCREW ISO4029 M6X6 A4	
220	312105-0452		4	SCREW M6S ISO 4017 M8X22 A480	
230	312105-0449		2	SCREW M6S ISO 4017 M8X16 A480	
240	315105-0165		2	WASHER BRB 8,4X16 RFR	
250	315741-0216		2	RETAINING RING DIN 705 A4 20	
260	315705-0232		2	PARALLEL KEY W. ROUND ENDS, 6X6X20 MM	
270	315115-0165		6	WASHER PLAIN, TBRB 8,4/16 H=3	
300	90600-0800		2	FLANGE BEARING 20X89X20 MM	
310	90458-2932		1	PLAIN BEARING, JUM-02-20	
320	90017-0029		1	LOCKING LEVER, NO. KR8X30-SUS	
330	90600-1159		1	ROLLER CHAIN, SIMPLEX 3/8 -290, SS	
340	312105-0368		2	SCREW M6S ISO 4017 M6X16 A480	
350	315105-0153		2	WASHER BRB 6,4X12 RFR	
360	312812-0318		1	HEXAGON NUT, NY-LOCK M8 A480	

Pos	Part No	UN	Qty	Description	Page No

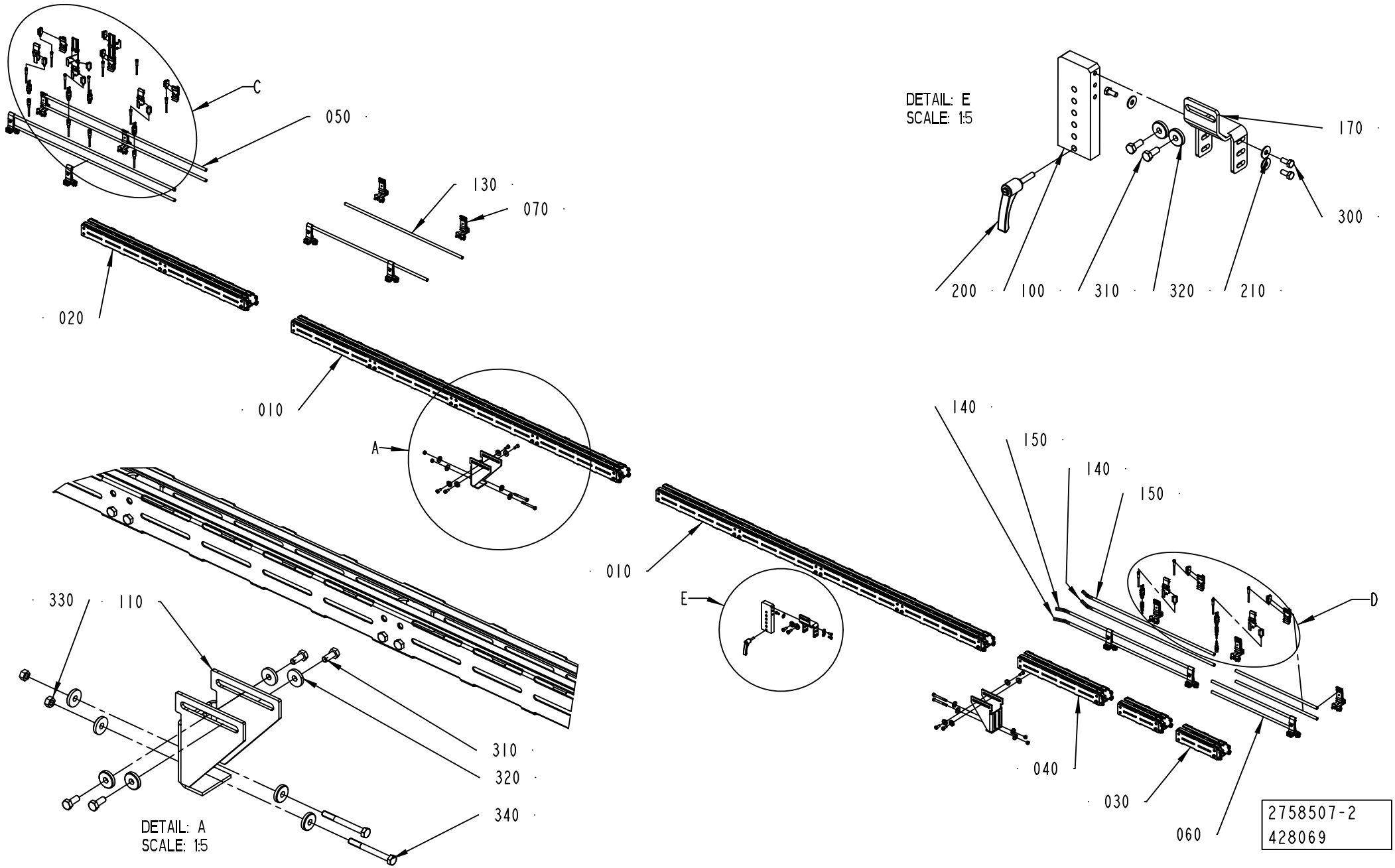
C
050
130
070
020
010
A
330
110
310
320
340
DETAIL: A
SCALE: 1:5
DETAIL: E
SCALE: 1:5
170
300
200
100
310
320
210
140
150
140
150
010
E
D
040
030
060
2758507-2
428069

ECM: 428924 - 20100401
Group number: 2758507-0200
Assembly Drawing: 2758507-2_1_AC

This list covers pages from 3-18 to 3-21

Pos	Part No	UN	Qty	Description	Page No
-					
010	2763616-0104		2	CONVEYOR BODY	**3-23**
020	2763616-0103		1	CONVEYOR BODY	**3-25**
030	2763616-0102		1	CONVEYOR BODY	**3-27**
040	2763616-0101		2	CONVEYOR BODY	**3-29**
050	2561274-0103		1	RAILING	**3-31**
060	2561274-0102		1	RAILING	**3-35**
070	1550743-0200		8	RAIL HOLDER	**3-33**
080	2778586-0100		3	SENSOR	**3-37, 10-19**
090	2778587-0100		1	SENSOR	**3-39**
100	2930211-0000		1	PLATE	
110	2965155-0000		2	SUPPORT	
120	2985775-0100		1	SENSOR	**3-41**
130	2779831-0000		2	PIPE	
140	2836266-0000		2	PIPE	
150	3068599-0000		2	PIPE	
170	2930210-0000		1	PLATE	
200	90017-0029		1	LOCKING LEVER, NO. KR8X30-SUS	
210	90457-0192		4	WASHER PLAIN ROUND, 6,5/18, H=1,5	
300	312105-0367		4	REW M6S ISO 4017 M6X14 A480	
310	312105-0451		16	SCREW M6S ISO 4017 M8X20 A480	
320	315125-0165		16	WASHER TBRSB 8,4X26X5 A4	
330	312607-0318		4	HEXAGON NUT, EN 24032 M6M M8 A480	
340	312105-0466		4	SCREW M6S ISO 4014 M8X75 A480	
350	351411-0050		1	ACTU/SENS. CABLE PRST 4-PRKT 4-07/5,0	
21B402	90459-5529		1	PHOTOCELL E3Z-T86A, SENDER+RECIEVER	
21B404	90459-5529		1	PHOTOCELL E3Z-T86A, SENDER+RECIEVER	
21B406	90459-5529		1	PHOTOCELL E3Z-T86A, SENDER+RECIEVER	
21B408	90459-5529		1	PHOTOCELL E3Z-T86A, SENDER+RECIEVER	
21B424	90459-5529		1	PHOTOCELL E3Z-T86A, SENDER+RECIEVER	
21B602	90459-5529		1	PHOTOCELL E3Z-T86A, SENDER+RECIEVER	
21W402	90459-6586		1	ACT/SENS.Y-CABLE, ASBN 2-PRKMV 4-07/0,6M	
21W404	90459-6586		1	ACT/SENS.Y-CABLE, ASBN 2-PRKMV 4-07/0,6M	
21W406	90459-6586		1	ACT/SENS.Y-CABLE, ASBN 2-PRKMV 4-07/0,6M	
21W408	90459-6586		1	ACT/SENS.Y-CABLE, ASBN 2-PRKMV 4-07/0,6M	
21W412	351309-0050		1	ACTUATOR/SENSOR CABLE PRKT 4-07/5M	
21W414	351309-0050		1	ACTUATOR/SENSOR CABLE PRKT 4-07/5M	
21W416	351309-0050		1	ACTUATOR/SENSOR CABLE PRKT 4-07/5M	
21W418	351309-0100		1	ACTUATOR/SENSOR CABLE PRKT 4-07/10M	
21W422	351405-0006		1	ACT/SENS. CABLE RSMVN 3-PRKT 4-3-06/0,6M	
21W424	90459-6586		1	ACT/SENS.Y-CABLE, ASBN 2-PRKMV 4-07/0,6M	
21W602	90459-6586		1	ACT/SENS.Y-CABLE, ASBN 2-PRKMV 4-07/0,6M	
21W612	351405-0050		1	SENS. CABLE RSMVN 3-PRKT 4-3-06/5,0M	

Machine Type	Group Description	Used-In	Group Number	Page No

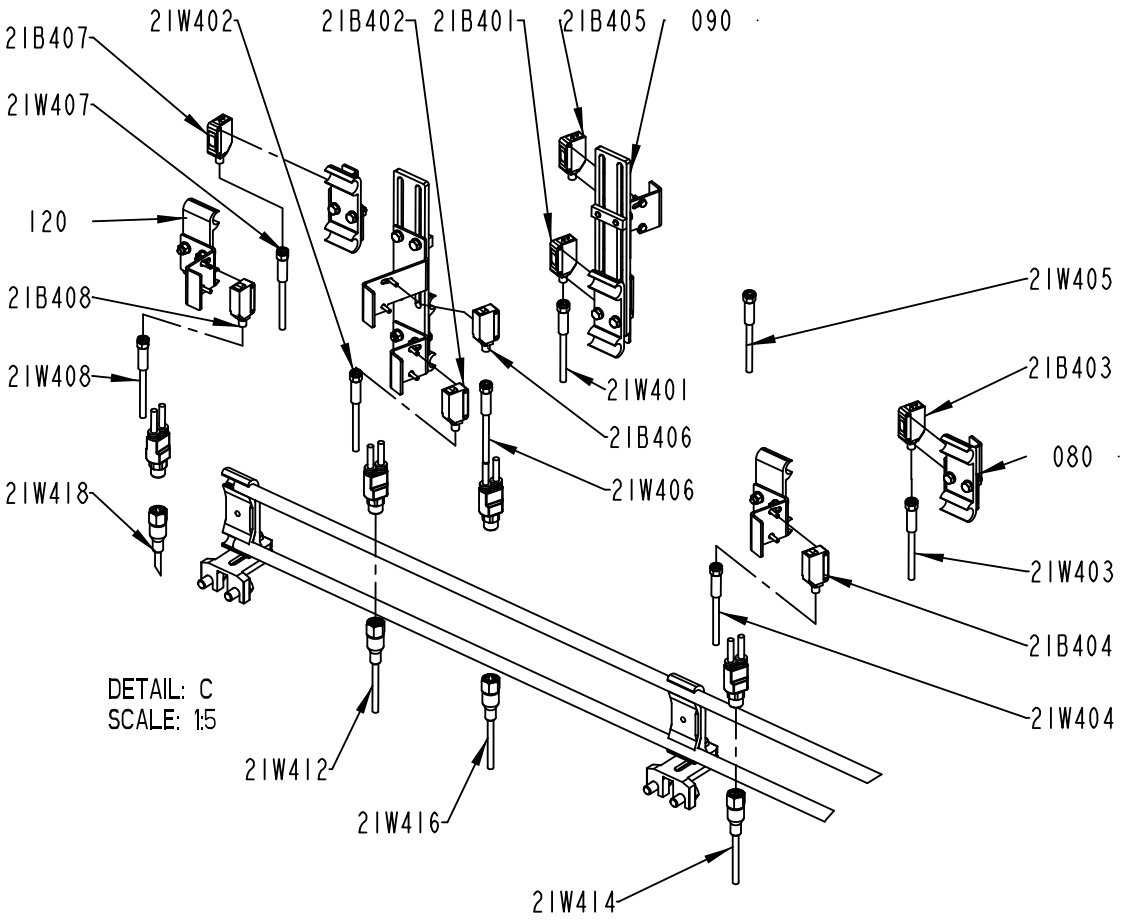

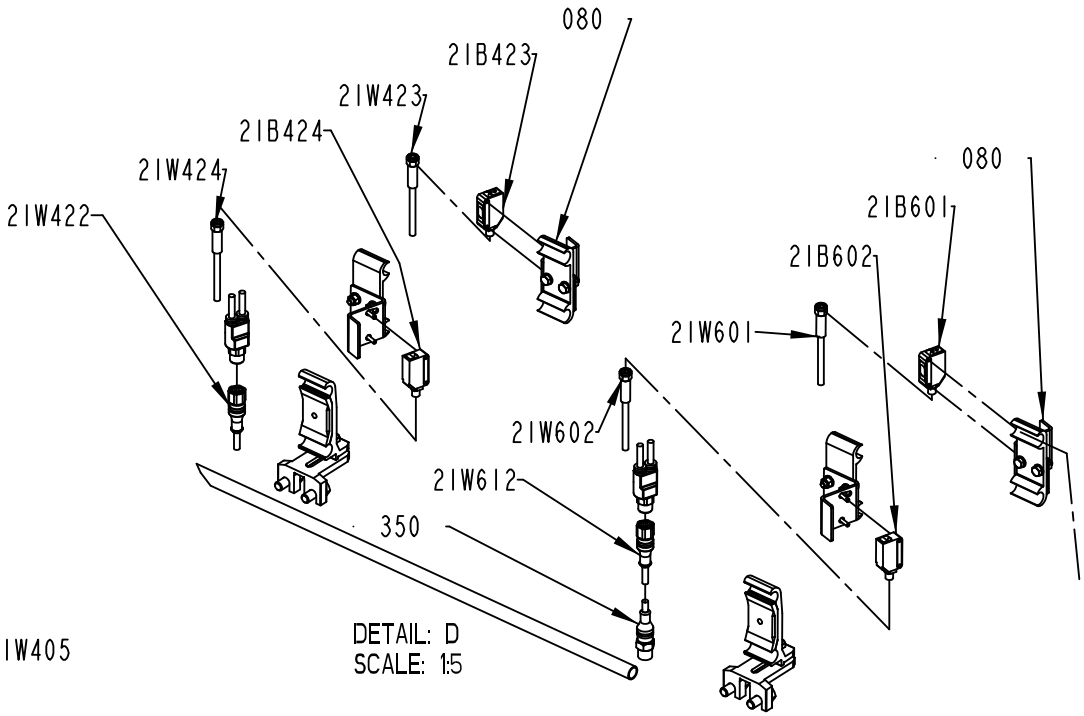

2758507-2
428069

ECM: 428924 - 20100401
Group number: 2758507-0200
Assembly Drawing: 2758507-2_2_AC

This list covers pages from 3-18 to 3-21

Pos	Part No	UN	Qty	Description	Page No
-					
010	2763616-0104		2	CONVEYOR BODY	**3-23**
020	2763616-0103		1	CONVEYOR BODY	**3-25**
030	2763616-0102		1	CONVEYOR BODY	**3-27**
040	2763616-0101		2	CONVEYOR BODY	**3-29**
050	2561274-0103		1	RAILING	**3-31**
060	2561274-0102		1	RAILING	**3-35**
070	1550743-0200		8	RAIL HOLDER	**3-33**
080	2778586-0100		3	SENSOR	**3-37, 10-19**
090	2778587-0100		1	SENSOR	**3-39**
100	2930211-0000		1	PLATE	
110	2965155-0000		2	SUPPORT	
120	2985775-0100		1	SENSOR	**3-41**
130	2779831-0000		2	PIPE	
140	2836266-0000		2	PIPE	
150	3068599-0000		2	PIPE	
170	2930210-0000		1	PLATE	
200	90017-0029		1	LOCKING LEVER, NO. KR8X30-SUS	
210	90457-0192		4	WASHER PLAIN ROUND, 6,5/18, H=1,5	
300	312105-0367		4	REW M6S ISO 4017 M6X14 A480	
310	312105-0451		16	SCREW M6S ISO 4017 M8X20 A480	
320	315125-0165		16	WASHER TBRSB 8,4X26X5 A4	
330	312607-0318		4	HEXAGON NUT, EN 24032 M6M M8 A480	
340	312105-0466		4	SCREW M6S ISO 4014 M8X75 A480	
350	351411-0050		1	ACTU/SENS. CABLE PRST 4-PRKT 4-07/5,0	
21B402	90459-5529		1	PHOTOCELL E3Z-T86A, SENDER+RECIEVER	
21B404	90459-5529		1	PHOTOCELL E3Z-T86A, SENDER+RECIEVER	
21B406	90459-5529		1	PHOTOCELL E3Z-T86A, SENDER+RECIEVER	
21B408	90459-5529		1	PHOTOCELL E3Z-T86A, SENDER+RECIEVER	
21B424	90459-5529		1	PHOTOCELL E3Z-T86A, SENDER+RECIEVER	
21B602	90459-5529		1	PHOTOCELL E3Z-T86A, SENDER+RECIEVER	
21W402	90459-6586		1	ACT/SENS.Y-CABLE, ASBN 2-PRKMV 4-07/0,6M	
21W404	90459-6586		1	ACT/SENS.Y-CABLE, ASBN 2-PRKMV 4-07/0,6M	
21W406	90459-6586		1	ACT/SENS.Y-CABLE, ASBN 2-PRKMV 4-07/0,6M	
21W408	90459-6586		1	ACT/SENS.Y-CABLE, ASBN 2-PRKMV 4-07/0,6M	
21W412	351309-0050		1	ACTUATOR/SENSOR CABLE PRKT 4-07/5M	
21W414	351309-0050		1	ACTUATOR/SENSOR CABLE PRKT 4-07/5M	
21W416	351309-0050		1	ACTUATOR/SENSOR CABLE PRKT 4-07/5M	
21W418	351309-0100		1	ACTUATOR/SENSOR CABLE PRKT 4-07/10M	
21W422	351405-0006		1	ACT/SENS. CABLE RSMVN 3-PRKT 4-3-06/0,6M	
21W424	90459-6586		1	ACT/SENS.Y-CABLE, ASBN 2-PRKMV 4-07/0,6M	
21W602	90459-6586		1	ACT/SENS.Y-CABLE, ASBN 2-PRKMV 4-07/0,6M	
21W612	351405-0050		1	SENS. CABLE RSMVN 3-PRKT 4-3-06/5,0M	

Machine Type	Group Description	Used-In	Group Number	Page No

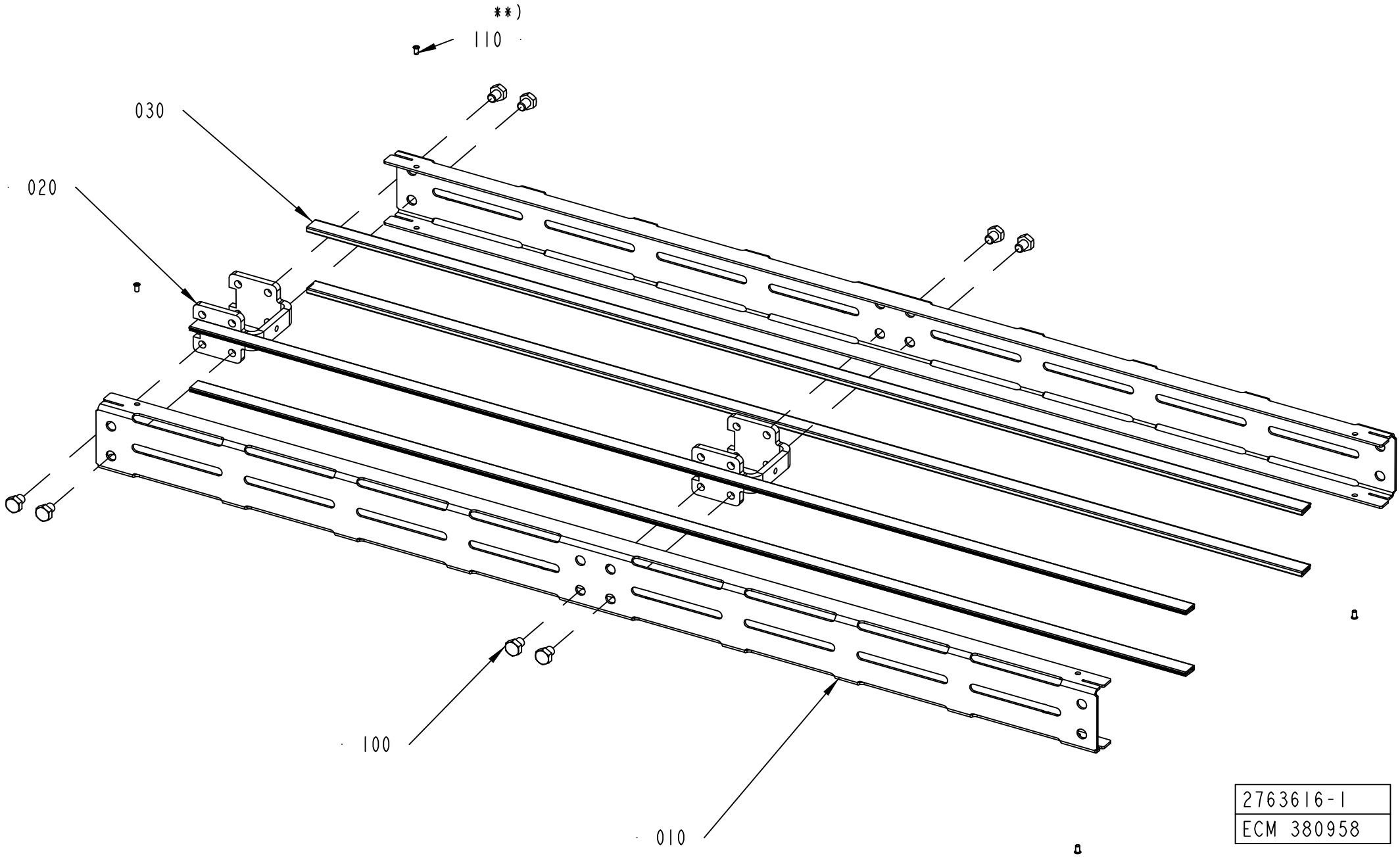
**)
110
030
020
100
010
2763616-1
ECM 380958

ECM: 380958 -
Group number: 2763616-0104
Assembly Drawing: 2763616-1_1_AB

Pos	Part No	UN	Qty	Description	Page No
L 2000					
010	2763617-0004		2	SIDE PLATE	
020	2561206-0000		4	SPACER	
030	2699305-1996		4	SLIDING STRIP	
100	90459-4735		16	SCREW M6S ISO 4017 M8X10 A480	
Common Parts					
010	2763617-0001		2	SIDE PLATE	
010	2763617-0002		2	SIDE PLATE	
010	2763617-0003		2	SIDE PLATE	
020	2561206-0000		1	SPACER	
030	1550595-2460		4	SLIDING STRIP	
030	1550595-4960		4	SLIDING STRIP	
030	1550595-9960		4	SLIDING STRIP	
100	90459-4735		8	SCREW M6S ISO 4017 M8X10 A480	
110	90600-6183		4	TUBULAR RIVET 3,5X6,2	

Pos	Part No	UN	Qty	Description	Page No

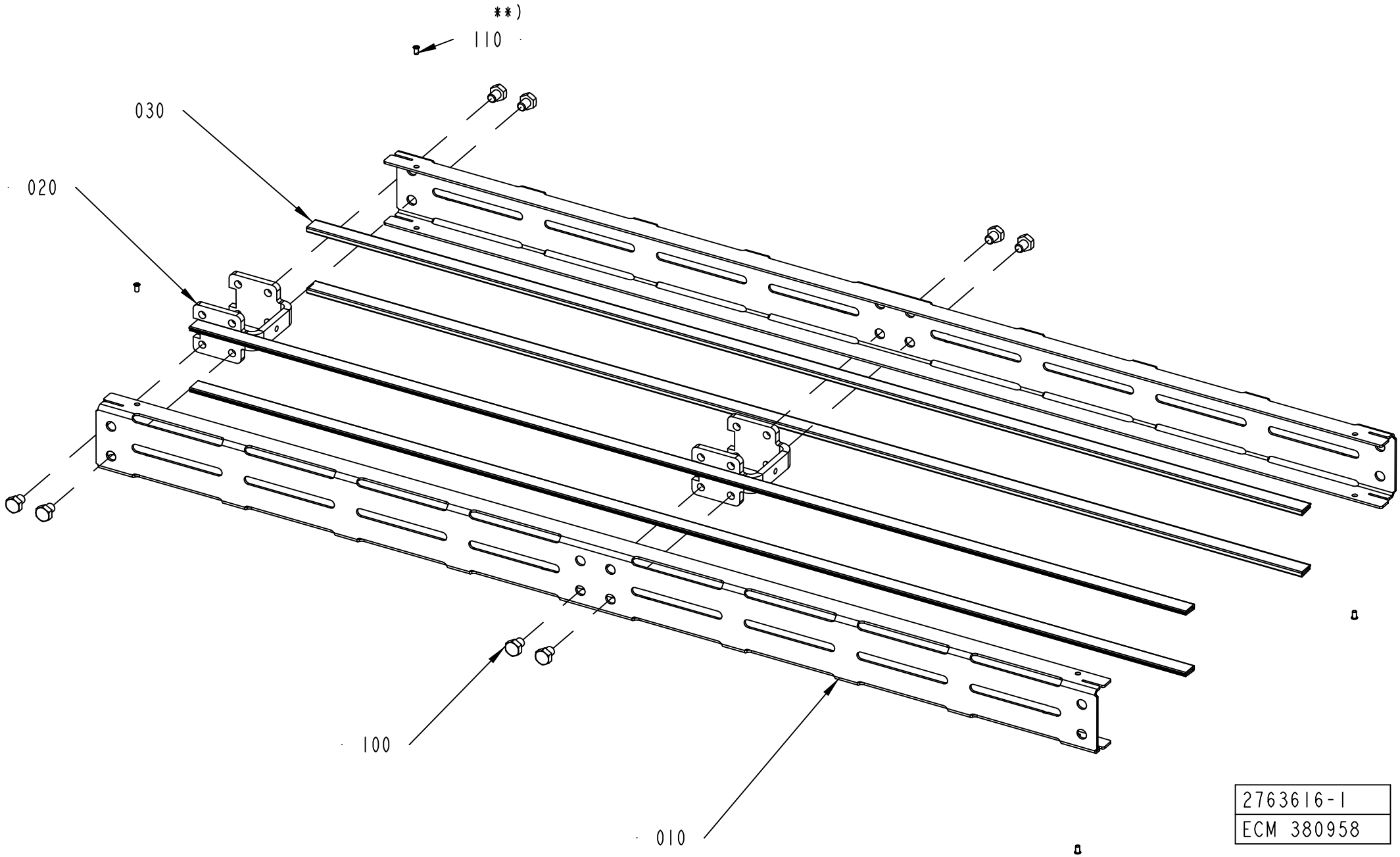
**)
110
030
020
100
010
2763616-1
ECM 380958

ECM: 380958 -
Group number: 2763616-0103
Assembly Drawing: 2763616-1_1_AB

Pos	Part No	UN	Qty	Description	Page No
L 1000					
010	2763617-0003		2	SIDE PLATE	
020	2561206-0000		2	SPACER	
030	1550595-9960		4	SLIDING STRIP	
100	90459-4735		8	SCREW M6S ISO 4017 M8X10 A480	
Common Parts					
010	2763617-0001		2	SIDE PLATE	
010	2763617-0004		2	SIDE PLATE	
010	2763617-0002		2	SIDE PLATE	
020	2561206-0000		1	SPACER	
030	2699305-1996		4	SLIDING STRIP	
030	1550595-4960		4	SLIDING STRIP	
030	1550595-2460		4	SLIDING STRIP	
100	90459-4735		16	SCREW M6S ISO 4017 M8X10 A480	
110	90600-6183		4	TUBULAR RIVET 3,5X6,2	

Pos	Part No	UN	Qty	Description	Page No

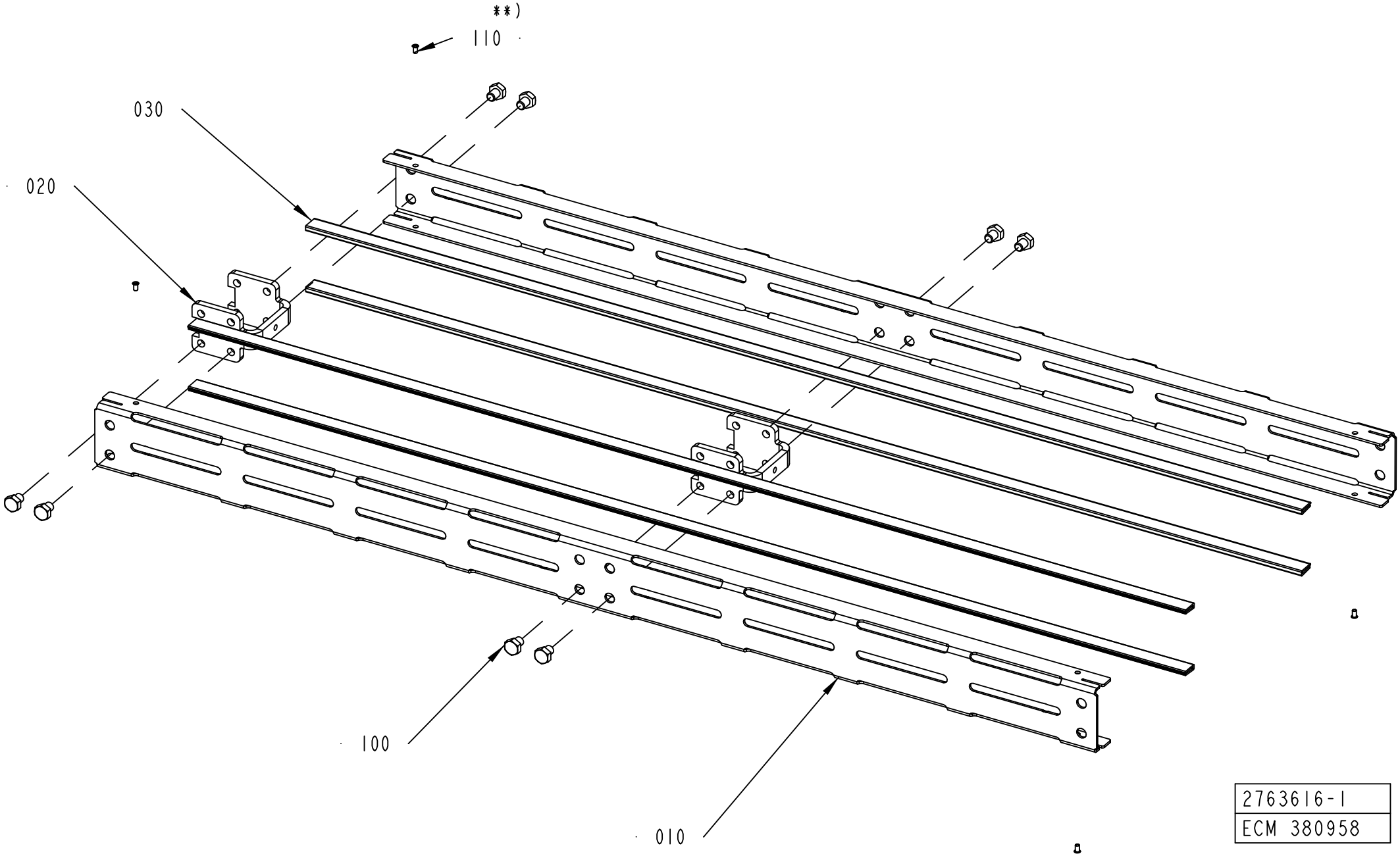

2763616-1
ECM 380958

ECM: 380958 -
Group number: 2763616-0102
Assembly Drawing: 2763616-1_1_AB

Pos	Part No	UN	Qty	Description	Page No
L 0250					
010	2763617-0001		2	SIDE PLATE	
020	2561206-0000		1	SPACER	
030	1550595-2460		4	SLIDING STRIP	
100	90459-4735		4	SCREW M6S ISO 4017 M8X10 A480	
L 0500					
010	2763617-0002		2	SIDE PLATE	
020	2561206-0000		1	SPACER	
030	1550595-4960		4	SLIDING STRIP	
100	90459-4735		4	SCREW M6S ISO 4017 M8X10 A480	
Common Parts					
010	2763617-0003		2	SIDE PLATE	
010	2763617-0004		2	SIDE PLATE	
020	2561206-0000		2	SPACER	
030	1550595-9960		4	SLIDING STRIP	
030	2699305-1996		4	SLIDING STRIP	
100	90459-4735		8	SCREW M6S ISO 4017 M8X10 A480	
110	90600-6183		4	TUBULAR RIVET 3,5X6,2	

Pos	Part No	UN	Qty	Description	Page No

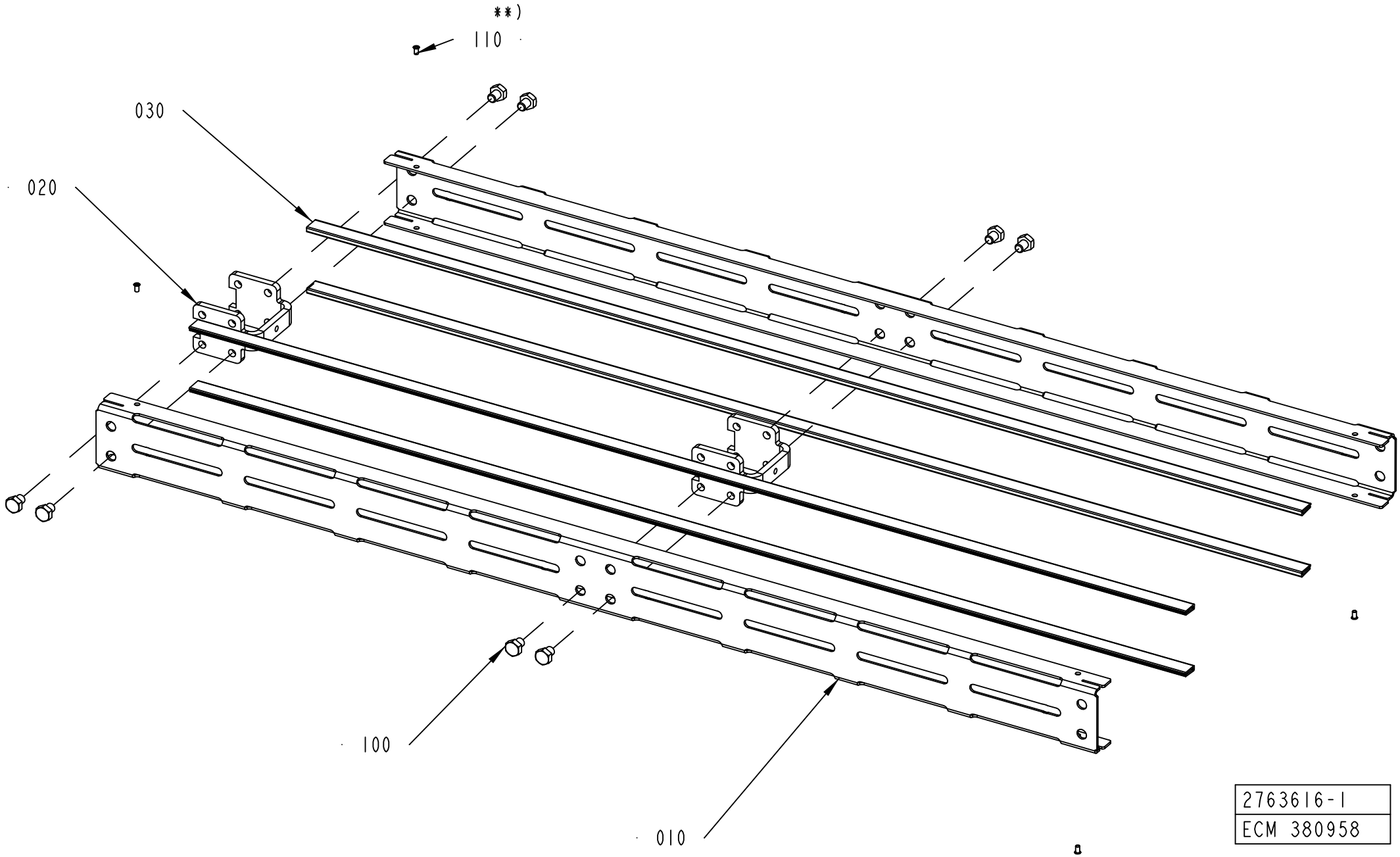

2763616-1
ECM 380958

ECM: 380958 -
Group number: 2763616-0101
Assembly Drawing: 2763616-1_1_AB

Pos	Part No	UN	Qty	Description	Page No
L 0250					
010	2763617-0001		2	SIDE PLATE	
020	2561206-0000		1	SPACER	
030	1550595-2460		4	SLIDING STRIP	
100	90459-4735		4	SCREW M6S ISO 4017 M8X10 A480	
L 0500					
010	2763617-0002		2	SIDE PLATE	
020	2561206-0000		1	SPACER	
030	1550595-4960		4	SLIDING STRIP	
100	90459-4735		4	SCREW M6S ISO 4017 M8X10 A480	
Common Parts					
010	2763617-0003		2	SIDE PLATE	
010	2763617-0004		2	SIDE PLATE	
020	2561206-0000		4	SPACER	
030	1550595-9960		4	SLIDING STRIP	
030	2699305-1996		4	SLIDING STRIP	
100	90459-4735		16	SCREW M6S ISO 4017 M8X10 A480	
110	90600-6183		4	TUBULAR RIVET 3,5X6,2	

Pos	Part No	UN	Qty	Description	Page No

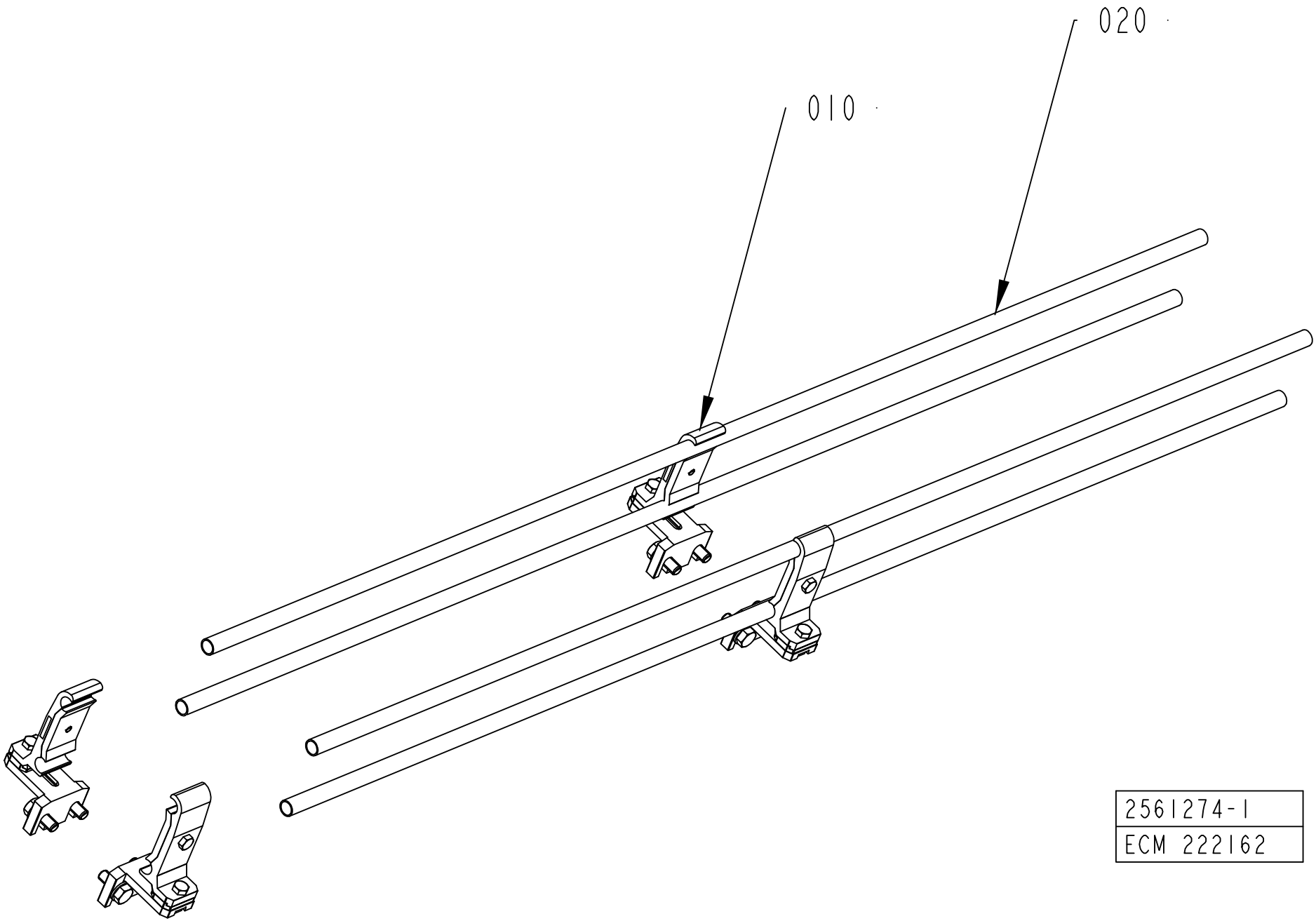
020
010
2561274-1
ECM 222162

ECM: 222162 -
Group number: 2561274-0103
Assembly Drawing: 2561274-1_1_AB

Pos	Part No	UN	Qty	Description	Page No
L 1000					
010	1550743-0200		4	RAIL HOLDER	**3-33**
020	476221-0003		4	PIPE	
Common Parts					
010	1550743-0200		2	RAIL HOLDER	**3-33**
020	476221-0002		4	PIPE	

Pos	Part No	UN	Qty	Description	Page No

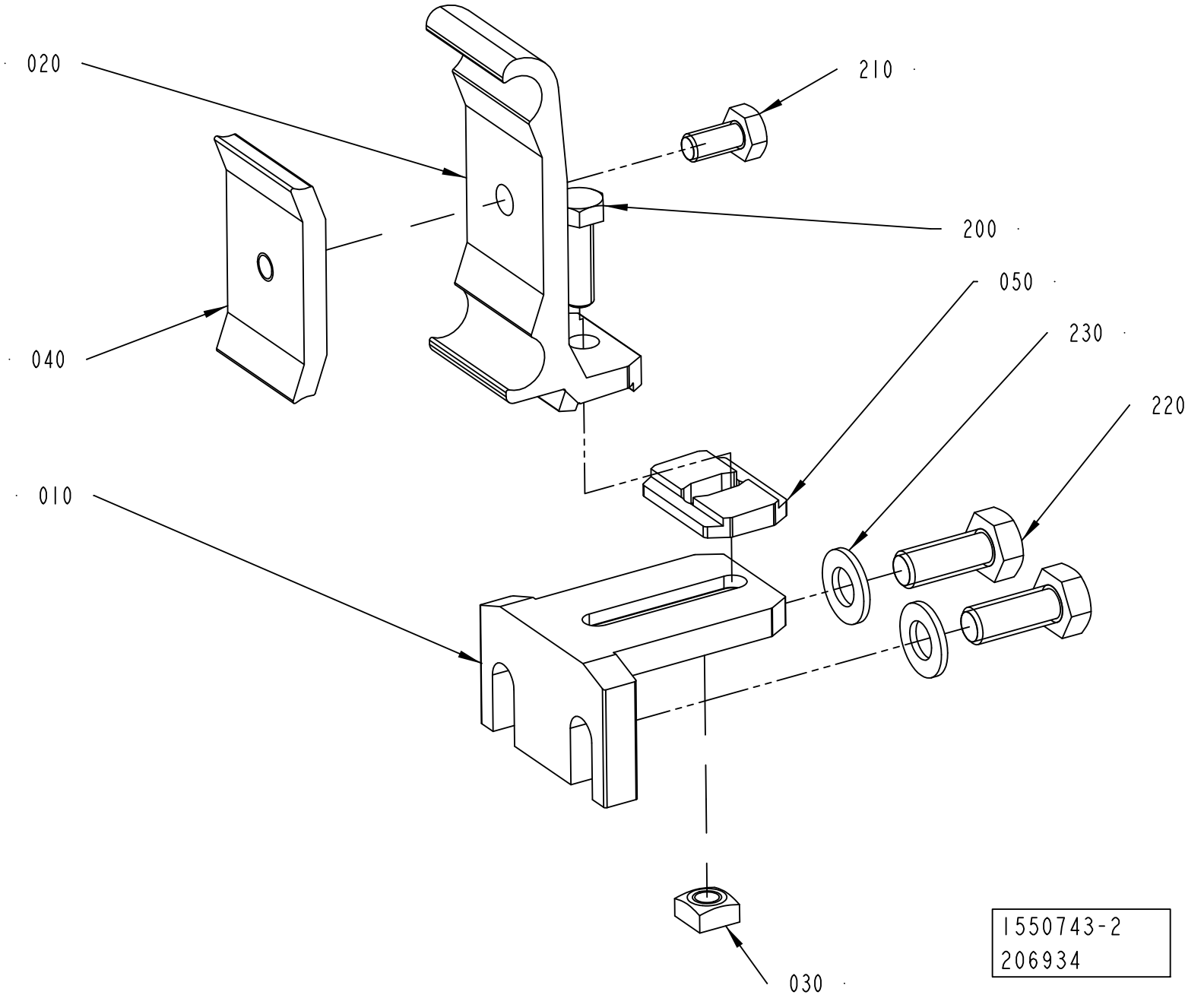
020
210
200
050
230
220
040
010
030
1550743-2
206934

ECM: 429045 - 20091201
Group number: 1550743-0200
Assembly Drawing: 1550743-2_1_AA

Pos	Part No	UN	Qty	Description	Page No
-					
010	1550772-0000		1	HOLDER	
020	2699437-0000		1	RAIL HOLDER	
030	1359565-0000		1	NUT	
040	1366727-0000		1	CLAMP	
050	2699436-0000		1	SPACER	
200	312105-0370		1	SCREW M6S ISO 4017 M6X20 A480	
210	312105-0366		1	SCREW M6S ISO 4017 M6X12 A480	
220	312105-0451		2	SCREW M6S ISO 4017 M8X20 A480	
230	315105-0165		2	WASHER BRB 8,4X16 RFR	

Pos	Part No	UN	Qty	Description	Page No

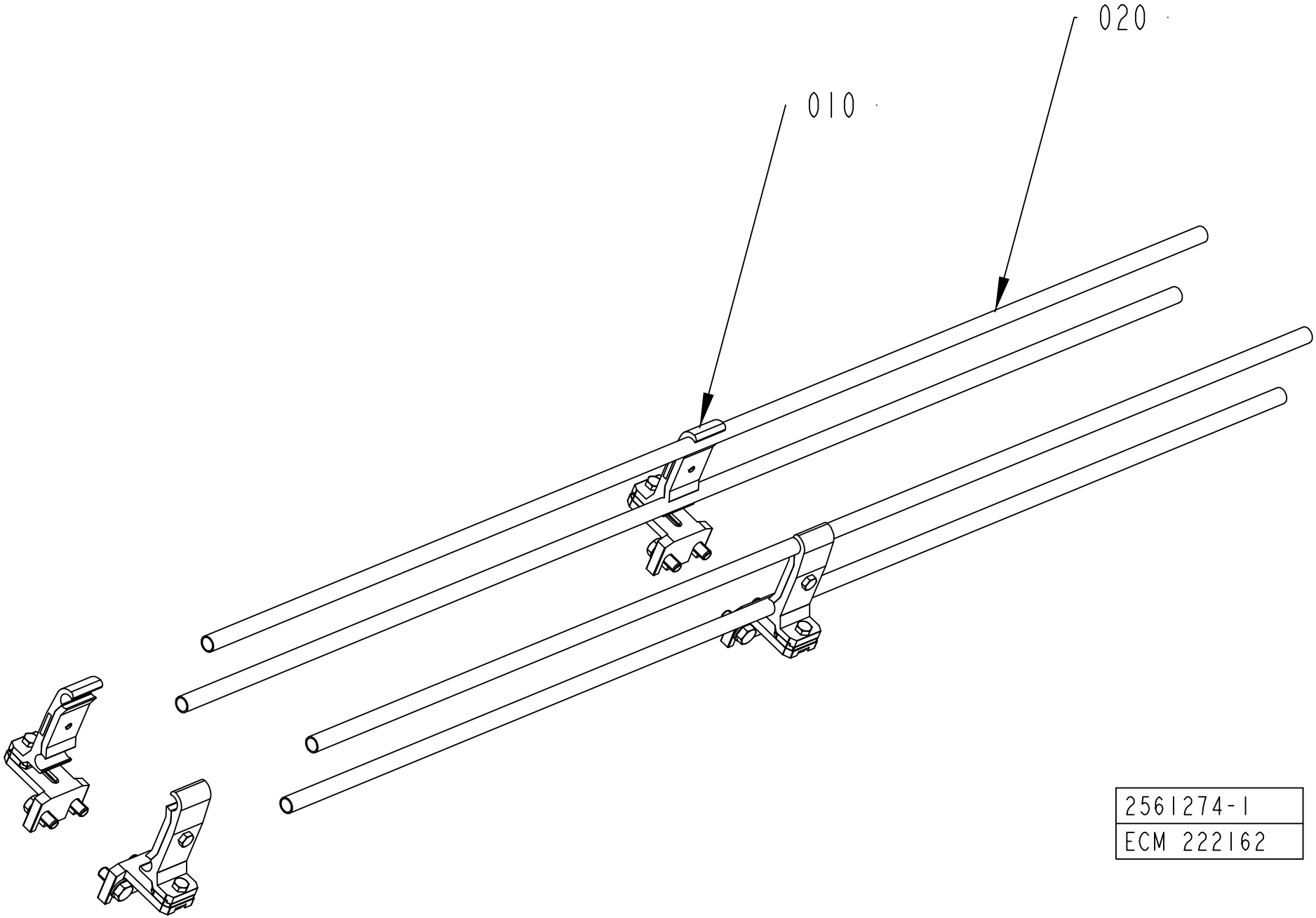

2561274-1
ECM 222162

ECM: 222162 -
Group number: 2561274-0102
Assembly Drawing: 2561274-1_1_AB

Pos	Part No	UN	Qty	Description	Page No
L 0250					
010	1550743-0200		2	RAIL HOLDER	**3-33**
L 0500					
010	1550743-0200		2	RAIL HOLDER	**3-33**
020	476221-0002		4	PIPE	
Common Parts					
010	1550743-0200		4	RAIL HOLDER	**3-33**
020	476221-0003		4	PIPE	

Pos	Part No	UN	Qty	Description	Page No

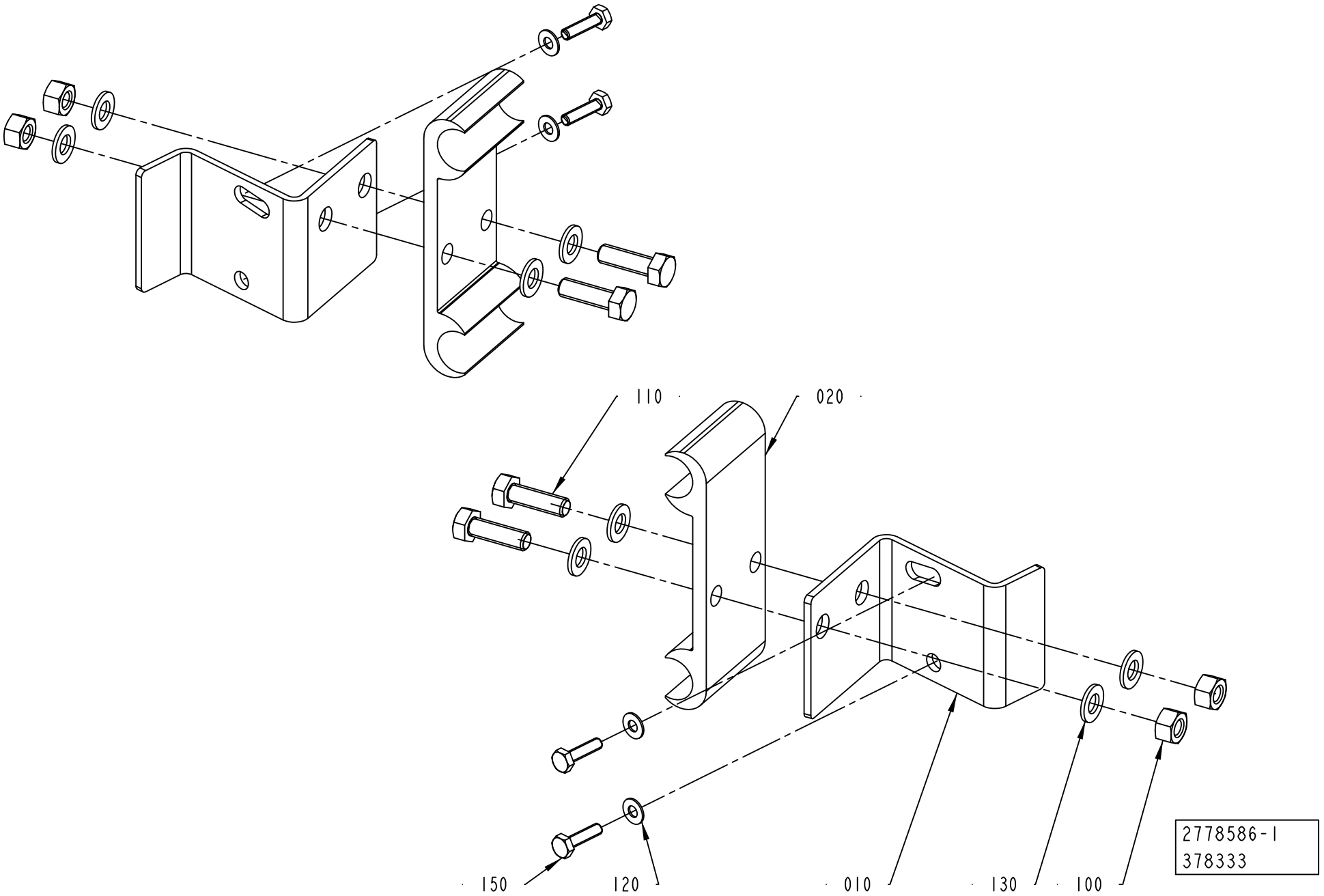
110
020
150
120
010
130
100
2778586-1
378333

ECM: 378333 - 20090406
Group number: 2778586-0100
Assembly Drawing: 2778586-1_1_AB

Pos	Part No	UN	Qty	Description	Page No
-					
010	2778580-0000		2	BRACKET	
020	1020637-0000		2	HOLDER	
100	312605-0314		4	HEXAGON NUT, M6M M5 A280	
110	312105-0329		4	SCREW M6S ISO 4017 M5X16 A480	
120	315106-0124		4	WASHER ISO 7089-3-200 HV A4	
130	315105-0146		8	WASHER BRB 5,3X10 RFR	
150	90287-0175		4	SCREW M6S M3X12 A480	

Pos	Part No	UN	Qty	Description	Page No

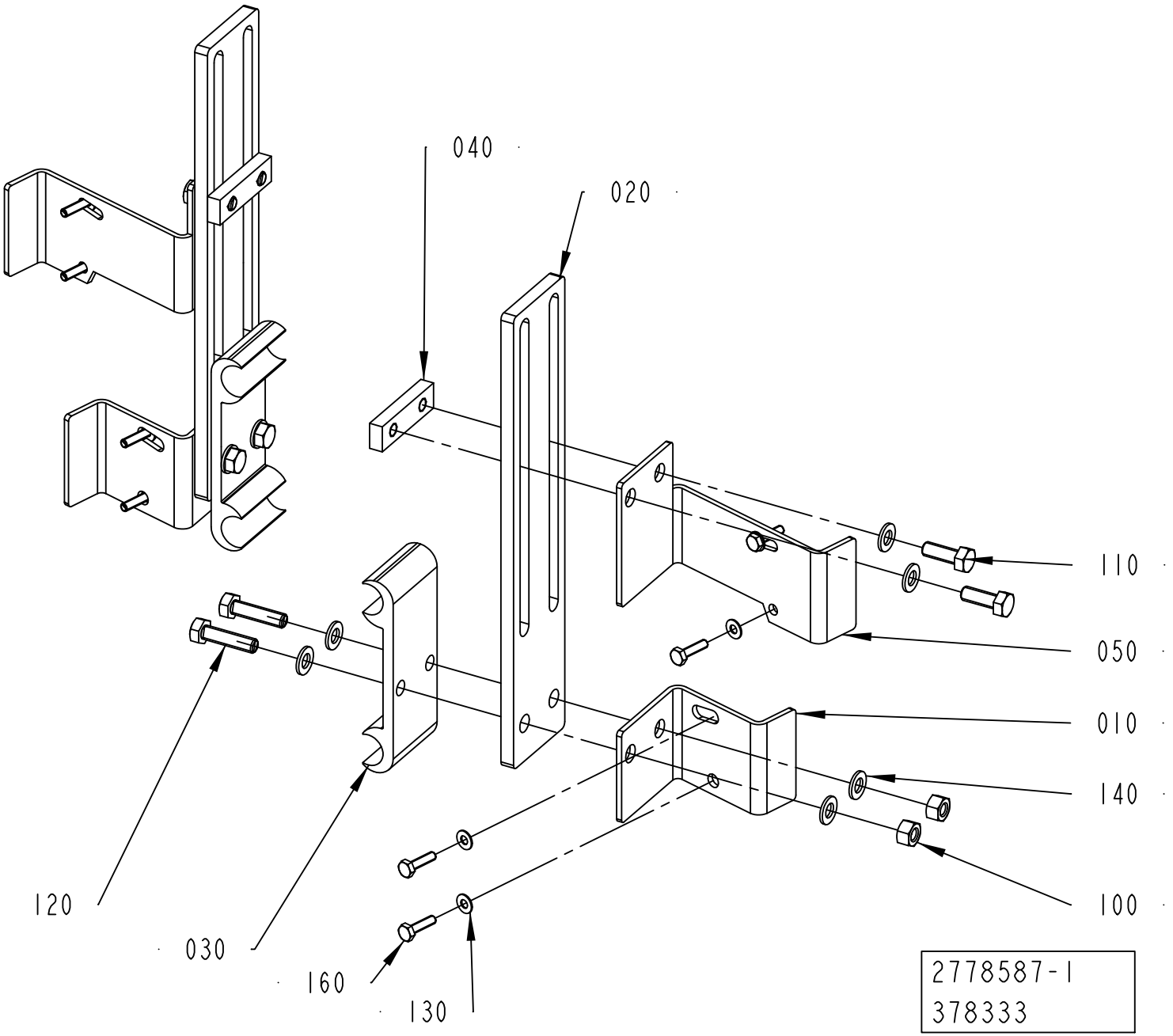
040
020
110
050
010
140
100
120
030
160
130
2778587-1
378333

ECM: 378333 - 20090406
Group number: 2778587-0100
Assembly Drawing: 2778587-1_1_AB

Pos	Part No	UN	Qty	Description	Page No
-					
010	2778580-0000		2	BRACKET	
020	2778584-0000		2	BRACKET	
030	1020637-0000		2	HOLDER	
040	2504290-0000		2	PLATE	
050	2985773-0000		2	BRACKET	
100	312605-0314		4	HEXAGON NUT, M6M M5 A280	
110	312105-0328		4	SCREW M6S ISO 4017 M5X14 A480	
120	312105-0331		4	SCREW M6S ISO 4017 M5X20 A480	
130	315106-0124		8	WASHER ISO 7089-3-200 HV A4	
140	315105-0146		12	WASHER BRB 5,3X10 RFR	
160	90287-0175		8	SCREW M6S M3X12 A480	

Pos	Part No	UN	Qty	Description	Page No

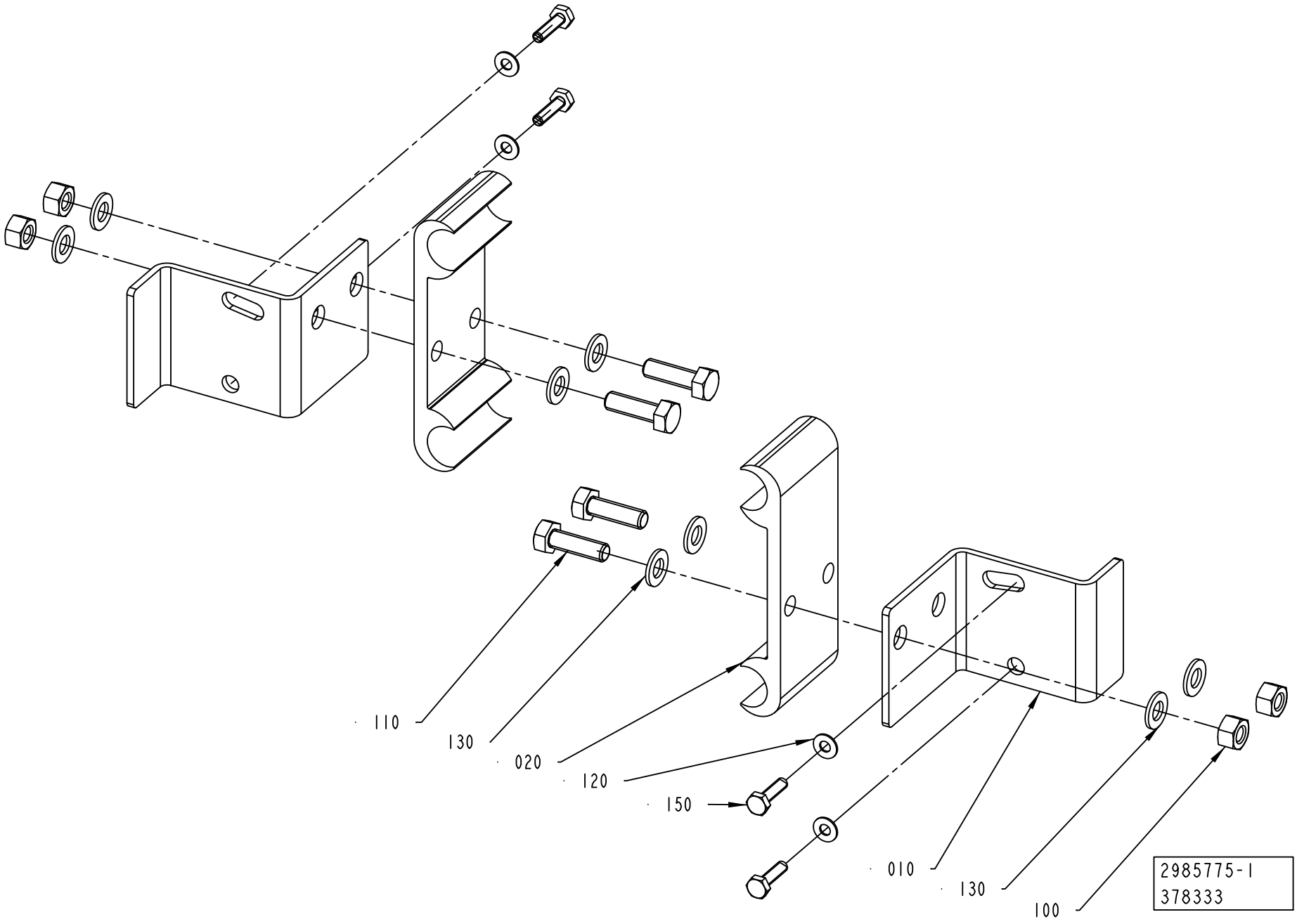
110
130
020
120
150
010
130
100
2985775-1
378333

ECM: 380457 - 20090406
Group number: 2985775-0100
Assembly Drawing: 2985775-1_1_AA

Pos	Part No	UN	Qty	Description	Page No
-					
010	2985774-0000		2	BRACKET	
020	1020637-0000		2	HOLDER	
100	312605-0314		4	HEXAGON NUT, M6M M5 A280	
110	312105-0329		4	SCREW M6S ISO 4017 M5X16 A480	
120	315106-0124		4	WASHER ISO 7089-3-200 HV A4	
130	315105-0146		8	WASHER BRB 5,3X10 RFR	
150	90287-0175		4	SCREW M6S M3X12 A480	

Pos	Part No	UN	Qty	Description	Page No

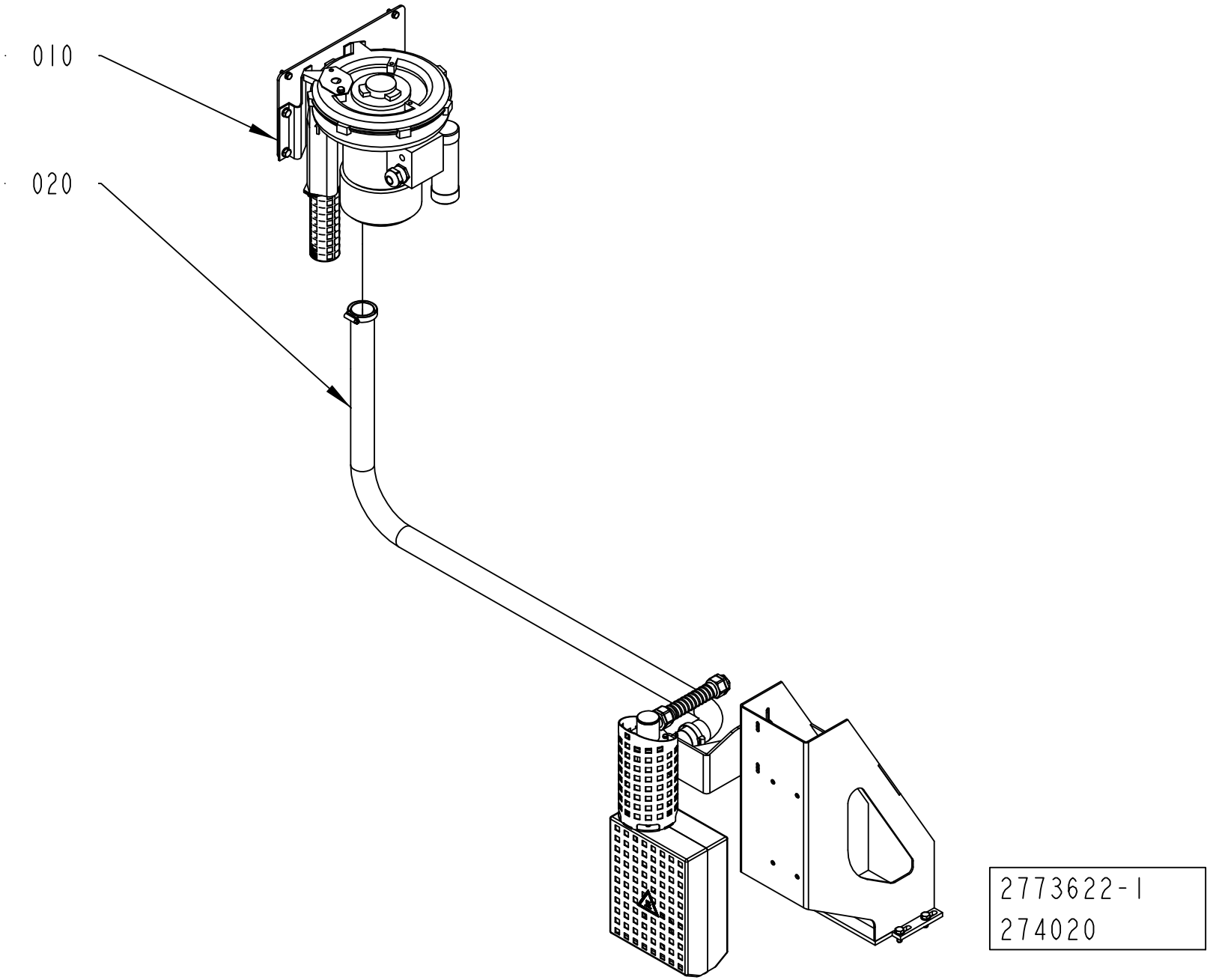
010
020
2773622-1
274020

ECM: 493186 - 20110701
Group number: 2773622-0100
Assembly Drawing: 2773622-1_1_AA

Pos	Part No	UN	Qty	Description	Page No
CAP 30/FLEX RECAP3, CAP 30/FLEX RECAP2 A3					
020	2873862-0100		1	HEATING ELEMENT	**3-45**
Common Parts					
010	2773623-0100		1	FAN SYSTEM	**3-47**

HEATING ELEMENT

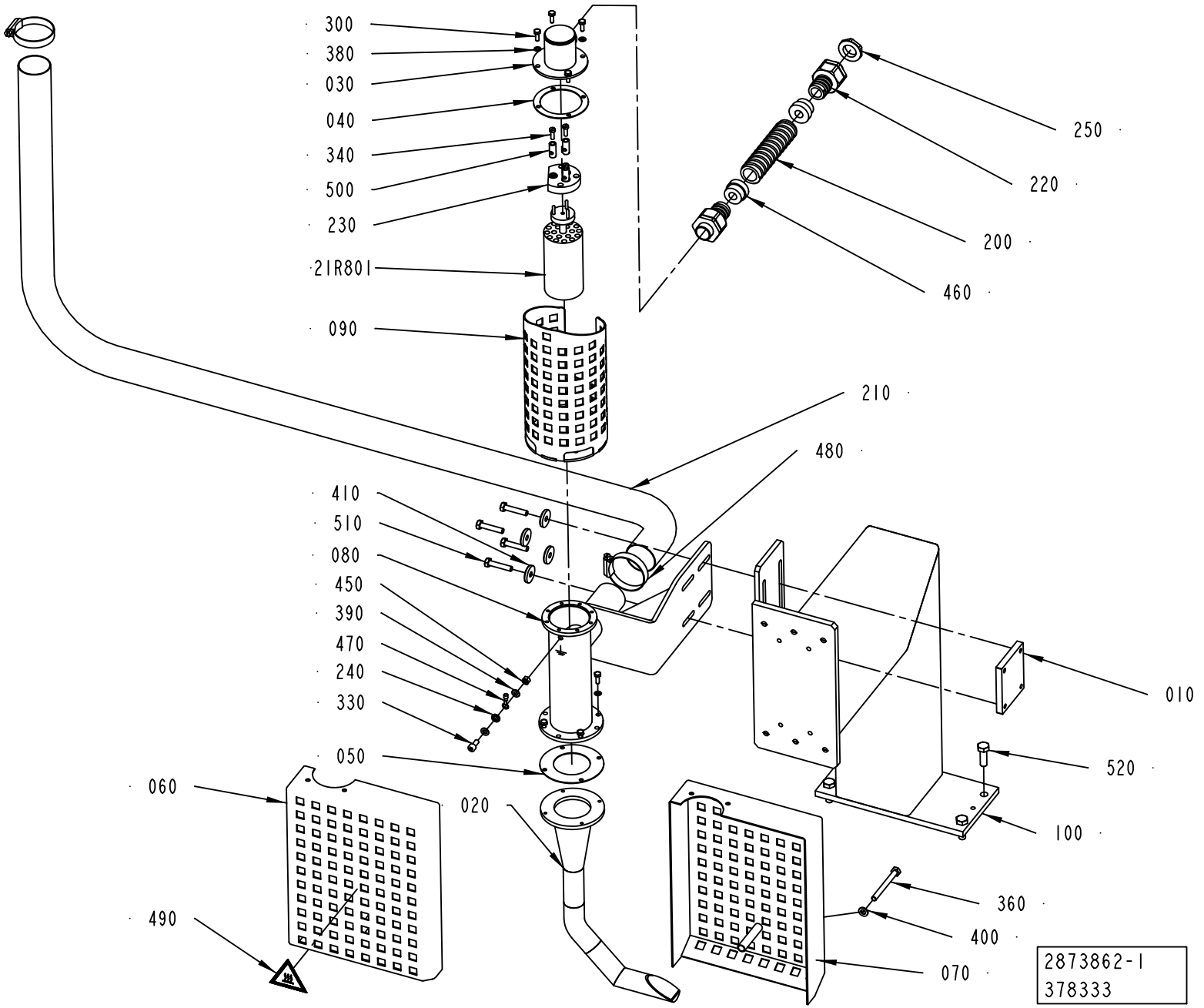

ECM: 494337 - 20110701
Group number: 2873862-0100
Assembly Drawing: 2873862-1_1_AB

Pos	Part No	UN	Qty	Description	Page No
CAP 30/FLEX RECAP3, CAP 30/FLEX RECAP2 A3					
020	2547915-0000		1	HEATING CHAMBER	
100	2934905-0000		1	SUPPORT	
Common Parts					
010	2873867-0000		1	PLATE	
030	2710819-0000		1	LID	
040	1188609-0000		1	FLANGE SEAL	
050	1188610-0000		1	FLANGE SEAL	
060	2773627-0000		1	HEAT GUARD	
070	2773630-0000		1	HEAT GUARD	
080	2873865-0000		1	PRE-HEATER	
090	2836263-0000		1	HEAT GUARD	
200	90152-0051	M	1	HOSE, SPIRAL CONDUIT, 25X18, UL 1816	
210	90152-0075	M	2.35	HOSE	
220	90458-0430		2	GLAND FITTING, VK 22054YUL16	
230	90125-0020		1	PLATE COMPLETE	
	294464-0000		*1*	*BASE PLATE*	
	270927-0000		*3*	*SCREW*	
	270926-0000		*6*	*NUT*	
240	90062-0060		1	LOCK WASHER 5,3/10 H=0,6 FZB	
250	90458-0323		1	NUT, M20X1,5	
300	312105-0291		8	SCREW M6S ISO 4017 M4X12 A470	
330	312115-0327		1	SCREW ISO4762 M5X12 A4 80	
340	312122-0291		3	SCREW ISO 1207 M4X12 NI PL BRASS	
360	312105-0382		1	SCREW M6S ISO 4014 M6X60 A480	
380	315105-0136		8	WASHER BRB 4,3X8 RFR	
390	315105-0146		2	WASHER BRB 5,3X10 RFR	
400	315105-0153		1	WASHER BRB 6,4X12 RFR	
410	315125-0153		4	WASHER TBRSB 6,4X22X4 A4	
450	312605-0314		1	HEXAGON NUT, M6M M5 A280	
460	353249-0012		2	INSERT, SINGLE HOLE, EK154 11	
470	353101-0122		1	CABLE SHOE 0,5-1,5MM2 M5 RED	
480	342991-0108		2	HOSE CLIP,WORM DRIVE TYPE (38)-50	
490	359710-0001		1	WARNING SIGN ISO, HOT SURFACE	
500	205438-0000		3	CABLE GLAND	
510	312105-0374		4	SCREW M6S ISO 4014 M6X30 A480	
520	312105-0453		4	SCREW M6S ISO 4017 M8X25 A480	
21R801	90206-0124		1	HEATING ELEMENT 2X1500W 230V	

Pos	Part No	UN	Qty	Description	Page No

Machine Type | Group Description | Used-In | Group Number | Page No

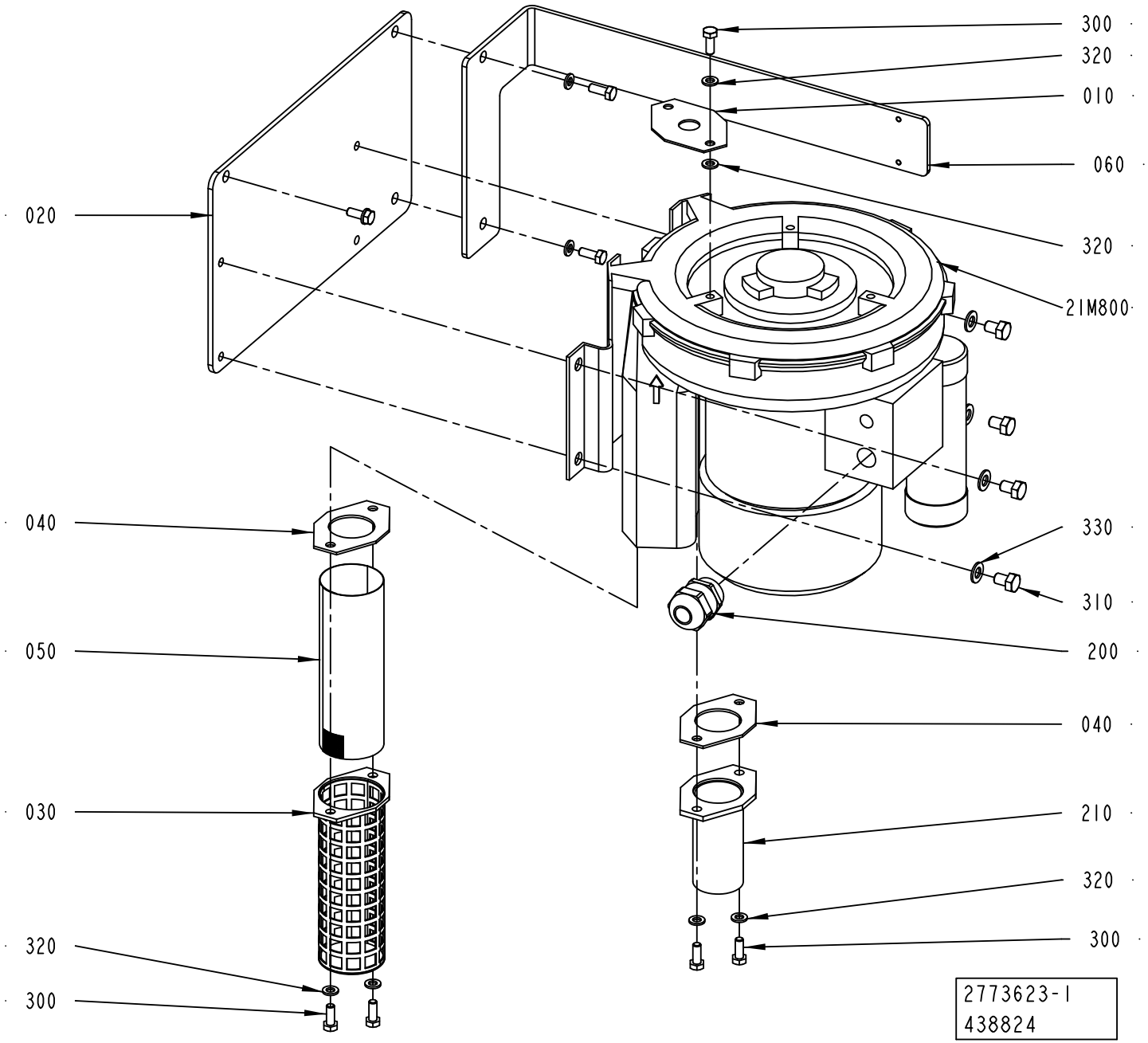
300
320
010
060
020
320
21M800
040
330
310
050
200
040
030
210
320
320
300
300
2773623-1
438824

ECM: 446239 - 20100701
Group number: 2773623-0100
Assembly Drawing: 2773623-1_1_AC

Pos	Part No	UN	Qty	Description	Page No
-					
010	1030874-0000		1	THROTTLE WASHER	
020	2779772-0000		1	BRACKET	
030	1030335-0000		1	FILTER HOLDER	
040	1030878-0000		2	GASKET	
050	1030338-0000		1	NET	
060	3093726-0000		1	PLATE	
200	90458-0316		1	CABLE GLAND, M25X1,5, 5311 1130	
210	2663999-0000		1	NIPPLE	
300	312105-0368		8	SCREW M6S ISO 4017 M6X16 A480	
310	312105-0447		4	SCREW M6S ISO 4017 M8X12 A480	
320	315105-0153		9	WASHER BRB 6,4X12 RFR	
330	315105-0165		4	WASHER BRB 8,4X16 RFR	
21M800	90459-6768		1	FAN 2BH1300-7AV15	

Pos	Part No	UN	Qty	Description	Page No

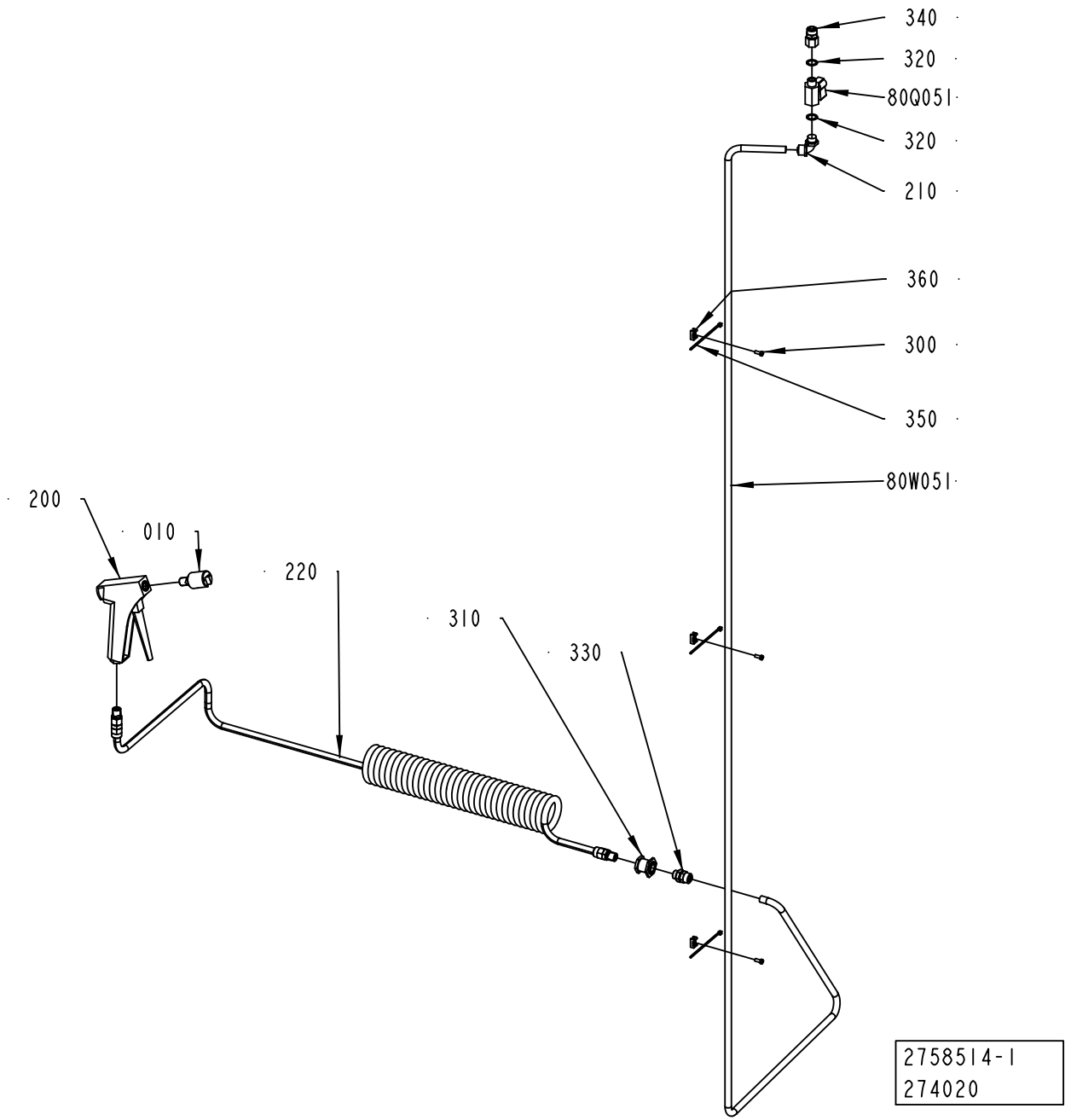
340
320
80Q051
320
210
360
300
350
80W051
200
010
220
310
330
2758514-1
274020

ECM: 274446 - 20060921
Group number: 2758514-0100
Assembly Drawing: 2758514-1_1_AA

Pos	Part No	UN	Qty	Description	Page No
-					
010	2506940-0000		1	NOZZLE	
200	90458-1483		1	SPRAY GUN WATER G1/4	
210	90224-0325		1	ELBOW 90 COUPL.,EXT.THREAD 10/8-G1/4"	
220	90458-1741		1	HOSE ASSEMBLY, CEJN 19 958 9669	
300	312125-0289		3	SCREW ISO 1207 M4X10 A4	
310	342767-0104		1	BULKHEAD LEAD-IN, G1/4	
320	315239-0110		2	NYLON WASHER G1/4, 1/4RRP	
330	342921-0132		1	STRAIGHT COUPLING, EXT.THREAD 10/8-G1/4	
340	342923-0132		1	STRAIGHT COUPL.,INT.THREADED 10/8-G1/4"	
350	352113-0101		3	CABLE TIE, BLACK 92X2,5 MM	
360	352113-0205		3	ANCHOR PLATES FOR STRIPS, TM2S8-C100	
80Q051	90187-0045		1	BALL VALVE, G1/4 CR PL	
80W051	315400-0009	MM	2800	TUBE PUN-H-10X1,5-SW	

Pos	Part No	UN	Qty	Description	Page No

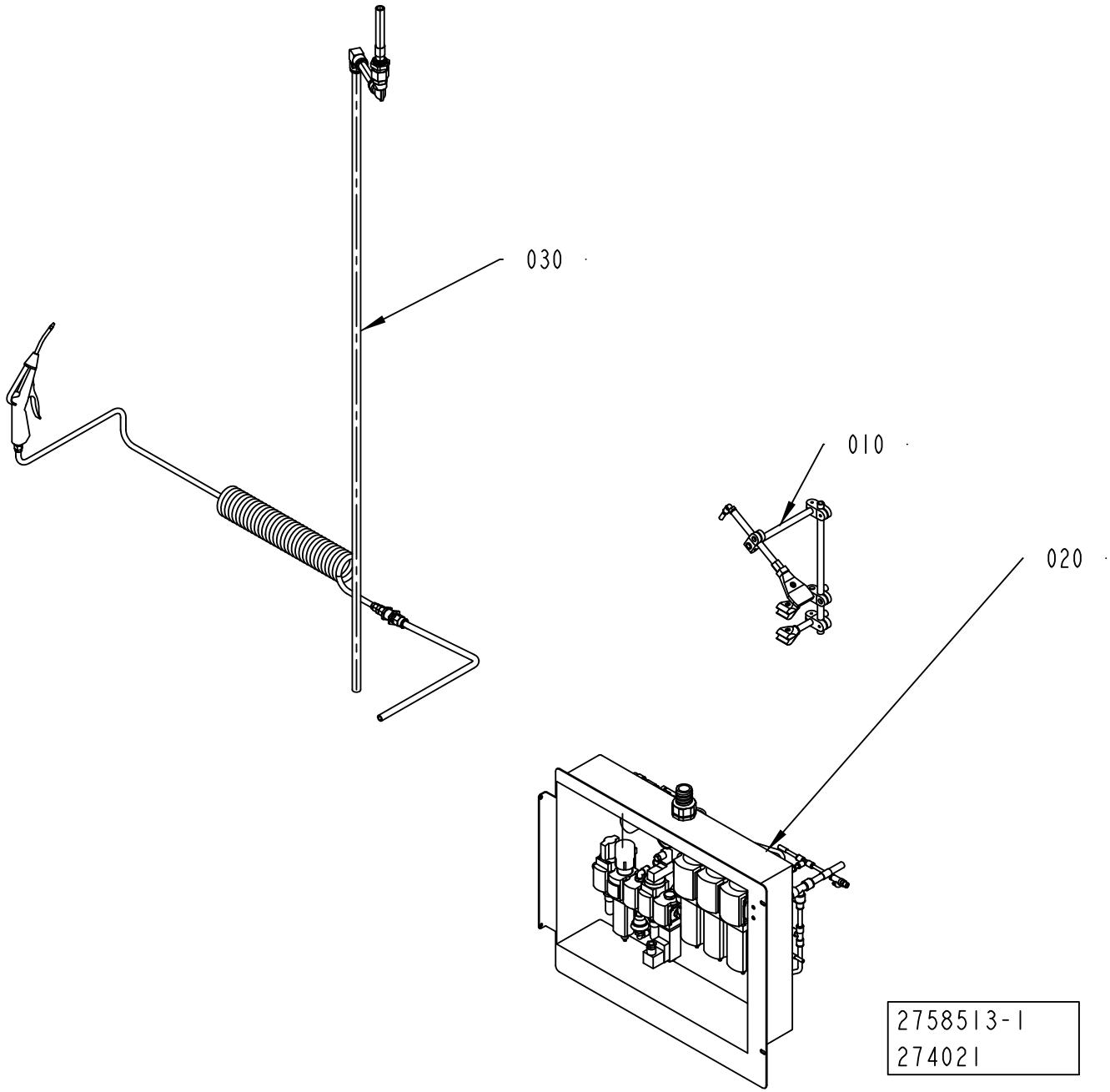
030
010
020
2758513-1
274021

ECM: 274471 - 20060921
Group number: 2758513-0100
Assembly Drawing: 2758513-1_1_AA

Pos	Part No	UN	Qty	Description	Page No
-					
010	2758512-0100		1	BLOWING SYSTEM	**3-53**
020	2838672-0100		1	PNEUMATIC PANEL	**3-55, 3-57, 3-59**
030	2838686-0100		1	AIR JET GUN	**3-65**

Pos	Part No	UN	Qty	Description	Page No

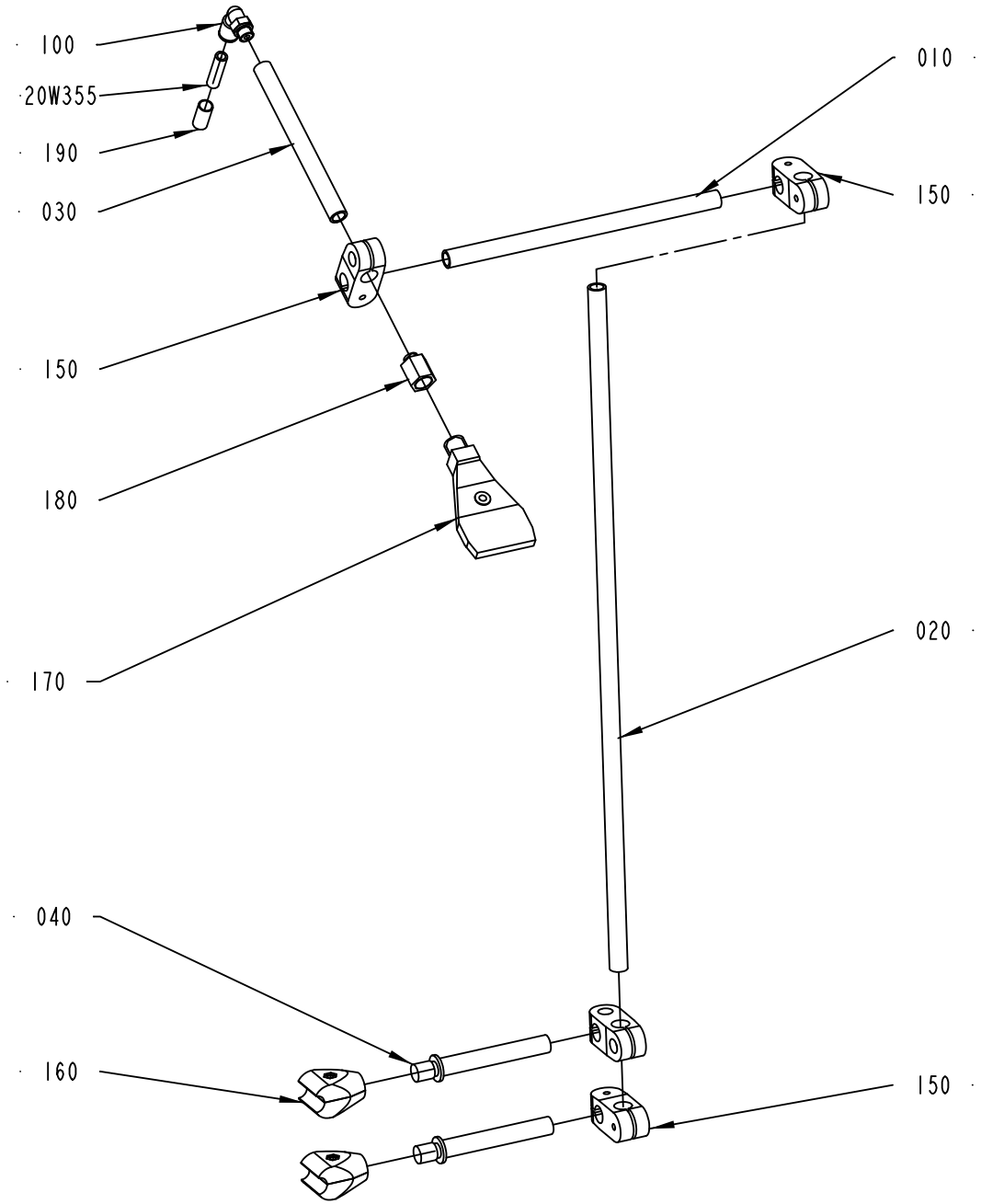
100
20W355
190
030
150
180
170
040
160
010
150
020
150
2758512-1
300393

ECM: 303456 - 20070517
Group number: 2758512-0100
Assembly Drawing: 2758512-1_1_AB

Pos	Part No	UN	Qty	Description	Page No
-					
010	2775403-0000		1	PIPE	
020	2775404-0000		1	PIPE	
030	2788176-0000		1	PIPE	
040	2838679-0000		2	SHAFT	
100	350002-0007		1	PUSH-IN L-FITTING QSL-F-G1/8-8	
150	90600-1001		4	CROSS CLAMP, 340/68385	
160	90458-0499		2	HOLDER 12 MM NO. 82 66861	
170	90424-0089		1	AIR NOZZLE, BSPT1/4, AAB727-1/4-15	
180	90330-0134		1	REDUCING NIPPLE, G1/8EXT-G1/4INT	
190	90459-7370		1	MARKING FOR PNEUM. TUBING, PRZ08	
20W355	315400-0004	MM	3000	TUBE PUN-H-8X1,25-BL	

Pos	Part No	UN	Qty	Description	Page No

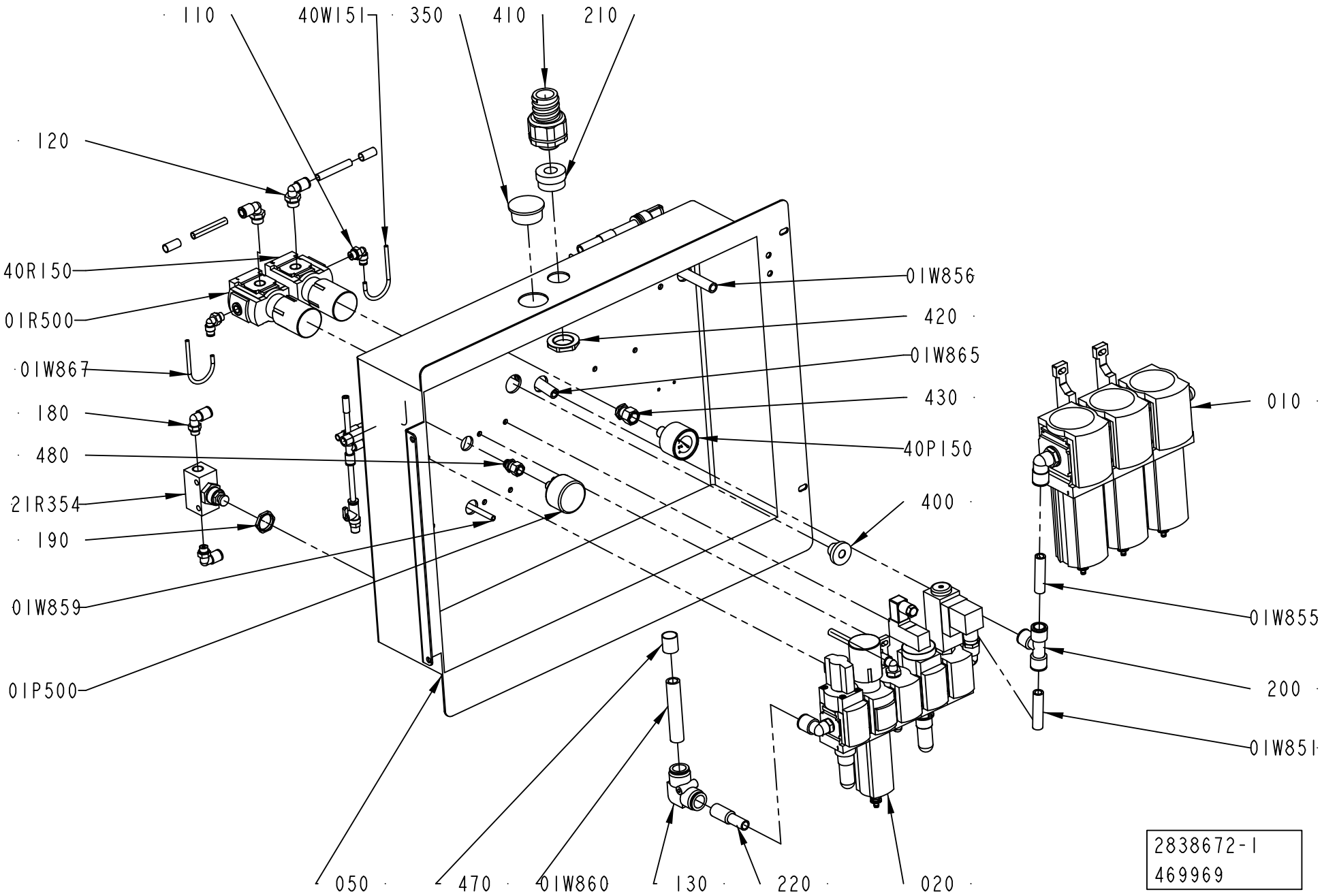
110
40W151
350
410
210
120
40R150
01R500
01W867
180
480
21R354
190
01W859
01P500
01W856
420
01W865
430
40P150
400
010
01W855
200
01W851
050
470
01W860
130
220
020
2838672-1
469969

ECM: 474784 - 20101109
Group number: 2838672-0100
Assembly Drawing: 2838672-1_1_AF

This list covers pages from 3-54 to 3-59

Pos	Part No	UN	Qty	Description	Page No
-					
010	2838673-0100		1	SERVICE UNIT	3-61
020	2838674-0100		1	SERVICE UNIT	3-63
050	2838676-0000		1	BRACKET	
100	2838701-0000		1	HOLDER	
110	350002-0005		3	PUSH-IN L-FITTING QSL-F-G1/8-4	
120	350002-0009		2	PUSH-IN L-FITTING QSL-F-G1/4-8	
130	90459-2553		1	PUSH-IN L-FITTING QSL 16	
140	350005-0002		3	PUSH-IN T-FITTING QST-F-6	
150	350006-0008		1	PUSH-IN FITTING QS-F-12H-8	
160	350005-0003		1	PUSH-IN T-FITTING QST-F-8	
170	350001-0011		2	PUSH-IN FITTING QS-F-G1/4-12	
180	350002-0007		4	PUSH-IN L-FITTING QSL-F-G1/8-8	
190	353250-0020		1	GLAND LOCK NUT, M20X1,5	
200	350005-0005		4	PUSH-IN T-FITTING QST-F-12	
210	353249-0015		1	INSERT, SINGLE HOLE, EK155 16	
220	90459-7107		1	SLEEVE QSH-16-12	
230	350001-0007		1	PUSH-IN FITTING QS-F-G1/8-8	
240	350002-0002		2	PUSH-IN L-FITTING QSL-F-M5-6	
250	350001-0006		2	PUSH-IN FITTING QS-F-G1/8-6	
260	350011-0002		1	PUSH-IN T-FITTING QST-F-8-6	
270	350004-0005		1	PUSH-IN L-FITTING QSL-F-12	
350	90261-0025		1	PLUG, BLIND, PLASTIC GPN300F28	
400	90015-0021		1	LEAD-IN, TET 10-14, E1458023	
410	90458-0432		1	GLAND FITTING, VK 22555YUL21	
420	90458-0324		1	NUT, M25X1,5	
430	90459-7333		1	PUSH-IN FITTING QSSF-1/4-4-B	
440	90459-7369		4	MARKING FOR PNEUM. TUBING, PRZ06	
450	90459-7370		5	MARKING FOR PNEUM. TUBING, PRZ08	
460	90459-7372		2	MARKING FOR PNEUM. TUBING, PRZ12	
470	90459-7373		1	MARKING FOR PNEUM. TUBING, PRZ16	
480	90459-7332		1	PUSH-IN FITTING QSSF-1/8-4-B	
490	90055-0222		2	ELBOW WITH TAILPIECE 6/6 MM	
500	90459-1825		1	ELBOW WITH TAILPIECE 12/12 MM	
510	90459-7368		1	MARKING FOR PNEUM. TUBING, PRZ04	
520	90600-1175		1	ELBOW WITH TAILPIECE 8/8 MM	
21K000	90458-1202		1	VALVES 2X3/2, CLOSED	
40K203	90458-1202		1	VALVES 2X3/2, CLOSED	
01P500	90459-3603		1	PRESSURE GAUGE, MAP-40-6-1/8-EN	
40P150	90459-7344		1	PRESSURE GAUGE, MA-40-6-R1/4-EN	
20Q051	90459-0290		1	NON-RETURN VALVE H-QS-6	
20Q052	90187-0191		1	BALL VALVE, R1/8 - HOSE 6 MM	
01R500	90459-5817		1	REGULATOR, MS4-LR-1/4-D6-A8-AS	
01R951	90328-0047		1	SILENCER G1/8"	
01R953	90328-0047		1	SILENCER G1/8"	
01R954	90328-0029		1	SILENCER M5	
01R955	90328-0029		1	SILENCER M5	
20R352	90328-0047		1	SILENCER G1/8"	
20R353	90328-0047		1	SILENCER G1/8"	
20R354	90328-0029		1	SILENCER M5	
20R355	90328-0029		1	SILENCER M5	
21R054	90459-3604		1	FLOW CONTROL VALVE, GR-QS-6	
21R354	90235-0748		1	THROTTLE CHECK VALVE, GRA-1/4-B	
40R150	90459-5817		1	REGULATOR, MS4-LR-1/4-D6-A8-AS	
01U950	90459-2591		1	SINGLE VALVE SUB-BASE CDSV5.0-AS-1/8	
20U350	90459-2591		1	SINGLE VALVE SUB-BASE CDSV5.0-AS-1/8	
01W851	315400-0010	MM	300	TUBE PUN-H-12X2-BL	
01W853	315400-0001	MM	300	TUBE PUN-H-6X1-BL	
01W854	315400-0010	MM	300	TUBE PUN-H-12X2-BL	
01W855	315400-0010	MM	300	TUBE PUN-H-12X2-BL	
01W856	315400-0010	MM	300	TUBE PUN-H-12X2-BL	
01W857	315400-0004	MM	300	TUBE PUN-H-8X1,25-BL	
01W858	315400-0010	MM	300	TUBE PUN-H-12X2-BL	
01W859	315400-0001	MM	300	TUBE PUN-H-6X1-BL	
01W860	315400-0013	MM	300	TUBE PUN-H-16-2,5-BL	
01W861	315400-0004	MM	300	TUBE PUN-H-8X1,25-BL	
01W862	315400-0010	MM	300	TUBE PUN-H-12X2-BL	
01W863	315400-0010	MM	300	TUBE PUN-H-12X2-BL	
01W864	315400-0010	MM	300	TUBE PUN-H-12X2-BL	
01W865	315400-0010	MM	300	TUBE PUN-H-12X2-BL	
01W867	315400-0016	MM	300	TUBE PUN-H-4X0,75-BL	
01W868	315400-0001	MM	300	TUBE PUN-H-6X1-BL	
01W875	315400-0004	MM	300	TUBE PUN-H-8X1,25-BL	
01W954	315400-0001	MM	300	TUBE PUN-H-6X1-BL	
01W956	315400-0001	MM	300	TUBE PUN-H-6X1-BL	
20W050	315400-0001	MM	300	TUBE PUN-H-6X1-BL	
20W051	315400-0001	MM	300	TUBE PUN-H-6X1-BL	
20W052	315400-0001	MM	300	TUBE PUN-H-6X1-BL	
20W053	315400-0001	MM	300	TUBE PUN-H-6X1-BL	
20W351	315400-0004	MM	300	TUBE PUN-H-8X1,25-BL	
20W354	315400-0004	MM	300	TUBE PUN-H-8X1,25-BL	
20W355	315400-0004	MM	300	TUBE PUN-H-8X1,25-BL	
20W356	315400-0001	MM	300	TUBE PUN-H-6X1-BL	
21W051	315400-0004	MM	300	TUBE PUN-H-8X1,25-BL	

Machine Type | Group Description | Used-In | Group Number | Page No

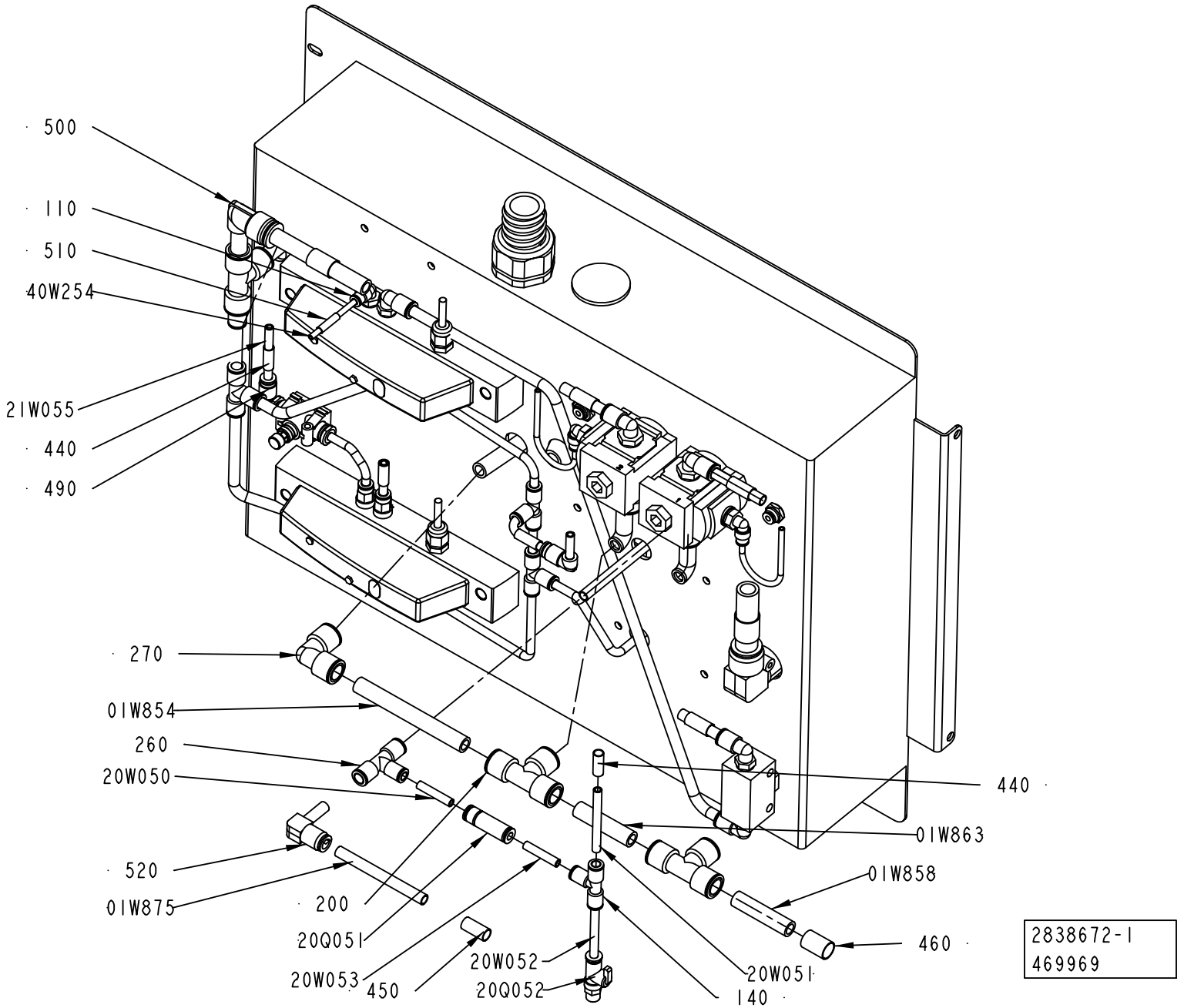
500
110
510
40W254
21W055
440
490
270
01W854
260
20W050
520
01W875
200
20Q051
20W053
450
20W052
20Q052
140
20W051
460
01W858
01W863
440
2838672-1
469969

Pos	Part No	UN	Qty	Description	Page No
- (Cont'd)					
21W054	315400-0001	MM	300	TUBE PUN-H-6X1-BL	
21W055	315400-0001	MM	300	TUBE PUN-H-6X1-BL	
40W150	315400-0010	MM	300	TUBE PUN-H-12X2-BL	
40W151	315400-0016	MM	300	TUBE PUN-H-4X0,75-BL	
40W152	315400-0004	MM	300	TUBE PUN-H-8X1,25-BL	
40W254	315400-0016	MM	300	TUBE PUN-H-4X0,75-BL	

Pos	Part No	UN	Qty	Description	Page No

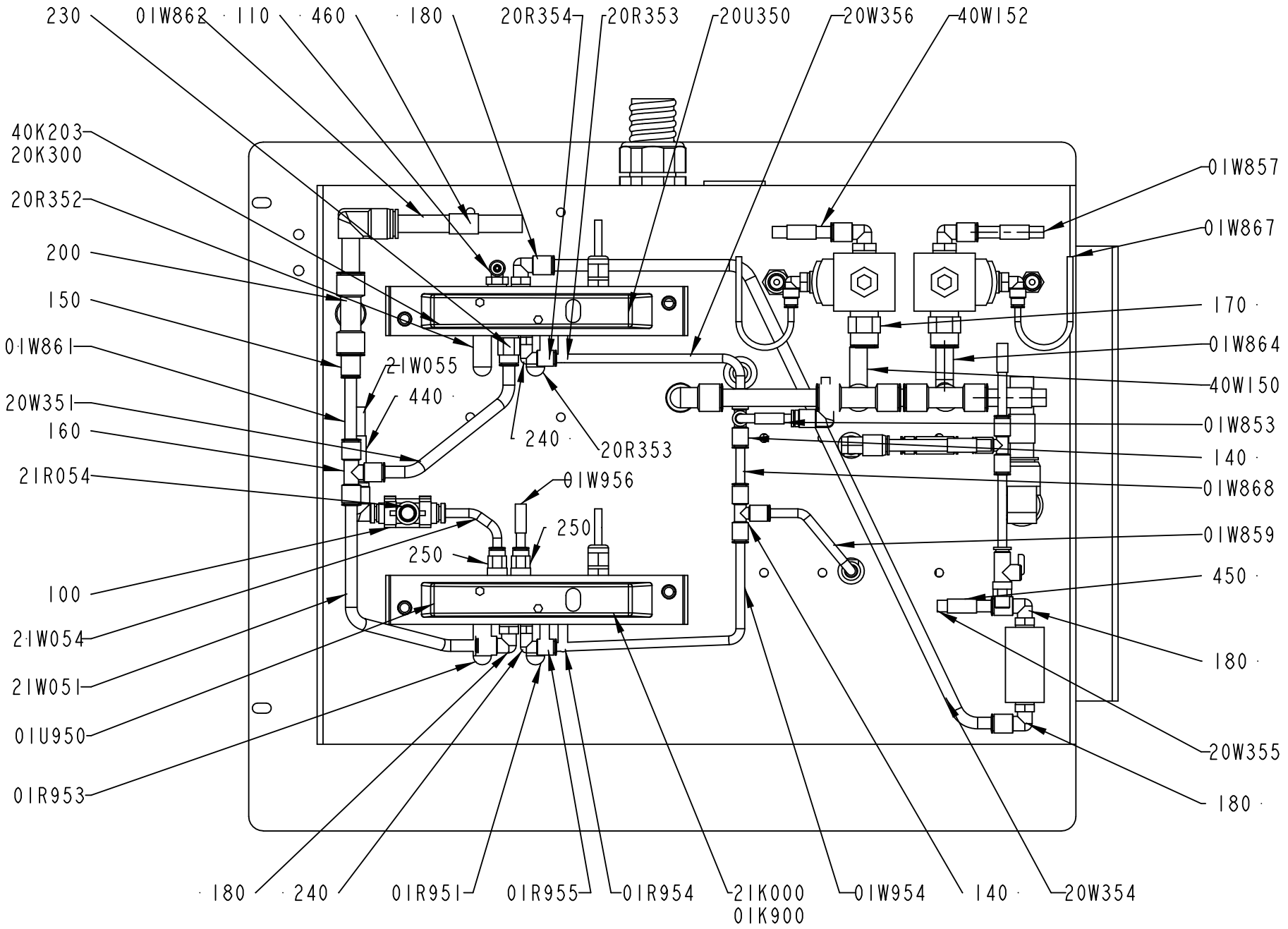

2838672-1
469969

Pos	Part No	UN	Qty	Description	Page No
SEE PREVIOUS LISTS PAGES: 3-55, 3-57.					

Pos	Part No	UN	Qty	Description	Page No

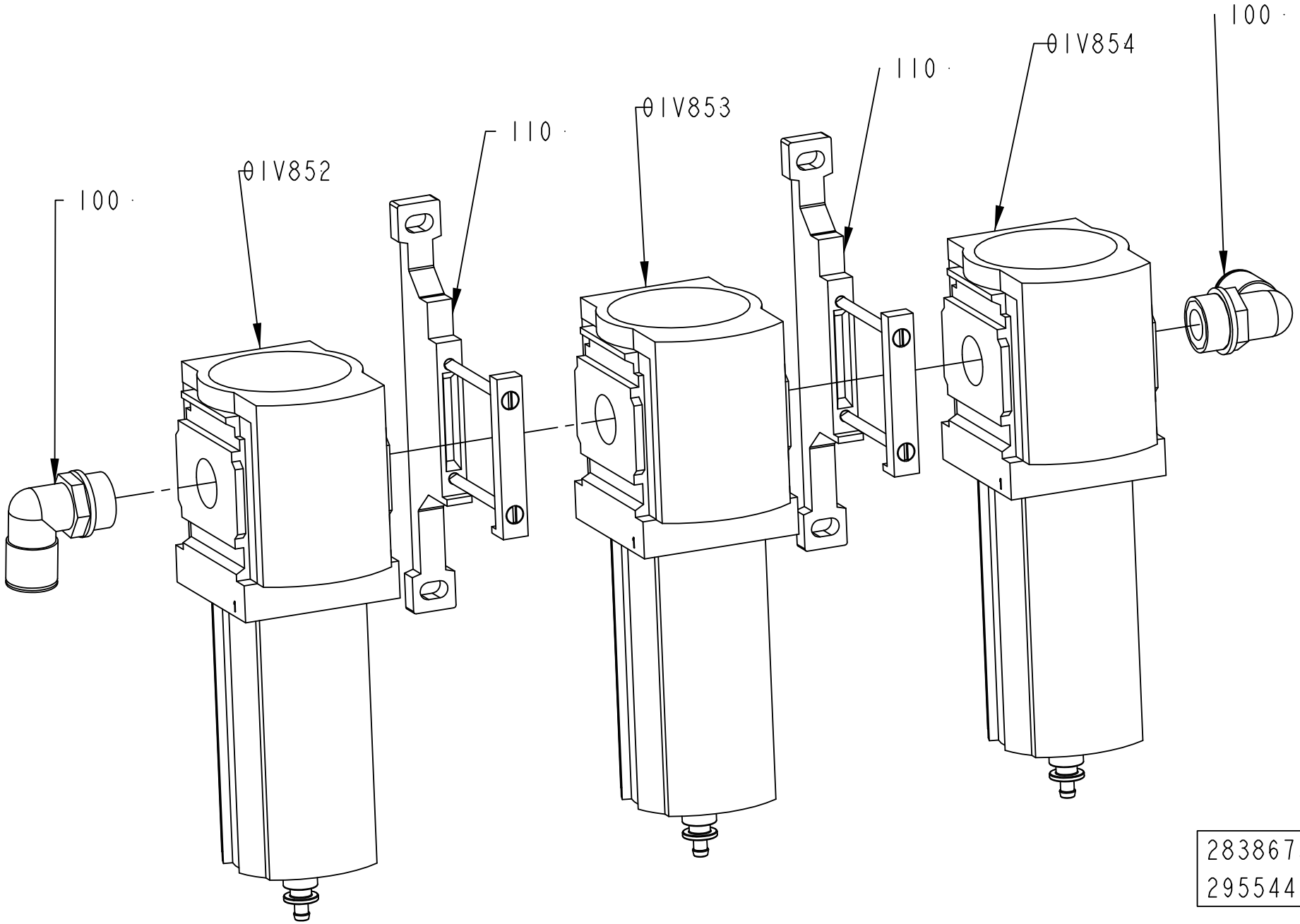
100
01V852
110
01V853
110
01V854
100
2838673-1
295544

ECM: 303486 - 20070517
Group number: 2838673-0100
Assembly Drawing: 2838673-1_1_AB

Pos	Part No	UN	Qty	Description	Page No
-					
100	350002-0016		2	PUSH-IN L-FITTING QSL-F-G1/2-12	
110	90459-1858		2	BRACKET, MS6-WP	
01V852	90459-2773		1	FILTER, MS6-LFM-1/2-BRV	
	90459-3812		*1*	*FILTER CARTRIDGE, MS6-LFM-B*	
01V853	90459-2772		1	FILTER, MS6-LFM-1/2-ARV	
	90459-3811		*1*	*FILTER CARTRIDGE MS6-LFM-A*	
01V854	90459-2771		1	FILTER, MS6-LFX-1/2-R	
	90459-3810		*1*	*FILTER CARTRIDGE, MS6-LFX*	

Pos	Part No	UN	Qty	Description	Page No

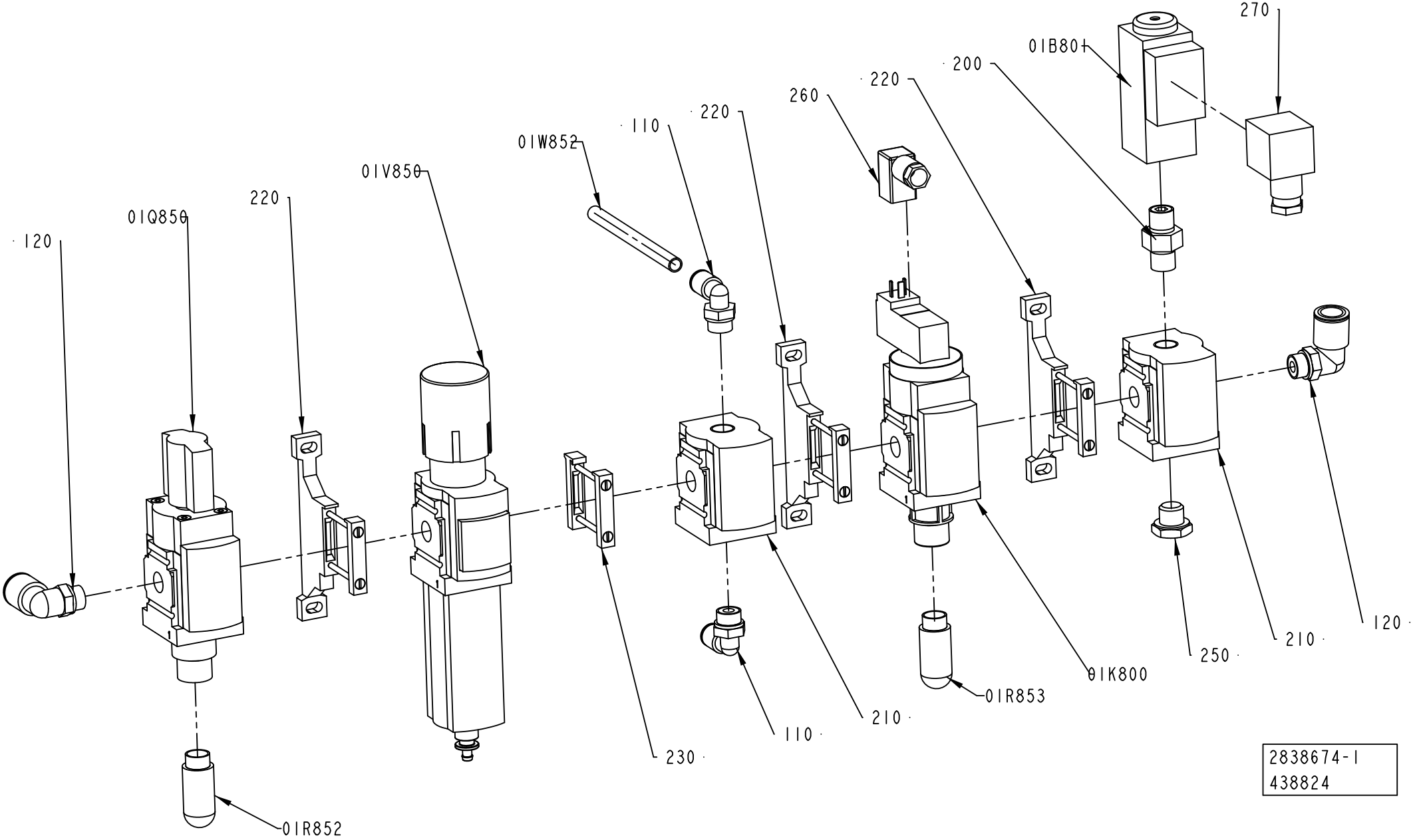
270
01B801
200
220
260
220
110
01W852
01V850
220
01Q850
120
01K800
01R853
250
210
120
110
210
230
01R852
2838674-1
438824

ECM: 438824 - 20100701
Group number: 2838674-0100
Assembly Drawing: 2838674-1_1_AD

Pos	Part No	UN	Qty	Description	Page No
-					
110	350002-0009		2	PUSH-IN L-FITTING QSL-F-G1/4-8	
120	350002-0011		2	PUSH-IN L-FITTING QSL-F-G1/4-12	
200	90224-0372		1	NIPPLE, EXT.THREAD, HEXAGON, R1/4-R1/4	
210	90459-2245		2	DISTRIBUTOR, MS4-FRM-1/4	
220	90459-2247		3	BRACKET, MS4-WP	
230	90459-2248		1	BRACKET, MS4-MV	
240	90224-0372		1	NIPPLE, EXT.THREAD, HEXAGON, R1/4-R1/4	
250	90330-0026		1	PLUG, EXT. G-THREAD, G1/4	
260	90458-2837		1	CONNECTING CABLE KMEB-1-24-5-LED	
270	90110-0095		1	CONNECTOR, PLUG SOCKET, MSSD-C-4P	
01B801	90459-6426		1	PRESSURE GUARD PEV-1/4-B-OD	
01K800	90459-2243		1	SHUT OFF VALVE, MS4-EE-1/4-10V24	
01Q850	90459-2337		1	SHUT OFF VALVE, MS4-EM1-1/4	
01R852	90328-0026		1	SILENCER G1/4"	
01R853	90328-0026		1	SILENCER G1/4"	
01V850	90459-2339		1	FILTER REGULATOR, MS4-LFR-1/4-D7-ERV-AS	
	90459-3814		*1*	*FILTER CARTRIDGE, MS4-LFP-E*	
01W852	315400-0004	MM	1000	TUBE PUN-H-8X1,25-BL	

Pos	Part No	UN	Qty	Description	Page No

Machine Type | Group Description | Used-In | Group Number | Page No

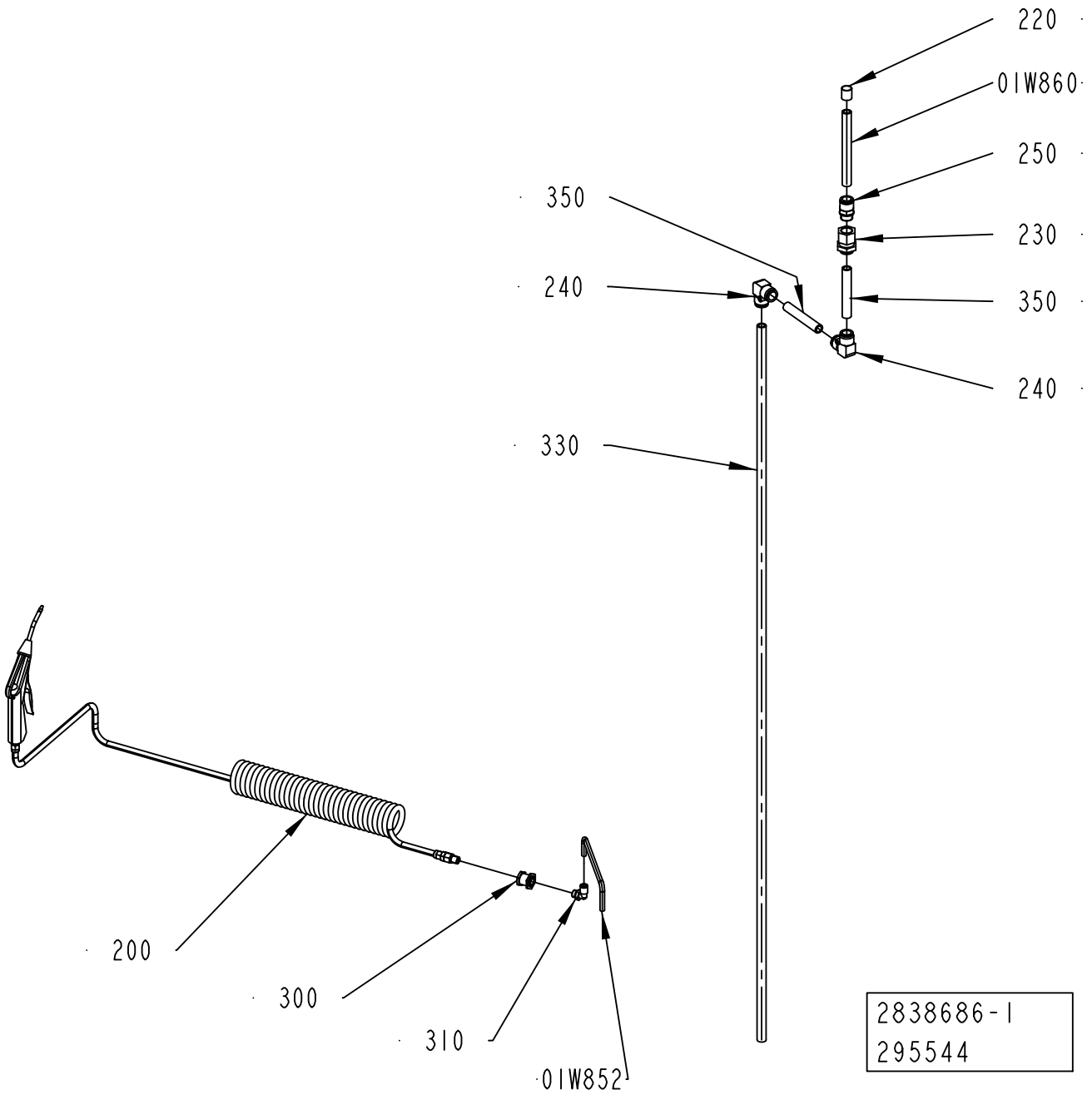
220
01W860
250
350
230
240
350
240
330
200
300
310
01W852
2838686-1
295544

ECM: 303489 - 20070517
Group number: 2838686-0100
Assembly Drawing: 2838686-1_1_AB

Pos	Part No	UN	Qty	Description	Page No
-					
200	90458-1740		1	AIR GUN ASSEMBLY, CEJN 199589668	
210	90459-1826		1	ELBOW PIPE JOINT, EXT.THREAD,D=16MM-G1/2	
220	90459-7373		1	MARKING FOR PNEUM. TUBING, PRZ16	
230	90459-0864		1	BULKHEAD CONNECTOR, 12 MM/M27X1,5	
240	90459-2553		2	PUSH-IN L-FITTING QSL 16	
250	90459-2215		1	STRAIGHT COUPLING, D=16 MM - G1/2"	
300	342767-0104		1	BULKHEAD LEAD-IN, G1/4	
310	350002-0009		1	PUSH-IN L-FITTING QSL-F-G1/4-8	
330	315400-0013	MM	2000	TUBE PUN-H-16-2,5-BL	
340	315400-0013	MM	200	TUBE PUN-H-16-2,5-BL	
350	315400-0013	MM	500	TUBE PUN-H-16-2,5-BL	
01W852	315400-0004	MM	1800	TUBE PUN-H-8X1,25-BL	
01W860	315400-0013	MM	500	TUBE PUN-H-16-2,5-BL	

Pos	Part No	UN	Qty	Description	Page No

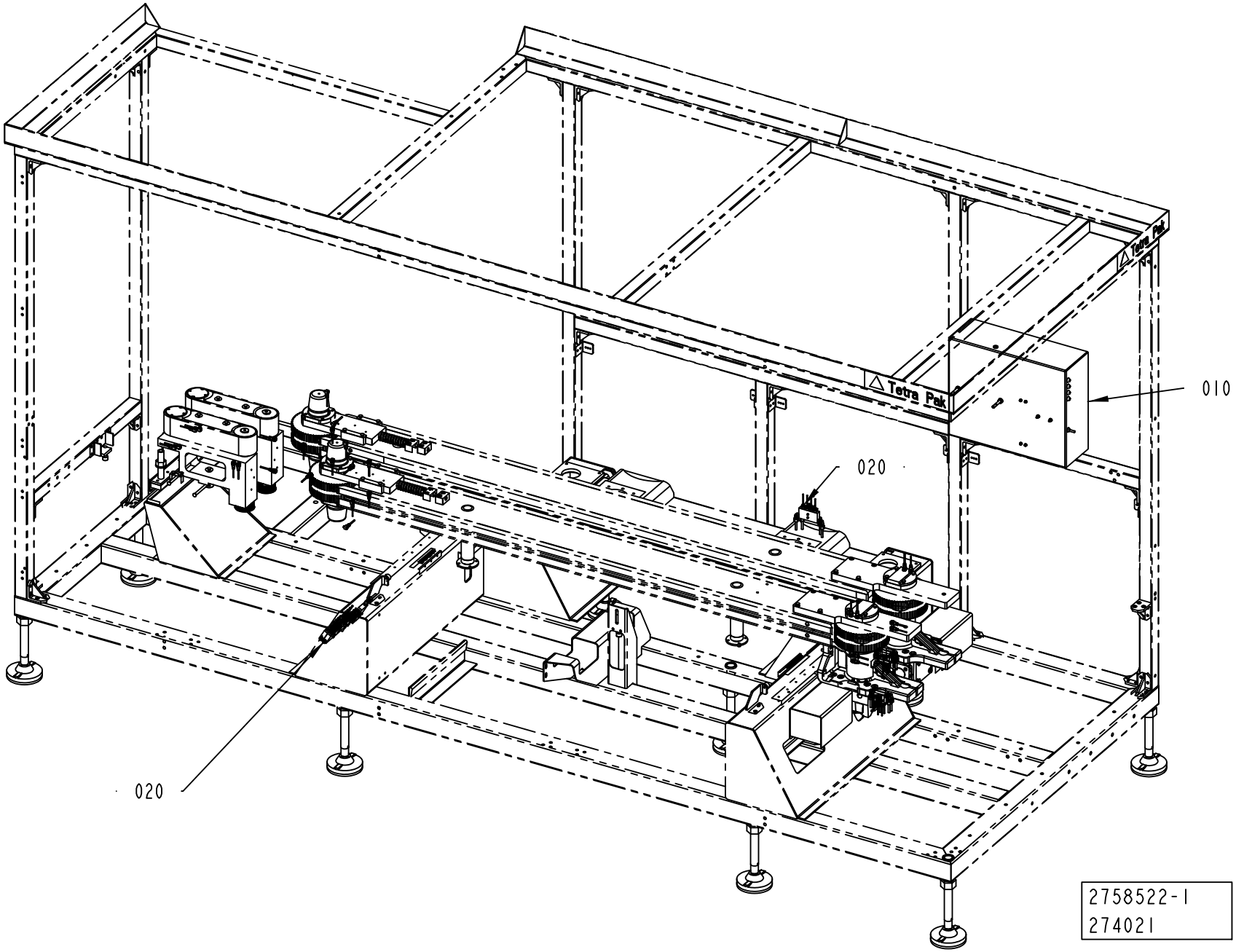
010
020
020
2758522-1
274021

ECM: 274475 - 20060921
Group number: 2758522-0100
Assembly Drawing: 2758522-1_1_AA

Pos	Part No	UN	Qty	Description	Page No
-					
010	2838677-0100		1	CENTRAL LUBRICATION	**3-69**
020	2769763-0100		1	OIL PIPE	**3-71, 3-73, 3-75**

Pos	Part No	UN	Qty	Description	Page No

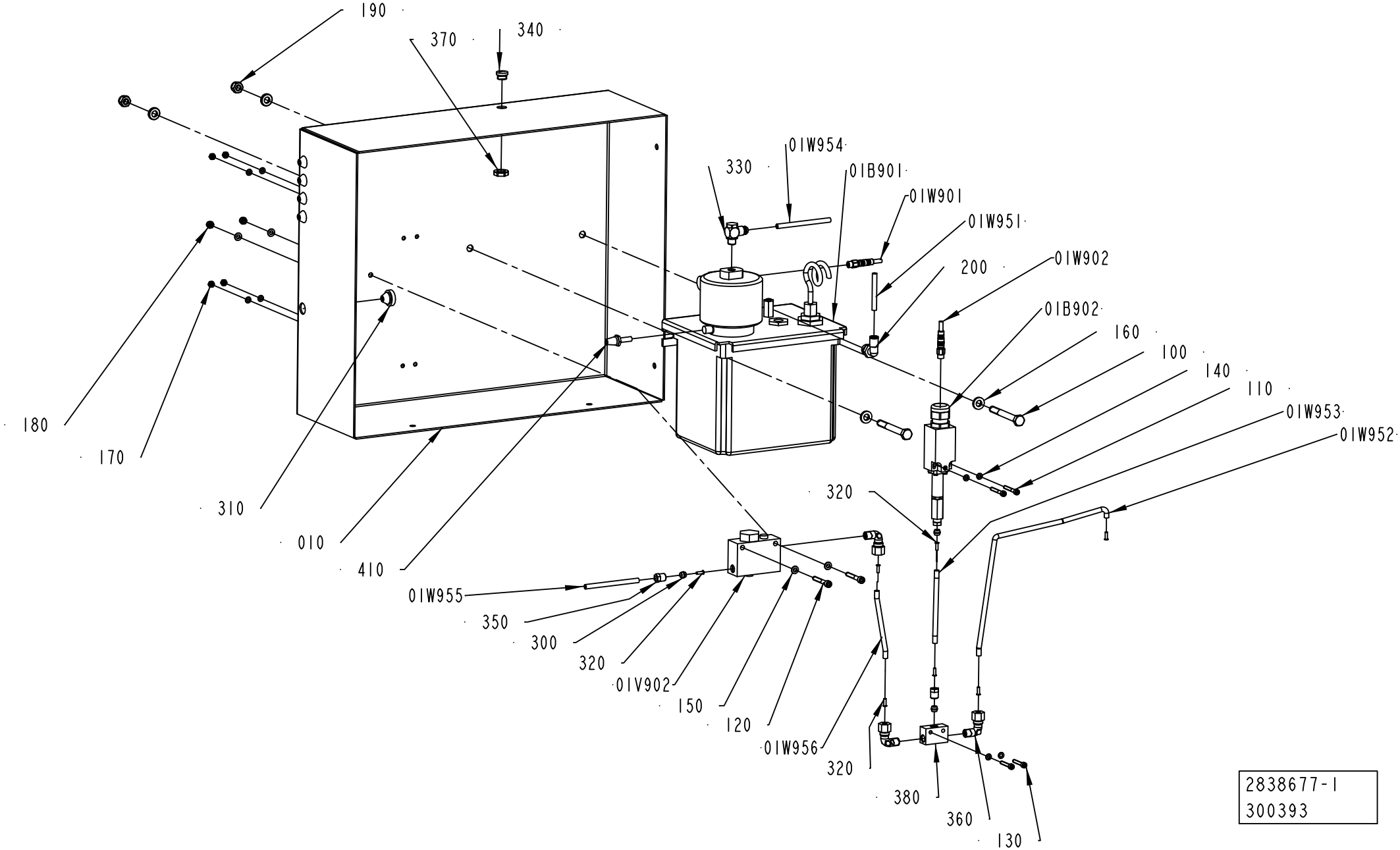
190
370
340
01W954
330
01B901
01W901
01W951
200
01W902
01B902
160
100
140
110
01W953
01W952
180
170
310
010
410
320
01W955
350
300
320
01V902
150
120
01W956
320
380
360
130
2838677-1
300393

ECM: 303488 - 20070517
Group number: 2838677-0100
Assembly Drawing: 2838677-1_1_AB

Pos	Part No	UN	Qty	Description	Page No
-					
010	2838678-0000		1	BRACKET	
100	312105-0465		2	SCREW M6S ISO 4014 M8X70 A480	
110	312115-0299		2	SCREW ISO4762 M4X30 A4 80	
120	312115-0337		2	SCREW ISO4762 M5X35 A4 80	
130	312115-0297		2	SCREW ISO4762 M4X25 A4 80	
140	315105-0136		8	WASHER BRB 4,3X8 RFR	
150	315105-0146		4	WASHER BRB 5,3X10 RFR	
160	315115-0165		4	WASHER PLAIN, TBRB 8,4/16 H=3	
170	312605-0312		4	HEXAGON NUT, M6M M4 A280	
180	312812-0314		2	HEXAGON NUT, NY-LOCK M5 A480	
190	312812-0318		2	HEXAGON NUT, NY-LOCK M8 A480	
200	350002-0008		1	PUSH-IN L-FITTING QSL-F-G1/4-6	
300	90028-0022		3	CONE TUBE 6 MM	
310	90015-0020		5	LEAD-IN, TET5-7, E-1458016	
320	90134-0030		1	SLEEVE FOR PLASTIC TUBE	
330	90459-5522		1	CONN. BANJO, COR8PB6M10	
340	90458-1306		1	BLIND PLUG CIRCULAR, M12X1,5 514GFK/212	
350	90134-0055		2	BUSHING/NUT INLET/OUTLET 6 MM	
360	90030-0200		3	CONN. ELBOW, WE06LM71	
370	90458-0321		1	NUT, M12X1,5	
380	90032-0043		1	DISTRIBUTION BLOCK 3 WAYS	
390	90134-0030		6	SLEEVE FOR PLASTIC TUBE	
400	90296-0075	L	4	SHELL OMALA OIL 320 (1PC=20L)	
410	90328-0017		1	SILENCER, D=6 MM	
01B901	90459-5481		1	OIL PUMP 3L, 10P-P3	
	90274-0052		*1*	*LEVEL GUARD, 10VA/250VDC/0,5A*	
	90048-0450		*1*	*SPARE PARTS KIT*	
01B902	90274-0084		1	PRESSURE GUARD, 1800 KPA	
01V902	90415-0030		1	OIL FILTER PN 100 ORD.NO 2.77 10 70.1	
	90415-0326		*1*	*FILTER INSERT*	
01W901	351401-0050		1	ACTU/SENS CABLE RSMVN 3-PRKMV 3-06/5,0M	
01W902	351401-0050		1	ACTU/SENS CABLE RSMVN 3-PRKMV 3-06/5,0M	
01W951	90166-0132	MM	1000	TUBE 6 MM PA,TRANSP.	
01W952	90166-0108	MM	200	TUBE 6 MM PA TRANSP.	
01W953	90166-0108	MM	200	TUBE 6 MM PA TRANSP.	
01W954	315400-0001	MM	1000	TUBE PUN-H-6X1-BL	
01W955	90166-0108	MM	1000	TUBE 6 MM PA TRANSP.	
01W956	90166-0108	MM	200	TUBE 6 MM PA TRANSP.	

Pos	Part No	UN	Qty	Description	Page No

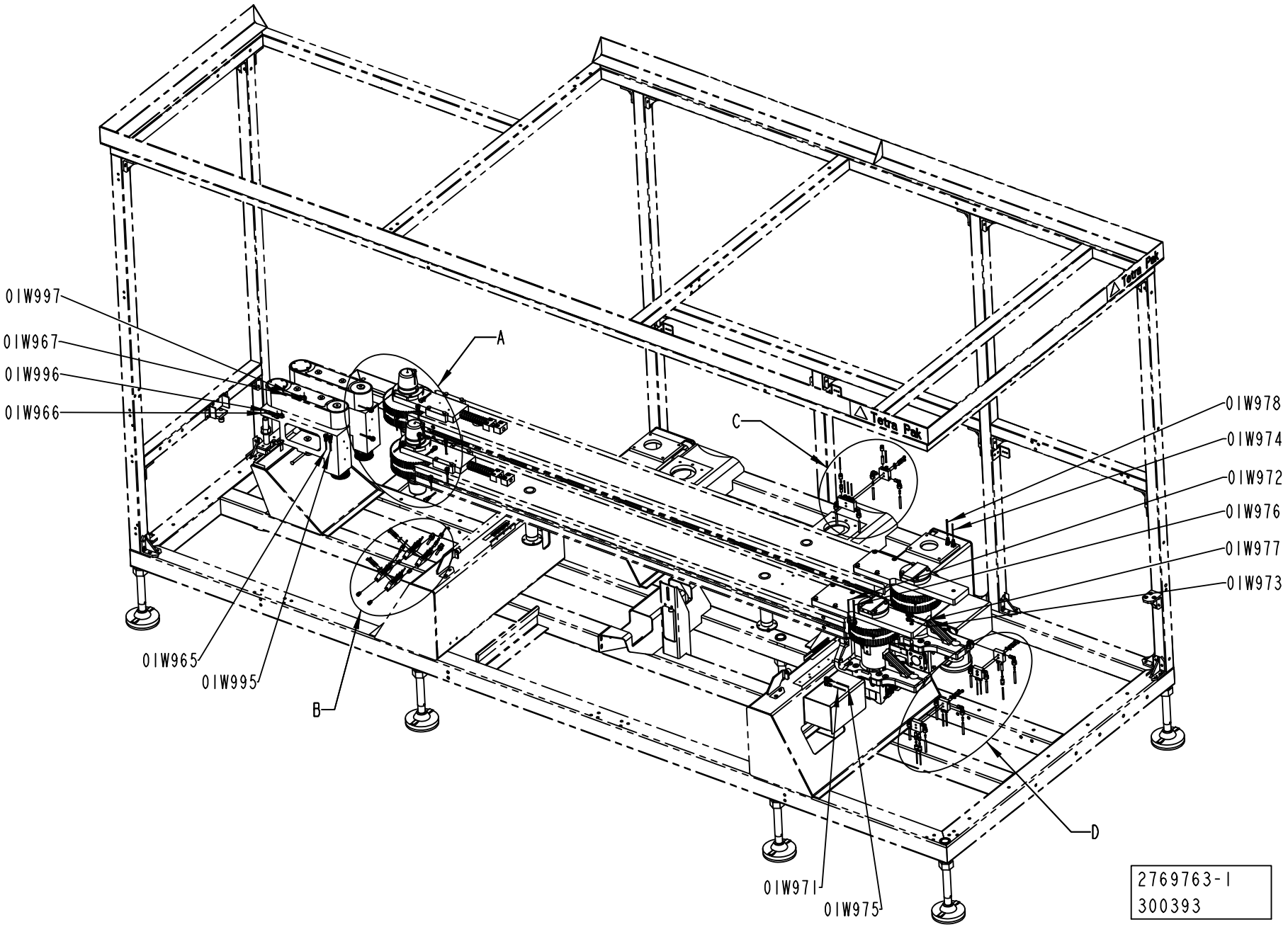
0IW997
0IW967
0IW996
0IW966
0IW965
0IW995
A
B
C
D
0IW978
0IW974
0IW972
0IW976
0IW977
0IW973
0IW971
0IW975
2769763-1
300393

ECM: 303482 - 20070517
Group number: 2769763-0100
Assembly Drawing: 2769763-1_1_AB

This list covers pages from 3-70 to 3-75

Pos	Part No	UN	Qty	Description	Page No
CAP 30/FLEX (See drawing on pages: 3-70, 3-72, 3-74)					
110	312105-0337		10	SCREW M6S ISO 4014 M5X35 A480	
120	315105-0146		10	WASHER BRB 5,3X10 RFR	
200	90134-0058		12	CONNECTION	
210	90134-0068		16	CONNECTION	
220	90134-0039		17	BUSHING VALVE CONNECTION 2,5 MM	
230	90028-0020		16	CONE TUBE 2,5MM	
240	90134-0040		13	BUSHING VALVE CONNECTION 4 MM	
250	90028-0021		13	CONE TUBE 4 MM	
260	90134-0054		2	BLOCK CONNECTION M10X1	
290	90030-0200		14	CONN. ELBOW, WE06LM71	
320	90134-0051		13	SPACING COLLAR DOSING BLOCK	
330	90092-0054		13	METERING VALVE 50 MM3	
340	90134-0031		29	SLEEVE FOR PLASTIC TUBE	
Common Parts					
130	342706-0130		7	STIFFNER SLEEVE FOR HOSE 6X1	
270	90134-0030		7	SLEEVE FOR PLASTIC TUBE	
280	90092-0052		3	METERING VALVE 10 MM3	
300	90087-0019		2	PLUG M10X1 STAINLESS	
310	90134-0052		1	PLUG DOSING BLOCK	
01U951	90032-0038		1	BLOCK 2 WAYS	
01U952	90032-0038		1	BLOCK 2 WAYS	
01U953	90032-0038		1	BLOCK 2 WAYS	
01U954	90032-0039		1	BLOCK 4 WAYS	
01U955	90032-0039		1	BLOCK 4 WAYS	
01U956	90032-0039		1	BLOCK 4 WAYS	
01U957	90032-0039		1	BLOCK 4 WAYS	
01U958	90032-0039		1	BLOCK 4 WAYS	
01U959	90032-0038		1	BLOCK 2 WAYS	
01U960	90032-0038		1	BLOCK 2 WAYS	
01W951	90166-0132	MM	3000	TUBE 6 MM PA,TRANSP.	
01W955	90166-0108	MM	3000	TUBE 6 MM PA TRANSP.	
01W956	90166-0108	MM	3000	TUBE 6 MM PA TRANSP.	
01W958	90166-0108	MM	3000	TUBE 6 MM PA TRANSP.	
01W960	90166-0108	MM	3000	TUBE 6 MM PA TRANSP.	
01W961	90166-0108	MM	3000	TUBE 6 MM PA TRANSP.	
01W962	90166-0132	MM	3000	TUBE 6 MM PA,TRANSP.	
01W963	90166-0109	MM	3000	TUBE 4 MM PA TRANSP.	
01W964	90166-0109	MM	3000	TUBE 4 MM PA TRANSP.	
01W965	90166-0109	MM	3000	TUBE 4 MM PA TRANSP.	
01W966	90166-0109	MM	3000	TUBE 4 MM PA TRANSP.	
01W967	90166-0109	MM	3000	TUBE 4 MM PA TRANSP.	
01W968	90166-0109	MM	3000	TUBE 4 MM PA TRANSP.	
01W969	90166-0143	MM	3000	TUBE 2,5 MM PA TRANSP.	
01W971	90166-0143	MM	3000	TUBE 2,5 MM PA TRANSP.	
01W972	90166-0143	MM	3000	TUBE 2,5 MM PA TRANSP.	
01W973	90166-0143	MM	3000	TUBE 2,5 MM PA TRANSP.	
01W974	90166-0143	MM	3000	TUBE 2,5 MM PA TRANSP.	
01W975	90166-0109	MM	3000	TUBE 4 MM PA TRANSP.	
01W976	90166-0109	MM	3000	TUBE 4 MM PA TRANSP.	
01W977	90166-0132	MM	3000	TUBE 6 MM PA,TRANSP.	
01W978	90166-0109	MM	3000	TUBE 4 MM PA TRANSP.	
01W979	90166-0109	MM	3000	TUBE 4 MM PA TRANSP.	
01W980	90166-0143	MM	3000	TUBE 2,5 MM PA TRANSP.	
01W981	90166-0143	MM	3000	TUBE 2,5 MM PA TRANSP.	
01W982	90166-0143	MM	3000	TUBE 2,5 MM PA TRANSP.	
01W983	90166-0143	MM	3000	TUBE 2,5 MM PA TRANSP.	
01W984	90166-0109	MM	3000	TUBE 4 MM PA TRANSP.	
01W990	90166-0143	MM	3000	TUBE 2,5 MM PA TRANSP.	
01W991	90166-0143	MM	3000	TUBE 2,5 MM PA TRANSP.	
01W992	90166-0143	MM	3000	TUBE 2,5 MM PA TRANSP.	
01W993	90166-0143	MM	3000	TUBE 2,5 MM PA TRANSP.	
01W994	90166-0143	MM	3000	TUBE 2,5 MM PA TRANSP.	
01W995	90166-0143	MM	3000	TUBE 2,5 MM PA TRANSP.	
01W996	90166-0143	MM	3000	TUBE 2,5 MM PA TRANSP.	
01W997	90166-0143	MM	3000	TUBE 2,5 MM PA TRANSP.	
01W998	90166-0109	MM	3000	TUBE 4 MM PA TRANSP.	

Machine Type | Group Description | Used-In | Group Number | Page No

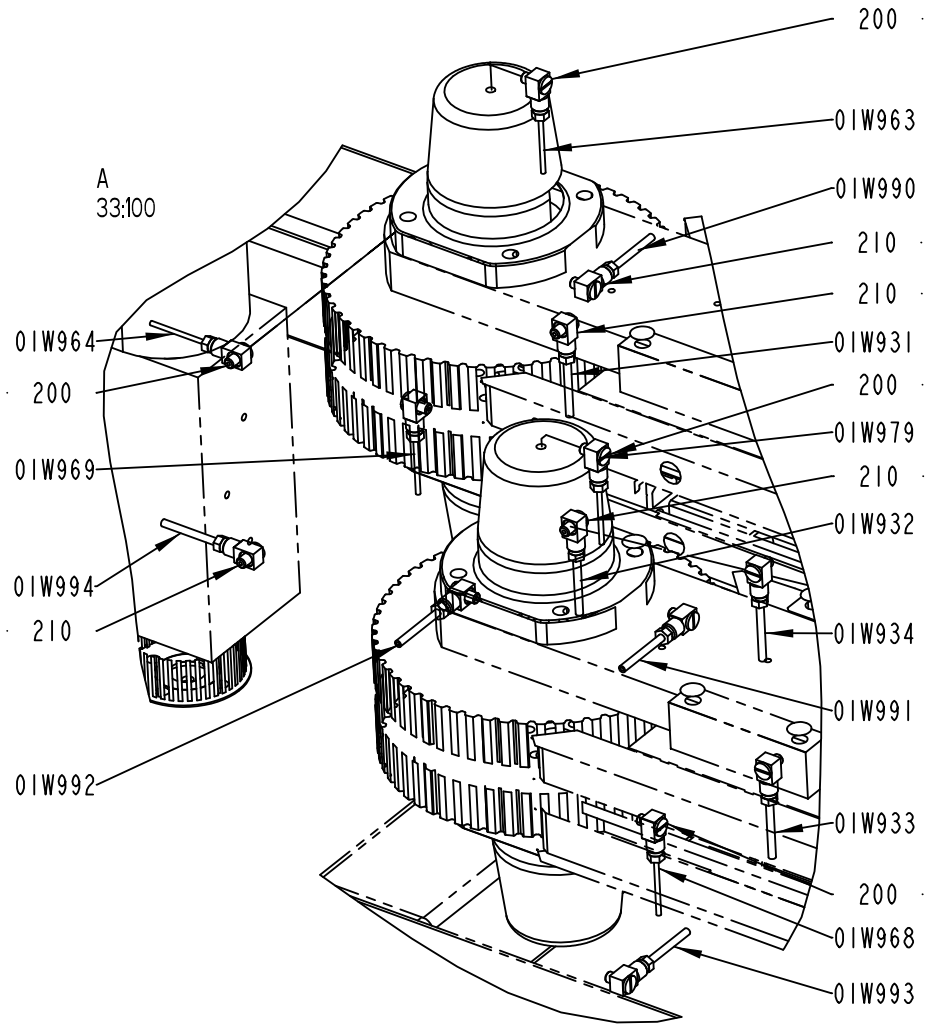
A
33:100
200
01W963
01W990
210
210
01W931
200
01W979
210
01W932
01W934
01W991
01W933
200
01W968
01W993
01W964
200
01W969
01W994
210
01W992

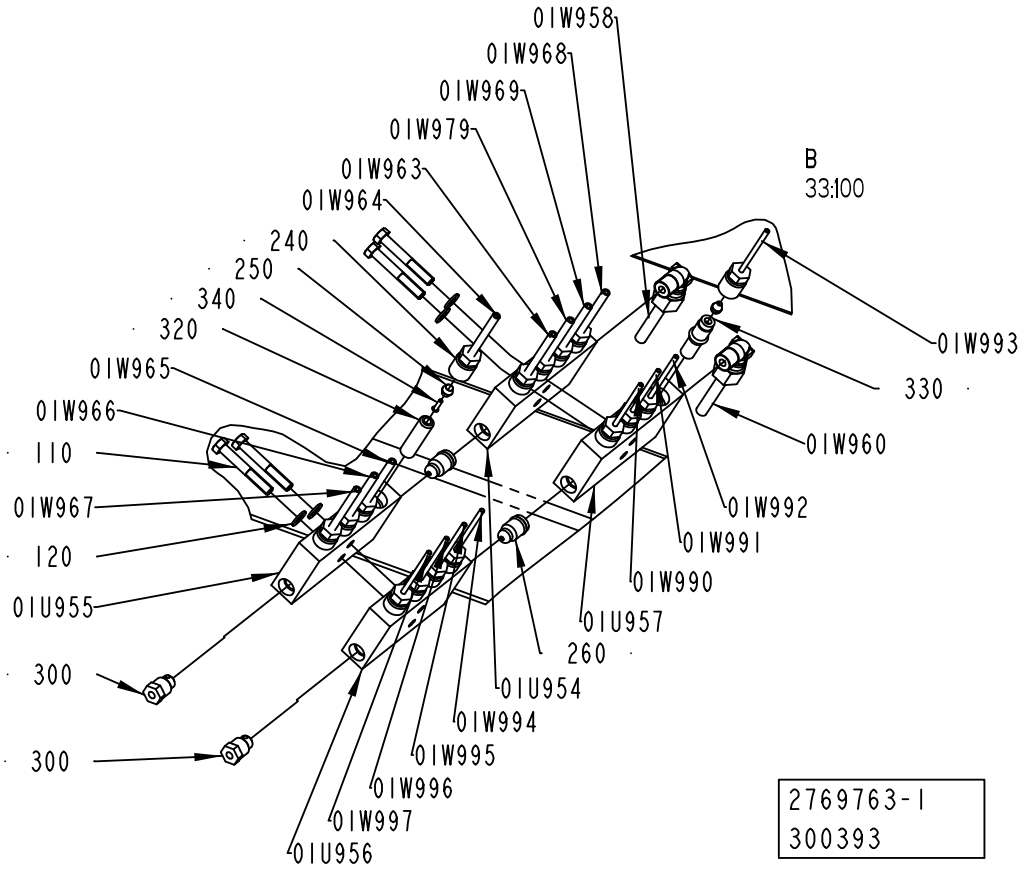
01W958
01W968
01W969
01W979
01W963
01W964
240
250
340
320
01W965
01W966
110
01W967
120
01U955
300
300
B
33:100
01W993
330
01W960
01W992
01W991
01W990
01U957
260
01U954
01W994
01W995
01W996
01W997
01U956
2769763-1
300393

ECM: 303482 - 20070517
Group number: 2769763-0100
Assembly Drawing: 2769763-1_2_AB

This list covers pages from 3-70 to 3-75

Pos	Part No	UN	Qty	Description	Page No
CAP 30/FLEX (See drawing on pages: 3-70, 3-72, 3-74)					
110	312105-0337		10	SCREW M6S ISO 4014 M5X35 A480	
120	315105-0146		10	WASHER BRB 5,3X10 RFR	
200	90134-0058		12	CONNECTION	
210	90134-0068		16	CONNECTION	
220	90134-0039		17	BUSHING VALVE CONNECTION 2,5 MM	
230	90028-0020		16	CONE TUBE 2,5MM	
240	90134-0040		13	BUSHING VALVE CONNECTION 4 MM	
250	90028-0021		13	CONE TUBE 4 MM	
260	90134-0054		2	BLOCK CONNECTION M10X1	
290	90030-0200		14	CONN. ELBOW, WE06LM71	
320	90134-0051		13	SPACING COLLAR DOSING BLOCK	
330	90092-0054		13	METERING VALVE 50 MM3	
340	90134-0031		29	SLEEVE FOR PLASTIC TUBE	
Common Parts					
130	342706-0130		7	STIFFNER SLEEVE FOR HOSE 6X1	
270	90134-0030		7	SLEEVE FOR PLASTIC TUBE	
280	90092-0052		3	METERING VALVE 10 MM3	
300	90087-0019		2	PLUG M10X1 STAINLESS	
310	90134-0052		1	PLUG DOSING BLOCK	
01U951	90032-0038		1	BLOCK 2 WAYS	
01U952	90032-0038		1	BLOCK 2 WAYS	
01U953	90032-0038		1	BLOCK 2 WAYS	
01U954	90032-0039		1	BLOCK 4 WAYS	
01U955	90032-0039		1	BLOCK 4 WAYS	
01U956	90032-0039		1	BLOCK 4 WAYS	
01U957	90032-0039		1	BLOCK 4 WAYS	
01U958	90032-0039		1	BLOCK 4 WAYS	
01U959	90032-0038		1	BLOCK 2 WAYS	
01U960	90032-0038		1	BLOCK 2 WAYS	
01W951	90166-0132	MM	3000	TUBE 6 MM PA,TRANSP.	
01W955	90166-0108	MM	3000	TUBE 6 MM PA TRANSP.	
01W956	90166-0108	MM	3000	TUBE 6 MM PA TRANSP.	
01W958	90166-0108	MM	3000	TUBE 6 MM PA TRANSP.	
01W960	90166-0108	MM	3000	TUBE 6 MM PA TRANSP.	
01W961	90166-0108	MM	3000	TUBE 6 MM PA TRANSP.	
01W962	90166-0132	MM	3000	TUBE 6 MM PA,TRANSP.	
01W963	90166-0109	MM	3000	TUBE 4 MM PA TRANSP.	
01W964	90166-0109	MM	3000	TUBE 4 MM PA TRANSP.	
01W965	90166-0109	MM	3000	TUBE 4 MM PA TRANSP.	
01W966	90166-0109	MM	3000	TUBE 4 MM PA TRANSP.	
01W967	90166-0109	MM	3000	TUBE 4 MM PA TRANSP.	
01W968	90166-0109	MM	3000	TUBE 4 MM PA TRANSP.	
01W969	90166-0143	MM	3000	TUBE 2,5 MM PA TRANSP.	
01W971	90166-0143	MM	3000	TUBE 2,5 MM PA TRANSP.	
01W972	90166-0143	MM	3000	TUBE 2,5 MM PA TRANSP.	
01W973	90166-0143	MM	3000	TUBE 2,5 MM PA TRANSP.	
01W974	90166-0143	MM	3000	TUBE 2,5 MM PA TRANSP.	
01W975	90166-0109	MM	3000	TUBE 4 MM PA TRANSP.	
01W976	90166-0109	MM	3000	TUBE 4 MM PA TRANSP.	
01W977	90166-0132	MM	3000	TUBE 6 MM PA,TRANSP.	
01W978	90166-0109	MM	3000	TUBE 4 MM PA TRANSP.	
01W979	90166-0109	MM	3000	TUBE 4 MM PA TRANSP.	
01W980	90166-0143	MM	3000	TUBE 2,5 MM PA TRANSP.	
01W981	90166-0143	MM	3000	TUBE 2,5 MM PA TRANSP.	
01W982	90166-0143	MM	3000	TUBE 2,5 MM PA TRANSP.	
01W983	90166-0143	MM	3000	TUBE 2,5 MM PA TRANSP.	
01W984	90166-0109	MM	3000	TUBE 4 MM PA TRANSP.	
01W990	90166-0143	MM	3000	TUBE 2,5 MM PA TRANSP.	
01W991	90166-0143	MM	3000	TUBE 2,5 MM PA TRANSP.	
01W992	90166-0143	MM	3000	TUBE 2,5 MM PA TRANSP.	
01W993	90166-0143	MM	3000	TUBE 2,5 MM PA TRANSP.	
01W994	90166-0143	MM	3000	TUBE 2,5 MM PA TRANSP.	
01W995	90166-0143	MM	3000	TUBE 2,5 MM PA TRANSP.	
01W996	90166-0143	MM	3000	TUBE 2,5 MM PA TRANSP.	
01W997	90166-0143	MM	3000	TUBE 2,5 MM PA TRANSP.	
01W998	90166-0109	MM	3000	TUBE 4 MM PA TRANSP.	

Machine Type | Group Description | Used-In | Group Number | Page No

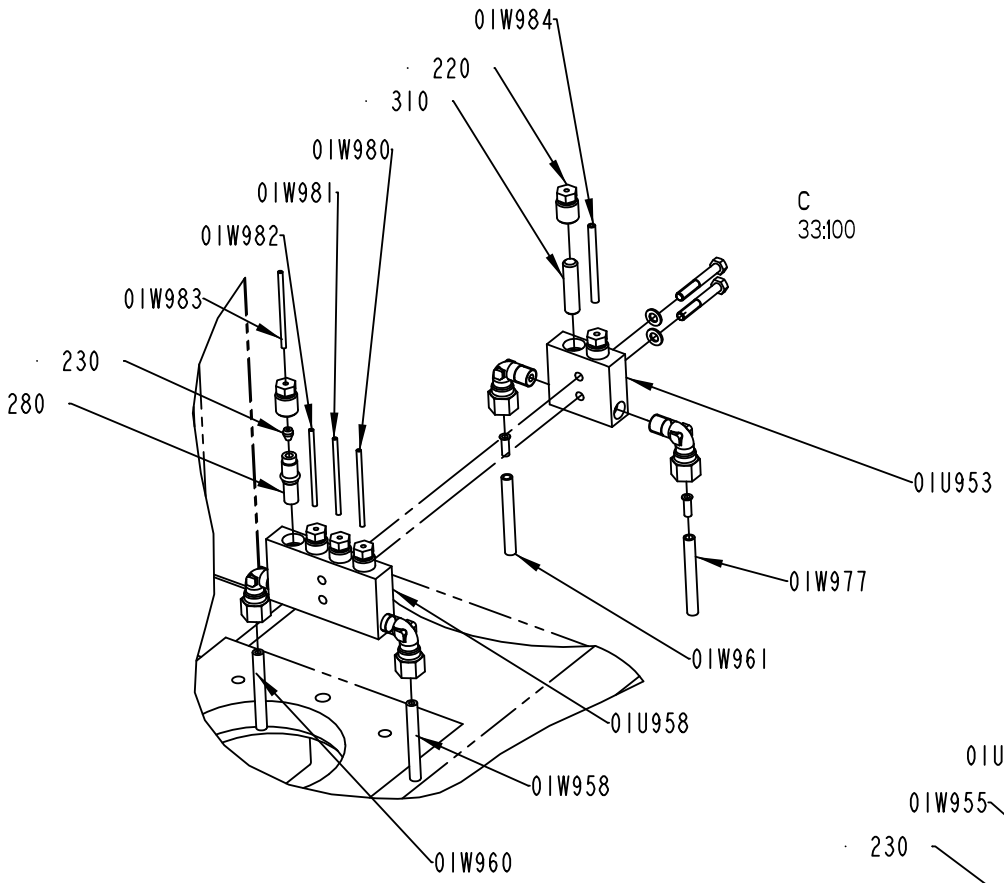

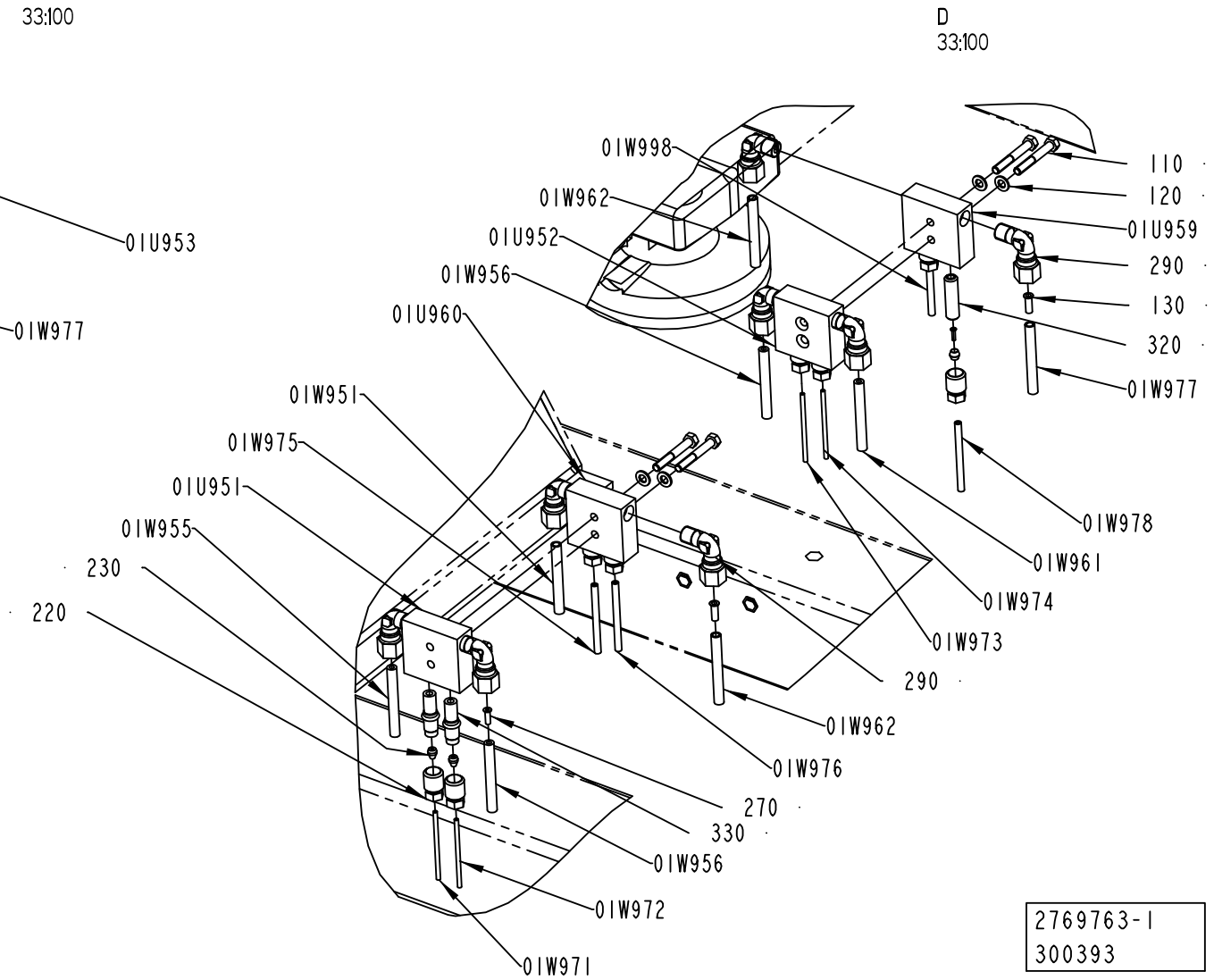

2769763-1
300393

ECM: 303482 - 20070517
Group number: 2769763-0100
Assembly Drawing: 2769763-1_3_AB

This list covers pages from 3-70 to 3-75

Pos	Part No	UN	Qty	Description	Page No
CAP 30/FLEX (See drawing on pages: 3-70, 3-72, 3-74)					
110	312105-0337		10	SCREW M6S ISO 4014 M5X35 A480	
120	315105-0146		10	WASHER BRB 5,3X10 RFR	
200	90134-0058		12	CONNECTION	
210	90134-0068		16	CONNECTION	
220	90134-0039		17	BUSHING VALVE CONNECTION 2,5 MM	
230	90028-0020		16	CONE TUBE 2,5MM	
240	90134-0040		13	BUSHING VALVE CONNECTION 4 MM	
250	90028-0021		13	CONE TUBE 4 MM	
260	90134-0054		2	BLOCK CONNECTION M10X1	
290	90030-0200		14	CONN. ELBOW, WE06LM71	
320	90134-0051		13	SPACING COLLAR DOSING BLOCK	
330	90092-0054		13	METERING VALVE 50 MM3	
340	90134-0031		29	SLEEVE FOR PLASTIC TUBE	
Common Parts					
130	342706-0130		7	STIFFNER SLEEVE FOR HOSE 6X1	
270	90134-0030		7	SLEEVE FOR PLASTIC TUBE	
280	90092-0052		3	METERING VALVE 10 MM3	
300	90087-0019		2	PLUG M10X1 STAINLESS	
310	90134-0052		1	PLUG DOSING BLOCK	
01U951	90032-0038		1	BLOCK 2 WAYS	
01U952	90032-0038		1	BLOCK 2 WAYS	
01U953	90032-0038		1	BLOCK 2 WAYS	
01U954	90032-0039		1	BLOCK 4 WAYS	
01U955	90032-0039		1	BLOCK 4 WAYS	
01U956	90032-0039		1	BLOCK 4 WAYS	
01U957	90032-0039		1	BLOCK 4 WAYS	
01U958	90032-0039		1	BLOCK 4 WAYS	
01U959	90032-0038		1	BLOCK 2 WAYS	
01U960	90032-0038		1	BLOCK 2 WAYS	
01W951	90166-0132	MM	3000	TUBE 6 MM PA,TRANSP.	
01W955	90166-0108	MM	3000	TUBE 6 MM PA TRANSP.	
01W956	90166-0108	MM	3000	TUBE 6 MM PA TRANSP.	
01W958	90166-0108	MM	3000	TUBE 6 MM PA TRANSP.	
01W960	90166-0108	MM	3000	TUBE 6 MM PA TRANSP.	
01W961	90166-0108	MM	3000	TUBE 6 MM PA TRANSP.	
01W962	90166-0132	MM	3000	TUBE 6 MM PA,TRANSP.	
01W963	90166-0109	MM	3000	TUBE 4 MM PA TRANSP.	
01W964	90166-0109	MM	3000	TUBE 4 MM PA TRANSP.	
01W965	90166-0109	MM	3000	TUBE 4 MM PA TRANSP.	
01W966	90166-0109	MM	3000	TUBE 4 MM PA TRANSP.	
01W967	90166-0109	MM	3000	TUBE 4 MM PA TRANSP.	
01W968	90166-0109	MM	3000	TUBE 4 MM PA TRANSP.	
01W969	90166-0143	MM	3000	TUBE 2,5 MM PA TRANSP.	
01W971	90166-0143	MM	3000	TUBE 2,5 MM PA TRANSP.	
01W972	90166-0143	MM	3000	TUBE 2,5 MM PA TRANSP.	
01W973	90166-0143	MM	3000	TUBE 2,5 MM PA TRANSP.	
01W974	90166-0143	MM	3000	TUBE 2,5 MM PA TRANSP.	
01W975	90166-0109	MM	3000	TUBE 4 MM PA TRANSP.	
01W976	90166-0109	MM	3000	TUBE 4 MM PA TRANSP.	
01W977	90166-0132	MM	3000	TUBE 6 MM PA,TRANSP.	
01W978	90166-0109	MM	3000	TUBE 4 MM PA TRANSP.	
01W979	90166-0109	MM	3000	TUBE 4 MM PA TRANSP.	
01W980	90166-0143	MM	3000	TUBE 2,5 MM PA TRANSP.	
01W981	90166-0143	MM	3000	TUBE 2,5 MM PA TRANSP.	
01W982	90166-0143	MM	3000	TUBE 2,5 MM PA TRANSP.	
01W983	90166-0143	MM	3000	TUBE 2,5 MM PA TRANSP.	
01W984	90166-0109	MM	3000	TUBE 4 MM PA TRANSP.	
01W990	90166-0143	MM	3000	TUBE 2,5 MM PA TRANSP.	
01W991	90166-0143	MM	3000	TUBE 2,5 MM PA TRANSP.	
01W992	90166-0143	MM	3000	TUBE 2,5 MM PA TRANSP.	
01W993	90166-0143	MM	3000	TUBE 2,5 MM PA TRANSP.	
01W994	90166-0143	MM	3000	TUBE 2,5 MM PA TRANSP.	
01W995	90166-0143	MM	3000	TUBE 2,5 MM PA TRANSP.	
01W996	90166-0143	MM	3000	TUBE 2,5 MM PA TRANSP.	
01W997	90166-0143	MM	3000	TUBE 2,5 MM PA TRANSP.	
01W998	90166-0109	MM	3000	TUBE 4 MM PA TRANSP.	

Machine Type | Group Description | Used-In | Group Number | Page No

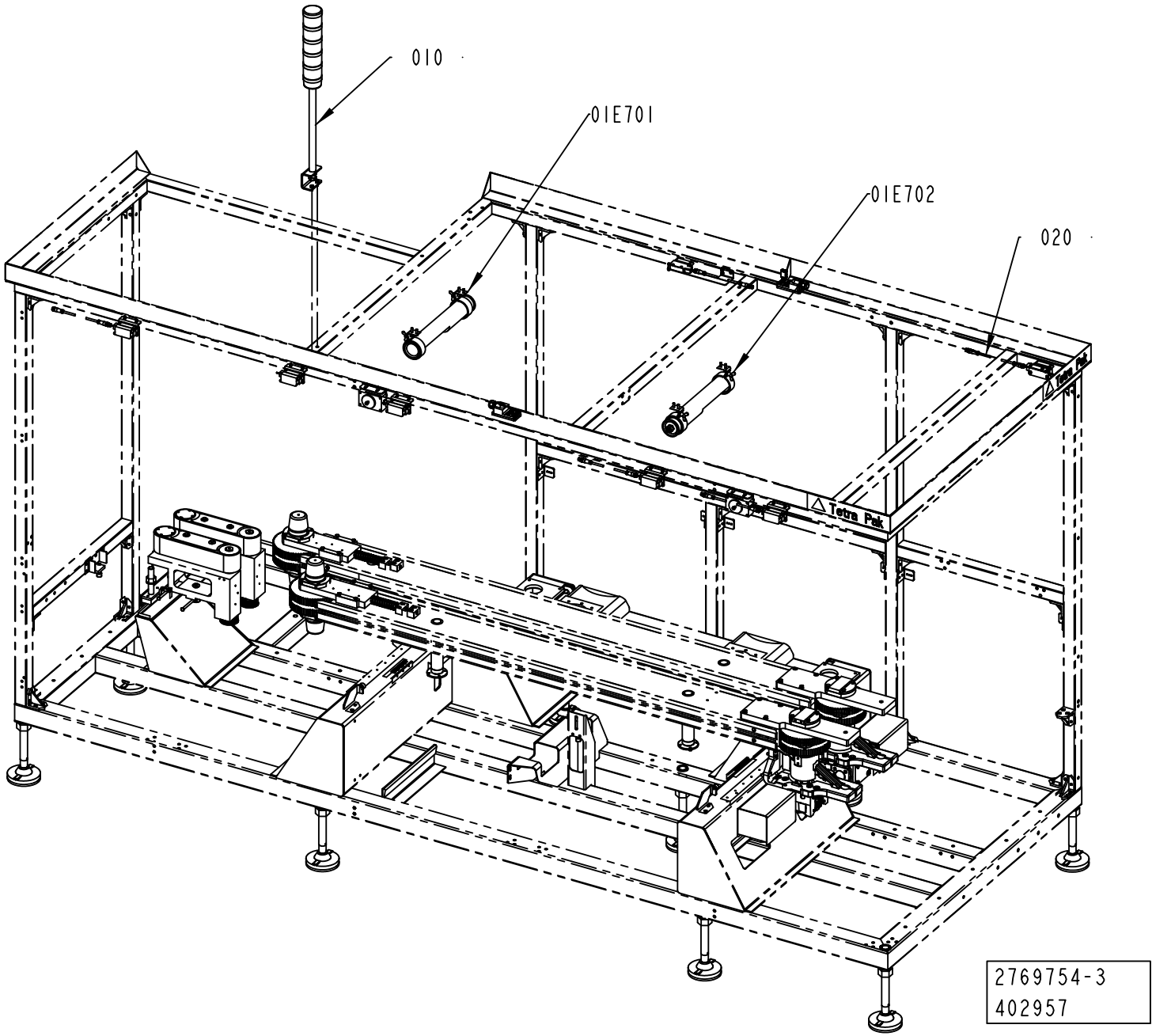
010
01E701
01E702
020
Tetra Pak
2769754-3
402957

ECM: 407735 - 20091001
Group number: 2769754-0200
Assembly Drawing: 2769754-3_1_AA

Pos	Part No	UN	Qty	Description	Page No
-					
010	2779764-0200		1	WARNING LAMP	**3-79**
020	2805700-0200		1	DOOR SAFETY SWITCH	**3-81, 3-83**
030	2873950-0100		1	CABLE SET	**3-85**
01E701	2769757-0100		1	LAMP	**3-87**
01E702	2769757-0100		1	LAMP	**3-87**

Pos	Part No	UN	Qty	Description	Page No

WARNING LAMP

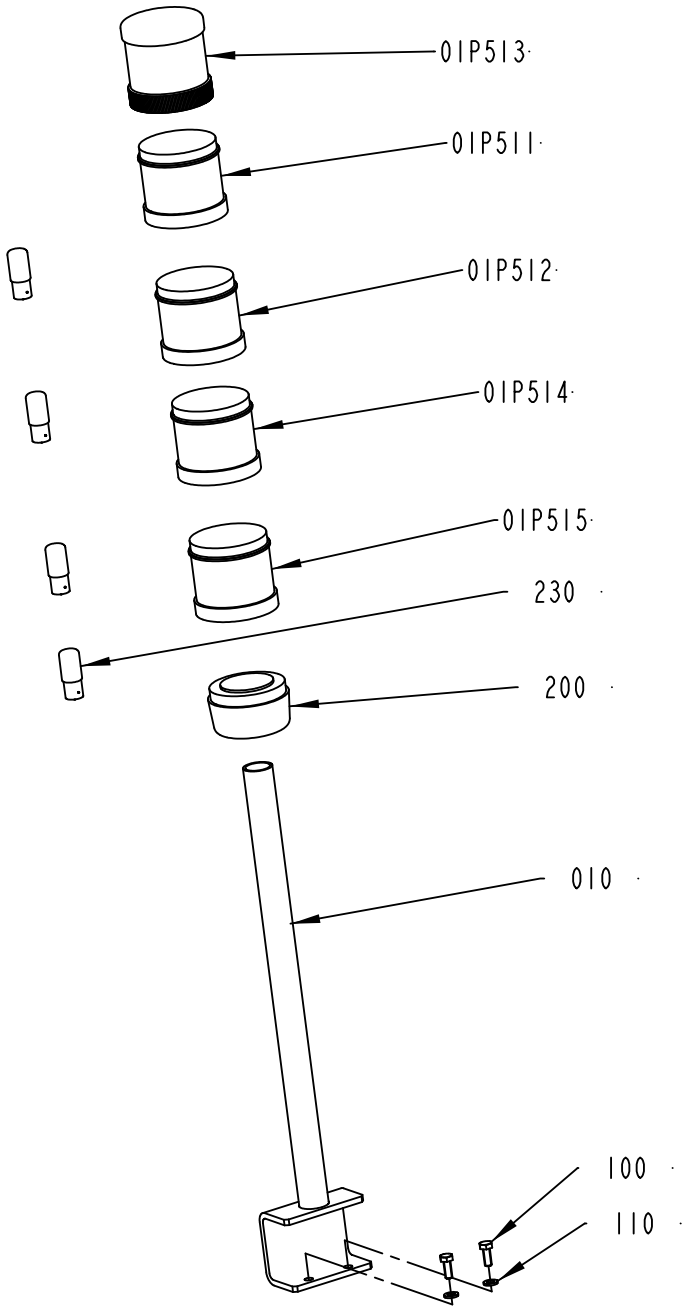

2779764-2
493186

ECM: 493247 - 20110701
Group number: 2779764-0200
Assembly Drawing: 2779764-2_1_AC

Pos	Part No	UN	Qty	Description	Page No
-					
010	2779765-0000		1	BRACKET	
100	312105-0368		2	SCREW M6S ISO 4017 M6X16 A480	
110	315105-0153		2	WASHER BRB 6,4X12 RFR	
200	90602-4627		1	TERMINAL ELEMENT, PSD-S CE-TM SPRING	
230	90036-0068		4	BULB 5W 24V, SL-L24 205348	
01P511	90602-4062		1	LIGHT ELEMENT, RED, PSD-S OE LED RD	
01P512	90602-4063		1	LIGHT ELEMENT, YELLOW, PSD-S OE LED YE	
01P513	90602-4631		1	SIREN 100DB, PSD-S AE SM8-5 100DB/1	
01P514	90602-4060		1	LIGHT ELEMENT, BLUE, PSD-S OE LED BU	
01P515	90602-4061		1	LIGHT ELEMENT, GREEN, PSD-S OE LED GN	

Pos	Part No	UN	Qty	Description	Page No

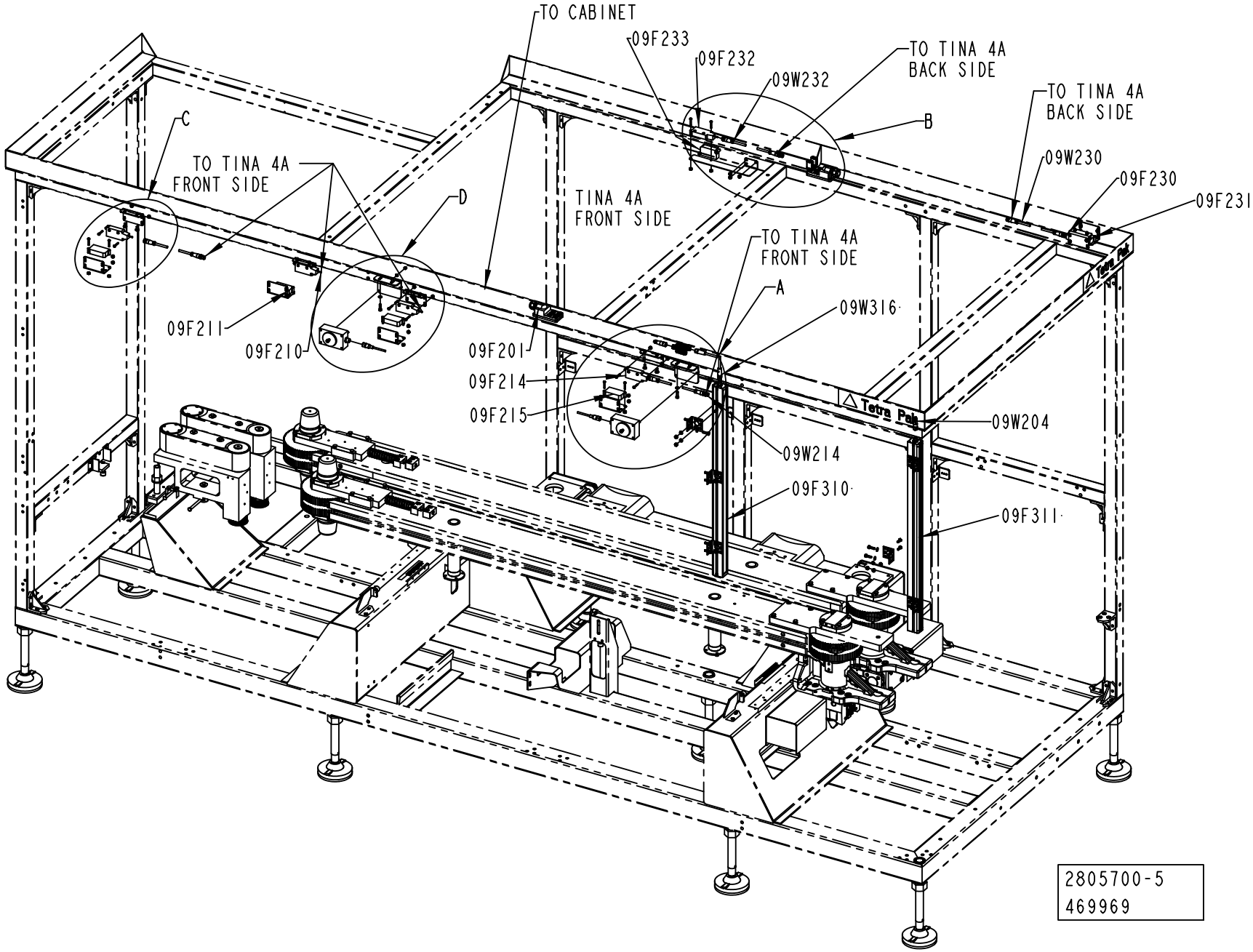
TO CABINET
09F233
09F232
09W232
TO TINA 4A BACK SIDE
TO TINA 4A BACK SIDE
B
09W230
09F230
09F231
C
TO TINA 4A FRONT SIDE
D
TINA 4A FRONT SIDE
TO TINA 4A FRONT SIDE
A
09W316
09F211
09F210
09F201
09F214
09F215
09W204
09W214
09F310
09F311
2805700-5
469969

ECM: 494335 - 20110701
Group number: 2805700-0200
Assembly Drawing: 2805700-5_1_AE

This list covers pages from 3-80 to 3-83

Pos	Part No	UN	Qty	Description	Page No
RECAP3, RECAP2 A3 (See drawing on pages: 3-80, 3-82)					
020	2817774-0000		5	SUPPORT	
040	3054997-0000		5	SUPPORT	
300	1539391-0000		44	ROUND NUT	
310	90459-4165		22	SAFETY SCREW SM4X25, 20-053-43	
330	312105-0370		16	SCREW M6S ISO 4017 M6X20 A480	
350	315105-0153		16	WASHER BRB 6,4X12 RFR	
370	90459-4871		6	BRACKET, FOCUS LIGHT BARRIER, 22-090-11	
380	90600-2563		10	SCREW PANHEAD SNAKE EYE SPANNER, M6X12	
09F234	90459-5627		1	CONNECTION TINA 1A, 20-054-00	
09F310	90600-4796		1	SAFETY LIGHT BARRIER,TRANSM. FT4-35-750	
09F311	90600-4797		1	SAFETY LIGHT BARRIER,TRANSM. FR4-35-750	
09F316	90600-4810		1	ADAPTER LIGHT BARR. TINA 10A, 20-054-12	
09W203	90459-4252		1	CABLE M12-C101, 20-056-10	
09W204	90459-4252		1	CABLE M12-C101, 20-056-10	
09W316	90459-4872		1	FOCUS JUMPER CABLE M12 8P 3M, 20-056-51	
Common Parts					
010	2781283-0000		2	BRACKET	
030	2817775-0000		1	SUPPORT	
320	312605-0314		4	HEXAGON NUT, M6M M5 A280	
360	315105-0146		4	WASHER BRB 5,3X10 RFR	
390	575034-0000		3	ROUND NUT	
09F201	90602-4058		1	CONNECTION BOX TINA 4A, 20-054-03	
09F202	90602-4058		1	CONNECTION BOX TINA 4A, 20-054-03	
09F210	90459-6961		1	SAFETY SENSOR, NON CONT. ADAM-E M12 0,5M	
09F211	90459-4089		1	SAFETY SENSOR NON-CONTACT EVA E	
09F212	90459-6961		1	SAFETY SENSOR, NON CONT. ADAM-E M12 0,5M	
09F213	90459-4089		1	SAFETY SENSOR NON-CONTACT EVA E	
09F214	90459-6961		1	SAFETY SENSOR, NON CONT. ADAM-E M12 0,5M	
09F215	90459-4089		1	SAFETY SENSOR NON-CONTACT EVA E	
09F216	90459-6961		1	SAFETY SENSOR, NON CONT. ADAM-E M12 0,5M	
09F217	90459-4089		1	SAFETY SENSOR NON-CONTACT EVA E	
09F230	90459-6961		1	SAFETY SENSOR, NON CONT. ADAM-E M12 0,5M	
09F231	90459-4089		1	SAFETY SENSOR NON-CONTACT EVA E	
09F232	90459-6961		1	SAFETY SENSOR, NON CONT. ADAM-E M12 0,5M	
09F233	90459-4089		1	SAFETY SENSOR NON-CONTACT EVA E	
09F236	90459-5627		1	CONNECTION TINA 1A, 20-054-00	
09K241	90459-6913		1	ELECTROMAG. DOOR LOCK. DEV.,JSD-ZH-EM1-K	
09K242	90459-6913		1	ELECTROMAG. DOOR LOCK. DEV.,JSD-ZH-EM1-K	
09W214	90459-4876		1	FOCUS JUMPER CABLE M12 5P 3M, 20-056-21	
09W216	90459-4876		1	FOCUS JUMPER CABLE M12 5P 3M, 20-056-21	
09W230	90459-4876		1	FOCUS JUMPER CABLE M12 5P 3M, 20-056-21	
09W232	90459-4876		1	FOCUS JUMPER CABLE M12 5P 3M, 20-056-21	
09W241	351309-0100		1	ACTUATOR/SENSOR CABLE PRKT 4-07/10M	
09W242	351309-0100		1	ACTUATOR/SENSOR CABLE PRKT 4-07/10M	

Machine Type | Group Description | Used-In | Group Number | Page No

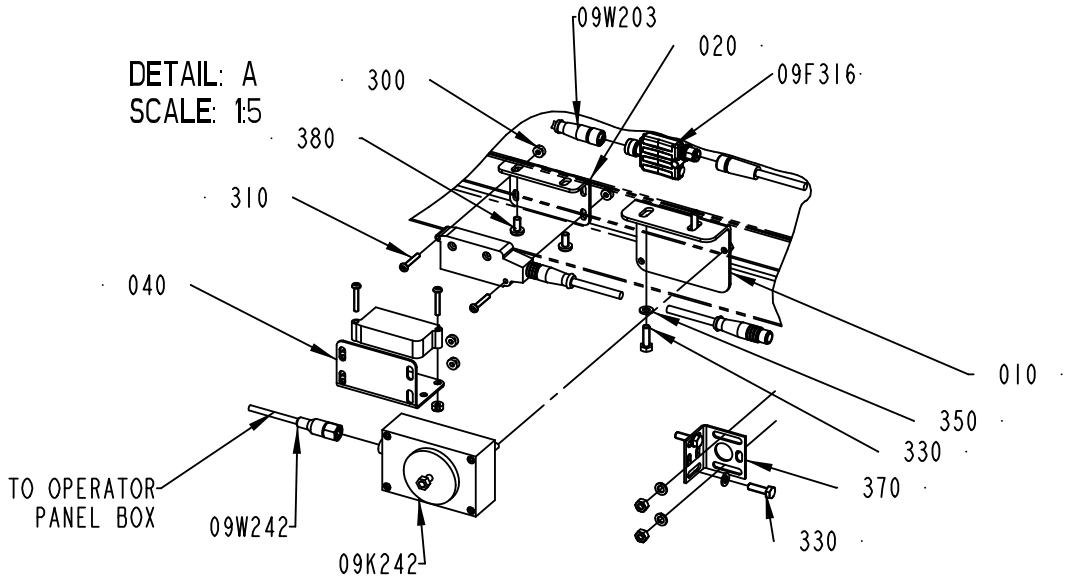

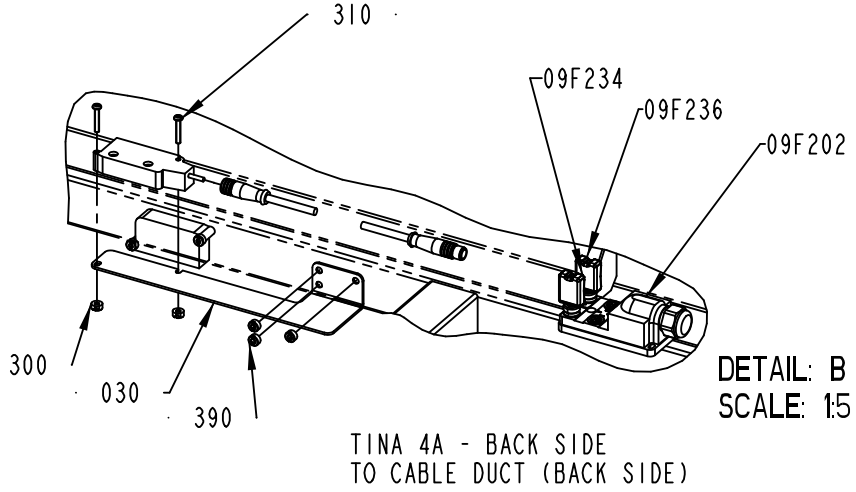

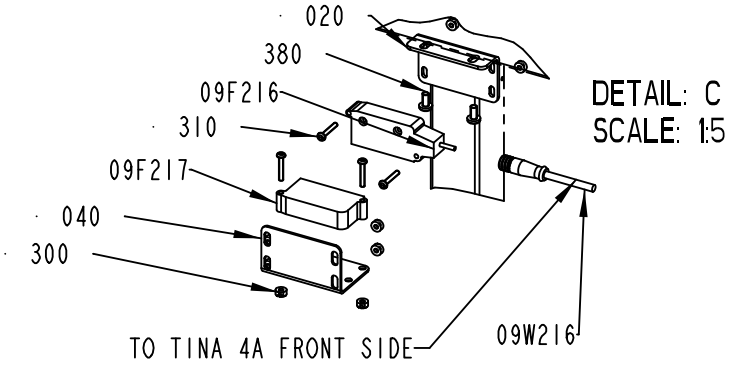

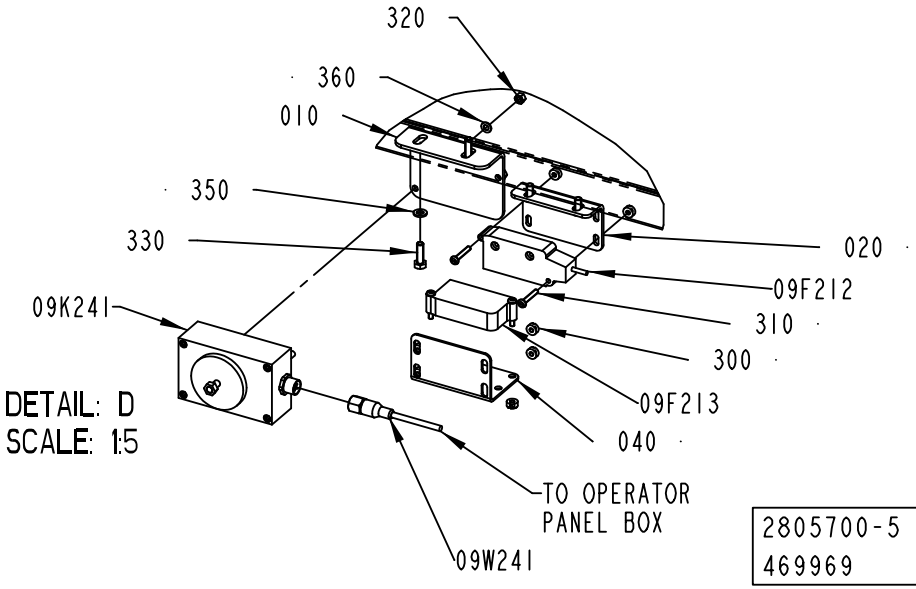

2805700-5
469969

ECM: 494335 - 20110701
Group number: 2805700-0200
Assembly Drawing: 2805700-5_2_AE

This list covers pages from 3-80 to 3-83

Pos	Part No	UN	Qty	Description	Page No
RECAP3, RECAP2 A3 (See drawing on pages: 3-80, 3-82)					
020	2817774-0000		5	SUPPORT	
040	3054997-0000		5	SUPPORT	
300	1539391-0000		44	ROUND NUT	
310	90459-4165		22	SAFETY SCREW SM4X25, 20-053-43	
330	312105-0370		16	SCREW M6S ISO 4017 M6X20 A480	
350	315105-0153		16	WASHER BRB 6,4X12 RFR	
370	90459-4871		6	BRACKET, FOCUS LIGHT BARRIER, 22-090-11	
380	90600-2563		10	SCREW PANHEAD SNAKE EYE SPANNER, M6X12	
09F234	90459-5627		1	CONNECTION TINA 1A, 20-054-00	
09F310	90600-4796		1	SAFETY LIGHT BARRIER,TRANSM. FT4-35-750	
09F311	90600-4797		1	SAFETY LIGHT BARRIER,TRANSM. FR4-35-750	
09F316	90600-4810		1	ADAPTER LIGHT BARR. TINA 10A, 20-054-12	
09W203	90459-4252		1	CABLE M12-C101, 20-056-10	
09W204	90459-4252		1	CABLE M12-C101, 20-056-10	
09W316	90459-4872		1	FOCUS JUMPER CABLE M12 8P 3M, 20-056-51	
Common Parts					
010	2781283-0000		2	BRACKET	
030	2817775-0000		1	SUPPORT	
320	312605-0314		4	HEXAGON NUT, M6M M5 A280	
360	315105-0146		4	WASHER BRB 5,3X10 RFR	
390	575034-0000		3	ROUND NUT	
09F201	90602-4058		1	CONNECTION BOX TINA 4A, 20-054-03	
09F202	90602-4058		1	CONNECTION BOX TINA 4A, 20-054-03	
09F210	90459-6961		1	SAFETY SENSOR, NON CONT. ADAM-E M12 0,5M	
09F211	90459-4089		1	SAFETY SENSOR NON-CONTACT EVA E	
09F212	90459-6961		1	SAFETY SENSOR, NON CONT. ADAM-E M12 0,5M	
09F213	90459-4089		1	SAFETY SENSOR NON-CONTACT EVA E	
09F214	90459-6961		1	SAFETY SENSOR, NON CONT. ADAM-E M12 0,5M	
09F215	90459-4089		1	SAFETY SENSOR NON-CONTACT EVA E	
09F216	90459-6961		1	SAFETY SENSOR, NON CONT. ADAM-E M12 0,5M	
09F217	90459-4089		1	SAFETY SENSOR NON-CONTACT EVA E	
09F230	90459-6961		1	SAFETY SENSOR, NON CONT. ADAM-E M12 0,5M	
09F231	90459-4089		1	SAFETY SENSOR NON-CONTACT EVA E	
09F232	90459-6961		1	SAFETY SENSOR, NON CONT. ADAM-E M12 0,5M	
09F233	90459-4089		1	SAFETY SENSOR NON-CONTACT EVA E	
09F236	90459-5627		1	CONNECTION TINA 1A, 20-054-00	
09K241	90459-6913		1	ELECTROMAG. DOOR LOCK. DEV.,JSD-ZH-EM1-K	
09K242	90459-6913		1	ELECTROMAG. DOOR LOCK. DEV.,JSD-ZH-EM1-K	
09W214	90459-4876		1	FOCUS JUMPER CABLE M12 5P 3M, 20-056-21	
09W216	90459-4876		1	FOCUS JUMPER CABLE M12 5P 3M, 20-056-21	
09W230	90459-4876		1	FOCUS JUMPER CABLE M12 5P 3M, 20-056-21	
09W232	90459-4876		1	FOCUS JUMPER CABLE M12 5P 3M, 20-056-21	
09W241	351309-0100		1	ACTUATOR/SENSOR CABLE PRKT 4-07/10M	
09W242	351309-0100		1	ACTUATOR/SENSOR CABLE PRKT 4-07/10M	

This page is intentionally left blank.

ECM: 480148 - 20110401
Group number: 2873950-0100
Assembly Drawing:

Pos	Part No	UN	Qty	Description	Page No
RECAP3, RECAP2 A3					
30W300	351422-0203	M	6	CABLE ÖLFLEX 150CY QUATTRO 4X1,5	
30W303	90600-1984		1	ACTUATOR/SENSOR CABLE PRKT 5/56-10M	
60W011	351150-0413	M	7	CABLE OLFLEX 4GX1,5 MM2 LIGHT/GREY	
60W110	90600-3293		1	MOTOR PWWER CABLE 2090-XXNPMF-16S09	
60W111	90600-3294		1	MOTOR FEEDBACK CABLE 2090-XXNFMF-S09/C	
60W210	90600-3293		1	MOTOR PWWER CABLE 2090-XXNPMF-16S09	
60W211	90600-3294		1	MOTOR FEEDBACK CABLE 2090-XXNFMF-S09/C	
60W310	90600-3293		1	MOTOR PWWER CABLE 2090-XXNPMF-16S09	
60W311	90600-3294		1	MOTOR FEEDBACK CABLE 2090-XXNFMF-S09/C	
60W421	351150-0413	M	9	CABLE OLFLEX 4GX1,5 MM2 LIGHT/GREY	
60W611	351150-0405	M	9	CABLE OLFLEX 5X0,75 MM2 LIGHT/GREY	
60X111	90459-2551		1	CONNECTOR, MOTOR FEEDBACK 15 PIN MALE	
60X211	90459-2551		1	CONNECTOR, MOTOR FEEDBACK 15 PIN MALE	
60X311	90459-2551		1	CONNECTOR, MOTOR FEEDBACK 15 PIN MALE	
Common Parts					
01W400	351150-0403	M	8	CABLE OLFLEX 3X0,75 MM2 LIGHT/GREY	
01W401	351150-0407	M	8	CABLE OLFLEX 12X0,75 MM2 LIGHT/GREY	
01W500	351150-0187	M	8	CABLE OLFLEX 5X6 MM2 LIGHT/GREY	
01W501	351150-0406	M	2	CABLE OLFLEX 7X0,75 MM2 LIGHT/GREY	
01W510	351150-0406	M	5.5	CABLE OLFLEX 7X0,75 MM2 LIGHT/GREY	
01W701	351150-0403	M	5	CABLE OLFLEX 3X0,75 MM2 LIGHT/GREY	
01W702	351150-0403	M	9	CABLE OLFLEX 3X0,75 MM2 LIGHT/GREY	
01W800	351150-0403	M	2	CABLE OLFLEX 3X0,75 MM2 LIGHT/GREY	
01W801	351150-0403	M	2	CABLE OLFLEX 3X0,75 MM2 LIGHT/GREY	
09W103	351150-0405	M	11	CABLE OLFLEX 5X0,75 MM2 LIGHT/GREY	
09W201	351423-0006	M	8	CABLE UNITRONIC LICY 5X0,34	
09W202	351423-0006	M	5	CABLE UNITRONIC LICY 5X0,34	
20W000	351422-0203	M	10	CABLE ÖLFLEX 150CY QUATTRO 4X1,5	
21W100	90600-3293		1	MOTOR PWWER CABLE 2090-XXNPMF-16S09	
21W101	90600-3294		1	MOTOR FEEDBACK CABLE 2090-XXNFMF-S09/C	
21W200	90600-3293		1	MOTOR PWWER CABLE 2090-XXNPMF-16S09	
21W201	90600-3294		1	MOTOR FEEDBACK CABLE 2090-XXNFMF-S09/C	
21W400	351422-0203	M	18	CABLE ÖLFLEX 150CY QUATTRO 4X1,5	
21W800	351150-0412	M	6	CABLE OLFLEX 3X1,5 MM2 LIGHT/GREY	
21W801	351120-0266	M	5	CABLE ÖLFLEX HEAT 180 SIHF 4X4	
30W000	90600-3293		1	MOTOR PWWER CABLE 2090-XXNPMF-16S09	
30W001	90600-3294		1	MOTOR FEEDBACK CABLE 2090-XXNFMF-S09/C	
30W400	90600-3293		1	MOTOR PWWER CABLE 2090-XXNPMF-16S09	
30W401	90600-3294		1	MOTOR FEEDBACK CABLE 2090-XXNFMF-S09/C	
21X101	90459-2551		1	CONNECTOR, MOTOR FEEDBACK 15 PIN MALE	
21X201	90459-2551		1	CONNECTOR, MOTOR FEEDBACK 15 PIN MALE	
30X001	90459-2551		1	CONNECTOR, MOTOR FEEDBACK 15 PIN MALE	
30X401	90459-2551		1	CONNECTOR, MOTOR FEEDBACK 15 PIN MALE	

Machine Type | Group Description | Used-In | Group Number | Page No

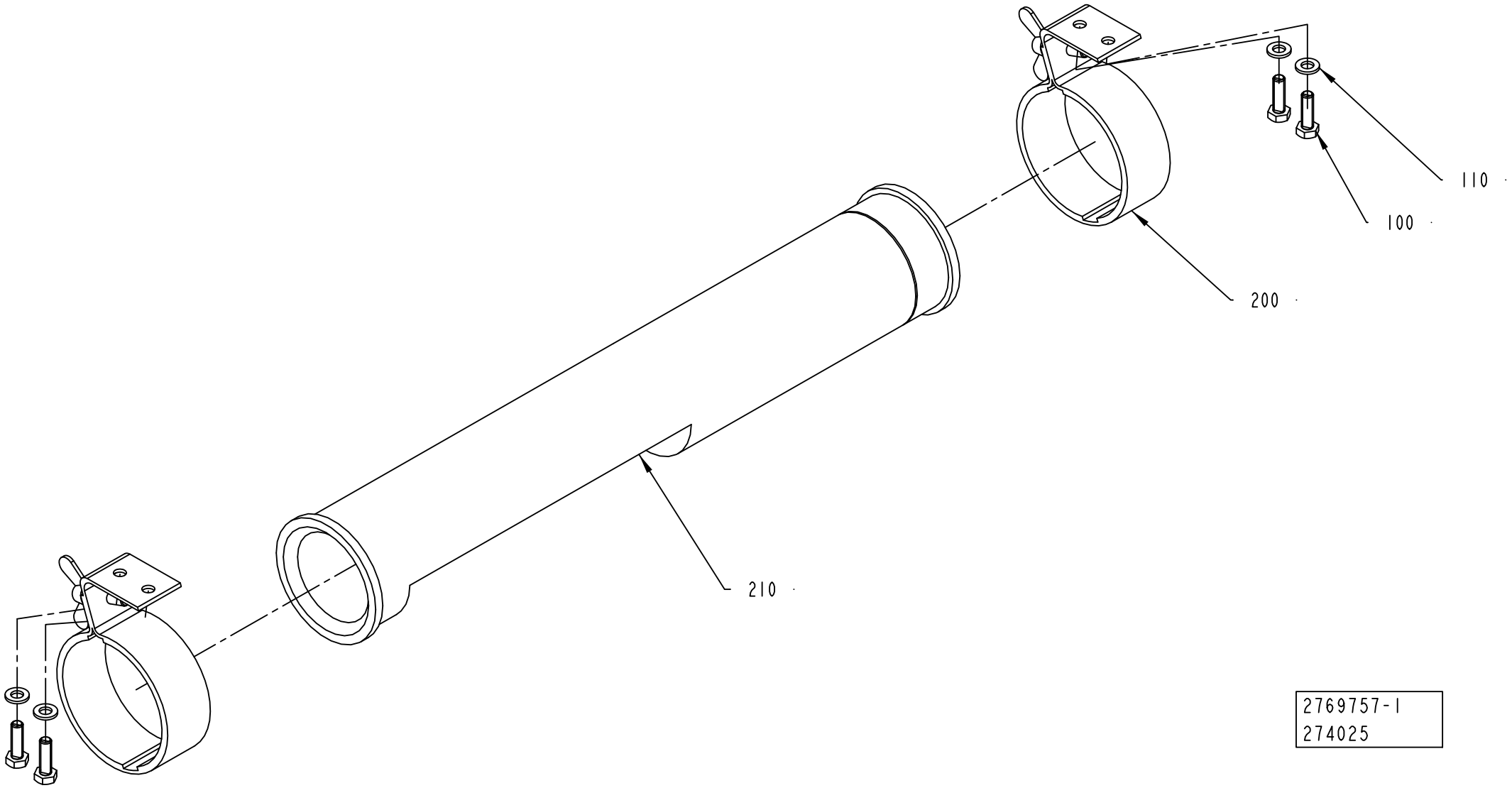
110
100
200
210
2769757-1
274025

ECM: 274503 - 20060921
Group number: 2769757-0100
Assembly Drawing: 2769757-1_1_AA

Pos	Part No	UN	Qty	Description	Page No
-					
100	312105-0370		4	SCREW M6S ISO 4017 M6X20 A480	
110	315105-0153		4	WASHER BRB 6,4X12 RFR	
200	90164-0303		2	LIGHT FIXTURE, BRACKET 70MM	
210	90164-0015		1	LIGHT FIXTURE, RL70CV-111 / 230V 50HZ	
	92297-0301		*1*	*STARTER 4-65W S\10, E 8219023*	
	90297-0007		*1*	*FLUORESCENT TUBE, PLS 11*	

Pos	Part No	UN	Qty	Description	Page No

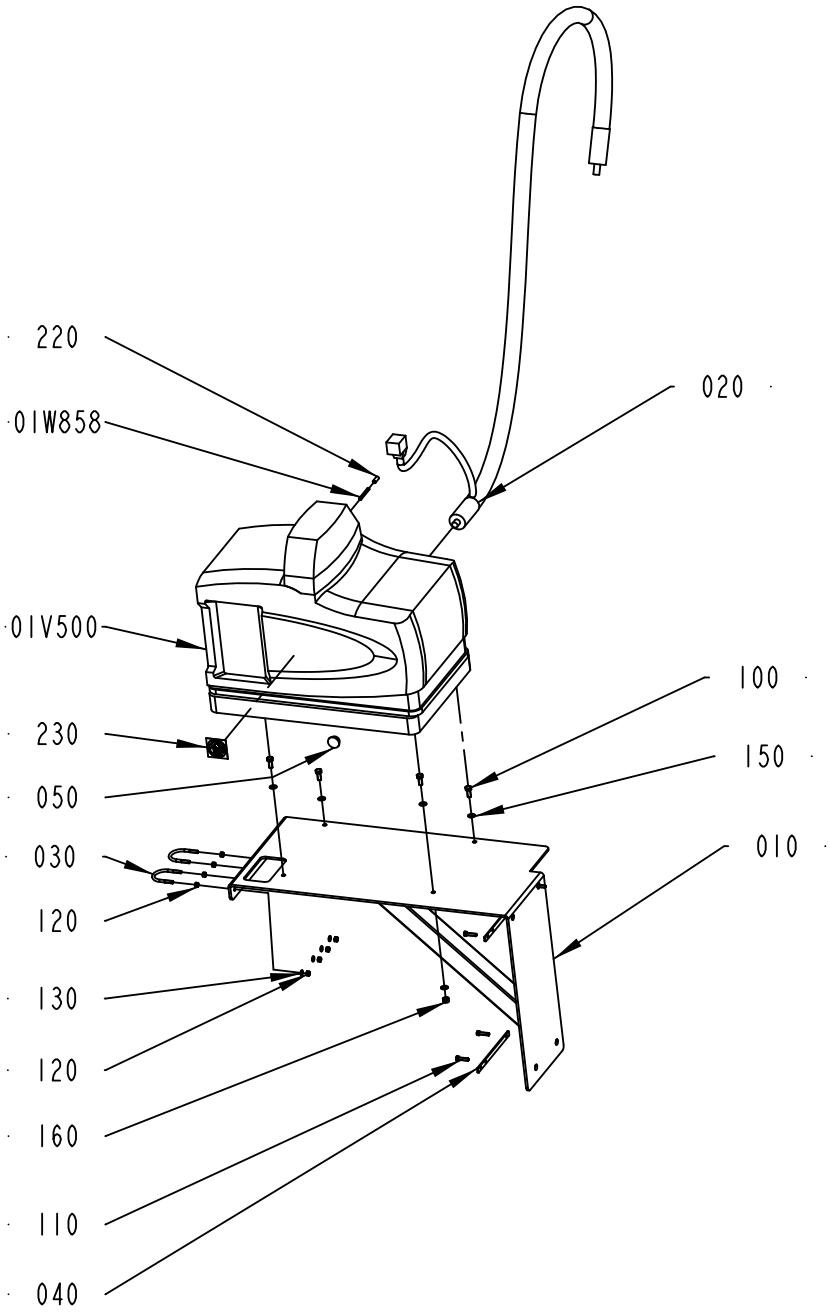
220
01W858
020
01V500
100
230
150
050
030
010
120
130
120
160
110
040

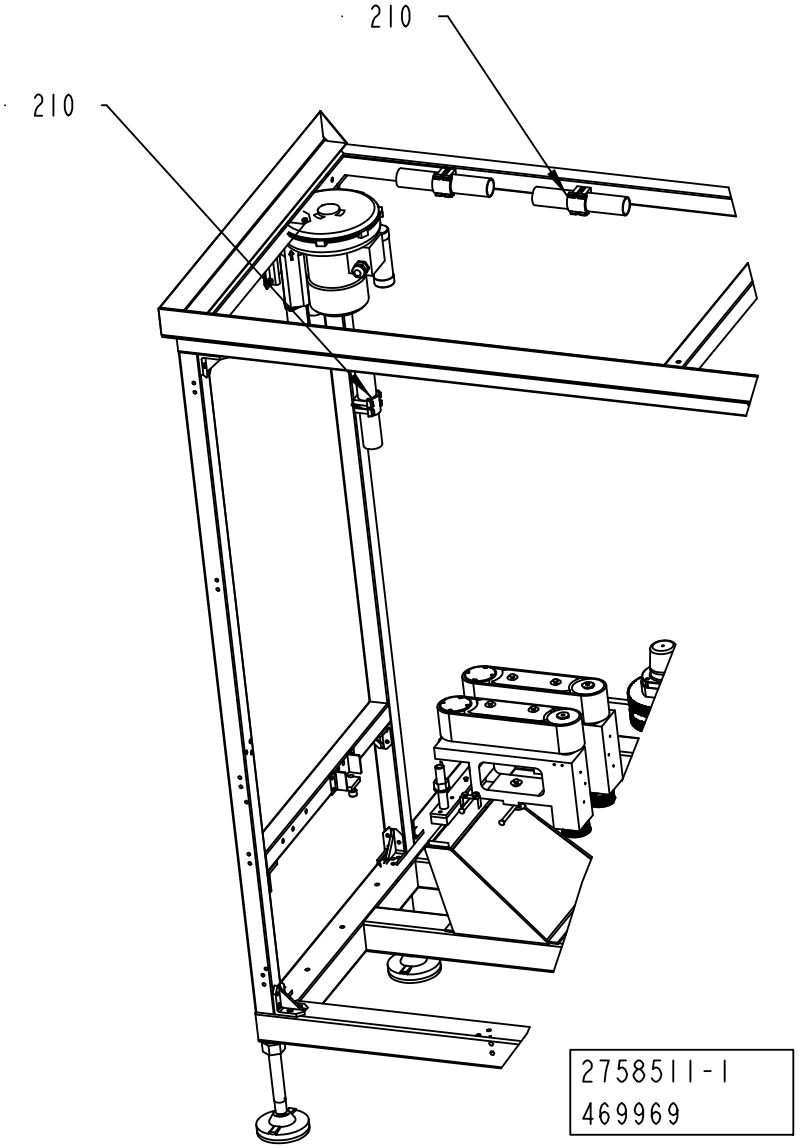
210
210
2758511-1
469969

ECM: 492967 - 20110701
Group number: 2758511-0100
Assembly Drawing: 2758511-1_1_AF

Pos	Part No	UN	Qty	Description	Page No
RECAP3, RECAP2 A3					
050	3117867-0000		1	PLASTIC PLUG	
220	90459-7369		1	MARKING FOR PNEUM. TUBING, PRZ06	
01V500	90459-1991		1	HOT MELT UNIT, #1049296	
	90459-1979		*1*	*THERMOSTAT SERV. KIT(P4,P7,P10) #1028321*	
	90459-1978		*1*	*RTD SERVICE KIT (P4,P7,P10) #1028320*	
	90459-1977		*1*	*WELDMENT, TANK, P4 #1051033*	
	90459-1976		*1*	*OPER. PANEL/ENCL.SERV.KIT(P4/7)#1028326*	
	90459-1975		*1*	*CPU CONT.BOARD SERV.KIT(P4/7/10)#1028325*	
	90459-1974		*1*	*FUSE KIT,MAIN CIRC.B.(P4/7/10),#1028329*	
	90459-1973		*1*	*MAIN CIRC.BOARD SERV.KIT(P4,P7),#1028322*	
	90459-1972		*1*	*FUSE KIT,HOSE/GUN (P4,P7,P10)),#1028331*	
	90459-1971		*1*	*HOSE/GUN MODULE KIT(P4,P7,P10),#1028328*	
	90439-0241		*1*	*ANGLE NIPPLE*	
	90459-1989		*1*	*COVERS,FRAME,CHASSIS, P4 #1021660*	
	90459-1988		*1*	*COV.,FRAME,SUBBASE MOUNT.PL.(P4)#1021661*	
	90459-1987		*1*	*PNEUM. PANEL ASS. (P4/7/10) #1028307*	
	90459-1986		*1*	*REPL. SATURN® FILTER, 100 MESH #1028305*	
	90459-1985		*1*	*PUMP SERVICE KIT (P4,P7,P10) #1028304*	
	90459-1984		*1*	*PUMP ASS. SERV. KIT (P4/7/10) #102830*	
	90459-1983		*1*	*HEATER-BLOCK KIT, #1064649*	
	90459-1982		*1*	*AUTO. PR. DIS. VALVE (P4/7/10)#1028308*	
	90459-1981		*1*	*MANIFOLD SERVICE KIT (P4,P7,P10)#1028309*	
	90459-1980		*1*	*MANIFOLD ASSEMBLY, 4-HOSE #1064651*	
01W858	315400-0001	MM	3000	TUBE PUN-H-6X1-BL	
Common Parts					
010	2766939-0000		1	SUPPORT	
020	90600-0773		1	AUTOMATIC GUN HOSE, #104008	
030	531616-0000		2	HOLDER	
040	2874024-0000		2	BRACKET	
100	312105-0451		4	SCREW M6S ISO 4017 M8X20 A480	
110	312105-0372		4	SCREW M6S ISO 4017 M6X25 A480	
120	312605-0316		8	HEXAGON NUT, M6M M6 A280	
130	315105-0153		4	WASHER BRB 6,4X12 RFR	
150	315105-0165		8	WASHER BRB 8,4X16 RFR	
160	312812-0318		4	HEXAGON NUT, NY-LOCK M8 A480	
210	90439-0295		3	SERVICE KIT, NO. 111940	
230	90459-2265		1	PROHIBITION SIGN ISO, DO NOT WASH	

Pos	Part No	UN	Qty	Description	Page No

OPERATOR INTERFACE

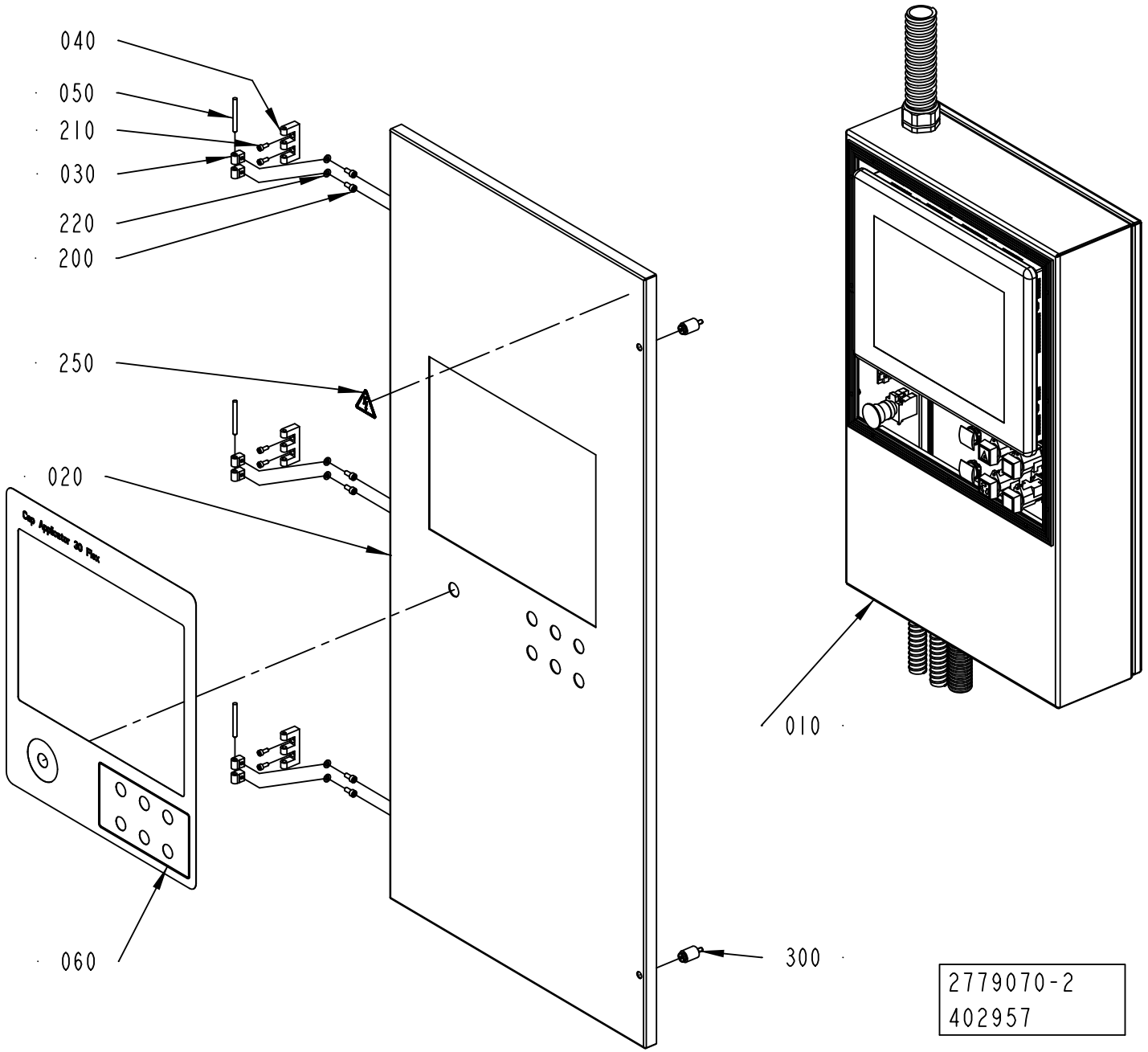

ECM: 407737 - 20091001
Group number: 2779070-0200
Assembly Drawing: 2779070-2_1_AA

Pos	Part No	UN	Qty	Description	Page No
CAP 30/FLEX					
060	2746920-0000		1	FOIL	
Common Parts					
010	2802386-0200		1	OPERATOR INTERFACE	**3-93**
020	2779768-0000		1	DOOR	
030	1129770-0000		6	BLOCKING PIECE	
040	1035792-0000		3	E-HINGE	
050	988685-0000		3	PIN	
200	312115-0367		6	SCREW ISO4762 M6X14 A4 80	
210	312115-0327		6	SCREW ISO4762 M5X12 A4 80	
220	315105-0153		6	WASHER BRB 6,4X12 RFR	
250	359705-0015		1	WARNING SIGN ISO, RISK OF ELECTRIC SHOCK	
300	90226-0458		2	MOUNTING SCREW	

Pos	Part No	UN	Qty	Description	Page No

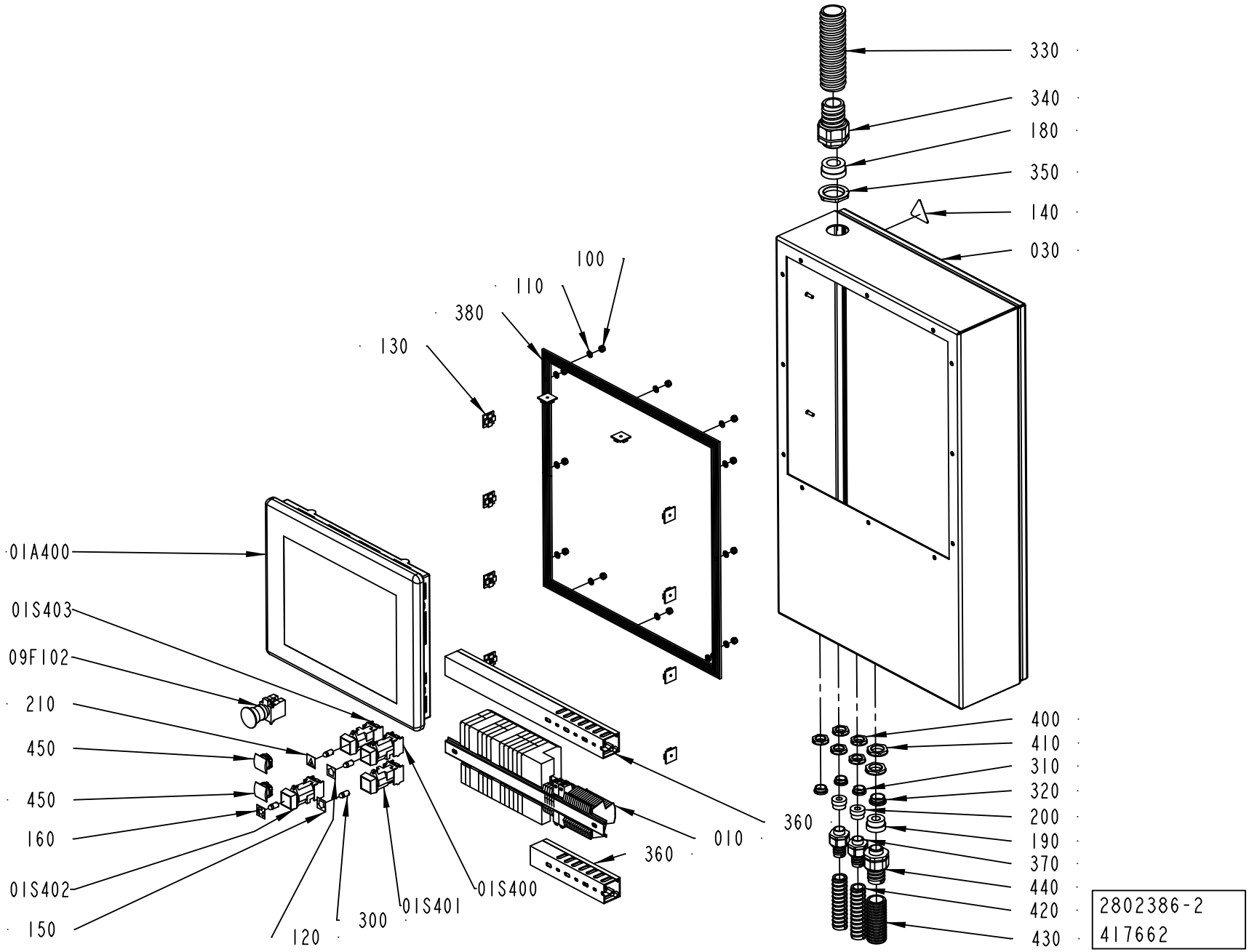
330
340
180
350
140
030
100
110
380
130
01A400
01S403
09F102
210
450
450
160
01S402
150
120
300
01S401
01S400
010
360
360
400
410
310
320
200
190
370
440
420
430
2802386-2
417662

ECM: 428926 - 20100401
Group number: 2802386-0200
Assembly Drawing: 2802386-2_1_AB

Pos	Part No	UN	Qty	Description	Page No
-					
010	2817783-0100		1	PLINTH	**3-95, 3-97**
030	2746904-0000		1	BOX	
100	312812-0316		12	HEXAGON NUT, NY-LOCK M6 A480	
110	315105-0153		12	WASHER BRB 6,4X12 RFR	
120	359301-0001		1	BUTTON SIGN, UP	
130	352113-0206		10	ANCHOR PLATES FOR STRIPS, ABM100-AT	
140	359705-0015		1	WARNING SIGN ISO, RISK OF ELECTRIC SHOCK	
150	359301-0005		1	BUTTON SIGN, DOWN	
160	359301-0090		1	BUTTON SIGN, INCHING	
180	353249-0054		1	INSERT, SINGLE HOLE, EK156 25	
190	353249-0015		1	INSERT, SINGLE HOLE, EK155 16	
200	353249-0012		2	INSERT, SINGLE HOLE, EK154 11	
210	359301-0105		1	BUTTON SIGN, ALARM STOP	
300	90036-0057		4	LIGHT BULB, BA9S 28V	
310	90458-1308		3	BLIND PLUG CIRCULAR, M20X1,5 514GFK/220	
320	90458-1309		1	BLIND PLUG CIRCULAR, M25X1,5 514GFK/225	
330	90152-0060	MM	1000	HOSE, SPIRAL CONDUIT, 42X35, UL3529	
340	90458-0434		1	GLAND FITTING, VK 24056YUL29	
350	90458-0326		1	NUT, M40X1,5	
360	90181-0038	MM	1100	CABLE DUCT, PLASTIC, 40X40	
370	90458-0430		2	GLAND FITTING, VK 22054YUL16	
380	90143-0071	MM	2000	RUBBER STRIP 4X20MM	
390	90152-0051	MM	1800	HOSE, SPIRAL CONDUIT, 25X18, UL 1816	
400	90458-0323		5	NUT, M20X1,5	
410	90458-0324		2	NUT, M25X1,5	
420	90152-0051	MM	1500	HOSE, SPIRAL CONDUIT, 25X18, UL 1816	
430	90152-0070	MM	700	HOSE, SPIRAL CONDUIT, 32,5X26, UL 2621	
440	90458-0432		1	GLAND FITTING, VK 22555YUL21	
450	90459-3279		3	BLANK PLUG BLACK, SQUARE, PLASTIC ZB5SZ5	
01A400	90600-8128		1	OPER. PANEL 15"PV+,2711P-T15C4D2TP SER.B	
09F102	90458-1651		1	EMERGENCY STOP, ZB4-BS-844 ZB4-BZ-104	
01S400	90064-0093		1	PUSH BUTTON, GREEN	
	90036-0057		*1*	*LIGHT BULB, BA9S 28V*	
01S401	90064-0098		1	PUSH BUTTON, WHITE	
01S402	90064-0093		1	PUSH BUTTON, GREEN	
	90036-0057		*1*	*LIGHT BULB, BA9S 28V*	
01S404	90064-0098		1	PUSH BUTTON, WHITE	

Machine Type	Group Description	Used-In	Group Number	Page No

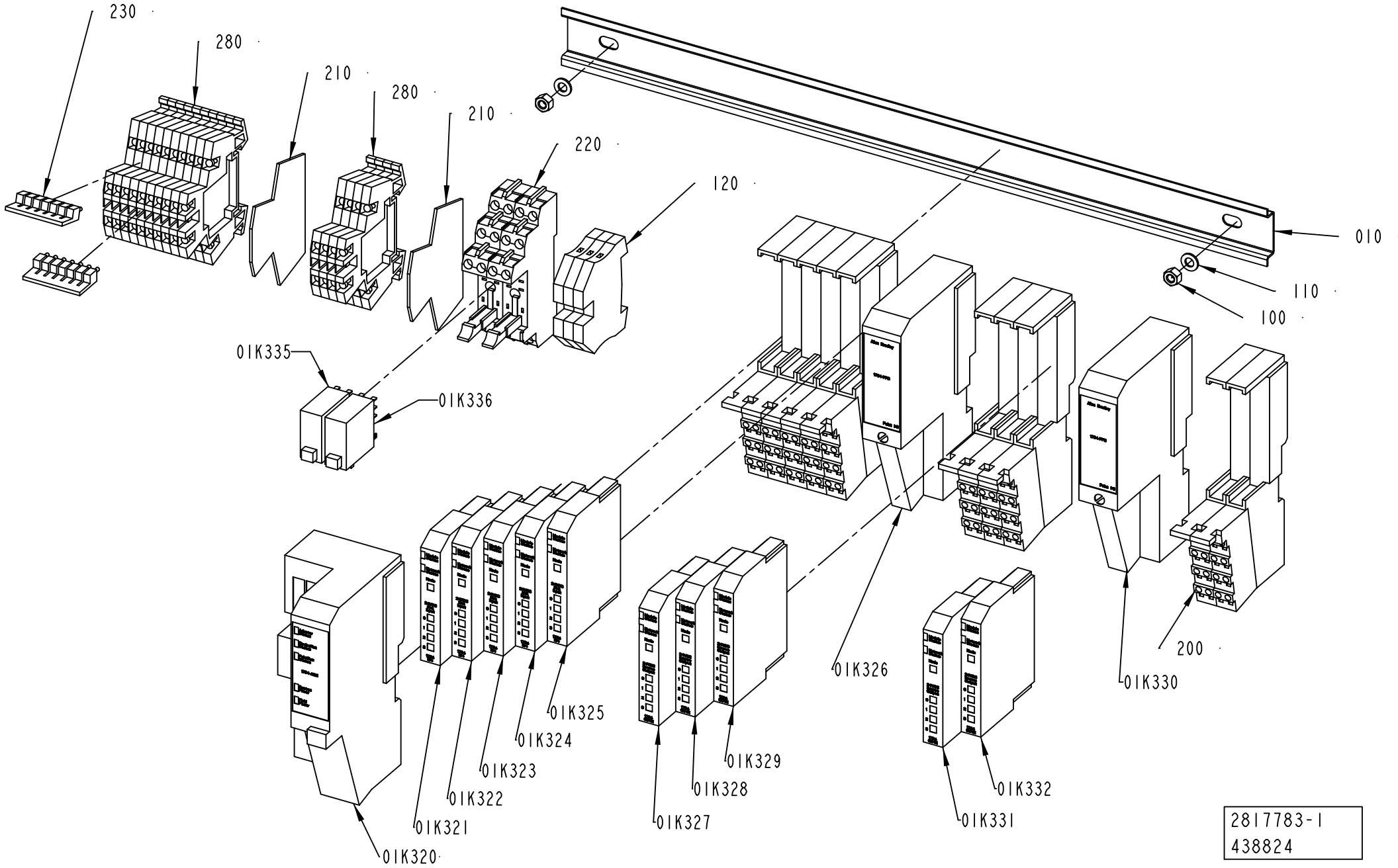
230
280
210
280
210
220
120
010
110
100
01K335
01K336
01K326
200
01K330
01K325
01K324
01K323
01K322
01K321
01K320
01K329
01K328
01K327
01K332
01K331
2817783-1
438824

ECM: 438887 - 20100701
Group number: 2817783-0100
Assembly Drawing: 2817783-1_1_AC

This list covers pages from 3-94 to 3-97

Pos	Part No	UN	Qty	Description	Page No
CAP 30/FLEX (See drawing on pages: 3-94, 3-96)					
200	90459-2526		10	REMOTE I/O BASE MODULE 8 POINTS, 1734-TB	
210	90077-0114		2	END PLATE, WAP 16+35 WTW 2,5-10	
220	90129-0018		2	BASE, P2RF-08-E	
280	90077-0113		14	TERMINAL BLOCK WDK 2.5	
01K325	90459-2503		1	DIGITAL INPUT 4 PTS SINK, 1734-IB4	
01K335	90119-0108		1	RELAY OMRON G2R-2-SNI-24DC	
	90129-0018		*1*	*BASE, P2RF-08-E*	
01K336	90119-0108		1	RELAY OMRON G2R-2-SNI-24DC	
	90129-0018		*1*	*BASE, P2RF-08-E*	
Common Parts					
010	2746909-0000		1	RAIL	
100	312605-0314		2	HEXAGON NUT, M6M M5 A280	
110	315105-0146		2	WASHER BRB 5,3X10 RFR	
120	353024-0205		3	EARTH TERMINAL WPE 4	
230	353034-0030		2	BRIDGE CONNECTOR WQV 2,5/10	
01K320	90459-2494		1	DEVICENET I/O ADAPTER MODULE, 1734-ADN	
01K321	90459-2503		1	DIGITAL INPUT 4 PTS SINK, 1734-IB4	
01K322	90459-2503		1	DIGITAL INPUT 4 PTS SINK, 1734-IB4	
01K323	90459-2503		1	DIGITAL INPUT 4 PTS SINK, 1734-IB4	
01K324	90459-2503		1	DIGITAL INPUT 4 PTS SINK, 1734-IB4	
01K326	90459-2501		1	FIELD POWER DISTRIBUTOR, 1734-FPD	
01K327	90459-2505		1	DIGITAL OUTPUT 4 PTS, 1734-OB4E	
01K328	90459-2505		1	DIGITAL OUTPUT 4 PTS, 1734-OB4E	
01K329	90459-2505		1	DIGITAL OUTPUT 4 PTS, 1734-OB4E	
01K330	90459-2501		1	FIELD POWER DISTRIBUTOR, 1734-FPD	
01K331	90459-2505		1	DIGITAL OUTPUT 4 PTS, 1734-OB4E	
01K332	90459-2505		1	DIGITAL OUTPUT 4 PTS, 1734-OB4E	

Pos	Part No	UN	Qty	Description	Page No

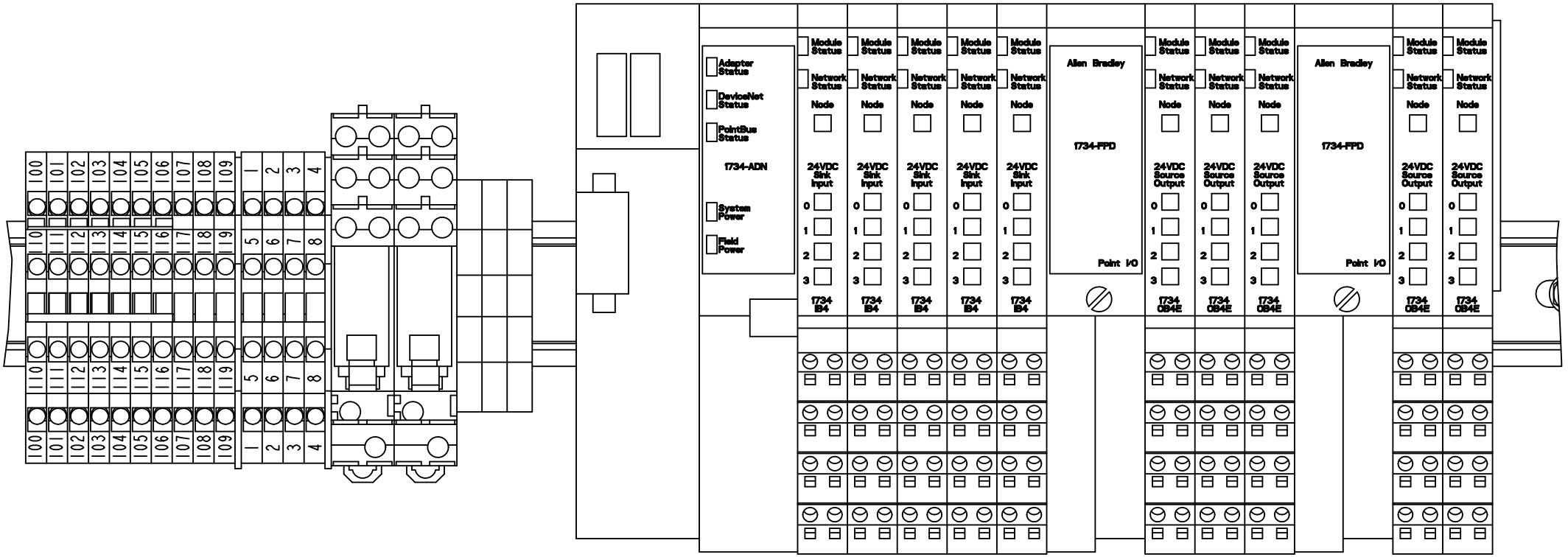

2817783-1
438824

ECM: 438887 - 20100701
Group number: 2817783-0100
Assembly Drawing: 2817783-1_2_AC

This list covers pages from 3-94 to 3-97

Pos	Part No	UN	Qty	Description	Page No
CAP 30/FLEX (See drawing on pages: 3-94, 3-96)					
200	90459-2526		10	REMOTE I/O BASE MODULE 8 POINTS, 1734-TB	
210	90077-0114		2	END PLATE, WAP 16+35 WTW 2,5-10	
220	90129-0018		2	BASE, P2RF-08-E	
280	90077-0113		14	TERMINAL BLOCK WDK 2.5	
01K325	90459-2503		1	DIGITAL INPUT 4 PTS SINK, 1734-IB4	
01K335	90119-0108		1	RELAY OMRON G2R-2-SNI-24DC	
	90129-0018		*1*	*BASE, P2RF-08-E*	
01K336	90119-0108		1	RELAY OMRON G2R-2-SNI-24DC	
	90129-0018		*1*	*BASE, P2RF-08-E*	
Common Parts					
010	2746909-0000		1	RAIL	
100	312605-0314		2	HEXAGON NUT, M6M M5 A280	
110	315105-0146		2	WASHER BRB 5,3X10 RFR	
120	353024-0205		3	EARTH TERMINAL WPE 4	
230	353034-0030		2	BRIDGE CONNECTOR WQV 2,5/10	
01K320	90459-2494		1	DEVICENET I/O ADAPTER MODULE, 1734-ADN	
01K321	90459-2503		1	DIGITAL INPUT 4 PTS SINK, 1734-IB4	
01K322	90459-2503		1	DIGITAL INPUT 4 PTS SINK, 1734-IB4	
01K323	90459-2503		1	DIGITAL INPUT 4 PTS SINK, 1734-IB4	
01K324	90459-2503		1	DIGITAL INPUT 4 PTS SINK, 1734-IB4	
01K326	90459-2501		1	FIELD POWER DISTRIBUTOR, 1734-FPD	
01K327	90459-2505		1	DIGITAL OUTPUT 4 PTS, 1734-OB4E	
01K328	90459-2505		1	DIGITAL OUTPUT 4 PTS, 1734-OB4E	
01K329	90459-2505		1	DIGITAL OUTPUT 4 PTS, 1734-OB4E	
01K330	90459-2501		1	FIELD POWER DISTRIBUTOR, 1734-FPD	
01K331	90459-2505		1	DIGITAL OUTPUT 4 PTS, 1734-OB4E	
01K332	90459-2505		1	DIGITAL OUTPUT 4 PTS, 1734-OB4E	

Pos	Part No	UN	Qty	Description	Page No

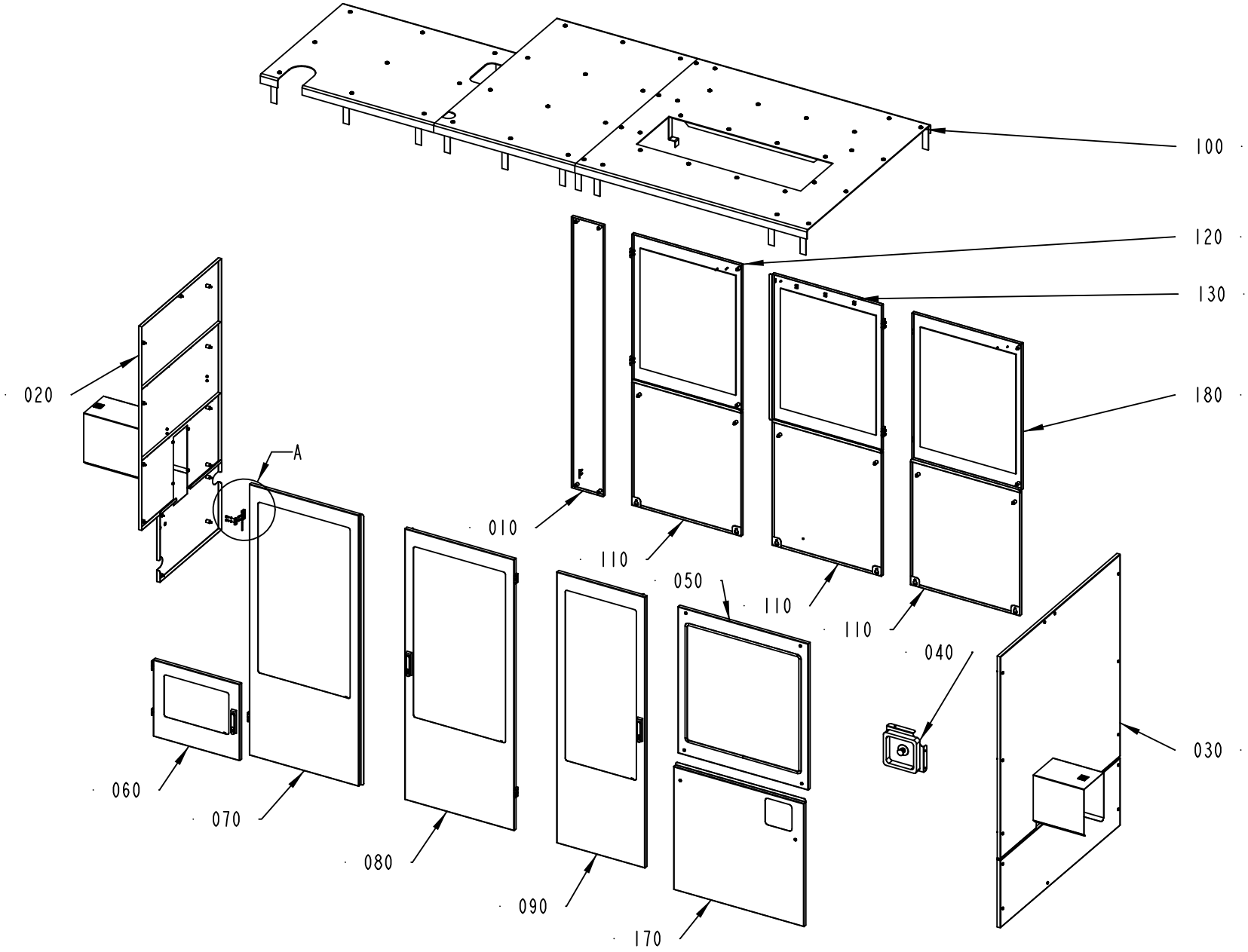

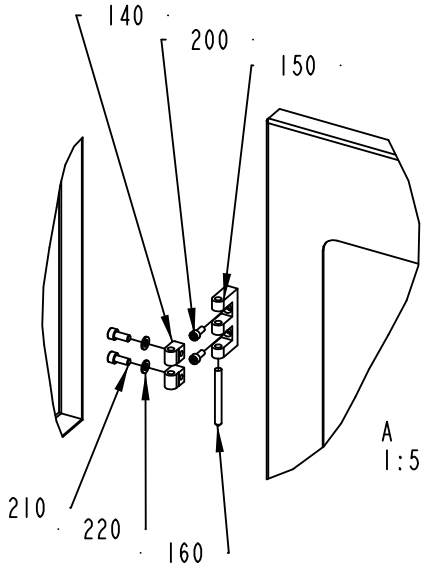

2826741-4
417662

ECM: 494336 - 20110701
Group number: 2826741-0200
Assembly Drawing: 2826741-4_1_AB

Pos	Part No	UN	Qty	Description	Page No
RECAP3, RECAP2 A3					
030	2805494-0200		1	COVER	**3-101**
050	2807108-0100		1	GLASS DOOR	**3-109**
070	2779833-0100		1	GLASS DOOR	**3-111**
090	2807110-0100		1	GLASS DOOR	**3-113**
140	1129770-0000		20	BLOCKING PIECE	
150	1035792-0000		10	E-HINGE	
160	988685-0000		10	PIN	
170	2807109-0100		1	DOOR	**3-115**
200	312115-0327		20	SCREW ISO4762 M5X12 A4 80	
210	312115-0367		20	SCREW ISO4762 M6X14 A4 80	
220	315105-0153		20	WASHER BRB 6,4X12 RFR	
Common Parts					
010	2779835-0200		1	DOOR	**3-117**
020	2826742-0200		1	COVER	**3-119**
040	2769760-0100		1	EMERGENCY STOP	**3-127**
060	2779832-0100		1	GLASS DOOR	**3-129**
080	2779834-0100		1	GLASS DOOR	**3-131**
100	2787230-0100		1	TOP SECTION	**3-133**
110	2805693-0100		3	DOOR	**3-135**
120	2805687-0100		1	GLASS DOOR	**3-137**
130	2805694-0100		1	GLASS DOOR	**3-139**
180	3047348-0100		1	GLASS DOOR	**3-141**

Pos	Part No	UN	Qty	Description	Page No

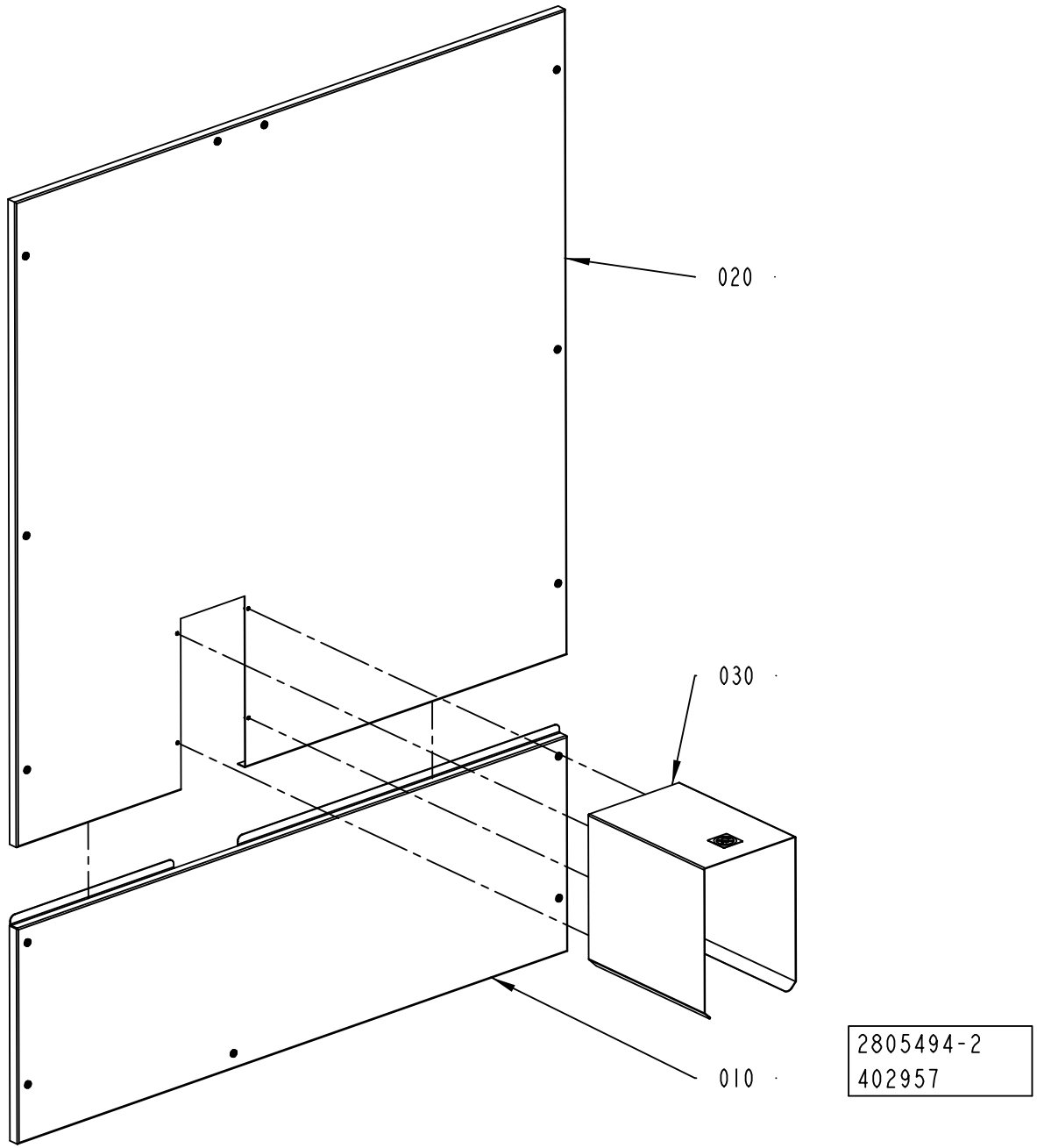
020
030
010
2805494-2
402957

ECM: 407754 - 20091001
Group number: 2805494-0200
Assembly Drawing: 2805494-2_1_AA

Pos	Part No	UN	Qty	Description	Page No
-					
010	2805495-0100		1	DOOR	**3-103**
020	2805497-0200		1	COVER	**3-105**
030	2805499-0200		1	TUNNEL	**3-107**

Pos	Part No	UN	Qty	Description	Page No

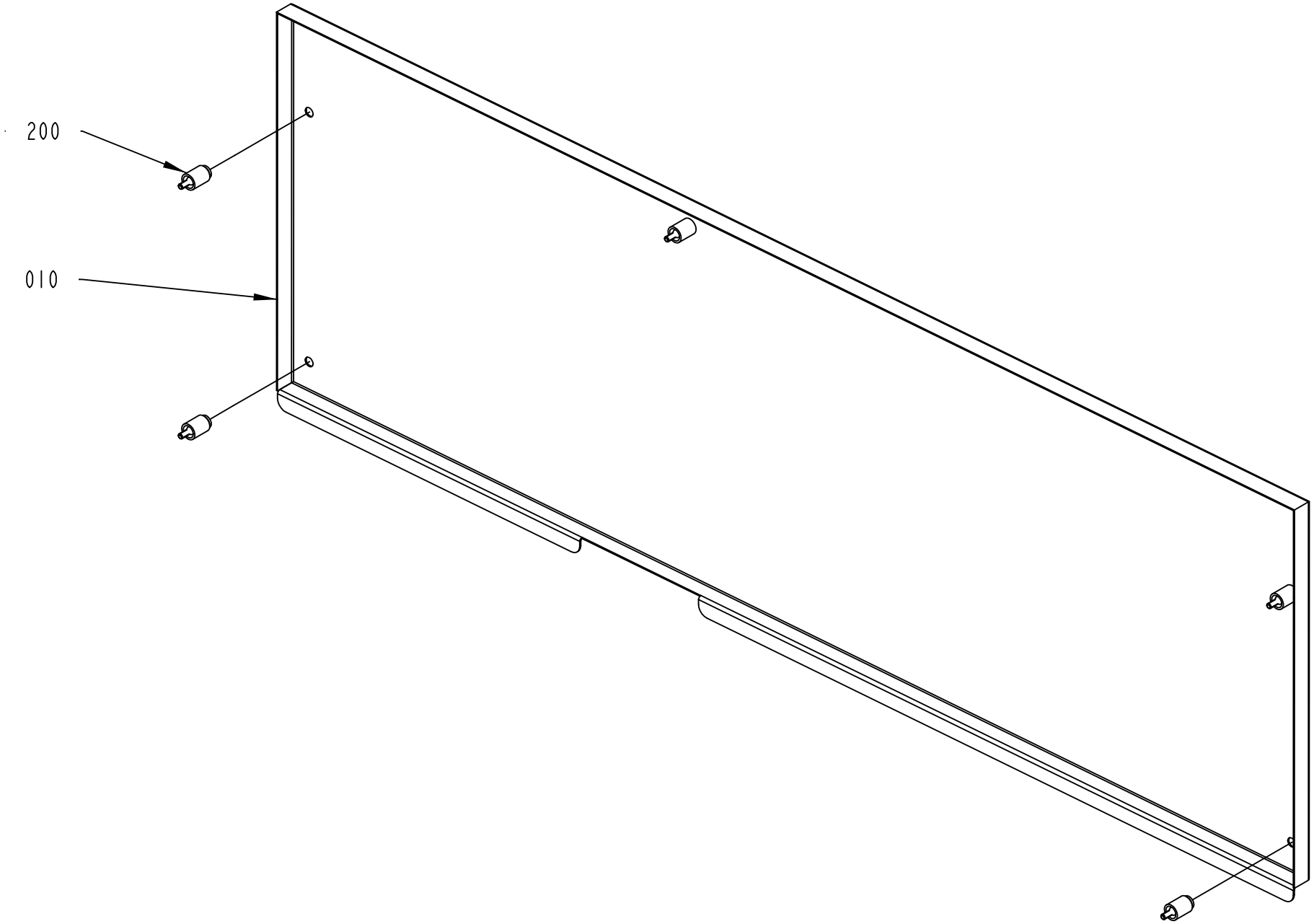

2805495-1
295540

ECM: 350253 - 20080701
Group number: 2805495-0100
Assembly Drawing: 2805495-1_1_AA

Pos	Part No	UN	Qty	Description	Page No
-					
010	2805496-0000		1	COVER	
020	90226-0458		5	MOUNTING SCREW	

Pos	Part No	UN	Qty	Description	Page No

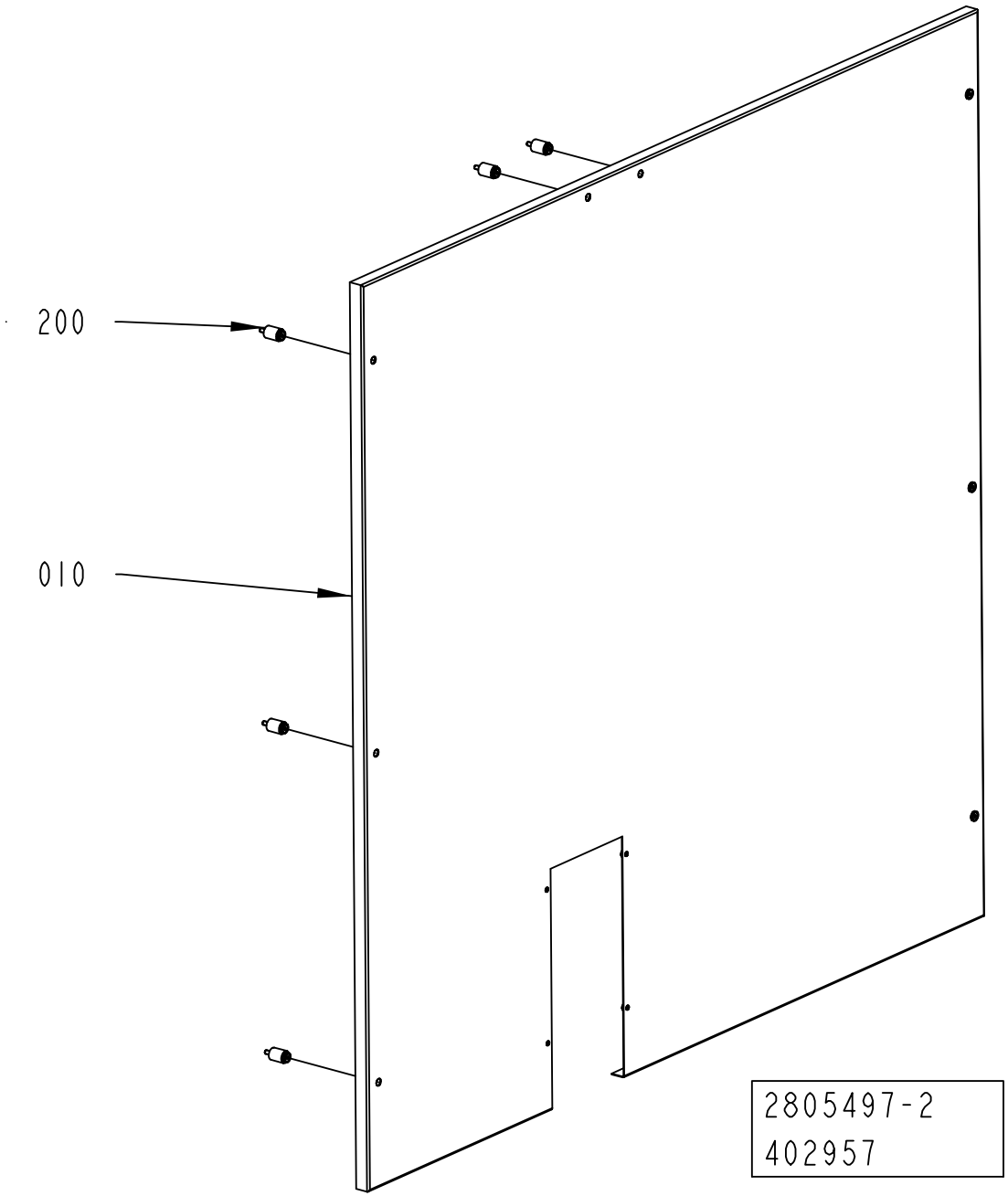
200
010
2805497-2
402957

ECM: 407755 - 20091001
Group number: 2805497-0200
Assembly Drawing: 2805497-2_1_AA

Pos	Part No	UN	Qty	Description	Page No
-					
010	3039013-0000		1	COVER	
020	90226-0458		8	MOUNTING SCREW	

Pos	Part No	UN	Qty	Description	Page No

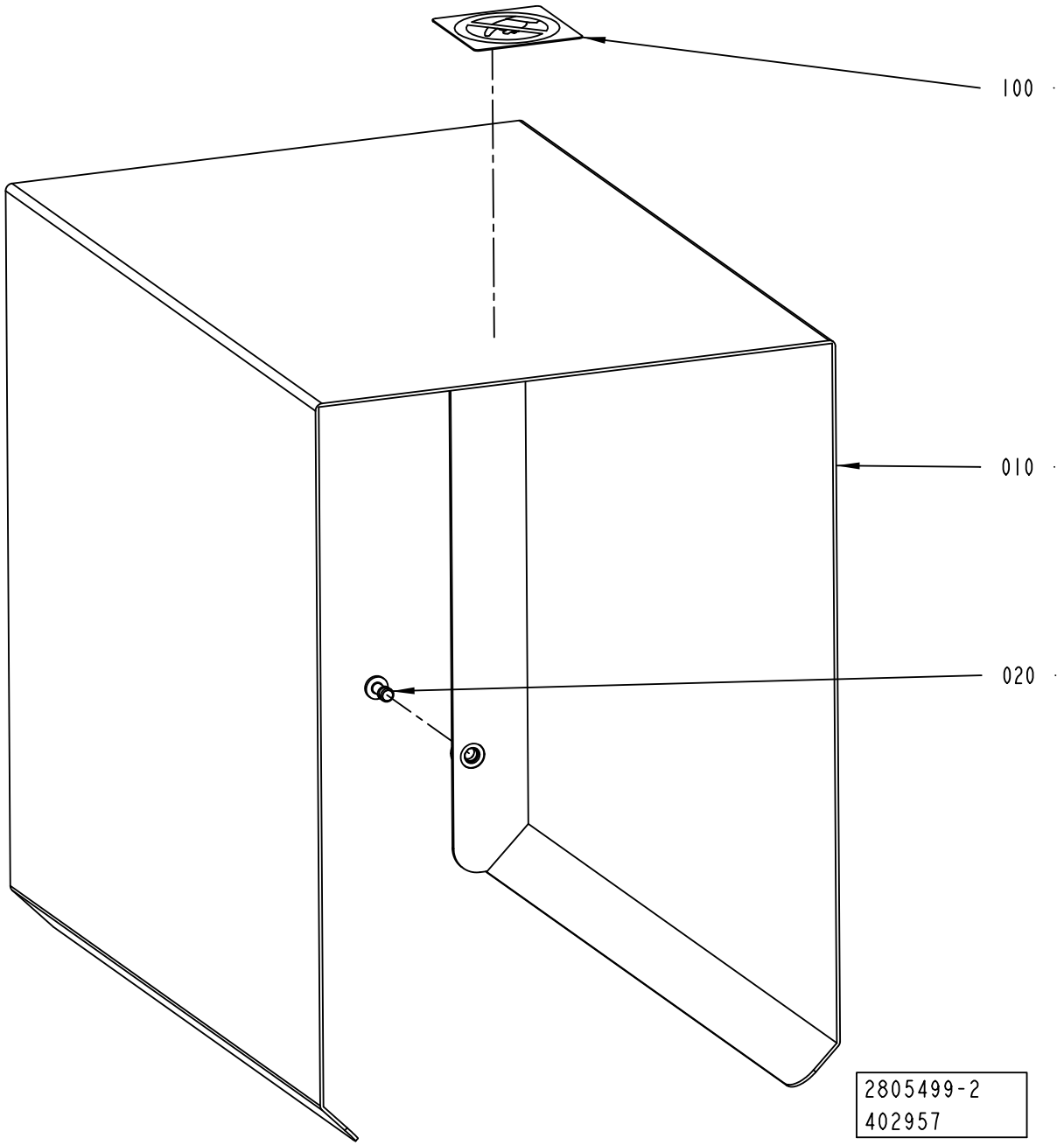
100
010
020
2805499-2
402957

ECM: 419447 - 20100110
Group number: 2805499-0200
Assembly Drawing: 2805499-2_1_AA

Pos	Part No	UN	Qty	Description	Page No
-					
010	2985853-0000		1	TUNNEL	
020	90601-2046		4	CAPTIVE SCREW M6, GUTBG 6-4-12	
100	1128856-0000		1	PROHIBITION SIGN	

Pos	Part No	UN	Qty	Description	Page No

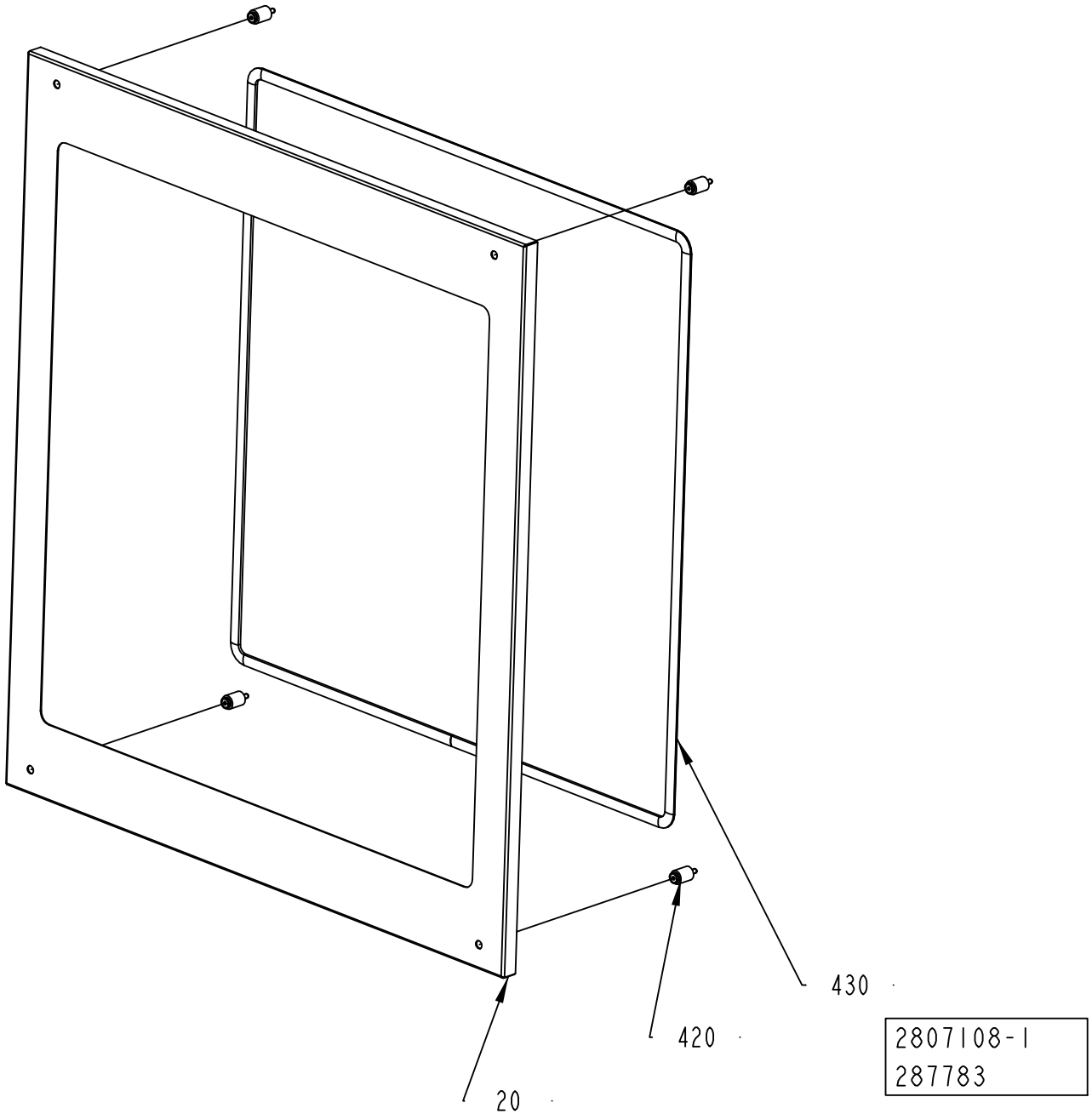
430
420
20
2807108-1
287783

ECM: 350256 - 20080701
Group number: 2807108-0100
Assembly Drawing: 2807108-1_1_AA

Pos	Part No	UN	Qty	Description	Page No
-					
020	2807111-0000		1	DOOR	
410	90157-0041		1	SEALING COMPOUND, RHODORSEAL 5651	
420	90226-0458		4	MOUNTING SCREW	
430	90143-0098	MM	600	RUBBER STRIP, CLAMPING, NO. 1038-02	

Pos	Part No	UN	Qty	Description	Page No

GLASS DOOR

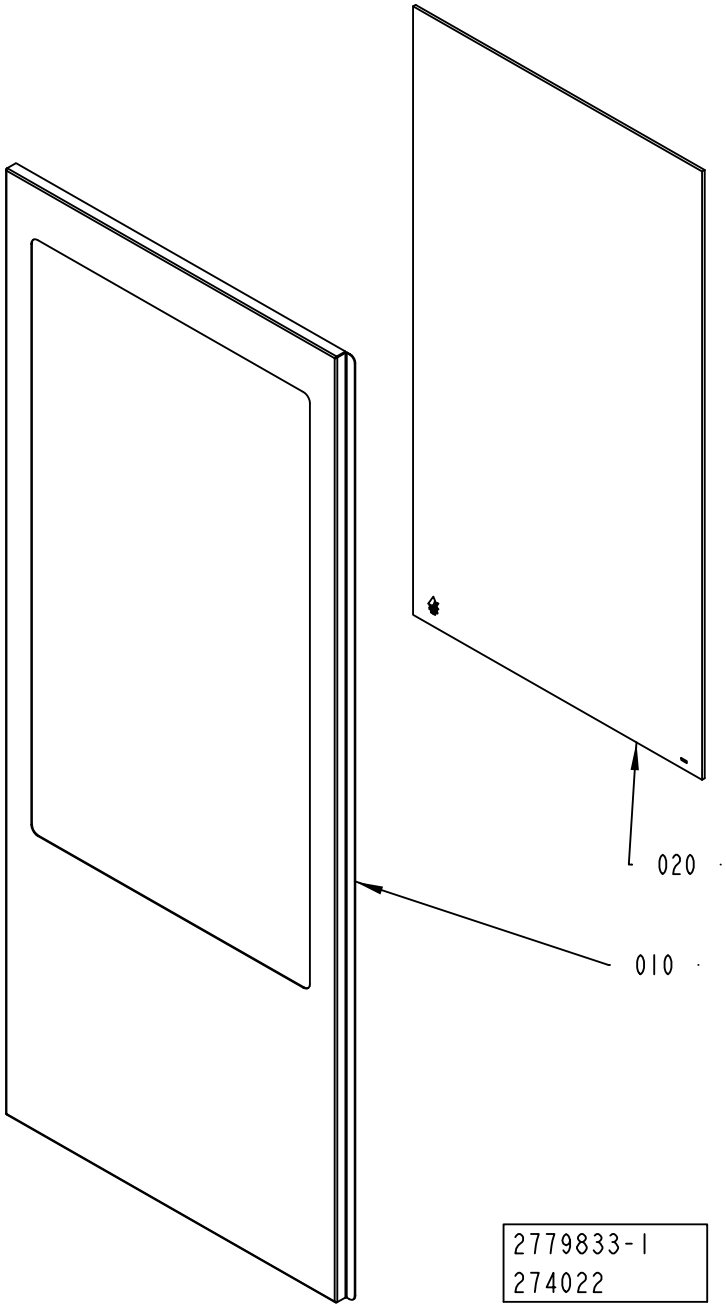

ECM: 305564 - 20070517
Group number: 2779833-0100
Assembly Drawing: 2779833-1_1_AA

Pos	Part No	UN	Qty	Description	Page No
-					
010	2779840-0000		1	DOOR	
020	2781278-0000		1	GLASS	
110	90157-0041		1	SEALING COMPOUND, RHODORSEAL 5651	

Pos	Part No	UN	Qty	Description	Page No

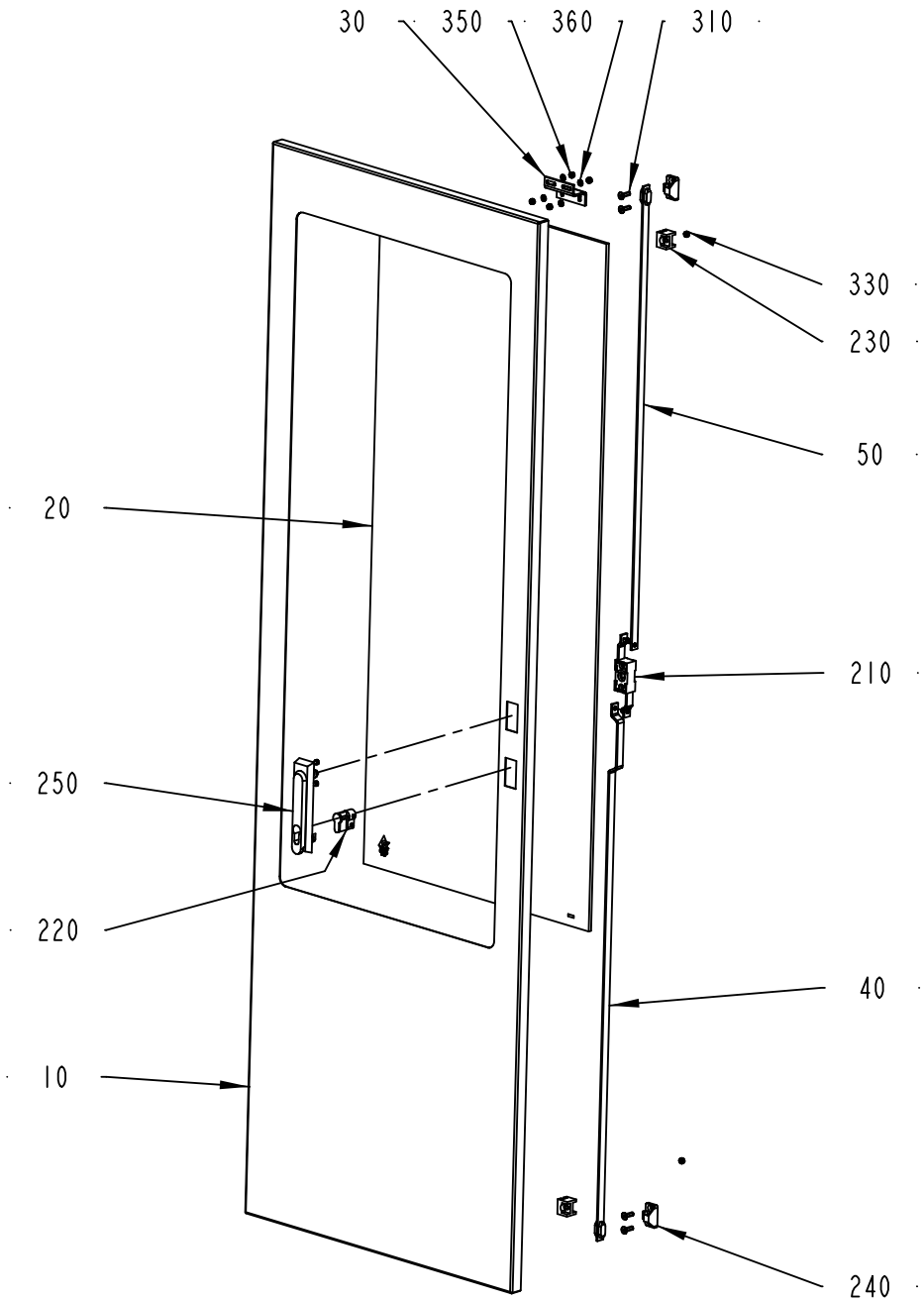
30
350
360
310
330
230
50
20
210
250
220
40
10
240
2807110-1
455569

ECM: 458831 - 20101001
Group number: 2807110-0100
Assembly Drawing: 2807110-1_1_AD

Pos	Part No	UN	Qty	Description	Page No
-					
010	2817767-0000		1	DOOR	
020	2817768-0000		1	GLASS	
030	2595618-0000		1	BRACKET	
040	2551030-0000		1	STRUT	
050	2781285-0000		1	STRUT	
210	90237-0123		1	LOCK, 1121-U10C	
220	90237-0128		1	LOCK CYLINDER, 1109-SU125	
230	90237-0144		2	GUIDE, 1121-SU540	
240	90237-0147		2	LOCKING LUG, NO. 1121-53-0P	
250	90237-0175		1	TURNING HANDLE, 1125-U185-0A	
310	312155-0370		4	SCREW DIN 7991 MF6S M6X20 A4 70	
330	312605-0314		2	HEXAGON NUT, M6M M5 A280	
350	312812-0314		4	HEXAGON NUT, NY-LOCK M5 A480	
360	315105-0146		4	WASHER BRB 5,3X10 RFR	
410	90157-0041		1	SEALING COMPOUND, RHODORSEAL 5651	

Pos	Part No	UN	Qty	Description	Page No

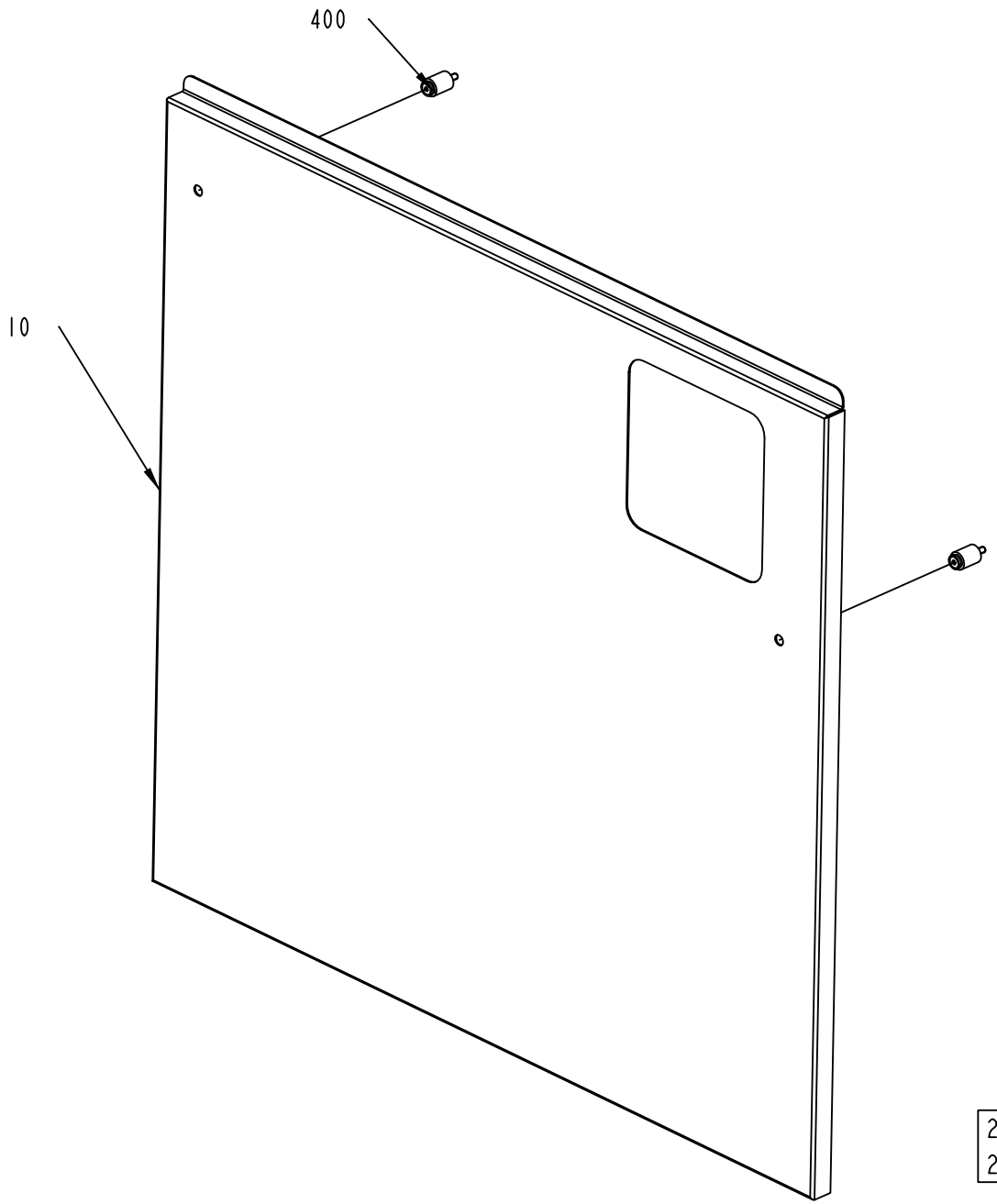
400
10
2807109-1
287783

ECM: 350257 - 20080701
Group number: 2807109-0100
Assembly Drawing: 2807109-1_1_AA

Pos	Part No	UN	Qty	Description	Page No
-					
010	2807112-0000		1	COVER	
400	90226-0458		2	MOUNTING SCREW	

Pos	Part No	UN	Qty	Description	Page No

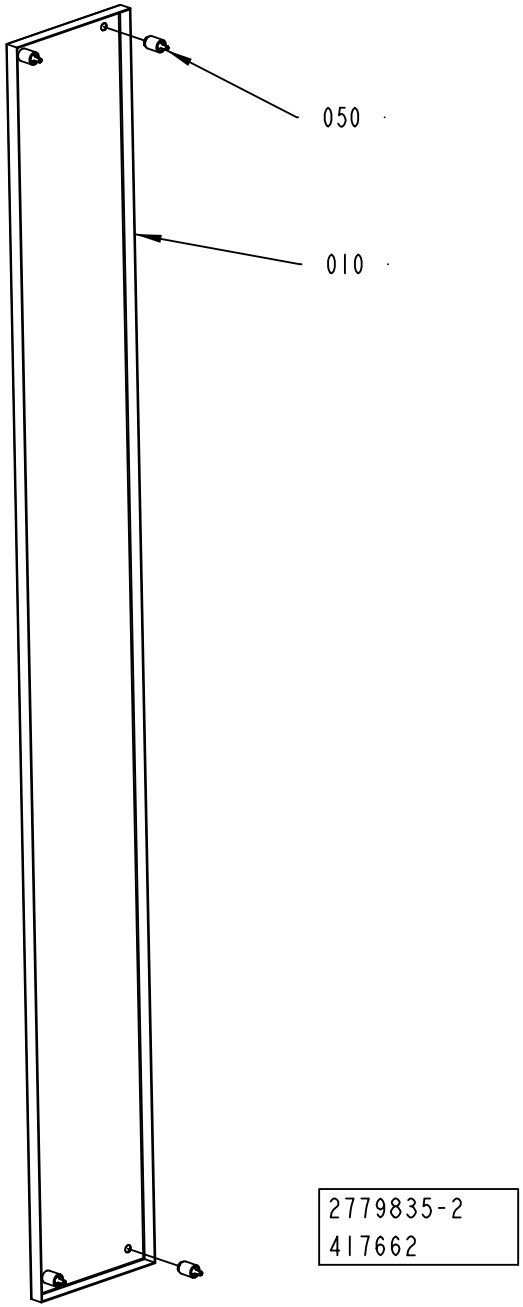
050
010
2779835-2
417662

ECM: 419448 - 20100110
Group number: 2779835-0200
Assembly Drawing: 2779835-2_1_AA

Pos	Part No	UN	Qty	Description	Page No
-					
010	3058858-0000		1	DOOR	
050	90226-0458		4	MOUNTING SCREW	

Pos	Part No	UN	Qty	Description	Page No

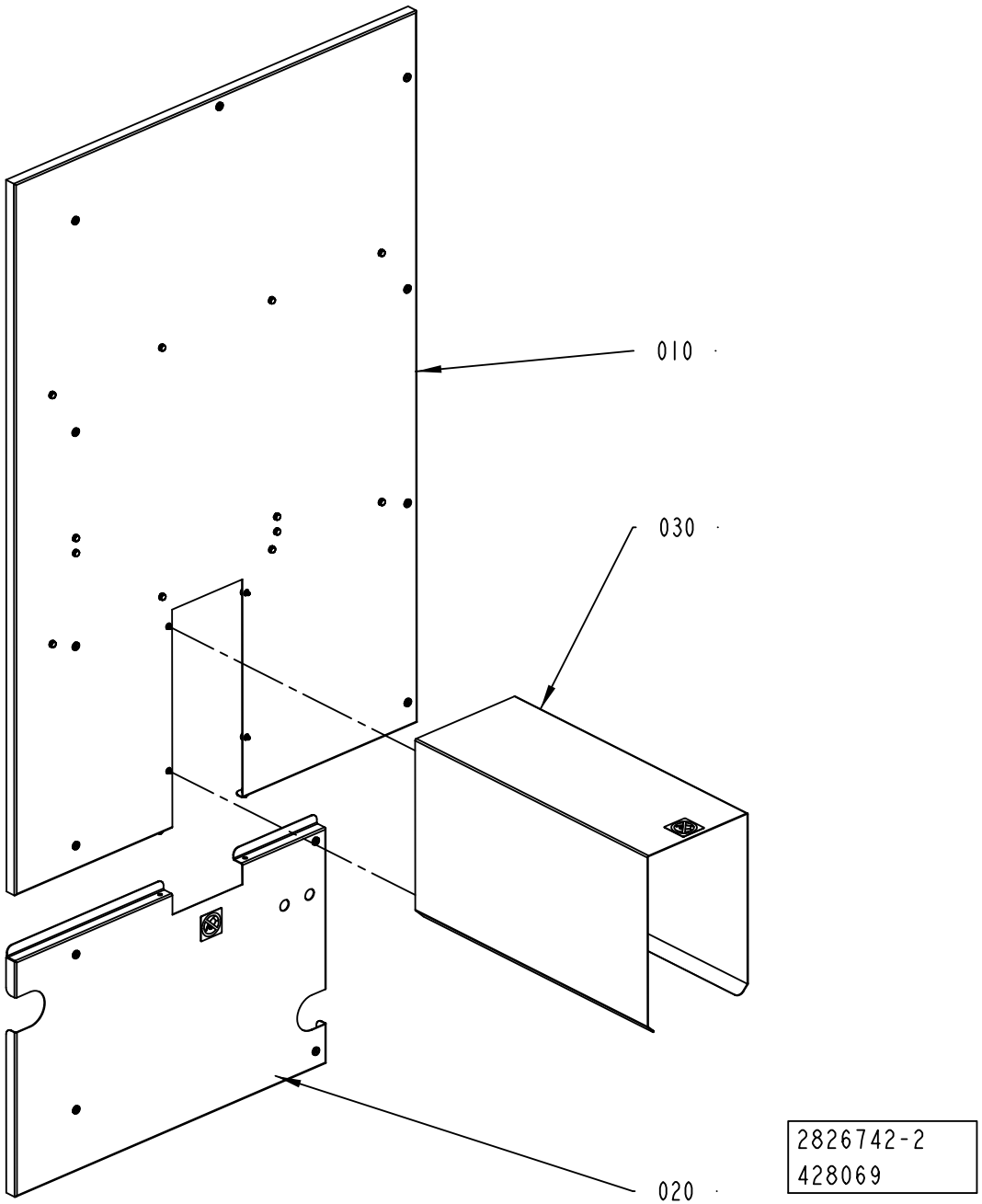
010
030
020
2826742-2
428069

ECM: 428928 - 20100401
Group number: 2826742-0200
Assembly Drawing: 2826742-2_1_AB

Pos	Part No	UN	Qty	Description	Page No
-					
010	2826744-0200		1	COVER	**3-121**
020	2842793-0200		1	DOOR	**3-123**
030	2805493-0200		1	TUNNEL	**3-125**

Pos	Part No	UN	Qty	Description	Page No

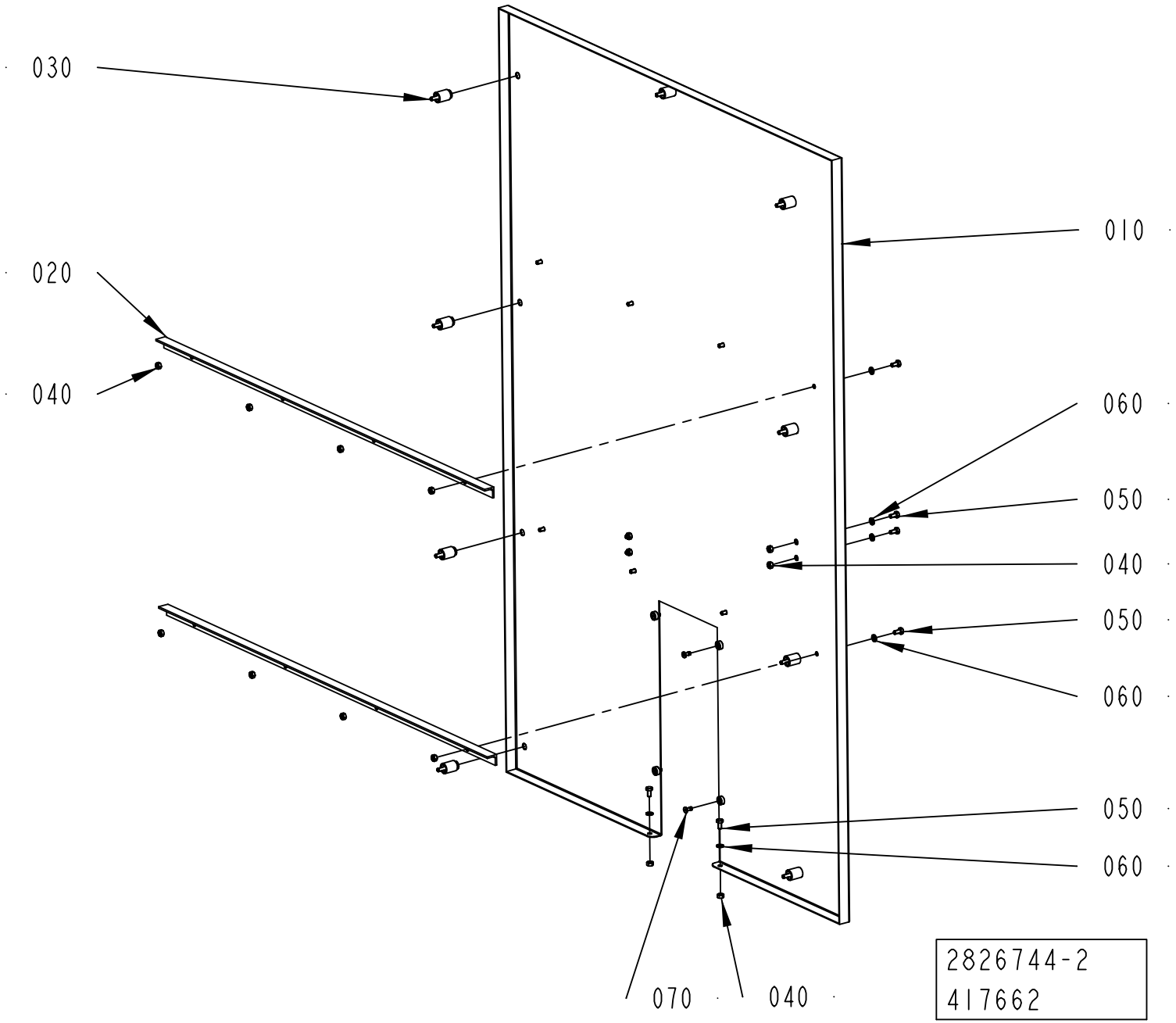
030
020
040
010
060
050
040
050
060
050
060
070
040
2826744-2
417662

ECM: 428929 - 20100401
Group number: 2826744-0200
Assembly Drawing: 2826744-2_1_AA

Pos	Part No	UN	Qty	Description	Page No
-					
010	3056497-0000		1	DOOR	
020	2842801-0000		2	COVER	
030	90226-0458		9	MOUNTING SCREW	
040	312605-0316		14	HEXAGON NUT, M6M M6 A280	
050	312105-0366		14	SCREW M6S ISO 4017 M6X12 A480	
060	315105-0153		14	WASHER BRB 6,4X12 RFR	
070	90601-2046		4	CAPTIVE SCREW M6, GUTBG 6-4-12	

Pos	Part No	UN	Qty	Description	Page No

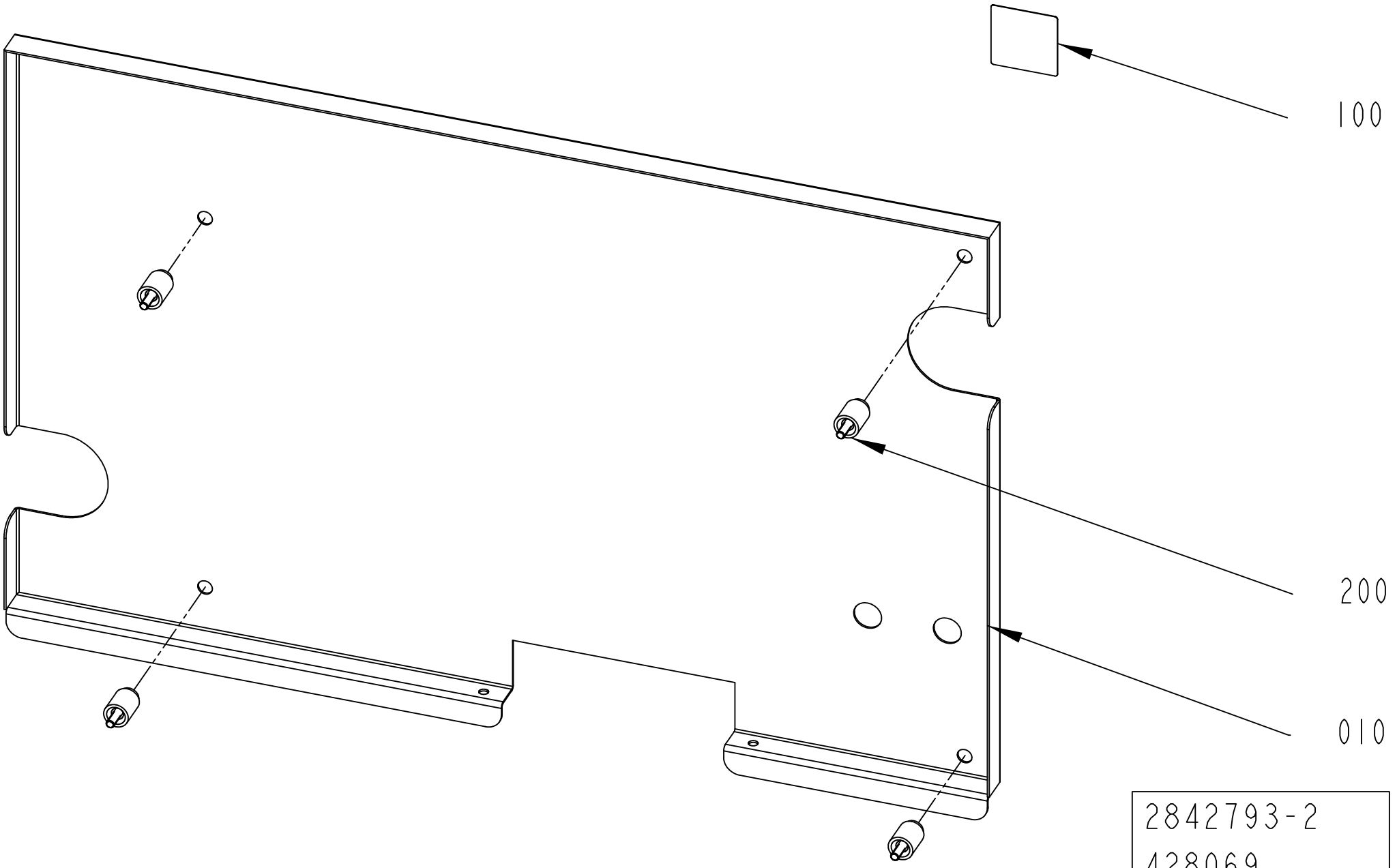
100
200
010
2842793-2
428069

ECM: 430662 - 20100401
Group number: 2842793-0200
Assembly Drawing: 2842793-2_1_AA

Pos	Part No	UN	Qty	Description	Page No
-					
010	2966581-0000		1	COVER	
100	1128856-0000		1	PROHIBITION SIGN	
200	90226-0458		4	MOUNTING SCREW	

Pos	Part No	UN	Qty	Description	Page No

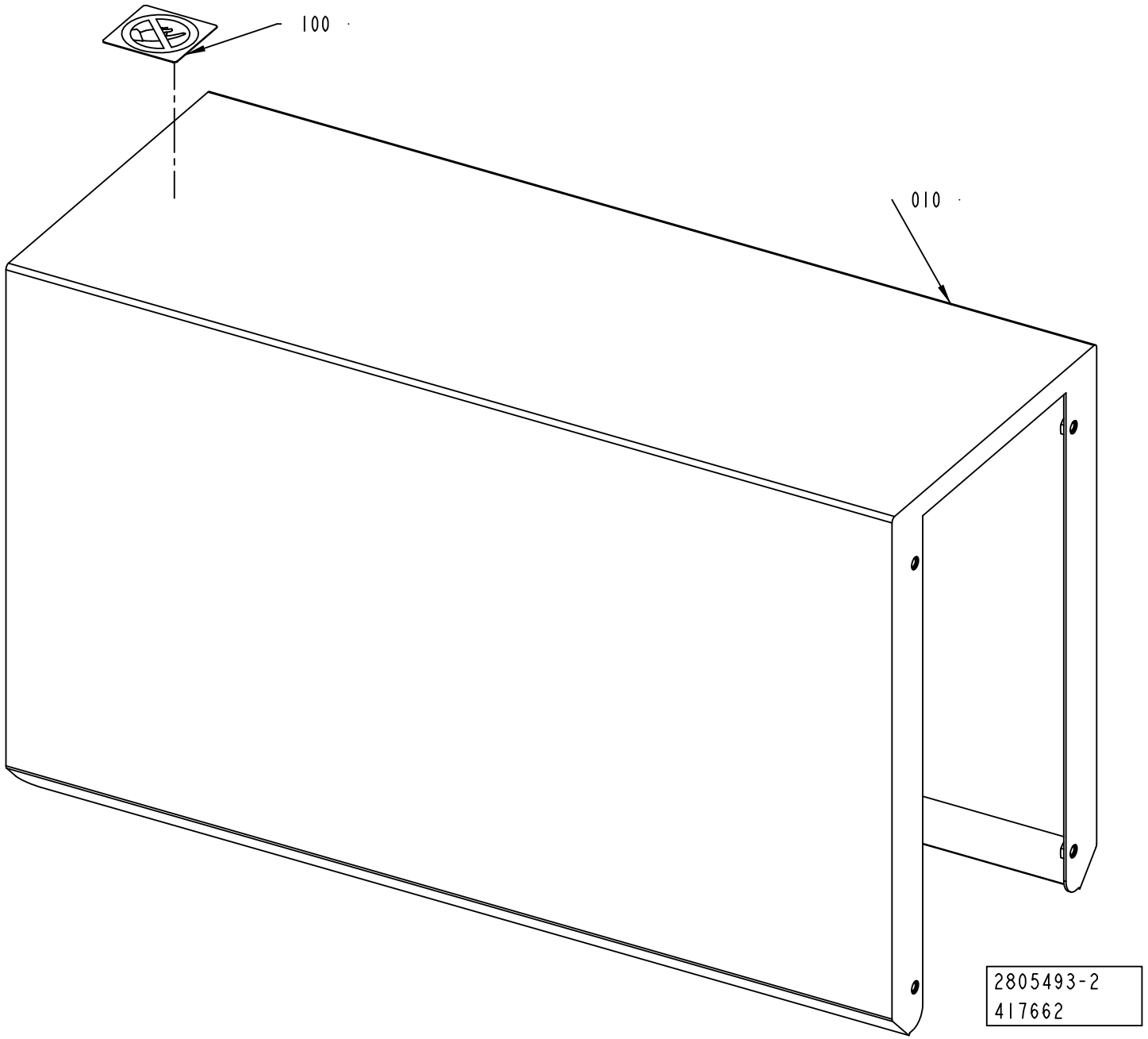
100
010
2805493-2
417662

ECM: 419450 - 20100110
Group number: 2805493-0200
Assembly Drawing: 2805493-2_1_AA

Pos	Part No	UN	Qty	Description	Page No
-					
010	2985804-0000		1	TUNNEL	
100	1128856-0000		1	PROHIBITION SIGN	

Pos	Part No	UN	Qty	Description	Page No

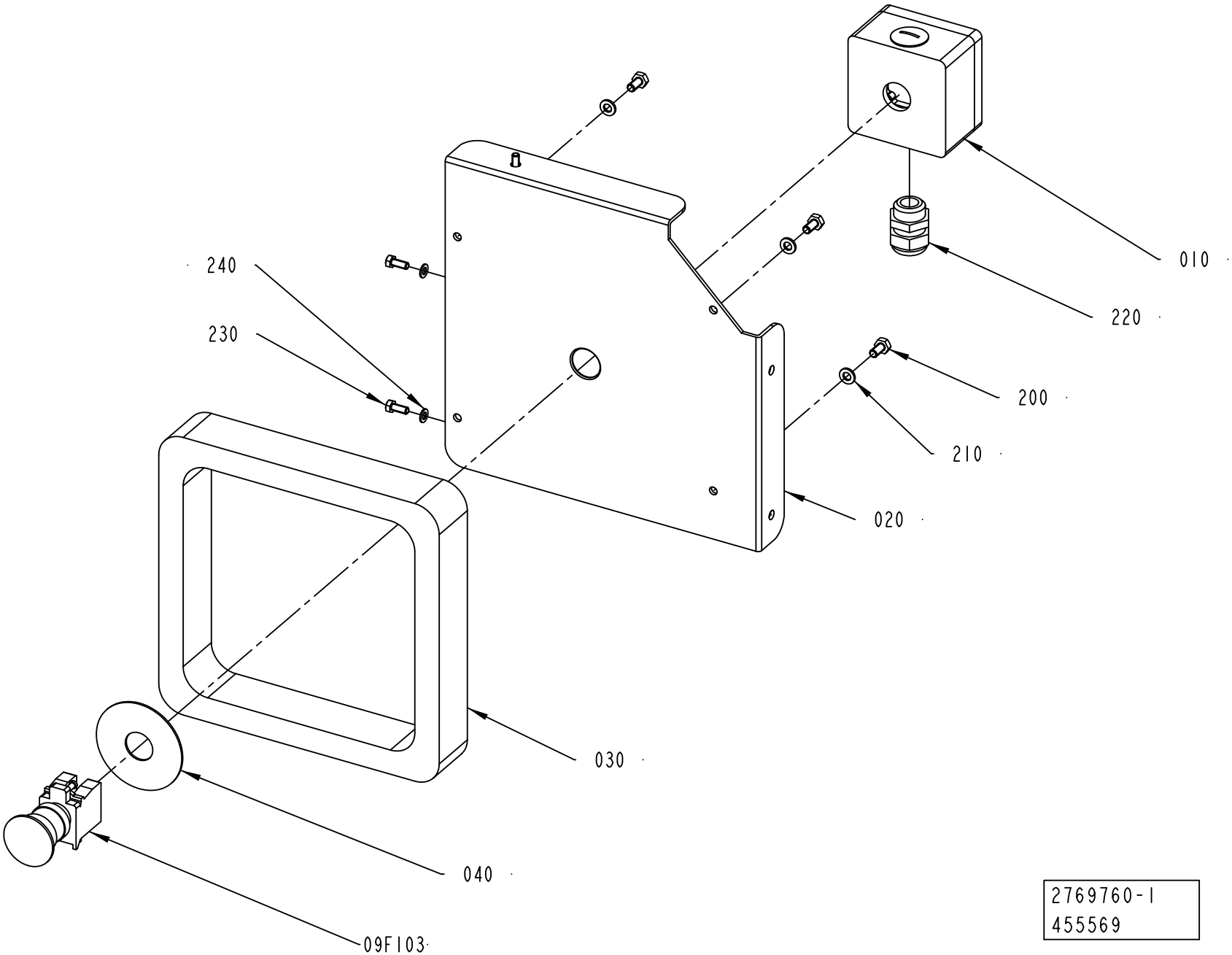

2769760-1
455569

ECM: 458826 - 20101001
Group number: 2769760-0100
Assembly Drawing: 2769760-1_1_AB

Pos	Part No	UN	Qty	Description	Page No
-					
010	1037130-0000		1	,CONNECTION BOX	
020	2779763-0000		1	COVER	
030	2779771-0000		1	SPACER	
040	486826-0001		1	SIGN "EMERGENCY STOP"	
200	312105-0366		4	SCREW M6S ISO 4017 M6X12 A480	
210	315105-0153		4	WASHER BRB 6,4X12 RFR	
220	352103-0110		1	CABLE GLAND, STR 16, PR22,5/PG16	
230	312105-0327		3	SCREW M6S ISO 4017 M5X12 A480	
240	315105-0146		3	WASHER BRB 5,3X10 RFR	
09F103	90458-1651		1	EMERGENCY STOP, ZB4-BS-844 ZB4-BZ-104	

Pos	Part No	UN	Qty	Description	Page No

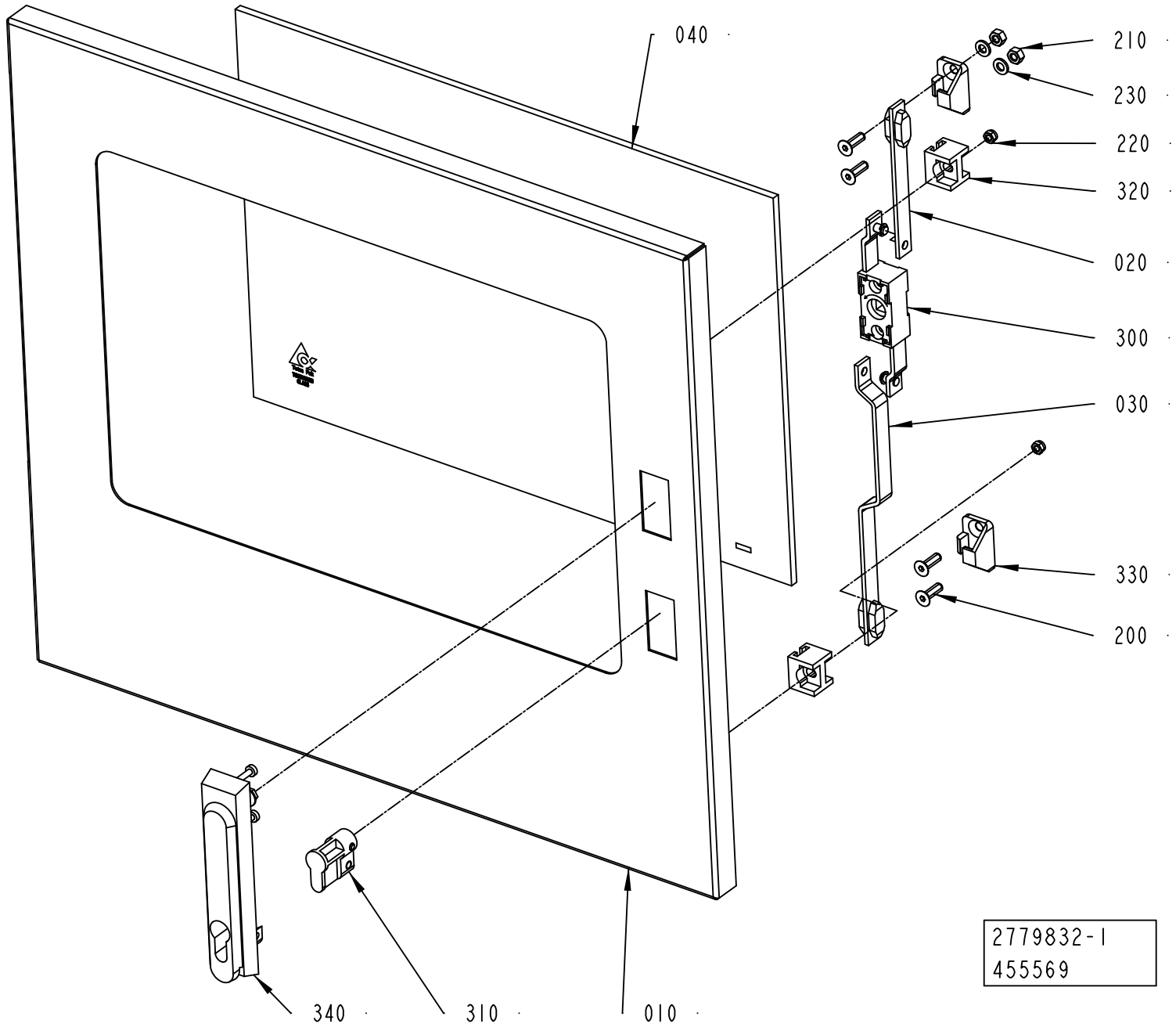
040
210
230
220
320
020
300
030
330
200
340
310
010
2779832-1
455569

ECM: 458829 - 20101001
Group number: 2779832-0100
Assembly Drawing: 2779832-1_1_AB

Pos	Part No	UN	Qty	Description	Page No
-					
010	2779838-0000		1	DOOR	
020	2563891-0000		1	STRUT	
030	2563892-0000		1	STRUT	
040	2779839-0000		1	GLASS	
200	312155-0370		4	SCREW DIN 7991 MF6S M6X20 A4 70	
210	312605-0316		2	HEXAGON NUT, M6M M6 A280	
220	312812-0314		2	HEXAGON NUT, NY-LOCK M5 A480	
230	315105-0153		2	WASHER BRB 6,4X12 RFR	
300	90237-0123		1	LOCK, 1121-U10C	
310	90237-0128		1	LOCK CYLINDER, 1109-SU125	
320	90237-0144		2	GUIDE, 1121-SU540	
330	90237-0147		2	LOCKING LUG, NO. 1121-53-0P	
340	90237-0175		1	TURNING HANDLE, 1125-U185-0A	
360	90157-0041		1	SEALING COMPOUND, RHODORSEAL 5651	

Pos	Part No	UN	Qty	Description	Page No

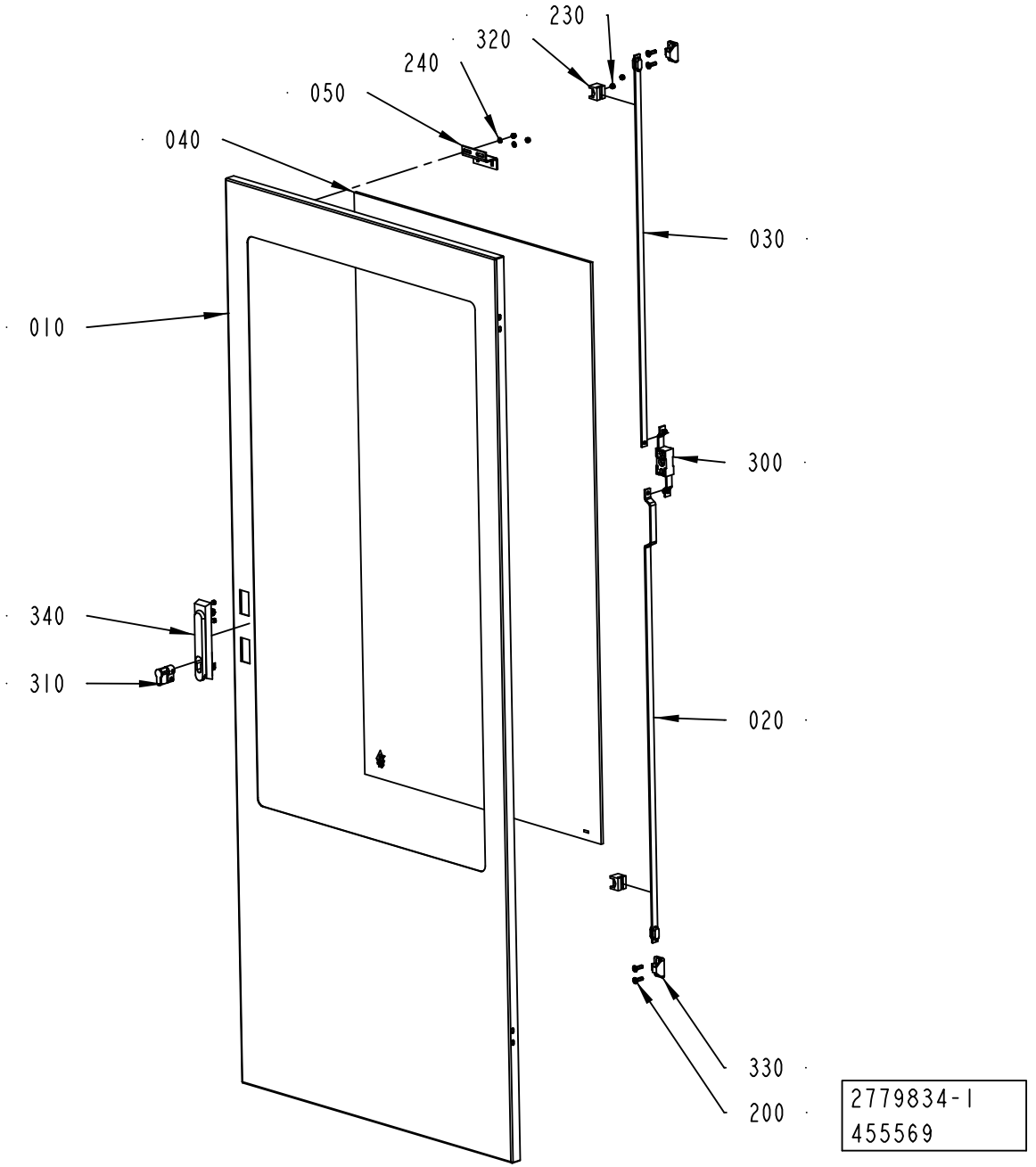
230
320
240
050
040
030
010
300
340
310
020
330
200
2779834-1
455569

ECM: 458830 - 20101001
Group number: 2779834-0100
Assembly Drawing: 2779834-1_1_AB

Pos	Part No	UN	Qty	Description	Page No
-					
010	2781279-0000		1	DOOR	
020	2551030-0000		1	STRUT	
030	2781285-0000		1	STRUT	
040	2781278-0000		1	GLASS	
050	2595618-0000		1	BRACKET	
200	312155-0370		4	SCREW DIN 7991 MF6S M6X20 A4 70	
230	312812-0314		4	HEXAGON NUT, NY-LOCK M5 A480	
240	315105-0146		2	WASHER BRB 5,3X10 RFR	
300	90237-0123		1	LOCK, 1121-U10C	
310	90237-0128		1	LOCK CYLINDER, 1109-SU125	
320	90237-0144		2	GUIDE, 1121-SU540	
330	90237-0147		2	LOCKING LUG, NO. 1121-53-0P	
340	90237-0175		1	TURNING HANDLE, 1125-U185-0A	
360	90157-0041		1	SEALING COMPOUND, RHODORSEAL 5651	

Pos	Part No	UN	Qty	Description	Page No

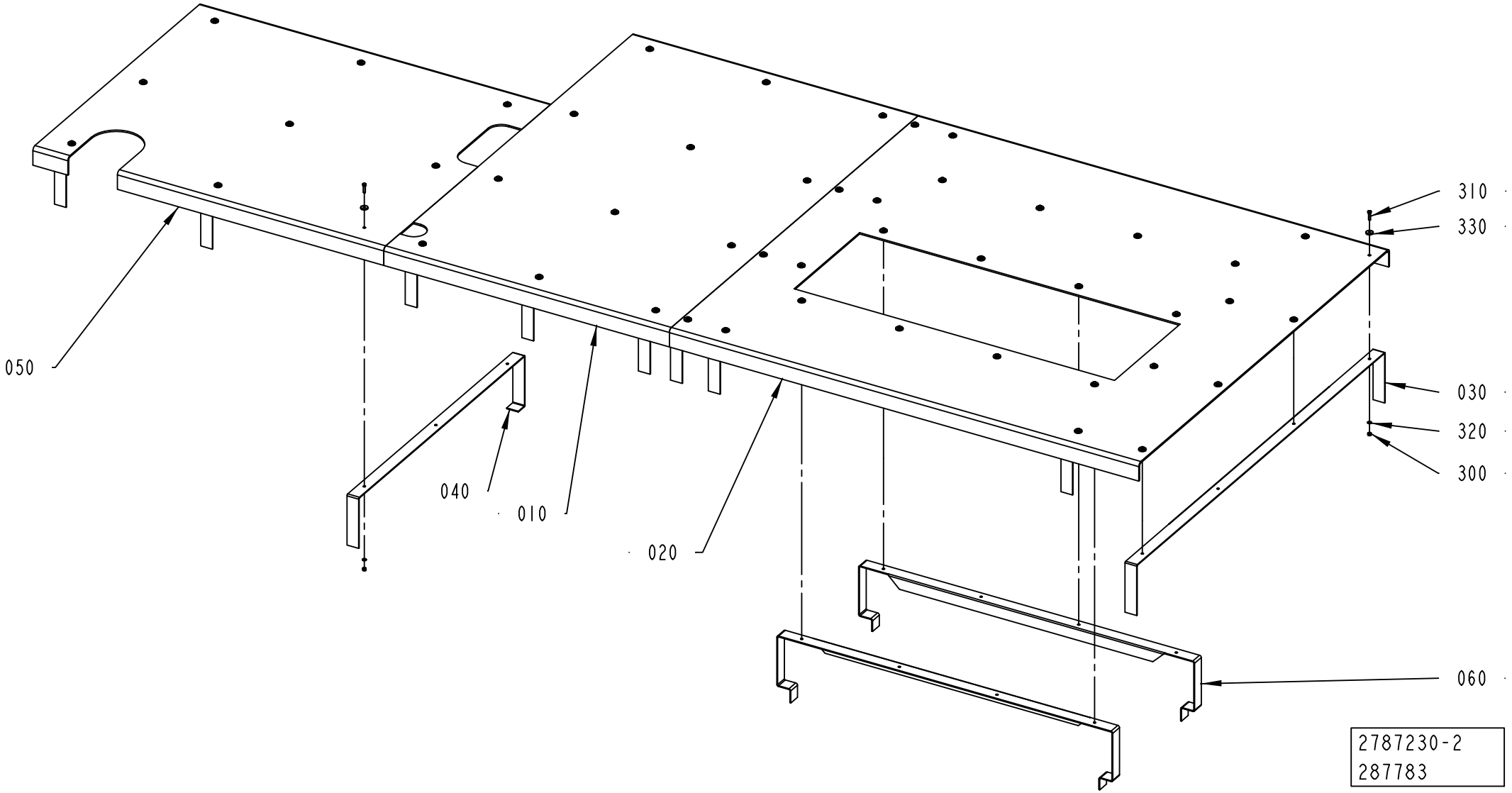
310
330
050
030
320
040
010
300
020
060
2787230-2
287783

ECM: 494334 - 20110701
Group number: 2787230-0100
Assembly Drawing: 2787230-2_1_AA

Pos	Part No	UN	Qty	Description	Page No
RECAP3, RECAP2 A3					
010	2817780-0000		1	PLATE	
020	2817781-0000		1	PLATE	
060	2817782-0000		3	BRACKET	
300	312812-0316		49	HEXAGON NUT, NY-LOCK M6 A480	
310	312105-0372		49	SCREW M6S ISO 4017 M6X25 A480	
320	315105-0153		49	WASHER BRB 6,4X12 RFR	
330	315125-0153		49	WASHER TBRSB 6,4X22X4 A4	
Common Parts					
030	2779823-0000		7	BRACKET	
040	2779824-0000		3	BRACKET	
050	2779825-0000		1	PLATE	

Pos	Part No	UN	Qty	Description	Page No

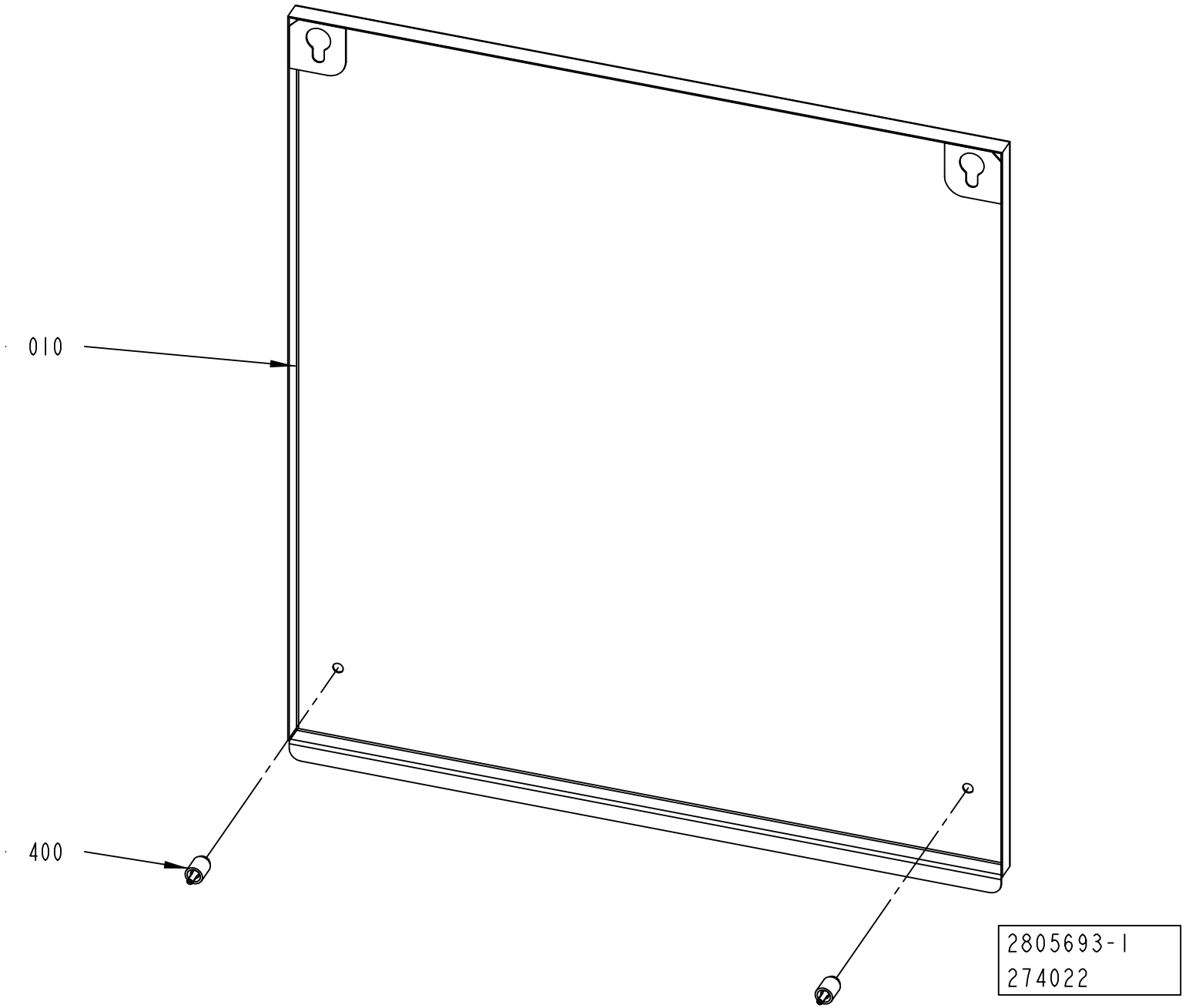
010
400
2805693-1
274022

ECM: 274542 - 20060921
Group number: 2805693-0100
Assembly Drawing: 2805693-1_1_AA

Pos	Part No	UN	Qty	Description	Page No
-					
010	2805692-0000		1	COVER	
400	90226-0458		2	MOUNTING SCREW	

Pos	Part No	UN	Qty	Description	Page No

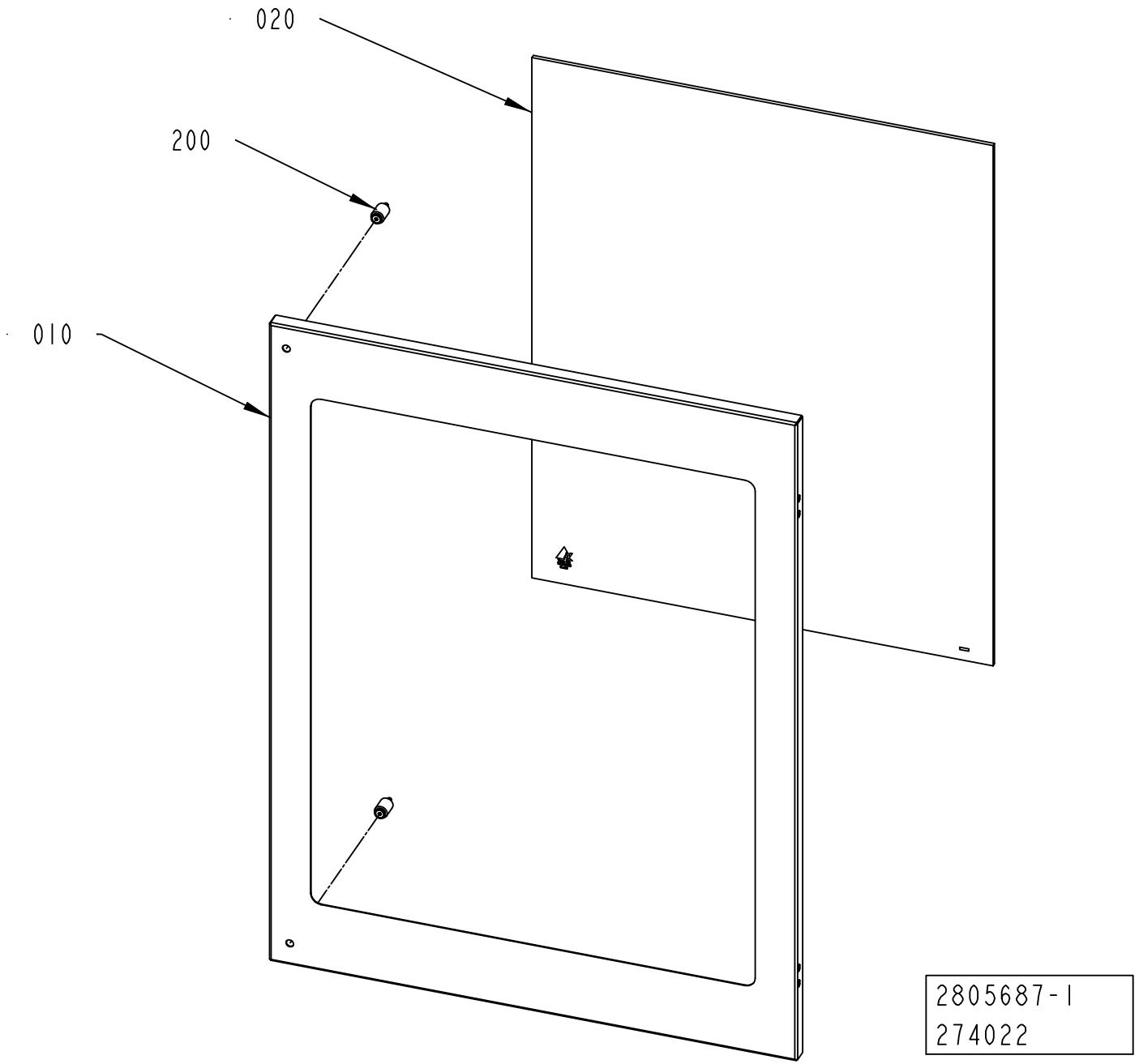
020
200
010
2805687-1
274022

ECM: 274543 - 20060921
Group number: 2805687-0100
Assembly Drawing: 2805687-1_1_AA

Pos	Part No	UN	Qty	Description	Page No
-					
010	2805688-0000		1	DOOR	
020	2805691-0000		1	GLASS	
200	90226-0458		2	MOUNTING SCREW	
220	90157-0041		1	SEALING COMPOUND, RHODORSEAL 5651	

Pos	Part No	UN	Qty	Description	Page No

GLASS DOOR

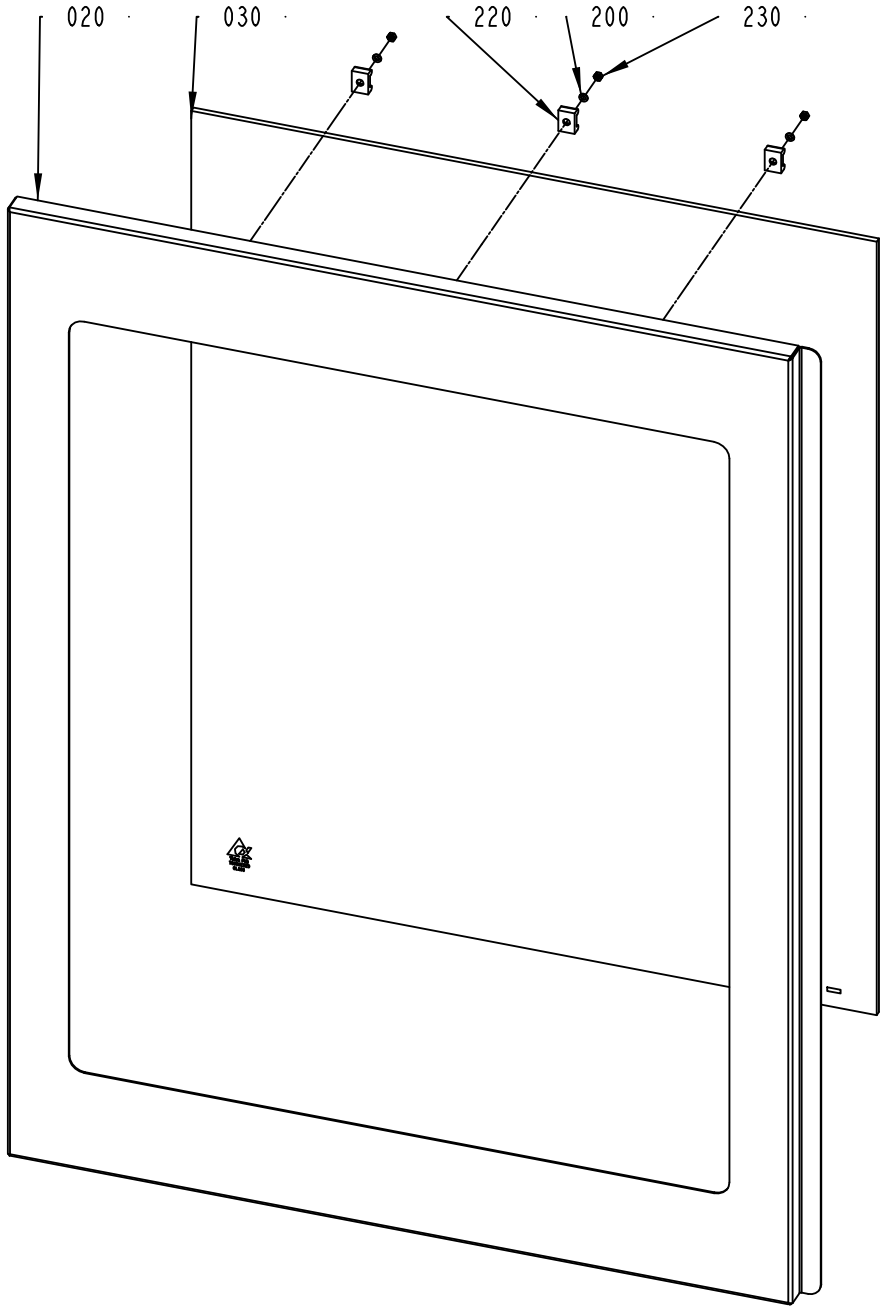

ECM: 303484 - 20070517
Group number: 2805694-0100
Assembly Drawing: 2805694-1_1_AB

Pos	Part No	UN	Qty	Description	Page No
-					
020	2805695-0000		1	DOOR	
030	2805691-0000		1	GLASS	
110	90157-0041		1	SEALING COMPOUND, RHODORSEAL 5651	
200	315105-0136		3	WASHER BRB 4,3X8 RFR	
220	352113-0204		3	ANCHOR PLATES FOR STRIPS, TM3S25-M	
230	312605-0312		3	HEXAGON NUT, M6M M4 A280	

Pos	Part No	UN	Qty	Description	Page No

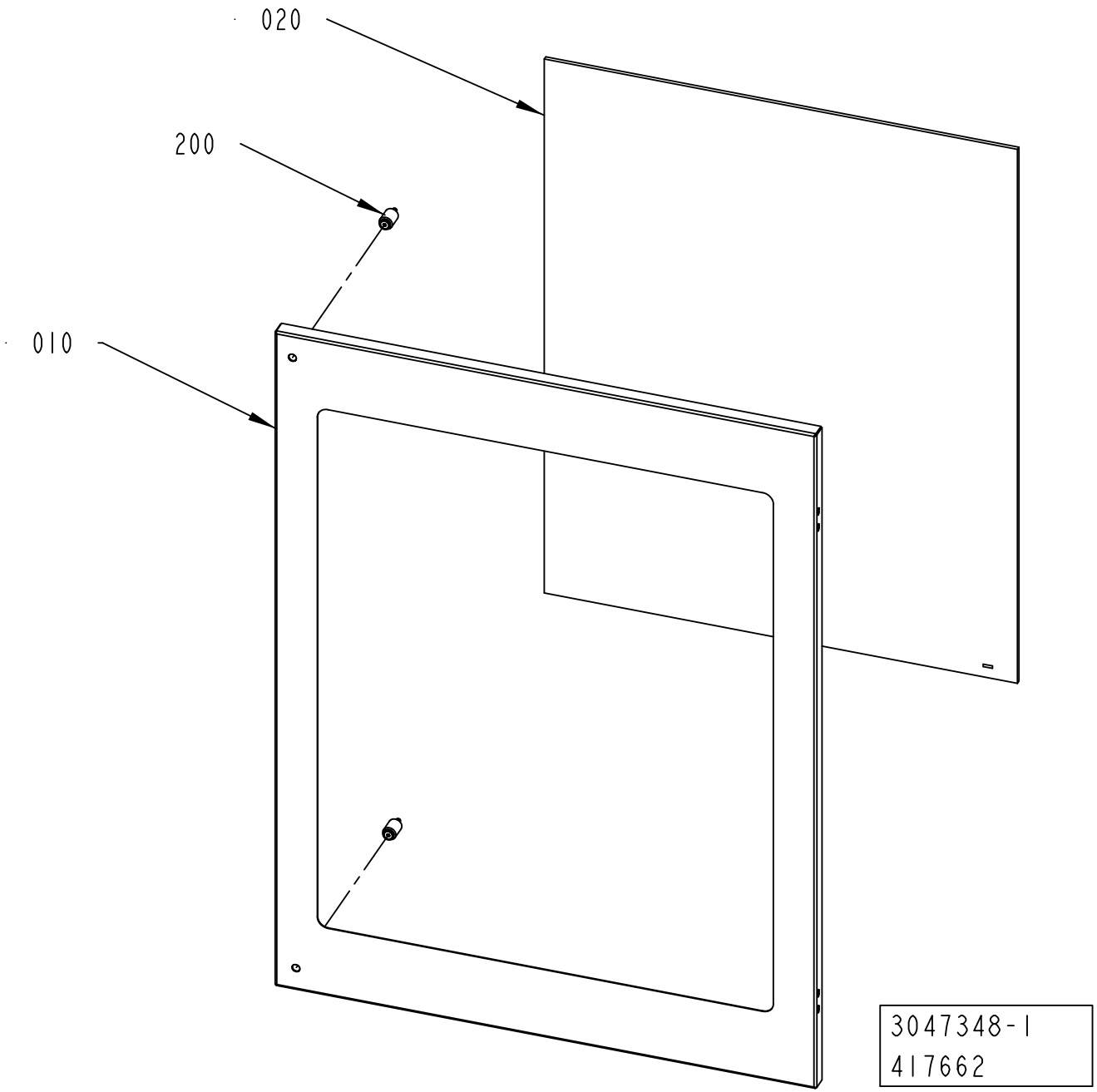
020
200
010
3047348-1
417662

ECM: 419452 - 20100110
Group number: 3047348-0100
Assembly Drawing: 3047348-1_1_AA

Pos	Part No	UN	Qty	Description	Page No
-					
010	3047349-0000		1	DOOR	
020	2805691-0000		1	GLASS	
200	90226-0458		2	MOUNTING SCREW	
220	90157-0041		1	SEALING COMPOUND, RHODORSEAL 5651	

Pos	Part No	UN	Qty	Description	Page No

Tetra Pak

SPC
Spare Parts Catalogue

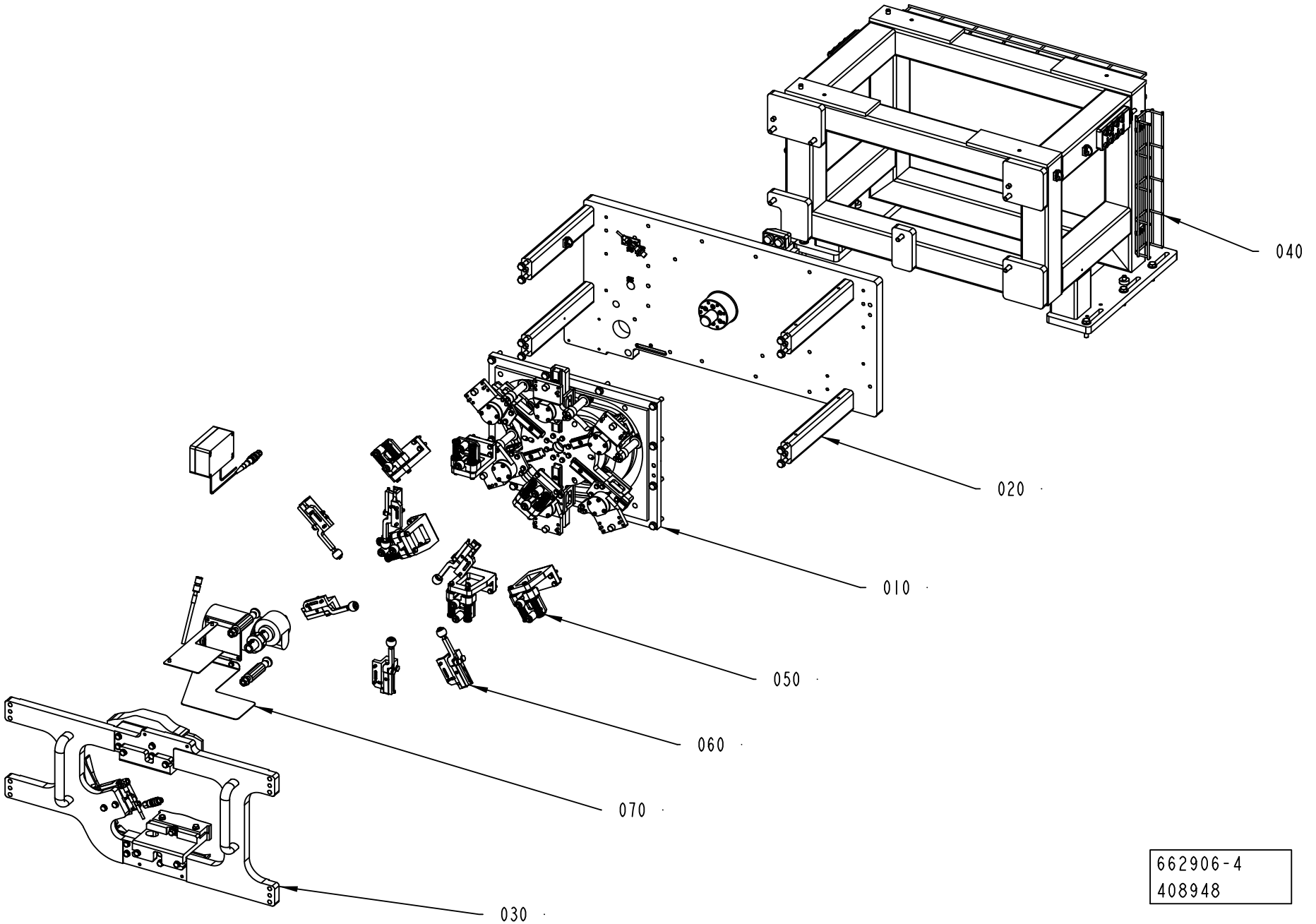
040
020
010
050
060
070
030
662906-4
408948

ECM: 492972 - 20110701
Group number: 662906-0200
Assembly Drawing: 662906-4_1_AA

Pos	Part No	UN	Qty	Description	Page No
RECAP3, RECAP2 A3					
070	2703755-0100		1	WHEEL	**4-5**
Common Parts					
010	2746938-0100		1	TRANSFER UNIT	**4-7**
020	2837072-0100		1	DRIVE UNIT	**4-17**
030	2839315-0100		1	CAMMODULE	**4-23**
040	2751664-0200		1	FRAME	**4-37**
050	2746939-0100		1	CAP CARRIER GROUP	**4-39**
060	2746941-0200		1	CAP HOLDERS GROUP	**4-43**

Pos	Part No	UN	Qty	Description	Page No

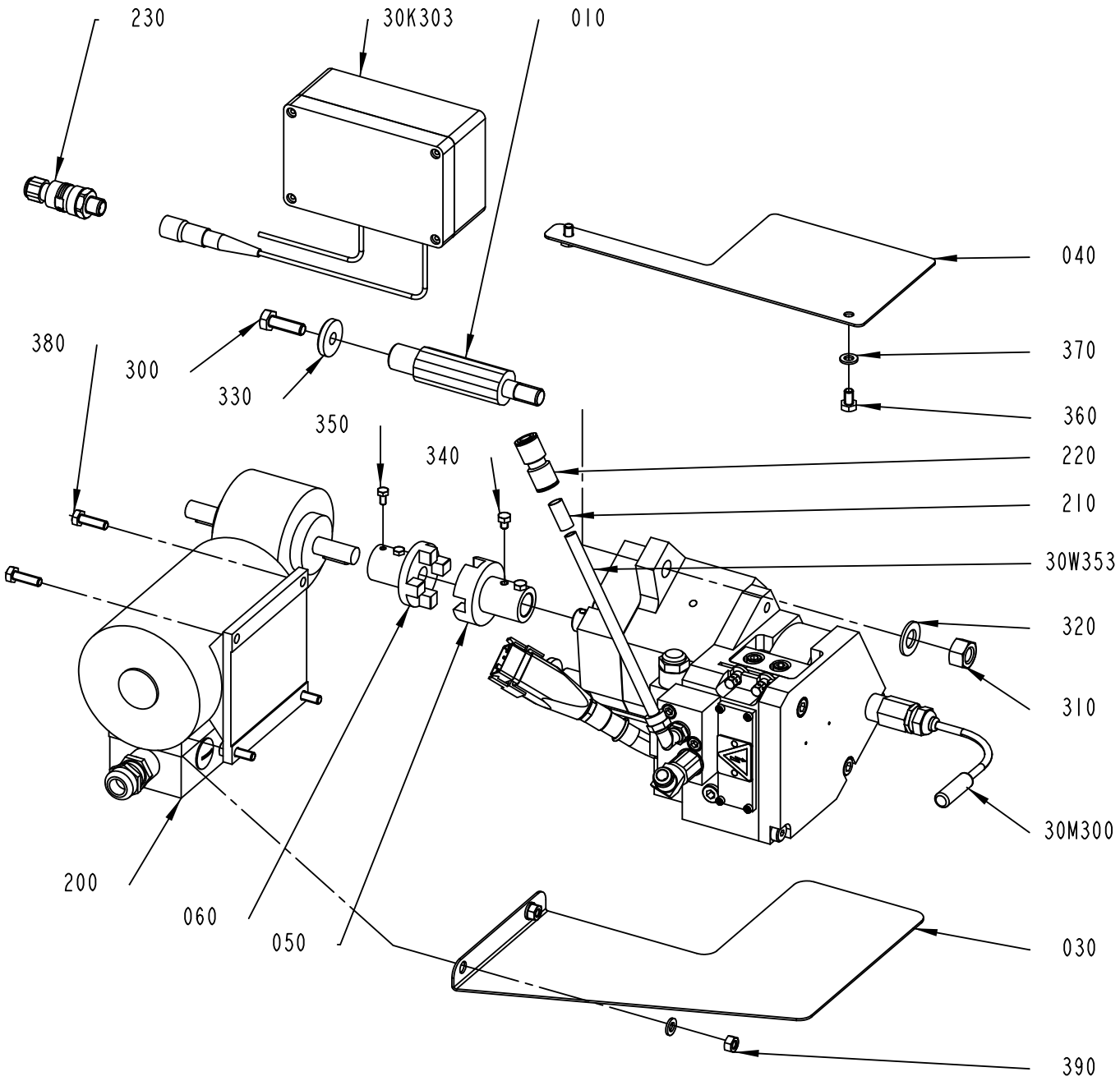

2703755-2
478089

ECM: 485487 - 20110401
Group number: 2703755-0100
Assembly Drawing: 2703755-2_1_AD

Pos	Part No	UN	Qty	Description	Page No
CAP 30/FLEX					
030	2937267-0000		1	COVER	
040	2937266-0000		1	COVER	
360	312105-0364		2	SCREW M6S ISO 4017 M6X10 A480	
390	312605-0316		2	HEXAGON NUT, M6M M6 A280	
Common Parts					
010	2870089-0000		2	SHAFT	
050	2994043-0000		1	JOINT	
060	2994044-0000		1	JOINT	
200	90458-0755		1	GEARS, WORM MOTOR 1600079	
210	90459-7370		1	MARKING FOR PNEUM. TUBING, PRZ08	
220	350009-0003		1	PUSH-IN FITTING QS-F-8	
230	90459-6570		1	CONNECTOR M12 5-POLES MALE, RSCN5/7	
300	312105-0453		2	SCREW M6S ISO 4017 M8X25 A480	
310	312605-0322		2	HEXAGON NUT, M6M M12 A280	
320	315105-0178		2	WASHER BRB 13X24 RFR	
330	315125-0165		2	WASHER TBRSB 8,4X26X5 A4	
340	90287-0199		2	SCREW M6S ISO 4017 M5X6 A480	
350	312105-0287		2	SCREW M6S ISO 4017 M4X8 A470	
370	315105-0153		4	WASHER BRB 6,4X12 RFR	
380	312105-0370		4	SCREW M6S ISO 4017 M6X20 A480	
30K303	90600-2067		1	LEVEL CONTROL LC25, #7125832	
30K353	90600-0553	MM	500	TUBE, 8X1 MM PTFE	
30M300	90600-0440		1	WHEEL APPLICATOR 60 PLATFORM, #7132058	
	90459-6657		*1*	*MODULE, NORDSON #1051725*	
	90459-6046		*1*	*SENSOR, NORDSON LC25 #783199*	

Pos	Part No	UN	Qty	Description	Page No

Machine Type | Group Description | Used-In | Group Number | Page No

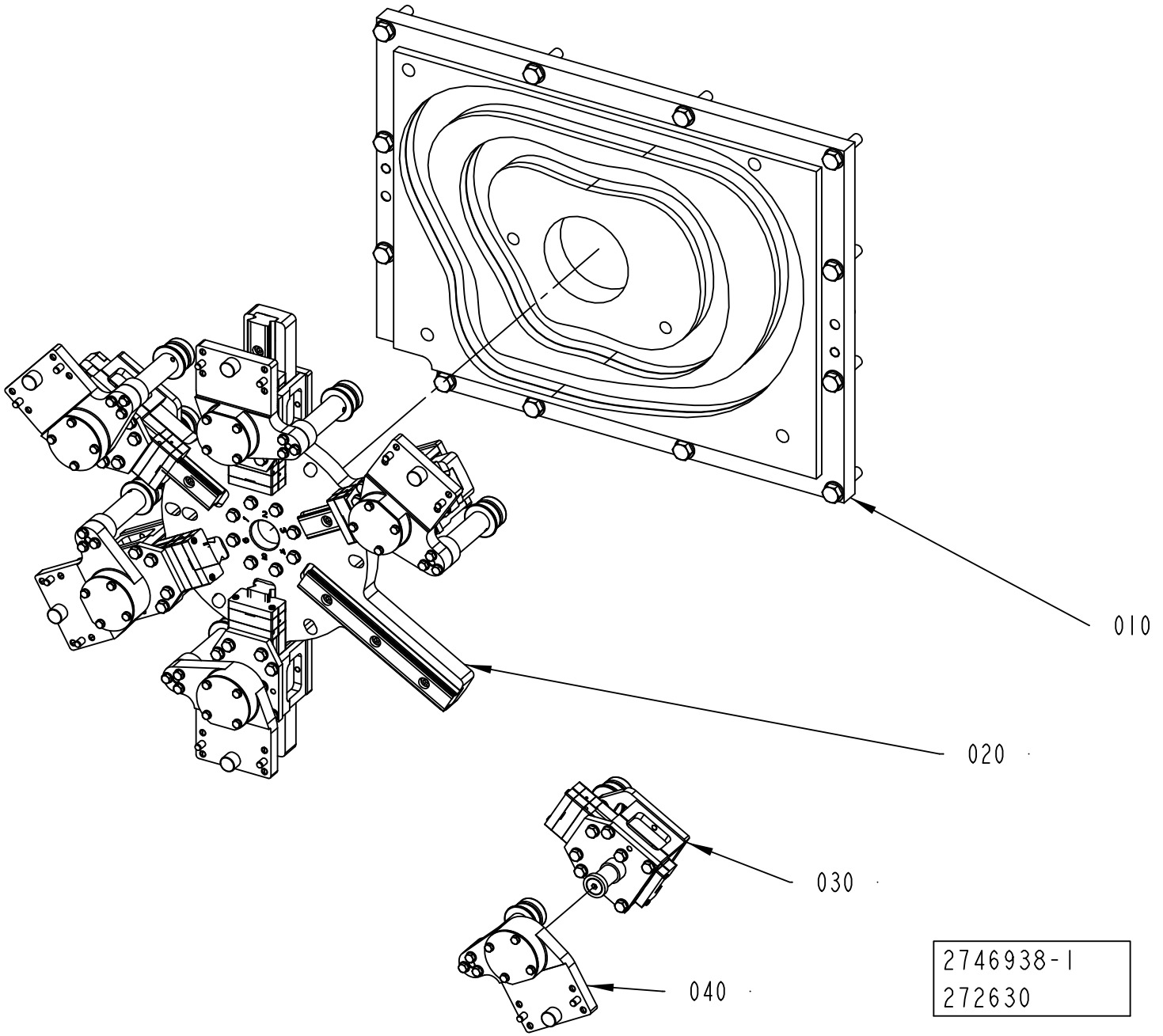
010
020
030
040
2746938-1
272630

ECM: 272707 - 20060921
Group number: 2746938-0100
Assembly Drawing: 2746938-1_1_AA

Pos	Part No	UN	Qty	Description	Page No
-					
010	2751655-0100		1	CAM	**4-9**
020	2751656-0100		1	STAR WHEEL	**4-11**
030	2751657-0100		6	SLIDER	**4-13**
040	2751658-0100		6	FOLLOWER CAM	**4-15**

Pos	Part No	UN	Qty	Description	Page No

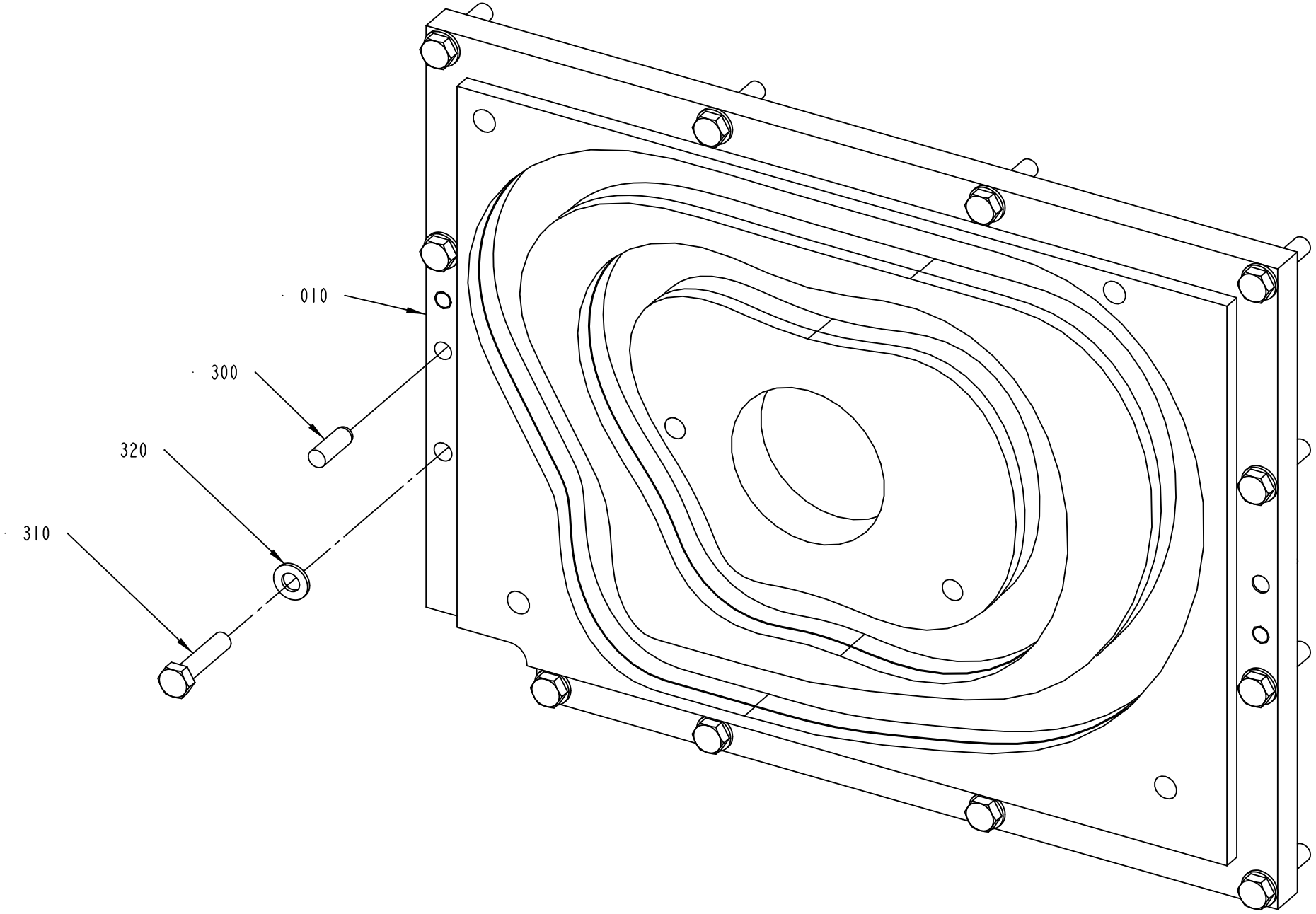

2751655-1
272630

ECM: 272706 - 20060921
Group number: 2751655-0100
Assembly Drawing: 2751655-1_1_AA

Pos	Part No	UN	Qty	Description	Page No
-					
010	2716116-0000		1	CAM	
300	311103-0458		2	PARALLEL PIN ISO 2338 10M6X30 A1	
310	312105-0500		12	SCREW M6S ISO 4014 M10X45 A480	
320	315106-0173		12	WASHER ISO 7089-10-200 HV A4	

Pos	Part No	UN	Qty	Description	Page No

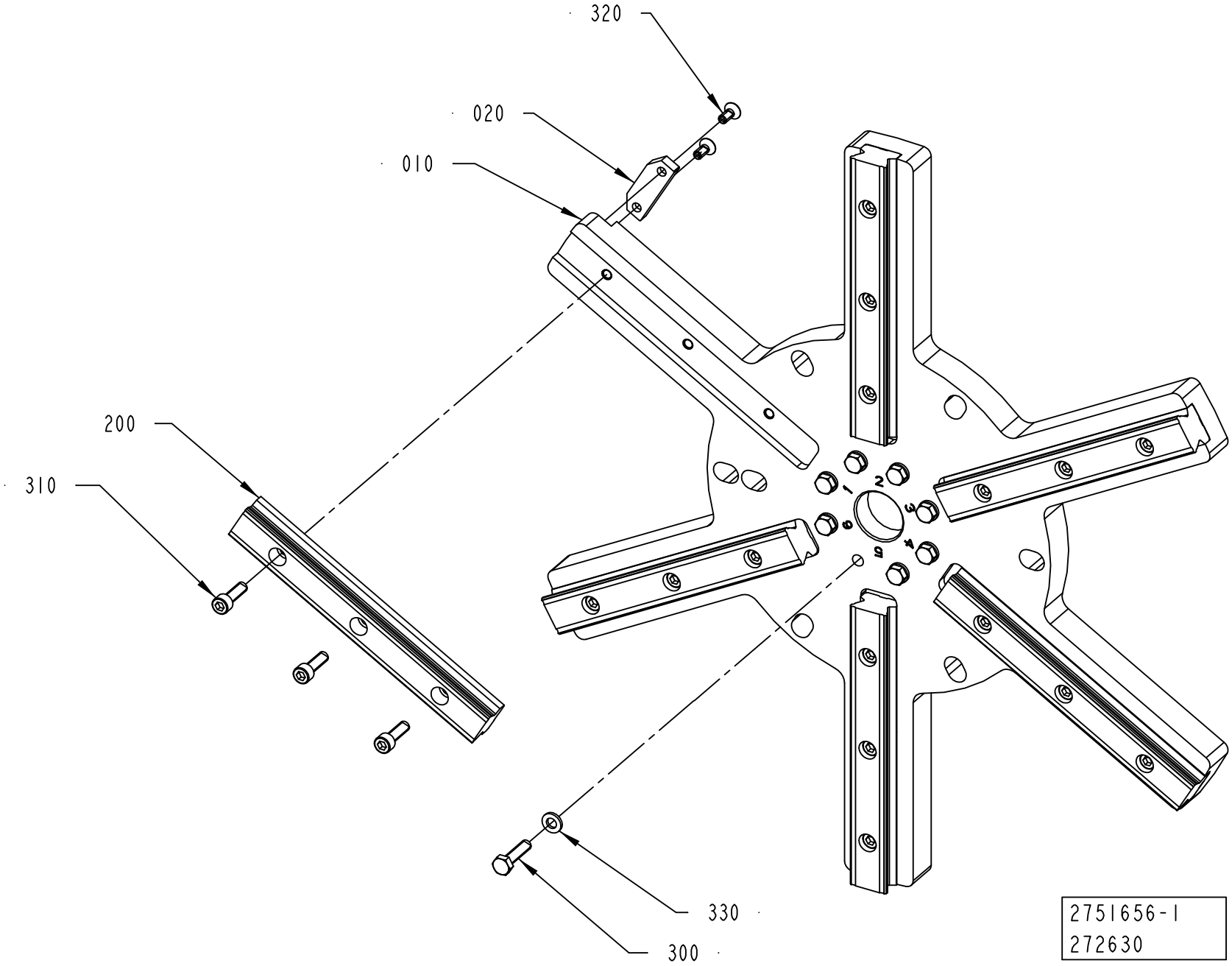
320
020
010
200
310
330
300
2751656-1
272630

ECM: 290152 - 20061221
Group number: 2751656-0100
Assembly Drawing: 2751656-1_1_AA

Pos	Part No	UN	Qty	Description	Page No
-					
010	2751702-0000		1	STAR WHEEL	
020	2751706-0000		1	FLAG	
200	90600-0434		6	GUIDE BAR, SSR25-180L-YM G30/30	
300	312105-0372		8	SCREW M6S ISO 4017 M6X25 A480	
310	312115-0370		18	SCREW ISO4762 M6X20 A4 80	
320	312155-0327		2	SCREW DIN 7991 MF6S M5X12 A4 70	
330	315106-0153		8	WASHER ISO 7089-6-200 HV A4	

Pos	Part No	UN	Qty	Description	Page No

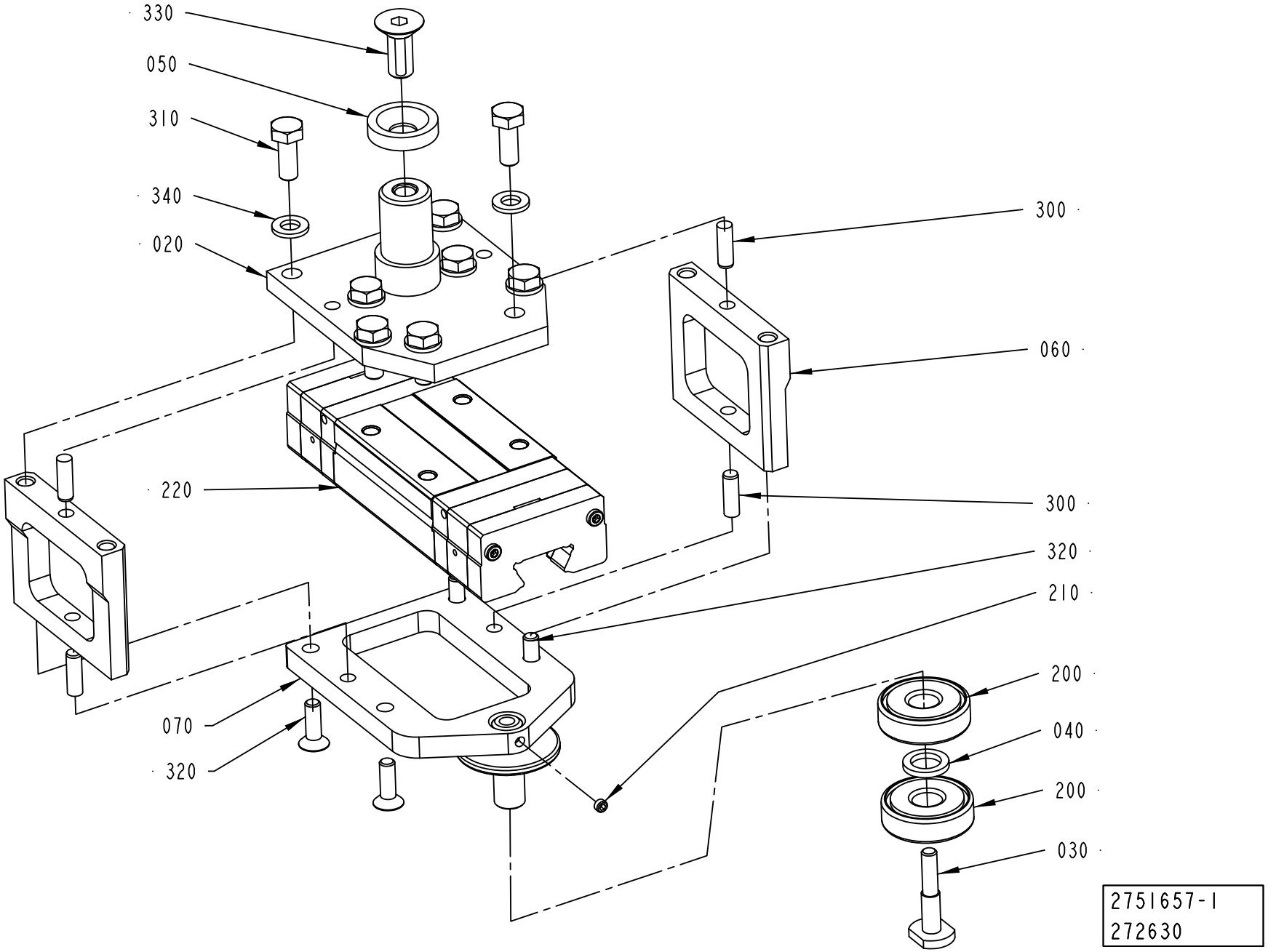
330
050
310
340
020
300
060
220
300
320
210
200
040
200
030
070
320
2751657-1
272630

ECM: 349992 - 20080701
Group number: 2751657-0100
Assembly Drawing: 2751657-1_1_AA

Pos	Part No	UN	Qty	Description	Page No
-					
020	2751739-0000		1	BRACKET	
030	2699680-0000		1	SCREW	
040	2699681-0000		1	SPACER	
050	2699683-0000		1	WASHER	
060	2703697-0000		2	SIDE	
070	2751703-0000		1	BRACKET	
200	90214-0123		2	BALL BEARING, 10X30X9 MM	
210	90459-1395		1	SCREW HEX.SOCK.SET CONEPT.MS6SS M4X4 A2	
220	90600-0344		1	CARRIAGE, SSR 25 XWYQZSSHH M	
300	311103-0308		4	PARALLEL PIN ISO 2338 5M6X16 A1	
310	312105-0368		8	SCREW M6S ISO 4017 M6X16 A480	
320	312155-0329		4	SCREW DIN 7991 MF6S M5X16 A4 70	
330	312155-0451		1	SCREW DIN 7991 MF6S M8X20 A4 70	
340	315105-0153		8	WASHER BRB 6,4X12 RFR	

Pos	Part No	UN	Qty	Description	Page No

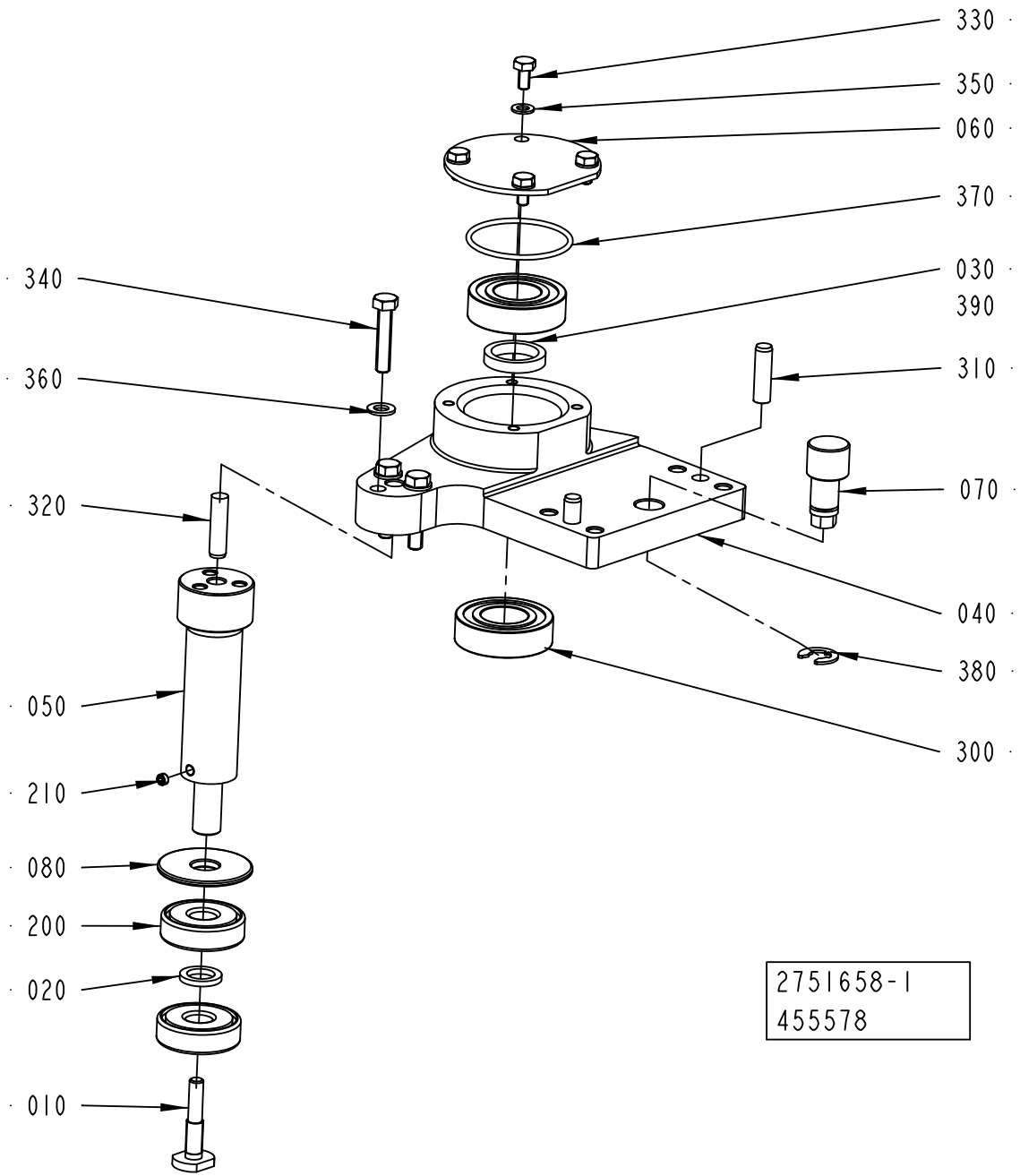
330
350
060
370
030
390
310
070
040
380
300
340
360
320
050
210
080
200
020
010
2751658-1
455578

ECM: 458844 - 20101001
Group number: 2751658-0100
Assembly Drawing: 2751658-1_1_AB

Pos	Part No	UN	Qty	Description	Page No
-					
010	2699680-0000		1	SCREW	
020	2699681-0000		1	SPACER	
030	2699682-0000		1	SPACER	
040	2751704-0000		1	PIVOT BRACKET	
050	2751705-0000		1	SHAFT	
060	2703696-0000		1	PROTECTIVE COVER	
070	2751698-0000		1	ECCENTRIC SHAFT	
080	2751699-0000		1	WASHER	
200	90214-0123		2	BALL BEARING, 10X30X9 MM	
210	90459-1395		1	SCREW HEX.SOCK.SET CONEPT.MS6SS M4X4 A2	
300	321308-0203		2	BALL BEARING 17/35X10	
310	311103-0354		2	PARALLEL PIN ISO 2338 6M6X22 A1	
320	311103-1355		1	PARALLEL PIN ISO 2338 6M6X24 A1	
330	312105-0287		4	SCREW M6S ISO 4017 M4X8 A470	
340	312105-0333		3	SCREW M6S ISO 4017 M5X25 A480	
350	315105-0136		4	WASHER BRB 4,3X8 RFR	
360	315105-0146		3	WASHER BRB 5,3X10 RFR	
370	315202-0716		1	O-RING 34,65X1,78 MM	
380	315755-0109		1	RETAINING RING SHAFT DIN 6799 7 SS	
390	90296-0068		1	SHELL ALVANIA GREASE EP 2 (1PC=20L)	

Pos	Part No	UN	Qty	Description	Page No

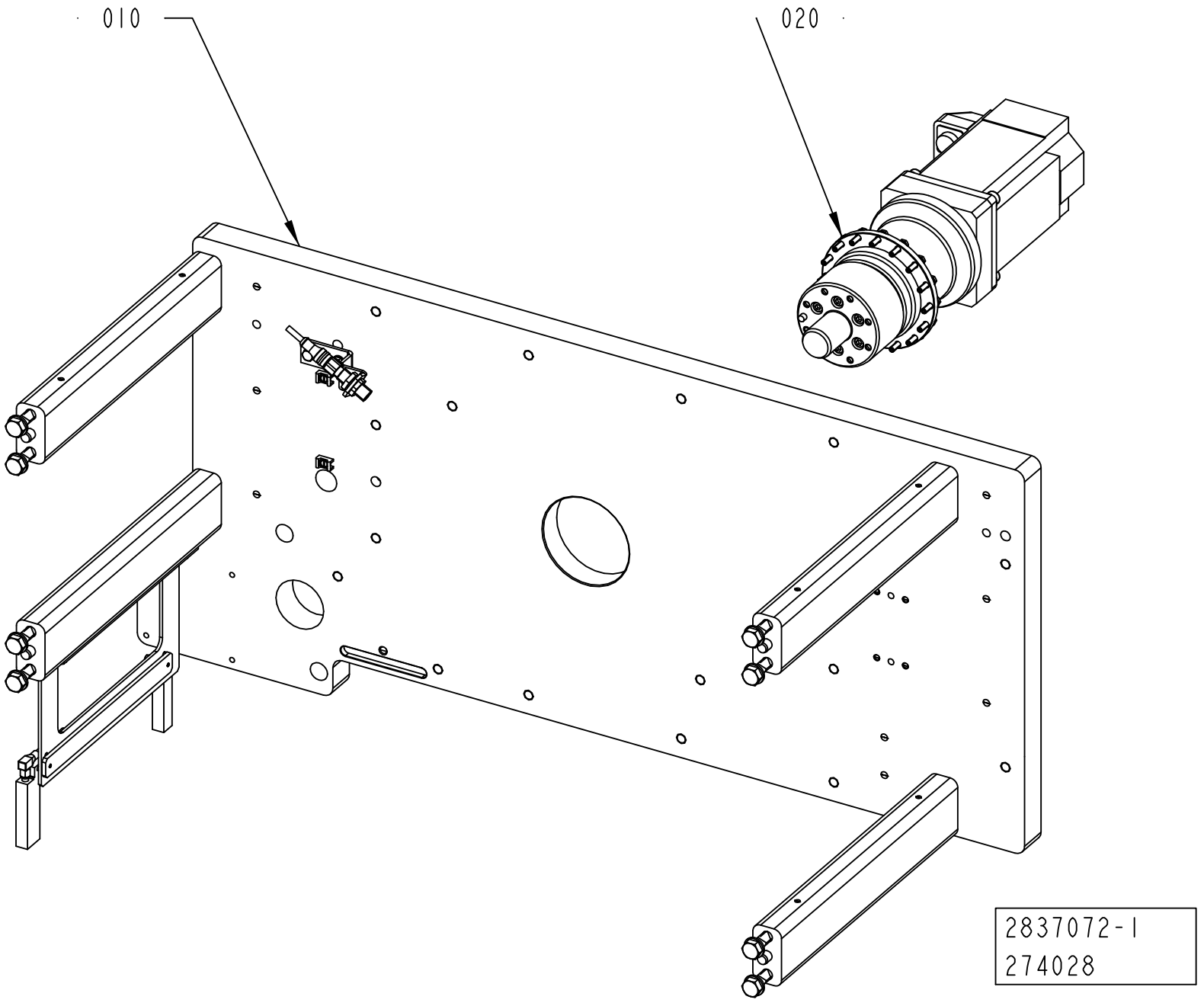
010
020
2837072-1
274028

ECM: 274028 - 20060921
Group number: 2837072-0100
Assembly Drawing: 2837072-1_1_AA

Pos	Part No	UN	Qty	Description	Page No
-					
010	2837073-0100		1	PLATE	**4-19**
020	2836507-0100		1	DRIVE MOTOR	**4-21**

Pos	Part No	UN	Qty	Description	Page No

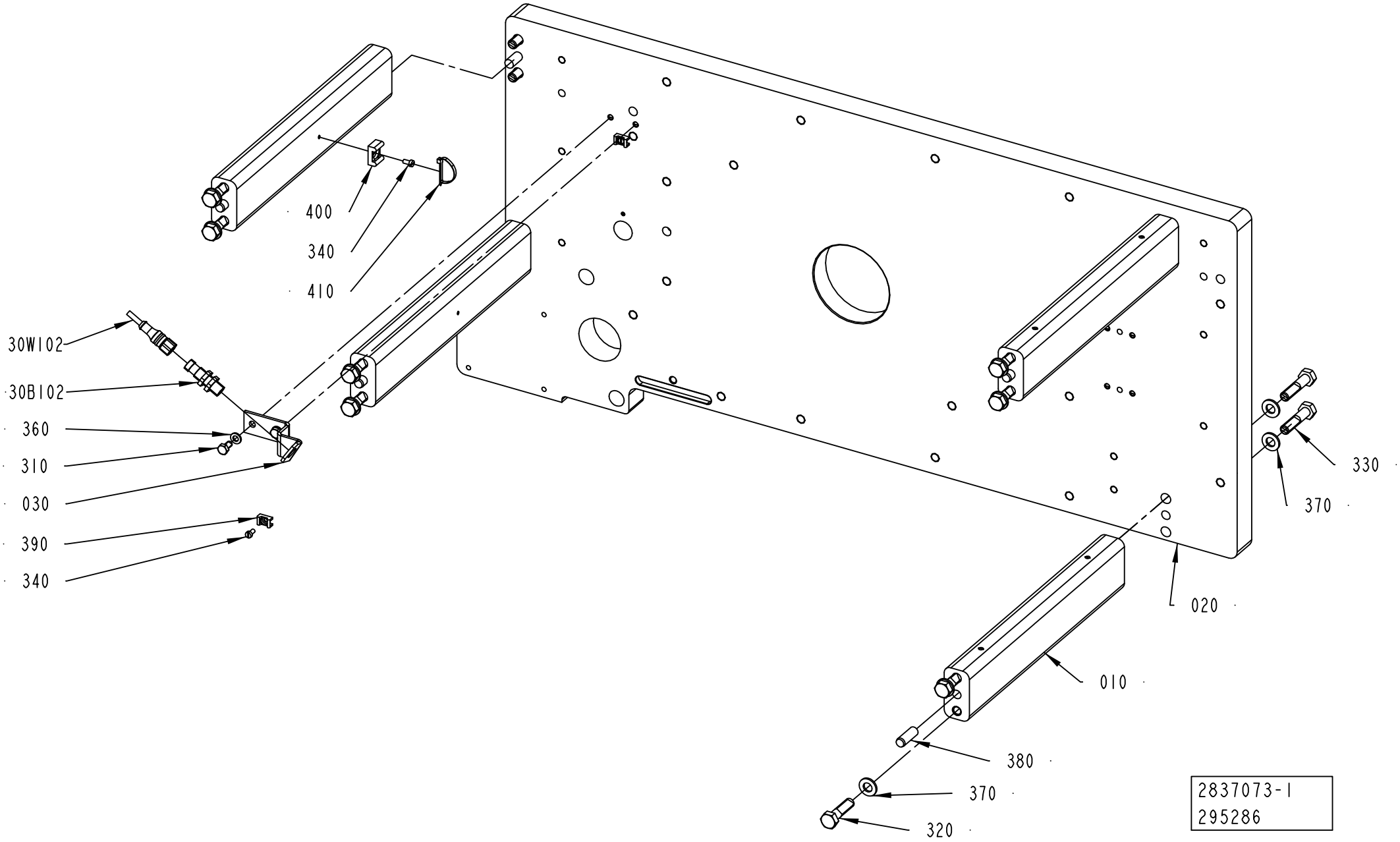
400
340
410
30W102
30B102
360
310
030
390
340
330
370
020
010
380
370
320
2837073-1
295286

ECM: 298769 - 20070323
Group number: 2837073-0100
Assembly Drawing: 2837073-1_1_AB

Pos	Part No	UN	Qty	Description	Page No
-					
010	2703704-0000		4	SPACER STRUT	
020	2835939-0000		1	PLATE	
030	2751741-0000		1	BRACKET	
310	312105-0366		2	SCREW M6S ISO 4017 M6X12 A480	
320	312105-0499		8	SCREW M6S ISO 4014 M10X40 A480	
330	312105-0500		8	SCREW M6S ISO 4014 M10X45 A480	
340	312125-0287		3	SCREW ISO 1207 M4X8 A4	
360	315105-0153		2	WASHER BRB 6,4X12 RFR	
370	315106-0173		16	WASHER ISO 7089-10-200 HV A4	
380	311103-0458		8	PARALLEL PIN ISO 2338 10M6X30 A1	
390	352113-0205		2	ANCHOR PLATES FOR STRIPS, TM2S8-C100	
400	352113-0203		1	ANCHOR PLATES FOR STRIPS, TM3S8-M0	
410	352113-0104		1	CABLE TIE, BLACK 300X4,8 MM	
30B102	90458-2907		1	PROX.SWITCH IFS204	
30W102	351411-0010		1	ACTU/SENS. CABLE PRST 4-PRKT 4-07/1,0M	

Pos	Part No	UN	Qty	Description	Page No

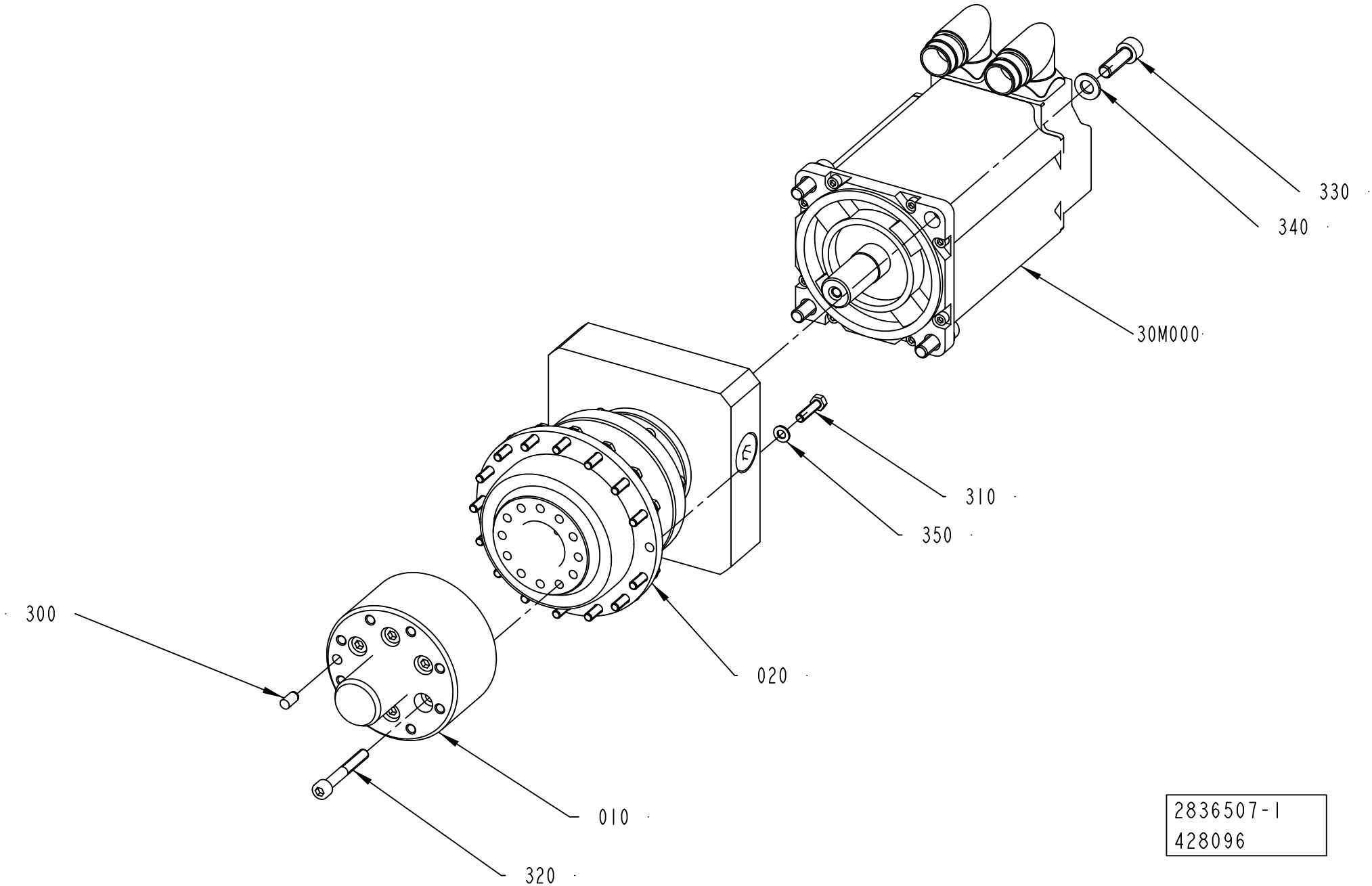
330
340
30M000
310
350
020
300
010
320
2836507-1
428096

ECM: 428939 - 20100401
Group number: 2836507-0100
Assembly Drawing: 2836507-1_1_AB

Pos	Part No	UN	Qty	Description	Page No
-					
010	2834311-0000		1	HUB	
020	90600-0761		1	GEARS,PLANETARY TP010S-MA3-66-0E1/MPL B4	
300	311103-0349		1	PARALLEL PIN ISO 2338 6M6X12 A1	
310	312105-0331		16	SCREW M6S ISO 4017 M5X20 A480	
320	312115-0379		6	SCREW ISO4762 M6X45 A4 80	
330	312115-0453		4	SCREW ISO4762 M8X25 A4 80	
340	315106-0165		4	WASHER ISO 7089-8-200 HV A4	
350	315105-0146		16	WASHER BRB 5,3X10 RFR	
30M000	90601-1926		1	SERVO MOTOR, MPL-B430P-MK72AA SERIES A	

Pos	Part No	UN	Qty	Description	Page No

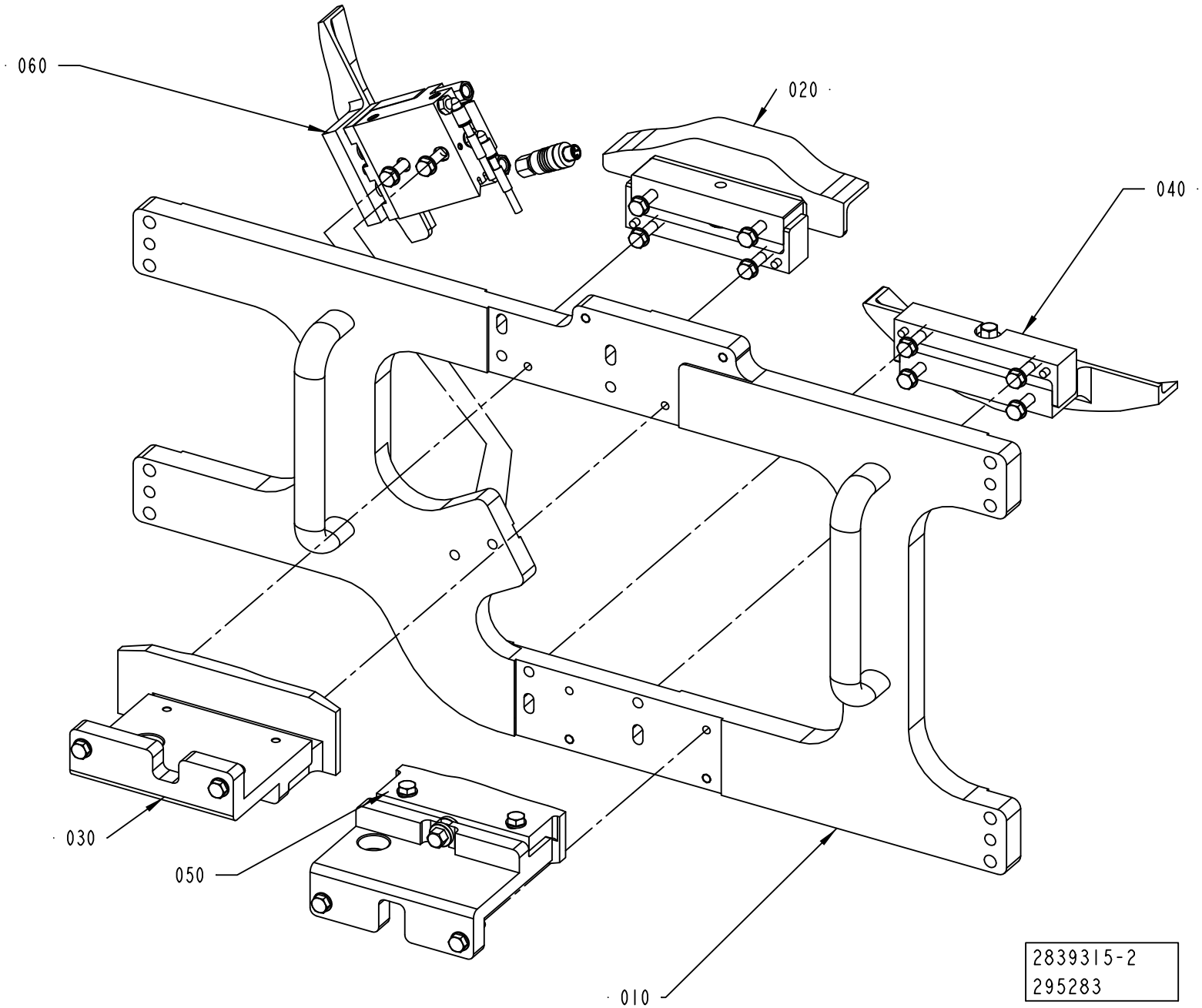
060
020
040
030
050
010
2839315-2
295283

ECM: 492978 - 20110701
Group number: 2839315-0100
Assembly Drawing: 2839315-2_1_AA

Pos	Part No	UN	Qty	Description	Page No
RECAP3, RECAP2 A3					
040	2839385-0100		1	CAM	**4-25**
050	2839386-0100		1	CAM	**4-27**
060	2780369-0100		1	CAM	**4-29**
Common Parts					
010	2839382-0100		1	MOUNTING PLATE	**4-31**
020	2839383-0100		1	CAM	**4-33**
030	2839384-0100		1	CAM	**4-35**

Pos	Part No	UN	Qty	Description	Page No

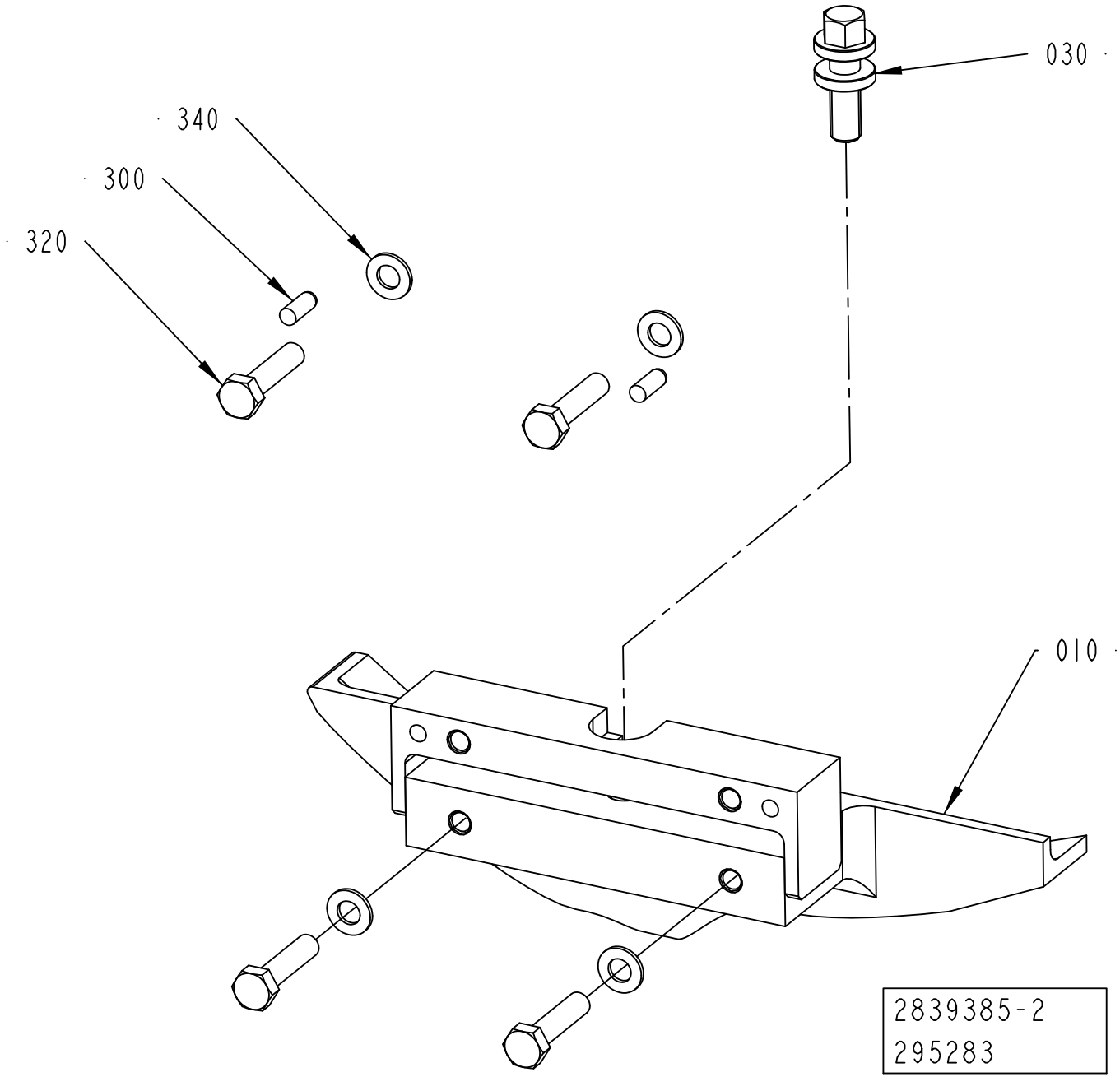
030
340
300
320
010
2839385-2
295283

ECM: 494343 - 20110701
Group number: 2839385-0100
Assembly Drawing: 2839385-2_1_AA

Pos	Part No	UN	Qty	Description	Page No
RECAP3, RECAP2 A3					
010	2839487-0000		1	CAM	
Common Parts					
020	2838277-0000		1	BRACKET	
030	2703842-0000		1	ADJUSTING SCREW	
300	311103-0351		2	PARALLEL PIN ISO 2338 6M6X16 A1	
320	312105-0457		4	SCREW M6S ISO 4014 M8X35 A480	
340	315105-0165		4	WASHER BRB 8,4X16 RFR	

Pos	Part No	UN	Qty	Description	Page No

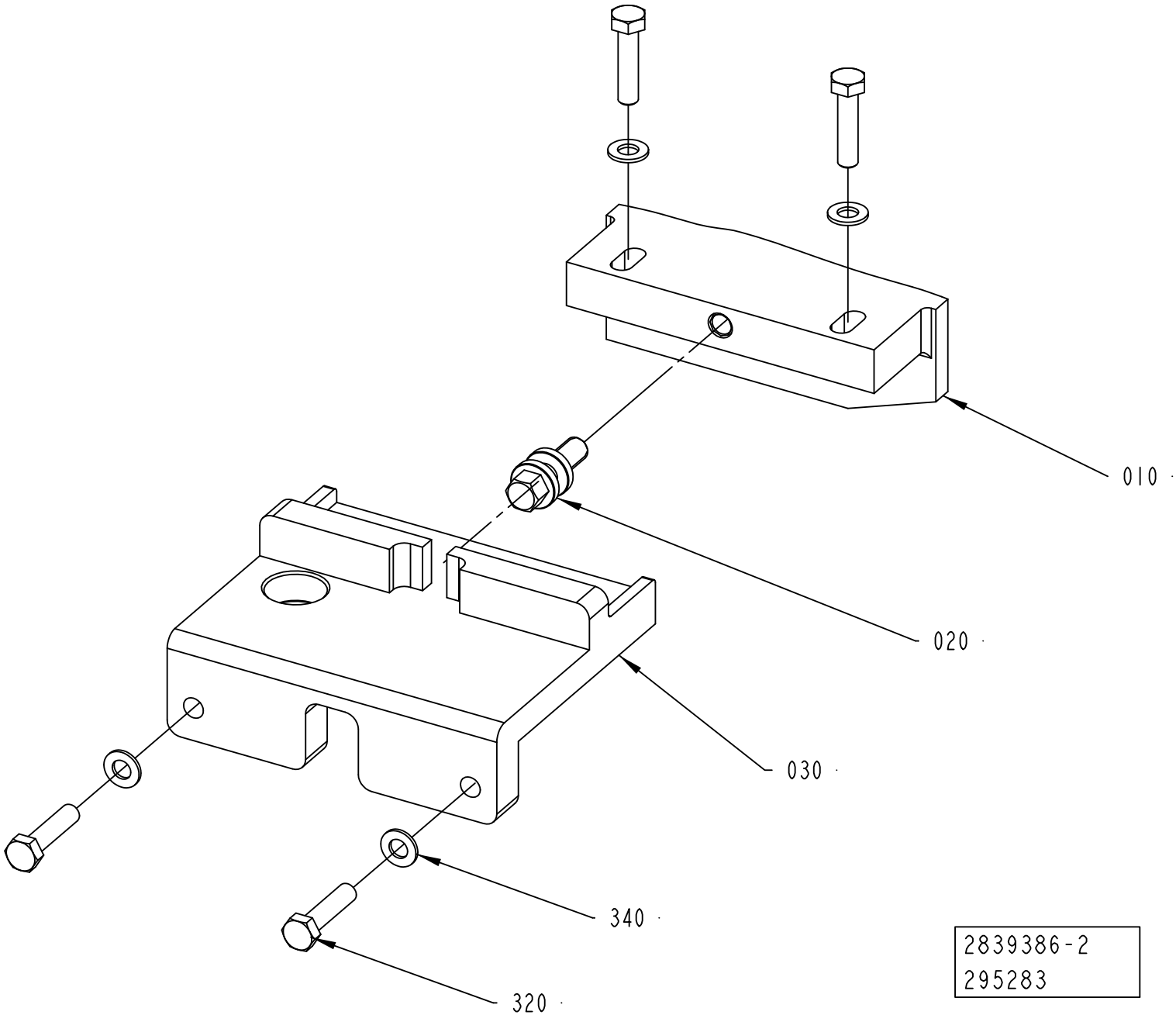
010
020
030
340
320
2839386-2
295283

ECM: 494344 - 20110701
Group number: 2839386-0100
Assembly Drawing: 2839386-2_1_AA

Pos	Part No	UN	Qty	Description	Page No
RECAP3, RECAP2 A3					
010	2839485-0000		1	CAM	
030	2838385-0000		1	BRACKET	
Common Parts					
020	2703842-0000		1	ADJUSTING SCREW	
300	312105-0457		4	SCREW M6S ISO 4014 M8X35 A480	
320	315105-0165		4	WASHER BRB 8,4X16 RFR	

Pos	Part No	UN	Qty	Description	Page No

Machine Type | Group Description | Used-In | Group Number | Page No

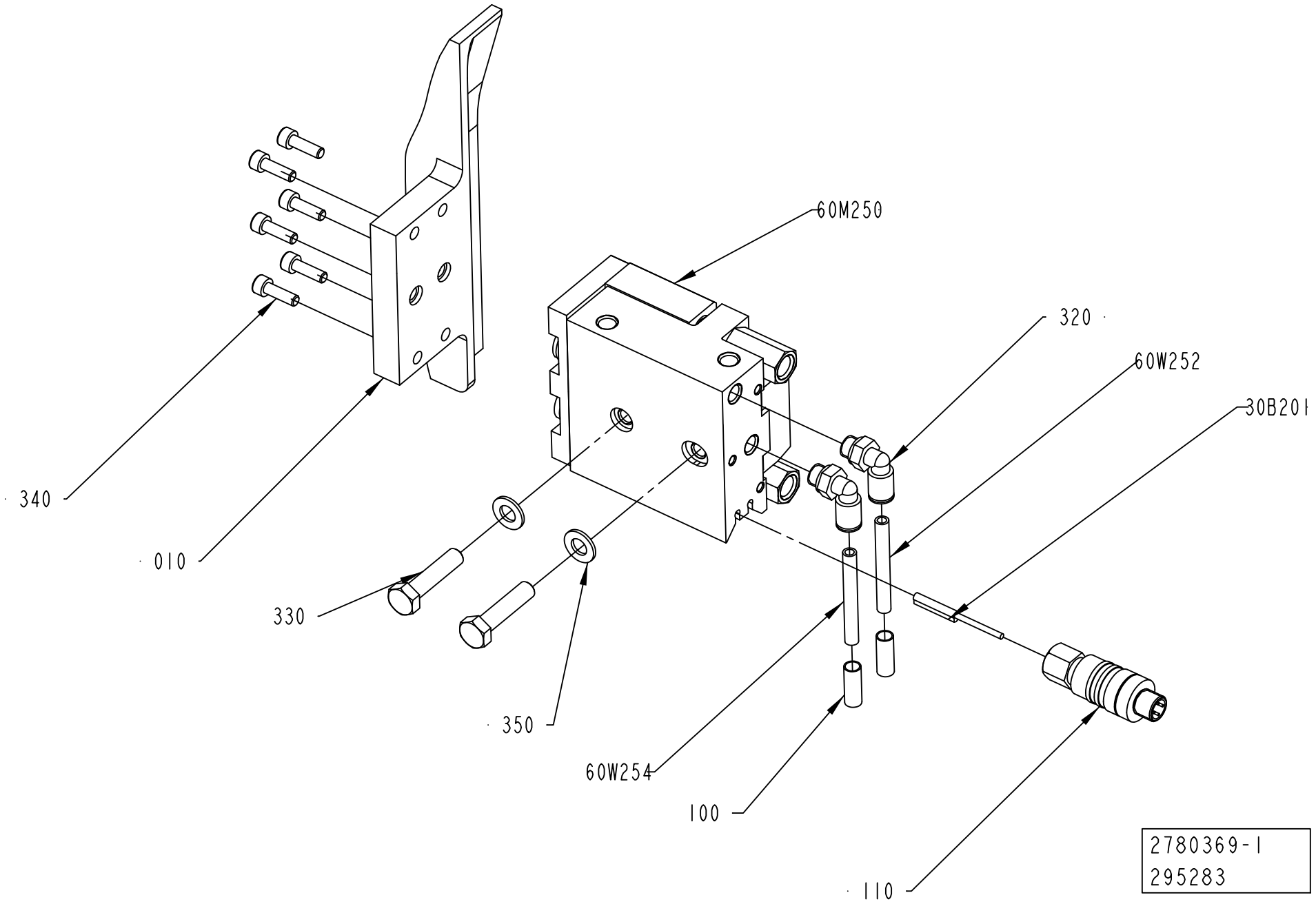
60M250
320
60W252
30B201
340
010
330
350
60W254
100
110
2780369-1
295283

ECM: 349993 - 20080701
Group number: 2780369-0100
Assembly Drawing: 2780369-1_1_AA

Pos	Part No	UN	Qty	Description	Page No
-					
010	2780374-0000		1	CAM	
100	90459-7369		2	MARKING FOR PNEUM. TUBING, PRZ06	
110	90459-1663		1	CONNECTOR, 405204 RSC4/7	
320	350002-0006		2	PUSH-IN L-FITTING QSL-F-G1/8-6	
330	312105-0457		2	SCREW M6S ISO 4014 M8X35 A480	
340	312115-0329		6	SCREW ISO4762 M5X16 A4 80	
350	315105-0165		2	WASHER BRB 8,4X16 RFR	
30B201	90458-2748		2	PROX. SENSOR, SMT-10-PS-KL-5-LED-24	
60M250	90600-2073		1	CYLINDER, SLT-20-10-P-A	
60W252	315400-0001	M	1	TUBE PUN-H-6X1-BL	
60W254	315400-0001	M	1	TUBE PUN-H-6X1-BL	

Pos	Part No	UN	Qty	Description	Page No

MOUNTING PLATE

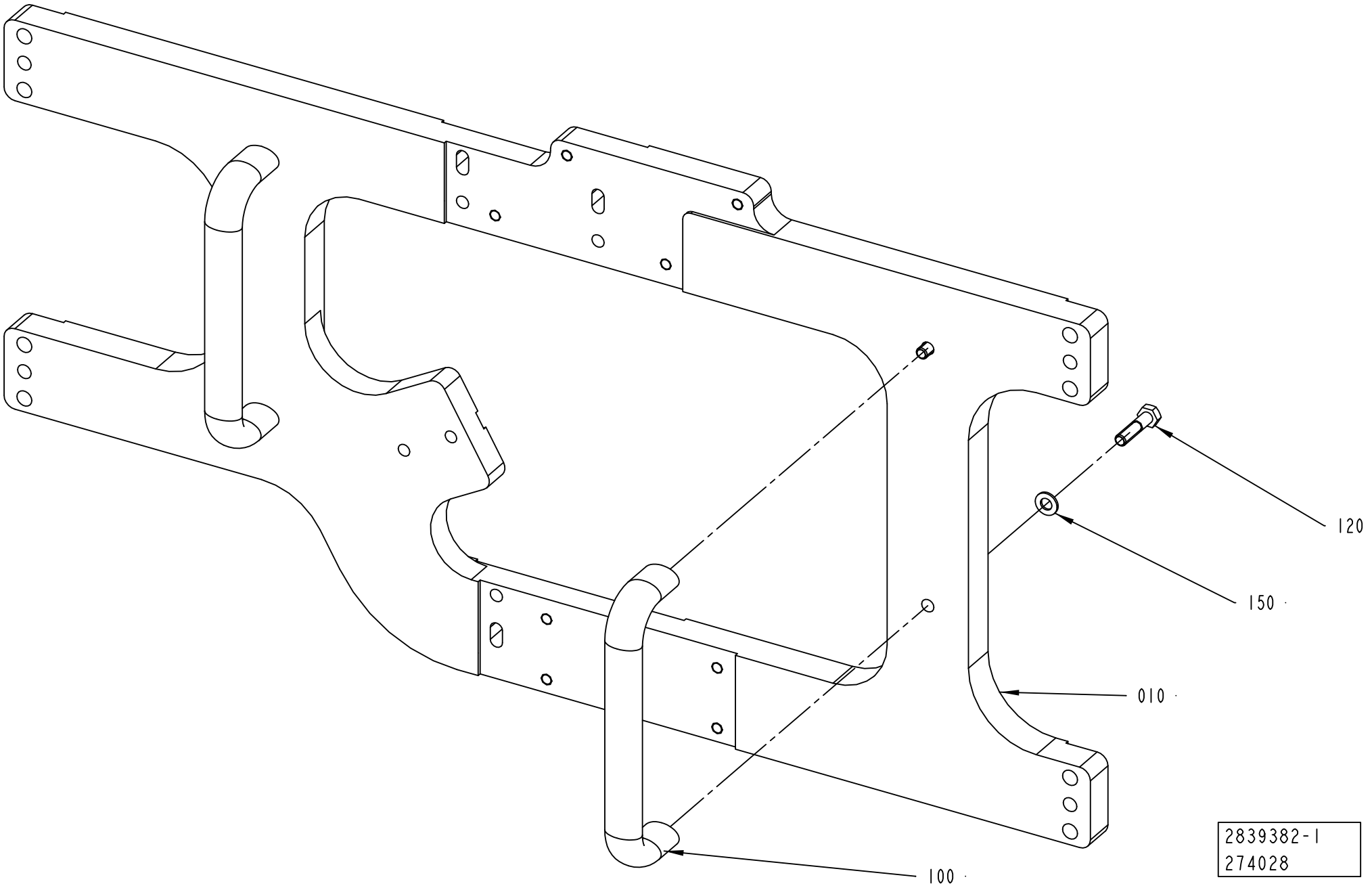

ECM: 438904 - 20100701
Group number: 2839382-0100
Assembly Drawing: 2839382-1_1_AA

Pos	Part No	UN	Qty	Description	Page No
RECAP3, RECAP2 A3					
010	2780379-0000		1	PLATE	
Common Parts					
100	90459-3779		2	HANDLE, GN565 SW 192-M8	
120	312105-0457		4	SCREW M6S ISO 4014 M8X35 A480	
150	315105-0165		4	WASHER BRB 8,4X16 RFR	

Pos	Part No	UN	Qty	Description	Page No

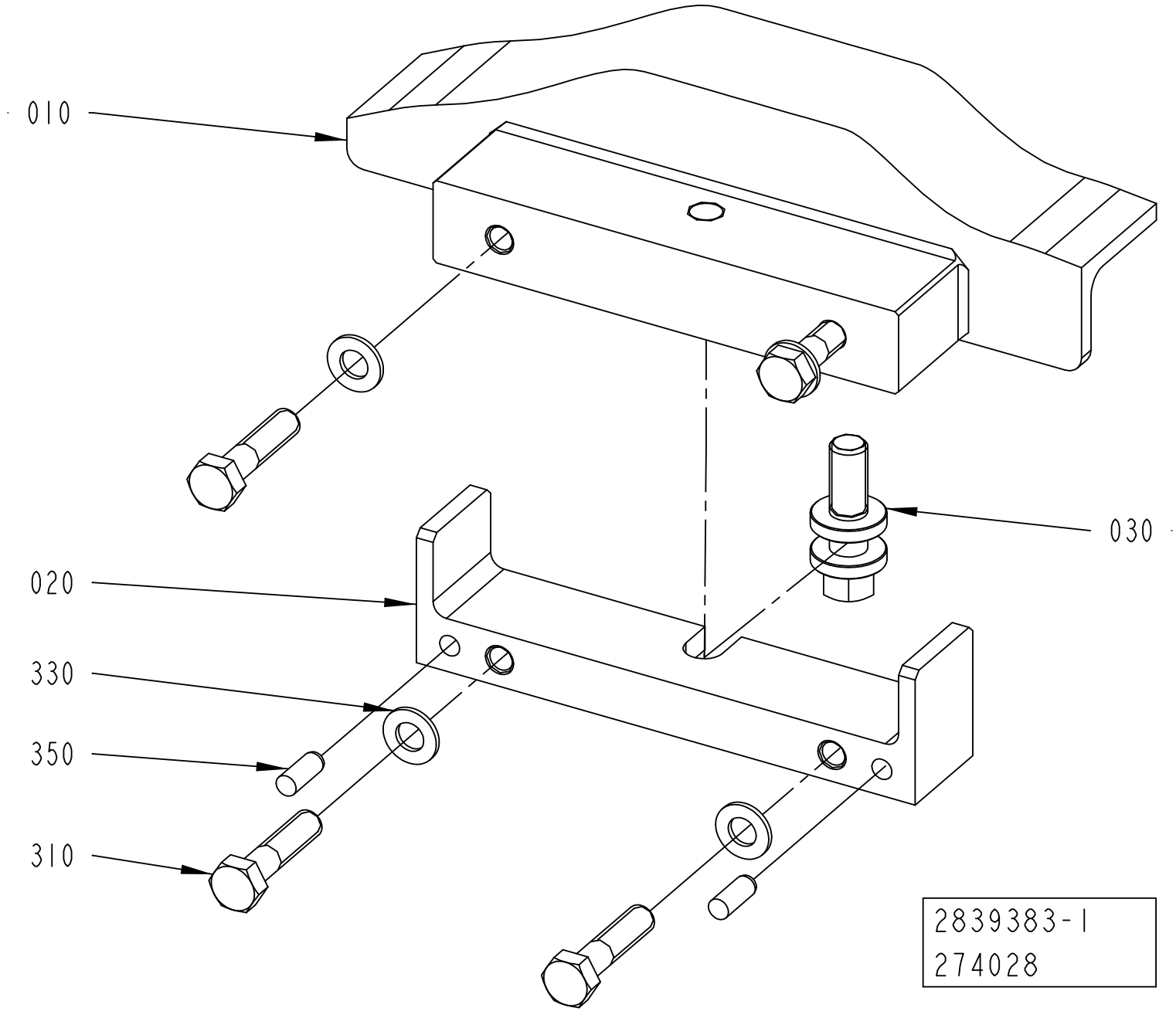
010
020
030
330
350
310
2839383-1
274028

ECM: 274028 - 20060921
Group number: 2839383-0100
Assembly Drawing: 2839383-1_1_AA

Pos	Part No	UN	Qty	Description	Page No
-					
010	2839392-0000		1	CAM	
020	2838277-0000		1	BRACKET	
030	2703842-0000		1	ADJUSTING SCREW	
310	312105-0457		4	SCREW M6S ISO 4014 M8X35 A480	
330	315105-0165		4	WASHER BRB 8,4X16 RFR	
350	311103-0351		2	PARALLEL PIN ISO 2338 6M6X16 A1	

Pos	Part No	UN	Qty	Description	Page No

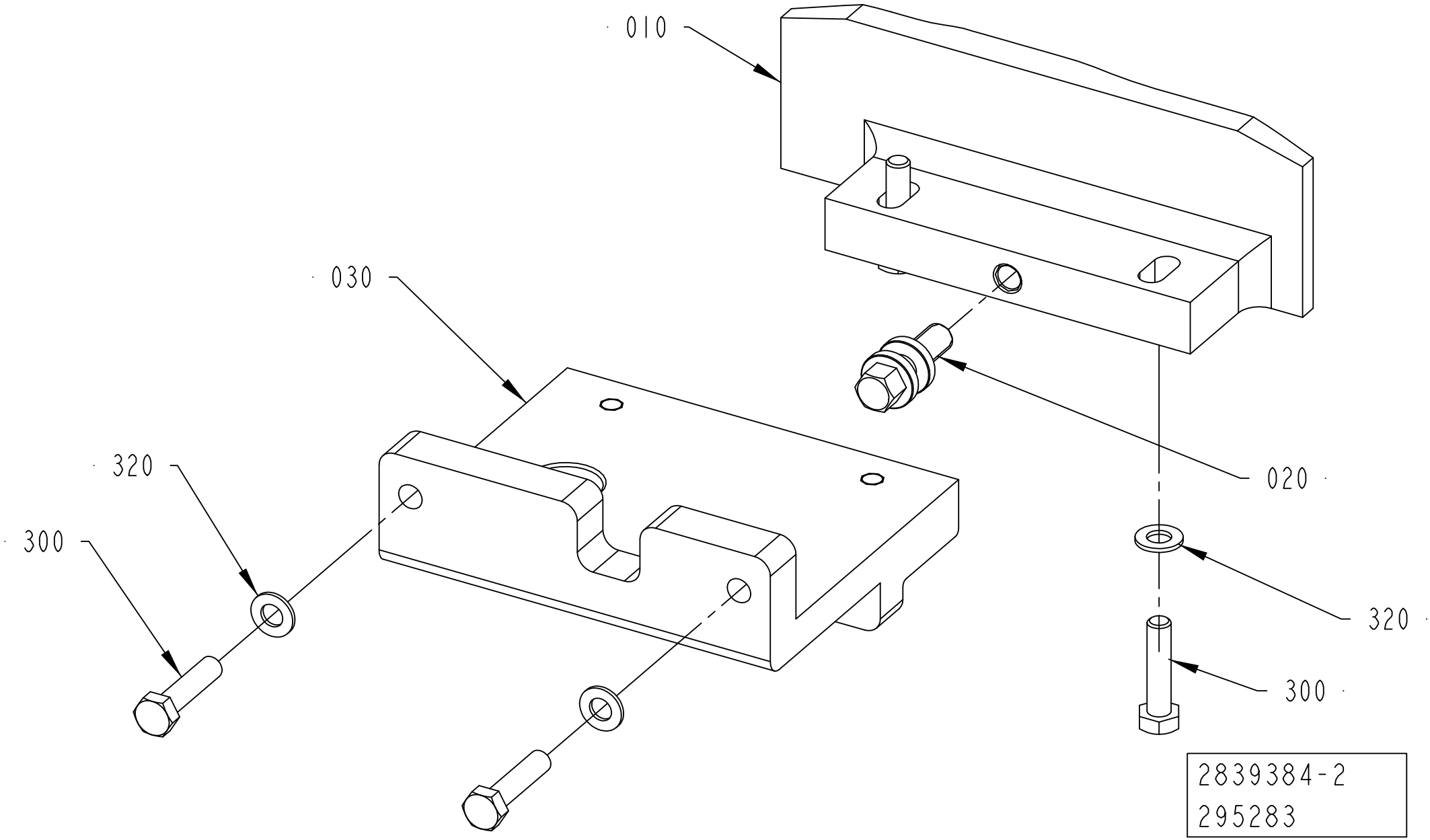
010
030
020
320
300
320
300
2839384-2
295283

ECM: 492980 - 20110701
Group number: 2839384-0100
Assembly Drawing: 2839384-2_1_AA

Pos	Part No	UN	Qty	Description	Page No
RECAP3, RECAP2 A3					
010	2839484-0000		1	CAM	
030	2715781-0000		1	BRACKET	
Common Parts					
020	2703842-0000		1	ADJUSTING SCREW	
300	312105-0457		4	SCREW M6S ISO 4014 M8X35 A480	
320	315105-0165		4	WASHER BRB 8,4X16 RFR	

Pos	Part No	UN	Qty	Description	Page No

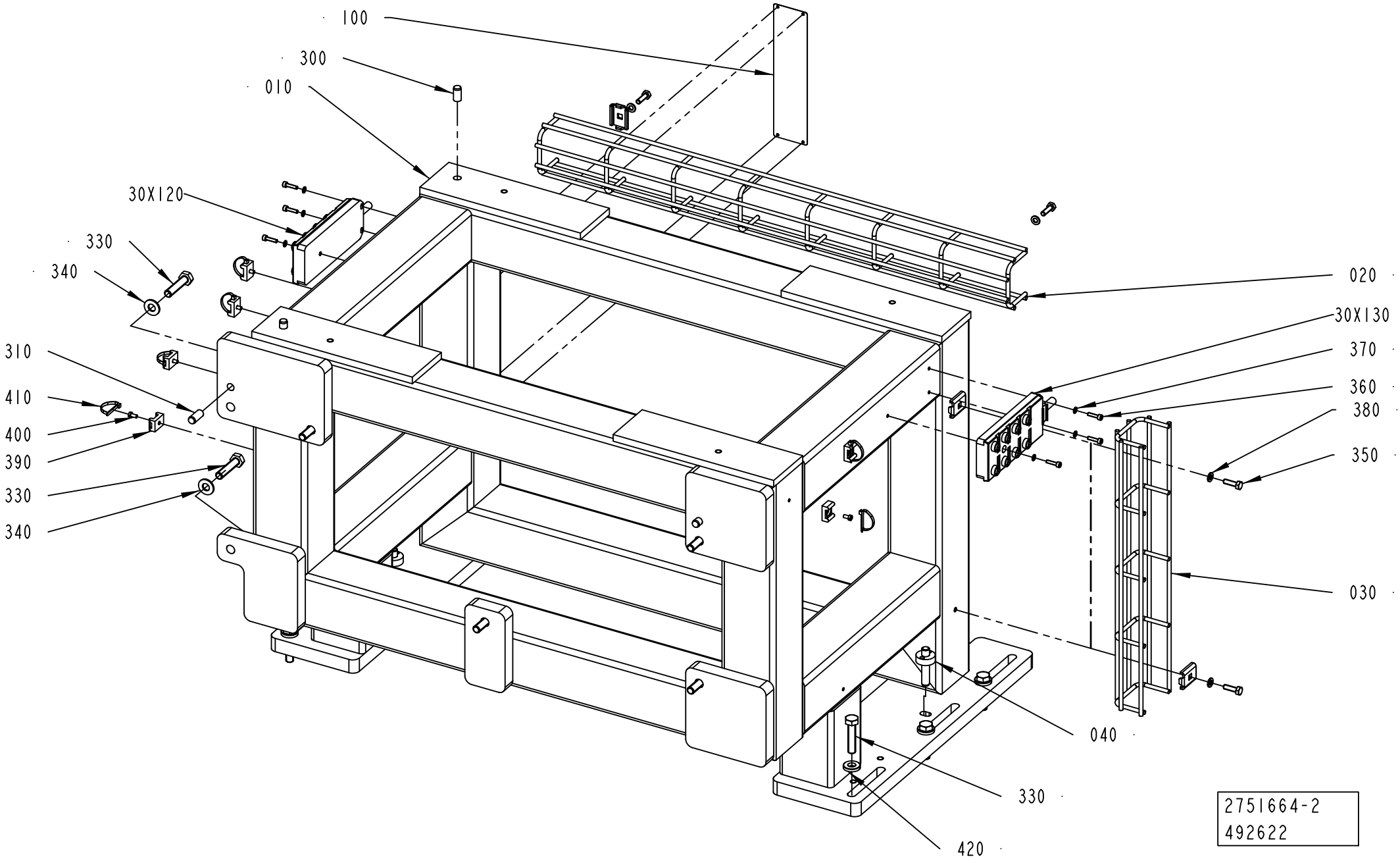
100
300
010
30X120
330
340
310
410
400
390
330
340
020
30X130
370
360
380
350
030
040
330
420
D
2751664-2
492622

ECM: 493015 - 20110701
Group number: 2751664-0200
Assembly Drawing: 2751664-2_1_AC

Pos	Part No	UN	Qty	Description	Page No
-					
010	3039024-0000		1	FRAME	
020	2838731-0000		1	CABLE	
030	2838732-0000		1	CABLE	
040	2944175-0000		2	PIN	
100	580923-0000		1	MACHINE SIGN CE	
220	90181-0183		4	CABLE DUCT, FITTING, B2	
300	311103-0454		2	PARALLEL PIN ISO 2338 10M6X20 A1	
310	311103-1456		2	PARALLEL PIN ISO 2338 10M6X24 A1	
330	312109-0500		12	SCREW M6S ISO 4017 M10X45 A480	
340	315105-0173		6	WASHER BRB 10,5X22 RFR	
350	312105-0370		4	SCREW M6S ISO 4017 M6X20 A480	
360	312115-0293		6	SCREW ISO4762 M4X16 A4 80	
370	315105-0136		6	WASHER BRB 4,3X8 RFR	
380	315105-0153		4	WASHER BRB 6,4X12 RFR	
390	352113-0203		6	ANCHOR PLATES FOR STRIPS, TM3S8-M0	
400	312125-0287		6	SCREW ISO 1207 M4X8 A4	
410	352113-0104		6	CABLE TIE, BLACK 300X4,8 MM	
420	315115-0173		6	WASHER PLAIN, TBRB 10,5/22 H=4	
30X120	90459-0839		1	DISTRIBUTION FRAME, ASBV 8 5-135/10M	
30X130	90459-0839		1	DISTRIBUTION FRAME, ASBV 8 5-135/10M	

Pos	Part No	UN	Qty	Description	Page No

Machine Type | Group Description | Used-In | Group Number | Page No

This page is intentionally left blank.

ECM: 492975 - 20110701
Group number: 2746939-0100
Assembly Drawing:

Pos	Part No	UN	Qty	Description	Page No
-					
010	2703700-0100		6	GUIDE BRACKET	**4-41**

Pos	Part No	UN	Qty	Description	Page No

Machine Type | Group Description | Used-In | Group Number | Page No

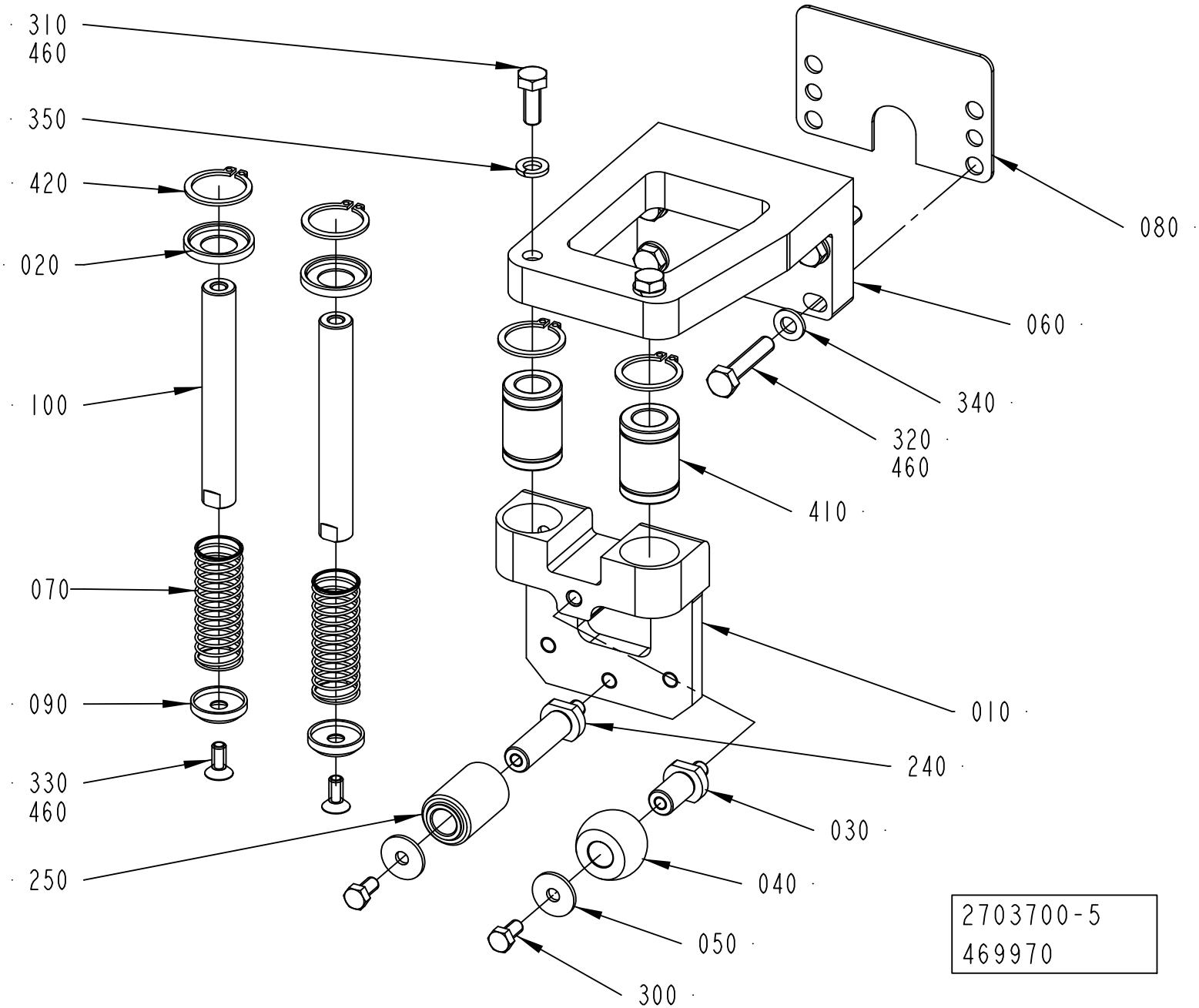
310
460
350
420
020
100
070
090
330
460
250
080
060
340
320
460
410
010
240
030
040
050
300
2703700-5
469970

ECM: 492974 - 20110701
Group number: 2703700-0100
Assembly Drawing: 2703700-5_1_AC

Pos	Part No	UN	Qty	Description	Page No
RECAP3, RECAP2 A3					
020	2751686-0000		2	WASHER	
030	2703683-0000		1	SHAFT	
040	1556630-0000		1	WHEEL	
050	1556643-0000		2	WASHER	
060	2703692-0000		1	HOLDER	
080	2703702-0000		1	SHIM	
240	2834018-0000		1	SHAFT	
250	2834034-0000		1	WHEEL	
300	312105-0325		2	SCREW M6S ISO 4017 M5X10 A480	
310	312105-0368		2	SCREW M6S ISO 4017 M6X16 A480	
320	312109-0374		4	SCREW M6S ISO 4017 M6X30 A480	
350	315402-0156		2	LOCK WASHER FBB 6,5	
410	90600-0375		2	BALL BUSHING, 12X21X30 MM	
420	90600-0373		4	RETAINING RING FOR SHAFT DIN 471 21 SS	
Common Parts					
010	2716127-0000		1	SLIDER	
070	2703708-0000		2	SPRING	
090	2751687-0000		2	WASHER	
100	90600-0376		2	SHAFT, LM SHAFT 12 G6 89L M	
330	312155-0327		2	SCREW DIN 7991 MF6S M5X12 A4 70	
340	315105-0153		4	WASHER BRB 6,4X12 RFR	

Pos	Part No	UN	Qty	Description	Page No

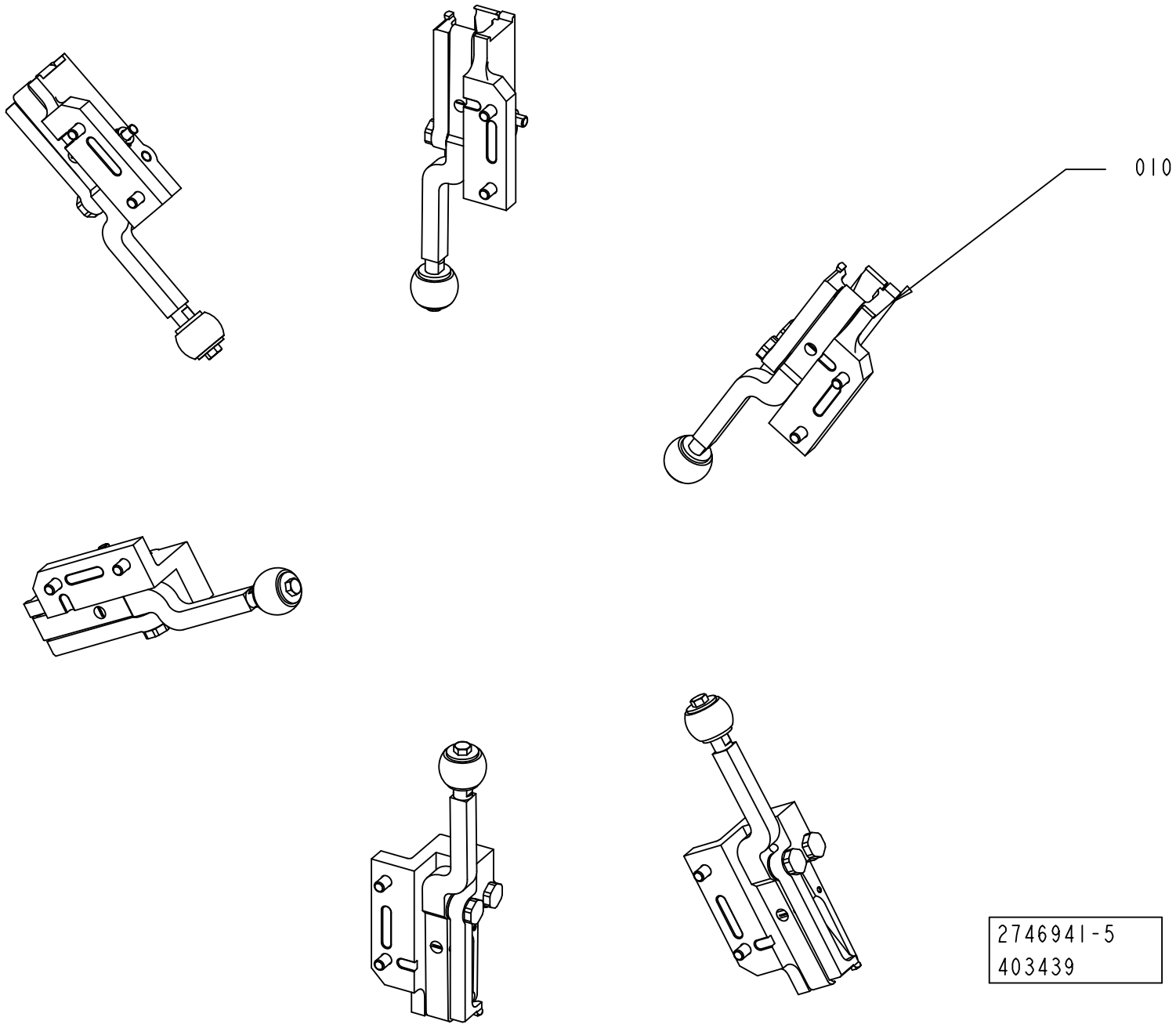
010
2746941-5
403439

ECM: 492976 - 20110701
Group number: 2746941-0200
Assembly Drawing: 2746941-5_1_AA

Pos	Part No	UN	Qty	Description	Page No
RECAP3, RECAP2 A3					
010	2895163-0200		6	CAP HOLDERS GROUP	**4-45**

Pos	Part No	UN	Qty	Description	Page No

Machine Type | Group Description | Used-In | Group Number | Page No

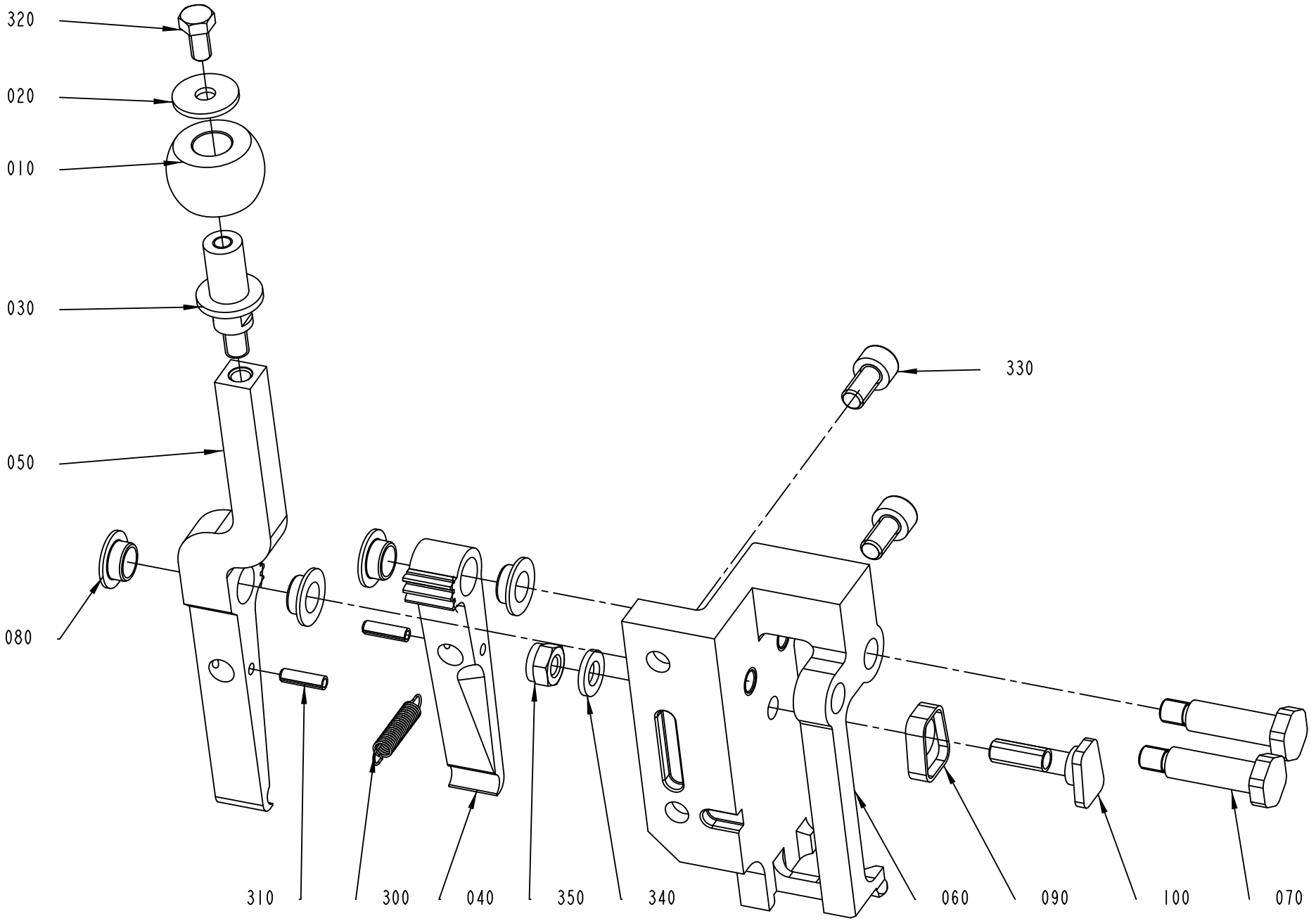
320
020
010
030
050
080
330
310
300
040
350
340
060
090
100
070
2895163-2
403439

ECM: 407781 - 20091001
Group number: 2895163-0200
Assembly Drawing: 2895163-2_1_AA

Pos	Part No	UN	Qty	Description	Page No
RECAP2 A3					
040	2982532-0000		1	CLAW	
050	2982531-0000		1	CLAW	
060	2923557-0000		1	PULLER	
RECAP3					
040	2912629-0000		1	CLAW	
050	2912630-0000		1	CLAW	
060	3009996-0000		1	PULLER	
090	3015035-0000		1	PUSHER	
100	3015036-0000		1	PIN	
340	315106-0153		1	WASHER ISO 7089-6-200 HV A4	
350	312812-0316		1	HEXAGON NUT, NY-LOCK M6 A480	
Common Parts					
010	1556630-0000		1	WHEEL	
020	1556643-0000		1	WASHER	
030	2746978-0000		1	SHAFT	
070	2895215-0000		2	SHAFT	
080	2914796-0000		4	BUSHING	
300	90335-0252		1	TENSION SPRING	
310	311112-0206		2	SPRING PIN, ISO 8752 3X12-C	
320	312105-0325		1	SCREW M6S ISO 4017 M5X10 A480	
330	312115-0366		2	SCREW ISO4762 M6X12 A4 80	

Pos	Part No	UN	Qty	Description	Page No

Tetra Pak

SPC
Spare Parts Catalogue

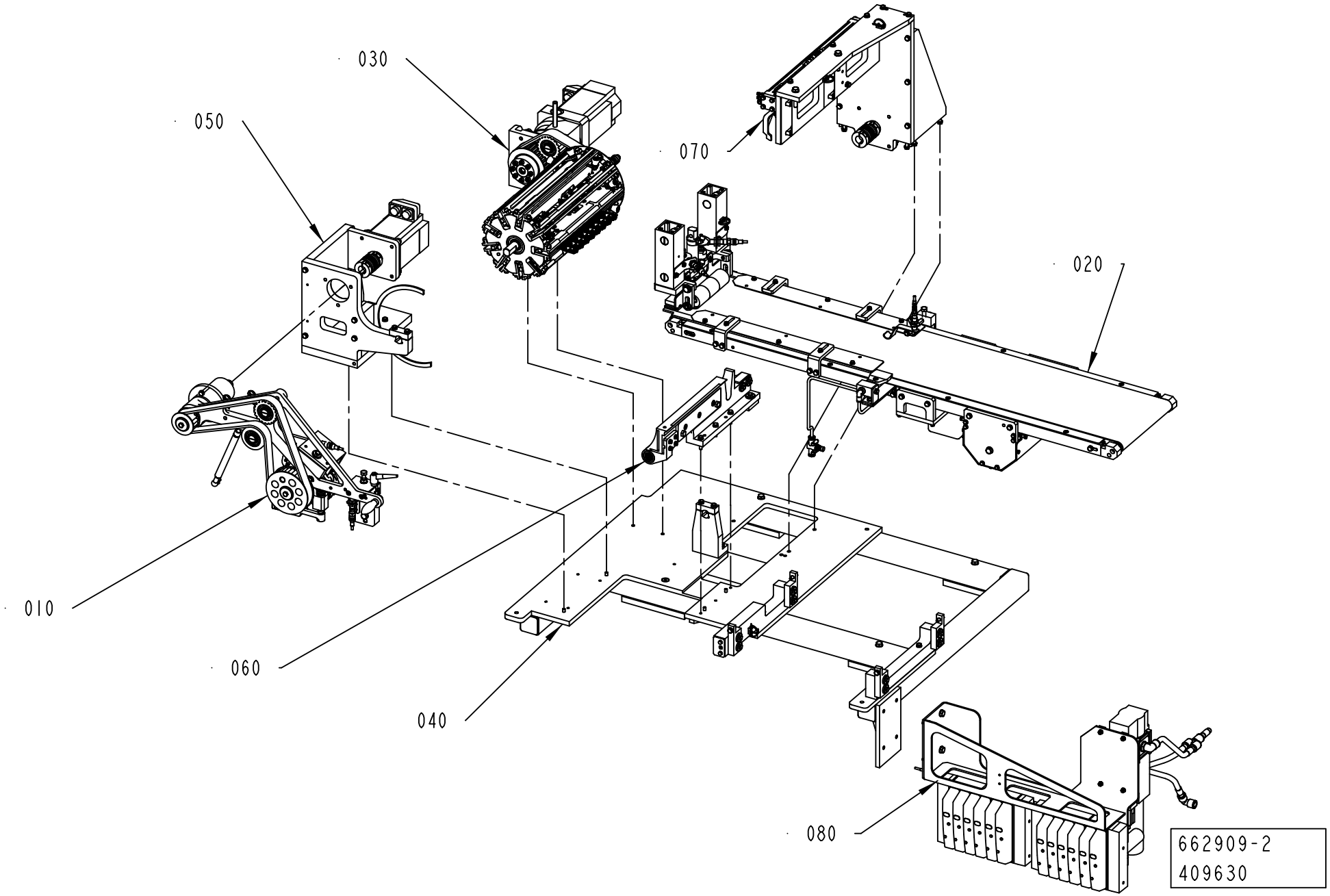
030
050
070
020
010
060
040
080
662909-2
409630

ECM: 409630 - 20091001
Group number: 662909-0200
Assembly Drawing: 662909-2_1_AA

Pos	Part No	UN	Qty	Description	Page No
-					
010	2835403-0200		1	CUTTING UNIT	**5-5**
020	2703794-0100		1	CONVEYOR	**5-11**
030	2703800-0100		1	ROW CUTTER	**5-35**
040	2715705-0200		1	FRAME	**5-43**
050	2715714-0100		1	DRIVE UNIT	**5-45**
060	2715730-0200		1	INDEXING UNIT	**5-47**
070	2715770-0100		1	DRIVE UNIT	**5-49**
080	2812002-0200		1	PNEUMATIC UNIT	**5-51**

Pos	Part No	UN	Qty	Description	Page No

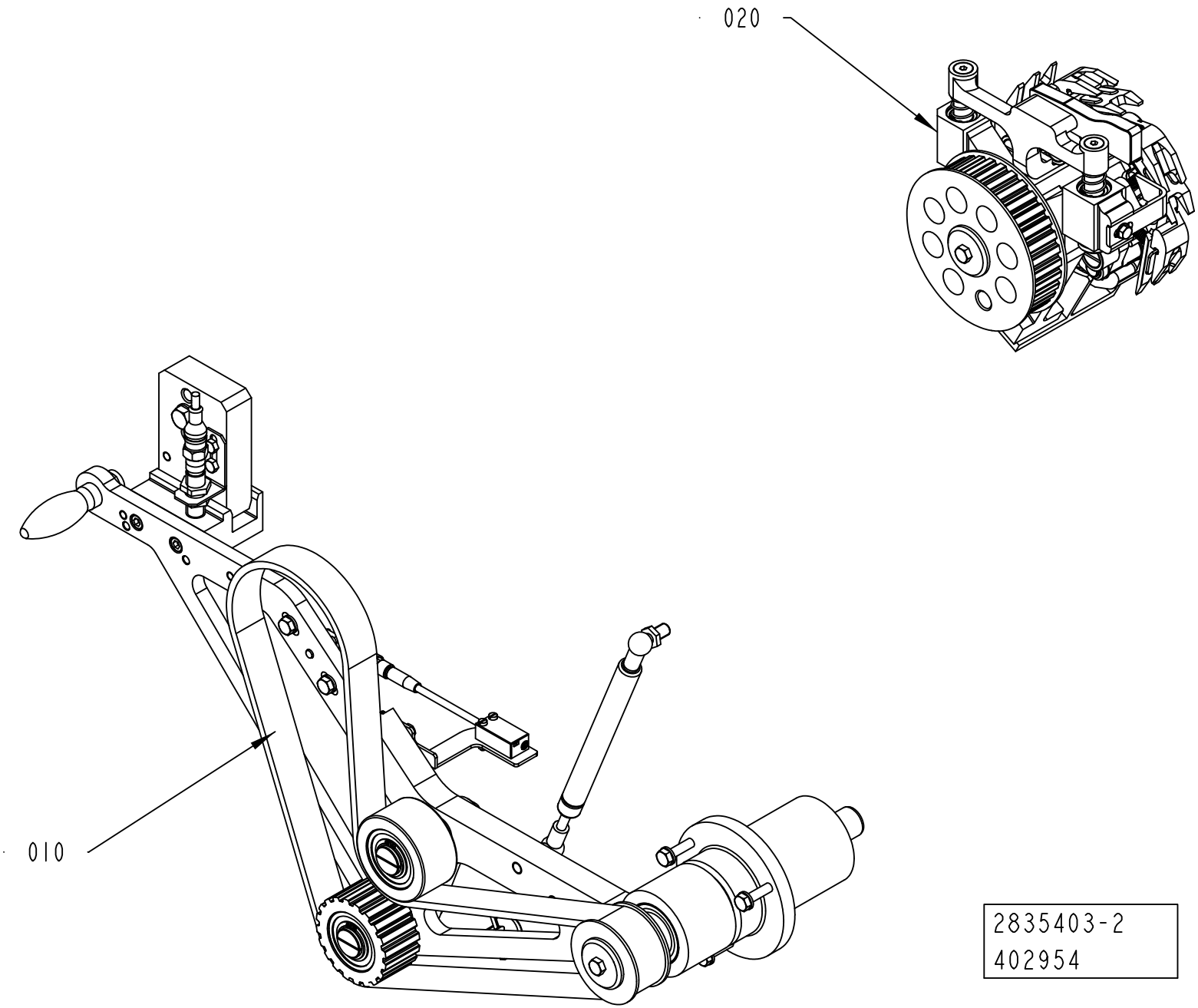
020
010
2835403-2
402954

ECM: 407816 - 20091001
Group number: 2835403-0200
Assembly Drawing: 2835403-2_1_AA

Pos	Part No	UN	Qty	Description	Page No
-					
010	2835404-0200		1	SUPPORT	**5-7**
020	2833343-0100		1	CUTTING WHEEL	**5-9**

Pos	Part No	UN	Qty	Description	Page No

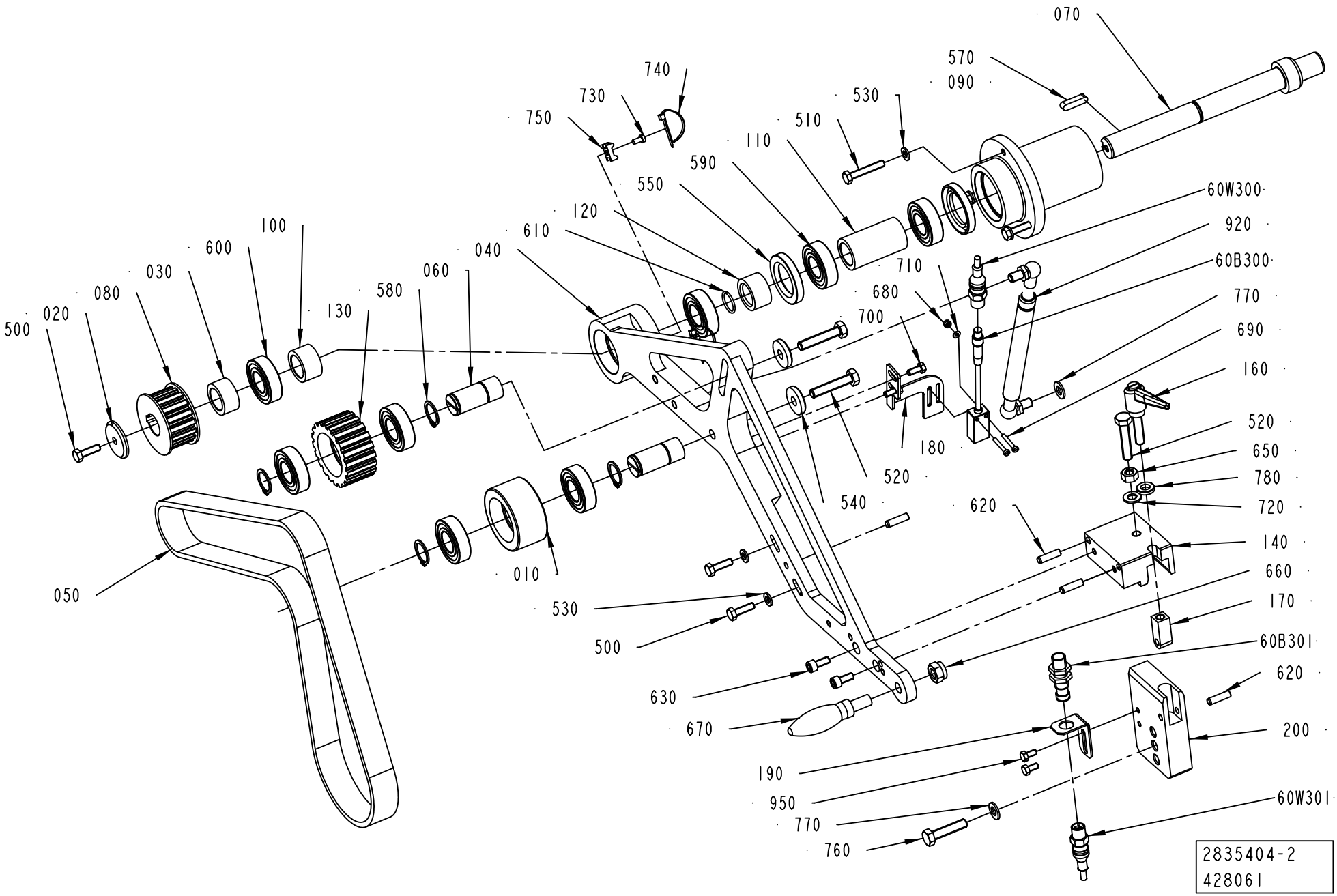
070
570
090
740
730
750
530
510
110
590
550
120
610
040
100
600
030
080
020
500
130
580
060
710
680
700
60W300
920
60B300
770
690
160
520
650
780
720
140
660
170
60B301
620
200
60W301
180
520
540
620
010
050
530
500
630
670
190
950
770
760
2835404-2
428061

ECM: 483968 - 20110401
Group number: 2835404-0200
Assembly Drawing: 2835404-2_1_AB

Pos	Part No	UN	Qty	Description	Page No
CAP 30/FLEX					
210	3127332-0000		1	BRACKET	
Common Parts					
010	1030627-0000		1	ROLL	
020	2703774-0000		1	WASHER	
030	2703775-0000		1	SPACER	
040	2835402-0000		1	BRACKET	
050	318174-0162		1	TIMING BELT 25T10/1150 PU	
060	2703783-0000		2	AXLE PIN	
070	2703784-0000		1	SHAFT	
080	2703786-0000		1	TOOTHED PULLEY	
090	2703788-0000		1	HOUSING	
100	2703803-0000		1	SPACER	
110	2703804-0000		1	SPACER	
120	2703789-0000		1	SPACER	
130	2605621-0000		1	TOOTHED PULLEY	
140	2837616-0000		1	BLOCK	
160	2715778-0000		1	LOCKING ARM	
170	2837617-0000		1	AXLE PIN	
180	2878496-0000		1	BRACKET	
190	2882297-0000		1	BRACKET	
200	2933730-0000		1	BRACKET	
220	3127768-0000		1	PLATE	
500	312105-0370		3	SCREW M6S ISO 4017 M6X20 A480	
510	312109-0376		3	SCREW M6S ISO 4017 M6X35 A480	
520	312109-0459		3	SCREW M6S ISO 4017 M8X40 A480	
530	315105-0153		5	WASHER BRB 6,4X12 RFR	
540	315125-0165		2	WASHER TBRSB 8,4X26X5 A4	
550	315221-0169		2	RADIAL SEAL 30X47X7 MM	
570	315705-0234		1	PARALLEL KEY W. ROUND ENDS 6X6X25 MM	
580	315751-0116		4	RETAINING RING FOR SHAFT DIN 471 20 SS	
590	321306-0104		2	BALL BEARING 20/42X12	
600	321308-0204		6	BALL BEARING 20/42X12	
610	315206-0705		1	O-RING 17,17X1,78 MM	
620	311103-0354		4	PARALLEL PIN ISO 2338 6M6X22 A1	
630	312115-0367		2	SCREW ISO4762 M6X14 A4 80	
650	312605-0318		1	HEXAGON NUT, M6M M8 A280	
660	312812-0320		1	HEXAGON NUT, NY-LOCK M10 A480	
670	318801-0109		1	HANDLE, THREADED TAP. NO. 8304-929	
690	312115-0230		2	SCREW ISO4762 M3X20 A4 80	
700	312105-0327		2	SCREW M6S ISO 4017 M5X12 A480	
710	312602-0310		1	HEXAGON NUT, EN 24032 M6M M3 NIPLBR	
720	315105-0165		1	WASHER BRB 8,4X16 RFR	
730	312125-0287		2	SCREW ISO 1207 M4X8 A4	
740	352113-0104		2	CABLE TIE, BLACK 300X4,8 MM	
750	352113-0205		2	ANCHOR PLATES FOR STRIPS, TM2S8-C100	
760	312109-0457		1	SCREW M6S ISO 4017 M8X35 A480	
770	315106-0165		2	WASHER ISO 7089-8-200 HV A4	
780	315115-0165		1	WASHER PLAIN, TBRB 8,4/16 H=3	
790	312602-0310		1	HEXAGON NUT, EN 24032 M6M M3 NIPLBR	
800	90296-0068	G	50	SHELL ALVANIA GREASE EP 2	
920	90458-2975		1	GAS SPRING G6-15-120-1-317-WX22-WX22-150	
950	312105-0325		2	SCREW M6S ISO 4017 M5X10 A480	
60B300	90459-7366		1	PHOTOCELL, WTB4-3P3161 F20	
60B301	90458-2907		1	PROX.SWITCH IFS204	
60W300	351408-0020		1	ACTU/SENS. CABLE PRST 3-PRKMWV 3-06/2,0M	
60W301	351411-0015		1	ACTU/SENS. CABLE PRST 4-PRKT 4-07/1,5M	

Machine Type	Group Description	Used-In	Group Number	Page No

CUTTING WHEEL

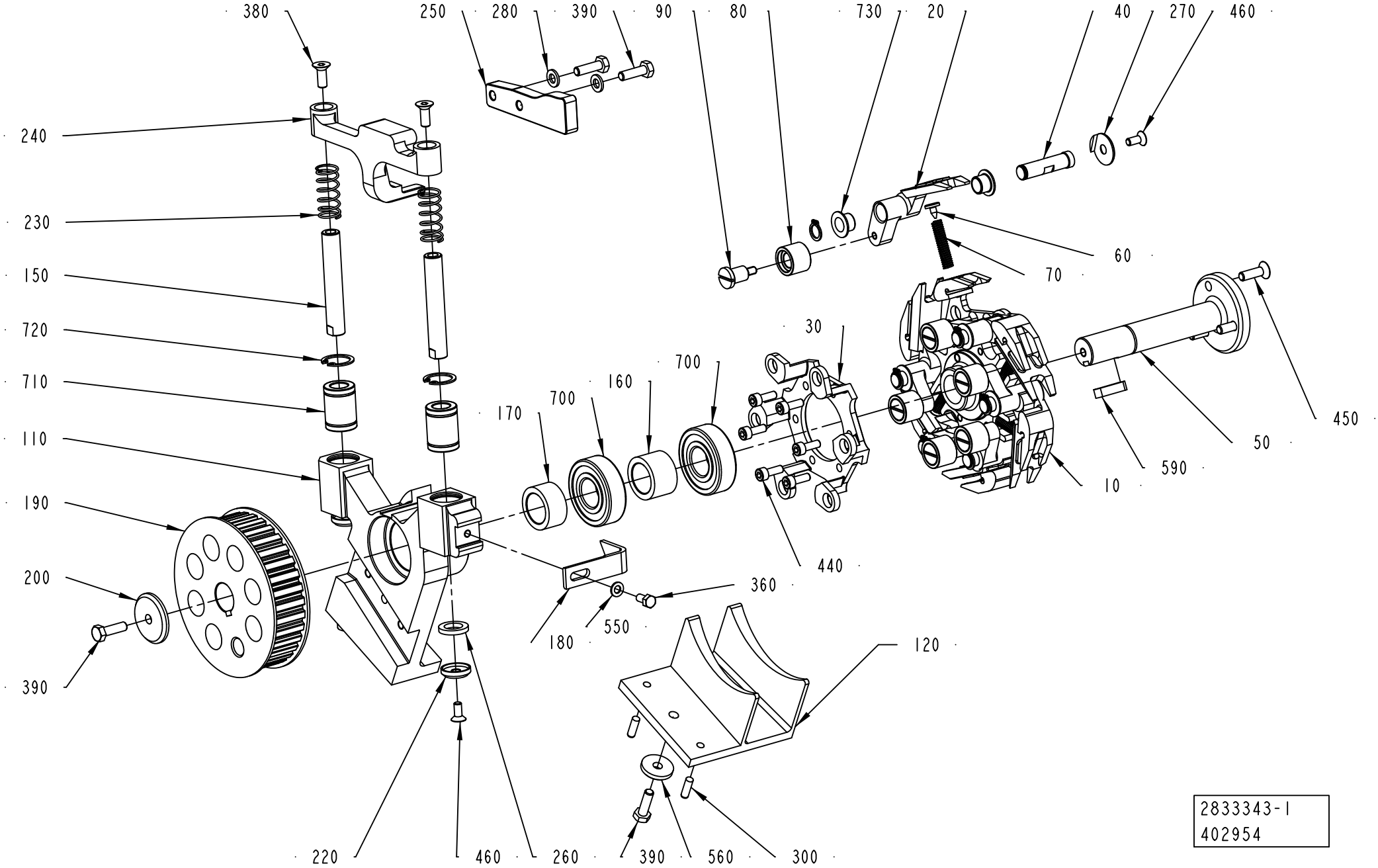

ECM: 459249 - 20101001
Group number: 2833343-0100
Assembly Drawing: 2833343-1_1_AB

Pos	Part No	UN	Qty	Description	Page No
CAP 30/FLEX RECAP2 A3					
010	2925333-0000		1	WHEEL	
020	2924097-0000		6	PRESSURE FINGER	
120	2980667-0000		1	GUIDE	
250	2863988-0000		1	CAM	
CAP 30/FLEX RECAP3					
010	2812009-0000		1	WHEEL	
020	2812010-0000		6	PRESSURE FINGER	
120	2792462-0000		1	GUIDE	
250	2863988-0000		1	CAM	
Common Parts					
030	2812011-0000		1	PLATE	
040	3010007-0000		6	AXLE PIN	
050	2703764-0000		1	SHAFT	
060	2703763-0000		6	PLATE	
070	2703765-0000		6	COMPRESSION SPRING	
080	2703769-0000		6	WHEEL	
090	2703770-0000		6	SCREW	
110	2833344-0000		1	BRACKET	
150	2834049-0000		2	SHAFT	
160	2703772-0000		1	SPACER	
170	2703775-0000		1	SPACER	
180	2837618-0000		1	STOP	
190	2703787-0000		1	TOOTHED PULLEY	
200	2703774-0000		1	WASHER	
220	2751687-0000		2	WASHER	
230	90600-0891		2	COMP. SPRING 2520, 1,2X16,4X35	
240	2863769-0000		1	CAM	
260	2871097-0000		2	DAMPER	
270	3025697-0000		6	WASHER	
280	315103-0153		2	WASHER, BRB, 6,4/12,H=1,5 NIPL BR	
300	311103-0308		2	PARALLEL PIN ISO 2338 5M6X16 A1	
360	312105-0325		1	SCREW M6S ISO 4017 M5X10 A480	
380	312155-0368		2	SCREW DIN 7991 MF6S M6X16 A4 70	
390	312105-0370		4	SCREW M6S ISO 4017 M6X20 A480	
440	312115-0327		6	SCREW ISO4762 M5X12 A4 80	
450	312155-0370		3	SCREW DIN 7991 MF6S M6X20 A4 70	
460	312155-0327		8	SCREW DIN 7991 MF6S M5X12 A4 70	
550	315105-0146		1	WASHER BRB 5,3X10 RFR	
560	315125-0153		1	WASHER TBRSB 6,4X22X4 A4	
590	315705-0234		1	PARALLEL KEY W. ROUND ENDS 6X6X25 MM	
700	321313-0104		2	BALL BEARING 20/47X14	
710	90600-0375		2	BALL BUSHING, 12X21X30 MM	
720	90458-1095		2	RETAINING RING FOR BORE DIN 472 21 SS	
730	321155-0139		12	FLANGE BUSHING, IGLIDUR X 10X12X9	
740	90141-0016		6	RETAINING RING FOR SHAFT DIN 471 10 SS	

Machine Type | Group Description | Used-In | Group Number | Page No

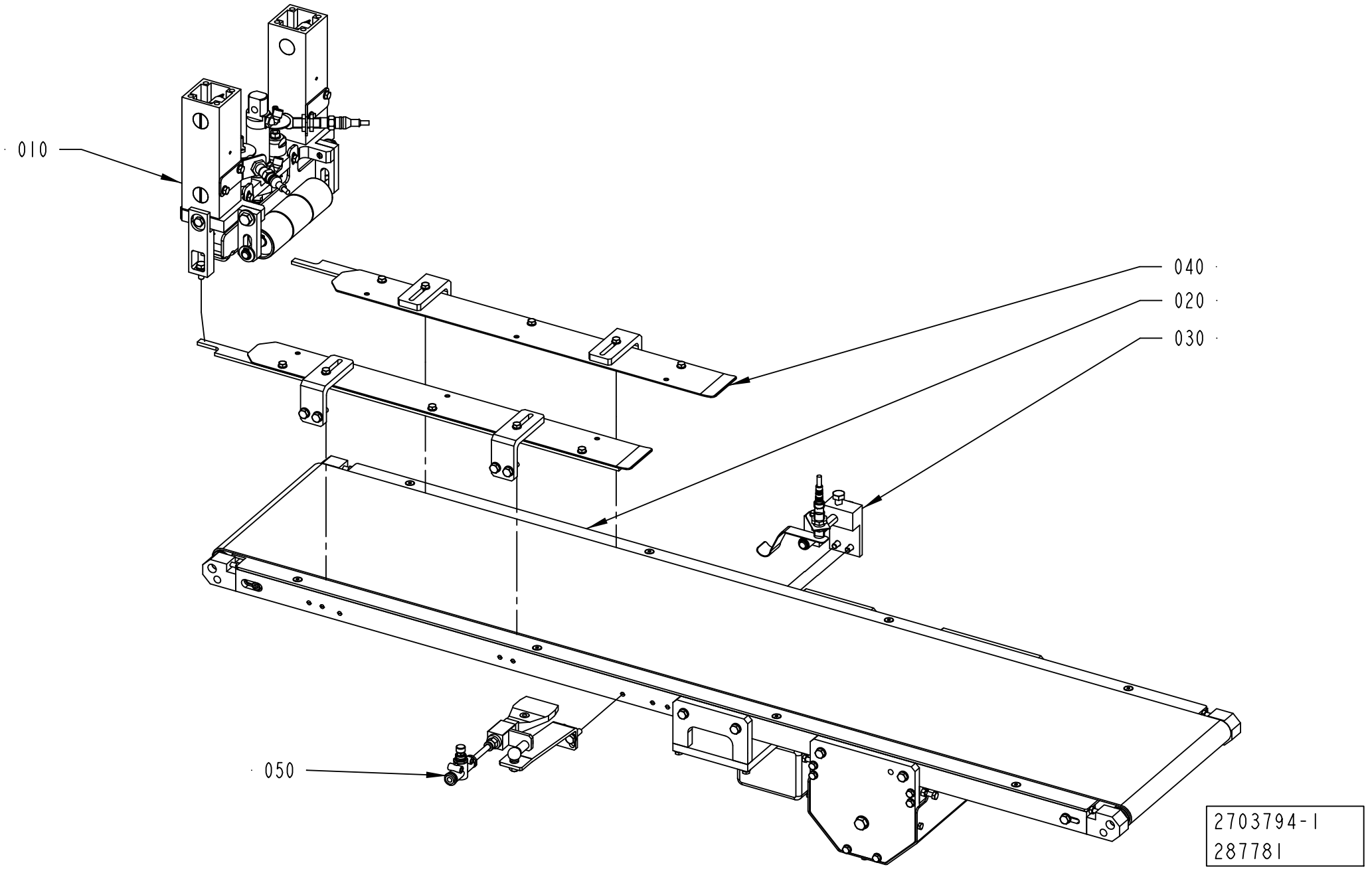
010
040
020
030
050
2703794-1
287781

ECM: 295900 - 20070606
Group number: 2703794-0100
Assembly Drawing: 2703794-1_1_AA

Pos	Part No	UN	Qty	Description	Page No
CAP 30/FLEX					
040	2780525-0100		1	GUIDE	**5-13**
Common Parts					
010	2703785-0100		1	HOLDER	**5-15**
020	2811583-0100		1	CONVEYOR	**5-17**
030	2703805-0100		1	CAP DETECTOR	**5-31**
050	2888723-0100		1	AIR SYSTEM	**5-33**

Pos	Part No	UN	Qty	Description	Page No

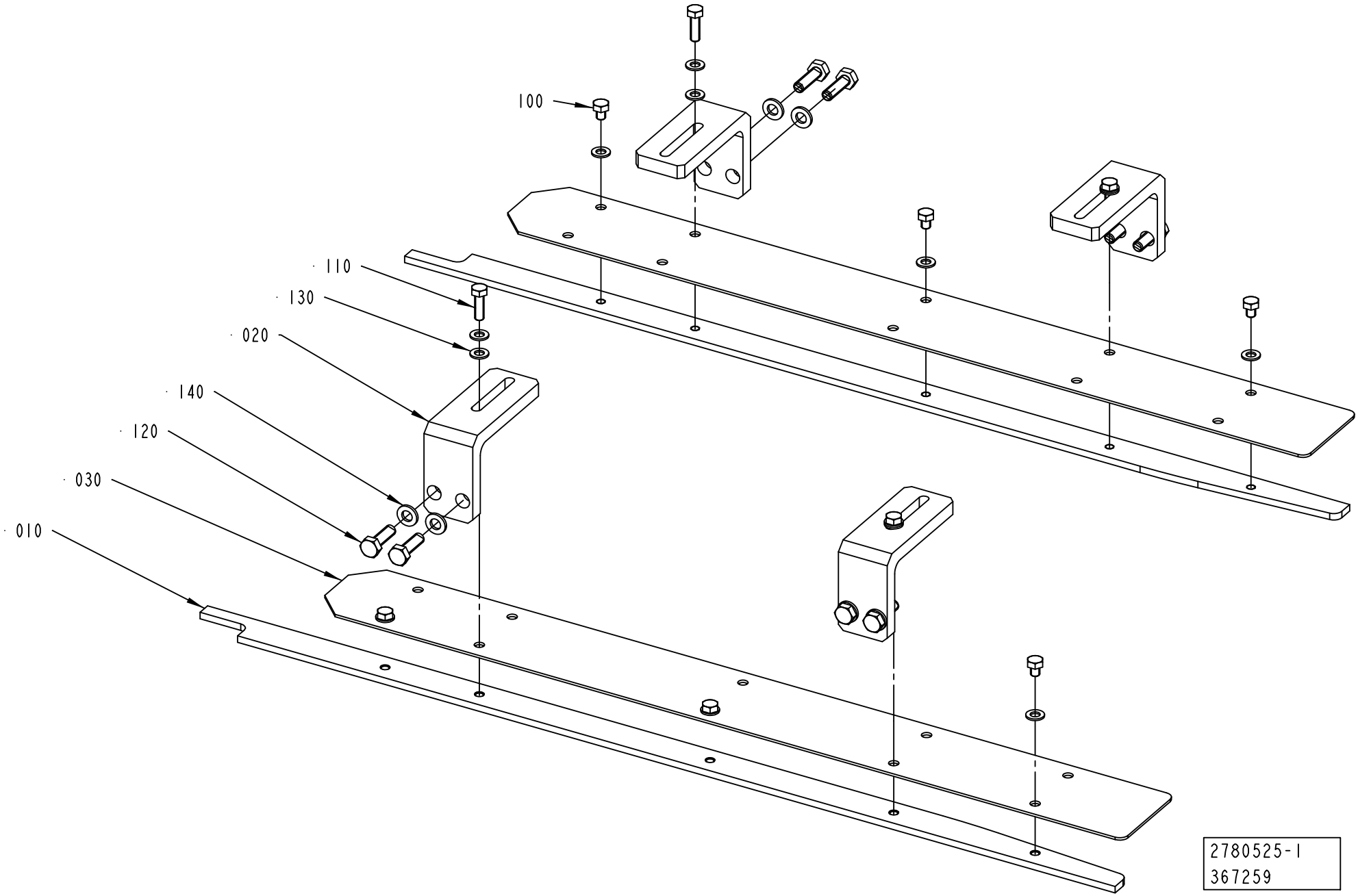
100
110
130
020
140
120
030
010
2780525-1
367259

ECM: 373810 - 20090101
Group number: 2780525-0100
Assembly Drawing: 2780525-1_1_AB

Pos	Part No	UN	Qty	Description	Page No
-					
010	2882488-0000		2	GUIDE	
020	2715728-0000		4	BRACKET	
030	2882489-0000		2	GUIDE	
100	90287-0199		6	SCREW M6S ISO 4017 M5X6 A480	
110	312105-0329		4	SCREW M6S ISO 4017 M5X16 A480	
120	312105-0370		8	SCREW M6S ISO 4017 M6X20 A480	
130	315105-0146		14	WASHER BRB 5,3X10 RFR	
140	315105-0153		8	WASHER BRB 6,4X12 RFR	

Pos	Part No	UN	Qty	Description	Page No

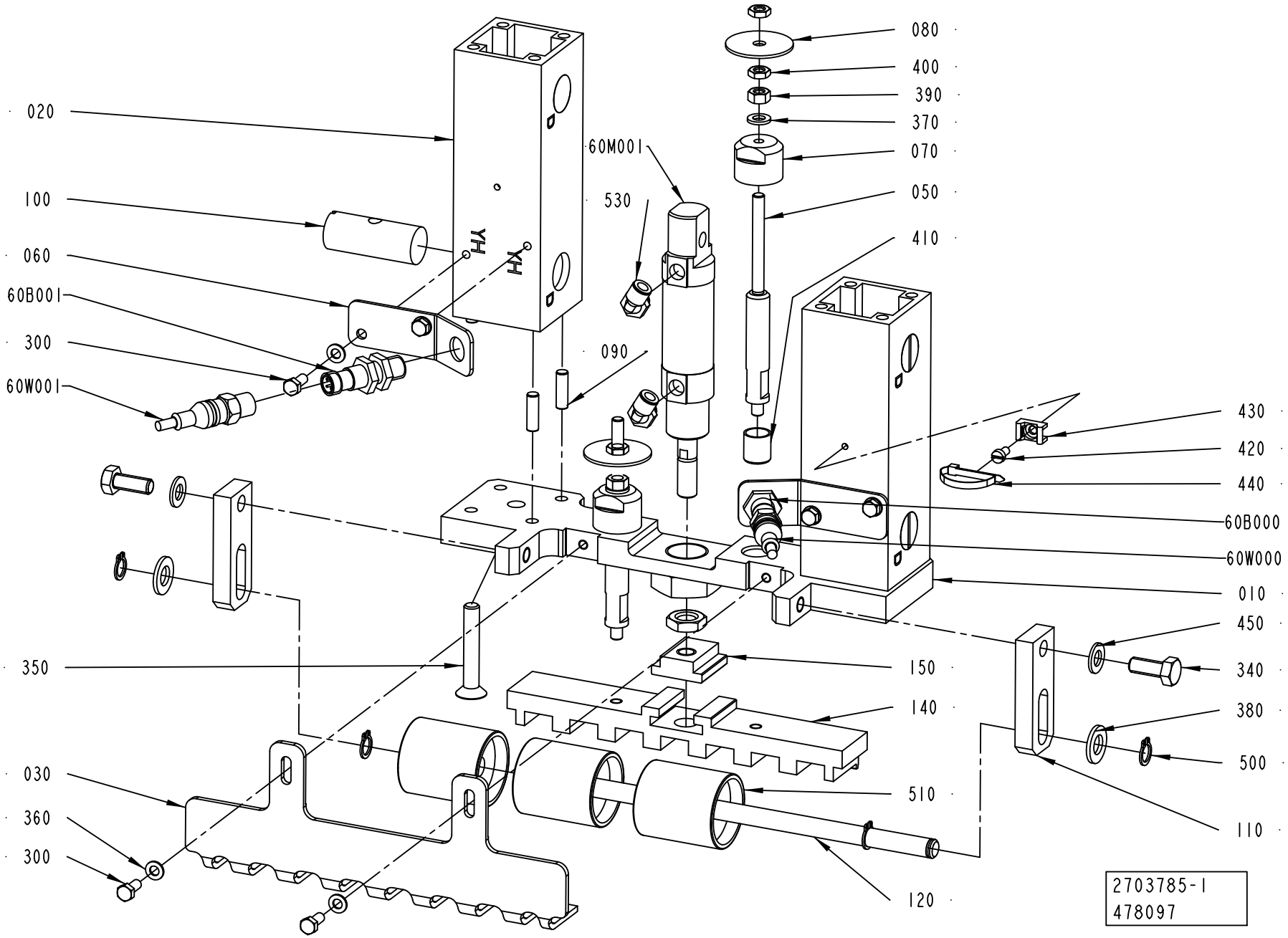
080
400
390
370
070
050
410
430
420
440
60B000
60W000
010
450
340
380
500
110
020
100
060
60B001
300
60W001
60M001
530
090
YH
YH
150
140
510
120
350
030
360
300
2703785-1
478097

ECM: 485079 - 20110401
Group number: 2703785-0100
Assembly Drawing: 2703785-1_1_AF

Pos	Part No	UN	Qty	Description	Page No
RECAP2 A3					
030	3007826-0000		1	GUIDE	
140	3007773-0000		1	PLATE	
RECAP3					
030	2780404-0000		1	GUIDE	
140	3005237-0000		1	PLATE	
Common Parts					
010	2828666-0000		1	BRACKET	
020	2715742-0000		2	PROFILE	
050	2715743-0000		2	SHAFT	
060	2715744-0000		2	BRACKET	
070	2715740-0000		2	STOP	
080	2715739-0000		2	FLAG	
090	1065410-0000		8	SLOTTED PIN	
100	486268-0000		4	NUT	
110	2826560-0000		2	PLATE	
120	2826563-0000		1	SHAFT	
150	3007680-0000		1	SPACER	
300	312105-0327		6	SCREW M6S ISO 4017 M5X12 A480	
340	312105-0451		2	SCREW M6S ISO 4017 M8X20 A480	
350	312155-0461		2	SCREW DIN 7991 MF6S M8X50A4 70	
360	315105-0146		6	WASHER BRB 5,3X10 RFR	
370	315105-0153		2	WASHER BRB 6,4X12 RFR	
380	315106-0173		2	WASHER ISO 7089-10-200 HV A4	
390	312605-0316		2	HEXAGON NUT, M6M M6 A280	
400	312625-0316		4	HEXAGON THIN NUT, EN 24035 ML6M M6 A4	
410	321136-0183		2	BUSHING, IGLIDUR H370 12X14X15	
420	312125-0287		1	SCREW ISO 1207 M4X8 A4	
430	352113-0205		1	ANCHOR PLATES FOR STRIPS, TM2S8-C100	
440	352113-0104		1	CABLE TIE, BLACK 300X4,8 MM	
450	315105-0165		2	WASHER BRB 8,4X16 RFR	
500	90141-0016		4	RETAINING RING FOR SHAFT DIN 471 10 SS	
510	90191-0069		3	WHEEL, NO. RSER 40X45	
530	90458-2956		2	ELBOW PIPE JOINT, EXT.THREAD, D=6MM-G1/8	
60B000	90458-2907		1	PROX.SWITCH IFS204	
60B001	90458-2907		1	PROX.SWITCH IFS204	
60M001	90459-4126		1	DOUBLE ACTING, MINI-ISO, CYL. 25-12	
60W000	351411-0015		1	ACTU/SENS. CABLE PRST 4-PRKT 4-07/1,5M	
60W001	351411-0015		1	ACTU/SENS. CABLE PRST 4-PRKT 4-07/1,5M	

Pos	Part No	UN	Qty	Description	Page No

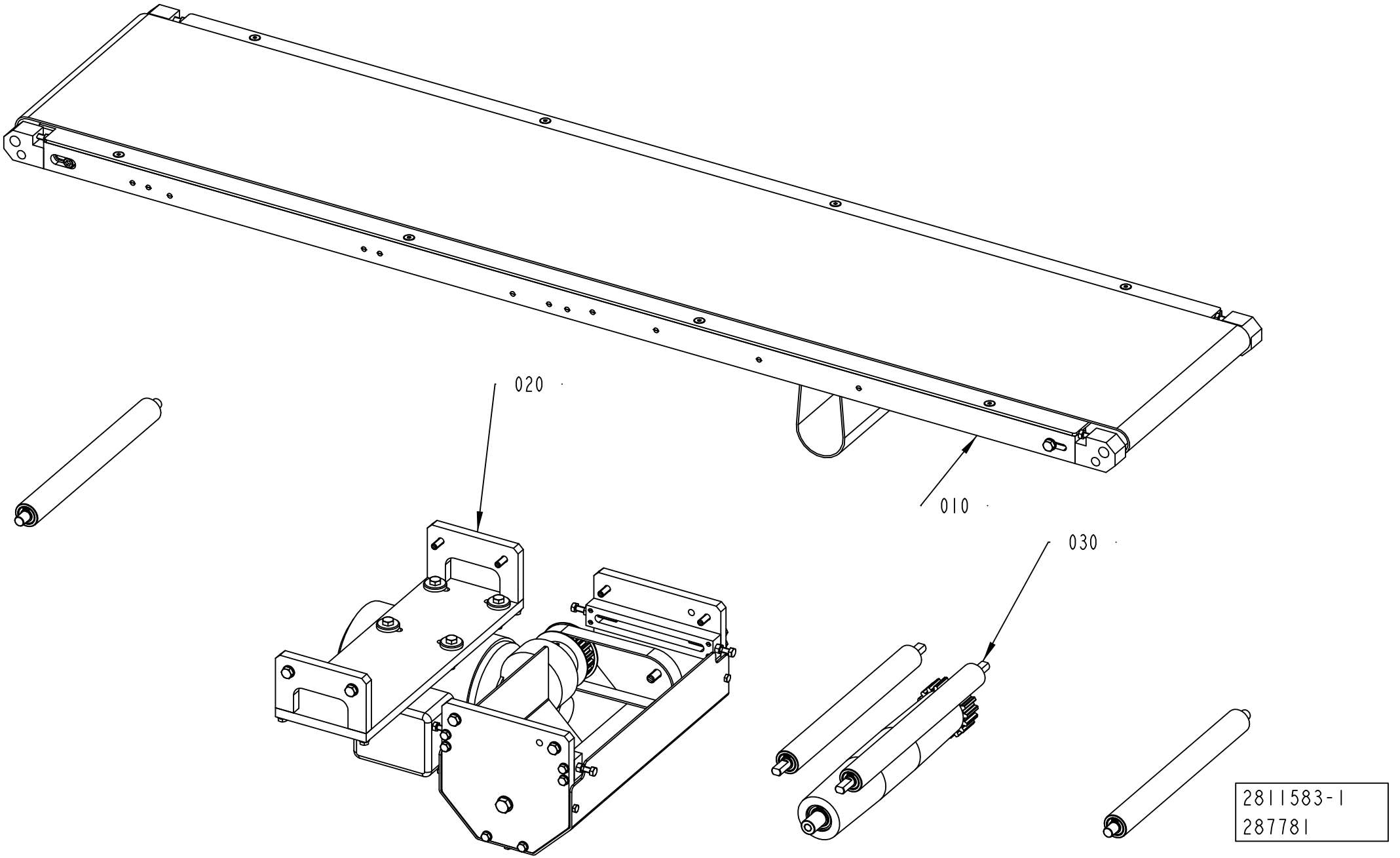
020
010
030
2811583-1
287781

ECM: 295901 - 20070606
Group number: 2811583-0100
Assembly Drawing: 2811583-1_1_AA

Pos	Part No	UN	Qty	Description	Page No
-					
010	2811482-0100		1	FRAMEWORK	**5-19**
020	2811470-0100		1	DRIVE UNIT	**5-21**
030	2811472-0100		1	ROLLER UNIT	**5-23**

Pos	Part No	UN	Qty	Description	Page No

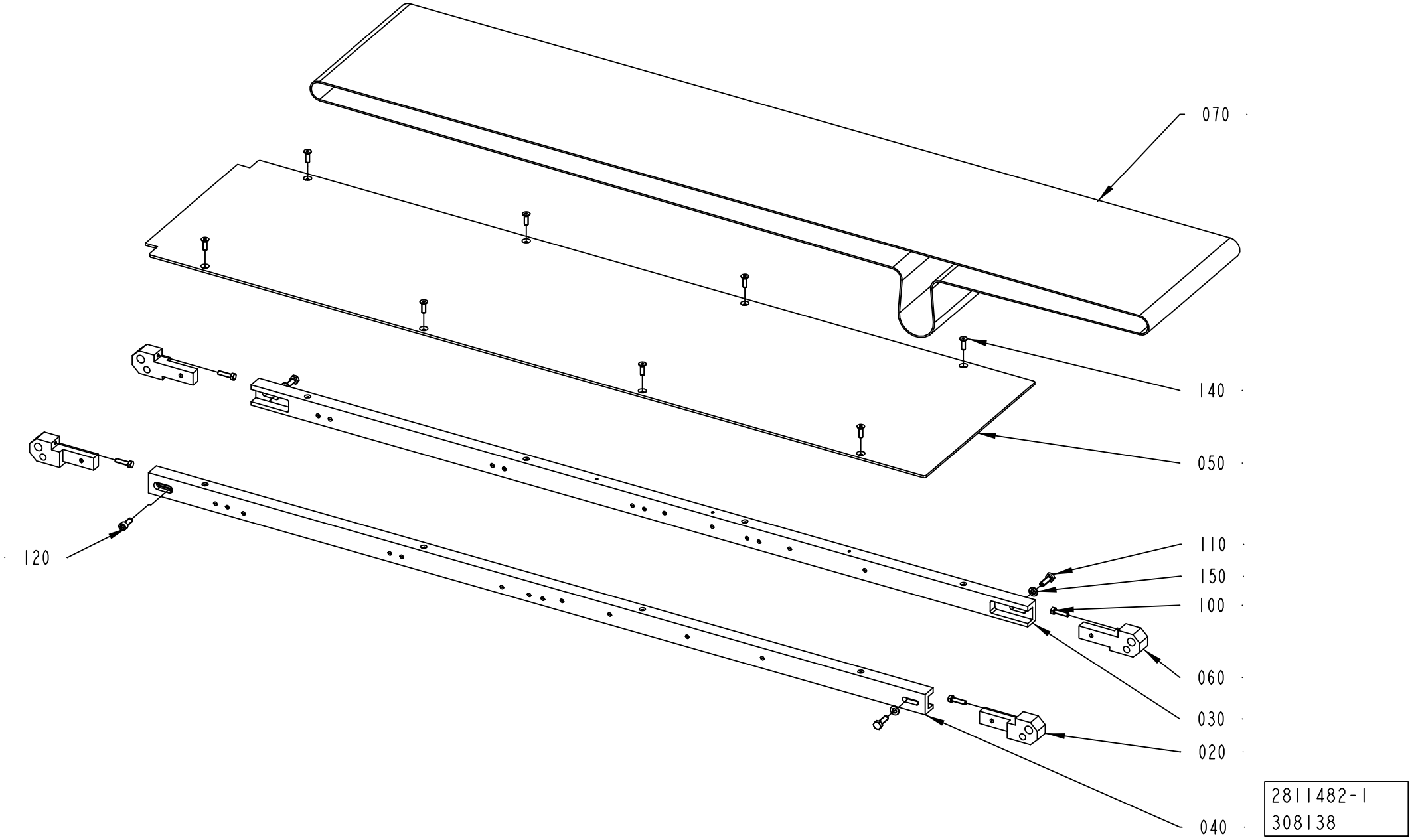
070
140
050
120
110
150
100
060
030
020
040
2811482-1
308138

ECM: 308138 - 20070606
Group number: 2811482-0100
Assembly Drawing: 2811482-1_1_AA

Pos	Part No	UN	Qty	Description	Page No
CAP 30/FLEX					
030	2811582-0000		1	FRAME UNION GIRDER	
040	2811483-0000		1	FRAME UNION GIRDER	
050	2811581-0000		1	SLIDE SHEET	
070	2811579-0000		1	CONVEYOR BELT	
140	312155-0329		8	SCREW DIN 7991 MF6S M5X16 A4 70	
Common Parts					
020	2737295-0000		2	SLIDE	
060	2737409-0000		2	SLIDE	
100	312105-0331		4	SCREW M6S ISO 4017 M5X20 A480	
110	312105-0370		3	SCREW M6S ISO 4017 M6X20 A480	
120	312115-0368		1	SCREW ISO4762 M6X16 A4 80	
150	315105-0153		3	WASHER BRB 6,4X12 RFR	

Pos	Part No	UN	Qty	Description	Page No

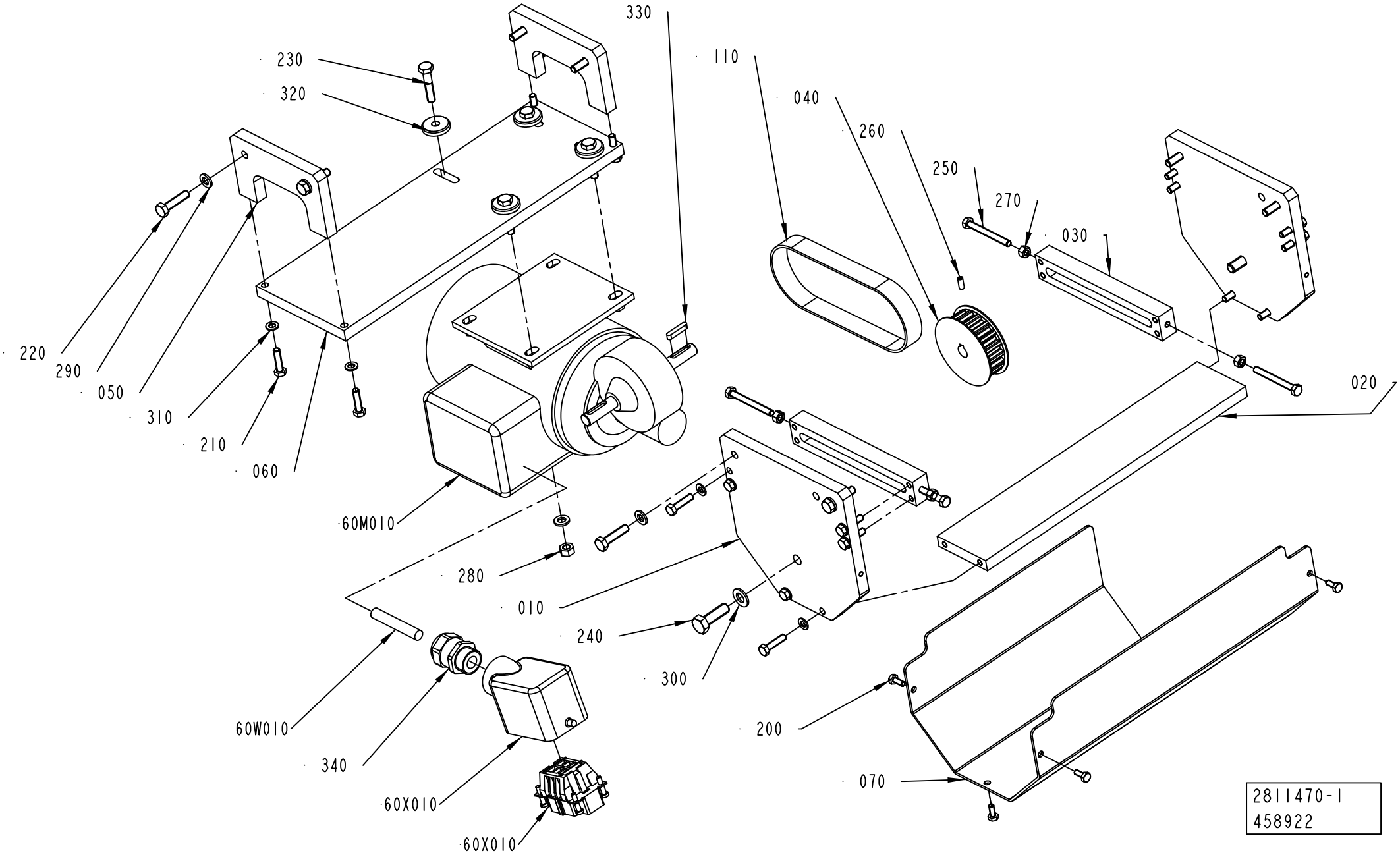
330
110
040
260
250
270
030
020
230
320
220
290
050
310
210
060
60M010
280
010
240
300
200
070
60W010
340
60X010
60X010
2811470-1
458922

ECM: 460760 - 20101001
Group number: 2811470-0100
Assembly Drawing: 2811470-1_1_AC

Pos	Part No	UN	Qty	Description	Page No
-					
010	2737419-0000		2	GABLE PLATE	
020	2811471-0000		1	PLATE	
030	2737421-0000		2	HEAD PLATE	
040	2968615-0000		1	DRIVE WHEEL	
050	2737423-0000		2	PLATE	
060	2811468-0000		1	PLATE	
070	2811469-0000		1	PROTECTION PLATE	
110	90417-0337		1	TIMING BELT 16T10/370 PU	
200	312105-0289		5	SCREW M6S H4X10 A4 70 ISO4017/DIN933	
210	312105-0331		16	SCREW M6S ISO 4017 M5X20 A480	
220	312105-0372		8	SCREW M6S ISO 4017 M6X25 A480	
230	312105-0374		4	SCREW M6S ISO 4014 M6X30 A480	
240	312105-0453		2	SCREW M6S ISO 4017 M8X25 A480	
250	312109-0340		4	SCREW M6S ISO 4017 M5X45 A480	
260	312318-0289		1	SCREW ISO4029 M4X10 A4	
270	312605-0314		4	HEXAGON NUT, M6M M5 A280	
280	312607-0316		4	HEXAGON NUT, EN 24032 M6M M6 A480	
290	315105-0153		12	WASHER BRB 6,4X12 RFR	
300	315105-0165		2	WASHER BRB 8,4X16 RFR	
310	315106-0146		16	WASHER ISO 7089-5-200 HV A4	
320	315125-0153		4	WASHER TBRSB 6,4X22X4 A4	
330	315701-0170		1	PARALLEL KEY W. ROUND ENDS 4X4X20 MM	
340	90458-0307		1	CABLE GLAND, M20X1,5, NO.5311 1020	
60M010	90069-0254		1	GEARS, WORM MOTOR SN5D56A-4	
60W010	351150-0413	M	5	CABLE OLFLEX 4GX1,5 MM2 LIGHT/GREY	
60X010	90110-0052		1	MALE INSERT, HAN E06, 0933 0062 601	
60X010	90459-1458		1	HOOD, SIDE ENTRY, HAN6E, 19 30 006 1540	

Pos	Part No	UN	Qty	Description	Page No

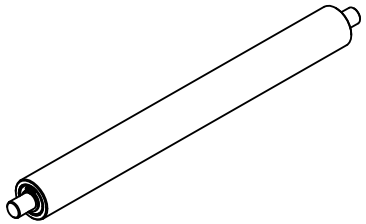

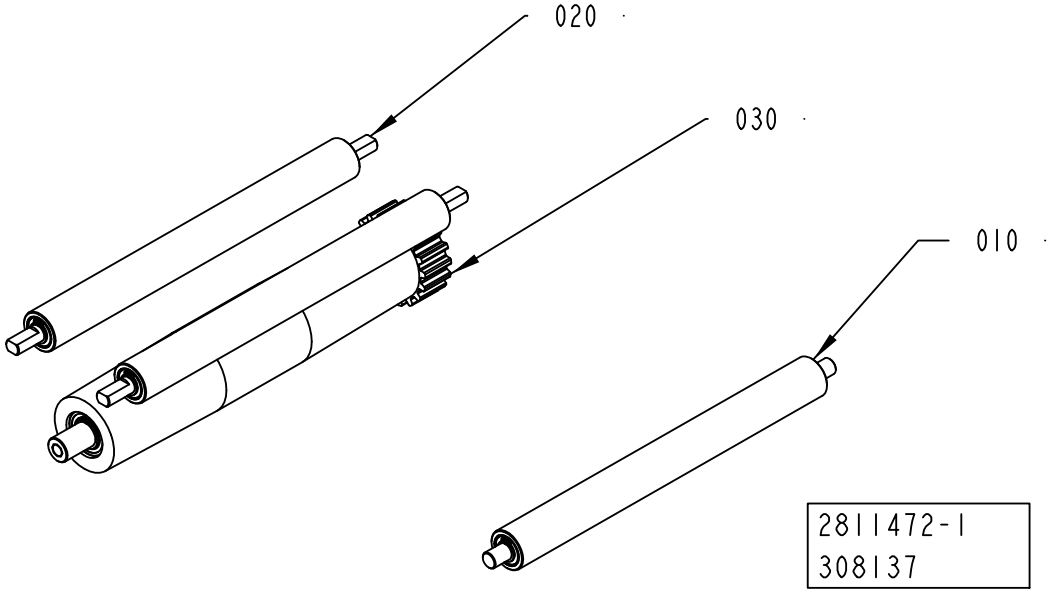
020
030
010
2811472-1
308137

ECM: 308137 - 20070606
Group number: 2811472-0100
Assembly Drawing: 2811472-1_1_AA

Pos	Part No	UN	Qty	Description	Page No
-					
010	2811473-0100		2	ROLL	**5-25**
020	2811481-0100		2	ROLL	**5-27**
030	2811476-0100		1	DRIVE ROLLER	**5-29**

Pos	Part No	UN	Qty	Description	Page No

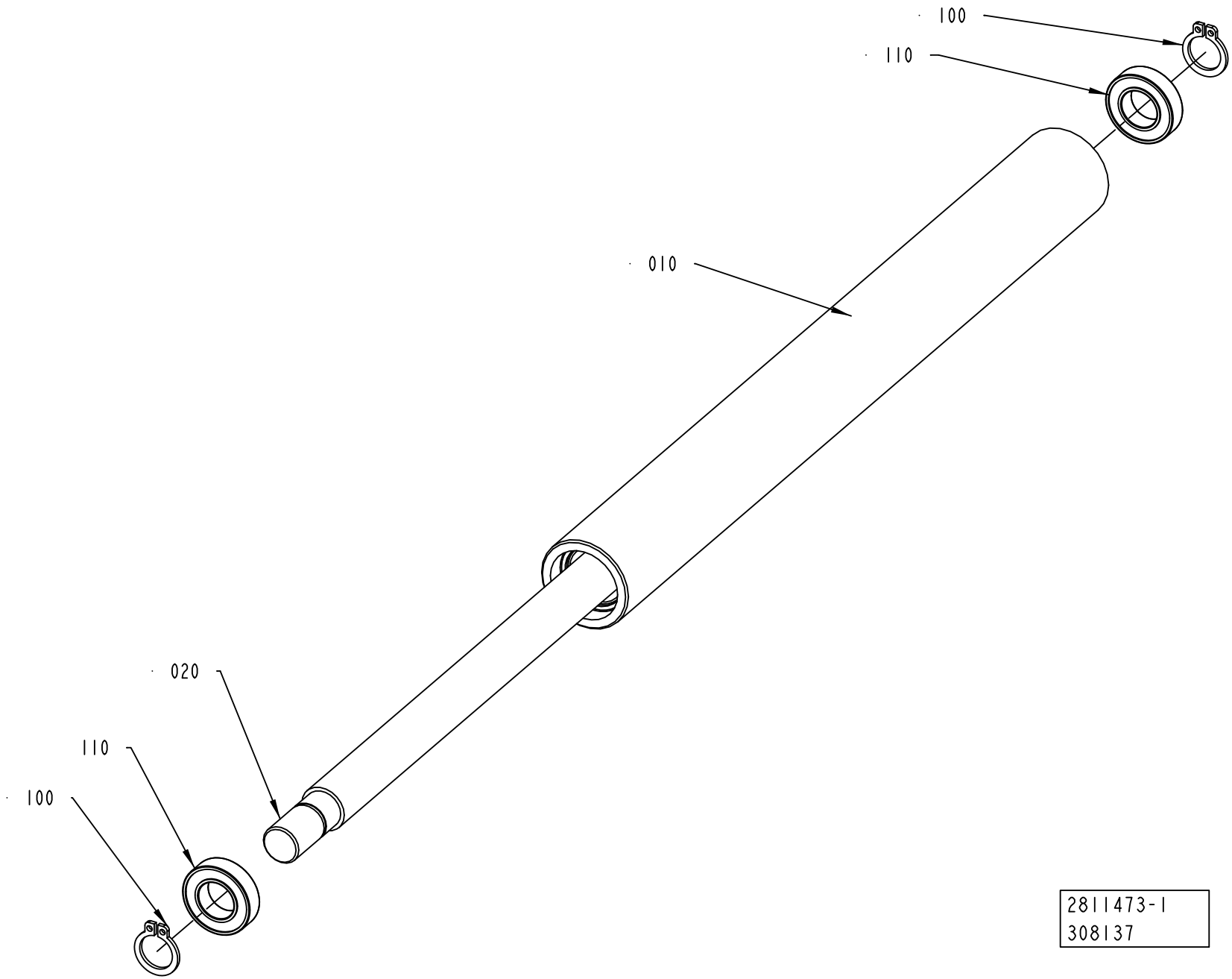
100
110
010
020
110
100
2811473-1
308137

ECM: 308137 - 20070606
Group number: 2811473-0100
Assembly Drawing: 2811473-1_1_AA

Pos	Part No	UN	Qty	Description	Page No
-					
010	2811479-0000		1	JACKET	
020	2811475-0000		1	SHAFT	
100	90141-0016		2	RETAINING RING FOR SHAFT DIN 471 10 SS	
110	90458-1438		2	BALL BEARING 10/19X5	

Pos	Part No	UN	Qty	Description	Page No

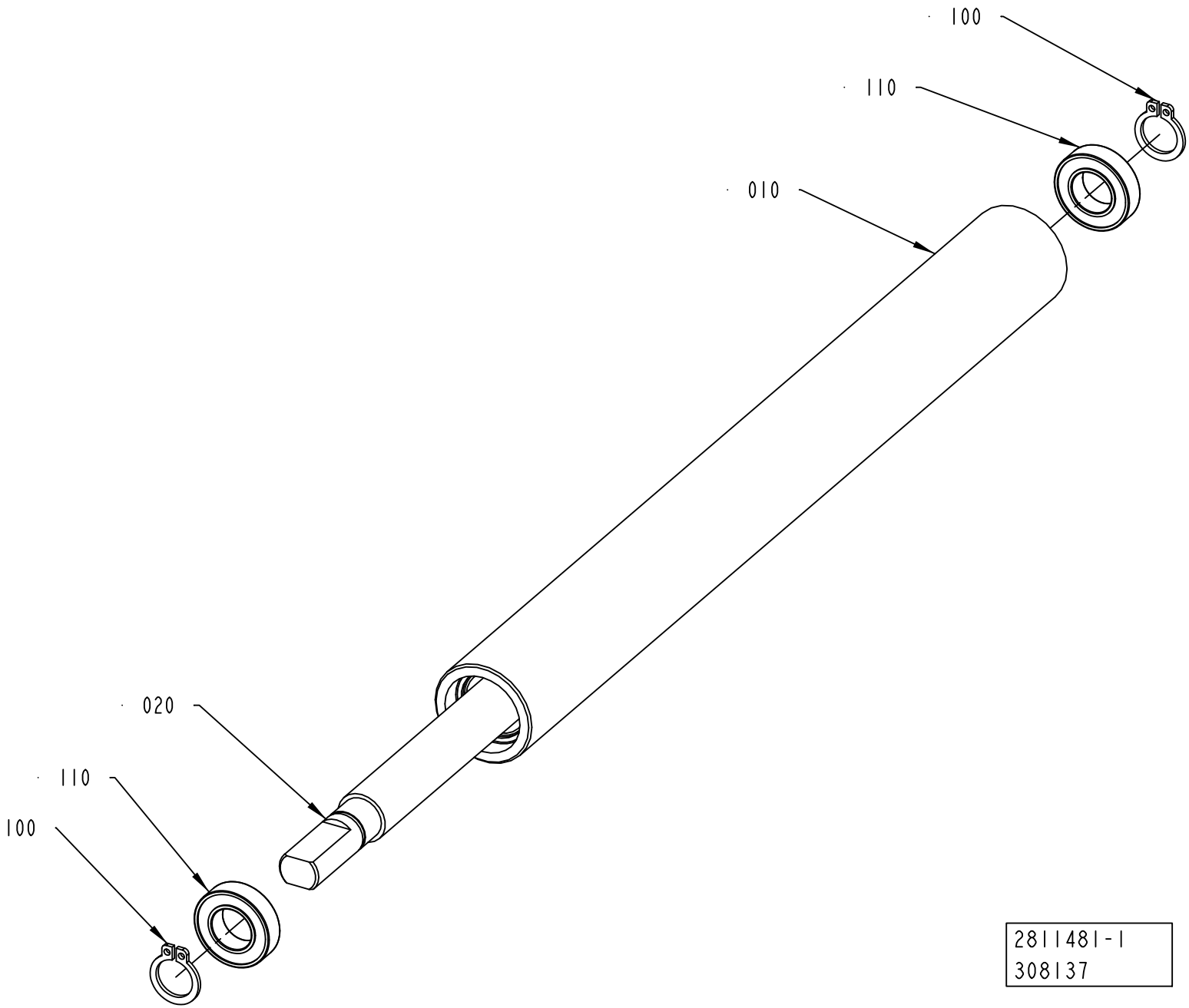
100
110
010
020
110
100
2811481-1
308137

ECM: 308137 - 20070606
Group number: 2811481-0100
Assembly Drawing: 2811481-1_1_AA

Pos	Part No	UN	Qty	Description	Page No
-					
010	2811479-0000		1	JACKET	
020	2811480-0000		1	SHAFT	
100	90141-0016		2	RETAINING RING FOR SHAFT DIN 471 10 SS	
110	90458-1438		2	BALL BEARING 10/19X5	

Pos	Part No	UN	Qty	Description	Page No

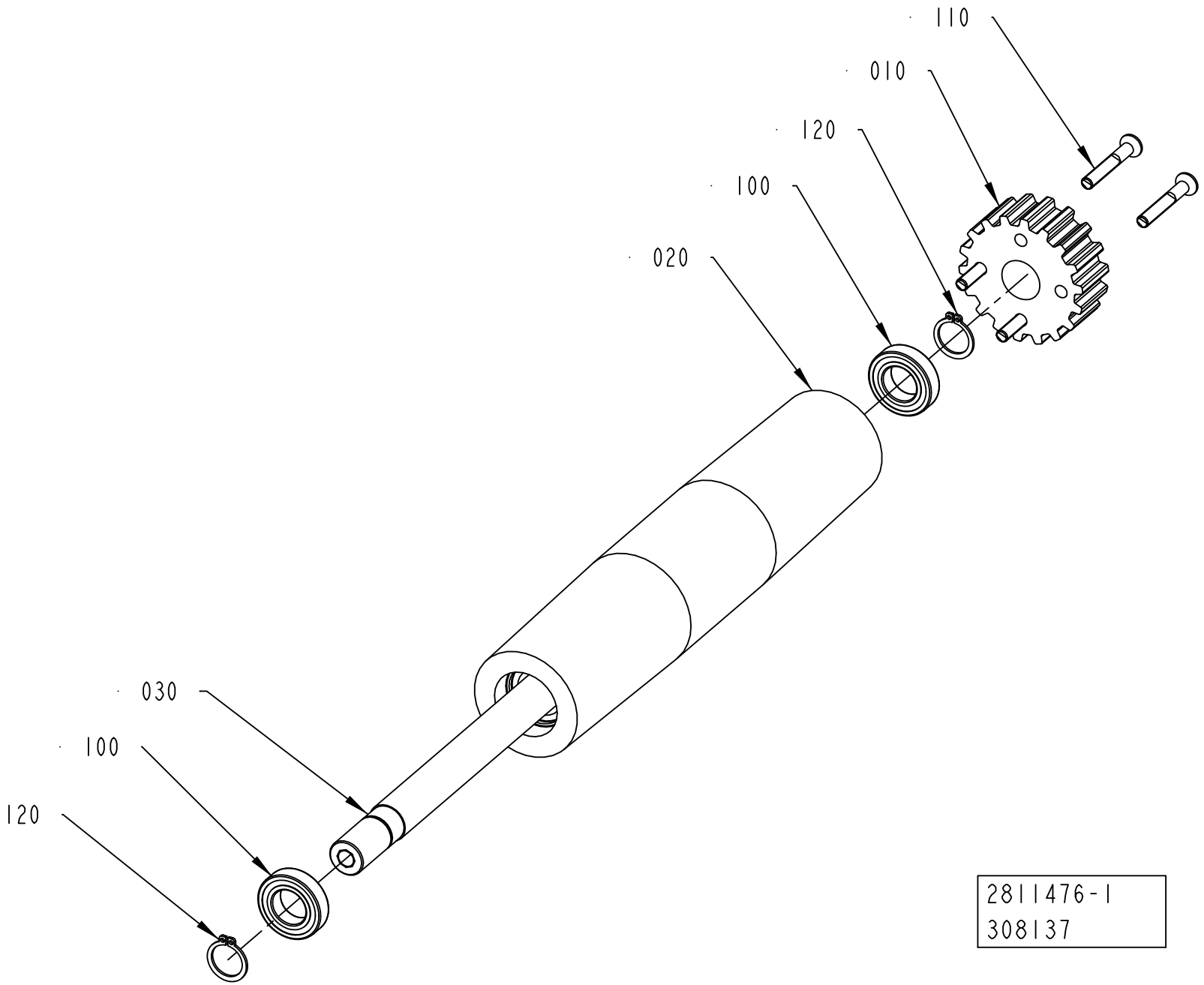
110
010
120
100
020
030
100
120
2811476-1
308137

ECM: 308137 - 20070606
Group number: 2811476-0100
Assembly Drawing: 2811476-1_1_AA

Pos	Part No	UN	Qty	Description	Page No
-					
010	2737413-0000		1	TOOTHED PULLEY	
020	2811477-0000		1	JACKET	
030	2811478-0000		1	SHAFT	
100	90459-4616		2	BALL BEARING 15/28X7	
110	312155-0337		4	SCREW DIN 7991 MF6S M5X35 A4 70	
120	315751-0112		2	RETAINING RING FOR SHAFT DIN 471 15 SS	

Pos	Part No	UN	Qty	Description	Page No

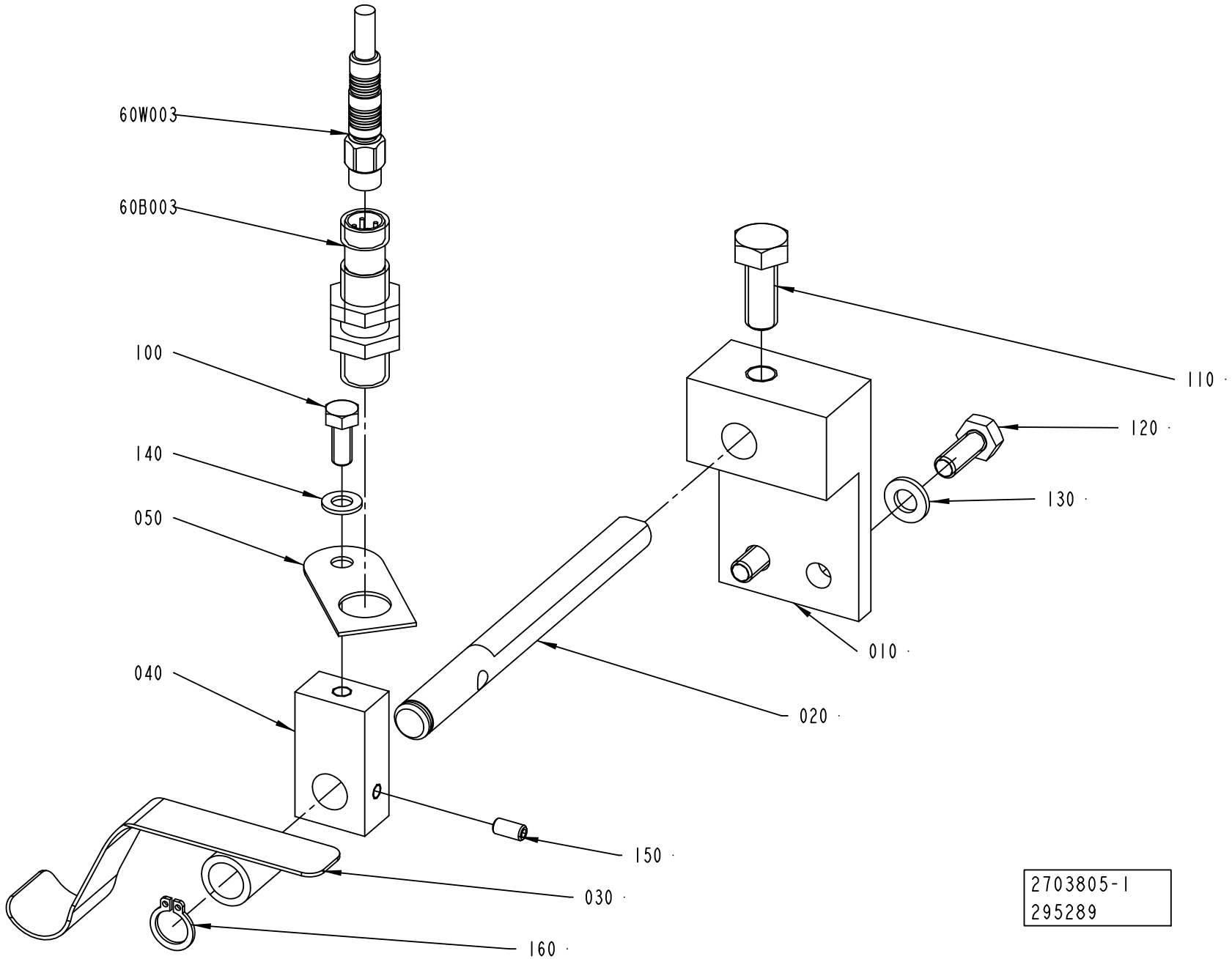
60W003
60B003
100
140
050
040
110
120
130
010
020
150
030
160
2703805-1
295289

ECM: 331251 - 20080407
Group number: 2703805-0100
Assembly Drawing: 2703805-1_1_AB

Pos	Part No	UN	Qty	Description	Page No
-					
010	1189461-0000		1	BRACKET	
020	2562219-0000		1	SHAFT	
030	1189457-0000		1	METAL FLAG	
040	2562171-0000		1	BRACKET	
050	1133251-0000		1	PLATE	
100	312105-0327		1	SCREW M6S ISO 4017 M5X12 A480	
110	312105-0451		1	SCREW M6S ISO 4017 M8X20 A480	
120	312105-0368		2	SCREW M6S ISO 4017 M6X16 A480	
130	315105-0153		2	WASHER BRB 6,4X12 RFR	
140	315105-0146		1	WASHER BRB 5,3X10 RFR	
150	312318-0287		1	SCREW ISO4029 M4X8 A4	
160	90141-0016		1	RETAINING RING FOR SHAFT DIN 471 10 SS	
60B003	90458-2907		1	PROX.SWITCH IFS204	
60W003	351405-0050		1	SENS. CABLE RSMVN 3-PRKT 4-3-06/5,0M	

Pos	Part No	UN	Qty	Description	Page No

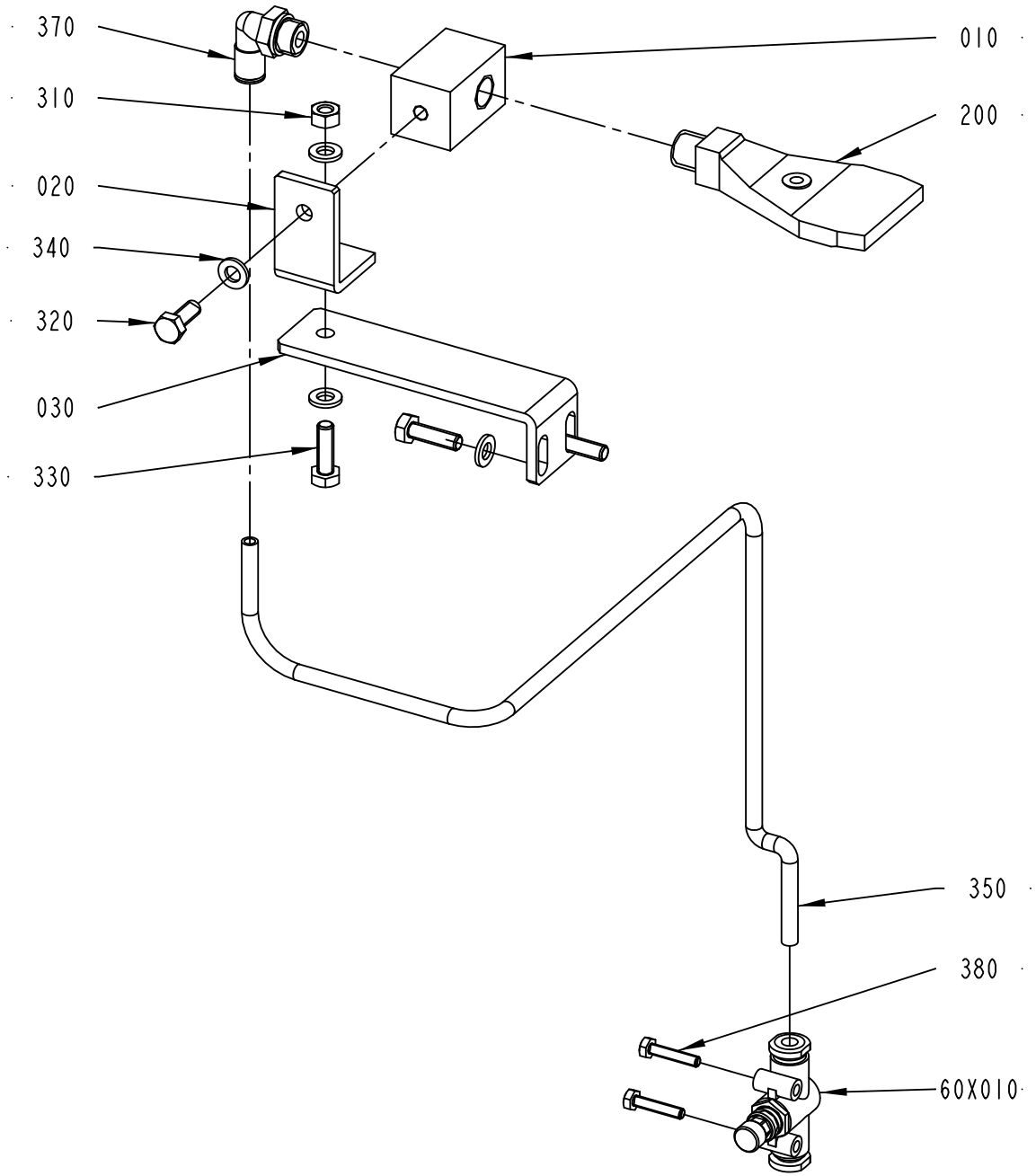
370
310
020
340
320
030
330
010
200
350
380
60X010
2888723-1
295289

ECM: 485080 - 20110401
Group number: 2888723-0100
Assembly Drawing: 2888723-1_1_AB

Pos	Part No	UN	Qty	Description	Page No
-					
010	2905379-0000		1	BRACKET	
020	2905380-0000		1	BRACKET	
030	2905381-0000		1	BRACKET	
200	90424-0089		1	AIR NOZZLE, BSPT1/4, AAB727-1/4-15	
310	312605-0316		1	HEXAGON NUT, M6M M6 A280	
320	312105-0368		1	SCREW M6S ISO 4017 M6X16 A480	
330	312105-0370		3	SCREW M6S ISO 4017 M6X20 A480	
340	315105-0153		5	WASHER BRB 6,4X12 RFR	
350	315400-0001	MM	5000	TUBE PUN-H-6X1-BL	
370	350002-0008		1	PUSH-IN L-FITTING QSL-F-G1/4-6	
380	312105-0295		2	SCREW M6S ISO 4017 M4X20 A470	
60X010	90459-3604		1	FLOW CONTROL VALVE, GR-QS-6	

Pos	Part No	UN	Qty	Description	Page No

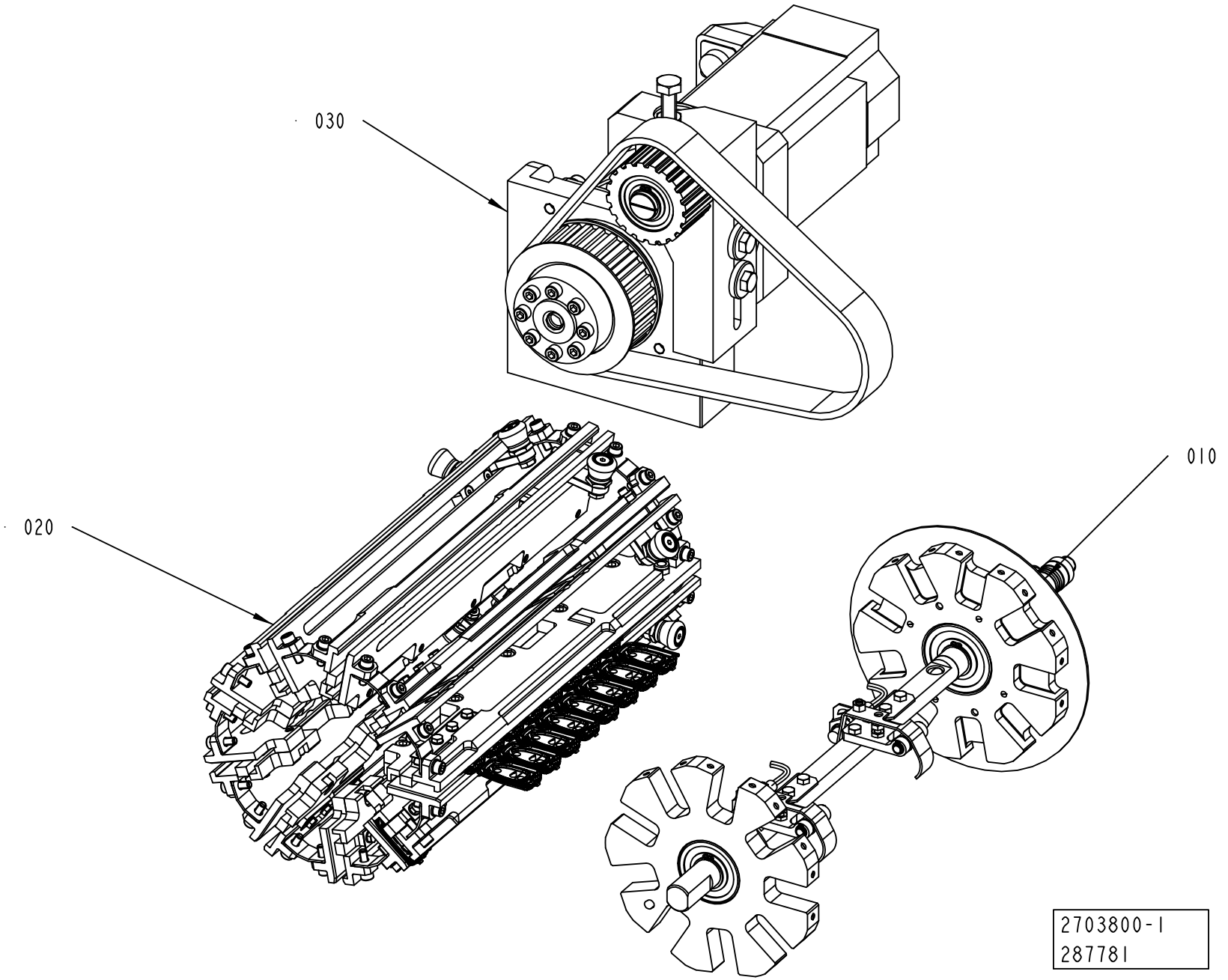
030
020
010
2703800-1
287781

ECM: 292544 - 20070606
Group number: 2703800-0100
Assembly Drawing: 2703800-1_1_AA

Pos	Part No	UN	Qty	Description	Page No
-					
010	2703810-0100		1	CUTTING MECHANISM BODY	**5-37**
020	2703820-0100		9	CUTTING UNIT	**5-39**
030	2715713-0100		1	DRIVE UNIT	**5-41**

Pos	Part No	UN	Qty	Description	Page No

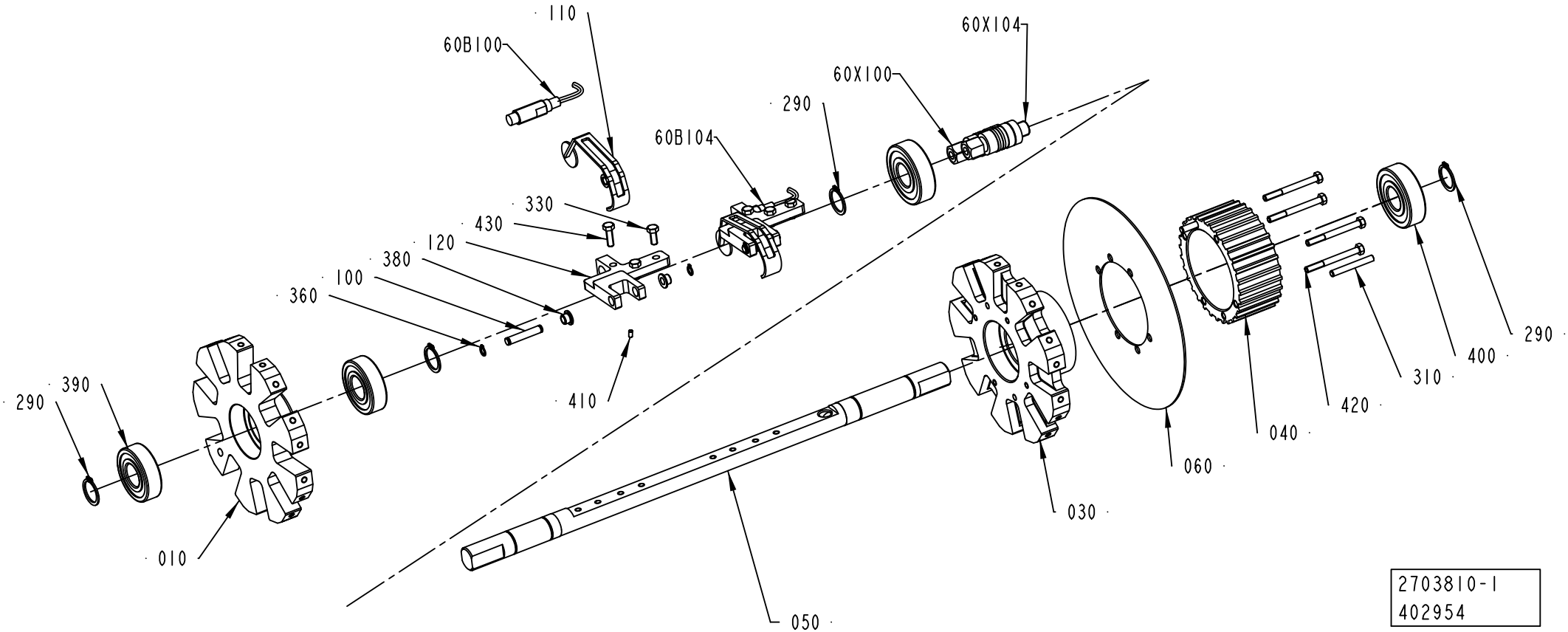
110
60B100
60X104
60X100
290
60B104
330
430
120
380
100
360
390
290
410
010
050
030
060
040
420
310
400
290
2703810-1
402954

ECM: 419495 - 20100110
Group number: 2703810-0100
Assembly Drawing: 2703810-1_1_AB

Pos	Part No	UN	Qty	Description	Page No
RECAP2 A3					
110	3039026-0000		2	FLAG	
RECAP3					
110	3011464-0000		2	FLAG	
Common Parts					
010	2703811-0000		1	END SECTION	
030	2703813-0000		1	END SECTION	
040	2869635-0000		1	TOOTHED PULLEY	
050	2869634-0000		1	SHAFT	
060	2715752-0000		1	PLATE	
100	2716004-0000		2	SHAFT	
120	3011782-0000		2	HOLDER	
290	315751-0116		4	RETAINING RING FOR SHAFT DIN 471 20 SS	
310	311103-0318		2	PARALLEL PIN ISO 2338 5M6X40 A1	
330	312105-0327		6	SCREW M6S ISO 4017 M5X12 A480	
360	315751-0103		4	RETAINING RING FOR SHAFT DIN 471 6X 0.7C	
380	321154-0060		4	FLANGE BUSHING, IGLIDUR W300 6X8X6	
390	321313-0104		2	BALL BEARING 20/47X14	
400	321316-0204		2	BALL BEARING 20/52X15	
410	312318-0220		2	SCREW ISO4029 M3X6 A4	
420	312105-0341		4	SCREW M6S ISO 4014 M5X50 A480	
430	312105-0329		2	SCREW M6S ISO 4017 M5X16 A480	
60B100	90600-0459		1	INDUCTIVE SWITCH, E2A-M12KN05-WP-B1 5M	
60B104	90600-0459		1	INDUCTIVE SWITCH, E2A-M12KN05-WP-B1 5M	
60X100	90459-1663		1	CONNECTOR, 405204 RSC4/7	
60X104	90459-1663		1	CONNECTOR, 405204 RSC4/7	

Pos	Part No	UN	Qty	Description	Page No

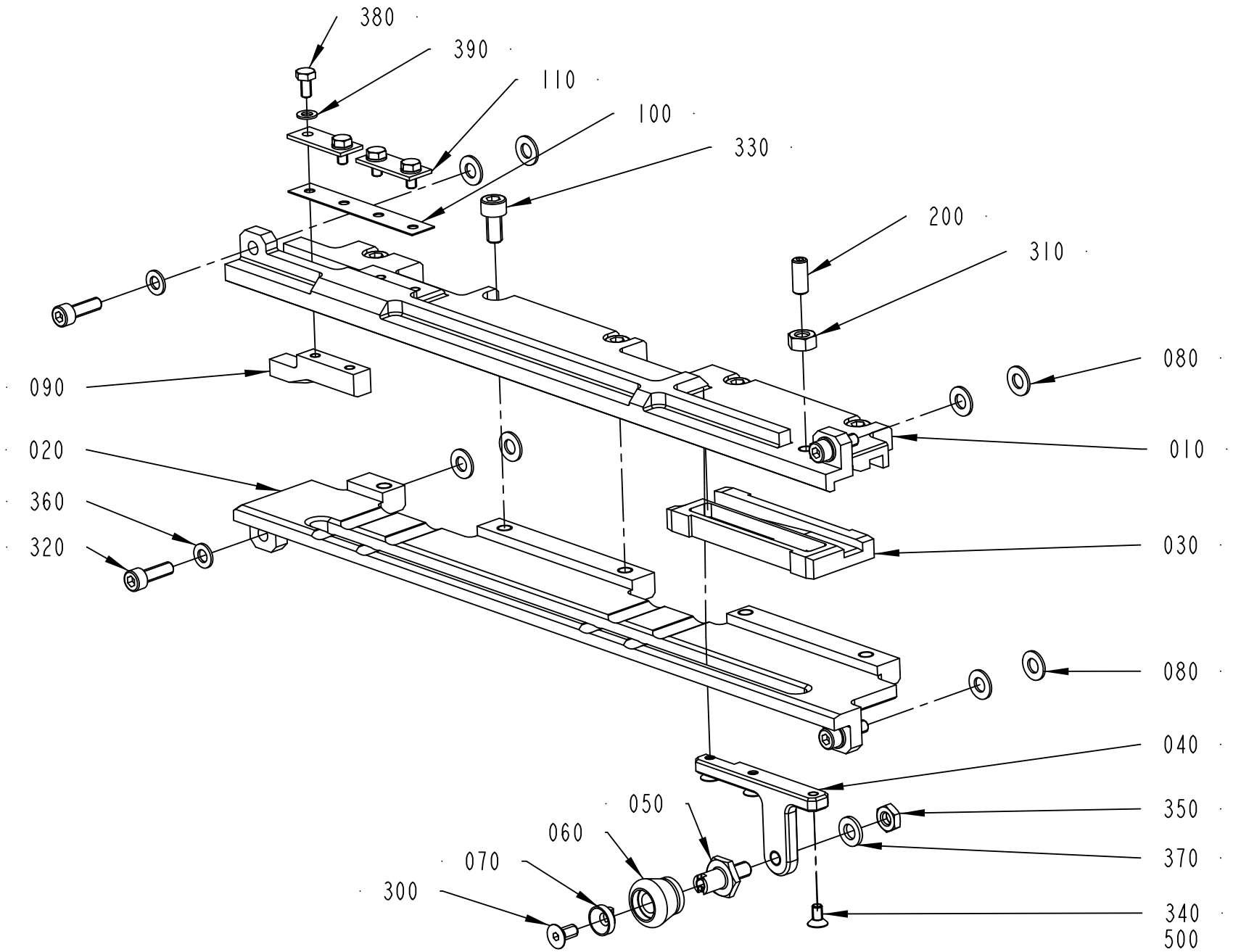
380
390
110
100
330
200
310
080
090
010
020
360
320
030
080
040
050
350
060
370
070
300
340
500
2703820-1
428061

ECM: 428956 - 20100401
Group number: 2703820-0100
Assembly Drawing: 2703820-1_1_AE

Pos	Part No	UN	Qty	Description	Page No
RECAP2 A3					
010	2923857-0000		1	SUPERSTRUCTURE	
020	2923858-0000		1	LOWER SECTION	
030	2923894-0000		1	SLIDER	
060	3004039-0000		1	WHEEL	
090	2924076-0000		1	GUIDE	
RECAP3					
010	2887113-0000		1	SUPERSTRUCTURE	
020	2703822-0000		1	LOWER SECTION	
030	2862624-0000		1	SLIDER	
060	2703828-0000		1	WHEEL	
090	2887115-0000		1	GUIDE	
Common Parts					
040	2862625-0000		1	ARM	
050	2811990-0000		1	SCREW	
070	2811991-0000		1	WASHER	
080	2982736-0000		8	WASHER	
100	2887618-0000		1	SPRING PLATE	
110	2918456-0000		2	PLATE	
200	90287-0163		1	SCREW SPRINGLOAD. SLOTTED HEAD M6X14	
300	312155-0325		1	SCREW DIN 7991 MF6S M5X10 A4 70	
310	312605-0316		1	HEXAGON NUT, M6M M6 A280	
320	312115-0329		4	SCREW ISO4762 M5X16 A4 80	
330	312115-0366		5	SCREW ISO4762 M6X12 A4 80	
340	312155-0287		3	SCREW DIN 7991 MF6S M4X8 A4 70	
350	312625-0316		1	HEXAGON THIN NUT, EN 24035 ML6M M6 A4	
360	315105-0146		4	WASHER BRB 5,3X10 RFR	
370	315105-0153		1	WASHER BRB 6,4X12 RFR	
380	312105-0287		4	SCREW M6S ISO 4017 M4X8 A470	
390	315105-0136		4	WASHER BRB 4,3X8 RFR	
500	90157-0016	ML	1	THREAD LOCKING, LOCTITE 242 50 ML	

Pos	Part No	UN	Qty	Description	Page No

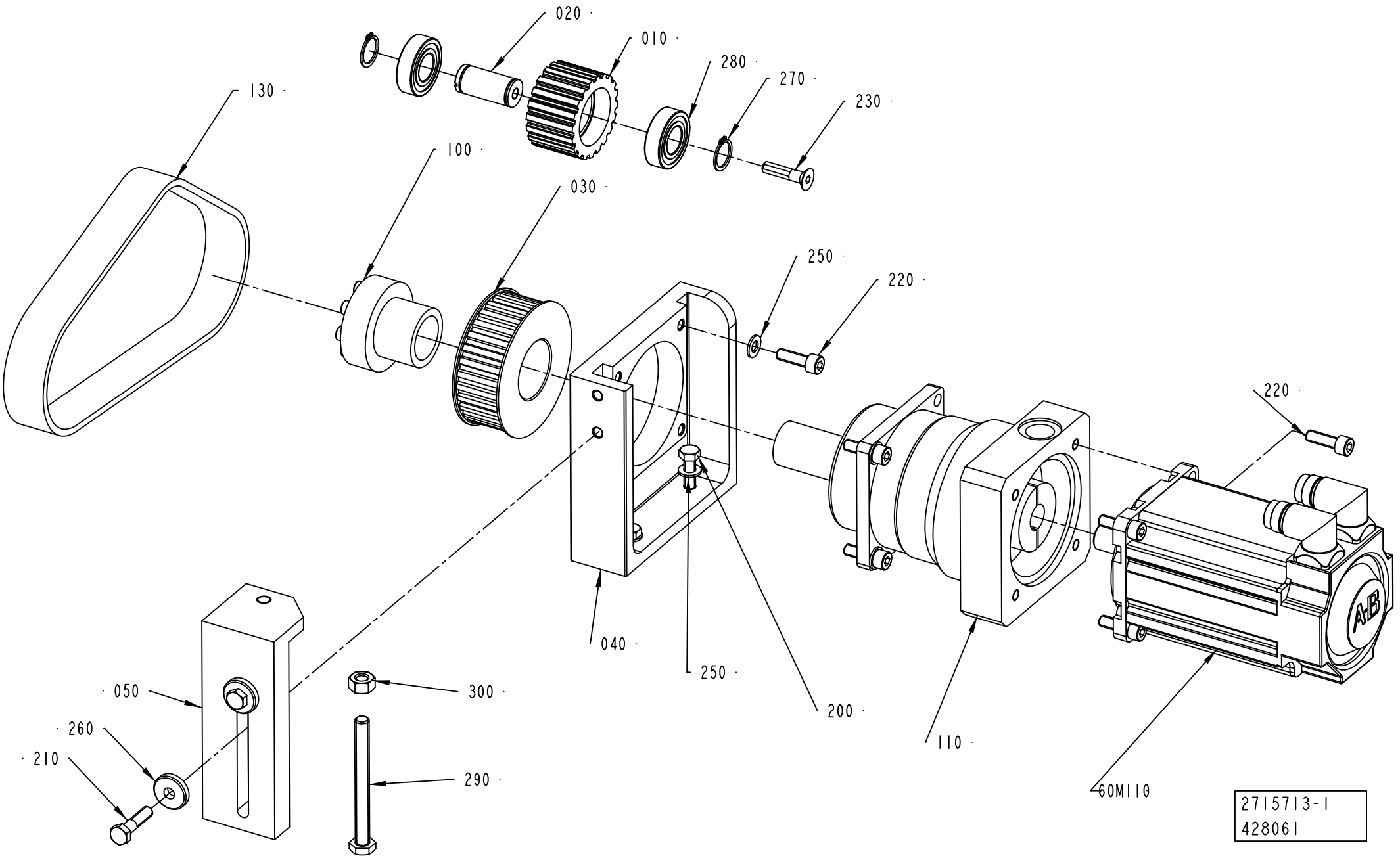
020
010
280
270
230
130
100
030
250
220
220
040
250
200
110
60M110
050
260
210
300
290
2715713-1
428061

ECM: 428958 - 20100401
Group number: 2715713-0100
Assembly Drawing: 2715713-1_1_AD

Pos	Part No	UN	Qty	Description	Page No
-					
010	2869636-0000		1	TOOTHED PULLEY	
020	2869637-0000		1	SHAFT	
030	2869638-0000		1	TOOTHED PULLEY	
040	2869639-0000		1	MOTOR BRACKET	
050	2869805-0000		1	BRACKET	
100	90458-2029		1	CLAMPING ELEMENT WITH SLEEVE, 32X43 MM	
110	90459-4009		1	GEARS, PLAN SP100S-MF1-10-0E1/BAUTZW508	
130	2911322-0000		1	TIMING BELT	
200	312105-0453		2	SCREW M6S ISO 4017 M8X25 A480	
210	312105-0457		2	SCREW M6S ISO 4014 M8X35 A480	
220	312115-0453		8	SCREW ISO4762 M8X25 A4 80	
230	312155-0457		1	SCREW DIN 7991 MF6S M8X35 A4 70	
250	315105-0165		6	WASHER BRB 8,4X16 RFR	
260	315125-0165		2	WASHER TBRSB 8,4X26X5 A4	
270	315751-0116		2	RETAINING RING FOR SHAFT DIN 471 20 SS	
280	321308-0204		2	BALL BEARING 20/42X12	
290	2973959-0000		1	SCREW	
300	312605-0320		1	HEXAGON NUT, M6M M10 A280	
60M100	90601-1926		1	SERVO MOTOR MPL-B430P-MK72AA SERIES A	

Pos	Part No	UN	Qty	Description	Page No

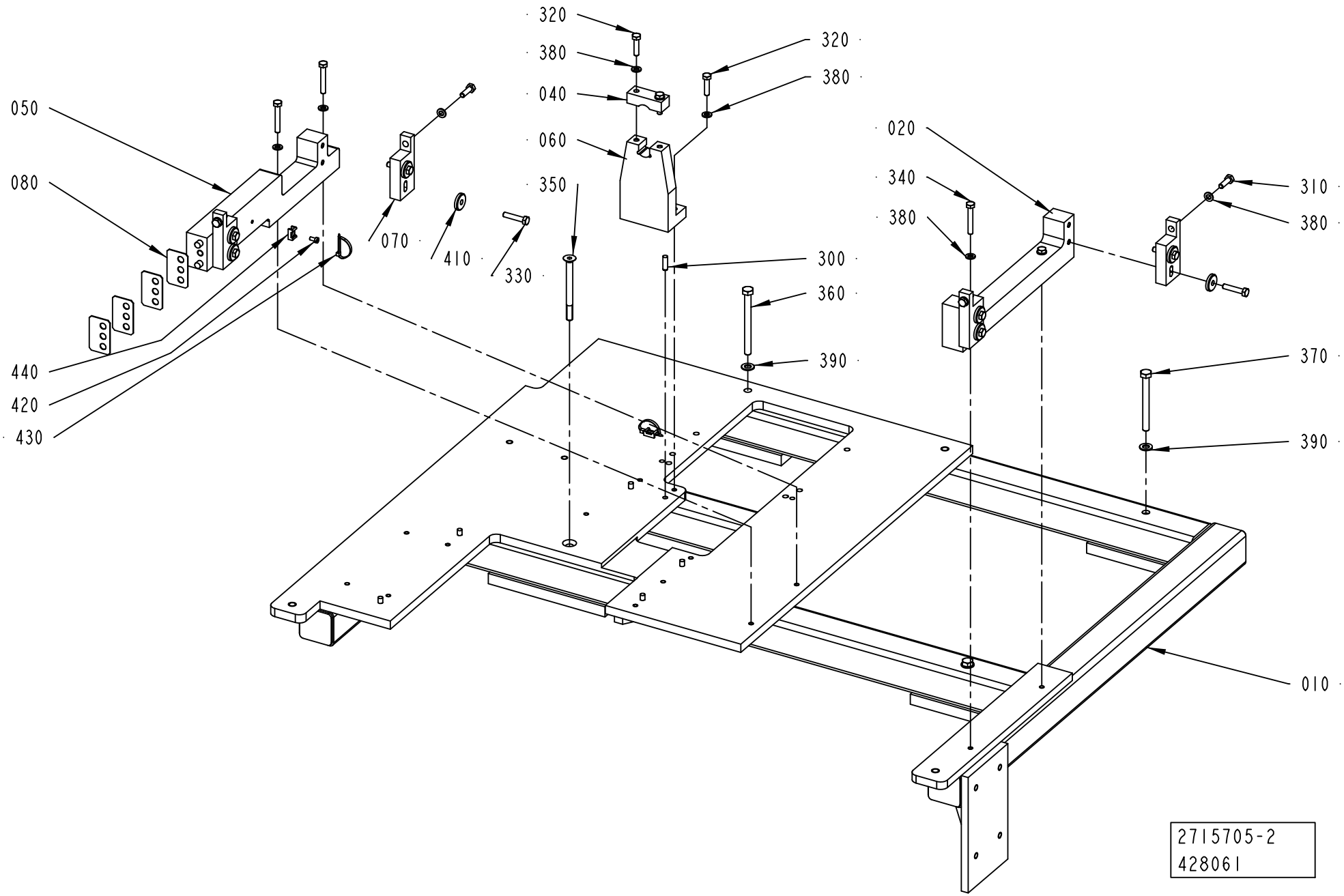
320
380
040
060
350
320
380
050
080
070
410
330
300
360
390
020
340
380
310
380
370
390
440
420
430
010
2715705-2
428061

ECM: 428957 - 20100401
Group number: 2715705-0200
Assembly Drawing: 2715705-2_1_AB

Pos	Part No	UN	Qty	Description	Page No
-					
010	2715706-0000		1	FRAME	
020	2715709-0000		1	CONVEYOR SUPPORT	
040	2715712-0000		1	AXLE SUPPORT	
050	3010670-0000		1	CONVEYOR SUPPORT	
060	2715711-0000		1	AXLE SUPPORT	
070	2703799-0000		4	BRACKET	
080	2933777-0000		4	SHIM	
300	311103-0353		6	PARALLEL PIN ISO 2338 6M6X20 A1	
310	312105-0370		4	SCREW M6S ISO 4017 M6X20 A480	
320	312105-0372		4	SCREW M6S ISO 4017 M6X25 A480	
330	312105-0374		8	SCREW M6S ISO 4014 M6X30 A480	
340	312105-0378		4	SCREW M6S ISO 4014 M6X40 A480	
350	2911848-0000		1	SCREW	
360	312105-0469		1	SCREW M6S ISO 4014 M8X90 A480	
370	312105-0467		2	SCREW M6S ISO 4014 M8X80 A480	
380	315105-0153		12	WASHER BRB 6,4X12 RFR	
390	315105-0165		3	WASHER BRB 8,4X16 RFR	
410	315125-0153		8	WASHER TBRSB 6,4X22X4 A4	
420	312125-0287		2	SCREW ISO 1207 M4X8 A4	
430	352113-0104		2	CABLE TIE, BLACK 300X4,8 MM	
440	352113-0205		2	ANCHOR PLATES FOR STRIPS, TM2S8-C100	

Pos	Part No	UN	Qty	Description	Page No

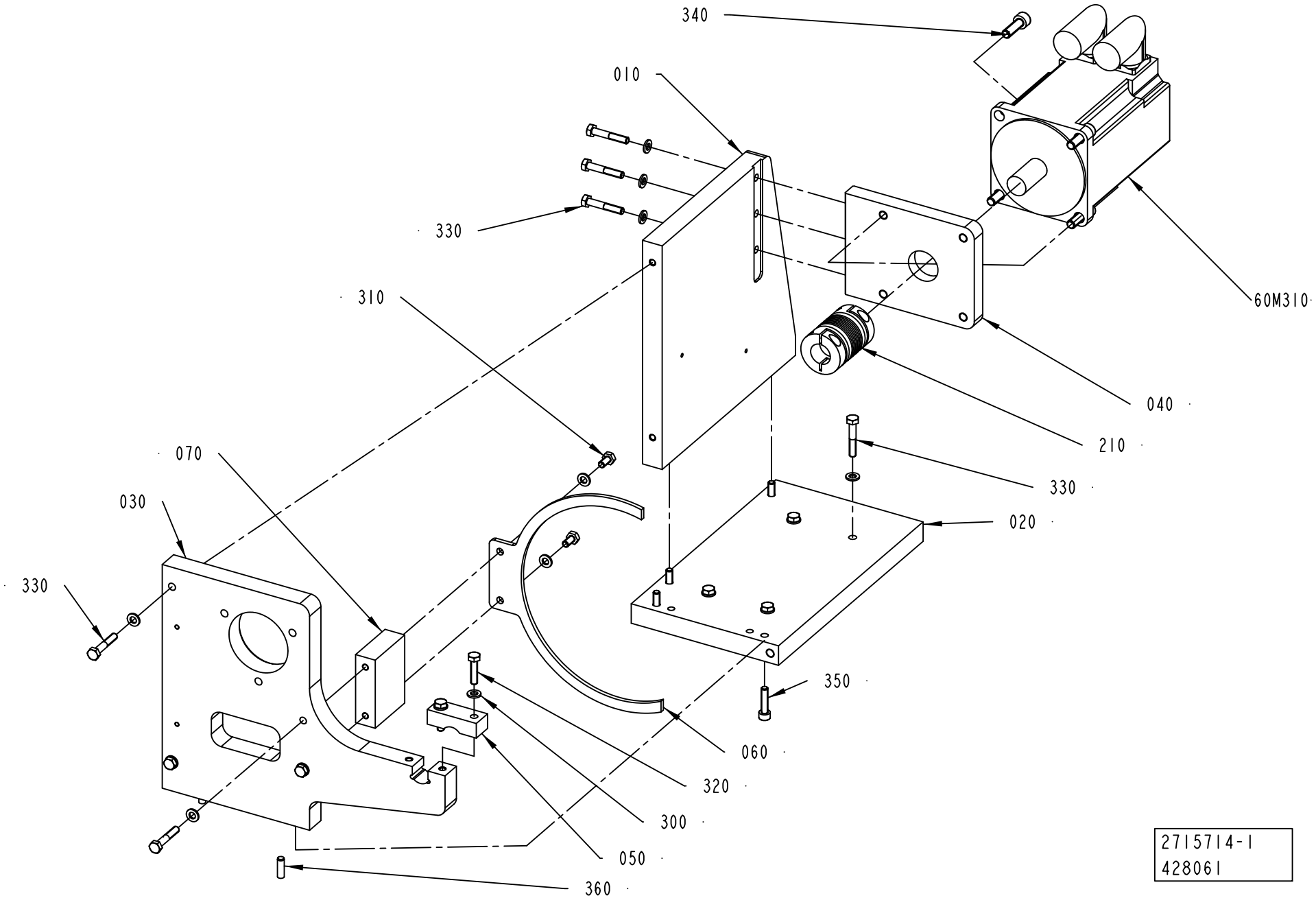
340
010
330
310
60M310
040
210
070
330
030
020
330
350
060
320
300
050
360
2715714-1
428061

ECM: 428959 - 20100401
Group number: 2715714-0100
Assembly Drawing: 2715714-1_1_AD

Pos	Part No	UN	Qty	Description	Page No
-					
010	2715715-0000		1	PLATE	
020	2715716-0000		1	PLATE	
030	2715717-0000		1	AXLE SUPPORT	
040	2715718-0000		1	PLATE	
050	2715712-0000		1	AXLE SUPPORT	
060	2703816-0000		1	GUIDE	
070	2715762-0000		1	MOUNTING BLOCK	
210	90600-0831		1	TORQUE RIGID COUPLING, 19X20 MM	
300	315105-0153		14	WASHER BRB 6,4X12 RFR	
310	312105-0366		2	SCREW M6S ISO 4017 M6X12 A480	
320	312105-0372		2	SCREW M6S ISO 4017 M6X25 A480	
330	312105-0376		11	SCREW M6S ISO 4014 M6X35 A480	
340	312115-0453		4	SCREW ISO4762 M8X25 A4 80	
350	312115-0372		4	SCREW ISO4762 M6X25 A4 80	
360	311103-0353		2	PARALLEL PIN ISO 2338 6M6X20 A1	
60M310	90601-0668		1	SERVO MOTOR MPL-B420P-MK72AA SERIES A	

Pos	Part No	UN	Qty	Description	Page No

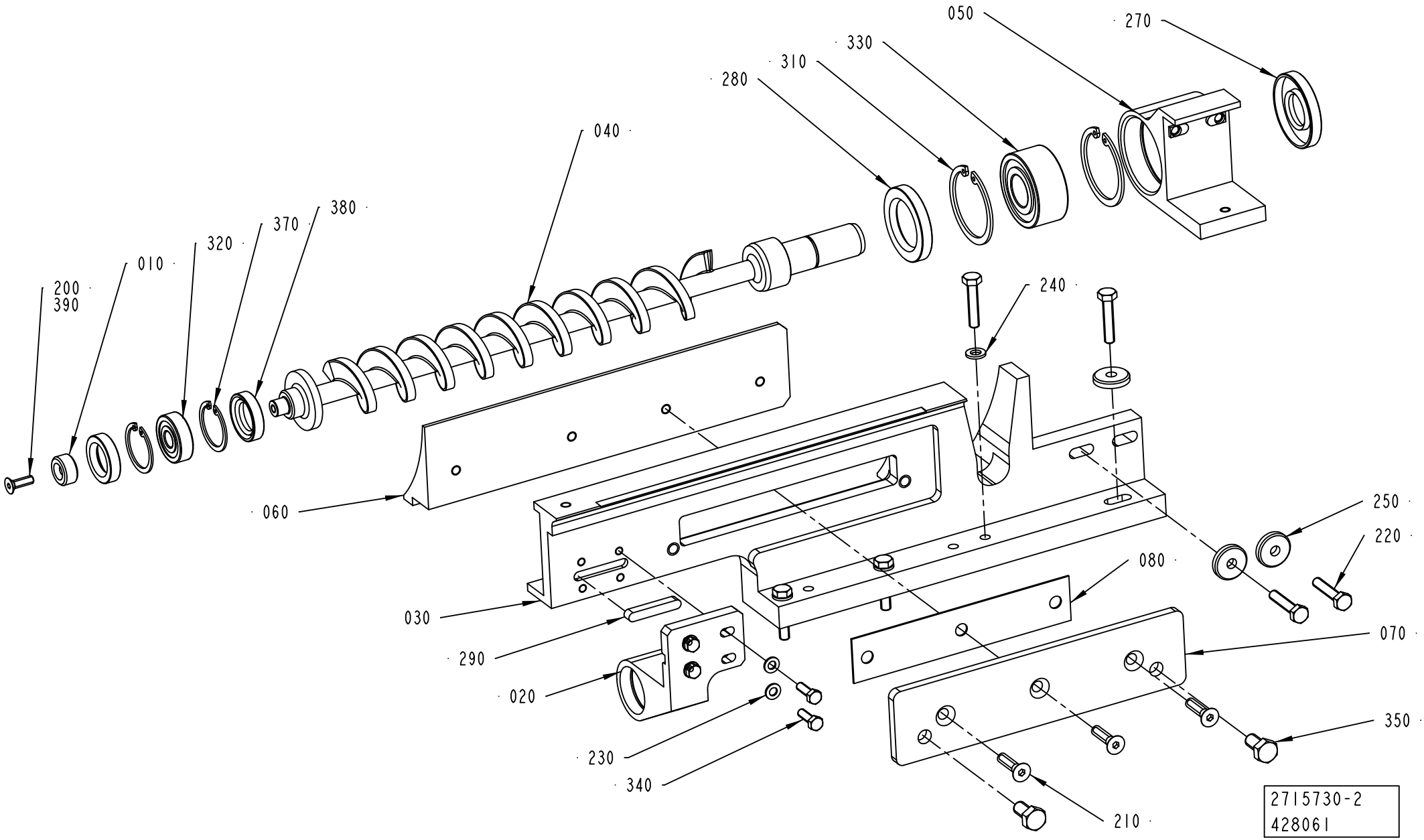
050
270
330
310
280
040
380
370
320
010
200
390
240
250
220
080
060
030
290
020
230
340
070
350
210
2715730-2
428061

ECM: 431466 - 20100401
Group number: 2715730-0200
Assembly Drawing: 2715730-2_1_AB

Pos	Part No	UN	Qty	Description	Page No
RECAP2 A3					
040	3003859-0000		1	SCREW	
RECAP3					
040	2715732-0000		1	SCREW	
080	2981083-0000		1	SHIM	
Common Parts					
010	3011412-0000		1	WASHER	
020	3011410-0000		1	BRACKET	
030	2890803-0000		1	BRACKET	
050	3011411-0000		1	BRACKET	
060	2890804-0000		1	SLIDER	
070	2930247-0000		1	PLATE	
200	312155-0329		1	SCREW DIN 7991 MF6S M5X16 A4 70	
210	312155-0372		3	SCREW DIN 7991 MF6S M6X25 A4 70	
220	312109-0374		6	SCREW M6S ISO 4017 M6X30 A480	
230	315105-0146		4	WASHER BRB 5,3X10 RFR	
240	315105-0153		3	WASHER BRB 6,4X12 RFR	
250	315125-0153		3	WASHER TBRSB 6,4X22X4 A4	
260	315221-0139		1	RADIAL SEAL 18X30X7 MM	
270	315221-0147		1	RADIAL SEAL 20X47X7 MM	
280	315221-0169		1	RADIAL SEAL 30X47X7 MM	
290	315705-0238		1	PARALL KEY W. ROUND ENDS 6X6X36 MM	
310	315753-0130		2	RETAINING RING FOR BORE DIN 472 47 SS	
320	321309-0100		1	BALL BEARING 10/30X9	
330	321330-0104		1	ANG. BALL BEAR 20/47X20,6	
340	312105-0329		4	SCREW M6S ISO 4017 M5X16 A480	
350	312105-0449		2	SCREW M6S ISO 4017 M8X16 A480	
360	90296-0068	G	50	SHELL ALVANIA GREASE EP 2	
370	315753-0122		2	RETAINING RING FOR BORE DIN 472 30 SS	
380	315221-0139		2	RADIAL SEAL 18X30X7 MM	
390	90157-0016		1	THREAD LOCKING, LOCTITE 242 50 ML	

Pos	Part No	UN	Qty	Description	Page No

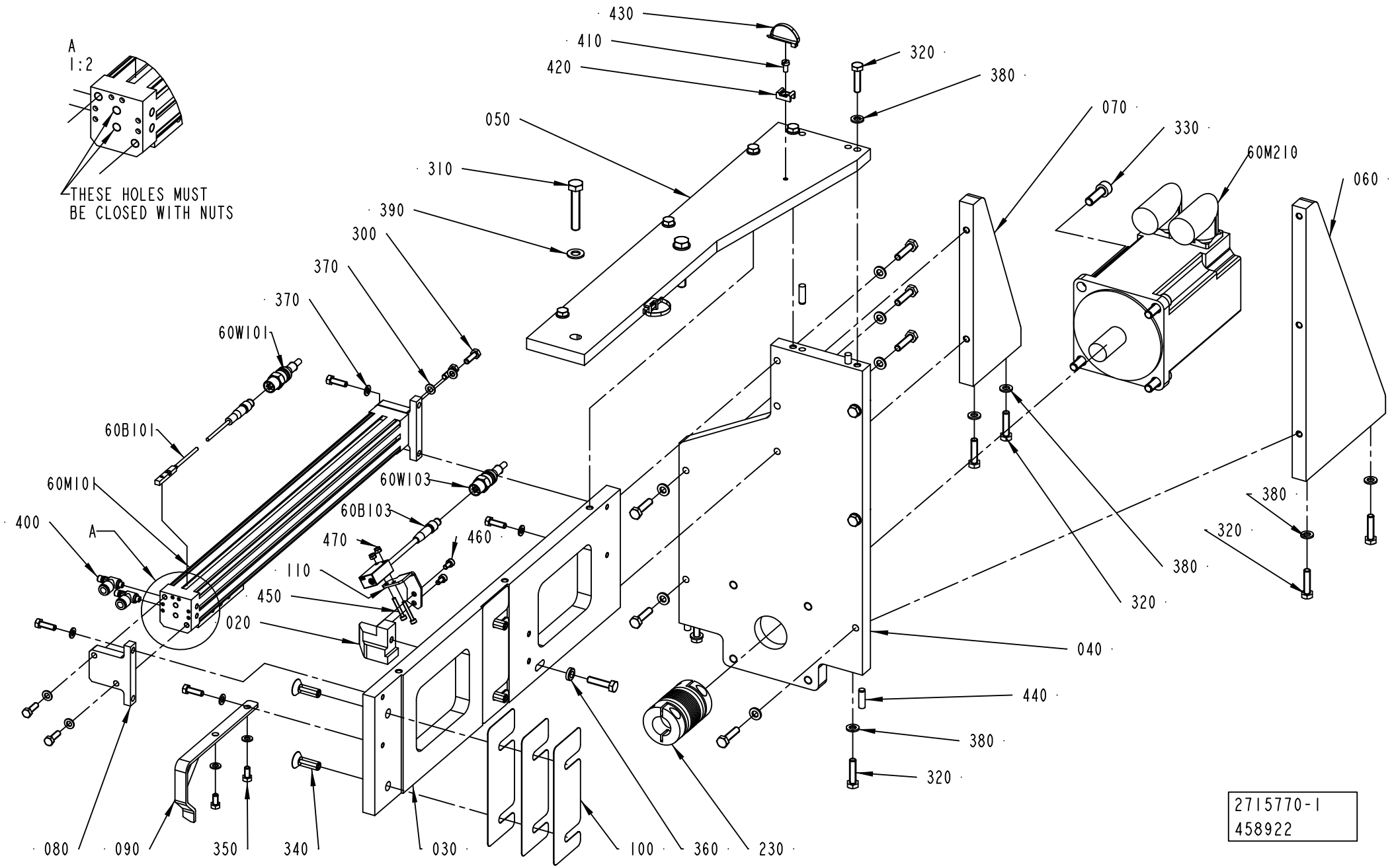
A
1:2
THESE HOLES MUST
BE CLOSED WITH NUTS
430
410
420
320
380
050
070
330
60M210
060
310
390
300
370
370
60W101
60B101
60M101
60W103
60B103
400
A
470
460
110
450
020
380
320
040
440
380
320
080
090
350
340
030
100
360
230
2715770-1
458922

ECM: 462373 - 20101001
Group number: 2715770-0100
Assembly Drawing: 2715770-1_1_AH

Pos	Part No	UN	Qty	Description	Page No
-					
020	2715738-0000		1	BLOCKING PIECE	
030	2715768-0000		1	PLATE	
040	2715769-0000		1	PLATE	
050	2715773-0000		1	PLATE	
060	2715779-0000		1	PLATE	
070	2715775-0000		1	PLATE	
080	2703818-0000		2	BRACKET	
090	2868538-0000		1	FINGER	
100	2985739-0000		6	SHIM	
110	3003834-0000		1	BRACKET	
230	90600-0831		1	TORQUE RIGID COUPLING, 19X20 MM	
300	312105-0329		8	SCREW M6S ISO 4017 M5X16 A480	
310	312109-0460		2	SCREW M6S ISO 4017 M8X45 A480	
320	312105-0372		20	SCREW M6S ISO 4017 M6X25 A480	
330	312115-0453		4	SCREW ISO4762 M8X25 A4 80	
340	312155-0453		4	SCREW DIN 7991 MF6S M8X25 A4 70	
350	312105-0325		2	SCREW M6S ISO 4017 M5X10 A480	
360	315115-0153		1	WASHER PLAIN, TBRB 6,4/12 H=3	
370	315105-0146		10	WASHER BRB 5,3X10 RFR	
380	315105-0153		19	WASHER BRB 6,4X12 RFR	
390	315105-0165		2	WASHER BRB 8,4X16 RFR	
400	90235-0844		2	THROTTLE CHECK VALVE M5, MANUAL, 6MM	
410	312125-0287		2	SCREW ISO 1207 M4X8 A4	
420	352113-0205		2	ANCHOR PLATES FOR STRIPS, TM2S8-C100	
430	352113-0104		2	CABLE TIE, BLACK 300X4,8 MM	
440	311103-0353		4	PARALLEL PIN ISO 2338 6M6X20 A1	
450	312115-0230		2	SCREW ISO4762 M3X20 A4 80	
460	312115-0287		2	SCREW ISO4762 M4X8 A4 80	
470	312812-0310		2	HEXAGON NUT, NY-LOCK M3 A480	
60B101	90600-3276		1	PROX. SENSOR, SME-8M-DS-24V-K-0,3-M8D	
60B103	90459-7366		1	PHOTOCELL, WTB4-3P3161 F20	
60M101	90600-2159		1	CYLINDER, RODLESS MECH. 18-260	
60M210	90601-0668		1	SERVO MOTOR MPL-B420P-MK72AA SERIES A	
60W101	351407-0015		1	ACTU/SENS. CABLE PRST 3-PRKMV 3-06/1,5M	
60W103	351407-0020		1	ACTU/SENS. CABLE PRST 3-PRKMV 3-06/2,0M	

Pos	Part No	UN	Qty	Description	Page No

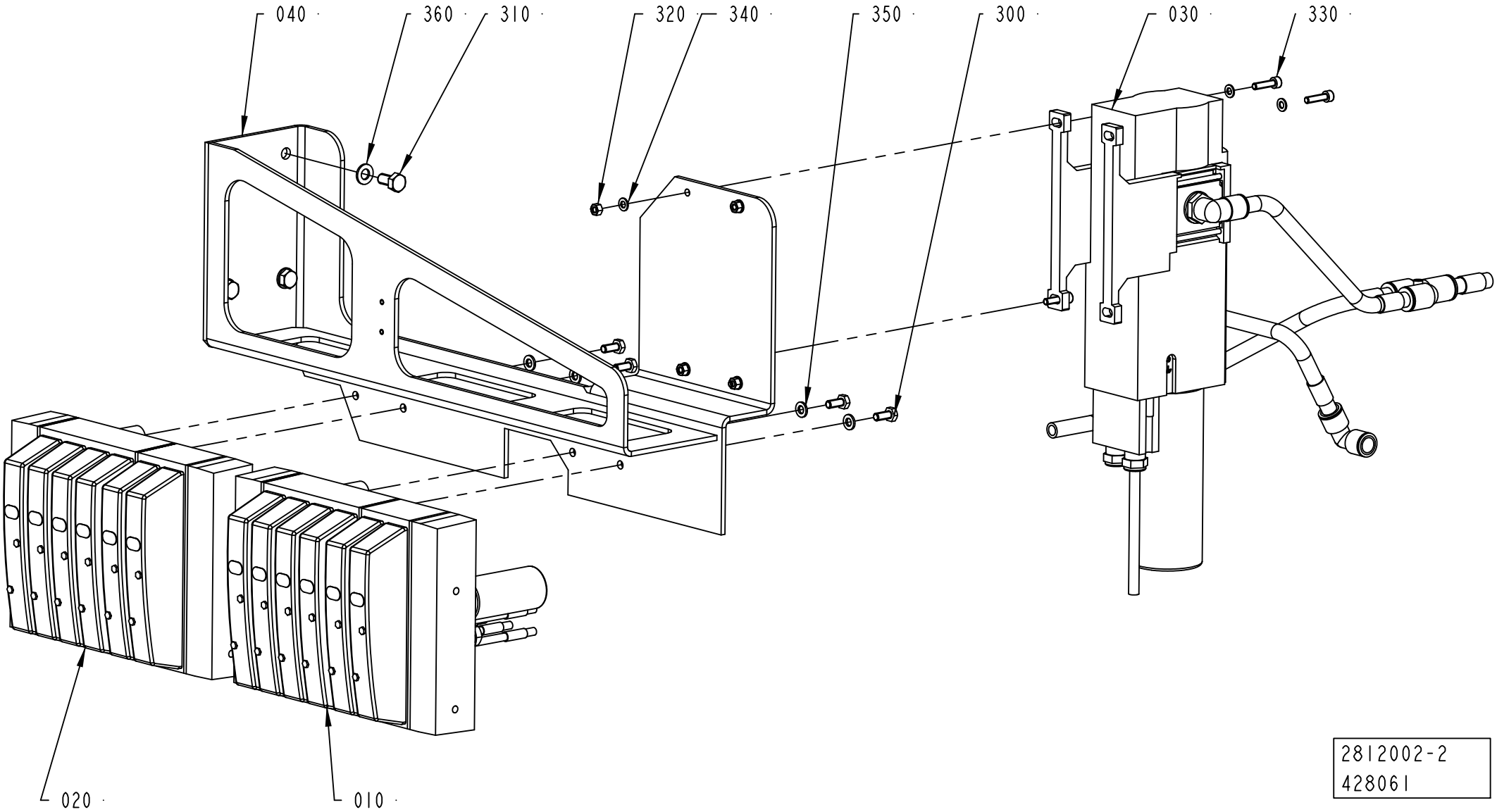
040
360
310
320
340
350
300
030
330
020
010
2812002-2
428061

ECM: 431473 - 20100401
Group number: 2812002-0200
Assembly Drawing: 2812002-2_1_AB

Pos	Part No	UN	Qty	Description	Page No
-					
010	2812003-0100		1	PNEUMATIC PANEL	**5-53**
020	2873954-0100		1	PNEUMATIC PANEL	**5-55**
030	2873955-0200		1	SHUT-OFF VALVE	**5-57**
040	3039150-0000		1	PNEUMATIC PANEL	
300	312105-0367		4	REW M6S ISO 4017 M6X14 A480	
310	312105-0449		4	SCREW M6S ISO 4017 M8X16 A480	
320	312605-0314		4	HEXAGON NUT, M6M M5 A280	
330	312115-0331		4	SCREW ISO4762 M5X20 A4 80	
340	315105-0146		8	WASHER BRB 5,3X10 RFR	
350	315105-0153		4	WASHER BRB 6,4X12 RFR	
360	315105-0165		4	WASHER BRB 8,4X16 RFR	

Pos	Part No	UN	Qty	Description	Page No

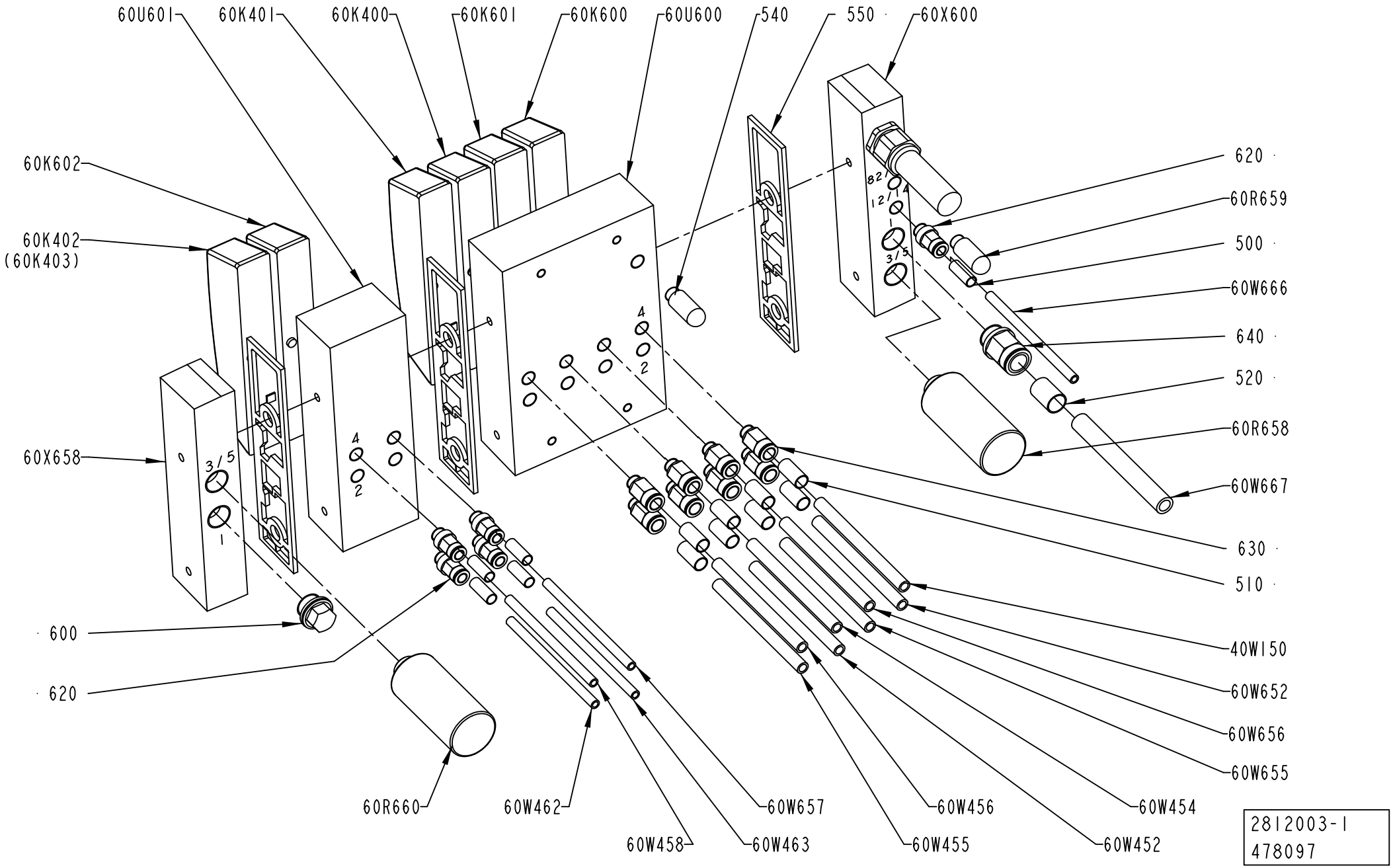
60U601
60K401
60K400
60K601
60K600
60U600
540
550
60X600
60K602
60K402
(60K403)
620
60R659
500
60W666
640
520
60R658
60W667
630
510
60X658
600
620
40W150
60W652
60W656
60W655
60W454
60W452
60W456
60W455
60W657
60W463
60W458
60W462
60R660
2812003-1
478097

ECM: 479900 - 20110401
Group number: 2812003-0100
Assembly Drawing: 2812003-1_1_AD

Pos	Part No	UN	Qty	Description	Page No
-					
500	90459-7369		5	MARKING FOR PNEUM. TUBING, PRZ06	
510	90459-7370		8	MARKING FOR PNEUM. TUBING, PRZ08	
520	90459-7372		1	MARKING FOR PNEUM. TUBING, PRZ12	
540	90328-0047		1	SILENCER G1/8"	
550	90458-1207		3	SEALING, STANDARD	
600	90459-0699		1	BLANKING PLUG, CDVI5.0-B-G3/8	
620	350001-0006		5	PUSH-IN FITTING QS-F-G1/8-6	
630	350001-0007		8	PUSH-IN FITTING QS-F-G1/8-8	
640	350001-0014		1	PUSH-IN FITTING QS-F-G3/8-12	
60K400	90458-1194		1	VALVE, 5/2 MONOSTABLE	
60K401	90458-1194		1	VALVE, 5/2 MONOSTABLE	
60K402	90458-1194		1	VALVE, 5/2 MONOSTABLE	
60K600	90458-1199		1	VALVE CLOSED IN MID-POSITION, 5/3	
60K601	90458-1194		1	VALVE, 5/2 MONOSTABLE	
60K602	90458-1202		1	VALVES 2X3/2, CLOSED	
60R658	90458-2838		1	SILENCER, U-3/8	
60R659	90328-0047		1	SILENCER G1/8"	
60R660	90458-2838		1	SILENCER, U-3/8	
60U600	90458-1204		1	BASIC SUB-BASE 4 VALVES, CDVI5.0-GB4-MP	
60U601	90458-1206		1	EXP. SUB-BASE 2 VALVES, CDVI5.0-EB	
40W150	315400-0004	MM	500	TUBE PUN-H-8X1,25-BL	
60W452	315400-0004	MM	500	TUBE PUN-H-8X1,25-BL	
60W454	315400-0004	MM	500	TUBE PUN-H-8X1,25-BL	
60W455	315400-0004	MM	500	TUBE PUN-H-8X1,25-BL	
60W456	315400-0004	MM	500	TUBE PUN-H-8X1,25-BL	
60W458	315400-0001	MM	500	TUBE PUN-H-6X1-BL	
60W462	315400-0001	MM	500	TUBE PUN-H-6X1-BL	
60W463	315400-0001	MM	500	TUBE PUN-H-6X1-BL	
60W652	315400-0004	MM	500	TUBE PUN-H-8X1,25-BL	
60W655	315400-0004	MM	500	TUBE PUN-H-8X1,25-BL	
60W656	315400-0004	MM	500	TUBE PUN-H-8X1,25-BL	
60W657	315400-0001	MM	500	TUBE PUN-H-6X1-BL	
60W666	315400-0001	MM	500	TUBE PUN-H-6X1-BL	
60W667	315400-0010	MM	500	TUBE PUN-H-12X2-BL	
60X600	90458-1212		1	LEFT ENDPLATE INCL. 10M CABLE	
60X658	90458-1214		1	RIGHT ENDPL EXT. PILOT AIR,CDVI5.0-EPR-S	

Pos	Part No	UN	Qty	Description	Page No

Machine Type | Group Description | Used-In | Group Number | Page No

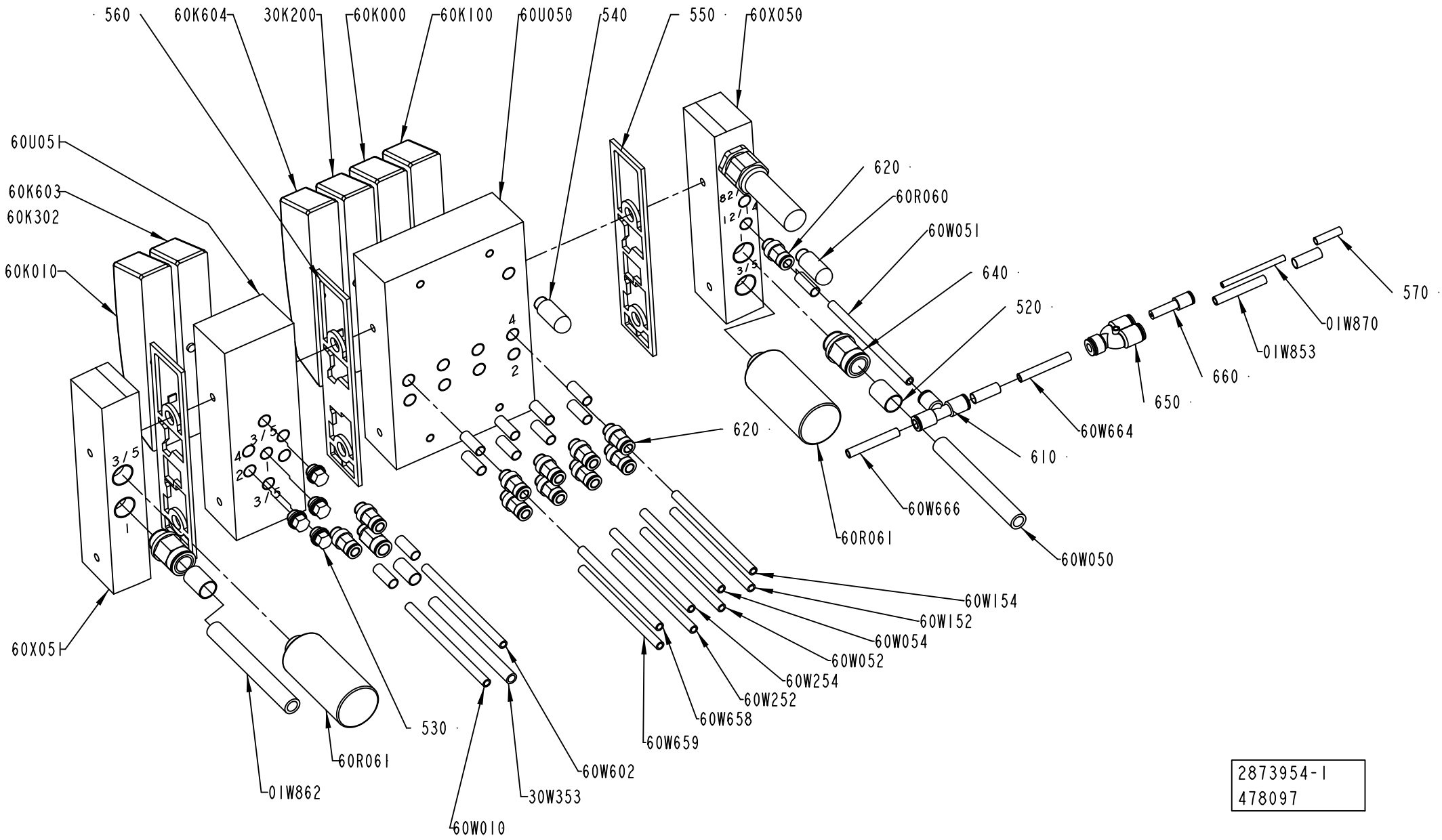
560
60K604
30K200
60K000
60K100
60U050
540
550
60X050
60U051
60K603
60K302
60K010
620
60R060
60W051
640
520
570
01W870
01W853
660
650
60W664
610
60W666
60W050
60R061
620
60W154
60W152
60W054
60W052
60W254
60W252
60W658
60W659
60W602
30W353
60W010
01W862
60R061
530
60X051
2873954-1
478097

ECM: 479901 - 20110401
Group number: 2873954-0100
Assembly Drawing: 2873954-1_1_AC

Pos	Part No	UN	Qty	Description	Page No
-					
500	90459-7369		13	MARKING FOR PNEUM. TUBING, PRZ06	
510	90459-7370		1	MARKING FOR PNEUM. TUBING, PRZ08	
520	90459-7372		2	MARKING FOR PNEUM. TUBING, PRZ12	
530	90459-0698		4	PLUG, EXT. G-THREAD, G1/8	
540	90328-0047		1	SILENCER G1/8"	
550	90458-1207		2	SEALING, STANDARD	
560	90458-1208		1	SEALING, CHANNEL 1 BLOCKED	
570	90459-7368		1	MARKING FOR PNEUM. TUBING, PRZ04	
610	350005-0002		1	PUSH-IN T-FITTING QST-F-6	
620	350001-0006		11	PUSH-IN FITTING QS-F-G1/8-6	
630	350001-0007		1	PUSH-IN FITTING QS-F-G1/8-8	
640	350001-0014		2	PUSH-IN FITTING QS-F-G3/8-12	
650	90055-0257		1	PUSH-IN Y-CONNECTOR QSY-6	
660	350006-0001		1	PUSH-IN FITTING QS-F-6H-4	
30K200	90458-1194		1	VALVE, 5/2 MONOSTABLE	
60K000	90458-1194		1	VALVE, 5/2 MONOSTABLE	
60K010	90458-1194		1	VALVE, 5/2 MONOSTABLE	
60K100	90458-1194		1	VALVE, 5/2 MONOSTABLE	
60K603	90458-1202		1	VALVES 2X3/2, CLOSED	
60K604	90458-1194		1	VALVE, 5/2 MONOSTABLE	
60R060	90328-0047		1	SILENCER G1/8"	
60R061	90458-2838		1	SILENCER, U-3/8	
60R062	90458-2838		1	SILENCER, U-3/8	
60U050	90458-1204		1	BASIC SUB-BASE 4 VALVES, CDVI5.0-GB4-MP	
60U051	90458-2596		1	EXPANSION MODULE EXTRA SUPPLY 2 VALVES	
01W853	315400-0001	M	3	TUBE PUN-H-6X1-BL	
01W862	315400-0010	MM	1	TUBE PUN-H-12X2-BL	
01W870	315400-0016	M	3	TUBE PUN-H-4X0,75-BL	
30W353	315400-0004	MM	1	TUBE PUN-H-8X1,25-BL	
30W659	315400-0001	MM	1	TUBE PUN-H-6X1-BL	
60W010	315400-0001	MM	1	TUBE PUN-H-6X1-BL	
60W050	315400-0010	MM	1	TUBE PUN-H-12X2-BL	
60W051	315400-0001	MM	1	TUBE PUN-H-6X1-BL	
60W052	315400-0001	MM	1	TUBE PUN-H-6X1-BL	
60W054	315400-0001	MM	1	TUBE PUN-H-6X1-BL	
60W152	315400-0001	MM	1	TUBE PUN-H-6X1-BL	
60W154	315400-0001	MM	1	TUBE PUN-H-6X1-BL	
60W252	315400-0001	MM	1	TUBE PUN-H-6X1-BL	
60W254	315400-0001	MM	1	TUBE PUN-H-6X1-BL	
60W602	315400-0001	MM	1	TUBE PUN-H-6X1-BL	
60W658	315400-0001	MM	1	TUBE PUN-H-6X1-BL	
60W666	315400-0001	MM	1	TUBE PUN-H-6X1-BL	
60X050	90458-1212		1	LEFT ENDPLATE INCL. 10M CABLE	
60X051	90458-1214		1	RIGHT ENDPL EXT. PILOT AIR,CDVI5.0-EPR-S	

Machine Type	Group Description	Used-In	Group Number	Page No

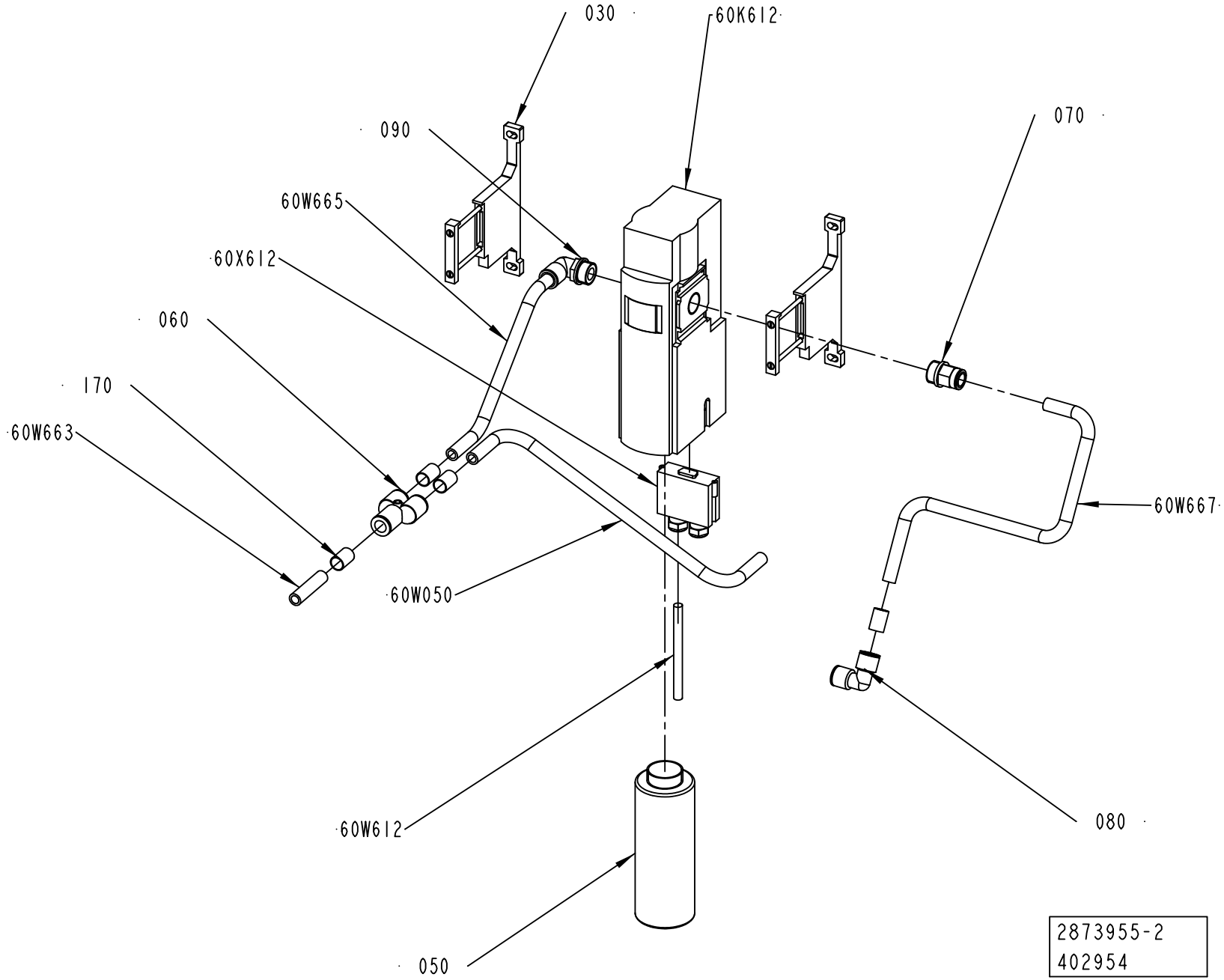
030
60K612
070
090
60W665
60X612
060
170
60W663
60W667
60W050
60W612
080
050
2873955-2
402954

ECM: 444501 - 20100701
Group number: 2873955-0200
Assembly Drawing: 2873955-2_1_AA

Pos	Part No	UN	Qty	Description	Page No
-					
030	90601-1587		2	BRACKET, MS6-WPB	
050	90601-1586		1	SILENCER, G1"	
060	90055-0147		1	PUSH-IN Y-CONNECTOR QSY-12	
070	350001-0016		1	PUSH-IN FITTING QS-F-G1/2-12	
080	350004-0005		1	PUSH-IN L-FITTING QSL-F-12	
090	350002-0016		1	PUSH-IN L-FITTING QSL-F-G1/2-12	
170	90459-7372		4	MARKING FOR PNEUM. TUBING, PRZ12	
60K612	90601-1126		1	SAFETY VALVE, MS6-SV-1/2-E-10V24-AG	
60W050	315400-0010	M	1	TUBE PUN-H-12X2-BL	
60W612	351150-0406	M	10	CABLE OLFLEX 7X0,75 MM2 LIGHT/GREY	
60W663	315400-0010	M	1	TUBE PUN-H-12X2-BL	
60W665	315400-0010	M	1	TUBE PUN-H-12X2-BL	
60W667	315400-0010	M	1	TUBE PUN-H-12X2-BL	
60X612	90601-1168		1	SOCKET CONNECTOR, NECA-S1G9-P9-MP3	

Pos	Part No	UN	Qty	Description	Page No

Tetra Pak

SPC
Spare Parts Catalogue

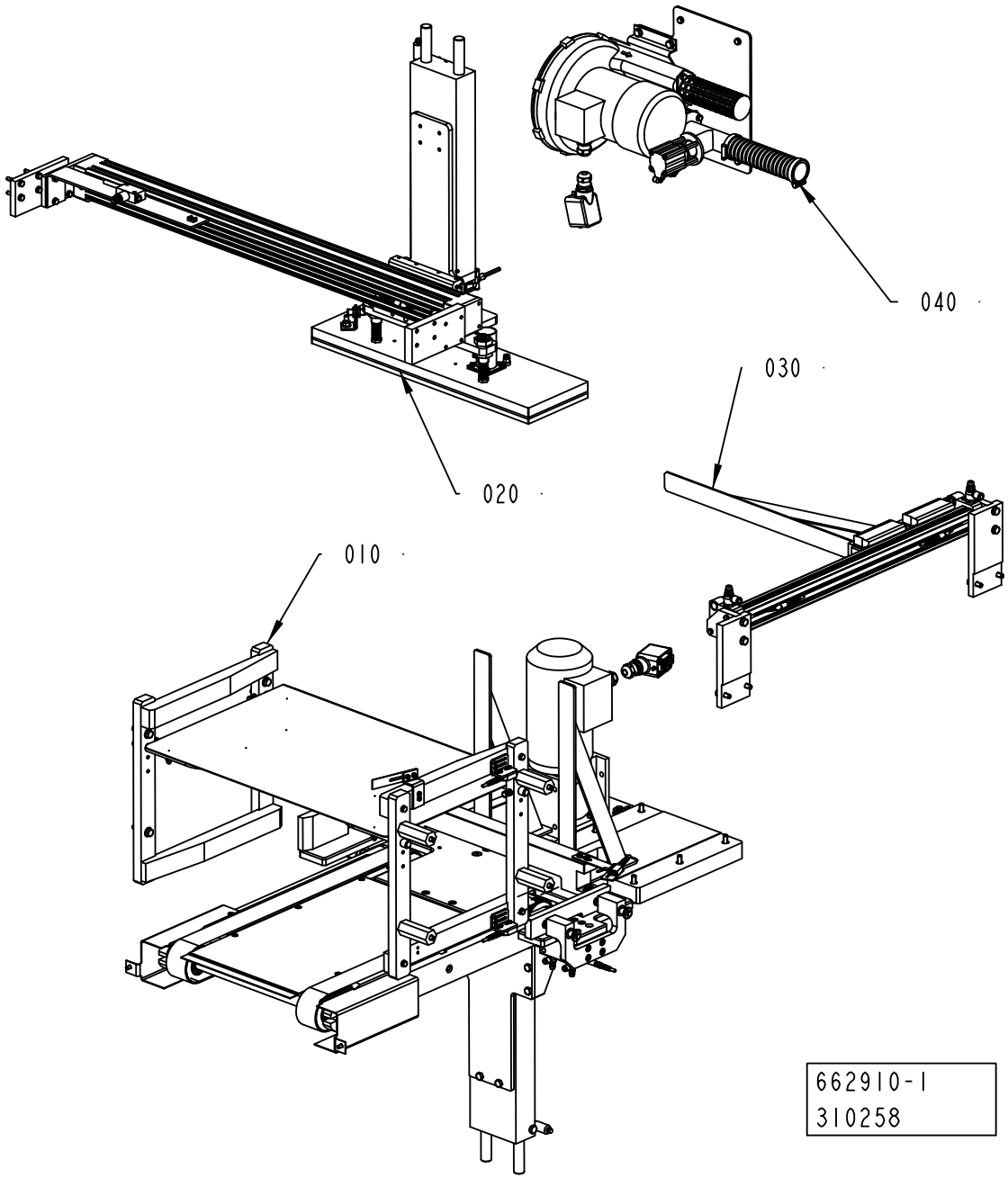
040
030
020
010
662910-1
310258

ECM: 310258 - 20070622
Group number: 662910-0100
Assembly Drawing: 662910-1_1_AA

Pos	Part No	UN	Qty	Description	Page No
-					
010	2792484-0100		1	LIFT	**6-5**
020	2715960-0100		1	POSITIONING UNIT	**6-15**
030	2792486-0100		1	PUSHER	**6-21**
040	2715970-0100		1	VACUUM SYSTEM	**6-23**

Pos	Part No	UN	Qty	Description	Page No

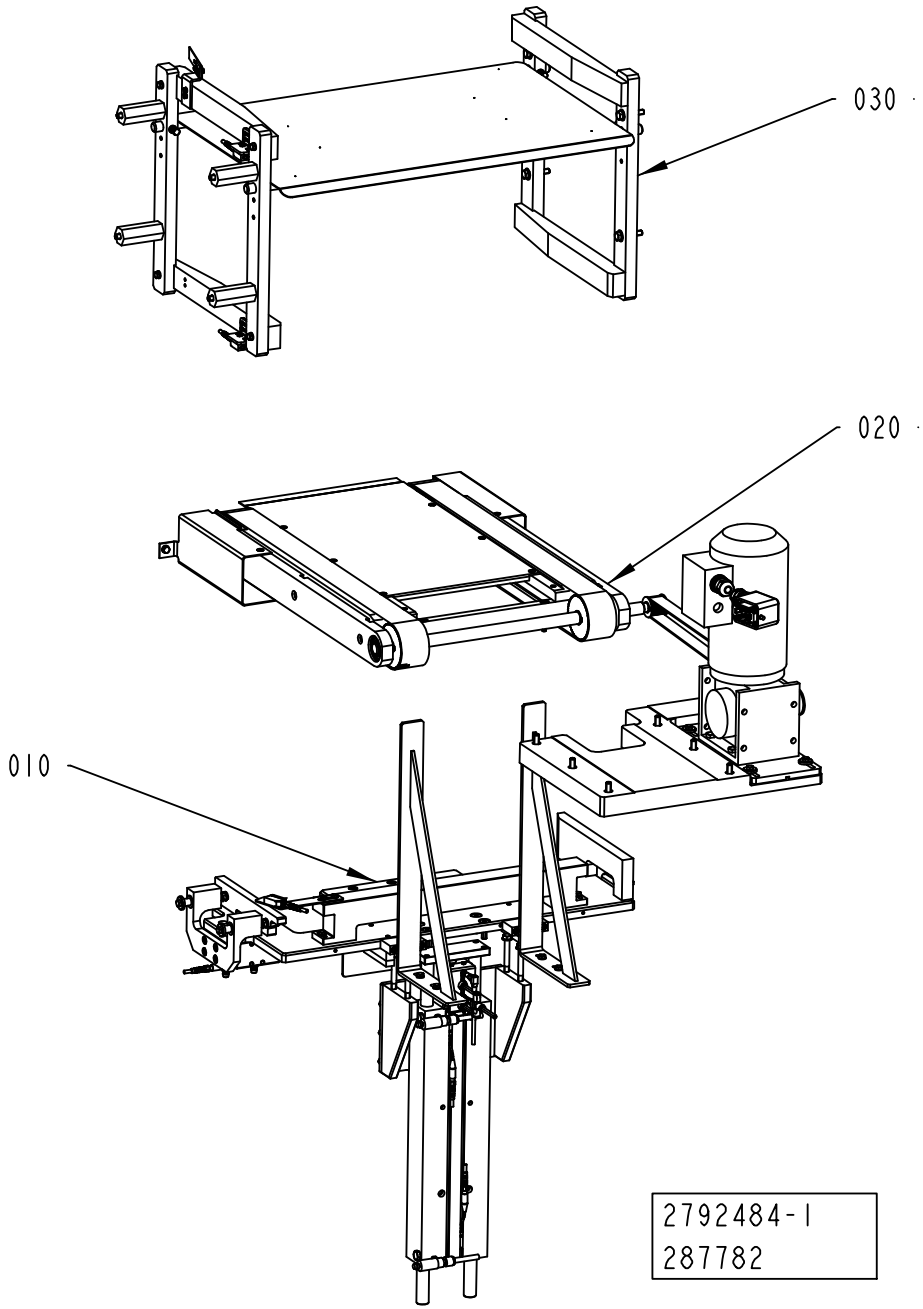
030
020
010
2792484-1
287782

ECM: 292541 - 20070622
Group number: 2792484-0100
Assembly Drawing: 2792484-1_1_AA

Pos	Part No	UN	Qty	Description	Page No
-					
010	2792485-0100		1	ELEVATOR	**6-7**
020	2792487-0100		1	CONVEYOR	**6-9**
030	2792488-0100		1	GUIDE	**6-11, 6-13**

Pos	Part No	UN	Qty	Description	Page No

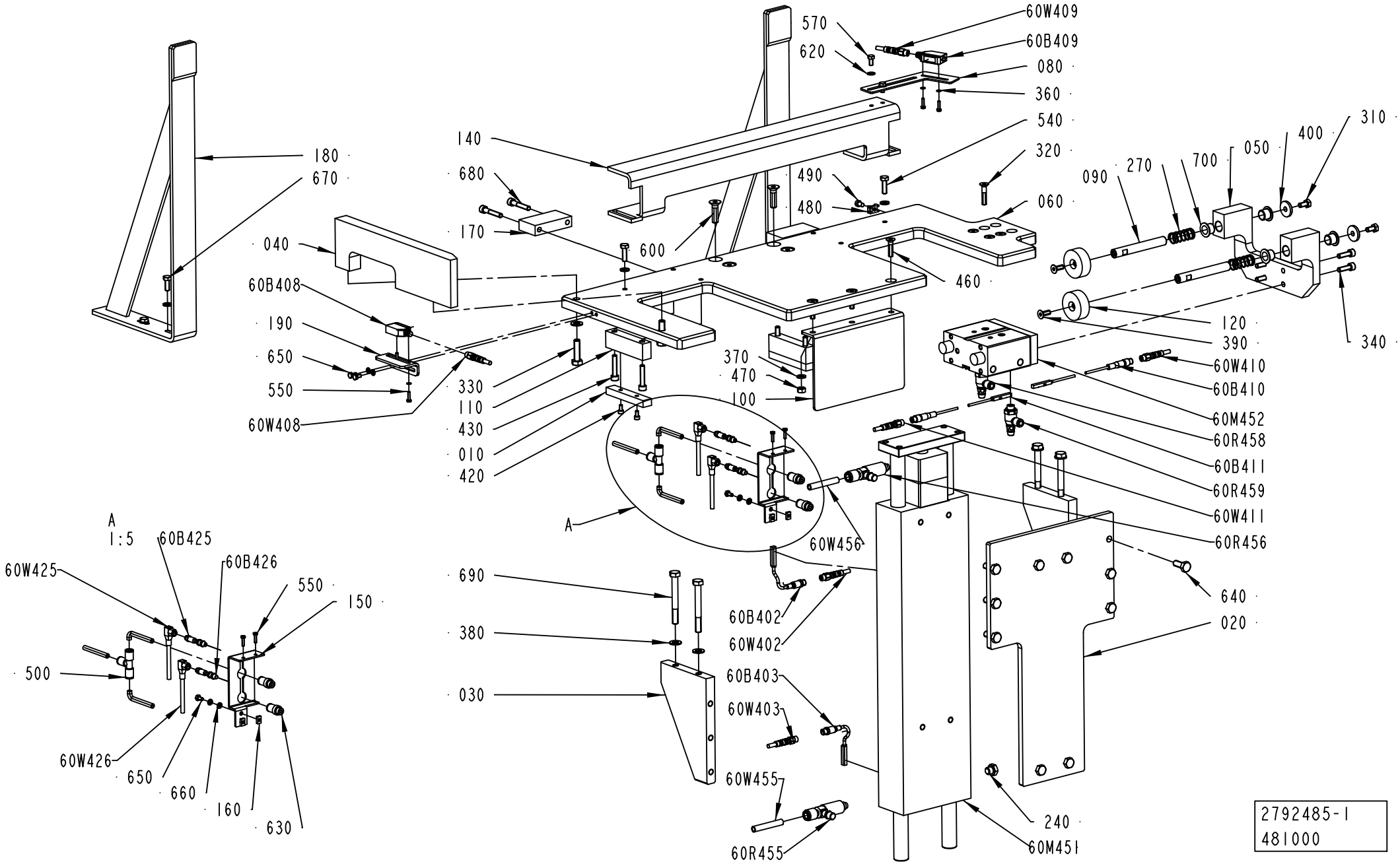
180
670
040
60B408
190
650
550
60W408
140
680
170
600
570
620
60W409
60B409
080
360
540
320
490
480
060
460
310
400
050
700
270
090
120
390
340
60W410
60B410
60M452
60R458
60B411
60R459
60W411
60R456
640
020
330
110
430
010
420
370
470
100
A
60W456
690
380
030
60B402
60W402
60B403
60W403
60W455
60R455
240
60M451
A
1:5
60B425
60W425
60B426
550
150
500
60W426
650
660
160
630
2792485-1
481000

ECM: 481001 - 20110401
Group number: 2792485-0100
Assembly Drawing: 2792485-1_1_AF

Pos	Part No	UN	Qty	Description	Page No
RECAP2 A3					
090	2930902-0000		2	SHAFT	
270	2930901-0000		2	COMPRESSION SPRING	
RECAP3					
090	2780402-0000		2	SHAFT	
270	90600-0891		2	COMP. SPRING 2520, 1,2X16,4X35	
Common Parts					
010	2715892-0000		2	STOP	
020	2897147-0000		1	PLATE	
030	2897148-0000		2	BRACKET	
040	2715917-0000		1	GUIDE	
050	2780399-0000		1	GUIDE	
060	2898046-0000		1	PLATE	
080	2898138-0000		1	SUPPORT	
100	2869808-0000		1	PLATE	
110	2792496-0000		2	PLATE	
120	2985766-0000		2	WASHER	
140	2931767-0000		1	BLOCK	
150	2898508-0000		1	BRACKET	
160	2909507-0000		2	PLATE	
170	2910645-0000		2	SLIDE	
180	2910646-0000		2	SUPPORT	
190	2911865-0000		1	SUPPORT	
240	90330-0066		2	PLUG, EXT. G-THREAD, G1/8	
310	312105-0366		2	SCREW M6S ISO 4017 M6X12 A480	
320	312155-0374		4	SCREW DIN 7991 MF6S M6X30 A4 70	
330	312105-0455		2	SCREW M6S ISO 4017 M8X30 A480	
340	312115-0370		4	SCREW ISO4762 M6X20 A4 80	
360	315105-0124		4	WASHER BRB 3,2X6 RFR	
380	315105-0165		6	WASHER BRB 8,4X16 RFR	
390	312155-0368		2	SCREW DIN 7991 MF6S M6X16 A4 70	
400	315125-0153		2	WASHER TBRSB 6,4X22X4 A4	
420	312115-0287		4	SCREW ISO4762 M4X8 A4 80	
430	312115-0374		4	SCREW ISO4762 M6X30 A4 80	
460	312155-0372		3	SCREW DIN 7991 MF6S M6X25 A4 70	
470	312605-0316		3	HEXAGON NUT, M6M M6 A280	
480	352113-0205		10	ANCHOR PLATES FOR STRIPS, TM2S8-C100	
490	312125-0323		10	SCREW ISO 1207 M5X8 A4	
500	350005-0002		1	PUSH-IN T-FITTING QST-F-6	
540	312105-0370		2	SCREW M6S ISO 4017 M6X20 A480	
550	90287-0175		6	SCREW M6S M3X12 A480	
570	312105-0325		2	SCREW M6S ISO 4017 M5X10 A480	
600	312155-0455		4	SCREW DIN 7991 MF6S M8X30 A4 70	
620	315105-0146		2	WASHER BRB 5,3X10 RFR	
630	350003-0005		2	PUSH-IN FITTING QS-F-G1/8-6-I	
640	312105-0451		10	SCREW M6S ISO 4017 M8X20 A480	
650	312105-0287		4	SCREW M6S ISO 4017 M4X8 A470	
660	315105-0136		6	WASHER BRB 4,3X8 RFR	
670	312105-0368		4	SCREW M6S ISO 4017 M6X16 A480	
680	312115-0376		4	SCREW ISO4762 M6X35 A4 80	
690	312105-0465		4	SCREW M6S ISO 4014 M8X70 A480	
700	321154-0180		4	FLANGE BUSHING, IGLIDUR W300 12X14X12	
60B402	90600-1182		1	PROXIMITY SENS. D-Y7P-S-A-PC	
60B403	90600-1182		1	PROXIMITY SENS. D-Y7P-S-A-PC	
60B408	90459-7272		1	PHOTOCELL E3Z-LS88	
60B409	90459-7272		1	PHOTOCELL E3Z-LS88	
60B410	90600-3276		1	PROX. SENSOR, SME-8M-DS-24V-K-0,3-M8D	
60B411	90600-3276		1	PROX. SENSOR, SME-8M-DS-24V-K-0,3-M8D	
60B425	90459-4788		1	PROX.SENSOR SEIN-M5B-PS-S-L	
60B426	90459-4788		1	PROX.SENSOR SEIN-M5B-PS-S-L	
60M451	90600-3010		1	CYLINDER WITH INT. GUIDING BORE 40	
60M452	90459-3245		1	CYLINDER; WITH INT. GUIDING BORE 25	
60R455	2911337-0000		1	QUIC EXHAUST VALVE	
60R456	2911337-0000		1	QUIC EXHAUST VALVE	
60R458	90235-0846		1	THROTTLE CHECK VALVE G1/8", MANUAL, 6	
60R459	90235-0846		1	THROTTLE CHECK VALVE G1/8", MANUAL, 6	
60W402	351401-0020		1	ACTU/SENS CABLE RSMVN 3-PRKMV 3-06/2,0M	
60W403	351401-0020		1	ACTU/SENS CABLE RSMVN 3-PRKMV 3-06/2,0M	
60W408	351403-0020		1	ACTU/SENS. CABLE RSMVN 3-PRKMV 4-06/2,0M	
60W409	351403-0020		1	ACTU/SENS. CABLE RSMVN 3-PRKMV 4-06/2,0M	
60W410	351401-0020		1	ACTU/SENS CABLE RSMVN 3-PRKMV 3-06/2,0M	
60W411	351401-0020		1	ACTU/SENS CABLE RSMVN 3-PRKMV 3-06/2,0M	
60W425	351402-0050		1	ACTU/SENS CABLE RSMVN 3-PRKMWV 3-06/5,0M	
60W426	351402-0050		1	ACTU/SENS CABLE RSMVN 3-PRKMWV 3-06/5,0M	
60W455	315400-0004	M	1	TUBE PUN-H-8X1,25-BL	
60W456	315400-0004	M	1	TUBE PUN-H-8X1,25-BL	
60W463	315400-0001	M	1	TUBE PUN-H-6X1-BL	
60W464	315400-0001	M	1	TUBE PUN-H-6X1-BL	
60W465	315400-0001	M	1	TUBE PUN-H-6X1-BL	

Machine Type | Group Description | Used-In | Group Number | Page No

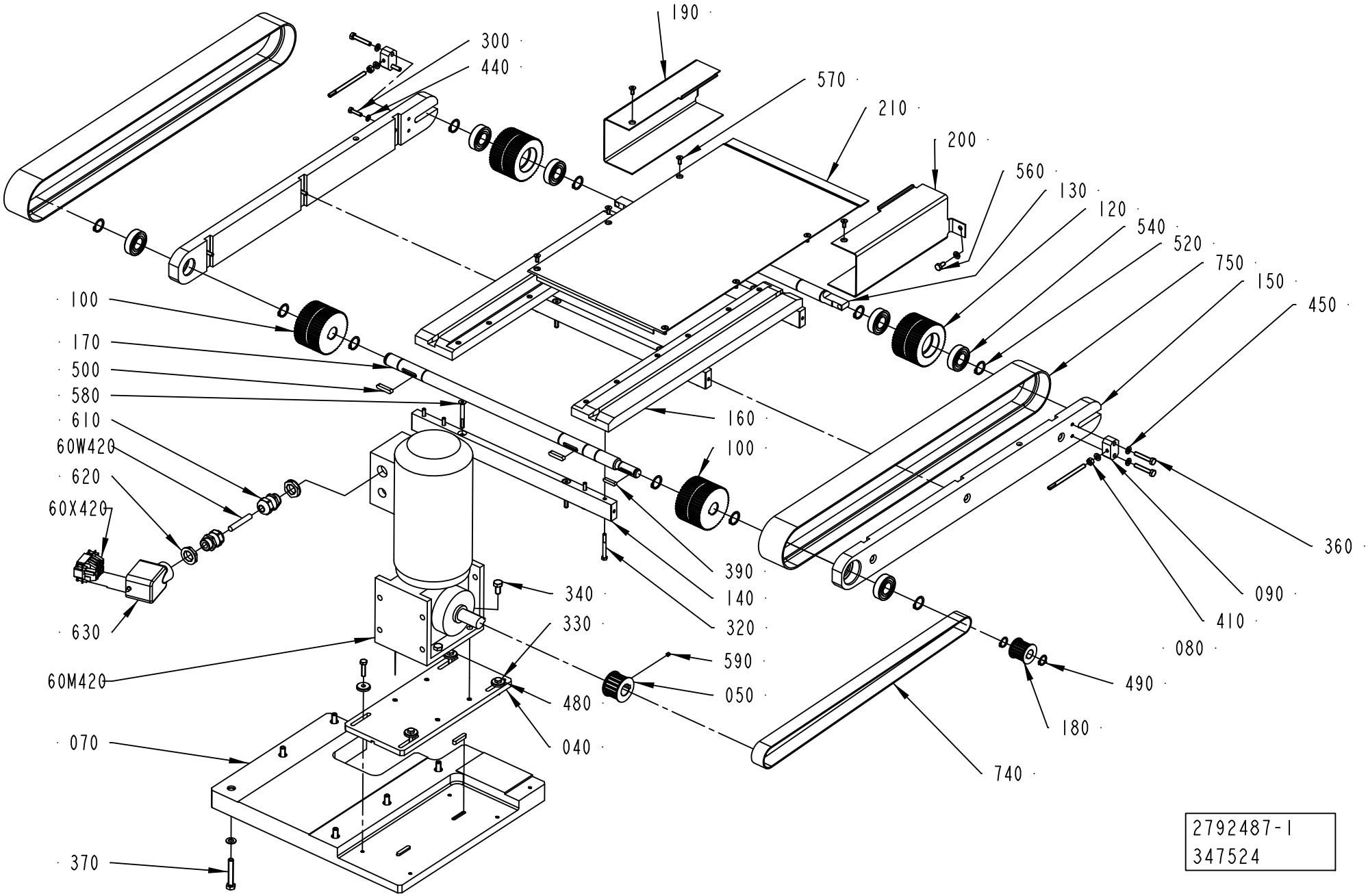
190
300
440
570
210
200
560
130
120
540
520
750
150
450
100
170
500
580
610
60W420
620
60X420
630
60M420
070
370
160
100
390
140
320
340
330
590
050
480
040
740
180
490
080
410
090
360
2792487-1
347524

ECM: 349803 - 20080701
Group number: 2792487-0100
Assembly Drawing: 2792487-1_1_AB

Pos	Part No	UN	Qty	Description	Page No
-					
040	2715902-0000		1	PLATE	
050	2780476-0000		1	TOOTHED PULLEY	
070	2715906-0000		1	PLATE	
080	2715907-0000		2	SCREW	
090	2715908-0000		2	BRACKET	
100	2792489-0000		2	PULLEY	
120	2792491-0000		2	PULLEY	
130	2715924-0000		1	SHAFT	
140	2792494-0000		3	PLATE	
150	2792492-0000		2	PLATE	
160	2792493-0000		2	GUIDE	
170	2715929-0000		1	SHAFT	
180	2780477-0000		1	TOOTHED PULLEY	
190	2780436-0000		1	PLATE	
200	2780437-0000		1	PLATE	
210	2780441-0000		1	PLATE	
300	312105-0331		6	SCREW M6S ISO 4017 M5X20 A480	
320	312105-0340		12	SCREW M6S ISO 4014 M5X45 A480	
330	312105-0372		4	SCREW M6S ISO 4017 M6X25 A480	
340	312105-0449		4	SCREW M6S ISO 4017 M8X16 A480	
360	312109-0376		4	SCREW M6S ISO 4017 M6X35 A480	
370	312109-0461		6	SCREW M6S ISO 4017 M8X50 A480	
390	315705-0202		1	PARALLEL KEY W ROUND ENDS 5X5X25MM	
410	312605-0316		2	HEXAGON NUT, M6M M6 A280	
440	315105-0146		6	WASHER BRB 5,3X10 RFR	
450	315105-0153		8	WASHER BRB 6,4X12 RFR	
460	315105-0165		6	WASHER BRB 8,4X16 RFR	
480	315125-0153		4	WASHER TBRSB 6,4X22X4 A4	
490	315751-0112		2	RETAINING RING FOR SHAFT DIN 471 15 SS	
500	315705-0236		4	PARALLEL KEY W. ROUND ENDS 6X6X30 MM	
520	315751-0116		10	RETAINING RING FOR SHAFT DIN 471 20 SS	
540	321308-0204		6	BALL BEARING 20/42X12	
560	312105-0366		2	SCREW M6S ISO 4017 M6X12 A480	
570	312155-0327		8	SCREW DIN 7991 MF6S M5X12 A4 70	
580	312155-0380		6	SCREW DIN 7991 MF6S M6X50 A4 70	
590	90459-5068		1	SET SCREW ISO4027 M5X6 HRC 45	
610	90458-0307		2	CABLE GLAND, M20X1,5, NO.5311 1020	
620	90458-0323		2	NUT, M20X1,5	
630	90459-1458		1	HOOD, SIDE ENTRY, HAN6E, 19 30 006 1540	
740	90600-0828		1	TIMING BELT 25T5/1075 PU	
750	90600-0830		2	TIMING BELT 25 ATK5/1440 PU	
60M420	90458-0965		1	GEARS, WORM MOTOR S37 DT 63 L4	
60W420	351150-0413	M	2	CABLE OLFLEX 4GX1,5 MM2 LIGHT/GREY	
60X420	90110-0052		1	MALE INSERT, HAN E06, 0933 0062 601	

Machine Type | Group Description | Used-In | Group Number | Page No

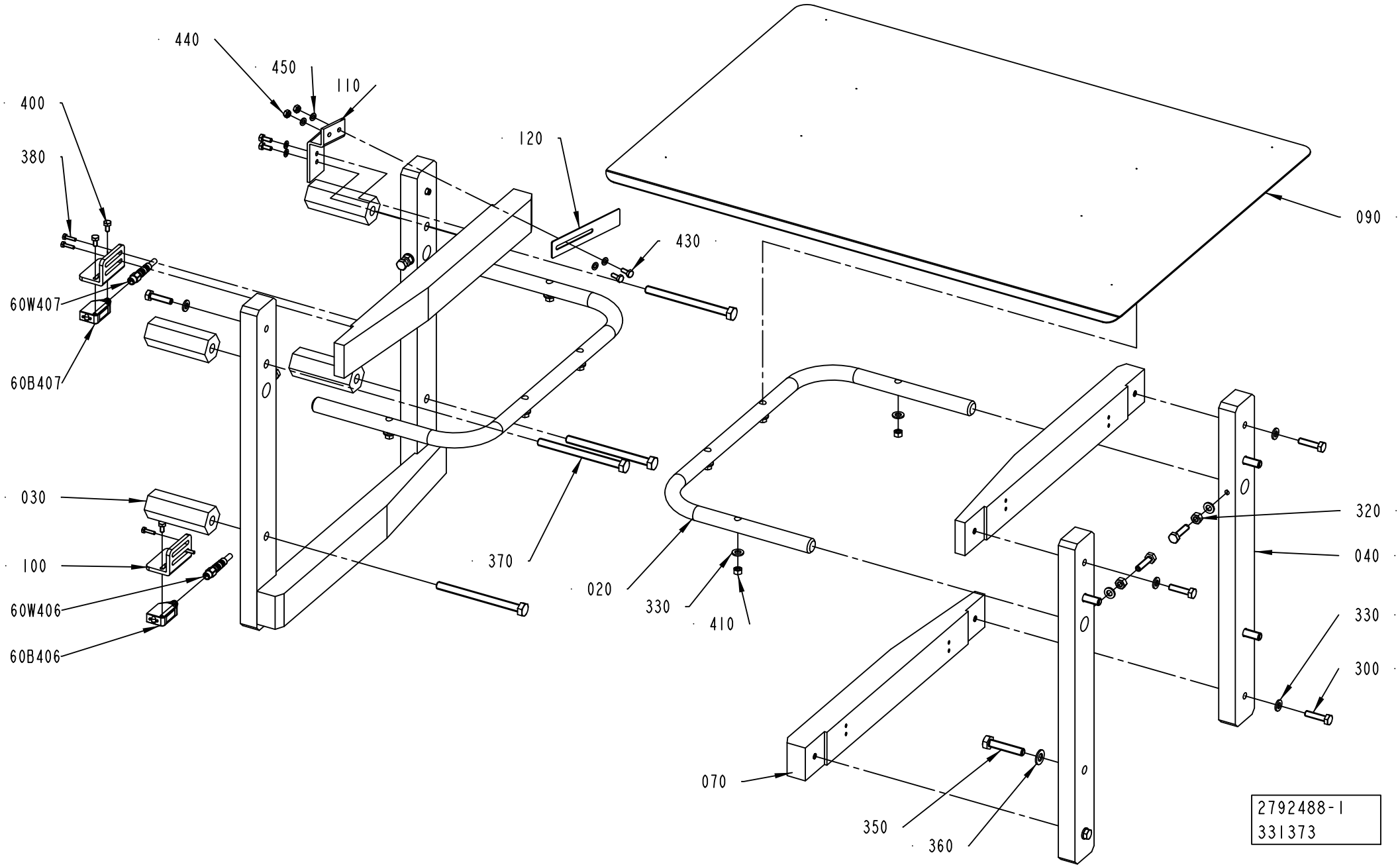
440
450
110
400
380
120
090
430
60W407
60B407
030
100
60W406
60B406
370
020
330
410
320
040
330
300
070
350
360
2792488-1
331373

ECM: 370208 - 20090101
Group number: 2792488-0100
Assembly Drawing: 2792488-1_1_AB

This list covers pages from 6-10 to 6-13

Pos	Part No	UN	Qty	Description	Page No
RECAP2 A3 (See drawing on page: 6-12)					
130	2977814-0000		4	SHIM	
300	312105-0372		8	SCREW M6S ISO 4017 M6X25 A480	
310	312109-0382		4	SCREW M6S ISO 4017 M6X60 A480	
RECAP3 (See drawing on page: 6-10)					
300	312105-0372		12	SCREW M6S ISO 4017 M6X25 A480	
Common Parts					
020	2715914-0000		2	GUIDE	
030	2780462-0000		4	SPACER	
040	2715921-0000		4	HOLDER	
070	2780472-0000		4	STEERING RAIL	
090	2867583-0000		1	PLATE	
100	2833240-0000		2	HOLDER	
110	2889892-0000		1	BRACKET	
120	2889893-0000		1	GUIDE	
320	312605-0316		4	HEXAGON NUT, M6M M6 A280	
330	315105-0153		21	WASHER BRB 6,4X12 RFR	
350	312109-0459		4	SCREW M6S ISO 4017 M8X40 A480	
360	315105-0165		4	WASHER BRB 8,4X16 RFR	
370	90458-1886		4	SCREW M6S ISO 4017 M8X100 A480	
380	90287-0175		4	SCREW M6S M3X12 A480	
400	312105-0287		4	SCREW M6S ISO 4017 M4X8 A470	
410	312605-0314		8	HEXAGON NUT, M6M M5 A280	
430	312105-0289		4	SCREW M6S H4X10 A4 70 ISO4017/DIN933	
440	312605-0312		2	HEXAGON NUT, M6M M4 A280	
450	315105-0136		6	WASHER BRB 4,3X8 RFR	
60B406	90459-7272		1	PHOTOCELL E3Z-LS88	
60B407	90459-7272		1	PHOTOCELL E3Z-LS88	
60W406	351403-0020		1	ACTU/SENS. CABLE RSMVN 3-PRKMV 4-06/2,0M	
60W407	351403-0020		1	ACTU/SENS. CABLE RSMVN 3-PRKMV 4-06/2,0M	

Pos	Part No	UN	Qty	Description	Page No

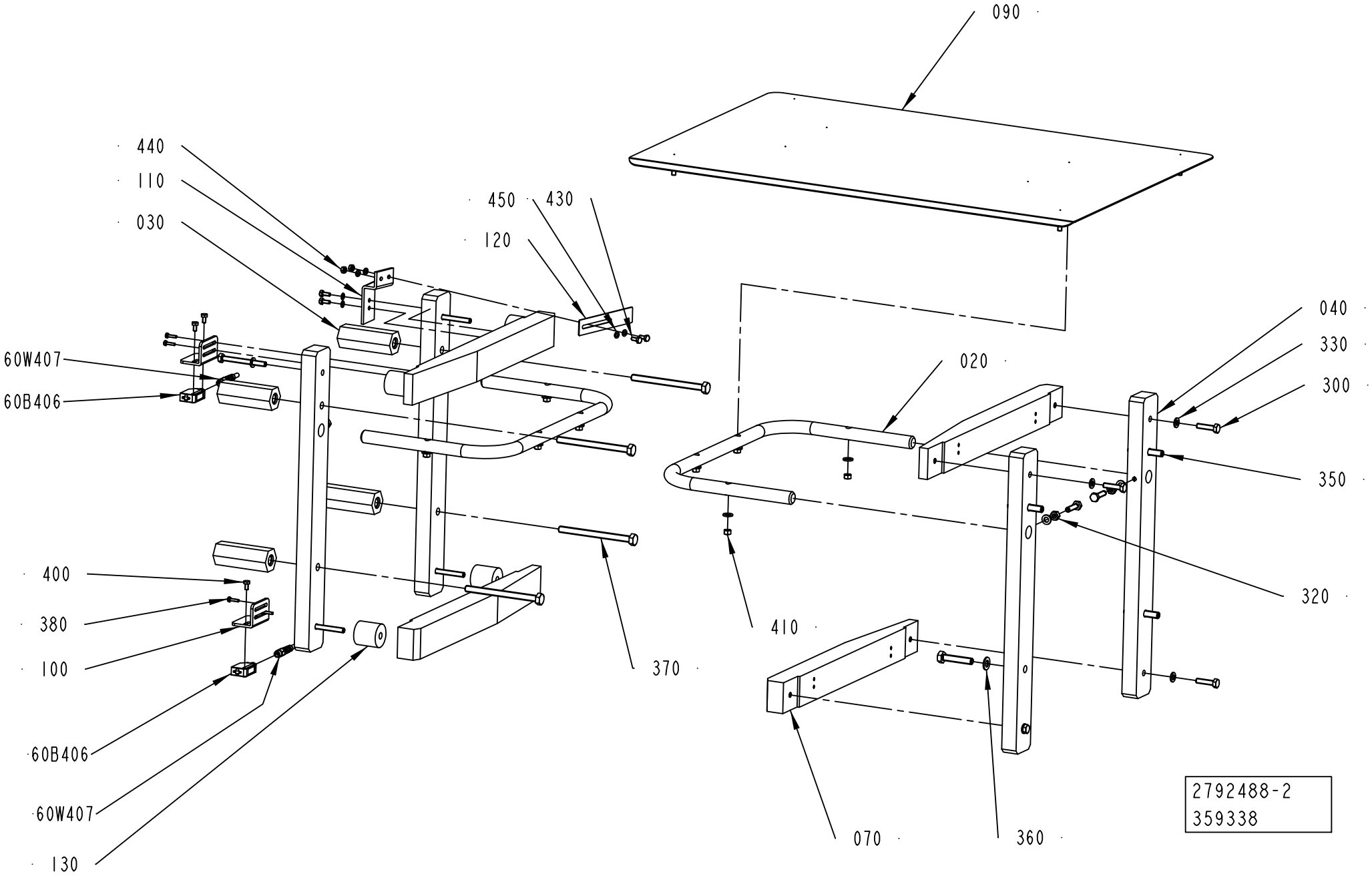
090
440
110
030
450
430
120
60W407
60B406
040
330
300
020
350
400
380
100
320
410
370
60B406
60W407
130
070
360
2792488-2
359338

ECM: 370208 - 20090101
Group number: 2792488-0100
Assembly Drawing: 2792488-2_1_AA

This list covers pages from 6-10 to 6-13

Pos	Part No	UN	Qty	Description	Page No
RECAP2 A3 (See drawing on page: 6-12)					
130	2977814-0000		4	SHIM	
300	312105-0372		8	SCREW M6S ISO 4017 M6X25 A480	
310	312109-0382		4	SCREW M6S ISO 4017 M6X60 A480	
RECAP3 (See drawing on page: 6-10)					
300	312105-0372		12	SCREW M6S ISO 4017 M6X25 A480	
Common Parts					
020	2715914-0000		2	GUIDE	
030	2780462-0000		4	SPACER	
040	2715921-0000		4	HOLDER	
070	2780472-0000		4	STEERING RAIL	
090	2867583-0000		1	PLATE	
100	2833240-0000		2	HOLDER	
110	2889892-0000		1	BRACKET	
120	2889893-0000		1	GUIDE	
320	312605-0316		4	HEXAGON NUT, M6M M6 A280	
330	315105-0153		21	WASHER BRB 6,4X12 RFR	
350	312109-0459		4	SCREW M6S ISO 4017 M8X40 A480	
360	315105-0165		4	WASHER BRB 8,4X16 RFR	
370	90458-1886		4	SCREW M6S ISO 4017 M8X100 A480	
380	90287-0175		4	SCREW M6S M3X12 A480	
400	312105-0287		4	SCREW M6S ISO 4017 M4X8 A470	
410	312605-0314		8	HEXAGON NUT, M6M M5 A280	
430	312105-0289		4	SCREW M6S H4X10 A4 70 ISO4017/DIN933	
440	312605-0312		2	HEXAGON NUT, M6M M4 A280	
450	315105-0136		6	WASHER BRB 4,3X8 RFR	
60B406	90459-7272		1	PHOTOCELL E3Z-LS88	
60B407	90459-7272		1	PHOTOCELL E3Z-LS88	
60W406	351403-0020		1	ACTU/SENS. CABLE RSMVN 3-PRKMV 4-06/2,0M	
60W407	351403-0020		1	ACTU/SENS. CABLE RSMVN 3-PRKMV 4-06/2,0M	

Pos	Part No	UN	Qty	Description	Page No

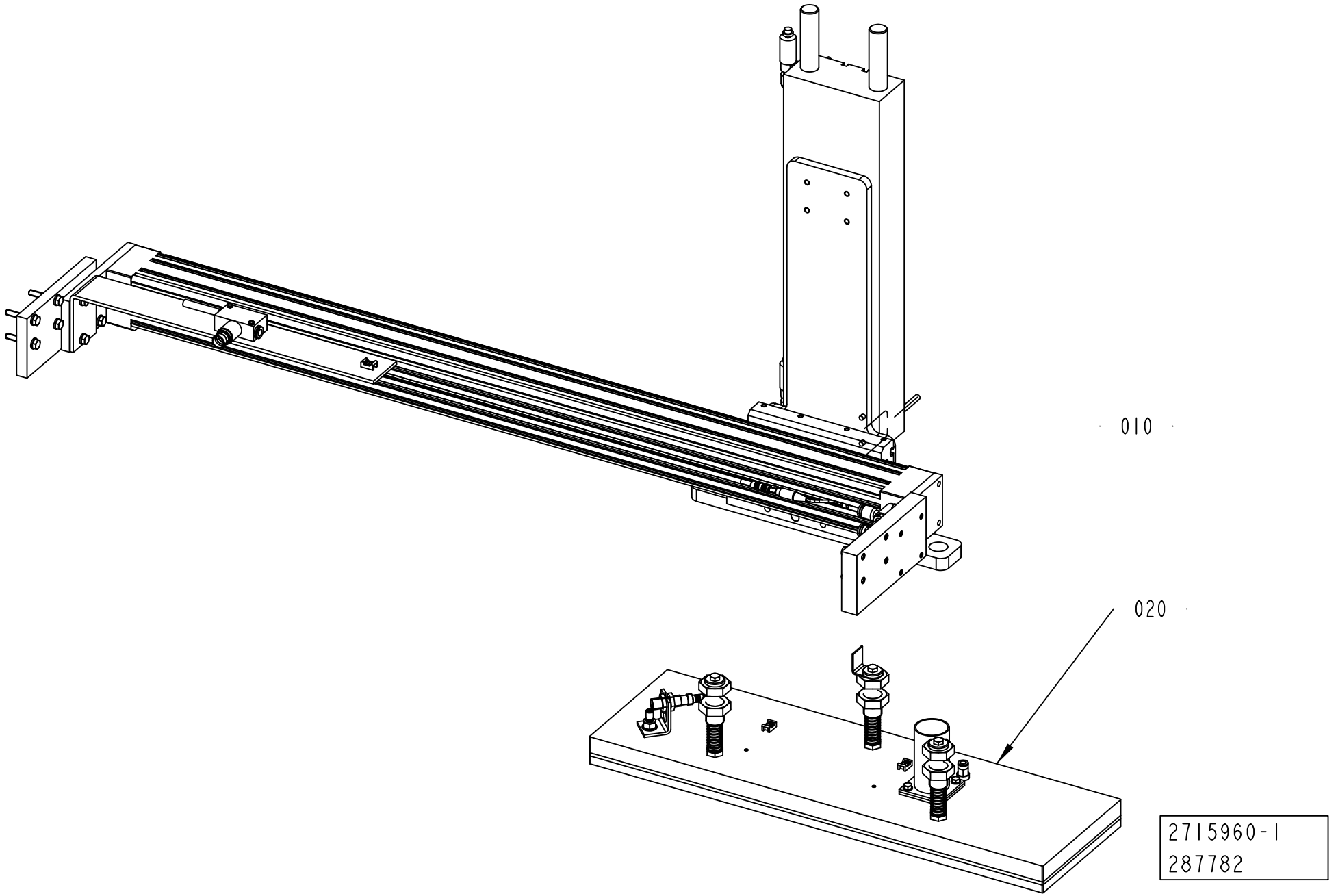
010
020
2715960-1
287782

ECM: 292534 - 20070622
Group number: 2715960-0100
Assembly Drawing: 2715960-1_1_AA

Pos	Part No	UN	Qty	Description	Page No
-					
010	2897952-0100		1	DRIVE UNIT	**6-17**
020	2780415-0100		1	SHEET CARRIER	**6-19**

Pos	Part No	UN	Qty	Description	Page No

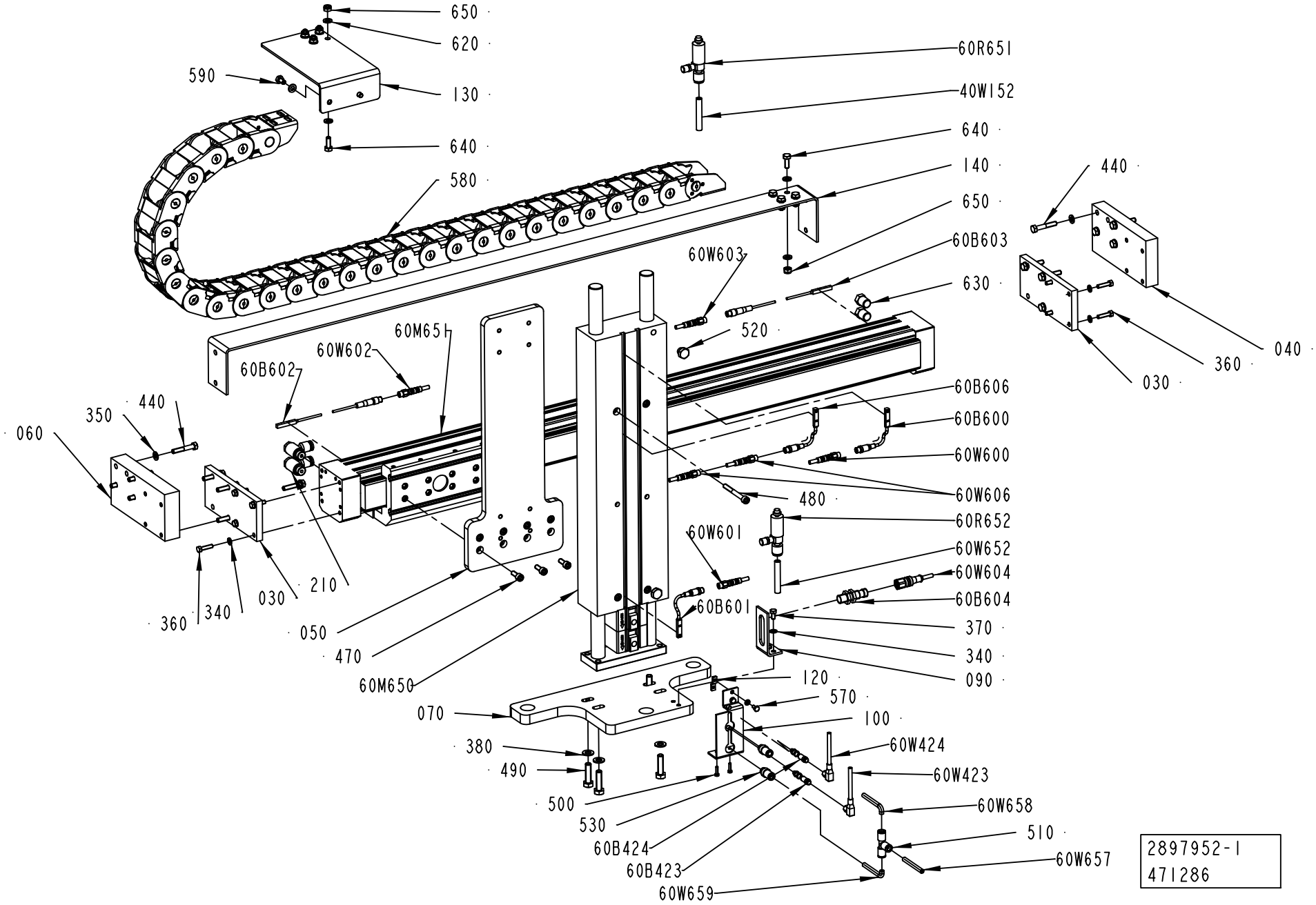
650
620
590
130
640
580
60R651
40W152
640
140
650
60B603
630
60W603
520
60M651
60W602
60B602
440
350
060
480
60B606
60B600
60W600
60W606
60R652
60W652
60W604
60B604
370
340
090
60W601
60B601
120
570
100
60W424
60W423
60W658
510
60W657
440
040
360
030
210
030
340
360
050
470
60M650
070
380
490
500
530
60B424
60B423
60W659
2897952-1
471286

ECM: 471289 - 20101109
Group number: 2897952-0100
Assembly Drawing: 2897952-1_1_AF

Pos	Part No	UN	Qty	Description	Page No
-					
030	2868165-0000		2	BRACKET	
040	2868166-0000		1	PLATE	
050	2897953-0000		1	PLATE	
060	2868170-0000		1	PLATE	
070	2897954-0000		1	PLATE	
090	2715945-0000		1	BRACKET	
100	2899500-0000		1	BRACKET	
120	2909507-0000		2	PLATE	
130	2955524-0000		1	PLATE	
140	2955525-0000		1	PLATE	
210	90459-3685		2	THROTTLE VALVE GRLA-1/4-QS-8-D	
340	315105-0146		10	WASHER BRB 5,3X10 RFR	
350	315105-0153		18	WASHER BRB 6,4X12 RFR	
360	312105-0331		8	SCREW M6S ISO 4017 M5X20 A480	
370	312105-0325		2	SCREW M6S ISO 4017 M5X10 A480	
380	315106-0165		4	WASHER ISO 7089-8-200 HV A4	
390	315105-0136		2	WASHER BRB 4,3X8 RFR	
420	312109-0374		8	SCREW M6S ISO 4017 M6X30 A480	
440	312105-0376		8	SCREW M6S ISO 4014 M6X35 A480	
470	312115-0368		8	SCREW ISO4762 M6X16 A4 80	
480	312111-0381		4	SCREW HEX.SOCK.HD.MC6S-TT 6X55 88 FZB	
490	312105-0455		4	SCREW M6S ISO 4017 M8X30 A480	
500	90287-0175		2	SCREW M6S M3X12 A480	
510	350005-0002		1	PUSH-IN T-FITTING QST-F-6	
520	90330-0066		2	PLUG, EXT. G-THREAD, G1/8	
530	350003-0005		2	PUSH-IN FITTING QS-F-G1/8-6-I	
570	312105-0287		2	SCREW M6S ISO 4017 M4X8 A470	
580	2958122-0000		1	CHAIN	
590	312105-0364		2	SCREW M6S ISO 4017 M6X10 A480	
620	315106-0153		16	WASHER ISO 7089-6-200 HV A4	
630	90457-0008		2	PLUG, EXT. G-THREAD, 4PH-SS	
640	312105-0368		8	SCREW M6S ISO 4017 M6X16 A480	
650	312812-0316		8	HEXAGON NUT, NY-LOCK M6 A480	
60B423	90459-4788		1	PROX.SENSOR SEIN-M5B-PS-S-L	
60B424	90459-4788		1	PROX.SENSOR SEIN-M5B-PS-S-L	
60B600	90600-1182		1	PROXIMITY SENS. D-Y7P-S-A-PC	
60B601	90600-1182		1	PROXIMITY SENS. D-Y7P-S-A-PC	
60B602	90600-3276		1	PROX. SENSOR, SME-8M-DS-24V-K-0,3-M8D	
60B603	90600-3276		1	PROX. SENSOR, SME-8M-DS-24V-K-0,3-M8D	
60B604	90458-2907		1	PROX.SWITCH IFS204	
60B606	90600-1182		1	PROXIMITY SENS. D-Y7P-S-A-PC	
60M650	90600-3009		1	CYLINDER WITH INT. GUIDING BORE 40	
60M651	90600-1077		1	CYLINDER, RODLESS MECH. 40-700	
60R651	2911337-0000		1	QUIC EXHAUST VALVE	
60R652	2911337-0000		1	QUIC EXHAUST VALVE	
60W423	351402-0050		1	ACTU/SENS CABLE RSMVN 3-PRKMWV 3-06/5,0M	
60W424	351402-0050		1	ACTU/SENS CABLE RSMVN 3-PRKMWV 3-06/5,0M	
60W600	351401-0050		1	ACTU/SENS CABLE RSMVN 3-PRKMV 3-06/5,0M	
60W601	351401-0050		1	ACTU/SENS CABLE RSMVN 3-PRKMV 3-06/5,0M	
60W602	351401-0050		1	ACTU/SENS CABLE RSMVN 3-PRKMV 3-06/5,0M	
60W603	351401-0020		1	ACTU/SENS CABLE RSMVN 3-PRKMV 3-06/2,0M	
60W604	351405-0050		1	SENS. CABLE RSMVN 3-PRKT 4-3-06/5,0M	
60W606	351401-0050		2	ACTU/SENS CABLE RSMVN 3-PRKMV 3-06/5,0M	
60W652	315400-0004	M	1	TUBE PUN-H-8X1,25-BL	
60W655	315400-0004	M	1	TUBE PUN-H-8X1,25-BL	
60W657	315400-0001	M	1	TUBE PUN-H-6X1-BL	
60W658	315400-0001	M	1	TUBE PUN-H-6X1-BL	
60W659	315400-0001	M	1	TUBE PUN-H-6X1-BL	

Machine Type | Group Description | Used-In | Group Number | Page No

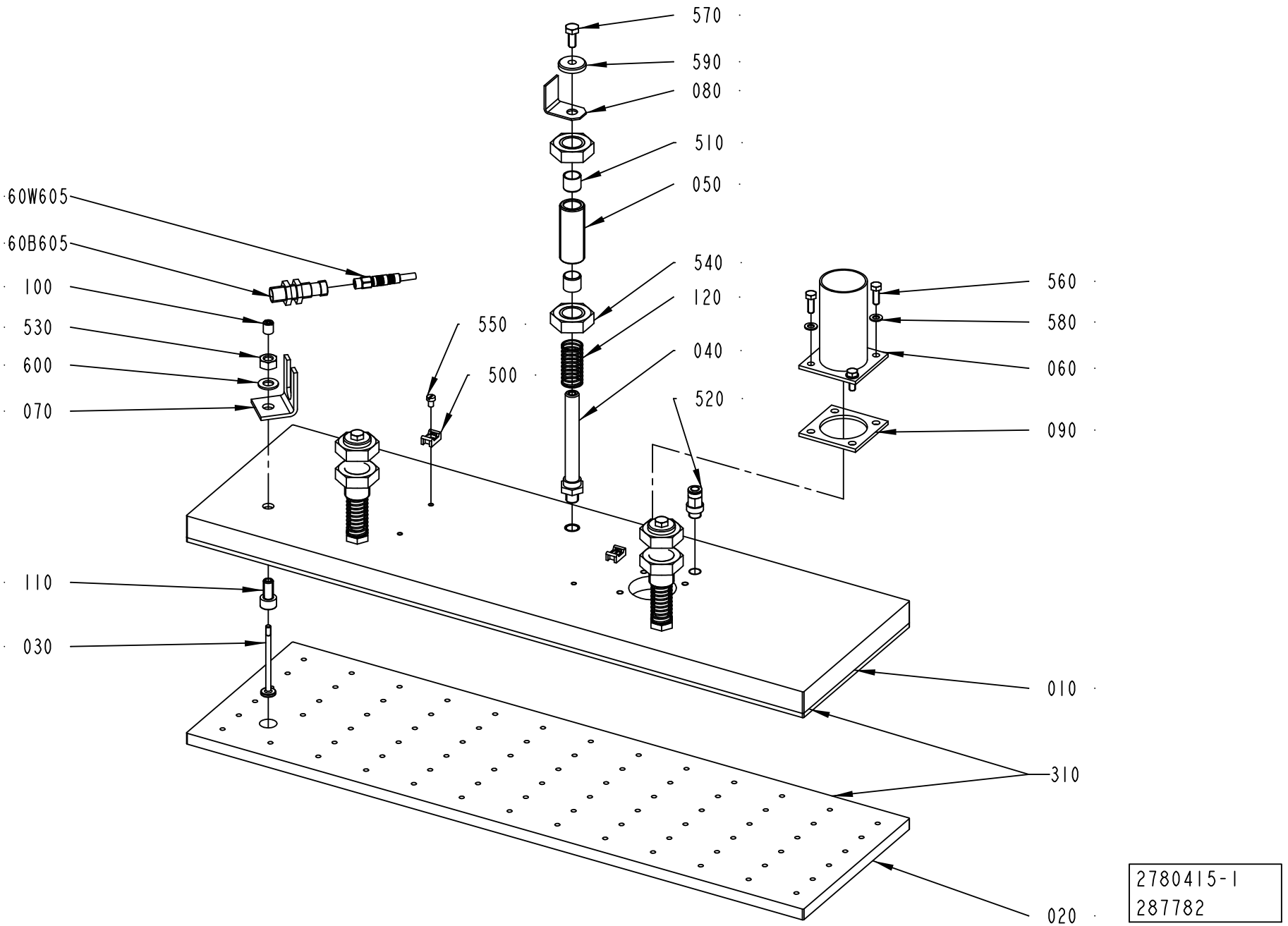
570
590
080
510
050
540
120
040
520
550
500
60W605
60B605
100
530
600
070
560
580
060
090
110
030
010
310
020
2780415-1
287782

ECM: 359104 - 20080924
Group number: 2780415-0100
Assembly Drawing: 2780415-1_1_AA

Pos	Part No	UN	Qty	Description	Page No
RECAP2 A3					
010	2927543-0000		1	PLATE	
020	2927545-0000		1	RUBBER MAT	
RECAP3					
010	2869126-0000		1	PLATE	
020	2869127-0000		1	RUBBER MAT	
Common Parts					
030	2780412-0000		1	INDICATOR	
040	2715873-0000		3	SHAFT	
050	2715874-0000		3	SHAFT	
060	2867529-0000		1	BRACKET	
070	1189198-0000		1	FASTENING BRACKET	
080	2780413-0000		1	FLAG	
090	1133029-0000		1	GASKET	
100	1188818-0000		1	NUT	
110	1133148-0000		1	SCREW	
120	2703708-0000		3	SPRING	
310	90153-0023		1	ADHESIVE, SILICON 251470 TUB 90CC(UN1993	
500	352113-0205		2	ANCHOR PLATES FOR STRIPS, TM2S8-C100	
510	321133-0180		6	BUSHING IGLIDUR G 12X14X12	
520	350001-0006		1	PUSH-IN FITTING QS-F-G1/8-6	
530	312605-0318		1	HEXAGON NUT, M6M M8 A280	
540	312632-0326		6	HEX.TH.NUT FINE,EN24035 ML6M M20X1,5 A4	
550	312125-0285		2	SCREW ISO 1207 M4X6 A4	
560	312105-0328		4	SCREW M6S ISO 4017 M5X14 A480	
570	312105-0367		3	REW M6S ISO 4017 M6X14 A480	
580	315105-0146		4	WASHER BRB 5,3X10 RFR	
590	315125-0153		3	WASHER TBRSB 6,4X22X4 A4	
600	315105-0165		1	WASHER BRB 8,4X16 RFR	
60B605	90458-2907		1	PROX.SWITCH IFS204	
60W605	351405-0050		1	SENS. CABLE RSMVN 3-PRKT 4-3-06/5,0M	

Pos	Part No	UN	Qty	Description	Page No

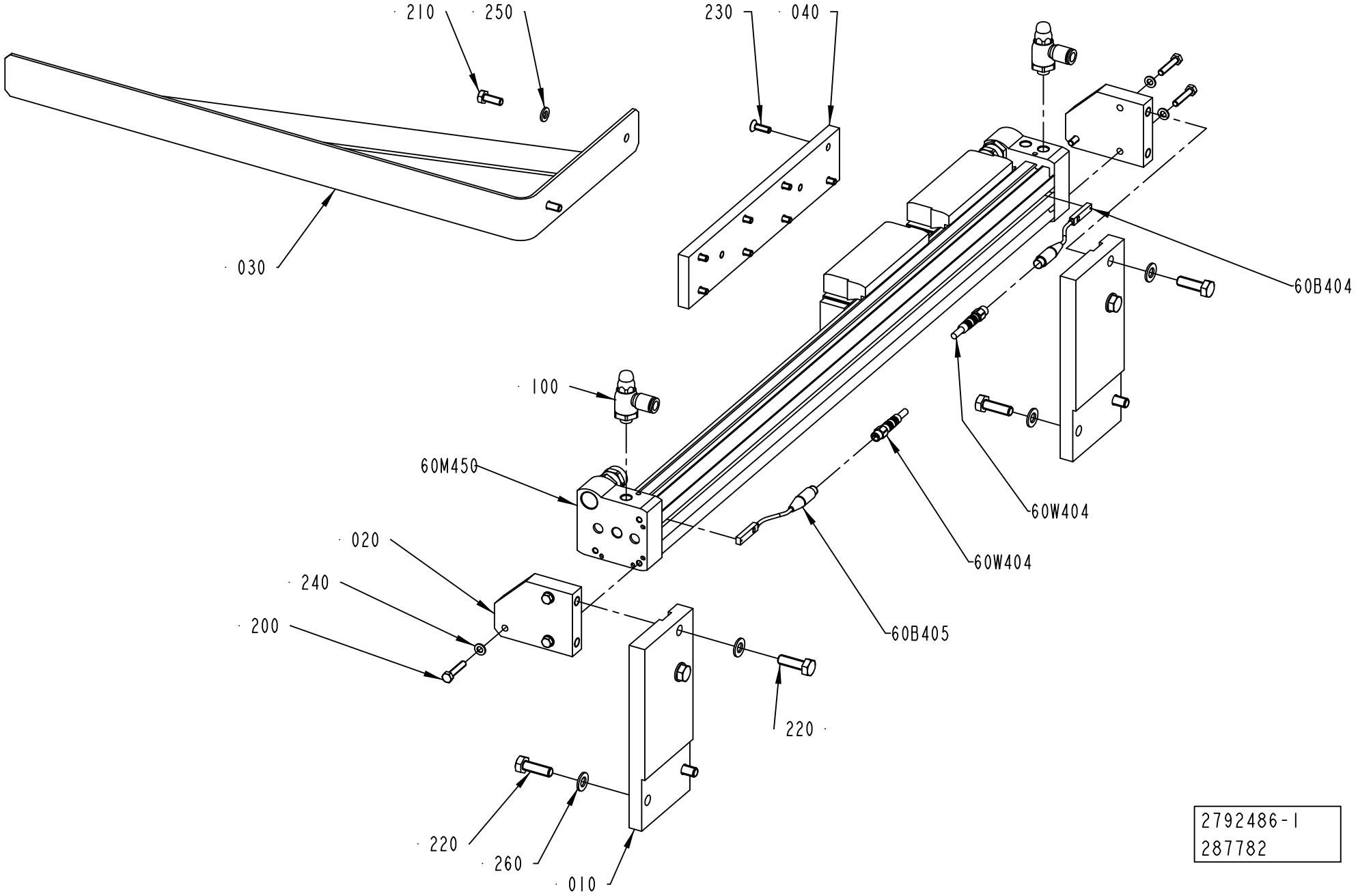
210
250
230
040
030
60B404
100
60M450
60W404
60W404
020
240
200
60B405
220
220
260
010
2792486-1
287782

ECM: 472663 - 20101109
Group number: 2792486-0100
Assembly Drawing: 2792486-1_1_AA

Pos	Part No	UN	Qty	Description	Page No
-					
010	2780464-0000		2	BRACKET	
020	2780467-0000		2	BRACKET	
030	2780468-0000		1	ARM	
040	2780478-0000		1	PLATE	
100	90235-0848		2	THROTTLE CHECK VALVE G1/8", MANUAL,8	
200	312105-0333		6	SCREW M6S ISO 4017 M5X25 A480	
210	312105-0368		2	SCREW M6S ISO 4017 M6X16 A480	
220	312105-0453		8	SCREW M6S ISO 4017 M8X25 A480	
230	312155-0329		8	SCREW DIN 7991 MF6S M5X16 A4 70	
240	315105-0146		6	WASHER BRB 5,3X10 RFR	
250	315105-0153		2	WASHER BRB 6,4X12 RFR	
260	315105-0165		8	WASHER BRB 8,4X16 RFR	
270	312607-0316		2	HEXAGON NUT, EN 24032 M6M M6 A480	
60B404	90600-3276		1	PROX. SENSOR, SME-8M-DS-24V-K-0,3-M8D	
60B405	90600-3276		1	PROX. SENSOR, SME-8M-DS-24V-K-0,3-M8D	
60M450	90600-1078		1	CYLINDER, RODLESS MECH. 25-500	
60W404	351401-0020		1	ACTU/SENS CABLE RSMVN 3-PRKMV 3-06/2,0M	
60W405	351401-0020		1	ACTU/SENS CABLE RSMVN 3-PRKMV 3-06/2,0M	

Pos	Part No	UN	Qty	Description	Page No

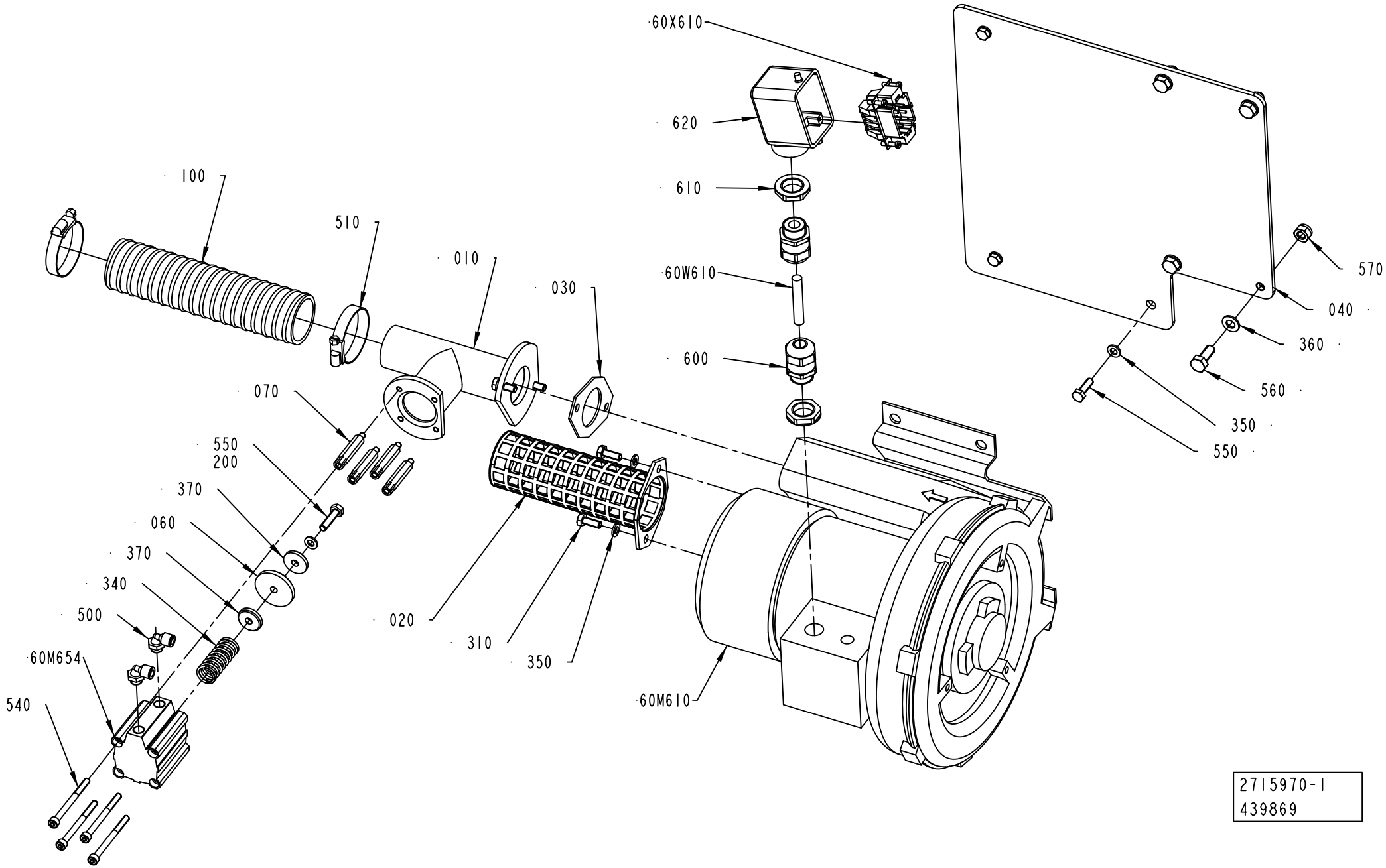
60X610
620
610
60W610
600
100
510
010
030
070
550
200
370
060
370
340
500
60M654
540
020
310
350
60M610
570
040
360
560
350
550
2715970-1
439869

ECM: 444505 - 20100701
Group number: 2715970-0100
Assembly Drawing: 2715970-1_1_AD

Pos	Part No	UN	Qty	Description	Page No
-					
010	2562202-0000		1	ATTACHMENT PIPE	
020	1030335-0000		1	FILTER HOLDER	
030	1030878-0000		1	GASKET	
040	2868608-0000		1	BRACKET	
060	1133035-0000		1	LID	
070	2562203-0000		4	SPACER	
100	90457-0203	M	1.3	FLEXIBLE CONDUIT PVC	
200	90157-0016	ML	1	THREAD LOCKING, LOCTITE 242 50 ML	
310	312105-0368		4	SCREW M6S ISO 4017 M6X16 A480	
340	90600-1869		1	COMP. SPRING 2634, 2X14X45	
350	315105-0153		8	WASHER BRB 6,4X12 RFR	
360	315105-0165		4	WASHER BRB 8,4X16 RFR	
370	315125-0153		2	WASHER TBRSB 6,4X22X4 A4	
500	90458-2956		2	ELBOW PIPE JOINT, EXT.THREAD, D=6MM-G1/8	
510	342991-0108		2	HOSE CLIP,WORM DRIVE TYPE (38)-50	
520	90459-1458		1	HOOD, SIDE ENTRY, HAN6E, 19 30 006 1540	
530	90458-0323		2	NUT, M20X1,5	
540	90458-0058		4	SCREW M5X60 A280	
550	312105-0370		4	SCREW M6S ISO 4017 M6X20 A480	
560	312105-0451		4	SCREW M6S ISO 4017 M8X20 A480	
570	312812-0318		4	HEXAGON NUT, NY-LOCK M8 A480	
600	90458-0307		2	CABLE GLAND, M20X1,5, NO.5311 1020	
60M610	90264-0078		1	FAN, 2BH1300-7AH16	
60M654	90450-0513		1	DOUBLE ACTING, COMPACT, CYL 32-25	
60W610	351150-0413	M	2	CABLE OLFLEX 4GX1,5 MM2 LIGHT/GREY	
60X610	90110-0052		1	MALE INSERT, HAN E06, 0933 0062 601	

Pos	Part No	UN	Qty	Description	Page No

Tetra Pak

SPC
Spare Parts Catalogue

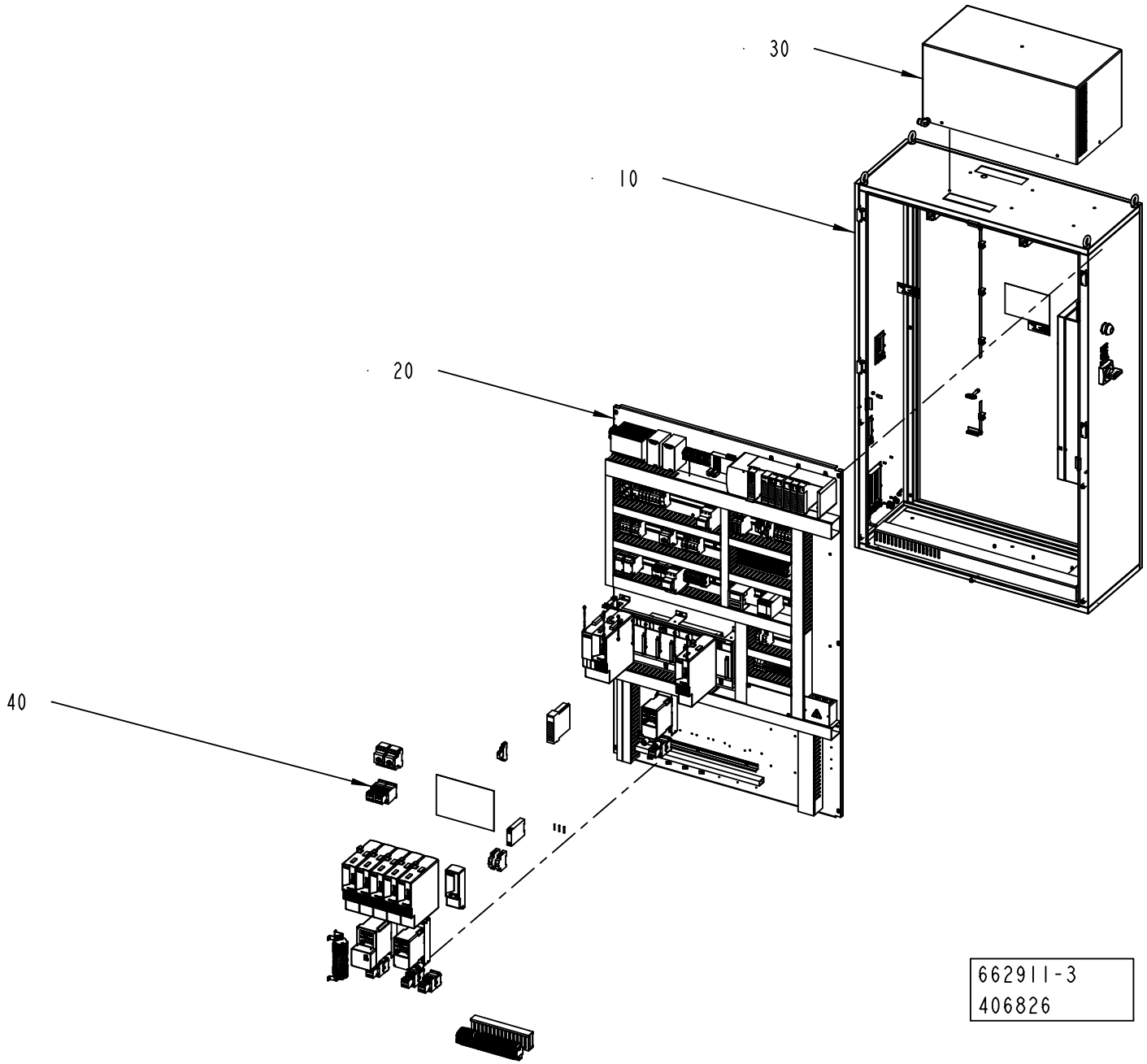
30
10
20
40
662911-3
406826

ECM: 406841 - 20091001
Group number: 662911-0200
Assembly Drawing: 662911-3_1_AA

Pos	Part No	UN	Qty	Description	Page No
-					
010	2833406-0200		1	CABINET	7-5
020	2833407-0200		1	CONTROL BOARD	7-9
030	2833408-0100		1	COOLING UNIT	7-55
040	2841404-0200		1	ELECTRICAL CONVERSION	7-57
050	2833409-0100		1	CABLE SET	7-63

Pos	Part No	UN	Qty	Description	Page No

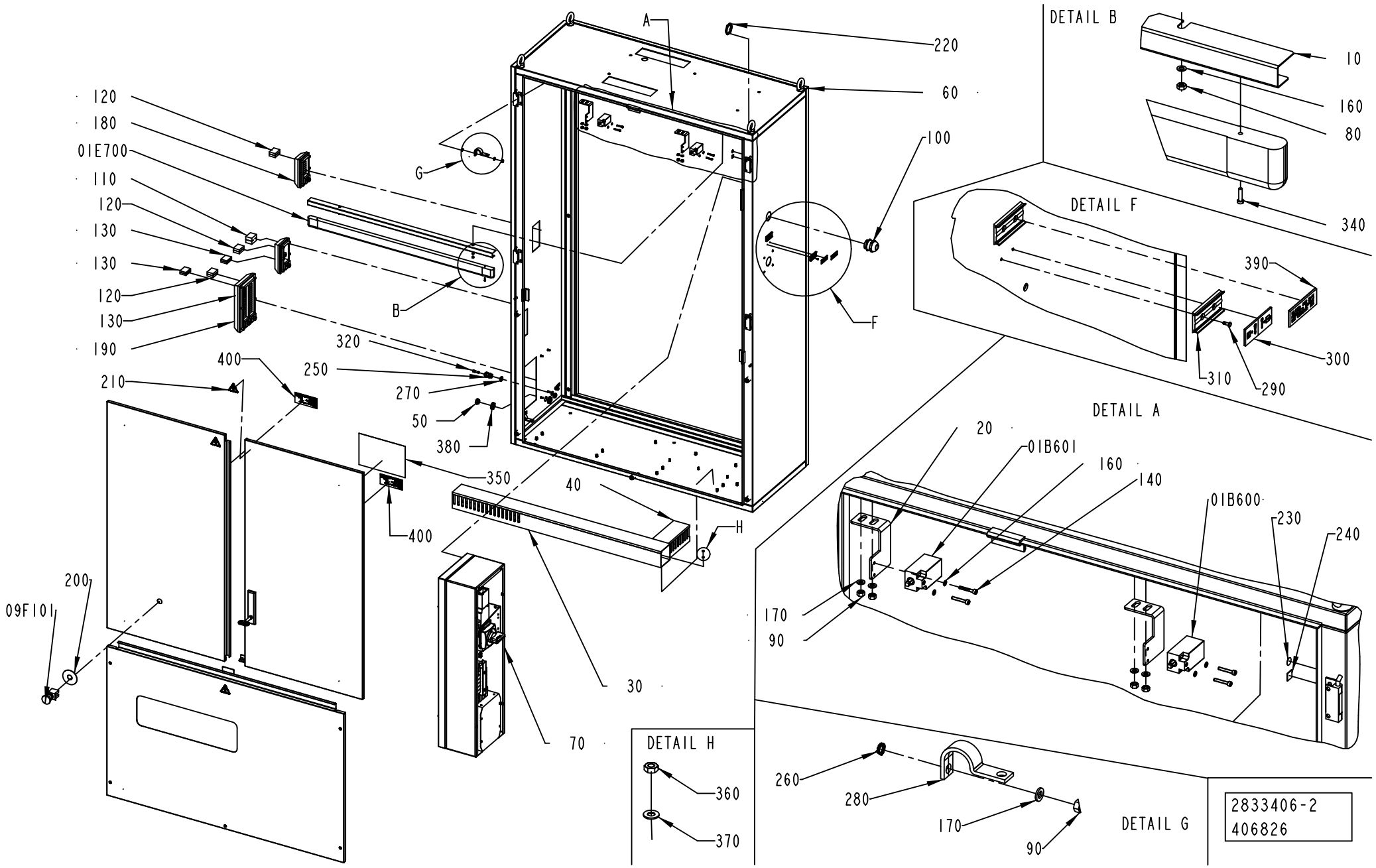
A
220
60
100
G
B
F
120
180
01E700
110
120
130
130
120
130
190
400
250
210
320
270
50
380
350
40
400
H
30
70
200
09F101
DETAIL B
10
160
80
340
DETAIL F
390
300
310
290
DETAIL A
20
01B601
160
140
01B600
230
240
170
90
DETAIL H
360
370
260
280
170
90
DETAIL G
2833406-2
406826

ECM: 406842 - 20091001
Group number: 2833406-0200
Assembly Drawing: 2833406-2_1_AA

Pos	Part No	UN	Qty	Description	Page No
-					
010	2947726-0000		1	SUPPORT	
020	2839225-0000		2	BRACKET	
030	2838459-0000		1	CABLE DUCT	
040	2838460-0000		1	CABLE DUCT	
050	90458-1308		2	BLIND PLUG CIRCULAR, M20X1,5 514GFK/220	
060	2833403-0000		1	WELDED CABINET	
	3117125-0001		*1*	*MODIFICATION DRAWING*	
	3117124-0001		*1*	*MODIFICATION DRAWING*	
070	2833410-0100		1	BOX	**7-7**
080	312605-0312		2	HEXAGON NUT, M6M M4 A280	
090	312605-0316		24	HEXAGON NUT, M6M M6 A280	
100	90458-0310		1	CABLE GLAND, M40X1,5, 5311 1050	
110	90458-1173		1	MULTI DIAMETER MODULE, CM 30W40	
120	90458-1174		18	MULTI DIAMETER MODULE, CM 20W40	
130	90458-1175		6	MULTI DIAMETER MODULE, CM 15W40	
140	312115-0297		4	SCREW ISO4762 M4X25 A4 80	
160	315105-0136		6	WASHER BRB 4,3X8 RFR	
170	315105-0153		24	WASHER BRB 6,4X12 RFR	
180	90458-1178		2	FRAME, CF 8	
190	90458-1179		1	FRAME, CF 32	
200	486826-0001		1	SIGN "EMERGENCY STOP"	
210	359705-0015		3	WARNING SIGN ISO, RISK OF ELECTRIC SHOCK	
220	353250-0040		1	GLAND LOCK NUT, M40X1,5	
230	2608177-0000		20	SIGN	
240	90194-0152		20	SIGN, EARTH	
250	90458-0314		2	CABLE GLAND, M16X1,5, 5311 1110	
260	90062-0015		20	LOCK WASHER SERRAT.EXT.GEAR,6,4/11 H=0,7	
270	353250-0016		2	GLAND LOCK NUT, M16X1,5	
280	90600-2904		11	EARTH BRAID, 250/16/8,5	
290	311520-0320		4	RIVET, BLANK 2,4X6	
300	359241-0124		1	SIGN: MAIN SWITCH	
310	359240-0100		2	SIGN HOLDER FOR 359240-0001	
320	342715-0102		2	BLIND PLUG 6 MM	
340	312125-0226		2	SCREW ISO 1207 M3X12 A4	
350	90600-2068		1	DELIVERED DESIGN SIGN, 90600-2068	
360	90099-0191		46	HEXAGON NYLON NUT, M4X0,7	
370	90005-0064		15	WASHER PL.RND.NYL.4,3/9, H=0,8	
380	90458-0323		2	NUT, M20X1,5	
390	90600-5823		1	SIGN, MAIN POWER MACHINE LABEL	
400	90459-7229		2	IDENTIF. OF SINGLE CONDUCTORS, TEMPLATE	
01B600	90044-0192		1	LIMIT SW. SZ2586.000	
01B601	90044-0192		1	LIMIT SW. SZ2586.000	
01E700	90600-4049		1	LIGHT FIXTURE, TCH128 1XTL5-21W/830 HF	
	90600-4239		*1*	*FLUORESCENT TUBE, MASTER TL5 HE 21W/830.*	
09F101	90458-1651		1	EMERGENCY STOP, ZB4-BS-844 ZB4-BZ-104	

Machine Type	Group Description	Used-In	Group Number	Page No

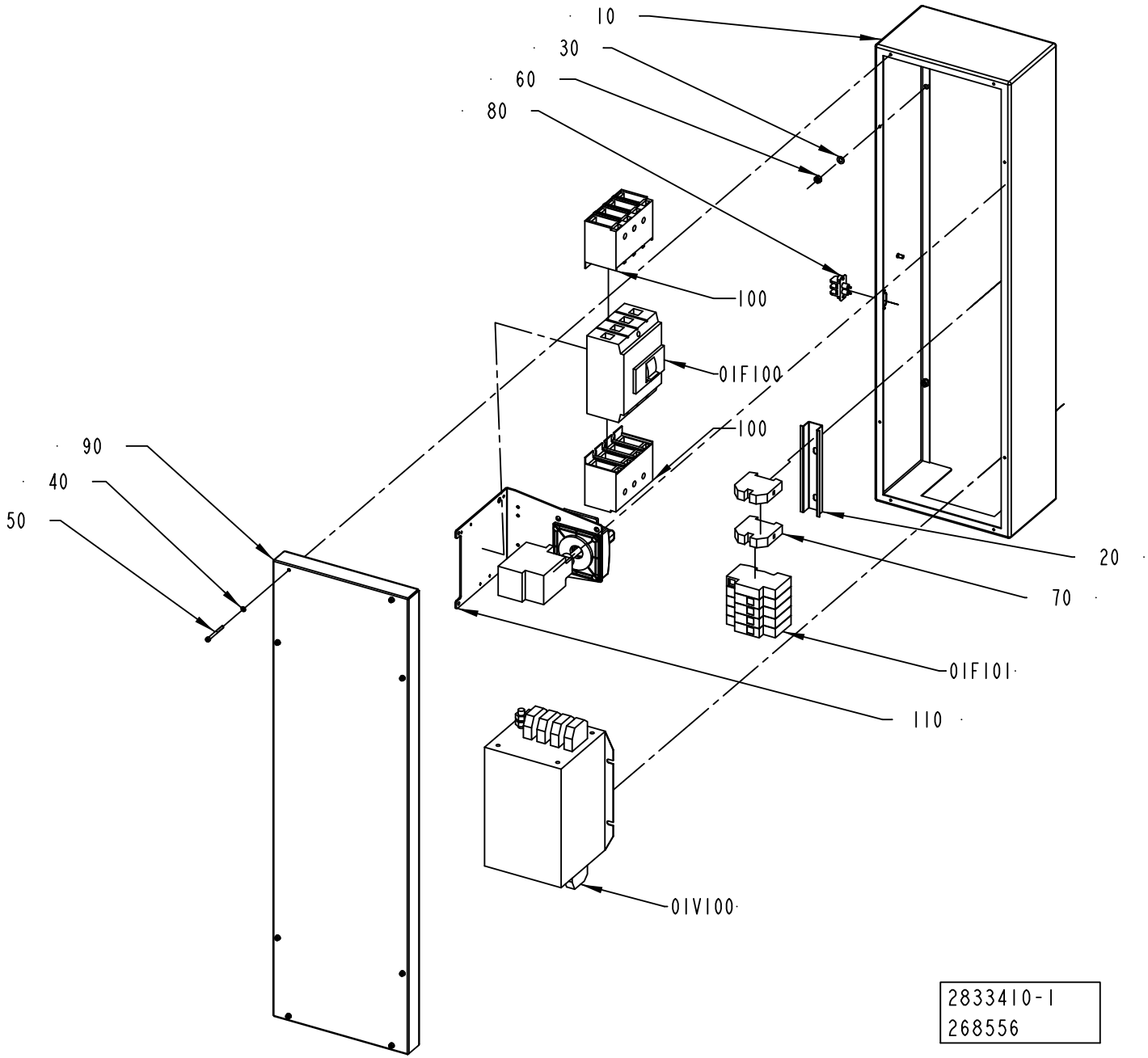
10
30
60
80
100
01F100
100
90
40
50
20
70
01F101
110
01V100
2833410-1
268556

ECM: 272039 - 20060925
Group number: 2833410-0100
Assembly Drawing: 2833410-1_1_AA

Pos	Part No	UN	Qty	Description	Page No
-					
010	2833411-0000		1	BOX	
020	2835456-0000		1	RAIL	
030	315105-0153		6	WASHER BRB 6,4X12 RFR	
040	315105-0136		8	WASHER BRB 4,3X8 RFR	
050	312115-0304		8	SCREW ISO4762 M4X45 A4 80	
060	312605-0316		6	HEXAGON NUT, M6M M6 A280	
070	353024-0209		2	EARTH TERMINAL WPE 35	
080	90024-0036		1	FEED THROUGH FILTER, 52-160-002-AD00	
090	2835450-0000		1	COVER	
100	90459-6617		2	COVER 4-POLE, NZM1-4-XKSA	
110	90600-1198		1	HANDLE, MZM1-XSM-R	
01F100	90459-4181		1	CURR. LIM. CIRC. BREAKER, NZMB1-4-A40	
01F101	90082-0013		1	SURGE PROTECTION DEVICE PU4CR 8021520000	
	90082-0301		*3*	*OVER VOLT. PROTECT. PU 0 C 833951*	
01V100	90024-0060		1	FILTER 80 A 440/250 VAC, B84144-A0080R00	

Pos	Part No	UN	Qty	Description	Page No

Machine Type	Group Description	Used-In	Group Number	Page No

CONTROL BOARD

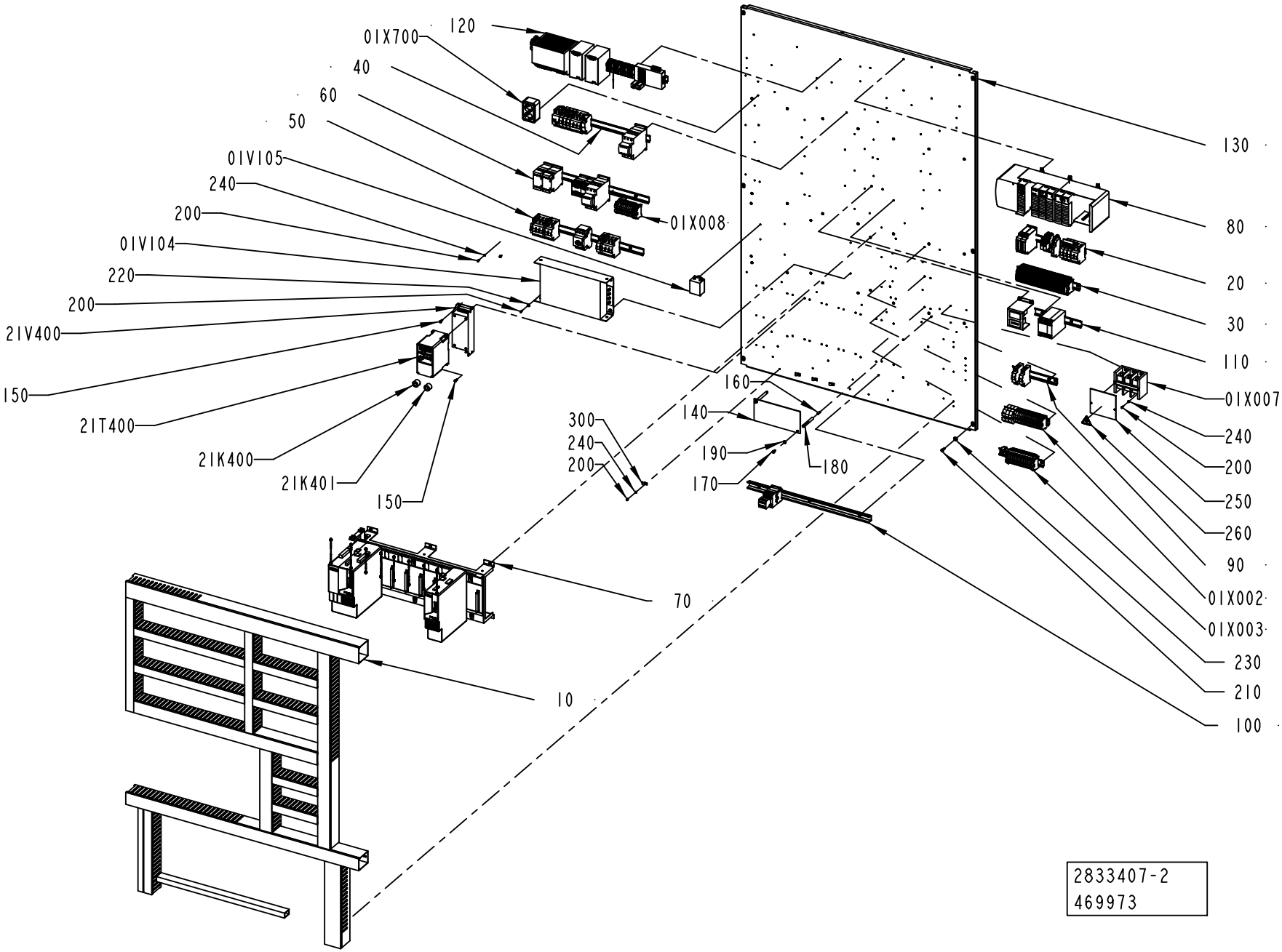

ECM: 474060 - 20101109
Group number: 2833407-0200
Assembly Drawing: 2833407-2_1_AB

Pos	Part No	UN	Qty	Description	Page No
-					
010	2833412-0100		1	CABLE DUCT	**7-11**
020	2835464-0200		1	DISTRIBUTION TERMINAL	**7-13**
030	2839229-0100		1	DISTRIBUTION TERMINAL	**7-15**
040	2835459-0200		1	FUSE BOARD 1	**7-29**
050	2835460-0100		1	FUSE BOARD 2	**7-31**
060	2835461-0100		1	FUSE BOARD 3	**7-33**
070	2835462-0200		1	MOTOR DRIVE CONTROL	**7-35**
080	2835458-0200		1	PLC	**7-37**
090	2839222-0100		1	PLINTH	**7-39**
100	2835463-0100		1	PLINTH	**7-41**
110	2839221-0100		1	PLINTH	**7-43**
120	2835457-0100		1	POWER SUPPLY UNIT	**7-45**
130	2833404-0000		1	MOUNTING PLATE	
140	2845320-0000		1	PROTECTION	
150	312115-0327		8	SCREW ISO4762 M5X12 A4 80	
160	312318-0370		2	SCREW ISO4029 M6X20 A4	
170	312125-0366		2	SCREW ISO 1207 M6X12 A4	
180	1038275-0012		2	SPACER	
190	315105-0153		2	WASHER BRB 6,4X12 RFR	
200	312125-0289		14	SCREW ISO 1207 M4X10 A4	
210	312115-0368		6	SCREW ISO4762 M6X16 A4 80	
220	90005-0082		4	WASHER PLAIN ROUND 4,3(M4)/12,H=1	
230	315105-0165		6	WASHER BRB 8,4X16 RFR	
240	315105-0136		10	WASHER BRB 4,3X8 RFR	
250	3047311-0000		1	PROTECTION	
260	359705-0015		1	WARNING SIGN ISO, RISK OF ELECTRIC SHOCK	
300	90165-0007		4	PIPE CLIP FOR TUBE D=8 MM	
21K400	90600-5249		1	FERRITE, B64290L616X38	
21K401	90600-5249		1	FERRITE, B64290L616X38	
21T400	90459-3450		1	FREQ. CONV., 22A-A4P5N104	
01V104	90459-2549		1	AC LINE FILTER 3-PHASE 30A, 2090-XXLF-X3	
01V105	90600-5252		1	LINE FILTER, B84113HB30	
21V400	90459-3460		1	FOOTPRINT FILTER 1 PHASE 10A	
01X002	2839223-0100		1	PLINTH	**7-49**
01X003	2839224-0100		1	PLINTH	**7-51**
01X007	90459-0959		1	DISTRIBUTOR BLOCK 1492-PD3163	
01X008	3046886-0100		1	DISTRIBUTION TERMINAL	**7-53**
01X700	90001-0033		1	WALL SOCKET, E1834666	

Pos	Part No	UN	Qty	Description	Page No

Machine Type | Group Description | Used-In | Group Number | Page No

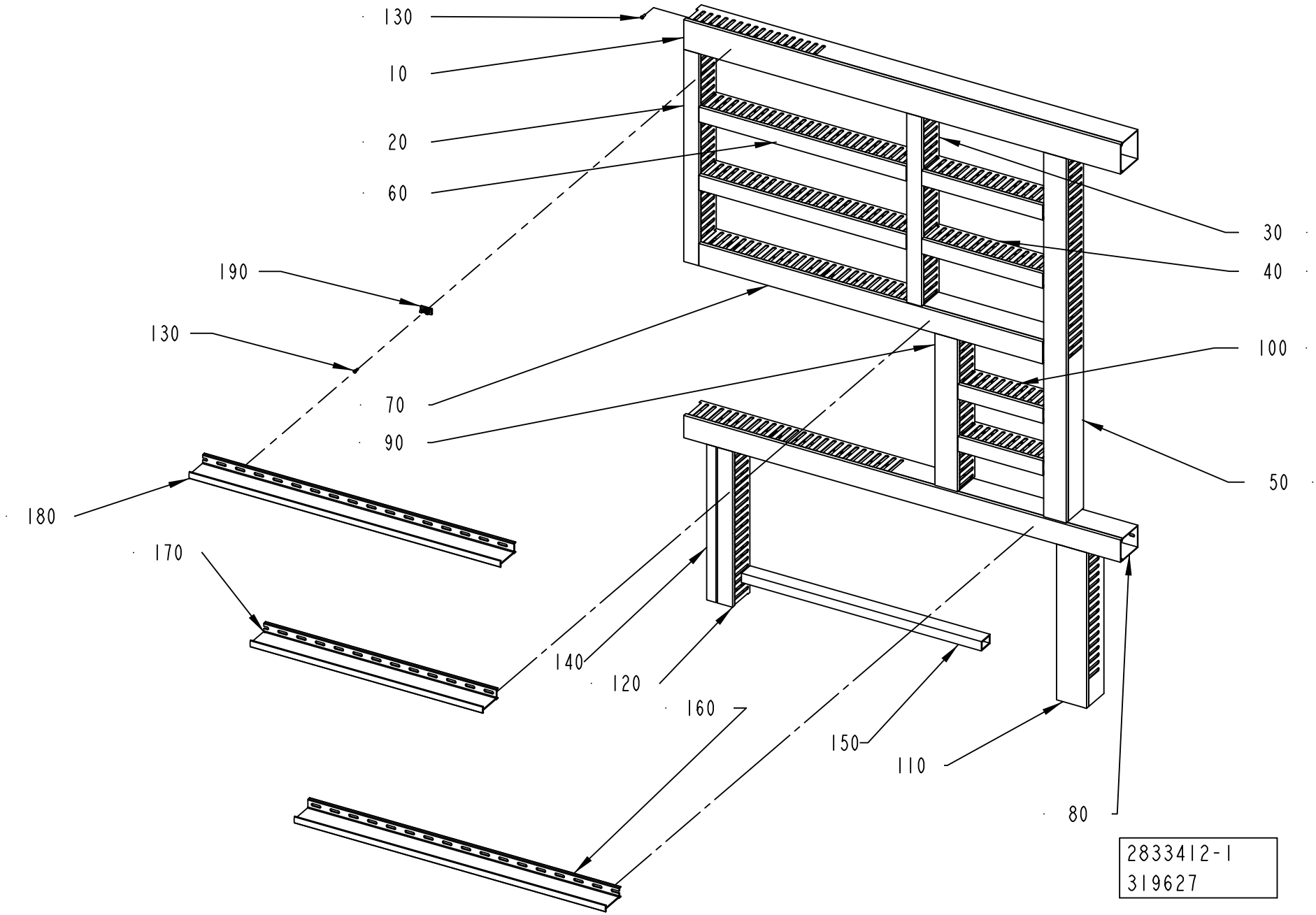
130
10
20
60
190
130
70
90
180
170
140
120
160
150
110
80
30
40
100
50
2833412-1
319627

ECM: 324219 - 20080407
Group number: 2833412-0100
Assembly Drawing: 2833412-1_1_AB

Pos	Part No	UN	Qty	Description	Page No
-					
010	2838462-0000		1	CABLE DUCT	
020	2838463-0000		1	CABLE DUCT	
030	2838464-0000		1	CABLE DUCT	
040	2838465-0000		2	CABLE DUCT	
050	2838466-0000		1	CABLE DUCT	
060	2838467-0000		2	CABLE DUCT	
070	2838468-0000		1	CABLE DUCT	
080	2838469-0000		1	CABLE DUCT	
090	2838470-0000		1	CABLE DUCT	
100	2838471-0000		2	CABLE DUCT	
110	2838472-0000		1	CABLE DUCT	
120	2838473-0000		1	CABLE DUCT	
130	90287-0124		67	SCREW PAN HEAD MSCS M4X12 NYLON	
140	2838474-0000		1	CABLE DUCT	
150	2838475-0000		1	CABLE DUCT	
160	2841405-0000		1	DIVIDER	
170	2841406-0000		1	DIVIDER	
180	2921902-0000		1	DIVIDER	
190	90600-2830		8	FASTENING ELEMENT, BLOCKSEP-E 01026	

Pos	Part No	UN	Qty	Description	Page No

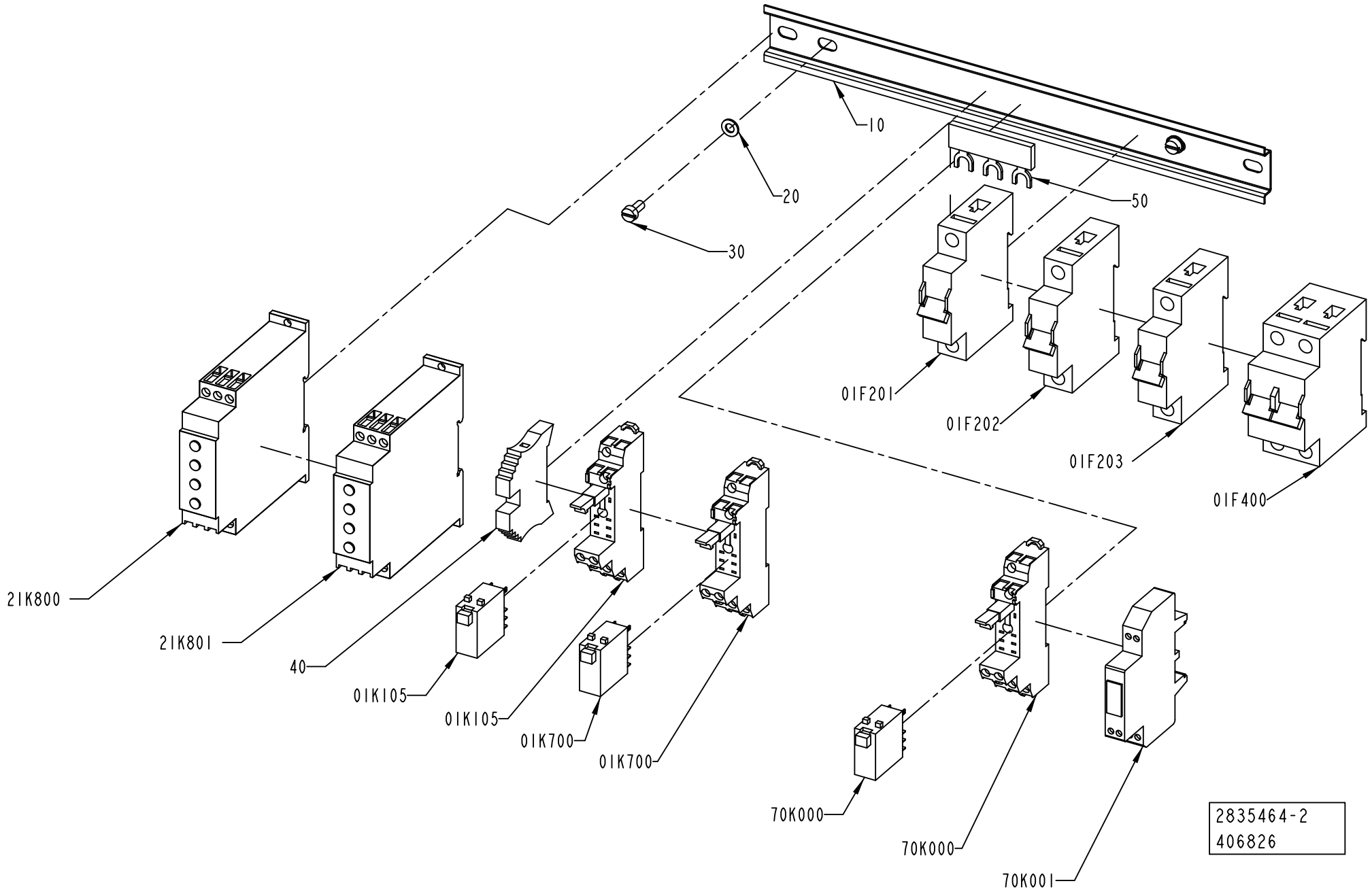
10
20
30
50
01F201
01F202
01F203
01F400
21K800
21K801
40
01K105
01K105
01K700
01K700
70K000
70K000
70K001
2835464-2
406826

ECM: 409327 - 20091001
Group number: 2835464-0200
Assembly Drawing: 2835464-2_1_AA

Pos	Part No	UN	Qty	Description	Page No
-					
010	2838478-0000		1	RAIL	
020	315105-0146		2	WASHER BRB 5,3X10 RFR	
030	312125-0325		2	SCREW ISO 1207 M5X10 A4	
040	353031-0203		1	END BRACKET, WEW 35/2	
050	90600-0203		1	COMMONING BUSBAR, 1-PH 85A	
01F201	354000-0040		1	MINIATURE CIRCUIT BREAKER, FAZ-C4/1	
01F202	354000-0060		1	MINIATURE CIRCUIT BREAKER, FAZ-C6/1	
01F203	354000-0040		1	MINIATURE CIRCUIT BREAKER, FAZ-C4/1	
01F400	354001-0040		1	MINIATURE CIRCUIT BREAKER, FAZ-C4/2	
01K105	90119-0108		1	RELAY OMRON G2R-2-SNI-24DC	
	90129-0018		*1*	*BASE, P2RF-08-E*	
01K105	90129-0018		1	BASE, P2RF-08-E	
01K700	90119-0108		1	RELAY OMRON G2R-2-SNI-24DC	
	90129-0018		*1*	*BASE, P2RF-08-E*	
01K700	90129-0018		1	BASE, P2RF-08-E	
21K800	90600-4731		1	RELAY	
21K801	90600-4731		1	RELAY	
70K000	90119-0108		1	RELAY OMRON G2R-2-SNI-24DC	
	90129-0018		*1*	*BASE, P2RF-08-E*	
70K000	90129-0018		1	BASE, P2RF-08-E	
70K001	90459-2739		1	OPTO-RELAY 50085, IN / OUT 4-53VDC 1A	

Pos	Part No	UN	Qty	Description	Page No

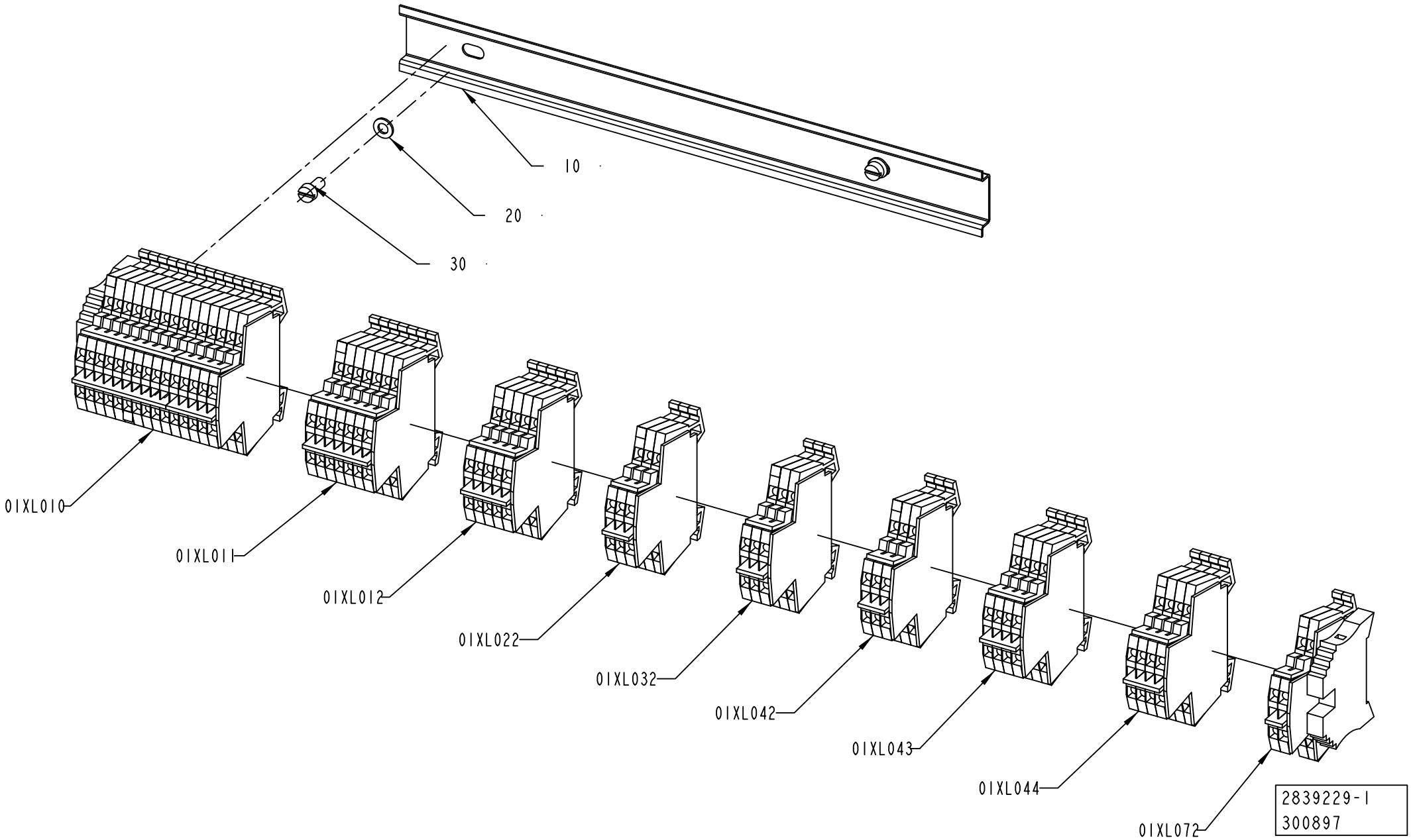
10
20
30
01XL010
01XL011
01XL012
01XL022
01XL032
01XL042
01XL043
01XL044
01XL072
2839229-1
300897

ECM: 302049 - 20070528
Group number: 2839229-0100
Assembly Drawing: 2839229-1_1_AB

Pos	Part No	UN	Qty	Description	Page No
-					
010	2838478-0000		1	RAIL	
020	315105-0146		2	WASHER BRB 5,3X10 RFR	
030	312125-0325		2	SCREW ISO 1207 M5X10 A4	
01XL072	2840917-0100		1	PLINTH	**7-17**
01XL044	2840915-0100		1	PLINTH	**7-19**
01XL043	2840915-0100		1	PLINTH	**7-19**
01XL042	2840911-0100		1	PLINTH	**7-21**
01XL032	2840911-0100		1	PLINTH	**7-21**
01XL022	2840911-0100		1	PLINTH	**7-21**
01XL012	2840910-0100		1	PLINTH	**7-23**
01XL011	2840909-0100		1	PLINTH	**7-25**
01XL010	2839230-0100		1	PLINTH	**7-27**

Pos	Part No	UN	Qty	Description	Page No

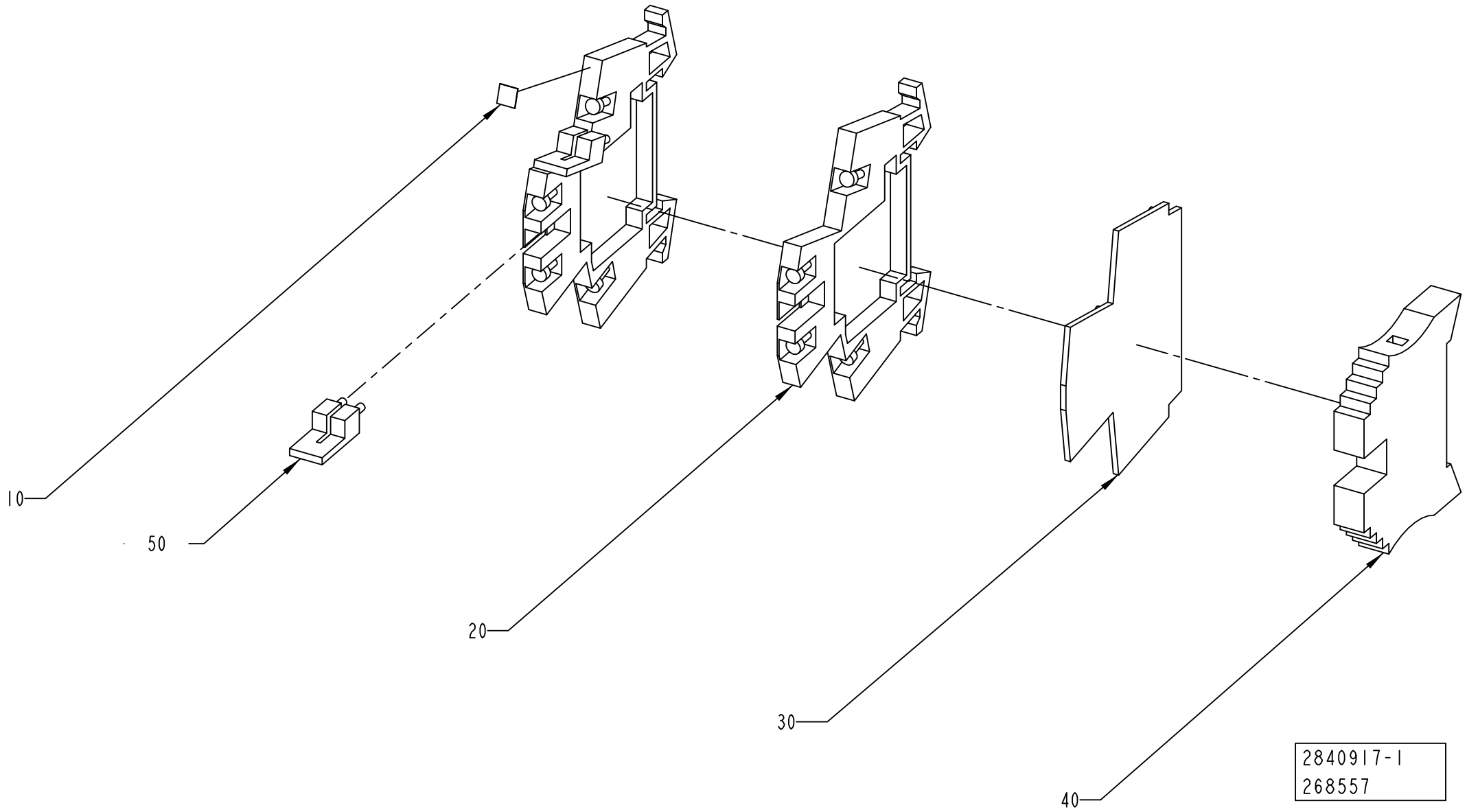
10
50
20
30
40
2840917-1
268557

ECM: 272048 - 20060925
Group number: 2840917-0100
Assembly Drawing: 2840917-1_1_AA

Pos	Part No	UN	Qty	Description	Page No
-					
010	359011-0807		1	MARKING, DEK 5 FW 1-50	
020	90077-0113		2	TERMINAL BLOCK WDK 2.5	
030	353032-0009		1	END PLATE, WAP WDK 2,5	
040	353031-0203		1	END BRACKET, WEW 35/2	
050	353034-0030		2	BRIDGE CONNECTOR WQV 2,5/10	

Pos	Part No	UN	Qty	Description	Page No

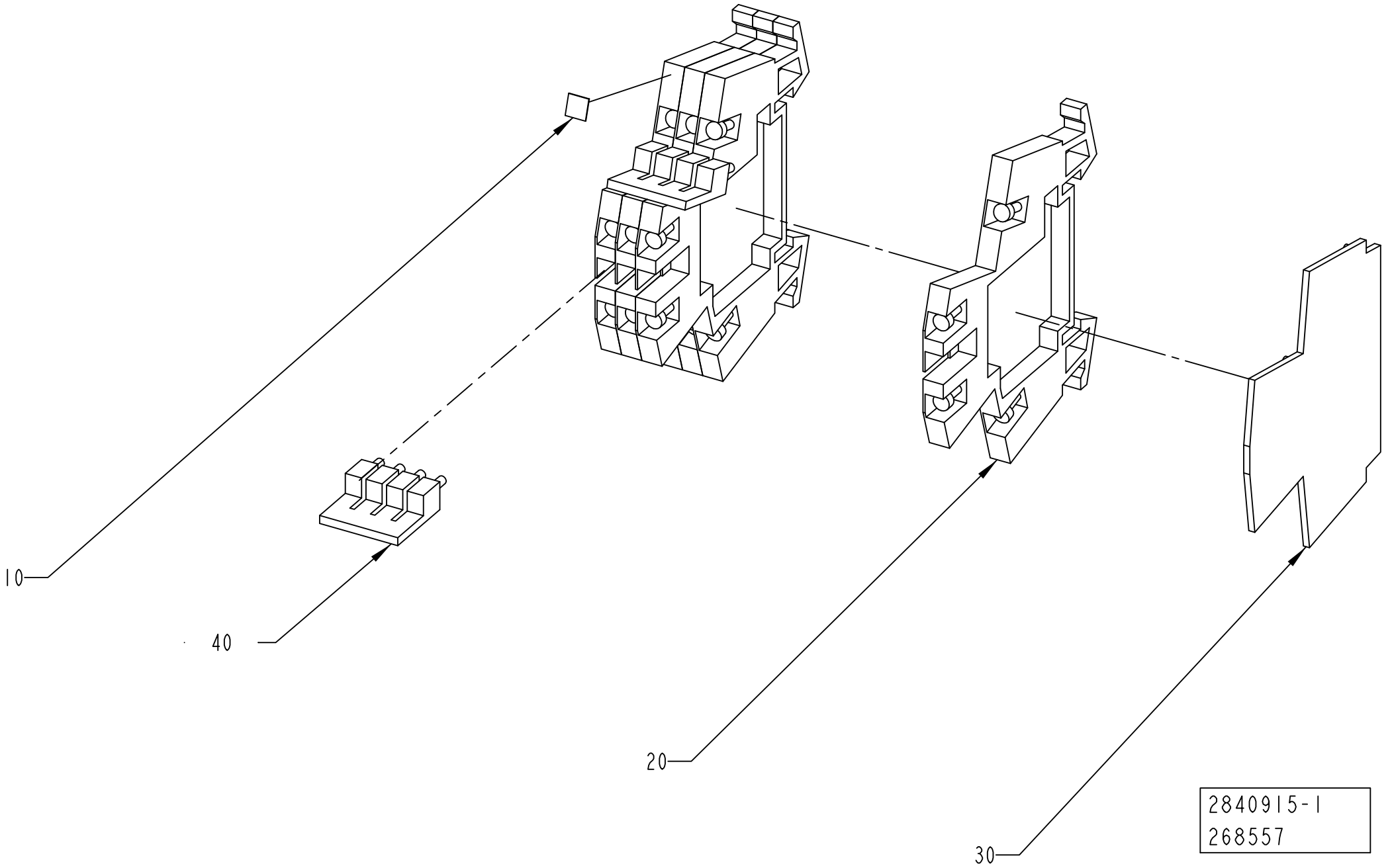
10
40
20
30
2840915-1
268557

ECM: 272047 - 20060925
Group number: 2840915-0100
Assembly Drawing: 2840915-1_1_AA

Pos	Part No	UN	Qty	Description	Page No
-					
010	359011-0807		1	MARKING, DEK 5 FW 1-50	
020	90077-0113		4	TERMINAL BLOCK WDK 2.5	
030	353032-0009		1	END PLATE, WAP WDK 2,5	
040	353034-0030		2	BRIDGE CONNECTOR WQV 2,5/10	

Pos	Part No	UN	Qty	Description	Page No

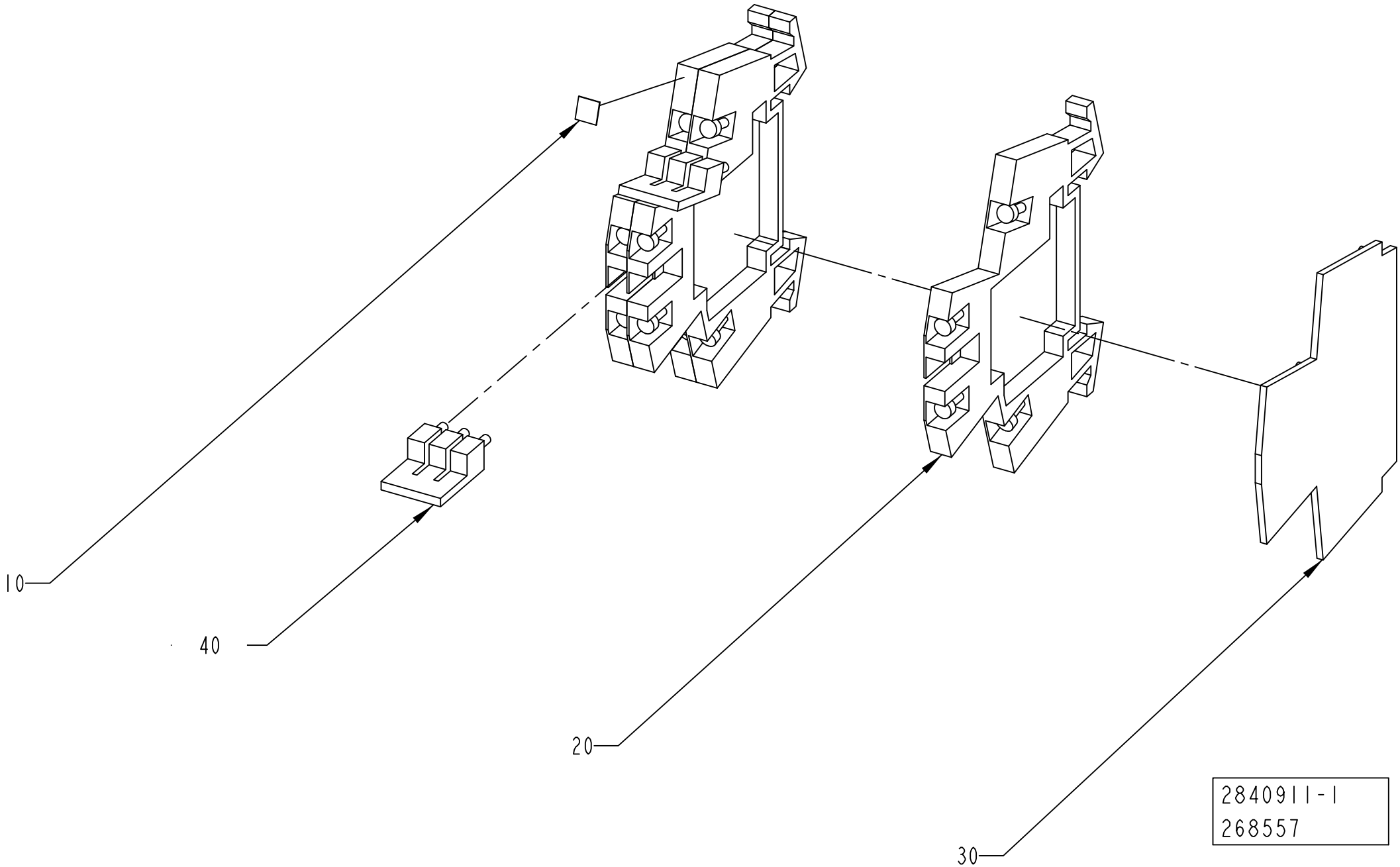
10
40
20
30
2840911-1
268557

ECM: 272046 - 20060925
Group number: 2840911-0100
Assembly Drawing: 2840911-1_1_AA

Pos	Part No	UN	Qty	Description	Page No
-					
010	359011-0807		1	MARKING, DEK 5 FW 1-50	
020	90077-0113		3	TERMINAL BLOCK WDK 2.5	
030	353032-0009		1	END PLATE, WAP WDK 2,5	
040	353034-0030		2	BRIDGE CONNECTOR WQV 2,5/10	

Pos	Part No	UN	Qty	Description	Page No

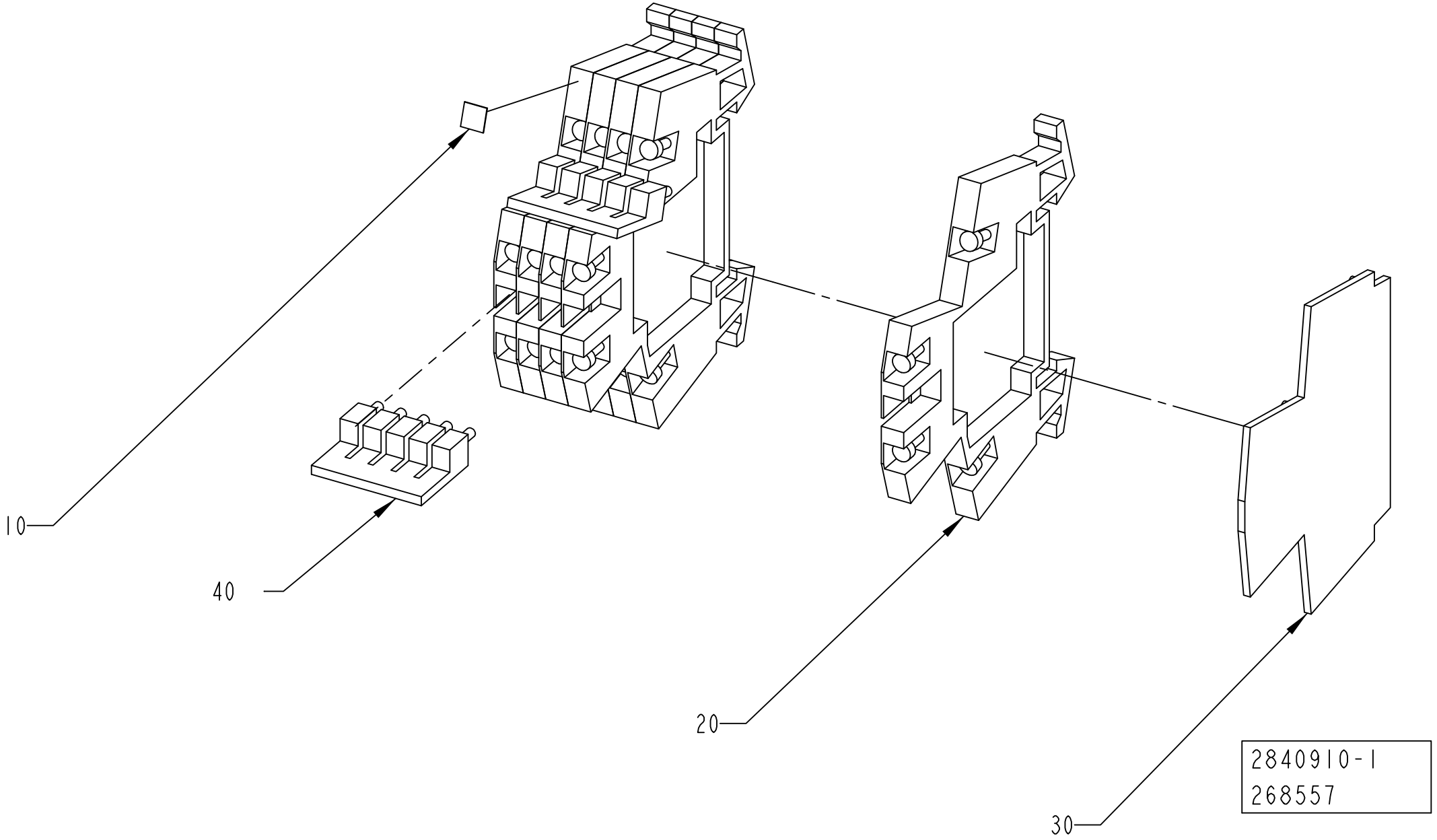
10
40
20
30
2840910-1
268557

ECM: 272045 - 20060925
Group number: 2840910-0100
Assembly Drawing: 2840910-1_1_AA

Pos	Part No	UN	Qty	Description	Page No
-					
010	359011-0807		1	MARKING, DEK 5 FW 1-50	
020	90077-0113		5	TERMINAL BLOCK WDK 2.5	
030	353032-0009		1	END PLATE, WAP WDK 2,5	
040	353034-0030		2	BRIDGE CONNECTOR WQV 2,5/10	

Pos	Part No	UN	Qty	Description	Page No

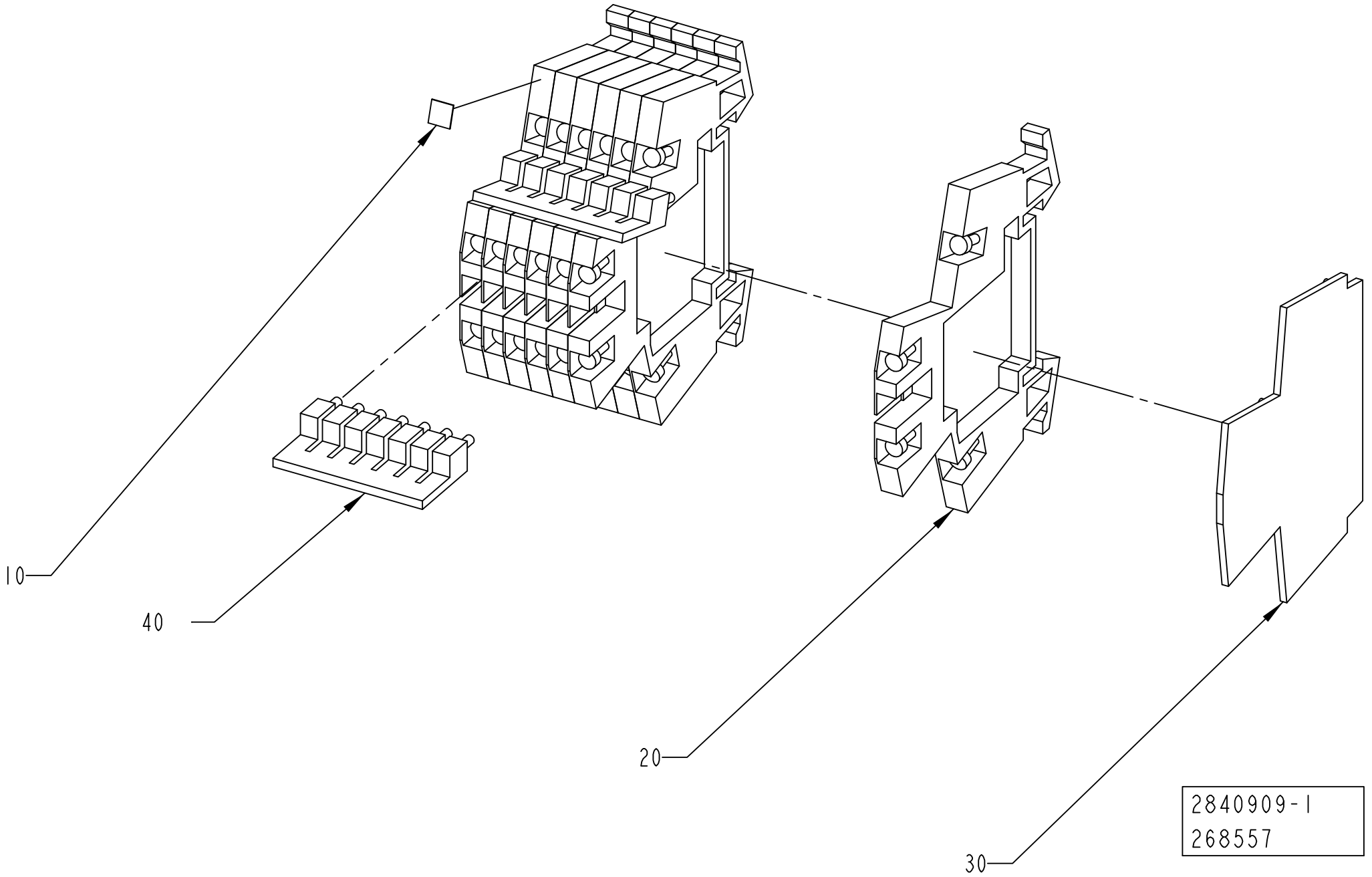
10
40
20
30
2840909-1
268557

ECM: 272044 - 20060925
Group number: 2840909-0100
Assembly Drawing: 2840909-1_1_AA

Pos	Part No	UN	Qty	Description	Page No
-					
010	359011-0807		1	MARKING, DEK 5 FW 1-50	
020	90077-0113		7	TERMINAL BLOCK WDK 2.5	
030	353032-0009		1	END PLATE, WAP WDK 2,5	
040	353034-0030		2	BRIDGE CONNECTOR WQV 2,5/10	

Pos	Part No	UN	Qty	Description	Page No

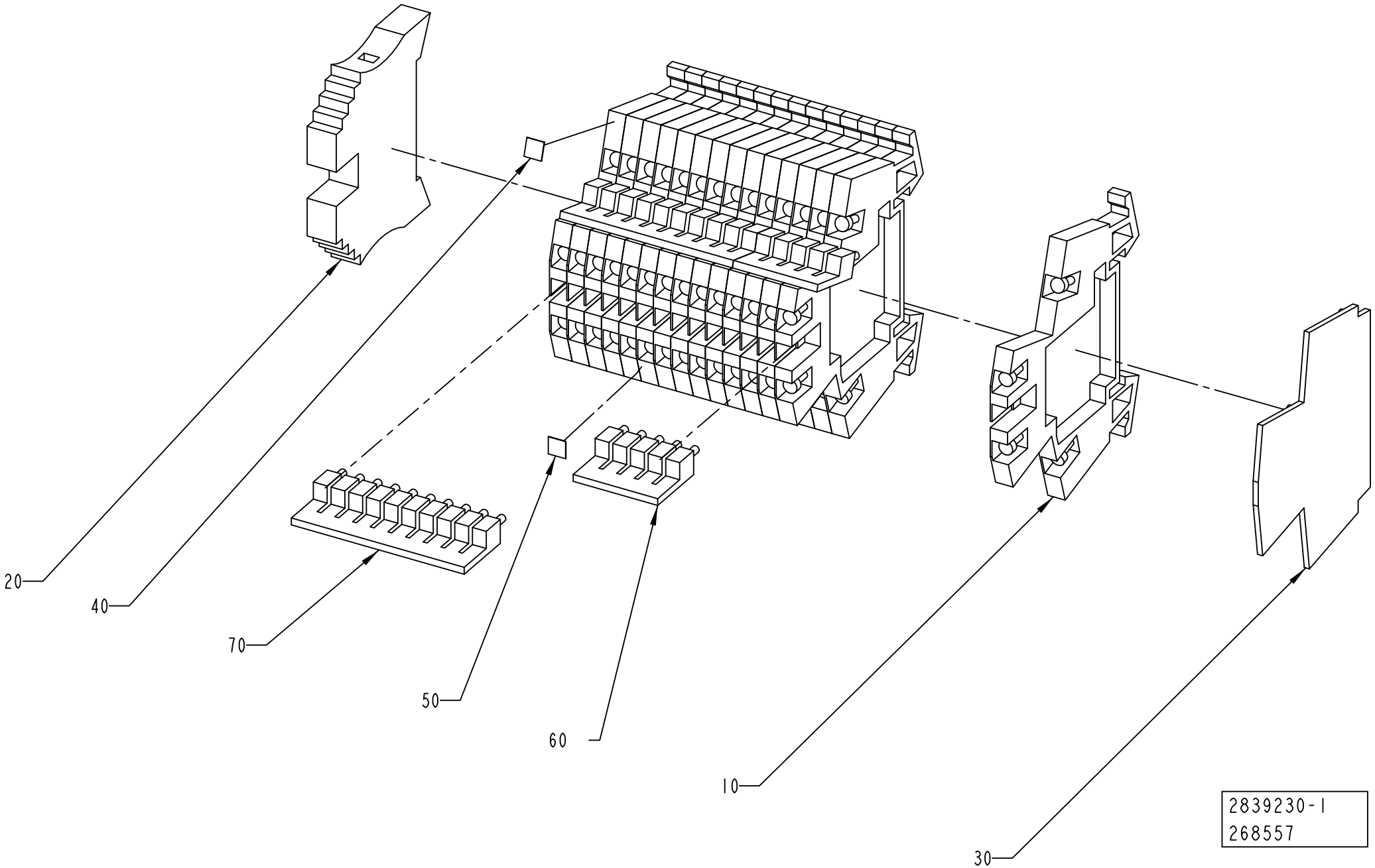
20
40
70
50
60
10
30
2839230-1
268557

ECM: 272043 - 20060925
Group number: 2839230-0100
Assembly Drawing: 2839230-1_1_AA

Pos	Part No	UN	Qty	Description	Page No
-					
010	90077-0113		15	TERMINAL BLOCK WDK 2.5	
020	353031-0203		1	END BRACKET, WEW 35/2	
030	353032-0009		1	END PLATE, WAP WDK 2,5	
040	359011-0807		1	MARKING, DEK 5 FW 1-50	
050	359011-0808		1	MARKING, DEK 5FW 51-100	
060	353034-0030		2	BRIDGE CONNECTOR WQV 2,5/10	
070	353034-0030		2	BRIDGE CONNECTOR WQV 2,5/10	

Pos	Part No	UN	Qty	Description	Page No

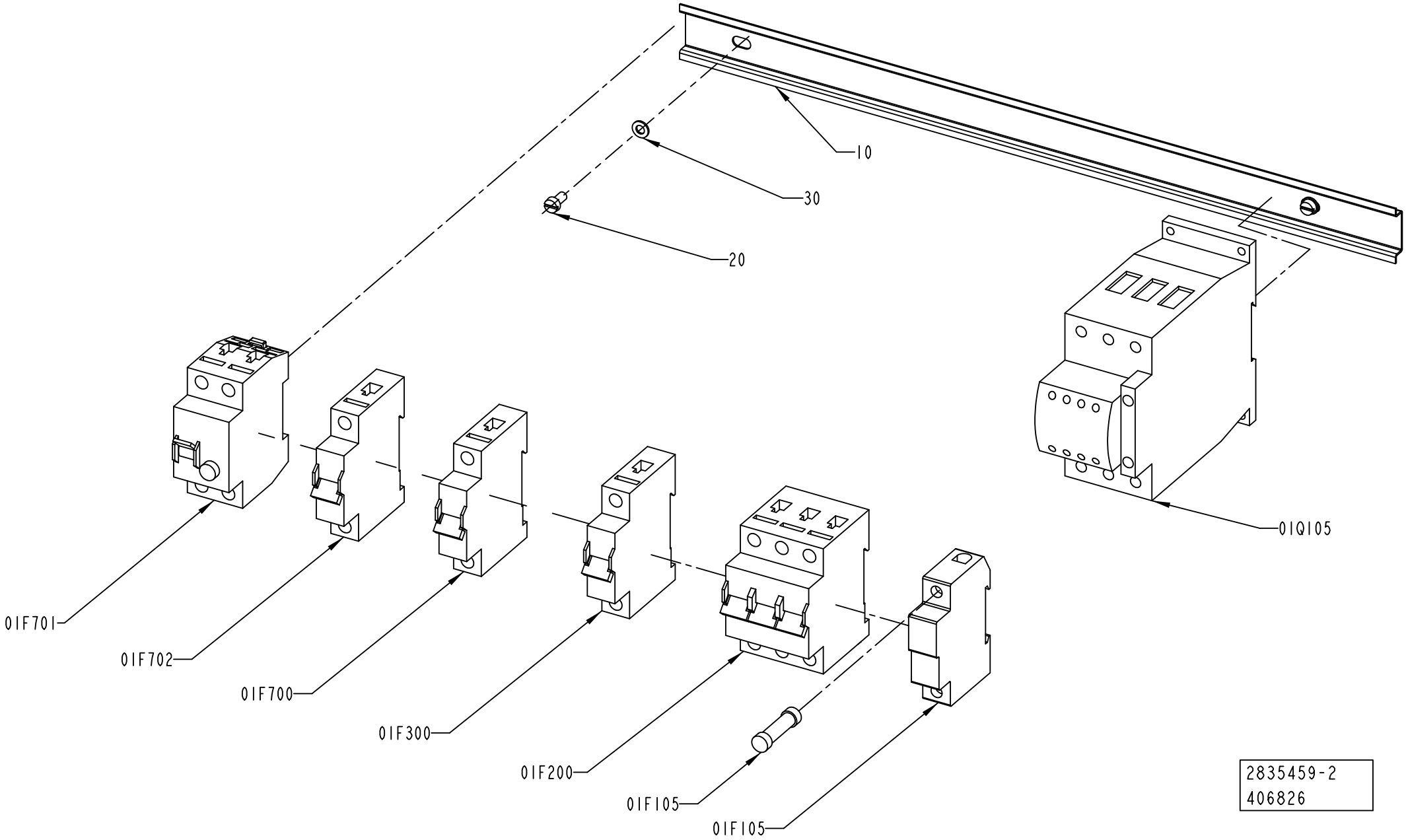

2835459-2
406826

ECM: 406846 - 20091001
Group number: 2835459-0200
Assembly Drawing: 2835459-2_1_AA

Pos	Part No	UN	Qty	Description	Page No
-					
010	2838477-0000		1	RAIL	
020	312125-0325		2	SCREW ISO 1207 M5X10 A4	
030	315105-0146		2	WASHER BRB 5,3X10 RFR	
01F105	90458-2510		1	FUSE, ATDR6	
01F105	90458-2507		1	FUSE HOLDER, USBCC1	
01F200	354002-0060		1	MINIATURE CIRCUIT BREAKER, FAZ-C6/3	
01F300	354000-0040		1	MINIATURE CIRCUIT BREAKER, FAZ-C4/1	
01F700	354000-0060		1	MINIATURE CIRCUIT BREAKER, FAZ-C6/1	
01F701	90459-5811		1	RESIDUAL CURRENT DEVICE, FI-25/2/003-A	
01F702	354000-0100		1	MINIATURE CIRCUIT BREAKER, FAZ-C10/1	
01Q105	90600-1759		1	CONTACTOR22KW24VDCDILM50-22+DILM65-XIP2X	

Pos	Part No	UN	Qty	Description	Page No

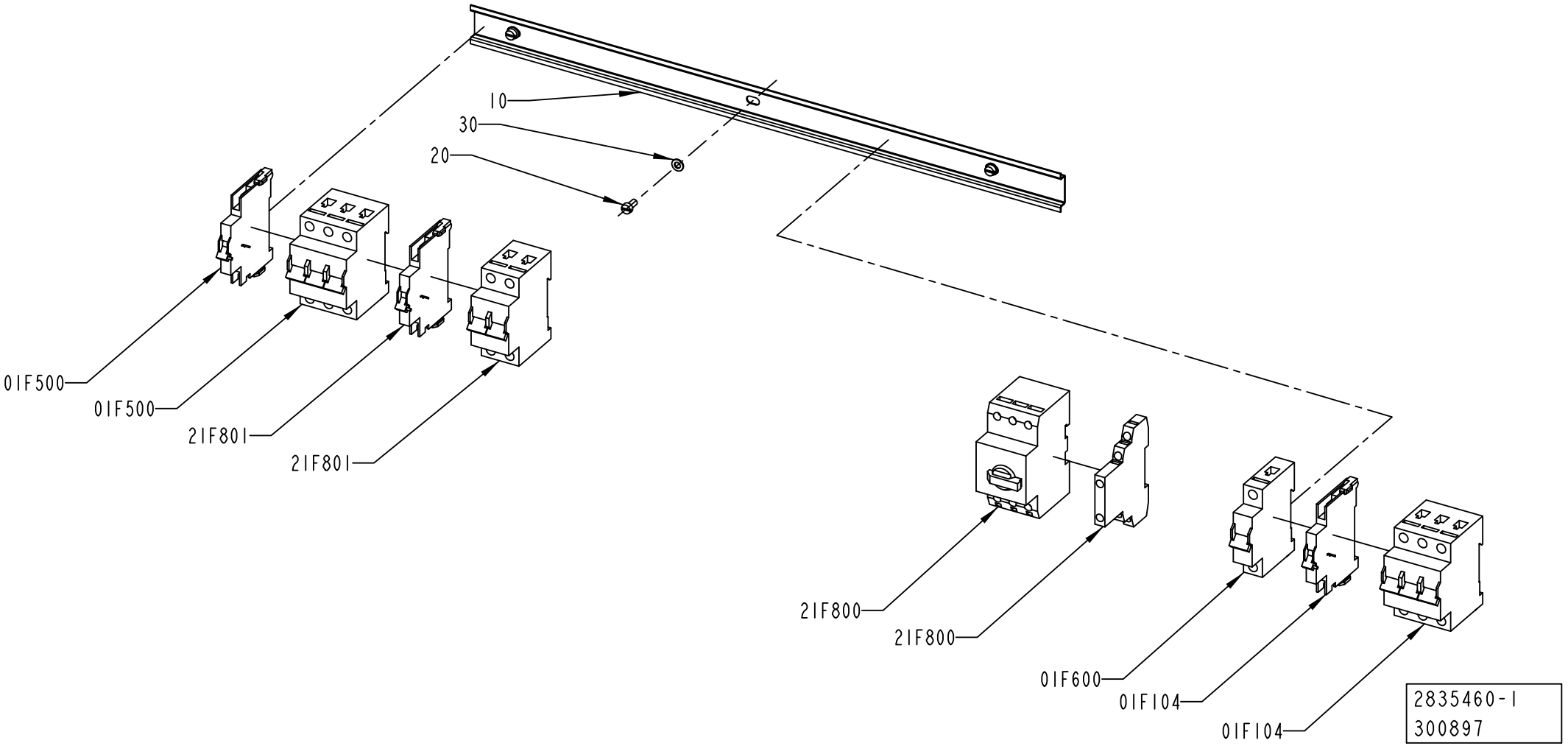
10
30
20
01F500
01F500
21F801
21F801
21F800
21F800
01F600
01F104
01F104
2835460-1
300897

ECM: 302046 - 20070528
Group number: 2835460-0100
Assembly Drawing: 2835460-1_1_AB

Pos	Part No	UN	Qty	Description	Page No
-					
010	2835452-0000		1	RAIL	
020	312125-0325		3	SCREW ISO 1207 M5X10 A4	
030	315105-0146		3	WASHER BRB 5,3X10 RFR	
01F104	90459-5813		1	AUXILIARY CONTACT, FAZ-XHIN11	
01F104	354002-0250		1	MINIATURE CIRCUIT BREAKER, FAZ-C25/3	
01F500	354002-0200		1	MINIATURE CIRCUIT BREAKER, FAZ-C20/3	
01F500	90459-5813		1	AUXILIARY CONTACT, FAZ-XHIN11	
01F600	354000-0060		1	MINIATURE CIRCUIT BREAKER, FAZ-C6/1	
21F800	90259-0313		1	AUXILIARY CONTACT, NHI21-PKZ0	
21F800	90459-5326		1	OVERLOAD PROTECTION, PKZM0-4	
21F801	90459-5813		1	AUXILIARY CONTACT, FAZ-XHIN11	
21F801	354001-0100		1	MINIATURE CIRCUIT BREAKER, FAZ-C10/2	

Pos	Part No	UN	Qty	Description	Page No

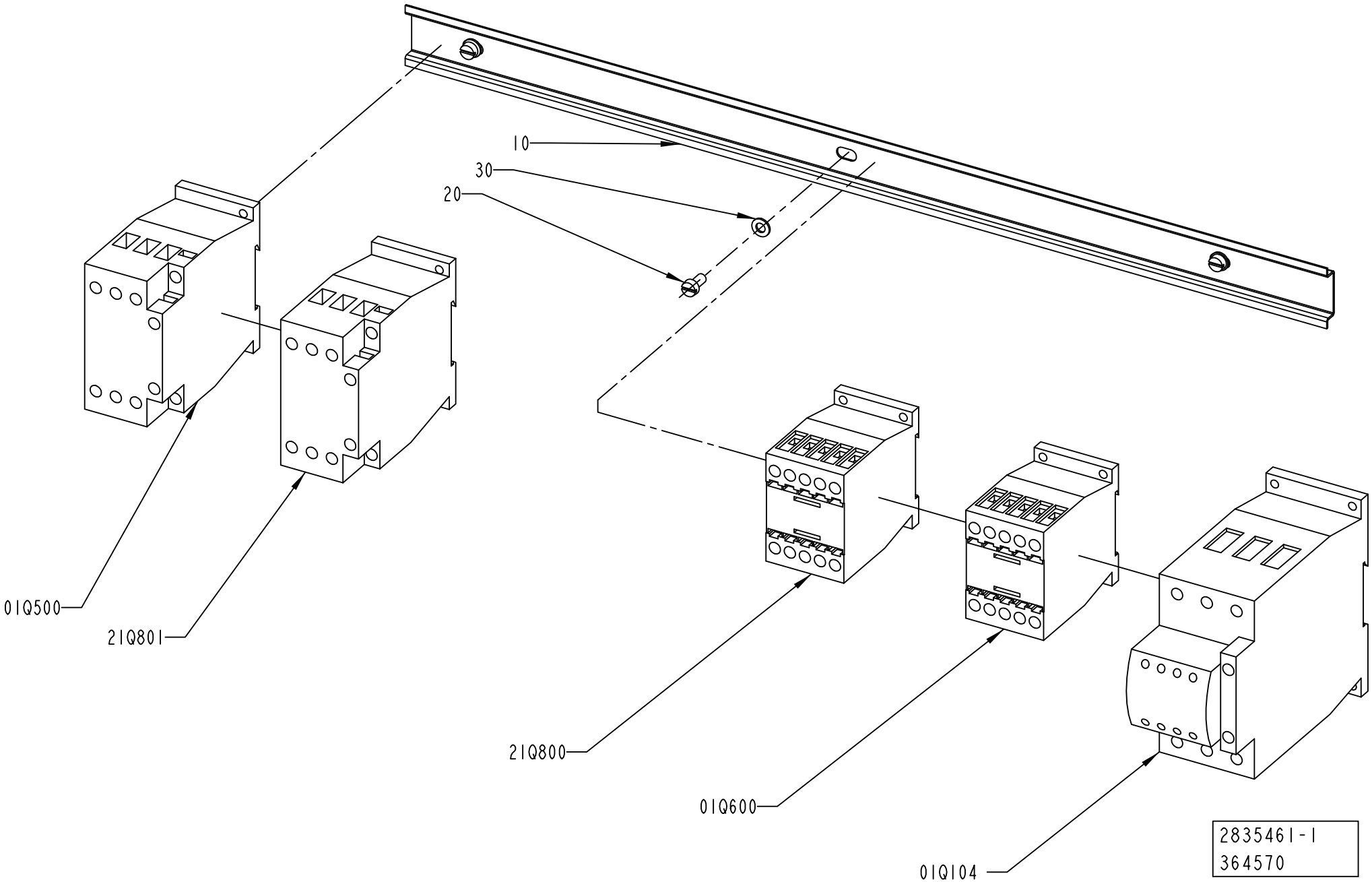
10
30
20
01Q500
21Q801
21Q800
01Q600
01Q104
2835461-1
364570

ECM: 364725 - 20090101
Group number: 2835461-0100
Assembly Drawing: 2835461-1_1_AC

Pos	Part No	UN	Qty	Description	Page No
-					
010	2835452-0000		1	RAIL	
020	312125-0325		3	SCREW ISO 1207 M5X10 A4	
030	315105-0146		3	WASHER BRB 5,3X10 RFR	
01Q104	90600-1759		1	CONTACTOR22KW24VDCDILM50-22+DILM65-XIP2X	
01Q500	90459-5311		1	CONTACTOR 15KW 24VDC, DILM32-10	
01Q600	90459-5308		1	CONTACTOR 4KW 24VDC, DILM9-10	
21Q800	90459-5308		1	CONTACTOR 4KW 24VDC, DILM9-10	
21Q801	90459-5309		1	CONTACTOR 7,5KW 24VDC, DILM17-10	

Pos	Part No	UN	Qty	Description	Page No

MOTOR DRIVE CONTROL

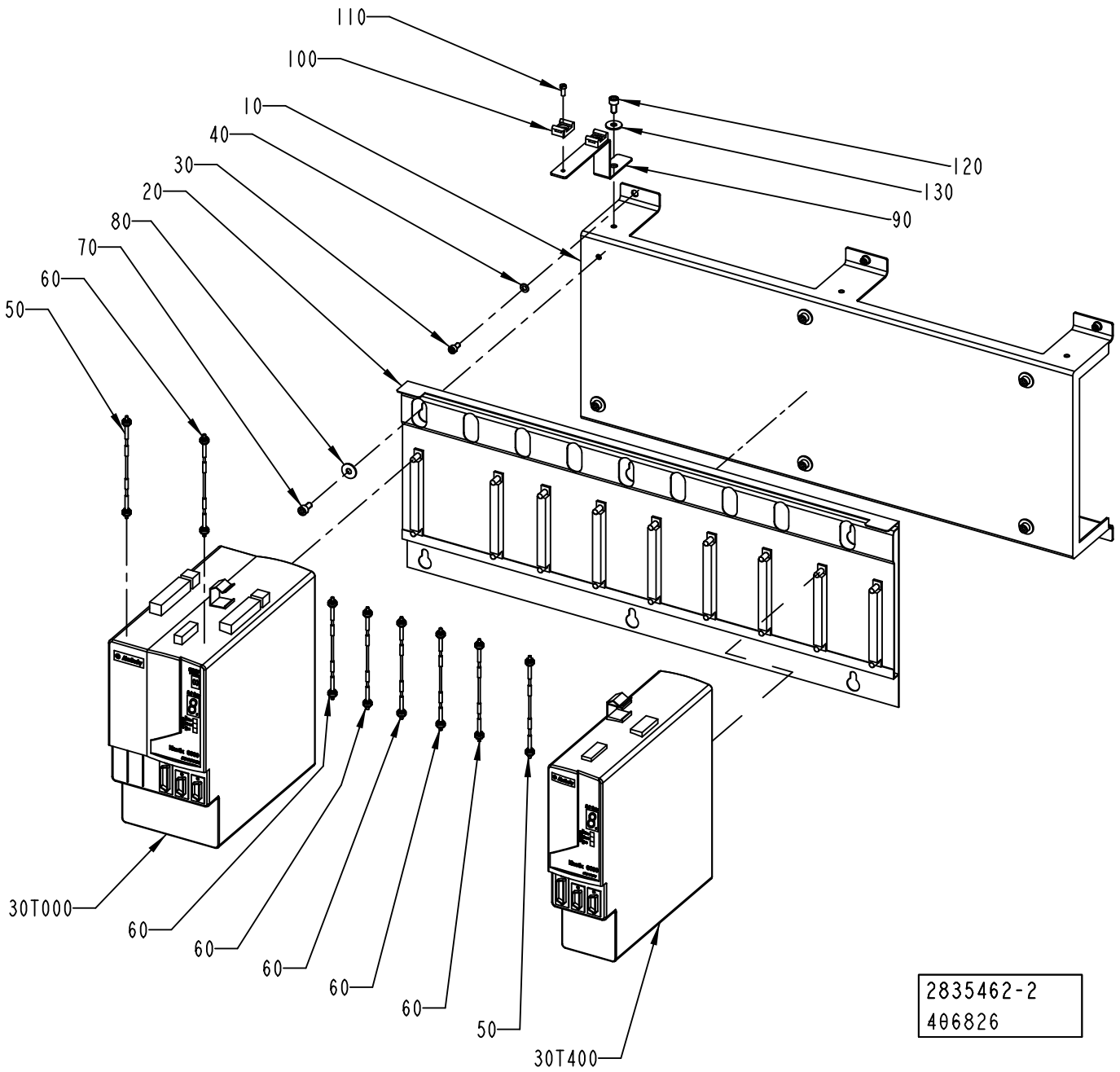

ECM: 406845 - 20091001
Group number: 2835462-0200
Assembly Drawing: 2835462-2_1_AA

Pos	Part No	UN	Qty	Description	Page No
-					
010	2790710-0000		1	BRACKET	
020	90459-5195		1	SLIM POWER RAIL,KINETIX,8 AXIS,2094-PRS8	
030	312115-0325		6	SCREW ISO4762 M5X10 A4 80	
040	315105-0146		6	WASHER BRB 5,3X10 RFR	
050	90459-2540		2	SERCOS CABLE 3.0M, 2090-SCEP3-0	
060	90459-2536		6	SERCOS CABLE 0.1M, 2090-SCEP0-1	
070	312115-0366		6	SCREW ISO4762 M6X12 A4 80	
080	90005-0060		6	WASHER PLAIN, RBS 6,4/M6)/18,H=1,5	
090	2839226-0000		1	FLANGE	
100	352113-0203		2	ANCHOR PLATES FOR STRIPS, TM3S8-M0	
110	312125-0289		2	SCREW ISO 1207 M4X10 A4	
120	312115-0366		1	SCREW ISO4762 M6X12 A4 80	
130	90005-0060		1	WASHER PLAIN, RBS 6,4/M6)/18,H=1,5	
30T000	90600-5212		1	AXIS MOD. W. PS,2094-BC02-M02-S SERIES B	
30T400	90600-5214		1	AXIS MOD. KINETIX 6000,2094-BM01-S SER.B	

Pos	Part No	UN	Qty	Description	Page No

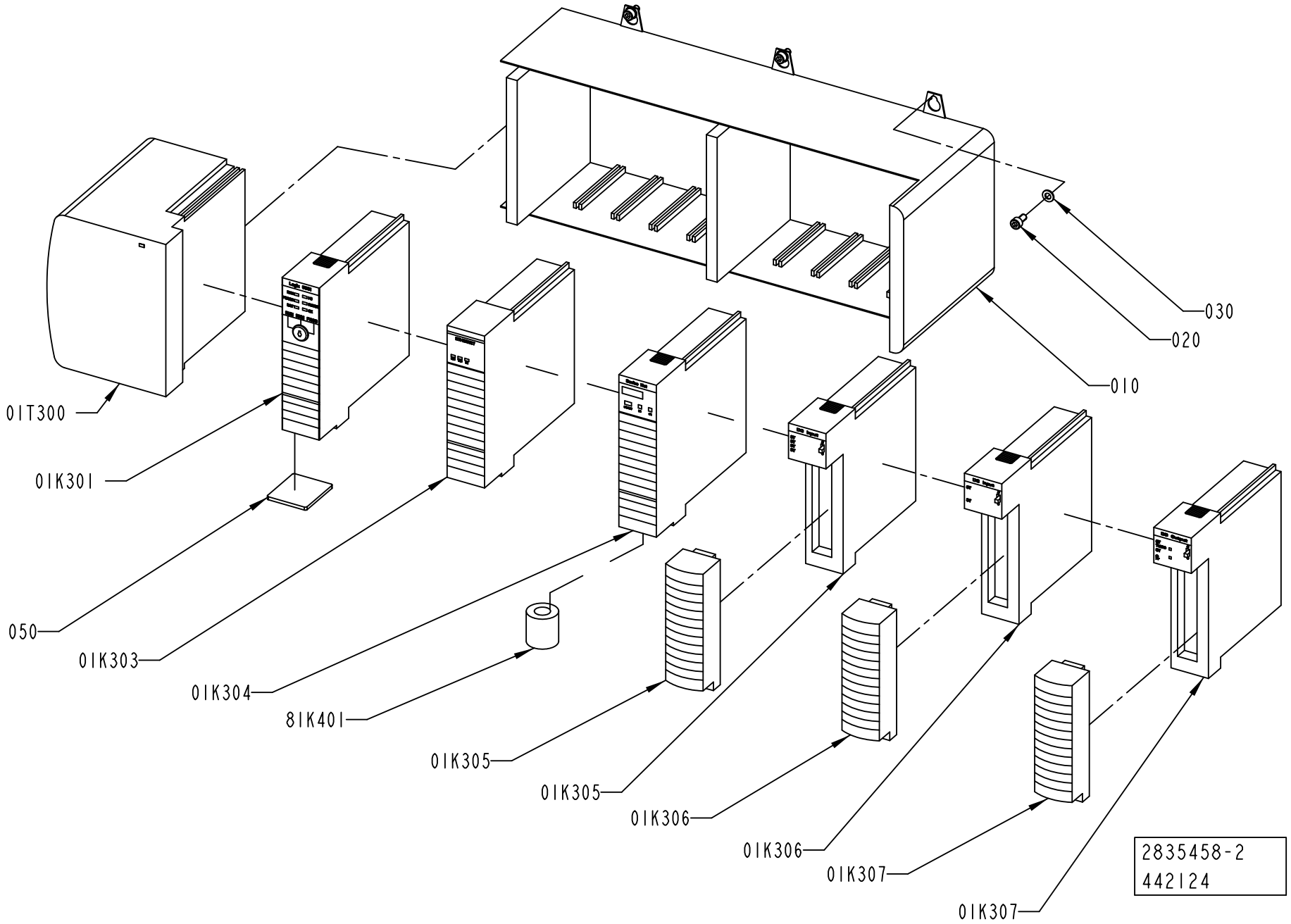
030
020
010
01T300
01K301
050
01K303
01K304
8IK401
01K305
01K305
01K306
01K306
01K307
01K307
2835458-2
442124

ECM: 445492 - 20100701
Group number: 2835458-0200
Assembly Drawing: 2835458-2_1_AB

Pos	Part No	UN	Qty	Description	Page No
-					
010	90459-2458		1	BASEPLATE, 10 SLOT CONTROLLOGIX CHASSIS	
020	312115-0325		6	SCREW ISO4762 M5X10 A4 80	
030	315105-0146		6	WASHER BRB 5,3X10 RFR	
050	90459-3145		1	FLASH MEMORY 64MBYTE, 1784-CF64	
01K301	90459-6557		1	PROCESSOR L61, SERIES B, 1756-L61/B	
	90459-6726		*1*	*SPARE BATTERY FOR CONTROLLOGIX, 1756-BA2*	
01K303	90459-2477		1	ETHERNET I/P BRIDGE MODULE, 1756-ENBT	
01K304	90600-5840		1	PLC DEVICEN. BR./SCAN MOD, 1756-DNB, D	
01K305	90459-6556		1	PLC DIGITAL INPUT 32PTS, 1756-IB32/B	
01K305	90459-2488		1	REMOVABLE TERMINAL BLOCK 36 POINTS	
01K306	90459-2487		1	REMOVABLE TERMINAL BLOCK 20 POINTS	
01K306	90459-2413		1	PLC DIGITAL INPUT MODULE16 POINTS	
01K307	90459-2487		1	REMOVABLE TERMINAL BLOCK 20 POINTS	
01K307	90459-2474		1	PLC,DIGIT. OUTPUT MODULE 16 PTS 10-31VDC	
81K401	90458-1140		1	FERRITE, RI-26-28-13	
01T300	90459-7267		1	POWER SUPPLY 24VDC, 1756-PB75/B	

Pos	Part No	UN	Qty	Description	Page No

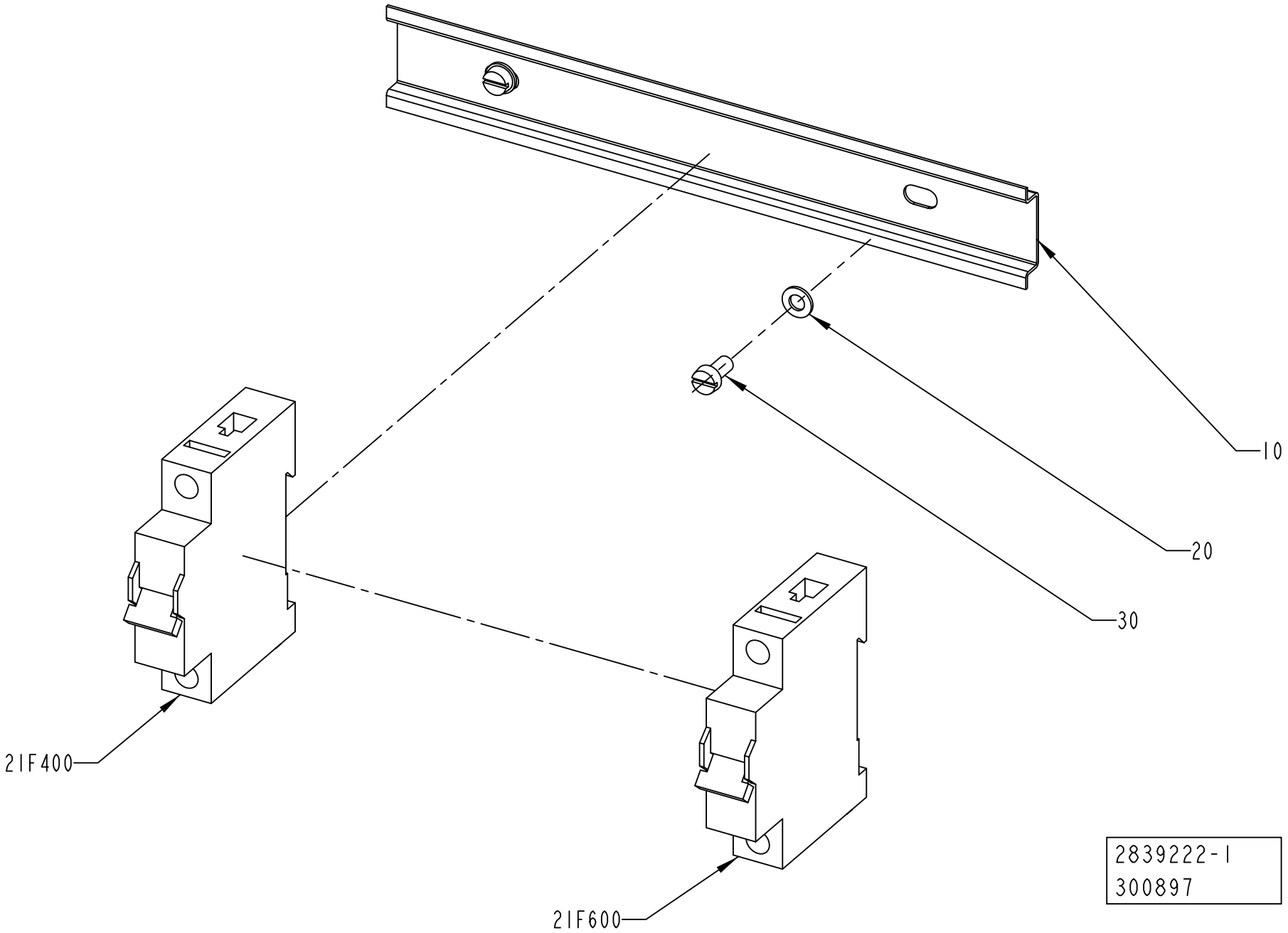
10
20
30
21F400
21F600
2839222-1
300897

ECM: 302048 - 20070528
Group number: 2839222-0100
Assembly Drawing: 2839222-1_1_AB

Pos	Part No	UN	Qty	Description	Page No
-					
010	2835454-0000		1	RAIL	
020	315105-0146		2	WASHER BRB 5,3X10 RFR	
030	312125-0325		2	SCREW ISO 1207 M5X10 A4	
21F400	354000-0100		1	MINIATURE CIRCUIT BREAKER, FAZ-C10/1	
21F600	354000-0100		1	MINIATURE CIRCUIT BREAKER, FAZ-C10/1	

Pos	Part No	UN	Qty	Description	Page No

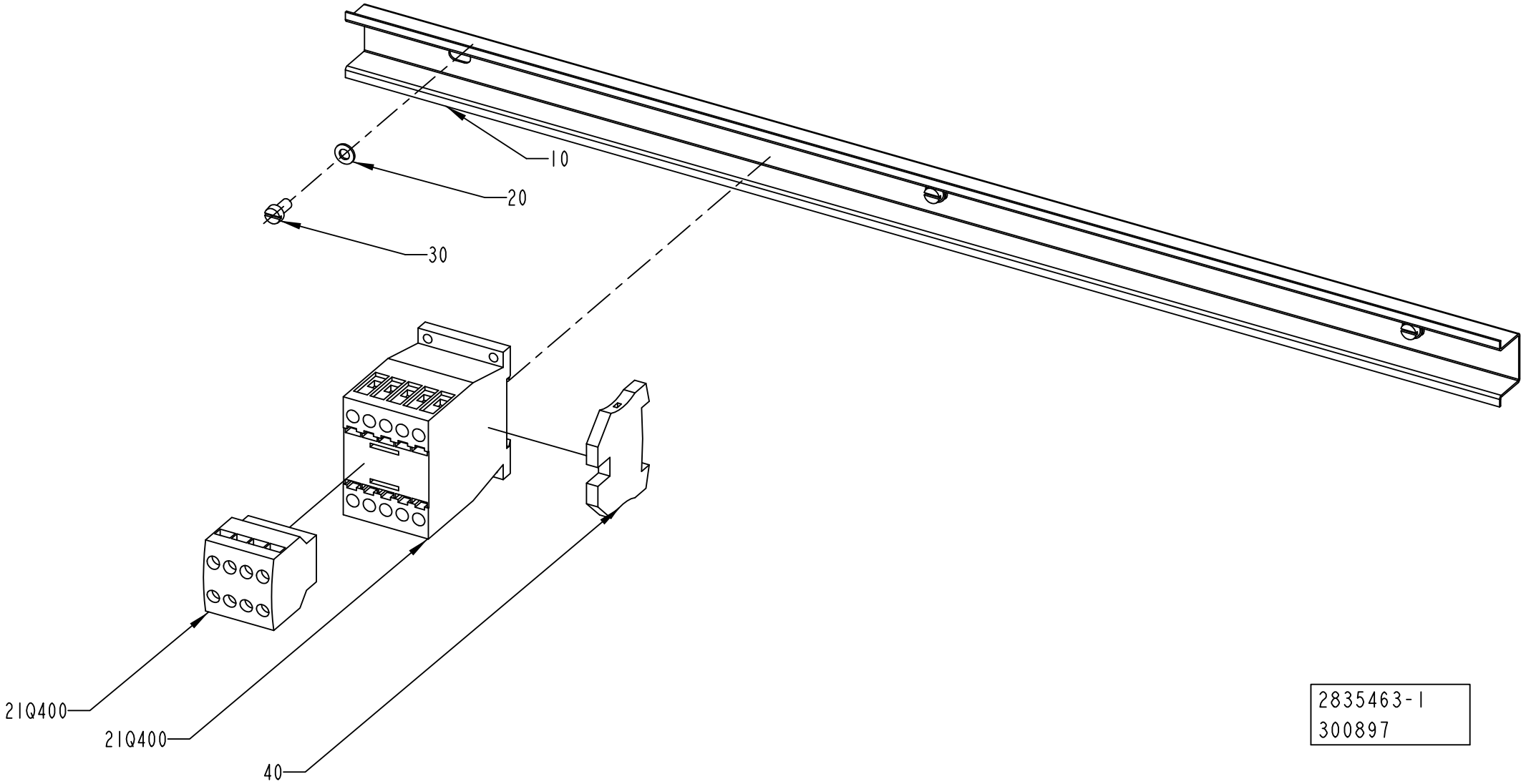
10
20
30
21Q400
21Q400
40
2835463-1
300897

ECM: 302044 - 20070528
Group number: 2835463-0100
Assembly Drawing: 2835463-1_1_AB

Pos	Part No	UN	Qty	Description	Page No
-					
010	2835455-0000		1	RAIL	
020	315105-0146		3	WASHER BRB 5,3X10 RFR	
030	312125-0325		3	SCREW ISO 1207 M5X10 A4	
040	353024-0205		1	EARTH TERMINAL WPE 4	
21Q400	90459-5308		1	CONTACTOR 4KW 24VDC, DILM9-10	
21Q400	90459-6852		1	AUXILIARY CONTACT, DILA-XHI22	

Pos	Part No	UN	Qty	Description	Page No

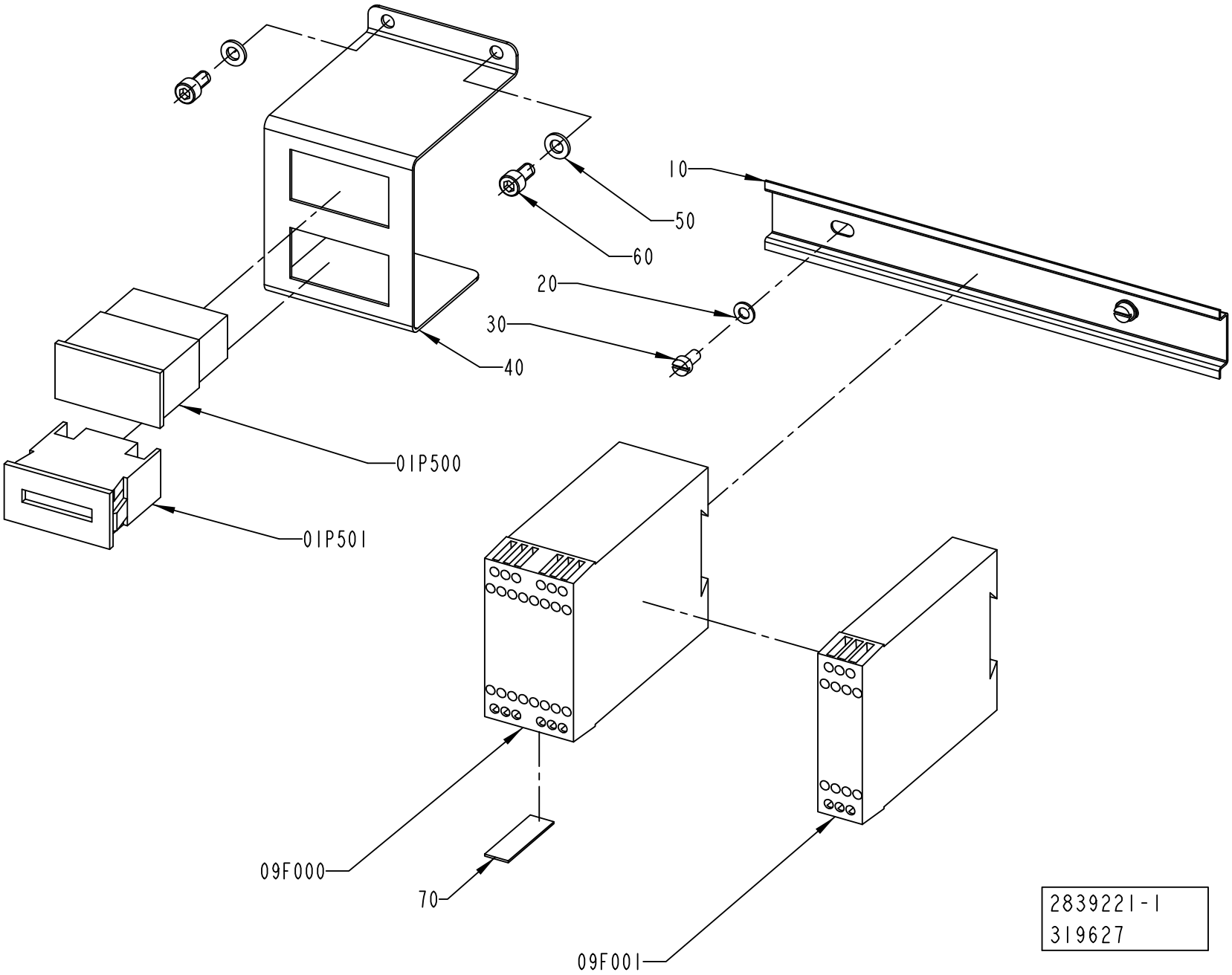
10
50
60
20
30
40
01P500
01P501
09F000
70
09F001
2839221-1
319627

ECM: 324218 - 20080407
Group number: 2839221-0100
Assembly Drawing: 2839221-1_1_AB

Pos	Part No	UN	Qty	Description	Page No
-					
010	2835453-0000		1	RAIL	
020	315105-0146		2	WASHER BRB 5,3X10 RFR	
030	312125-0325		2	SCREW ISO 1207 M5X10 A4	
040	2839227-0000		1	SUPPORT	
050	315105-0153		2	WASHER BRB 6,4X12 RFR	
060	312115-0366		2	SCREW ISO4762 M6X12 A4 80	
070	90459-4891		1	PROGR. IDENTIFIER ID-FIX RW, 20-070-21	
09F000	90459-6692		1	SAFETY PLC, PLUTO B20 20-070-06	
09F001	90459-2291		1	SAFETY TIME RELAY, E1T-0.5S-24VDC	
01P500	90053-0029		1	COUNTER, F524.800FA3C 24VDC	
01P501	90053-0031		1	HOUR COUNTER, B 609.10 10-50VDC	

Pos	Part No	UN	Qty	Description	Page No

POWER SUPPLY UNIT

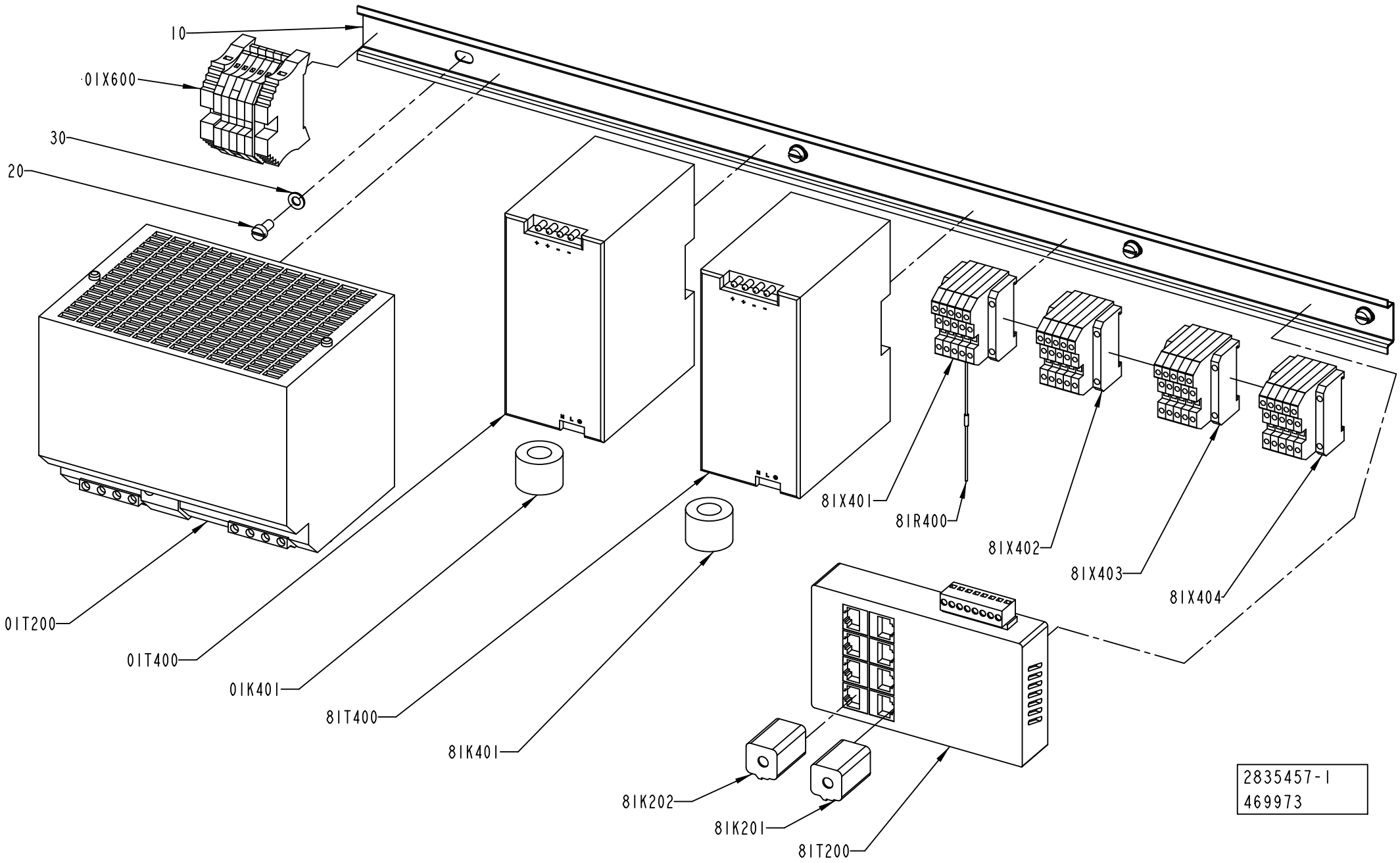

ECM: 473874 - 20101109
Group number: 2835457-0100
Assembly Drawing: 2835457-1_1_AC

Pos	Part No	UN	Qty	Description	Page No
-					
010	2838476-0000		1	RAIL	
020	312125-0325		4	SCREW ISO 1207 M5X10 A4	
030	315105-0146		4	WASHER BRB 5,3X10 RFR	
01K401	90600-5249		1	FERRITE, B64290L616X38	
81K201	90458-1170		1	FERRITE, SFC-6	
81K202	90458-1170		1	FERRITE, SFC-6	
81K401	90600-5249		1	FERRITE, B64290L616X38	
81R400	90459-2523		1	TERMINATOR, OPEN STYLE, 1485A-C2	
01T200	90459-4133		1	POWER SUPPLY UNIT 6EP1 436-3BA00	
01T400	90459-5886		1	POWER SUPPLY UNIT 115-230 VAC/24VDC100W	
81T200	90459-6858		1	ETHERNET SW, FL SWITCH SF 8TX FROM V 14	
81T400	90459-5886		1	POWER SUPPLY UNIT 115-230 VAC/24VDC100W	
01X600	2890591-0100		1	PLINTH	**7-47**
81X401	90459-2519		1	TAP, OPEN STYLE	
81X402	90459-2519		1	TAP, OPEN STYLE	
81X403	90459-2519		1	TAP, OPEN STYLE	
81X404	90459-2519		1	TAP, OPEN STYLE	

Pos	Part No	UN	Qty	Description	Page No

Machine Type	Group Description	Used-In	Group Number	Page No

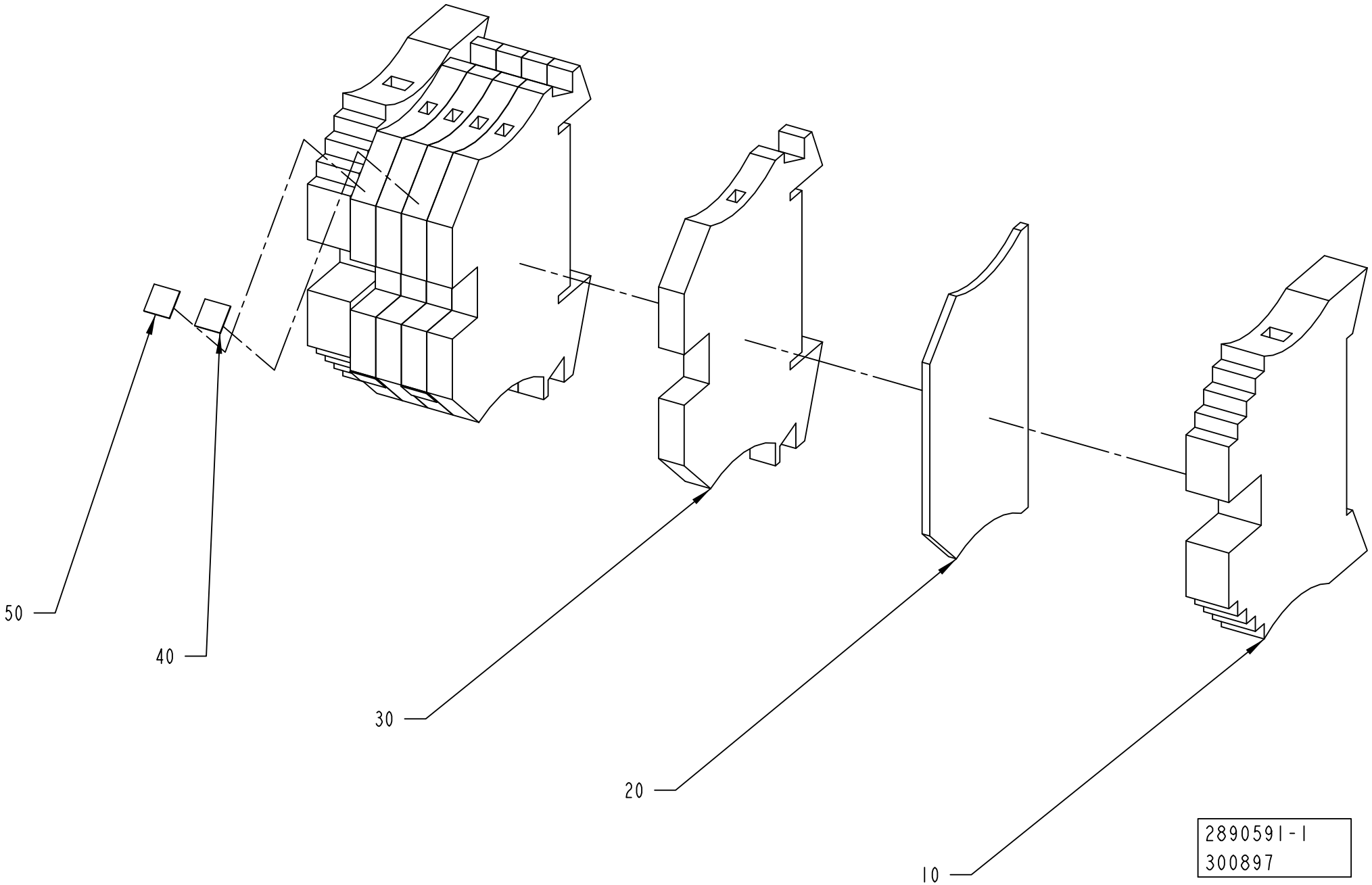
50
40
30
20
10
2890591-1
300897

ECM: 302775 - 20070528
Group number: 2890591-0100
Assembly Drawing: 2890591-1_1_AA

Pos	Part No	UN	Qty	Description	Page No
-					
010	353031-0203		2	END BRACKET, WEW 35/2	
020	353032-0004		1	END PLATE, WAP 2,5-10, BEIGE	
030	353021-0212		5	FEED THROUGH TERMINAL, WDU 2,5	
040	359011-0819		2	MARKING, EARTH, DEK 5 GW ERDE I.KR.	
050	359011-0807		2	MARKING, DEK 5 FW 1-50	

Pos	Part No	UN	Qty	Description	Page No

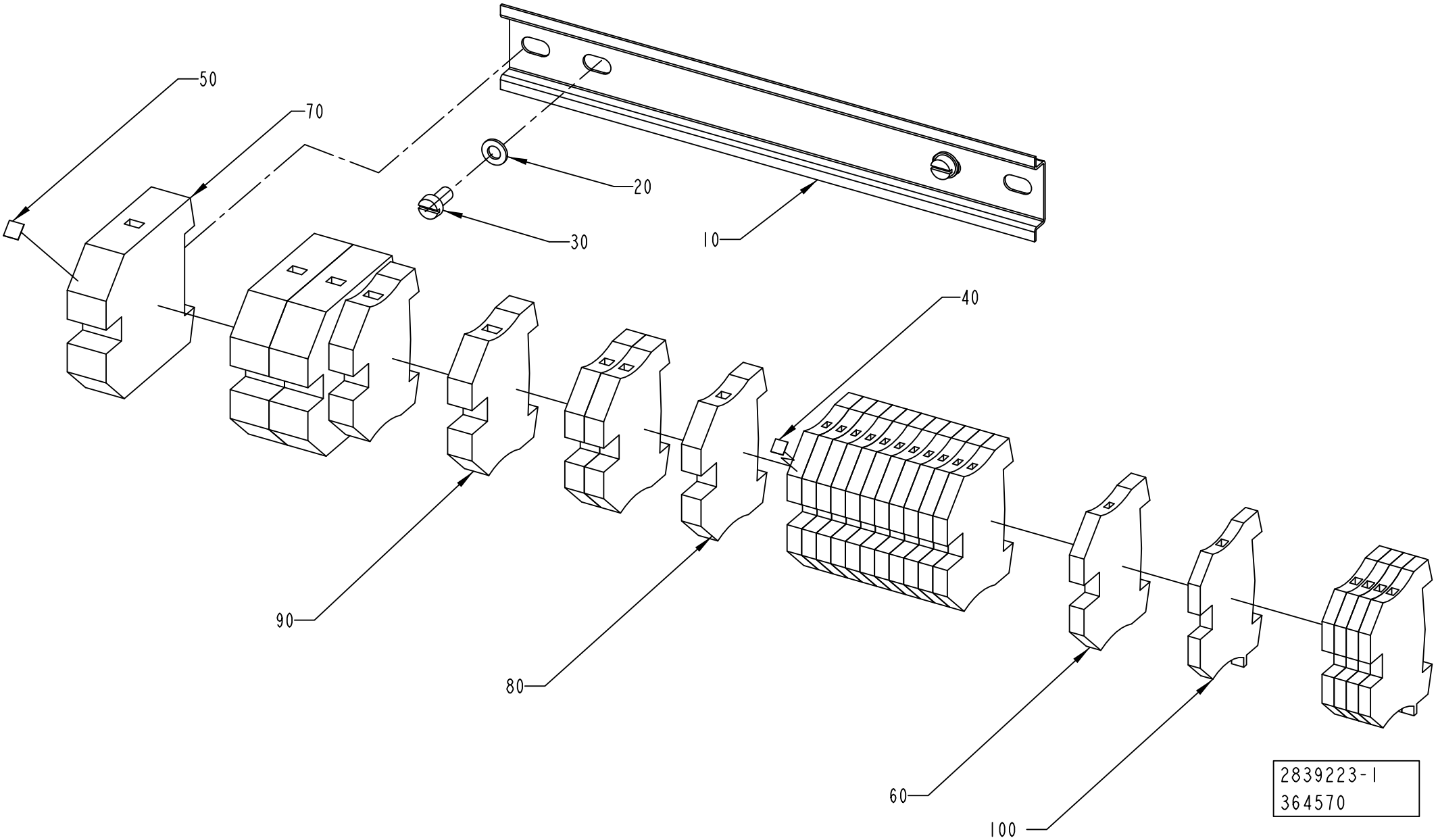
50
70
20
30
10
40
90
80
60
100
2839223-1
364570

ECM: 364722 - 20090101
Group number: 2839223-0100
Assembly Drawing: 2839223-1_1_AB

Pos	Part No	UN	Qty	Description	Page No
-					
010	2835454-0000		1	RAIL	
020	315105-0146		2	WASHER BRB 5,3X10 RFR	
030	312125-0325		2	SCREW ISO 1207 M5X10 A4	
040	359011-0807		1	MARKING, DEK 5 FW 1-50	
050	359011-0821		1	MARKING, DEK 6 FW 1-50	
060	353024-0205		12	EARTH TERMINAL WPE 4	
070	353024-0209		3	EARTH TERMINAL WPE 35	
080	353024-0206		3	EARTH TERMINAL WPE 6	
090	353024-0207		2	EARTH TERMINAL WPE 10	
100	353024-0204		5	EARTH TERMINAL WPE 2,5	

Pos	Part No	UN	Qty	Description	Page No

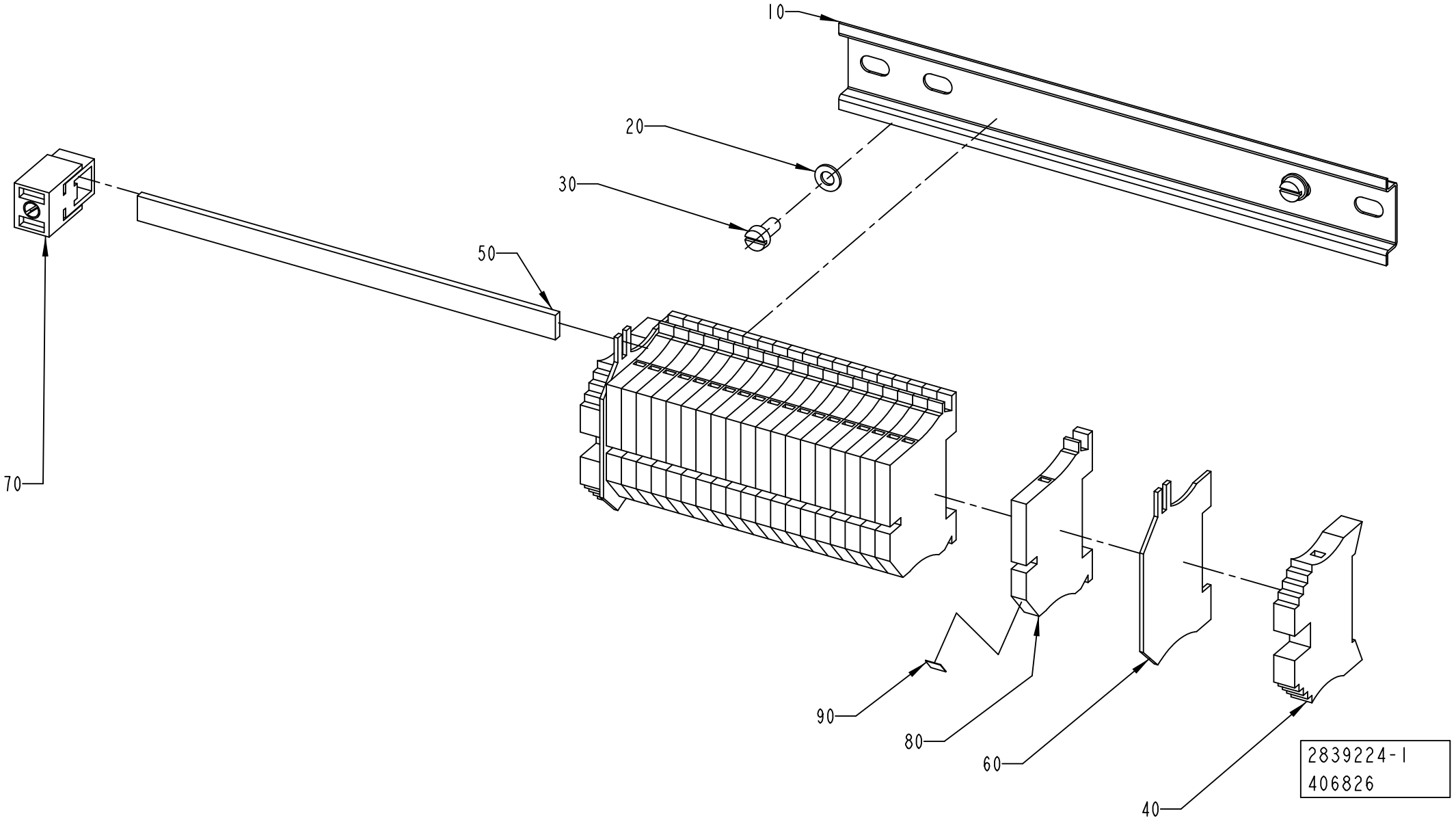
10
20
30
50
70
90
80
60
40
2839224-1
406826

ECM: 410056 - 20091001
Group number: 2839224-0100
Assembly Drawing: 2839224-1_1_AB

Pos	Part No	UN	Qty	Description	Page No
-					
010	2835454-0000		1	RAIL	
020	315105-0146		2	WASHER BRB 5,3X10 RFR	
030	312125-0325		2	SCREW ISO 1207 M5X10 A4	
040	353031-0203		2	END BRACKET, WEW 35/2	
050	353041-0001	MM	165	BUS BAR RAIL 10X3MM SSCH	
060	353033-0104		2	END PLATE, WHP2,5-35N/10X3 BL	
070	353041-0106		1	HOLDER ZB35 K 5026.8	
080	353022-0002		20	TERMINAL WNT 4 10X3	
090	359011-0821		1	MARKING, DEK 6 FW 1-50	

Pos	Part No	UN	Qty	Description	Page No

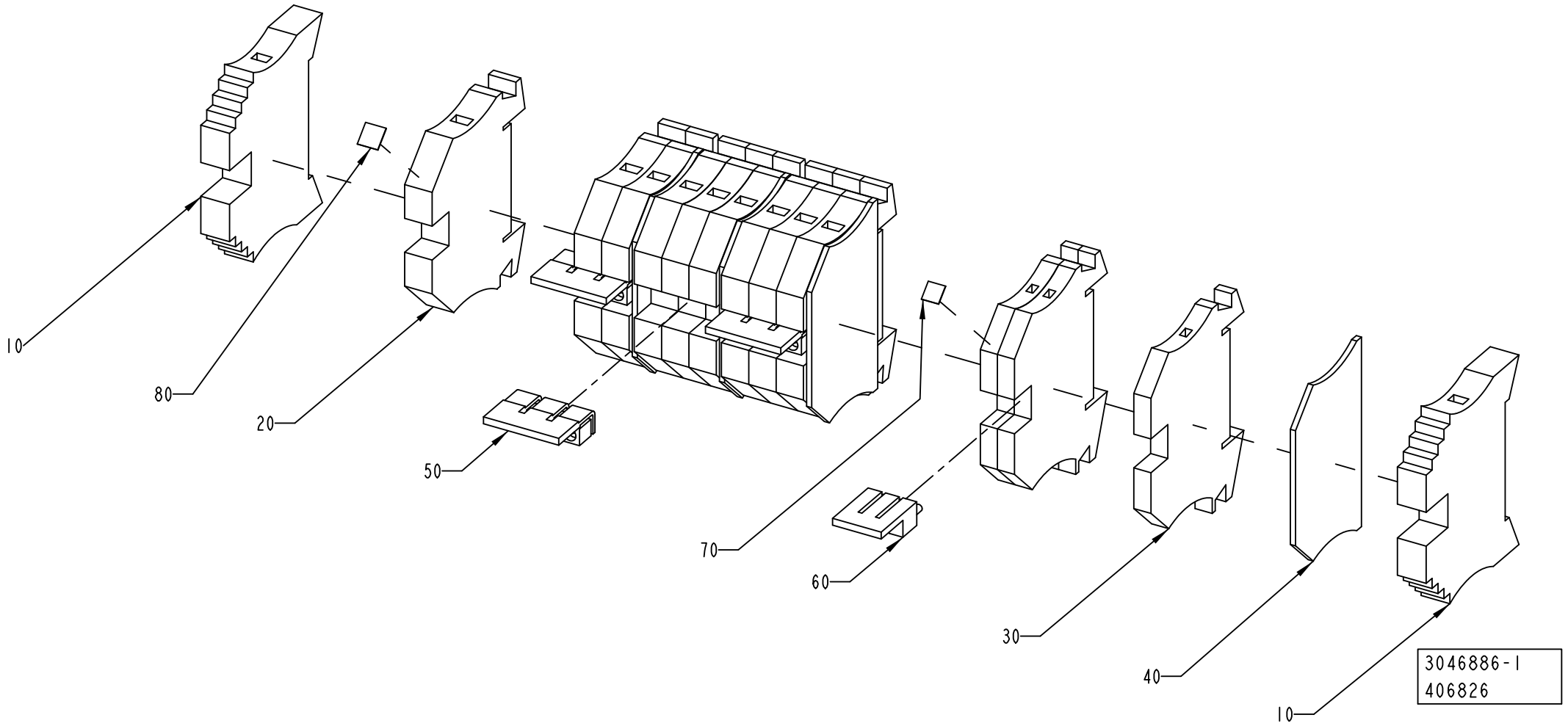
10
80
20
50
70
60
30
40
10
3046886-1
406826

ECM: 409316 - 20091001
Group number: 3046886-0100
Assembly Drawing: 3046886-1_1_AA

Pos	Part No	UN	Qty	Description	Page No
-					
010	353031-0203		2	END BRACKET, WEW 35/2	
020	353021-0214		9	FEED THROUGH TERMINAL, WDU 6	
030	353021-0212		3	FEED THROUGH TERMINAL, WDU 2,5	
040	353032-0004		4	END PLATE, WAP 2,5-10, BEIGE	
050	90600-5931		3	BRIDGE CONNECTOR WQV 6/3	
060	353034-0042		1	BRIDGE CONNECTOR WQV 2,5/3	
070	359011-0807		1	MARKING, DEK 5 FW 1-50	
080	359011-0821		1	MARKING, DEK 6 FW 1-50	

Pos	Part No	UN	Qty	Description	Page No

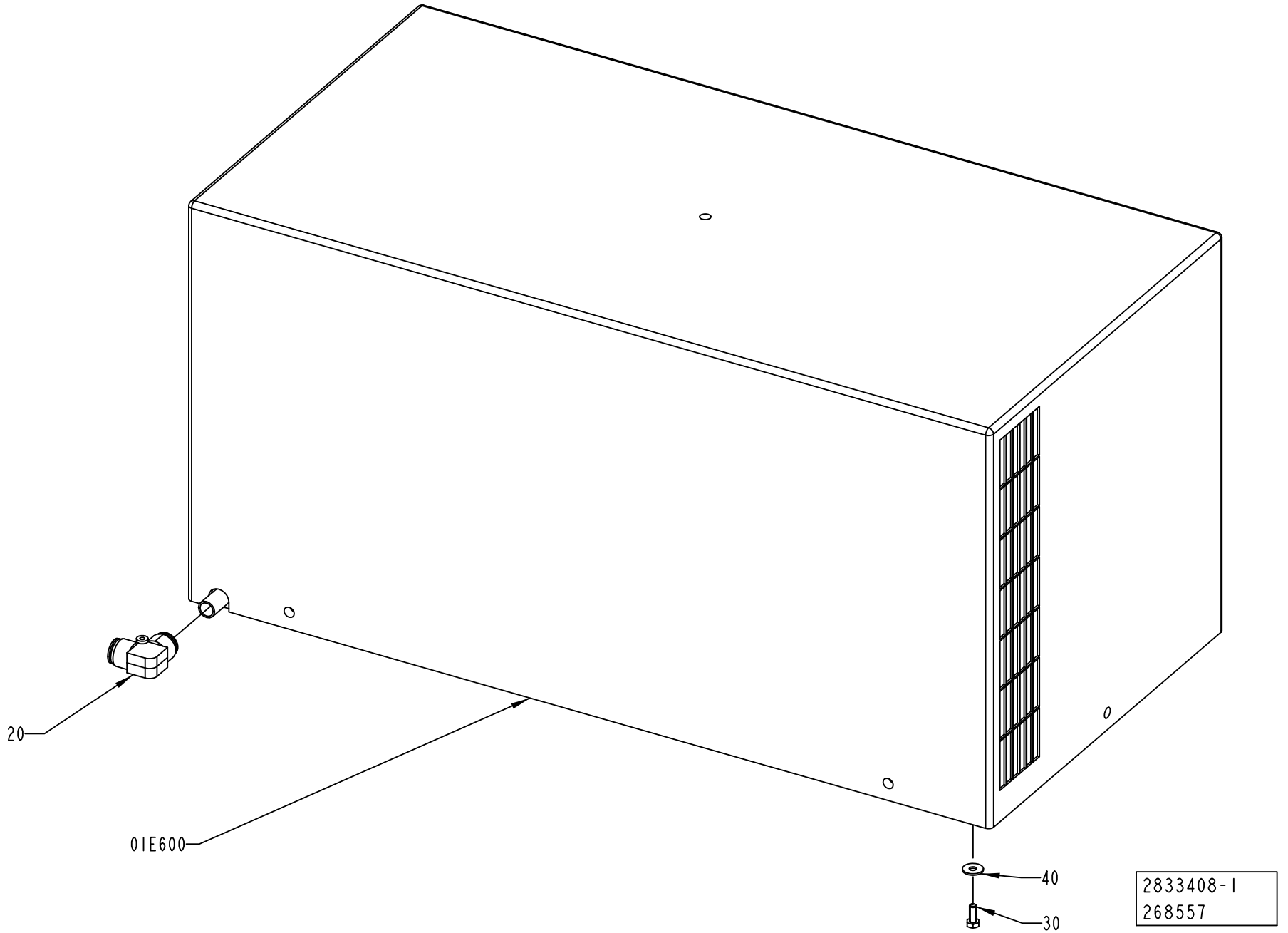
20
01E600
40
30
2833408-1
268557

ECM: 272447 - 20060925
Group number: 2833408-0100
Assembly Drawing: 2833408-1_1_AA

Pos	Part No	UN	Qty	Description	Page No
-					
020	90459-2553		1	PUSH-IN L-FITTING QSL 16	
030	312105-0368		6	SCREW M6S ISO 4017 M6X16 A480	
040	90005-0060		6	WASHER PLAIN, RBS 6,4/M6)/18,H=1,5	
01E600	90459-0813		1	COOLING UNIT, KB20A619.01	
	90600-2822		*1*	*THERMOSTAT, TMI0000216*	
	90600-0676		*1*	*GRID, DISA1880AA*	
	90600-0675		*1*	*GASKET, A6411AA*	
	90600-0673		*1*	*THERMOSTAT, KELVIN TMI0000218*	
	90600-0672		*2*	*FAN, VBA0001499 , 50HZ_3UF , 60HZ_2UF*	
	90459-0364		*1*	*FILTER KB20/30/40 POLYURETH. FILTER 2001*	

Pos	Part No	UN	Qty	Description	Page No

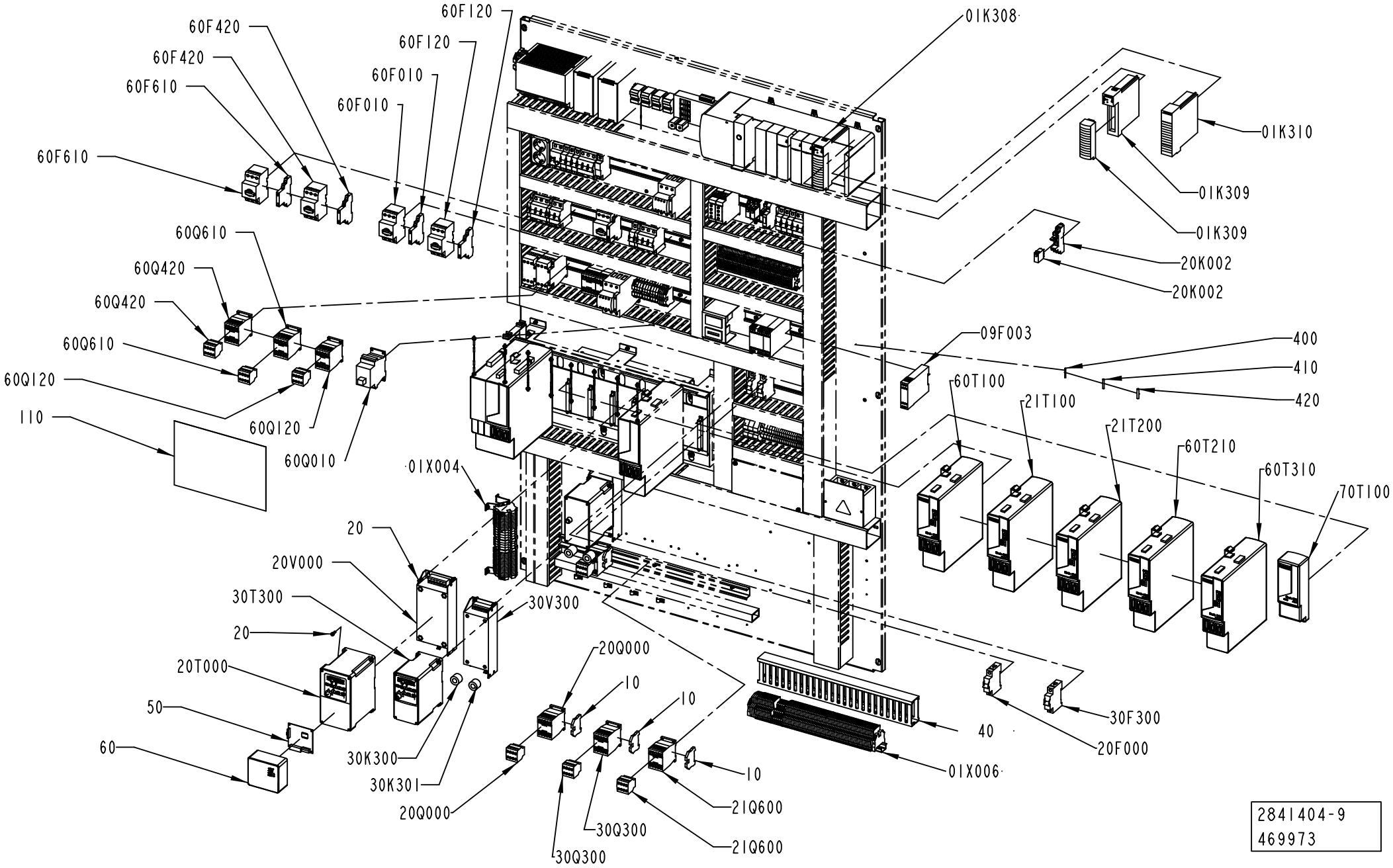

2841404-9
469973

ECM: 493691 - 20110701
Group number: 2841404-0200
Assembly Drawing: 2841404-9_1_AB

Pos	Part No	UN	Qty	Description	Page No
CAP 30/FLEX TBA RECAP3, CAP 30/FLEX TBA RECAP2 A3					
010	353024-0205		3	EARTH TERMINAL WPE 4	
020	312115-0327		16	SCREW ISO4762 M5X12 A4 80	
040	2890590-0000		1	CABLE DUCT	
110	3046435-0000		1	FUSE PANEL LABEL	
400	351160-0102	M	458	WIRE AWM 1X0,75 MM2 DARKBLUE	
410	351164-0105	M	65	WIRE AWM 1X2,5 MM2 BLACK	
420	351164-0107	M	39	WIRE AWM 1X6 MM2 BLACK	
09F003	90459-1131		1	SAFETY TIME RELAY, E1T-0S-24VDC	
20F000	354000-0060		1	MINIATURE CIRCUIT BREAKER, FAZ-C6/1	
30F300	354000-0060		1	MINIATURE CIRCUIT BREAKER, FAZ-C6/1	
60F010	90459-5321		1	OVERLOAD PROTECTION, PKZM0-0,4	
60F010	90259-0313		1	AUXILIARY CONTACT, NHI21-PKZ0	
60F120	90459-5324		1	OVERLOAD PROTECTION, PKZM0-1,6	
60F120	90259-0313		1	AUXILIARY CONTACT, NHI21-PKZ0	
60F420	90459-5323		1	OVERLOAD PROTECTION, PKZM0-1	
60F420	90259-0313		1	AUXILIARY CONTACT, NHI21-PKZ0	
60F610	90259-0313		1	AUXILIARY CONTACT, NHI21-PKZ0	
60F610	90459-5324		1	OVERLOAD PROTECTION, PKZM0-1,6	
01K308	90459-2474		1	PLC,DIGIT. OUTPUT MODULE 16 PTS 10-31VDC	
01K308	90459-2487		1	REMOVABLE TERMINAL BLOCK 20 POINTS	
01K309	90459-2474		1	PLC,DIGIT. OUTPUT MODULE 16 PTS 10-31VDC	
01K309	90459-2487		1	REMOVABLE TERMINAL BLOCK 20 POINTS	
01K310	90459-2480		1	8-AXIS SERCOS MOTION MODULE	
20K002	90119-0108		1	RELAY OMRON G2R-2-SNI-24DC	
	90129-0018		*1*	*BASE, P2RF-08-E*	
20K002	90129-0018		1	BASE, P2RF-08-E	
30K300	90600-5249		1	FERRITE, B64290L616X38	
30K301	90600-5249		1	FERRITE, B64290L616X38	
20Q000	90459-6852		1	AUXILIARY CONTACT, DILA-XHI22	
20Q000	90459-5308		1	CONTACTOR 4KW 24VDC, DILM9-10	
30Q300	90459-6852		1	AUXILIARY CONTACT, DILA-XHI22	
30Q300	90459-5308		1	CONTACTOR 4KW 24VDC, DILM9-10	
60Q010	90600-2048		1	SOLID STATE RELAY, 3RF2403-1BD04	
60Q120	90459-5308		1	CONTACTOR 4KW 24VDC, DILM9-10	
60Q120	90459-6852		1	AUXILIARY CONTACT, DILA-XHI22	
60Q420	90459-6852		1	AUXILIARY CONTACT, DILA-XHI22	
60Q420	90459-5308		1	CONTACTOR 4KW 24VDC, DILM9-10	
60Q610	90459-5308		1	CONTACTOR 4KW 24VDC, DILM9-10	
60Q610	90459-6852		1	AUXILIARY CONTACT, DILA-XHI22	
20T000	90459-3441		1	FREQ. CONV., 22B-A2P3N104	
30T300	90459-3449		1	FREQ. CONV., 22A-A2P3N104	
60T100	90600-5216		1	AXIS MOD. KINETIX 6000,2094-BM02-S SER.B	
60T210	90600-5214		1	AXIS MOD. KINETIX 6000,2094-BM01-S SER.B	
60T310	90600-5214		1	AXIS MOD. KINETIX 6000,2094-BM01-S SER.B	
70T100	90459-2547		1	POWER RAIL SLOT FILLER, 2094-PRF	
20V000	90459-3454		1	FOOTPRINT FILTER 1 PHASE 18A	
30V300	90459-3460		1	FOOTPRINT FILTER 1 PHASE 10A	
Common Parts					
050	90459-2614		1	DEVICENET ADAPTER POWERFLEX 40 22-COMM-D	
060	90459-2795		1	FRONT LID FOR POWERFLEX 40, 22B-CCB	
21Q600	90459-6852		1	AUXILIARY CONTACT, DILA-XHI22	
21Q600	90459-5308		1	CONTACTOR 4KW 24VDC, DILM9-10	
21T100	90600-5216		1	AXIS MOD. KINETIX 6000,2094-BM02-S SER.B	
21T200	90600-5216		1	AXIS MOD. KINETIX 6000,2094-BM02-S SER.B	
01X004	2840918-0100		1	PLINTH	**7-59**
01X006	2841403-0200		1	PLINTH	**7-61**

Machine Type | Group Description | Used-In | Group Number | Page No

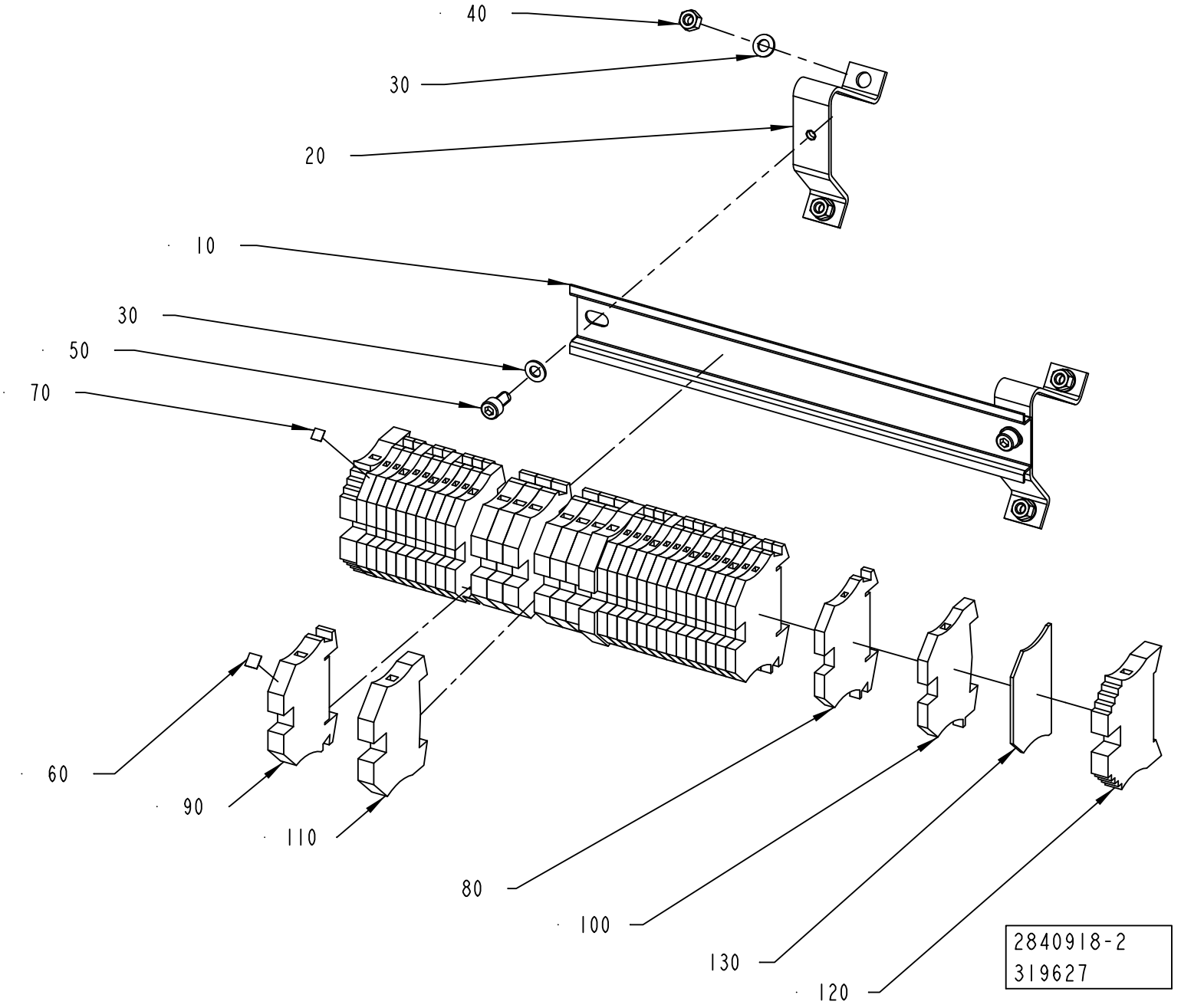
40
30
20
10
30
50
70
60
90
110
80
100
130
120
2840918-2
319627

ECM: 480658 - 20110401
Group number: 2840918-0100
Assembly Drawing: 2840918-2_1_AB

Pos	Part No	UN	Qty	Description	Page No
RECAP3, RECAP2 A3					
080	353021-0212		19	FEED THROUGH TERMINAL, WDU 2,5	
100	353024-0204		7	EARTH TERMINAL WPE 2,5	
Common Parts					
010	2841402-0000		1	RAIL	
020	90099-0005		2	MOUNTING RAIL SUPPORT, TSTW 5/M5	
030	315105-0146		6	WASHER BRB 5,3X10 RFR	
040	312605-0314		4	HEXAGON NUT, M6M M5 A280	
050	312115-0325		2	SCREW ISO4762 M5X10 A4 80	
060	359011-0821		2	MARKING, DEK 6 FW 1-50	
070	359011-0807		2	MARKING, DEK 5 FW 1-50	
090	353021-0214		7	FEED THROUGH TERMINAL, WDU 6	
110	353024-0206		2	EARTH TERMINAL WPE 6	
120	353031-0203		2	END BRACKET, WEW 35/2	
130	353032-0004		1	END PLATE, WAP 2,5-10, BEIGE	

Pos	Part No	UN	Qty	Description	Page No

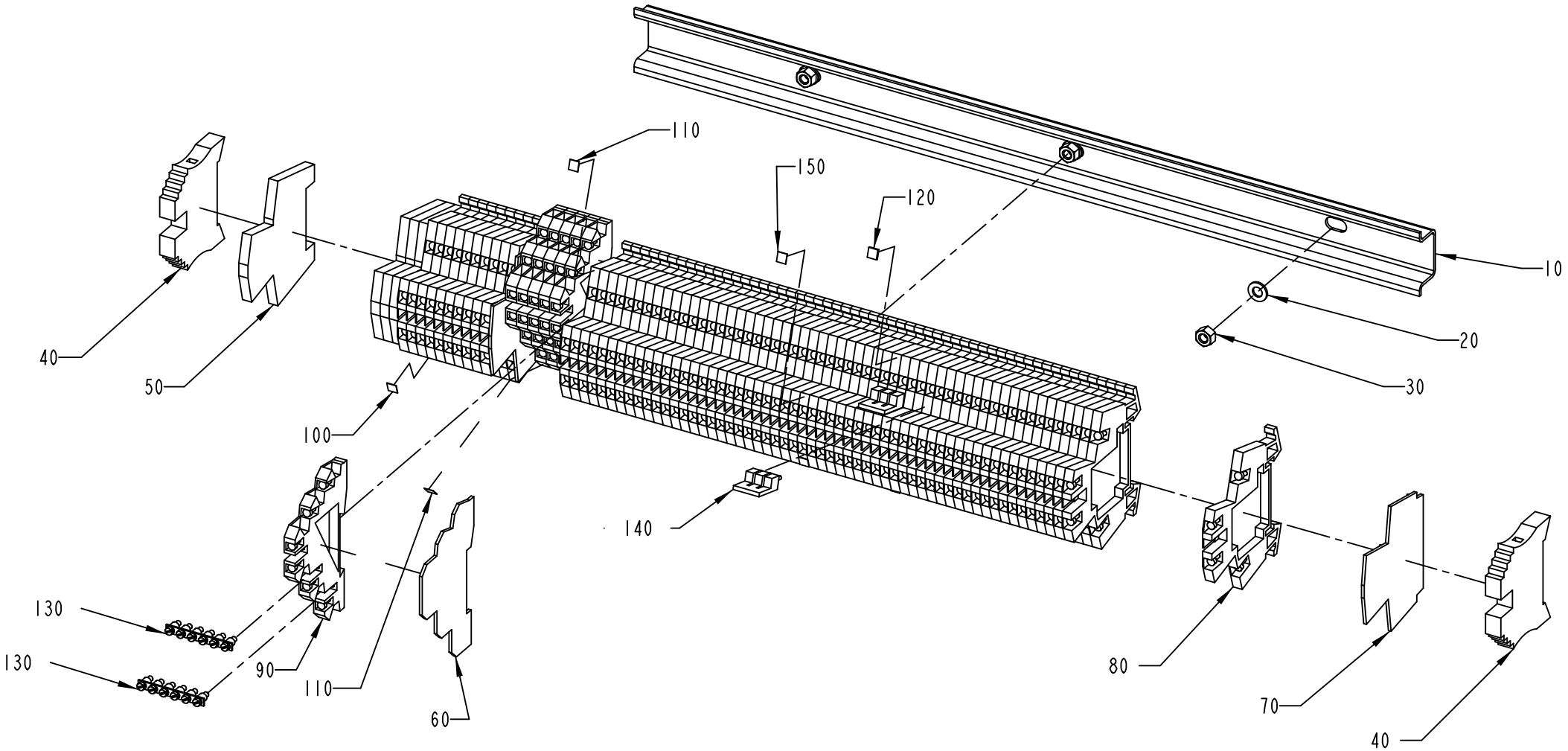
110
150
120
10
20
30
40
50
100
140
130
130
90
110
60
80
70
40
2841403-4
406826

ECM: 480659 - 20110401
Group number: 2841403-0200
Assembly Drawing: 2841403-4_1_AA

Pos	Part No	UN	Qty	Description	Page No
RECAP3, RECAP2 A3					
010	2890015-0000		1	RAIL	
020	315105-0146		3	WASHER BRB 5,3X10 RFR	
030	312605-0314		3	HEXAGON NUT, M6M M5 A280	
080	90077-0113		67	TERMINAL BLOCK WDK 2.5	
150	359011-0811		2	MARKING, DEK 5 FW 201-250	
Common Parts					
040	353031-0203		2	END BRACKET, WEW 35/2	
050	353024-0212		4	EARTH TERMINAL WDK 2,5 PE	
060	353032-0302		1	END PLATE, AP DLD2,5 DB	
070	353032-0009		2	END PLATE, WAP WDK 2,5	
090	353021-0302		6	TERMINAL, DLD 2,5/35	
100	359011-0807		1	MARKING, DEK 5 FW 1-50	
110	359011-0809		3	MARKING, DEK 5 FW 101-150	
120	359011-0806		2	MARKING, DEK 5 FW 1-200	
130	353034-0404		2	BRIDGE CONNECTOR Q 10 DLI	
140	353034-0030		2	BRIDGE CONNECTOR WQV 2,5/10	

Pos	Part No	UN	Qty	Description	Page No

This page is intentionally left blank.

ECM: 309363 - 20070528
Group number: 2833409-0100
Assembly Drawing:

Pos	Part No	UN	Qty	Description	Page No
-					
010	351160-0105	M	4	WIRE AWM 1X2,5 MM2 DARKBLUE	
020	351160-0106	M	5	WIRE AWM 1X4 MM2 DARKBLUE	
030	351161-0104	M	13	WIRE AWM 1X1,5 MM2 LIGHTBLUE	
040	351161-0105	M	20	WIRE AWM 1X2,5 MM2 LIGHTBLUE	
050	351161-0106	M	2.6	WIRE AWM 1X4 MM2 LIGHTBLUE	
060	351161-0107	M	2.6	WIRE AWM 1X6 MM2 LIGHTBLUE	
070	351161-0109	M	2.6	WIRE AWM 1X16 MM2 LIGHTBLUE	
080	351162-0102	M	26	WIRE AWM 1X0,75 MM2 YELLOW-GREEN	
090	351162-0104	M	13	WIRE AWM 1X1,5 MM2 YELLOW-GREEN	
100	351162-0105	M	29	WIRE AWM 1X2,5 MM2 YELLOW-GREEN	
110	351162-0106	M	6.5	WIRE AWM 1X4 MM2 YELLOW-GREEN	
120	351162-0107	M	2.6	WIRE AWM 1X6 MM2 YELLOW-GREEN	
130	351162-0108	M	3.9	WIRE AWM 1X10 MM2 YELLOW-GREEN	
140	351162-0109	M	3.9	WIRE AWM 1X16 MM2 YELLOW-GREEN	
150	351164-0104	M	32	WIRE AWM 1X1,5 MM2 BLACK	
160	351164-0106	M	13	WIRE AWM 1X4 MM2 BLACK	
170	351164-0108	M	29	WIRE AWM 1X10 MM2 BLACK	
180	351164-0109	M	4	WIRE AWM 1X16 MM2 BLACK	
81W200	90459-1621		1	CABLE, ETHERNET RJ 45 CONNECT. 1 M	
81W201	90459-6395		1	CABLE, ETHERNET RJ 45 STRAIGHT.10M	
81W400	90459-2530	MM	325	DEVICENET CABLE THIN	
81W401	90459-2530	M	1.3	DEVICENET CABLE THIN	
81W402	90459-2530	M	4.5	DEVICENET CABLE THIN	
81W403	90459-2530	M	13	DEVICENET CABLE THIN	
81W405	90459-2530	MM	260	DEVICENET CABLE THIN	
81W406	90459-2530	MM	260	DEVICENET CABLE THIN	
81W407	90459-2530	MM	260	DEVICENET CABLE THIN	
81W700	90220-0183	MM	325	SCR. CABLE 2X0,34MM2	
81W701	90220-0183	MM	325	SCR. CABLE 2X0,34MM2	
81W702	90220-0183	MM	325	SCR. CABLE 2X0,34MM2	

Pos	Part No	UN	Qty	Description	Page No

Machine Type | Group Description | Used-In | Group Number | Page No

Tetra Pak

SPC
Spare Parts Catalogue

This page is intentionally left blank.

ECM: 472987 - 20101109
Group number: 662913-0200
Assembly Drawing:

Pos	Part No	UN	Qty	Description	Page No
-					
	2838695-0000		1	INSTALLATION DRAWING	
010	2853706-0100		1	SETTING TOOL	**8-5**
020	2838693-0100		1	START-UP KIT	**8-13**
030	2986247-0100		1	CAP DETECTOR	**8-15**
040	3039029-0000		1	PNEUMATIC DIAGRAM	
050	2838680-0000		1	DIAGRAM	
060	2838684-0000		1	WATER DIAGRAM	
070	2873923-0100		1	POSITION TEMPLATE	**8-31**
080	2873953-0100		1	CAP	**8-33**

Pos	Part No	UN	Qty	Description	Page No

This page is intentionally left blank.

ECM: 493009 - 20110701
Group number: 2853706-0100
Assembly Drawing:

Pos	Part No	UN	Qty	Description	Page No
RECAP3, RECAP2 A3					
050	2873956-0100		1	BELT TIGHTENER	**8-7**
070	2788137-0000		1	TEMPLATE	
080	2911910-0000		1	TEMPLATE	
Common Parts					
010	2715750-0100		1	TEMPLATE	**8-9**
020	2716125-0100		1	SETTING TOOL	**8-11**
030	3044285-0000		2	TEMPLATE	

Pos	Part No	UN	Qty	Description	Page No

Machine Type | Group Description | Used-In | Group Number | Page No

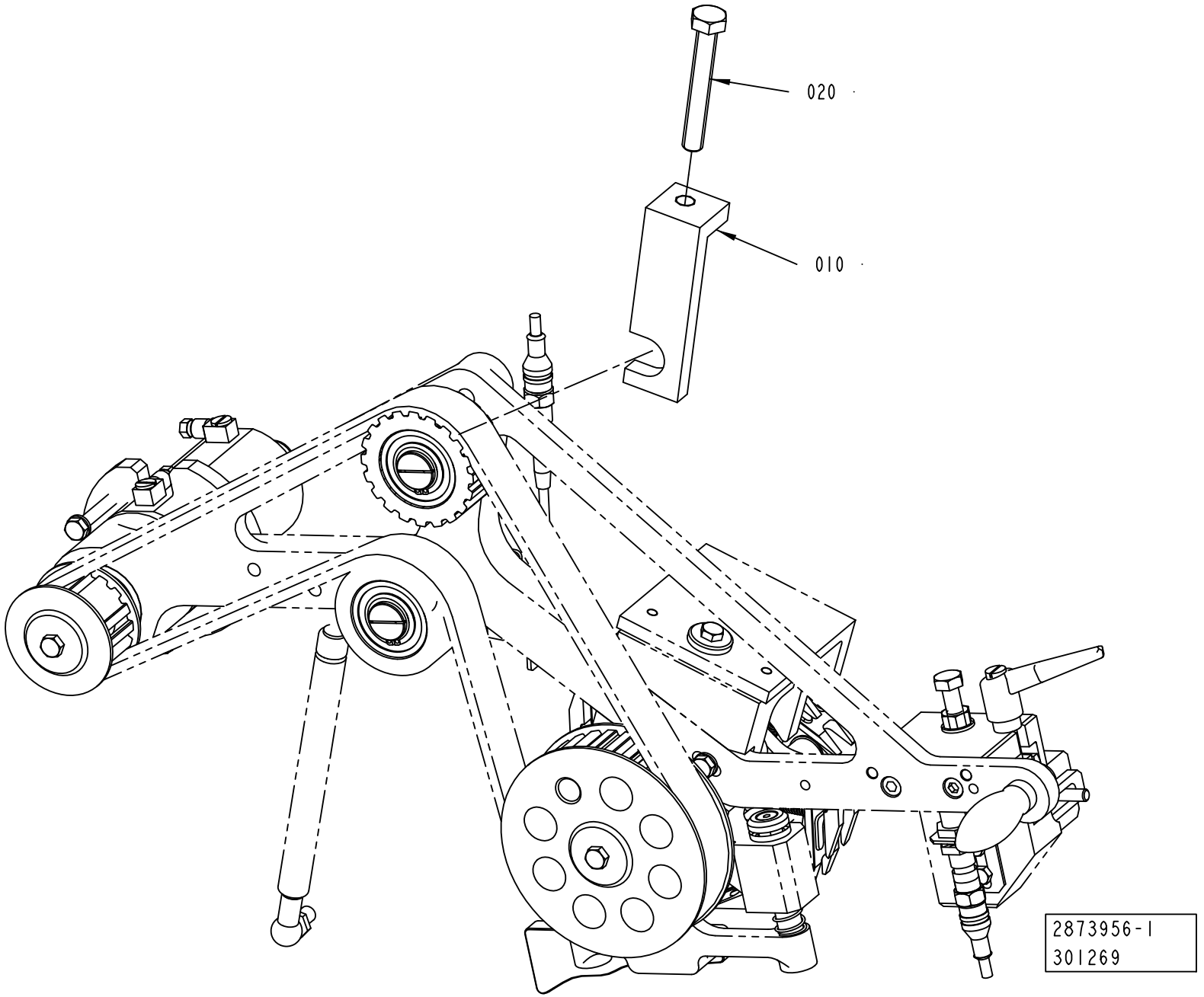
020
010
2873956-1
301269

ECM: 310668 - 20070528
Group number: 2873956-0100
Assembly Drawing: 2873956-1_1_AA

Pos	Part No	UN	Qty	Description	Page No
-					
010	2873948-0000		1	BRACKET	
020	90287-0330		1	SCREW M6S ISO 4017 M10X70 A480	

Pos	Part No	UN	Qty	Description	Page No

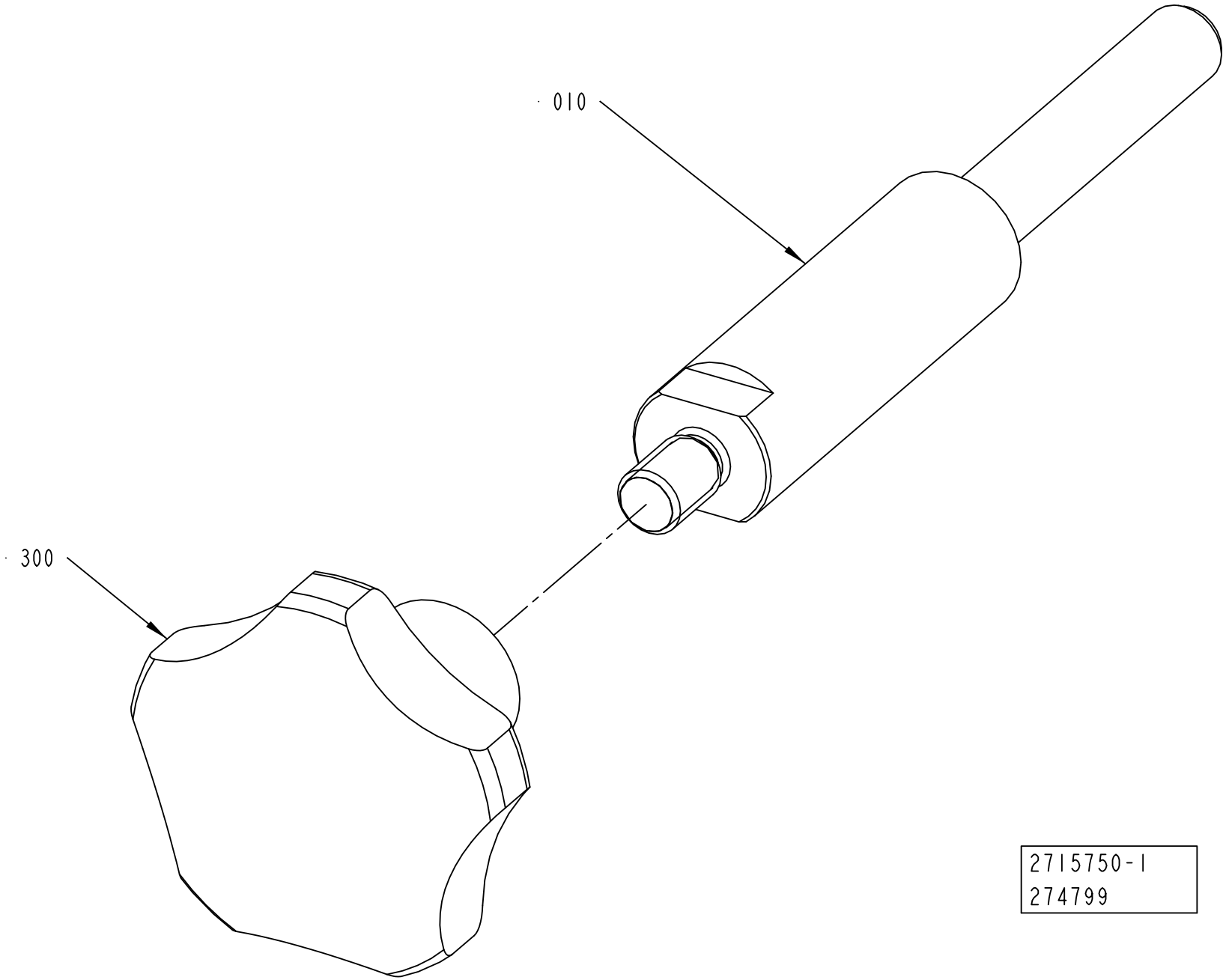
010
300
2715750-1
274799

ECM: 444700 - 20100701
Group number: 2715750-0100
Assembly Drawing: 2715750-1_1_AA

Pos	Part No	UN	Qty	Description	Page No
-					
010	2715751-0000		1	SHAFT	
300	90051-0054		1	STELLAR KNOB, INT. THREAD, NO. 8306-0340	

Pos	Part No	UN	Qty	Description	Page No

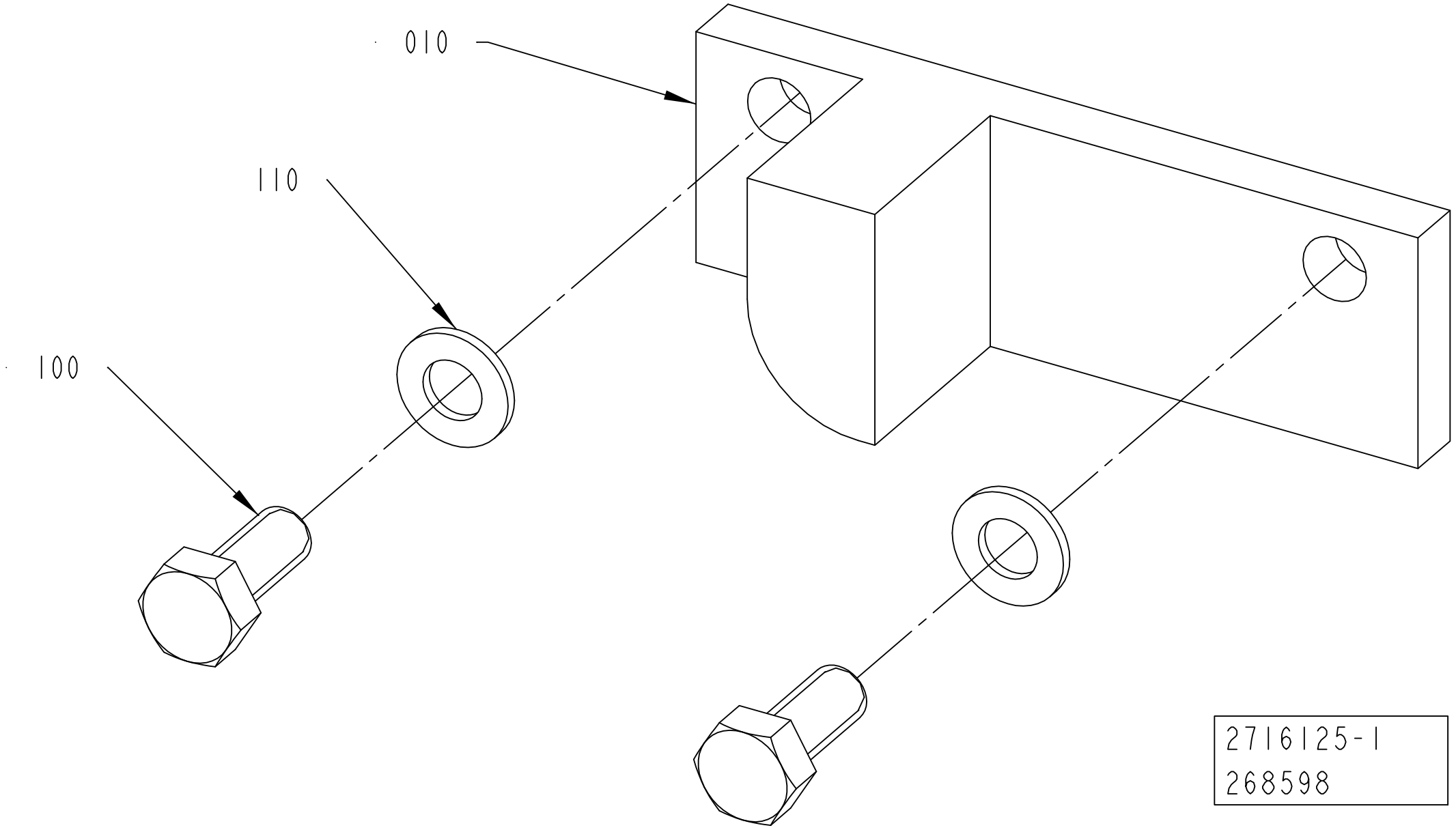
010
110
100
2716125-1
268598

ECM: 269065 - 20060920
Group number: 2716125-0100
Assembly Drawing: 2716125-1_1_AA

Pos	Part No	UN	Qty	Description	Page No
-					
010	2716154-0000		1	SETTING TEMPLATE	
100	312105-0327		2	SCREW M6S ISO 4017 M5X12 A480	
110	315105-0146		2	WASHER BRB 5,3X10 RFR	

Pos	Part No	UN	Qty	Description	Page No

This page is intentionally left blank.

ECM: 493008 - 20110701
Group number: 2838693-0100
Assembly Drawing:

Pos	Part No	UN	Qty	Description	Page No
RECAP2 A3					
020	90153-0059	KG	1	.50.0 ADHESIVE, HOTMELT RECAP 12 KG	
040	90335-0252		20	TENSION SPRING	
050	2911986-0000		3	ARM	
060	321154-0180		6	FLANGE BUSHING, IGLIDUR W300 12X14X12	
RECAP3					
020	90153-0059	KG	1	.50.0 ADHESIVE, HOTMELT RECAP 12 KG	
040	90335-0252		20	TENSION SPRING	
Common Parts					
080	90458-2510		3	FUSE, ATDR6	

Pos	Part No	UN	Qty	Description	Page No

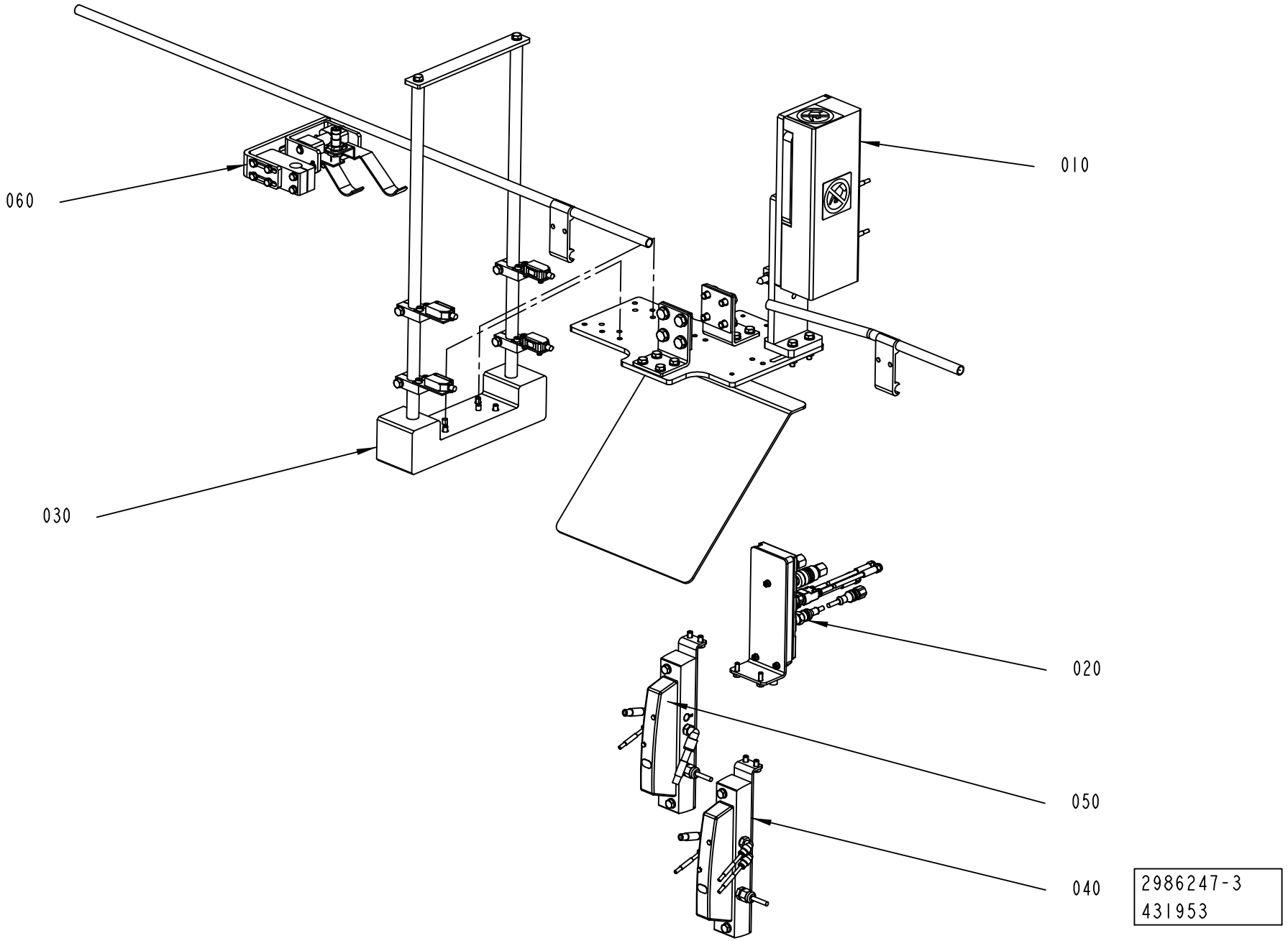
060
010
030
020
050
040
2986247-3
431953

ECM: 459268 - 20101001
Group number: 2986247-0100
Assembly Drawing: 2986247-3_1_AB

Pos	Part No	UN	Qty	Description	Page No
RECAP2 A3 (See drawing on page: 8-14)					
060	2819144-0100		1	ALARM DEVICE	**8-17, 8-19**
RECAP3 (See drawing on page: 8-14)					
060	2819144-0100		1	ALARM DEVICE	**8-17, 8-19**
Common Parts					
010	2986246-0100		1	EJECTOR	**8-21**
020	2839195-0100		1	DISTRIBUTOR	**8-23**
030	2956718-0100		1	PHOTOCELL BRACKET	**8-25**
040	2839074-0100		1	PNEUMATIC UNIT	**8-27**
050	2839194-0100		1	PNEUMATIC UNIT	**8-29**

Pos	Part No	UN	Qty	Description	Page No

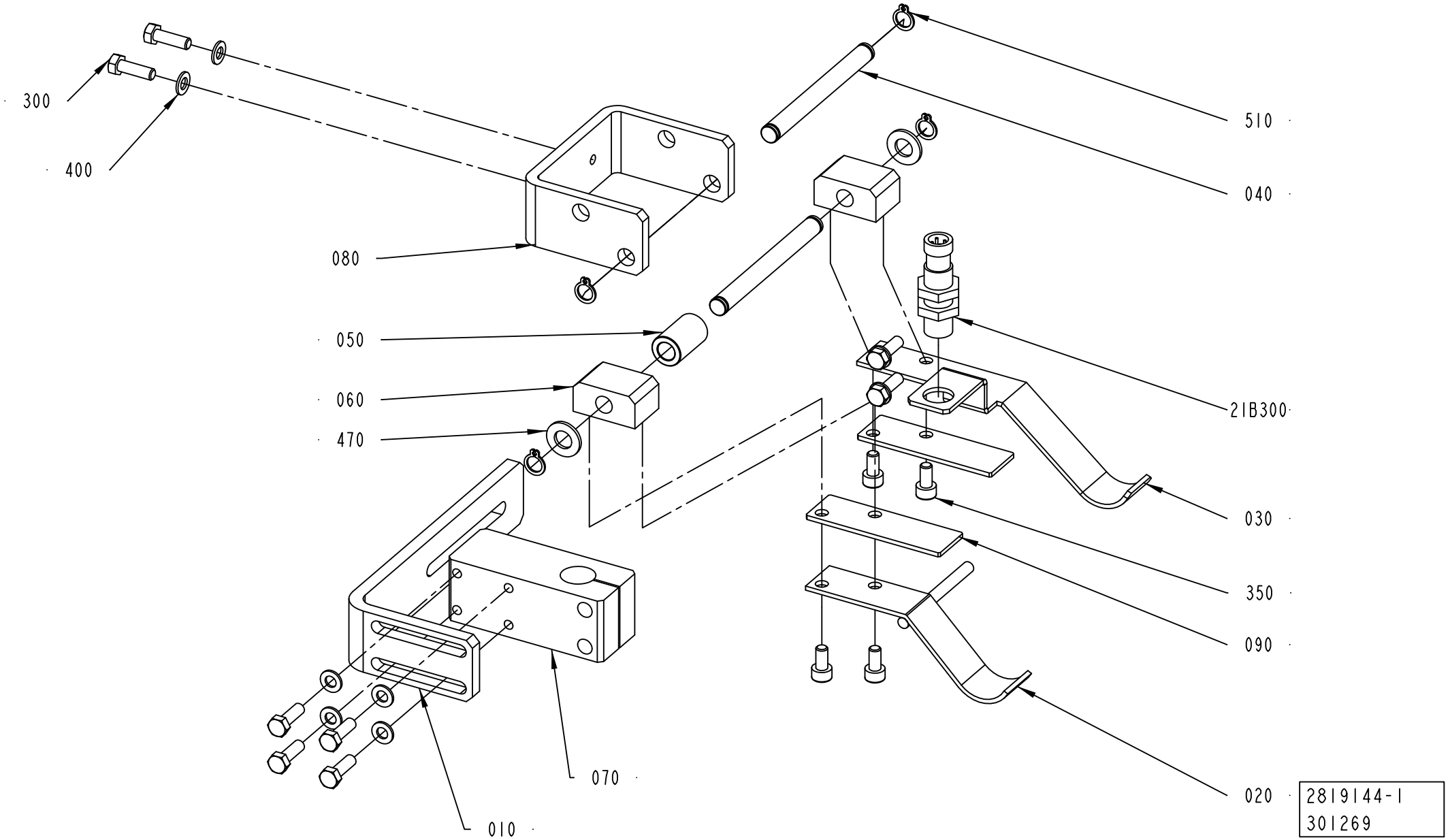
300
400
080
050
060
470
010
070
510
040
21B300
030
350
090
020
2819144-1
301269

ECM: 444702 - 20100701
Group number: 2819144-0100
Assembly Drawing: 2819144-1_1_AB

This list covers pages from 8-16 to 8-19

Pos	Part No	UN	Qty	Description	Page No
RECAP2 A3 (See drawing on page: 8-18)					
100	2983415-0000		1	SPACER	
110	2983438-0000		1	SPACER	
RECAP3 (See drawing on page: 8-16)					
050	2819081-0000		1	SPACER	
Common Parts					
010	2887994-0000		1	BRACKET	
020	2819036-0000		1	LEVER	
030	2819093-0000		1	LEVER	
040	2819079-0000		2	SHAFT	
060	2819037-0000		2	SUPPORT	
070	2887950-0000		1	SUPPORT	
080	2825844-0000		1	SUPPORT	
090	2890547-0000		2	PLATE	
300	312105-0329		8	SCREW M6S ISO 4017 M5X16 A480	
350	312115-0325		4	SCREW ISO4762 M5X10 A4 80	
400	315105-0146		8	WASHER BRB 5,3X10 RFR	
470	315105-0165		2	WASHER BRB 8,4X16 RFR	
510	90141-0015		4	RETAINING RING FOR SHAFT DIN 471 8 SS	
21B300	90458-2907		1	PROX.SWITCH IFS204	

Pos	Part No	UN	Qty	Description	Page No

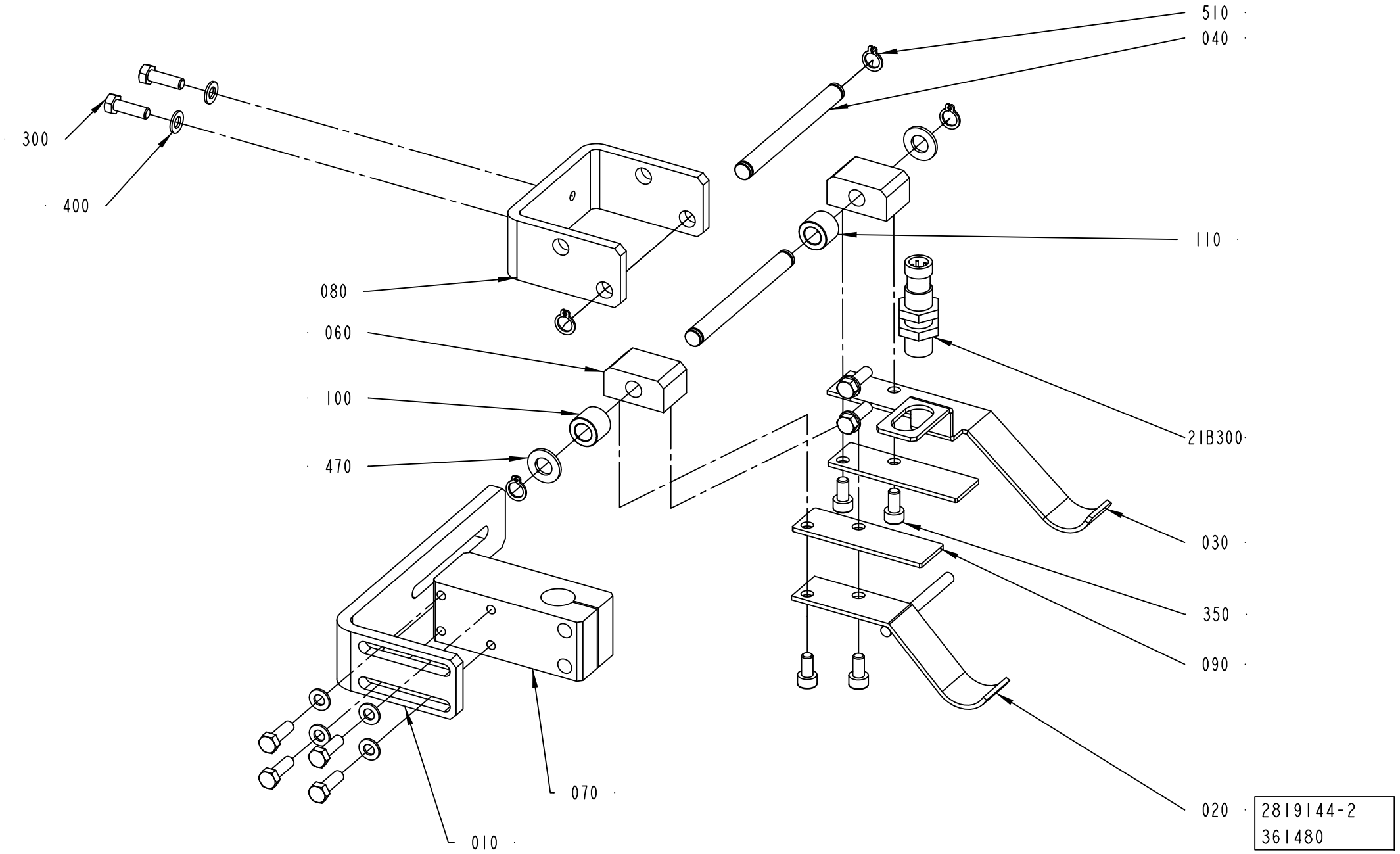

2819144-2
361480

ECM: 444702 - 20100701
Group number: 2819144-0100
Assembly Drawing: 2819144-2_1_AA

This list covers pages from 8-16 to 8-19

Pos	Part No	UN	Qty	Description	Page No
RECAP2 A3 (See drawing on page: 8-18)					
100	2983415-0000		1	SPACER	
110	2983438-0000		1	SPACER	
RECAP3 (See drawing on page: 8-16)					
050	2819081-0000		1	SPACER	
Common Parts					
010	2887994-0000		1	BRACKET	
020	2819036-0000		1	LEVER	
030	2819093-0000		1	LEVER	
040	2819079-0000		2	SHAFT	
060	2819037-0000		2	SUPPORT	
070	2887950-0000		1	SUPPORT	
080	2825844-0000		1	SUPPORT	
090	2890547-0000		2	PLATE	
300	312105-0329		8	SCREW M6S ISO 4017 M5X16 A480	
350	312115-0325		4	SCREW ISO4762 M5X10 A4 80	
400	315105-0146		8	WASHER BRB 5,3X10 RFR	
470	315105-0165		2	WASHER BRB 8,4X16 RFR	
510	90141-0015		4	RETAINING RING FOR SHAFT DIN 471 8 SS	
21B300	90458-2907		1	PROX.SWITCH IFS204	

Pos	Part No	UN	Qty	Description	Page No

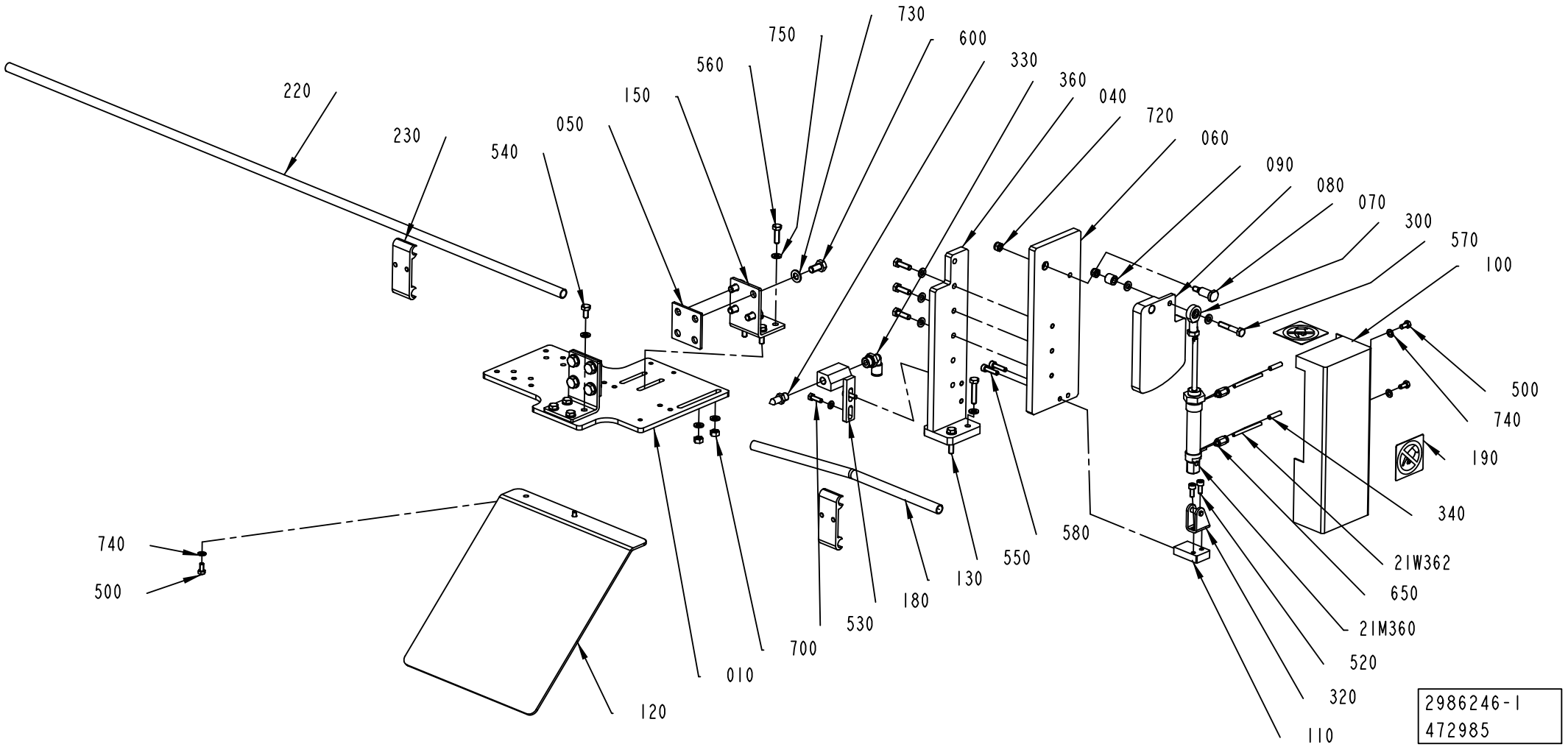
220
230
540
050
150
560
750
730
600
330
360
040
720
060
090
080
070
300
570
100
500
740
190
340
21W362
650
21M360
520
320
110
580
550
130
180
530
700
010
120
740
500
2986246-1
472985

ECM: 473912 - 20101109
Group number: 2986246-0100
Assembly Drawing: 2986246-1_1_AB

Pos	Part No	UN	Qty	Description	Page No
-					
010	2958971-0000		1	PLATE	
040	2873872-0000		1	BRACKET	
050	2815585-0000		2	SPACER	
060	2873876-0000		1	PLATE	
070	2817525-0000		1	SHAFT	
080	2817527-0000		1	PUSHER	
090	2817573-0000		1	SPACER	
100	2817578-0000		1	COVER	
110	2818204-0000		1	SUPPORT	
120	2818427-0000		1	SLIDE PLATE	
130	2818738-0000		1	RAILING	
150	2814679-0000		2	BRACKET	
180	2873866-0000		1	SUPPORT	
190	1128856-0000		2	PROHIBITION SIGN	
220	476221-0013		1	PIPE	
230	1020637-0000		2	HOLDER	
300	90115-0163		1	ROD END, ID=6 MM, M6X1	
320	90459-3655		1	REAR CLEVIS FOOT MOUNTING, LBN-12/16	
330	90424-0087		1	AIR NOZZLE	
340	90459-7368		2	MARKING FOR PNEUM. TUBING, PRZ04	
360	350002-0009		1	PUSH-IN L-FITTING QSL-F-G1/4-8	
500	312105-0325		5	SCREW M6S ISO 4017 M5X10 A480	
520	312115-0327		2	SCREW ISO4762 M5X12 A4 80	
530	312105-0329		2	SCREW M6S ISO 4017 M5X16 A480	
540	312105-0366		4	SCREW M6S ISO 4017 M6X12 A480	
550	312109-0374		2	SCREW M6S ISO 4017 M6X30 A480	
560	312105-0370		7	SCREW M6S ISO 4017 M6X20 A480	
570	312105-0376		1	SCREW M6S ISO 4014 M6X35 A480	
580	312115-0331		2	SCREW ISO4762 M5X20 A4 80	
600	312105-0449		8	SCREW M6S ISO 4017 M8X16 A480	
650	350001-0001		2	PUSH-IN FITTING QS-F-M5-4	
700	312607-0316		6	HEXAGON NUT, EN 24032 M6M M6 A480	
720	312812-0316		2	HEXAGON NUT, NY-LOCK M6 A480	
730	315105-0165		8	WASHER BRB 8,4X16 RFR	
740	315105-0146		7	WASHER BRB 5,3X10 RFR	
750	315105-0153		21	WASHER BRB 6,4X12 RFR	
21M360	90457-0871		1	DOUBLE ACTING, MINI-ISO, CYL. 16-25	
21W362	315400-0016	MM	500	TUBE PUN-H-4X0,75-BL	
21W364	315400-0016	MM	500	TUBE PUN-H-4X0,75-BL	

Pos	Part No	UN	Qty	Description	Page No

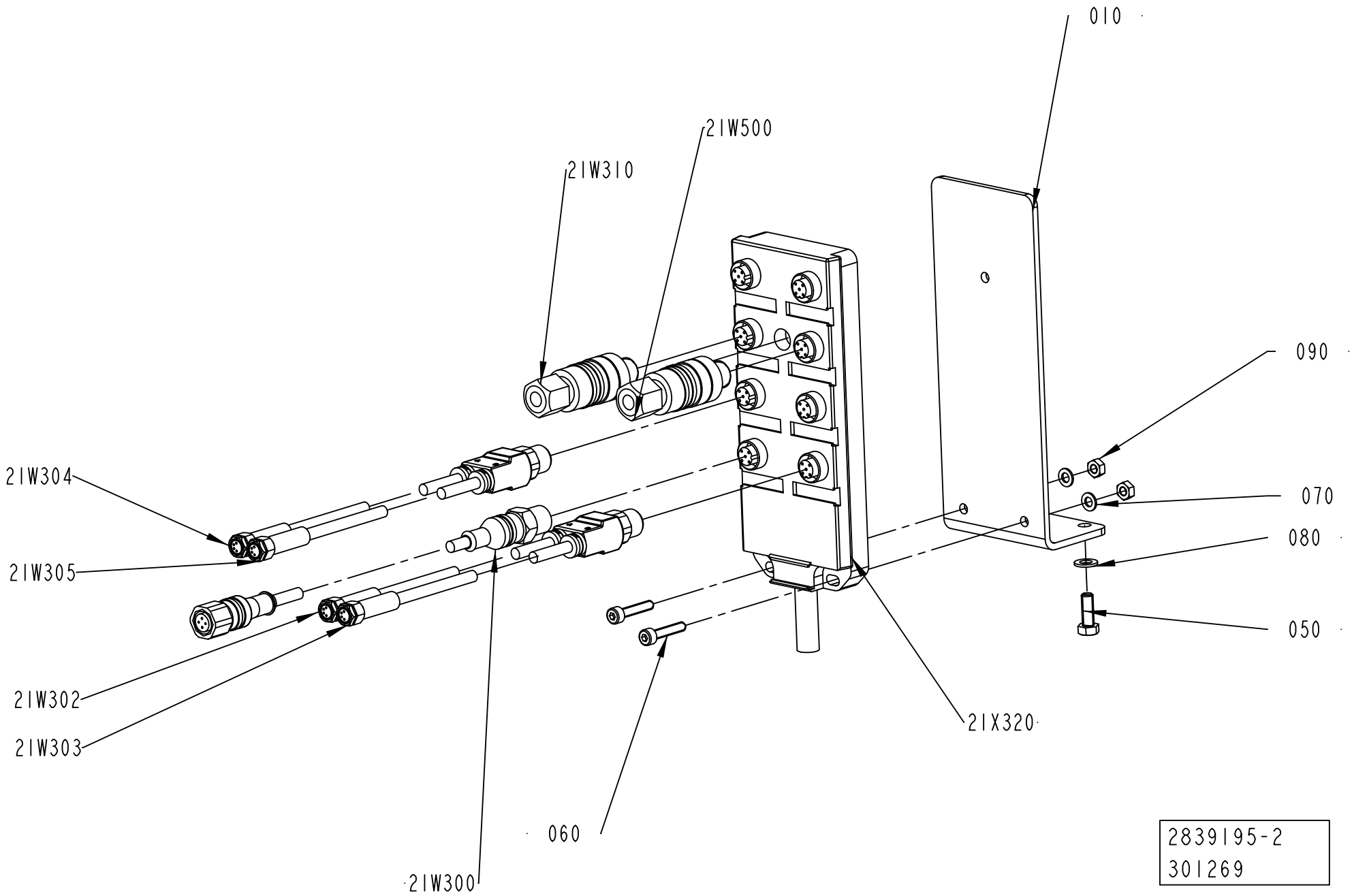
010
21W500
21W310
090
21W304
070
21W305
080
050
21W302
21W303
21X320
060
21W300
2839195-2
301269

ECM: 459266 - 20101001
Group number: 2839195-0100
Assembly Drawing: 2839195-2_1_AA

Pos	Part No	UN	Qty	Description	Page No
RECAP3, RECAP2 A3					
21W300	351411-0010		1	ACTU/SENS. CABLE PRST 4-PRKT 4-07/1,0M	
Common Parts					
010	2827671-0000		1	BRACKET	
050	312105-0328		2	SCREW M6S ISO 4017 M5X14 A480	
060	312115-0295		3	SCREW ISO4762 M4X20 A4 80	
070	315105-0136		3	WASHER BRB 4,3X8 RFR	
080	315105-0146		2	WASHER BRB 5,3X10 RFR	
090	312607-0312		3	HEXAGON NUT, EN 24032 M6M M4 A480	
21W302	90459-6586		1	ACT/SENS.Y-CABLE, ASBN 2-PRKMV 4-07/0,6M	
21W304	90459-6586		1	ACT/SENS.Y-CABLE, ASBN 2-PRKMV 4-07/0,6M	
21W310	90459-1663		1	CONNECTOR, 405204 RSC4/7	
21W500	90459-1663		1	CONNECTOR, 405204 RSC4/7	
21X320	90459-0839		1	DISTRIBUTION FRAME, ASBV 8 5-135/10M	

Pos	Part No	UN	Qty	Description	Page No

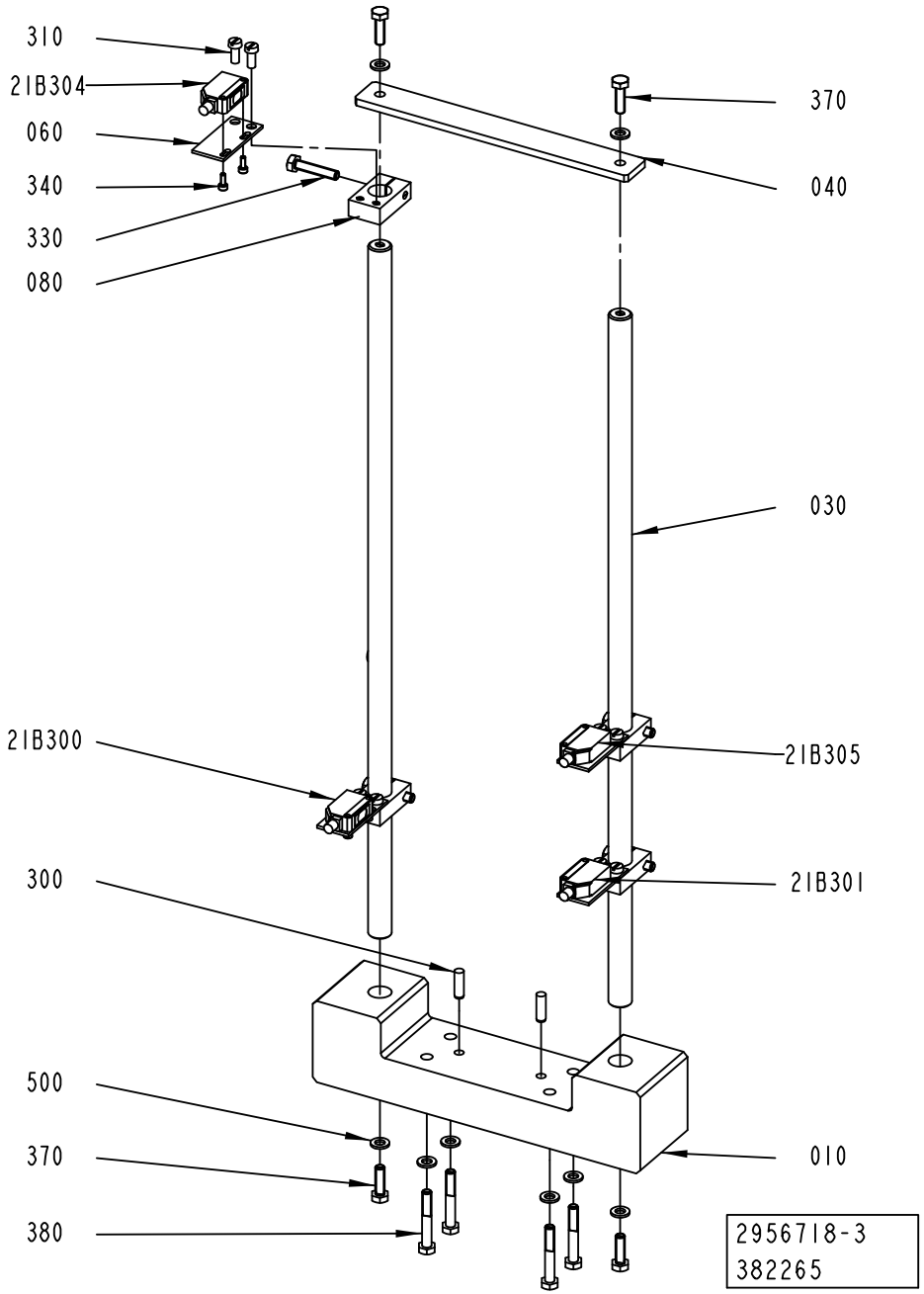
310
21B304
060
340
330
080
370
040
030
21B300
21B305
300
21B301
500
370
380
010
2956718-3
382265

ECM: 493754 - 20110701
Group number: 2956718-0100
Assembly Drawing: 2956718-3_1_AB

Pos	Part No	UN	Qty	Description	Page No
RECAP3, RECAP2 A3					
010	2986316-0000		1	BRACKET	
030	2956908-0000		2	SHAFT	
040	2957790-0000		1	BRACKET	
060	2826483-0000		4	BRACKET	
080	1189007-0000		4	CLAMP BLOCK	
310	312125-0327		8	SCREW ISO 1207 M5X12 A4	
330	312109-0374		4	SCREW M6S ISO 4017 M6X30 A480	
340	312115-0222		8	SCREW ISO4762 M3X8 A4 80	
370	312105-0370		4	SCREW M6S ISO 4017 M6X20 A480	
500	315105-0153		12	WASHER BRB 6,4X12 RFR	
21B300	90459-5529		1	PHOTOCELL E3Z-T86A, SENDER+RECIEVER	
Common Parts					
300	311103-0353		2	PARALLEL PIN ISO 2338 6M6X20 A1	
380	312105-0378		4	SCREW M6S ISO 4014 M6X40 A480	
21B304	90459-5529		1	PHOTOCELL E3Z-T86A, SENDER+RECIEVER	

Pos	Part No	UN	Qty	Description	Page No

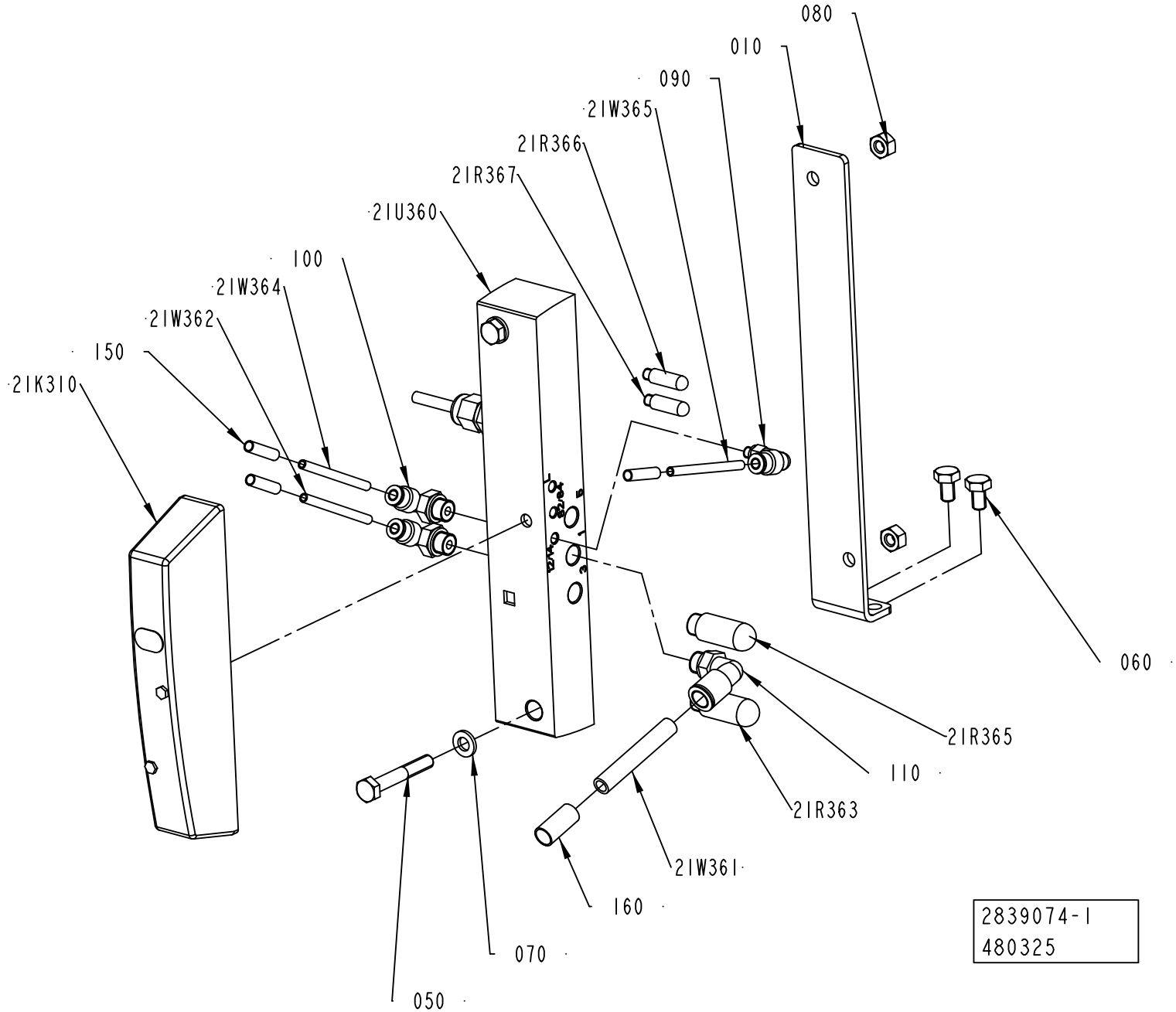
080
010
090
21W365
21R366
21R367
21U360
100
21W364
21W362
150
21K310
060
21R365
110
21R363
21W361
160
070
050
2839074-1
480325

ECM: 480325 - 20110401
Group number: 2839074-0100
Assembly Drawing: 2839074-1_1_AB

Pos	Part No	UN	Qty	Description	Page No
-					
010	2839073-0000		1	BRACKET	
050	312105-0378		2	SCREW M6S ISO 4014 M6X40 A480	
060	312105-0364		2	SCREW M6S ISO 4017 M6X10 A480	
070	315106-0153		2	WASHER ISO 7089-6-200 HV A4	
080	312605-0316		2	HEXAGON NUT, M6M M6 A280	
090	350002-0001		1	PUSH-IN L-FITTING QSL-F-M5-4	
100	350002-0005		2	PUSH-IN L-FITTING QSL-F-G1/8-4	
110	350002-0007		1	PUSH-IN L-FITTING QSL-F-G1/8-8	
150	90459-7368		3	MARKING FOR PNEUM. TUBING, PRZ04	
160	90459-7370		1	MARKING FOR PNEUM. TUBING, PRZ08	
21K310	90458-1197		1	VALVE, 5/2 BISTABLE	
21R363	90328-0047		1	SILENCER G1/8"	
21R365	90328-0047		1	SILENCER G1/8"	
21R366	90328-0029		1	SILENCER M5	
21R367	90328-0029		1	SILENCER M5	
21U360	90459-2591		1	SINGLE VALVE SUB-BASE CDSV5.0-AS-1/8	
21W361	315400-0004	M	4	TUBE PUN-H-8X1,25-BL	
21W362	315400-0016	M	0.5	TUBE PUN-H-4X0,75-BL	
21W364	315400-0016	M	0.5	TUBE PUN-H-4X0,75-BL	
21W365	315400-0016	M	0.5	TUBE PUN-H-4X0,75-BL	

Pos	Part No	UN	Qty	Description	Page No

Machine Type | Group Description | Used-In | Group Number | Page No

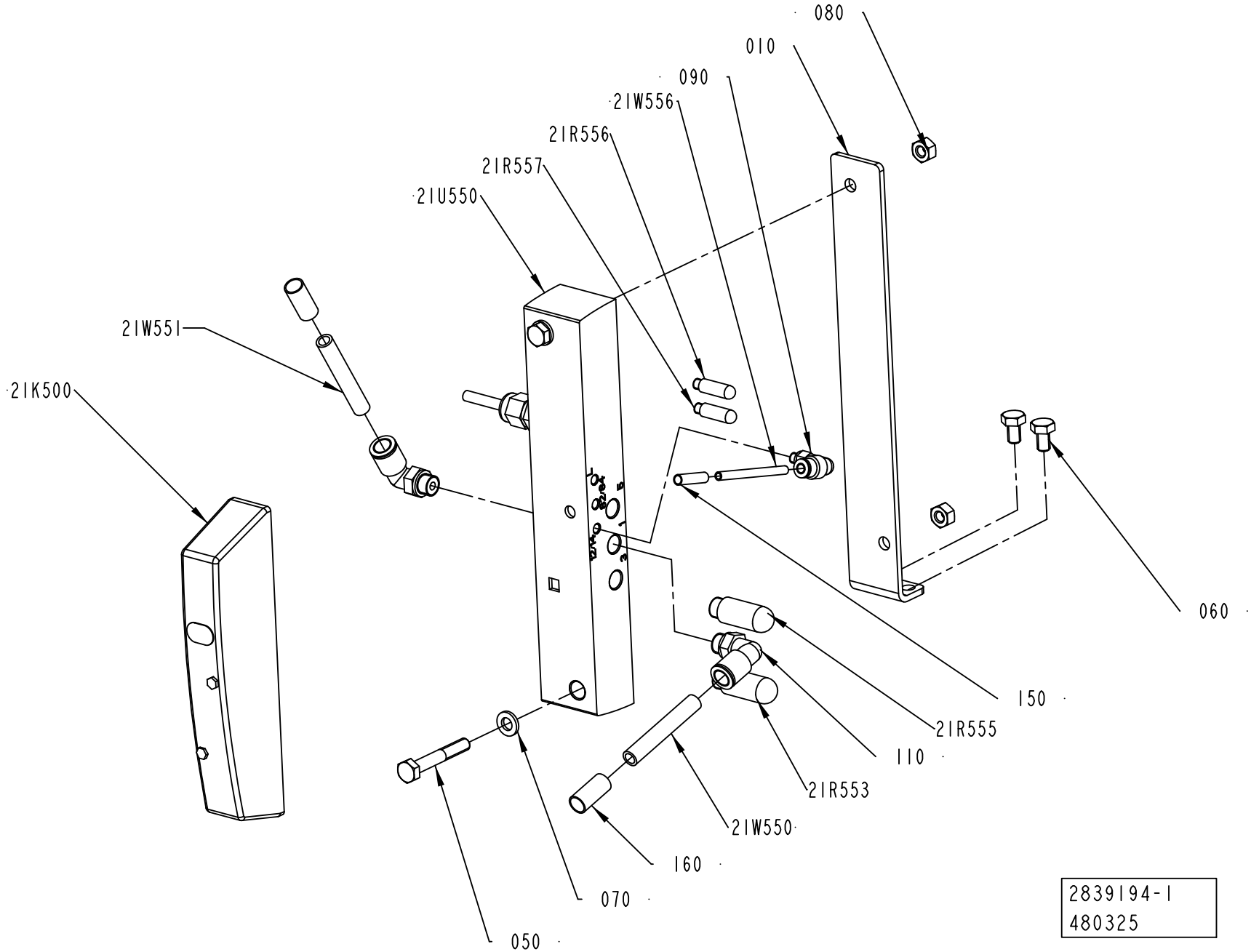
080
010
090
21W556
21R556
21R557
21U550
21W551
21K500
060
150
21R555
110
21R553
21W550
160
070
050
2839194-1
480325

ECM: 480325 - 20110401
Group number: 2839194-0100
Assembly Drawing: 2839194-1_1_AB

Pos	Part No	UN	Qty	Description	Page No
-					
010	2839073-0000		1	BRACKET	
050	312105-0378		2	SCREW M6S ISO 4014 M6X40 A480	
060	312105-0364		2	SCREW M6S ISO 4017 M6X10 A480	
070	315106-0153		2	WASHER ISO 7089-6-200 HV A4	
080	312605-0316		2	HEXAGON NUT, M6M M6 A280	
090	350002-0001		1	PUSH-IN L-FITTING QSL-F-M5-4	
110	350002-0007		2	PUSH-IN L-FITTING QSL-F-G1/8-8	
150	90459-7368		1	MARKING FOR PNEUM. TUBING, PRZ04	
160	90459-7370		2	MARKING FOR PNEUM. TUBING, PRZ08	
21K500	90458-1203		1	VALVE 2X3/2 1X OPEN 1X CLOSED	
21R553	90328-0047		1	SILENCER G1/8"	
21R555	90328-0047		1	SILENCER G1/8"	
21R556	90328-0029		1	SILENCER M5	
21R557	90328-0029		1	SILENCER M5	
21U550	90459-2591		1	SINGLE VALVE SUB-BASE CDSV5.0-AS-1/8	
21W550	315400-0004	M	4	TUBE PUN-H-8X1,25-BL	
21W551	315400-0004	M	4	TUBE PUN-H-8X1,25-BL	
21W556	315400-0016	M	0.5	TUBE PUN-H-4X0,75-BL	

Pos	Part No	UN	Qty	Description	Page No

This page is intentionally left blank.

ECM: 493010 - 20110701
Group number: 2873923-0100
Assembly Drawing:

Pos	Part No	UN	Qty	Description	Page No
TBA 1000B RECAP3					
010	1482064-0000		1	POSITION TEMPLATE	
TBA 1000S RECAP3					
010	1482063-0000		1	POSITION TEMPLATE	
TBA 1000SQ RECAP3					
010	1482065-0000		1	POSITION TEMPLATE	
TBA 1500S RECAP3					
010	1500071-0000		1	POSITION TEMPLATE	
TBA 2000S RECAP3, TBA 1890S RECAP3					
010	2636293-0000		1	POSITION TEMPLATE	

Pos	Part No	UN	Qty	Description	Page No

This page is intentionally left blank.

ECM: 446886 - 20100701
Group number: 2873953-0100
Assembly Drawing:

Pos	Part No	UN	Qty	Description	Page No
RECAP2 A3					
010	A893009301	KPC	8.28	RECAP2 A3 WHITE	
020	1143130-0003		1	BOX	
030	2529720-0062		4	LABEL	
RECAP3					
010	A894000101	KPC	5.93	RECAP3 A1 WHITE	
020	1350910-0000		1	BOX	
030	2529720-0109		4	LABEL	

Pos	Part No	UN	Qty	Description	Page No

Tetra Pak

SPC
Spare Parts Catalogue

This page is intentionally left blank.

ECM: 407049 - 20091001
Group number: 662914-0200
Assembly Drawing:

Pos	Part No	UN	Qty	Description	Page No
-					
0010	2879015-0200		1	ELECTRICAL DOCUMENT	9-5

Pos	Part No	UN	Qty	Description	Page No

Machine Type | Group Description | Used-In | Group Number | Page No

This page is intentionally left blank.

ECM: 407048 - 20091001
Group number: 2879015-0200
Assembly Drawing:

Pos	Part No	UN	Qty	Description	Page No
CAP 30/FLEX RECAP3, CAP 30/FLEX RECAP2 A3					
0040	2913432-0200		1	ELECTRICAL DOCUMENT	

Pos	Part No	UN	Qty	Description	Page No

Tetra Pak

SPC
Spare Parts Catalogue

This page is intentionally left blank.

ECM: 445517 - 20100701
Group number: 662916-0200
Assembly Drawing:

Pos	Part No	UN	Qty	Description	Page No
CONVEYOR CONTROL					
040	2873874-0100		1	AUTOMATION CONVEYOR CONTROL	**10-5**
LINE COMMUNICATION ETHERNET (ROCKWELL)					
030	2890013-0100		1	COMMUNICATION UNIT	**10-7**
GLUE SHELF					
010	2842806-0100		1	SHELF	**10-9**
PHOTOCELL UNIT					
080	2930179-0100		1	CONVEYOR CONTROL ACCESSORIES	**10-11**
POWER SUPPLY DEVICE					
090	2930182-0100		1	POWER SUPPLY DEVICE	**10-21**
LINE COMMUNICATION SNP					
020	2873925-0100		1	COMMUNICATION UNIT	**10-23**
FINAL DEST. USA					
070	2873930-0100		1	CAUTION SIGN LIST	**10-25**

Pos	Part No	UN	Qty	Description	Page No

Machine Type | Group Description | Used-In | Group Number | Page No

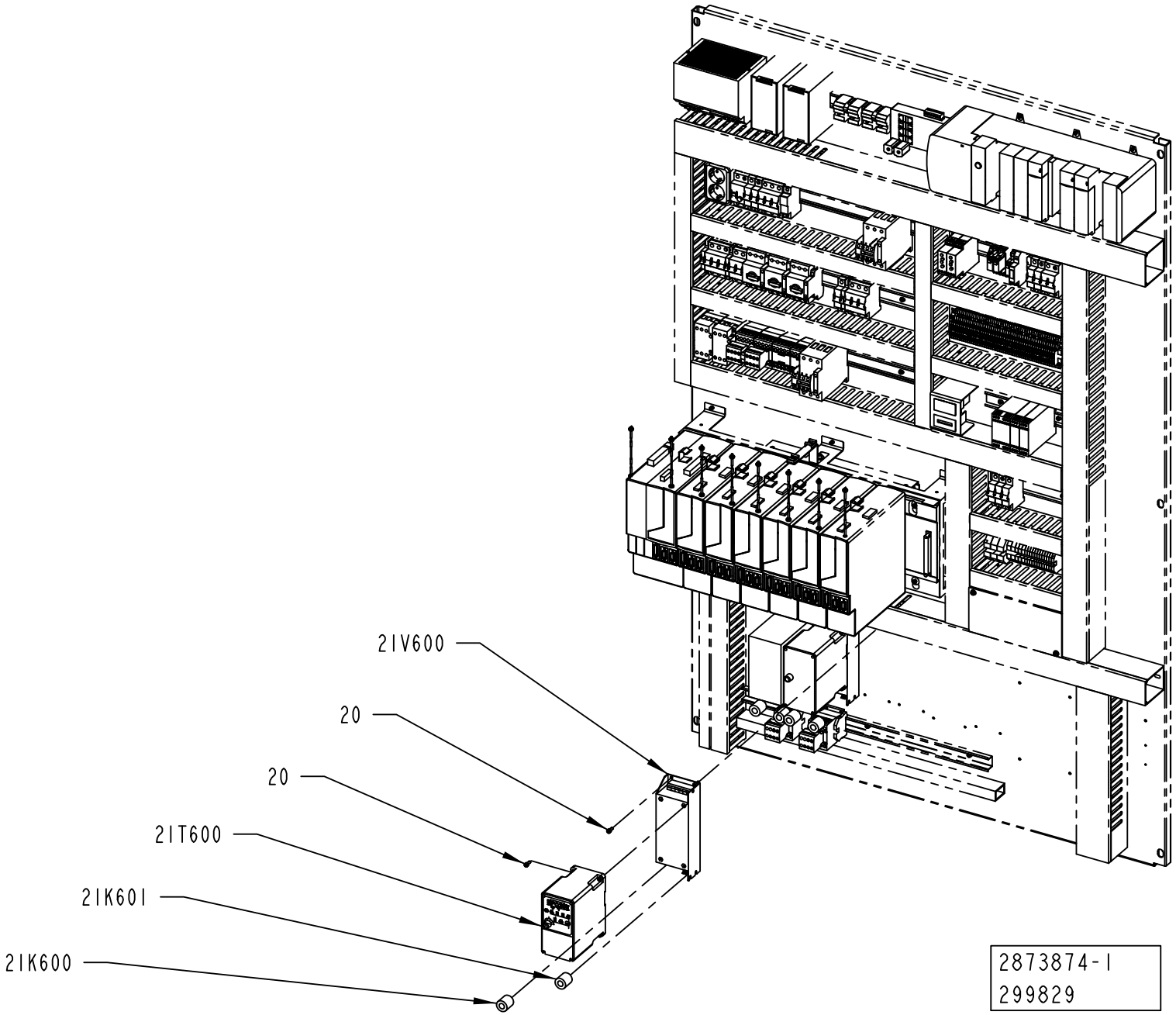
21V600
20
20
21T600
21K601
21K600
2873874-1
299829

ECM: 299829 - 20070528
Group number: 2873874-0100
Assembly Drawing: 2873874-1_1_AA

Pos	Part No	UN	Qty	Description	Page No
-					
020	312115-0327		8	SCREW ISO4762 M5X12 A4 80	
21K600	90458-1140		1	FERRITE, RI-26-28-13	
21K601	90458-1140		1	FERRITE, RI-26-28-13	
21T600	90459-3450		1	FREQ. CONV., 22A-A4P5N104	
21V600	90459-3460		1	FOOTPRINT FILTER 1 PHASE 10A	

Pos	Part No	UN	Qty	Description	Page No

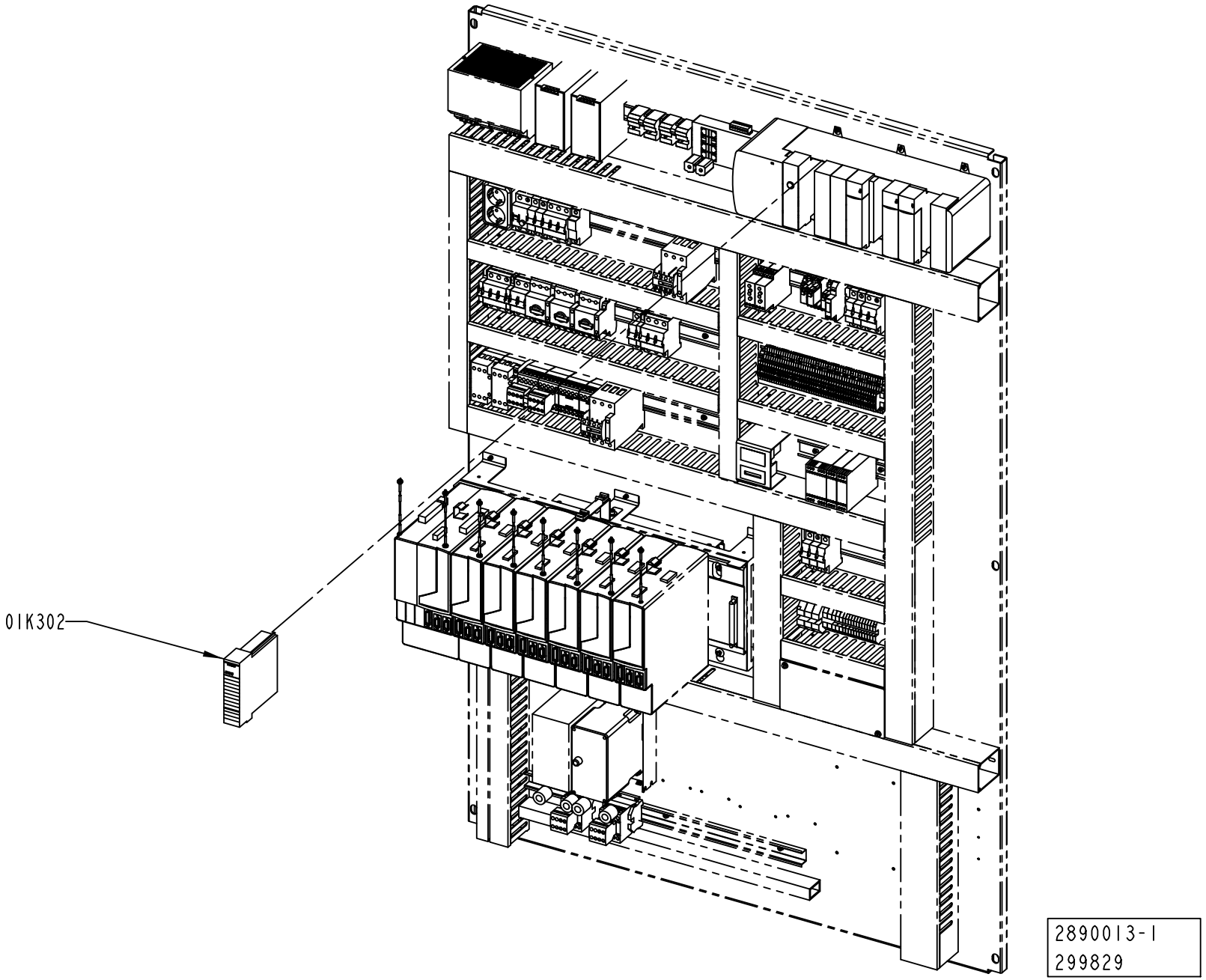
01K302
2890013-1
299829

ECM: 302635 - 20070528
Group number: 2890013-0100
Assembly Drawing: 2890013-1_1_AA

Pos	Part No	UN	Qty	Description	Page No	Pos	Part No	UN	Qty	Description	Page No
-											
01K302	90459-2477		1	ETHERNET I/P BRIDGE MODULE, 1756-ENBT							

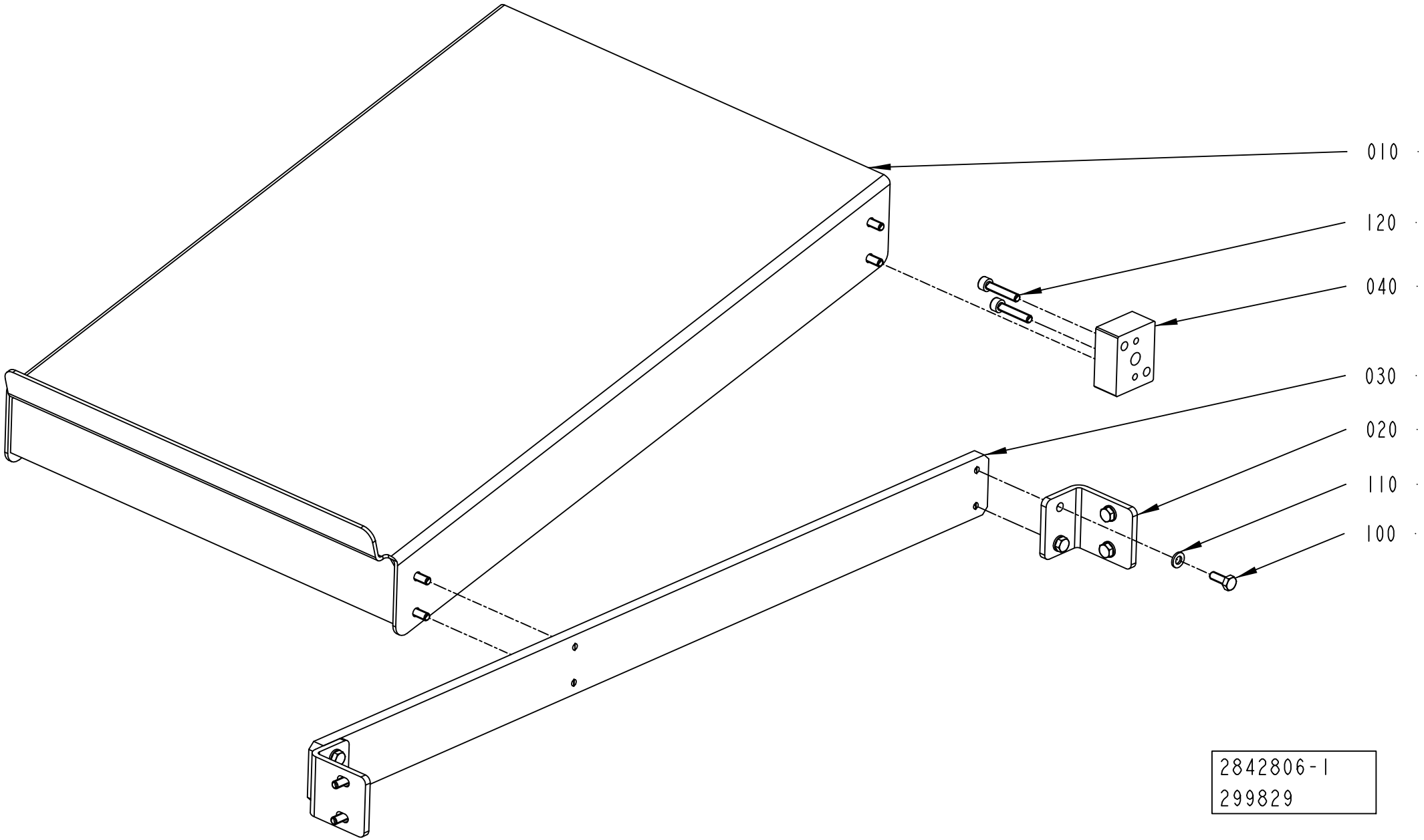
010
120
040
030
020
110
100
2842806-1
299829

ECM: 310549 - 20070528
Group number: 2842806-0100
Assembly Drawing: 2842806-1_1_AB

Pos	Part No	UN	Qty	Description	Page No
-					
010	2842800-0000		1	SHELF	
020	2842804-0000		2	BRACKET	
030	2842803-0000		1	PLATE	
040	2842805-0000		1	SPACER	
100	312105-0368		12	SCREW M6S ISO 4017 M6X16 A480	
110	315105-0153		12	WASHER BRB 6,4X12 RFR	
120	312115-0374		2	SCREW ISO4762 M6X30 A4 80	

Pos	Part No	UN	Qty	Description	Page No

This page is intentionally left blank.

ECM: 335433 - 20080407
Group number: 2930179-0100
Assembly Drawing:

Pos	Part No	UN	Qty	Description	Page No
-					
010	2930176-0100		1	SENSOR GROUP	**10-13**
020	2930177-0100		1	CABLE MARKING SET	**10-15**
030	2930178-0100		1	SENSOR GROUP	**10-17**

Pos	Part No	UN	Qty	Description	Page No

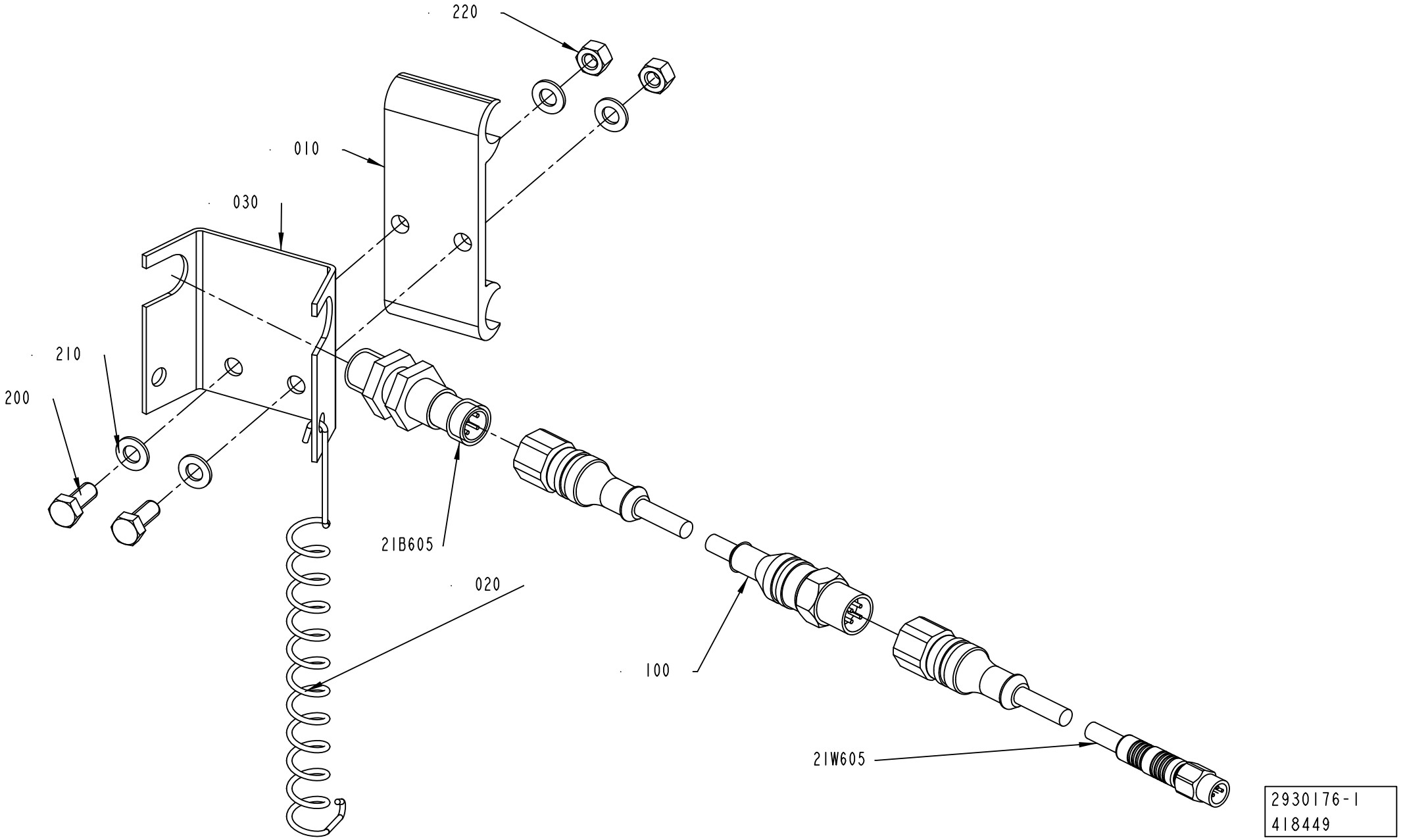
220
010
030
210
200
21B605
020
100
21W605
2930176-1
418449

ECM: 419543 - 20100110
Group number: 2930176-0100
Assembly Drawing: 2930176-1_1_AB

Pos	Part No	UN	Qty	Description	Page No
-					
010	1020637-0000		1	HOLDER	
020	532412-0000		1	SPRING	
030	545897-0000		1	BRACKET	
100	351411-0050		1	ACTU/SENS. CABLE PRST 4-PRKT 4-07/5,0	
200	312105-0327		2	SCREW M6S ISO 4017 M5X12 A480	
210	315105-0146		4	WASHER BRB 5,3X10 RFR	
220	312605-0314		2	HEXAGON NUT, M6M M5 A280	
21B605	90458-2907		1	PROX.SWITCH IFS204	
21W605	351405-0050		1	SENS. CABLE RSMVN 3-PRKT 4-3-06/5,0M	

Pos	Part No	UN	Qty	Description	Page No

This page is intentionally left blank.

ECM: 335431 - 20080407
Group number: 2930177-0100
Assembly Drawing:

Pos	Part No	UN	Qty	Description	Page No
-					
010	1497932-0000		1	SET OF SIGNS	
100	359009-0100		10	CABLE MARKING, YELLOW, PK2/4"0"	
110	359009-0101		10	CABLE MARKING, YELLOW, PK 2/4"1"	
120	359009-0102		10	WORM GEAR BS 50 G	
130	359009-0103		10	CABLE MARKING, YELLOW, PK 2/4"3"	
140	359009-0104		10	CABLE MARKING, YELLOW, PK 2/4"4"	
150	359009-0105		10	CABLE MARKING, YELLOW, PK 2/4"5"	
160	359009-0106		10	CABLE MARKING, YELLOW, PK 2/4"6"	
170	359009-0107		10	CABLE MARKING, YELLOW, PK 2/4"7"	
180	359009-0108		10	CABLE MARKING, YELLOW, PK 2/4"8"	
190	359009-0109		10	CABLE MARKING, YELLOW, PK 2/4"9"	
200	359009-0222		10	CABLE MARKING, YELLOW, PK 2/4" W"	
210	352113-0101		10	CABLE TIE, BLACK 92X2,5 MM	
220	359009-0201		10	CABLE MARKING, YELLOW, PK 2/4" B"	

Pos	Part No	UN	Qty	Description	Page No

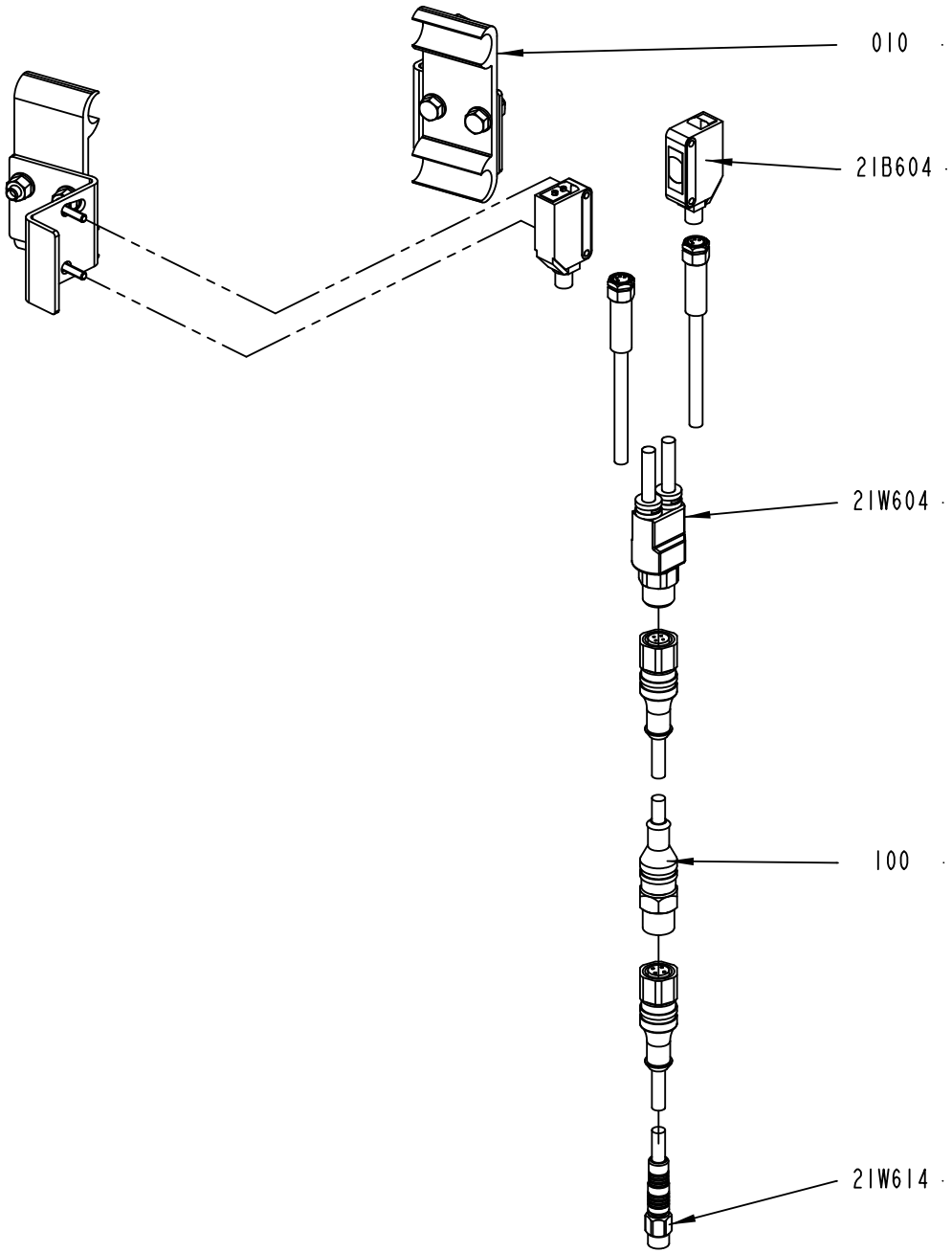

2930178-1
418449

ECM: 419544 - 20100110
Group number: 2930178-0100
Assembly Drawing: 2930178-1_1_AB

Pos	Part No	UN	Qty	Description	Page No
-					
010	2778586-0100		1	SENSOR	**3-37, 10-19**
100	351411-0050		1	ACTU/SENS. CABLE PRST 4-PRKT 4-07/5,0	
21B604	90459-5529		1	PHOTOCELL E3Z-T86A, SENDER+RECIEVER	
21W604	90459-6586		1	ACT/SENS.Y-CABLE, ASBN 2-PRKMV 4-07/0,6M	
21W614	351405-0050		1	SENS. CABLE RSMVN 3-PRKT 4-3-06/5,0M	

Pos	Part No	UN	Qty	Description	Page No

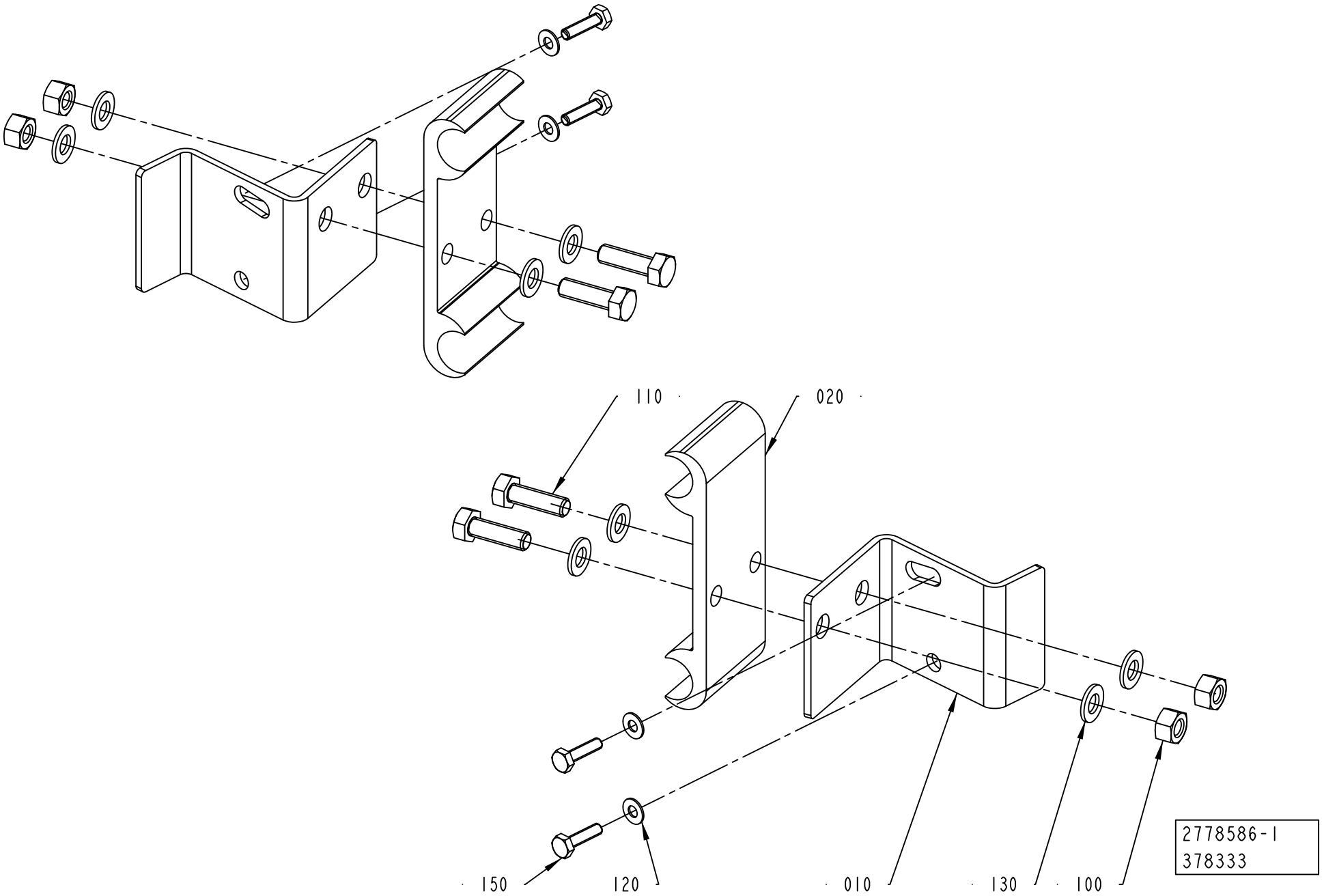
110
020
150
120
010
130
100
2778586-1
378333

ECM: 378333 - 20090406
Group number: 2778586-0100
Assembly Drawing: 2778586-1_1_AB

Pos	Part No	UN	Qty	Description	Page No
-					
010	2778580-0000		2	BRACKET	
020	1020637-0000		2	HOLDER	
100	312605-0314		4	HEXAGON NUT, M6M M5 A280	
110	312105-0329		4	SCREW M6S ISO 4017 M5X16 A480	
120	315106-0124		4	WASHER ISO 7089-3-200 HV A4	
130	315105-0146		8	WASHER BRB 5,3X10 RFR	
150	90287-0175		4	SCREW M6S M3X12 A480	

Pos	Part No	UN	Qty	Description	Page No

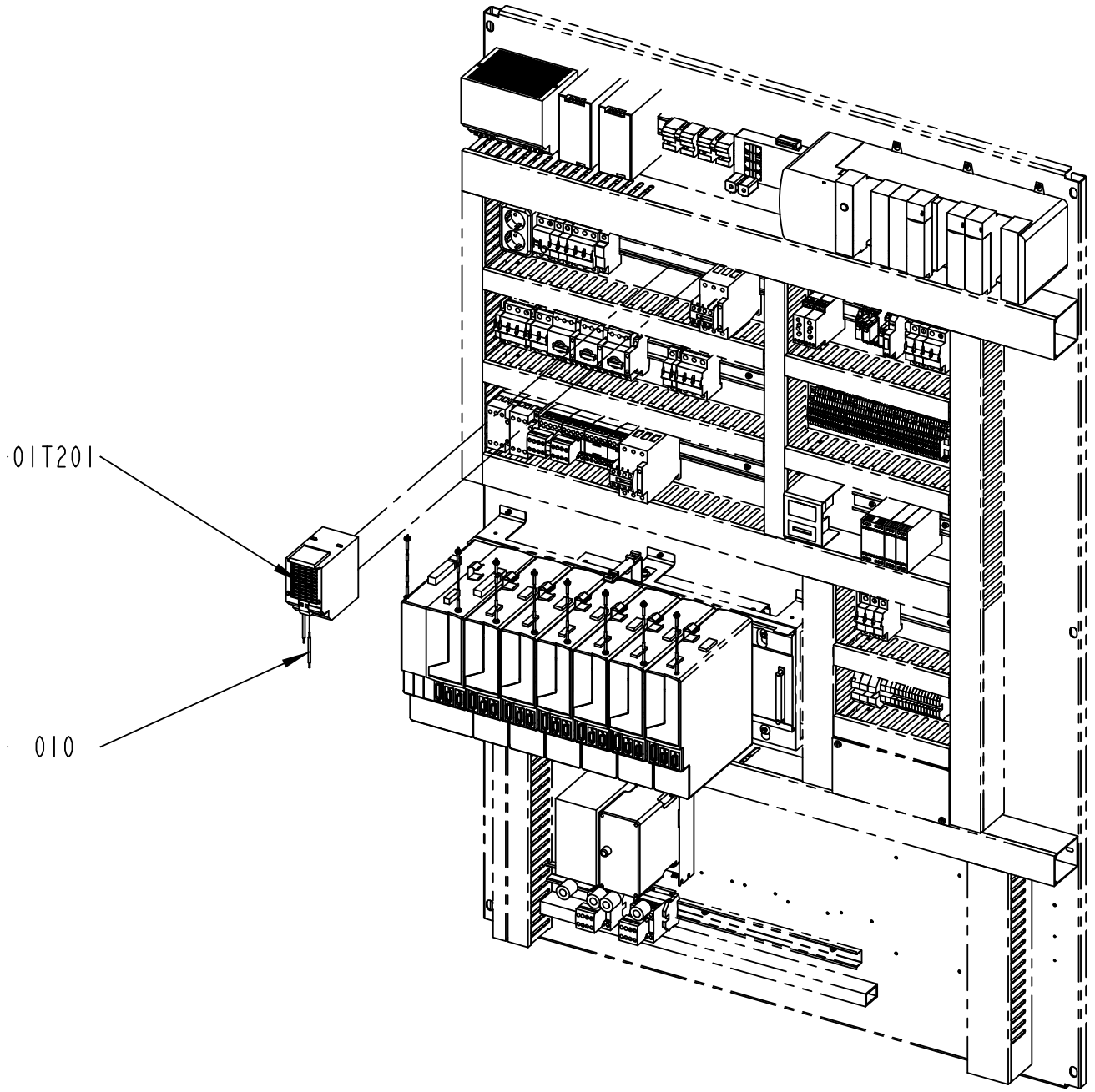

2930182-1
335187

ECM: 337066 - 20080407
Group number: 2930182-0100
Assembly Drawing: 2930182-1_1_AA

Pos	Part No	UN	Qty	Description	Page No
-					
010	351160-0105	M	5	WIRE AWM 1X2,5 MM2 DARKBLUE	
100	353001-0115		10	END SLEEVE 2,5/14	
110	359000-0013		10	WIRE MARKING, YELLOW, PA1/3"+"	
120	359000-0023		10	WIRE MARKING, YELLOW, PA1/3"-"	
130	359000-0300		10	WIRE MARKING, YELLOW, PA1/3"0"	
140	359000-0301		10	WIRE MARKING, YELLOW, PA1/3"1"	
150	359000-0302		10	WIRE MARKING, YELLOW, PA1/3"2"	
160	359000-0303		10	WIRE MARKING, YELLOW, PA1/3"3"	
170	359000-0304		10	WIRE MARKING, YELLOW, PA1/3"4"	
180	359000-0305		10	WIRE MARKING, YELLOW, PA1/3"5"	
190	359000-0306		10	WIRE MARKING, YELLOW, PA1/3"6"	
200	359000-0307		10	WIRE MARKING, YELLOW, PA1/3"7"	
210	359000-0308		10	WIRE MARKING, YELLOW, PA1/3"8"	
220	359000-0309		10	WIRE MARKING, YELLOW, PA1/3"9"	
01T201	90459-2939		1	BUFFER UNIT, 6EP1961-3BA01	

Pos	Part No	UN	Qty	Description	Page No

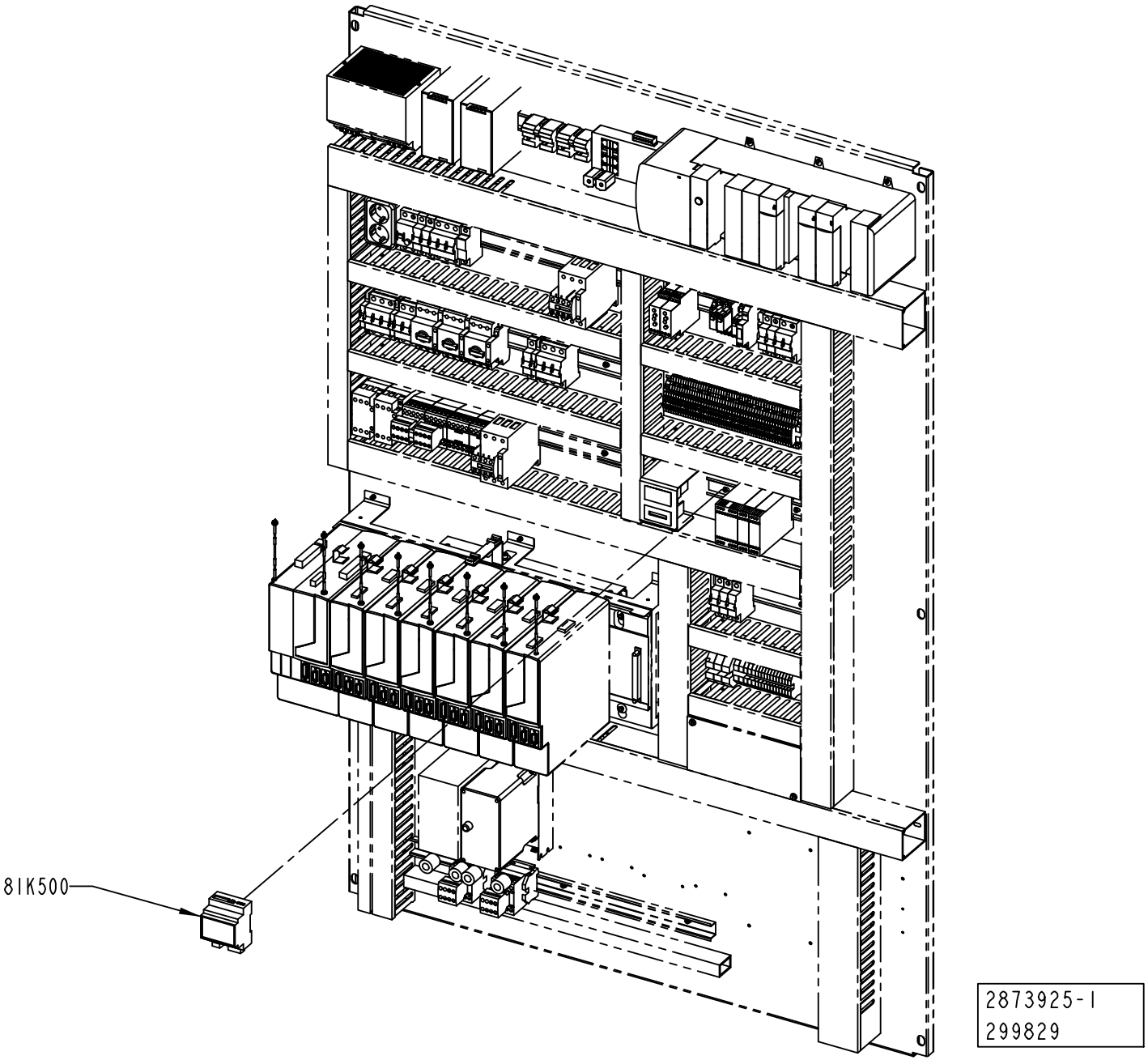
81K500
2873925-1
299829

ECM: 302633 - 20070528
Group number: 2873925-0100
Assembly Drawing: 2873925-1_1_AA

Pos	Part No	UN	Qty	Description	Page No
-					
81K500	90459-4235		1	SNP TO DF1 GATEWAY, 0220 1166 01 REV B	

Pos	Part No	UN	Qty	Description	Page No

Machine Type | Group Description | Used-In | Group Number | Page No

This page is intentionally left blank.

ECM: 444605 - 20100701
Group number: 2873930-0100
Assembly Drawing:

Pos	Part No	UN	Qty	Description	Page No
-					
010	359715-0100		7	WARNING SIGN ANSI (H), ELECTRIC SHOCK	
020	90459-2232		1	WARNING SIGN ANSI (H), DO NOT WASH	
040	90459-7458		3	WARNING SIGN ANSI (H), HOT SURFACE	
050	359725-0100		2	WARNING SIGN ANSI (H), ENTANGLEMENT	
060	90459-7228		1	ELECTRICAL EQUIPMENT SIGN, TEMPLATE	
70	359725-0125		2	WARNING SIGN ANSI (V), PNEUMATIC ENERGY	
80	359725-0108		1	WARNING SIGN ANSI (H), MOVING PART	

Pos	Part No	UN	Qty	Description	Page No

Tetra Pak

SPC
Spare Parts Catalogue

Part No	Description	Page No
A893009301	RECAP2 A3 WHITE	8-33
90001-0033	WALL SOCKET, E1834666	7-9
90005-0060	WASHER PLAIN, RBS 6,4/M6)/18,H=1,5	7-35, 7-55
90005-0064	WASHER PL.RND.NYL.4,3/9, H=0,8	7-5
90005-0082	WASHER PLAIN ROUND 4,3(M4)/12,H=1	7-9
90005-0139	WASHER PLAIN ROUND 5,2(M5)/15, H=1,6	1-13
90015-0020	LEAD-IN, TET5-7, E-1458016	3-69
90015-0021	LEAD-IN, TET 10-14, E1458023	3-55, 3-57
90017-0029	LOCKING LEVER, NO. KR8X30-SUS	1-19, 1-51, 3-17, 3-19, 3-21
90024-0036	FEED THROUGH FILTER, 52-160-002-AD00	7-7
90024-0060	FILTER 80 A 440/250 VAC, B84144-A0080R00	7-7
90028-0020	CONE TUBE 2,5MM	3-71, 3-73, 3-75
90028-0021	CONE TUBE 4 MM	3-71, 3-73, 3-75
90028-0022	CONE TUBE 6 MM	3-69
90030-0200	CONN. ELBOW, WE06LM71	3-69, 3-71, 3-73, 3-75
90032-0038	BLOCK 2 WAYS	3-71, 3-73, 3-75
90032-0039	BLOCK 4 WAYS	3-71, 3-73, 3-75
90032-0043	DISTRIBUTION BLOCK 3 WAYS	3-69
90036-0057	LIGHT BULB, BA9S 28V	3-93
90036-0068	BULB 5W 24V, SL-L24 205348	3-79
90044-0192	LIMIT SW. SZ2586.000	7-5
90051-0054	STELLAR KNOB, INT. THREAD, NO. 8306-0340	8-9
90053-0029	COUNTER, F524.800FA3C 24VDC	7-43
90053-0031	HOUR COUNTER, B 609.10 10-50VDC	7-43
90055-0147	PUSH-IN Y-CONNECTOR QSY-12	5-57
90055-0222	ELBOW WITH TAILPIECE 6/6 MM	3-55, 3-57
90055-0257	PUSH-IN Y-CONNECTOR QSY-6	5-55
90062-0015	LOCK WASHER SERRAT.EXT.GEAR,6,4/11 H=0,7	7-5
90062-0060	LOCK WASHER 5,3/10 H=0,6 FZB	3-45
90064-0093	PUSH BUTTON, GREEN	3-93
90064-0098	PUSH BUTTON, WHITE	3-93
90069-0254	GEARS, WORM MOTOR SN5D56A-4	5-21
90077-0113	TERMINAL BLOCK WDK 2.5	3-95, 3-97, 7-17, 7-19, 7-21, 7-23, 7-25, 7-27, 7-61
90077-0114	END PLATE, WAP 16+35 WTW 2,5-10	3-95, 3-97
90082-0013	SURGE PROTECTION DEVICE PU4CR 8021520000	7-7
90087-0019	PLUG M10X1 STAINLESS	3-71, 3-73, 3-75
90091-0304	RADIAL SEAL 45X65X8 MM DUST LIP	1-27, 1-31, 1-37, 1-41
90091-0322	RADIAL SEAL 25X42X7 MM DUST LIP	1-7, 1-9
90092-0052	METERING VALVE 10 MM3	3-71, 3-73, 3-75
90092-0054	METERING VALVE 50 MM3	3-71, 3-73, 3-75
90099-0005	MOUNTING RAIL SUPPORT, TSTW 5/M5	7-59
90099-0191	HEXAGON NYLON NUT, M4X0,7	7-5
90110-0052	MALE INSERT, HAN E06, 0933 0062 601	5-21, 6-9, 6-23
90110-0053	FEMALE INSERT HAN 6 E 09 33 006 2701	3-7, 3-9
90110-0095	CONNECTOR, PLUG SOCKET, MSSD-C-4P	3-63
90115-0134	ROD END, ID=10 MM, M10X1,25	1-13
90115-0163	ROD END, ID=6 MM, M6X1	8-21
90119-0108	RELAY OMRON G2R-2-SNI-24DC	3-95, 3-97, 7-13, 7-57
90125-0020	PLATE COMPLETE	3-45
90129-0018	BASE, P2RF-08-E	3-95, 3-97, 7-13, 7-57
90134-0030	SLEEVE FOR PLASTIC TUBE	3-69, 3-71, 3-73, 3-75
90134-0031	SLEEVE FOR PLASTIC TUBE	3-71, 3-73, 3-75
90134-0039	BUSHING VALVE CONNECTION 2,5 MM	3-71, 3-73, 3-75
90134-0040	BUSHING VALVE CONNECTION 4 MM	3-71, 3-73, 3-75
90134-0051	SPACING COLLAR DOSING BLOCK	3-71, 3-73, 3-75
90134-0052	PLUG DOSING BLOCK	3-71, 3-73, 3-75
90134-0054	BLOCK CONNECTION M10X1	3-71, 3-73, 3-75
90134-0055	BUSHING/NUT INLET/OUTLET 6 MM	3-69
90134-0058	CONNECTION	2-11, 2-13, 3-71, 3-73, 3-75
90134-0068	CONNECTION	2-11, 3-71, 3-73, 3-75
90141-0015	RETAINING RING FOR SHAFT DIN 471 8 SS	8-17, 8-19
90141-0016	RETAINING RING FOR SHAFT DIN 471 10 SS	5-9, 5-15, 5-25, 5-27, 5-31
90143-0071	RUBBER STRIP 4X20MM	3-93
90143-0098	RUBBER STRIP, CLAMPING, NO. 1038-02	3-109
90152-0051	HOSE, SPIRAL CONDUIT, 25X18, UL 1816	3-45, 3-93
90152-0060	HOSE, SPIRAL CONDUIT, 42X35, UL3529	3-93
90152-0070	HOSE, SPIRAL CONDUIT, 32,5X26, UL 2621	3-93
90152-0075	HOSE	3-45
90153-0023	ADHESIVE, SILICON 251470 TUB 90CC(UN1993	6-19
90153-0059	.50.0 ADHESIVE, HOTMELT RECAP 12 KG	8-13
90157-0016	THREAD LOCKING, LOCTITE 242 50 ML	5-39, 5-47, 6-23
90157-0037	THREAD SEALANT LOCTITE 542	1-7, 1-9, 1-43, 1-45
90157-0041	SEALING COMPOUND, RHODORSEAL 561	3-109, 3-111, 3-113, 3-129, 3-131, 3-137, 3-139, 3-141
90164-0015	LIGHT FIXTURE, RL70CV-111 / 230V 50HZ	3-87
90164-0303	LIGHT FIXTURE, BRACKET 70MM	3-87
90165-0007	PIPE CLIP FOR TUBE D=8 MM	7-9
90166-0108	TUBE 6 MM PA TRANSP.	3-69, 3-71, 3-73, 3-75
90166-0109	TUBE 4 MM PA TRANSP.	3-71, 3-73, 3-75
90166-0113	HOSE	3-7, 3-9
90166-0126	TUBE 12 MM PA,TRANSP.	1-31, 1-41, 1-43, 1-45
90166-0132	TUBE 6 MM PA,TRANSP.	3-69, 3-71, 3-73, 3-75
90166-0143	TUBE 2,5 MM PA TRANSP.	3-71, 3-73, 3-75
90181-0038	CABLE DUCT, PLASTIC, 40X40	3-93
90181-0182	CABLE TRENCH PARTS	3-7, 3-9

Part No	Description	Page No
90181-0183	CABLE DUCT, FITTING, B2	3-7, 3-9, 4-37
90181-0184	CABLE TRENCH PARTS	3-7, 3-9
90181-0186	CABLE DUCT, ELBOW BRACKET, B27	3-7, 3-9
90181-0190	CABLE DUCT, WALL BRACKET, B4 MINI	3-7, 3-9
90181-0314	CABLE TRENCH PARTS	3-7, 3-9
90187-0045	BALL VALVE, G1/4 CR PL	3-49
90187-0191	BALL VALVE, R1/8 - HOSE 6 MM	3-55, 3-57
90191-0069	WHEEL, NO. RSER 40X45	5-15
90194-0152	SIGN, EARTH	7-5
90206-0124	HEATING ELEMENT 2X1500W 230V	3-45
90214-0123	BALL BEARING, 10X30X9 MM	4-13, 4-15
90214-0186	BALL BEARING 30/42X7	1-7, 1-9
90220-0183	SCR. CABLE 2X0,34MM2	7-63
90224-0325	ELBOW 90 COUPL.,EXT.THREAD 10/8-G1/4"	3-49
90224-0372	NIPPLE, EXT.THREAD, HEXAGON, R1/4-R1/4	3-63
90226-0458	MOUNTING SCREW	3-91, 3-103, 3-105, 3-109, 3-115, 3-117, 3-121, 3-123, 3-135, 3-137, 3-141
90235-0748	THROTTLE CHECK VALVE, GRA-1/4-B	3-55, 3-57
90235-0844	THROTTLE CHECK VALVE M5, MANUAL, 6MM	5-49
90235-0846	THROTTLE CHECK VALVE G1/8", MANUAL, 6	6-7
90235-0848	THROTTLE CHECK VALVE G1/8", MANUAL,8	6-21
90237-0123	LOCK, 1121-U10C	3-113, 3-129, 3-131
90237-0128	LOCK CYLINDER, 1109-SU125	3-113, 3-129, 3-131
90237-0144	GUIDE, 1121-SU540	3-113, 3-129, 3-131
90237-0147	LOCKING LUG, NO. 1121-53-0P	3-113, 3-129, 3-131
90237-0175	TURNING HANDLE, 1125-U185-0A	3-113, 3-129, 3-131
90240-0262	FLANGE BUSHING, IGLIDUR X 12X14X12	2-7
90259-0313	AUXILIARY CONTACT, NHI21-PKZ0	7-31, 7-57
90261-0025	PLUG, BLIND, PLASTIC GPN300F28	3-55, 3-57
90261-0064	PLUG, BLIND, PLASTIC, NO. SFL42	1-25, 1-35
90264-0078	FAN, 2BH1300-7AH16	6-23
90274-0084	PRESSURE GUARD, 1800 KPA	3-69
90287-0124	SCREW PAN HEAD MSCS M4X12 NYLON	7-11
90287-0154	SCREW, SOCK.SET DOGPOINT M6X10	3-11
90287-0163	SCREW SPRINGLOAD. SLOTTED HEAD M6X14	5-39
90287-0175	SCREW M6S M3X12 A480	1-19, 3-11, 3-37, 3-39, 3-41, 6-7, 6-11, 6-13, 6-17, 10-19
90287-0199	SCREW M6S ISO 4017 M5X6 A480	4-5, 5-13
90287-0230	SCREW, HEX.SOCK.HEAD SHOULD. M5X6	1-57
90287-0330	SCREW M6S ISO 4017 M10X70 A480	8-7
90296-0068	SHELL ALVANIA GREASE EP 2 (1PC=20L)	4-15, 5-7, 5-47
90296-0075	SHELL OMALA OIL 320 (1PC=20L)	3-69
90328-0017	SILENCER, D=6 MM	1-13, 3-69
90328-0026	SILENCER G1/4"	3-63
90328-0029	SILENCER M5	3-55, 3-57, 8-27, 8-29
90328-0047	SILENCER G1/8"	1-55, 3-55, 3-57, 5-53, 5-55, 8-27, 8-29
90330-0026	PLUG, EXT. G-THREAD, G1/4	3-63
90330-0066	PLUG, EXT. G-THREAD, G1/8	6-7, 6-17
90330-0134	REDUCING NIPPLE, G1/8EXT-G1/4INT	3-53
90335-0252	TENSION SPRING	4-45, 8-13
90347-0011	VIBRATION DAMPER MEGI 781056	3-11
90415-0030	OIL FILTER PN 100 ORD.NO 2.77 10 70.1	3-69
90417-0337	TIMING BELT 16T10/370 PU	5-21
90424-0087	AIR NOZZLE	8-21
90424-0089	AIR NOZZLE, BSPT1/4, AAB727-1/4-15	3-53, 5-33
90439-0295	SERVICE KIT, NO. 111940	3-89
90450-0513	DOUBLE ACTING, COMPACT, CYL 32-25	6-23
90457-0008	PLUG, EXT. G-THREAD, 4PH-SS	6-17
90457-0192	WASHER PLAIN ROUND, 6,5/18, H=1,5	3-19, 3-21
90457-0203	FLEXIBLE CONDUIT PVC	6-23
90457-0871	DOUBLE ACTING, MINI-ISO, CYL. 16-25	8-21
90458-0058	SCREW M5X60 A280	6-23
90458-0181	RETAINING RING FOR BORE DIN 472 80 SS	1-43, 1-45
90458-0307	CABLE GLAND, M20X1,5, 5311 1020	3-7, 3-9, 5-21, 6-9, 6-23
90458-0310	CABLE GLAND, M40X1,5, 5311 1050	7-5
90458-0314	CABLE GLAND, M16X1,5, 5311 1110	7-5
90458-0316	CABLE GLAND, M25X1,5, 5311 1130	3-47
90458-0321	NUT, M12X1,5	3-69
90458-0323	NUT, M20X1,5	3-7, 3-9, 3-45, 3-93, 6-9, 6-23, 7-5
90458-0324	NUT, M25X1,5	3-55, 3-57, 3-93
90458-0326	NUT, M40X1,5	3-7, 3-9, 3-93
90458-0430	GLAND FITTING, VK 22054YUL16	3-7, 3-9, 3-45, 3-93
90458-0432	GLAND FITTING, VK 22555YUL21	3-55, 3-57, 3-93
90458-0434	GLAND FITTING, VK 24056YUL29	3-7, 3-9, 3-93
90458-0438	GLAND, EXTENDED WITH INSERT, M20X1,5	1-15
90458-0499	HOLDER 12 MM NO. 82 66861	3-53
90458-0507	PARALLEL KEY W. ROUND ENDS 6X6X60 MM	1-7, 1-9
90458-0755	GEARS, WORM MOTOR 1600079	4-5
90458-0965	GEARS, WORM MOTOR S37 DT 63 L4	6-9
90458-1095	RETAINING RING FOR BORE DIN 472 21 SS	5-9
90458-1140	FERRITE, RI-26-28-13	7-37, 10-5
90458-1170	FERRITE, SFC-6	7-45
90458-1173	MULTI DIAMETER MODULE, CM 30W40	7-5
90458-1174	MULTI DIAMETER MODULE, CM 20W40	7-5
90458-1175	MULTI DIAMETER MODULE, CM 15W40	7-5
90458-1178	FRAME, CF 8	7-5

Part No	Description	Page No
90458-1179	FRAME, CF 32	7-5
90458-1194	VALVE, 5/2 MONOSTABLE	5-53, 5-55
90458-1197	VALVE, 5/2 BISTABLE	8-27
90458-1199	VALVE CLOSED IN MID-POSITION, 5/3	5-53
90458-1202	VALVES 2X3/2, CLOSED	3-55, 3-57, 5-53, 5-55
90458-1203	VALVE 2X3/2 1X OPEN 1X CLOSED	8-29
90458-1204	BASIC SUB-BASE 4 VALVES, CDVI5.0-GB4-MP	5-53, 5-55
90458-1206	EXP. SUB-BASE 2 VALVES, CDVI5.0-EB	5-53
90458-1207	SEALING, STANDARD	5-53, 5-55
90458-1208	SEALING, CHANNEL 1 BLOCKED	5-55
90458-1212	LEFT ENDPLATE INCL. 10M CABLE	5-53, 5-55
90458-1214	RIGHT ENDPL EXT. PILOT AIR,CDVI5.0-EPR-S	5-53, 5-55
90458-1306	BLIND PLUG CIRCULAR, M12X1,5 514GFK/212	3-69
90458-1308	BLIND PLUG CIRCULAR, M20X1,5 514GFK/220	3-93, 7-5
90458-1309	BLIND PLUG CIRCULAR, M25X1,5 514GFK/225	3-93
90458-1438	BALL BEARING 10/19X5	5-25, 5-27
90458-1483	SPRAY GUN WATER G1/4	3-49
90458-1651	EMERGENCY STOP, ZB4-BS-844 ZB4-BZ-104	3-93, 3-127, 7-5
90458-1740	AIR GUN ASSEMBLY, CEJN 199589668	3-65
90458-1741	HOSE ASSEMBLY, CEJN 19 958 9669	3-49
90458-1886	SCREW M6S ISO 4017 M8X100 A480	6-11, 6-13
90458-2029	CLAMPING ELEMENT WITH SLEEVE, 32X43 MM	5-41
90458-2370	DOUBLE ACTING, ROUND, CYL 32-150	1-55
90458-2507	FUSE HOLDER, USBCC1	7-29
90458-2510	FUSE, ATDR6	7-29, 8-13
90458-2596	EXPANSION MODULE EXTRA SUPPLY 2 VALVES	5-55
90458-2748	PROX. SENSOR, SMT-10-PS-KL-5-LED-24	4-29
90458-2837	CONNECTING CABLE KMEB-1-24-5-LED	3-63
90458-2838	SILENCER, U-3/8	5-53, 5-55
90458-2907	PROX.SWITCH IFS204	1-49, 4-19, 5-7, 5-15, 5-31, 6-17, 6-19, 8-17, 8-19, 10-13
90458-2932	PLAIN BEARING, JUM-02-20	1-19, 1-51, 3-17
90458-2956	ELBOW PIPE JOINT, EXT.THREAD, D=6MM-G1/8	5-15, 6-23
90458-2975	GAS SPRING G6-15-120-1-317-WX22-WX22-150	5-7
90459-0290	NON-RETURN VALVE H-QS-6	3-55, 3-57
90459-0698	PLUG, EXT. G-THREAD, G1/8	5-55
90459-0699	BLANKING PLUG, CDVI5.0-B-G3/8	5-53
90459-0813	COOLING UNIT, KB20A619.01	7-55
90459-0839	DISTRIBUTION FRAME, ASBV 8 5-135/10M	4-37, 8-23
90459-0864	BULKHEAD CONNECTOR, 12 MM/M27X1,5	3-65
90459-0959	DISTRIBUTOR BLOCK 1492-PD3163	7-9
90459-1018	ROD END, BALL JOINT EYE M10X1,25	1-55
90459-1131	SAFETY TIME RELAY, E1T-0S-24VDC	7-57
90459-1395	SCREW HEX.SOCK.SET CONEPT.MS6SS M4X4 A2	4-13, 4-15
90459-1458	HOOD, SIDE ENTRY, HAN6E, 19 30 006 1540	5-21, 6-9, 6-23
90459-1461	HOUSING, 19 30 006 1255	3-7, 3-9
90459-1621	CABLE, ETHERNET RJ 45 CONNECT. 1 M	7-63
90459-1663	CONNECTOR, 405204 RSC4/7	4-29, 5-37, 8-23
90459-1825	ELBOW WITH TAILPIECE 12/12 MM	3-55, 3-57
90459-1826	ELBOW PIPE JOINT, EXT.THREAD,D=16MM-G1/2	3-65
90459-1858	BRACKET, MS6-WP	3-61
90459-1991	HOT MELT UNIT, #1049296	3-89
90459-2133	PUSH-IN FITTING QSSF-1/2-12-B	3-7, 3-9
90459-2215	STRAIGHT COUPLING, D=16 MM - G1/2"	3-65
90459-2232	WARNING SIGN ANSI (H), DO NOT WASH	10-25
90459-2243	SHUT OFF VALVE, MS4-EE-1/4-10V24	3-63
90459-2245	DISTRIBUTOR, MS4-FRM-1/4	3-63
90459-2247	BRACKET, MS4-WP	3-63
90459-2248	BRACKET, MS4-MV	3-63
90459-2265	PROHIBITION SIGN ISO, DO NOT WASH	3-89
90459-2291	SAFETY TIME RELAY, E1T-0.5S-24VDC	7-43
90459-2337	SHUT OFF VALVE, MS4-EM1-1/4	3-63
90459-2339	FILTER REGULATOR, MS4-LFR-1/4-D7-ERV-AS	3-63
90459-2413	PLC DIGITAL INPUT MODULE16 POINTS	7-37
90459-2458	BASEPLATE, 10 SLOT CONTROLLOGIX CHASSIS	7-37
90459-2474	PLC,DIGIT. OUTPUT MODULE 16 PTS 10-31VDC	7-37, 7-57
90459-2477	ETHERNET I/P BRIDGE MODULE, 1756-ENBT	7-37, 10-7
90459-2480	8-AXIS SERCOS MOTION MODULE	7-57
90459-2487	REMOVABLE TERMINAL BLOCK 20 POINTS	7-37, 7-57
90459-2488	REMOVABLE TERMINAL BLOCK 36 POINTS	7-37
90459-2494	DEVICENET I/O ADAPTER MODULE, 1734-ADN	3-95, 3-97
90459-2501	FIELD POWER DISTRIBUTOR, 1734-FPD	3-95, 3-97
90459-2503	DIGITAL INPUT 4 PTS SINK, 1734-IB4	3-95, 3-97
90459-2505	DIGITAL OUTPUT 4 PTS, 1734-OB4E	3-95, 3-97
90459-2519	TAP, OPEN STYLE	7-45
90459-2523	TERMINATOR, OPEN STYLE, 1485A-C2	7-45
90459-2526	REMOTE I/O BASE MODULE 8 POINTS, 1734-TB	3-95, 3-97
90459-2530	DEVICENET CABLE THIN	7-63
90459-2536	SERCOS CABLE 0.1M, 2090-SCEP0-1	7-35
90459-2540	SERCOS CABLE 3.0M, 2090-SCEP3-0	7-35
90459-2547	POWER RAIL SLOT FILLER, 2094-PRF	7-57
90459-2549	AC LINE FILTER 3-PHASE 30A, 2090-XXLF-X3	7-9
90459-2551	CONNECTOR, MOTOR FEEDBACK 15 PIN MALE	3-85
90459-2553	PUSH-IN L-FITTING QSL 16	3-55, 3-57, 3-65, 7-55
90459-2591	SINGLE VALVE SUB-BASE CDSV5.0-AS-1/8	3-55, 3-57, 8-27, 8-29

Part No	Description	Page No
90459-2614	DEVICENET ADAPTER POWERFLEX 40 22-COMM-D	7-57
90459-2644	NUT ROUND WITH SLOTS M30X1,5 SS	1-7, 1-9
90459-2739	OPTO-RELAY 50085, IN / OUT 4-53VDC 1A	7-13
90459-2771	FILTER, MS6-LFX-1/2-R	3-61
90459-2772	FILTER, MS6-LFM-1/2-ARV	3-61
90459-2773	FILTER, MS6-LFM-1/2-BRV	3-61
90459-2795	FRONT LID FOR POWERFLEX 40, 22B-CCB	7-57
90459-2939	BUFFER UNIT, 6EP1961-3BA01	10-21
90459-3081	HOUSING, 19 20 003 1250	3-7, 3-9
90459-3115	BRACKET, REAR, CLEVIS, ROUND, BORE 32	1-55
90459-3145	FLASH MEMORY 64MBYTE, 1784-CF64	7-37
90459-3245	CYLINDER; WITH INT. GUIDING BORE 25	6-7
90459-3279	BLANK PLUG BLACK, SQUARE, PLASTIC ZB5SZ5	3-93
90459-3441	FREQ. CONV., 22B-A2P3N104	7-57
90459-3449	FREQ. CONV., 22A-A2P3N104	7-57
90459-3450	FREQ. CONV., 22A-A4P5N104	7-9, 10-5
90459-3454	FOOTPRINT FILTER 1 PHASE 18A	7-57
90459-3460	FOOTPRINT FILTER 1 PHASE 10A	7-9, 7-57, 10-5
90459-3603	PRESSURE GAUGE, MAP-40-6-1/8-EN	3-55, 3-57
90459-3604	FLOW CONTROL VALVE, GR-QS-6	3-55, 3-57, 5-33
90459-3655	REAR CLEVIS FOOT MOUNTING, LBN-12/16	8-21
90459-3685	THROTTLE VALVE GRLA-1/4-QS-8-D	6-17
90459-3779	HANDLE, GN565 SW 192-M8	4-31
90459-4009	GEARS, PLAN SP100S-MF1-10-0E1/BAUTZW508	5-41
90459-4089	SAFETY SENSOR NON-CONTACT EVA E	3-81, 3-83
90459-4126	DOUBLE ACTING, MINI-ISO, CYL. 25-12	5-15
90459-4133	POWER SUPPLY UNIT 6EP1 436-3BA00	7-45
90459-4165	SAFETY SCREW SM4X25, 20-053-43	3-81, 3-83
90459-4181	CURR. LIM. CIRC. BREAKER, NZMB1-4-A40	7-7
90459-4235	SNP TO DF1 GATEWAY, 0220 1166 01 REV B	10-23
90459-4252	CABLE M12-C101, 20-056-10	3-81, 3-83
90459-4588	RADIAL SEAL 60X85X8 MM DUST LIP	1-43, 1-45
90459-4616	BALL BEARING 15/28X7	5-29
90459-4727	STANDING BEARING, KSTM-20	1-51
90459-4735	SCREW M6S ISO 4017 M8X10 A480	3-23, 3-25, 3-27, 3-29
90459-4788	PROX.SENSOR SEIN-M5B-PS-S-L	6-7, 6-17
90459-4871	BRACKET, FOCUS LIGHT BARRIER, 22-090-11	3-81, 3-83
90459-4872	FOCUS JUMPER CABLE M12 8P 3M, 20-056-51	3-81, 3-83
90459-4876	FOCUS JUMPER CABLE M12 5P 3M, 20-056-21	3-81, 3-83
90459-4891	PROGR. IDENTIFIER ID-FIX RW, 20-070-21	7-43
90459-5068	SET SCREW ISO4027 M5X6 HRC 45	6-9
90459-5195	SLIM POWER RAIL,KINETIX,8 AXIS,2094-PRS8	7-35
90459-5308	CONTACTOR 4KW 24VDC, DILM9-10	7-33, 7-41, 7-57
90459-5309	CONTACTOR 7,5KW 24VDC, DILM17-10	7-33
90459-5311	CONTACTOR 15KW 24VDC, DILM32-10	7-33
90459-5321	OVERLOAD PROTECTION, PKZM0-0,4	7-57
90459-5323	OVERLOAD PROTECTION, PKZM0-1	7-57
90459-5324	OVERLOAD PROTECTION, PKZM0-1,6	7-57
90459-5326	OVERLOAD PROTECTION, PKZM0-4	7-31
90459-5481	OIL PUMP 3L, 10P-P3	3-69
90459-5522	CONN. BANJO, COR8PB6M10	3-69
90459-5529	PHOTOCELL E3Z-T86A, SENDER+RECIEVER	3-19, 3-21, 8-25, 10-17
90459-5627	CONNECTION TINA 1A, 20-054-00	3-81, 3-83
90459-5811	RESIDUAL CURRENT DEVICE, FI-25/2/003-A	7-29
90459-5813	AUXILIARY CONTACT, FAZ-XHIN11	7-31
90459-5817	REGULATOR, MS4-LR-1/4-D6-A8-AS	3-55, 3-57
90459-5886	POWER SUPPLY UNIT 115-230 VAC/24VDC100W	7-45
90459-5949	REAR CLEVIS FOOT MOUNTING, CRLBN-32	1-55
90459-6062	ARMORBLOCK DIGITAL CONFIGURABLE I/O	3-7, 3-9, 3-11
90459-6280	NUT GUK 5 M25 X 1.5 FZB	1-7, 1-9, 1-27, 1-31, 1-37, 1-41, 1-43, 1-45
90459-6395	CABLE, ETHERNET RJ 45 STRAIGHT.10M	7-63
90459-6426	PRESSURE GUARD PEV-1/4-B-OD	3-63
90459-6556	PLC DIGITAL INPUT 32PTS, 1756-IB32/B	7-37
90459-6557	PROCESSOR L61, SERIES B, 1756-L61/B	7-37
90459-6570	CONNECTOR M12 5-POLES MALE, RSCN5/7	4-5
90459-6586	ACT/SENS.Y-CABLE, ASBN 2-PRKMV 4-07/0,6M	1-9, 3-19, 3-21, 8-23, 10-17
90459-6617	COVER 4-POLE, NZM1-4-XKSA	7-7
90459-6692	SAFETY PLC, PLUTO B20 20-070-06	7-43
90459-6768	FAN 2BH1300-7AV15	3-47
90459-6820	FEMALE INSERT HAN 4 A, 09 20 004 2711	3-7, 3-9
90459-6847	RESISTOR, 0939 CTX 101	3-11
90459-6852	AUXILIARY CONTACT, DILA-XHI22	7-41, 7-57
90459-6858	ETHERNET SW, FL SWITCH SF 8TX FROM V 14	7-45
90459-6913	ELECTROMAG. DOOR LOCK. DEV.,JSD-ZH-EM1-K	3-81, 3-83
90459-6961	SAFETY SENSOR, NON CONT. ADAM-E M12 0,5M	3-81, 3-83
90459-7107	SLEEVE QSH-16-12	3-55, 3-57
90459-7228	ELECTRICAL EQUIPMENT SIGN, TEMPLATE	10-25
90459-7229	IDENTIF. OF SINGLE CONDUCTORS, TEMPLATE	7-5
90459-7267	POWER SUPPLY 24VDC, 1756-PB75/B	7-37
90459-7272	PHOTOCELL E3Z-LS88	6-7, 6-11, 6-13
90459-7332	PUSH-IN FITTING QSSF-1/8-4-B	3-55, 3-57
90459-7333	PUSH-IN FITTING QSSF-1/4-4-B	3-55, 3-57
90459-7344	PRESSURE GAUGE, MA-40-6-R1/4-EN	3-55, 3-57
90459-7366	PHOTOCELL, WTB4-3P3161 F20	5-7, 5-49

Part No	Description	Page No
90459-7368	MARKING FOR PNEUM. TUBING, PRZ04	3-55, 3-57, 5-55, 8-21, 8-27, 8-29
90459-7369	MARKING FOR PNEUM. TUBING, PRZ06	1-13, 1-55, 3-55, 3-57, 3-89, 4-29, 5-53, 5-55
90459-7370	MARKING FOR PNEUM. TUBING, PRZ08	3-53, 3-55, 3-57, 4-5, 5-53, 5-55, 8-27, 8-29
90459-7372	MARKING FOR PNEUM. TUBING, PRZ12	3-55, 3-57, 5-53, 5-55, 5-57
90459-7373	MARKING FOR PNEUM. TUBING, PRZ16	3-55, 3-57, 3-65
90459-7458	WARNING SIGN ANSI (H), HOT SURFACE	10-25
90511-8563	STRIPE HEIGHT 70MM, ROLL LENGTH 25M	3-11
90600-0203	COMMONING BUSBAR, 1-PH 85A	7-13
90600-0344	CARRIAGE, SSR 25 XWYQZSSHH M	4-13
90600-0373	RETAINING RING FOR SHAFT DIN 471 21 SS	4-41
90600-0375	BALL BUSHING, 12X21X30 MM	4-41, 5-9
90600-0376	SHAFT, LM SHAFT 12 G6 89L M	4-41
90600-0434	GUIDE BAR, SSR25-180L-YM G30/30	4-11
90600-0440	WHEEL APPLICATOR 60 PLATFORM, #7132058	4-5
90600-0459	INDUCTIVE SWITCH, E2A-M12KN05-WP-B1 5M	5-37
90600-0553	TUBE, 8X1 MM PTFE	4-5
90600-0656	COMP. SPRING 6777, 4X36X120	2-15
90600-0658	WORM GEAR SCREW JACK, TP00063000130	3-15
90600-0683	COMP. SPRING 2496, 1,2X10,4X45	2-7
90600-0761	GEARS,PLANETARY TP010S-MA3-66-0E1/MPL B4	4-21
90600-0773	AUTOMATIC GUN HOSE, #104008	3-89
90600-0798	BUSHING INSERT, JUM-02-30	1-29, 1-39
90600-0799	STANDING BEARING, KSTM-25	1-49
90600-0800	FLANGE BEARING 20X89X20 MM	1-51, 3-17
90600-0803	WORM GEAR MR V 63 UO3A-80B4 … B5/35	1-43, 1-45
90600-0804	WORM GEAR MR V 63 UO3A-80B4 … B5/140	2-9
90600-0812	GEAR BOX, TP00042000110	1-19
90600-0814	TIMING BELT AT10 5250X25 MM+35236050	1-57
90600-0815	TIMING BELT 25AT10/4800 +32 2. 3.6.050	1-57
90600-0825	GUIDE BAR, 4 RSR20VMUU+580LM	1-53
90600-0828	TIMING BELT 25T5/1075 PU	6-9
90600-0830	TIMING BELT 25 ATK5/1440 PU	6-9
90600-0831	TORQUE RIGID COUPLING, 19X20 MM	5-45, 5-49
90600-0891	COMP. SPRING 2520, 1,2X16,4X35	5-9, 6-7
90600-0892	NEEDLE ROLLER BEARING, 50X80X28 MM	1-43, 1-45
90600-0961	ROLLER CHAIN, SIMPLEX 3/8 -159, SS	1-19
90600-0962	ROLLER CHAIN, SIMPLEX 3/8 -243, SS	1-19
90600-0964	ROLLER CHAIN, SIMPLEX 3/8 -333, SS	1-19
90600-0971	RACK, ZRR2-100	3-11
90600-1001	CROSS CLAMP, 340/68385	3-53
90600-1002	FOOT 45000N, 297/63399N	3-11
90600-1005	WORM GEAR SCREW JACK, TR00042000130	1-51
90600-1077	CYLINDER, RODLESS MECH. 40-700	6-17
90600-1078	CYLINDER, RODLESS MECH. 25-500	6-21
90600-1080	DOUBLE ACTING, ROUND, CYL 32-80	1-13
90600-1159	ROLLER CHAIN, SIMPLEX 3/8 -290, SS	3-17
90600-1175	ELBOW WITH TAILPIECE 8/8 MM	3-55, 3-57
90600-1182	PROXIMITY SENS. D-Y7P-S-A-PC	6-7, 6-17
90600-1198	HANDLE, MZM1-XSM-R	7-7
90600-1759	CONTACTOR22KW24VDCDILM50-22+DILM65-XIP2X	7-29, 7-33
90600-1869	COMP. SPRING 2634, 2X14X45	6-23
90600-1984	ACTUATOR/SENSOR CABLE PRKT 5/56-10M	3-85
90600-2048	SOLID STATE RELAY, 3RF2403-1BD04	7-57
90600-2067	LEVEL CONTROL LC25, #7125832	4-5
90600-2068	DELIVERED DESIGN SIGN, 90600-2068	7-5
90600-2073	CYLINDER, SLT-20-10-P-A	4-29
90600-2159	CYLINDER, RODLESS MECH. 18-260	5-49
90600-2563	SCREW PANHEAD SNAKE EYE SPANNER, M6X12	3-81, 3-83
90600-2830	FASTENING ELEMENT, BLOCKSEP-E 01026	7-11
90600-2904	EARTH BRAID, 250/16/8,5	7-5
90600-3009	CYLINDER WITH INT. GUIDING BORE 40	6-17
90600-3010	CYLINDER WITH INT. GUIDING BORE 40	6-7
90600-3276	PROX. SENSOR, SME-8M-DS-24V-K-0,3-M8D	5-49, 6-7, 6-17, 6-21
90600-3293	MOTOR PWWER CABLE 2090-XXNPMF-16S09	3-85
90600-3294	MOTOR FEEDBACK CABLE 2090-XXNFMF-S09/C	3-85
90600-4049	LIGHT FIXTURE, TCH128 1XTL5-21W/830 HF	7-5
90600-4731	RELAY	7-13
90600-4732	LASER SENSOR, WS/WE9L-P330	1-9
90600-4796	SAFETY LIGHT BARRIER,TRANSM. FT4-35-750	3-81, 3-83
90600-4797	SAFETY LIGHT BARRIER,TRANSM. FR4-35-750	3-81, 3-83
90600-4810	ADAPTER LIGHT BARR. TINA 10A, 20-054-12	3-81, 3-83
90600-5135	BUSHING, 12X14X8 MM	2-7
90600-5212	AXIS MOD. W. PS,2094-BC02-M02-S SERIES B	7-35
90600-5214	AXIS MOD. KINETIX 6000,2094-BM01-S SER.B	7-35, 7-57
90600-5216	AXIS MOD. KINETIX 6000,2094-BM02-S SER.B	7-57
90600-5249	FERRITE, B64290L616X38	7-9, 7-45, 7-57
90600-5252	LINE FILTER, B84113HB30	7-9
90600-5823	SIGN, MAIN POWER MACHINE LABEL	7-5
90600-5840	PLC DEVICEN. BR./SCAN MOD, 1756-DNB, D	7-37
90600-5931	BRIDGE CONNECTOR WQV 6/3	7-53
90600-6183	TUBULAR RIVET 3,5X6,2	3-23, 3-25, 3-27, 3-29
90600-8128	OPER. PANEL 15"PV+,2711P-T15C4D2TP SER.B	3-93
90601-0668	SERVO MOTOR, MPL-B420P-MK72AA SERIES A	1-43, 1-45, 2-9, 5-45, 5-49
90601-1126	SAFETY VALVE, MS6-SV-1/2-E-10V24-AG	5-57

Part No	Description	Page No
90601-1168	SOCKET CONNECTOR, NECA-S1G9-P9-MP3	5-57
90601-1586	SILENCER, G1"	5-57
90601-1587	BRACKET, MS6-WPB	5-57
90601-1926	SERVO MOTOR, MPL-B430P-MK72AA SERIES A	4-21, 5-41
90601-2046	CAPTIVE SCREW M6, GUTBG 6-4-12	3-107, 3-121
90602-4058	CONNECTION BOX TINA 4A, 20-054-03	3-81, 3-83
90602-4060	LIGHT ELEMENT, BLUE, PSD-S OE LED BU	3-79
90602-4061	LIGHT ELEMENT, GREEN, PSD-S OE LED GN	3-79
90602-4062	LIGHT ELEMENT, RED, PSD-S OE LED RD	3-79
90602-4063	LIGHT ELEMENT, YELLOW, PSD-S OE LED YE	3-79
90602-4627	TERMINAL ELEMENT, PSD-S CE-TM SPRING	3-79
90602-4631	SIREN 100DB, PSD-S AE SM8-5 100DB/1	3-79
90602-4674	TIMING BELT 25T10/1150-DL PU	1-11
90602-4689	TIMING BELT 32T5/780 PU + SUPERGRIP	1-7, 1-9
205438-0000 ..	CABLE GLAND	3-45
290027-0000 ..	WASHER	1-7, 1-9
311103-0308 ..	PARALLEL PIN ISO 2338 5M6X16 A1	4-13, 5-9
311103-0318 ..	PARALLEL PIN ISO 2338 5M6X40 A1	5-37
311103-0349 ..	PARALLEL PIN ISO 2338 6M6X12 A1	4-21
311103-0351 ..	PARALLEL PIN ISO 2338 6M6X16 A1	1-35, 3-11, 4-25, 4-33
311103-0353 ..	PARALLEL PIN ISO 2338 6M6X20 A1	1-31, 1-41, 1-43, 1-45, 1-53, 1-57, 5-43, 5-45, 5-49, 8-25
311103-0354 ..	PARALLEL PIN ISO 2338 6M6X22 A1	4-15, 5-7
311103-0405 ..	PARALLEL PIN ISO 2338 8M6X30 A1	3-15
311103-0454 ..	PARALLEL PIN ISO 2338 10M6X20 A1	4-37
311103-0458 ..	PARALLEL PIN ISO 2338 10M6X30 A1	4-9, 4-19
311103-1355 ..	PARALLEL PIN ISO 2338 6M6X24 A1	1-57, 4-15
311103-1456 ..	PARALLEL PIN ISO 2338 10M6X24 A1	4-37
311112-0206 ..	SPRING PIN, ISO 8752 3X12-C	4-45
311112-0208 ..	SPRING PIN, ISO 8752 3X16-C	2-7
311112-0256 ..	SPRING PIN, ISO 8752 4X20-C	2-7
311112-0312 ..	SPRING PIN, ISO 8752 5X28-C	1-51
311112-0345 ..	SPRING PIN, ISO 8752 6X32-C	1-21
311112-0347 ..	SPRING PIN, ISO 8752 6X40-C	1-49
311112-0349 ..	SPRING PIN, ISO 8752 6X50-C	3-15
311520-0320 ..	RIVET, BLANK 2,4X6	7-5
312104-0379 ..	SCREW M6S M6X45H FZB	1-43, 1-45
312105-0287 ..	SCREW M6S ISO 4017 M4X8 A470	1-11, 4-5, 4-15, 5-39, 6-7, 6-11, 6-13, 6-17
312105-0289 ..	SCREW M6S H4X10 A4 70 ISO4017/DIN933	1-9, 1-25, 1-35, 5-21, 6-11, 6-13
312105-0291 ..	SCREW M6S ISO 4017 M4X12 A470	2-7, 2-9, 3-45
312105-0295 ..	SCREW M6S ISO 4017 M4X20 A470	5-33
312105-0325 ..	SCREW M6S ISO 4017 M5X10 A480	4-41, 4-45, 5-7, 5-9, 5-49, 6-7, 6-17, 8-21
312105-0327 ..	SCREW M6S ISO 4017 M5X12 A480	1-7, 1-9, 1-49, 2-5, 3-127, 5-7, 5-15, 5-31, 5-37, 8-11, 10-13
312105-0328 ..	SCREW M6S ISO 4017 M5X14 A480	3-39, 6-19, 8-23
312105-0329 ..	SCREW M6S ISO 4017 M5X16 A480	2-5, 3-37, 3-41, 5-13, 5-37, 5-47, 5-49, 8-17, 8-19, 8-21, 10-19
312105-0331 ..	SCREW M6S ISO 4017 M5X20 A480	2-11, 3-39, 4-21, 5-19, 5-21, 6-9, 6-17
312105-0333 ..	SCREW M6S ISO 4017 M5X25 A480	4-15, 6-21
312105-0337 ..	SCREW M6S ISO 4014 M5X35 A480	3-71, 3-73, 3-75
312105-0340 ..	SCREW M6S ISO 4014 M5X45 A480	6-9
312105-0341 ..	SCREW M6S ISO 4014 M5X50 A480	5-37
312105-0343 ..	SCREW M6S ISO 4014 M5X60 A480	1-13
312105-0364 ..	SCREW M6S ISO 4017 M6X10 A480	1-7, 1-9, 4-5, 6-17, 8-27, 8-29
312105-0366 ..	SCREW M6S ISO 4017 M6X12 A480	1-25, 1-35, 2-7, 3-7, 3-9, 3-11, 3-33, 3-121, 3-127, 4-19, 5-45, 6-7, 6-9, 8-21
312105-0367 ..	REW M6S ISO 4017 M6X14 A480	3-19, 3-21, 5-51, 6-19
312105-0368 ..	SCREW M6S ISO 4017 M6X16 A480	1-11, 2-11, 2-13, 3-7, 3-9, 3-11, 3-17, 3-47, 3-79, 4-13, 4-41, 5-31, 5-33, 6-7, 6-17, 6-21, 6-23, 7-55, 10-9
312105-0370 ..	SCREW M6S ISO 4017 M6X20 A480	1-7, 1-9, 1-29, 1-31, 1-39, 1-49, 1-51, 1-55, 1-57, 2-5, 2-11, 2-13, 3-11, 3-13, 3-33, 3-81, 3-83, 3-87, 4-5, 4-37, 5-7, 5-9, 5-13, 5-19, 5-33, 5-43, 6-7, 6-23, 8-21, 8-25
312105-0372 ..	SCREW M6S ISO 4017 M6X25 A480	1-49, 2-5, 2-11, 3-7, 3-9, 3-89, 3-133, 4-11, 5-21, 5-43, 5-45, 5-49, 6-9, 6-11, 6-13
312105-0374 ..	SCREW M6S ISO 4014 M6X30 A480	1-27, 1-31, 1-37, 1-41, 3-45, 5-21, 5-43
312105-0376 ..	SCREW M6S ISO 4014 M6X35 A480	5-45, 6-17, 8-21
312105-0378 ..	SCREW M6S ISO 4014 M6X40 A480	2-11, 3-15, 5-43, 8-25, 8-27, 8-29
312105-0379 ..	SCREW M6S ISO 4014 M6X45 A480	1-49
312105-0382 ..	SCREW M6S ISO 4014 M6X60 A480	3-45
312105-0388 ..	SCREW M6S ISO 4014 M6X90 A480	3-11
312105-0447 ..	SCREW M6S ISO 4017 M8X12 A480	3-47
312105-0449 ..	SCREW M6S ISO 4017 M8X16 A480	3-17, 5-47, 5-51, 6-9, 8-21
312105-0451 ..	SCREW M6S ISO 4017 M8X20 A480	1-11, 1-57, 2-9, 2-11, 3-19, 3-21, 3-33, 3-89, 5-15, 5-31, 6-7, 6-23
312105-0452 ..	SCREW M6S ISO 4017 M8X22 A480	1-43, 1-45, 3-17
312105-0453 ..	SCREW M6S ISO 4017 M8X25 A480	1-7, 1-19, 1-51, 1-57, 2-9, 3-45, 4-5, 5-21, 5-41, 6-21
312105-0455 ..	SCREW M6S ISO 4017 M8X30 A480	1-7, 1-43, 1-45, 1-49, 2-9, 3-15, 6-7, 6-17
312105-0457 ..	SCREW M6S ISO 4014 M8X35 A480	1-7, 1-27, 1-31, 1-37, 1-41, 4-25, 4-27, 4-29, 4-31, 4-33, 4-35, 5-41
312105-0459 ..	SCREW M6S ISO 4014 M8X40 A480	1-27, 1-37, 1-43, 1-45, 1-49, 2-11
312105-0460 ..	SCREW M6S ISO 4014 M8X45 A480	1-27, 1-37, 2-13
312105-0465 ..	SCREW M6S ISO 4014 M8X70 A480	1-57, 3-69, 6-7
312105-0466 ..	SCREW M6S ISO 4014 M8X75 A480	3-19, 3-21
312105-0467 ..	SCREW M6S ISO 4014 M8X80 A480	5-43
312105-0469 ..	SCREW M6S ISO 4014 M8X90 A480	1-19, 1-51, 5-43
312105-0471 ..	SCREW M6S ISO 4014 M8X100 A480	3-15
312105-0473 ..	SCREW M6S ISO 4014 M8X110 A480	1-7, 1-9
312105-0475 ..	SCREW M6S ISO 4014 M8X120 A480	1-57

Part No	Description	Page No
312105-0499 ..	SCREW M6S ISO 4014 M10X40 A480	4-19
312105-0500 ..	SCREW M6S ISO 4014 M10X45 A480	4-9, 4-19
312105-0515 ..	SCREW M6S ISO 4014 M10X120 A480	2-9, 2-11
312109-0340 ..	SCREW M6S ISO 4017 M5X45 A480	5-21
312109-0374 ..	SCREW M6S ISO 4017 M6X30 A480	1-49, 4-41, 5-47, 6-17, 8-21, 8-25
312109-0376 ..	SCREW M6S ISO 4017 M6X35 A480	2-11, 5-7, 6-9
312109-0382 ..	SCREW M6S ISO 4017 M6X60 A480	6-11, 6-13
312109-0457 ..	SCREW M6S ISO 4017 M8X35 A480	2-9, 5-7
312109-0459 ..	SCREW M6S ISO 4017 M8X40 A480	1-9, 2-9, 2-13, 5-7, 6-11, 6-13
312109-0460 ..	SCREW M6S ISO 4017 M8X45 A480	5-49
312109-0461 ..	SCREW M6S ISO 4017 M8X50 A480	6-9
312109-0463 ..	SCREW M6S ISO 4017 M8X60 A480	2-9
312109-0467 ..	SCREW M6S ISO 4017 M8X80 A480	1-7, 1-9
312109-0500 ..	SCREW M6S ISO 4017 M10X45 A480	4-37
312109-0542 ..	SCREW M6S ISO 4017 M12X50 A280	1-31, 1-41
312109-0552 ..	SCREW M6S M12X100H A480	3-11
312111-0381 ..	SCREW HEX.SOCK.HD.MC6S-TT 6X55 88 FZB	6-17
312115-0222 ..	SCREW ISO4762 M3X8 A4 80	8-25
312115-0228 ..	SCREW ISO4762 M3X16 A4 80	1-7, 1-9
312115-0230 ..	SCREW ISO4762 M3X20 A4 80	5-7, 5-49
312115-0287 ..	SCREW ISO4762 M4X8 A4 80	5-49, 6-7
312115-0289 ..	SCREW ISO4762 M4X10 A4 80	3-7, 3-9
312115-0291 ..	SCREW ISO4762 M4X12 A4 80	2-7, 2-9
312115-0293 ..	SCREW ISO4762 M4X16 A4 80	1-53, 4-37
312115-0295 ..	SCREW ISO4762 M4X20 A4 80	8-23
312115-0297 ..	SCREW ISO4762 M4X25 A4 80	3-69, 7-5
312115-0299 ..	SCREW ISO4762 M4X30 A4 80	3-69
312115-0304 ..	SCREW ISO4762 M4X45 A4 80	7-7
312115-0325 ..	SCREW ISO4762 M5X10 A4 80	7-35, 7-37, 7-59, 8-17, 8-19
312115-0327 ..	SCREW ISO4762 M5X12 A4 80	1-53, 3-45, 3-91, 3-99, 5-9, 7-9, 7-57, 8-21, 10-5
312115-0329 ..	SCREW ISO4762 M5X16 A4 80	4-29, 5-39
312115-0331 ..	SCREW ISO4762 M5X20 A4 80	5-51, 8-21
312115-0337 ..	SCREW ISO4762 M5X35 A4 80	3-69
312115-0364 ..	SCREW ISO4762 M6X10 A4 80	1-9
312115-0366 ..	SCREW ISO4762 M6X12 A4 80	1-55, 1-57, 4-45, 5-39, 7-35, 7-43
312115-0367 ..	SCREW ISO4762 M6X14 A4 80	1-25, 1-35, 3-91, 3-99, 5-7
312115-0368 ..	SCREW ISO4762 M6X16 A4 80	5-19, 6-17, 7-9
312115-0370 ..	SCREW ISO4762 M6X20 A4 80	2-9, 4-11, 6-7
312115-0372 ..	SCREW ISO4762 M6X25 A4 80	1-43, 1-45, 5-45
312115-0374 ..	SCREW ISO4762 M6X30 A4 80	1-43, 1-45, 6-7, 10-9
312115-0376 ..	SCREW ISO4762 M6X35 A4 80	6-7
312115-0379 ..	SCREW ISO4762 M6X45 A4 80	4-21
312115-0447 ..	SCREW ISO4762 M8X12 A4 80	1-31
312115-0449 ..	SCREW ISO4762 M8X16 A4 80	1-25, 1-29, 1-35, 1-39
312115-0451 ..	SCREW ISO4762 M8X20 A4 80	1-43, 1-45
312115-0453 ..	SCREW ISO4762 M8X25 A4 80	1-43, 1-45, 4-21, 5-41, 5-45, 5-49
312115-0455 ..	SCREW ISO4762 M8X30 A4 80	2-13, 3-11
312115-0457 ..	SCREW ISO4762 M8X35 A4 80	1-43, 1-45
312115-0459 ..	SCREW ISO4762 M8X40 A4 80	1-31, 1-41
312115-0460 ..	SCREW ISO4762 M8X45 A4 80	2-9
312115-0461 ..	SCREW ISO4762 M8X50 A4 80	1-31, 1-41
312115-0489 ..	SCREW ISO4762 M10X16 A4 80	1-31, 1-41
312115-0540 ..	SCREW ISO4762 M12X40 A4 80	3-11
312122-0291 ..	SCREW ISO 1207 M4X12 NI PL BRASS	3-45
312125-0222 ..	SCREW ISO 1207 M3X8 A4	3-7, 3-9
312125-0226 ..	SCREW ISO 1207 M3X12 A4	7-5
312125-0232 ..	SCREW ISO 1207 M3X25 A4	3-7, 3-9
312125-0285 ..	SCREW ISO 1207 M4X6 A4	6-19
312125-0287 ..	SCREW ISO 1207 M4X8 A4	2-13, 3-7, 3-9, 4-19, 4-37, 5-7, 5-15, 5-43, 5-49
312125-0289 ..	SCREW ISO 1207 M4X10 A4	1-7, 1-9, 3-49, 7-9, 7-35
312125-0323 ..	SCREW ISO 1207 M5X8 A4	1-27, 1-31, 1-37, 1-41, 1-43, 1-45, 3-11, 6-7
312125-0325 ..	SCREW ISO 1207 M5X10 A4	7-13, 7-15, 7-29, 7-31, 7-33, 7-39, 7-41, 7-43, 7-45, 7-49, 7-51
312125-0327 ..	SCREW ISO 1207 M5X12 A4	8-25
312125-0331 ..	SCREW ISO 1207 M5X20 A4	2-13
312125-0366 ..	SCREW ISO 1207 M6X12 A4	7-9
312155-0287 ..	SCREW DIN 7991 MF6S M4X8 A4 70	5-39
312155-0325 ..	SCREW DIN 7991 MF6S M5X10 A4 70	5-39
312155-0327 ..	SCREW DIN 7991 MF6S M5X12 A4 70	2-5, 4-11, 4-41, 5-9, 6-9
312155-0329 ..	SCREW DIN 7991 MF6S M5X16 A4 70	1-15, 2-13, 4-13, 5-19, 5-47, 6-21
312155-0337 ..	SCREW DIN 7991 MF6S M5X35 A4 70	5-29
312155-0368 ..	SCREW DIN 7991 MF6S M6X16 A4 70	5-9, 6-7
312155-0370 ..	SCREW DIN 7991 MF6S M6X20 A4 70	2-5, 3-113, 3-129, 3-131, 5-9
312155-0372 ..	SCREW DIN 7991 MF6S M6X25 A4 70	5-47, 6-7
312155-0374 ..	SCREW DIN 7991 MF6S M6X30 A4 70	6-7
312155-0380 ..	SCREW DIN 7991 MF6S M6X50 A4 70	6-9
312155-0449 ..	SCREW DIN 7991 MF6S M8X16 A4 70	1-11
312155-0451 ..	SCREW DIN 7991 MF6S M8X20 A4 70	4-13
312155-0453 ..	SCREW DIN 7991 MF6S M8X25 A4 70	5-49
312155-0455 ..	SCREW DIN 7991 MF6S M8X30 A4 70	6-7
312155-0457 ..	SCREW DIN 7991 MF6S M8X35 A4 70	5-41
312155-0461 ..	SCREW DIN 7991 MF6S M8X50A4 70	5-15
312318-0220 ..	SCREW ISO4029 M3X6 A4	5-37
312318-0283 ..	SCREW ISO4029 M4X4 A4	1-51
312318-0285 ..	SCREW ISO4029 M4X6 A4	1-19

Part No	Description	Page No
312318-0287 ..	SCREW ISO4029 M4X8 A4	3-17, 5-31
312318-0289 ..	SCREW ISO4029 M4X10 A4	5-21
312318-0360 ..	SCREW ISO4029 M6X6 A4	1-51, 3-17
312318-0370 ..	SCREW ISO4029 M6X20 A4	7-9
312602-0310 ..	HEXAGON NUT, EN 24032 M6M M3 NIPLBR	5-7
312605-0310 ..	HEXAGON NUT, M6M M3 A280	1-9, 1-19, 3-11
312605-0312 ..	HEXAGON NUT, M6M M4 A280	3-69, 3-139, 6-11, 6-13, 7-5
312605-0314 ..	HEXAGON NUT, M6M M5 A280	3-37, 3-39, 3-41, 3-45, 3-81, 3-83, 3-95, 3-97, 3-113, 5-21, 5-51, 6-11, 6-13, 7-59, 7-61, 10-13, 10-19
312605-0316 ..	HEXAGON NUT, M6M M6 A280	1-49, 3-7, 3-9, 3-89, 3-121, 3-129, 4-5, 5-15, 5-33, 5-39, 6-7, 6-9, 6-11, 6-13, 7-5, 7-7, 8-27, 8-29
312605-0318 ..	HEXAGON NUT, M6M M8 A280	1-51, 5-7, 6-19
312605-0320 ..	HEXAGON NUT, M6M M10 A280	5-41
312605-0322 ..	HEXAGON NUT, M6M M12 A280	4-5
312607-0312 ..	HEXAGON NUT, EN 24032 M6M M4 A480	8-23
312607-0316 ..	HEXAGON NUT, EN 24032 M6M M6 A480	5-21, 6-21, 8-21
312607-0318 ..	HEXAGON NUT, EN 24032 M6M M8 A480	3-19, 3-21
312607-0326 ..	HEXAGON NUT, EN 24032 M6M M20 A480	1-31
312607-0332 ..	HEXAGON NUT, EN 24032 M6M M30 A480	3-11
312625-0316 ..	HEXAGON THIN NUT, EN 24035 ML6M M6 A4	5-15, 5-39
312625-0318 ..	HEXAGON THIN NUT, EN 24035 ML6M M8 A4	1-7
312625-0326 ..	HEXAGON THIN NUT, EN 24035 ML6M M20 A4	1-15
312625-0330 ..	HEXAGON THIN NUT, EN 24035 ML6M M27 A4	1-43, 1-45
312632-0326 ..	HEX.TH.NUT FINE,EN24035 ML6M M20X1,5 A4	6-19
312705-0318 ..	NUT HEX. DOMED CAP MHM-6 M8 A280	1-7
312812-0310 ..	HEXAGON NUT, NY-LOCK M3 A480	5-49
312812-0314 ..	HEXAGON NUT, NY-LOCK M5 A480	2-5, 2-7, 2-13, 3-69, 3-113, 3-129, 3-131
312812-0316 ..	HEXAGON NUT, NY-LOCK M6 A480	2-11, 3-93, 3-133, 4-45, 6-17, 8-21
312812-0318 ..	HEXAGON NUT, NY-LOCK M8 A480	1-13, 1-43, 1-45, 3-11, 3-17, 3-69, 3-89, 6-23
312812-0320 ..	HEXAGON NUT, NY-LOCK M10 A480	1-13, 5-7
312812-0322 ..	HEXAGON NUT, NY-LOCK M12 A480	2-15
315103-0153 ..	WASHER, BRB, 6,4/12,H=1,5 NIPL BR	5-9
315105-0124 ..	WASHER BRB 3,2X6 RFR	1-7, 1-9, 3-7, 3-9, 6-7
315105-0136 ..	WASHER BRB 4,3X8 RFR	1-9, 1-11, 1-25, 1-35, 2-7, 2-9, 3-7, 3-9, 3-45, 3-69, 3-139, 4-15, 4-37, 5-39, 6-7, 6-11, 6-13, 6-17, 7-5, 7-7, 7-9, 8-23
315105-0146 ..	WASHER BRB 5,3X10 RFR	1-7, 1-9, 1-49, 1-53, 2-5, 2-7, 2-11, 2-13, 3-37, 3-39, 3-41, 3-45, 3-69, 3-71, 3-73, 3-75, 3-81, 3-83, 3-95, 3-97, 3-113, 3-127, 3-131, 4-15, 4-21, 5-9, 5-13, 5-15, 5-31, 5-39, 5-47, 5-49, 5-51, 6-7, 6-9, 6-17, 6-19, 6-21, 7-13, 7-15, 7-29, 7-31, 7-33, 7-35, 7-37, 7-39, 7-41, 7-43, 7-45, 7-49, 7-51, 7-59, 7-61, 8-11, 8-17, 8-19, 8-21, 8-23, 10-13, 10-19
315105-0153 ..	WASHER BRB 6,4X12 RFR	1-7, 1-9, 1-11, 1-25, 1-27, 1-29, 1-31, 1-35, 1-37, 1-39, 1-41, 1-43, 1-45, 1-49, 1-51, 1-55, 2-5, 2-11, 2-13, 3-7, 3-9, 3-11, 3-13, 3-15, 3-17, 3-45, 3-47, 3-79, 3-81, 3-83, 3-87, 3-89, 3-91, 3-93, 3-99, 3-121, 3-127, 3-129, 3-133, 4-5, 4-13, 4-19, 4-37, 4-41, 5-7, 5-13, 5-15, 5-19, 5-21, 5-31, 5-33, 5-39, 5-43, 5-45, 5-47, 5-49, 5-51, 6-9, 6-11, 6-13, 6-17, 6-21, 6-23, 7-5, 7-7, 7-9, 7-43, 8-21, 8-25, 10-9
315105-0156 ..	WASHER BRB 6,7X14 RFR	3-11
315105-0165 ..	WASHER BRB 8,4X16 RFR	1-7, 1-11, 1-13, 1-19, 1-27, 1-31, 1-37, 1-41, 1-43, 1-45, 1-49, 1-51, 1-57, 2-9, 2-13, 3-15, 3-17, 3-33, 3-47, 3-89, 4-25, 4-27, 4-29, 4-31, 4-33, 4-35, 5-7, 5-15, 5-21, 5-41, 5-43, 5-49, 5-51, 6-7, 6-9, 6-11, 6-13, 6-19, 6-21, 6-23, 7-9, 8-17, 8-19, 8-21
315105-0173 ..	WASHER BRB 10,5X22 RFR	1-13, 2-9, 4-37
315105-0178 ..	WASHER BRB 13X24 RFR	1-27, 1-31, 1-37, 1-41, 2-15, 4-5
315105-0186 ..	WASHER BRB 17X30 RFR	1-27, 1-37
315105-0192 ..	WASHER BRB 21X36 RFR	1-31
315105-0203 ..	WASHER BRB 30X52 RFR	1-43, 1-45
315106-0124 ..	WASHER ISO 7089-3-200 HV A4	3-37, 3-39, 3-41, 10-19
315106-0146 ..	WASHER ISO 7089-5-200 HV A4	5-21
315106-0153 ..	WASHER ISO 7089-6-200 HV A4	4-11, 4-45, 6-17, 8-27, 8-29
315106-0165 ..	WASHER ISO 7089-8-200 HV A4	1-57, 4-21, 5-7, 6-17
315106-0173 ..	WASHER ISO 7089-10-200 HV A4	4-9, 4-19, 5-15
315106-0192 ..	WASHER ISO 7089-20-200 HV A4	1-15
315115-0153 ..	WASHER PLAIN, TBRB 6,4/12 H=3	5-49
315115-0165 ..	WASHER PLAIN, TBRB 8,4/16 H=3	1-43, 1-45, 1-49, 1-51, 2-13, 3-15, 3-17, 3-69, 5-7
315115-0173 ..	WASHER PLAIN, TBRB 10,5/22 H=4	2-11, 4-37
315125-0153 ..	WASHER TBRSB 6,4X22X4 A4	2-5, 2-7, 3-7, 3-9, 3-45, 3-133, 5-9, 5-21, 5-43, 5-47, 6-7, 6-9, 6-19, 6-23
315125-0165 ..	WASHER TBRSB 8,4X26X5 A4	1-7, 1-9, 2-11, 3-11, 3-19, 3-21, 4-5, 5-7, 5-41
315125-0173 ..	WASHER TBRSB 10,5X28X6 A4	1-31, 1-41
315202-0602 ..	O-RING 44,04X3,53 MM	1-43, 1-45
315202-0702 ..	O-RING 12,42X1,78 MM	2-13
315202-0705 ..	O-RING 17,17X1,78 MM	1-7, 1-9
315202-0710 ..	O-RING 25,12X1,78 MM	2-11
315202-0716 ..	O-RING 34,65X1,78 MM	4-15
315202-0717 ..	O-RING 20,29X2,62 MM	1-43, 1-45
315202-0732 ..	O-RING 44,12X2,62 MM	1-29, 1-39
315202-0733 ..	O-RING 45,69X2,62 MM	1-7, 1-9
315202-0741 ..	O-RING 58,42X2,62 MM	1-43, 1-45
315206-0705 ..	O-RING 17,17X1,78 MM	5-7
315221-0139 ..	RADIAL SEAL 18X30X7 MM	5-47
315221-0147 ..	RADIAL SEAL 20X47X7 MM	5-47
315221-0169 ..	RADIAL SEAL 30X47X7 MM	2-11, 5-7, 5-47
315221-0175 ..	RADIAL SEAL 35X47X7 MM	2-11
315221-0192 ..	RADIAL SEAL 45X62X8 MM	1-7, 1-9
315221-0198 ..	RADIAL SEAL 50X65X8 MM	1-43, 1-45
315239-0110 ..	NYLON WASHER G1/4, 1/4RRP	3-49
315400-0001 ..	TUBE PUN-H-6X1-BL	1-13, 1-55, 3-55, 3-57, 3-69, 3-89, 4-29, 5-33, 5-53, 5-55, 6-7, 6-17

Part No	Description	Page No
315400-0004 ..	TUBE PUN-H-8X1,25-BL	3-53, 3-55, 3-57, 3-63, 3-65, 5-53, 5-55, 6-7, 6-17, 8-27, 8-29
315400-0009 ..	TUBE PUN-H-10X1,5-SW	3-49
315400-0010 ..	TUBE PUN-H-12X2-BL	3-55, 3-57, 5-53, 5-55, 5-57
315400-0013 ..	TUBE PUN-H-16-2,5-BL	3-55, 3-57, 3-65
315400-0016 ..	TUBE PUN-H-4X0,75-BL	3-55, 3-57, 5-55, 8-21, 8-27, 8-29
315402-0156 ..	LOCK WASHER FBB 6,5	4-41
315701-0170 ..	PARALLEL KEY W. ROUND ENDS 4X4X20 MM	5-21
315701-0371 ..	PARALLEL KEY W. ROUND ENDS, 14X9X90 MM	1-31, 1-41
315705-0202 ..	PARALLEL KEY W ROUND ENDS 5X5X25MM	6-9
315705-0232 ..	PARALLEL KEY W. ROUND ENDS, 6X6X20 MM	1-7, 1-9, 3-17
315705-0234 ..	PARALLEL KEY W. ROUND ENDS, 6X6X25 MM	1-15, 5-7, 5-9
315705-0236 ..	PARALLEL KEY W. ROUND ENDS 6X6X30 MM	6-9
315705-0238 ..	PARALL KEY W. ROUND ENDS 6X6X36 MM	5-47
315705-0239 ..	PARALLEL KEY W. ROUND ENDS, 6X6X40 MM	1-19, 1-51, 1-57
315705-0267 ..	PARALLEL KEY W. ROUND ENDS, 8X7X30 MM	1-49
315705-0303 ..	PARALLEL KEY W. ROUND ENDS, 10X8X50 MM	1-27, 1-37, 1-43, 1-45
315705-0307 ..	PARALLEL KEY W. ROUND ENDS, 10X8X70 MM	1-43, 1-45, 2-9
315741-0216 ..	RETAINING RING DIN 705 A4 20	1-51, 3-17
315751-0103 ..	RETAINING RING FOR SHAFT DIN 471 6X 0.7C	5-37
315751-0112 ..	RETAINING RING FOR SHAFT DIN 471 15 SS	5-29, 6-9
315751-0116 ..	RETAINING RING FOR SHAFT DIN 471 20 SS	1-13, 1-15, 5-7, 5-37, 5-41, 6-9
315751-0130 ..	RETAINING RING FOR SHAFT DIN 471 50 SS	1-43, 1-45
315752-0136 ..	RETAINING RING FOR BORE DIN 472 62	1-27, 1-31, 1-37, 1-41
315753-0122 ..	RETAINING RING FOR BORE DIN 472 30 SS	5-47
315753-0130 ..	RETAINING RING FOR BORE DIN 472 47 SS	2-11, 5-47
315755-0106 ..	RETAINING RING SHAFT DIN 6799 4 SS	2-5
315755-0109 ..	RETAINING RING SHAFT DIN 6799 7 SS	4-15
318174-0162 ..	TIMING BELT 25T10/1150 PU	5-7
318801-0109 ..	HANDLE, THREADED TAP. NO. 8304-929	5-7
321133-0180 ..	BUSHING IGLIDUR G 12X14X12	6-19
321136-0183 ..	BUSHING, IGLIDUR H370 12X14X15	5-15
321153-0500 ..	FLANGE BUSHING, IGLIDUR G 70X75X50	3-15
321154-0060 ..	FLANGE BUSHING, IGLIDUR W300 6X8X6	5-37
321154-0180 ..	FLANGE BUSHING, IGLIDUR W300 12X14X12	6-7, 8-13
321155-0139 ..	FLANGE BUSHING, IGLIDUR X 10X12X9	5-9
321306-0104 ..	BALL BEARING 20/42X12	1-7, 1-9, 5-7
321306-0105 ..	BALL BEARING 25/47X12	2-11
321308-0203 ..	BALL BEARING 17/35X10	4-15
321308-0204 ..	BALL BEARING 20/42X12	1-13, 5-7, 5-41, 6-9
321309-0100 ..	BALL BEARING 10/30X9	5-47
321309-0105 ..	BALL BEARING 25/52X15	1-27, 1-31, 1-37, 1-41
321313-0104 ..	BALL BEARING 20/47X14	5-9, 5-37
321314-0105 ..	BALL BEARING 25/62X17	1-27, 1-31, 1-37, 1-41
321316-0204 ..	BALL BEARING 20/52X15	5-37
321330-0104 ..	ANG. BALL BEAR 20/47X20,6	5-47
321330-0105 ..	ANG. BALL BEAR 25/52X20,6	1-43, 1-45
342706-0130 ..	STIFFNER SLEEVE FOR HOSE 6X1	3-71, 3-73, 3-75
342715-0102 ..	BLIND PLUG 6 MM	7-5
342767-0104 ..	BULKHEAD LEAD-IN, G1/4	3-49, 3-65
342921-0132 ..	STRAIGHT COUPLING, EXT.THREAD 10/8-G1/4	3-49
342923-0132 ..	STRAIGHT COUPL.,INT.THREADED 10/8-G1/4"	3-49
342991-0108 ..	HOSE CLIP,WORM DRIVE TYPE (38)-50	3-45, 6-23
350001-0001 ..	PUSH-IN FITTING QS-F-M5-4	8-21
350001-0006 ..	PUSH-IN FITTING QS-F-G1/8-6	3-55, 3-57, 5-53, 5-55, 6-19
350001-0007 ..	PUSH-IN FITTING QS-F-G1/8-8	3-55, 3-57, 5-53, 5-55
350001-0011 ..	PUSH-IN FITTING QS-F-G1/4-12	3-55, 3-57
350001-0014 ..	PUSH-IN FITTING QS-F-G3/8-12	5-53, 5-55
350001-0016 ..	PUSH-IN FITTING QS-F-G1/2-12	3-7, 3-9, 5-57
350002-0001 ..	PUSH-IN L-FITTING QSL-F-M5-4	8-27, 8-29
350002-0002 ..	PUSH-IN L-FITTING QSL-F-M5-6	3-55, 3-57
350002-0005 ..	PUSH-IN L-FITTING QSL-F-G1/8-4	3-55, 3-57, 8-27
350002-0006 ..	PUSH-IN L-FITTING QSL-F-G1/8-6	1-13, 1-55, 4-29
350002-0007 ..	PUSH-IN L-FITTING QSL-F-G1/8-8	3-53, 3-55, 3-57, 8-27, 8-29
350002-0008 ..	PUSH-IN L-FITTING QSL-F-G1/4-6	3-69, 5-33
350002-0009 ..	PUSH-IN L-FITTING QSL-F-G1/4-8	3-55, 3-57, 3-63, 3-65, 8-21
350002-0011 ..	PUSH-IN L-FITTING QSL-F-G1/4-12	3-63
350002-0016 ..	PUSH-IN L-FITTING QSL-F-G1/2-12	3-61, 5-57
350003-0005 ..	PUSH-IN FITTING QS-F-G1/8-6-I	6-7, 6-17
350004-0005 ..	PUSH-IN L-FITTING QSL-F-12	3-55, 3-57, 5-57
350005-0002 ..	PUSH-IN T-FITTING QST-F-6	3-55, 3-57, 5-55, 6-7, 6-17
350005-0003 ..	PUSH-IN T-FITTING QST-F-8	3-55, 3-57
350005-0005 ..	PUSH-IN T-FITTING QST-F-12	3-55, 3-57
350006-0001 ..	PUSH-IN FITTING QS-F-6H-4	5-55
350006-0008 ..	PUSH-IN FITTING QS-F-12H-8	3-55, 3-57
350009-0003 ..	PUSH-IN FITTING QS-F-8	4-5
350011-0002 ..	PUSH-IN T-FITTING QST-F-8-6	3-55, 3-57
351120-0266 ..	CABLE ÖLFLEX HEAT 180 SIHF 4X4	3-85
351150-0187 ..	CABLE OLFLEX 5X6 MM2 LIGHT/GREY	3-85
351150-0403 ..	CABLE OLFLEX 3X0,75 MM2 LIGHT/GREY	3-85
351150-0405 ..	CABLE OLFLEX 5X0,75 MM2 LIGHT/GREY	3-85
351150-0406 ..	CABLE OLFLEX 7X0,75 MM2 LIGHT/GREY	3-85, 5-57
351150-0407 ..	CABLE OLFLEX 12X0,75 MM2 LIGHT/GREY	3-85
351150-0412 ..	CABLE OLFLEX 3X1,5 MM2 LIGHT/GREY	3-85
351150-0413 ..	CABLE OLFLEX 4GX1,5 MM2 LIGHT/GREY	3-85, 5-21, 6-9, 6-23

Part No	Description	Page No
351160-0102 ..	WIRE AWM 1X0,75 MM2 DARKBLUE	7-57
351160-0105 ..	WIRE AWM 1X2,5 MM2 DARKBLUE	7-63, 10-21
351160-0106 ..	WIRE AWM 1X4 MM2 DARKBLUE	7-63
351161-0104 ..	WIRE AWM 1X1,5 MM2 LIGHTBLUE	7-63
351161-0105 ..	WIRE AWM 1X2,5 MM2 LIGHTBLUE	7-63
351161-0106 ..	WIRE AWM 1X4 MM2 LIGHTBLUE	7-63
351161-0107 ..	WIRE AWM 1X6 MM2 LIGHTBLUE	7-63
351161-0109 ..	WIRE AWM 1X16 MM2 LIGHTBLUE	7-63
351162-0102 ..	WIRE AWM 1X0,75 MM2 YELLOW-GREEN	7-63
351162-0104 ..	WIRE AWM 1X1,5 MM2 YELLOW-GREEN	7-63
351162-0105 ..	WIRE AWM 1X2,5 MM2 YELLOW-GREEN	7-63
351162-0106 ..	WIRE AWM 1X4 MM2 YELLOW-GREEN	7-63
351162-0107 ..	WIRE AWM 1X6 MM2 YELLOW-GREEN	7-63
351162-0108 ..	WIRE AWM 1X10 MM2 YELLOW-GREEN	7-63
351162-0109 ..	WIRE AWM 1X16 MM2 YELLOW-GREEN	7-63
351164-0104 ..	WIRE AWM 1X1,5 MM2 BLACK	7-63
351164-0105 ..	WIRE AWM 1X2,5 MM2 BLACK	7-57
351164-0106 ..	WIRE AWM 1X4 MM2 BLACK	7-63
351164-0107 ..	WIRE AWM 1X6 MM2 BLACK	7-57
351164-0108 ..	WIRE AWM 1X10 MM2 BLACK	7-63
351164-0109 ..	WIRE AWM 1X16 MM2 BLACK	7-63
351309-0050 ..	ACTUATOR/SENSOR CABLE PRKT 4-07/5M	3-19, 3-21
351309-0100 ..	ACTUATOR/SENSOR CABLE PRKT 4-07/10M	1-9, 3-7, 3-9, 3-11, 3-19, 3-21, 3-81, 3-83
351401-0020 ..	ACTU/SENS CABLE RSMVN 3-PRKMV 3-06/2,0M	6-7, 6-17, 6-21
351401-0050 ..	ACTU/SENS CABLE RSMVN 3-PRKMV 3-06/5,0M	3-69, 6-17
351402-0050 ..	ACTU/SENS CABLE RSMVN 3-PRKMWV 3-06/5,0M	6-7, 6-17
351403-0020 ..	ACTU/SENS. CABLE RSMVN 3-PRKMV 4-06/2,0M	6-7, 6-11, 6-13
351405-0006 ..	ACT/SENS. CABLE RSMVN 3-PRKT 4-3-06/0,6M	3-19, 3-21
351405-0050 ..	SENS. CABLE RSMVN 3-PRKT 4-3-06/5,0M	1-49, 3-19, 3-21, 5-31, 6-17, 6-19, 10-13, 10-17
351407-0015 ..	ACTU/SENS. CABLE PRST 3-PRKMV 3-06/1,5M	5-49
351407-0020 ..	ACTU/SENS. CABLE PRST 3-PRKMV 3-06/2,0M	5-49
351408-0020 ..	ACTU/SENS. CABLE PRST 3-PRKMWV 3-06/2,0M	5-7
351411-0010 ..	ACTU/SENS. CABLE PRST 4-PRKT 4-07/1,0M	4-19, 8-23
351411-0015 ..	ACTU/SENS. CABLE PRST 4-PRKT 4-07/1,5M	5-7, 5-15
351411-0050 ..	ACTU/SENS. CABLE PRST 4-PRKT 4-07/5,0	3-19, 3-21, 10-13, 10-17
351413-0003 ..	DEVICENET CONN. CABLE, 0935 361 103/0,3M	3-11
351413-0050 ..	DEVICENET CONN. CABLE, 0935 361 103/5M	3-11
351415-0100 ..	DEVICENET CONN. CABLE, 0935 361 105/10M	3-7, 3-9
351422-0203 ..	CABLE ÖLFLEX 150CY QUATTRO 4X1,5	3-85
351423-0006 ..	CABLE UNITRONIC LICY 5X0,34	3-85
352103-0110 ..	CABLE GLAND, STR 16, PR22,5/PG16	3-127
352113-0101 ..	CABLE TIE, BLACK 92X2,5 MM	3-49, 10-15
352113-0104 ..	CABLE TIE, BLACK 300X4,8 MM	2-13, 4-19, 4-37, 5-7, 5-15, 5-43, 5-49
352113-0203 ..	ANCHOR PLATES FOR STRIPS, TM3S8-M0	2-13, 4-19, 4-37, 7-35
352113-0204 ..	ANCHOR PLATES FOR STRIPS, TM3S25-M	1-27, 1-31, 1-37, 1-41, 1-43, 1-45, 3-11, 3-139
352113-0205 ..	ANCHOR PLATES FOR STRIPS, TM2S8-C100	1-7, 1-9, 3-49, 4-19, 5-7, 5-15, 5-43, 5-49, 6-7, 6-19
352113-0206 ..	ANCHOR PLATES FOR STRIPS, ABM100-AT	3-93
353001-0115 ..	END SLEEVE 2,5/14	10-21
353021-0212 ..	FEED THROUGH TERMINAL, WDU 2,5	7-47, 7-53, 7-59
353021-0214 ..	FEED THROUGH TERMINAL, WDU 6	7-53, 7-59
353021-0302 ..	TERMINAL, DLD 2,5/35	7-61
353022-0002 ..	TERMINAL WNT 4 10X3	7-51
353024-0204 ..	EARTH TERMINAL WPE 2,5	7-49, 7-59
353024-0205 ..	EARTH TERMINAL WPE 4	3-95, 3-97, 7-41, 7-49, 7-57
353024-0206 ..	EARTH TERMINAL WPE 6	7-49, 7-59
353024-0207 ..	EARTH TERMINAL WPE 10	7-49
353024-0209 ..	EARTH TERMINAL WPE 35	7-7, 7-49
353024-0212 ..	EARTH TERMINAL WDK 2,5 PE	7-61
353031-0203 ..	END BRACKET, WEW 35/2	7-13, 7-17, 7-27, 7-47, 7-51, 7-53, 7-59, 7-61
353032-0004 ..	END PLATE, WAP 2,5-10, BEIGE	7-47, 7-53, 7-59
353032-0009 ..	END PLATE, WAP WDK 2,5	7-17, 7-19, 7-21, 7-23, 7-25, 7-27, 7-61
353032-0302 ..	END PLATE, AP DLD2,5 DB	7-61
353033-0104 ..	END PLATE, WHP2,5-35N/10X3 BL	7-51
353034-0030 ..	BRIDGE CONNECTOR WQV 2,5/10	3-95, 3-97, 7-17, 7-19, 7-21, 7-23, 7-25, 7-27, 7-61
353034-0042 ..	BRIDGE CONNECTOR WQV 2,5/3	7-53
353034-0404 ..	BRIDGE CONNECTOR Q 10 DLI	7-61
353041-0001 ..	BUS BAR RAIL 10X3MM SSCH	7-51
353041-0106 ..	HOLDER ZB35 K 5026.8	7-51
353101-0122 ..	CABLE SHOE 0,5-1,5MM2 M5 RED	3-45
353249-0012 ..	INSERT, SINGLE HOLE, EK154 11	3-7, 3-9, 3-45, 3-93
353249-0015 ..	INSERT, SINGLE HOLE, EK155 16	3-55, 3-57, 3-93
353249-0054 ..	INSERT, SINGLE HOLE, EK156 25	3-7, 3-9, 3-93
353250-0016 ..	GLAND LOCK NUT, M16X1,5	7-5
353250-0020 ..	GLAND LOCK NUT, M20X1,5	3-55, 3-57
353250-0040 ..	GLAND LOCK NUT, M40X1,5	7-5
354000-0040 ..	MINIATURE CIRCUIT BREAKER, FAZ-C4/1	7-13, 7-29
354000-0060 ..	MINIATURE CIRCUIT BREAKER, FAZ-C6/1	7-13, 7-29, 7-31, 7-57
354000-0100 ..	MINIATURE CIRCUIT BREAKER, FAZ-C10/1	7-29, 7-39
354001-0040 ..	MINIATURE CIRCUIT BREAKER, FAZ-C4/2	7-13
354001-0100 ..	MINIATURE CIRCUIT BREAKER, FAZ-C10/2	7-31
354002-0060 ..	MINIATURE CIRCUIT BREAKER, FAZ-C6/3	7-29
354002-0200 ..	MINIATURE CIRCUIT BREAKER, FAZ-C20/3	7-31
354002-0250 ..	MINIATURE CIRCUIT BREAKER, FAZ-C25/3	7-31
359000-0013 ..	WIRE MARKING, YELLOW, PA1/3"+"	10-21

Machine Type Group Description Page No

Part No	Description	Page No
359000-0023 ..	WIRE MARKING, YELLOW, PA1/3"-"	10-21
359000-0300 ..	WIRE MARKING, YELLOW, PA1/3"0"	10-21
359000-0301 ..	WIRE MARKING, YELLOW, PA1/3"1"	10-21
359000-0302 ..	WIRE MARKING, YELLOW, PA1/3"2"	10-21
359000-0303 ..	WIRE MARKING, YELLOW, PA1/3"3"	10-21
359000-0304 ..	WIRE MARKING, YELLOW, PA1/3"4"	10-21
359000-0305 ..	WIRE MARKING, YELLOW, PA1/3"5"	10-21
359000-0306 ..	WIRE MARKING, YELLOW, PA1/3"6"	10-21
359000-0307 ..	WIRE MARKING, YELLOW, PA1/3"7"	10-21
359000-0308 ..	WIRE MARKING, YELLOW, PA1/3"8"	10-21
359000-0309 ..	WIRE MARKING, YELLOW, PA1/3"9"	10-21
359009-0100 ..	CABLE MARKING, YELLOW, PK2/4"0"	10-15
359009-0101 ..	CABLE MARKING, YELLOW, PK 2/4"1"	10-15
359009-0102 ..	WORM GEAR BS 50 G	10-15
359009-0103 ..	CABLE MARKING, YELLOW, PK 2/4"3"	10-15
359009-0104 ..	CABLE MARKING, YELLOW, PK 2/4"4"	10-15
359009-0105 ..	CABLE MARKING, YELLOW, PK 2/4"5"	10-15
359009-0106 ..	CABLE MARKING, YELLOW, PK 2/4"6"	10-15
359009-0107 ..	CABLE MARKING, YELLOW, PK 2/4"7"	10-15
359009-0108 ..	CABLE MARKING, YELLOW, PK 2/4"8"	10-15
359009-0109 ..	CABLE MARKING, YELLOW, PK 2/4"9"	10-15
359009-0201 ..	CABLE MARKING, YELLOW, PK 2/4" B"	10-15
359009-0222 ..	CABLE MARKING, YELLOW, PK 2/4" W"	10-15
359011-0806 ..	MARKING, DEK 5 FW 1-200	7-61
359011-0807 ..	MARKING, DEK 5 FW 1-50	7-17, 7-19, 7-21, 7-23, 7-25, 7-27, 7-47, 7-49, 7-53, 7-59, 7-61
359011-0808 ..	MARKING, DEK 5FW 51-100	7-27
359011-0809 ..	MARKING, DEK 5 FW 101-150	7-61
359011-0811 ..	MARKING, DEK 5 FW 201-250	7-61
359011-0819 ..	MARKING, EARTH, DEK 5 GW ERDE I.KR.	7-47
359011-0821 ..	MARKING, DEK 6 FW 1-50	7-49, 7-51, 7-53, 7-59
359240-0100 ..	SIGN HOLDER FOR 359240-0001	7-5
359241-0124 ..	SIGN: MAIN SWITCH	7-5
359301-0001 ..	BUTTON SIGN, UP	3-93
359301-0005 ..	BUTTON SIGN, DOWN	3-93
359301-0090 ..	BUTTON SIGN, INCHING	3-93
359301-0105 ..	BUTTON SIGN, ALARM STOP	3-93
359705-0015 ..	WARNING SIGN ISO, RISK OF ELECTRIC SHOCK	3-91, 3-93, 7-5, 7-9
359705-0021 ..	WARNING SIGN ISO, PNEUMATIC ENERGY	1-11
359710-0001 ..	WARNING SIGN ISO, HOT SURFACE	3-45
359715-0100 ..	WARNING SIGN ANSI (H), ELECTRIC SHOCK	10-25
359725-0100 ..	WARNING SIGN ANSI (H), ENTANGLEMENT	10-25
359725-0108 ..	WARNING SIGN ANSI (H), MOVING PART	10-25
359725-0125 ..	WARNING SIGN ANSI (V), PNEUMATIC ENERGY	10-25
476221-0002 ..	PIPE	3-31, 3-35
476221-0003 ..	PIPE	3-31, 3-35
476221-0013 ..	PIPE	8-21
486268-0000 ..	NUT	5-15
486826-0001 ..	SIGN "EMERGENCY STOP"	3-127, 7-5
531616-0000 ..	HOLDER	3-89
532412-0000 ..	SPRING	10-13
545897-0000 ..	BRACKET	10-13
575034-0000 ..	ROUND NUT	3-81, 3-83
580923-0000 ..	MACHINE SIGN CE	4-37
988685-0000 ..	PIN	3-91, 3-99
1020637-0000 .	HOLDER	3-37, 3-39, 3-41, 8-21, 10-13, 10-19
1021990-0000 .	SIGN 356X70MM HOUSE MARK TEXT TETRA PAK	3-11
1030335-0000 .	FILTER HOLDER	3-47, 6-23
1030338-0000 .	NET	3-47
1030627-0000 .	ROLL	5-7
1030874-0000 .	THROTTLE WASHER	3-47
1030878-0000 .	GASKET	3-47, 6-23
1035792-0000 .	E-HINGE	3-91, 3-99
1037130-0000 .	,CONNECTION BOX	3-127
1038275-0012 .	SPACER	7-9
1065410-0000 .	SLOTTED PIN	5-15
1128856-0000 .	PROHIBITION SIGN	3-107, 3-123, 3-125, 8-21
1129770-0000 .	BLOCKING PIECE	3-91, 3-99
1133029-0000 .	GASKET	6-19
1133035-0000 .	LID	6-23
1133148-0000 .	SCREW	6-19
1133251-0000 .	PLATE	5-31
1143130-0003 .	BOX	8-33
1188609-0000 .	FLANGE SEAL	3-45
1188610-0000 .	FLANGE SEAL	3-45
1188818-0000 .	NUT	6-19
1189007-0000 .	CLAMP BLOCK	8-25
1189198-0000 .	FASTENING BRACKET	6-19
1189457-0000 .	METAL FLAG	5-31
1189461-0000 .	BRACKET	5-31
1350910-0000 .	BOX	8-33
1359565-0000 .	NUT	3-33
1366727-0000 .	CLAMP	3-33
1482063-0000 .	POSITION TEMPLATE	8-31
1482064-0000 .	POSITION TEMPLATE	8-31

Part No	Description	Page No
1482065-0000	.POSITION TEMPLATE	8-31
1497932-0000	.SET OF SIGNS	10-15
1500071-0000	.POSITION TEMPLATE	8-31
1539391-0000	.ROUND NUT	3-81, 3-83
1550595-2460	.SLIDING STRIP	3-23, 3-25, 3-27, 3-29
1550595-4960	.SLIDING STRIP	3-23, 3-25, 3-27, 3-29
1550595-9960	.SLIDING STRIP	3-23, 3-25, 3-27, 3-29
1550743-0200	.RAIL HOLDER	3-19, 3-21, 3-31, 3-35
1550772-0000	.HOLDER	3-33
1556630-0000	.WHEEL	4-41, 4-45
1556643-0000	.WASHER	4-41, 4-45
2504290-0000	.PLATE	3-39
2506940-0000	.NOZZLE	3-49
2529720-0062	.LABEL	8-33
2529720-0109	.LABEL	8-33
2547915-0000	.HEATING CHAMBER	3-45
2551030-0000	.STRUT	3-113, 3-131
2561206-0000	.SPACER	3-23, 3-25, 3-27, 3-29
2561274-0102	.RAILING	3-19, 3-21
2561274-0103	.RAILING	3-19, 3-21
2562171-0000	.BRACKET	5-31
2562202-0000	.ATTACHMENT PIPE	6-23
2562203-0000	.SPACER	6-23
2562219-0000	.SHAFT	5-31
2563891-0000	.STRUT	3-129
2563892-0000	.STRUT	3-129
2595618-0000	.BRACKET	3-113, 3-131
2605621-0000	.TOOTHED PULLEY	5-7
2608177-0000	.SIGN	7-5
2636293-0000	.POSITION TEMPLATE	8-31
2663999-0000	.NIPPLE	3-47
2684864-0000	.SHAFT	2-7
2699305-1996	.SLIDING STRIP	3-23, 3-25, 3-27, 3-29
2699436-0000	.SPACER	3-33
2699437-0000	.RAIL HOLDER	3-33
2699680-0000	.SCREW	4-13, 4-15
2699681-0000	.SPACER	4-13, 4-15
2699682-0000	.SPACER	4-15
2699683-0000	.WASHER	4-13
2703683-0000	.SHAFT	4-41
2703692-0000	.HOLDER	4-41
2703696-0000	.PROTECTIVE COVER	4-15
2703697-0000	.SIDE	4-13
2703700-0100	.GUIDE BRACKET	4-39
2703702-0000	.SHIM	4-41
2703704-0000	.SPACER STRUT	4-19
2703708-0000	.SPRING	4-41, 6-19
2703711-0000	.HOLDER	2-9
2703715-0000	.SHAFT	2-7
2703725-0000	.ROLLER	2-7
2703755-0100	.WHEEL	4-3
2703763-0000	.PLATE	5-9
2703764-0000	.SHAFT	5-9
2703765-0000	.COMPRESSION SPRING	5-9
2703769-0000	.WHEEL	5-9
2703770-0000	.SCREW	5-9
2703772-0000	.SPACER	5-9
2703774-0000	.WASHER	5-7, 5-9
2703775-0000	.SPACER	5-7, 5-9
2703783-0000	.AXLE PIN	5-7
2703784-0000	.SHAFT	5-7
2703785-0100	.HOLDER	5-11
2703786-0000	.TOOTHED PULLEY	5-7
2703787-0000	.TOOTHED PULLEY	5-9
2703788-0000	.HOUSING	5-7
2703789-0000	.SPACER	5-7
2703794-0100	.CONVEYOR	5-3
2703799-0000	.BRACKET	5-43
2703800-0100	.ROW CUTTER	5-3
2703803-0000	.SPACER	5-7
2703804-0000	.SPACER	5-7
2703805-0100	.CAP DETECTOR	5-11
2703810-0100	.CUTTING MECHANISM BODY	5-35
2703811-0000	.END SECTION	5-37
2703813-0000	.END SECTION	5-37
2703816-0000	.GUIDE	5-45
2703818-0000	.BRACKET	5-49
2703820-0100	.CUTTING UNIT	5-35
2703822-0000	.LOWER SECTION	5-39
2703828-0000	.WHEEL	5-39
2703842-0000	.ADJUSTING SCREW	2-11, 2-13, 4-25, 4-27, 4-33, 4-35
2710819-0000	.LID	3-45
2712603-0000	.PLATE	1-51
2715666-0000	.BRACKET	2-5

Part No	Description	Page No
2715671-0000	.BRACKET	2-5
2715695-0000	.SLEEVE	2-7
2715705-0200	.FRAME	5-3
2715706-0000	.FRAME	5-43
2715709-0000	.CONVEYOR SUPPORT	5-43
2715711-0000	.AXLE SUPPORT	5-43
2715712-0000	.AXLE SUPPORT	5-43, 5-45
2715713-0100	.DRIVE UNIT	5-35
2715714-0100	.DRIVE UNIT	5-3
2715715-0000	.PLATE	5-45
2715716-0000	.PLATE	5-45
2715717-0000	.AXLE SUPPORT	5-45
2715718-0000	.PLATE	5-45
2715728-0000	.BRACKET	5-13
2715730-0200	.INDEXING UNIT	5-3
2715732-0000	.SCREW	5-47
2715738-0000	.BLOCKING PIECE	5-49
2715739-0000	.FLAG	5-15
2715740-0000	.STOP	5-15
2715742-0000	.PROFILE	5-15
2715743-0000	.SHAFT	5-15
2715744-0000	.BRACKET	5-15
2715750-0100	.TEMPLATE	8-5
2715751-0000	.SHAFT	8-9
2715752-0000	.PLATE	5-37
2715762-0000	.MOUNTING BLOCK	5-45
2715768-0000	.PLATE	5-49
2715769-0000	.PLATE	5-49
2715770-0100	.DRIVE UNIT	5-3
2715773-0000	.PLATE	5-49
2715775-0000	.PLATE	5-49
2715778-0000	.LOCKING ARM	5-7
2715779-0000	.PLATE	5-49
2715781-0000	.BRACKET	4-35
2715794-0000	.ARM	2-7
2715797-0000	.BUSHING	2-7
2715798-0000	.TURN SPRING	2-7
2715804-0000	.SCREW	2-5
2715837-0000	.KEY	2-9
2715842-0000	.ARM	2-7
2715843-0000	.HOLDER	2-7
2715844-0000	.BRACKET	2-7
2715873-0000	.SHAFT	6-19
2715874-0000	.SHAFT	6-19
2715892-0000	.STOP	6-7
2715902-0000	.PLATE	6-9
2715906-0000	.PLATE	6-9
2715907-0000	.SCREW	6-9
2715908-0000	.BRACKET	6-9
2715914-0000	.GUIDE	6-11, 6-13
2715917-0000	.GUIDE	6-7
2715921-0000	.HOLDER	6-11, 6-13
2715924-0000	.SHAFT	6-9
2715929-0000	.SHAFT	6-9
2715945-0000	.BRACKET	6-17
2715960-0100	.POSITIONING UNIT	6-3
2715970-0100	.VACUUM SYSTEM	6-3
2716004-0000	.SHAFT	5-37
2716041-0000	.BRACKET	2-9
2716116-0000	.CAM	4-9
2716125-0100	.SETTING TOOL	8-5
2716127-0000	.SLIDER	4-41
2716154-0000	.SETTING TEMPLATE	8-11
2737295-0000	.SLIDE	5-19
2737409-0000	.SLIDE	5-19
2737413-0000	.TOOTHED PULLEY	5-29
2737419-0000	.GABLE PLATE	5-21
2737421-0000	.HEAD PLATE	5-21
2737423-0000	.PLATE	5-21
2746903-0000	.CABLE DUCT	3-7, 3-9
2746904-0000	.BOX	3-93
2746909-0000	.RAIL	3-95, 3-97
2746920-0000	.FOIL	3-91
2746938-0100	.TRANSFER UNIT	4-3
2746939-0100	.CAP CARRIER GROUP	4-3
2746941-0200	.CAP HOLDERS GROUP	4-3
2746978-0000	.SHAFT	4-45
2751655-0100	.CAM	4-7
2751656-0100	.STAR WHEEL	4-7
2751657-0100	.SLIDER	4-7
2751658-0100	.FOLLOWER CAM	4-7
2751664-0200	.FRAME	4-3
2751667-0100	.PRESSURE FINGER	2-5
2751686-0000	.WASHER	4-41

Part No	Description	Page No
2751687-0000	.WASHER	4-41, 5-9
2751692-0000	.BRACKET	2-11
2751693-0000	.STEERING	2-11
2751695-0000	.STEERING	2-5
2751698-0000	.ECCENTRIC SHAFT	4-15
2751699-0000	.WASHER	4-15
2751700-0000	.BOW CLAMP	2-9
2751702-0000	.STAR WHEEL	4-11
2751703-0000	.BRACKET	4-13
2751704-0000	.PIVOT BRACKET	4-15
2751705-0000	.SHAFT	4-15
2751706-0000	.FLAG	4-11
2751710-0000	.SUPPORT PLATE	2-9
2751712-0000	.TOOTHED PULLEY	2-11
2751714-0000	.SUPPORT PLATE	2-11
2751721-0000	.SPACER	2-5
2751725-0000	.BOW CLAMP	2-11
2751739-0000	.BRACKET	4-13
2751741-0000	.BRACKET	4-19
2751742-0000	.BRACKET	2-5
2751747-0000	.SPACER	2-11
2751748-0000	.SLEEVE	2-11
2758505-0200	.MACHINE BODY	3-3
2758507-0200	.PACKAGE CONVEYOR	3-3
2758511-0100	.HOTMELT UNIT	3-3
2758512-0100	.BLOWING SYSTEM	3-51
2758513-0100	.AIR SUPPLY	3-3
2758514-0100	.WATER CONNECTION	3-3
2758515-0200	.CABLE DUCT	3-5
2758522-0100	.LUBRICATION UNIT	3-3
2763616-0101	.CONVEYOR BODY	3-19, 3-21
2763616-0102	.CONVEYOR BODY	3-19, 3-21
2763616-0103	.CONVEYOR BODY	3-19, 3-21
2763616-0104	.CONVEYOR BODY	3-19, 3-21
2763617-0001	.SIDE PLATE	3-23, 3-25, 3-27, 3-29
2763617-0002	.SIDE PLATE	3-23, 3-25, 3-27, 3-29
2763617-0003	.SIDE PLATE	3-23, 3-25, 3-27, 3-29
2763617-0004	.SIDE PLATE	3-23, 3-25, 3-27, 3-29
2766610-0000	.FRAME	1-29
2766611-0000	.GUIDE	1-25
2766615-0000	.FRAME	1-25
2766927-0000	.PILLAR	1-25, 1-35
2766939-0000	.SUPPORT	3-89
2766944-0000	.BRACKET	1-49
2766950-0000	.SHAFT	1-51
2766953-0000	.PLATE	1-27, 1-37
2766954-0100	.BELT STRETCHER	1-25
2766958-0000	.SHAFT	1-27, 1-31, 1-37, 1-41
2766959-0000	.SPACER	1-27, 1-31, 1-37, 1-41
2766962-0000	.BLOCK	1-27, 1-37
2766963-0000	.BRACKET	1-27, 1-37
2766964-0000	.FLANGE	3-15
2766968-0000	.SHAFT	3-15
2766972-0000	.SHAFT	3-17
2766973-0100	.TRANSMISSION	3-15
2766974-0000	.SLEEVE	1-29, 1-39
2766975-0000	.FRAME	3-11
2766976-0000	.FLANGE	1-29, 1-39
2766980-0100	.BELT STRETCHER	1-29
2766981-0000	.TOOTHED PULLEY	1-27, 1-31, 1-37, 1-41
2766989-0000	.BRACKET	1-31, 1-41
2766990-0100	.BRAKE UNIT	1-5
2766991-0100	.BRAKE UNIT	1-5
2766994-0200	.DRIVE	1-5
2769679-0000	.DRIVE SHAFT	1-7, 1-9
2769682-0000	.SHAFT	1-7, 1-9
2769686-0000	.COVER	1-7, 1-9
2769695-0000	.BRACKET	1-49
2769709-0000	.FRAME	3-15
2769713-0000	.CYLINDRICAL PIN	3-15
2769717-0000	.FLANGE	3-15
2769718-0100	.PNEUMATIC CYLINDER	1-47
2769726-0000	.BRACKET	1-19, 1-51, 3-17
2769729-0000	.SHAFT	1-19, 1-51
2769738-0100	.HEIGHT ADJUSTMENT	3-5
2769739-0000	.DISC	3-15
2769741-0000	.SPACER	1-7, 1-9
2769743-0100	.BELT STRETCHER	1-39
2769746-0000	.FRAME	1-31
2769754-0200	.ELECTRIC EQUIPMENT	3-3
2769757-0100	.LAMP	3-77
2769760-0100	.EMERGENCY STOP	3-99
2769761-0200	.MACHINE BODY	3-5
2769763-0100	.OIL PIPE	3-67

Part No	Description	Page No
2769773-0000	.SPACER	1-11
2773600-0000	.SPACER	1-7, 1-9
2773601-0000	.SPACER	1-11
2773604-0000	.PLATE	1-13
2773615-0000	.ROLLER	1-13
2773616-0000	.GUIDE	1-25, 1-29
2773622-0100	.LINE HEATER	3-3
2773623-0100	.FAN SYSTEM	3-43
2773627-0000	.HEAT GUARD	3-45
2773630-0000	.HEAT GUARD	3-45
2773632-0000	.SPACER	1-49
2773636-0100	.BELT STRETCHER	1-11
2773637-0000	.BRACKET	1-13
2773638-0000	.PLATE	1-13
2773639-0000	.SHAFT	1-13
2775398-0000	.PIN	1-13
2775403-0000	.PIPE	3-53
2775404-0000	.PIPE	3-53
2775412-0000	.PLATE	1-11
2775417-0000	.BRACKET	1-31, 1-41
2775418-0000	.SHAFT	1-7
2775420-0000	.SLIDE	1-31
2775421-0000	.SCREW	1-31
2775423-0000	.PLATE	1-31
2775427-0000	.BRACKET	1-7
2775437-0000	.TOOTHED PULLEY	1-43, 1-45
2775438-0000	.PLATE	1-43, 1-45
2775439-0000	.BUSHING	1-43, 1-45
2775442-0000	.TOOTHED PULLEY	1-43, 1-45
2775443-0000	.SPACER	1-43, 1-45
2775445-0000	.SPACER	1-43, 1-45
2775446-0000	.SHAFT	1-43, 1-45
2775447-0000	.BRACKET	3-11
2778564-0000	.WASHER	1-7, 1-9
2778566-0000	.BELLOWS	1-43, 1-45
2778567-0000	.BEAM	3-11
2778568-0000	.FRAME UPPER	3-11
2778570-0000	.FRAME	1-39
2778571-0000	.FRAME	1-41
2778572-0100	.BELT STRETCHER	1-35
2778574-0000	.BEAM	3-11
2778576-0000	.BEAM	3-11
2778580-0000	.BRACKET	3-37, 3-39, 10-19
2778584-0000	.BRACKET	3-39
2778585-0000	.PILLAR	1-57
2778586-0100	.SENSOR	3-19, 3-21, 10-17
2778587-0100	.SENSOR	3-19, 3-21
2778588-0000	.FRAME	1-35
2778592-0000	.PLATE	1-57
2778594-0000	.PLATE	1-19, 1-51
2778595-0100	.ANGLE	3-11
2779008-0000	.BRACKET	3-13
2779009-0000	.BEAM	3-11
2779011-0000	.BEAM	3-11
2779012-0000	.BEAM	3-11
2779013-0000	.CAM	1-51
2779014-0000	.PLATE	1-51
2779057-0000	.PLATE	1-49
2779062-0000	.SPROCKET	1-19
2779063-0000	.PLATE	1-19
2779070-0200	.OPERATOR INTERFACE	3-3
2779756-0000	.SHAFT	1-19
2779759-0000	.PLATE	1-19
2779763-0000	.COVER	3-127
2779764-0200	.WARNING LAMP	3-77
2779765-0000	.BRACKET	3-79
2779768-0000	.DOOR	3-91
2779769-0000	.SPROCKET	3-17
2779771-0000	.SPACER	3-127
2779772-0000	.BRACKET	3-47
2779774-0000	.GUIDE	1-35
2779775-0000	.GUIDE	1-35, 1-39
2779776-0000	.PLATE	3-11
2779786-0000	.PLATE	3-11
2779800-0000	.PLATE	3-7, 3-9
2779811-0000	.BEAM	3-11
2779818-0000	.BEAM	3-11
2779823-0000	.BRACKET	3-133
2779824-0000	.BRACKET	3-133
2779825-0000	.PLATE	3-133
2779831-0000	.PIPE	1-57, 3-19, 3-21
2779832-0100	.GLASS DOOR	3-99
2779833-0100	.GLASS DOOR	3-99
2779834-0100	.GLASS DOOR	3-99

Part No	Description	Page No
2779835-0200	.DOOR	3-99
2779838-0000	.DOOR	3-129
2779839-0000	.GLASS	3-129
2779840-0000	.DOOR	3-111
2780331-0000	.CURVE	2-5
2780332-0000	.CURVE	2-5
2780333-0000	.CURVE	2-5
2780334-0000	.CURVE	2-5
2780369-0100	.CAM	4-23
2780374-0000	.CAM	4-29
2780379-0000	.PLATE	4-31
2780399-0000	.GUIDE	6-7
2780402-0000	.SHAFT	6-7
2780404-0000	.GUIDE	5-15
2780412-0000	.INDICATOR	6-19
2780413-0000	.FLAG	6-19
2780415-0100	.SHEET CARRIER	6-15
2780436-0000	.PLATE	6-9
2780437-0000	.PLATE	6-9
2780441-0000	.PLATE	6-9
2780462-0000	.SPACER	6-11, 6-13
2780464-0000	.BRACKET	6-21
2780467-0000	.BRACKET	6-21
2780468-0000	.ARM	6-21
2780472-0000	.STEERING RAIL	6-11, 6-13
2780476-0000	.TOOTHED PULLEY	6-9
2780477-0000	.TOOTHED PULLEY	6-9
2780478-0000	.PLATE	6-21
2780525-0100	.GUIDE	5-11
2781278-0000	.GLASS	3-111, 3-131
2781279-0000	.DOOR	3-131
2781283-0000	.BRACKET	3-81, 3-83
2781285-0000	.STRUT	3-113, 3-131
2781286-0000	.HAND WHEEL	1-21
2781292-0000	.SHAFT	1-13
2787230-0100	.TOP SECTION	3-99
2788134-0000	.COVER	1-25, 1-35
2788137-0000	.TEMPLATE	8-5
2788144-0000	.SHAFT	1-21
2788154-0000	.BLOCK	3-11
2788155-0000	.ANGLE	3-11
2788168-0000	.PLATE	1-53
2788169-0000	.PLATE	1-57
2788174-0000	.LEVER	1-49
2788176-0000	.PIPE	3-53
2790710-0000	.BRACKET	7-35
2792462-0000	.GUIDE	5-9
2792484-0100	.LIFT	6-3
2792485-0100	.ELEVATOR	6-5
2792486-0100	.PUSHER	6-3
2792487-0100	.CONVEYOR	6-5
2792488-0100	.GUIDE	6-5
2792489-0000	.PULLEY	6-9
2792491-0000	.PULLEY	6-9
2792492-0000	.PLATE	6-9
2792493-0000	.GUIDE	6-9
2792494-0000	.PLATE	6-9
2792496-0000	.PLATE	6-7
2802375-0000	.COVER	1-53
2802376-0000	.COVER	1-53
2802386-0200	.OPERATOR INTERFACE	3-91
2802392-0000	.PILLAR	1-43, 1-45
2802404-0100	.HANDLE	1-19
2802405-0000	.STOP ARM	1-51
2802417-0000	.PLATE	3-7, 3-9
2802423-0000	.PLATE	3-7, 3-9
2802629-0000	.BRACKET	2-11
2802635-0000	.SUPPORT	2-11, 2-13
2802637-0000	.MOUNTING SHEET	2-13
2802644-0000	.SPACER	2-13
2802645-0100	.BELT STRETCHER	2-3
2802646-0100	.FRAME SECTION	2-3
2802647-0100	.DRIVE	2-3
2802648-0100	.CAP HOLDERS GROUP	2-3
2805461-0000	.GUIDE	1-57
2805467-0000	.SCREW	1-31, 1-41
2805468-0000	.SCREW	1-7
2805493-0200	.TUNNEL	3-119
2805494-0200	.COVER	3-99
2805495-0100	.DOOR	3-101
2805496-0000	.COVER	3-103
2805497-0200	.COVER	3-101
2805499-0200	.TUNNEL	3-101
2805686-0000	.BEAM	3-11

Part No	Description	Page No
2805687-0100	.GLASS DOOR	3-99
2805688-0000	.DOOR	3-137
2805691-0000	.GLASS	3-137, 3-139, 3-141
2805692-0000	.COVER	3-135
2805693-0100	.DOOR	3-99
2805694-0100	.GLASS DOOR	3-99
2805695-0000	.DOOR	3-139
2805696-0000	.SUPPORT	3-11
2805697-0000	.SUPPORT	3-11
2805698-0000	.BEAM	3-11
2805700-0200	.DOOR SAFETY SWITCH	3-77
2807095-0000	.BEAM	3-11
2807101-0000	.BEAM	3-11
2807102-0000	.COVER	3-11
2807104-0000	.BEAM	3-11
2807105-0000	.PLATE	3-11
2807106-0000	.COVER	3-11
2807108-0100	.GLASS DOOR	3-99
2807109-0100	.DOOR	3-99
2807110-0100	.GLASS DOOR	3-99
2807111-0000	.DOOR	3-109
2807112-0000	.COVER	3-115
2811468-0000	.PLATE	5-21
2811469-0000	.PROTECTION PLATE	5-21
2811470-0100	.DRIVE UNIT	5-17
2811471-0000	.PLATE	5-21
2811472-0100	.ROLLER UNIT	5-17
2811473-0100	.ROLL	5-23
2811475-0000	.SHAFT	5-25
2811476-0100	.DRIVE ROLLER	5-23
2811477-0000	.JACKET	5-29
2811478-0000	.SHAFT	5-29
2811479-0000	.JACKET	5-25, 5-27
2811480-0000	.SHAFT	5-27
2811481-0100	.ROLL	5-23
2811482-0100	.FRAMEWORK	5-17
2811483-0000	.FRAME UNION GIRDER	5-19
2811579-0000	.CONVEYOR BELT	5-19
2811581-0000	.SLIDE SHEET	5-19
2811582-0000	.FRAME UNION GIRDER	5-19
2811583-0100	.CONVEYOR	5-11
2811990-0000	.SCREW	5-39
2811991-0000	.WASHER	5-39
2812002-0200	.PNEUMATIC UNIT	5-3
2812003-0100	.PNEUMATIC PANEL	5-51
2812009-0000	.WHEEL	5-9
2812010-0000	.PRESSURE FINGER	5-9
2812011-0000	.PLATE	5-9
2814679-0000	.BRACKET	8-21
2815585-0000	.SPACER	8-21
2817525-0000	.SHAFT	8-21
2817527-0000	.PUSHER	8-21
2817573-0000	.SPACER	8-21
2817578-0000	.COVER	8-21
2817767-0000	.DOOR	3-113
2817768-0000	.GLASS	3-113
2817774-0000	.SUPPORT	3-81, 3-83
2817775-0000	.SUPPORT	3-81, 3-83
2817780-0000	.PLATE	3-133
2817781-0000	.PLATE	3-133
2817782-0000	.BRACKET	3-133
2817783-0100	.PLINTH	3-93
2817784-0000	.SCREW	1-27, 1-37
2818204-0000	.SUPPORT	8-21
2818427-0000	.SLIDE PLATE	8-21
2818738-0000	.RAILING	8-21
2819036-0000	.LEVER	8-17, 8-19
2819037-0000	.SUPPORT	8-17, 8-19
2819079-0000	.SHAFT	8-17, 8-19
2819081-0000	.SPACER	8-17, 8-19
2819093-0000	.LEVER	8-17, 8-19
2819144-0100	.ALARM DEVICE	8-15
2825844-0000	.SUPPORT	8-17, 8-19
2826483-0000	.BRACKET	8-25
2826560-0000	.PLATE	5-15
2826563-0000	.SHAFT	5-15
2826728-0000	.DRIVE PULLEY	1-7, 1-9
2826729-0000	.PULLEY	1-7, 1-9
2826737-0000	.GUIDE	1-7, 1-9
2826741-0200	.DOORS AND COVERS	3-3
2826742-0200	.COVER	3-99
2826744-0200	.COVER	3-119
2827671-0000	.BRACKET	8-23
2828666-0000	.BRACKET	5-15

Part No	Description	Page No
2830220-0000	.BEAM	3-11
2830225-0000	.SPACER	1-7, 1-9
2833240-0000	.HOLDER	6-11, 6-13
2833343-0100	.CUTTING WHEEL	5-5
2833344-0000	.BRACKET	5-9
2833403-0000	.WELDED CABINET	7-5
2833404-0000	.MOUNTING PLATE	7-9
2833406-0200	.CABINET	7-3
2833407-0200	.CONTROL BOARD	7-3
2833408-0100	.COOLING UNIT	7-3
2833409-0100	.CABLE SET	7-3
2833410-0100	.BOX	7-5
2833411-0000	.BOX	7-7
2833412-0100	.CABLE DUCT	7-9
2834018-0000	.SHAFT	4-41
2834034-0000	.WHEEL	4-41
2834049-0000	.SHAFT	5-9
2834311-0000	.HUB	4-21
2835402-0000	.BRACKET	5-7
2835403-0200	.CUTTING UNIT	5-3
2835404-0200	.SUPPORT	5-5
2835450-0000	.COVER	7-7
2835452-0000	.RAIL	7-31, 7-33
2835453-0000	.RAIL	7-43
2835454-0000	.RAIL	7-39, 7-49, 7-51
2835455-0000	.RAIL	7-41
2835456-0000	.RAIL	7-7
2835457-0100	.POWER SUPPLY UNIT	7-9
2835458-0200	.PLC	7-9
2835459-0200	.FUSE BOARD 1	7-9
2835460-0100	.FUSE BOARD 2	7-9
2835461-0100	.FUSE BOARD 3	7-9
2835462-0200	.MOTOR DRIVE CONTROL	7-9
2835463-0100	.PLINTH	7-9
2835464-0200	.DISTRIBUTION TERMINAL	7-9
2835939-0000	.PLATE	4-19
2836263-0000	.HEAT GUARD	3-45
2836266-0000	.PIPE	3-19, 3-21
2836507-0100	.DRIVE MOTOR	4-17
2837072-0100	.DRIVE UNIT	4-3
2837073-0100	.PLATE	4-17
2837175-0000	.BEARING HALF	2-9
2837191-0000	.TOOTHED PULLEY	2-9
2837255-0000	.WASHER	2-9, 2-11
2837616-0000	.BLOCK	5-7
2837617-0000	.AXLE PIN	5-7
2837618-0000	.STOP	5-9
2837623-0000	.BRACKET	1-43, 1-45
2837624-0000	.SHAFT	1-43, 1-45
2837625-0000	.COVER	1-45
2837626-0000	.BRACKET	1-43, 1-45
2837627-0000	.FLANGE	1-43, 1-45
2837628-0000	.SPACER	1-43, 1-45
2837630-0000	.COVER	1-43
2837631-0000	.SPACER	2-13
2838277-0000	.BRACKET	4-25, 4-33
2838385-0000	.BRACKET	4-27
2838459-0000	.CABLE DUCT	7-5
2838460-0000	.CABLE DUCT	7-5
2838462-0000	.CABLE DUCT	7-11
2838463-0000	.CABLE DUCT	7-11
2838464-0000	.CABLE DUCT	7-11
2838465-0000	.CABLE DUCT	7-11
2838466-0000	.CABLE DUCT	7-11
2838467-0000	.CABLE DUCT	7-11
2838468-0000	.CABLE DUCT	7-11
2838469-0000	.CABLE DUCT	7-11
2838470-0000	.CABLE DUCT	7-11
2838471-0000	.CABLE DUCT	7-11
2838472-0000	.CABLE DUCT	7-11
2838473-0000	.CABLE DUCT	7-11
2838474-0000	.CABLE DUCT	7-11
2838475-0000	.CABLE DUCT	7-11
2838476-0000	.RAIL	7-45
2838477-0000	.RAIL	7-29
2838478-0000	.RAIL	7-13, 7-15
2838633-0200	.PACKAGE HANDLING	1-3
2838639-0200	.PACKAGE POSITIONER	1-17
2838640-0100	.BELT UNIT	1-23
2838641-0200	.BELT	1-23
2838643-0200	.PACKAGE POSITIONER	1-3
2838644-0200	.PACKAGE POSITIONER	1-17
2838645-0200	.BELT	1-33
2838646-0100	.BELT UNIT	1-33

Part No	Description	Page No
2838647-0100	.SLIDING RACK	1-17
2838648-0200	.DRIVE	1-17
2838649-0200	.DRIVE	1-17
2838650-0100	.SLIDING RACK	1-17
2838652-0100	.SETTING ARM	1-47
2838653-0100	.GUIDE RAIL	1-47
2838654-0200	.BELT BRAKE	1-3
2838669-0100	.SETTING ARM	1-47
2838672-0100	.PNEUMATIC PANEL	3-51
2838673-0100	.SERVICE UNIT	3-55, 3-57
2838674-0100	.SERVICE UNIT	3-55, 3-57
2838676-0000	.BRACKET	3-55, 3-57
2838677-0100	.CENTRAL LUBRICATION	3-67
2838678-0000	.BRACKET	3-69
2838679-0000	.SHAFT	3-53
2838680-0000	.DIAGRAM	8-3
2838683-0000	.PLATE	1-49
2838684-0000	.WATER DIAGRAM	8-3
2838686-0100	.AIR JET GUN	3-51
2838690-0000	.WHEEL	1-51
2838693-0100	.START-UP KIT	8-3
2838695-0000	.INSTALLATION DRAWING	8-3
2838701-0000	.HOLDER	3-55, 3-57
2838710-0200	.WORM GEAR MOTOR	1-11
2838721-0000	.SHAFT	2-9
2838728-0000	.ADJUSTMENT BRACKET	2-5
2838731-0000	.CABLE	4-37
2838732-0000	.CABLE	4-37
2838781-0000	.STEERING	2-5
2838783-0000	.PLATE	2-13
2838784-0000	.SLIDING STRIP	2-13
2838815-0000	.SHAFT	2-11
2839073-0000	.BRACKET	8-27, 8-29
2839074-0100	.PNEUMATIC UNIT	8-15
2839194-0100	.PNEUMATIC UNIT	8-15
2839195-0100	.DISTRIBUTOR	8-15
2839221-0100	.PLINTH	7-9
2839222-0100	.PLINTH	7-9
2839223-0100	.PLINTH	7-9
2839224-0100	.PLINTH	7-9
2839225-0000	.BRACKET	7-5
2839226-0000	.FLANGE	7-35
2839227-0000	.SUPPORT	7-43
2839229-0100	.DISTRIBUTION TERMINAL	7-9
2839230-0100	.PLINTH	7-15
2839315-0100	.CAMMODULE	4-3
2839382-0100	.MOUNTING PLATE	4-23
2839383-0100	.CAM	4-23
2839384-0100	.CAM	4-23
2839385-0100	.CAM	4-23
2839386-0100	.CAM	4-23
2839392-0000	.CAM	4-33
2839484-0000	.CAM	4-35
2839485-0000	.CAM	4-27
2839487-0000	.CAM	4-25
2840909-0100	.PLINTH	7-15
2840910-0100	.PLINTH	7-15
2840911-0100	.PLINTH	7-15
2840915-0100	.PLINTH	7-15
2840917-0100	.PLINTH	7-15
2840918-0100	.PLINTH	7-57
2841402-0000	.RAIL	7-59
2841403-0200	.PLINTH	7-57
2841404-0200	.ELECTRICAL CONVERSION	7-3
2841405-0000	.DIVIDER	7-11
2841406-0000	.DIVIDER	7-11
2842793-0200	.DOOR	3-119
2842800-0000	.SHELF	10-9
2842801-0000	.COVER	3-121
2842803-0000	.PLATE	10-9
2842804-0000	.BRACKET	10-9
2842805-0000	.SPACER	10-9
2842806-0100	.SHELF	10-3
2843157-0100	.CLAMPING ELEMENT	2-3
2843158-0000	.FLANGE	2-15
2843159-0000	.SHAFT	2-15
2845320-0000	.PROTECTION	7-9
2846403-0000	.ROLLER	3-17
2846405-0000	.PIVOT ARM	3-17
2853706-0100	.SETTING TOOL	8-3
2862624-0000	.SLIDER	5-39
2862625-0000	.ARM	5-39
2863769-0000	.CAM	5-9
2863988-0000	.CAM	5-9

Part No	Description	Page No
2864915-0000	.PLATE	3-11
2867529-0000	.BRACKET	6-19
2867583-0000	.PLATE	6-11, 6-13
2868165-0000	.BRACKET	6-17
2868166-0000	.PLATE	6-17
2868170-0000	.PLATE	6-17
2868538-0000	.FINGER	5-49
2868608-0000	.BRACKET	6-23
2869126-0000	.PLATE	6-19
2869127-0000	.RUBBER MAT	6-19
2869634-0000	.SHAFT	5-37
2869635-0000	.TOOTHED PULLEY	5-37
2869636-0000	.TOOTHED PULLEY	5-41
2869637-0000	.SHAFT	5-41
2869638-0000	.TOOTHED PULLEY	5-41
2869639-0000	.MOTOR BRACKET	5-41
2869805-0000	.BRACKET	5-41
2869808-0000	.PLATE	6-7
2870089-0000	.SHAFT	4-5
2871097-0000	.DAMPER	5-9
2873862-0100	.HEATING ELEMENT	3-43
2873865-0000	.PRE-HEATER	3-45
2873866-0000	.SUPPORT	8-21
2873867-0000	.PLATE	3-45
2873871-0000	.BRACKET	2-5
2873872-0000	.BRACKET	8-21
2873874-0100	.AUTOMATION CONVEYOR CONTROL	10-3
2873876-0000	.PLATE	8-21
2873878-0000	.GUIDE	1-39
2873879-0000	.GUIDE	1-29
2873894-0000	.CAM	2-5
2873923-0100	.POSITION TEMPLATE	8-3
2873925-0100	.COMMUNICATION UNIT	10-3
2873928-0000	.CABLE DUCT	3-7, 3-9
2873930-0100	.CAUTION SIGN LIST	10-3
2873941-0000	.SIGN	1-19, 3-11
2873948-0000	.BRACKET	8-7
2873950-0100	.CABLE SET	3-77
2873953-0100	.CAP	8-3
2873954-0100	.PNEUMATIC PANEL	5-51
2873955-0200	.SHUT-OFF VALVE	5-51
2873956-0100	.BELT TIGHTENER	8-5
2874024-0000	.BRACKET	3-89
2878496-0000	.BRACKET	5-7
2879015-0200	.ELECTRICAL DOCUMENT	9-3
2882297-0000	.BRACKET	5-7
2882488-0000	.GUIDE	5-13
2882489-0000	.GUIDE	5-13
2887113-0000	.SUPERSTRUCTURE	5-39
2887115-0000	.GUIDE	5-39
2887618-0000	.SPRING PLATE	5-39
2887950-0000	.SUPPORT	8-17, 8-19
2887994-0000	.BRACKET	8-17, 8-19
2888723-0100	.AIR SYSTEM	5-11
2889892-0000	.BRACKET	6-11, 6-13
2889893-0000	.GUIDE	6-11, 6-13
2890013-0100	.COMMUNICATION UNIT	10-3
2890015-0000	.RAIL	7-61
2890547-0000	.PLATE	8-17, 8-19
2890590-0000	.CABLE DUCT	7-57
2890591-0100	.PLINTH	7-45
2890803-0000	.BRACKET	5-47
2890804-0000	.SLIDER	5-47
2895163-0200	.CAP HOLDERS GROUP	4-43
2895215-0000	.SHAFT	4-45
2897147-0000	.PLATE	6-7
2897148-0000	.BRACKET	6-7
2897952-0100	.DRIVE UNIT	6-15
2897953-0000	.PLATE	6-17
2897954-0000	.PLATE	6-17
2898046-0000	.PLATE	6-7
2898138-0000	.SUPPORT	6-7
2898508-0000	.BRACKET	6-7
2899500-0000	.BRACKET	6-17
2905379-0000	.BRACKET	5-33
2905380-0000	.BRACKET	5-33
2905381-0000	.BRACKET	5-33
2909507-0000	.PLATE	6-7, 6-17
2910645-0000	.SLIDE	6-7
2910646-0000	.SUPPORT	6-7
2911322-0000	.TIMING BELT	5-41
2911337-0000	.QUIC EXHAUST VALVE	6-7, 6-17
2911848-0000	.SCREW	5-43
2911865-0000	.SUPPORT	6-7

Part No	Description	Page No
2911910-0000	.TEMPLATE	8-5
2911986-0000	.ARM	2-7, 8-13
2912629-0000	.CLAW	4-45
2912630-0000	.CLAW	4-45
2913432-0200	.ELECTRICAL DOCUMENT	9-5
2914796-0000	.BUSHING	4-45
2918456-0000	.PLATE	5-39
2921902-0000	.DIVIDER	7-11
2923557-0000	.PULLER	4-45
2923857-0000	.SUPERSTRUCTURE	5-39
2923858-0000	.LOWER SECTION	5-39
2923894-0000	.SLIDER	5-39
2924076-0000	.GUIDE	5-39
2924097-0000	.PRESSURE FINGER	5-9
2925333-0000	.WHEEL	5-9
2927543-0000	.PLATE	6-19
2927545-0000	.RUBBER MAT	6-19
2930176-0100	.SENSOR GROUP	10-11
2930177-0100	.CABLE MARKING SET	10-11
2930178-0100	.SENSOR GROUP	10-11
2930179-0100	.CONVEYOR CONTROL ACCESSORIES	10-3
2930182-0100	.POWER SUPPLY DEVICE	10-3
2930210-0000	.PLATE	3-19, 3-21
2930211-0000	.PLATE	3-19, 3-21
2930247-0000	.PLATE	5-47
2930901-0000	.COMPRESSION SPRING	6-7
2930902-0000	.SHAFT	6-7
2931767-0000	.BLOCK	6-7
2931768-0000	.CABLE DUCT	3-7, 3-9
2931769-0000	.CABLE DUCT	3-7, 3-9
2931770-0000	.DIVIDER	3-7, 3-9
2931771-0000	.CABLE DUCT	3-7, 3-9
2931772-0000	.CABLE DUCT	3-7, 3-9
2931773-0000	.CABLE DUCT	3-7, 3-9
2931774-0000	.CABLE DUCT	3-7, 3-9
2931775-0000	.CABLE DUCT	3-7, 3-9
2931776-0000	.CABLE DUCT	3-7, 3-9
2931777-0000	.CABLE DUCT	3-7, 3-9
2931778-0000	.CABLE DUCT	3-7, 3-9
2931779-0000	.CABLE DUCT	3-7, 3-9
2931780-0000	.CABLE DUCT	3-7, 3-9
2931781-0000	.CABLE DUCT	3-7, 3-9
2931782-0000	.CABLE DUCT	3-7, 3-9
2931783-0000	.PLATE	3-7, 3-9
2931784-0000	.DIVIDER	3-7, 3-9
2931785-0000	.ANGLE	3-7, 3-9
2931786-0000	.ANGLE	3-7, 3-9
2931787-0000	.ANGLE	3-7, 3-9
2931788-0000	.DIVIDER	3-7, 3-9
2933730-0000	.BRACKET	5-7
2933777-0000	.SHIM	5-43
2934904-0000	.RAIL BRACKET	3-7, 3-9
2934905-0000	.SUPPORT	3-45
2936120-0000	.BRACKET	1-7
2936506-0000	.BRACKET	1-9
2936740-0000	.BRACKET	1-7
2937266-0000	.COVER	4-5
2937267-0000	.COVER	4-5
2937337-0000	.SPACER	1-31, 1-41
2943597-0000	.PLATE	1-9
2944164-0000	.PLATE	1-9
2944175-0000	.PIN	4-37
2947726-0000	.SUPPORT	7-5
2955524-0000	.PLATE	6-17
2955525-0000	.PLATE	6-17
2956718-0100	.PHOTOCELL BRACKET	8-15
2956908-0000	.SHAFT	8-25
2957790-0000	.BRACKET	8-25
2958122-0000	.CHAIN	6-17
2958971-0000	.PLATE	8-21
2964292-0000	.BEAM	3-11
2964293-0000	.BEAM	3-11
2965155-0000	.SUPPORT	3-19, 3-21
2966581-0000	.COVER	3-123
2968615-0000	.DRIVE WHEEL	5-21
2973959-0000	.SCREW	5-41
2977814-0000	.SHIM	6-11, 6-13
2980667-0000	.GUIDE	5-9
2981083-0000	.SHIM	5-47
2982531-0000	.CLAW	4-45
2982532-0000	.CLAW	4-45
2982736-0000	.WASHER	5-39
2983415-0000	.SPACER	8-17, 8-19
2983438-0000	.SPACER	8-17, 8-19

Part No	Description	Page No
2985739-0000	.SHIM	5-49
2985766-0000	.WASHER	6-7
2985773-0000	.BRACKET	3-39
2985774-0000	.BRACKET	3-41
2985775-0100	.SENSOR	3-19, 3-21
2985781-0000	.PLATE	1-43, 1-45
2985804-0000	.TUNNEL	3-125
2985809-0000	.HOUSING	1-49
2985832-0000	.COVER	1-11
2985833-0000	.WORM GEAR MOTOR	1-15
2985846-0000	.PLATE	1-43, 1-45
2985847-0000	.PLATE	1-11
2985853-0000	.TUNNEL	3-107
2986246-0100	.EJECTOR	8-15
2986247-0100	.CAP DETECTOR	8-3
2986316-0000	.BRACKET	8-25
2994043-0000	.JOINT	4-5
2994044-0000	.JOINT	4-5
3003834-0000	.BRACKET	5-49
3003859-0000	.SCREW	5-47
3004039-0000	.WHEEL	5-39
3005237-0000	.PLATE	5-15
3007680-0000	.SPACER	5-15
3007773-0000	.PLATE	5-15
3007826-0000	.GUIDE	5-15
3009996-0000	.PULLER	4-45
3010007-0000	.AXLE PIN	5-9
3010622-0000	.CANTILEVER	1-7
3010624-0000	.CANTILEVER	1-9
3010670-0000	.CONVEYOR SUPPORT	5-43
3011410-0000	.BRACKET	5-47
3011411-0000	.BRACKET	5-47
3011412-0000	.WASHER	5-47
3011464-0000	.FLAG	5-37
3011782-0000	.HOLDER	5-37
3015035-0000	.PUSHER	4-45
3015036-0000	.PIN	4-45
3016909-0000	.DRIVE SHAFT	1-15
3017287-0000	.PLATE	1-11
3017300-0000	.FLANGE	1-15
3021525-0000	.PLATE	1-49
3022021-0000	.HOUSING	1-49
3022022-0000	.SHAFT	1-49
3022023-0000	.SHAFT	1-49
3022488-0000	.CAM	1-49
3022734-0000	.COVER	3-11
3022796-0000	.BELLOWS	1-27, 1-31, 1-37, 1-41
3025697-0000	.WASHER	5-9
3039013-0000	.COVER	3-105
3039024-0000	.FRAME	4-37
3039026-0000	.FLAG	5-37
3039027-0000	.PLATE	3-11
3039029-0000	.PNEUMATIC DIAGRAM	8-3
3039030-0000	.TOOTHED PULLEY	1-7, 1-9, 1-15
3039040-0000	.SPACER	3-11
3039150-0000	.PNEUMATIC PANEL	5-51
3043254-0000	.COVER	1-25, 1-35, 1-43, 1-45
3044285-0000	.TEMPLATE	8-5
3046435-0000	.FUSE PANEL LABEL	7-57
3046886-0100	.DISTRIBUTION TERMINAL	7-9
3047311-0000	.PROTECTION	7-9
3047341-0000	.ANGLE BRACKET	3-7, 3-9
3047348-0100	.GLASS DOOR	3-99
3047349-0000	.DOOR	3-141
3053815-0000	.COVER	1-43
3053816-0000	.COVER	1-45
3054997-0000	.SUPPORT	3-81, 3-83
3056497-0000	.DOOR	3-121
3058858-0000	.DOOR	3-117
3058859-0000	.BEAM	3-11
3068599-0000	.PIPE	3-19, 3-21
3086231-0000	.SCREW	1-49
3086233-0000	.BRACKET	1-49
3093726-0000	.PLATE	3-47
3095793-0000	.PLATE	2-13
3095794-0000	.ANGLE BRACKET	2-13
3095795-0000	.SLIDING STRIP	2-13
3117862-0000	.TIMING BELT	2-9
3117867-0000	.PLASTIC PLUG	3-89
3123920-0000	.TENSION SPRING	1-27, 1-31, 1-37, 1-41
3127332-0000	.BRACKET	5-7
3127768-0000	.PLATE	5-7

Tetra Pak

SPC
Spare Parts Catalogue

Pos	Part No	Description	Page No
0			
01XL010	2839230-0100 ..	PLINTH	7-15
01XL011	2840909-0100 ..	PLINTH	7-15
01XL012	2840910-0100 ..	PLINTH	7-15
01XL022	2840911-0100 ..	PLINTH	7-15
01XL032	2840911-0100 ..	PLINTH	7-15
01XL042	2840911-0100 ..	PLINTH	7-15
01XL043	2840915-0100 ..	PLINTH	7-15
01XL044	2840915-0100 ..	PLINTH	7-15
01XL072	2840917-0100 ..	PLINTH	7-15
A			
01A400	90600-8128	OPER. PANEL 15"PV+,2711P-T15C4D2TP SER.B	3-93
B			
01B600	90044-0192	LIMIT SW. SZ2586.000	7-5
01B601	90044-0192	LIMIT SW. SZ2586.000	7-5
01B801	90459-6426	PRESSURE GUARD PEV-1/4-B-OD	3-63
01B901	90459-5481	OIL PUMP 3L, 10P-P3	3-69
01B902	90274-0084	PRESSURE GUARD, 1800 KPA	3-69
20B003	90600-4732	LASER SENSOR, WS/WE9L-P330	1-9
21B000	90458-2907	PROX.SWITCH IFS204	1-49
21B300	90458-2907	PROX.SWITCH IFS204	8-17, 8-19
21B300	90459-5529	PHOTOCELL E3Z-T86A, SENDER+RECIEVER	8-25
21B304	90459-5529	PHOTOCELL E3Z-T86A, SENDER+RECIEVER	8-25
21B402	90459-5529	PHOTOCELL E3Z-T86A, SENDER+RECIEVER	3-19, 3-21
21B404	90459-5529	PHOTOCELL E3Z-T86A, SENDER+RECIEVER	3-19, 3-21
21B406	90459-5529	PHOTOCELL E3Z-T86A, SENDER+RECIEVER	3-19, 3-21
21B408	90459-5529	PHOTOCELL E3Z-T86A, SENDER+RECIEVER	3-19, 3-21
21B424	90459-5529	PHOTOCELL E3Z-T86A, SENDER+RECIEVER	3-19, 3-21
21B602	90459-5529	PHOTOCELL E3Z-T86A, SENDER+RECIEVER	3-19, 3-21
21B604	90459-5529	PHOTOCELL E3Z-T86A, SENDER+RECIEVER	10-17
21B605	90458-2907	PROX.SWITCH IFS204	10-13
30B102	90458-2907	PROX.SWITCH IFS204	4-19
30B201	90458-2748	PROX. SENSOR, SMT-10-PS-KL-5-LED-24	4-29
60B000	90458-2907	PROX.SWITCH IFS204	5-15
60B001	90458-2907	PROX.SWITCH IFS204	5-15
60B003	90458-2907	PROX.SWITCH IFS204	5-31
60B100	90600-0459	INDUCTIVE SWITCH, E2A-M12KN05-WP-B1 5M	5-37
60B101	90600-3276	PROX. SENSOR, SME-8M-DS-24V-K-0,3-M8D	5-49
60B103	90459-7366	PHOTOCELL, WTB4-3P3161 F20	5-49
60B104	90600-0459	INDUCTIVE SWITCH, E2A-M12KN05-WP-B1 5M	5-37
60B300	90459-7366	PHOTOCELL, WTB4-3P3161 F20	5-7
60B301	90458-2907	PROX.SWITCH IFS204	5-7
60B402	90600-1182	PROXIMITY SENS. D-Y7P-S-A-PC	6-7
60B403	90600-1182	PROXIMITY SENS. D-Y7P-S-A-PC	6-7
60B404	90600-3276	PROX. SENSOR, SME-8M-DS-24V-K-0,3-M8D	6-21
60B405	90600-3276	PROX. SENSOR, SME-8M-DS-24V-K-0,3-M8D	6-21
60B406	90459-7272	PHOTOCELL E3Z-LS88	6-11, 6-13
60B407	90459-7272	PHOTOCELL E3Z-LS88	6-11, 6-13
60B408	90459-7272	PHOTOCELL E3Z-LS88	6-7
60B409	90459-7272	PHOTOCELL E3Z-LS88	6-7
60B410	90600-3276	PROX. SENSOR, SME-8M-DS-24V-K-0,3-M8D	6-7
60B411	90600-3276	PROX. SENSOR, SME-8M-DS-24V-K-0,3-M8D	6-7
60B423	90459-4788	PROX.SENSOR SEIN-M5B-PS-S-L	6-17
60B424	90459-4788	PROX.SENSOR SEIN-M5B-PS-S-L	6-17
60B425	90459-4788	PROX.SENSOR SEIN-M5B-PS-S-L	6-7
60B426	90459-4788	PROX.SENSOR SEIN-M5B-PS-S-L	6-7
60B600	90600-1182	PROXIMITY SENS. D-Y7P-S-A-PC	6-17
60B601	90600-1182	PROXIMITY SENS. D-Y7P-S-A-PC	6-17
60B602	90600-3276	PROX. SENSOR, SME-8M-DS-24V-K-0,3-M8D	6-17
60B603	90600-3276	PROX. SENSOR, SME-8M-DS-24V-K-0,3-M8D	6-17
60B604	90458-2907	PROX.SWITCH IFS204	6-17
60B605	90458-2907	PROX.SWITCH IFS204	6-19
60B606	90600-1182	PROXIMITY SENS. D-Y7P-S-A-PC	6-17
E			
01E600	90459-0813	COOLING UNIT, KB20A619.01	7-55
01E700	90600-4049	LIGHT FIXTURE, TCH128 1XTL5-21W/830 HF	7-5
01E701	2769757-0100 ..	LAMP	3-77
01E702	2769757-0100 ..	LAMP	3-77
F			
01F100	90459-4181	CURR. LIM. CIRC. BREAKER, NZMB1-4-A40	7-7
01F101	90082-0013	SURGE PROTECTION DEVICE PU4CR 8021520000	7-7
01F104	90459-5813	AUXILIARY CONTACT, FAZ-XHIN11	7-31
01F104	354002-0250	MINIATURE CIRCUIT BREAKER, FAZ-C25/3	7-31
01F105	90458-2507	FUSE HOLDER, USBCC1	7-29
01F105	90458-2510	FUSE, ATDR6	7-29
01F200	354002-0060	MINIATURE CIRCUIT BREAKER, FAZ-C6/3	7-29
01F201	354000-0040	MINIATURE CIRCUIT BREAKER, FAZ-C4/1	7-13
01F202	354000-0060	MINIATURE CIRCUIT BREAKER, FAZ-C6/1	7-13
01F203	354000-0040	MINIATURE CIRCUIT BREAKER, FAZ-C4/1	7-13
01F300	354000-0040	MINIATURE CIRCUIT BREAKER, FAZ-C4/1	7-29
01F400	354001-0040	MINIATURE CIRCUIT BREAKER, FAZ-C4/2	7-13
01F500	90459-5813	AUXILIARY CONTACT, FAZ-XHIN11	7-31
01F500	354002-0200	MINIATURE CIRCUIT BREAKER, FAZ-C20/3	7-31

Pos	Part No	Description	Page No
F			
01F600	354000-0060	MINIATURE CIRCUIT BREAKER, FAZ-C6/1	7-31
01F700	354000-0060	MINIATURE CIRCUIT BREAKER, FAZ-C6/1	7-29
01F701	90459-5811	RESIDUAL CURRENT DEVICE, FI-25/2/003-A	7-29
01F702	354000-0100	MINIATURE CIRCUIT BREAKER, FAZ-C10/1	7-29
09F000	90459-6692	SAFETY PLC, PLUTO B20 20-070-06	7-43
09F001	90459-2291	SAFETY TIME RELAY, E1T-0.5S-24VDC	7-43
09F003	90459-1131	SAFETY TIME RELAY, E1T-0S-24VDC	7-57
09F101	90458-1651	EMERGENCY STOP, ZB4-BS-844 ZB4-BZ-104	7-5
09F102	90458-1651	EMERGENCY STOP, ZB4-BS-844 ZB4-BZ-104	3-93
09F103	90458-1651	EMERGENCY STOP, ZB4-BS-844 ZB4-BZ-104	3-127
09F201	90602-4058	CONNECTION BOX TINA 4A, 20-054-03	3-81, 3-83
09F202	90602-4058	CONNECTION BOX TINA 4A, 20-054-03	3-81, 3-83
09F210	90459-6961	SAFETY SENSOR, NON CONT. ADAM-E M12 0,5M	3-81, 3-83
09F211	90459-4089	SAFETY SENSOR NON-CONTACT EVA E	3-81, 3-83
09F212	90459-6961	SAFETY SENSOR, NON CONT. ADAM-E M12 0,5M	3-81, 3-83
09F213	90459-4089	SAFETY SENSOR NON-CONTACT EVA E	3-81, 3-83
09F214	90459-6961	SAFETY SENSOR, NON CONT. ADAM-E M12 0,5M	3-81, 3-83
09F215	90459-4089	SAFETY SENSOR NON-CONTACT EVA E	3-81, 3-83
09F216	90459-6961	SAFETY SENSOR, NON CONT. ADAM-E M12 0,5M	3-81, 3-83
09F217	90459-4089	SAFETY SENSOR NON-CONTACT EVA E	3-81, 3-83
09F230	90459-6961	SAFETY SENSOR, NON CONT. ADAM-E M12 0,5M	3-81, 3-83
09F231	90459-4089	SAFETY SENSOR NON-CONTACT EVA E	3-81, 3-83
09F232	90459-6961	SAFETY SENSOR, NON CONT. ADAM-E M12 0,5M	3-81, 3-83
09F233	90459-4089	SAFETY SENSOR NON-CONTACT EVA E	3-81, 3-83
09F234	90459-5627	CONNECTION TINA 1A, 20-054-00	3-81, 3-83
09F236	90459-5627	CONNECTION TINA 1A, 20-054-00	3-81, 3-83
09F310	90600-4796	SAFETY LIGHT BARRIER,TRANSM. FT4-35-750	3-81, 3-83
09F311	90600-4797	SAFETY LIGHT BARRIER,TRANSM. FR4-35-750	3-81, 3-83
09F316	90600-4810	ADAPTER LIGHT BARR. TINA 10A, 20-054-12	3-81, 3-83
20F000	354000-0060	MINIATURE CIRCUIT BREAKER, FAZ-C6/1	7-57
21F400	354000-0100	MINIATURE CIRCUIT BREAKER, FAZ-C10/1	7-39
21F600	354000-0100	MINIATURE CIRCUIT BREAKER, FAZ-C10/1	7-39
21F800	90259-0313	AUXILIARY CONTACT, NHI21-PKZ0	7-31
21F800	90459-5326	OVERLOAD PROTECTION, PKZM0-4	7-31
21F801	90459-5813	AUXILIARY CONTACT, FAZ-XHIN11	7-31
21F801	354001-0100	MINIATURE CIRCUIT BREAKER, FAZ-C10/2	7-31
30F300	354000-0060	MINIATURE CIRCUIT BREAKER, FAZ-C6/1	7-57
60F010	90259-0313	AUXILIARY CONTACT, NHI21-PKZ0	7-57
60F010	90459-5321	OVERLOAD PROTECTION, PKZM0-0,4	7-57
60F120	90259-0313	AUXILIARY CONTACT, NHI21-PKZ0	7-57
60F120	90459-5324	OVERLOAD PROTECTION, PKZM0-1,6	7-57
60F420	90259-0313	AUXILIARY CONTACT, NHI21-PKZ0	7-57
60F420	90459-5323	OVERLOAD PROTECTION, PKZM0-1	7-57
60F610	90259-0313	AUXILIARY CONTACT, NHI21-PKZ0	7-57
60F610	90459-5324	OVERLOAD PROTECTION, PKZM0-1,6	7-57
K			
01K105	90119-0108	RELAY OMRON G2R-2-SNI-24DC	7-13
01K105	90129-0018	BASE, P2RF-08-E	7-13
01K301	90459-6557	PROCESSOR L61, SERIES B, 1756-L61/B	7-37
01K302	90459-2477	ETHERNET I/P BRIDGE MODULE, 1756-ENBT	10-7
01K303	90459-2477	ETHERNET I/P BRIDGE MODULE, 1756-ENBT	7-37
01K304	90600-5840	PLC DEVICEN. BR./SCAN MOD, 1756-DNB, D	7-37
01K305	90459-2488	REMOVABLE TERMINAL BLOCK 36 POINTS	7-37
01K305	90459-6556	PLC DIGITAL INPUT 32PTS, 1756-IB32/B	7-37
01K306	90459-2413	PLC DIGITAL INPUT MODULE16 POINTS	7-37
01K306	90459-2487	REMOVABLE TERMINAL BLOCK 20 POINTS	7-37
01K307	90459-2474	PLC,DIGIT. OUTPUT MODULE 16 PTS 10-31VDC	7-37
01K307	90459-2487	REMOVABLE TERMINAL BLOCK 20 POINTS	7-37
01K308	90459-2474	PLC,DIGIT. OUTPUT MODULE 16 PTS 10-31VDC	7-57
01K308	90459-2487	REMOVABLE TERMINAL BLOCK 20 POINTS	7-57
01K309	90459-2474	PLC,DIGIT. OUTPUT MODULE 16 PTS 10-31VDC	7-57
01K309	90459-2487	REMOVABLE TERMINAL BLOCK 20 POINTS	7-57
01K310	90459-2480	8-AXIS SERCOS MOTION MODULE	7-57
01K320	90459-2494	DEVICENET I/O ADAPTER MODULE, 1734-ADN	3-95, 3-97
01K321	90459-2503	DIGITAL INPUT 4 PTS SINK, 1734-IB4	3-95, 3-97
01K322	90459-2503	DIGITAL INPUT 4 PTS SINK, 1734-IB4	3-95, 3-97
01K323	90459-2503	DIGITAL INPUT 4 PTS SINK, 1734-IB4	3-95, 3-97
01K324	90459-2503	DIGITAL INPUT 4 PTS SINK, 1734-IB4	3-95, 3-97
01K325	90459-2503	DIGITAL INPUT 4 PTS SINK, 1734-IB4	3-95, 3-97
01K326	90459-2501	FIELD POWER DISTRIBUTOR, 1734-FPD	3-95, 3-97
01K327	90459-2505	DIGITAL OUTPUT 4 PTS, 1734-OB4E	3-95, 3-97
01K328	90459-2505	DIGITAL OUTPUT 4 PTS, 1734-OB4E	3-95, 3-97
01K329	90459-2505	DIGITAL OUTPUT 4 PTS, 1734-OB4E	3-95, 3-97
01K330	90459-2501	FIELD POWER DISTRIBUTOR, 1734-FPD	3-95, 3-97
01K331	90459-2505	DIGITAL OUTPUT 4 PTS, 1734-OB4E	3-95, 3-97
01K332	90459-2505	DIGITAL OUTPUT 4 PTS, 1734-OB4E	3-95, 3-97
01K335	90119-0108	RELAY OMRON G2R-2-SNI-24DC	3-95, 3-97
01K336	90119-0108	RELAY OMRON G2R-2-SNI-24DC	3-95, 3-97
01K340	90459-6062	ARMORBLOCK DIGITAL CONFIGURABLE I/O	3-7, 3-9
01K350	90459-6062	ARMORBLOCK DIGITAL CONFIGURABLE I/O	3-11
01K360	90459-6062	ARMORBLOCK DIGITAL CONFIGURABLE I/O	3-11
01K401	90600-5249	FERRITE, B64290L616X38	7-45

Pos	Part No	Description	Page No
K			
01K420	90459-6062	ARMORBLOCK DIGITAL CONFIGURABLE I/O	3-7, 3-9
01K700	90119-0108	RELAY OMRON G2R-2-SNI-24DC	7-13
01K700	90129-0018	BASE, P2RF-08-E	7-13
01K800	90459-2243	SHUT OFF VALVE, MS4-EE-1/4-10V24	3-63
09K241	90459-6913	ELECTROMAG. DOOR LOCK. DEV.,JSD-ZH-EM1-K	3-81, 3-83
09K242	90459-6913	ELECTROMAG. DOOR LOCK. DEV.,JSD-ZH-EM1-K	3-81, 3-83
20K002	90119-0108	RELAY OMRON G2R-2-SNI-24DC	7-57
20K002	90129-0018	BASE, P2RF-08-E	7-57
21K000	90458-1202	VALVES 2X3/2, CLOSED	3-55, 3-57
21K310	90458-1197	VALVE, 5/2 BISTABLE	8-27
21K400	90600-5249	FERRITE, B64290L616X38	7-9
21K401	90600-5249	FERRITE, B64290L616X38	7-9
21K500	90458-1203	VALVE 2X3/2 1X OPEN 1X CLOSED	8-29
21K600	90458-1140	FERRITE, RI-26-28-13	10-5
21K601	90458-1140	FERRITE, RI-26-28-13	10-5
21K800	90600-4731	RELAY	7-13
21K801	90600-4731	RELAY	7-13
30K200	90458-1194	VALVE, 5/2 MONOSTABLE	5-55
30K300	90600-5249	FERRITE, B64290L616X38	7-57
30K301	90600-5249	FERRITE, B64290L616X38	7-57
30K303	90600-2067	LEVEL CONTROL LC25, #7125832	4-5
30K353	90600-0553	TUBE, 8X1 MM PTFE	4-5
40K203	90458-1202	VALVES 2X3/2, CLOSED	3-55, 3-57
60K000	90458-1194	VALVE, 5/2 MONOSTABLE	5-55
60K010	90458-1194	VALVE, 5/2 MONOSTABLE	5-55
60K100	90458-1194	VALVE, 5/2 MONOSTABLE	5-55
60K400	90458-1194	VALVE, 5/2 MONOSTABLE	5-53
60K401	90458-1194	VALVE, 5/2 MONOSTABLE	5-53
60K402	90458-1194	VALVE, 5/2 MONOSTABLE	5-53
60K600	90458-1199	VALVE CLOSED IN MID-POSITION, 5/3	5-53
60K601	90458-1194	VALVE, 5/2 MONOSTABLE	5-53
60K602	90458-1202	VALVES 2X3/2, CLOSED	5-53
60K603	90458-1202	VALVES 2X3/2, CLOSED	5-55
60K604	90458-1194	VALVE, 5/2 MONOSTABLE	5-55
60K612	90601-1126	SAFETY VALVE, MS6-SV-1/2-E-10V24-AG	5-57
70K000	90119-0108	RELAY OMRON G2R-2-SNI-24DC	7-13
70K000	90129-0018	BASE, P2RF-08-E	7-13
70K001	90459-2739	OPTO-RELAY 50085, IN / OUT 4-53VDC 1A	7-13
81K201	90458-1170	FERRITE, SFC-6	7-45
81K202	90458-1170	FERRITE, SFC-6	7-45
81K401	90458-1140	FERRITE, RI-26-28-13	7-37
81K401	90600-5249	FERRITE, B64290L616X38	7-45
81K500	90459-4235	SNP TO DF1 GATEWAY, 0220 1166 01 REV B	10-23
M			
20M000	2838710-0200	WORM GEAR MOTOR	1-11
20M050	90600-1080	DOUBLE ACTING, ROUND, CYL 32-80	1-13
21M051	2769718-0100	PNEUMATIC CYLINDER	1-47
21M052	2769718-0100	PNEUMATIC CYLINDER	1-47
21M100	90601-0668	SERVO MOTOR, MPL-B420P-MK72AA SERIES A	1-43
21M200	90601-0668	SERVO MOTOR, MPL-B420P-MK72AA SERIES A	1-45
21M360	90457-0871	DOUBLE ACTING, MINI-ISO, CYL. 16-25	8-21
21M800	90459-6768	FAN 2BH1300-7AV15	3-47
30M000	90601-1926	SERVO MOTOR, MPL-B430P-MK72AA SERIES A	4-21
30M300	90600-0440	WHEEL APPLICATOR 60 PLATFORM, #7132058	4-5
30M400	90601-0668	SERVO MOTOR, MPL-B420P-MK72AA SERIES A	2-9
60M001	90459-4126	DOUBLE ACTING, MINI-ISO, CYL. 25-12	5-15
60M010	90069-0254	GEARS, WORM MOTOR SN5D56A-4	5-21
60M100	90601-1926	SERVO MOTOR MPL-B430P-MK72AA SERIES A	5-41
60M101	90600-2159	CYLINDER, RODLESS MECH. 18-260	5-49
60M210	90601-0668	SERVO MOTOR MPL-B420P-MK72AA SERIES A	5-49
60M250	90600-2073	CYLINDER, SLT-20-10-P-A	4-29
60M310	90601-0668	SERVO MOTOR MPL-B420P-MK72AA SERIES A	5-45
60M420	90458-0965	GEARS, WORM MOTOR S37 DT 63 L4	6-9
60M450	90600-1078	CYLINDER, RODLESS MECH. 25-500	6-21
60M451	90600-3010	CYLINDER WITH INT. GUIDING BORE 40	6-7
60M452	90459-3245	CYLINDER; WITH INT. GUIDING BORE 25	6-7
60M610	90264-0078	FAN, 2BH1300-7AH16	6-23
60M650	90600-3009	CYLINDER WITH INT. GUIDING BORE 40	6-17
60M651	90600-1077	CYLINDER, RODLESS MECH. 40-700	6-17
60M654	90450-0513	DOUBLE ACTING, COMPACT, CYL 32-25	6-23
P			
01P500	90053-0029	COUNTER, F524.800FA3C 24VDC	7-43
01P500	90459-3603	PRESSURE GAUGE, MAP-40-6-1/8-EN	3-55, 3-57
01P501	90053-0031	HOUR COUNTER, B 609.10 10-50VDC	7-43
01P511	90602-4062	LIGHT ELEMENT, RED, PSD-S OE LED RD	3-79
01P512	90602-4063	LIGHT ELEMENT, YELLOW, PSD-S OE LED YE	3-79
01P513	90602-4631	SIREN 100DB, PSD-S AE SM8-5 100DB/1	3-79
01P514	90602-4060	LIGHT ELEMENT, BLUE, PSD-S OE LED BU	3-79
01P515	90602-4061	LIGHT ELEMENT, GREEN, PSD-S OE LED GN	3-79
40P150	90459-7344	PRESSURE GAUGE, MA-40-6-R1/4-EN	3-55, 3-57
Q			
01Q104	90600-1759	CONTACTOR22KW24VDCDILM50-22+DILM65-XIP2X	7-33

Pos	Part No	Description	Page No
Q			
01Q105	90600-1759	CONTACTOR22KW24VDCDILM50-22+DILM65-XIP2X	7-29
01Q500	90459-5311	CONTACTOR 15KW 24VDC, DILM32-10	7-33
01Q600	90459-5308	CONTACTOR 4KW 24VDC, DILM9-10	7-33
01Q850	90459-2337	SHUT OFF VALVE, MS4-EM1-1/4	3-63
20Q000	90459-5308	CONTACTOR 4KW 24VDC, DILM9-10	7-57
20Q000	90459-6852	AUXILIARY CONTACT, DILA-XHI22	7-57
20Q051	90459-0290	NON-RETURN VALVE H-QS-6	3-55, 3-57
20Q052	90187-0191	BALL VALVE, R1/8 - HOSE 6 MM	3-55, 3-57
21Q400	90459-5308	CONTACTOR 4KW 24VDC, DILM9-10	7-41
21Q400	90459-6852	AUXILIARY CONTACT, DILA-XHI22	7-41
21Q600	90459-5308	CONTACTOR 4KW 24VDC, DILM9-10	7-57
21Q600	90459-6852	AUXILIARY CONTACT, DILA-XHI22	7-57
21Q800	90459-5308	CONTACTOR 4KW 24VDC, DILM9-10	7-33
21Q801	90459-5309	CONTACTOR 7,5KW 24VDC, DILM17-10	7-33
30Q300	90459-5308	CONTACTOR 4KW 24VDC, DILM9-10	7-57
30Q300	90459-6852	AUXILIARY CONTACT, DILA-XHI22	7-57
60Q010	90600-2048	SOLID STATE RELAY, 3RF2403-1BD04	7-57
60Q120	90459-5308	CONTACTOR 4KW 24VDC, DILM9-10	7-57
60Q120	90459-6852	AUXILIARY CONTACT, DILA-XHI22	7-57
60Q420	90459-5308	CONTACTOR 4KW 24VDC, DILM9-10	7-57
60Q420	90459-6852	AUXILIARY CONTACT, DILA-XHI22	7-57
60Q610	90459-5308	CONTACTOR 4KW 24VDC, DILM9-10	7-57
60Q610	90459-6852	AUXILIARY CONTACT, DILA-XHI22	7-57
80Q051	90187-0045	BALL VALVE, G1/4 CR PL	3-49
R			
01R360	90459-6847	RESISTOR, 0939 CTX 101	3-11
01R500	90459-5817	REGULATOR, MS4-LR-1/4-D6-A8-AS	3-55, 3-57
01R852	90328-0026	SILENCER G1/4"	3-63
01R853	90328-0026	SILENCER G1/4"	3-63
01R951	90328-0047	SILENCER G1/8"	3-55, 3-57
01R953	90328-0047	SILENCER G1/8"	3-55, 3-57
01R954	90328-0029	SILENCER M5	3-55, 3-57
01R955	90328-0029	SILENCER M5	3-55, 3-57
20R051	90328-0017	SILENCER, D=6 MM	1-13
20R352	90328-0047	SILENCER G1/8"	3-55, 3-57
20R353	90328-0047	SILENCER G1/8"	3-55, 3-57
20R354	90328-0029	SILENCER M5	3-55, 3-57
20R355	90328-0029	SILENCER M5	3-55, 3-57
21R054	90459-3604	FLOW CONTROL VALVE, GR-QS-6	3-55, 3-57
21R354	90235-0748	THROTTLE CHECK VALVE, GRA-1/4-B	3-55, 3-57
21R363	90328-0047	SILENCER G1/8"	8-27
21R365	90328-0047	SILENCER G1/8"	8-27
21R366	90328-0029	SILENCER M5	8-27
21R367	90328-0029	SILENCER M5	8-27
21R553	90328-0047	SILENCER G1/8"	8-29
21R555	90328-0047	SILENCER G1/8"	8-29
21R556	90328-0029	SILENCER M5	8-29
21R557	90328-0029	SILENCER M5	8-29
21R801	90206-0124	HEATING ELEMENT 2X1500W 230V	3-45
40R150	90459-5817	REGULATOR, MS4-LR-1/4-D6-A8-AS	3-55, 3-57
60R060	90328-0047	SILENCER G1/8"	5-55
60R061	90458-2838	SILENCER, U-3/8	5-55
60R062	90458-2838	SILENCER, U-3/8	5-55
60R455	2911337-0000	QUIC EXHAUST VALVE	6-7
60R456	2911337-0000	QUIC EXHAUST VALVE	6-7
60R458	90235-0846	THROTTLE CHECK VALVE G1/8", MANUAL, 6	6-7
60R459	90235-0846	THROTTLE CHECK VALVE G1/8", MANUAL, 6	6-7
60R651	2911337-0000	QUIC EXHAUST VALVE	6-17
60R652	2911337-0000	QUIC EXHAUST VALVE	6-17
60R658	90458-2838	SILENCER, U-3/8	5-53
60R659	90328-0047	SILENCER G1/8"	5-53
60R660	90458-2838	SILENCER, U-3/8	5-53
81R400	90459-2523	TERMINATOR, OPEN STYLE, 1485A-C2	7-45
S			
01S400	90064-0093	PUSH BUTTON, GREEN	3-93
01S401	90064-0098	PUSH BUTTON, WHITE	3-93
01S402	90064-0093	PUSH BUTTON, GREEN	3-93
01S404	90064-0098	PUSH BUTTON, WHITE	3-93
T			
01T200	90459-4133	POWER SUPPLY UNIT 6EP1 436-3BA00	7-45
01T201	90459-2939	BUFFER UNIT, 6EP1961-3BA01	10-21
01T300	90459-7267	POWER SUPPLY 24VDC, 1756-PB75/B	7-37
01T400	90459-5886	POWER SUPPLY UNIT 115-230 VAC/24VDC100W	7-45
20T000	90459-3441	FREQ. CONV., 22B-A2P3N104	7-57
21T100	90600-5216	AXIS MOD. KINETIX 6000,2094-BM02-S SER.B	7-57
21T200	90600-5216	AXIS MOD. KINETIX 6000,2094-BM02-S SER.B	7-57
21T400	90459-3450	FREQ. CONV., 22A-A4P5N104	7-9
21T600	90459-3450	FREQ. CONV., 22A-A4P5N104	10-5
30T000	90600-5212	AXIS MOD. W. PS,2094-BC02-M02-S SERIES B	7-35
30T300	90459-3449	FREQ. CONV., 22A-A2P3N104	7-57
30T400	90600-5214	AXIS MOD. KINETIX 6000,2094-BM01-S SER.B	7-35
60T100	90600-5216	AXIS MOD. KINETIX 6000,2094-BM02-S SER.B	7-57

Pos	Part No	Description	Page No
T			
60T210	90600-5214	AXIS MOD. KINETIX 6000,2094-BM01-S SER.B	7-57
60T310	90600-5214	AXIS MOD. KINETIX 6000,2094-BM01-S SER.B	7-57
70T100	90459-2547	POWER RAIL SLOT FILLER, 2094-PRF	7-57
81T200	90459-6858	ETHERNET SW, FL SWITCH SF 8TX FROM V 14	7-45
81T400	90459-5886	POWER SUPPLY UNIT 115-230 VAC/24VDC100W	7-45
U			
01U950	90459-2591	SINGLE VALVE SUB-BASE CDSV5.0-AS-1/8	3-55, 3-57
01U951	90032-0038	BLOCK 2 WAYS	3-71, 3-73, 3-75
01U952	90032-0038	BLOCK 2 WAYS	3-71, 3-73, 3-75
01U953	90032-0038	BLOCK 2 WAYS	3-71, 3-73, 3-75
01U954	90032-0039	BLOCK 4 WAYS	3-71, 3-73, 3-75
01U955	90032-0039	BLOCK 4 WAYS	3-71, 3-73, 3-75
01U956	90032-0039	BLOCK 4 WAYS	3-71, 3-73, 3-75
01U957	90032-0039	BLOCK 4 WAYS	3-71, 3-73, 3-75
01U958	90032-0039	BLOCK 4 WAYS	3-71, 3-73, 3-75
01U959	90032-0038	BLOCK 2 WAYS	3-71, 3-73, 3-75
01U960	90032-0038	BLOCK 2 WAYS	3-71, 3-73, 3-75
20U350	90459-2591	SINGLE VALVE SUB-BASE CDSV5.0-AS-1/8	3-55, 3-57
21U360	90459-2591	SINGLE VALVE SUB-BASE CDSV5.0-AS-1/8	8-27
21U550	90459-2591	SINGLE VALVE SUB-BASE CDSV5.0-AS-1/8	8-29
60U050	90458-1204	BASIC SUB-BASE 4 VALVES, CDVI5.0-GB4-MP	5-55
60U051	90458-2596	EXPANSION MODULE EXTRA SUPPLY 2 VALVES	5-55
60U600	90458-1204	BASIC SUB-BASE 4 VALVES, CDVI5.0-GB4-MP	5-53
60U601	90458-1206	EXP. SUB-BASE 2 VALVES, CDVI5.0-EB	5-53
V			
01V100	90024-0060	FILTER 80 A 440/250 VAC, B84144-A0080R00	7-7
01V104	90459-2549	AC LINE FILTER 3-PHASE 30A, 2090-XXLF-X3	7-9
01V105	90600-5252	LINE FILTER, B84113HB30	7-9
01V500	90459-1991	HOT MELT UNIT, #1049296	3-89
01V850	90459-2339	FILTER REGULATOR, MS4-LFR-1/4-D7-ERV-AS	3-63
01V852	90459-2773	FILTER, MS6-LFM-1/2-BRV	3-61
01V853	90459-2772	FILTER, MS6-LFM-1/2-ARV	3-61
01V854	90459-2771	FILTER, MS6-LFX-1/2-R	3-61
01V902	90415-0030	OIL FILTER PN 100 ORD.NO 2.77 10 70.1	3-69
20V000	90459-3454	FOOTPRINT FILTER 1 PHASE 18A	7-57
21V400	90459-3460	FOOTPRINT FILTER 1 PHASE 10A	7-9
21V600	90459-3460	FOOTPRINT FILTER 1 PHASE 10A	10-5
30V300	90459-3460	FOOTPRINT FILTER 1 PHASE 10A	7-57
W			
01W340	351309-0100	ACTUATOR/SENSOR CABLE PRKT 4-07/10M	3-7, 3-9
01W341	351413-0050	DEVICENET CONN. CABLE, 0935 361 103/5M	3-11
01W350	351309-0100	ACTUATOR/SENSOR CABLE PRKT 4-07/10M	3-11
01W351	351413-0003	DEVICENET CONN. CABLE, 0935 361 103/0,3M	3-11
01W360	351309-0100	ACTUATOR/SENSOR CABLE PRKT 4-07/10M	3-11
01W400	351150-0403	CABLE OLFLEX 3X0,75 MM2 LIGHT/GREY	3-85
01W401	351150-0407	CABLE OLFLEX 12X0,75 MM2 LIGHT/GREY	3-85
01W500	351150-0187	CABLE OLFLEX 5X6 MM2 LIGHT/GREY	3-85
01W501	351150-0406	CABLE OLFLEX 7X0,75 MM2 LIGHT/GREY	3-85
01W510	351150-0406	CABLE OLFLEX 7X0,75 MM2 LIGHT/GREY	3-85
01W701	351150-0403	CABLE OLFLEX 3X0,75 MM2 LIGHT/GREY	3-85
01W702	351150-0403	CABLE OLFLEX 3X0,75 MM2 LIGHT/GREY	3-85
01W800	351150-0403	CABLE OLFLEX 3X0,75 MM2 LIGHT/GREY	3-85
01W801	351150-0403	CABLE OLFLEX 3X0,75 MM2 LIGHT/GREY	3-85
01W851	315400-0010	TUBE PUN-H-12X2-BL	3-55, 3-57
01W852	315400-0004	TUBE PUN-H-8X1,25-BL	3-63, 3-65
01W853	315400-0001	TUBE PUN-H-6X1-BL	3-55, 3-57, 5-55
01W854	315400-0010	TUBE PUN-H-12X2-BL	3-55, 3-57
01W855	315400-0010	TUBE PUN-H-12X2-BL	3-55, 3-57
01W856	315400-0010	TUBE PUN-H-12X2-BL	3-55, 3-57
01W857	315400-0004	TUBE PUN-H-8X1,25-BL	3-55, 3-57
01W858	315400-0001	TUBE PUN-H-6X1-BL	3-89
01W858	315400-0010	TUBE PUN-H-12X2-BL	3-55, 3-57
01W859	315400-0001	TUBE PUN-H-6X1-BL	3-55, 3-57
01W860	315400-0013	TUBE PUN-H-16-2,5-BL	3-55, 3-57, 3-65
01W861	315400-0004	TUBE PUN-H-8X1,25-BL	3-55, 3-57
01W862	315400-0010	TUBE PUN-H-12X2-BL	3-55, 3-57, 5-55
01W863	315400-0010	TUBE PUN-H-12X2-BL	3-55, 3-57
01W864	315400-0010	TUBE PUN-H-12X2-BL	3-55, 3-57
01W865	315400-0010	TUBE PUN-H-12X2-BL	3-55, 3-57
01W867	315400-0016	TUBE PUN-H-4X0,75-BL	3-55, 3-57
01W868	315400-0001	TUBE PUN-H-6X1-BL	3-55, 3-57
01W870	315400-0016	TUBE PUN-H-4X0,75-BL	5-55
01W875	315400-0004	TUBE PUN-H-8X1,25-BL	3-55, 3-57
01W901	351401-0050	ACTU/SENS CABLE RSMVN 3-PRKMV 3-06/5,0M	3-69
01W902	351401-0050	ACTU/SENS CABLE RSMVN 3-PRKMV 3-06/5,0M	3-69
01W951	90166-0132	TUBE 6 MM PA,TRANSP.	3-69, 3-71, 3-73, 3-75
01W952	90166-0108	TUBE 6 MM PA TRANSP.	3-69
01W953	90166-0108	TUBE 6 MM PA TRANSP.	3-69
01W954	315400-0001	TUBE PUN-H-6X1-BL	3-55, 3-57, 3-69
01W955	90166-0108	TUBE 6 MM PA TRANSP.	3-69, 3-71, 3-73, 3-75
01W956	90166-0108	TUBE 6 MM PA TRANSP.	3-69, 3-71, 3-73, 3-75
01W956	315400-0001	TUBE PUN-H-6X1-BL	3-55, 3-57

Pos	Part No	Description	Page No
W			
01W958	90166-0108	TUBE 6 MM PA TRANSP.	3-71, 3-73, 3-75
01W960	90166-0108	TUBE 6 MM PA TRANSP.	3-71, 3-73, 3-75
01W961	90166-0108	TUBE 6 MM PA TRANSP.	3-71, 3-73, 3-75
01W962	90166-0132	TUBE 6 MM PA,TRANSP.	3-71, 3-73, 3-75
01W963	90166-0109	TUBE 4 MM PA TRANSP.	3-71, 3-73, 3-75
01W964	90166-0109	TUBE 4 MM PA TRANSP.	3-71, 3-73, 3-75
01W965	90166-0109	TUBE 4 MM PA TRANSP.	3-71, 3-73, 3-75
01W966	90166-0109	TUBE 4 MM PA TRANSP.	3-71, 3-73, 3-75
01W967	90166-0109	TUBE 4 MM PA TRANSP.	3-71, 3-73, 3-75
01W968	90166-0109	TUBE 4 MM PA TRANSP.	3-71, 3-73, 3-75
01W969	90166-0143	TUBE 2,5 MM PA TRANSP.	3-71, 3-73, 3-75
01W971	90166-0143	TUBE 2,5 MM PA TRANSP.	3-71, 3-73, 3-75
01W972	90166-0143	TUBE 2,5 MM PA TRANSP.	3-71, 3-73, 3-75
01W973	90166-0143	TUBE 2,5 MM PA TRANSP.	3-71, 3-73, 3-75
01W974	90166-0143	TUBE 2,5 MM PA TRANSP.	3-71, 3-73, 3-75
01W975	90166-0109	TUBE 4 MM PA TRANSP.	3-71, 3-73, 3-75
01W976	90166-0109	TUBE 4 MM PA TRANSP.	3-71, 3-73, 3-75
01W977	90166-0132	TUBE 6 MM PA,TRANSP.	3-71, 3-73, 3-75
01W978	90166-0109	TUBE 4 MM PA TRANSP.	3-71, 3-73, 3-75
01W979	90166-0109	TUBE 4 MM PA TRANSP.	3-71, 3-73, 3-75
01W980	90166-0143	TUBE 2,5 MM PA TRANSP.	3-71, 3-73, 3-75
01W981	90166-0143	TUBE 2,5 MM PA TRANSP.	3-71, 3-73, 3-75
01W982	90166-0143	TUBE 2,5 MM PA TRANSP.	3-71, 3-73, 3-75
01W983	90166-0143	TUBE 2,5 MM PA TRANSP.	3-71, 3-73, 3-75
01W984	90166-0109	TUBE 4 MM PA TRANSP.	3-71, 3-73, 3-75
01W990	90166-0143	TUBE 2,5 MM PA TRANSP.	3-71, 3-73, 3-75
01W991	90166-0143	TUBE 2,5 MM PA TRANSP.	3-71, 3-73, 3-75
01W992	90166-0143	TUBE 2,5 MM PA TRANSP.	3-71, 3-73, 3-75
01W993	90166-0143	TUBE 2,5 MM PA TRANSP.	3-71, 3-73, 3-75
01W994	90166-0143	TUBE 2,5 MM PA TRANSP.	3-71, 3-73, 3-75
01W995	90166-0143	TUBE 2,5 MM PA TRANSP.	3-71, 3-73, 3-75
01W996	90166-0143	TUBE 2,5 MM PA TRANSP.	3-71, 3-73, 3-75
01W997	90166-0143	TUBE 2,5 MM PA TRANSP.	3-71, 3-73, 3-75
01W998	90166-0109	TUBE 4 MM PA TRANSP.	3-71, 3-73, 3-75
09W103	351150-0405	CABLE OLFLEX 5X0,75 MM2 LIGHT/GREY	3-85
09W201	351423-0006	CABLE UNITRONIC LICY 5X0,34	3-85
09W202	351423-0006	CABLE UNITRONIC LICY 5X0,34	3-85
09W203	90459-4252	CABLE M12-C101, 20-056-10	3-81, 3-83
09W204	90459-4252	CABLE M12-C101, 20-056-10	3-81, 3-83
09W214	90459-4876	FOCUS JUMPER CABLE M12 5P 3M, 20-056-21	3-81, 3-83
09W216	90459-4876	FOCUS JUMPER CABLE M12 5P 3M, 20-056-21	3-81, 3-83
09W230	90459-4876	FOCUS JUMPER CABLE M12 5P 3M, 20-056-21	3-81, 3-83
09W232	90459-4876	FOCUS JUMPER CABLE M12 5P 3M, 20-056-21	3-81, 3-83
09W241	351309-0100	ACTUATOR/SENSOR CABLE PRKT 4-07/10M	3-81, 3-83
09W242	351309-0100	ACTUATOR/SENSOR CABLE PRKT 4-07/10M	3-81, 3-83
09W316	90459-4872	FOCUS JUMPER CABLE M12 8P 3M, 20-056-51	3-81, 3-83
20W000	351422-0203	CABLE ÖLFLEX 150CY QUATTRO 4X1,5	3-85
20W003	90459-6586	ACT/SENS.Y-CABLE, ASBN 2-PRKMV 4-07/0,6M	1-9
20W030	351309-0100	ACTUATOR/SENSOR CABLE PRKT 4-07/10M	1-9
20W050	315400-0001	TUBE PUN-H-6X1-BL	3-55, 3-57
20W051	315400-0001	TUBE PUN-H-6X1-BL	1-13, 3-55, 3-57
20W052	315400-0001	TUBE PUN-H-6X1-BL	3-55, 3-57
20W053	315400-0001	TUBE PUN-H-6X1-BL	3-55, 3-57
20W351	315400-0004	TUBE PUN-H-8X1,25-BL	3-55, 3-57
20W354	315400-0004	TUBE PUN-H-8X1,25-BL	3-55, 3-57
20W355	315400-0004	TUBE PUN-H-8X1,25-BL	3-53, 3-55, 3-57
20W356	315400-0001	TUBE PUN-H-6X1-BL	3-55, 3-57
21W000	351405-0050	SENS. CABLE RSMVN 3-PRKT 4-3-06/5,0M	1-49
21W051	315400-0004	TUBE PUN-H-8X1,25-BL	3-55, 3-57
21W054	315400-0001	TUBE PUN-H-6X1-BL	3-55, 3-57
21W055	315400-0001	TUBE PUN-H-6X1-BL	3-55, 3-57
21W100	90600-3293	MOTOR PWWER CABLE 2090-XXNPMF-16S09	3-85
21W101	90600-3294	MOTOR FEEDBACK CABLE 2090-XXNFMF-S09/C	3-85
21W200	90600-3293	MOTOR PWWER CABLE 2090-XXNPMF-16S09	3-85
21W201	90600-3294	MOTOR FEEDBACK CABLE 2090-XXNFMF-S09/C	3-85
21W300	351411-0010	ACTU/SENS. CABLE PRST 4-PRKT 4-07/1,0M	8-23
21W302	90459-6586	ACT/SENS.Y-CABLE, ASBN 2-PRKMV 4-07/0,6M	8-23
21W304	90459-6586	ACT/SENS.Y-CABLE, ASBN 2-PRKMV 4-07/0,6M	8-23
21W310	90459-1663	CONNECTOR, 405204 RSC4/7	8-23
21W361	315400-0004	TUBE PUN-H-8X1,25-BL	8-27
21W362	315400-0016	TUBE PUN-H-4X0,75-BL	8-21, 8-27
21W364	315400-0016	TUBE PUN-H-4X0,75-BL	8-21, 8-27
21W365	315400-0016	TUBE PUN-H-4X0,75-BL	8-27
21W400	351422-0203	CABLE ÖLFLEX 150CY QUATTRO 4X1,5	3-85
21W402	90459-6586	ACT/SENS.Y-CABLE, ASBN 2-PRKMV 4-07/0,6M	3-19, 3-21
21W404	90459-6586	ACT/SENS.Y-CABLE, ASBN 2-PRKMV 4-07/0,6M	3-19, 3-21
21W406	90459-6586	ACT/SENS.Y-CABLE, ASBN 2-PRKMV 4-07/0,6M	3-19, 3-21
21W408	90459-6586	ACT/SENS.Y-CABLE, ASBN 2-PRKMV 4-07/0,6M	3-19, 3-21
21W412	351309-0050	ACTUATOR/SENSOR CABLE PRKT 4-07/5M	3-19, 3-21
21W414	351309-0050	ACTUATOR/SENSOR CABLE PRKT 4-07/5M	3-19, 3-21
21W416	351309-0050	ACTUATOR/SENSOR CABLE PRKT 4-07/5M	3-19, 3-21
21W418	351309-0100	ACTUATOR/SENSOR CABLE PRKT 4-07/10M	3-19, 3-21

Pos	Part No	Description	Page No
W			
21W422	351405-0006	ACT/SENS. CABLE RSMVN 3-PRKT 4-3-06/0,6M	3-19, 3-21
21W424	90459-6586	ACT/SENS.Y-CABLE, ASBN 2-PRKMV 4-07/0,6M	3-19, 3-21
21W500	90459-1663	CONNECTOR, 405204 RSC4/7	8-23
21W550	315400-0004	TUBE PUN-H-8X1,25-BL	8-29
21W551	315400-0004	TUBE PUN-H-8X1,25-BL	8-29
21W556	315400-0016	TUBE PUN-H-4X0,75-BL	8-29
21W602	90459-6586	ACT/SENS.Y-CABLE, ASBN 2-PRKMV 4-07/0,6M	3-19, 3-21
21W604	90459-6586	ACT/SENS.Y-CABLE, ASBN 2-PRKMV 4-07/0,6M	10-17
21W605	351405-0050	SENS. CABLE RSMVN 3-PRKT 4-3-06/5,0M	10-13
21W612	351405-0050	SENS. CABLE RSMVN 3-PRKT 4-3-06/5,0M	3-19, 3-21
21W614	351405-0050	SENS. CABLE RSMVN 3-PRKT 4-3-06/5,0M	10-17
21W800	351150-0412	CABLE OLFLEX 3X1,5 MM2 LIGHT/GREY	3-85
21W801	351120-0266	CABLE ÖLFLEX HEAT 180 SIHF 4X4	3-85
30W000	90600-3293	MOTOR PWWER CABLE 2090-XXNPMF-16S09	3-85
30W001	90600-3294	MOTOR FEEDBACK CABLE 2090-XXNFMF-S09/C	3-85
30W102	351411-0010	ACTU/SENS. CABLE PRST 4-PRKT 4-07/1,0M	4-19
30W300	351422-0203	CABLE ÖLFLEX 150CY QUATTRO 4X1,5	3-85
30W303	90600-1984	ACTUATOR/SENSOR CABLE PRKT 5/56-10M	3-85
30W353	315400-0004	TUBE PUN-H-8X1,25-BL	5-55
30W400	90600-3293	MOTOR PWWER CABLE 2090-XXNPMF-16S09	3-85
30W401	90600-3294	MOTOR FEEDBACK CABLE 2090-XXNFMF-S09/C	3-85
30W659	315400-0001	TUBE PUN-H-6X1-BL	5-55
40W150	315400-0004	TUBE PUN-H-8X1,25-BL	5-53
40W150	315400-0010	TUBE PUN-H-12X2-BL	3-55, 3-57
40W151	315400-0016	TUBE PUN-H-4X0,75-BL	3-55, 3-57
40W152	315400-0004	TUBE PUN-H-8X1,25-BL	3-55, 3-57
40W254	315400-0016	TUBE PUN-H-4X0,75-BL	3-55, 3-57
60W000	351411-0015	ACTU/SENS. CABLE PRST 4-PRKT 4-07/1,5M	5-15
60W001	351411-0015	ACTU/SENS. CABLE PRST 4-PRKT 4-07/1,5M	5-15
60W003	351405-0050	SENS. CABLE RSMVN 3-PRKT 4-3-06/5,0M	5-31
60W010	315400-0001	TUBE PUN-H-6X1-BL	5-55
60W010	351150-0413	CABLE OLFLEX 4GX1,5 MM2 LIGHT/GREY	5-21
60W011	351150-0413	CABLE OLFLEX 4GX1,5 MM2 LIGHT/GREY	3-85
60W050	315400-0010	TUBE PUN-H-12X2-BL	5-55, 5-57
60W051	315400-0001	TUBE PUN-H-6X1-BL	5-55
60W052	315400-0001	TUBE PUN-H-6X1-BL	5-55
60W054	315400-0001	TUBE PUN-H-6X1-BL	5-55
60W101	351407-0015	ACTU/SENS. CABLE PRST 3-PRKMV 3-06/1,5M	5-49
60W103	351407-0020	ACTU/SENS. CABLE PRST 3-PRKMV 3-06/2,0M	5-49
60W110	90600-3293	MOTOR PWWER CABLE 2090-XXNPMF-16S09	3-85
60W111	90600-3294	MOTOR FEEDBACK CABLE 2090-XXNFMF-S09/C	3-85
60W152	315400-0001	TUBE PUN-H-6X1-BL	5-55
60W154	315400-0001	TUBE PUN-H-6X1-BL	5-55
60W210	90600-3293	MOTOR PWWER CABLE 2090-XXNPMF-16S09	3-85
60W211	90600-3294	MOTOR FEEDBACK CABLE 2090-XXNFMF-S09/C	3-85
60W252	315400-0001	TUBE PUN-H-6X1-BL	4-29, 5-55
60W254	315400-0001	TUBE PUN-H-6X1-BL	4-29, 5-55
60W300	351408-0020	ACTU/SENS. CABLE PRST 3-PRKMWV 3-06/2,0M	5-7
60W301	351411-0015	ACTU/SENS. CABLE PRST 4-PRKT 4-07/1,5M	5-7
60W310	90600-3293	MOTOR PWWER CABLE 2090-XXNPMF-16S09	3-85
60W311	90600-3294	MOTOR FEEDBACK CABLE 2090-XXNFMF-S09/C	3-85
60W402	351401-0020	ACTU/SENS CABLE RSMVN 3-PRKMV 3-06/2,0M	6-7
60W403	351401-0020	ACTU/SENS CABLE RSMVN 3-PRKMV 3-06/2,0M	6-7
60W404	351401-0020	ACTU/SENS CABLE RSMVN 3-PRKMV 3-06/2,0M	6-21
60W405	351401-0020	ACTU/SENS CABLE RSMVN 3-PRKMV 3-06/2,0M	6-21
60W406	351403-0020	ACTU/SENS. CABLE RSMVN 3-PRKMV 4-06/2,0M	6-11, 6-13
60W407	351403-0020	ACTU/SENS. CABLE RSMVN 3-PRKMV 4-06/2,0M	6-11, 6-13
60W408	351403-0020	ACTU/SENS. CABLE RSMVN 3-PRKMV 4-06/2,0M	6-7
60W409	351403-0020	ACTU/SENS. CABLE RSMVN 3-PRKMV 4-06/2,0M	6-7
60W410	351401-0020	ACTU/SENS CABLE RSMVN 3-PRKMV 3-06/2,0M	6-7
60W411	351401-0020	ACTU/SENS CABLE RSMVN 3-PRKMV 3-06/2,0M	6-7
60W420	351150-0413	CABLE OLFLEX 4GX1,5 MM2 LIGHT/GREY	6-9
60W421	351150-0413	CABLE OLFLEX 4GX1,5 MM2 LIGHT/GREY	3-85
60W423	351402-0050	ACTU/SENS CABLE RSMVN 3-PRKMWV 3-06/5,0M	6-17
60W424	351402-0050	ACTU/SENS CABLE RSMVN 3-PRKMWV 3-06/5,0M	6-17
60W425	351402-0050	ACTU/SENS CABLE RSMVN 3-PRKMWV 3-06/5,0M	6-7
60W426	351402-0050	ACTU/SENS CABLE RSMVN 3-PRKMWV 3-06/5,0M	6-7
60W452	315400-0004	TUBE PUN-H-8X1,25-BL	5-53
60W454	315400-0004	TUBE PUN-H-8X1,25-BL	5-53
60W455	315400-0004	TUBE PUN-H-8X1,25-BL	5-53, 6-7
60W456	315400-0004	TUBE PUN-H-8X1,25-BL	5-53, 6-7
60W458	315400-0001	TUBE PUN-H-6X1-BL	5-53
60W462	315400-0001	TUBE PUN-H-6X1-BL	5-53
60W463	315400-0001	TUBE PUN-H-6X1-BL	5-53, 6-7
60W464	315400-0001	TUBE PUN-H-6X1-BL	6-7
60W465	315400-0001	TUBE PUN-H-6X1-BL	6-7
60W600	351401-0050	ACTU/SENS CABLE RSMVN 3-PRKMV 3-06/5,0M	6-17
60W601	351401-0050	ACTU/SENS CABLE RSMVN 3-PRKMV 3-06/5,0M	6-17
60W602	315400-0001	TUBE PUN-H-6X1-BL	5-55
60W602	351401-0050	ACTU/SENS CABLE RSMVN 3-PRKMV 3-06/5,0M	6-17
60W603	351401-0020	ACTU/SENS CABLE RSMVN 3-PRKMV 3-06/2,0M	6-17
60W604	351405-0050	SENS. CABLE RSMVN 3-PRKT 4-3-06/5,0M	6-17

Pos	Part No	Description	Page No
W			
60W605	351405-0050	SENS. CABLE RSMVN 3-PRKT 4-3-06/5,0M	6-19
60W606	351401-0050	ACTU/SENS CABLE RSMVN 3-PRKMV 3-06/5,0M	6-17
60W610	351150-0413	CABLE OLFLEX 4GX1,5 MM2 LIGHT/GREY	6-23
60W611	351150-0405	CABLE OLFLEX 5X0,75 MM2 LIGHT/GREY	3-85
60W612	351150-0406	CABLE OLFLEX 7X0,75 MM2 LIGHT/GREY	5-57
60W652	315400-0004	TUBE PUN-H-8X1,25-BL	5-53, 6-17
60W655	315400-0004	TUBE PUN-H-8X1,25-BL	5-53, 6-17
60W656	315400-0004	TUBE PUN-H-8X1,25-BL	5-53
60W657	315400-0001	TUBE PUN-H-6X1-BL	5-53, 6-17
60W658	315400-0001	TUBE PUN-H-6X1-BL	5-55, 6-17
60W659	315400-0001	TUBE PUN-H-6X1-BL	6-17
60W663	315400-0010	TUBE PUN-H-12X2-BL	5-57
60W665	315400-0010	TUBE PUN-H-12X2-BL	5-57
60W666	315400-0001	TUBE PUN-H-6X1-BL	5-53, 5-55
60W667	315400-0010	TUBE PUN-H-12X2-BL	5-53, 5-57
80W051	315400-0009	TUBE PUN-H-10X1,5-SW	3-49
81W200	90459-1621	CABLE, ETHERNET RJ 45 CONNECT. 1 M	7-63
81W201	90459-6395	CABLE, ETHERNET RJ 45 STRAIGHT.10M	7-63
81W400	90459-2530	DEVICENET CABLE THIN	7-63
81W401	90459-2530	DEVICENET CABLE THIN	7-63
81W402	90459-2530	DEVICENET CABLE THIN	7-63
81W403	90459-2530	DEVICENET CABLE THIN	7-63
81W404	351415-0100	DEVICENET CONN. CABLE, 0935 361 105/10M	3-7, 3-9
81W405	90459-2530	DEVICENET CABLE THIN	7-63
81W406	90459-2530	DEVICENET CABLE THIN	7-63
81W407	90459-2530	DEVICENET CABLE THIN	7-63
81W420	351309-0100	ACTUATOR/SENSOR CABLE PRKT 4-07/10M	3-7, 3-9
81W421	351415-0100	DEVICENET CONN. CABLE, 0935 361 105/10M	3-9
81W700	90220-0183	SCR. CABLE 2X0,34MM2	7-63
81W701	90220-0183	SCR. CABLE 2X0,34MM2	7-63
81W702	90220-0183	SCR. CABLE 2X0,34MM2	7-63
X			
01X002	2839223-0100	PLINTH	7-9
01X003	2839224-0100	PLINTH	7-9
01X004	2840918-0100	PLINTH	7-57
01X006	2841403-0200	PLINTH	7-57
01X007	90459-0959	DISTRIBUTOR BLOCK 1492-PD3163	7-9
01X008	3046886-0100	DISTRIBUTION TERMINAL	7-9
01X600	2890591-0100	PLINTH	7-45
01X700	90001-0033	WALL SOCKET, E1834666	7-9
21X101	90459-2551	CONNECTOR, MOTOR FEEDBACK 15 PIN MALE	3-85
21X201	90459-2551	CONNECTOR, MOTOR FEEDBACK 15 PIN MALE	3-85
21X320	90459-0839	DISTRIBUTION FRAME, ASBV 8 5-135/10M	8-23
30X001	90459-2551	CONNECTOR, MOTOR FEEDBACK 15 PIN MALE	3-85
30X120	90459-0839	DISTRIBUTION FRAME, ASBV 8 5-135/10M	4-37
30X130	90459-0839	DISTRIBUTION FRAME, ASBV 8 5-135/10M	4-37
30X401	90459-2551	CONNECTOR, MOTOR FEEDBACK 15 PIN MALE	3-85
40X400	90110-0053	FEMALE INSERT HAN 6 E 09 33 006 2701	3-7, 3-9
50X000	90110-0053	FEMALE INSERT HAN 6 E 09 33 006 2701	3-9
50X001	90459-6820	FEMALE INSERT HAN 4 A, 09 20 004 2711	3-7, 3-9
50X110	90110-0053	FEMALE INSERT HAN 6 E 09 33 006 2701	3-7, 3-9
60X010	90110-0052	MALE INSERT, HAN E06, 0933 0062 601	5-21
60X010	90459-1458	HOOD, SIDE ENTRY, HAN6E, 19 30 006 1540	5-21
60X010	90459-3604	FLOW CONTROL VALVE, GR-QS-6	5-33
60X050	90458-1212	LEFT ENDPLATE INCL. 10M CABLE	5-55
60X051	90458-1214	RIGHT ENDPL EXT. PILOT AIR,CDVI5.0-EPR-S	5-55
60X100	90459-1663	CONNECTOR, 405204 RSC4/7	5-37
60X104	90459-1663	CONNECTOR, 405204 RSC4/7	5-37
60X111	90459-2551	CONNECTOR, MOTOR FEEDBACK 15 PIN MALE	3-85
60X420	90110-0052	MALE INSERT, HAN E06, 0933 0062 601	6-9
60X600	90458-1212	LEFT ENDPLATE INCL. 10M CABLE	5-53
60X610	90110-0052	MALE INSERT, HAN E06, 0933 0062 601	6-23
60X612	90601-1168	SOCKET CONNECTOR, NECA-S1G9-P9-MP3	5-57
60X658	90458-1214	RIGHT ENDPL EXT. PILOT AIR,CDVI5.0-EPR-S	5-53
81X401	90459-2519	TAP, OPEN STYLE	7-45

Tetra Pak

SPC binder labels. 40 mm Full width *Note! This page is generated* **automatically.**
using the **variable definitions** *made in the* **front page** *file!!*

CAP 30/Flex ReCap
662950-0200
Issue: 2011-06 Doc No: SPC-3047194-0108

CAP 30/Flex ReCap
662950-0200
Issue: 2011-06 Doc No: SPC-3047194-0108

CAP 30/Flex ReCap
662950-0200
Issue: 2011-06 Doc No: SPC-3047194-0108

CAP 30/Flex ReCap
662950-0200
Issue: 2011-06 Doc No: SPC-3047194-0108

CAP 30/Flex ReCap
662950-0200
Issue: 2011-06 Doc No: SPC-3047194-0108

CAP 30/Flex ReCap
662950-0200
Issue: 2011-06 Doc No: SPC-3047194-0108

CAP 30/Flex ReCap
662950-0200
Issue: 2011-06 Doc No: SPC-3047194-0108

CAP 30/Flex ReCap
662950-0200
Issue: 2011-06 Doc No: SPC-3047194-0108

CAP 30/Flex ReCap
662950-0200
Issue: 2011-06 Doc No: SPC-3047194-0108

CAP 30/Flex ReCap
662950-0200
Issue: 2011-06 Doc No: SPC-3047194-0108

CAP 30/Flex ReCap
662950-0200
Issue: 2011-06 Doc No: SPC-3047194-0108

SPC binder labels. 30 mm Half width *Note! This page is generated* **automatically.**
using the **variable definitions** *made in the* **front page** *file!!*

CAP 30/Flex ReCap
662950-0200
Issue: 2011-06 Doc No: SPC-3047194-0108

CAP 30/Flex ReCap
662950-0200
Issue: 2011-06 Doc No: SPC-3047194-0108

CAP 30/Flex ReCap
662950-0200
Issue: 2011-06 Doc No: SPC-3047194-0108

CAP 30/Flex ReCap
662950-0200
Issue: 2011-06 Doc No: SPC-3047194-0108

CAP 30/Flex ReCap
662950-0200
Issue: 2011-06 Doc No: SPC-3047194-0108

CAP 30/Flex ReCap
662950-0200
Issue: 2011-06 Doc No: SPC-3047194-0108

CAP 30/Flex ReCap
662950-0200
Issue: 2011-06 Doc No: SPC-3047194-0108

CAP 30/Flex ReCap
662950-0200
Issue: 2011-06 Doc No: SPC-3047194-0108

CAP 30/Flex ReCap
662950-0200
Issue: 2011-06 Doc No: SPC-3047194-0108

CAP 30/Flex ReCap
662950-0200
Issue: 2011-06 Doc No: SPC-3047194-0108

CAP 30/Flex ReCap
662950-0200
Issue: 2011-06 Doc No: SPC-3047194-0108

CAP 30/Flex ReCap
662950-0200
Issue: 2011-06 Doc No: SPC-3047194-0108

CAP 30/Flex ReCap
662950-0200
Issue: 2011-06 Doc No: SPC-3047194-0108