EM

Electrical Manual

Cap 30/Flex

662950-0300

ScrewCap

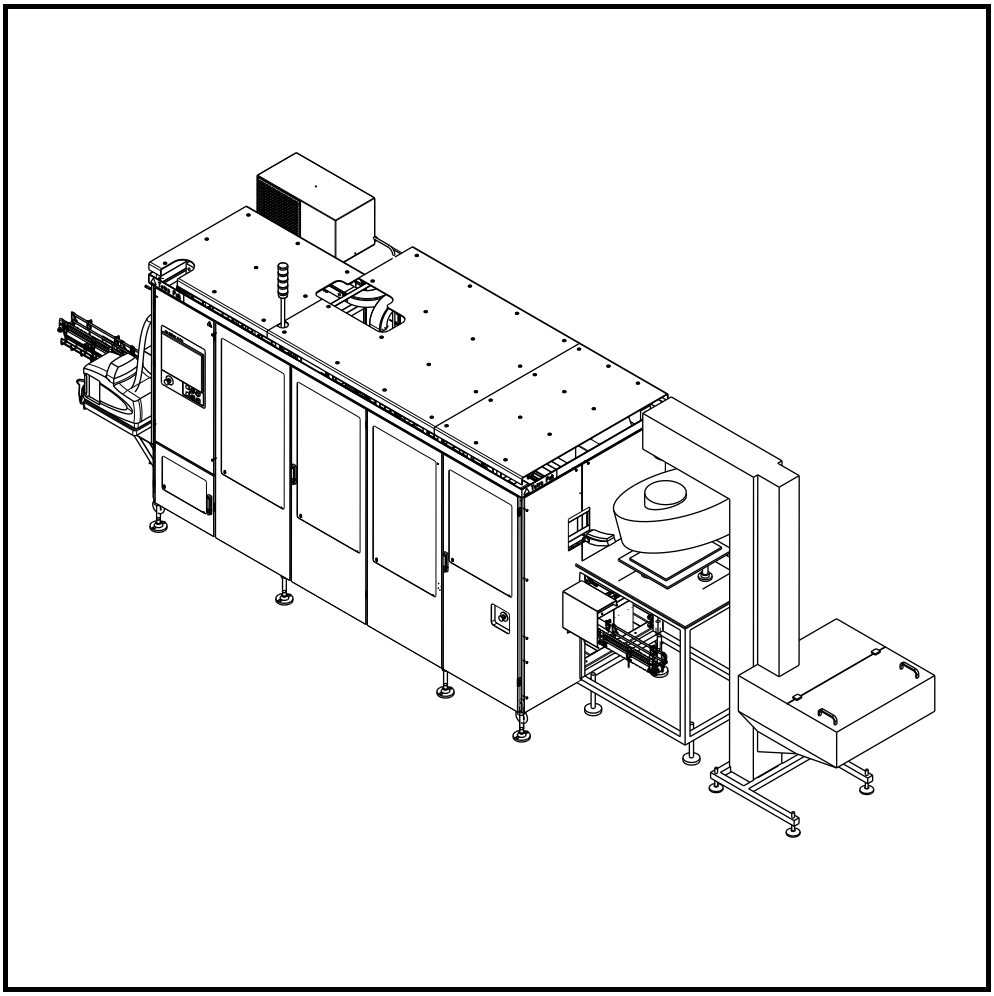

WARNING

Read and follow all safety precaution instructions throughout this manual and on safety signs attached to this equipment.

Failure to follow all safety precaution instructions could result in death or serious injury.

Tetra Pak®

Doc. No. EM-3202356-0110

Copyright © 2015 Tetra Pak International S.A.

All rights reserved. No part of this document may be reproduced or copied in any form or by any means without written permission from Tetra Pak Packaging Solutions.

, Tetra Pak, and all other trademarks displayed in this document are the property of the Tetra Pak International SA. Tetra Pak Packaging Solutions together with Tetra Pak International SA form part of ‘the Tetra Pak Group’. The content of this manual is in accordance with the design and construction of the machine or equipment at the time of publishing. The Tetra Pak Group reserves the right to introduce design modifications without prior notice.

The English language version of this document contains the original instructions. All other language versions are translations of the original instructions.

This document was produced and printed by:

Tetra Pak Packaging Solutions
Via Delfini 1
41123 Modena
Italy

Doc. No. EM-3202356-0110

Issue 2015-06

This manual is valid for:

Series No. / Machine No.
Year of Manufacture Sign.

EM
Electrical Manual

Cap 30/Flex
662950-0300

i Introduction
ii Safety Precautions
1 Electrical System Description
2 Document List
3 Position Summary
4 Circuit Diagrams
5 Line Summary
6 Cabinet Terminal Summary
7 Terminal Strip Overview
8 Cable Connection List
9 Mains Connection
10 Drawing Remarks
11 Engineering Change Description
12 Component Location
13 Other Information
14 Program Documents

Machine or equipment configurations that this manual is valid for are described on the next page.

Doc. No. EM-3202356-0110
Issue 2015-06

Tetra Pak®
Tetra Pak Packaging Solutions

Valid for:

Name	Drawing Specification and Development Step	Additional Information
Cap 30/Flex	662950-0300	

i Introduction

About the Introduction Chapter

This chapter contains basic information about this manual and the related Tetra Pak equipment.

About the Introduction Chapter i-2

Abbreviations and Terminology i-5

Manual Information i-6

Delivered Manuals i-6

CM i-6

EM i-6

IM i-6

MM i-6

OM i-6

SPC i-6

TeM i-7

Page Layout i-8

Page Numbering i-9

Typographical Conventions i-9

Symbols i-10

Machine Introduction i-11

Intended Use of the Equipment i-11

Manufacturer i-11

Identification i-12

CE Classification i-12

Machine Plate i-12

Food Grade Lubricated Machine Plate i-13

Orientation i-14

Hygiene i-15

Packaging Material i-15

How to Use This EM i-16

Reference Designation i-17

List of Function Codes i-18

Explanation of the American Wire Gauge (AWG) Table on the First Page of the Circuit Diagrams i-18

Example i-20

Optional Equipment i-21

How to Trace an Electrical Component i-21

Example 1: How to Trace a Line i-22

Line Connection Order i-22

How to Trace a Line i-23

Example 2: How to Trace a Contactor i-24

Example 3: How to Trace a Terminal in the Electrical Cabinet i-25

Example 4: How to Trace a Terminal Outside the Electrical Cabinet i-26

Example 5: How to Trace a Network i-27

Example 6: How to Find Electrical Components Using the SPC i-29

Assistance and Inquiries i-31

Abbreviations and Terminology

Abbreviation/Terminology	Meaning	Translation
ANSI	American National Standards Institute	American National Standards Institute
APU	Applicator Unit	Applicator Unit
AWG	American Wire Gauge	American Wire Gauge
CAP	Cap Applicator	Cap Applicator
CE	Communautés Européennes/European Communities	Communautés Européennes/European Communities
COMMs	Communications	Communications
Cont'd	Continued	Continued
CSA	Canadian Standard Association	Canadian Standard Association
CSU	Cap Sorter Unit	Cap Sorter Unit
Doc.	Document	Document
EEA	European Economic Area	European Economic Area
EM	Electrical Manual	Electrical Manual
EN	European Norm	European Norm
HMGU	Hotmelt Gun Unit	Hotmelt Gun Unit
IM	Installation Manual	Installation Manual
IPU	Infeed Package Unit	Infeed Package Unit
LH	Left Hand	Left Hand
ISO	International Standards Organization	International Standards Organization
MM	Maintenance Manual	Maintenance Manual
No.	Number	Number
OE	Optional Equipment	Optional Equipment
OM	Operation Manual	Operation Manual
PE	Polyethylene	Polyethylene
Pos	Position	Position
psi	Pound per square inch	Pound per square inch
PTU	Package Transfer Unit	Package Transfer Unit
PVC	Polyvinyl chloride	Polyvinyl chloride
QuTI-P	Quality and Technical Issues Platform	Quality and Technical Issues Platform
RH	Right Hand	Right Hand
S	Slim (package shape)	Slim (package shape)
SPC	Spare Parts Catalogue	Spare Parts Catalogue
TP	Tetra Pak	Tetra Pak
UL	Underwriters Laboratories	Underwriters Laboratories
V	Volt	Volt

Manual Information

The Tetra Pak Group recommends reading all delivered manuals carefully. Make sure that the delivered manuals are available to personnel who operate or maintain the equipment.

It is important to keep this manual for the lifetime of the equipment and to pass the manual on to any subsequent holder or user.

Any item that is named specifically in this manual is to be considered a designated item for the equipment. Designated items are verified by the Tetra Pak Group for use with the equipment.

The Tetra Pak Group will not be held responsible for any damage, loss, injury, or death caused by not following the instructions in the manuals that accompany this equipment, or by a failure to use designated items specified in the manuals that accompany this equipment.

Delivered Manuals

Manuals delivered with this equipment:

CM

The Conversion Manual provides technicians with information on converting the equipment between different production modes.

EM

The Electrical Manual provides technicians with information about the equipment's electrical system.

IM

The Installation Manual provides technicians with information required to safely install the equipment.

MM

The Maintenance Manual provides technicians with information on maintaining the equipment.

OM

The Operation Manual provides the operator with information on handling and operating the equipment before, during, and after production.

SPC

The Spare Parts Catalogue provides the information necessary to order spare parts from the Tetra Pak Group.

TeM

The Technical Manual provides technicians with information which can be:

- information required to safely install the equipment
- information required to maintaining the equipment
- information about the machine's/equipment's electrical system
- information necessary to order spare parts from the Tetra Pak Group
- other technical information

Page Layout

Every main page in a manual contains a header and a footer. The page header contains the chapter name (1) and the section name (2). The page footer contains the page number (3), and the document number (4). See also the Page Numbering section.

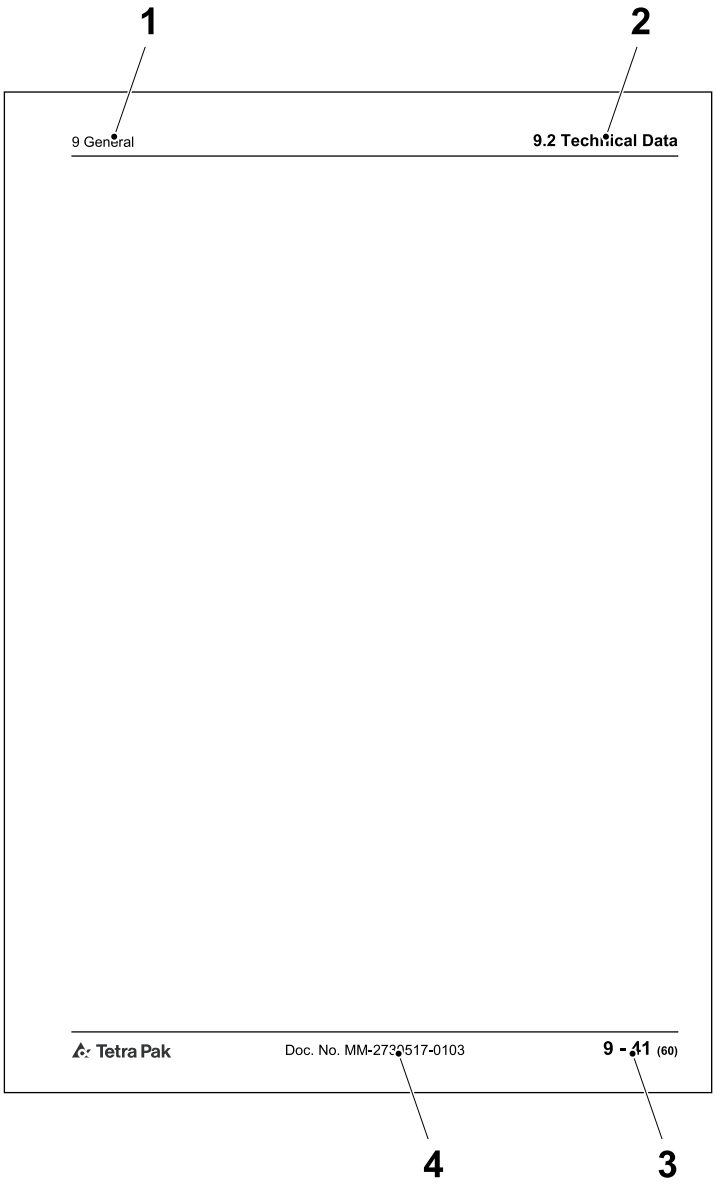

1 Chapter name
2 Section name
3 Page number
4 Document number

Page Numbering

A page number has three parts:

- chapter number (1)
- consecutive page number (2) within the chapter
- total number of pages (3) in the chapter

Note! The letters UP may replace the chapter number (1) if the manual includes update pages. The consecutive page number (2) and the total number of pages (3) of update pages do not follow the existing sequential page numbering of the chapter.

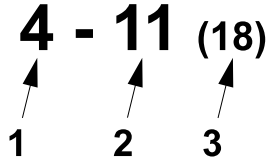

1 Chapter number
2 Consecutive page number
3 Total number of pages

Typographical Conventions

Physical buttons on the operator panel, emergency stop devices, program steps, and program tasks are printed in CAPITAL LETTERS.

Names of buttons, entry fields, menu items, or other objects that allow the user to control the user interface are printed in `Courier`.

Information that is displayed on the user interface, is to be repeated in the user manual, but is not used to control the user interface, is printed in `COURIER CAPITAL LETTERS`.

Cross-references are underlined.

Symbols

Symbols used in illustrations.

	A pointer arrow indicates the position of an object.
	A zoom arrow indicates that an object view is enlarged. The arrow points towards the enlarged view of the object.
	A rotation movement arrow indicates rotational movement of an object. The arrow points in the direction of rotation.
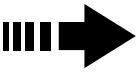	A straight movement arrow indicates movement of an object. The arrow points in the direction of movement.

Machine Introduction

Intended Use of the Equipment

The intended use of this Tetra Pak equipment is to apply a closure onto a package.

Tetra Brik Aseptic Slim packages with SlimCaps or ReCaps must have opening tabs. The opening tabs are applied by a PullTab unit which is incorporated in to the filling machine. Packages with StreamCaps must have pre-laminated holes.

All other use is prohibited. Tetra Pak will not be held responsible for injury or damage if the equipment is used for any other purpose than the intended use described above.

Manufacturer

This Tetra Pak equipment has been manufactured by

Tetra Pak Packaging Solutions
Via Delfini 1
41123 Modena
Italy

Identification

CE Classification

This equipment complies with the basic health and safety regulations of the European Economic Area (EEA).

Machine Plate

The illustration below shows an example of the machine plate and its location on the equipment. The machine plate carries data needed when contacting Tetra Pak concerning this specific equipment.

Make sure that the equipment data in the front pages of this manual corresponds to the machine plate data and the machine specification.

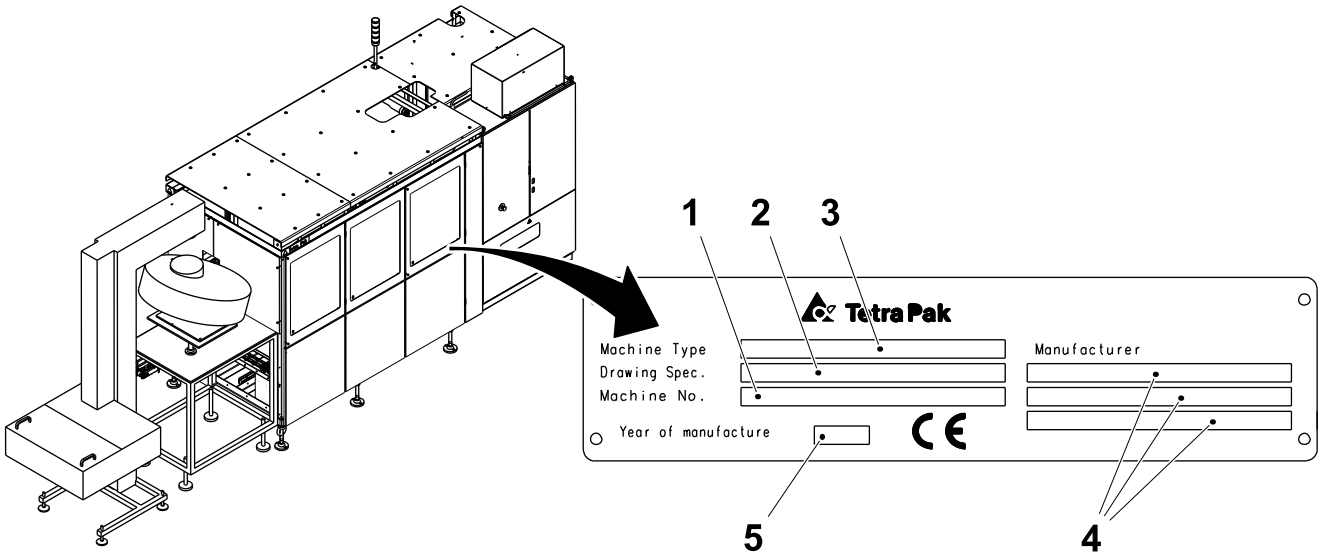

1 Machine number
2 Drawing specifications
3 Machine type
4 Manufacturer
5 Year of manufacture

Food Grade Lubricated Machine Plate

The illustration below shows an example of the Food Grade Lubricated Machine plate and its location on the equipment. The Food Grade Lubricated Machine plate indicates that lubricants used in this equipment are of food grade quality.

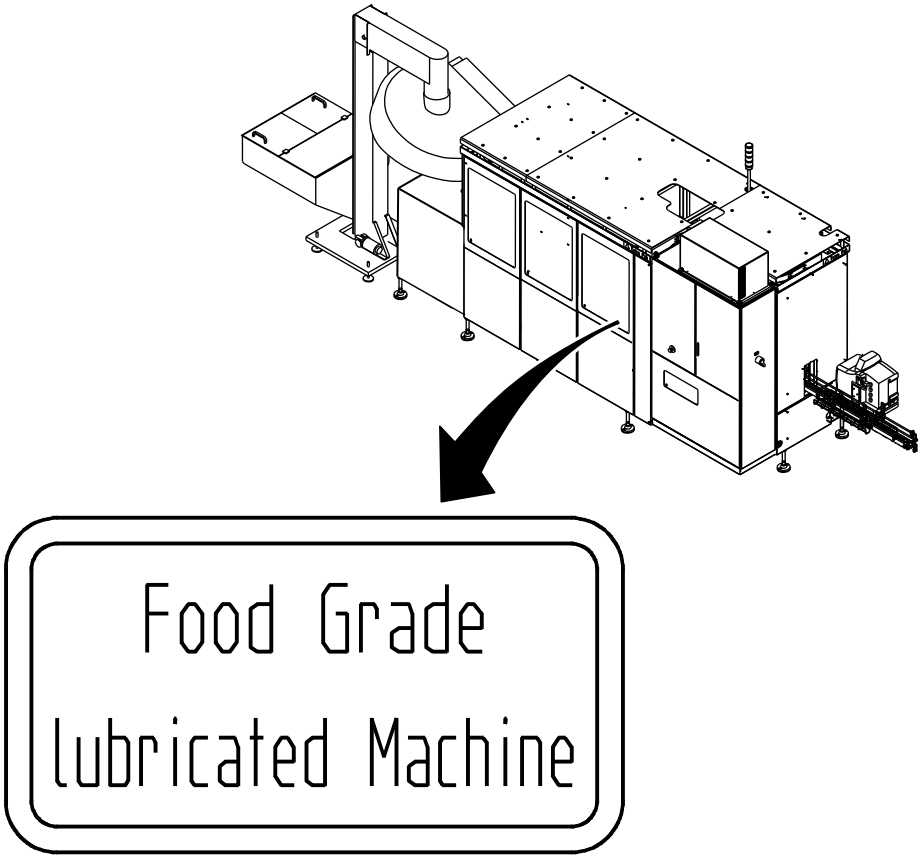

Orientation

The illustration below shows the orientation of the equipment. This orientation information will be used throughout this manual. The arrows indicate the flow of material.

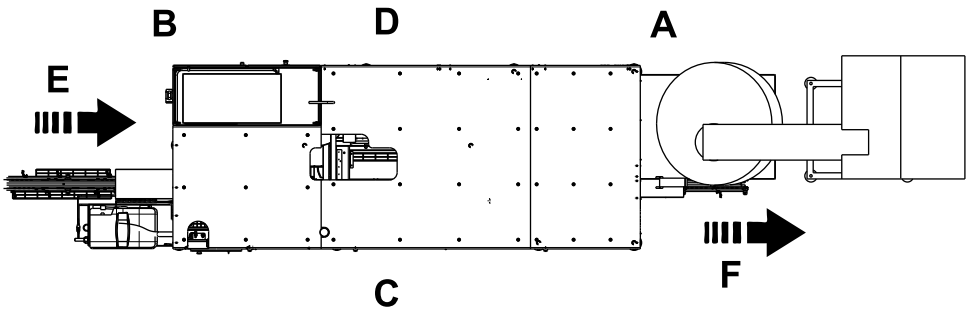

A Front
B Back
C Left
D Right
E Infeed
F Outfeed

Hygiene

Packaging Material

Avoid microbiological contamination of the packaging material:

- Always protect your packaging material against contamination. Do not let the caps come into contact with contaminated areas. Only use caps direct from their packaging material.
- Except when filling the cap sorter with caps, always keep the cap-sorter magazine door closed. Keep the transparent door panels clean.
- Always keep the doors to the filling room (area) closed. To prevent contamination via air streams, never open a window when the machine is in production.
- Never clean the floors or the machine in the filling room (area) when the machine is in production.
- Compressed air used for cleaning purposes is to be used only for cleaning filters and should only be used outside of the applicator room (area).
- Disinfect your hands before touching anything that may come into contact with the product. Use code H disinfectant. See the Technical Data chapter of the Maintenance Manual.
- Keep your hands clean.
- Always wear some type of hair protection (cap or hairnet) and clean clothes (preferably white).
- Do not wear a watch, ring, necklace, earrings, or any other exposed jewellery.

How to Use This EM

Chapters in this EM.

Chapter	Name	Drawing No.
i	Introduction	
ii	Safety Precautions	
1	Electrical Systems Description	
2	Document List	xxxxxxx-0001
3	Position Summary	xxxxxxx-0002
4	Circuit Diagrams	xxxxxxx-0003
5	Line Summary	xxxxxxx-0004
6	Cabinet Terminal Summary	xxxxxxx-0005
7	Terminal Strip Overview	xxxxxxx-0006
8	Cable Connection List	xxxxxxx-0007
9	Mains Connection	xxxxxxx-0008
10	Drawing Remarks	xxxxxxx-0098
11	Engineering Change Description	xxxxxxx-0099
12	Component Location	
13	Other Information, for example • Bill of Materials • Fuse Panel	
14	Program Documents	

The Document List chapter is a table of contents for the chapters 3 to 9, listing all drawings included.

In the Circuit Diagrams, the first pages are reserved for distribution terminals and the last pages can be used for pre-connected cables. Pre-connected cables are connected to spare terminals and are reserved for future use.

The diagrams in the Mains Connection chapter show how the machine should be connected to the local supply, the dimensions of the connection cable, and the connection of the matching transformer, when used.

The Drawing Remarks chapter lists the drawing remarks indicated with a number in the drawing.

The Program Documents chapter contains the PLC programs for this equipment.

(Cont'd)

(Cont'd)

The documents and drawings are identified by drawing number (1), version code (2), and page number (3). The page number is the consecutive numbering of the pages that belong to the main number and is used as a reference in the diagrams.

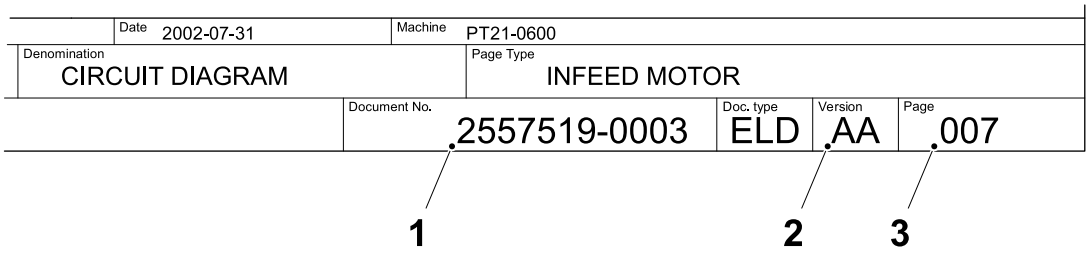

1 Drawing number
2 Version code
3 Page number

Reference Designation

Components are identified by the reference designation, defined by a function code (1), and a component code (2).

The object code for the group level (3) refers to the purpose or task of the group level that the component serves or supplies. See the List of Function Codes section.

The object code for the component level (4) refers to the purpose or task of the current object. The letter is in accordance with international standards.

Examples: Code P for components that present information, such as an alarm lamp, a clock, or a volt meter. Code M for components that provide mechanical energy such as an actuator, or an electric motor.

Tetra Pak has chosen to always use the function oriented structure for reference designation. The prefix indicating function oriented structure (=) is not shown in the reference designation.

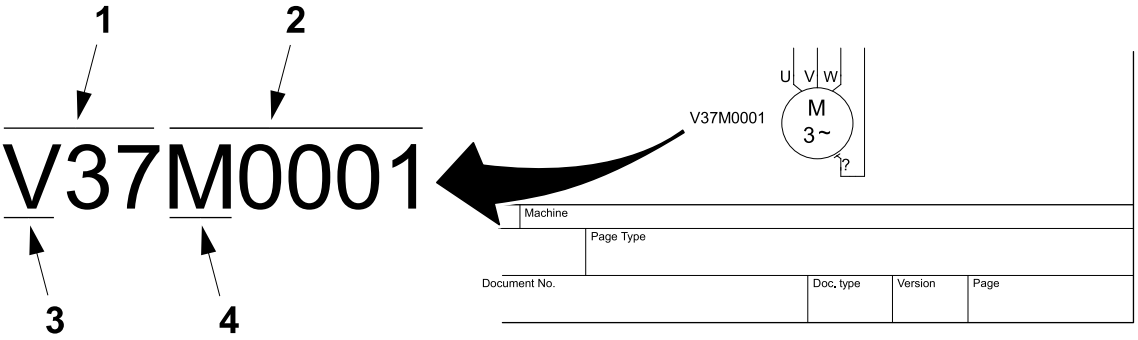

1 Function code
2 Component code
3 Object code, group level
4 Object code, component level

List of Function Codes

Function codes for this equipment.

Function Code	Identification
1	SERVICE AND SUPPLY
9	SAFETY
20	INFEED PACKAGE
21	PACKAGE TRANSFER
30	APPLICATOR UNIT
40	HOT MELT GUNS APPLICATOR
50	CAP SORTER
60	RECAP CUT AND FEEDING
70	CAP POSITIONING SYSTEM
81	COMMUNICATION

Explanation of the American Wire Gauge (AWG) Table on the First Page of the Circuit Diagrams

The cables and conductors used in Tetra Pak® equipment and documentation are, in most cases, given in measurements of metric area, such as 1.5 mm². Metric areas and AWG sizes are not fully interchangeable, and CSA/UL standards have a different current density for conductors than EN/ISO standards.

(Cont'd)

(Cont'd)

The AWG table on the first page of the circuit diagrams illustrates how metric areas correspond to AWG sizes, and how the current carrying capacity is recalculated based on the current density for the corresponding AWG conductor.

	1	2	3	4	5	6	7
	Current carrying capacity, A Ambient temperature 40ºC			Conductor size mm^2	AWG	Current density A / mm^2	
	B1	Based on CSA/UL density	CSA/UL	EN	CSA/UL	B1	CSA/UL
A			**2,64**	0,32	**22**		**8,25**
	N/A	4,13		0,50			
B			**4,4**	0,52	**20**		**8,48**
	8,6	5,61		0,75		11,47	
			6,16	0,82	**18**		**7,48**
C	10,3	7,48		1,00		10,30	
D			**8,8**	1,31	**16**		**6,72**
	13,5	10,08		1,50		9,00	
E			**13,2**	2,08	**14**		**6,35**
	18,3	15,87		2,50		7,32	
F			**17,6**	3,31	**12**		**5,32**
	24	21,27		4,00		6,00	
G			**26,4**	5,26	**10**		**5,02**
	31	30,11		6,00		5,17	
H			**44**	8,37	**8**		**5,26**
	44	52,59		10,00		4,40	
I			**57,2**	13,30	**6**		**4,30**
	59	68,81		16,00		3,69	
J			**74,8**	21,15	**4**		**3,54**
	77	88,42		25,00		3,08	
K			**88**	26,67	**3**		**3,30**
			101,2	33,62	**2**		**3,01**
	96	105,35		35,00		2,74	
L			**114,4**	42,41	**1**		**2,70**
	117	134,87		50,00		2,34	
M			**132**	53,49	**1/0**		**2,47**
			154	67,43	**2/0**		**2,28**
	149	159,87		70,00		2,13	
N			**176**	85,01	**3/0**		**2,07**
	180	196,68		95,00		1,89	
O			**202,4**	107,20	**4/0**		**1,89**
	208	226,57		120,00		1,73	

(Cont'd)

(Cont'd)

In the AWG table on the previous page, column 1 gives the current carrying capacity according to EN 60204-1:2006 Table 6, installation method B1. The values are given for 40 °C ambient temperature.

Column 2 gives the current carrying capacity, limited by the AWG current density in column 7 within the same row(s) letter.

Column 3 gives the CSA/UL current carrying capacity according to NFPA 79:2007 Table 12.5.1 (75 °C insulation). The values have been converted to 40 °C ambient temperature according to NFPA 79:2007 Table 12.5.5(a).

For conductors smaller than 10 mm^2, the current carrying capacity is limited by the AWG density in column 7, that is, values in column 2 with grey background colour are valid for the current carrying capacity.

For conductors equal to or larger than 10 mm^2, the current carrying capacity is limited by the calculated value from EN 60204-1:2006 Table 6 (column 6), that is, values in column 1 with grey background colour are valid for the current carrying capacity.

Example

In the row with the letter D

- 1.5 mm^2 conductor (column 4) has, according to EN 60204-1:2006 Table 6, a current carrying capacity of 13.5 A (column 1).
- 13.5 A in a 1.5 mm^2 conductor gives a current density of 9.00 A/mm2 (column 6).
- The corresponding AWG conductor, AWG 16 (column 5), has a current carrying capacity of 8.8 A (column 3), which gives a current density of 6.72 A/mm^2 (column 7)
- A 1.5 mm^2 conductor with a density of 6.72 A/mm^2 gives a current carrying capacity of 10.08 A (column 2).

Optional Equipment

An optional equipment designation indicates that the component belongs to specific optional equipment. The designation numbers for this equipment are explained in the Drawing Remarks chapter.

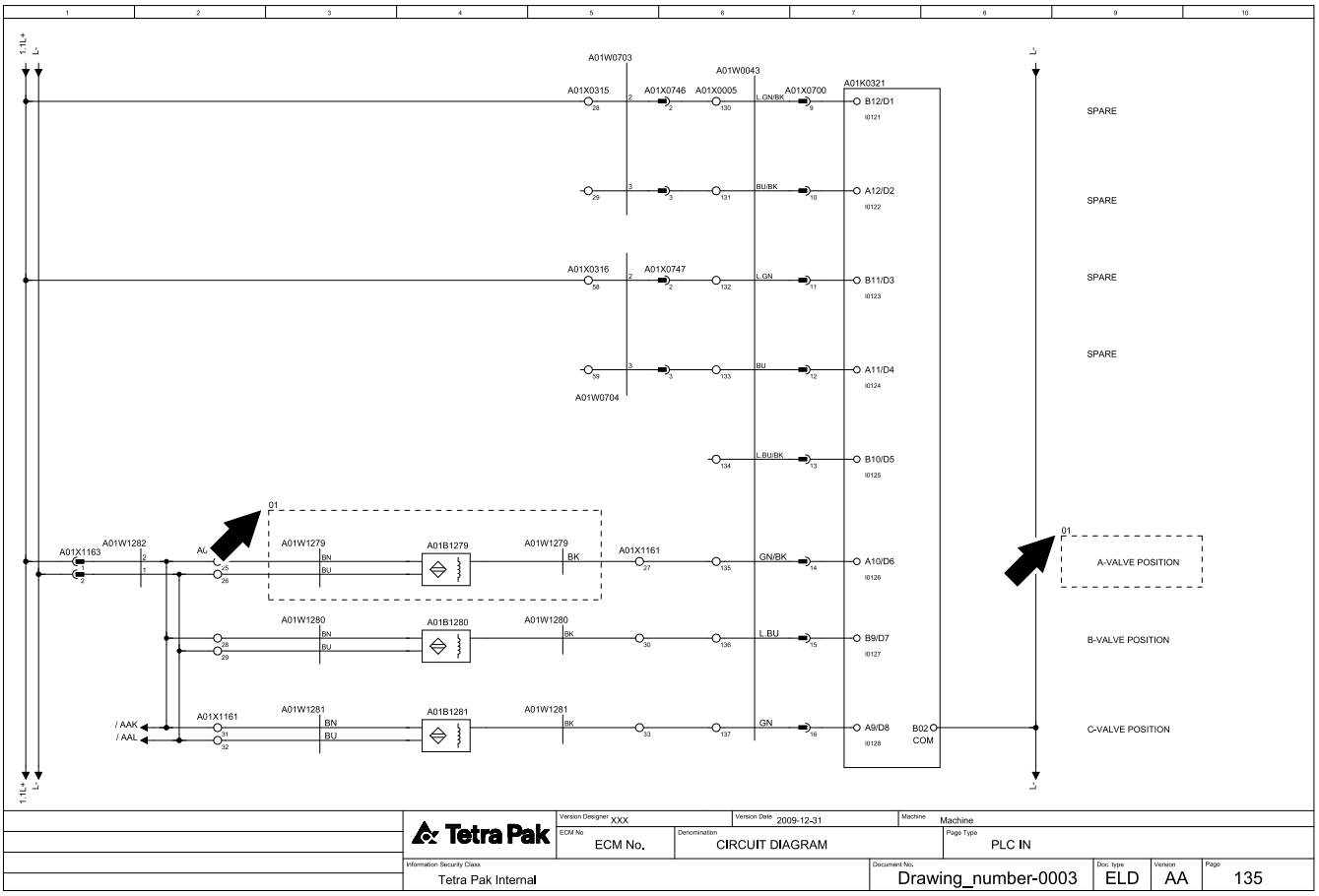

How to Trace an Electrical Component

Start tracing an electrical component by finding the correct list with page and column references to the Circuit Diagram.

Example 1: How to Trace a Line on page i-22 illustrates how to trace a Line. Use the Line Summary.

Example 2: How to Trace a Contactor on page i-24 illustrates how to trace a contactor. Find page references in the Position Summary. The procedure is identical when tracing sensors or other components. For cables, the page references are in the Cable Connection List. The number of spare cores is shown in the cable connection list.

Example 3: How to Trace a Terminal in the Electrical Cabinet on page i-25 and Example 4: How to Trace a Terminal Outside the Electrical Cabinet on page i-26 illustrate how to trace a terminal. Find page references for terminals *in* the electrical cabinet in the Cabinet Terminal Summary, and page references for terminals *outside* the electrical cabinet in the Terminal Strip Overview.

(Cont'd)

(Cont'd)

Example 5: How to Trace a Network on page i-27 illustrates how to trace a network (DeviceNet, Ethernet etc.). The last pages of the Circuit Diagrams are reserved for the network layout; these provide an overview of the network with cross references to locate the components in the circuit diagrams.

Example 6: How to Find Electrical Components Using the SPC on page i-29 illustrates how to locate a component in the Spare Parts Catalogue, SPC.

Example 1: How to Trace a Line

Line Connection Order

The line connection order is shown in the Line Summary.

How to Trace a Line

The illustration below shows how to trace line connection L- from the component terminal A01X1163:2 to A01K0321:B02.

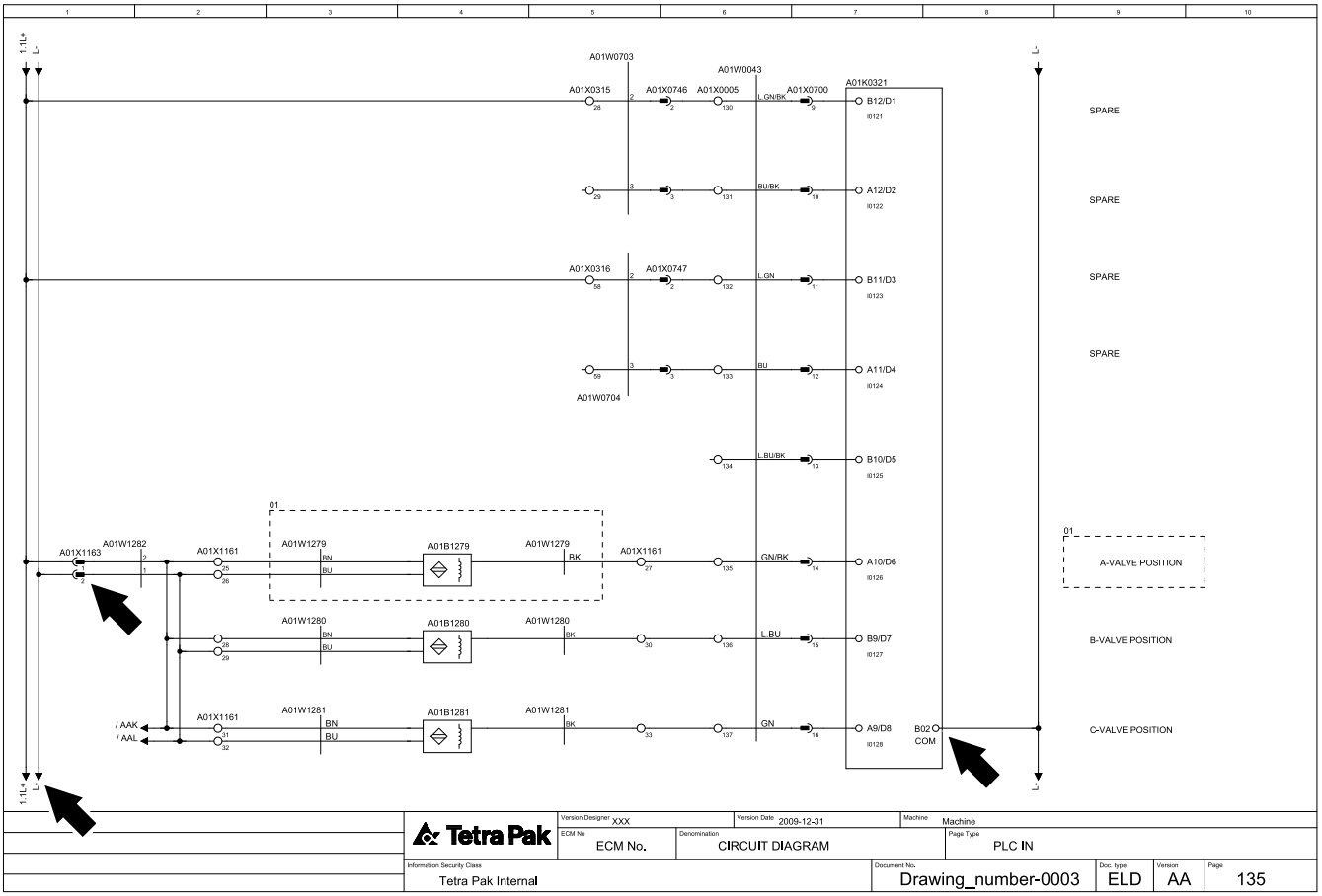

Line summary : Drawing_number-0003

Net	Page.Col.	Option	Area/Color	Net
L-				
A01X0010:1	001.2		0,75 BU	
A01X1163:2	135.1		0,75 BU	
A01K0321:B02	135.8			

Example 2: How to Trace a Contactor

The illustration below shows how to trace contactor G34K0110 to page 114, column 6 in the Circuit diagram.

Related contacts are traced with a cross reference to page 014, column 5.

Note! For master and slave components, such as coils and contacts, only the master is reported in the Position Summary. The slave shows the page and column references of the master.

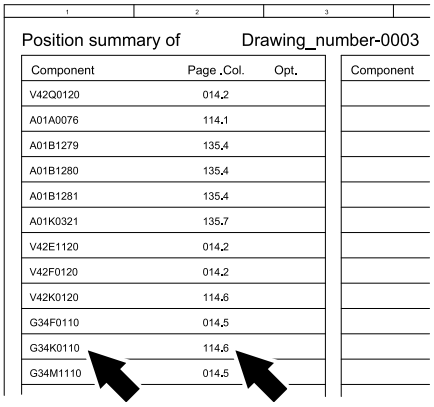

Position summary of Drawing_number-0003

Component	Page .Col.	Opt.	Component
V42Q0120	014.2		
A01A0076	114.1		
A01B1279	135.4		
A01B1280	135.4		
A01B1281	135.4		
A01K0321	135.7		
V42E1120	014.2		
V42F0120	014.2		
V42K0120	114.6		
G34F0110	014.5		
G34K0110	114.6		
G34M1110	014.5		

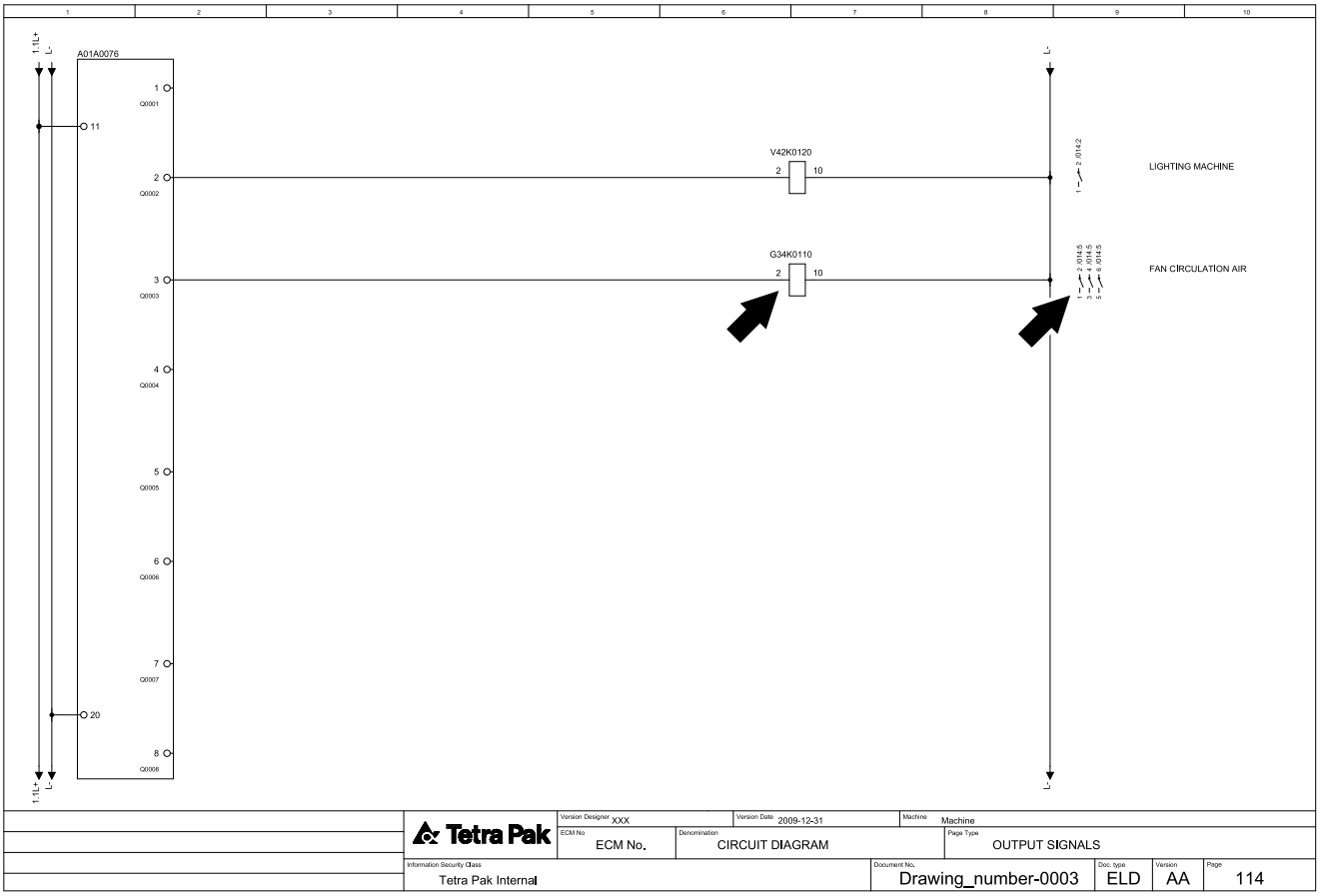

Example 3: How to Trace a Terminal in the Electrical Cabinet

The Cabinet Terminal Summary refers to the page and column where the relevant terminal is to be found.

The illustration below shows how to trace terminal A01X0005:130 to page 135, column 6 in the Circuit diagram.

Cabinet terminal summary of Drawing_number-0003

A01X0005	Page .Col.	Opt.
A01X0005:130	135.6	
A01X0005:131	135.6	
A01X0005:132	135.6	
A01X0005:133	135.6	
A01X0005:134	135.6	
A01X0005:135	135.6	
A01X0005:136	135.6	
A01X0005:137	135.6	

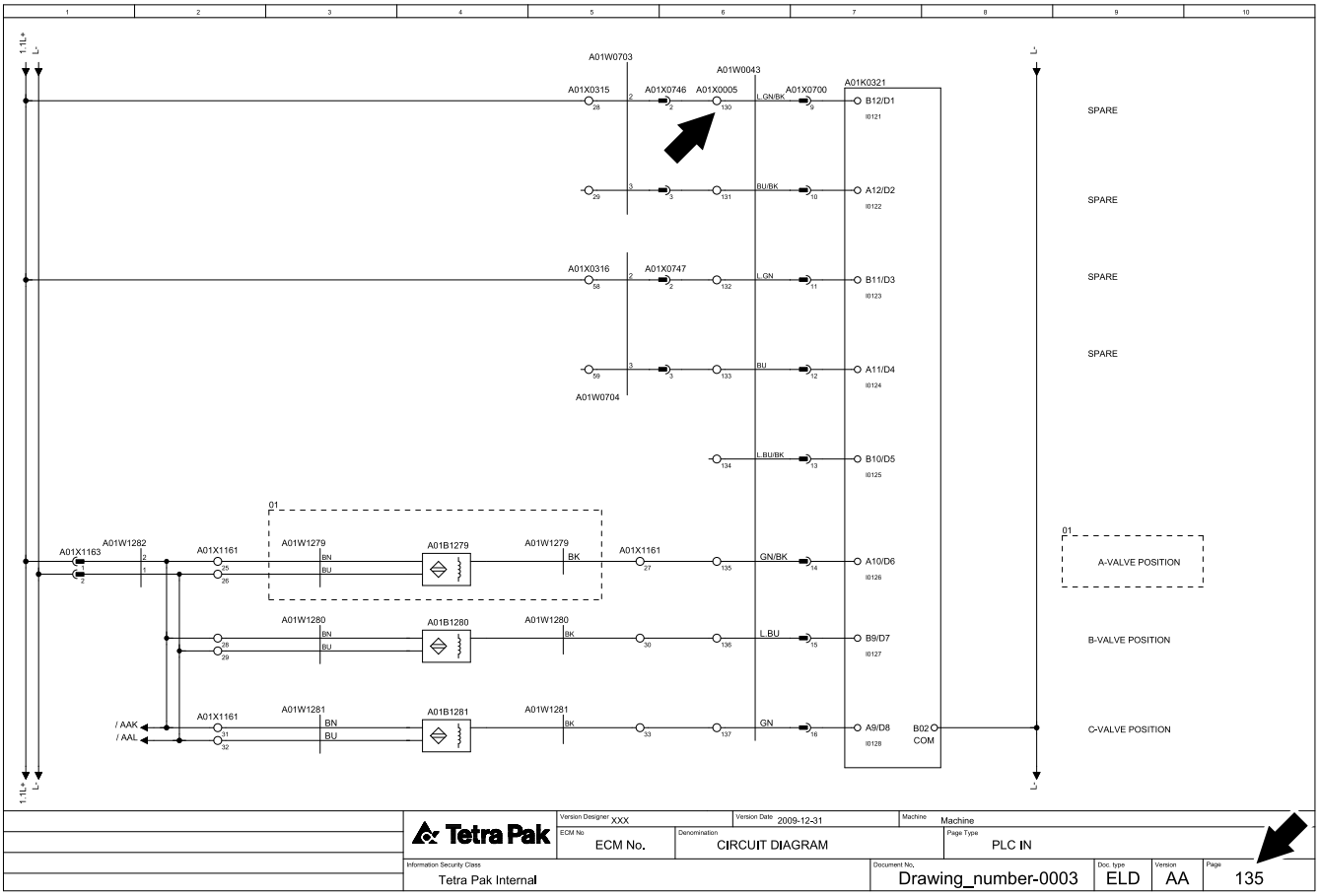

Example 4: How to Trace a Terminal Outside the Electrical Cabinet

The Terminal Strip Overview refer to the page and column where the relevant terminal is to be found.

The illustration below shows how to trace terminal A01X1161:26 to page 135, column 2 in the Circuit diagram. Note the connected component, A01B1279.

Terminal strip of Drawing_number-0003

A01X1161

From	Cable	Internal Jumper	Terminal	External Jumper	Cable	To	Page.Col.	Option	Function text
A01X1163:1	A01W1282-2		25		A01W1279-BN	A01B1279	135.2		A-VALVE POSITION
A01X1163:2	A01W1282-1		26		A01W1279-BU	A01B1279	135.2		A-VALVE POSITION
A01B1279	A01W1279-BK		27			A01X0005:135	135.5		
			28		A01W1280-BN	A01B1280	135.2		B-VALVE POSITION
			29		A01W1280-BU	A01B1280	135.2		B-VALVE POSITION
A01B1280	A01W1280-BK		30			A01X0005:136	135.5		
			31		A01W1281-BN	A01B1281	135.2		C-VALVE POSITION
			32		A01W1281-BU	A01B1281	135.2		C-VALVE POSITION
A01B1281	A01W1281-BK		33			A01X0005:137	135.5		

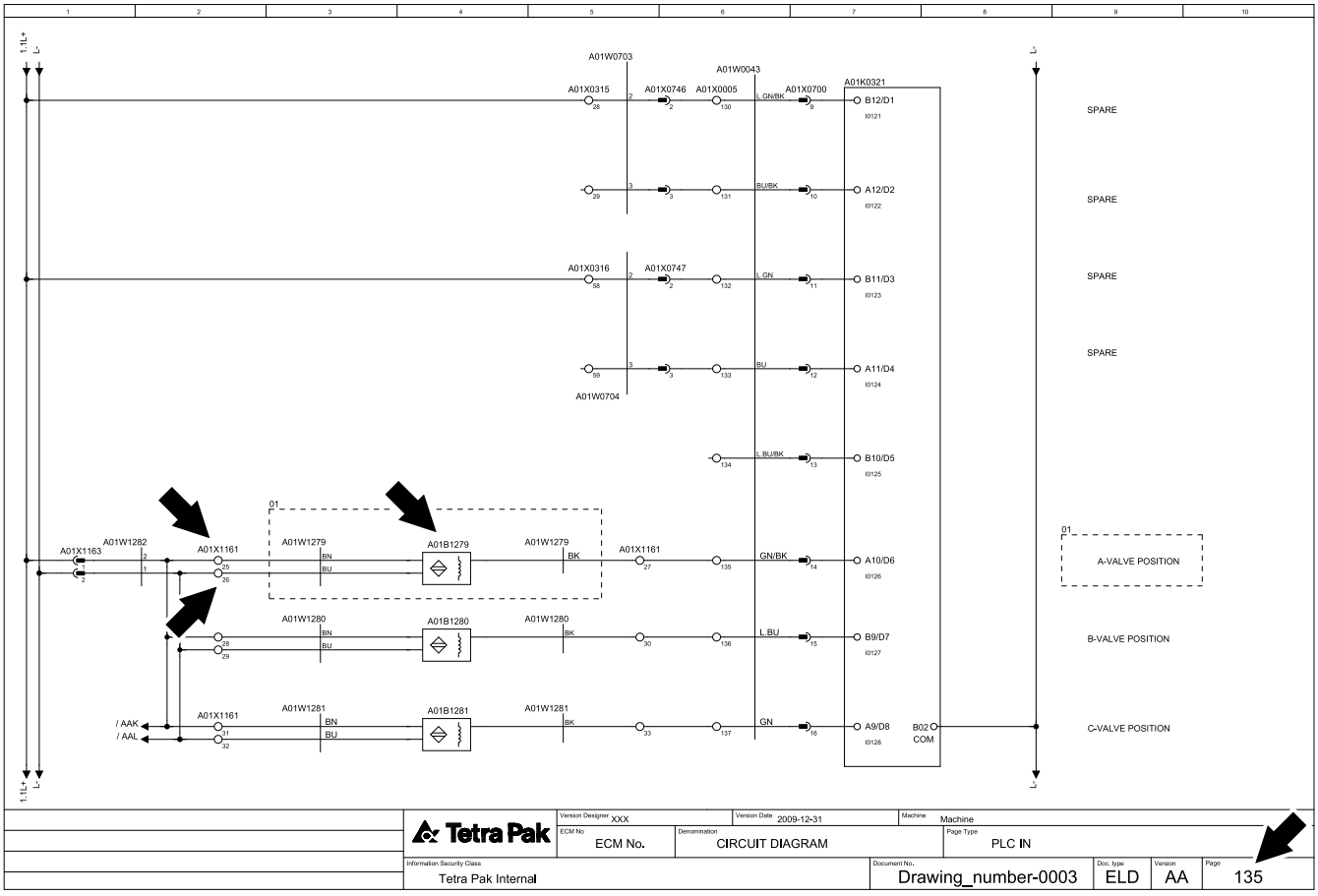

Example 5: How to Trace a Network

The illustration below shows how to find the terminal strip A01X9300 and the network cable A01W9300 in the network overview page(s).

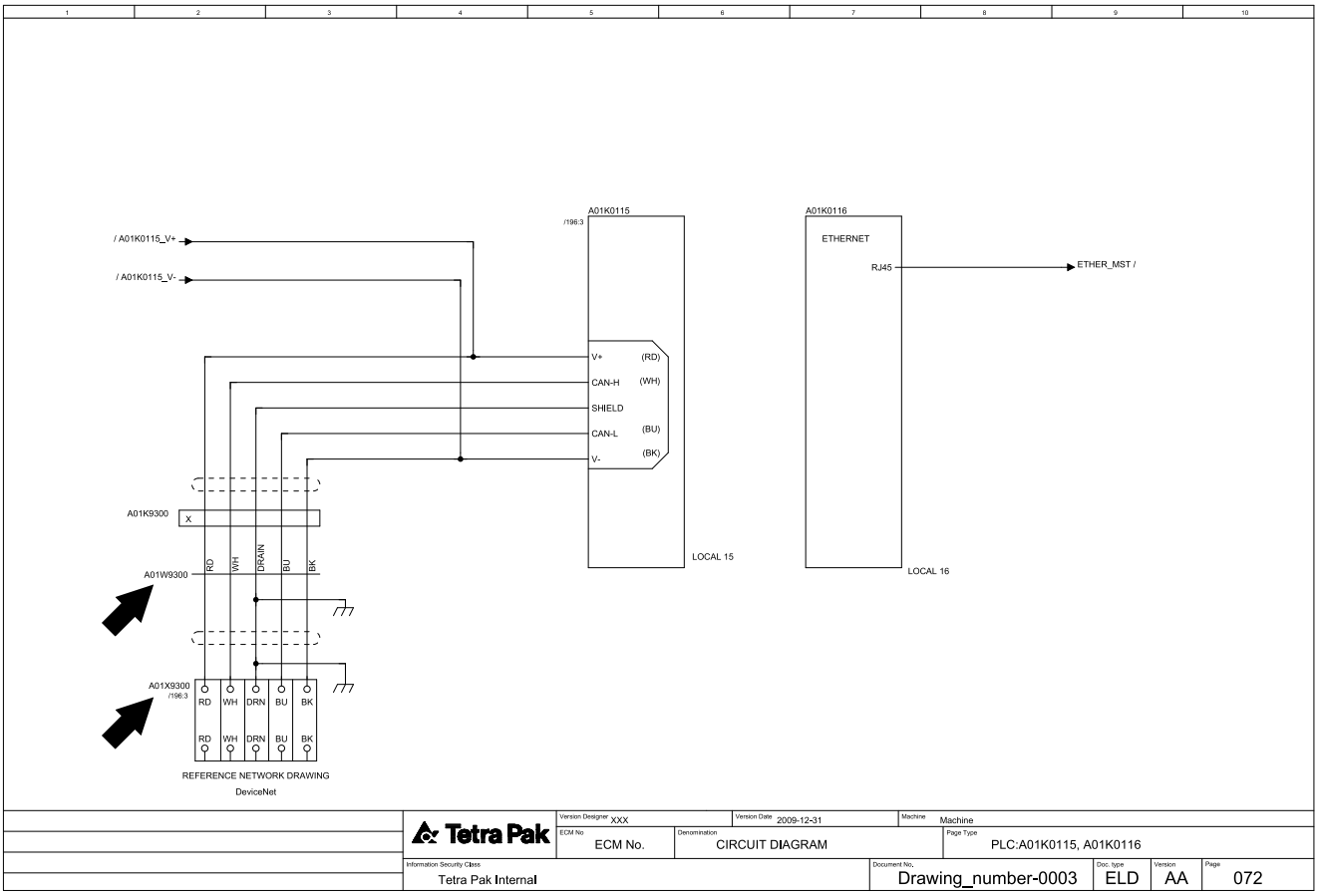

(Cont'd)

(Cont'd)

The figure reference, for example; "fig F" in the Network Overview page, refers to the Network Figure Drawing which provides a description of the component wiring. See the illustration.

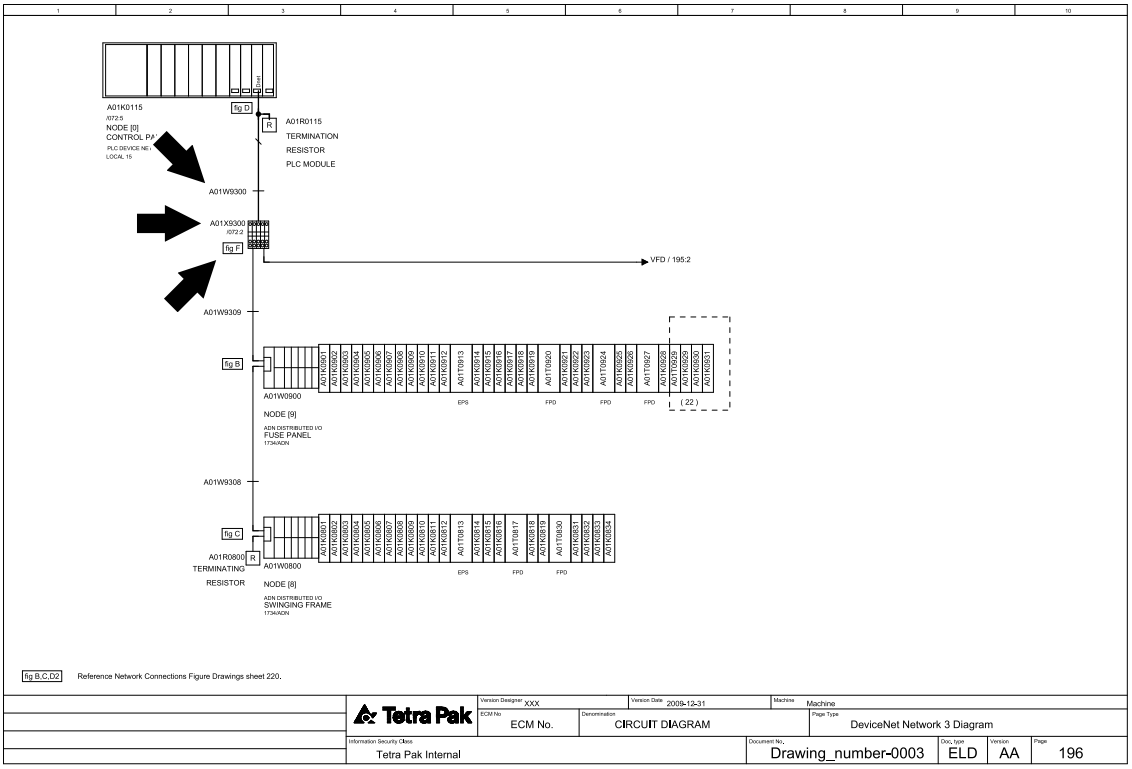

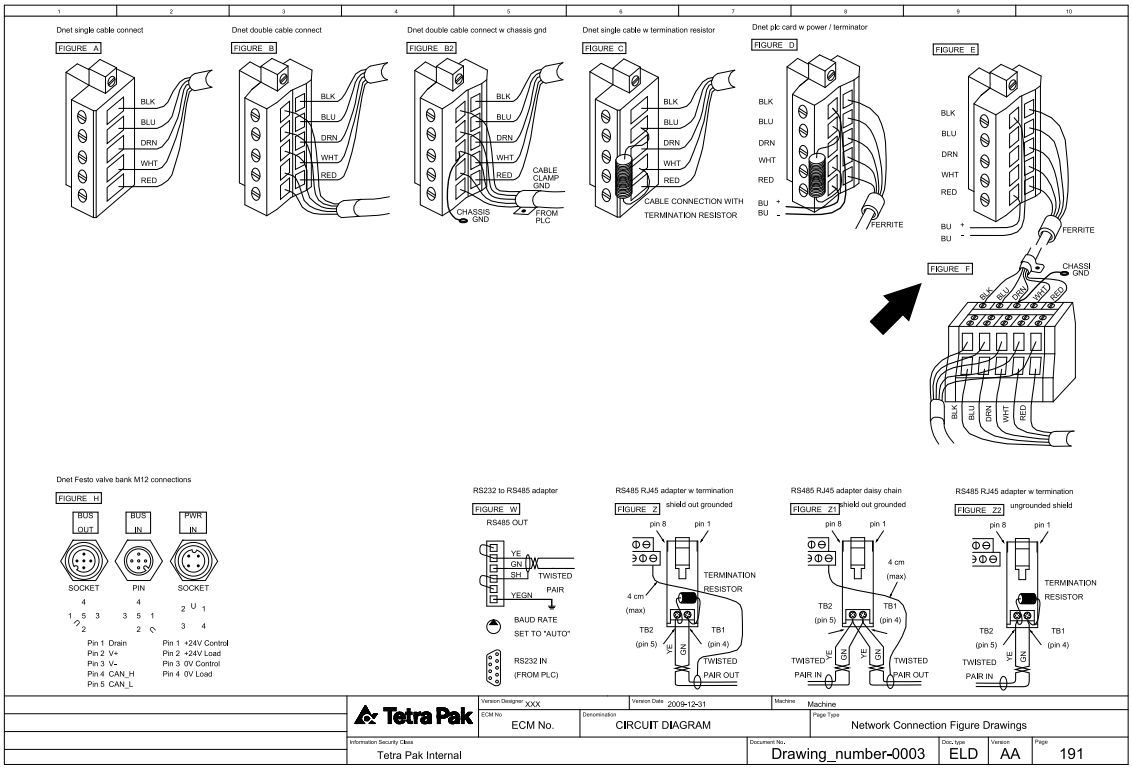

Example 6: How to Find Electrical Components Using the SPC

The Reference Designation Parts Index in the Spare Parts Catalogue, SPC, is used to locate electrical parts. For SPCs without a Reference Designation Parts Index, see the Component Location chapter in this manual.

(Cont'd)

(Cont'd)

The illustration below shows how to find component A04B0041 in the SPC. The Reference Designation Parts Index refers to page 2-5. In the drawing on page 2-4, the position number is the same as the reference designation for the component.

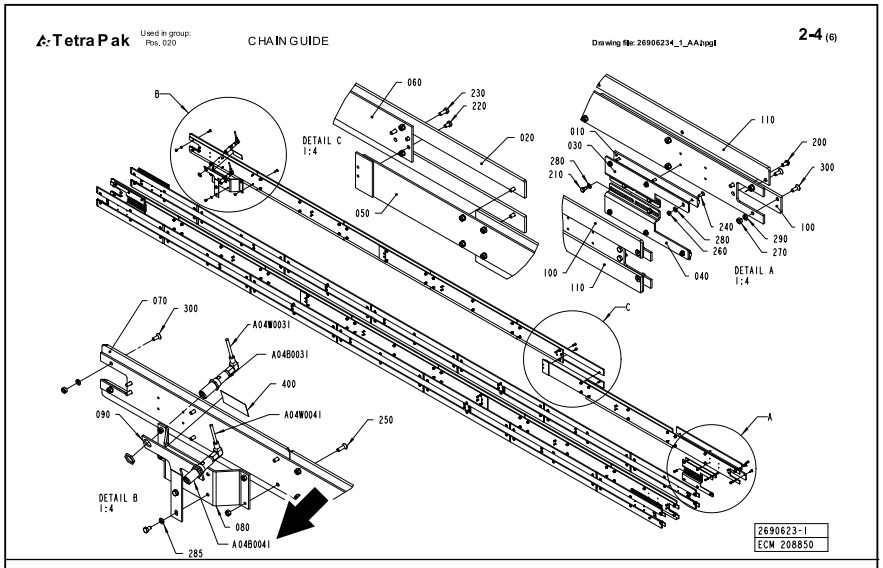

ECM: 209071 - 50001231
Group number: 2690623-0100
Assembly Drawing: 2690623-1_1_AA

This list covers pages from 2-2 to 2-5

Pos	Part No	UN	Qty	Description	Page No
-					
010	2597877-0000		8	CHAIN GUIDE	
020	2653358-0000		40	CHAIN GUIDE	
030	2653365-0000		4	SUPPORT	
040	2653366-0000		4	SUPPORT	
050	2653367-0000		8	PLATE	
060	2653368-0000		4	PLATE	
070	2653369-0000		8	CHAIN GUIDE	
080	2690632-0000		1	HOLDER	
090	2690633-0000		1	HOLDER	
100	2730969-0000		4	CHAIN GUIDE	
110	2730970-0000		4	CHAIN GUIDE	
200	90458-0072		8	SCREW ISO 7380 S M6X12 A2	
210	312105-0287		16	SCREW M6S ISO4017 M4X8 A470	
220	312105-0364		18	SCREW M6S ISO 4017 M6X10 A480	
230	312105-0368		40	SCREW M6S ISO 4017 M6X16 A480	
240	312155-0291		24	SCREW DIN 7991 MF6S M4X12 A4 70	
250	312155-0370		4	SCREW DIN 7991 MF6S M6X20 A4 70	
260	312605-0312		24	HEXAGON NUT, M6M M4 A280	
270	312605-0316		168	HEXAGON NUT, M6M M6 A280	
280	315105-0146		40	WASHER BRB5,3X10RFR	
285	315105-0153		2	WASHER BRB6,4X12RFR	
290	315[illegible]-0156		164	LOCK WASHER FBB 6,5	
300	[illegible]		164	SCREW DIN 7991 MF6S M6X16 A4 70	
400	[illegible]-0008		1	WARNING SIGN ISO, LASER RADIATION	
A04W0041	[illegible]-0050		1	ACTUATOR/SENSOR CABLE RKWTN 4-225/5M	
A04W0031	[illegible]12-0050		1	ACTUATOR/SENSOR CABLE RKWTN 4-225/5M	
A04B0041	90459-5012		1	LASER SENSOR, YD24PA3	
C05C0041	2690632-0000		1	HOLDER	
C05C0031	2653367-0000		8	PLATE	
T04B0031	90459-5012		1	LASER SENSOR, YD24PA3	
T05C0041	2653369-0000		8	CHAIN GUIDE	
T05C0031	2653368-0000		4	PLATE	

Tetra Pak

iv-2 (4)

Doc No: SPC-854654-0101

Pos	Part No	Description	Page No
A			
F09A0332	[illegible]	THERMOCOUPLE CABLE K/PVC/20AWG 2X0,5MM2	1-3, 1-5
T03A0321	[illegible]39	THERMOCOUPLE CABLE K/PVC/20AWG 2X0,5MM2	1-3, 1-5
T03A0322	[illegible]30	HEATING ELEMENT, 3000W, 220V	1-3, 1-5
B			
A04B0041	90459-5012	LASER SENSOR, YD24PA3	2-3, 2-5
C01B0001	351120-0145	CABLE SILFLEX SIHF 3X2,5 0046020	1-3, 1-5
C32B0001	90220-2259	THERMOCOUPLE CABLE K/PVC/20AWG 2X0,5MM2	1-3, 1-5
T04B0031	90459-5012	LASER SENSOR, YD24PA3	2-3, 2-5
C			
C05C0031	2653367-0000	PLATE	2-3, 2-5
C05C0041	2690632-0000	HOLDER	2-3, 2-5
T05C0031	2653368-0000	PLATE	2-3, 2-5

Page No

2-5 (6)

: No: SPC-854654-0101

Assistance and Inquiries

For assistance when operating this equipment, or other inquiries, comments, or suggestions, submit the questions or give feedback by using the QuTI-P tool. Type QuTI-P in the address field of your browser. If access to QuTI-P is not available, request access by contacting the Global Service Desk.

If access to the Tetra Pak® intranet is not available, contact the nearest Tetra Pak representative.

This page intentionally left blank

ii Safety Precautions

Description

Safety Precaution Instructions

WARNING

Read and understand this manual before using the machine.
Failure to follow safety precautions and instructions can result in death or serious injury.

Definition of Lockout Procedure

A lockout procedure is a procedure to put each necessary energy isolating device in its safe position to prevent the energisation of the equipment, such as when a maintenance procedure should be carried out.

A lockout is the use of a device, for example, a padlock, to make sure that an energy isolating device cannot be operated.

An energy isolating device is a mechanical device that physically prevents transmission or release of energy, such as an electrical supply disconnecting device.

Description ii-2

Safety Messages Description..... ii-5

Personnel Requirements ii-6

Skilled Person ii-6

Instructed Person ii-6

Safety Signs..... ii-7

Location of Safety Signs ii-9

Protective Devices ii-12

Emergency Stop..... ii-12

Emergency Stop Push-Buttons ii-13

Safeguards..... ii-14

Indicating Tower..... ii-16

Audible Alarm ii-17

Safe Manual Handling ii-18

Personal Protection ii-19

Noise ii-19

Entanglement..... ii-19

Hazardous Substances..... ii-20

Disposal of Chemical Substances..... ii-20

Personal Protective Equipment ii-20

Supply Systems..... ii-21

Power Supply..... ii-21

Residual Voltage..... ii-22

Electrical Cabinet ii-22

Socket Outlet..... ii-23

Air Supply..... ii-24

Hotmelt Equipment ii-25

General ii-25
Hotmelt Unit ii-26
Hotmelt Guns ii-27

Additional Information ii-28
Package Heater ii-28
Cap Detector ii-29

Safety Messages Description

A safety message is always accompanied by a safety alert symbol and a signal word.

The safety alert symbol is used to alert about potential personal injury hazards. To avoid hazards, obey all safety messages that follow this symbol.

The following safety alert symbols and signal words are used in this manual to inform the user of hazards.

DANGER	Danger indicates an imminently hazardous situation which, if not avoided, **will** result in **death or serious injury**.
WARNING	Warning indicates a potentially hazardous situation which, if not avoided, **could** result in **death or serious injury**.
CAUTION	Caution indicates a potentially hazardous situation which, if not avoided, **may** result in **minor or moderate injury.** It may also be used to alert against unsafe practices.
CAUTION	Caution without the safety alert symbol indicates a potentially hazardous situation which, if not avoided, **may** result in **property damage**.

Personnel Requirements

Note! Personnel includes all persons working on or near this equipment.

Only skilled or instructed persons are allowed to work with this equipment.

Skilled Person

A skilled person must have relevant education and experience to enable him or her to identify hazards, analyse risks, and avoid hazards which electricity, machinery, chemicals, other energies, and supply systems on this equipment can create.

Skilled persons must meet local regulations, such as certifications and qualifications for working with these energies and systems.

Instructed Person

An instructed person must be adequately advised or supervised by a skilled person. The skilled person enables the instructed person to identify hazards, analyse risks, and avoid hazards which electricity, machinery, chemicals, other energies, and supply systems on this equipment can create.

Safety Signs

WARNING

Damaged or missing safety signs.
Safety signs are used to indicate safety hazards. If the signs are missing or damaged, they can not fulfil this function. Replace all missing or damaged safety signs immediately.

Safety signs are attached to the equipment. The table below lists all the signs that are used, and illustrations show their locations on the equipment. Each position number refers to two standards of a safety sign in the table, but only one is used on the equipment.

- Make sure that each safety sign is legible and in its correct position after installation and maintenance.
- Replace all missing or damaged safety signs immediately.

Pos	ISO Standard	ANSI Standard
1	 **Hazardous voltage.** Will shock, burn, or cause death. Follow lockout procedure before maintenance.	
2	 **Hot surface.** Do not touch. Follow lockout procedure before maintenance.	
3	 **Risk of equipment damage.** Do not let water into this area.	

(Cont'd)

(Cont'd)

Pos	ISO Standard	ANSI Standard
4		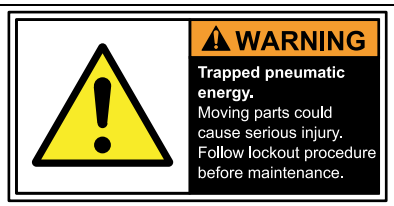
	Trapped pneumatic energy. Moving parts could cause serious injury. Follow lockout procedure before maintenance.	
5		
	Do not reach in. Moving parts may cause injury. Follow instructions for safe work practice.	
6		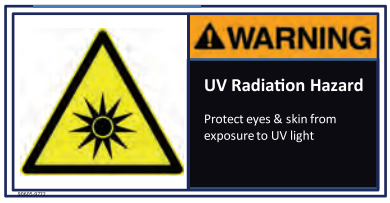
	Risk of UV Radiation. Do not see and touch when the UV lamp is in function. Follow lockout procedure before maintenance.	
7	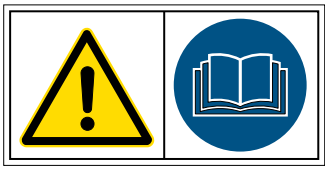	Not applicable
	Risk of electric shock. This equipment can cause currents greater than 10 mA in the electrical power supply protective conductor (PE). Connect the equipment to the electric power supply source in accordance with applicable local or national regulations.	

Location of Safety Signs

The illustration shows where the safety signs are located. The position numbers refer to the table in the Safety Signs section.

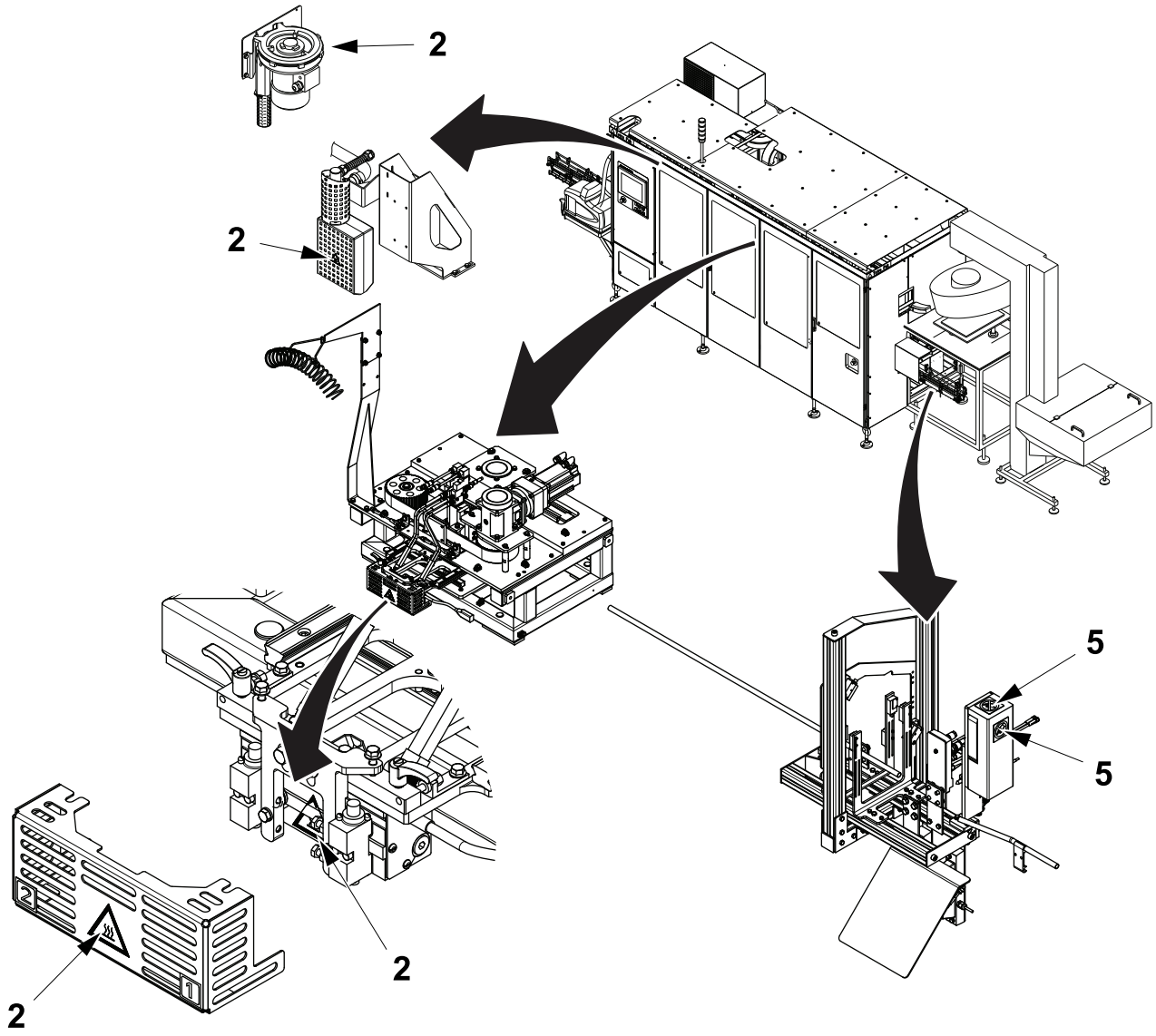

(Cont'd)

(Cont'd)

The illustration shows where the safety signs are located. The position numbers refer to the table in the Safety Signs section.

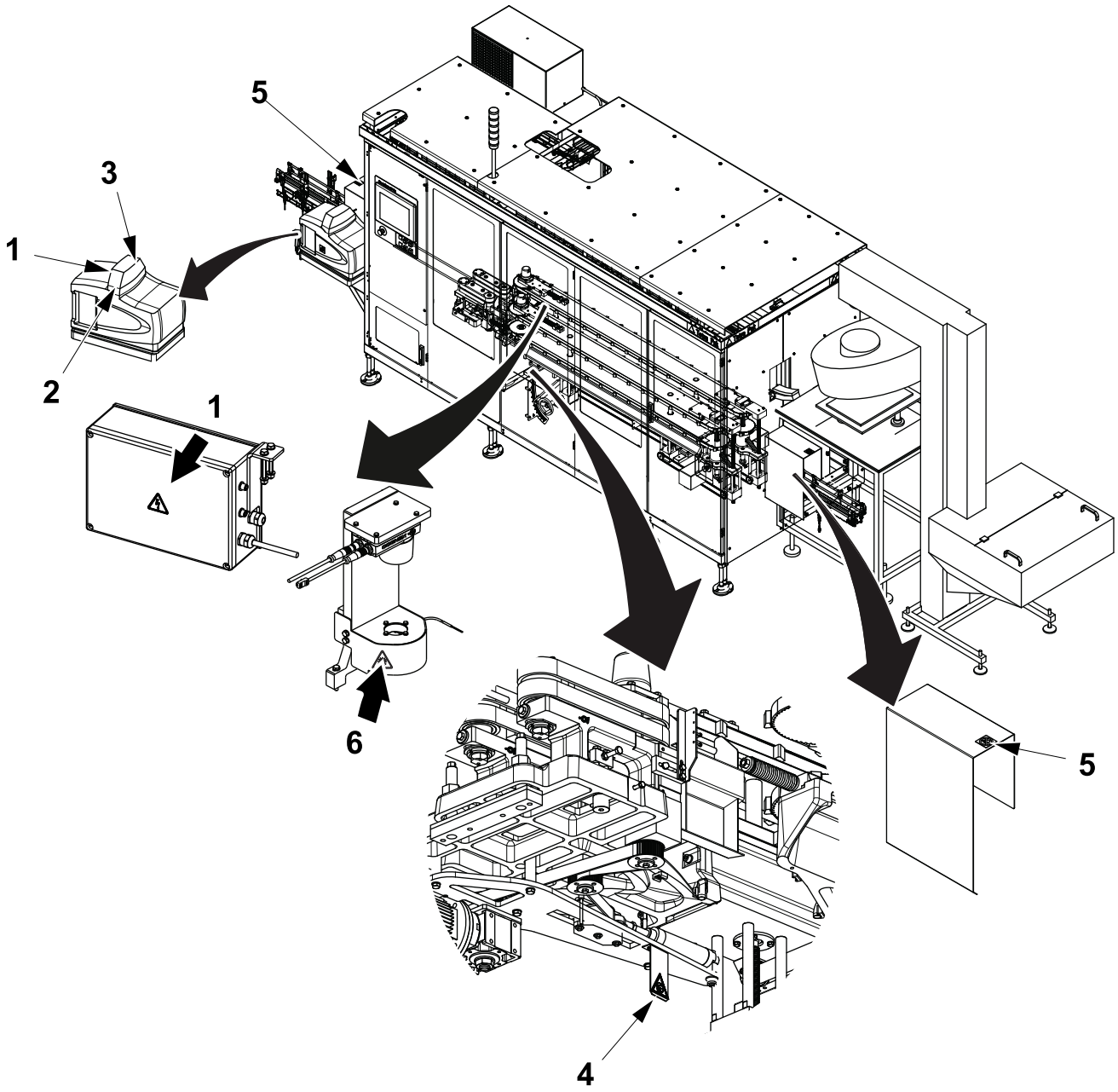

(Cont'd)

(Cont'd)

The illustration shows where the safety signs are located. The position numbers refer to the table in the Safety Signs section.

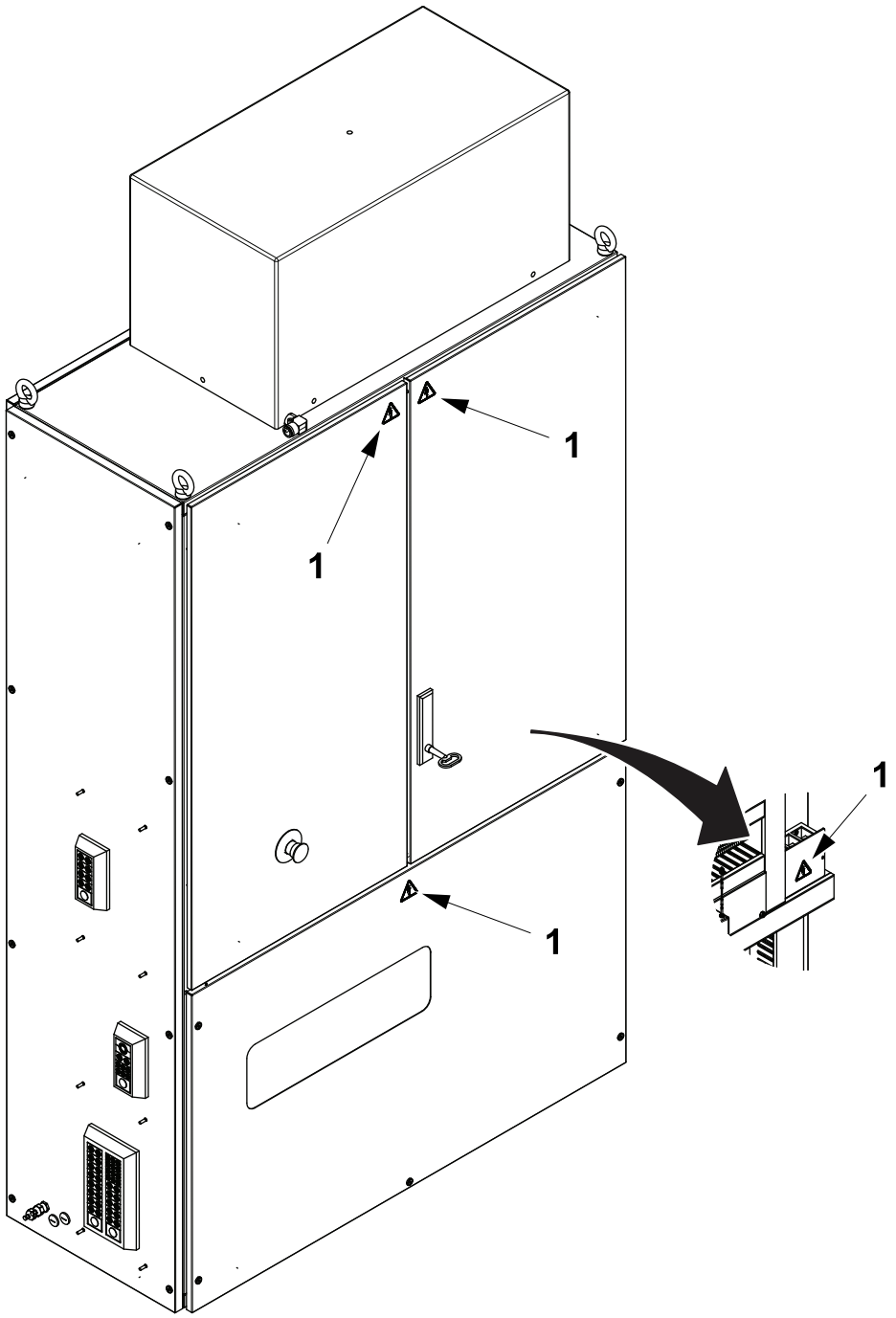

Protective Devices

There are different kinds of protective device designed to ensure safe use of the equipment. See the sections below.

WARNING

Hazardous zones.
Hazardous zones are safeguarded and provided with protective devices. Do not inch or run this equipment if any protective device is inoperative.

Change inoperative components of the safety system immediately.

For the locations of safeguards and/or other protective devices not mentioned in this section, see the Maintenance Manual.

Emergency Stop

DANGER

Hazardous voltage.
Will shock, burn, or cause death.
Hazardous voltage remains ON after activating an EMERGENCY STOP.

Emergency stop devices are used to stop this equipment immediately in a hazardous situation. Learn the positions of all emergency stop devices and how to use them.

Instructions for a normal production stop are included in the Stop chapter of the Operation Manual.

Emergency Stop Push-Buttons

Push one of the EMERGENCY STOP push-buttons to stop this equipment immediately.

The location of each EMERGENCY STOP push-button is shown by an arrow.

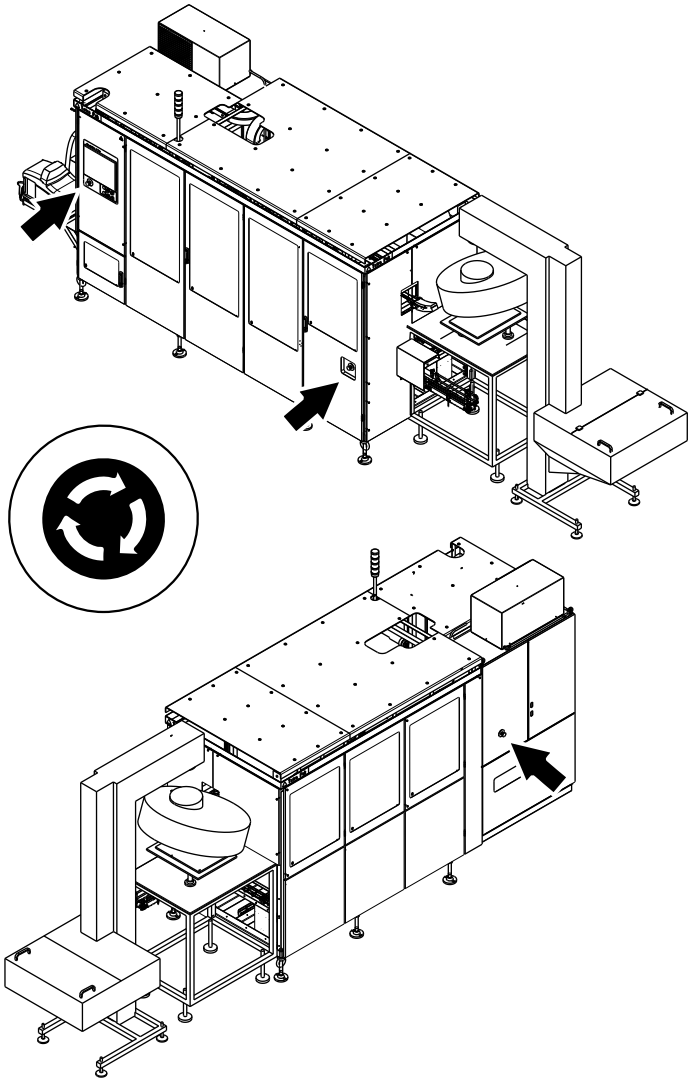

Safeguards

WARNING
Moving machinery parts.
Never defeat or bypass the interlocking devices.

Movable guards, for example, doors and covers leading to hazardous zones, are fitted with interlocking devices where required. These devices are usually electric safety switches that are parts of the safety system and must never be defeated, bypassed, or otherwise made inoperative.

Where movable guards (doors) are equipped with means to be locked in a nonclosed position, any person with the intention to preside, for any reason, behind such a guard must lock the guard in the nonclosed position by use of a padlock.

Note! For work on the electrical equipment, the electrical power must also be disconnected.

CAUTION
Corners and edges.
Close the doors, guards, or parts of the equipment unless they must be open during work.

CAUTION
Burn hazard.
Parts of the equipment protected by guards may be hot after operation. Allow components to cool down or use personal protective equipment.

After installation and maintenance, and before this equipment is inched or run, check that all safeguards are in place and that they operate correctly.

(Cont'd)

(Cont'd)

CAUTION
Equipment damage.
The equipment can be damaged if it is not stopped in the correct way. Never stop this equipment by opening a movable guard, for example, a door or cover, equipped with an interlocking device.

Movable guards with safety switches installed are shown by an arrow.

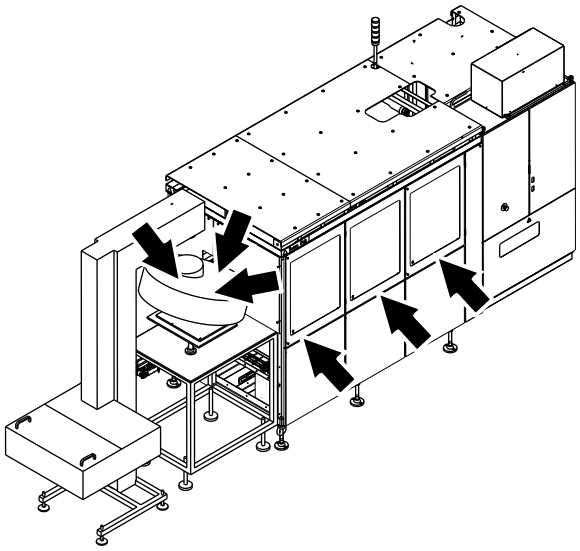

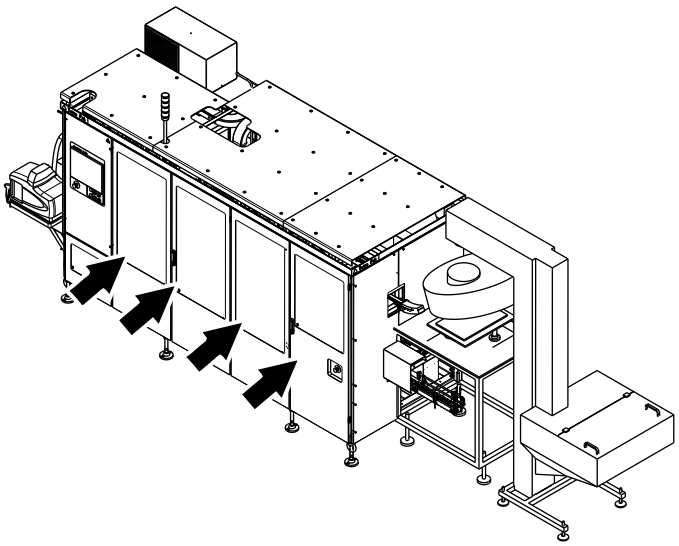

Movable guards with an electromagnetic door lock installed are shown by an arrow.

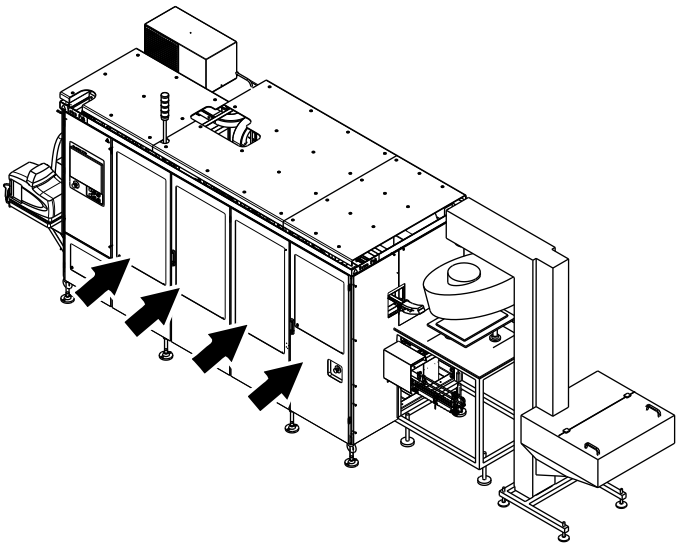

Indicating Tower

An indicating tower is a column of warning lights:

- A red light (1) indicates a hazardous condition. This is a situation that requires immediate action.
- A yellow light (2) indicates an abnormal or impending critical condition. This is a condition calling for action by the operator.
- A blue light (3) indicates that operator action is required.
- A green light (4) indicates a normal condition.

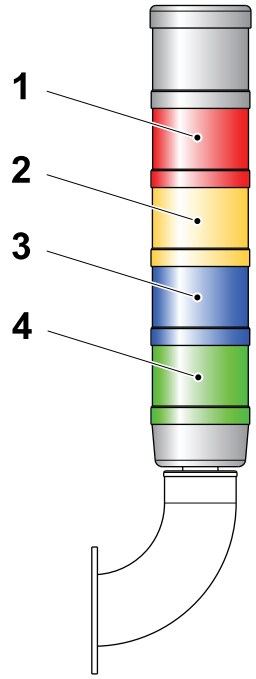

1 Red light
2 Yellow light
3 Blue light
4 Green light

Audible Alarm

The audible alarm (1) produces a warning signal every time this equipment is about to start. The warning signal sounds for approximately three seconds prior to starting to alert personnel.

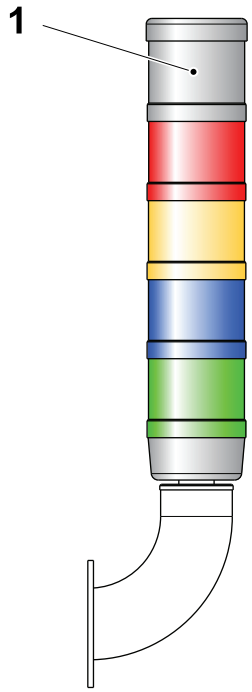

1 Audible alarm

Safe Manual Handling

Use mechanical lifting aids whenever possible. If mechanical lifting aids are not available, do not attempt to lift loads over 23 kg without the assistance of a colleague. Avoid lifting below knee height and above shoulder height. If it is necessary to lift from the floor, follow the instructions below to reduce the risk of back and disc injuries.

- Use safety shoes and be sure that the surface of the floor is not slippery.
- Get close to the load.
- Take a wide stance and find the best positions for your feet.
- Bend your hips and knees, and use your leg muscles.
- Keep the load close to your body.
- Do not twist your body while moving the load.
- Take small steps when turning.

In order to reduce the risk of injury to discs and back muscles, be careful to not bend or twist your back when lifting. Keep the load close to your body to reduce the strain on your back.

To reduce the ergonomic risks to each individual operator, job rotation is recommended, so that recovery and variety are provided.

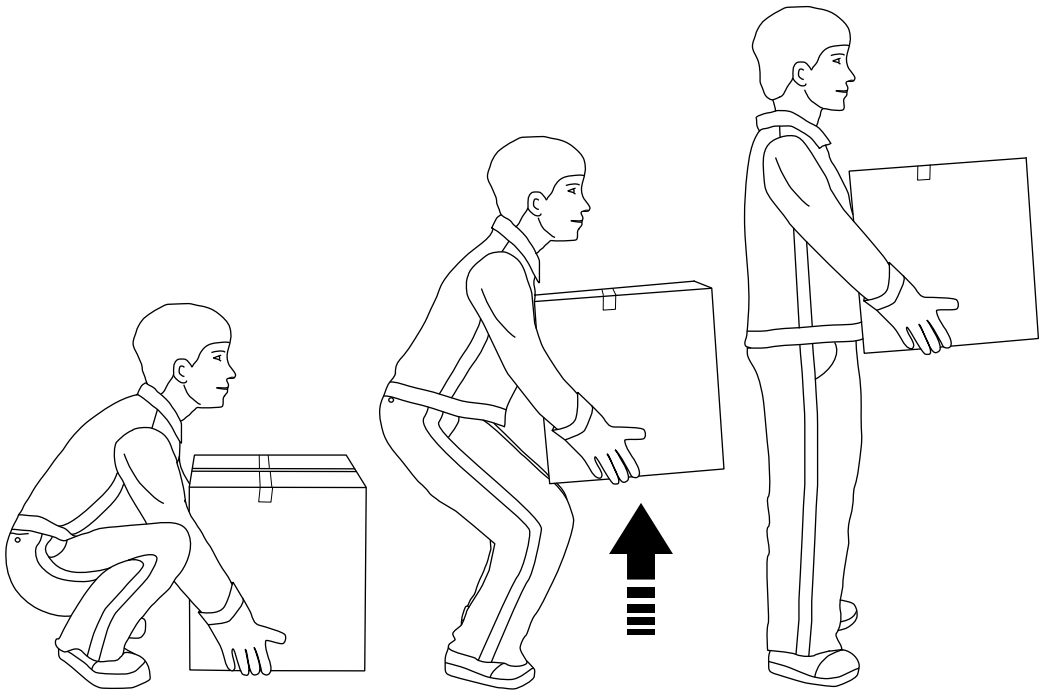

Personal Protection

This section applies to all personnel at all times when this equipment is in operation. For special personal protective equipment required when handling hazardous substances, see the Hazardous Substances section.

Noise

WARNING

Hazardous noise.
Can cause impaired hearing.
Wear hearing protection whenever this equipment is in operation.

CAUTION

Hazardous noise.
May cause impaired hearing.
Hearing protection is recommended whenever this equipment is in operation.

Entanglement

WARNING

Risk of entanglement.
Do not wear jewellery or loose clothing when working on or near this equipment.
Restrain long hair with, for example, clips or rubber bands.

Hazardous Substances

WARNING

Contact with chemicals can cause death, serious injury, or illness.
Always read and follow the instructions in the safety data sheet supplied by the manufacturer or local supplier, when handling chemicals.

Make sure that

- the safety data sheet is available
- preparations have been done to ensure that the stated safety measures in the safety data sheet can be followed
- the locations of the first aid equipment are learned in order to act immediately in case of an accident

Disposal of Chemical Substances

Always read and follow the disposal instructions in the safety data sheet supplied by the manufacturer or local supplier.

It is strongly recommended that used chemical containers are

- disposed of according to the instructions immediately after use
- not used as disposal containers for other chemicals in order to avoid uncontrolled chemical reactions within the container

Personal Protective Equipment

Wear personal protective equipment when working with hotmelt equipment.

- protective goggles (for instance, TP No. 90303-11), tight fitting
  If there is a risk of splashes, a visor is a suitable complement
- protective gloves made of neoprene (for instance, TP No. 90303-12), nitrile, or butyl rubber
- protective apron (for instance, TP No. 90303-13), or protective suit when handling larger amounts
- protective shoes or boots made of PVC, PE plastic, or rubber
- proper respiratory equipment, if ventilation is insufficient

Supply Systems

Power Supply

DANGER

Hazardous voltage and moving machinery.
The electrical supply disconnecting device must be in position O (OFF) and secured with a lock before any maintenance that requires the electrical supply to be disconnected. See the Machine Status section of the MM Procedure Start Table.

Note! The key to the lock must be removed by the technician and retained in his/her possession until all work is completed.

DANGER

Hazardous voltage can be present with the power supply switched off.
Circuits identified by orange-coloured conductors are not disconnected by the main electrical supply disconnecting device. The location of the electrical supply disconnecting device of these circuits is described in the Maintenance Manual procedures that include work on these types of circuit.

Certain maintenance procedures may require power supply systems to be on. These exceptions are clearly stated in the Maintenance Manual.

The illustrations show the electrical supply disconnecting device and its location.

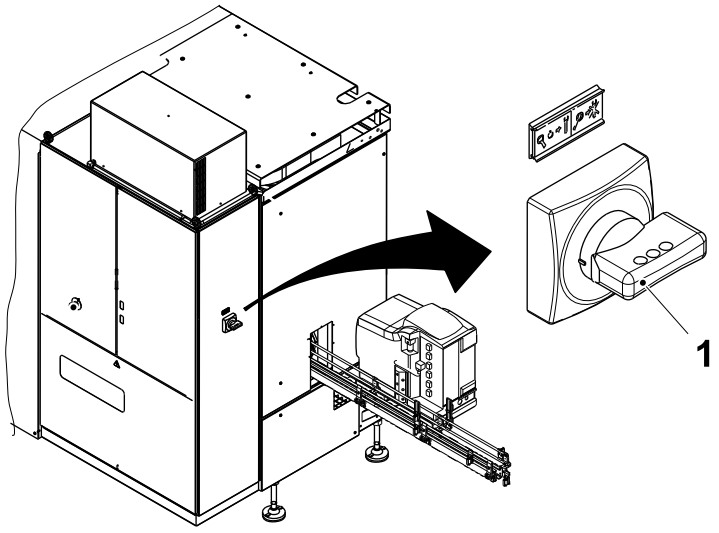

1 Electrical supply disconnecting device

Residual Voltage

DANGER

Hazardous voltage.
Will shock, burn, or cause death.
After the electrical supply disconnecting device is turned to position O (OFF), residual voltage remains in the capacitor circuits. Wait five minutes before opening the enclosure containing these circuits. Ensure that no residual voltage remains on the capacitors before touching them.

Electrical Cabinet

DANGER

Hazardous voltage.
Will shock, burn, or cause death.
Parts behind doors to the electrical cabinet may be live. The electrical supply disconnecting device must be turned to position O (OFF) and secured with a lock before maintenance inside the electrical cabinet.

Note! The key to the lock must be removed by the technician and retained in his/her possession until all work is completed.

Make sure that the electrical cabinet doors are closed after working inside the electrical cabinet. Doors with locks must be locked.

The location of each electrical cabinet is shown by an arrow.

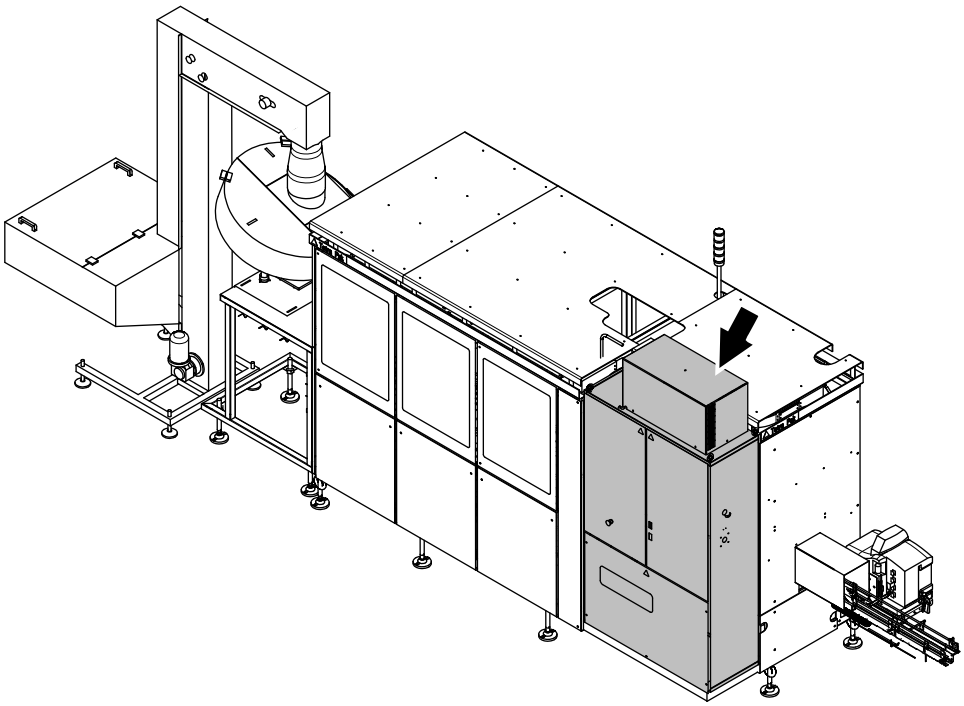

Socket Outlet

WARNING

Hazardous voltage.
Can shock, burn, or cause death.
Read the Maintenance Manual before using this socket outlet.

The socket outlet (1) is connected to a residual current device (2) to protect users against electrical shock if there is an earth fault in the connected equipment. The residual current device must be tested each time before the socket outlet is being used. See the MM for test procedure.

The illustrations show the socket outlet, the residual current device, and their locations.

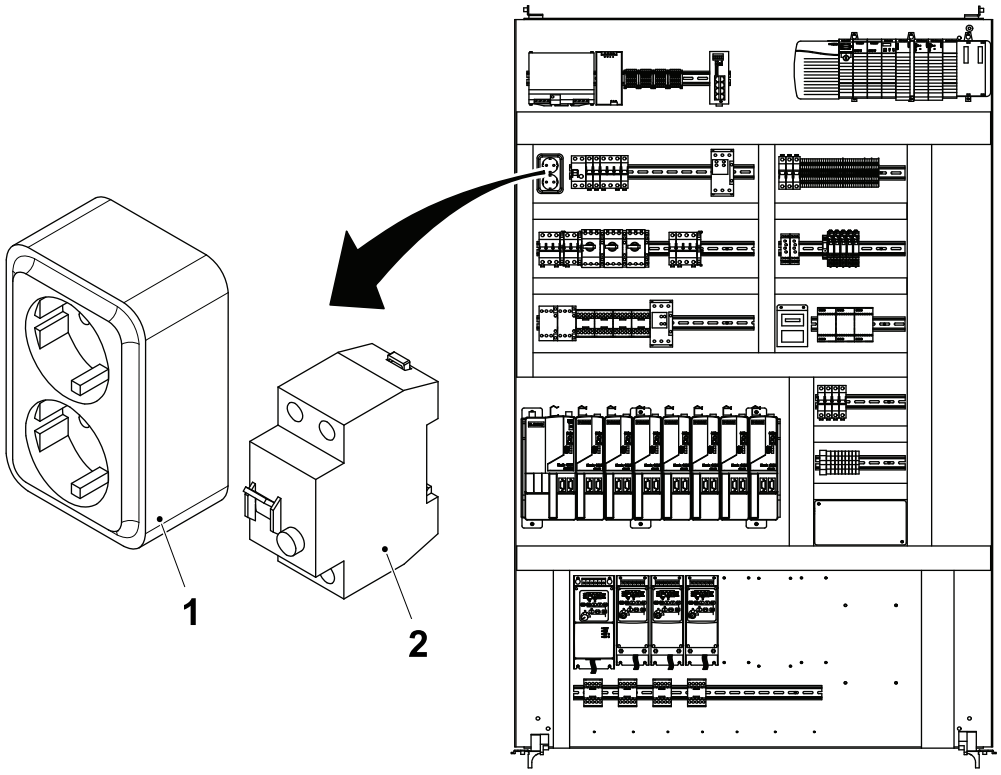

1 Socket outlet
2 Residual current device

Air Supply

WARNING

Compressed air and moving machinery.
Close the main air valve and lock it, and safely release compressed air from the air system before any maintenance that requires the air supply to be closed. See the Machine Status section of the MM Procedure Start Table.

Note! The key to the lock must be removed by the technician and retained in his/her possession until all work is completed.

Certain maintenance procedures may require air supply systems to be on. These exceptions are clearly stated in the Maintenance Manual.

The illustration shows the shut-off valve (1). The shut-off handle (2), is used to close the air supply.

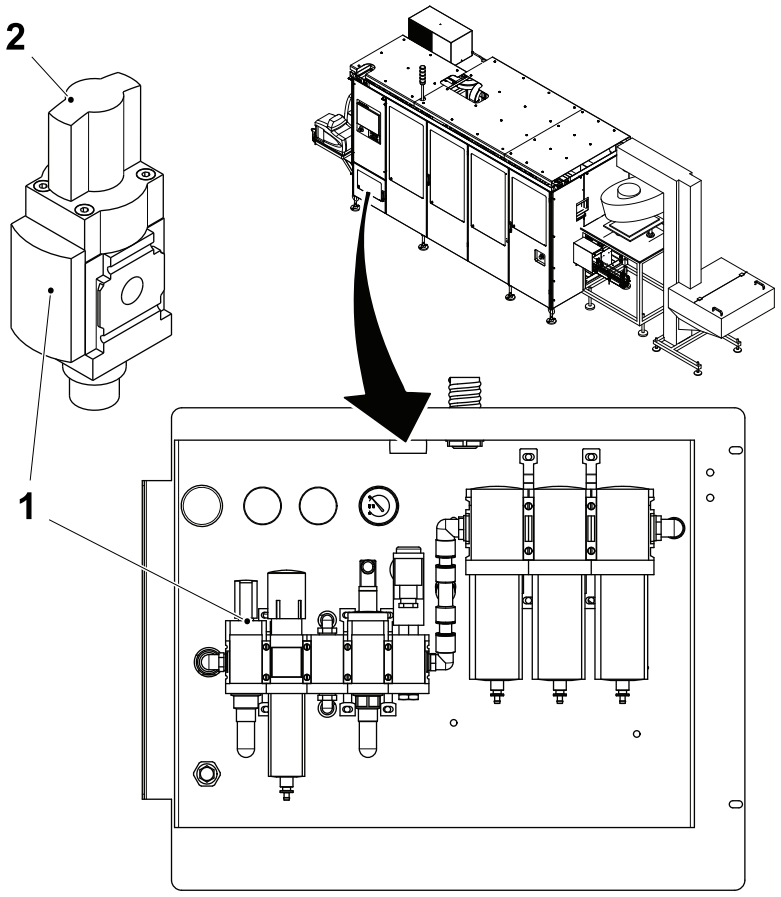

1 Shut-off valve
2 Shut-off handle

Hotmelt Equipment

General

DANGER

Risk of electrical shock.
The voltage is 400V inside the hotmelt unit. Risk of immediate danger to life from electrical shock.

WARNING

Risk of personal injury.
All service work on the hotmelt unit must be carried out by authorized personnel. Always wear safety glasses, protective gloves, and other protective clothing to avoid injuries caused by splashing hotmelt material. Failure to relieve any air or adhesive pressure could cause serious injuries from burning when the hotmelt filter is detached or flushed. Never remove any part or component until the air and the electrical supply to the machine have been disconnected and the pressure of the hotmelt in the system has been relieved.

WARNING

Risk of hotmelt vapours.
When the tank lid is open, hotmelt vapours could be released. Vent the application area or wear a respirator.

Note! Always refer to the documentation provided from Nordson Corporation before doing any kind of work on the hotmelt equipment. The Nordson hotmelt manual is included with the delivery from Tetra Pak. The information in this manual only deals with what is specific for this machine.

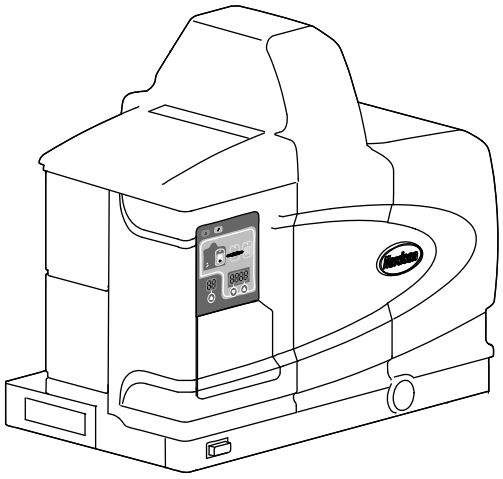

Hotmelt Unit

CAUTION

Risk of damage to the equipment

Never flush water or any other liquid towards the hotmelt unit when cleaning the machine. Failure to obey could result in damage to equipment.

WARNING

Risk of burns.

During PREHEATING and PREPARATION the hotmelt unit becomes hot. Do not touch the hotmelt unit and beware of the entrapped heat inside the unit when service is performed.

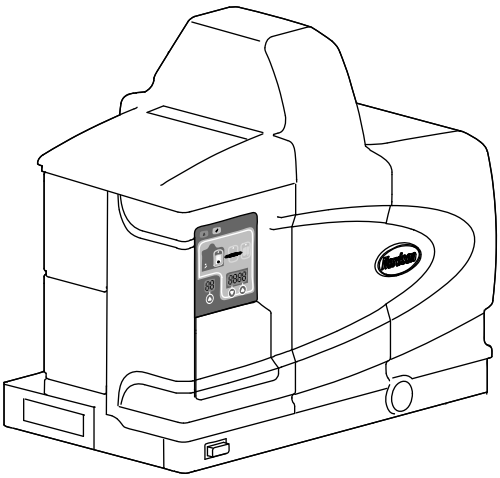

Hotmelt Guns

WARNING

Risk of burns.

During PREHEATING, PREPARATION and PRODUCTION the hotmelt guns are hot. There is risk of severe burns. Do not touch the hotmelt guns and beware of the entrapped heat when service is performed.

CAUTION

Risk of damage to the equipment

Never flush water or any other liquid towards the hotmelt guns when cleaning the machine. Failure to obey could result in damage to equipment.

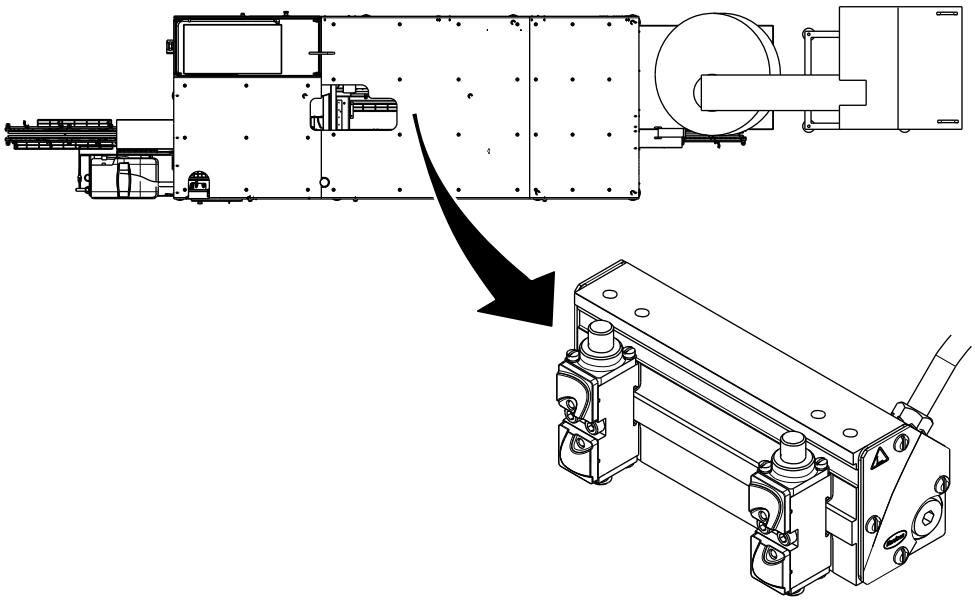

Additional Information

Package Heater

WARNING

Risk of burns.

The package heater is very hot and there is risk of severe burns. Never touch the package heater.

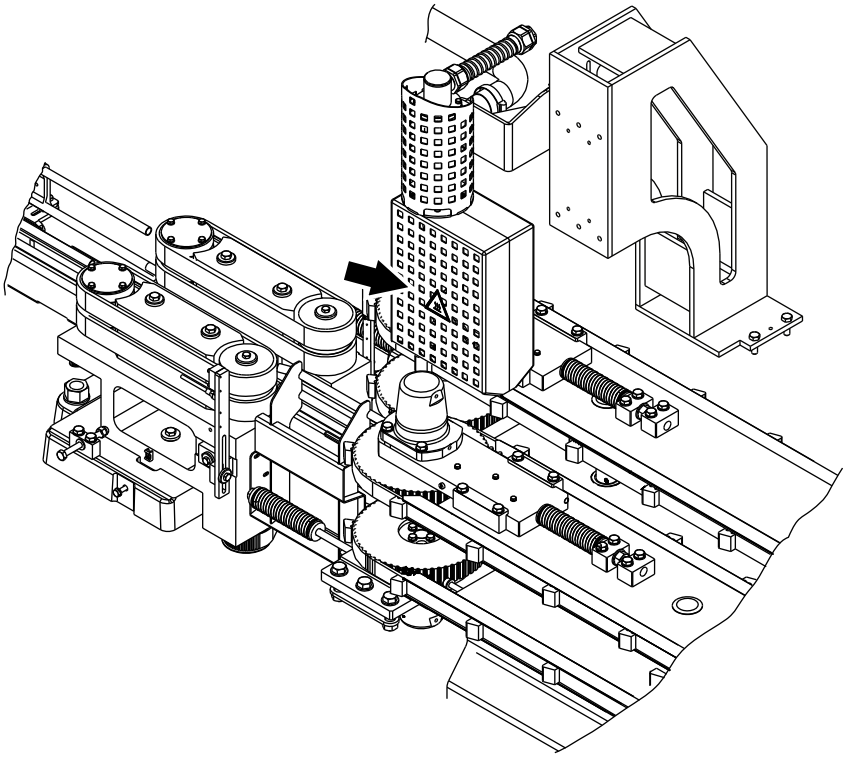

Cap Detector

WARNING

Risk of personal injury.

Never put any part of the body, such as a hand, near the cap detector when the machine is working. There is a risk of injury caused by the movable pusher.

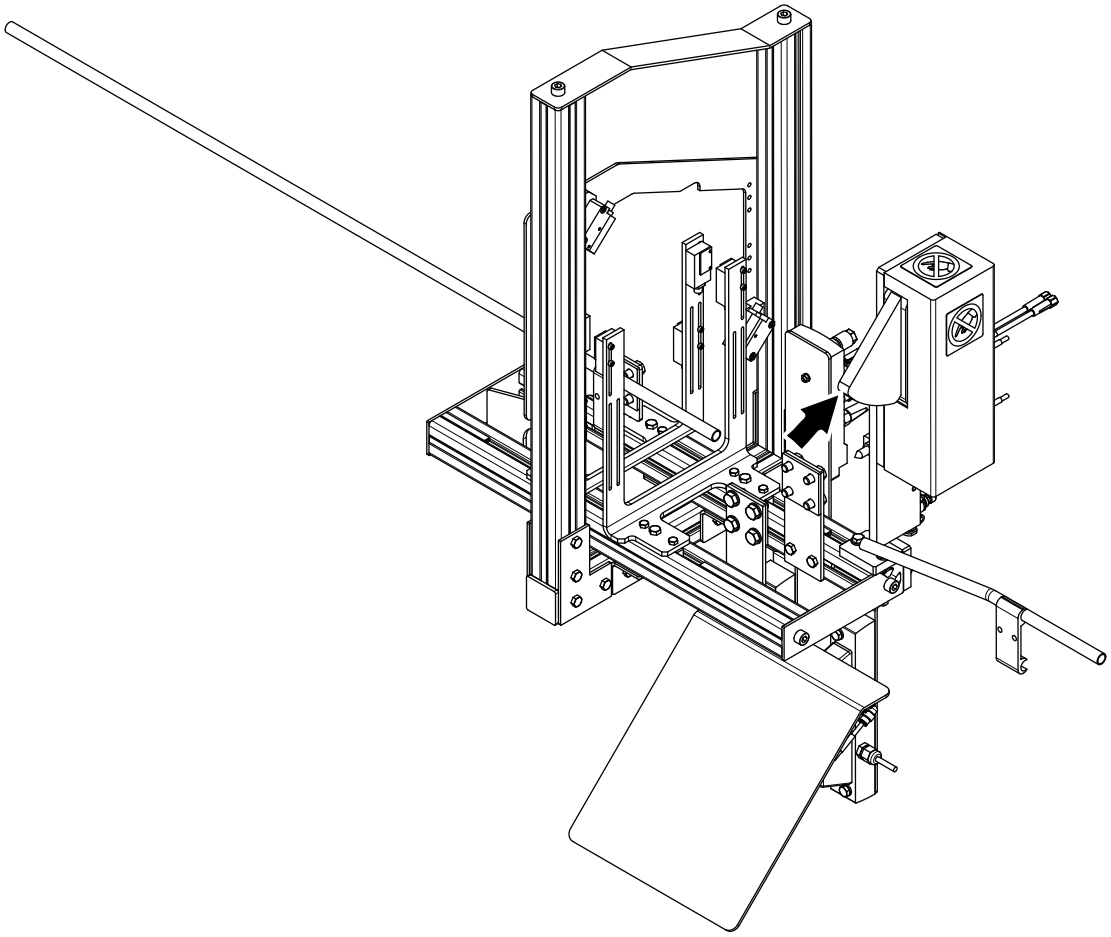

This page intentionally left blank

1 Electrical System Description

Description

This chapter contains a description of the electrical safety system.

Description 1-2

1.1 Safety System 1-5

1.1-1 Safety System - Description 1-5
1.1-2 Safety Relay (Pluto) - Applicator Doors 1-6
1.1-3 Emergency Stop Buttons 1-7
1.1-4 Door Monitor (Operator Side) 1-8
1.1-5 Door Monitor and Covers 1-9

This page intentionally left blank

1.1 Safety System

1.1-1 Safety System - Description

All the safety lines are managed from the PLUTO B20 device which is a safety PLC with customized I/O and programmable software inside.

The main relays are as follows:

a) Safety relay: PLUTO B20 Jokab

b) Expansion relay: E1T0,5s Jokab

The safety lines are summarized in the following illustration:

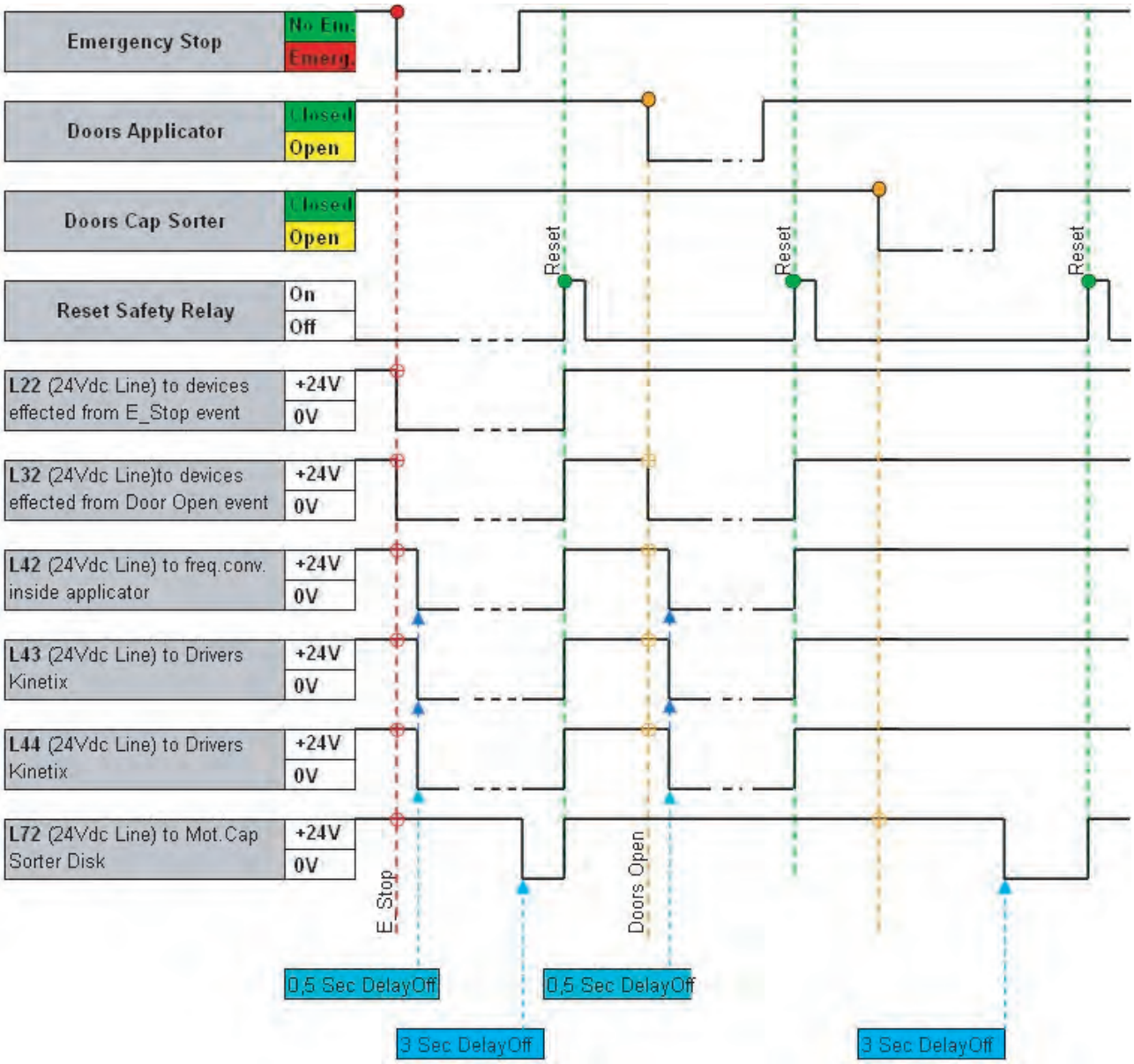

1.1-2 Safety Relay (Pluto) - Applicator Doors

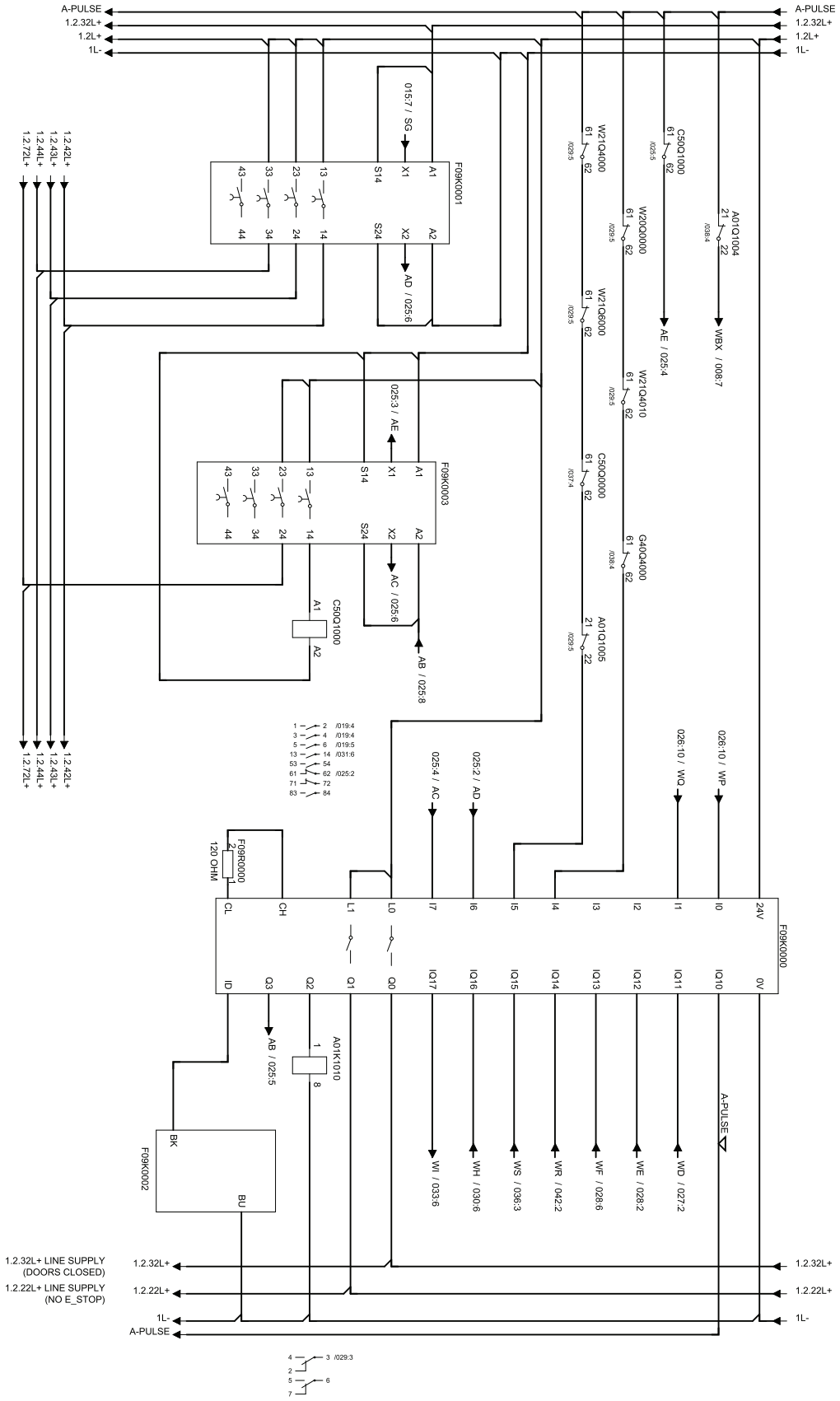

1.1-3 Emergency Stop Buttons

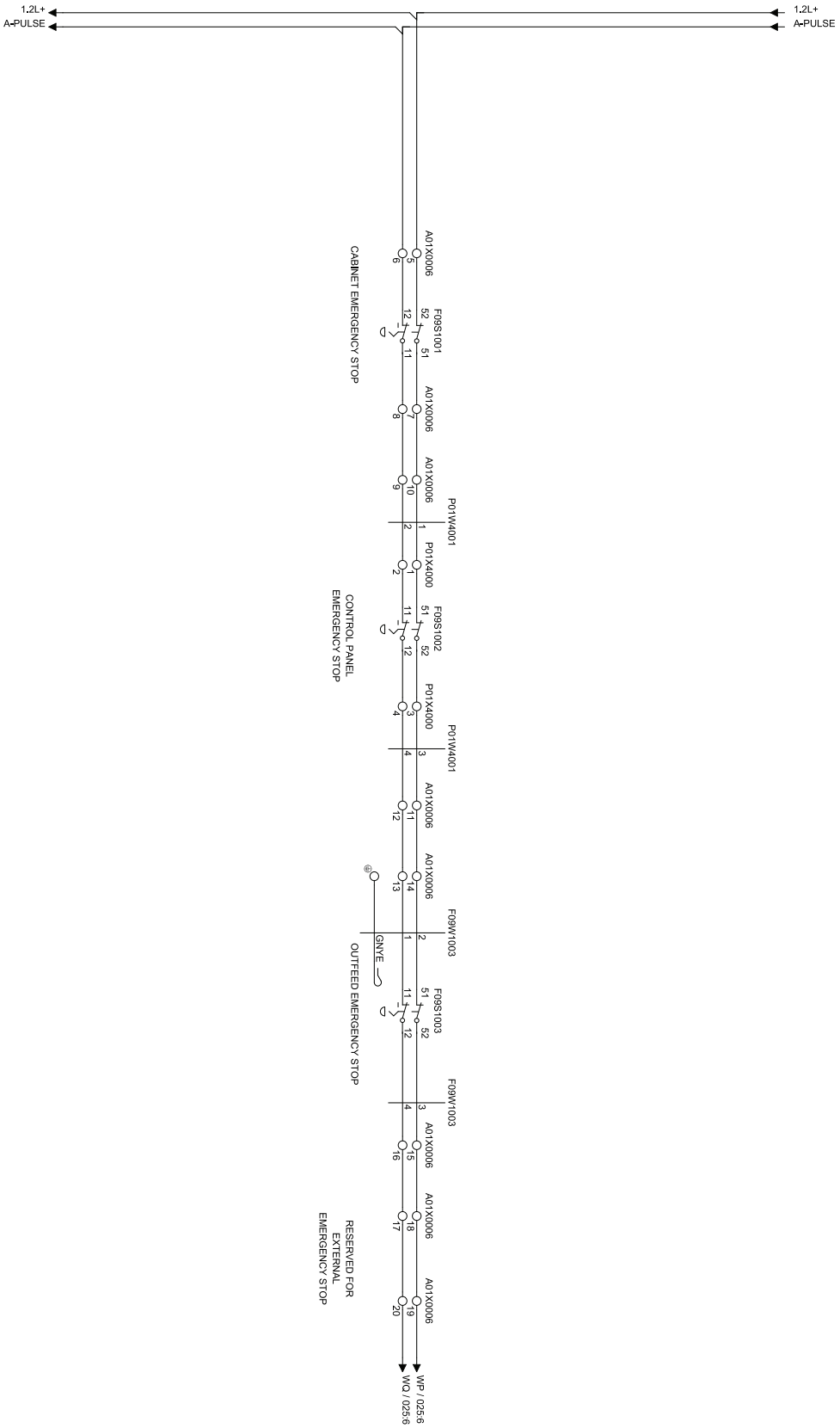

1.1-4 Door Monitor (Operator Side)

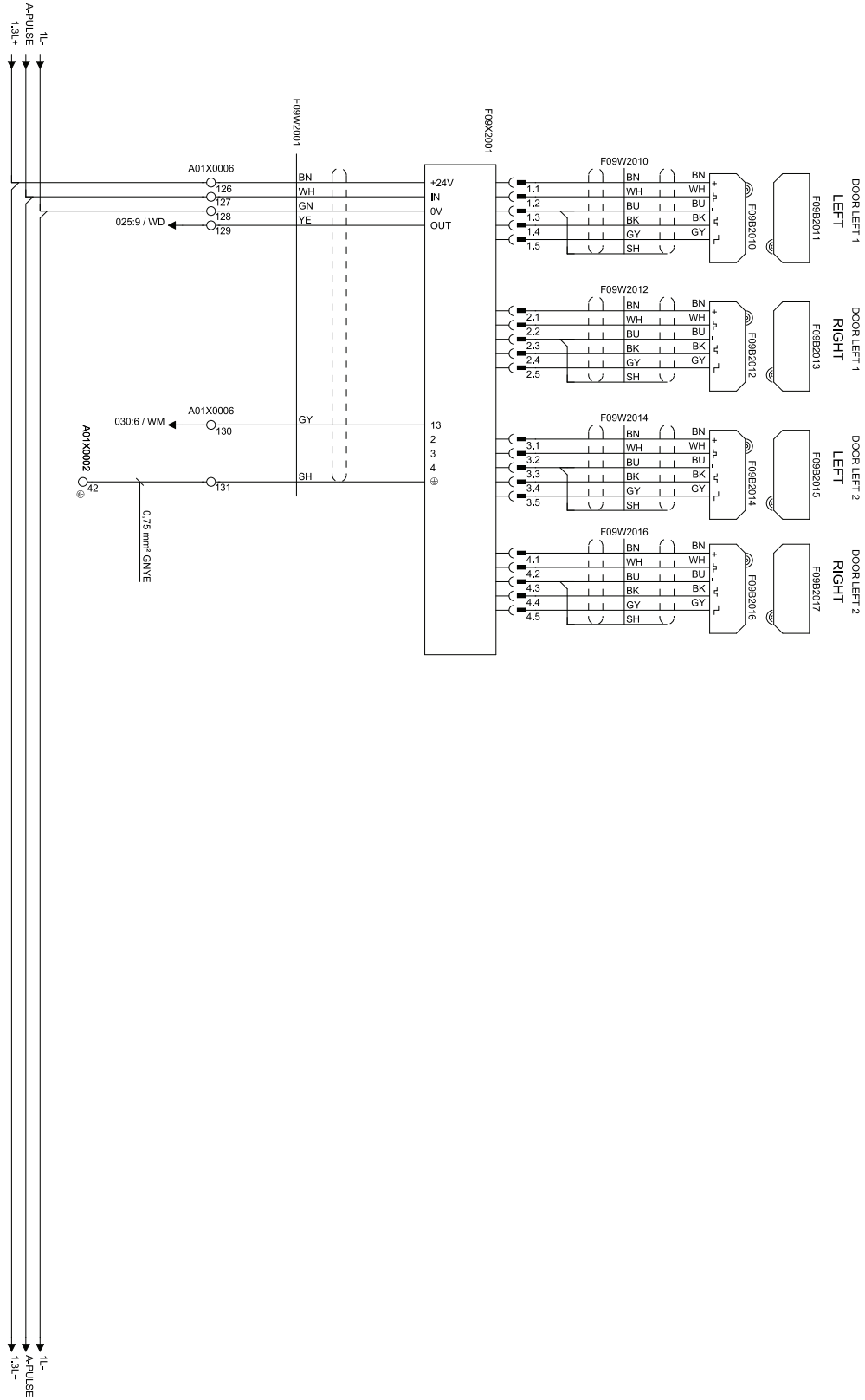

1.1-5 Door Monitor and Covers

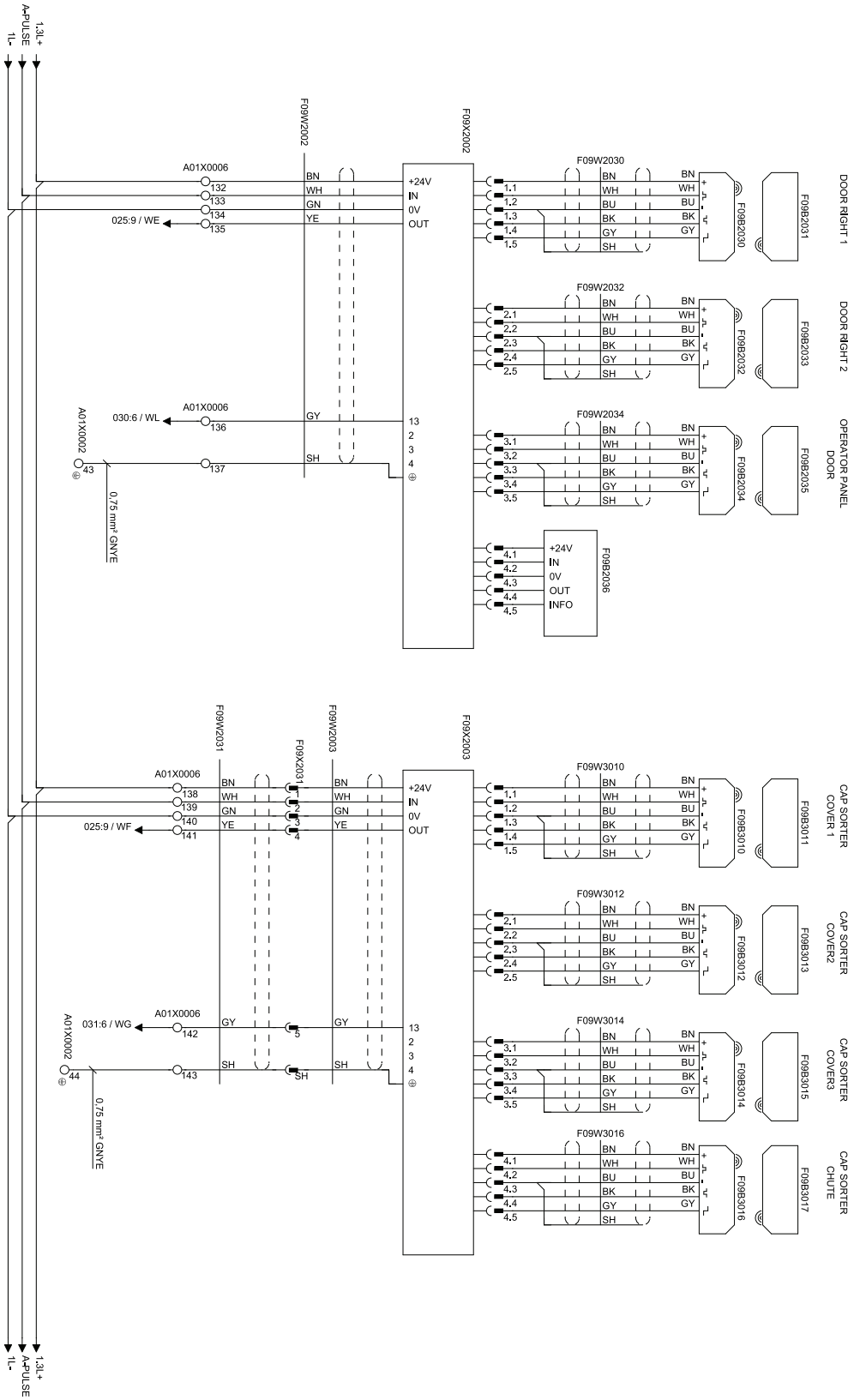

This page intentionally left blank

2 Document List

Description

This chapter is a table of contents that includes the drawing specification for each electrical document valid for the equipment.

2.1 Document List

This page intentionally left blank

This drawing must not without the consent of Tetra Pak be copied, transmitted or disclosed to any third party.

RELEASED

DOCUMENTS LIST

Drawing number	Page	Denomination	Page type	Version
3218867-0001	001	DOCUMENTS LIST	DOCUMENTS LIST	AK
3218867-0001	002	DOCUMENTS LIST	DOCUMENTS LIST	AK
3218867-0001	003	DOCUMENTS LIST	DOCUMENTS LIST	AK
3218867-0001	004	DOCUMENTS LIST	DOCUMENTS LIST	AK
3218867-0002	001	POSITION SUMMARY	POSITION SUMMARY	AK
3218867-0002	002	POSITION SUMMARY	POSITION SUMMARY	AK
3218867-0002	003	POSITION SUMMARY	POSITION SUMMARY	AK
3218867-0003	001	CIRCUIT DIAGRAM	0V_24V TERMINAL	AK
3218867-0003	002	CIRCUIT DIAGRAM	TERMINAL	AK
3218867-0003	003	CIRCUIT DIAGRAM	MAINS	AK
3218867-0003	004	CIRCUIT DIAGRAM	CONTROL VOLTAGE	AK
3218867-0003	005	CIRCUIT DIAGRAM	LIGHT FIXTURES - CE VERSION	AK
3218867-0003	006	CIRCUIT DIAGRAM	LIGHT FIXTURES - UL/CSA VERSION	AK
3218867-0003	007	CIRCUIT DIAGRAM	COOLING UNIT	AK
3218867-0003	008	CIRCUIT DIAGRAM	SERVO MOTOR 1 (APPLICATOR WHELL)	AK
3218867-0003	009	CIRCUIT DIAGRAM	SERVO MOTOR 2 (X AXIS GLUE APPL.)	AK
3218867-0003	010	CIRCUIT DIAGRAM	SERVO MOTOR 3 (Y AXIS GLUE APPL.)	AK
3218867-0003	011	CIRCUIT DIAGRAM	SERVO MOTOR 4 (PACK. TRANSFER INNER)	AK
3218867-0003	012	CIRCUIT DIAGRAM	SERVO MOTOR 5 (PACK. TRANSFER OUTER)	AK
3218867-0003	013	CIRCUIT DIAGRAM	SERVO MOTOR 6 (CAP SEQUENCER)	AK
3218867-0003	014	CIRCUIT DIAGRAM	SERVO MOTOR 7 (PUSH DOWN)	AK
3218867-0003	015	CIRCUIT DIAGRAM	SERVO MOTOR 8 (AXIS X POSITIONING SYS.)	AK
3218867-0003	016	CIRCUIT DIAGRAM	MOTORS	AK
3218867-0003	017	CIRCUIT DIAGRAM	MOTORS CAP SORTER	AK
3218867-0003	018	CIRCUIT DIAGRAM	MOTORS	AK
3218867-0003	019	CIRCUIT DIAGRAM	MOTOR	AK
3218867-0003	020	CIRCUIT DIAGRAM	MOTORS	AK
3218867-0003	021	CIRCUIT DIAGRAM	PLC RACK	AK
3218867-0003	022	CIRCUIT DIAGRAM	POWER SUPPLY DEVICE NET	AK
3218867-0003	023	CIRCUIT DIAGRAM	CURRENT CONTROL RELAY	AK
3218867-0003	024	CIRCUIT DIAGRAM	ETHERNET SWITCH/CONTROL PANEL	AK
3218867-0003	025	CIRCUIT DIAGRAM	SAFETY RELAY	AK
3218867-0003	026	CIRCUIT DIAGRAM	EMERGENCY STOP	AK
3218867-0003	027	CIRCUIT DIAGRAM	DOORS MONITORING (OPERATOR SIDE)	AK
3218867-0003	028	CIRCUIT DIAGRAM	DOORS AND COVERS MONITOR	AK
3218867-0003	029	CIRCUIT DIAGRAM	POWER ON TO THE MOTORS	AK
3218867-0003	030	CIRCUIT DIAGRAM	PLC IN	AK
3218867-0003	031	CIRCUIT DIAGRAM	PLC IN	AK
3218867-0003	032	CIRCUIT DIAGRAM	PLC IN	AK
3218867-0003	033	CIRCUIT DIAGRAM	PLC IN	AK
3218867-0003	034	CIRCUIT DIAGRAM	PLC IN	AK
3218867-0003	035	CIRCUIT DIAGRAM	PLC IN	AK
3218867-0003	036	CIRCUIT DIAGRAM	PLC OUT	AK
3218867-0003	037	CIRCUIT DIAGRAM	PLC OUT	AK
3218867-0003	038	CIRCUIT DIAGRAM	PLC OUT	AK
3218867-0003	039	CIRCUIT DIAGRAM	PLC OUT	AK

Tetra Pak®

Version Designer: ROG
ECM No: 736736
Denomination: DOCUMENTS LIST
Version Date: 2015-05-29
Machine: CAP30 Flex ScrewCap 0300
Page Type: DOCUMENTS LIST
Document No.: 3218867-0001
Doc. type: ELD
Version: AK
Page: 001
Information Security Class: PUBLIC

This drawing must not without the consent of Tetra Pak be copied, transmitted or disclosed to any third party.

RELEASED

DOCUMENTS LIST

Drawing number	Page	Denomination	Page type	Version
3218867-0003	040	CIRCUIT DIAGRAM	REMOTE I/O ADAPTER O.P. BOX	AK
3218867-0003	041	CIRCUIT DIAGRAM	REMOTE I/O ADAPTER O.P. BOX	AK
3218867-0003	042	CIRCUIT DIAGRAM	REMOTE I/O ADAPTER O.P. BOX	AK
3218867-0003	043	CIRCUIT DIAGRAM	REMOTE I/O ADAPTER O.P. BOX	AK
3218867-0003	044	CIRCUIT DIAGRAM	REMOTE I/O ADAPTER O.P. BOX	AK
3218867-0003	045	CIRCUIT DIAGRAM	REMOTE I/O ADAPTER O.P. BOX	AK
3218867-0003	046	CIRCUIT DIAGRAM	FIELD POWER DISTR. O.P. BOX	AK
3218867-0003	047	CIRCUIT DIAGRAM	REMOTE OUTPUT O.P. BOX	AK
3218867-0003	048	CIRCUIT DIAGRAM	REMOTE OUTPUT O.P. BOX	AK
3218867-0003	049	CIRCUIT DIAGRAM	REMOTE OUTPUT O.P. BOX	AK
3218867-0003	050	CIRCUIT DIAGRAM	FIELD POWER DISTR. O.P. BOX	AK
3218867-0003	051	CIRCUIT DIAGRAM	REMOTE OUTPUT O.P. BOX	AK
3218867-0003	052	CIRCUIT DIAGRAM	REMOTE OUTPUT O.P. BOX	AK
3218867-0003	053	CIRCUIT DIAGRAM	REMOTE OUTPUT O.P. BOX	AK
3218867-0003	054	CIRCUIT DIAGRAM	ARMOR BLOCK (COLLISION SENSORS)	AK
3218867-0003	055	CIRCUIT DIAGRAM	ARMOR BLOCK (MACHINE BODY)	AK
3218867-0003	056	CIRCUIT DIAGRAM	ARMOR BLOCK (CAP SORTER)	AK
3218867-0003	057	CIRCUIT DIAGRAM	VISION SYSTEM DEVICE	AK
3218867-0003	058	CIRCUIT DIAGRAM	RESERVED PAGE	AK
3218867-0003	059	CIRCUIT DIAGRAM	LIFTING DEVICE APPLICATIOR WHEEL	AK
3218867-0003	060	CIRCUIT DIAGRAM	LIFTING DEVICE PACKAGE LINE	AK
3218867-0003	061	CIRCUIT DIAGRAM	LIFTING DEVICE CAP SORTER	AK
3218867-0003	062	CIRCUIT DIAGRAM	ETHERNET COMMUNICATION	AK
3218867-0003	063	CIRCUIT DIAGRAM	NETWORK LAYOUT DEVICENET	AK
3218867-0003	064	CIRCUIT DIAGRAM	SERVO MOTOR CONNECTIONS	AK
3218867-0003	065	CIRCUIT DIAGRAM	FIGURE DRAWING	AK
3218867-0003	066	CIRCUIT DIAGRAM	ADHESIVE DETECTOR	AK
3218867-0004	001	LINE SUMMARY	LINE SUMMARY	AK
3218867-0004	002	LINE SUMMARY	LINE SUMMARY	AK
3218867-0004	003	LINE SUMMARY	LINE SUMMARY	AK
3218867-0004	004	LINE SUMMARY	LINE SUMMARY	AK
3218867-0004	005	LINE SUMMARY	LINE SUMMARY	AK
3218867-0004	006	LINE SUMMARY	LINE SUMMARY	AK
3218867-0005	001	CABINET TERMINAL SUMMARY	CABINET TERMINAL SUMMARY	AK
3218867-0005	002	CABINET TERMINAL SUMMARY	CABINET TERMINAL SUMMARY	AK
3218867-0005	003	CABINET TERMINAL SUMMARY	CABINET TERMINAL SUMMARY	AK
3218867-0005	004	CABINET TERMINAL SUMMARY	CABINET TERMINAL SUMMARY	AK
3218867-0005	005	CABINET TERMINAL SUMMARY	CABINET TERMINAL SUMMARY	AK
3218867-0005	006	CABINET TERMINAL SUMMARY	CABINET TERMINAL SUMMARY	AK
3218867-0005	007	CABINET TERMINAL SUMMARY	CABINET TERMINAL SUMMARY	AK
3218867-0006	001	TERMINAL STRIP OVERVIEW	TERMINAL STRIP OVERVIEW	AK
3218867-0006	002	TERMINAL STRIP OVERVIEW	TERMINAL STRIP OVERVIEW	AK
3218867-0006	003	TERMINAL STRIP OVERVIEW	TERMINAL STRIP OVERVIEW	AK
3218867-0006	004	TERMINAL STRIP OVERVIEW	TERMINAL STRIP OVERVIEW	AK
3218867-0006	005	TERMINAL STRIP OVERVIEW	TERMINAL STRIP OVERVIEW	AK
3218867-0006	006	TERMINAL STRIP OVERVIEW	TERMINAL STRIP OVERVIEW	AK

Tetra Pak®

Version Designer: ROG
ECM No: 736736
Denomination: DOCUMENTS LIST
Version Date: 2015-05-29
Machine: CAP30 Flex ScrewCap 0300
Page Type: DOCUMENTS LIST
Document No.: 3218867-0001
Doc. type: ELD
Version: AK
Page: 002
Information Security Class: PUBLIC

This drawing must not without the consent of Tetra Pak be copied, transmitted or disclosed to any third party.

RELEASED

DOCUMENTS LIST

Drawing number	Page	Denomination	Page type	Version
3218867-0006	007	TERMINAL STRIP OVERVIEW	TERMINAL STRIP OVERVIEW	AK
3218867-0006	008	TERMINAL STRIP OVERVIEW	TERMINAL STRIP OVERVIEW	AK
3218867-0006	009	TERMINAL STRIP OVERVIEW	TERMINAL STRIP OVERVIEW	AK
3218867-0006	010	TERMINAL STRIP OVERVIEW	TERMINAL STRIP OVERVIEW	AK
3218867-0006	011	TERMINAL STRIP OVERVIEW	TERMINAL STRIP OVERVIEW	AK
3218867-0006	012	TERMINAL STRIP OVERVIEW	TERMINAL STRIP OVERVIEW	AK
3218867-0006	013	TERMINAL STRIP OVERVIEW	TERMINAL STRIP OVERVIEW	AK
3218867-0006	014	TERMINAL STRIP OVERVIEW	TERMINAL STRIP OVERVIEW	AK
3218867-0006	015	TERMINAL STRIP OVERVIEW	TERMINAL STRIP OVERVIEW	AK
3218867-0006	016	TERMINAL STRIP OVERVIEW	TERMINAL STRIP OVERVIEW	AK
3218867-0006	017	TERMINAL STRIP OVERVIEW	TERMINAL STRIP OVERVIEW	AK
3218867-0006	018	TERMINAL STRIP OVERVIEW	TERMINAL STRIP OVERVIEW	AK
3218867-0006	019	TERMINAL STRIP OVERVIEW	TERMINAL STRIP OVERVIEW	AK
3218867-0006	020	TERMINAL STRIP OVERVIEW	TERMINAL STRIP OVERVIEW	AK
3218867-0006	021	TERMINAL STRIP OVERVIEW	TERMINAL STRIP OVERVIEW	AK
3218867-0006	022	TERMINAL STRIP OVERVIEW	TERMINAL STRIP OVERVIEW	AK
3218867-0006	023	TERMINAL STRIP OVERVIEW	TERMINAL STRIP OVERVIEW	AK
3218867-0006	024	TERMINAL STRIP OVERVIEW	TERMINAL STRIP OVERVIEW	AK
3218867-0006	025	TERMINAL STRIP OVERVIEW	TERMINAL STRIP OVERVIEW	AK
3218867-0006	026	TERMINAL STRIP OVERVIEW	TERMINAL STRIP OVERVIEW	AK
3218867-0006	027	TERMINAL STRIP OVERVIEW	TERMINAL STRIP OVERVIEW	AK
3218867-0006	028	TERMINAL STRIP OVERVIEW	TERMINAL STRIP OVERVIEW	AK
3218867-0006	029	TERMINAL STRIP OVERVIEW	TERMINAL STRIP OVERVIEW	AK
3218867-0006	030	TERMINAL STRIP OVERVIEW	TERMINAL STRIP OVERVIEW	AK
3218867-0006	031	TERMINAL STRIP OVERVIEW	TERMINAL STRIP OVERVIEW	AK
3218867-0006	032	TERMINAL STRIP OVERVIEW	TERMINAL STRIP OVERVIEW	AK
3218867-0006	033	TERMINAL STRIP OVERVIEW	TERMINAL STRIP OVERVIEW	AK
3218867-0006	034	TERMINAL STRIP OVERVIEW	TERMINAL STRIP OVERVIEW	AK
3218867-0006	035	TERMINAL STRIP OVERVIEW	TERMINAL STRIP OVERVIEW	AK
3218867-0006	036	TERMINAL STRIP OVERVIEW	TERMINAL STRIP OVERVIEW	AK
3218867-0006	037	TERMINAL STRIP OVERVIEW	TERMINAL STRIP OVERVIEW	AK
3218867-0006	038	TERMINAL STRIP OVERVIEW	TERMINAL STRIP OVERVIEW	AK
3218867-0006	039	TERMINAL STRIP OVERVIEW	TERMINAL STRIP OVERVIEW	AK
3218867-0006	040	TERMINAL STRIP OVERVIEW	TERMINAL STRIP OVERVIEW	AK
3218867-0006	041	TERMINAL STRIP OVERVIEW	TERMINAL STRIP OVERVIEW	AK
3218867-0006	042	TERMINAL STRIP OVERVIEW	TERMINAL STRIP OVERVIEW	AK
3218867-0006	043	TERMINAL STRIP OVERVIEW	TERMINAL STRIP OVERVIEW	AK
3218867-0006	044	TERMINAL STRIP OVERVIEW	TERMINAL STRIP OVERVIEW	AK
3218867-0006	045	TERMINAL STRIP OVERVIEW	TERMINAL STRIP OVERVIEW	AK
3218867-0006	046	TERMINAL STRIP OVERVIEW	TERMINAL STRIP OVERVIEW	AK
3218867-0006	047	TERMINAL STRIP OVERVIEW	TERMINAL STRIP OVERVIEW	AK
3218867-0006	048	TERMINAL STRIP OVERVIEW	TERMINAL STRIP OVERVIEW	AK
3218867-0006	049	TERMINAL STRIP OVERVIEW	TERMINAL STRIP OVERVIEW	AK
3218867-0006	050	TERMINAL STRIP OVERVIEW	TERMINAL STRIP OVERVIEW	AK
3218867-0006	051	TERMINAL STRIP OVERVIEW	TERMINAL STRIP OVERVIEW	AK
3218867-0006	052	TERMINAL STRIP OVERVIEW	TERMINAL STRIP OVERVIEW	AK

Tetra Pak®

Version Designer: ROG
ECM No: 736736
Denomination: DOCUMENTS LIST
Version Date: 2015-05-29
Machine: CAP30 Flex ScrewCap 0300
Page Type: DOCUMENTS LIST
Document No.: 3218867-0001
Doc. type: ELD
Version: AK
Page: 003
Information Security Class: PUBLIC

This drawing must not without the consent of Tetra Pak be copied, transmitted or disclosed to any third party.

RELEASED

DOCUMENTS LIST

Drawing number	Page	Denomination	Page type	Version
3218867-0006	053	TERMINAL STRIP OVERVIEW	TERMINAL STRIP OVERVIEW	AK
3218867-0006	054	TERMINAL STRIP OVERVIEW	TERMINAL STRIP OVERVIEW	AK
3218867-0006	055	TERMINAL STRIP OVERVIEW	TERMINAL STRIP OVERVIEW	AK
3218867-0006	056	TERMINAL STRIP OVERVIEW	TERMINAL STRIP OVERVIEW	AK
3218867-0006	057	TERMINAL STRIP OVERVIEW	TERMINAL STRIP OVERVIEW	AK
3218867-0006	058	TERMINAL STRIP OVERVIEW	TERMINAL STRIP OVERVIEW	AK
3218867-0006	059	TERMINAL STRIP OVERVIEW	TERMINAL STRIP OVERVIEW	AK
3218867-0006	060	TERMINAL STRIP OVERVIEW	TERMINAL STRIP OVERVIEW	AK
3218867-0006	061	TERMINAL STRIP OVERVIEW	TERMINAL STRIP OVERVIEW	AK
3218867-0006	062	TERMINAL STRIP OVERVIEW	TERMINAL STRIP OVERVIEW	AK
3218867-0006	063	TERMINAL STRIP OVERVIEW	TERMINAL STRIP OVERVIEW	AK
3218867-0006	064	TERMINAL STRIP OVERVIEW	TERMINAL STRIP OVERVIEW	AK
3218867-0006	065	TERMINAL STRIP OVERVIEW	TERMINAL STRIP OVERVIEW	AK
3218867-0006	066	TERMINAL STRIP OVERVIEW	TERMINAL STRIP OVERVIEW	AK
3218867-0006	067	TERMINAL STRIP OVERVIEW	TERMINAL STRIP OVERVIEW	AK
3218867-0006	068	TERMINAL STRIP OVERVIEW	TERMINAL STRIP OVERVIEW	AK
3218867-0006	069	TERMINAL STRIP OVERVIEW	TERMINAL STRIP OVERVIEW	AK
3218867-0006	070	TERMINAL STRIP OVERVIEW	TERMINAL STRIP OVERVIEW	AK
3218867-0006	071	TERMINAL STRIP OVERVIEW	TERMINAL STRIP OVERVIEW	AK
3218867-0006	072	TERMINAL STRIP OVERVIEW	TERMINAL STRIP OVERVIEW	AK
3218867-0006	073	TERMINAL STRIP OVERVIEW	TERMINAL STRIP OVERVIEW	AK
3218867-0007	001	CABLE CONNECTION LIST	CABLE CONNECTION LIST	AK
3218867-0007	002	CABLE CONNECTION LIST	CABLE CONNECTION LIST	AK
3218867-0007	003	CABLE CONNECTION LIST	CABLE CONNECTION LIST	AK
3218867-0007	004	CABLE CONNECTION LIST	CABLE CONNECTION LIST	AK
3218867-0007	005	CABLE CONNECTION LIST	CABLE CONNECTION LIST	AK
3218867-0007	006	CABLE CONNECTION LIST	CABLE CONNECTION LIST	AK
3218867-0007	007	CABLE CONNECTION LIST	CABLE CONNECTION LIST	AK
3218867-0007	008	CABLE CONNECTION LIST	CABLE CONNECTION LIST	AK
3218867-0007	009	CABLE CONNECTION LIST	CABLE CONNECTION LIST	AK
3218867-0007	010	CABLE CONNECTION LIST	CABLE CONNECTION LIST	AK
3218867-0007	011	CABLE CONNECTION LIST	CABLE CONNECTION LIST	AK
3218867-0007	012	CABLE CONNECTION LIST	CABLE CONNECTION LIST	AK
3218867-0007	013	CABLE CONNECTION LIST	CABLE CONNECTION LIST	AK
3218867-0007	014	CABLE CONNECTION LIST	CABLE CONNECTION LIST	AK
3218867-0007	015	CABLE CONNECTION LIST	CABLE CONNECTION LIST	AK
3218867-0007	016	CABLE CONNECTION LIST	CABLE CONNECTION LIST	AK
3218867-0007	017	CABLE CONNECTION LIST	CABLE CONNECTION LIST	AK
3218867-0007	018	CABLE CONNECTION LIST	CABLE CONNECTION LIST	AK
3218867-0007	019	CABLE CONNECTION LIST	CABLE CONNECTION LIST	AK
3218867-0008	001	MAINS CONNECTION	MAINS CONNECTION	AK
3218867-0008	002	MAINS CONNECTION	MAINS CONNECTION	AK
3218867-0098	001	DRAWING REMARKS	DRAWING REMARKS	AK
3218867-0099	001	ENGINEERING CHANGE DESCRIPTION	ENGINEERING CHANGE DESCRIPTION	AK

Tetra Pak®

Version Designer: ROG
ECM No: 736736
Denomination: DOCUMENTS LIST
Version Date: 2015-05-29
Machine: CAP30 Flex ScrewCap 0300
Page Type: DOCUMENTS LIST
Document No.: 3218867-0001
Doc. type: ELD
Version: AK
Page: 004
Information Security Class: PUBLIC

3 Position Summary

Description

This chapter is a list of all electrical components that are shown in the electrical drawings, with page references to the drawings where they are located.

3.1 Position Summary

This page intentionally left blank

This drawing must not without the consent of Tetra Pak be copied, transmitted or disclosed to any third party.

POSITION SUMMARY 3218867-0003

Component	Page / Col.	Option
A01A4000	024.7	
A01B6000	030.5	
A01B6001	030.6	
A01B6010	030.4	
A01C3001	021.3	
A01E6000	007.4	
A01E7000	005.3	
A01E7001	005.4	
A01E7002	005.5	
A01E7003	005.7	
A01F1001	003.5	
A01F1004	008.1	
A01F1005	008.3	
A01F2000	004.1	
A01F2001	004.5	
A01F2002	004.5	
A01F2003	004.6	
A01F2004	005.4	
A01F2005	004.6	
A01F2020	004.6	
A01F2021	004.8	
A01F2022	004.8	
A01F2023	004.9	
A01F2024	004.9	
A01F2025	004.10	
A01F3000	004.9	
A01F6000	007.4	
A01F7000	006.2	ULCSA

Component	Page / Col.	Option
A01F7001	005.9	
A01F7002	005.9	
A01K1000	003.6	
A01K1001	003.7	
A01K1002	003.7	
A01K1004	008.1	
A01K1005	008.3	
A01K1010	025.8	
A01K3001	021.3	
A01K3002	021.3	
A01K3003	021.3	
A01K3004	021.2	
A01K3005	030.7	
A01K3006	034.7	
A01K3007	036.2	
A01K3008	038.2	
A01K3010	021.3	
A01K3020	063.6	
A01K3021	041.7	
A01K3022	042.7	
A01K3023	043.7	
A01K3024	044.7	
A01K3025	045.7	
A01K3026	046.7	
A01K3027	047.2	
A01K3028	048.2	
A01K3029	049.2	
A01K3030	050.7	

Component	Page / Col.	Option
A01K3031	051.2	
A01K3032	052.2	
A01K3033	053.2	
A01K3034	053.3	
A01K3035	053.3	
A01K3036	053.3	
A01K7000	036.3	
A01K8000	051.5	
A01K9000	051.5	
A01P5000	037.4	
A01P5001	037.4	
A01P5010	048.4	
A01Q1000	003.2	
A01Q1001	003.2	UL/CSA
A01Q1004	038.4	
A01Q1005	029.5	
A01Q2020	038.4	
A01Q6000	007.4	
A01T2000	004.1	
A01T2001	004.4	
A01T2020	004.6	
A01T3000	021.3	
A01T7000	006.2	ULCSA
A01X7000	005.9	
A81K4001	021.2	
A81K4002	022.9	
A81K4125	054.8	
A81K5000	021.9	COM.UNIT

Component	Page / Col.	Option
A81R4000	022.8	
A81R4021	061.5	
A81R5020	021.9	
A81R7000	018.1	
A81R7004	020.7	
A81S2010	024.6	
A81T4000	022.9	
A81X2000	024.2	
A81X5023	063.2	
A81X5024	063.3	
A81X5025	063.4	
A81X5026	063.5	
A81X5029	063.10	
A81X5123	059.4	
A81X5125	060.4	
A81X5126	060.8	
A81X5127	061.4	
A81X7000	018.1	
A81X7001	018.7	
A81X7002	019.1	
A81X7003	020.1	
A81X7004	020.7	
A81X8124	059.8	
C50B0013	056.3	
C50B0014	056.4	
C50B1001	056.2	
C50B1002	056.2	
C50B1005	056.2	

This drawing must not without the consent of Tetra Pak be copied, transmitted or disclosed to any third party.

POSITION SUMMARY 3218867-0003

Component	Page / Col.	Option
C50F0000	017.6	
C50F1000	019.2	
C50K1000	019.2	
C50K1001	019.3	
C50K1002	019.2	
C50K1004	039.5	
C50M0000	017.6	
C50M1000	019.4	
C50M1020	061.1	
C50Q0000	017.6	
C50Q1000	019.4	
C50T1000	019.1	
C81K4130	056.8	
F09B2010	027.2	
F09B2011	027.2	
F09B2012	027.3	
F09B2013	027.3	
F09B2014	027.4	
F09B2015	027.4	
F09B2016	027.5	
F09B2017	027.5	
F09B2030	028.2	
F09B2031	028.2	
F09B2032	028.3	
F09B2033	028.3	
F09B2034	028.4	
F09B2035	028.4	
F09B2036	028.4	

Component	Page / Col.	Option
F09B2041	049.4	
F09B2042	049.4	
F09B3010	028.6	
F09B3011	028.7	
F09B3012	028.7	
F09B3013	028.8	
F09B3014	028.8	
F09B3015	028.8	
F09B3016	028.9	
F09B3017	028.9	
F09K0000	025.7	
F09K0001	025.2	
F09K0002	025.9	
F09K0003	025.4	
F09R0000	025.7	
F09S1001	026.3	
F09S1002	026.5	
F09S1003	026.7	
F09X2001	027.2	
F09X2002	028.2	
F09X2003	028.6	
G30B0025	054.3	
G30B0027	054.3	
G30B0028	054.3	
G30B1001	032.4	PAC.CRAS.
G30B1002	032.4	
G30B1022	059.4	
G30B1023	059.9	

Component	Page / Col.	Option
G30M0000	008.3	
G30M0020	059.1	
G30M0021	059.6	
G30M4000	014.3	
G30T0000	008.1	
G30T4000	014.1	
G40B0010	033.4	
G40B0011	033.4	
G40B0012	032.4	
G40B0013	032.4	
G40B2000	033.4	
G40B2002	032.5	
G40B2025	061.4	
G40B2026	054.3	
G40B5001	056.4	
G40B5005	056.4	
G40F4000	017.4	
G40K1000	039.5	
G40K1001	039.5	
G40K2003	052.4	
G40K2010	037.4	
G40K2011	037.4	
G40M0000	009.3	
G40M0002	010.3	
G40M3000	013.3	
G40M4000	017.4	
G40Q4000	017.4	
G40T0000	009.1	

Component	Page / Col.	Option
G40T0002	010.1	
G40T3000	013.1	
G41B0000	066.8	ADH. DET.
G41B0020	033.4	ADH. DET.
G41E0002	066.8	ADH. DET.
G41K0011	066.5	ADH. DET.
G41R0002	066.2	ADH. DET.
G41T0002	066.3	ADH. DET.
G70B0000	057.8	VIS.SYS.D.
G70E0002	057.5	
G70K0000	037.4	
G70K0001	057.2	
G70M1000	015.3	POS.SYS.
G70T1000	015.1	POS.SYS.
K01B8001	044.5	
P01P4000	047.4	
P01P4001	047.4	
P01P4002	047.4	
P01P4004	047.4	
P01S4000	041.5	
P01S4001	041.5	
P01S4002	041.5	
P01S4004	042.5	
V01B9001	055.3	
V01B9002	055.3	
V01F5000	016.6	
V01Q5000	036.3	
V01V5000	016.5	

This drawing must not without the consent of Tetra Pak
be copied, transmitted or disclosed to any third party.

POSITION SUMMARY 3218867-0003

Component	Page / Col.	Option
W20B0000	018.5	
W20B0002	032.4	
W20B0003	032.5	
W20F0000	018.2	
W20K0000	018.2	
W20K0002	037.4	
W20K0004	036.3	
W20K3000	052.4	
W20M0000	018.4	
W20Q0000	018.4	
W20Q0004	036.3	
W20T0000	018.2	
W20T0004	018.6	
W21B0000	055.3	
W21B1025	060.4	
W21B2025	060.9	
W21B3000	034.5	
W21B3001	034.5	
W21B3002	034.4	
W21B3003	034.4	
W21B3004	034.5	
W21B3005	034.5	
W21B3006	034.4	
W21B3007	034.4	
W21B3008	034.5	
W21B3009	034.5	
W21B3018	034.4	
W21B3019	034.4	

Component	Page / Col.	Option
W21B4001	043.4	
W21B4002	043.5	
W21B4003	043.4	
W21B4004	043.5	
W21B4005	043.4	
W21B4006	043.5	
W21B4007	043.4	
W21B4008	043.5	
W21B4023	055.2	
W21B4024	055.4	
W21B6001	055.2	
W21B6002	055.4	
W21B6003	055.2	
W21B6004	055.4	
W21B6005	055.3	
W21E8001	016.8	
W21F4000	018.8	
W21F4010	020.7	P.ALIGNER
W21F6000	020.2	OUT. P.CONV.
W21F8000	016.1	
W21F8001	016.8	
W21K0000	051.5	
W21K1000	011.7	
W21K2000	012.7	
W21K3010	039.5	
W21K3011	039.5	
W21K4000	018.8	
W21K4001	018.9	

Component	Page / Col.	Option
W21K4002	018.7	
W21K4010	020.7	P.ALIGNER
W21K4011	020.8	P.ALIGNER
W21K4012	020.7	P.ALIGNER
W21K5000	039.5	
W21K6000	020.2	OUT. P.CONV.
W21K6001	020.3	OUT. P.CONV.
W21K6002	020.2	OUT. P.CONV.
W21K8000	023.4	
W21K8001	023.7	
W21M1000	011.3	
W21M1020	060.1	
W21M2000	012.3	
W21M2020	060.6	
W21M4000	018.9	
W21M4010	020.9	P.ALIGNER
W21M6000	020.4	OUT. P.CONV.
W21M8000	016.1	
W21Q4000	018.9	
W21Q4010	020.9	P. ALIGNER
W21Q6000	020.4	OUT. P.CONV.
W21Q8000	016.1	
W21Q8001	036.3	
W21T1000	011.1	
W21T2000	012.1	
W21T4000	018.7	
W21T4010	020.7	P.ALIGNER
W21T6000	020.1	OUT. P.CONV.

Component	Page / Col.	Option
W81K4120	055.8	

This page intentionally left blank

4 Circuit Diagrams

Description

This chapter contains all component drawings, such as programmable logic controller (PLC) modules, terminals, and cables.

4.1 Circuit Diagrams

This page intentionally left blank

RELEASED

This drawing must not without the consent of Tetra Pak
be copied, transmitted or disclosed to any third party.

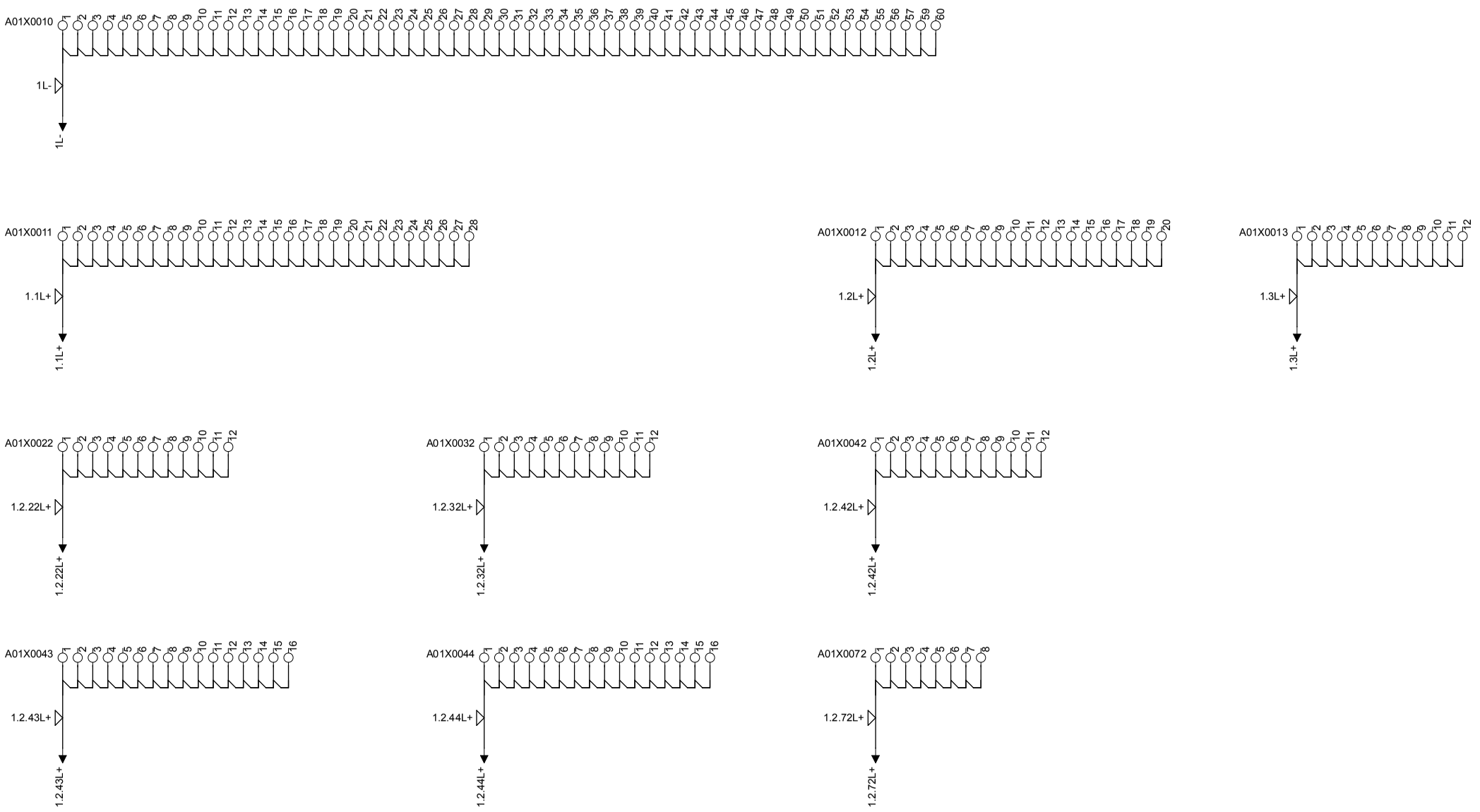

Tetra Pak®	Version Designer: ROG	Version Date: 2015-05-29	Machine: CAP30 Flex ScrewCap 0300	
	ECM No: 736736	Denomination: CIRCUIT DIAGRAM	Page Type: 0V_24V TERMINAL	
	Information Security Class: PUBLIC	Document No.: 3218867-0003	Doc. type: ELD	Version: AK / Page: 001

RELEASED

This drawing must not without the consent of Tetra Pak
be copied, transmitted or disclosed to any third party.

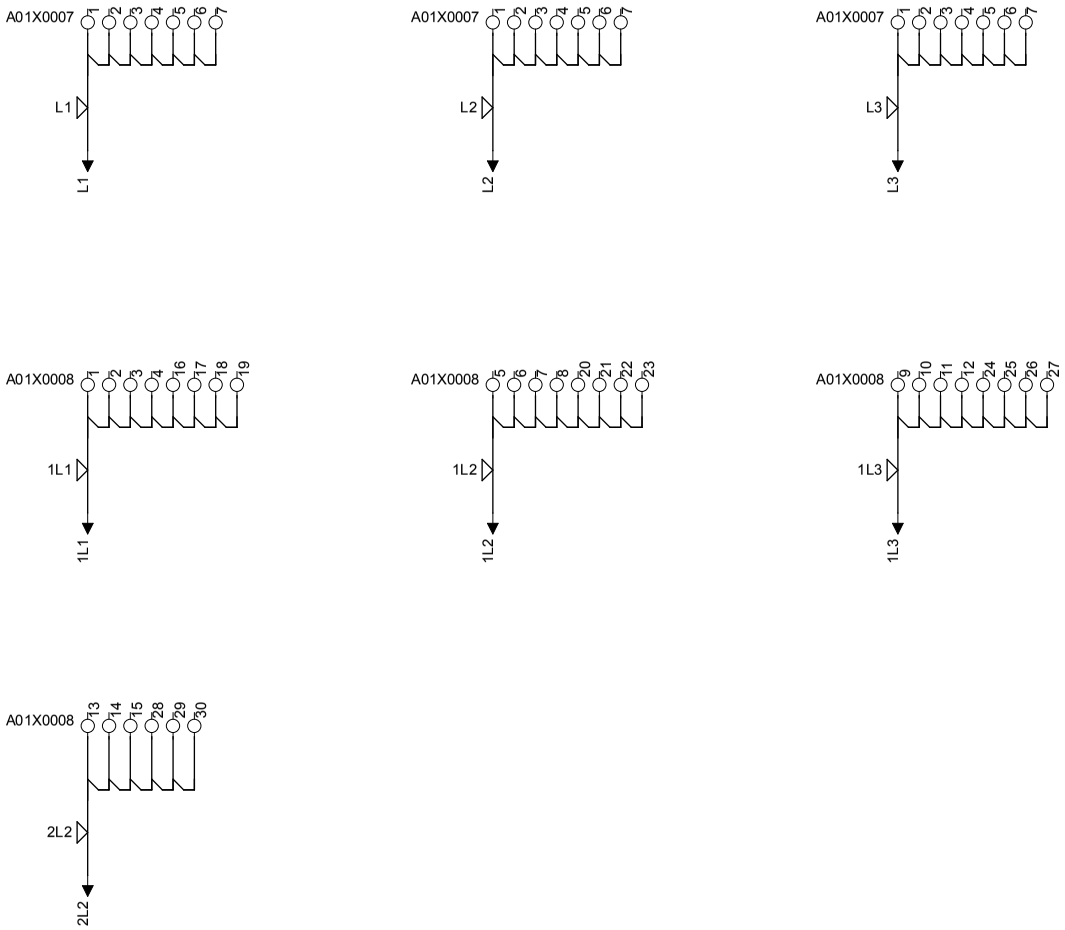

Tetra Pak®	Version Designer: ROG	Version Date: 2015-05-29	Machine: CAP30 Flex ScrewCap 0300				
	ECM No: 736736	Denomination: CIRCUIT DIAGRAM	Page Type: TERMINAL				
	Information Security Class: PUBLIC	Document No.: 3218867-0003	Doc. type: ELD	Version: AK	Page: 002		

RELEASED

This drawing must not without the consent of Tetra Pak be copied, transmitted or disclosed to any third party.

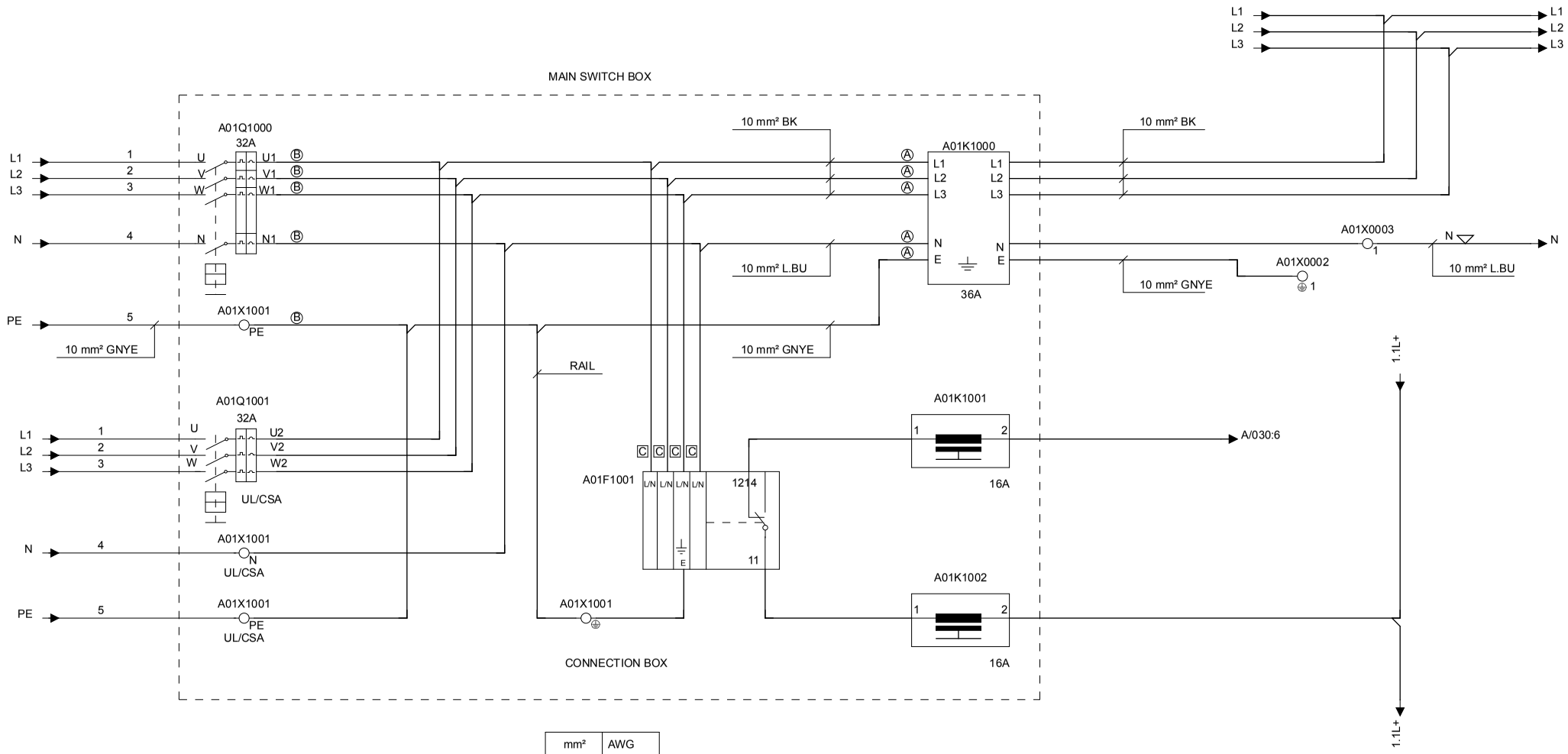

mm²	AWG
10.00	8
6.00	10
4.00	12
2.50	14
1.50	16
1.00	18
0.75	20

FOR TYPE OF WIRING, INSTRUCTION ETC.
SEE SPECIFICATION FOR SUBSUPPLIERS TPUS 3502.22

WHERE NOTHING ELSE IS SAID
OR LINE SUMMARY IS VALID : 0,75 mm2 BU

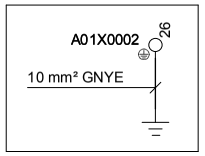

STIRRUP KINETIX

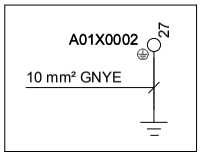

EARTH PLATE

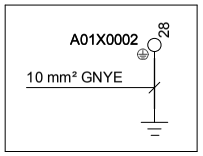

EARTH CUPBOARD

Tetra Pak®	Version Designer: ROG	Version Date: 2015-05-29	Machine: CAP30 Flex ScrewCap 0300	
	ECM No: 736736	Denomination: CIRCUIT DIAGRAM	Page Type: MAINS	
Information Security Class: PUBLIC	Document No.: 3218867-0003	Doc. type: ELD	Version: AK	Page: 003

RELEASED

This drawing must not without the consent of Tetra Pak be copied, transmitted or disclosed to any third party.

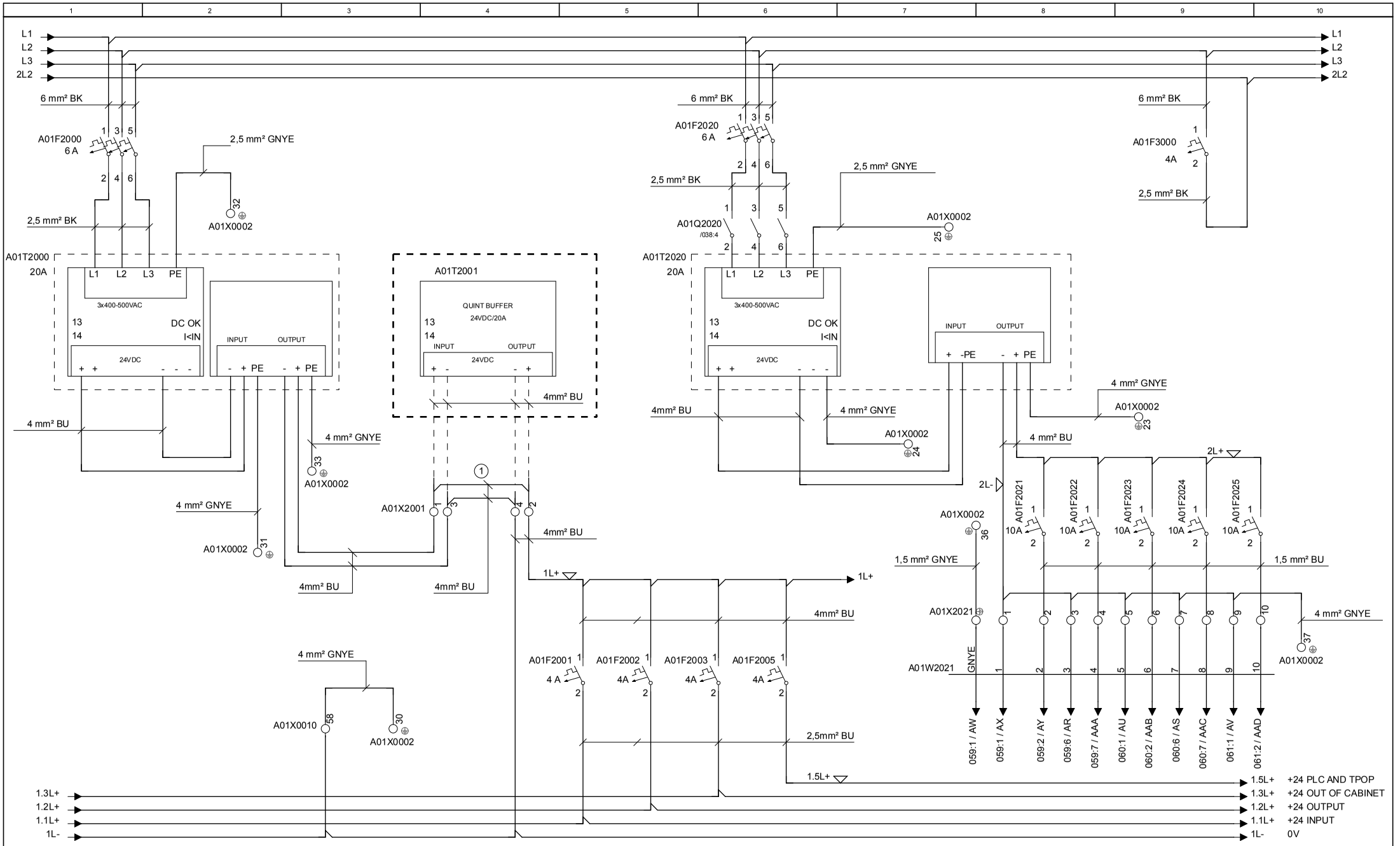

Tetra Pak®	Version Designer: ROG	Version Date: 2015-05-29	Machine: CAP30 Flex ScrewCap 0300		
	ECM No: 736736	Denomination: CIRCUIT DIAGRAM	Page Type: CONTROL VOLTAGE		
	Information Security Class: PUBLIC	Document No.: 3218867-0003	Doc. type: ELD	Version: AK	Page: 004

RELEASED

This drawing must not without the consent of Tetra Pak be copied, transmitted or disclosed to any third party.

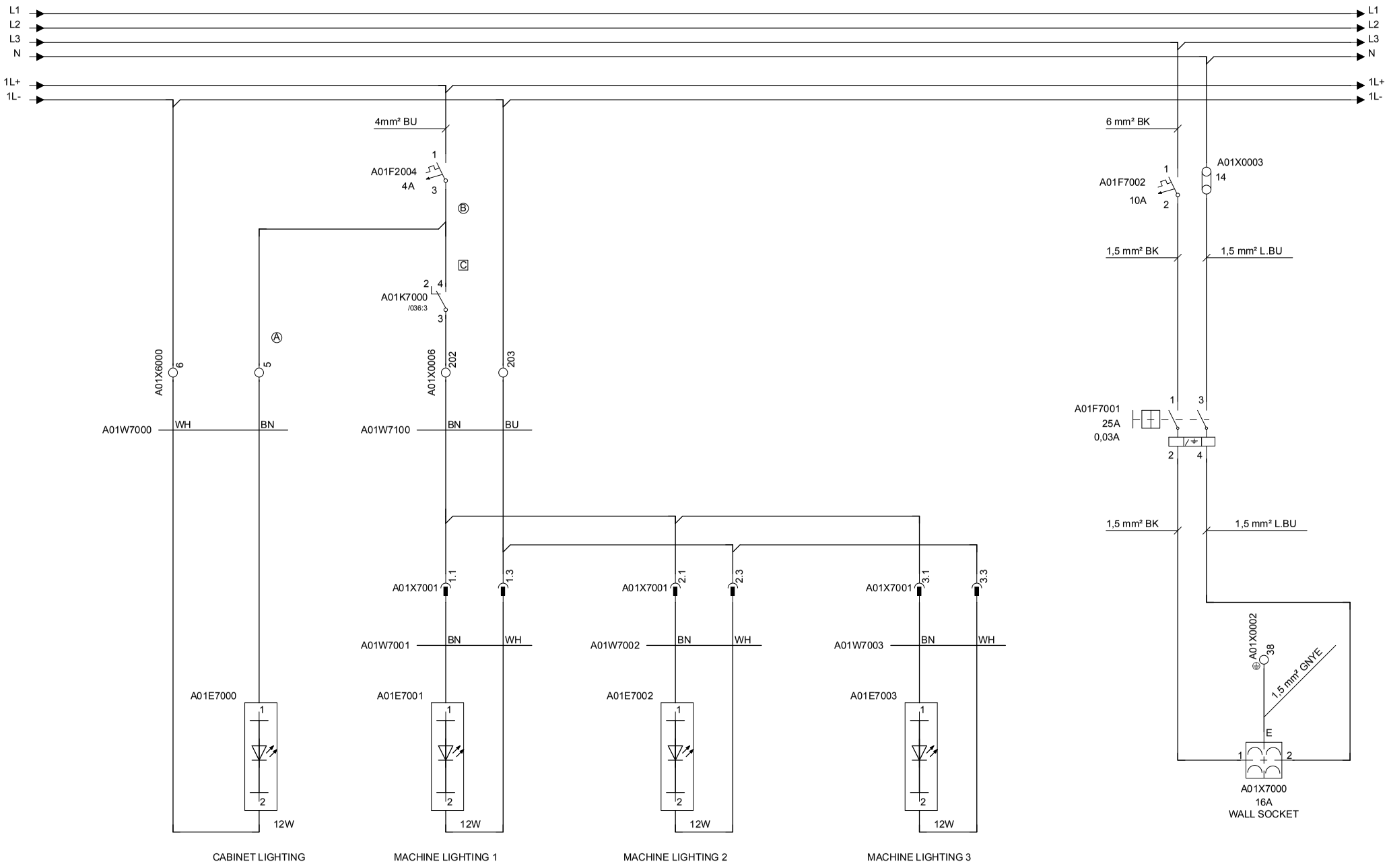

Tetra Pak®	Version Designer: ROG	Version Date: 2015-05-29	Machine: CAP30 Flex ScrewCap 0300		
	ECM No: 736736	Denomination: CIRCUIT DIAGRAM	Page Type: LIGHT FIXTURES - CE VERSION		
	Information Security Class: PUBLIC	Document No.: 3218867-0003	Doc. type: ELD	Version: AK	Page: 005

RELEASED

This drawing must not without the consent of Tetra Pak
be copied, transmitted or disclosed to any third party.

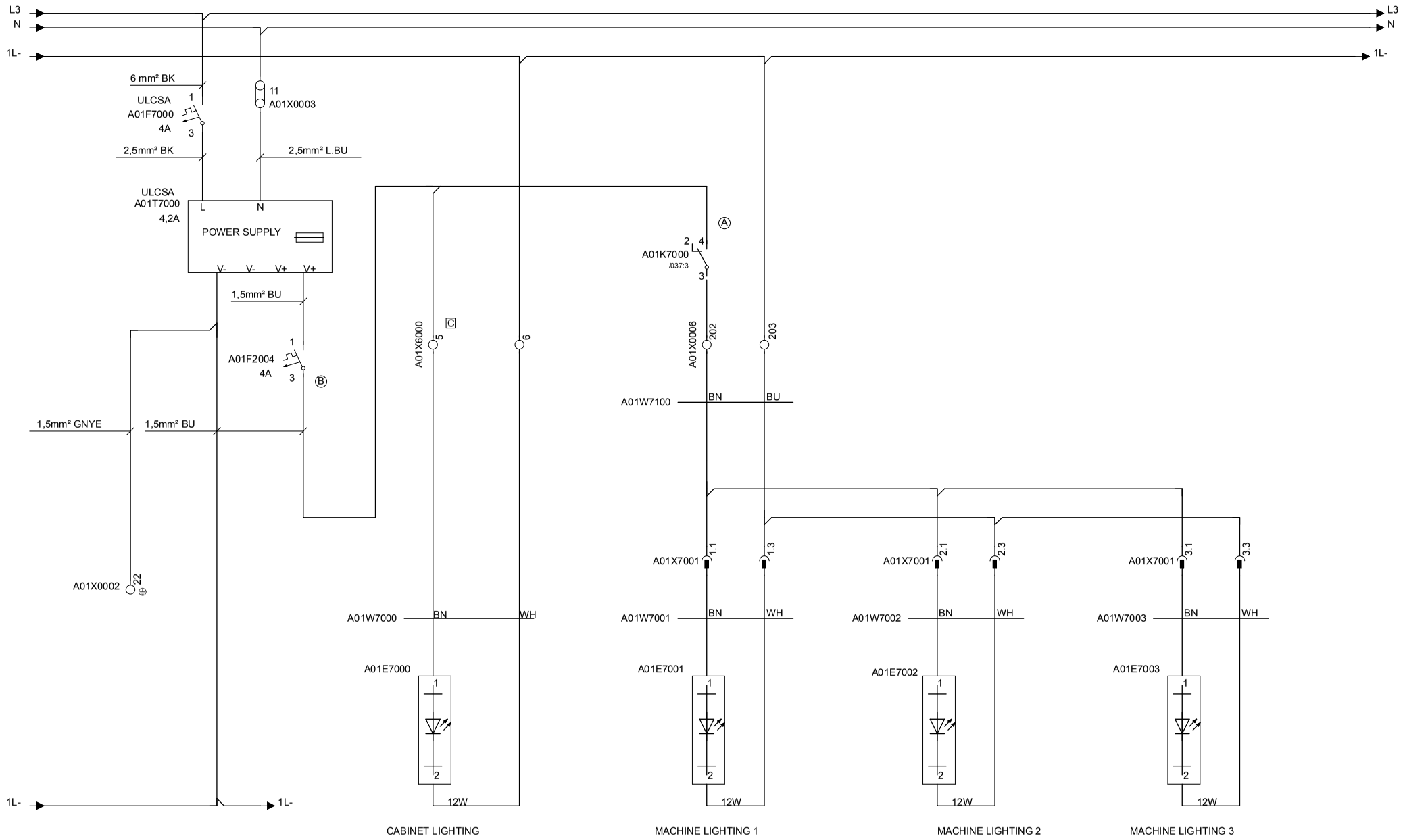

Tetra Pak®	Version Designer: ROG	Version Date: 2015-05-29	Machine: CAP30 Flex ScrewCap 0300	
	ECM No: 736736	Denomination: CIRCUIT DIAGRAM	Page Type: LIGHT FIXTURES - UL/CSA VERSION	
	Information Security Class: PUBLIC	Document No.: 3218867-0003	Doc. type: ELD	Version: AK / Page: 006

RELEASED

This drawing must not without the consent of Tetra Pak be copied, transmitted or disclosed to any third party.

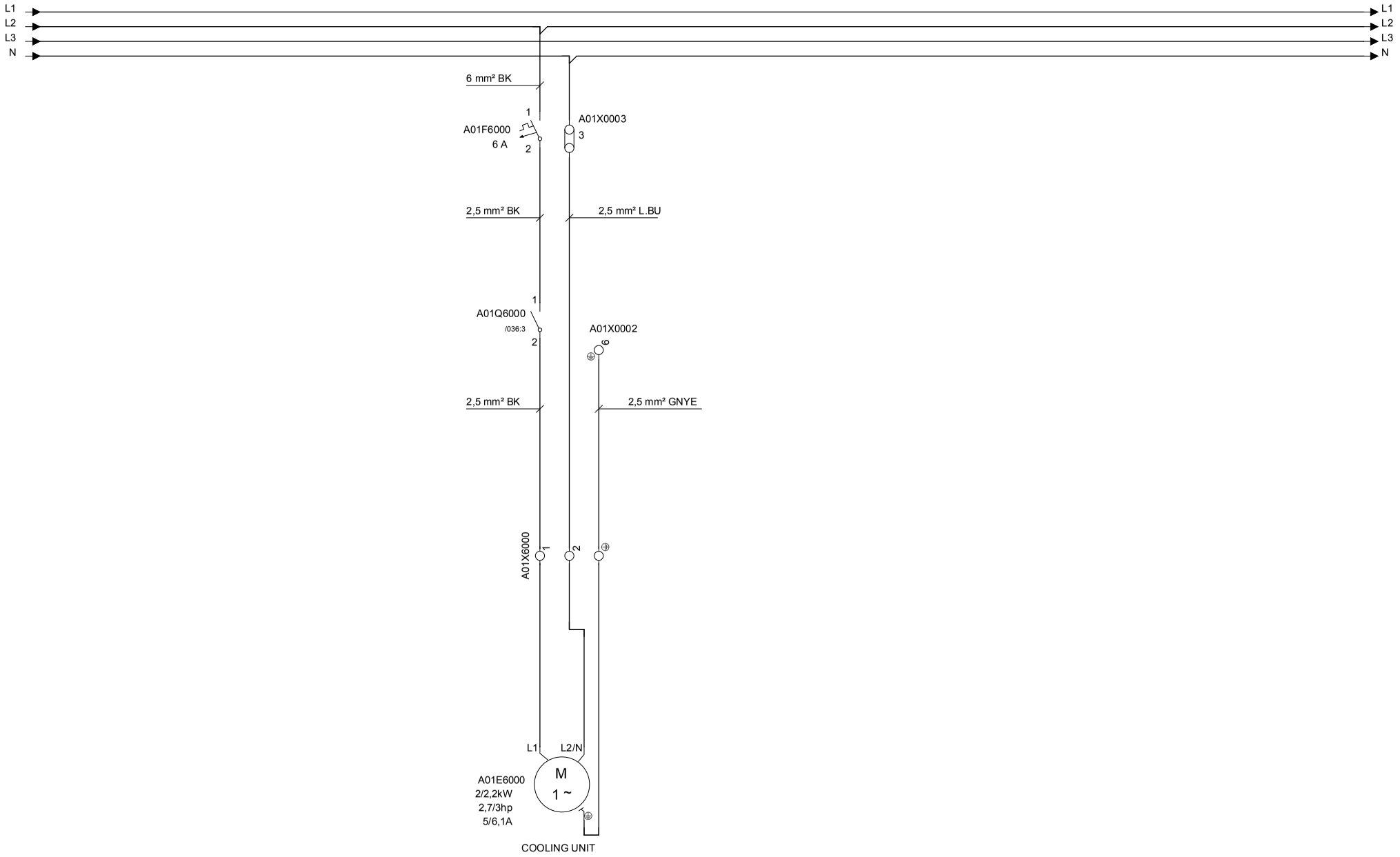

Tetra Pak®	Version Designer: ROG	Version Date: 2015-05-29	Machine: CAP30 Flex ScrewCap 0300	
	ECM No: 736736	Denomination: CIRCUIT DIAGRAM	Page Type: COOLING UNIT	
	Information Security Class: PUBLIC	Document No.: 3218867-0003	Doc. type: ELD	Version: AK / Page: 007

RELEASED

This drawing must not without the consent of Tetra Pak be copied, transmitted or disclosed to any third party.

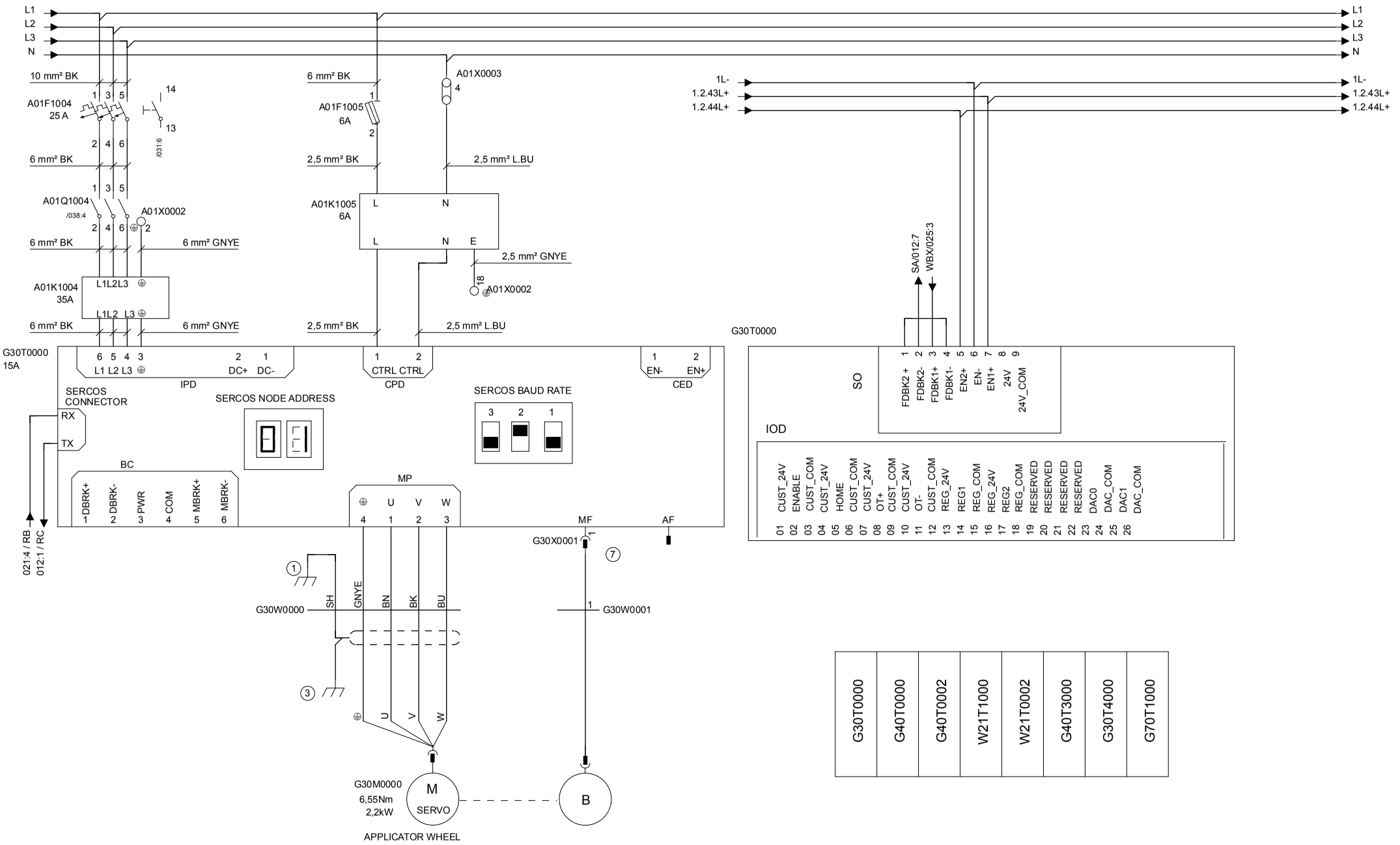

Tetra Pak®	Version Designer: ROG	Version Date: 2015-05-29	Machine: CAP30 Flex ScrewCap 0300				
	ECM No: 736736	Denomination: CIRCUIT DIAGRAM	Page Type: SERVO MOTOR 1 (APPLICATOR WHELL)				
	Information Security Class: PUBLIC	Document No.: 3218867-0003	Doc. type: ELD	Version: AK	Page: 008		

RELEASED

This drawing must not without the consent of Tetra Pak be copied, transmitted or disclosed to any third party.

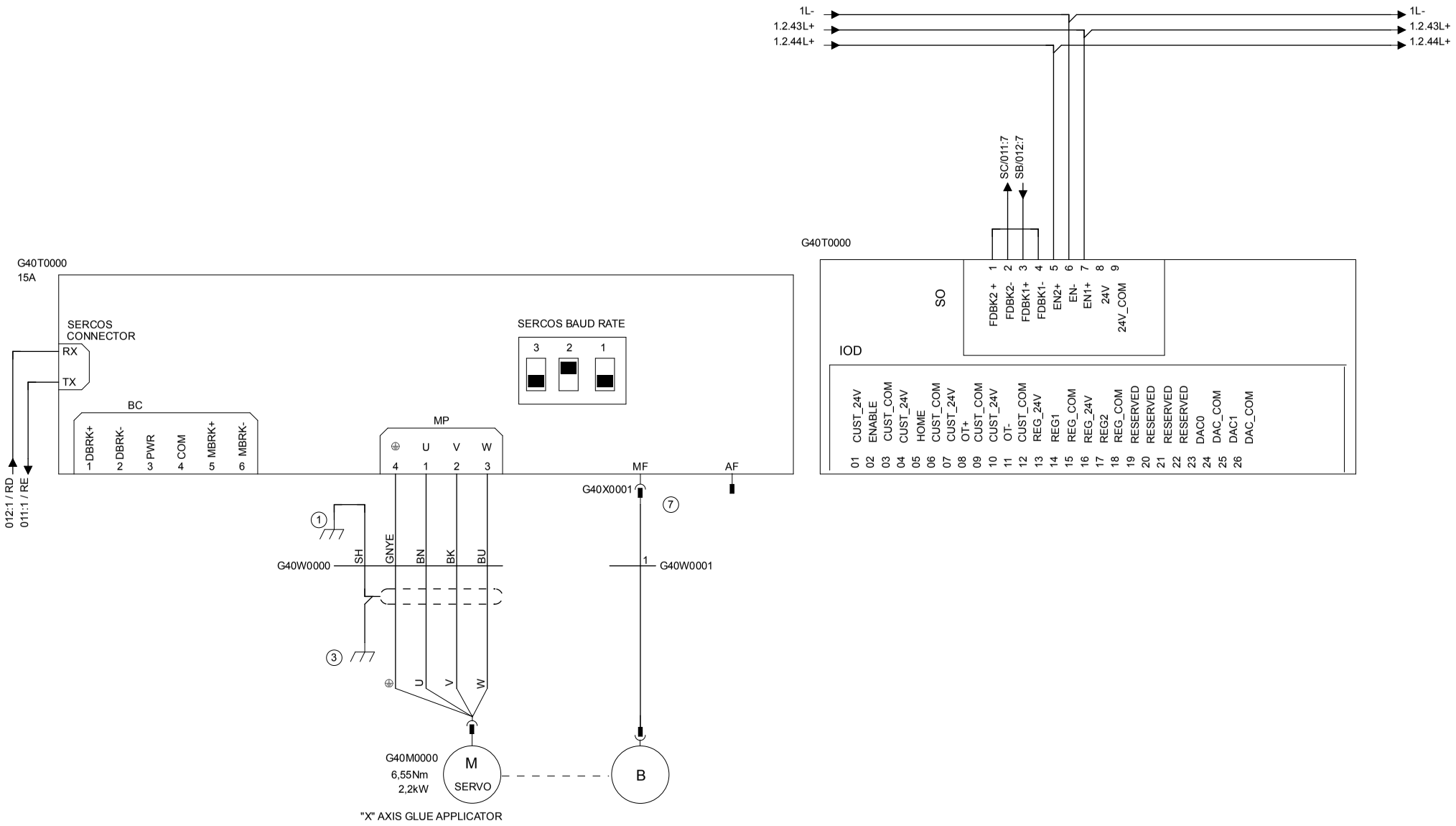

Tetra Pak®	Version Designer: ROG	Version Date: 2015-05-29	Machine: CAP30 Flex ScrewCap 0300				
	ECM No: 736736	Denomination: CIRCUIT DIAGRAM	Page Type: SERVO MOTOR 2 (X AXIS GLUE APPL.)				
	Information Security Class: PUBLIC	Document No.: 3218867-0003	Doc. type: ELD	Version: AK	Page: 009		

RELEASED

This drawing must not without the consent of Tetra Pak be copied, transmitted or disclosed to any third party.

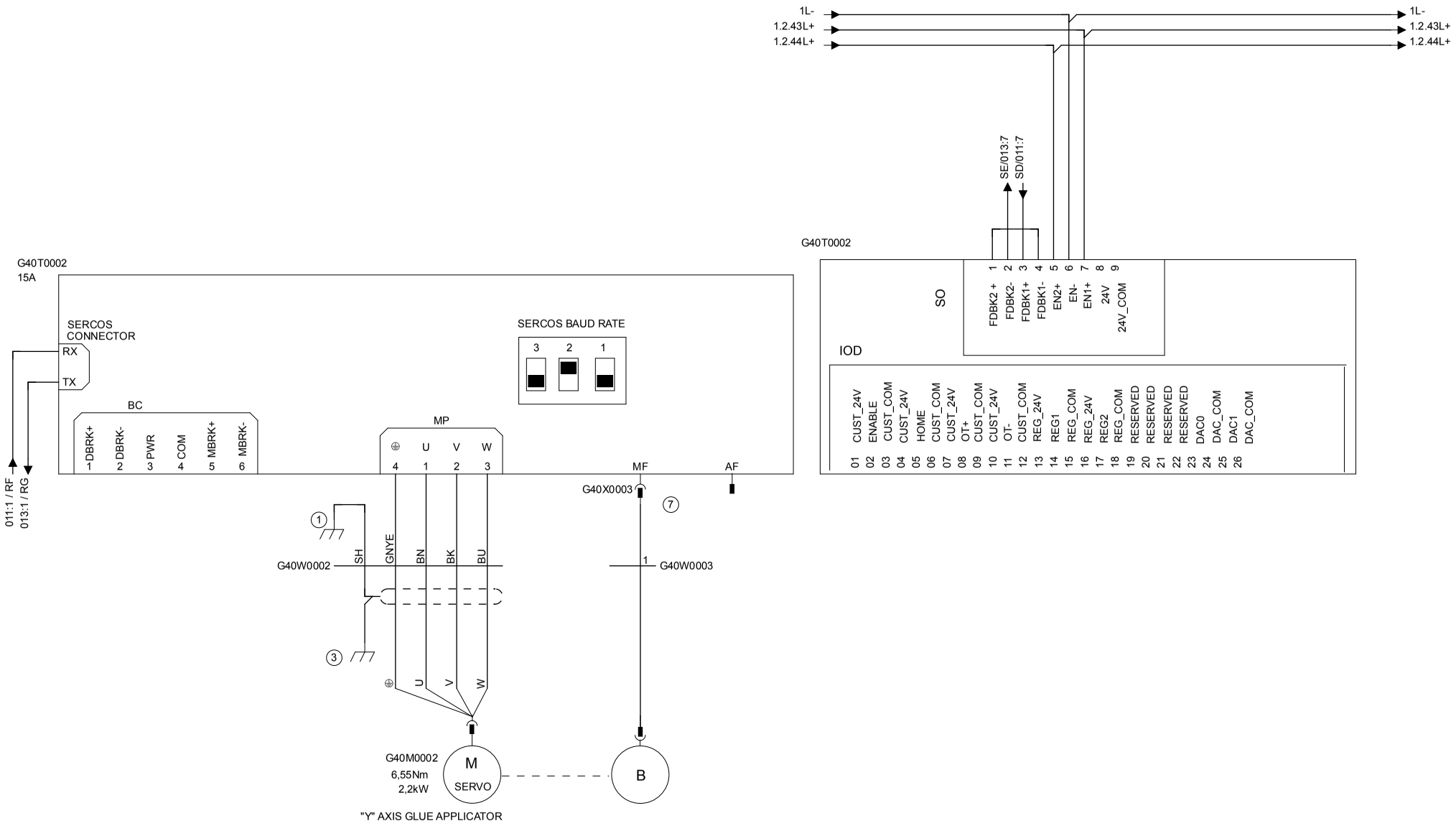

Tetra Pak®	Version Designer: ROG	Version Date: 2015-05-29	Machine: CAP30 Flex ScrewCap 0300		
	ECM No: 736736	Denomination: CIRCUIT DIAGRAM	Page Type: SERVO MOTOR 3 (Y AXIS GLUE APPL.)		
	Information Security Class: PUBLIC	Document No.: 3218867-0003	Doc. type: ELD	Version: AK	Page: 010

RELEASED

This drawing must not without the consent of Tetra Pak be copied, transmitted or disclosed to any third party.

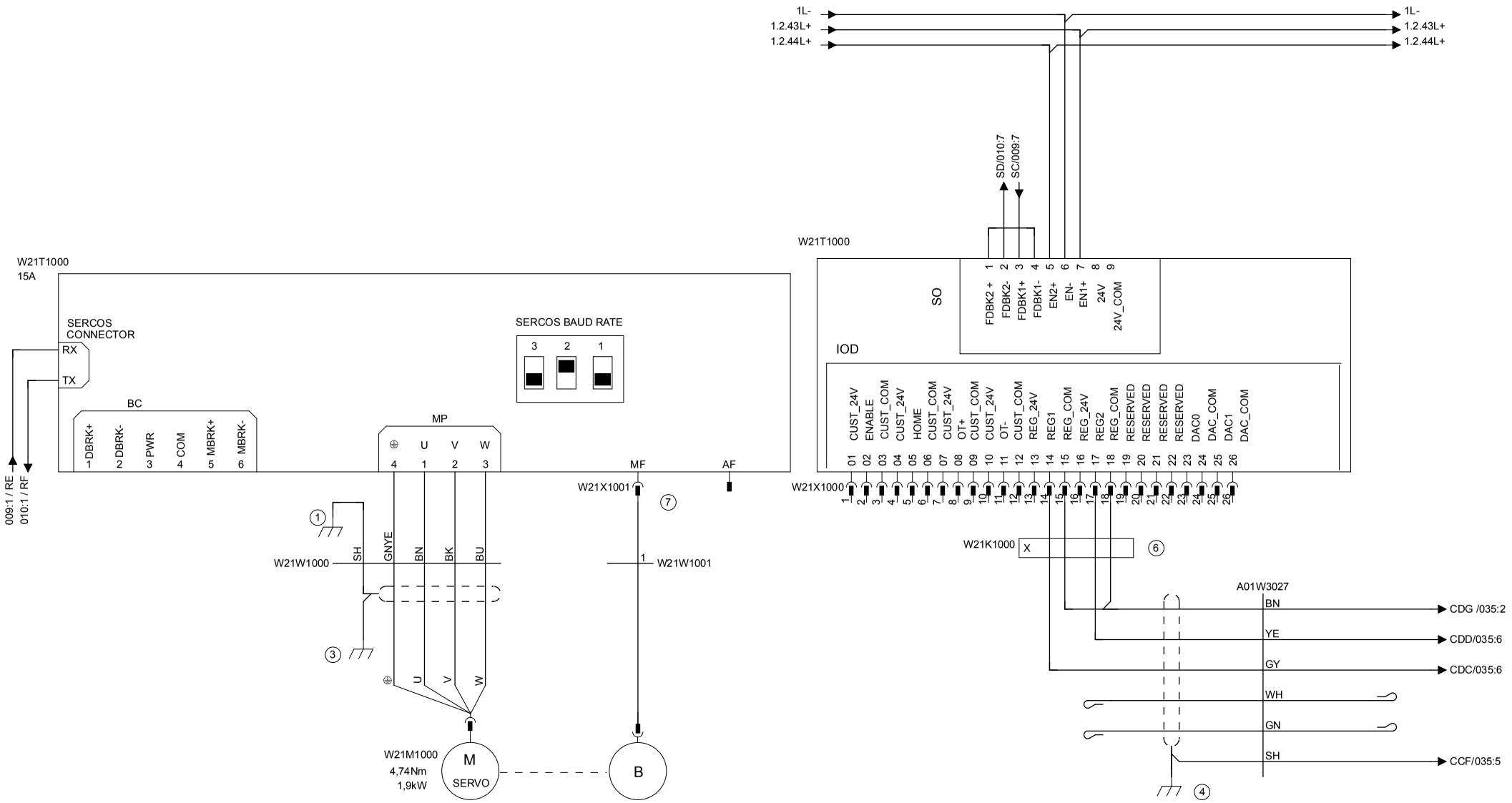

Tetra Pak®	Version Designer: ROG	Version Date: 2015-05-29	Machine: CAP30 Flex ScrewCap 0300	
	ECM No: 736736	Denomination: CIRCUIT DIAGRAM	Page Type: SERVO MOTOR 4 (PACK. TRANSFER INNER)	
	Information Security Class: PUBLIC	Document No.: 3218867-0003	Doc. type: ELD	Version: AK / Page: 011

RELEASED

This drawing must not without the consent of Tetra Pak be copied, transmitted or disclosed to any third party.

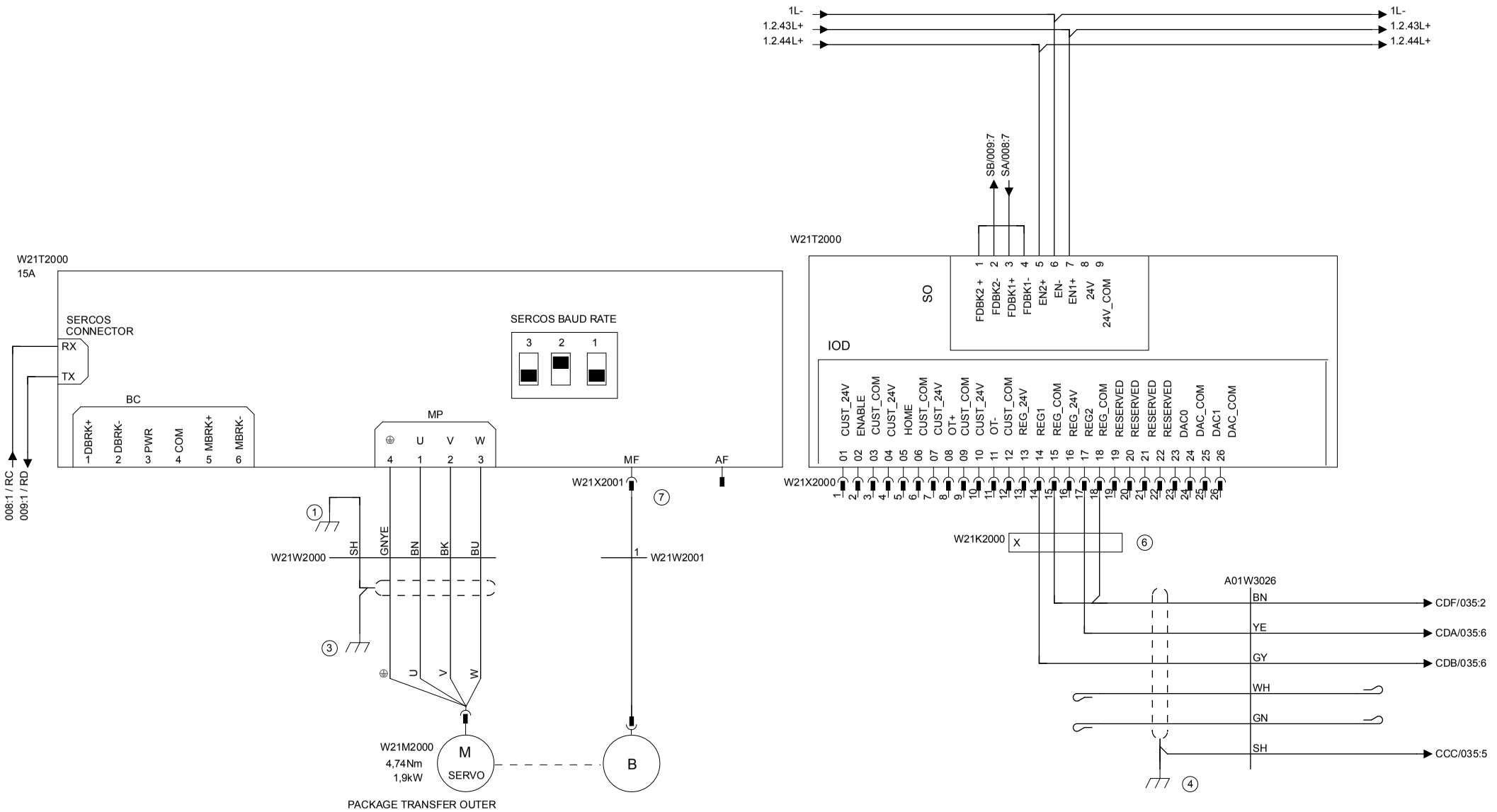

Tetra Pak®	Version Designer: ROG	Version Date: 2015-05-29	Machine: CAP30 Flex ScrewCap 0300	
	ECM No: 736736	Denomination: CIRCUIT DIAGRAM	Page Type: SERVO MOTOR 5 (PACK. TRANSFER OUTER)	
	Information Security Class: PUBLIC	Document No.: 3218867-0003	Doc. type: ELD	Version: AK / Page: 012

RELEASED

This drawing must not without the consent of Tetra Pak be copied, transmitted or disclosed to any third party.

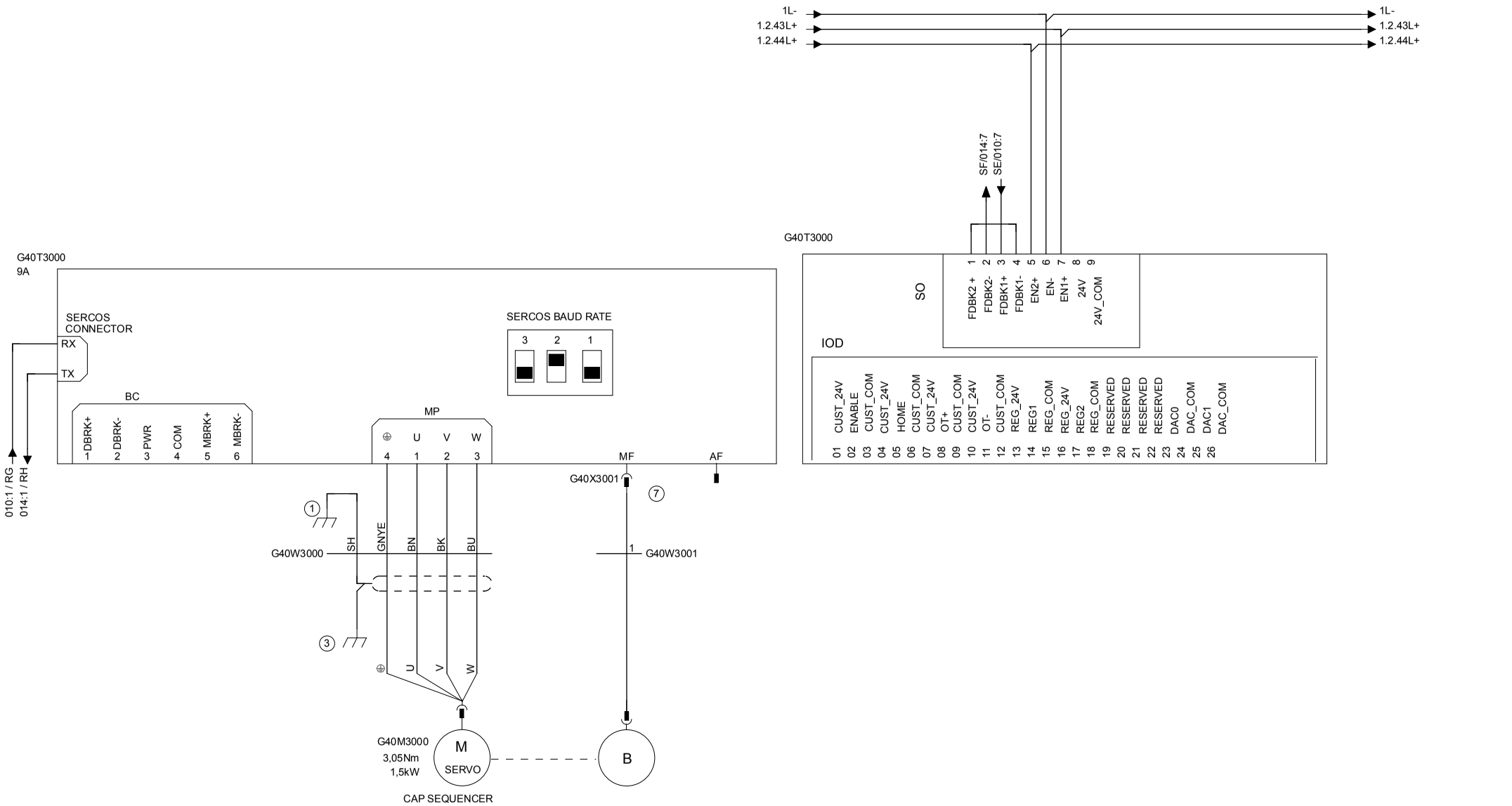

Tetra Pak®	Version Designer: ROG	Version Date: 2015-05-29	Machine: CAP30 Flex ScrewCap 0300	
	ECM No: 736736	Denomination: CIRCUIT DIAGRAM	Page Type: SERVO MOTOR 6 (CAP SEQUENCER)	
	Information Security Class: PUBLIC	Document No.: 3218867-0003	Doc. type: ELD	Version: AK / Page: 013

RELEASED

This drawing must not without the consent of Tetra Pak be copied, transmitted or disclosed to any third party.

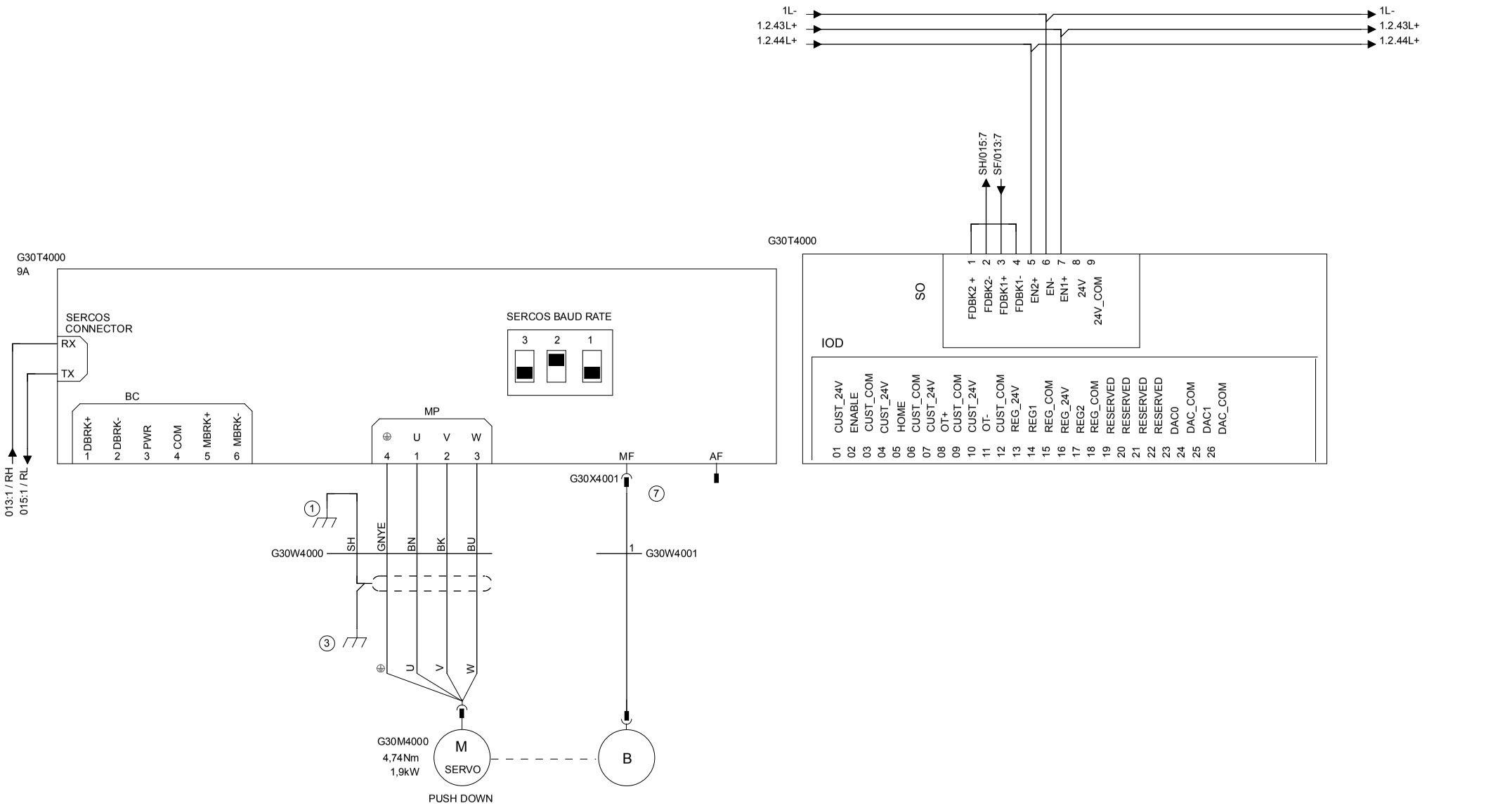

Tetra Pak®	Version Designer: ROG	Version Date: 2015-05-29	Machine: CAP30 Flex ScrewCap 0300		
	ECM No: 736736	Denomination: CIRCUIT DIAGRAM	Page Type: SERVO MOTOR 7 (PUSH DOWN)		
	Information Security Class: PUBLIC	Document No.: 3218867-0003	Doc. type: ELD	Version: AK	Page: 014

RELEASED

This drawing must not without the consent of Tetra Pak be copied, transmitted or disclosed to any third party.

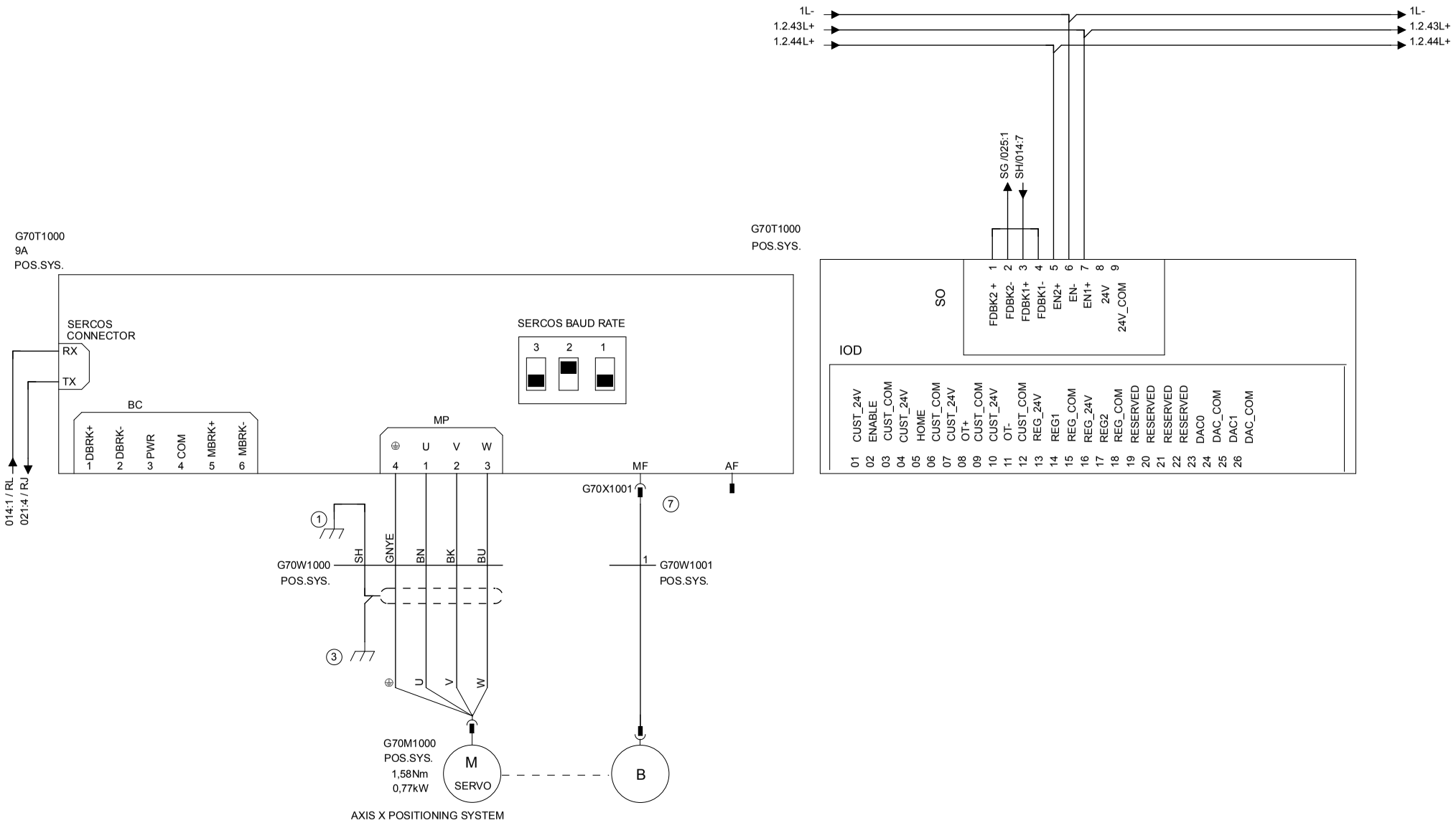

Tetra Pak®	Version Designer: ROG	Version Date: 2015-05-29	Machine: CAP30 Flex ScrewCap 0300			
	ECM No: 736736	Denomination: CIRCUIT DIAGRAM	Page Type: SERVO MOTOR 8 (AXIS X POSITIONING SYS.)			
	Information Security Class: PUBLIC	Document No.: 3218867-0003	Doc. type: ELD	Version: AK	Page: 015	

RELEASED

This drawing must not without the consent of Tetra Pak be copied, transmitted or disclosed to any third party.

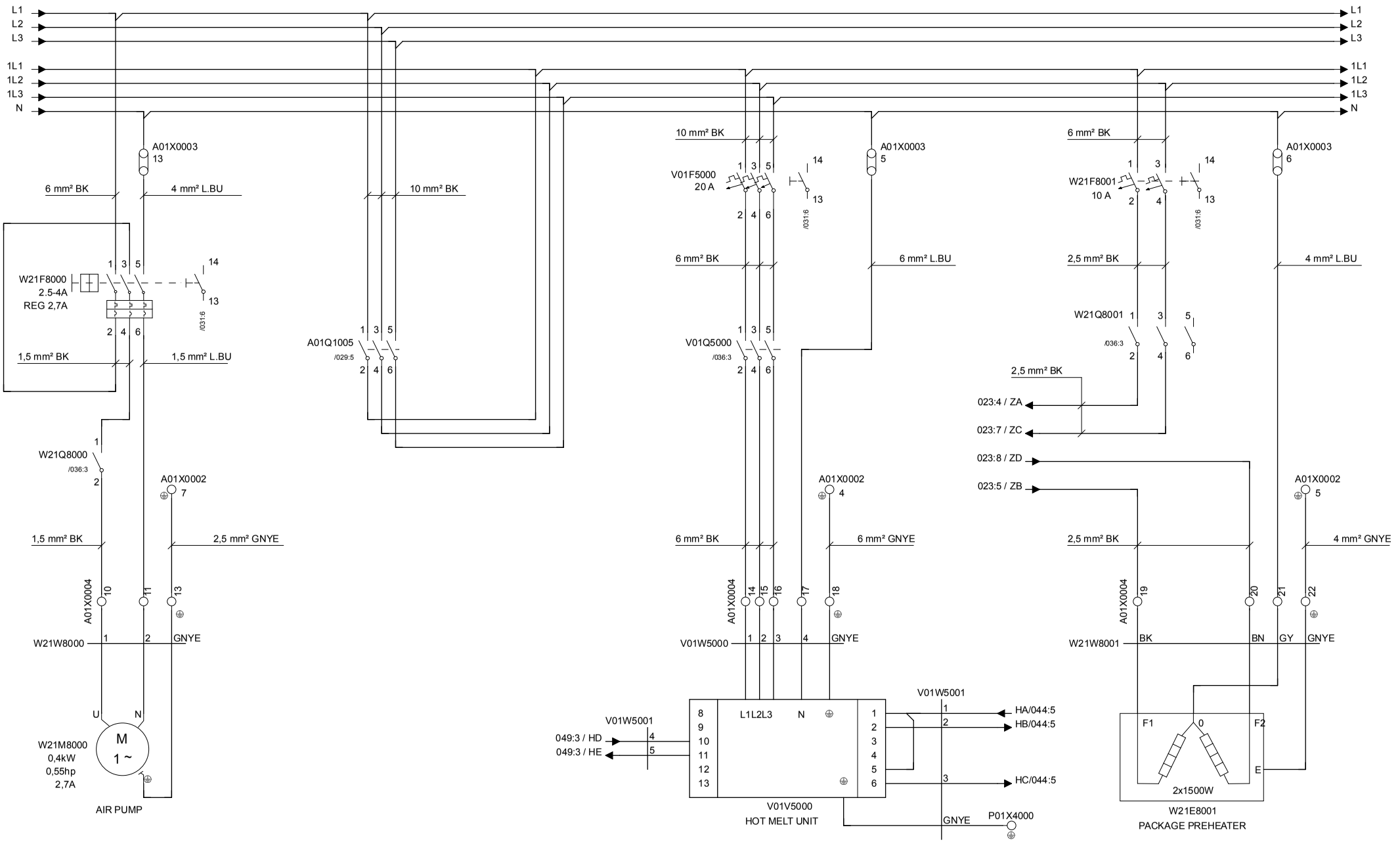

Tetra Pak®	Version Designer: ROG	Version Date: 2015-05-29	Machine: CAP30 Flex ScrewCap 0300				
	ECM No: 736736	Denomination: CIRCUIT DIAGRAM	Page Type: MOTORS				
	Information Security Class: PUBLIC	Document No.: 3218867-0003	Doc. type: ELD	Version: AK	Page: 016		

RELEASED

This drawing must not without the consent of Tetra Pak be copied, transmitted or disclosed to any third party.

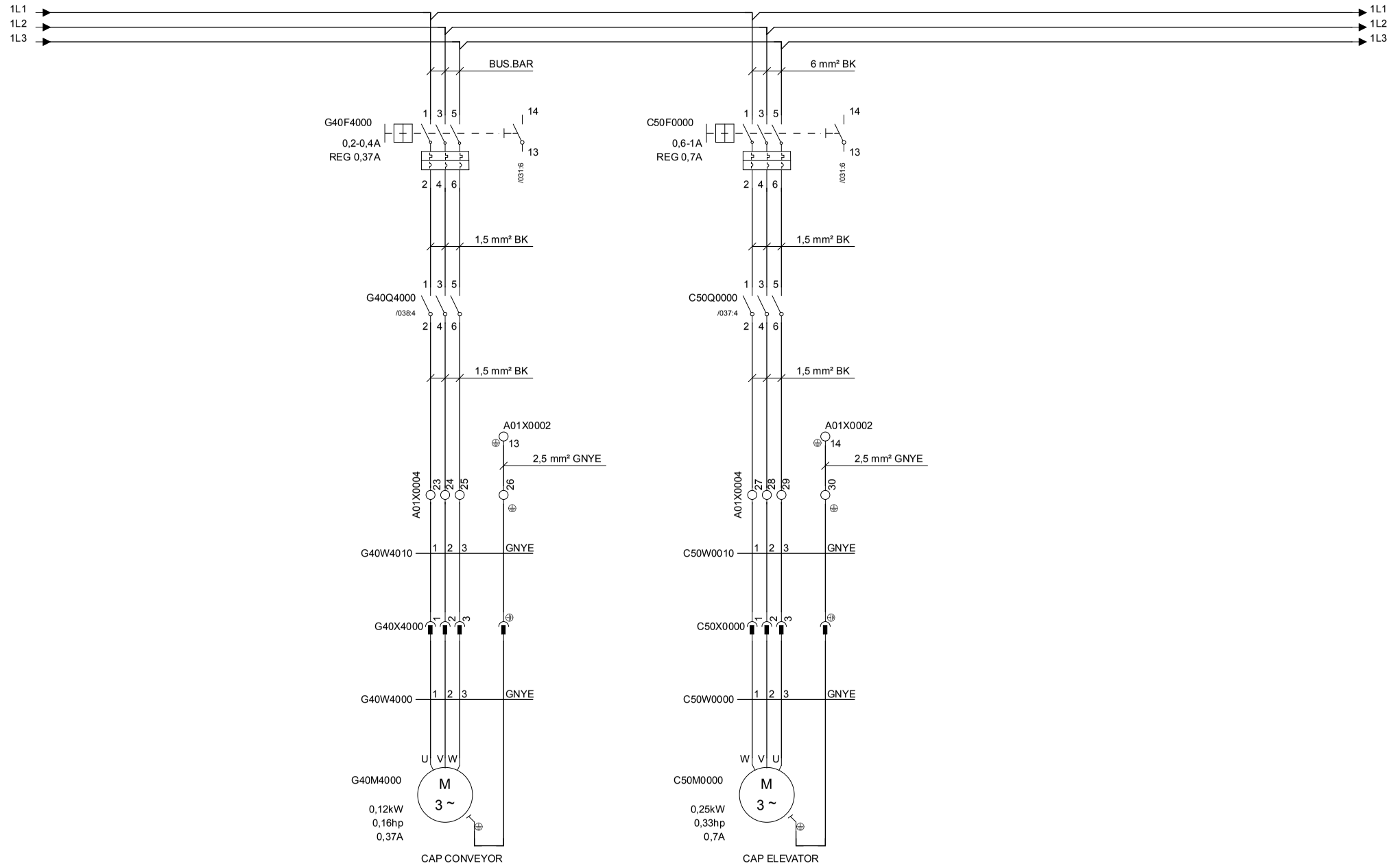

Tetra Pak®	Version Designer: ROG	Version Date: 2015-05-29	Machine: CAP30 Flex ScrewCap 0300	
	ECM No: 736736	Denomination: CIRCUIT DIAGRAM	Page Type: MOTORS CAP SORTER	
	Information Security Class: PUBLIC	Document No.: 3218867-0003	Doc. type: ELD	Version: AK / Page: 017

RELEASED

This drawing must not without the consent of Tetra Pak
be copied, transmitted or disclosed to any third party.

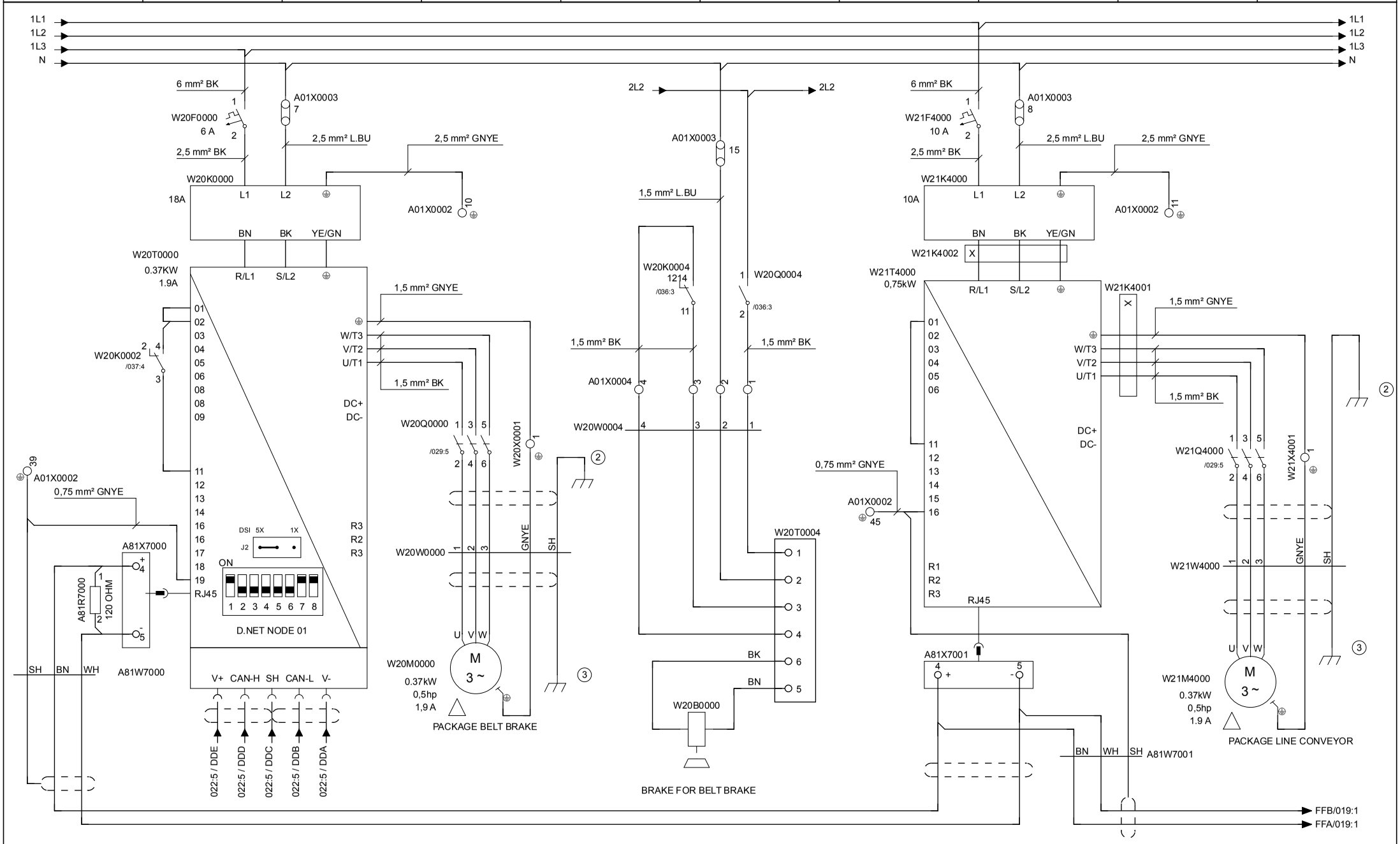

Tetra Pak®	Version Designer: ROG	Version Date: 2015-05-29	Machine: CAP30 Flex ScrewCap 0300		
	ECM No: 736736	Denomination: CIRCUIT DIAGRAM	Page Type: MOTORS		
	Information Security Class: PUBLIC	Document No.: 3218867-0003	Doc. type: ELD	Version: AK	Page: 018

This drawing must not without the consent of Tetra Pak
be copied, transmitted or disclosed to any third party.

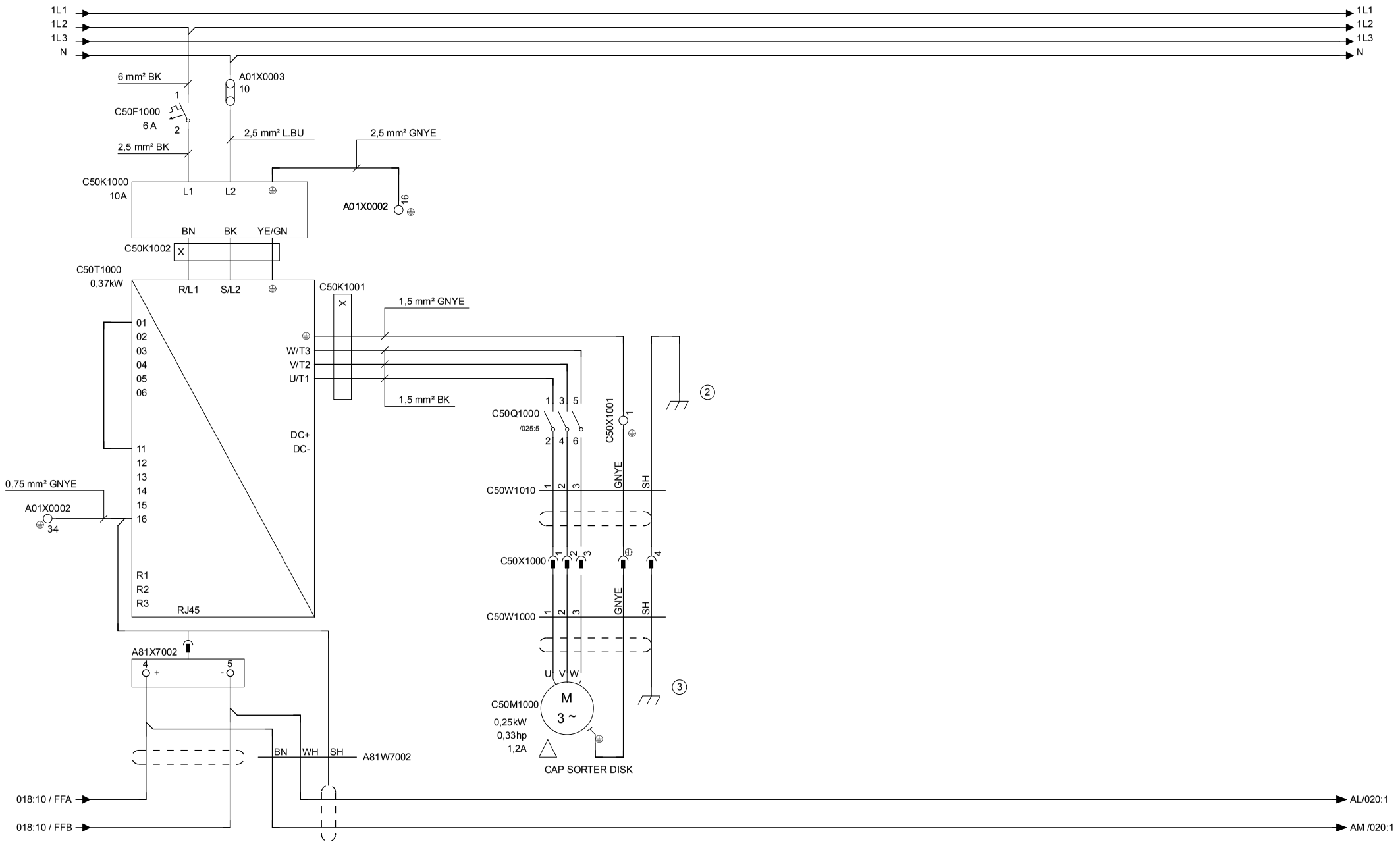

Tetra Pak®	Version Designer: ROG	Version Date: 2015-05-29	Machine: CAP30 Flex ScrewCap 0300		
	ECM No: 736736	Denomination: CIRCUIT DIAGRAM	Page Type: MOTOR		
	Information Security Class: PUBLIC	Document No.: 3218867-0003	Doc. type: ELD	Version: AK	Page: 019

RELEASED

This drawing must not without the consent of Tetra Pak
be copied, transmitted or disclosed to any third party.

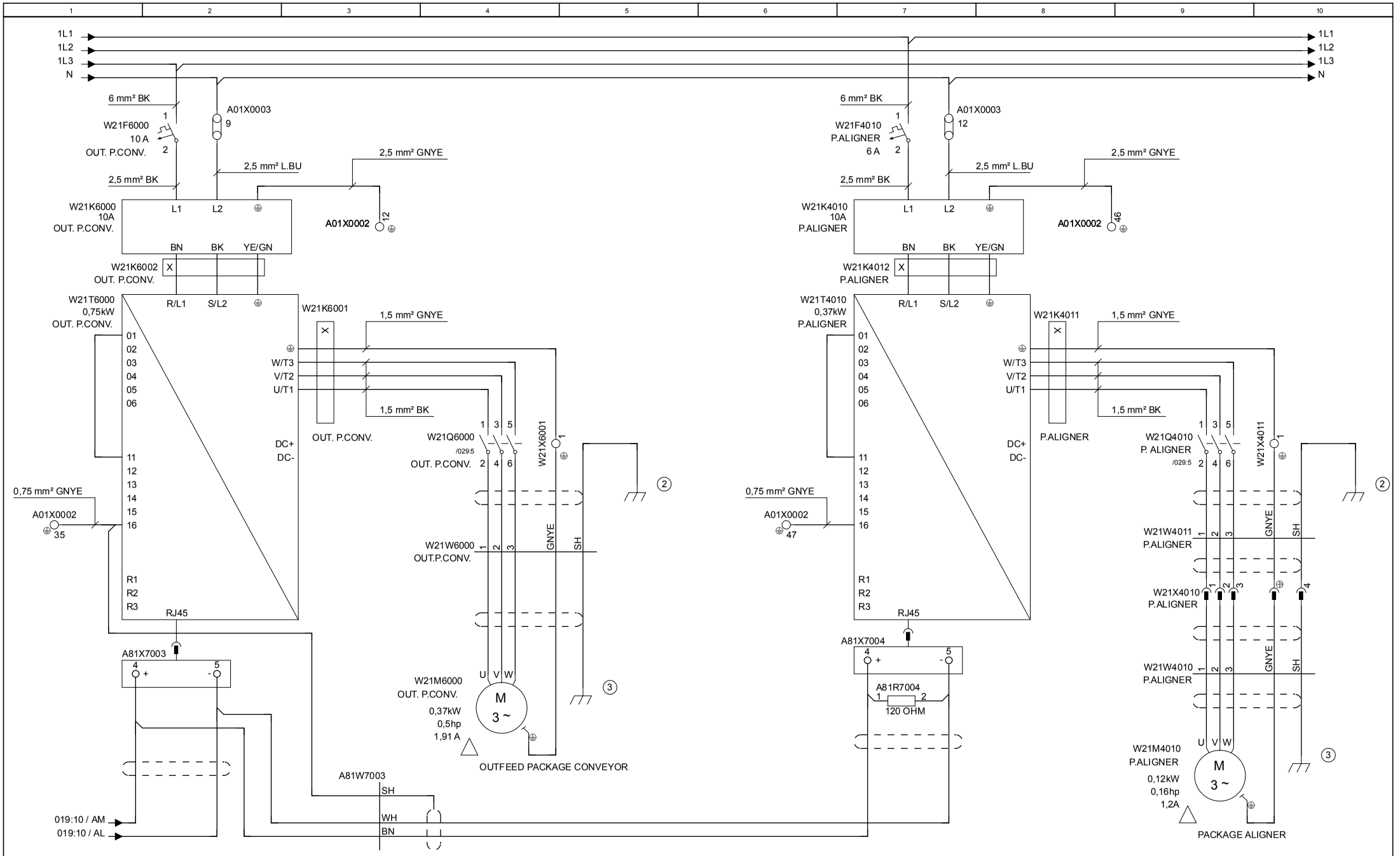

Tetra Pak®	Version Designer: ROG	Version Date: 2015-05-29	Machine: CAP30 Flex ScrewCap 0300	
	ECM No: 736736	Denomination: CIRCUIT DIAGRAM	Page Type: MOTORS	
	Information Security Class: PUBLIC	Document No.: 3218867-0003	Doc. type: ELD	Version: AK / Page: 020

RELEASED

This drawing must not without the consent of Tetra Pak be copied, transmitted or disclosed to any third party.

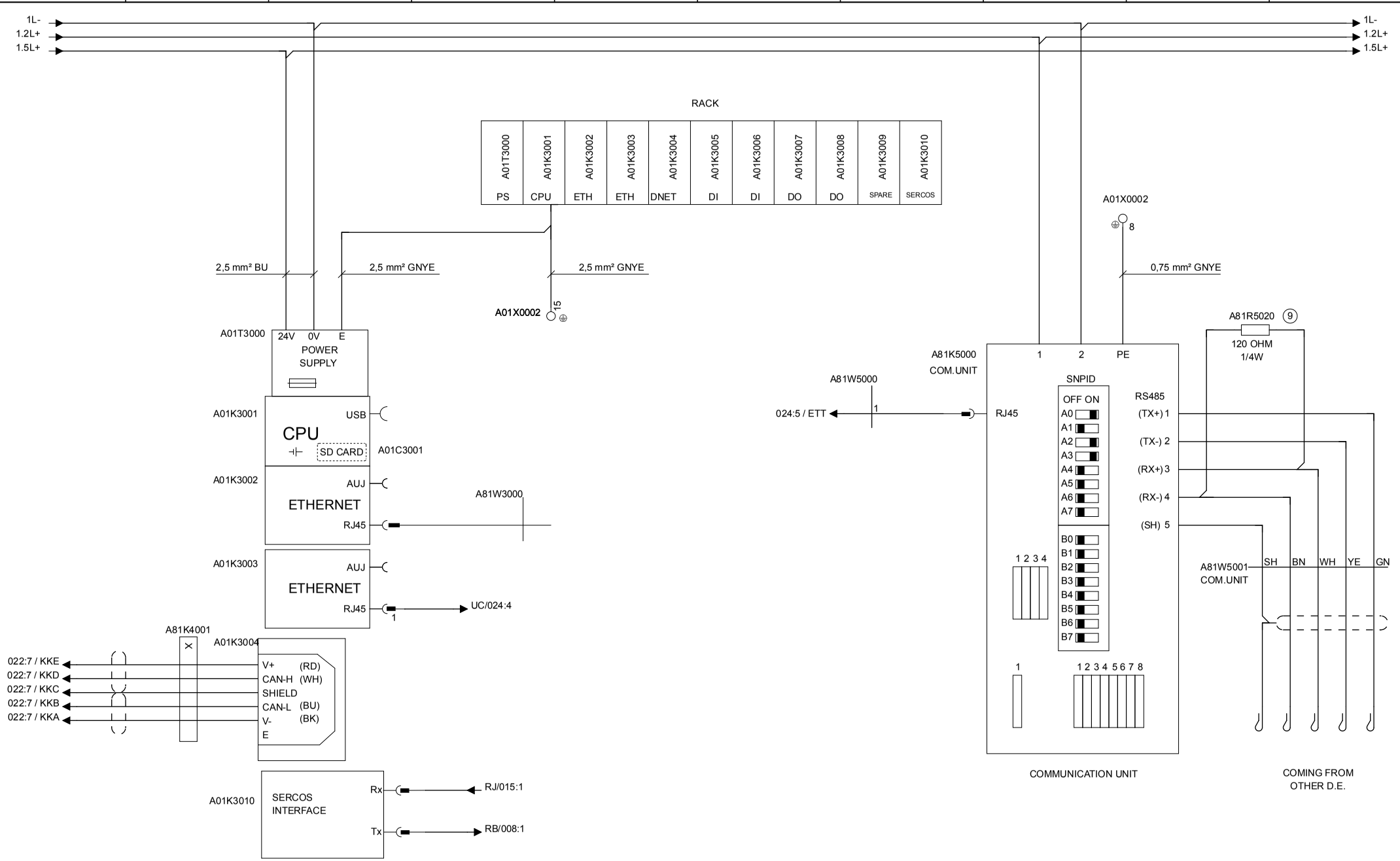

Tetra Pak®	Version Designer: ROG	Version Date: 2015-05-29	Machine: CAP30 Flex ScrewCap 0300	
	ECM No: 736736	Denomination: CIRCUIT DIAGRAM	Page Type: PLC RACK	
	Information Security Class: PUBLIC	Document No.: 3218867-0003	Doc. type: ELD	Version: AK / Page: 021

RELEASED

This drawing must not without the consent of Tetra Pak be copied, transmitted or disclosed to any third party.

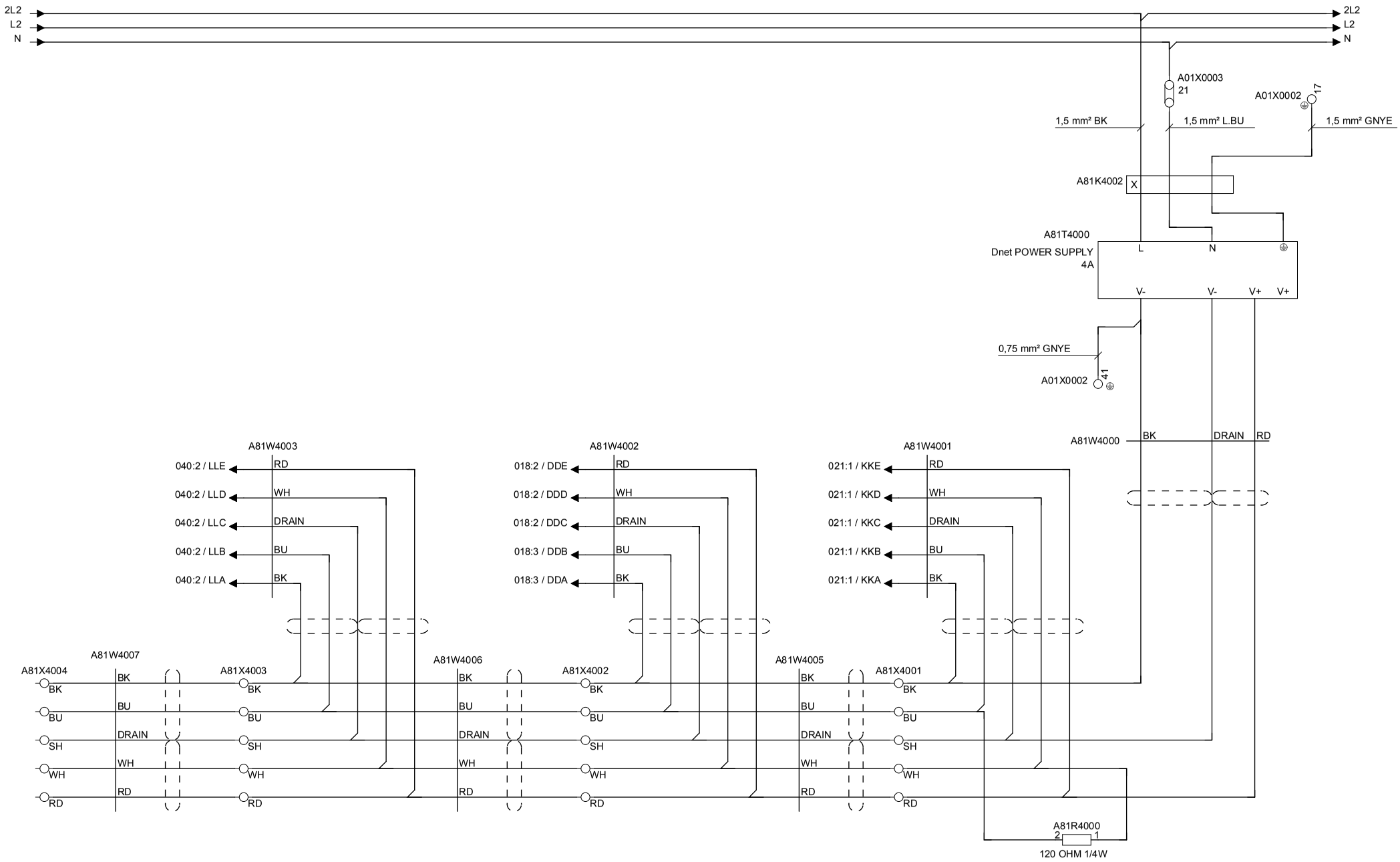

Tetra Pak®	Version Designer: ROG	Version Date: 2015-05-29	Machine: CAP30 Flex ScrewCap 0300	
	ECM No: 736736	Denomination: CIRCUIT DIAGRAM	Page Type: POWER SUPPLY DEVICE NET	
	Information Security Class: PUBLIC	Document No.: 3218867-0003	Doc. type: ELD	Version: AK / Page: 022

RELEASED

This drawing must not without the consent of Tetra Pak
be copied, transmitted or disclosed to any third party.

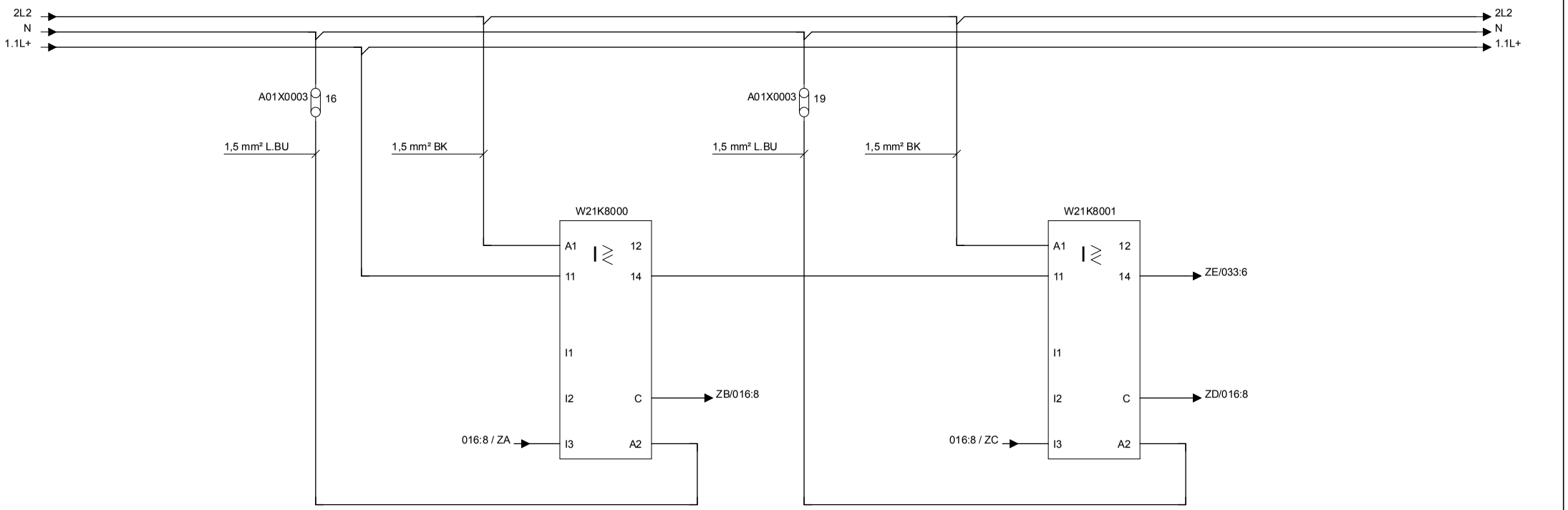

Tetra Pak®	Version Designer: ROG	Version Date: 2015-05-29	Machine: CAP30 Flex ScrewCap 0300	
	ECM No: 736736	Denomination: CIRCUIT DIAGRAM	Page Type: CURRENT CONTROL RELAY	
	Information Security Class: PUBLIC	Document No.: 3218867-0003	Doc. type: ELD	Version: AK / Page: 023

RELEASED

This drawing must not without the consent of Tetra Pak be copied, transmitted or disclosed to any third party.

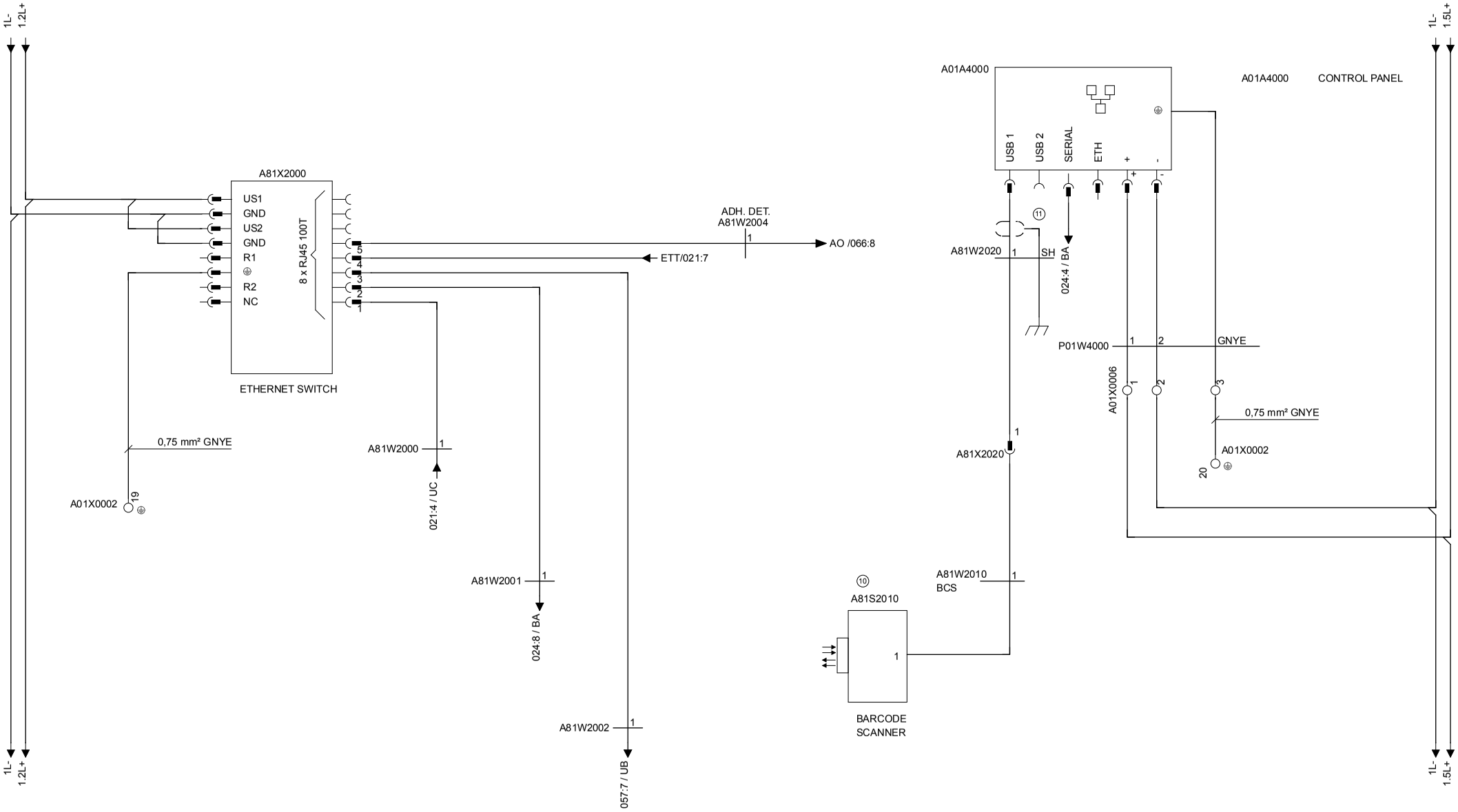

Tetra Pak®	Version Designer: ROG	Version Date: 2015-05-29	Machine: CAP30 Flex ScrewCap 0300	
	ECM No: 736736	Denomination: CIRCUIT DIAGRAM	Page Type: ETHERNET SWITCH/CONTROL PANEL	
	Information Security Class: PUBLIC	Document No.: 3218867-0003	Doc. type: ELD	Version: AK / Page: 024

RELEASED

This drawing must not without the consent of Tetra Pak
be copied, transmitted or disclosed to any third party.

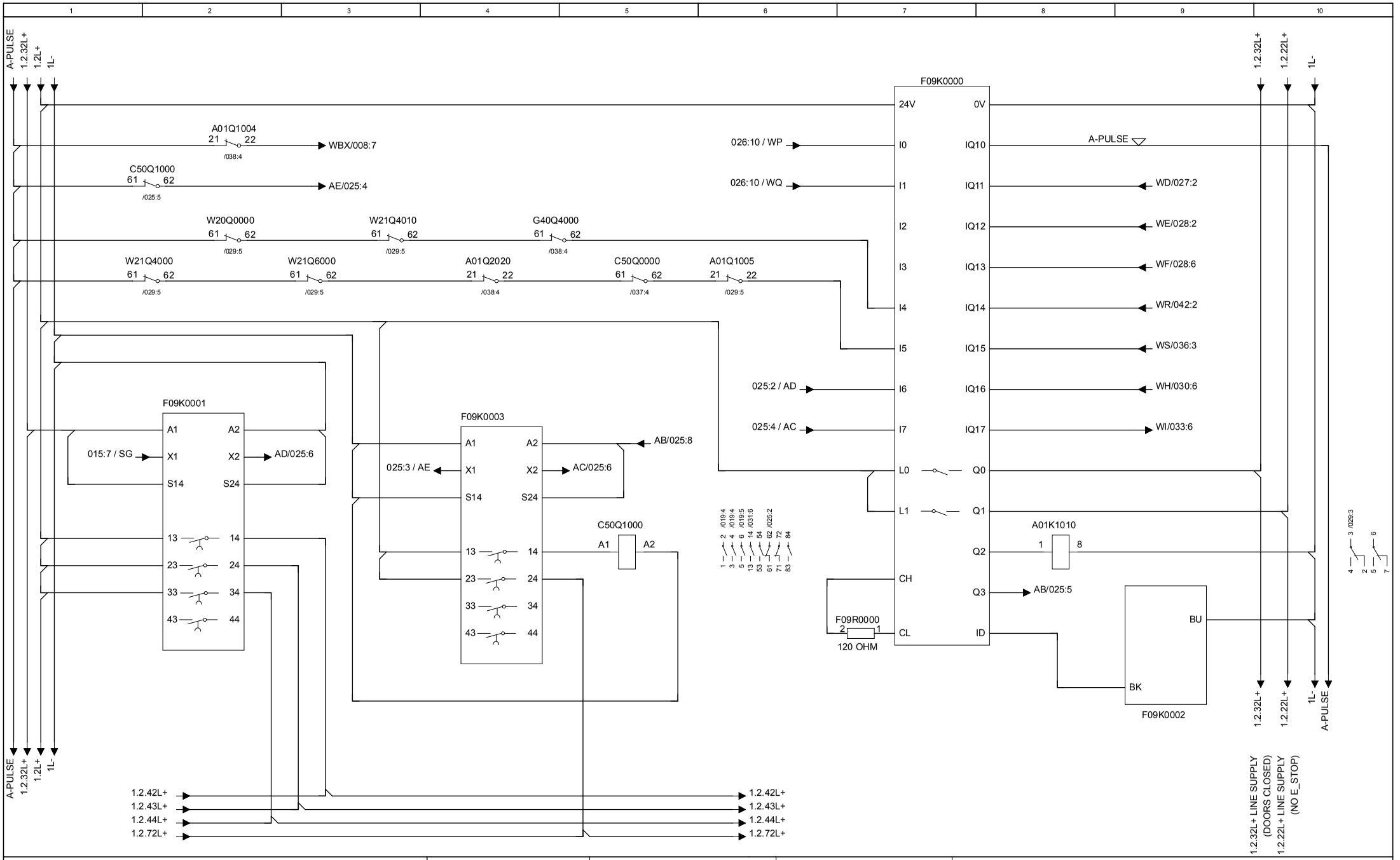

Tetra Pak®	Version Designer: ROG	Version Date: 2015-05-29	Machine: CAP30 Flex ScrewCap 0300		
	ECM No: 736736	Denomination: CIRCUIT DIAGRAM	Page Type: SAFETY RELAY		
	Information Security Class: PUBLIC	Document No.: 3218867-0003	Doc. type: ELD	Version: AK	Page: 025

RELEASED

This drawing must not without the consent of Tetra Pak
be copied, transmitted or disclosed to any third party.

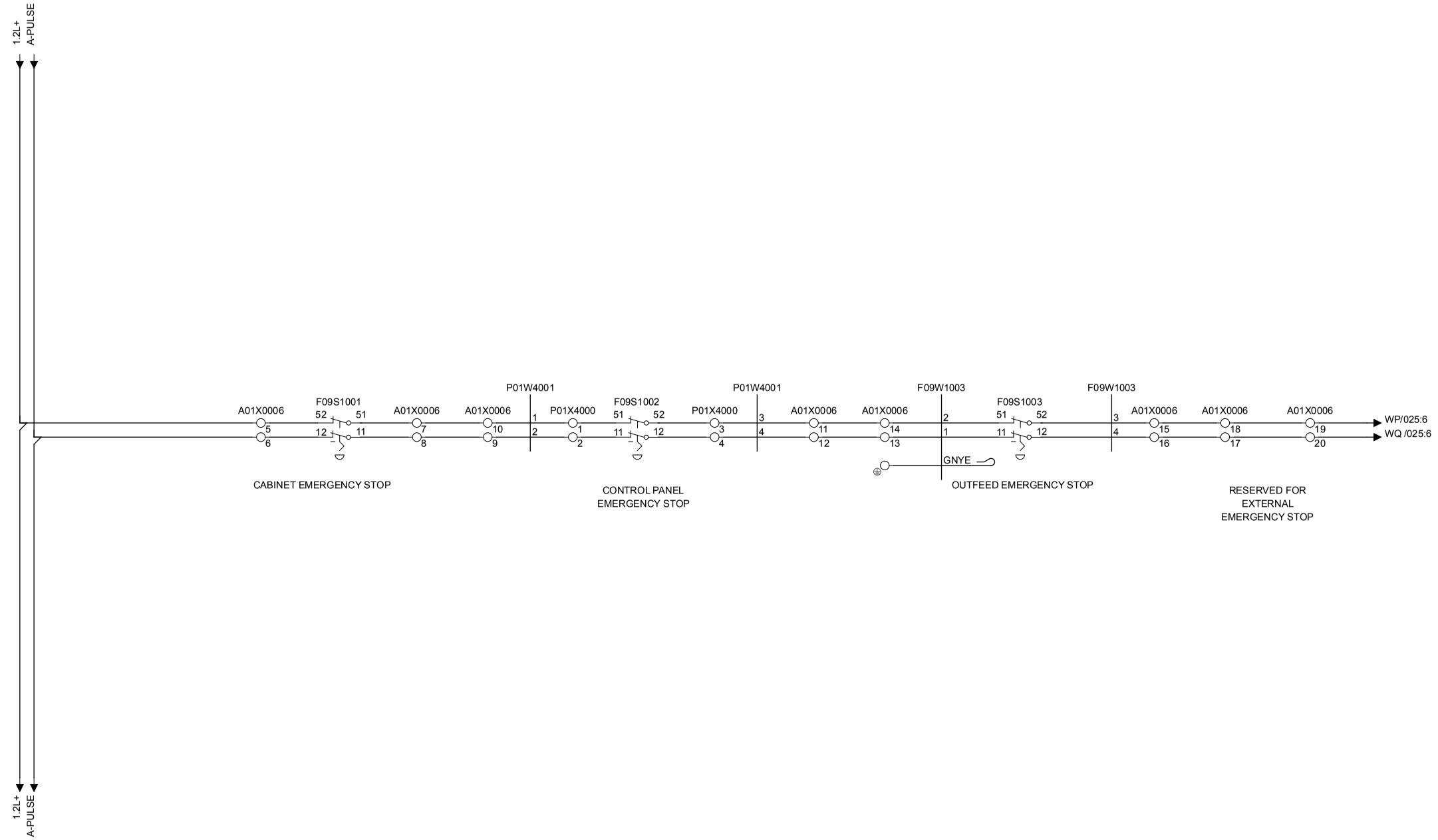

Tetra Pak®	Version Designer: ROG	Version Date: 2015-05-29	Machine: CAP30 Flex ScrewCap 0300				
	ECM No: 736736	Denomination: CIRCUIT DIAGRAM	Page Type: EMERGENCY STOP				
	Information Security Class: PUBLIC	Document No.: 3218867-0003	Doc. type: ELD	Version: AK	Page: 026		

This drawing must not without the consent of Tetra Pak
be copied, transmitted or disclosed to any third party.

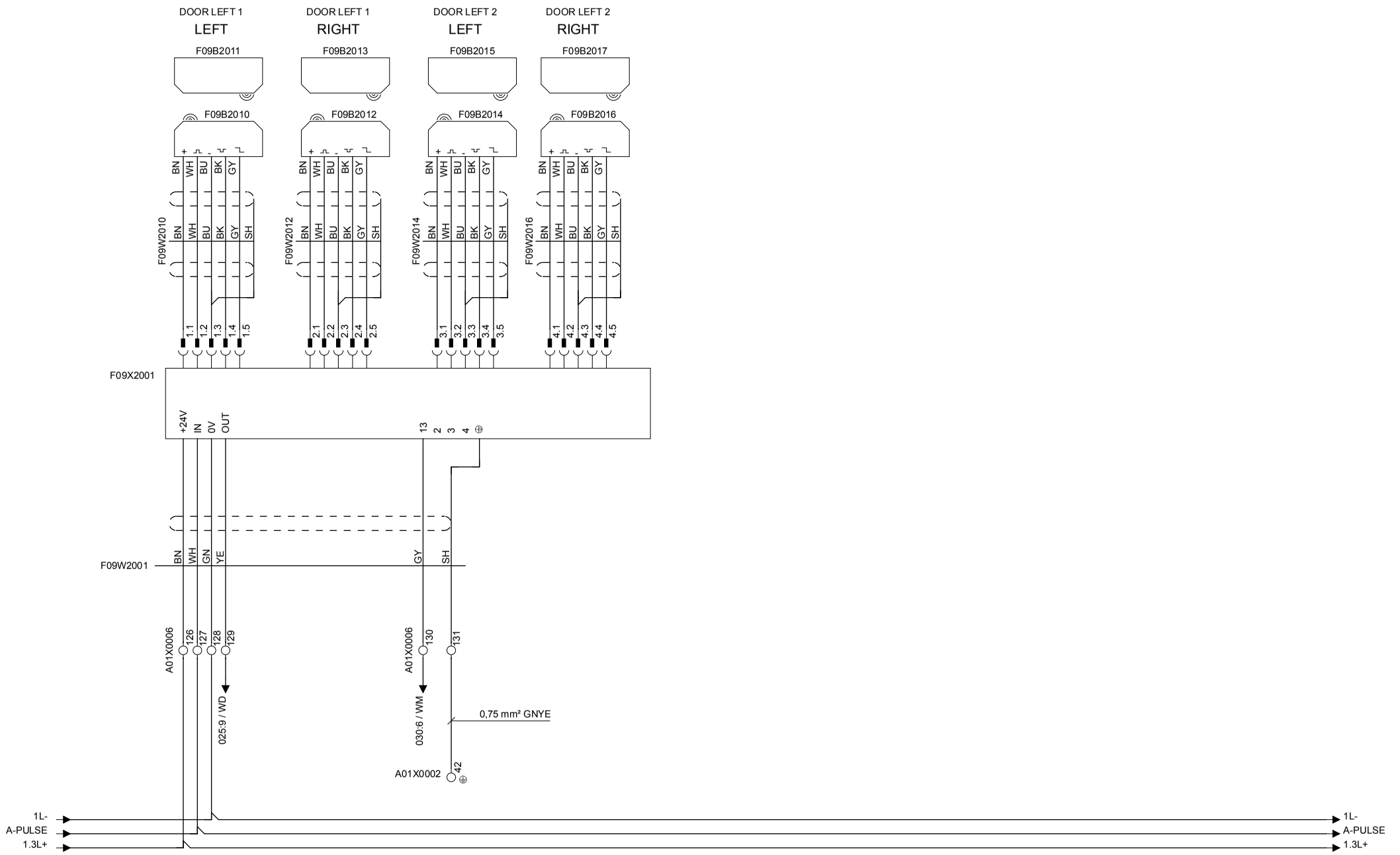

Tetra Pak®	Version Designer: ROG	Version Date: 2015-05-29	Machine: CAP30 Flex ScrewCap 0300					
	ECM No: 736736	Denomination: CIRCUIT DIAGRAM	Page Type: DOORS MONITORING (OPERATOR SIDE)					
	Information Security Class: PUBLIC	Document No.: 3218867-0003	Doc. type: ELD	Version: AK	Page: 027			

RELEASED

This drawing must not without the consent of Tetra Pak be copied, transmitted or disclosed to any third party.

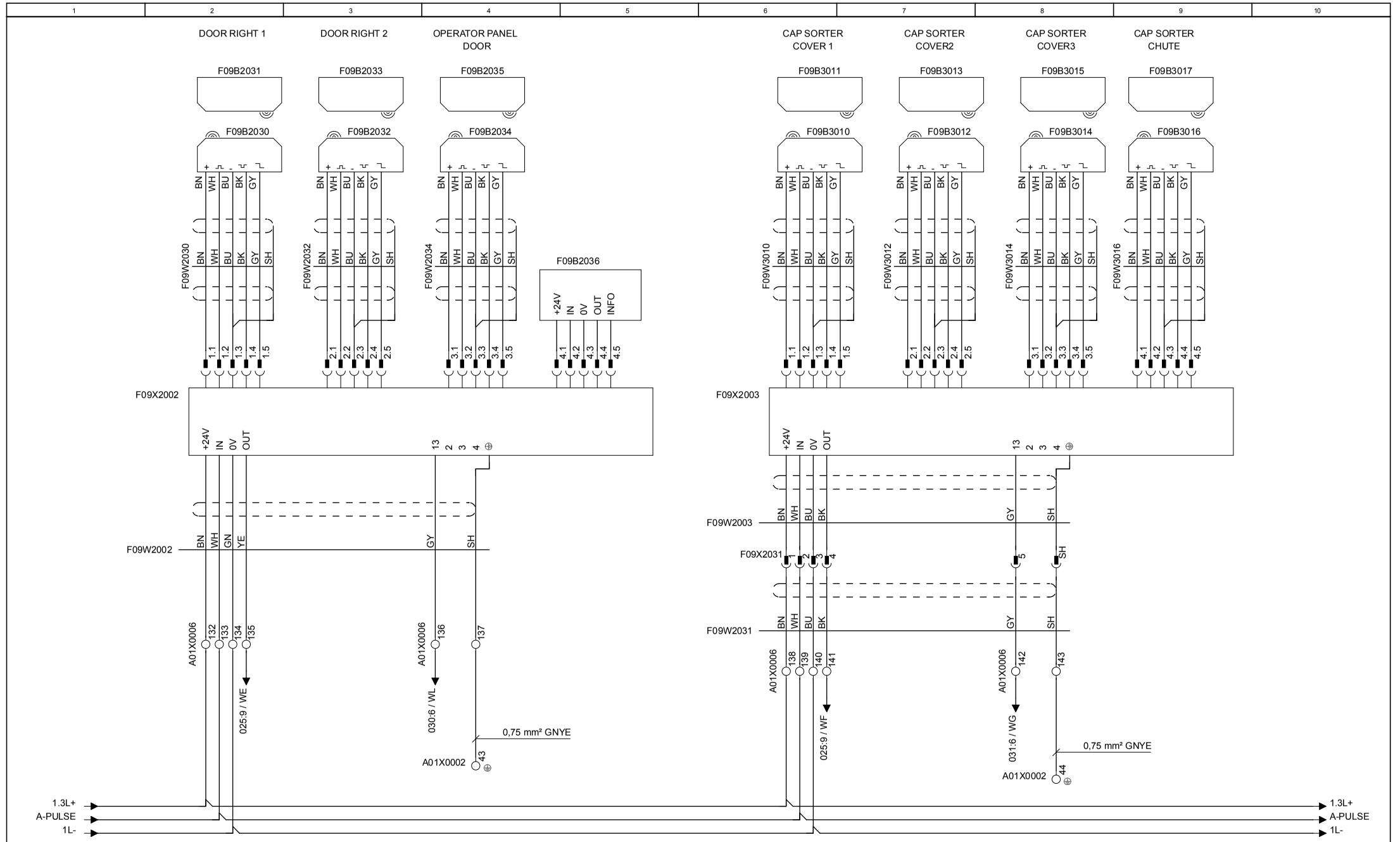

Tetra Pak®	Version Designer: ROG	Version Date: 2015-05-29	Machine: CAP30 Flex ScrewCap 0300	
	ECM No: 736736	Denomination: CIRCUIT DIAGRAM	Page Type: DOORS AND COVERS MONITOR	
	Information Security Class: PUBLIC	Document No.: 3218867-0003	Doc. type: ELD	Version: AK / Page: 028

RELEASED

This drawing must not without the consent of Tetra Pak be copied, transmitted or disclosed to any third party.

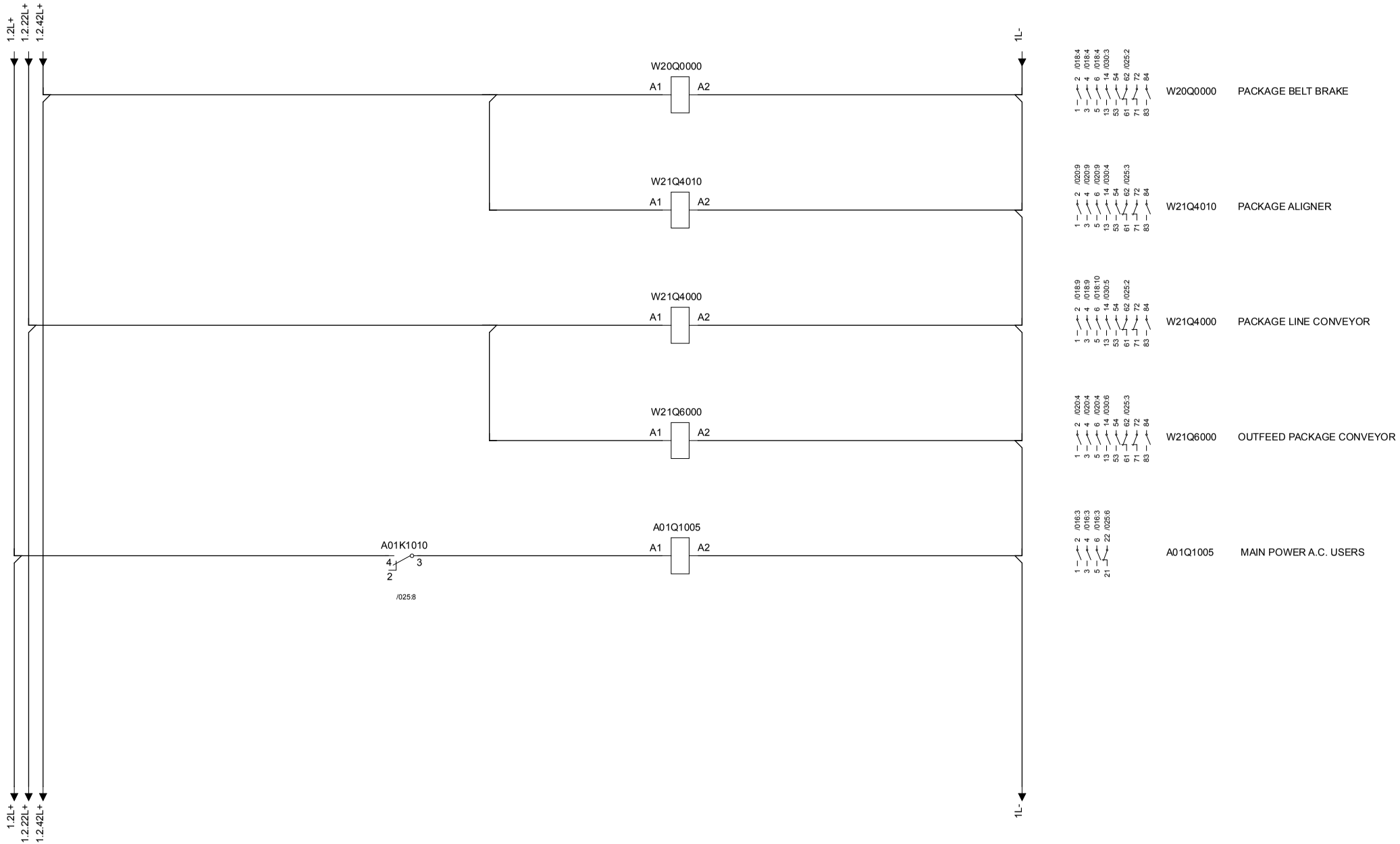

Tetra Pak®	Version Designer: ROG	Version Date: 2015-05-29	Machine: CAP30 Flex ScrewCap 0300		
	ECM No: 736736	Denomination: CIRCUIT DIAGRAM	Page Type: POWER ON TO THE MOTORS		
	Information Security Class: PUBLIC	Document No.: 3218867-0003	Doc. type: ELD	Version: AK	Page: 029

RELEASED

This drawing must not without the consent of Tetra Pak be copied, transmitted or disclosed to any third party.

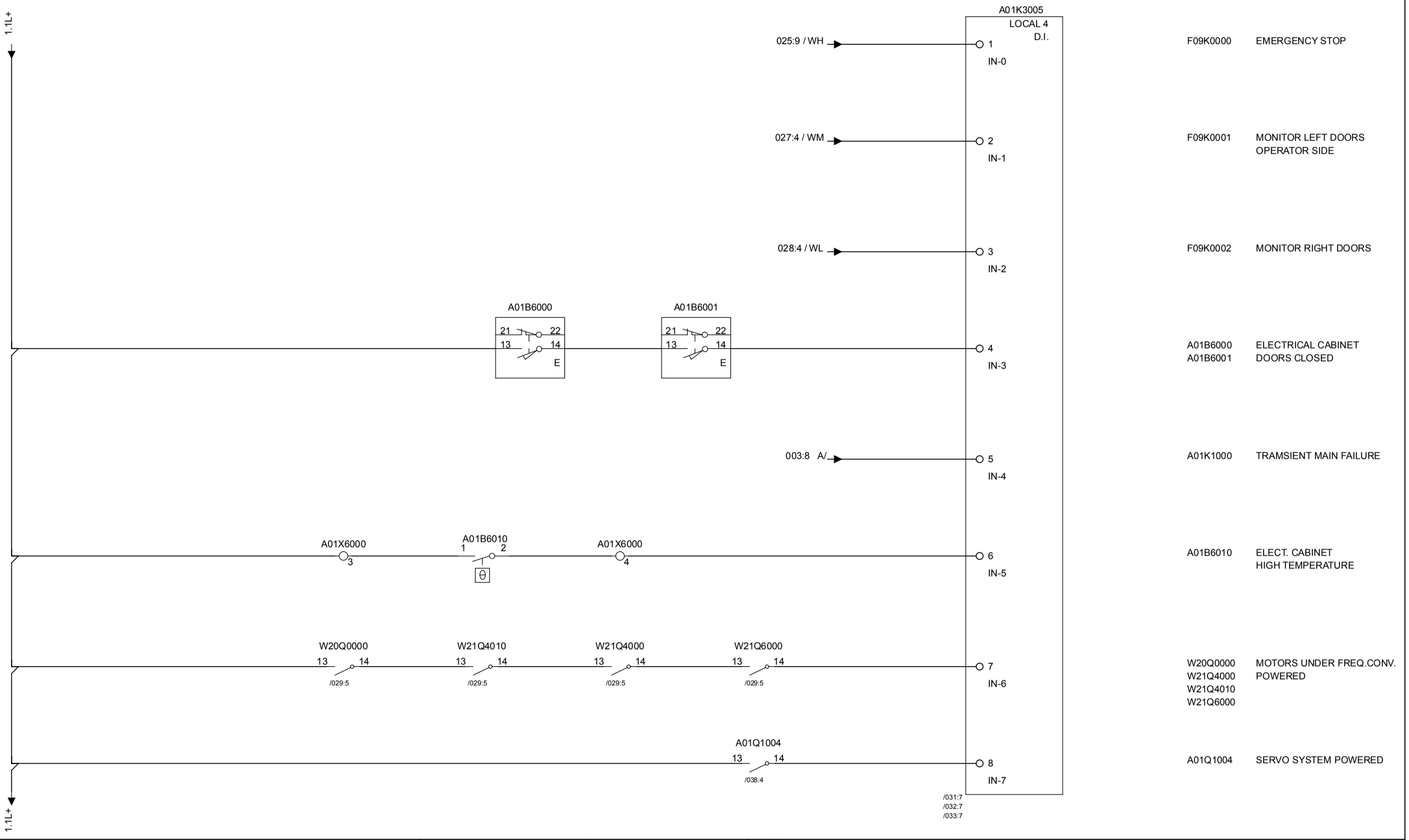

Tetra Pak®	Version Designer: ROG	Version Date: 2015-05-29	Machine: CAP30 Flex ScrewCap 0300	
	ECM No: 736736	Denomination: CIRCUIT DIAGRAM	Page Type: PLC IN	
	Information Security Class: PUBLIC	Document No.: 3218867-0003	Doc. type: ELD	Version: AK / Page: 030

RELEASED

This drawing must not without the consent of Tetra Pak be copied, transmitted or disclosed to any third party.

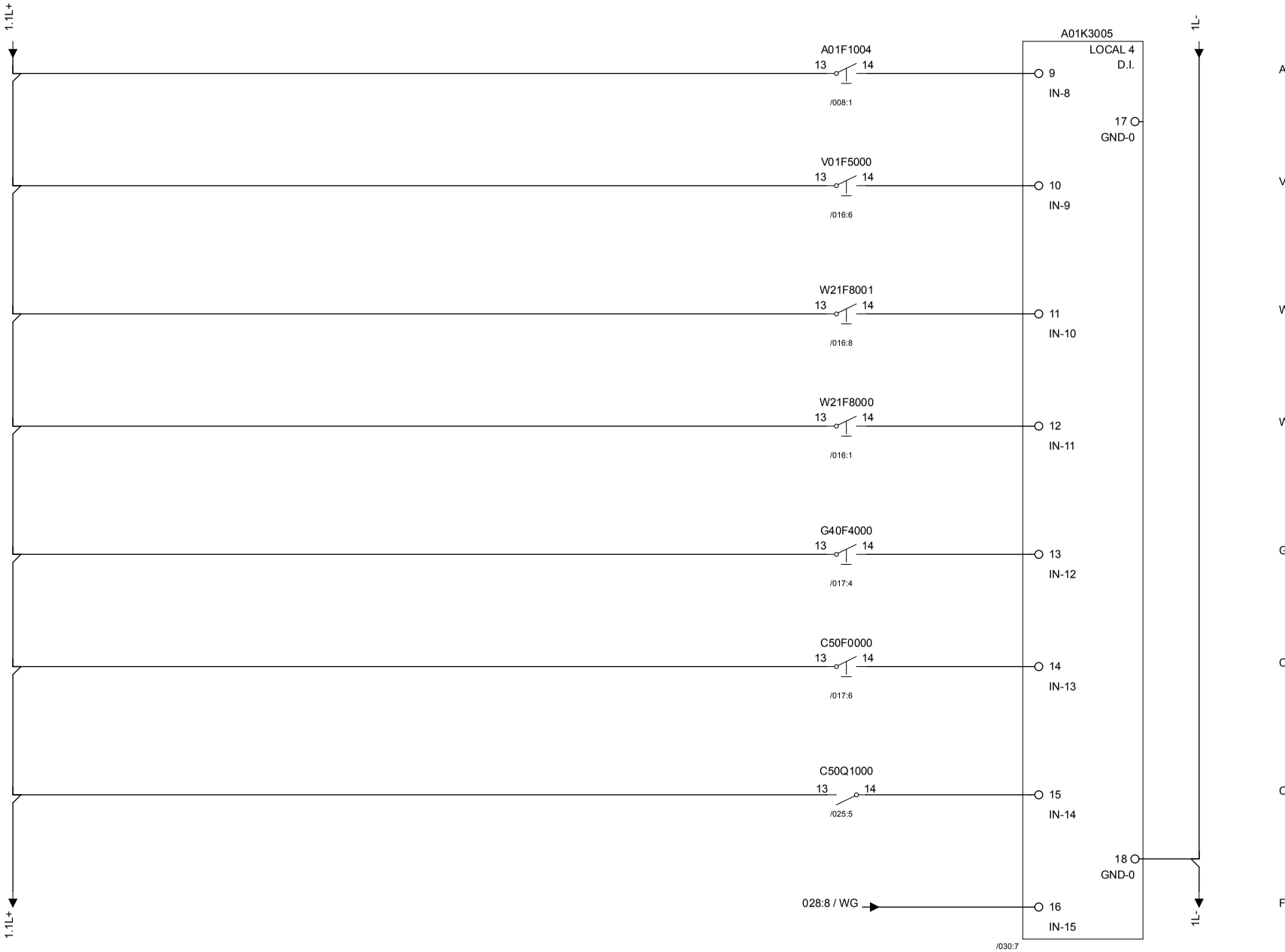

A01F1004	NO OVERLOAD PROTECTION SERVO SYSTEM
V01F5000	NO OVERLOAD PROTECTION HOT MELT UNIT
W21F8001	NO OVERLOAD PROTECTION PACKAGE PREHEATER
W21F8000	NO OVERLOAD PROTECTION AIR PUMP
G40F4000	NO OVERLOAD PROTECTION CAP CONVEYOR
C50F0000	NO OVERLOAD PROTECTION CAP ELEVATOR
C50Q1000	CAP SORTER DISK POWERED
F09K0003	MONITOR CAP SORTER DOOR

Tetra Pak®	Version Designer: ROG	Version Date: 2015-05-29	Machine: CAP30 Flex ScrewCap 0300			
	ECM No: 736736	Denomination: CIRCUIT DIAGRAM	Page Type: PLC IN			
	Information Security Class: PUBLIC	Document No.: 3218867-0003	Doc. type: ELD	Version: AK	Page: 031	

RELEASED

This drawing must not without the consent of Tetra Pak be copied, transmitted or disclosed to any third party.

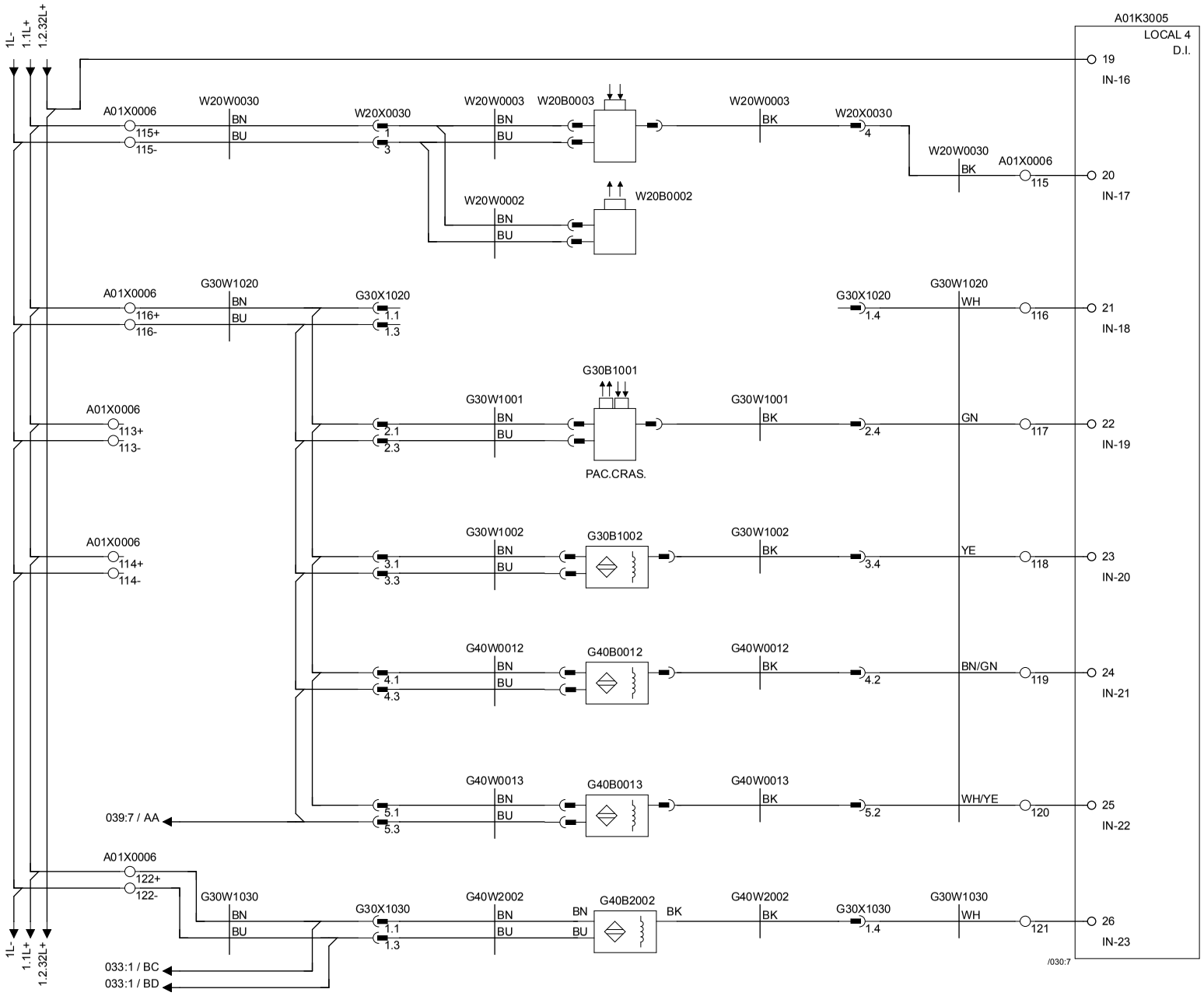

Tetra Pak®	Version Designer: ROG	Version Date: 2015-05-29	Machine: CAP30 Flex ScrewCap 0300	
	ECM No: 736736	Denomination: CIRCUIT DIAGRAM	Page Type: PLC IN	
	Information Security Class: PUBLIC	Document No.: 3218867-0003	Doc. type: ELD	Version: AK / Page: 032

RELEASED

This drawing must not without the consent of Tetra Pak be copied, transmitted or disclosed to any third party.

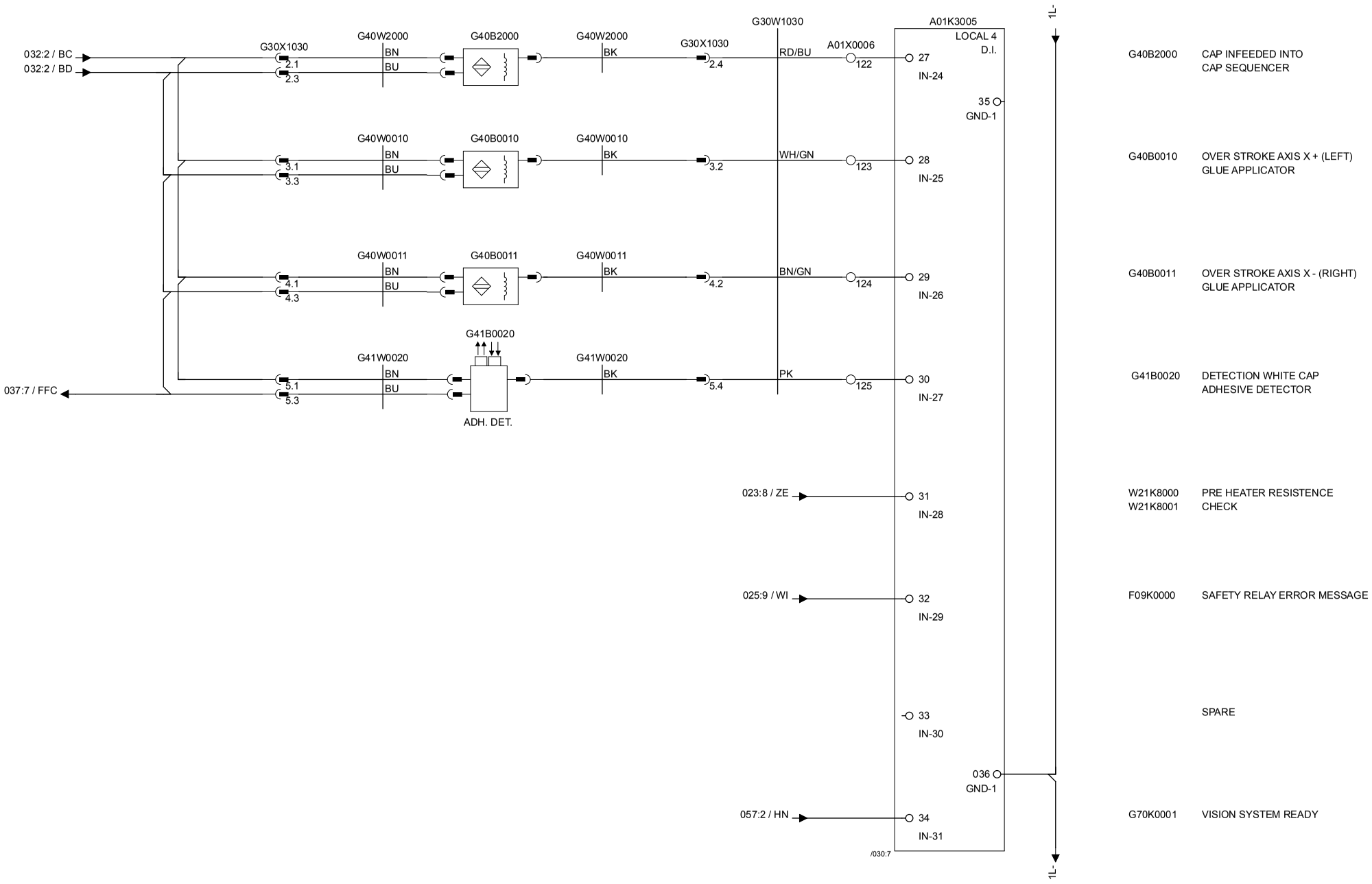

G40B2000	CAP INFEEDED INTO CAP SEQUENCER
G40B0010	OVER STROKE AXIS X + (LEFT) GLUE APPLICATOR
G40B0011	OVER STROKE AXIS X - (RIGHT) GLUE APPLICATOR
G41B0020	DETECTION WHITE CAP ADHESIVE DETECTOR
W21K8000 W21K8001	PRE HEATER RESISTENCE CHECK
F09K0000	SAFETY RELAY ERROR MESSAGE
	SPARE
G70K0001	VISION SYSTEM READY

Tetra Pak®	Version Designer: ROG	Version Date: 2015-05-29	Machine: CAP30 Flex ScrewCap 0300
	ECM No: 736736	Denomination: CIRCUIT DIAGRAM	Page Type: PLC IN
	Information Security Class: PUBLIC	Document No.: 3218867-0003	Doc. type: ELD / Version: AK / Page: 033

RELEASED

This drawing must not without the consent of Tetra Pak be copied, transmitted or disclosed to any third party.

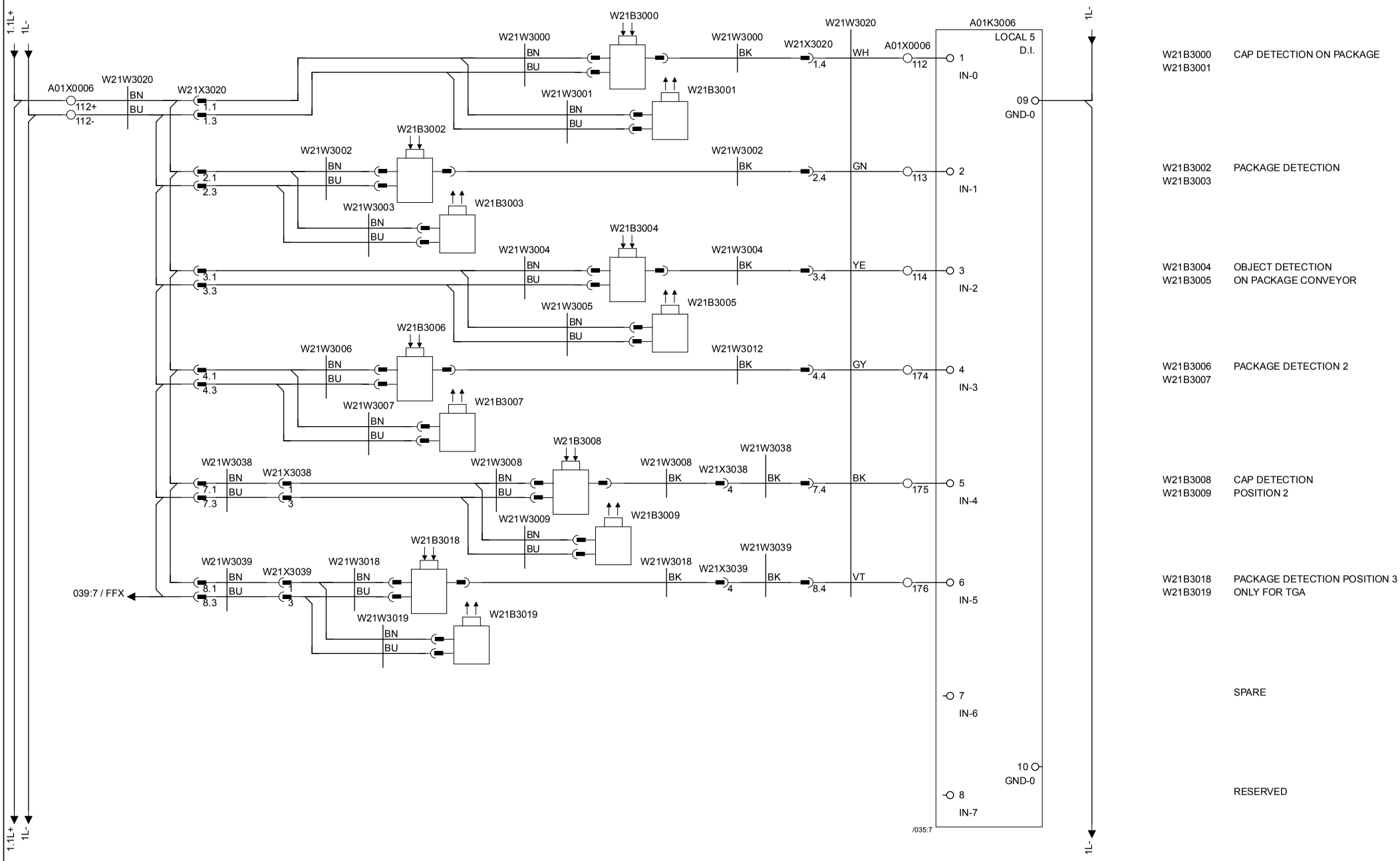

W21B3000 W21B3001	CAP DETECTION ON PACKAGE
W21B3002 W21B3003	PACKAGE DETECTION
W21B3004 W21B3005	OBJECT DETECTION ON PACKAGE CONVEYOR
W21B3006 W21B3007	PACKAGE DETECTION 2
W21B3008 W21B3009	CAP DETECTION POSITION 2
W21B3018 W21B3019	PACKAGE DETECTION POSITION 3 ONLY FOR TGA
	SPARE
	RESERVED

Tetra Pak®	Version Designer: ROG	Version Date: 2015-05-29	Machine: CAP30 Flex ScrewCap 0300	
	ECM No: 736736	Denomination: CIRCUIT DIAGRAM	Page Type: PLC IN	
	Information Security Class: PUBLIC	Document No.: 3218867-0003	Doc. type: ELD	Version: AK	Page: 034

RELEASED

This drawing must not without the consent of Tetra Pak
be copied, transmitted or disclosed to any third party.

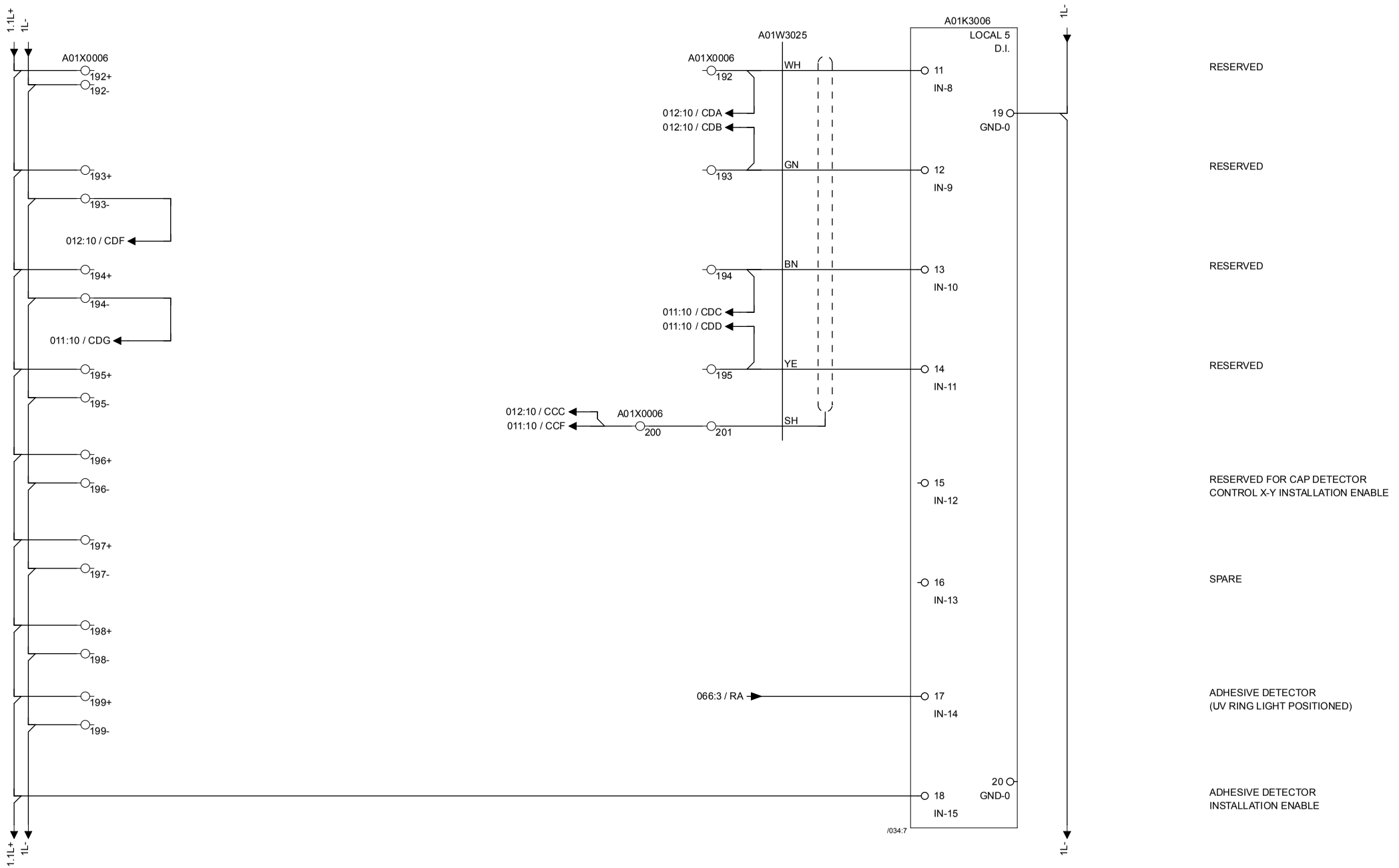

Tetra Pak®	Version Designer: ROG	Version Date: 2015-05-29	Machine: CAP30 Flex ScrewCap 0300	
	ECM No: 736736	Denomination: CIRCUIT DIAGRAM	Page Type: PLC IN	
	Information Security Class: PUBLIC	Document No.: 3218867-0003	Doc. type: ELD	Version: AK	Page: 035

RELEASED

This drawing must not without the consent of Tetra Pak
be copied, transmitted or disclosed to any third party.

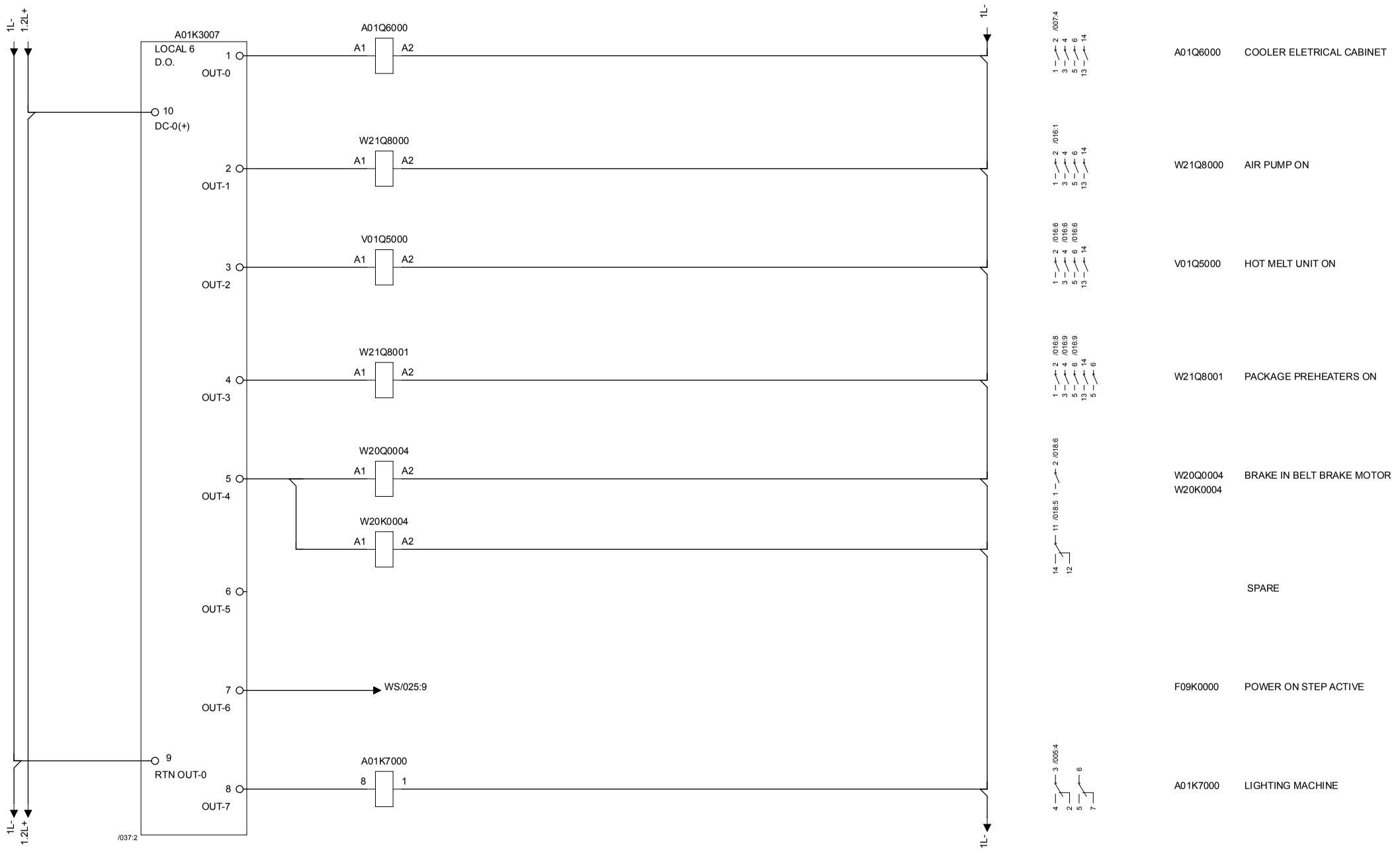

Tetra Pak®	Version Designer: ROG	Version Date: 2015-05-29	Machine: CAP30 Flex ScrewCap 0300					
	ECM No: 736736	Denomination: CIRCUIT DIAGRAM	Page Type: PLC OUT					
	Information Security Class: PUBLIC	Document No.: 3218867-0003	Doc. type: ELD	Version: AK	Page: 036			

RELEASED

This drawing must not without the consent of Tetra Pak be copied, transmitted or disclosed to any third party.

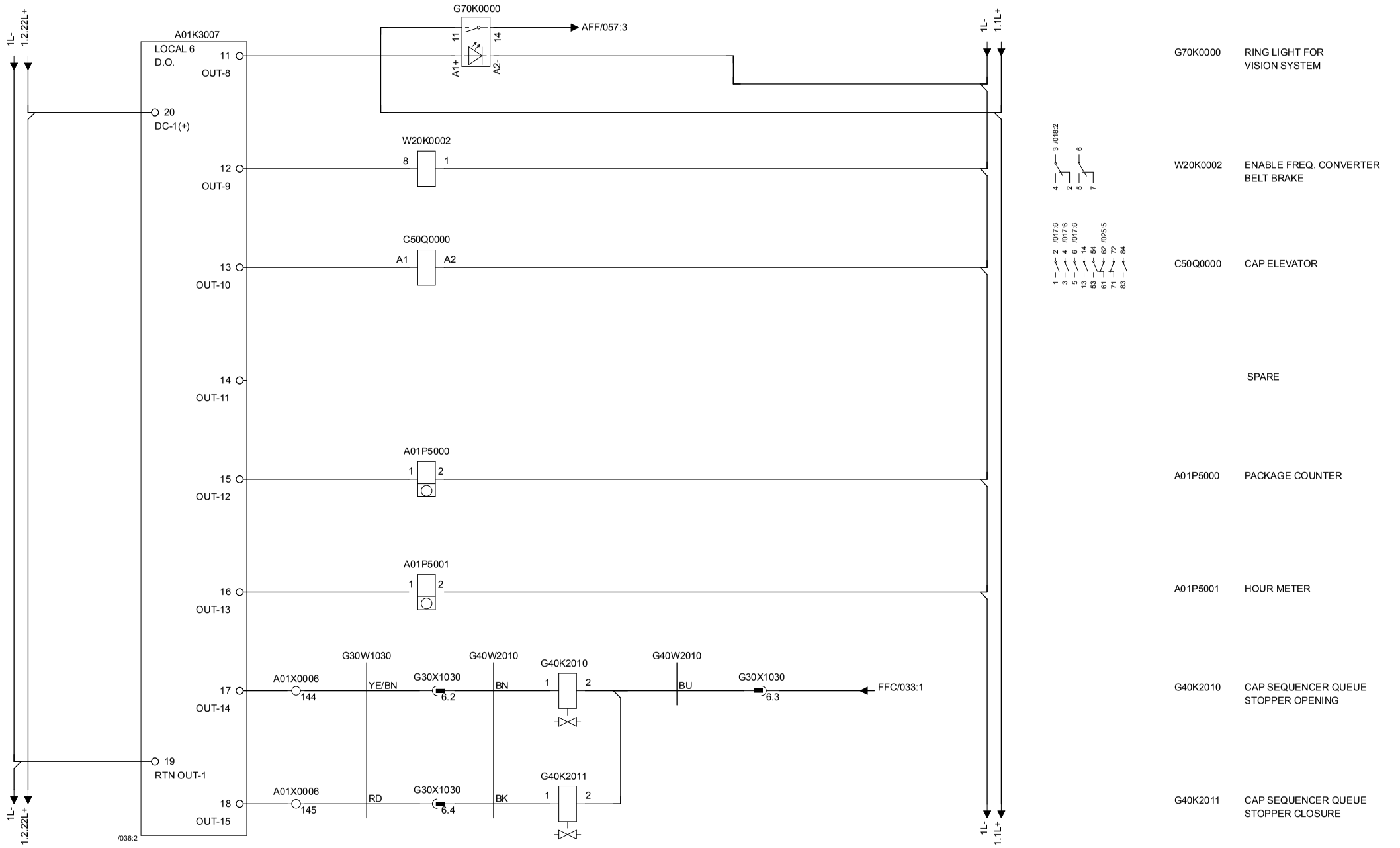

G70K0000	RING LIGHT FOR VISION SYSTEM
W20K0002	ENABLE FREQ. CONVERTER BELT BRAKE
C50Q0000	CAP ELEVATOR
	SPARE
A01P5000	PACKAGE COUNTER
A01P5001	HOUR METER
G40K2010	CAP SEQUENCER QUEUE STOPPER OPENING
G40K2011	CAP SEQUENCER QUEUE STOPPER CLOSURE

Tetra Pak®	Version Designer: ROG	Version Date: 2015-05-29	Machine: CAP30 Flex ScrewCap 0300	
	ECM No: 736736	Denomination: CIRCUIT DIAGRAM	Page Type: PLC OUT	
	Information Security Class: PUBLIC	Document No.: 3218867-0003	Doc. type: ELD	Version: AK	Page: 037

RELEASED

This drawing must not without the consent of Tetra Pak
be copied, transmitted or disclosed to any third party.

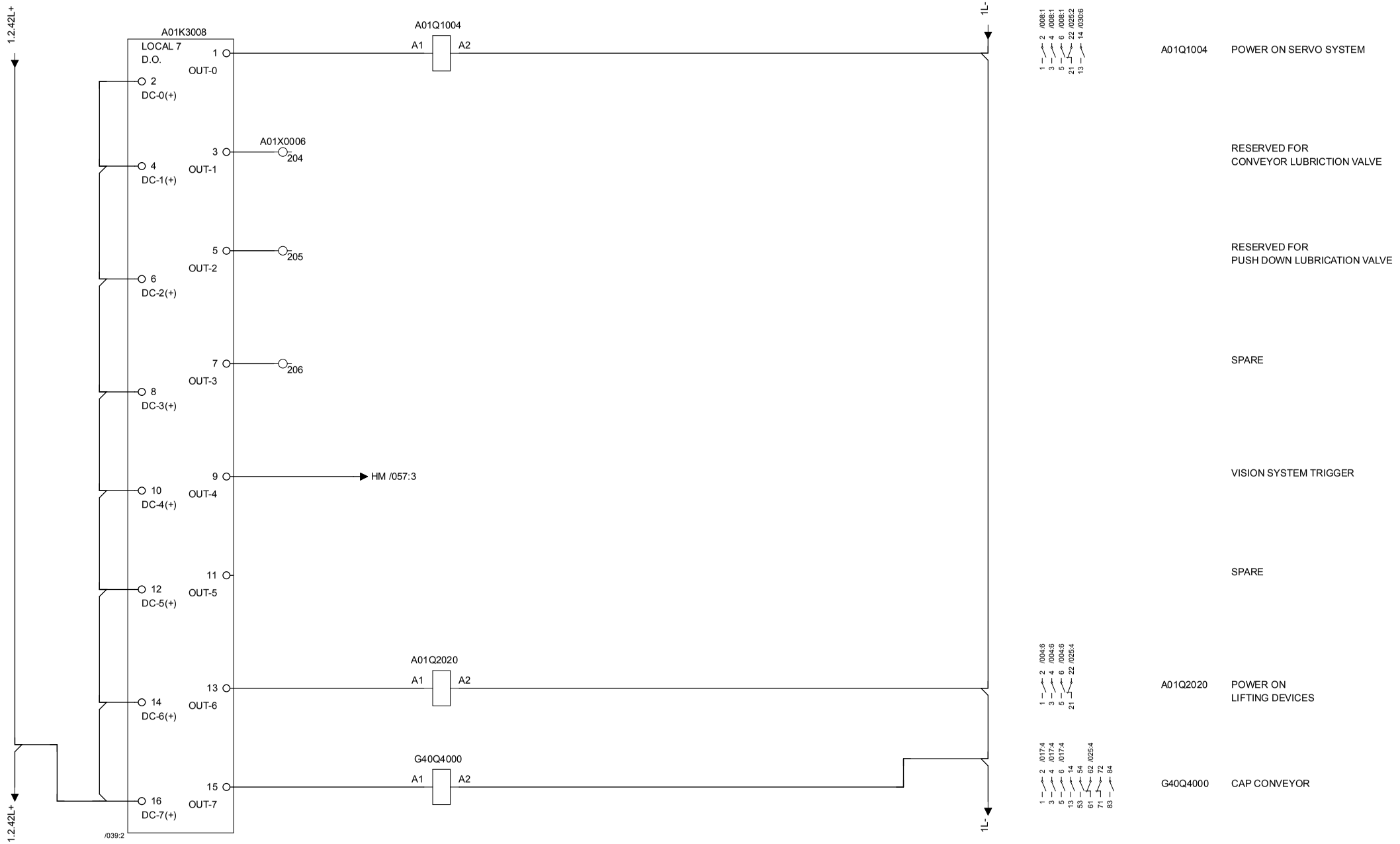

Tetra Pak®	Version Designer: ROG	Version Date: 2015-05-29	Machine: CAP30 Flex ScrewCap 0300				
	ECM No: 736736	Denomination: CIRCUIT DIAGRAM	Page Type: PLC OUT				
	Information Security Class: PUBLIC	Document No.: 3218867-0003	Doc. type: ELD	Version: AK	Page: 038		

RELEASED

This drawing must not without the consent of Tetra Pak be copied, transmitted or disclosed to any third party.

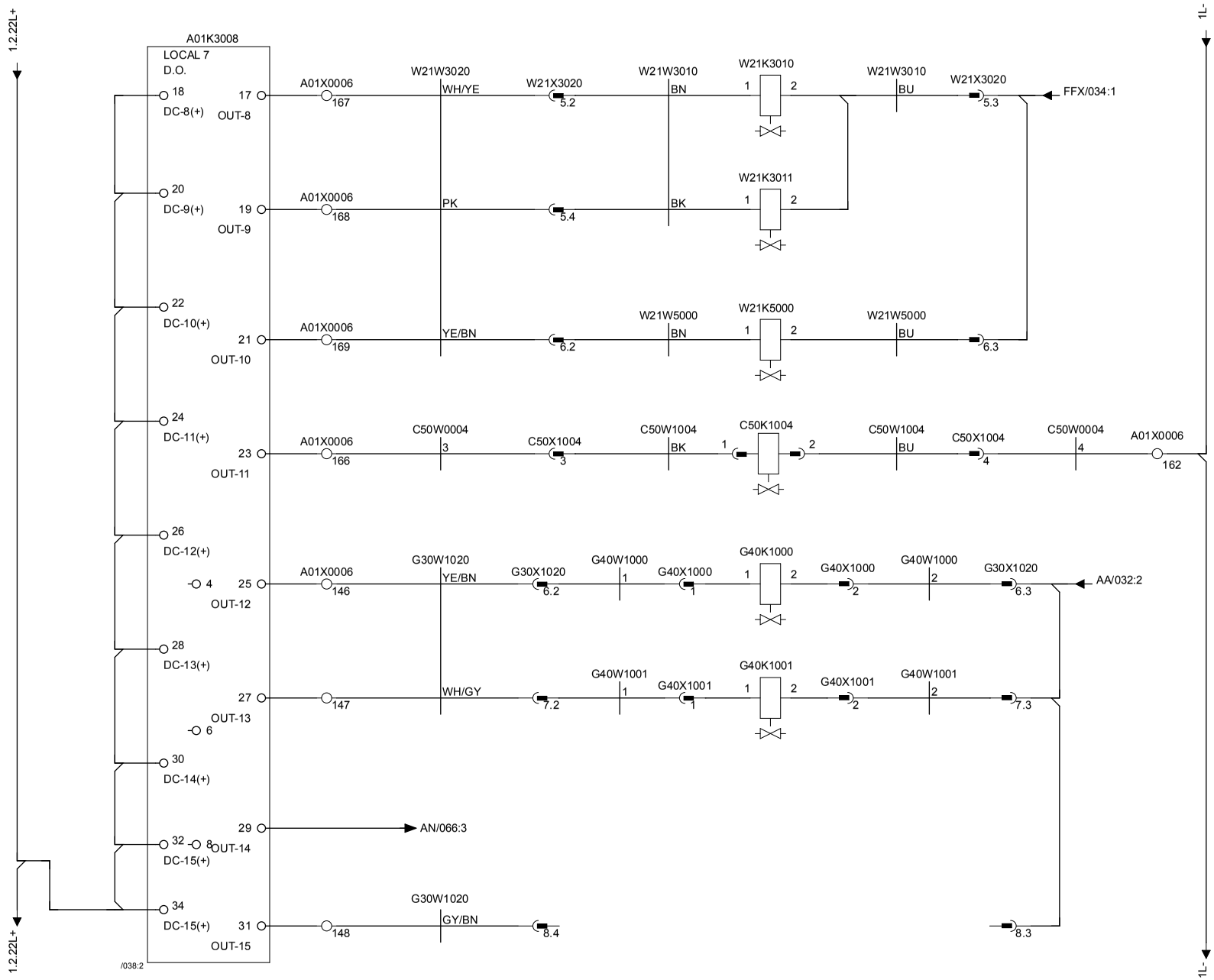

W21K3010	WASTE PACKAGE EJECTION ON
W21K3011	WASTE PACKAGE EJECTION OFF
W21K5000	BLOW CLEANING PACKAGE CONVEYOR
C50K1004	CAP SORTER AIR BLOW
G40K1000	HOT MELT GUN 1 OPENING
G40K1001	HOT MELT GUN 2 OPENING
	TRIGGER ADHESIVE DETECTOR
	SPARE

Tetra Pak®	Version Designer: ROG	Version Date: 2015-05-29	Machine: CAP30 Flex ScrewCap 0300	
	ECM No: 736736	Denomination: CIRCUIT DIAGRAM	Page Type: PLC OUT	
	Information Security Class: PUBLIC	Document No.: 3218867-0003	Doc. type: ELD	Version: AK	Page: 039

RELEASED

This drawing must not without the consent of Tetra Pak
be copied, transmitted or disclosed to any third party.

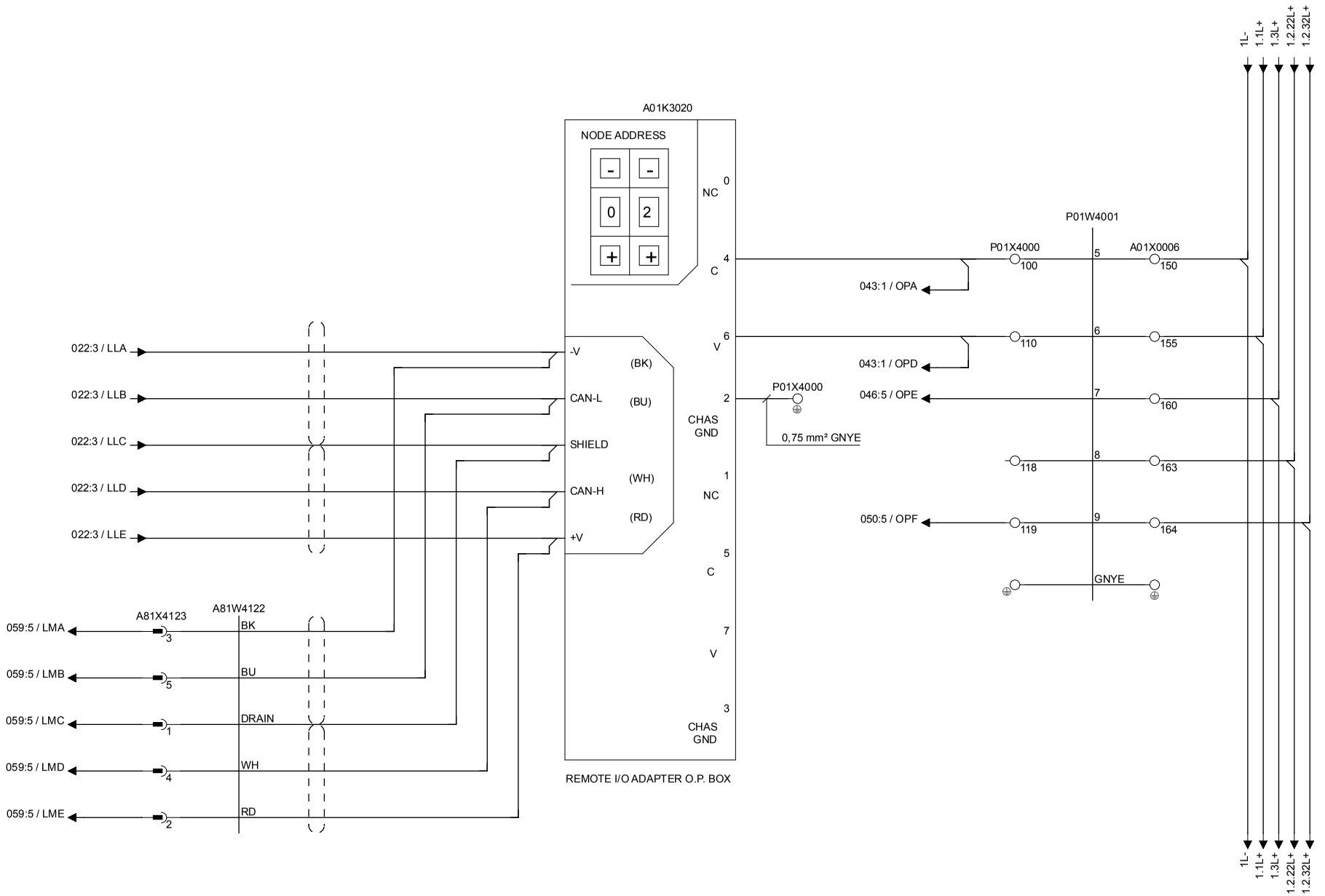

Tetra Pak®	Version Designer: ROG	Version Date: 2015-05-29	Machine: CAP30 Flex ScrewCap 0300	
	ECM No: 736736	Denomination: CIRCUIT DIAGRAM	Page Type: REMOTE I/O ADAPTER O.P. BOX	
	Information Security Class: PUBLIC	Document No.: 3218867-0003	Doc. type: ELD	Version: AK / Page: 040

This drawing must not without the consent of Tetra Pak
be copied, transmitted or disclosed to any third party.

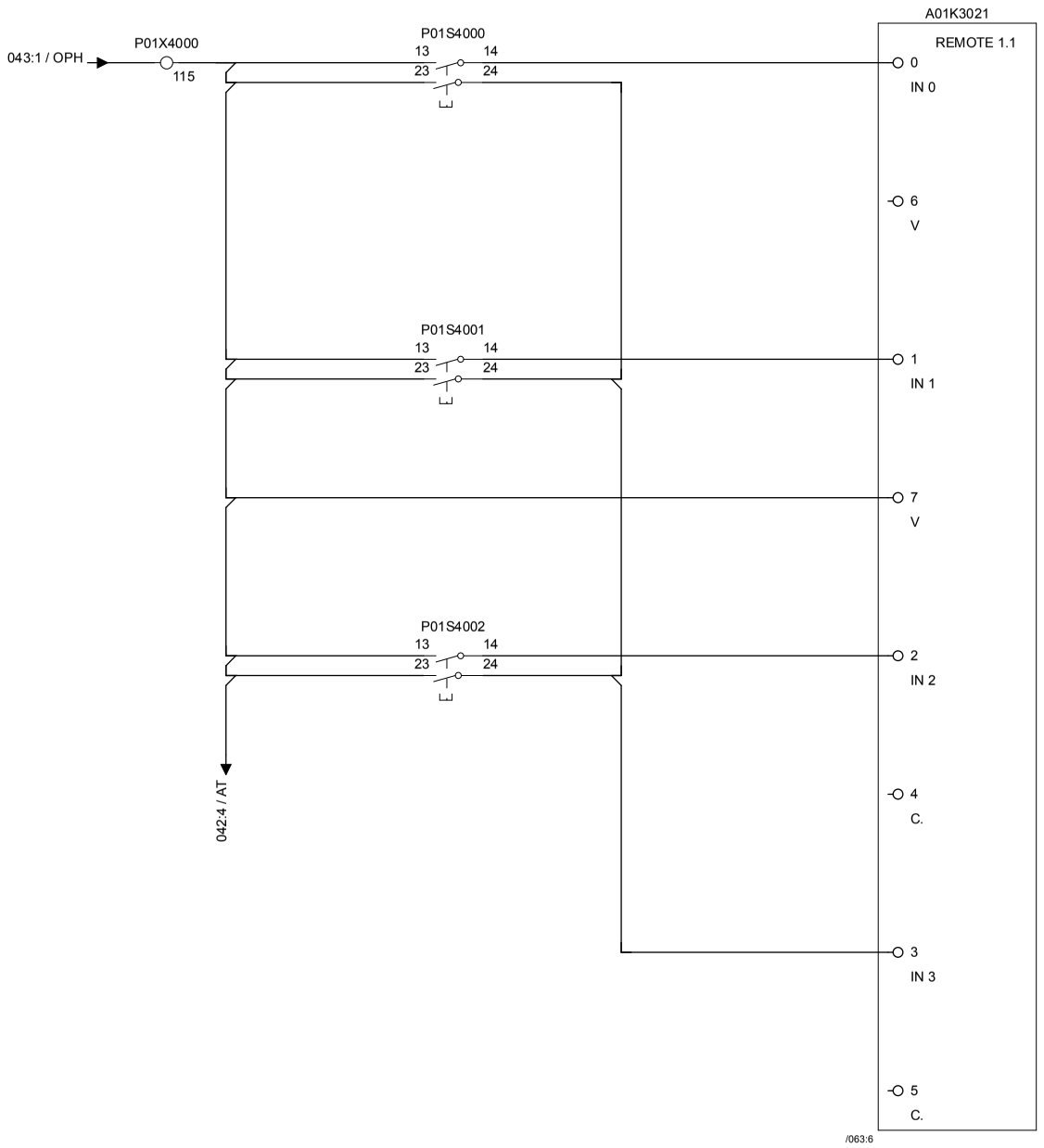

P01S4000 STEP UP

P01S4001 STEP DOWN

P01S4002 INCHING

P01S4000 CHECK PUSH-BUTTONS
P01S4001
P01S4002

Tetra Pak®	Version Designer: ROG	Version Date: 2015-05-29	Machine: CAP30 Flex ScrewCap 0300	
	ECM No: 736736	Denomination: CIRCUIT DIAGRAM	Page Type: REMOTE I/O ADAPTER O.P. BOX	
	Information Security Class: PUBLIC	Document No.: 3218867-0003	Doc. type: ELD	Version: AK / Page: 041

RELEASED

This drawing must not without the consent of Tetra Pak be copied, transmitted or disclosed to any third party.

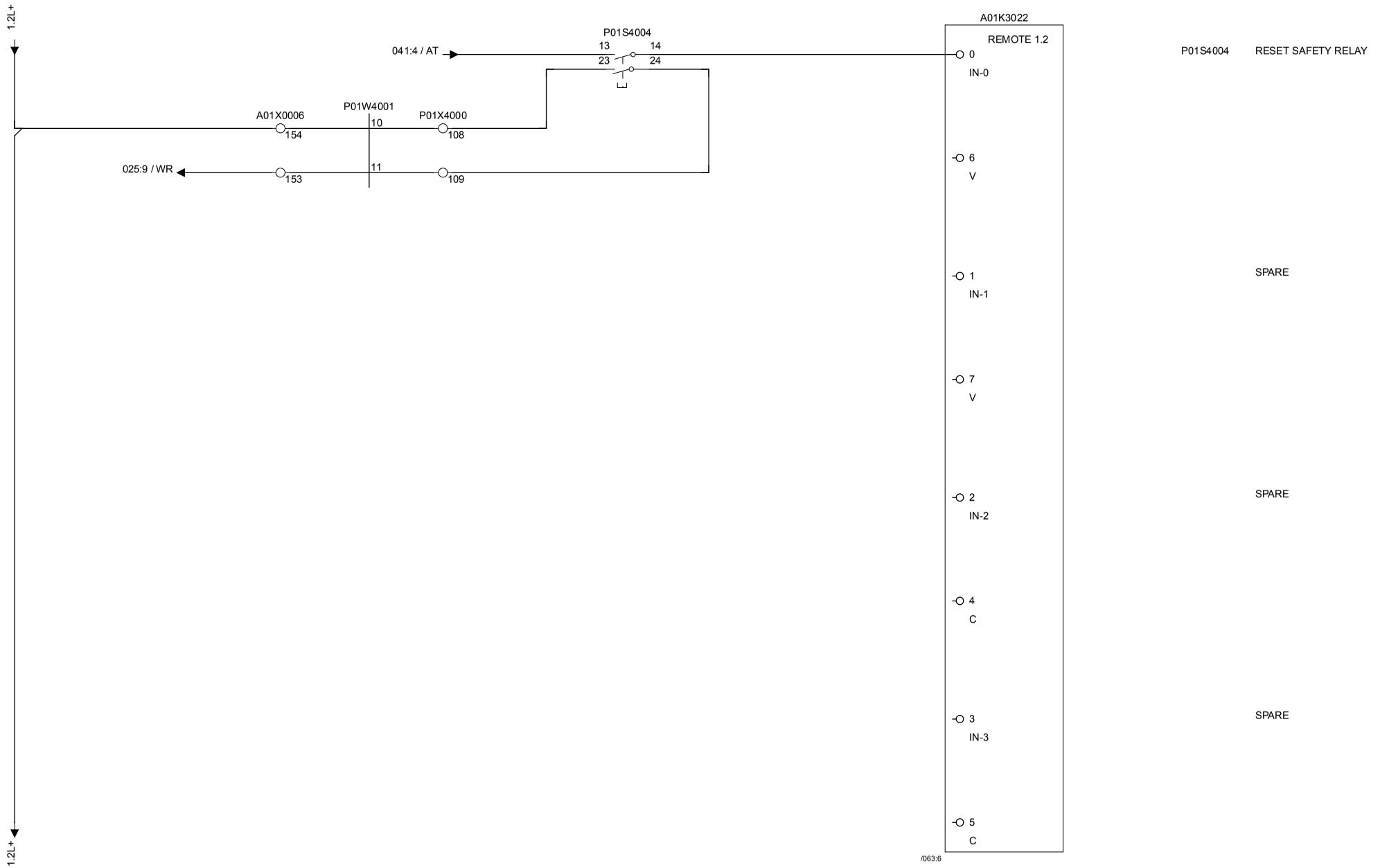

Tetra Pak®	Version Designer: ROG	Version Date: 2015-05-29	Machine: CAP30 Flex ScrewCap 0300	
	ECM No: 736736	Denomination: CIRCUIT DIAGRAM	Page Type: REMOTE I/O ADAPTER O.P. BOX	
	Information Security Class: PUBLIC	Document No.: 3218867-0003	Doc. type: ELD	Version: AK / Page: 042

RELEASED

This drawing must not without the consent of Tetra Pak
be copied, transmitted or disclosed to any third party.

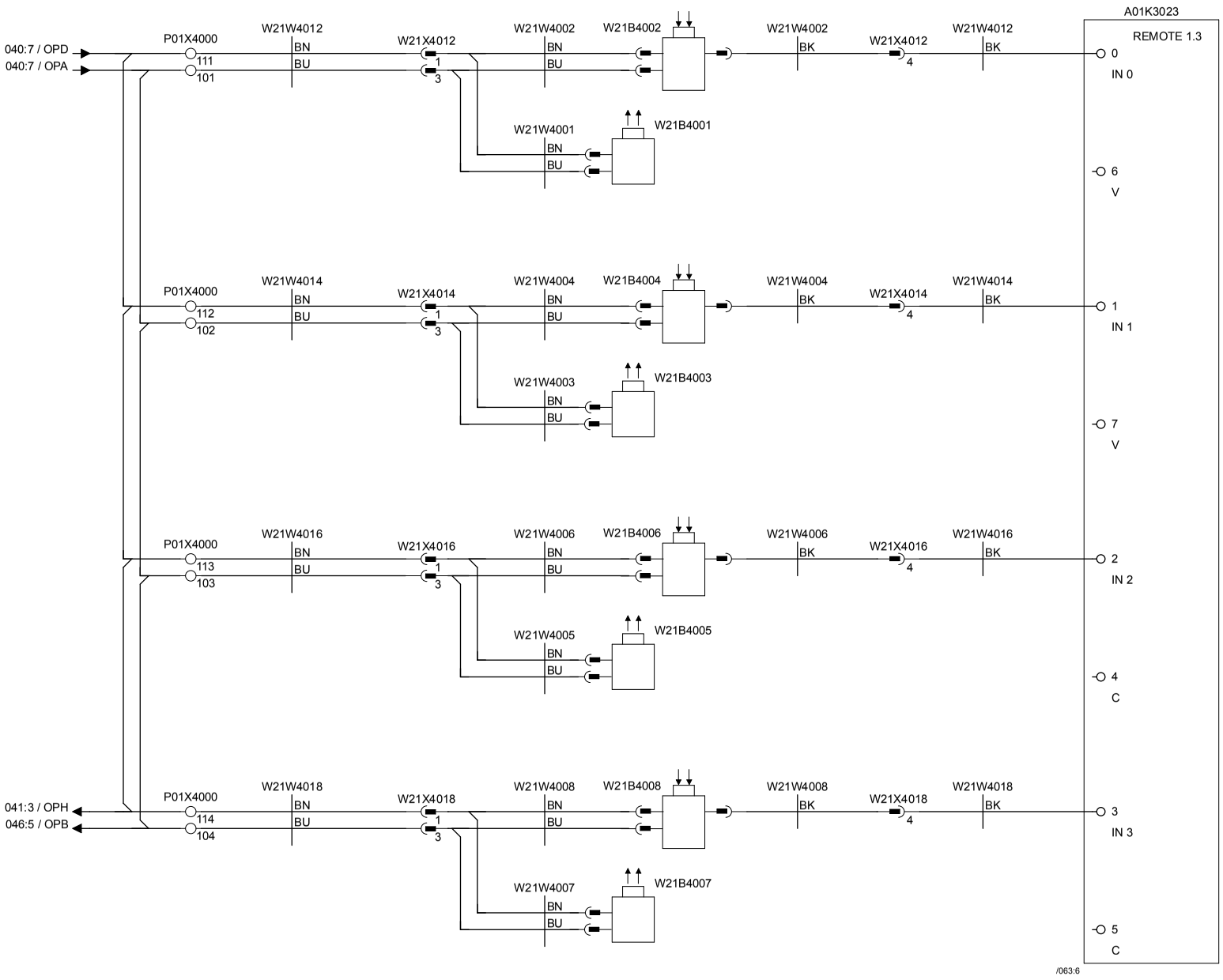

W21B4002 W21B4001	LONG PACKAGE QUEUE
W21B4004 W21B4003	SHORT PACKAGE QUEUE
W21B4006 W21B4005	VERIFIES PACKAGE STANDING
W21B4008 W21B4007	TOO LONG PACKAGE QUEUE

Tetra Pak®	Version Designer: ROG	Version Date: 2015-05-29	Machine: CAP30 Flex ScrewCap 0300	
	ECM No: 736736	Denomination: CIRCUIT DIAGRAM	Page Type: REMOTE I/O ADAPTER O.P. BOX	
	Information Security Class: PUBLIC	Document No.: 3218867-0003	Doc. type: ELD	Version: AK / Page: 043

RELEASED

This drawing must not without the consent of Tetra Pak
be copied, transmitted or disclosed to any third party.

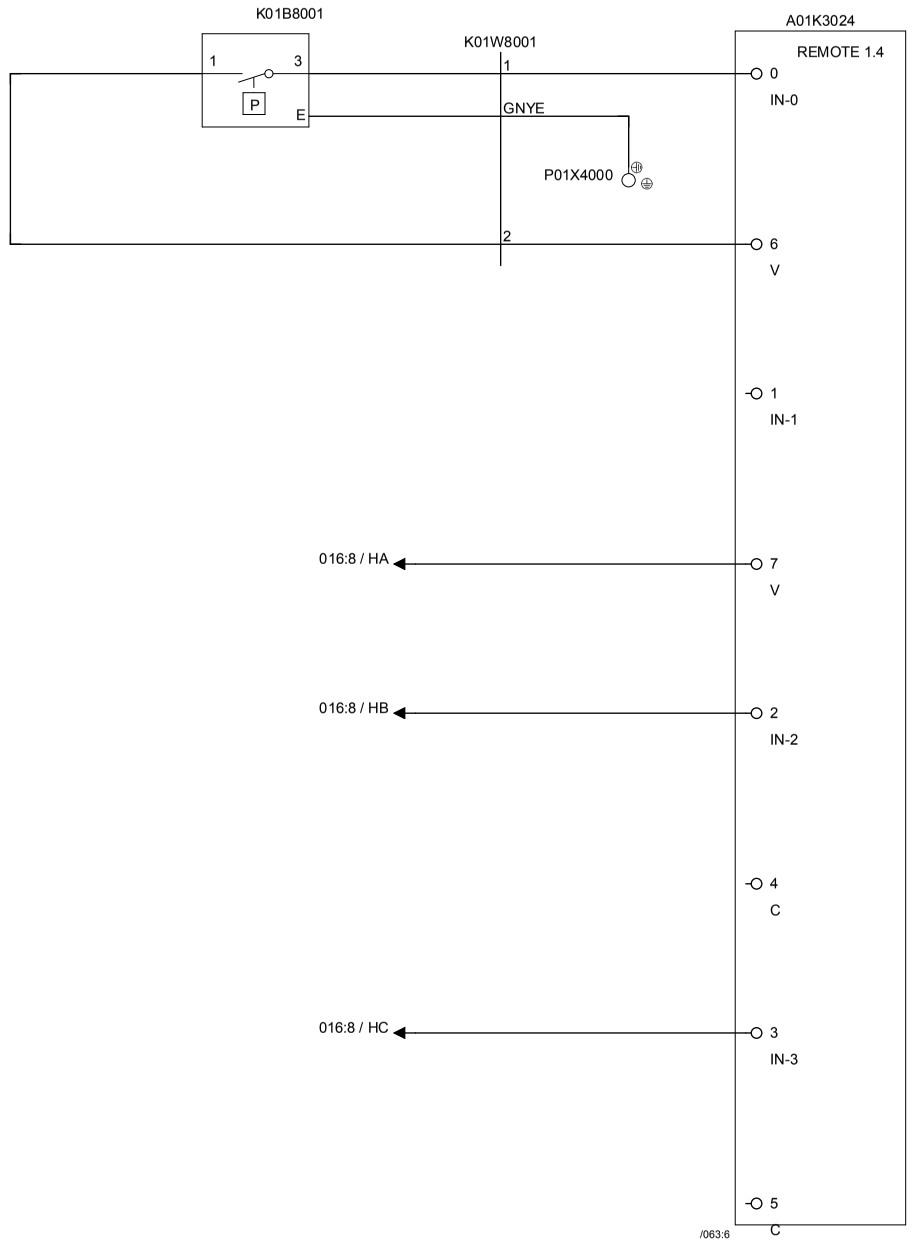

K01B8001	AIR PRESSURE GUARD
	SPARE
V01V5000	HOT MELT UNIT
V01V5000	HOT MELT UNIT READY
A01K5000	LOW LEVEL HOT MELT TANK

Tetra Pak®	Version Designer: ROG	Version Date: 2015-05-29	Machine: CAP30 Flex ScrewCap 0300	
	ECM No: 736736	Denomination: CIRCUIT DIAGRAM	Page Type: REMOTE I/O ADAPTER O.P. BOX	
	Information Security Class: PUBLIC	Document No.: 3218867-0003	Doc. type: ELD	Version: AK / Page: 044

RELEASED

This drawing must not without the consent of Tetra Pak
be copied, transmitted or disclosed to any third party.

1	2	3	4	5	6	7	8	9	10

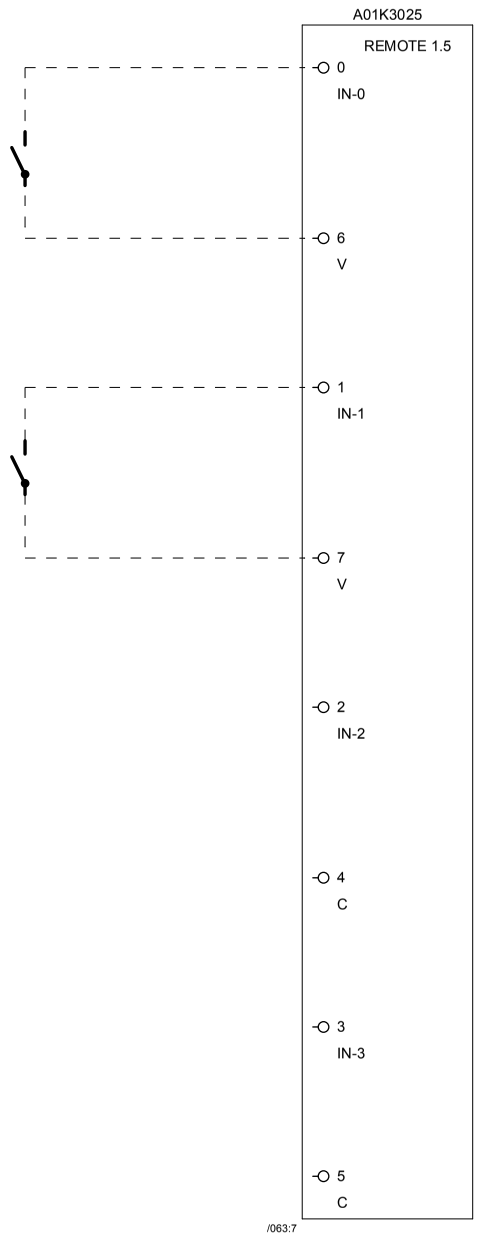

Tetra Pak®	Version Designer: ROG	Version Date: 2015-05-29	Machine: CAP30 Flex ScrewCap 0300			
	ECM No: 736736	Denomination: CIRCUIT DIAGRAM	Page Type: REMOTE I/O ADAPTER O.P. BOX			
	Information Security Class: PUBLIC	Document No.: 3218867-0003	Doc. type: ELD	Version: AK	Page: 045	

RELEASED

This drawing must not without the consent of Tetra Pak
be copied, transmitted or disclosed to any third party.

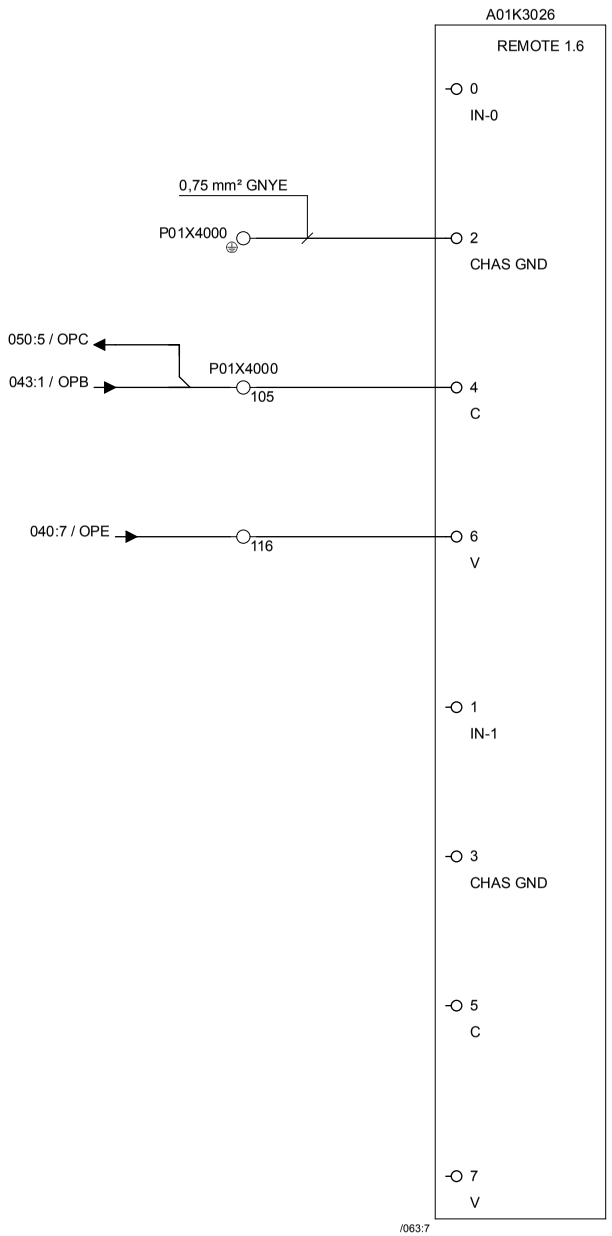

Tetra Pak®	Version Designer: ROG	Version Date: 2015-05-29	Machine: CAP30 Flex ScrewCap 0300	
	ECM No: 736736	Denomination: CIRCUIT DIAGRAM	Page Type: FIELD POWER DISTR. O.P. BOX	
	Information Security Class: PUBLIC	Document No.: 3218867-0003	Doc. type: ELD	Version: AK / Page: 046

This drawing must not without the consent of Tetra Pak
be copied, transmitted or disclosed to any third party.

1	2	3	4	5	6	7	8	9	10

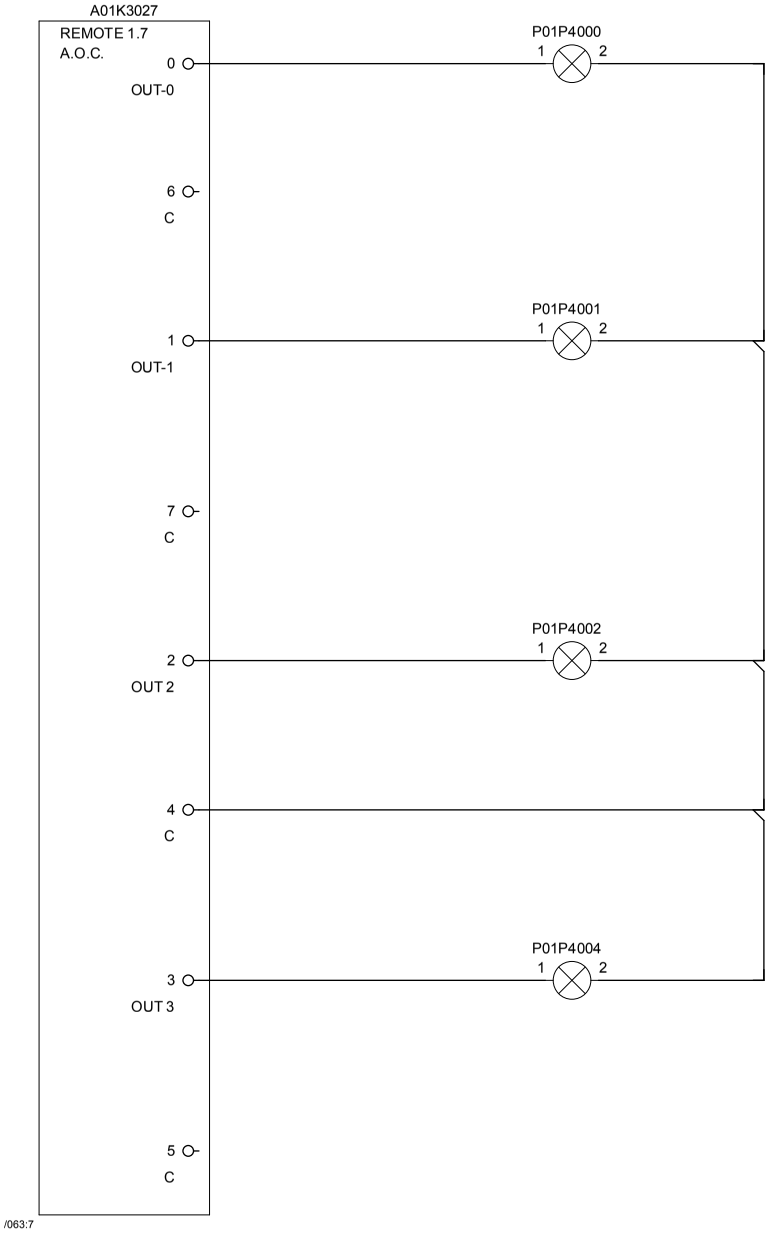

P01P4000	STEP UP LAMP
P01P4001	STEP DOWN LAMP
P01P4002	INCHING LAMP
P 01P4004	RESET LAMP

Tetra Pak®	Version Designer: ROG	Version Date: 2015-05-29	Machine: CAP30 Flex ScrewCap 0300		
	ECM No: 736736	Denomination: CIRCUIT DIAGRAM	Page Type: REMOTE OUTPUT O.P. BOX		
	Information Security Class: PUBLIC	Document No.: 3218867-0003	Doc. type: ELD	Version: AK	Page: 047

This drawing must not without the consent of Tetra Pak
be copied, transmitted or disclosed to any third party.

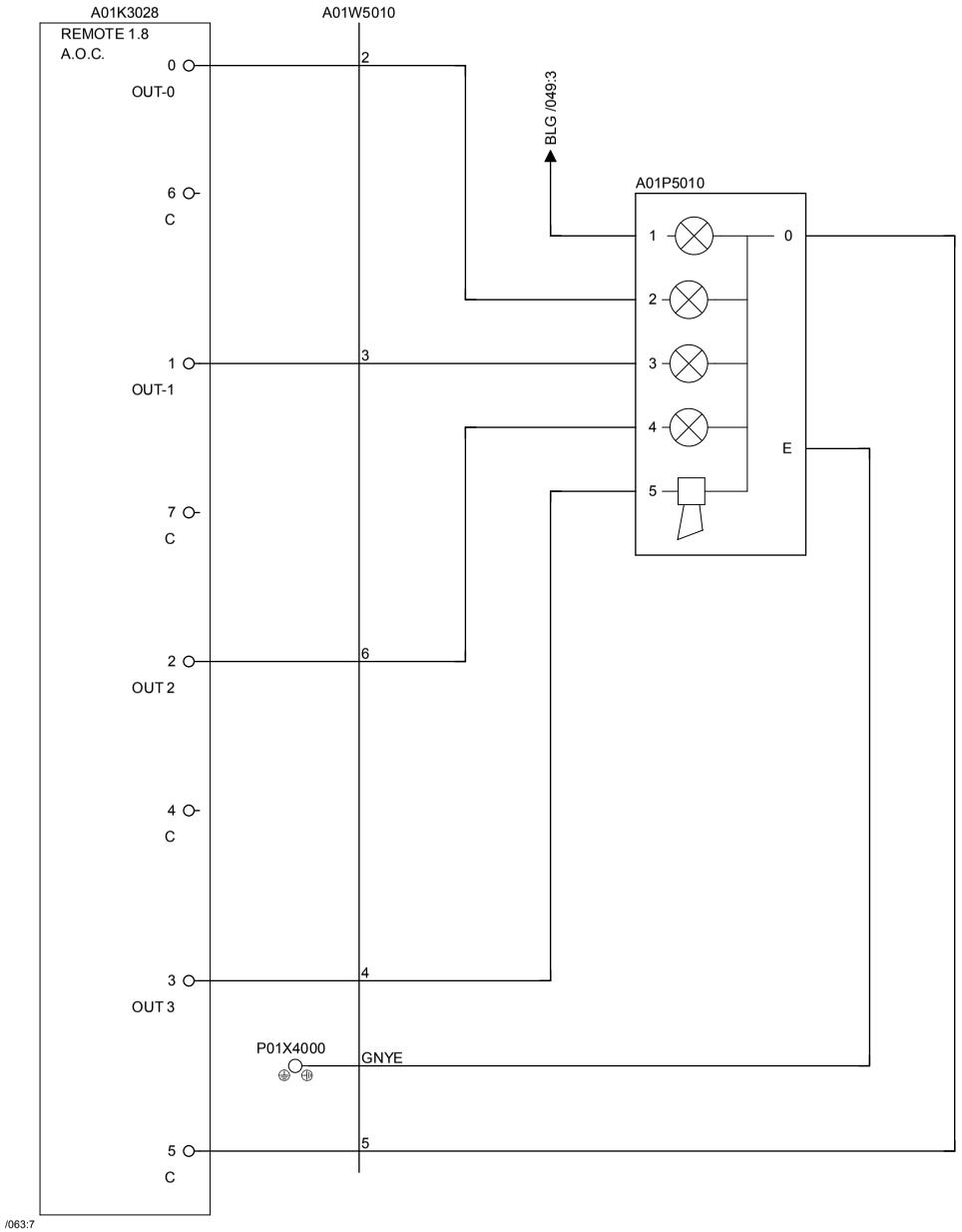

A01P5014	ALARM BEACON BLUE
A01P5012	ALARM BEACON YELLOW
A01P5011	ALARM BEACON RED
A01P5013	HOOTER

Tetra Pak®	Version Designer: ROG	Version Date: 2015-05-29	Machine: CAP30 Flex ScrewCap 0300				
	ECM No: 736736	Denomination: CIRCUIT DIAGRAM	Page Type: REMOTE OUTPUT O.P. BOX				
	Information Security Class: PUBLIC	Document No.: 3218867-0003	Doc. type: ELD	Version: AK	Page: 048		

This drawing must not without the consent of Tetra Pak
be copied, transmitted or disclosed to any third party.

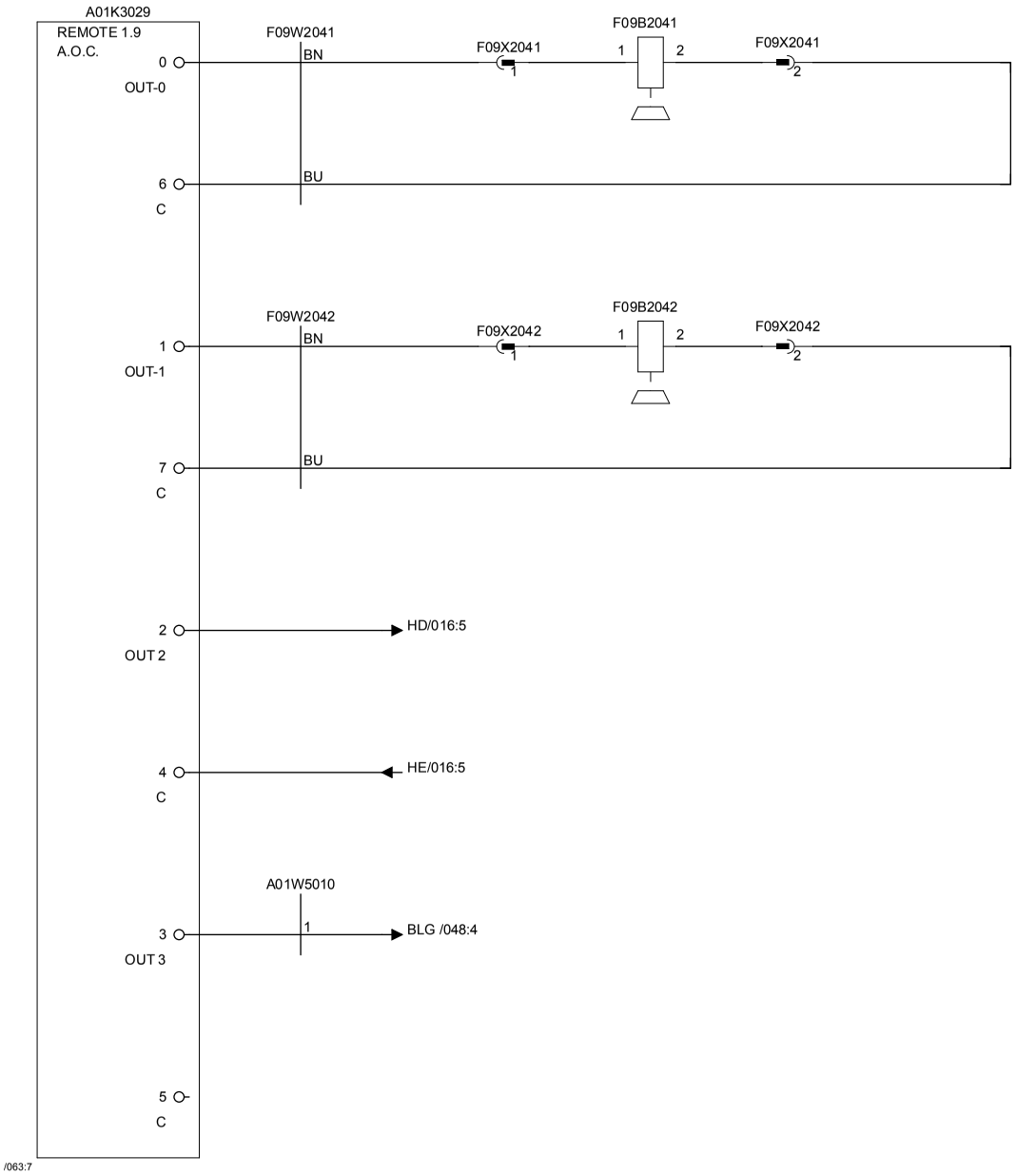

F09B2041	LOCKER DOOR FRONT 1
F09B2042	LOCKER DOOR FRONT 2
V01V5000	STANDBY TEMPERATURE
A01P5015	BEACON LAMP GREEN

Tetra Pak®	Version Designer: ROG	Version Date: 2015-05-29	Machine: CAP30 Flex ScrewCap 0300				
	ECM No: 736736	Denomination: CIRCUIT DIAGRAM	Page Type: REMOTE OUTPUT O.P. BOX				
	Information Security Class: PUBLIC	Document No.: 3218867-0003	Doc. type: ELD	Version: AK	Page: 049		

RELEASED

This drawing must not without the consent of Tetra Pak
be copied, transmitted or disclosed to any third party.

1	2	3	4	5	6	7	8	9	10

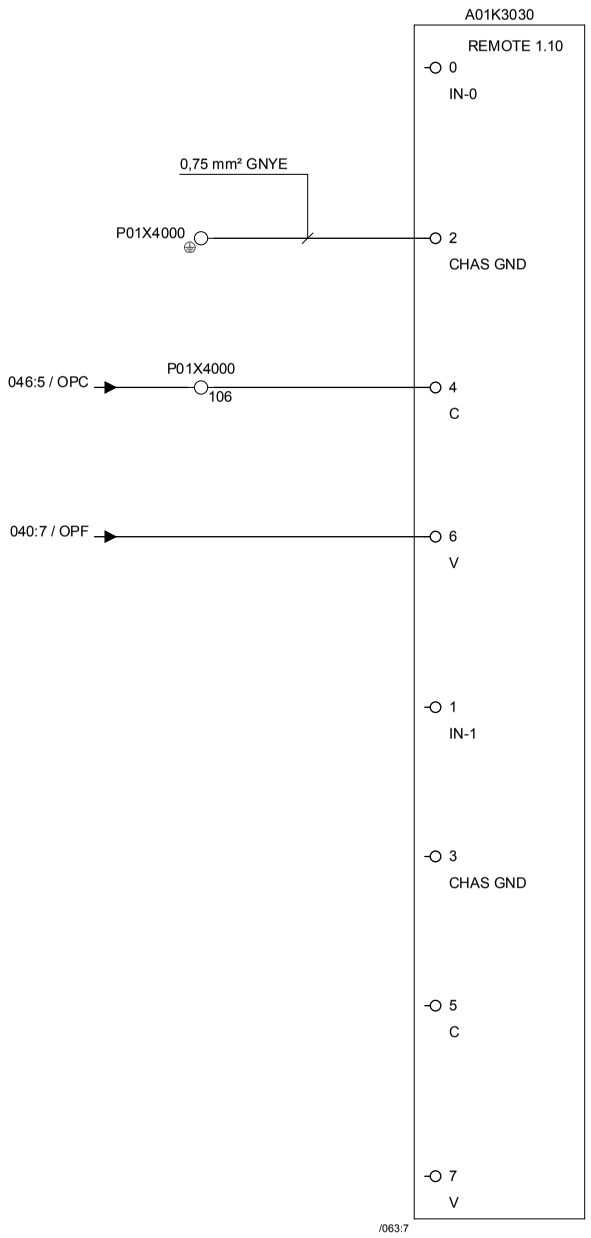

Tetra Pak®	Version Designer: ROG	Version Date: 2015-05-29	Machine: CAP30 Flex ScrewCap 0300			
	ECM No: 736736	Denomination: CIRCUIT DIAGRAM	Page Type: FIELD POWER DISTR. O.P. BOX			
	Information Security Class: PUBLIC	Document No.: 3218867-0003	Doc. type: ELD	Version: AK	Page: 050	

RELEASED

This drawing must not without the consent of Tetra Pak
be copied, transmitted or disclosed to any third party.

1	2	3	4	5	6	7	8	9	10

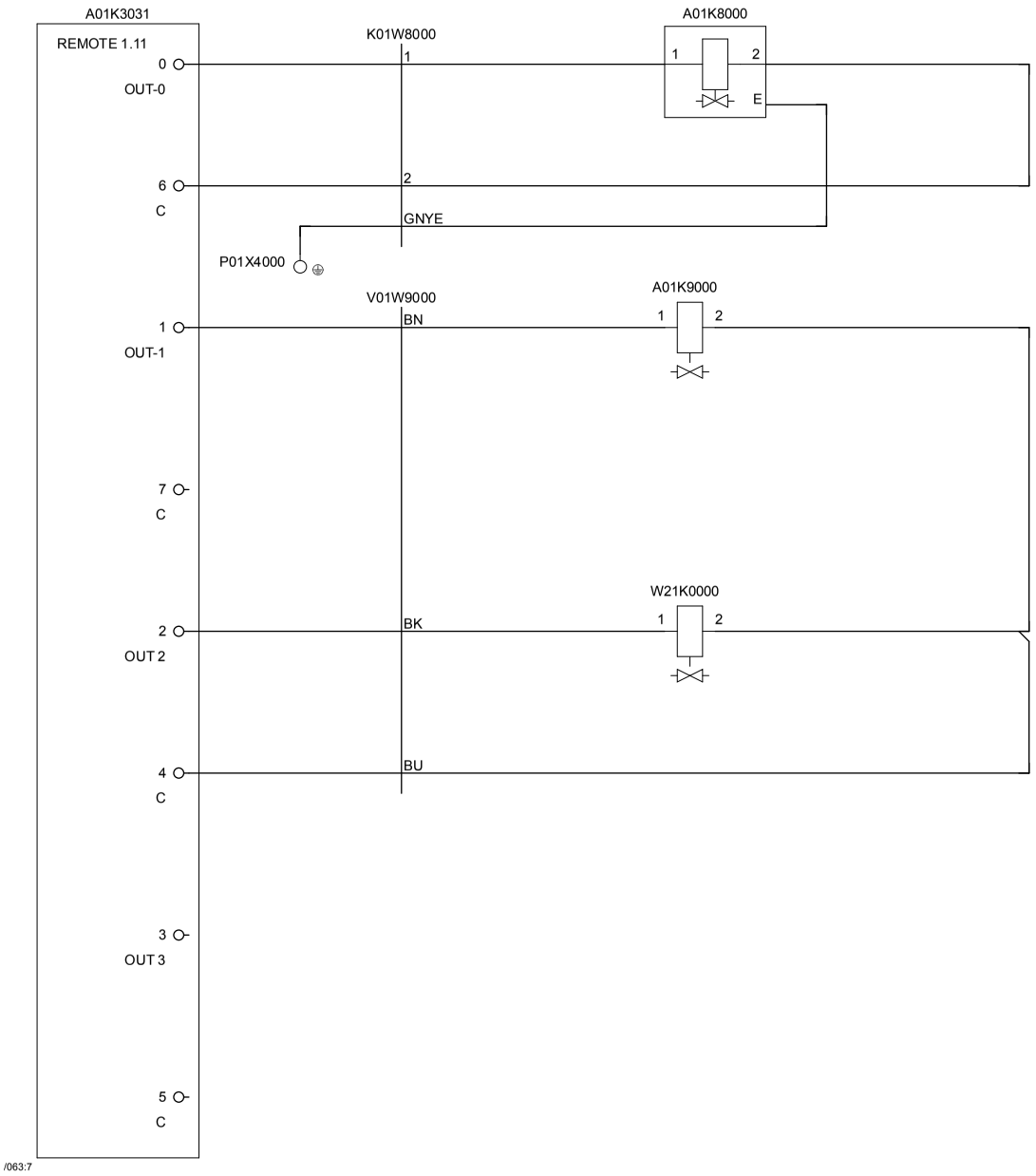

A01K8000	MAIN AIR VALVE
A01K9000	CENTRAL LUBRICATION
W21K0000	LOCK PACKAGE TRANSFER
	SPARE

Tetra Pak®	Version Designer: ROG	Version Date: 2015-05-29	Machine: CAP30 Flex ScrewCap 0300		
	ECM No: 736736	Denomination: CIRCUIT DIAGRAM	Page Type: REMOTE OUTPUT O.P. BOX		
	Information Security Class: PUBLIC	Document No.: 3218867-0003	Doc. type: ELD	Version: AK	Page: 051

This drawing must not without the consent of Tetra Pak
be copied, transmitted or disclosed to any third party.

1	2	3	4	5	6	7	8	9	10

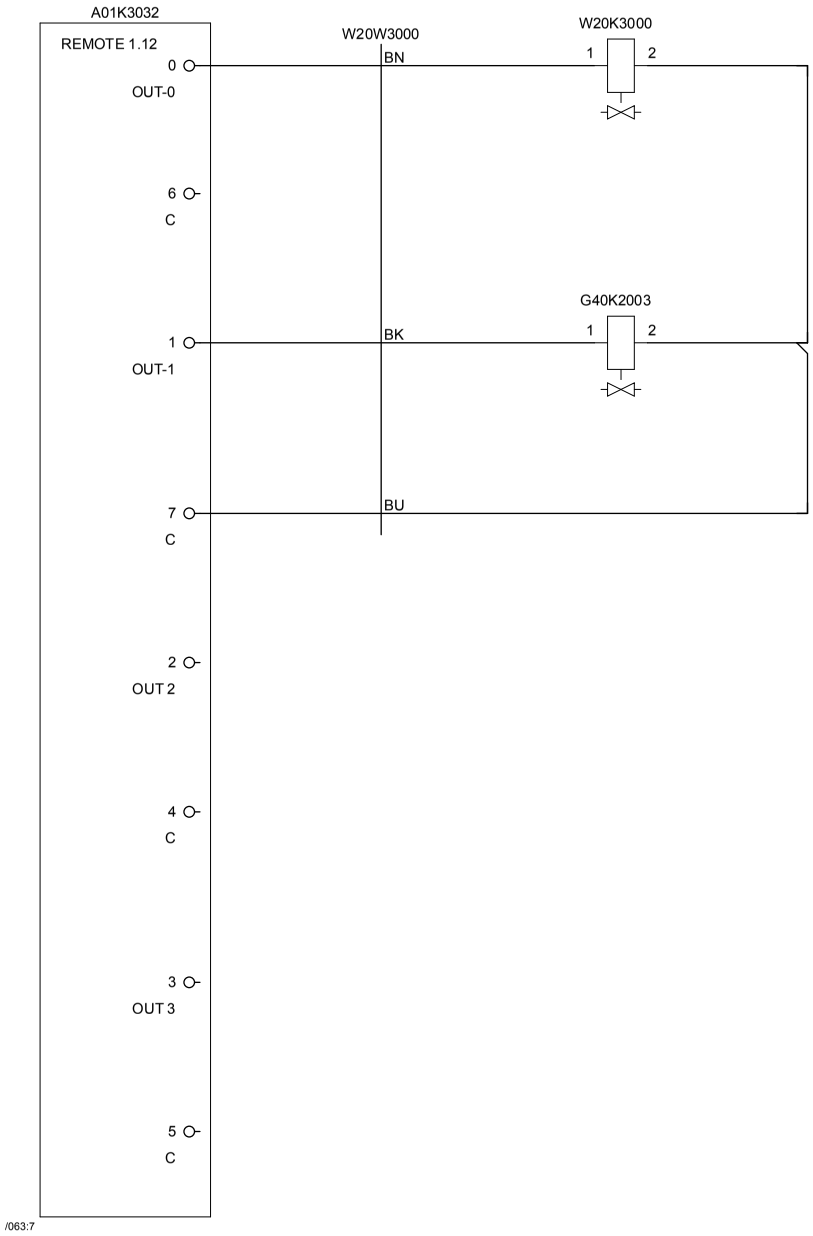

W0K3000	PACKAGE DRYING AIR
G40K2003	CAP SEQUENCER AIR BLOW
	SPARE
	SPARE

Tetra Pak®	Version Designer: ROG	Version Date: 2015-05-29	Machine: CAP30 Flex ScrewCap 0300	
	ECM No: 736736	Denomination: CIRCUIT DIAGRAM	Page Type: REMOTE OUTPUT O.P. BOX	
Information Security Class: PUBLIC	Document No.: 3218867-0003	Doc. type: ELD	Version: AK	Page: 052

RELEASED

This drawing must not without the consent of Tetra Pak be copied, transmitted or disclosed to any third party.

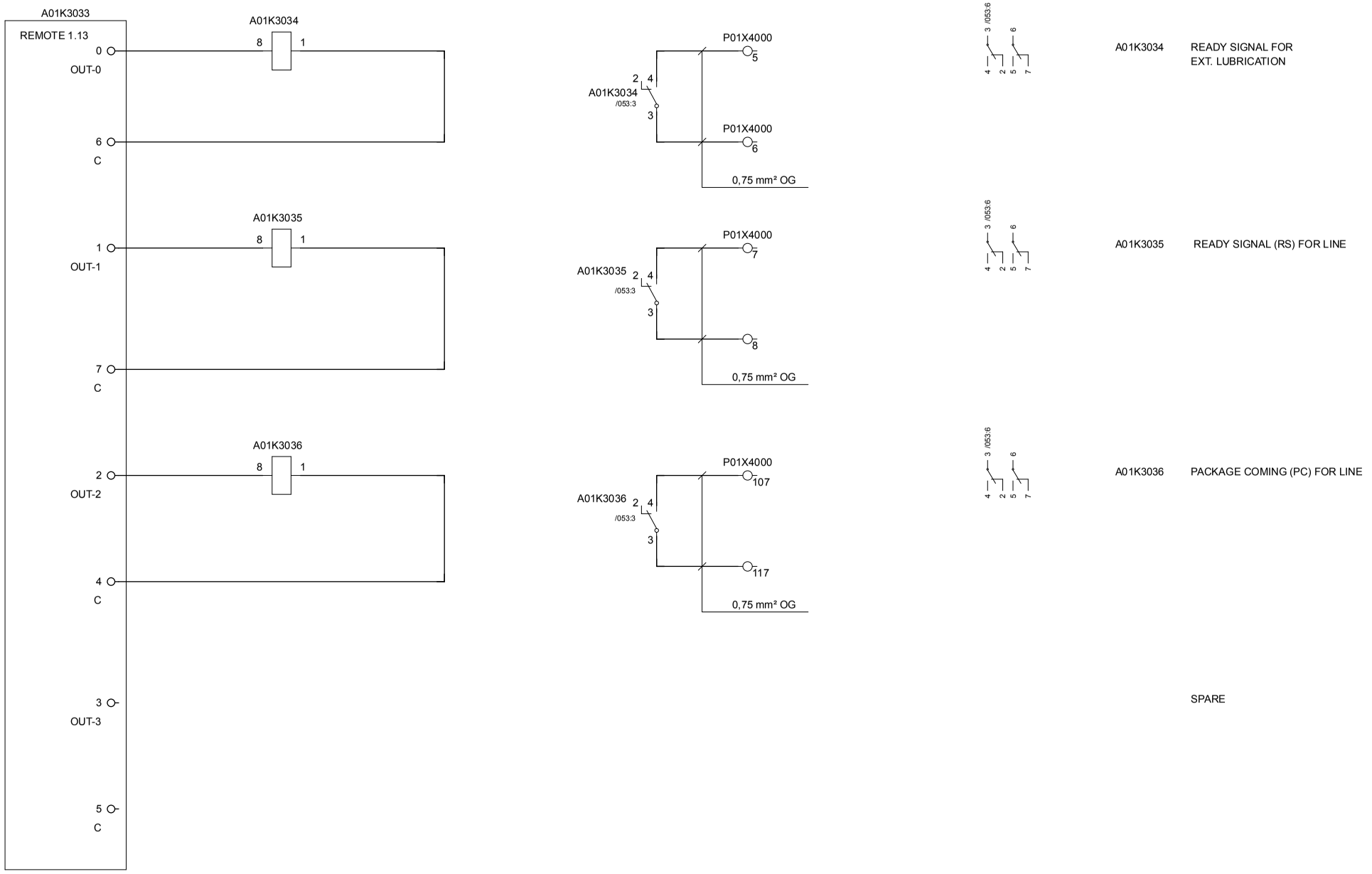

A01K3034	READY SIGNAL FOR EXT. LUBRICATION
A01K3035	READY SIGNAL (RS) FOR LINE
A01K3036	PACKAGE COMING (PC) FOR LINE
	SPARE

Version Designer: ROG	Version Date: 2015-05-29	Machine: CAP30 Flex ScrewCap 0300		
ECM No: 736736	Denomination: CIRCUIT DIAGRAM	Page Type: REMOTE OUTPUT O.P. BOX		
Information Security Class: PUBLIC	Document No.: 3218867-0003	Doc. type: ELD	Version: AK	Page: 053

RELEASED

This drawing must not without the consent of Tetra Pak
be copied, transmitted or disclosed to any third party.

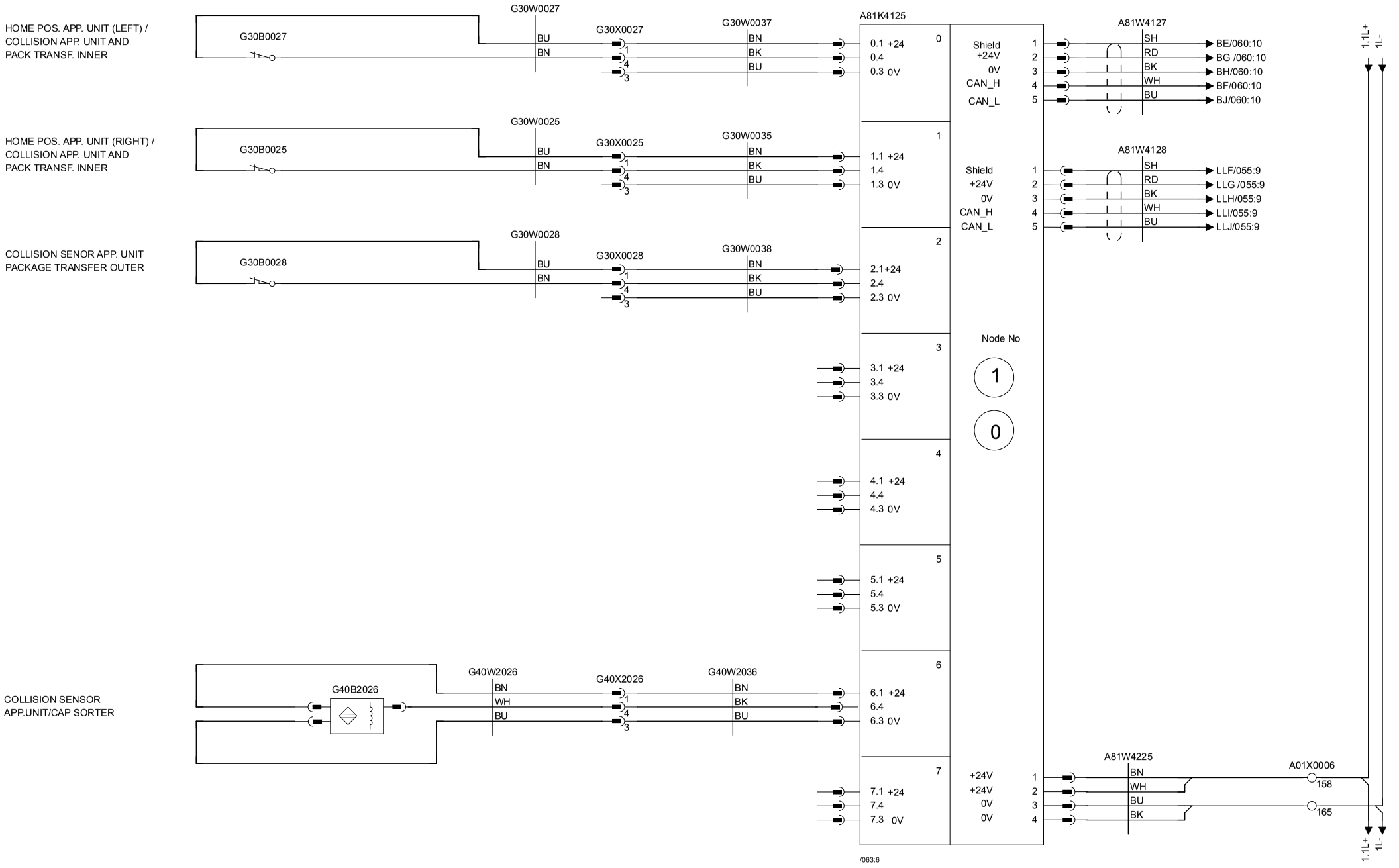

Tetra Pak®	Version Designer: ROG	Version Date: 2015-05-29	Machine: CAP30 Flex ScrewCap 0300		
	ECM No: 736736	Denomination: CIRCUIT DIAGRAM	Page Type: ARMOR BLOCK (COLLISION SENSORS)		
	Information Security Class: PUBLIC	Document No.: 3218867-0003	Doc. type: ELD	Version: AK	Page: 054

RELEASED

This drawing must not without the consent of Tetra Pak be copied, transmitted or disclosed to any third party.

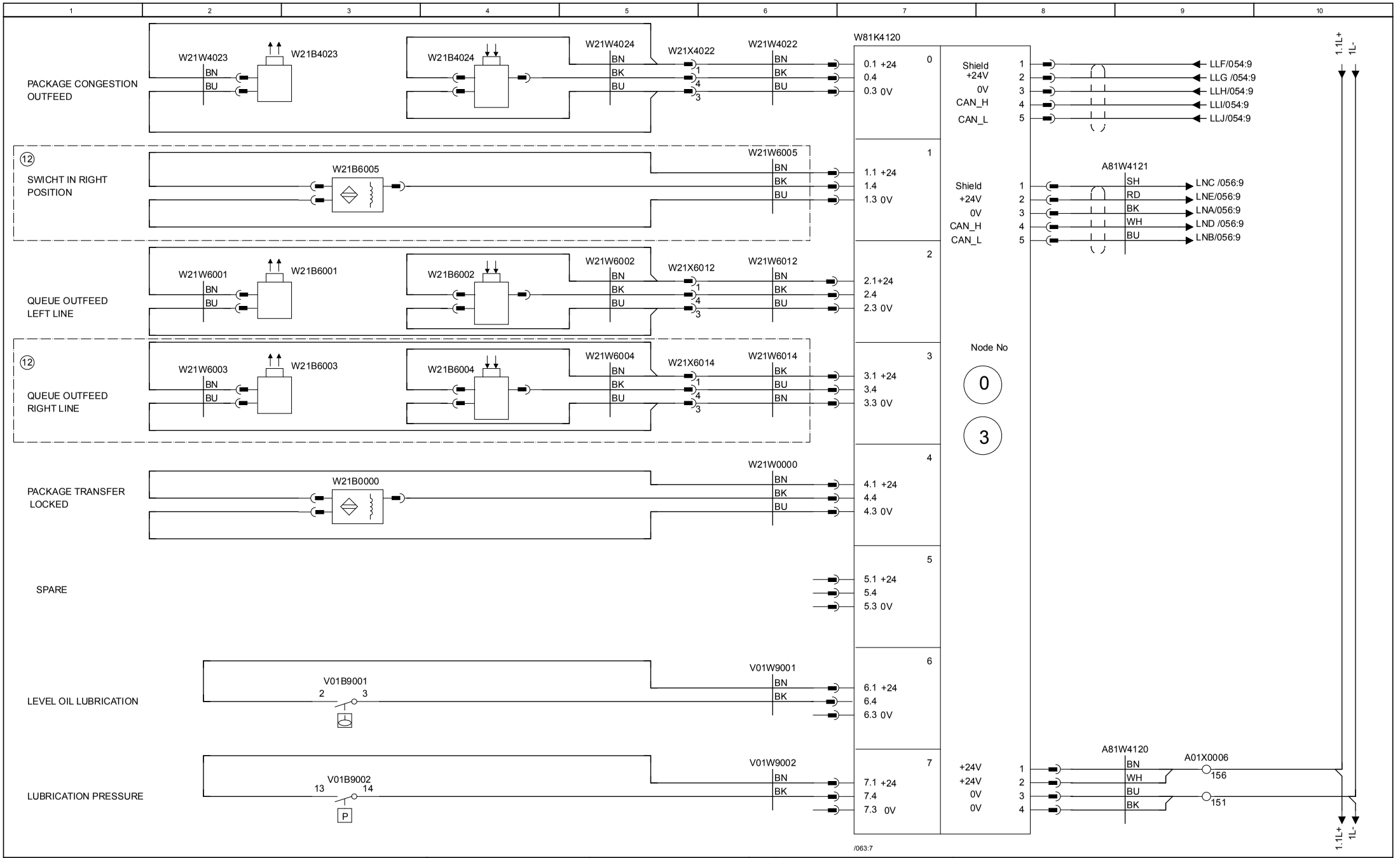

Tetra Pak®	Version Designer: ROG	Version Date: 2015-05-29	Machine: CAP30 Flex ScrewCap 0300		
	ECM No: 736736	Denomination: CIRCUIT DIAGRAM	Page Type: ARMOR BLOCK (MACHINE BODY)		
	Information Security Class: PUBLIC	Document No.: 3218867-0003	Doc. type: ELD	Version: AK	Page: 055

RELEASED

This drawing must not without the consent of Tetra Pak be copied, transmitted or disclosed to any third party.

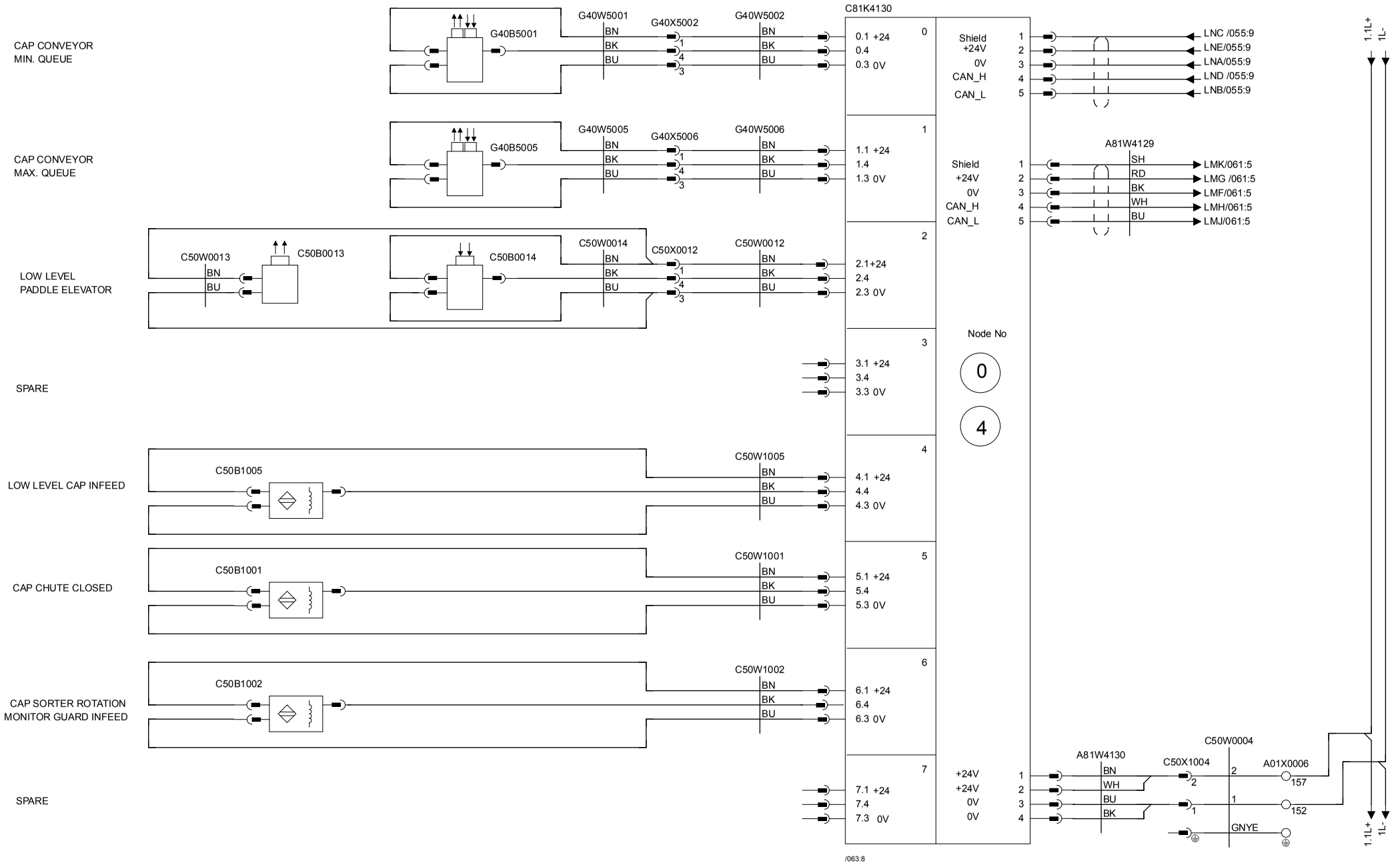

Tetra Pak®	Version Designer: ROG	Version Date: 2015-05-29	Machine: CAP30 Flex ScrewCap 0300				
	ECM No: 736736	Denomination: CIRCUIT DIAGRAM	Page Type: ARMOR BLOCK (CAP SORTER)				
	Information Security Class: PUBLIC	Document No.: 3218867-0003	Doc. type: ELD	Version: AK	Page: 056		

This drawing must not without the consent of Tetra Pak
be copied, transmitted or disclosed to any third party.

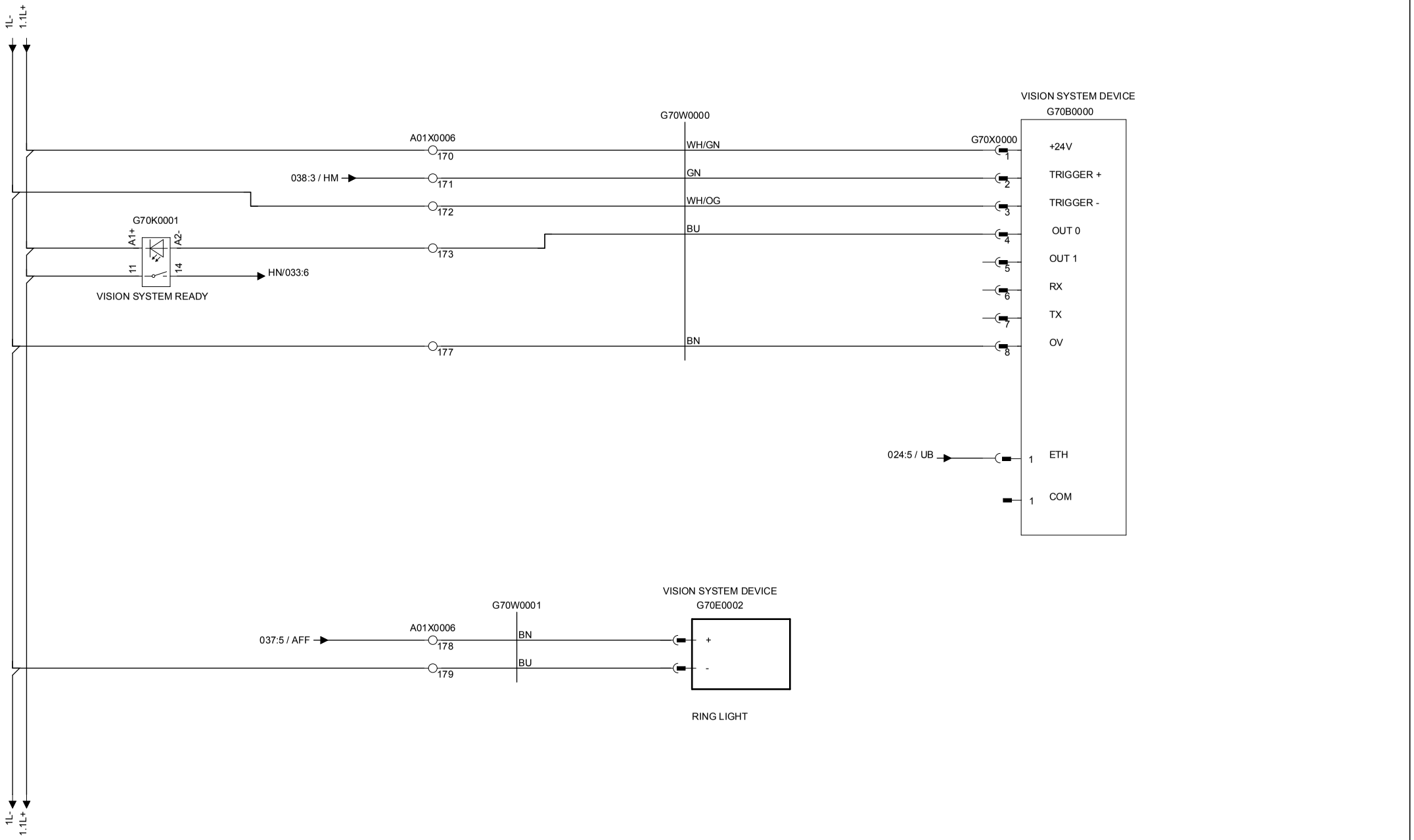

Tetra Pak®	Version Designer: ROG	Version Date: 2015-05-29	Machine: CAP30 Flex ScrewCap 0300		
	ECM No: 736736	Denomination: CIRCUIT DIAGRAM	Page Type: VISION SYSTEM DEVICE		
	Information Security Class: PUBLIC	Document No.: 3218867-0003	Doc. type: ELD	Version: AK	Page: 057

This drawing must not without the consent of Tetra Pak
be copied, transmitted or disclosed to any third party.

1	2	3	4	5	6	7	8	9	10

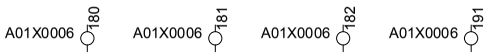

Tetra Pak®	Version Designer: ROG	Version Date: 2015-05-29	Machine: CAP30 Flex ScrewCap 0300		
	ECM No: 736736	Denomination: CIRCUIT DIAGRAM	Page Type: RESERVED PAGE		
	Information Security Class: PUBLIC	Document No.: 3218867-0003	Doc. type: ELD	Version: AK	Page: 058

This drawing must not without the consent of Tetra Pak be copied, transmitted or disclosed to any third party.

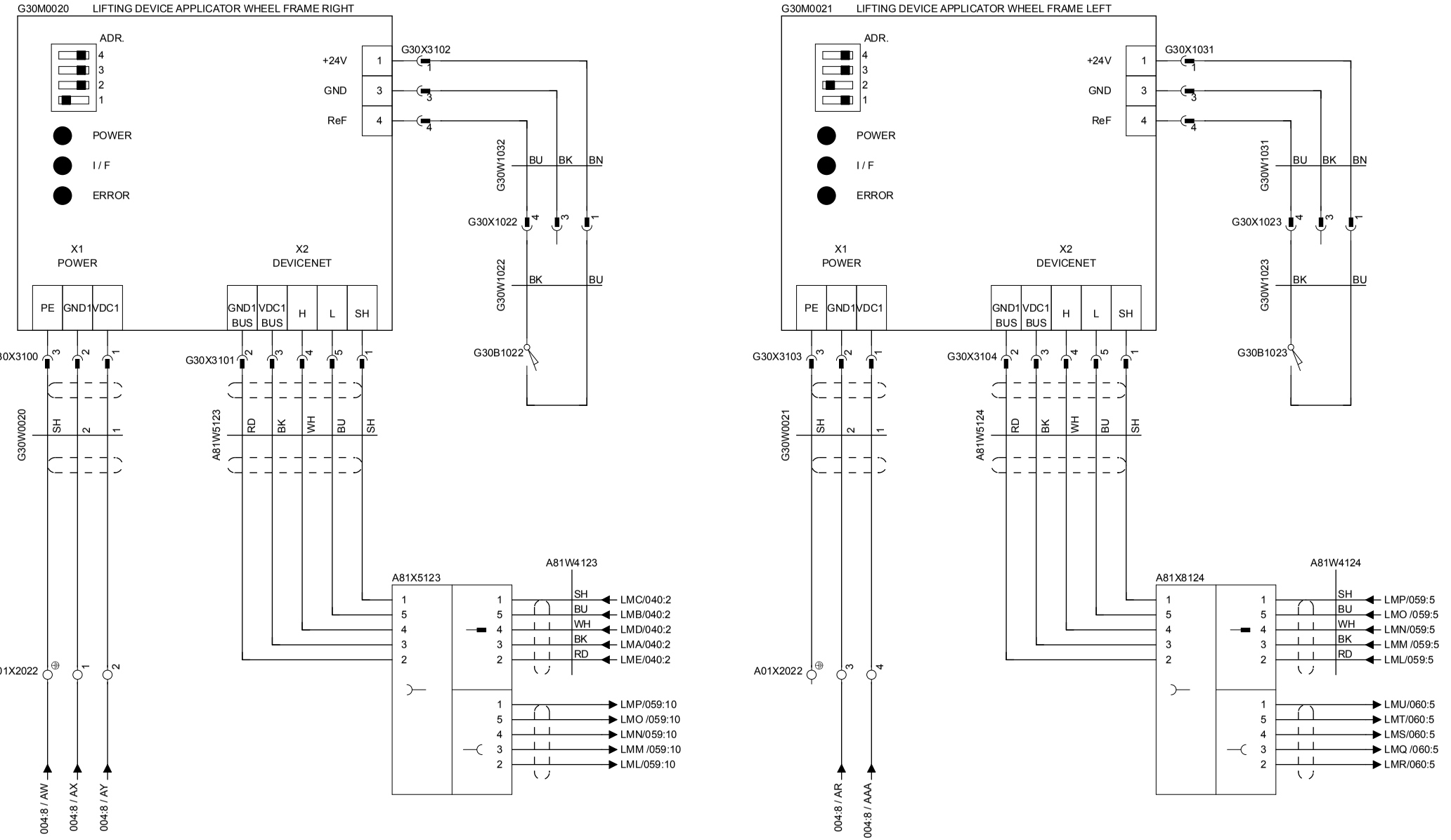

Tetra Pak®	Version Designer: ROG	Version Date: 2015-05-29	Machine: CAP30 Flex ScrewCap 0300	
	ECM No: 736736	Denomination: CIRCUIT DIAGRAM	Page Type: LIFTING DEVICE APPLICATIOR WHEEL	
	Information Security Class: PUBLIC	Document No.: 3218867-0003	Doc. type: ELD	Version: AK / Page: 059

RELEASED

This drawing must not without the consent of Tetra Pak be copied, transmitted or disclosed to any third party.

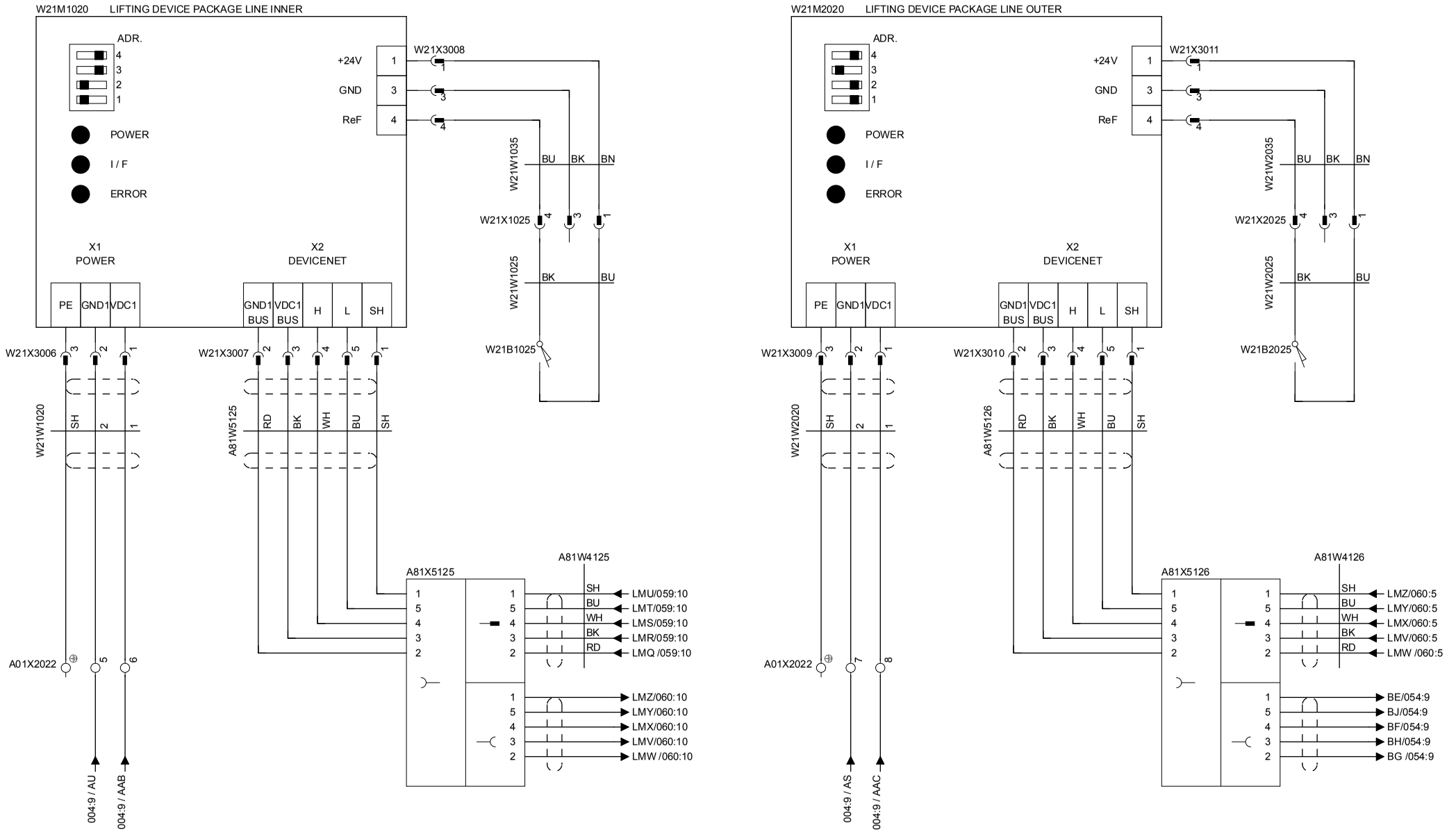

Tetra Pak®	Version Designer: ROG	Version Date: 2015-05-29	Machine: CAP30 Flex ScrewCap 0300	
	ECM No: 736736	Denomination: CIRCUIT DIAGRAM	Page Type: LIFTING DEVICE PACKAGE LINE	
	Information Security Class: PUBLIC	Document No.: 3218867-0003	Doc. type: ELD	Version: AK / Page: 060

This drawing must not without the consent of Tetra Pak
be copied, transmitted or disclosed to any third party.

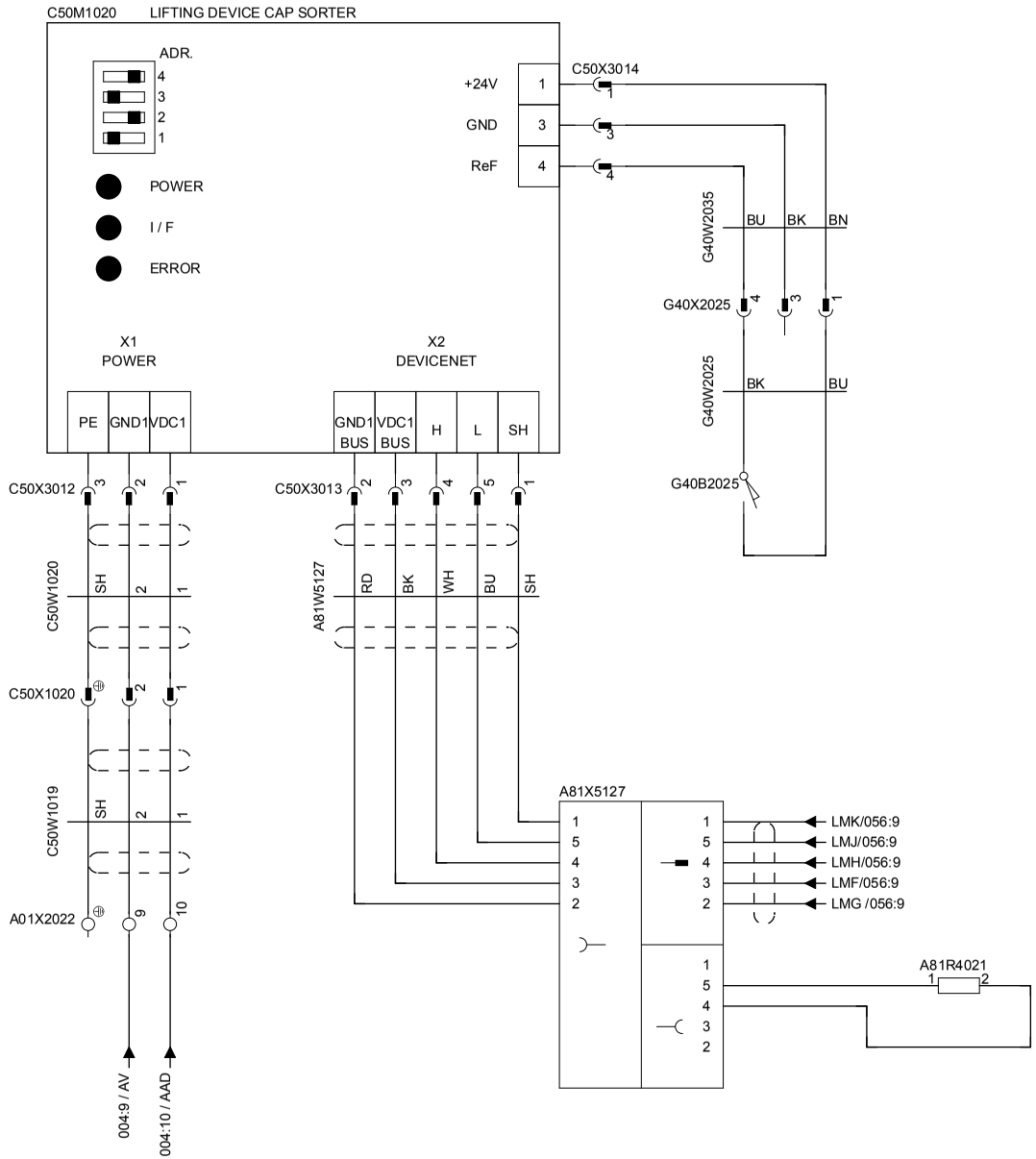

Tetra Pak®	Version Designer: ROG	Version Date: 2015-05-29	Machine: CAP30 Flex ScrewCap 0300					
	ECM No: 736736	Denomination: CIRCUIT DIAGRAM	Page Type: LIFTING DEVICE CAP SORTER					
	Information Security Class: PUBLIC	Document No.: 3218867-0003	Doc. type: ELD	Version: AK	Page: 061			

RELEASED

This drawing must not without the consent of Tetra Pak
be copied, transmitted or disclosed to any third party.

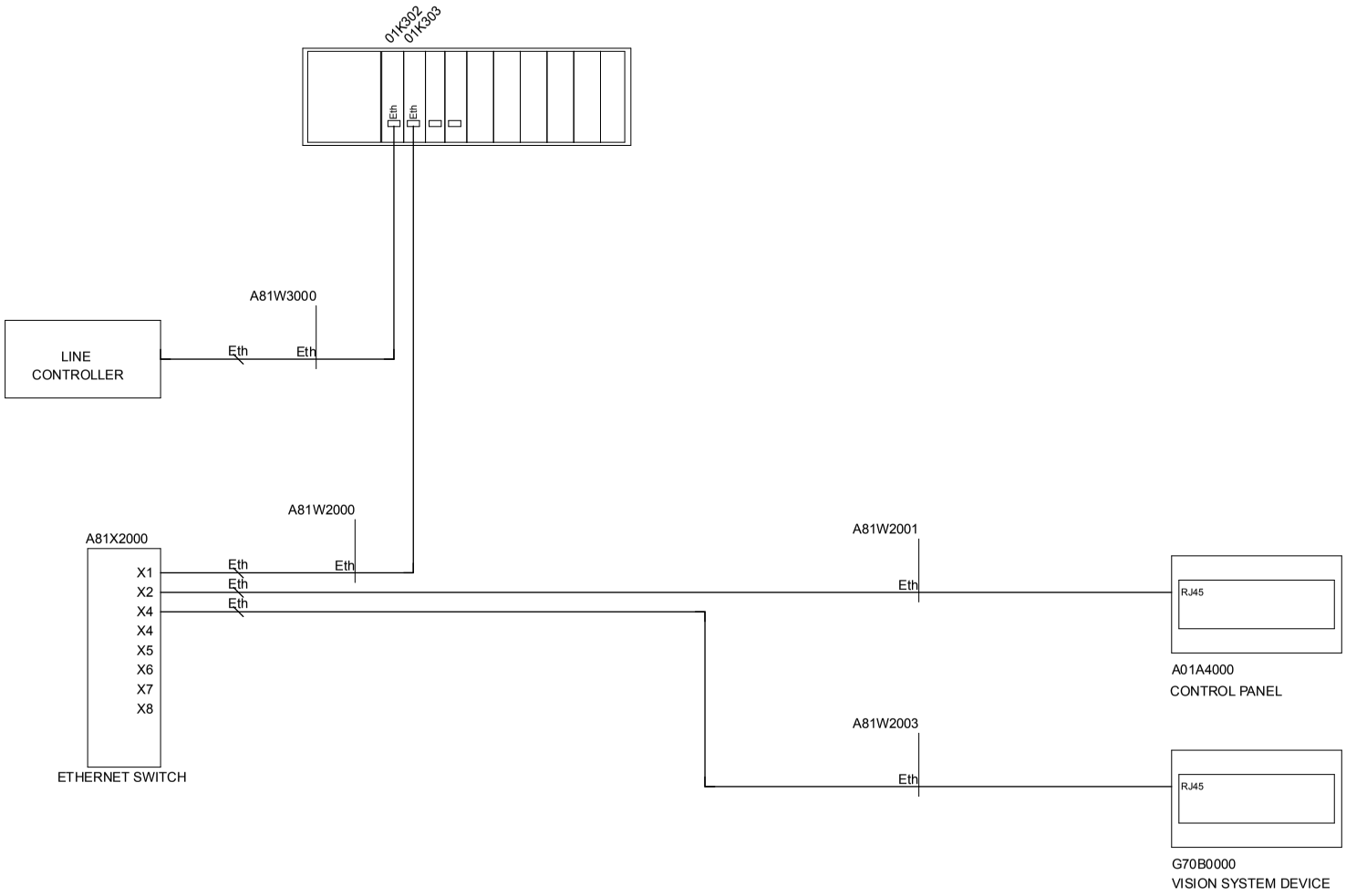

Tetra Pak®	Version Designer: ROG	Version Date: 2015-05-29	Machine: CAP30 Flex ScrewCap 0300	
	ECM No: 736736	Denomination: CIRCUIT DIAGRAM	Page Type: ETHERNET COMMUNICATION	
	Information Security Class: PUBLIC	Document No.: 3218867-0003	Doc. type: ELD	Version: AK / Page: 062

RELEASED

This drawing must not without the consent of Tetra Pak be copied, transmitted or disclosed to any third party.

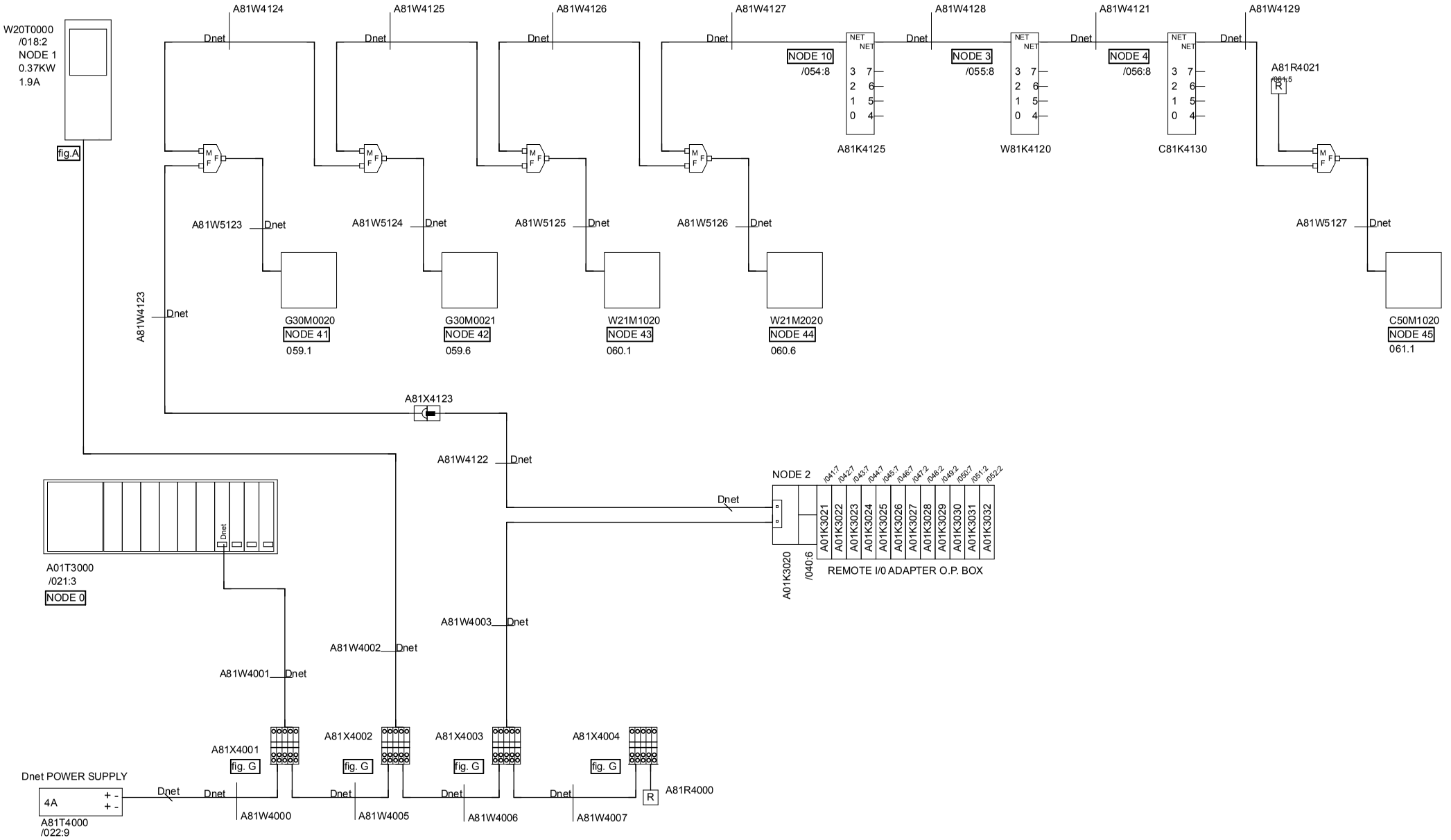

Tetra Pak®	Version Designer: ROG	Version Date: 2015-05-29	Machine: CAP30 Flex ScrewCap 0300	
	ECM No: 736736	Denomination: CIRCUIT DIAGRAM	Page Type: NETWORK LAYOUT DEVICENET	
	Information Security Class: PUBLIC	Document No.: 3218867-0003	Doc. type: ELD	Version: AK / Page: 063

This drawing must not without the consent of Tetra Pak
be copied, transmitted or disclosed to any third party.

1	2	3	4	5	6	7	8	9	10

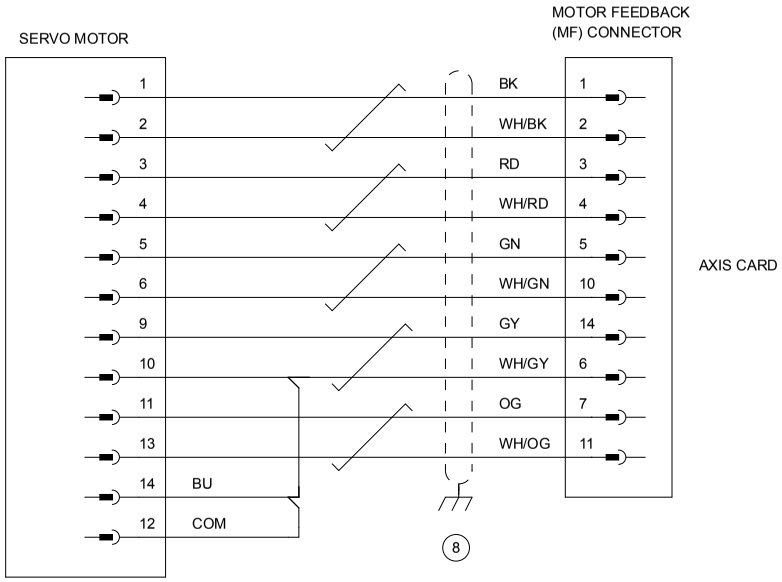

Tetra Pak®	Version Designer: ROG	Version Date: 2015-05-29	Machine: CAP30 Flex ScrewCap 0300			
	ECM No: 736736	Denomination: CIRCUIT DIAGRAM	Page Type: SERVO MOTOR CONNECTIONS			
	Information Security Class: PUBLIC	Document No.: 3218867-0003	Doc. type: ELD	Version: AK	Page: 064	

This drawing must not without the consent of Tetra Pak be copied, transmitted or disclosed to any third party.

Dnet single cable connect

FIGURE A

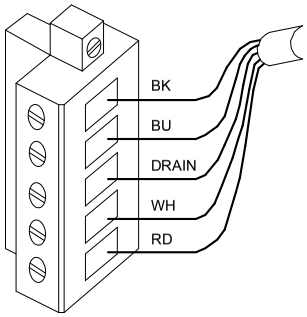

Dnet double cable connect

FIGURE B

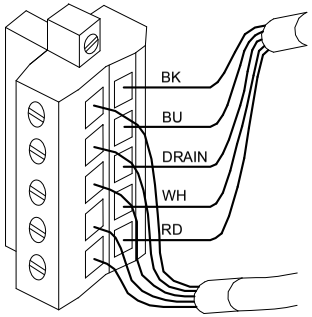

Dnet single cable w termination resistor

FIGURE C

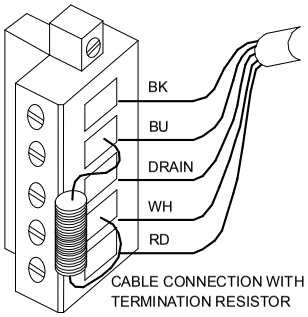

Dnet plc card w power / terminator

FIGURE D

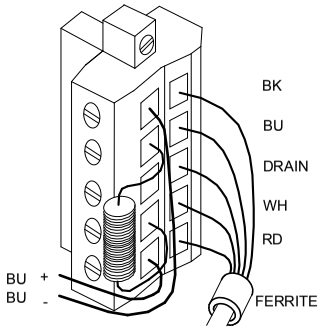

FIGURE E

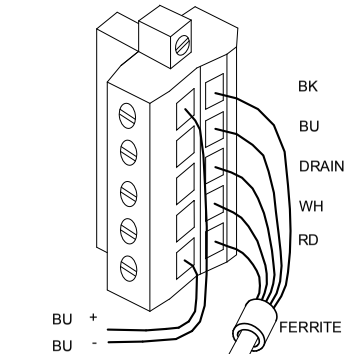

ARMOSTART external connections

FIGURE L

INPUT CONNECTOR



SOCKET



Pin 1 +V Out
Pin 2 Input 1 or 3
Pin 3 Comm
Pin 4 Input 0 or 2
Pin 5 NC (No Connection)

OUTPUT CONNECTOR

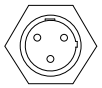

PIN



Pin 1 PE
Pin 2 Return
Pin 3 Relay Out

DEVICENET CONNECTOR



SOCKET



Pin 1 Drain (NC)
Pin 2 +VDNet
Pin 3 -VDNet
Pin 4 CAN_H

MOTOR CONNECTOR



SOCKET



Pin 1 T1 Black
Pin 2 T2 White
Pin 3 T3 Red
Pin 4 GND Green

FIGURE G

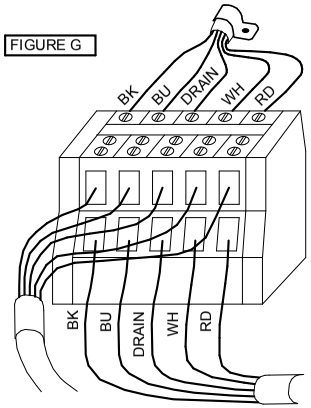

Dnet plc card w ferrite

FIGURE I

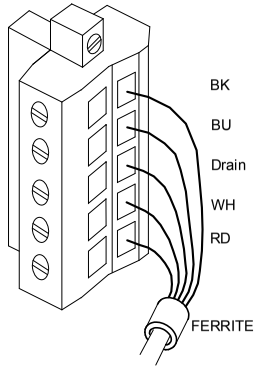

FIGURE F

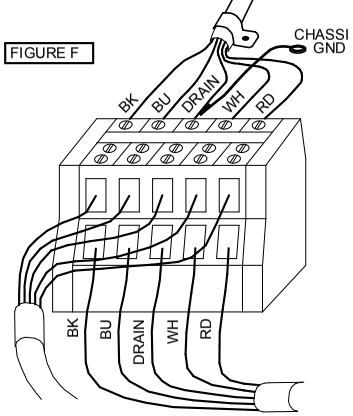

Dnet Festo valve bank M12 connections

FIGURE H

BUS OUT



SOCKET



Pin 1 Drain
Pin 2 V+
Pin 3 V-
Pin 4 CAN_H
Pin 5 CAN_L

BUS IN

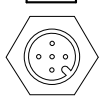

PIN



PWR IN



SOCKET



Pin 1 Drain
Pin 2 V+
Pin 3 V-
Pin 4 CAN_H

RS232 to RS485 adapter

FIGURE W2

RS485 OUT

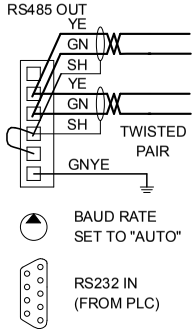

RS232 to RS485 adapter

FIGURE W

RS485 OUT

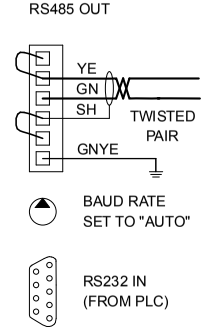

RS485 RJ45 adapter daisy chain

FIGURE X

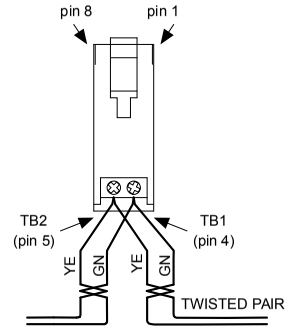

RS485 RJ45 adapter w termination

FIGURE Z

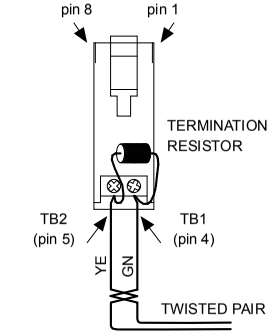

Tetra Pak®	Version Designer: ROG	Version Date: 2015-05-29	Machine: CAP30 Flex ScrewCap 0300	
	ECM No: 736736	Denomination: CIRCUIT DIAGRAM	Page Type: FIGURE DRAWING	
	Information Security Class: PUBLIC	Document No.: 3218867-0003	Doc. type: ELD	Version: AK / Page: 065

RELEASED

This drawing must not without the consent of Tetra Pak
be copied, transmitted or disclosed to any third party.

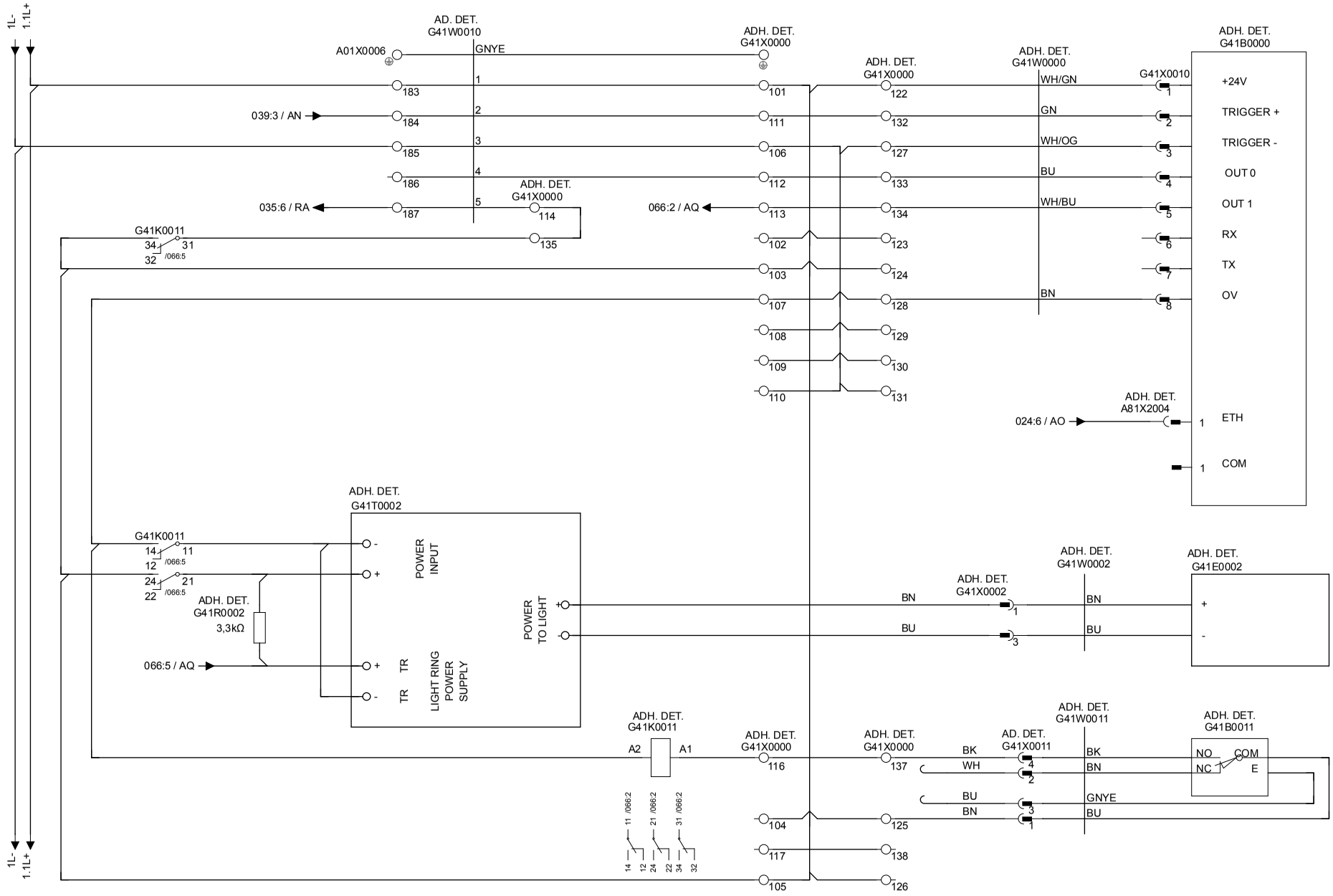

Tetra Pak®	Version Designer: ROG	Version Date: 2015-05-29	Machine: CAP30 Flex ScrewCap 0300		
	ECM No: 736736	Denomination: CIRCUIT DIAGRAM	Page Type: ADHESIVE DETECTOR		
	Information Security Class: PUBLIC	Document No.: 3218867-0003	Doc. type: ELD	Version: AK	Page: 066

5 Line Summary

Description

All connections inside the electrical cabinet are listed in this chapter.

5.1 Line Summary

This page intentionally left blank

This drawing must not without the consent of Tetra Pak be copied, transmitted or disclosed to any third party.

Line summary of 3218867-0003

Net	Page / Col.	Option	Area/Color
1.1L+			
A01X0011:1	001.1		2,5 mm² BU
A01F2001:2	004.5		
1.1L+			
A01X0011:2	001.1		0,75 mm² BU
A01X6000:3	030.3		
1.1L+			
A01X0011:3	001.1		0,75 mm² BU
W21K8000:11	023.4		
1.1L+			
A01X0011:4	001.1		0,75 mm² BU
A01B6000:13	030.5		
1.1L+			
A01X0011:5	001.1		0,75 mm² BU
W20Q0000:13	030.3		
C50Q1000:13	031.6		
1.1L+			
A01X0011:6	001.1		0,75 mm² BU
V01F5000:13	031.6		
W21F8001:13	031.6		
G40F4000:13	031.6		
C50F0000:13	031.6		
W21F8000:13	031.6		
A01F1004:13	031.6		
A01Q1004:13	030.6		

Net	Page / Col.	Option	Area/Color
1.1L+			
A01X0011:7	001.2		0,75 mm² BU
A01K1002:2	003.7		
1.1L+			
A01X0011:8	001.2		0,75 mm² BU
G70K0001:A1+	057.2		
1.1L+			
A01X0011:9	001.2		0,75 mm² BU
A01K1002:2	003.7		
1.1L+			
A01X0011:10	001.2		0,75 mm² BU
G70K0001:11	057.2		
G70K0000:11	037.4		
1.1L+			
A01X0011:11	001.2		0,75 mm² BU
A01X0006:122+	032.1		BRIDGE
A01X0006:116+	032.1		
A01X0006:115+	032.1		
A01X0006:114+	032.1		
A01X0006:113+	032.1		
A01X0006:112+	034.1		
1.1L+			
A01X0006:115+	032.1		0,75 mm² BU
A01X0006:170	057.4		
1.1L+			
A01X0011:12	001.2		0,75 mm² BU

Net	Page / Col.	Option	Area/Color
A01X0006:157	056.10		BRIDGE
A01X0006:156	055.9		
A01X0006:155	040.8		
A01X0006:158	054.10		
1.1L+			
A01X0011:14	001.2		0,75 mm² BU
A01X0006:199+	035.1		BRIDGE
A01X0006:198+	035.1		
A01X0006:197+	035.1		
A01X0006:196+	035.1		
A01X0006:195+	035.1		
A01X0006:194+	035.1		
A01X0006:193+	035.1		
A01X0006:192+	035.1		
1.1L+			
A01X0011:21	001.3		2,5 mm² BU
A01X0011:28	001.4		
1.1L+			
A01X0011:23	001.3		0,75 mm² BU
A01X0006:183	066.3		
1.1L+			
A01X0011:24	001.3		0,75 mm² BU
A01K3006:18	035.7		
1.2.22L+			
A01X0022:1	001.1		0,75 mm² BU
F09K0000:Q1	025.7		

Net	Page / Col.	Option	Area/Color
1.2.22L+			
A01X0022:2	001.1		0,75 mm² BU
A01K3007:20	037.2		
1.2.22L+			
A01X0022:3	001.1		0,75 mm² BU
A01X0006:163	040.8		
1.2.22L+			
A01X0022:4	001.1		0,75 mm² BU
W21Q4000:A1	029.5		
W21Q6000:A1	029.5	OUT.P.CONV.	
1.2.22L+			
A01X0022:5	001.1		0,75 mm² BU
A01K3008:34	039.2		
1.2.22L+			
A01X0022:9	001.2		2,5 mm² BU
A01X0022:12	001.2		
1.2.32L+			
A01X0032:1	001.4		0,75 mm² BU
F09K0000:Q0	025.7		
1.2.32L+			
A01X0032:2	001.4		0,75 mm² BU
F09K0001:S14	025.2		
1.2.32L+			
A01X0032:3	001.4		0,75 mm² BU
A01X0006:164	040.8		

Tetra Pak®

Version Designer	Version Date	Machine
ROG	2015-05-29	CAP30 Flex ScrewCap 0300

ECM No	Denomination	Page Type
736736	LINE SUMMARY	LINE SUMMARY

Information Security Class	Document No.	Doc. type	Version	Page
PUBLIC	3218867-0004	ELD	AK	001

This drawing must not without the consent of Tetra Pak be copied, transmitted or disclosed to any third party.

Line summary of 3218867-0003

Net	Page / Col.	Option	Area/Color
1.2.32L+			
A01X0032:4	001.4		0,75 mm² BU
A01K3005:19	032.7		
1.2.32L+			
A01X0032:5	001.4		0,75 mm² BU
F09K0001:A1	025.2		
1.2.32L+			
A01X0032:9	001.4		2,5 mm² BU
A01X0032:12	001.5		
1.2.42L+			
A01X0042:1	001.6		0,75 mm² BU
F09K0001:14	025.2		
1.2.42L+			
A01X0042:2	001.6		0,75 mm² BU
W20Q0000:A1	029.5		
W21Q4010:A1	029.5	P. ALIGNER	
1.2.42L+			
A01X0042:3	001.6		0,75 mm² BU
A01K3008:16	038.2		
1.2.42L+			
A01X0042:9	001.7		2,5 mm² BU
A01X0042:12	001.7		
1.2.43L+			
A01X0043:1	001.1		0,75 mm² BU
F09K0001:24	025.2		

Net	Page / Col.	Option	Area/Color
1.2.43L+			
A01X0043:2	001.1		0,75 mm² BU
G30T0000:7	008.7		
1.2.43L+			
A01X0043:3	001.1		0,75 mm² BU
G40T0000:7	009.7		
1.2.43L+			
A01X0043:4	001.1		0,75 mm² BU
G40T0002:7	010.7		
1.2.43L+			
A01X0043:5	001.1		0,75 mm² BU
W21T1000:7	011.7		
1.2.43L+			
A01X0043:6	001.1		0,75 mm² BU
W21T2000:7	012.7		
1.2.43L+			
A01X0043:7	001.2		0,75 mm² BU
G40T3000:7	013.7		
1.2.43L+			
A01X0043:8	001.2		0,75 mm² BU
G30T4000:7	014.7		
1.2.43L+			
A01X0043:9	001.2		0,75 mm² BU
G70T1000:7	015.7	POS.SYS.	
1.2.43L+			
A01X0043:12	001.2		2,5 mm² BU
A01X0043:16	001.2		

Net	Page / Col.	Option	Area/Color
1.2.44L+			
A01X0044:1	001.4		0,75 mm² BU
F09K0001:34	025.2		
1.2.44L+			
A01X0044:2	001.4		0,75 mm² BU
G30T0000:5	008.7		
1.2.44L+			
A01X0044:3	001.4		0,75 mm² BU
G40T0000:5	009.7		
1.2.44L+			
A01X0044:4	001.4		0,75 mm² BU
G40T0002:5	010.7		
1.2.44L+			
A01X0044:5	001.4		0,75 mm² BU
W21T1000:5	011.7		
1.2.44L+			
A01X0044:6	001.4		0,75 mm² BU
W21T2000:5	012.7		
1.2.44L+			
A01X0044:7	001.4		0,75 mm² BU
G40T3000:5	013.7		
1.2.44L+			
A01X0044:8	001.4		0,75 mm² BU
G30T4000:5	014.7		
1.2.44L+			
A01X0044:9	001.4		0,75 mm² BU
G70T1000:5	015.7	POS.SYS.	

Net	Page / Col.	Option	Area/Color
1.2.44L+			
A01X0044:12	001.5		2,5 mm² BU
A01X0044:16	001.5		
1.2.72L+			
A01X0072:1	001.6		0,75 mm² BU
F09K0003:24	025.4		
1.2.72L+			
A01X0072:6	001.7		2,5 mm² BU
A01X0072:8	001.7		
1.2L+			
A01X0012:1	001.6		2,5 mm² BU
A01F2002:2	004.5		
1.2L+			
A01X0012:2	001.6		0,75 mm² BU
A81X2000:US1	024.2		
A81X2000:US2	024.2		
F09K0000:24V	025.7		
1.2L+			
A01X0012:3	001.6		0,75 mm² BU
F09K0000:L0	025.7		
1.2L+			
A01X0012:4	001.7		0,75 mm² BU
F09K0001:13	025.2		
1.2L+			
A01X0012:6	001.7		0,75 mm² BU
A01K3007:10	036.2		

This drawing must not without the consent of Tetra Pak be copied, transmitted or disclosed to any third party.

Line summary of 3218867-0003

Net	Page / Col.	Option	Area/Color
1.2L+			
A01X0012:8	001.7		0,75 mm² BU
A81K5000:1	021.9	COM.UNIT	
1.2L+			
A01X0012:9	001.7		0,75 mm² BU
F09K0000:L1	025.7		
1.2L+			
A01X0012:10	001.7		0,75 mm² BU
A01K1010:4	029.3		
1.2L+			
A01X0012:11	001.7		0,75 mm² BU
F09K0001:23	025.2		
1.2L+			
A01X0012:14	001.8		0,75 mm² BU
F09K0003:13	025.4		
1.2L+			
A01X0012:15	001.8		2,5 mm² BU
A01X0012:20	001.8		
1.2L+			
A01X0012:16	001.8		0,75 mm² BU
A01X0006:5	026.2		
1.2L+			
A01X0012:17	001.8		0,75 mm² BU
A01X0006:154	042.3		
1.2L+			
A01X0012:18	001.8		0,75 mm² BU
F09K0001:33	025.2		

Net	Page / Col.	Option	Area/Color
1.2L+			
A01X0012:19	001.8		0,75 mm² BU
F09K0003:23	025.4		
1.3L+			
A01X0013:1	001.9		2,5 mm² BU
A01F2003:2	004.6		
1.3L+			
A01X0013:2	001.9		0,75 mm² BU
A01X0006:126	027.2		
1.3L+			
A01X0013:3	001.9		0,75 mm² BU
A01X0006:132	028.2		
1.3L+			
A01X0013:4	001.9		0,75 mm² BU
A01X0006:138	028.6		
1.3L+			
A01X0013:5	001.9		0,75 mm² BU
A01X0006:160	040.8		
1.3L+			
A01X0013:9	001.10		2,5 mm² BU
A01X0013:12	001.10		
1.5L+			
A01T3000:24V	021.3		2,5 mm² BU
A01F2005:2	004.6		0,75 mm² BU
A01X0006:1	024.8		

Net	Page / Col.	Option	Area/Color
1L1			
A01X0008:1	002.1		6 mm² BK
A01Q1005:2	016.3		10 mm² BK
V01F5000:1	016.6		
1L1			
A01X0008:2	002.1		6 mm² BK
W21F8001:1	016.8		
1L1			
A01X0008:3	002.1		6 mm² BK
C50F0000:1	017.6		BUS.BAR
G40F4000:1	017.4		
1L1			
A01X0008:4	002.2		6 mm² BK
W21F4000:1	018.8		
1L1			
A01X0008:16	002.2		6 mm² BK
W21F4010:1	020.7	P.ALIGNER	
1L2			
A01X0008:5	002.3		6 mm² BK
A01Q1005:4	016.3		10 mm² BK
V01F5000:3	016.6		
1L2			
A01X0008:6	002.3		6 mm² BK
W21F8001:3	016.8		
1L2			
A01X0008:7	002.3		6 mm² BK

Net	Page / Col.	Option	Area/Color
C50F0000:3	017.6		BUS.BAR
G40F4000:3	017.4		
1L2			
A01X0008:8	002.3		6 mm² BK
C50F1000:1	019.2		
1L3			
A01X0008:9	002.5		6 mm² BK
A01Q1005:6	016.3		10 mm² BK
V01F5000:5	016.6		
1L3			
A01X0008:10	002.5		6 mm² BK
C50F0000:5	017.6		BUS.BAR
G40F4000:5	017.4		
1L3			
A01X0008:11	002.5		6 mm² BK
W20F0000:1	018.2		
1L3			
A01X0008:12	002.5		6 mm² BK
W21F6000:1	020.2	OUT. P.CONV.	
1L+			
A01F2005:1	004.6		4 mm² BU
A01F2004:1	005.4		
A01F2003:1	004.6		
A01F2002:1	004.5		
A01F2001:1	004.5		
A01X2001:2	004.4		

This drawing must not without the consent of Tetra Pak be copied, transmitted or disclosed to any third party.

Line summary of 3218867-0003

Net	Page / Col.	Option	Area/Color
1L-			
A01X0010:1	001.1		4 mm² BU
A01X2001:4	004.4		
1L-			
A01X0010:2	001.1		0,75 mm² BU
A81K5000:2	021.9	COM.UNIT	
1L-			
A01X0010:3	001.1		0,75 mm² BU
F09K0001:A2	025.2		
1L-			
A01X0010:4	001.1		0,75 mm² BU
F09K0000:0V	025.7		
F09K0002:BU	025.9		
1L-			
A01X0010:5	001.1		0,75 mm² BU
A81X2000:GND	024.2		
1L-			
A01X0010:6	001.1		0,75 mm² BU
A01P5000:2	037.4		
1L-			
A01X0010:7	001.2		0,75 mm² BU
F09K0003:S14	025.4		
1L-			
A01X0010:8	001.2		0,75 mm² BU
A01X0006:162	039.8		
A01X0006:165	054.10		

Net	Page / Col.	Option	Area/Color
1L-			
A01X0010:10	001.2		0,75 mm² BU
W20Q0000:A2	029.5		
W21Q4000:A2	029.5		
W21Q6000:A2	029.5	OUT.P.CONV.	
C50Q1000:A2	025.5		
A01Q1005:A2	029.5		
W21Q4010:A2	029.5	P. ALIGNER	
1L-			
A01X0010:11	001.2		0,75 mm² BU
V01Q5000:A2	036.3		
1L-			
A01X0010:12	001.2		0,75 mm² BU
A01K1010:8	025.8		
1L-			
A01X0010:13	001.2		0,75 mm² BU
F09K0001:S24	025.2		
1L-			
A01X0010:14	001.2		0,75 mm² BU
A01K3005:18	031.8		
1L-			
A01X0010:15	001.2		0,75 mm² BU
A01K3005:036	033.8		
1L-			
A01X0010:16	001.2		0,75 mm² BU
A01K3007:9	036.2		

Net	Page / Col.	Option	Area/Color
1L-			
A01X0010:17	001.3		0,75 mm² BU
A01K3007:19	037.2		
1L-			
A01X0010:20	001.3		0,75 mm² BU
A81X2000:GND	024.2		
1L-			
A01X0010:21	001.3		2,5 mm² BU
A01T3000:0V	021.3		
1L-			
A01X0010:22	001.3		0,75 mm² BU
A01X6000:6	005.2		
1L-			
A01X0010:23	001.3		0,75 mm² BU
A01X0006:199-	035.1		BRIDGE
A01X0006:198-	035.1		
A01X0006:197-	035.1		
A01X0006:196-	035.1		
A01X0006:195-	035.1		
A01X0006:194-	035.1		
A01X0006:193-	035.1		
A01X0006:192-	035.1		
1L-			
A01X0006:192-	035.1		0,75 mm² BU
A01X0006:140	028.6		

Net	Page / Col.	Option	Area/Color
1L-			
A01X0006:195-	035.1		0,75 mm² BU
A01X0006:177	057.4		
1L-			
A01X0006:196-	035.1		0,75 mm² BU
A01X0006:179	057.4		
1L-			
A01X0006:198-	035.1		0,75 mm² BU
A01X0006:203	005.4		
1L-			
A01X0010:24	001.3		0,75 mm² BU
A01X0006:122-	032.1		BRIDGE
A01X0006:116-	032.1		
A01X0006:115-	032.1		
A01X0006:114-	032.1		
A01X0006:113-	032.1		
A01X0006:112-	034.1		
1L-			
A01X0006:112-	034.1		0,75 mm² BU
A01X0006:2	024.8		
1L-			
A01X0006:113-	032.1		0,75 mm² BU
A01X0006:128	027.2		
1L-			
A01X0006:114-	032.1		0,75 mm² BU
A01X0006:134	028.2		

This drawing must not without the consent of Tetra Pak be copied, transmitted or disclosed to any third party.

Line summary of 3218867-0003

Net	Page / Col.	Option	Area/Color
1L-			
A01X0010:25	001.3		0,75 mm² BU
A01X0006:152	056.10		BRIDGE
A01X0006:151	055.9		
A01X0006:150	040.8		0,75 mm² BU
A01X0006:172	057.4		
1L-			
A01X0010:26	001.3		0,75 mm² BU
A01K3006:19	035.8		
1L-			
A01X0010:27	001.4		0,75 mm² BU
A01K3006:09	034.8		
1L-			
A01X0010:31	001.4		0,75 mm² BU
A01K7000:1	036.3		
A01Q1004:A2	038.4		
G70K0000:A2-	037.4		
1L-			
A01X0010:32	001.4		0,75 mm² BU
A01P5001:2	037.4		
1L-			
A01X0010:33	001.4		0,75 mm² BU
G30T0000:6	008.7		
1L-			
A01X0010:34	001.4		0,75 mm² BU
G40T0000:6	009.7		

Net	Page / Col.	Option	Area/Color
1L-			
A01X0010:35	001.4		0,75 mm² BU
G40T0002:6	010.7		
1L-			
A01X0010:36	001.4		0,75 mm² BU
W21T1000:6	011.7		
1L-			
A01X0010:37	001.4		0,75 mm² BU
W21T2000:6	012.7		
1L-			
A01X0010:38	001.5		0,75 mm² BU
G40T3000:6	013.7		
1L-			
A01X0010:39	001.5		0,75 mm² BU
G30T4000:6	014.7		
1L-			
A01X0010:40	001.5		4 mm² BU
A01X0010:41	001.5		
1L-			
A01X0010:42	001.5		0,75 mm² BU
W20Q0004:A2	036.3		
W20K0004:A2	036.3		
1L-			
A01X0010:44	001.5		0,75 mm² BU
G70T1000:6	015.7	POS.SYS.	

Net	Page / Col.	Option	Area/Color
1L-			
A01X0010:45	001.5		4 mm² BU
A01X0010:60	001.7		
1L-			
A01X0010:46	001.5		0,75 mm² BU
W20K0002:1	037.4		
1L-			
A01X0010:47	001.5		0,75 mm² BU
F09K0003:A1	025.4		
1L-			
A01X0010:48	001.6		0,75 mm² BU
A01Q6000:A2	036.3		
1L-			
A01X0010:49	001.6		0,75 mm² BU
W21Q8000:A2	036.3		
W21Q8001:A2	036.3		
1L-			
A01X0010:50	001.6		0,75 mm² BU
C50Q0000:A2	037.4		
1L-			
A01X0010:51	001.6		0,75 mm² BU
G40Q4000:A2	038.4		
C50Q0000:A2	037.4		
1L-			
A01X0010:52	001.6		0,75 mm² BU
A01Q2020:A2	038.4		

Net	Page / Col.	Option	Area/Color
1L-			
A01X0010:53	001.6		0,75 mm² BU
A01X0006:185	066.3		
1L-			
A01X0010:55	001.6		4 mm² BU
A01X0010:56	001.6		
1L-			
A01X0010:59	001.7		1,5 mm² BU
A01T7000:V-	006.2	ULCSA	
2L2			
A01X0008:13	002.1		2,5 mm² BK
A01F3000:2	004.9		
2L2			
A01X0008:14	002.1		1,5 mm² BK
A81T4000:L	022.9		
2L2			
A01X0008:15	002.1		1,5 mm² BK
W21K8000:A1	023.4		
2L2			
A01X0008:28	002.2		1,5 mm² BK
W21K8001:A1	023.7		
2L2			
A01X0008:29	002.2		1,5 mm² BK
W20Q0004:1	018.6		
2L+			
A01T2020:+	004.7		4 mm² BU

This drawing must not without the consent of Tetra Pak be copied, transmitted or disclosed to any third party.

Line summary of 3218867-0003

Net	Page / Col.	Option	Area/Color
2L+			
A01F2021:1	004.8		BRIDGE
A01F2022:1	004.8		
A01F2023:1	004.9		
A01F2024:1	004.9		
A01F2025:1	004.10		
2L-			
A01T2020:-	004.7		4 mm² BU
A01X2021:1	004.8		BRIDGE
A01X2021:3	004.8		
A01X2021:5	004.9		
A01X2021:7	004.9		
A01X2021:9	004.9		
A-PULSE			
W21Q4000:61	025.2		0,75 mm² BU
C50Q1000:61	025.2		
W20Q0000:61	025.2		
A01Q1004:21	025.2		
F09K0000:IQ10	025.7		
A01X0006:139	028.6		
A01X0006:133	028.2		
A01X0006:127	027.2		
A01X0006:6	026.2		
L1			
A01X0007:1	002.1		10 mm² BK
A01K1000:L1	003.6		

Net	Page / Col.	Option	Area/Color
L1			
A01X0007:2	002.1		6 mm² BK
A01F2000:1	004.1		
L1			
A01X0007:3	002.1		10 mm² BK
A01F1004:1	008.1		
L1			
A01X0007:4	002.2		10 mm² BK
A01Q1005:1	016.3		
L1			
A01X0007:5	002.2		6 mm² BK
A01F1005:1	008.3		
L1			
A01X0007:6	002.2		6 mm² BK
W21F8000:1	016.1		
L1			
A01X0007:7	002.2		6 mm² BK
A01F2020:1	004.6		
L2			
A01X0007:1	002.3		10 mm² BK
A01K1000:L2	003.6		
L2			
A01X0007:2	002.3		6 mm² BK
A01F2000:3	004.1		
L2			
A01X0007:3	002.3		10 mm² BK
A01F1004:3	008.1		

Net	Page / Col.	Option	Area/Color
L2			
A01X0007:4	002.3		10 mm² BK
A01Q1005:3	016.3		
L2			
A01X0007:5	002.4		6 mm² BK
A01F6000:1	007.4		
L2			
A01X0007:6	002.4		6 mm² BK
A01F3000:1	004.9		
L2			
A01X0007:7	002.4		6 mm² BK
A01F2020:3	004.6		
L3			
A01X0007:1	002.5		10 mm² BK
A01K1000:L3	003.6		
L3			
A01X0007:2	002.5		6 mm² BK
A01F2000:5	004.1		
L3			
A01X0007:3	002.5		10 mm² BK
A01F1004:5	008.1		
L3			
A01X0007:4	002.5		10 mm² BK
A01Q1005:5	016.3		
L3			
A01X0007:5	002.5		6 mm² BK
A01F7002:1	005.9		

Net	Page / Col.	Option	Area/Color
L3			
A01X0007:6	002.5		6 mm² BK
A01F7000:1	006.2	ULCSA	
L3			
A01X0007:7	002.6		6 mm² BK
A01F2020:5	004.6		

6 Cabinet Terminal Summary

Description

All terminals inside the electrical cabinet are listed in this chapter. The field *Opt.* specifies if the terminal is reserved for an option.

6.1 Cabinet Terminal Summary

This page intentionally left blank

This drawing must not without the consent of Tetra Pak be copied, transmitted or disclosed to any third party.

Cabinet terminal summary of 3218867-0003

A01X0002	Page / Col.	Option
A01X0002:1	003.8	
A01X0002:2	008.2	
A01X0002:3		
A01X0002:4	016.6	
A01X0002:5	016.10	
A01X0002:6	007.5	
A01X0002:7	016.2	
A01X0002:8	021.8	COM.UNIT
A01X0002:9		
A01X0002:10	018.4	
A01X0002:11	018.9	
A01X0002:12	020.3	OPT.P.CONV.
A01X0002:13	017.4	
A01X0002:14	017.6	
A01X0002:15	021.4	
A01X0002:16	019.3	
A01X0002:17	022.10	
A01X0002:18	008.4	
A01X0002:19	024.1	
A01X0002:20	024.9	
A01X0002:21		
A01X0002:22	006.2	
A01X0002:23	004.9	
A01X0002:24	004.7	
A01X0002:25	004.7	
A01X0002:26	003.8	
A01X0002:27	003.9	
A01X0002:28	003.10	
A01X0002:29		
A01X0002:30	004.3	
A01X0002:31	004.2	
A01X0002:32	004.2	
A01X0002:33	004.3	
A01X0002:34	019.1	
A01X0002:35	020.1	OPT.P.CONV.
A01X0002:36	004.8	
A01X0002:37	004.10	
A01X0002:38	005.9	
A01X0002:39	018.1	
A01X0002:40		
A01X0002:41	022.8	
A01X0002:42	027.4	
A01X0002:43	028.4	
A01X0002:44	028.8	
A01X0002:45	018.7	
A01X0002:46	020.8	P.ALIGNER
A01X0002:47	020.6	P.ALIGNER
A01X0002:48		
A01X0002:49		
A01X0002:50		

A01X0003	Page / Col.	Option
A01X0003:1	003.9	
A01X0003:2		
A01X0003:3	007.5	
A01X0003:4	008.4	
A01X0003:5	016.7	
A01X0003:6	016.9	
A01X0003:7	018.3	
A01X0003:8	018.8	
A01X0003:9	020.2	OUT. P.CONV.
A01X0003:10	019.2	
A01X0003:11	006.3	
A01X0003:12	020.7	P.ALIGNER
A01X0003:13	016.2	
A01X0003:14	005.9	
A01X0003:15	018.6	
A01X0003:16	023.3	
A01X0003:17		
A01X0003:18		
A01X0003:19	023.6	
A01X0003:20		
A01X0003:21	022.9	

A01X0004	Page / Col.	Option
A01X0004:1	018.6	
A01X0004:2	018.6	
A01X0004:3	018.5	
A01X0004:4	018.5	
A01X0004:5		
A01X0004:10	016.1	
A01X0004:11	016.2	
A01X0004:12		
A01X0004:13	016.2	
A01X0004:14	016.6	
A01X0004:15	016.6	
A01X0004:16	016.6	
A01X0004:17	016.6	
A01X0004:18	016.6	
A01X0004:19	016.8	
A01X0004:20	016.9	
A01X0004:21	016.9	
A01X0004:22	016.10	
A01X0004:23	017.4	
A01X0004:24	017.4	
A01X0004:25	017.4	
A01X0004:26	017.4	
A01X0004:27	017.6	
A01X0004:28	017.6	
A01X0004:29	017.6	
A01X0004:30	017.6	

This drawing must not without the consent of Tetra Pak be copied, transmitted or disclosed to any third party.

Cabinet terminal summary of 3218867-0003

A01X0004	Page / Col.	Option
A01X0004:31		
A01X0004:32		
A01X0004:33		
A01X0004:34		
A01X0004:35		
A01X0004:36		
A01X0004:37		
A01X0004:38		

A01X0006	Page / Col.	Option
A01X0006:1	024.8	
A01X0006:2	024.8	
A01X0006:3	024.9	
A01X0006:4		
A01X0006:5	026.2	
A01X0006:6	026.2	
A01X0006:7	026.3	
A01X0006:8	026.3	
A01X0006:9	026.4	
A01X0006:10	026.4	
A01X0006:11	026.6	
A01X0006:12	026.6	
A01X0006:13	026.7	
A01X0006:14	026.7	
A01X0006:15	026.8	

A01X0006:16	026.8
A01X0006:17	026.9
A01X0006:18	026.9
A01X0006:19	026.10
A01X0006:20	026.10
A01X0006:112	034.7
A01X0006:112+	034.1
A01X0006:112-	034.1
A01X0006:113	034.7
A01X0006:113+	032.1
A01X0006:113-	032.1
A01X0006:114	034.7
A01X0006:114+	032.1
A01X0006:114-	032.1
A01X0006:115	032.7
A01X0006:115+	032.1
A01X0006:115-	032.1
A01X0006:116	032.7
A01X0006:116+	032.1
A01X0006:116-	032.1
A01X0006:117	032.7
A01X0006:118	032.7
A01X0006:119	032.7
A01X0006:120	032.7
A01X0006:121	032.7

A01X0006:122	033.7
A01X0006:122+	032.1
A01X0006:122-	032.1
A01X0006:123	033.7
A01X0006:124	033.7
A01X0006:125	033.7
A01X0006:126	027.2
A01X0006:127	027.2
A01X0006:128	027.2
A01X0006:129	027.2
A01X0006:130	027.4
A01X0006:131	027.4
A01X0006:132	028.2
A01X0006:133	028.2
A01X0006:134	028.2
A01X0006:135	028.2
A01X0006:136	028.4
A01X0006:137	028.4
A01X0006:138	028.6
A01X0006:139	028.6
A01X0006:140	028.6
A01X0006:141	028.6
A01X0006:142	028.8
A01X0006:143	028.8
A01X0006:144	037.3

A01X0006:145	037.3
A01X0006:146	039.3
A01X0006:147	039.3
A01X0006:148	039.3
A01X0006:150	040.8
A01X0006:151	055.9
A01X0006:152	056.10
A01X0006:153	042.3
A01X0006:154	042.3
A01X0006:155	040.8
A01X0006:156	055.9
A01X0006:157	056.10
A01X0006:158	054.10
A01X0006:159	
A01X0006:160	040.8
A01X0006:161	
A01X0006:162	039.8
A01X0006:163	040.8
A01X0006:164	040.8
A01X0006:165	054.10
A01X0006:166	039.3
A01X0006:167	039.3
A01X0006:168	039.3
A01X0006:169	039.3
A01X0006:170	057.4

This drawing must not without the consent of Tetra Pak be copied, transmitted or disclosed to any third party.

Cabinet terminal summary of 3218867-0003

A01X0006	Page / Col.	Option
A01X0006:171	057.4	
A01X0006:172	057.4	
A01X0006:173	057.4	
A01X0006:174	034.7	
A01X0006:175	034.7	
A01X0006:176	034.7	
A01X0006:177	057.4	
A01X0006:178	057.4	
A01X0006:179	057.4	
A01X0006:180	058.1	
A01X0006:181	058.2	
A01X0006:182	058.3	
A01X0006:183	066.3	
A01X0006:184	066.3	
A01X0006:185	066.3	
A01X0006:186	066.3	
A01X0006:187	066.3	
A01X0006:188		
A01X0006:189		
A01X0006:190		
A01X0006:191	058.3	
A01X0006:192	035.6	
A01X0006:192+	035.1	
A01X0006:192-	035.1	

A01X0006:193	035.6	
A01X0006:193+	035.1	
A01X0006:193-	035.1	
A01X0006:194	035.6	
A01X0006:194+	035.1	
A01X0006:194-	035.1	
A01X0006:195	035.6	
A01X0006:195+	035.1	
A01X0006:195-	035.1	
A01X0006:196		
A01X0006:196+	035.1	
A01X0006:196-	035.1	
A01X0006:197		
A01X0006:197+	035.1	
A01X0006:197-	035.1	
A01X0006:198		
A01X0006:198+	035.1	
A01X0006:198-	035.1	
A01X0006:199		
A01X0006:199+	035.1	
A01X0006:199-	035.1	
A01X0006:200	035.5	
A01X0006:201	035.6	
A01X0006:202	005.4	
A01X0006:203	005.4	

A01X0006:204	038.3	
A01X0006:205	038.3	
A01X0006:206	038.3	
A01X0006:207		
A01X0006:208		
A01X0006:209		
A01X0006:GND	066.3	
A01X0006:⏚	026.7	
A01X0006:⏚	040.8	
A01X0006:⏚		
A01X0006:⏚		
A01X0006:⏚		
A01X0006:⏚		
A01X0006:⏚		
A01X0006:⏚		
A01X0006:⏚		
A01X0006:⏚		
A01X0006:⏚		
A01X0006:⏚		
A01X0006:⏚		
A01X0006:⏚	056.10	

A01X0008	Page / Col.	Option
A01X0008:1	002.1	

A01X0008:2	002.1	
A01X0008:3	002.1	
A01X0008:4	002.2	
A01X0008:5	002.3	
A01X0008:6	002.3	
A01X0008:7	002.3	
A01X0008:8	002.3	
A01X0008:9	002.5	
A01X0008:10	002.5	
A01X0008:11	002.5	
A01X0008:12	002.5	
A01X0008:13	002.1	
A01X0008:14	002.1	
A01X0008:15	002.1	
A01X0008:16	002.2	
A01X0008:17	002.2	
A01X0008:18	002.2	
A01X0008:19	002.2	
A01X0008:20	002.4	
A01X0008:21	002.4	
A01X0008:22	002.4	
A01X0008:23	002.4	
A01X0008:24	002.5	
A01X0008:25	002.5	
A01X0008:26	002.6	

This drawing must not without the consent of Tetra Pak be copied, transmitted or disclosed to any third party.

Cabinet terminal summary of 3218867-0003

A01X0008	Page / Col.	Option
A01X0008:27	002.6	
A01X0008:28	002.2	
A01X0008:29	002.2	
A01X0008:30	002.2	

A01X0010	Page / Col.	Option
A01X0010:1	001.1	
A01X0010:2	001.1	
A01X0010:3	001.1	
A01X0010:4	001.1	
A01X0010:5	001.1	
A01X0010:6	001.1	
A01X0010:7	001.2	
A01X0010:8	001.2	
A01X0010:9	001.2	
A01X0010:10	001.2	
A01X0010:11	001.2	
A01X0010:12	001.2	
A01X0010:13	001.2	
A01X0010:14	001.2	
A01X0010:15	001.2	
A01X0010:16	001.2	
A01X0010:17	001.3	
A01X0010:18	001.3	
A01X0010:19	001.3	
A01X0010:20	001.3	
A01X0010:21	001.3	
A01X0010:22	001.3	
A01X0010:23	001.3	
A01X0010:24	001.3	
A01X0010:25	001.3	
A01X0010:26	001.3	
A01X0010:27	001.4	
A01X0010:28	001.4	
A01X0010:29	001.4	
A01X0010:30	001.4	
A01X0010:31	001.4	
A01X0010:32	001.4	
A01X0010:33	001.4	
A01X0010:34	001.4	
A01X0010:35	001.4	
A01X0010:36	001.4	
A01X0010:37	001.4	
A01X0010:38	001.5	
A01X0010:39	001.5	
A01X0010:40	001.5	
A01X0010:41	001.5	
A01X0010:42	001.5	
A01X0010:43	001.5	
A01X0010:44	001.5	
A01X0010:45	001.5	
A01X0010:46	001.5	
A01X0010:47	001.5	
A01X0010:48	001.6	
A01X0010:49	001.6	
A01X0010:50	001.6	
A01X0010:51	001.6	
A01X0010:52	001.6	
A01X0010:53	001.6	
A01X0010:54	001.6	
A01X0010:55	001.6	
A01X0010:56	001.6	
A01X0010:57	001.6	
A01X0010:58	004.3	
A01X0010:59	001.7	
A01X0010:60	001.7	

A01X0011	Page / Col.	Option
A01X0011:1	001.1	
A01X0011:2	001.1	
A01X0011:3	001.1	
A01X0011:4	001.1	
A01X0011:5	001.1	
A01X0011:6	001.1	
A01X0011:7	001.2	
A01X0011:8	001.2	
A01X0011:9	001.2	
A01X0011:10	001.2	
A01X0011:11	001.2	
A01X0011:12	001.2	
A01X0011:13	001.2	
A01X0011:14	001.2	
A01X0011:15	001.2	
A01X0011:16	001.2	
A01X0011:17	001.3	
A01X0011:18	001.3	
A01X0011:19	001.3	
A01X0011:20	001.3	
A01X0011:21	001.3	
A01X0011:22	001.3	
A01X0011:23	001.3	
A01X0011:24	001.3	
A01X0011:25	001.3	
A01X0011:26	001.3	
A01X0011:27	001.4	
A01X0011:28	001.4	

A01X0012	Page / Col.	Option
A01X0012:1	001.6	
A01X0012:2	001.6	
A01X0012:3	001.6	
A01X0012:4	001.7	

This drawing must not without the consent of Tetra Pak be copied, transmitted or disclosed to any third party.

Cabinet terminal summary of 3218867-0003

A01X0012	Page / Col.	Option
A01X0012:5	001.7	
A01X0012:6	001.7	
A01X0012:7	001.7	
A01X0012:8	001.7	
A01X0012:9	001.7	
A01X0012:10	001.7	
A01X0012:11	001.7	
A01X0012:12	001.7	
A01X0012:13	001.7	
A01X0012:14	001.8	
A01X0012:15	001.8	
A01X0012:16	001.8	
A01X0012:17	001.8	
A01X0012:18	001.8	
A01X0012:19	001.8	
A01X0012:20	001.8	

A01X0013	Page / Col.	Option
A01X0013:1	001.9	
A01X0013:2	001.9	
A01X0013:3	001.9	
A01X0013:4	001.9	
A01X0013:5	001.9	
A01X0013:6	001.9	
A01X0013:7	001.10	
A01X0013:8	001.10	
A01X0013:9	001.10	
A01X0013:10	001.10	
A01X0013:11	001.10	
A01X0013:12	001.10	

A01X0022	Page / Col.	Option
A01X0022:1	001.1	
A01X0022:2	001.1	
A01X0022:3	001.1	
A01X0022:4	001.1	
A01X0022:5	001.1	
A01X0022:6	001.1	
A01X0022:7	001.2	
A01X0022:8	001.2	
A01X0022:9	001.2	
A01X0022:10	001.2	
A01X0022:11	001.2	
A01X0022:12	001.2	

A01X0032	Page / Col.	Option
A01X0032:1	001.4	
A01X0032:2	001.4	
A01X0032:3	001.4	
A01X0032:4	001.4	
A01X0032:5	001.4	
A01X0032:6	001.4	
A01X0032:7	001.4	
A01X0032:8	001.4	
A01X0032:9	001.4	
A01X0032:10	001.5	
A01X0032:11	001.5	
A01X0032:12	001.5	

A01X0042	Page / Col.	Option
A01X0042:1	001.6	
A01X0042:2	001.6	
A01X0042:3	001.6	
A01X0042:4	001.7	
A01X0042:5	001.7	
A01X0042:6	001.7	
A01X0042:7	001.7	
A01X0042:8	001.7	
A01X0042:9	001.7	
A01X0042:10	001.7	
A01X0042:11	001.7	
A01X0042:12	001.7	

A01X0043	Page / Col.	Option
A01X0043:1	001.1	
A01X0043:2	001.1	
A01X0043:3	001.1	
A01X0043:4	001.1	
A01X0043:5	001.1	
A01X0043:6	001.1	
A01X0043:7	001.2	
A01X0043:8	001.2	
A01X0043:9	001.2	
A01X0043:10	001.2	
A01X0043:11	001.2	
A01X0043:12	001.2	
A01X0043:13	001.2	
A01X0043:14	001.2	
A01X0043:15	001.2	
A01X0043:16	001.2	

A01X0044	Page / Col.	Option
A01X0044:1	001.4	
A01X0044:2	001.4	
A01X0044:3	001.4	
A01X0044:4	001.4	
A01X0044:5	001.4	
A01X0044:6	001.4	
A01X0044:7	001.4	
A01X0044:8	001.4	
A01X0044:9	001.4	
A01X0044:10	001.5	
A01X0044:11	001.5	
A01X0044:12	001.5	
A01X0044:13	001.5	

This drawing must not without the consent of Tetra Pak be copied, transmitted or disclosed to any third party.

Cabinet terminal summary of 3218867-0003

A01X0044	Page / Col.	Option
A01X0044:14	001.5	
A01X0044:15	001.5	
A01X0044:16	001.5	

A01X0072	Page / Col.	Option
A01X0072:1	001.6	
A01X0072:2	001.6	
A01X0072:3	001.6	
A01X0072:4	001.7	
A01X0072:5	001.7	
A01X0072:6	001.7	
A01X0072:7	001.7	
A01X0072:8	001.7	

A01X1001	Page / Col.	Option
A01X1001:N	003.2	UL/CSA
A01X1001:PE	003.2	
A01X1001:PE	003.2	UL/CSA
A01X1001:⏚	003.4	

A01X2001	Page / Col.	Option
A01X2001:1	004.4	
A01X2001:2	004.4	
A01X2001:3	004.4	
A01X2001:4	004.4	

A01X2021	Page / Col.	Option
A01X2021:1	004.8	
A01X2021:2	004.8	
A01X2021:3	004.8	
A01X2021:4	004.8	
A01X2021:5	004.9	
A01X2021:6	004.9	
A01X2021:7	004.9	
A01X2021:8	004.9	
A01X2021:9	004.9	
A01X2021:10	004.10	
A01X2021:⏚	004.8	

A01X6000	Page / Col.	Option
A01X6000:1	007.4	
A01X6000:2	007.5	
A01X6000:⏚	007.5	
A01X6000:3	030.3	
A01X6000:4	030.5	
A01X6000:5	005.3	
A01X6000:6	005.2	

A81X4001	Page / Col.	Option
A81X4001:BK	022.7	
A81X4001:BU	022.7	
A81X4001:RD	022.7	
A81X4001:SH	022.7	
A81X4001:WH	022.7	

A81X4002	Page / Col.	Option
A81X4002:BK	022.5	
A81X4002:BU	022.5	
A81X4002:RD	022.5	
A81X4002:SH	022.5	
A81X4002:WH	022.5	

A81X4003	Page / Col.	Option
A81X4003:BK	022.3	
A81X4003:BU	022.3	
A81X4003:RD	022.3	
A81X4003:SH	022.3	
A81X4003:WH	022.3	

A81X4004	Page / Col.	Option
A81X4004:BK	022.1	
A81X4004:BU	022.1	
A81X4004:RD	022.1	
A81X4004:SH	022.1	
A81X4004:WH	022.1	

A81X4123	Page / Col.	Option
A81X4123:1	040.2	
A81X4123:2	040.2	
A81X4123:3	040.2	
A81X4123:4	040.2	
A81X4123:5	040.2	

C50X1001	Page / Col.	Option
C50X1001:1	019.5	

G30X0001	Page / Col.	Option
G30X0001:1	008.5	

G30X4001	Page / Col.	Option
G30X4001:	014.5	

G40X0001	Page / Col.	Option
G40X0001:	009.5	

G40X0003	Page / Col.	Option
G40X0003:1	010.5	

G40X3001	Page / Col.	Option
G40X3001:1	013.5	

G70X1001	Page / Col.	Option
G70X1001:	015.5	POS.SYS.

W20X0001	Page / Col.	Option
W20X0001:1	018.4	

W21X1000	Page / Col.	Option
W21X1000:1	011.6	
W21X1000:2	011.6	
W21X1000:3	011.6	
W21X1000:4	011.6	
W21X1000:5	011.6	

This drawing must not without the consent of Tetra Pak
be copied, transmitted or disclosed to any third party.

Cabinet terminal summary of 3218867-0003

W21X1000	Page / Col.	Option
W21X1000:6	011.7	
W21X1000:7	011.7	
W21X1000:8	011.7	
W21X1000:9	011.7	
W21X1000:10	011.7	
W21X1000:11	011.7	
W21X1000:12	011.7	
W21X1000:13	011.7	
W21X1000:14	011.7	
W21X1000:15	011.7	
W21X1000:16	011.8	
W21X1000:17	011.8	
W21X1000:18	011.8	
W21X1000:19	011.8	
W21X1000:20	011.8	
W21X1000:21	011.8	
W21X1000:22	011.8	
W21X1000:23	011.8	
W21X1000:24	011.8	
W21X1000:25	011.8	
W21X1000:26	011.8	

W21X1001	Page / Col.	Option
W21X1001:1	011.5	

W21X2000	Page / Col.	Option
W21X2000:1	012.6	
W21X2000:2	012.6	
W21X2000:3	012.6	
W21X2000:4	012.6	
W21X2000:5	012.6	
W21X2000:6	012.7	
W21X2000:7	012.7	
W21X2000:8	012.7	
W21X2000:9	012.7	
W21X2000:10	012.7	
W21X2000:11	012.7	
W21X2000:12	012.7	
W21X2000:13	012.7	
W21X2000:14	012.7	
W21X2000:15	012.7	
W21X2000:16	012.8	
W21X2000:17	012.8	
W21X2000:18	012.8	
W21X2000:19	012.8	
W21X2000:20	012.8	
W21X2000:21	012.8	
W21X2000:22	012.8	
W21X2000:23	012.8	
W21X2000:24	012.8	
W21X2000:25	012.8	
W21X2000:26	012.8	

W21X2001	Page / Col.	Option
W21X2001:1	012.5	

W21X4001	Page / Col.	Option
W21X4001:1	018.10	

W21X4011	Page / Col.	Option
W21X4011:1	020.10	P.ALIGNER

W21X6001	Page / Col.	Option
W21X6001:1	020.4	OUT.P.CONV.

This page intentionally left blank

7 Terminal Strip Overview

Description

All terminals used in the equipment except for those in the electrical cabinet are listed in this chapter.

7.1 Terminal Strip Overview

This page intentionally left blank

RELEASED

This drawing must not without the consent of Tetra Pak
be copied, transmitted or disclosed to any third party.

1	2	3	4	5	6	7	8	9	10

Terminal-strip overview 3218867-0003

A01X2022

From	Cable	Internal Jumper	Terminal	External Jumper	Cable	To	Page / Col.	Option	Function text
A01X2021:1	A01W2021-1		1		G30W0020-2	G30X3100:2	059.1		
A01X2021:2	A01W2021-2		2		G30W0020-1	G30X3100:1	059.2		
A01X2021:3	A01W2021-3		3		G30W0021-2	G30X3103:2	059.6		
A01X2021:4	A01W2021-4		4		G30W0021-1	G30X3103:1	059.7		
A01X2021:5	A01W2021-5		5		W21W1020-2	W21X3006:2	060.1		
A01X2021:6	A01W2021-6		6		W21W1020-1	W21X3006:1	060.2		
A01X2021:7	A01W2021-7		7		W21W2020-2	W21X3009:2	060.6		
A01X2021:8	A01W2021-8		8		W21W2020-1	W21X3009:1	060.7		
A01X2021:9	A01W2021-9		9		C50W1019-2	C50X1020:2	061.1		
A01X2021:10	A01W2021-10		10		C50W1019-1	C50X1020:1	061.2		
A01X2021:⏚	A01W2021-GNYE		⏚		G30W0020-SH	G30X3100:3	059.1		
			⏚		G30W0021-SH	G30X3103:3	059.6		
			⏚		W21W1020-SH	W21X3006:3	060.1		
			⏚		W21W2020-SH	W21X3009:3	060.6		
			⏚		C50W1019-SH	C50X1020:⏚	061.1		

Tetra Pak®	Version Designer: ROG	Version Date: 2015-05-29	Machine: CAP30 Flex ScrewCap 0300	
	ECM No: 736736	Denomination: TERMINAL STRIP OVERVIEW	Page Type: TERMINAL STRIP OVERVIEW	
	Information Security Class: PUBLIC	Document No.: 3218867-0006	Doc. type: ELD	Version: AK / Page: 001

RELEASED

This drawing must not without the consent of Tetra Pak
be copied, transmitted or disclosed to any third party.

1 2 3 4 5 6 7 8 9 10

Terminal-strip overview 3218867-0003

A01X7001

From	Cable	Internal Jumper	Terminal	External Jumper	Cable	To	Page / Col.	Option	Function text
A01X0006:202	A01W7100-BN		1.1		A01W7001-BN	A01E7001:1	005.4		MACHINE LIGHTING 1
A01X0006:203	A01W7100-BU		1.3		A01W7001-WH	A01E7001:2	005.4		MACHINE LIGHTING 1
			2.1		A01W7002-BN	A01E7002:1	005.5		MACHINE LIGHTING 2
			2.3		A01W7002-WH	A01E7002:2	005.6		MACHINE LIGHTING 2
			3.1		A01W7003-BN	A01E7003:1	005.7		MACHINE LIGHTING 3
			3.3		A01W7003-WH	A01E7003:2	005.7		MACHINE LIGHTING 3

Tetra Pak®

Version Designer: ROG	Version Date: 2015-05-29	Machine: CAP30 Flex ScrewCap 0300	
ECM No: 736736	Denomination: TERMINAL STRIP OVERVIEW	Page Type: TERMINAL STRIP OVERVIEW	
Information Security Class: PUBLIC	Document No.: 3218867-0006	Doc. type: ELD	Version: AK	Page: 002

This drawing must not without the consent of Tetra Pak
be copied, transmitted or disclosed to any third party.

1 2 3 4 5 6 7 8 9 10

Terminal-strip overview 3218867-0003

C50X0000

From	Cable	Internal Jumper	Terminal	External Jumper	Cable	To	Page / Col.	Option	Function text
A01X0004:27	C50W0010-1		1		C50W0000-1	C50M0000:W	017.6		CAP ELEVATOR
A01X0004:28	C50W0010-2		2		C50W0000-2	C50M0000:V	017.6		CAP ELEVATOR
A01X0004:29	C50W0010-3		3		C50W0000-3	C50M0000:U	017.6		CAP ELEVATOR
			4						
			5						
			6						
A01X0004:30	C50W0010-GNYE		⏚		C50W0000-GNYE	C50M0000:⏚	017.6		CAP ELEVATOR

Tetra Pak®

Version Designer	Version Date	Machine
ROG	2015-05-29	CAP30 Flex ScrewCap 0300

ECM No	Denomination	Page Type
736736	TERMINAL STRIP OVERVIEW	TERMINAL STRIP OVERVIEW

Information Security Class	Document No.	Doc. type	Version	Page
PUBLIC	3218867-0006	ELD	AK	003

This drawing must not without the consent of Tetra Pak
be copied, transmitted or disclosed to any third party.

1 2 3 4 5 6 7 8 9 10

Terminal-strip overview 3218867-0003

C50X0012

From	Cable	Internal Jumper	Terminal	External Jumper	Cable	To	Page / Col.	Option	Function text
C81K4130:2.1	C50W0012-BN		1		C50W0014-BN	C50B0014	056.5		LOW LEVEL PADDLE ELEVATOR
					C50W0013-BN	C50B0013			LOW LEVEL PADDLE ELEVATOR
C81K4130:2.3	C50W0012-BU		3		C50W0014-BU	C50B0014	056.5		LOW LEVEL PADDLE ELEVATOR
					C50W0013-BU	C50B0013			LOW LEVEL PADDLE ELEVATOR
C81K4130:2.4	C50W0012-BK		4		C50W0014-BK	C50B0014	056.5		LOW LEVEL PADDLE ELEVATOR

Tetra Pak®

Version Designer	Version Date	Machine
ROG	2015-05-29	CAP30 Flex ScrewCap 0300

ECM No	Denomination	Page Type
736736	TERMINAL STRIP OVERVIEW	TERMINAL STRIP OVERVIEW

Information Security Class	Document No.	Doc. type	Version	Page
PUBLIC	3218867-0006	ELD	AK	004

This drawing must not without the consent of Tetra Pak
be copied, transmitted or disclosed to any third party.

Terminal-strip overview 3218867-0003

C50X1000

From	Cable	Internal Jumper	Terminal	External Jumper	Cable	To	Page / Col.	Option	Function text
C50Q1000:2	C50W1010-1		1		C50W1000-1	C50M1000:U	019.4		CAP SORTER DISK
C50Q1000:4	C50W1010-2		2		C50W1000-2	C50M1000:V	019.4		CAP SORTER DISK
C50Q1000:6	C50W1010-3		3		C50W1000-3	C50M1000:W	019.5		CAP SORTER DISK
GND	C50W1010-SH		4		C50W1000-SH	C50W1000	019.5		
			5						
			6						
C50X1001:1	C50W1010-GNYE		⏚		C50W1000-GNYE	C50M1000:⏚	019.5		CAP SORTER DISK

Version Designer: ROG	Version Date: 2015-05-29	Machine: CAP30 Flex ScrewCap 0300		
ECM No: 736736	Denomination: TERMINAL STRIP OVERVIEW	Page Type: TERMINAL STRIP OVERVIEW		
Information Security Class: PUBLIC	Document No.: 3218867-0006	Doc. type: ELD	Version: AK	Page: 005

This drawing must not without the consent of Tetra Pak
be copied, transmitted or disclosed to any third party.

1 2 3 4 5 6 7 8 9 10

Terminal-strip overview 3218867-0003

C50X1004

From	Cable	Internal Jumper	Terminal	External Jumper	Cable	To	Page / Col.	Option	Function text
A01X0006:152	C50W0004-1		1		A81W4130-BU	C81K4130:3	056.9		ARMOR BLOCK (CAP SORTER)
					A81W4130-BK	C81K4130:4			ARMOR BLOCK (CAP SORTER)
A01X0006:157	C50W0004-2		2		A81W4130-BN	C81K4130:1	056.9		ARMOR BLOCK (CAP SORTER)
					A81W4130-WH	C81K4130:2			ARMOR BLOCK (CAP SORTER)
A01X0006:166	C50W0004-3		3		C50W1004-BK	C50K1004:1	039.4		
A01X0006:162	C50W0004-4		4		C50W1004-BU	C50K1004:2	039.7		
A01X0006:⏚	C50W0004-GNYE		⏚				056.9		

Tetra Pak®

Version Designer	Version Date	Machine
ROG	2015-05-29	CAP30 Flex ScrewCap 0300

ECM No	Denomination	Page Type
736736	TERMINAL STRIP OVERVIEW	TERMINAL STRIP OVERVIEW

Information Security Class	Document No.	Doc. type	Version	Page
PUBLIC	3218867-0006	ELD	AK	006

RELEASED

This drawing must not without the consent of Tetra Pak
be copied, transmitted or disclosed to any third party.

1 2 3 4 5 6 7 8 9 10

Terminal-strip overview 3218867-0003

C50X1020

From	Cable	Internal Jumper	Terminal	External Jumper	Cable	To	Page / Col.	Option	Function text
A01X2022:10	C50W1019-1		1		C50W1020-1	C50X3012:1	061.2		
A01X2022:9	C50W1019-2		2		C50W1020-2	C50X3012:2	061.1		
A01X2022:⏚	C50W1019-SH		⏚		C50W1020-SH	C50X3012:3	061.1		

Tetra Pak®

Version Designer	Version Date	Machine
ROG	2015-05-29	CAP30 Flex ScrewCap 0300

ECM No	Denomination	Page Type
736736	TERMINAL STRIP OVERVIEW	TERMINAL STRIP OVERVIEW

Information Security Class	Document No.	Doc. type	Version	Page
PUBLIC	3218867-0006	ELD	AK	007

This drawing must not without the consent of Tetra Pak
be copied, transmitted or disclosed to any third party.

1 2 3 4 5 6 7 8 9 10

Terminal-strip overview 3218867-0003

C50X3012

From	Cable	Internal Jumper	Terminal	External Jumper	Cable	To	Page / Col.	Option	Function text
C50M1020:VDC1			1		C50W1020-1	C50X1020:1	061.2		
C50M1020:GND1			2		C50W1020-2	C50X1020:2	061.1		
C50M1020:PE			3		C50W1020-SH	C50X1020:⏚	061.1		

RELEASED

This drawing must not without the consent of Tetra Pak
be copied, transmitted or disclosed to any third party.

1 2 3 4 5 6 7 8 9 10

Terminal-strip overview 3218867-0003

C50X3013

From	Cable	Internal Jumper	Terminal	External Jumper	Cable	To	Page / Col.	Option	Function text
C50M1020:SH			1		A81W5127-SH	A81X5127:1	061.3		
C50M1020:GND1			2		A81W5127-RD	A81X5127:2	061.3		
C50M1020:VDC1			3		A81W5127-BK	A81X5127:3	061.3		
C50M1020:H			4		A81W5127-WH	A81X5127:4	061.3		
C50M1020:L			5		A81W5127-BU	A81X5127:5	061.3		

Tetra Pak®

Version Designer: ROG	Version Date: 2015-05-29	Machine: CAP30 Flex ScrewCap 0300	
ECM No: 736736	Denomination: TERMINAL STRIP OVERVIEW	Page Type: TERMINAL STRIP OVERVIEW	
Information Security Class: PUBLIC	Document No.: 3218867-0006	Doc. type: ELD	Version: AK / Page: 009

This drawing must not without the consent of Tetra Pak
be copied, transmitted or disclosed to any third party.

1 2 3 4 5 6 7 8 9 10

Terminal-strip overview 3218867-0003

C50X3014

From	Cable	Internal Jumper	Terminal	External Jumper	Cable	To	Page / Col.	Option	Function text
C50M1020:1			1		G40W2035-BN	G40X2025:1	061.4		
C50M1020:3			3		G40W2035-BK	G40X2025:3	061.4		
C50M1020:4			4		G40W2035-BU	G40X2025:4	061.4		

Tetra Pak®

Version Designer: ROG	Version Date: 2015-05-29	Machine: CAP30 Flex ScrewCap 0300	
ECM No: 736736	Denomination: TERMINAL STRIP OVERVIEW	Page Type: TERMINAL STRIP OVERVIEW	
Information Security Class: PUBLIC	Document No.: 3218867-0006	Doc. type: ELD	Version: AK / Page: 010

RELEASED

This drawing must not without the consent of Tetra Pak
be copied, transmitted or disclosed to any third party.

1 2 3 4 5 6 7 8 9 10

Terminal-strip overview 3218867-0003

F09X2010

From	Cable	Internal Jumper	Terminal	External Jumper	Cable	To	Page / Col.	Option	Function text
F09B2010:BN	F09W2010-BN		1.1				027.2		
F09B2010:WH	F09W2010-WH		1.2				027.2		
F09B2010:BU	F09W2010-BU		1.3				027.2		
F09W2010:SH	F09W2010-SH								
F09B2010:BK	F09W2010-BK		1.4				027.2		
F09B2010:GY	F09W2010-GY		1.5				027.2		

Tetra Pak®

Version Designer	Version Date	Machine
ROG	2015-05-29	CAP30 Flex ScrewCap 0300

ECM No	Denomination	Page Type
736736	TERMINAL STRIP OVERVIEW	TERMINAL STRIP OVERVIEW

Information Security Class	Document No.	Doc. type	Version	Page
PUBLIC	3218867-0006	ELD	AK	011

RELEASED

This drawing must not without the consent of Tetra Pak
be copied, transmitted or disclosed to any third party.

1 2 3 4 5 6 7 8 9 10

Terminal-strip overview 3218867-0003

F09X2012

From	Cable	Internal Jumper	Terminal	External Jumper	Cable	To	Page / Col.	Option	Function text
F09B2012:BN	F09W2012-BN		2.1				027.3		
F09B2012:WH	F09W2012-WH		2.2				027.3		
F09B2012:BU	F09W2012-BU		2.3				027.3		
F09W2012:SH	F09W2012-SH								
F09B2012:BK	F09W2012-BK		2.4				027.3		
F09B2012:GY	F09W2012-GY		2.5				027.3		

Tetra Pak®

Version Designer: ROG	Version Date: 2015-05-29	Machine: CAP30 Flex ScrewCap 0300	
ECM No: 736736	Denomination: TERMINAL STRIP OVERVIEW	Page Type: TERMINAL STRIP OVERVIEW	
Information Security Class: PUBLIC	Document No.: 3218867-0006	Doc. type: ELD	Version: AK / Page: 012

RELEASED

This drawing must not without the consent of Tetra Pak
be copied, transmitted or disclosed to any third party.

1 2 3 4 5 6 7 8 9 10

Terminal-strip overview 3218867-0003

F09X2014

From	Cable	Internal Jumper	Terminal	External Jumper	Cable	To	Page / Col.	Option	Function text
F09B2014:BN	F09W2014-BN		3.1				027.4		
F09B2014:WH	F09W2014-WH		3.2				027.4		
F09B2014:BU	F09W2014-BU		3.3				027.4		
F09W2014:SH	F09W2014-SH								
F09B2014:BK	F09W2014-BK		3.4				027.4		
F09B2014:GY	F09W2014-GY		3.5				027.4		

Tetra Pak®

Version Designer	Version Date	Machine
ROG	2015-05-29	CAP30 Flex ScrewCap 0300

ECM No	Denomination	Page Type
736736	TERMINAL STRIP OVERVIEW	TERMINAL STRIP OVERVIEW

Information Security Class	Document No.	Doc. type	Version	Page
PUBLIC	3218867-0006	ELD	AK	013

This drawing must not without the consent of Tetra Pak
be copied, transmitted or disclosed to any third party.

1 2 3 4 5 6 7 8 9 10

Terminal-strip overview 3218867-0003

F09X2016

From	Cable	Internal Jumper	Terminal	External Jumper	Cable	To	Page / Col.	Option	Function text
F09B2016:BN	F09W2016-BN		4.1				027.4		
F09B2016:WH	F09W2016-WH		4.2				027.5		
F09B2016:BU	F09W2016-BU		4.3				027.5		
F09W2016:SH	F09W2016-SH								
F09B2016:BK	F09W2016-BK		4.4				027.5		
F09B2016:GY	F09W2016-GY		4.5				027.5		

Tetra Pak®

Version Designer	Version Date	Machine
ROG	2015-05-29	CAP30 Flex ScrewCap 0300

ECM No	Denomination	Page Type
736736	TERMINAL STRIP OVERVIEW	TERMINAL STRIP OVERVIEW

Information Security Class	Document No.	Doc. type	Version	Page
PUBLIC	3218867-0006	ELD	AK	014

RELEASED

This drawing must not without the consent of Tetra Pak
be copied, transmitted or disclosed to any third party.

1 2 3 4 5 6 7 8 9 10

Terminal-strip overview 3218867-0003

F09X2030

From	Cable	Internal Jumper	Terminal	External Jumper	Cable	To	Page / Col.	Option	Function text
F09B2030:BN	F09W2030-BN		1.1				028.2		
F09B2030:WH	F09W2030-WH		1.2				028.2		
F09B2030:BU	F09W2030-BU		1.3				028.2		
F09W2030:SH	F09W2030-SH								
F09B2030:BK	F09W2030-BK		1.4				028.2		
F09B2030:GY	F09W2030-GY		1.5				028.2		

Tetra Pak®

Version Designer	Version Date	Machine
ROG	2015-05-29	CAP30 Flex ScrewCap 0300

ECM No	Denomination	Page Type
736736	TERMINAL STRIP OVERVIEW	TERMINAL STRIP OVERVIEW

Information Security Class	Document No.	Doc. type	Version	Page
PUBLIC	3218867-0006	ELD	AK	015

This drawing must not without the consent of Tetra Pak
be copied, transmitted or disclosed to any third party.

1 2 3 4 5 6 7 8 9 10

Terminal-strip overview 3218867-0003

F09X2031

From	Cable	Internal Jumper	Terminal	External Jumper	Cable	To	Page / Col.	Option	Function text
A01X0006:138	F09W2031-BN		1		F09W2003-BN	F09X2003:+24V	028.6		CAP SORTER CHUTE
A01X0006:139	F09W2031-WH		2		F09W2003-WH	F09X2003:IN	028.6		CAP SORTER CHUTE
A01X0006:140	F09W2031-BU		3		F09W2003-BU	F09X2003:0V	028.6		CAP SORTER CHUTE
A01X0006:141	F09W2031-BK		4		F09W2003-BK	F09X2003:OUT	028.6		CAP SORTER CHUTE
A01X0006:142	F09W2031-GY		5		F09W2003-GY	F09X2003:13	028.8		CAP SORTER CHUTE
A01X0006:143	F09W2031-SH		SH		F09W2003-SH	F09X2003:⏚	028.8		CAP SORTER CHUTE

Tetra Pak®

Version Designer: ROG	Version Date: 2015-05-29	Machine: CAP30 Flex ScrewCap 0300	
ECM No: 736736	Denomination: TERMINAL STRIP OVERVIEW	Page Type: TERMINAL STRIP OVERVIEW	
Information Security Class: PUBLIC	Document No.: 3218867-0006	Doc. type: ELD	Version: AK	Page: 016

RELEASED

This drawing must not without the consent of Tetra Pak
be copied, transmitted or disclosed to any third party.

1 2 3 4 5 6 7 8 9 10

Terminal-strip overview 3218867-0003

F09X2032

From	Cable	Internal Jumper	Terminal	External Jumper	Cable	To	Page / Col.	Option	Function text
F09B2032:BN	F09W2032-BN		2.1				028.3		
F09B2032:WH	F09W2032-WH		2.2				028.3		
F09B2032:BU	F09W2032-BU		2.3				028.3		
F09W2032:SH	F09W2032-SH								
F09B2032:BK	F09W2032-BK		2.4				028.3		
F09B2032:GY	F09W2032-GY		2.5				028.3		

Tetra Pak®

Version Designer	Version Date	Machine
ROG	2015-05-29	CAP30 Flex ScrewCap 0300

ECM No	Denomination	Page Type
736736	TERMINAL STRIP OVERVIEW	TERMINAL STRIP OVERVIEW

Information Security Class	Document No.	Doc. type	Version	Page
PUBLIC	3218867-0006	ELD	AK	017

This drawing must not without the consent of Tetra Pak
be copied, transmitted or disclosed to any third party.

1 2 3 4 5 6 7 8 9 10

Terminal-strip overview 3218867-0003

F09X2034

From	Cable	Internal Jumper	Terminal	External Jumper	Cable	To	Page / Col.	Option	Function text
F09B2034:BN	F09W2034-BN		3.1				028.4		
F09B2034:WH	F09W2034-WH		3.2				028.4		
F09B2034:BU	F09W2034-BU		3.3				028.4		
F09W2034:SH	F09W2034-SH								
F09B2034:BK	F09W2034-BK		3.4				028.4		
F09B2034:GY	F09W2034-GY		3.5				028.4		

Tetra Pak®

Version Designer	Version Date	Machine
ROG	2015-05-29	CAP30 Flex ScrewCap 0300

ECM No	Denomination	Page Type
736736	TERMINAL STRIP OVERVIEW	TERMINAL STRIP OVERVIEW

Information Security Class	Document No.	Doc. type	Version	Page
PUBLIC	3218867-0006	ELD	AK	018

RELEASED

This drawing must not without the consent of Tetra Pak
be copied, transmitted or disclosed to any third party.

1 2 3 4 5 6 7 8 9 10

Terminal-strip overview 3218867-0003

F09X2036

From	Cable	Internal Jumper	Terminal	External Jumper	Cable	To	Page / Col.	Option	Function text
F09B2036:+24V			4.1				028.4		
F09B2036:IN			4.2				028.5		
F09B2036:0V			4.3				028.5		
F09B2036:OUT			4.4				028.5		
F09B2036:INFO			4.5				028.5		

Tetra Pak®

Version Designer: ROG	Version Date: 2015-05-29	Machine: CAP30 Flex ScrewCap 0300	
ECM No: 736736	Denomination: TERMINAL STRIP OVERVIEW	Page Type: TERMINAL STRIP OVERVIEW	
Information Security Class: PUBLIC	Document No.: 3218867-0006	Doc. type: ELD	Version: AK / Page: 019

RELEASED

This drawing must not without the consent of Tetra Pak
be copied, transmitted or disclosed to any third party.

1 2 3 4 5 6 7 8 9 10

Terminal-strip overview 3218867-0003

F09X2041

From	Cable	Internal Jumper	Terminal	External Jumper	Cable	To	Page / Col.	Option	Function text
A01K3029:0	F09W2041-BN		1			F09B2041:1	049.4		LOCKER DOOR FRONT 1
A01K3029:6	F09W2041-BU		2			F09B2041:2	049.5		LOCKER DOOR FRONT 1
			3						
			4						

Tetra Pak®

Version Designer: ROG	Version Date: 2015-05-29	Machine: CAP30 Flex ScrewCap 0300	
ECM No: 736736	Denomination: TERMINAL STRIP OVERVIEW	Page Type: TERMINAL STRIP OVERVIEW	
Information Security Class: PUBLIC	Document No.: 3218867-0006	Doc. type: ELD	Version: AK	Page: 020

This drawing must not without the consent of Tetra Pak
be copied, transmitted or disclosed to any third party.

1 2 3 4 5 6 7 8 9 10

Terminal-strip overview 3218867-0003

F09X2042

From	Cable	Internal Jumper	Terminal	External Jumper	Cable	To	Page / Col.	Option	Function text
A01K3029:1	F09W2042-BN		1			F09B2042:1	049.4		LOCKER DOOR FRONT 2
A01K3029:7	F09W2042-BU		2			F09B2042:2	049.5		LOCKER DOOR FRONT 2
			3						
			4						

Tetra Pak®

Version Designer: ROG	Version Date: 2015-05-29	Machine: CAP30 Flex ScrewCap 0300	
ECM No: 736736	Denomination: TERMINAL STRIP OVERVIEW	Page Type: TERMINAL STRIP OVERVIEW	
Information Security Class: PUBLIC	Document No.: 3218867-0006	Doc. type: ELD	Version: AK	Page: 021

RELEASED

This drawing must not without the consent of Tetra Pak
be copied, transmitted or disclosed to any third party.

1 2 3 4 5 6 7 8 9 10

Terminal-strip overview 3218867-0003

F09X3010

From	Cable	Internal Jumper	Terminal	External Jumper	Cable	To	Page / Col.	Option	Function text
F09B3010:BN	F09W3010-BN		1.1				028.6		
F09B3010:WH	F09W3010-WH		1.2				028.6		
F09B3010:BU	F09W3010-BU		1.3				028.6		
F09W3010:SH	F09W3010-SH								
F09B3010:BK	F09W3010-BK		1.4				028.6		
F09B3010:GY	F09W3010-GY		1.5				028.7		

Tetra Pak®

Version Designer: ROG	Version Date: 2015-05-29	Machine: CAP30 Flex ScrewCap 0300	
ECM No: 736736	Denomination: TERMINAL STRIP OVERVIEW	Page Type: TERMINAL STRIP OVERVIEW	
Information Security Class: PUBLIC	Document No.: 3218867-0006	Doc. type: ELD	Version: AK / Page: 022

This drawing must not without the consent of Tetra Pak
be copied, transmitted or disclosed to any third party.

1 2 3 4 5 6 7 8 9 10

Terminal-strip overview 3218867-0003

F09X3012

From	Cable	Internal Jumper	Terminal	External Jumper	Cable	To	Page / Col.	Option	Function text
F09B3012:BN	F09W3012-BN		2.1				028.7		
F09B3012:WH	F09W3012-WH		2.2				028.7		
F09B3012:BU	F09W3012-BU		2.3				028.7		
F09W3012:SH	F09W3012-SH								
F09B3012:BK	F09W3012-BK		2.4				028.7		
F09B3012:GY	F09W3012-GY		2.5				028.7		

Tetra Pak®

Version Designer	Version Date	Machine
ROG	2015-05-29	CAP30 Flex ScrewCap 0300

ECM No	Denomination	Page Type
736736	TERMINAL STRIP OVERVIEW	TERMINAL STRIP OVERVIEW

Information Security Class	Document No.	Doc. type	Version	Page
PUBLIC	3218867-0006	ELD	AK	023

RELEASED

This drawing must not without the consent of Tetra Pak
be copied, transmitted or disclosed to any third party.

1 2 3 4 5 6 7 8 9 10

Terminal-strip overview 3218867-0003

F09X3014

From	Cable	Internal Jumper	Terminal	External Jumper	Cable	To	Page / Col.	Option	Function text
F09B3014:BN	F09W3014-BN		3.1				028.8		
F09B3014:WH	F09W3014-WH		3.2				028.8		
F09B3014:BU	F09W3014-BU		3.3				028.8		
F09W3014:SH	F09W3014-SH								
F09B3014:BK	F09W3014-BK		3.4				028.8		
F09B3014:GY	F09W3014-GY		3.5				028.8		

Tetra Pak®

Version Designer	Version Date	Machine
ROG	2015-05-29	CAP30 Flex ScrewCap 0300

ECM No	Denomination	Page Type
736736	TERMINAL STRIP OVERVIEW	TERMINAL STRIP OVERVIEW

Information Security Class	Document No.	Doc. type	Version	Page
PUBLIC	3218867-0006	ELD	AK	024

RELEASED

This drawing must not without the consent of Tetra Pak
be copied, transmitted or disclosed to any third party.

1 2 3 4 5 6 7 8 9 10

Terminal-strip overview 3218867-0003

F09X3016

From	Cable	Internal Jumper	Terminal	External Jumper	Cable	To	Page / Col.	Option	Function text
F09B3016:BN	F09W3016-BN		4.1				028.9		
F09B3016:WH	F09W3016-WH		4.2				028.9		
F09B3016:BU	F09W3016-BU		4.3				028.9		
F09W3016:SH	F09W3016-SH								
F09B3016:BK	F09W3016-BK		4.4				028.9		
F09B3016:GY	F09W3016-GY		4.5				028.9		

Tetra Pak®

Version Designer	Version Date	Machine
ROG	2015-05-29	CAP30 Flex ScrewCap 0300

ECM No	Denomination	Page Type
736736	TERMINAL STRIP OVERVIEW	TERMINAL STRIP OVERVIEW

Information Security Class	Document No.	Doc. type	Version	Page
PUBLIC	3218867-0006	ELD	AK	025

This drawing must not without the consent of Tetra Pak
be copied, transmitted or disclosed to any third party.

1 2 3 4 5 6 7 8 9 10

Terminal-strip overview 3218867-0003

G30X0025

From	Cable	Internal Jumper	Terminal	External Jumper	Cable	To	Page / Col.	Option	Function text
A81K4125:1.1	G30W0035-BN		1		G30W0025-BU	G30B0025	054.5		HOME POS. APP. UNIT (RIGHT) / COLLISION APP. UNIT AND
A81K4125:1.3	G30W0035-BU		3				054.5		
A81K4125:1.4	G30W0035-BK		4		G30W0025-BN	G30B0025	054.5		HOME POS. APP. UNIT (RIGHT) / COLLISION APP. UNIT AND

Tetra Pak®

Version Designer: ROG	Version Date: 2015-05-29	Machine: CAP30 Flex ScrewCap 0300	
ECM No: 736736	Denomination: TERMINAL STRIP OVERVIEW	Page Type: TERMINAL STRIP OVERVIEW	
Information Security Class: PUBLIC	Document No.: 3218867-0006	Doc. type: ELD	Version: AK / Page: 026

RELEASED

This drawing must not without the consent of Tetra Pak
be copied, transmitted or disclosed to any third party.

1 2 3 4 5 6 7 8 9 10

Terminal-strip overview 3218867-0003

G30X0027

From	Cable	Internal Jumper	Terminal	External Jumper	Cable	To	Page / Col.	Option	Function text
A81K4125:0.1	G30W0037-BN		1		G30W0027-BU	G30B0027	054.5		HOME POS. APP. UNIT (LEFT) / COLLISION APP. UNIT AND
A81K4125:0.3	G30W0037-BU		3				054.5		
A81K4125:0.4	G30W0037-BK		4		G30W0027-BN	G30B0027	054.5		HOME POS. APP. UNIT (LEFT) / COLLISION APP. UNIT AND

Tetra Pak®

Version Designer	Version Date	Machine
ROG	2015-05-29	CAP30 Flex ScrewCap 0300

ECM No	Denomination	Page Type
736736	TERMINAL STRIP OVERVIEW	TERMINAL STRIP OVERVIEW

Information Security Class	Document No.	Doc. type	Version	Page
PUBLIC	3218867-0006	ELD	AK	027

RELEASED

This drawing must not without the consent of Tetra Pak
be copied, transmitted or disclosed to any third party.

1 2 3 4 5 6 7 8 9 10

Terminal-strip overview 3218867-0003

G30X0028

From	Cable	Internal Jumper	Terminal	External Jumper	Cable	To	Page / Col.	Option	Function text
A81K4125:2.1	G30W0038-BN		1		G30W0028-BU	G30B0028	054.5		COLLISION SENOR APP. UNIT PACKAGE TRANSFER OUTE
A81K4125:2.3	G30W0038-BU		3				054.5		
A81K4125:2.4	G30W0038-BK		4		G30W0028-BN	G30B0028	054.5		COLLISION SENOR APP. UNIT PACKAGE TRANSFER OUTE

Tetra Pak®

Version Designer	Version Date	Machine
ROG	2015-05-29	CAP30 Flex ScrewCap 0300

ECM No	Denomination	Page Type
736736	TERMINAL STRIP OVERVIEW	TERMINAL STRIP OVERVIEW

Information Security Class	Document No.	Doc. type	Version	Page
PUBLIC	3218867-0006	ELD	AK	028

This drawing must not without the consent of Tetra Pak be copied, transmitted or disclosed to any third party.

Terminal-strip overview 3218867-0003

G30X1020

From	Cable	Internal Jumper	Terminal	External Jumper	Cable	To	Page / Col.	Option	Function text
A01X0006:116+	G30W1020-BN		1.1				032.3		
A01X0006:116-	G30W1020-BU		1.3				032.3		
A01X0006:116	G30W1020-WH		1.4				032.6		
			2.1		G30W1001-BN	G30B1001	032.3		
			2.3		G30W1001-BU	G30B1001	032.3		
A01X0006:117	G30W1020-GN		2.4		G30W1001-BK	G30B1001	032.6		
			3.1		G30W1002-BN	G30B1002	032.3		CAP HOLDER 1 APPLICATOR WHEEL
			3.3		G30W1002-BU	G30B1002	032.3		CAP HOLDER 1 APPLICATOR WHEEL
A01X0006:118	G30W1020-YE		3.4		G30W1002-BK	G30B1002	032.6		CAP HOLDER 1 APPLICATOR WHEEL
			4.1		G40W0012-BN	G40B0012	032.3		OVER STROKE AXIS + (FRONT) GLUE APPLICATOR
A01X0006:119	G30W1020-BN/GN		4.2		G40W0012-BK	G40B0012	032.6		OVER STROKE AXIS + (FRONT) GLUE APPLICATOR
			4.3		G40W0012-BU	G40B0012	032.3		OVER STROKE AXIS + (FRONT) GLUE APPLICATOR
			5.1		G40W0013-BN	G40B0013	032.3		OVER STROKE AXIS - (BACK) GLUE APPLICATOR
A01X0006:120	G30W1020-WH/YE		5.2		G40W0013-BK	G40B0013	032.6		OVER STROKE AXIS - (BACK) GLUE APPLICATOR
			5.3		G40W0013-BU	G40B0013	032.3		OVER STROKE AXIS - (BACK) GLUE APPLICATOR
A01X0006:146	G30W1020-YE/BN		6.2		G40W1000-1	G40X1000:1	039.4		HOT MELT GUN 1OPENING
			6.3		G40W1000-2	G40X1000:2	039.7		HOT MELT GUN 1OPENING
A01X0006:147	G30W1020-WH/GY		7.2		G40W1001-1	G40X1001:1	039.4		HOT MELT GUN 2 OPENING
			7.3		G40W1001-2	G40X1001:2	039.7		HOT MELT GUN 2 OPENING
			8.3				039.7		
A01X0006:148	G30W1020-GY/BN		8.4				039.4		

Tetra Pak®

Version Designer	Version Date	Machine
ROG	2015-05-29	CAP30 Flex ScrewCap 0300

ECM No	Denomination	Page Type
736736	TERMINAL STRIP OVERVIEW	TERMINAL STRIP OVERVIEW

Information Security Class	Document No.	Doc. type	Version	Page
PUBLIC	3218867-0006	ELD	AK	029

RELEASED

This drawing must not without the consent of Tetra Pak
be copied, transmitted or disclosed to any third party.

1 2 3 4 5 6 7 8 9 10

Terminal-strip overview 3218867-0003

G30X1022

From	Cable	Internal Jumper	Terminal	External Jumper	Cable	To	Page / Col.	Option	Function text
G30B1022	G30W1022-BU		1		G30W1032-BN	G30X3102:1	059.5		
			3		G30W1032-BK	G30X3102:3	059.5		
G30B1022	G30W1022-BK		4		G30W1032-BU	G30X3102:4	059.4		

Version Designer: ROG	Version Date: 2015-05-29	Machine: CAP30 Flex ScrewCap 0300		
ECM No: 736736	Denomination: TERMINAL STRIP OVERVIEW	Page Type: TERMINAL STRIP OVERVIEW		
Information Security Class: PUBLIC	Document No.: 3218867-0006	Doc. type: ELD	Version: AK	Page: 030

This drawing must not without the consent of Tetra Pak
be copied, transmitted or disclosed to any third party.

1 2 3 4 5 6 7 8 9 10

Terminal-strip overview 3218867-0003

G30X1023

From	Cable	Internal Jumper	Terminal	External Jumper	Cable	To	Page / Col.	Option	Function text
G30B1023	G30W1023-BU		1		G30W1031-BN	G30X1031:1	059.10		
			3		G30W1031-BK	G30X1031:3	059.10		
G30B1023	G30W1023-BK		4		G30W1031-BU	G30X1031:4	059.9		

Tetra Pak®

Version Designer	Version Date	Machine
ROG	2015-05-29	CAP30 Flex ScrewCap 0300

ECM No	Denomination	Page Type
736736	TERMINAL STRIP OVERVIEW	TERMINAL STRIP OVERVIEW

Information Security Class	Document No.	Doc. type	Version	Page
PUBLIC	3218867-0006	ELD	AK	031

This drawing must not without the consent of Tetra Pak
be copied, transmitted or disclosed to any third party.

Terminal-strip overview 3218867-0003

G30X1030

From	Cable	Internal Jumper	Terminal	External Jumper	Cable	To	Page / Col.	Option	Function text
A01X0006:122+	G30W1030-BN		1.1		G40W2002-BN	G40B2002:BN	032.3		CAP SEQUENCER STOPPER CLOSE
A01X0006:122-	G30W1030-BU		1.3		G40W2002-BU	G40B2002:BU	032.3		CAP SEQUENCER STOPPER CLOSE
A01X0006:121	G30W1030-WH		1.4		G40W2002-BK	G40B2002:BK	032.6		CAP SEQUENCER STOPPER CLOSE
			2.1		G40W2000-BN	G40B2000	033.3		CAP INFEEDED INTO CAP SEQUENCER
			2.3		G40W2000-BU	G40B2000	033.3		CAP INFEEDED INTO CAP SEQUENCER
A01X0006:122	G30W1030-RD/BU		2.4		G40W2000-BK	G40B2000	033.6		CAP INFEEDED INTO CAP SEQUENCER
			3.1		G40W0010-BN	G40B0010	033.3		OVER STROKE AXIS X + (LEFT) GLUE APPLICATOR
A01X0006:123	G30W1030-WH/GN		3.2		G40W0010-BK	G40B0010	033.6		OVER STROKE AXIS X + (LEFT) GLUE APPLICATOR
			3.3		G40W0010-BU	G40B0010	033.3		OVER STROKE AXIS X + (LEFT) GLUE APPLICATOR
			4.1		G40W0011-BN	G40B0011	033.3		OVER STROKE AXIS X - (RIGHT) GLUE APPLICATOR
A01X0006:124	G30W1030-BN/GN		4.2		G40W0011-BK	G40B0011	033.6		OVER STROKE AXIS X - (RIGHT) GLUE APPLICATOR
			4.3		G40W0011-BU	G40B0011	033.3		OVER STROKE AXIS X - (RIGHT) GLUE APPLICATOR
			5.1		G41W0020-BN	G41B0020	033.3		
			5.3		G41W0020-BU	G41B0020	033.3		
A01X0006:125	G30W1030-PK		5.4		G41W0020-BK	G41B0020	033.6		
A01X0006:144	G30W1030-YE/BN		6.2		G40W2010-BN	G40K2010:1	037.4		CAP SEQUENCER QUEUE STOPPER OPENING
			6.3		G40W2010-BU	G40K2010:2	037.6		CAP SEQUENCER QUEUE STOPPER OPENING
A01X0006:145	G30W1030-RD		6.4		G40W2010-BK	G40K2011:1	037.4		CAP SEQUENCER QUEUE STOPPER CLOSURE

Tetra Pak®

Version Designer	Version Date	Machine
ROG	2015-05-29	CAP30 Flex ScrewCap 0300

ECM No	Denomination	Page Type
736736	TERMINAL STRIP OVERVIEW	TERMINAL STRIP OVERVIEW

Information Security Class	Document No.	Doc. type	Version	Page
PUBLIC	3218867-0006	ELD	AK	032

This drawing must not without the consent of Tetra Pak
be copied, transmitted or disclosed to any third party.

1 2 3 4 5 6 7 8 9 10

Terminal-strip overview 3218867-0003

G30X1031

From	Cable	Internal Jumper	Terminal	External Jumper	Cable	To	Page / Col.	Option	Function text
G30M0021:1			1		G30W1031-BN	G30X1023:1	059.9		
G30M0021:3			3		G30W1031-BK	G30X1023:3	059.9		
G30M0021:4			4		G30W1031-BU	G30X1023:4	059.9		

Tetra Pak®

Version Designer: ROG	Version Date: 2015-05-29	Machine: CAP30 Flex ScrewCap 0300	
ECM No: 736736	Denomination: TERMINAL STRIP OVERVIEW	Page Type: TERMINAL STRIP OVERVIEW	
Information Security Class: PUBLIC	Document No.: 3218867-0006	Doc. type: ELD	Version: AK / Page: 033

This drawing must not without the consent of Tetra Pak
be copied, transmitted or disclosed to any third party.

1 2 3 4 5 6 7 8 9 10

Terminal-strip overview 3218867-0003

G30X3100

From	Cable	Internal Jumper	Terminal	External Jumper	Cable	To	Page / Col.	Option	Function text
G30M0020:VDC1			1		G30W0020-1	A01X2022:2	059.2		
G30M0020:GND1			2		G30W0020-2	A01X2022:1	059.1		
G30M0020:PE			3		G30W0020-SH	A01X2022:⏚	059.1		

Tetra Pak®

Version Designer	Version Date	Machine
ROG	2015-05-29	CAP30 Flex ScrewCap 0300

ECM No	Denomination	Page Type
736736	TERMINAL STRIP OVERVIEW	TERMINAL STRIP OVERVIEW

Information Security Class	Document No.	Doc. type	Version	Page
PUBLIC	3218867-0006	ELD	AK	034

RELEASED

This drawing must not without the consent of Tetra Pak
be copied, transmitted or disclosed to any third party.

1 2 3 4 5 6 7 8 9 10

Terminal-strip overview 3218867-0003

G30X3101

From	Cable	Internal Jumper	Terminal	External Jumper	Cable	To	Page / Col.	Option	Function text
G30M0020:SH			1		A81W5123-SH	A81X5123:1	059.3		
G30M0020:GND1			2		A81W5123-RD	A81X5123:2	059.3		
G30M0020:VDC1			3		A81W5123-BK	A81X5123:3	059.3		
G30M0020:H			4		A81W5123-WH	A81X5123:4	059.3		
G30M0020:L			5		A81W5123-BU	A81X5123:5	059.3		

Tetra Pak®

Version Designer: ROG	Version Date: 2015-05-29	Machine: CAP30 Flex ScrewCap 0300	
ECM No: 736736	Denomination: TERMINAL STRIP OVERVIEW	Page Type: TERMINAL STRIP OVERVIEW	
Information Security Class: PUBLIC	Document No.: 3218867-0006	Doc. type: ELD	Version: AK / Page: 035

This drawing must not without the consent of Tetra Pak
be copied, transmitted or disclosed to any third party.

1 2 3 4 5 6 7 8 9 10

Terminal-strip overview 3218867-0003

G30X3102

From	Cable	Internal Jumper	Terminal	External Jumper	Cable	To	Page / Col.	Option	Function text
G30M0020:1			1		G30W1032-BN	G30X1022:1	059.4		
G30M0020:3			3		G30W1032-BK	G30X1022:3	059.4		
G30M0020:4			4		G30W1032-BU	G30X1022:4	059.4		

Tetra Pak®

Version Designer: ROG	Version Date: 2015-05-29	Machine: CAP30 Flex ScrewCap 0300	
ECM No: 736736	Denomination: TERMINAL STRIP OVERVIEW	Page Type: TERMINAL STRIP OVERVIEW	
Information Security Class: PUBLIC	Document No.: 3218867-0006	Doc. type: ELD	Version: AK / Page: 036

This drawing must not without the consent of Tetra Pak
be copied, transmitted or disclosed to any third party.

1 2 3 4 5 6 7 8 9 10

Terminal-strip overview 3218867-0003

G30X3103

From	Cable	Internal Jumper	Terminal	External Jumper	Cable	To	Page / Col.	Option	Function text
G30M0021:VDC1			1		G30W0021-1	A01X2022:4	059.7		
G30M0021:GND1			2		G30W0021-2	A01X2022:3	059.6		
G30M0021:PE			3		G30W0021-SH	A01X2022:⏚	059.6		

RELEASED

This drawing must not without the consent of Tetra Pak
be copied, transmitted or disclosed to any third party.

1 2 3 4 5 6 7 8 9 10

Terminal-strip overview 3218867-0003

G30X3104

From	Cable	Internal Jumper	Terminal	External Jumper	Cable	To	Page / Col.	Option	Function text
G30M0021:SH			1		A81W5124-SH	A81X8124:1	059.8		
G30M0021:GND1			2		A81W5124-RD	A81X8124:2	059.8		
G30M0021:VDC1			3		A81W5124-BK	A81X8124:3	059.8		
G30M0021:H			4		A81W5124-WH	A81X8124:4	059.8		
G30M0021:L			5		A81W5124-BU	A81X8124:5	059.8		

Tetra Pak®

Version Designer: ROG	Version Date: 2015-05-29	Machine: CAP30 Flex ScrewCap 0300	
ECM No: 736736	Denomination: TERMINAL STRIP OVERVIEW	Page Type: TERMINAL STRIP OVERVIEW	
Information Security Class: PUBLIC	Document No.: 3218867-0006	Doc. type: ELD	Version: AK / Page: 038

RELEASED

This drawing must not without the consent of Tetra Pak
be copied, transmitted or disclosed to any third party.

1 2 3 4 5 6 7 8 9 10

Terminal-strip overview 3218867-0003

G40X1000

From	Cable	Internal Jumper	Terminal	External Jumper	Cable	To	Page / Col.	Option	Function text
G30X1020:6.2	G40W1000-1		1			G40K1000:1	039.5		HOT MELT GUN 1OPENING
G30X1020:6.3	G40W1000-2		2			G40K1000:2	039.6		HOT MELT GUN 1OPENING

Tetra Pak®

Version Designer	Version Date	Machine
ROG	2015-05-29	CAP30 Flex ScrewCap 0300

ECM No	Denomination	Page Type
736736	TERMINAL STRIP OVERVIEW	TERMINAL STRIP OVERVIEW

Information Security Class	Document No.	Doc. type	Version	Page
PUBLIC	3218867-0006	ELD	AK	039

RELEASED

This drawing must not without the consent of Tetra Pak
be copied, transmitted or disclosed to any third party.

1 2 3 4 5 6 7 8 9 10

Terminal-strip overview 3218867-0003

G40X1001

From	Cable	Internal Jumper	Terminal	External Jumper	Cable	To	Page / Col.	Option	Function text
G30X1020:7.2	G40W1001-1		1			G40K1001:1	039.5		HOT MELT GUN 2 OPENING
G30X1020:7.3	G40W1001-2		2			G40K1001:2	039.6		HOT MELT GUN 2 OPENING

Tetra Pak®

Version Designer	Version Date	Machine
ROG	2015-05-29	CAP30 Flex ScrewCap 0300

ECM No	Denomination	Page Type
736736	TERMINAL STRIP OVERVIEW	TERMINAL STRIP OVERVIEW

Information Security Class	Document No.	Doc. type	Version	Page
PUBLIC	3218867-0006	ELD	AK	040

RELEASED

This drawing must not without the consent of Tetra Pak
be copied, transmitted or disclosed to any third party.

1 2 3 4 5 6 7 8 9 10

Terminal-strip overview 3218867-0003

G40X2025

From	Cable	Internal Jumper	Terminal	External Jumper	Cable	To	Page / Col.	Option	Function text
G40B2025	G40W2025-BU		1		G40W2035-BN	C50X3014:1	061.5		
			3		G40W2035-BK	C50X3014:3	061.5		
G40B2025	G40W2025-BK		4		G40W2035-BU	C50X3014:4	061.4		

Tetra Pak®

Version Designer	Version Date	Machine
ROG	2015-05-29	CAP30 Flex ScrewCap 0300

ECM No	Denomination	Page Type
736736	TERMINAL STRIP OVERVIEW	TERMINAL STRIP OVERVIEW

Information Security Class	Document No.	Doc. type	Version	Page
PUBLIC	3218867-0006	ELD	AK	041

RELEASED

This drawing must not without the consent of Tetra Pak
be copied, transmitted or disclosed to any third party.

1 2 3 4 5 6 7 8 9 10

Terminal-strip overview 3218867-0003

G40X2026

From	Cable	Internal Jumper	Terminal	External Jumper	Cable	To	Page / Col.	Option	Function text
A81K4125:6.1	G40W2036-BN		1		G40W2026-BN	G40B2026	054.5		COLLISION SENSOR APP.UNIT/CAP SORTER
A81K4125:6.3	G40W2036-BU		3		G40W2026-BU	G40B2026	054.5		COLLISION SENSOR APP.UNIT/CAP SORTER
A81K4125:6.4	G40W2036-BK		4		G40W2026-WH	G40B2026	054.5		COLLISION SENSOR APP.UNIT/CAP SORTER

Tetra Pak®

Version Designer: ROG	Version Date: 2015-05-29	Machine: CAP30 Flex ScrewCap 0300	
ECM No: 736736	Denomination: TERMINAL STRIP OVERVIEW	Page Type: TERMINAL STRIP OVERVIEW	
Information Security Class: PUBLIC	Document No.: 3218867-0006	Doc. type: ELD	Version: AK	Page: 042

This drawing must not without the consent of Tetra Pak
be copied, transmitted or disclosed to any third party.

1 2 3 4 5 6 7 8 9 10

Terminal-strip overview 3218867-0003

G40X4000

From	Cable	Internal Jumper	Terminal	External Jumper	Cable	To	Page / Col.	Option	Function text
A01X0004:23	G40W4010-1		1		G40W4000-1	G40M4000:U	017.4		CAP CONVEYOR
A01X0004:24	G40W4010-2		2		G40W4000-2	G40M4000:V	017.4		CAP CONVEYOR
A01X0004:25	G40W4010-3		3		G40W4000-3	G40M4000:W	017.4		CAP CONVEYOR
			4						
			5						
			6						
A01X0004:26	G40W4010-GNYE		⏚		G40W4000-GNYE	G40M4000:⏚	017.4		CAP CONVEYOR

Tetra Pak®

Version Designer	Version Date	Machine
ROG	2015-05-29	CAP30 Flex ScrewCap 0300

ECM No	Denomination	Page Type
736736	TERMINAL STRIP OVERVIEW	TERMINAL STRIP OVERVIEW

Information Security Class	Document No.	Doc. type	Version	Page
PUBLIC	3218867-0006	ELD	AK	043

This drawing must not without the consent of Tetra Pak
be copied, transmitted or disclosed to any third party.

1 2 3 4 5 6 7 8 9 10

Terminal-strip overview 3218867-0003

G40X5002

From	Cable	Internal Jumper	Terminal	External Jumper	Cable	To	Page / Col.	Option	Function text
C81K4130:0.1	G40W5002-BN		1		G40W5001-BN	G40B5001	056.5		CAP CONVEYOR MIN. QUEUE
C81K4130:0.3	G40W5002-BU		3		G40W5001-BU	G40B5001	056.5		CAP CONVEYOR MIN. QUEUE
C81K4130:0.4	G40W5002-BK		4		G40W5001-BK	G40B5001	056.5		CAP CONVEYOR MIN. QUEUE

RELEASED

This drawing must not without the consent of Tetra Pak
be copied, transmitted or disclosed to any third party.

1 2 3 4 5 6 7 8 9 10

Terminal-strip overview 3218867-0003

G40X5006

From	Cable	Internal Jumper	Terminal	External Jumper	Cable	To	Page / Col.	Option	Function text
C81K4130:1.1	G40W5006-BN		1		G40W5005-BN	G40B5005	056.5		CAP CONVEYOR MAX. QUEUE
C81K4130:1.3	G40W5006-BU		3		G40W5005-BU	G40B5005	056.5		CAP CONVEYOR MAX. QUEUE
C81K4130:1.4	G40W5006-BK		4		G40W5005-BK	G40B5005	056.5		CAP CONVEYOR MAX. QUEUE

Tetra Pak®

Version Designer	Version Date	Machine
ROG	2015-05-29	CAP30 Flex ScrewCap 0300

ECM No	Denomination	Page Type
736736	TERMINAL STRIP OVERVIEW	TERMINAL STRIP OVERVIEW

Information Security Class	Document No.	Doc. type	Version	Page
PUBLIC	3218867-0006	ELD	AK	045

This drawing must not without the consent of Tetra Pak
be copied, transmitted or disclosed to any third party.

Terminal-strip overview 3218867-0003

G41X0000

From	Cable	Internal Jumper	Terminal	External Jumper	Cable	To	Page / Col.	Option	Function text
			101		G41W0010-1	A01X0006:183	066.6	ADH. DET.	
			102				066.6	ADH. DET.	
			103			G41K0011:34	066.6	ADH. DET.	
						G41K0011:24			
			104				066.6	ADH. DET.	
			105			G41K0011:24	066.6	ADH. DET.	
			106		G41W0010-3	A01X0006:185	066.6	ADH. DET.	
			107			G41K0011:14	066.6	ADH. DET.	
			108				066.6	ADH. DET.	
			109				066.6	ADH. DET.	
			110				066.6	ADH. DET.	
			111		G41W0010-2	A01X0006:184	066.6	ADH. DET.	
			112		G41W0010-4	A01X0006:186	066.6	ADH. DET.	
			113			G41T0002:+	066.6	ADH. DET.	
			114		G41W0010-5	A01X0006:187	066.4	ADH. DET.	
			115					ADH. DET.	
G41K0011:A1			116				066.6	ADH. DET.	
			117				066.6	ADH. DET.	
			118					ADH. DET.	
			119					ADH. DET.	
			120					ADH. DET.	
			121					ADH. DET.	
G41X0010:1	G41W0000-WH/GN		122				066.6	ADH. DET.	
			123				066.6	ADH. DET.	
			124				066.6	ADH. DET.	
G41X0011:1			125				066.6	ADH. DET.	
			126				066.6	ADH. DET.	
G41X0010:3	G41W0000-WH/OG		127				066.6	ADH. DET.	
G41X0010:8	G41W0000-BN		128				066.6	ADH. DET.	
			129				066.6	ADH. DET.	

Tetra Pak®

Version Designer	Version Date	Machine
ROG	2015-05-29	CAP30 Flex ScrewCap 0300

ECM No	Denomination	Page Type
736736	TERMINAL STRIP OVERVIEW	TERMINAL STRIP OVERVIEW

Information Security Class	Document No.	Doc. type	Version	Page
PUBLIC	3218867-0006	ELD	AK	046

This drawing must not without the consent of Tetra Pak
be copied, transmitted or disclosed to any third party.

Terminal-strip overview 3218867-0003

G41X0000

From	Cable	Internal Jumper	Terminal	External Jumper	Cable	To	Page / Col.	Option	Function text
			130				066.6	ADH. DET.	
			131				066.6	ADH. DET.	
G41X0010:2	G41W0000-GN		132				066.6	ADH. DET.	
G41X0010:4	G41W0000-BU		133				066.6	ADH. DET.	
G41X0010:5	G41W0000-WH/BU		134				066.6	ADH. DET.	
G41K0011:31			135				066.4	ADH. DET.	
			136					ADH. DET.	
G41X0011:4			137				066.6	ADH. DET.	
			138				066.6	ADH. DET.	
			139					ADH. DET.	
			140					ADH. DET.	
			141					ADH. DET.	
			142					ADH. DET.	
A01X0006:GND	G41W0010-GNYE		GND				066.6	ADH. DET.	
			GND					ADH. DET.	
			GND					ADH. DET.	
			GND					ADH. DET.	

Tetra Pak®

Version Designer: ROG	Version Date: 2015-05-29	Machine: CAP30 Flex ScrewCap 0300	
ECM No: 736736	Denomination: TERMINAL STRIP OVERVIEW	Page Type: TERMINAL STRIP OVERVIEW	
Information Security Class: PUBLIC	Document No.: 3218867-0006	Doc. type: ELD	Version: AK	Page: 047

RELEASED

This drawing must not without the consent of Tetra Pak
be copied, transmitted or disclosed to any third party.

1 2 3 4 5 6 7 8 9 10

Terminal-strip overview 3218867-0003

G41X0002

From	Cable	Internal Jumper	Terminal	External Jumper	Cable	To	Page / Col.	Option	Function text
G41E0002:+	G41W0002-BN		1			G41T0002:+	066.7	ADH. DET.	
			2					ADH. DET.	
G41E0002:-	G41W0002-BU		3			G41T0002:-	066.7	ADH. DET.	
			4					ADH. DET.	
			5					ADH. DET.	

Tetra Pak®

Version Designer: ROG	Version Date: 2015-05-29	Machine: CAP30 Flex ScrewCap 0300	
ECM No: 736736	Denomination: TERMINAL STRIP OVERVIEW	Page Type: TERMINAL STRIP OVERVIEW	
Information Security Class: PUBLIC	Document No.: 3218867-0006	Doc. type: ELD	Version: AK	Page: 048

This drawing must not without the consent of Tetra Pak
be copied, transmitted or disclosed to any third party.

1 2 3 4 5 6 7 8 9 10

Terminal-strip overview 3218867-0003

G41X0011

From	Cable	Internal Jumper	Terminal	External Jumper	Cable	To	Page / Col.	Option	Function text
G41X0000:125			1		G41W0011-BU	G41B0011:COM	066.7	ADH. DET.	
WH			2		G41W0011-BN	G41B0011:NC	066.7	ADH. DET.	
BU			3		G41W0011-GNYE	G41B0011:E	066.7	ADH. DET.	
G41X0000:137			4		G41W0011-BK	G41B0011:NO	066.7	ADH. DET.	

Tetra Pak®

Version Designer	Version Date	Machine
ROG	2015-05-29	CAP30 Flex ScrewCap 0300

ECM No	Denomination	Page Type
736736	TERMINAL STRIP OVERVIEW	TERMINAL STRIP OVERVIEW

Information Security Class	Document No.	Doc. type	Version	Page
PUBLIC	3218867-0006	ELD	AK	049

This drawing must not without the consent of Tetra Pak
be copied, transmitted or disclosed to any third party.

1 2 3 4 5 6 7 8 9 10

Terminal-strip overview 3218867-0003

G70X0000

From	Cable	Internal Jumper	Terminal	External Jumper	Cable	To	Page / Col.	Option	Function text
A01X0006:170	G70W0000-WH/GN		1			G70B0000	057.8		VISION SYSTEM DEVICE
A01X0006:171	G70W0000-GN		2			G70B0000	057.8		VISION SYSTEM DEVICE
A01X0006:172	G70W0000-WH/OG		3			G70B0000	057.8		VISION SYSTEM DEVICE
A01X0006:173	G70W0000-BU		4			G70B0000	057.8		VISION SYSTEM DEVICE
			5			G70B0000	057.8		VISION SYSTEM DEVICE
			6			G70B0000	057.8		VISION SYSTEM DEVICE
			7			G70B0000	057.8		VISION SYSTEM DEVICE
A01X0006:177	G70W0000-BN		8			G70B0000	057.8		VISION SYSTEM DEVICE

Tetra Pak®

Version Designer	Version Date	Machine
ROG	2015-05-29	CAP30 Flex ScrewCap 0300

ECM No	Denomination	Page Type
736736	TERMINAL STRIP OVERVIEW	TERMINAL STRIP OVERVIEW

Information Security Class	Document No.	Doc. type	Version	Page
PUBLIC	3218867-0006	ELD	AK	050

This drawing must not without the consent of Tetra Pak be copied, transmitted or disclosed to any third party.

1 2 3 4 5 6 7 8 9 10

Terminal-strip overview 3218867-0003

P01X4000

From	Cable	Internal Jumper	Terminal	External Jumper	Cable	To	Page / Col.	Option	Function text
F09S1002:51			1		P01W4001-1	A01X0006:10	026.4		CONTROL PANEL EMERGENCY STOP
F09S1002:11			2		P01W4001-2	A01X0006:9	026.4		CONTROL PANEL EMERGENCY STOP
			3			F09S1002:52	026.5		CONTROL PANEL EMERGENCY STOP
					P01W40013	A01X0006:11			
A01X0006:12	P01W4001-4		4			F09S1002:12	026.5		CONTROL PANEL EMERGENCY STOP
A01K3034:4			5				053.6		
A01K3034:3			6				053.6		
			7			A01K3035:4	053.6		READY SIGNAL (RS) FOR LINE
			8			A01K3035:3	053.6		READY SIGNAL (RS) FOR LINE
A01X0006:150	P01W4001-5		100			A01K3020:4	040.8		REMOTE I/O ADAPTER O.P. BOX
A01K3020:4			101		W21W4012-BU	W21X4012:3	043.2		LONG PACKAGE QUEUE
			102		W21W4014-BU	W21X4014:3	043.2		SHORT PACKAGE QUEUE
			103		W21W4016-BU	W21X4016:3	043.2		VERIFIES PACKAGE STANDING
			104		W21W4018-BU	W21X4018:3	043.2		TOO LONG PACKAGE QUEUE
			105			A01K3026:4	046.6		
			106			A01K3030:4	050.6		
			107			A01K3036:4	053.6		PACKAGE COMING (PC) FOR LINE
A01X0006:154	P01W4001-10		108			P01S4004:23	042.4		RESET SAFETY RELAY
A01X0006:153	P01W4001-11		109			P01S4004:24	042.4		RESET SAFETY RELAY
A01K3020:6			110		P01W4001-6	A01X0006:155	040.8		REMOTE I/O ADAPTER O.P. BOX
A01K3020:6			111		W21W4012-BN	W21X4012:1	043.2		LONG PACKAGE QUEUE
			112		W21W4014-BN	W21X4014:1	043.2		SHORT PACKAGE QUEUE
			113		W21W4016-BN	W21X4016:1	043.2		VERIFIES PACKAGE STANDING
			114		W21W4018-BN	W21X4018:1	043.2		TOO LONG PACKAGE QUEUE
			115			P01S4000:13	041.3		STEP UP
A01X0006:160	P01W4001-7		116			A01K3026:6	046.6		
			117			A01K3036:3	053.6		PACKAGE COMING (PC) FOR LINE
A01X0006:163	P01W4001-8		118				040.8		
A01K3030:6			119				040.8		
A01X0006:164	P01W4001-9								

This drawing must not without the consent of Tetra Pak
be copied, transmitted or disclosed to any third party.

1 2 3 4 5 6 7 8 9 10

Terminal-strip overview 3218867-0003

P01X4000

From	Cable	Internal Jumper	Terminal	External Jumper	Cable	To	Page / Col.	Option	Function text
V01V5000:⏚	V01W5001-GNYE		⏚				016.8		
			⏚			A01K3020:2	040.6		REMOTE I/O ADAPTER O.P. BOX
A01X0006:⏚	P01W4001-GNYE		⏚				040.8		
K01B8001:E	K01W8001-GNYE		⏚				044.6		
A01P5010:E	A01W5010-GNYE		⏚				048.3		
A01K8000:E	K01W8000-GNYE		⏚				051.3		
A01K3026:2			⏚				046.6		
A01K3030:2			⏚				050.6		

Tetra Pak®

Version Designer: ROG	Version Date: 2015-05-29	Machine: CAP30 Flex ScrewCap 0300	
ECM No: 736736	Denomination: TERMINAL STRIP OVERVIEW	Page Type: TERMINAL STRIP OVERVIEW	
Information Security Class: PUBLIC	Document No.: 3218867-0006	Doc. type: ELD	Version: AK / Page: 052

This drawing must not without the consent of Tetra Pak
be copied, transmitted or disclosed to any third party.

1 2 3 4 5 6 7 8 9 10

Terminal-strip overview 3218867-0003

W20X0030

From	Cable	Internal Jumper	Terminal	External Jumper	Cable	To	Page / Col.	Option	Function text
A01X0006:115+	W20W0030-BN		1		W20W0003-BN	W20B0003	032.3		PACKAGE PRESENCE ON BELT BRAKE
					W20W0002-BN	W20B0002			PACKAGE PRESENCE ON BELT BRAKE
			2						
A01X0006:115-	W20W0030-BU		3		W20W0003-BU	W20B0003	032.3		PACKAGE PRESENCE ON BELT BRAKE
					W20W0002-BU	W20B0002			PACKAGE PRESENCE ON BELT BRAKE
A01X0006:115	W20W0030-BK		4		W20W0003-BK	W20B0003	032.6		PACKAGE PRESENCE ON BELT BRAKE

Tetra Pak®

Version Designer: ROG	Version Date: 2015-05-29	Machine: CAP30 Flex ScrewCap 0300	
ECM No: 736736	Denomination: TERMINAL STRIP OVERVIEW	Page Type: TERMINAL STRIP OVERVIEW	
Information Security Class: PUBLIC	Document No.: 3218867-0006	Doc. type: ELD	Version: AK	Page: 053

This drawing must not without the consent of Tetra Pak
be copied, transmitted or disclosed to any third party.

1 2 3 4 5 6 7 8 9 10

Terminal-strip overview 3218867-0003

W21X1025

From	Cable	Internal Jumper	Terminal	External Jumper	Cable	To	Page / Col.	Option	Function text
W21B1025	W21W1025-BU		1		W21W1035-BN	W21X3008:1	060.5		
			3		W21W1035-BK	W21X3008:3	060.5		
W21B1025	W21W1025-BK		4		W21W1035-BU	W21X3008:4	060.4		

Tetra Pak®	Version Designer ROG	Version Date 2015-05-29	Machine CAP30 Flex ScrewCap 0300		
	ECM No 736736	Denomination TERMINAL STRIP OVERVIEW	Page Type TERMINAL STRIP OVERVIEW		
	Information Security Class PUBLIC	Document No. 3218867-0006	Doc. type ELD	Version AK	Page 054

This drawing must not without the consent of Tetra Pak
be copied, transmitted or disclosed to any third party.

1 2 3 4 5 6 7 8 9 10

Terminal-strip overview 3218867-0003

W21X2025

From	Cable	Internal Jumper	Terminal	External Jumper	Cable	To	Page / Col.	Option	Function text
W21B2025	W21W2025-BU		1		W21W2035-BN	W21X3011:1	060.10		
			3		W21W2035-BK	W21X3011:3	060.10		
W21B2025	W21W2025-BK		4		W21W2035-BU	W21X3011:4	060.9		

Tetra Pak®	Version Designer ROG	Version Date 2015-05-29	Machine CAP30 Flex ScrewCap 0300		
	ECM No 736736	Denomination TERMINAL STRIP OVERVIEW	Page Type TERMINAL STRIP OVERVIEW		
	Information Security Class PUBLIC	Document No. 3218867-0006	Doc. type ELD	Version AK	Page 055

This drawing must not without the consent of Tetra Pak
be copied, transmitted or disclosed to any third party.

1 2 3 4 5 6 7 8 9 10

Terminal-strip overview 3218867-0003

W21X3006

From	Cable	Internal Jumper	Terminal	External Jumper	Cable	To	Page / Col.	Option	Function text
W21M1020:VDC1			1		W21W1020-1	A01X2022:6	060.2		
W21M1020:GND1			2		W21W1020-2	A01X2022:5	060.1		
W21M1020:PE			3		W21W1020-SH	A01X2022:⏚	060.1		

RELEASED

This drawing must not without the consent of Tetra Pak
be copied, transmitted or disclosed to any third party.

1 2 3 4 5 6 7 8 9 10

Terminal-strip overview 3218867-0003

W21X3007

From	Cable	Internal Jumper	Terminal	External Jumper	Cable	To	Page / Col.	Option	Function text
W21M1020:SH			1		A81W5125-SH	A81X5125:1	060.3		
W21M1020:GND1			2		A81W5125-RD	A81X5125:2	060.3		
W21M1020:VDC1			3		A81W5125-BK	A81X5125:3	060.3		
W21M1020:H			4		A81W5125-WH	A81X5125:4	060.3		
W21M1020:L			5		A81W5125-BU	A81X5125:5	060.3		

Tetra Pak®

Version Designer	Version Date	Machine
ROG	2015-05-29	CAP30 Flex ScrewCap 0300

ECM No	Denomination	Page Type
736736	TERMINAL STRIP OVERVIEW	TERMINAL STRIP OVERVIEW

Information Security Class	Document No.	Doc. type	Version	Page
PUBLIC	3218867-0006	ELD	AK	057

This drawing must not without the consent of Tetra Pak
be copied, transmitted or disclosed to any third party.

1 2 3 4 5 6 7 8 9 10

Terminal-strip overview 3218867-0003

W21X3008

From	Cable	Internal Jumper	Terminal	External Jumper	Cable	To	Page / Col.	Option	Function text
W21M1020:1			1		W21W1035-BN	W21X1025:1	060.4		
W21M1020:3			3		W21W1035-BK	W21X1025:3	060.4		
W21M1020:4			4		W21W1035-BU	W21X1025:4	060.4		

Tetra Pak®

Version Designer	Version Date	Machine
ROG	2015-05-29	CAP30 Flex ScrewCap 0300

ECM No	Denomination	Page Type
736736	TERMINAL STRIP OVERVIEW	TERMINAL STRIP OVERVIEW

Information Security Class	Document No.	Doc. type	Version	Page
PUBLIC	3218867-0006	ELD	AK	058

This drawing must not without the consent of Tetra Pak
be copied, transmitted or disclosed to any third party.

1 2 3 4 5 6 7 8 9 10

Terminal-strip overview 3218867-0003

W21X3009

From	Cable	Internal Jumper	Terminal	External Jumper	Cable	To	Page / Col.	Option	Function text
W21M2020:VDC1			1		W21W2020-1	A01X2022:8	060.7		
W21M2020:GND1			2		W21W2020-2	A01X2022:7	060.6		
W21M2020:PE			3		W21W2020-SH	A01X2022:⏚	060.6		

RELEASED

This drawing must not without the consent of Tetra Pak
be copied, transmitted or disclosed to any third party.

1 2 3 4 5 6 7 8 9 10

Terminal-strip overview 3218867-0003

W21X3010

From	Cable	Internal Jumper	Terminal	External Jumper	Cable	To	Page / Col.	Option	Function text
W21M2020:SH			1		A81W5126-SH	A81X5126:1	060.8		
W21M2020:GND1			2		A81W5126-RD	A81X5126:2	060.8		
W21M2020:VDC1			3		A81W5126-BK	A81X5126:3	060.8		
W21M2020:H			4		A81W5126-WH	A81X5126:4	060.8		
W21M2020:L			5		A81W5126-BU	A81X5126:5	060.8		

Tetra Pak®

Version Designer	Version Date	Machine
ROG	2015-05-29	CAP30 Flex ScrewCap 0300

ECM No	Denomination	Page Type
736736	TERMINAL STRIP OVERVIEW	TERMINAL STRIP OVERVIEW

Information Security Class	Document No.	Doc. type	Version	Page
PUBLIC	3218867-0006	ELD	AK	060

This drawing must not without the consent of Tetra Pak
be copied, transmitted or disclosed to any third party.

1 2 3 4 5 6 7 8 9 10

Terminal-strip overview 3218867-0003

W21X3011

From	Cable	Internal Jumper	Terminal	External Jumper	Cable	To	Page / Col.	Option	Function text
W21M2020:1			1		W21W2035-BN	W21X2025:1	060.9		
W21M2020:3			3		W21W2035-BK	W21X2025:3	060.9		
W21M2020:4			4		W21W2035-BU	W21X2025:4	060.9		

Tetra Pak®

Version Designer: ROG	Version Date: 2015-05-29	Machine: CAP30 Flex ScrewCap 0300	
ECM No: 736736	Denomination: TERMINAL STRIP OVERVIEW	Page Type: TERMINAL STRIP OVERVIEW	
Information Security Class: PUBLIC	Document No.: 3218867-0006	Doc. type: ELD	Version: AK	Page: 061

This drawing must not without the consent of Tetra Pak be copied, transmitted or disclosed to any third party.

Terminal-strip overview 3218867-0003

W21X3020

From	Cable	Internal Jumper	Terminal	External Jumper	Cable	To	Page / Col.	Option	Function text
A01X0006:112+	W21W3020-BN		1.1		W21W3000-BN	W21B3000	034.2		CAP DETECTION ON PACKAGE
					W21W3001-BN	W21B3001			CAP DETECTION ON PACKAGE
A01X0006:112-	W21W3020-BU		1.3		W21W3000-BU	W21B3000	034.2		CAP DETECTION ON PACKAGE
					W21W3001-BU	W21B3001			CAP DETECTION ON PACKAGE
A01X0006:112	W21W3020-WH		1.4		W21W3000-BK	W21B3000	034.6		CAP DETECTION ON PACKAGE
			2.1		W21W3002-BN	W21B3002	034.2		PACKAGE DETECTION
					W21W3003-BN	W21B3003			PACKAGE DETECTION
			2.3		W21W3002-BU	W21B3002	034.2		PACKAGE DETECTION
					W21W3003-BU	W21B3003			PACKAGE DETECTION
A01X0006:113	W21W3020-GN		2.4		W21W3002-BK	W21B3002	034.6		PACKAGE DETECTION
			3.1		W21W3004-BN	W21B3004	034.2		OBJECT DETECTION ON PACKAGE CONVEYOR
					W21W3005-BN	W21B3005			OBJECT DETECTION ON PACKAGE CONVEYOR
			3.3		W21W3004-BU	W21B3004	034.2		OBJECT DETECTION ON PACKAGE CONVEYOR
					W21W3005-BU	W21B3005			OBJECT DETECTION ON PACKAGE CONVEYOR
A01X0006:114	W21W3020-YE		3.4		W21W3004-BK	W21B3004	034.6		OBJECT DETECTION ON PACKAGE CONVEYOR
			4.1		W21W3006-BN	W21B3006	034.2		PACKAGE DETECTION 2
					W21W3007-BN	W21B3007			PACKAGE DETECTION 2
			4.3		W21W3006-BU	W21B3006	034.2		PACKAGE DETECTION 2
					W21W3007-BU	W21B3007			PACKAGE DETECTION 2
A01X0006:174	W21W3020-GY		4.4		W21W3012-BK	W21B3006	034.6		PACKAGE DETECTION 2
A01X0006:167	W21W3020-WH/YE		5.2		W21W3010-BN	W21K3010:1	039.4		WASTE PACKAGE EJECTION ON
			5.3		W21W3010-BU	W21K3010:2	039.7		WASTE PACKAGE EJECTION ON
A01X0006:168	W21W3020-PK		5.4		W21W3010-BK	W21K3011:1	039.4		WASTE PACKAGE EJECTION OFF
A01X0006:169	W21W3020-YE/BN		6.2		W21W5000-BN	W21K5000:1	039.4		BLOW CLEANING PACKAGE CONVEYOR
			6.3		W21W5000-BU	W21K5000:2	039.7		BLOW CLEANING PACKAGE CONVEYOR
			7.1		W21W3038-BN	W21X3038:1	034.2		
			7.3		W21W3038-BU	W21X3038:3	034.2		
A01X0006:175	W21W3020-BK		7.4		W21W3038-BK	W21X3038:4	034.6		
			8.1		W21W3039-BN	W21X3039:1	034.2		
			8.3		W21W3039-BU	W21X3039:3	034.2		

This drawing must not without the consent of Tetra Pak
be copied, transmitted or disclosed to any third party.

1 2 3 4 5 6 7 8 9 10

Terminal-strip overview 3218867-0003

W21X3020

From	Cable	Internal Jumper	Terminal	External Jumper	Cable	To	Page / Col.	Option	Function text
A01X0006:176	W21W3020-VT		8.4		W21W3039-BK	W21X3039:4	034.6		

This drawing must not without the consent of Tetra Pak
be copied, transmitted or disclosed to any third party.

1 2 3 4 5 6 7 8 9 10

Terminal-strip overview 3218867-0003

W21X3038

From	Cable	Internal Jumper	Terminal	External Jumper	Cable	To	Page / Col.	Option	Function text
W21X3020:7.1	W21W3038-BN		1		W21W3008-BN	W21B3008	034.2		CAP DETECTION POSITION 2
					W21W3009-BN	W21B3009			CAP DETECTION POSITION 2
W21X3020:7.3	W21W3038-BU		3		W21W3008-BU	W21B3008	034.2		CAP DETECTION POSITION 2
					W21W3009-BU	W21B3009			CAP DETECTION POSITION 2
W21X3020:7.4	W21W3038-BK		4		W21W3008-BK	W21B3008	034.5		CAP DETECTION POSITION 2

Tetra Pak®

Version Designer: ROG	Version Date: 2015-05-29	Machine: CAP30 Flex ScrewCap 0300	
ECM No: 736736	Denomination: TERMINAL STRIP OVERVIEW	Page Type: TERMINAL STRIP OVERVIEW	
Information Security Class: PUBLIC	Document No.: 3218867-0006	Doc. type: ELD	Version: AK	Page: 064

This drawing must not without the consent of Tetra Pak
be copied, transmitted or disclosed to any third party.

1 2 3 4 5 6 7 8 9 10

Terminal-strip overview 3218867-0003

W21X3039

From	Cable	Internal Jumper	Terminal	External Jumper	Cable	To	Page / Col.	Option	Function text
W21X3020:8.1	W21W3039-BN		1		W21W3018-BN	W21B3018	034.2		PACKAGE DETECTION POSITION 3 ONLY FOR TGA
					W21W3019-BN	W21B3019			PACKAGE DETECTION POSITION 3 ONLY FOR TGA
W21X3020:8.3	W21W3039-BU		3		W21W3018-BU	W21B3018	034.2		PACKAGE DETECTION POSITION 3 ONLY FOR TGA
					W21W3019-BU	W21B3019			PACKAGE DETECTION POSITION 3 ONLY FOR TGA
W21X3020:8.4	W21W3039-BK		4		W21W3018-BK	W21B3018	034.5		PACKAGE DETECTION POSITION 3 ONLY FOR TGA

Tetra Pak®

Version Designer	Version Date	Machine
ROG	2015-05-29	CAP30 Flex ScrewCap 0300

ECM No	Denomination	Page Type
736736	TERMINAL STRIP OVERVIEW	TERMINAL STRIP OVERVIEW

Information Security Class	Document No.	Doc. type	Version	Page
PUBLIC	3218867-0006	ELD	AK	065

This drawing must not without the consent of Tetra Pak
be copied, transmitted or disclosed to any third party.

1 2 3 4 5 6 7 8 9 10

Terminal-strip overview 3218867-0003

W21X4010

From	Cable	Internal Jumper	Terminal	External Jumper	Cable	To	Page / Col.	Option	Function text
W21Q4010:2	W21W4011-1		1		W21W4010-1	W21M4010:U	020.9	P.ALIGNER	PACKAGE ALIGNER
W21Q4010:4	W21W4011-2		2		W21W4010-2	W21M4010:V	020.9	P.ALIGNER	PACKAGE ALIGNER
W21Q4010:6	W21W4011-3		3		W21W4010-3	W21M4010:W	020.9	P.ALIGNER	PACKAGE ALIGNER
GND	W21W4011-SH		4		W21W4010-SH	W21W4010	020.10	P.ALIGNER	
			5						
			6						
W21X4011:1	W21W4011-GNYE		⏚		W21W4010-GNYE	W21M4010:⏚	020.10	P.ALIGNER	PACKAGE ALIGNER

Tetra Pak®	Version Designer: ROG	Version Date: 2015-05-29	Machine: CAP30 Flex ScrewCap 0300	
	ECM No: 736736	Denomination: TERMINAL STRIP OVERVIEW	Page Type: TERMINAL STRIP OVERVIEW	
Information Security Class: PUBLIC	Document No.: 3218867-0006	Doc. type: ELD	Version: AK	Page: 066

This drawing must not without the consent of Tetra Pak
be copied, transmitted or disclosed to any third party.

1 2 3 4 5 6 7 8 9 10

Terminal-strip overview 3218867-0003

W21X4012

From	Cable	Internal Jumper	Terminal	External Jumper	Cable	To	Page / Col.	Option	Function text
P01X4000:111	W21W4012-BN		1		W21W4002-BN	W21B4002	043.3		LONG PACKAGE QUEUE
					W21W4001-BN	W21B4001			LONG PACKAGE QUEUE
			2						
P01X4000:101	W21W4012-BU		3		W21W4002-BU	W21B4002	043.3		LONG PACKAGE QUEUE
					W21W4001-BU	W21B4001			LONG PACKAGE QUEUE
A01K3023:0	W21W4012-BK		4		W21W4002-BK	W21B4002	043.6		LONG PACKAGE QUEUE

Tetra Pak®

Version Designer	Version Date	Machine
ROG	2015-05-29	CAP30 Flex ScrewCap 0300

ECM No	Denomination	Page Type
736736	TERMINAL STRIP OVERVIEW	TERMINAL STRIP OVERVIEW

Information Security Class	Document No.	Doc. type	Version	Page
PUBLIC	3218867-0006	ELD	AK	067

This drawing must not without the consent of Tetra Pak
be copied, transmitted or disclosed to any third party.

1 2 3 4 5 6 7 8 9 10

Terminal-strip overview 3218867-0003

W21X4014

From	Cable	Internal Jumper	Terminal	External Jumper	Cable	To	Page / Col.	Option	Function text
P01X4000:112	W21W4014-BN		1		W21W4004-BN	W21B4004	043.3		SHORT PACKAGE QUEUE
					W21W4003-BN	W21B4003			SHORT PACKAGE QUEUE
			2						
P01X4000:102	W21W4014-BU		3		W21W4004-BU	W21B4004	043.3		SHORT PACKAGE QUEUE
					W21W4003-BU	W21B4003			SHORT PACKAGE QUEUE
A01K3023:1	W21W4014-BK		4		W21W4004-BK	W21B4004	043.6		SHORT PACKAGE QUEUE

Tetra Pak®

Version Designer: ROG	Version Date: 2015-05-29	Machine: CAP30 Flex ScrewCap 0300	
ECM No: 736736	Denomination: TERMINAL STRIP OVERVIEW	Page Type: TERMINAL STRIP OVERVIEW	
Information Security Class: PUBLIC	Document No.: 3218867-0006	Doc. type: ELD	Version: AK	Page: 068

This drawing must not without the consent of Tetra Pak
be copied, transmitted or disclosed to any third party.

1 2 3 4 5 6 7 8 9 10

Terminal-strip overview 3218867-0003

W21X4016

From	Cable	Internal Jumper	Terminal	External Jumper	Cable	To	Page / Col.	Option	Function text
P01X4000:113	W21W4016-BN		1		W21W4006-BN	W21B4006	043.3		VERIFIES PACKAGE STANDING
					W21W4005-BN	W21B4005			VERIFIES PACKAGE STANDING
			2						
P01X4000:103	W21W4016-BU		3		W21W4006-BU	W21B4006	043.3		VERIFIES PACKAGE STANDING
					W21W4005-BU	W21B4005			VERIFIES PACKAGE STANDING
A01K3023:2	W21W4016-BK		4		W21W4006-BK	W21B4006	043.6		VERIFIES PACKAGE STANDING

Tetra Pak®

Version Designer: ROG	Version Date: 2015-05-29	Machine: CAP30 Flex ScrewCap 0300	
ECM No: 736736	Denomination: TERMINAL STRIP OVERVIEW	Page Type: TERMINAL STRIP OVERVIEW	
Information Security Class: PUBLIC	Document No.: 3218867-0006	Doc. type: ELD	Version: AK	Page: 069

This drawing must not without the consent of Tetra Pak
be copied, transmitted or disclosed to any third party.

1 2 3 4 5 6 7 8 9 10

Terminal-strip overview 3218867-0003

W21X4018

From	Cable	Internal Jumper	Terminal	External Jumper	Cable	To	Page / Col.	Option	Function text
P01X4000:114	W21W4018-BN		1		W21W4008-BN	W21B4008	043.3		TOO LONG PACKAGE QUEUE
					W21W4007-BN	W21B4007			TOO LONG PACKAGE QUEUE
			2						
P01X4000:104	W21W4018-BU		3		W21W4008-BU	W21B4008	043.3		TOO LONG PACKAGE QUEUE
					W21W4007-BU	W21B4007			TOO LONG PACKAGE QUEUE
A01K3023:3	W21W4018-BK		4		W21W4008-BK	W21B4008	043.6		TOO LONG PACKAGE QUEUE

Tetra Pak®

Version Designer: ROG	Version Date: 2015-05-29	Machine: CAP30 Flex ScrewCap 0300	
ECM No: 736736	Denomination: TERMINAL STRIP OVERVIEW	Page Type: TERMINAL STRIP OVERVIEW	
Information Security Class: PUBLIC	Document No.: 3218867-0006	Doc. type: ELD	Version: AK	Page: 070

RELEASED

This drawing must not without the consent of Tetra Pak
be copied, transmitted or disclosed to any third party.

1 2 3 4 5 6 7 8 9 10

Terminal-strip overview 3218867-0003

W21X4022

From	Cable	Internal Jumper	Terminal	External Jumper	Cable	To	Page / Col.	Option	Function text
W81K4120:0.1	W21W4022-BN		1		W21W4024-BN	W21B4024	055.5		PACKAGE CONGESTION OUTFEED
					W21W4023-BN	W21B4023			PACKAGE CONGESTION OUTFEED
			2						
W81K4120:0.3	W21W4022-BU		3		W21W4024-BU	W21B4024	055.5		PACKAGE CONGESTION OUTFEED
					W21W4023-BU	W21B4023			PACKAGE CONGESTION OUTFEED
W81K4120:0.4	W21W4022-BK		4		W21W4024-BK	W21B4024	055.5		PACKAGE CONGESTION OUTFEED

Tetra Pak®

Version Designer	Version Date	Machine
ROG	2015-05-29	CAP30 Flex ScrewCap 0300

ECM No	Denomination	Page Type
736736	TERMINAL STRIP OVERVIEW	TERMINAL STRIP OVERVIEW

Information Security Class	Document No.	Doc. type	Version	Page
PUBLIC	3218867-0006	ELD	AK	071

This drawing must not without the consent of Tetra Pak
be copied, transmitted or disclosed to any third party.

1 2 3 4 5 6 7 8 9 10

Terminal-strip overview 3218867-0003

W21X6012

From	Cable	Internal Jumper	Terminal	External Jumper	Cable	To	Page / Col.	Option	Function text
W81K4120:2.1	W21W6012-BN		1		W21W6002-BN	W21B6002	055.5		QUEUE OUTFEED LEFT LINE
					W21W6001-BN	W21B6001			QUEUE OUTFEED LEFT LINE
W81K4120:2.3	W21W6012-BU		3		W21W6002-BU	W21B6002	055.5		QUEUE OUTFEED LEFT LINE
					W21W6001-BU	W21B6001			QUEUE OUTFEED LEFT LINE
W81K4120:2.4	W21W6012-BK		4		W21W6002-BK	W21B6002	055.5		QUEUE OUTFEED LEFT LINE

Tetra Pak®

Version Designer: ROG	Version Date: 2015-05-29	Machine: CAP30 Flex ScrewCap 0300	
ECM No: 736736	Denomination: TERMINAL STRIP OVERVIEW	Page Type: TERMINAL STRIP OVERVIEW	
Information Security Class: PUBLIC	Document No.: 3218867-0006	Doc. type: ELD	Version: AK / Page: 072

This drawing must not without the consent of Tetra Pak
be copied, transmitted or disclosed to any third party.

1 2 3 4 5 6 7 8 9 10

Terminal-strip overview 3218867-0003

W21X6014

From	Cable	Internal Jumper	Terminal	External Jumper	Cable	To	Page / Col.	Option	Function text
W81K4120:3.1	W21W6014-BK		1		W21W6004-BN	W21B6004	055.5		QUEUE OUTFEED RIGHT LINE
					W21W6003-BN	W21B6003			QUEUE OUTFEED RIGHT LINE
W81K4120:3.3	W21W6014-BN		3		W21W6004-BU	W21B6004	055.5		QUEUE OUTFEED RIGHT LINE
					W21W6003-BU	W21B6003			QUEUE OUTFEED RIGHT LINE
W81K4120:3.4	W21W6014-BU		4		W21W6004-BK	W21B6004	055.5		QUEUE OUTFEED RIGHT LINE

Tetra Pak®

Version Designer	Version Date	Machine
ROG	2015-05-29	CAP30 Flex ScrewCap 0300

ECM No	Denomination	Page Type
736736	TERMINAL STRIP OVERVIEW	TERMINAL STRIP OVERVIEW

Information Security Class	Document No.	Doc. type	Version	Page
PUBLIC	3218867-0006	ELD	AK	073

This page intentionally left blank

8 Cable Connection List

Description

All cable connections used in the equipment are listed in this chapter.

8.1 Cable Connection List

This page intentionally left blank

This drawing must not without the consent of Tetra Pak be copied, transmitted or disclosed to any third party.

Cable Connection List of 3218867-0003

From	Cable	To	Page / Col.	Option
A01W2021				
A01X2021:⏚	GNYE	A01X2022:⏚	059.1	
A01X2021:1	1	A01X2022:1	059.1	
A01X2021:2	2	A01X2022:2	059.2	
A01X2021:3	3	A01X2022:3	059.6	
A01X2021:4	4	A01X2022:4	059.7	
A01X2021:5	5	A01X2022:5	060.1	
A01X2021:6	6	A01X2022:6	060.2	
A01X2021:7	7	A01X2022:7	060.6	
A01X2021:8	8	A01X2022:8	060.7	
A01X2021:9	9	A01X2022:9	061.1	
A01X2021:10	10	A01X2022:10	061.2	
A01W3025				
A01X0006:192	WH	A01K3006:11	035.7	
A01X0006:194	BN	A01K3006:13	035.7	
A01X0006:193	GN	A01K3006:12	035.7	
A01X0006:195	YE	A01K3006:14	035.7	
A01X0006:201	SH	A01W3025:SH	035.6	
A01W3026				
A01X0006:193	GY	W21X2000:14	012.7	
	WH		012.9	
A01X0006:192	YE	W21X2000:17	012.8	
	GN		012.9	
A01X0006:193-	BN	W21X2000:15	012.7	
A01X0006:200	SH	GND	012.8	
A01W3027				
A01X0006:194	GY	W21X1000:14	011.7	
	WH		011.9	
A01X0006:195	YE	W21X1000:17	011.8	
	GN		011.9	
A01X0006:194-	BN	W21X1000:15	011.7	

From	Cable	To	Page / Col.	Option
A01X0006:200	SH	GND	011.8	
A01W5010				
A01K3029:3	1	A01P5010:1	048.4	
A01K3028:0	2	A01P5010:2	048.4	
A01K3028:1	3	A01P5010:3	048.4	
A01K3028:3	4	A01P5010:5	048.4	
A01K3028:5	5	A01P5010:0	048.5	
A01K3028:2	6	A01P5010:4	048.4	
P01X4000:⏚	GNYE	A01P5010:E	048.5	
A01W7000				
A01X6000:6	WH	A01E7000:2	005.3	
A01X6000:5	BN	A01E7000:1	005.3	
A01W7001				
A01X7001:1.3	WH	A01E7001:2	005.4	
A01X7001:1.1	BN	A01E7001:1	005.4	
A01W7002				
A01X7001:2.3	WH	A01E7002:2	005.5	
A01X7001:2.1	BN	A01E7002:1	005.5	
A01W7003				
A01X7001:3.3	WH	A01E7003:2	005.7	
A01X7001:3.1	BN	A01E7003:1	005.7	
A01W7100				
A01X0006:202	BN	A01X7001:1.1	005.4	
	WH			
A01X0006:203	BU	A01X7001:1.3	005.4	
	BK			

Tetra Pak®	Version Designer: ROG	Version Date: 2015-05-29	Machine: CAP30 Flex ScrewCap 0300	
	ECM No: 736736	Denomination: CABLE CONNECTION LIST	Page Type: CABLE CONNECTION LIST	
	Information Security Class: PUBLIC	Document No.: 3218867-0007	Doc. type: ELD	Version: AK / Page: 001

This drawing must not without the consent of Tetra Pak be copied, transmitted or disclosed to any third party.

Cable Connection List of 3218867-0003

From	Cable	To	Page / Col.	Option
	A81W2000			
A01K3003:1	1	A81X2000:1	024.3	
	A81W2001			
A01A4000:5	1	A81X2000:2	024.3	
	A81W2002			
A81X2000:3	1	G70B0000:1	057.8	
	A81W2004			
A81X2000:5	1	A81X2004:1	066.8	ADH. DET.
	A81W2010			
A81X2020:1	1	A81S2010	024.7	
	A81W2020			
A01A4000:6	1	A81X2020:1	024.7	
A81W2020	SH	GND	024.8	
	A81W4000			
A81X4001:BK	BK	A81T4000:V-	022.9	
	BU			
A81X4001:SH	DRAIN	A81T4000:V-	022.9	
	WH			
A81X4001:RD	RD	A81T4000:V+	022.9	
	A81W4001			
A81X4001:BK	BK	A01K3004:V-	021.2	
A81X4001:BU	BU	A01K3004:CAN-L	021.2	
A81X4001:SH	DRAIN	A01K3004:SHIELD	021.2	
A81X4001:WH	WH	A01K3004:CAN-H	021.2	
A81X4001:RD	RD	A01K3004:V+	021.2	

From	Cable	To	Page / Col.	Option
	A81W4002			
A81X4002:BK	BK	W20T0000:V-	018.2	
A81X4002:BU	BU	W20T0000:CAN-L	018.2	
A81X4002:SH	DRAIN	W20T0000:SH	018.2	
A81X4002:WH	WH	W20T0000:CAN-H	018.2	
A81X4002:RD	RD	W20T0000:V+	018.2	
	A81W4003			
A81X4003:BK	BK	A01K3020:-V	040.6	
A81X4003:BU	BU	A01K3020:CAN-L	040.6	
A81X4003:SH	DRAIN	A01K3020:SHIELD	040.6	
A81X4003:WH	WH	A01K3020:CAN-H	040.6	
A81X4003:RD	RD	A01K3020:+V	040.6	
	A81W4005			
A81X4001:BK	BK	A81X4002:BK	022.5	
A81X4001:BU	BU	A81X4002:BU	022.5	
A81X4001:SH	DRAIN	A81X4002:SH	022.5	
A81X4001:WH	WH	A81X4002:WH	022.5	
A81X4001:RD	RD	A81X4002:RD	022.5	
	A81W4006			
A81X4002:BK	BK	A81X4003:BK	022.3	
A81X4002:BU	BU	A81X4003:BU	022.3	
A81X4002:SH	DRAIN	A81X4003:SH	022.3	
A81X4002:WH	WH	A81X4003:WH	022.3	
A81X4002:RD	RD	A81X4003:RD	022.3	
	A81W4007			
A81X4003:BK	BK	A81X4004:BK	022.1	
A81X4003:BU	BU	A81X4004:BU	022.1	
A81X4003:SH	DRAIN	A81X4004:SH	022.1	
A81X4003:WH	WH	A81X4004:WH	022.1	

This drawing must not without the consent of Tetra Pak
be copied, transmitted or disclosed to any third party.

Cable Connection List of 3218867-0003

From	Cable	To	Page / Col.	Option
	A81W4007			
A81X4003:RD	RD	A81X4004:RD	022.1	
	A81W4120			
A01X0006:156	WH	W81K4120:2	055.8	
A01X0006:151	BU	W81K4120:3	055.8	
A01X0006:151	BK	W81K4120:4	055.8	
A01X0006:156	BN	W81K4120:1	055.8	
	A81W4121			
C81K4130:2	RD	W81K4120:2	055.8	
C81K4130:3	BK	W81K4120:3	055.8	
C81K4130:4	WH	W81K4120:4	055.8	
C81K4130:5	BU	W81K4120:5	055.8	
C81K4130:1	SH	W81K4120:1	055.8	
	A81W4122			
A81X4123:3	BK	A01K3020:-V	040.6	
A81X4123:5	BU	A01K3020:CAN-L	040.6	
A81X4123:1	DRAIN	A01K3020:SHIELD	040.6	
A81X4123:4	WH	A01K3020:CAN-H	040.6	
A81X4123:2	RD	A01K3020:+V	040.6	
	A81W4123			
A81X4123:2	RD	A81X5123:2	059.4	
A81X4123:3	BK	A81X5123:3	059.4	
A81X4123:4	WH	A81X5123:4	059.4	
A81X4123:5	BU	A81X5123:5	059.4	
A81X4123:1	SH	A81X5123:1	059.4	
	A81W4124			
A81X5123:2	RD	A81X8124:2	059.9	
A81X5123:3	BK	A81X8124:3	059.9	

From	Cable	To	Page / Col.	Option
A81X5123:4	WH	A81X8124:4	059.9	
A81X5123:5	BU	A81X8124:5	059.9	
A81X5123:1	SH	A81X8124:1	059.9	
	A81W4125			
A81X5125:2	RD	A81X8124:3	059.9	
A81X5125:3	BK	A81X8124:2	059.9	
A81X5125:4	WH	A81X8124:4	059.9	
A81X5125:5	BU	A81X8124:5	059.9	
A81X5125:1	SH	A81X8124:1	059.9	
	A81W4126			
A81X5125:2	RD	A81X5126:2	060.9	
A81X5125:3	BK	A81X5126:3	060.9	
A81X5125:4	WH	A81X5126:4	060.9	
A81X5125:5	BU	A81X5126:5	060.9	
A81X5125:1	SH	A81X5126:1	060.9	
	A81W4127			
A81K4125:2	RD	A81X5126:2	060.9	
A81K4125:3	BK	A81X5126:3	060.9	
A81K4125:4	WH	A81X5126:4	060.9	
A81K4125:5	BU	A81X5126:5	060.9	
A81K4125:1	SH	A81X5126:1	060.9	
	A81W4128			
A81K4125:2	RD	W81K4120:2	055.8	
A81K4125:3	BK	W81K4120:3	055.8	
A81K4125:4	WH	W81K4120:4	055.8	
A81K4125:5	BU	W81K4120:5	055.8	
A81K4125:1	SH	W81K4120:1	055.8	

This drawing must not without the consent of Tetra Pak be copied, transmitted or disclosed to any third party.

Cable Connection List of 3218867-0003

From	Cable	To	Page / Col.	Option
A81W4129				
A81X5127:2	RD	C81K4130:2	056.8	
A81X5127:3	BK	C81K4130:3	056.8	
A81X5127:4	WH	C81K4130:4	056.8	
A81X5127:5	BU	C81K4130:5	056.8	
A81X5127:1	SH	C81K4130:1	056.8	
A81W4130				
C50X1004:2	BN	C81K4130:1	056.8	
C50X1004:2	WH	C81K4130:2	056.8	
C50X1004:1	BU	C81K4130:3	056.8	
C50X1004:1	BK	C81K4130:4	056.8	
A81W4225				
A01X0006:158	WH	A81K4125:2	054.8	
A01X0006:165	BU	A81K4125:3	054.8	
A01X0006:165	BK	A81K4125:4	054.8	
A01X0006:158	BN	A81K4125:1	054.8	
A81W5000				
A81X2000:4	1	A81K5000:RJ45	021.9	
A81W5001				
	GN	A81K5000:1	021.9	
	BN	A81K5000:4	021.9	
	YE	A81K5000:2	021.9	
	WH	A81K5000:3	021.9	
	SH	A81K5000:5	021.9	
A81W5123				
G30X3101:2	RD	A81X5123:2	059.4	
G30X3101:3	BK	A81X5123:3	059.4	
G30X3101:4	WH	A81X5123:4	059.4	

From	Cable	To	Page / Col.	Option
G30X3101:5	BU	A81X5123:5	059.4	
G30X3101:1	SH	A81X5123:1	059.4	
A81W5124				
G30X3104:2	RD	A81X8124:2	059.8	
G30X3104:3	BK	A81X8124:3	059.8	
	WH			
G30X3104:5	BU	A81X8124:5	059.8	
G30X3104:1	SH	A81X8124:1	059.8	
G30X3104:4	WH	A81X8124:4	059.8	
A81W5125				
W21X3007:2	RD	A81X5125:2	060.4	
W21X3007:3	BK	A81X5125:3	060.4	
W21X3007:4	WH	A81X5125:4	060.4	
W21X3007:5	BU	A81X5125:5	060.4	
W21X3007:1	SH	A81X5125:1	060.4	
A81W5126				
W21X3010:2	RD	A81X5126:2	060.8	
W21X3010:3	BK	A81X5126:3	060.8	
W21X3010:4	WH	A81X5126:4	060.8	
W21X3010:5	BU	A81X5126:5	060.8	
W21X3010:1	SH	A81X5126:1	060.8	
A81W5127				
C50X3013:2	RD	A81X5127:2	061.4	
C50X3013:3	BK	A81X5127:3	061.4	
C50X3013:4	WH	A81X5127:4	061.4	
C50X3013:5	BU	A81X5127:5	061.4	
C50X3013:1	SH	A81X5127:1	061.4	

This drawing must not without the consent of Tetra Pak be copied, transmitted or disclosed to any third party.

Cable Connection List of 3218867-0003

From	Cable	To	Page / Col.	Option
A81W7000				
A81X7000:5	WH	A81X7001:5	018.8	
A81X7000:4	BN	A81X7001:4	018.7	
A01X0002:39	SH	A81W7000:SH	018.1	
A81W7001				
A81X7001:5	WH	A81X7002:5	019.2	
A81X7001:4	BN	A81X7002:4	019.2	
A01X0002:45	SH	A81W7001:SH	018.8	
A81W7002				
A81X7002:5	WH	A81X7003:5	020.2	
A81X7002:4	BN	A81X7003:4	020.1	
A81W7002:SH	SH	C50T1000:16	019.1	
A81W7003				
A81X7003:5	WH	A81X7004:5	020.7	
A81X7003:4	BN	A81X7004:4	020.7	
A81W7003:SH	SH	W21T6000:16	020.1	
C50W0000				
C50X0000:1	1	C50M0000:W	017.6	
C50X0000:2	2	C50M0000:V	017.6	
C50X0000:3	3	C50M0000:U	017.6	
C50X0000:⏚	GNYE	C50M0000:⏚	017.6	
C50W0004				
A01X0006:152	1	C50X1004:1	056.9	
A01X0006:157	2	C50X1004:2	056.9	
A01X0006:166	3	C50X1004:3	039.4	
A01X0006:162	4	C50X1004:4	039.7	
A01X0006:⏚	GNYE	C50X1004:⏚	056.9	

From	Cable	To	Page / Col.	Option
C50W0010				
A01X0004:27	1	C50X0000:1	017.6	
A01X0004:28	2	C50X0000:2	017.6	
A01X0004:29	3	C50X0000:3	017.6	
A01X0004:30	GNYE	C50X0000:⏚	017.6	
C50W0012				
C50X0012:1	BN	C81K4130:2.1	056.8	
C50X0012:3	BU	C81K4130:2.3	056.8	
C50X0012:4	BK	C81K4130:2.4	056.8	
C50W0013				
C50X0012:1	BN	C50B0013	056.3	
C50X0012:3	BU	C50B0013	056.3	
C50W0014				
C50X0012:1	BN	C50B0014	056.4	
C50X0012:3	BU	C50B0014	056.4	
C50X0012:4	BK	C50B0014	056.4	
C50W1000				
C50X1000:1	1	C50M1000:U	019.4	
C50X1000:2	2	C50M1000:V	019.4	
C50X1000:3	3	C50M1000:W	019.4	
C50X1000:⏚	GNYE	C50M1000:⏚	019.4	
C50X1000:4	SH	C50W1000	019.5	
C50W1001				
C50B1001	BN	C81K4130:5.1	056.8	
C50B1001	BU	C81K4130:5.3	056.8	
C50B1001	BK	C81K4130:5.4	056.8	

This drawing must not without the consent of Tetra Pak be copied, transmitted or disclosed to any third party.

Cable Connection List of 3218867-0003

From	Cable	To	Page / Col.	Option
C50W1002				
C50B1002	BN	C81K4130:6.1	056.8	
C50B1002	BU	C81K4130:6.3	056.8	
C50B1002	BK	C81K4130:6.4	056.8	
C50W1004				
C50X1004:3	BK	C50K1004:1	039.5	
C50X1004:4	BU	C50K1004:2	039.5	
C50W1005				
C50B1005	BN	C81K4130:4.1	056.8	
C50B1005	BU	C81K4130:4.3	056.8	
C50B1005	BK	C81K4130:4.4	056.8	
C50W1010				
C50X1000:1	1	C50Q1000:2	019.4	
C50X1000:2	2	C50Q1000:4	019.4	
C50X1000:3	3	C50Q1000:6	019.5	
C50X1000:⏚	GNYE	C50X1001:1	019.5	
C50X1000:4	SH	GND	019.5	
C50W1019				
A01X2022:10	1	C50X1020:1	061.2	
A01X2022:9	2	C50X1020:2	061.1	
A01X2022:⏚	SH	C50X1020:⏚	061.1	
C50W1020				
C50X1020:1	1	C50X3012:1	061.2	
C50X1020:2	2	C50X3012:2	061.1	
C50X1020:⏚	SH	C50X3012:3	061.1	
F09W1003				
A01X0006:13	1	F09S1003:11	026.7	
A01X0006:14	2	F09S1003:51	026.7	
A01X0006:15	3	F09S1003:52	026.7	
A01X0006:16	4	F09S1003:12	026.7	
A01X0006:⏚	GNYE		026.7	
F09W2001				
A01X0006:130	GY	F09X2001:13	027.2	
A01X0006:127	WH	F09X2001:IN	027.2	
A01X0006:129	YE	F09X2001:OUT	027.2	
A01X0006:128	GN	F09X2001:0V	027.2	
A01X0006:126	BN	F09X2001:+24V	027.2	
A01X0006:131	SH	F09X2001:⏚	027.2	
F09W2002				
A01X0006:136	GY	F09X2002:13	028.2	
A01X0006:133	WH	F09X2002:IN	028.2	
A01X0006:135	YE	F09X2002:OUT	028.2	
A01X0006:134	GN	F09X2002:0V	028.2	
A01X0006:132	BN	F09X2002:+24V	028.2	
A01X0006:137	SH	F09X2002:⏚	028.2	
F09W2003				
F09X2031:1	BN	F09X2003:+24V	028.6	
F09X2031:2	WH	F09X2003:IN	028.6	
F09X2031:3	BU	F09X2003:0V	028.6	
F09X2031:4	BK	F09X2003:OUT	028.6	
F09X2031:5	GY	F09X2003:13	028.6	
F09X2031:SH	SH	F09X2003:⏚	028.6	
F09W2010				
F09X2010:1.1	BN	F09B2010:BN	027.2	
F09X2010:1.2	WH	F09B2010:WH	027.2	
F09X2010:1.3	BU	F09B2010:BU	027.2	
F09X2010:1.4	BK	F09B2010:BK	027.2	

Tetra Pak®

Version Designer	Version Date	Machine
ROG	2015-05-29	CAP30 Flex ScrewCap 0300

ECM No	Denomination	Page Type
736736	CABLE CONNECTION LIST	CABLE CONNECTION LIST

Information Security Class	Document No.	Doc. type	Version	Page
PUBLIC	3218867-0007	ELD	AK	006

This drawing must not without the consent of Tetra Pak be copied, transmitted or disclosed to any third party.

Cable Connection List of 3218867-0003

From	Cable	To	Page / Col.	Option
F09W2010				
F09X2010:1.5	GY	F09B2010:GY	027.2	
F09X2010:1.3	SH	F09W2010:SH	027.2	
F09W2012				
F09X2012:2.1	BN	F09B2012:BN	027.3	
F09X2012:2.2	WH	F09B2012:WH	027.3	
F09X2012:2.3	BU	F09B2012:BU	027.3	
F09X2012:2.4	BK	F09B2012:BK	027.3	
F09X2012:2.5	GY	F09B2012:GY	027.3	
F09X2012:2.3	SH	F09W2012:SH	027.3	
F09W2014				
F09X2014:3.1	BN	F09B2014:BN	027.4	
F09X2014:3.2	WH	F09B2014:WH	027.4	
F09X2014:3.3	BU	F09B2014:BU	027.4	
F09X2014:3.4	BK	F09B2014:BK	027.4	
F09X2014:3.5	GY	F09B2014:GY	027.4	
F09X2014:3.3	SH	F09W2014:SH	027.4	
F09W2016				
F09X2016:4.1	BN	F09B2016:BN	027.5	
F09X2016:4.2	WH	F09B2016:WH	027.5	
F09X2016:4.3	BU	F09B2016:BU	027.5	
F09X2016:4.4	BK	F09B2016:BK	027.5	
F09X2016:4.5	GY	F09B2016:GY	027.5	
F09X2016:4.3	SH	F09W2016:SH	027.4	
F09W2030				
F09X2030:1.1	BN	F09B2030:BN	028.2	
F09X2030:1.2	WH	F09B2030:WH	028.2	
F09X2030:1.3	BU	F09B2030:BU	028.2	
F09X2030:1.4	BK	F09B2030:BK	028.2	
F09X2030:1.5	GY	F09B2030:GY	028.2	

From	Cable	To	Page / Col.	Option
F09X2030:1.3	SH	F09W2030:SH	028.2	
F09W2031				
A01X0006:138	BN	F09X2031:1	028.6	
A01X0006:139	WH	F09X2031:2	028.6	
A01X0006:140	BU	F09X2031:3	028.6	
A01X0006:141	BK	F09X2031:4	028.6	
A01X0006:142	GY	F09X2031:5	028.8	
A01X0006:143	SH	F09X2031:SH	028.8	
F09W2032				
F09X2032:2.1	BN	F09B2032:BN	028.3	
F09X2032:2.2	WH	F09B2032:WH	028.3	
F09X2032:2.3	BU	F09B2032:BU	028.3	
F09X2032:2.4	BK	F09B2032:BK	028.3	
F09X2032:2.5	GY	F09B2032:GY	028.3	
F09X2032:2.3	SH	F09W2032:SH	028.3	
F09W2034				
F09X2034:3.1	BN	F09B2034:BN	028.4	
F09X2034:3.2	WH	F09B2034:WH	028.4	
F09X2034:3.3	BU	F09B2034:BU	028.4	
F09X2034:3.4	BK	F09B2034:BK	028.4	
F09X2034:3.5	GY	F09B2034:GY	028.4	
F09X2034:3.3	SH	F09W2034:SH	028.4	
F09W2041				
F09X2041:1	BN	A01K3029:0	049.2	
	WH			
F09X2041:2	BU	A01K3029:6	049.2	
	BK			

Tetra Pak®	Version Designer: ROG	Version Date: 2015-05-29	Machine: CAP30 Flex ScrewCap 0300	
	ECM No: 736736	Denomination: CABLE CONNECTION LIST	Page Type: CABLE CONNECTION LIST	
	Information Security Class: PUBLIC	Document No.: 3218867-0007	Doc. type: ELD	Version: AK / Page: 007

This drawing must not without the consent of Tetra Pak be copied, transmitted or disclosed to any third party.

Cable Connection List of 3218867-0003

From	Cable	To	Page / Col.	Option
F09W2042				
F09X2042:1	BN	A01K3029:1	049.2	
	WH			
F09X2042:2	BU	A01K3029:7	049.2	
	BK			
F09W3010				
F09X3010:1.1	BN	F09B3010:BN	028.6	
F09X3010:1.2	WH	F09B3010:WH	028.6	
F09X3010:1.3	BU	F09B3010:BU	028.6	
F09X3010:1.4	BK	F09B3010:BK	028.6	
F09X3010:1.5	GY	F09B3010:GY	028.6	
F09X3010:1.3	SH	F09W3010:SH	028.6	
F09W3012				
F09X3012:2.1	BN	F09B3012:BN	028.7	
F09X3012:2.2	WH	F09B3012:WH	028.7	
F09X3012:2.3	BU	F09B3012:BU	028.7	
F09X3012:2.4	BK	F09B3012:BK	028.7	
F09X3012:2.5	GY	F09B3012:GY	028.7	
F09X3012:2.3	SH	F09W3012:SH	028.7	
F09W3014				
F09X3014:3.1	BN	F09B3014:BN	028.8	
F09X3014:3.2	WH	F09B3014:WH	028.8	
F09X3014:3.3	BU	F09B3014:BU	028.8	
F09X3014:3.4	BK	F09B3014:BK	028.8	
F09X3014:3.5	GY	F09B3014:GY	028.8	
F09X3014:3.3	SH	F09W3014:SH	028.8	
F09W3016				
F09X3016:4.1	BN	F09B3016:BN	028.9	
F09X3016:4.2	WH	F09B3016:WH	028.9	
F09X3016:4.3	BU	F09B3016:BU	028.9	
F09X3016:4.4	BK	F09B3016:BK	028.9	
F09X3016:4.5	GY	F09B3016:GY	028.9	
F09X3016:4.3	SH	F09W3016:SH	028.9	
G30W0000				
G30M0000:U	BN	G30T0000:1	008.3	
G30M0000:V	BK	G30T0000:2	008.4	
G30M0000:W	BU	G30T0000:3	008.4	
G30M0000:⏚	GNYE	G30T0000:4	008.3	
	WH			
	BK			
GND	SH	GND	008.3	
	SH			
G30W0001				
G30X0001:1	1	G30M0000	008.5	
G30W0020				
A01X2022:2	1	G30X3100:1	059.2	
A01X2022:1	2	G30X3100:2	059.1	
A01X2022:⏚	SH	G30X3100:3	059.1	
G30W0021				
A01X2022:4	1	G30X3103:1	059.7	
A01X2022:3	2	G30X3103:2	059.6	
A01X2022:⏚	SH	G30X3103:3	059.6	
G30W0025				
G30X0025:4	BN	G30B0025	054.3	
G30X0025:1	BU	G30B0025	054.3	
	BK			

Tetra Pak®

Version Designer	Version Date	Machine
ROG	2015-05-29	CAP30 Flex ScrewCap 0300

ECM No	Denomination	Page Type
736736	CABLE CONNECTION LIST	CABLE CONNECTION LIST

Information Security Class	Document No.	Doc. type	Version	Page
PUBLIC	3218867-0007	ELD	AK	008

This drawing must not without the consent of Tetra Pak be copied, transmitted or disclosed to any third party.

Cable Connection List of 3218867-0003

From	Cable	To	Page / Col.	Option
G30W0027				
G30X0027:4	BN	G30B0027	054.3	
G30X0027:1	BU	G30B0027	054.3	
	BK			
G30W0028				
G30X0028:4	BN	G30B0028	054.3	
G30X0028:1	BU	G30B0028	054.3	
	BK			
G30W0035				
G30X0025:1	BN	A81K4125:1.1	054.8	
G30X0025:3	BU	A81K4125:1.3	054.8	
G30X0025:4	BK	A81K4125:1.4	054.8	
G30W0037				
G30X0027:1	BN	A81K4125:0.1	054.8	
G30X0027:3	BU	A81K4125:0.3	054.8	
G30X0027:4	BK	A81K4125:0.4	054.8	
G30W0038				
G30X0028:1	BN	A81K4125:2.1	054.8	
G30X0028:3	BU	A81K4125:2.3	054.8	
G30X0028:4	BK	A81K4125:2.4	054.8	
G30W1001				
G30X1020:2.1	BN	G30B1001	032.4	PAC.CRAS.
G30X1020:2.3	BU	G30B1001	032.4	PAC.CRAS.
G30X1020:2.4	BK	G30B1001	032.4	PAC.CRAS.
G30W1002				
G30X1020:3.1	BN	G30B1002	032.4	
G30X1020:3.3	BU	G30B1002	032.4	

From	Cable	To	Page / Col.	Option
G30X1020:3.4	BK	G30B1002	032.4	
G30W1020				
A01X0006:116+	BN	G30X1020:1.1	032.3	
A01X0006:116-	BU	G30X1020:1.3	032.3	
	GY/PK			
	RD/BU			
	WH/GN			
A01X0006:119	BN/GN	G30X1020:4.2	032.6	
A01X0006:120	WH/YE	G30X1020:5.2	032.6	
A01X0006:146	YE/BN	G30X1020:6.2	039.4	
A01X0006:147	WH/GY	G30X1020:7.2	039.4	
A01X0006:148	GY/BN	G30X1020:8.4	039.4	
A01X0006:116	WH	G30X1020:1.4	032.6	
A01X0006:117	GN	G30X1020:2.4	032.6	
A01X0006:118	YE	G30X1020:3.4	032.6	
	GY			
	PK			
	RD			
	BK			
	VT			
	GNYE			
G30W1022				
G30X1022:4	BK	G30B1022	059.4	
G30X1022:1	BU	G30B1022	059.4	
G30W1023				
G30X1023:4	BK	G30B1023	059.9	
G30X1023:1	BU	G30B1023	059.9	
G30W1030				
A01X0006:122+	BN	G30X1030:1.1	032.3	
A01X0006:122-	BU	G30X1030:1.3	032.3	

This drawing must not without the consent of Tetra Pak be copied, transmitted or disclosed to any third party.

Cable Connection List of 3218867-0003

From	Cable	To	Page / Col.	Option
	G30W1030			
	GY/PK			
A01X0006:122	RD/BU	G30X1030:2.4	033.6	
A01X0006:123	WH/GN	G30X1030:3.2	033.6	
A01X0006:124	BN/GN	G30X1030:4.2	033.6	
	WH/YE			
A01X0006:144	YE/BN	G30X1030:6.2	037.4	
	WH/GY			
	GY/BN			
A01X0006:121	WH	G30X1030:1.4	032.6	
	GN			
	YE			
	GY			
A01X0006:125	PK	G30X1030:5.4	033.6	
A01X0006:145	RD	G30X1030:6.4	037.4	
	BK			
	VT			
	GNYE			
	G30W1031			
G30X1023:1	BN	G30X1031:1	059.9	
G30X1023:4	BU	G30X1031:4	059.9	
G30X1023:3	BK	G30X1031:3	059.9	
	G30W1032			
G30X1022:1	BN	G30X3102:1	059.4	
G30X1022:4	BU	G30X3102:4	059.4	
G30X1022:3	BK	G30X3102:3	059.4	
	G30W4000			
G30M4000:U	BN	G30T4000:1	014.3	
G30M4000:V	BK	G30T4000:2	014.4	
G30M4000:W	BU	G30T4000:3	014.4	
G30M4000:⏚	GNYE	G30T4000:4	014.3	

From	Cable	To	Page / Col.	Option
	WH			
	BK			
GND	SH	GND	014.3	
	SH			
	G30W4001			
G30X4001	1	G30M4000	014.5	
	G40W0000			
G40M0000:U	BN	G40T0000:1	009.3	
G40M0000:V	BK	G40T0000:2	009.4	
G40M0000:W	BU	G40T0000:3	009.4	
G40M0000:⏚	GNYE	G40T0000:4	009.3	
	WH			
	BK			
GND	SH	GND	009.3	
	SH			
	G40W0001			
G40X0001	1	G40M0000	009.5	
	G40W0002			
G40M0002:U	BN	G40T0002:1	010.3	
G40M0002:V	BK	G40T0002:2	010.4	
G40M0002:W	BU	G40T0002:3	010.4	
G40M0002:⏚	GNYE	G40T0002:4	010.3	
	WH			
	BK			
GND	SH	GND	010.3	
	SH			
	G40W0003			
G40X0003:1	1	G40M0002	010.5	

Tetra Pak®	Version Designer: ROG	Version Date: 2015-05-29	Machine: CAP30 Flex ScrewCap 0300		
	ECM No: 736736	Denomination: CABLE CONNECTION LIST	Page Type: CABLE CONNECTION LIST		
	Information Security Class: PUBLIC	Document No.: 3218867-0007	Doc. type: ELD	Version: AK	Page: 010

This drawing must not without the consent of Tetra Pak be copied, transmitted or disclosed to any third party.

Cable Connection List of 3218867-0003

From	Cable	To	Page / Col.	Option
G40W0010				
G30X1030:3.1	BN	G40B0010	033.4	
G30X1030:3.3	BU	G40B0010	033.4	
G30X1030:3.2	BK	G40B0010	033.4	
G40W0011				
G30X1030:4.1	BN	G40B0011	033.4	
G30X1030:4.3	BU	G40B0011	033.4	
G30X1030:4.2	BK	G40B0011	033.4	
G40W0012				
G30X1020:4.1	BN	G40B0012	032.4	
G30X1020:4.3	BU	G40B0012	032.4	
G30X1020:4.2	BK	G40B0012	032.4	
G40W0013				
G30X1020:5.1	BN	G40B0013	032.4	
G30X1020:5.3	BU	G40B0013	032.4	
G30X1020:5.2	BK	G40B0013	032.4	
G40W1000				
G30X1020:6.2	1	G40X1000:1	039.5	
G30X1020:6.3	2	G40X1000:2	039.6	
G40W1001				
G30X1020:7.2	1	G40X1001:1	039.5	
G30X1020:7.3	2	G40X1001:2	039.6	
G40W2000				
G30X1030:2.1	BN	G40B2000	033.4	
G30X1030:2.3	BU	G40B2000	033.4	
G30X1030:2.4	BK	G40B2000	033.4	

From	Cable	To	Page / Col.	Option
G40W2002				
G30X1030:1.1	BN	G40B2002:BN	032.5	
G30X1030:1.3	BU	G40B2002:BU	032.5	
G30X1030:1.4	BK	G40B2002:BK	032.5	
G40W2010				
G30X1030:6.2	BN	G40K2010:1	037.4	
G30X1030:6.3	BU	G40K2010:2	037.4	
G30X1030:6.4	BK	G40K2011:1	037.4	
G40W2025				
G40X2025:4	BK	G40B2025	061.4	
G40X2025:1	BU	G40B2025	061.4	
G40W2026				
G40X2026:1	BN	G40B2026	054.3	
G40X2026:4	WH	G40B2026	054.3	
G40X2026:3	BU	G40B2026	054.3	
	BK			
G40W2035				
C50X3014:1	BN	G40X2025:1	061.5	
C50X3014:4	BU	G40X2025:4	061.4	
C50X3014:3	BK	G40X2025:3	061.5	
G40W2036				
G40X2026:1	BN	A81K4125:6.1	054.8	
G40X2026:3	BU	A81K4125:6.3	054.8	
G40X2026:4	BK	A81K4125:6.4	054.8	
G40W3000				
G40M3000:U	BN	G40T3000:1	013.3	
G40M3000:V	BK	G40T3000:2	013.4	

This drawing must not without the consent of Tetra Pak be copied, transmitted or disclosed to any third party.

Cable Connection List of 3218867-0003

From	Cable	To	Page / Col.	Option
G40W3000				
G40M3000:W	BU	G40T3000:3	013.4	
G40M3000:⏚	GNYE	G40T3000:4	013.3	
	WH			
	BK			
GND	SH	GND	013.3	
	SH			
G40W3001				
G40X3001:1	1	G40M3000	013.5	
G40W4000				
G40X4000:1	1	G40M4000:U	017.4	
G40X4000:2	2	G40M4000:V	017.4	
G40X4000:3	3	G40M4000:W	017.4	
G40X4000:⏚	GNYE	G40M4000:⏚	017.4	
G40W4010				
A01X0004:23	1	G40X4000:1	017.4	
A01X0004:24	2	G40X4000:2	017.4	
A01X0004:25	3	G40X4000:3	017.4	
A01X0004:26	GNYE	G40X4000:⏚	017.4	
G40W5001				
G40X5002:1	BN	G40B5001	056.4	
G40X5002:3	BU	G40B5001	056.4	
G40X5002:4	BK	G40B5001	056.4	
G40W5002				
G40X5002:1	BN	C81K4130:0.1	056.8	
G40X5002:3	BU	C81K4130:0.3	056.8	
G40X5002:4	BK	C81K4130:0.4	056.8	

From	Cable	To	Page / Col.	Option
G40W5005				
G40X5006:1	BN	G40B5005	056.4	
G40X5006:3	BU	G40B5005	056.4	
G40X5006:4	BK	G40B5005	056.4	
G40W5006				
G40X5006:1	BN	C81K4130:1.1	056.8	
G40X5006:3	BU	C81K4130:1.3	056.8	
G40X5006:4	BK	C81K4130:1.4	056.8	
G41W0000				
	OG			
G41X0000:133	BU	G41X0010:4	066.8	ADH. DET.
G41X0000:132	GN	G41X0010:2	066.8	ADH. DET.
G41X0000:128	BN	G41X0010:8	066.8	ADH. DET.
G41X0000:127	WH/OG	G41X0010:3	066.8	ADH. DET.
G41X0000:122	WH/GN	G41X0010:1	066.8	ADH. DET.
G41X0000:134	WH/BU	G41X0010:5	066.8	ADH. DET.
	WH/BN			
G41W0002				
G41X0002:1	BN	G41E0002:+	066.8	ADH. DET.
G41X0002:3	BU	G41E0002:-	066.8	ADH. DET.
G41W0010				
A01X0006:183	1	G41X0000:101	066.6	
A01X0006:184	2	G41X0000:111	066.6	
A01X0006:185	3	G41X0000:106	066.6	
A01X0006:186	4	G41X0000:112	066.6	
A01X0006:187	5	G41X0000:114	066.4	
	6			
A01X0006:GND	GNYE	G41X0000:GND	066.6	

This drawing must not without the consent of Tetra Pak be copied, transmitted or disclosed to any third party.

Cable Connection List of 3218867-0003

From	Cable	To	Page / Col.	Option
	G41W0011			
G41X0011:4	BK	G41B0011:NO	066.9	ADH. DET.
G41X0011:2	BN	G41B0011:NC	066.9	ADH. DET.
G41X0011:1	BU	G41B0011:COM	066.9	ADH. DET.
G41X0011:3	GNYE	G41B0011:E	066.9	ADH. DET.
	G41W0020			
G30X1030:5.1	BN	G41B0020	033.4	ADH. DET.
G30X1030:5.3	BU	G41B0020	033.4	ADH. DET.
G30X1030:5.4	BK	G41B0020	033.4	ADH. DET.
	G70W0000			
	OG			
A01X0006:173	BU	G70X0000:4	057.8	V.S.D.
A01X0006:171	GN	G70X0000:2	057.8	V.S.D.
A01X0006:177	BN	G70X0000:8	057.8	V.S.D.
A01X0006:172	WH/OG	G70X0000:3	057.8	V.S.D.
A01X0006:170	WH/GN	G70X0000:1	057.8	V.S.D.
	WH/BU			
	WH/BN			
	G70W0001			
A01X0006:178	BN	G70E0002:+	057.5	V.S.D.
	WH			
A01X0006:179	BU	G70E0002:-	057.5	V.S.D.
	BK			
	G70W1000			
G70M1000:U	BN	G70T1000:1	015.3	
G70M1000:V	BK	G70T1000:2	015.4	
G70M1000:W	BU	G70T1000:3	015.4	
G70M1000:⏚	GNYE	G70T1000:4	015.3	
	WH			
	BK			

From	Cable	To	Page / Col.	Option
GND	SH	GND	015.3	
	SH			
	G70W1001			
G70X1001	1	G70M1000	015.5	
	K01W8000			
A01K3031:0	1	A01K8000:1	051.5	
A01K3031:6	2	A01K8000:2	051.5	
P01X4000:⏚	GNYE	A01K8000:E	051.5	
	K01W8001			
A01K3024:0	1	K01B8001:3	044.5	
A01K3024:6	2	K01B8001:1	044.5	
P01X4000:⏚	GNYE	K01B8001:E	044.5	
	P01W4000			
A01X0006:1	1	A01A4000:2	024.8	
A01X0006:2	2	A01A4000:3	024.8	
A01X0006:3	GNYE	A01A4000:⏚	024.8	
	P01W4001			
A01X0006:10	1	P01X4000:1	026.4	
A01X0006:9	2	P01X4000:2	026.4	
A01X0006:11	3	P01X4000:3	026.5	
A01X0006:12	4	P01X4000:4	026.5	
A01X0006:150	5	P01X4000:100	040.8	
A01X0006:155	6	P01X4000:110	040.8	
A01X0006:160	7	P01X4000:116	046.6	
A01X0006:163	8	P01X4000:118	040.8	
A01X0006:164	9	P01X4000:119	040.8	
A01X0006:154	10	P01X4000:108	042.4	
A01X0006:153	11	P01X4000:109	042.4	

This drawing must not without the consent of Tetra Pak be copied, transmitted or disclosed to any third party.

Cable Connection List of 3218867-0003

From	Cable	To	Page / Col.	Option
P01W4001				
A01X0006:⏚	GNYE	P01X4000:⏚	040.8	
V01W5000				
A01X0004:14	1	V01V5000:L1	016.6	
A01X0004:15	2	V01V5000:L2	016.6	
A01X0004:16	3	V01V5000:L3	016.6	
A01X0004:17	4	V01V5000:N	016.6	
A01X0004:18	GNYE	V01V5000:⏚	016.6	
V01W5001				
A01K3024:7	1	V01V5000:1	016.7	
A01K3024:2	2	V01V5000:2	016.7	
A01K3024:3	3	V01V5000:6	016.7	
A01K3029:2	4	V01V5000:10	016.5	
A01K3029:4	5	V01V5000:11	016.5	
	6			
P01X4000:⏚	GNYE	V01V5000:⏚	016.6	
V01W9000				
A01K3031:1	BN	A01K9000:1	051.5	
A01K3031:4	BU	W21K0000:2	051.5	
A01K3031:2	BK	W21K0000:1	051.5	
V01W9001				
V01B9001:2	BN	W81K4120:6.1	055.8	
	BU			
V01B9001:3	BK	W81K4120:6.4	055.8	
V01W9002				
V01B9002:13	BN	W81K4120:7.1	055.8	
	BU			
V01B9002:14	BK	W81K4120:7.4	055.8	

From	Cable	To	Page / Col.	Option
W20W0000				
W20M0000:U	1	W20Q0000:2	018.4	
W20M0000:V	2	W20Q0000:4	018.4	
W20M0000:W	3	W20Q0000:6	018.4	
W20M0000:⏚	GNYE	W20X0001:1	018.4	
GND	SH	W20W0000	018.4	
W20W0002				
W20X0030:1	BN	W20B0002	032.4	
W20X0030:3	BU	W20B0002	032.4	
W20W0003				
W20X0030:1	BN	W20B0003	032.5	
W20X0030:3	BU	W20B0003	032.5	
W20X0030:4	BK	W20B0003	032.5	
W20W0004				
A01X0004:1	1	W20T0004:1	018.6	
A01X0004:2	2	W20T0004:2	018.6	
A01X0004:3	3	W20T0004:3	018.6	
A01X0004:4	4	W20T0004:4	018.6	
	GNYE			
W20W0030				
A01X0006:115+	BN	W20X0030:1	032.3	
A01X0006:115-	BU	W20X0030:3	032.3	
A01X0006:115	BK	W20X0030:4	032.6	
W20W3000				
A01K3032:0	BN	W20K3000:1	052.4	
A01K3032:7	BU	G40K2003:2	052.4	
A01K3032:1	BK	G40K2003:1	052.4	

Tetra Pak®	Version Designer: ROG	Version Date: 2015-05-29	Machine: CAP30 Flex ScrewCap 0300		
	ECM No: 736736	Denomination: CABLE CONNECTION LIST	Page Type: CABLE CONNECTION LIST		
	Information Security Class: PUBLIC	Document No.: 3218867-0007	Doc. type: ELD	Version: AK	Page: 014

This drawing must not without the consent of Tetra Pak be copied, transmitted or disclosed to any third party.

Cable Connection List of 3218867-0003

From	Cable	To	Page / Col.	Option
W21W0000				
W21B0000	BN	W81K4120:4.1	055.8	
W21B0000	BU	W81K4120:4.3	055.8	
W21B0000	BK	W81K4120:4.4	055.8	
W21W1000				
W21M1000:U	BN	W21T1000:1	011.3	
W21M1000:V	BK	W21T1000:2	011.4	
W21M1000:W	BU	W21T1000:3	011.4	
W21M1000:⏚	GNYE	W21T1000:4	011.3	
	WH			
	BK			
GND	SH	GND	011.3	
	SH			
W21W1001				
W21X1001:1	1	W21M1000	011.5	
W21W1020				
A01X2022:6	1	W21X3006:1	060.2	
A01X2022:5	2	W21X3006:2	060.1	
A01X2022:⏚	SH	W21X3006:3	060.1	
W21W1025				
W21X1025:4	BK	W21B1025	060.4	
W21X1025:1	BU	W21B1025	060.4	
W21W1035				
W21X1025:1	BN	W21X3008:1	060.4	
W21X1025:4	BU	W21X3008:4	060.4	
W21X1025:3	BK	W21X3008:3	060.4	

From	Cable	To	Page / Col.	Option
W21W2000				
W21M2000:U	BN	W21T2000:1	012.3	
W21M2000:V	BK	W21T2000:2	012.4	
W21M2000:W	BU	W21T2000:3	012.4	
W21M2000:⏚	GNYE	W21T2000:4	012.3	
	WH			
	BK			
GND	SH	GND	012.3	
	SH			
W21W2001				
W21X2001:1	1	W21M2000	012.5	
W21W2020				
A01X2022:8	1	W21X3009:1	060.7	
A01X2022:7	2	W21X3009:2	060.6	
A01X2022:⏚	SH	W21X3009:3	060.6	
W21W2025				
W21X2025:4	BK	W21B2025	060.9	
W21X2025:1	BU	W21B2025	060.9	
W21W2035				
W21X2025:1	BN	W21X3011:1	060.9	
W21X2025:4	BU	W21X3011:4	060.9	
W21X2025:3	BK	W21X3011:3	060.9	
W21W3000				
W21X3020:1.1	BN	W21B3000	034.5	
W21X3020:1.3	BU	W21B3000	034.5	
W21X3020:1.4	BK	W21B3000	034.5	

This drawing must not without the consent of Tetra Pak be copied, transmitted or disclosed to any third party.

Cable Connection List of 3218867-0003

From	Cable	To	Page / Col.	Option
W21W3001				
W21X3020:1.1	BN	W21B3001	034.5	
W21X3020:1.3	BU	W21B3001	034.5	
W21W3002				
W21X3020:2.1	BN	W21B3002	034.4	
W21X3020:2.3	BU	W21B3002	034.4	
W21X3020:2.4	BK	W21B3002	034.4	
W21W3003				
W21X3020:2.1	BN	W21B3003	034.4	
W21X3020:2.3	BU	W21B3003	034.4	
W21W3004				
W21X3020:3.1	BN	W21B3004	034.5	
W21X3020:3.3	BU	W21B3004	034.5	
W21X3020:3.4	BK	W21B3004	034.5	
W21W3005				
W21X3020:3.1	BN	W21B3005	034.5	
W21X3020:3.3	BU	W21B3005	034.5	
W21W3006				
W21X3020:4.1	BN	W21B3006	034.4	
W21X3020:4.3	BU	W21B3006	034.4	
	BK			
W21W3007				
W21X3020:4.1	BN	W21B3007	034.4	
W21X3020:4.3	BU	W21B3007	034.4	
W21W3008				
W21X3038:1	BN	W21B3008	034.5	
W21X3038:3	BU	W21B3008	034.5	
W21X3038:4	BK	W21B3008	034.5	
W21W3009				
W21X3038:1	BN	W21B3009	034.5	
W21X3038:3	BU	W21B3009	034.5	
W21W3010				
W21X3020:5.2	BN	W21K3010:1	039.5	
W21X3020:5.3	BU	W21K3010:2	039.5	
W21X3020:5.4	BK	W21K3011:1	039.5	
W21W3018				
W21X3039:1	BN	W21B3018	034.4	
W21X3039:3	BU	W21B3018	034.4	
W21X3039:4	BK	W21B3018	034.4	
W21W3019				
W21X3039:1	BN	W21B3019	034.4	
W21X3039:3	BU	W21B3019	034.4	
W21W3020				
A01X0006:112+	BN	W21X3020:1.1	034.2	
A01X0006:112-	BU	W21X3020:1.3	034.2	
	GY/PK			
	RD/BU			
	WH/GN			
	BN/GN			
A01X0006:167	WH/YE	W21X3020:5.2	039.4	
A01X0006:169	YE/BN	W21X3020:6.2	039.4	
	WH/GY			
	GY/BN			
A01X0006:112	WH	W21X3020:1.4	034.6	

This drawing must not without the consent of Tetra Pak be copied, transmitted or disclosed to any third party.

Cable Connection List of 3218867-0003

From	Cable	To	Page / Col.	Option
W21W3020				
A01X0006:113	GN	W21X3020:2.4	034.6	
A01X0006:114	YE	W21X3020:3.4	034.6	
A01X0006:174	GY	W21X3020:4.4	034.6	
A01X0006:168	PK	W21X3020:5.4	039.4	
	RD			
A01X0006:175	BK	W21X3020:7.4	034.6	
A01X0006:176	VT	W21X3020:8.4	034.6	
	GNYE			
W21W3038				
W21X3020:7.1	BN	W21X3038:1	034.2	
W21X3020:7.3	BU	W21X3038:3	034.2	
W21X3020:7.4	BK	W21X3038:4	034.5	
W21W3039				
W21X3020:8.1	BN	W21X3039:1	034.2	
W21X3020:8.3	BU	W21X3039:3	034.2	
W21X3020:8.4	BK	W21X3039:4	034.5	
W21W4000				
W21M4000:U	1	W21Q4000:2	018.9	
W21M4000:V	2	W21Q4000:4	018.9	
W21M4000:W	3	W21Q4000:6	018.10	
W21M4000:⏚	GNYE	W21X4001:1	018.10	
	SH	GND	018.10	
W21W4001				
W21X4012:1	BN	W21B4001	043.4	
W21X4012:3	BU	W21B4001	043.4	
W21W4002				
W21X4012:1	BN	W21B4002	043.5	
W21X4012:3	BU	W21B4002	043.5	
W21X4012:4	BK	W21B4002	043.5	
W21W4003				
W21X4014:1	BN	W21B4003	043.4	
W21X4014:3	BU	W21B4003	043.4	
W21W4004				
W21X4014:1	BN	W21B4004	043.5	
W21X4014:3	BU	W21B4004	043.5	
W21X4014:4	BK	W21B4004	043.5	
W21W4005				
W21X4016:1	BN	W21B4005	043.4	
W21X4016:3	BU	W21B4005	043.4	
W21W4006				
W21X4016:1	BN	W21B4006	043.5	
W21X4016:3	BU	W21B4006	043.5	
W21X4016:4	BK	W21B4006	043.5	
W21W4007				
W21X4018:1	BN	W21B4007	043.4	
W21X4018:3	BU	W21B4007	043.4	
W21W4008				
W21X4018:1	BN	W21B4008	043.5	
W21X4018:3	BU	W21B4008	043.5	
W21X4018:4	BK	W21B4008	043.5	
W21W4010				
W21X4010:1	1	W21M4010:U	020.9	P.ALIGNER
W21X4010:2	2	W21M4010:V	020.9	P.ALIGNER

Tetra Pak®	Version Designer: ROG	Version Date: 2015-05-29	Machine: CAP30 Flex ScrewCap 0300	
	ECM No: 736736	Denomination: CABLE CONNECTION LIST	Page Type: CABLE CONNECTION LIST	
	Information Security Class: PUBLIC	Document No.: 3218867-0007	Doc. type: ELD	Version: AK / Page: 017

This drawing must not without the consent of Tetra Pak be copied, transmitted or disclosed to any third party.

Cable Connection List of 3218867-0003

From	Cable	To	Page / Col.	Option
W21W4010				
W21X4010:3	3	W21M4010:W	020.9	P.ALIGNER
W21X4010:⏚	GNYE	W21M4010:⏚	020.9	P.ALIGNER
W21X4010:4	SH	W21W4010	020.10	P.ALIGNER
W21W4011				
W21X4010:1	1	W21Q4010:2	020.9	P.ALIGNER
W21X4010:2	2	W21Q4010:4	020.9	P.ALIGNER
W21X4010:3	3	W21Q4010:6	020.9	P.ALIGNER
W21X4010:⏚	GNYE	W21X4011:1	020.10	P.ALIGNER
W21X4010:4	SH	GND	020.10	P.ALIGNER
W21W4012				
P01X4000:111	BN	W21X4012:1	043.3	
P01X4000:101	BU	W21X4012:3	043.3	
A01K3023:0	BK	W21X4012:4	043.6	
W21W4014				
P01X4000:112	BN	W21X4014:1	043.3	
P01X4000:102	BU	W21X4014:3	043.3	
A01K3023:1	BK	W21X4014:4	043.6	
W21W4016				
P01X4000:113	BN	W21X4016:1	043.3	
P01X4000:103	BU	W21X4016:3	043.3	
A01K3023:2	BK	W21X4016:4	043.6	
W21W4018				
P01X4000:114	BN	W21X4018:1	043.3	
P01X4000:104	BU	W21X4018:3	043.3	
A01K3023:3	BK	W21X4018:4	043.6	

From	Cable	To	Page / Col.	Option
W21W4022				
W21X4022:1	BN	W81K4120:0.1	055.8	
W21X4022:3	BU	W81K4120:0.3	055.8	
W21X4022:4	BK	W81K4120:0.4	055.8	
W21W4023				
W21X4022:1	BN	W21B4023	055.2	
W21X4022:3	BU	W21B4023	055.2	
W21W4024				
W21X4022:1	BN	W21B4024	055.4	
W21X4022:3	BU	W21B4024	055.4	
W21X4022:4	BK	W21B4024	055.4	
W21W5000				
W21X3020:6.2	BN	W21K5000:1	039.5	
W21X3020:6.3	BU	W21K5000:2	039.5	
	BK			
W21W6000				
W21M6000:U	1	W21Q6000:2	020.4	OUT.P.CONV.
W21M6000:V	2	W21Q6000:4	020.4	OUT.P.CONV.
W21M6000:W	3	W21Q6000:6	020.4	OUT.P.CONV.
W21M6000:⏚	GNYE	W21X6001:1	020.4	OUT.P.CONV.
GND	SH	W21W6000	020.5	OUT.P.CONV.
W21W6001				
W21X6012:1	BN	W21B6001	055.2	
W21X6012:3	BU	W21B6001	055.2	
W21W6002				
W21X6012:1	BN	W21B6002	055.4	
W21X6012:3	BU	W21B6002	055.4	

This drawing must not without the consent of Tetra Pak
be copied, transmitted or disclosed to any third party.

Cable Connection List of 3218867-0003

From	Cable	To	Page / Col.	Option
	W21W6002			
W21X6012:4	BK	W21B6002	055.4	
	W21W6003			
W21X6014:1	BN	W21B6003	055.2	
W21X6014:3	BU	W21B6003	055.2	
	W21W6004			
W21X6014:1	BN	W21B6004	055.4	
W21X6014:3	BU	W21B6004	055.4	
W21X6014:4	BK	W21B6004	055.4	
	W21W6005			
W21B6005	BN	W81K4120:1.1	055.8	
W21B6005	BU	W81K4120:1.3	055.8	
W21B6005	BK	W81K4120:1.4	055.8	
	W21W6012			
W21X6012:1	BN	W81K4120:2.1	055.8	
W21X6012:3	BU	W81K4120:2.3	055.8	
W21X6012:4	BK	W81K4120:2.4	055.8	
	W21W6014			
W21X6014:3	BN	W81K4120:3.3	055.8	
W21X6014:4	BU	W81K4120:3.4	055.8	
W21X6014:1	BK	W81K4120:3.1	055.8	
	W21W8000			
A01X0004:10	1	W21M8000:U	016.1	
A01X0004:11	2	W21M8000:N	016.1	
A01X0004:13	GNYE	W21M8000:⏚	016.1	

From	Cable	To	Page / Col.	Option
	W21W8001			
A01X0004:20	BN	W21E8001:F2	016.8	
A01X0004:19	BK	W21E8001:F1	016.8	
A01X0004:21	GY	W21E8001:0	016.8	
A01X0004:22	GNYE	W21E8001:E	016.8	

This page intentionally left blank

9 Mains Connection

Description

The drawings that show the connection from the mains power to the electrical cabinet are included in this chapter.

9.1 Mains Connection

This page intentionally left blank

This drawing must not without the consent of Tetra Pak
be copied, transmitted or disclosed to any third party.

Main voltage 200-600V except 400/230V

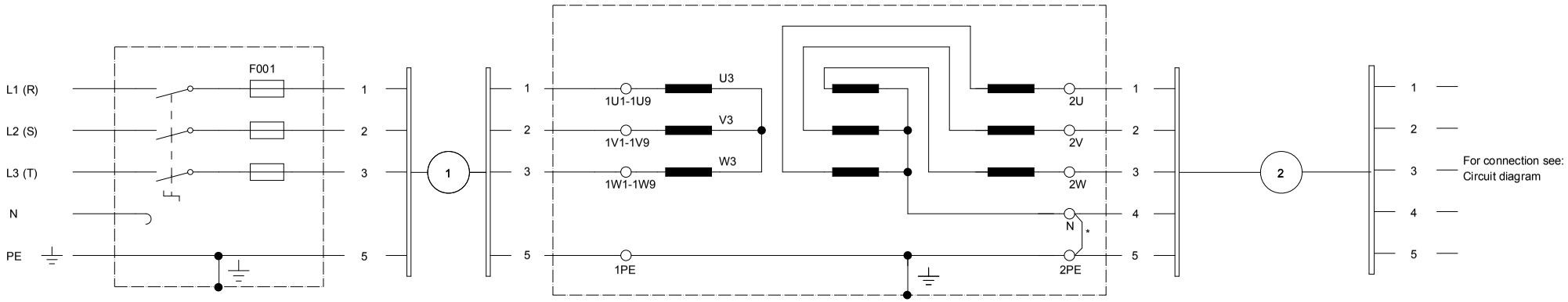

Mains

Customer´s fuse box

Matching transformer connection according
to diagram Mains Conncetion page 002

* NOTE: Make sure that the bridge is connected.

Main switch

Main voltage 400/230V

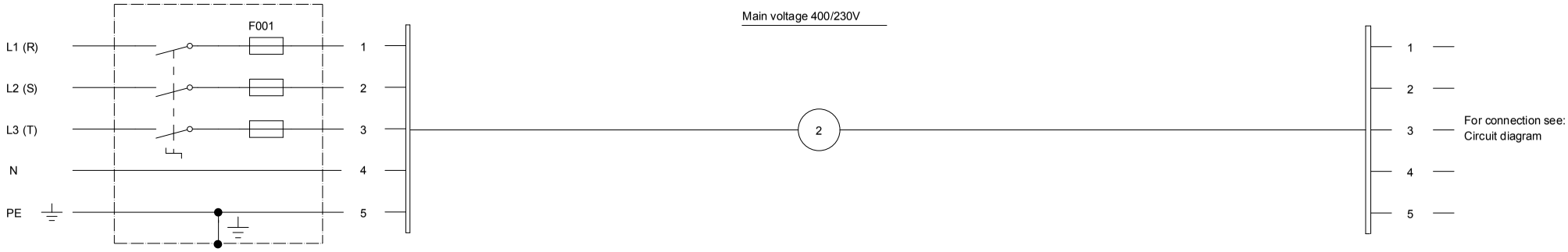

Mains

Customer´s fuse box

ATTENTION: The dimensiong of the main cable and protective grounding has to be carried out according to current local regulations.

Main switch

Tetra Pak®	Version Designer: ROG	Version Date: 2015-05-29	Machine: CAP30 Flex ScrewCap 0300	
	ECM No: 736736	Denomination: MAINS CONNECTION	Page Type: MAINS CONNECTION	
	Information Security Class: PUBLIC	Document No.: 3218867-0008	Doc. type: ELD	Version: AK / Page: 001

This drawing must not without the consent of Tetra Pak be copied, transmitted or disclosed to any third party.

MAIN VOLTAGE	FUSES (SLOW) F001	AREA TO COPPER (CU) CABLE WITH No. ①	②	SETTING VALUE A01F0010	CONNECTIONS ON MATCHING TRANSFORMER		
V	A	mm²	mm²	A	MAINS	TAP	CONNECT
600/347 3x600	63	3X6/6	4X16/16	32	L1 L2 L3 PE	1U9 1V9 1W9 ⏚	1U3 - U4 1V3 - V4 1W3 - W4
550/318 3x550	63	3X6/6	4X16/16	32	L1 L2 L3 PE	1U8 1V8 1W8 ⏚	1U3 - U4 1V3 - V4 1W3 - W4
500/289 3x500	80	3X10/10	4X16/16	32	L1 L2 L3 PE	1U7 1V7 1W7 ⏚	1U3 - U4 1V3 - V4 1W3 - W4
480/277 3x480	80	3X10/10	4X16/16	32	L1 L2 L3 PE	1U6 1V6 1W6 ⏚	1U3 - U4 1V3 - V4 1W3 - W4
440/254 3x440	80	3X10/10	4X16/16	32	L1 L2 L3 PE	1U5 1V5 1W5 ⏚	1U2 - U4 1V2 - V4 1W2 - W4
415/240 3x415	80	3X10/10	4X16/16	32	L1 L2 L3 PE	1U5 1V5 1W5 ⏚	1U1 - U4 1V1 - V4 1W1 - W4
400/230	63		4X10/10				
380/220 3x380	100	3X16/16	4X16/16	32	L1 L2 L3 PE	1U9 1V9 1W9 ⏚	1U3 - 1U5 1V3 - 1V5 1W3 - 1W5
240/140 3x240	160	3X25/16	4X16/16	32	L1 L2 L3 PE	1U3 1V3 1W3 ⏚	U3 - U4 1U3-1U6 V3 - V4 1V3-1V6 W3 - W4 1W3-1W6
220/127 3x220	160	3X25/16	4X16/16	32	L1 L2 L3 PE	1U2 1V2 1W2 ⏚	U3 - U4 1U2-1U5 V3 - V4 1V2-1V5 W3 - W4 1W2-1W5
200/115 3x200	160	3X25/16	4X16/16	32	L1 L2 L3 PE	1U1 1V1 1W1 ⏚	U3 - U4 1U1-1U4 V3 - V4 1V1-1V4 W3 - W4 1W1-1W4

MATCHING TRANSFORMER

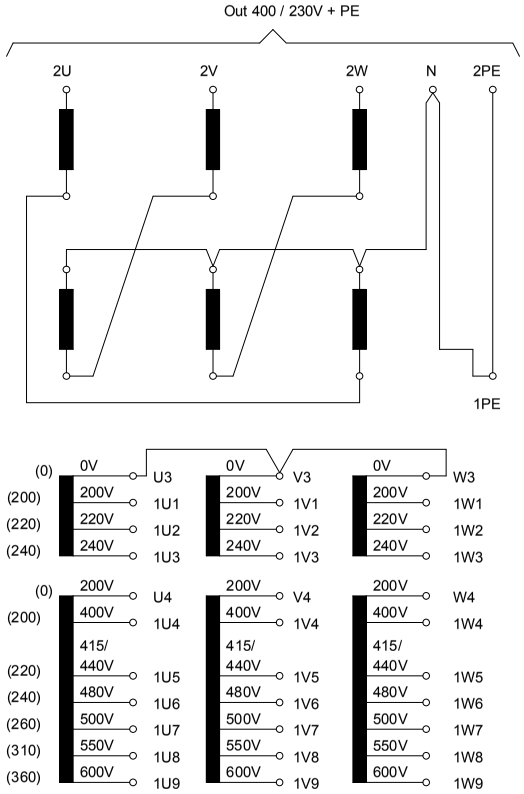

ATTENTION:

Cable areas are dimensioned according to Swedish regulations (ELSÄK-FS 1999:5 and SS4241424:6) 40 C ambient temp and cable on metal ladder with space between the cables.
National regulations have to be followed in each country.
Tetra Pak is not responsible for the dimensioning at installation.
Tetra Pak only provides recomendations.

Tetra Pak®	Version Designer: ROG	Version Date: 2015-05-29	Machine: CAP30 Flex ScrewCap 0300		
	ECM No: 736736	Denomination: MAINS CONNECTION	Page Type: MAINS CONNECTION		
	Information Security Class: PUBLIC	Document No.: 3218867-0008	Doc. type: ELD	Version: AK	Page: 002

10 Drawing Remarks

Description

The following pages contain the drawing remarks that are referenced in chapter 4.1 Circuit Diagrams.

10.1 Drawing Remarks

Identity	Document type	Version	ECM 736736
3218867-0098	**ELD**	**AK**	**Issued by/Date: ROG/2015-05-29**
			Approved/Date: AZU/2015-05-29

Drawing No.	Page	Note	Remark
3218867-0003	004	1	REMOVE THE BRIDGE IN CASE OF BUFFER MODULE A01T2001 IS INSTALLED.
	008	1	CONNECTED TO THE DRIVER
		3	CONNECTED TO CABLE GLAND.
		7	SEE CONNECTION PAGE 064.
	009	1	CONNECTED TO THE DRIVER.
		3	CONNECTED TO CABLE GLAND.
		7	SEE CONNECTION PAGE 064.
	010	1	CONNECTED TO THE DRIVER.
		3	CONNECTED TO CABLE GLAND.
		7	SEE CONNECTION PAGE 064.
	011	1	CONNECTED TO THE DRIVER.
		3	CONNECTED TO CABLE GLAND.
		4	CONNECT SHIELD TO CHASSIS.
		6	TWO TURNS.
		7	SEE CONNECTION PAGE 064.
	012	1	CONNECTED TO THE DRIVER.
		3	CONNECTED TO CABLE GLAND.
		4	CONNECT SHIELD TO CHASSIS.
		6	TWO TURNS.
		7	SEE CONNECTION PAGE 064.
	013	1	CONNECTED TO THE DRIVER.
		3	SHIELD MUST BE GROUNDED ON THE CLIP ON TOP OF THE DRIVER.
		7	SEE CONNECTION PAGE 064.
	014	1	CONNECTED TO THE DRIVER.
		3	SHIELD MUST BE GROUNDED ON THE CLIP ON TOP OF THE DRIVER.
		7	SEE CONNECTION PAGE 064.
	015	1	CONNECTED TO THE DRIVER.
		3	SHIELD MUST BE GROUNDED ON THE CLIP ON TOP OF THE DRIVER.
		7	SEE CONNECTION PAGE 064.
	018	2	CONNECTED TO SHIELD CLAMP.
		3	CONNECTED TO CABLE GLAND.
	019	2	CONNECTED TO SHIELD CLAMP.
		3	CONNECTED TO CABLE GLAND.
	020	2	CONNECTED TO SHIELD CLAMP.
		3	CONNECTED TO CABLE GLAND.

(Cont'd)

(Cont'd)

Identity	Document type	Version	ECM 736736
3218867-0098	ELD	AK	Issued by/Date: ROG/2015-05-29
			Approved/Date: AZU/2015-05-29

Drawing No.	Page	Note	Remark
	021	9	CONNECT THE RESISTOR IF A81K5000 IS PRESENT AND IF A81K5000 IS THE LAST DEVICE OF THIS COMMUNICATION CHAIN.
	024	10	INSTALLED IN CASE OF BARCODE SCANNER OPTIONAL EQUIPMENT.
		11	CONNECT TO SHIELD CLIP INSIDE THE PANEL FRAME, CLOSE TO THE USB CONNECTOR.
	055	12	OPTIONAL FOR CONVEYOR SWITCH.
	064	8	CONNECTED TO THE CONNECTOR PREDISPOSITION.
3218867-0008	001	1	MAKE THE BRIDGE USING A CONNECTION AREA NOT SMALLER THEN 16mm.
		2	RECOMMENDED MAIN FUSE TO ACHIEVE SELECTIVITY.

11 Engineering Change Description

Description

This chapter describes the changes introduced by the ECM.

11.1 Engineering Change Description

This page intentionally left blank

ECM No.	Drawing No.	Alteration
736736	3218867-0001 AK	DOCUMENT LIST: CHANGED ACCORDING TO UPDATE CIRCUIT DIAGRAM.
	3218867-0002 AK	POSITION SUMMARY: CHANGED ACCORDING TO UPDATE CIRCUIT DIAGRAM.
	3218867-0003 AK	**SH.008:** Changed Sercos Baud Rate DIP-SWITCH settings of G30T0000. **SH.009:** Changed Sercos Baud Rate DIP-SWITCH settings of G40T0000. **SH.010:** Changed Sercos Baud Rate DIP-SWITCH settings of G40T0002. **SH.011:** Changed Sercos Baud Rate DIP-SWITCH settings of W21T1000. **SH.012:** Changed Sercos Baud Rate DIP-SWITCH settings of W21T2000. **SH.013:** Changed Sercos Baud Rate DIP-SWITCH settings of G40T3000. **SH.014:** Changed Sercos Baud Rate DIP-SWITCH settings of G30T4000. **SH.015:** Changed Sercos Baud Rate DIP-SWITCH settings of G70T1000. **SH.032:** Changed function description of A01K3005:20 with “NO PACKAGE PRESENCE ON BELT BRAKE” (was “PACKAGE PRESENCE ON BELT BRAKE”). **SH.045:** Changed function description of A01K3025:3 with “RESERVED FOR CONVEYOR LUBRICATION INSTALLED” (was “SPARE”). **SH.054:** Changed reference cable with A81W4225 (was W81W4130). **SH.056:** Changed symbol of G40B5001 and G40B5005. Removed G40B5000, G40W5000, G40B5004, G40W5004.
	3218867-0004 AK	LINE SUMMARY:CHANGED ACCORDING TO UPDATE CIRCUIT DIAGRAM.
	3218867-0005 AK	CABINET TERMINAL SUMMARY: CHANGED ACCORDING TO UPDATE CIRCUIT DIAGRAM.
	3218867-0006 AK	TERMINAL STRIP OVERVIEW: CHANGED ACCORDING TO UPDATE CIRCUIT DIAGRAM.
	3218867-0007 AK	CABLE CONNECTION LIST: CHANGED ACCORDING TO UPDATE CIRCUIT DIAGRAM.
	3218867-0008 AK	MAINS CONNECTION: CHANGED ACCORDING TO UPDATE CIRCUIT DIAGRAM.
	3218867-0098 AK	DRAWING REMARKS: CHANGED ACCORDING TO UPDATED CIRCUIT DIAGRAM.
	3218867-0099 AK	EC DESCRIPTION: CHANGED ACCORDING TO UPDATED CIRCUIT DIAGRAM.
699177	3218867-0001 AJ	DOCUMENT LIST: CHANGED ACCORDING TO UPDATE CIRCUIT DIAGRAM.
	3218867-0002 AJ	POSITION SUMMARY: CHANGED ACCORDING TO UPDATE CIRCUIT DIAGRAM.

This drawing must not without the consent of Tetra Pak be copied, transmitted or disclosed to any third party.

ECM No.	Drawing No.	Alteration
	3218867-0003 AJ	**SH.018:** Inserted W20B0000, W20W0004, W20Q0004, W20K0004, A01X0004:1-2-3-4, A01X0003:15. **SH.036:** Inserted W20Q0004, W20K0004. **SH.039:** Changed function description of W21K5000 with "BLOW CLEANING PACKAGE CONVEYOR" (was "BLOCK CLEANING PACKAGE CONVEYOR").
	3218867-0004 AJ	LINE SUMMARY: CHANGED ACCORDING TO UPDATE CIRCUIT DIAGRAM.
	3218867-0005 AJ	CABINET TERMINAL SUMMARY: CHANGED ACCORDING TO UPDATE CIRCUIT DIAGRAM.
	3218867-0006 AJ	TERMINAL STRIP OVERVIEW: CHANGED ACCORDING TO UPDATE CIRCUIT DIAGRAM.
	3218867-0007 AJ	CABLE CONNECTION LIST: CHANGED ACCORDING TO UPDATE CIRCUIT DIAGRAM.
	3218867-0008 AJ	MAINS CONNECTION: CHANGED ACCORDING TO UPDATE CIRCUIT DIAGRAM.
	3218867-0098 AJ	DRAWING REMARKS: CHANGED ACCORDING TO UPDATED CIRCUIT DIAGRAM.
	3218867-0099 AJ	EC DESCRIPTION: CHANGED ACCORDING TO UPDATED CIRCUIT DIAGRAM.
670992	3218867-0001 AH	DOCUMENT LIST: CHANGED ACCORDING TO UPDATE CIRCUIT DIAGRAM.
	3218867-0002 AH	POSITION SUMMARY: CHANGED ACCORDING TO UPDATE CIRCUIT DIAGRAM.
	3218867-0003 AH	**SH.001:** Removed terminal A01X0010:58. **SH.004:** Changed symbol of A01T2000 and A01T2001. Inserted terminals A01X0002:30, 33. Inserted terminal A01X0010:58. Inserted terminals A01X2001:1, 2, 3, 4. Inserted Drawing Remark 1 (for details see document 3218867-0098 AH). **SH.017:** Changed reference cable with G40W4010 (was W40W4010). **SH.028:** Inserted F09X2031, F09W2031. **SH.033:** Inserted G41B0020, G41W0020 . **SH.044:** Changed reference PIN connection of K01B8001 with 1, 3, E (was 1, 2, E). **SH.048:** Changed symbol and connection of A01P5010.
	3218867-0004 AH	LINE SUMMARY: CHANGED ACCORDING TO UPDATE CIRCUIT DIAGRAM.
	3218867-0005 AH	CABINET TERMINAL SUMMARY: CHANGED ACCORDING TO UPDATE CIRCUIT DIAGRAM.
	3218867-0006 AH	TERMINAL STRIP OVERVIEW: CHANGED ACCORDING TO UPDATE CIRCUIT DIAGRAM.
	3218867-0007 AH	CABLE CONNECTION LIST: CHANGED ACCORDING TO UPDATE CIRCUIT DIAGRAM.
	3218867-0008 AH	MAINS CONNECTION: CHANGED ACCORDING TO UPDATE CIRCUIT DIAGRAM.

This drawing must not without the consent of Tetra Pak be copied, transmitted or disclosed to any third party.

ECM No.	Drawing No.	Alteration
	3218867-0098 AH	DRAWING REMARKS: CHANGED ACCORDING TO UPDATED CIRCUIT DIAGRAM.
	3218867-0099 AH	EC DESCRIPTION: CHANGED ACCORDING TO UPDATED CIRCUIT DIAGRAM.
634037	3218867-0001 AG	DOCUMENT LIST: CHANGED ACCORDING TO UPDATE CIRCUIT DIAGRAM.
	3218867-0002 AG	POSITION SUMMARY: CHANGED ACCORDING TO UPDATE CIRCUIT DIAGRAM.
	3218867-0003 AG	**SH.024:** Inserted cable A81W2004 connected to A81X2000:5. **SH.035:** Inserted signal reference RA connected to A01K3006:17. Inserted connection from line 1.1L+ to A01K3006:18. **SH.036:** Changed function description of A01K3007:5 with "RESERVED FOR MOTOR BRAKE IN BELT BRAKE" (was "SPARE"). **SH.038:** Changed function description of A01K3008:3 with "RESERVED FOR CONVEYOR LUBRICATION VALVE" (was "SPARE"). Changed function description of A01K3008:4 with "RESERVED FOR PUSH DOWN LUBRICATION VALVE" (was "SPARE"). **SH.039:** Changed function description of G40K1001 with "HOT MELT GUN 2 OPENING" (was "HOT MELT GUN 1 OPENING"). Inserted signal reference AN connected to A01K3008:29 and changed function description with "TRIGGER ADHESIVE DETECTOR". **SH.058:** Removed terminals A01X0006:183/190. **SH.066:** Inserted page 066.
	3218867-0004 AG	LINE SUMMARY:CHANGED ACCORDING TO UPDATE CIRCUIT DIAGRAM.
	3218867-0005 AG	CABINET TERMINAL SUMMARY: CHANGED ACCORDING TO UPDATE CIRCUIT DIAGRAM.
	3218867-0006 AG	TERMINAL STRIP OVERVIEW: CHANGED ACCORDING TO UPDATE CIRCUIT DIAGRAM.
	3218867-0007 AG	CABLE CONNECTION LIST: CHANGED ACCORDING TO UPDATE CIRCUIT DIAGRAM.
	3218867-0008 AG	MAINS CONNECTION: CHANGED ACCORDING TO UPDATE CIRCUIT DIAGRAM.
	3218867-0098 AG	DRAWING REMARKS: CHANGED ACCORDING TO UPDATED CIRCUIT DIAGRAM.
	3218867-0099 AG	EC DESCRIPTION: CHANGED ACCORDING TO UPDATED CIRCUIT DIAGRAM.
613990	3218867-0001 AF	DOCUMENT LIST: CHANGED ACCORDING TO UPDATE CIRCUIT DIAGRAM.

This drawing must not without the consent of Tetra Pak be copied, transmitted or disclosed to any third party.

ECM No.	Drawing No.	Alteration
	3218867-0002 AF	POSITION SUMMARY: CHANGED ACCORDING TO UPDATE CIRCUIT DIAGRAM.
	3218867-0003 AF	**SH.034:** Changed reference connector with W21X3020 (was W21X3024). Changed reference cable with W21W3020 (was W21W3024). **SH.039:** Changed reference connector with W21X3020 (was W21X3024). Changed reference cable with W21W3020 (was W21W3024). **SH.054:** Changed color cable G40W2026 connection with WH (was BK).
	3218867-0004 AF	LINE SUMMARY:CHANGED ACCORDING TO UPDATE CIRCUIT DIAGRAM.
	3218867-0005 AF	CABINET TERMINAL SUMMARY: CHANGED ACCORDING TO UPDATE CIRCUIT DIAGRAM.
	3218867-0006 AF	TERMINAL STRIP OVERVIEW: CHANGED ACCORDING TO UPDATE CIRCUIT DIAGRAM.
	3218867-0007 AF	CABLE CONNECTION LIST: CHANGED ACCORDING TO UPDATE CIRCUIT DIAGRAM.
	3218867-0008 AF	MAINS CONNECTION: CHANGED ACCORDING TO UPDATE CIRCUIT DIAGRAM.
	3218867-0098 AF	DRAWING REMARKS: CHANGED ACCORDING TO UPDATED CIRCUIT DIAGRAM.
	3218867-0099 AF	EC DESCRIPTION: CHANGED ACCORDING TO UPDATED CIRCUIT DIAGRAM.
580730	3218867-0001-AE	DOCUMENT LIST: CHANGED ACCORDING TO UPDATE CIRCUIT DIAGRAM.
	3218867-0002-AE	POSITION SUMMARY: CHANGED ACCORDING TO UPDATE CIRCUIT DIAGRAM.
	3218867-0003-AE	**SH.004:** Introduced new devices A01F2020, A01Q2020, A01T2020, A01F2021, A01F2022, A01F2023, A01F2024, A01F2025, A01X2021, A01W2021, A01X0002:23, A01X0002:24, A01X0002:25, A01X0002:36, A01X0002:37. Introduced new interruption points AX, AY, AR, AAA, AU, AAB, AS, AAC, AV, AAD and AW. Modified pin A01F2005:1-2 (was A01F2005:1-3) **SH.016:** Changed color wire from W21F8000:6 to A01X0004:11 in 1,5mm^2 L.BU (was 1,5mm^2 BK). **SH.025:** Introduced NC contact of A01K2020. Removed wire from W21Q6000:21 to C50Q0000:61. Wired A01K2020:21 with W21Q6000:22. Wired A01K2020:22 with C50Q0000:61 **SH.025:** Introduced W21X3024:7.1, W21X3024:7.3 W21X3024:7.4, W21X3024:8.1, W21X3024:8.3, W21X3024:8.4, W21W3034, W21W3034, W21X3034,

This drawing must not without the consent of Tetra Pak be copied, transmitted or disclosed to any third party.

ECM No.	Drawing No.	Alteration
		SH.034: Introduced W21X3024:7.1, W21X3024:7.2, W21X3024:7.4, W21X3024:8.1, W21X3024:8.2, W21X3024:8.4, W21X3038, W21X3039, W21W3038, W21W3039, W21W3008, W21W3009, W21W3018, W21W3019, W21B3008, W21B3009, W21B3018, W21B3019, W21W3024:BK and W21W3024:VT. Changed the comment of A01K3006:1 “CAP DETECTION ON PACKAGE”. Changed the comment of A01K3006:5 “CAP DETECTION POSITION 2” (was “RESERVED”). Changed the comment of A01K3006:6 “CAP DETECTION POSITION 3 ONLY FOR TGA” (was “RESERVED”). **SH.038:** Introduced A01Q2020. Introduced wire from A01K3008:7 (OUT-6) to A01Q2020:A1, and from A01Q2020:A2 to 1L- line. Changed the comment of A01K3008:7 “POWER ON LIFTING DEVICES” (was “RESERVED (QUICK CHANGE MOTOR POWER)”) **SH.040:** Introduced terminal strip A01X4123 and the wire A81W4122 from A01K3000 to A01X4123. Introduced new interruption points LMA, LMB, LMC, LMD and LME. **SH.054:** Introduced new page 054. **SH.055:** Changed page with 055 (was 054). **SH.056:** Changed page with 056 (was 055). Removed C81R4130. Introduced A81W4129. Introduced new interruption points LMF, LMG, LMH, LMJ and LMK. **SH.057:** Changed page with 057 (was 056). **SH.058:** Changed page with 058 (was 057). **SH.059:** Introduced new page 059. **SH.060:** Introduced new page 060. **SH.061:** Introduced new page 061. **SH.062:** Changed page with 062 (was 058). **SH.063:** Changed page with 063 (was 059). Introduced A81W4122, A81X4123, A81W4123, A81W5123, A81W5124, A81W5125, A81W5126, A81W5127, A81W4124, A81W4125, A81W4126, A81W4127, A81W4129, G30M0020, G30M0021, W21M1020, W21M2020, C50M1020, A81R4021 **SH.064:** Changed page with 064 (was 060). **SH.065:** Changed page with 065 (was 061).
	3218867-0004-AE	LINE SUMMARY:CHANGED ACCORDING TO UPDATE CIRCUIT DIAGRAM.
	3218867-0005-AE	CABINET TERMINAL SUMMARY: CHANGED ACCORDING TO UPDATE CIRCUIT DIAGRAM.
	3218867-0006-AE	TERMINAL STRIP OVERVIEW: CHANGED ACCORDING TO UPDATE CIRCUIT DIAGRAM.
	3218867-0007-AE	CABLE CONNECTION LIST: CHANGED ACCORDING TO UPDATE CIRCUIT DIAGRAM.

This drawing must not without the consent of Tetra Pak be copied, transmitted or disclosed to any third party.

ECM No.	Drawing No.	Alteration
	3218867-0008-AE	MAINS CONNECTION: CHANGED ACCORDING TO UPDATE CIRCUIT DIAGRAM.
	3218867-0098-AE	DRAWING REMARKS: CHANGED ACCORDING TO UPDATED CIRCUIT DIAGRAM.
	3218867-0099-AE	EC DESCRIPTION: CHANGED ACCORDING TO UPDATED CIRCUIT DIAGRAM.
576873	3218867-0001-AD	DOCUMENT LIST: CHANGED ACCORDING TO UPDATE CIRCUIT DIAGRAM.
	3218867-0002-AD	POSITION SUMMARY: CHANGED ACCORDING TO UPDATE CIRCUIT DIAGRAM.
	3218867-0003-AD	**SH.037:** Changed pin reference of G70K0000 with 11 (was 13+); A1+ (was A1-); A2- (was A2+). **SH.056:** Changed pin reference of G70K0001 with 11 (was 13+); A1+ (was A2+); A2- (was A1-);14 (was 14-).
	3218867-0004-AD	LINE SUMMARY:CHANGED ACCORDING TO UPDATE CIRCUIT DIAGRAM.
	3218867-0005-AD	CABINET TERMINAL SUMMARY: CHANGED ACCORDING TO UPDATE CIRCUIT DIAGRAM.
	3218867-0006-AD	TERMINAL STRIP OVERVIEW: CHANGED ACCORDING TO UPDATE CIRCUIT DIAGRAM.
	3218867-0007-AD	CABLE CONNECTION LIST: CHANGED ACCORDING TO UPDATE CIRCUIT DIAGRAM.
	3218867-0008-AD	MAINS CONNECTION: CHANGED ACCORDING TO UPDATE CIRCUIT DIAGRAM.
	3218867-0098-AD	DRAWING REMARKS: CHANGED ACCORDING TO UPDATED CIRCUIT DIAGRAM.
	3218867-0099-AD	EC DESCRIPTION: CHANGED ACCORDING TO UPDATED CIRCUIT DIAGRAM.
566077	3218867-0001-AC	DOCUMENT LIST: CHANGED ACCORDING TO UPDATE CIRCUIT DIAGRAM.
	3218867-0002-AC	POSITION SUMMARY: CHANGED ACCORDING TO UPDATE CIRCUIT DIAGRAM.
	3218867-0003-AC	**SH.034:** Changed reference of cables W21W3006 (was W21W3012) and W21W3007 (was W21W3013). **SH.035:** Changed description of A01K3006:15 with “RESERVED FOR CAP DETECTOR CONTROL X-Y INSTALLATION ENABLE” (was “SPARE”); Changed description of A01K3006:17 with “RESERVED FOR ADHESIVE DETECTOR (UV RING LIGHT POSITIONED)” (was “SPARE”); Changed description of A01K3006:18 with “RESERVED FOR ADHESIVE DETECTOR INSTALLATION ENABLE” (was “RESERVED FOR ADHESIVE DETECTION INSTALLATION ENABLE”). **SH.037:** Changed pin reference of G70K0000 with 13+ (was 11+).

This drawing must not without the consent of Tetra Pak be copied, transmitted or disclosed to any third party.

ECM No.	Drawing No.	Alteration
		SH.056: Changed pin reference of G70K0001 with 13+ (was 11+).
	3218867-0004-AC	LINE SUMMARY:CHANGED ACCORDING TO UPDATE CIRCUIT DIAGRAM.
	3218867-0005-AC	CABINET TERMINAL SUMMARY: CHANGED ACCORDING TO UPDATE CIRCUIT DIAGRAM.
	3218867-0006-AC	TERMINAL STRIP OVERVIEW: CHANGED ACCORDING TO UPDATE CIRCUIT DIAGRAM.
	3218867-0007-AC	CABLE CONNECTION LIST: CHANGED ACCORDING TO UPDATE CIRCUIT DIAGRAM.
	3218867-0008-AC	MAINS CONNECTION: CHANGED ACCORDING TO UPDATE CIRCUIT DIAGRAM.
	3218867-0098-AC	DRAWING REMARKS: CHANGED ACCORDING TO UPDATED CIRCUIT DIAGRAM.
	3218867-0099-AC	EC DESCRIPTION: CHANGED ACCORDING TO UPDATED CIRCUIT DIAGRAM.
550413	3218867-0001-AB	DOCUMENT LIST: CHANGED ACCORDING TO UPDATE CIRCUIT DIAGRAM.
	3218867-0002-AB	POSITION SUMMARY: CHANGED ACCORDING TO UPDATE CIRCUIT DIAGRAM.
	3218867-0003-AB	**SH.002:** Inserted reference terminal strip A01X0008 on line 2L2. **SH.003:** Inserted terminal A01X1001:⏚ **SH.006:** Changed size A01T7000 with 4,2A (was 4A). Removed terminal A01X0002:21. **SH.009:** Changed connection from G40T0000:V to G40M0000:V with cable G40W0000:BK (was G40W0000:BU). Changed connection from G40T0000:W to G40M0000:W with cable G40W0000:BU (was G40W0000:BK). **SH.010:** Changed connection from G40T0002:V to G40M0002:V with cable G40W0002:BK (was G40W0002:BU). Changed connection from G40T0002:W to G40M0002:W with cable G40W0002:BU (was G40W0002:BK). **SH.011:** Changed connection from W21T1000:V to W21M1000:V with cable W21W1000:BK (was W21W1000:BU). Changed connection from W21T1000:W to W21M1000:W with cable W21W1000:BU (was W21W1000:BK). **SH.016:** Changed reference of contacts A01Q5000 with new V01Q5000. **SH.023:** Removed wrong connection from W21K8000 to W21K8001:I1. **SH.024:** Removed connection from A81X2000:US2 to line 1.2L+. Removed connection from A81X2000:GND to line 1L-.

This drawing must not without the consent of Tetra Pak be copied, transmitted or disclosed to any third party.

ECM No.	Drawing No.	Alteration
		SH.030: Changed description of A01B6010 with " ELECT. CABINET HIGH TEMPERATURE" (was " ELECT. CABINET HIGH TEMPERATURE FAULT"). **SH.036:** Changed reference of coil A01Q5000 with new V01Q5000. **SH.037:** Changed connection from G70K0000:11+ to line 1.1L+ (was to A01X0006:178). Changed connection from G70K0000:14 to A01X0006:178 (was to line 1.1L+). **SH.048:** Changed connection cable A01W5010. Changed assignment colors lamp A01P5010. **SH.049:** Changed connection cable A01W5010. Changed assignment colors lamp A01P5010. **SH.055:** Removed sensor C50B2000 and cable C50W2000.
	3218867-0004-AB	LINE SUMMARY:CHANGED ACCORDING TO UPDATE CIRCUIT DIAGRAM.
	3218867-0005-AB	CABINET TERMINAL SUMMARY: CHANGED ACCORDING TO UPDATE CIRCUIT DIAGRAM.
	3218867-0006-AB	TERMINAL STRIP OVERVIEW: CHANGED ACCORDING TO UPDATE CIRCUIT DIAGRAM.
	3218867-0007-AB	CABLE CONNECTION LIST: CHANGED ACCORDING TO UPDATE CIRCUIT DIAGRAM.
	3218867-0008-AB	MAINS CONNECTION: CHANGED ACCORDING TO UPDATE CIRCUIT DIAGRAM.
	3218867-0098-AB	DRAWING REMARKS: CHANGED ACCORDING TO UPDATED CIRCUIT DIAGRAM.
	3218867-0099-AB	EC DESCRIPTION: CHANGED ACCORDING TO UPDATED CIRCUIT DIAGRAM.
524976		DOCUMENTATION INTRODUCED.

This drawing must not without the consent of Tetra Pak be copied, transmitted or disclosed to any third party.

12 Component Location

Description

For component location, refer to the Electrical Parts Index in the SPC.

13 Other Information

Description

This chapter gives other information, when applicable; such as, a Bill of Materials, fuse panel label etc.

Description 13-2

13.1 Bills of Material 13-5

13.1.1 Bills of Material 13-5

13.2 Fuse Panel Label 13-9

13.2.1 Fuse Panel Label (CE) 13-9

13.2.2 Fuse Panel Label (UL-CSA) 13-13

This page intentionally left blank

13.1 Bills of Material

This chapter includes the lists of the documents and programs.

13.1.1 Bills of Material

This page intentionally left blank

ECM	P534796(L524977)	P554794(L550414)	P566153(L566078)	P578942(L576874)	P586084(L580731)	P615711(L613991)
Release date	2012.04.01	2012.04.02	2012.10.01	2013.01.01	2013.01.02	2013.10.01

ECM	P634468(L634038)	P680320(L670993)	P700710(L699178)	P740232(L736737)
Release date	2014.01.15	2014.10.01	2015.01.01	2015.07.01

Chg	Position	Sp	SH	Description	As	Cr	Identity	DTp	Prt	Vs	Unit	Column quantity All	ECM
I	0010			DOCUMENTS LIST			3218867-0001	ELD	000	AK		x	740232
I	0020			POSITION SUMMARY			3218867-0002	ELD	000	AK		x	740232
I	0030			CIRCUIT DIAGRAM			3218867-0003	ELD	000	AK		x	740232
I	0040			LINE SUMMARY			3218867-0004	ELD	000	AK		x	740232
I	0050			CABINET TERMINAL SUMMARY			3218867-0005	ELD	000	AK		x	740232
I	0060			TERMINAL STRIP OVERVIEW			3218867-0006	ELD	000	AK		x	740232
I	0070			CABLE CONNECTION LIST			3218867-0007	ELD	000	AK		x	740232
I	0080			MAINS CONNECTION			3218867-0008	ELD	000	AK		x	740232
I	0098			DRAWING REMARKS			3218867-0098	ELD	000	AK		x	740232
I	0099			ENGINEERING CHANGE DESCRIPTION			3218867-0099	ELD	000	AK		x	740232

Information 'valid to' 2015.07.01

Chg	Position	Sp	SH	Description	Acs	Identity	DTp	Prt	Vs	Unit	Column quantity All	ECM
D	0010			DOCUMENTS LIST		3218867-0001	ELD	000	AJ		x	700710
D	0020			POSITION SUMMARY		3218867-0002	ELD	000	AJ		x	700710
D	0030			CIRCUIT DIAGRAM		3218867-0003	ELD	000	AJ		x	700710
D	0040			LINE SUMMARY		3218867-0004	ELD	000	AJ		x	700710
D	0050			CABINET TERMINAL SUMMARY		3218867-0005	ELD	000	AJ		x	700710
D	0060			TERMINAL STRIP OVERVIEW		3218867-0006	ELD	000	AJ		x	700710
D	0070			CABLE CONNECTION LIST		3218867-0007	ELD	000	AJ		x	700710
D	0080			MAINS CONNECTION		3218867-0008	ELD	000	AJ		x	700710
D	0098			DRAWING REMARKS		3218867-0098	ELD	000	AJ		x	700710
D	0099			ENGINEERING CHANGE DESCRIPTION		3218867-0099	ELD	000	AJ		x	700710

13.2 Fuse Panel Label

This chapter shows the location and the setting of the fuses.

13.2.1 Fuse Panel Label (CE)

This page intentionally left blank

3199127 AB

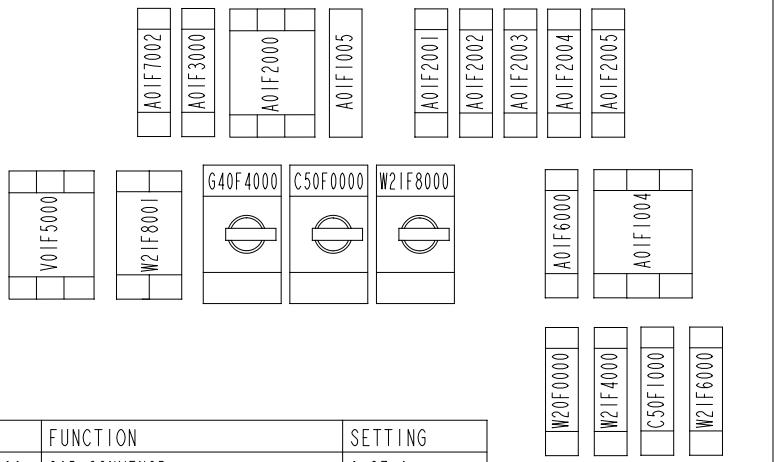

POS	FUNCTION	SETTING
G40F4000	CAP CONVEYOR	0.37 A
C50F0000	CAP ELEVATOR	0.7 A
W21F8000	AIR PUMP	2.7 A

POS	FUNCTION	FUSE TYPE
A01F7002	WALL SOCKET 10A	FAZ-C10/1
A01F3000	PLC AND DEVICE NET POWER SUPPLY 4A	FAZ-C4/1
A01F2000	POWER SUPPLY 24 VCC 6A	FAZ-C6/3
A01F1005	ELECTRONIC POWER SERVO SYSTEM 6A	FUSE ADTR 6
A01F2001	24 VCC INPUT 4A	FAZ-C4/1
A01F2002	24 VCC OUTPUT 4A	FAZ-C4/1
A01F2003	24 VCC OUTPUT 4A	FAZ-C4/1
A01F2004	24 VCC LIGHTING 4A	FAZ-C4/1
A01F2005	24 VCC PLC AND TPOP 4A	FAZ-C4/1
V01F5000	HOT MELT UNIT 20A	FAZ-C20/3
W21F8001	PACKAGE PREHEATER 10A	FAZ-C10/2
A01F6000	COOLING UNIT 6A	FAZ-C6/1
A01F1004	MAIN POWER SERVO SYSTEM 25A	FAZ-C25/3
W20F0000	PACKAGE BELT BRAKE 6A	FAZ-C6/1
W21F4000	PACKEGE LINE CONVEYOR 10A	FAZ-C10/1
C50F1000	CAP SORTER DISC 6A	FAZ-C6/1
W21F6000	OUTFEED PACKAGE CONVEYOR 10A	FAZ-C10/1

CAP 30 FLEX

132±2

108±2

CLR G40F4000; C50F0000; W21F8000; SETTINGS.

BLACK PRINTING ON WHITE PAPER
PLASTIC EMBEDDED
SHINY SURFACE

1 THIS PAGE
1 TOTAL

Release Level: Released		ECM No: 538846	PDM Version Drawing 2.1 Model 2.1
Marked according to standard B 2103.10 Method/Size NO /-		Unless otherwise stated SHARP EDGES BROKEN; Scale 7:10	Surface Roughness
Material: SEE ABOVE			Surface Treatment: ---
Version Designer: MOGI	Version Date: 2012-01-18		Denomination: FUSE PANEL LABEL -
Information Security Class: Tetra Pak Restricted			
Hygienic Demands: No	Critical Part: N		
Tetra Pak	Drawing No: 3199127	Document Type: DRA	R3 Version: AB; Page: 1(1)

©Tetra Pak. All rights reserved; any copying, transmittal or disclosure subject to Tetra Pak's written approval.

Pro/ENGINEER - A3

3199131 AB

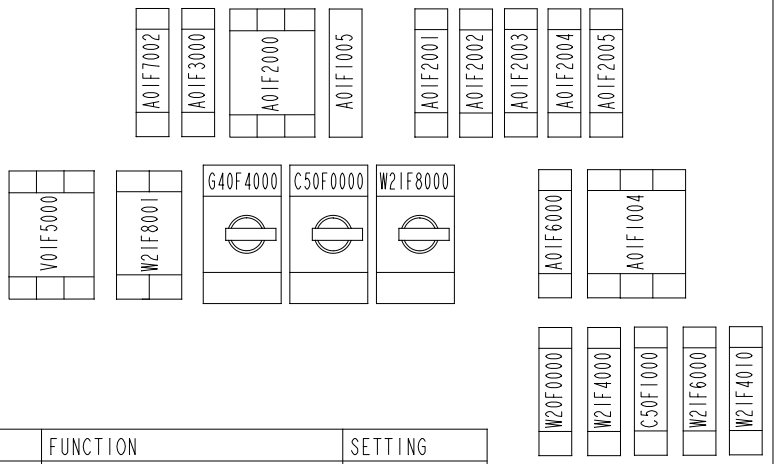

POS	FUNCTION	SETTING
G40F4000	CAP CONVEYOR	0.37 A
C50F0000	CAP ELEVATOR	0.7 A
W21F8000	AIR PUMP	2.7 A

POS	FUNCTION		FUSE TYPE
A01F7002	WALL SOCKET	10A	FAZ-C10/1
A01F3000	PLC AND DEVICE NET POWER SUPPLY	4A	FAZ-C4/1
A01F2000	POWER SUPPLY 24 VCC	6A	FAZ-C6/3
A01F1005	ELECTRONIC POWER SERVO SYSTEM	6A	FUSE ADTR 6
A01F2001	24 VCC INPUT	4A	FAZ-C4/1
A01F2002	24 VCC OUTPUT	4A	FAZ-C4/1
A01F2003	24 VCC OUTPUT	4A	FAZ-C4/1
A01F2004	24 VCC LIGHTING	4A	FAZ-C4/1
A01F2005	24 VCC PLC AND TPOP	4A	FAZ-C4/1
V01F5000	HOT MELT UNIT	20A	FAZ-C20/3
W21F8001	PACKAGE PREHEATER	10A	FAZ-C10/2
A01F6000	COOLING UNIT	6A	FAZ-C6/1
A01F1004	MAIN POWER SERVO SYSTEM	25A	FAZ-C25/3
W20F0000	PACKAGE BELT BRAKE	6A	FAZ-C6/1
W21F4000	PACKEGE LINE CONVEYOR	10A	FAZ-C10/1
C50F1000	CAP SORTER DISC	6A	FAZ-C6/1
W21F6000	OUTFEED PACKAGE CONVEYOR	10A	FAZ-C10/1
W21F4010	PACKAGE ALIGNER	6A	FAZ-C6/1

CAP 30 FLEX

132±2

108±2

CLR G40F4000; C50F0000; W21F8000; SETTINGS.

BLACK PRINTING ON WHITE PAPER
PLASTIC EMBEDDED
SHINY SURFACE

1 THIS PAGE
1 TOTAL

Release Level: Released		ECM No: 538846	PDM Version Drawing: 2.1 Model: 2.1
Marked according to standard B 2103.10 Method/Size: NO /-		Unless otherwise stated: SHARP EDGES BROKEN; Scale: 7:10	Surface Roughness
Material: SEE ABOVE			Surface Treatment: ---
Version Designer: MOG1	Version Date: 2012-01-18		Denomination: FUSE PANEL LABEL -
Information Security Class: Tetra Pak Restricted			
Hygienic Demands: No	Critical Part: N		
Tetra Pak	Drawing No: 3199131	Document Type: DRA	R3 Version: AB / Page: 1(1)

©Tetra Pak. All rights reserved; any copying, transmittal or disclosure subject to Tetra Pak's written approval.

Pro/ENGINEER - A3

13.2.2 Fuse Panel Label (UL-CSA)

This page intentionally left blank

3199178 AB

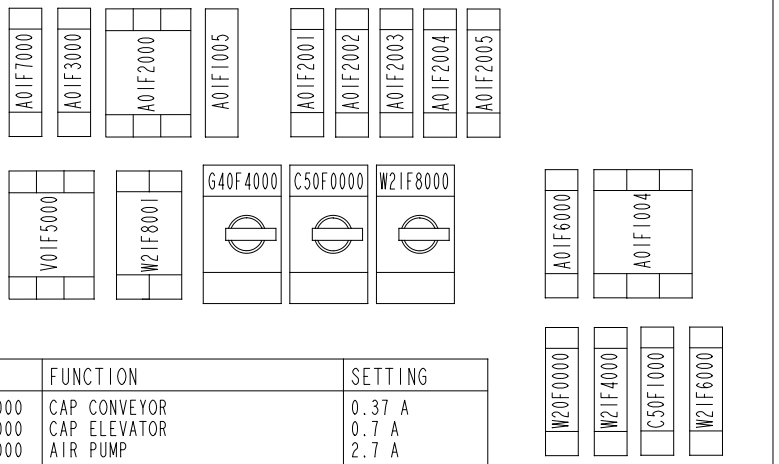

POS	FUNCTION	SETTING
G40F4000	CAP CONVEYOR	0.37 A
C50F0000	CAP ELEVATOR	0.7 A
W21F8000	AIR PUMP	2.7 A

POS	FUNCTION		FUSE TYPE
A01F7000	MACHINE AND CABINET LIGHTING	4A	FAZ-C4/1 NA
A01F3000	PLC AND DEVICE NET POWER SUPPLY	4A	FAZ-C4/1 NA
A01F2000	POWER SUPPLY 24 VCC	6A	FAZ-C6/3 NA
A01F1005	ELECTRONIC POWER SERVO SYSTEM	6A	FUSE ADTR 6
A01F2001	24 VCC INPUT	4A	FAZ-C4/1 NA
A01F2002	24 VCC OUTPUT	4A	FAZ-C4/1 NA
A01F2003	24 VCC PLC	4A	FAZ-C4/1 NA
A01F2004	24 VCC LIGHTING	4A	FAZ-C4/1 NA
A01F2005	24 VCC PLC AND TPOP	4A	FAZ-C4/1 NA
V01F5000	HOT MELT UNIT	20A	FAZ-C20/3 NA
W21F8001	PACKAGE PREHEATER	10A	FAZ-C10/2 NA
A01F6000	COOLING UNIT	6A	FAZ-C6/1 NA
A01F1004	MAIN POWER SERVO SYSTEM	25A	FAZ-C25/3 NA
W20F0000	PACKAGE BELT BRAKE	6A	FAZ-C6/1 NA
W21F4000	PACKEGE LINE CONVEYOR	10A	FAZ-C10/1 NA
C50F1000	CAP SORTER DISC	6A	FAZ-C6/1 NA
W21F6000	OUTFEED PACKAGE CONVEYOR	10A	FAZ-C10/1 NA

132±2

108±2

CAP 30 FLEX UL/CSA

CLR G40F4000; C50F0000; W21F8000; SETTINGS.

BLACK PRINTING ON WHITE PAPER
PLASTIC EMBEDDED
SHINY SURFACE

1 THIS PAGE
1 TOTAL

Release Level: Released		ECM No: 538846	PDM Version Drawing: 2.1 Model: 2.1
Marked according to standard B 2103.10		Unless otherwise stated: SHARP EDGES BROKEN	Surface Roughness
Method/Size: NO /-		Scale: 7:10	
Material: SEE ABOVE			Surface Treatment: ---
Version Designer: MOGI	Version Date: 2012-01-18	Denomination: FUSE PANEL LABEL	
Information Security Class: Tetra Pak Restricted		-	
Hygienic Demands: No	Critical Part: N		
Tetra Pak	Drawing No: 3199178	Document Type: DRA	R3 Version: AB / Page: 1(1)

©Tetra Pak. All rights reserved; any copying, transmittal or disclosure subject to Tetra Pak's written approval.

Pro/ENGINEER - A3

3199182 AB

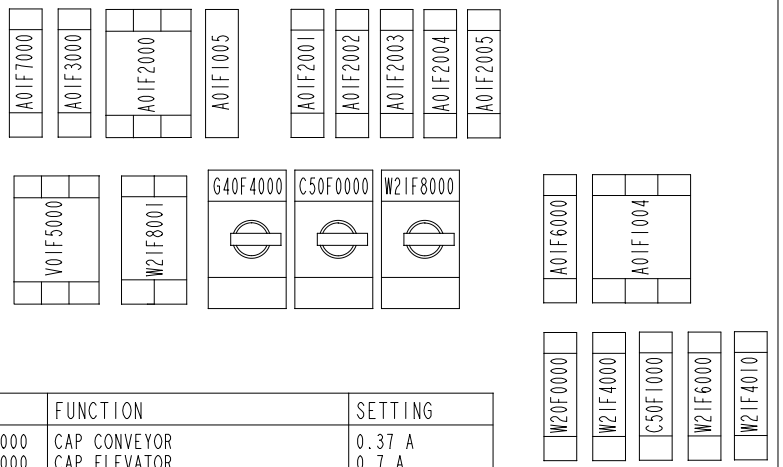

POS	FUNCTION	SETTING
G40F4000	CAP CONVEYOR	0.37 A
C50F0000	CAP ELEVATOR	0.7 A
W21F8000	AIR PUMP	2.7 A

POS	FUNCTION		FUSE TYPE
A01F7000	MACHINE AND CABINET LIGHTING	4A	FAZ-C4/1 NA
A01F3000	PLC AND DEVICE NET POWER SUPPLY	4A	FAZ-C4/1 NA
A01F2000	POWER SUPPLY 24 VCC	6A	FAZ-C6/3 NA
A01F1005	ELECTRONIC POWER SERVO SYSTEM	6A	FUSE ADTR 6
A01F2001	24 VCC INPUT	4A	FAZ-C4/1 NA
A01F2002	24 VCC OUTPUT	4A	FAZ-C4/1 NA
A01F2003	24 VCC PLC	4A	FAZ-C4/1 NA
A01F2004	24 VCC LIGHTING	4A	FAZ-C4/1 NA
A01F2005	24 VCC PLC AND TPOP	4A	FAZ-C4/1 NA
V01F5000	HOT MELT UNIT	20A	FAZ-C20/3 NA
W21F8001	PACKAGE PREHEATER	10A	FAZ-C10/2 NA
A01F6000	COOLING UNIT	6A	FAZ-C6/1 NA
A01F1004	MAIN POWER SERVO SYSTEM	25A	FAZ-C25/3 NA
W20F0000	PACKAGE BELT BRAKE	6A	FAZ-C6/1 NA
W21F4000	PACKEGE LINE CONVEYOR	10A	FAZ-C10/1 NA
C50F1000	CAP SORTER DISC	6A	FAZ-C6/1 NA
W21F6000	OUTFEED PACKAGE CONVEYOR	10A	FAZ-C10/1 NA
W21F4010	PACKAGE ALIGNER	6A	FAZ-C6/1 NA

CAP 30 FLEX UL/CSA

132±2

108±2

CLR G40F4000; C50F0000; W21F8000; SETTINGS.

BLACK PRINTING ON WHITE PAPER
PLASTIC EMBEDDED
SHINY SURFACE

1 THIS PAGE
1 TOTAL

Release Level: Released		ECM No: 538846	PDM Version Drawing: 2.1 Model: 2.1
Marked according to standard B 2103.10 Method/Size: NO /-		Unless otherwise stated: SHARP EDGES BROKEN; Scale: 7:10	Surface Roughness
Material: SEE ABOVE			Surface Treatment: ---
Version Designer: MOGI	Version Date: 2012-01-18		Denomination: FUSE PANEL LABEL -
Information Security Class: Tetra Pak Restricted			
Hygienic Demands: No	Critical Part: N		
Tetra Pak	Drawing No: 3199182	Document Type: DRA	R3 Version: AB; Page: 1(1)

©Tetra Pak. All rights reserved; any copying, transmittal or disclosure subject to Tetra Pak's written approval.

Pro/ENGINEER - A3

14 Program Documents

Description

The program document used for this machine is contained on a CDROM. For installation instructions, see the MM.

Description 14-2

14.1 CDROM Contents 14-5

This page intentionally left blank

14.1 CDROM Contents

The two CDROMs contain the machine programs. One CD has the firmware (for initial setup) and the second CD contains the applications.

The application programs are as follows:

- PLC program (Rockwell)
- Safety PLC program (Jokab)
- Networks configuration (Device-Net, Rockwell)
- Operator Panel program (Rockwell)
- Vision system.

This page intentionally left blank

Tetra Pak®

Label for 40 mm binder ***Note!*** *This page is generated* ***automatically.***

Cap 30/Flex
662950-0300 Issue 2015-06
Doc. No. EM-3202356-0110

Cap 30/Flex
662950-0300 Issue 2015-06
Doc. No. EM-3202356-0110

Cap 30/Flex
662950-0300 Issue 2015-06
Doc. No. EM-3202356-0110

Cap 30/Flex
662950-0300 Issue 2015-06
Doc. No. EM-3202356-0110

Cap 30/Flex
662950-0300 Issue 2015-06
Doc. No. EM-3202356-0110

Cap 30/Flex
662950-0300 Issue 2015-06
Doc. No. EM-3202356-0110

Cap 30/Flex
662950-0300 Issue 2015-06
Doc. No. EM-3202356-0110

Cap 30/Flex
662950-0300 Issue 2015-06
Doc. No. EM-3202356-0110

Cap 30/Flex 1(2)
662950-0300 Issue 2015-06
Doc. No. EM-3202356-0110

Cap 30/Flex 2(2)
662950-0300 Issue 2015-06
Doc. No. EM-3202356-0110

Cap 30/Flex 1(2)
662950-0300 Issue 2015-06
Doc. No. EM-3202356-0110

Cap 30/Flex 2(2)
662950-0300 Issue 2015-06
Doc. No. EM-3202356-0110

Cap 30/Flex1(3)
662950-0300 Issue 2015-06
Doc. No. EM-3202356-0110

Cap 30/Flex 2(3)
662950-0300 Issue 2015-06
Doc. No. EM-3202356-0110

Cap 30/Flex 3(3)
662950-0300 Issue 2015-06
Doc. No. EM-3202356-0110

Cap 30/Flex3(3)
662950-0300 Issue 2015-06
Doc. No. EM-3202356-0110

Cap 30/Flex
662950-0300 Issue 2015-06
Doc. No. EM-3202356-0110

Cap 30/Flex 1(2)
662950-0300 Issue 2015-06
Doc. No. EM-3202356-0110

Cap 30/Flex
662950-0300 Issue 2015-06
Doc. No. EM-3202356-0110

Cap 30/Flex 2(2)
662950-0300 Issue 2015-06
Doc. No. EM-3202356-0110

Cap 30/Flex
662950-0300 Issue 2015-06
Doc. No. EM-3202356-0110

Cap 30/Flex 1(3)
662950-0300 Issue 2015-06
Doc. No. EM-3202356-0110

Cap 30/Flex
662950-0300 Issue 2015-06
Doc. No. EM-3202356-0110

Cap 30/Flex 2(3)
662950-0300 Issue 2015-06
Doc. No. EM-3202356-0110

Cap 30/Flex
662950-0300 Issue 2015-06
Doc. No. EM-3202356-0110

Cap 30/Flex 3(3)
662950-0300 Issue 2015-06
Doc. No. EM-3202356-0110

Cap 30/Flex
662950-0300 Issue 2015-06
Doc. No. EM-3202356-0110

Cap 30/Flex 3(3)
662950-0300 Issue 2015-06
Doc. No. EM-3202356-0110

Cap 30/Flex
662950-0300 Issue 2015-06
Doc. No. EM-3202356-0110

Cap 30/Flex
662950-0300 Issue 2015-06
Doc. No. EM-3202356-0110

Cap 30/Flex
662950-0300 Issue 2015-06
Doc. No. EM-3202356-0110

Cap 30/Flex 1(3)
662950-0300 Issue 2015-06
Doc. No. EM-3202356-0110

Cap 30/Flex 1(2)
662950-0300 Issue 2015-06
Doc. No. EM-3202356-0110

Cap 30/Flex 2(3)
662950-0300 Issue 2015-06
Doc. No. EM-3202356-0110

Cap 30/Flex 2(2)

662950-0300 Issue 2015-06

Doc. No. EM-3202356-0110

Cap 30/Flex 3(3)

662950-0300 Issue 2015-06

Doc. No. EM-3202356-0110