MM

Maintenance Manual

CAP30/Flex ScrewCap

662950-0300

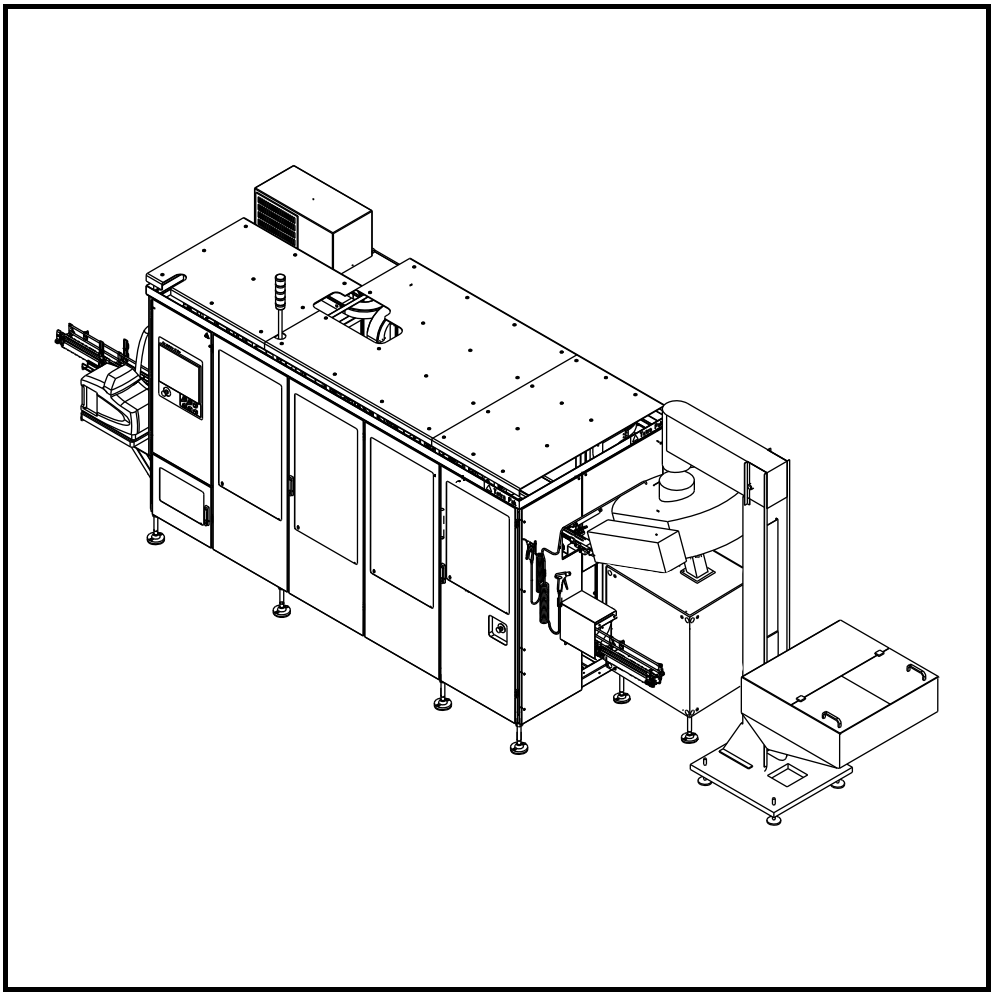

WARNING

Read and follow all safety precaution instructions throughout this manual and on safety signs attached to this equipment.

Failure to follow all safety precaution instructions could result in death or serious injury.

Tetra Pak®

Doc. No. MM-3202353-0112

Copyright © 2014 Tetra Pak International S.A.

All rights reserved. No part of this document may be reproduced or copied in any form or by any means without written permission from Tetra Pak Packaging Solutions.

, Tetra Pak, and all other trademarks displayed in this document are the property of the Tetra Pak International SA. Tetra Pak Packaging Solutions together with Tetra Pak International SA form part of ‘the Tetra Pak Group’. The content of this manual is in accordance with the design and construction of the machine or equipment at the time of publishing. The Tetra Pak Group reserves the right to introduce design modifications without prior notice.

The English language version of this document contains the original instructions. All other language versions are translations of the original instructions.

This document was produced and printed by:

Tetra Pak Packaging Solutions
Via Delfini 1
41123 Modena
Italy

Doc. No. MM-3202353-0112

Issue 2014-11

This manual is valid for:

Series No. / Machine No.
Year of Manufacture Sign.

MM
Maintenance Manual

CAP30/Flex ScrewCap
662950-0300

i Introduction
ii Safety Precautions
1 Machine Synchronisation
2 Package Line
3 Push Down
4 Hotmelt Applicator
5 Cap Sorter
6 Machine Body
7 Applicator Unit
8 Cap Sequencer
9 Cap Conveyor
10 Electrical System
11 Regular Accessories
12 Optional Equipment
13 General

Machine or equipment configurations that this manual is valid for are described on the next page.

Doc. No. MM-3202353-0112
Issue 2014-11

Tetra Pak®
Tetra Pak Packaging Solutions

Valid for:

Name	Drawing Specification and Development Step	Additional Information
CAP30/Flex ScrewCap	662950-0300	Volume and Package Shape: TBA 2000 S SlimCap 2000 TBA 1500 S SlimCap 1000 TBA 1500 S HeliCap2 23 TBA 1000 Sq StreamCap 1000 TBA 1000 Sq HeliCap 27 TBA 1000 S SlimCap 1000 TBA 1000 S HeliCap2 23 TBA 500 Sq StreamCap 1000 TBA 500 Sq HeliCap 27 TBA 250 Sq StreamCap 200 TBA 200 Sq StreamCap 200 TBA 200 E HeliCap2 23 TBA 250 E HeliCap2 23 TPA 1000 Sq StreamCap 1000 TPA 1000 Sq HeliCap 27 TPA 750 Sq StreamCap 1000 TPA 750 Sq HeliCap 27 TPA 500 Sq StreamCap 500 TGA 1500 Sq StreamCap 1000 TGA 1500 Sq HeliCap 27 TGA 1000 Sq StreamCap 1000 TGA 1000 Crystal Helicap 27 TGA 1000 Leaf Helicap 27 TGA 1000 Sq HeliCap 27 TGA750 Sq StreamCap 1000 TGA750 Sq HeliCap 27 TGA 500 Sq StreamCap 1000 TGA 500 Sq HeliCap 27

Update Log for Doc. No. MM-3202353-0112

This table shows all changes made to this manual, including installed rebuilding kits, added or removed pages. Page numbering on added pages begins with UP.

Date	Installed Kit	Added Pages (Doc. No.)	Removed Pages	Signature

Date	Installed Kit	Added Pages (Doc. No.)	Removed Pages	Signature

i Introduction

About the Introduction Chapter

This chapter contains basic information about this manual and the related Tetra Pak equipment.

About the Introduction Chapter i-2

Abbreviations and Terminology i-5

Manual Information i-6

Delivered Manuals i-6

CM i-6

EM i-6

IM i-6

MM i-6

OM i-6

RM i-6

SPC i-6

TeM i-7

UP i-7

Page Layout i-8

Page Numbering i-9

Typographical Conventions i-9

Symbols i-9

Machine Introduction i-10

Intended Use of the Equipment i-10

Manufacturer i-10

Identification i-11

CE Classification i-11

Machine Plate i-11

Orientation i-12

Hygiene i-13

Microbiological Pollution i-13

How to Use This MM i-14

Procedures i-14

Procedure Start Table i-14
TPMS i-15
How TPMS Works i-15
TPMS Maintenance Recommendation Overview i-16
Assistance and Inquiries i-18

Abbreviations and Terminology

Abbreviation/Terminology	Meaning	Translation
ANSI	American National Standards Institute	American National Standards Institute
APU	Applicator Unit	Applicator Unit
CAP	Cap Applicator	Cap Applicator
CE	Communautés Européennes/European Communities	Communautés Européennes/European Communities
COMMs	Communications	Communications
Cont'd	Continued	Continued
CPS	Cap Positioning System	Cap Positioning System
CSO	Cap Sorter	Cap Sorter
Deg.	Degree	Degree
Doc.	Document	Document
EEA	European Economic Area	European Economic Area
EM	Electrical Manual	Electrical Manual
HMGU	Hotmelt Gun Unit	Hotmelt Gun Unit
IM	Installation Manual	Installation Manual
IPU	Infeed Package Unit	Infeed Package Unit
ISO	International Standards Organization	International Standards Organization
MM	Maintenance Manual	Maintenance Manual
ms	milli-second	milli-second
No.	Number	Number
O.E.	Optional Equipment	
OM	Operation Manual	Operation Manual
Pos	Position	Position
psi	Pound per square inch	Pound per square inch
PTU	Package Transfer Unit	Package Transfer Unit
PVC	Polyvinyl chloride	Polyvinyl chloride
QuTI-P	Quality and Technical Issues Platform	Quality and Technical Issues Platform
S	Slim (package shape)	Slim (package shape)
SPC	Spare Parts Catalogue	Spare Parts Catalogue
Sq	Square (package shape)	Square (package shape)
TBA	Tetra Brik® Aseptic	Tetra Brik® Aseptic
TGA	Tetra Gemina Aseptic	Tetra Gemina Aseptic
TP	Tetra Pak	Tetra Pak
TPA	Tetra Prisma Aseptic	Tetra Prisma Aseptic
V	Volt	Volt

Manual Information

The Tetra Pak Group recommends reading all delivered manuals carefully. Make sure that the delivered manuals are available to personnel who operate or maintain the equipment.

It is important to keep this manual for the lifetime of the equipment and to pass the manual on to any subsequent holder or user.

Any item that is named specifically in this manual is to be considered a designated item for the equipment. Designated items are verified by the Tetra Pak Group for use with the equipment.

The Tetra Pak Group will not be held responsible for any damage, loss, injury, or death caused by not following the instructions in the manuals that accompany this equipment, or by a failure to use designated items specified in the manuals that accompany this equipment.

Delivered Manuals

Manuals delivered with this equipment:

CM

The Conversion Manual provides technicians with information on converting the equipment between different production modes.

EM

The Electrical Manual provides technicians with information about the equipment's electrical system.

IM

The Installation Manual provides technicians with information required to safely install the equipment.

MM

The Maintenance Manual provides technicians with information on maintaining the equipment.

OM

The Operation Manual provides the operator with information on handling and operating the equipment before, during, and after production.

RM

The Rebuilding Manual provides technicians with information required to safely install a kit to an installed machine or equipment.

SPC

The Spare Parts Catalogue provides the information necessary to order spare parts from the Tetra Pak Group.

TeM

The Technical Manual provides technicians with information which can be:

- information required to safely install the equipment
- information required to maintaining the equipment
- information about the machine's/equipment's electrical system
- information necessary to order spare parts from the Tetra Pak Group
- other technical information

UP

The Update Pages provides new pages to update existing machine manuals.

Page Layout

Every main page in a manual contains a header and a footer. The page header contains the chapter name (1) and the section name (2). The page footer contains the page number (3), and the document number (4). See also the Page Numbering section.

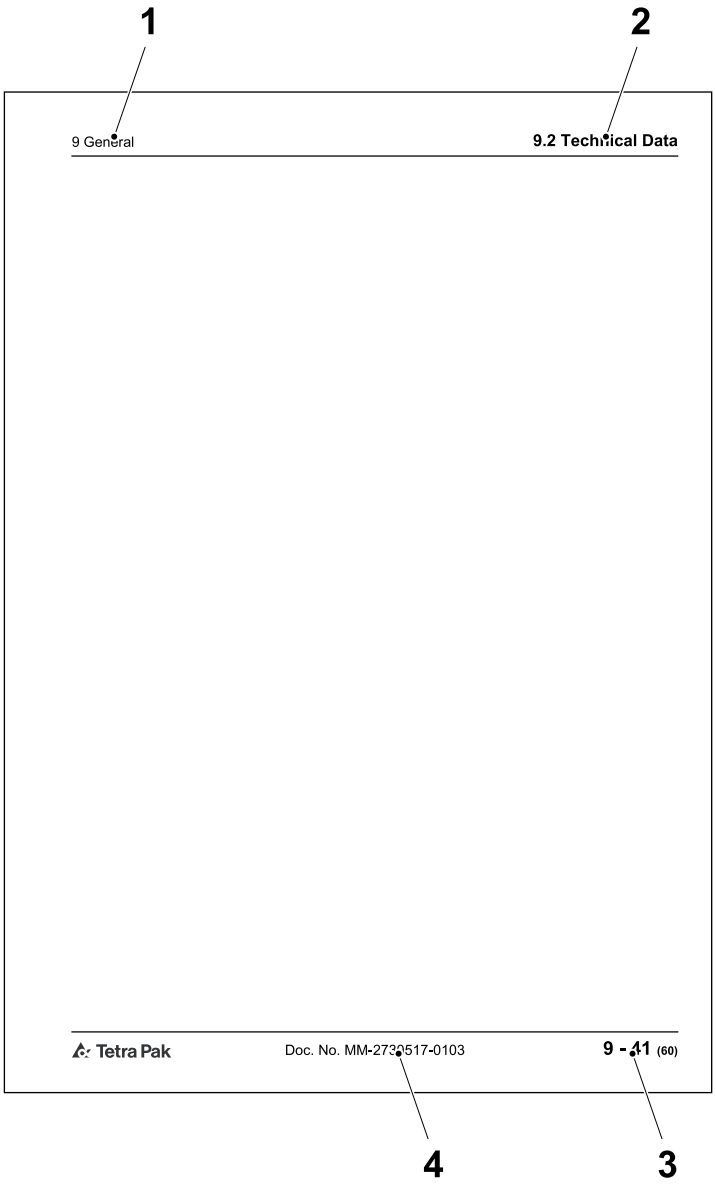

1 Chapter name
2 Section name
3 Page number
4 Document number

Page Numbering

A page number has three parts:

- chapter number (1)
- consecutive page number (2) within the chapter
- total number of pages (3) in the chapter

Note! The letters UP may replace the chapter number (1) if the manual includes update pages. The consecutive page number (2) and the total number of pages (3) of update pages do not follow the existing sequential page numbering of the chapter.

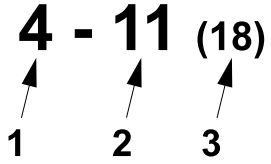

1 Chapter number
2 Consecutive page number
3 Total number of pages

Typographical Conventions

Controls on the operator panel, emergency stop devices, and program steps are printed in CAPITAL LETTERS.

Menu names, button names and other text displayed in software are printed in COURIER.

Cross-references are underlined.

Symbols

Symbols used in illustrations.

	A pointer arrow indicates the position of an object.
	A zoom arrow indicates that an object view is enlarged. The arrow points towards the enlarged view of the object.
	A rotation movement arrow indicates rotational movement of an object. The arrow points in the direction of rotation.
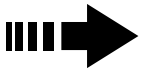	A straight movement arrow indicates movement of an object. The arrow points in the direction of movement.

Machine Introduction

Intended Use of the Equipment

The intended use of this Tetra Pak equipment is to apply a closure onto a package.

Tetra Brik Aseptic Slim packages must have opening tabs. The opening tabs are applied by a PullTab unit which is incorporated in to the filling machine. All other packages must have pre-laminated holes.

All other use is prohibited. Tetra Pak will not be held responsible for injury or damage if the equipment is used for any other purpose than the intended use described above.

Manufacturer

This Tetra Pak equipment has been manufactured by

Tetra Pak Packaging Solutions

Via Delfini 1

41123 MODENA

Italy

Identification

CE Classification

This equipment complies with the basic health and safety regulations of the European Economic Area (EEA).

Machine Plate

The illustration below shows an example of the machine plate and its location on the equipment. The machine plate carries data needed when contacting Tetra Pak concerning this specific equipment.

Make sure that the equipment data in the front pages of this manual corresponds to the machine plate data and the machine specification.

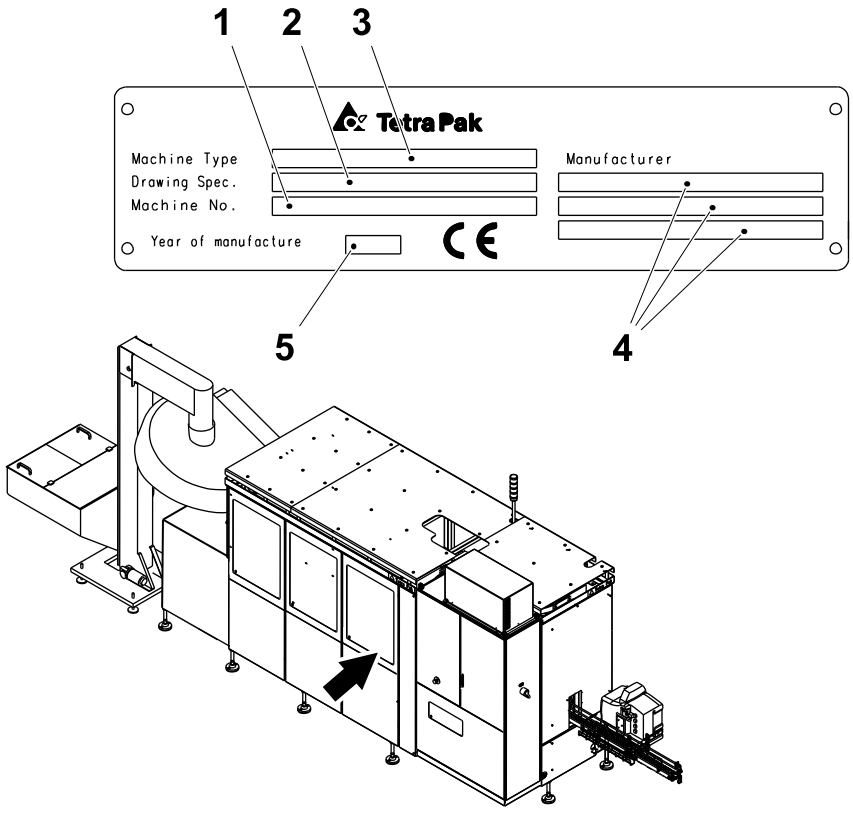

1 Machine serial number
2 Drawing specifications
3 Machine type
4 Manufacturer
5 Year of manufacture

Orientation

The illustration below shows the orientation of the equipment. This orientation information will be used throughout this manual. The arrows indicate the flow of material.

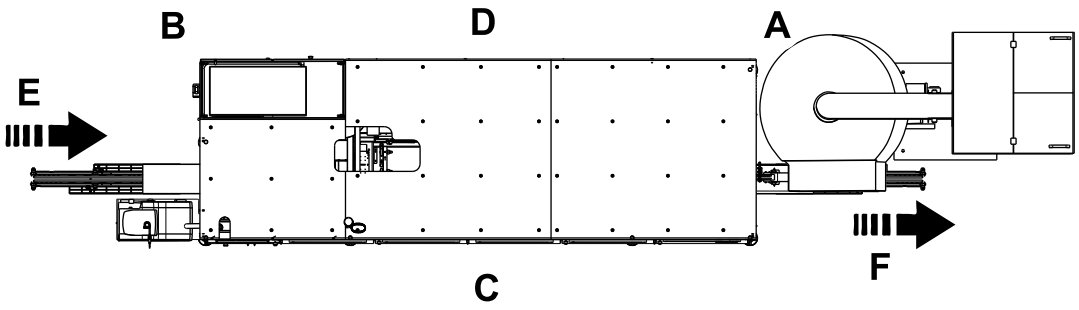

A Front
B Back
C Left-hand side
D Right-hand side
E Infeed
F Outfeed

Hygiene

Microbiological Pollution

To avoid microbiological pollution of the packaging material:

- Never clean the floors or the equipment when the equipment is in production
- Compressed air used for cleaning purposes is to be used only for cleaning filters and should only be used outside of the filling room (area) or in the final folder compartment of the filling machine
- Disinfect your hands before touching anything that may come into contact with the product. Use disinfectant code H. See the Technical Data chapter
- Keep your hands and gloves clean
- Always wear some type of hair protection (cap or hairnet) and clean clothes (preferably white)
- Do not wear a watch, ring, necklace, earrings, or any other exposed jewellery.

How to Use This MM

Procedures

The name of the chapters and sections in the MM correspond to the groups in the structure of the equipment. Procedures correspond to a chapter or a section:

- The hyphens indicate that it is a procedure heading. The example shows a heading for Procedure number 3 in Section 1.5.
- The text after the second hyphen tells what type of procedure it is. Check, Change, and Set are common procedure types.

1.5-3 Outfeed Servo - Change Bearings

Maintenance procedures in this manual are connected to the Tetra Pak Maintenance System, TPMS. See the TPMS section.

Procedure Start Table

Procedures in this manual begin with a table providing information needed to perform the procedure.

- Machine Status (1) shows actuator status, program step, and any other machine status necessary to begin the procedure.
- Special Equipment (2) shows a list of personal protective equipment and special tools that are not normally carried by a service technician, but are needed in the procedure.
- Consumables (3) shows items, such as lubricants, that are required to perform the procedure. Consumables do not include replacement parts.
- SPC Reference (4) shows the assembly number, found in the index of the SPC.

Machine Status (1)	Electrical supply disconnecting device in position O (OFF) Main air valve OFF Main water valve OFF
Special Equipment (2)	Hook spanner TP No. 777170-0105 Dial indicator
Consumables (3)	Lint-free cloths
SPC Reference (4)	2501234-0100

1 Machine Status
2 Special Equipment
3 Consumables
4 SPC Reference

TPMS

TPMS is the maintenance methodology to handle all maintenance-related work processes from development and the whole life cycles for Tetra Pak® machines and equipment. The TPMS methodology is reliability-centred (best industry practice) and aims at finding the right combination of predetermined, condition-based, and corrective maintenance. In maintenance, the challenge is to find the right level of investment in parts and labour effort to achieve the desired performance, quality, and reliability. Thanks to TPMS, it is possible to create maintenance plans with a good balance between what is invested and what it received in return.

How TPMS Works

Users around the globe continuously feed the system with maintenance data. The data is continuously evaluated and then utilised to improve maintenance recommendations and customer-specific scheduling of maintenance tasks. TPMS takes a holistic approach to maintenance by including the actions needed to contribute to plant efficiency. With this advanced maintenance management tool, the maintenance checklists are designed to include latest updates of our recommendations to meet the demands for fewer unscheduled stops, reduced waste, and less interference with production.

TPMS Maintenance Recommendation Overview

With the Tetra Pak Group's extensive experience of managing maintenance on Tetra Pak® packaging lines, together with our advanced maintenance management tools, we can support you in tailoring the right maintenance plans (checklists) to follow the maintenance system in a consistent way. Using TPMS is a foundation to having your machine run at its best. Checklists can be managed and delivered directly from your local Tetra Pak service station. In the checklist you will find information concerning what tasks shall be done and when they shall be done. Furthermore, the document reference will give guidance as to how to perform the work. The document references are MM, SPC, OM, RM, EM, and TeM.

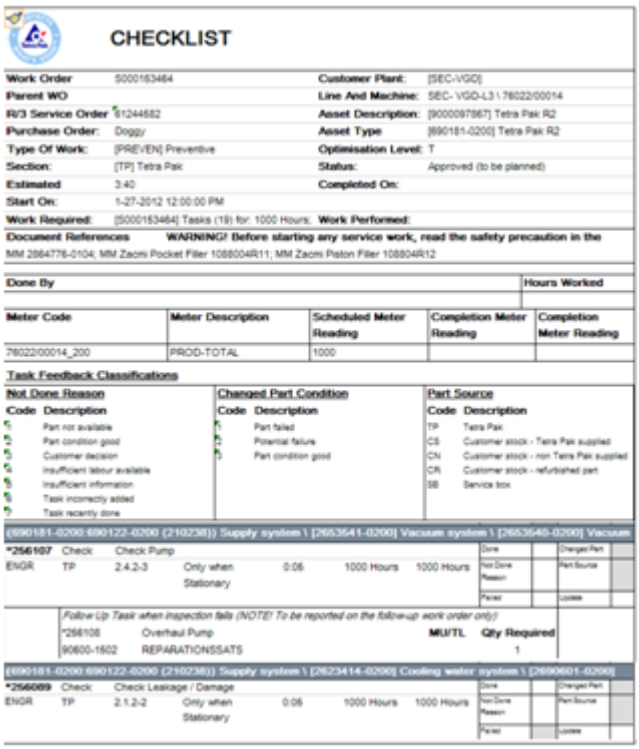

CHECKLIST

Work Order	5000163464	**Customer Plant:**	[SEC-VGO]
Parent WO		**Line And Machine:**	SEC- VGO-L3 \ 76022/00014
R/3 Service Order	61244682	**Asset Description:**	[9000097867] Tetra Pak R2
Purchase Order:	Doggy	**Asset Type**	[690181-0200] Tetra Pak R2
Type Of Work:	[PREVEN] Preventive	**Optimisation Level:**	T
Section:	[TP] Tetra Pak	**Status:**	Approved (to be planned)
Estimated	3:40	**Completed On:**	
Start On:	1-27-2012 12:00:00 PM		
Work Required:	[5000163464] Tasks (19) for: 1000 Hours;	**Work Performed:**	

Document References **WARNING! Before starting any service work, read the safety precaution in the**
MM 2864776-0104; MM Zacmi Pocket Filler 1088004R11; MM Zacmi Piston Filler 108804R12

Done By	**Hours Worked**

Meter Code	**Meter Description**	**Scheduled Meter Reading**	**Completion Meter Reading**	**Completion Meter Reading**
76022/00014_200	PROD-TOTAL	1000		

Task Feedback Classifications

Not Done Reason		**Changed Part Condition**		**Part Source**	
Code	**Description**	**Code**	**Description**	**Code**	**Description**
1	Part not available	1	Part failed	TP	Tetra Pak
2	Part condition good	2	Potential failure	CS	Customer stock - Tetra Pak supplied
3	Customer decision	3	Part condition good	CN	Customer stock - non Tetra Pak supplied
4	Insufficient labour available			CR	Customer stock - refurbished part
5	Insufficient information			SB	Service box
6	Task incorrectly added				
7	Task recently done				

((690181-0200 690122-0200 (210238)) Supply system \ [2653541-0200] Vacuum system \ [2653540-0200] Vacuum

*256107	Check:	Check Pump					Done	Changed Part
ENGR	TP	2.4.2-3	Only when Stationary	0:05	1000 Hours	1000 Hours	Not Done Reason	Part Source
							Failed	Update

Follow Up Task when inspection fails (NOTE! To be reported on the follow-up work order only)

	*256108	Overhaul Pump	MU/TL Qty Required
	90600-1502	REPARATIONSSATS	1

((690181-0200 690122-0200 (210238)) Supply system \ [2623414-0200] Cooling water system \ [2690601-0200]

*256089	Check:	Check Leakage / Damage					Done	Changed Part
ENGR	TP	2.1.2-2	Only when Stationary	0:05	1000 Hours	1000 Hours	Not Done Reason	Part Source
							Failed	Update

Note! The layout of the checklist is subject to change.

For those customers that intend to set up their own maintenance system and plans, the Tetra Pak Group can on a upon-request basis provide a maintenance recommendation overview for the specific equipment, including tasks required to keep the equipment in good condition. The recommendation will be provided free of charge for up to a year after delivery.

(Cont'd)

(Cont'd)

The following items can be found in the maintenance recommendation overview:

Task Code	**Trade**	**Task Action**	**Task Description**	**Document Reference**	**Interval**
Number of the task	Skill required to perform the task	Check, Change, Turn, and so on	Work description	Where info can be found on how to perform this task	When the task shall be performed

Task Code	Trade	Task Action	Task Description	Document Reference	Interval
*2812811	ENGR	Change	Change Shaft / Cylinder	1.4.4-1	
Superstructure \ [2528076-0100] Sterile air system \ [1499158-0100] Air super-heater					
*181142	ENGR	Delime	Delime Heat exchanger	1.4.5-2	3000 Hours
Superstructure \ [2528076-0100] Sterile air system \ [1538166-0100] Air valve					
*3732	ENGR	Change	Change Seal ring / Plain bearing	1.4.6-2	9000 Hours
*2806794	ENGR	Check	Check Shaft / Cylinder	1.4.6-2	1000 Hours
*2807375	ENGR	Change	Change Shaft / Cylinder	1.4.6-2	

The Tetra Pak Group's Maintenance recommendations are continuously updated and improved based on user feedback.

Note! Contact the local Tetra Pak® office for additional information and support regarding TPMS.

Assistance and Inquiries

For assistance when operating this equipment, or other inquiries, comments, or suggestions, submit the questions or give feedback by using the QuTI-P tool. Type QuTI-P in the address field of your browser. If access to QuTI-P is not available, request access by contacting the Global Service Desk.

If access to the Tetra Pak® intranet is not available, contact the nearest Tetra Pak representative.

ii Safety Precautions

Description

Safety Precaution Instructions

WARNING

Read and understand this manual before using the machine.
Failure to follow safety precautions and instructions can result in death or serious injury.

Definition of Lockout Procedure

A lockout procedure is a procedure to put each necessary energy isolating device in its safe position to prevent the energisation of the equipment, such as when a maintenance procedure should be carried out.

A lockout is the use of a device, for example, a padlock, to make sure that an energy isolating device cannot be operated.

An energy isolating device is a mechanical device that physically prevents transmission or release of energy, such as an electrical supply disconnecting device.

Description ii-2

Safety Messages Description..... ii-5

Personnel Requirements ii-6

Skilled Person ii-6

Instructed Person ii-6

Safety Signs..... ii-7

Locations of Safety Signs ii-9

Protective Devices ii-10

Emergency Stop..... ii-10

Emergency Stop Buttons ii-11

Safeguards..... ii-12

Indicating Tower..... ii-14

Audible Alarm ii-15

Safe Manual Handling ii-16

Personal Protection ii-17

Noise ii-17

Entanglement..... ii-17

Hazardous Substances..... ii-18

Disposal of Chemical Substances..... ii-18

Personal Protective Equipment ii-18

Supply Systems..... ii-19

Power Supply..... ii-19

Residual Voltage..... ii-20

Electrical Cabinet ii-20

Socket Outlet..... ii-21

Air Supply..... ii-22

Hotmelt Equipment ii-23

General **ii-23**
Hotmelt Unit **ii-24**
Hotmelt Guns **ii-25**

Additional Information **ii-26**
Package Heater **ii-26**
Waste Device **ii-27**
Equipment for Lifting and Moving Loads **ii-28**

Safety Messages Description

A safety message is always accompanied by a safety alert symbol and a signal word.

The safety alert symbol is used to alert about potential personal injury hazards. To avoid hazards, obey all safety messages that follow this symbol.

The following safety alert symbols and signal words are used in this manual to inform the user of hazards.

DANGER	Danger indicates an imminently hazardous situation which, if not avoided, **will** result in **death or serious injury**.
WARNING	Warning indicates a potentially hazardous situation which, if not avoided, **could** result in **death or serious injury**.
CAUTION	Caution indicates a potentially hazardous situation which, if not avoided, **may** result in **minor or moderate injury.** It may also be used to alert against unsafe practices.
CAUTION	Caution without the safety alert symbol indicates a potentially hazardous situation which, if not avoided, **may** result in **property damage**.

Personnel Requirements

Note! Personnel includes all persons working on or near this equipment.

Only skilled or instructed persons are allowed to work with this equipment.

Skilled Person

A skilled person must have relevant education and experience to enable him or her to identify hazards, analyse risks, and avoid hazards which electricity, machinery, chemicals, other energies, and supply systems on this equipment can create.

Skilled persons must meet local regulations, such as certifications and qualifications for working with these energies and systems.

Instructed Person

An instructed person must be adequately advised or supervised by a skilled person. The skilled person enables the instructed person to identify hazards, analyse risks, and avoid hazards which electricity, machinery, chemicals, other energies, and supply systems on this equipment can create.

Safety Signs

WARNING

Damaged or missing safety signs.
Safety signs are used to indicate safety hazards. If the signs are missing or damaged, they can not fulfil this function. Replace all missing or damaged safety signs immediately.

Safety signs are attached to the equipment. The table below lists all the signs that are used, and illustrations show their locations on the equipment. Each position number refers to two standards of a safety sign in the table, but only one is used on the equipment.

- Make sure that each safety sign is legible and in its correct position after installation and maintenance.
- Replace all missing or damaged safety signs immediately.

Pos	ISO Standard	ANSI Standard
1	 **Hazardous voltage.** Will shock, burn, or cause death. Follow lockout procedure before maintenance.	
2	 **Hot surface.** Do not touch. Follow lockout procedure before maintenance.	
3	 **Risk of equipment damage.** Do not let water into this area.	

(Cont'd)

(Cont'd)

Pos	ISO Standard	ANSI Standard
4		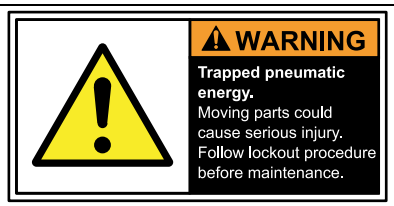
	Trapped pneumatic energy. Moving parts could cause serious injury. Follow lockout procedure before maintenance.	
5		
	Do not reach in. Moving parts may cause injury. Follow instructions for safe work practice.	
6		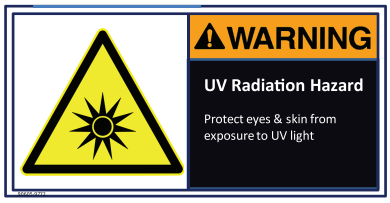
	Risk of UV Radiation. Do not see and touch when the UV lamp is in function. Follow lockout procedure before maintenance.	
7	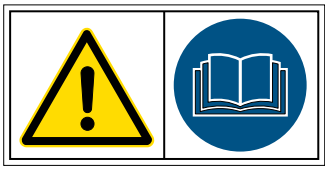	Not applicable
	Risk of electric shock. This equipment can cause currents greater than 10 mA in the electrical power supply protective conductor (PE). Connect the equipment to the electric power supply source in accordance with applicable local or national regulations.	

Locations of Safety Signs

The illustration shows where the safety signs are located. The position numbers refer to the table in the Safety Signs section.

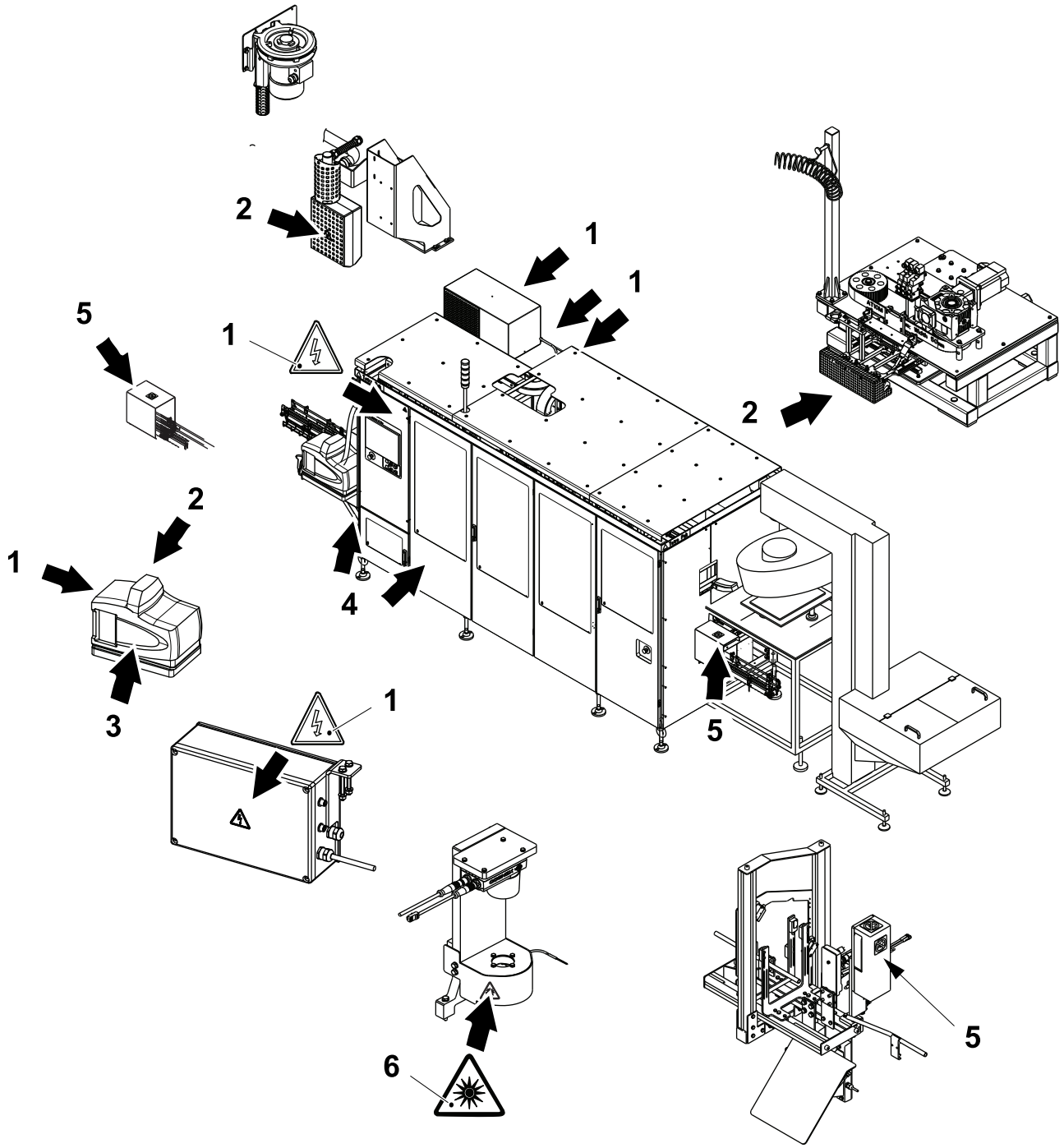

Protective Devices

There are different kinds of protective device designed to ensure safe use of the equipment. See the sections below.

WARNING

Hazardous zones.
Hazardous zones are safeguarded and provided with protective devices. Do not inch or run this equipment if any protective device is inoperative.

Change inoperative components of the safety system immediately.

For the locations of safeguards and/or other protective devices not mentioned in this section, see the Maintenance Manual.

Emergency Stop

DANGER

Hazardous voltage.
Will shock, burn, or cause death.
Hazardous voltage remains ON after activating an EMERGENCY STOP.

Emergency stop devices are used to stop this equipment immediately in a hazardous situation. Learn the positions of all emergency stop devices and how to use them.

Instructions for a normal production stop are included in the Stop chapter of the Operation Manual.

Emergency Stop Buttons

Push one of the EMERGENCY STOP buttons to stop this equipment immediately.

The location of each EMERGENCY STOP button is shown by an arrow.

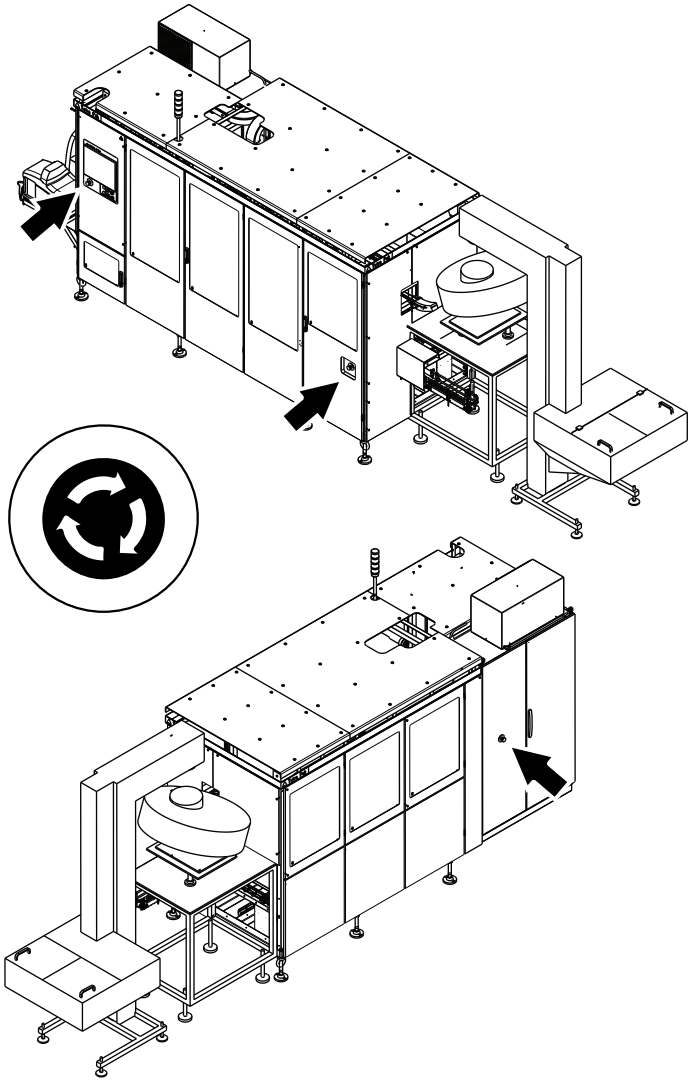

Safeguards

WARNING
Moving machinery parts.
Never defeat or bypass the interlocking devices.

Movable guards, for example, doors and covers leading to hazardous zones, are fitted with interlocking devices where required. These devices are usually electric safety switches that are parts of the safety system and must never be defeated, bypassed, or otherwise made inoperative.

Where movable guards (doors) are equipped with means to be locked in a nonclosed position, any person with the intention to preside, for any reason, behind such a guard must lock the guard in the nonclosed position by use of a padlock.

Note! For work on the electrical equipment, the electrical power must also be disconnected.

CAUTION
Corners and edges.
Close the doors, guards, or parts of the equipment unless they must be open during work.

CAUTION
Burn hazard.
Parts of the equipment protected by guards may be hot after operation. Allow components to cool down or use personal protective equipment.

After installation and maintenance, and before this equipment is inched or run, check that all safeguards are in place and that they operate correctly.

(Cont'd)

(Cont'd)

CAUTION
Equipment damage.
The equipment can be damaged if it is not stopped in the correct way. Never stop this equipment by opening a movable guard, for example, a door or cover, equipped with an interlocking device.

The location of each interlocking device is shown by an arrow.

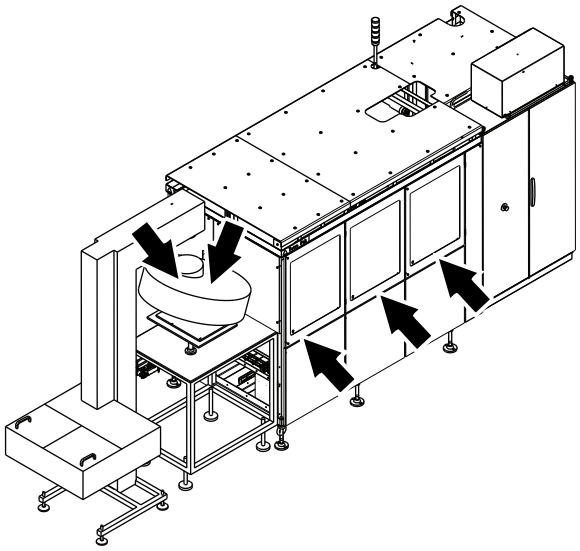

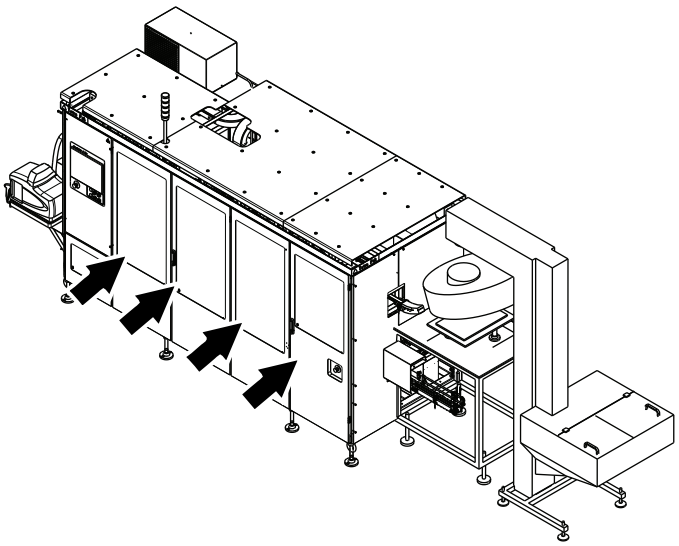

Movable guards with an electromagnetic door lock installed are shown by an arrow.

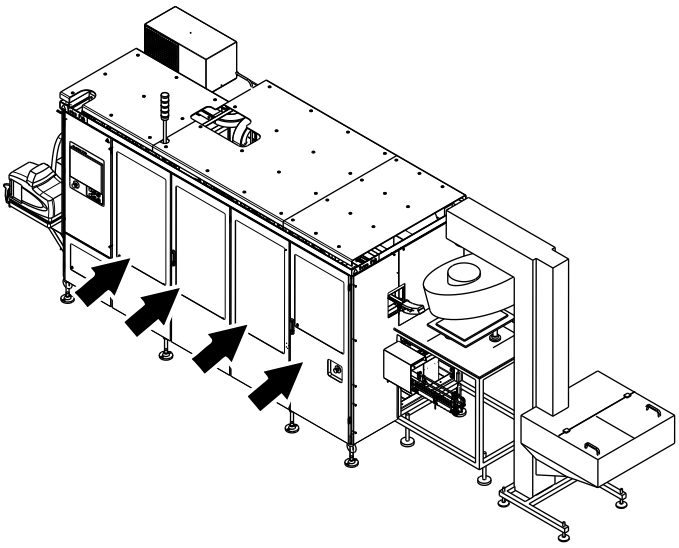

Indicating Tower

An indicating tower is a column of warning lights:

- A red light (1) indicates a hazardous condition. This is a situation that requires immediate action.
- A yellow light (2) indicates an abnormal or impending critical condition. This is a condition calling for action by the operator.
- A blue light (3) indicates that operator action is required.
- A green light (4) indicates a normal condition.

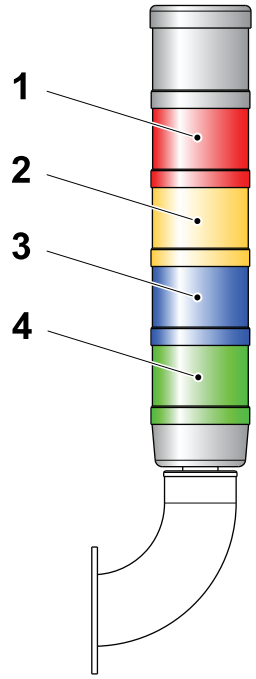

1 Red light
2 Yellow light
3 Blue light
4 Green light

Audible Alarm

The audible alarm (1) produces a warning signal every time this equipment is about to start. The warning signal sounds for approximately three seconds prior to starting to alert personnel.

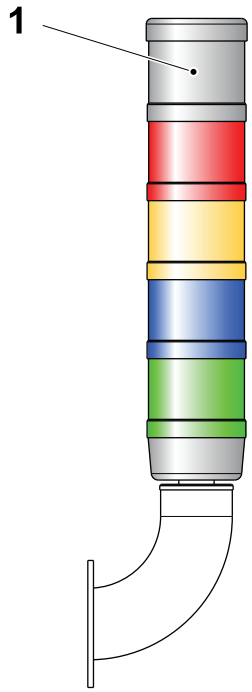

1 Audible alarm

Safe Manual Handling

Use mechanical lifting aids whenever possible. If mechanical lifting aids are not available, do not attempt to lift loads over 23 kg without the assistance of a colleague. Avoid lifting below knee height and above shoulder height. If it is necessary to lift from the floor, follow the instructions below to reduce the risk of back and disc injuries.

- Use safety shoes and be sure that the surface of the floor is not slippery.
- Get close to the load.
- Take a wide stance and find the best positions for your feet.
- Bend your hips and knees, and use your leg muscles.
- Keep the load close to your body.
- Do not twist your body while moving the load.
- Take small steps when turning.

In order to reduce the risk of injury to discs and back muscles, be careful to not bend or twist your back when lifting. Keep the load close to your body to reduce the strain on your back.

To reduce the ergonomic risks to each individual operator, job rotation is recommended, so that recovery and variety are provided.

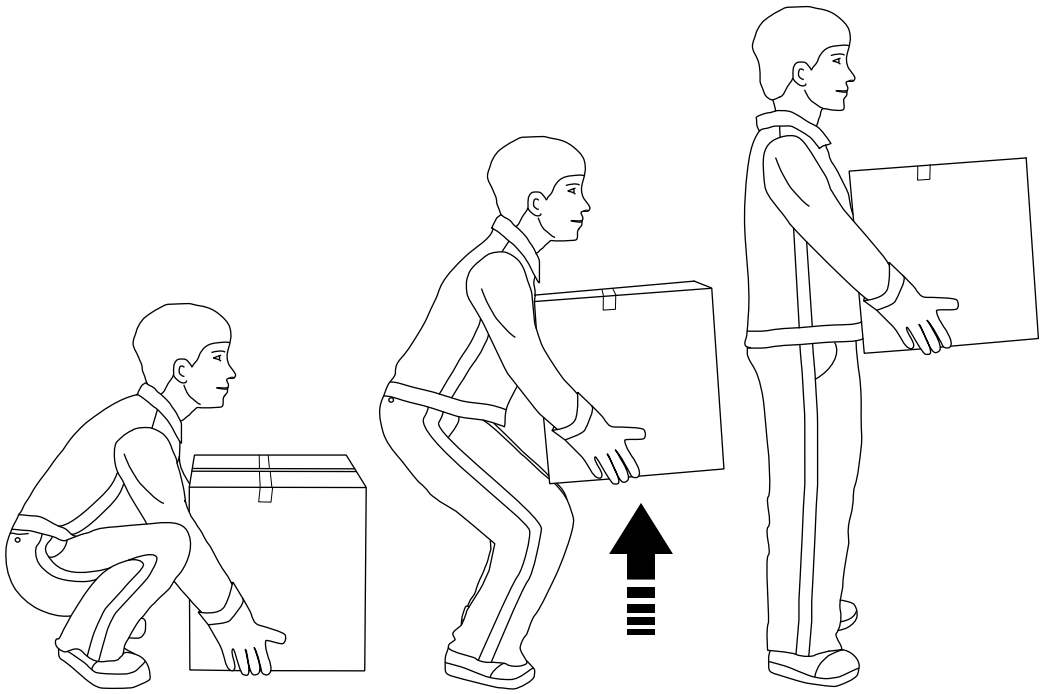

Personal Protection

This section applies to all personnel at all times when this equipment is in operation. For special personal protective equipment required when handling hazardous substances, see the Hazardous Substances section.

Noise

WARNING

Hazardous noise.
Can cause impaired hearing.
Wear hearing protection whenever this equipment is in operation.

CAUTION

Hazardous noise.
May cause impaired hearing.
Hearing protection is recommended whenever this equipment is in operation.

Entanglement

WARNING

Risk of entanglement.
Do not wear jewellery or loose clothing when working on or near this equipment.
Restrain long hair with, for example, clips or rubber bands.

Hazardous Substances

WARNING

Contact with chemicals can cause death, serious injury, or illness.
Always read and follow the instructions in the safety data sheet supplied by the manufacturer or local supplier, when handling chemicals.

Make sure that

- the safety data sheet is available
- preparations have been done to ensure that the stated safety measures in the safety data sheet can be followed
- the locations of the first aid equipment are learned in order to act immediately in case of an accident

Disposal of Chemical Substances

Always read and follow the disposal instructions in the safety data sheet supplied by the manufacturer or local supplier.

It is strongly recommended that used chemical containers are

- disposed of according to the instructions immediately after use
- not used as disposal containers for other chemicals in order to avoid uncontrolled chemical reactions within the container

Personal Protective Equipment

The personal protective equipment for hydrogen peroxide is

- protective goggles (for instance, TP No. 90303-11), tight fitting
  If there is a risk of splashes, a visor is a suitable complement
- protective gloves made of neoprene (for instance, TP No. 90303-12), nitrile, or butyl rubber
- protective apron (for instance, TP No. 90303-13), or protective suit when handling larger amounts
- protective shoes or boots made of PVC, PE plastic, or rubber
- proper respiratory equipment, if ventilation is insufficient

Supply Systems

Power Supply

DANGER

Hazardous voltage and moving machinery.
The electrical supply disconnecting device must be in position O (OFF) and secured with a lock before any maintenance that requires the electrical supply to be disconnected. See the Machine Status section of the MM Procedure Start Table.

Note! The key to the lock must be removed by the technician and retained in his/her possession until all work is completed.

DANGER

Hazardous voltage can be present with the power supply switched off.
Circuits identified by orange-coloured conductors are not disconnected by the main electrical supply disconnecting device. The location of the electrical supply disconnecting device of these circuits is described in the Maintenance Manual procedures that include work on these types of circuit.

Certain maintenance procedures may require power supply systems to be on. These exceptions are clearly stated in the Maintenance Manual.

The illustrations show the electrical supply disconnecting device and its location.

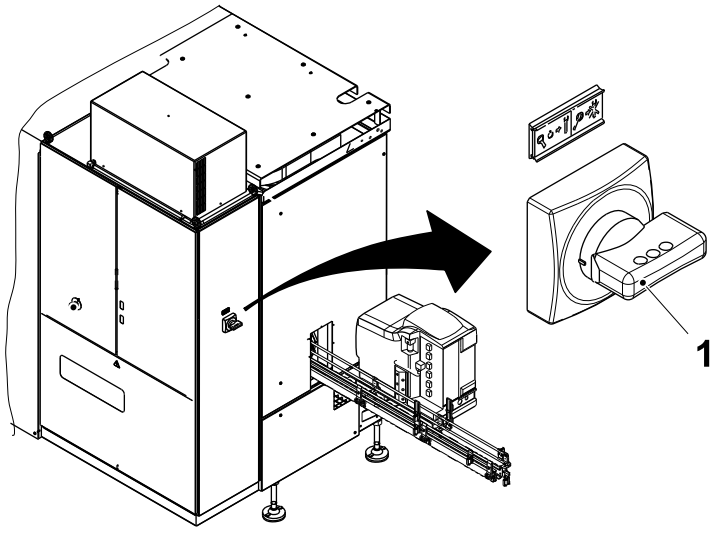

1 Electrical supply disconnecting device

Residual Voltage

DANGER

Hazardous voltage.
Will shock, burn, or cause death.
After the electrical supply disconnecting device is turned to position O (OFF), residual voltage remains in the capacitor circuits. Wait five minutes before opening the enclosure containing these circuits. Ensure that no residual voltage remains on the capacitors before touching them.

Electrical Cabinet

DANGER

Hazardous voltage.
Will shock, burn, or cause death.
Parts behind doors to the electrical cabinet may be live. The electrical supply disconnecting device must be turned to position O (OFF) and secured with a lock before maintenance inside the electrical cabinet.

Note! The key to the lock must be removed by the technician and retained in his/her possession until all work is completed.

Make sure that the electrical cabinet doors are closed after working inside the electrical cabinet. Doors with locks must be locked.

The location of each electrical cabinet is shown by an arrow.

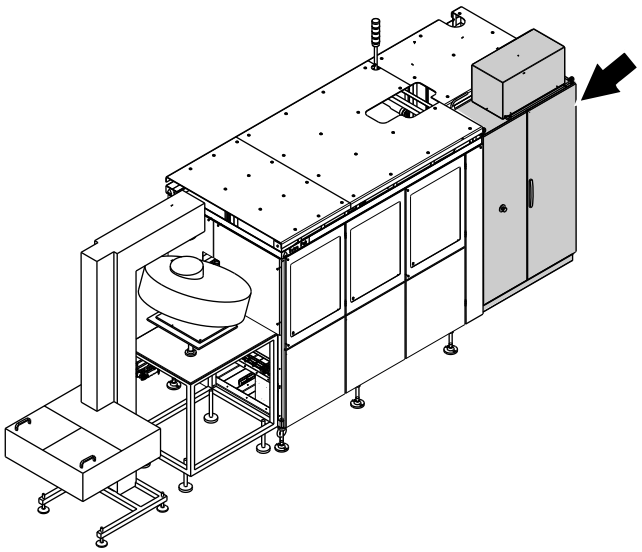

Socket Outlet

WARNING

Hazardous voltage.
Can shock, burn, or cause death.
Read the Maintenance Manual before using this socket outlet.

The socket outlet (1) is connected to a residual current device (2) to protect users against electrical shock if there is an earth fault in the connected equipment. The residual current device must be tested each time before the socket outlet is being used. See the MM for test procedure.

The illustrations show the socket outlet, the residual current device, and their locations.

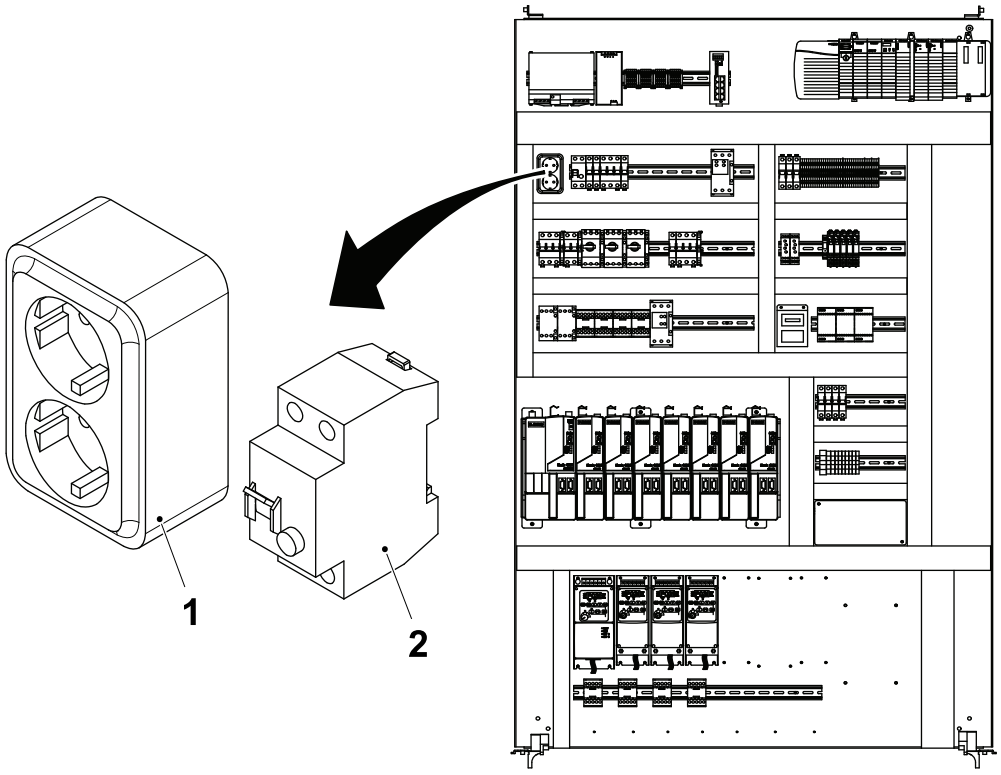

1 Socket outlet
2 Residual current device

Air Supply

WARNING

Compressed air and moving machinery.
Close the air supply valve and lock it, and safely release compressed air from the air system before any maintenance that requires the air supply to be closed. See the Machine Status section of the MM Procedure Start Table.

Note! The key to the lock must be removed by the technician and retained in his/her possession until all work is completed.

Certain maintenance procedures may require air supply systems to be on. These exceptions are clearly stated in the Maintenance Manual.

The illustrations show the main air valve (1), the lock (2), and their location.

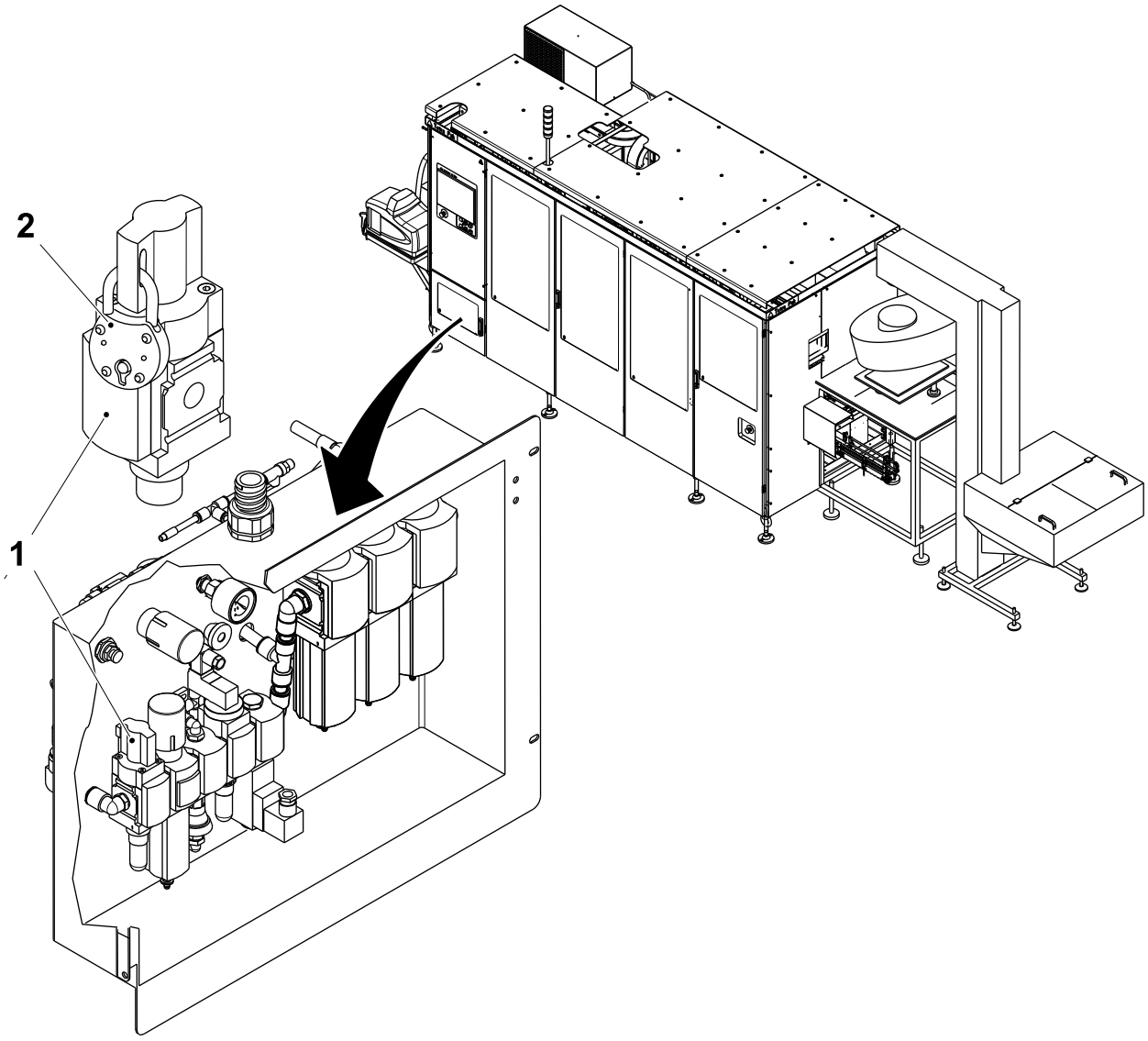

1 Main air valve
2 Lock

Hotmelt Equipment

General

DANGER

Risk of electrical shock.
The voltage is 400V inside the hotmelt unit. Risk of immediate danger to life from electrical shock.

WARNING

Risk of personal injury.
All service work on the hotmelt unit must be carried out by authorized personnel. Always wear safety glasses, protective gloves, and other protective clothing to avoid injuries caused by splashing hotmelt material. Failure to relieve any air or adhesive pressure could cause serious injuries from burning when the hotmelt filter is detached or flushed. Never remove any part or component until the air and the electrical supply to the machine have been disconnected and the pressure of the hotmelt in the system has been relieved.

WARNING

Risk of hotmelt vapours.
When the tank lid is open, hotmelt vapours could be released. Vent the application area or wear a respirator.

Note! Always refer to the documentation provided from Nordson Corporation before doing any kind of work on the hotmelt equipment. The Nordson hotmelt manual is included with the delivery from Tetra Pak. The information in this manual only deals with what is specific for this machine.

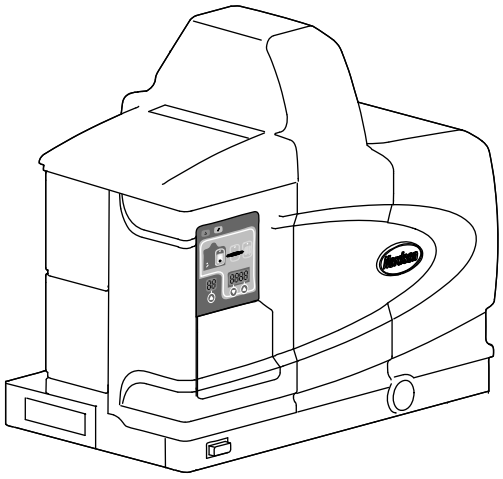

Hotmelt Unit

CAUTION

Risk of damage to the equipment

Never flush water or any other liquid towards the hotmelt unit when cleaning the machine. Failure to obey could result in damage to equipment.

WARNING

Risk of burns.

During PREHEATING and PREPARATION the hotmelt unit becomes hot. Do not touch the hotmelt unit and beware of the entrapped heat inside the unit when service is performed.

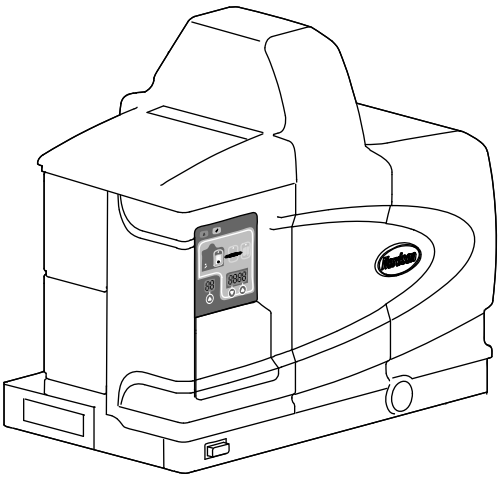

Hotmelt Guns

WARNING

Risk of burns.

During PREHEATING, PREPARATION and PRODUCTION the hotmelt guns are hot. There is risk of severe burns. Do not touch the hotmelt guns and beware of the entrapped heat when service is performed.

CAUTION

Risk of damage to the equipment

Never flush water or any other liquid towards the hotmelt guns when cleaning the machine. Failure to obey could result in damage to equipment.

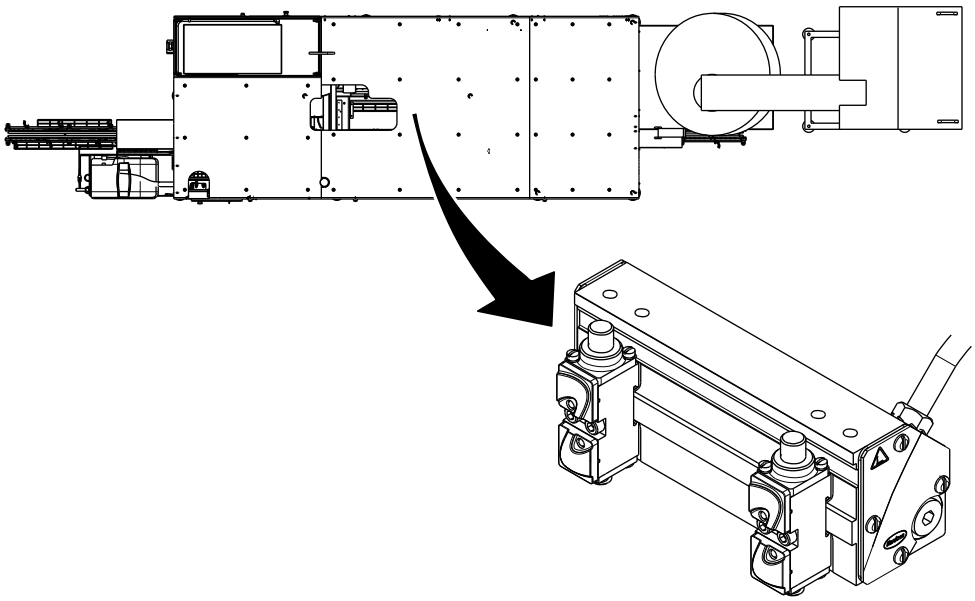

Additional Information

Package Heater

WARNING

Risk of Burns

The package heater is very hot and there is risk of severe burns. Never touch the package heater.

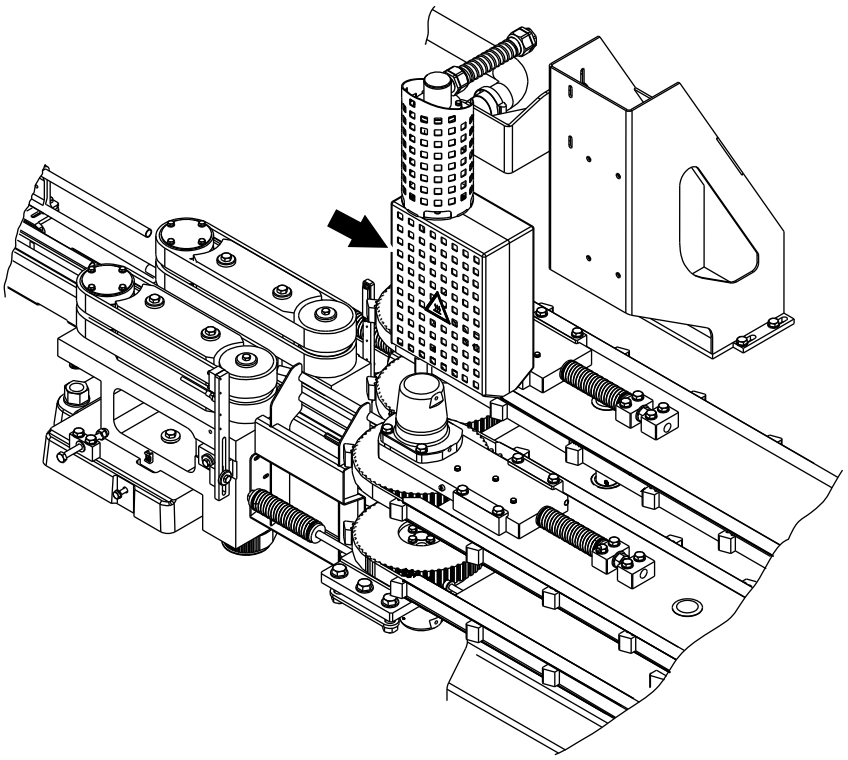

Waste Device

WARNING

Risk of personal injury

Never put any part of the body, such as a hand, near the waste device when the machine is working. There is a risk of injury caused by the movable pusher.

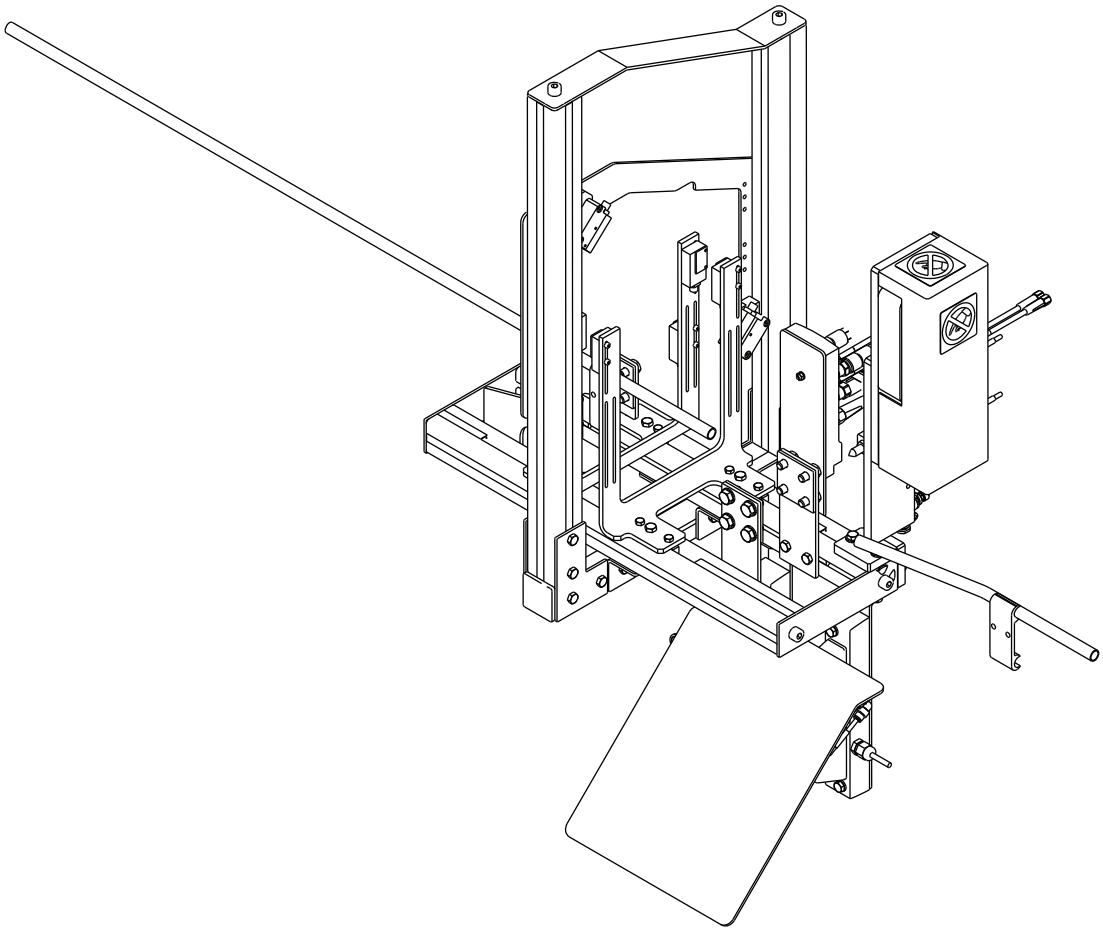

Equipment for Lifting and Moving Loads

WARNING

Risk of crushing injury

Make sure that the capacity of the lifting equipment is adequate and that the equipment itself is in good working order.

If lifting tackle has to be joined to make up the necessary length, make sure that the joints are secure and have the same lifting capacity as the rest of the lifting tackle.

Always engage safety clips fitted to lifting hooks to prevent the lifting tackle from slipping off.

Use ropes or poles to steady and manoeuvre suspended loads. Do not use hands or feet.

Make sure that the route and destination are free from obstacles before moving a suspended load. It must be possible to quickly and safely lower the load to the floor in an emergency.

When depositing loads, keep lifting tackle in place until the stability of the load has been substantiated.

1 Machine Synchronisation

Machine Synchronisation - Description

This section lists the machine settings in the order they should be carried out on the machine.

Note! The package production speed of the Cap30 should be equal to the filling machine plus 20 percent unless the down stream equipment is slower. In this case the Cap30 should match the down stream equipment speed .

Machine Synchronisation - Description 1-2

1.1 Machine Synchronisation 1-5

1.1.1 Settings 1-5

1.1.1.1 Password. 1-5

1.1.1-1 HMI User Management - Log On as a User 1-6

1.1.1-2 HMI User Management - Change User Password 1-10

1.1.2 Machine Settings 1-16

1.1.2.1 Basic Setting Sequence. 1-16

1.1.2.2 Zero Setting Sequence (with no mechanical adjustment). 1-22

1.1.2.3 Package Change - Setting Sequence 1-23

1.1.2.4 Package Infeed - Performance Settings 1-25

1.1.2.5 HMI Setting Screens 1-26

1.1.2.5-1 Package Transfer Unit Setting Screen. 1-26

1.1.2.5-2 Infeed Package Setting Screen 1-27

1.1.2.5-3 Infeed Speeds and Angles (Flex ScrewCap). 1-29

1.1.2.5-4 Conveyor Speeds Fine Settings 1-32

1.1.2.5-5 Set Package Conveyor Speed. 1-33

1.1.2.5-6 Set Belt Brake Speed 1-36

1.1.2.5-7 Display Trend Curve 1-38

1.1.2.5-8 Set Package Infeed Start Angle. 1-43

1.1.2.5-9 Set Package Infeed Running Angle 1-46

1.1.2.5-10 Set Package Infeed Running Angle Range 1-48

1.1.2.5-11 Set Hotmelt Pressure to Machine Speed 1-49

1.1.2.5-12 Outfeed Conveyor - Setting Speed. 1-50

This page intentionally left blank

1.1 Machine Synchronisation

1.1.1 Settings

1.1.1.1 Password

The table below shows the user name and passwords in the machine as it leaves production. The machine defaults to the operator profile which has no password.

To login as a user see, 1.1.1-1 HMI User Management - Log On as a User on page 1-6.

To change these settings see, 1.1.1-2 HMI User Management - Change User Password on page 1-10.

User Profile	User Name	Password	Access Description
Supervisor	supervisor	shiftsup	Access to: - user administration - production control settings and functions - maintenance control settings and functions - create and delete recipes - software installation and configuration - Shutdown - diagnostic - partial access to the configuration window
Service technician	technician	custtech	Access to: - production control settings and functions - maintenance control settings and functions - create and delete recipes - software installation and configuration - partial access to the configuration window
Pwroperator	pwroperator	Not Used	Not Used on the Cap30
Operator (default user with logon)			Access to: - production control settings and functions - Alarm management - basic alarm management

1.1.1-1 HMI User Management - Log On as a User

This procedure describes how to login to the HMI and how to access the restricted password protected sections of the HMI. The level of access permitted is defined by the user profile, see 1.1.1 Settings on page 1-5.

The machine defaults to the operator profile which has no password.

The technician or supervisor requires a password to access the setting screens as follows:

a) To login touch the SYSTEM SETUP button (1).

Note! Items like the positioning system only appear on the screen below when installed.

Note! After 15 minutes of HMI inactivity the user is automatically logged out, but it is always recommended to log out using the LOGOUT button, at the end of the operation.

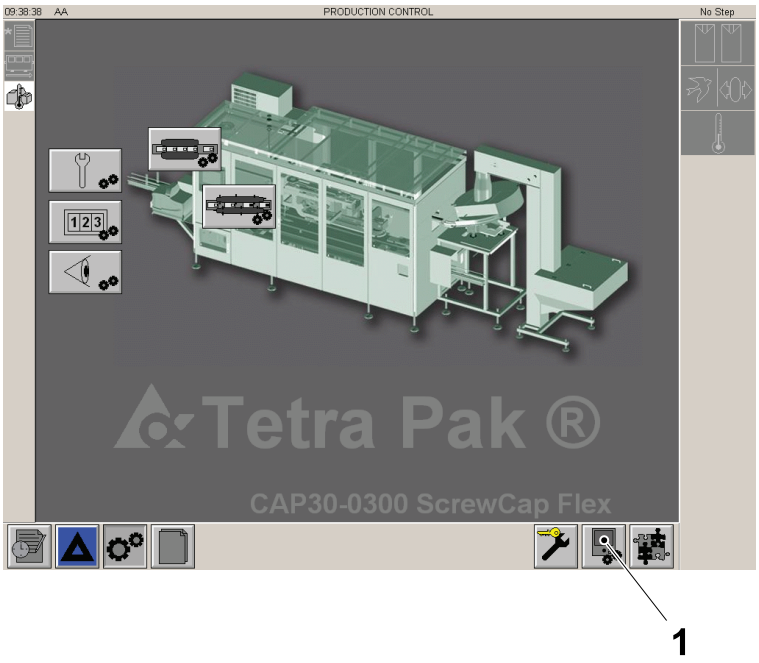

1 SYSTEM SETUP button

(Cont'd)

(Cont'd)

b) On the setup window the following buttons are displayed:

- LANGUAGE button (2)
- USER MANAGEMENT button (3)
- DIAGNOSTIC button (4)
- SHUT DOWN button (5).

Note! The DIAGNOSTIC button (4) and the SHUT DOWN button (5) are not available to the operator.

c) Touch the USER MANAGEMENT button (3).

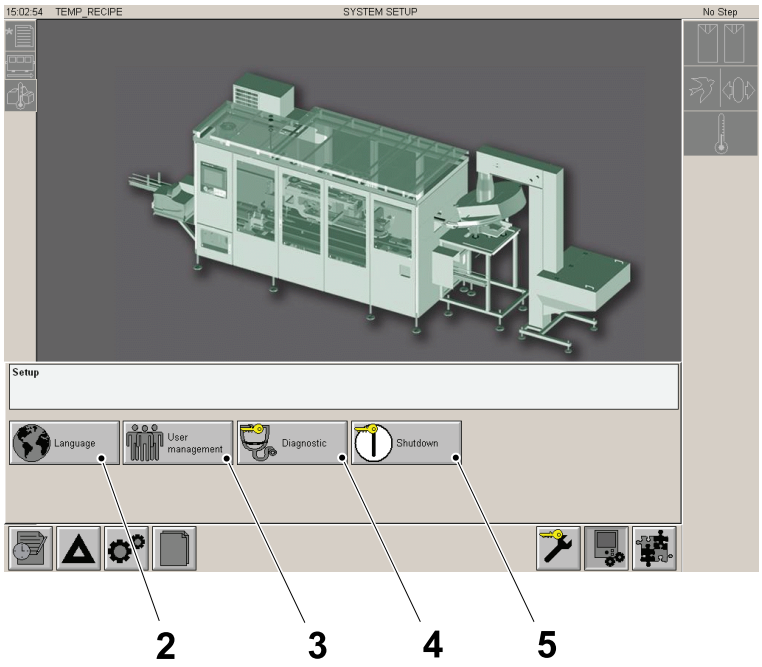

2 LANGUAGE button
3 USER MANAGEMENT button
4 DIAGNOSTIC button
5 SHUT DOWN button

(Cont'd)

(Cont'd)

d) On the User Management window the following buttons are displayed:

- LOGOUT button (6)
- LOGIN button (7)
- Locked CHANGE PASSWORD button (8).

Note! The CHANGE PASSWORD button (8) is not enabled until logged on by the supervisor, see 1.1.1-2 HMI User Management - Change User Password on page 1-10.

The actual user is shown in the window (9).

e) Touch the LOGIN button (7).

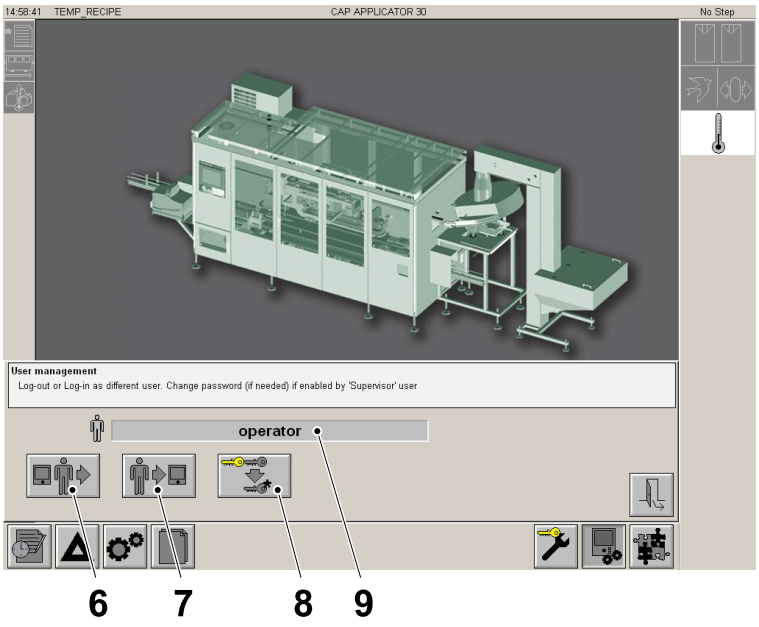

6 LOGOUT button
7 LOGIN button
8 CHANGE PASSWORD button
9 Window

(Cont'd)

(Cont'd)

f) On the LOGIN window (10) touch the USER button (11) and then type the user name and enter.

g) On the LOGIN window (10) touch the PASSWORD button (12) to display the key board, then type the password and enter.

h) Touch the ENTER button (13) to confirm the password or the ESC button (14) to close the LOGIN window (10).

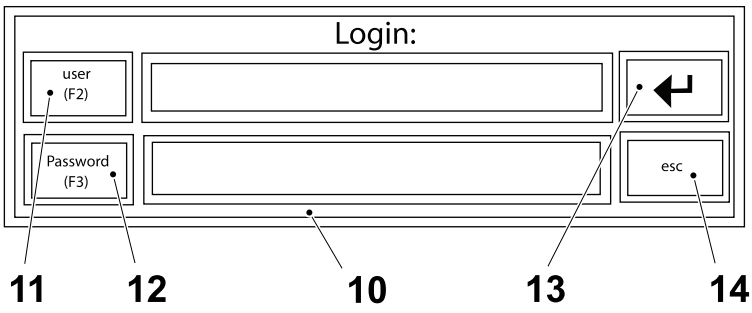

10 Login window
11 User button
12 Password button
13 Enter button
14 Esc button

1.1.1-2 HMI User Management - Change User Password

CAUTION
Risk of unplanned machine stoppage.
If the default passwords are changed and subsequently forgotten, the HMI software must be reinstalled. Perform 10.9.1-4 Touch Screen - New Application Software Installation on page 10-264, in order to restore the default passwords and have the access to the restricted sections of the HMI.

The user with the profile “supervisor” has the authority to set and change the passwords for the user profiles of “technician” and “pwroperator”. To change the password of either the user profiles proceed as follows:

a) Log on to the HMI as the user profile “supervisor”, see 1.1.1-1 HMI User Management - Log On as a User on page 1-6.

b) In the `USER MANAGEMENT` window, touch the:

- `ENABLE TECHNICIAN CHANGE PASSWORD` button (1) for the user profile "technician".

  Note! The Pwroperator `CHANGE PASSWORD` button (2) is not used on the Cap30.

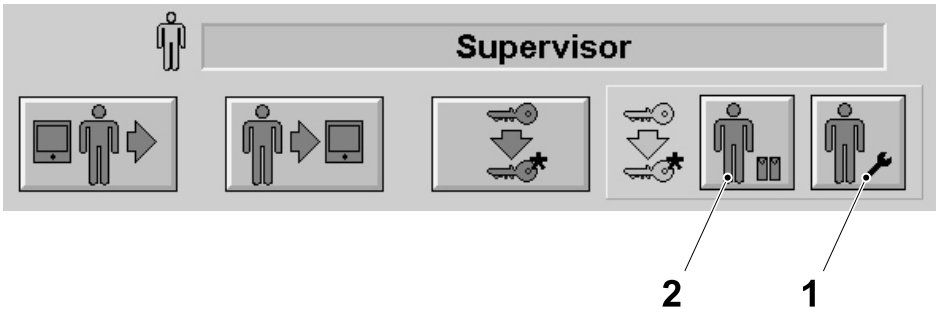

1 `ENABLE TECHNICIAN CHANGE PASSWORD` button
2 Pwroperator change password button

(Cont’d)

(Cont'd)

c) Touch the LOG OFF button (3).

d) Log on to the HMI using the user profile chosen in item b), see 1.1.1-1 HMI User Management - Log On as a User on page 1-6.

e) The CHANGE PASSWORD button (4) is now enabled in the USER MANAGEMENT window, touch the CHANGE PASSWORD button (4) to display the CHANGE PASSWORD window (5).

Note! An old password, can be reused only if the password has been changed at least 5 times, or if the HMI software has been reinstalled.

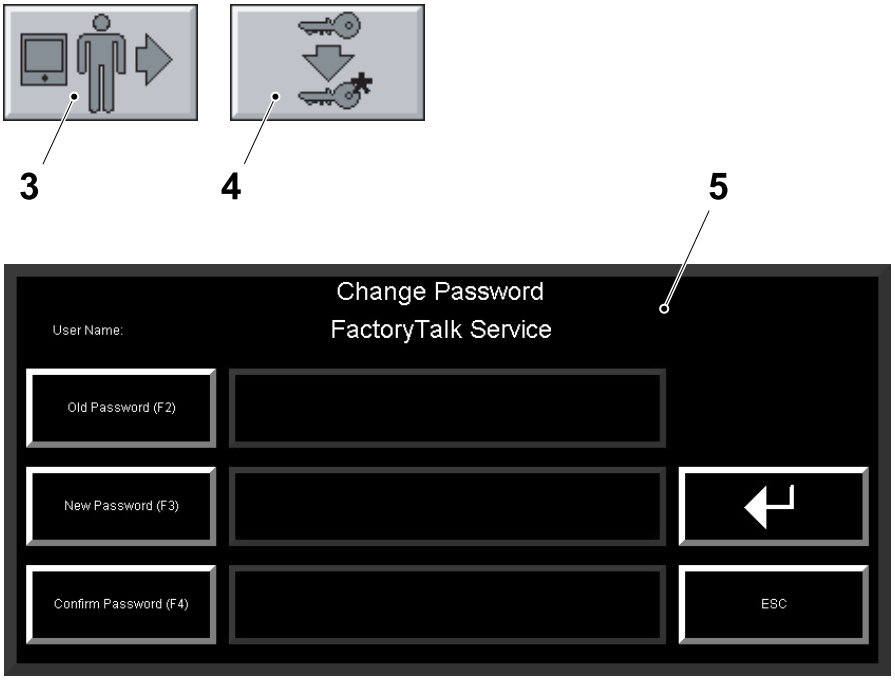

3 LOG OFF button
4 CHANGE PASSWORD button
5 CHANGE PASSWORD window

(Cont'd)

(Cont'd)

f) Touch the OLD PASSWORD button (6) to display the KEYBOARD (7).

g) Use the KEYBOARD (7) to type the current password, then touch the ENTER button (8).

h) Touch the NEW PASSWORD button (9) to display the KEYBOARD (7).

i) Use the KEYBOARD (7) to type the new password, then touch the ENTER button (8).

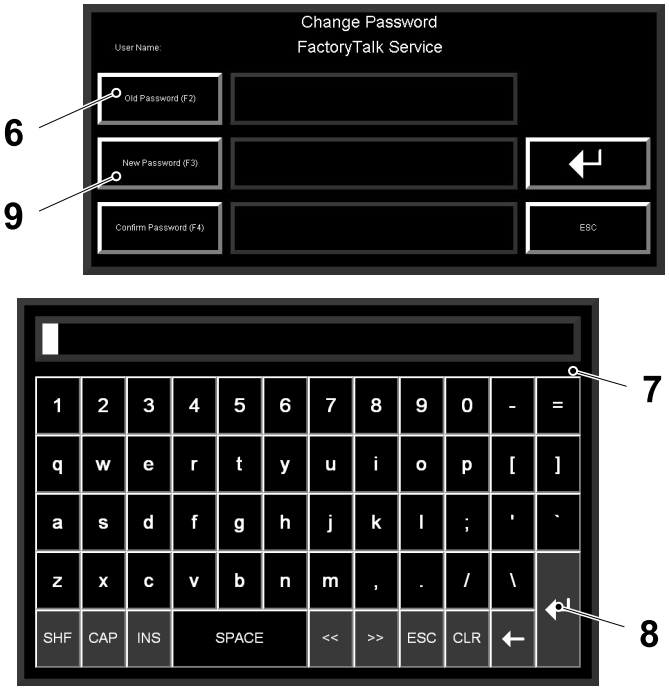

6 OLD PASSWORD button
7 KEYBOARD
8 ENTER button
9 NEW PASSWORD button

(Cont'd)

(Cont'd)

j) Touch the CONFIRM PASSWORD button (10) to display the KEYBOARD (7).

k) Use the KEYBOARD (7) to type and repeat the new password, then touch the ENTER button (8).

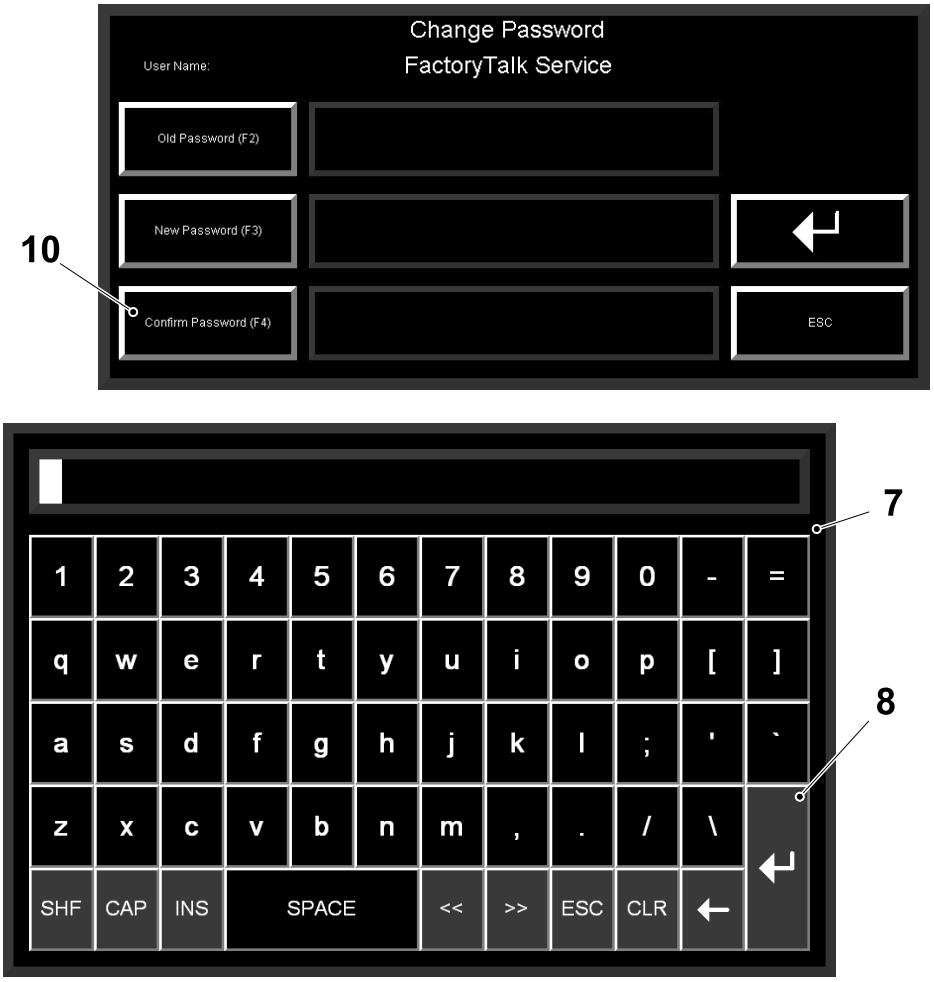

7 KEYBOARD

8 ENTER button

10 CONFIRM PASSWORD button

(Cont'd)

(Cont'd)

l) Touch the ENTER button (11) to finalise the password change procedure.

m) If necessary repeat the procedure to change the password for the other user profile. The password for the user profile "supervisor" can be changed by logging on as the "supervisor" and selecting the CHANGE PASSWORD button (4) in the USER MANAGEMENT window.

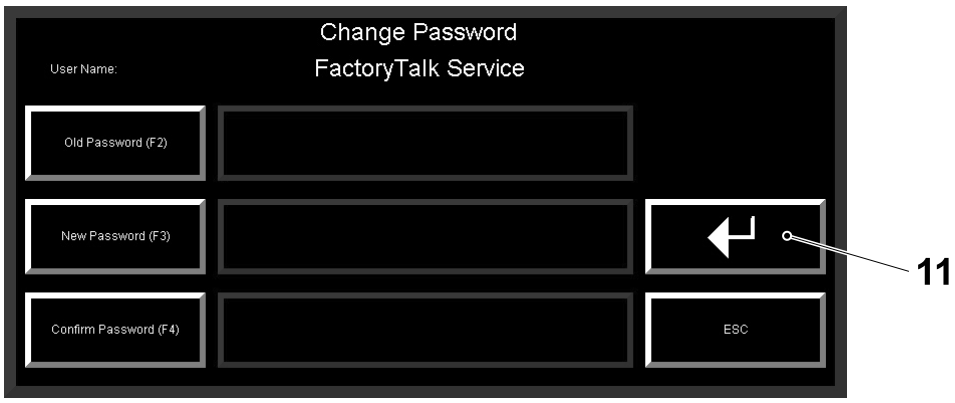

11 ENTER button

(Cont'd)

(Cont'd)

Note! If the ENABLE CHANGE PASSWORD buttons are not deselected by the "supervisor" profile, the CHANGE PASSWORD button remains visible and accessible in the profiles for the "pwroperator" and "technician".

n) Touch the LOG OFF button (3).

o) Log on to the HMI using the user profile "supervisor", see 1.1.1-2 HMI User Management - Change User Password on page 1-10.

p) In the USER MANAGEMENT window, depending on which button was selected in item b) on page 1-10, deselect the:

- ENABLE TECHNICIAN CHANGE PASSWORD button (1) for the user profile "technician".

If necessary repeat the procedure to change the password for the other user profile. The password for the user profile "supervisor" can be changed by logging on as the "supervisor" and selecting the CHANGE PASSWORD button in the USER MANAGEMENT window.

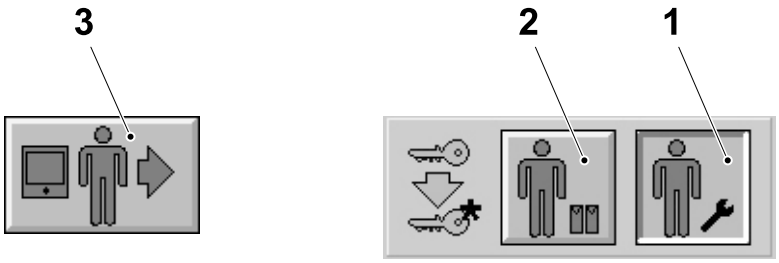

1 ENABLE TECHNICIAN CHANGE PASSWORD button

2 Pwroperator change password button

3 LOG OFF button

1.1.2 Machine Settings

1.1.2.1 Basic Setting Sequence

Note! The package production speed of the Cap30 should be equal to the filling machine plus 20 percent unless the down stream equipment is slower. In this case the Cap30 should match the down stream equipment speed.

Machine synchronisation settings must be performed in sequence according to the flowchart below. These settings are performed before the first start-up or commissioning of the cap applicator.

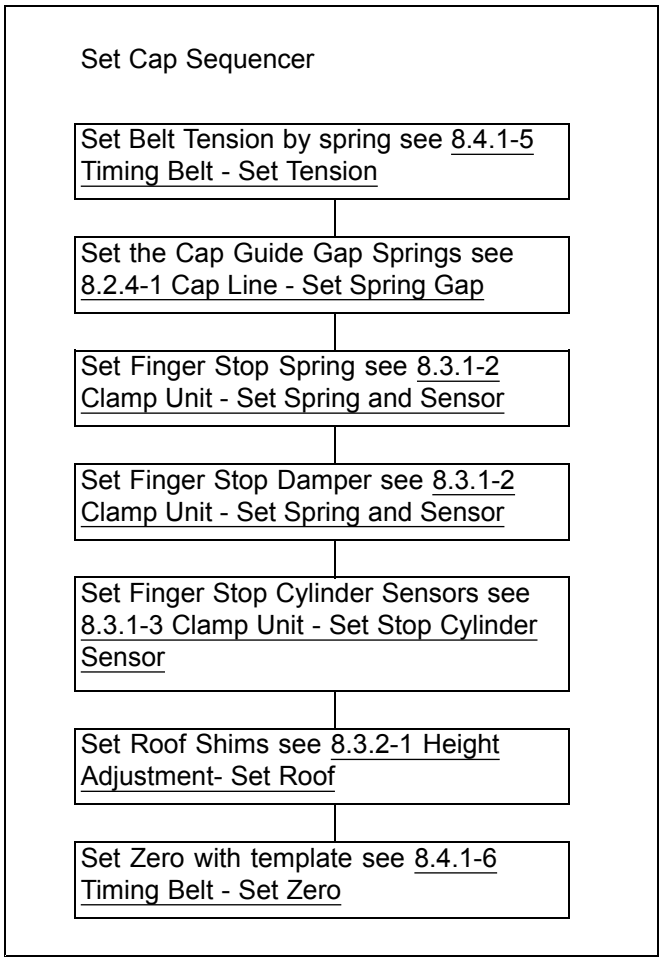

(Cont'd)

(Cont'd)

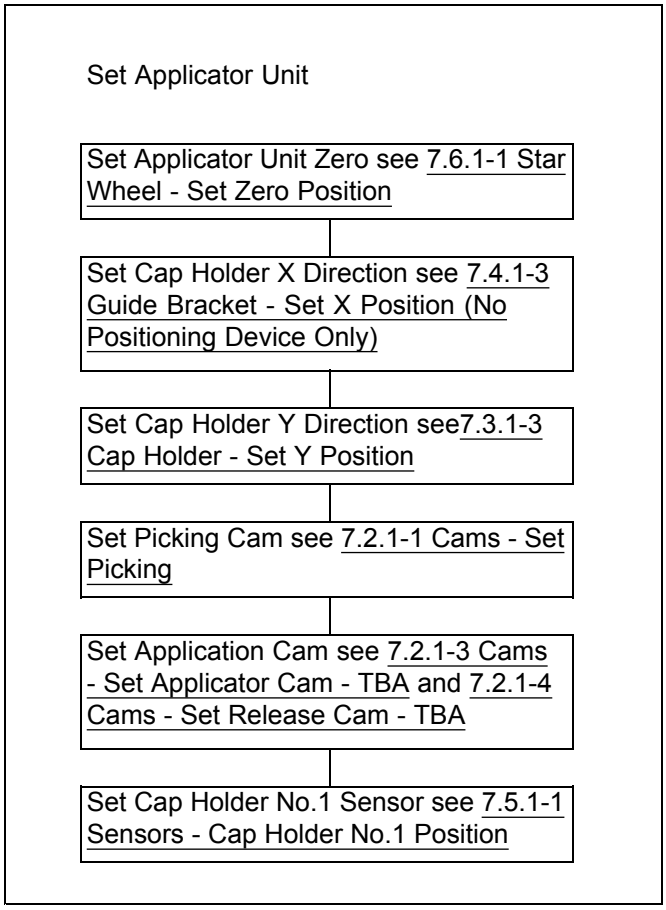
Set Applicator Unit
Set Applicator Unit Zero see 7.6.1-1 Star Wheel - Set Zero Position
Set Cap Holder X Direction see 7.4.1-3 Guide Bracket - Set X Position (No Positioning Device Only)
Set Cap Holder Y Direction see7.3.1-3 Cap Holder - Set Y Position
Set Picking Cam see 7.2.1-1 Cams - Set Picking
Set Application Cam see 7.2.1-3 Cams - Set Applicator Cam - TBA and 7.2.1-4 Cams - Set Release Cam - TBA
Set Cap Holder No.1 Sensor see 7.5.1-1 Sensors - Cap Holder No.1 Position

(Cont'd)

(Cont'd)

Set Package Infeed

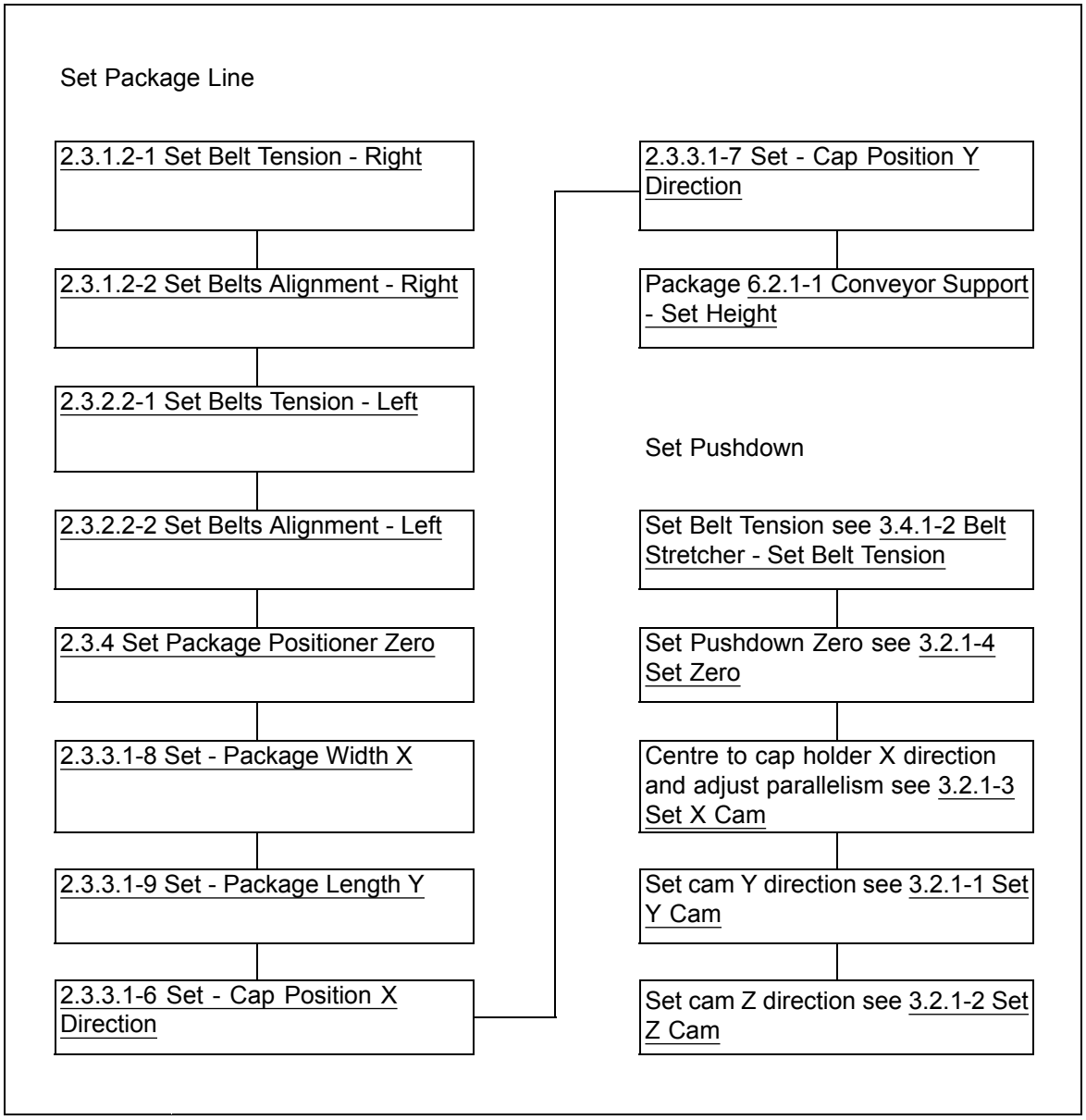

(Cont'd)

(Cont'd)

Set Package Infeed Cont'd

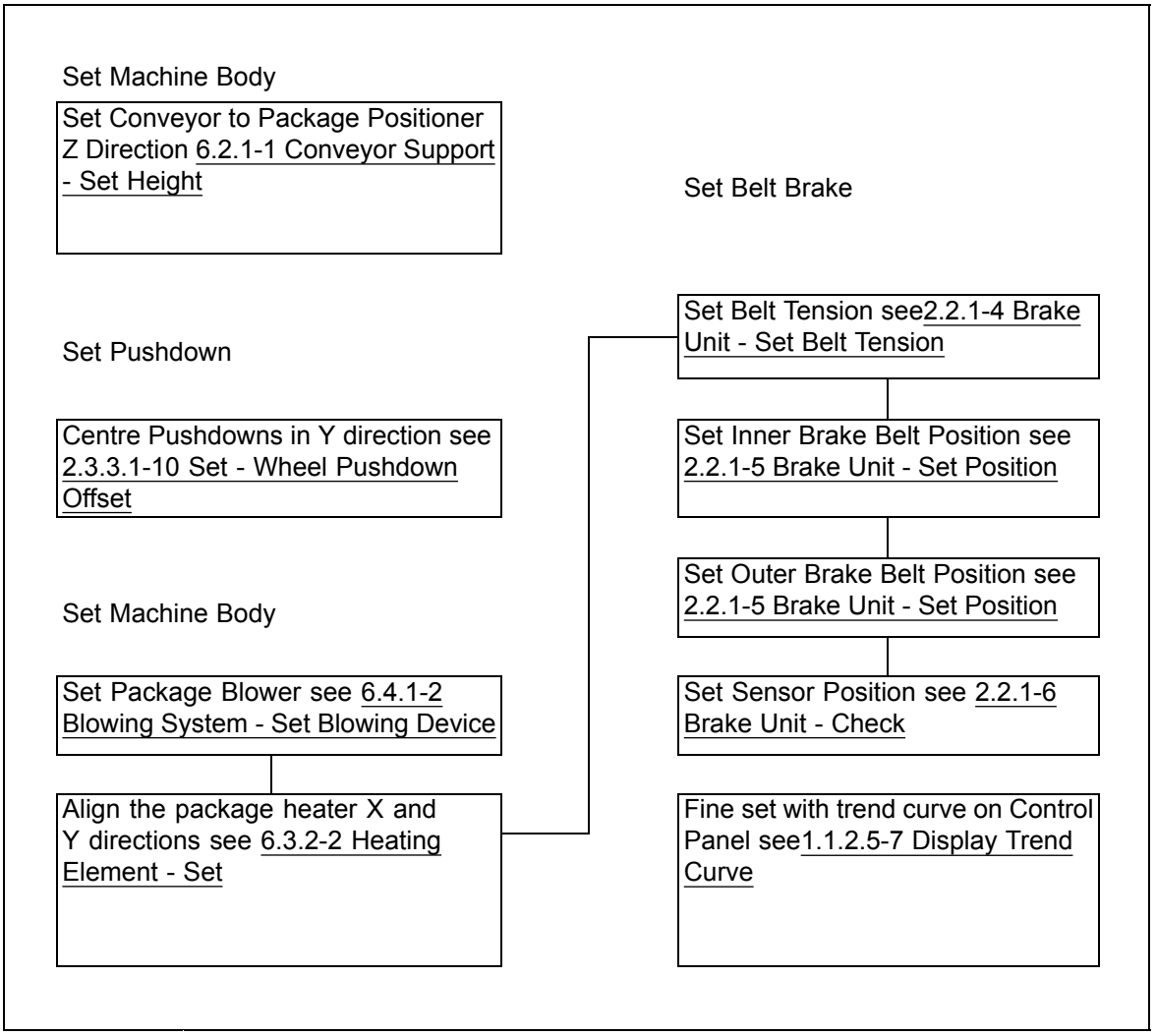

(Cont'd)

(Cont'd)

Set Hot Melt Gun Applicator

Set Nozzle Gap see13.1-1 Adhesive Weight/Temperature/Nozzle

Set Belt Tension see 4.3.1-1 Timing Belt - Removal

Set Sensor Positions see 4.3.1-2 Timing Belt - Set Position Sensors

Set Cap Conveyor Belt

Set Belt Tension see 9.2.1-3 Conveyor Belt - Set Tension

Set Belt Alignment (by roller) see 9.2.1-6 Conveyor Belt - Set Alignment

Set Level with Spirit Level

Set Alignment to Cap Sequencer see 9.2.1-7 Conveyor Belt - Set Conveyor to Cap Sequencer

Set Cap Height to Cap Sequencer see 9.2.1-8 Conveyor Roof - Set Height

Set Cap Conveyor Sensors see 9.2.1-11 Conveyor Belt - Set Sensors

Set Cap Sorter

Set Z Direction see 5.4.1-7 Cap Sorter - Set X, Y and Z Position

Set Cap Level see 5.4.1-8 Feeder - Set Cap Level

Set Pressure Gauge see 5.2.1 Pneumatic Panel

Set Hotmelt Weight

Set Nordson Equipment see 6.6.2-7 Hotmelt Equipment - Set Pressure and 13.1-1 Adhesive Weight/Temperature/Nozzle

(Cont'd)

(Cont'd)

Note! Although the vision system is part of the TPA, TGA and TBA 200 E machines it has been left in the Optional Equipment Section 12.5 Vision System (Mandatory for TGA/TPA and HeliCap).

Set Vision System

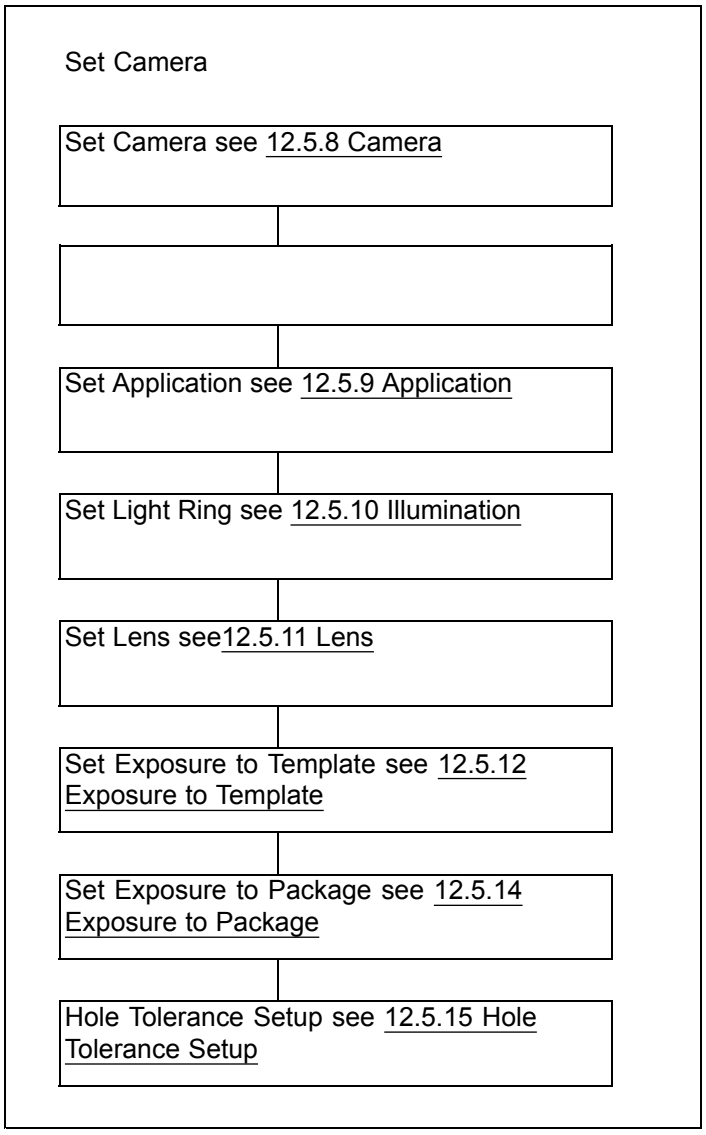

1.1.2.2 Zero Setting Sequence (with no mechanical adjustment).

Machine synchronisation settings must be performed in sequence according to the flowchart below. These settings are performed before the first start-up or commissioning of the cap applicator.

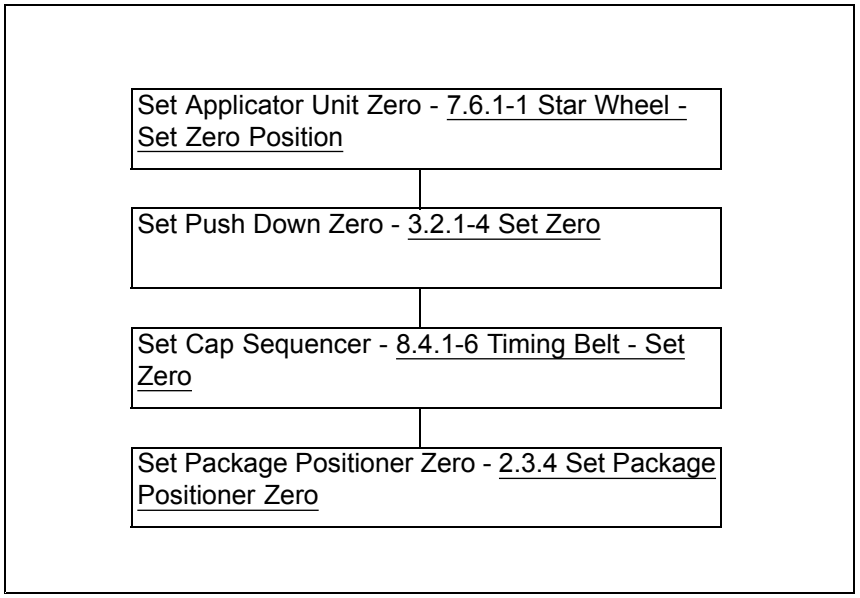

1.1.2.3 Package Change - Setting Sequence

The setting sequence must be performed according to the flowchart below. These settings are performed before the first start-up after changing the cap applicator.

Package Setting Sequence

Procedure Order	Page
10.9.1-13 Touch Screen - Create New Recipes	10-322
11.1-2 Cap Detector - Set	11-7
2.3.5-1 Upper Left Package Positioner - Set Height	2-100
2.3.5-2 Upper Right Package Positioner - Set Height	2-101
2.3.3.1-8 Set - Package Width X	2-70
2.4.2-4 Package Aligner - Set Position	2-121
2.3.3.1-9 Set - Package Length Y	2-71
2.3.1.2-2 Set Belts Alignment - Right	2-32
2.3.2.2-2 Set Belts Alignment - Left	2-38
2.2.1-5 Brake Unit - Set Position	2-13
6.8.2-1 Infeed Rail Change	6-72
6.4.1-2 Blowing System - Set Blowing Device	6-19
6.8.1-2 Height Adjustment - Set	6-71
5.4.1-7 Cap Sorter - Set X, Y and Z Position	5-35
6.2.2 Conveyor Sensor Positions	6-9
12.5.17 Setting Machine Using Vision System	12-132

(Cont'd)

(Cont'd)

Positioning System Setting Sequence

Procedure Order	Page
12.5.4.1-1 Laptop to Camera Connection	12-23
Write down the parameters of 12.5.12 Exposure to Template and 12.5.14 Exposure to Package	12-107 and 12-118
12.5.9.1-1 Loading an Application Program in the In-Sight5100 Camera	12-99
12.5.9.1-2 Saving an Application Program in the In-Sight5100 Camera	12-99
12.5.8.1 Initial Start Up 12.5.10.1 Adjusting the Height of the Illumination	12-85 12-100
12.5.12 Exposure to Template	12-107
12.5.14 Exposure to Package	12-118
12.5.9.1-2 Saving an Application Program in the In-Sight5100 Camera	12-99
12.5.4.2-5 Vision System - Deactivation from the TPOP	12-36

1.1.2.4 Package Infeed - Performance Settings

Package infeed performance settings must be performed in sequence according to the flowchart below.

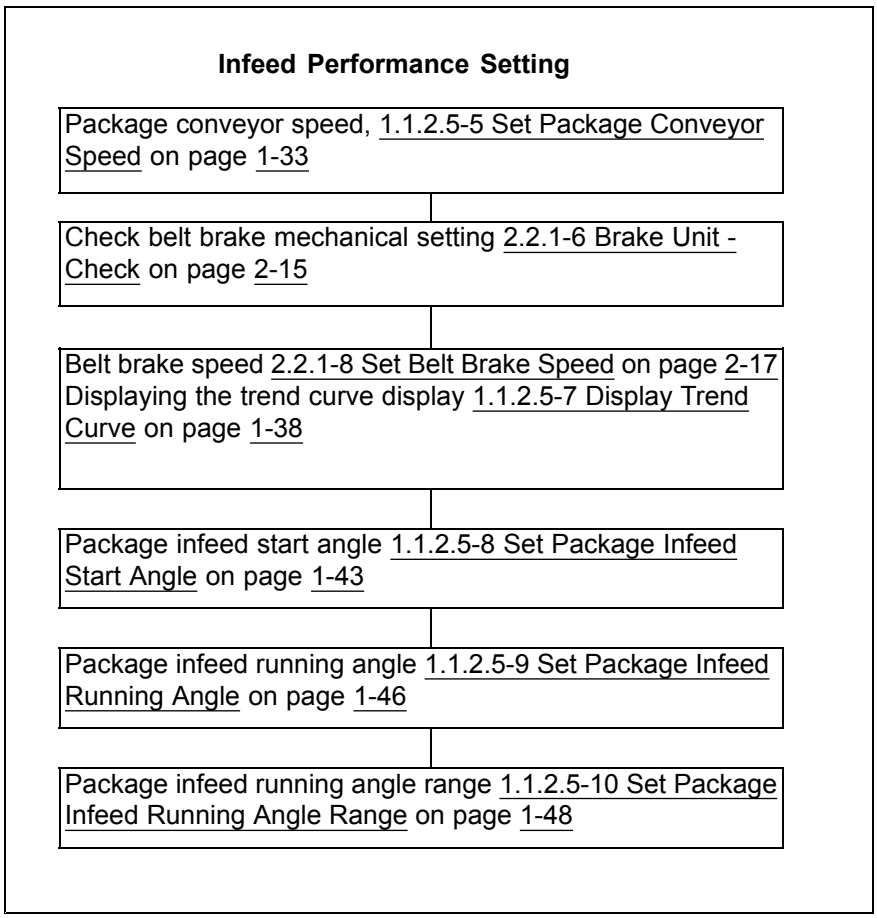

1.1.2.5 HMI Setting Screens

1.1.2.5-1 Package Transfer Unit Setting Screen

Introduction

A number of settings can be made at the control panel to ensure that the packages leaving the belt unit are fed into the package positioner at the correct speed and are correctly spaced.

The setting that can be made from the PACKAGE TRANSFER UNIT SETTING screen is:

a) The `PACKAGE CONVEYOR SPEED` button (1). This setting is needed to ensure the positive location of a package in the package positioner. The conveyor speed must be 15% higher than that of the package positioner.

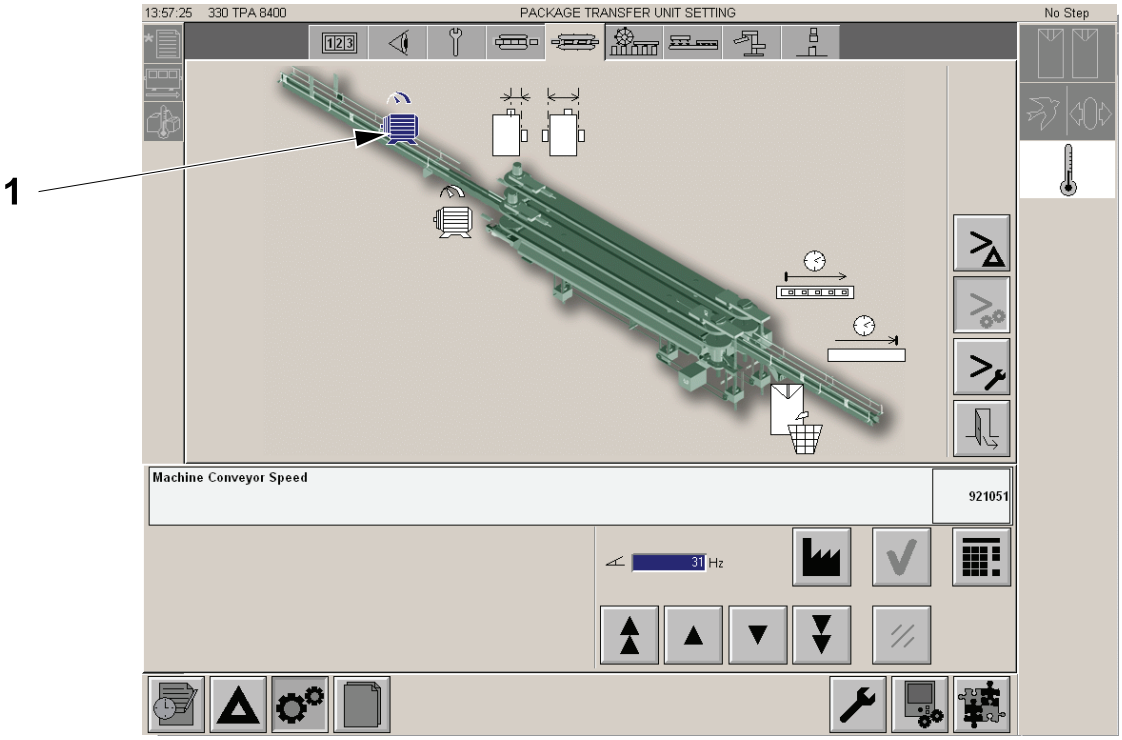

1 Package Conveyor Speed button

1.1.2.5-2 Infeed Package Setting Screen

The settings that can be made from the INFEED PACKAGE SETTING screen are:

- The PACKAGE INFEED START ANGLE button (1). At this angle, the belt brake drive motor receives a start command and the first package is released by the belt brake. The angle value is related to the inner package transfer axis.
- The PACKAGE INFEED RUNNING ANGLE button (2). At this angle, the following package should reach the photocell at the outlet of the belt brake. The photocell is connected to a regulator that controls the belt brake motor speed. To prevent self oscillation, a limit is applied to the output of the regulator.

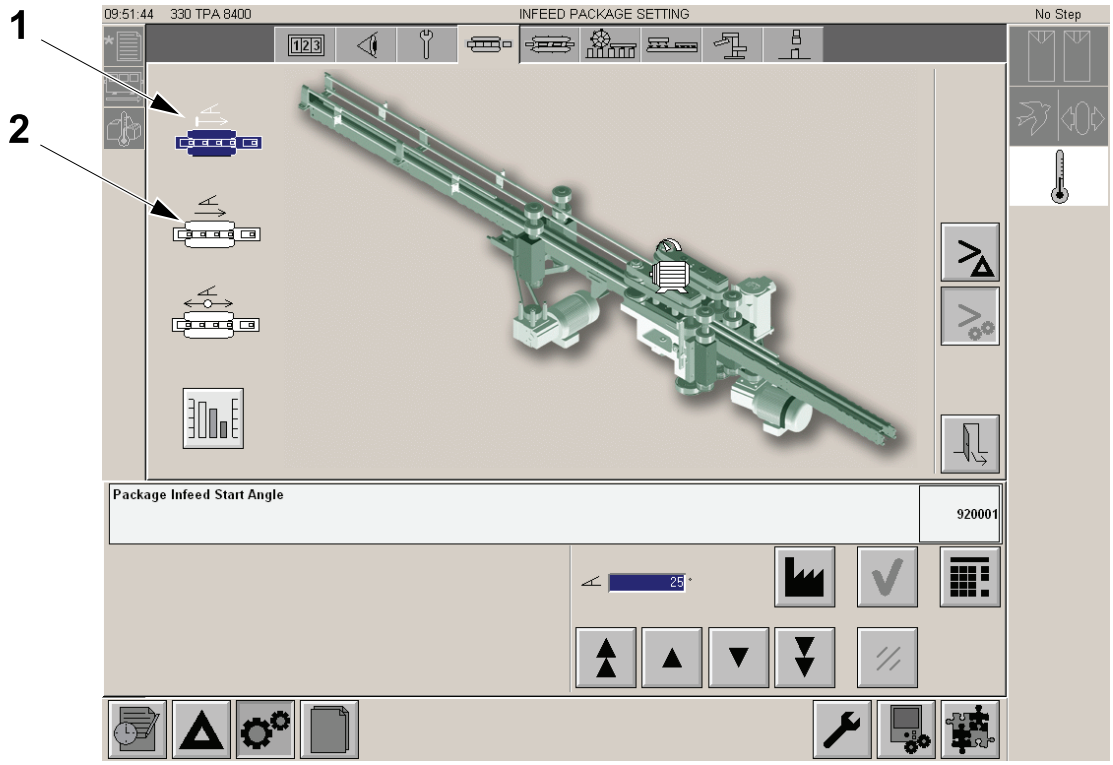

1 PACKAGE INFEED START ANGLE button
2 PACKAGE INFEED RUNNING ANGLE button

(Cont'd)

(Cont'd)

- The PACKAGE INFEED RANGE ANGLE button (3). These settings are used to define the maximum and minimum allowable belt brake running angles. When a package arrives at an angle that is out of the range, the package is stopped and held by the belt brake and a restart is then made.
- The TREND button (4). This is a graph that shows the actual running angle of the packages compared with the desired running angle and the maximum and minimum allowable running angles.
- The BELT BRAKE SPEED button (5). This setting is used to adjust the belt brake speed.

  Note! All default angles and speeds are defined in the table on the following page.

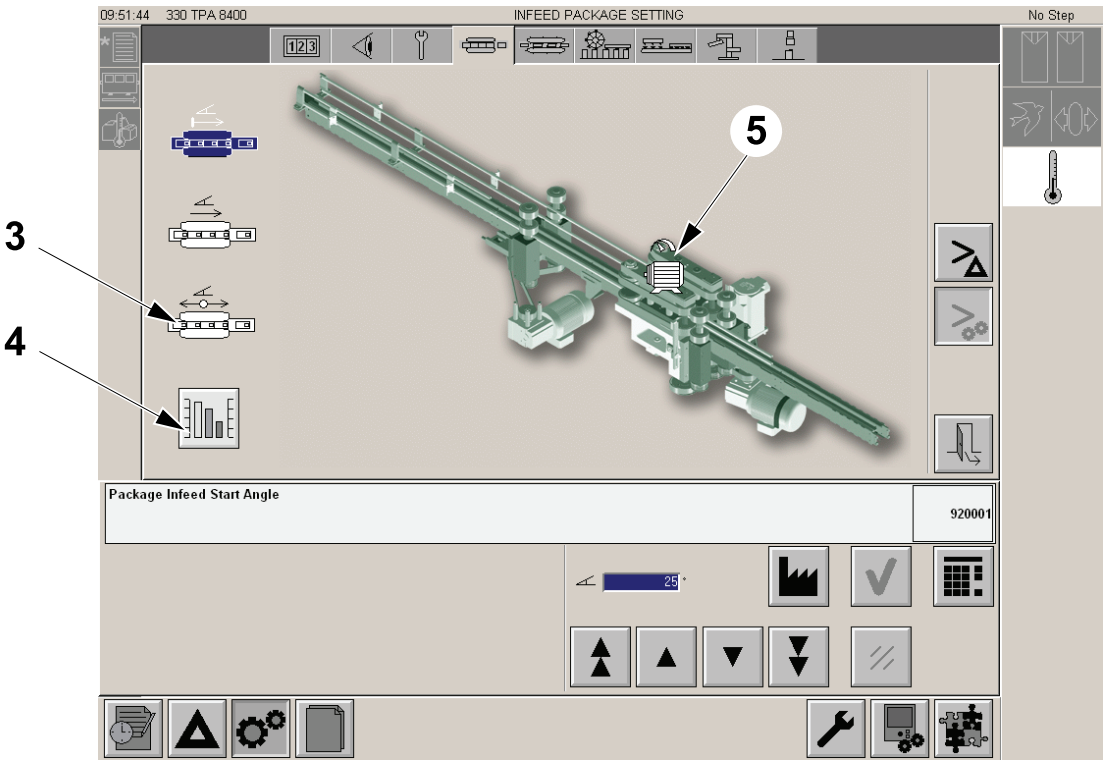

3 PACKAGE INFEED RANGE ANGLE button
4 TREND button
5 BELT BRAKE SPEED button
6 Input pusher Speed button
7 Acceleration Pusher Speed button

1.1.2.5-3 Infeed Speeds and Angles (Flex ScrewCap)

The following table defines the correct default values for the infeed motor speeds and angles.

1) This is using the drive unit (25 m/min at 50Hz). Using proportion it is possible to calculate the speed in m/min

2) The first angle is the start angle, the second is the running angle. They are adjustable between ±30 deg.

3) The belt brake speed should be fine set using the infeed graph.

Note! The Package aligner should be plus 6% of the package conveyor speed.

Note! Valid for holding belts, see 2.1 Functional Description on page 2-7.

Package Volume	Package Speed	Package Conveyor Drive (Hz) (1)	Infeed Angles (2)	Infeed Angle Range	Belt Brake Drive (Hz) (3)
TBA 500 Sq	8400 9600	44 50	355º - 340º	±40º	48 55
TBA 1000 Sq	8400 9600	44 50	355º - 340º	±40º	48 55
TBA 1000 S	8400 9600	45 52	65º - 45º	±40º	59 68
TBA 1500 S	6600 7200	38 43	65º - 45º	±40º	50 53
TBA 2000 S	6000 6600	39 43	70º - 50º	±40º	48 52
TBA 200 Sq TBA 250 Sq	9600 10800	56 56	270º - 260º	±40º	46
TBA 200 E TBA 250 E	9600 10800	56 56	330º - 310º	±40º	46
TPA 500 Sq	8400 9600	32 36	65º - 85º	±60º	35
TPA 750 Sq	8400 9600	32 36	65º - 85º	±60º	35
TPA 1000 Sq	8400 7800	52 45	90º - 60º	±60º	53 48
TGA 500 Sq	8400	44	350º - 340º	±40º	46
TGA 750 Sq	8400	44	350º - 340º	±40º	46
TGA 1000 Sq	8400	44	350º - 340º	±40º	46
TGA 1000 Crystal/Leaf	8400	52.7	74º - 74º	±40º	51.5

(Cont'd)

(Cont'd)

Note! Valid for pulling belts, see 2.1 Functional Description on page 2-7.

The following table defines the correct default values for the infeed motor speeds and angles.

1) This is using the drive unit (25 m/min at 50Hz). Using proportion it is possible to calculate the speed in m/min

2) The first angle is the start angle, the second is the running angle. They are adjustable between ±30 deg.

3) The belt brake speed should be fine set using the infeed graph.

Note! Valid for TBA 200 E and TBA 250 E.

Package Volume	Package Speed	Package Conveyor Drive (Hz) (1)	Infeed Angles (2)	Infeed Angle Range	Belt Brake Drive (Hz) (3)
TBA 200 E TBA 250 E	8400 9600 10800	30 34 38.5	60º - 80º 60º - 80º 60º - 80º	±40º ±40º ±40º	29 33 37

Checks

Note! Valid for pulling belts, see 2.1 Functional Description on page 2-7.

Make sure that the Belt's teeth touch the package between the earlier and latest limits, see pictures below.

Decrease from 80º to 60º (for example) the package infeed angles (start and running) if the belt's teeth touch the package too early.

Increase from 80º to 100º (for example) the package infeed angles (start and running) if the belt's teeth touch the package too late.

Note! Start angle and running angle usually have the same value.

(Cont'd)

(Cont'd)

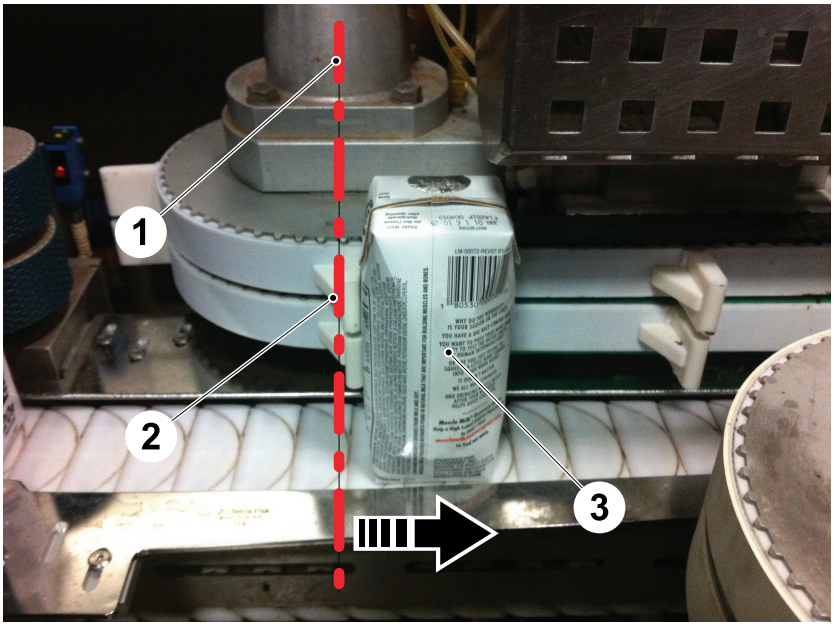

This picture shows the earlier limit (1) for the belt's teeth (2) to touch the package (3).

1 Earlier limit
2 Teeth
3 Package

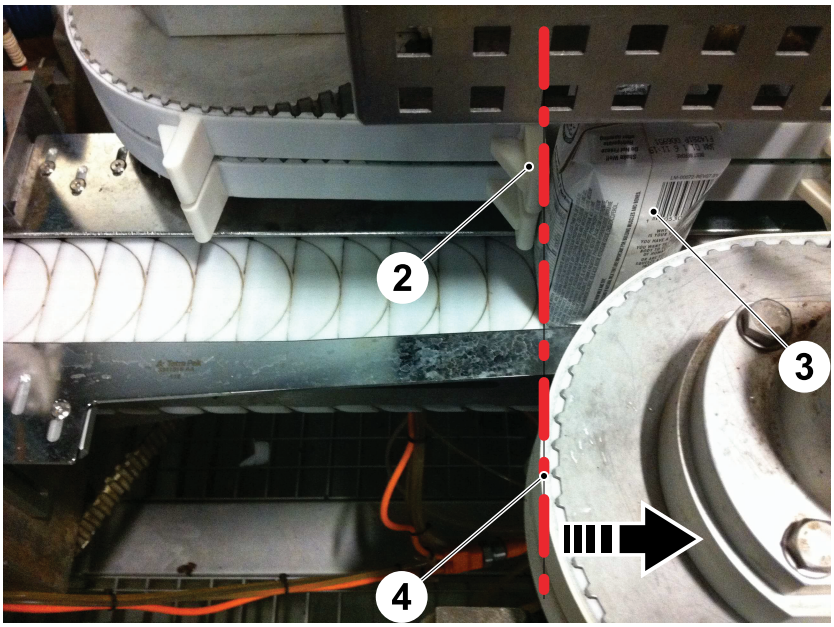

This picture shows the latest limit (4) for the belt's teeth (2) to touch the package (3).

2 Teeth
3 Package
4 Latest limit

1.1.2.5-4 Conveyor Speeds Fine Settings

Note! Valid only for TBA 200 E and TBA 250 E packages.

Note! The table refers to conveyor speeds in the PRODUCTION phase. In the table there are the modified speeds for Helix and for the packages conveyor between Helix and CAP30, for a given speed of CAP30.

a) Adjust the Helix conveyor speed and the speed of the conveyor between the Helix and the CAP30 for any given speed of the CAP30.

Note! The fine setting prevents the TBA 200 E and TBA 250 E packages from falling.

Package Volume	Helix Conveyor Speed (m/min)	Package Conveyor between Helix and CAP30 (m/min)	CAP30 Conveyor Speed (m/min)	Notes
TBA 200 E TBA 250 E	16.5	22	30.2 (m/min) 10800 (packs/hour)	

Note! The table refers to conveyor speeds in the EMPTYING phase.

Package Volume	Helix Conveyor Speed (m/min)	Package Conveyor between Helix and CAP30 (m/min)	CAP30 Conveyor Speed (m/min)	Notes
TBA 200 E TBA 250 E	21	26	30.2 10800 (packs/hour)	

1.1.2.5-5 Set Package Conveyor Speed

Note! The correct package conveyor speed is the package transfer speed +15%.

Note! The default value for the package conveyor speed is defined in the table on the previous page, (Select the correct drive unit speed).

Note! The package transfer speed is pre-defined and cannot be changed but it can be used as a reference to set the package conveyor speed.

a) To change the package conveyor speed, touch the SETTING button (1) and then the PACKAGE POSITIONER button (2).

Note! Items like the positioning system only appear on the screen below when installed.

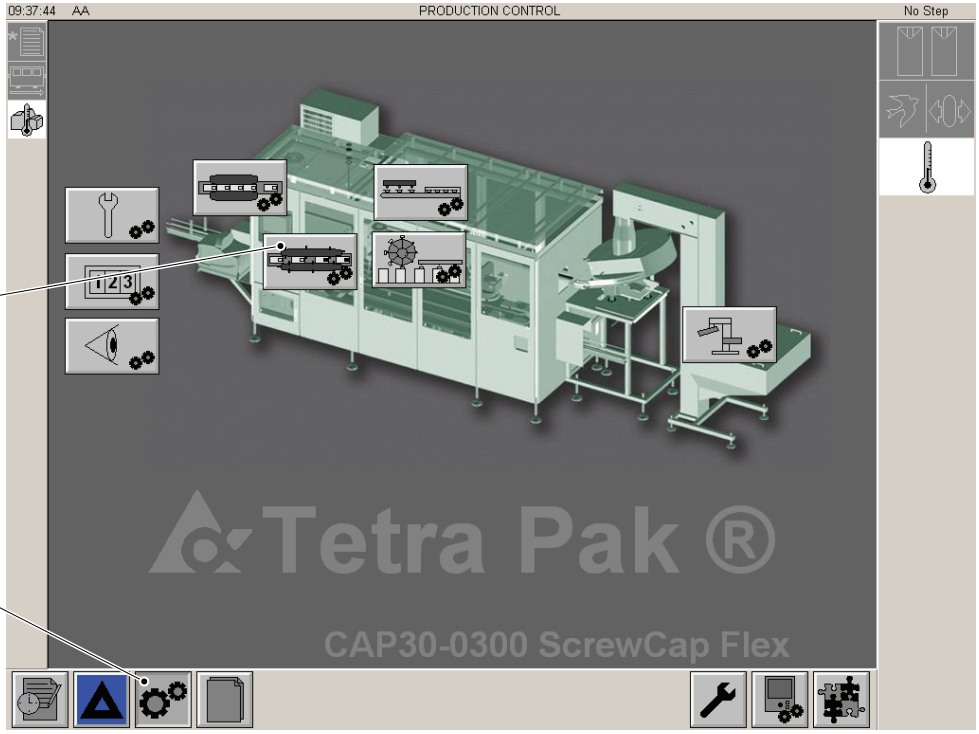

1 SETTING button
2 PACKAGE POSITIONER button

(Cont'd)

(Cont'd)

b) Touch the CONVEYOR SPEED icon (3).

c) To change the SPEED VALUE (Hz) (4), use the ARROW keys (5) or the keyboard which is accessible via the KEYBOARD button (6).

d) Introduce the value by clicking the OK button (7).

e) Repeat steps c) and d) until the conveyor and the package transfer are running at the same speed.

f) The indicated SPEED VALUE (Hz) (4) is the present running speed of the package conveyor and the package positioner.

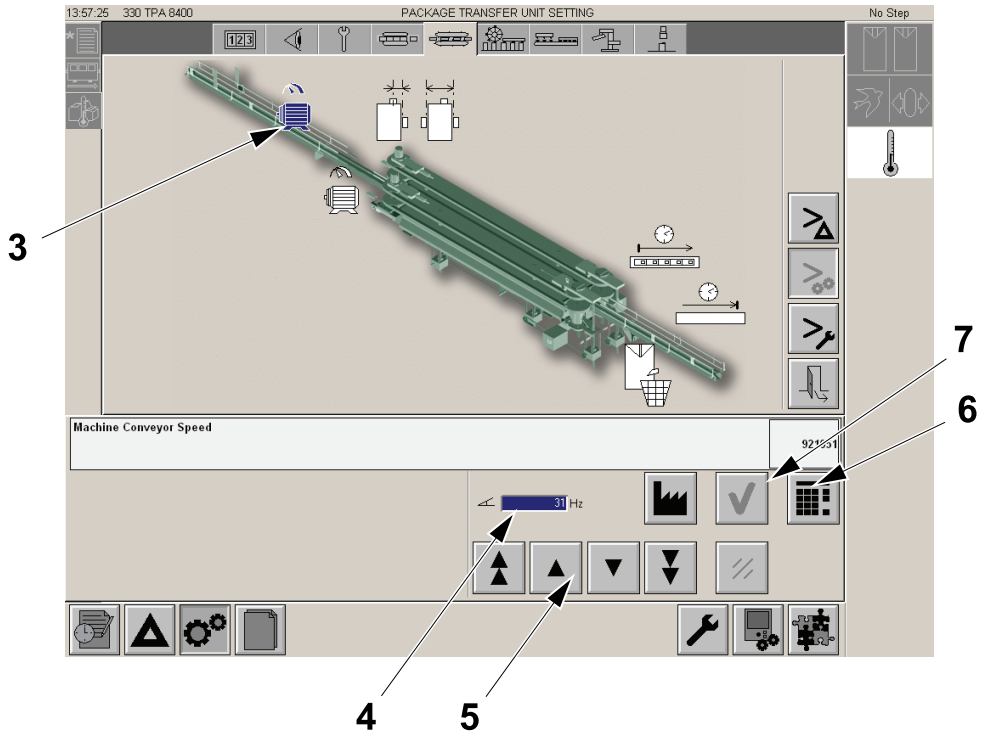

3 CONVEYOR SPEED icon
4 SPEED VALUE (Hz)
5 ARROW KEYS
6 KEYBOARD button
7 OK button

(Cont'd)

(Cont'd)

g) Increase the indicated SPEED VALUE (Hz) (4) by +15% to set the correct package conveyor speed.

h) Touch the EXIT button (8).

i) When the correct speed is obtained, store the corrected value in the appropriate recipe, see 10.9.1-14 Touch Screen - Saving Recipe Settings on page 10-328.

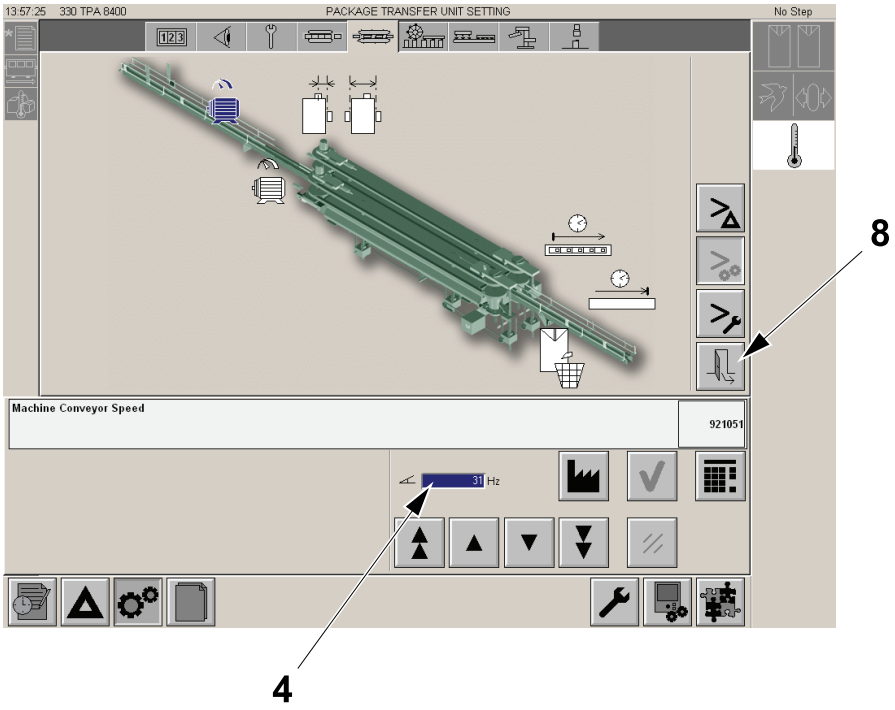

4 SPEED VALUE (Hz)
8 EXIT button

1.1.2.5-6 Set Belt Brake Speed

Note! The default value for the belt brake speed is defined in the 1.1.2.5-3 Infeed Speeds and Angles (Flex ScrewCap) on page 1-29.

a) To set the belt brake speed, touch the SETTING button (1) and then the INFEED PACKAGE UNIT button (2).

Note! Items like the positioning system only appear on the screen below when installed.

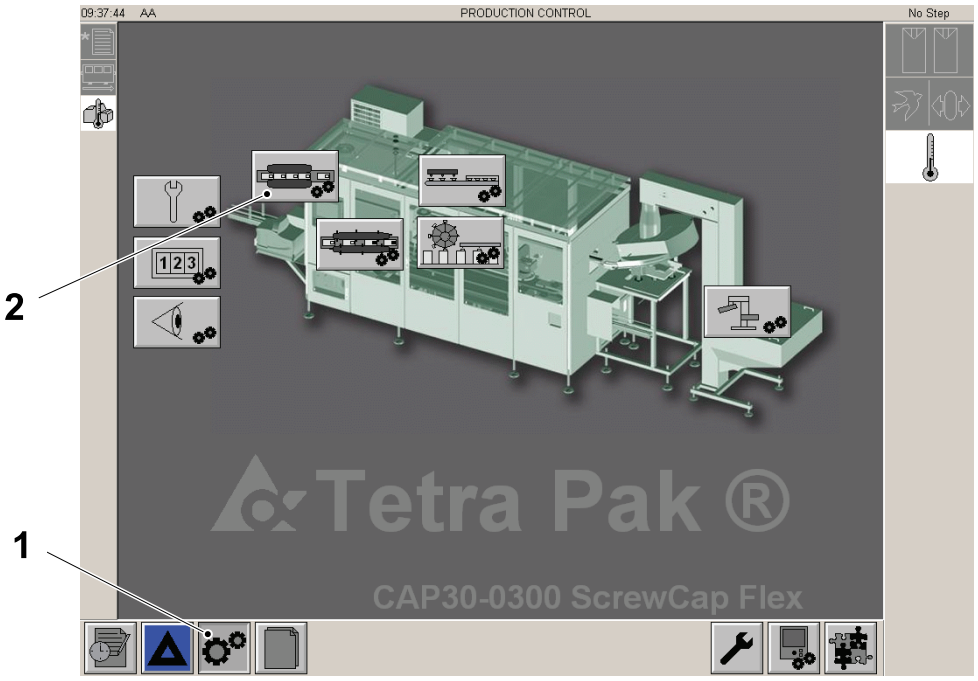

1 SETTING button
2 INFEED PACKAGE UNIT button

(Cont'd)

(Cont'd)

b) Touch the BELT BRAKE SPEED icon (3).

c) To increase or decrease the SPEED VALUE (4), use the ARROW KEYS (5) or the keyboard which is accessible via the KEYBOARD button (6).

d) Introduce the value by clicking the OK button (7).

e) Touch the EXIT button (8) .

f) To set the correct speed, use the trend curve, see 1.1.2.5-7 Display Trend Curve on page 1-41.

g) When the correct result is obtained store the corrected values in the appropriate recipe, see 10.9.1-14 Touch Screen - Saving Recipe Settings on page 10-328.

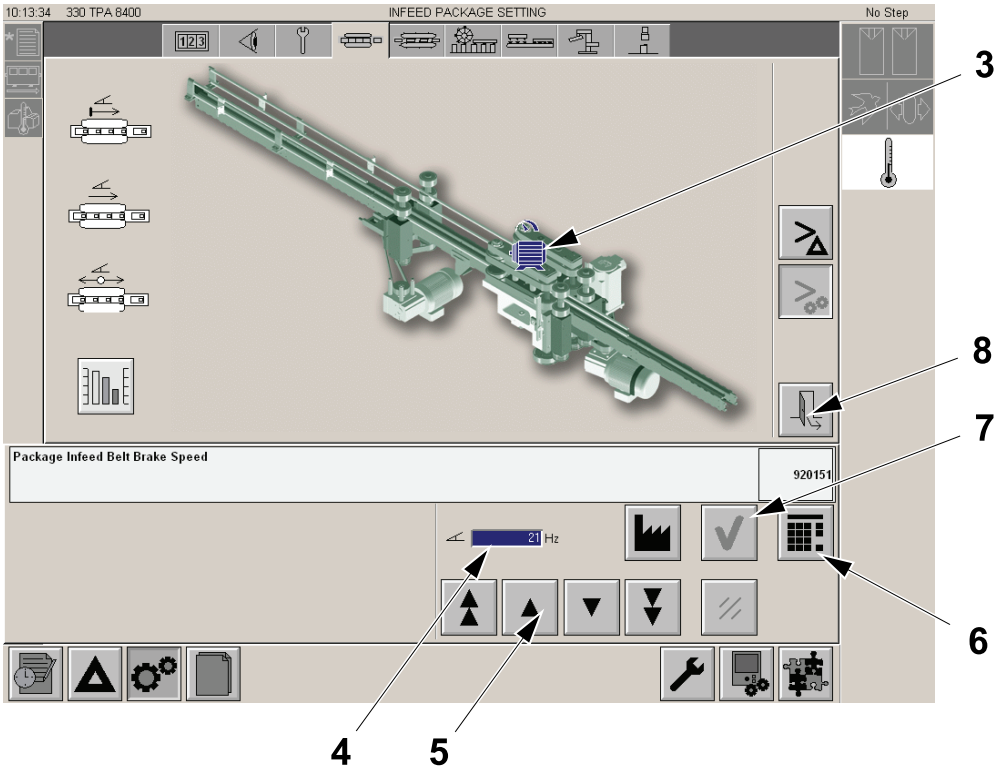

3 BELT BRAKE SPEED button
4 SPEED VALUE
5 ARROW KEYS
6 KEYBOARD button
7 OK button
8 EXIT button

1.1.2.5-7 Display Trend Curve

a) To open the trend curve graph, touch the SETTING button (1) and then the INFEED PACKAGE UNIT button (2).

b) Touch the PACKAGE INFEED TREND button (3).

c) To use the trend curve, refer to Using the Trend Curve to Correct Belt Brake Speed. on page 1-41.

Note! Items like the positioning system only appear on the screen below when installed.

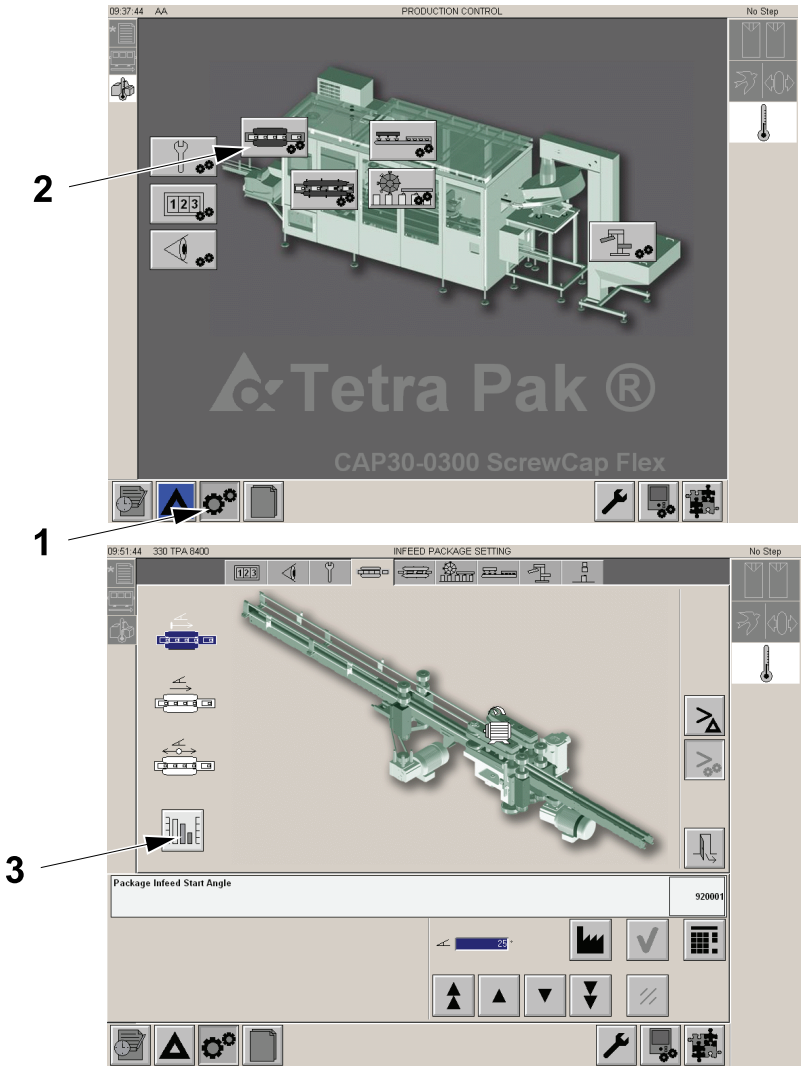

1 SETTING button
2 INFEED PACKAGE UNIT button
3 PACKAGE INFEED TREND button

(Cont'd)

(Cont'd)

Normal Presentation

The following illustration is an example of the Trend Screen.

The illustration shows the DESIRED RUNNING ANGLE (1), the MAXIMUM ALLOWABLE RUNNING ANGLE (2), the MINIMUM ALLOWABLE RUNNING ANGLE (3) the actual RUNNING ANGLE OF LAST PACKAGES (4) leaving the belt unit.

Note! The DESIRED RUNNING ANGLE (1) is the BLUE line and the actual RUNNING ANGLE OF LAST PACKAGES (4) is the GREEN line.

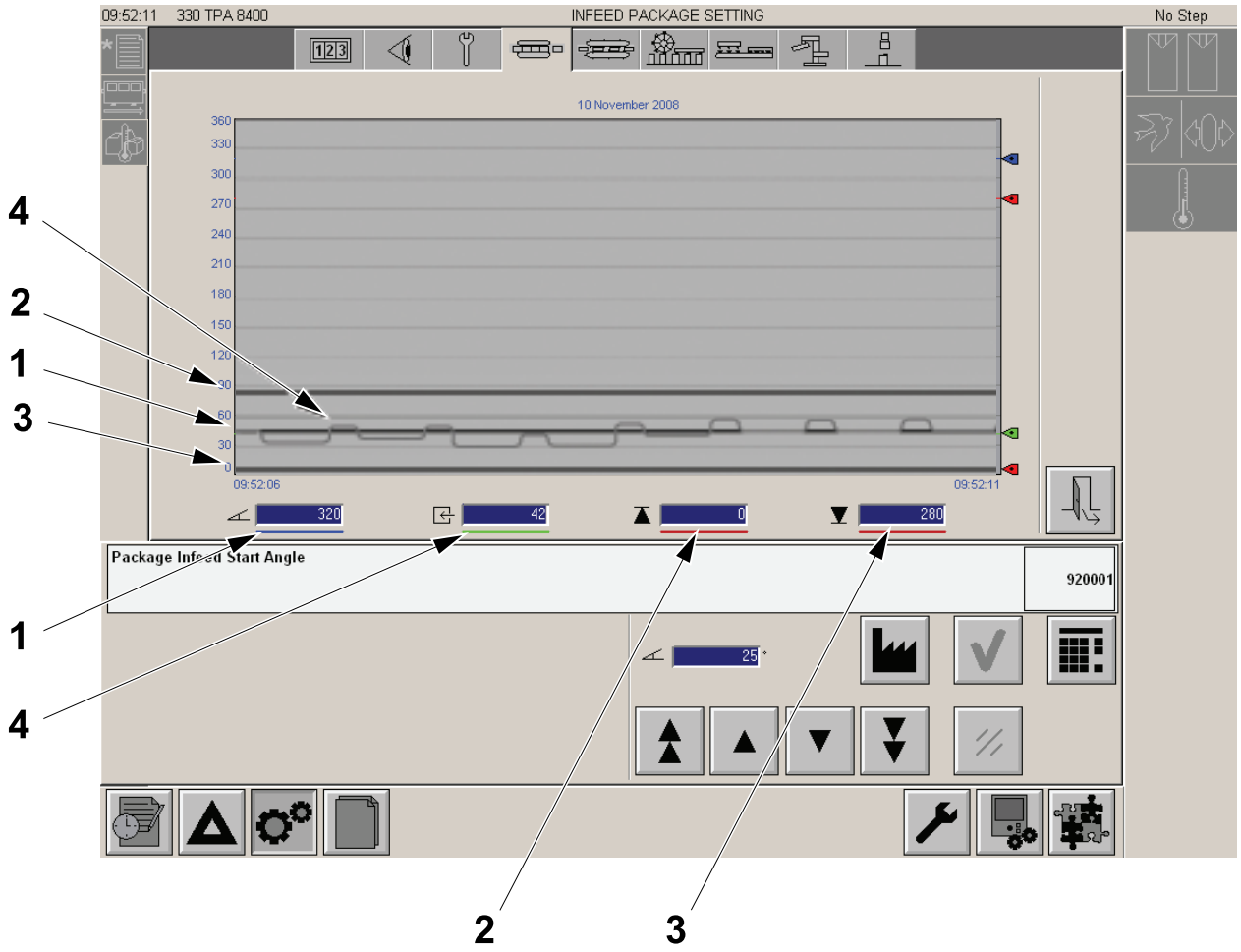

1 DESIRED RUNNING ANGLE
2 MAXIMUM ALLOWABLE RUNNING ANGLE
3 MINIMUM ALLOWABLE RUNNING ANGLE
4 RUNNING ANGLE OF LAST PACKAGE

(Cont'd)

(Cont'd)

The following example of the Trend Screen shows what can happen when the DESIRED RUNNING ANGLE (1) is near to 360 degrees. The MAXIMUM ALLOWABLE RUNNING ANGLE (2) will appear at the bottom of the screen and the MINIMUM ALLOWABLE RUNNING ANGLE (3) will be at the top of the screen. The actual RUNNING ANGLE OF LAST PACKAGES (4) that has just left the belt unit at the left hand end. This may be at the top of the screen as shown below or the bottom of the screen. The actual RUNNING ANGLE OF LAST PACKAGES (4) that have recently left the belt unit will appear split as shown.

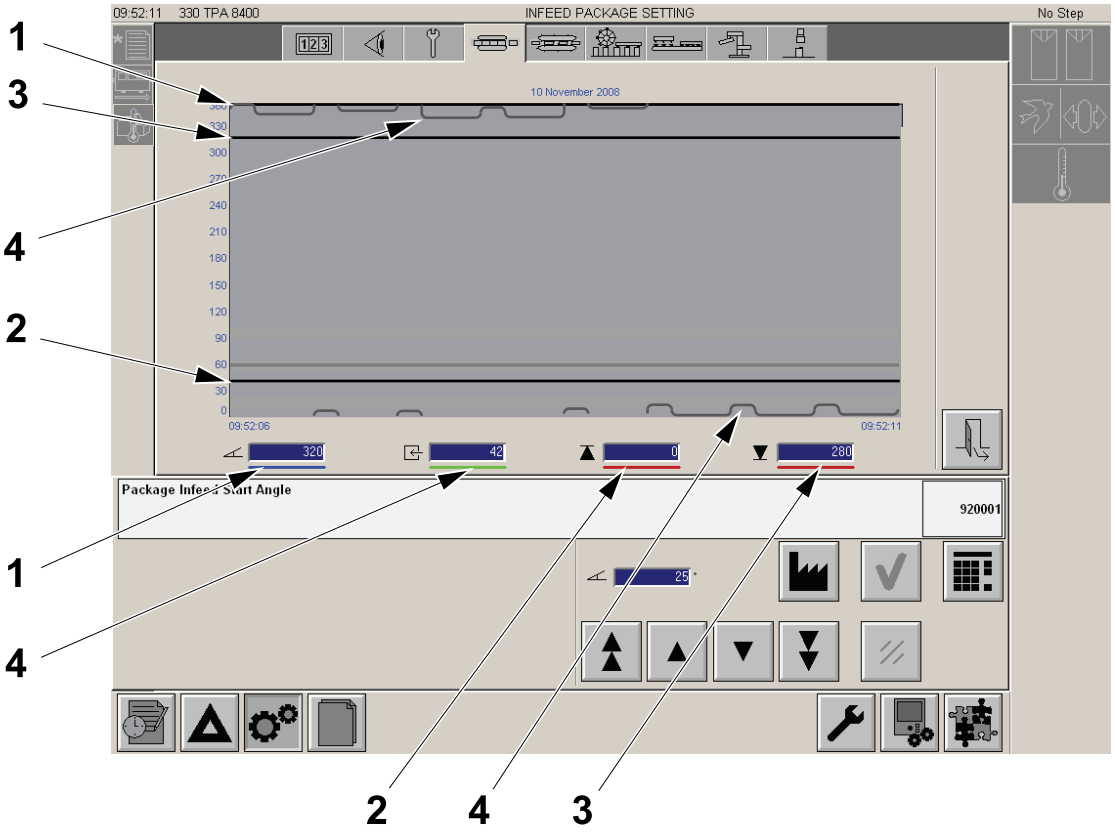

1 DESIRED RUNNING ANGLE

2 MAXIMUM ALLOWABLE RUNNING ANGLE

3 MINIMUM ALLOWABLE RUNNING ANGLE

4 RUNNING ANGLE OF LAST PACKAGE

(Cont'd)

(Cont'd)

Using the Trend Curve to Correct Belt Brake Speed.

Note! The machine must be in PRODUCTION to use the TREND curve.

The illustrations below shows three examples A, B and C of a trend curve.

In the example **A**, the RUNNING ANGLE (1) straddles the DESIRED RUNNING ANGLE (2) indicating optimum belt brake speed.

In example **B**, the RUNNING ANGLE (1)) is consistently between the DESIRED RUNNING ANGLE (2) and the MAXIMUM ALLOWABLE RUNNING ANGLE (3). This indicates that the packages are arriving **too late**. This error should be corrected by **increasing** the belt brake speed. See 1.1.2.5-6 Set Belt Brake Speed on page 1-36.

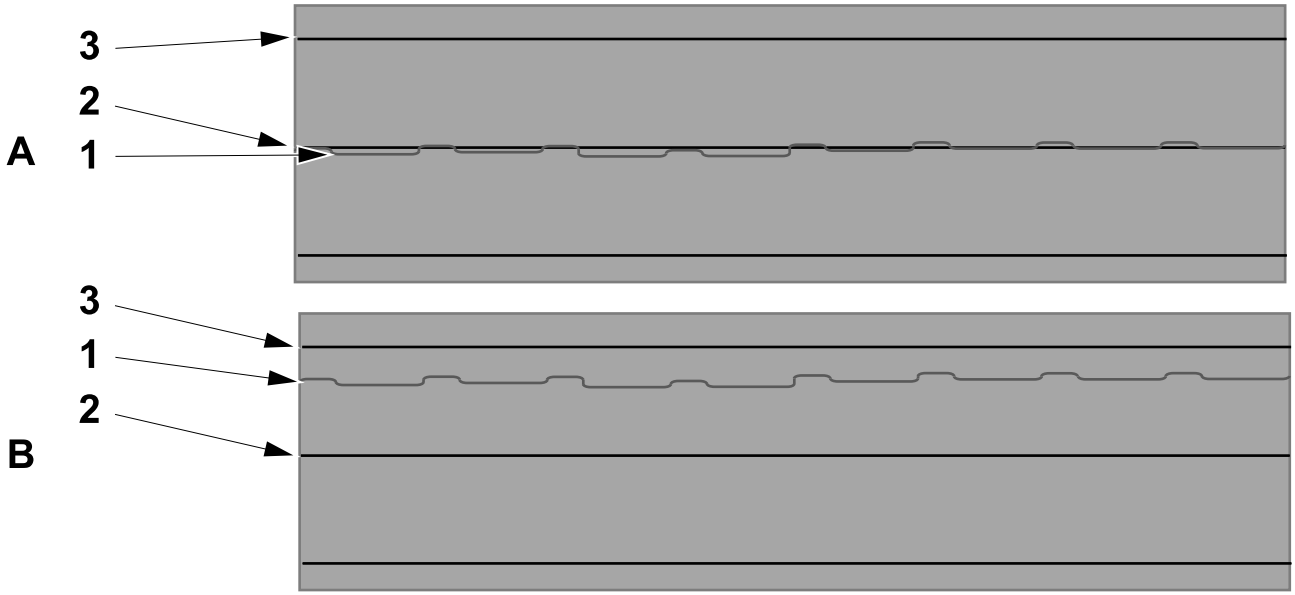

1 RUNNING ANGLE
2 DESIRED RUNNING ANGLE
3 MAXIMUM ALLOWABLE RUNNING ANGLE

(Cont'd)

(Cont'd)

In example **C**, the RUNNING ANGLE (1) is consistently between the DESIRED RUNNING ANGLE (2) and the MINIMUM ALLOWABLE RUNNING ANGLE (4). This indicates that the packages are arriving **too early**. This error should be corrected by **reducing** the belt brake speed. See 1.1.2.5-6 Set Belt Brake Speed on page 1-36.

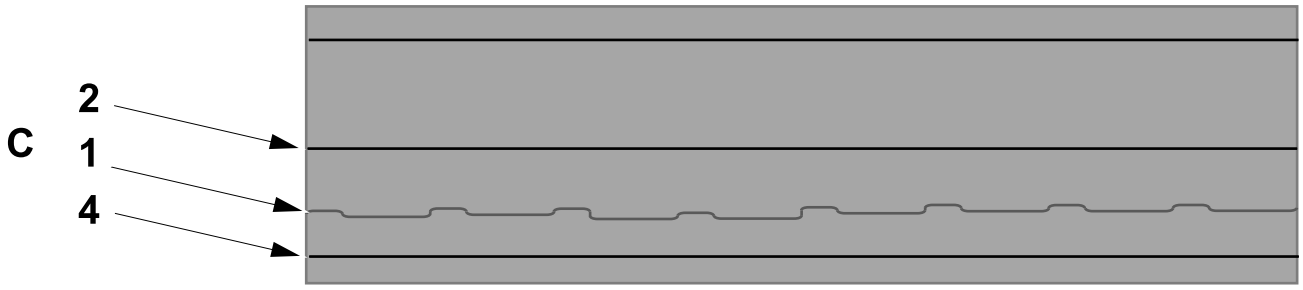

1 RUNNING ANGLE
2 DESIRED RUNNING ANGLE
4 MINIMUM ALLOWABLE RUNNING ANGLE

1.1.2.5-8 Set Package Infeed Start Angle

Note! The default value for the belt brake speed is defined in the 1.1.2.5-3 Infeed Speeds and Angles (Flex ScrewCap) on page 1-29.

a) To set the Package Infeed Start Angle, touch the `SETTING` button (1) and then the `INFEED PACKAGE UNIT` button (2).

Note! Items like the positioning system only appear on the screen below when installed.

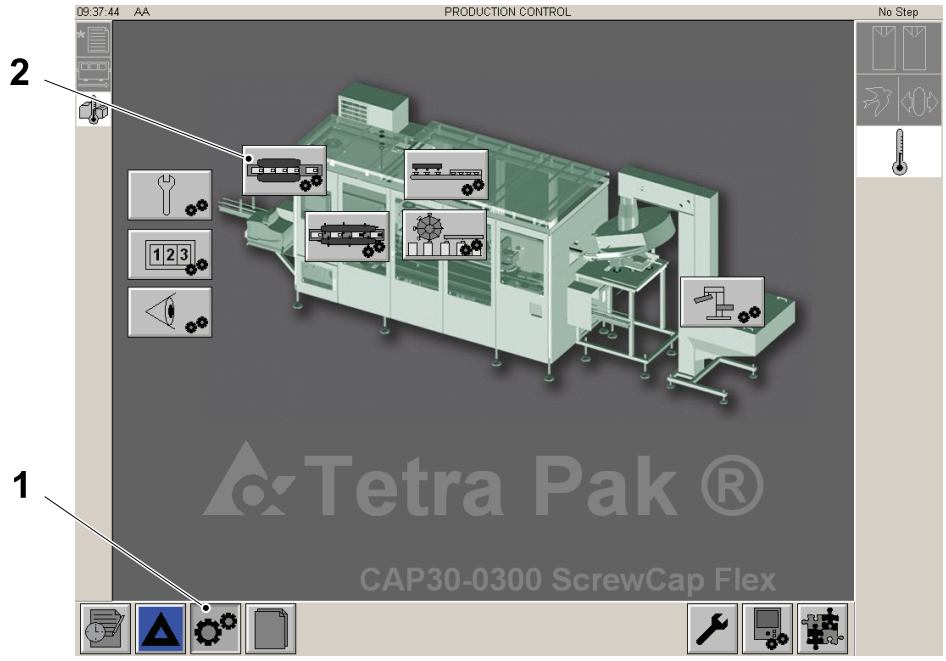

1 `SETTING` button
2 `INFEED PACKAGE UNIT` button

(Cont'd)

(Cont'd)

b) Touch the PACKAGE INFEED START ANGLE button (3).

c) To increase or decrease the START ANGLE VALUE (4), use the keyboard button ARROW KEYS (5) or the keyboard which is accessible via the KEYBOARD button (6).

d) Introduce the value by clicking the OK button (7).

e) Touch the EXIT button (8).

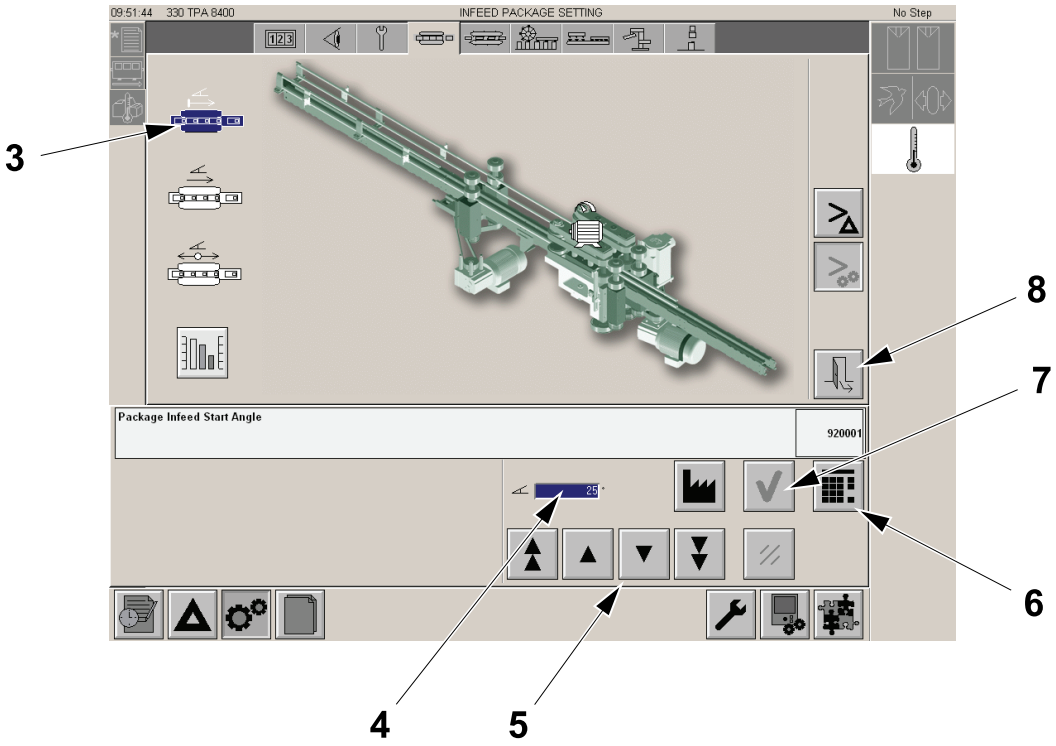

3 PACKAGE INFEED START ANGLE button
4 START ANGLE VALUE
5 ARROW KEYS
6 KEYBOARD button
7 OK button
8 EXIT button

(Cont'd)

(Cont'd)

Note! When the correct infeed start angle is obtained, the package (9) should be in firm contact with the belt tooth (10) before the belt tooth (10) is aligned with the front of the pulley (11).

f) When the correct result is obtained store the corrected values in the appropriate recipe, see 10.9.1-14 Touch Screen - Saving Recipe Settings.

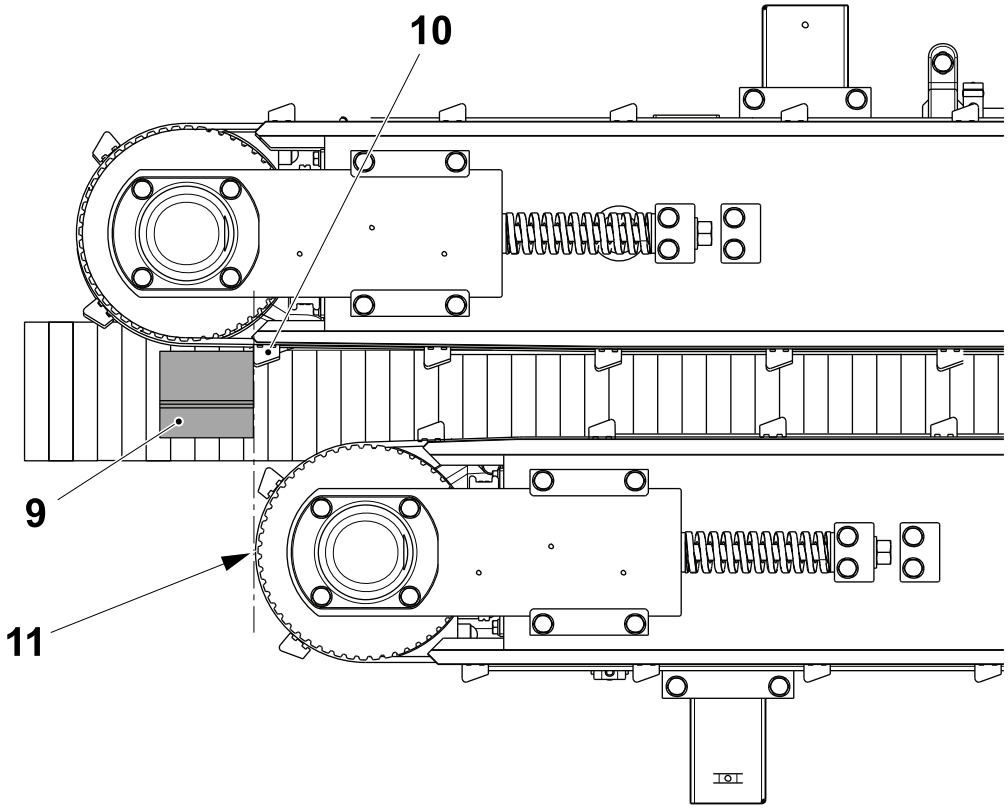

9 Package
10 Belt tooth
11 Pulley

1.1.2.5-9 Set Package Infeed Running Angle

Note! The default value for the belt brake speed is defined in the 1.1.2.5-3 Infeed Speeds and Angles (Flex ScrewCap) on page 1-29.

a) To set the package infeed running angle, touch the `SETTING` button (1) and then the `INFEED PACKAGE UNIT` button (2).

Note! Items like the positioning system only appear on the screen below when installed.

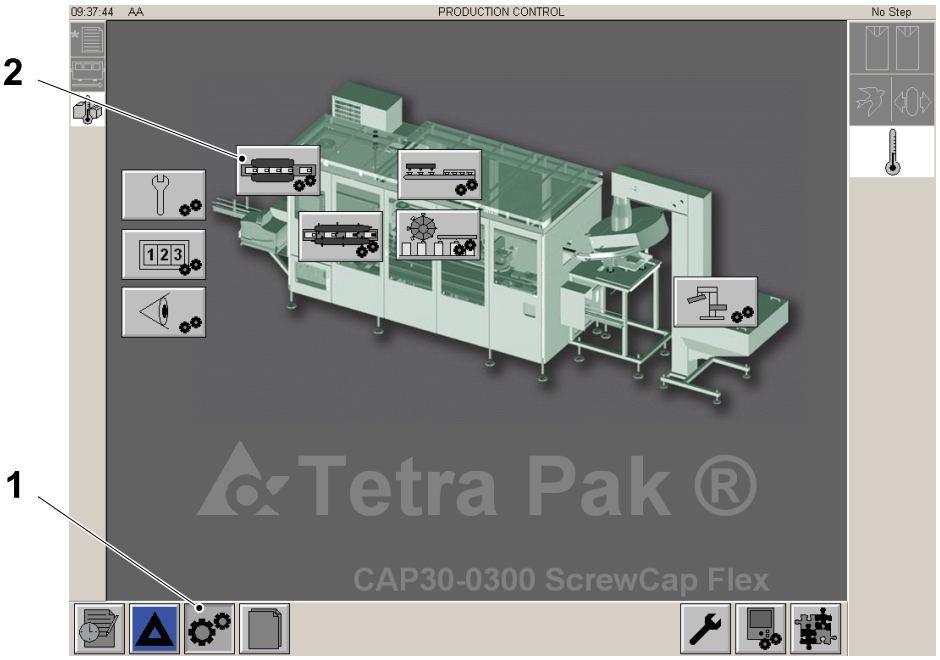

1 `SETTING` button
2 `INFEED PACKAGE UNIT` button

(Cont'd)

(Cont'd)

b) Touch the PACKAGE INFEED RUNNING ANGLE button (3).

c) To increase or decrease the RUNNING ANGLE (4), use the ARROW KEYS (5) or the keyboard which is accessible via the KEYBOARD button (6).

d) Introduce the value by clicking the OK button (7).

e) Touch the EXIT button (8).

f) When the correct result is obtained store the corrected values in the appropriate recipe, see 10.9.1-14 Touch Screen - Saving Recipe Settings.

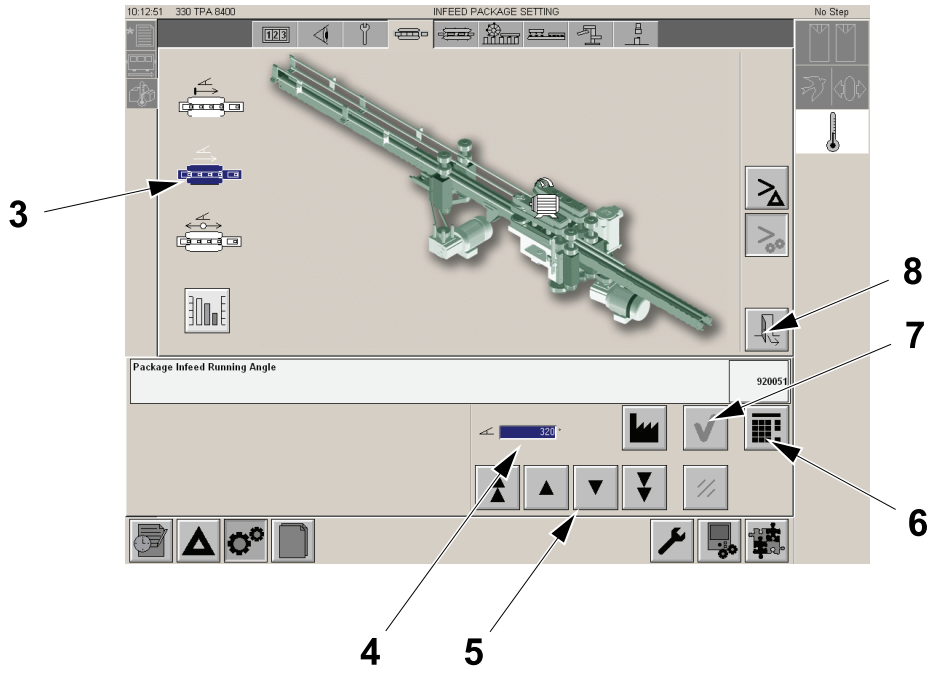

3 PACKAGE INFEED RUNNING ANGLE button
4 Running Angle
5 Arrow keys
6 keyboard button
7 OK button
8 EXIT button

1.1.2.5-10 Set Package Infeed Running Angle Range

The value set for the Package Infeed Running Angle Range will have a positive and negative component centred around the desired running angle. For example, if the desired running angle is 60 degrees and the running angle range is 40 degrees. The maximum allowable running angle will be 100 degrees and the minimum allowable running angle will be 20 degrees.

Note! The default value for the belt brake speed is defined in the 1.1.2.5-3 Infeed Speeds and Angles (Flex ScrewCap) on page 1-29.

a) To set the belt brake range, touch the `SETTING` button (1) and then the `INFEED PACKAGE UNIT` button (2).

Note! Items like the positioning system only appear on the screen below when installed.

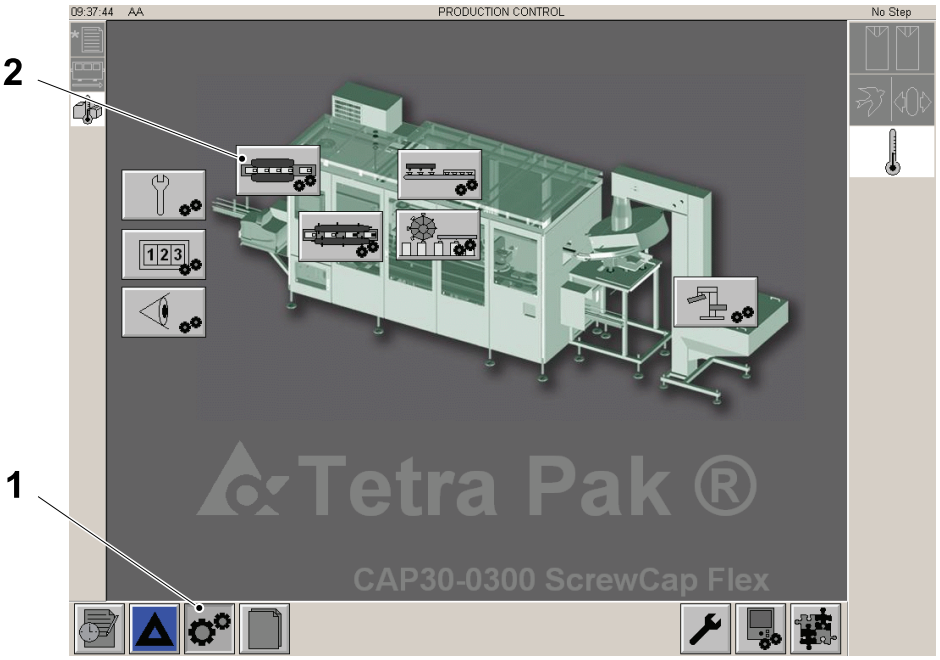

1 `SETTING` button
2 `INFEED PACKAGE UNIT` button

(Cont'd)

(Cont'd)

b) Touch the PACKAGE INFEED RUNNING ANGLE RANGE button (3).

c) To increase or decrease the ANGLE RANGE VALUE (4), use the ARROW KEYS (5) or the keyboard which is accessible via the KEYBOARD button (6).

d) Introduce the value by clicking the OK button (7).

e) Touch the EXIT button (8).

f) When the correct result is obtained store the corrected values in the appropriate recipe, see 10.9.1-14 Touch Screen - Saving Recipe Settings.

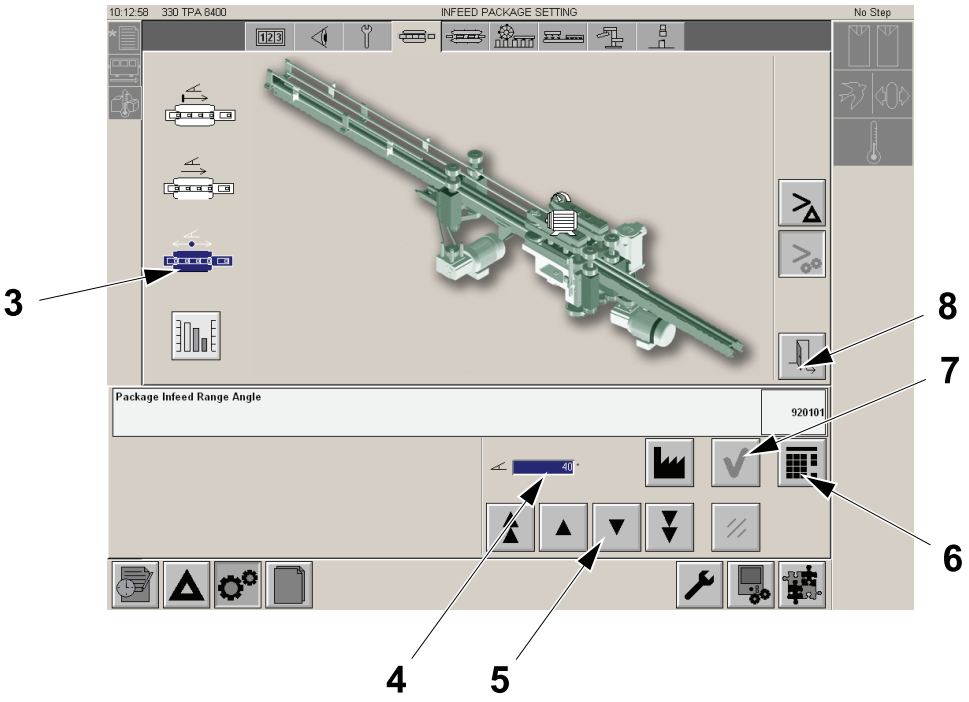

3 PACKAGE INFEED RUNNING ANGLE RANGE button
4 ANGLE RANGE VALUE
5 ARROW KEYS
6 ARROW KEYS
7 OK button
8 EXIT button

1.1.2.5-11 Set Hotmelt Pressure to Machine Speed

The speed of the machine directly affects the amount of glue supplied to the caps. The hotmelt pressure should be adjusted to suit the machine speed, see 6.6.2-7 Hotmelt Equipment - Set Pressure.

1.1.2.5-12 Outfeed Conveyor - Setting Speed

It's possible to set the speed of the outfeed conveyor to optimise the exit of the packages from the machine. The actual speed to be set is dependant on the installation.

To access the selection, do as follows:

a) Touch the PRODUCTION CONTROL button (1) .

b) In the PRODUCTION CONTROL window, touch the PACKAGE TRANSFER button (2) .

Note! Items like the positioning system only appear on the screen below when installed.

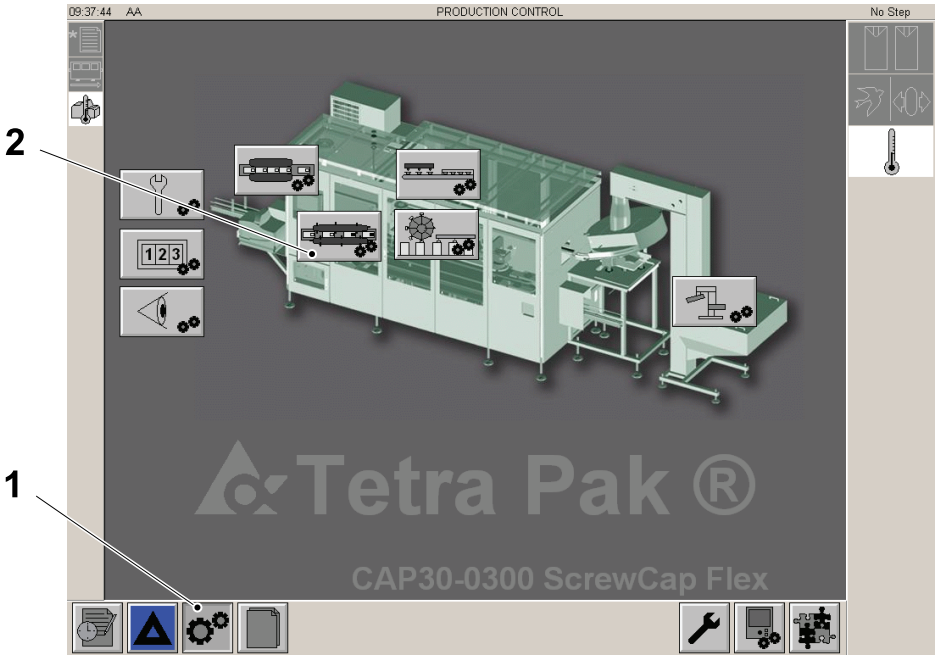

1 PRODUCTION CONTROL button
2 PACKAGE TRANSFER button

(Cont'd)

(Cont'd)

c) In the package transfer setting unit window (3), touch the OUTFEED CONVEYOR SPEED icon (4).

d) Use the ARROW KEY (5) or the NUMERIC button (6) to set the number in the VALUE WINDOW (7) to the correct value.

Note! When the value in the VALUE WINDOW (7) is zero the outfeed conveyor speed and the package conveyor speed are the same. The outfeed conveyor speed can be increased up to 40%. The outfeed conveyor speed can be decreased down to -40%.

e) Touch the OK button (8)

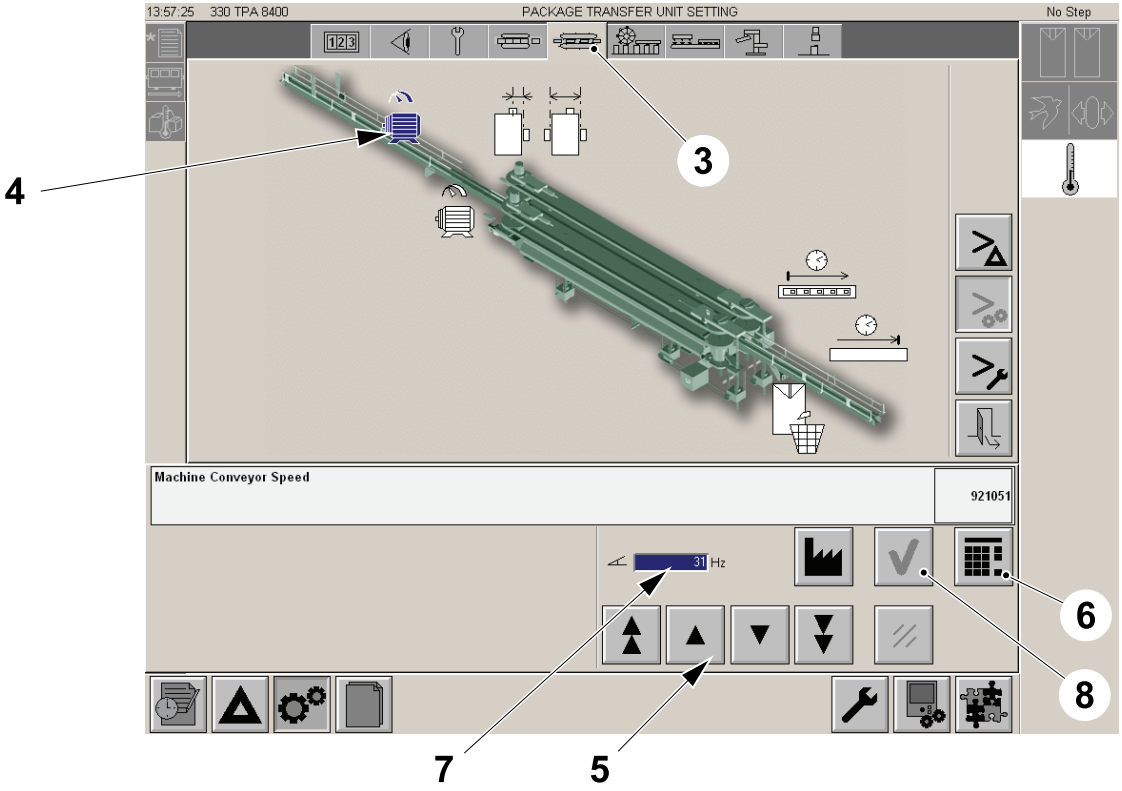

3 Package transfer setting unit window
4 OUTFEED CONVEYOR SPEED icon
5 ARROW KEY
6 NUMERIC button
7 VALUE WINDOW
8 OK button

This page intentionally left blank

2 Package Line

Package Line - Description

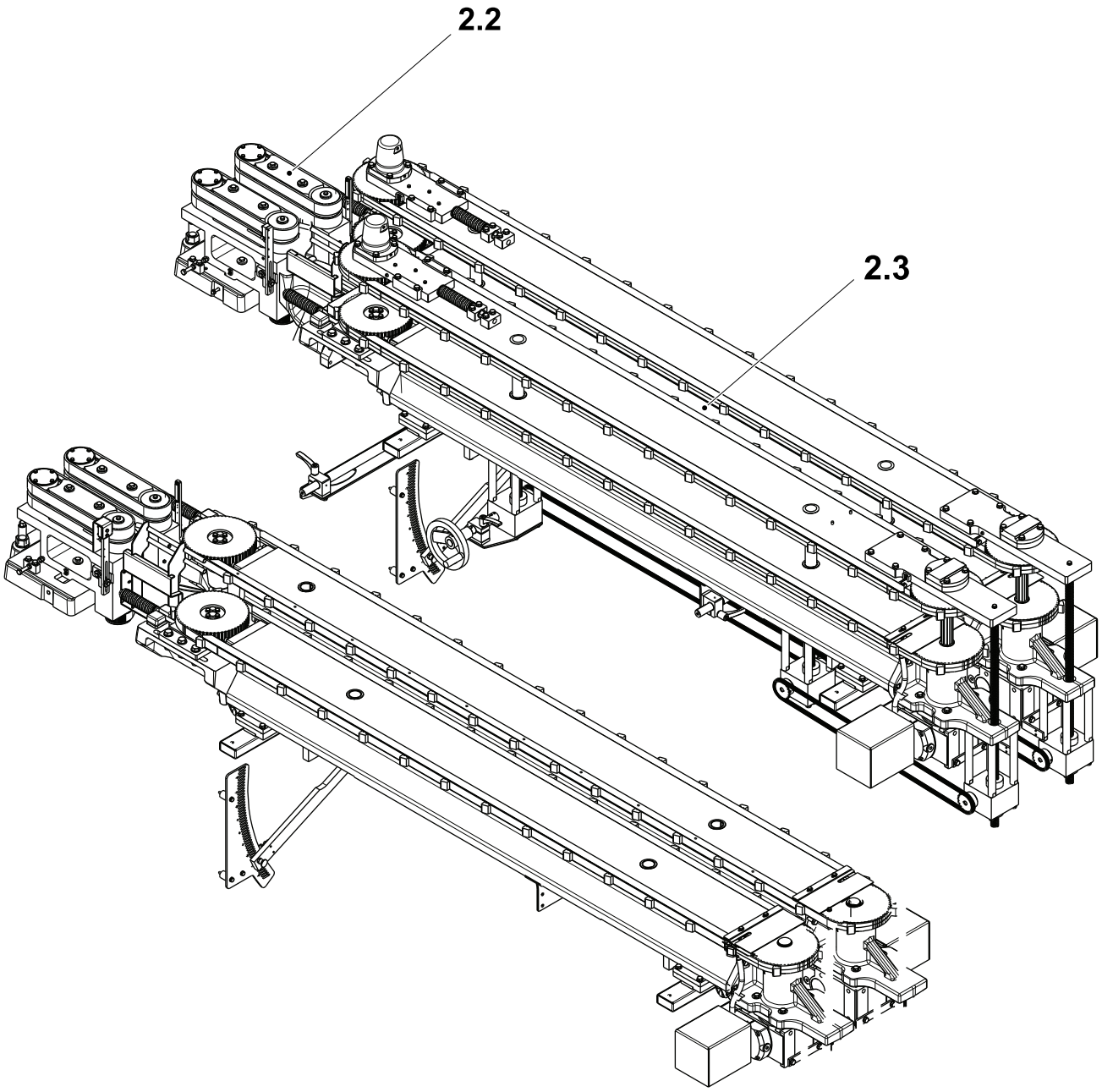

2.2 Belt Brake

2.3 Package Positioner

2.4 Package Handling - Not Illustrated

Package Line - Description 2-2

2.1 Functional Description 2-7

2.2 Belt Brake 2-8

2.2.1 Brake Unit 2-8

2.2.1-1 Brake Unit - Check Belt Tension 2-8
2.2.1-2 Brake Unit - Check Belts 2-9
2.2.1-3 Brake Unit - Change Belt 2-10
2.2.1-4 Brake Unit - Set Belt Tension 2-11
2.2.1-5 Brake Unit - Set Position 2-13
2.2.1-6 Brake Unit - Check 2-15
2.2.1-7 Brake Unit - Set Sensor 2-16
2.2.1-8 Set Belt Brake Speed 2-17
2.2.1-9 Brake Unit - Check Ball Bearing 2-17

2.2.2 Drive 2-27

2.2.2-1 Drive - Check Belt 2-27
2.2.2-2 Drive - Change Belt 2-28
2.2.2-3 Drive - Change Bearings 2-30

2.3 Package Positioner 2-32

2.3.1 Package Positioner (Right) 2-32

2.3.1.1 Package Positioner (Right) - Change Belts 2-32

2.3.1.1-1 Release the Upper Belt 2-32
2.3.1.1-2 Release the Lower Belt 2-33
2.3.1.1-3 Removal and Installation of the Belts 2-34
2.3.1.1-4 Installation of Spring 2-35

2.3.1.2 Package Positioner (Right) - Set Tension 2-36

2.3.1.2-1 Set Belt Tension - Right 2-36
2.3.1.2-2 Set Belts Alignment - Right 2-37

2.3.2 Package Positioner (Left) 2-38

2.3.2.1 Package Positioner (Left) Change Belts 2-38

2.3.2.1-1 Release the Upper Belt 2-38
2.3.2.1-2 Release the Lower Belt 2-39
2.3.2.1-3 Removal and Installation of the Belts 2-40

2.3.2.1-4 Installation of Spring 2-41
2.3.2.2 Package Positioner (Left) Set Tension 2-42
2.3.2.2-1 Set Belts Tension - Left 2-42
2.3.2.2-2 Set Belts Alignment - Left 2-43
2.3.3 Drive 2-44
2.3.3.1 Drive - Change Bearings 2-44
2.3.3.1-1 Preparation 2-44
2.3.3.1-2 Procedure 2-47
2.3.3.1-3 Drive - Motor and Gearbox 2-55
2.3.3.1-4 Belt Stretcher - Change Bearings 2-57
2.3.3.1-5 Cylinder Speed - Set Regulator Valve 2-64
2.3.3.1-6 Set - Cap Position X Direction 2-65
2.3.3.1-7 Set - Cap Position Y Direction 2-66
2.3.3.1-8 Set - Package Width X 2-70
2.3.3.1-9 Set - Package Length Y 2-71
2.3.3.1-10 Set - Wheel Pushdown Offset 2-73
2.3.4 Set Package Positioner Zero 2-75
2.3.4.1 Set Package Positioner Zero - Setting 2-75
2.3.4.1-1 Coarse Setting Inner Package Positioner Zero 2-75
2.3.4.1-2 Fine Setting Inner Package Positioner Zero 2-83
2.3.4.1-3 Memorizing Inner Package Positioner Zero Position 2-88
2.3.4.1-4 Coarse Setting Outer Package Positioner Zero 2-90
2.3.4.1-5 Fine Setting Outer Package Positioner Zero 2-93
2.3.4.1-6 Memorizing the Outer Package Positioner Zero Position 2-98
2.3.5 Upper Package Positioner - Set 2-100
2.3.5-1 Upper Left Package Positioner - Set Height 2-100
2.3.5-2 Upper Right Package Positioner - Set Height 2-101
2.3.5-3 Upper Inner Package Positioner - Set X Direction 2-102

2.4 Package Handling 2-104

2.4.1 Package Guides 2-104

2.4.1-1 Infeed Package Guide Rollers - Set (TGA-TPA Only) 2-104

2.4.1-2 Guide Roller Inner - Set X Position 2-107

2.4.1-3 Check Guide Roller Inner 2-108

2.4.1-4 Guide Roller Outer (TPA Only) Set Height 2-109

2.4.1-5 Guide Roller Outer - Set X Direction 2-110

2.4.1-6 Infeed Package Guides - Set (TBA 200 E and TBA 250 E) 2-111

2.4.1-7 Outfeed Package Guides - Set 2-114

2.4.2 Package Aligner (TPA Only) 2-116

2.4.2-1 Package Aligner - Set Speed 2-116

2.4.2-2 Package Aligner - Change Belt 2-118

2.4.2-3 Package Aligner - Set Angle 2-120

2.4.2-4 Package Aligner - Set Position 2-121

2.4.2-5 Package Aligner from the TPOP 2-124

2.4.3 Package Crash Sensor (TPA and TGA Only) 2-130

2.4.3-1 Package Line - Set Photocell 2-130

This page intentionally left blank

2.1 Functional Description

The Package Line has the following main components:

- Belt Brake
- Package Positioner
- Package Aligner.

Packages arriving at the infeed end of the machine form a queue at the entrance of the belt brake.

The belt brake slows the packages as they pass and then releases them individually into the package positioner. The space between consecutive packages is such that synchronisation is achieved at the cap applicator unit.

The Package Aligner keeps TPA packages from twisting between the belt brake and the package positioner.

The package positioner collects the correctly spaced packages and moves them at a constant speed, first, to a position below the cap applicator unit where the cap is applied and then to the outfeed end of the machine where the packages are transferred to the outfeed conveyor.

The belts of the package positioner work in two ways:

- 1) belts that keep the packages in position, see picture 1
- 2) belts that pull the packages, see picture 2.

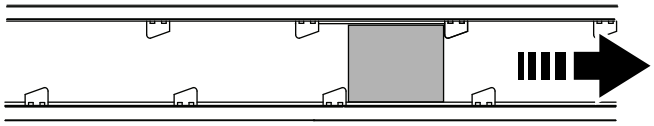

Holding belts, valid for all the packages except TBA 200E and TBA 250E

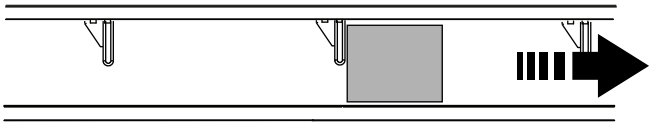

Pulling belts, valid only for TBA 200E and TBA 250E packages

2.2 Belt Brake

2.2.1 Brake Unit

2.2.1-1 Brake Unit - Check Belt Tension

Machine Status	Electrical supply disconnecting device in position O (OFF) Main air valve OFF
SPC Reference	2766990-0200 2766991-0200

a) Check the tension of the . It should be possible to move each belt the distance **A**, at the centre.

b) If necessary, adjust the tension, see 2.2.1-4 Brake Unit - Set Belt Tension.

A = 5 ±1 mm

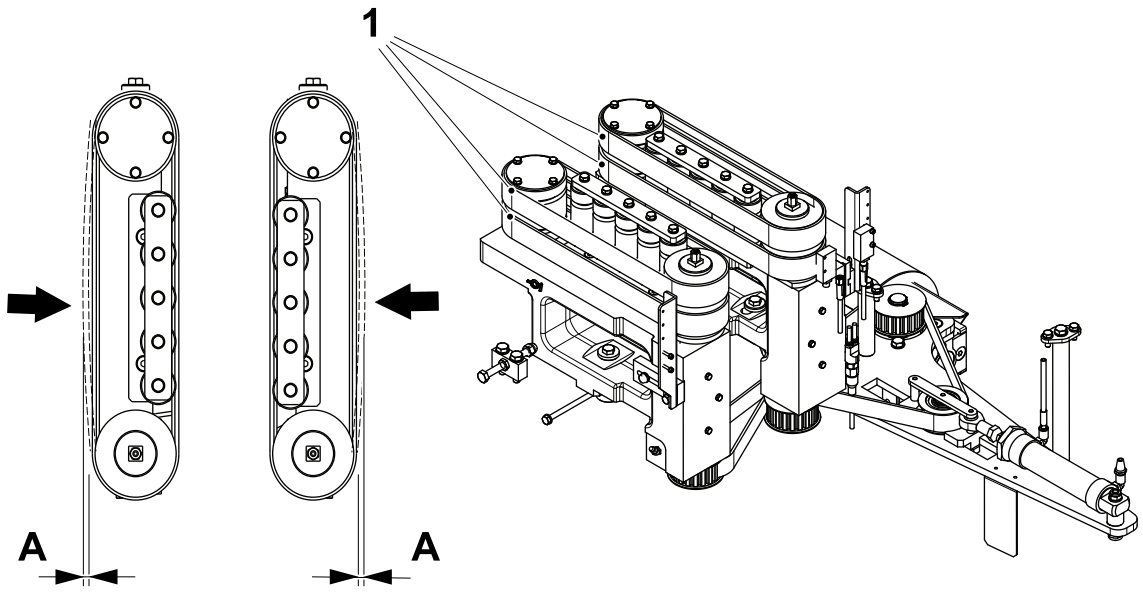

1 Belt

2.2.1-2 Brake Unit - Check Belts

Machine Status	Electrical supply disconnecting device in position O (OFF) Main air valve OFF
SPC Reference	2766990-0200 2766991-0200

Check the for wear or damage. If necessary, change the belts, see 2.2.1-3 Brake Unit - Change Belt.

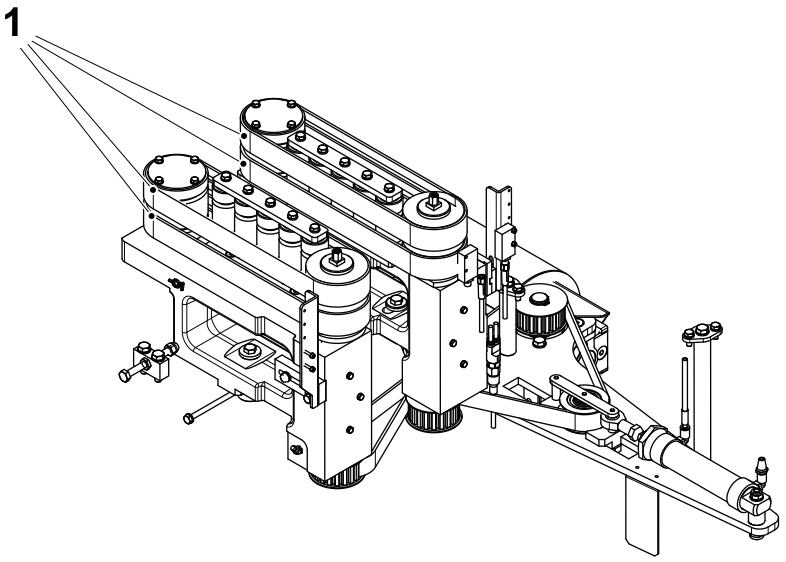

1 Belts

2.2.1-3 Brake Unit - Change Belt

Machine Status	Electrical supply disconnecting device in position O (OFF) Main air valve OFF
SPC Reference	2766990-0200 2766991-0200

a) Loosen the and loosen the to release the belt tension.

b) Remove the .

c) Install the new belts and assemble in the reverse order.

d) Repeat the procedure for the other belts.

e) Tension the belts, see 2.2.1-4 Brake Unit - Set Belt Tension.

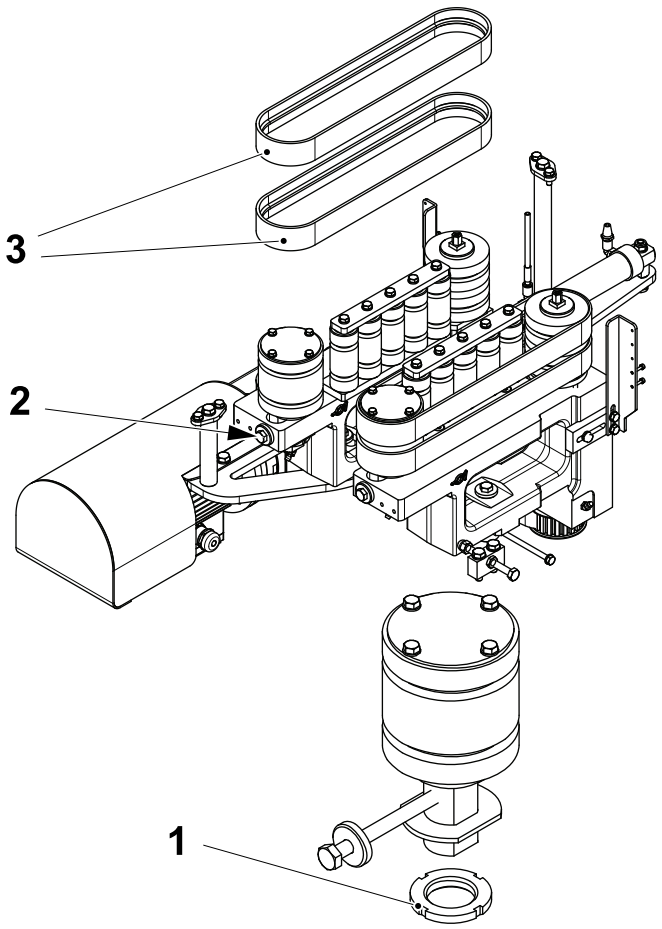

1 Nut
2 Screw
3 Belt

2.2.1-4 Brake Unit - Set Belt Tension

Machine Status	Electrical supply disconnecting device in position O (OFF) Main air valve OFF
Special Equipment	TP No. 90600-3415 TP No. 90459-2181
SPC Reference	2766990-0200 2766991-0200

a) Loosen the nut (1).

b) Use the screw (2) adjust the tension of the belt (3). The tension should be set to 250N (80 Hz) using the tool TP No.90600-3415 or TP No. 90459-2181 for each of the belts.

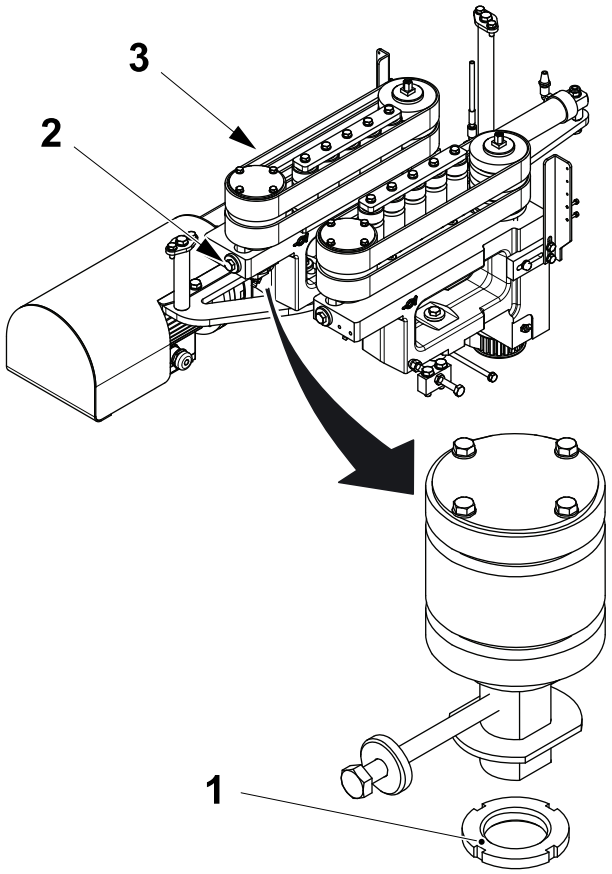

1 Nut
2 Screw
3 Belt

(Cont'd)

(Cont'd)

c) Without moving the screw (2) tighten the nut (1).

d) Repeat the procedure for the other belts.

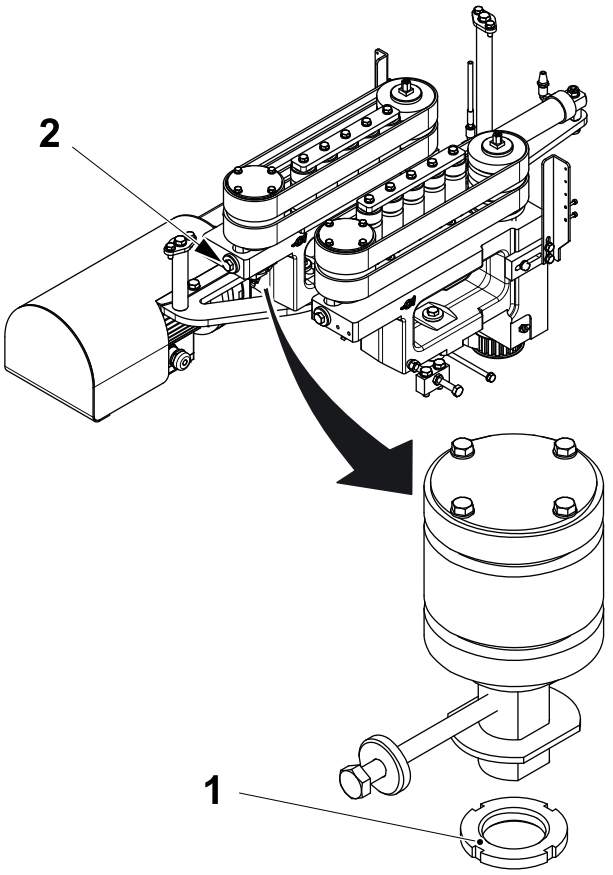

1 Nut
2 Screw

2.2.1-5 Brake Unit - Set Position

Machine Status	Electrical supply disconnecting device in position O (OFF) Main air valve OFF
SPC Reference	2766990-0200 2766991-0200

Inner Brake Position

a) Make sure that the main air supply is turned OFF and release the air pressure from the cylinder see, 2.2.2-2 Drive - Change Belt the first page only.

b) Loosen the screw (1).

c) Slide the inner inner brake (2) until the distance **A** from the surface of the transfer belt (3) is obtained.

d) Without moving the inner brake (2), tighten the screw (1).

A = 1 - 3 mm

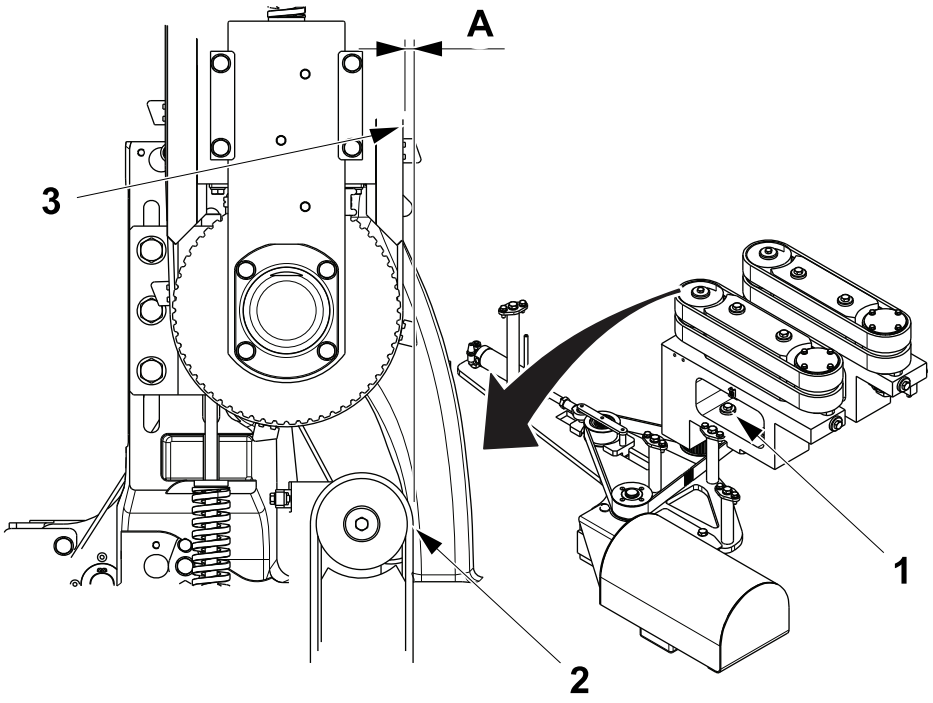

1 Screw
2 Inner brake
3 Transfer belt

(Cont'd)

(Cont'd)

Outer Brake Position

a) Loosen the screw (1) and release the outer brake (2).

b) Use the screw (3) and the screw (4) to adjust the position of the outer brake (2) until parallel and the distance **A** is obtained.

c) Without moving the outer brake (2), tighten the screw (1).

d) Check that the drive belt under the belt brake is located correctly and turn the main air supply ON.

Note! Check in production that the first package is always stopped in the correct position, see 2.2.1-6 Brake Unit - Check.

A = Package size -1mm

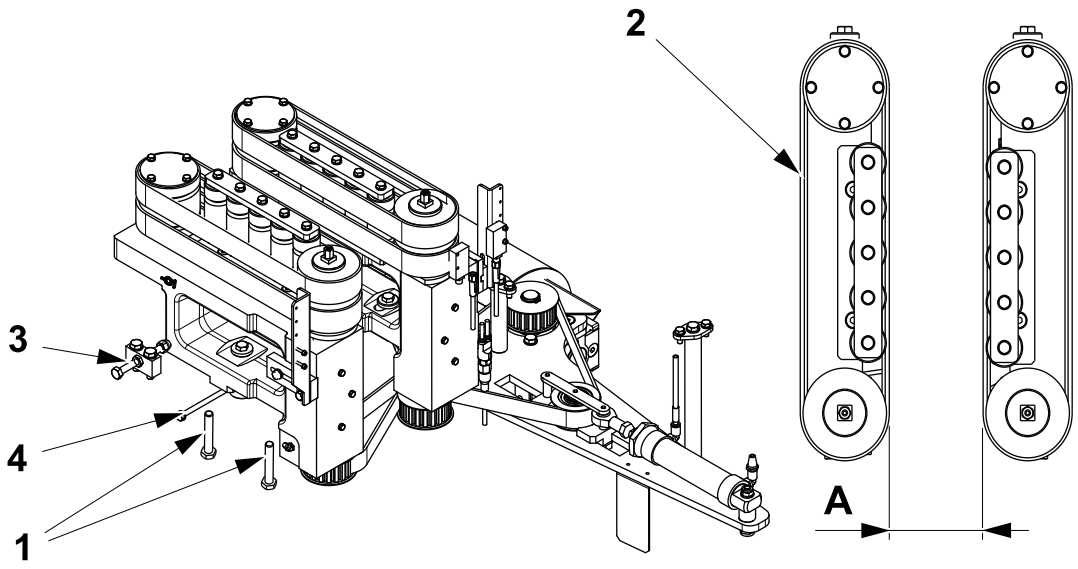

1 Screw
2 Outer brake
3 Screw
4 Screw

2.2.1-6 Brake Unit - Check

Machine Status	Electrical supply disconnecting device in position O (OFF) Main air valve OFF
SPC Reference	2766990-0200 2766991-0200

a) Check that the belt brake stops and holds a package in the end of belt brake position (1) shown. If not adjust the sensor until the correct position is obtained, see 2.2.1-7 Brake Unit - Set Sensor.

b) Check that the belt brake holds the package when there is a queue in the package direction (2) . If not adjust the belt brake until the front package is held in the end of belt brake position (1) shown.

Note! Distance A equals 5 mm before the end of belt brake position (1) and 15 mm after, this is OK if sustainable.

A = 20mm max

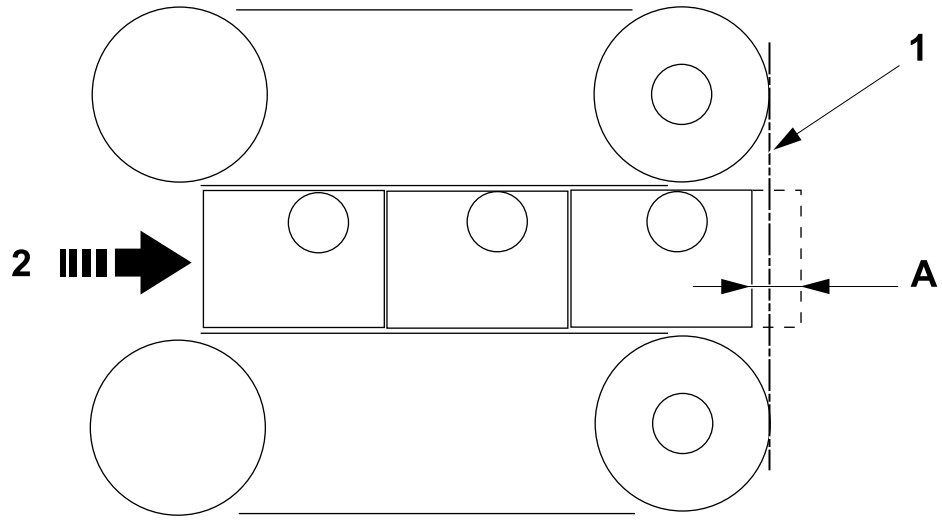

1 End of Belt Brake Position
2 Package direction

2.2.1-7 Brake Unit - Set Sensor

Machine Status	Electrical supply disconnecting device in position O (OFF) Main air valve OFF
SPC Reference	2766990-0200 2766991-0200

a) Loosen the screw (1) and screw (2) as required.

b) Move the bracket (3), the bracket (4) and the bracket (5) holding the sensors (6) so that the beam (7) passes through the gap without striking the shafts (8).

Note! The hole (9) may be used to position the sensors (6) for different package types.

c) Tighten the screw (1) and the screw (2).

d) The sensors (6) should be the distance **A** from the belts front edge (10).

e) To set the sensors (6) electrically see 10.8.3 General Purpose Sensor.

Note! Every time the position is changed the infeed start angle and the running angle should be set again, see 1.1.2.5-8 Set Package Infeed Start Angle and 1.1.2.5-9 Set Package Infeed Running Angle.

A = 20 mm

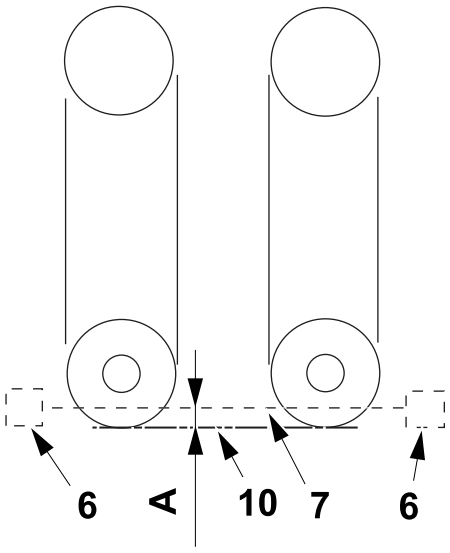

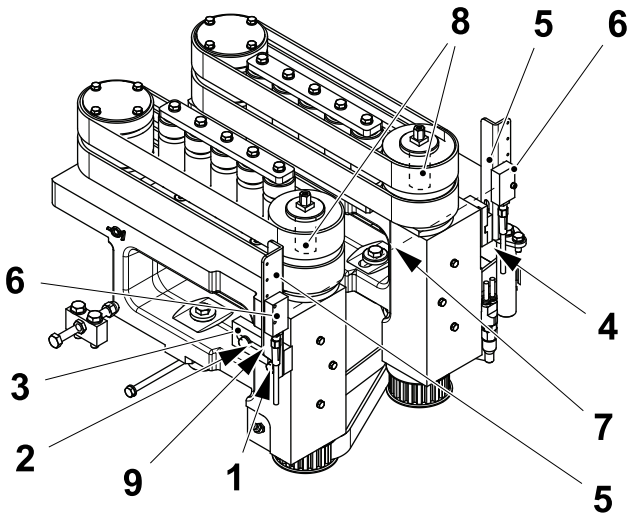

1 Screw
2 Screw
3 Bracket
4 Bracket
5 Bracket
6 Sensor
7 Beam
8 Shaft
9 Hole
10 Front edge

2.2.1-8 Set Belt Brake Speed

Machine Status	Electrical supply disconnecting device in position I (ON) Main air valve OFF
SPC Reference	2766990-0200 2766991-0200

To set the Belt Brake speed, see 1.1.2.4 Package Infeed - Performance Settings, and 1.1.2.5-6 Set Belt Brake Speed.

2.2.1-9 Brake Unit - Check Ball Bearing

Machine Status	Electrical supply disconnecting device in position O (OFF) Main air valve OFF
SPC Reference	2766990-0200 2766991-0200

Note! Perform this procedure every 1000 hours.

Remove Belt

a) Step down the machine to STEP0.

b) Remove the belt (1), see 2.2.2-2 Drive - Change Belt.

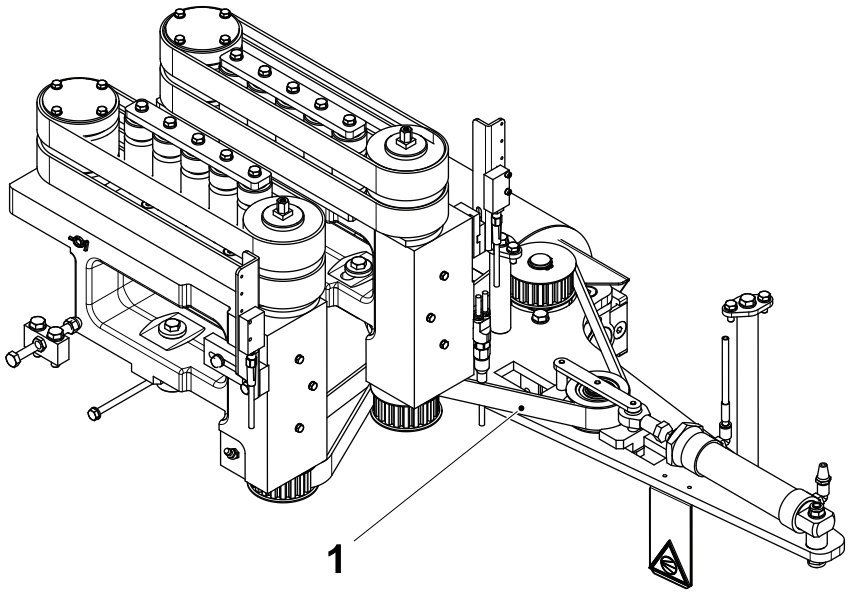

1 Belt

(Cont'd)

(Cont'd)

Remove Belts

a) Loosen the nuts (1) and the screws (2) to release the belt tension.

b) Remove the belts (3).

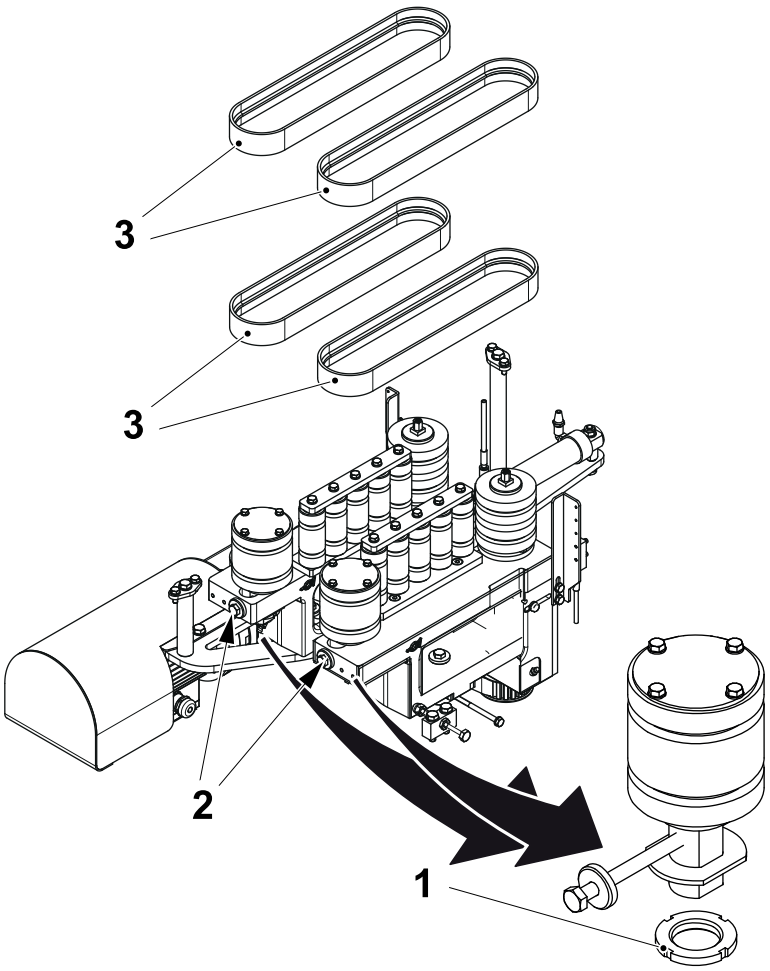

1 Nut
2 Screw
3 Belt

(Cont'd)

(Cont'd)

Check the Ball Bearing

a) Manually move and rotate the shafts (1).

b) Make sure that there aren't any noises or backlashes.

c) If the shafts (1) have backlashes or generate noises, replace the ball bearing, see Remove the Shaft on page 2-20.

d) Manually move and rotate the shafts (2).

e) Make sure that there aren't any noises or backlashes.

f) If the shafts (2) have backlashes or generate noises, replace the ball bearing, see Change the Ball Bearing on page 2-23.

g) In case there are no backlashes or noises, see Install Belt on page 2-25.

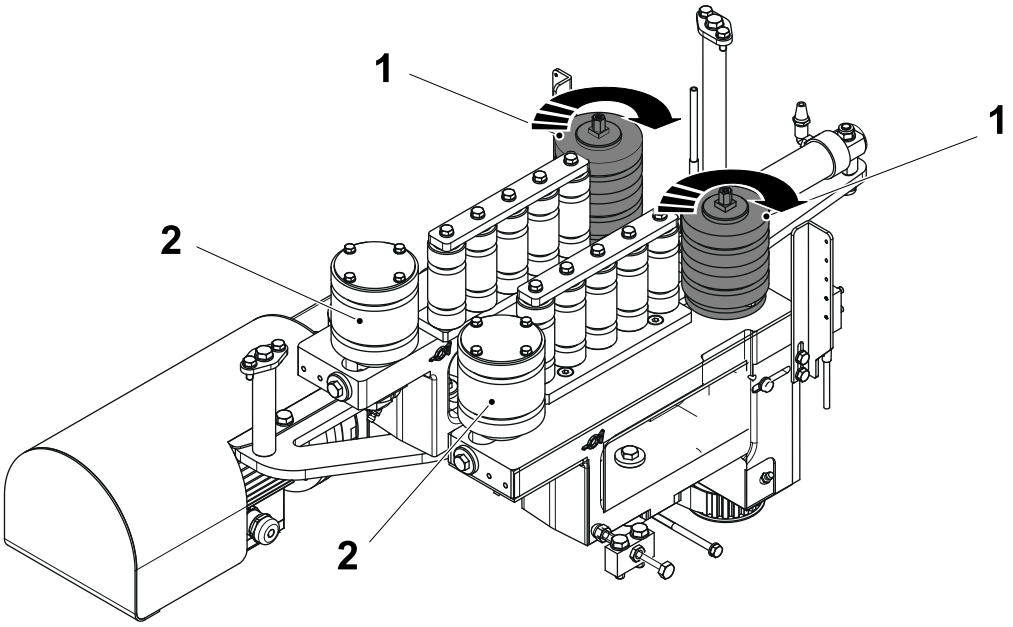

1 Shaft
2 Shaft

(Cont'd)

(Cont'd)

Remove the Shaft

a) Loosen the screw (1) and remove the washer (2) and the pulley (3).

b) Remove the key (4).

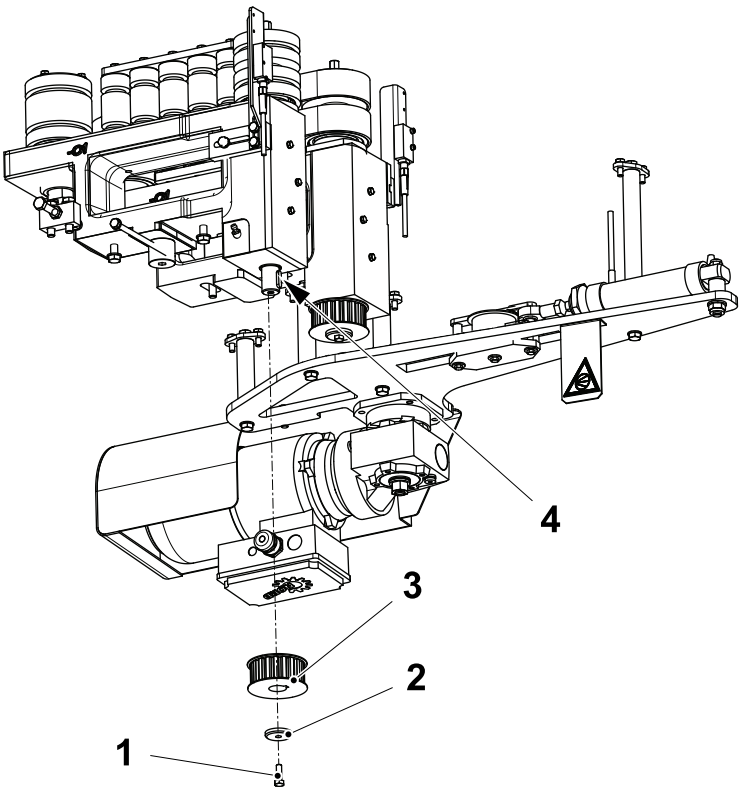

1 Screw
2 Washer
3 Pulley
4 Key

(Cont'd)

(Cont'd)

c) Remove the shaft (5).

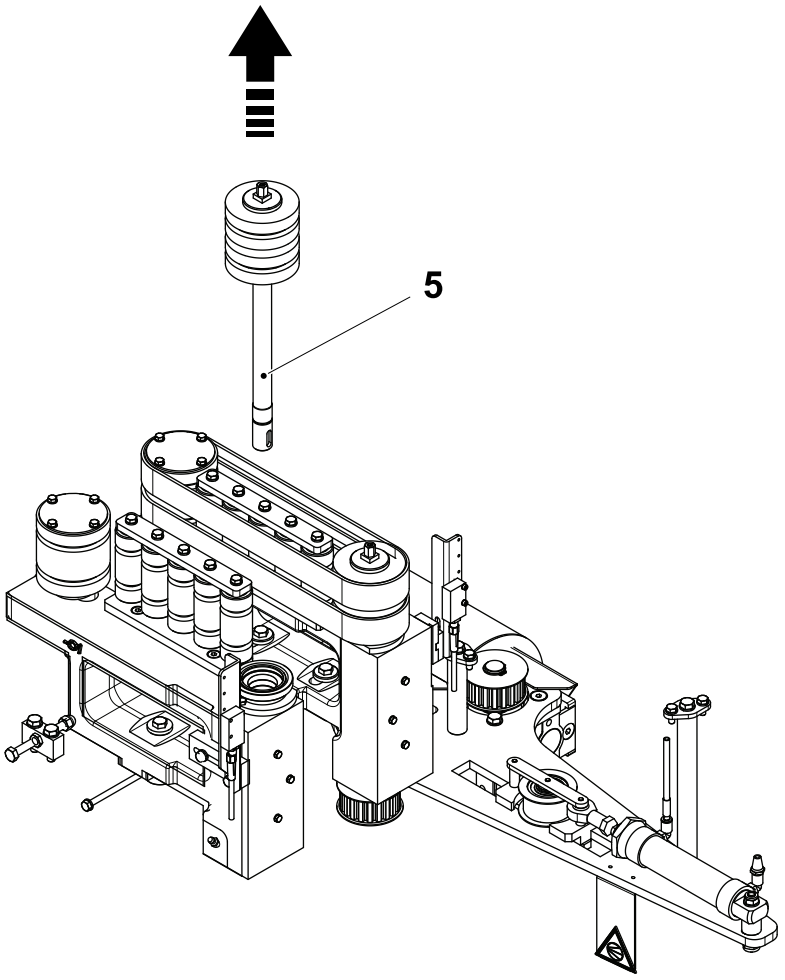

5 Shaft

(Cont'd)

(Cont'd)

Change the Ball Bearing

a) Loosen the screw (1) and remove the flange (2).

b) On the workbench, remove the ball bearing (3), the O-Ring (4) and the radial seal (5).

c) Change the ball bearing (3), the O-Ring (4) and the radial seal (5).

d) Remove the ball bearing (6), the O-Ring (7) and the radial seal (8).

e) Change the ball bearing (6), the O-Ring (7) and the radial seal (8).

f) Assemble in reverse order.

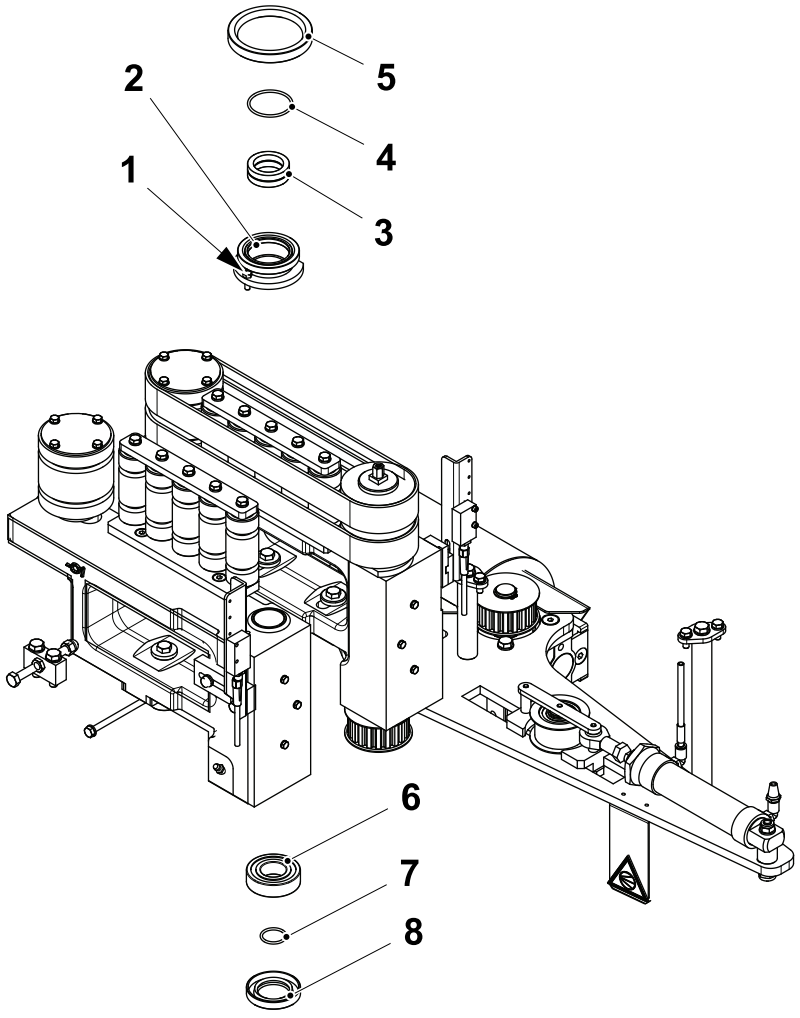

1 Screw
2 Flange
3 Ball bearing
4 O-Ring
5 Radial Seal
6 Ball Bearing
7 O-Ring
8 Radial Seal

(Cont'd)

(Cont'd)

Change the Ball Bearing

a) Loosen and remove the nut (1).

b) Loosen and remove the screw (2).

c) Remove the pulley (3).

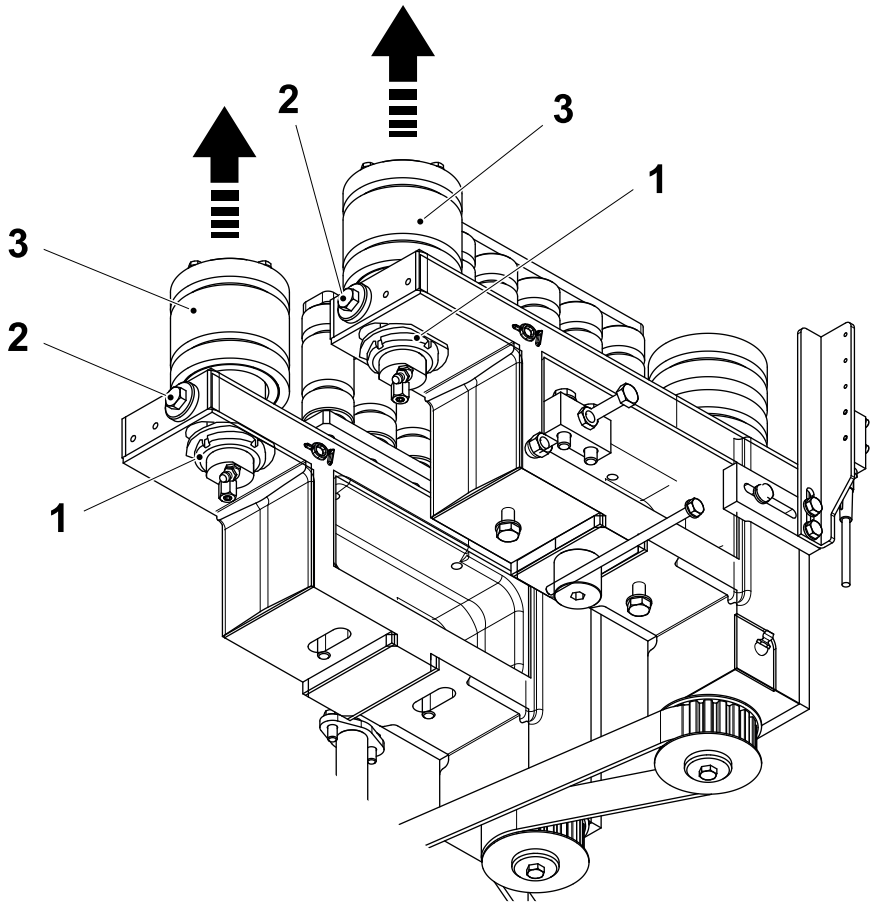

1 Nut 2 Screw 3 Pulley

(Cont'd)

(Cont'd)

d) On the workbench, loosen the screws (4) and remove the cover (5).

e) Remove the pulley (6) and replace the O-ring (7).

f) Loosen the nut (8) and replace the ball bearing (9).

g) Replace the radial seal (10).

h) Assemble in reverse order.

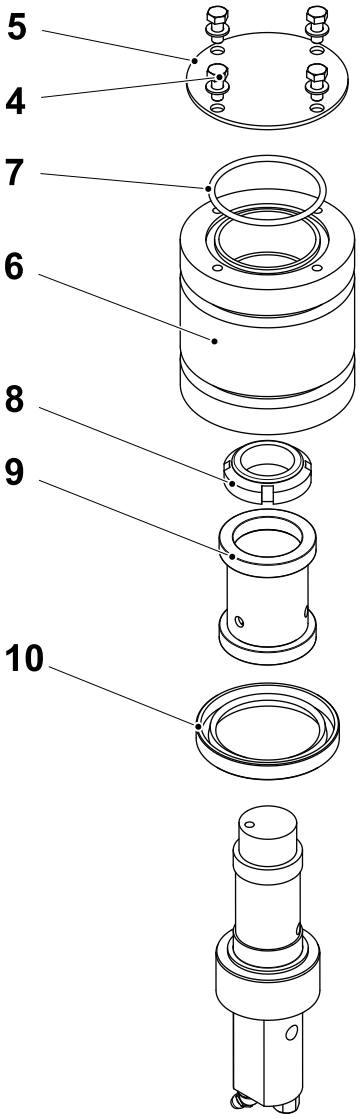

4 Screw
5 Cover
6 Pulley
7 O-ring
8 Nut
9 Ball bearing
10 Radial seal

(Cont'd)

(Cont'd)

Install Belt

a) Make sure that the machine is in STEP0.

b) Install the belt (1), see 2.2.2-2 Drive - Change Belt.

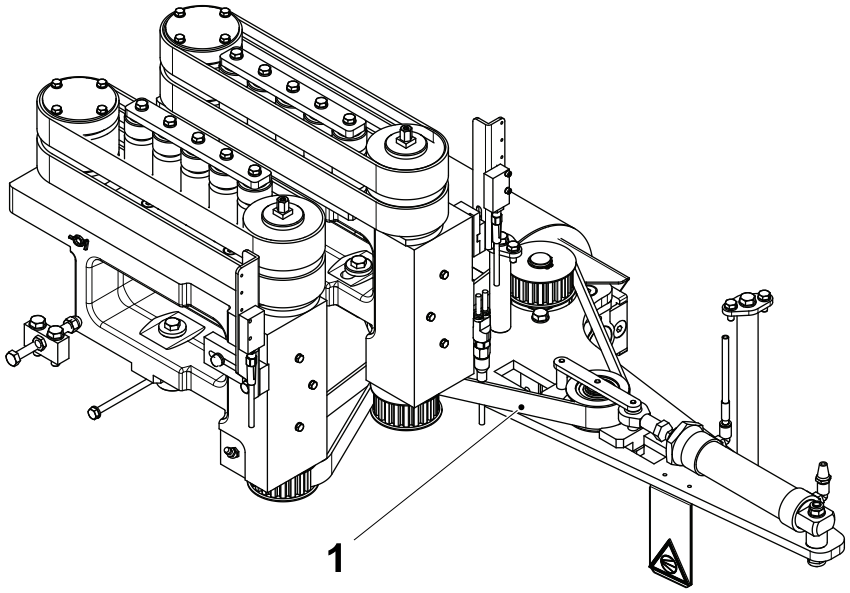

1 Belt

(Cont'd)

(Cont'd)

Install Belts

a) Loosen the nuts (1) and the screws (2).

b) Install the belts (3).

c) Tension the belts, see 2.2.1-4 Brake Unit - Set Belt Tension.

Note! A wrong setting of belt tension can cause bearing failure.

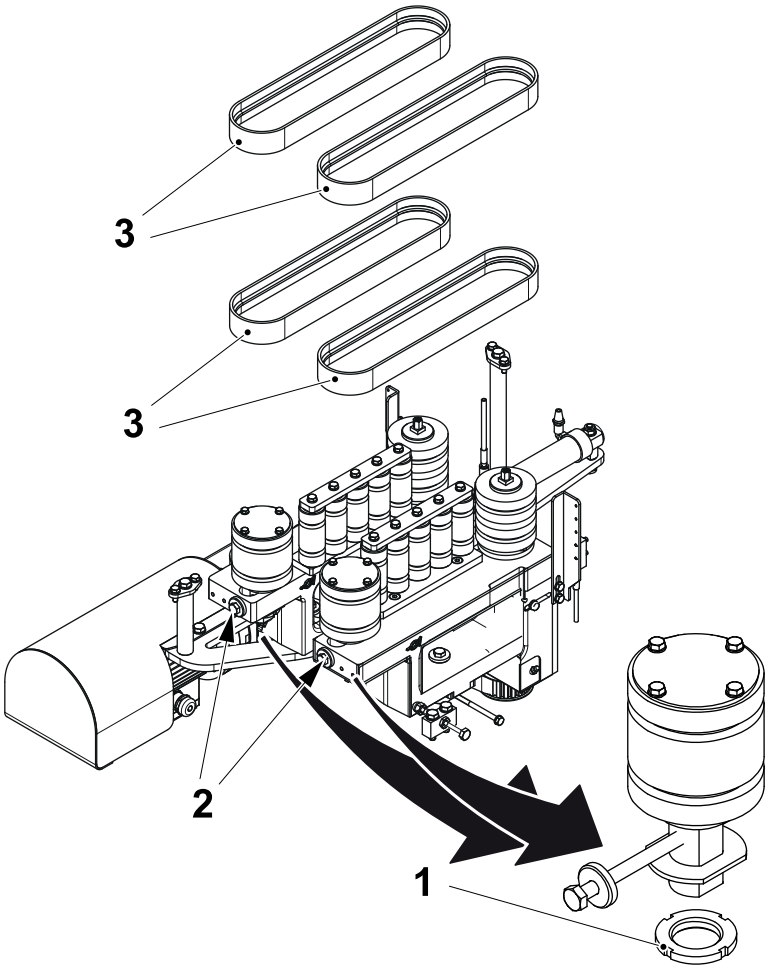

1 Nut
2 Screw
3 Belt

d) Make sure that the belts are correctly located and then switch the main air supply ON.

2.2.2 Drive

2.2.2-1 Drive - Check Belt

Machine Status	Electrical supply disconnecting device in position O (OFF) Main air valve OFF
SPC Reference	2766994-0300

a) Check the for wear or damage. If necessary, change the belt, see 2.2.2-2 Drive - Change Belt.

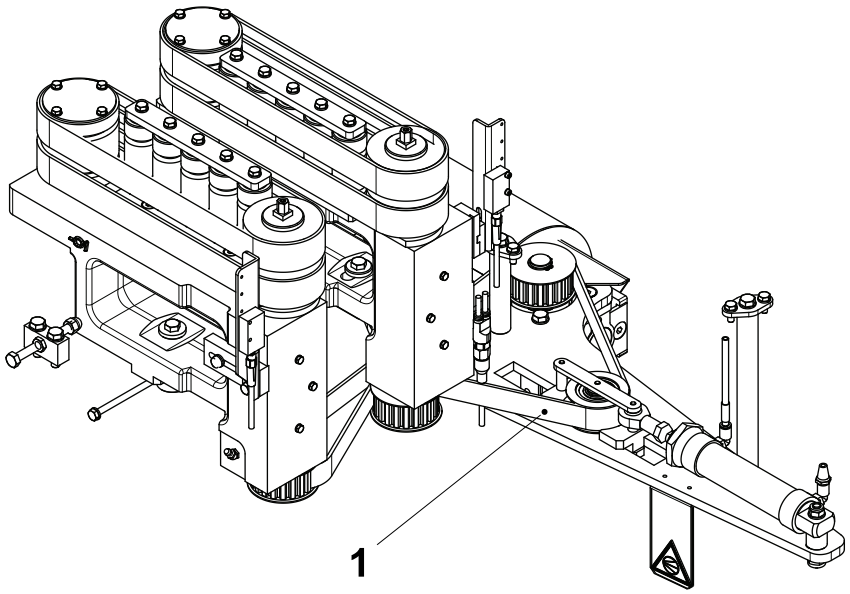

1 Drive belt

2.2.2-2 Drive - Change Belt

Machine Status	Electrical supply disconnecting device in position O (OFF) Main air valve OFF
SPC Reference	2766994-0300

a) Make sure that the main air supply is turned OFF.

b) Release the air from the cylinders by opening the valve (1) .

c) Close the valve (1) when the air has been expelled.

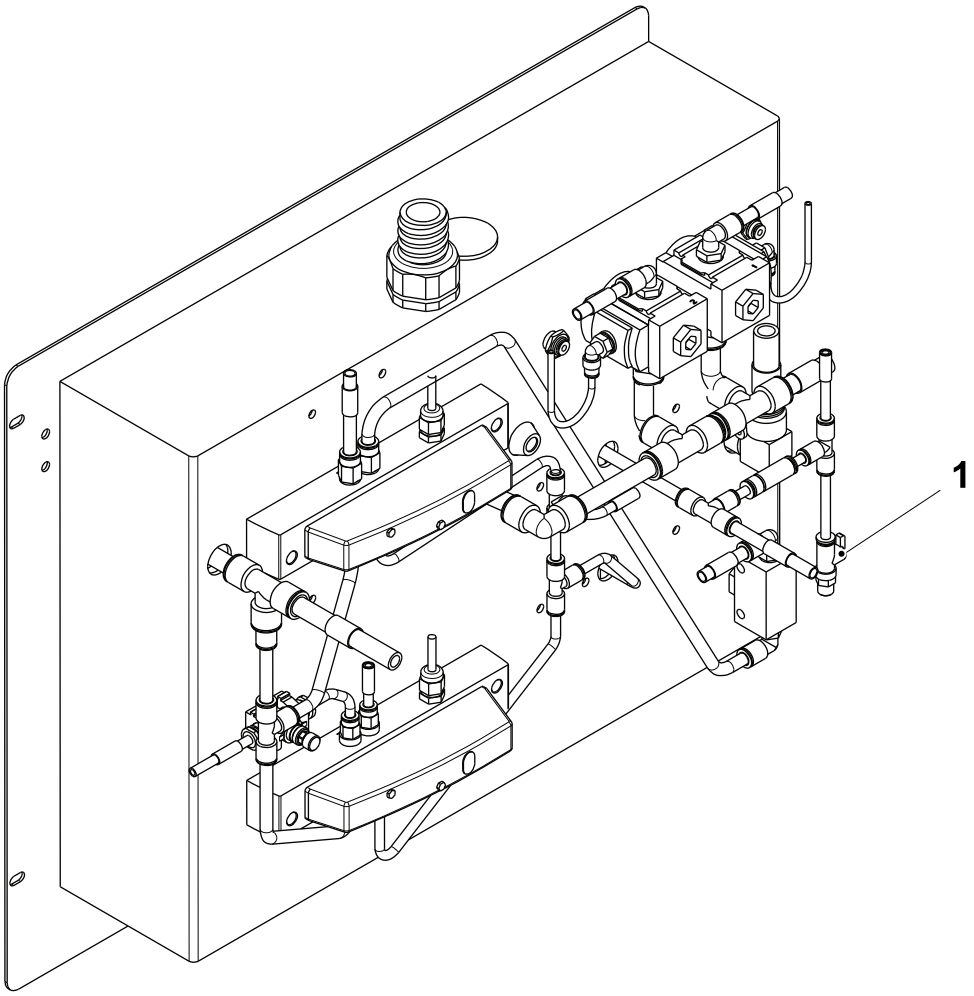

1 Valve

(Cont'd)

(Cont'd)

Note! When changing the drive belt, **do not** remove the screw (2).

d) Remove the screw (3) and the screw (4).

e) Move the plate (5) out of the way and remove the belt (6) .

f) Install a new belt and assemble in the reverse order.

g) Check that the belts are correctly located and switch the main air supply ON.

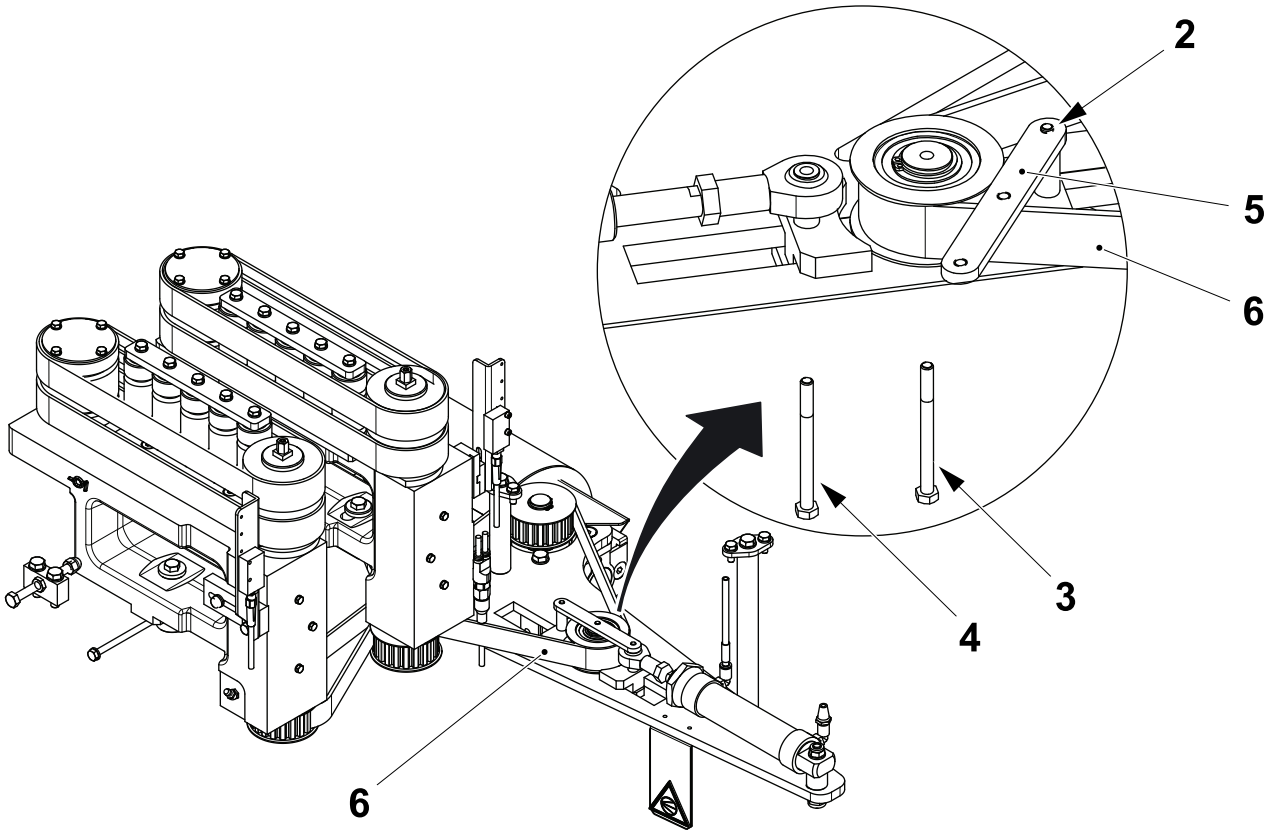

2 Screw
3 Screw
4 Screw
5 Plate
6 Belt

2.2.2-3 Drive - Change Bearings

Machine Status	Electrical supply disconnecting device in position O (OFF) Main air valve OFF
SPC Reference	2766994-0300

a) Make sure that system air is turned OFF and the pressure has been released, see 2.2.2-2 Drive - Change Belt.

b) Remove the belt (1), see 2.2.2-2 Drive - Change Belt steps d) and e).

c) Remove the roller (2).

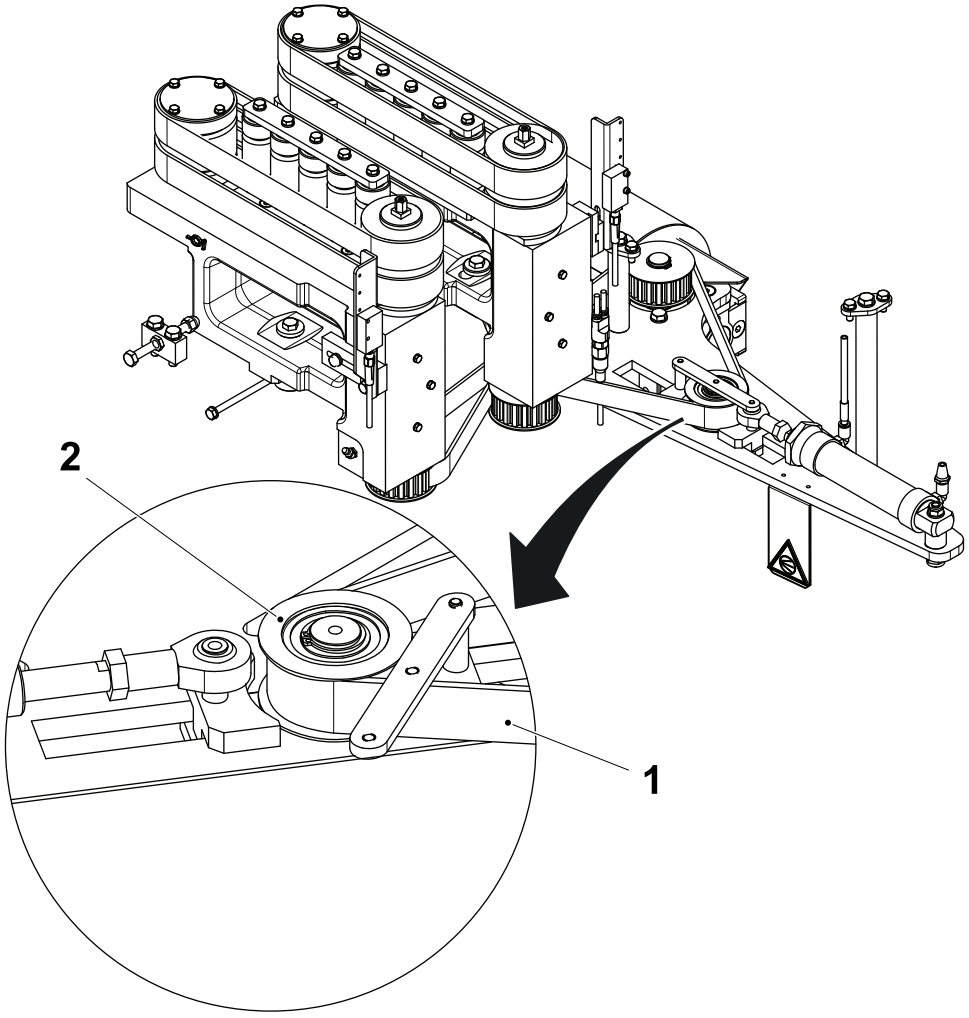

1 Belt
2 Roller

(Cont'd)

(Cont'd)

d) Remove the retaining ring (3) and push out the pin (4).

e) Extract the ball bearing (5) from the roller (2). Change the ball bearings.

f) Assemble in the reverse order.

Note! Always check that the belts are located correctly before Stepping Up.

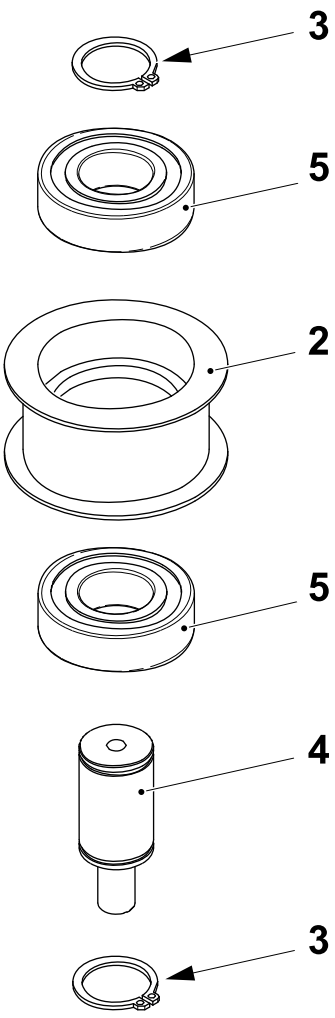

2 Roller
3 Retaining ring
4 Pin
5 Ball bearing

2.3 Package Positioner

2.3.1 Package Positioner (Right)

2.3.1.1 Package Positioner (Right) - Change Belts

2.3.1.1-1 Release the Upper Belt

Machine Status	Electrical supply disconnecting device in position O (OFF) Main air valve OFF
SPC Reference	3199892-0100

Note! Only if upper belt is present.

a) Loosen the screw (1).

b) Compress the spring (2) with its screw to reduce the belt (3) tension.

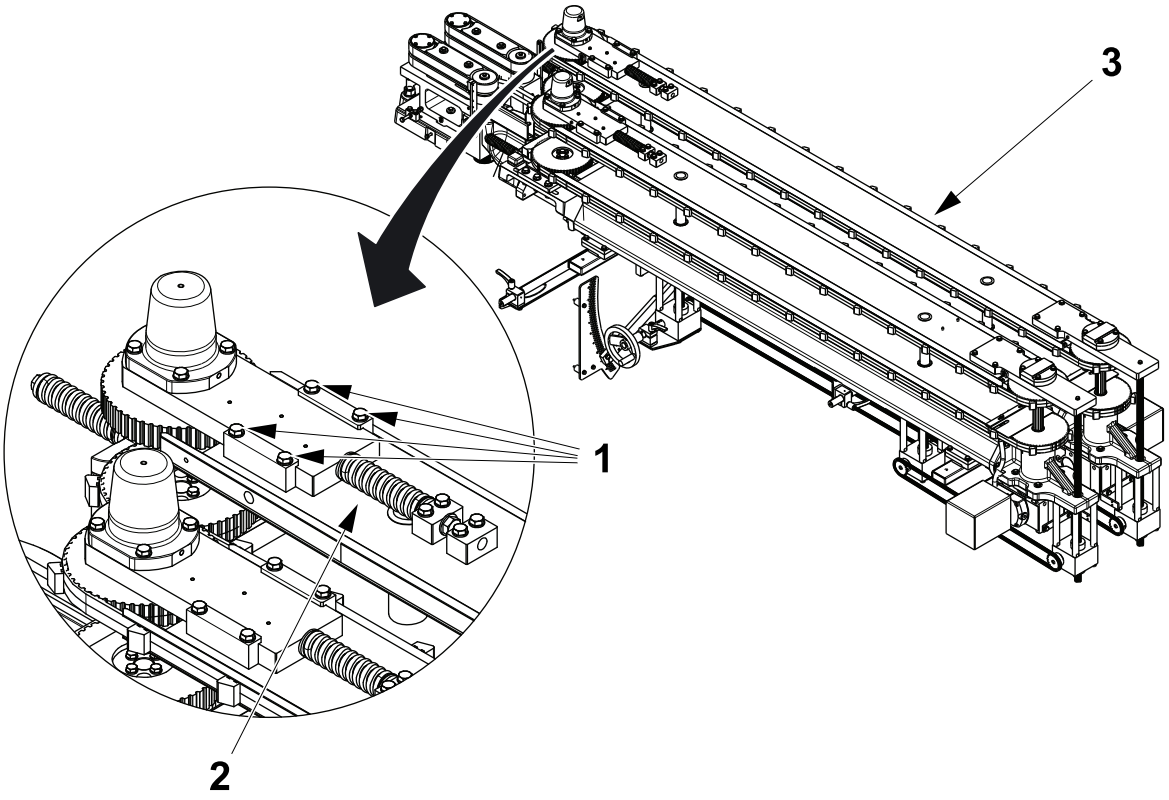

1 Screw
2 Spring
3 Belt

2.3.1.1-2 Release the Lower Belt

Machine Status	Electrical supply disconnecting device in position O (OFF) Main air valve OFF
SPC Reference	3199892-0100

Note! The distance **A** is the length of the spring (1) in its compressed state.

a) Measure and record the length **A** of the spring (1).

b) Loosen the three screw (2).

c) Decompress the spring (1) with its screw to reduce the belt (3) tension.

Note! In case of removal of the screw during the loosening see, 2.3.1.1-4 Installation of Spring.

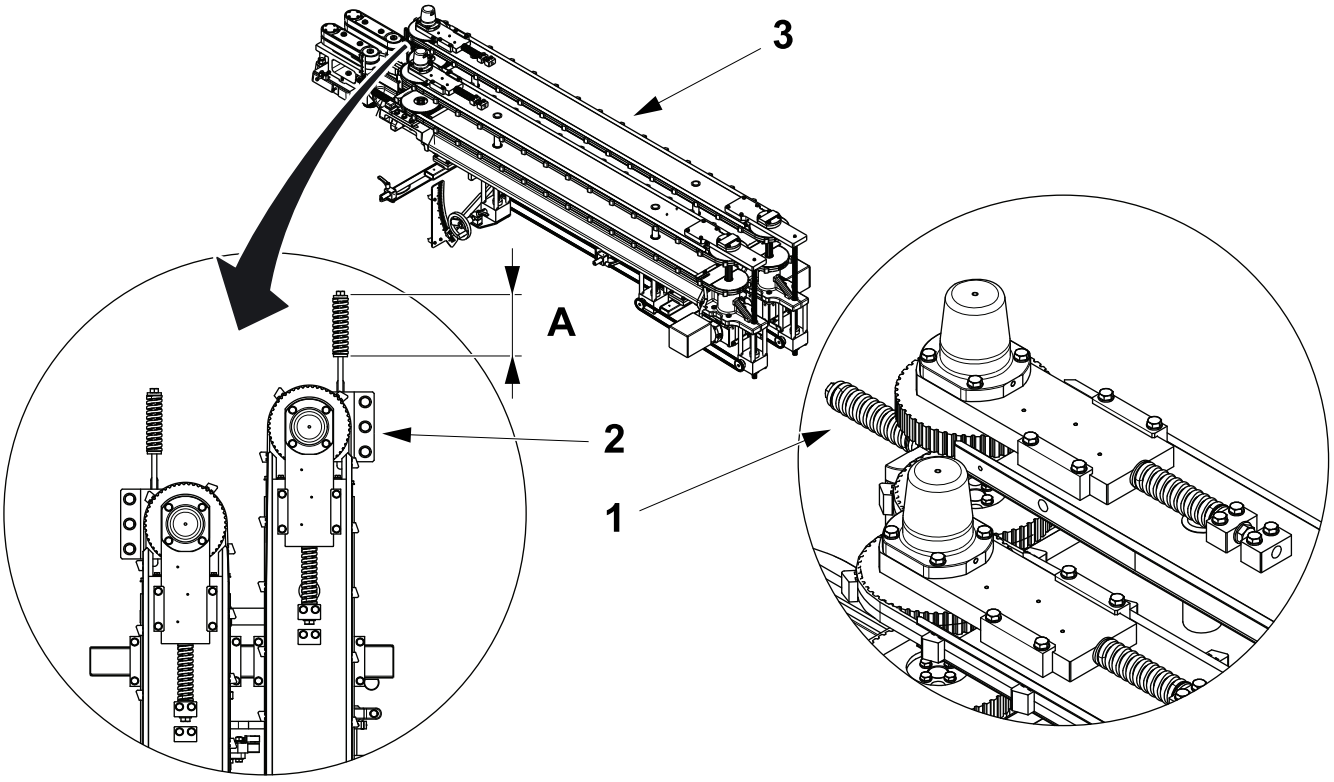

1 Spring
2 Screw
3 Belt

2.3.1.1-3 Removal and Installation of the Belts

Machine Status	Electrical supply disconnecting device in position O (OFF) Main air valve OFF
SPC Reference	3199892-0100

a) Release the screw (1).

b) Remove the old and install the new belt.

Note! Belts are package dependant, refer to the SPC.

c) Tighten the screw (1).

d) Set the belt tension see, 2.3.1.2 Package Positioner (Right) - Set Tension.

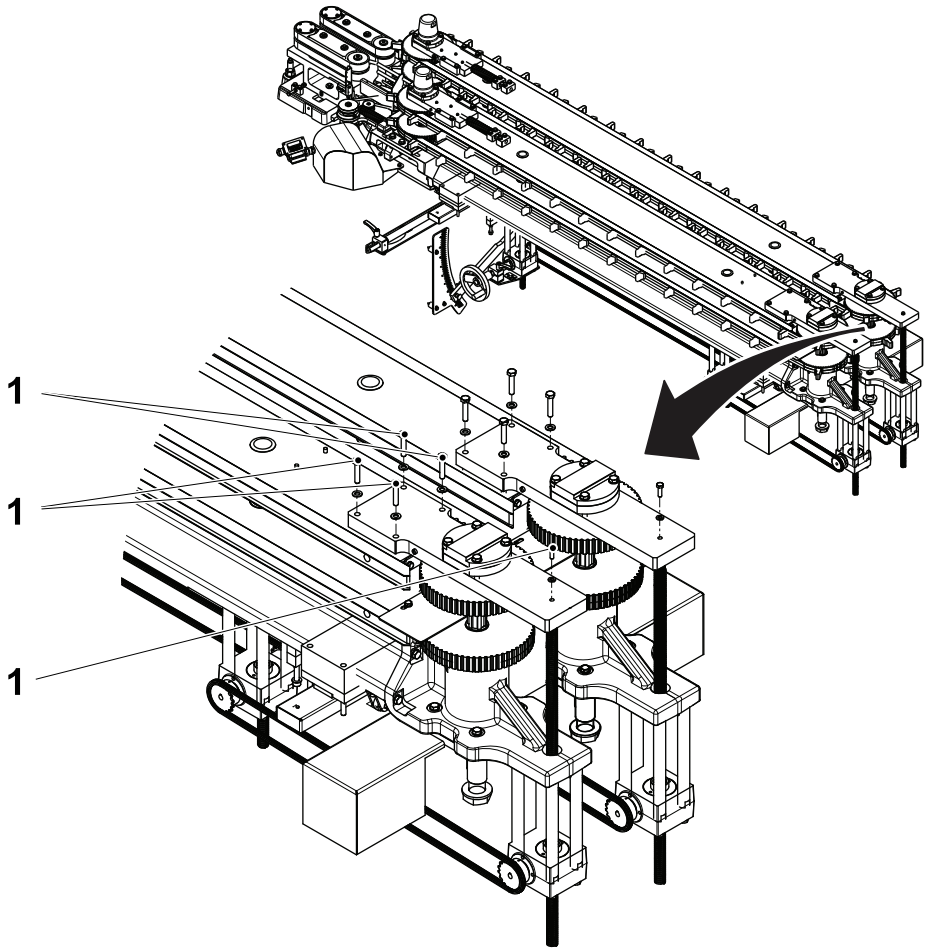

1 Screw

2.3.1.1-4 Installation of Spring

Machine Status	Main air valve ON
SPC Reference	3199892-0100

In case of removal of the screw (1) during the loosening, it is necessary to do as follows. Remove the washer (2), fit the screw (1) and tighten it until the three screw (3) are in position. Tighten the three screw (3), remove the screw (1), fit the washer (2) and the screw (1).

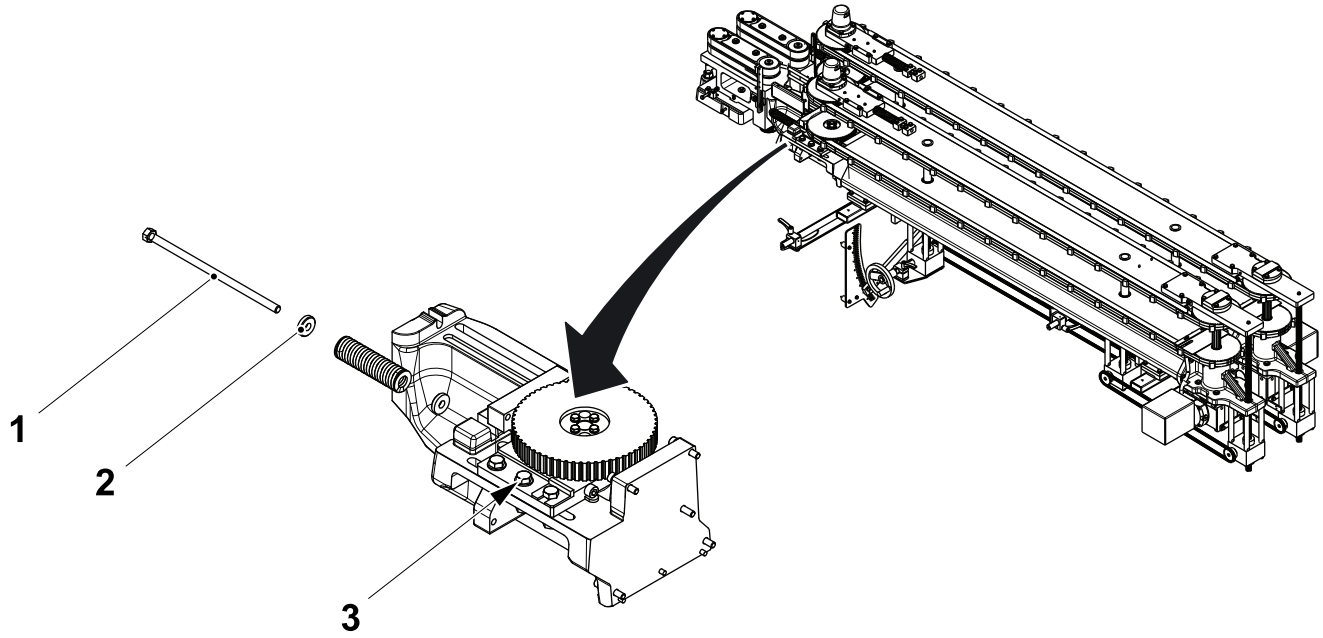

1 Screw
2 Washer
3 Screw

2.3.1.2 Package Positioner (Right) - Set Tension

2.3.1.2-1 Set Belt Tension - Right

Machine Status	Electrical supply disconnecting device in position O (OFF) Main air valve OFF
SPC Reference	3199892-0100

Note! For TBA 200 Sq and TBA 250 Sq use e) to g) only

Note! The distance **A** is the length of the in its released state.

a) Loosen the four screw (1).

b) Release the screw (2) and the spring (3) to apply pressure on the plate (4) and the belt.

c) Tighten the screw (1).

d) Measure the distance **A** on the spring (3).

e) Loosen the three screws (5).

f) Release the screw (6) and adjust until the distance **B** on the spring (7) is the same as the distance **A** on the spring (3).

g) Tighten the screws (5).

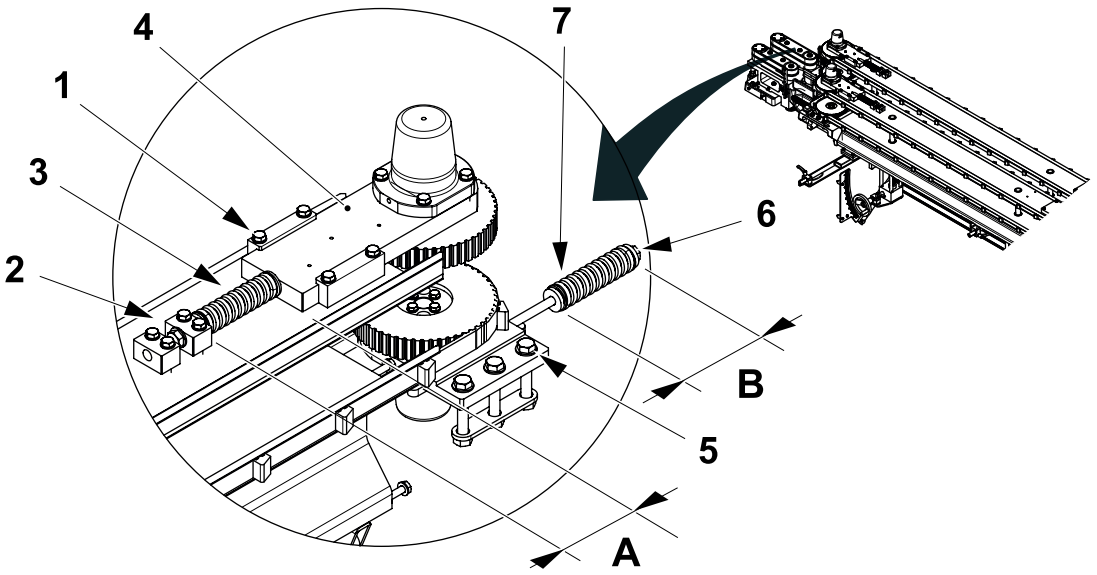

1 Screw
2 Screw
3 Spring
4 Plate
5 Screw
6 Screw
7 Spring

2.3.1.2-2 Set Belts Alignment - Right

Machine Status	Electrical supply disconnecting device in position O (OFF) Main air valve OFF
SPC Reference	3199892-0100

Note! (Not applicable to TBA 200 Sq or TBA 250 Sq)

a) Release the three screw (1) at the bottom of the drive.

b) Rotate the pulley (2) to set the lower belt carrier (3) the distance **A** behind the upper belt carrier (4).

Note! For TPA 500, TBA 200 E, TBA 250 E, TGA 1000 Crystal and TGA 1000 Leaf the belt carriers should be level, the distance A = 0 mm.

c) Without moving the pulley (2), tighten the screw (1).

A = 2 mm

A = 0 mm for TPA 500, TBA 200 E, TBA 250 E, TGA 1000 Crystal and TGA 1000 Leaf

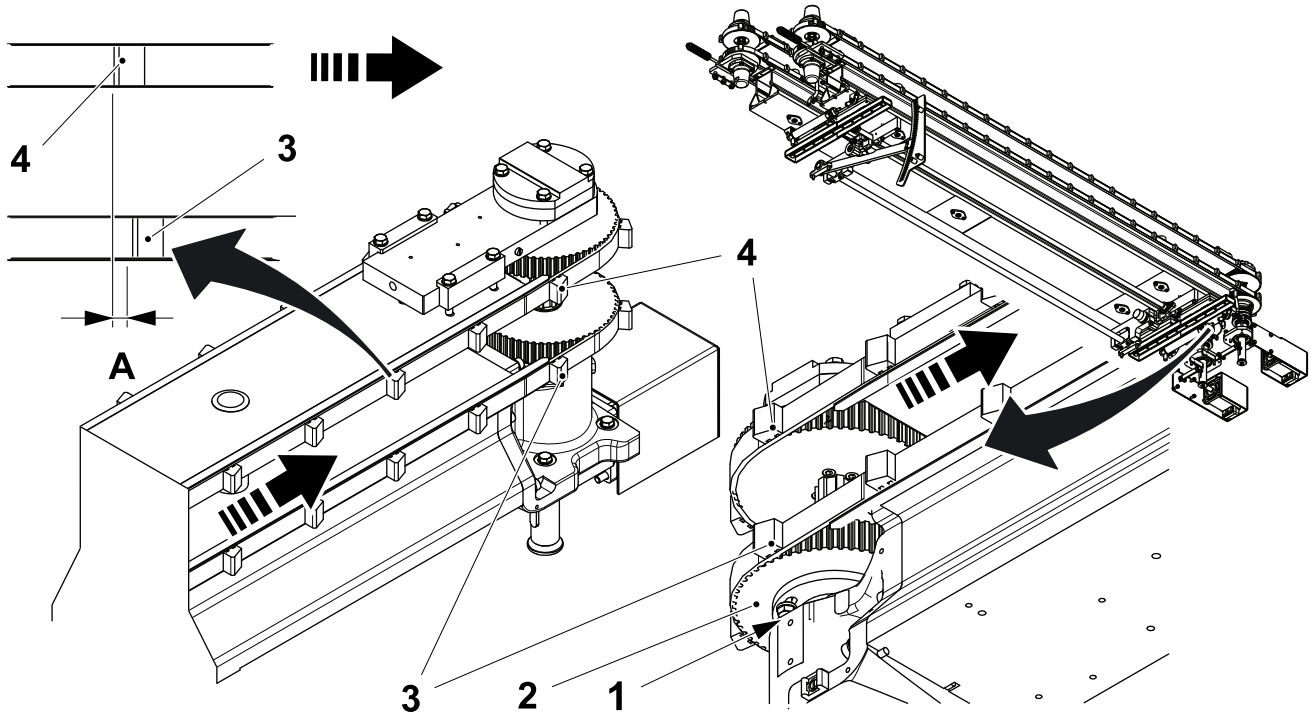

1 Screw
2 Pulley
3 Lower belt carrier
4 Upper belt carrier

2.3.2 Package Positioner (Left)

2.3.2.1 Package Positioner (Left) Change Belts

2.3.2.1-1 Release the Upper Belt

Machine Status	Electrical supply disconnecting device in position O (OFF) Main air valve OFF
SPC Reference	3199892-0100

Note! Only if upper belt is present.

a) Loosen the screws (1).

b) Compress the spring (2) with its screw to reduce the belt (3) tension.

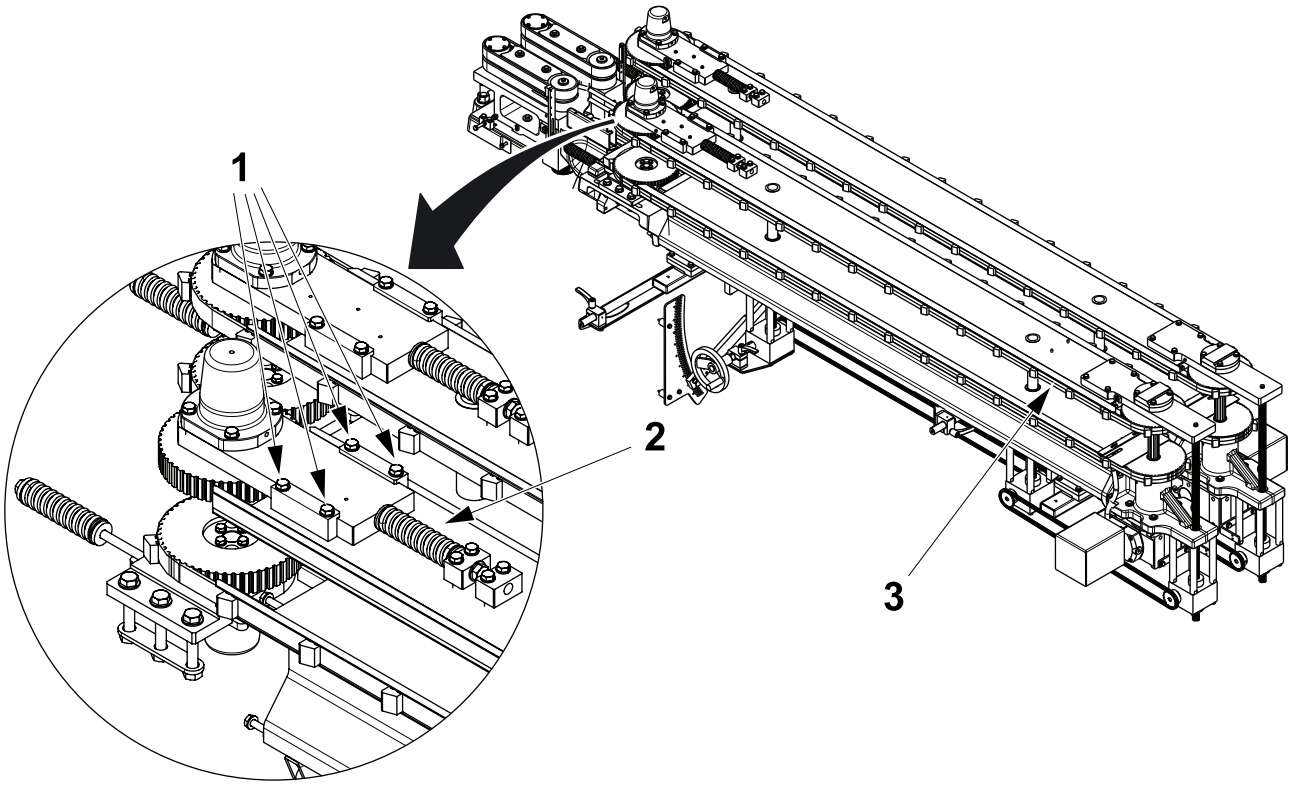

1 Screw
2 Spring
3 Belt

2.3.2.1-2 Release the Lower Belt

Machine Status	Electrical supply disconnecting device in position O (OFF) Main air valve OFF
SPC Reference	3199892-0100

Note! The distance **A** is the length of the spring (1) in its compressed state.

a) Measure and record the length **A** of the spring (1).

b) Loosen the three screws (2).

c) Decompress the spring (1) with its screw to reduce the belt (3).

Note! In case of removal of the screw during the loosening see, 2.3.2.1-4 Installation of Spring.

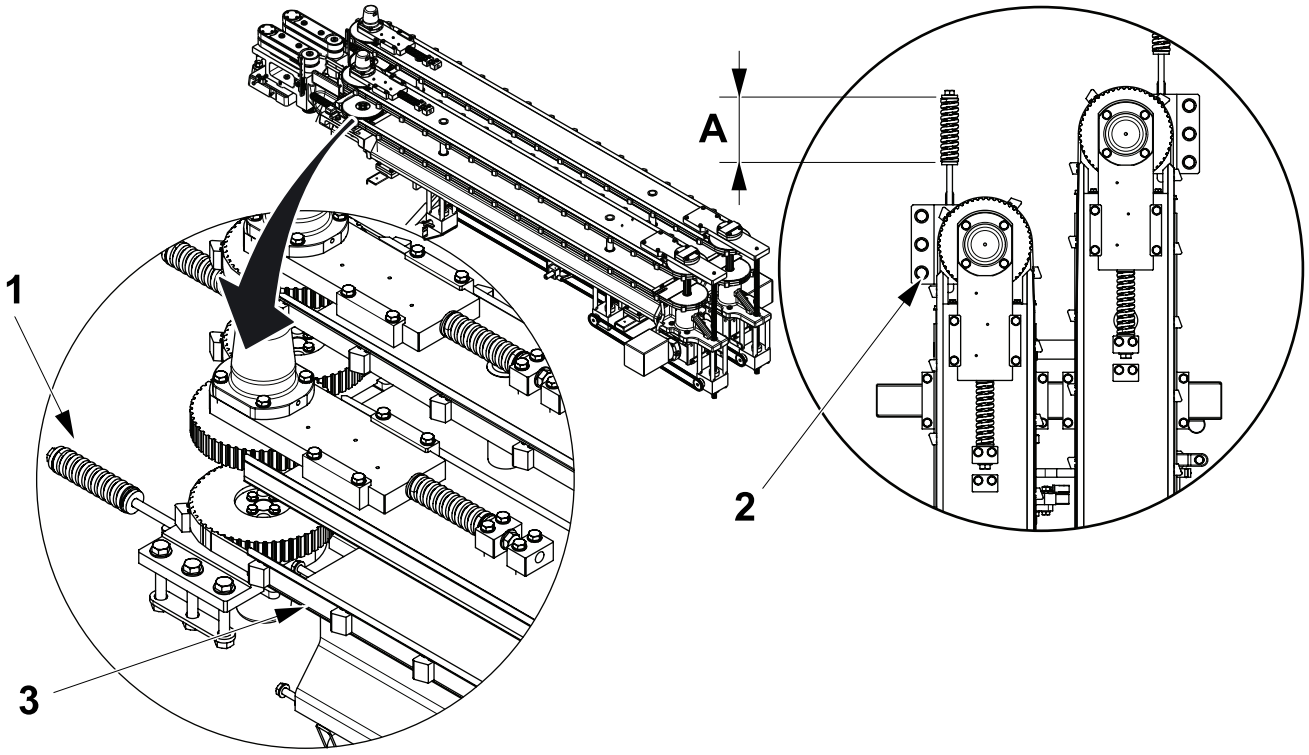

1 Spring
2 Screw
3 Belt

2.3.2.1-3 Removal and Installation of the Belts

Machine Status	Electrical supply disconnecting device in position O (OFF) Main air valve OFF
SPC Reference	3199892-0100

a) Release the screws (1).

b) Remove the old and install the new belt. .

Note! Belts are package dependant, refer to the SPC.

c) Tighten the screws (1).

d) Set the belt tension see, 2.3.2.2-1 Set Belts Tension - Left

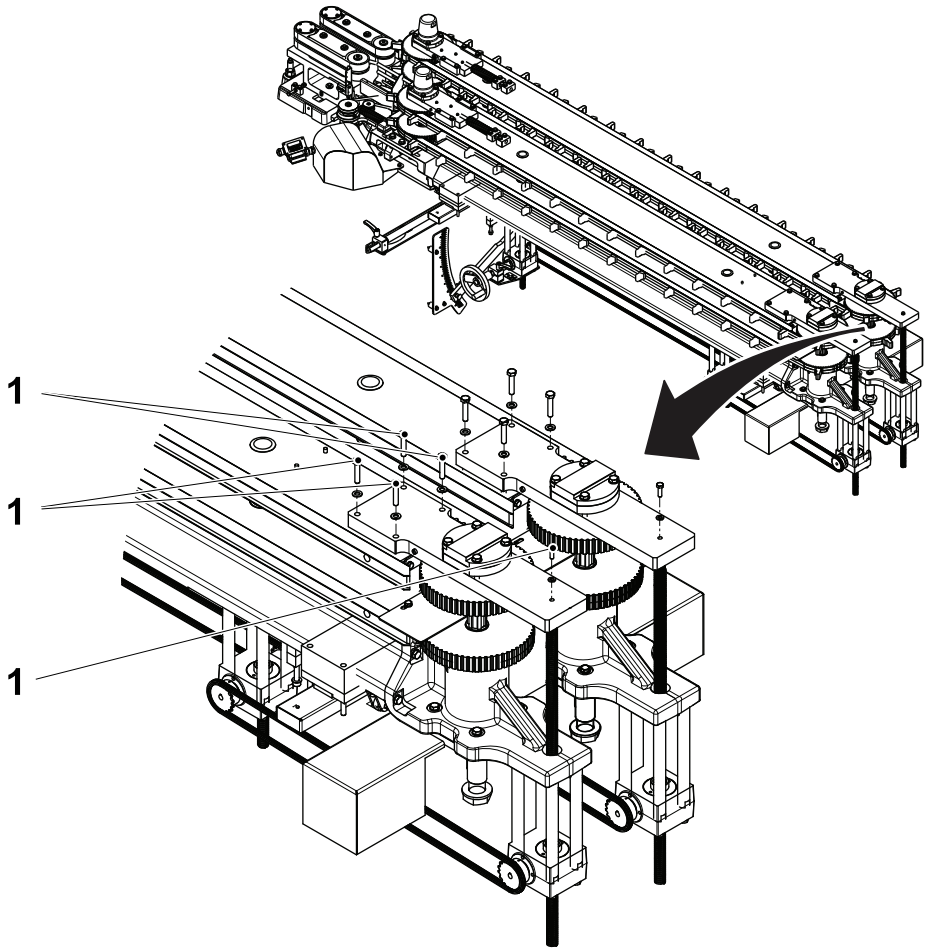

1 Screw

2.3.2.1-4 Installation of Spring

Machine Status	Electrical supply disconnecting device in position O (OFF) Main air valve OFF
SPC Reference	3199892-0100

In case of removal of the screw (1) during the loosening, it's necessary to do as follows. Remove the washer (2), fit the screw (1) and tighten it until the three screws (3) are in position. Tighten the three screws (3), remove the screw (1), fit the washer (2) and the screw (1).

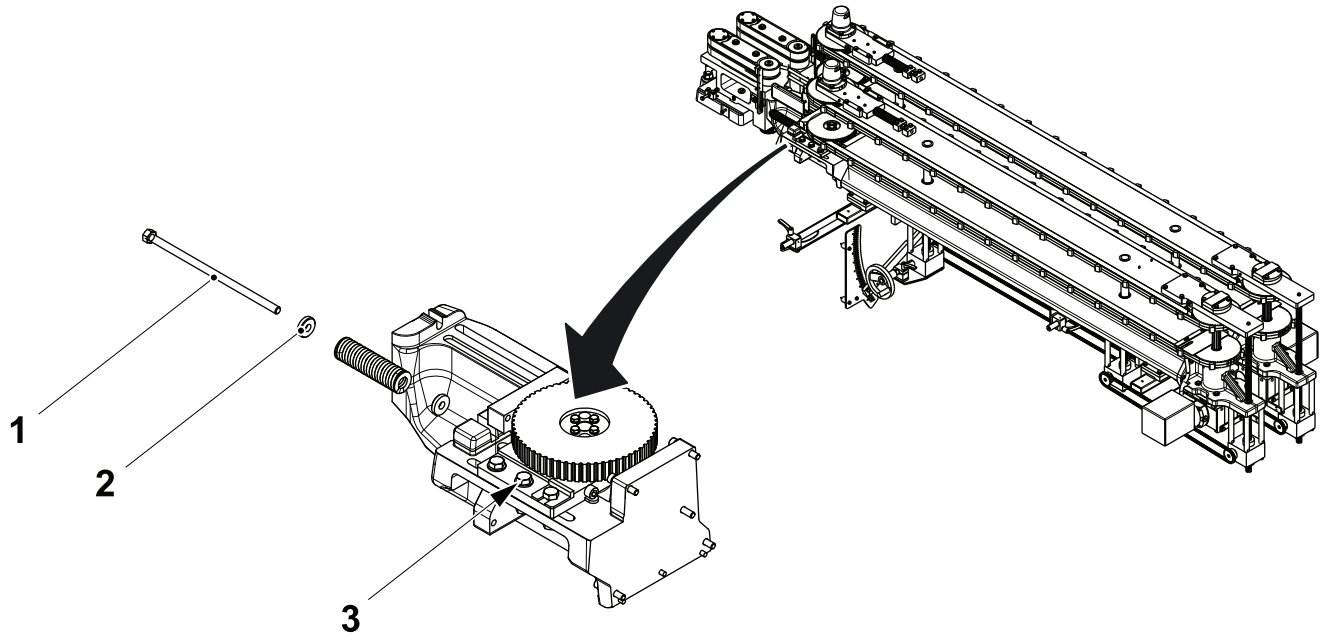

1 Screw
2 Washer
3 Screw

2.3.2.2 Package Positioner (Left) Set Tension

2.3.2.2-1 Set Belts Tension - Left

Machine Status	Electrical supply disconnecting device in position O (OFF) Main air valve OFF
SPC Reference	3199892-0100

Note! For TBA 200 Sq and TBA 250 Sq use e) to g) only

Note! The distance **A** is the length of the in its released state.

a) Loosen the four screws (1).

b) Release the screw (2) and the spring (3) to apply pressure on the plate (4) and the belt.

c) Tighten the screws (1).

d) Measure the distance **A** on the spring (3).

e) Loosen the three screws (5).

f) Release the screw (6) and adjust until the distance **B** on the spring (7) is the same as the distance **A** on the spring (3).

g) Tighten the screws (5).

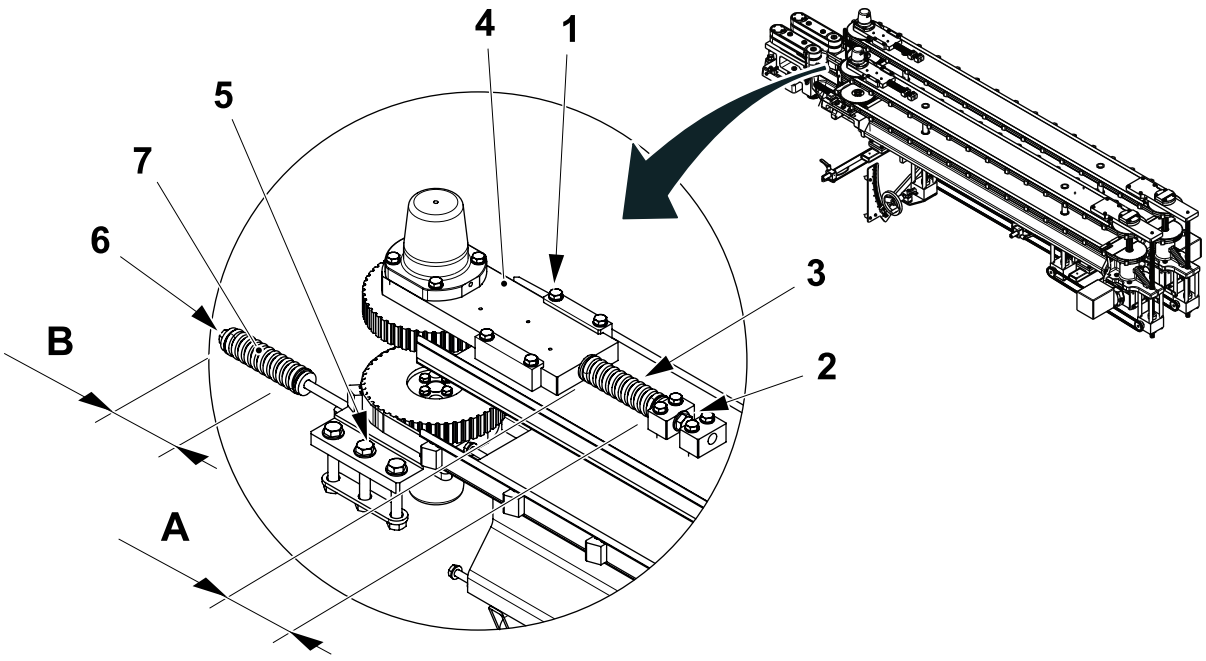

1 Screw
2 Screw
3 Spring
4 Plate
5 Screw
6 Screw
7 Spring

2.3.2.2-2 Set Belts Alignment - Left

Machine Status	Electrical supply disconnecting device in position O (OFF) Main air valve OFF
SPC Reference	3199892-0100

Note! (Not applicable to TBA 200 Sq or TBA 250 Sq)

a) Release the three screws (1) at the bottom of the drive.

b) Rotate the pulley (2) to set the lower belt carriers (3) distance **A** behind the upper belt carriers (4).

Note! For TPA 500, TBA 200 E, TBA 250 E, TGA 1000 Crystal and TGA 1000 Leaf the belt carriers should be level, distance A should be 0 mm.

c) Without moving the pulley (2), tighten the screws (1).

A = 2 mm

A = 0 mm for TPA 500, TBA 200 E, TBA 250 E, TGA 1000 Crystal and TGA 1000 Leaf

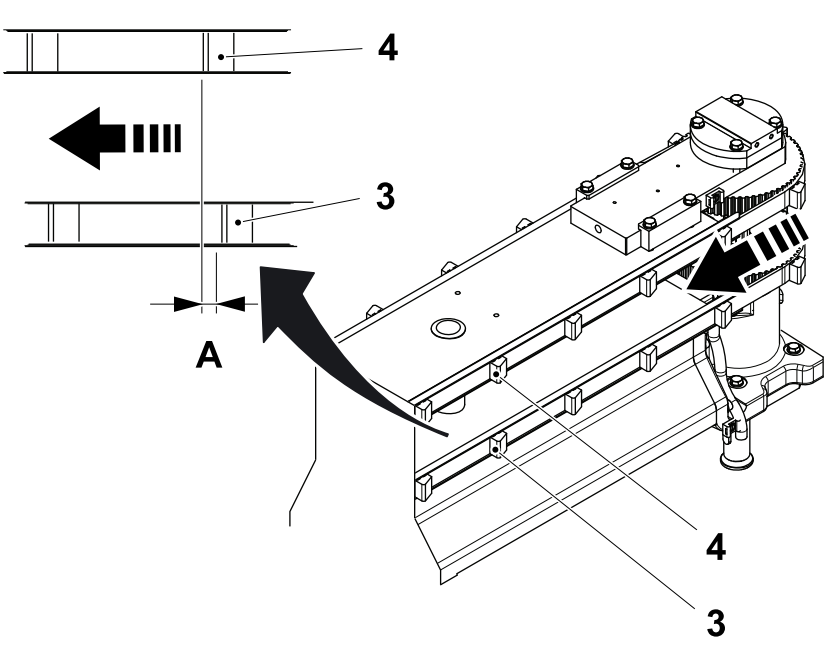

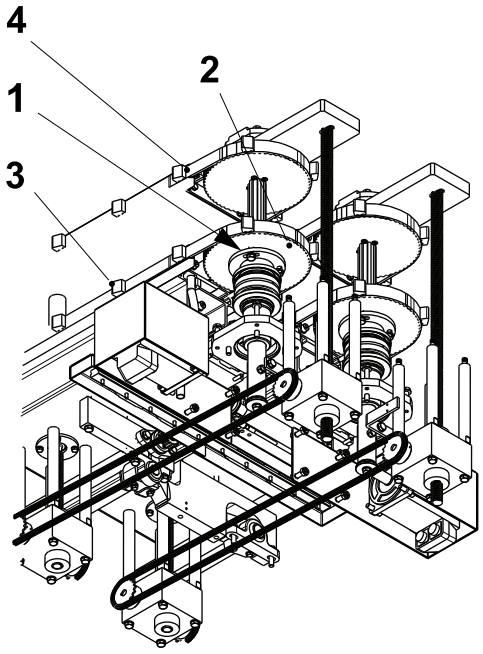

1 Screw
2 Pulley
3 Lower belt carrier
4 Upper belt carrier

2.3.3 Drive

2.3.3.1 Drive - Change Bearings

2.3.3.1-1 Preparation

Machine Status	Electrical supply disconnecting device in position O (OFF) Main air valve OFF
SPC Reference	3199886-0100 3199887-0100

Note! Only steps b) and c) applicable for TBA 200 Sq and TBA 250Sq.

Note! The oil pipes require some form of blanking caps and plugs to prevent leakage.

a) Disconnect the oil pipes from the bellows (1).

b) Disconnect the oil pipes from the housing (2).

c) Release the belt tension, see 2.3.1.1 Package Positioner (Right) - Change Belts and 2.3.2.1 Package Positioner (Left) Change Belts.

d) Before releasing the gearbox (3) record the distance **A**.

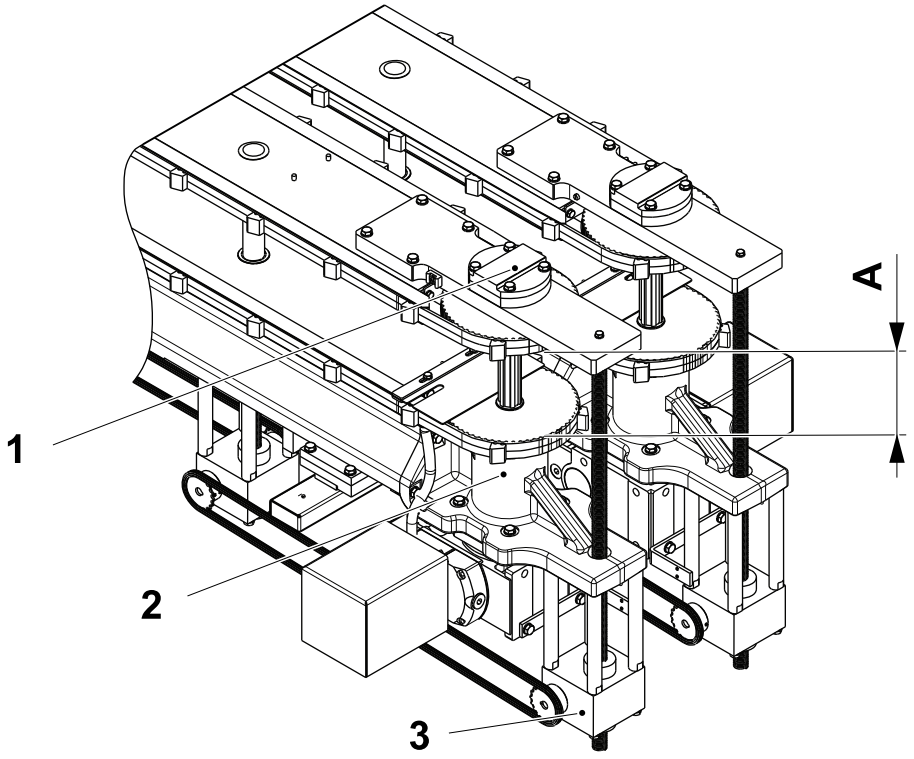

1 Bellows
2 Housing
3 Gearbox

(Cont'd)

(Cont'd)

Note! The relative position of the chain (4) and the sprocket (5) and the sprocket (6) must be kept to prevent the package line being distorted when it is moved up or down.

e) At both ends of the chain (4), feed cable ties (7) through the links of the chain (4) and tighten them to prevent the chain (4) moving with respect to the sprocket (5) and the sprocket (6).

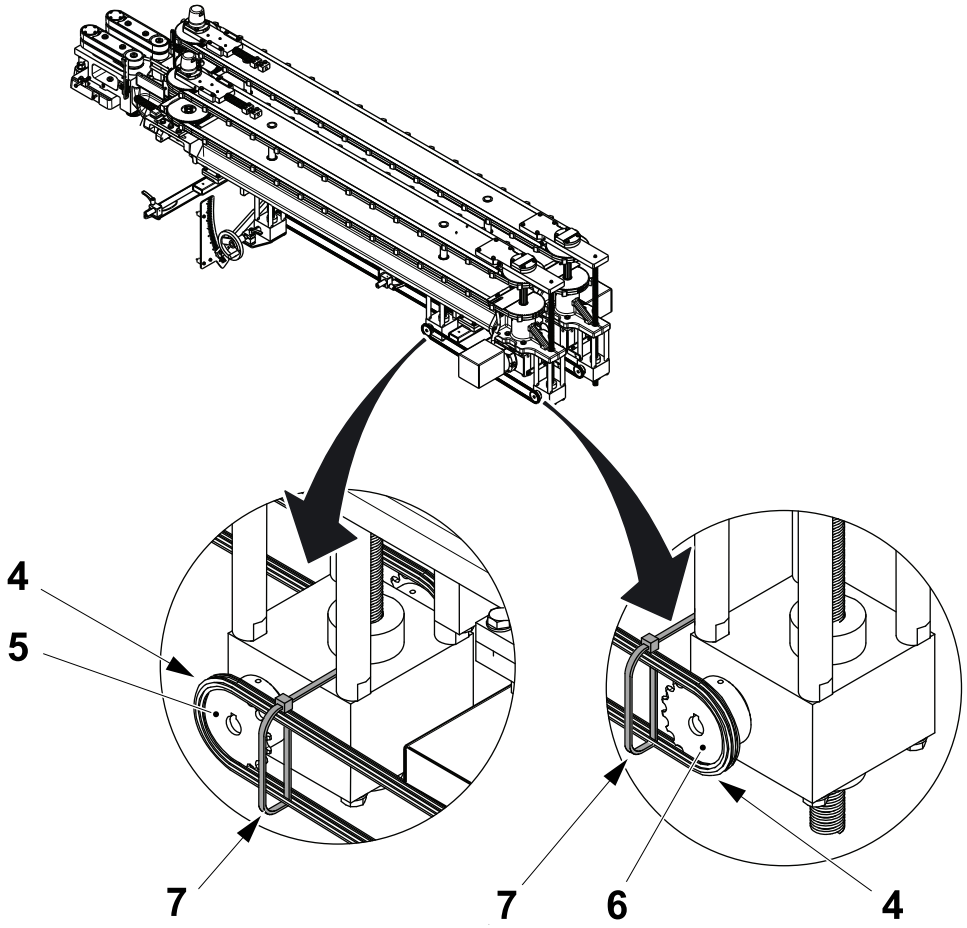

4 Chain
5 Sprocket
6 Sprocket
7 Cable Tie

(Cont'd)

(Cont'd)

f) Place a beam (8) beneath the gearbox (3) to prevent it dropping when the screw (9) and the screw (10) are removed.

g) Remove the screw (9) and the screw (10) and separate the gearbox (3) from the shaft (11).

h) Rest the gearbox (3) on the beam (8).

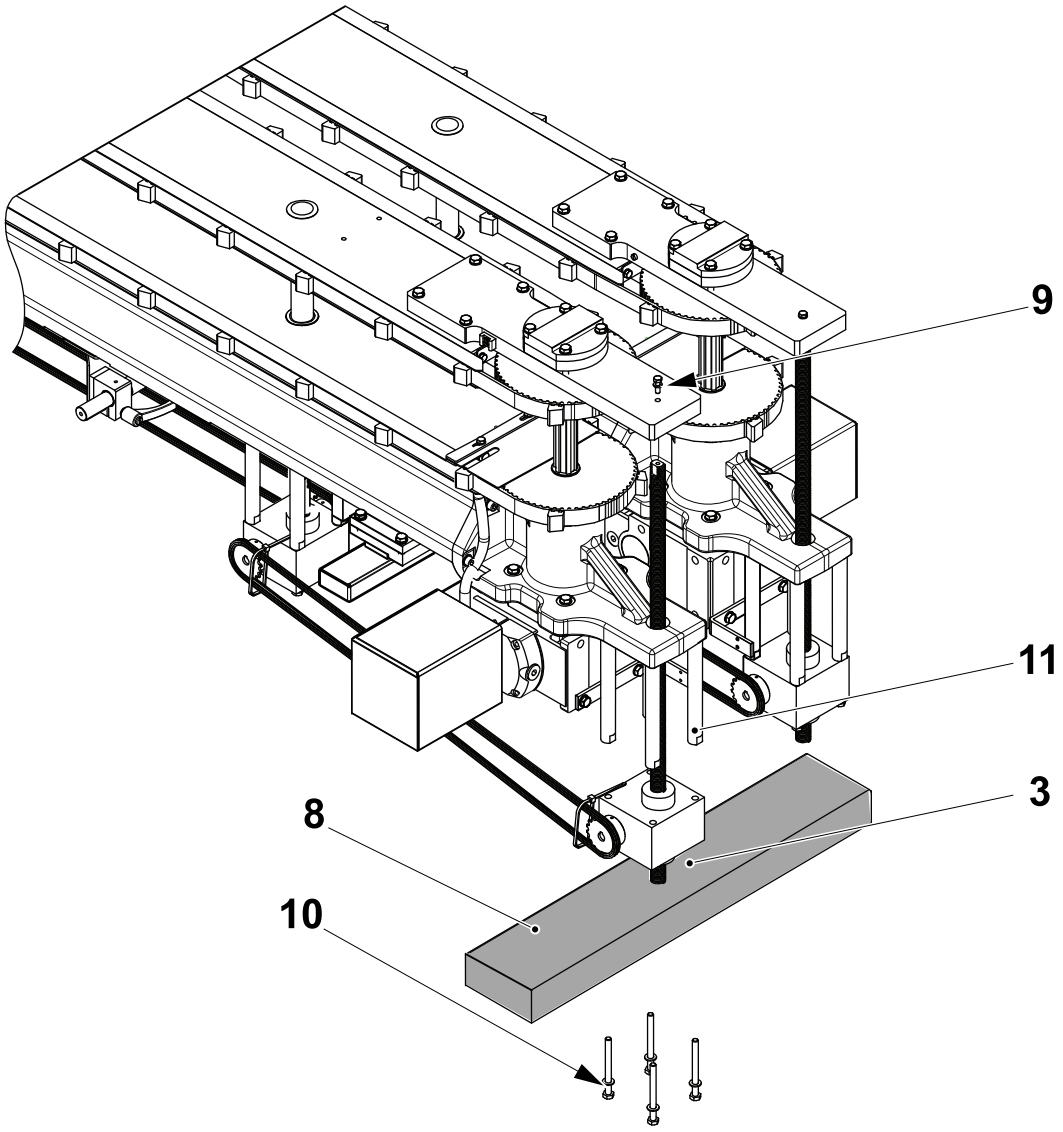

3 Gearbox
8 Beam
9 Screw
10 Screw
11 Shaft

2.3.3.1-2 Procedure

Machine Status	Electrical supply disconnecting device in position O (OFF) Main air valve OFF
SPC Reference	3199886-0100 3199887-0100

Note! Steps a) to f) not applicable to TBA 200 Sq or TBA 250 Sq.

a) Remove the screws (1), the screws (2) and the bellows (3).

b) Remove the nut (4).

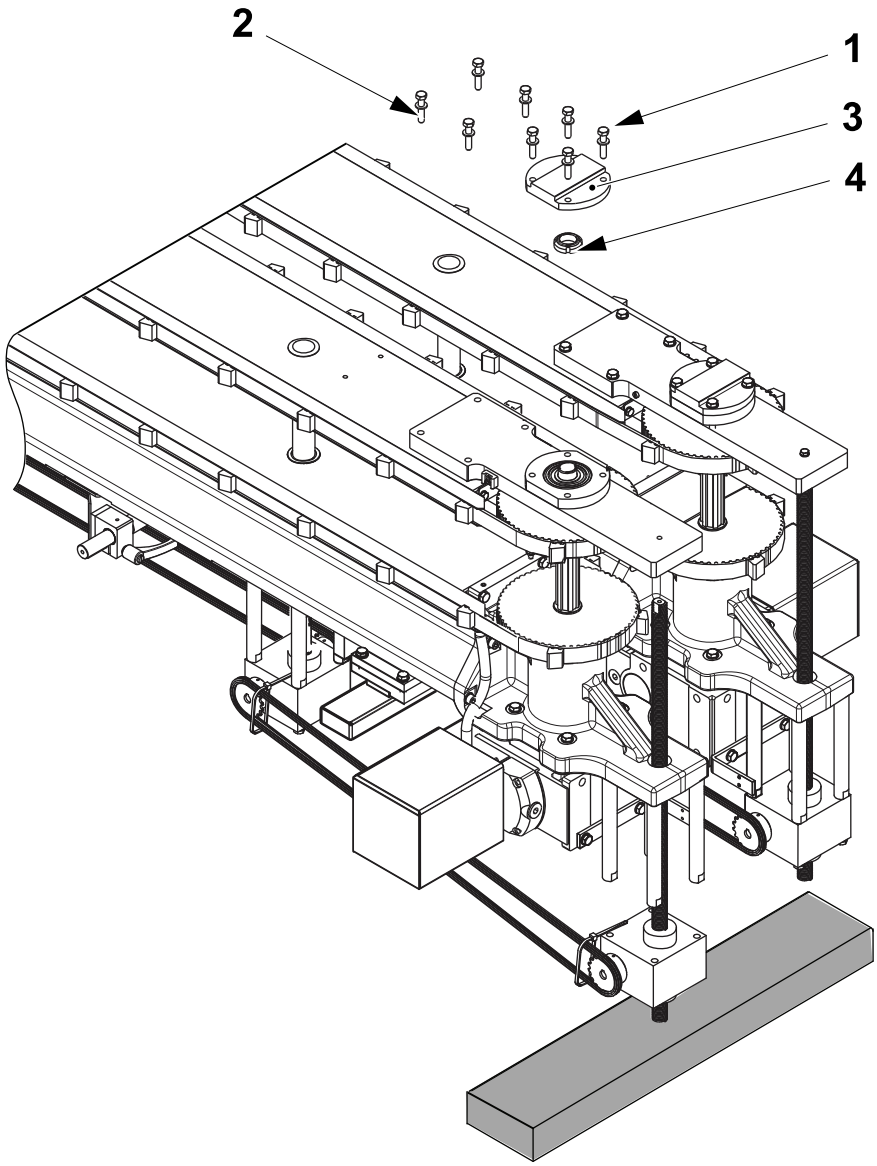

1 Screw
2 Screw
3 Bellows
4 Nut

(Cont'd)

(Cont'd)

c) Remove the plate (5).

d) Remove the spacer (6).

e) Extract and change the bearing (7).

f) Change the O-ring (8) and the seal ring (9).

g) Remove the belt (10) (not applicable to TBA 200 and 250 Sq).

h) Remove the belt (11).

i) Remove the shaft and pulley (12).

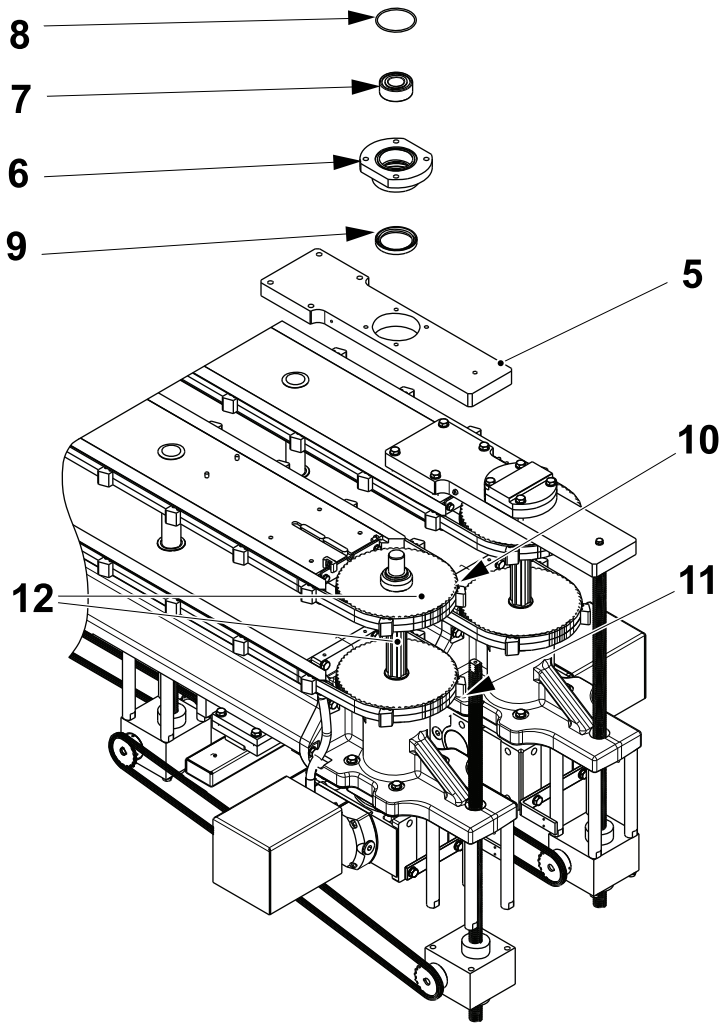

5 Plate
6 Spacer
7 Bearing
8 O-ring
9 Seal ring
10 Belt
11 Belt
12 Shaft and pulley

(Cont'd)

(Cont'd)

Note! Before removing the drive/gearbox assembly (13), make sure that all hose and cable fixings are disconnected from it.

j) Remove the six screw (14), the two cover (15) and the drive/gearbox assembly (13) from the frame (16).

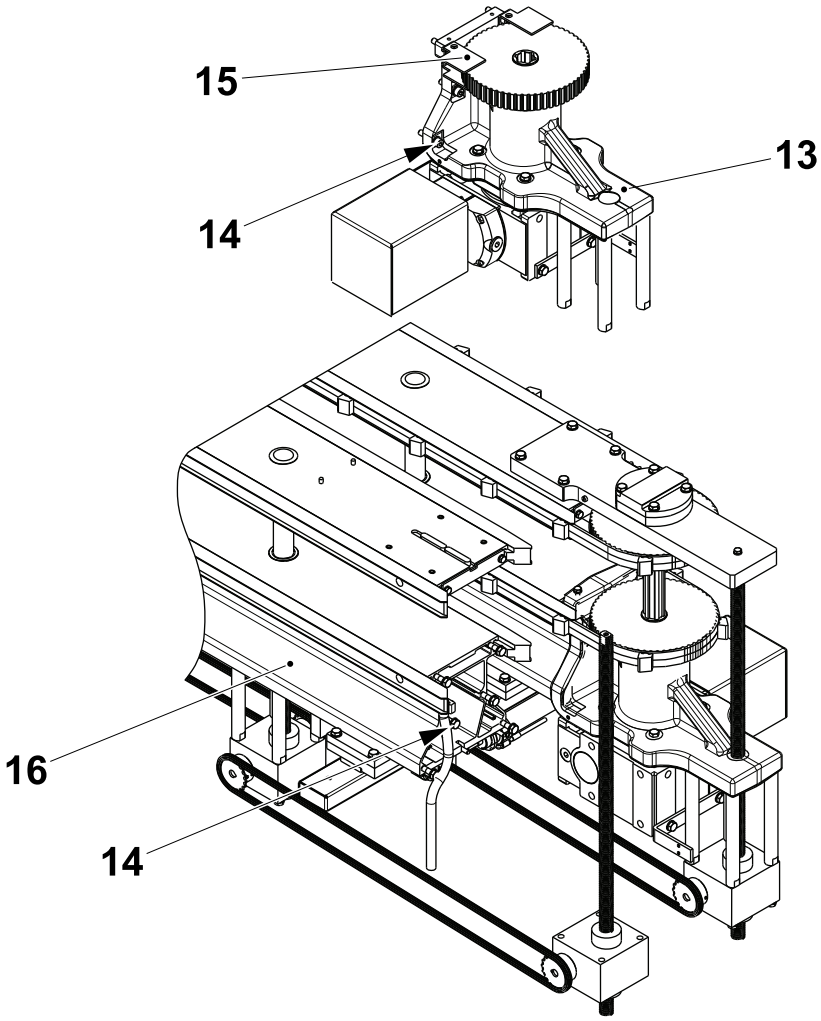

13 Drive/Gearbox assembly
14 Screw
15 Cover
16 Frame

(Cont'd)

(Cont'd)

k) Remove the nut (17) and the washer (18) from the end of the shaft assembly (19).

l) Remove the four screws (20) and separate the bracket (21) from the gearbox (22). Retain the key key (23) for the assembly.

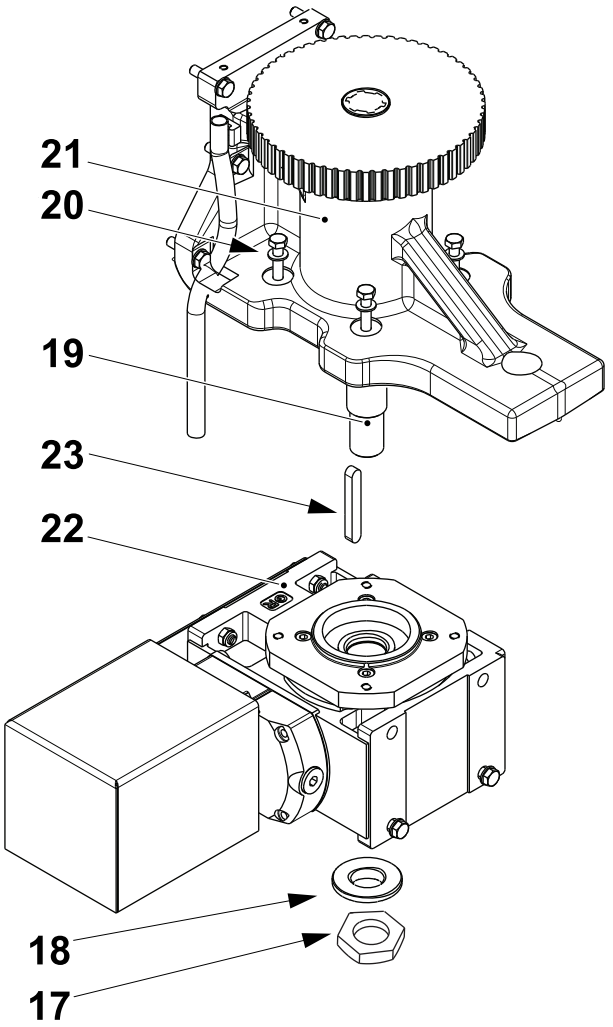

17 Screw/Nut
18 Washer
19 Shaft assembly
20 Screw
21 Bracket
22 Gearbox
23 Key

(Cont'd)

(Cont'd)

m) Remove the screws (24) and the toothed pulley (25).

n) Remove the screws (26), the bushing (27) and the plate (28)

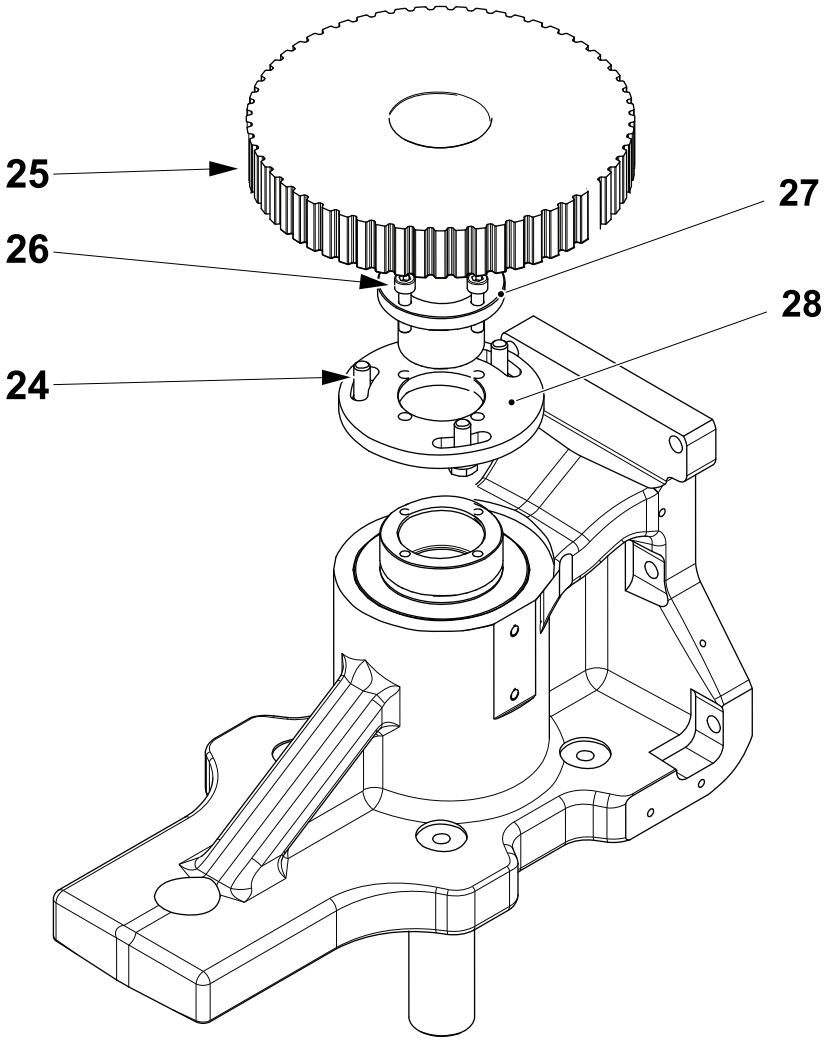

24 Screw
25 Toothed pulley
26 Screw
27 Bushing
28 Plate

(Cont'd)

(Cont'd)

o) Remove the seal ring (29) and the seal ring (30) from the housing (31).

p) Remove the retaining ring (32) from the housing (31) and pull out the lower shaft assembly (19).

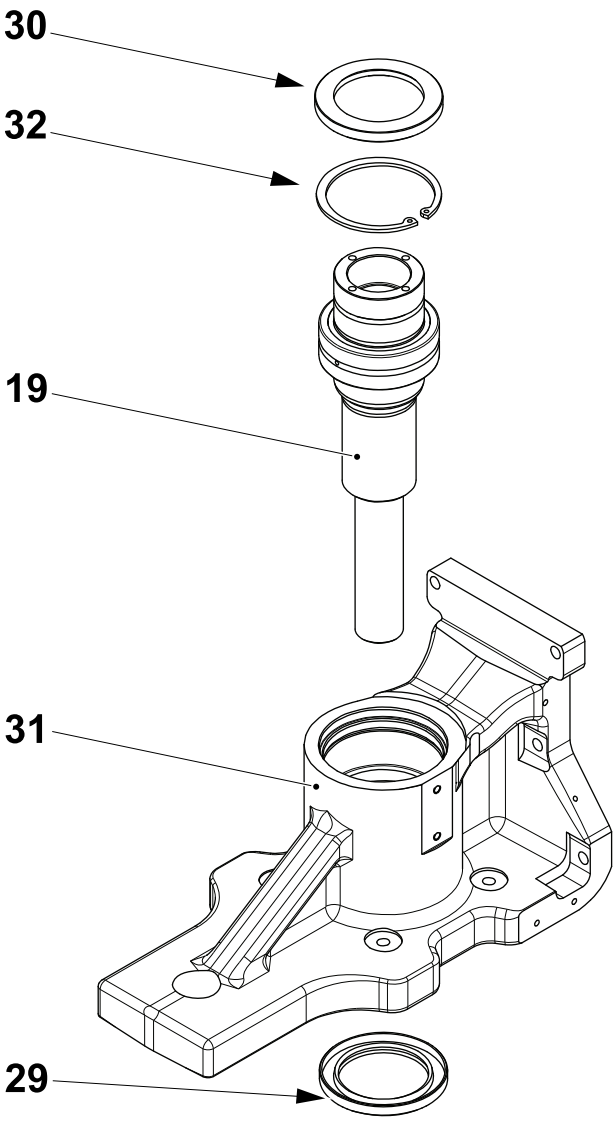

19 Shaft assembly
29 Seal ring
30 Seal ring
31 Housing
32 Retaining ring

(Cont'd)

(Cont'd)

q) Remove the retaining ring (33) from the shaft assembly (19).

r) Remove the spacer (34) and the O-ring (35).

s) Remove the bearing (36).

t) Remove the spacer (37) and the O-ring (38).

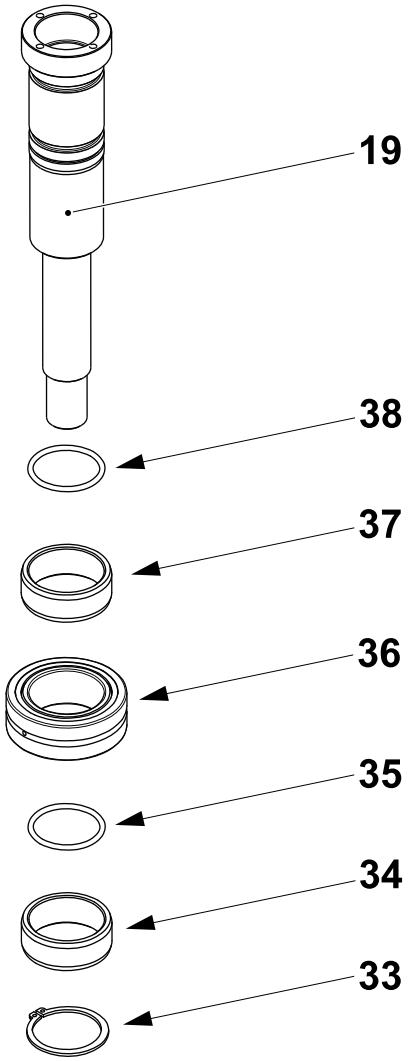

19 Shaft assembly
33 Retaining ring
34 Spacer
35 O-ring
36 Bearing
37 Spacer
38 O-ring

(Cont'd)

(Cont'd)

u) Assemble in the reverse order.

v) Install the belts, see 2.3.1.1 Package Positioner (Right) - Change Belts.

w) Repeat steps a) to v) for the other drive (39).

Note! The servo motors should now be set to zero, see 2.3.4 Set Package Positioner Zero.

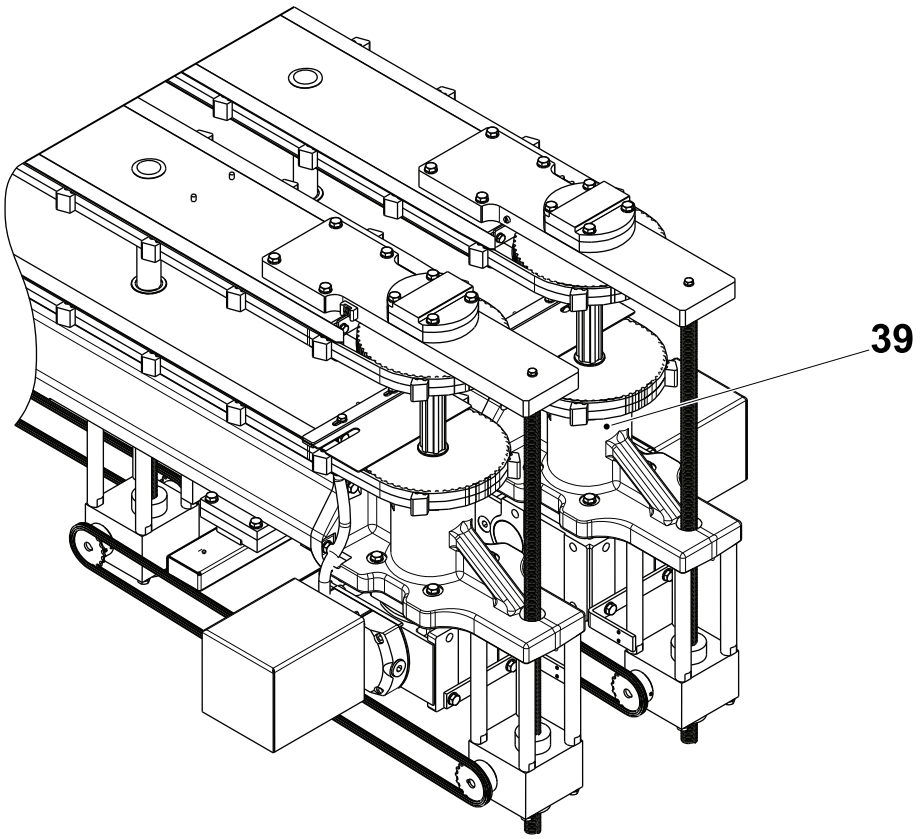

39 Drive

2.3.3.1-3 Drive - Motor and Gearbox

Machine Status	Electrical supply disconnecting device in position O (OFF) Main air valve OFF
SPC Reference	3199874-0100 3199891-0100

Separation

There may or may not be a plug (1).

The access hole (2) may be in a different location.

There is one screw (3) in the clamp (4).

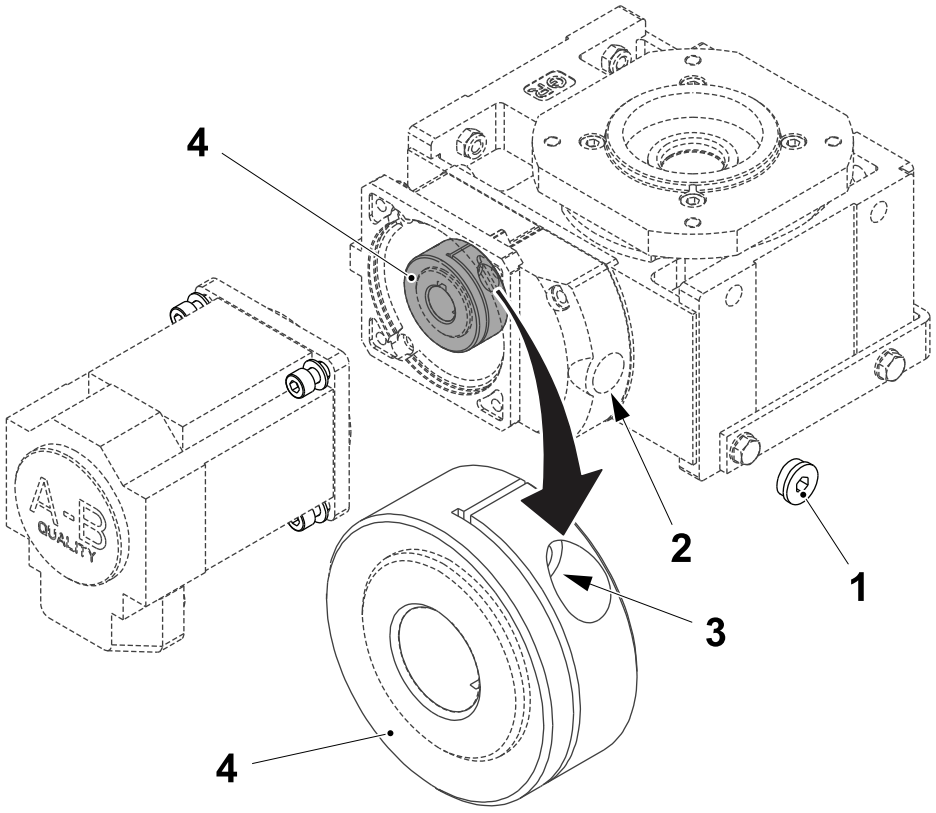

1 Plug
2 Access hole
3 Screw
4 Clamp

(Cont'd)

(Cont'd)

a) If fitted, remove the plug (1).

b) Using the access hole (2), locate the screw (3) in the clamp (4) with a 5 mm allen key and loosen the screw (3).

c) Remove the screw (5) and separate the motor (6) from the gearbox (7).

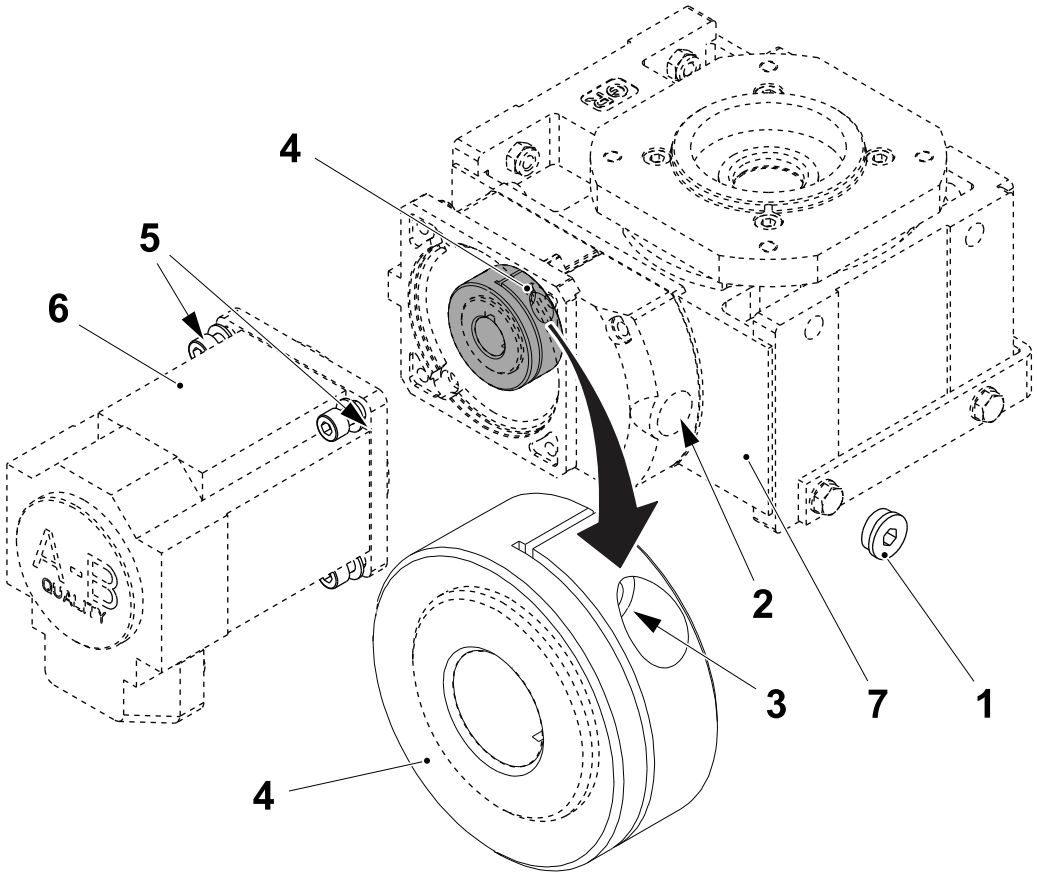

1 Plug
2 Access hole
3 Screw
4 Clamp
5 Screw
6 Motor
7 Gearbox

(Cont'd)

(Cont'd)

Assembly

a) Install the motor (1) so that the screw (2) loosely hold it.

b) Tighten the screw (3) ensuring that the clamp (4) is at the end of the drive gearbox shaft (5) so that it clamps securely onto the drive motor shaft (6).

c) Tighten completely the screw (2) that hold the motor (1).

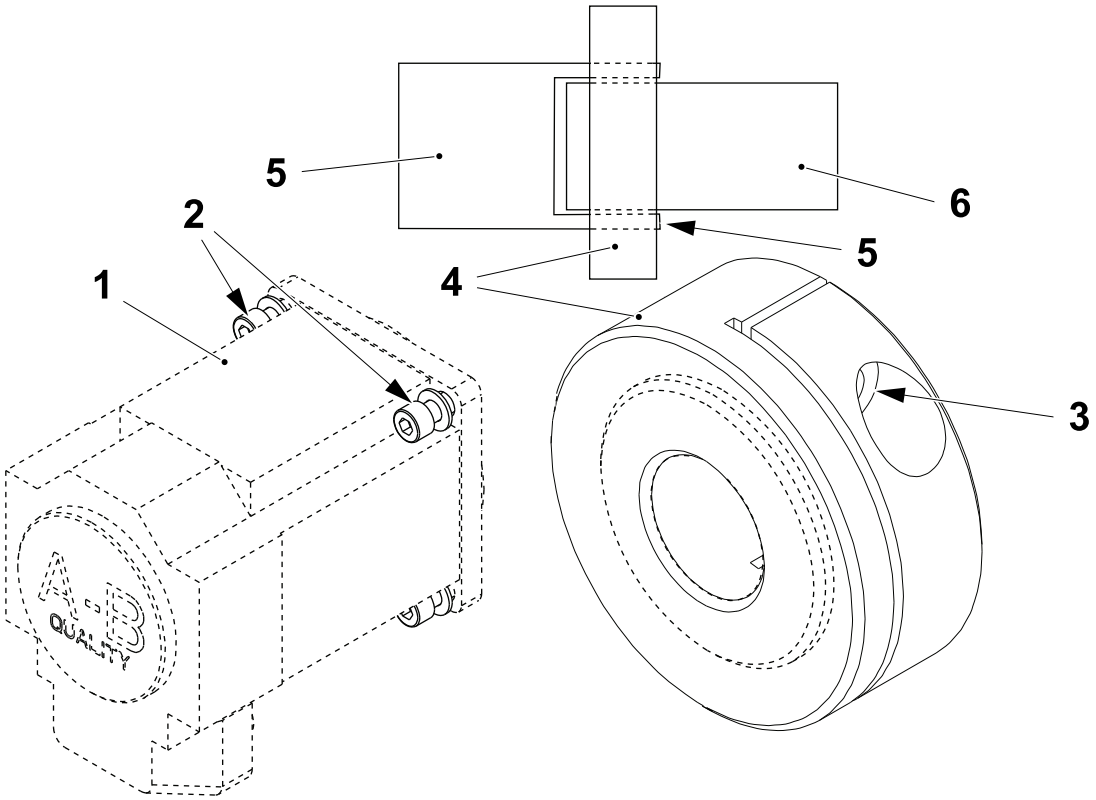

1 Motor
2 Screw
3 Screw
4 Clamp
5 Gearbox shaft
6 Drive motor shaft

2.3.3.1-4 Belt Stretcher - Change Bearings

Machine Status	Electrical supply disconnecting device in position O (OFF) Main air valve OFF
SPC Reference	2766954-0200 2769743-0200

Upper Assemblies

Note! Not applicable to TBA 200 and 250 Sq.

(Cont'd)

(Cont'd)

a) Remove the belts, see 2.3.1.1 Package Positioner (Right) - Change Belts and 2.3.2.1 Package Positioner (Left) Change Belts.

b) Remove the screw (1) and the bracket (2)

c) Remove the screw (3) and the bellows assembly (4).

d) Repeat steps b) and c) for the other bellows assembly (5).

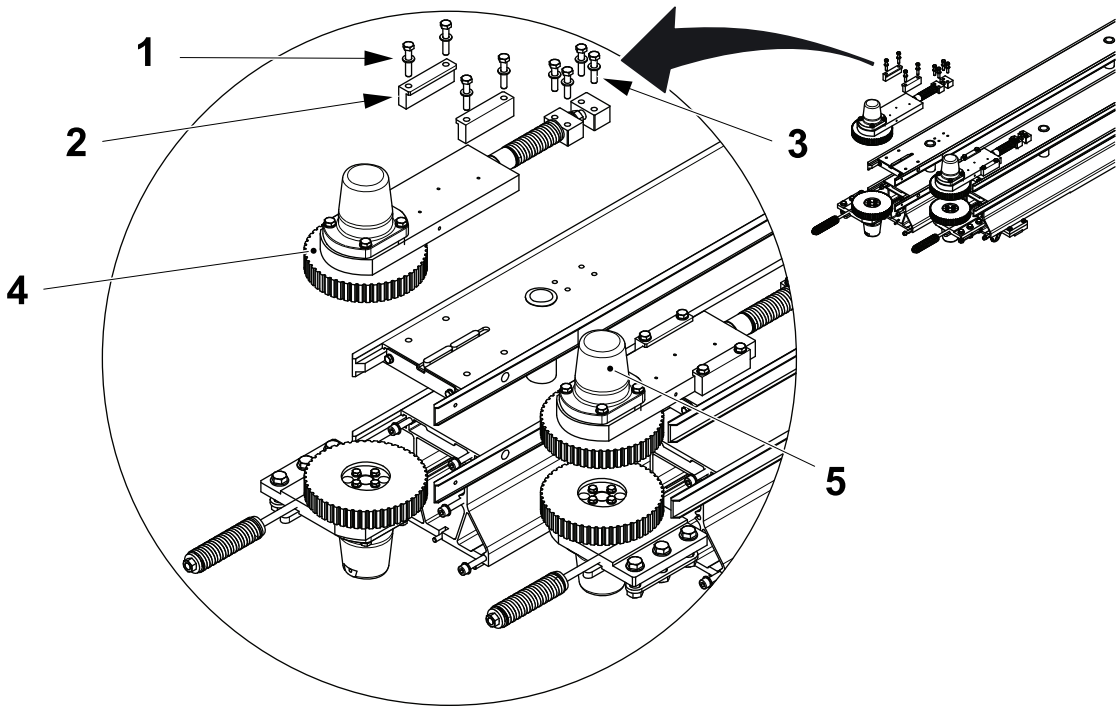

1 Screw
2 Bracket
3 Screw
4 Bellows assembly
5 Bellows assembly

(Cont'd)

(Cont'd)

e) Remove the screw (6) and the toothed pulley (7) from the shaft (8).

f) Remove the screw (9) from the bellows (10).

g) Remove the seal ring (11) from the bellows (10).

h) Remove the retaining ring (12) and pull out the shaft (8).

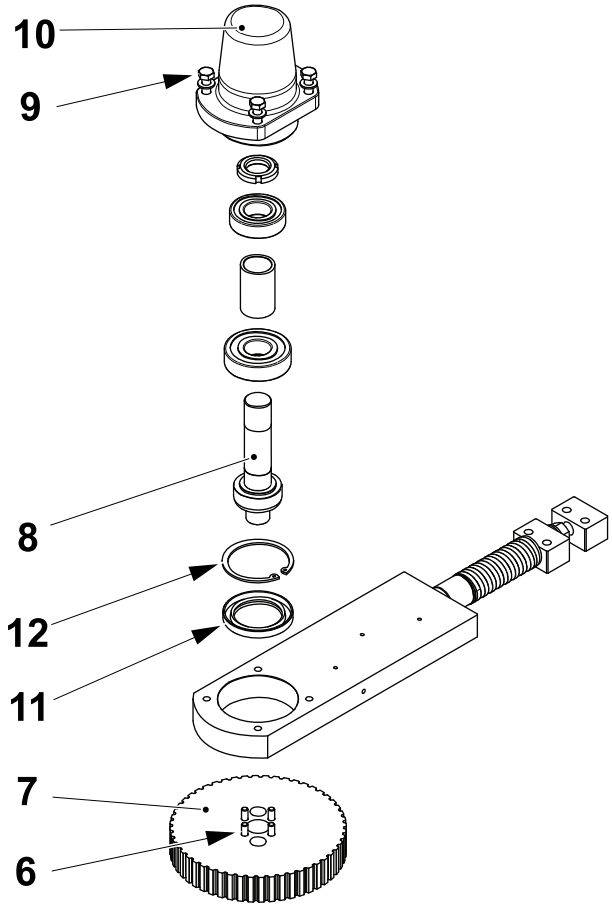

6 Screw
7 Toothed pulley
8 Shaft
9 Screw
10 Bellows
11 Seal ring
12 Retaining ring

(Cont'd)

(Cont'd)

i) Remove the nut (13), the bearing (14), the spacer (15) and the bearing (16) from the shaft (8).

j) Change the seal ring (11), the retaining ring (12), the bearing (14) and the bearing (16).

k) Assemble in the reverse order.

l) Install the belts, see 2.3.1.1 Package Positioner (Right) - Change Belts and 2.3.2.1 Package Positioner (Left) Change Belts.

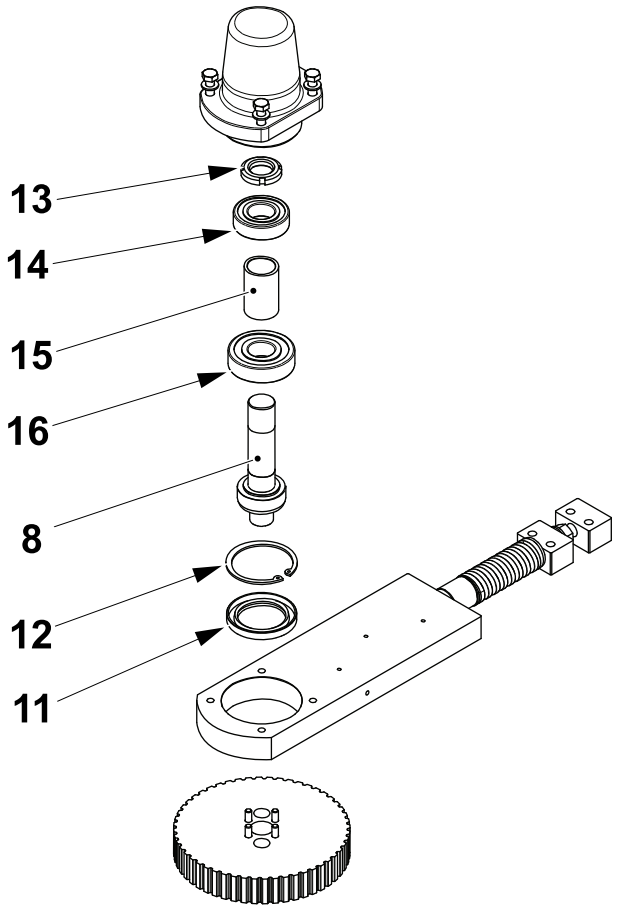

8 Shaft
11 Seal ring
12 Retaining ring
13 Nut
14 Bearing
15 Spacer
16 Bearing

(Cont'd)

(Cont'd)

Lower Assemblies

a) Remove the belts, see 2.3.1.1 Package Positioner (Right) - Change Belts and 2.3.2.1 Package Positioner (Left) Change Belts.

b) Remove the screw (1) and the bellows assembly (2).

c) Repeat step b) for the other bellows assembly (3).

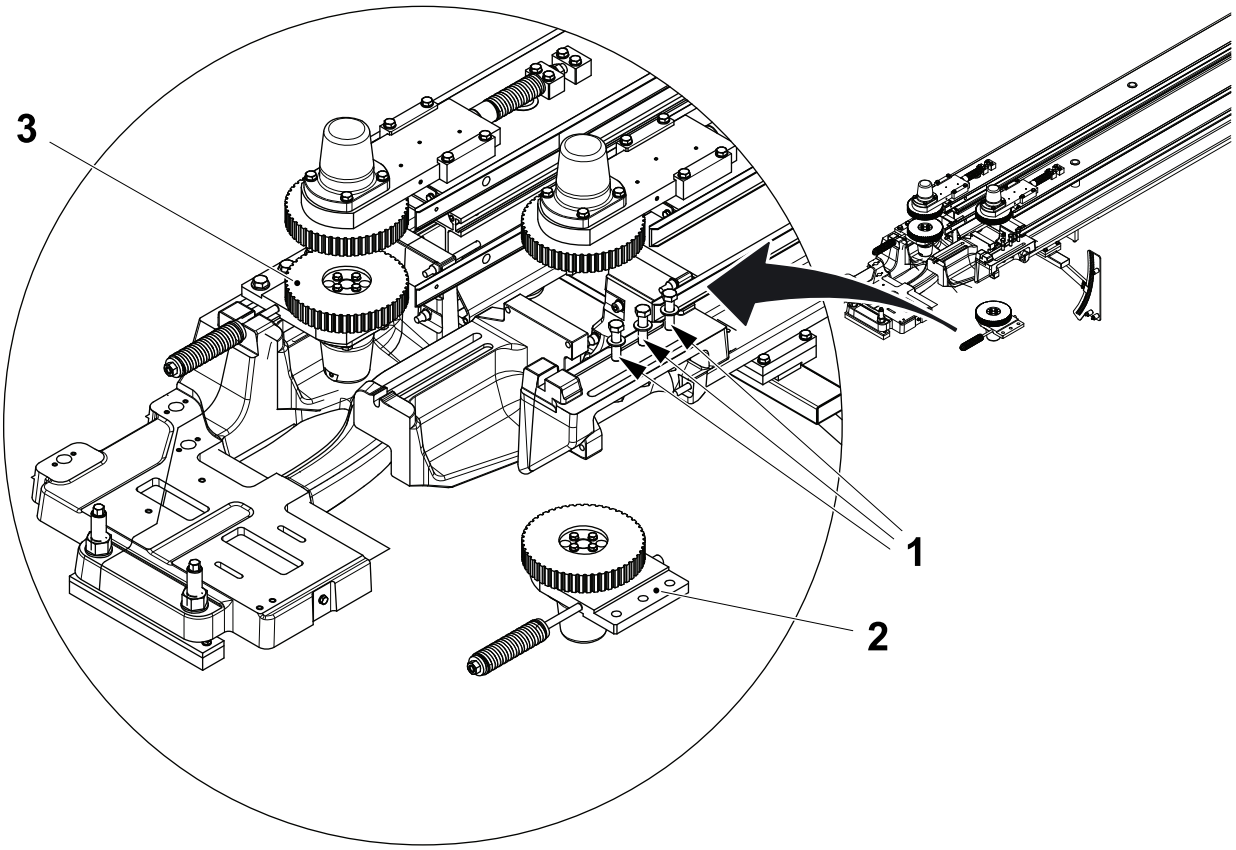

1 Screw
2 Bellows assembly
3 Bellows assembly

(Cont'd)

(Cont'd)

d) Remove the screw (4) and the toothed pulley (5) from the shaft (6).

e) Remove the screw (7) from the bellows (8).

f) Remove the seal ring (9) from the bellows (8).

g) Remove the retaining ring (10) and pull out the shaft (6).

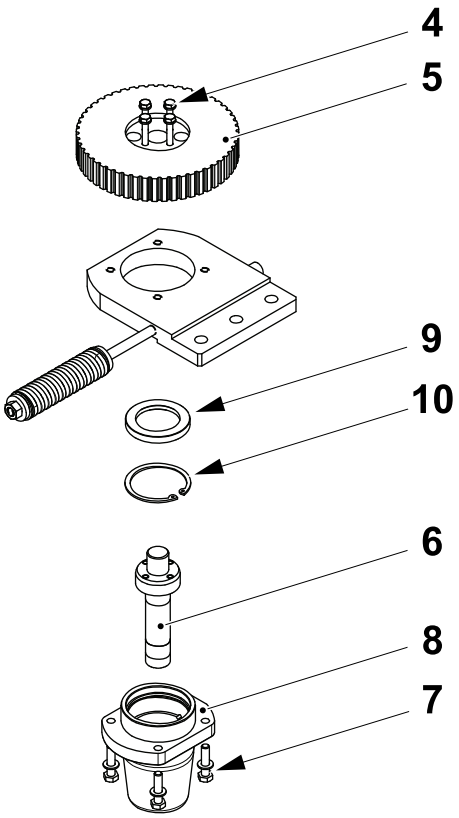

4 Screw
5 Toothed pulley
6 Shaft
7 Screw
8 Bellows
9 Seal ring
10 Retaining ring

(Cont'd)

(Cont'd)

h) Remove the nut (11), the bearing (12), the spacer (13) and the bearing (14) from the shaft (6).

i) Change the seal ring (9) , the retaining ring (10), the bearing (12) and the bearing (14).

j) Assemble in the reverse order.

k) Install the belts, see 2.3.1.1 Package Positioner (Right) - Change Belts and 2.3.2.1 Package Positioner (Left) Change Belts.

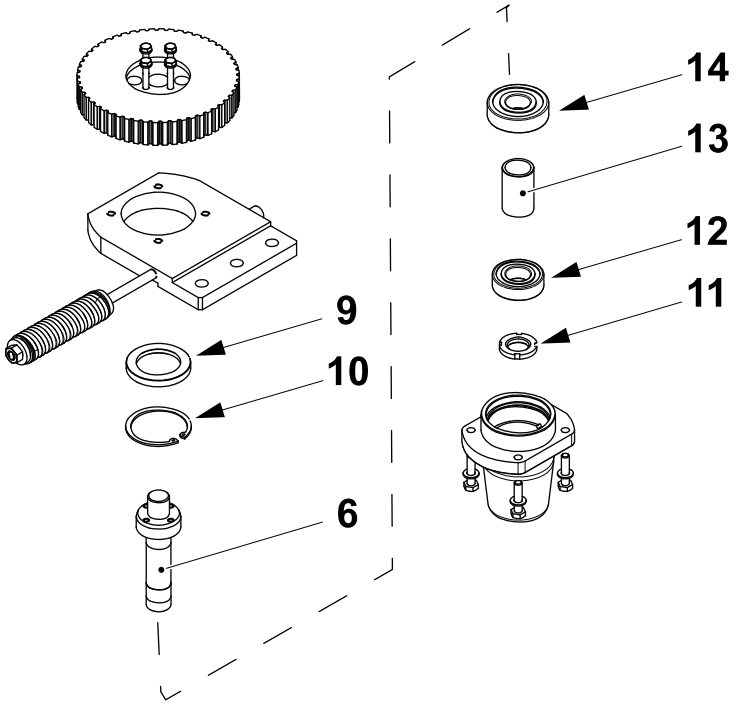

6 Shaft
9 Seal ring
10 Retaining ring
11 Nut
12 Bearing
13 Spacer
14 Bearing

2.3.3.1-5 Cylinder Speed - Set Regulator Valve

Machine Status	Electrical supply disconnecting device in position I (ON) Main air valve ON
SPC Reference	2838650-0200

a) Turn the regulator valve (1) to increase or decrease the speed so that the cylinder (2) returns the left hand package positioner (3).

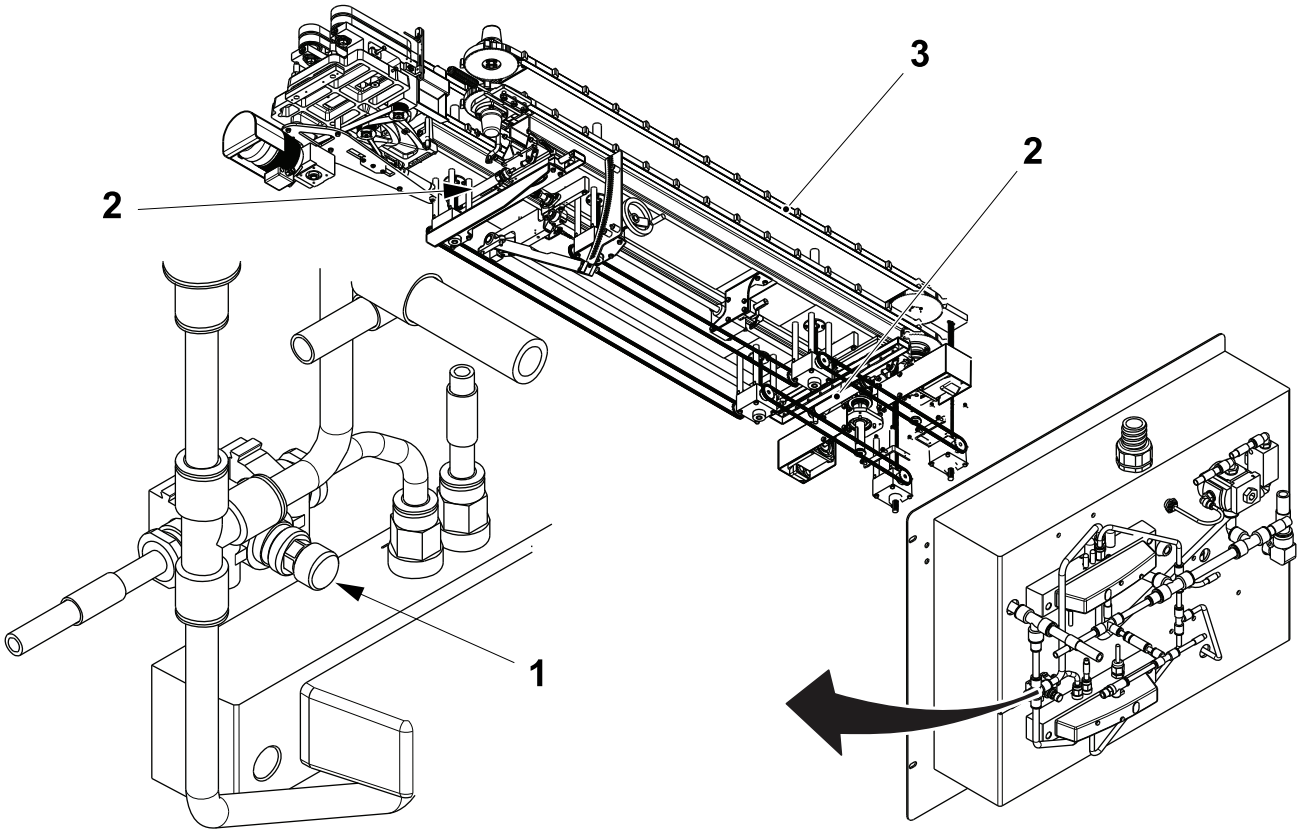

1 Regulator valve
2 Cylinder
3 Package positioner

2.3.3.1-6 Set - Cap Position X Direction

Machine Status	Electrical supply disconnecting device in position O (OFF) Main air valve OFF
SPC Reference	2838650-0200

a) Pull the knob (1) out and move the lever (2) in the direction of the arrow **A** this will move the positioner in the direction of the arrow **B**.

b) Pull the knob (1) out and move the lever (2) in the direction of the arrow **C** this will move the positioner in the direction of the arrow **D** .

c) Each hole (3) on the plate is a movement of 0.2 mm.

Note! After any positional change the packages will require testing, see OM chapter 5 for details.

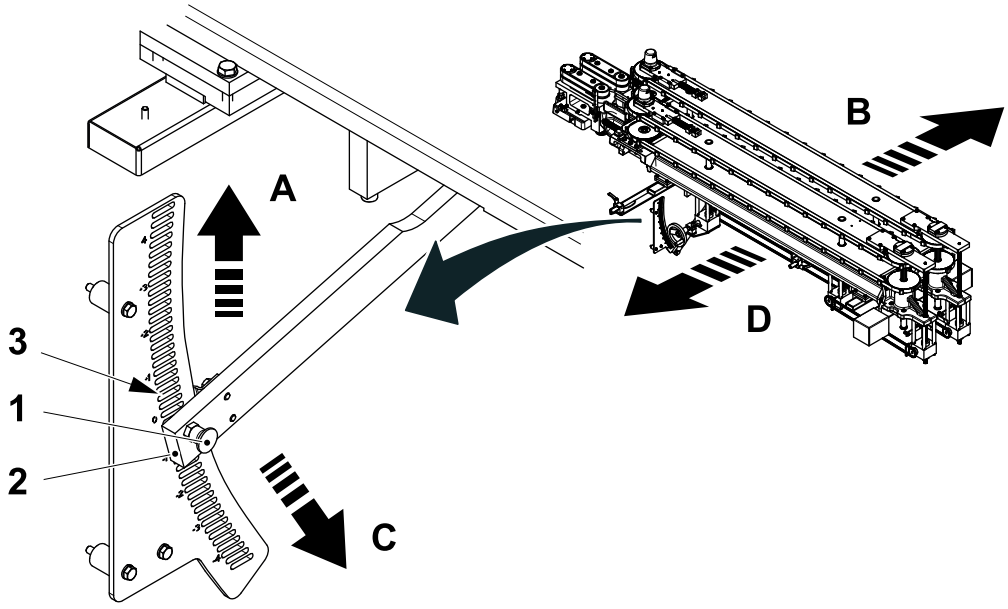

1 Knob
2 Lever
3 Hole

2.3.3.1-7 Set - Cap Position Y Direction

Machine Status	Electrical supply disconnecting device in position O (OFF) Main air valve OFF
SPC Reference	2838650-0200

Note! Valid for holding belts, see 2.1 Functional Description on page 2-7.

a) Touch the SETTING button (1) and then the PACKAGE POSITIONER button (2).

Note! Items like the positioning system only appear on the screen below when installed.

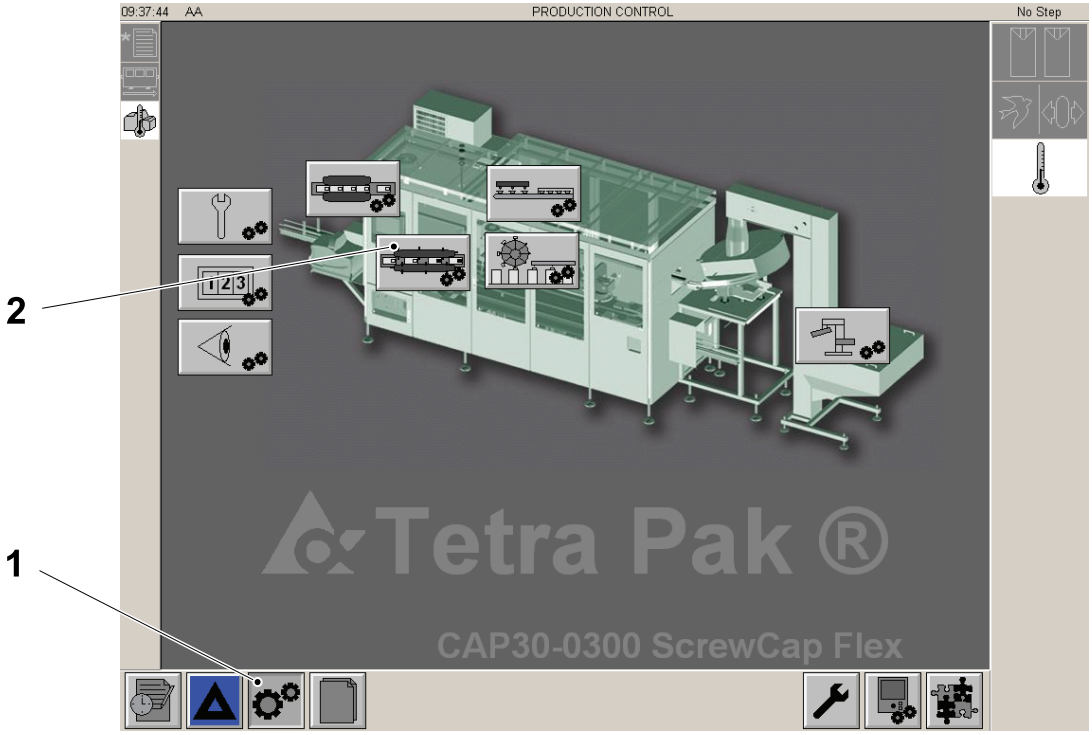

1 Setting button
2 Package positioner button

(Cont'd)

(Cont'd)

b) Touch the CAP POSITION ICON (3).

c) To increase or decrease the CAP POSITION VALUE (4), use the ARROW KEYS (5) or the keyboard which is accessible via the KEYBOARD button (6).

d) Introduce the value by clicking the OK button (7).

e) Touch the EXIT button (8).

f) Step the machine down to PRE-HEATING and then back up to PREPARATION to apply the new cap position value.

g) When the correct result is obtained store the corrected values in the appropriate recipe, see 10.9.1-14 Touch Screen - Saving Recipe Settings.

Note! After any positional change the packages will require testing, see OM chapter 5 for details.

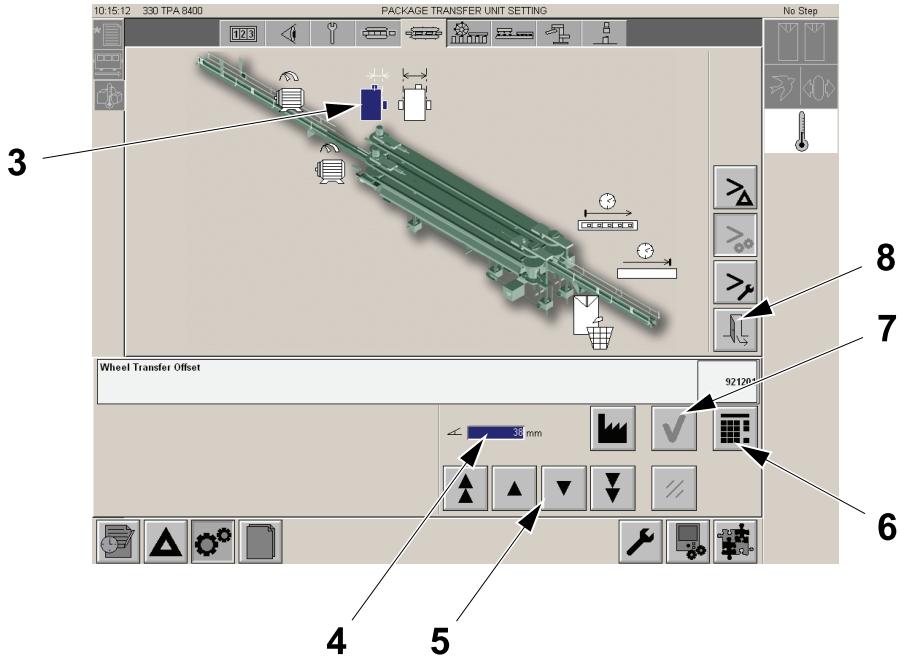

3 Cap position icon
4 Cap Position Valve
5 Arrow keys
6 Keyboard button
7 Ok button
8 Exit button

(Cont'd)

(Cont'd)

Set - Cap Position Y Direction

Note! Valid for pulling belts, see 2.1 Functional Description on page 2-7.

a) Touch the SETTING button (1) and then the PACKAGE POSITIONER button (2).

Note! Items like the positioning system only appear on the screen below when installed.

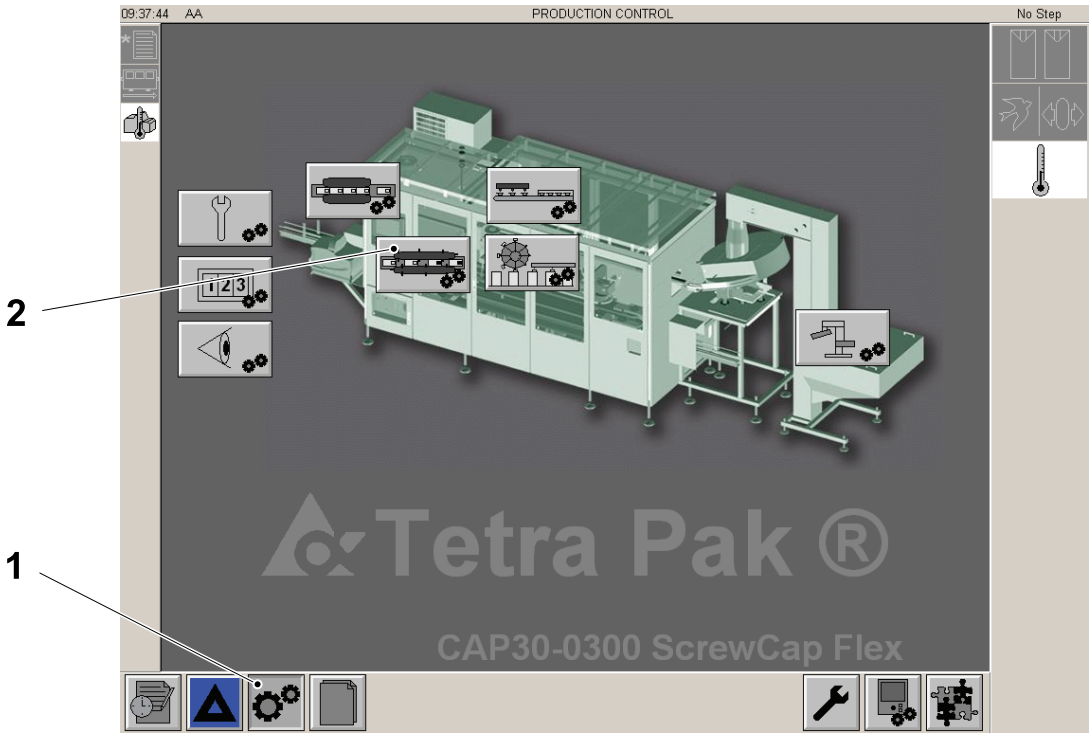

1 Setting button
2 Package positioner button

(Cont'd)

(Cont'd)

b) Touch the CAP POSITION ICON (3).

c) To increase or decrease the CAP POSITION VALUE (4), use the ARROW KEYS (5) or the keyboard which is accessible via the KEYBOARD button (6).

d) Introduce the value by clicking the OK button (7).

Note! For TBA 200 E and TBA 250 E a good starting value is "0".

e) Touch the EXIT button (8).

f) Step the machine down to PRE-HEATING and then back up to PREPARATION to apply the new cap position value.

g) When the correct result is obtained store the corrected values in the appropriate recipe, see 10.9.1-14 Touch Screen - Saving Recipe Settings.

Note! After any positional change the packages will require testing, see OM chapter 5 for details.

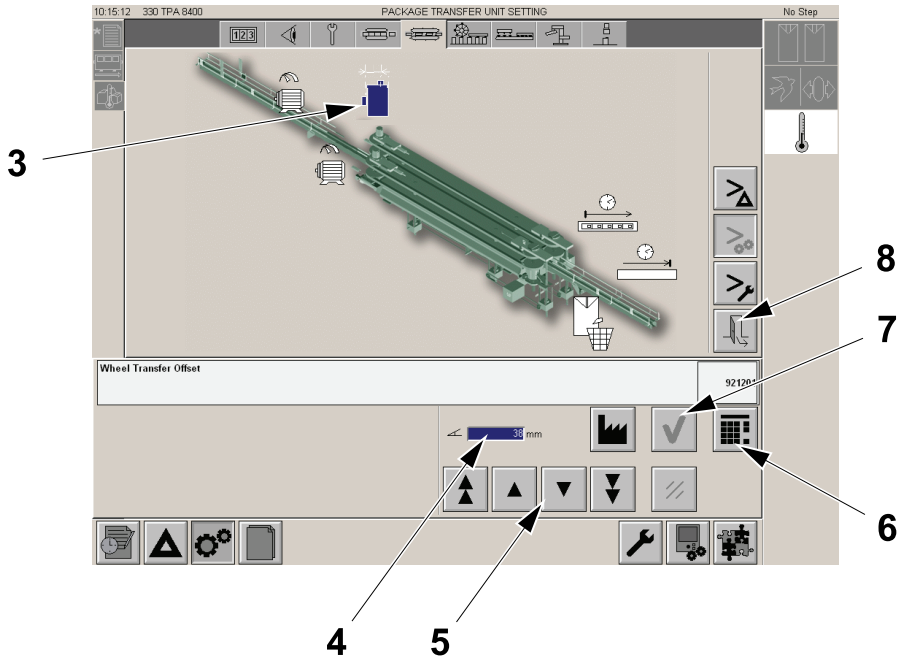

3 Cap position icon
4 Cap Position Valve
5 Arrow keys
6 Keyboard button
7 Ok button
8 Exit button

2.3.3.1-8 Set - Package Width X

Machine Status	Electrical supply disconnecting device in position O (OFF) Main air valve OFF
SPC Reference	2838650-0200

Basic Setting

a) Measure the package in the X direction.

b) Turn the handle (1) to increase or decrease the distance **A** of the left hand package positioner (2) .

Note! The package must not be squeezed.

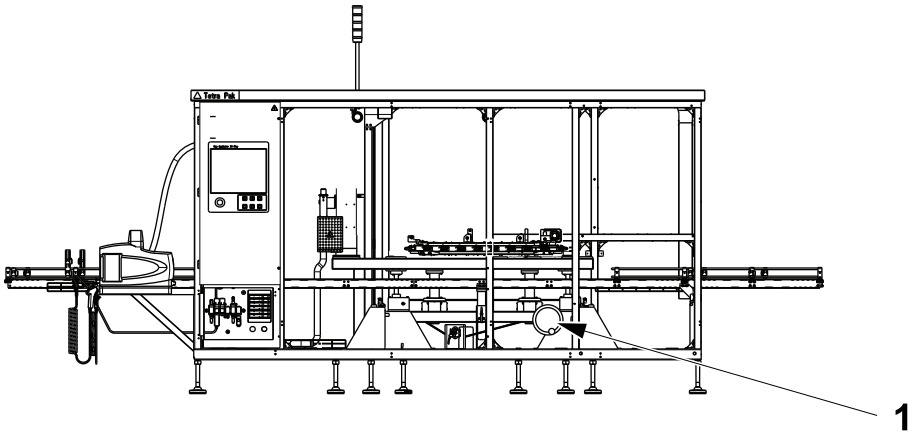

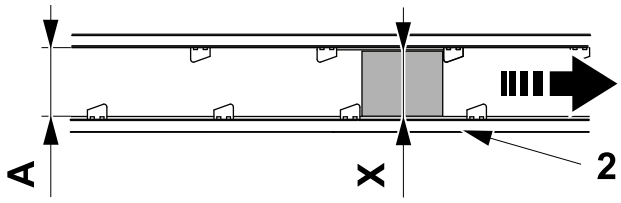

Holding belts, valid for all the packages except TBA 200E and TBA 250E

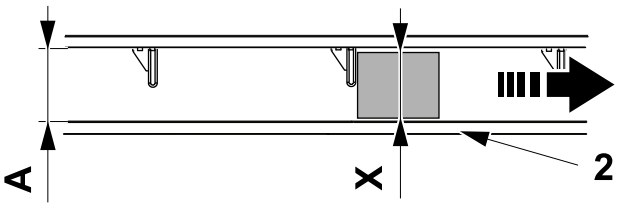

Pulling belts, valid only for TBA 200E and TBA 250E packages

1 Handle
2 Positioner

2.3.3.1-9 Set - Package Length Y

Machine Status	Electrical supply disconnecting device in position I (ON) Main air valve ON
SPC Reference	2838643-0200

Note! This setting is not valid for pulling belts, see 2.1 Functional Description on page 2-7.

a) Measure the package in the **Y** direction.

b) To set the dimension **A**, touch the `SETTING` button (1) and then the `PACKAGE POSITIONER` button (2).

Note! The package must not be squeezed.

Note! Items like the positioning system only appear on the screen below when installed.

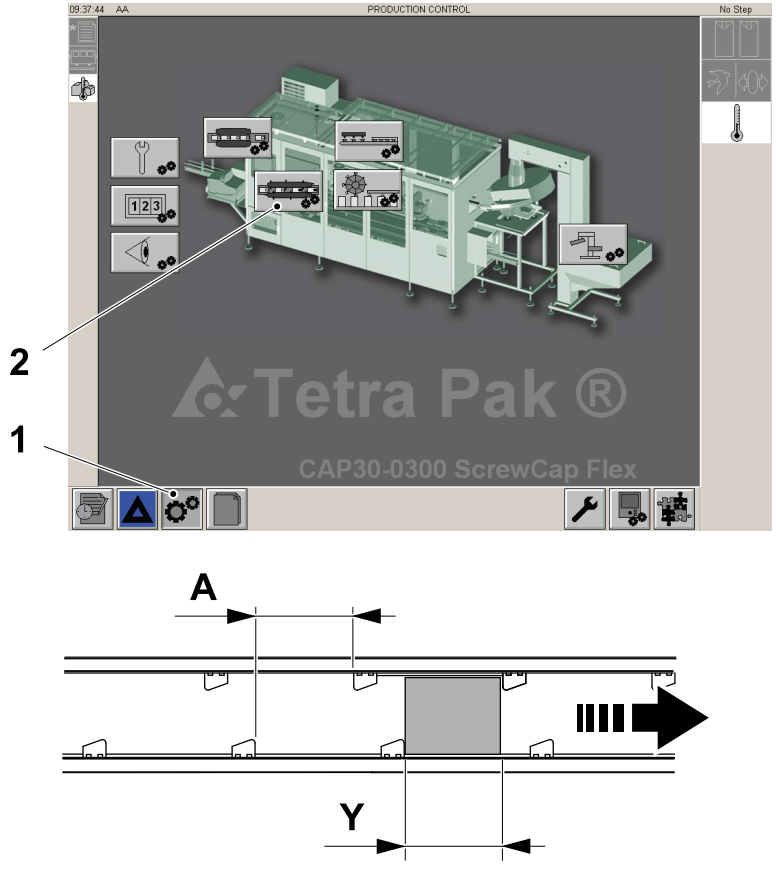

1 Setting button
2 Package positioner button

(Cont'd)

(Cont'd)

c) Touch the PACKAGE WIDTH ICON (3).

d) To increase or decrease the VALUE (4), use the ARROW KEYS (5) or the keyboard which is accessible via the KEYBOARD button (6).

e) Introduce the value by clicking the OK button (7).

f) Touch the EXIT button (8).

g) Step the machine down to PRE-HEATING and then back up to PREPARATION to apply the new package width value.

h) When the correct result is obtained store the corrected values in the appropriate recipe, see 10.9.1-16 Touch Screen - Delete Recipes.

Note! The correct setting is when the package is held but not squeezed.

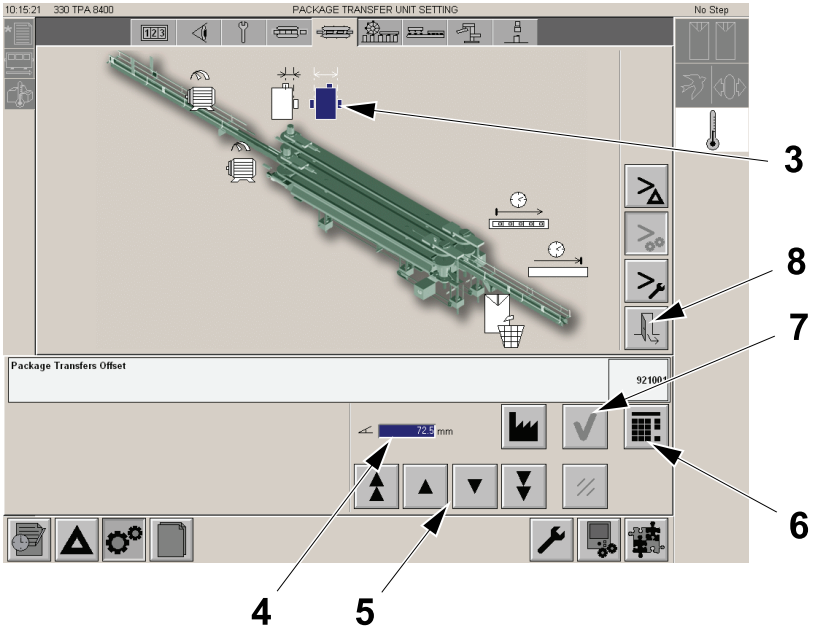

3 Package width icon
4 Value
5 Arrow keys
6 keyboard button
7 Ok button
8 Exit button

2.3.3.1-10 Set - Wheel Pushdown Offset

Machine Status	Electrical supply disconnecting device in position I (ON) Main air valve ON
SPC Reference	2838650-0200

a) To move the pushdown into the centre of the cap touch the SETTING button (1) and then the PACKAGE POSITIONER button (2).

Note! Items like the positioning system only appear on the screen below when installed.

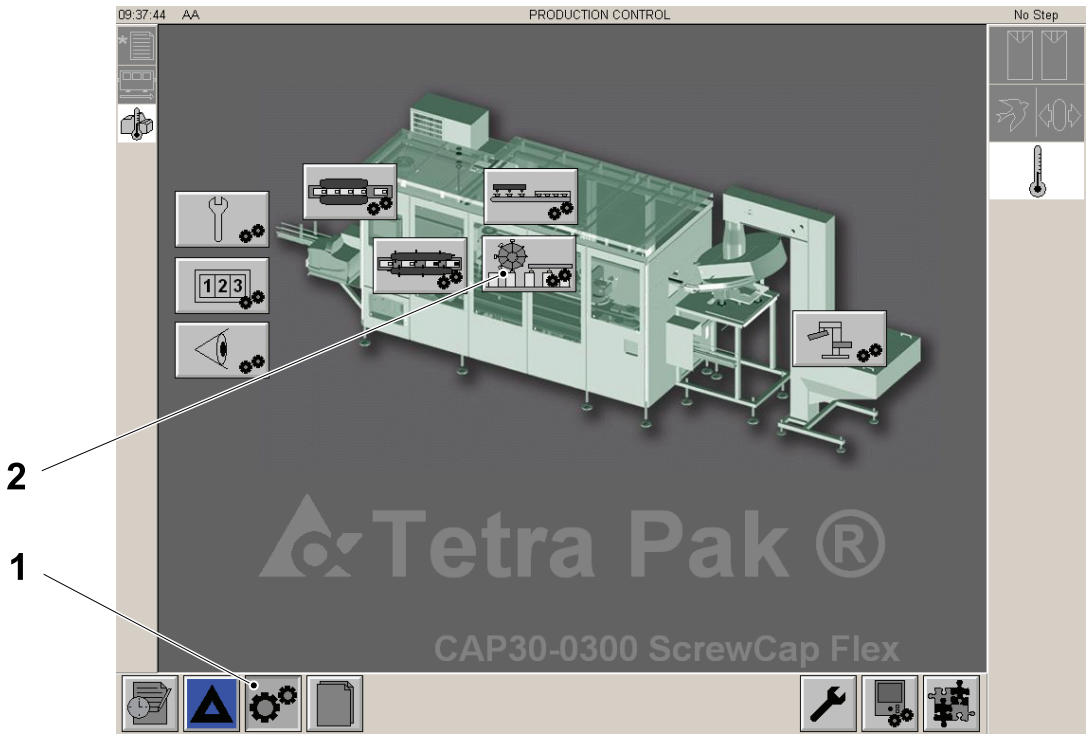

1 Setting button
2 Package positioner button

(Cont'd)

(Cont'd)

b) Touch the WHEEL PUSHDOWN OFFSET ICON (3).

c) To increase or decrease the Y position of the pushdown (±5 mm maximum), change the Value (4) using the ARROW KEYS (5) or the keyboard which is accessible via the KEYBOARD button (6).

d) Introduce the value by clicking the OK button (7).

e) Touch the EXIT button (8).

f) Step the machine down to PRE-HEATING and then back up to PREPARATION to apply the new value.

g) When the correct result is obtained (pushdown centred on the cap) store the corrected values in the appropriate recipe, see 10.9.1-14 Touch Screen - Saving Recipe Settings.

Note! After any positional change the packages will require testing, see OM chapter 5 for details.

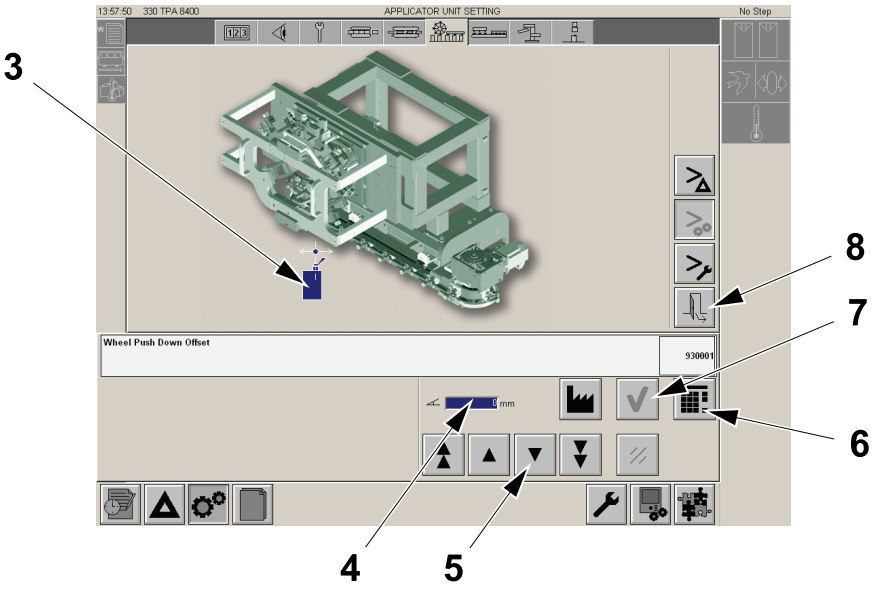

3 Wheel pushdown offset icon
4 Value
5 Arrow keys
6 Keyboard button
7 Ok button
8 Exit button

2.3.4 Set Package Positioner Zero

2.3.4.1 Set Package Positioner Zero - Setting

2.3.4.1-1 Coarse Setting Inner Package Positioner Zero

Machine Status	Electrical supply disconnecting device in position O (OFF) Main air valve OFF
Special Equipment	Zero Alignment tool TP No. 2788137-0000 Zero Alignment tool TP No. 2873935-0000
SPC Reference	662901-0300

Note! Valid for holding belts, see 2.1 Functional Description on page 2-7.

a) Place the template (1) on the package positioner (2).

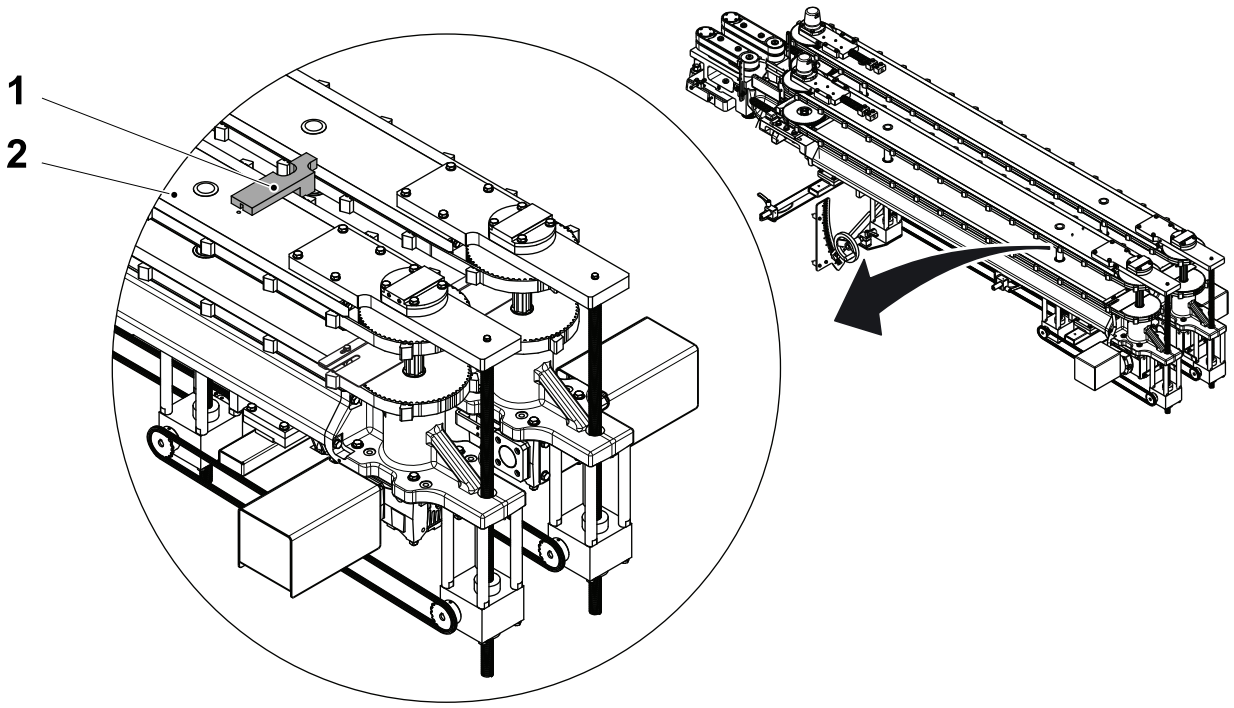

1 Template
2 Package positioner

(Cont'd)

(Cont'd)

b) Attach a piece of paper (3) to the surface of the inner package positioner (4) package so that it is in line with the template (1) as shown.

Note! The line (5) is the centre-line of the pins the templates locate on.

c) Draw a line (5) on the paper that is in line with the part of the part of template (6) indicated below. This is the mechanical zero position for the inner package positioner.

d) Remove the template (1).

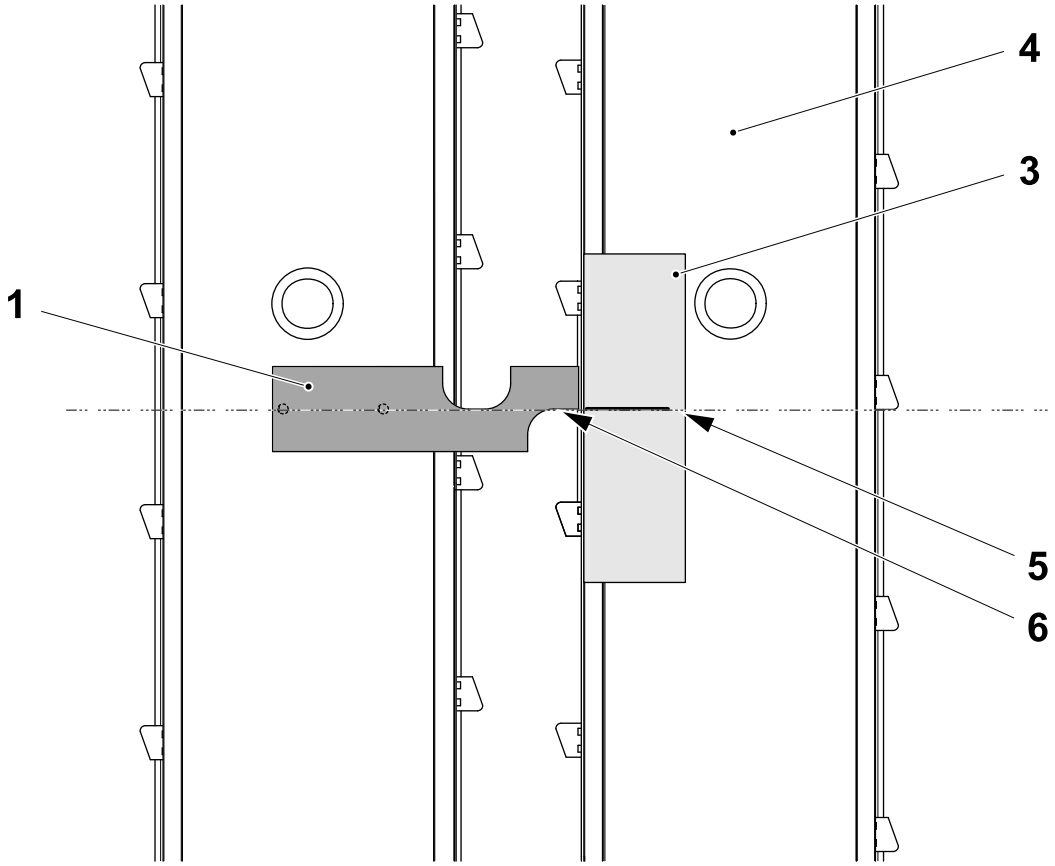

1 Template
3 Paper
4 Inner package positioner
5 Line
6 Part of template

(Cont'd)

(Cont'd)

Note! The arrow indicates the direction of movement of the belt (7) and the belt (8) relative to the position of the line (5) on the paper.

e) Using the INCHING button (9) on the control panel, inch the nearest tooth (10) on the belt (7) toward the line (5) on the paper (3).

Note! The INCHING button (9) on the control panel allows the package positioner to be inched in increments of approximately 0.4 mm.

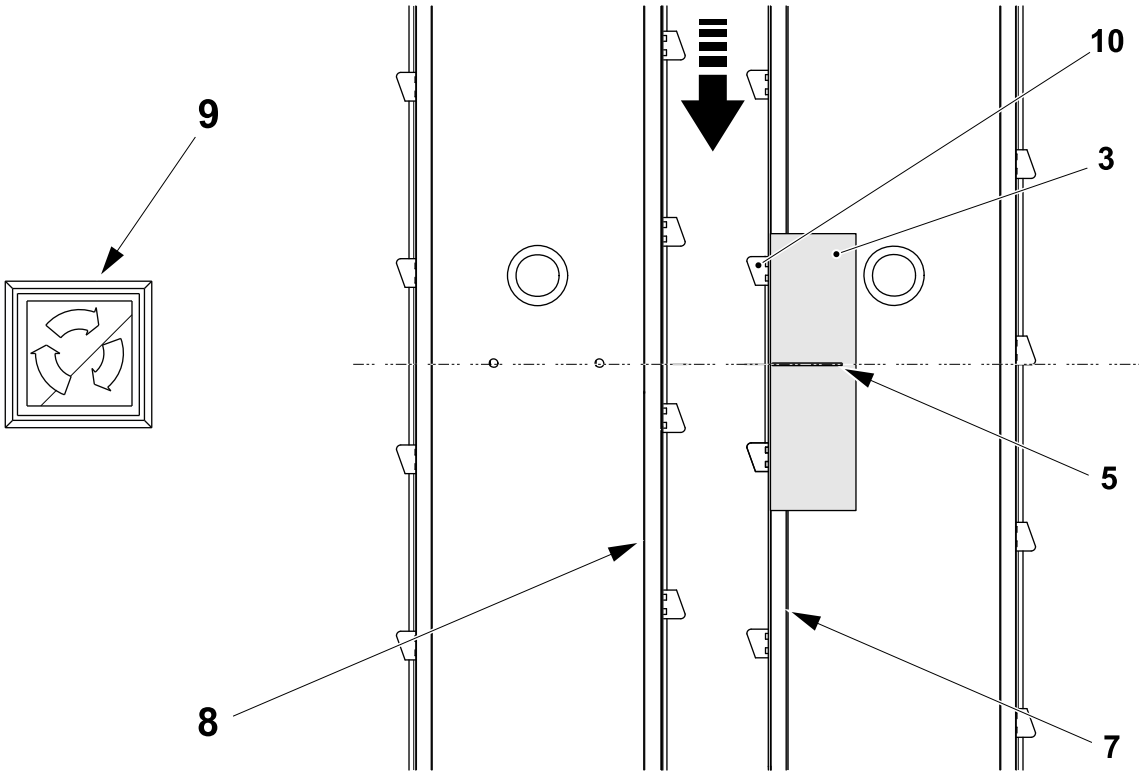

3 Paper
5 Line
7 Belt
8 Belt
9 Inch button
10 Tooth

(Cont'd)

(Cont'd)

f) Stop inching when the working surface (11) of the tooth (10) is near to the line (5) but has not reached it.

g) Measure the distance between the working surface (11) of the tooth (10) and the line (5). Note the distance **A** for use in the fine setting.

h) Continue with the fine setting if necessary, see 2.3.4.1-2 Fine Setting Inner Package Positioner Zero.

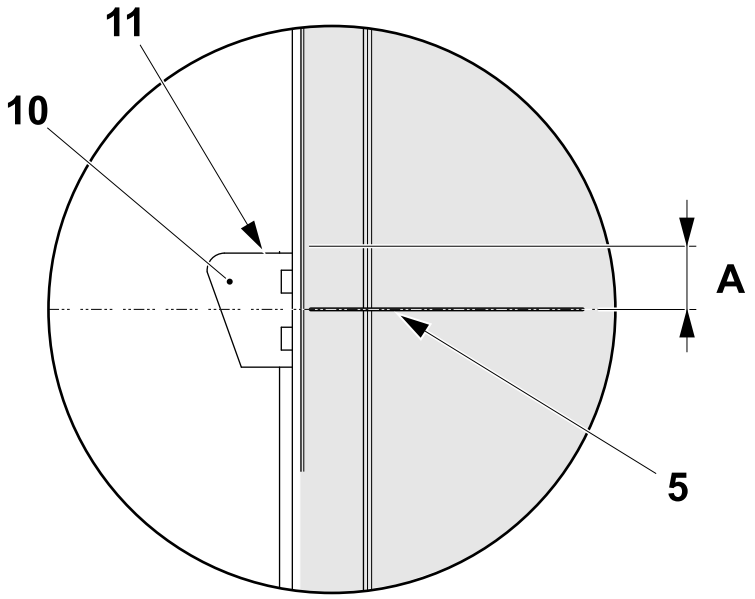

5 Line
10 Tooth
11 Working surface

Coarse Setting Inner Package Positioner Zero

Note! Valid for pulling belts, see 2.1 Functional Description on page 2-7.

(Cont'd)

(Cont'd)

a) Place the template (1) on the package positioner (2).

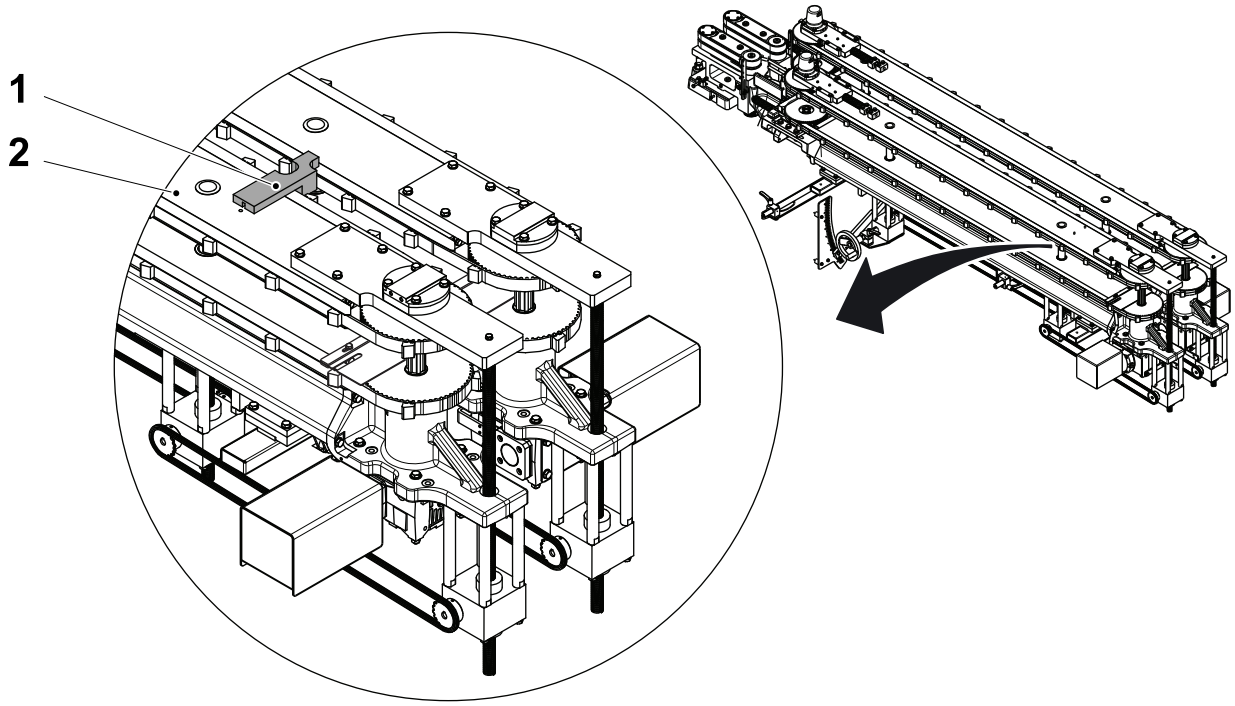

1 Template
2 Package positioner

(Cont'd)

(Cont'd)

b) Attach a piece of paper (3) to the surface of the inner package positioner (4) package so that it is in line with the template (1) as shown.

Note! The line (5) is the centre-line of the pins the templates locate on.

c) Draw a line (5) on the paper that is in line with the part of the part of template (6) indicated below. This is the mechanical zero position for the inner package positioner.

d) Remove the template (1).

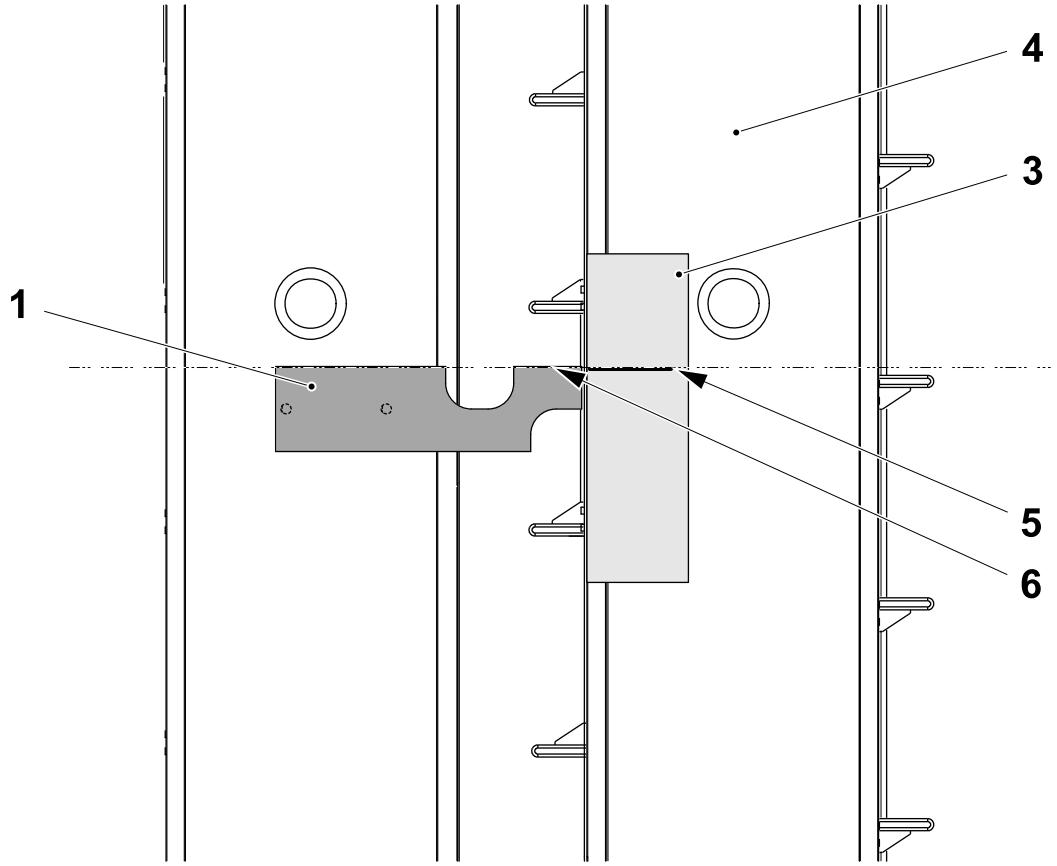

1 Template
3 Paper
4 Inner package positioner
5 Line
6 Part of template

(Cont'd)

(Cont'd)

Note! The arrow indicates the direction of movement of the belt (7) and the belt (8) relative to the position of the line (5) on the paper.

e) Using the INCHING button (9) on the control panel, inch the nearest tooth (10) on the belt (7) toward the line (5) on the paper (3).

Note! The INCHING button (9) on the control panel allows the package positioner to be inched in increments of approximately 0.4 mm.

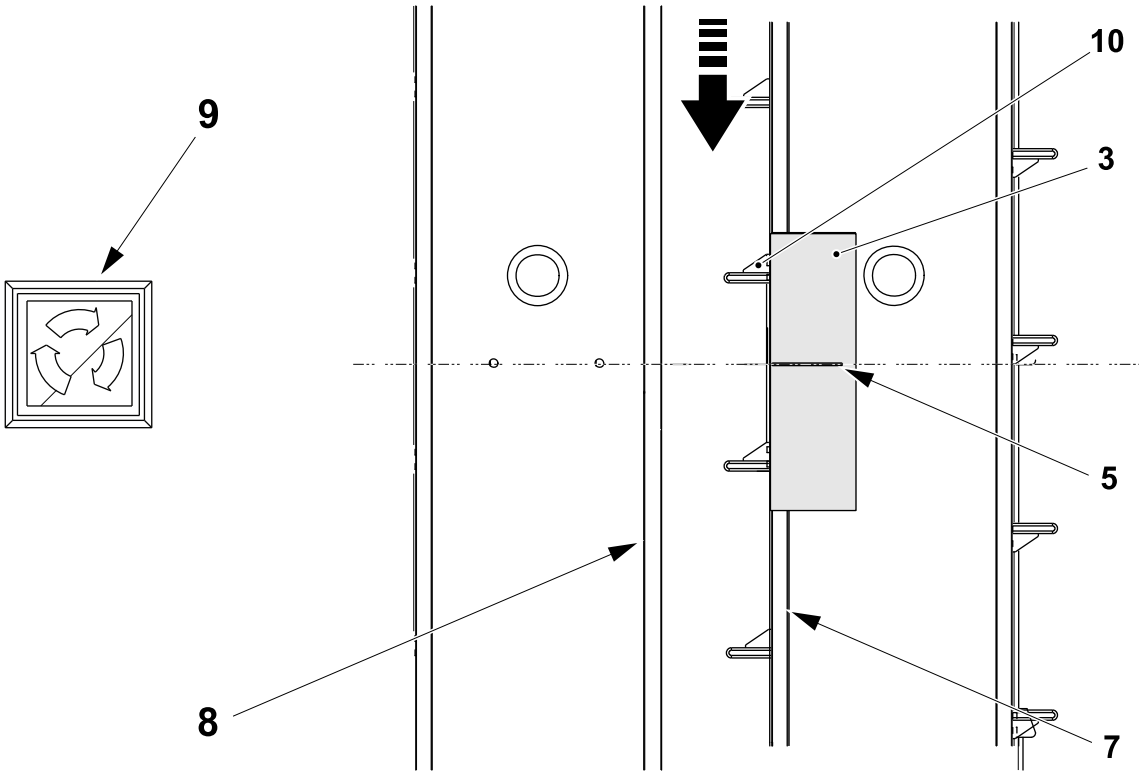

3 Paper
5 Line
7 Belt
8 Belt
9 Inch button
10 Tooth

(Cont'd)

(Cont'd)

f) Stop inching when the working surface (11) of the tooth (10) is near to the line (5).

g) Continue with the fine setting if necessary, see 2.3.4.1-2 Fine Setting Inner Package Positioner Zero.

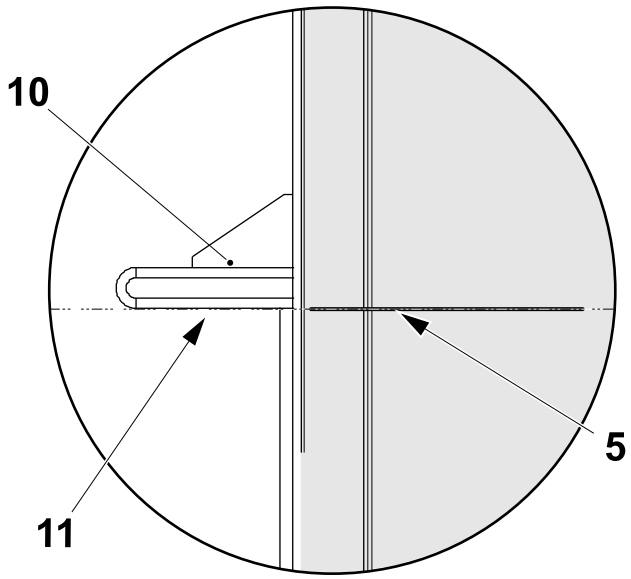

5 Line
10 Tooth
11 Working surface

2.3.4.1-2 Fine Setting Inner Package Positioner Zero

Machine Status	Electrical supply disconnecting device in position I (ON) Main air valve ON
SPC Reference	662901-0300

a) Touch the SETTINGS button (1).

b) Touch the OVERVIEW button (2) to display the OVERVIEW window.

Note! Items like the positioning system only appear on the screen below when installed.

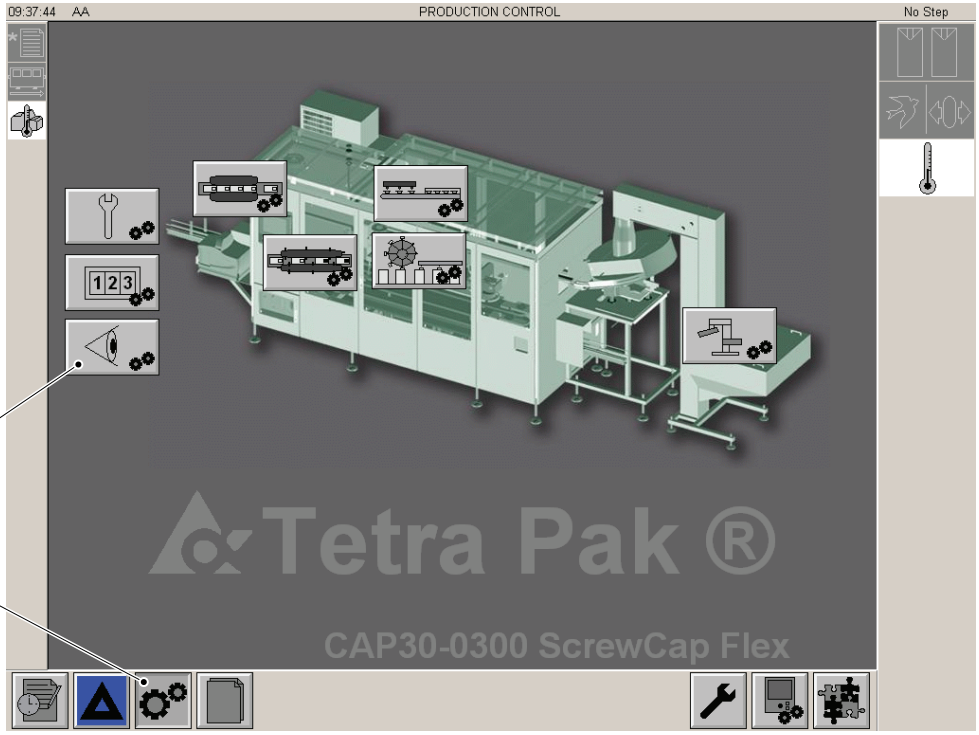

1 Settings button
2 Overview button

(Cont'd)

(Cont'd)

c) On the overview window (3) touch the virtual master axis actual position window (4) and read the value. This value is the theoretical virtual axis value of the machine to which all motors are aligned. Note this value for use in step h).

d) Touch the EXIT button (5).

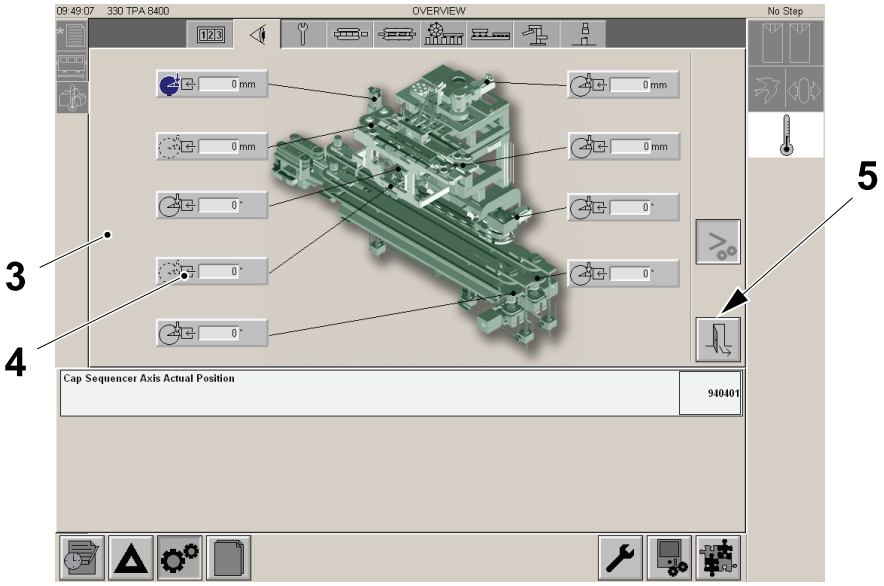

3 Overview window
4 Virtual master axis actual position window
5 EXIT button

(Cont'd)

(Cont'd)

e) Step up the machine to STEP 2.

f) Touch the MAINTENANCE button (6) and then the SERVICE button (7).

Note! Items like the positioning system only appear on the screen below when installed.

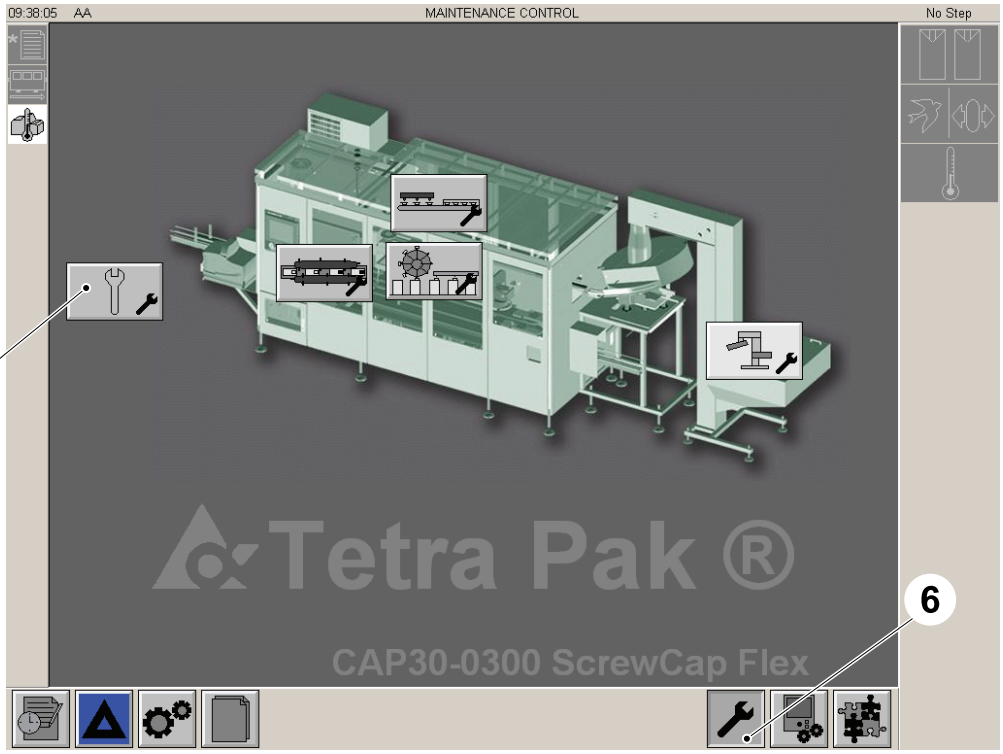

6 MAINTENANCE button
7 SERVICE button

(Cont'd)

(Cont'd)

g) Touch the INCHING button (8) to display the inching window (9) .

Note! The inching window (9) allows the package positioner to be inched in increments of approximately 0.4 mm.

Note! The angle value displayed in the window (10) is the value to be changed to move the package positioner to the zero position.

Note! Do not try to inch to the zero position in one go. It is better to repeat steps i) to m) until the zero position is obtained.

Note! The value should be increased to inch the package positioner with a conversion factor of 1° to 0.4 mm.

h) From the value measured in the 2.3.4.1-1 Coarse Setting Inner Package Positioner Zero step g), calculate the value to be entered in the window (10) to move the package positioner nearer to the zero position.

i) Touch the SETTING button (11) to modify the value in the window (10).

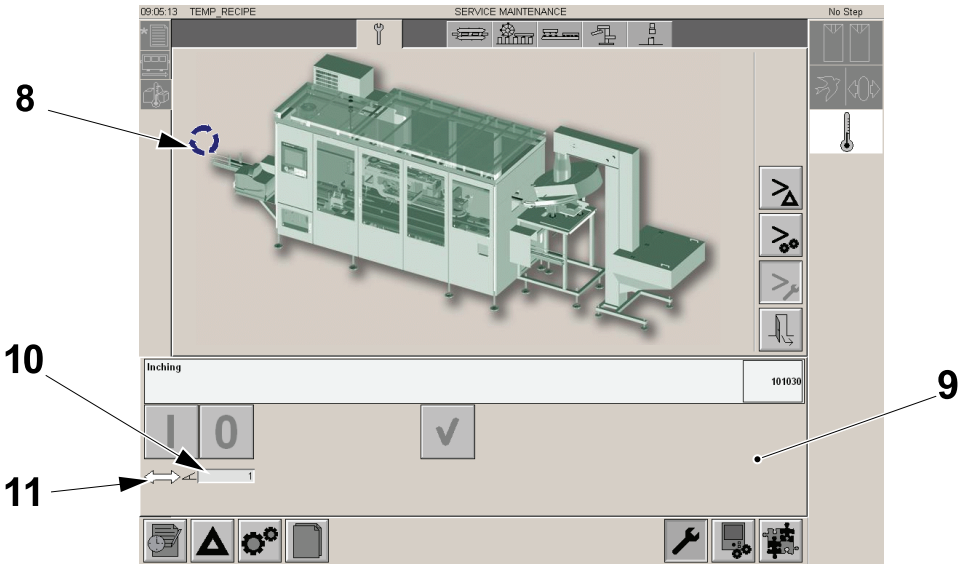

8 INCHING button
9 Inching window
10 Window
11 SETTING button

(Cont'd)

(Cont'd)

j) Using the UP AND DOWN buttons (12) set the number in the degrees window (13) to indicate the desired value. Touch the OK button (14).

k) Touch the ON button (15).

l) Touch the OK button (16). The package positioner will inch to the new position.

m) Touch the EXIT button (17) to leave.

n) Repeat the procedure from step of the 2.3.4.1-1 Coarse Setting Inner Package Positioner Zero to step m) above until the working surface (18) of the belt tooth (19) is aligned with the line (20) on the paper. When it is, save the inner package positioner zero position in the memory, see 2.3.4.1-3 Memorizing Inner Package Positioner Zero Position.

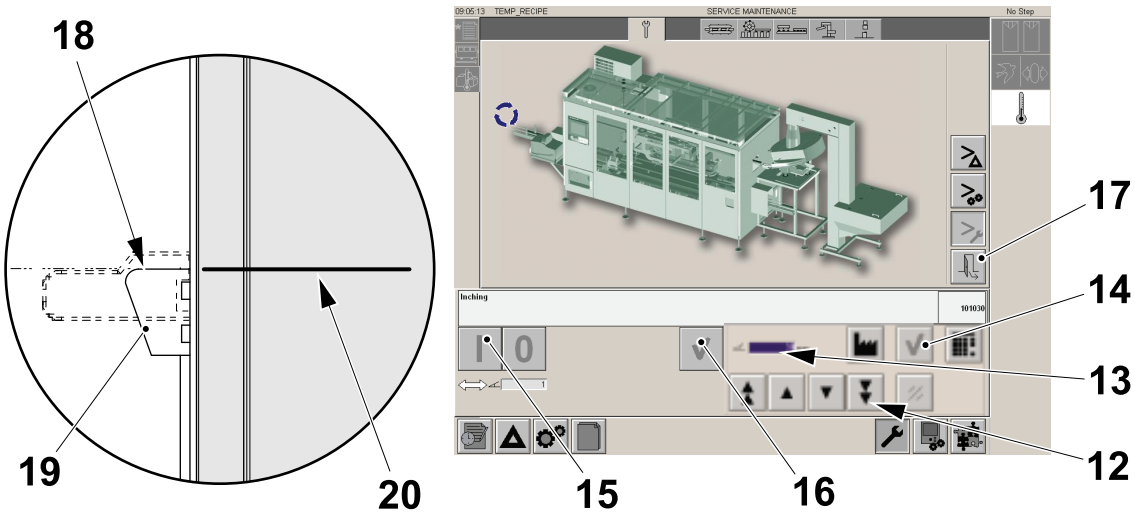

12 UP AND DOWN buttons
13 Degrees window
14 OK button
15 ON button
16 OK button
17 EXIT button
18 Working surface
19 Belt tooth
20 Line

2.3.4.1-3 Memorizing Inner Package Positioner Zero Position

Machine Status	Electrical supply disconnecting device in position I (ON) Main air valve ON
SPC Reference	662901-0300

This procedure stores to memory the zero position of the Inner Package Positioner that has been located with the 2.3.4.1-1 Coarse Setting Inner Package Positioner Zero and the 2.3.4.1-2 Fine Setting Inner Package Positioner Zero procedures.

Note! On completion of this procedure, the package positioner will remain at the zero position until the machine is stepped up. When the machine is stepped up to STEP 2 or higher the package positioner will move to an offset position determined by the values entered for the Y-axis package dimension and Y-axis cap position, see 2.3.3.1-9 Set - Package Length Y and 2.3.3.1-7 Set - Cap Position Y Direction.

a) Make sure the machine is at `STEP 0`.

b) Touch the `SYSTEM SETUP` button (1) and follow the login procedure see, 1.1.1-1 HMI User Management - Log On as a User.

c) Touch the `PACKAGE POSITIONER` button (2).

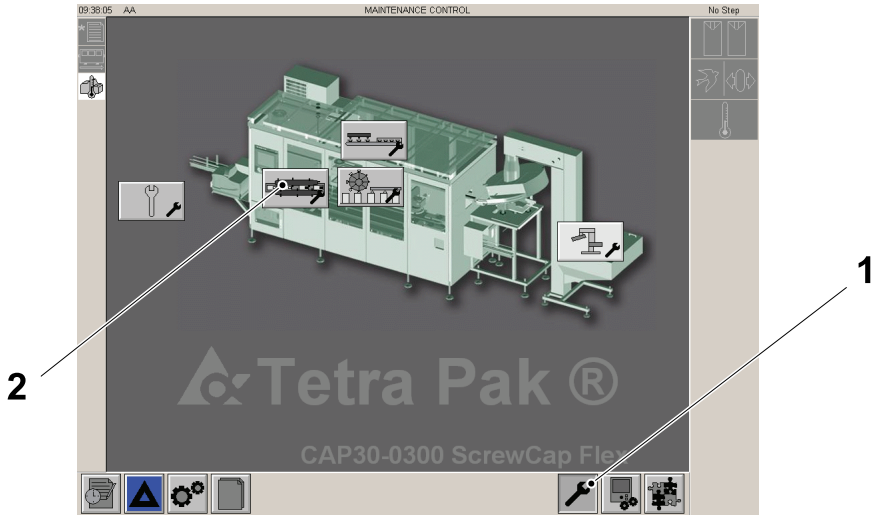

1 System Setup button
2 Package positioner button

(Cont'd)

(Cont'd)

d) Touch the ZERO button (3).

e) Touch the ON button (4).

f) Touch the OK button (5) for at least three seconds. The background of the ON button (4) will go green and the zero value for inner package positioner will be stored to memory.

g) Touch the EXIT button (6).

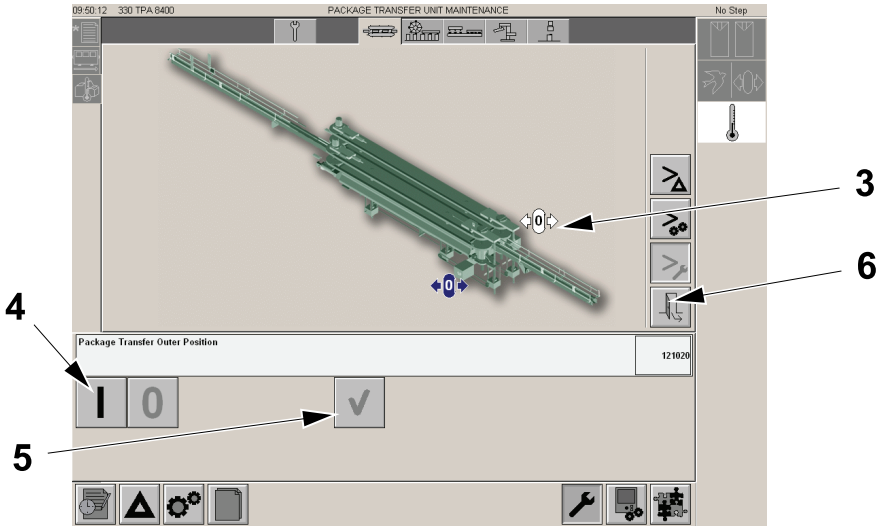

3 Zero button
4 ON button
5 OK button
6 Exit button

2.3.4.1-4 Coarse Setting Outer Package Positioner Zero

Machine Status	Electrical supply disconnecting device in position I (ON) Main air valve ON
SPC Reference	662901-0300

a) Set the inner package positioner (1) to zero see, 2.3.4.1-1 Coarse Setting Inner Package Positioner Zero.

b) Attach a piece of paper (2) to the surface of the outer package positioner (3) so that it is opposite the paper (4) on the inner package positioner (1).

c) Draw a line (5) on the piece paper (2) so that it is in line with the line (6) already drawn on the inner package positioner. The new line is the mechanical zero position for the outer package positioner (3).

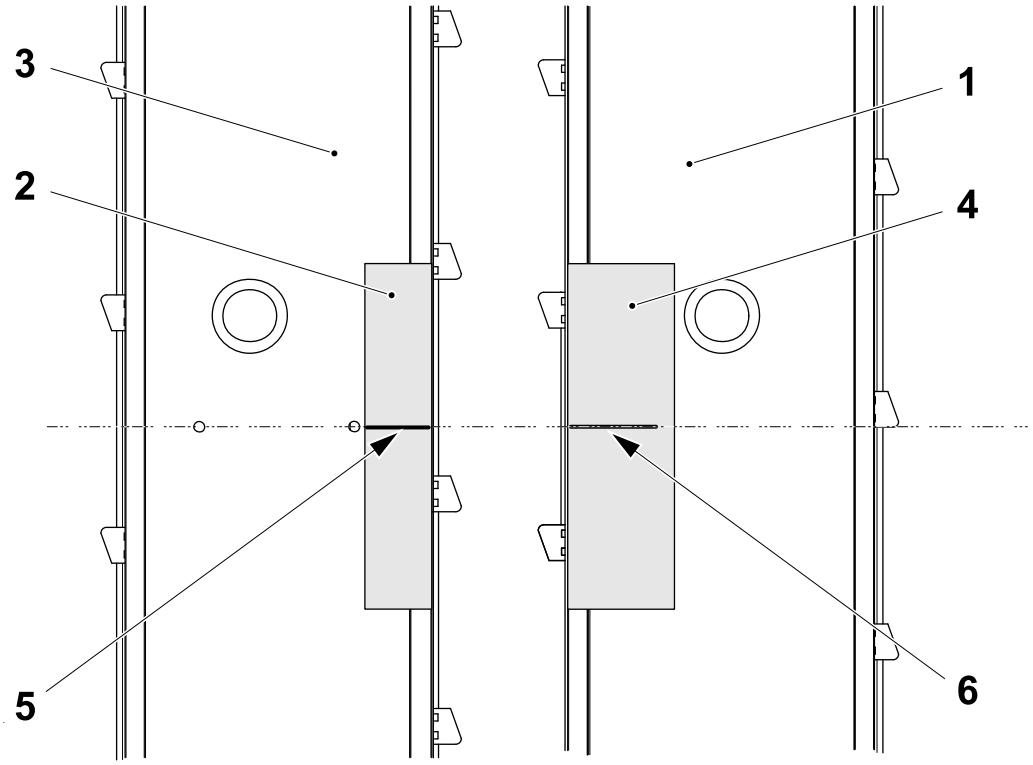

1 Inner package positioner
2 Paper
3 Outer package positioner
4 Paper
5 Line
6 Line

(Cont'd)

(Cont'd)

Note! The arrow indicates the direction of movement of the belt (7) and the belt (8) relative to the position of the line (5) on the paper (2).

d) Using the INCH BUTTON (9) on the control panel, inch the nearest tooth (10) on the belt (7) toward the line (5) on the paper (2).

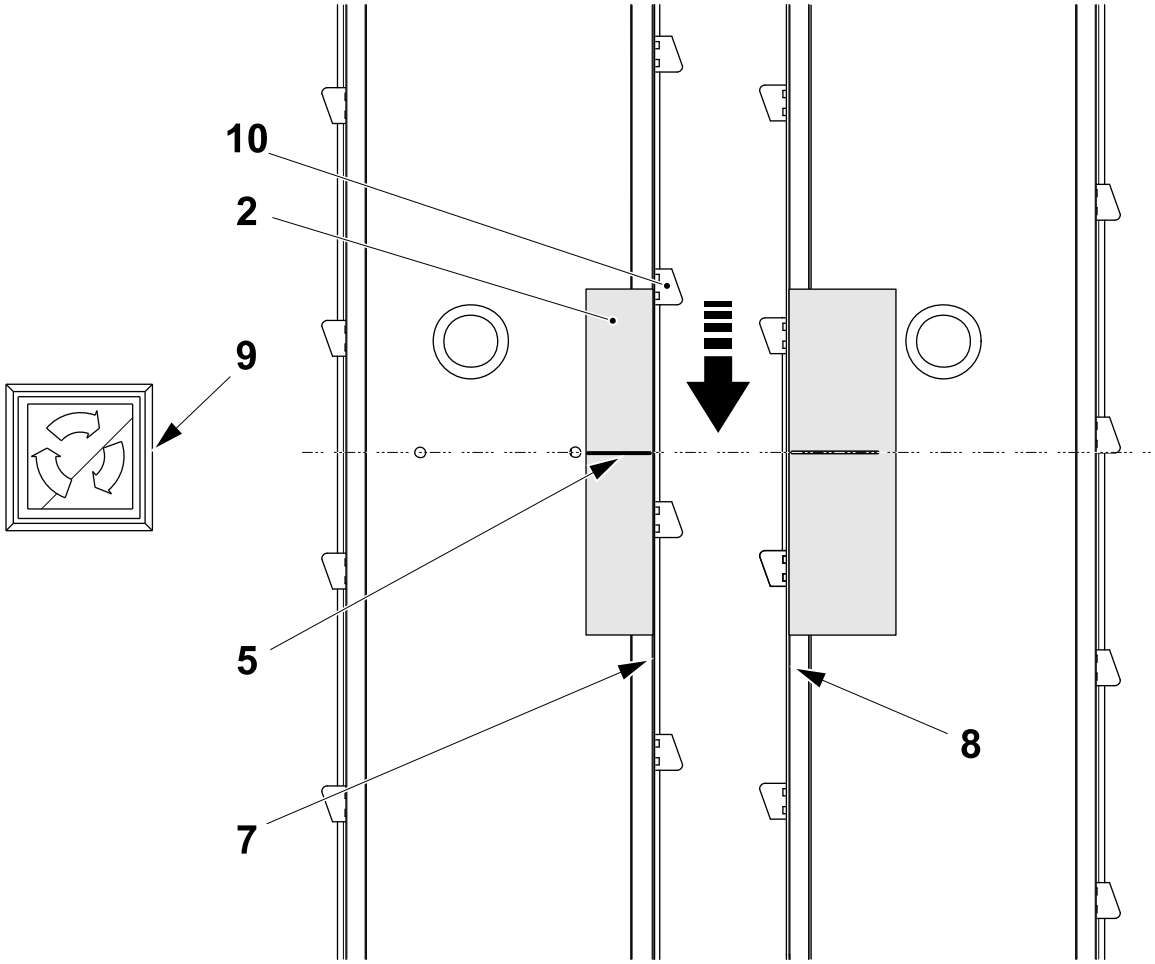

2 Paper
5 Line
7 Belt
8 Belt
9 Inch button
10 Tooth

(Cont'd)

(Cont'd)

e) Stop inching when the working surface (11) of the tooth (10) is near to the line (5) but has not reached it.

f) Measure the distance **A** between the working surface (11) of the tooth (10) and the line (5). Note the distance **A** for use in the fine setting.

g) Continue with the fine setting, see 2.3.4.1-5 Fine Setting Outer Package Positioner Zero.

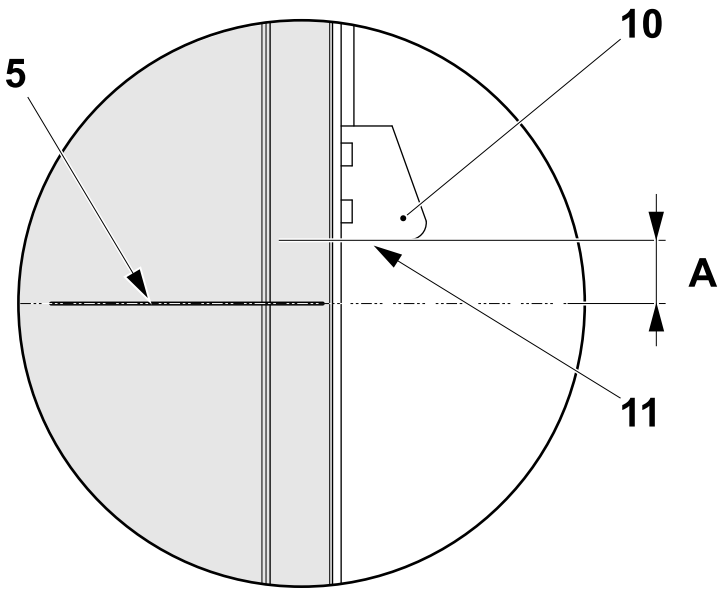

5 Line
10 Tooth
11 Working surface

2.3.4.1-5 Fine Setting Outer Package Positioner Zero

Machine Status	Electrical supply disconnecting device in position I (ON) Main air valve ON
SPC Reference	662901-0300

a) Touch the SETTING button (1).

b) Touch the OVERVIEW button (2) to display the OVERVIEW window.

Note! Items like the positioning system only appear on the screen below when installed.



1 SETTING button
2 OVERVIEW button

(Cont'd)

(Cont'd)

c) On the OVERVIEW window (3) touch the VIRTUAL MASTER AXIS ACTUAL POSITION window (4) and read the value in the ANGLE VALUE window (5). This value is the theoretical virtual axis value of the machine to which all motors are aligned. Note this value for use in step h).

d) Touch the EXIT button (6).

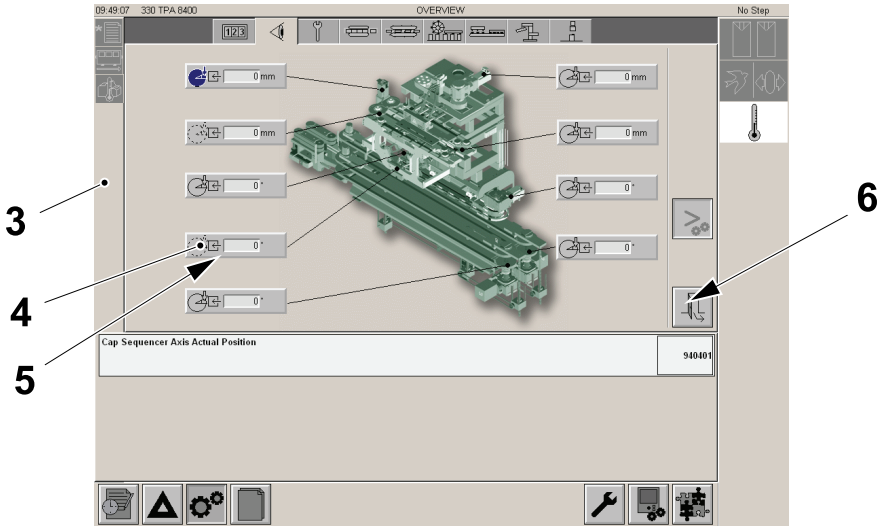

3 Overview window
4 Virtual master axis actual position window
5 Angle value window
6 Exit button

(Cont'd)

(Cont'd)

e) Step up the machine to STEP 2.

f) Touch the MAINTENANCE button (7) and then the SERVICE button (8).

Note! Items like the positioning system only appear on the screen below when installed.

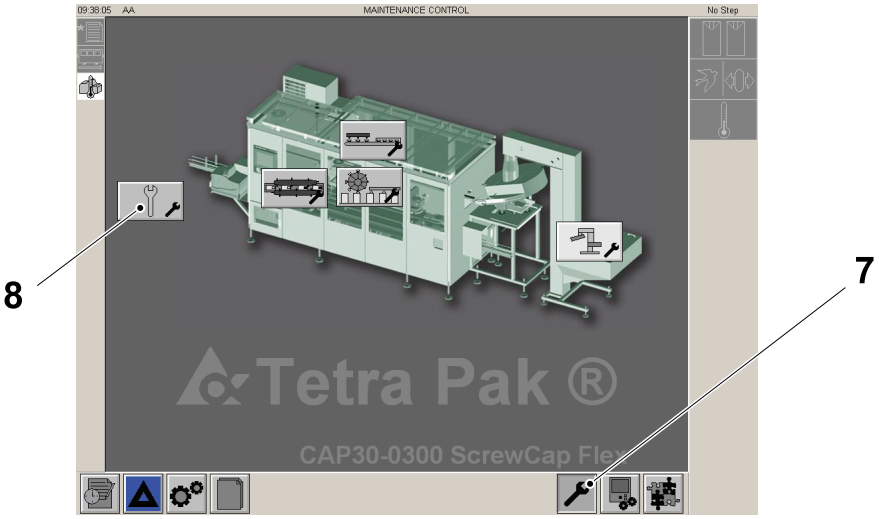

7 MAINTENANCE button
8 SERVICE button

(Cont'd)

(Cont'd)

Note! The INCHING window (9) allows the package positioner to be inched in increments of approximately 0.4 mm.

Note! Do not try to inch to the zero position in one go. It is better to repeat steps i) to m) until the zero position is obtained.

Note! The angle value displayed in the window (10) is the value to be changed to move the package positioner to the zero position.

g) Touch the INCHING button (11) to display the INCHING window (9).

h) From the value measured in the 2.3.4.1-4 Coarse Setting Outer Package Positioner Zero step , calculate the value to be entered in the INCHING button (11) to move the package positioner nearer to the zero position.

i) Touch the SETTING button (12) to modify the value in the window (10).

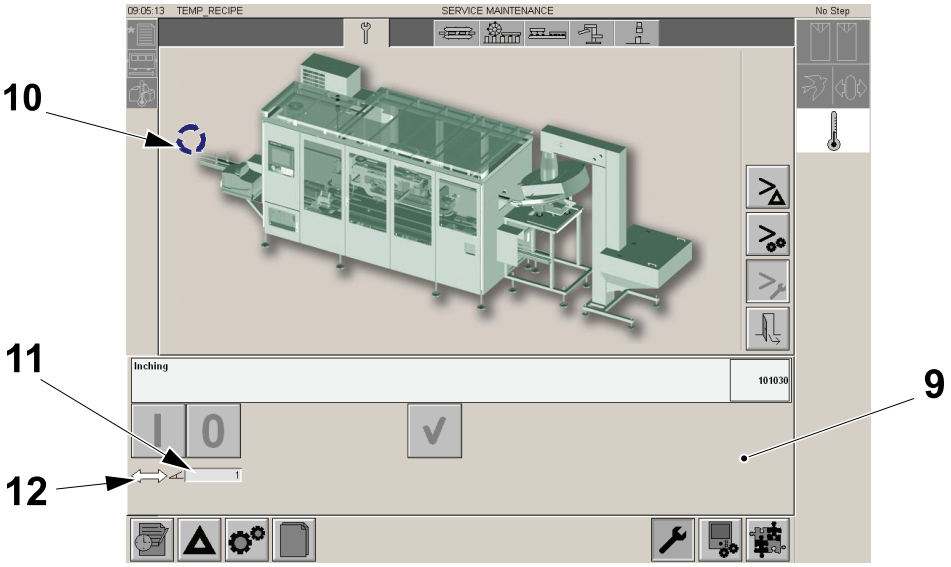

9 Inching window
10 Window
11 INCHING button
12 SETTING button

(Cont'd)

(Cont'd)

The value should be increased to inch the package positioner with a conversion factor of 1° to 0.4 mm.

j) Using the UP AND DOWN buttons (13) set the number in the DEGREES window (14) to indicate the desired value.Touch the OK button (15).

k) Touch the ON button (16).

l) Touch the OK button (17) for at least three seconds. The background of the OK button (15) will go green and the package positioner will inch to the new position.

m) Touch the EXIT button (18) to leave.

n) Repeat the procedure from step of the 2.3.4.1-4 Coarse Setting Outer Package Positioner Zero to step m) above until the working surface (19) of the belt tooth (20) is aligned with the line (21) on the paper. When it is, save the outer package positioner zero position in the memory, see 2.3.4.1-6 Memorizing the Outer Package Positioner Zero Position.

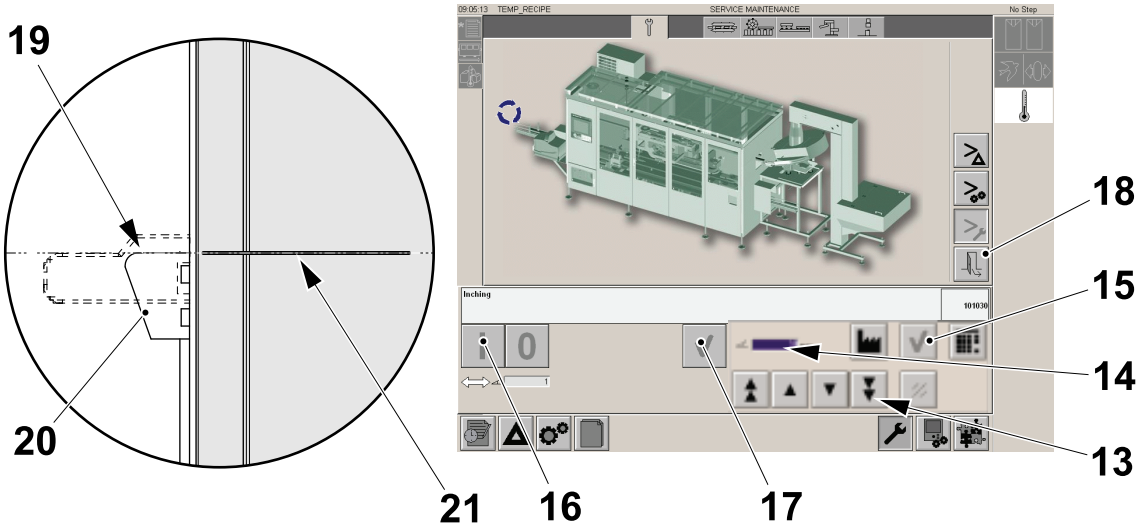

13 UP AND DOWN buttons
14 Degrees window
15 OK button
16 ON button
17 OK button
18 EXIT button
19 Working surface
20 Tooth
21 Line

2.3.4.1-6 Memorizing the Outer Package Positioner Zero Position

Machine Status	Electrical supply disconnecting device in position I (ON) Main air valve ON
SPC Reference	662901-0300

This procedure stores to memory the zero position of the Outer Package Positioner that has been located with the 2.3.4.1-4 Coarse Setting Outer Package Positioner Zero and the 2.3.4.1-5 Fine Setting Outer Package Positioner Zero procedures.

Note! On completion of this procedure, the package positioner will remain at the zero position until the machine is stepped up. When the machine is stepped up to STEP 2 or higher the package positioner will move to an offset position determined by the values entered for the Y-axis package dimension and Y-axis cap position, see 2.3.3.1-9 Set - Package Length Y and 2.3.3.1-7 Set - Cap Position Y Direction.

Note! Make sure the machine is at STEP 0.

a) Touch the SYSTEM SETUP BUTTON (1) to enter your login, see 1.1.1-1 HMI User Management - Log On as a User.

b) Touch the MAINTENANCE button (2).

c) Touch the PACKAGE POSITIONER button (3).

Note! Items like the positioning system only appear on the screen below when installed.

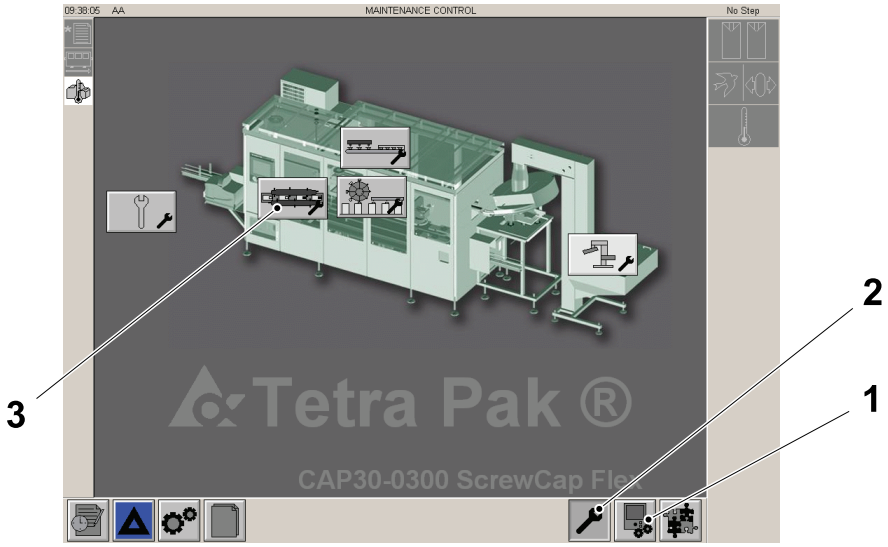

1 SYSTEM SETUP button
2 MAINTENANCE button
3 PACKAGE POSITIONER button

(Cont'd)

(Cont'd)

d) Touch the ZERO button (4) for the outer package positioner.

e) Touch the ON button (5).

f) Touch the OK button (6) for at least three seconds. The background of the ON button (5) will go green and the zero value for inner package positioner will be stored to memory.

g) Touch the EXIT button (7).

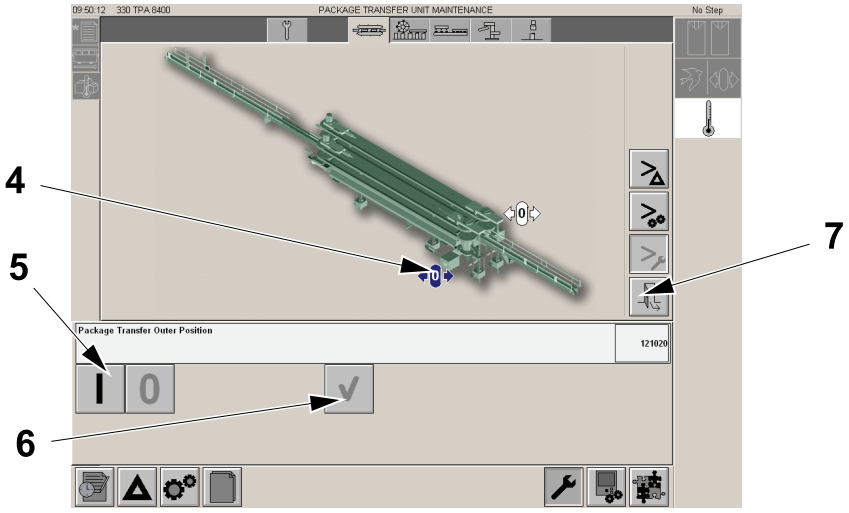

4 ZERO button
5 ON button
6 OK button
7 EXIT button

2.3.5 Upper Package Positioner - Set

2.3.5-1 Upper Left Package Positioner - Set Height

Machine Status	Electrical supply disconnecting device in position O (OFF) Main air valve OFF
SPC Reference	662901-0300

a) Turn the lock (1).

b) Turn the handle (2) to set the distance **A** from the inside of the top of the belt unit (3) to the top of the lower belt unit (4).

c) Turn the lock (1) to lock the shaft.

Package	**A** ±1 (mm) Theoretical	**A** ±1 (mm) Actual	Package	**A** ±1 (mm) Theoretical	**A** ±1 (mm) Actual
TBA 500 Sq	8		TGA 500 Sq	23	
TBA 1000 Sq	95		TGA 750 Sq	69	
TBA 1000 S	100		TGA 1000 Sq	134	
TBA 1500 S	141		TGA 1500 Sq	144	
TBA 2000 S	141		TBA 200 E	15	
TPA 500 Sq	22		TBA 250 E	38	
TPA 750 Sq	37		TGA 1000 Crystal/Leaf	59.5	
TPA 1000 Sq	91				

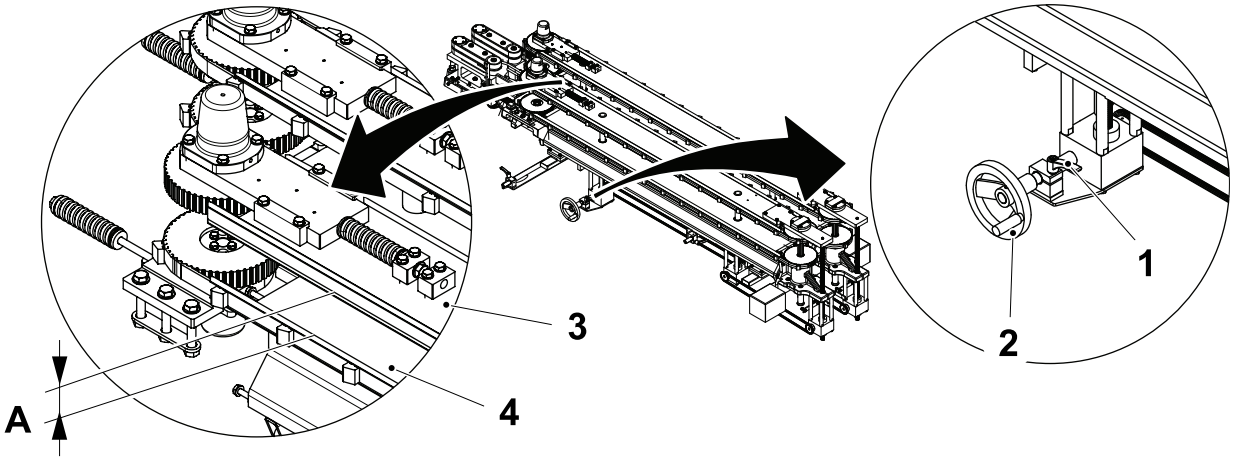

1 Lock
2 Handle
3 Belt unit
4 Belt unit

2.3.5-2 Upper Right Package Positioner - Set Height

Machine Status	Electrical supply disconnecting device in position O (OFF) Main air valve OFF
SPC Reference	662901-0300

a) Turn the lock (1).

b) Turn thehandle (2) to set the distance **A** from the inside of the top of the belt unit (3) to the top of the lower belt unit (4).

c) Turn the lock (1) to lock the shaft.

Package	**A** ±1 (mm) Theoretical	**A** ±1 (mm) Actual	Package	**A** ±1 (mm) Theoretical	**A** ±1 (mm) Actual
TBA 500 Sq	8		TGA 500 Sq	5	
TBA 1000 Sq	95		TGA 750 Sq	55	
TBA 1000 S	100		TGA 1000 Sq	118	
TBA 1500 S	141		TGA 1500 Sq	107	
TBA 2000 S	141		TBA 200 E	2	
TPA 500 Sq	22		TBA 250 E	25	
TPA 750 Sq	37		TGA 1000 Crystal/Leaf	59.5	
TPA 1000 Sq	91				

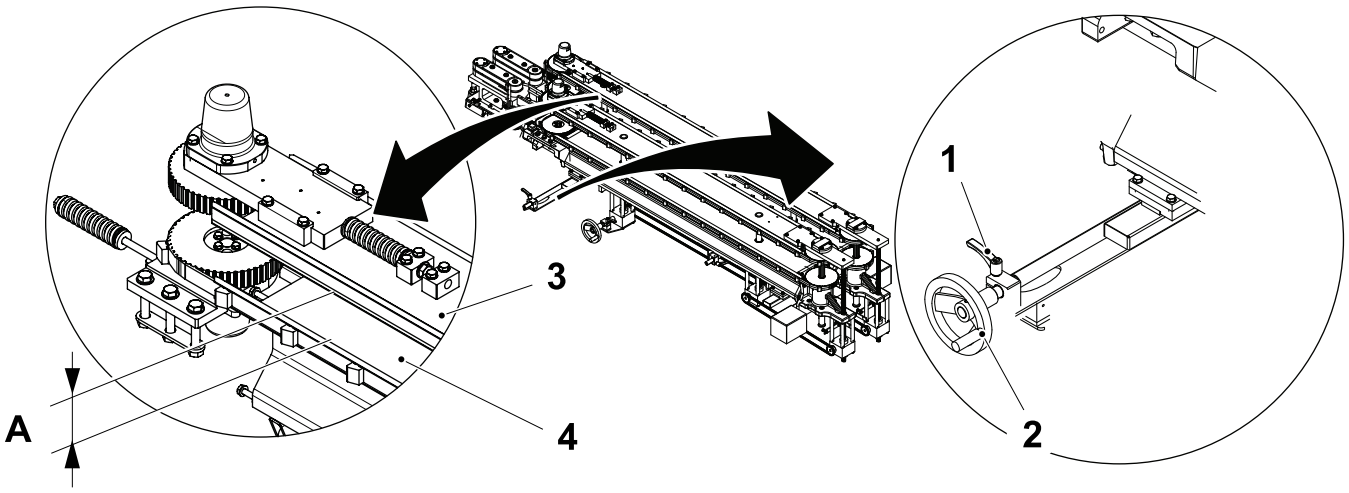

1 Lock
2 Handle
3 Belt unit
4 Belt unit

2.3.5-3 Upper Inner Package Positioner - Set X Direction

Machine Status	Electrical supply disconnecting device in position I (ON) Main air valve ON
Special Equipment	Template 3044285-0000
SPC Reference	2838653-0200

a) Pull the knob (1) out.

b) Set the lever (2) to the Zero position on the scale (3).

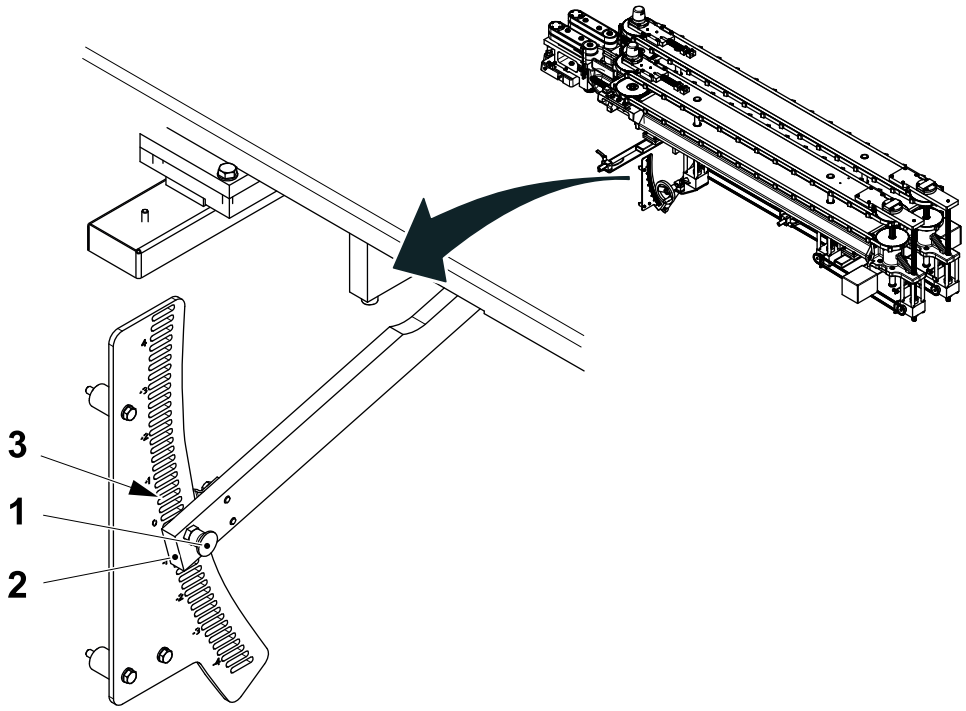

1 Knob
2 Lever
3 Scale

(Cont'd)

(Cont'd)

c) Release the four screws (4) .

d) Insert the two templates (5) (one at each end) into the hole (6) .

e) With the inner package transfer (7) pushed up against the templates (5) tighten the screws (4).

f) Remove the setting tools.

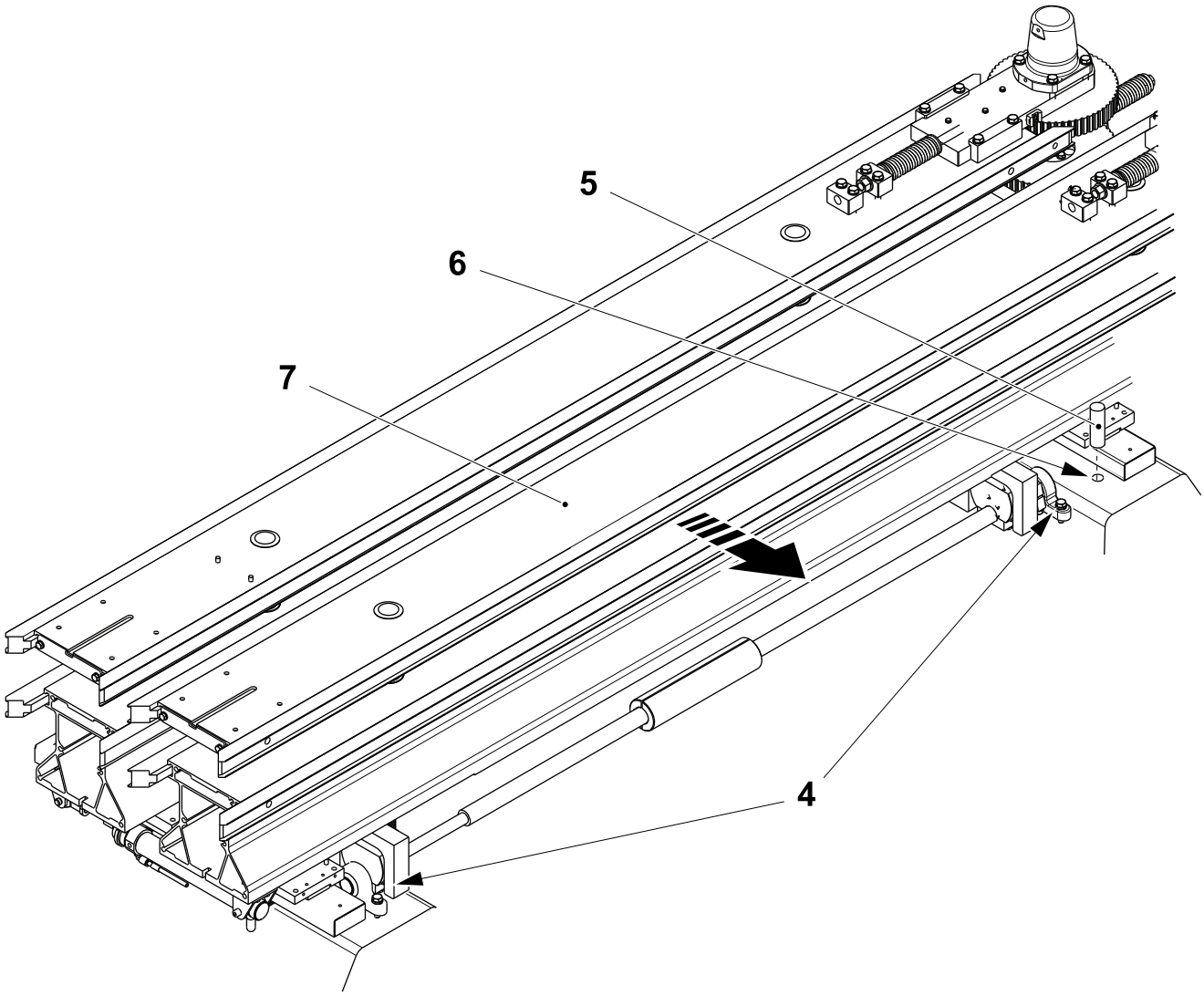

4 Screw
5 Template
6 Hole
7 Inner package transfer

2.4 Package Handling

2.4.1 Package Guides

2.4.1-1 Infeed Package Guide Rollers - Set (TGA-TPA Only)

Machine Status	Electrical supply disconnecting device in position O (OFF) Main air valve OFF
SPC Reference	3199895-0100

The guide roller (1) is good for TPA, TGA Crystal and TGA Leaf. The small guide roller (2) is used only with TPA.

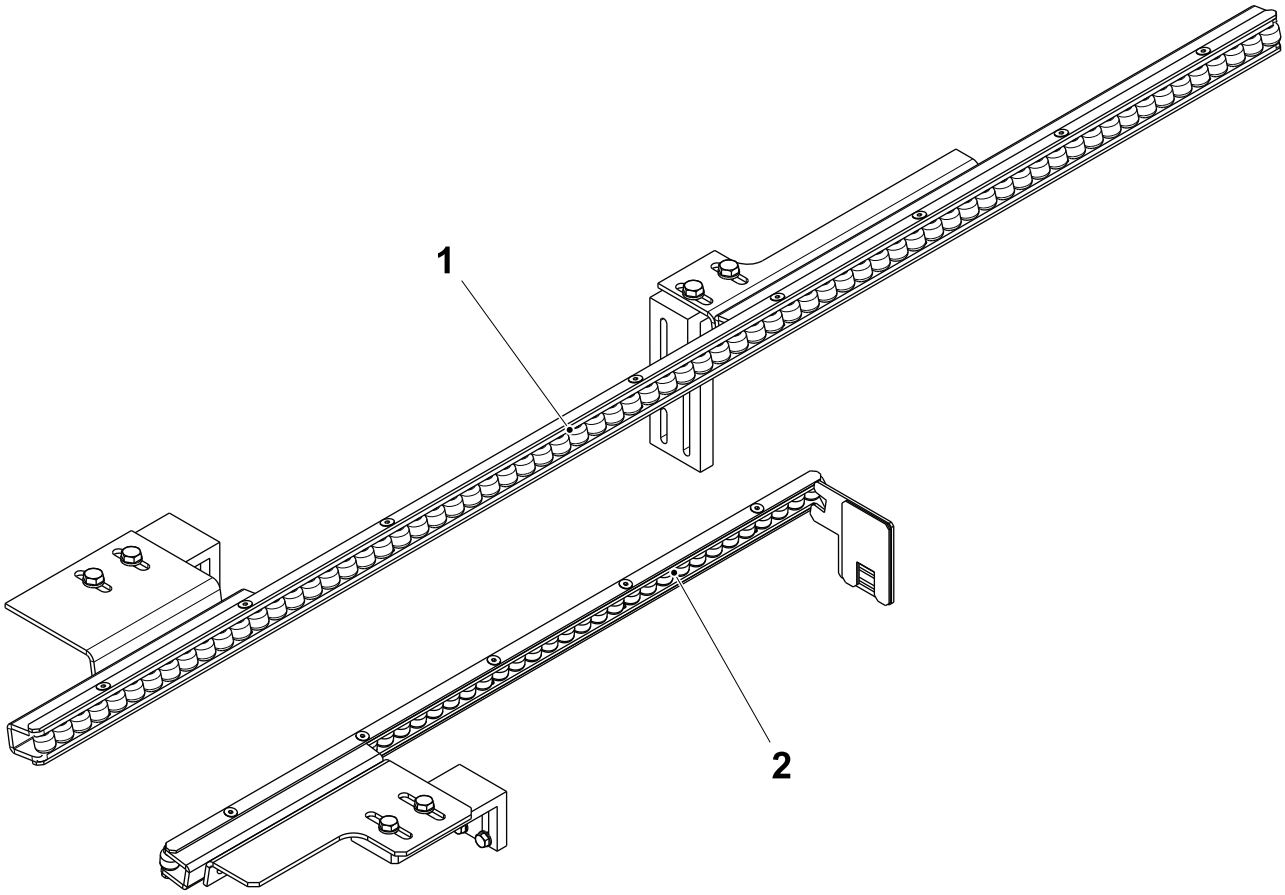

1 Guide roller
2 Guide roller

(Cont'd)

(Cont'd)

Guide Roller Inner Set Height

Note! TGA Crystal, TGA Leaf and TPA ONLY.

a) Release the screws (1) and adjust the height of the guide roller (2) .

Note! The belt brake must be set first see, 2.2.1-5 Brake Unit - Set Position.

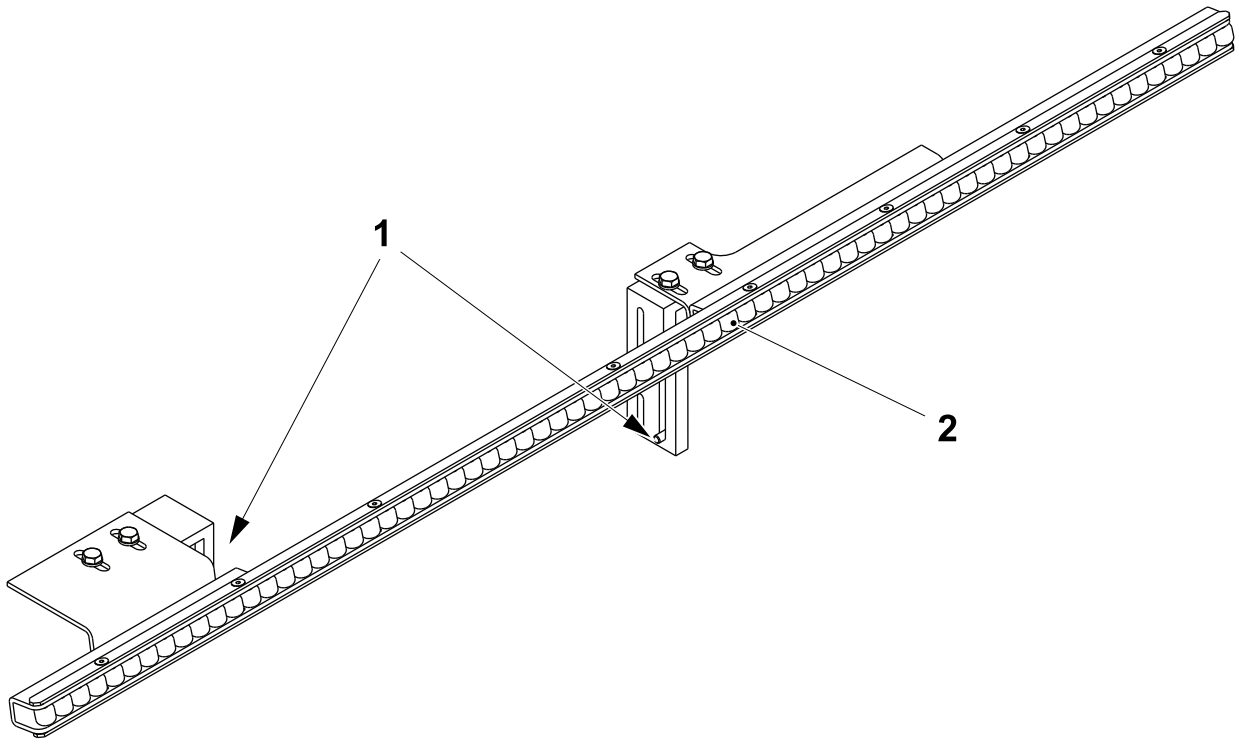

1 Screw
2 Guide roller

(Cont'd)

(Cont'd)

b) Fix the guide roller (2) in the middle between the lower package lIne (3) and the package conveyor (4) .

Note! Check that the guide roller (2) is parallel to the package conveyor (4) .

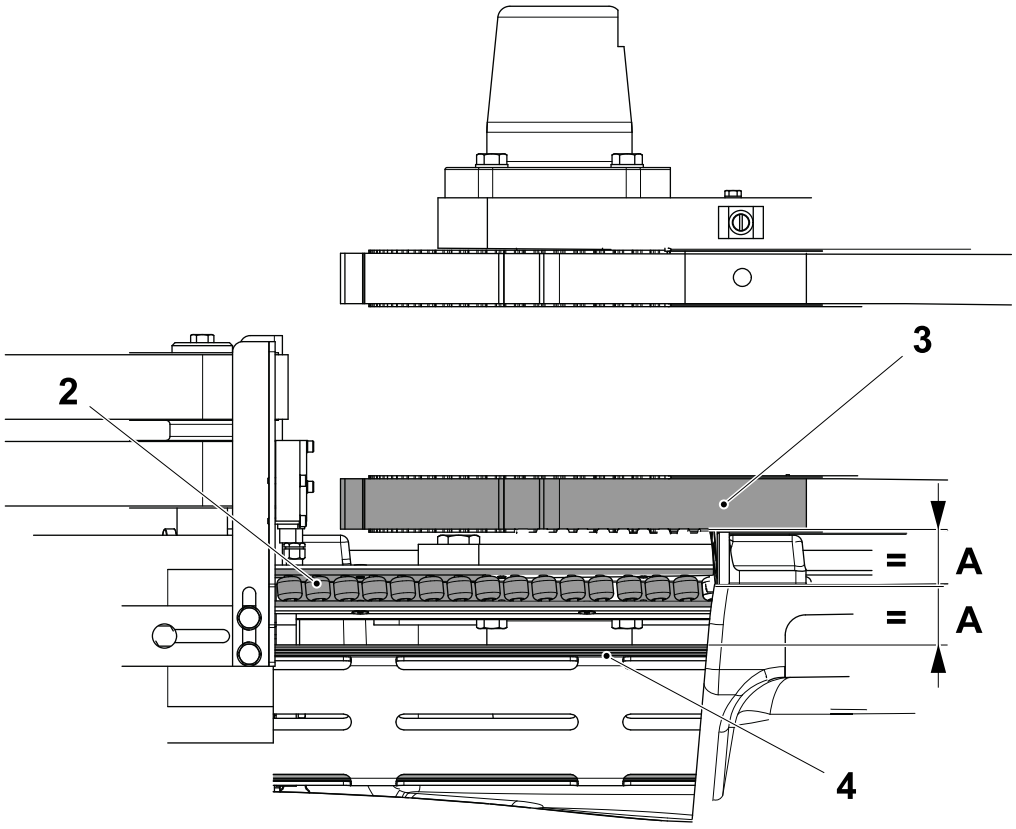

2 Guide roller
3 Lower Package LIne
4 Package Conveyor

2.4.1-2 Guide Roller Inner - Set X Position

Machine Status	Electrical supply disconnecting device in position O (OFF) Main air valve OFF
SPC Reference	3199895-0300

a) Loosen the screws (1) .

b) Move the roller assembly (2) until; the distance A is obtained between the package (3) and the package transfer belt (4).

c) Without moving the roller assembly (2) tighten the screws (1).

Note! When performing this setting the package transfer belt (4) must be standing on the conveyor (5), standing in front of the package transfer black guide (6) and touching the roller assembly (2) .

A = 1 - 2mm

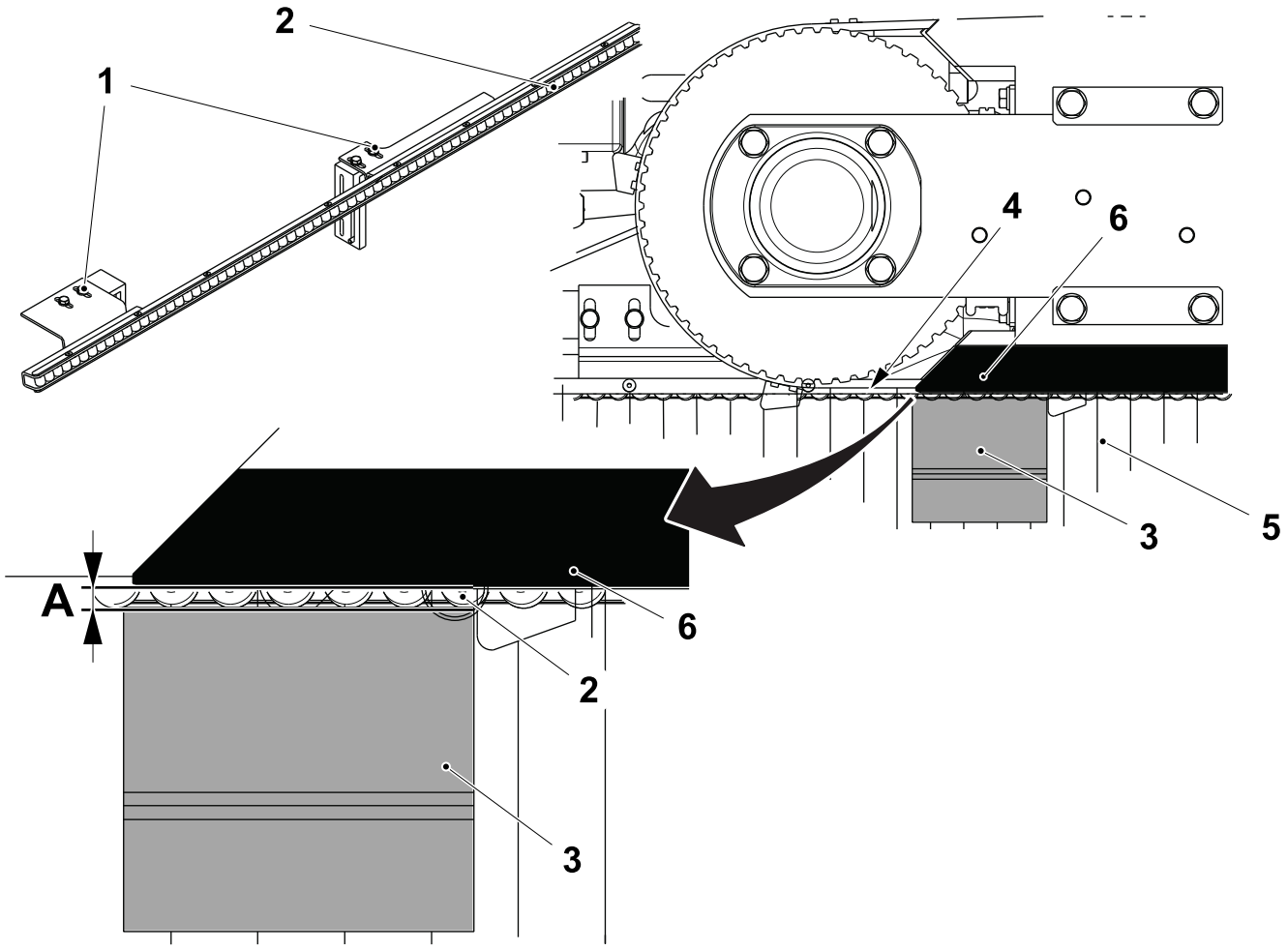

1 Screw
2 Roller assembly
3 Package
4 Package transfer belt
5 Conveyor
6 Black guide

2.4.1-3 Check Guide Roller Inner

Machine Status	Electrical supply disconnecting device in position O (OFF) Main air valve ON
SPC Reference	3199895-0100

a) Move the package (1) backwards and forwards and check that the rollers (2) are moving.

Note! Make sure that the package (1) is nearly but not touching the transfer belt (3) and is standing on the conveyor (4) .

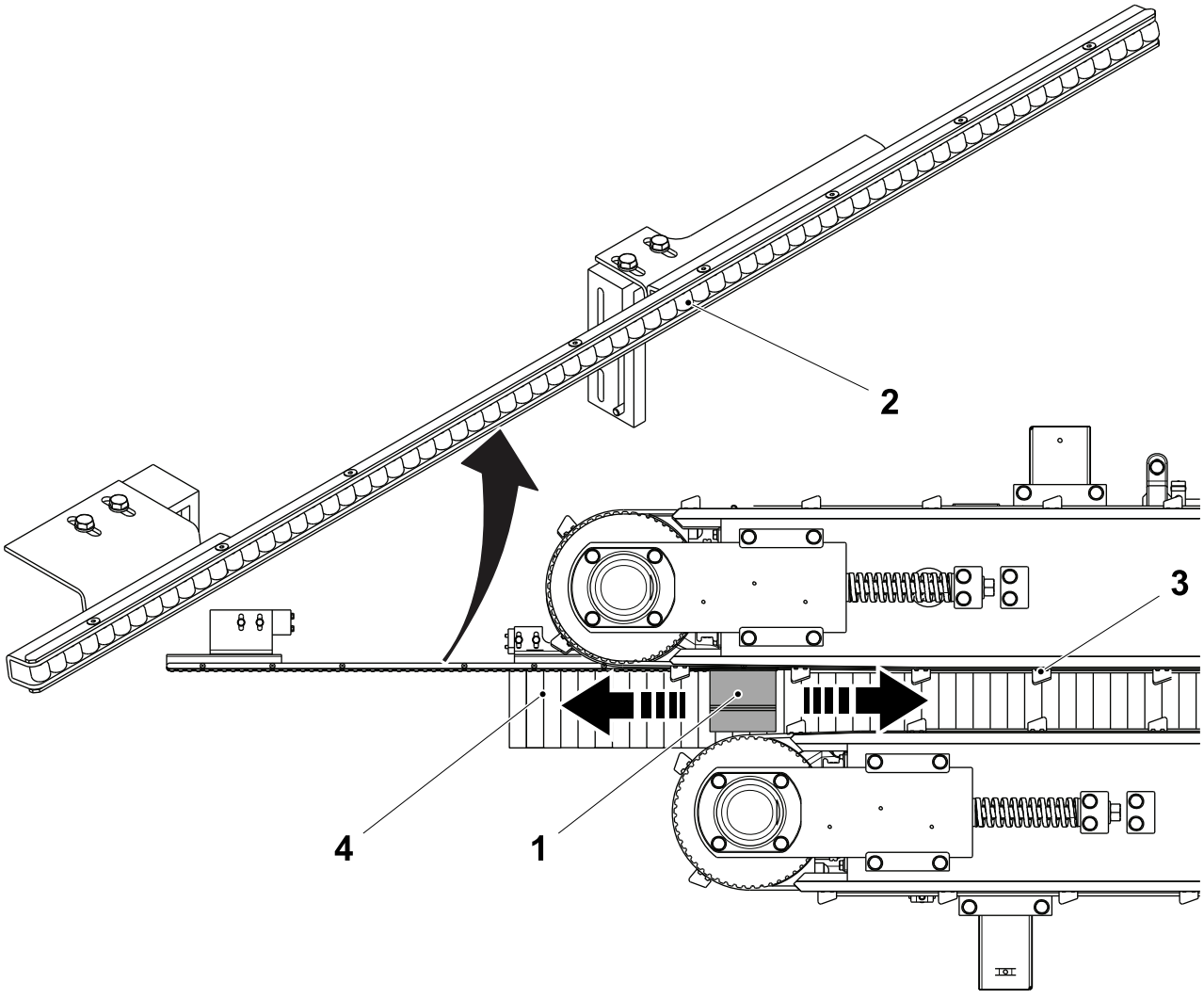

1 Package
2 Roller
3 Transfer belt
4 Conveyor

2.4.1-4 Guide Roller Outer (TPA Only) Set Height

Machine Status	Electrical supply disconnecting device in position O (OFF) Main air valve ON
SPC Reference	3199895-0300

a) Release the screws (1) and move the bracket (2) until the guide roller (3) is level.

b) Tighten the screws (1).

c) Release the scews (4) and move the guide roller (3) until 3 to 4 mm from the package.

d) Add shims (5) to get as close as possible to the aligner.

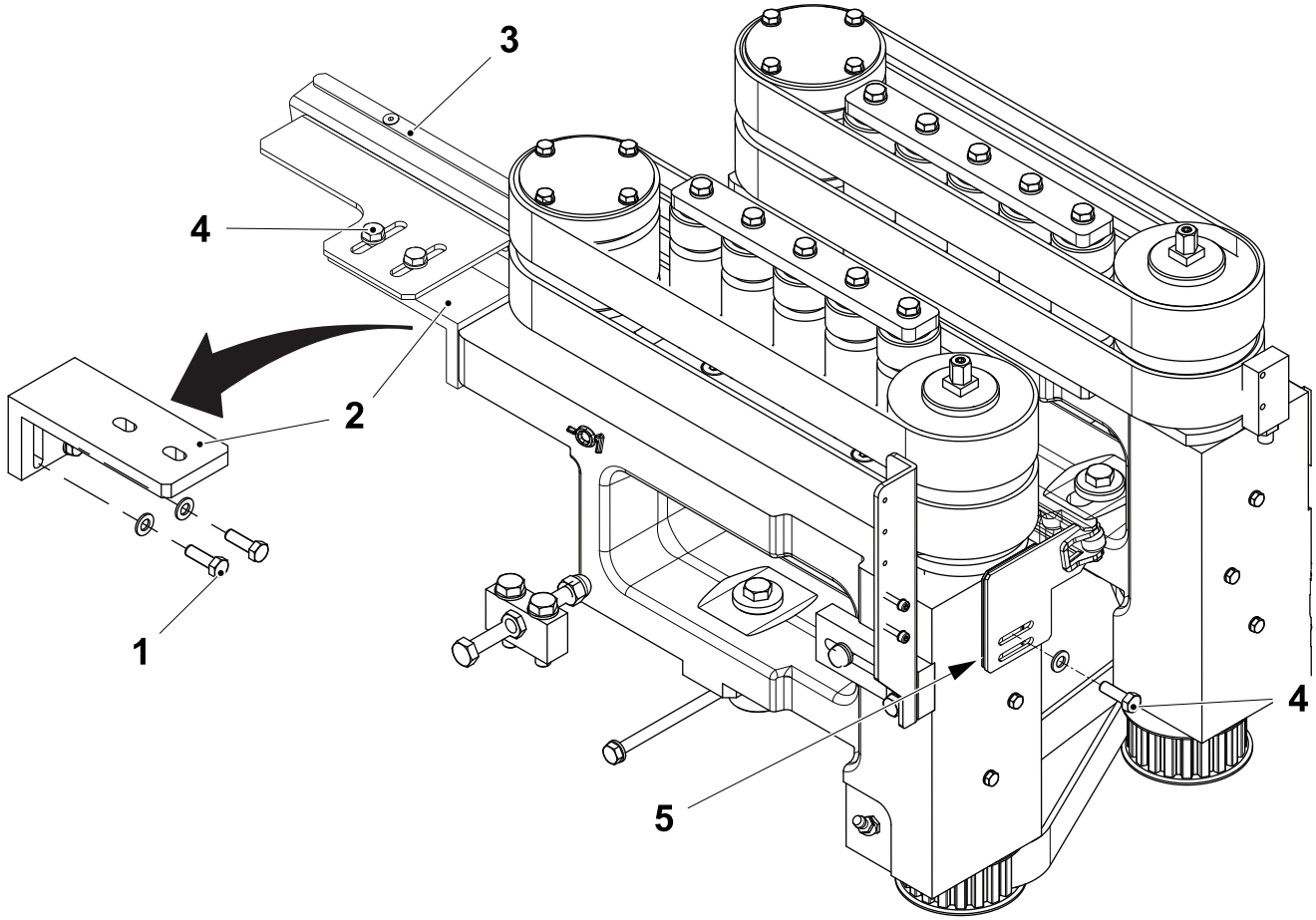

1 Screw
2 Bracket
3 Guide roller
4 Screw
5 Shim

2.4.1-5 Guide Roller Outer - Set X Direction

Machine Status	Electrical supply disconnecting device in position O (OFF) Main air valve OFF
SPC Reference	3199895-0100

a) Loosen the screws (1) and set the position of the guide roller (2) .

Note! The guide guide roller (2) should be distance A from the surface of the package (3) .

A = 3 - 4 mm

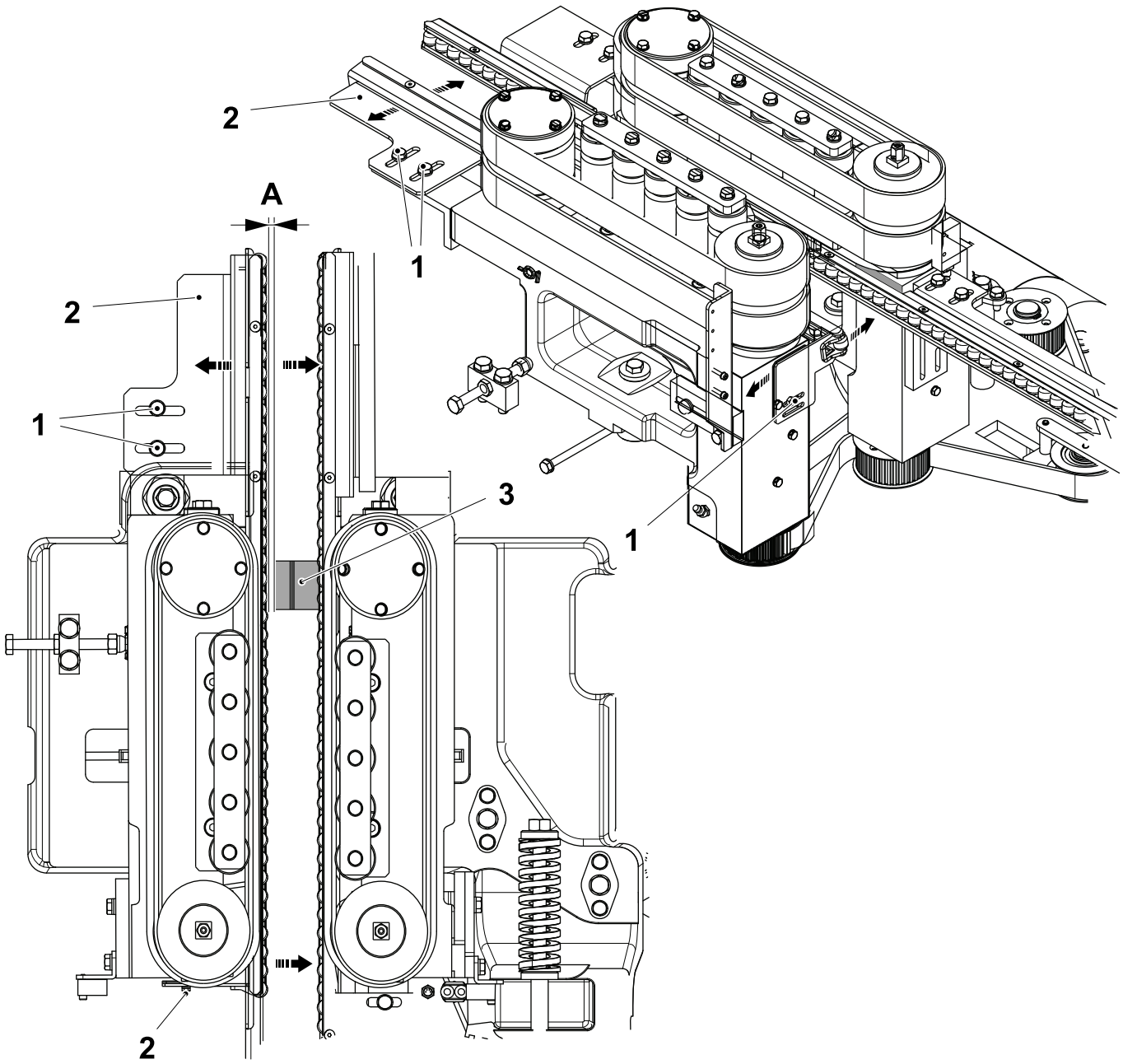

1 Screw 2 Guide roller 3 Package

2.4.1-6 Infeed Package Guides - Set (TBA 200 E and TBA 250 E)

Machine Status	Electrical supply disconnecting device in position O (OFF) Main air valve OFF
SPC Reference	3139123-0100

Note! Valid for holding belts, see 2.1 Functional Description on page 2-7.

Note! The belt brake must be set first see, 2.2.1-5 Brake Unit - Set Position.

a) Release the screws (1) and adjust the bracket (2) until the guide plate (3) is distance A from the conveyor top (4) .

b) Release the screws (5) and adjust the guide plate (3) until the distance B behind the belt brake is obtained.

Note! Make sure the guide plate (3) are parallel.

A = 2 mm
B = 1 mm

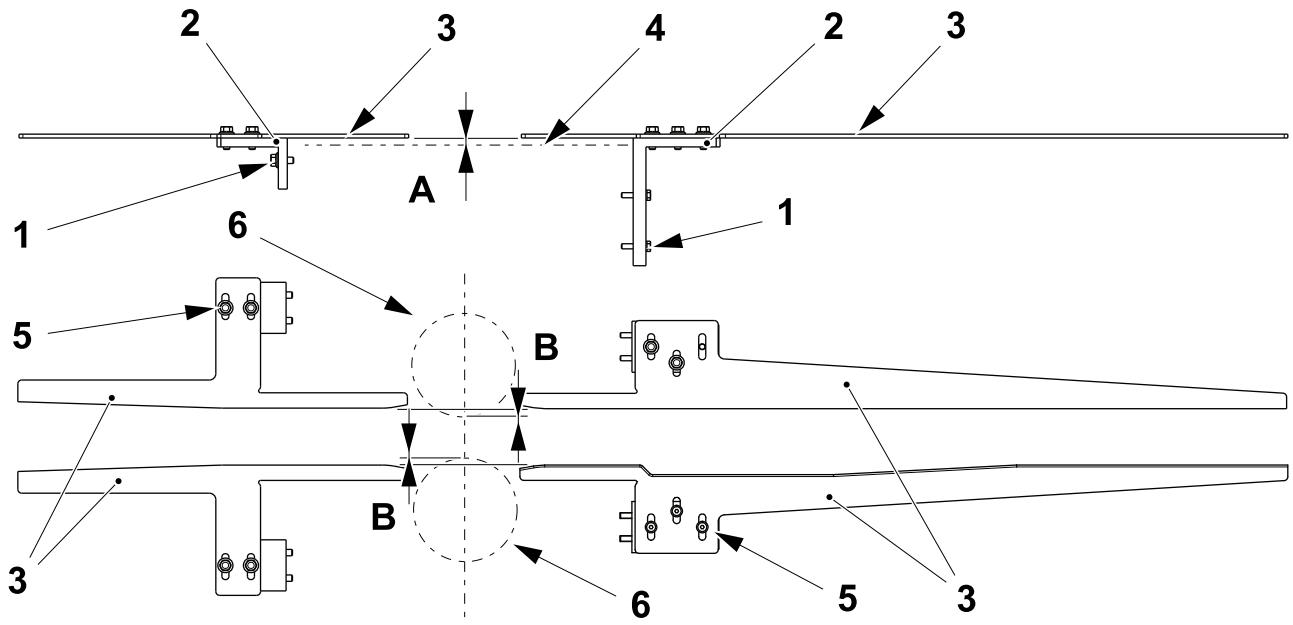

1 Screw
2 Bracket
3 Guide plate
4 Conveyor top
5 Screw
6 Belt brake

(Cont'd)

(Cont'd)

Infeed Package Guides - Set (TBA 200 E and TBA 250 E)

Note! Valid for pulling belts, see 2.1 Functional Description on page 2-7.

a) Place package (1) and package (2) as shown in the picture below.

b) Put in place side rail (3) and side rail (7) with the screws (4) and screws (8) in order to have the distance **A** on both sides of package (1).

c) Place the package (2) in touch with the side rail (3) and make sure that there is a distance **B** from the package (2) and the inner upper belt (5).

d) Move the package (2) just before the contact with the outer belt (6).

e) Set the side rail (7) in order to obtain the distance **C** from the package (2) and tighten the screws (8).

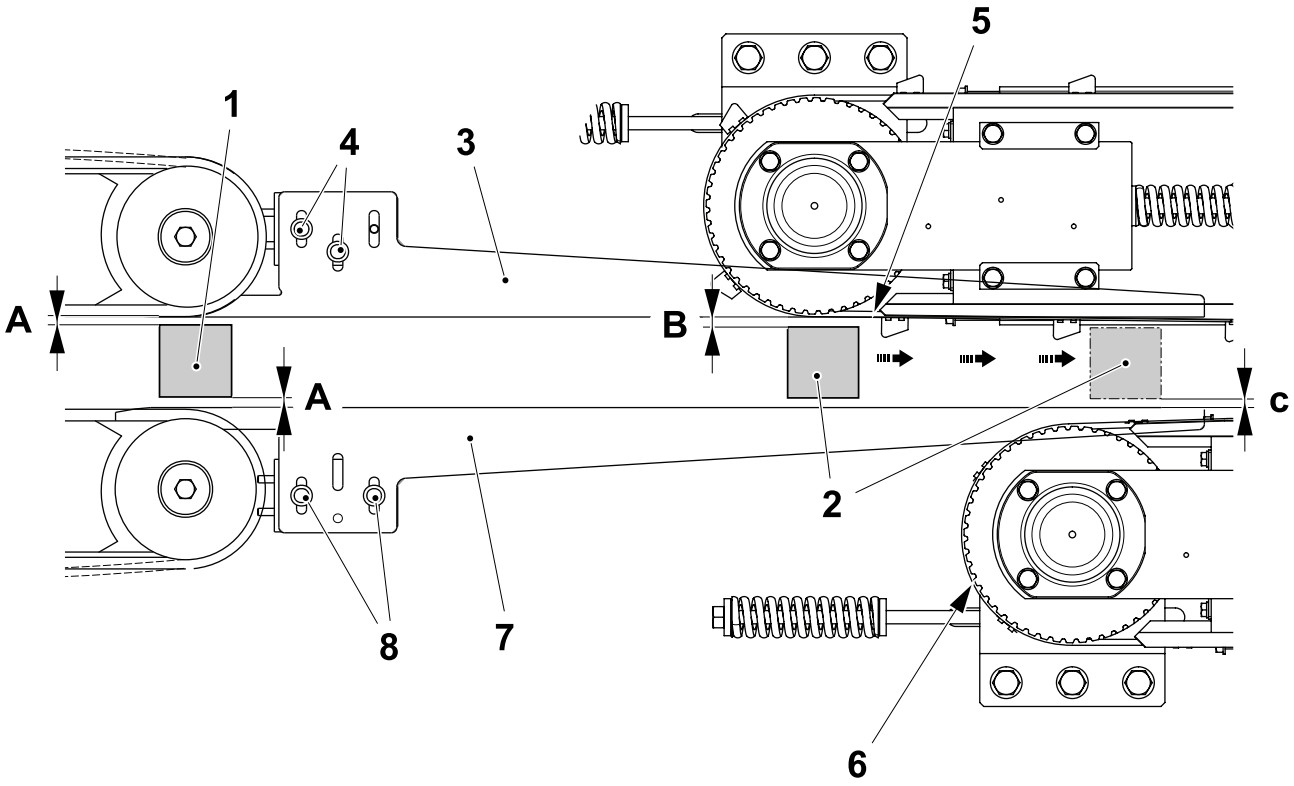

A = 1 mm
B = 2 mm
C = 0.5 mm

1 Package
2 Package
3 Side Rail
4 Screw
5 Belt
6 Belt
7 Side Rail
8 Screw

(Cont'd)

(Cont'd)

Belt Brake Unit - Set Position

Note! Valid for pulling belts, see 2.1 Functional Description on page 2-7.

a) Align the belts, see 2.3.1.2-2 Set Belts Alignment - Right.

b) Set the belt brake, see 2.2.1-5 Brake Unit - Set Position.

c) Set the side rails (1) before the belt brake (2) in order to accept 90 degrees rotated package (3).

d) Tighten the screws (4).

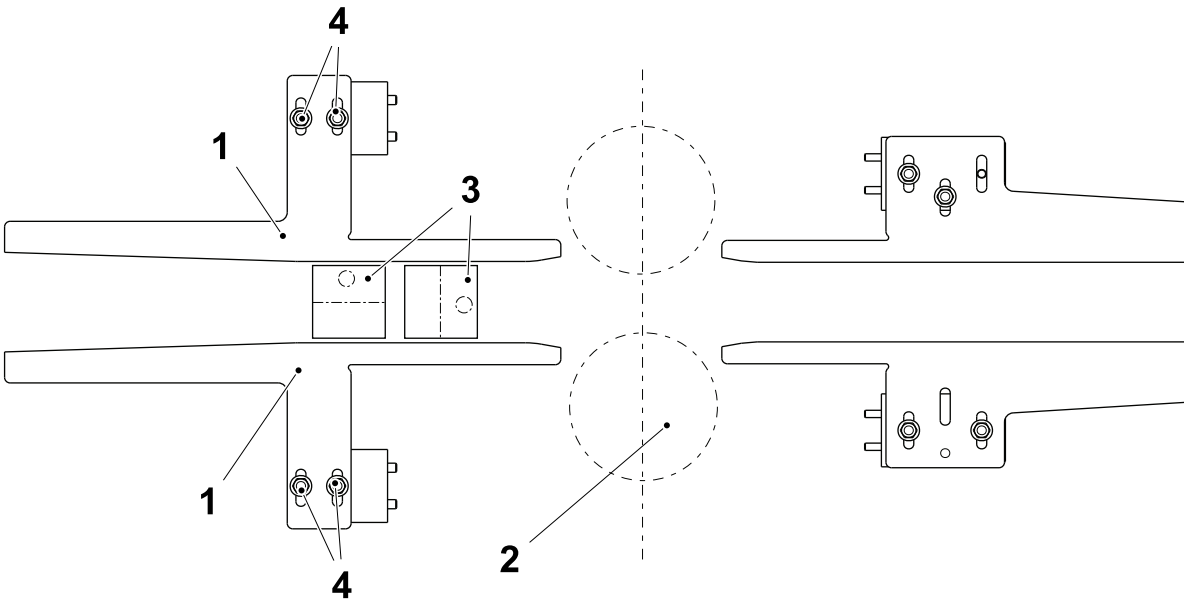

1 Side Rail
2 Belt brake
3 Package
4 Screw

2.4.1-7 Outfeed Package Guides - Set

Machine Status	Electrical supply disconnecting device in position O (OFF) Main air valve OFF
SPC Reference	3199892-0100 3199893-0100

a) Loosen the screws (1) and move the plate (2) until the plate (3) is distance A from the conveyor top (4). Tighten the screws (1).

b) Loosen the screws (5) and move the plate (3) until it is the distance B behind the belt (6).

c) Make sure that the package congestion outfeed sensors (7) work properly.

A = 2mm

B = 2mm

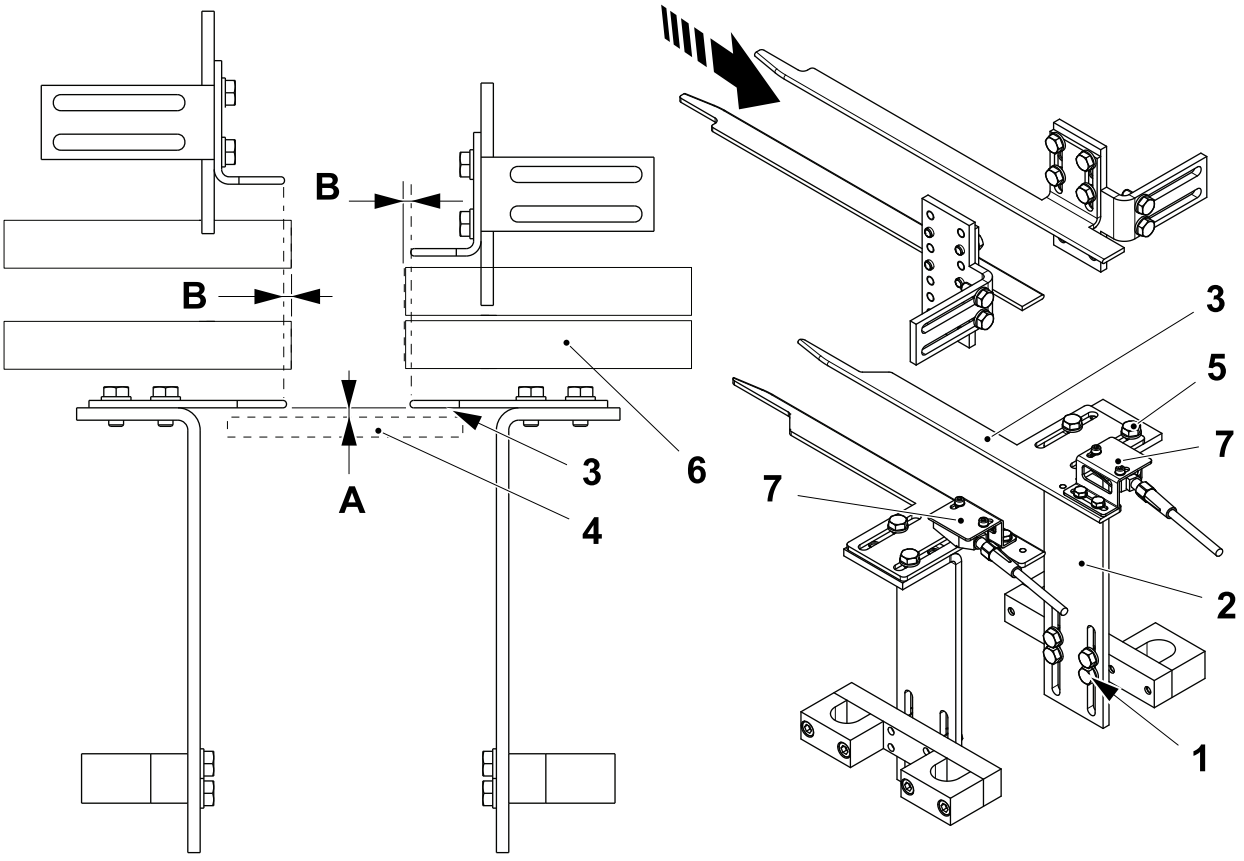

1 Screw
2 Plate
3 Plate
4 Conveyor top
5 Screw
6 Belt
7 Package congestion outfeed sensor

(Cont'd)

(Cont'd)

d) Loosen the screws (8) and move the bracket (9) until the plate (10) is the distance B behind the belt (6) . Tighten the.belt (6) .

e) Loosen the screws (8) and move the screws (11) and move the plate (10) until it is the distance C from the top of wheel (12). Tighten the screws (11) .

f) Repeat steps a) and e).

B = 2mm
C = 15mm

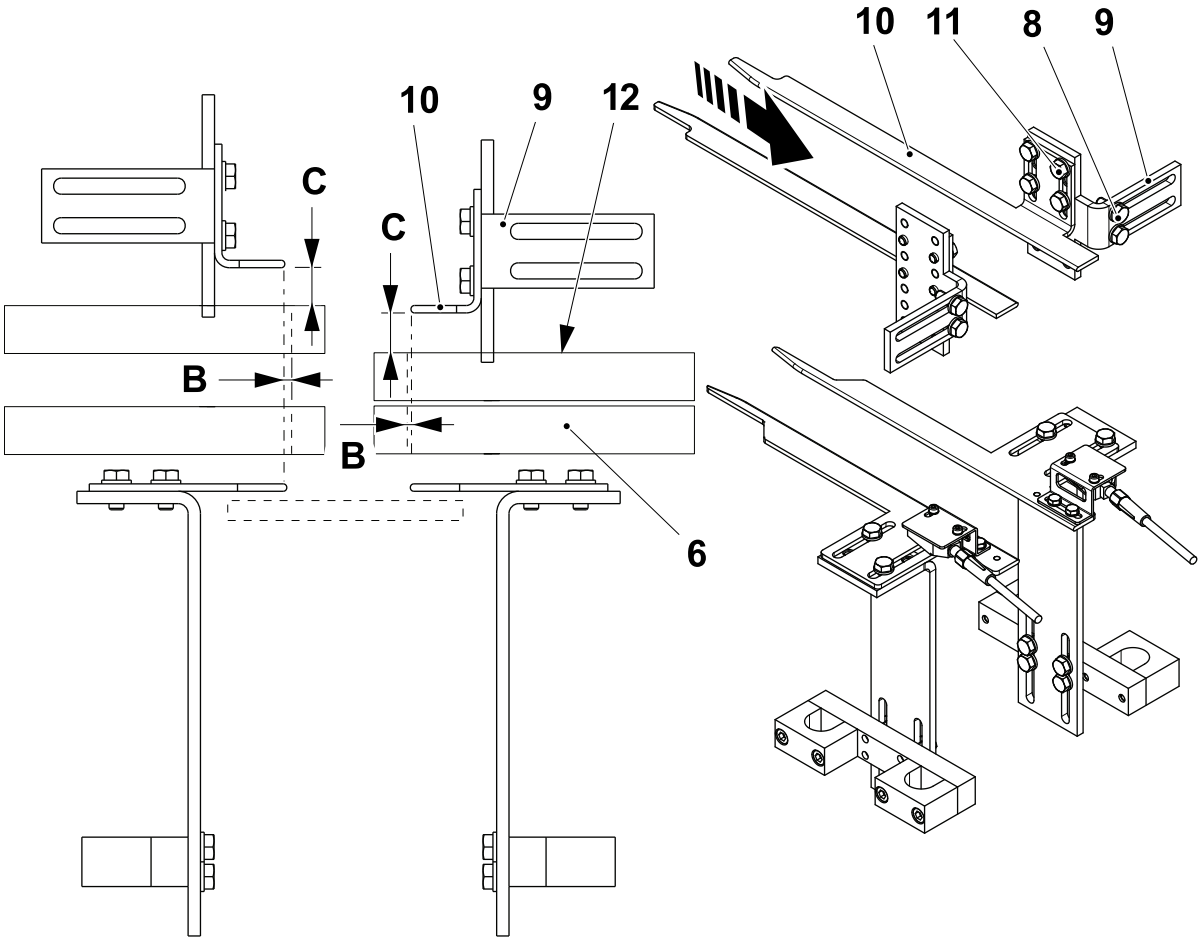

6 Belt
8 Screw
9 Bracket
10 Plate
11 Screw
12 Top of wheel

2.4.2 Package Aligner **(TPA Only)**

2.4.2-1 Package Aligner - Set Speed

Machine Status	Electrical supply disconnecting device in position I (ON) Main air valve ON
SPC Reference	3199895-0100

The speed of the package aligner has been programmed to run at the same speed as the package conveyor speed.

If there is a visible difference between the two speeds, the package aligner speed can be adjusted by ±20%.

Adjust the package aligner speed as follows:

a) Touch the `SETTING` button (1) and then the `PACKAGE TRANSFER UNIT` button (2).

Note! Items like the positioning system only appear on the screen below when installed.

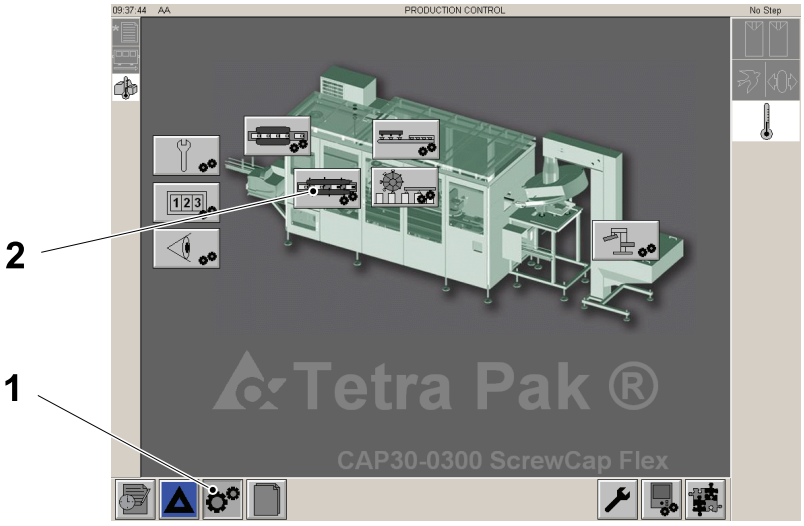

1 Settings button
2 Package transfer unit button

(Cont'd)

(Cont'd)

b) Touch the PACKAGE ALIGNER button (3).

c) To increase or decrease the value, use the ARROW KEYS (4) or the keyboard (accessible via the KEYBOARD button (5)) to change the SPEED VALUE (6).

d) Introduce the value by clicking the OK button (7).

e) Touch the EXIT button (8).

f) When the correct result is obtained, store the corrected values in the appropriate recipe, see 10.9.1-14 Touch Screen - Saving Recipe Settings.

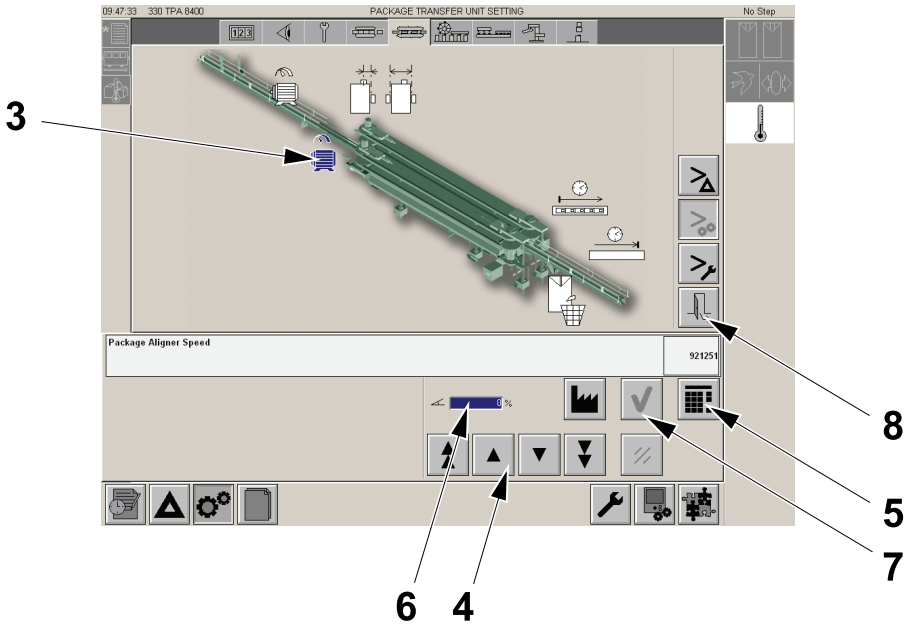

3 Package aligner button
4 Arrow keys
5 keyboard button
6 Speed value
7 Ok button
8 Exit button

2.4.2-2 Package Aligner - Change Belt

Machine Status	Electrical supply disconnecting device in position O (OFF) Main air valve OFF
Special Equipment	Belt tension measuring meter: TP 90600-3415 or TP 90459-2181
SPC Reference	3199895-0100

Note! Disconnect the electrical power supply to the motor.

a) Remove the three screws (1) and the cover (2).

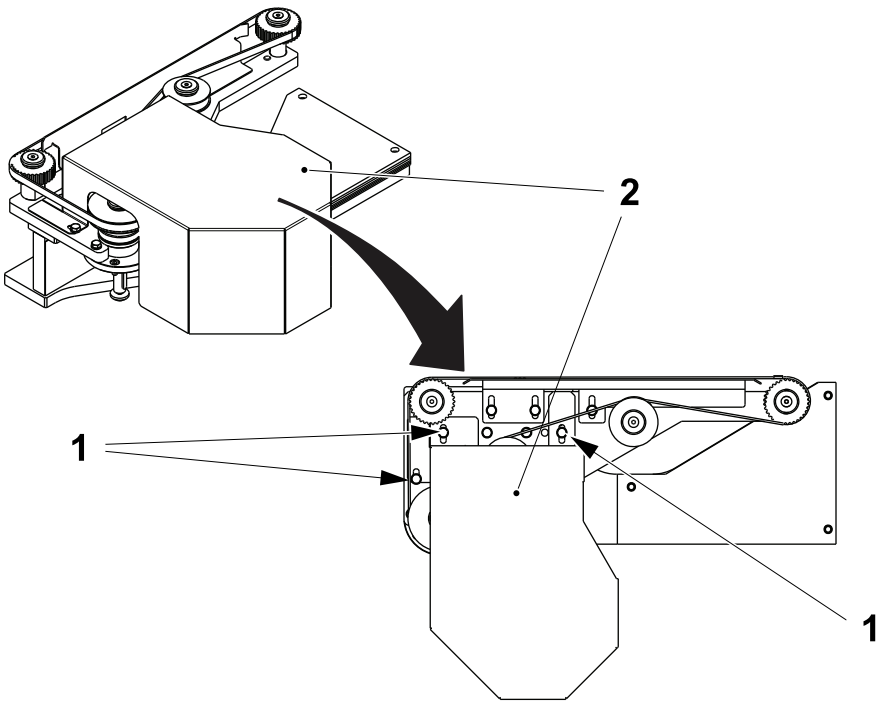

1 Screw
2 Cover

(Cont'd)

(Cont'd)

Note! When the screw (3) is loose, the shaft (4) makes the wheel (5) to go forward or backward.

b) Release the screw (3) and replace the belt (6).

c) Rotate and move forward the wheel (5) until the new belt (6) allows approximately a distance **A** = 5mm of movement.

Note! Do not over tension the belt (6).

d) Tighten the screw (3).

e) Measure the belt tension using a "belt tension measuring meter" TP part 90459-2181 or 90600-3415.

Note! The correct tension is about 70 to 80 Hz.

f) Produce vibrations hitting the belt (6) with a spanner and measure the belt tension in the position **P**.

g) Repeat the operation until the belt tension is set properly.

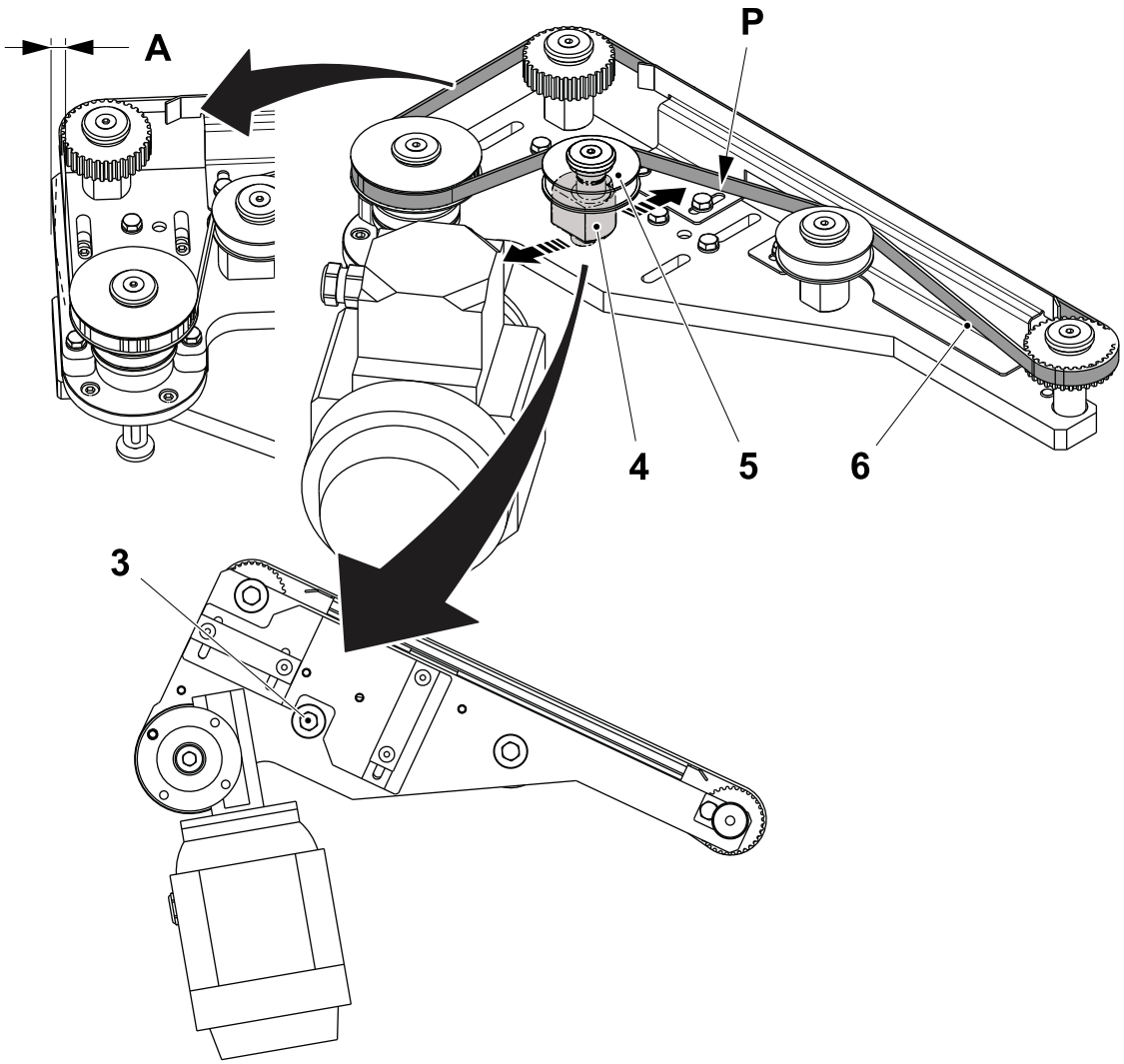

A = 5mm

3 Screw
4 Shaft
5 Wheel
6 Belt

2.4.2-3 Package Aligner - Set Angle

Machine Status	Electrical supply disconnecting device in position O (OFF) Main air valve OFF
SPC Reference	3199895-0100

Note! This setting is required only if the 2.4.2-4 Package Aligner - Set Position on the next page cannot be obtained.

a) Loosen without remove the screws (1).

b) Pull the package package aligner (2) and tighten the screws (1).

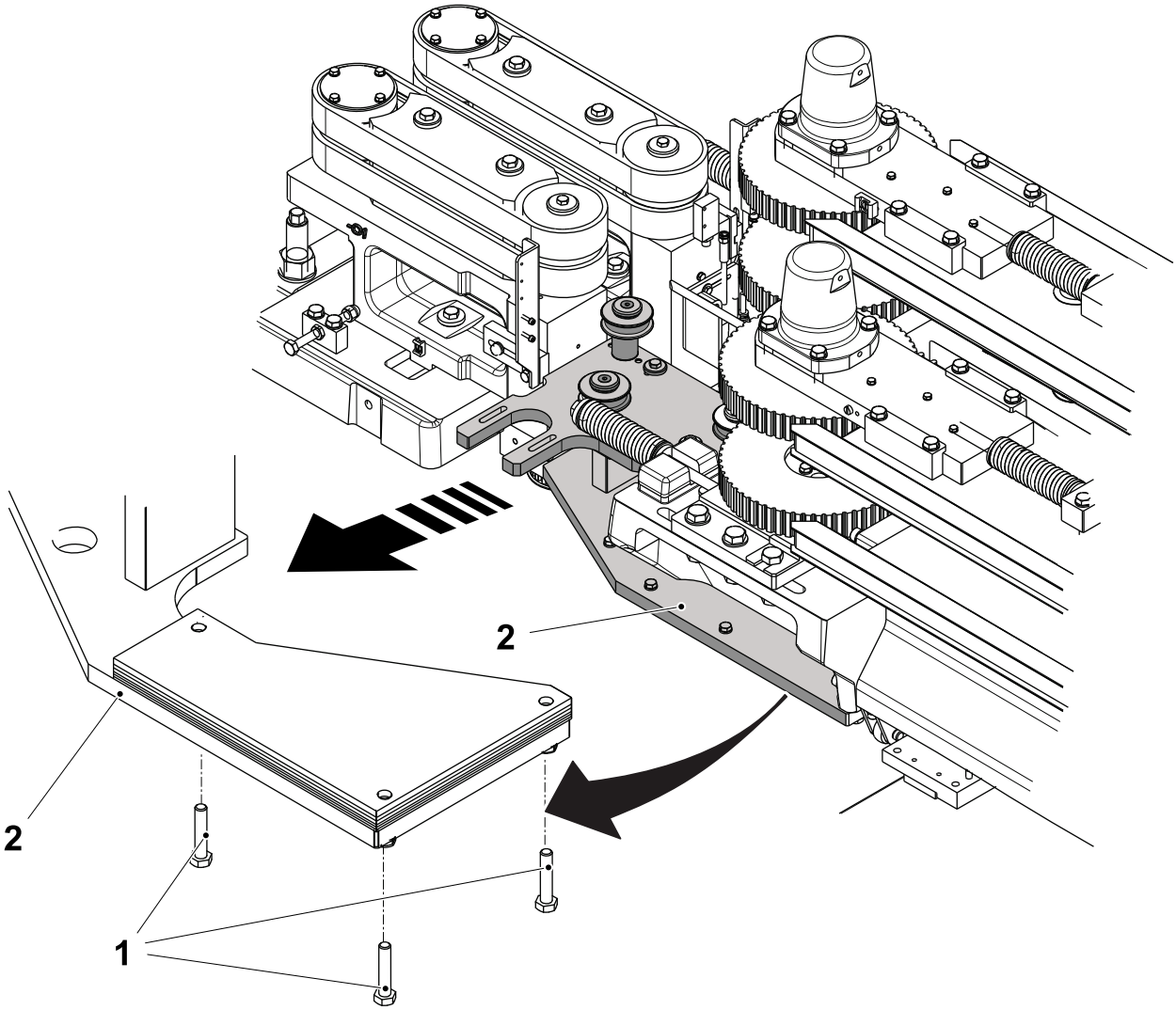

1 Screw
2 Package aligner

2.4.2-4 Package Aligner - Set Position

Machine Status	Electrical supply disconnecting device in position O (OFF) Main air valve OFF
SPC Reference	2880018-0100

a) Make sure that the package (1) and the package (2) are in the positions shown and **touching** the guide roller (3) .

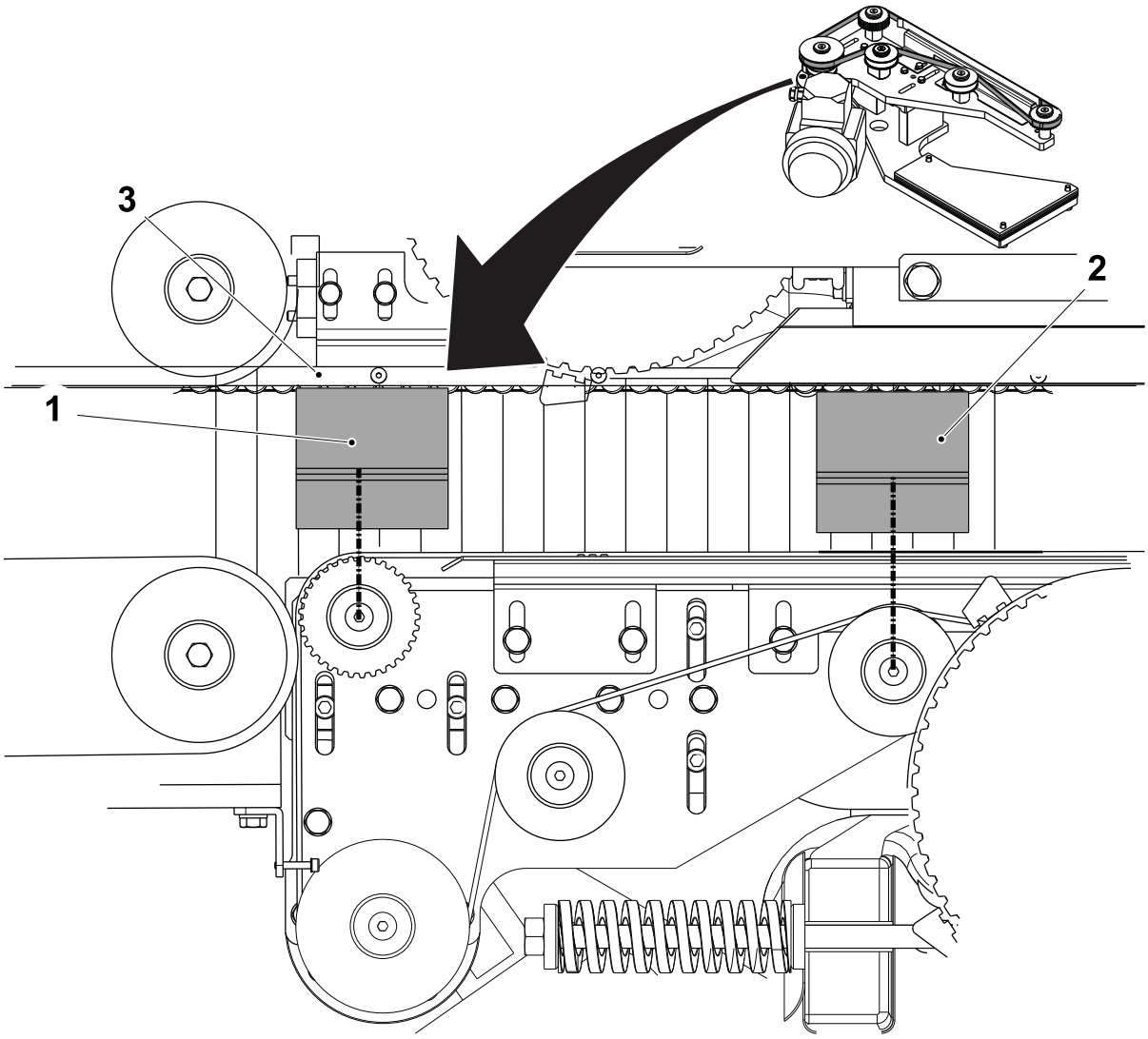

1 Package
2 Package
3 Guide roller

(Cont'd)

(Cont'd)

b) Release the screws (4) and move the package aligner (5) until the distance A and B from the surface of the belt (6) is obtained.

c) Put the package aligner (5) in position according to the distances A and B .

d) Hold the package aligner (5) in position and tighten the screws (4).

Note! If the package aligner (5) inclination is not enough to reach the desired settings, make the 2.4.2-3 Package Aligner - Set Angle.

A = 4 ± 1mm
B = 1 ± 0.5mm

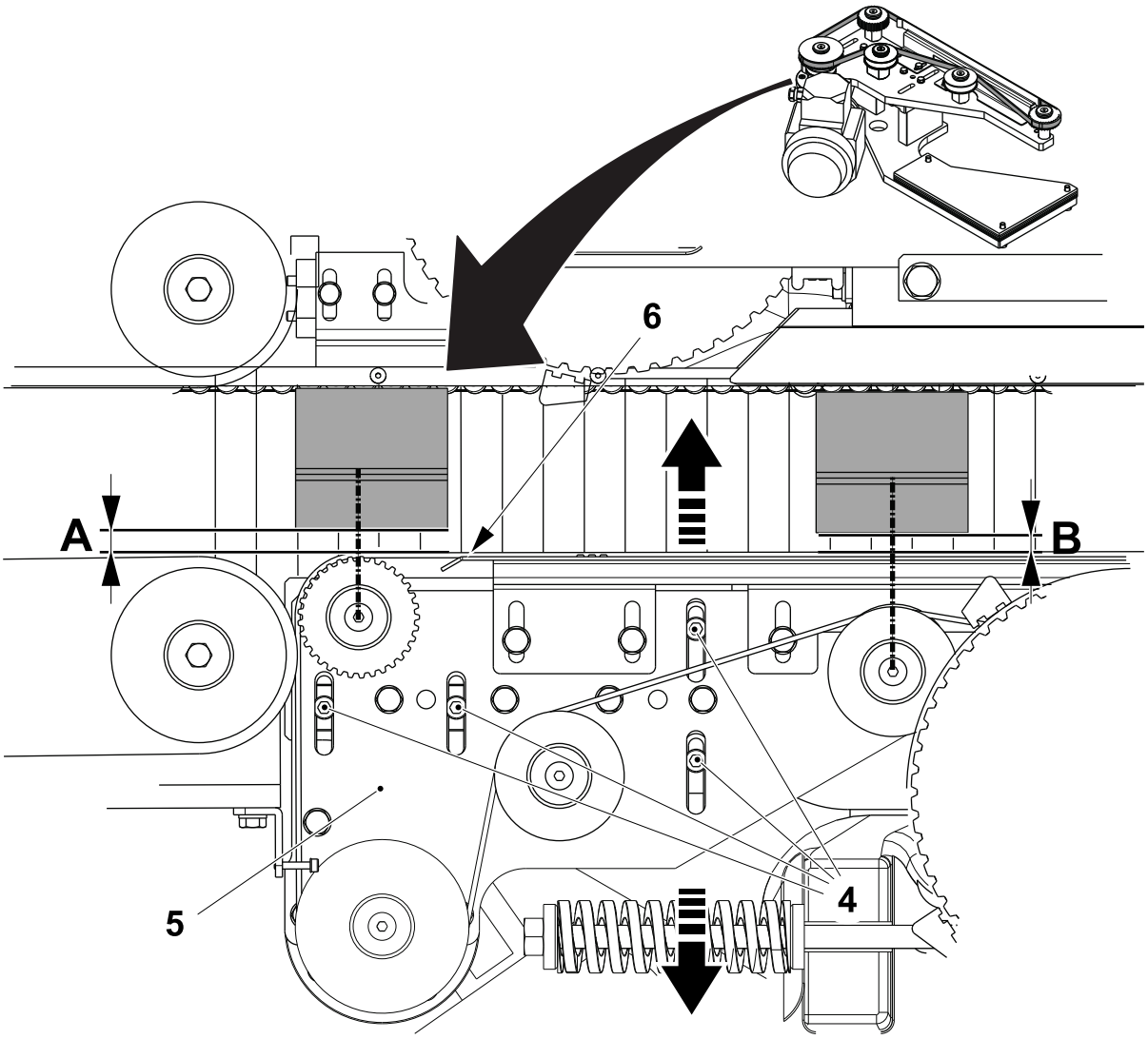

4 Screw
5 Package aligner
6 Belt

(Cont'd)

(Cont'd)

e) Install the cover (7) and tighten the screws (8).

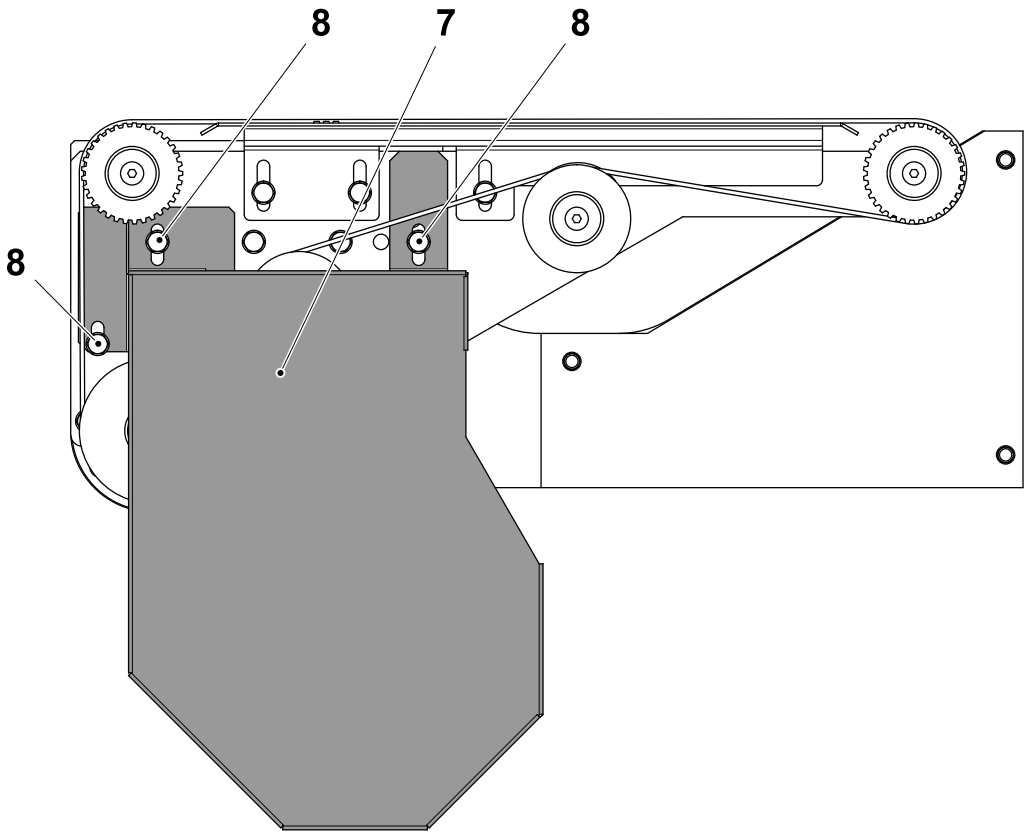

7 Cover
8 Screw

2.4.2-5 Package Aligner from the TPOP

Machine Status	Electrical supply disconnecting device in position I (ON) Main air valve ON
SPC Reference	3199895-0100

Package Aligner Installation on the TPOP

a) Login is required see, 1.1.1-1 HMI User Management - Log On as a User.

b) Step the machine down to STEP0.

c) Touch the `OPTION` icon (1), then touch the `PACKAGE ALIGNER` icon (2).

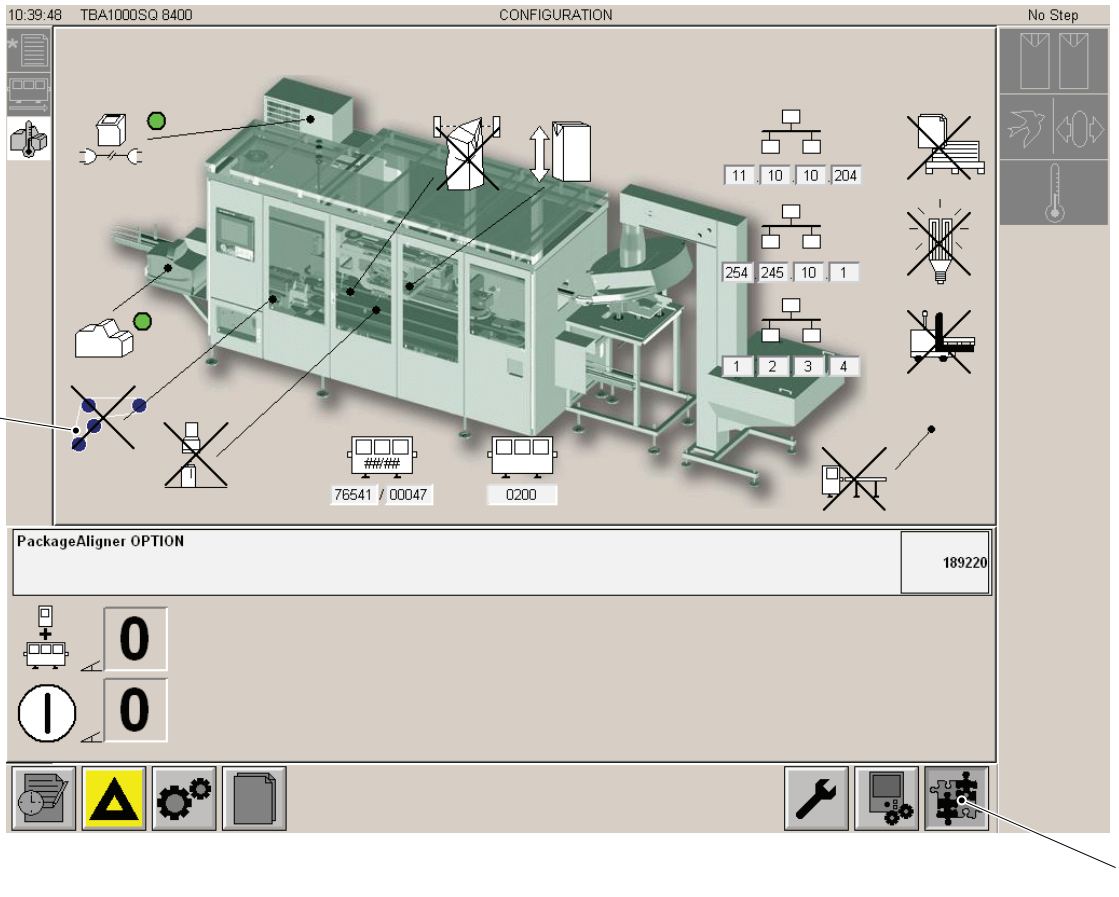

1 Option icon
2 Package aligner icon

(Cont'd)

(Cont'd)

d) Touch the STATUS icon (3).

e) Touch the ON Icon (4) then the OK button (5) to install the package aligner.

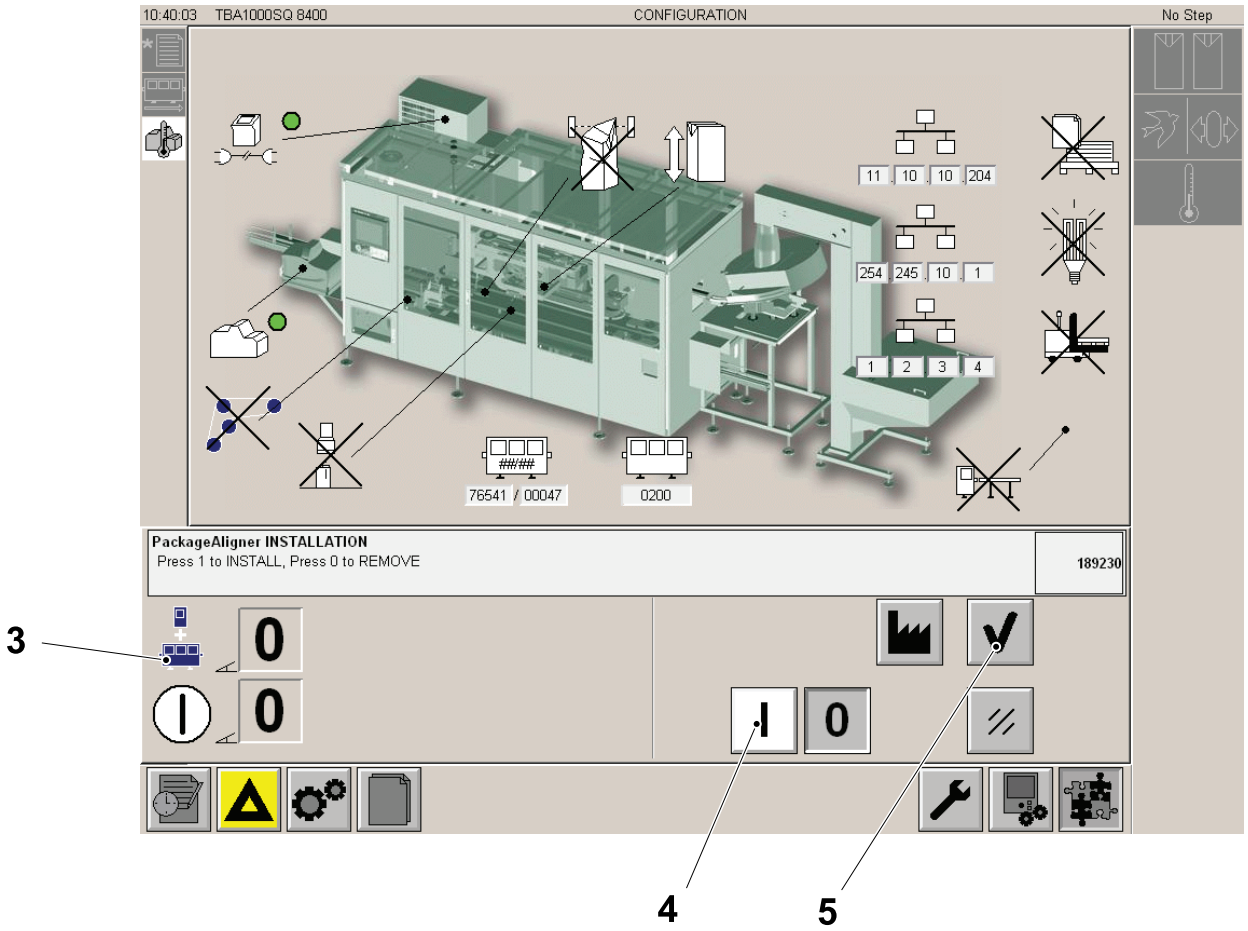

3 Status icon
4 ON icon
5 OK button

(Cont'd)

(Cont'd)

Package Aligner Activation on the TPOP

a) Touch the STATUS icon (1) which will change to ON and the main STATUS icon (2) returns to white.

b) Touch the activation STATUS icon (3), the ON icon (4) then the OK button (5) activate the package aligner.

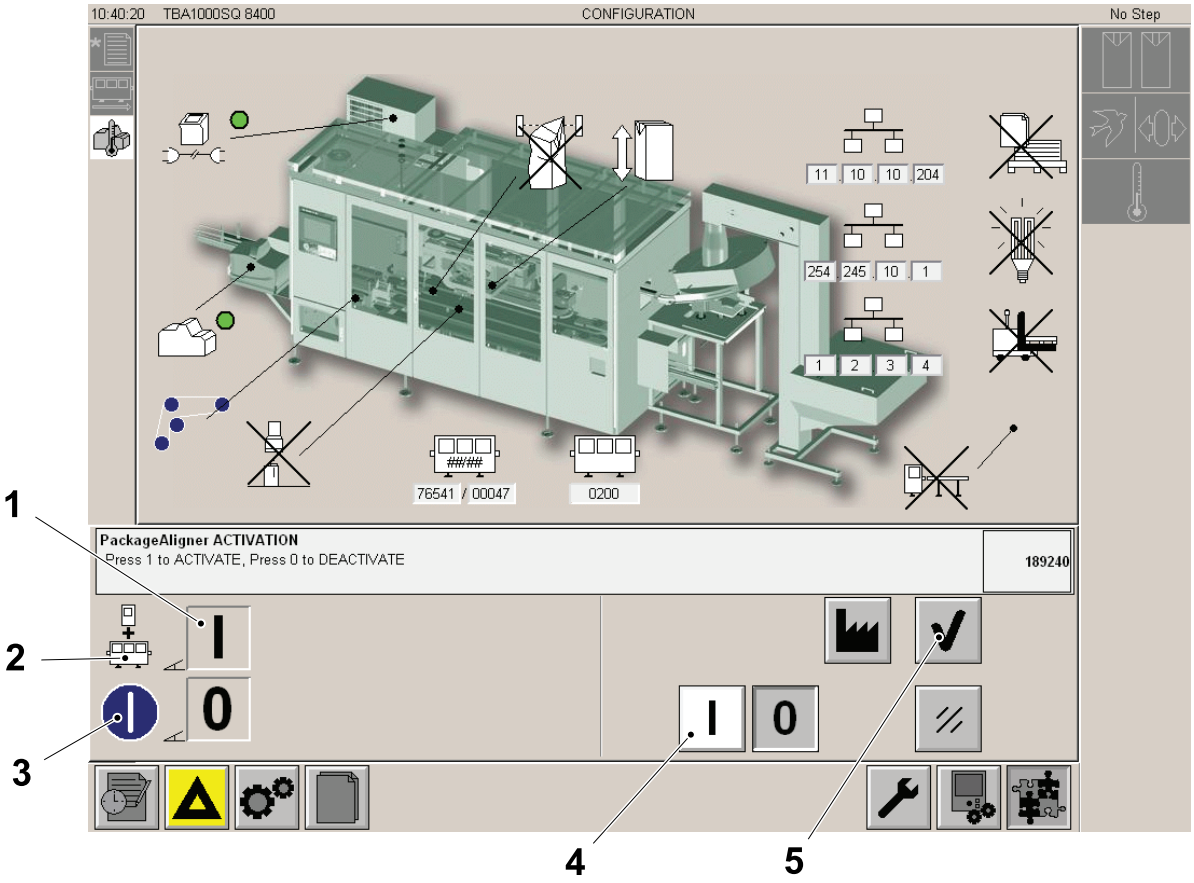

1 STATUS icon
2 STATUS icon
3 STATUS icon
4 ON Icon
5 OK button

(Cont'd)

(Cont'd)

c) Touch the activation STATUS icon (6) and it changes to ON and the PACKAGE ALIGNER icon (7) changes to green.

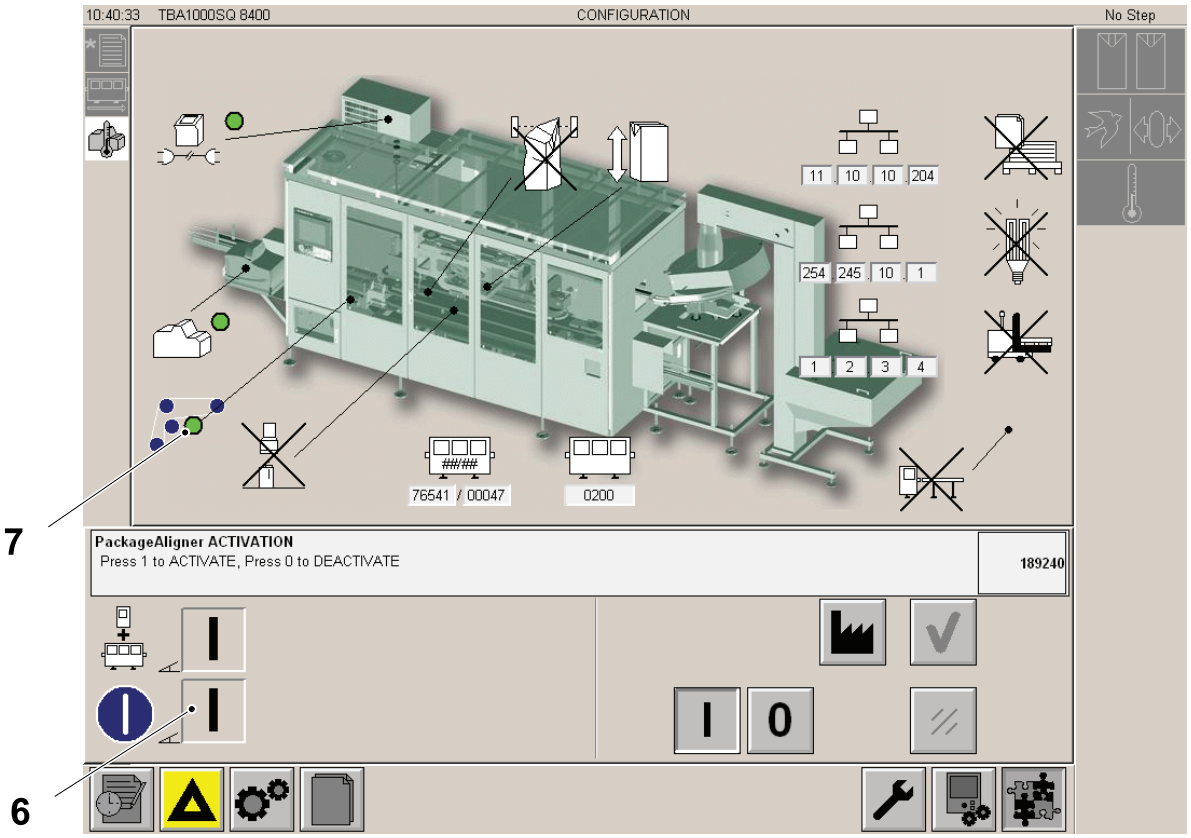

6 STATUS Icon
7 PACKAGE ALIGNER icon

(Cont'd)

(Cont'd)

Package Aligner Deactivation on the TPOP

a) Login is required see, 1.1.1-1 HMI User Management - Log On as a User.

b) Step the machine down to `STEP0`.

c) In the `OPTION SCREEN` (1) , touch the `PACKAGE ALIGNER ICON` (2) .

d) Touch the `OFF` button (3) and the `OK` button (4).

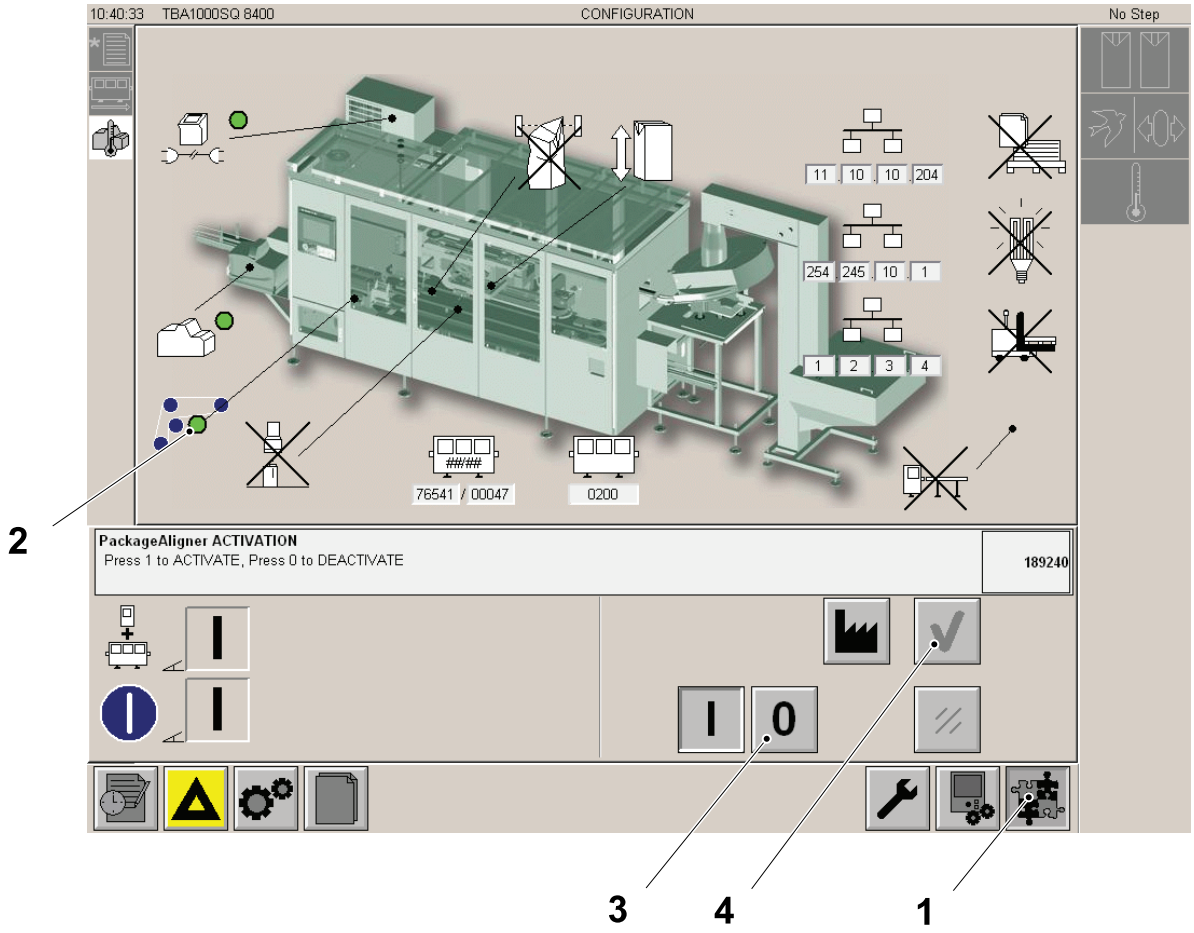

1 Option screen
2 Package aligner icon
3 `OFF` button
4 `OK` button

(Cont'd)

(Cont'd)

e) Touch the STATUS icon (5) and the PACKAGE ALIGNER ICON (2) goes to blue.

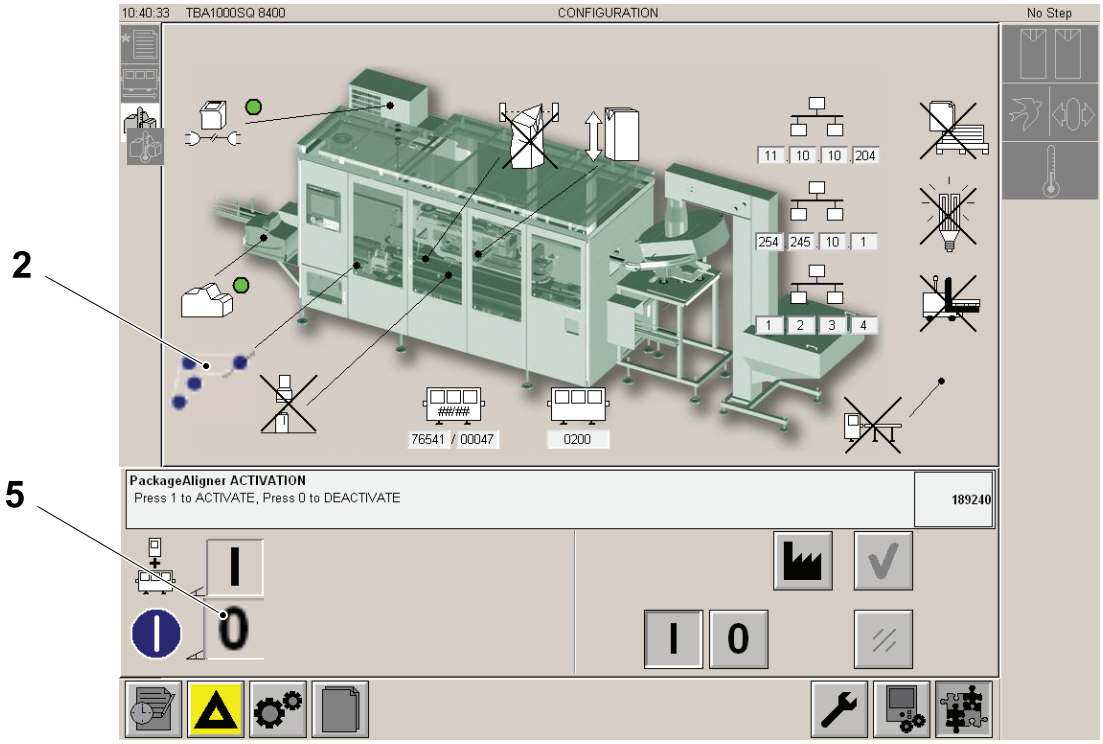

2 Package aligner icon
5 STATUS icon

2.4.3 Package Crash Sensor (TPA and TGA Only)

2.4.3-1 Package Line - Set Photocell

Machine Status	Electrical supply disconnecting device in position O (OFF) Main air valve OFF
SPC Reference	3199895-0100

CAUTION
Damage to Equipment
The reading line of the photocell must be set at the height of the vision system to prevent damage to the vision system.

Note! The photocell (1) should detect any packages above the height of the camera.

Note! If the reading line (2) of the photocell (1) is not level to the vision system (3) but higher, packages may damage the vision system (3).

a) Loosen the screws (4) to change the height of the photocell (1) .

Note! A is for TPA and B is for TGA as defined in the SPC.

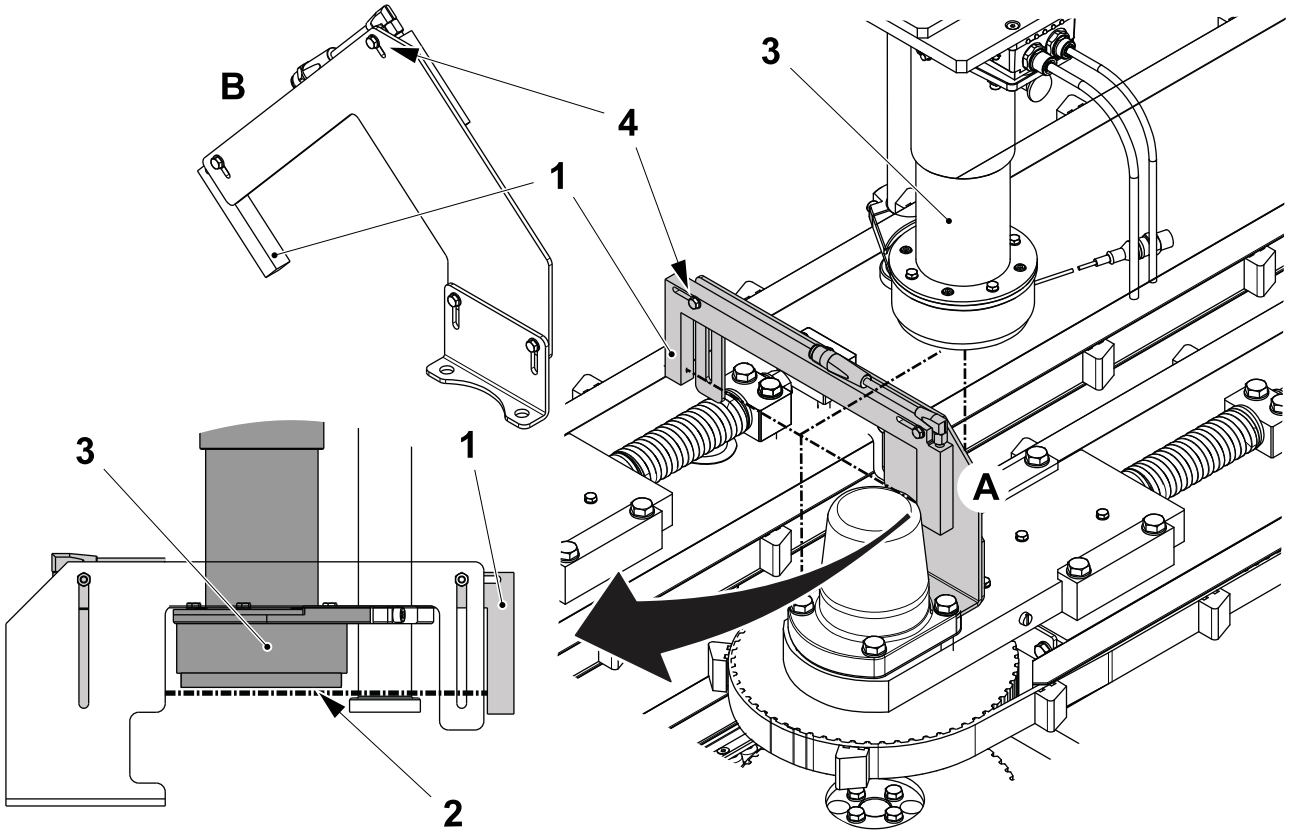

1 Photocell
2 Reading line
3 Vision system
4 Screw

3 Push Down

Push Down - Description

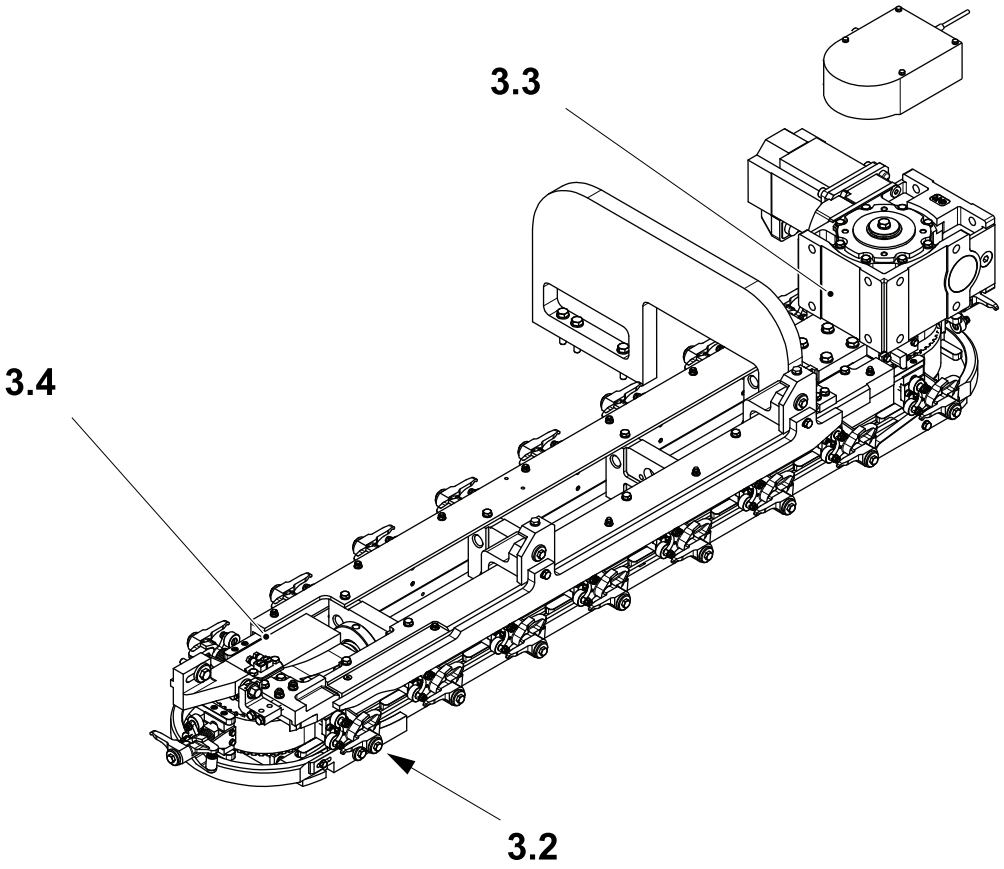

3.2 Push Down

3.3 Drive

3.4 Belt Stretcher

Push Down - Description 3-2

3.1 Functional Description 3-5

3.2 Push Down 3-6

3.2.1 Set X, Y, Z and Zero 3-6

3.2.1-1 Set Y Cam 3-6

3.2.1-2 Set Z Cam 3-8

3.2.1-3 Set X Cam 3-10

3.2.1-4 Set Zero 3-12

3.2.2 Cap Holder 3-15

3.2.2-1 Pressure Finger - Check Bushings and Rollers 3-15

3.2.2-2 Pressure Finger - Change Bushings and Rollers 3-16

3.3 Drive 3-18

3.3.1 Drive - Check 3-18

3.3.1-1 Timing Belt - Check 3-18

3.3.1-2 Timing Belt - Change 3-19

3.3.1-3 Timing Belt - Change Guides 3-24

3.3.1-4 Drive Unit - Change Motor 3-26

3.4 Belt Stretcher 3-29

3.4.1 Belt Stretcher - Change 3-29

3.4.1-1 Belt Stretcher - Change Bearings 3-29

3.4.1-2 Belt Stretcher - Set Belt Tension 3-31

This page intentionally left blank

3.1 Functional Description

The push down, located below the applicator unit, applies pressure to the top of each cap as it is applied to the top of a package and maintains that pressure until the package reaches the end of the package positioner.

To perform this action the cap holder (1), spaced equally around a moving belt, are moved into the holding position as they pass beneath the cam (2) and allowed to drop back into the free position at the end of the cam (2).

The belt is kept at the correct tension by the belt stretcher (3) and moved by the drive unit (4).

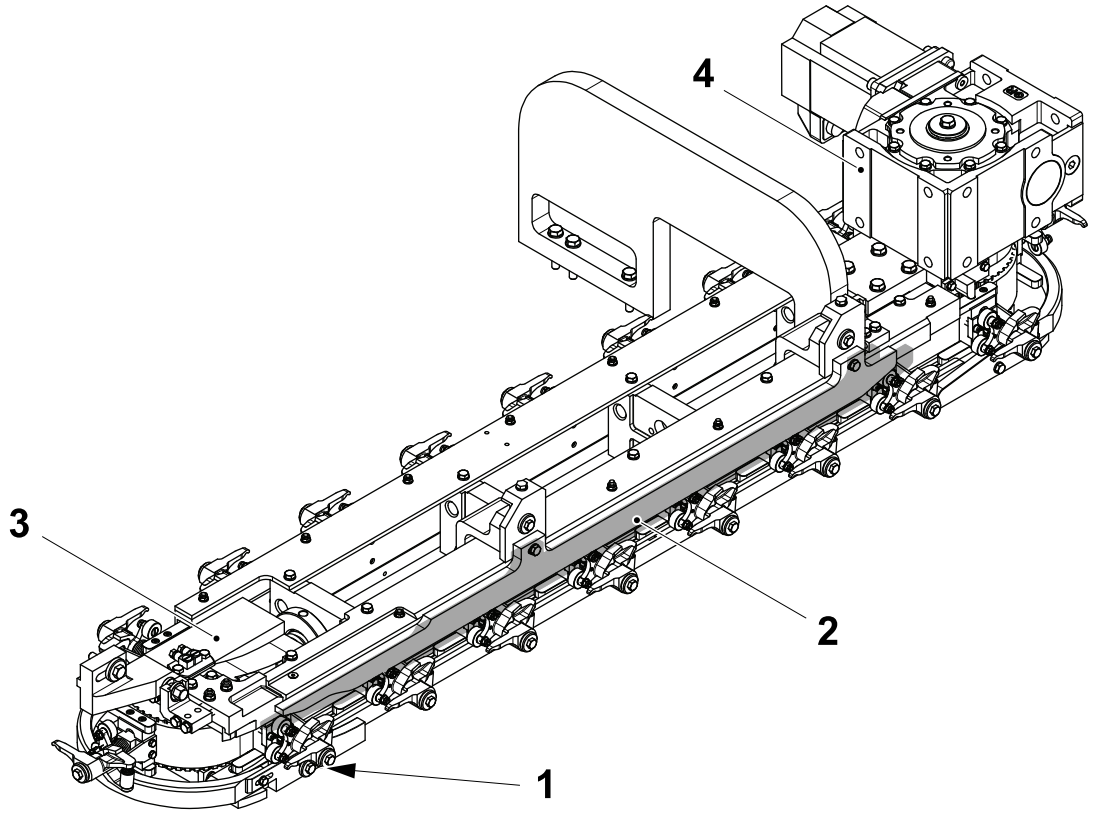

1 Cap holder
2 Cam
3 Belt stretcher
4 Drive unit

3.2 Push Down

3.2.1 Set X, Y, Z and Zero

3.2.1-1 Set Y Cam

Machine Status	Electrical supply disconnecting device in position O (OFF) Main air valve OFF
SPC Reference	662902-0200

Note! The machine must **NOT** be in bypass mode when setting.

a) Inch the machine to 350 degrees for all machines except Helicap2 23 which is 330 degrees.

b) Check that the distance is correct between the pushdown (1) in the cap holder and the pushdown's in the end stroke position (2), see next page.

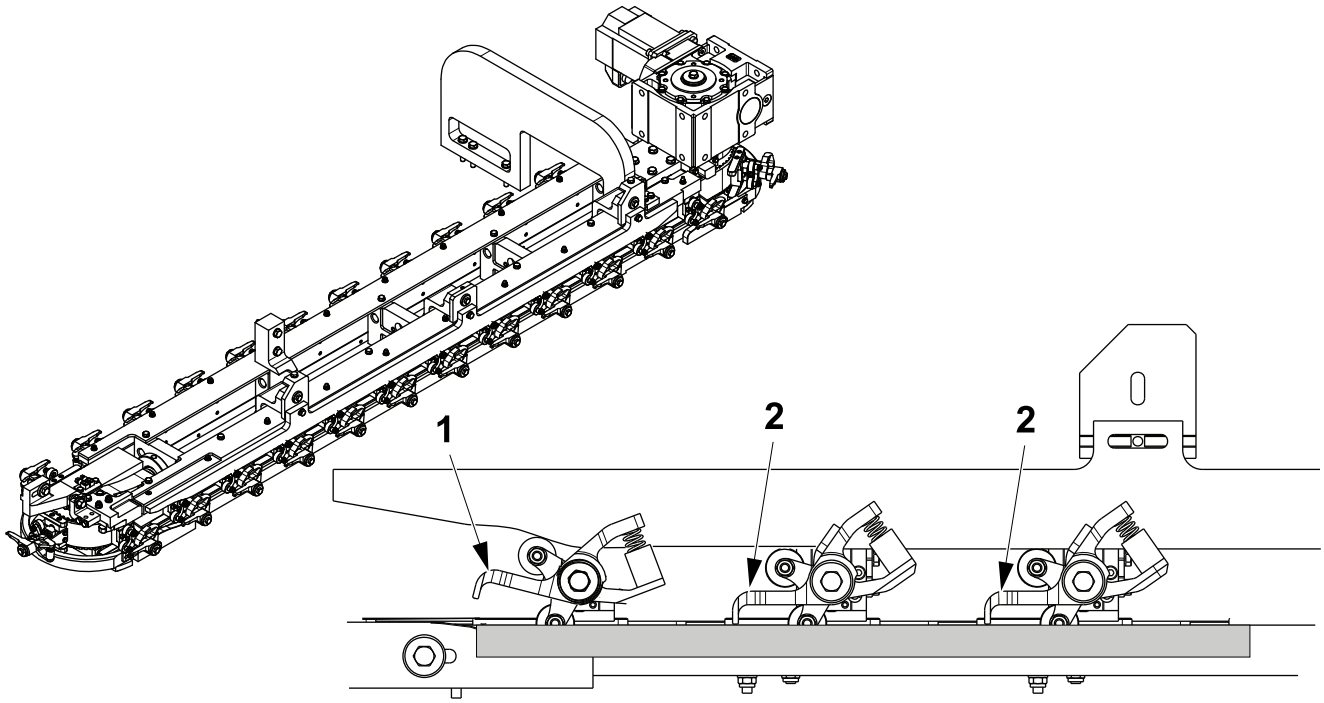

1 Pushdown
2 End stroke position

(Cont'd)

(Cont'd)

c) Place a straight edge (3) under the end stroke position (2), release the screw (4) and move the cam (5) until the distance A is obtained. Tighten the screw (4).

Note! Removing the cap holder (6) will help during this setting.

A = 4mm

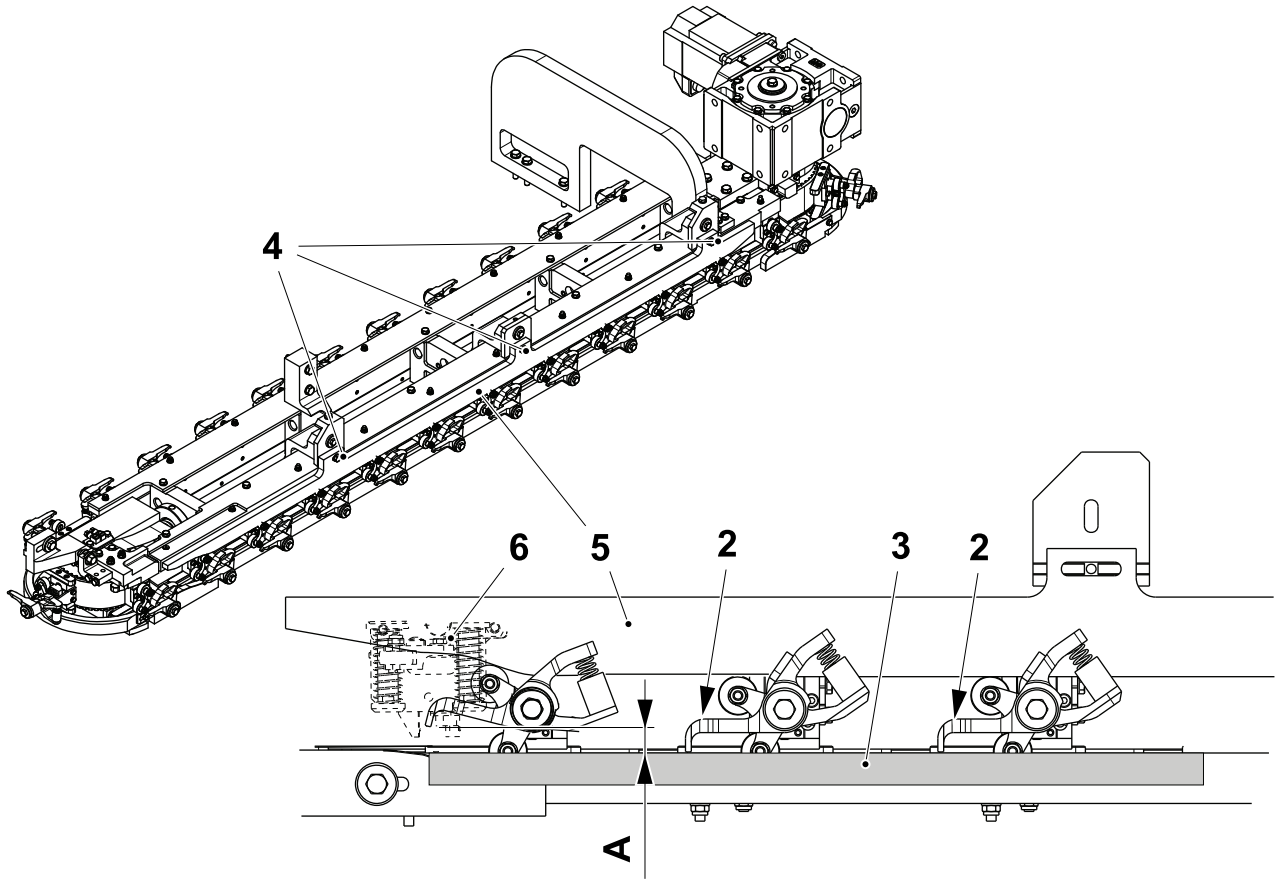

2 End stroke position
3 Straight edge
4 Screw
5 Cam
6 Cap holder

3.2.1-2 Set Z Cam

Machine Status	Electrical supply disconnecting device in position O (OFF) Main air valve OFF
SPC Reference	662902-0200

Note! This adjustment is for the pushdown fingers to the applicator only.

CAUTION

Application pressure

Do not adjust the pushdown pressure here, see 6.2.1-1 Conveyor Support - Set Height.

(Cont'd)

(Cont'd)

Note! The machine must NOT be in bypass mode when setting.

a) Inch the machine to 350 degrees (330 degrees for Helicap2 23 and for HeliCap 27) and check the distance **A** between the pushdown finger (1) and the bottom of the cap holder gripper (2).

b) Release the screw (3) and turn the screw (4) to raise or lower the height of the pushdown (5).

Note! Keep the distance B equal at both ends of the pushdown (5).

Volume	StreamCap Dimension A	SlimCap Dimension A	HeliCap2 23 Dimension A	HeliCap 27 Dimension A
2000		5.5 mm		
1500		5.5 mm	5 mm	
1000	4.5 mm	5.5 mm	5 mm	6 mm
750	4.5 mm			6 mm
500	4.5 mm			
250	5.5 mm		5 mm	
200	5.5 mm		5 mm	

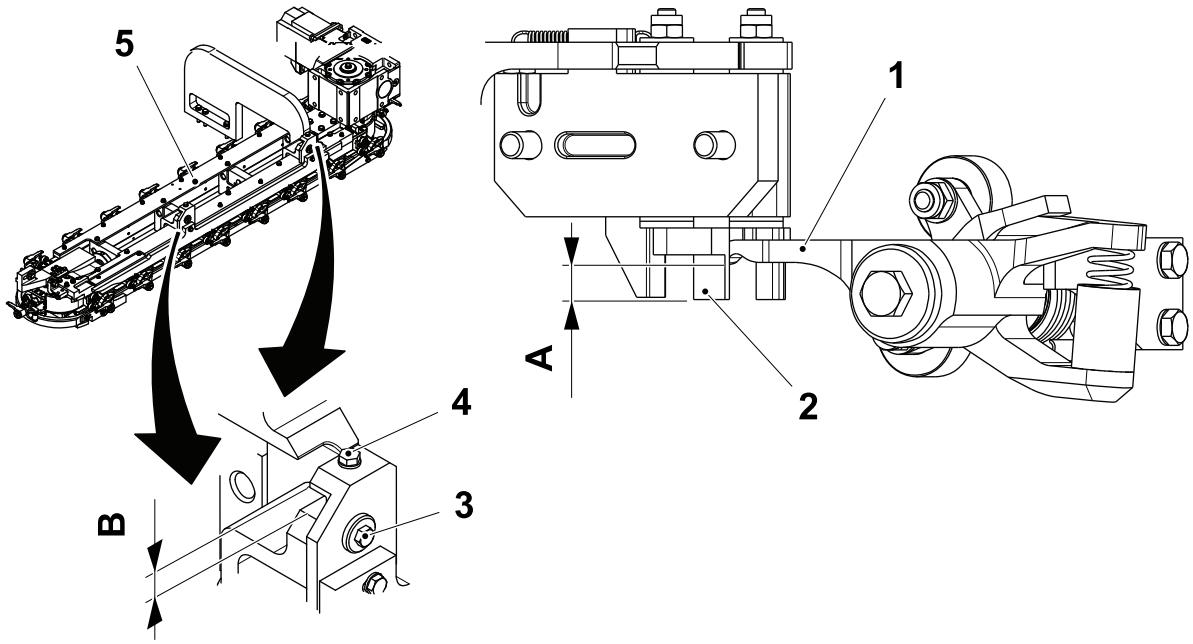

1 Pushdown finger
2 Cap holder gripper
3 Screw
4 Screw
5 Pushdown

3.2.1-3 Set X Cam

Machine Status	Electrical supply disconnecting device in position O (OFF) Main air valve OFF
SPC Reference	662902-0200

a) Release the screws (1).

Note! Verify that the push down is in the middle of the cap. If not adjust the distance A, see next page.

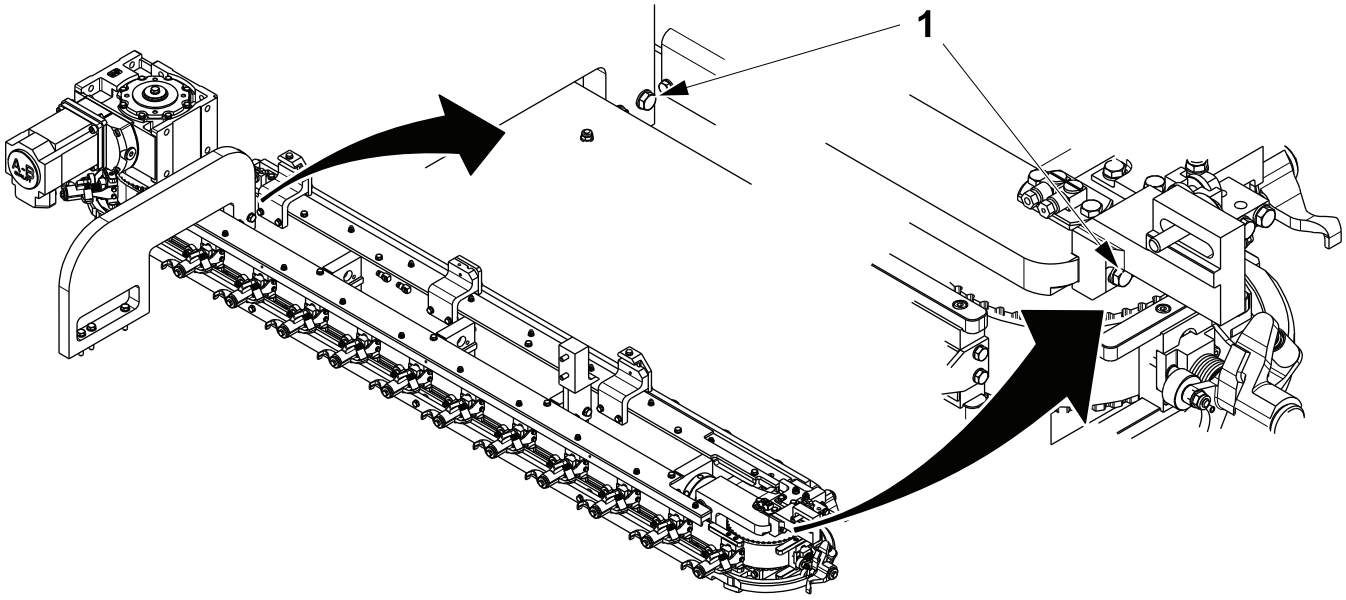

1 Screw

(Cont'd)

(Cont'd)

b) Turn the two screws (2) to move the pushdown (3) and set the distance A so that the pushdown is centred on the cap. Tighten the screws (1).

c) Check that the distance B is equal between the cam (4) and the belt (5) at both ends.

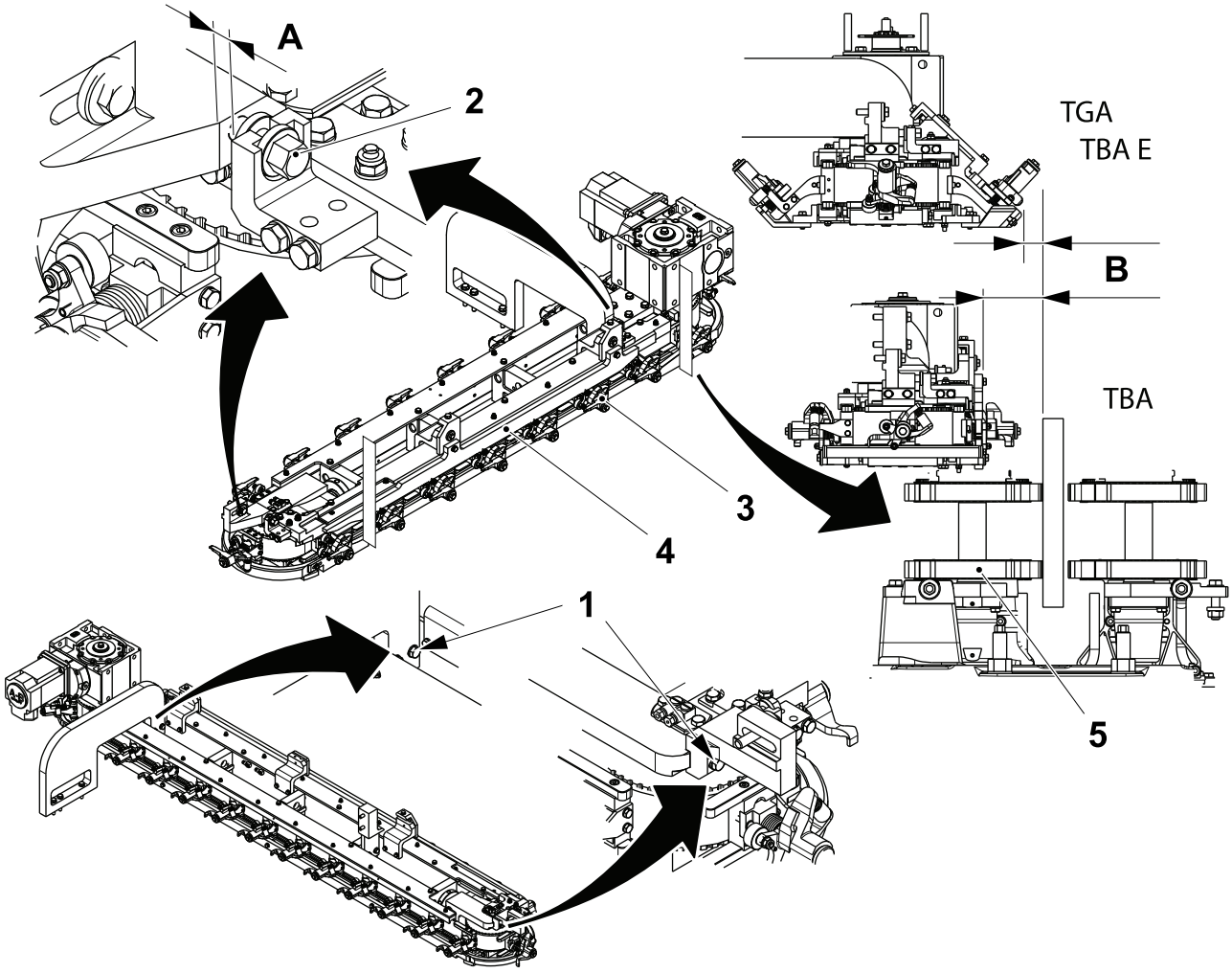

1 Screw
2 Screw
3 Pushdown
4 Cam
5 Belt

3.2.1-4 Set Zero

Machine Status	Electrical supply disconnecting device in position O (OFF) Main air valve OFF
SPC Reference	662902-0200

a) Using a straight edge (1), align the leading edge of a pushdown holder (2) with the front surface of the zero tool (3).

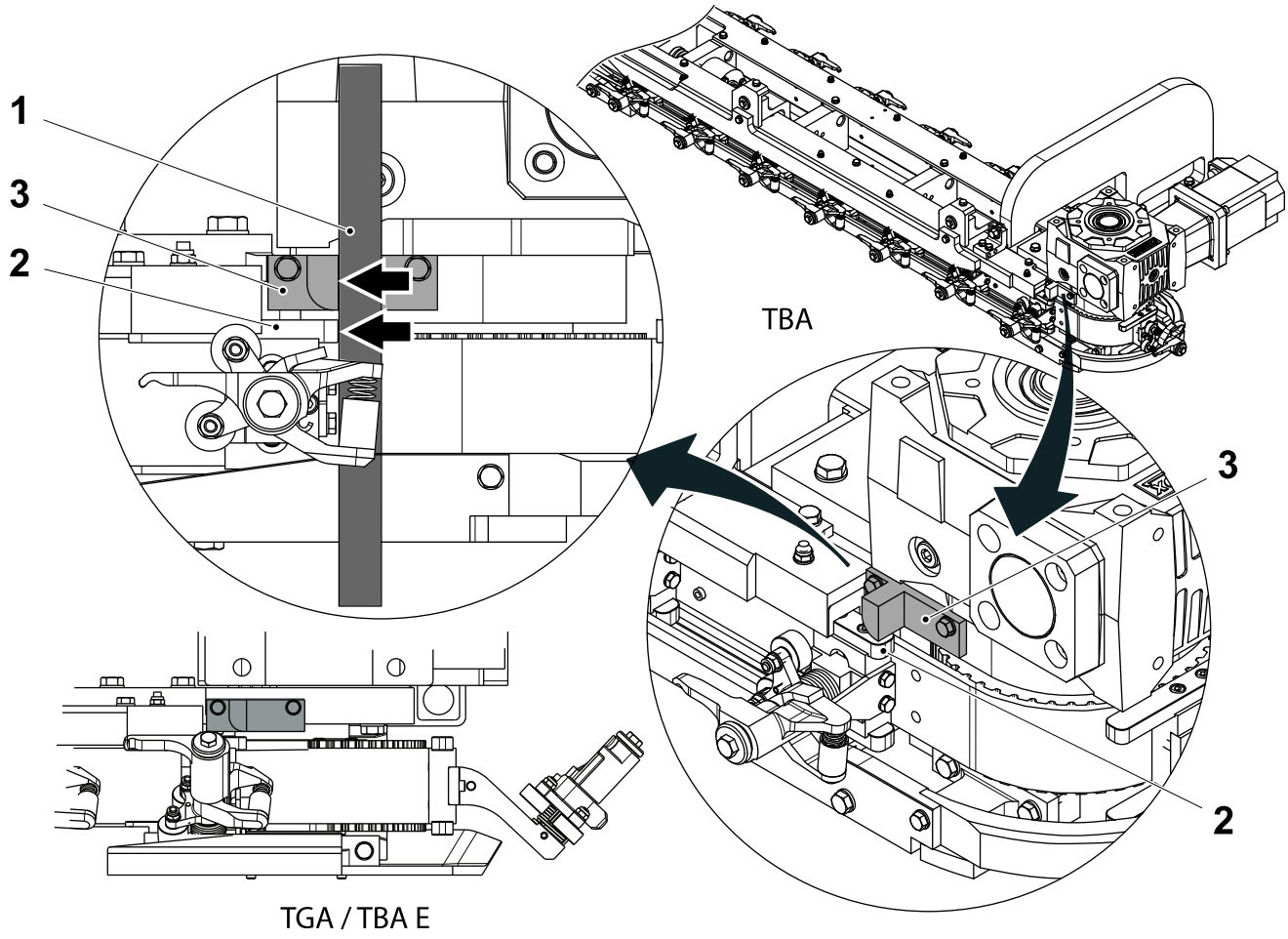

1 Straight edge
2 Pushdown holder
3 Zero tool

(Cont'd)

(Cont'd)

b) Turn the main power on.

c) Touch the SYSTEM SETUP button (4) and login see, 1.1.1-1 HMI User Management - Log On as a User.

d) Touch the MAINTENANCE button (5).

e) Touch the APPLICATOR UNIT button (6).

Note! Items like the positioning system only appear on the screen below when installed.

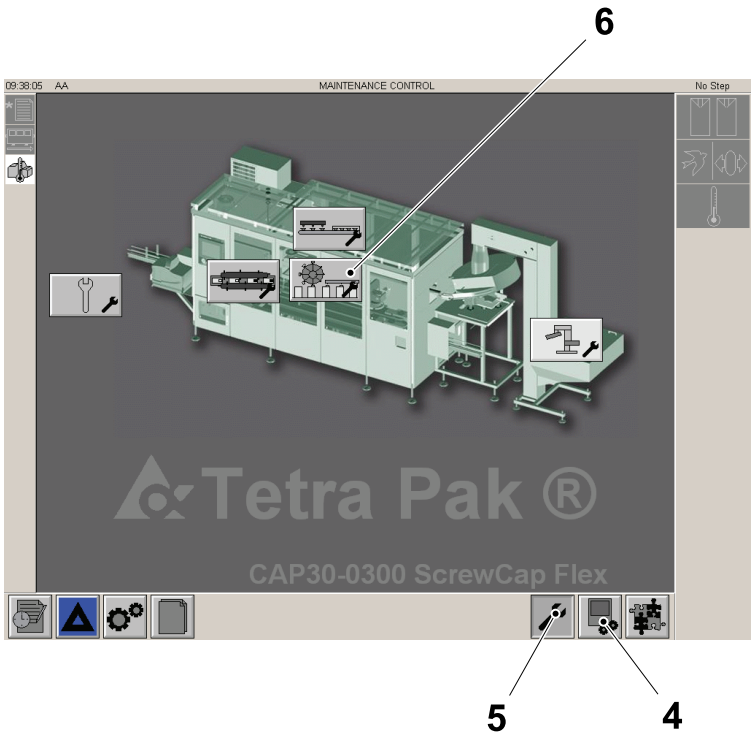

4 System setup button
5 Maintenance button
6 Applicator unit button

(Cont'd)

(Cont'd)

f) Touch the ZERO button (7).

g) Touch the ON button (8).

h) Touch the OK button (9) for three seconds. The background of the ON button (8) should go green.

i) Touch the EXIT button (10).

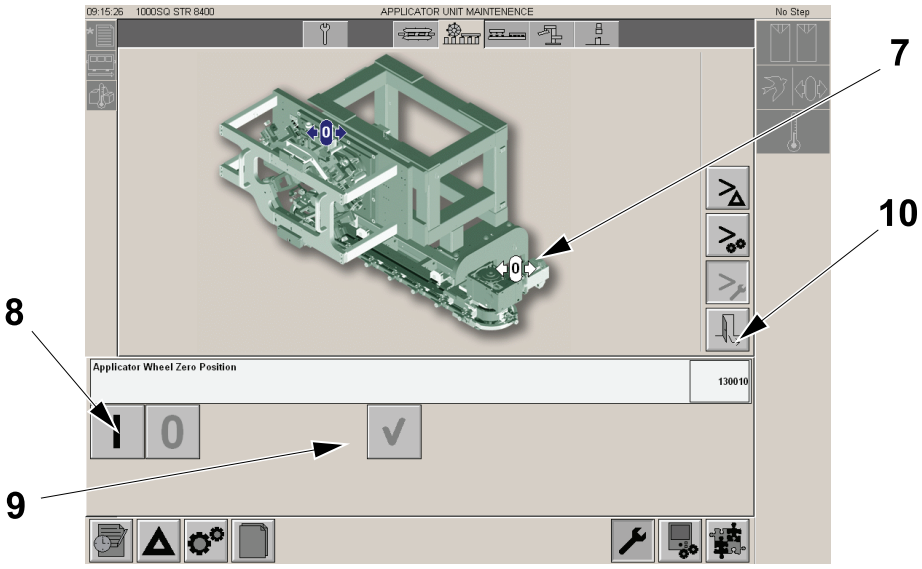

7 Zero button
8 ON button
9 OK button
10 Exit button

3.2.2 Cap Holder

3.2.2-1 Pressure Finger - Check Bushings and Rollers

Machine Status	Electrical supply disconnecting device in position O (OFF)
SPC Reference	2751667-0200

WARNING
Risk of burns.
Nearby components may be hot.

a) Check the bushing (1) and the roller (2) of the cap holder for signs of wear or damage, see 3.2.2-2 Pressure Finger - Change Bushings and Rollers.

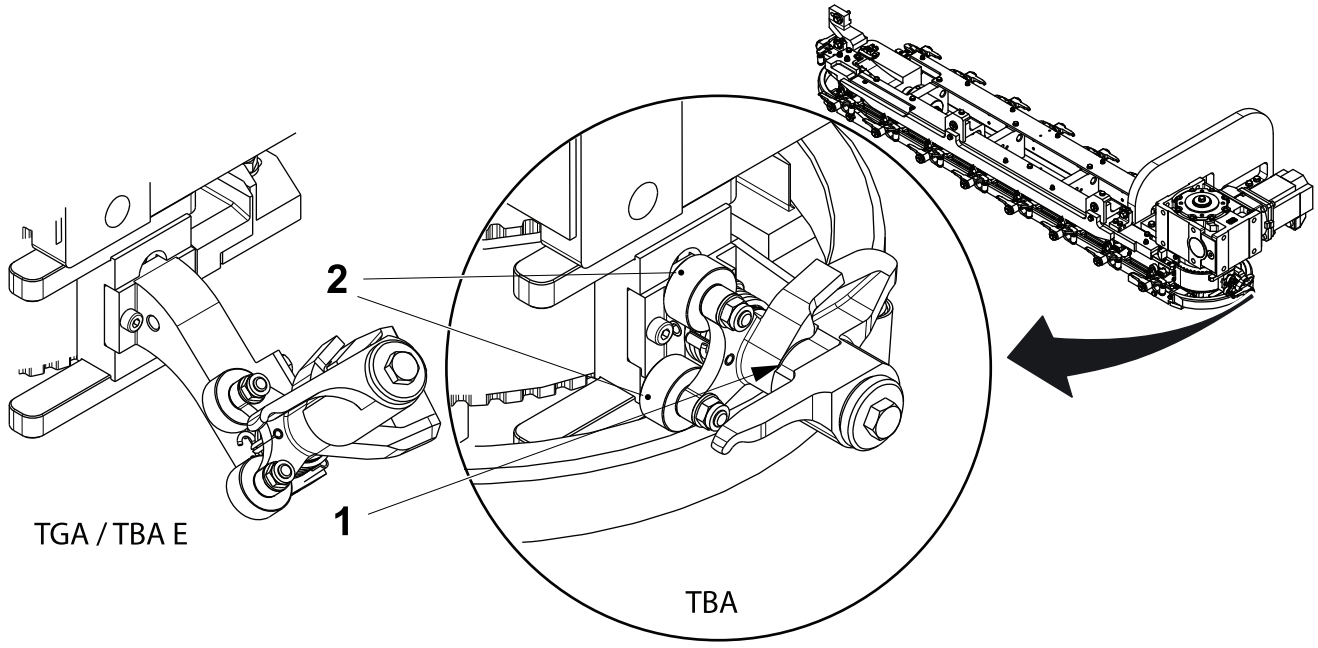

1 Bushing
2 Roller

3.2.2-2 Pressure Finger - Change Bushings and Rollers

Machine Status	Electrical supply disconnecting device in position O (OFF)
SPC Reference	2751667-0200

WARNING
Risk of burns.
Nearby components may be hot.

a) Remove the screw (1), the washer (2) and the arm (3), collecting the sleeve (4) and the spring (5).

b) Change the bushing (6).

c) Remove the arm (7), the bushing (8) and the bushing (9).

Note! The items arm (3), spring (5) and arm (7) and cap dependant, screwcap shown.

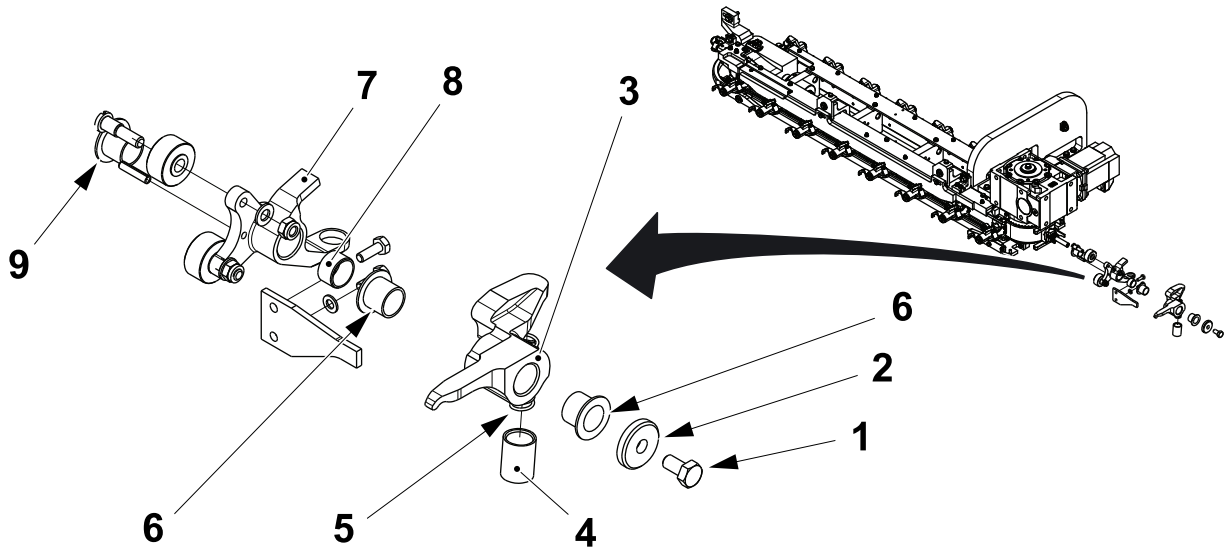

1 Screw
2 Washer
3 Arm
4 Sleeve
5 Spring
6 Bushing
7 Arm
8 Bushing
9 Bushing

(Cont'd)

(Cont'd)

WARNING
Risk of burns.
Nearby components may be hot.

d) Remove the nut (10), the washer (11), the shaft (12) and the rollers (13) .

e) Assemble in the reverse order.

f) Repeat the procedure for the other cap holders.

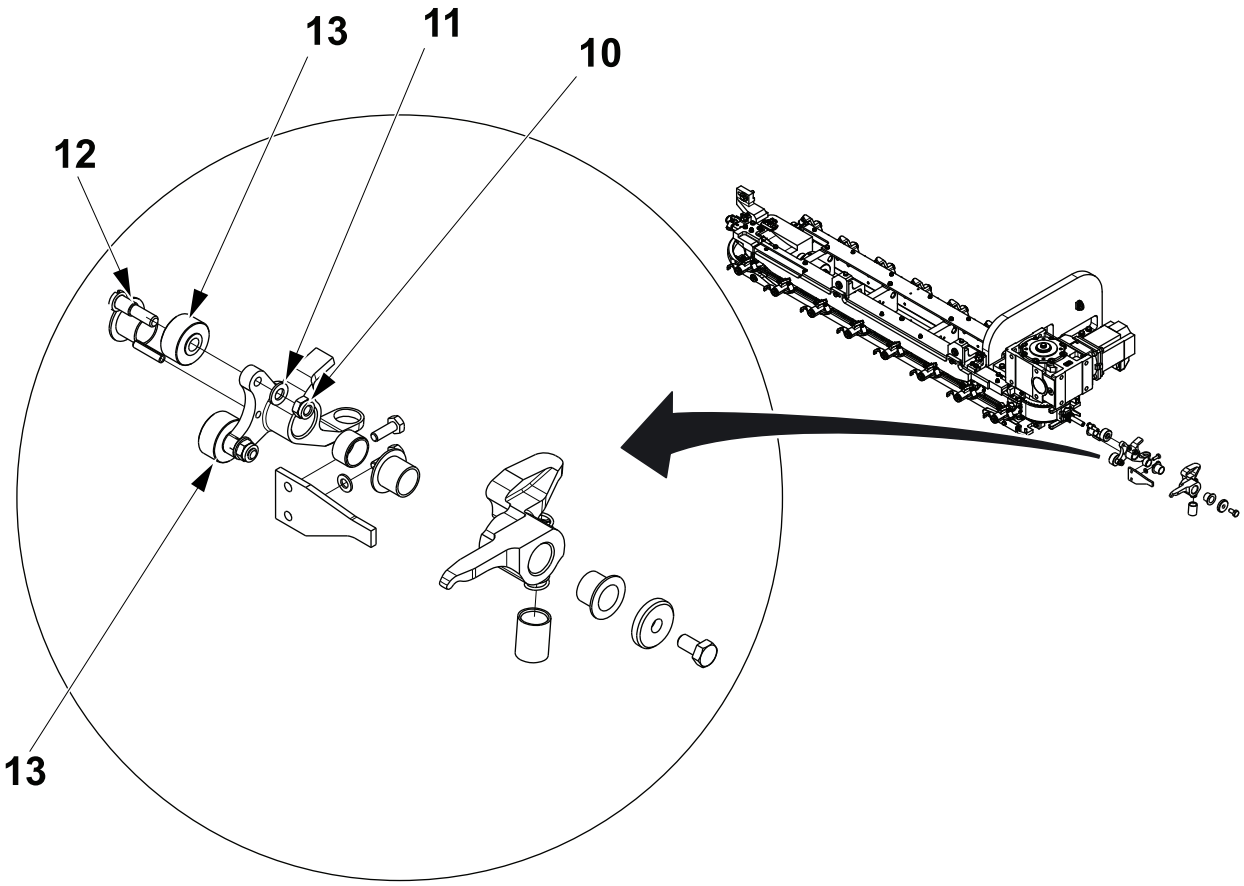

10 Nut
11 Washer
12 Shaft
13 Roller

3.3 Drive

3.3.1 Drive - Check

3.3.1-1 Timing Belt - Check

Machine Status	Electrical supply disconnecting device in position O (OFF)
SPC Reference	2802647-0200

WARNING

Risk of burns.
Nearby components may be hot.

a) Check the belt (1) for signs of wear or damage. If necessary, change the belt, see 3.3.1-2 Timing Belt - Change.

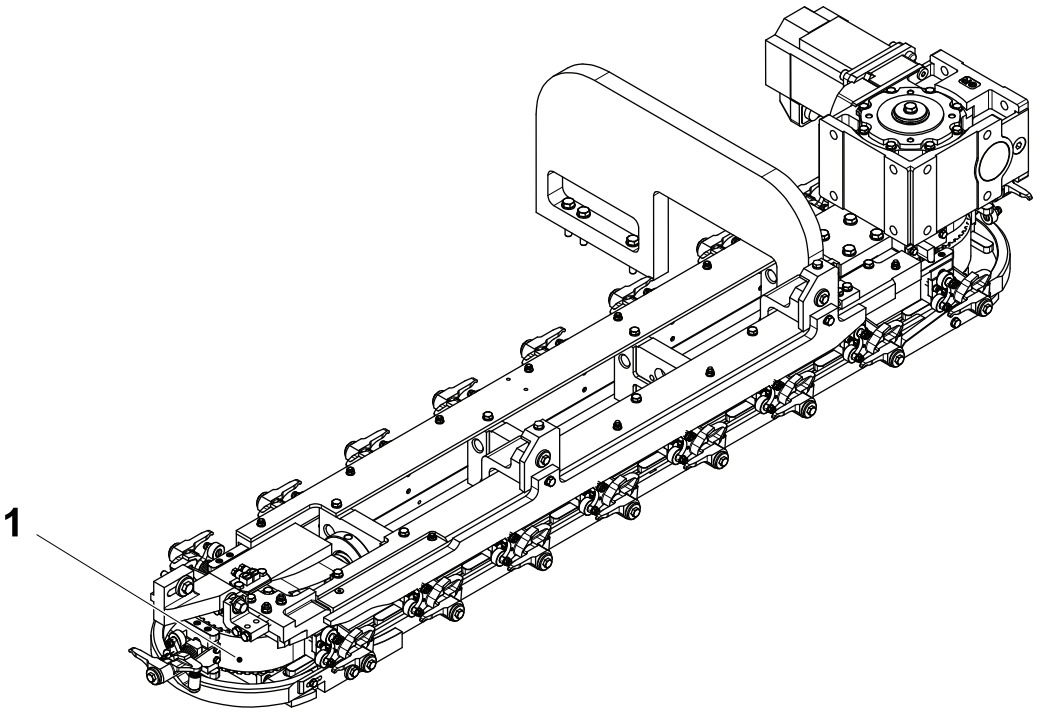

1 Belt

3.3.1-2 Timing Belt - Change

Machine Status	Electrical supply disconnecting device in position O (OFF) Main air valve OFF
SPC Reference	2802647-0200

WARNING
Risk of burns.
Nearby components may be hot.

Note! The oil pipes will require blanking with caps and plugs to prevent leakage.

a) Disconnect the oil pipe (1) at the position shown.

Note! Protect the surface of the package transfer with packaging material.

b) Disconnect the electrical connectors from the motor connector block (2).

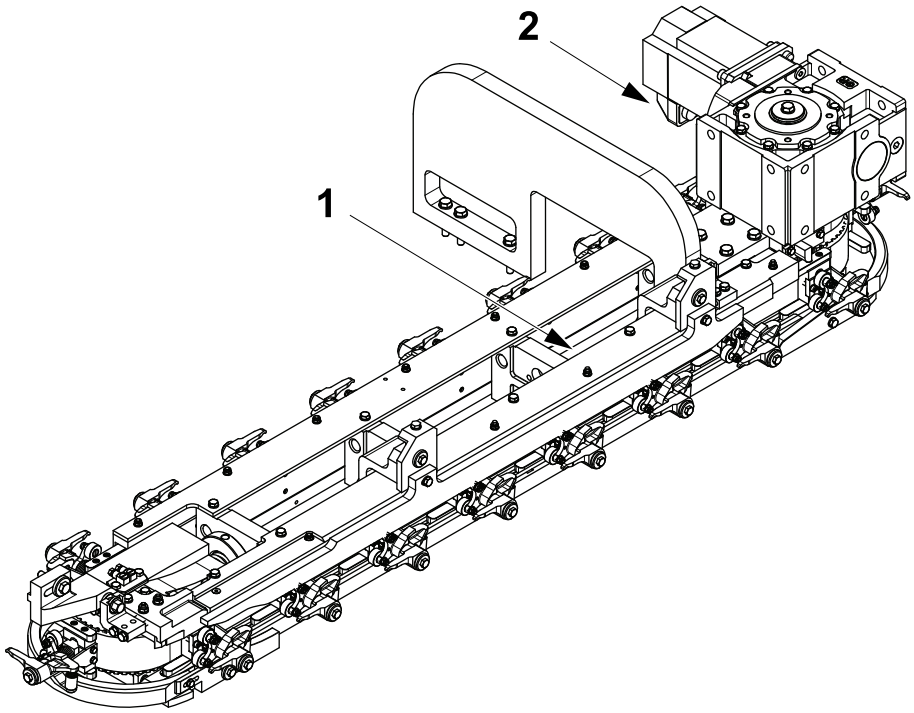

1 Oil pipe
2 Connector block

(Cont'd)

(Cont'd)

WARNING

Heavy Assembly

This assembly is heavy and requires two people to move it.

c) Remove the screw (3) and the screws (5).

d) Remove the pushdown (6) from below the cap applicator unit (7).

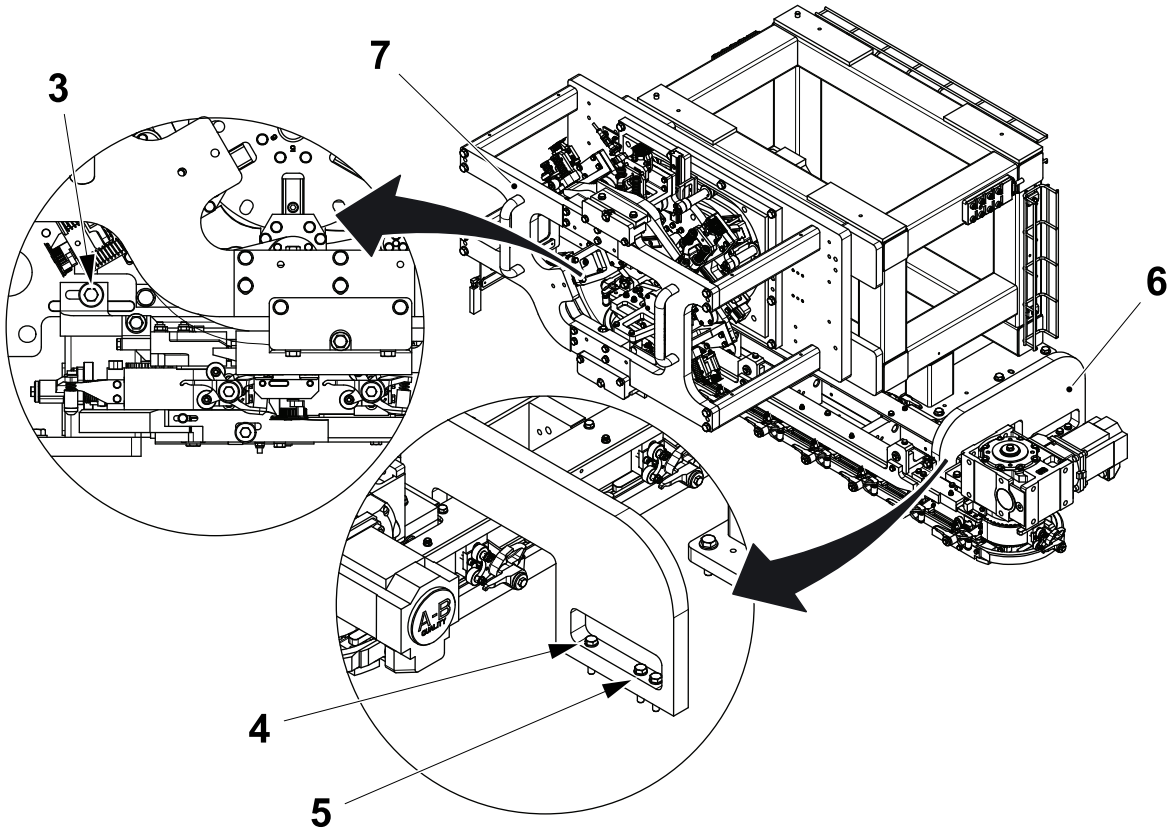

3 Screw
4 Screw
5 Screw
6 Pushdown
7 Cap applicator unit

(Cont'd)

(Cont'd)

Note! Do Not touch the nut (8) .

e) At the end of the pushdown, loosen the screw (9) and turn the flange (10) to reduce the tension applied by the belt stretcher (11).

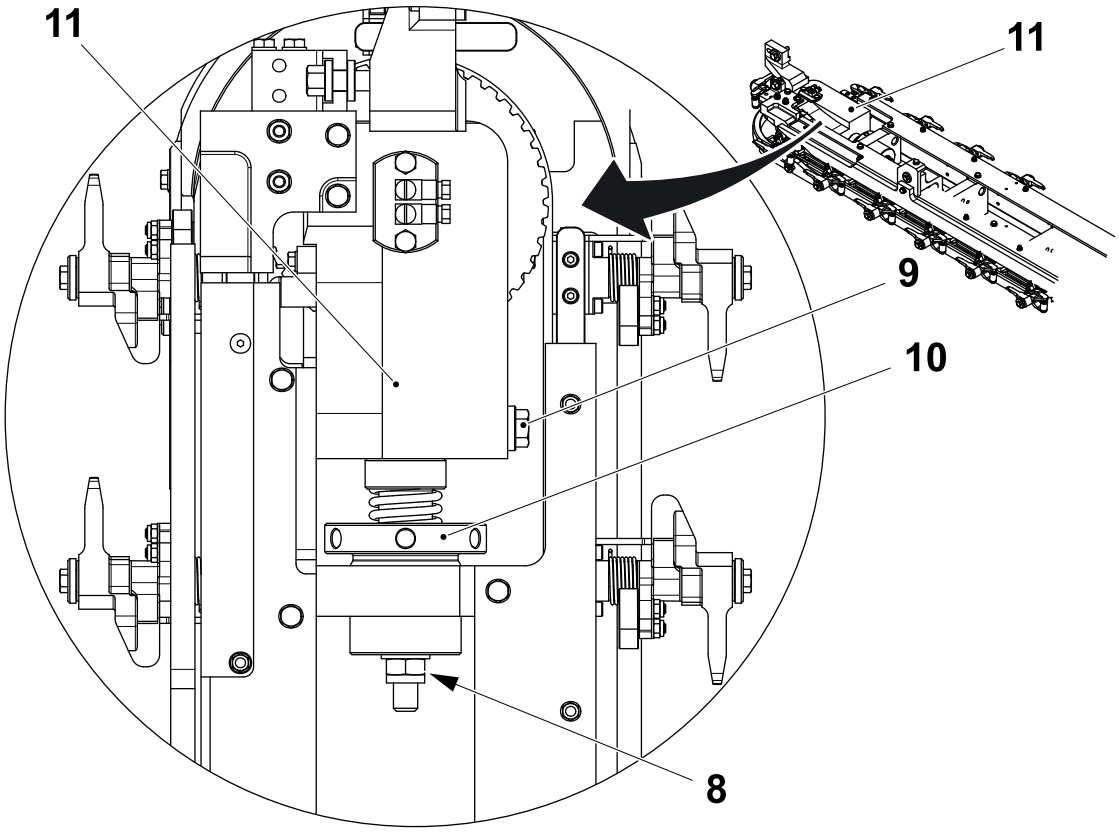

8 Nut
9 Screw
10 Flange
11 Belt stretcher

(Cont'd)

(Cont'd)

f) At the four corners of the unit, remove the screw (12) from the brackets (13).

g) Remove the row of screws (14), the row of screws (15) and separate the belt section (16) of the unit from the drive unit/frame section (17).

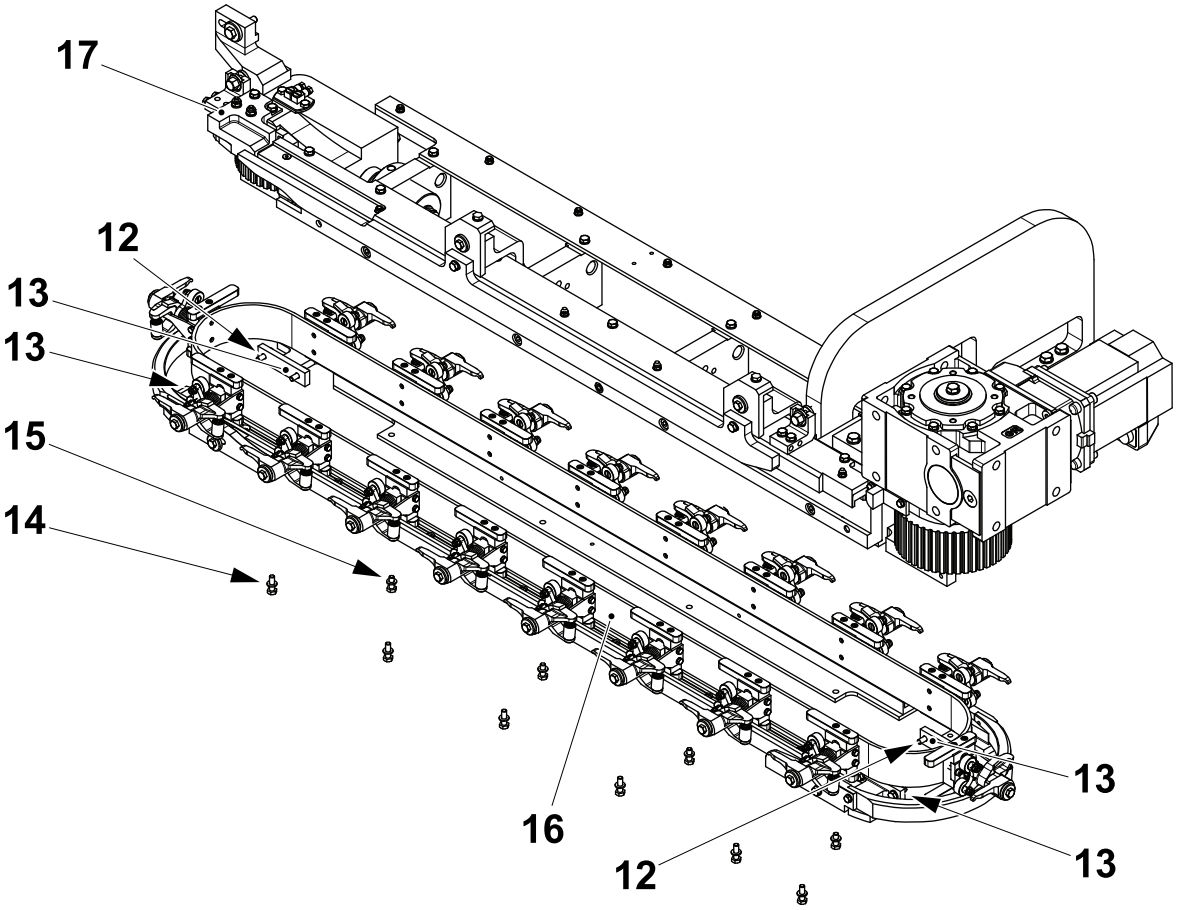

12 Screw
13 Bracket
14 Row of screws
15 Row of screws
16 Belt section
17 Drive unit/frame section

(Cont'd)

(Cont'd)

h) Remove the belt (18) from the guide section (19). Change the belt.

i) Assemble in the reverse order.

j) Set the belt tension see, 3.4.1-2 Belt Stretcher - Set Belt Tension.

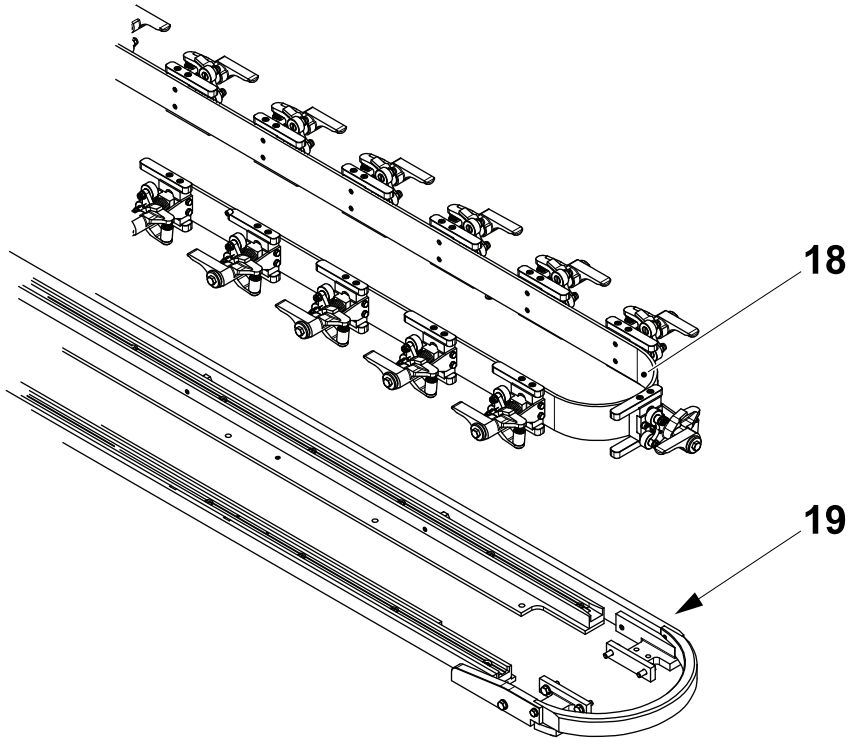

18 Belt
19 Guide section

3.3.1-3 Timing Belt - Change Guides

Machine Status	Electrical supply disconnecting device in position O (OFF) Main air valve OFF
SPC Reference	2802647-0200

WARNING

Risk of burns.

Nearby components may be hot.

a) Remove the belts, see 3.3.1-2 Timing Belt - Change.

b) For the lower front guide (1), remove the row of screws (2) and change the lower front guide (1).

c) For the lower rear guide (3), remove the row of screws (4) and the cam (5).

d) Remove the row of screws (6) and change the lower rear guide (3).

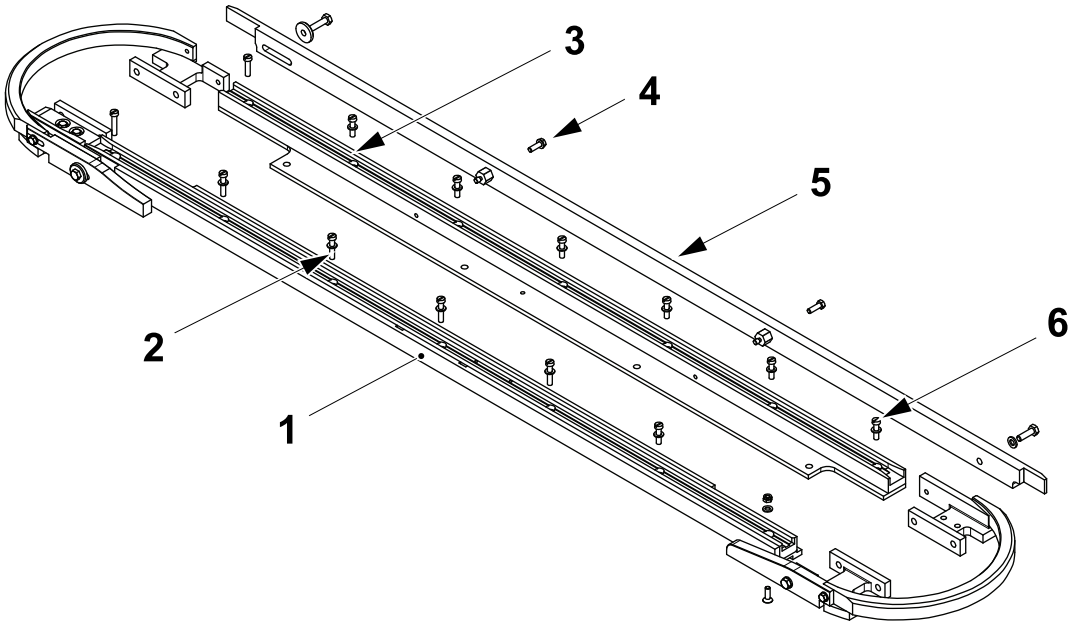

1 Lower front guide
2 Row of screws
3 Lower rear guide
4 Row of screws
5 Cam
6 Row of screws

(Cont'd)

(Cont'd)

e) For the upper front guide (7), remove the row of screws (8) and change the upper front guide (7).

f) For the upper rear guide (9), remove the row of screws (10) and change the upper rear guide (9).

g) Assemble in the reverse order.

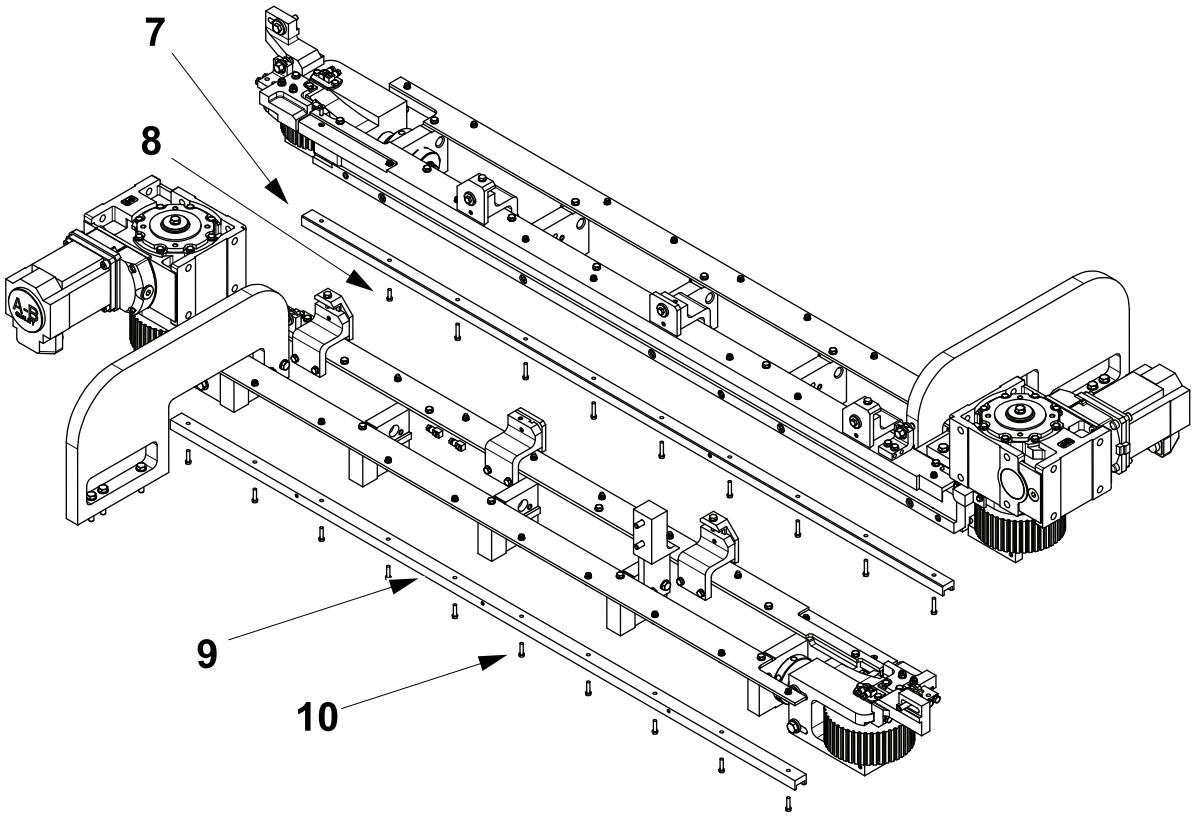

7 Upper front guide
8 Row of screws
9 Upper rear guide
10 Row of screws

3.3.1-4 Drive Unit - Change Motor

Machine Status	Electrical supply disconnecting device in position O (OFF)
SPC Reference	2802647-0200

Separation

Disconnect the electrical connections.

There may or may not be a plug (1).

The access hole (2) may be in a different location or more than one.

There is one screw (3) in the clamp (4).

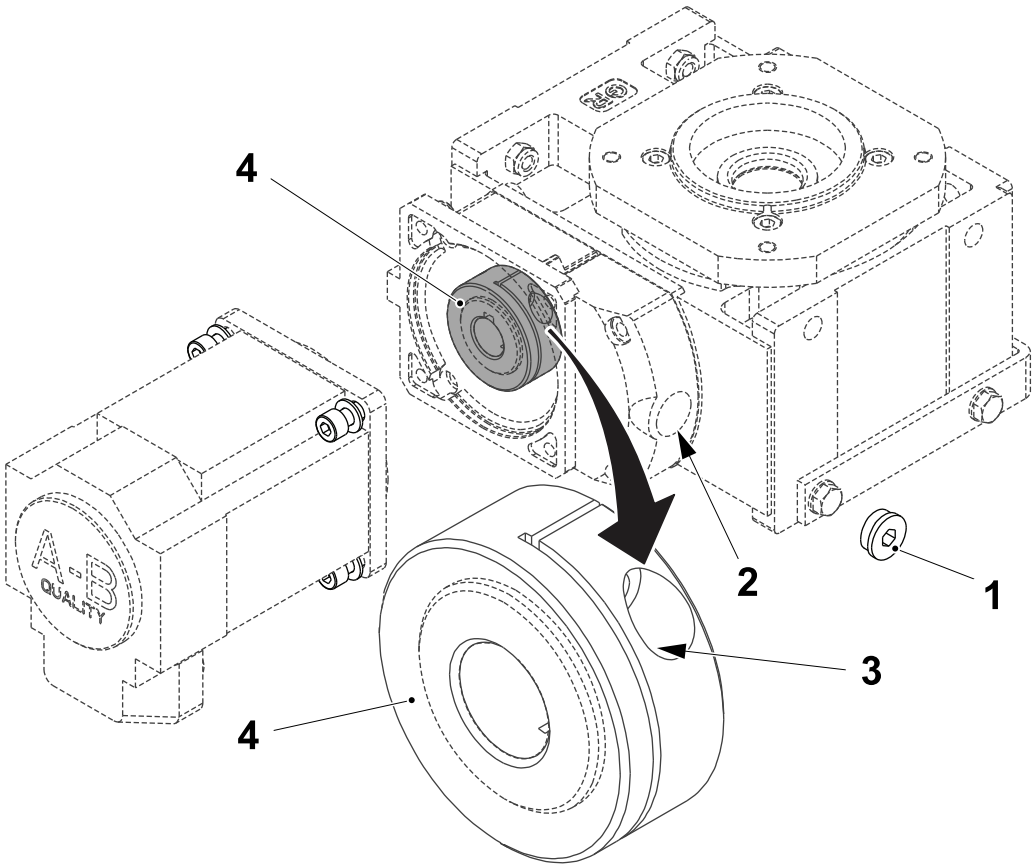

1 Plug
2 Access hole
3 Screw
4 Clamp

(Cont'd)

(Cont'd)

a) If fitted, remove the plug (1).

b) Using the access hole (2), locate the screw (3) in the clamp (4) with a 5 mm allen key and loosen the screw (3).

c) Remove the screws (5) and separate the motor (6) from the gearbox (7).

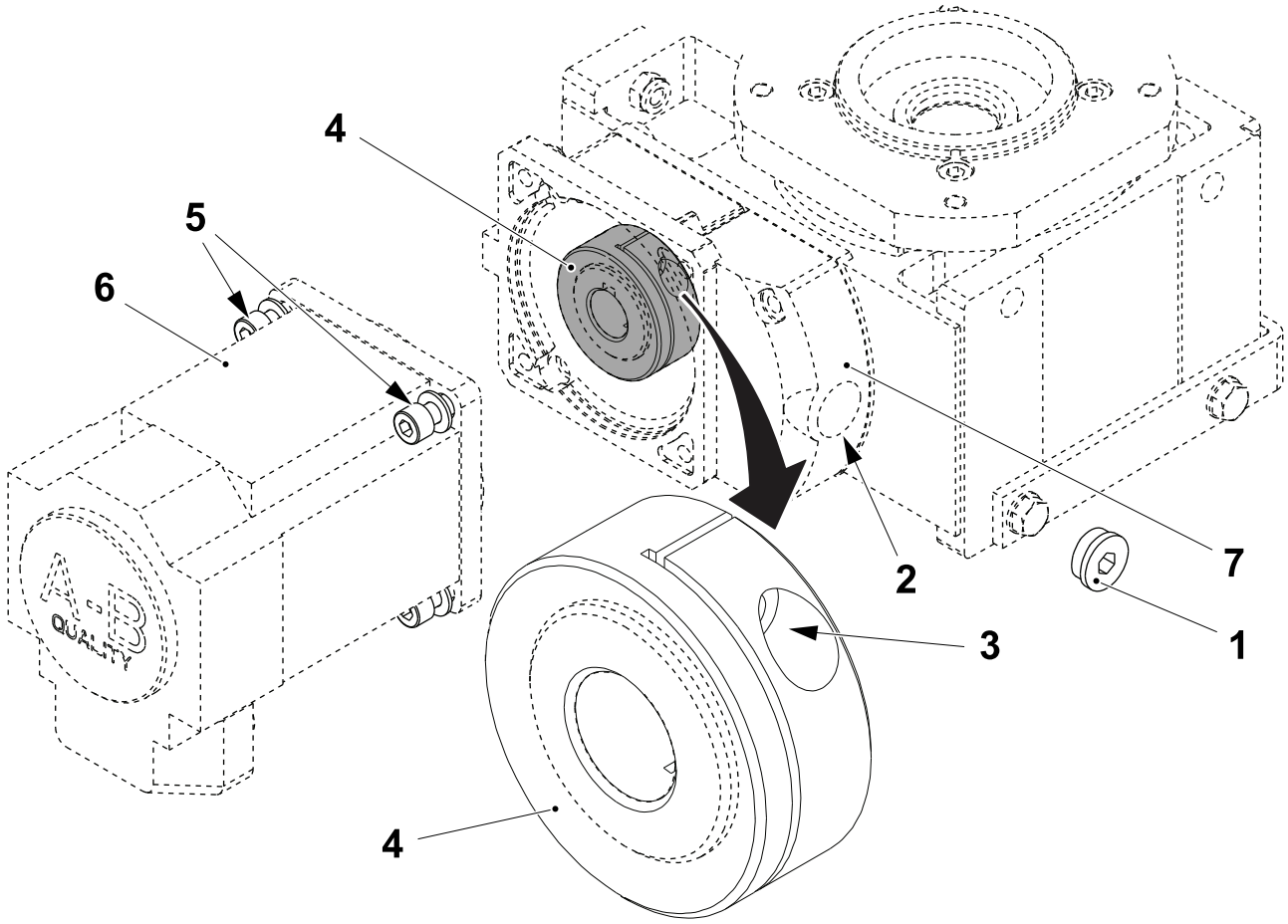

1 Plug
2 Access hole
3 Screw
4 Clamp
5 Screw
6 Motor
7 Gearbox

(Cont'd)

(Cont'd)

Assembly

a) Install the motor (1) so that the screws (2) loosely holds it.

b) Tighten the screw (3) ensuring that the clamp (4) is at the end of the drive gearbox shaft (5) so that it clamps securely onto the dive motor shaft (6).

c) Tighten completely the screws (2) that holds the motor (1).

d) Connect the electrical connections.

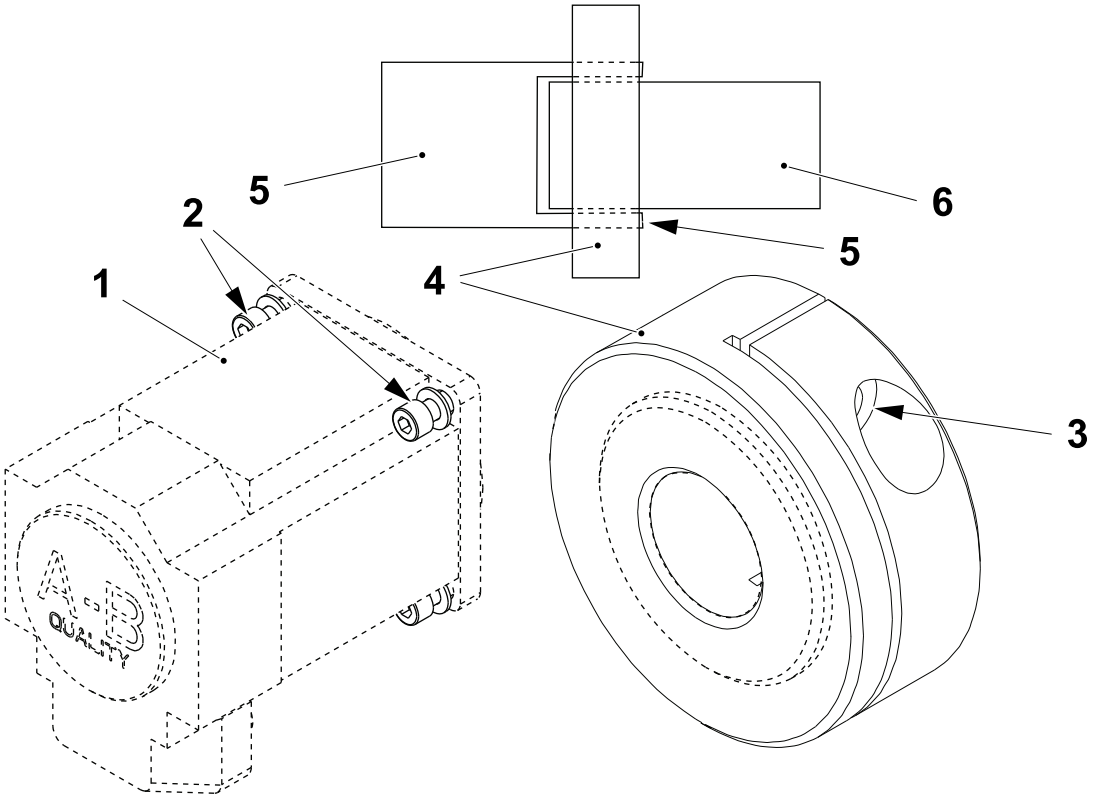

1 Motor
2 Screw
3 Screw
4 Clamp
5 Gearbox shaft
6 Drive motor shaft

3.4 Belt Stretcher

3.4.1 Belt Stretcher - Change

3.4.1-1 Belt Stretcher - Change Bearings

Machine Status	Electrical supply disconnecting device in position O (OFF)
SPC Reference	2802645-0200

CAUTION
Risk of burns.
Nearby components may be hot.

a) Remove the pushdown (1), see 3.3.1-2 Timing Belt - Change steps a) to i). Do not remove the belt.

b) Remove the screws (2) and the screw (3) and the washer (4).

c) Pull out the shaft (5).

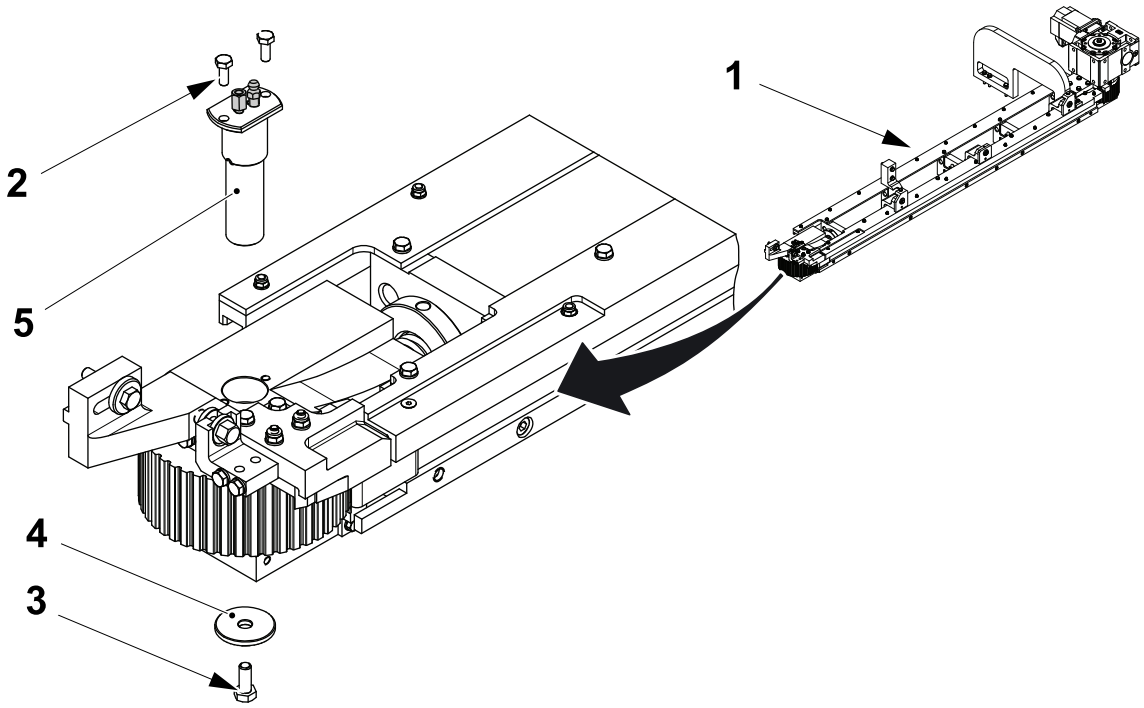

1 Pushdown
2 Screw
3 Screw
4 Washer
5 Shaft

(Cont'd)

(Cont'd)

d) Remove the sleeve (6).

e) Remove the seal ring (7) and the seal ring (8).

f) Remove the retaining ring (9) and the retaining ring (10).

g) Change the bearing (11) and the bearing (12).

h) If necessary, change the spacer (13) or the toothed pulley (14).

i) Assemble in the reverse order.

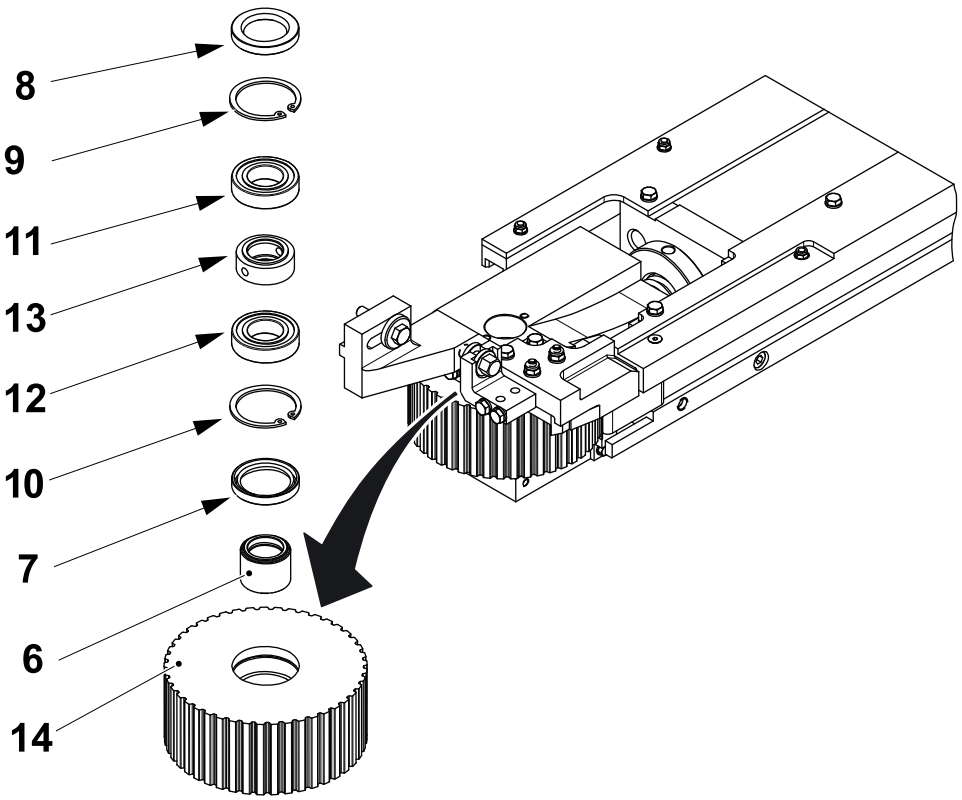

6 Sleeve
7 Seal ring
8 Seal ring
9 Retaining ring
10 Retaining ring
11 Bearing
12 Bearing
13 Spacer
14 Toothed pulley

3.4.1-2 Belt Stretcher - Set Belt Tension

Machine Status	Electrical supply disconnecting device in position O (OFF)
SPC Reference	2802645-0200

a) Release the two screws (1).

Note! Do not touch the nut (2).

b) Turn the flange (3) until the distance A is obtained.

A = 32mm

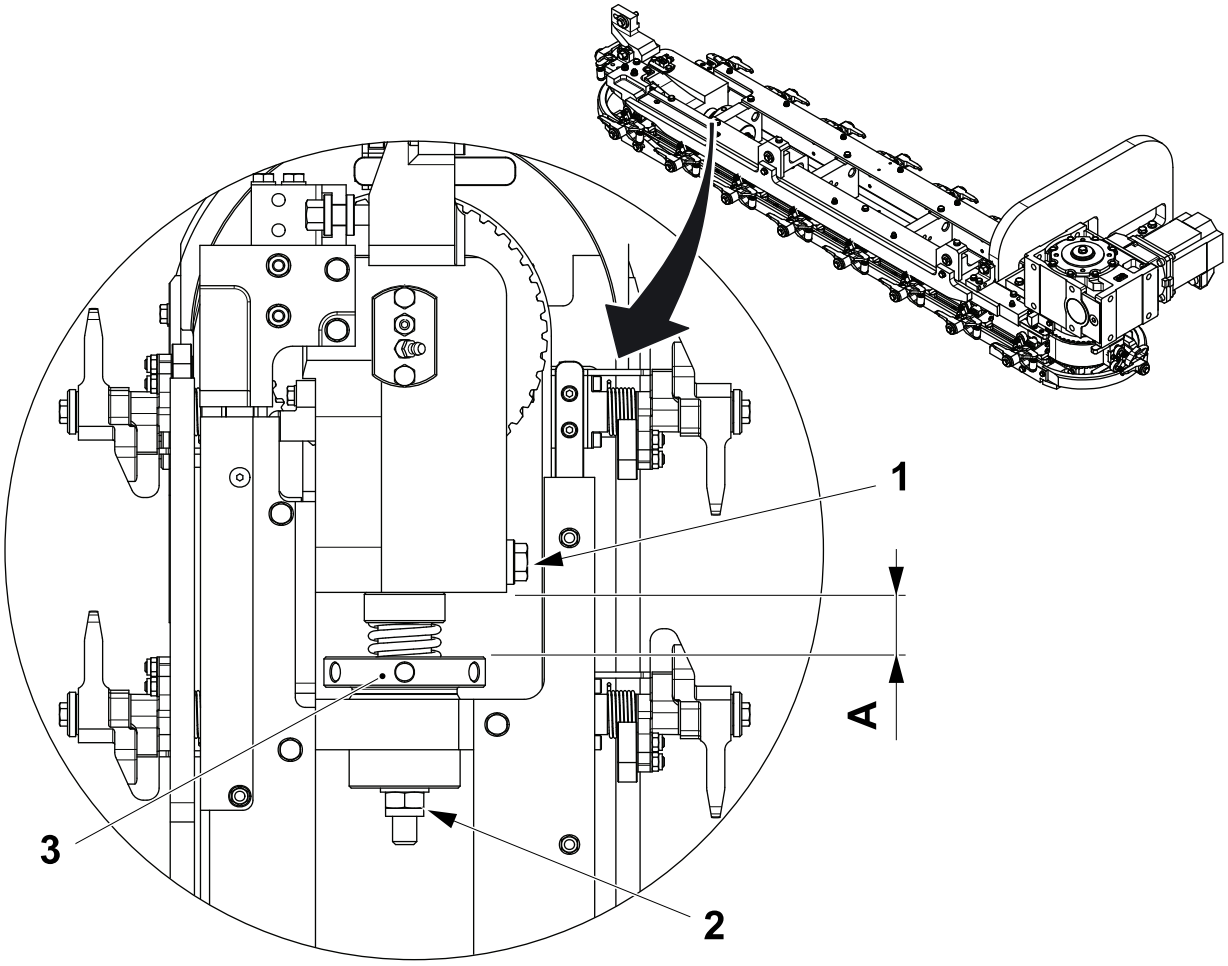

1 Screw
2 Nut
3 Flange

This page intentionally left blank

4 Hotmelt Applicator

4 Hotmelt Applicator

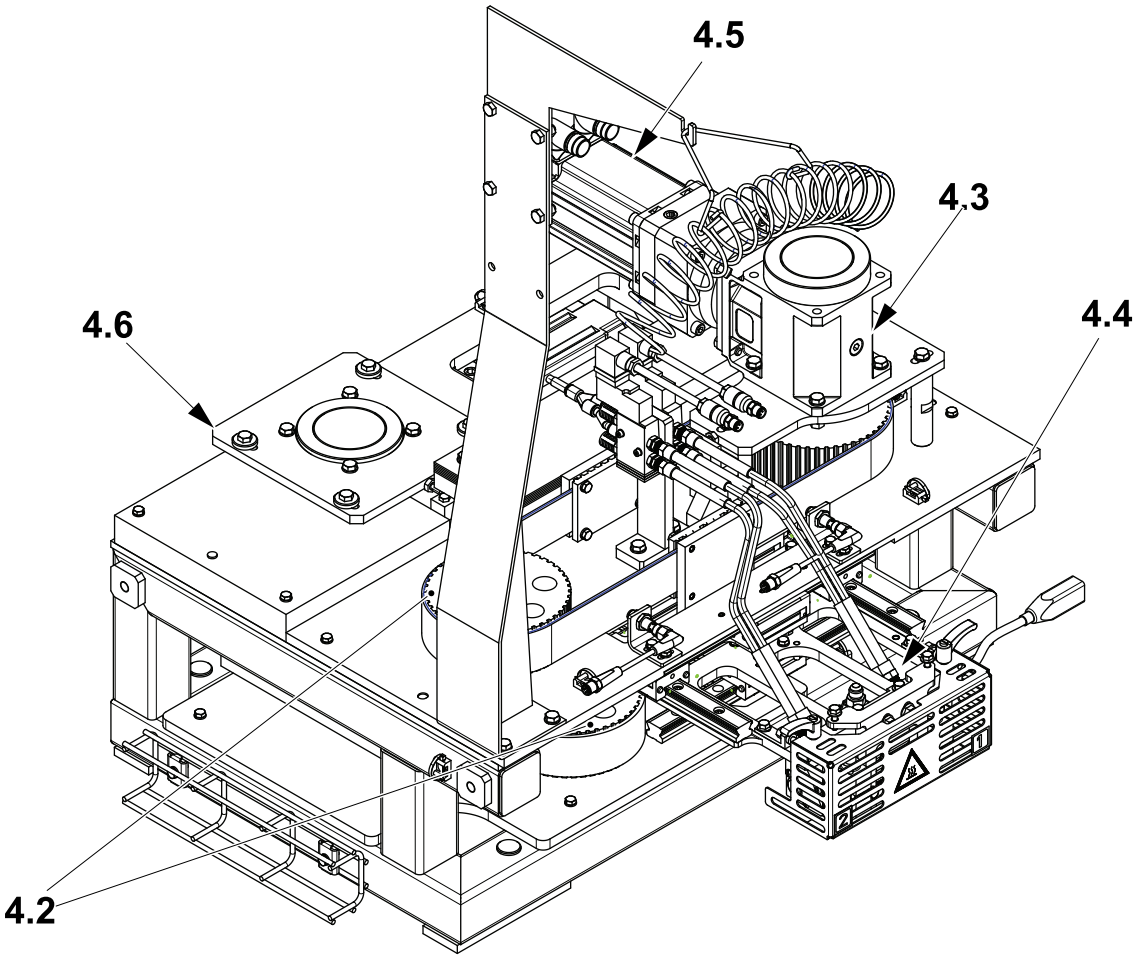

4.2 Pulley
4.3 Motion Control
4.4 Hotmelt Gun
4.5 Drive Unit
4.6 Motion Control

4 Hotmelt Applicator 4-2

4.1 Hotmelt Applicator - Functional Description 4-5

4.2 Pulley 4-6

4.2.1 Pulley - Change. 4-6

4.2.1-1 Pulley - Change Bearing 4-6

4.3 Motion Control. 4-8

4.3.1 Motion Control (Y-Direction) 4-8

4.3.1-1 Timing Belt - Removal 4-8

4.3.1-2 Timing Belt - Set Position Sensors 4-17

4.4 Hotmelt Gun. 4-19

4.4-1 Hotmelt Gun - Set Temperature. 4-19

4.4-2 Hotmelt Gun - Remove and Install Cover 4-20

4.4-3 Hotmelt Gun - Change Nozzle 4-21

4.4-4 Hotmelt Gun - Check Nozzles 4-22

4.4-5 Hotmelt Gun - Clean Nozzle. 4-23

4.4-6 Perform a Gun Purge Operation 4-29

4.4-7 Hotmelt Gun - Change Gun 4-34

4.4-8 Hotmelt Gun - Change Filter. 4-36

4.4-9 Hotmelt Gun - Change Heater /Thermocouple 4-37

4.4-10 Hotmelt Gun - Set 4-44

4.4-11 Hotmelt Gun - Check 4-52

4.4-12 Check Bead Pattern 4-61

4.4-13 Set Bead Pattern 4-64

4.4.1 Adhesive Preservation - Setup 4-72

4.4.1-1 Adhesive Preservation Activation 4-72

4.4.1-2 Adhesive Preservation Settings. 4-74

4.4.1-3 Delay On Stand-By Description. 4-76

4.4.1-4 Delay On Stand-By Setting. 4-77

4.4.1-5 Delay On To Step Zero. 4-79

4.4.1-6 Adhesive Preservation Hooter Activation 4-81

4.4.1-7 Adhesive Preservation Hooter Deactivation 4-82

4.5 Drive Unit 4-83

4.5.1 Drive Motor 4-83

4.5.1-1 Drive Motor - Change 4-83

4.5.2 Drive Motor Gearbox 4-85

4.5.2-1 Gearbox - Change 4-85

4.5.2-2 Clamping Element - Removal and Installation 4-86

4.6 Motion Control 4-88

4.6.1 Motion Control (X-Direction) 4-88

4.6.1-1 Timing Belt - Change 4-88

4.6.1-2 Timing Belt - Set Position Sensors 4-98

4.1 Hotmelt Applicator - Functional Description

The Hotmelt Applicator consists of the following:

- Motion Control
- Drive Unit
- Pulleys
- Hotmelt Guns.

The hotmelt guns apply adhesive to the cap in a set pattern. This pattern is controlled by the motion control units (which controls the X and Y directions) which are driven by the drive units via the pulleys.

4.2 Pulley

4.2.1 Pulley - Change

4.2.1-1 Pulley - Change Bearing

Machine Status	Electrical supply disconnecting device in position O (OFF)
SPC Reference	2695135-0200

a) Release the belt tension, see 4.3.1-1 Timing Belt - Removal, and remove.

b) Remove the retaining ring (1) and the toothed pulley (2).

c) Remove the bearing (3).

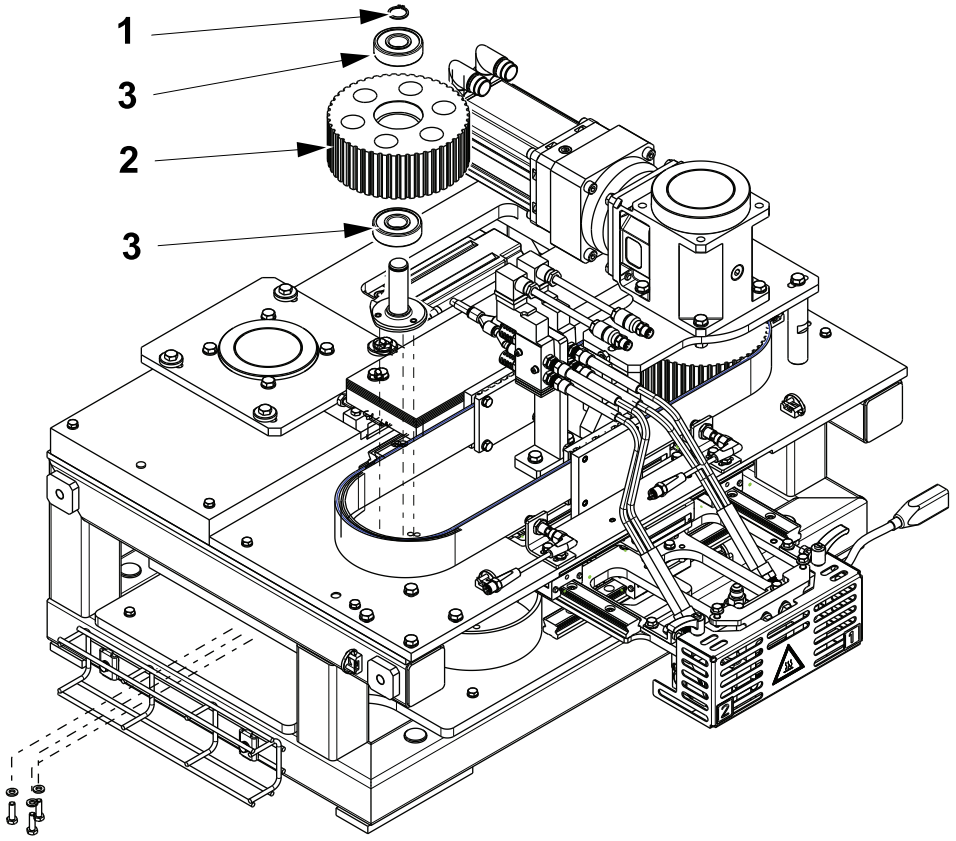

1 Retaining ring
2 Toothed Pulley
3 Bearing

(Cont'd)

(Cont'd)

d) If necessary remove the screw (4) and change the shaft (5) shaft.

e) Assemble in the reverse order.

f) Tension the belt, see 4.3.1-1 Timing Belt - Removal, and Assembly.

g) Carry out the above procedure for the other pulley (6).

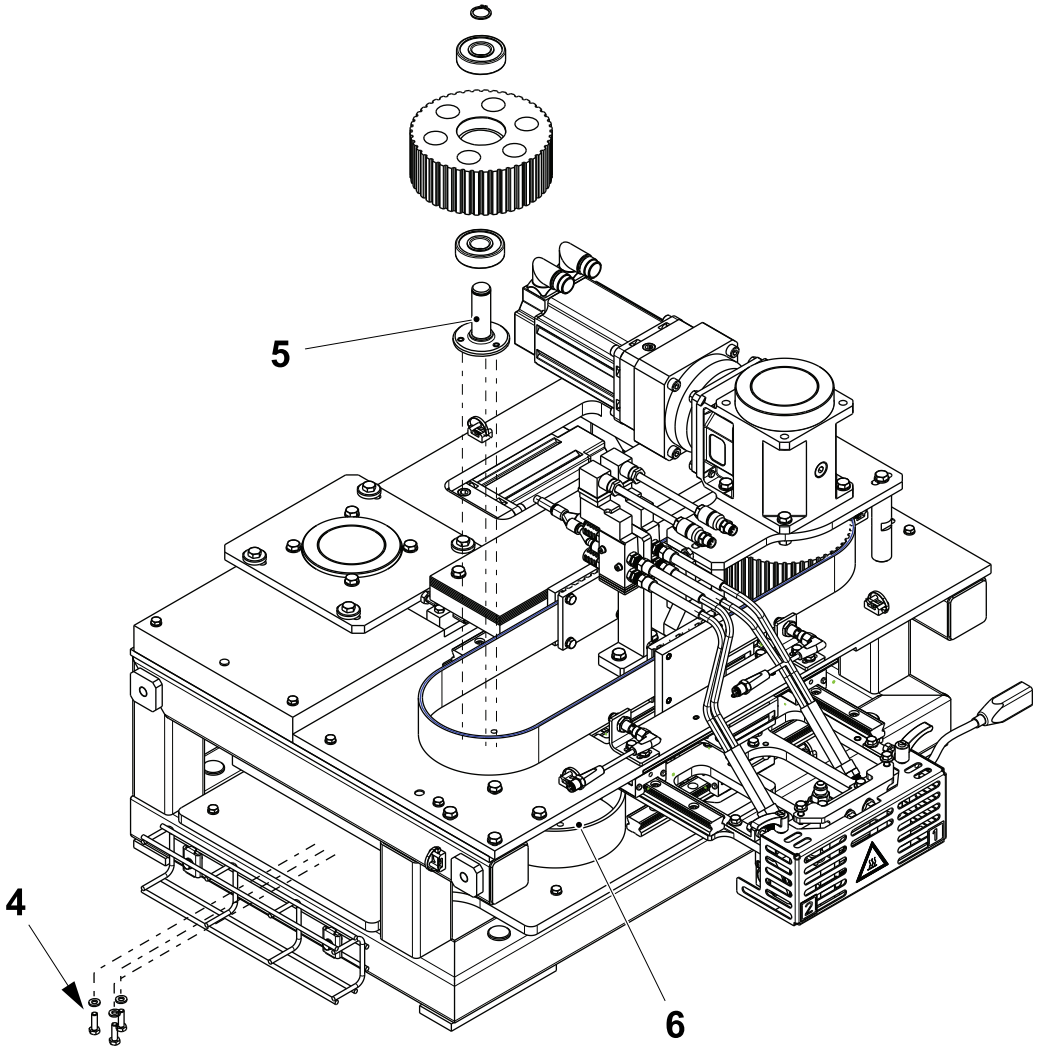

4 Screw
5 Shaft
6 Pulley

4.3 Motion Control

4.3.1 Motion Control (Y-Direction)

4.3.1-1 Timing Belt - Removal

Machine Status	Electrical supply disconnecting device in position O (OFF)
SPC Reference	2716090-0200

WARNING

Risk of burns.

Nearby components may be hot.

a) Loosen the lock nut (1) and turn the screw (2) fully clockwise so that the plate (3) can move when its fixing screws are loosened, see step b) on next page.

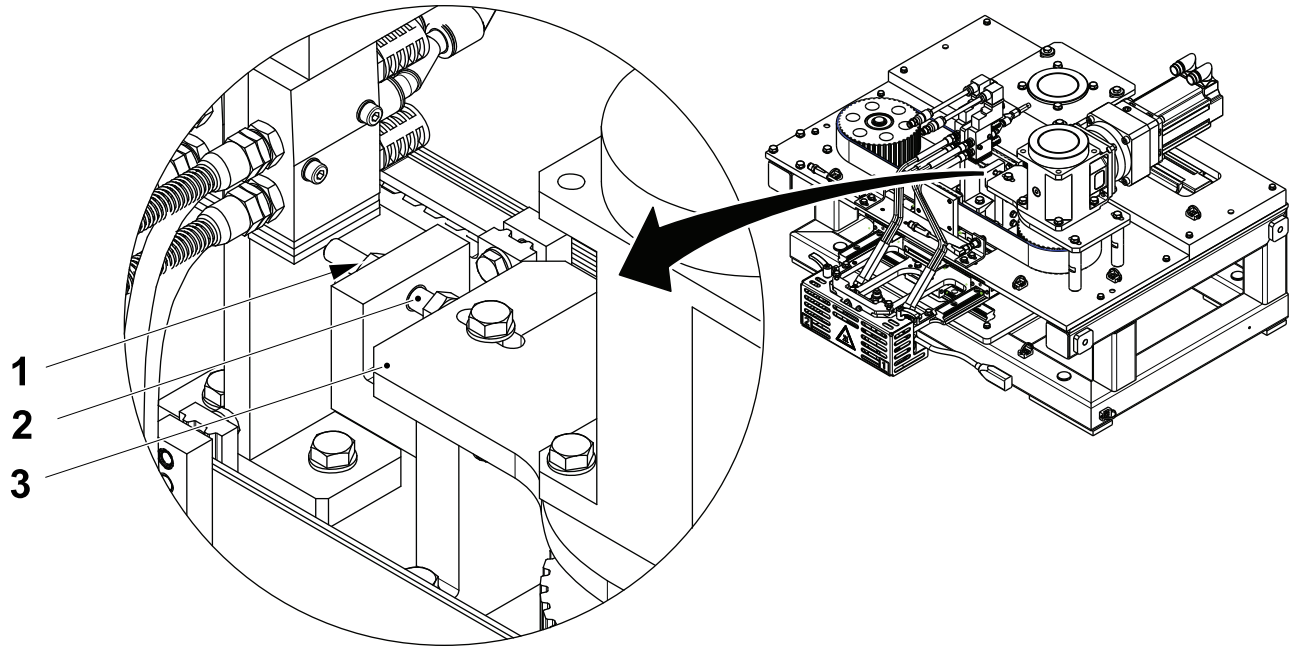

1 Lock nut
2 Screw
3 Plate

(Cont'd)

(Cont'd)

b) Loosen the screw (4) to release the belt tension.

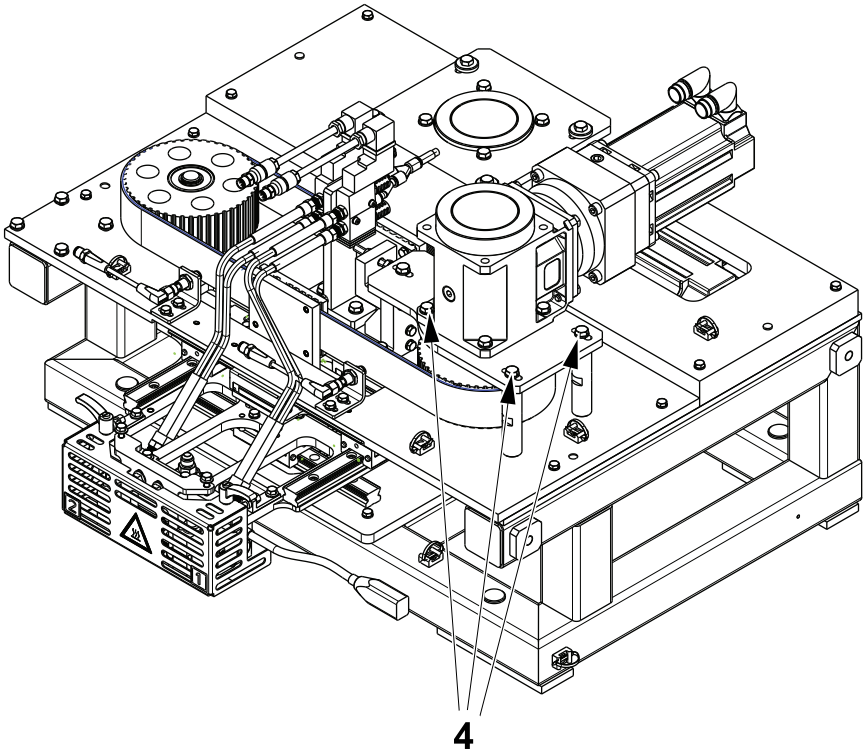

4 Screw

(Cont'd)

(Cont'd)

c) Remove the screw (5) and the belt holder (6).

d) Remove the screw (7) and the belt holder (8).

e) Remove the belt (9).

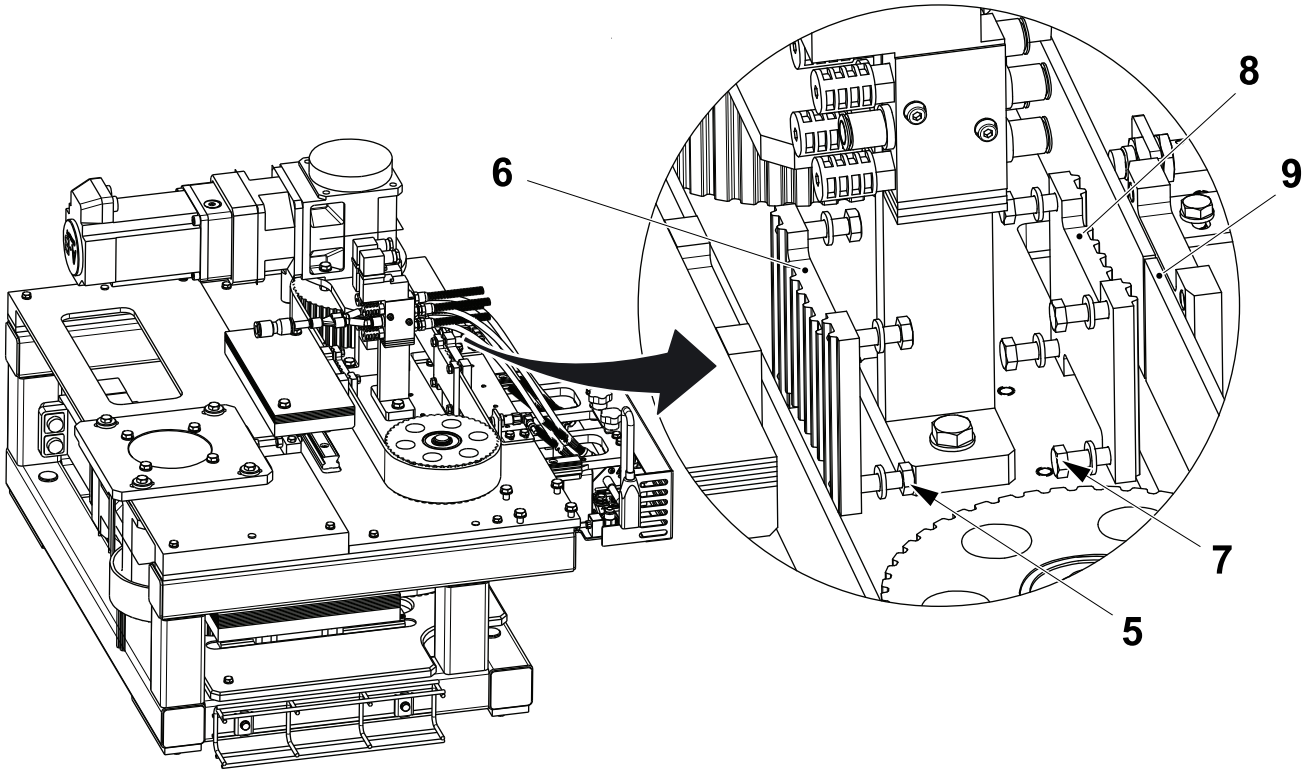

5 Screw
6 Belt holder
7 Screw
8 Belt holder
9 Belt

(Cont'd)

(Cont'd)

Assembly

WARNING
Risk of burns.
Nearby components may be hot.

a) Install the belt (1) making sure that the ends touch and then clamp the ends together using the belt holder (2), the bracket (3) and the screw (4).

Note! The ends of the belt should be joined together with centre of the bracket (3) aligned with the centre of the support (5).

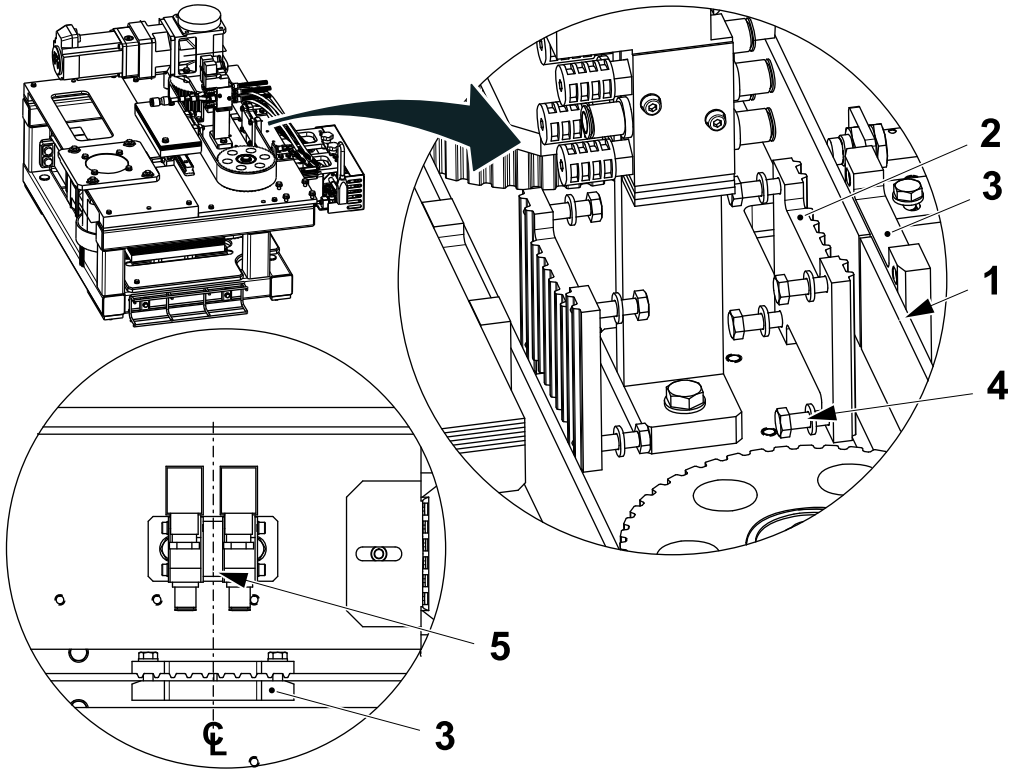

1 Belt
2 Belt holder
3 Bracket
4 Screw
5 Support

(Cont'd)

(Cont'd)

b) Turn the screw (6) counter clockwise until the belt (1) is slightly tensioned.

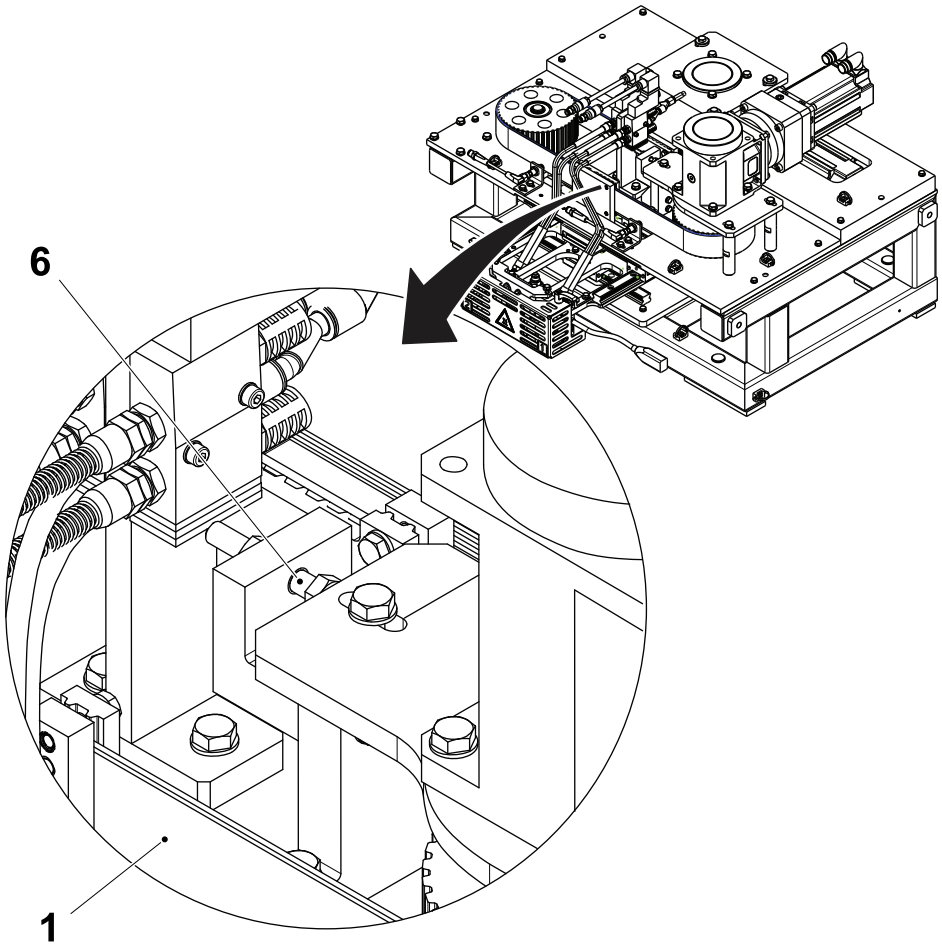

1 Belt
6 Screw

(Cont'd)

(Cont'd)

c) Continue to tension the belt (1) until the belt cannot be moved more than the distance **A** at the centre line of the support (5).

- Measure the belt tension using a "belt tension measuring meter" TP part 90459-2181 or 90600-3415. The tension should be about 95 to 100 Hz.
- Measure it in the middle of the belt and produce vibrations by hitting the belt with a spanner.

A = 1 - 2 mm

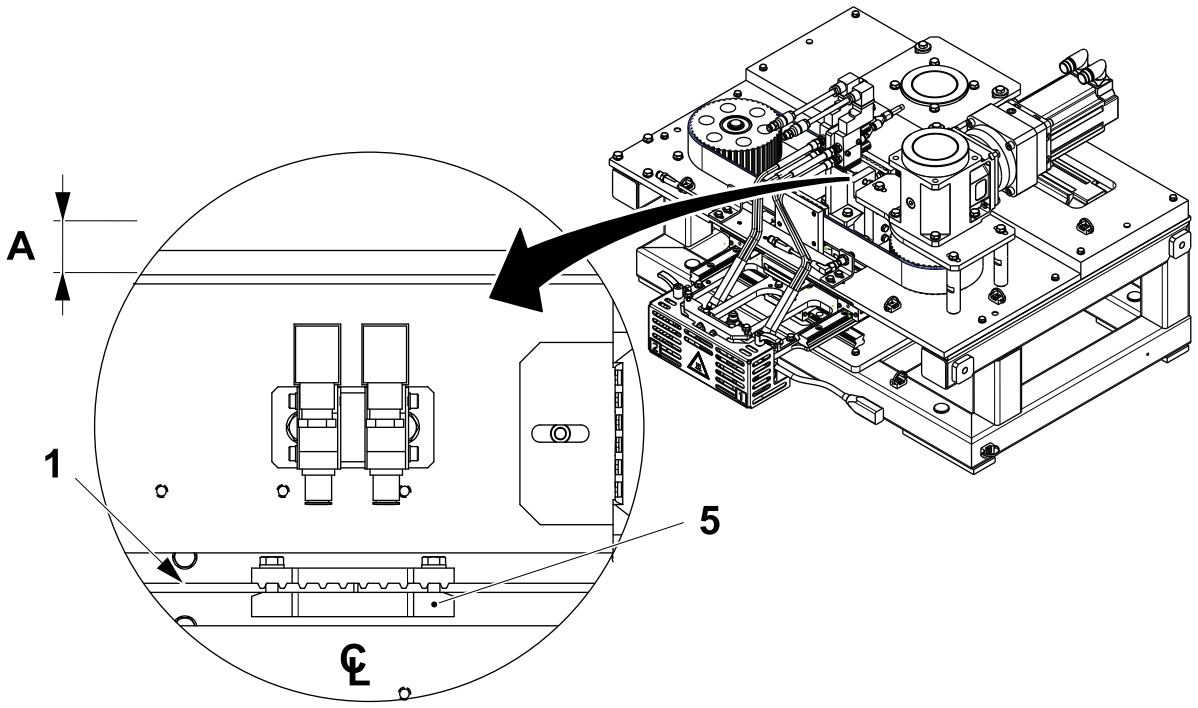

1 Belt
5 Support

(Cont'd)

(Cont'd)

d) Tighten the lock nut (7).

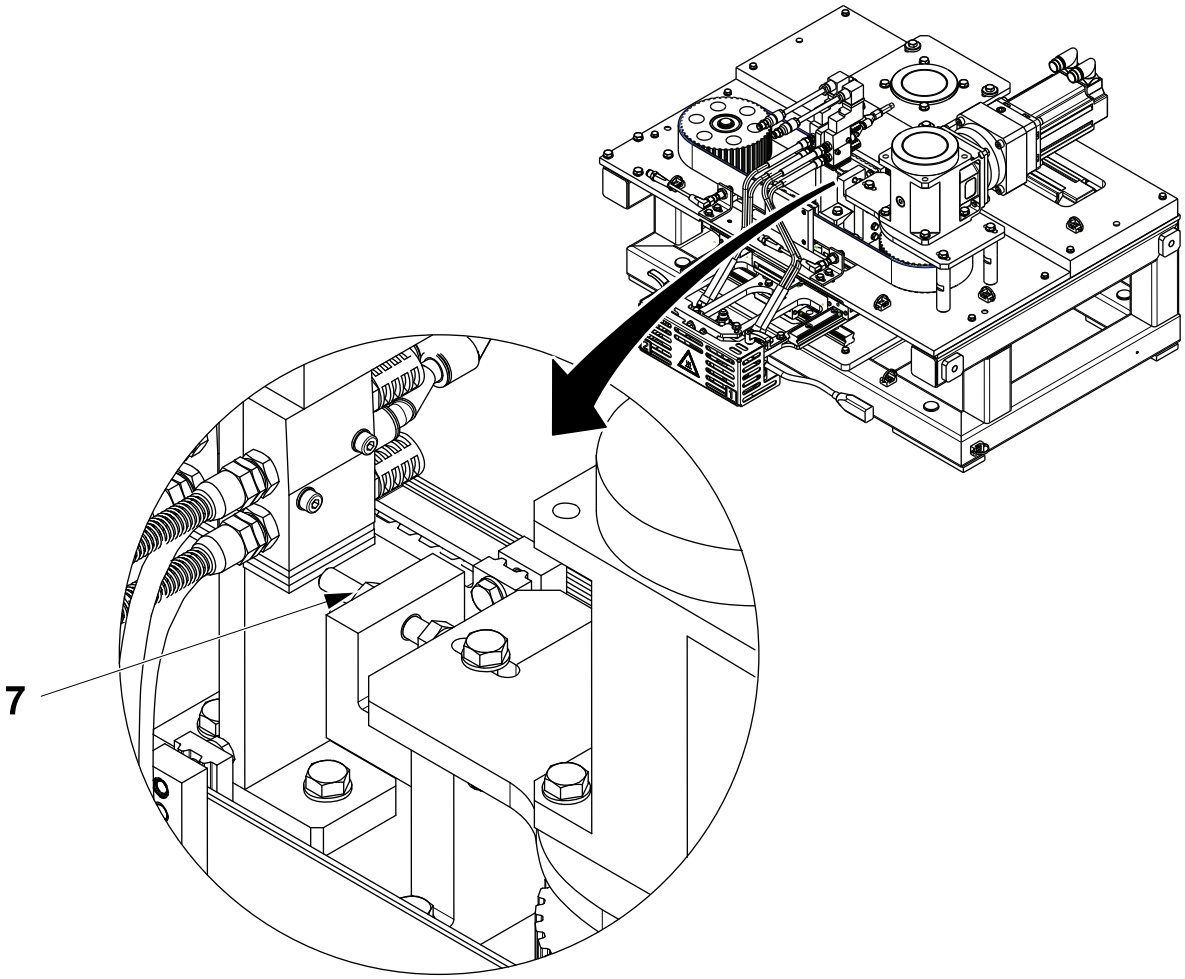

7 Nut

(Cont'd)

(Cont'd)

e) Tighten the screw (8).

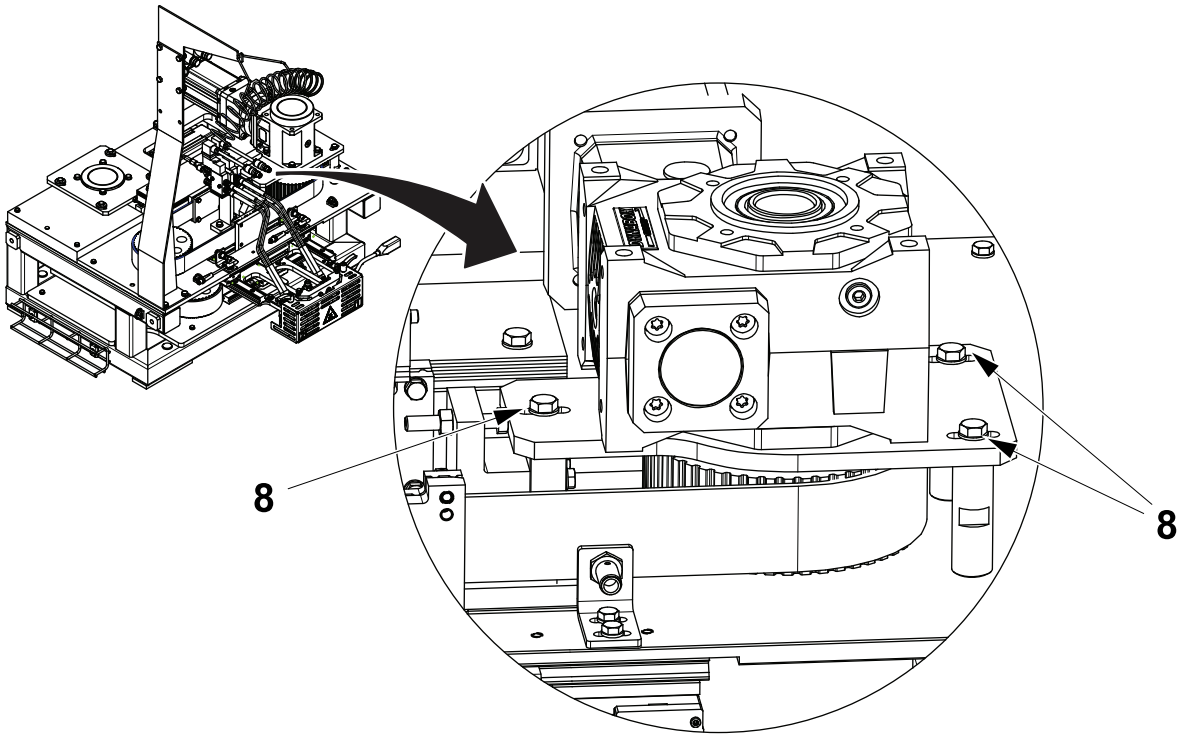

8 Screw

(Cont'd)

(Cont'd)

f) Move the bracket (9) until its centre is aligned with the centre of the bracket (3) and the centre of the support (5).

g) Without moving the bracket (9) relative to the belt (1), install the belt holder (10) and secure it in position with the screws (11).

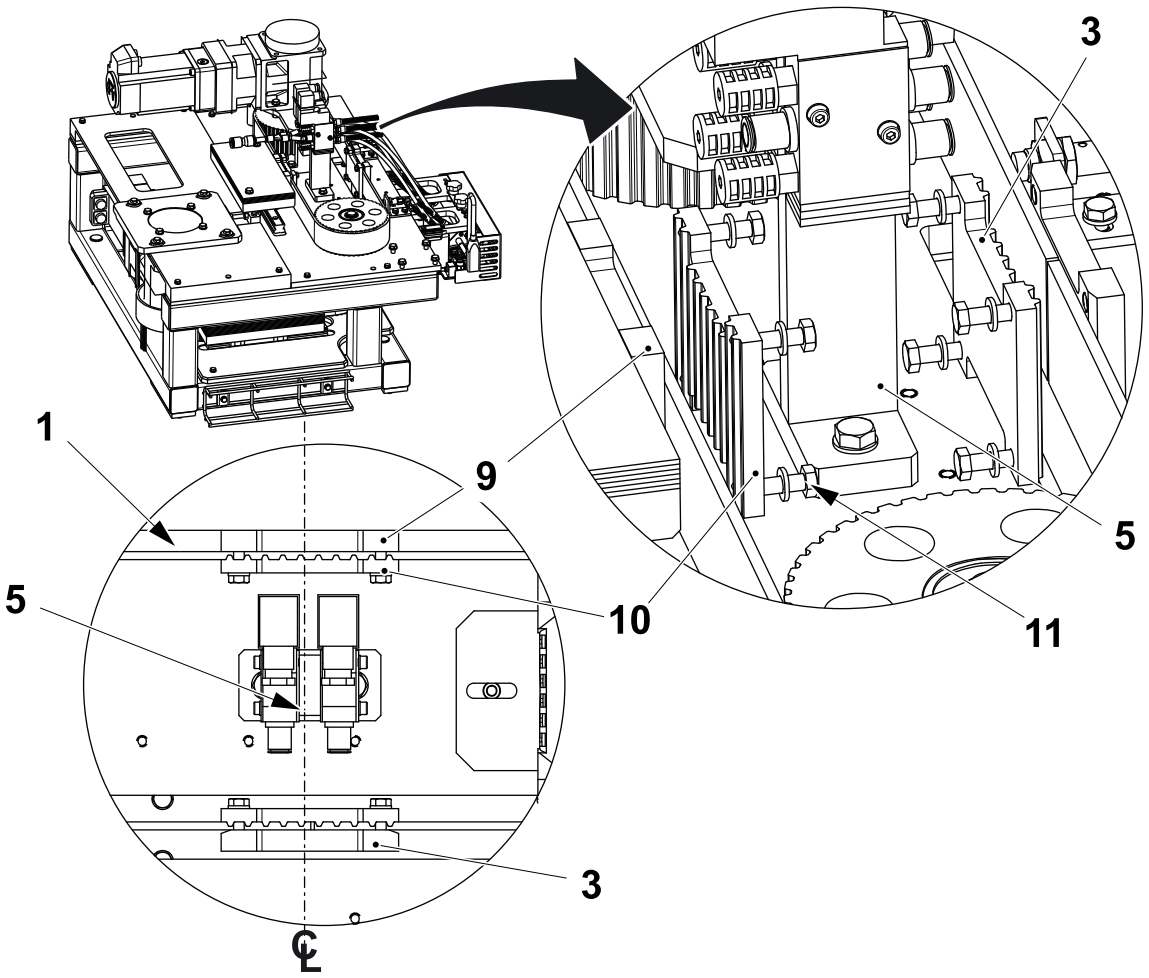

1 Belt
3 Bracket
5 Support
9 Bracket
10 Belt holder
11 Screw

4.3.1-2 Timing Belt - Set Position Sensors

Machine Status	Electrical supply disconnecting device in position O (OFF)
SPC Reference	2716097-0200

Removal

WARNING
Risk of burns.
Nearby components may be hot.

a) Move the belt holder (1) in the direction shown until it is in contact with the plate (2).

b) Loosen the screw (3) and move the sensor bracket (4) in the same direction.

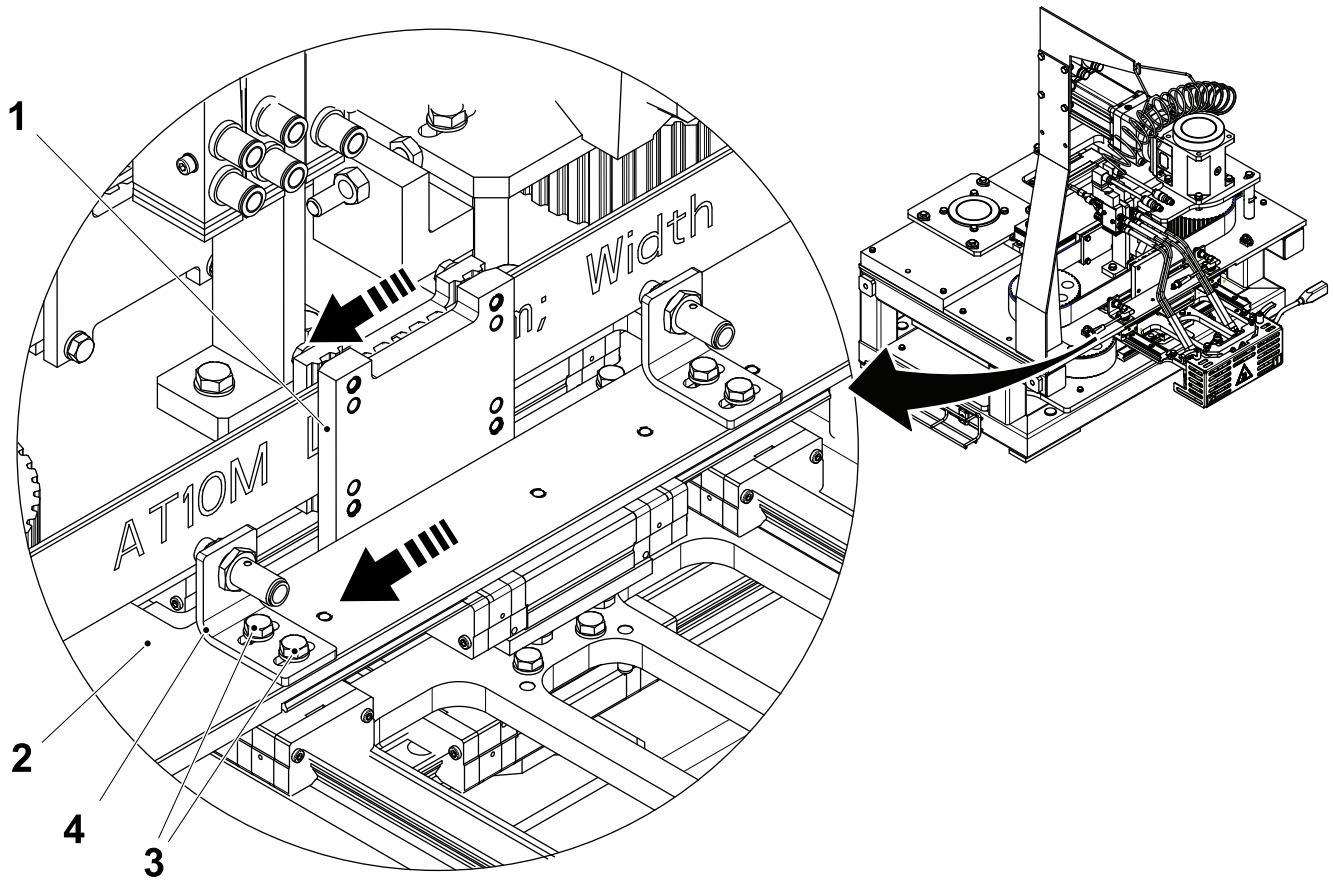

1 Belt holder
2 Plate
3 Screw
4 Bracket

(Cont'd)

(Cont'd)

c) Move the belt holder (1) the distance **A** in the opposite direction.

d) Move the sensor bracket (4) until the LED (5) in the sensor comes on.

e) Without moving the belt holder, tighten the screw (3).

f) Repeat for the other three sensors. One in this assembly and the other two in the other motion control assembly, see 4.6.1 Motion Control (X-Direction).

A = 5mm

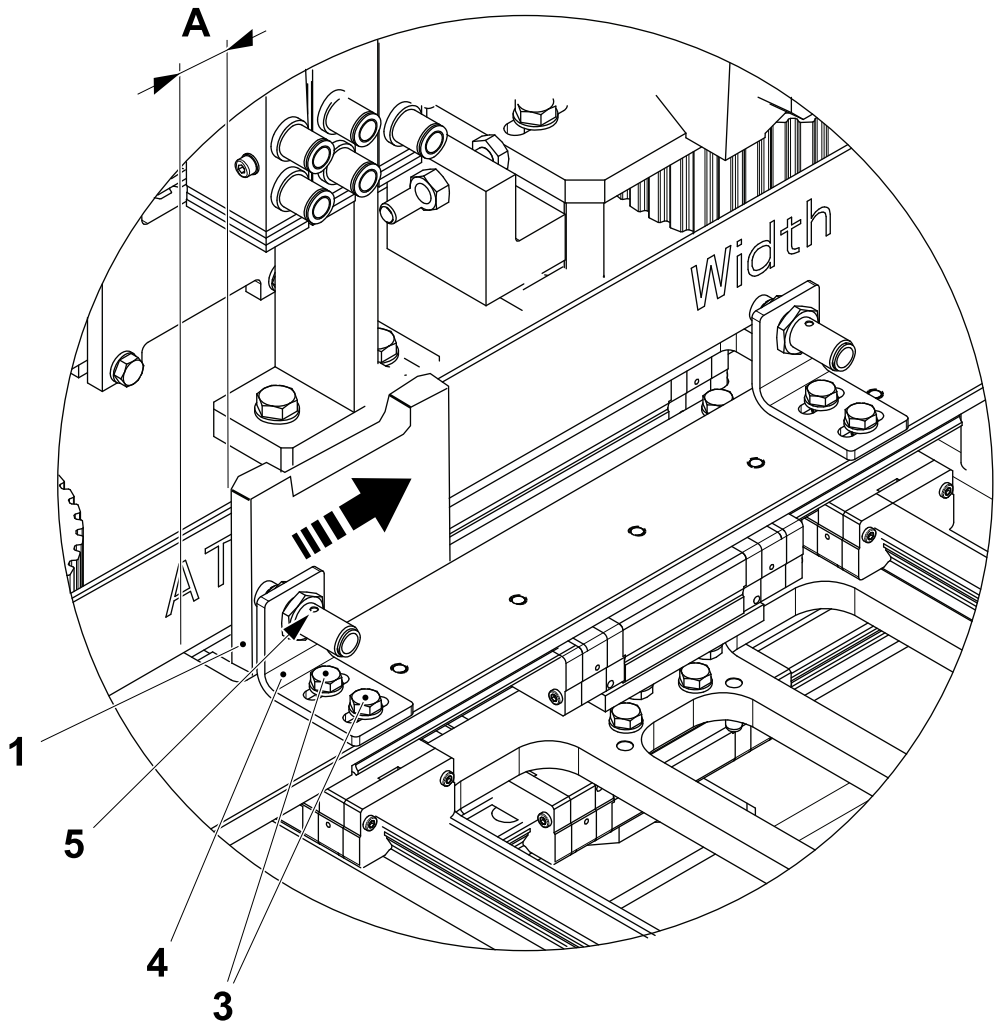

1 Belt holder
3 Screw
4 Bracket
5 LED

4.4 Hotmelt Gun

4.4-1 Hotmelt Gun - Set Temperature

Machine Status	Electrical supply disconnecting device in position I (ON)
SPC Reference	2716091-0400

Refer to 6.6.2-6 Set Tank, Hose and Gun Temperatures and 6.6.2-7 Hotmelt Equipment - Set Pressure.

4.4-2 Hotmelt Gun - Remove and Install Cover

Machine Status	Electrical supply disconnecting device in position I (ON) step 1
SPC Reference	2716091-0400

WARNING

Risk of burns.

Hot adhesive. Wear safety glasses, protective gloves and other protective clothing to avoid injuries from hot adhesive.

Note! The hotmelt equipment must be at operating temperature.

Note! Do not let adhesive go on the machine parts.

a) Loosen the lever (1) and remove the cover (2) from the applicator unit (3).

b) Install the cover (2) onto the applicator unit (3) with the lever (1).

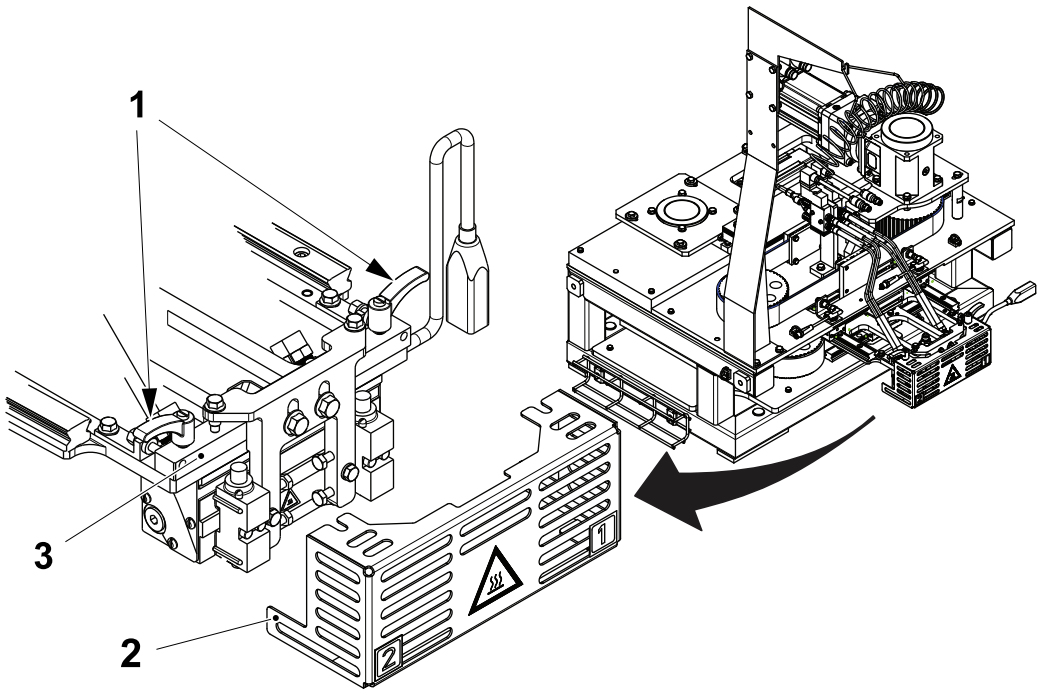

1 Lever
2 Cover
3 Applicator unit

4.4-3 Hotmelt Gun - Change Nozzle

Machine Status	step1
SPC Reference	2716091-0400

WARNING

Risk of Burns

Hot adhesive. Wear safety glasses, protective gloves and other protective clothing to avoid injuries from hot adhesive.

Note! The hotmelt equipment must be at operating temperature.

Note! Do not let adhesive go on the machine parts.

a) Remove the cover see, 4.4-2 Hotmelt Gun - Remove and Install Cover.

b) Change the nozzle (1), refer to 13.1-1 Adhesive Weight/Temperature/Nozzle for specific nozzle number.

c) Replace the cover see, 4.4-2 Hotmelt Gun - Remove and Install Cover.

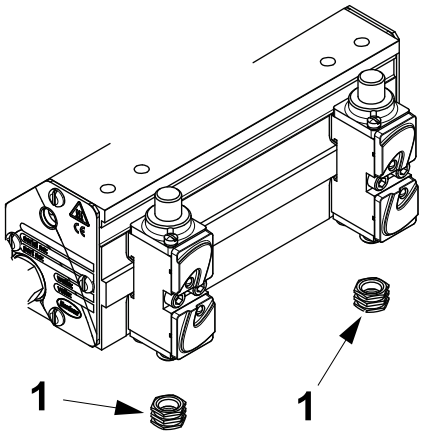

1 Nozzle

4.4-4 Hotmelt Gun - Check Nozzles

SPC Reference	2716091-0400

WARNING

Risk of burns.

Hot adhesive. Wear safety glasses, protective gloves and other protective clothing to avoid injuries from hot adhesive.

Note! A working hole has a circular shaped hole (1). A damaged nozzle has a non-circular shaped hole (2).

a) Check the nozzles and discard the damaged ones.

Note! Cleaning may be required before the decision to discard see, 4.4-5 Hotmelt Gun - Clean Nozzle on page 4-23.

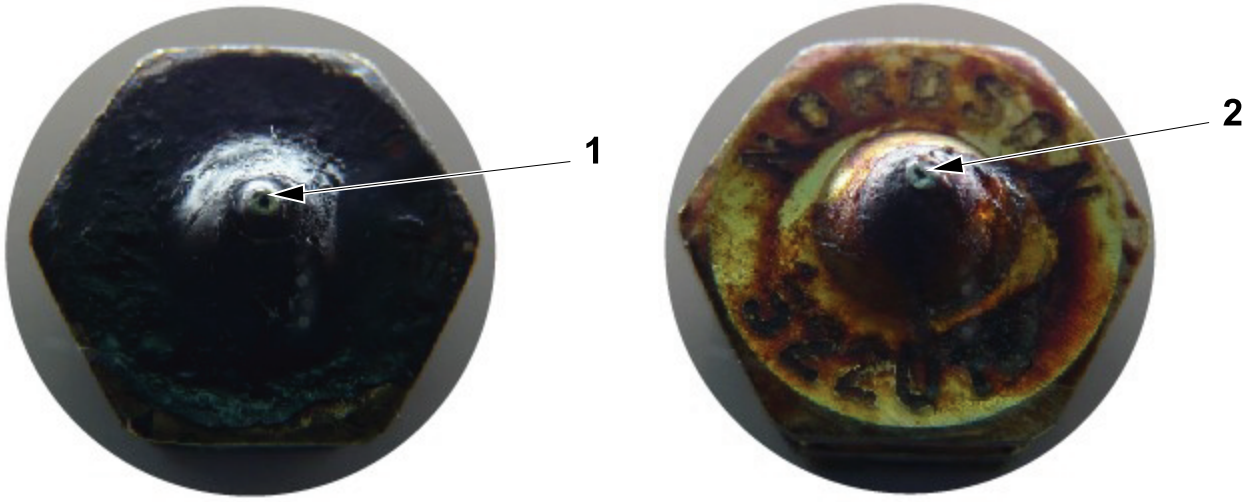

Working nozzle

Damaged nozzle

1 Hole
2 Hole

4.4-5 Hotmelt Gun - Clean Nozzle

Machine Status	STEP 1
Special Equipment	Nozzle Cleaning Brush: TP Pt No 2985810-0000
SPC Reference	2716091-0400

Clean the Nozzles

WARNING

Risk of burns.

Hot adhesive. Wear safety glasses, protective gloves and other protective clothing to avoid injuries from hot adhesive.

CAUTION

The nozzles are delicate.

Handle the nozzle (1) with care to avoid any damage to their top (2).

Note! The hotmelt equipment must be at operating temperature.

Note! Do not let adhesive go on the machine parts.

a) Loosen and remove the nozzle (1).

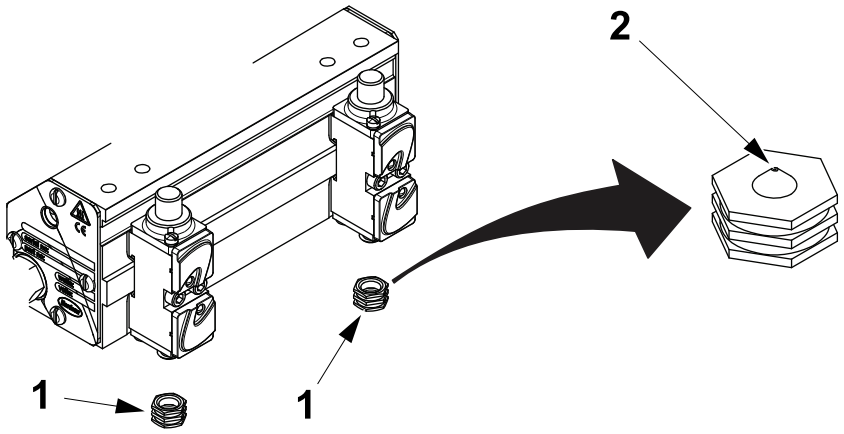

1 Nozzle
2 Top

(Cont'd)

(Cont'd)

Cleaning Procedure

WARNING

Risk of burns.

Hot adhesive. Wear safety glasses, protective gloves and other protective clothing to avoid injuries from hot adhesive.

a) Place the dirty nozzle (1) in a vice (2) with the top (3) in upward position.

b) Put the hot air blower (4) close to the nozzle (1) and heat the nozzle (1) .

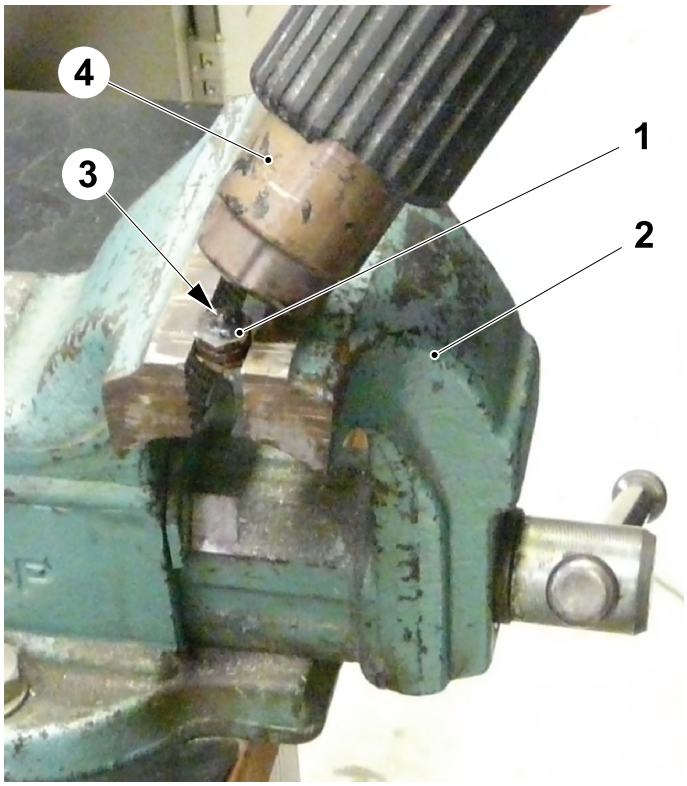

1 Nozzle
2 Vice
3 Top
4 Hot air blower

(Cont'd)

(Cont'd)

CAUTION
The nozzles are delicate.
Handle the nozzle (1) with care to avoid any damage to their top (3).

c) Use a steel brush (5) to clean the nozzle (1).

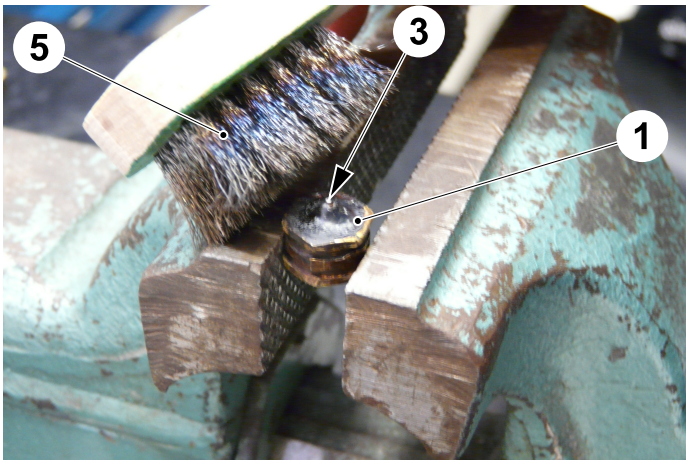

1 Nozzle
3 Top
5 Steel brush

d) Heat and clean the nozzle (1), alternatively. Finally heating before the next step.

Note! A good result is shown in the picture below.

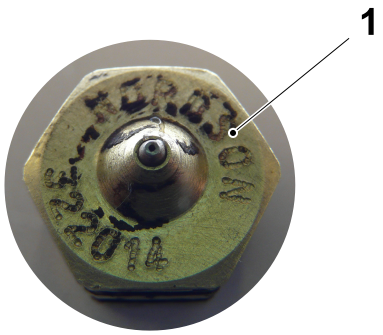

1 Nozzle

(Cont'd)

(Cont'd)

WARNING

Risk of burns.

Hot adhesive. Wear safety glasses, protective gloves and other protective clothing to avoid injuries from hot adhesive.

CAUTION

The nozzles are delicate.

Handle the nozzle (1) with care to avoid any damage to their top.

e) Use compressed cold air to cool the nozzle (1).

f) Remove the nozzle (1) from the vice.

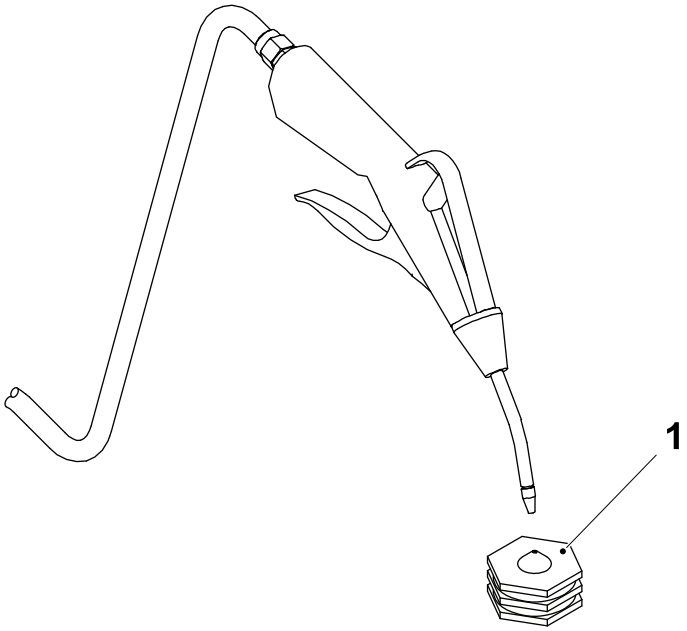

1 Nozzle

(Cont'd)

(Cont'd)

g) Place the nozzle (1) back into the vice (2) with the top (3) in downward position.

h) Put the hot air blower (4) close to the nozzle (1) and heat the nozzle (1).

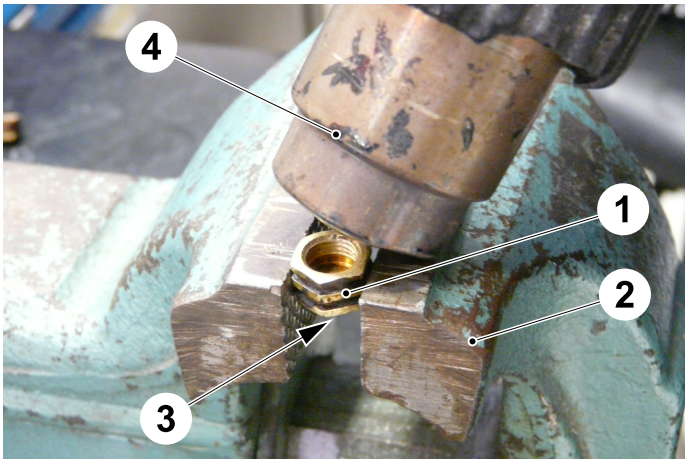

1 Nozzle
2 Vice
3 Top
4 Hot air blower

i) Use compressed cold air to remove the hotmelt from the nozzle (1).

j) Repeat from the point h) until the nozzle (1) is internally cleaned.

Note! Repeat the cleaning procedure from step a) if necessary.

k) Always finish cleaning from the top, see step a).

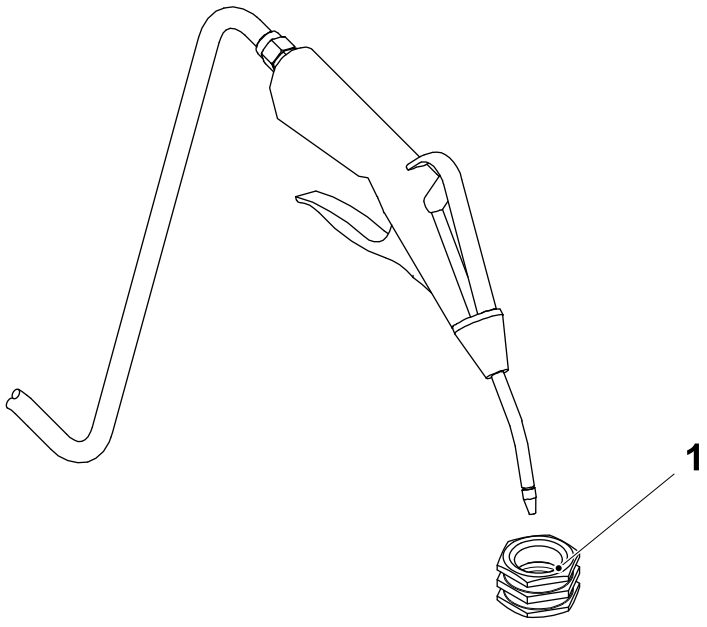

1 Nozzle

(Cont'd)

(Cont'd)

Install Nozzles

WARNING

Risk of burns.

Hot adhesive. Wear safety glasses, protective gloves and other protective clothing to avoid injuries from hot adhesive.

CAUTION

The nozzles are delicate.

Handle the nozzles (1) with care to avoid any damage to their top (2).

Note! The hotmelt equipment must be at operating temperature.

Note! Do not let adhesive go on the machine parts.

a) Install the correct nozzles (1), see 13.1-1 Adhesive Weight/Temperature/Nozzle.

b) Replace the cover see, 4.4-2 Hotmelt Gun - Remove and Install Cover.

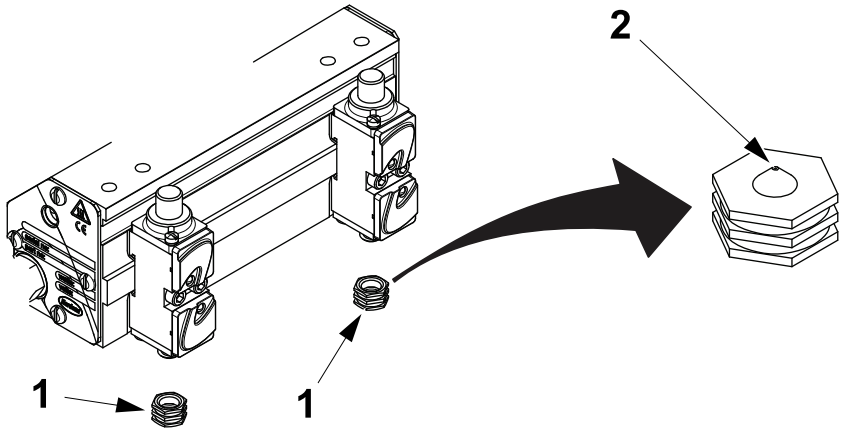

1 Nozzle
2 Top

4.4-6 Perform a Gun Purge Operation

Machine Status	step 1
SPC Reference	2716091-0400

WARNING

Risk of burns.

Hot adhesive. Wear safety glasses, protective gloves and other protective clothing to avoid injuries from hot adhesive.

a) Login the TPOP as service technician, see 1.1.1-1 HMI User Management - Log On as a User.

b) Touch the MAINTENANCE button (1) and the HOTMELT GUN APPLICATOR button (2).

Note! Items like the positioning system only appear on the screen below when installed.

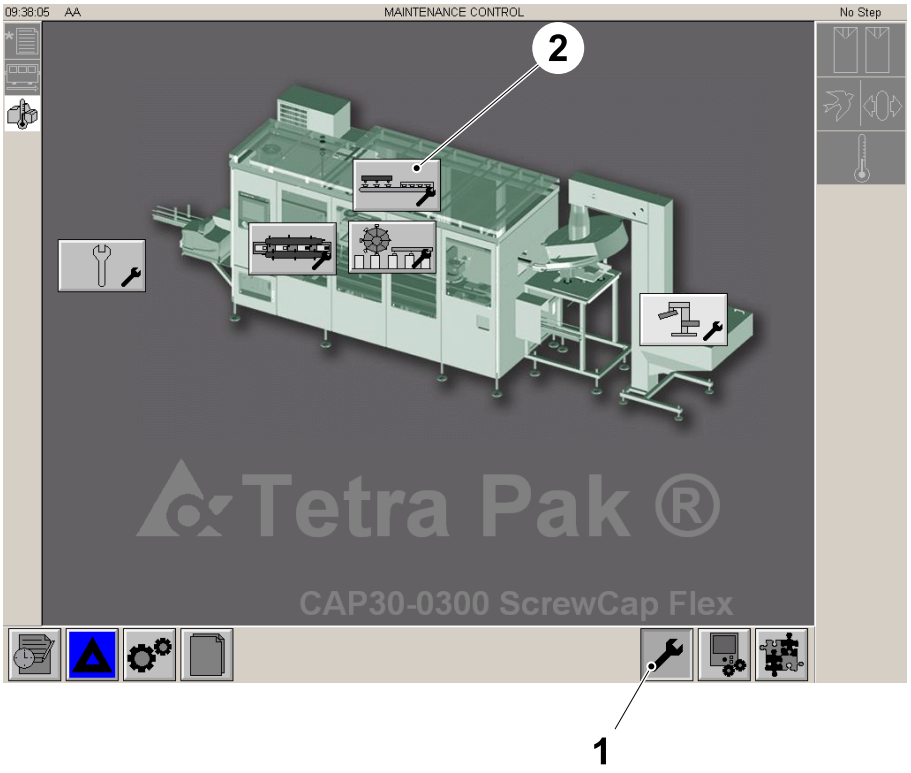

1 MAINTENANCE button
2 HOTMELT GUN APPLICATOR button

(Cont'd)

(Cont'd)

c) Take a 40x60 cm piece of packaging paper (3) and place it under the hotmelt guns (4).

Note! Position the piece of packaging paper (3) on the cap sequencer guide (5).

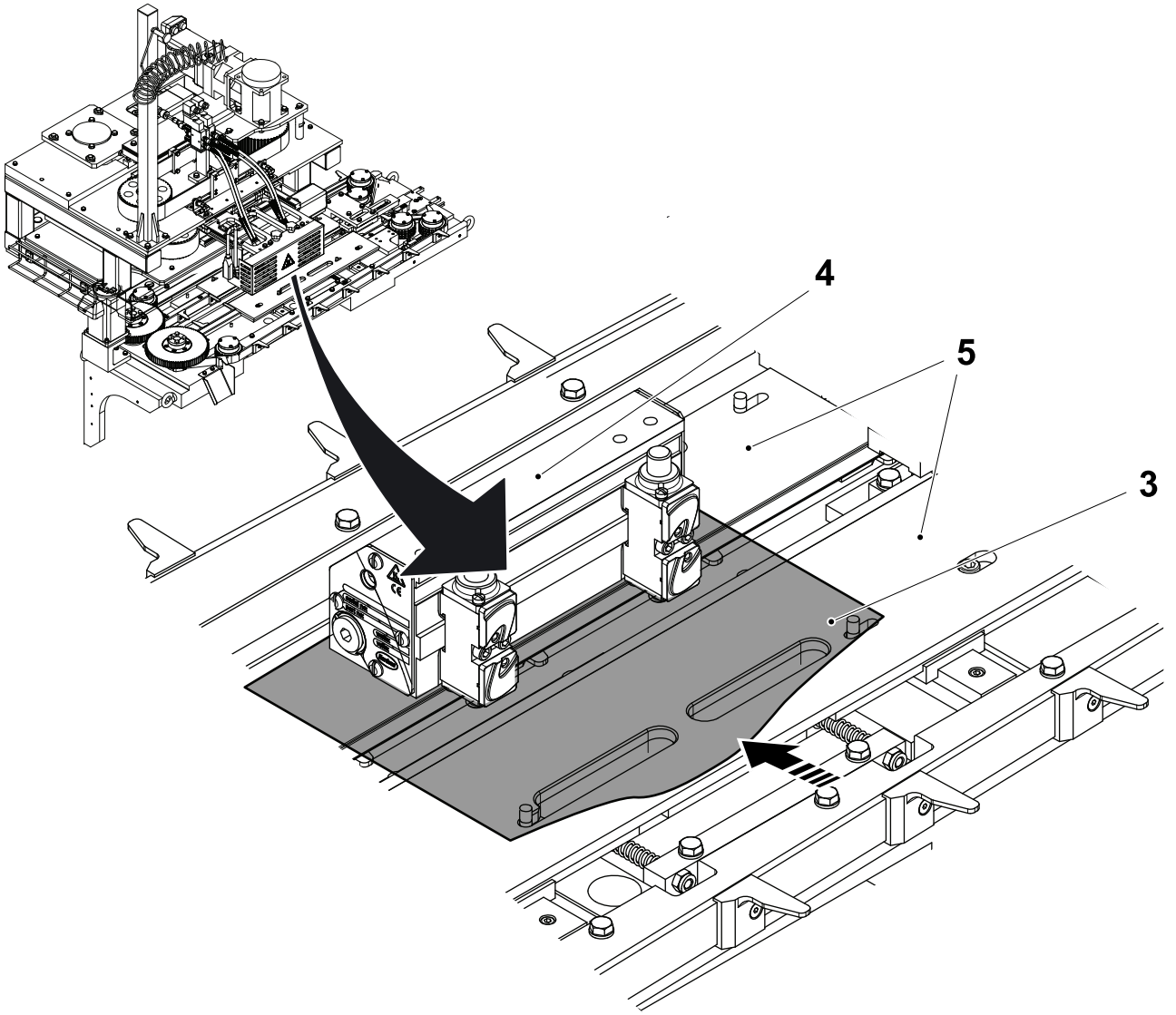

3 Piece of packaging paper
4 Hotmelt guns
5 Cap sequencer guide

(Cont'd)

(Cont'd)

CAUTION
If an alarm appears there can be a reset of the machine.
Check the package paper is in position under the hotmelt guns before performing another purge.

d) Close the doors to enable the purge operation.

e) Set the air pressure of the hotmelt tank at 2 bars.

f) Touch the PURGE button (6), the ON button (7) and the OK button (8) to start the purge operation.

Note! The OK button (8) when pressed makes the guns purge for one second. After four seconds it's possible to perform another purge, but be sure to check that the hotmelt doesn't exit from the package paper.

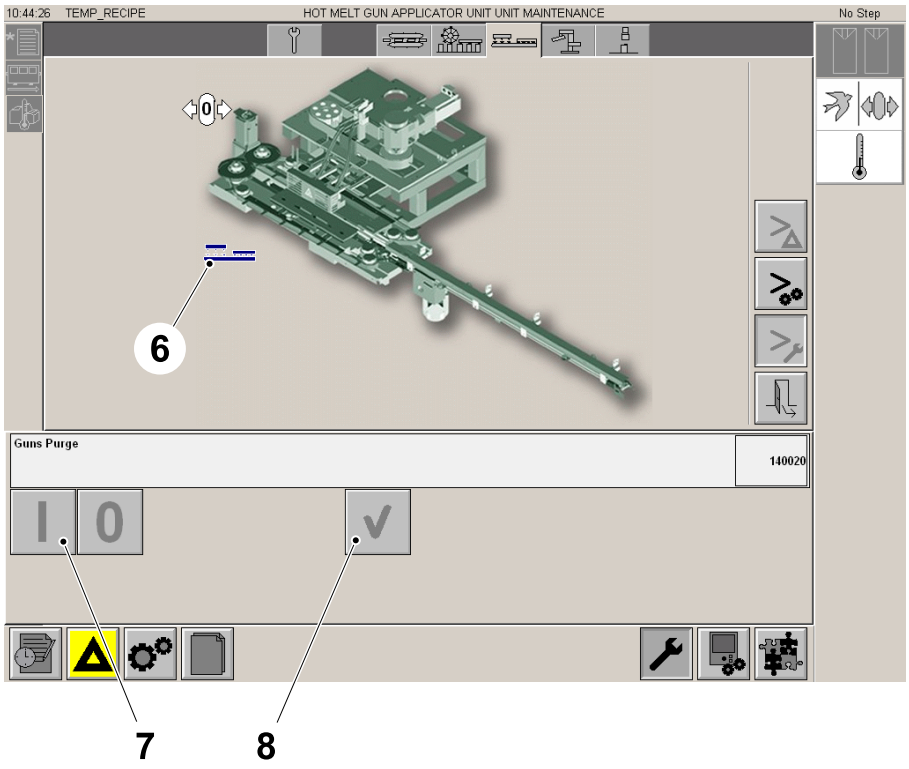

6 PURGE button
7 ON button
8 OK button

(Cont'd)

(Cont'd)

Note! The time bar (9) of two minutes is shown during a purge operation. The time bar (9) is reset to zero every time a new purge is performed. It's possible to start another purge operation four seconds after the previous purge. It's possible to perform four consecutive purges at maximum.

g) Opening the doors is only possible after the time bar (9) ends the count.

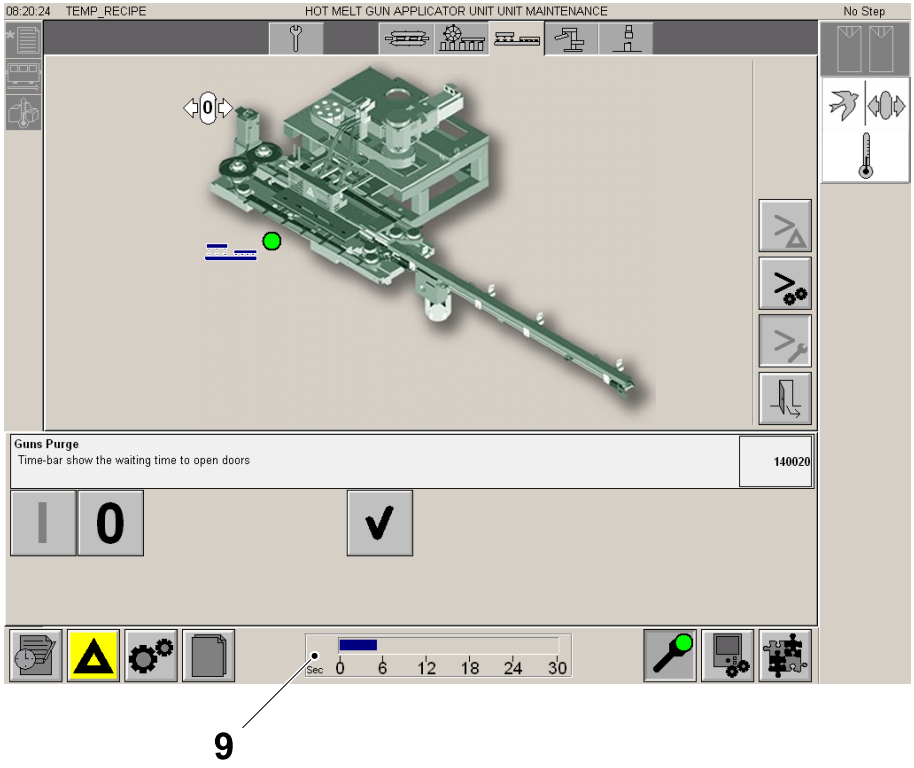

9 Time bar

(Cont'd)

(Cont'd)

CAUTION
The consistency of the glue (10) may not be enough.
Check that it stays on the piece of packaging paper (3).

h) When the purge operation is completed, open the doors and remove the piece of packaging paper (3) from under the hotmelt guns (4).

Note! In case it is necessary to repeat the procedure it's recommended to use another piece of packaging paper (3) .

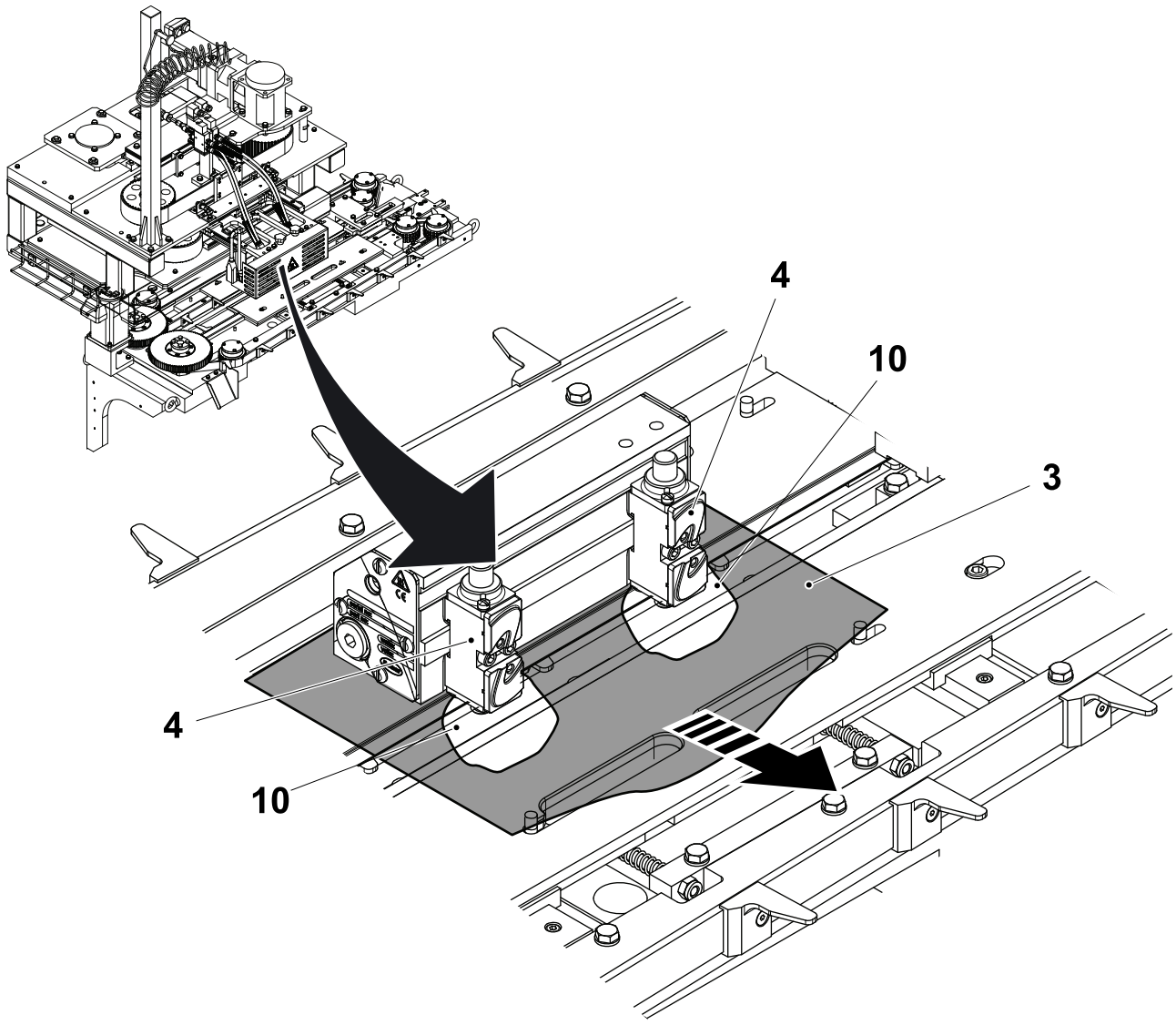

3 Piece of packaging paper
4 Hotmelt guns
10 Glue

4.4-7 Hotmelt Gun - Change Gun

Machine Status	step 1
SPC Reference	2716091-0400

WARNING

Risk of burns.

Hot adhesive. Wear safety glasses, protective gloves and other protective clothing to avoid injuries from hot adhesive.

Note! The hotmelt equipment must be at operating temperature.

Note! Do not let adhesive go on the machine parts.

a) Turn off the main air valve (1).

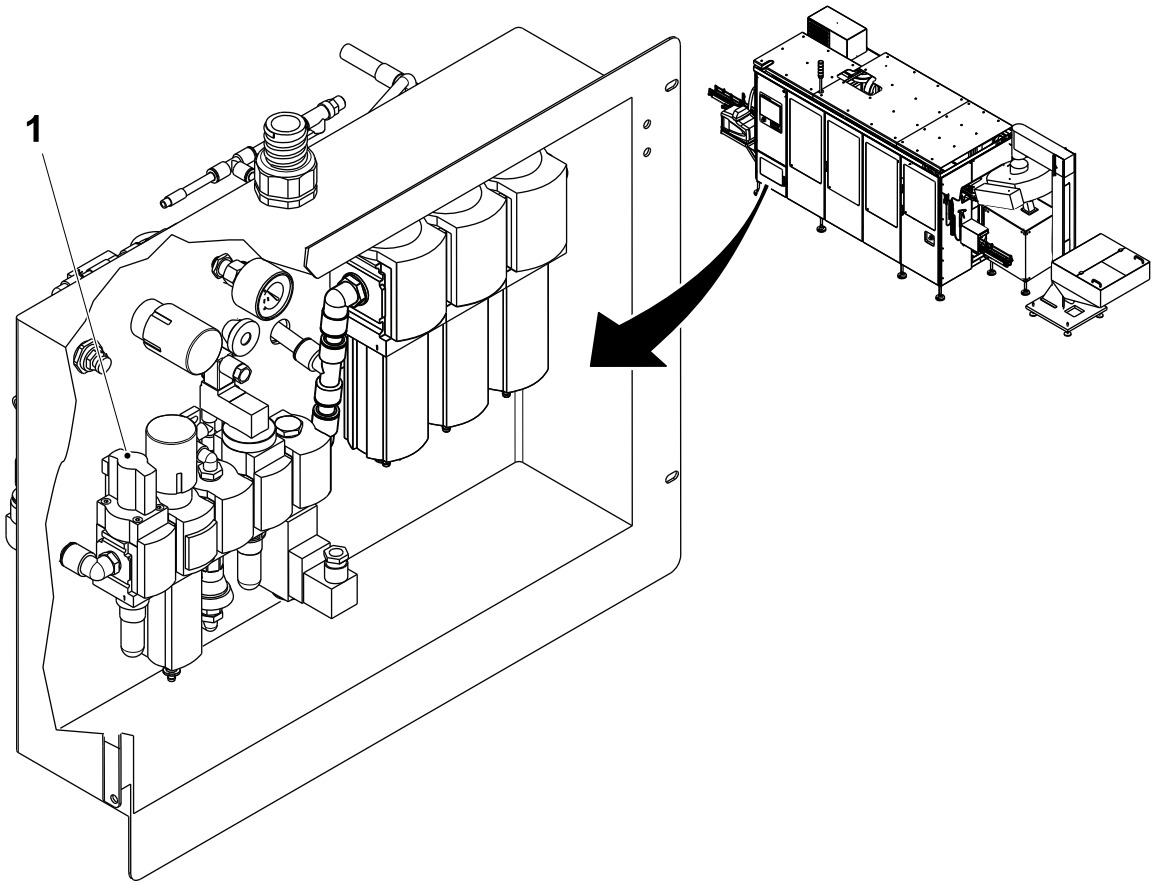

1 Air valve

(Cont'd)

(Cont'd)

b) Remove the screws (2) and change the guns (3).

c) Install the new guns (3) making sure that the O-rings (4) are installed.

d) Install the cover, see 4.4-2 Hotmelt Gun - Remove and Install Cover on page 4-20.

e) Open the main air valve.

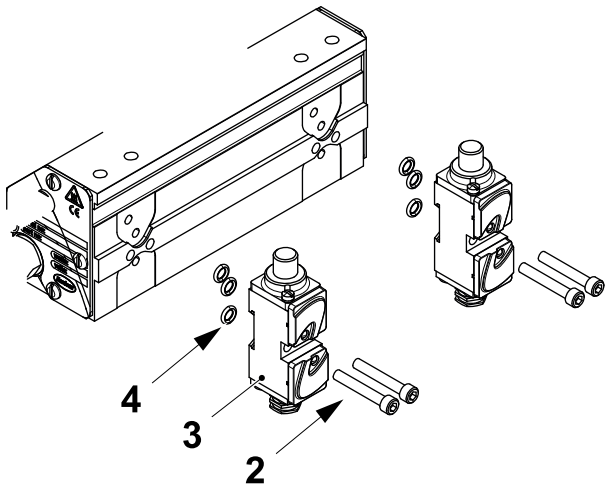

2 Screw
3 Gun
4 O-ring

4.4-8 Hotmelt Gun - Change Filter

Machine Status	step 1
SPC Reference	2716091-0400

WARNING

Risk of burns.

Hot adhesive. Wear safety glasses, protective gloves and other protective clothing to avoid injuries from hot adhesive.

Note! The hotmelt equipment must be at operating temperature.

Note! Do not let adhesive go on the machine parts.

a) Remove the cover see, 4.4-2 Hotmelt Gun - Remove and Install Cover.

b) Remove and change the filter (1).

c) Install the cover see, 4.4-2 Hotmelt Gun - Remove and Install Cover.

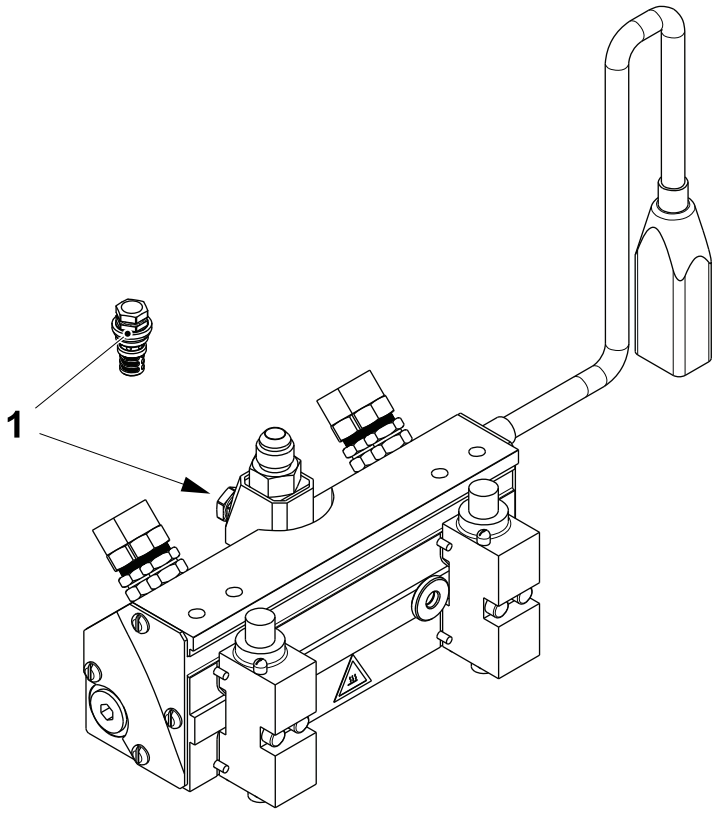

1 Filter

4.4-9 Hotmelt Gun - Change Heater /Thermocouple

Machine Status	Electrical supply disconnecting device in position O (OFF) Main air valve OFF
SPC Reference	2716091-0400

WARNING

Risk of burns.

The equipment may be hot, allow it to cool completely before changing the heater.

a) Remove the cover see, 4.4-2 Hotmelt Gun - Remove and Install Cover.

b) Remove the nozzles so that they do not get damaged.

c) Disconnect the connector (1) from the connector (2).

d) Disconnect the hotmelt hose (3).

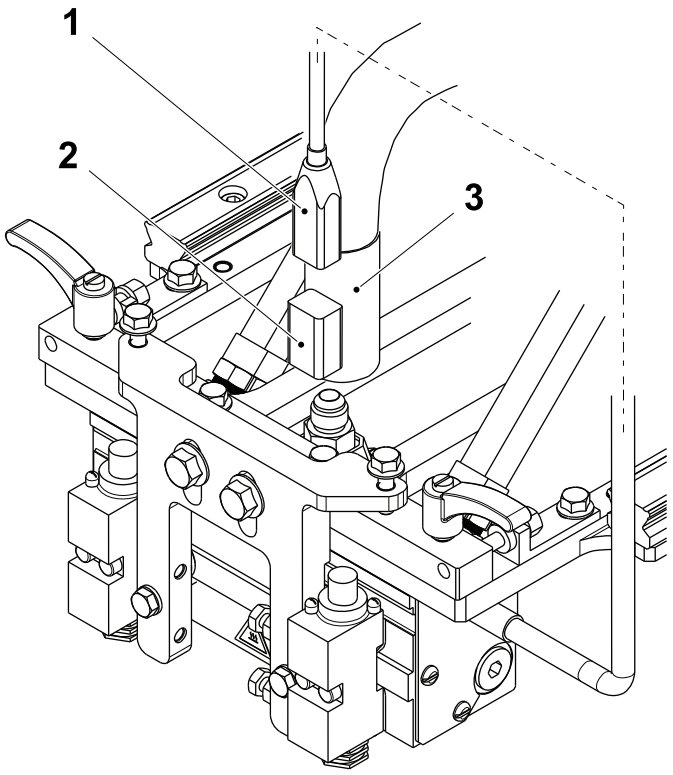

1 Connector
2 Connector
3 Hotmelt hose

(Cont'd)

(Cont'd)

e) Disconnect the four air hose (4).

f) Support the hotmelt gun assembly (5) from beneath and remove the screws (6).

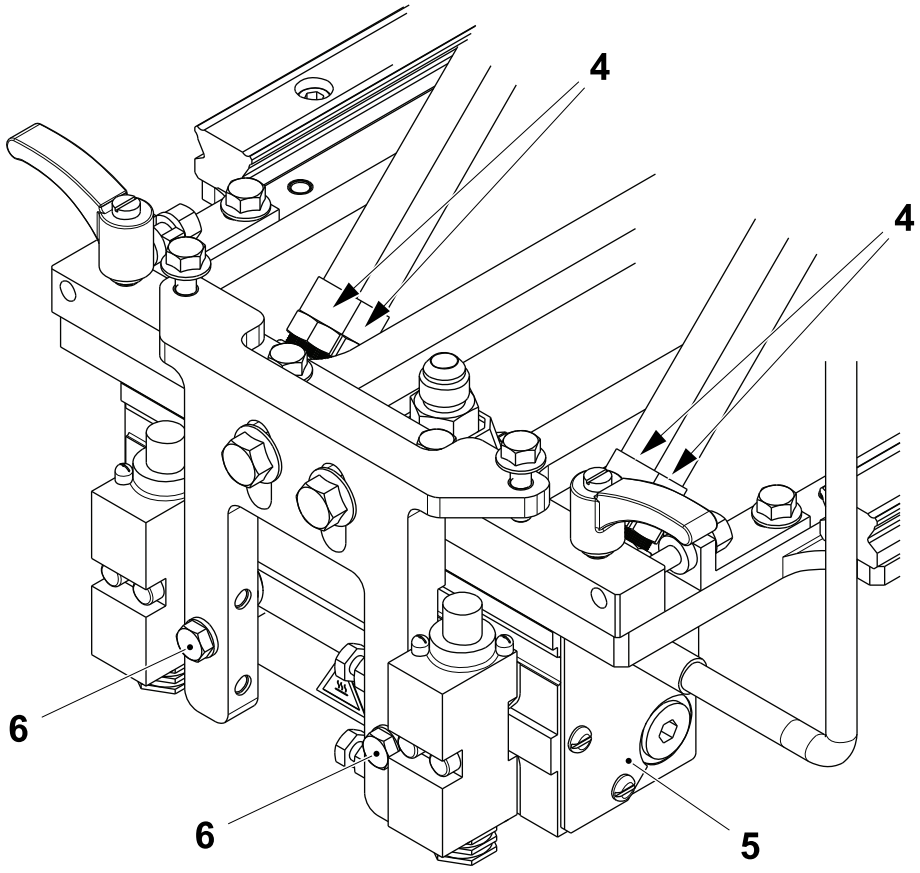

4 Air hose
5 Hotmelt gun assembly
6 Screw

(Cont'd)

(Cont'd)

g) Remove the filter assembly (7) by releasing the nut (8).

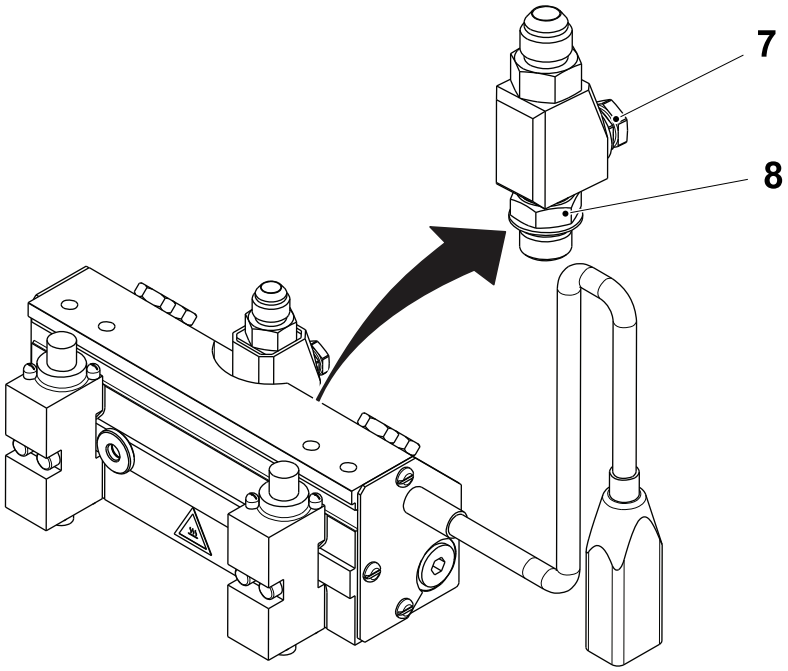

7 Filter assembly
8 Nut

(Cont'd)

(Cont'd)

Heater Only

a) Remove the four screws (1) and the plate (2) from body (3).

Note! Do not disconnect the power wires (4) from the connector block (5).

b) Disconnect the heater wires (6) from the connector block (5).

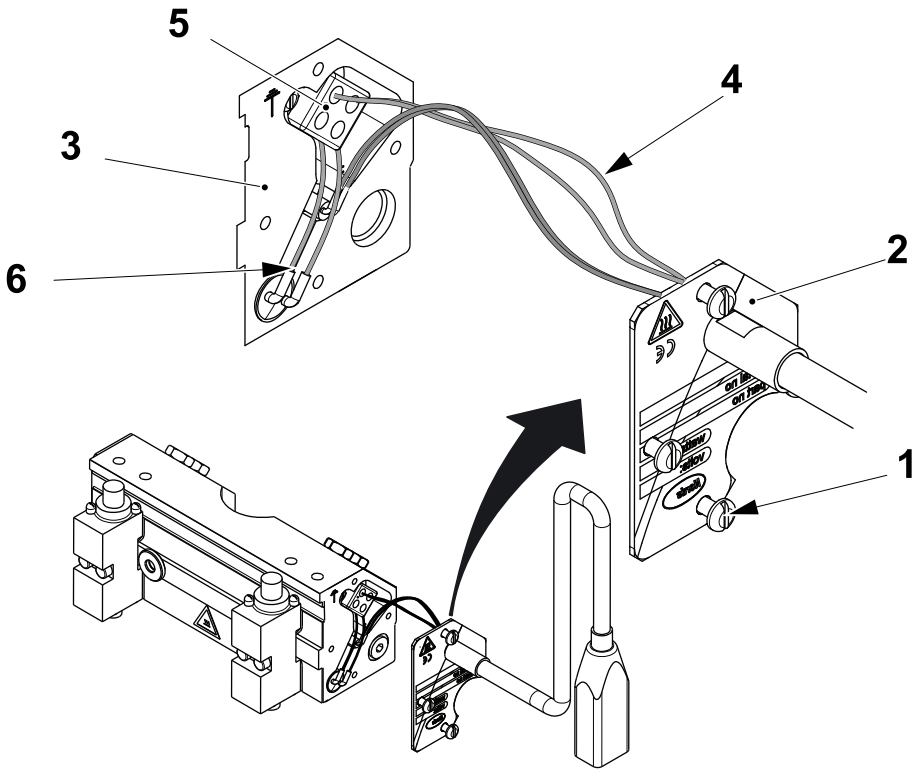

1 Screw
2 Plate
3 Body
4 Power wire
5 Connector block
6 Heater wire

(Cont'd)

(Cont'd)

c) At the other end of the body (3), remove the screws (7) and the plate (8).

d) Using a steel rod or similar, push the heater (9) out of the body (3).

e) Change the heater (9).

f) Assemble in the reverse order.

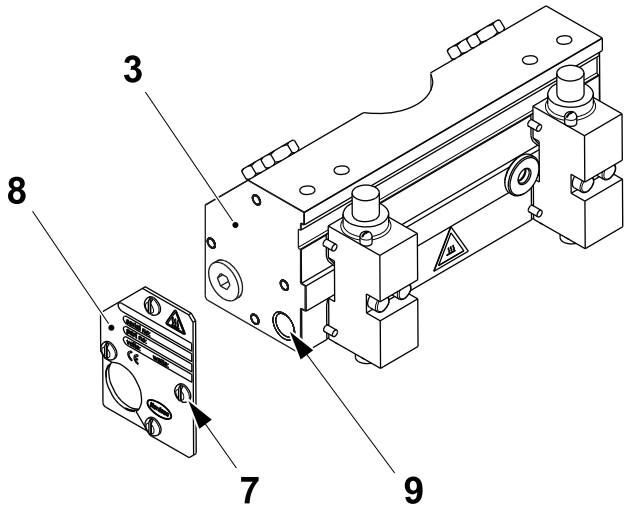

3 Body
7 Screw
8 Plate
9 Heater

(Cont'd)

(Cont'd)

Thermocouple Only

a) Remove the four screws (1) and the plate (2) from body (3).

Note! Do not disconnect the heater wires (4) from the connectorblock (5).

b) Disconnect the power wires (6) from the connector block (5).

c) Disconnect the earth wire from the screw (7).

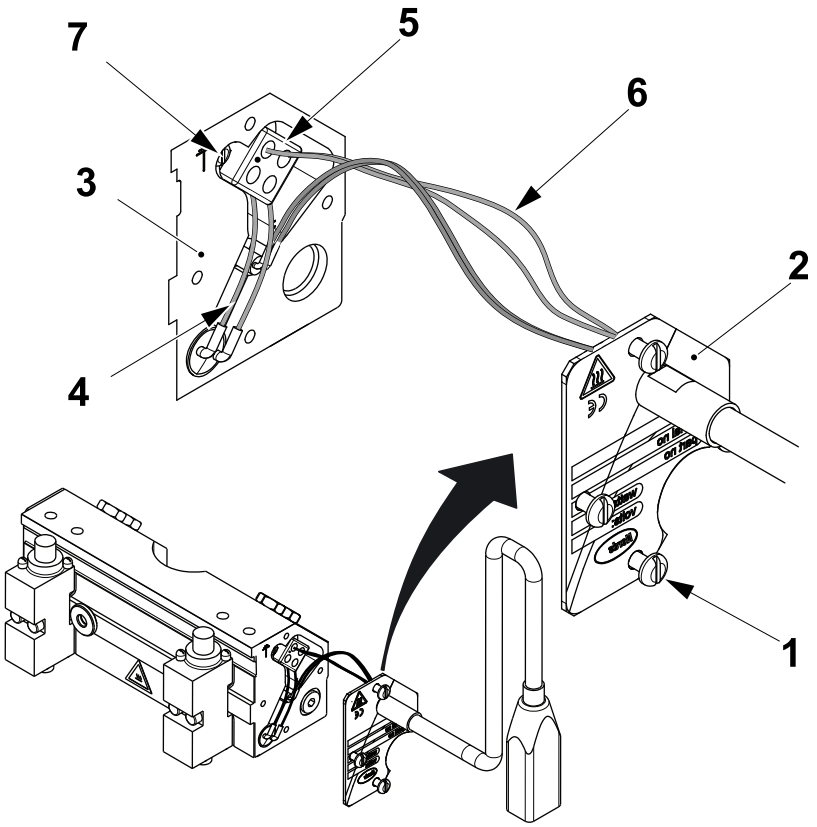

1 Screw
2 Plate
3 Body
4 Heater wire
5 Block
6 Wires
7 Screw

(Cont'd)

(Cont'd)

d) Remove the thermocouple (8) from the body (3).

e) Change the thermocouple assembly (9).

f) Assemble in the reverse order.

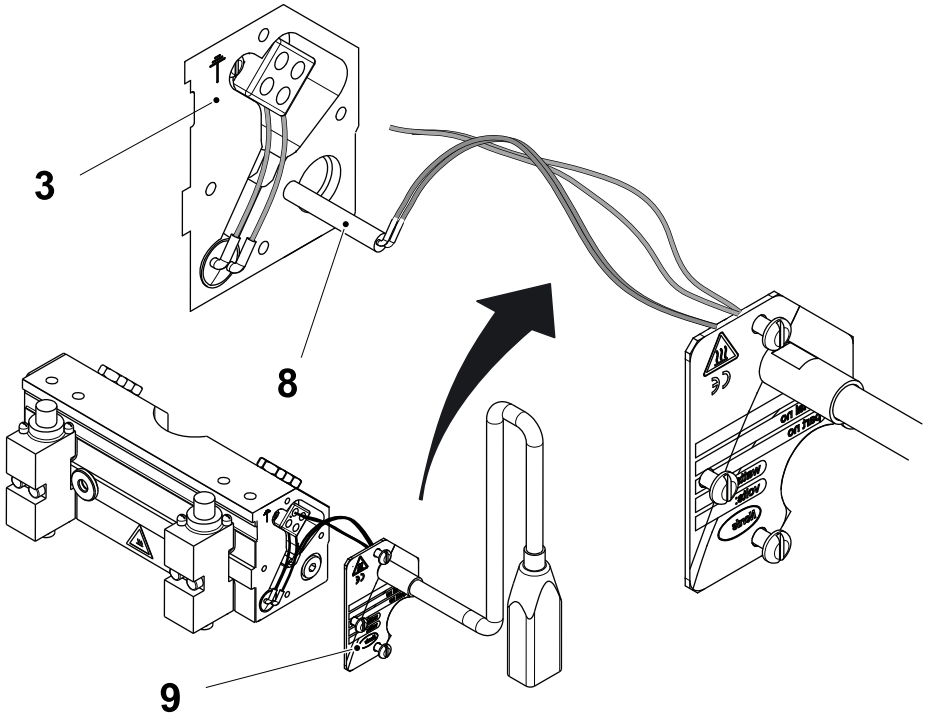

3 Body
8 Thermocouple
9 Thermocouple assembly

4.4-10 Hotmelt Gun - Set

Machine Status	preparation
Special Equipment	Guide 3047353-0000
SPC Reference	2716091-0400

Set Nozzle Height

WARNING

Risk of burns.
Hot adhesive. Wear safety glasses, protective gloves and other protective clothing to avoid injuries from hot adhesive.

CAUTION

The nozzles are delicate.
Handle the nozzle (1) with care to avoid any damage to their top (2).

Note! Do not let adhesive go on the machine parts.

Note! The hotmelt equipment must be at operating temperature. Check 13.1-1 Adhesive Weight/Temperature/Nozzle for the temperature of different glues.

a) Remove the cap sequencer guides see, 8.2.1-1 Guide - Removal and Installation.

b) Remove the cover see, 4.4-2 Hotmelt Gun - Remove and Install Cover.

c) Loosen and remove the nozzle (1).

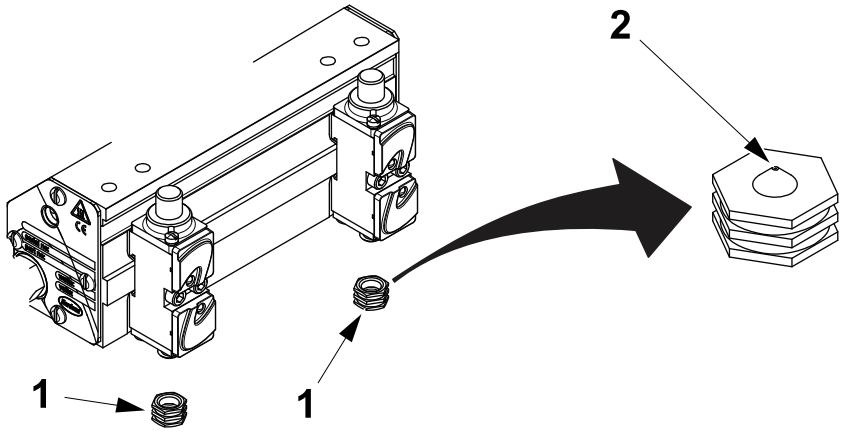

1 Nozzle
2 Top

(Cont'd)

(Cont'd)

d) Check the two gun (3) are touching their two reference pin (4).

e) Install the guide (5) onto the inner cap guide mounting.

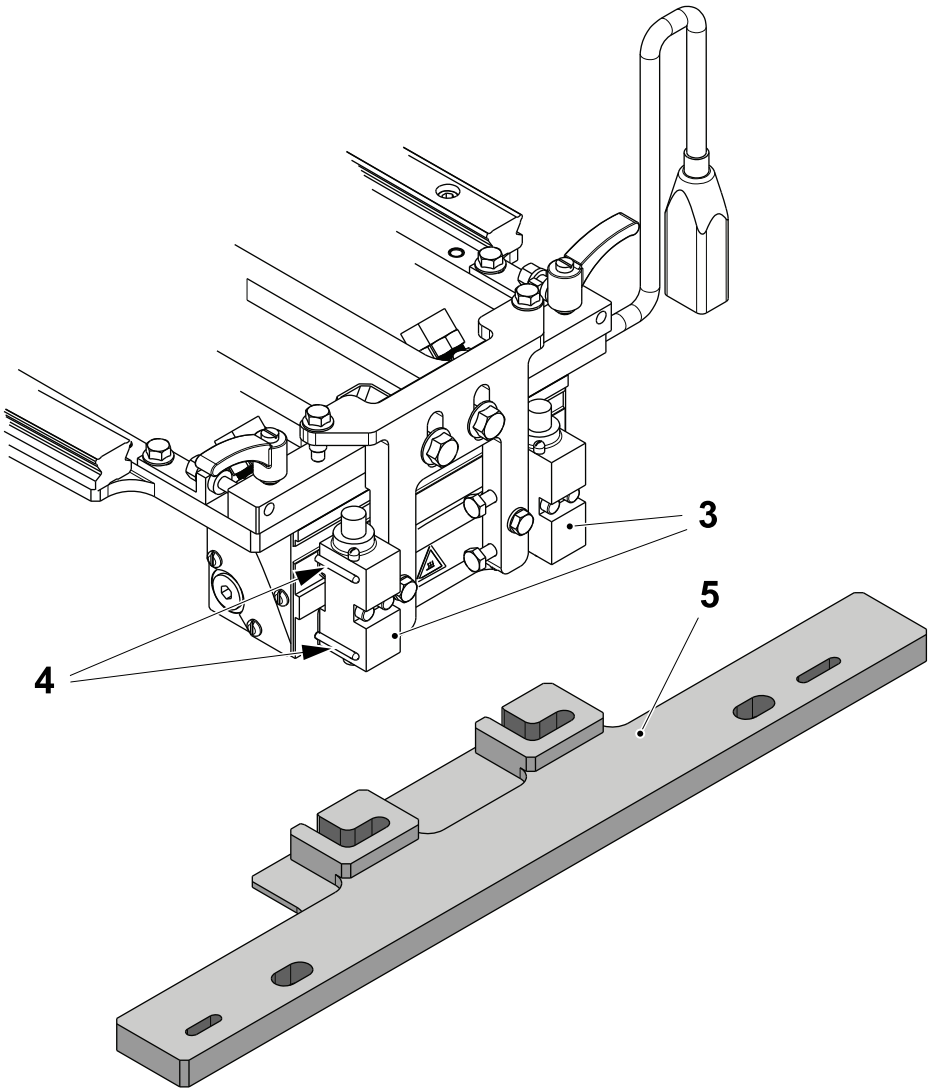

3 Gun
4 Pin
5 Guide

(Cont'd)

(Cont'd)

f) Using the guide set the guns Z alignment to the distance **A**.

Cap Type	Distance A mm
Helicap2 23	9.5 mm
Helicap27	12 mm
Streamcap	TBD
Slimcap	TBD

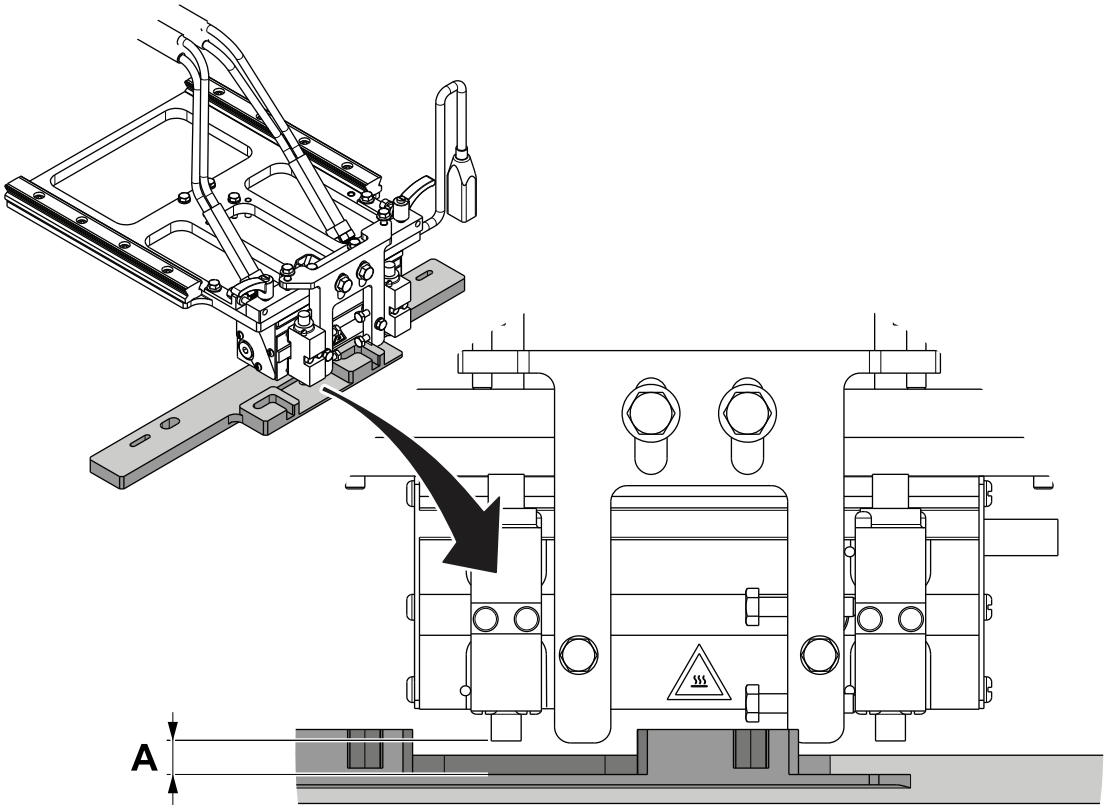

(Cont'd)

(Cont'd)

g) If the distance is not correct adjust it by loosening the two fixing screws (6) and adjusting the two Z regulating screws (7).

h) Tighten the screws (6) when the correct distance is achieved.

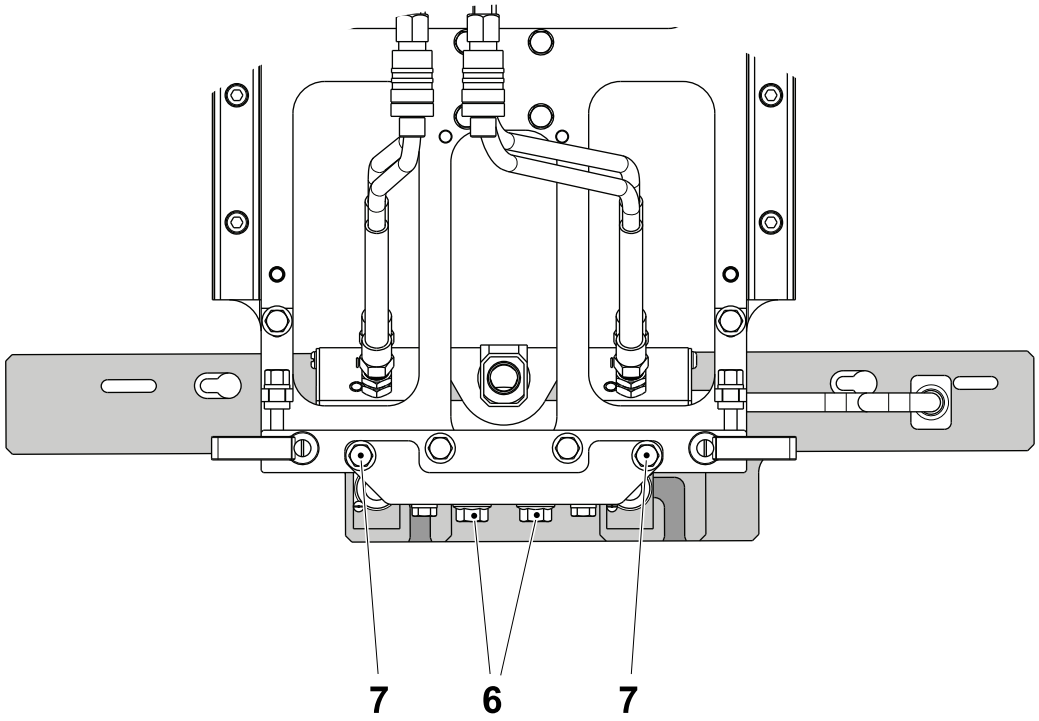

6 Screw
7 Screw

(Cont'd)

(Cont'd)

i) Loosen the two fixing screws (8) just a little in one of the guns only.

j) Move the gun (3) into the Y setting slots (9) of the guide (5).

k) Let the loosened gun adjust itself inside the guide slot.

l) Tighten the fixing screws (8) of the gun.

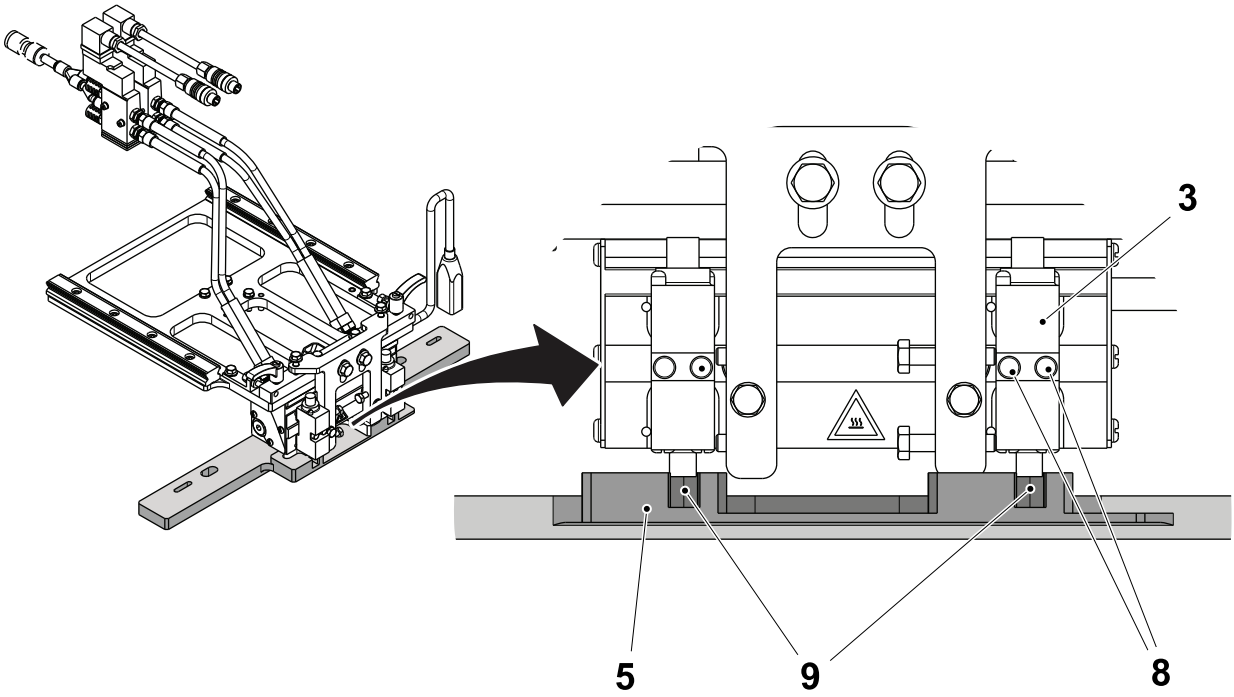

3 Gun
5 Guide
8 Screw
9 Slots

(Cont'd)

(Cont'd)

m) Loosen the screws (10)

n) Move the guns inside the guides "X setting slots".

o) Let the gun module adjust itself in reference to the guide (5).

p) Tighten the four screws (10).

Note! Check that the gun group can move freely inside the guide (5).

q) Remove the guide (5).

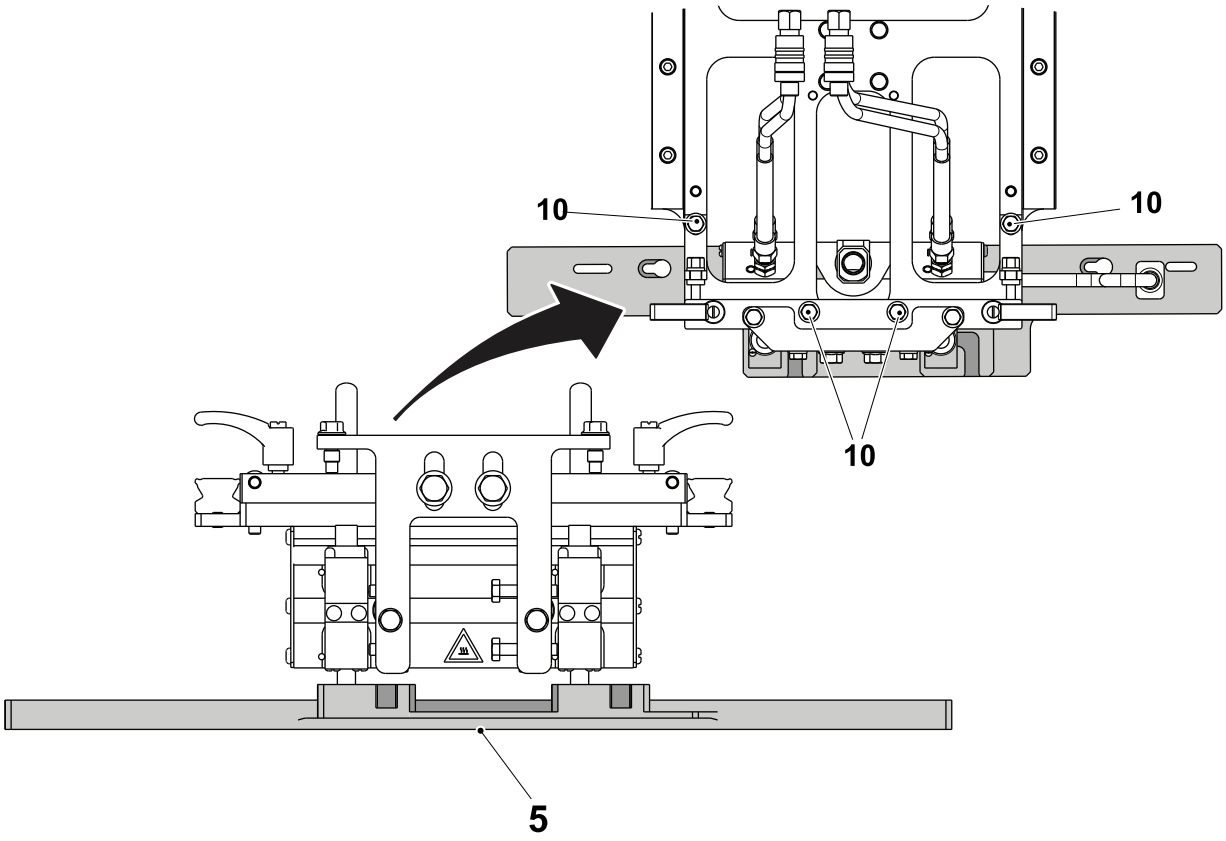

5 Guide
10 Screw

(Cont'd)

(Cont'd)

Note! Do Not adjust the left gun (11) when fine setting.

r) To move the gun to the left loosen the screws (8) and place your feeler gauge with the distance required between the screws (12) and the gun. To move the gun to the right loosen the screws (12) and place your feeler gauge with the distance required between the screws (12) and the gun. Move the screws (12) until it touches the feeler gauge.

s) Loosen the screws (8) and move the gun so that it touches the screws (12) and tighten the screws (8).

Note! Move the screws (12) away from the gun before going to production.

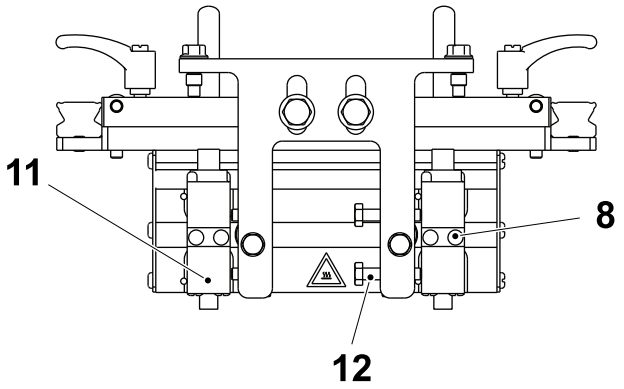

8 Screw
11 Gun
12 Screw

(Cont'd)

(Cont'd)

t) Install the two nozzle (1).

u) Install the cap guides see, 8.2.1-1 Guide - Removal and Installation.

v) Install the cover see, 4.4-2 Hotmelt Gun - Remove and Install Cover.

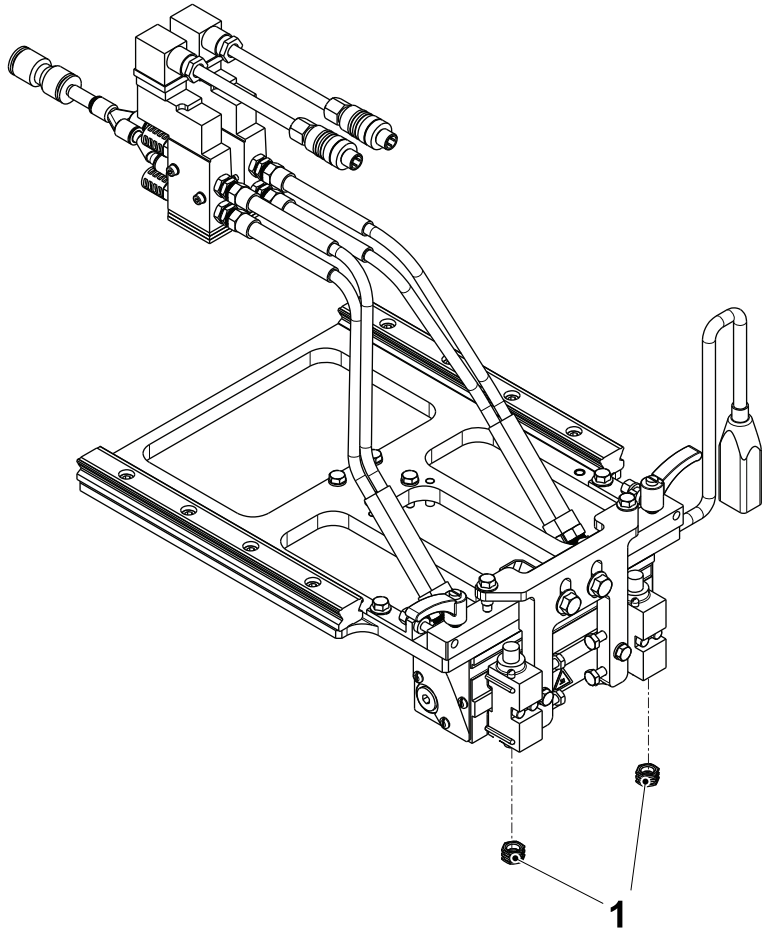

1 Nozzle

4.4-11 Hotmelt Gun - Check

Machine Status	Electrical supply disconnecting device in position I (ON) Main air valve ON preparation
SPC Reference	2716091-0400

Alignment

WARNING

Risk of burns

These parts and others close by may be hot.

This alignment can be checked using a test facility incorporated in the TPOP program. To check the glue application proceed as follows.

Note! This procedure checks the alignment of the two nozzles relative to the centre line of the cap sequencer.

a) Make sure that the machine is at PREPARATION.

b) At the control panel, touch the SETTING button (1).

c) In the window that appears, touch the SERVICE button (2).

Note! Items like the positioning system only appear on the screen below when installed.

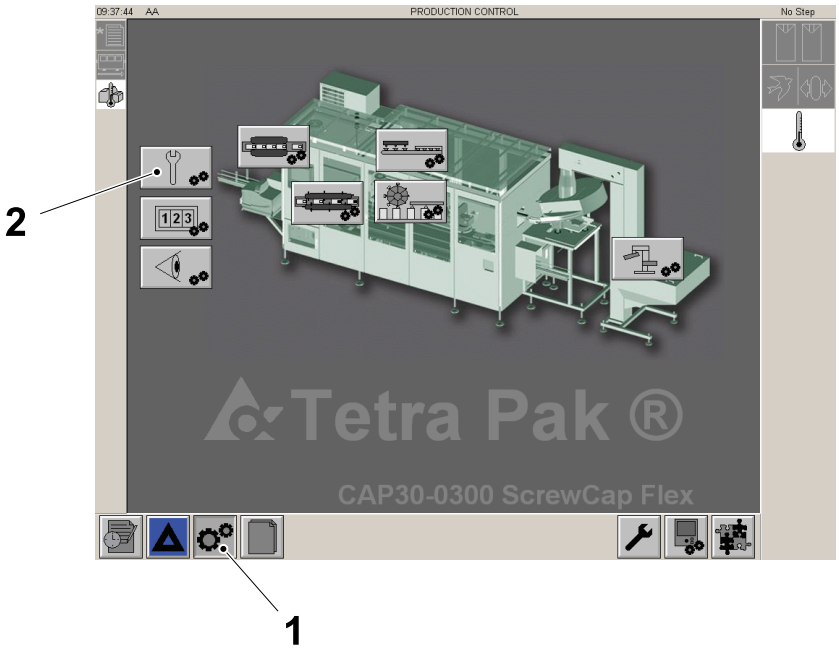

1 Setting button
2 Service button

(Cont'd)

(Cont'd)

d) In the SERVICE window (3), touch the HOTMELT PATTERN TEST button (4).

e) Touch the ON button (5) to active the function, then press and hold in the STEP UP button (6) until the machine starts to move.

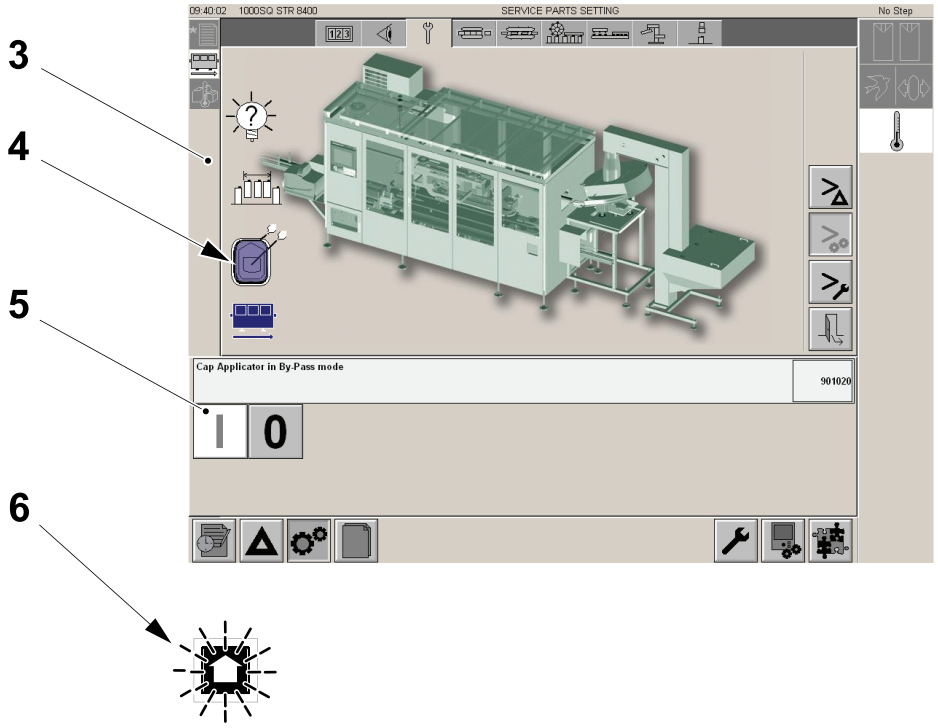

3 SERVICE window
4 HOTMELT PATTERN TEST button
5 ON button
6 STEP UP button

(Cont'd)

(Cont'd)

Pattern Test

a) Perform a pattern test, see from Alignment on page 4-52.

b) Use a calibration lens (1) TP90459-4931 to check that the distance from the cap edge to the glue bead is centred in **Y** direction. In example: if the distance **Y**1= 2 mm and the distance **Y**2=3 mm change the Y offset of +0.5mm.

c) Repeat for the **X** direction.

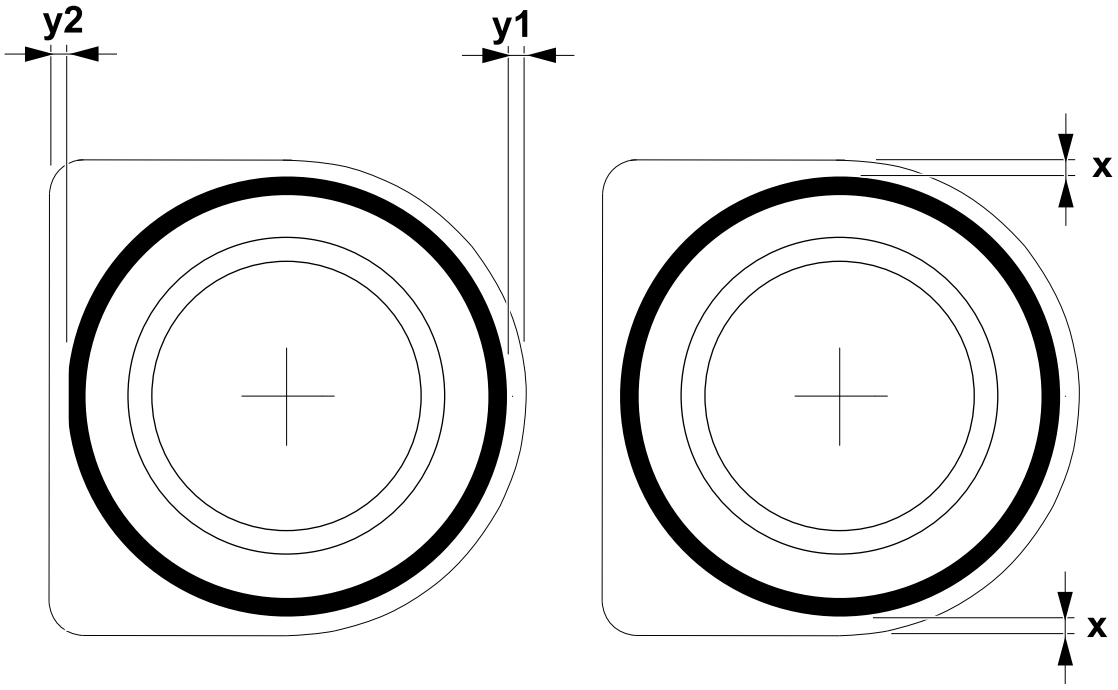



1 Calibration lens

(Cont'd)

(Cont'd)

Check

Note! SlimCap (1) machines apply a small spot of hotmelt to the centre of the cap. StreamCap (2) and HeliCap (3) do not.

d) Remove the two caps from the applicator and examine them **in the same order** they were produced. Check if the two caps show the **same** or **different** patterns of hotmelt application.

e) If the two cap (4) show the **same** pattern (5) of hotmelt as in example **A,** the 2 nozzles are correctly aligned, check the bead pattern overlap, see 4.4-12 Check Bead Pattern.

f) If the two cap (4) show the **same** pattern (5) as in examples **B** or **C**, the 2 nozzles are offset by the same amount. If this is the case, check the hotmelt bead setting, see 4.4-12 Check Bead Pattern.

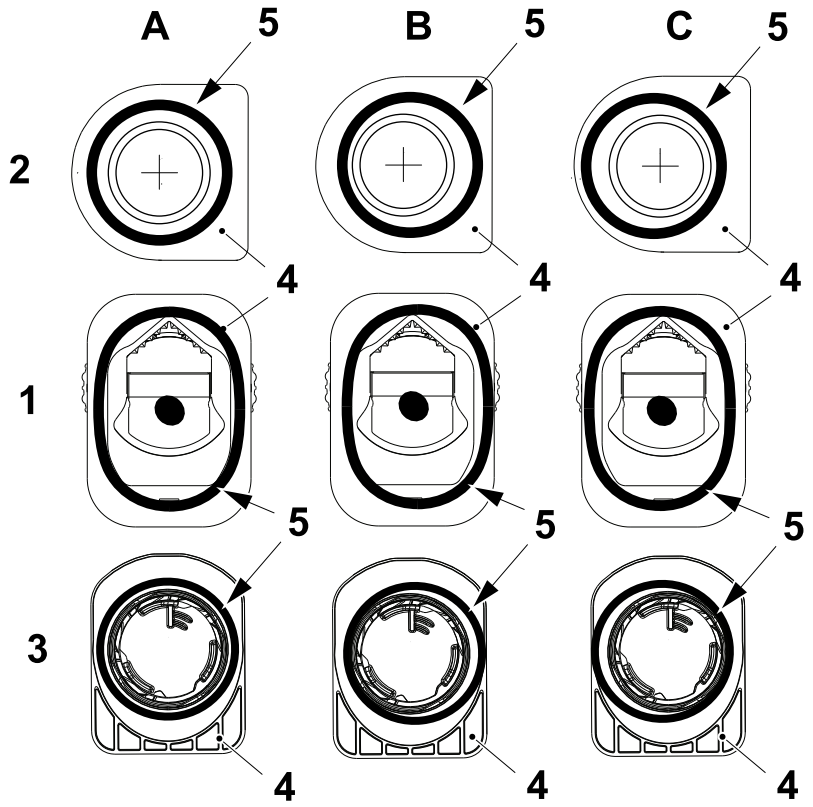

1 SlimCap
2 StreamCap
3 HeliCap
4 Cap
5 Pattern

(Cont'd)

(Cont'd)

g) If the caps show **different** hotmelt application patterns as in example **D** where the hot melt applicator is out of alignment in the clockwise direction or as in example **E** where the hot melt applicator is out of alignment in the counter clockwise direction, continue below.

h) Loosen the screw (6) and move the hotmelt guns (7) to correct the misalignment by turning the screw (8).

i) Tighten the screw (6) and repeat the procedure from step d) until the correct result is obtained.

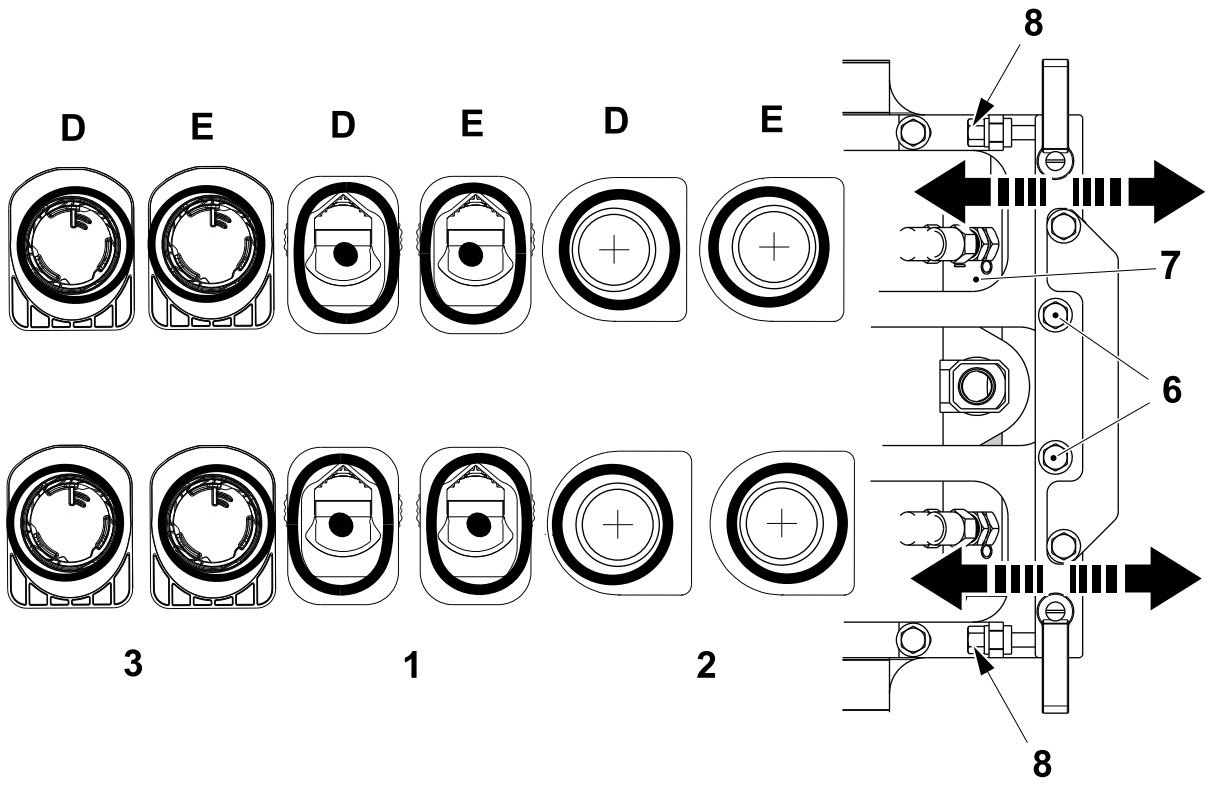

1 SlimCap
2 StreamCap
3 HeliCap
6 Screw
7 Gun
8 Screw

(Cont'd)

(Cont'd)

Check Bead Position

The position of the two nozzles can be changed in relation to the x and y-axis of machine using a facility accessible from the control panel. Any change made will affect **both nozzles by the same amount**.

Use the examples below to determine in which axis there is a misalignment and then proceed from step b) to change position of the nozzles:

- 1. Bead position correct
- 2. X-axis value large decrease value and 3, X-axis value small increase value
- 4. Y-axis value small increase value and 5, Y-axis value large decrease value. The arrow shows direction through the cap sequencer.

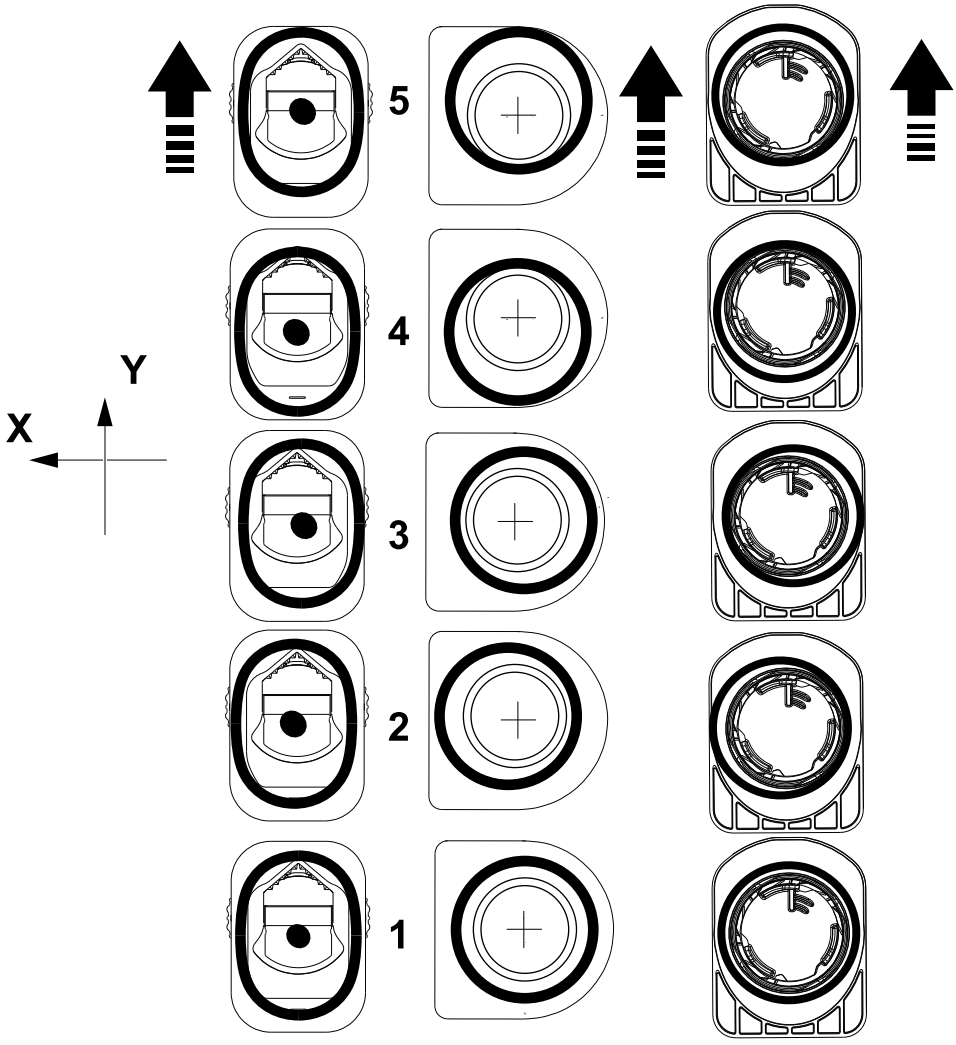

(Cont'd)

(Cont'd)

Change Bead Position

a) Log on as user, see 1.1.1-1 HMI User Management - Log On as a User.

b) At the control panel, touch the SETTINGS button (1) and then touch HOTMELT GUN APPLICATOR button (2).

Note! Items like the positioning system only appear on the screen below when installed.

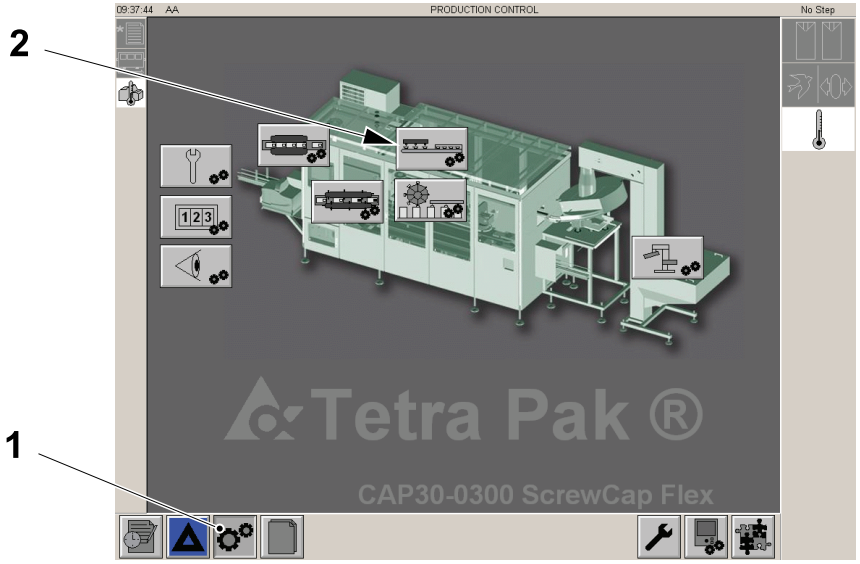

1 SETTINGS button
2 HOTMELT GUN APPLICATOR button

(Cont'd)

(Cont'd)

c) To move both of the nozzles by the same amount in the **x-axis**, touch the X-AXIS CONTROL button (3) and then use the ARROW key (4) or the keyboard which is accessible via the KEYBOARD button (5) to change the hotmelt pattern value (6) for the **x-axis**.

d) Introduce the value by clicking the OK button (7).

Note! You must Step down the machine to zero and then back up to store the new value.

e) Produce another two caps and check the **x-axis** bead position again.

f) When the **x-axis** position is correct, continue below for the **y-axis**.

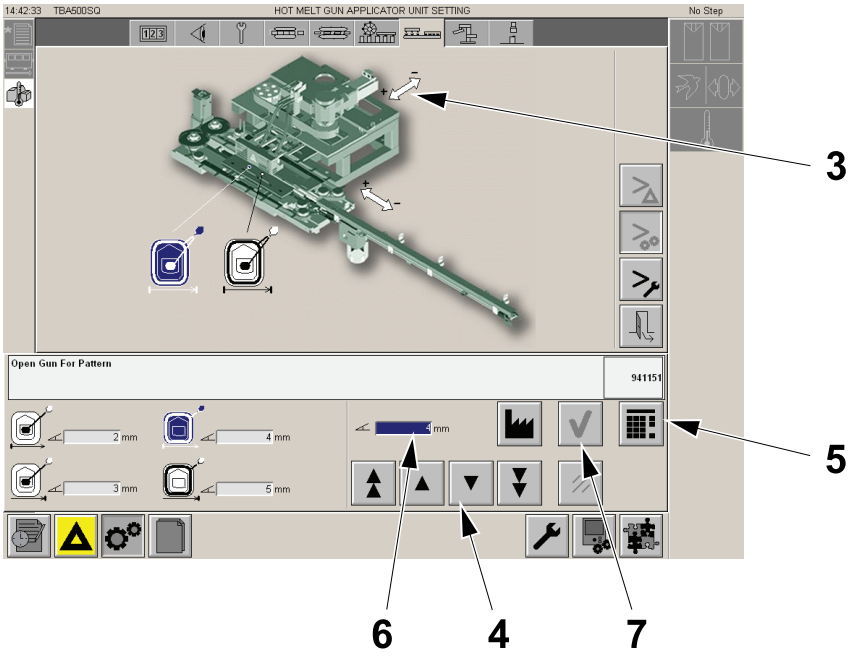

3 X-AXIS CONTROL button
4 Arrow key
5 KEYBOARD button
6 Hotmelt pattern value
7 OK button

(Cont'd)

(Cont'd)

g) To move both of the nozzles by the same amount in the **y-axis**, touch the `Y-AXIS CONTROL` button (8) and then use the `ARROW` key (4) or the keyboard which is accessible via the `KEYBOARD` button (5), to change the hotmelt pattern value (6) for the **y-axis**.

h) Introduce the value by clicking the `OK` button (7).

Note! You must Step down the machine to zero and then back up to store the new value.

i) Produce another two caps and check the **y-axis** bead position again.

j) When the bead position is correct in both axis, save the new values in the recipe, see 10.9.1-14 Touch Screen - Saving Recipe Settings.

k) Check the bead pattern, see 4.4-12 Check Bead Pattern.

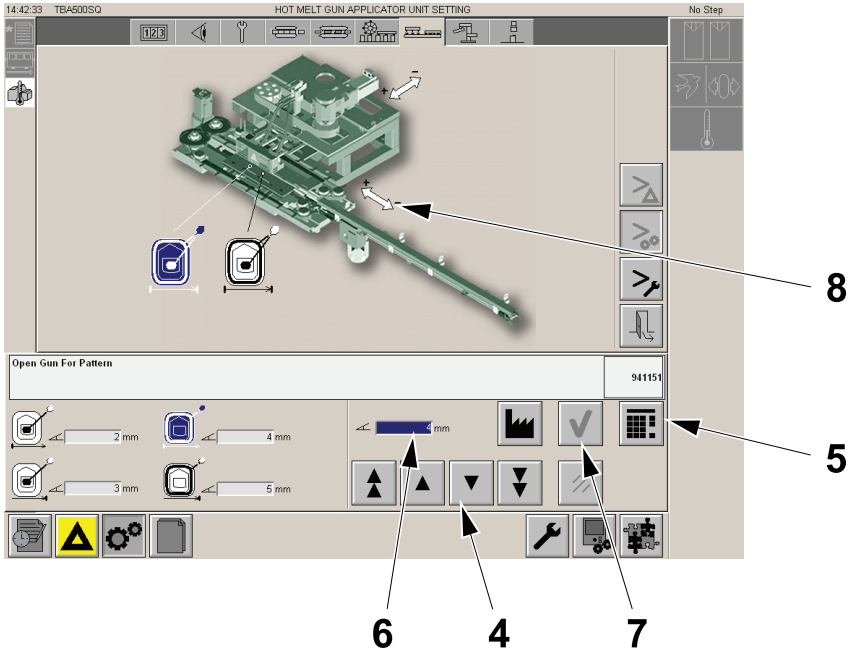

4 Arrow key
5 `KEYBOARD` button
6 Hotmelt pattern value
7 `OK` button
8 Y-axis control button

4.4-12 Check Bead Pattern

Machine Status	preparation
SPC Reference	2716091-0400

The bead can be changed to ensure that the correct pattern is obtained. Any change made will affect **both** of the **nozzles by the same amount**.

The illustration below, shows an example of an incomplete bead A and a perfect bead **B**. The perfect bead has an overlap of the distance C.

The incomplete bead shows that the bead start/gun open (1) is too late and the bead end/gun close (2) is too early both relative to the ideal start/end position (3).

C = 4 - 5 mm

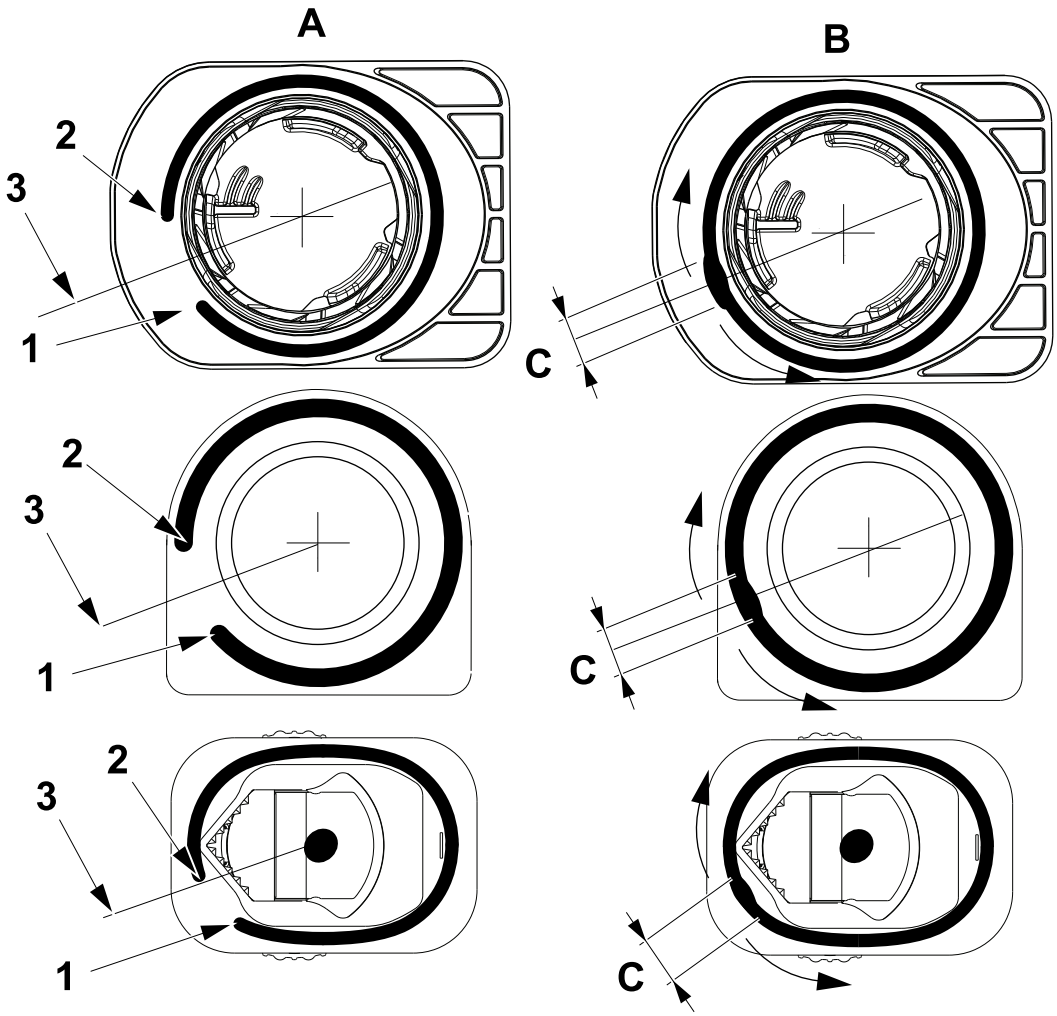

1 Bead start/gun open
2 Bead end/gun close
3 Ideal start/end position

(Cont'd)

(Cont'd)

To obtain the correct bead pattern, the nozzle must be opened in the earlier direction (4) and closed in the later direction (5) .

The perfect bead has an overlap of the distance **C**.

To obtain the correct bead pattern, proceed from 4.4-13 Set Bead Pattern, to open and close the guns earlier or later as required.

C = 4 - 5 mm

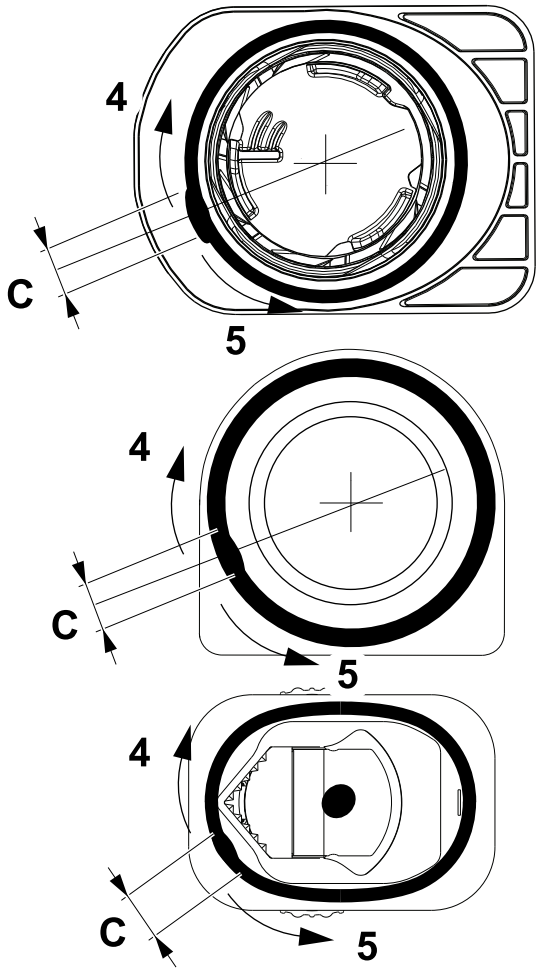

4 Earlier direction
5 Later direction

(Cont'd)

(Cont'd)

Check Glue Amount

a) Touch the hotmelt pattern test icon (1).

b) Touch the ON button (2) to activate the function.

c) Press the STEP UP button (3). The machine will now apply hotmelt glue to two caps and move them to a position where they can be removed.

d) Open the door and remove the caps from the cap holders.

e) Put the caps with glue on the workbench.

f) Repeat from a) four more times to collect 10 caps with glue.

g) Put 10 caps without glue on the scales and zero them.

h) Put the 10 caps with glue on the scales and check the difference in weight (this is the weight of the glue) in 13.1-1 Adhesive Weight/Temperature/Nozzle.

i) Adjust if necessary see, 6.6.2-7 Hotmelt Equipment - Set Pressure.

Note! 2.0Bar is a good starting point for the pressure.

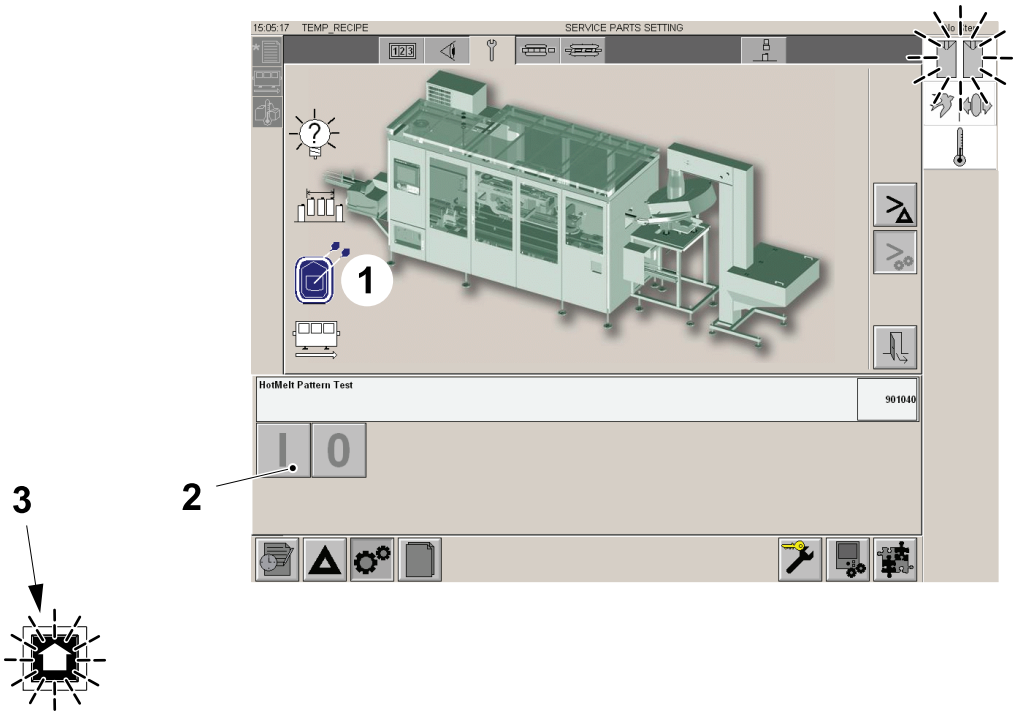

1 Hotmelt pattern test icon
2 ON button
3 STEP UP button

4.4-13 Set Bead Pattern

Machine Status	Preparation
SPC Reference	2716091-0400

a) Use the pattern test function, see Pattern Test on page 4-54 and check the bead pattern, see 4.4-12 Check Bead Pattern.

b) Login the TPOP as a service technician, see 1.1.1-1 HMI User Management - Log On as a User.

c) At the control panel touch the SETTING button (1) and then touch the HOTMELT GUN APPLICATOR button (2).

Note! Items like the positioning system only appear on the screen below when installed.



1 SETTING button
2 HOTMELT GUN APPLICATOR button

(Cont'd)

(Cont'd)

d) In the PRODUCTION CONTROL window, select the first gun (3) this will open the `OPEN GUN FOR PATTERN` window and you should make a note of the values (4).

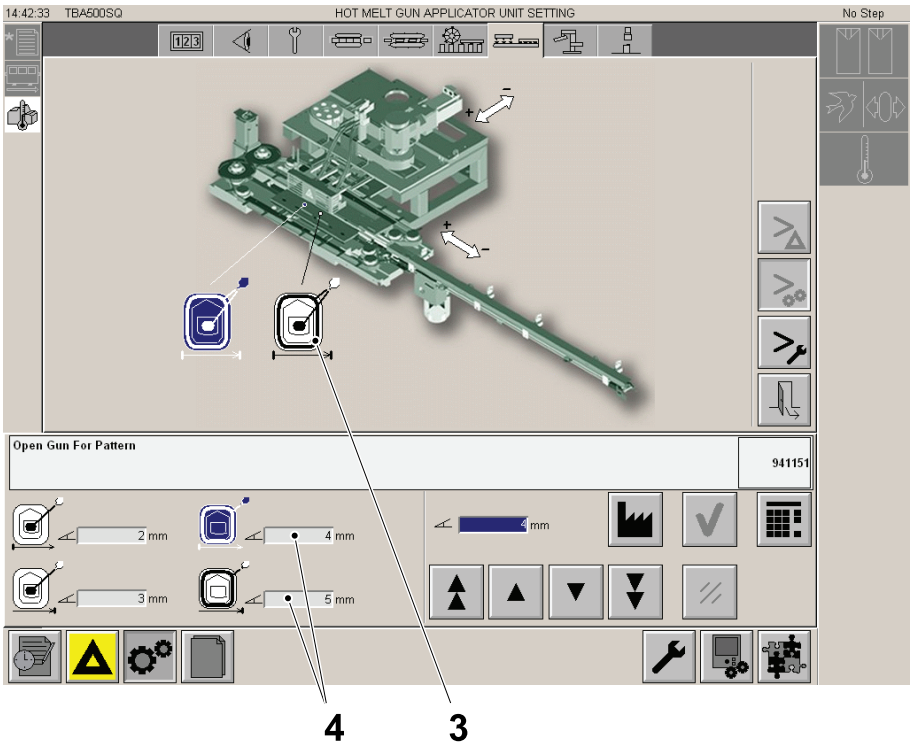

3 Gun
4 Value

(Cont'd)

(Cont'd)

e) Select the second gun (5) and use the ARROW key (6) or the keyboard which is accessible via the KEYBOARD button (7) to update the opening and closing values (4) .

f) Confirm with the OK button (8).

Note! You must Step down the machine to zero and then back up to store the new value.

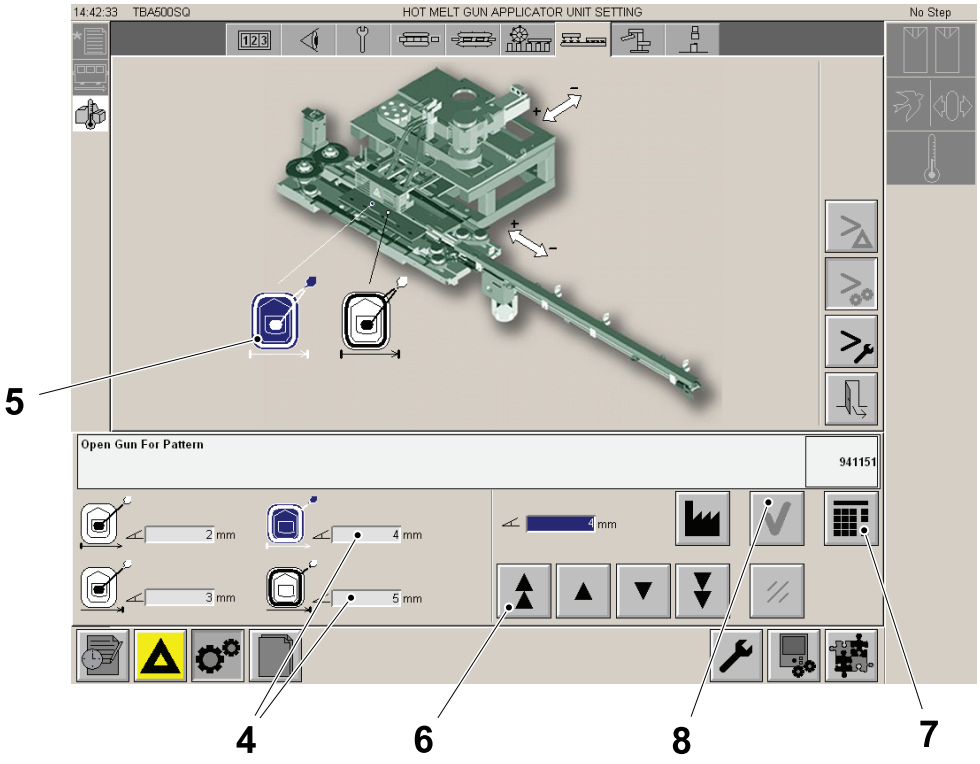

4 Value
5 gun
6 ARROW key
7 KEYBOARD button
8 OK button

(Cont'd)

(Cont'd)

Correct Centre Spot (SlimCap Machines)

a) Use the test pattern function see, Alignment, steps to e) and produce two caps, then check the bead pattern see, 4.4-12 Check Bead Pattern.

b) Login the TPOP as a service technician, see 1.1.1-1 HMI User Management - Log On as a User.

c) At the control panel touch the SETTING button (1) and the n touch the HOTMELT GUN APPLICATOR button (2).

Note! Items like the positioning system only appear on the screen below when installed.



1 SETTING button
2 HOTMELT GUN APPLICATOR button

(Cont'd)

(Cont'd)

d) Use the illustration below, to determine whether or not the centre spot (3) is in the correct position A and has the correct length B. If the centre spot (3) is in the incorrect position C and/or does not have the correct length B, continue below.

B = 3 - 4 mm

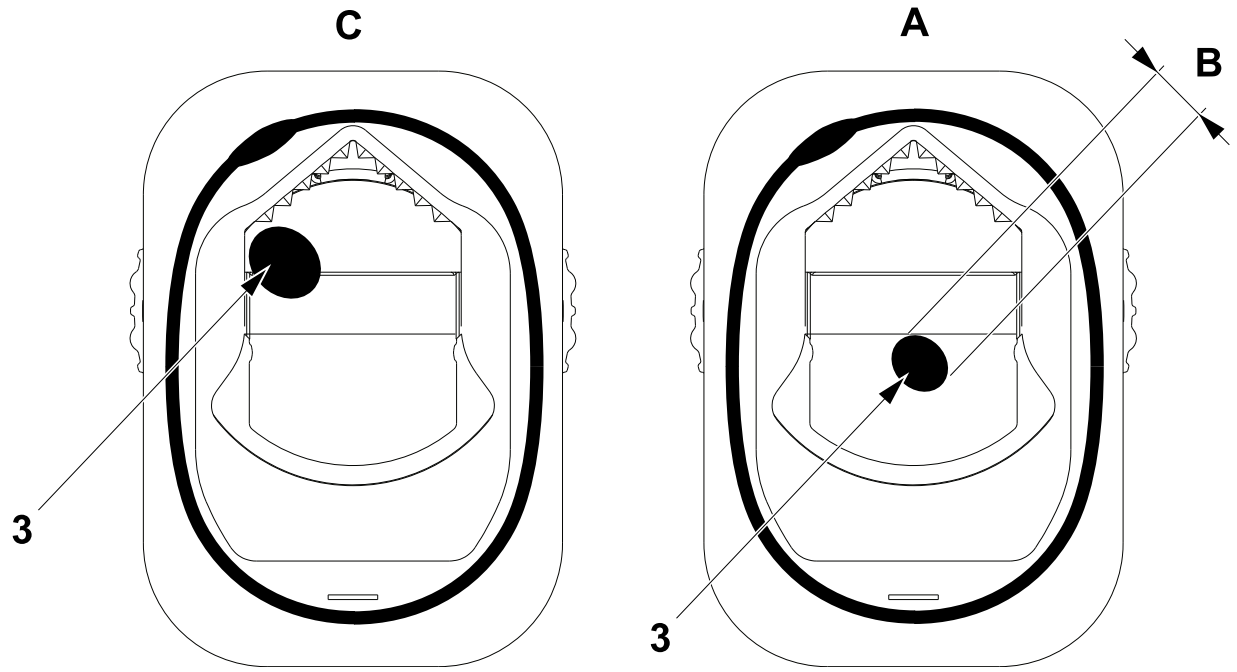

3 Centre spot

(Cont'd)

(Cont'd)

Gun Selection

Note! Since the setting for the dot are gun dependant, it's necessary to select the gun before the setting:

- left nozzle (1).
- right nozzle (2) .

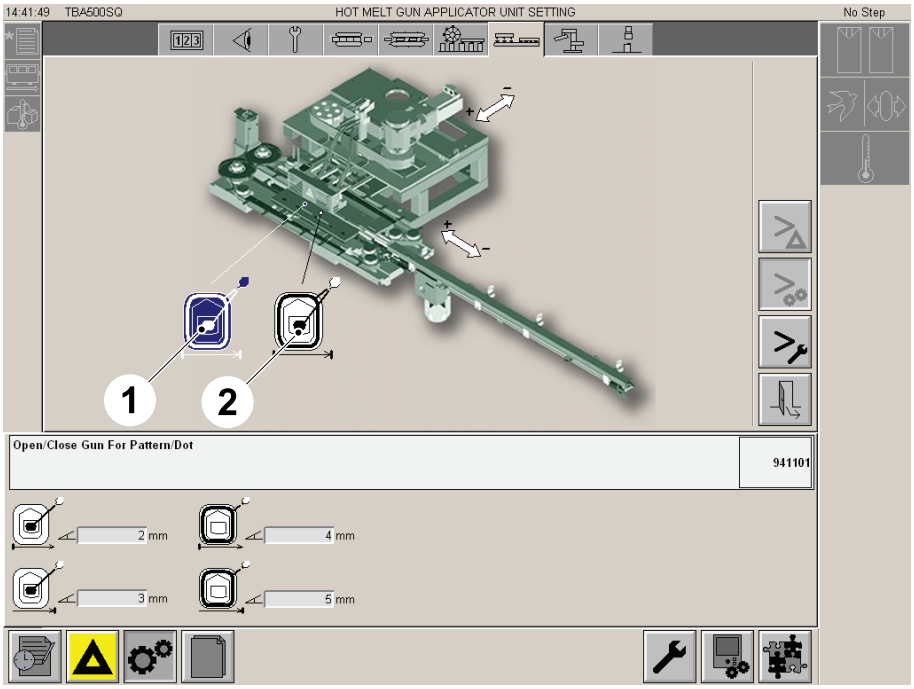

1 Left nozzle
2 Right nozzle

(Cont'd)

(Cont'd)

Open Gun for Dot

a) Touch the OPEN GUN FOR DOT button (1).

b) Use the ARROW keys (2) or the keyboard which is accessible via the KEYBOARD button (3) to change the GUN START TIME value in the value window (4).

c) Introduce the value by clicking the OK button (5) .

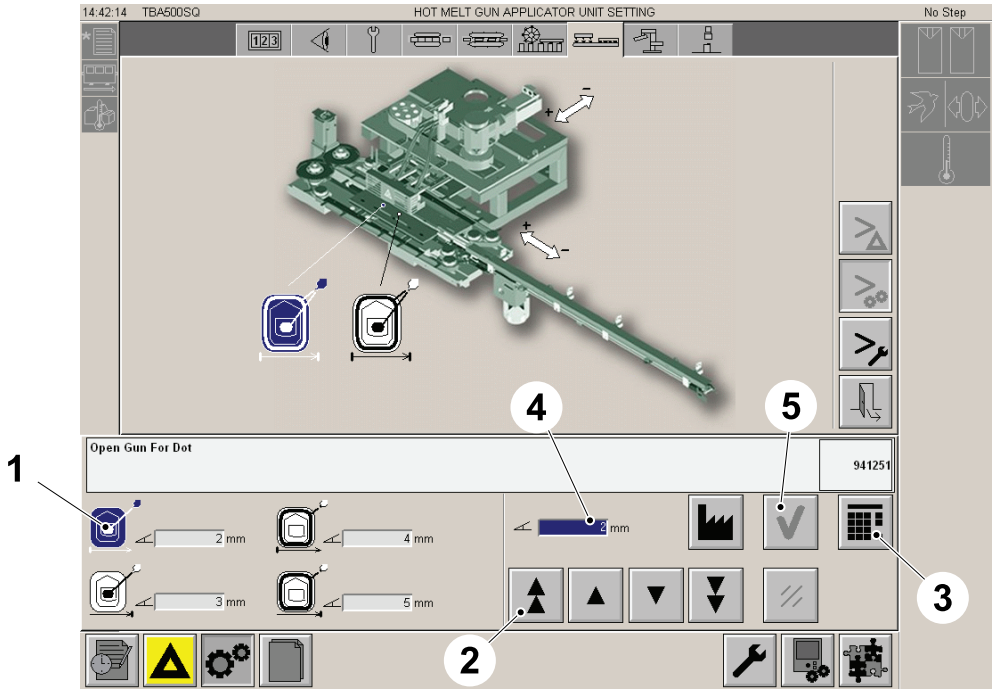

1 OPEN GUN FOR DOT button
2 ARROW keys
3 KEYBOARD button
4 value window
5 OK button

(Cont'd)

(Cont'd)

Close Gun for Dot

a) Touch the CLOSE GUN FOR DOT button (1).

b) Use the ARROW keys (2) or the keyboard which is accessible via the KEYBOARD button (3) to change the GUN CLOSE TIME value in the value window (4) .

c) Introduce the value by clicking the OK button (5).

d) Produce another 2 caps and check the size and position of the centre spot again.

e) When the centre spot is in the correct position and has the correct length, save the new values in the recipe, see 10.9.1-14 Touch Screen - Saving Recipe Settings.

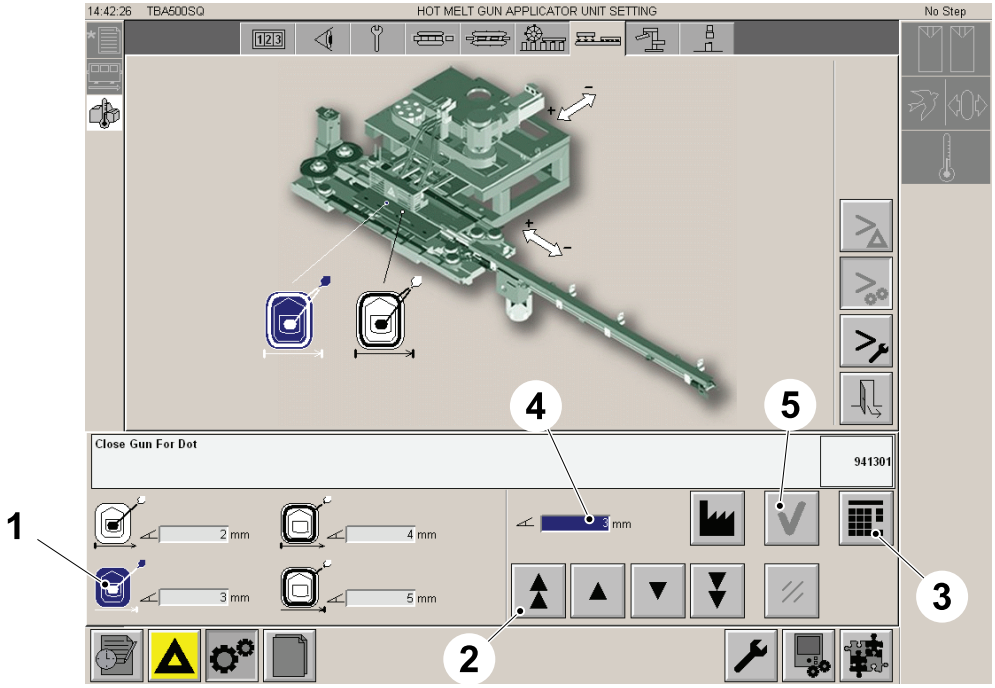

1 CLOSE GUN FOR DOT button
2 ARROW keys
3 KEYBOARD button
4 Value window
5 OK button

4.4.1 Adhesive Preservation - Setup

4.4.1-1 Adhesive Preservation Activation

Machine Status	Electrical supply disconnecting device in position I (ON) Machine in Step0
SPC Reference	2779070-0300

In this paragraph is described the adhesive preservation functionality. The adhesive preservation functionality has been introduced to automatically stand-by and then switch-off the hotmelt circuit when the machine is not operating.

a) Step down the machine to STEP 0.

b) Login the TPOP as service technician, see 1.1.1-1 HMI User Management - Log On as a User.

c) Touch the `CONFIGURATION` button (1), the `HOTMELT PRESERVATION` button (2) and the `ACTIVATION` icon (3) to access the activation screen of the adhesive preservation.

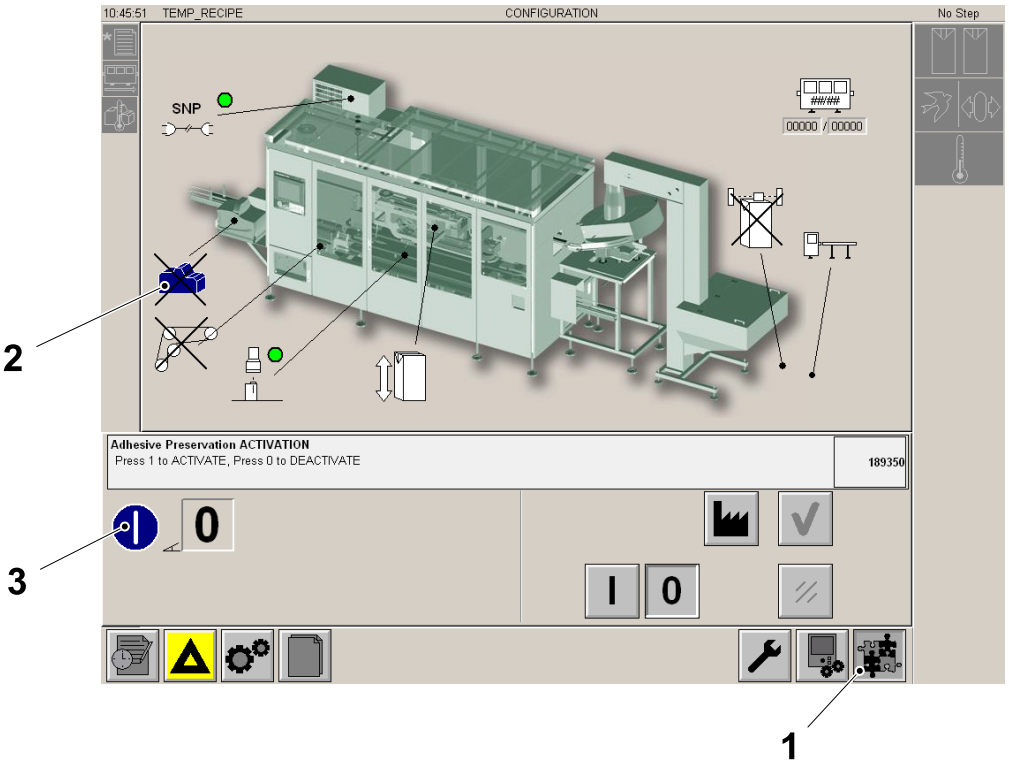

1 CONFIGURATION button
2 `HOTMELT PRESERVATION` button
3 `ACTIVATION` icon

(Cont'd)

(Cont'd)

d) Touch the ON button (4) and the OK button (5) to activate the adhesive preservation.

Note! The OFF icon changes to the ON button (6), the GREEN dot (7), the Icon (8) comes on and all show that the adhesive preservation functionality has been activated.

Note! When the adhesive preservation is active, also the delay on stand-by and the delay on to step zero are active and need to be set, see 4.4.1-1 Adhesive Preservation Activation on page 4-72.

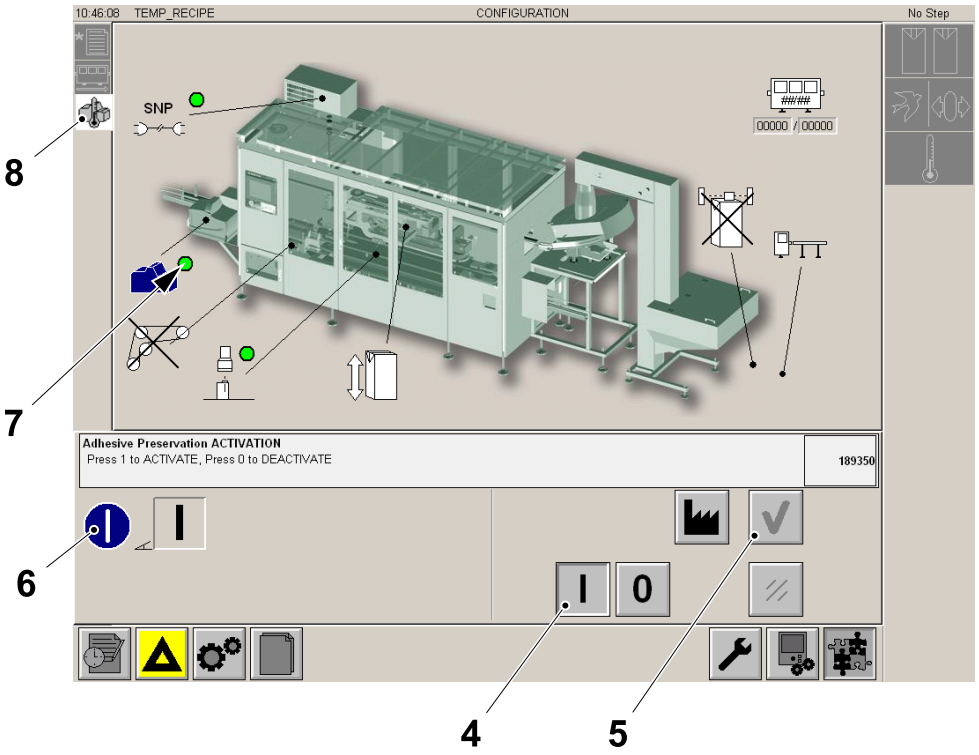

4 ON button
5 OK Button
6 ON button
7 Green dot
8 Icon

4.4.1-2 Adhesive Preservation Settings

Machine Status	Electrical supply disconnecting device in position I (ON) Machine in Step0
SPC Reference	2779070-0300

a) Login the TPOP as service technician, see 1.1.1-1 HMI User Management - Log On as a User, if required.

b) Touch the PRODUCTION CONTROL button (1) and the SERVICE PARTS button (2).

Note! Items like the positioning system only appear on the screen below when installed.

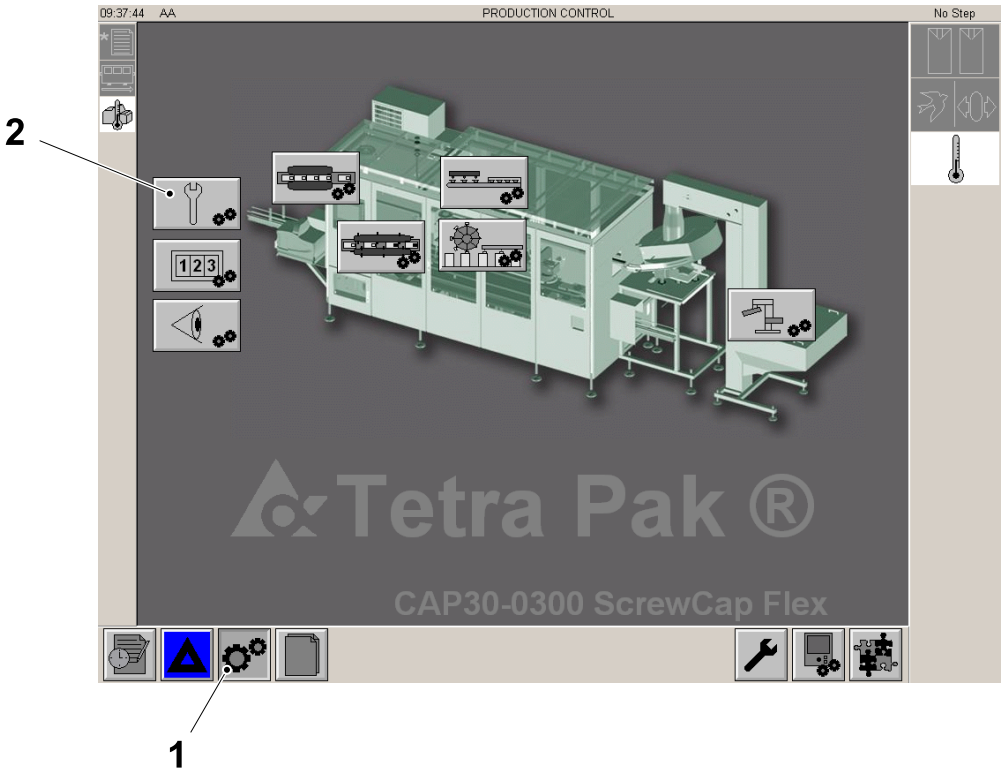

1 PODUCTION CONTROL button
2 SERVICE PARTS button

(Cont'd)

(Cont'd)

c) Touch the ADHESIVE PRESERVATION icon (3).

Note! The available functions of the adhesive preservation are the DELAY ON STAND BY (4), the DELAY ON TO STEP ZERO (5) and the Audible alarm (6).

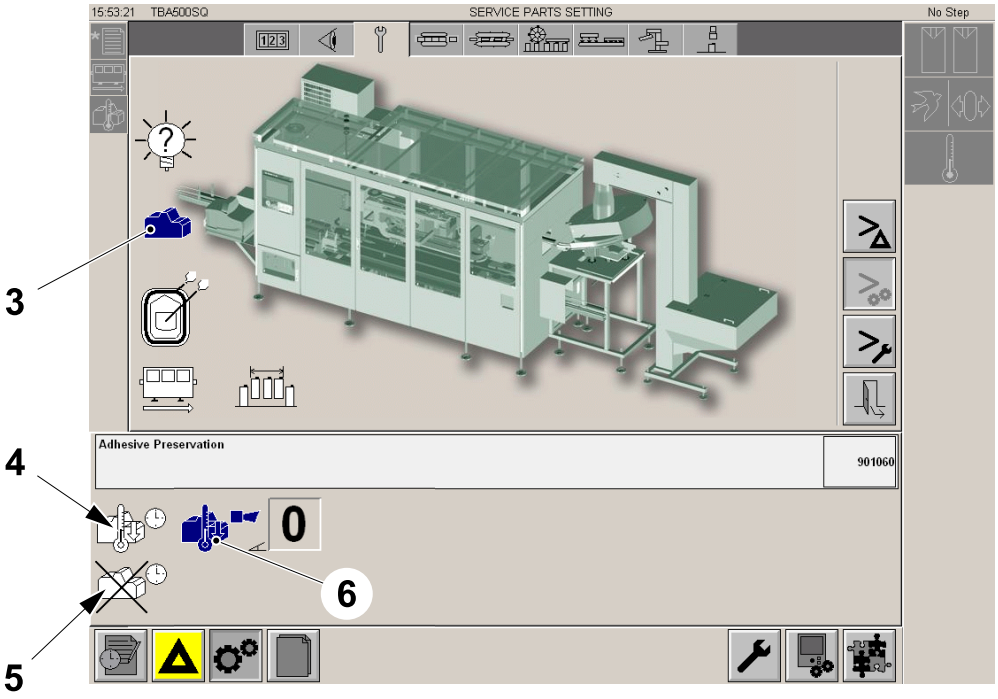

3 Adhesive preservation icon
4 Delay on stand by
5 Delay on to step zero
6 Audible alarm

4.4.1-3 Delay On Stand-By Description

Machine Status	Electrical supply disconnecting device in position I (ON) Machine in Step0
SPC Reference	2779070-0300

When during the PRODUCTION there are no packages and the package conveyor stops, the machine starts a counter called delay on stand-by.
The delay on stand-by is a programmable time in minutes after which the temperature of the hotmelt circuit is lowered by 50 degrees and the machine goes down to STEP1 PREHEATING. When the hotmelt starts to cool down the ADHESIVE PRESERVATION icon (1) flashes and the hooter starts ringing if it's active, see 4.4.1-6 Adhesive Preservation Hooter Activation.

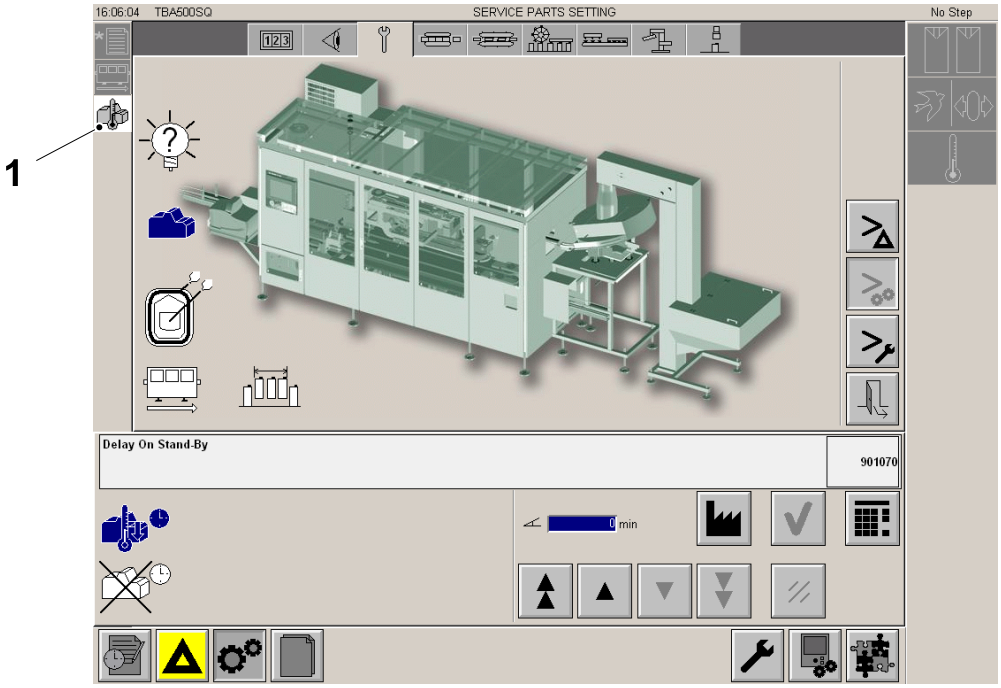

1 Adhesive preservation icon

4.4.1-4 Delay On Stand-By Setting

Machine Status	Electrical supply disconnecting device in position I (ON) Main air valve ON Machine in Step0
SPC Reference	2779070-0300

a) Touch the DELAY ON STAND-BY button (1).

b) Insert the value in minutes to wait before the machine is put in STEP1, by using the ARROW button (2) or by touching the NUMERIC button (3).

c) Touch the OK button (4).

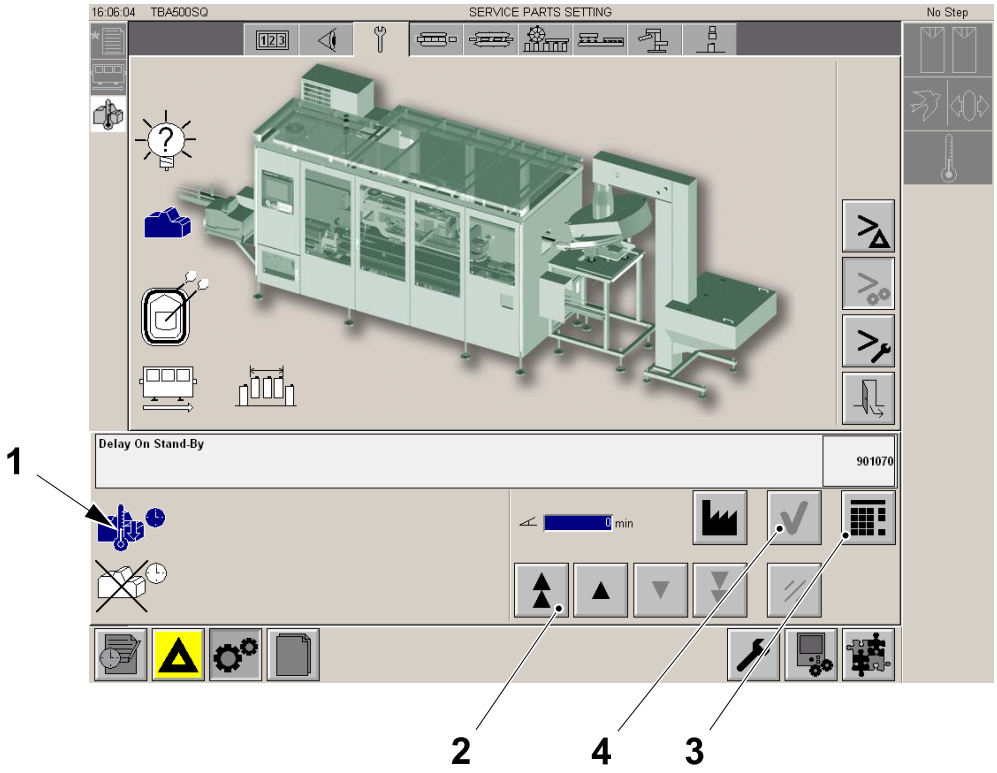

1 DELAY ON STAND-BY button
2 ARROW button
3 NUMERIC button
4 OK button

(Cont'd)

(Cont'd)

d) When the machine has to go back in full operation, press the STEP UP button (5) to restore the operating temperature of the hotmelt circuit.

Note! Items like the positioning system only appear on the screen below when installed.

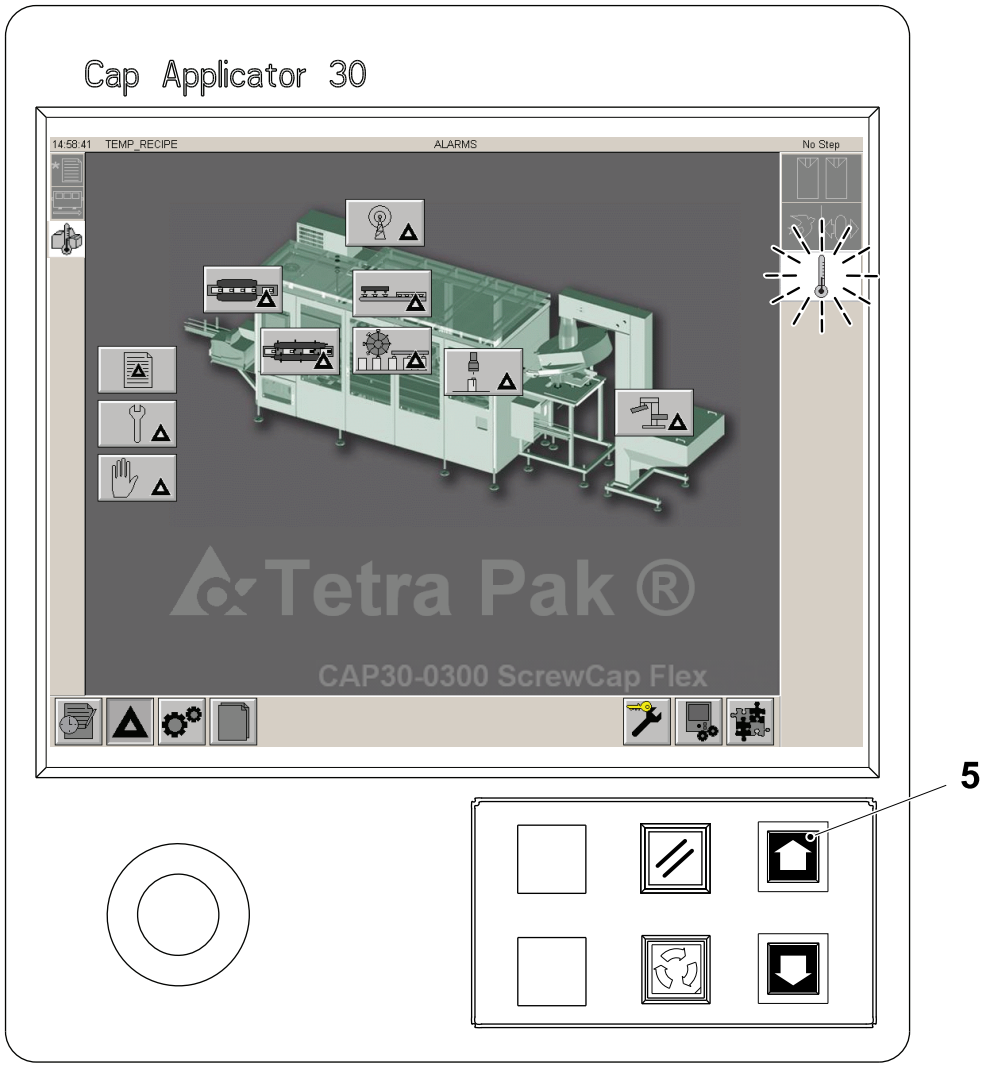

5 STEP UP button

4.4.1-5 Delay On To Step Zero

Machine Status	Electrical supply disconnecting device in position I (ON) Machine in Step0
SPC Reference	2779070-0300

Description

When the delay on stand-by time has passed and the machine is already at STEP1 PREHEATING, the counter called delay on to step zero starts. The delay on step zero is a programmable time in minutes after which the hotmelt circuit is switched-off and the machine goes down to STEP0.

Delay On To Step Zero Setting

a) Touch the DELAY ON TO STEP ZERO button (1).

b) Insert the value in minutes to wait before the machine is put in STEP0, by using the ARROW button (2) or by touching the NUMERIC button (3).

c) Touch the OK button (4).

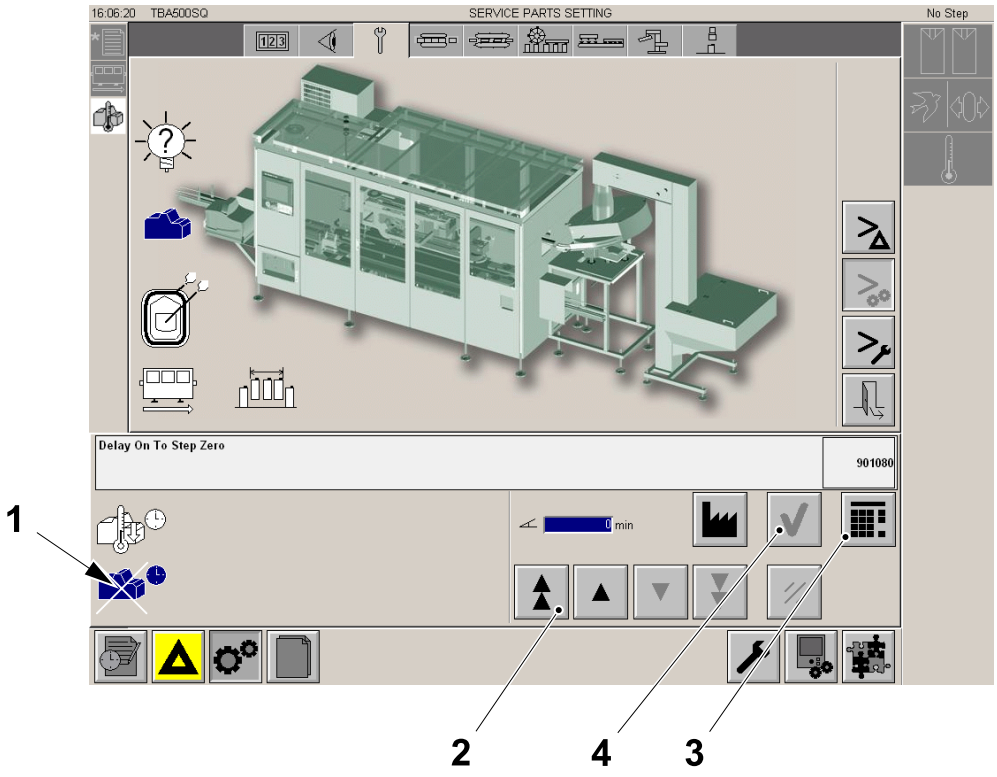

1 DELAY ON TO STEP ZERO button
2 ARROW button
3 NUMERIC button
4 OK button

(Cont'd)

(Cont'd)

d) When the machine has to go back in full operation, press the STEP UP button (5) to switch-on the hotmelt circuit.

Note! Items like the positioning system only appear on the screen below when installed.

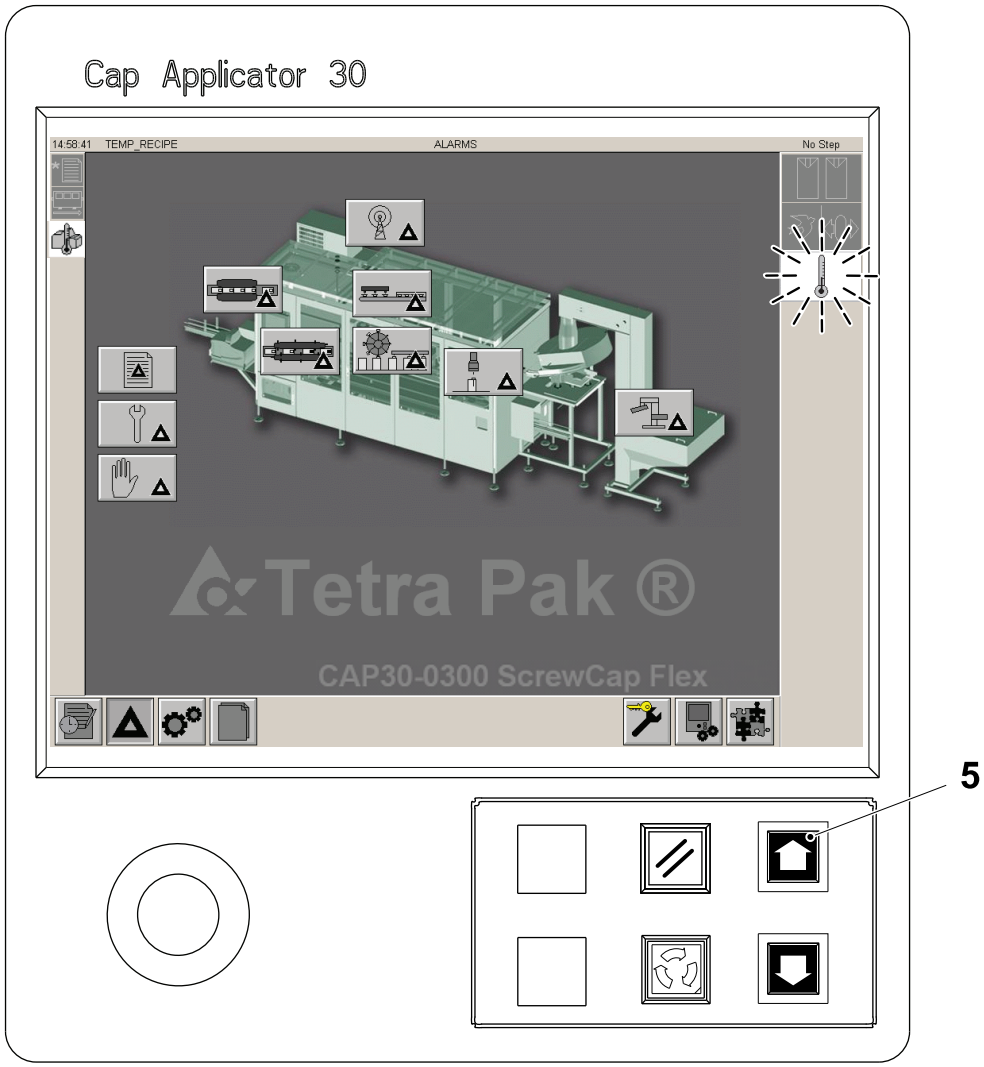

5 STEP UP button

4.4.1-6 Adhesive Preservation Hooter Activation

Machine Status	Electrical supply disconnecting device in position I (ON) Machine in Step0
SPC Reference	2779070-0300

When the hooter function is activated the audible alarm sounds when the adhesive preservation goes to STAND-BY.

a) Login the TPOP as service technician, see 1.1.1-1 HMI User Management - Log On as a User, if required.

b) Touch the HOOTER ACTIVATION icon (1) .

c) Touch the ON button (2) to activate the hooter function.

d) Touch the OK button (3) to confirm and the ON button (4) appears.

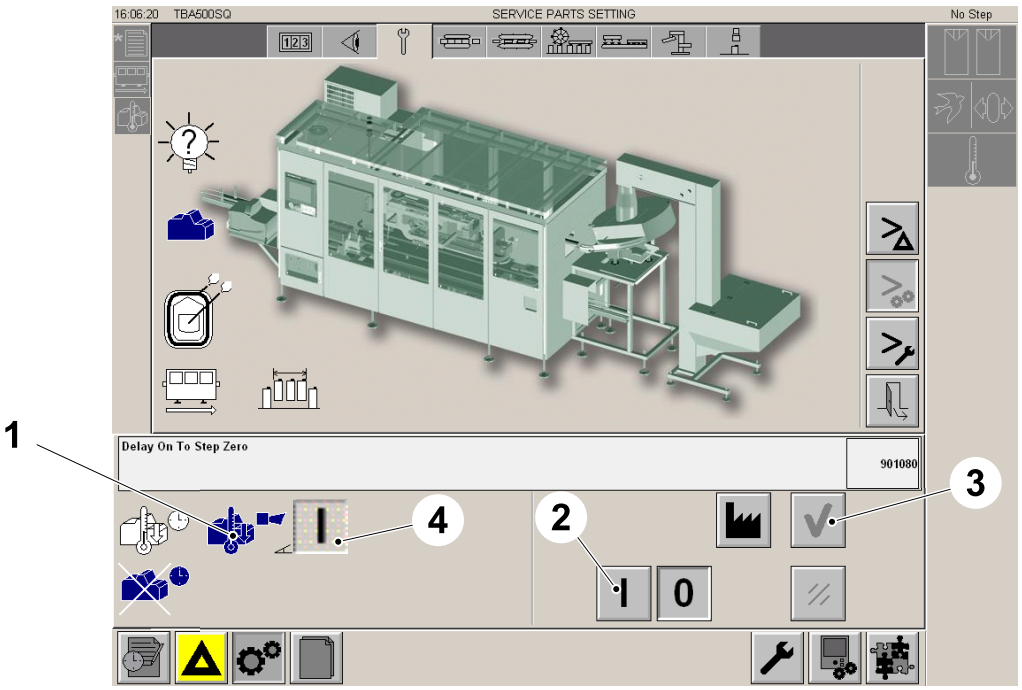

1 HOOTER ACTIVATION ICON
2 ON button
3 OK button
4 On button

4.4.1-7 Adhesive Preservation Hooter Deactivation

Machine Status	Electrical supply disconnecting device in position I (ON) Machine in Step0
SPC Reference	2779070-0300

a) Login the TPOP as service technician, see 1.1.1-1 HMI User Management - Log On as a User, if required.

b) Touch the HOOTER ACTIVATION icon (1).

c) Touch the OFF button (2) to deactivate the hooter function.

d) Touch the OK button (3) to confirm and the OFF button (4) appears.

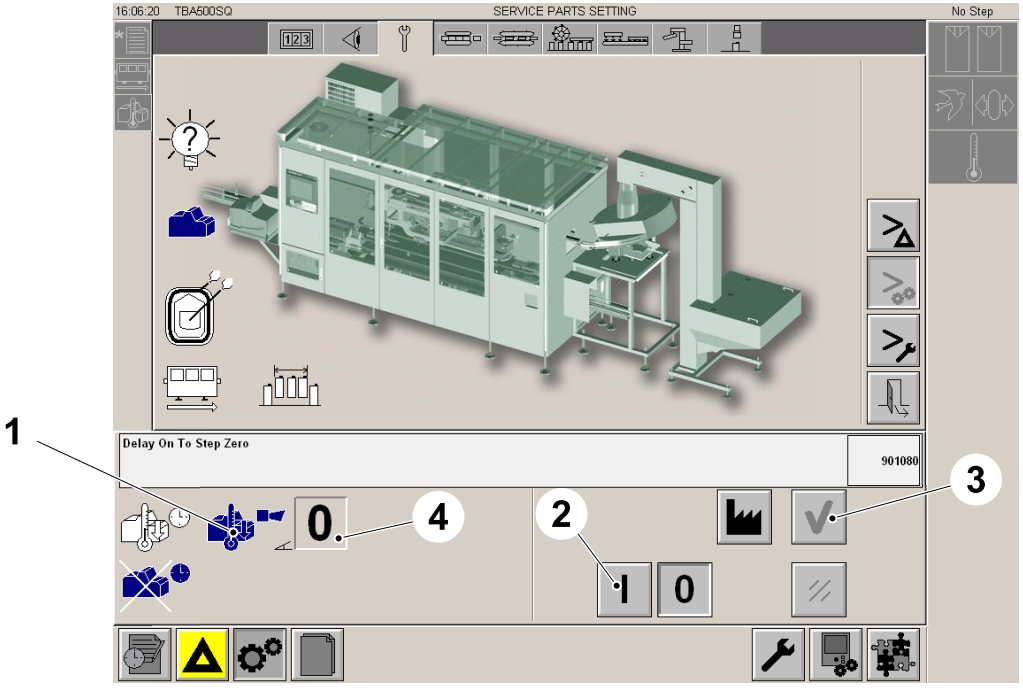

1 HOOTER ACTIVATION button
2 Off button
3 OK button
4 Off button

4.5 Drive Unit

4.5.1 Drive Motor

4.5.1-1 Drive Motor - Change

Machine Status	Electrical supply disconnecting device in position O (OFF)
SPC Reference	2716097-0200

a) Disconnect the two motor cables and remove the plug (1).

b) Release the screw (2) and screw (3) this will free the clamping end off the shaft (4) which is part of the gearbox.

c) Release the screws (5) and remove the motor (6) .

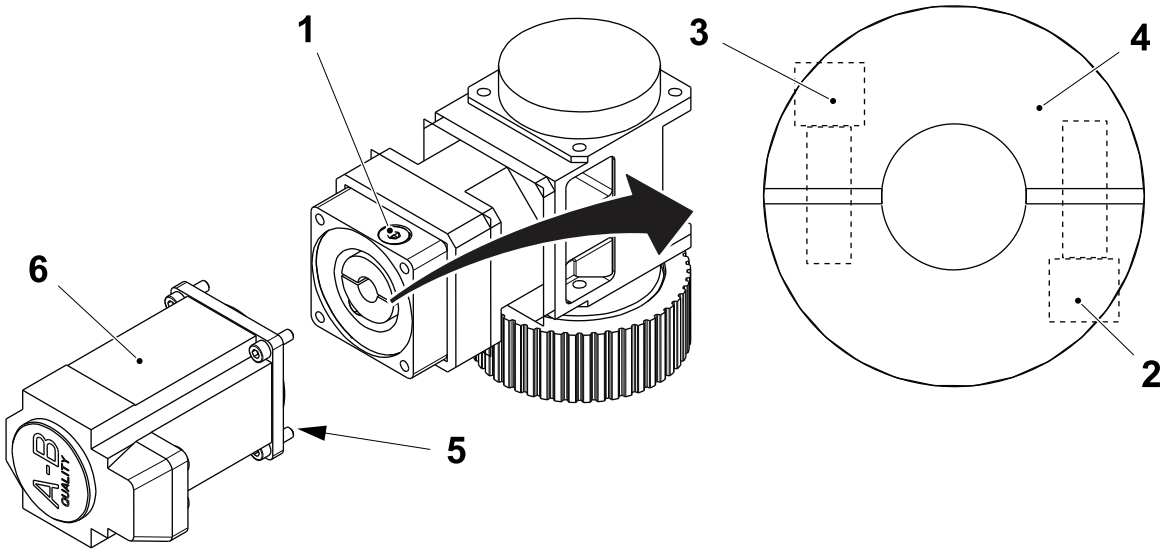

1 Plug
2 Screw
3 Screw
4 Shaft
5 Screw
6 Motor

(Cont'd)

(Cont'd)

d) Install the new motor (6) so that the screws (5) loosely hold it.

e) Tighten the screw (2) and the screw (3) alternately, i.e; (2)-(3)-(2) to ensure correct clamping but do not tighten completely.

f) Tighten completely the screws (5) that hold the motor (6).

g) Release the screw (2) and the screw (3) then tighten again alternately, i.e; (2)-(3)-(2) to ensure correct clamping stopping at 25Nm.

h) Insert theplug (1) and connect the two motor cables.

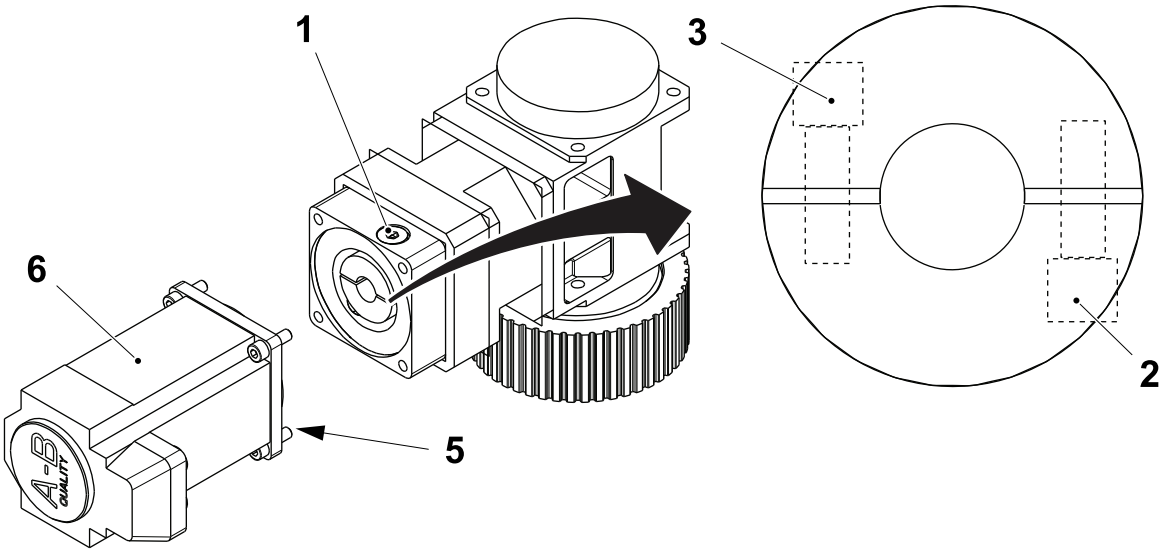

1 Plug
2 Screw
3 Screw
5 Screw
6 Motor

4.5.2 Drive Motor Gearbox

4.5.2-1 Gearbox - Change

Machine Status	Electrical supply disconnecting device in position O (OFF)
SPC Reference	2716097-0200

a) Remove the drive motor (1) see, 4.5.1-1 Drive Motor - Change.

b) Remove the pulley (2) by releasing the clamping element (3) , see 4.5.2-2 Clamping Element - Removal and Installation.

c) Replace the gearbox (4) and install in the reverse order.

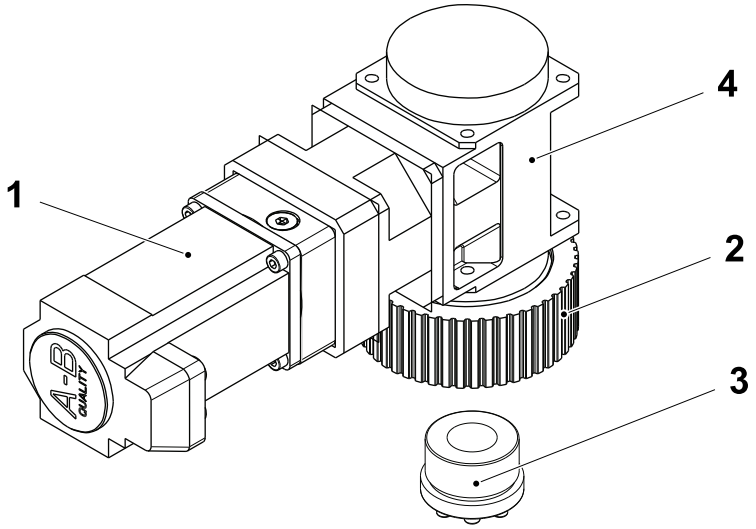

1 Drive motor
2 Pulley
3 Clamping element
4 Gearbox

4.5.2-2 Clamping Element - Removal and Installation

Machine Status	Electrical supply disconnecting device in position O (OFF) Main air valve OFF
Special Equipment	Torque Wrench min. 17 Nm
Consumables	grease - TP No. 344407-0000
SPC Reference	90458-2029

CAUTION
Risk of major damage to the machine!
Always tighten the screws crosswise using the method described below. Never adjust the tightening torque after locking, remove and start again.

a) Remove the screws (1) and insert them into the withdrawal holes (2) and tighten.

Note! Lubricate the screws (1). Apply grease Klübersynth UH1 14-151 (TP No. 344407-0000) **only** onto the clamp inner surface **C**. Grease accidentally applied to other areas of the roller or shaft will cause slippage and should be removed.

The inner surface **A** and the outer surface **B** of the clamping element must be cleaned before assembling.

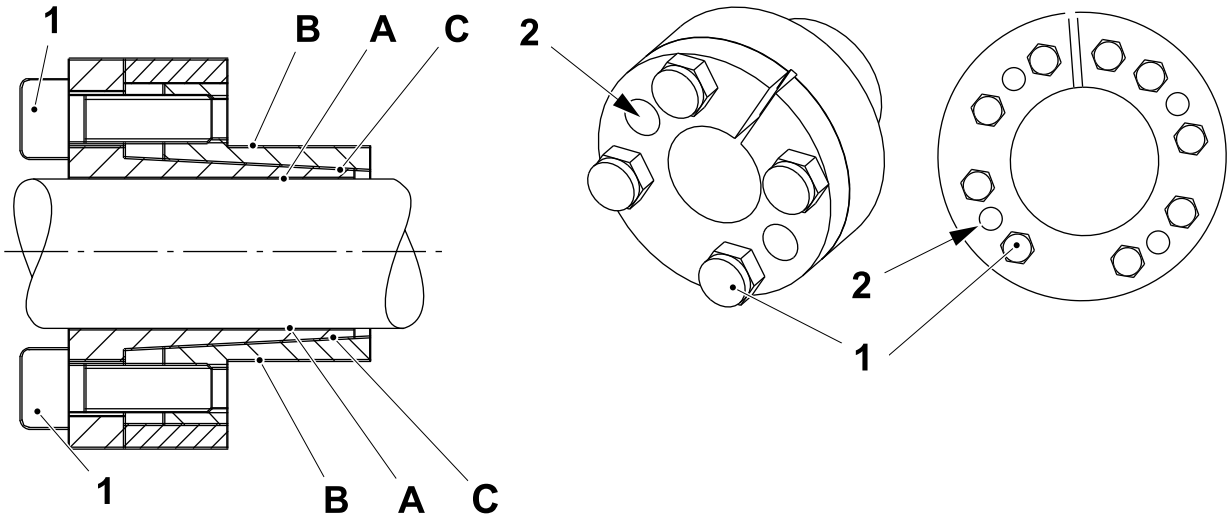

1 Screw
2 Withdrawal hole

(Cont'd)

(Cont'd)

Note! Lubricate the screws (1). Apply grease Klübersynth UH1 14-151 (TP No. 344407-0000) **only** onto the clamp inner surface **C**. Grease accidentally applied to other areas of the roller or shaft will cause slippage and should be removed.

b) Put the clamping element (3) in place and tighten the screws (1) crosswise, first by hand and then to **9 ±2 Nm** with the aid of a torque wrench.

c) Continue to tighten the screws crosswise to **17 ±2 Nm** with the aid of a torque wrench.

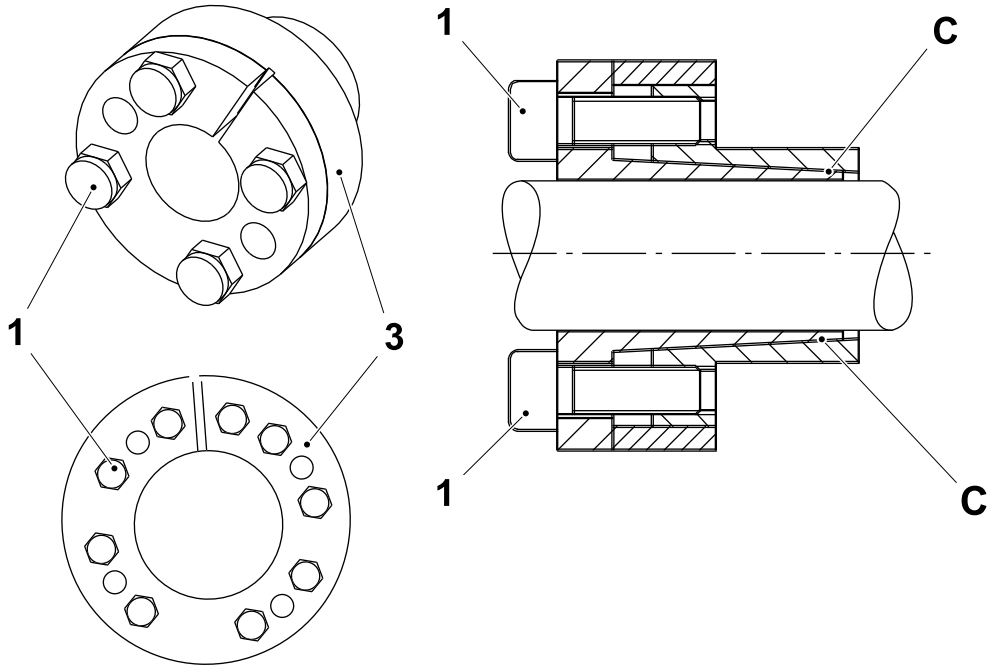

1 Screw
3 Clamping element

4.6 Motion Control

4.6.1 Motion Control (X-Direction)

4.6.1-1 Timing Belt - Change

Machine Status	Electrical supply disconnecting device in position O (OFF)
SPC Reference	2716097-0200

Removal

WARNING

Risk of burns.

Nearby components may be hot.

a) Measure the distance **A** between the block (1) and the plate (2) .

Note! The measurement above is for reference only and should not be used when setting the belt tension.

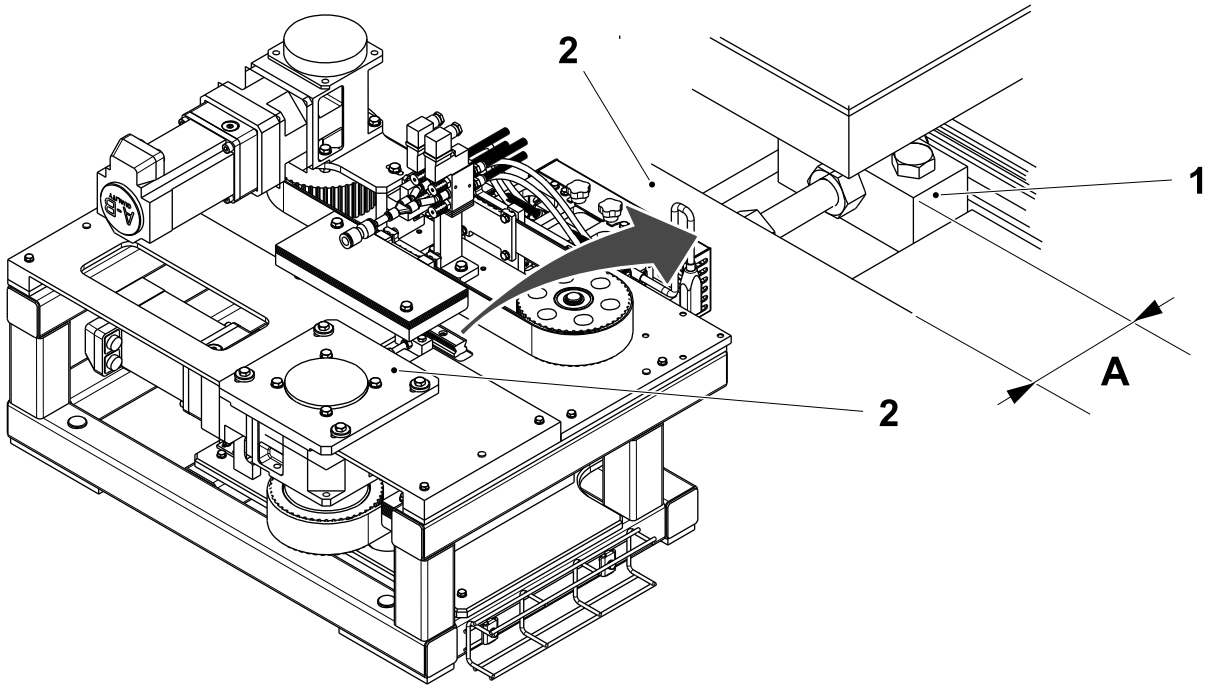

1 Block
2 Plate

(Cont'd)

(Cont'd)

b) Loosen the lock nut (3) and turn the screw (4) fully clockwise so that the plate (2) can move when its fixing screws are loosened, see step c) on the next page.

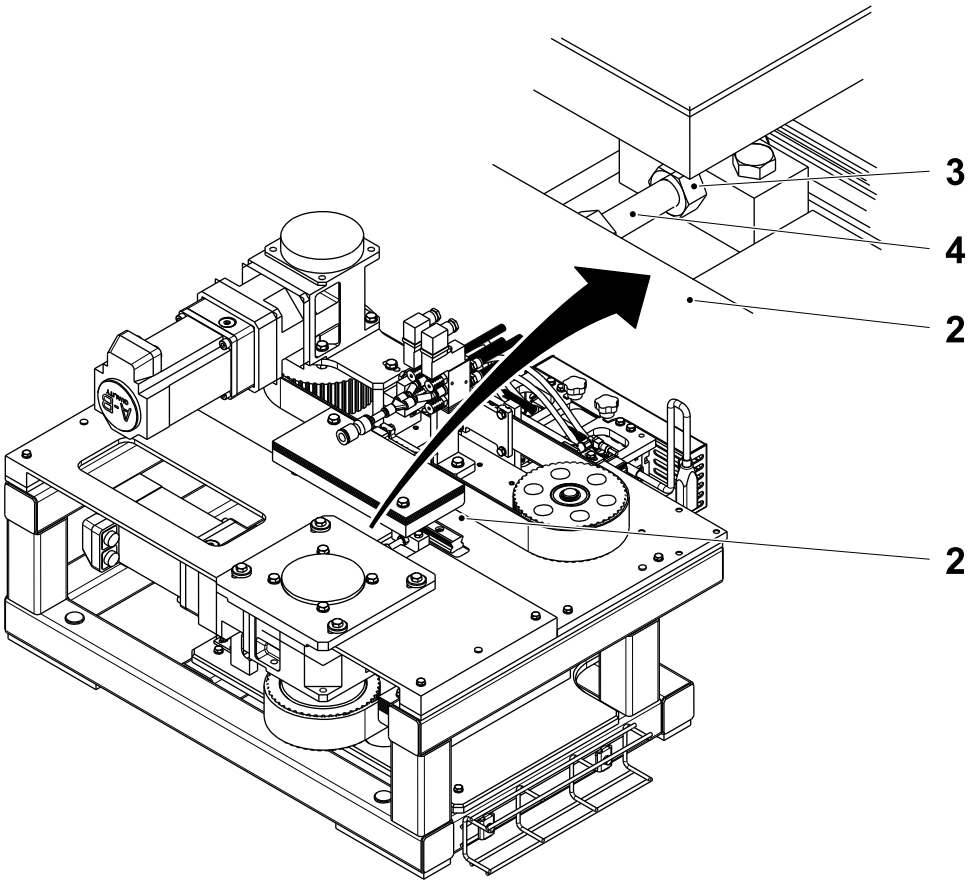

2 Plate
3 Lock nut
4 Screw

(Cont'd)

(Cont'd)

c) Loosen the screw (5) to release the belt tension.

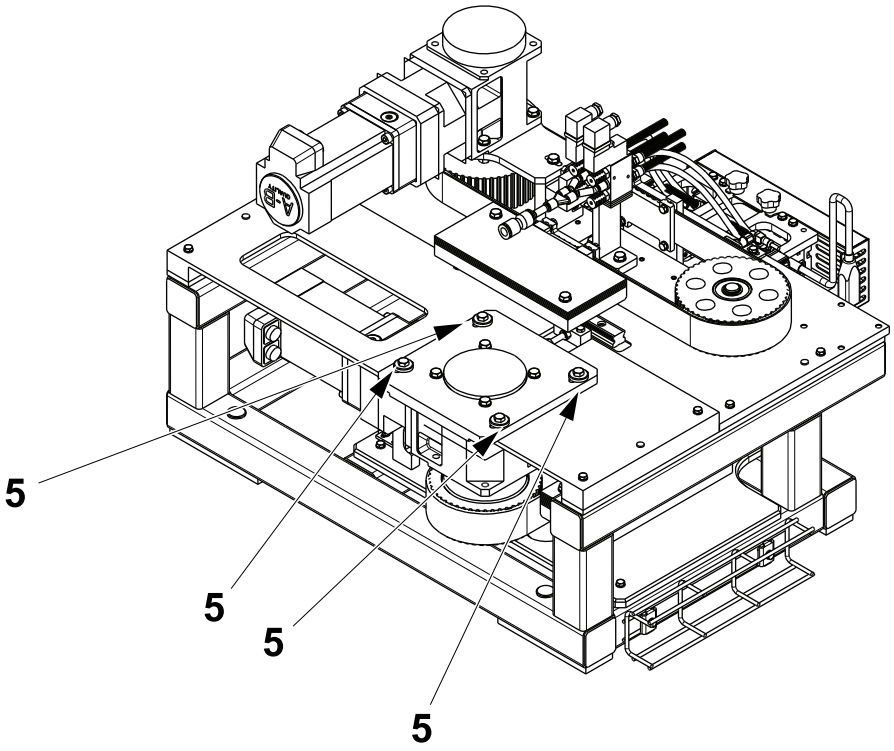

5 Screw

(Cont'd)

(Cont'd)

d) Remove the screw (6) and the belt holder (7).

e) Remove the screw (8) and the belt holder (9).

f) Remove the belt (10).

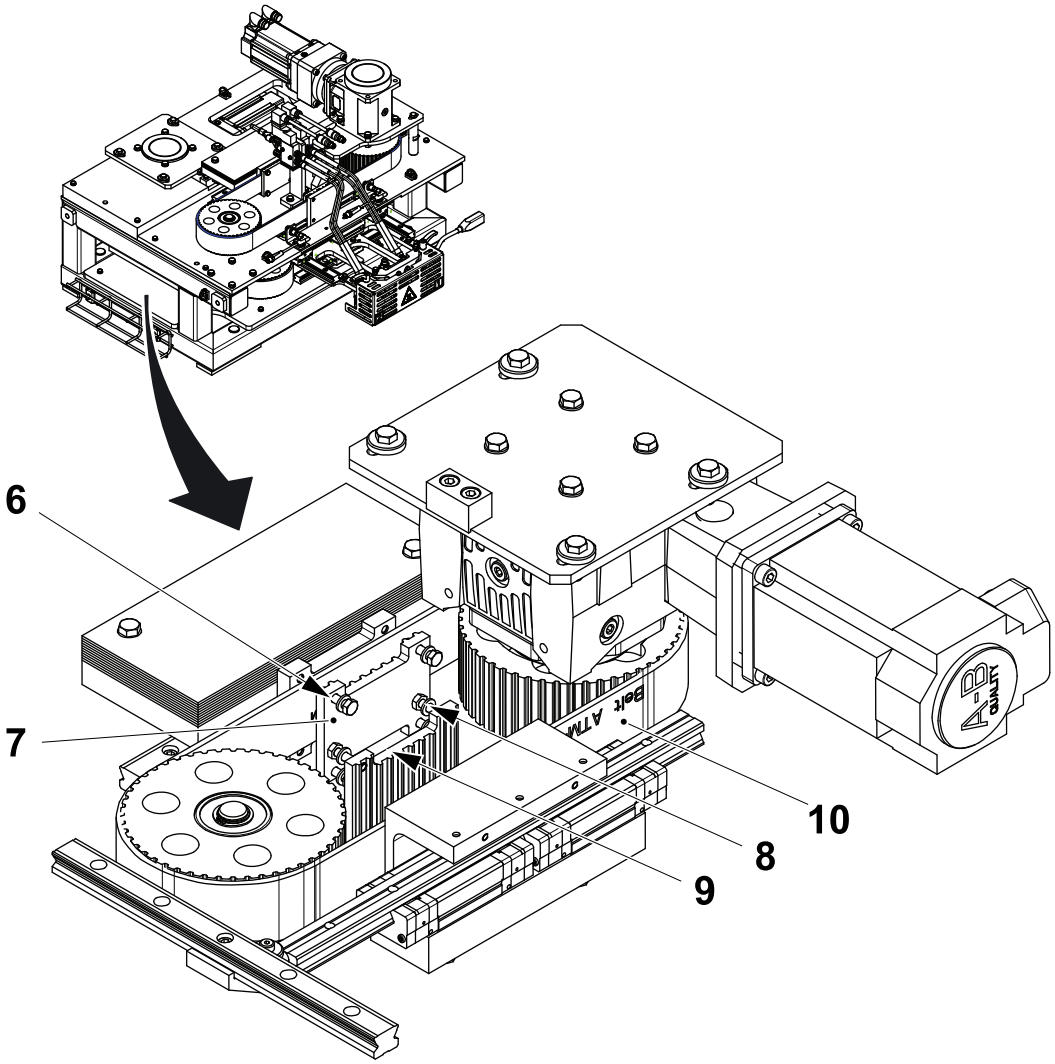

6 Screw
7 Belt holder
8 Screw
9 Belt holder
10 Belt

(Cont'd)

(Cont'd)

Assemble

WARNING

Risk of burns.

Nearby components may be hot.

a) Install the belt (1) making sure that the ends touch and then clamp the ends together using the belt holder (2), the bracket (3) and the screw (4).

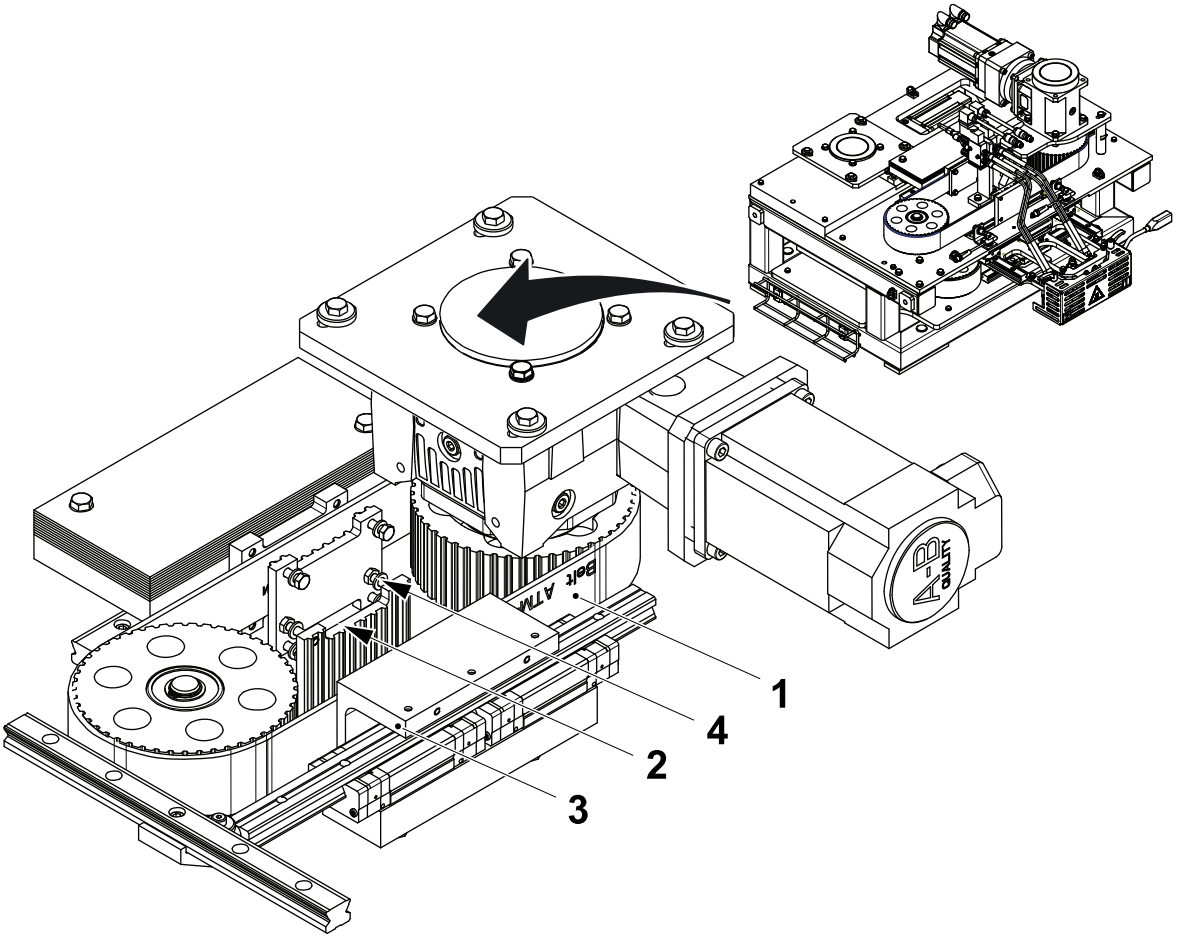

1 Belt
2 Belt holder
3 Bracket
4 Screw

(Cont'd)

(Cont'd)

b) Turn the screw (5) counter clockwise until the belt (1) is slightly tensioned.

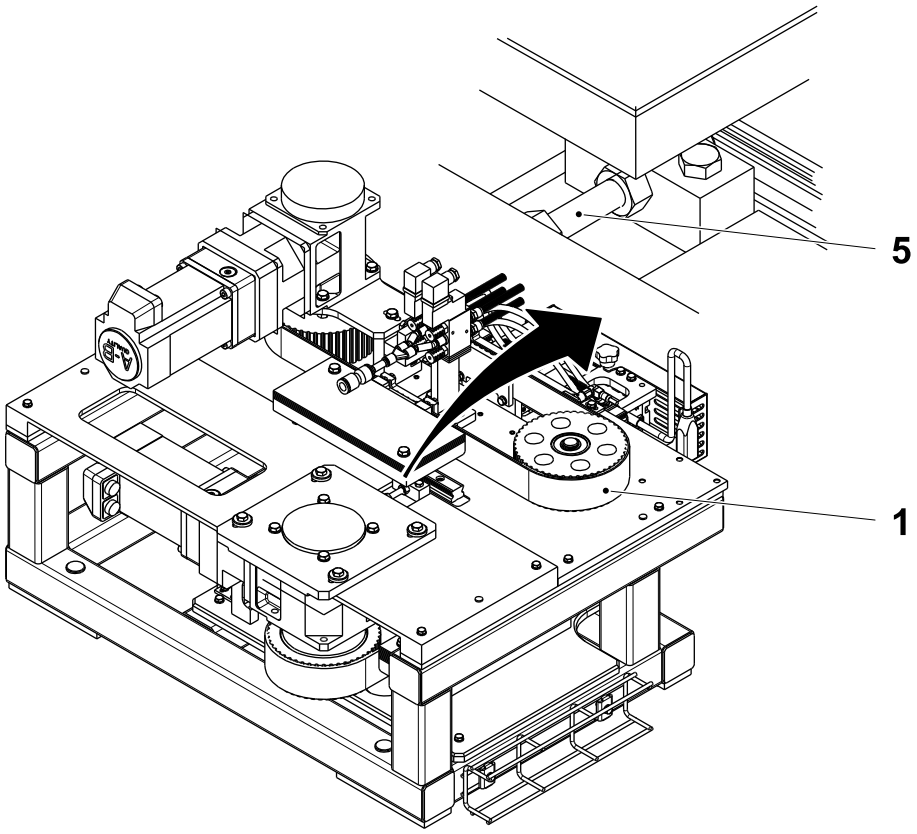

1 Belt
5 Screw

(Cont'd)

(Cont'd)

c) Continue to tension the belt (1) until it cannot be moved more than the distance **A** at the centre line of the bracket (3).

- Measure the belt tension using a "belt tension measuring meter" Tp part 90459-2181 or 90600-3415. The tension should be about 170 - 180Hz.
- Measure in the middle of the belt and produce vibrations by hitting the belt with a spanner.

A = 5mm

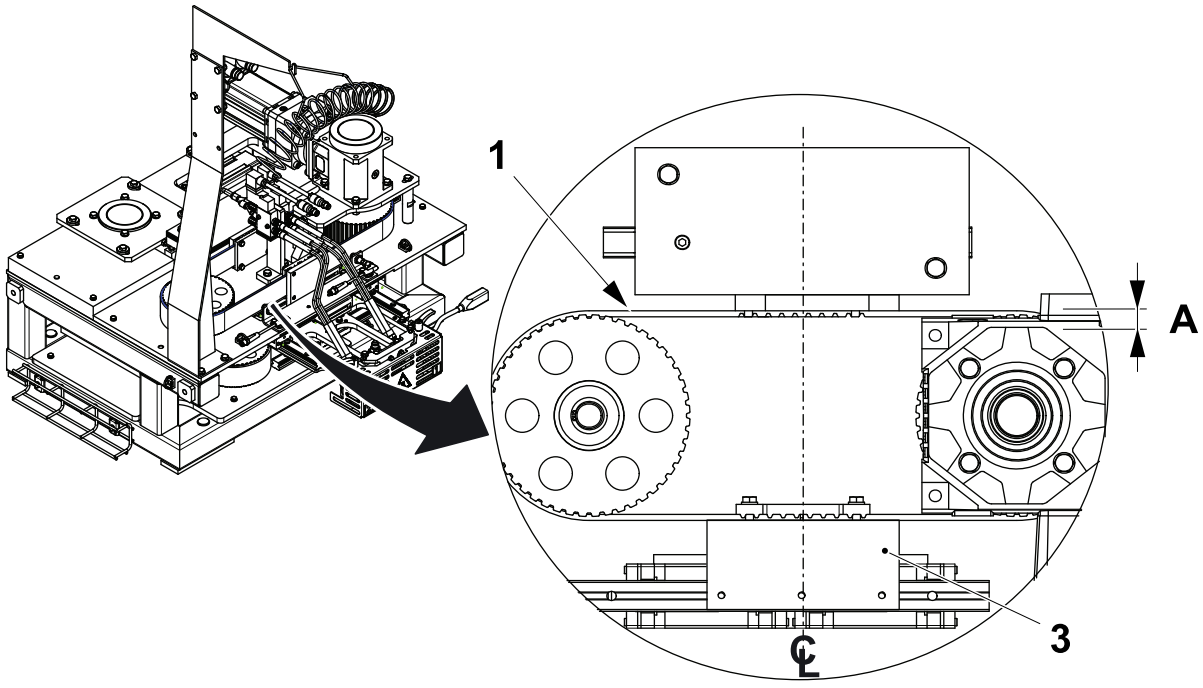

1 Belt
3 Bracket

(Cont'd)

(Cont'd)

d) Tighten the lock nut (6).

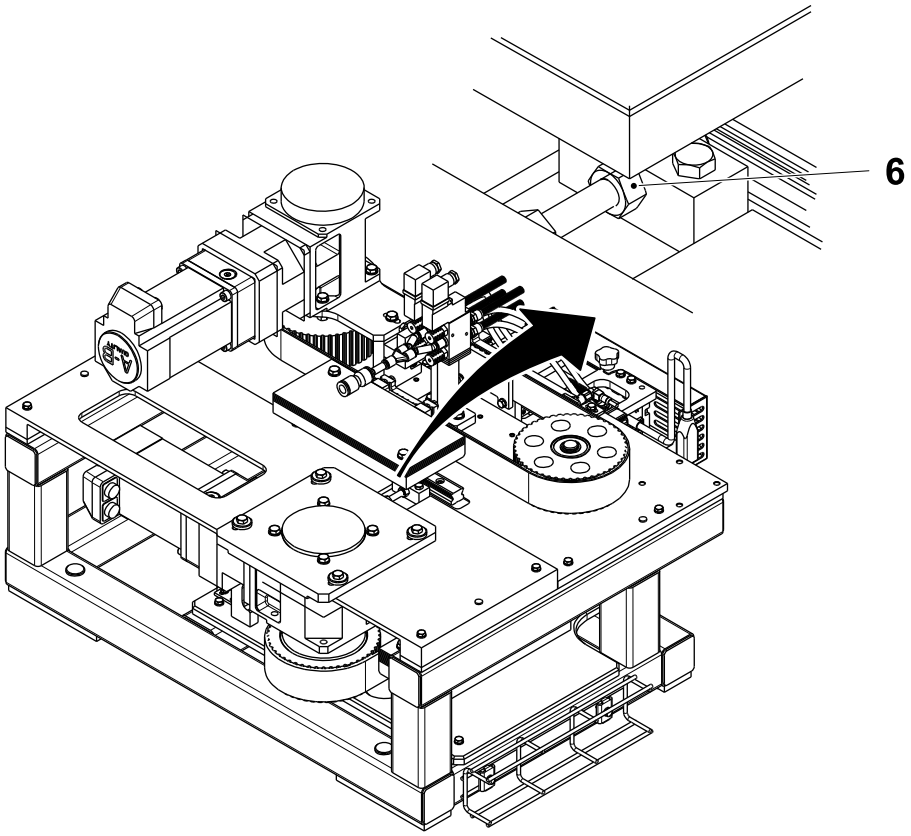

6 Lock nut

(Cont'd)

(Cont'd)

e) Tighten the screw (7).

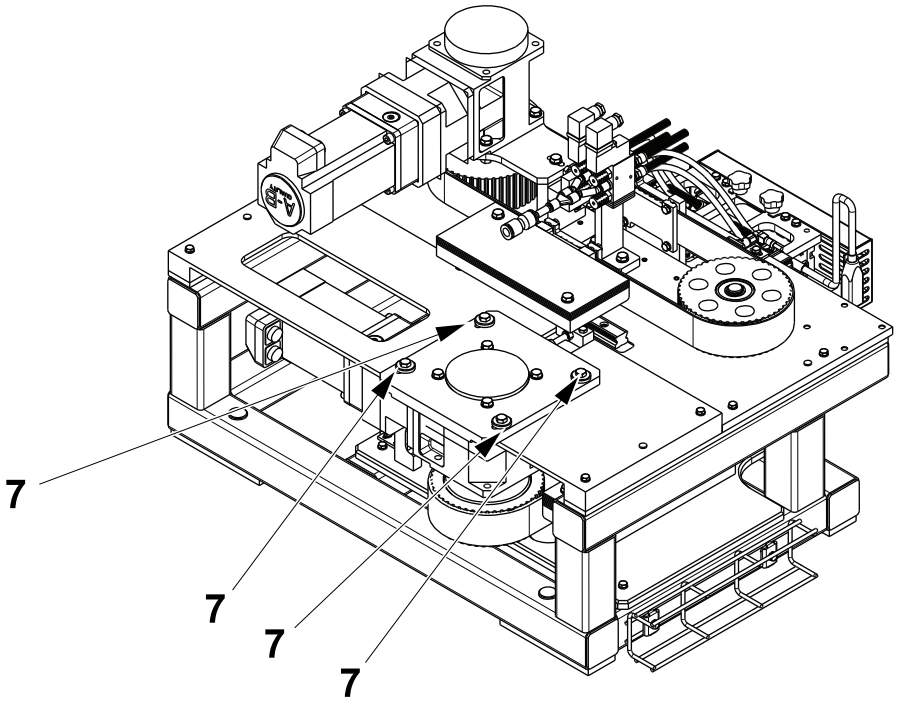

7 Screw

(Cont'd)

(Cont'd)

f) Move the bracket (3) until it is centred in the middle of its stroke.

g) Without moving the counter balance (8) relative to the belt (1), install the belt holder (9) and secure it in position with the screw (10) .

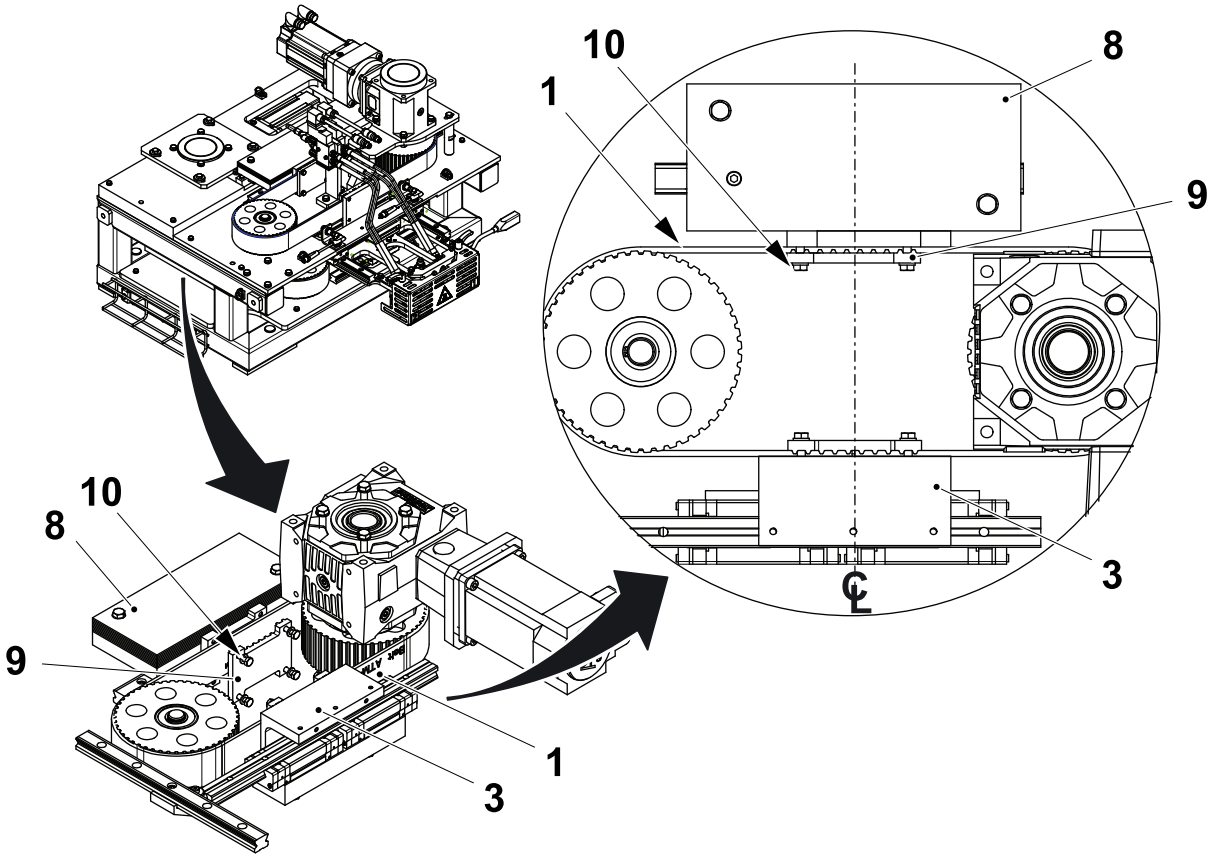

1 Belt
3 Bracket
8 Counter balance
9 Belt holder
10 Screw

4.6.1-2 Timing Belt - Set Position Sensors

Machine Status	Electrical supply disconnecting device in position O (OFF)
SPC Reference	2716097-0200

Removal

WARNING
Risk of burns.
Nearby components may be hot.

a) Move the belt holder (1) in the direction shown until it is in contact with the plate (2).

b) Loosen the screw (3) and move the sensor bracket (4) in the same direction.

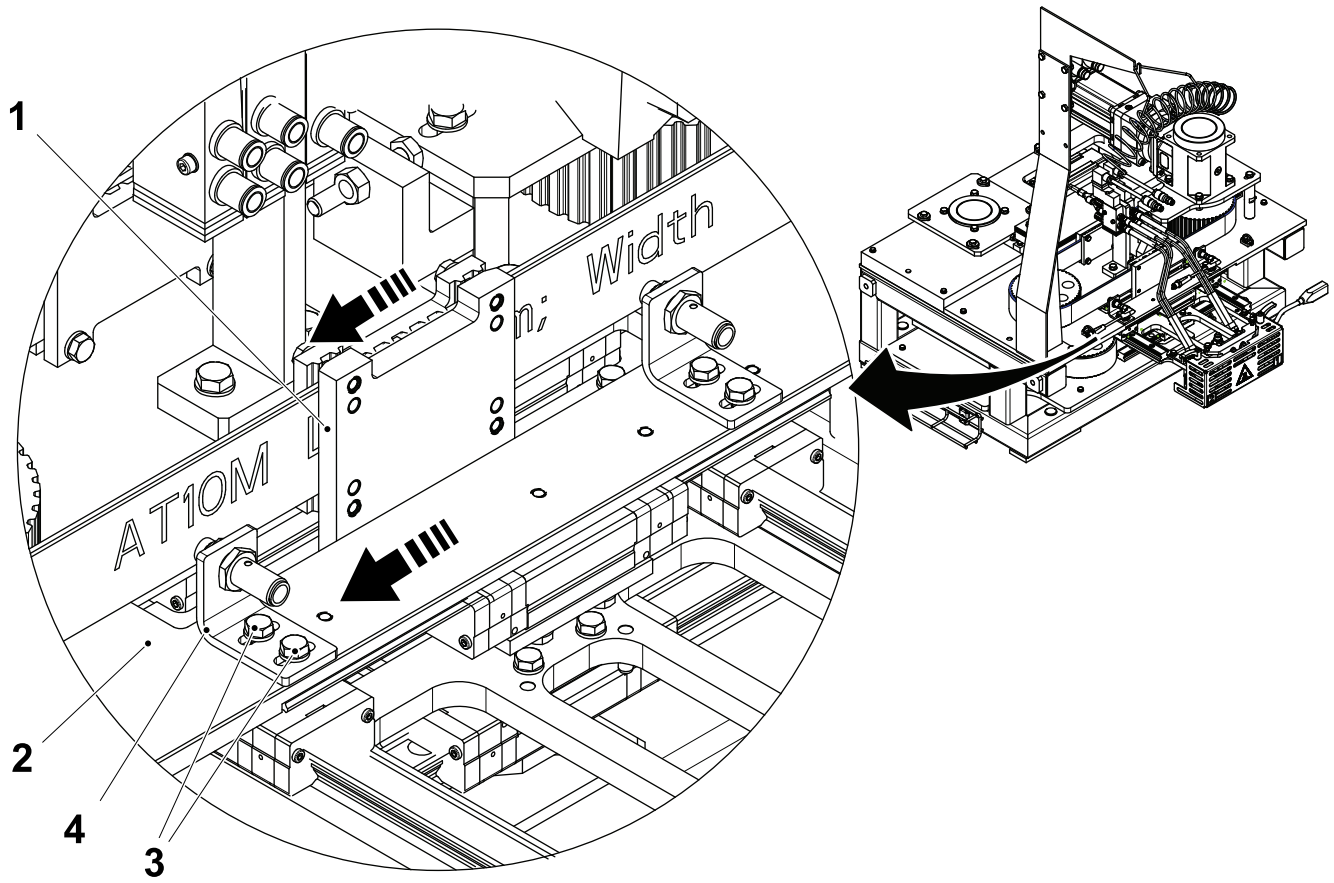

1 Belt holder
2 Plate
3 Screw
4 Bracket

(Cont'd)

(Cont'd)

c) Move the belt holder (1) the distance **A** in the opposite direction.

d) Move the sensor bracket (4) until the LED (5) in the sensor comes on.

e) Without moving the belt holder, tighten the screw (3).

f) Repeat for the other three sensors. One in this assembly and the other two in the other motion control assembly, see 4.6.1 Motion Control (X-Direction).

A = 5mm

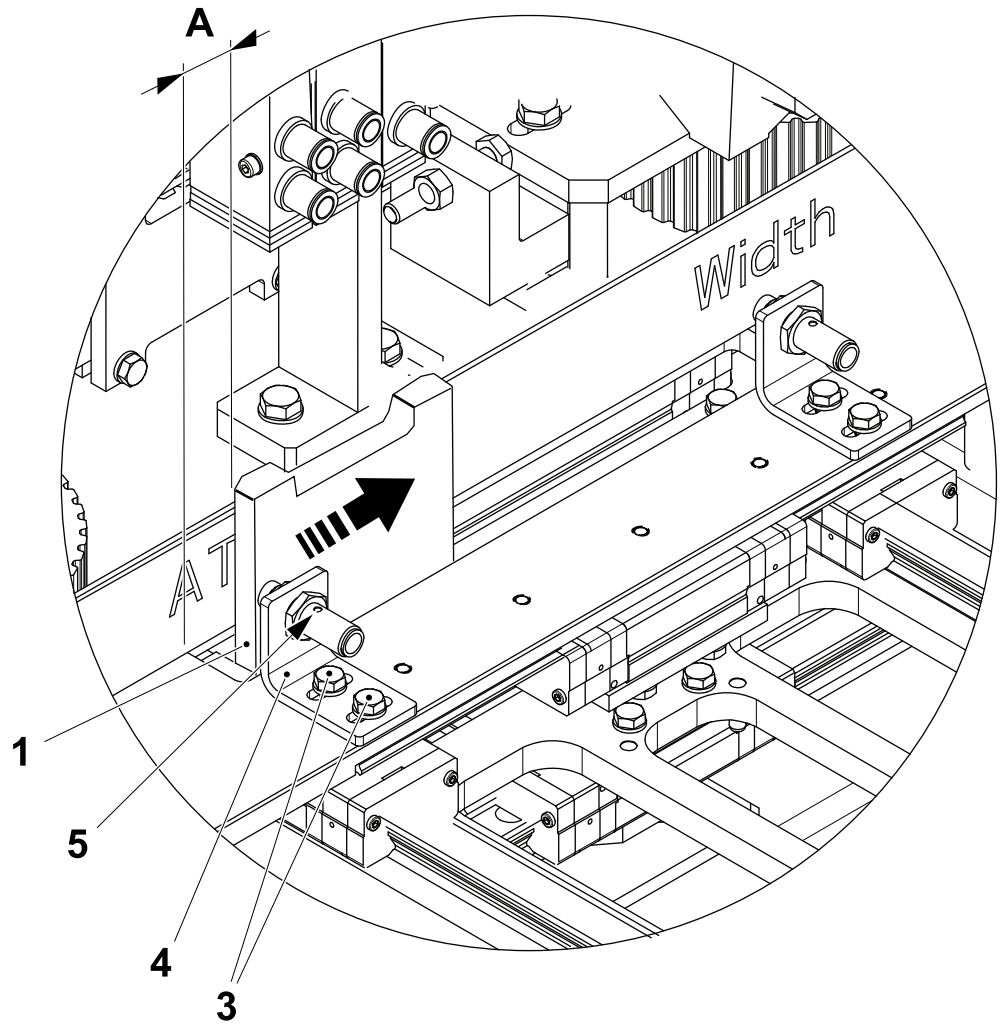

1 Belt holder
3 Screw
4 Bracket
5 LED

This page intentionally left blank

5 Cap Sorter

Cap Sorter - Description

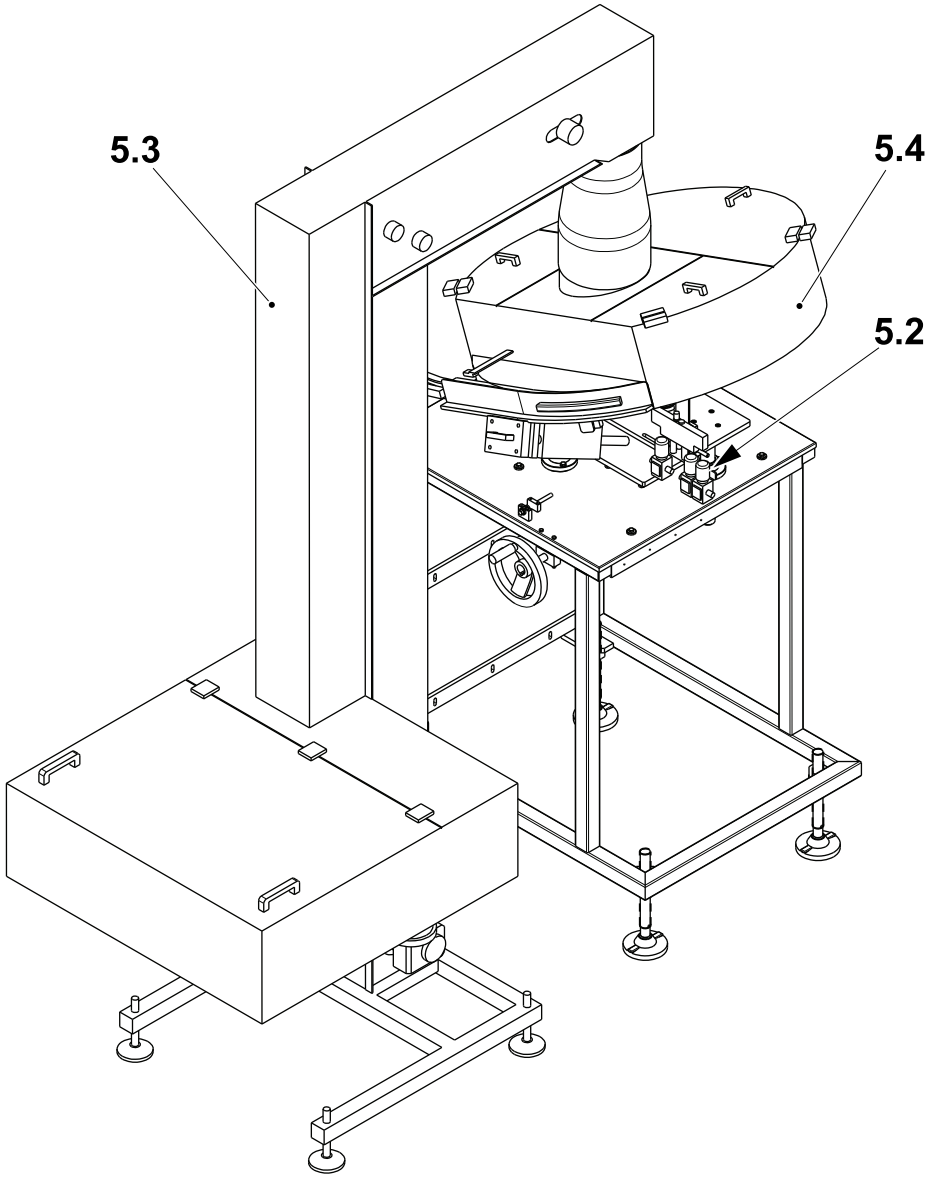

5.2 Cap Sorter Pneumatics

5.3 Elevator

5.4 Feeder

Cap Sorter - Description 5-2

5.1 Functional Description 5-5

5.2 Cap Sorter Pneumatics 5-6

5.2.1 Pneumatic Panel 5-6

5.2.1-1 Pneumatic Panel - Description 5-6

5.3 Elevator 5-7

5.3.1 Elevator - Check 5-7

5.3.1-1 Elevator - Check Belt Tension 5-7

5.3.1-2 Elevator - Set Conveyor Belt Tension 5-8

5.3.1-3 Elevator - Overhaul 5-9

5.3.1-4 Elevator - Lubricate 5-20

5.4 Feeder 5-21

5.4.1 Feeder - Check 5-21

5.4.1-1 Feeder - Check Function 5-21

5.4.1-2 Feeder - Check Air Injectors 5-23

5.4.1-3 Feeder - Set Air Injector Positions 5-24

5.4.1-4 Feeder - Set Cam Positions 5-27

5.4.1-5 Feeder - Change Discharger 5-28

5.4.1-6 Feeder - Change Brush 5-34

5.4.1-7 Cap Sorter - Set X, Y and Z Position 5-35

5.4.1-8 Feeder - Set Cap Level 5-39

5.4.1-9 Feeder - Set Cap Sensor 5-40

5.4.1-10 Feeder - Set Segments and Brushes 5-41

5.4.1-11 Feeder - Set Guide 5-42

5.4.1-12 Feeder - Set Sorter Speeds 5-43

5.4.2 Feeder - Troubleshooting 5-45

5.4.2-1 Cap Sorter - Troubleshooting 5-45

5.4.2-2 Feeder - Fine Checks 5-49

5.4.2-3 Cap Sorter - Add or Remove shims 5-57

5.4.2-4 Cap Sorter - Replace Gearbox 5-62

This page intentionally left blank

5.1 Functional Description

Caps are supplied in plastic bags contained in cardboard boxes. Caps are put into the hopper (1) containing a conveyor belt (2) which transports the caps to the feeder (3) . The feeder supplies caps with the correct orientation to the cap handling group.

The feeder has a rotating disc with slots at the perimeter. When caps fall from the elevator into the feeder, the disc rotates and the caps are turned the correct way (upside down) into the slots of the rotating disc helped by the cap sorter pneumatics (4) .

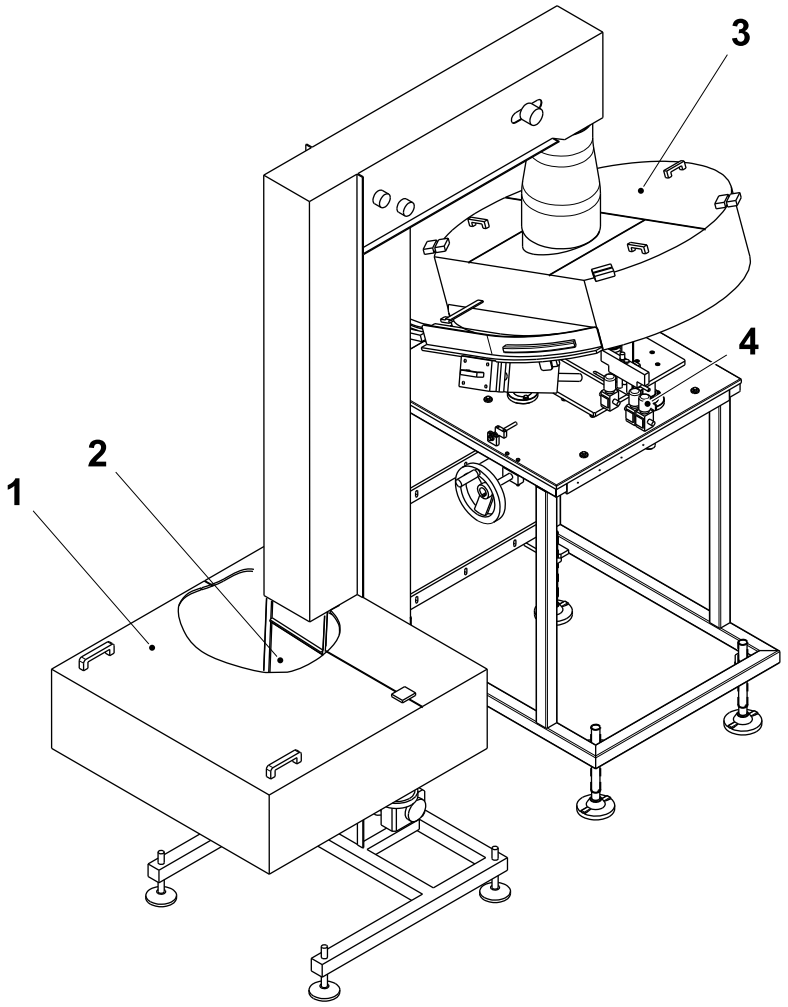

1 Hopper
2 Conveyor belt
3 Feeder
4 Cap sorter pneumatics

5.2 Cap Sorter Pneumatics

5.2.1 Pneumatic Panel

5.2.1-1 Pneumatic Panel - Description

For the main pneumatic panel see, 6.4.2 Pneumatic Panel - Description.

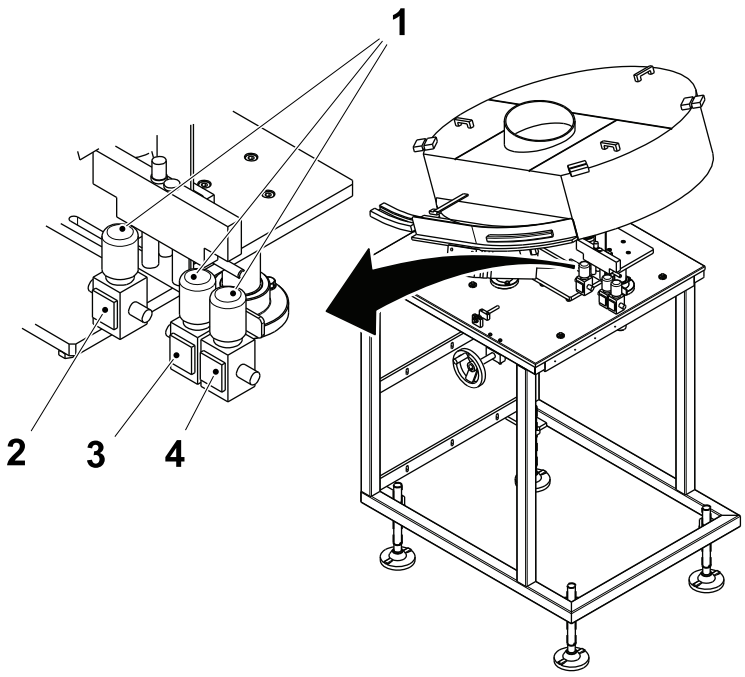

1 Regulator
2 Pressure gauge (1 Bar)
3 Pressure gauge (3 Bar)
4 Pressure gauge (4 Bar)

5.3 Elevator

5.3.1 Elevator - Check

5.3.1-1 Elevator - Check Belt Tension

Machine Status	Electrical supply disconnecting device in position O (OFF) Main air valve OFF
SPC Reference	662904-0300

a) Check the tension of the belt (1).

b) Check the belt (1) for wear or damage.

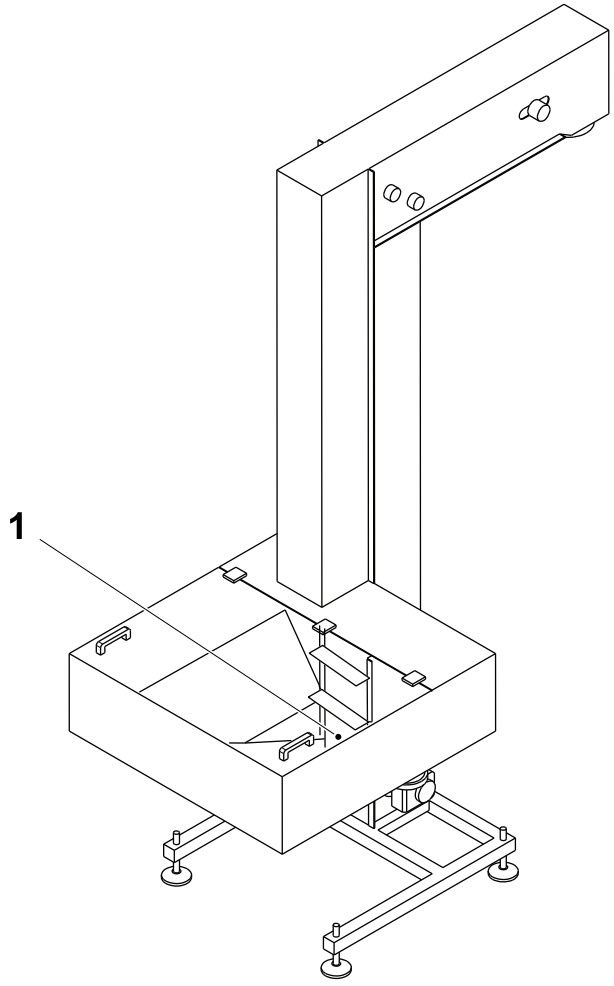

1 Belt

5.3.1-2 Elevator - Set Conveyor Belt Tension

Machine Status	Electrical supply disconnecting device in position O (OFF) Main air valve OFF
SPC Reference	662904-0300

Use the two nut (1) on both sides to set the conveyor belt tension.

A = 80 mm + 5 mm

B = 14 mm

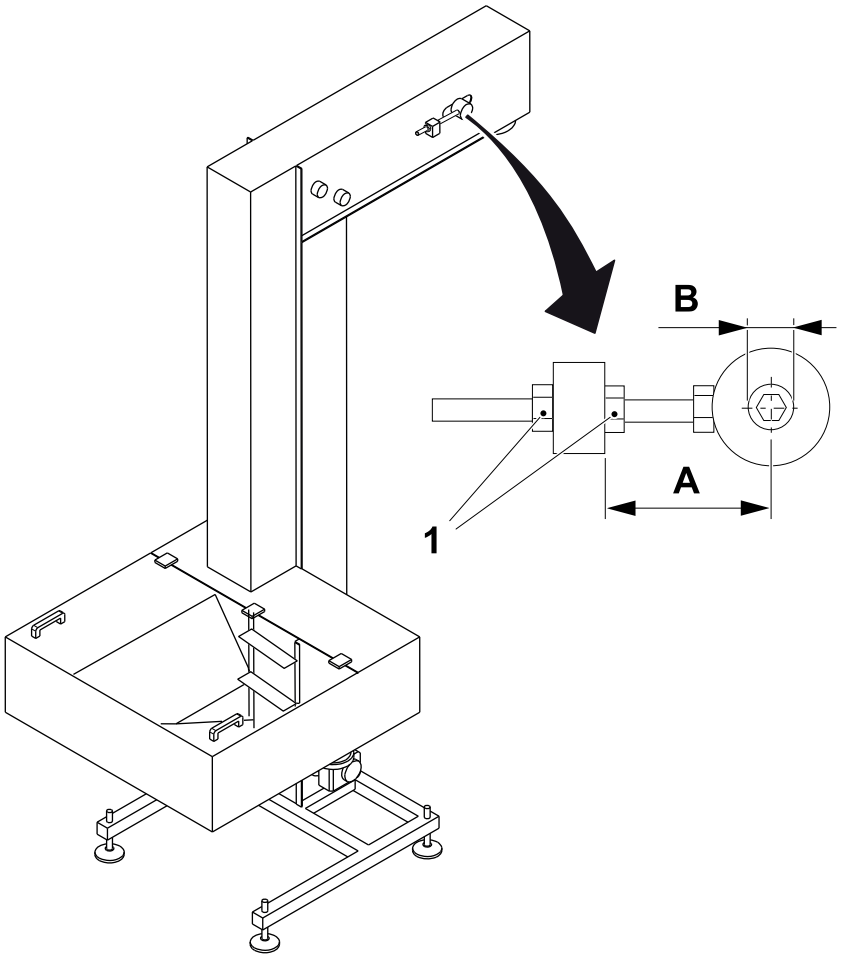

1 Nut

5.3.1-3 Elevator - Overhaul

Machine Status	Electrical supply disconnecting device in position O (OFF) Main air valve OFF
SPC Reference	662904-0300

Note! Do not remove the screw (1).

a) At both sides of the elevator, remove the screw (2) and the cover (3).

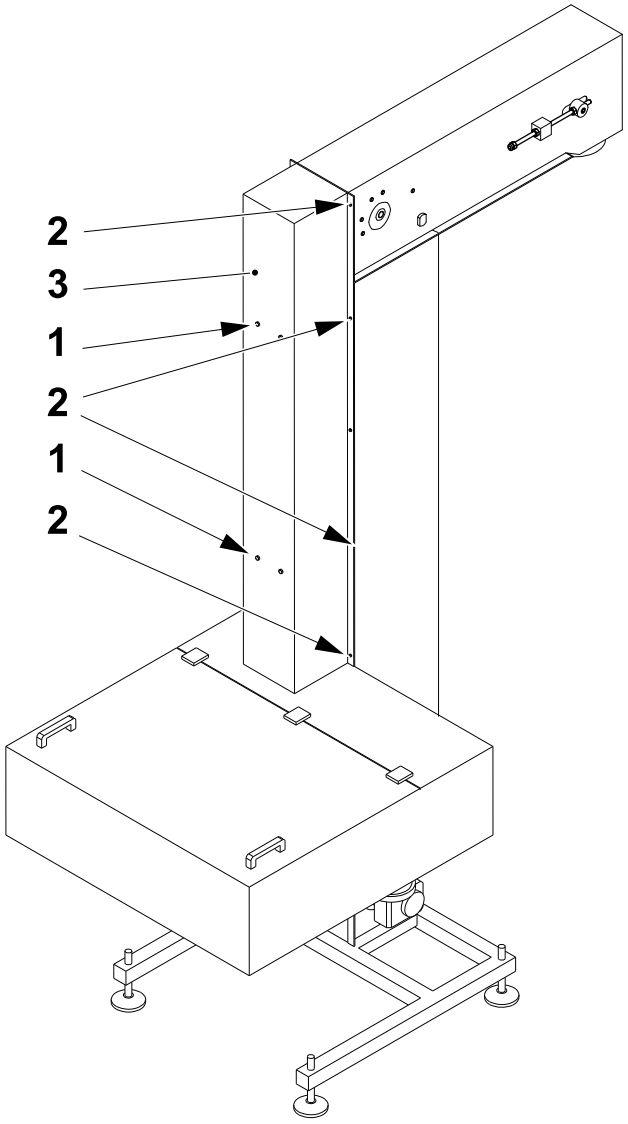

1 Screw
2 Screw
3 Cover

(Cont'd)

(Cont'd)

b) At both sides of the elevator, measure and record the distance **A** between the edge of the block (4) and the centre of the boss (5).

c) At both sides of the elevator, loosen the nuts (6) at the sides of the block (4) and reduce the belt tension to a minimum.

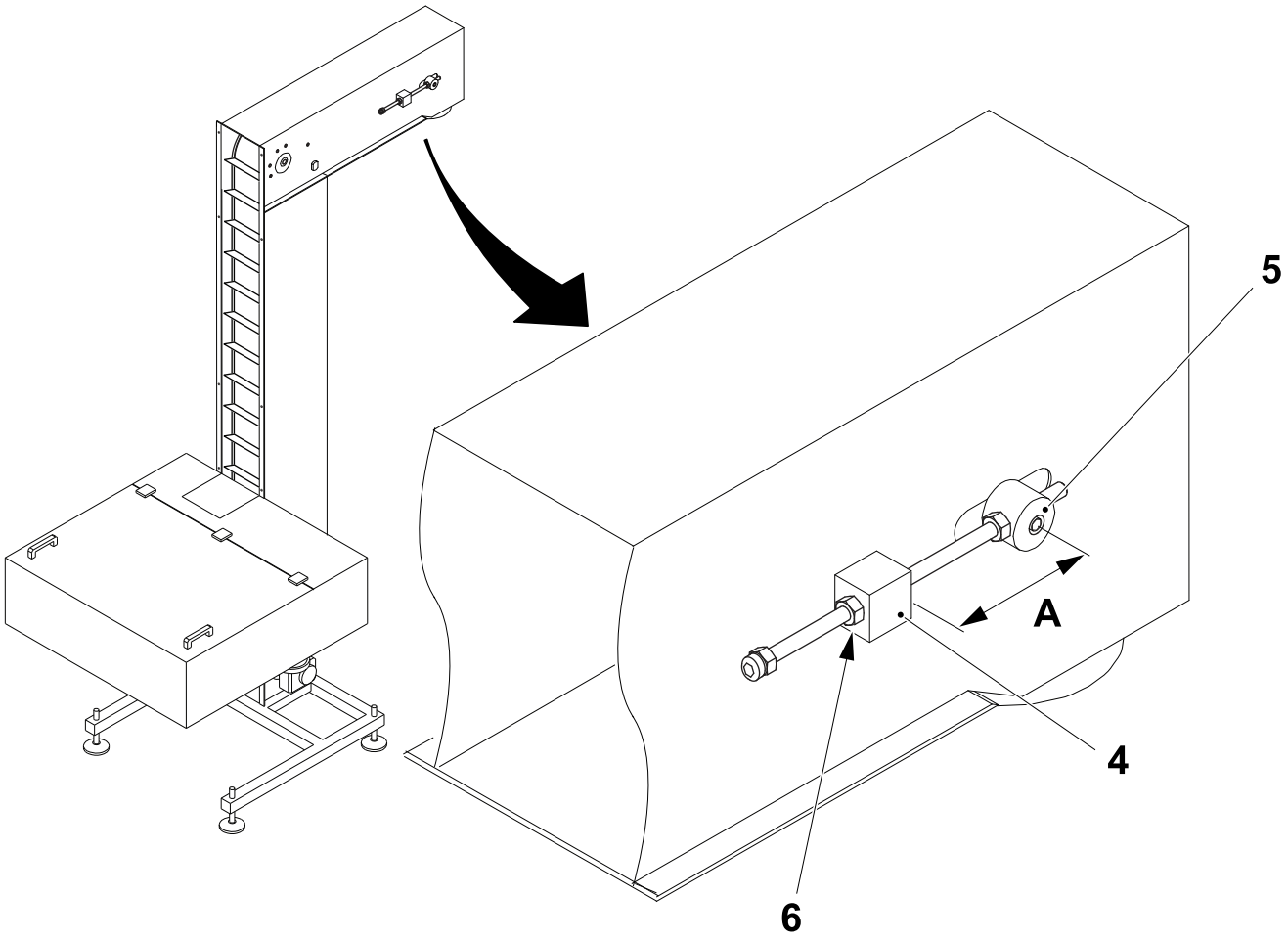

4 Block
5 Boss
6 Nut

(Cont'd)

(Cont'd)

d) Remove the four screw (7) and the transparent plate (8).

e) Remove the four screws (9) and the two guides (10).

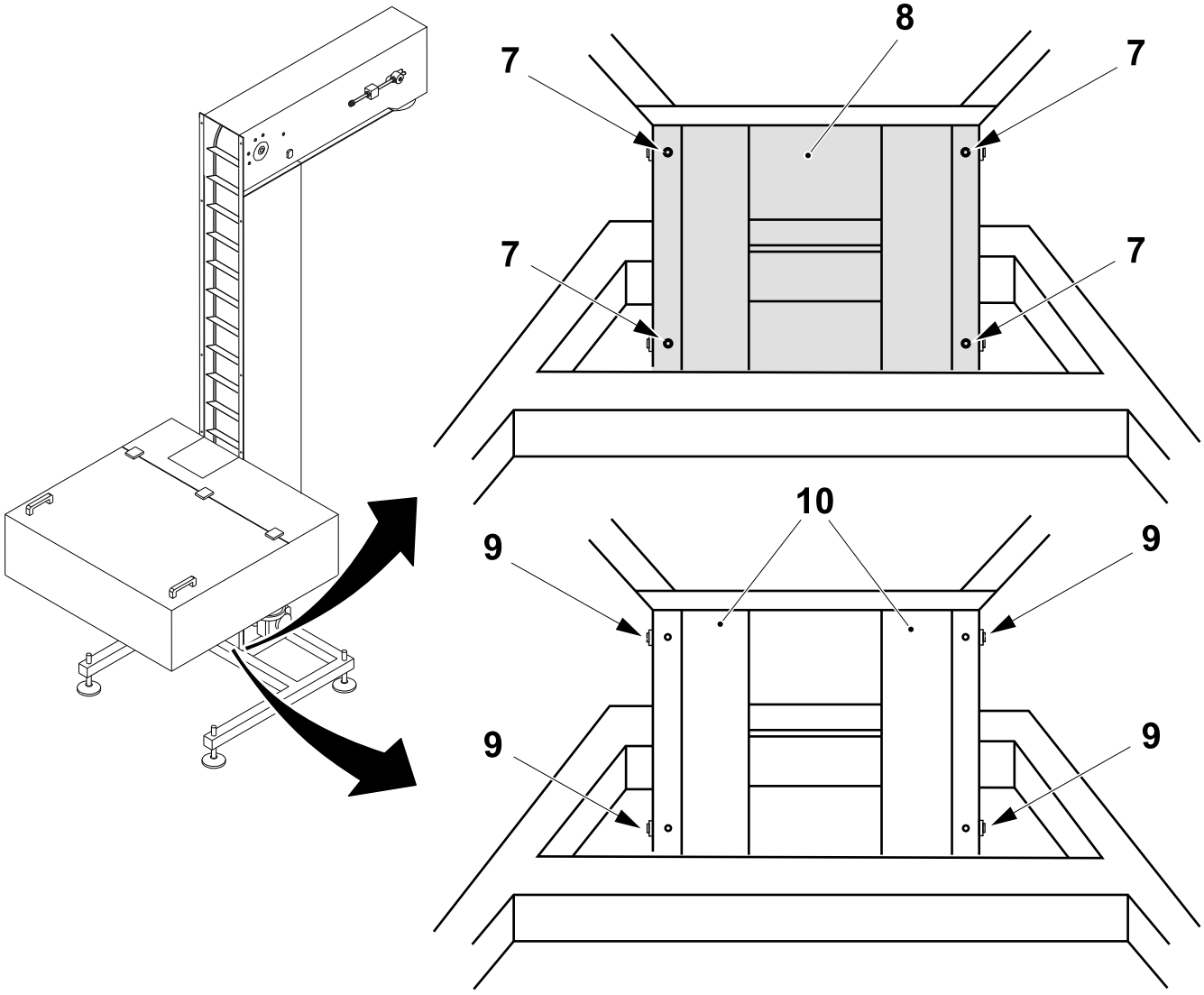

7 Screw
8 Transparent plate
9 Screw
10 Guide

(Cont'd)

(Cont'd)

f) Remove the screws (11) and the cover (12).

g) Remove the screws (13) and the cover (14).

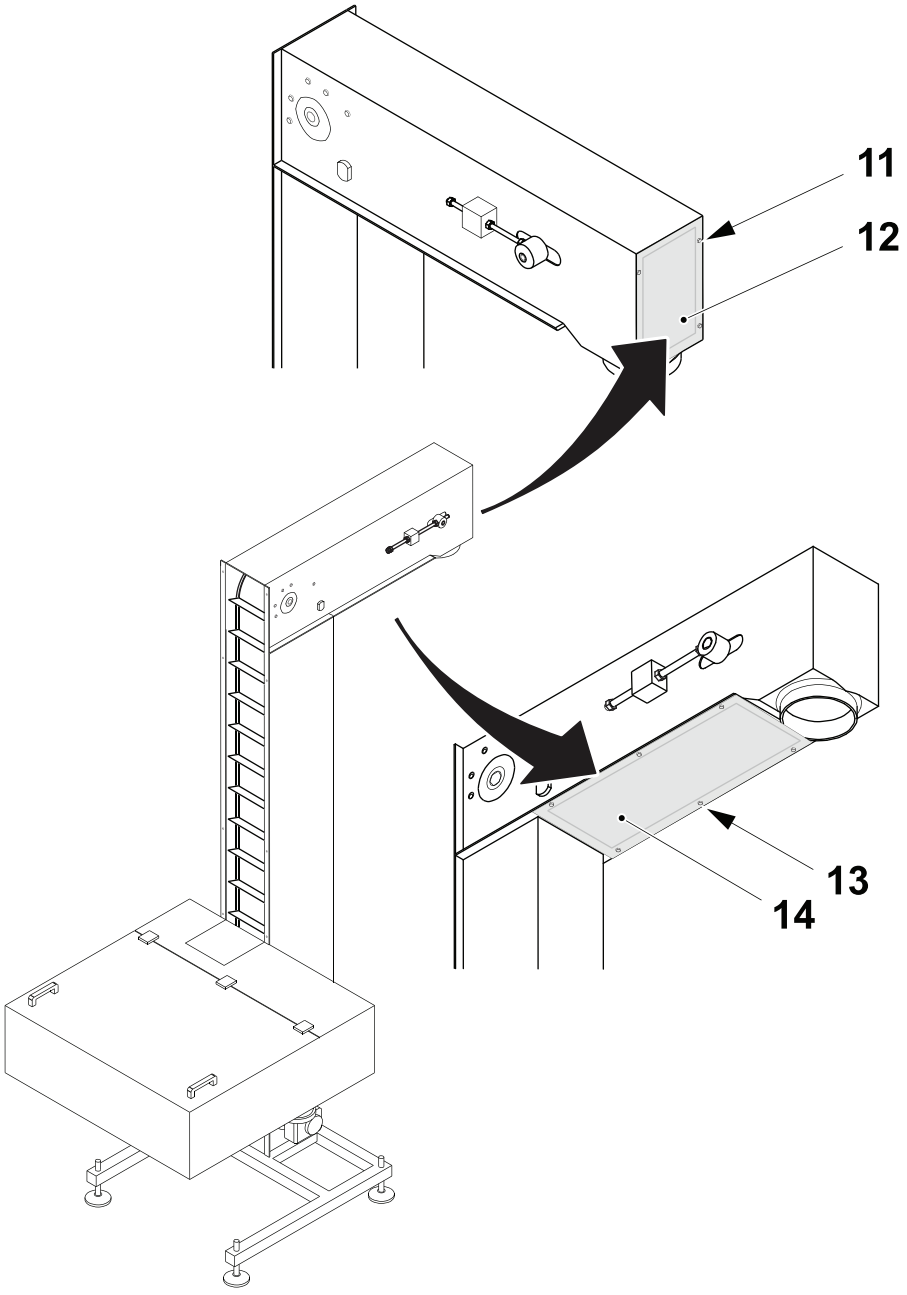

11 Screw
12 Cover
13 Screw
14 Cover

(Cont'd)

(Cont'd)

h) At the side of the column (15), remove the screws (16) and the motor (17). If necessary, change the motor (17).

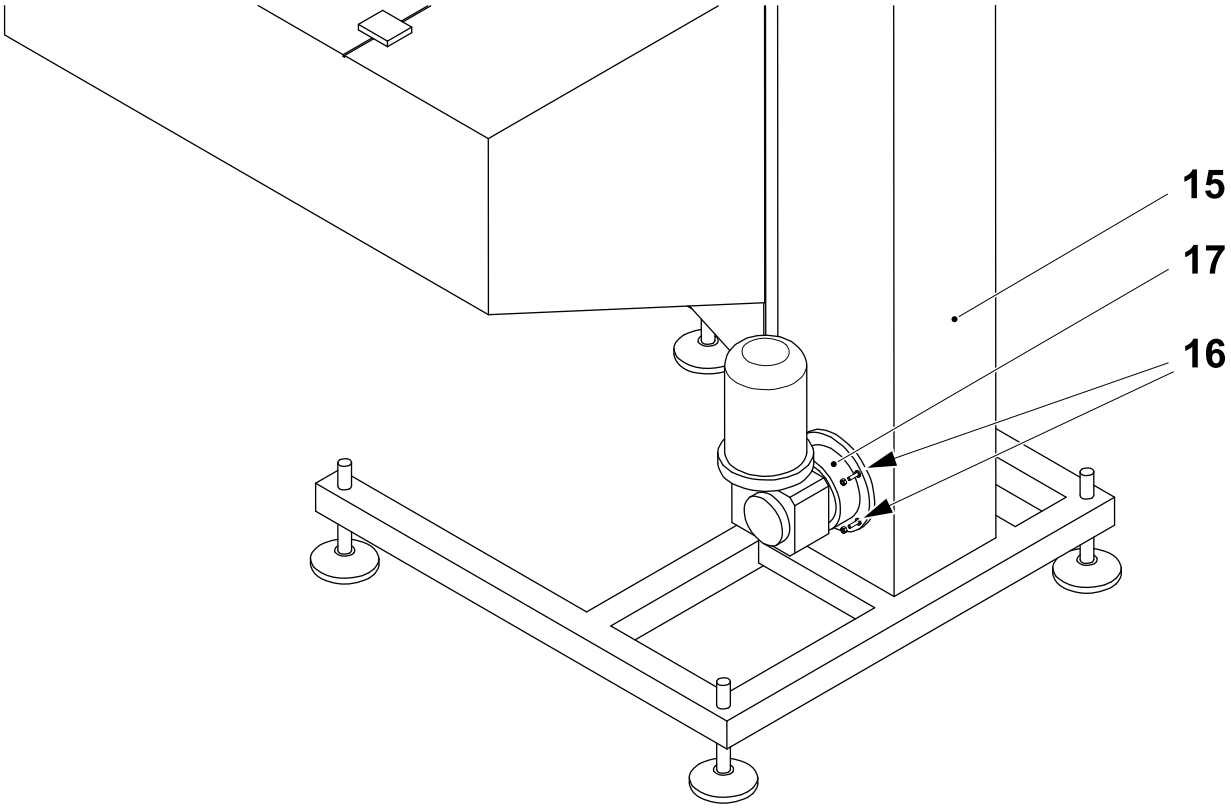

15 Column
16 Screw
17 Motor

(Cont'd)

(Cont'd)

i) At the other side of the column (15), mark the position of the housing (18) with a soft tipped pen or similar.

j) Loosen the screw (19).

k) Loosen the grub screw (20) and remove the centre screw (21).

l) Remove the nuts (22) and pull off the housing (18).

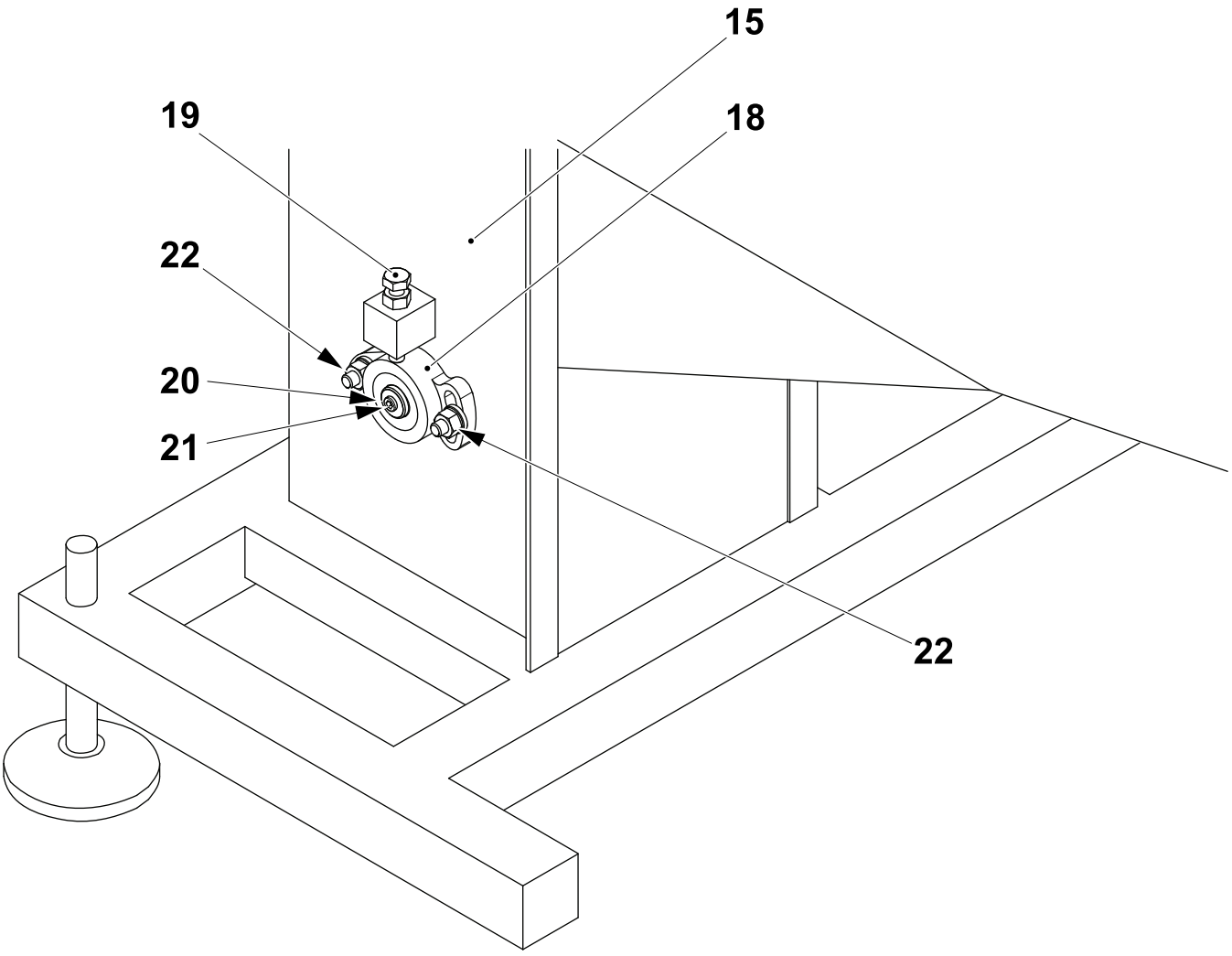

15 Column
18 Housing
19 Screw
20 Grub screw
21 Screw
22 Nut

(Cont'd)

(Cont'd)

Note! Do not remove the guide plate fixing screws (23).

m) At both sides of the elevator, remove the guide fixing screws (24).

n) At one side remove the nut (25) and at both sides of the elevator, remove the screws (26) from the roller (27).

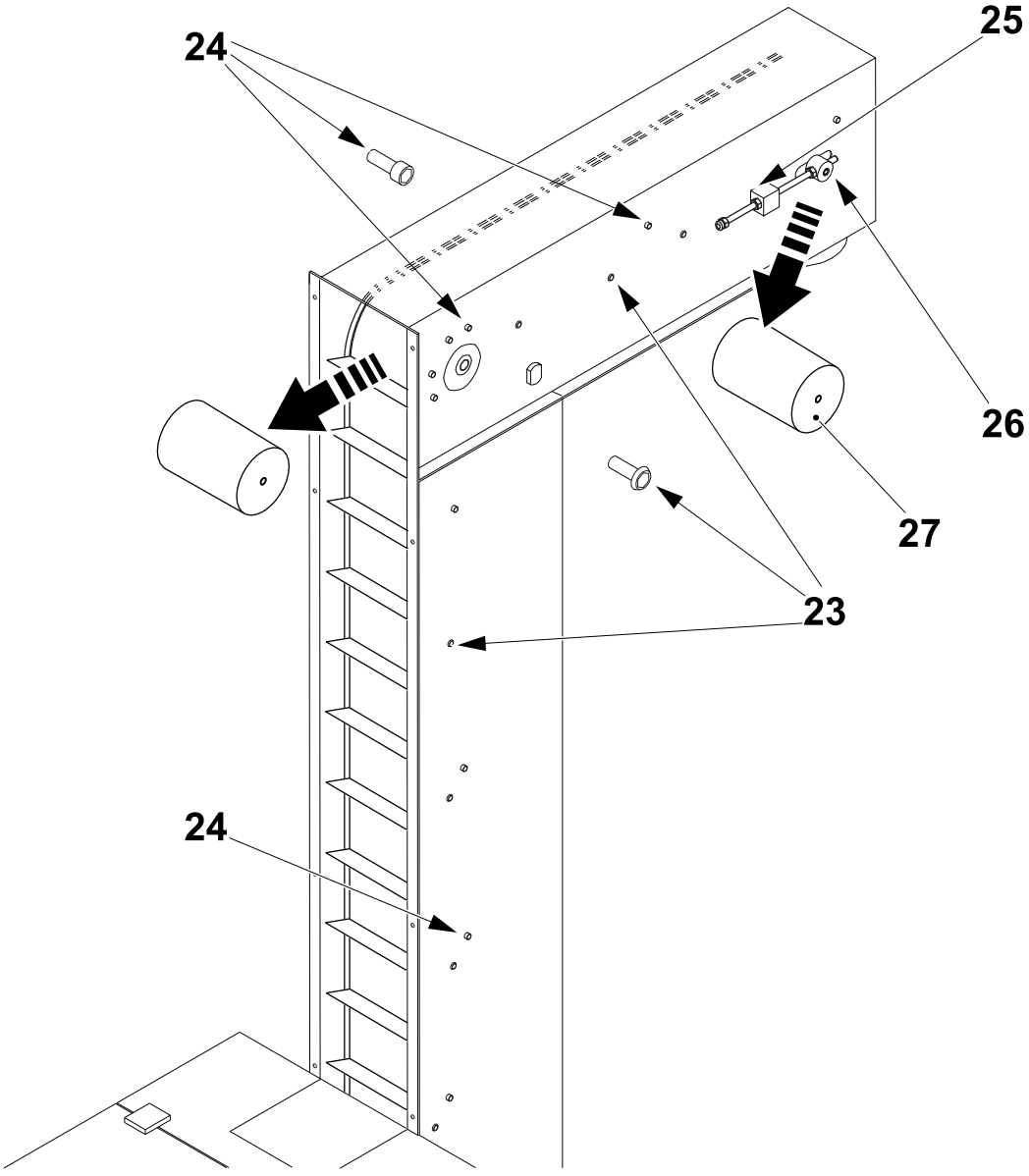

23 Screw
24 Screw
25 Nut
26 Screw
27 Roller

(Cont'd)

(Cont'd)

o) At both sides of the elevator, remove the screw (28) from the roller (29).

p) Remove the roller (27), the roller (29) and the guide (30), the guide (31) and the guide (32). If necessary, change the roller (27) and the roller (29).

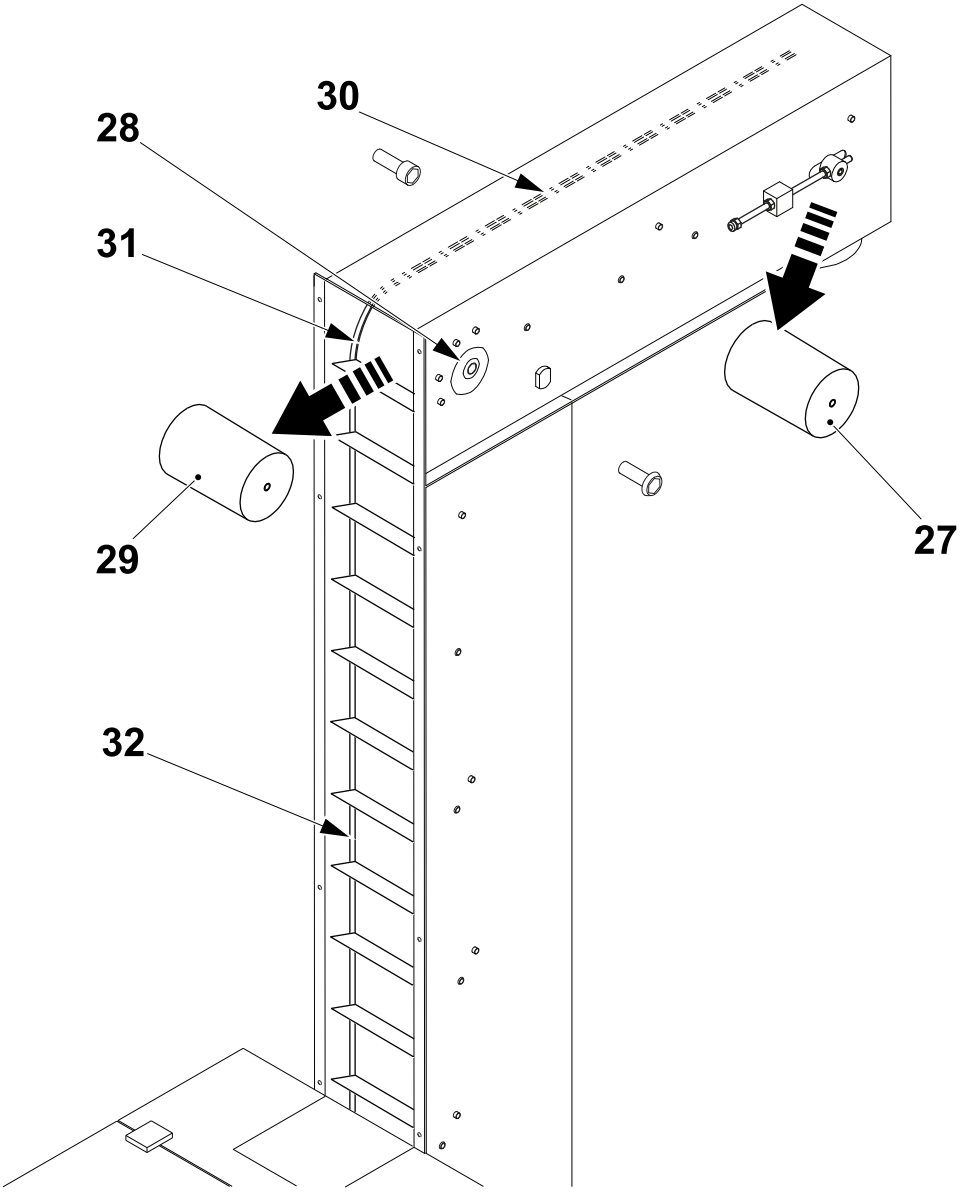

27 Roller
28 Screw
29 Roller
30 Guide
31 Guide
32 Guide

(Cont'd)

(Cont'd)

q) At the bottom of the elevator, remove the roller (33). If necessary, change the roller (33).

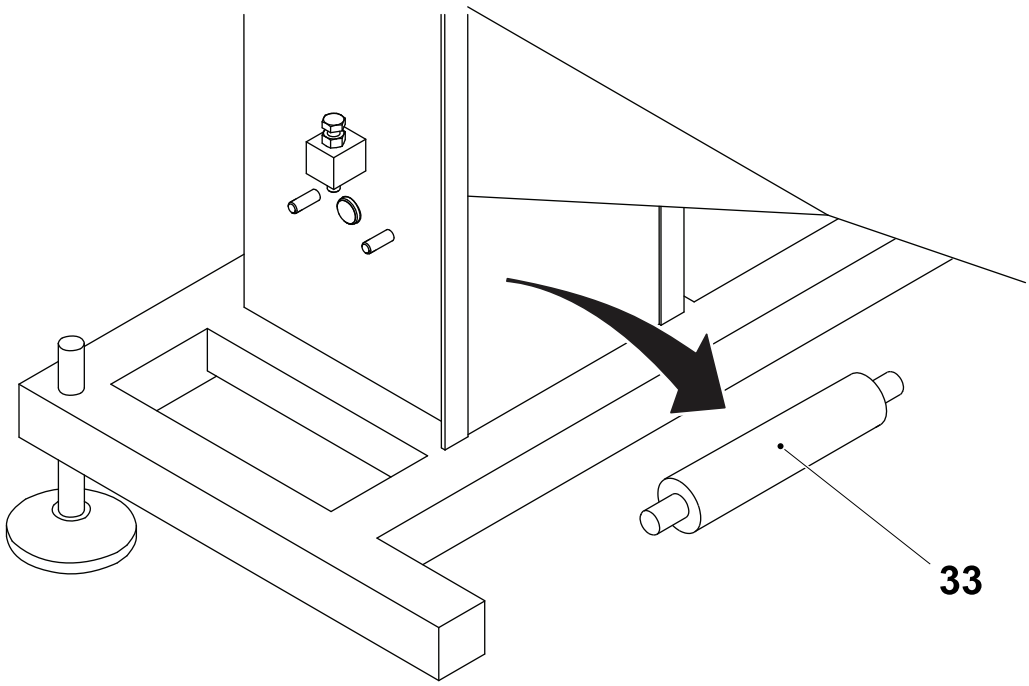

33 Roller

(Cont'd)

(Cont'd)

r) At both sides of the elevator, remove the guide plate fixing screws (23).

s) Remove the guide plate (34) and the guide plate (35) together with the belt (36). If necessary, change the belt (36).

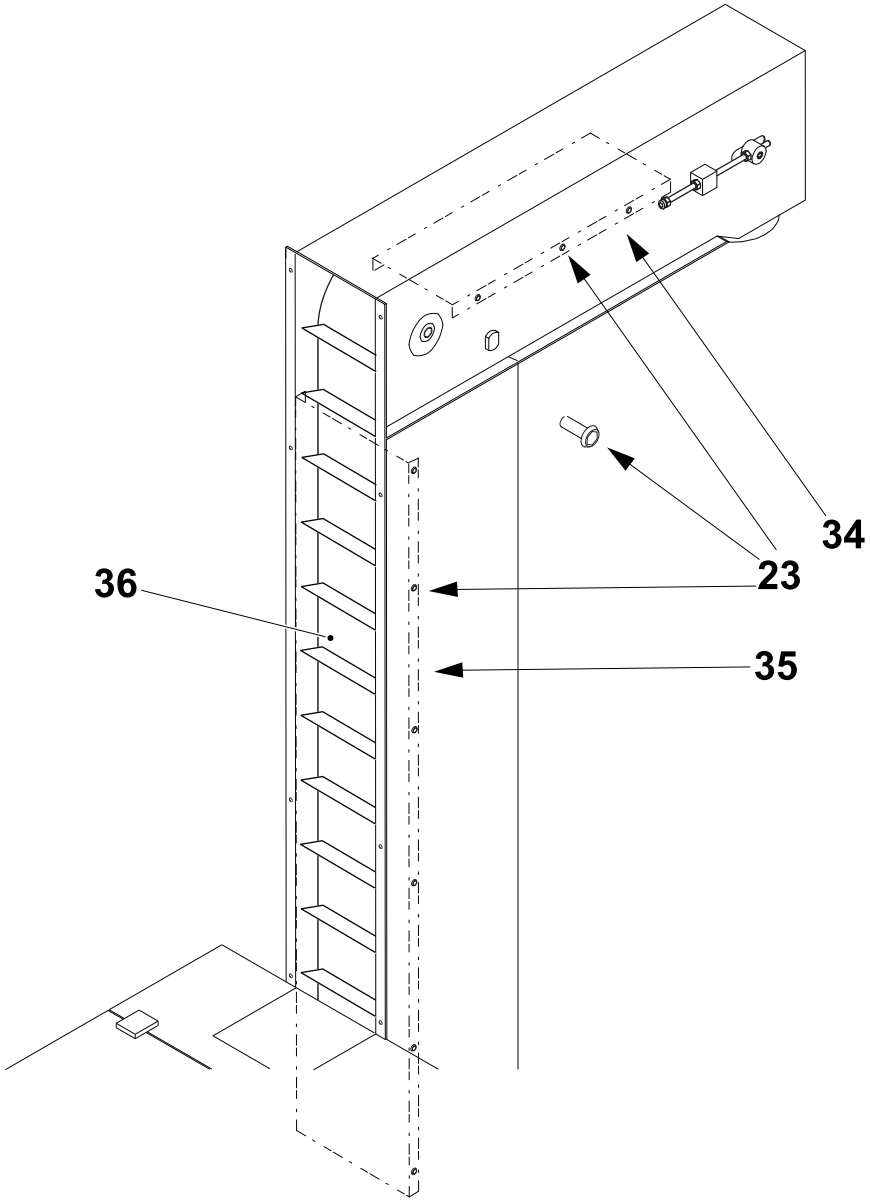

23 Screw
34 Guide plate
35 Guide plate
36 Belt

(Cont'd)

(Cont'd)

Note! When assembling the new belt, make sure that it is fitted with the teeth (37) on the belt (36) pointing upward in the direction of travel as shown.

t) Assemble in the reverse order.

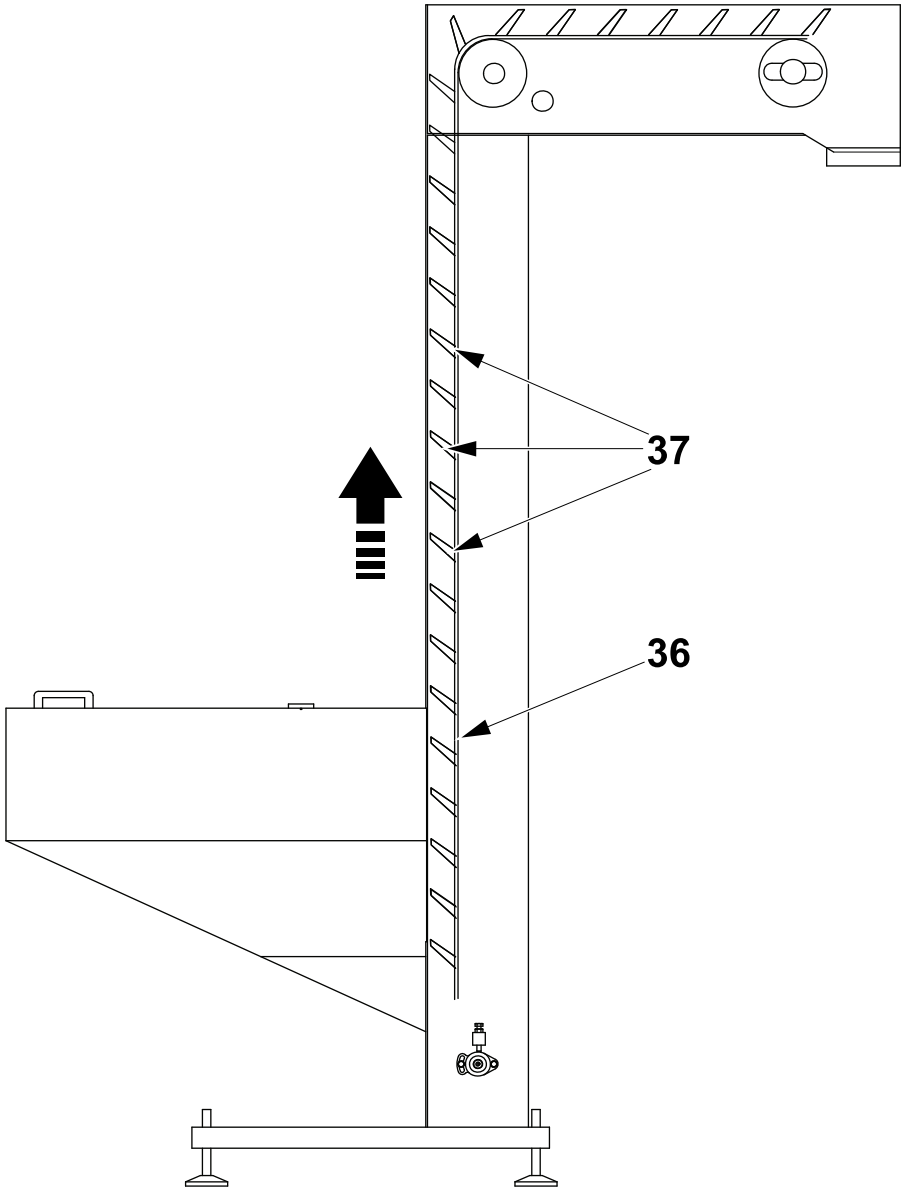

36 Belt
37 Teeth

5.3.1-4 Elevator - Lubricate

Machine Status	Electrical supply disconnecting device in position O (OFF) Main air valve OFF
Special Equipment	Kluber Grease Gun - TP No. 90604-5444
Consumables	Klübersynth UH1 14-151 TP No: 344407-0000
SPC Reference	662904-0300

Lubricate the bearing housing (1) with grease Klübersynth UH1 14-151 (TP No. 344407-0000).

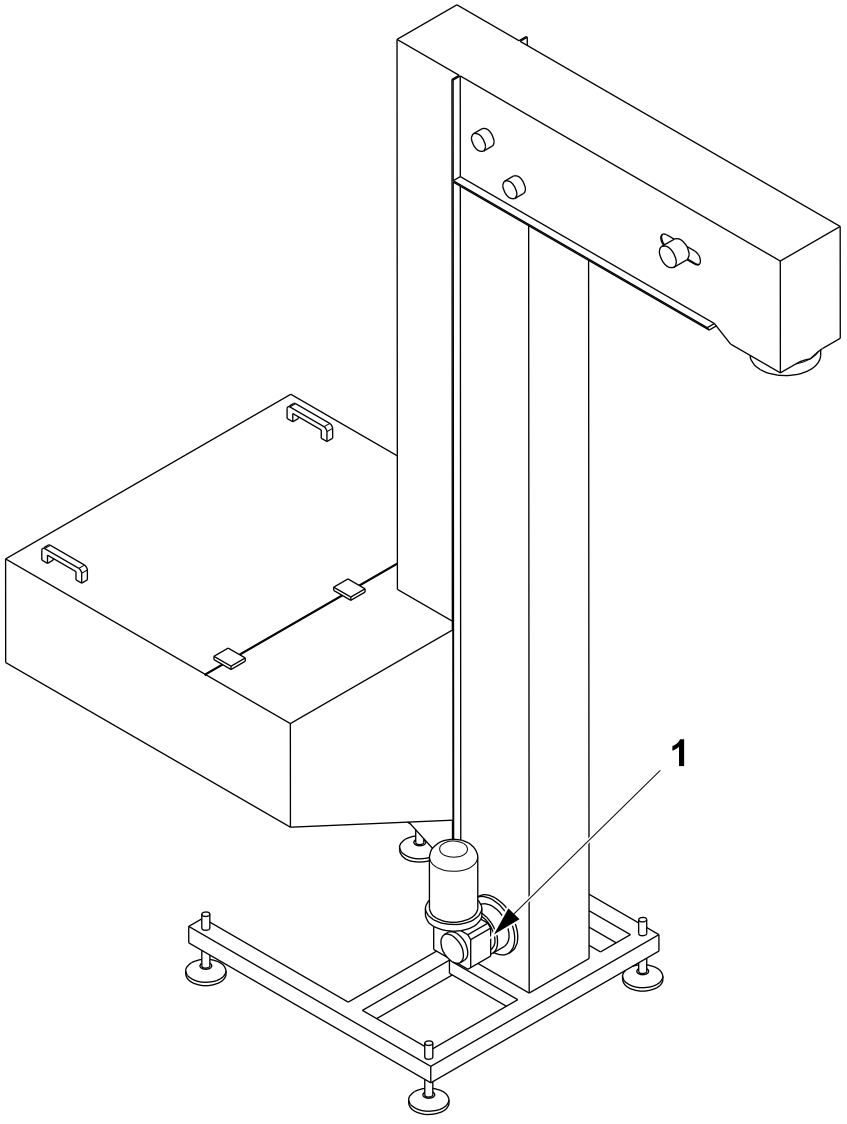

1 Bearing housing

5.4 Feeder

5.4.1 Feeder - Check

5.4.1-1 Feeder - Check Function

Machine Status	STEP 3
SPC Reference	662904-0300

Note! Before the machine is started, make sure that the inspection hatch on the infeeder is fitted.

Check the infeeder to avoid the following incidents:

- incorrectly delivered caps
- damaged caps
- capacity too low
- disc not rotating.

If a problem is found, see 5.4.2 Feeder - Troubleshooting.

Incorrect Delivered Caps

If the infeeder delivers caps rotated 180º. Check the brush (1) . See 5.4.1-6 Feeder - Change Brush.

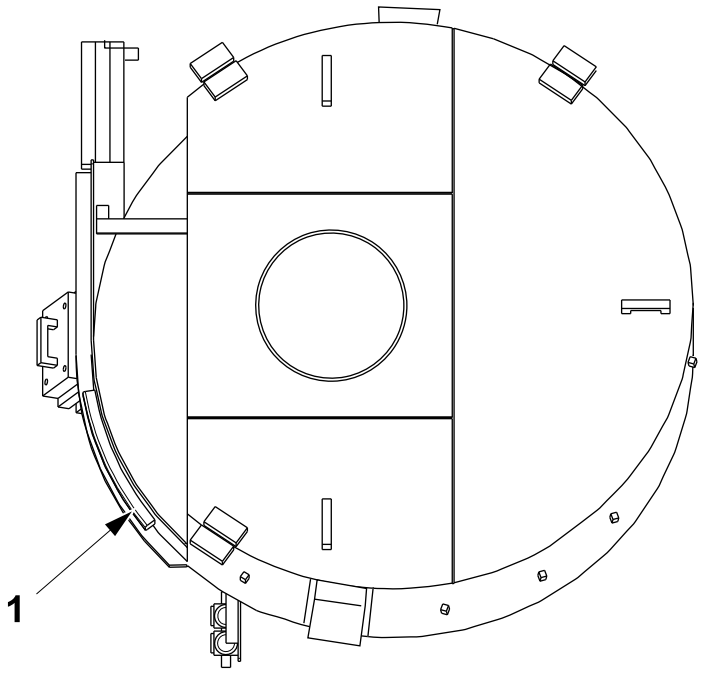

1 Brush

(Cont'd)

(Cont'd)

Disc Not Rotating

a) If the disc (1) in the infeeder does not rotate when the machine is running, look for trapped caps. If there are no trapped caps, check that the friction torque limiter (2) is in the correct position.

Note! The friction torque limiter (2) must be fully tightened down.

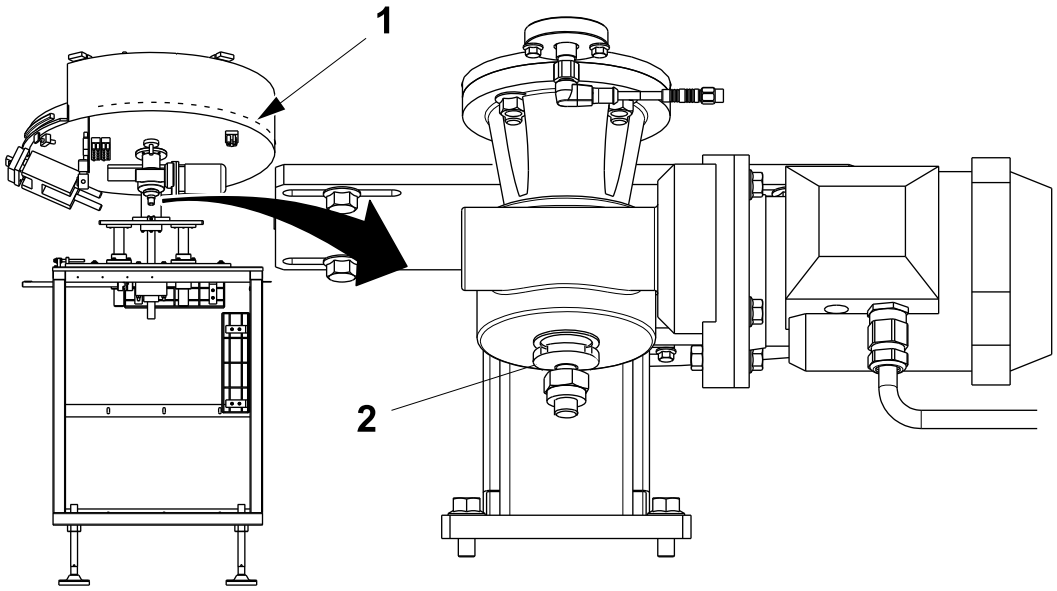

1 Disc
2 Friction torque limiter

5.4.1-2 Feeder - Check Air Injectors

Machine Status	step3
SPC Reference	662904-0300

a) Check that the injectors are clear and blowing air.

b) Check the location of the air injectors as shown below.

c) Check the height of the air injectors, see 5.4.1-3 Feeder - Set Air Injector Positions.

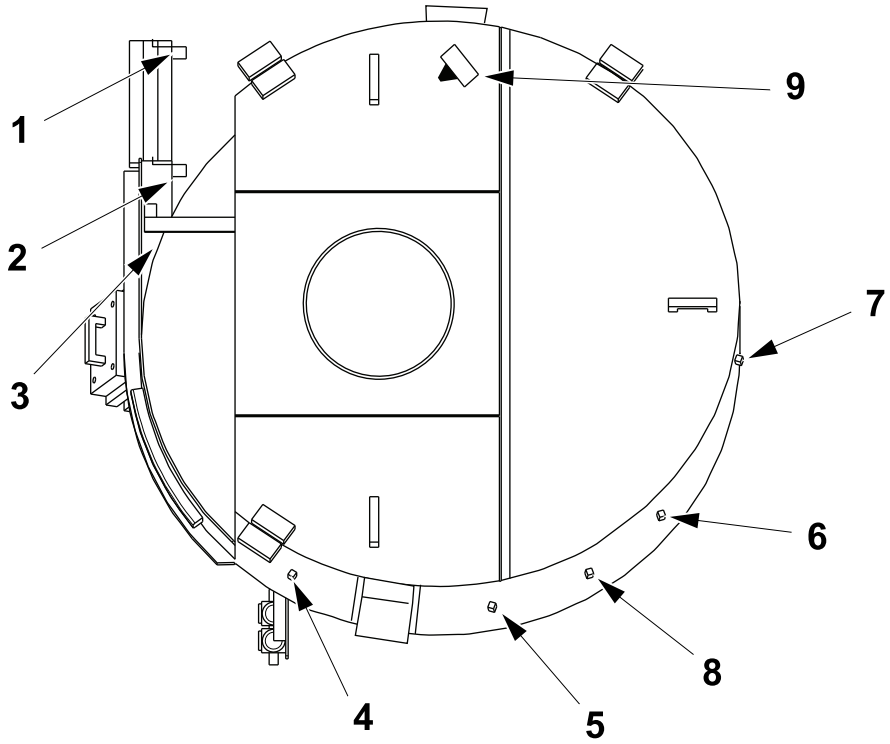

1 Air injector 1 Bar for G50G1064 STR 200 only
2 Air injector 1 Bar for G50G1064
3 Air injector 1 Bar for G50G1072 HeliCap only
4 Air injector 3 Bar for G50G1066
5 Air injector 4 Bar for G50G1068
6 Air injector 4 Bar for G50G1067
7 Air injector 3 Bar for G50G1065
8 Air injector 4 Bar G50G1069 for all except ST200, Slim1000 and Helicap2 23
9 Airblow nozzle 4 Bar G50G1069 ST200, and Helicap2 23 only

5.4.1-3 Feeder - Set Air Injector Positions

Machine Status	STEP 3
SPC Reference	662904-0300

a) Remove the nuts (1) if necessary and install the air injector (2) and the blanking plate (3) in the correct position, see the table on the next page.

b) The air hose (4) is shown in the lower position (5) and the blanking plate in the upper position (6).

Note! When the single position (7) is not used for the G50G1069 it is blanked off, see the table on the next page.

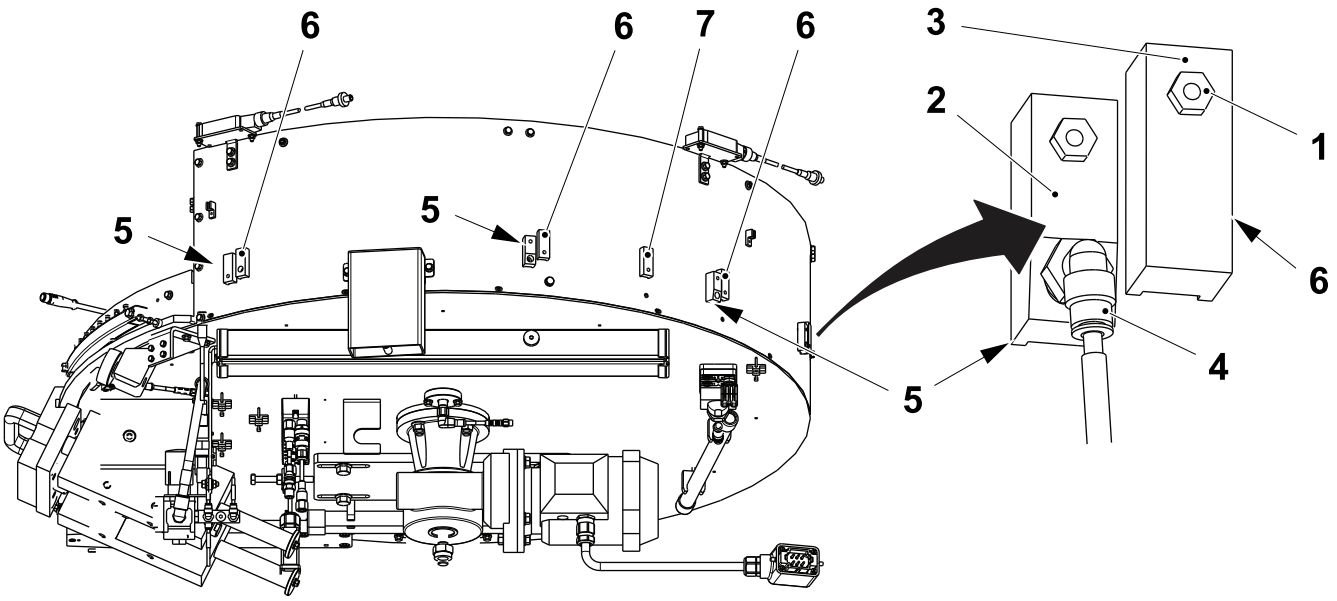

1 Nut
2 Injector
3 Blanking plate
4 Air hose
5 Lower position
6 Upper position
7 Single position

(Cont'd)

(Cont'd)

Theoretical positions for the injectors.

Upper Position (6)	Lower Position (5)	G50G1066		G50G1068		G50G1069 Single pos (7)		G50G1067		G50G1065	
		Amm	Bmm	Amm	Bmm	Amm	Bmm	Amm	Bmm	Amm	Bmm
StreamCap 500		86.5	59	505.5	58	657.5	58	792.5	60	1042.5	64
StreamCap 1000		86.5	59	505.5	58	657.5	58	792.5	60	1042.5	64
SlimCap 2000		86.5	59	505.5	58	657.5	58	792.5	60	1042.5	64
HeliCap 27		86.5	59	505.5	58	657.5	58	792.5	60	1042.5	64
	StreamCap 200	60.5	53	485.5	51			772.5	51	1022.5	59
	SlimCap 1000	60.5	53	485.5	51			772.5	51	1022.5	59
	HeliCap2 23	86.5	59	485.5	51			772.5	51	1022.5	59

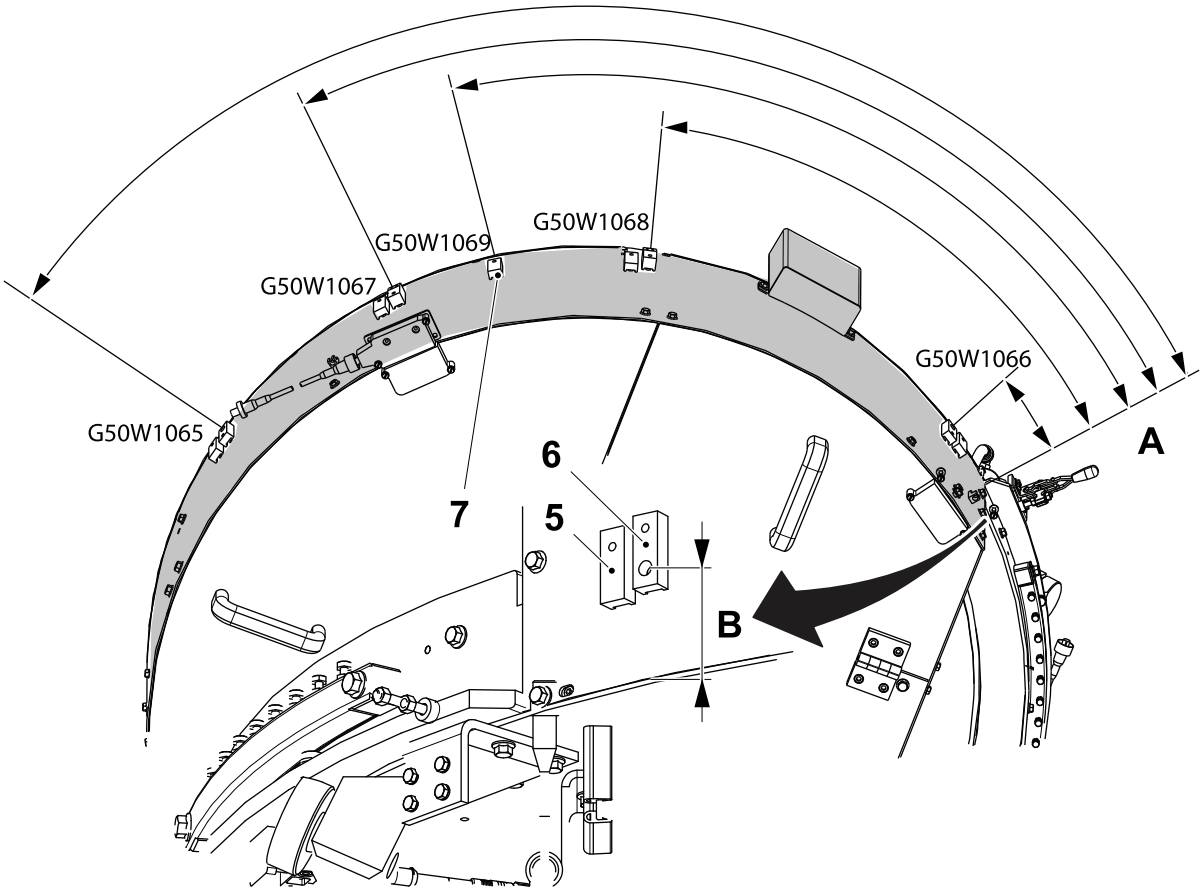

5 Lower position
6 Upper position
7 Single position

(Cont'd)

(Cont'd)

Install the plug (8) for SlimCap 1000 or install the connector (9) if the StreamCap 200, 500, 1000, SlimCap 2000, HeliCap2 23 or HeliCap27 are required.

Note! Always check the SPC for the correct part number.

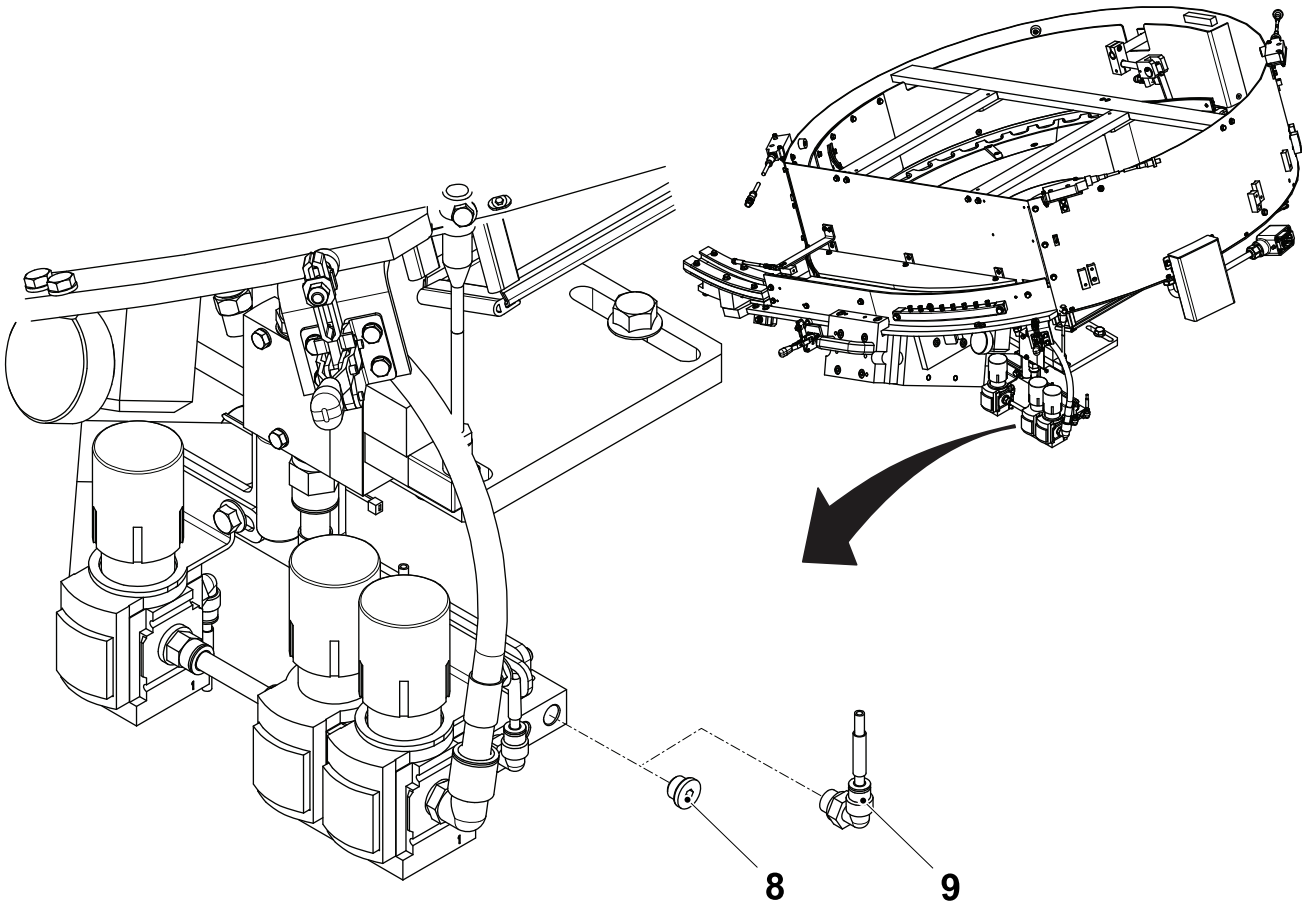

8 Plug
9 Connector

5.4.1-4 Feeder - Set Cam Positions

Machine Status	STEP 3
SPC Reference	662904-0300

a) Install the cam (1), cam (2), and the cam (3) in the correct position and combination using the screws (4).

Cam Position 3	Cam Position 2	Cam Position 1
StreamCap 200		
StreamCap 500		StreamCap 500
StreamCap 1000		StreamCap 1000
SlimCap 1000		SlimCap 1000
SlimCap 2000		SlimCap 2000
HeliCap2 23		HeliCap2 23
HeliCap 27		HeliCap 27

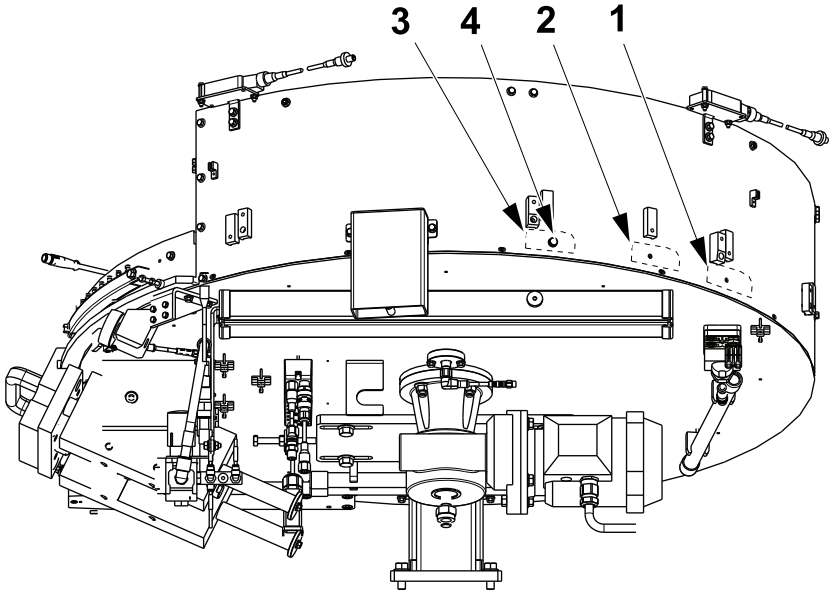

1 Cam
2 Cam
3 Cam
4 Screw

5.4.1-5 Feeder - Change Discharger

Machine Status	Electrical supply disconnecting device in position O (OFF) Main air valve OFF
SPC Reference	662904-0300

Cap Sorter Discharger Removal

a) Loosen the screws (1) and remove the discharger (2).

b) Remove the pins (3), if present.

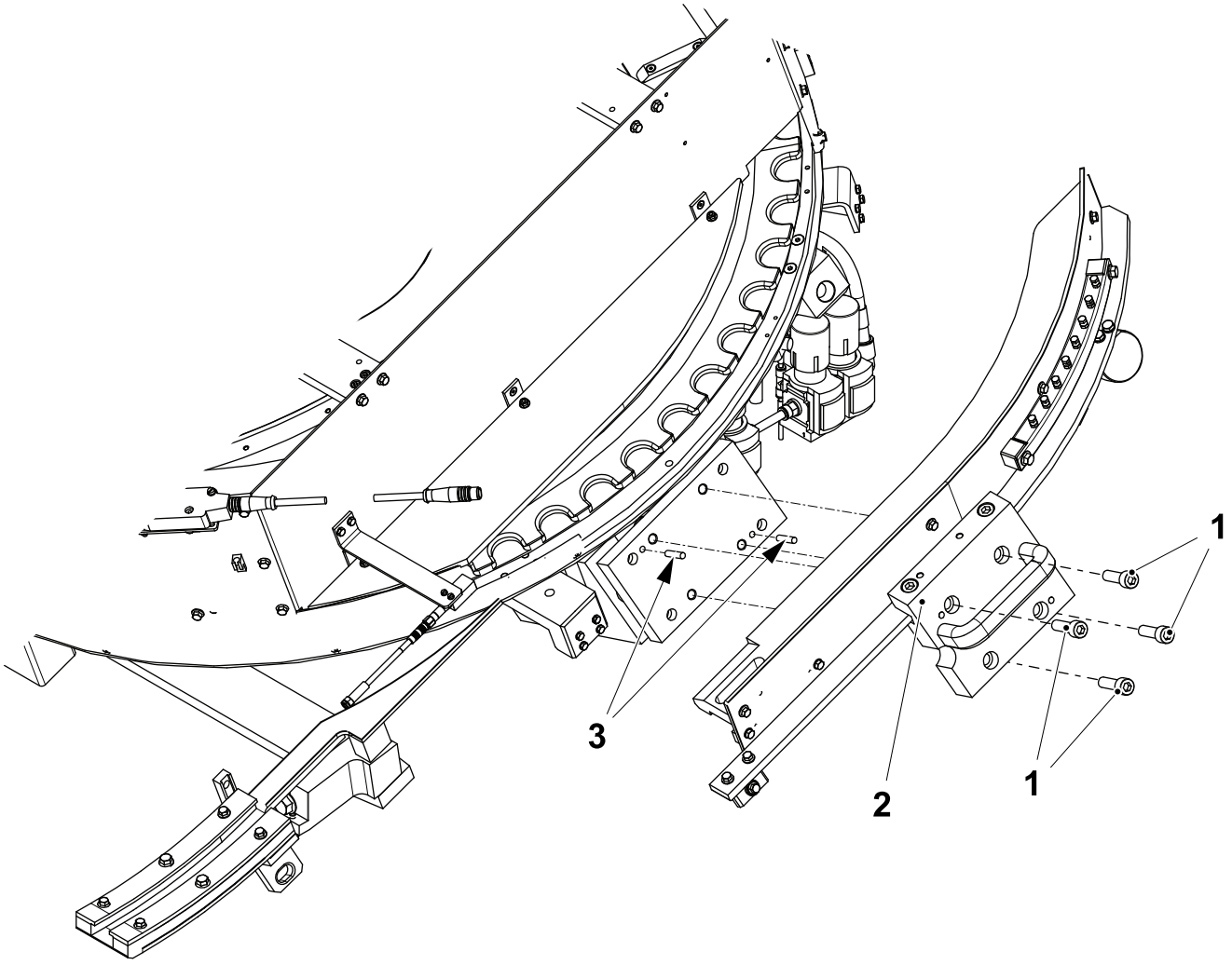

1 Screw
2 Discharger
3 Pin

(Cont'd)

(Cont'd)

Replace Chute

a) Loosen the screw (1) and remove the chute (2), if required.

b) Install the new chute (2) and tighten the screw (1).

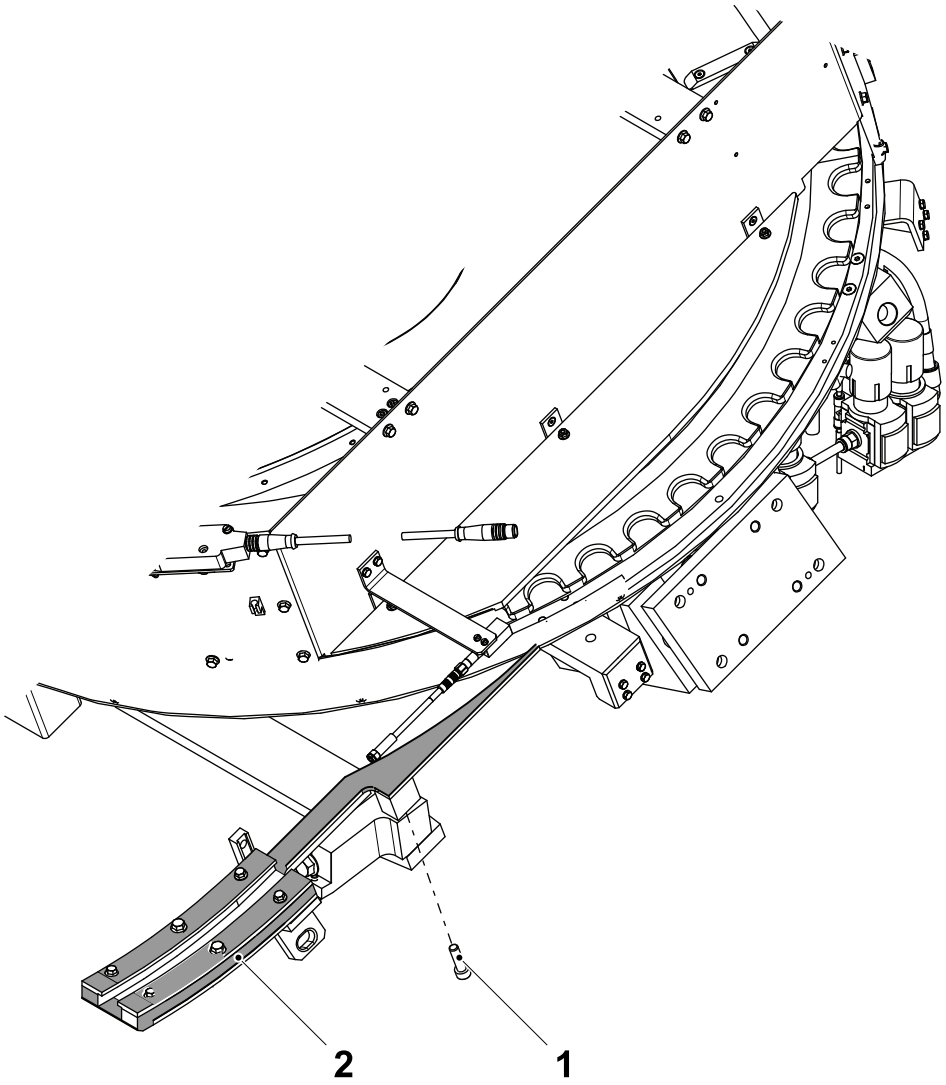

1 Screw
2 Chute

(Cont'd)

(Cont'd)

Cap Sorter Discharger Installation

a) Loosen without removal, the screws (1) and the screws (2).

b) Put in position the discharger (3).

c) Push downward the discharger (3) and tighten the screws (4).

d) Tighten the screws (1) and the screws (2).

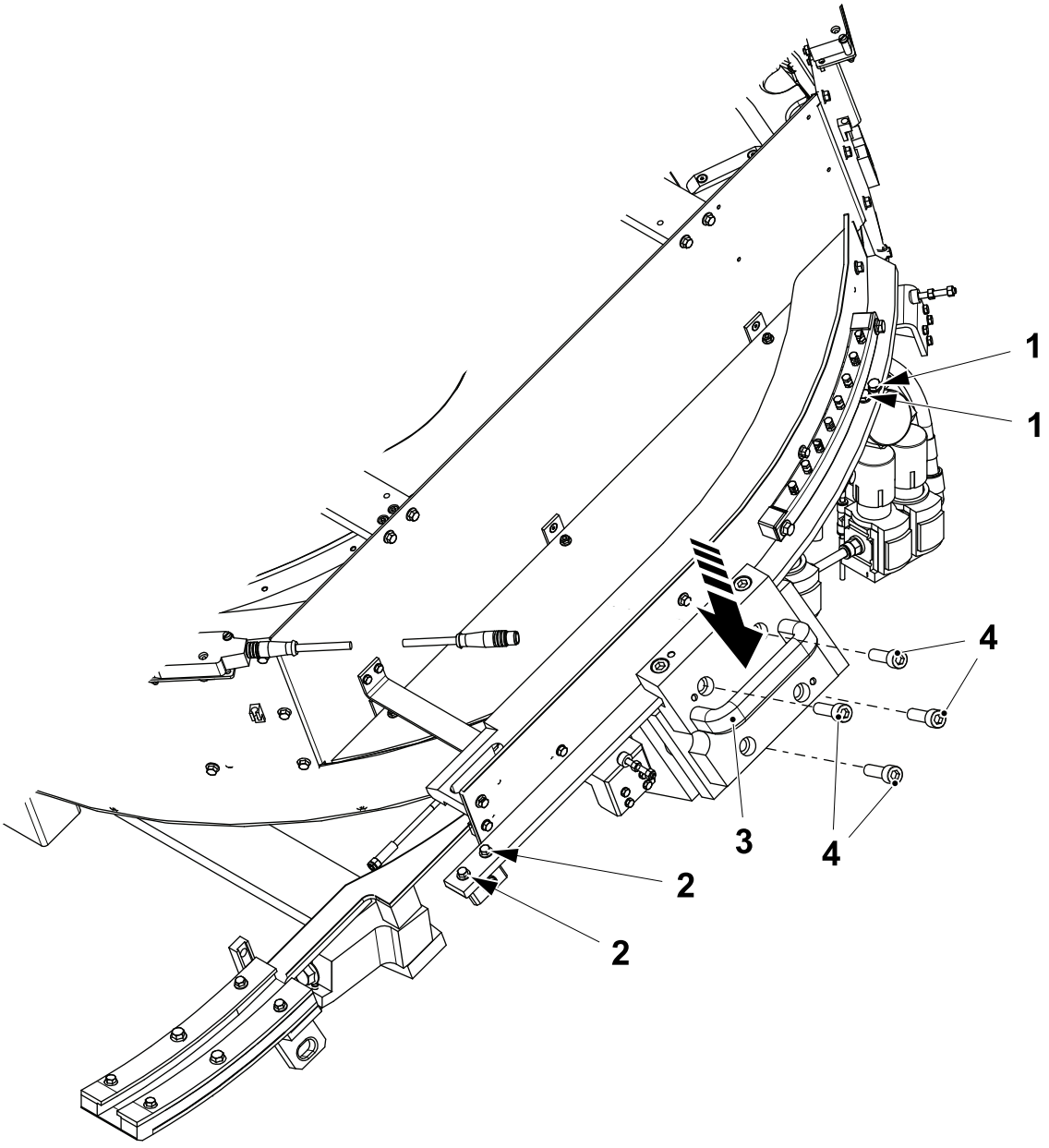

1 Screw
2 Screw
3 Discharger
4 Screw

(Cont'd)

(Cont'd)

e) When the procedure is correct the discharger (3) is closest to the reference surface (5) .

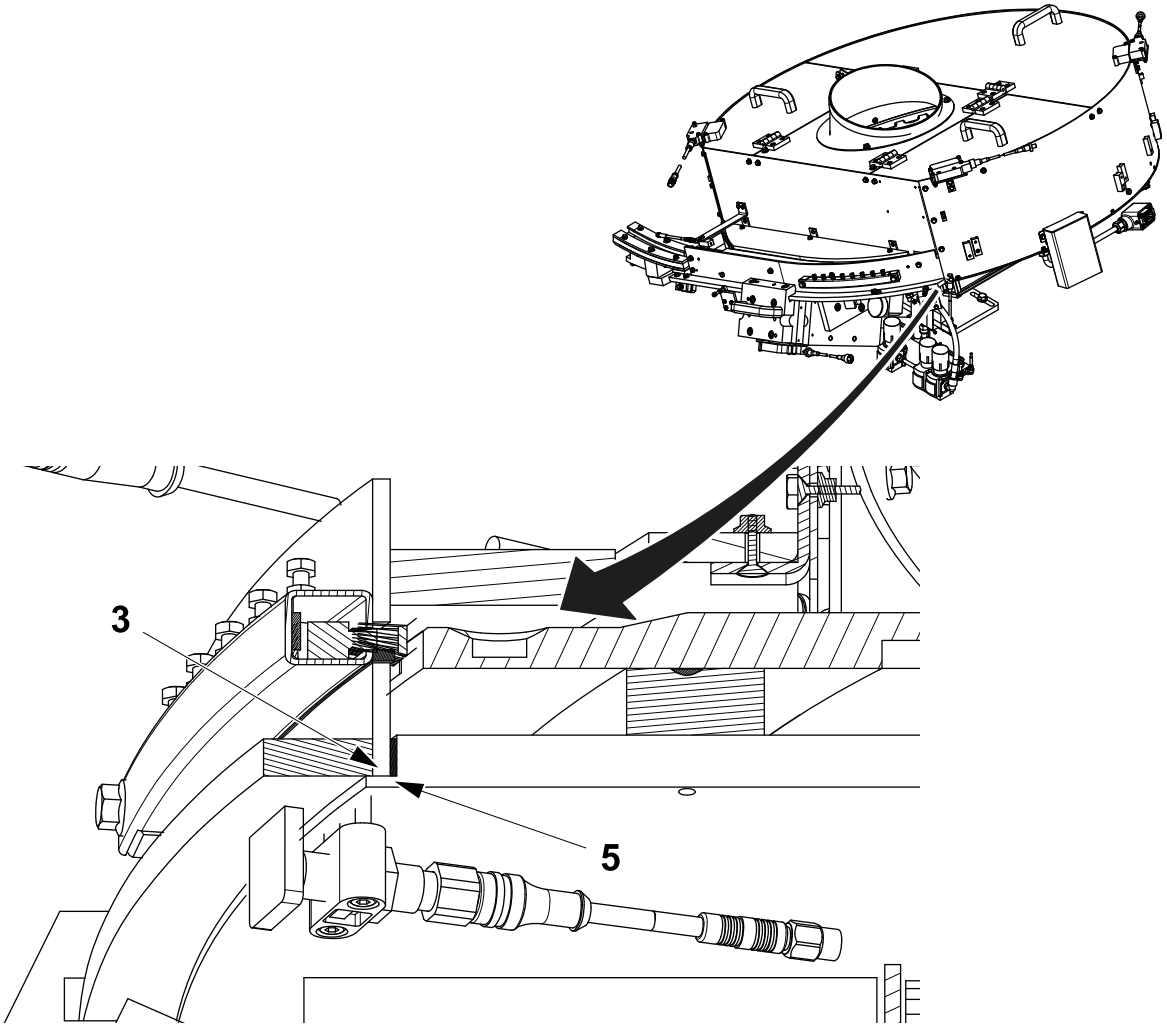

3 Discharger
5 Reference surface

(Cont'd)

(Cont'd)

Cap Sorter Discharger Lock

a) Lift the locking handle (1) and the locking handle (2) up to lock the discharger (3) in the correct position.

Note! Check that the locking handles keep the discharger (3) pushed in the correct position. If the discharger (3) changes its position after the locking handle (1) and the locking handle (2) have been locked, proceed with the instruction b).

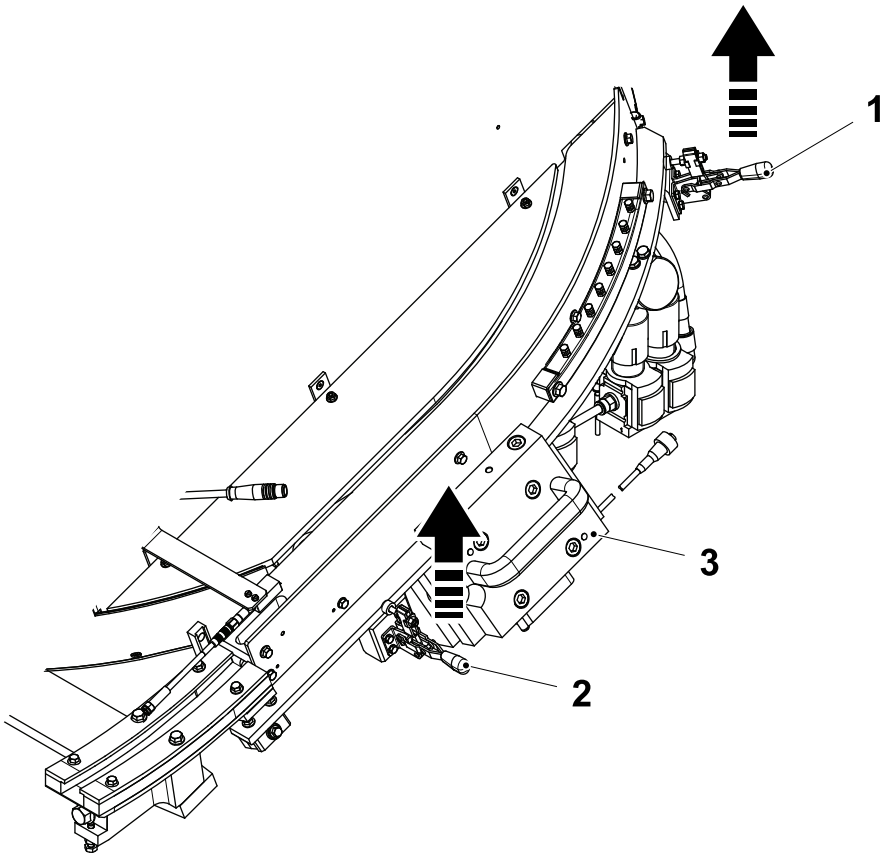

1 Locking handle
2 Locking handle
3 Discharger

(Cont'd)

(Cont'd)

b) For each of the locking handles, remove the cap (4), if present.

c) Tighten the screw (5) (one rotation can be enough) to increase the distance **A**.

d) Adjust the position of the screw (6).

e) Repeat from point a) on previous page.

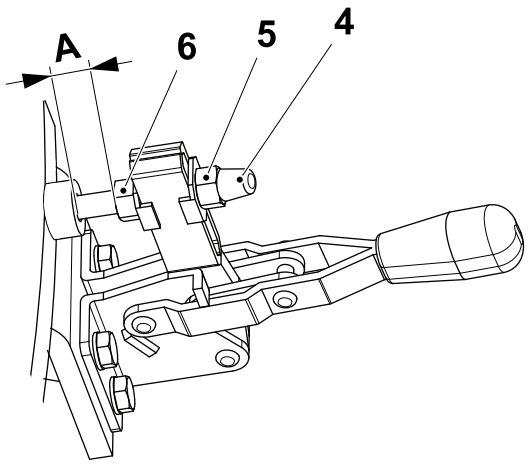

4 Cap
5 Screw
6 Screw

5.4.1-6 Feeder - Change Brush

Machine Status	Electrical supply disconnecting device in position O (OFF) Main air valve OFF
SPC Reference	662904-0300

a) Loosen the screw (1).

b) Remove the brush holder (2).

c) Loosen the screws (3) of the seven brushes and replace the brushes (4).

Note! There are seven brushes (4) each held in place by the screws (3) .

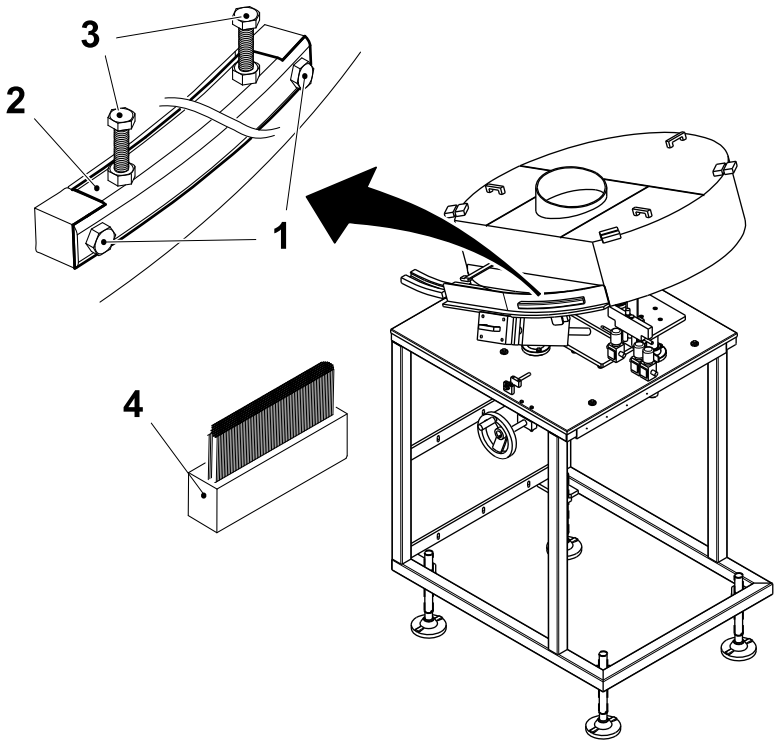

1 Screw
2 Brush holder
3 Screw
4 Brush

5.4.1-7 Cap Sorter - Set X, Y and Z Position

Machine Status	Electrical supply disconnecting device in position O (OFF) Main air valve OFF
SPC Reference	662904-0300

X Position

a) Loosen the four screws (1) to free the plate (2).

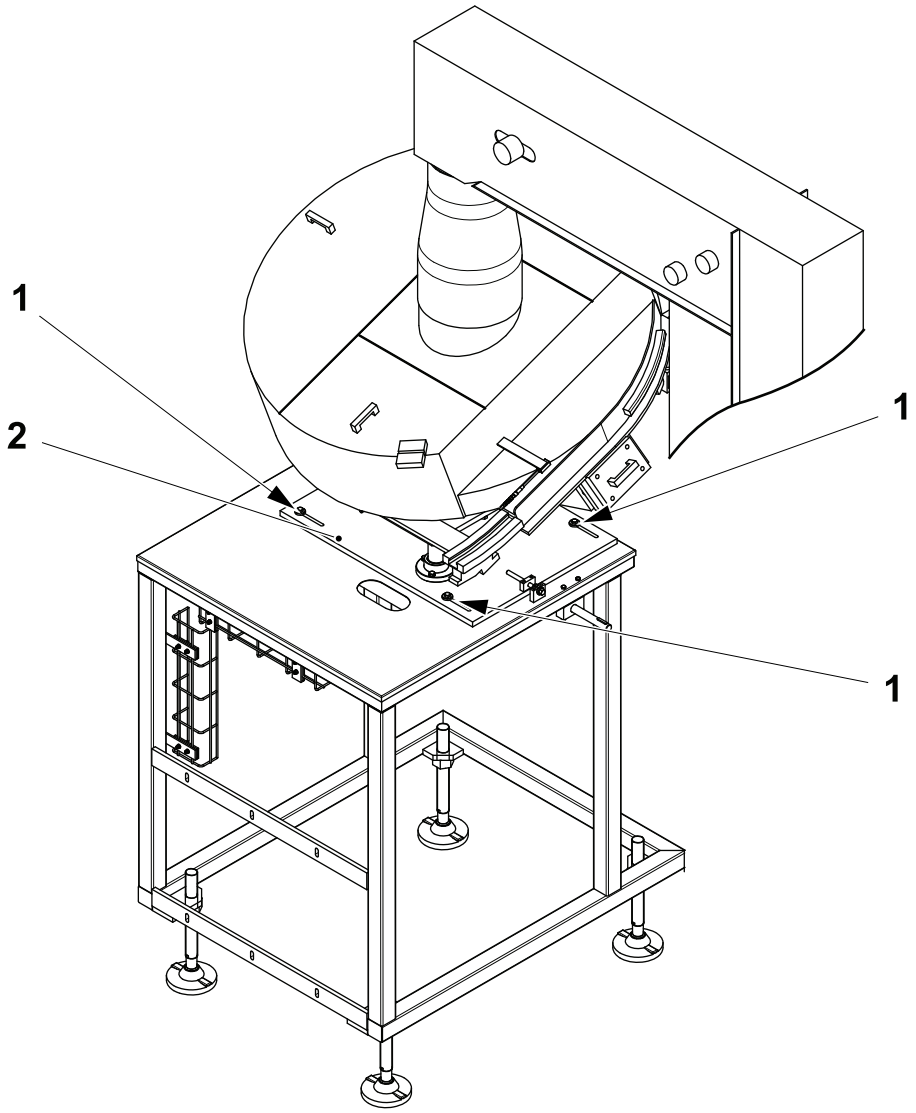

1 Screw
2 Plate

(Cont'd)

(Cont'd)

b) Measure the distance **A** between the beam (3) and the cap conveyor (4).

c) Make the distance **B** between the beam (5) and cap conveyor (4) the same as the distance **A**, by means of the screws (6).

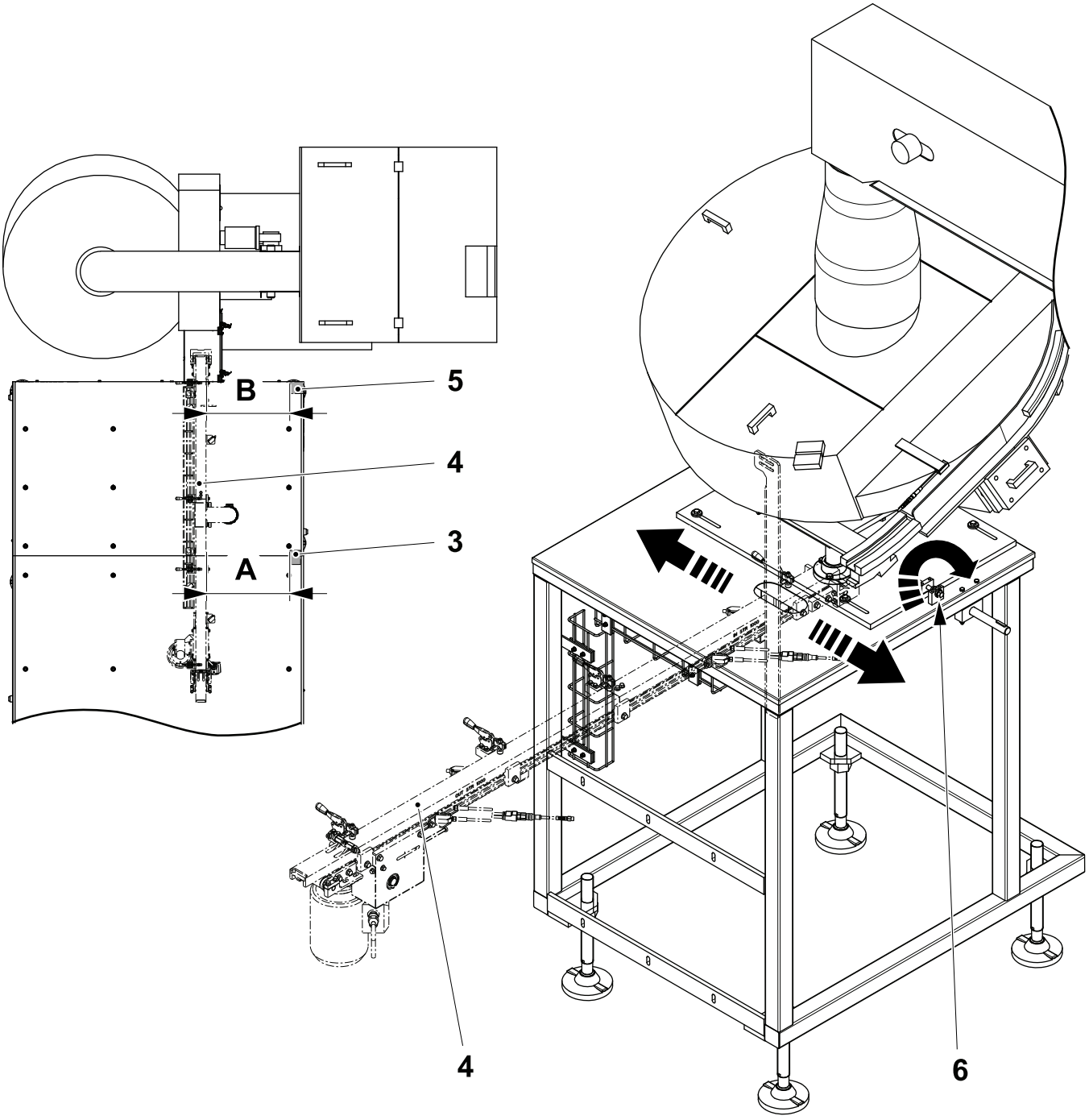

3 Beam
4 Cap conveyor
5 Beam
6 Screw

(Cont'd)

(Cont'd)

Z Position

Note! Always make only small adjustments at one time.

a) Check that the cap conveyor is parallel and level.

b) Use the handle (1) to align the Z direction.

c) Check that the conveyor is level and not stressed after adjustment.

Package	**A ±1 (mm)** Theoretical	**A ±1 (mm)** Actual	**Package**	**A ±1 (mm)** Theoretical	**A ±1 (mm)** Actual
TBA 500 Sq	104		TPA 500 Sq	123	
TBA 1000 Sq	202		TPA 750 Sq	145	
TBA 1000 S	170		TPA 1000 Sq	200	
TBA 1500 S	216		TGA 500 Sq	78	
TBA 2000 S	209		TGA 750 Sq	123	
TBA 200 E	72		TGA 1000 Sq	178	
TBA 250 E	95		TGA 1500 Sq	188	
TBA 250 E	95		TGA 1000 Crystal/Leaf	137	

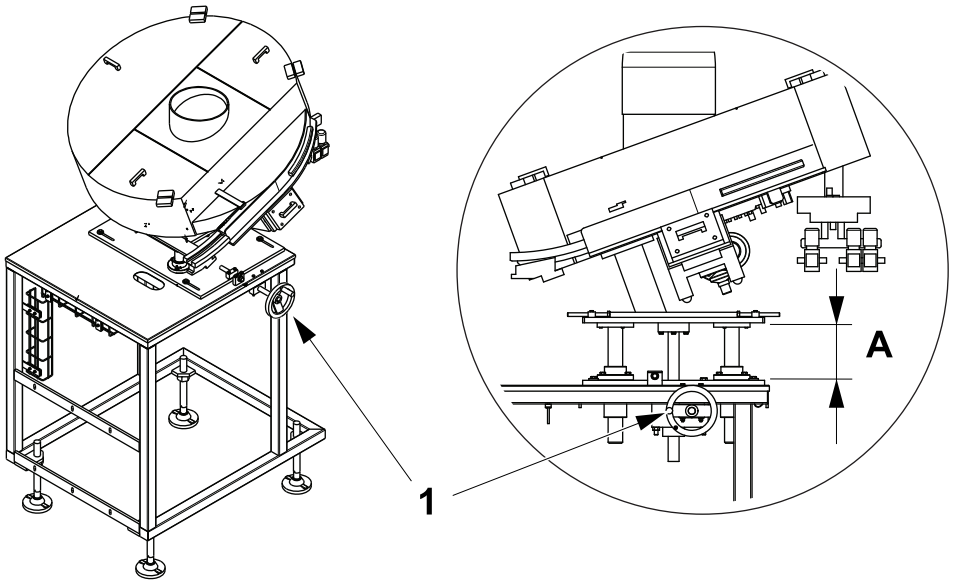

1 Handle

(Cont'd)

(Cont'd)

Y Position

Note! Always make only small adjustments at one time.

a) Loosen the four screws (1) to free the plate (2).

b) Move the feeder (3) close to the cap conveyor (4).

c) Check that the cap conveyor (4) is level and not stressed after adjustment.

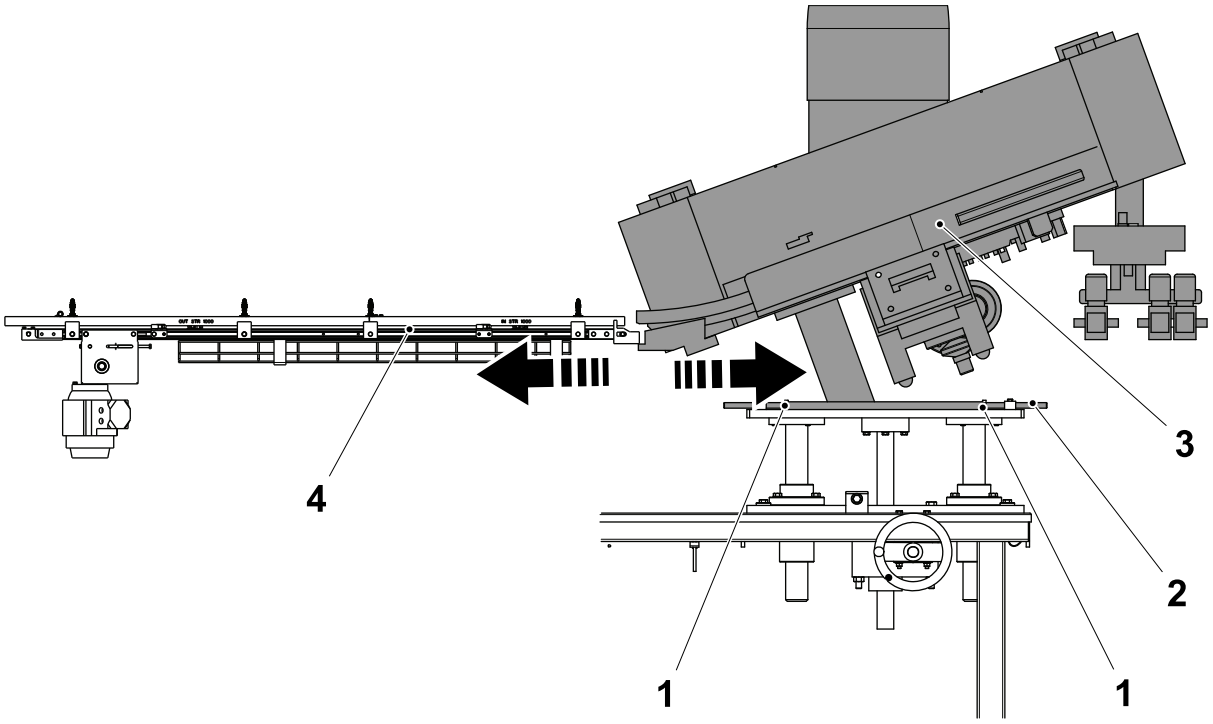

1 Screw
2 Plate
3 Feeder
4 Cap conveyor

5.4.1-8 Feeder - Set Cap Level

Machine Status	Electrical supply disconnecting device in position I (ON) Main air valve ON
SPC Reference	662904-0300

a) Release the screw (1) and adjust the bracket (2) to set the distance **A**.

b) Release the screw (3) and adjust the bracket (2) until the distance **B** is reached between the lever (4) and the disc (5), tighten the screw (1) and (3).

c) Adjust the sensor (6) until the distance **C** is reached between the lever (4) and the sensor (6).

A = 78 mm
B = 7 mm
C = 2 mm

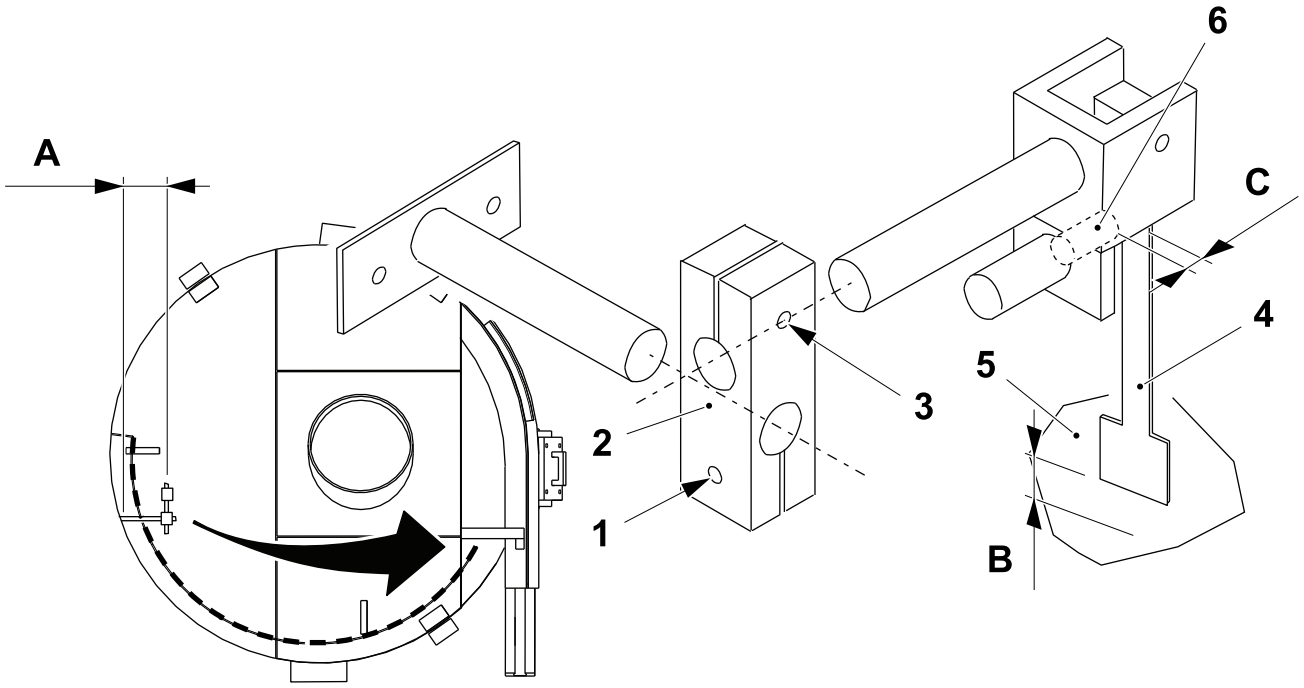

1 Screw
2 Bracket
3 Screw
4 Lever
5 Disc
6 Sensor

5.4.1-9 Feeder - Set Cap Sensor

Machine Status	Electrical supply disconnecting device in position I (ON) Main air valve ON
SPC Reference	662904-0300

a) Release the nuts (1) and move the sensor (2) into the correct holes (3), see table.

b) Tighten the nuts (1).

c) Set the sensitivity, see 10.8.2-1 Sensor (C50B2000) - Set.

Note! The sensor should not activate when there is movement beneath the chute.

Holes	Cap
A	
B	Helicap2 23, Helicap27, Slimcap 1000, Slimcap 2000, Streamcap 1000
C	
D	
E	Streamcap 200

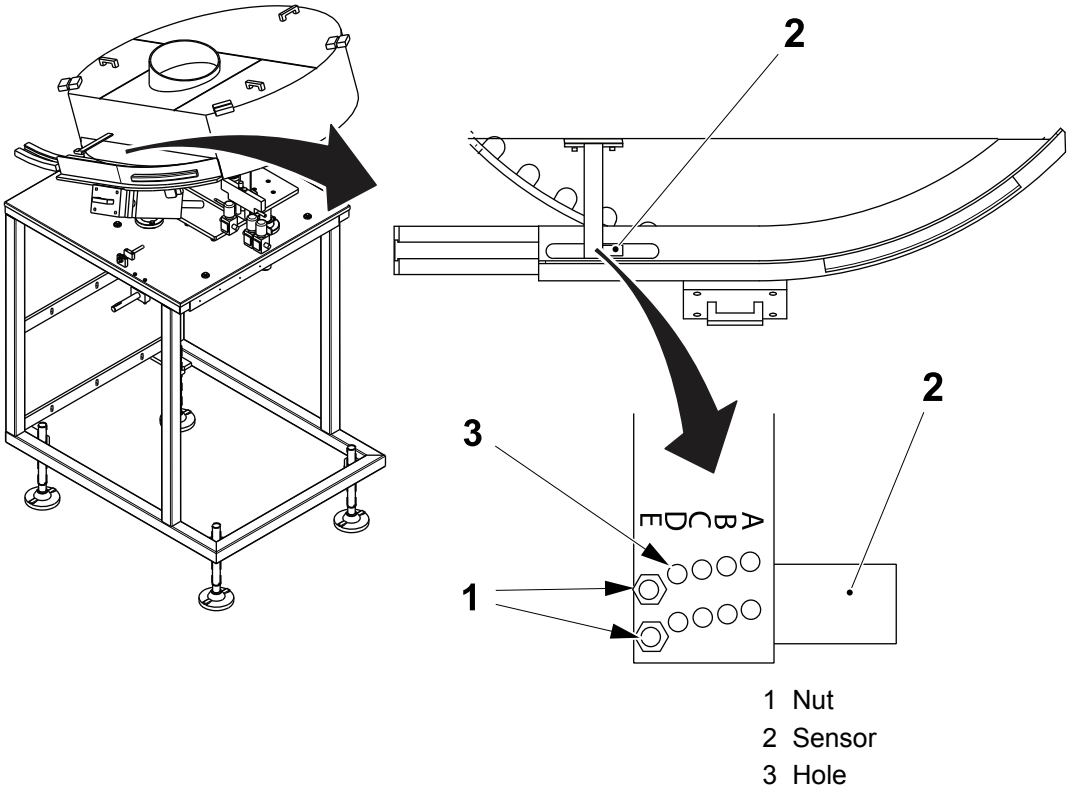

1 Nut
2 Sensor
3 Hole

5.4.1-10 Feeder - Set Segments and Brushes

Machine Status	Electrical supply disconnecting device in position I (ON) Main air valve ON
SPC Reference	662904-0300

Change the segment (1) for the cap type to be used and the brushes (2) according to the latest SPC.

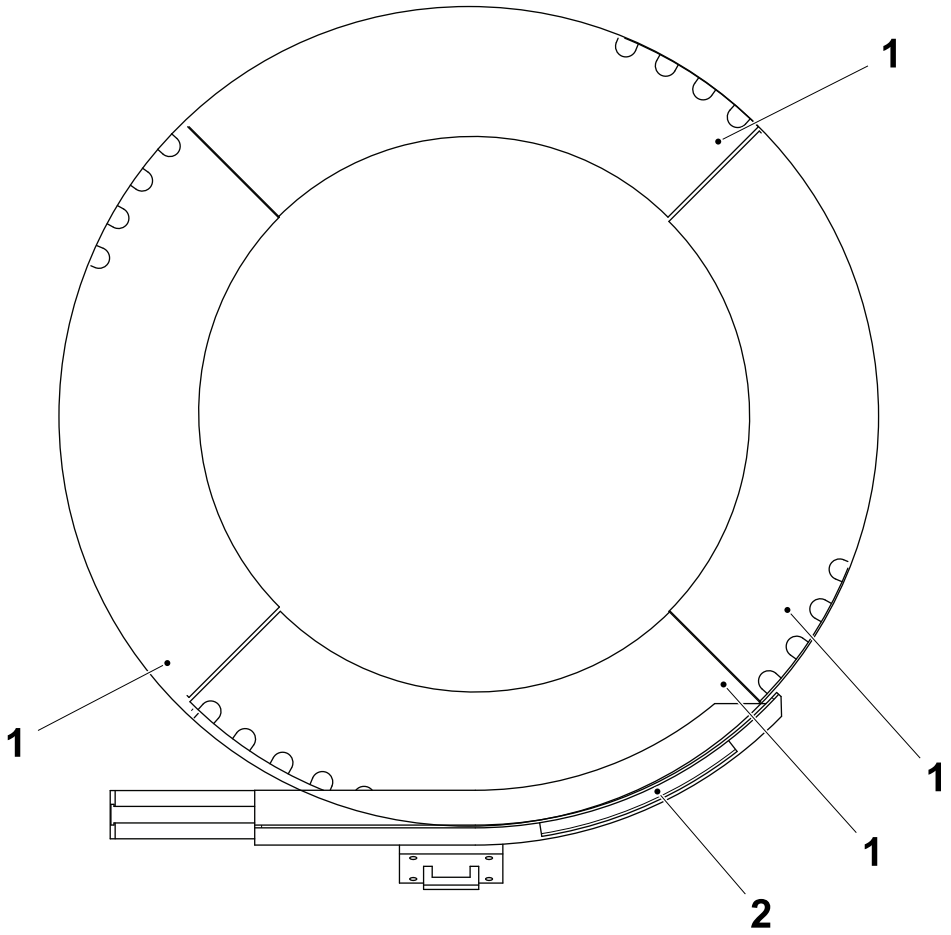

1 Segment
2 Brush

5.4.1-11 Feeder - Set Guide

Machine Status	Electrical supply disconnecting device in position I (ON) Main air valve ON
SPC Reference	662904-0300

a) Remove the screws (1) at each of the positions A or B.

b) Move the guide (2) to the position required, see table below and insert the screws (1).

c) Tighten the screws (1).

Position	**Cap Type**
A	All caps with exception of **B**
B	SLIM 2000 and HeliCap27

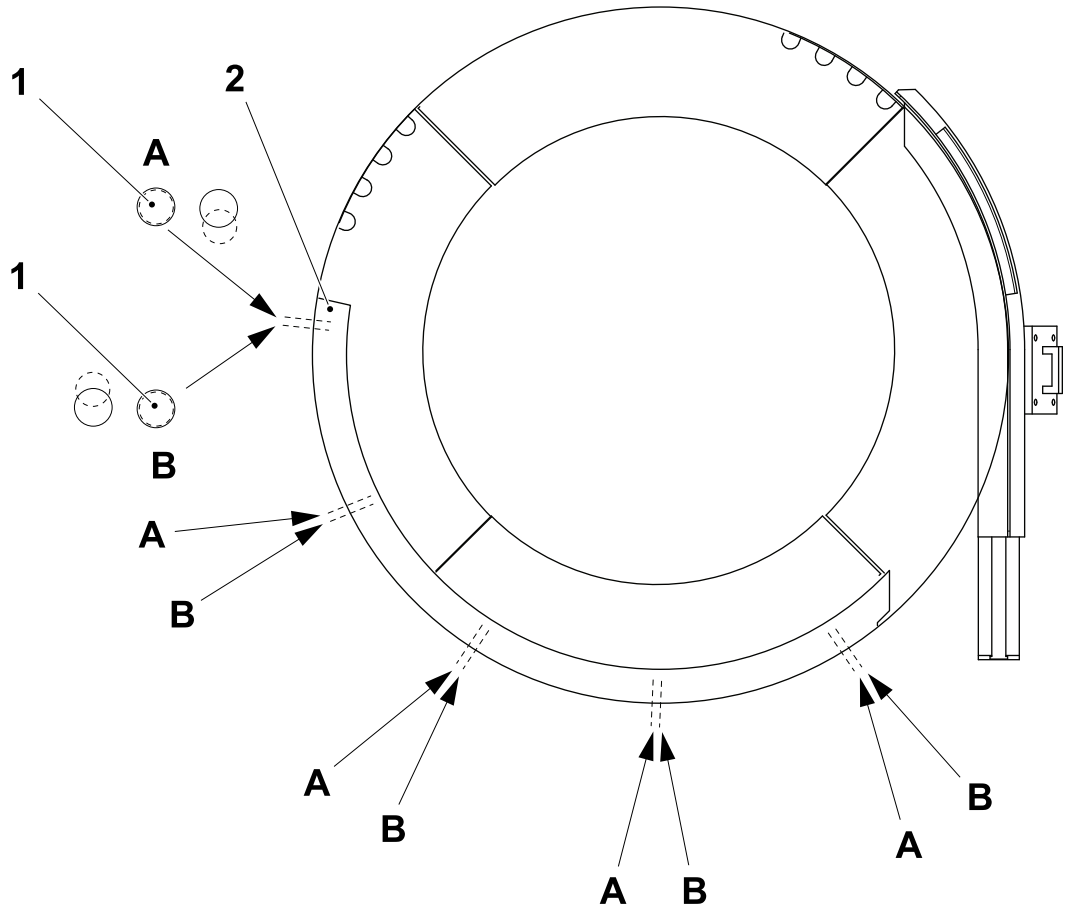

1 Screw
2 Guide

5.4.1-12 Feeder - Set Sorter Speeds

Machine Status	Electrical supply disconnecting device in position I (ON) Main air valve ON
SPC Reference	662904-0300

a) Log on as a user, see 1.1.1-1 HMI User Management - Log On as a User.

b) Touch the SETTING button (1) and then the caps sorter icon (2).

Note! Items like the positioning system only appear on the screen below when installed.

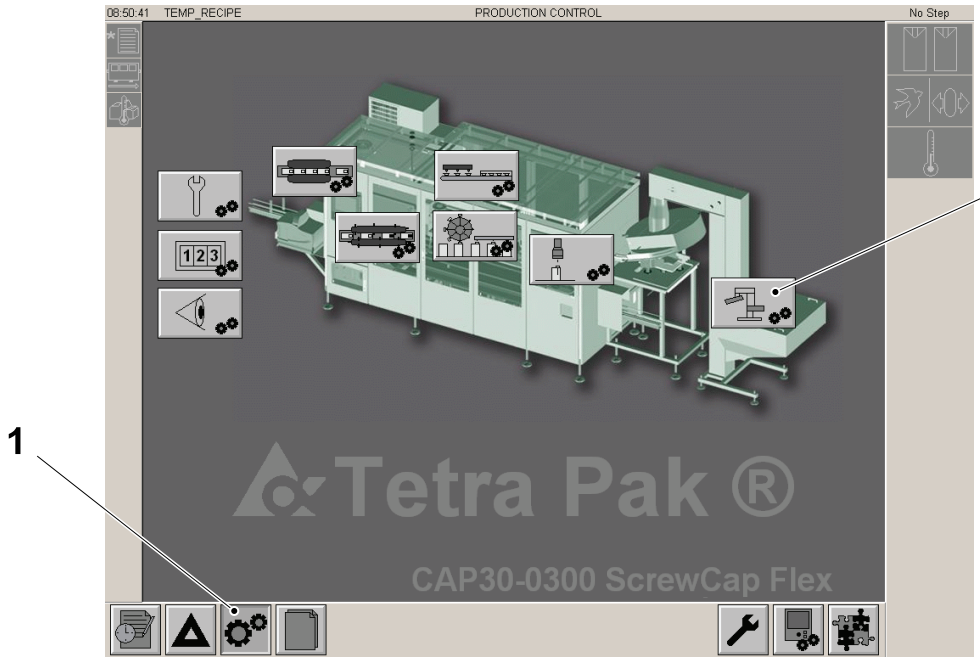

1 SETTING button
2 Cap Sorter Icon

(Cont'd)

(Cont'd)

c) Select any of the buttons 3 - 7 shown below to adjust the value.

d) Touch the Ok button (8) twice to confirm the setting.

e) When all the settings are correct touch the recipe button (9) and save, see 10.9.1-14 Touch Screen - Saving Recipe Settings.

Setting	Value		
	Slim Cap	Stream Cap	HeliCap
Time to start load button (3)	0.5Sec	0.5 Sec	0.5 Sec
Time to stop load button (4)	0.3Sec	0.3 Sec	0.3 Sec
Time to start elevator Button (5)	0.5Sec	0.5 Sec	0.5 Sec
Time to stop elevator button (6)	1.0Sec	1.0 Sec	1.0 Sec

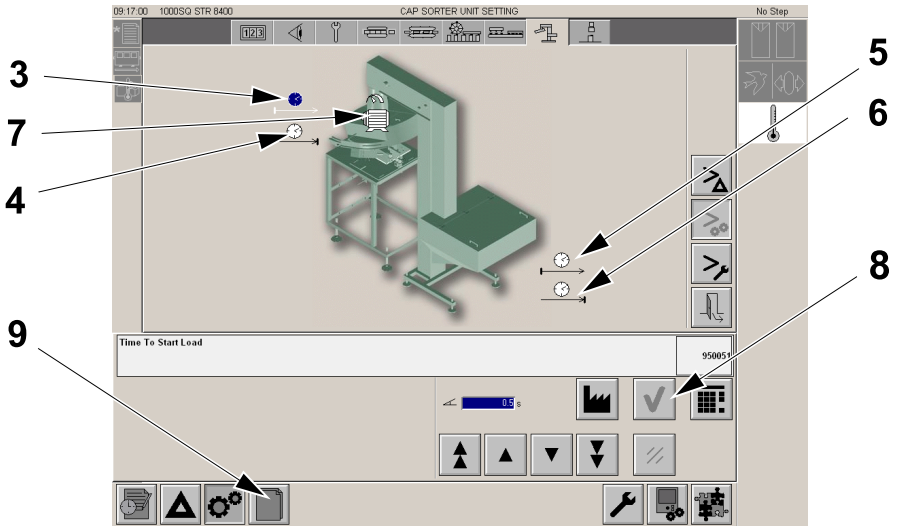

3 TIME TO START LOAD button
4 TIME TO STOP LOAD button
5 TIME TO START ELEVATOR Button
6 TIME TO STOP ELEVATOR button
7 DISK SPEED button
8 OK button
9 RECIPE button

5.4.2 Feeder - Troubleshooting

5.4.2-1 Cap Sorter - Troubleshooting

Machine Status	Electrical supply disconnecting device in position I (ON) Main air valve ON
SPC Reference	662904-0300

Check Cap Sorter - Run ability

a) Install the discharger (1) with the screw (2).

b) Put a box under the hose (3) and close the machine doors.

c) Operate the cap sorter with two boxes of caps.

d) Check that there is no damage to the caps that are delivered.

e) Remove the cap discharger (1).

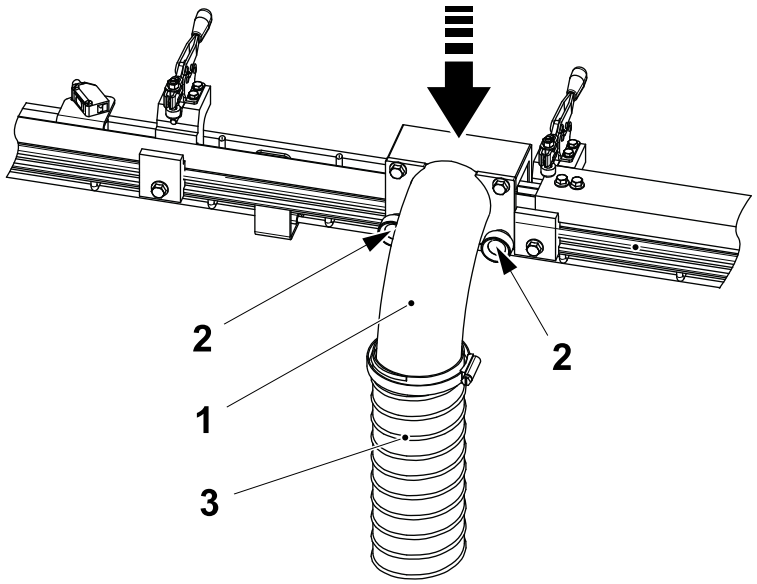

1 Discharger
2 Screw
3 Hose

(Cont'd)

(Cont'd)

Troubleshooting

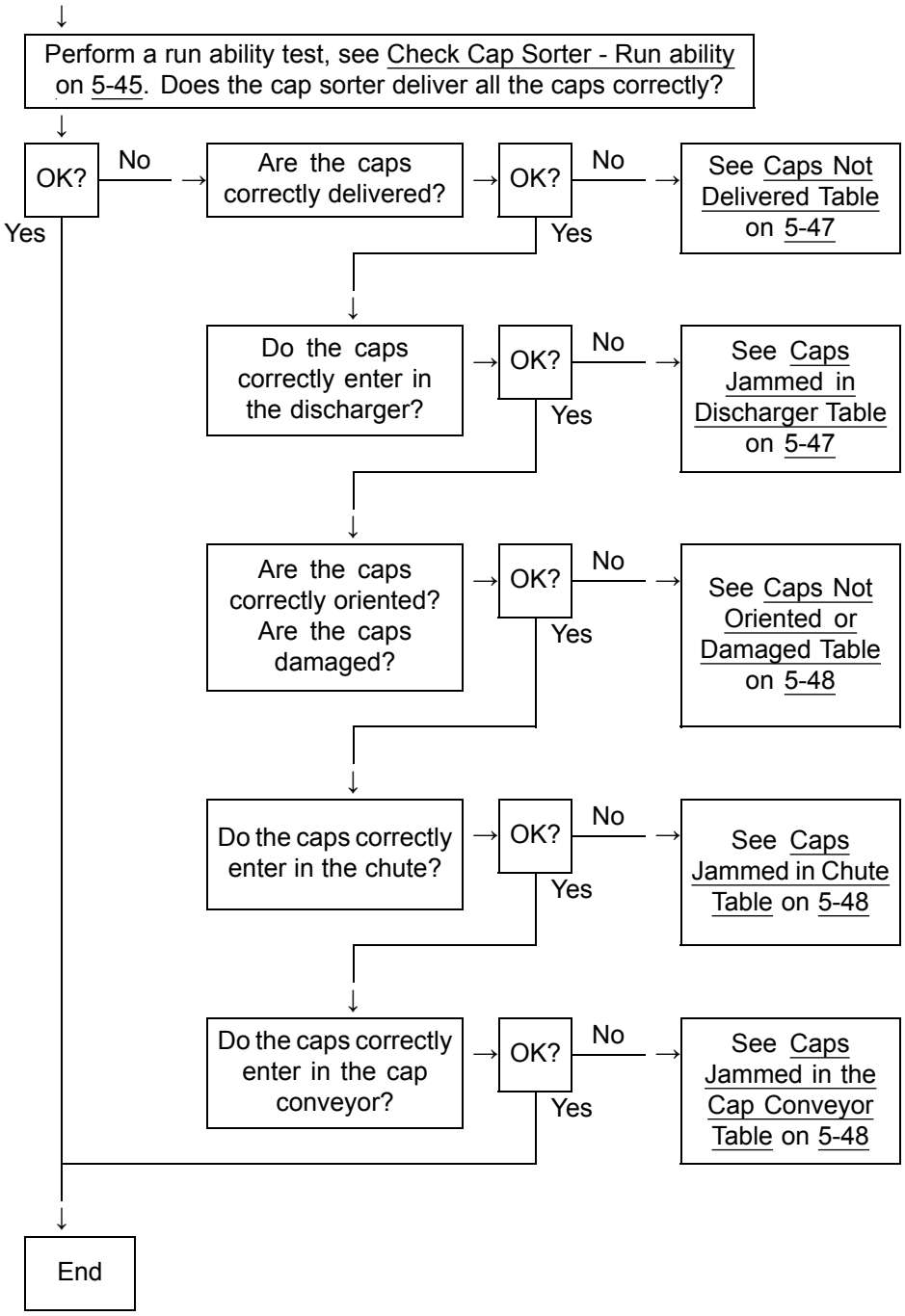

(Cont'd)

(Cont'd)

Caps Not Delivered Table

Procedure	Done	Notes	Page No.
Check the pneumatic circuit of the cap sorter. Check that the air hoses connected to the nozzles have the correct pressure.			
Check that all the nozzles have been changed and correctly installed, see 5.4.1-3 Feeder - Set Air Injector Positions.			5-24
Check if one of the nozzles discards all the caps. Replace the nozzle.			

Caps Jammed in Discharger Table

Procedure	Done	Notes	Page No.
Check the pneumatic circuit of the cap sorter. Check that the air hoses connected to the nozzles have the correct pressure.			
Check that all the nozzles have been changed and correctly installed, see 5.4.1-3 Feeder - Set Air Injector Positions			5-24
Check that the nozzles are not obstructed. If a nozzle is obstructed, remove the obstruction or replace the nozzle.			
Check that the guides are not scraped. Scrapes can make the caps to fall off from the guide.			
Check that the nozzle (G50G1066) before the discharger doesn't make the caps to exit from their position in the guide. In case this happens, 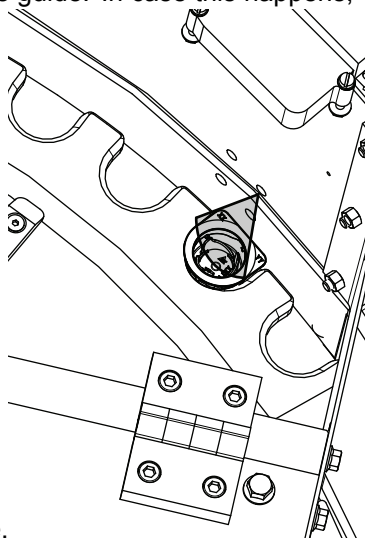 replace the nozzle.			

(Cont'd)

(Cont'd)

Caps Not Oriented or Damaged Table

Procedure	Done	Notes	Page No.
Check the brushes and check if they are worn or damaged			
Check that the clamps of the discharger work correctly.			
Check that the nozzles are not obstructed. If a nozzle is obstructed, remove the obstruction or replace the nozzle.			
Check the height of the discharger, see 5.4.2-2 Feeder - Fine Checks.			5-49
Check the position of the plate of the discharger and the disk, see 5.4.1-5 Feeder - Change Discharger.			5-28

Caps Jammed in Chute Table

Procedure	Done	Notes	Page No.
Check that the nozzles in the chute are not damaged or obstructed. If a nozzle is obstructed, remove the obstruction or replace the nozzle. If a nozzle is damaged replace the nozzle.			
Check that the chute is clean and that its base is not scraped. Scrapes can make the caps to create jams.			
Check if the caps are damaged. If the caps get damaged in the chute see Caps Not Oriented or Damaged Table			5-48
Check that the transition between the chute and the cap conveyor is smooth and that the caps don't stop, see 5.4.1-7 Cap Sorter - Set X, Y and Z Position.			5-35

Caps Jammed in the Cap Conveyor Table

Procedure	Done	Notes	Page No.
Check that the cap conveyor roof is clean and that is not scraped. Scrapes can make the caps to create jams.			
Check that the cap conveyor belt is free to rotate and is not damaged.			
Check that the sensors for min. queue and max. queue work properly.			
Check that the transition between the chute and the cap conveyor is smooth and that the caps don't stop, see 5.4.1-7 Cap Sorter - Set X, Y and Z Position.			5-35

5.4.2-2 Feeder - Fine Checks

Machine Status	Electrical supply disconnecting device in position I (ON) Main air valve ON
Special Equipment	Caliper
SPC Reference	662904-0300

WARNING

Risk of Falling

These components are in a high position, be sure to use suitable equipment to reach them.

(Cont'd)

(Cont'd)

Check

a) Mark a 1 on the first Guide 1 (1) with a suitable pen.

b) Use a calliper to measure the distance A between the Cavity for the cap (2) and the bottom surface of the Roof (3).

Note! The measure must be done in 3 positions minimum, see the arrows in the illustration.

c) Put all the measures in the following table:

	Measure 1	**Measure 2**	**Measure 3**	**Note**
Guide 1				
Guide 2				
Guide 3				
Guide 4				

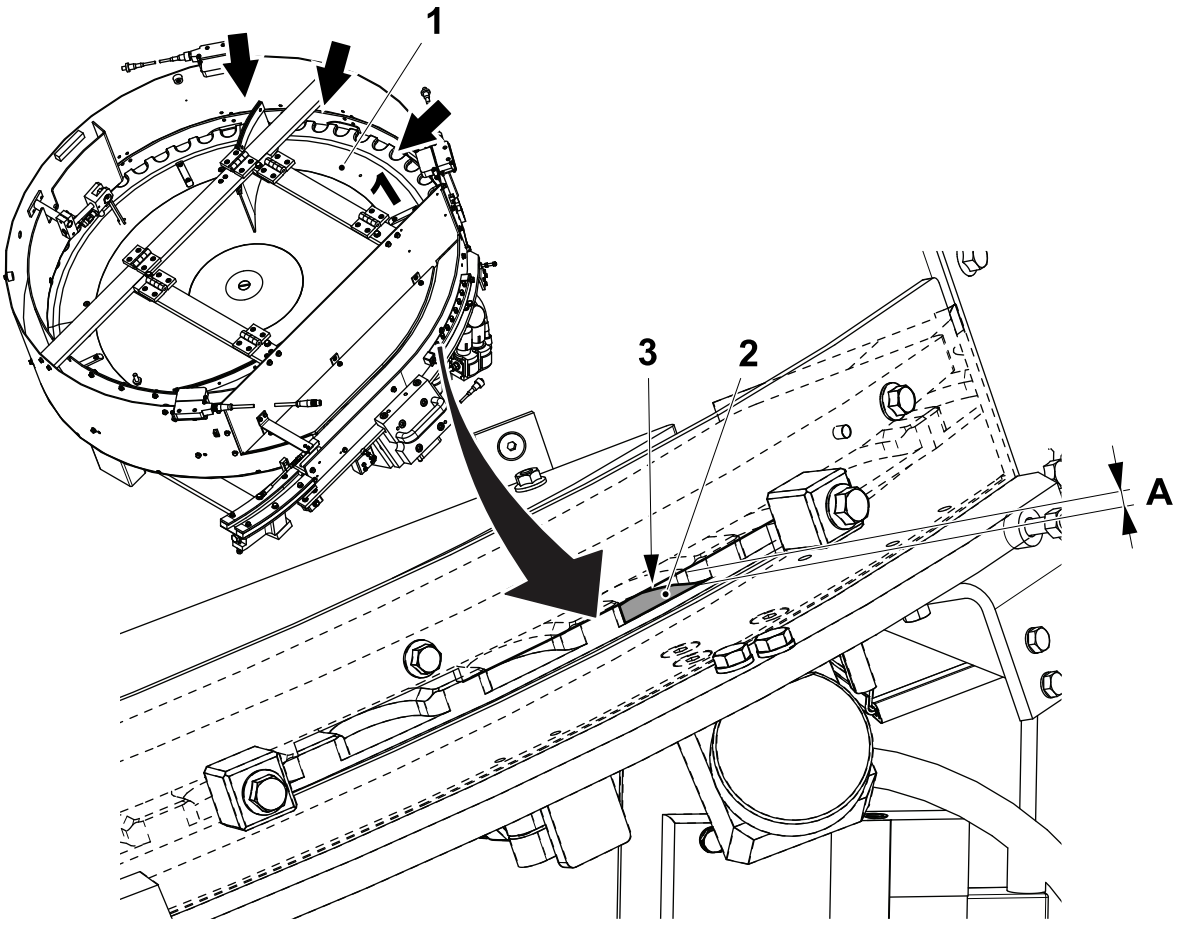

1 Guide 1
2 Cavity for the cap
3 Roof

(Cont'd)

(Cont'd)

Note! Distance A is only an indication and it is given in order to find evident mistakes. Variations of ± 0,5 mm from the nominal values are accepted and no setting changes are needed.

d) Check the dimension of A in the table against the results in the table on the previous page.

Cap Sorter	
Cap	**A**
Slim 1000	14
Str 1000	18
HeliCap2 23	16.5
HeliCap 27	18

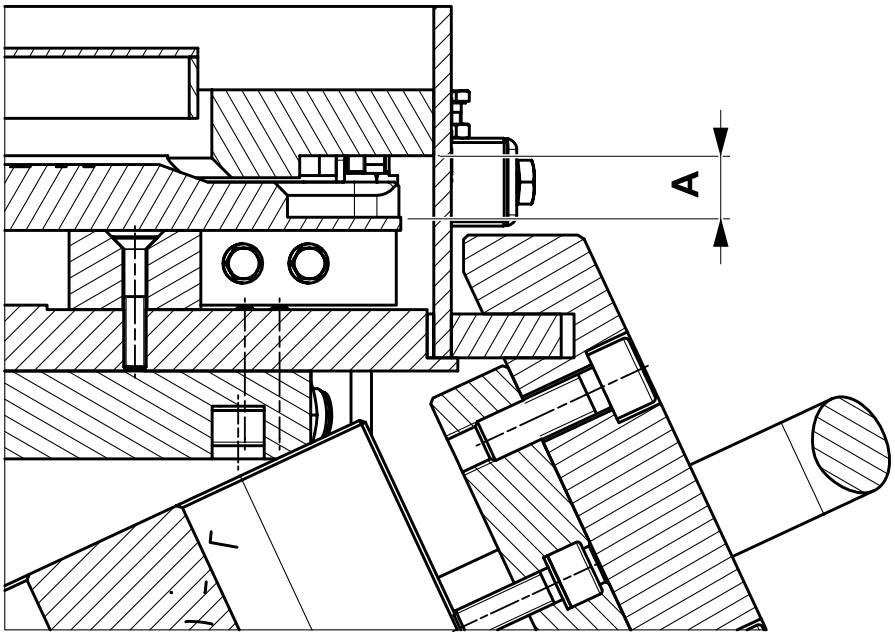

(Cont'd)

(Cont'd)

e) Rotate the cap sorter and repeat from a) for all the other three guides (4) .

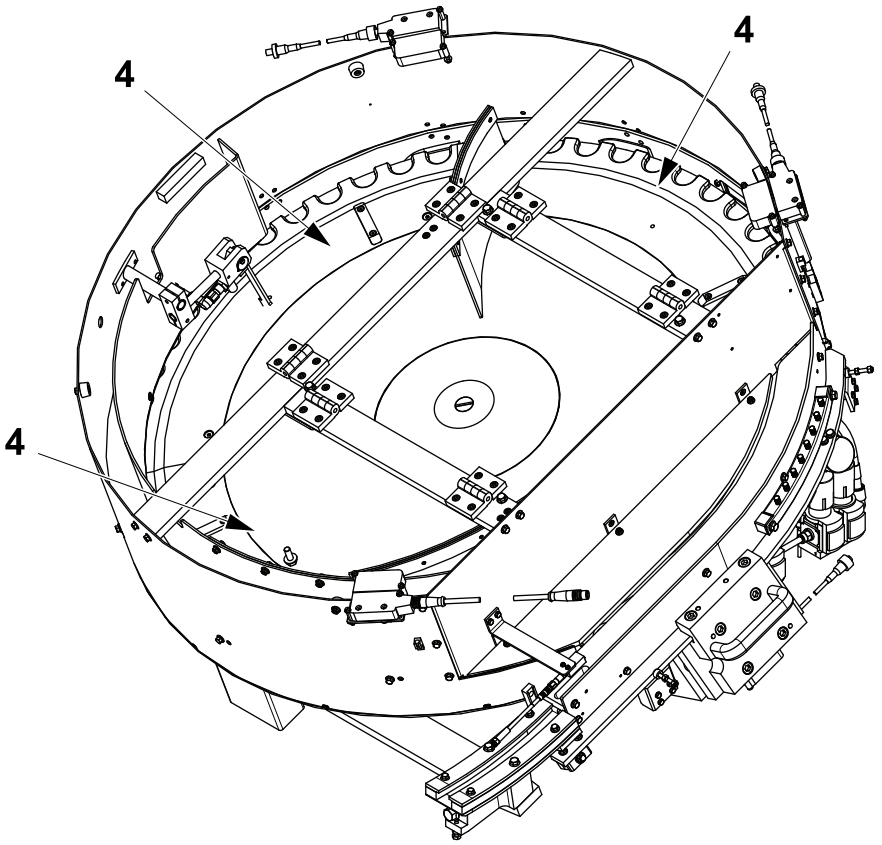

4 Guide

(Cont'd)

(Cont'd)

Corrections

a) Check the table on page 5-50.

b) Add or Remove one shim (1) maximum to reduce or increase the measures, see 5.4.2-3 Cap Sorter - Add or Remove shims.

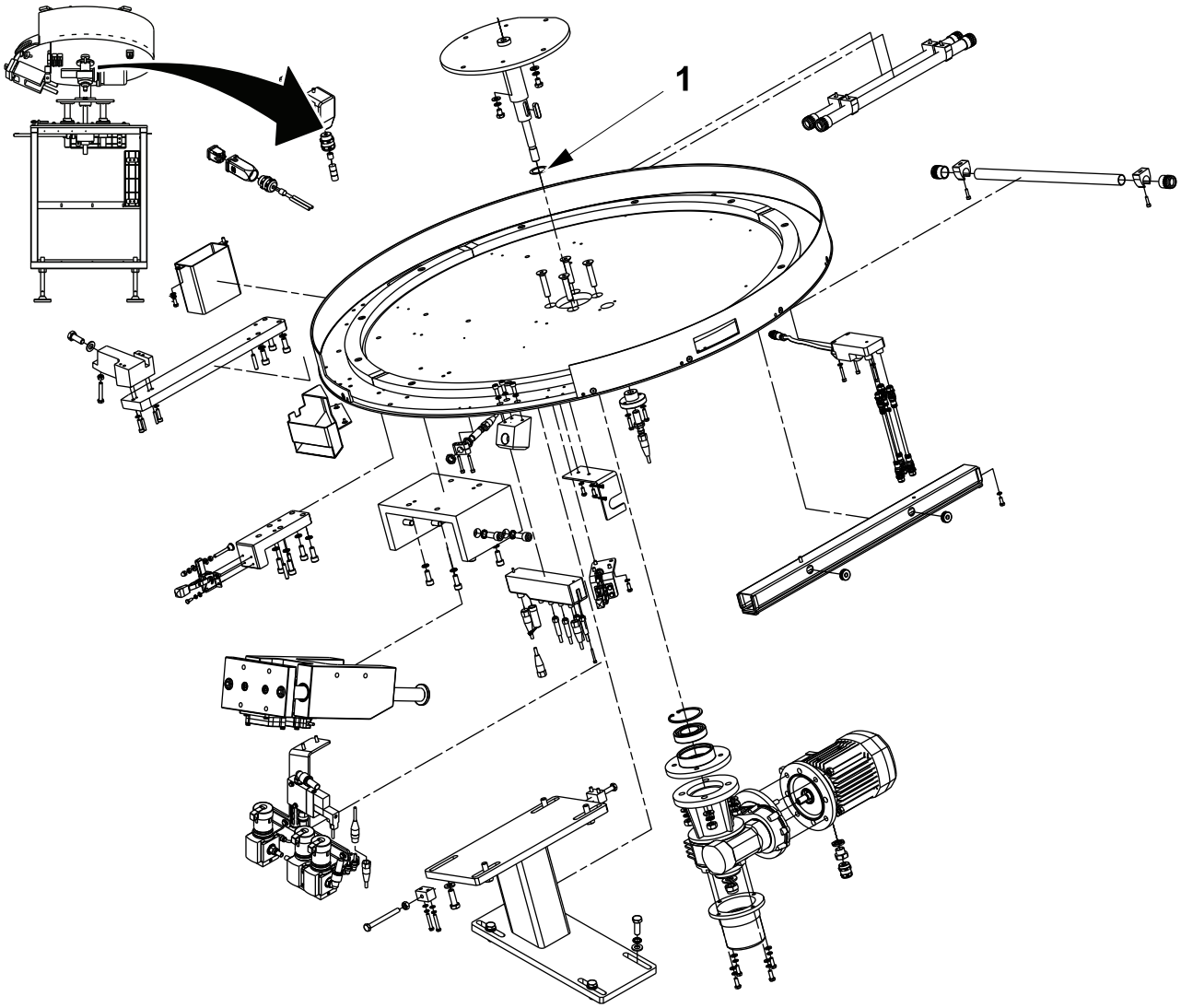

1 Shim

(Cont'd)

(Cont'd)

c) All the measures for the same guide must be not too different: 1mm is the maximum allowed difference. If there is more than 1 mm it is recommended to swap the opposite guide (2).

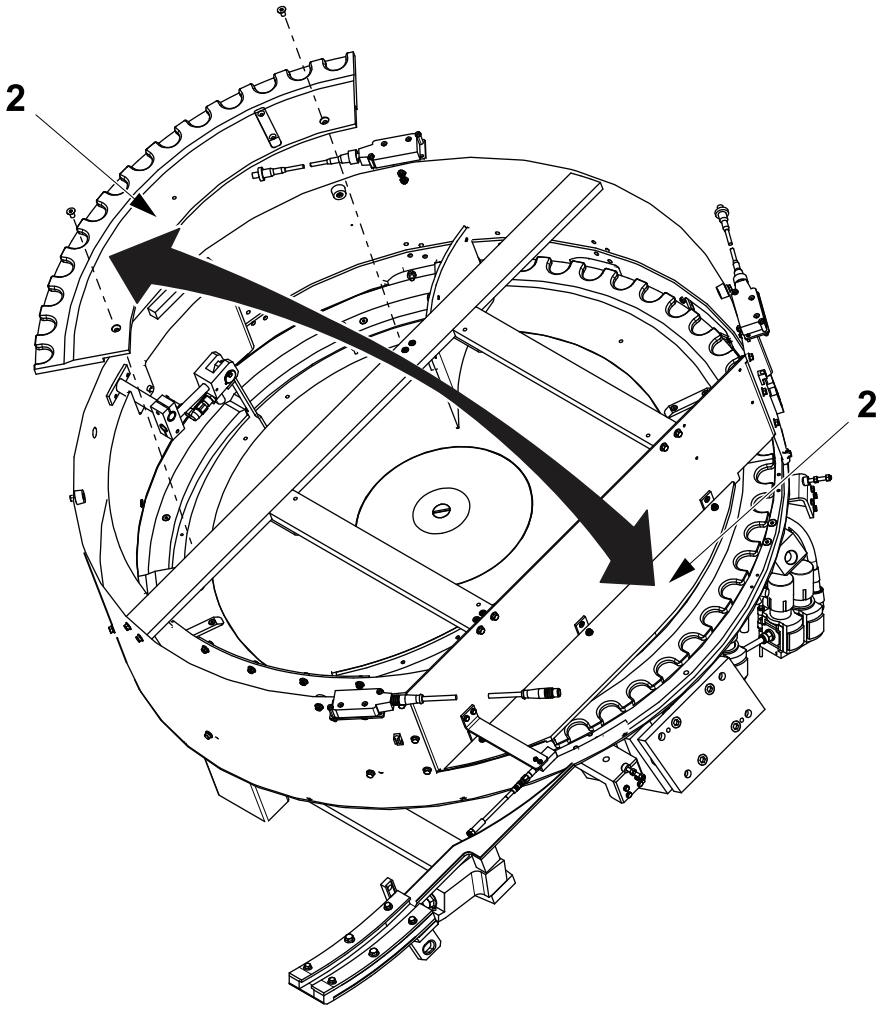

2 Guide

(Cont'd)

(Cont'd)

Install the Box of Brushes

Note! Not applicable for DreamCap.

a) Install the box of brushes (1) by means of the screw (2).

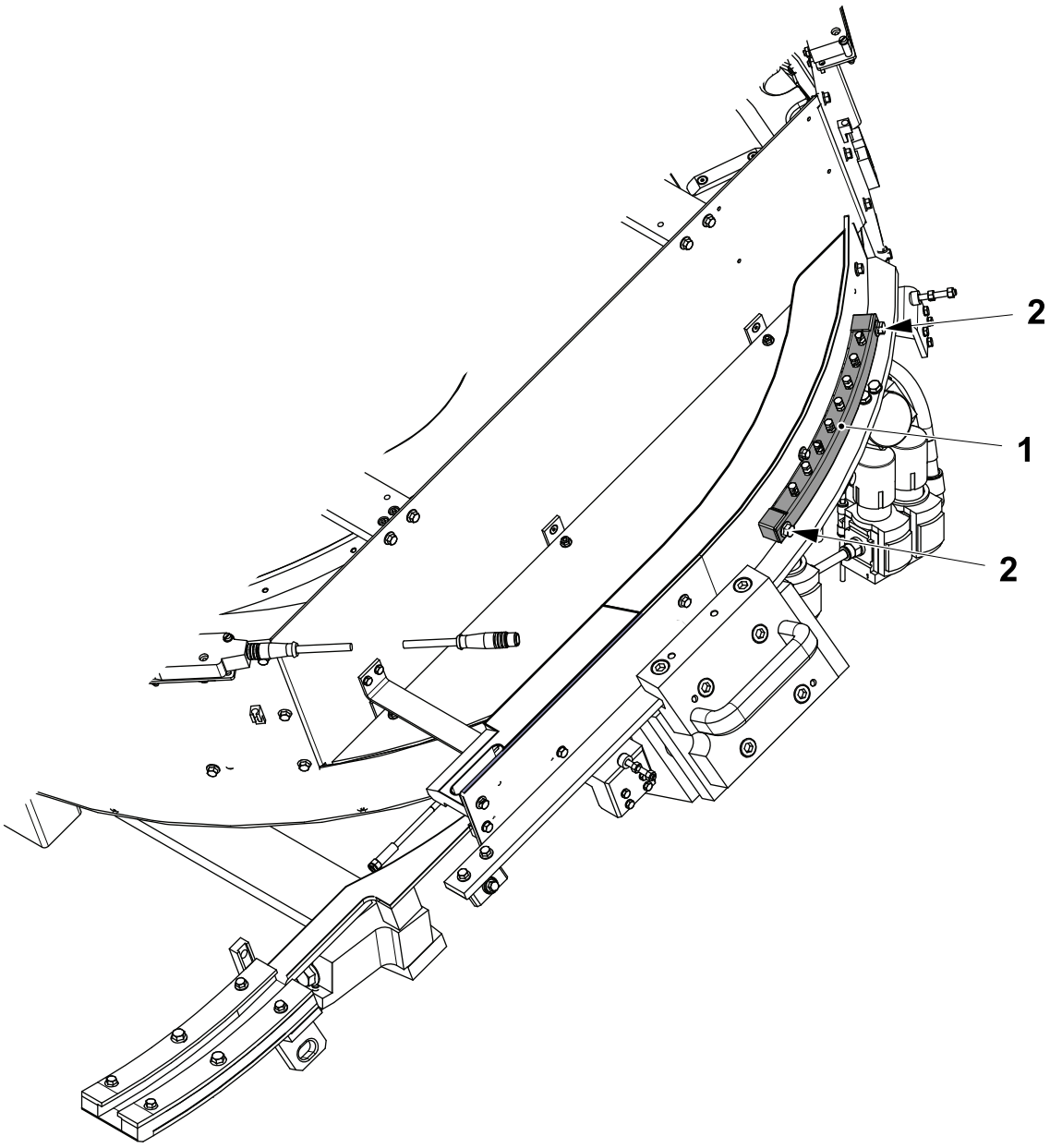

1 Box of brushes
2 Screw

(Cont'd)

(Cont'd)

Tighten the Friction

a) Tighten the nut (1) and install the potection (2).

b) Install the cap (3) by means of the screw (4).

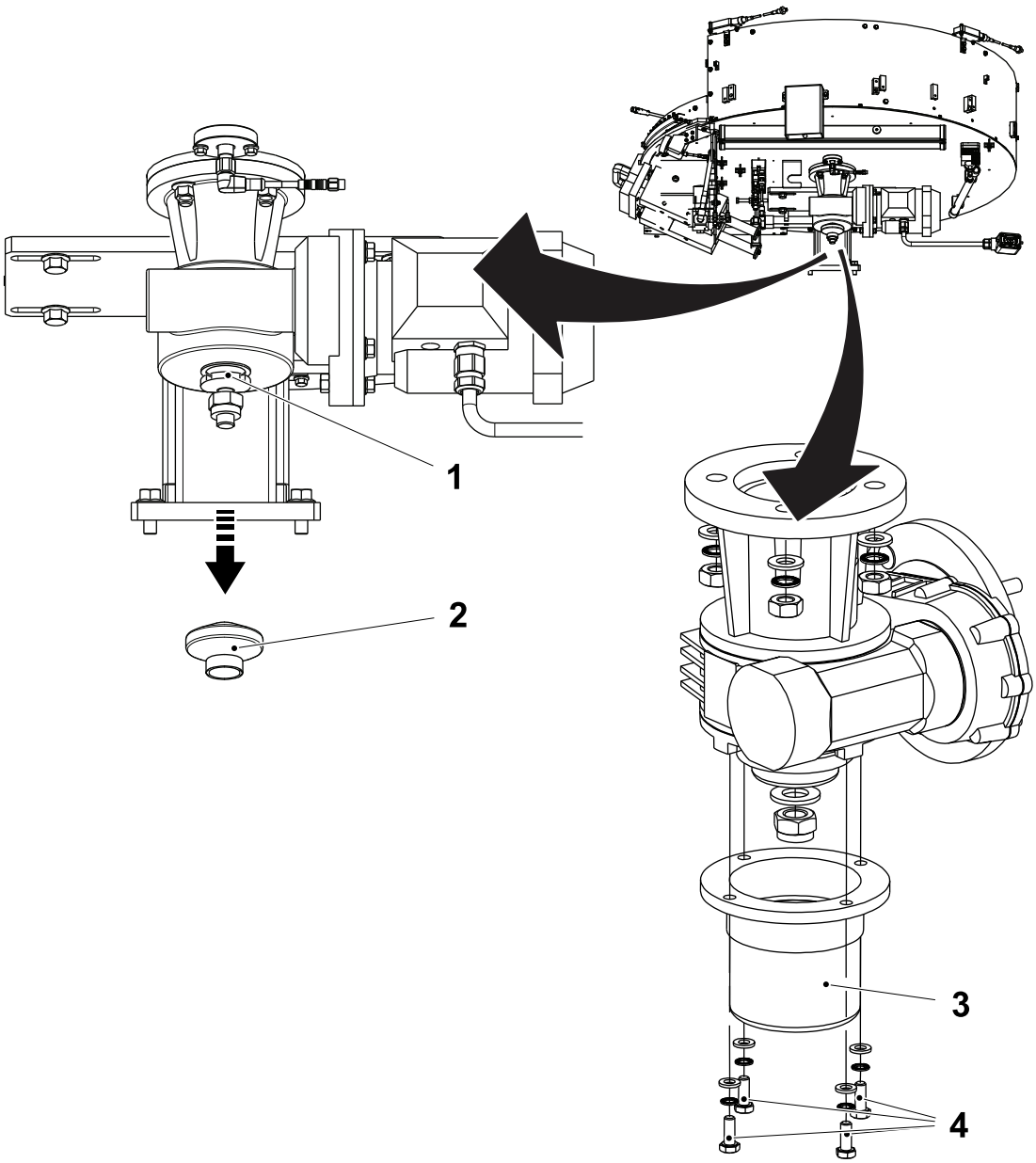

1 Nut
2 Protection
3 Cap
4 Screw

5.4.2-3 Cap Sorter - Add or Remove shims

Machine Status	Electrical supply disconnecting device in position I (ON) Main air valve ON
SPC Reference	662904-0300

WARNING

The cap sorter is high.

These components are in a high position, be sure to use suitable equipment to reach them.

Note! Perform this procedure only if required, see 5.4.2-1 Cap Sorter - Troubleshooting.

(Cont'd)

(Cont'd)

Remove Covers

a) Loosen the screw (1) and remove the cover (2).

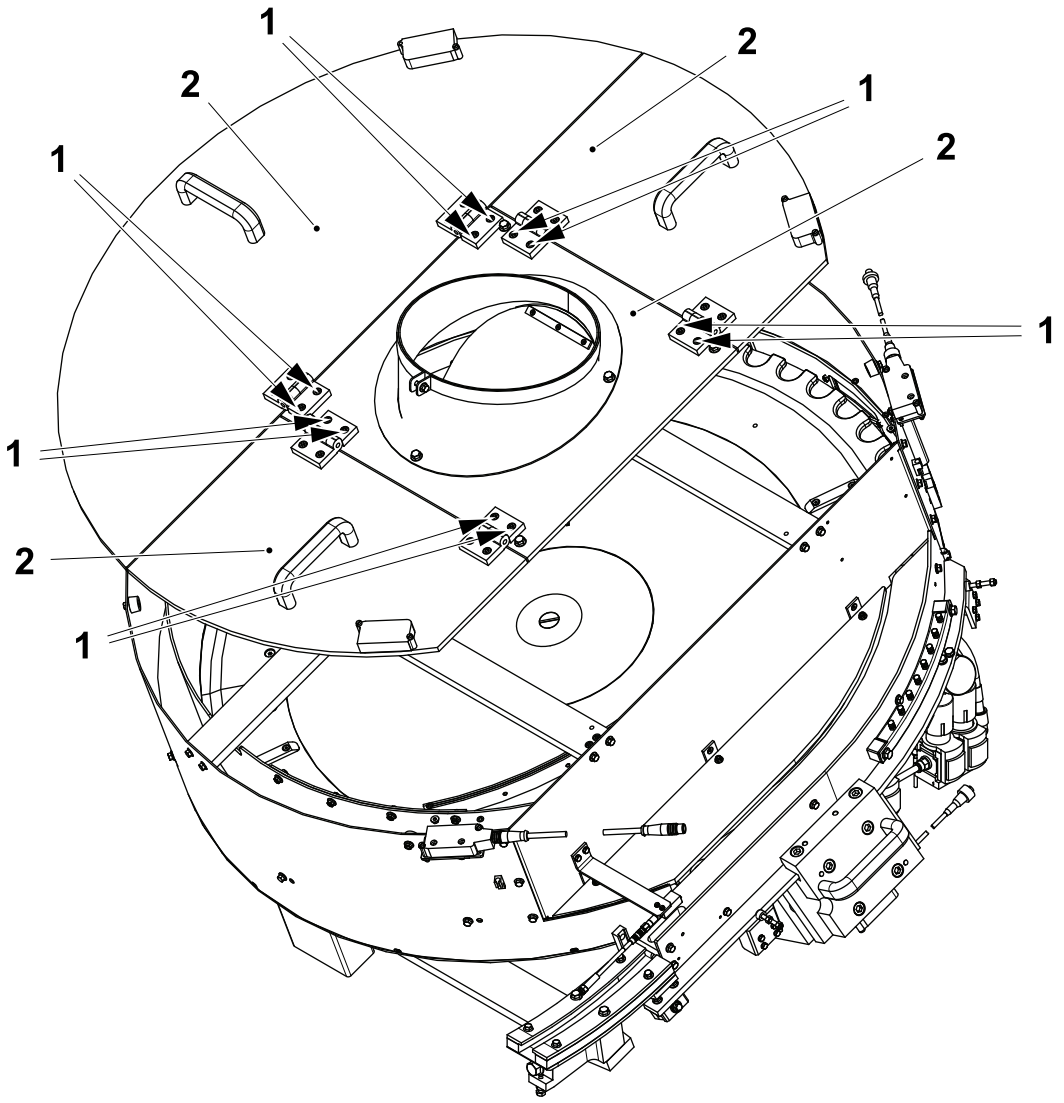

1 Screw
2 Cover

(Cont'd)

(Cont'd)

Remove the Guides

a) Loosen the screw (1) and remove the guide (2).

b) Rotate the cap sorter and repeat previous step for the other three guides.

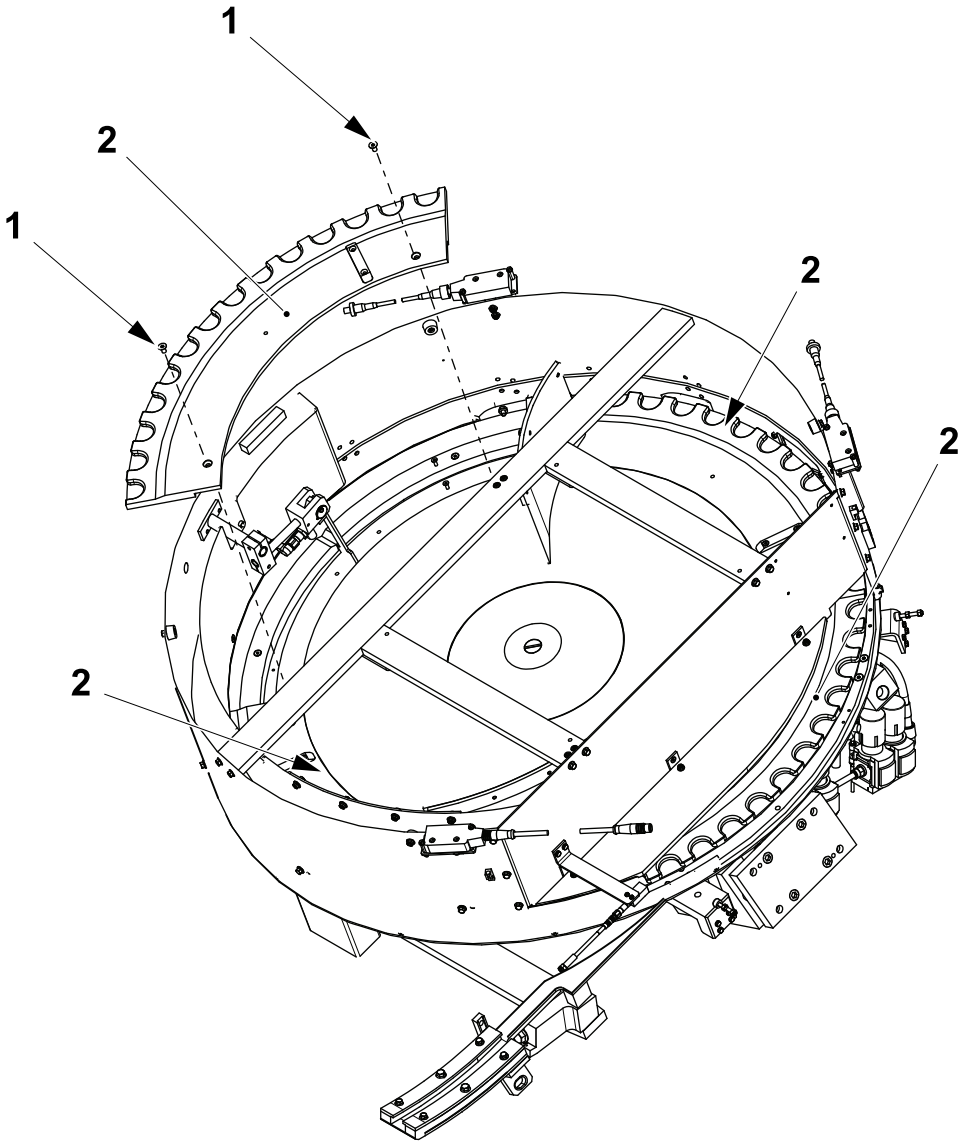

1 Screw
2 Guide

(Cont'd)

(Cont'd)

Remove Components

a) Loosen the screw (1) and remove the cover (2).

b) Loosen the screw (3) and remove the disc (4).

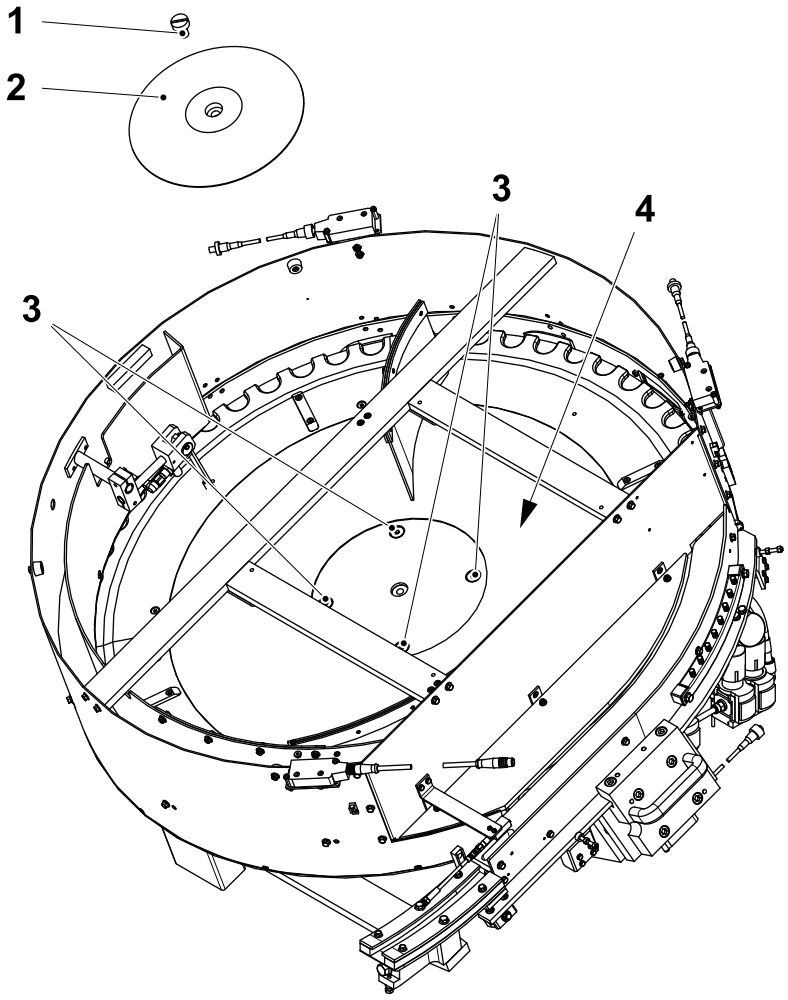

1 Screw
2 Cover
3 Screw
4 Disc

(Cont'd)

(Cont'd)

c) Loosen the screw (5) and remove the cap (6).

d) Remove the screw (7).

e) Loosen the screw (8) and remove the motor assembly (9).

f) Remove the disc (10).

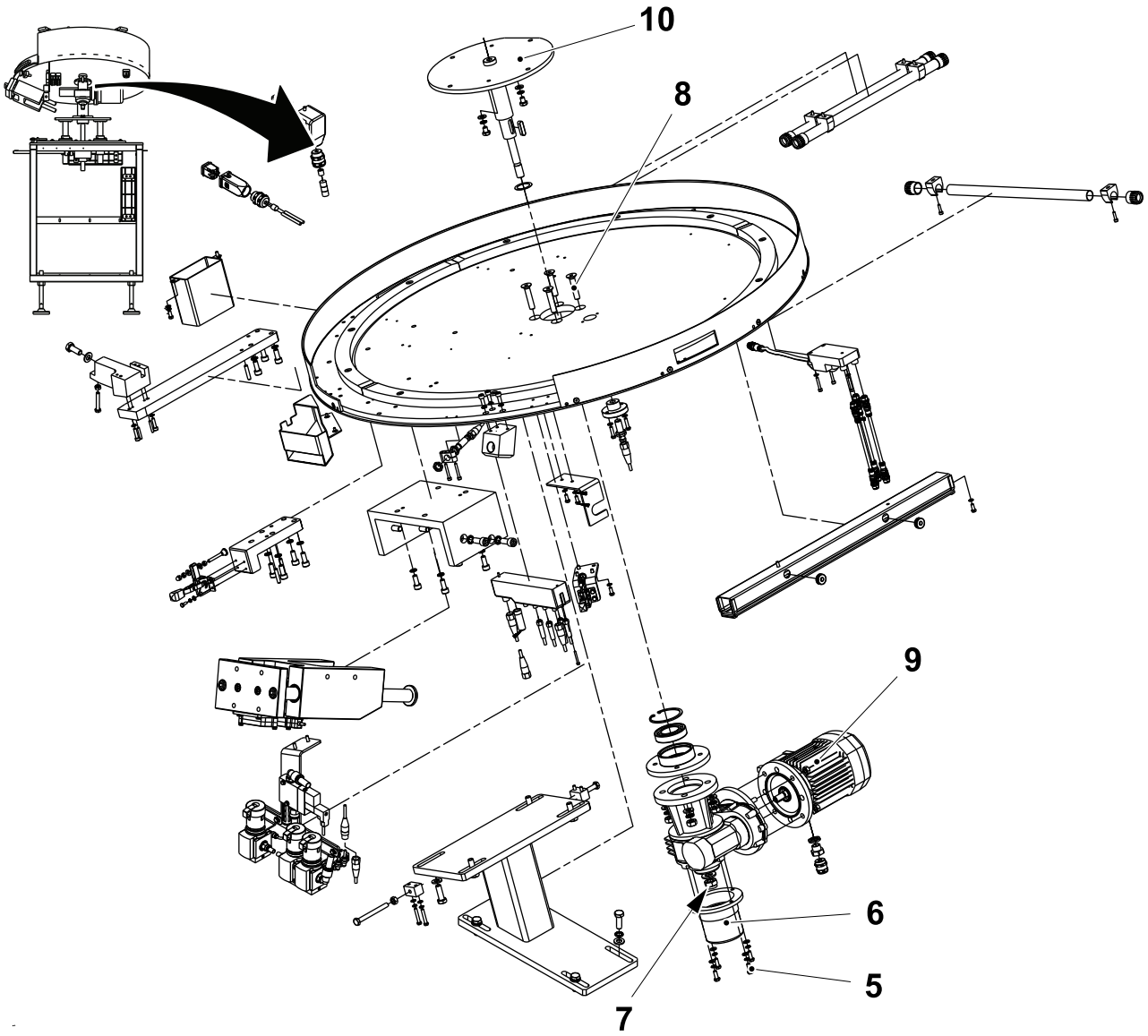

5 Screw
6 Cap
7 Screw
8 Screw
9 Motor assembly
10 Disc

(Cont'd)

(Cont'd)

g) On the workbench, remove the key (11) and add or remove shim (12) .

Note! It is allowed to add or remove shims for a max 0.5mm.

h) Assemble in the reverse order.

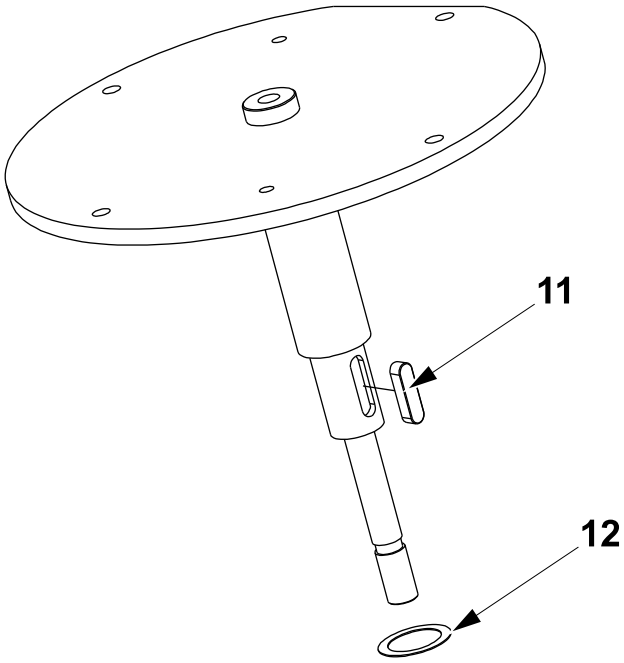

11 Key
12 Shim

5.4.2-4 Cap Sorter - Replace Gearbox

Machine Status	Electrical supply disconnecting device in position I (ON) Main air valve ON
SPC Reference	662904-0300

WARNING

The cap sorter is high.

These components are in a high position, be sure to use suitable equipment to reach them.

(Cont'd)

(Cont'd)

Remove Components

a) Loosen the screws (1) and remove the protection (2).

b) Loosen the screw (3) and remove thewasher (4).

c) Disconnect the electrical cables from the motor (5).

d) Loosen the four nuts (6) and remove the Motor gearbox group (7).

e) Replace the Motor gearbox group (7) and assemble in the reverse order.

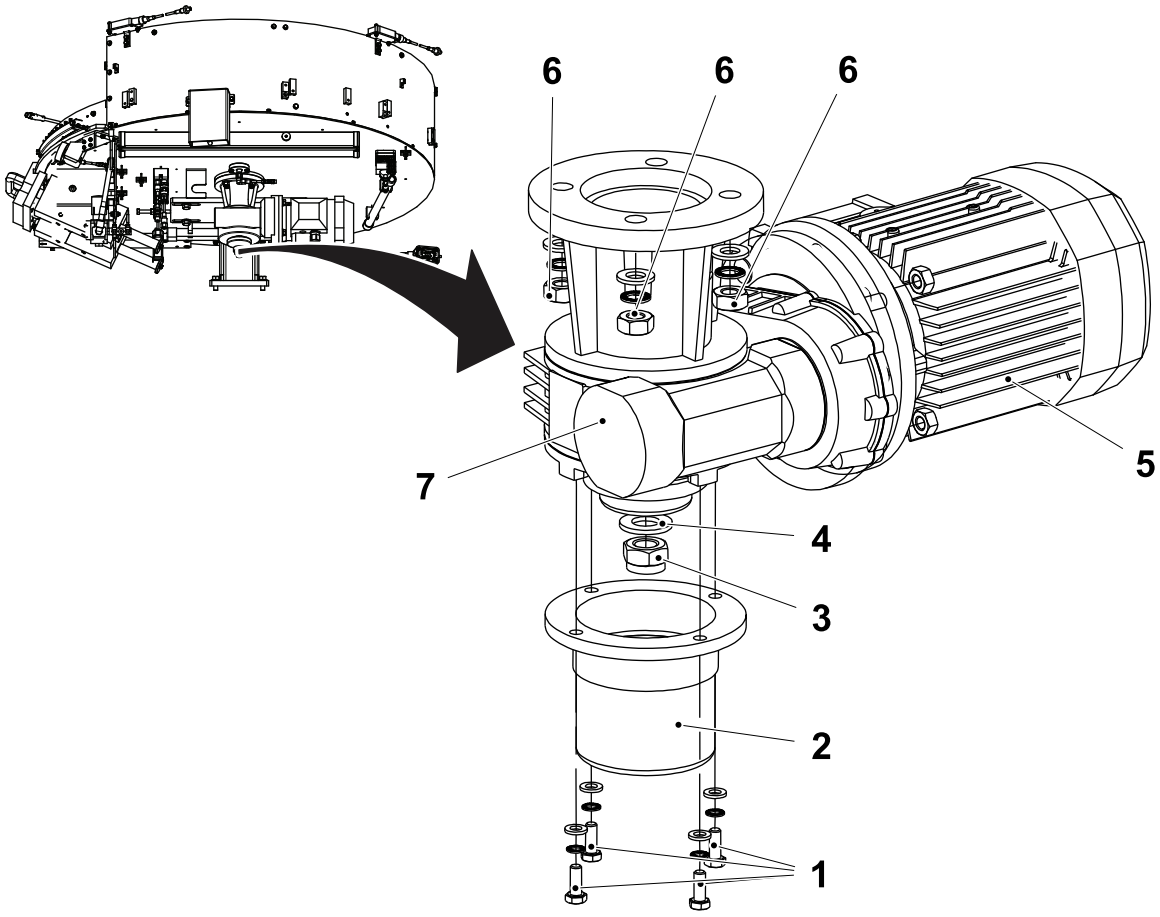

1 Screw
2 Protection
3 Screw
4 Washer
5 Motor
6 Nut
7 Motor gearbox group

Final Checks and Settings

a) Do the final checks according to 5.4.2-2 Feeder - Fine Checks.

This page intentionally left blank

6 Machine Body

Machine Body - Description

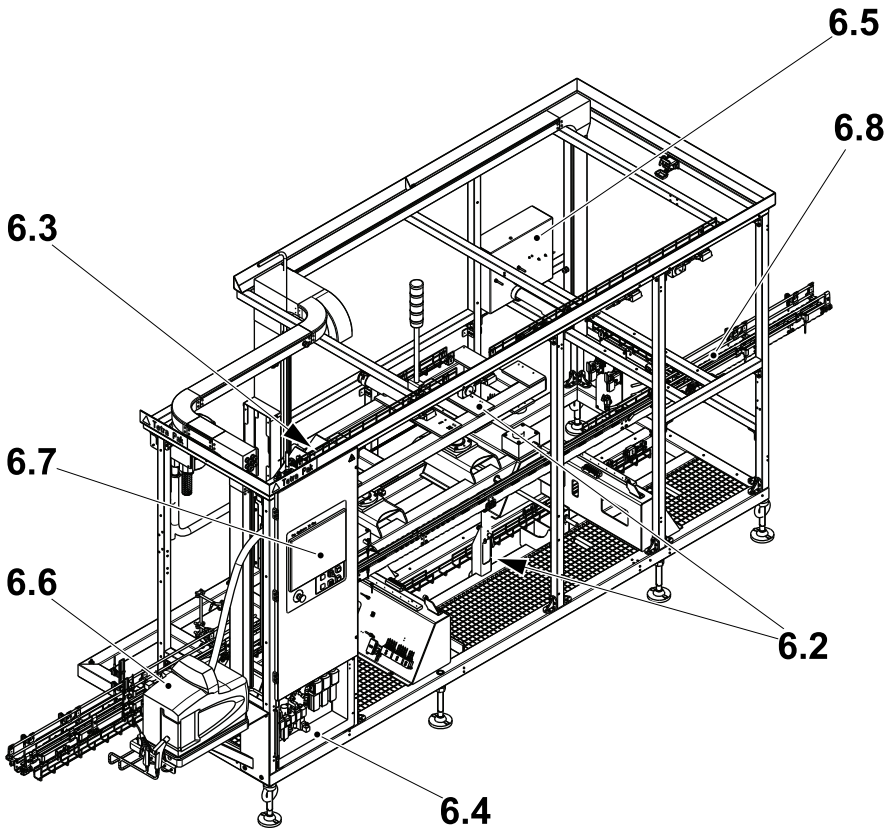

6.2 Package

6.3 Line Heater

6.4 Air Supply

6.5 Machine Lubrication

6.6 Hotmelt Unit

6.7 Operator Interface

6.8 Machine Body

Machine Body - Description 6-2

6.1 Functional Description 6-5

6.2 Package 6-6

6.2.1 Height Adjustment 6-6

6.2.1-1 Conveyor Support - Set Height 6-6

6.2.2 Conveyor Sensor Positions 6-9

6.3 Line Heater 6-12

6.3.1 Fan System 6-12

6.3.1-1 Fan System - Check 6-12

6.3.1-2 Fan System - Clean Fan Filter 6-13

6.3.2 Heating Element 6-14

6.3.2-1 Heating Element - Change 6-14

6.3.2-2 Heating Element - Set 6-16

6.4 Air Supply 6-18

6.4.1 Blowing System 6-18

6.4.1-1 Blowing System - Check 6-18

6.4.1-2 Blowing System - Set Blowing Device 6-19

6.4.2 Pneumatic Panel - Description 6-20

6.4.2-1 Pneumatic Panel - Check 6-22

6.4.2-2 Pneumatic Panel - Set Pressure Switch 6-24

6.4.2-3 Pneumatic Panel - Clean Filter Regulator 6-26

6.4.2-4 Pneumatic Panel - Set Filter Regulator 6-28

6.5 Machine Lubrication 6-29

6.5.1 Lubrication Unit (Pushdown) 6-29

6.5.1-1 Lubrication Unit (Pushdown). 6-29

6.5.1.1 Lubrication Unit - Functional Description. 6-31

6.5.2 Central Lubrication - Check 6-33

6.5.2-1 Central Lubrication - Check Level Switch 6-33

6.5.2-2 Central Lubrication - Check Pressure Switch 6-34

6.5.2-3 Pushdown Lubrication - Clean Conveyor Lubricant Tank 6-35
6.5.2-4 Pushdown Lubrication - Fault Finding 6-36

6.5.3 Nipple Lubrication 6-37

6.5.3-1 Package Line - Lubricate the Grease Nipples 6-37
6.5.3-2 Belt Brake - Lubricate the Grease Nipples 6-39
6.5.3-3 Pushdown - Lubricate the Grease Nipples 6-40

6.6 Hotmelt Unit 6-41

6.6.1 Functional Description 6-41

6.6.1-1 Hotmelt Panel Overview 6-43

6.6.2 Hotmelt Equipment 6-45

6.6.2-1 Hotmelt Equipment - Check 6-45
6.6.2-2 Hotmelt Equipment - Empty Tank 6-46
6.6.2-3 Hotmelt Equipment - Change Hotmelt Unit 6-53
6.6.2-4 Hotmelt Equipment - Change Filter. 6-57
6.6.2-5 Hotmelt Equipment - F2 Alarm. 6-59
6.6.2-6 Set Tank, Hose and Gun Temperatures. 6-60
6.6.2-7 Hotmelt Equipment - Set Pressure 6-62
6.6.2-8 BYPASS Mode - Switch On the Hotmelt Unit 6-63

6.7 Operator Interface 6-68

6.7.1 Operator Interface - TPOP 6-68

6.7.1-1 TPOP - Change 6-68

6.8 Machine Body 6-70

6.8.1 Conveyor - Height Adjustment. 6-70

6.8.1-1 Height Adjustment - Check 6-70
6.8.1-2 Height Adjustment - Set. 6-71

6.8.2 Conveyor Infeed Rail. 6-72

6.8.2-1 Infeed Rail Change 6-72

6.1 Functional Description

The machine body consists of the following;

- The package conveyor complete with sensors for moving and regulating the packages.
- The package heater which preheats the PE layer of the package to make the hotmelt bond of the cap stronger. The heat is delivered to the package by a fan.
- The air supply which is regulated by the pneumatic panel.
- The lubrication unit for the continuous lubrication of the bearings.
- The hotmelt unit which preheats the hotmelt and supplies it to the guns via a hose.
- The TPOP for the Human Machine Interface (HMI), Alarms, Displays and Setting ect,.
- The height adjustment via the applicator unit adjust. This gives the height flexibility required for the different package sizes.

6.2 Package

6.2.1 Height Adjustment

6.2.1-1 Conveyor Support - Set Height

Machine Status	Electrical supply disconnecting device in position O (OFF) Main air valve OFF
SPC Reference	2769738-0100

a) Release the two screws (1) that hold each of the end bracket (2) and the locking lever (3).

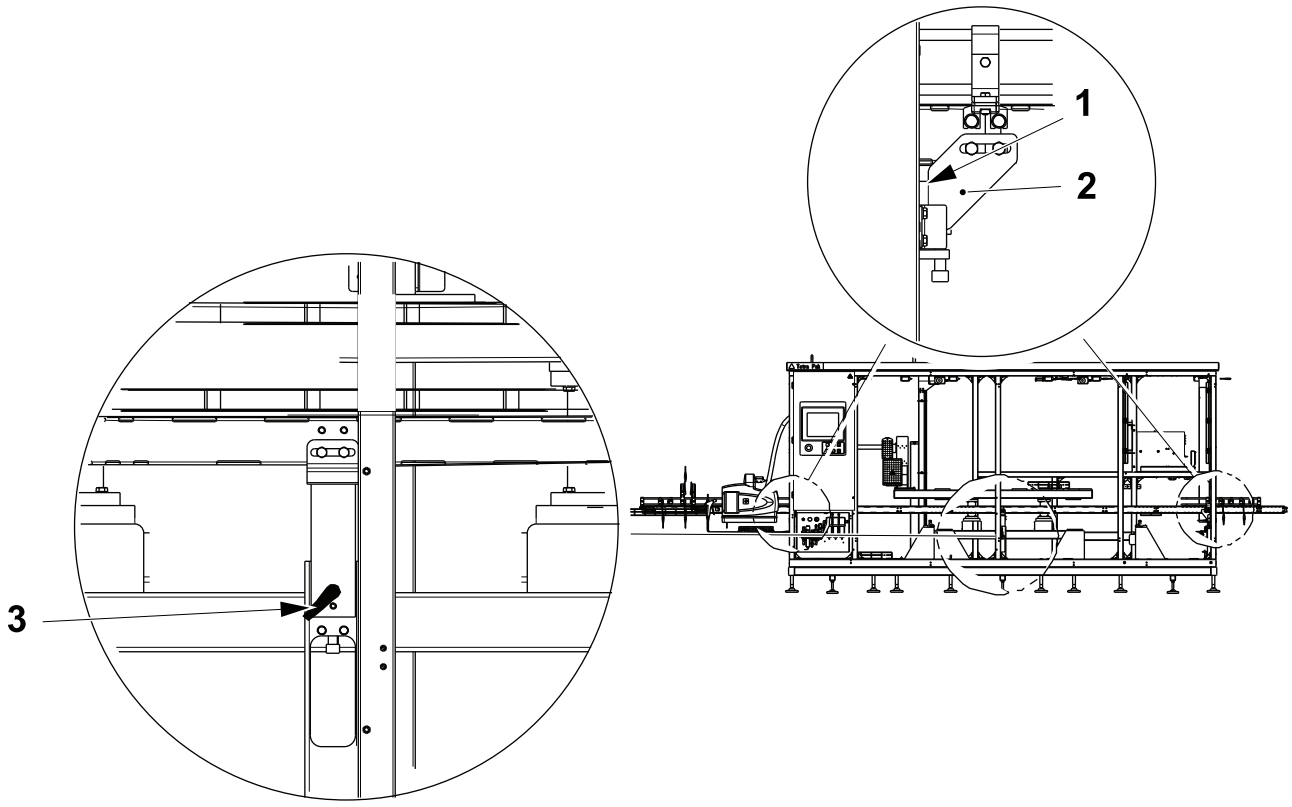

1 Screw
2 Bracket
3 Locking lever

(Cont'd)

(Cont'd)

b) Raise or lower the conveyor to obtain distance **A** (the distance between the top of the chain conveyor (4) and the bottom of the belt tooth (5)) by the adjusting screw (6).

Package Type	Distance A (mm)
TBA Family TGA Sq Family	5
TPA Family TGA Crystal/Leaf Family	41
TBA Portion	20
TBA 200 E	7
TBA 250 E	7

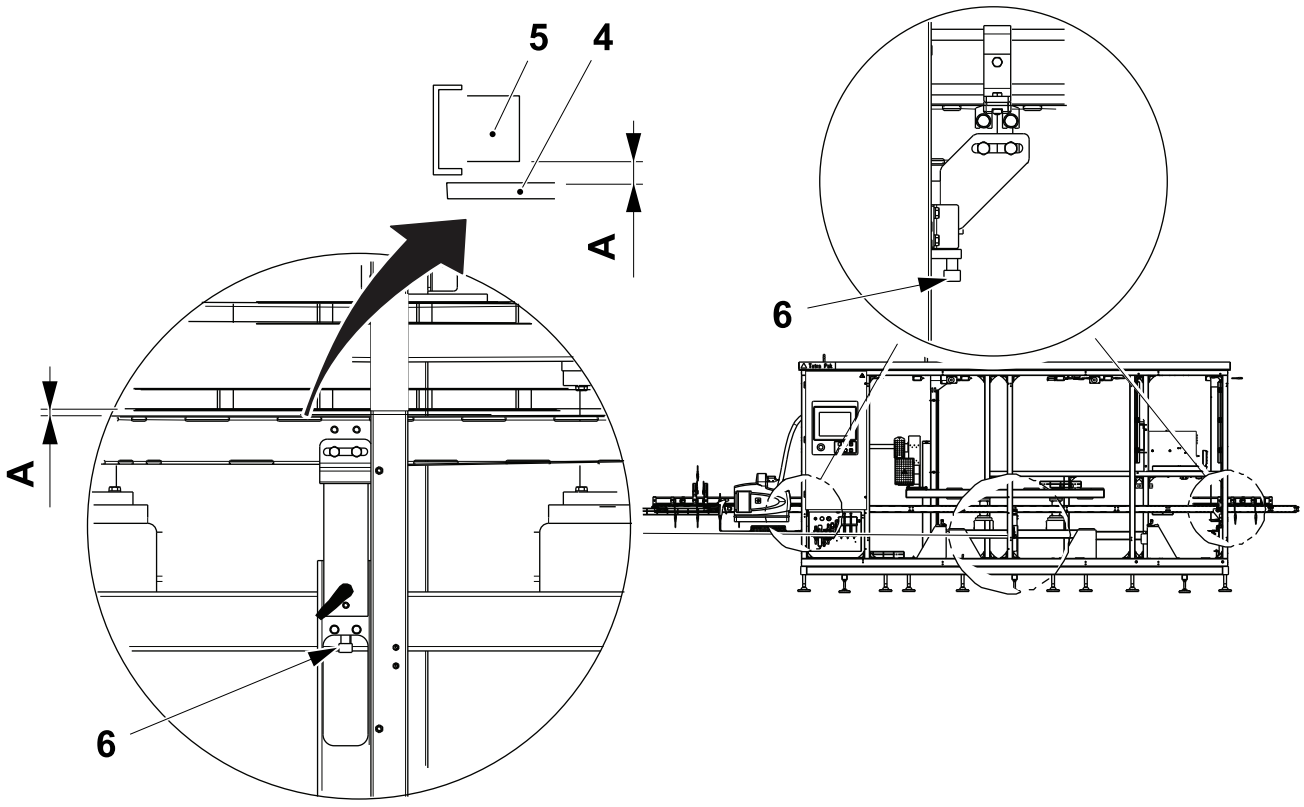

4 Conveyor
5 Belt tooth
6 Adjusting screw

(Cont'd)

(Cont'd)

c) Tighten the locking lever (3) and the screws (1).

Note! Make sure that the conveyor is level in the (Y) direction and square in the (X) direction, also check the packages for squareness.

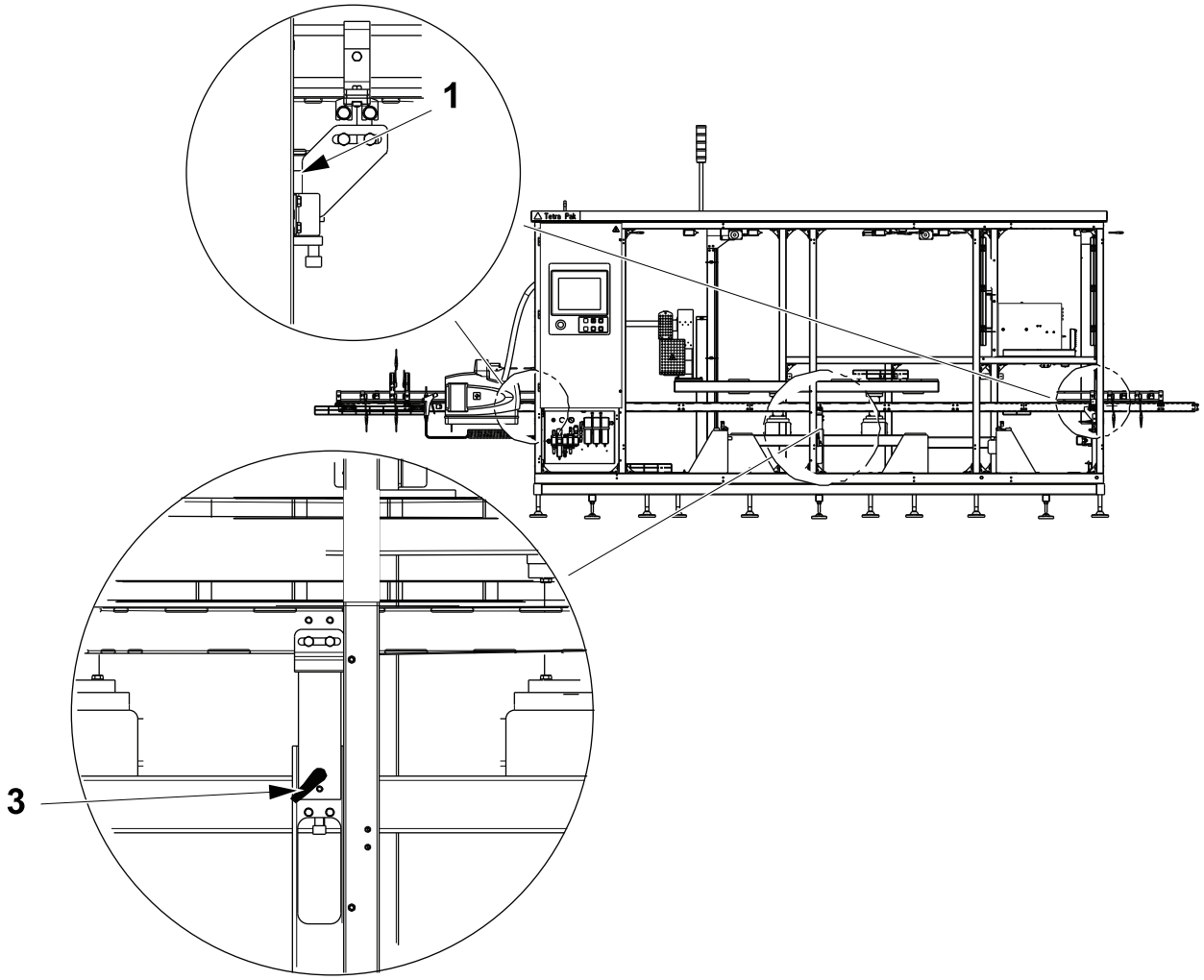

1 Screw
3 Locking lever

6.2.2 Conveyor Sensor Positions

Note! Valid for All except TBA Edge

The too long package queue sensor (1) is installed **1 m** before the DE unit (2) (distance **A**). This sensor is used to start the machine when it is in production stand by waiting for packages. In the presence of the line controller the sensor can be positioned closer to the machine, see Installation in TP A3 iLines in CM. The illustration below shows the location of the long package queue sensor (3), fallen package sensor (4), short package queue sensor (5) which matches caps to packages and are all referenced to the rear of belt brake (6).

Note! Check for gaps between packages and that the packages stop in the correct position, adjust as necessary.

A = 1m
B = 500mm
C = 800mm

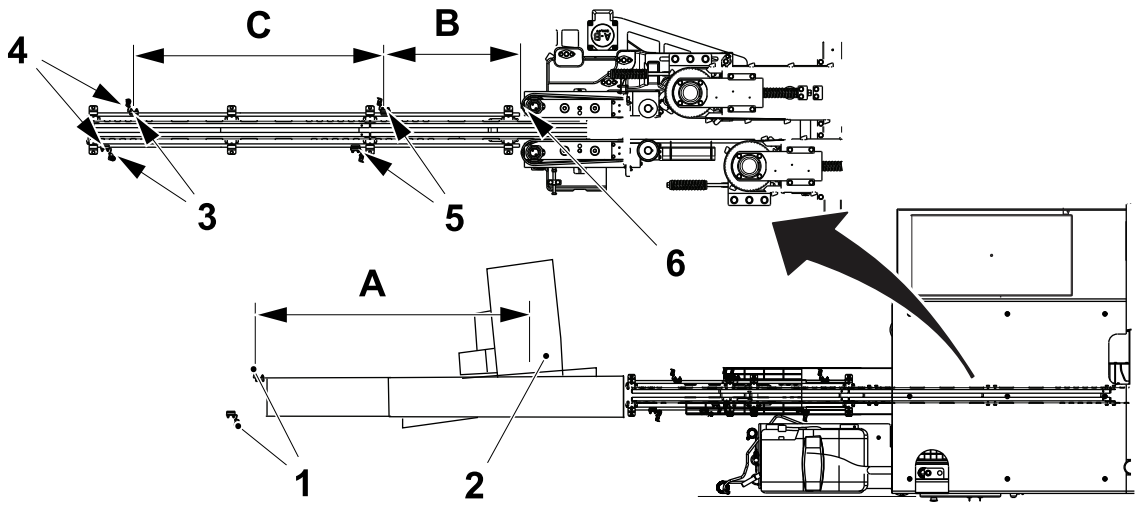

1 Too long package queue sensor
2 DE unit
3 Long package queue sensor
4 Fallen package sensor
5 Short package queue sensor
6 Rear of belt brake

(Cont'd)

(Cont'd)

Note! Valid only for TBA Edge

Make sure that the sensors are installed in the direction **D**, see picture.

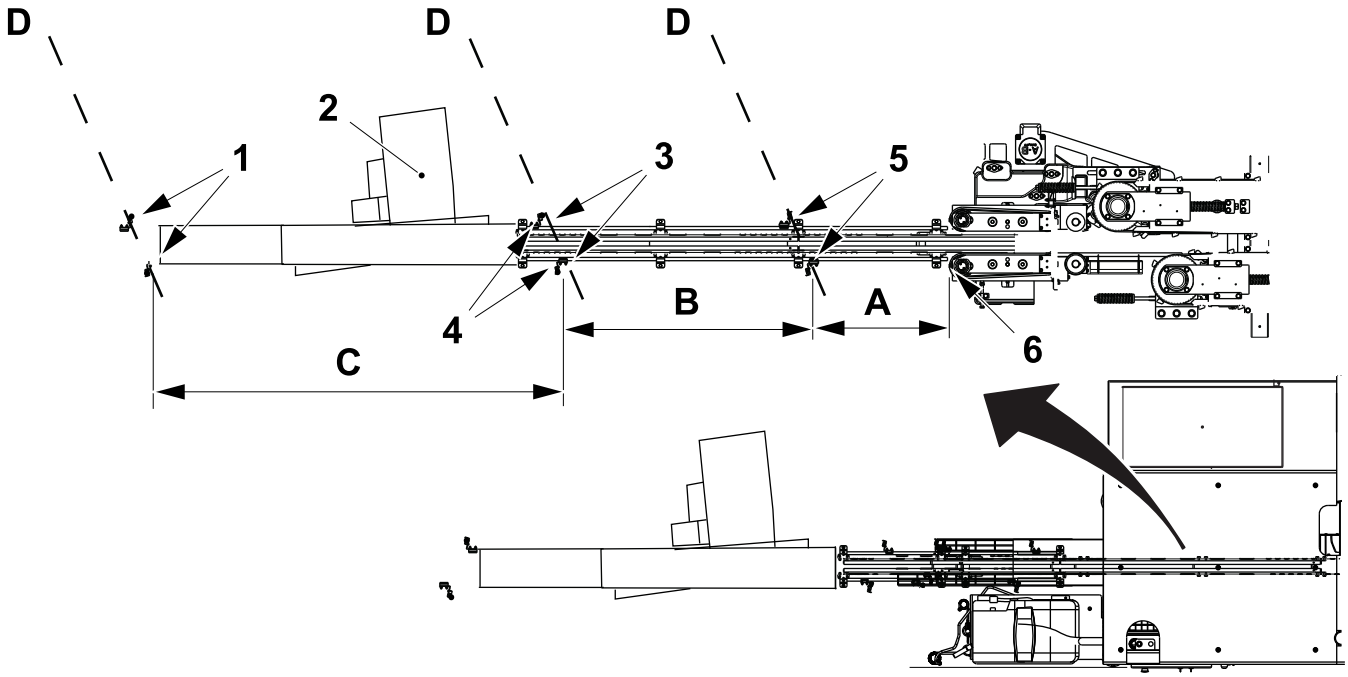

A = 500 mm

B = 400 mm

C = 380 mm

1 Too long package queque sensor
2 DE Unit
3 Long package queque sensor
4 Fallen package sensor
5 Short package queque sensor
6 Rear of belt brake

(Cont'd)

(Cont'd)

Note! Valid for All

As well as the end of bearing housing (7) also shown is the location of the outfeed congestion package sensor (8) and the cap detector photo-electric sensor (9), see 11.1 Cap Detector for the distances **D** and **E**.

Note! The maximum distance of the queue Outfeed Left Line (10) is 5 m. The extension cable part number is: 351411-0050 (not included in machine delivery).

The queue Outfeed Left Line (10) is installed at the discharge end of the cap applicator and after the DE unit (11). Where there is only one DE unit installed, the queue Outfeed Left Line (10) sensor is installed after the DE unit (12) (distance **F**).

F = 1m

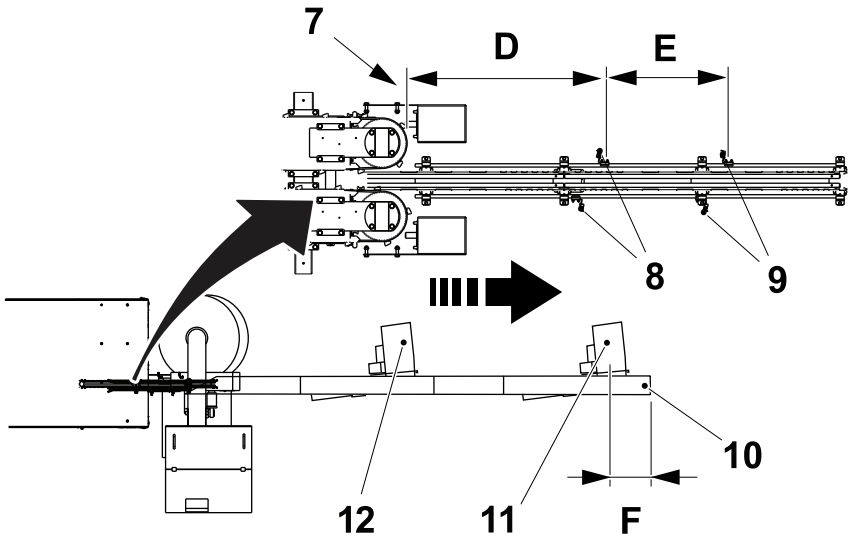

7 End of bearing housing
8 Outfeed congestion package sensor
9 Cap detector photo-electric sensor
10 Queue Outfeed Left Line
11 DE unit
12 DE unit

6.3 Line Heater

6.3.1 Fan System

6.3.1-1 Fan System - Check

Machine Status	Electrical supply disconnecting device in position I (ON) Main air valve ON
SPC Reference	2773622-0200

WARNING

Risk of burns.

The preheating equipment is very hot. Failure to observe this information could result in severe burns.

a) The heating Element (1) and the fan (2) are alarmed for malfunction.

b) Check that the filter (3) is clean.

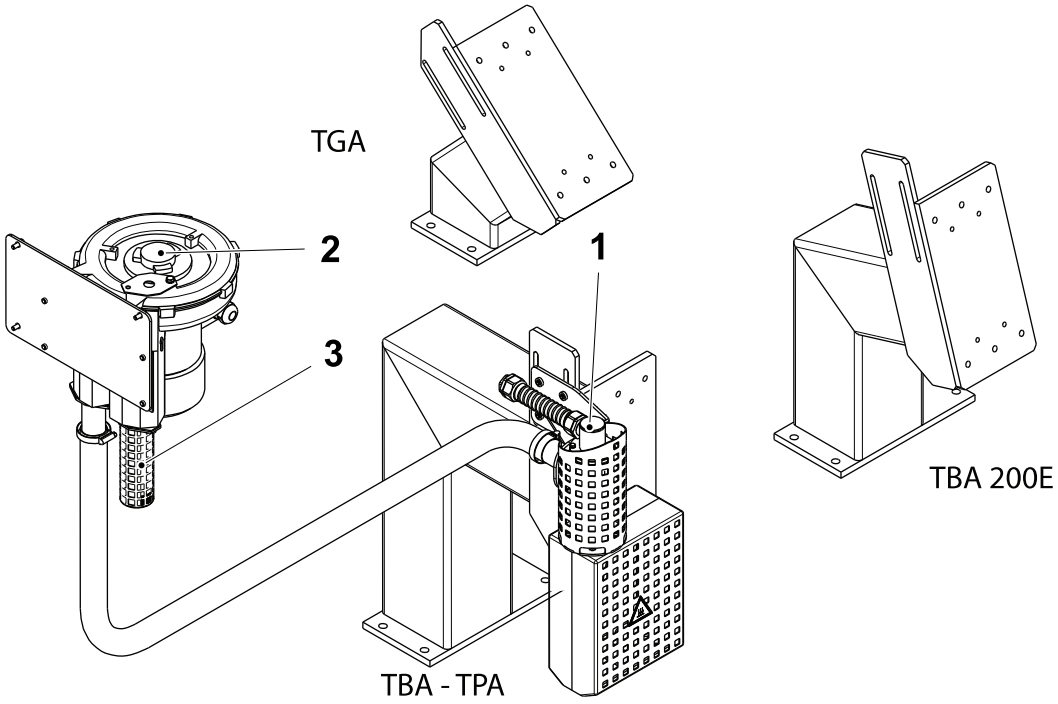

1 Heating Element
2 Fan
3 Filter

6.3.1-2 Fan System - Clean Fan Filter

Machine Status	Electrical supply disconnecting device in position I (ON) Main air valve ON
SPC Reference	2773622-0200

a) Remove the screw (1), the cover (2) and the gasket (3) .

b) Clean the filter (4).

c) Assemble in the reverse order.

Note! A restrictor (5) must be fitted when running at 60Hz.

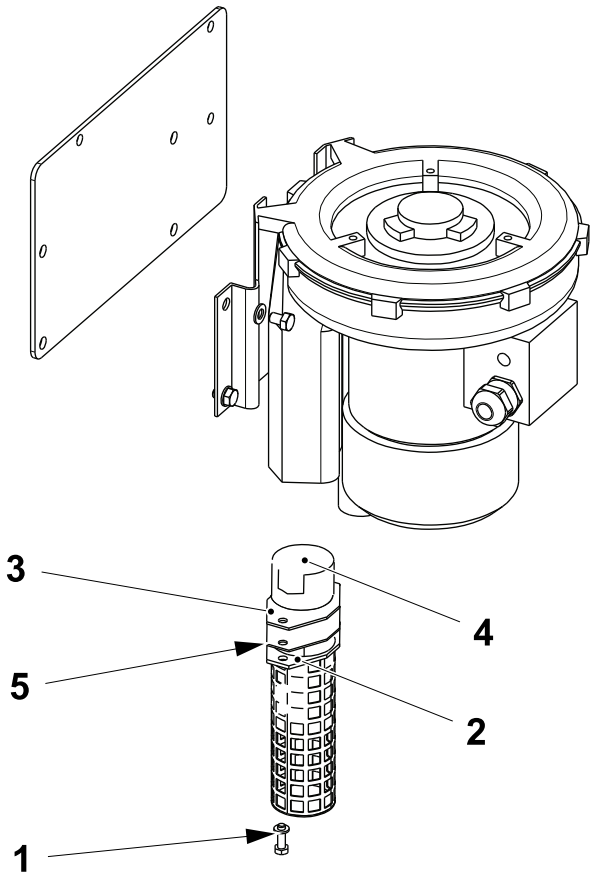

1 Screw
2 Cover
3 Gasket
4 Filter
5 Restrictor

6.3.2 Heating Element

6.3.2-1 Heating Element - Change

Machine Status	Electrical supply disconnecting device in position O (OFF) Main air valve OFF
SPC Reference	3203761-0100

WARNING

Risk of burns.

The preheating equipment is very hot. Failure to observe this information could result in severe burns.

a) Change the heating element (1) by removing the four screws (2), the pipe bend (3), and the flange seal (4).

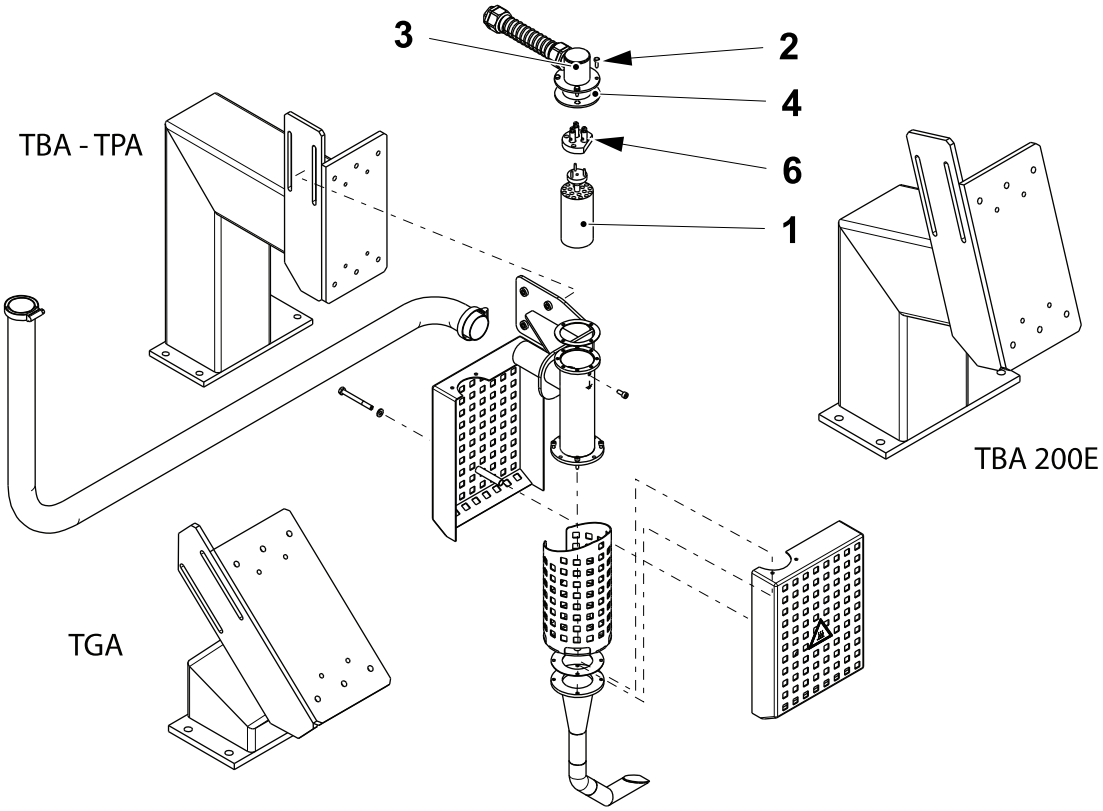

1 Heating element
2 Screw
3 Pipe bend
4 Flange seal

(Cont'd)

(Cont'd)

b) Release the earth cable screw (5) making sure not to drop the nut.

c) Disconnect the heating element (1) from the female plug (6).

d) Assemble in the reverse order replacing the flange seal (4).

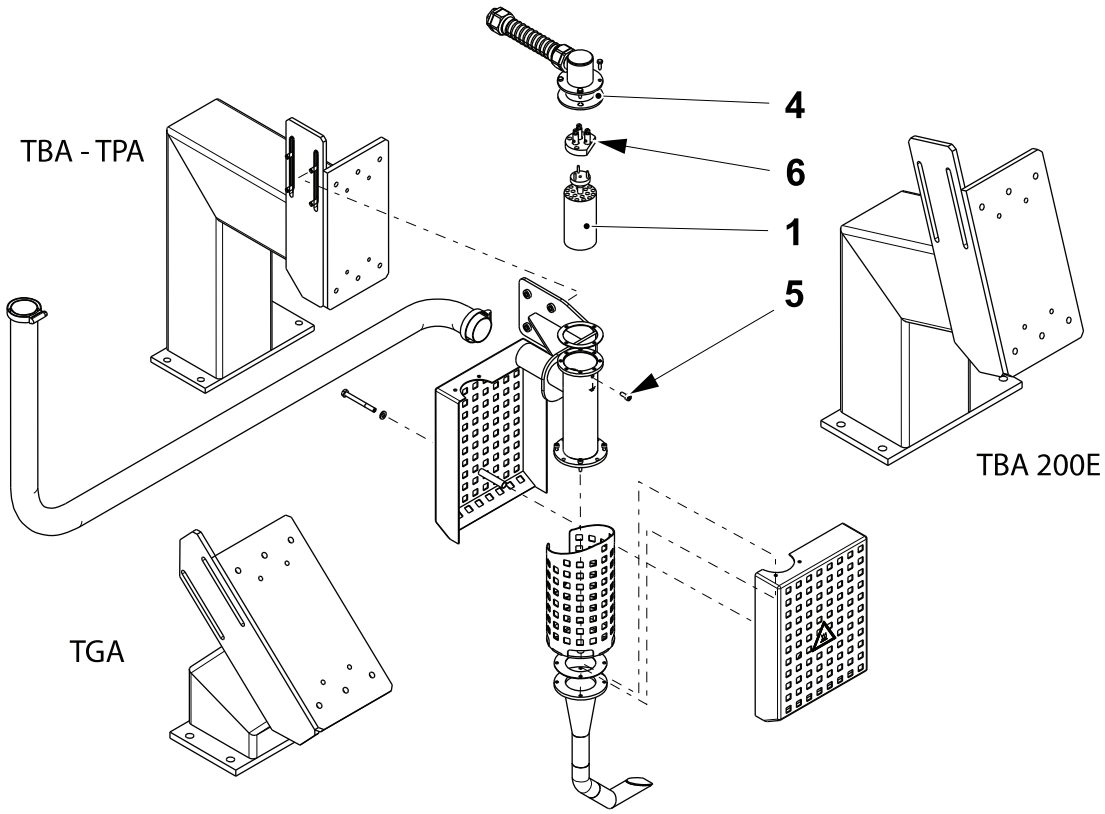

1 Heating element
4 Flange seal
5 Screw
6 Female plug

6.3.2-2 Heating Element - Set

Machine Status	Electrical supply disconnecting device in position O (OFF) Main air valve OFF
SPC Reference	3203761-0100

WARNING

Risk of burns.

The preheating equipment is very hot. Failure to observe this information could result in severe burns.

Note! It is very important that the preheating system is correctly set and that the element is working properly, otherwise there will be problems with liftng the PullTab strip.

a) Release the four screws (1) and set the distance **A** between the heating element nozzle (2) and the package top (3).

Note! The nozzle (2) is volume/cap dependent. See latest SPC.

A = 8 ± 1 mm

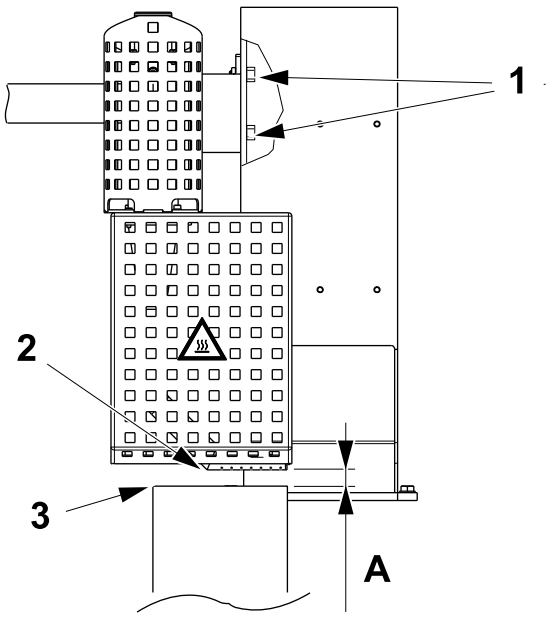

1 Screw
2 Nozzle
3 Package top

(Cont'd)

(Cont'd)

b) Centre the nozzle over the laminated hole (4) or pulltab (5).

Tighten the screws (1).

Note! The nozzle (2) is volume/cap dependent. See latest SPC.

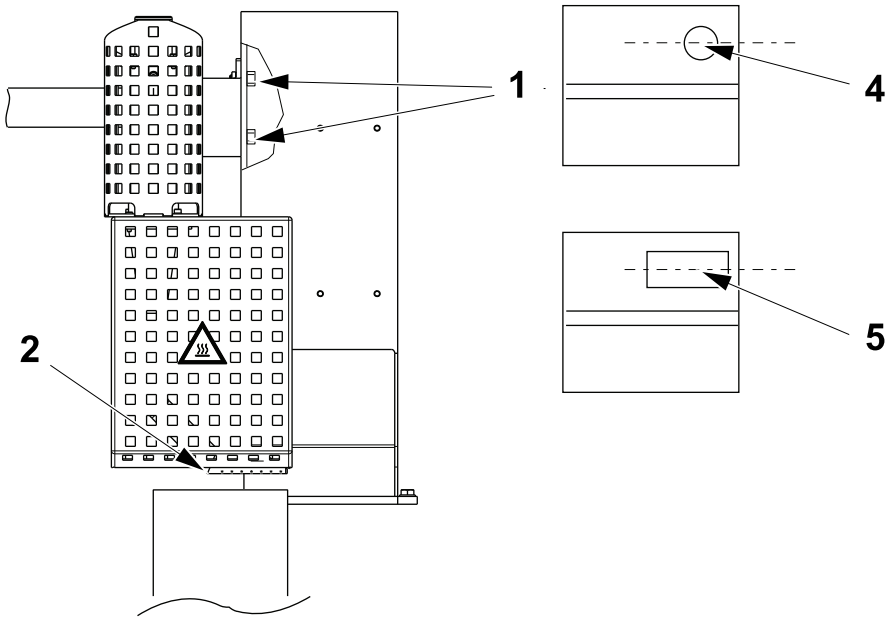

1 Screw
2 Nozzle
4 Hole
5 Pulltab

6.4 Air Supply

6.4.1 Blowing System

6.4.1-1 Blowing System - Check

Machine Status	Electrical supply disconnecting device in position I (ON) Main air valve ON
SPC Reference	2838672-0200

a) Make sure that the packages are under the air nozzle (1) which should remove moisture from that part of the package where the cap is to be applied.

b) Check that the pull tab strips are not being raised by the air jet.

c) See 6.4.2 Pneumatic Panel - Description for pneumatic panel (2) settings.

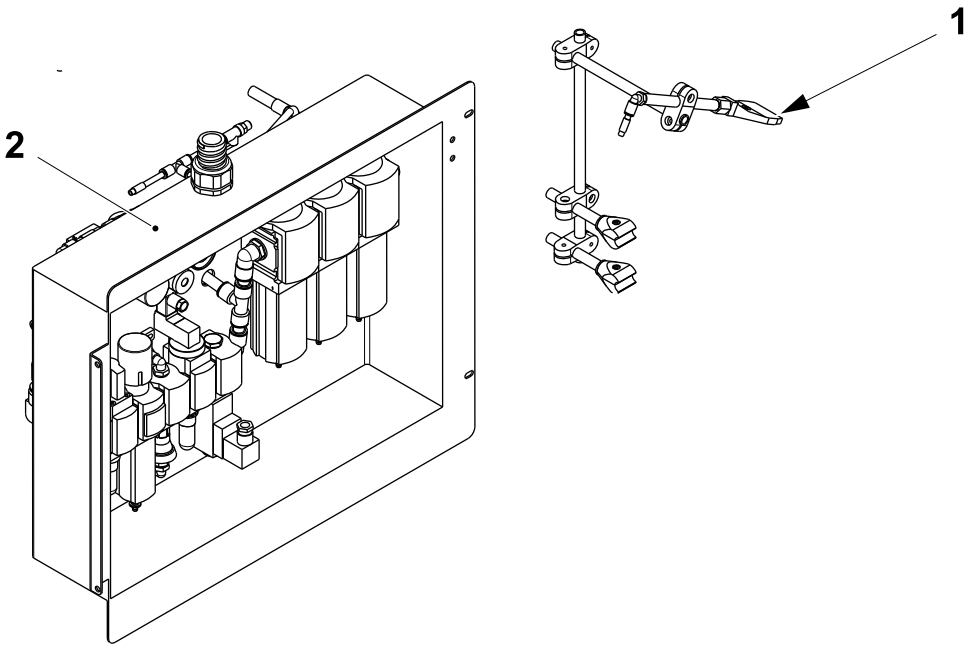

1 Air nozzle
2 Pneumatic panel

6.4.1-2 Blowing System - Set Blowing Device

Machine Status	Electrical supply disconnecting device in position I (ON) Main air valve ON
SPC Reference	2838672-0200

a) Release the screws (1) and set the nozzle (2) to the distance **A** above the package.

b) Centre the nozzle (2) between the edge of the package and the transversal seal (3) at 45 degrees so that the moisture is blown away from the packages. Make sure that the pulltab is not lifted by the air.

Note! The above setting is package dependent.

c) Tighten the screws (1).

d) The force of the air blown is controlled by the throttle check valve (4) .

A = 5 - 10 mm

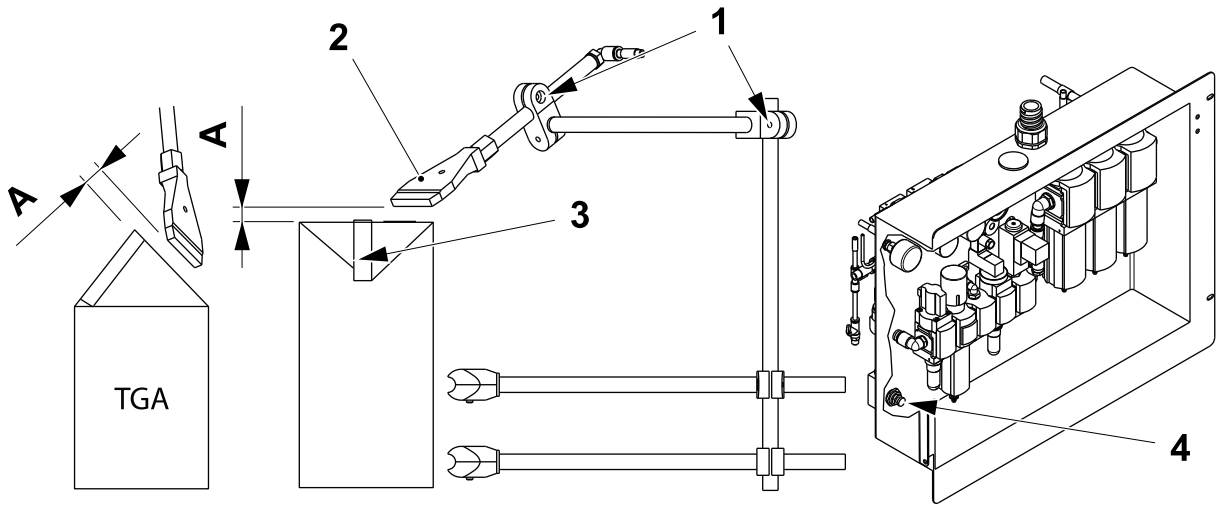

1 Screw
2 Nozzle
3 Transversal seal
4 Throttle check valve

6.4.2 Pneumatic Panel - Description

Pneumatic Panel Front

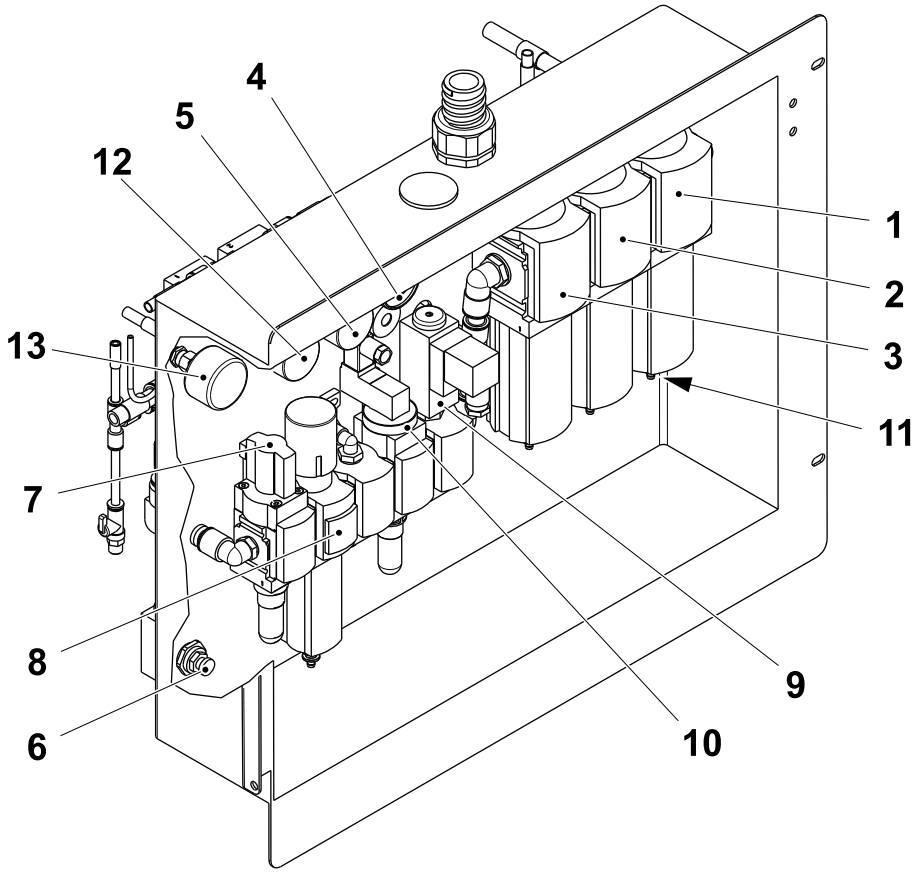

1 Filter (Oil) K01V8054
2 Filter (Air) K01V8053
3 Filter (Air) K01V8052
4 Pressure gauge 4K0P1050
5 Pressure regulator 4K0R1050
6 Throttle check valve K21R3054
7 Shutoff valve K01Q8050
8 Filter regulator K01V8050
9 Shutoff valve K01K8000
10 Pressure guard K01B8001
11 Drain valve
12 Pressure regulator K01R5000
13 Pressure gauge K01P5000

(Cont'd)

(Cont'd)

Pneumatic Panel Back

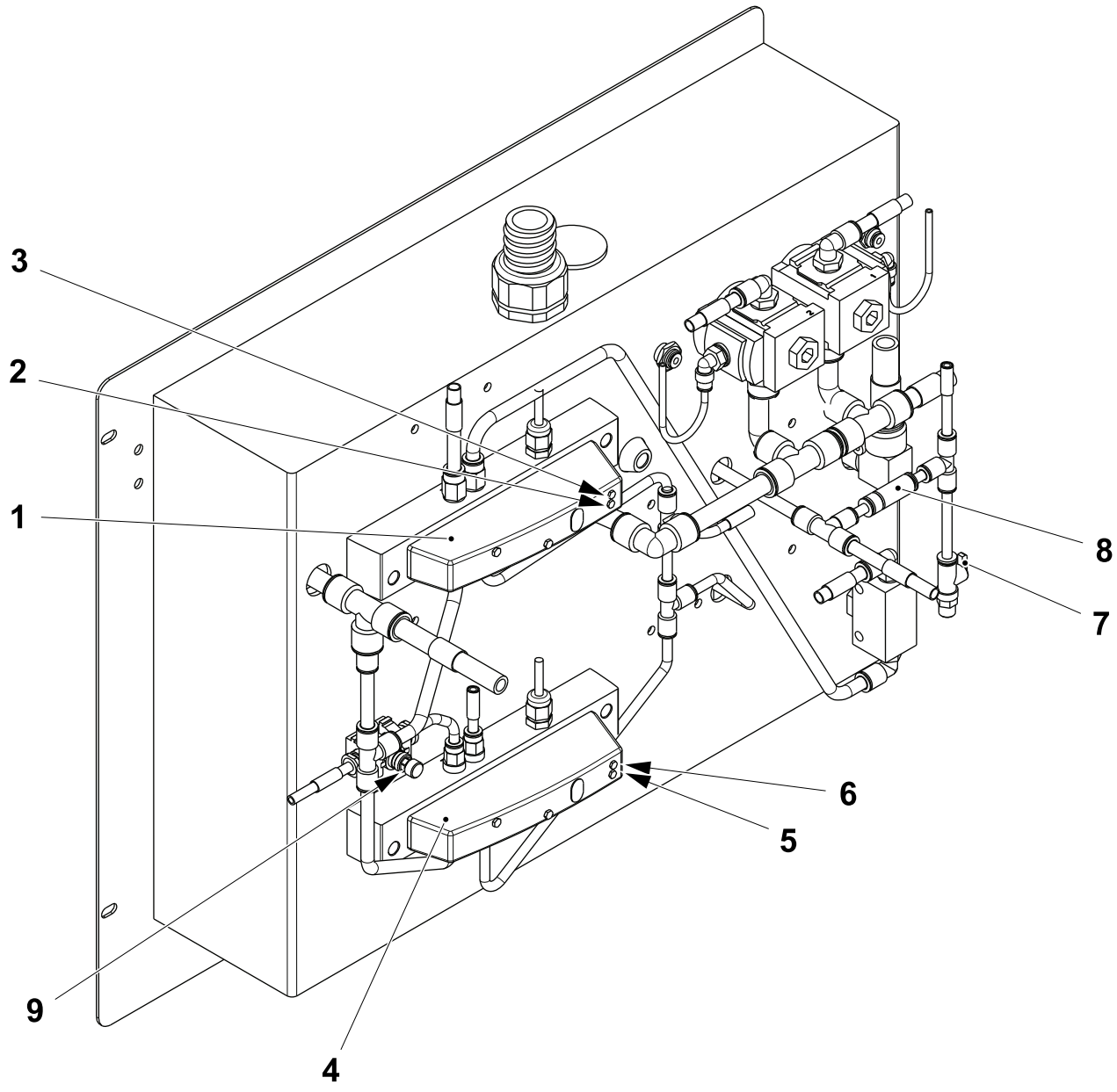

1 Sub base K20U3050
2 LED 14 K40K2003
3 LED 12 K40K2003
4 Sub base K01U9050
5 LED 14 K40K2003
6 LED 12 K40K2003
7 Release valve K20Q0052
8 Non return valve K21Q0051
9 Flow control valve K21R0054

6.4.2-1 Pneumatic Panel - Check

Machine Status	Electrical supply disconnecting device in position I (ON) Main air valve ON
SPC Reference	2838672-0200

Note! The pressure switch (1) can also be activated by variations of the incoming air pressure.

a) Check that the working pressure is 6.0 Bar.

b) If the pressure switch (1) is actuated too often, the air filter (2) may be clogged. If necessary, clean or replace the filter.

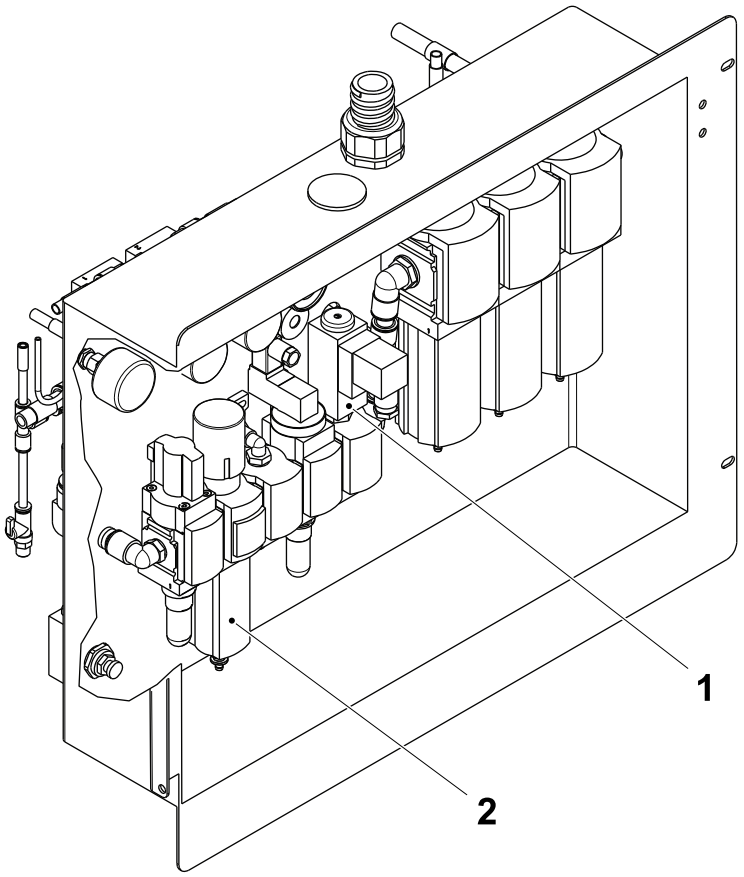

1 Pressure switch
2 Air filter

(Cont'd)

(Cont'd)

Note! The pressure switch (1) can also be activated by variations of the incoming air pressure.

c) The air filter (2), the air filter (3) and the air filter (4) are bled automatically. The oil filter (5) requires manual bleeding from the bleed valve (6) when the level has reached a maximum value.

d) The pressure switch (1) is activated when the air pressure drops below 0.38 MPa (3.8 Bar).

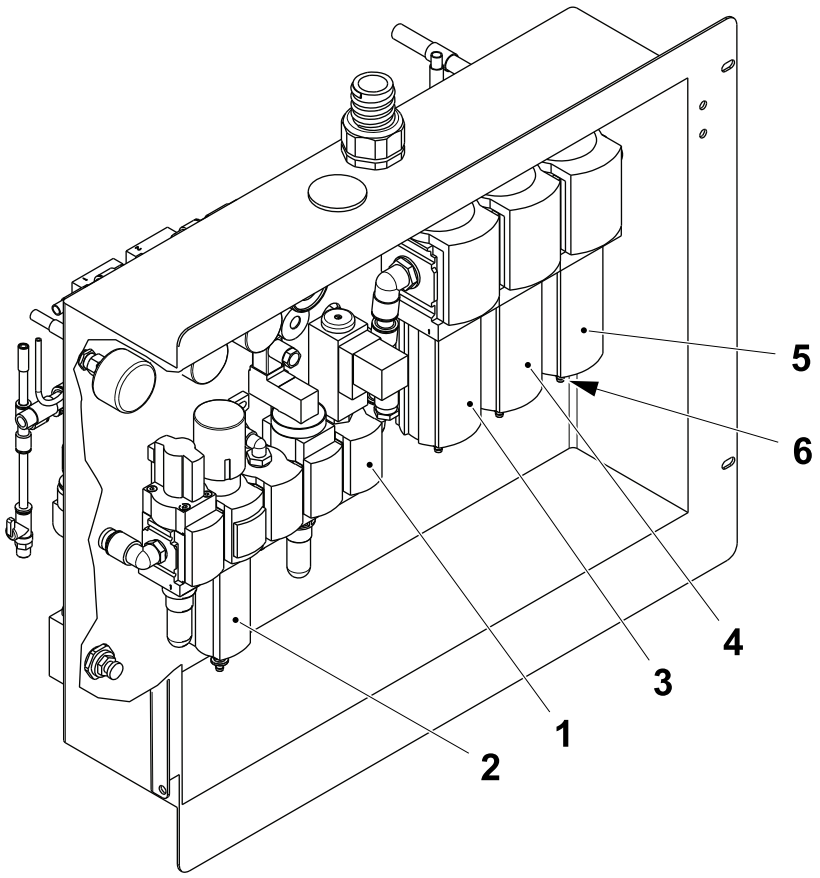

1 Pressure switch
2 Air filter
3 Air filter
4 Air filter
5 Oil filter
6 Bleed valve

6.4.2-2 Pneumatic Panel - Set Pressure Switch

Machine Status	Electrical supply disconnecting device in position I (ON) Main air valve ON
SPC Reference	2838672-0200

a) Using a screw driver, locate the setting screw (1) at the top of the pressure switch (2) by removing the plug (3).

b) Reduce the working pressure to 3.8 Bar.

c) Turn the setting screw (1) fully counter clockwise and step up the machine to STEP 2.

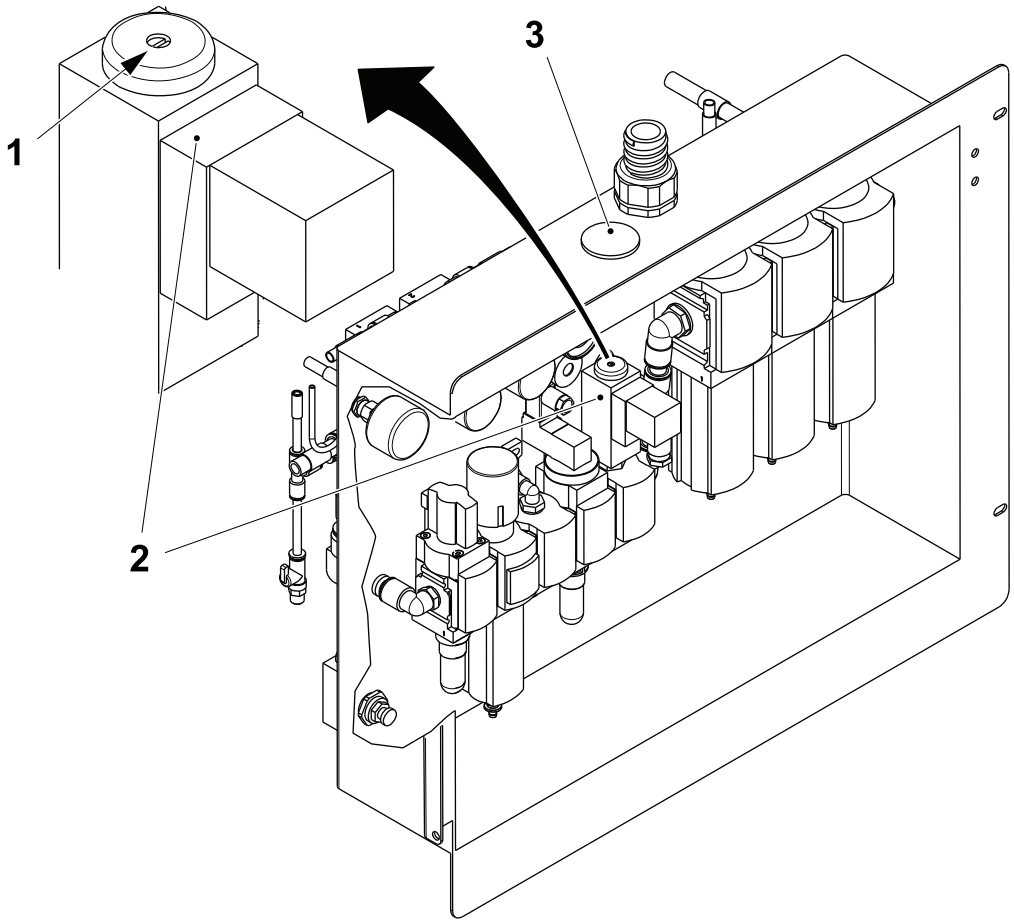

1 Setting screw
2 Pressure switch
3 Plug

(Cont'd)

(Cont'd)

d) Slowly turn the setting screw (1) clockwise until the Led (4) (inside the operator interface (5)) on the I/A01K3024 goes out.

e) Slowly turn the setting screw (1) counter clockwise until the Led (4) comes back on.

f) Set the working pressure to 6.0 Bar.

g) Replace the plug (3) .

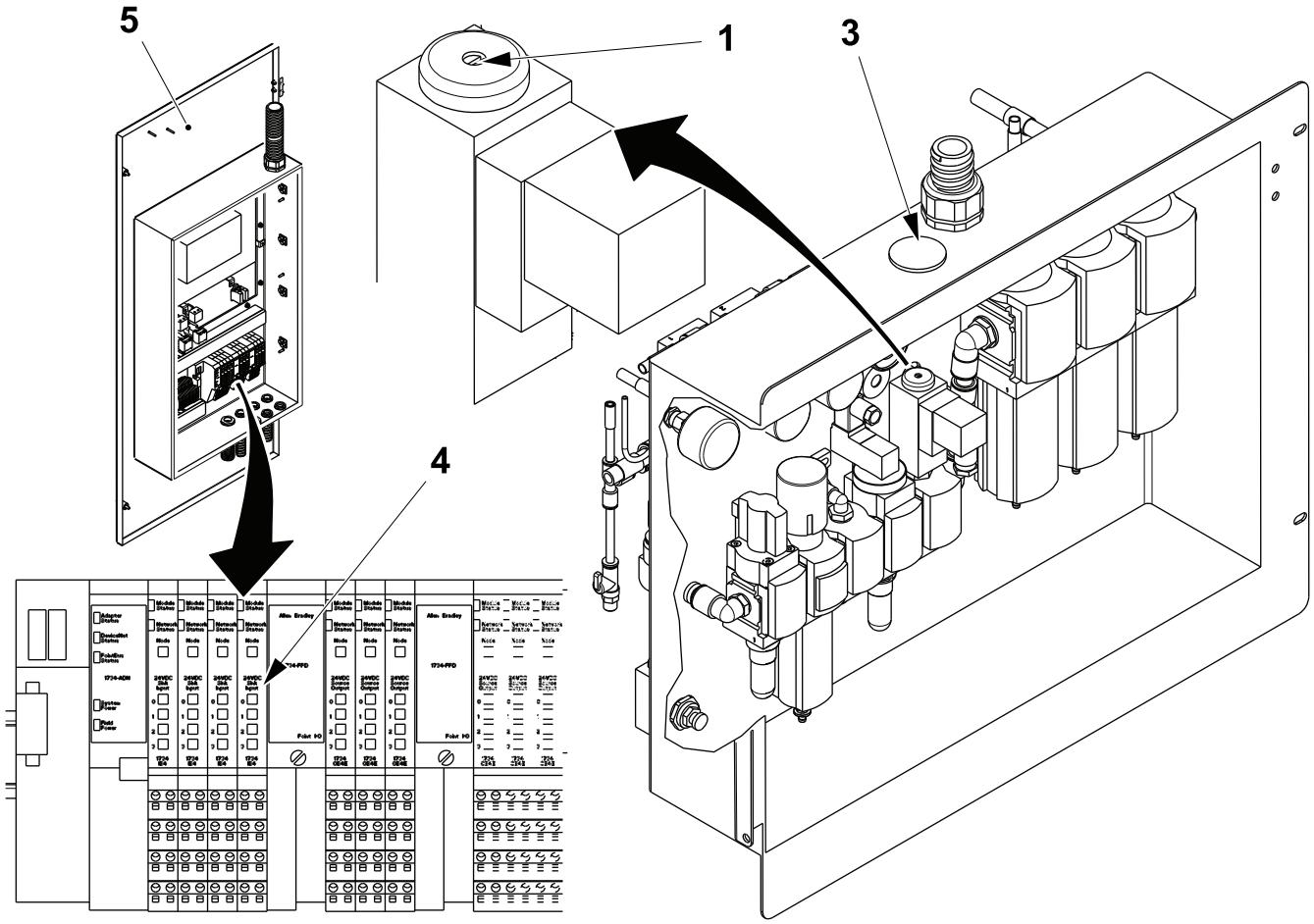

1 Setting screw
3 Plug
4 Led
5 Operator Interface

6.4.2-3 Pneumatic Panel - Clean Filter Regulator

Machine Status	Electrical supply disconnecting device in position I (ON) Main air valve ON
SPC Reference	2838672-0200

Air Filters

a) Press down and rotate the shut off valve (1) clockwise.

Note! The position shown in the illustration is OFF.

b) Press down on the blue button (2) and hold while rotating the filter housing (3).

c) Clean the internal filter by blowing air through it. If necessary replace the internal filter.

d) Assemble in the reverse order.

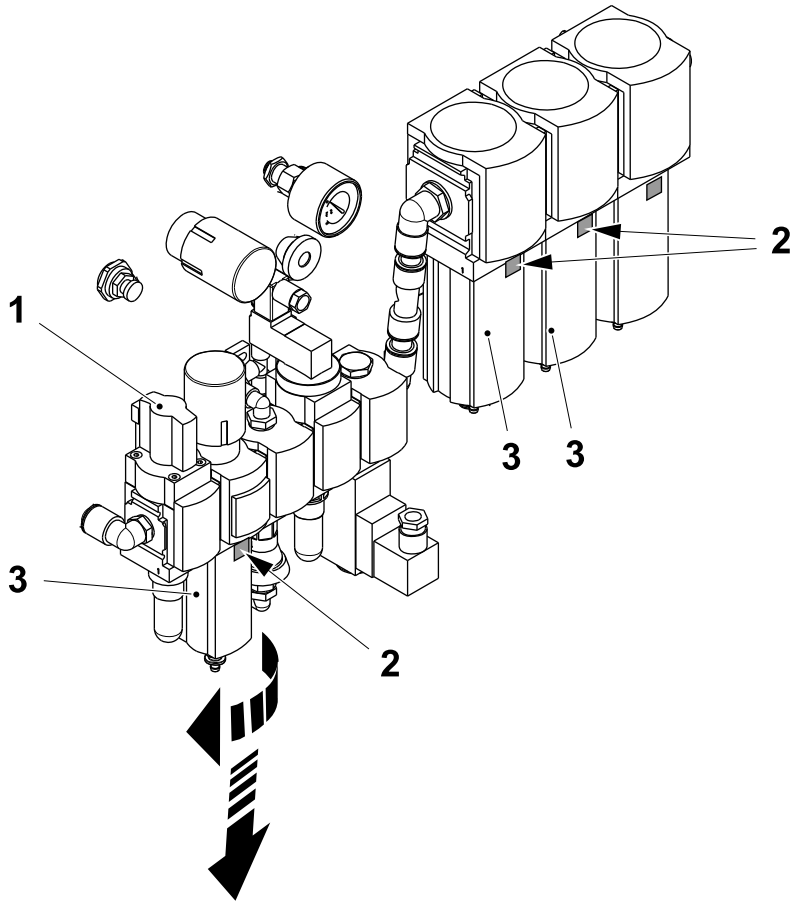

1 Shut off valve
2 Blue button
3 Filter housing

(Cont'd)

(Cont'd)

Oil Filter

a) Press down and rotate the shut off valve (1) clockwise.

b) Using the drain valve (2) empty any contents of the filter housing (3).

c) Press down on the blue button (4) and hold while rotating and pulling down on the filter housing (3).

d) Unscrew the filter element (5).

e) Replace and assemble in the reverse order.

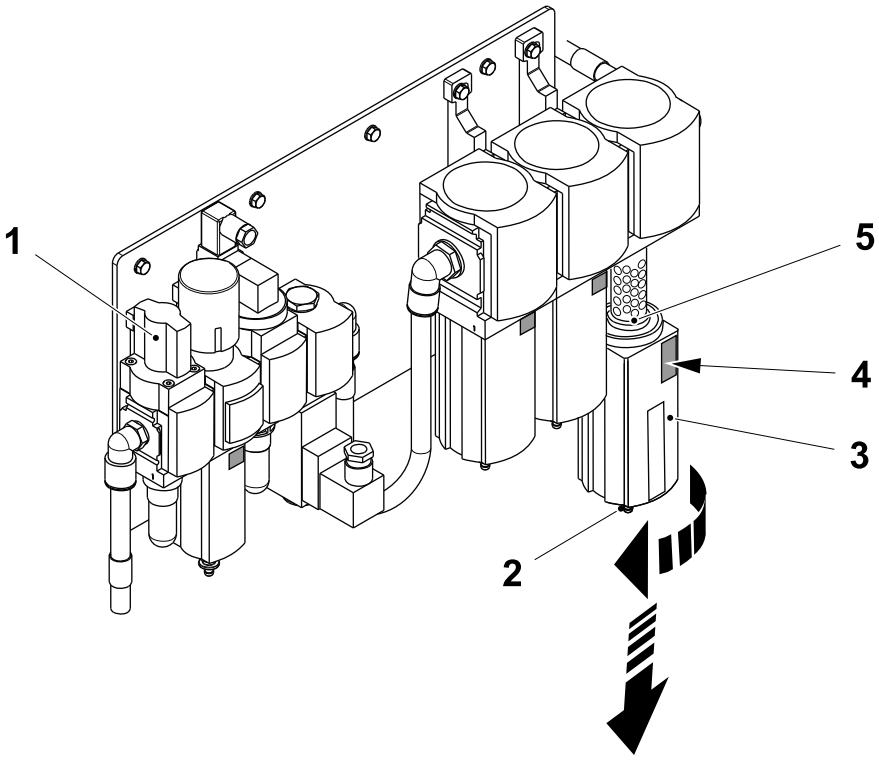

1 Shut off valve
2 Drain valve
3 Filter housing
4 Blue button
5 Filter element

6.4.2-4 Pneumatic Panel - Set Filter Regulator

Machine Status	Electrical supply disconnecting device in position I (ON) Main air valve ON
SPC Reference	2838672-0200

a) Press down and rotate the shut off valve (1) to switch the air on.

b) Rotate the pressure regulator knob (2) until the gauge (3) indicates 6.0 Bar / 0.6 MPa.

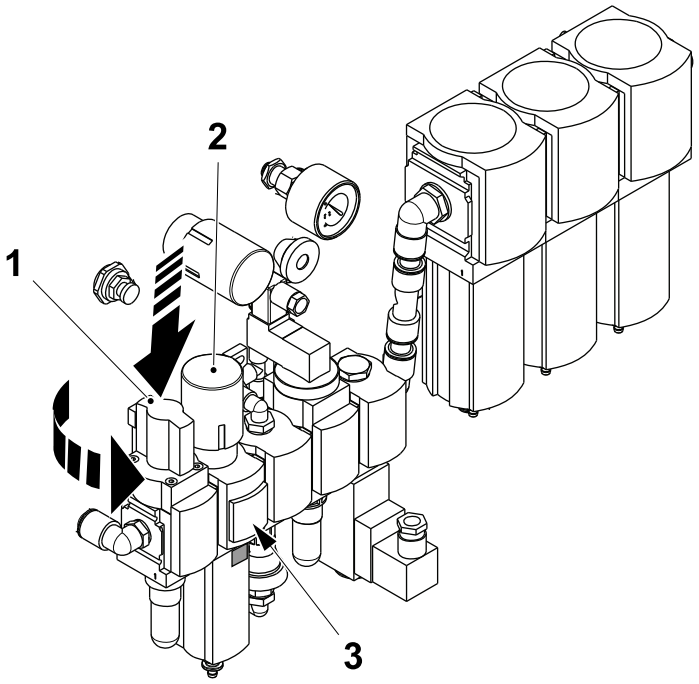

1 Shut off valve
2 Pressure regulator knob
3 Gauge

6.5 Machine Lubrication

6.5.1 Lubrication Unit (Pushdown)

6.5.1-1 Lubrication Unit (Pushdown)

Consumables	Food Grade Lubricant with PTFE, RM 2000T TP No. 90606-3683
SPC Reference	3208664-0100

System Functional Description

The lubrication system is a one-way automatic system. This means that the system to the pushdown must be bled to achieve functionality.

There is no manual lubrication button as to do so would force conveyor lubricant through the seals on the pushdown.

Conveyor lubricant is fed from the central lubrication pump through the main line distribution blocks and into the non return valves.

- The pump keeps the conveyor lubricant under pressure for a short while then the system is decompressed to a pressure of approximately 0.1 - 0.3 MPa.
- If the remaining pressure is to low air might enter the system.

A = 10 seconds	1 = Lubrication during production
B = 4 Hours	2 = Control of pressure
C = 8 seconds	3 = Control of oil level

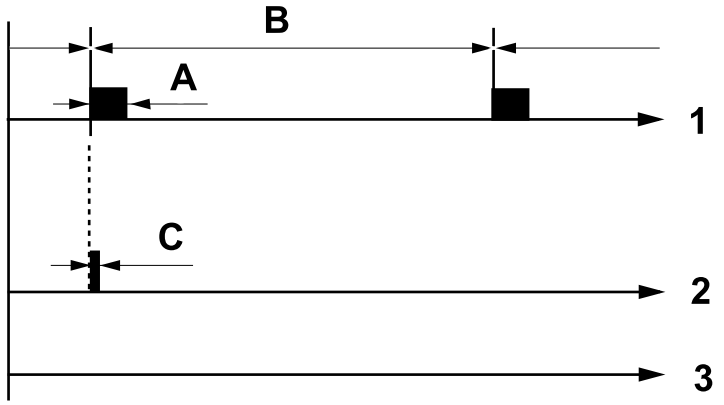

(Cont'd)

(Cont'd)

The time needed for the compression, depends on the viscosity of the lubricant, running temperature and the size of the system.

During production (drive motor on) the lubrication sequence "lubrication during running" is activated.

The lubrication sequences is:

- Automatic lubrication during production = one lubrication pulse **A** every fourth hour **B**.
- Should the system not depressurise within **C** a blue alarm is indicated and sounds.

A = 10 seconds	1 = Lubrication during production
B = 4 Hours	2 = Control of pressure
C = 8 seconds	3 = Control of lubricant level

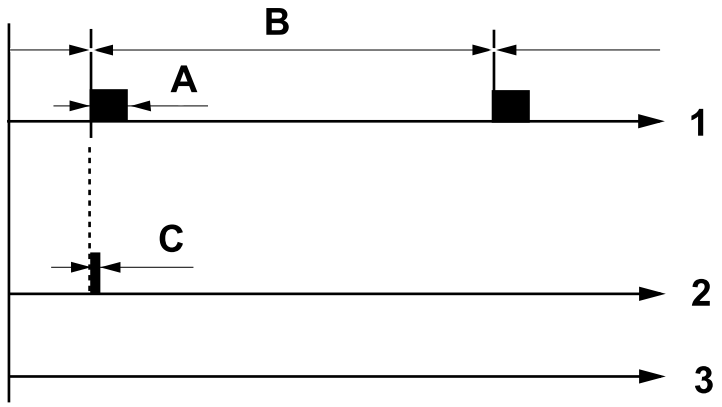

6.5.1.1 Lubrication Unit - Functional Description

The central lubrication unit consists of the level guard (1) and the pneumatic pump (2) which is built into the conveyor lubricant reservoir (3). The conveyor lubricant reservoir (3) is equipped with the air inlet pipe (4), the air exhaust (5), the air breather (6), and the main conveyor lubricant pipe (7). There is also a low pressure switch (8) and an conveyor lubricant filter (9).

Note! The air breather (6) can vary in shape.

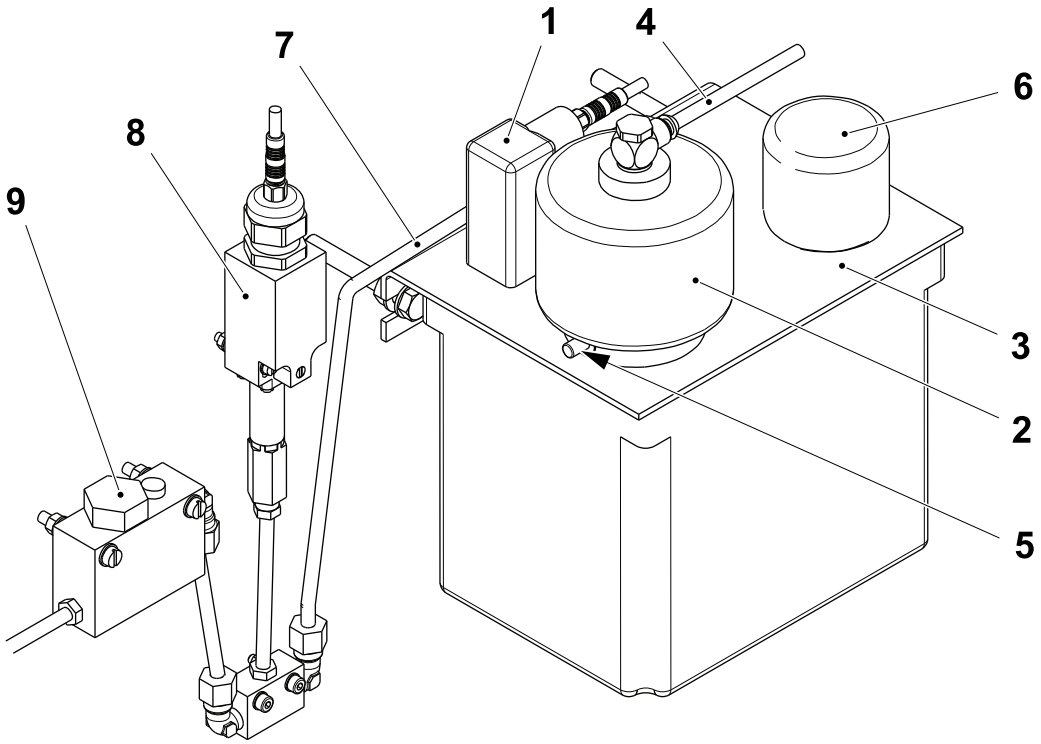

1 Level guard
2 Pneumatic pump
3 Conveyor lubricant reservoir
4 Air inlet pipe
5 Air exhaust
6 Air breather
7 Main conveyor lubricant pipe
8 Low pressure switch
9 Conveyor lubricant filter

(Cont'd)

(Cont'd)

The conveyor lubricant pump is equipped with a level guard. A warning light is activated at minimum level and a timer which counts 60 minutes starts. If the conveyor lubricant reservoir is not refilled within this time limit, the machine stops.

The minimum level is set at a level which prevents the suction pipe from sucking in from the surface level of the conveyor lubricant, where there might be dirt which is lighter than the conveyor lubricant.

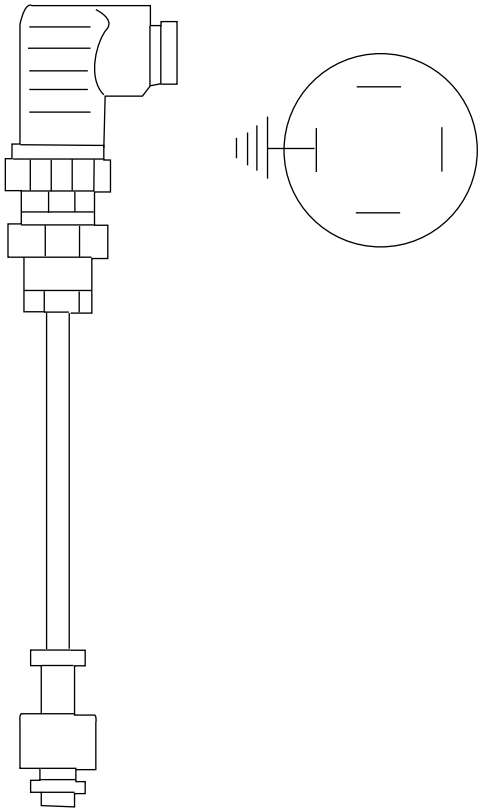

6.5.2 Central Lubrication - Check

6.5.2-1 Central Lubrication - Check Level Switch

Machine Status	Production
SPC Reference	3208664-0100

Level Switch V01B9001

a) Check the V01B9001 level switch (1) by pushing up the level switches magnetic float (2) to its top position. Make sure the recessed section is uppermost.

b) With a wiring tester check continuity between contact (3) and the contact (4), if there is no continuity change the level switch (1).

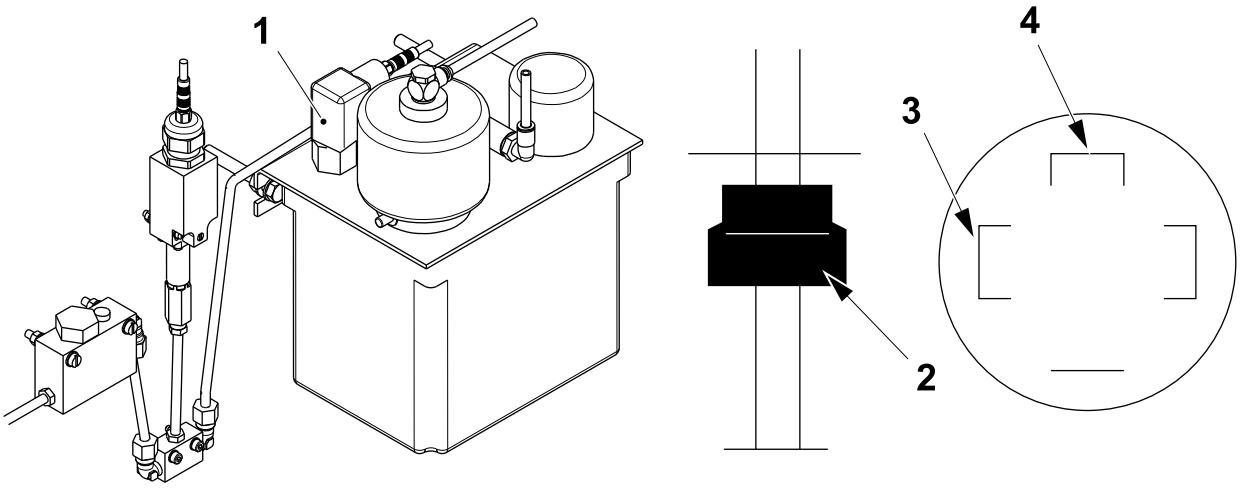

1 Level switch
2 Magnetic float
3 Contact
4 Contact

6.5.2-2 Central Lubrication - Check Pressure Switch

Machine Status	Production
SPC Reference	3208664-0100

Pressure Switch V01B9002

Remove the cap and check that the pin (1) moves when the solenoid valve for the lubrication pump is actuated and the connection of the switch (2) is closed.

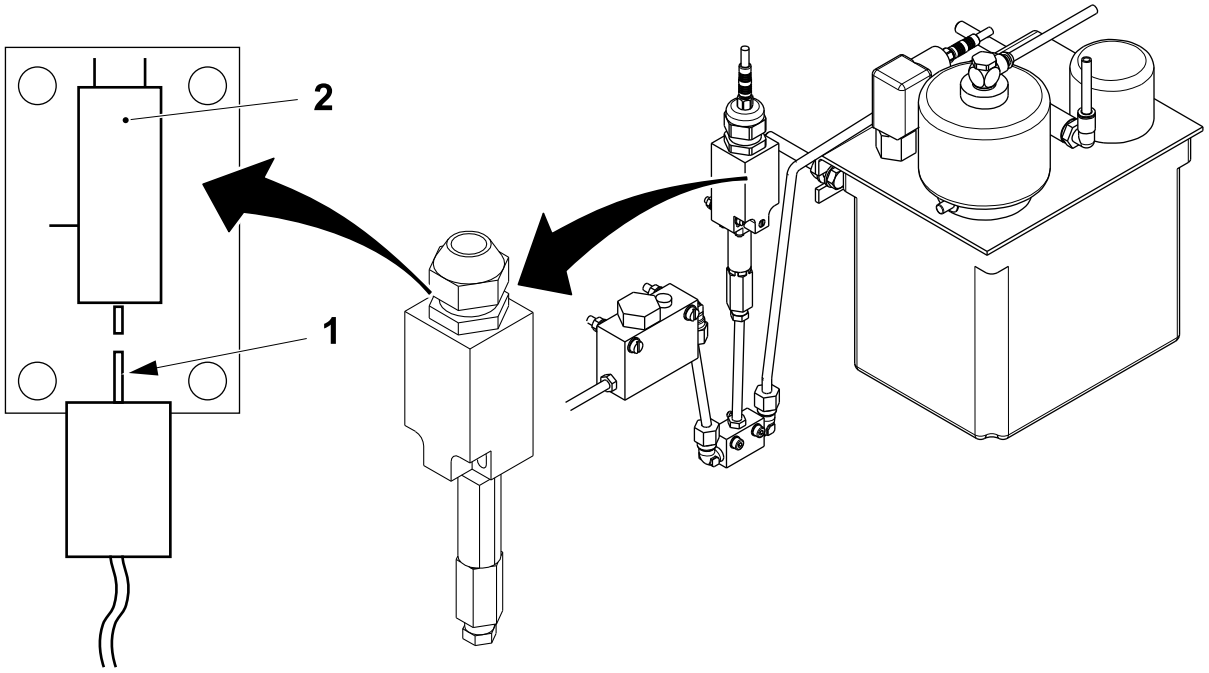

1 Pin
2 Switch

6.5.2-3 Pushdown Lubrication - Clean Conveyor Lubricant Tank

Machine Status	Electrical supply disconnecting device in position O (OFF) Main air valve OFF
Consumables	Food Grade Lubricant with PTFE, RM 2000T TP No. 90606-3683
SPC Reference	3208664-0100

a) Remove the screws (1) and drain any pollutants from the reservoir (2).

b) Clean the reservoir (2) and refill with new conveyor lubricant.

c) Install the reservoir (2) and tighten the screws (1).

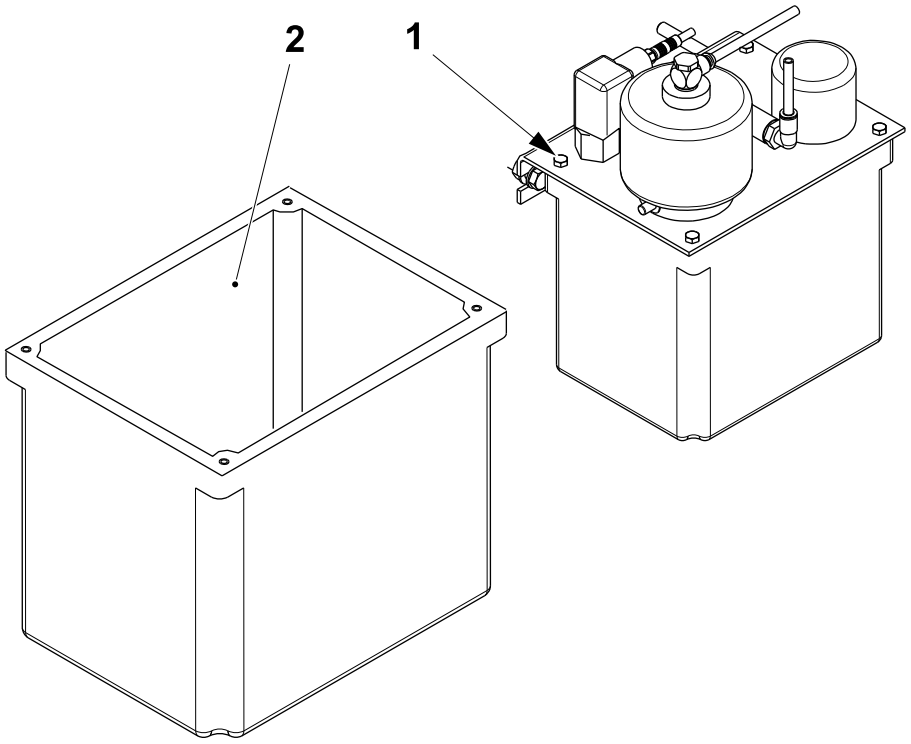

1 Screw
2 Reservoir

6.5.2-4 Pushdown Lubrication - Fault Finding

Machine Status	Electrical supply disconnecting device in position I (ON) Main air valve ON
SPC Reference	3208664-0100

If No Pressure Builds Up In System

To find the fault, do the following:

a) Check the conveyor lubricant level.

b) Disconnect one conveyor lubricant hose and check if there is pressure in the hose when the solenoid valve is opened.

c) If there is still no pressure, disconnect the air hose at the pump and check if there is air pressure in the hose when the solenoid valve is opened. Use a pressure gauge (range 0 - 10 bar) to check that the air pressure to the pump is approximately 6 bar.

d) Check all pressure lines and manifolds (distribution blocks) for leakage.

e) If all these checks have been carried out without finding any fault, replace the pump. Check the lubrication system after replacing the pump.

If Conveyor Lubricant Is Not Delivered To One Or More Of The Lubrication Points

To find the fault, do the following:

a) Check the main conveyor lubricant line concerned is clear of obstructions.

b) Check the capacity of the pump with the aid of a pressure gauge in accordance with the directives on periodical maintenance.

6.5.3 Nipple Lubrication

6.5.3-1 Package Line - Lubricate the Grease Nipples

Machine Status	Electrical supply disconnecting device in position I (ON) Main air valve ON
Special Equipment	Oil Gun - TP No. 3243399-0101 Lubrication Equipment (manual pumps or pneumatic pumps)
Consumables	Oil - TP No. 344414-0000
SPC Reference	2838648-0200

Install the Oil Gun

Note! It's recommended to use a lubrication equipment (1) such as: manual pumps or pneumatic pumps.

Note! The hose (2) in the oil gun (3) is suitable to reach the grease nipples that are in difficult positions.

Note! The oil gun (3) is equipped with a pressure regulator to avoid too high pressures of the oil.

a) Remove any oil guns (4) from the lubrication equipment (1) and install the oil gun (3).



1 Lubrication equipment 2 Hose 3 Oil gun 4 Oil guns

(Cont'd)

(Cont'd)

Lubricate the Grease Nipples

Note! It's recommended that the nipples are oiled every 5000 hours with Kluberoil 4 UH1 320-N (TP No. 344414-0000).

a) Oil through the grease nipple (1) using the oil gun (2).

Note! The proper quantity of oil is reached when the oil comes out of the non-return valve (3).

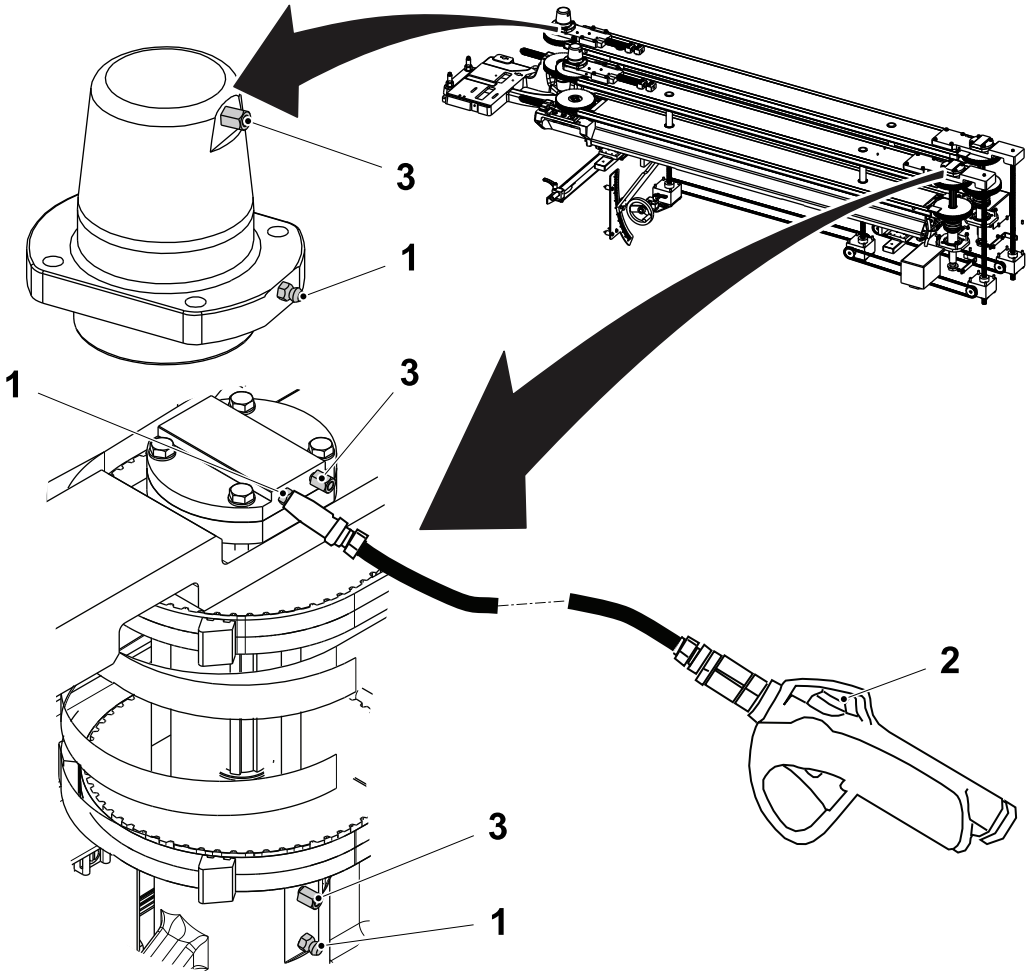

1 Grease nipple
2 Oil gun
3 Non-return valve

6.5.3-2 Belt Brake - Lubricate the Grease Nipples

Machine Status	Electrical supply disconnecting device in position I (ON) Main air valve ON
Special Equipment	Oil Gun - TP No. 3243399-0101
Consumables	Oil - TP No. 344414-0000
SPC Reference	2838648-0200

Note! It's recommended that the nipples are oiled every 5000 hours with Kluberoil 4 UH1 320-N (TP No. 344414-0000).

a) Install the oil gun (2), see Install the Oil Gun on page 6-37.

b) Oil through the grease nipple (1) using the oil gun (2).

Note! The proper quantity of grease is reached when the grease comes out of the non return valve (3).

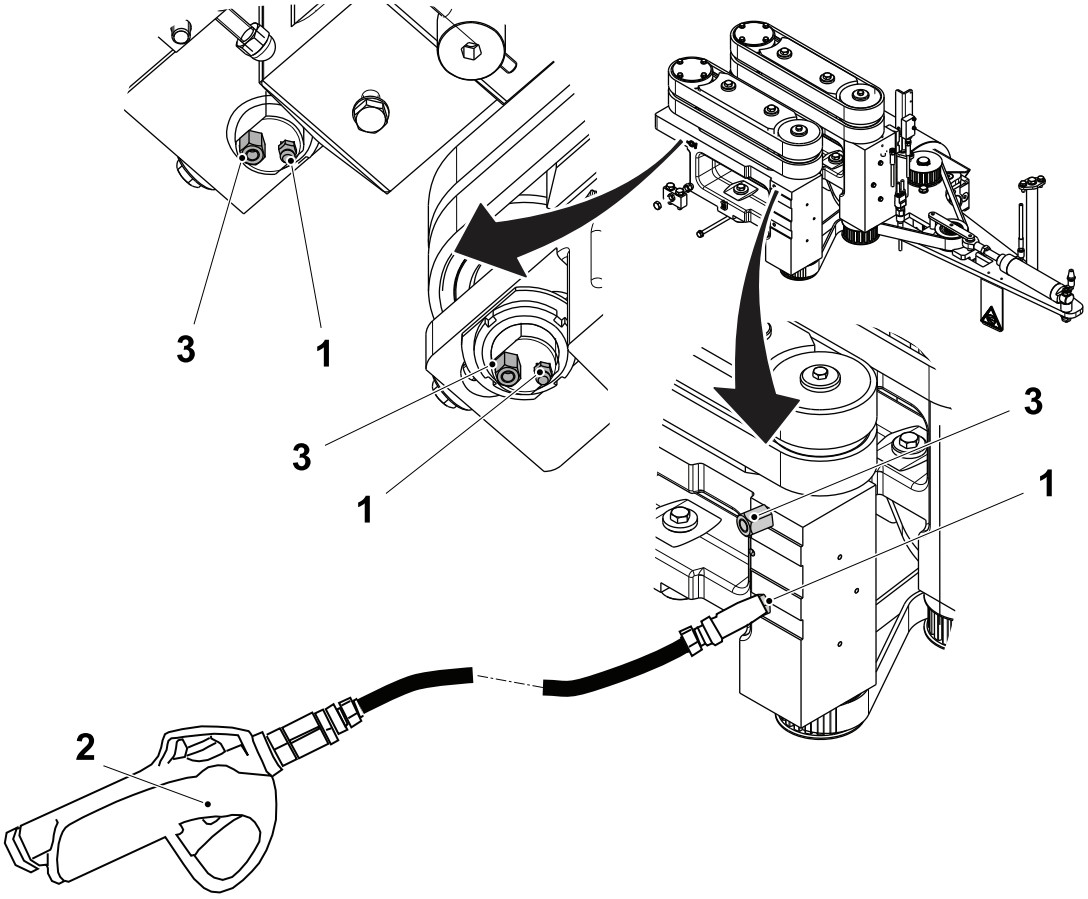

1 Grease nipple 2 Oil gun 3 Non return valve

6.5.3-3 Pushdown - Lubricate the Grease Nipples

Machine Status	Electrical supply disconnecting device in position I (ON) Main air valve ON
Special Equipment	Oil Gun - TP No. 3243399-0101
Consumables	Oil - TP No. 344414-0000
SPC Reference	2838648-0200

Note! It's recommended that the nipples are oiled every 5000 hours with Kluberoil 4 UH1 320-N (TP No. 344414-0000).

a) Install the oil gun (2), see Install the Oil Gun on page 6-37.

b) Oil through the grease nipple (1) using the oil gun (2).

Note! The proper quantity of grease can be reached when the grease exit to the non return valve (3).

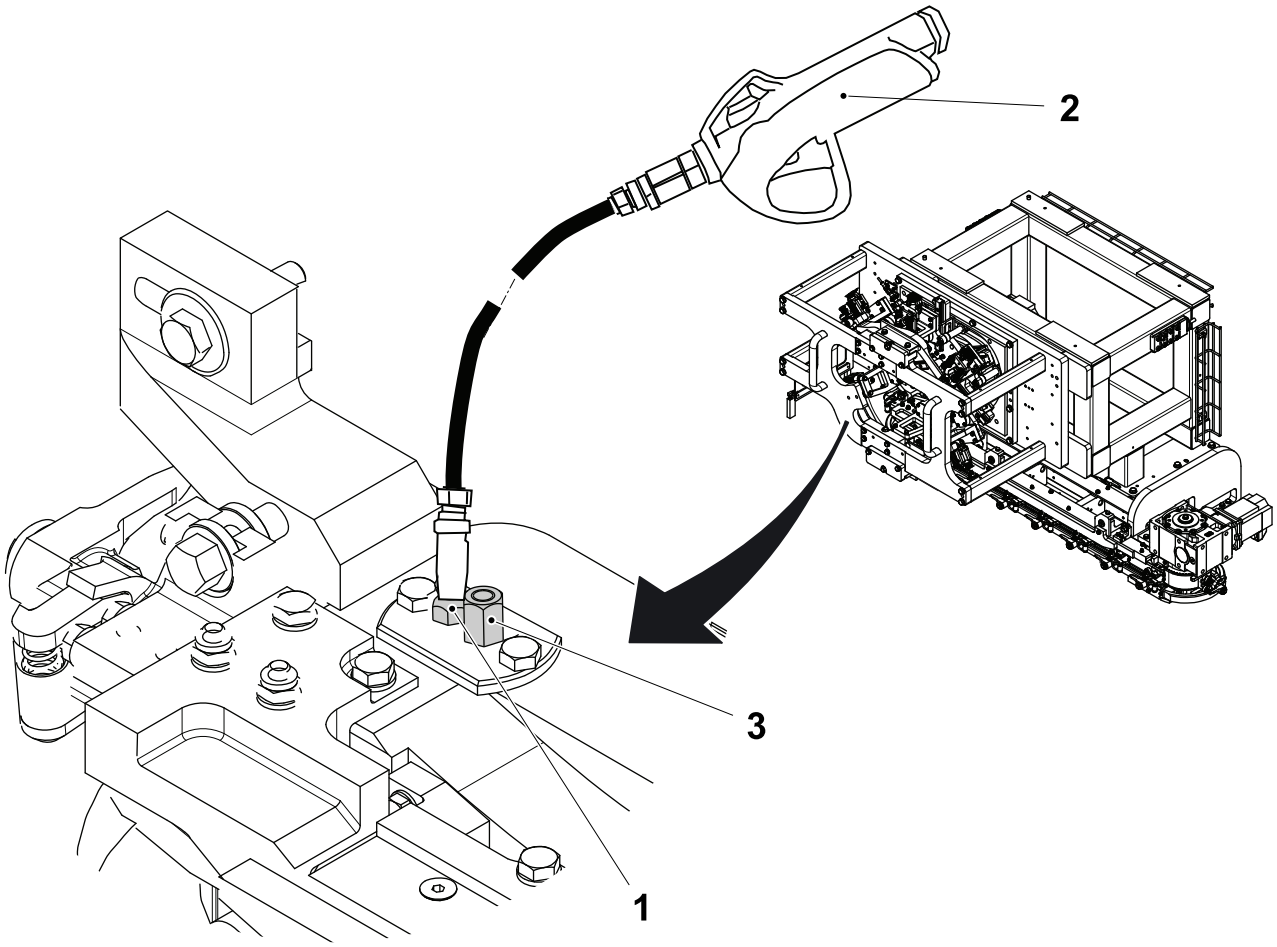

1 Grease nipple
2 Oil Gun
3 Non return valve

6.6 Hotmelt Unit

6.6.1 Functional Description

DANGER

Risk of immediate danger to life.
The voltage is 400V inside the hotmelt unit. There is risk of immediate danger to life through electrical shock if the warning signs are ignored.

WARNING

Risk of personal injury.
Carefully follow the safety instructions in the ii Safety Precautions chapter and the Nordson manual.

Note! The are part of the Screw Cap Hotmelt Applicator and are described further in Chapter 4 Hotmelt Applicator.

The hotmelt equipment consists of the hotmelt gun (1), the hotmelt unit (2), the hose (3) and the hotmelt tank (4). The tank (4), the hose (3) and the are electrically heated.

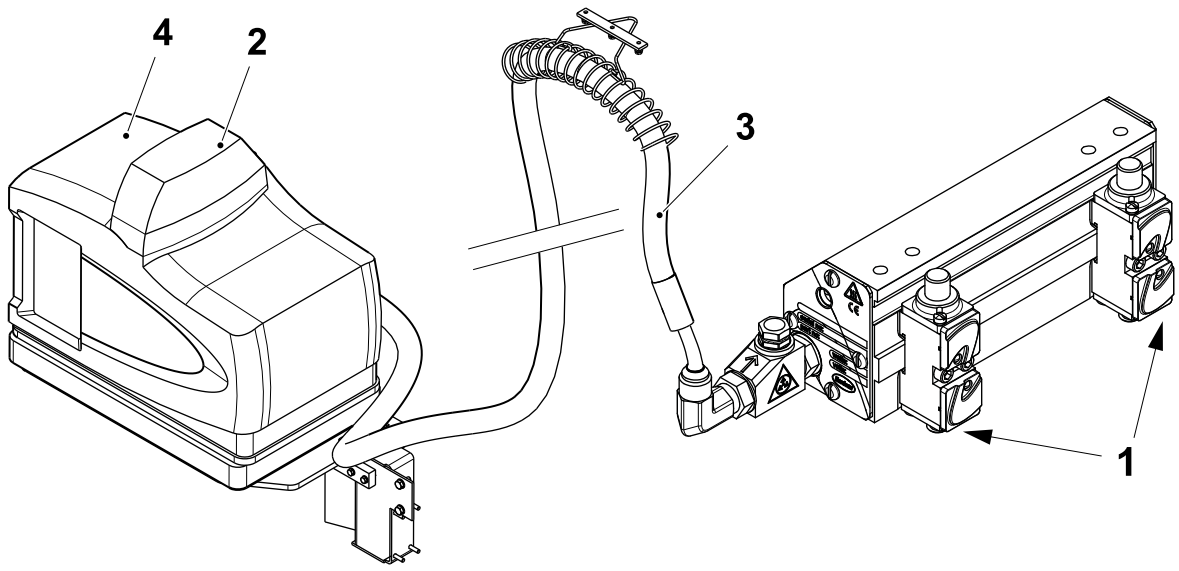

1 Hotmelt gun
2 Hotmelt unit
3 Hose
4 Tank

(Cont'd)

(Cont'd)

When the system is turned ON, the tank (4), hose (3) and the hotmelt gun (1) are heated. When the tank, the hose and the guns are within 3°C (37.5°F) of their set point temperatures a time delay starts, see . The time delay provides additional time for the adhesive in the tank to melt. During the time delay, the green ready LED (5) flashes. When the green ready LED (5) is fixed, the hotmelt equipment is ready.

The adhesive passes through the hotmelt pump into a distribution manifold. The adhesive then flows through a filter into the hose (3) and to the hotmelt gun (1) .

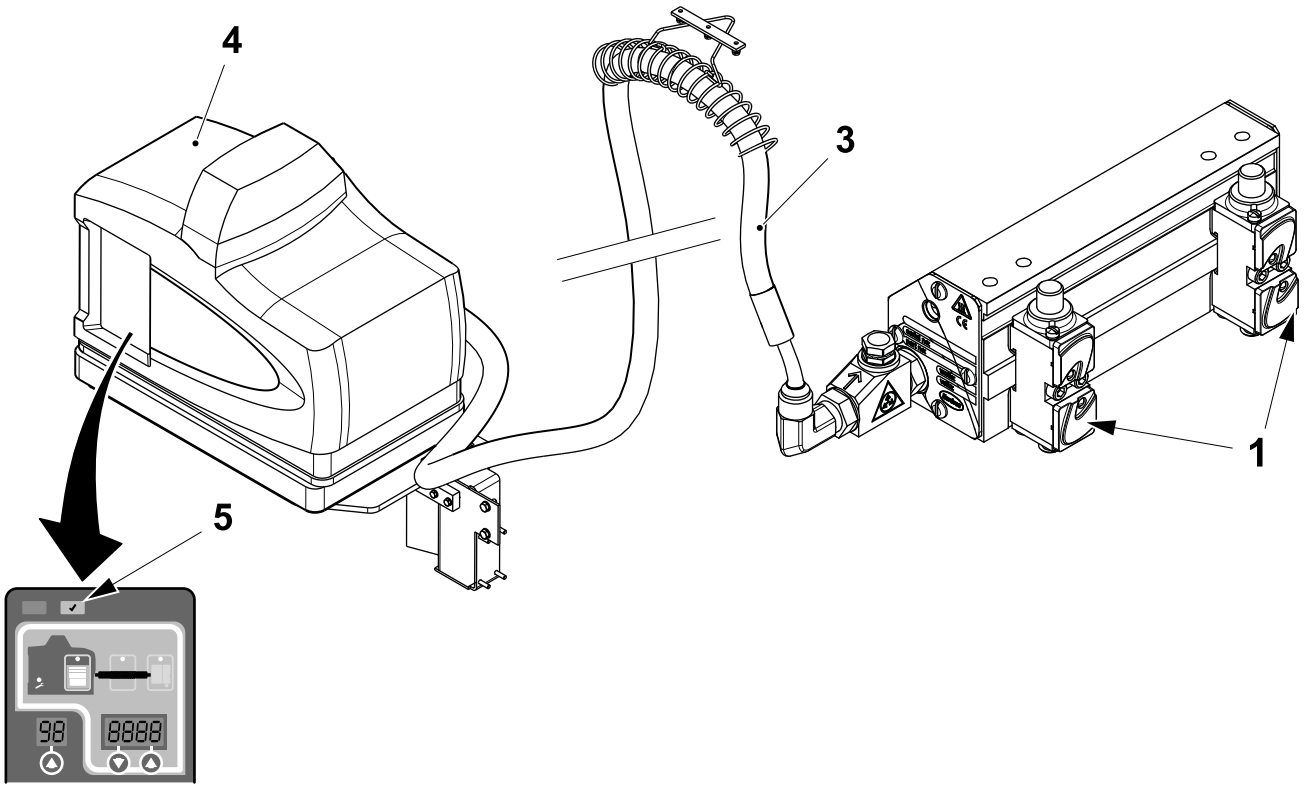

1 Hotmelt gun
3 Hose
4 Tank
5 Ready LED

6.6.1-1 Hotmelt Panel Overview

Machine Status	Electrical supply disconnecting device in position I (ON) Main air valve ON
SPC Reference	2758511-0200

Panel Overview

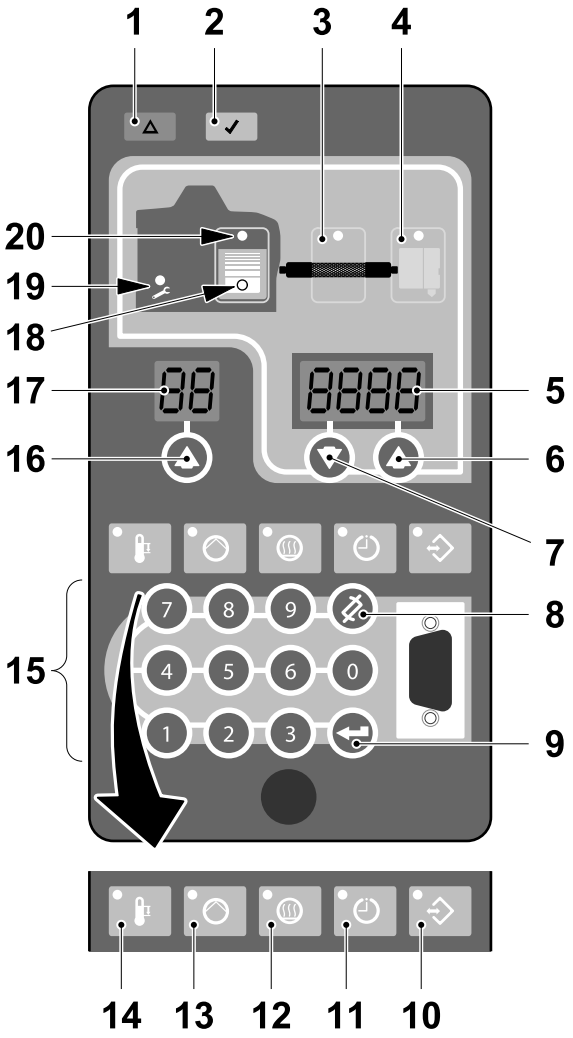

1 Fault LED
2 Ready LED
3 Hose Key
4 Gun Key
5 Multipurpose display
6 Up Key for Multipurpose display
7 Down Key for Multipurpose display
8 CLEAR/RESET key
9 ENTER key
10 SETUP key
11 SEVEN DAY CLOCK key
12 HEATER key
13 PUMP key
14 STANDBY key
15 Keypad
16 UP key for selector display
17 Selector key
18 Low level LED (Not used)
19 Service LED (filter change required)
20 TANK key

(Cont'd)

(Cont'd)

Parameter Description

Parameter	Parameter Name	Purpose	Setting
4	Ready Time Delay	A timer that delays the activation of the Ready LED after the tank, hose and gun are at the set point temperature. This allows additional time for the hotmelt material to melt.	For Jowathern 250.00 - 10 minutes
			For National 134 - 135B Leuenberger PS 880 and Capfix100 - 0 minutes
20	Temperature Units	Sets the display temperature units to Celsius or Fahrenheit. 0 = Celsius, 1 = Fahrenheit	Celsius
21	Over Temperature Delta Value	Sets the number of degrees (delta value) that any heated component can exceed its assigned set point before an over temperature fault occurs	5 Deg C
22	Under temperature Delta Value	Sets the number of degrees (delta value) that any heated component can drop below its assigned set point before an under temperature fault occurs	5 Deg C
30	Standard Input 1	Hose/Gun Enable/Disable	6
31	Standard Input 2	Stand-by NO/OFF	1
40	Standard Output 1	Ready and Pump is ON	2

6.6.2 Hotmelt Equipment

6.6.2-1 Hotmelt Equipment - Check

Machine Status	Electrical supply disconnecting device in position I (ON) Main air valve ON
SPC Reference	2758511-0200

WARNING

Risk of burns.

Hot adhesive. Wear safety glasses, protective gloves and other protective clothing to avoid injuries from the hot adhesive.

Note! The hotmelt unit must be at operating temperature. To do this the machine must be at STEP 1.

a) Check the hose (1) and the connection (2) for wear, damage and leaks. Change parts if necessary.

b) Look at the colour of the hotmelt in the tank. The colour should be light yellow. If the hotmelt material has become brown, empty the tank and fill with new hotmelt, see 6.6.2-2 Hotmelt Equipment - Empty Tank on next page.

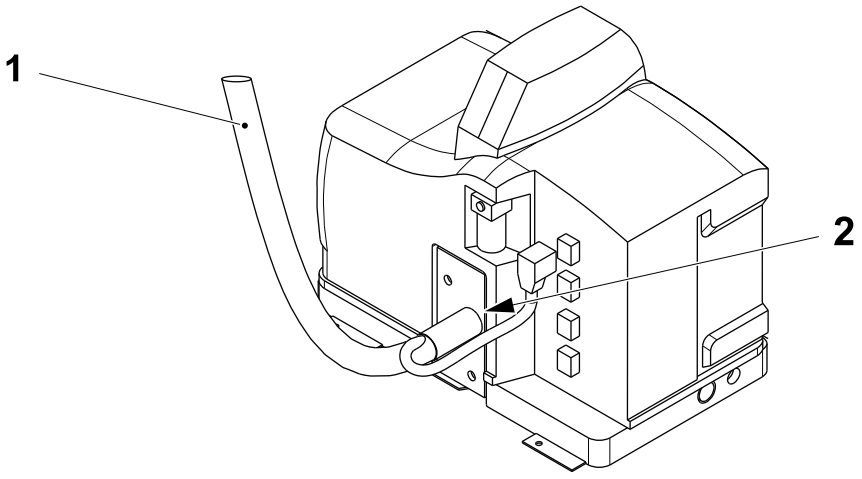

1 Hose
2 Connection

6.6.2-2 Hotmelt Equipment - Empty Tank

Machine Status	Electrical supply disconnecting device in position I (ON) Main air valve ON step 2
SPC Reference	2758511-0200

Purge the Hotmelt Hose

a) Loosen the nut (1) and remove the hose (2).

Note! Leave the hose (2) connected to the cable (3). The cable (3) is long enough to operate.

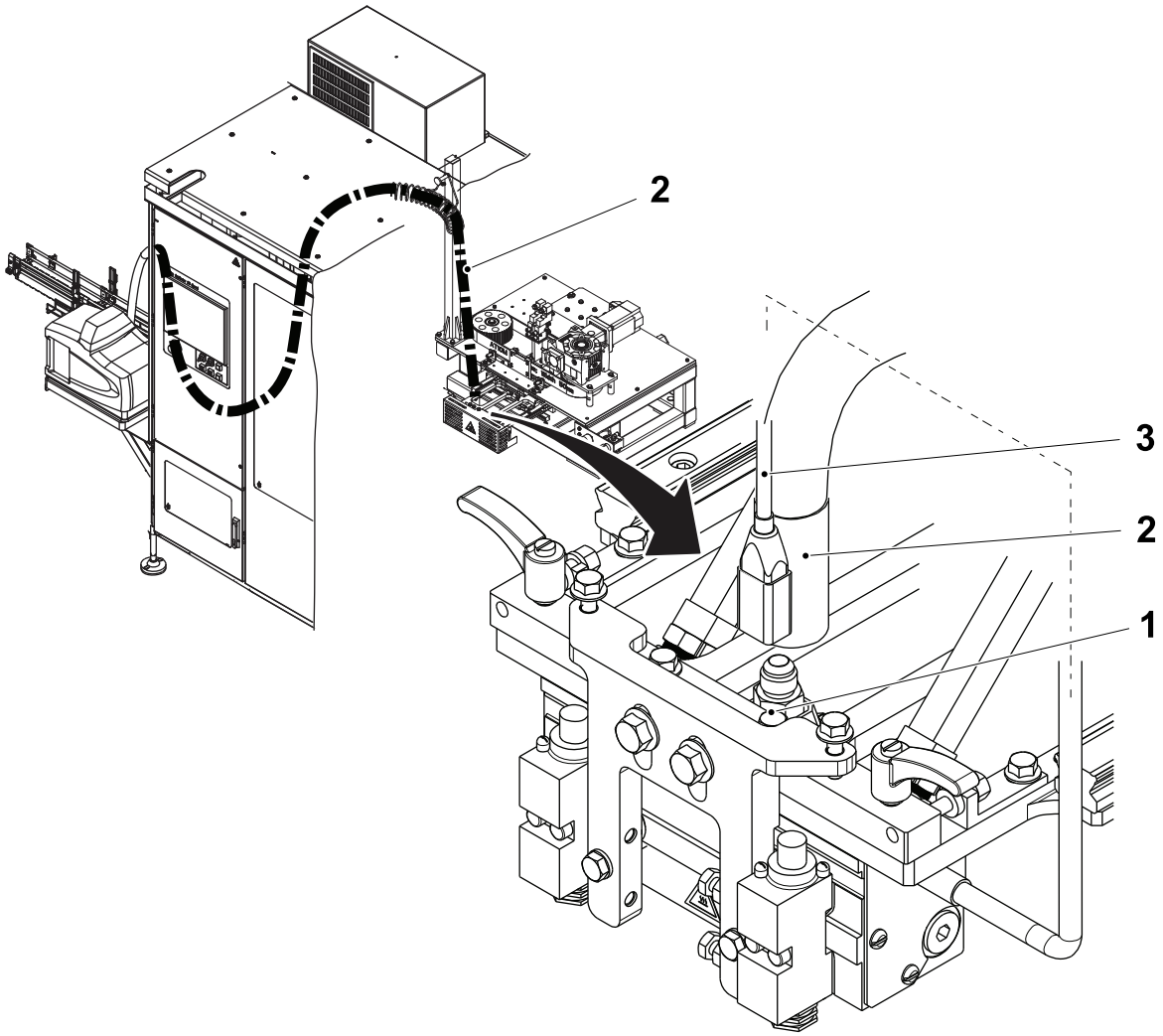

1 Nut
2 Hotmelt hose
3 Cable

(Cont'd)

(Cont'd)

b) Make sure that the main air supply valve (4) is turned ON.

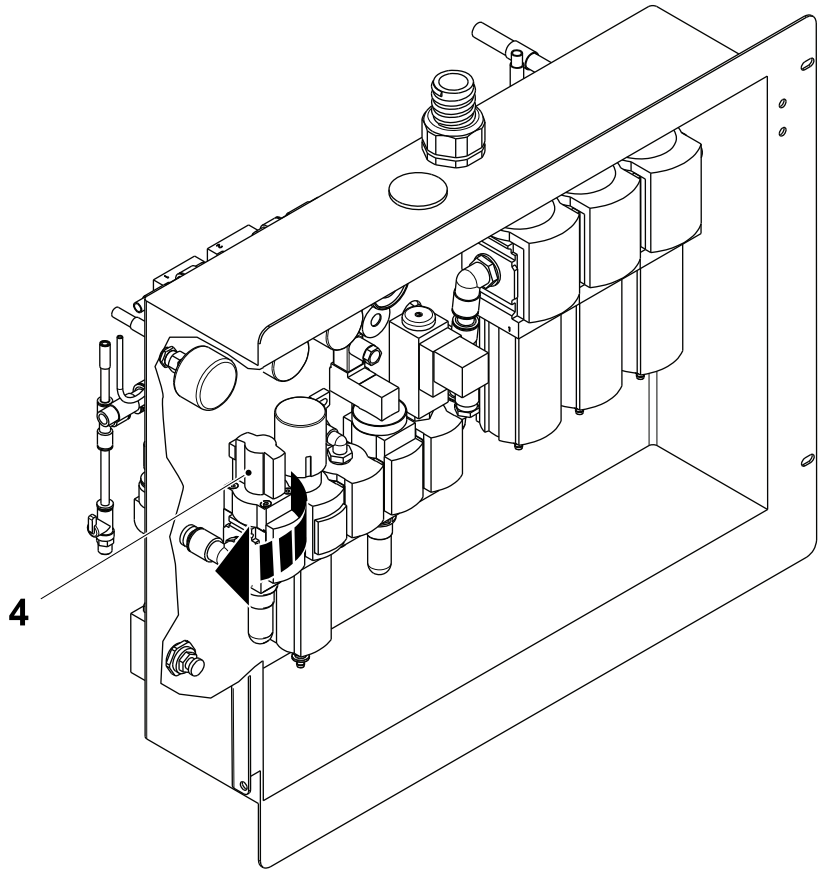

4 Valve

(Cont'd)

(Cont'd)

c) Turn the pressure regulator (5) in a counter clockwise direction to reduce the operating air pressure to 0 bar. The pressure is shown on the gauge (6).

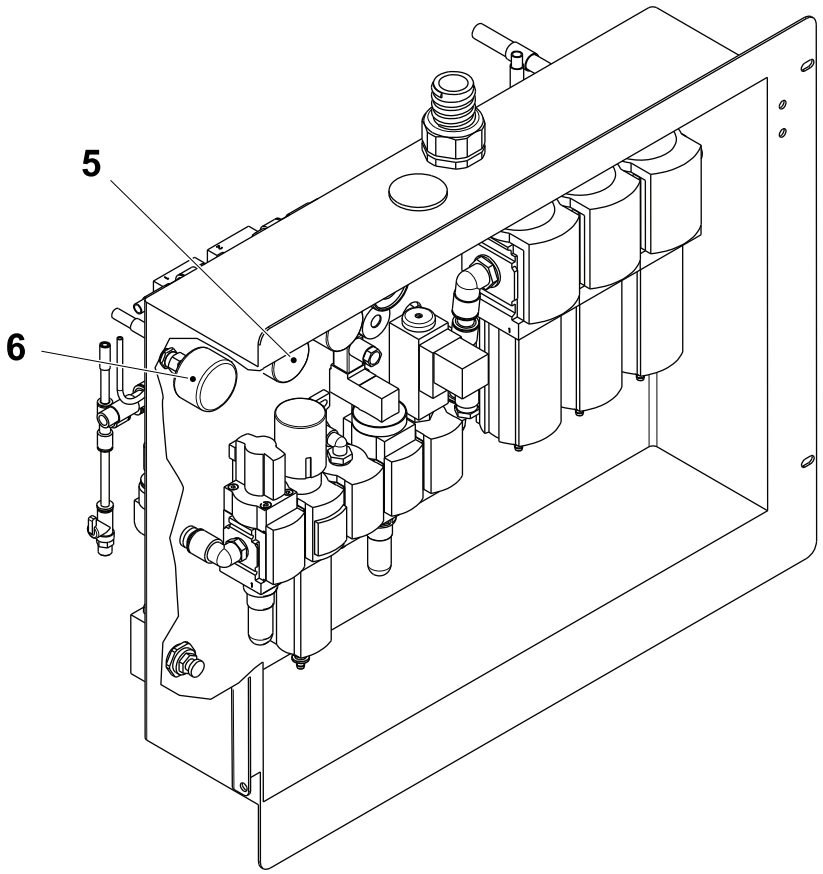

5 Regulator
6 Gauge

(Cont'd)

(Cont'd)

WARNING

Risk of burns.

Hot adhesive. Wear safety glasses, protective gloves and other protective clothing to avoid injuries from hot adhesive.

Note! The hotmelt equipment must be at operating temperature.

Note! Do not let hotmelt adhesive go onto machine parts.

d) Put the hose (2) into a can (7).

e) Step up the machine at STEP 2.

f) Set the pressure of the hotmelt unit at about 1 bar (0.1 MPa).

g) Hold the hose while the hotmelt is filling the can (7).

h) Set the pressure of the hotmelt unit at zero as soon as the new hotmelt is coming from the hose.

i) Assemble in the reverse order.

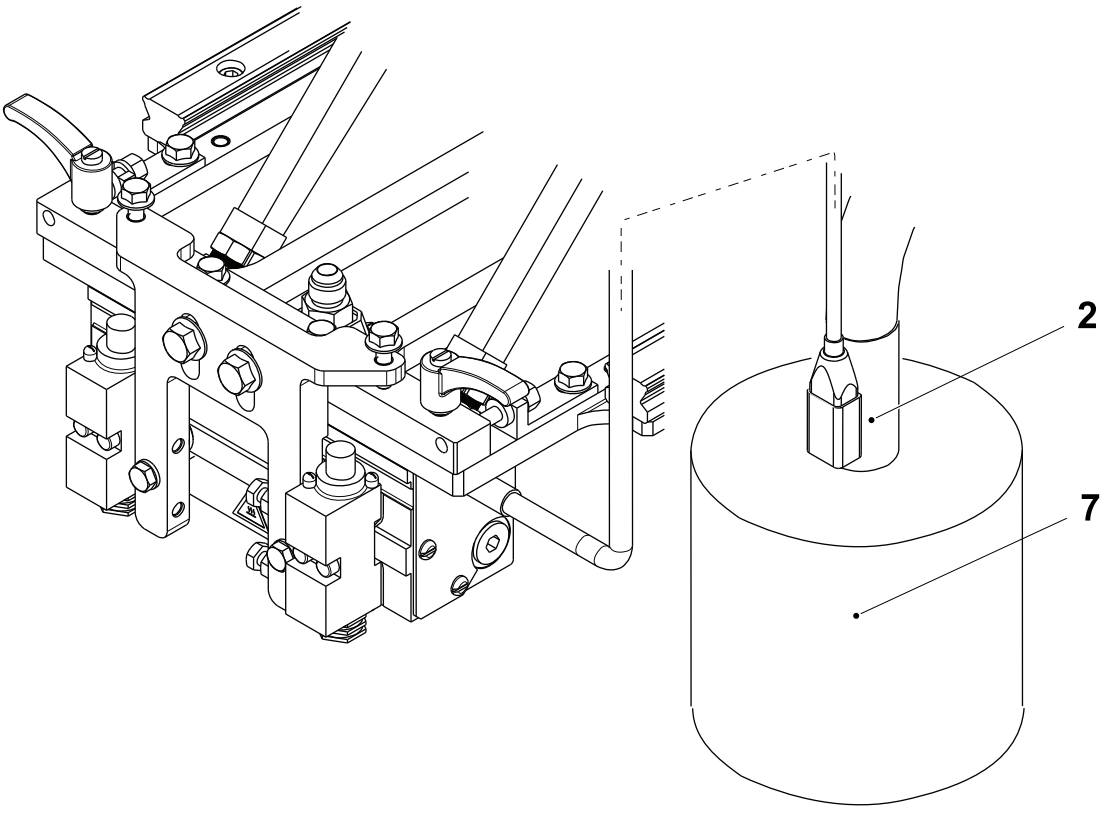

2 Hotmelt hose

7 Can

(Cont'd)

(Cont'd)

Empty Tank

a) Make sure that the main air supply valve (1) is turned ON.

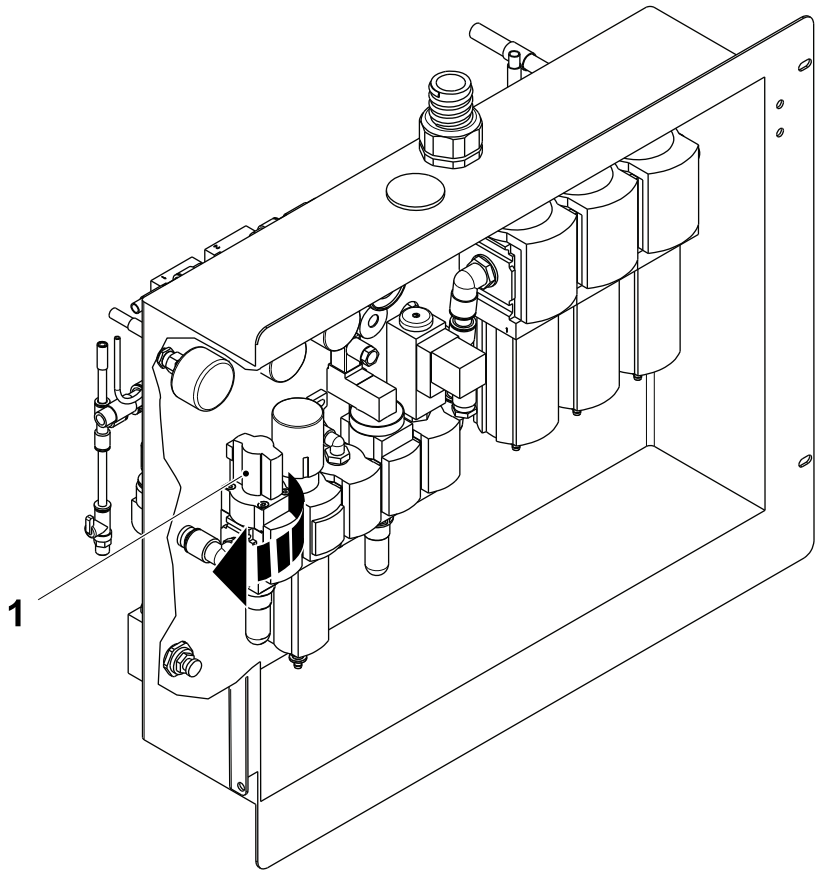

1 Valve

(Cont'd)

(Cont'd)

WARNING

Risk of burns.

Hot adhesive. Wear safety glasses, protective gloves and other protective clothing to avoid injuries from hot adhesive.

Note! The hotmelt equipment must be at operating temperature.

Note! Do not let hotmelt adhesive go onto machine parts.

b) Step up the machine to Step 2.

c) Turn the pressure regulator (2) in a counter clockwise direction to reduce the operating air pressure to 1.4 bar (0.14 MPa). The pressure is shown on the gauge (3).

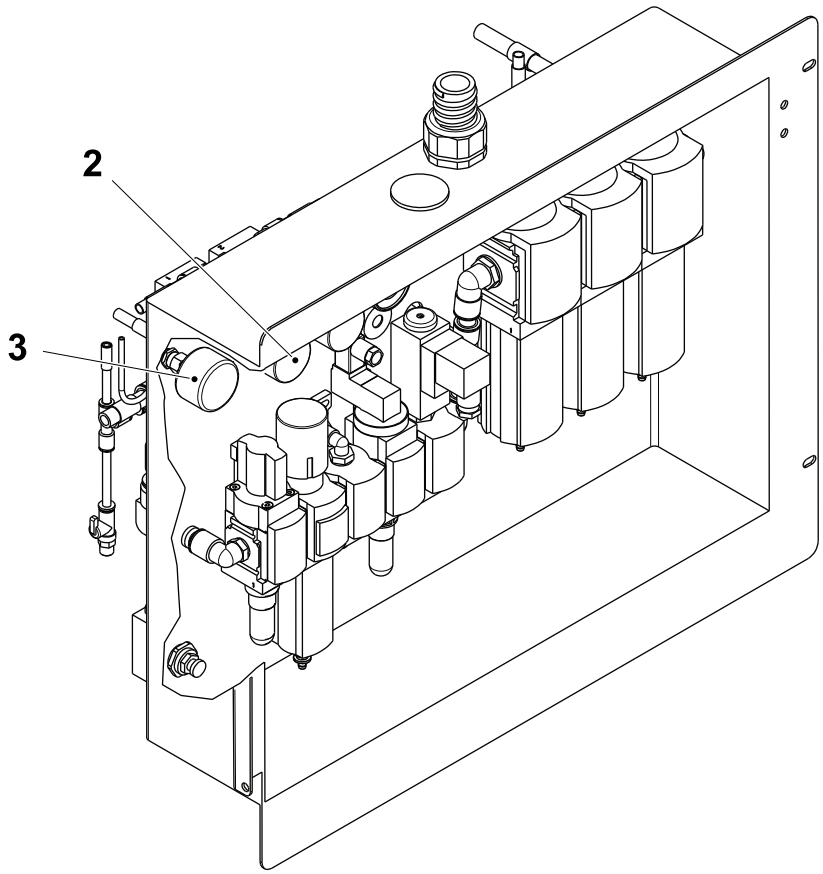

2 Regulator
3 Gauge

(Cont'd)

(Cont'd)

d) Pull down the drain chute (4) and put a container under the drain chute.

e) Slowly turn the drain valve (5) counterclockwise until the adhesive begins to flow.

f) Empty the tank (6).

g) Close the drain valve (5) in a clockwise direction and push up the drain chute (4).

h) If required, fill the tank (6) with adhesive. For recommended type of hotmelt material, see 13.1-1 Adhesive Weight/Temperature/Nozzle.

i) Set the air pressure regulator, see 6.6.2-7 Hotmelt Equipment - Set Pressure.

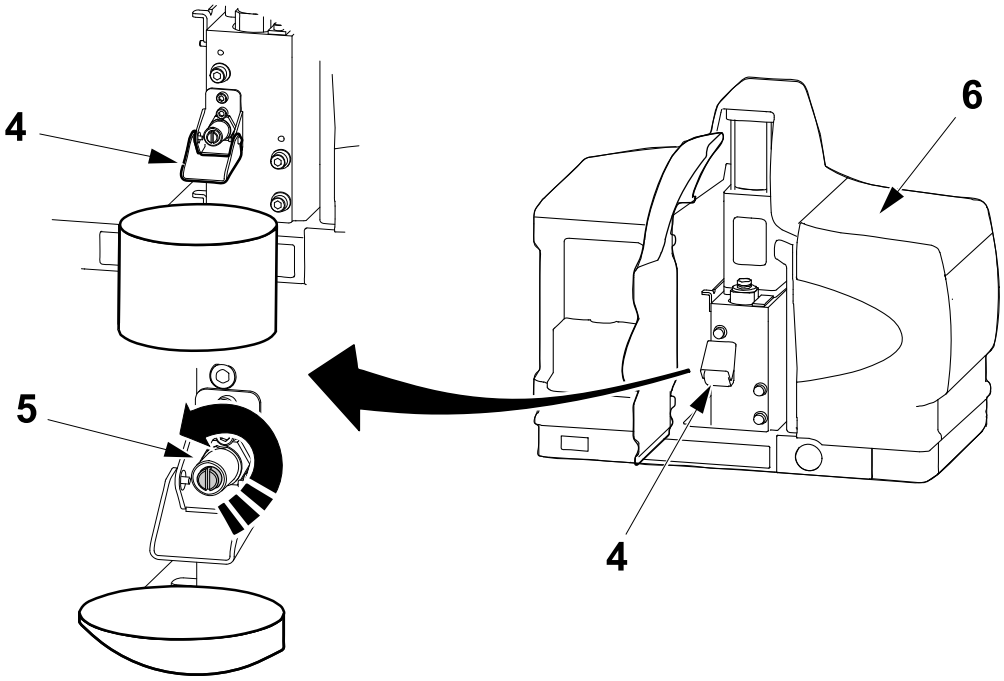

4 Drain chute
5 Drain valve
6 Tank

6.6.2-3 Hotmelt Equipment - Change Hotmelt Unit

Machine Status	Electrical supply disconnecting device in position O (OFF) Main air valve OFF
SPC Reference	2758511-0200

Electrically Disconnect the Tank

WARNING

Burn hazard.

Risk of personal injury. Wear safety glasses, protective gloves and other protective clothing to avoid injuries from hot surfaces or hotmelt pouring out.

a) Empty the hotmelt container as described in 6.6.2-2 Hotmelt Equipment - Empty Tank.

b) Switch OFF (1) the hotmelt unit and let it cool off.

c) Open the electrical enclosure door (2). Disconnect the electrical supply cable (3) from the receptacle (4) on the main board.

d) Disconnect the ground lead (5) from the ground lug (6) on the sub-base.

e) Disconnect the ground jumper (7) from the ground post (8) on the sub-base.

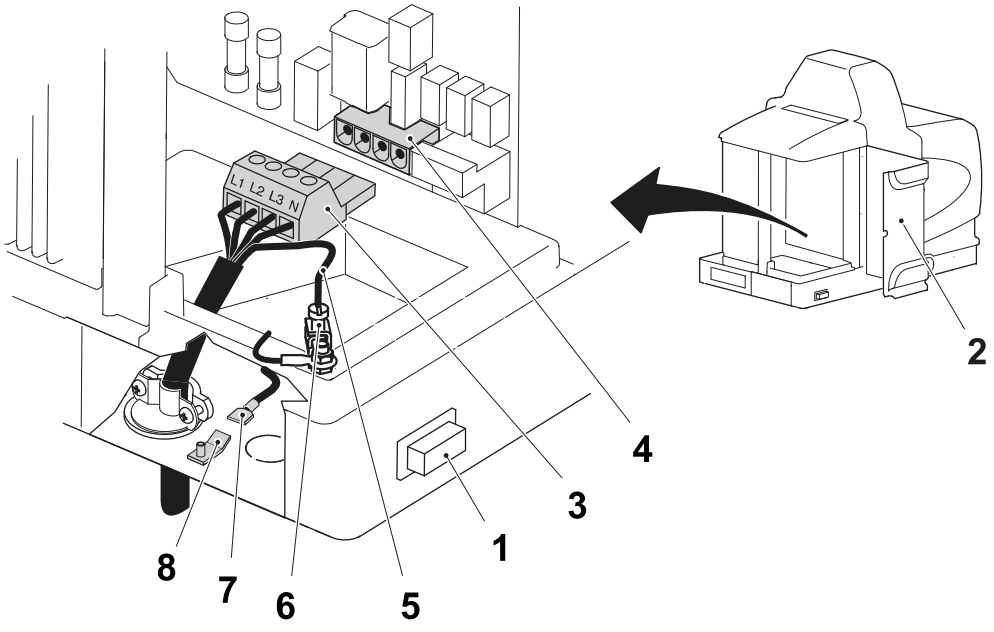

1 Switch ON/OFF
2 Door
3 Electrical supply cable connection
4 Receptacle
5 Ground lead
6 Ground lug
7 Ground jumper
8 Ground post

(Cont'd)

(Cont'd)

f) Disconnect the jumper (9) from the post (10) on the sub-base.

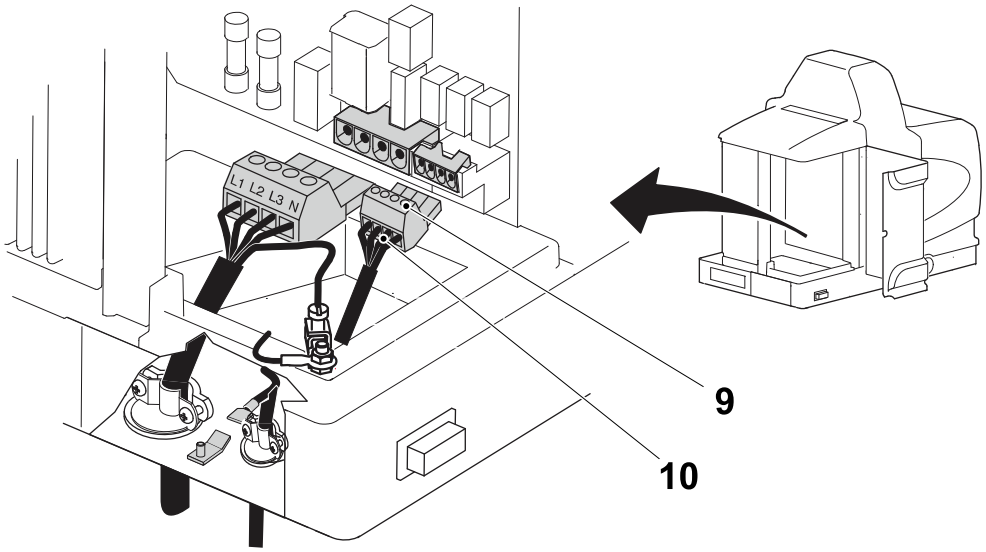

9 Jumper
10 Post

(Cont'd)

(Cont'd)

Mechanical Disassembly

a) Disconnect the hotmelt hose (1) from the hotmelt unit (2).

b) Disconnect the electrical plug (3) from the hotmelt unit (2).

c) Relieve the air pressure and disconnect the air pipe from the filter (4).

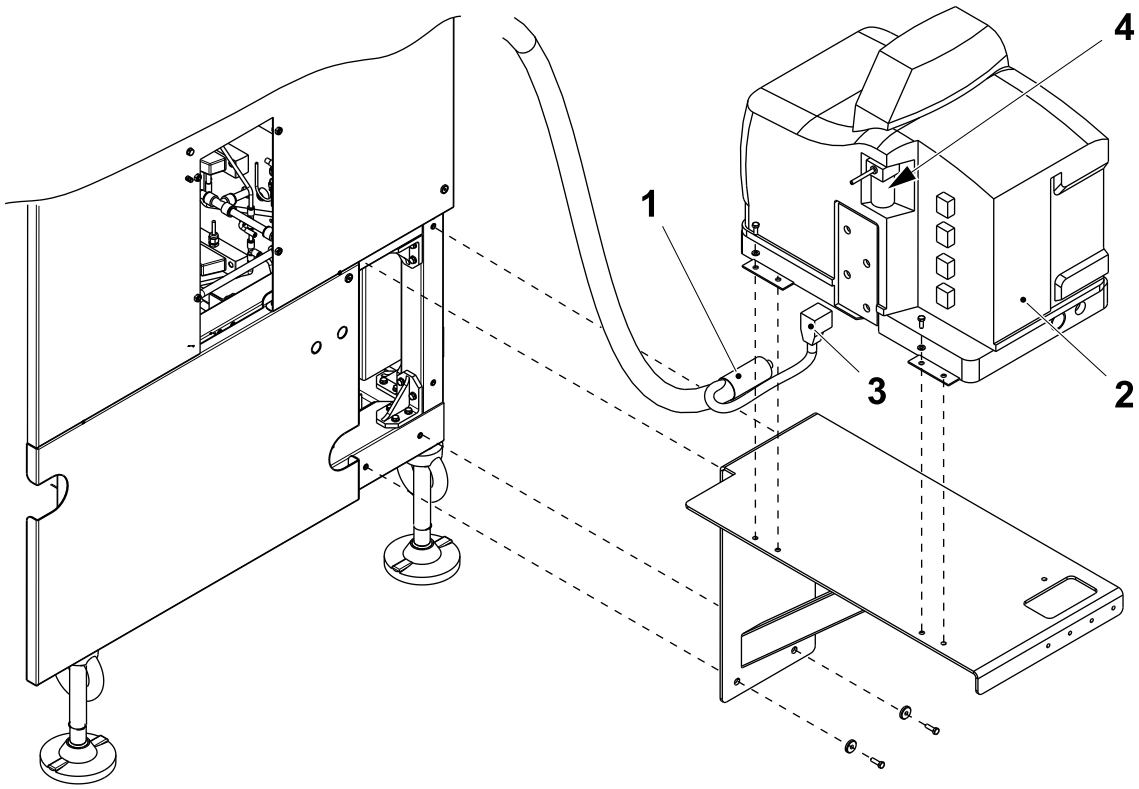

1 Hotmelt hose
2 Hotmelt unit
3 Electrical plug
4 Filter

(Cont'd)

(Cont'd)

Removal

a) Turn the locking screws (1) to the left approximately half turn.

b) Slide the hotmelt unit forward and then lift it clear of the sub-base.

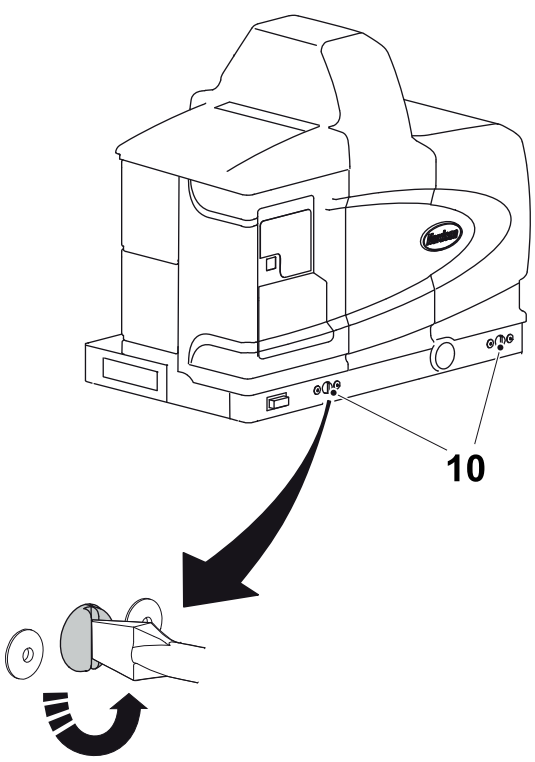

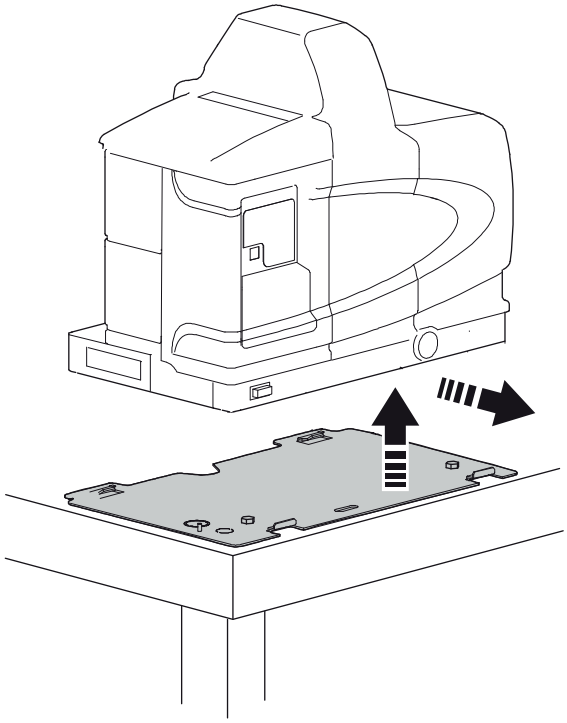

1 Screw

Installation

Note! For further information, read the *Nordson ProBlue Adhesive Melters Manual,* included in the delivery from Tetra Pak.

a) Assemble in reverse order.

6.6.2-4 Hotmelt Equipment - Change Filter

Machine Status	Electrical supply disconnecting device in position O (OFF) Main air valve OFF
SPC Reference	2758511-0200

WARNING

Risk of burns.

Hot adhesive. Wear safety glasses, protective gloves and other protective clothing to avoid injuries from hot adhesive.

Note! The hotmelt equipment must be at operating temperature.

Note! Do not let hotmelt adhesive go onto machine parts.

a) Release the air pressure, see 6.6.2-2 Hotmelt Equipment - Empty Tank.

b) Put a container below the drain chute (1) and slowly open the drain valve (2) to relieve system pressure.

c) Remove the filter (3).

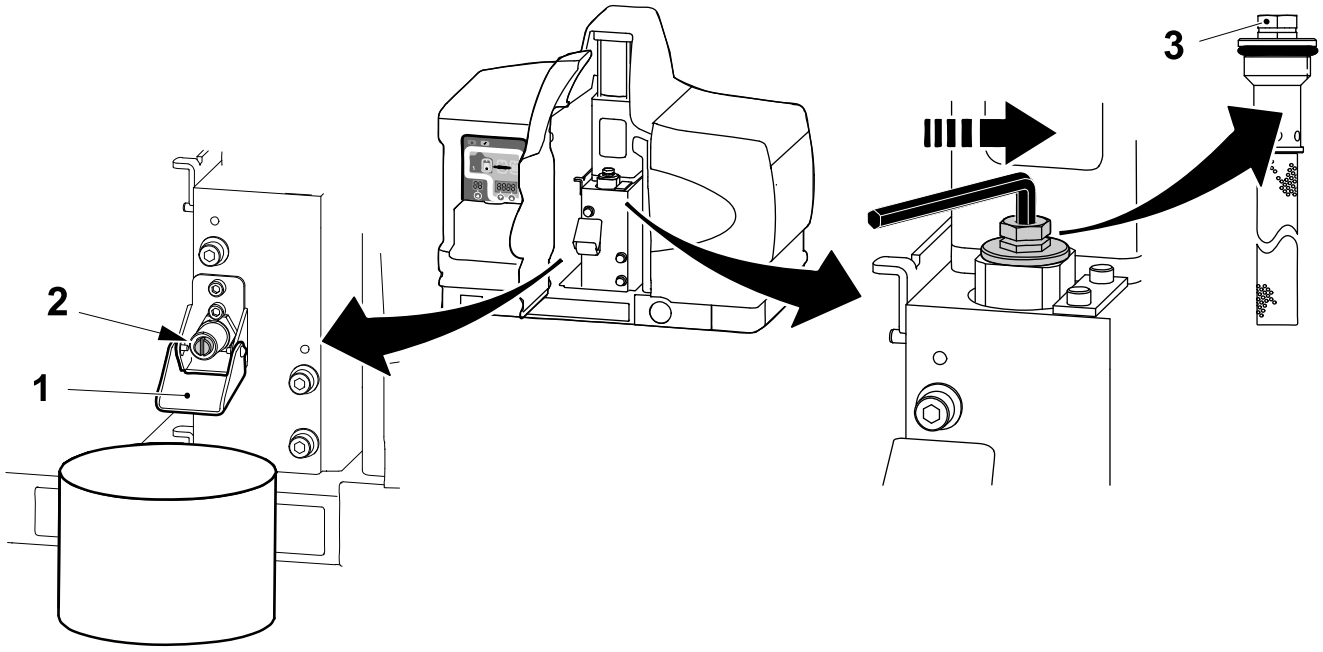

1 Drain chute
2 Drain valve
3 Filter

(Cont'd)

(Cont'd)

d) Before the new filter is installed, check that the O-ring (4) is in good condition and if necessary replace the O-ring (4).

e) Install the filter (3) and tighten to 4.5 Nm (40 in.lb.).

f) Close the drain valve (2).

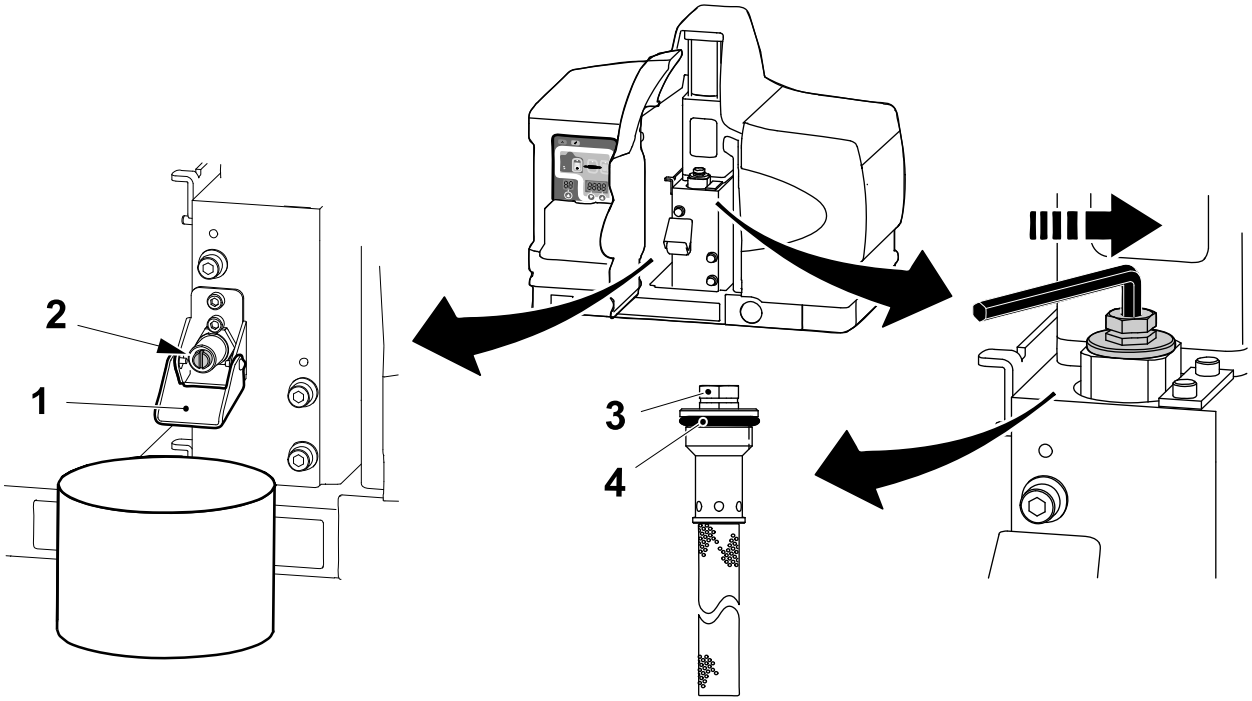

2 Drain valve
3 Filter
4 O-ring

6.6.2-5 Hotmelt Equipment - F2 Alarm

Machine Status	Electrical supply disconnecting device in position I (ON) Main air valve ON STEP2
SPC Reference	2758511-0200

Note! If the guns have cooled down, an alarm “F2” locks the hotmelt unit. The hotmelt unit needs to be reset and reheated.

a) Press the CLEAR/RESET-key (1).

b) Press the HEATER-key (2).

c) The hotmelt unit starts to heat up.

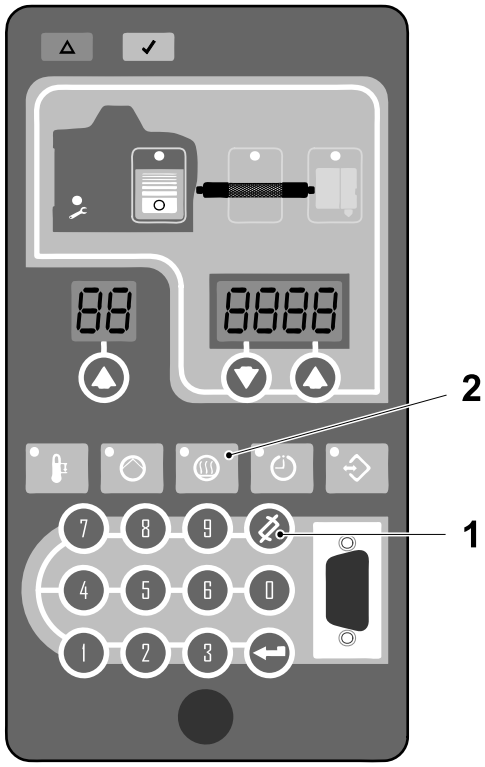

1 CLEAR/RESET-key
2 HEATER-key

6.6.2-6 Set Tank, Hose and Gun Temperatures

Machine Status	Electrical supply disconnecting device in position I (ON) Main air valve ON
SPC Reference	2758511-0200

Note! See 13.1-1 Adhesive Weight/Temperature/Nozzle for temperature values.

a) Press the TANK-key (1), the HOSE-key (2) or the Gun-key (3) for three seconds.

b) The digit “1” appears in the selector display (4).

c) Use the UP-key (5) or the keypad (6) to change the digit in the selector display (4).

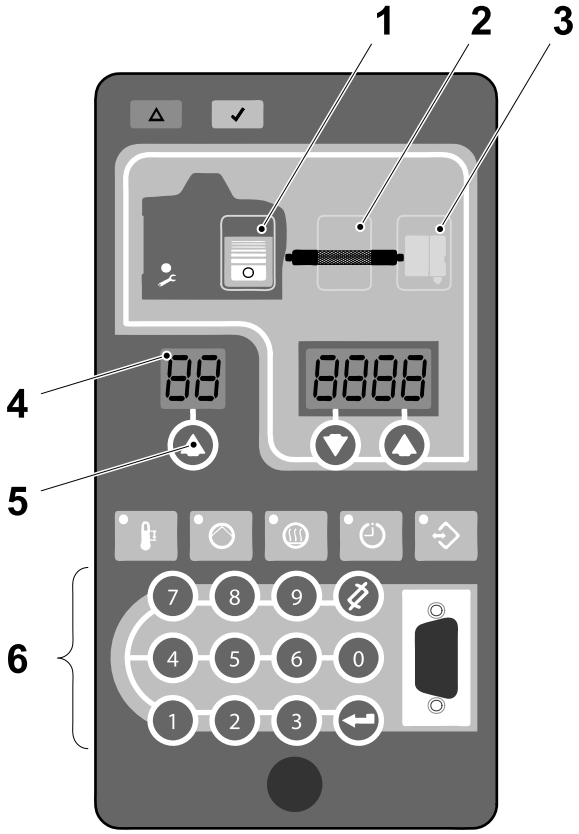

1 TANK-key
2 HOSE-key
3 Gun-key
4 Selector display
5 UP-key
6 Keypad

(Cont’d)

(Cont'd)

d) Press the ENTER-key (7) to confirm the selected digit.

e) The multipurpose display (8) starts to flash.

f) Press the DOWN-key (9), the UP-key (10), or the keypad (6) to enter the required value.

g) Press the ENTER-key (7) to confirm the required value.

h) Either continue to set more temperature values or press the SETUP-key (11) twice to exit the setup procedure.

Note! If the current setting can not be changed, the display is password protected. For further information read Nordson Pro Blue Adhesive Melters Manual, Chapter 4, "Enter the Melter Password".

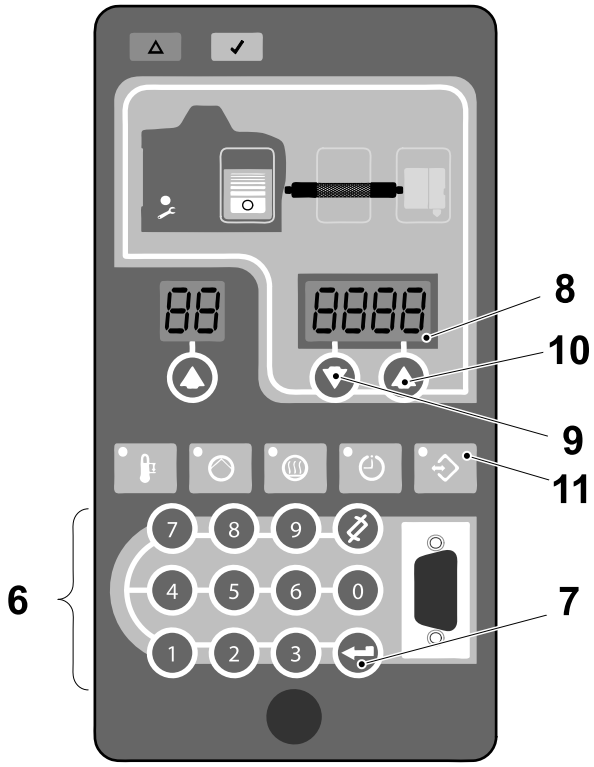

6 Keypad
7 ENTER-key
8 Multipurpose display
9 DOWN-key
10 UP-key
11 SETUP-key

6.6.2-7 Hotmelt Equipment - Set Pressure

Machine Status	Electrical supply disconnecting device in position I (ON) Main air valve ON
SPC Reference	2758511-0200

WARNING

Risk of burns.

Hot adhesive. Wear safety glasses, protective gloves and other protective clothing to avoid injuries from hot adhesive.

a) To change the hotmelt unit pressure turn the regulator (1) clockwise to increase the pressure.

b) STEP DOWN the machine to allow the pressure to dissipate.

c) STEP UP the machine and read the setting on the pressure gauge (2).

Note! Make adjustments in small increments.

d) Repeat steps a) to c) until the correct pressure is reached.

e) Check glue bead size by weighing ten caps without glue, ten with glue, see Chapter 3 in the OM.

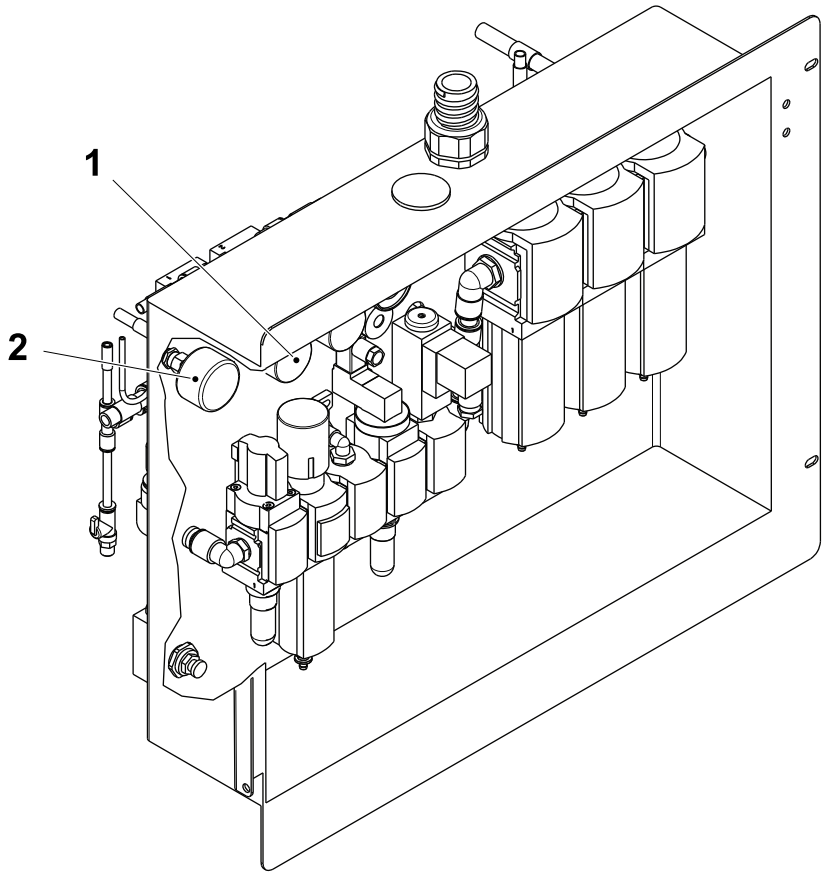

1 Regulator
2 Gauge

6.6.2-8 BYPASS Mode - Switch On the Hotmelt Unit

Machine Status	Electrical supply disconnecting device in position I (ON) Main air valve ON
SPC Reference	662950-0300

In BYPASS mode it is possible to switch-ON the hotmelt unit. To access the selection, do as follows:

a) Touch the PRODUCTION CONTROL button (1).

b) In the PRODUCTION CONTROL window, touch the SERVICE PARTS button (2).

Note! Items like the positioning system only appear on the screen below when installed.

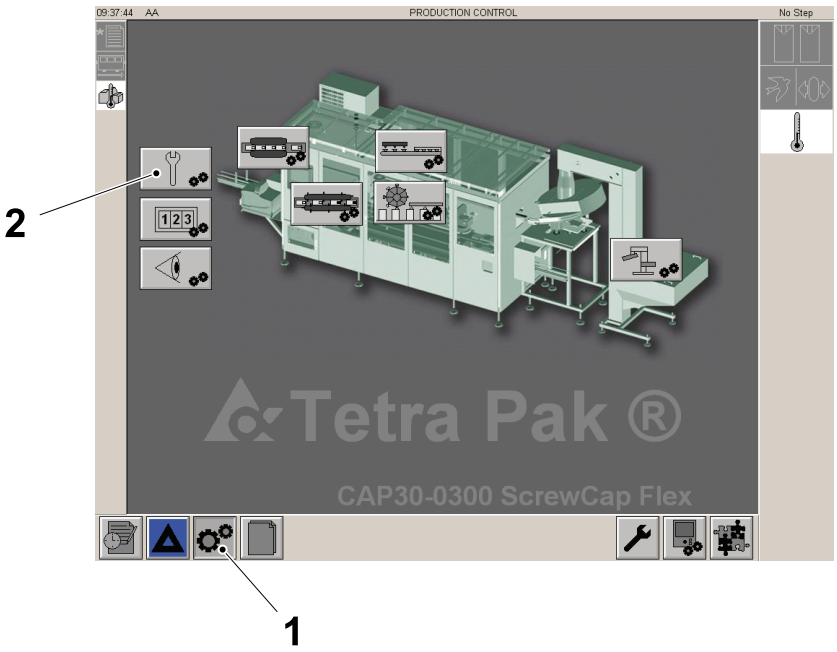

1 PRODUCTION CONTROL button
2 SERVICE PARTS button

(Cont'd)

(Cont'd)

Bypass Activation

Note! When the bypass mode is active, no caps are applied on the packages that pass through the machine.

To enable the bypass mode do as follows:

a) Step down the machine to STEP 0.

b) Touch the BYPASS icon (1).

Note! The icon (2) shows if the bypass is active.

c) Touch the icon (3).

d) Touch the ON button (4).

e) Touch the OK button (5).

Note! When the bypass is active the icon (6) is lighted ON.

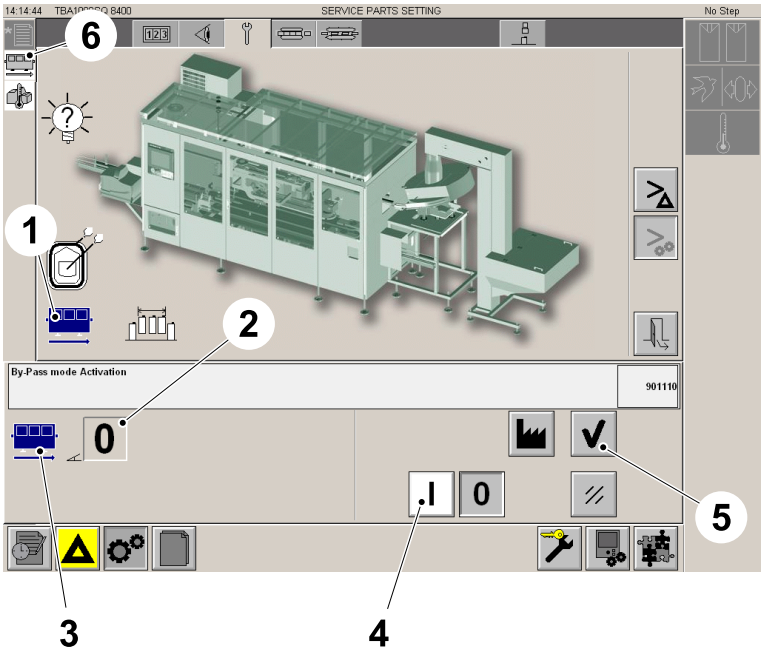

1 BYPASS icon
2 icon
3 icon
4 ON button
5 OK button
6 icon

(Cont'd)

(Cont'd)

Bypass Deactivation

To Disable the bypass mode do as follows:

a) Step down the machine to STEP 0.

b) Touch the BYPASS iconBYPASS icon (1).

Note! The icon (2) shows if the bypass is active.

c) Touch the icon (3).

d) Touch the OFF button (4).

e) Touch the OK button (5).

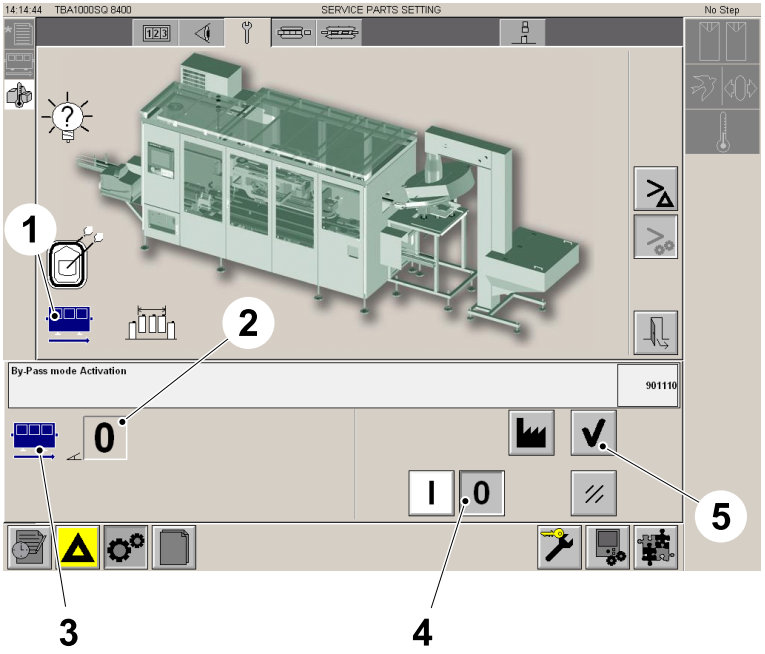

1 BYPASS icon
2 icon
3 icon
4 OFF button
5 OK button

(Cont'd)

(Cont'd)

Hotmelt Unit Activation

Note! After the activation of the Bypass, the machine can be stepped-up.

Note! When the BYPASS is active, it is possible to switch on the hotmelt unit (1).

To switch on the hotmelt unit, do as follows:

a) Touch the HOTMELT POWER-ON icon (2).

b) Touch the ON button (3).

c) Touch the OK button (4).

Note! Every time that the BYPASS is deactivated the HOTMELT POWER-ON function is automatically switched off.

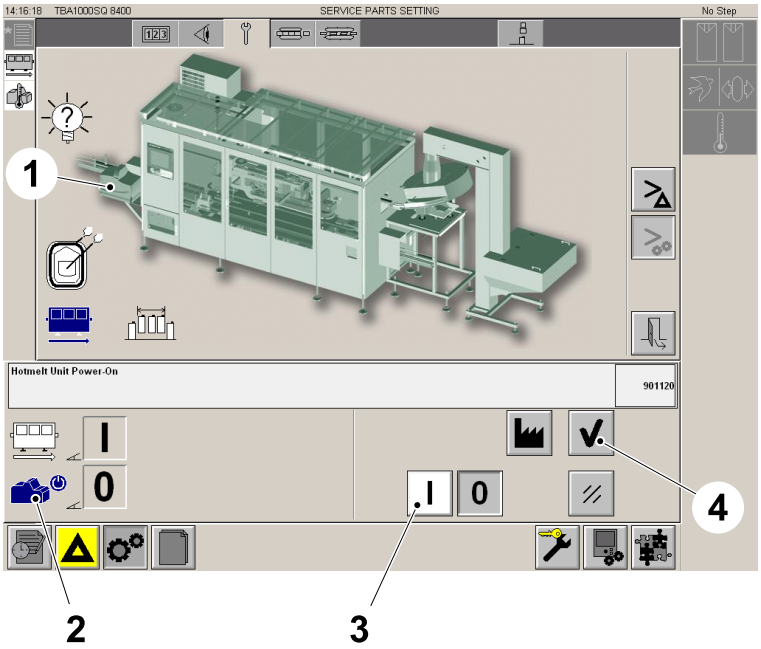

1 Hotmelt unit
2 HOTMELT POWER-ON icon
3 ON button
4 OK button

(Cont'd)

(Cont'd)

Hotmelt Unit Deactivation

To switch off the hotmelt unit (1), do as follows:

a) Touch the HOTMELT POWER-ON icon (2).

b) Touch the OFF button (3).

c) Touch the OK button (4).

Note! Every time that the BYPASS is deactivated also the HOTMELT POWER-ON function is automatically switched off.

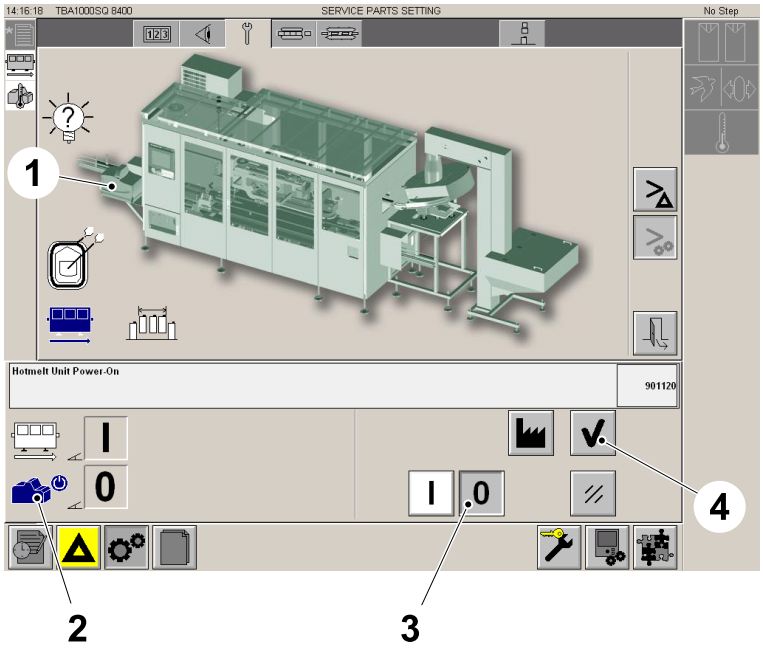

1 Hotmelt unit
2 HOTMELT POWER-ON icon
3 OFF button
4 OK button

6.7 Operator Interface

6.7.1 Operator Interface - TPOP

6.7.1-1 TPOP - Change

Machine Status	Electrical supply disconnecting device in position O (OFF) Main air valve OFF
SPC Reference	2779070-0300

DANGER

Hazardous voltage and moving machinery.
The power supply disconnector must be turned off and secured with a lock before any maintenance.

Note! The key to the lock must be removed by the technician and retained in his/her possession until all work is completed.

a) Release the two screw (1) and open the door (2).

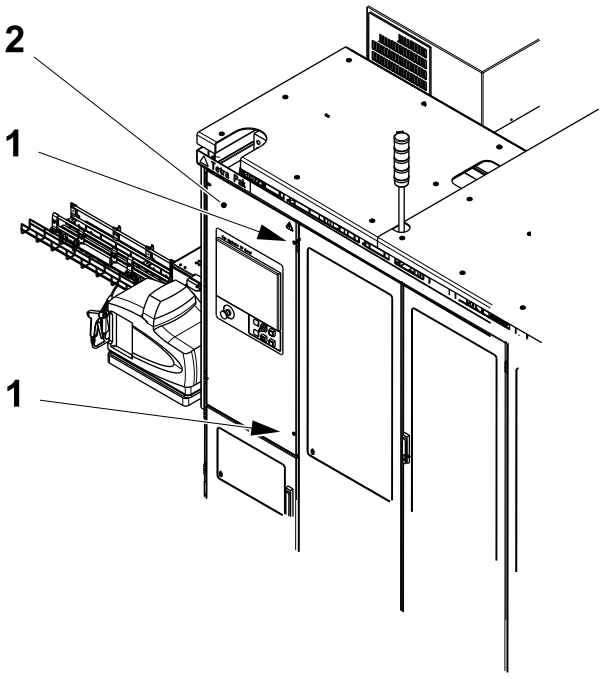

1 Screw
2 Door

(Cont'd)

(Cont'd)

b) Release the door (3) by turning the lock (4) with the key supplied.

c) Disconnect the electrical connections from the TPOP making a note from where.

d) Tape or hold the panel (5), release the eight screw (6) and remove the panel (5) from the front of the door (2).

e) Assemble in the reverse order. For the control panels firmware ect., see 10.9.1 Control Panel - Touch Screen.

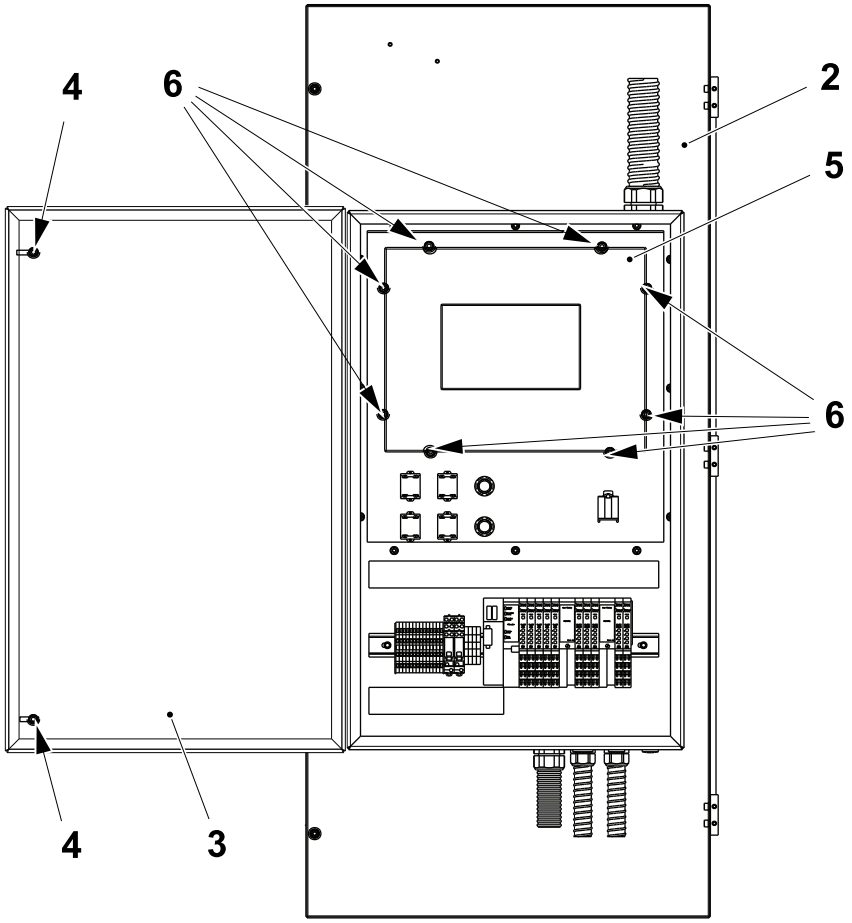

2 Door
3 Door
4 Lock
5 Panel
6 Screw

6.8 Machine Body

6.8.1 Conveyor - Height Adjustment

6.8.1-1 Height Adjustment - Check

Machine Status	Electrical supply disconnecting device in position O (OFF) Main air valve OFF
SPC Reference	2769738-0100

a) Make sure that all parts are free from dirt.

b) When it is necessary to adjust the height make sure that the lock (1) is released.

c) Make sure that the machine body (2) moves freely when the handle (3) is turned.

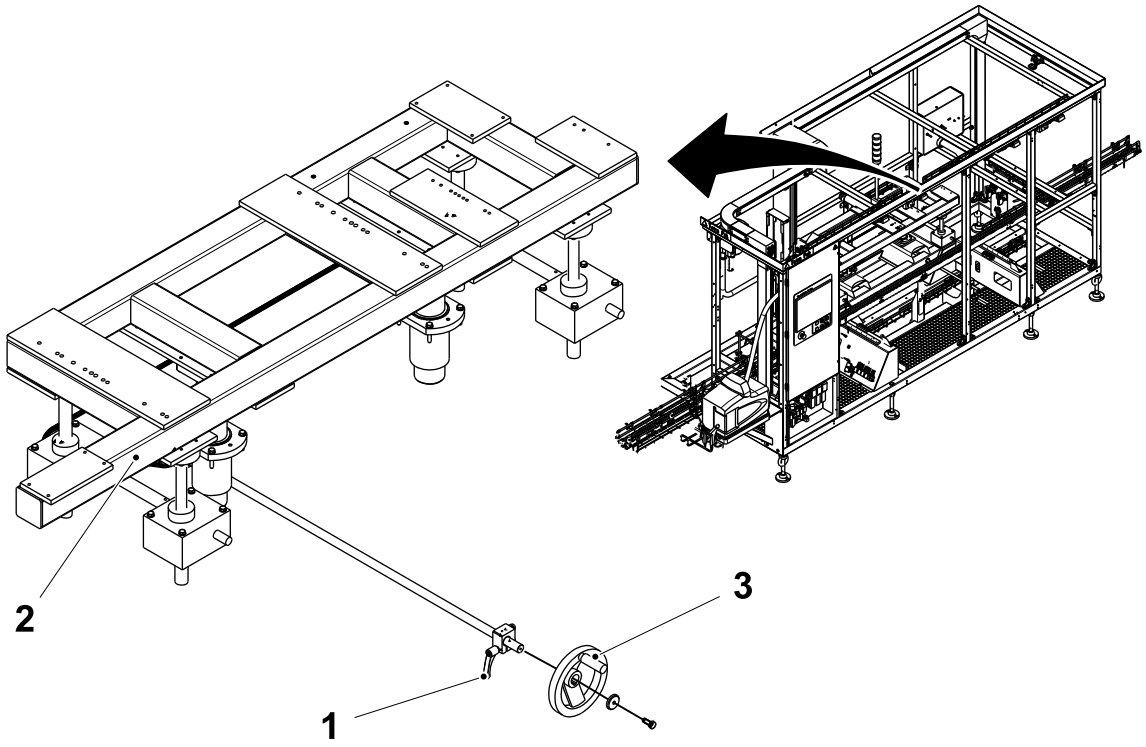

1 Lock
2 Machine body
3 Handle

6.8.1-2 Height Adjustment - Set

Machine Status	Electrical supply disconnecting device in position O (OFF) Main air valve OFF
SPC Reference	2769738-0100

CAUTION
Risk of damage to equipment
After making a small adjustment to the height adjust the cap sorter.

Set the distance **A** from the top of the conveyor belt (1) to the bottom of the pushdown finger (2) by turning the handle (3).

Note! Make sure that the conveyor is level (Y) and square (X), also check the packages for squareness.

Note! On TPA and TGA packages the height of the package is from the bottom until the centre of the hole.

A = Package height + Cap height
less 1 mm for All except Helicap2 23
less 2.5 mm for Helicap2 23 Only

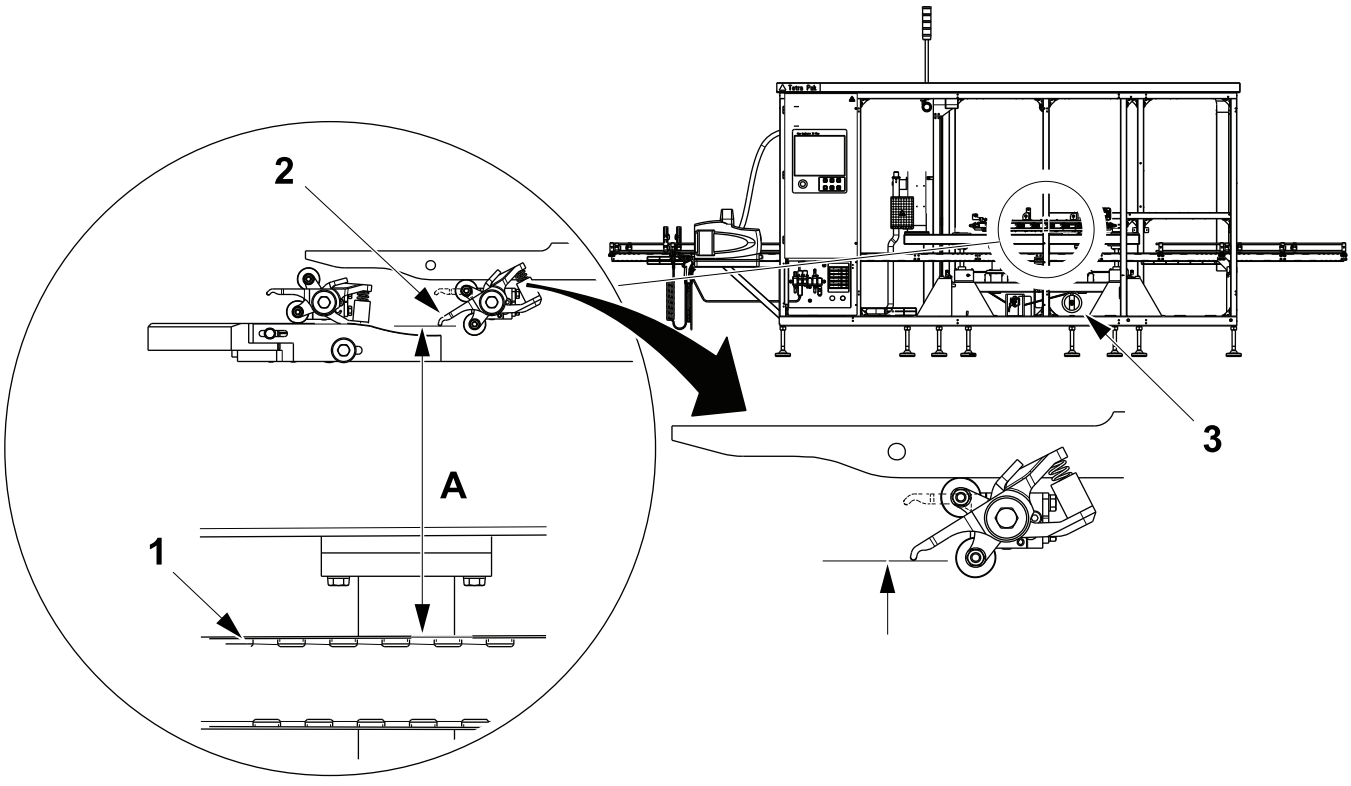

1 Conveyor belt
2 Pushdown finger
3 Handle

6.8.2 Conveyor Infeed Rail

6.8.2-1 Infeed Rail Change

Machine Status	Electrical supply disconnecting device in position O (OFF) Main air valve OFF
SPC Reference	662905-0100

Note! Valid for All to TPA and vice-versa

a) Release the screw (1) and change the screw (1).

A = TBA and TGA
B = TPA

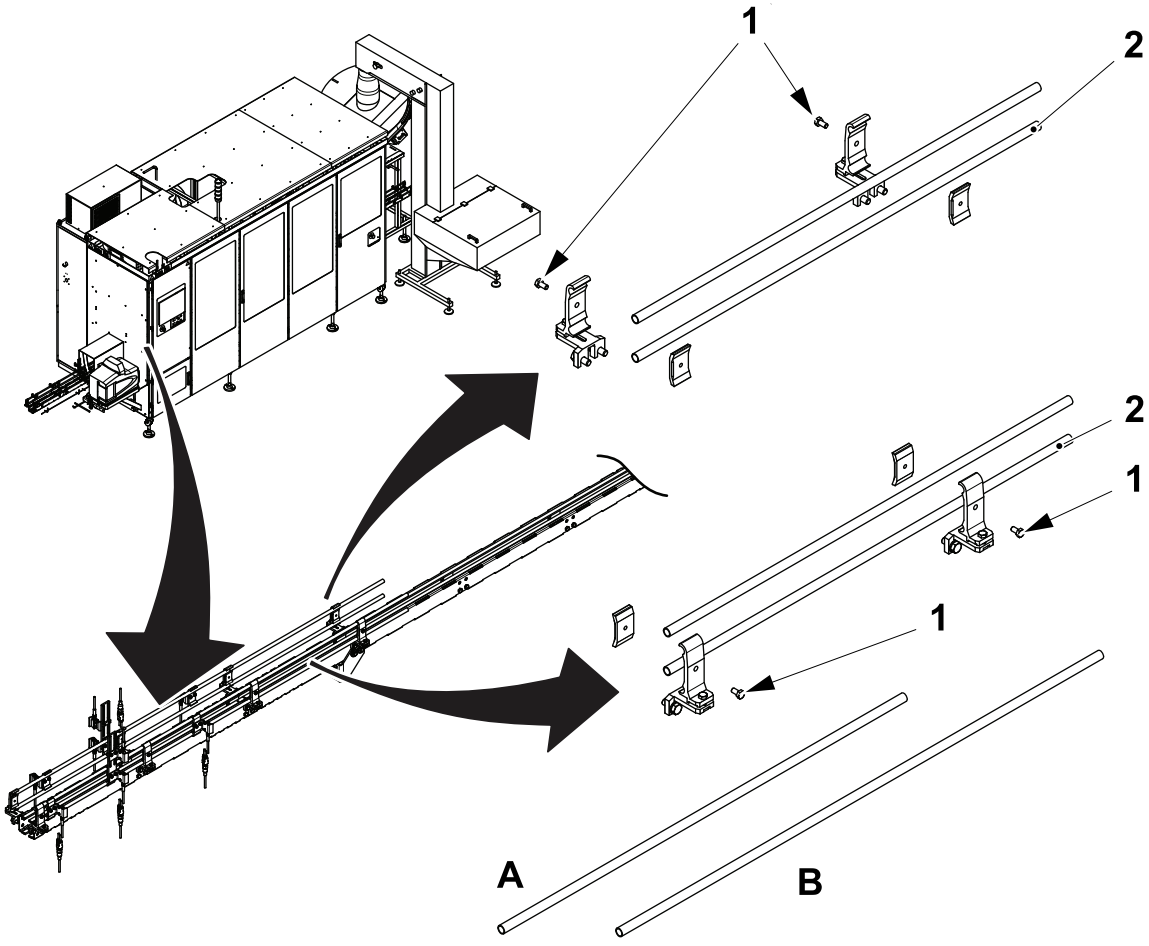

1 Screw
2 Rail

7 Applicator Unit

Applicator Unit - Description

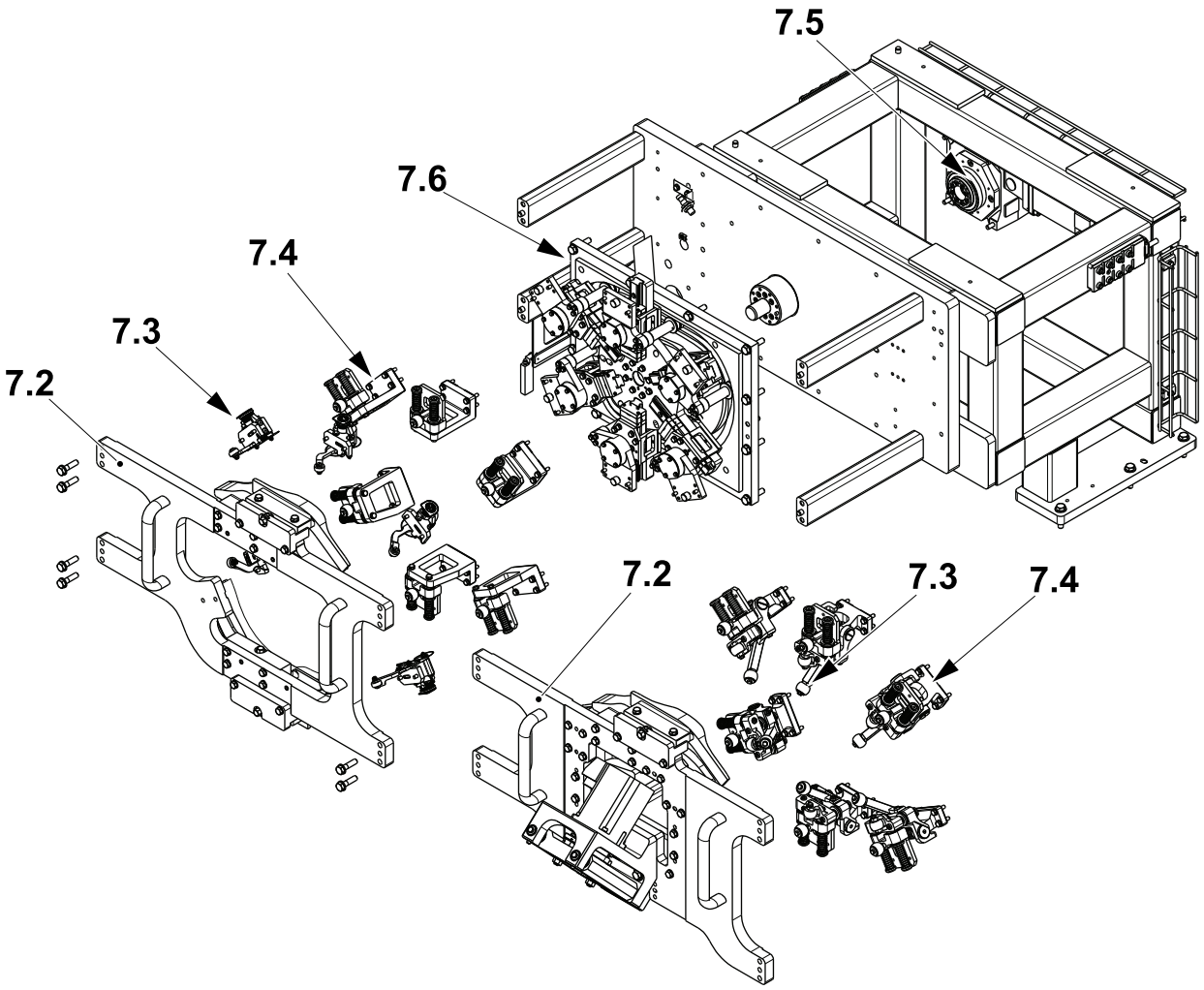

7.2 Cam Module

7.3 Cap Holders Group

7.4 Cap Carrier

7.5 Drive Unit

7.6 Transfer Unit

Applicator Unit - Description 7-2

7.1 Applicator Unit - Functional Description 7-5

7.2 Cam Module 7-6

7.2.1 Cams - Settings 7-6

7.2.1-1 Cams - Set Picking 7-6

7.2.1-2 Gripper Cam - Z Adjustment TBA, TPA, TGA. 7-8

7.2.1-3 Cams - Set Applicator Cam - TBA 7-9

7.2.1-4 Cams - Set Release Cam - TBA 7-10

7.2.1-5 Release and Application Cam - TBA,TGA and TPA with Vision System 7-11

7.2.1-6 Vision System Cam Module - Overhaul 7-15

7.2.2 Cam Module - Change 7-16

7.2.2-1 Cam Module - Removal 7-16

7.3 Cap Holders Group 7-19

7.3.1 Cap Holder 7-19

7.3.1-1 Cap Holder - Check 7-19

7.3.1-2 Cap Holder - Change Roller and Bushings 7-20

7.3.1-3 Cap Holder - Set Y Position 7-21

7.4 Cap Carrier 7-28

7.4.1 Guide Bracket 7-28

7.4.1-1 Guide Bracket - Check 7-28

7.4.1-2 Guide Bracket - Change Roller and Bushings 7-31

7.4.1-3 Guide Bracket - Set X Position (No Positioning Device Only) 7-39

7.4.1-4 Guide Bracket - Set X Position (With Positioning Device) 7-40

7.5 Drive Unit 7-41

7.5.1 Sensors 7-41

7.5.1-1 Sensors - Cap Holder No.1 Position 7-41

7.6 Transfer Unit 7-42

7.6.1 Star Wheel 7-42

7.6.1-1 Star Wheel - Set Zero Position. 7-42

7.6.1-2 Star Wheel - Change Outer Cam Follower Bearings. 7-45

7.6.1-3 Star Wheel - Change 7-46

7.6.1-4 Star Wheel - Change Inner Cam Follower Bearings. 7-47

7.1 Applicator Unit - Functional Description

The applicator unit is made up from the following:

- Cam module, this module carries the picking, gripping, application and release cams.
- Cap holder group collects and transfers the caps to the packages.
- Cap carrier groups mount on to the star wheel and carries the cap holder groups.
- Drive unit rotates the star wheel via a servo motor.
- Transfer unit has built in cam tracks and is fitted with a sensor.
- Each of the cap holders collects a cap after the adhesive has been applied and is rotated via the star wheel on the transfer unit (which is driven by the drive unit) until in a position to place the cap on a package.
- Cams on the cam module determine how, when and where the cap holder (mounted on the cap carrier group) collects and releases the cap.

7.2 Cam Module

7.2.1 Cams - Settings

7.2.1-1 Cams - Set Picking

Machine Status	Electrical supply disconnecting device in position O (OFF) Main air valve OFF
SPC Reference	2839315-0200

Picking Cam - Z Adjustment TBA, TPA, TGA

COARSE SETTING

Note! Before setting the cams set the cap holder group see 7.4 Cap Carrier.

a) Release the two upper screw (1).

b) Using the screw (2), adjust the picking cam (3) to change the distance **A**.

c) Tighten the screw (1).

d) Check that the distance **A** is equal at each end of the picking cam.

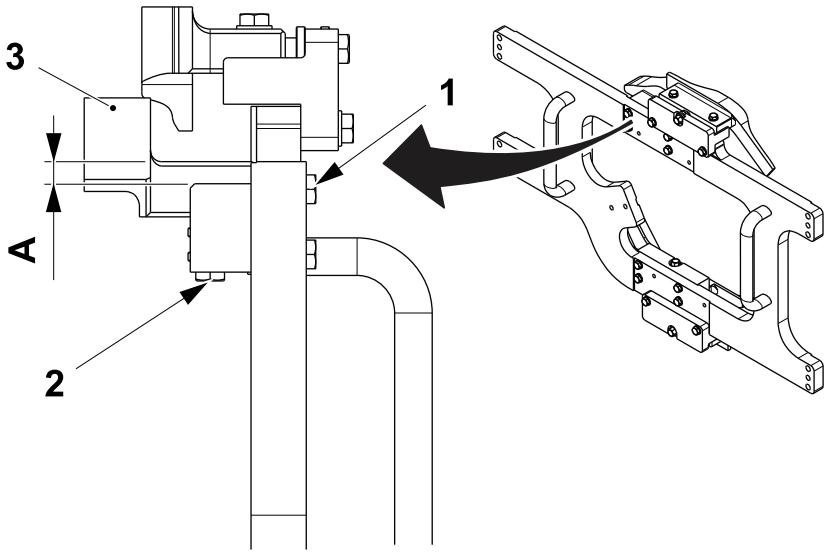

1 Screw
2 Screw
3 Picking cam

(Cont'd)

(Cont'd)

Fine Setting

a) Inch the machine slowly around so that caps are collected by the cap holders.

b) Make sure that the cap is not held by more than the distance **B**. This will make sure that the cap holder lever does not touch the cap sequencer.

c) If the distance **B** is incorrect, repeat the procedure COARSE SETTING and steps a) and b) of this procedure.

Volume	StreamCap Dimension B	SlimCap Dimension B	HeliCap2 23 Dimension B	HeliCap27 Dimension B
2000		5.5 mm		
1000	4.5 mm	5.5 mm	5. mm	6.5 mm
750				6.5 mm
500	4.5 mm			6.5 mm
250	4.5 mm		5. mm	
200	4.5 mm		5. mm	

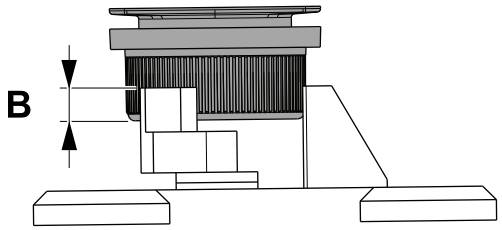

7.2.1-2 Gripper Cam - Z Adjustment TBA, TPA, TGA

Machine Status	Electrical supply disconnecting device in position O (OFF) Main air valve OFF
SPC Reference	2839315-0200

Note! Before setting the cam (1), set the cap holder group see 7.4.1-3 Guide Bracket - Set X Position (No Positioning Device Only).

a) Release the screw (2).

b) Using the screw (3), adjust the gripper cam (1) to change the distance **A**.

c) Tighten the screw (2).

d) Check that the distance **A** is equal at each end of the cam (1).

Note! Check that the gripper (4) are holding the cap before the cap completely leaves the guide (5).

A = 4.5 mm

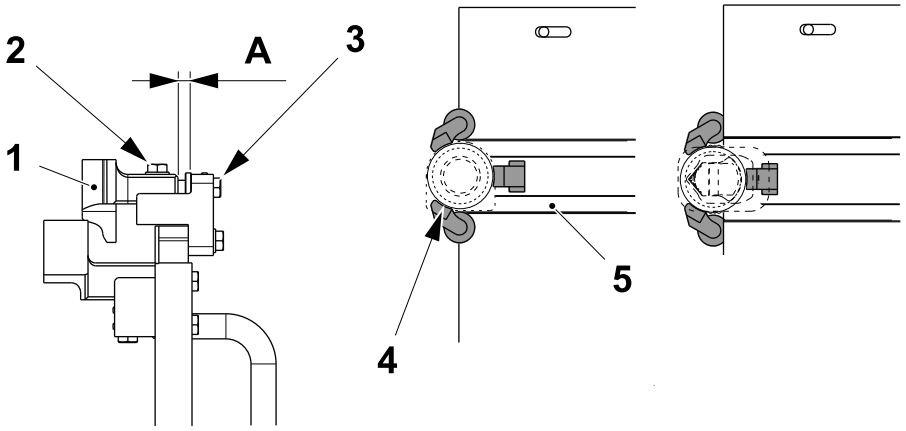

1 Cam
2 Screw
3 Screw
4 Gripper
5 Guide

7.2.1-3 Cams - Set Applicator Cam - TBA

Machine Status	Electrical supply disconnecting device in position O (OFF) Main air valve OFF
SPC Reference	2839315-0200

Application Cam - TBA

a) Inch the machine to 360 degrees.

b) Release the screw (1) and then use the screw (2) to adjust the position of the applicator cam (3) until the stroke at the spring is the distance **A**.

c) Tighten the screw (1).

A = 19.5 mm ±0.5

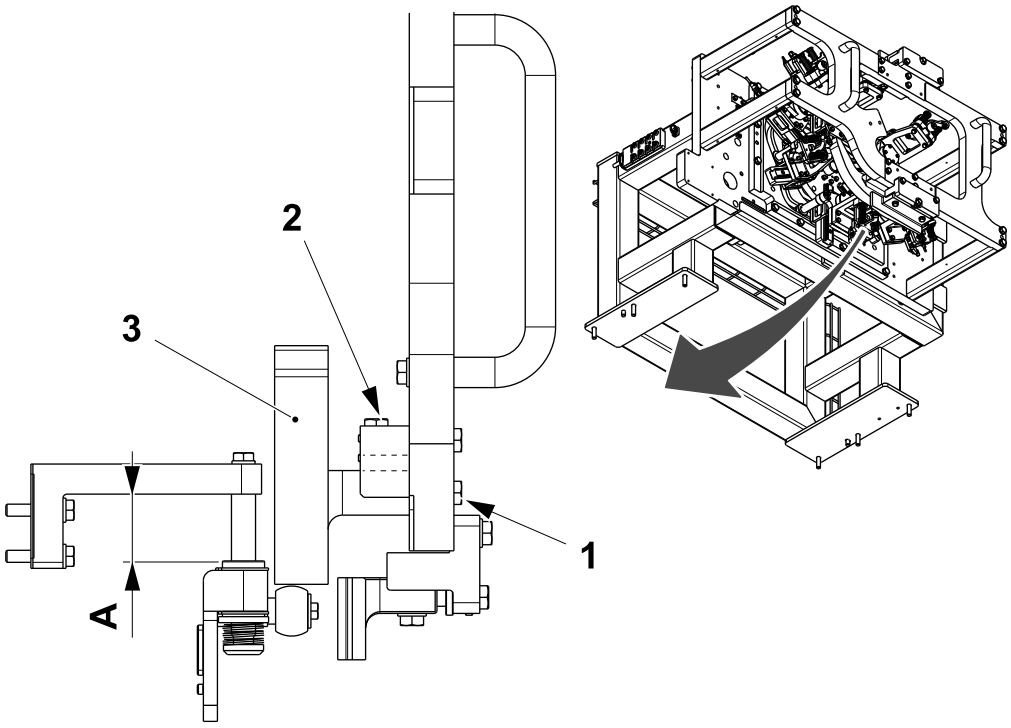

1 Screw
2 Screw
3 Applicator cam

7.2.1-4 Cams - Set Release Cam - TBA

Machine Status	Electrical supply disconnecting device in position O (OFF) Main air valve OFF
SPC Reference	2839315-0200

Cam - Set Release Cam - TBA

Note! Before setting the cams, set the cap holder group see 7.3.1-3 Cap Holder - Set Y Position.

a) Release the screw (1) and then use the screw (2) to adjust the release cam (3) to set the distance **A** making sure that the cap is still being gripped.

b) Tighten the screw (1).

Note! Make sure that the distance **A** is equal at both ends of the release cam (3).

A = 9 mm

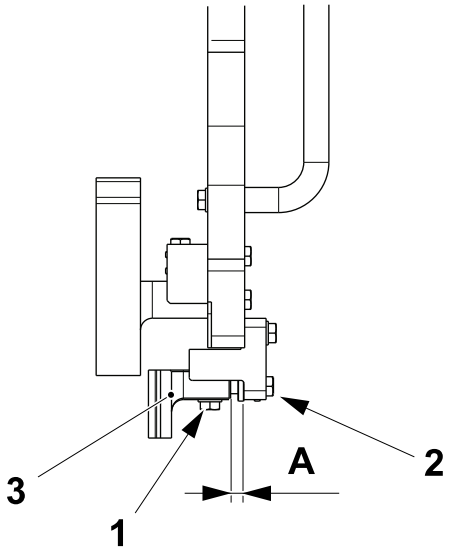

1 Screw
2 Screw
3 Release cam

7.2.1-5 Release and Application Cam - TBA,TGA and TPA with Vision System

Machine Status	Electrical supply disconnecting device in position O (OFF) Main air valve OFF
SPC Reference	2839315-0200

Note! The guide cams (1) will vary between package types.

a) The release and applicator cam (2) is moved into position by the motor (3) and the vision system, see 12.5 Vision System (Mandatory for TGA/TPA and HeliCap).

b) Position the pin (4) in the zero slot (5).

c) Close all doors and guards.

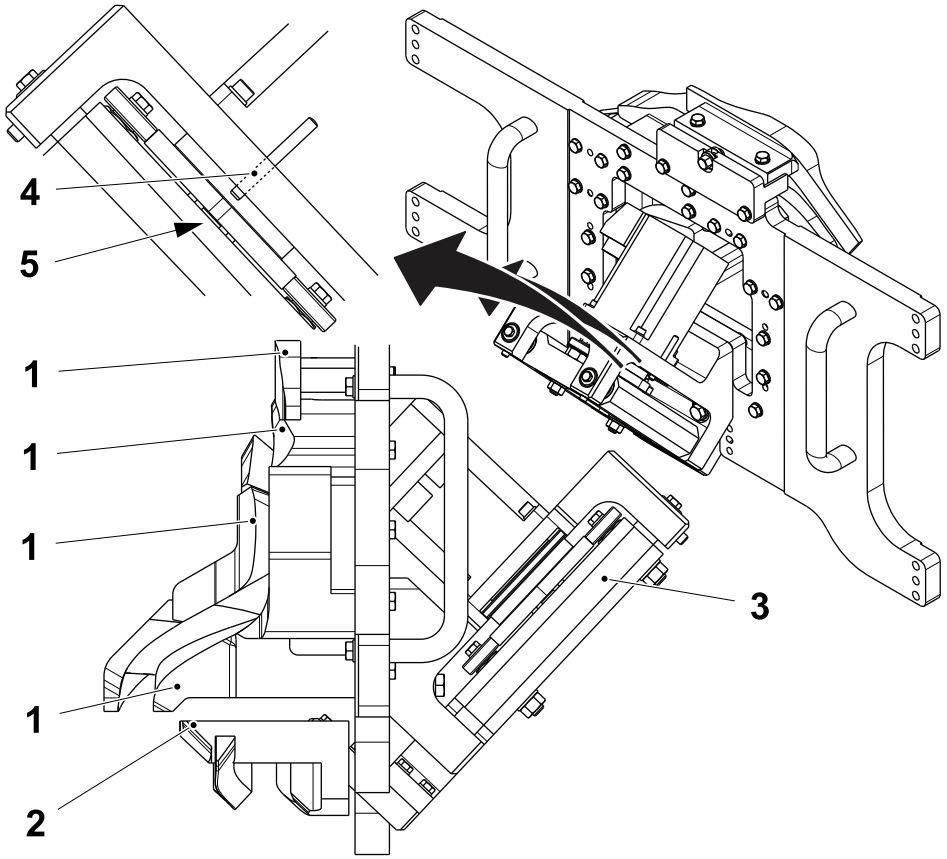

1 Guide cams
2 Release and applicator cam
3 Motor
4 Pin
5 Zero slot

(Cont'd)

(Cont'd)

d) Touch the MAINTENANCE button (6).

Note! Items like the positioning system only appear on the screen below when installed.

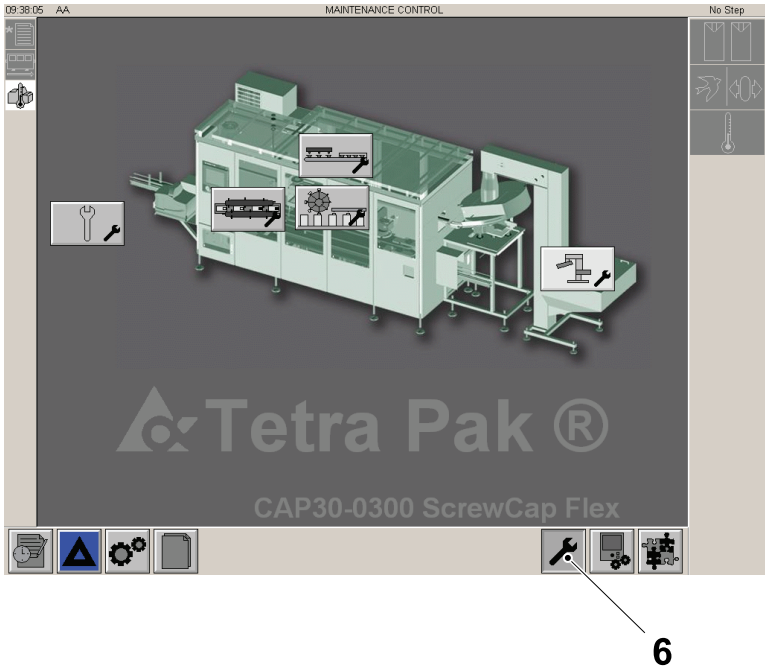

6 Maintenance button

(Cont'd)

(Cont'd)

e) Touch the VISION SYSTEM button (7).

f) Touch the ZERO button (8).

g) Touch the ON button (9).

h) Touch the OK button (10) for three seconds. The background of the ON button (9) should go green.

i) Touch the EXIT button (11).

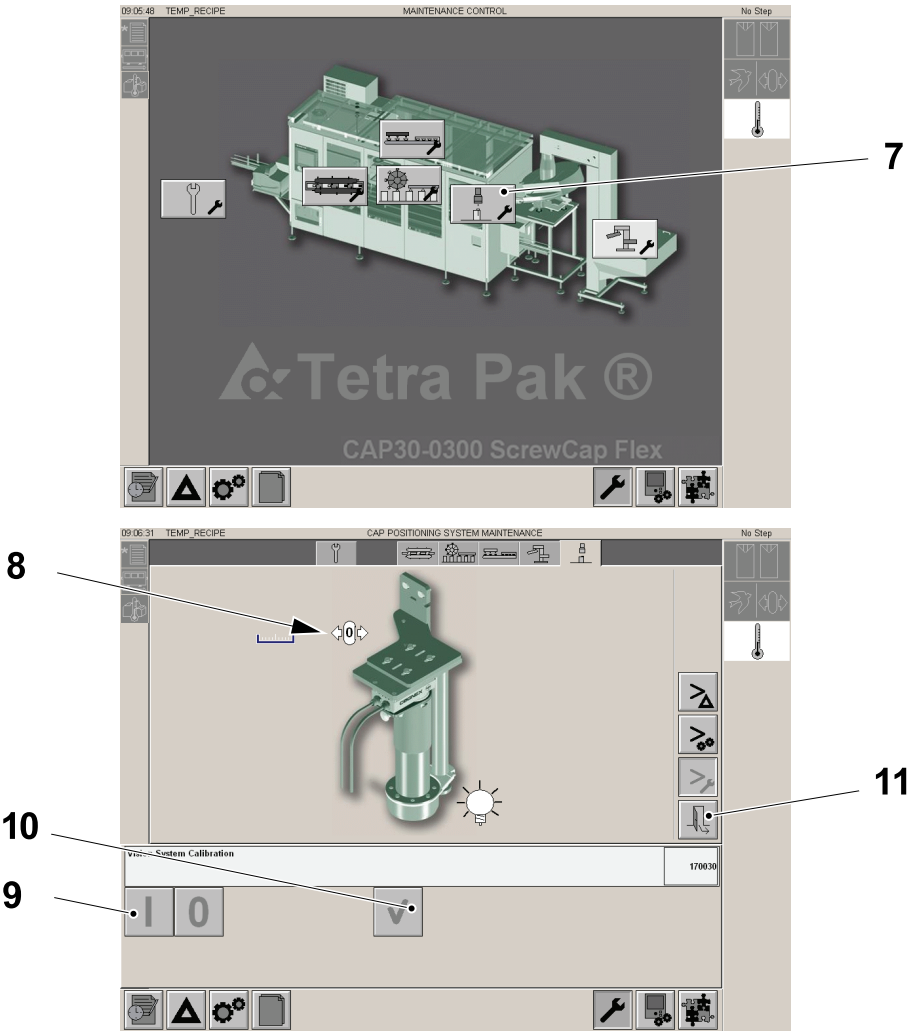

7 Vision system button
8 zero button
9 ON button
10 Ok button
11 Exit button

(Cont'd)

(Cont'd)

Note! Set the machine to zero degrees.

j) Rotate the cam (12) checking that the roller (13) stays in contact with the release and applicator cam (2) during the total rotation on the cam (12).

k) Place shim (14) behind the cap carrier (15) if necessary to keep the roller in contact with the release and applicator cam (2).

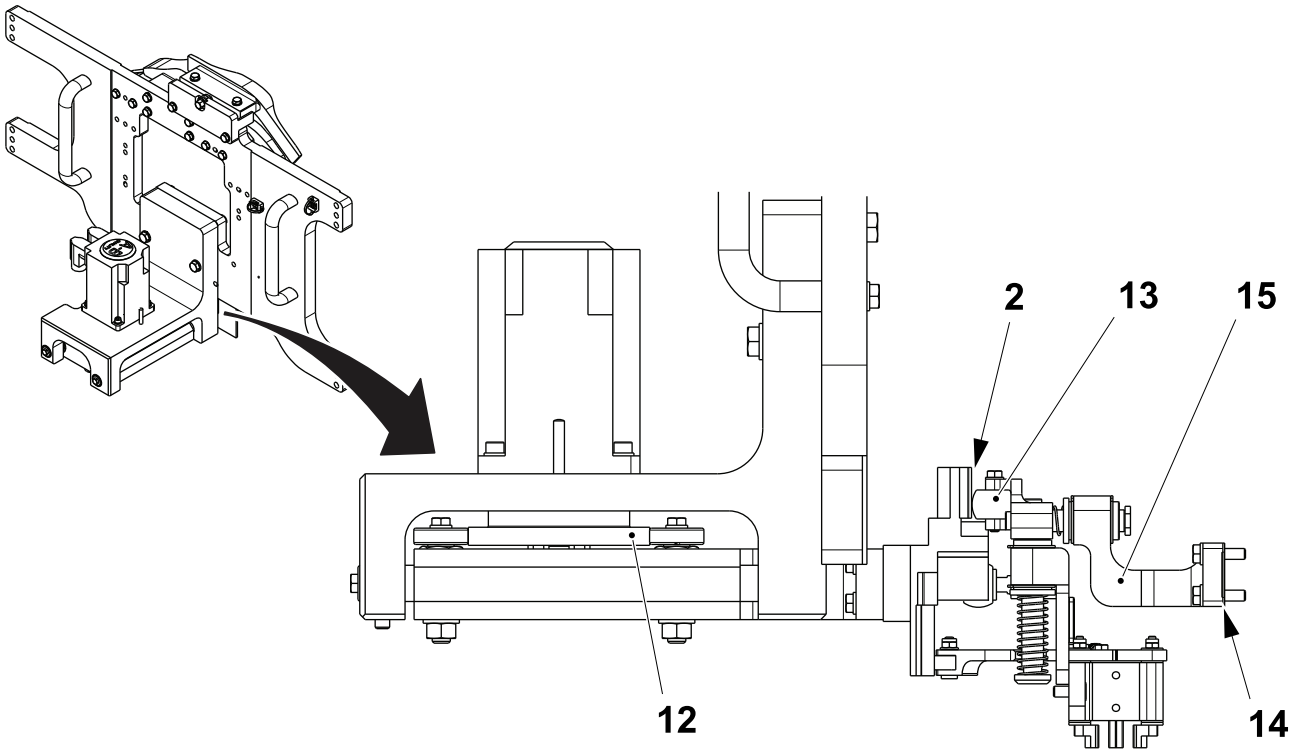

2 Release and applicator cam
12 Cam
13 Roller
14 Shim
15 Cap carrier

7.2.1-6 Vision System Cam Module - Overhaul

Machine Status	Electrical supply disconnecting device in position O (OFF) Main air valve OFF
SPC Reference	2780560-0200

a) Remove the screw (1) and the shaft (2) while supporting the carriage (3).

b) Remove the scrapper (4) and the bushing (5).

c) Remove the screw (6), the washer (7) and the bearing (8).

d) Assemble in the reverse order replacing any parts that are required.

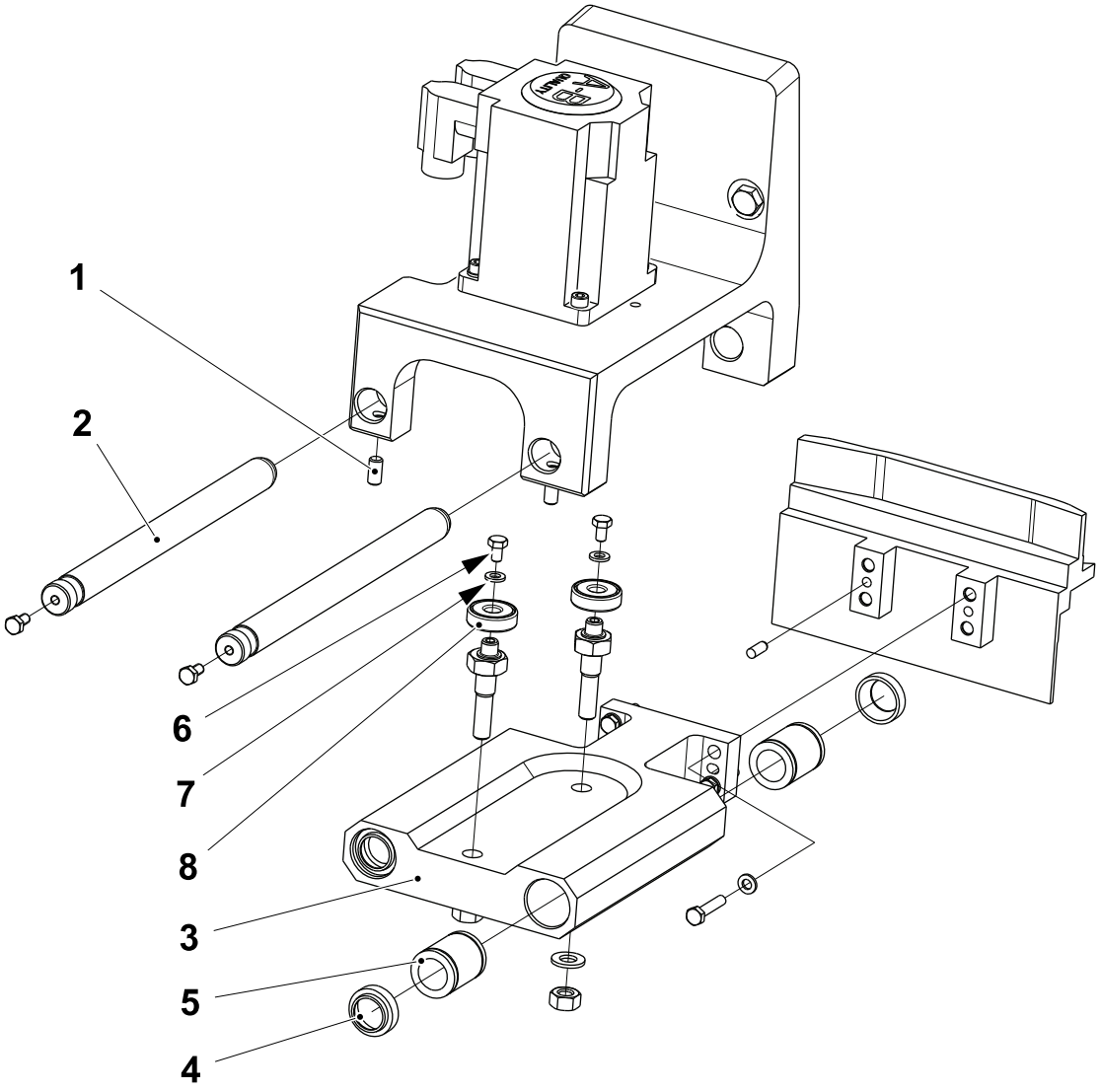

1 Screw
2 Shaft
3 Carriage
4 Scrapper
5 Bushing
6 Screw
7 Washer
8 Bearing

7.2.2 Cam Module - Change

7.2.2-1 Cam Module - Removal

Machine Status	Electrical supply disconnecting device in position O (OFF) Main air valve OFF
SPC Reference	2839315-0200

Cam Module - Removal Preparation

WARNING

The cam module is heavy!

Because of the weight there may be the necessity of two or three people.

a) Record the setting **A** of the cam (1), see 7.2.1 Cams - Settings.

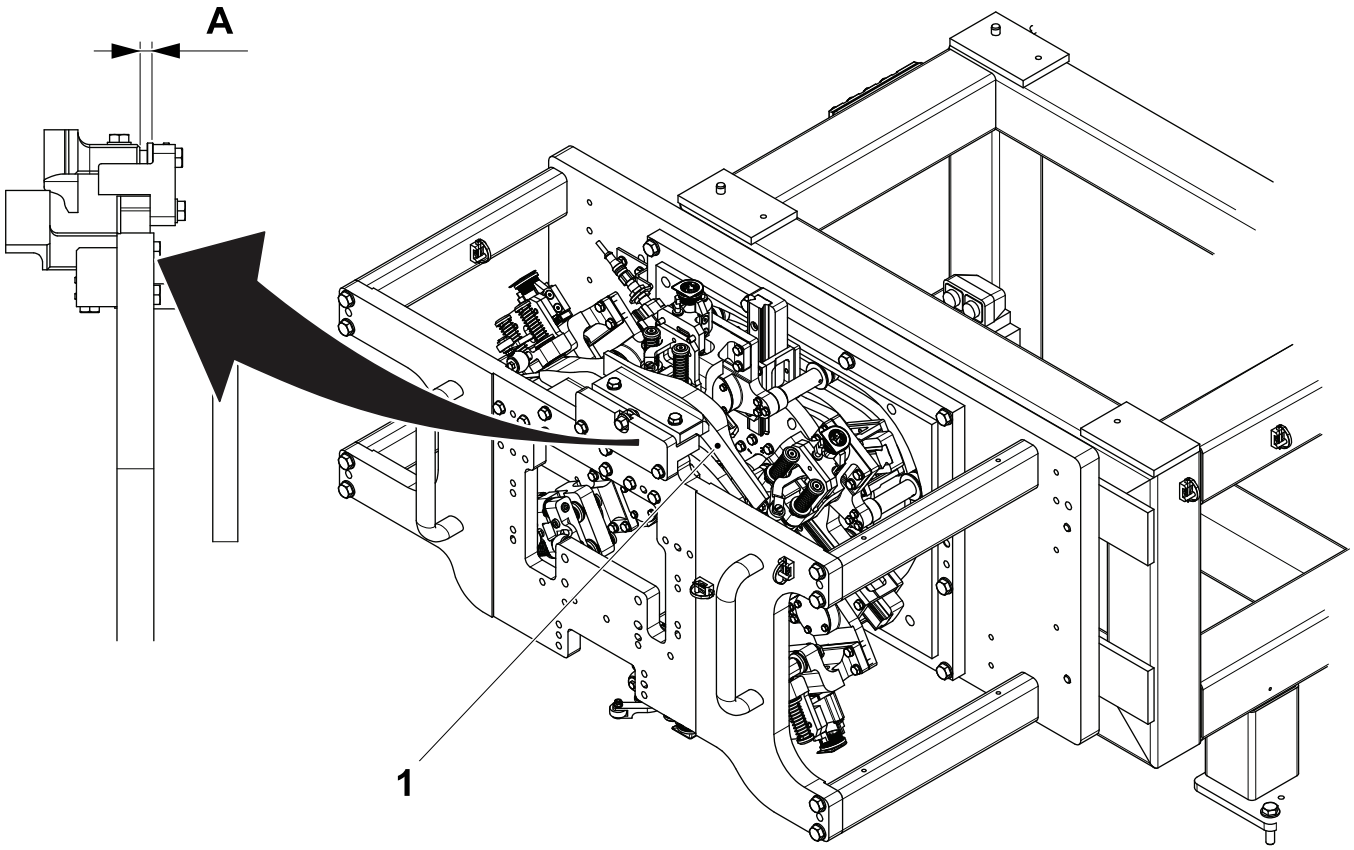

1 Cam

(Cont'd)

(Cont'd)

b) Loosen the screw (2).

c) Remove the screw (3) and the cam (1).

d) Remove the screw (4) and the bracket (5).

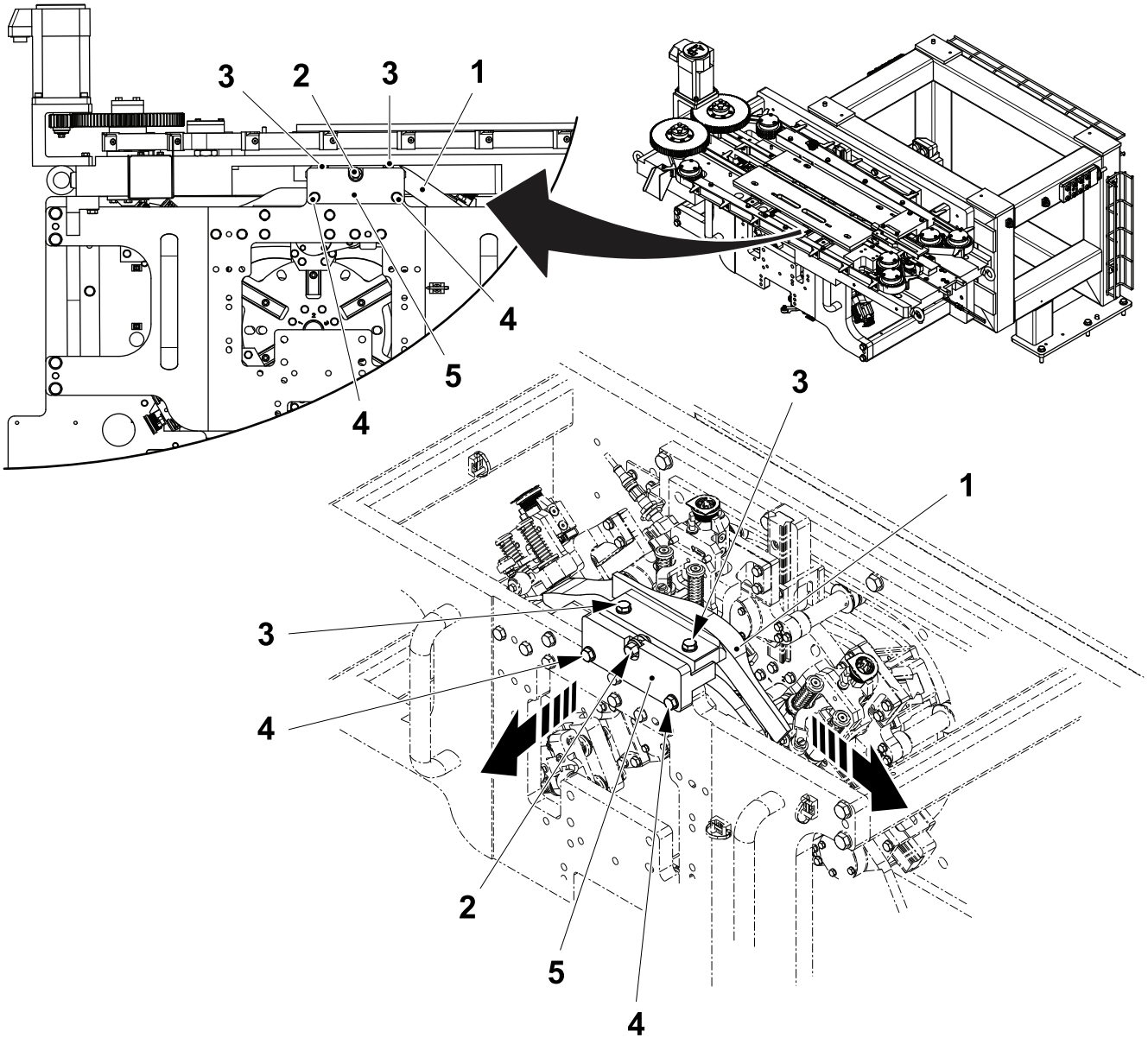

1 Cam
2 Screw
3 Screw
4 Screw
5 Bracket

(Cont'd)

(Cont'd)

Cam Module Removal

a) Remove the eight screw (1) and the cam module (2).

Note! Before assembly remove the screw (3) and the cap holder (4).

b) Assemble in the reverse order.

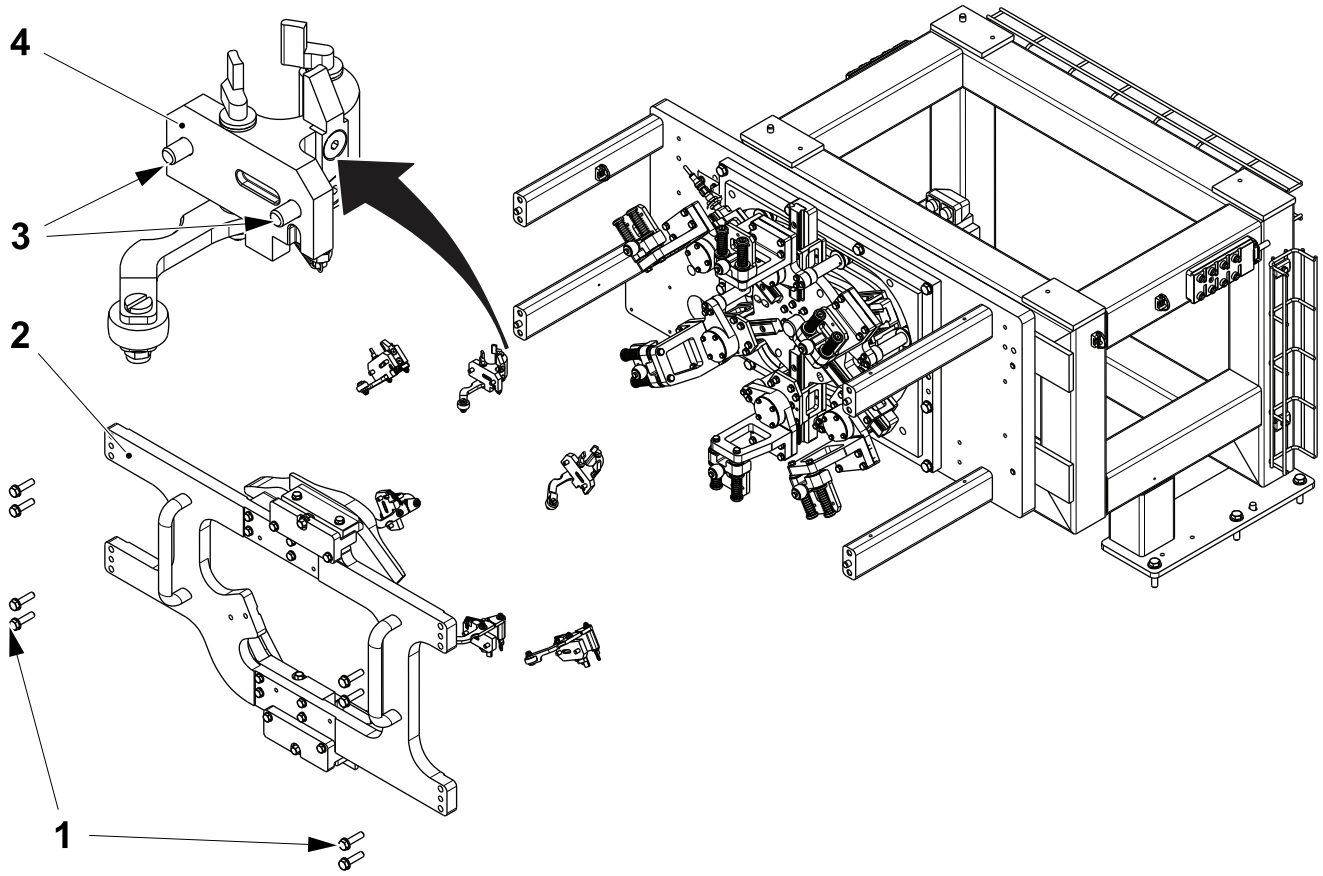

1 Screw
2 Cam module
3 Screw
4 Cap holder

7.3 Cap Holders Group

7.3.1 Cap Holder

7.3.1-1 Cap Holder - Check

Machine Status	Electrical supply disconnecting device in position O (OFF) Main air valve OFF
Consumables	THREAD LOCKING LOCTITE 2701 50 ML TP No. 344433-0050
SPC Reference	2703670-0100

a) Check that the roller (1) is not damaged or worn and that it rotates freely.

b) Check that the spring (2) still returns the arm (3).

c) Replace if necessary.

Note! Use loctite when you tighten the screws that fix the spring (2).

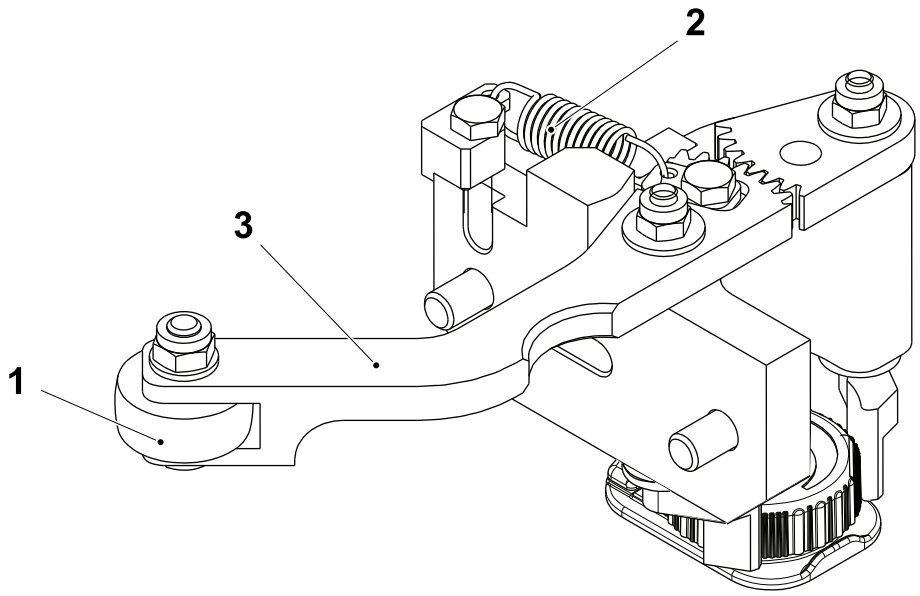

1 Roller
2 Spring
3 Arm

7.3.1-2 Cap Holder - Change Roller and Bushings

Machine Status	Electrical supply disconnecting device in position O (OFF) Main air valve OFF
SPC Reference	2703670-0100

a) Remove the two screw (1) and the cap holder (2).

b) Remove the nut (3) and the washer (4).

c) Remove the screw (5) and the roller (6).

d) Remove the nut (7) and the washer (8).

e) Remove the gear arm (9), the clamping shaft (10) and the bushing (11).

f) Assemble in the reverse order.

Note! Components in this assembly are cap dependent, see the latest SPC.

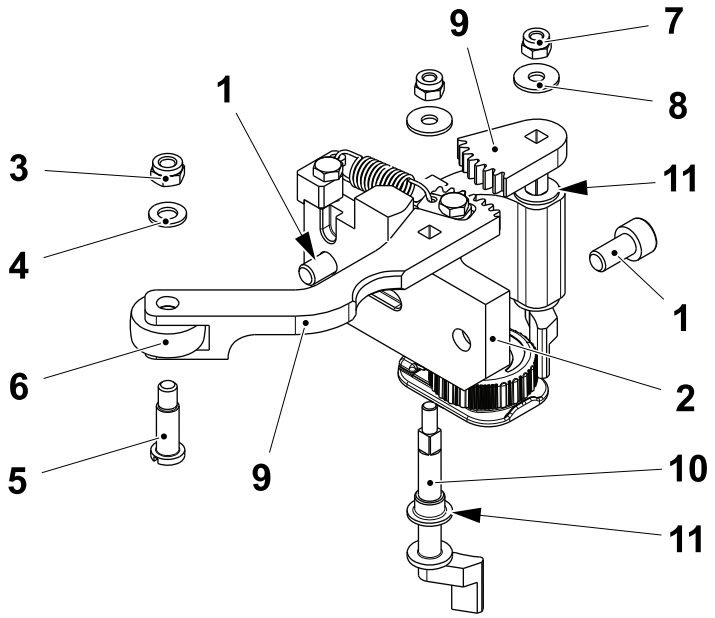

1 Screw
2 Cap holder
3 Nut
4 Washer
5 Screw
6 Roller
7 Nut
8 Washer
9 Gear arm
10 Clamping shaft
11 Bushing

7.3.1-3 Cap Holder - Set Y Position

Machine Status	Electrical supply disconnecting device in position O (OFF) Main air valve OFF
SPC Reference	2703670-0200

Set Y Position at Control Panel

Note! Before setting the Y position of the cap holders, set the X position of the individual guide brackets, see 7.4.1-3 Guide Bracket - Set X Position (No Positioning Device Only).

a) Touch the MAINTENANCE button (1) to login see, 1.1.1-1 HMI User Management - Log On as a User.

b) Touch the MAINTENANCE button (1).

c) Touch the SERVICE button (2).

Note! Items like the positioning system only appear on the screen below when installed.

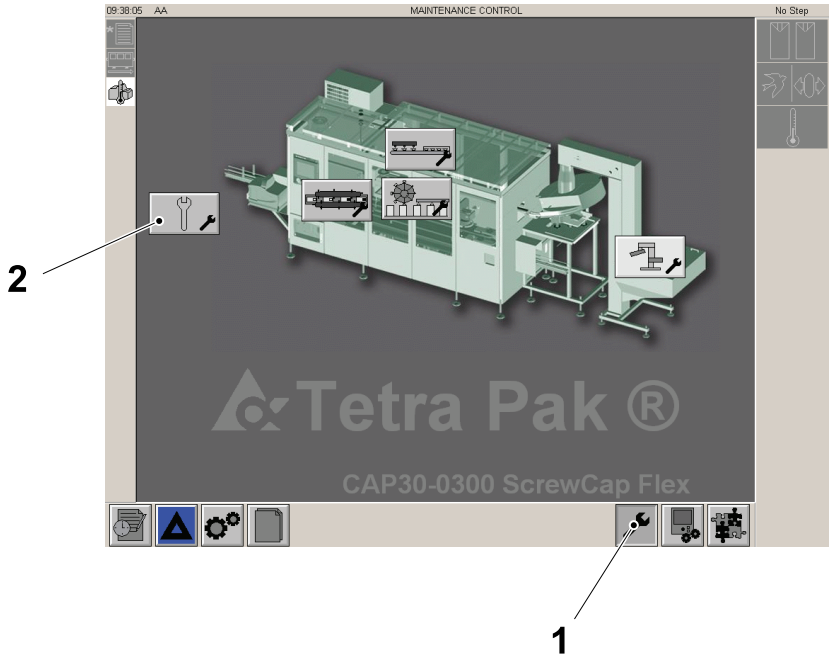

1 MAINTENANCE button
2 SERVICE button

(Cont'd)

(Cont'd)

d) Touch the INCHING button (3).

Note! The value in the window (4) should be 180 degrees.

e) If the value in the window (4) is correct go to step j). If the value is incorrect continue with step f).

f) Touch the SETTING button (5) to modify the value in the window (4).

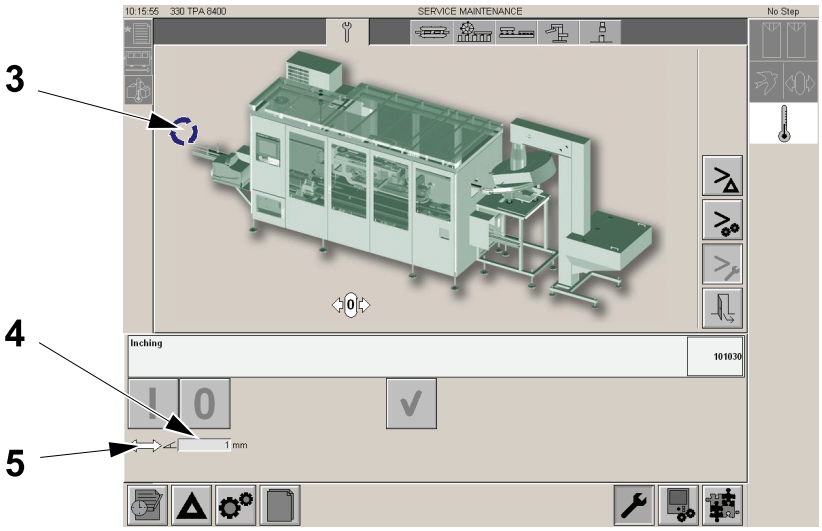

3 INCHING button
4 Window
5 SETTING button

(Cont'd)

(Cont'd)

g) Using the up and down buttons (6) set the number in the degrees window (7) to read 180 Degrees.

h) Touch the OK button (8).

i) Check that the value set in step g) appears in the window (4).

j) Touch the ON button (9).

k) Touch the OK button (10).

l) Touch the EXIT button (11) to leave.

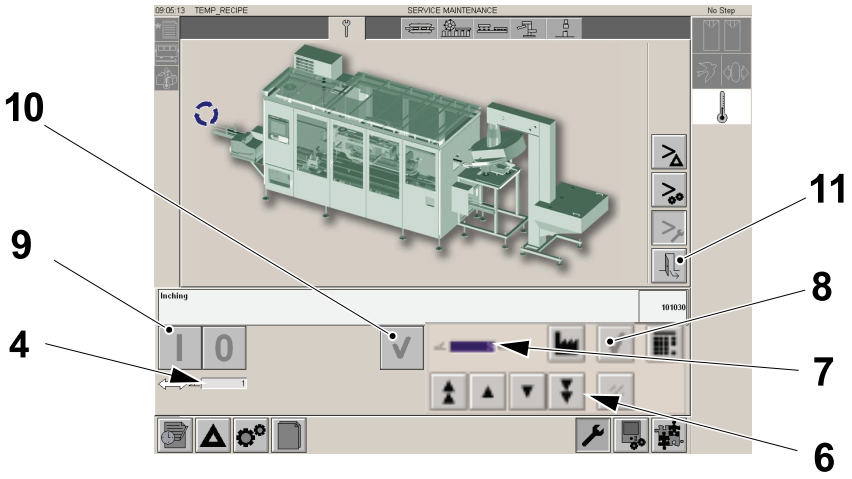

4 Window
6 Up and down buttons
7 Degrees window
8 OK button
9 ON button
10 OK button
11 EXIT button

(Cont'd)

(Cont'd)

Set Y Position at Transfer Unit

a) Open the doors and make sure that the hole (1) lines up with the hole in the plate (2) and insert the pin (3).

b) If problems are encountered inserting the pin (3), the machine zero settings should be done again see, 7.6.1-1 Star Wheel - Set Zero Position.

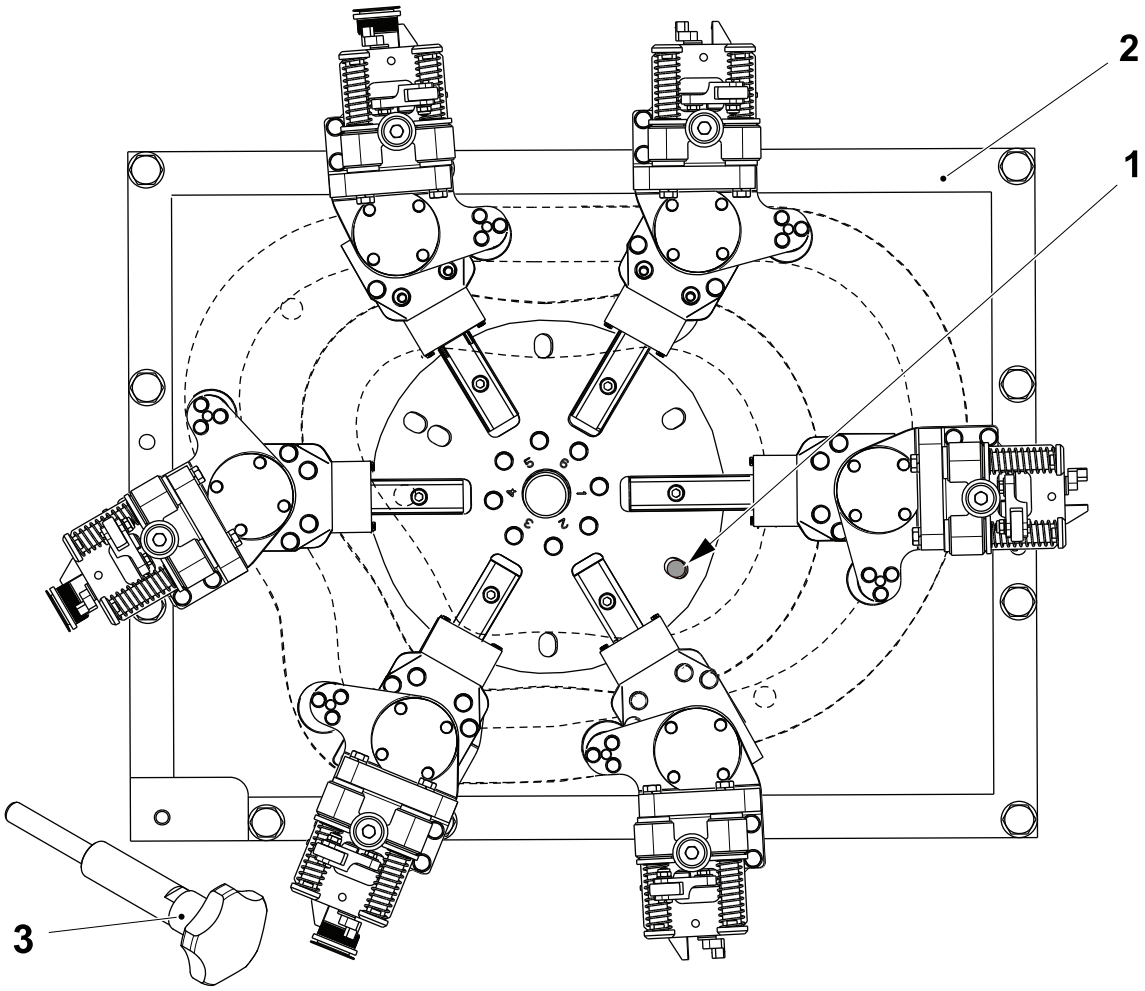

1 Hole
2 Plate
3 Pin

(Cont'd)

(Cont'd)

Set Y Position at Cap Carrier

a) At cap holder No 1 (1), centralise the guide bracket (2) relative to the cam follower (3). To do this loosen the four screw (4) and align the edges with the cam follower (3) or turn the eccentric cam (5) for fine adjustment. When the guide bracket (2) and the cam follower (3) are aligned, tighten the screw (4). Repeat for all positions.

b) Measure the distance **A** between the top surface of the cap holder No 1 (1) and the lower surface of the support (6) for all positions and average the distance **A**.

c) Set the average of distance **A** at all positions.

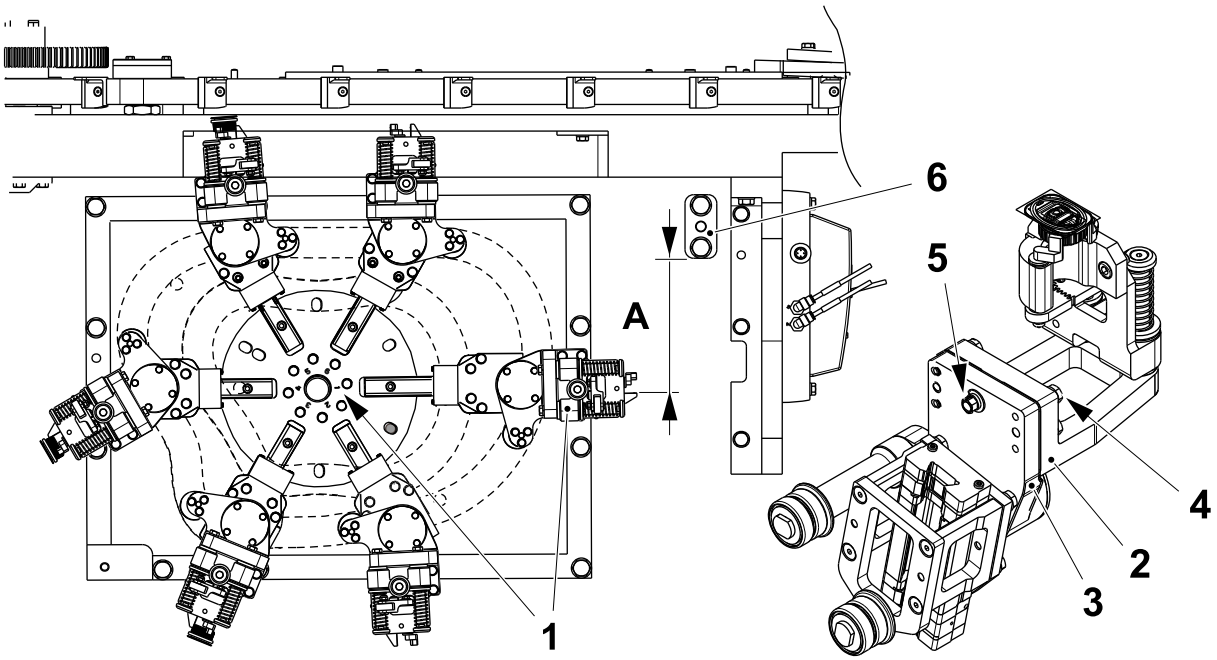

1 Cap Holder No 1
2 Guide bracket
3 Cam follower
4 Screw
5 Eccentric cam
6 Support

(Cont'd)

(Cont'd)

d) Remove the pin (7).

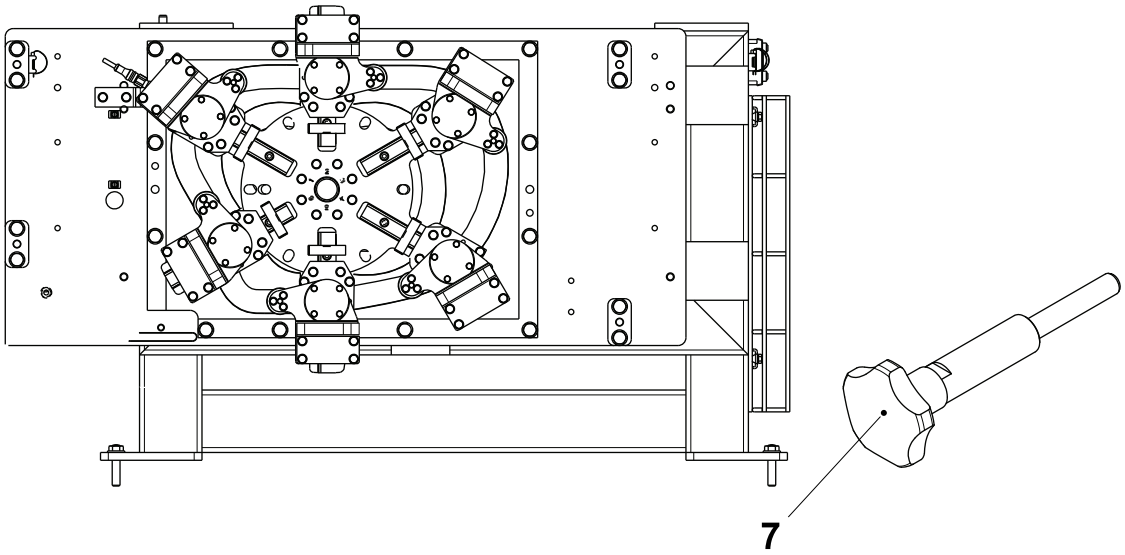

7 Pin

e) Touch the MAINTENANCE button (8).

f) Touch the SERVICE button (9).

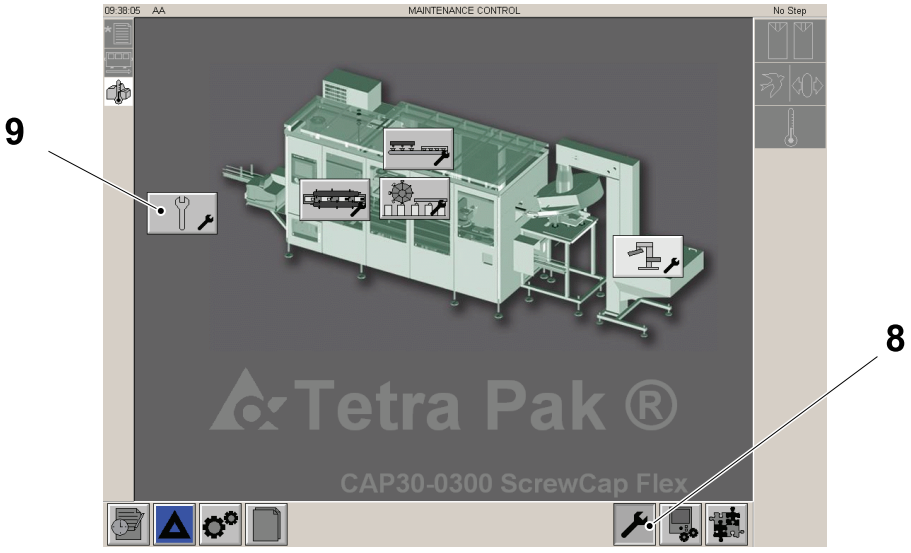

8 MAINTENANCE button
9 SERVICE button

(Cont'd)

(Cont'd)

g) Touch the OK button (10) to move the next cap carrier to the horizontal position.

h) Insert the pin (7) again.

i) Adjust the horizontal cap carrier, if necessary refer to step a) on page 7-25 until the distance **A** is obtained again.

j) Remove the pin (7).

k) Repeat items g) to j) for the other cap carriers.

Note! After any positional change the packages will require testing, see OM chapter 5 for details.

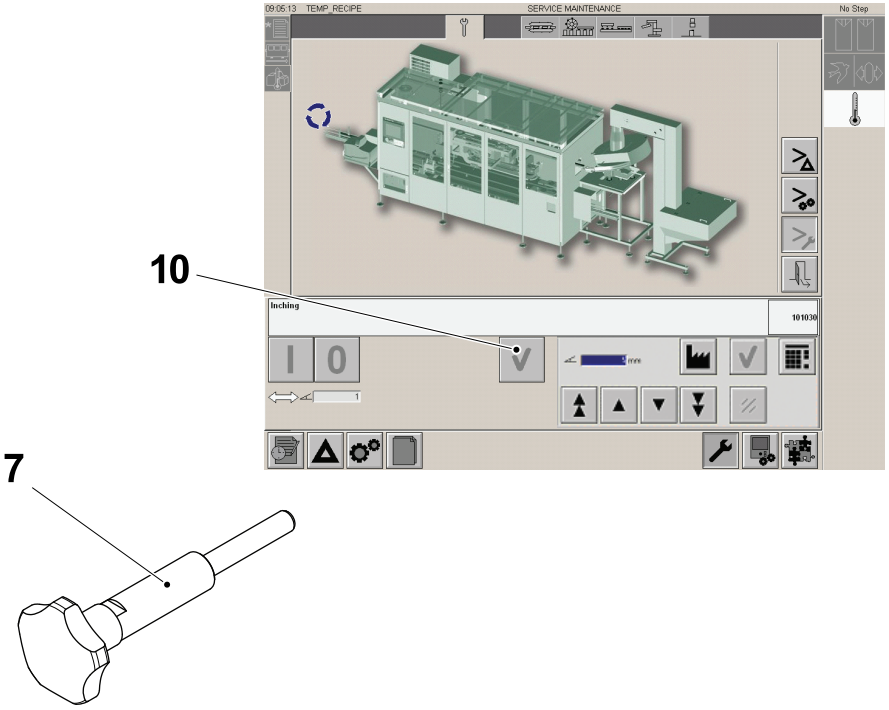

7 Pin
10 OK button

7.4 Cap Carrier

7.4.1 Guide Bracket

7.4.1-1 Guide Bracket - Check

Machine Status	Electrical supply disconnecting device in position O (OFF) Main air valve OFF
SPC Reference	2746939-0200

TBA - Without Positioning Device

Note! Valid for TBA StreamCap 200/1000 and TBA SlimCap 1000/2000.

a) Check that the roller (1) is not damaged or worn and rotate freely.

b) Check that the spring (2) return the roller carrier.

c) Replace if necessary.

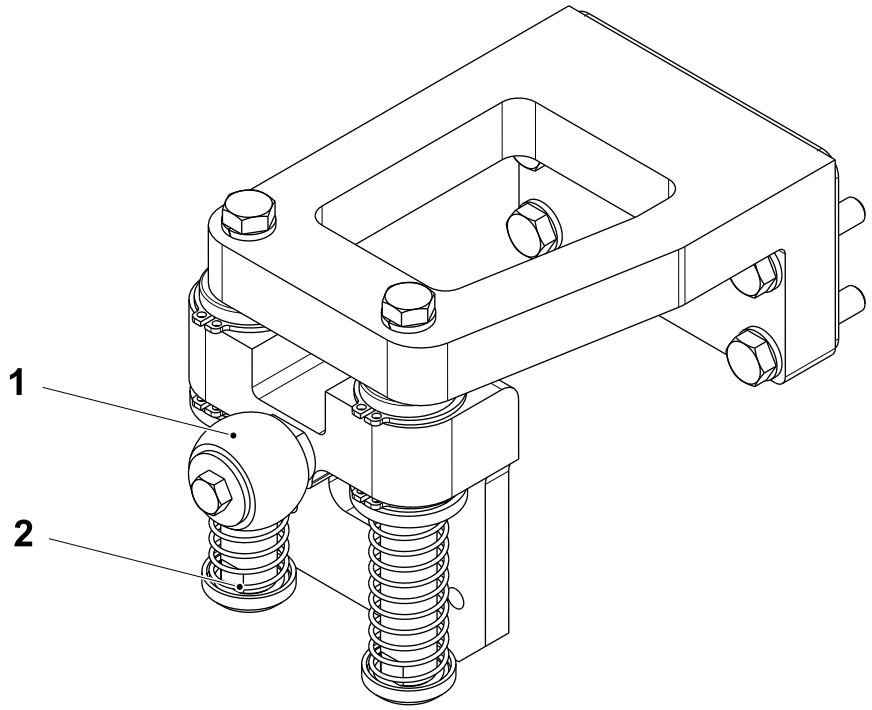

1 Roller
2 Spring

(Cont'd)

(Cont'd)

TGA, TPA and TBA 200 E and TBA 250 E - With Positioning Device

Note! Valid for TPA Helicap27 TPA StreamCap 500 / StreamCap 1000, TBA 200 E HeliCap2 23, TBA 250 E HeliCap2 23 and TGA.

a) Check that the roller (1) are not damaged or worn and rotate freely.

b) Check that the spring (2) return the carriers.

c) Replace if necessary.

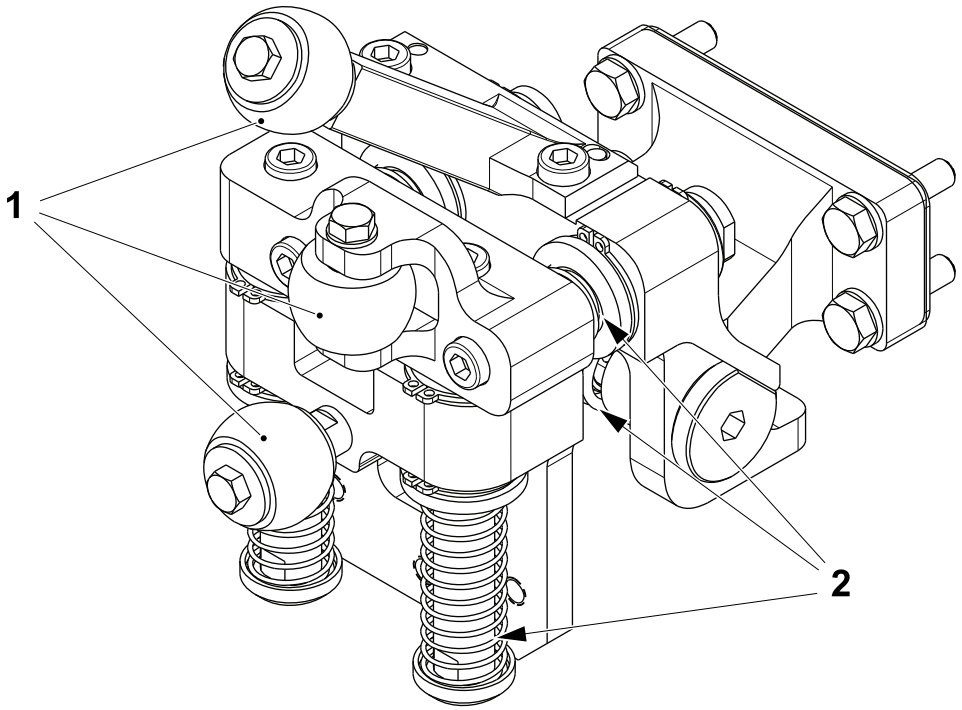

1 Roller
2 Spring

(Cont'd)

(Cont'd)

TBA - With Positioning Device

Note! Valid for TBA StreamCap 200 TBA StreamCap 1000, TBA Helicap27 and TBA 1000 S and HeliCap2 23.

a) Check that the rollers (1) are not damaged or worn and rotate freely.

b) Check that the springs (2) return the carriers.

c) Replace if necessary.

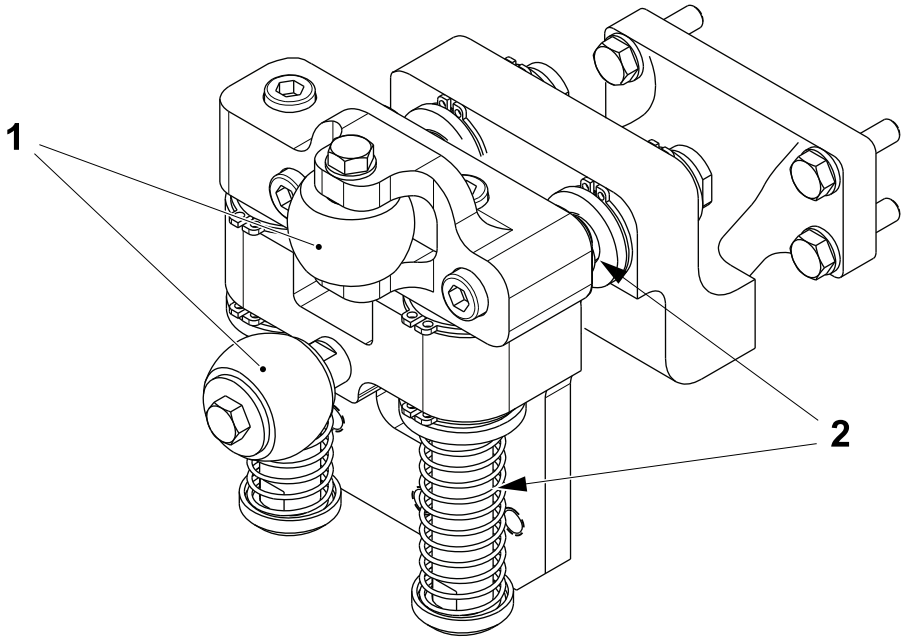

1 Roller
2 Spring

7.4.1-2 Guide Bracket - Change Roller and Bushings

Machine Status	Electrical supply disconnecting device in position O (OFF) Main air valve OFF
SPC Reference	2746939-0200

TBA - Without Positioning Device

Note! Valid for TBA StreamCap 200/1000 and TBA SlimCap 1000/2000.

a) Remove the screw (1) and the shaft (2).

b) Remove the washer (3) and the spring (4).

c) Remove the retaining ring (5) and the bushing (6).

d) Remove the screw (7), the washer (8) and the roller (9).

e) Assemble in the reverse and check the setting, see 7.4.1-3 Guide Bracket - Set X Position (No Positioning Device Only) and Set Y Position at Cap Carrier.

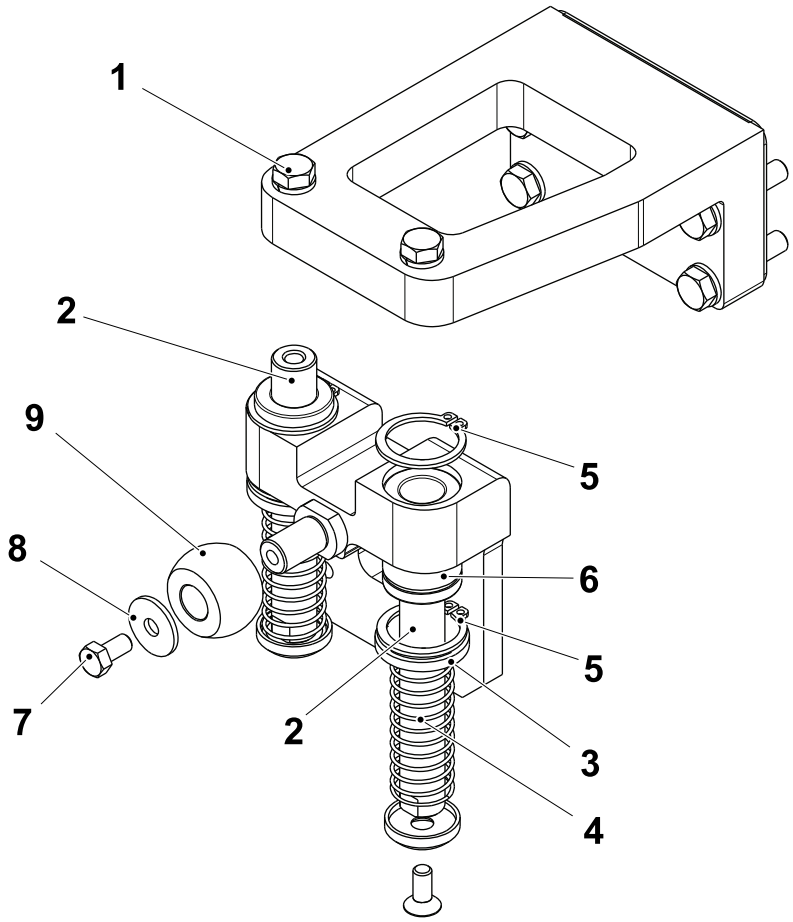

1 Screw
2 Shaft
3 Washer
4 Spring
5 Retaining ring
6 Bushing
7 Screw
8 Washer
9 Roller

(Cont'd)

(Cont'd)

TGA, TPA and TBA 200 E and TBA 250 E - With Positioning Device

Note! Valid for TPA Helicap27 TPA StreamCap 500 / StreamCap 1000, TBA 200 E HeliCap2 23, TBA 250 E HeliCap2 23 and TGA.

a) Remove the screw (1) and the shaft (2).

b) Remove the washer (3) and the spring (4).

c) Remove the retaining ring (5) and the bushing (6).

d) Remove the screw (7), the washer (8) and the roller (9).

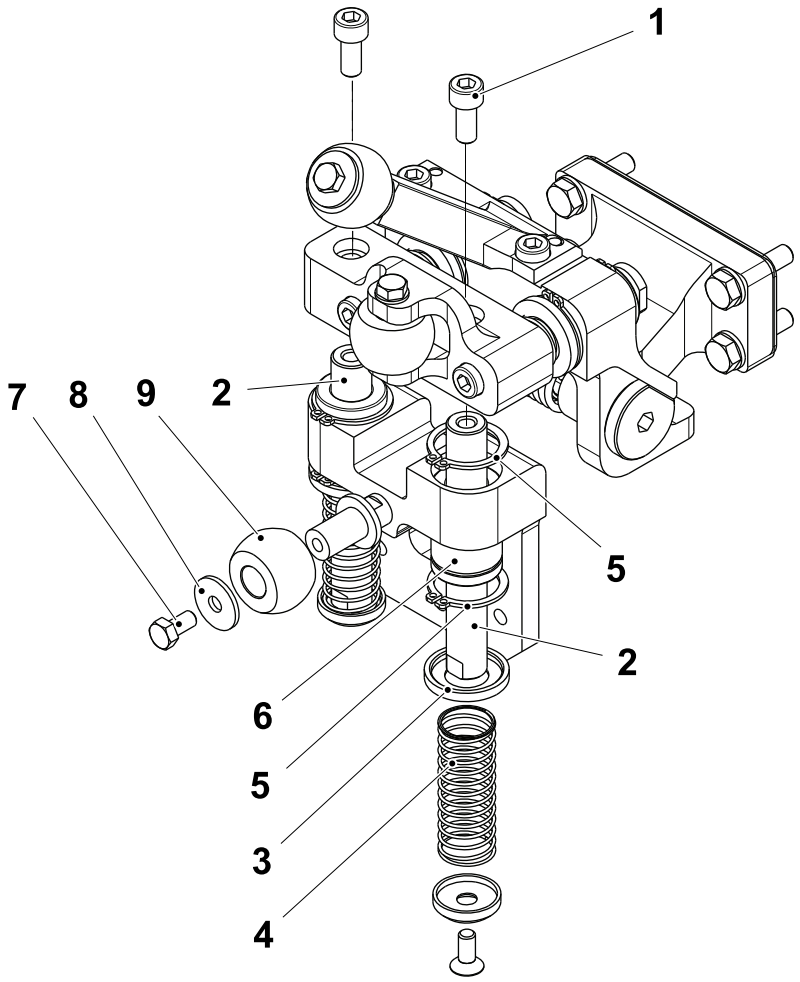

1 Screw
2 Shaft
3 Washer
4 Spring
5 Retaining ring
6 Bushing
7 Screw
8 Washer
9 Roller

(Cont'd)

(Cont'd)

e) Remove the screw (10), the washer (11) and the roller (12).

f) Remove the screw (13) and the support (14).

g) Remove the screw (15), the washer (16), the bushing (17) and the roller (18).

h) Remove the screw (19) and the mounting block (20) collecting the spring (21).

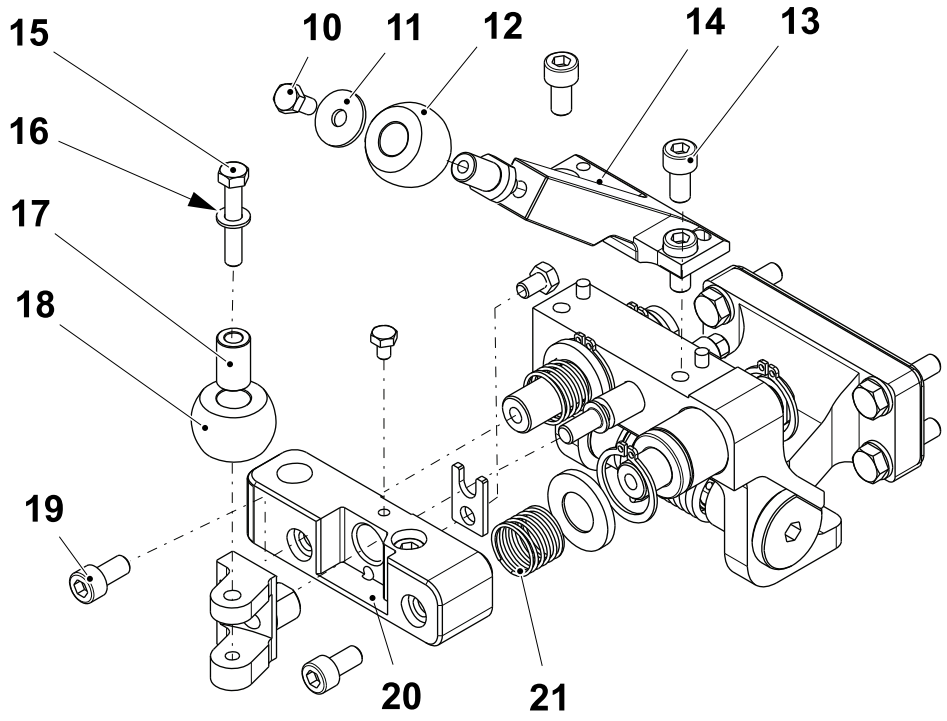

10 Screw	16 Washer
11 Washer	17 Bushing
12 Roller	18 Roller
13 Screw	19 Screw
14 Support	20 Mounting block
15 Screw	21 Spring

(Cont'd)

(Cont'd)

i) Remove the washer (22), the retaining ring (23) and the bushing (24).

j) Release the screw (25), remove the screw (26) and the block (27).

k) Remove the screw (28) and the bracket (29).

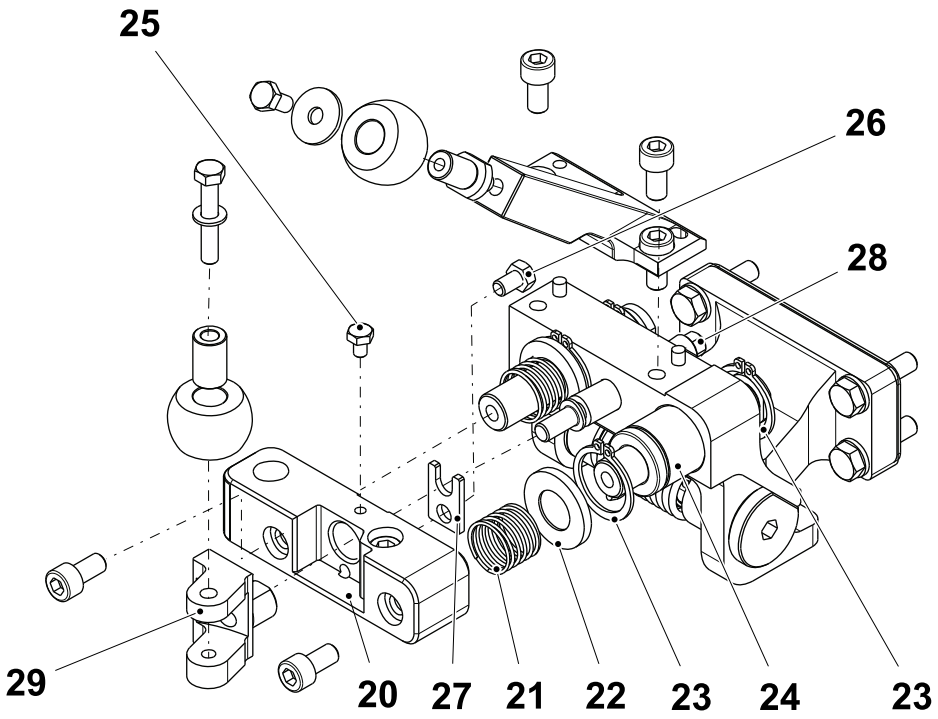

22 Washer
23 Retaining ring
24 Bushing
25 Screw
26 Screw
27 Block
28 Screw
29 Bracket

(Cont'd)

(Cont'd)

l) Remove the screw screw (30) and collect the shim (31).

m) Remove the screw (32) and carefully release the tension on the half shaft (33) and remove.

n) Remove the screw (34), the half shaft (35), the spring guide (36) and the spring (37).

o) Remove the mounting block (38) and the bushing (39) and the bushing (40).

p) Assemble in the reverse order using the mounting block (41) and remembering to install the shim (31). Check the setting, see 7.4.1-3 Guide Bracket - Set X Position (No Positioning Device Only).

Note! The slot (42) and the pin (43) are to anchor the spring (37).

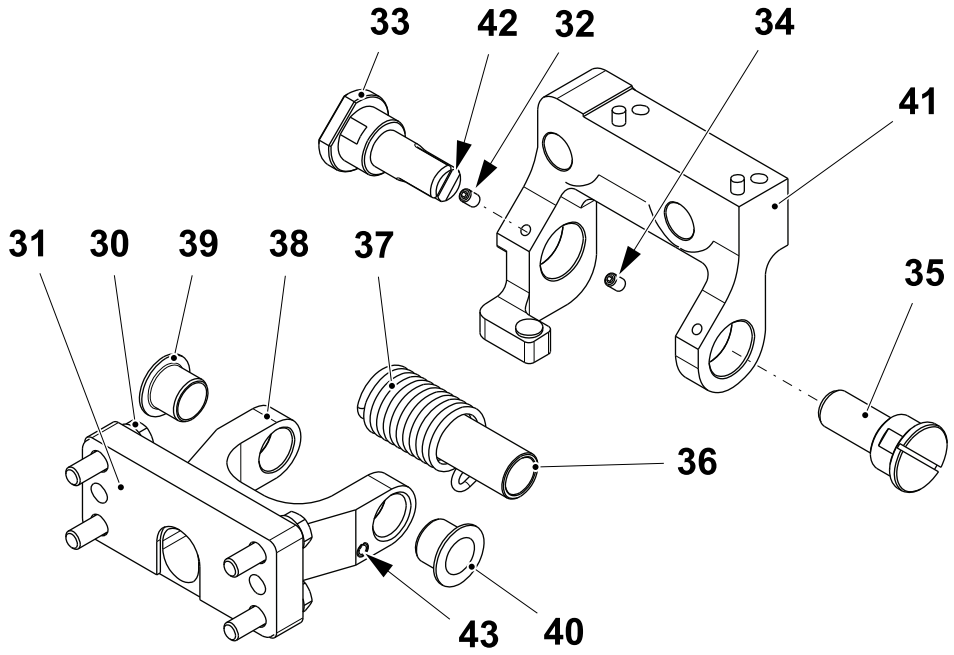

30 Screw
31 Shim
32 Screw
33 Half shaft
34 Screw
35 Half shaft
36 Spring guide
37 Spring
38 Mounting block
39 Bushing
40 Bushing
41 Mounting block
42 Slot
43 Pin

(Cont'd)

(Cont'd)

TBA - With Positioning Device

a) Remove the screws (1) and the shafts (2).

b) Remove the washer (3) and the spring (4).

c) Remove the retaining rings (5) and the bushings (6).

d) Remove the screw (7), the washer (8) and the roller (9).

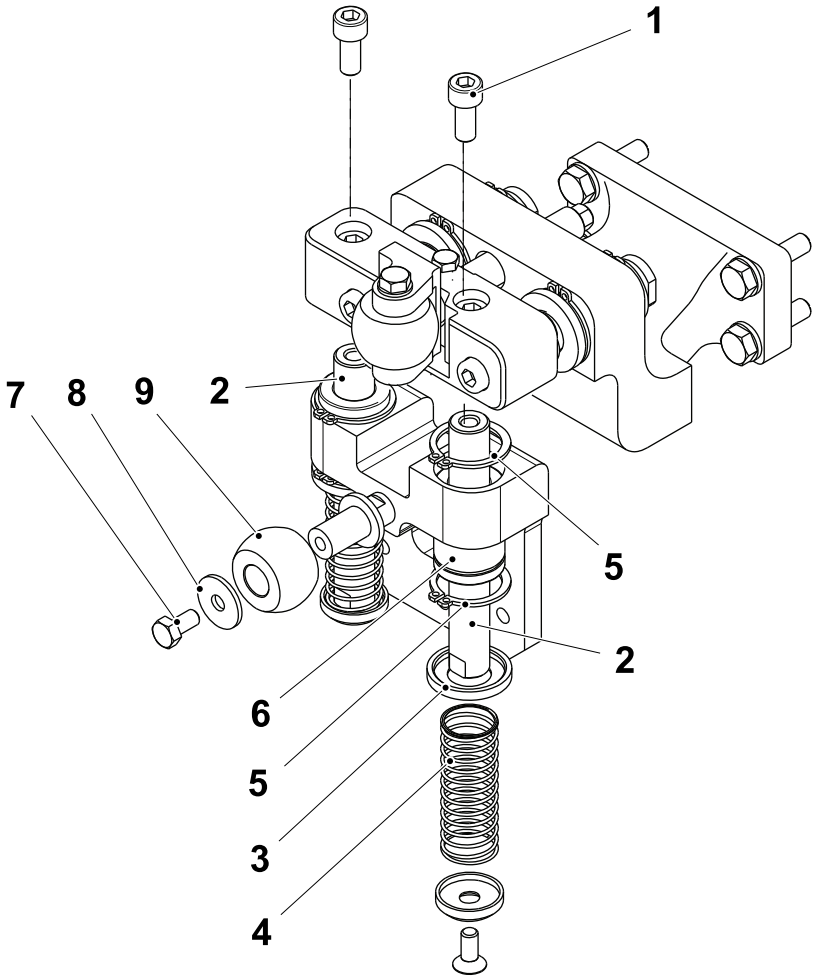

1 Screw
2 Shaft
3 Washer
4 Spring
5 Retaining ring
6 Bushing
7 Screw
8 Washer
9 Roller

(Cont'd)

(Cont'd)

e) Remove the screw (10), the washer (11) and the roller (12).

f) Remove the screws (13) and the support (14).

g) Remove the screw (15), the washer (16), the bushing (17) and the roller (18).

h) Remove the screws (19) and the mounting block (20) collecting the spring (21).

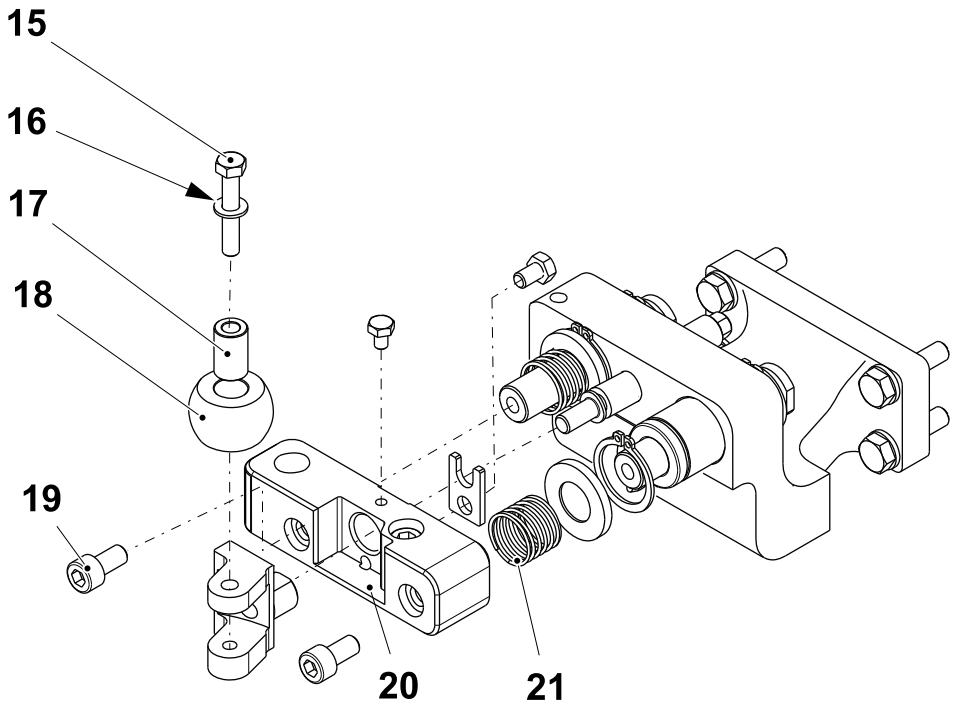

10 Screw	16 Washer
11 Washer	17 Bushing
12 Roller	18 Roller
13 Screw	19 Screw
14 Support	20 Mounting block
15 Screw	21 Spring

(Cont'd)

(Cont'd)

i) Remove the washer (22), the retaining ring (23) and the bushing (24) .

j) Release the screw (25), remove the screw (26) and the block (27) .

k) Remove the screw (28) and the bracket (29).

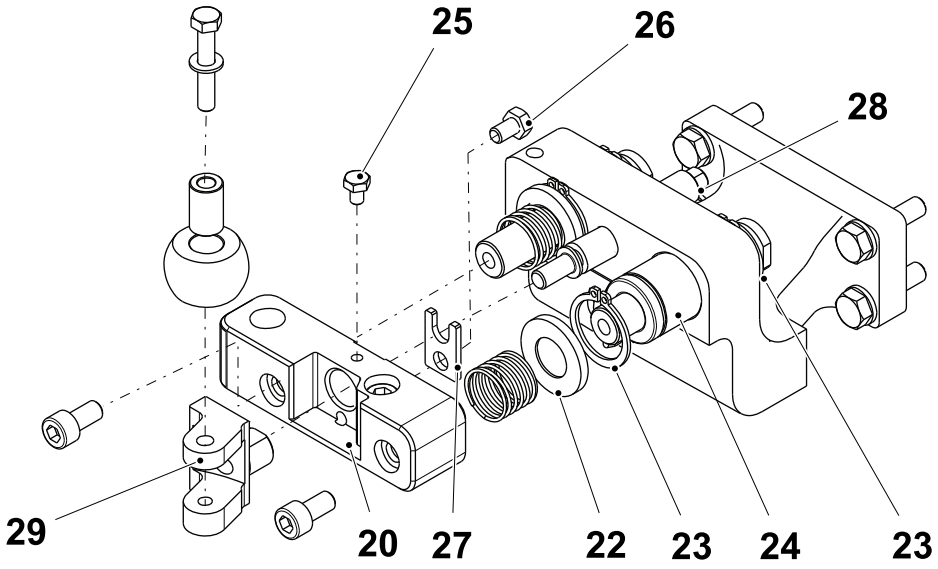

22 Washer
23 Retaining ring
24 Bushing
25 Screw
26 Screw
27 Block
28 Screw
29 Bracket

7.4.1-3 Guide Bracket - Set X Position (No Positioning Device Only)

Machine Status	Electrical supply disconnecting device in position I (ON) Main air valve OFF
SPC Reference	2746939-0200

Inch the machine to 70 degrees and centre the cap (1) between the guide (2) on the cap sequencer unit by placing shim (3) between the cap carrier (4) and the cap holder (5).

Repeat for all cap carriers.

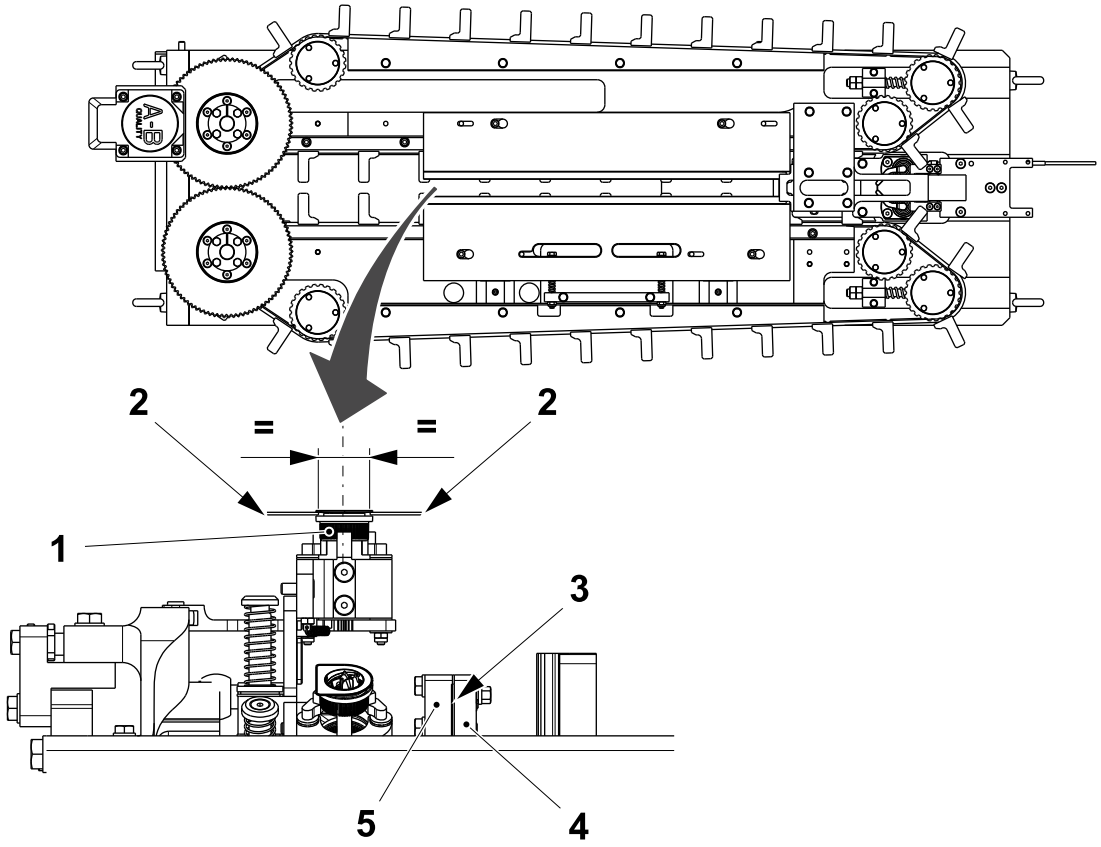

1 Cap
2 Guide
3 Shim
4 Cap carrier
5 Cap holder

7.4.1-4 Guide Bracket - Set X Position (With Positioning Device)

Machine Status	Electrical supply disconnecting device in position I (ON) Main air valve OFF
SPC Reference	2746939-0200

Inch the machine to 70 degrees. Centre the cap (1) between the guides (2) on the cap sequencer unit by placing a 1 mm shim (3) between the cap carrier (4) and the cap holder (5) and then use the adjusting screw (6).

Repeat for all cap carriers.

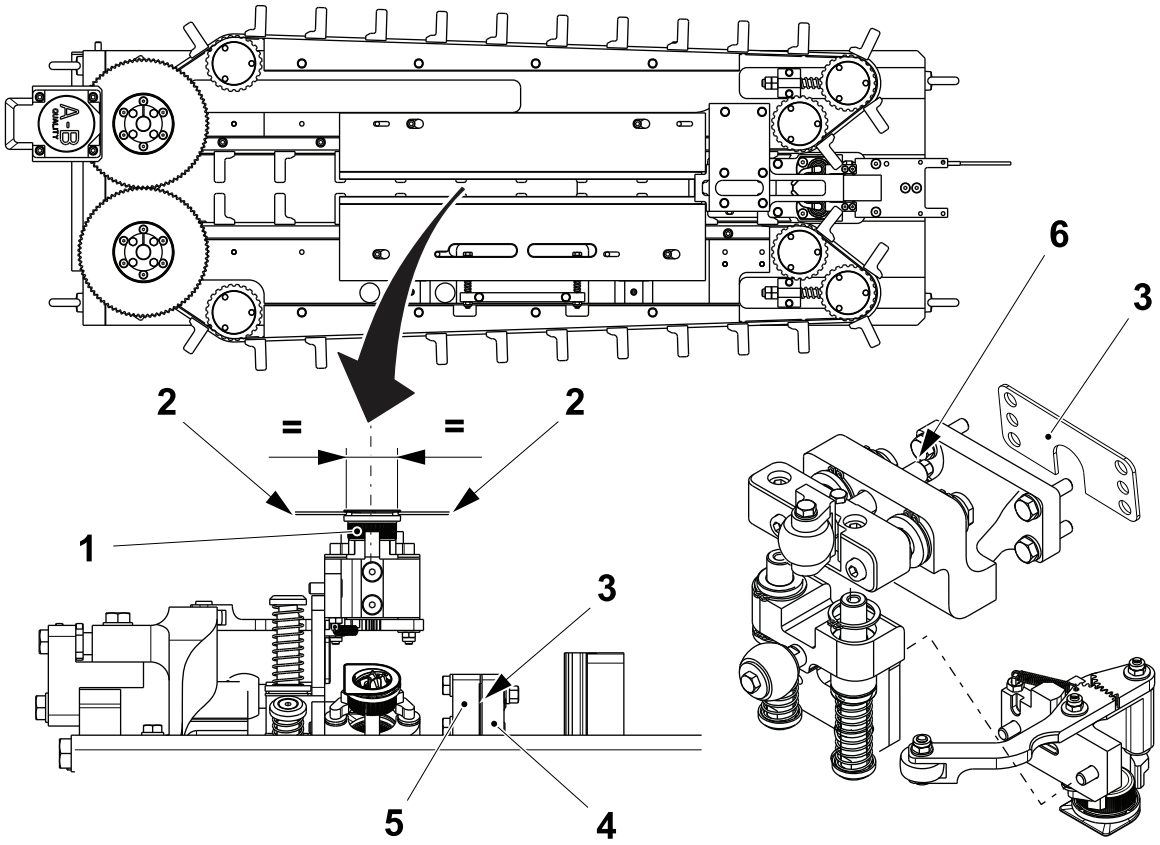

1 Cap
2 Guide
3 Shim
4 Cap carrier
5 Cap holder
6 Screw

7.5 Drive Unit

7.5.1 Sensors

7.5.1-1 Sensors - Cap Holder No.1 Position

Machine Status	Electrical supply disconnecting device in position O (OFF) Main air valve OFF
SPC Reference	2837072-0200

Set the sensor (1) to the distance **A**.

Note! Check that only cap holder number 1 activates the sensor.

A = 2mm

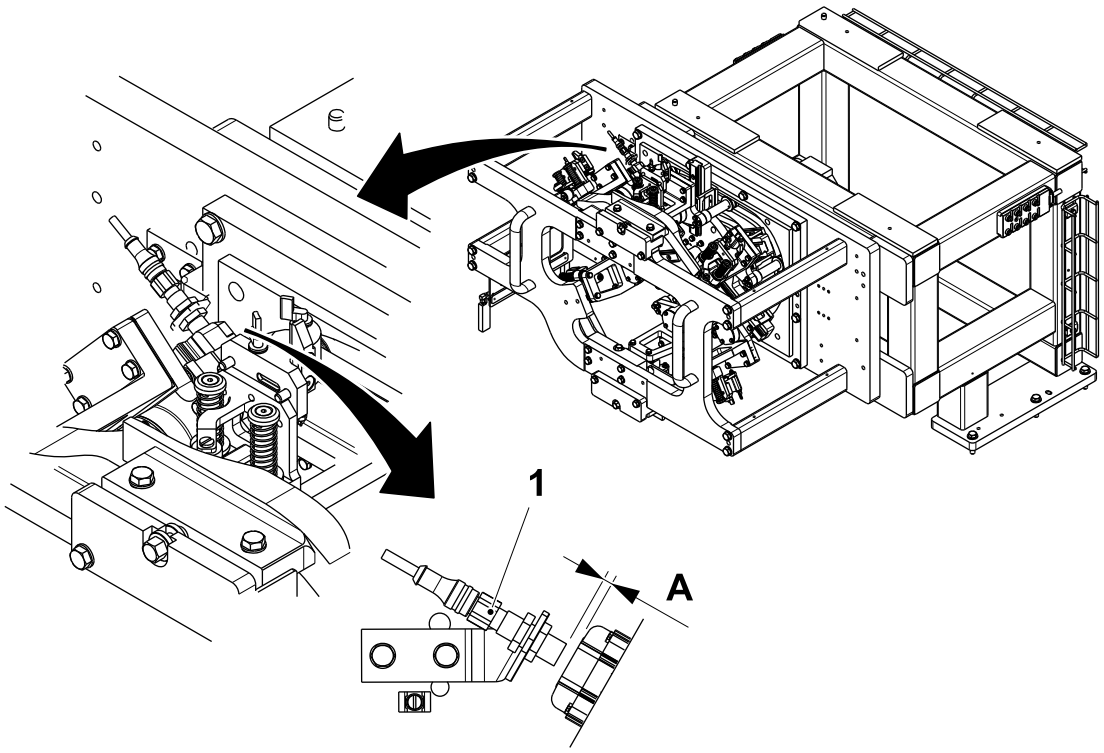

1 Sensor

7.6 Transfer Unit

7.6.1 Star Wheel

7.6.1-1 Star Wheel - Set Zero Position

Machine Status	Electrical supply disconnecting device in position O (OFF) Main air valve OFF
SPC Reference	2751656-0100

a) Manually turn the star wheel until the hole (1) can be aligned with the hole in the plate (2).

b) Insert the pin (3).

c) Close all doors and guards.

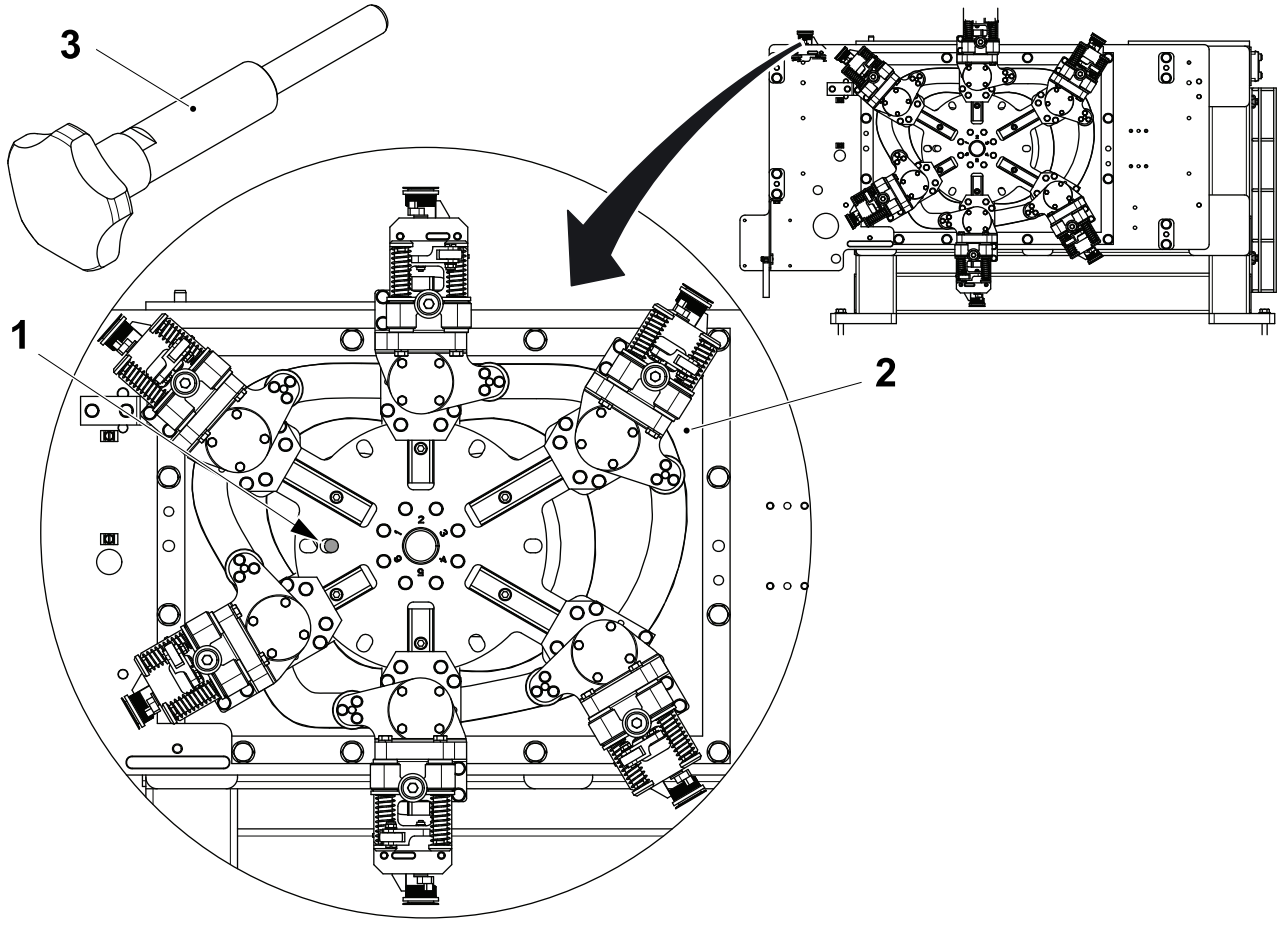

1 Hole
2 Plate
3 Pin

(Cont'd)

(Cont'd)

d) Turn the main power on and login see, 1.1.1-1 HMI User Management - Log On as a User.

e) Touch the MAINTENANCE button (4).

Note! Items like the positioning system only appear on the screen below when installed.

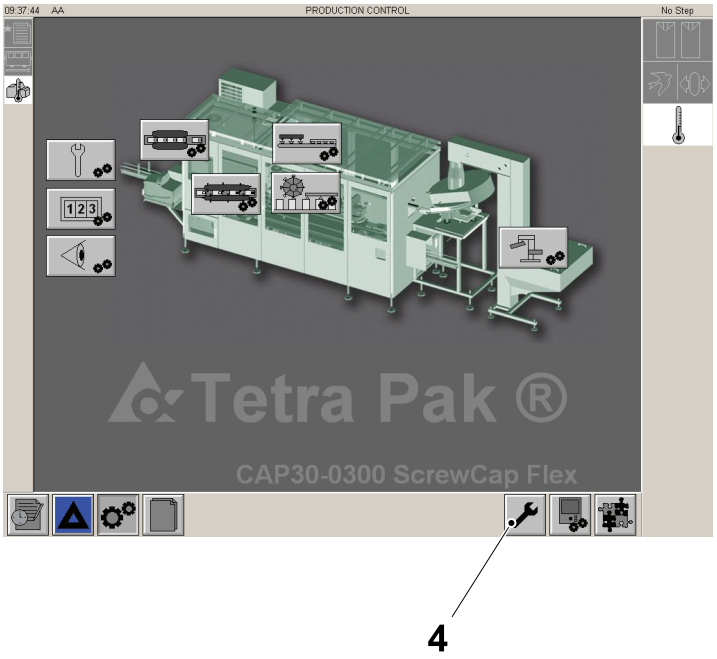

4 MAINTENANCE button

(Cont'd)

(Cont'd)

f) Touch the APPLICATOR UNIT button (5).

g) Touch the ZERO button (6).

h) Touch the ON button (7).

i) Touch the OK button (8) for three seconds. The background of the ON button (7) should go green.

j) Touch the EXIT button (9).

Note! The pin must be removed before starting the machine.

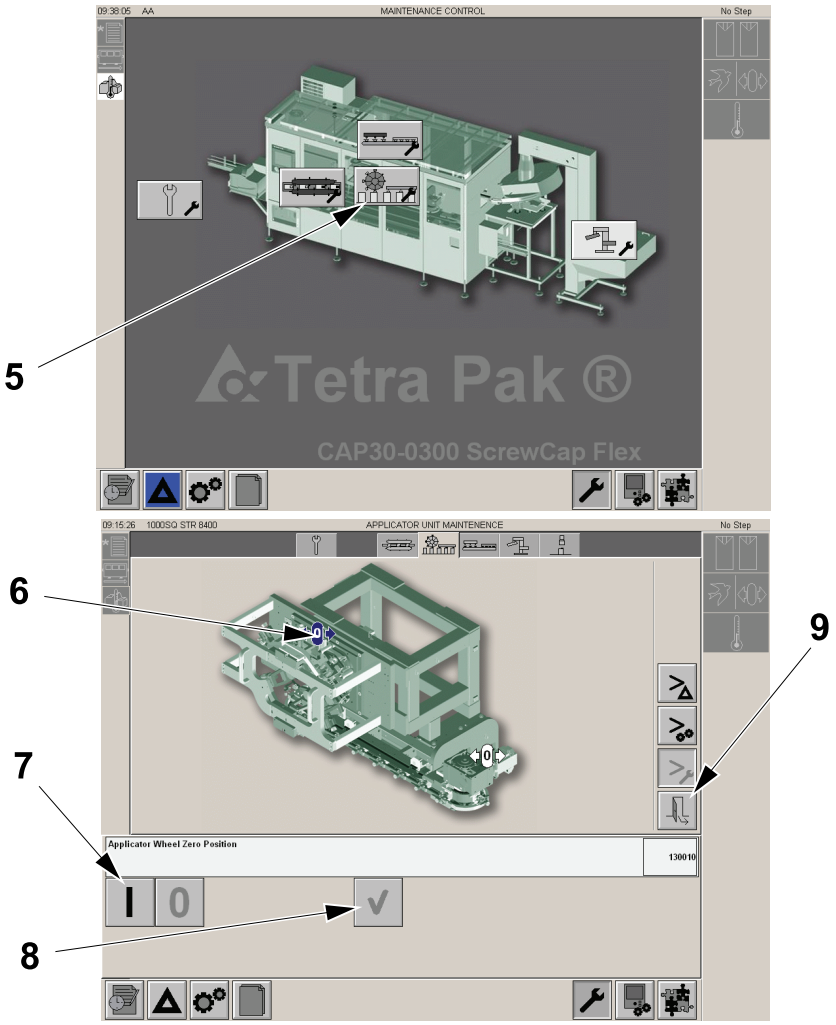

5 APPLICATOR UNIT button
6 ZERO button
7 ON button
8 OK button
9 EXIT button

7.6.1-2 Star Wheel - Change Outer Cam Follower Bearings

Machine Status	Electrical supply disconnecting device in position O (OFF) Main air valve OFF
SPC Reference	2746938-0200

a) Remove the screw (1) and the cover (2).

b) Release the outer cam follower (3) from the inner cam follower by removing the screw (4) and the washer (5).

c) Remove the seal (6), the bearing (7) and the spacer (8).

d) Remove the screw (9) and the shaft (10) only if necessary.

e) Remove the screw (11), the bearing (12) and the spacer (13).

f) Assemble in the reverse order.

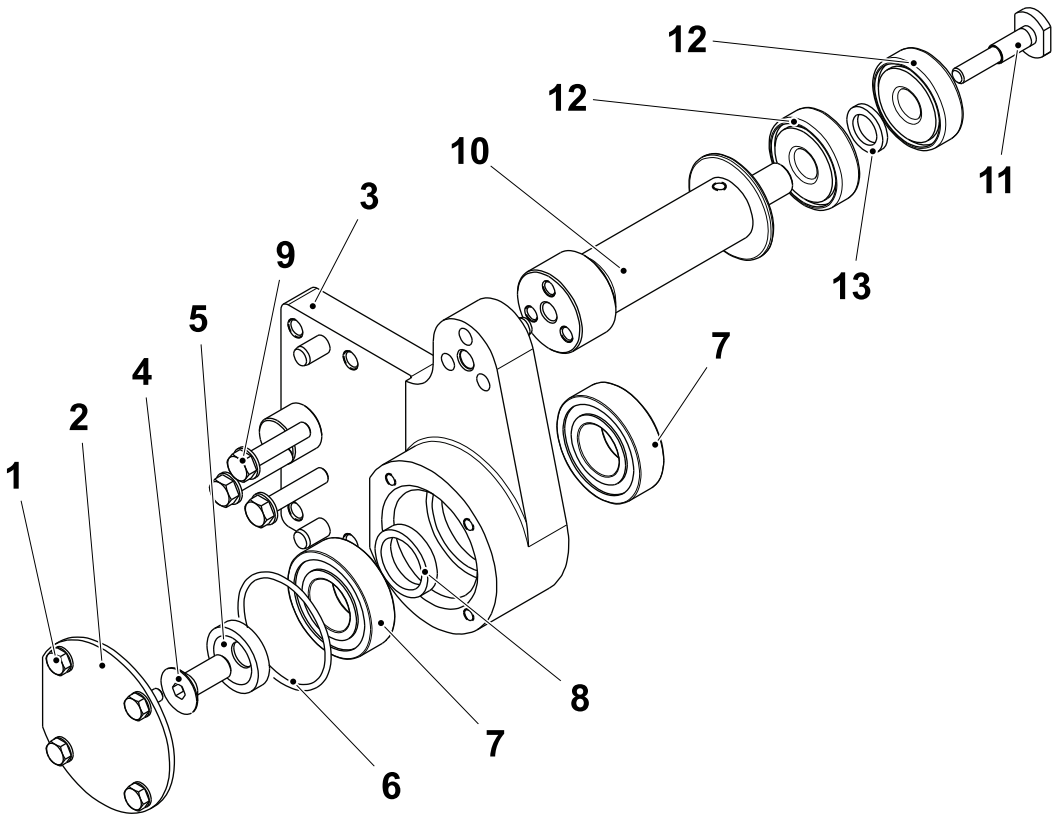

1 Screw
2 Cover
3 Outer cam follower
4 Screw
5 Washer
6 Seal
7 Bearing
8 Spacer
9 Screw
10 Shaft
11 Screw
12 Bearing
13 Spacer

7.6.1-3 Star Wheel - Change

Machine Status	Electrical supply disconnecting device in position O (OFF) Main air valve OFF
SPC Reference	2746938-0200

a) Remove the cam module and the cap holder, see 7.3.1-2 Cap Holder - Change Roller and Bushings.

b) Remove the screws (1) and the star wheel (2).

c) Assemble in the reverse order.

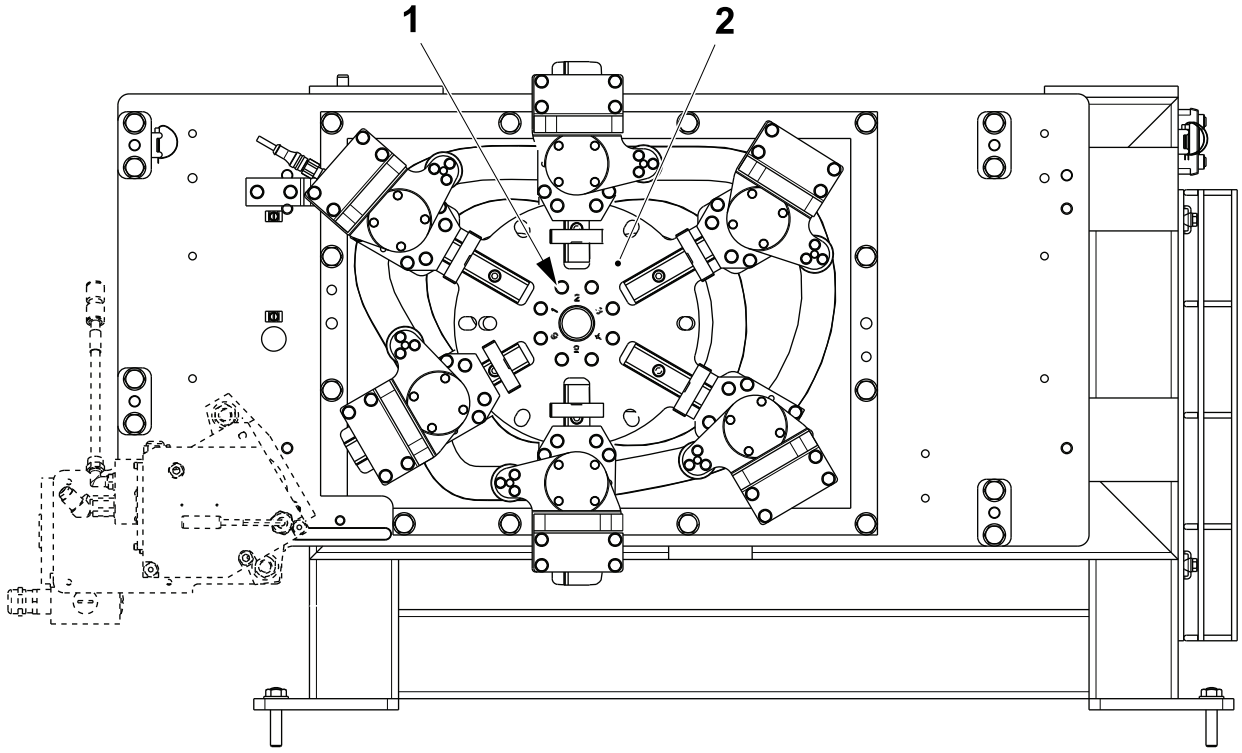

1 Screw
2 Star wheel

7.6.1-4 Star Wheel - Change Inner Cam Follower Bearings

Machine Status	Electrical supply disconnecting device in position O (OFF) Main air valve OFF
SPC Reference	2746939-0200

a) Remove the cam module, the cap holder, see 7.2.2-1 Cam Module - Removal, the outer cam follower, see 7.6.1-2 Star Wheel - Change Outer Cam Follower Bearings steps a) to b) and the star wheel, see 7.6.1-3 Star Wheel - Change.

b) Remove the screw (1), the bearing (2) and the spacer (3).

c) Remove the screw (4) and the shaft (5).

d) Remove the screw (6) and the plate (7).

e) Remove the screw (8) and the plate (9).

f) Remove the screw (10), the plate (11) and the slider (12).

g) Assemble in the reverse order.

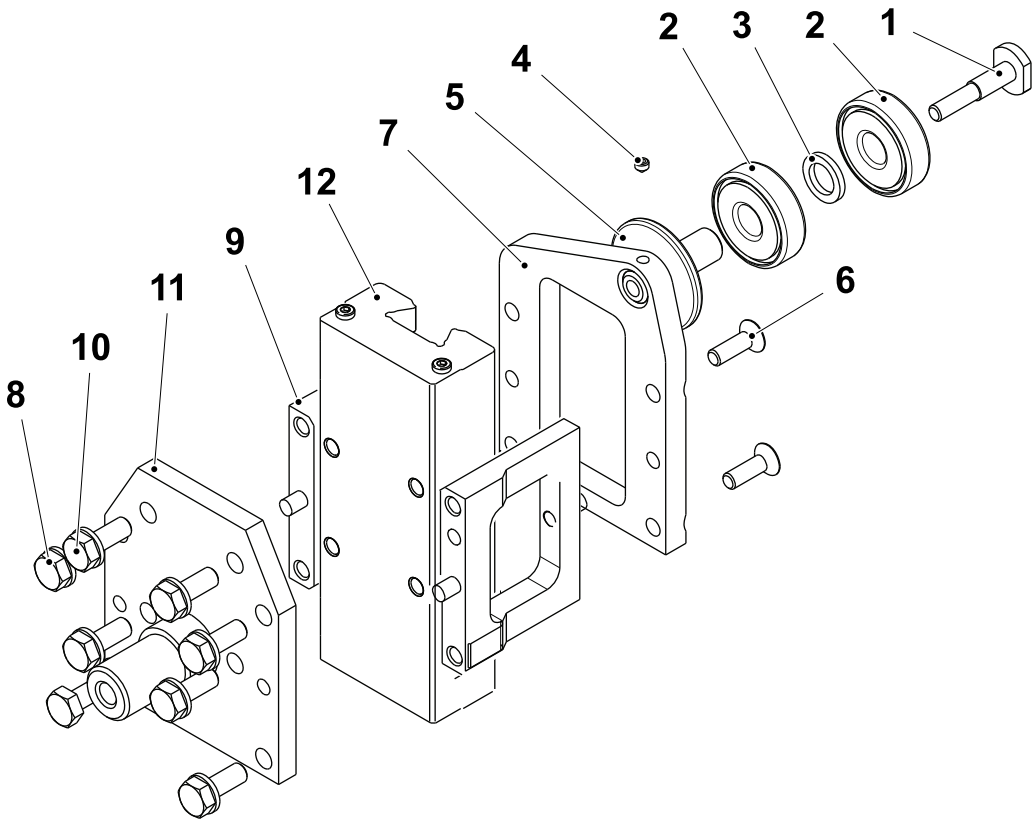

1 Screw
2 Bearing
3 Spacer
4 Screw
5 Shaft
6 Screw
7 Plate
8 Screw
9 Plate
10 Screw
11 Plate
12 Slider

This page intentionally left blank

8 Cap Sequencer

Cap Sequencer

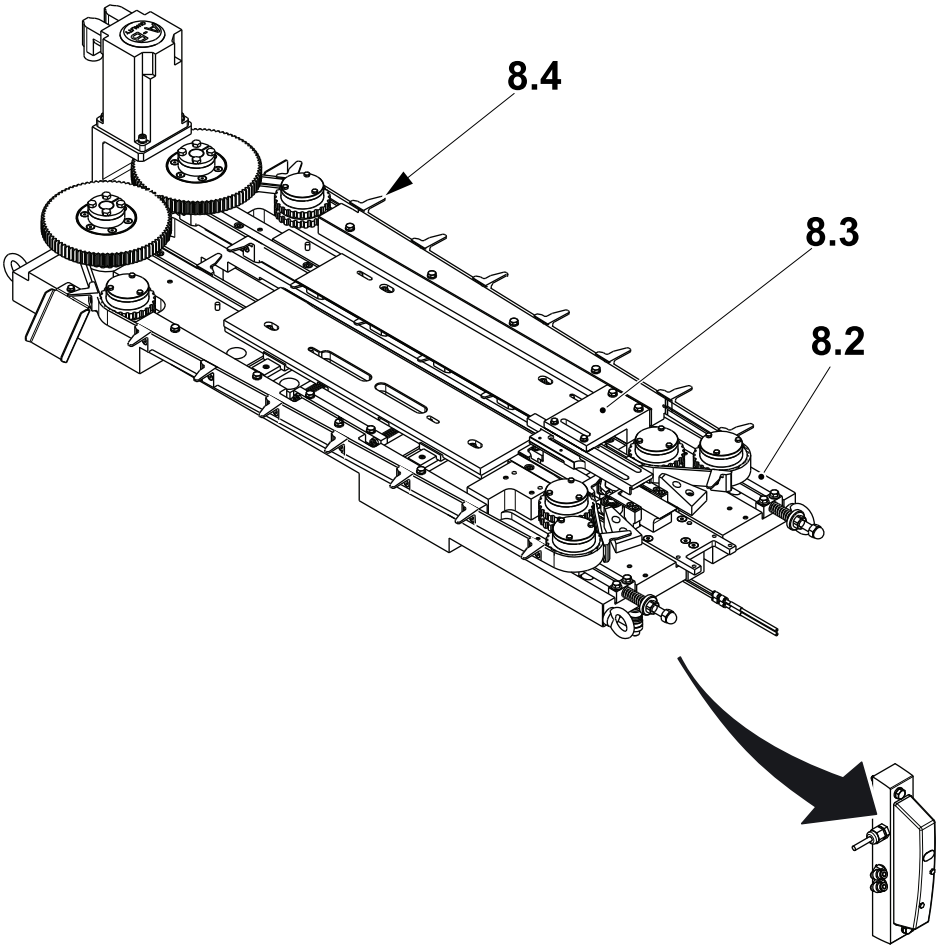

8.2 Base Unit

8.3 Feed Unit

8.4 Carrier Belt

Cap Sequencer 8-2

8.1 Functional Description 8-5

8.2 Base Unit 8-6

8.2.1 Cap Guide 8-6

8.2.1-1 Guide - Removal and Installation 8-6

8.2.1-2 Toothed Pulley - Change Bearing 8-7

8.2.2 Drive Pulley 8-9

8.2.2-1 Drive Pulley - Change Bearing 8-9

8.2.3 Toothed Pulley 8-12

8.2.3-1 Toothed Pulley - Change Bearing 8-12

8.2.4 Cap Line 8-16

8.2.4-1 Cap Line - Set Spring Gap 8-16

8.2.4-2 Cap Line - Set Guides (HeliCap2 23 Ony) 8-17

8.3 Feed Unit 8-18

8.3.1 Clamp Unit 8-18

8.3.1-1 Clamp Unit - Change Bushing 8-18

8.3.1-2 Clamp Unit - Set Spring and Sensor 8-19

8.3.1-3 Clamp Unit - Set Stop Cylinder Sensor 8-22

8.3.2 Height Adjustment 8-23

8.3.2-1 Height Adjustment- Set Roof 8-23

8.3.2-2 Height Adjustment - Overhaul 8-25

8.3.3 Finger 8-26

8.3.3-1 Finger - Check 8-26

8.3.3-2 Finger - Change 8-27

8.3.3-3 Guide Rail - Set (StreamCap 200) 8-30

8.4 Carrier Belt 8-31

8.4.1 Timing Belt 8-31

8.4.1-1 Timing Belt - Check 8-31

8.4.1-2 Timing Belt - Change 8-32

8.4.1-3 Clamping Element - Removal and Installation 8-41
8.4.1-4 Timing Belt - Change Finger 8-43
8.4.1-5 Timing Belt - Set Tension 8-44
8.4.1-6 Timing Belt - Set Zero 8-45

8.1 Functional Description

The cap sequencer base unit (1) supports the feed unit (2) which collects the caps as they arrive from the cap conveyor. The carrier belt (3) moves the caps towards the hotmelt guns and the cap carriers on the cap applicator unit. Movement is provided for the belts by a servo motor and pulley drive system.

Fingers on the belts ensure that the caps are correctly spaced to achieve synchronisation with the hotmelt guns and the cap carriers.

Note! The guide plates (4) are for HeliCap2 23 Only.

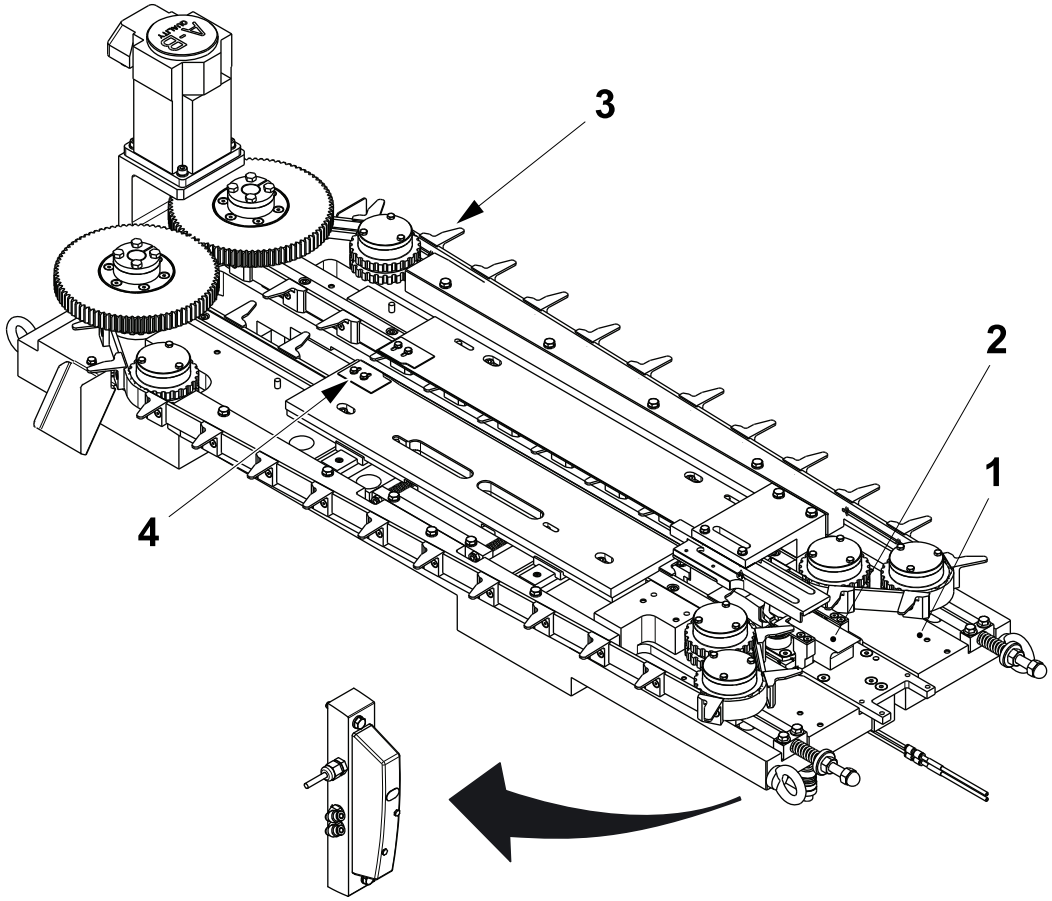

1 Base unit
2 Feed unit
3 Carrier belt
4 Guide plate

8.2 Base Unit

8.2.1 Cap Guide

8.2.1-1 Guide - Removal and Installation

Machine Status	Electrical supply disconnecting device in position O (OFF)
SPC Reference	2746933-0200

a) Release the screw (1) and remove the guide (2).

b) Assemble in the reverse order.

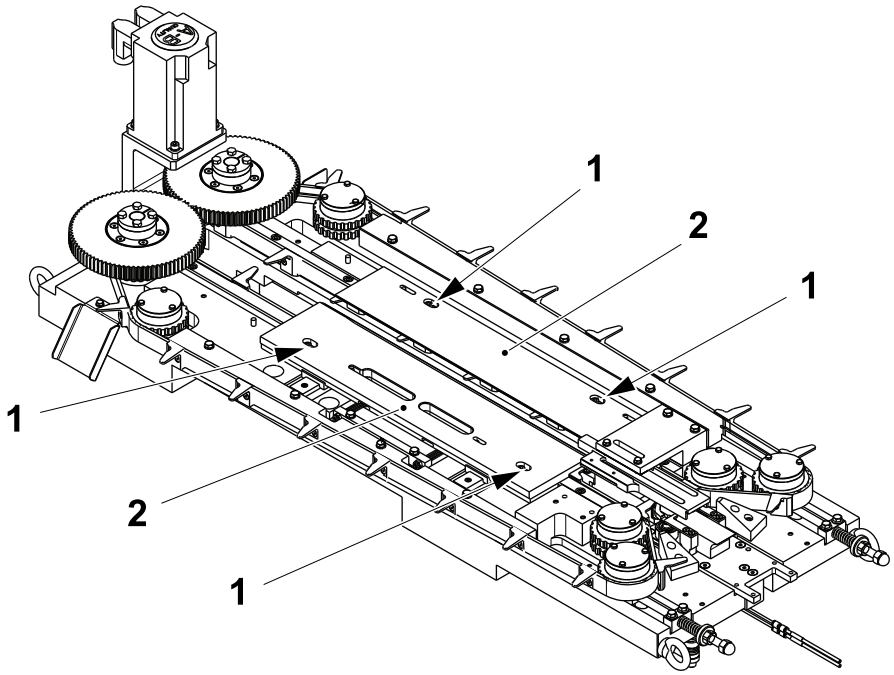

1 Screw
2 Guide

8.2.1-2 Toothed Pulley - Change Bearing

Machine Status	Electrical supply disconnecting device in position O (OFF) Main air valve OFF
Special Equipment	Kluber Grease Gun - TP No. 90604-5444 30 mm Spanner
Consumables	Grease - TP No. 344407-0000
SPC Reference	2746933-0200

a) Remove the timing belt (1) at the side where the toothed pulley (2) is to be overhauled, see 8.4 Carrier Belt.

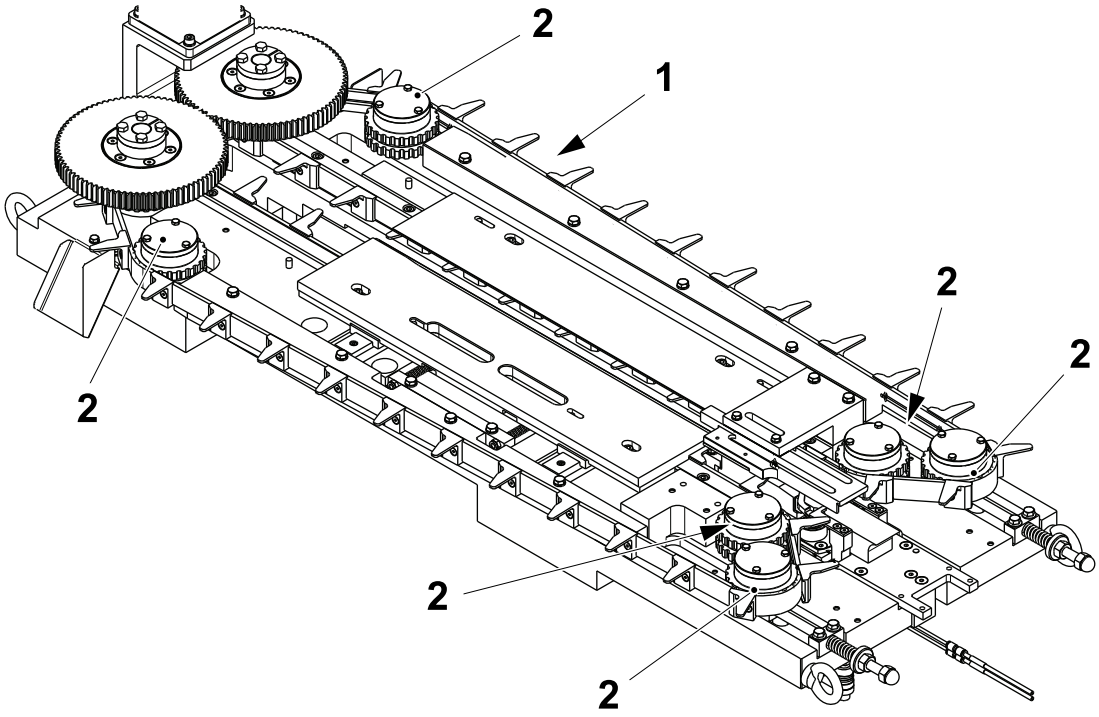

1 Timing belt
2 Toothed pulley

(Cont'd)

(Cont'd)

b) Release the shaft (3) with the special equipment spanner.

c) Remove the screw (4), the cover (5) and change the O-ring (6).

d) Remove the screw (7) from the shaft (3).

e) Change the bearing seal (8), the bearing (9) and the bearing (10) and the spacer (11).

f) Assemble in the reverse order greasing the points **A** of the bearings with Klübersynth UH1 14-151 (TP No. 344407-0000) as installed

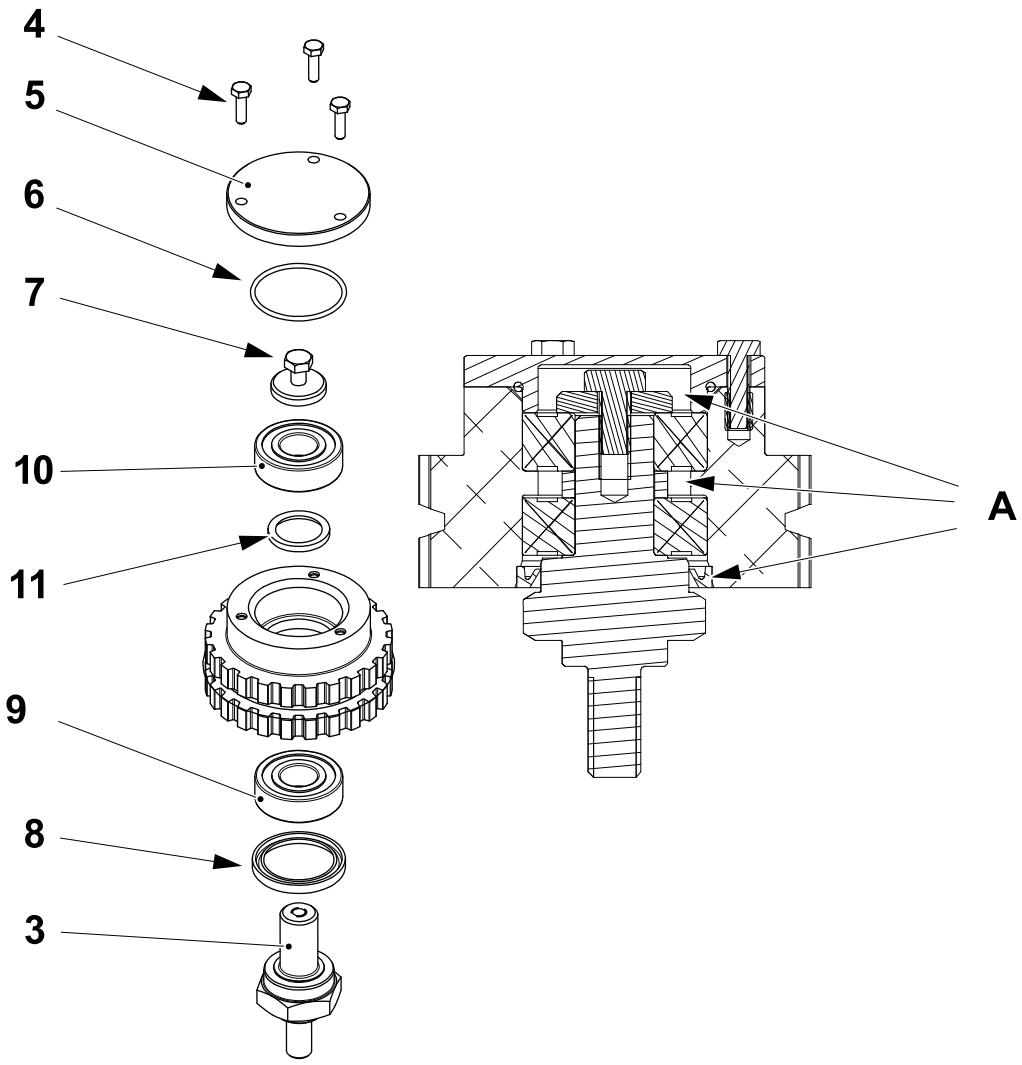

3 Shaft
4 Screw
5 Cover
6 O-ring
7 Screw
8 Bearing seal
9 Bearing
10 Bearing
11 Spacer

8.2.2 Drive Pulley

8.2.2-1 Drive Pulley - Change Bearing

Machine Status	Electrical supply disconnecting device in position O (OFF)
Consumables	Grease - TP No. 344407-0000
SPC Reference	2746933-0200

Note! The toothed pulley (1) will be removed when the timing belt (2) is removed, see 8.4.1-2 Timing Belt - Change.

a) Remove the timing belt (2) at the side where the toothed pulley (1) is to be overhauled, see 8.4 Carrier Belt.

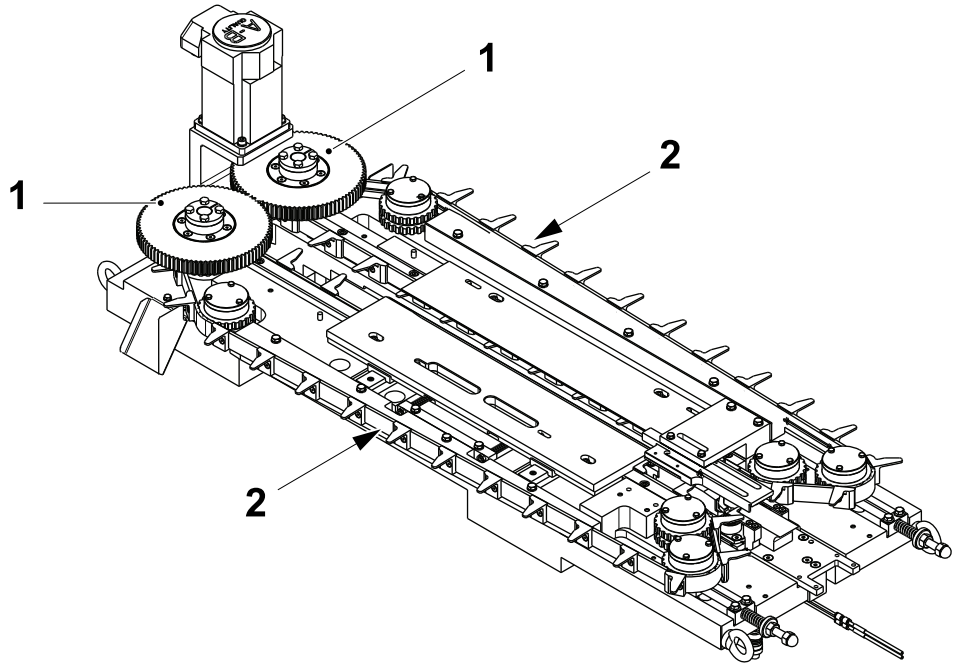

1 Toothed pulley
2 Timing belt

(Cont'd)

(Cont'd)

b) Remove the toothed pulley (3).

c) Removed the screw (4) and the locking locking hub (5).

d) Remove the screw (6) and the cover (7).

e) Change the O-ring (8).

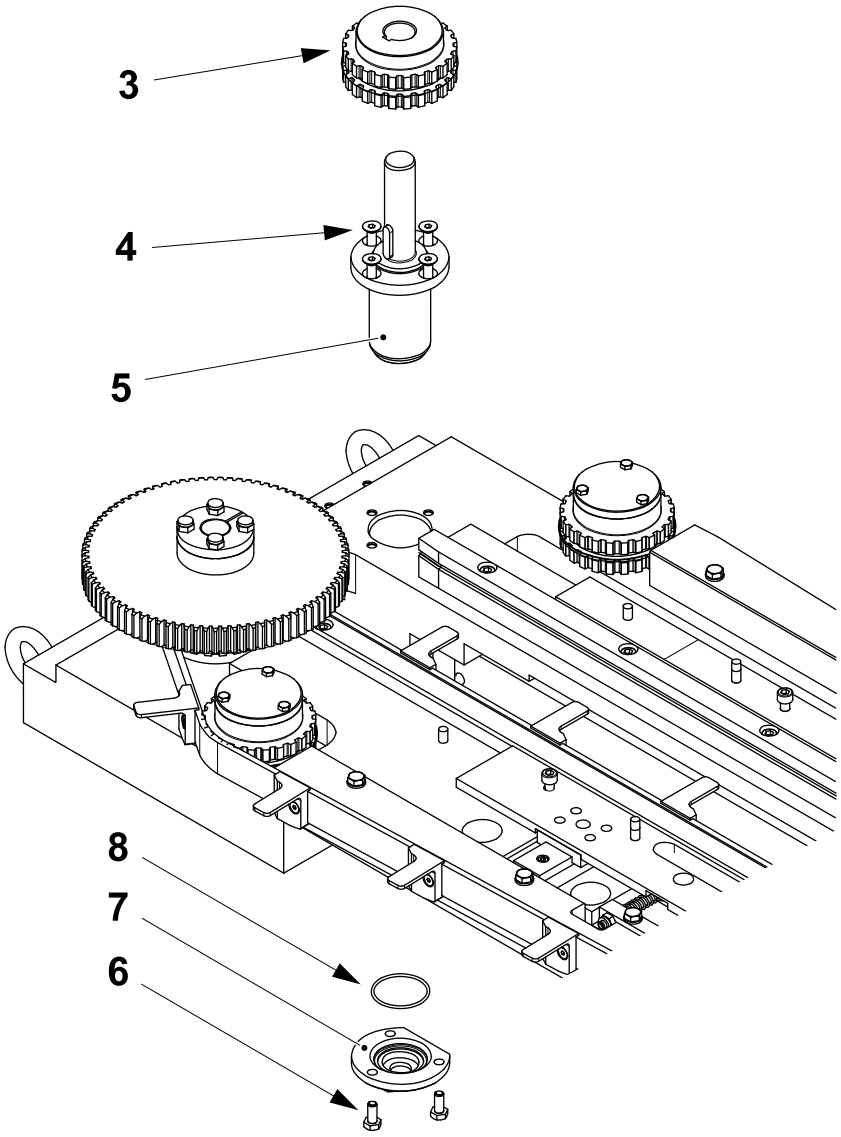

3 Toothed pulley
4 Screw
5 Locking hub
6 Screw
7 Cover
8 O-ring

(Cont'd)

(Cont'd)

f) Remove the screw (9) from the shaft (10).

g) Remove the shaft (10) from the locking hub (5).

h) Change the bearing seal (11) and the bearing (12).

i) Change the bearing (13).

j) Assemble in the reverse order.

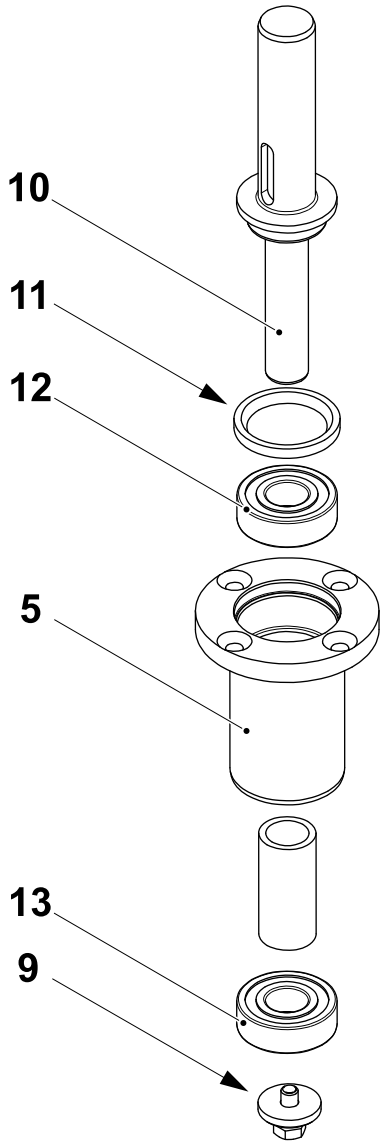

5 Locking hub
9 Screw
10 Shaft
11 Bearing seal
12 Bearing
13 Bearing

8.2.3 Toothed Pulley

8.2.3-1 Toothed Pulley - Change Bearing

Machine Status	Electrical supply disconnecting device in position O (OFF)
Consumables	Grease - TP No. 344407-0000
SPC Reference	2746933-0200

a) Remove the timing belt (1) at the side where the toothed pulley (2) is to be overhauled, see 8.4 Carrier Belt.

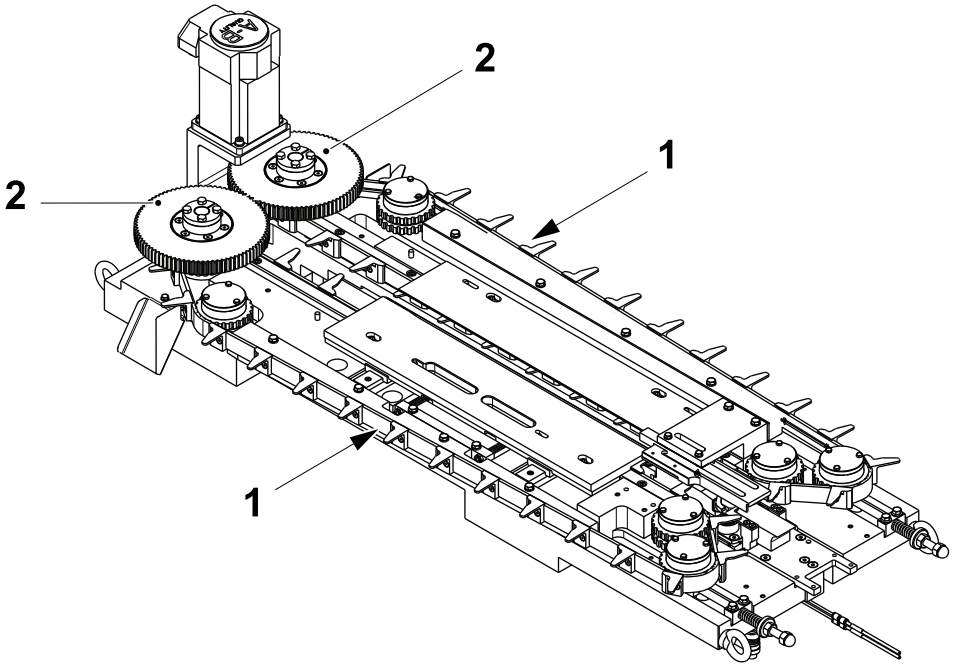

1 Timing belt
2 Toothed pulley

(Cont'd)

(Cont'd)

b) At the bottom of the toothed pulley (3) to be overhauled, remove the screw (4).

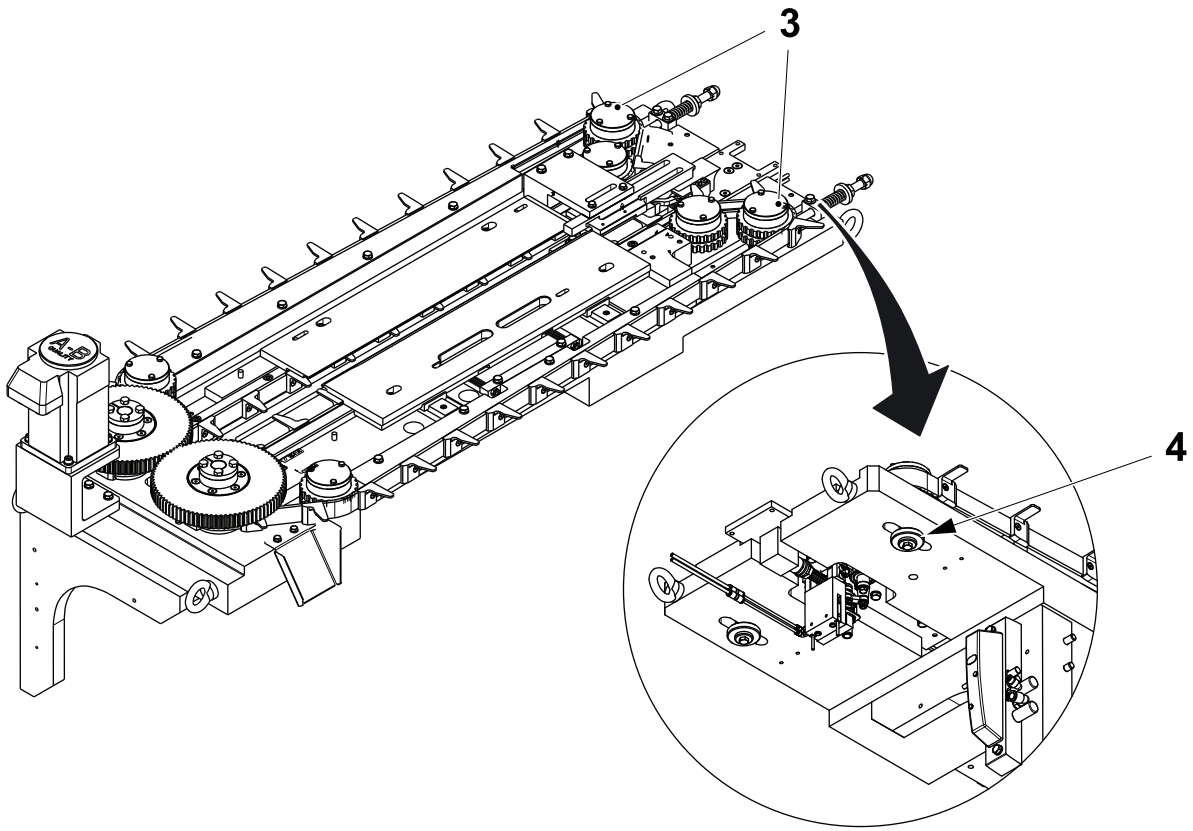

3 Toothed pulley
4 Screw

(Cont'd)

(Cont'd)

c) To overhaul the toothed pulley (3), remove the screw (5) and the toothed pulley (3).

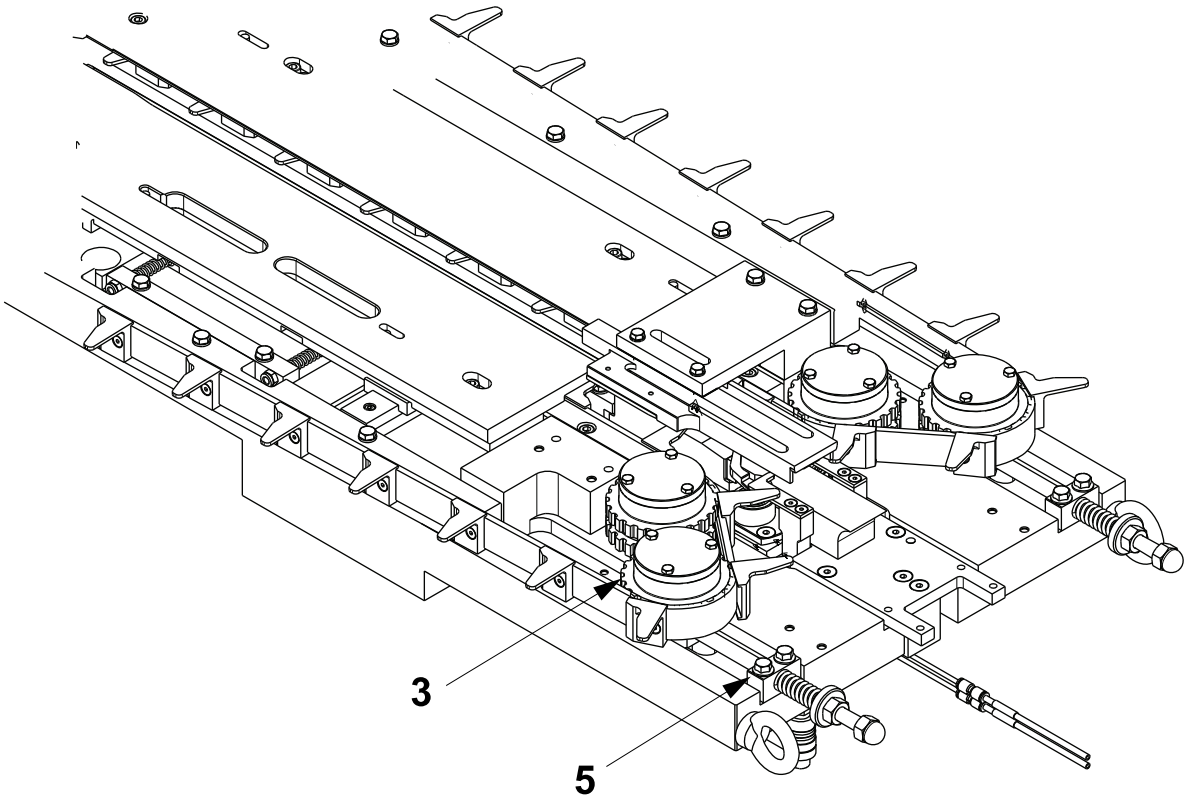

3 Toothed pulley
5 Screw

(Cont'd)

(Cont'd)

d) Remove the screw (6) and the cover (7).

e) Change the O-ring (8).

f) Remove the screw (9) from the shaft (10).

g) Remove the toothed pulley (11) from the shaft (10).

h) Change the bearing seal (12), the bearing (13), the bearing (14) and the spacer (15) .

i) Assemble in the reverse order greasing the at position **A** of the bearings with Klübersynth UH1 14-151 (TP No. 344407-0000) as installed

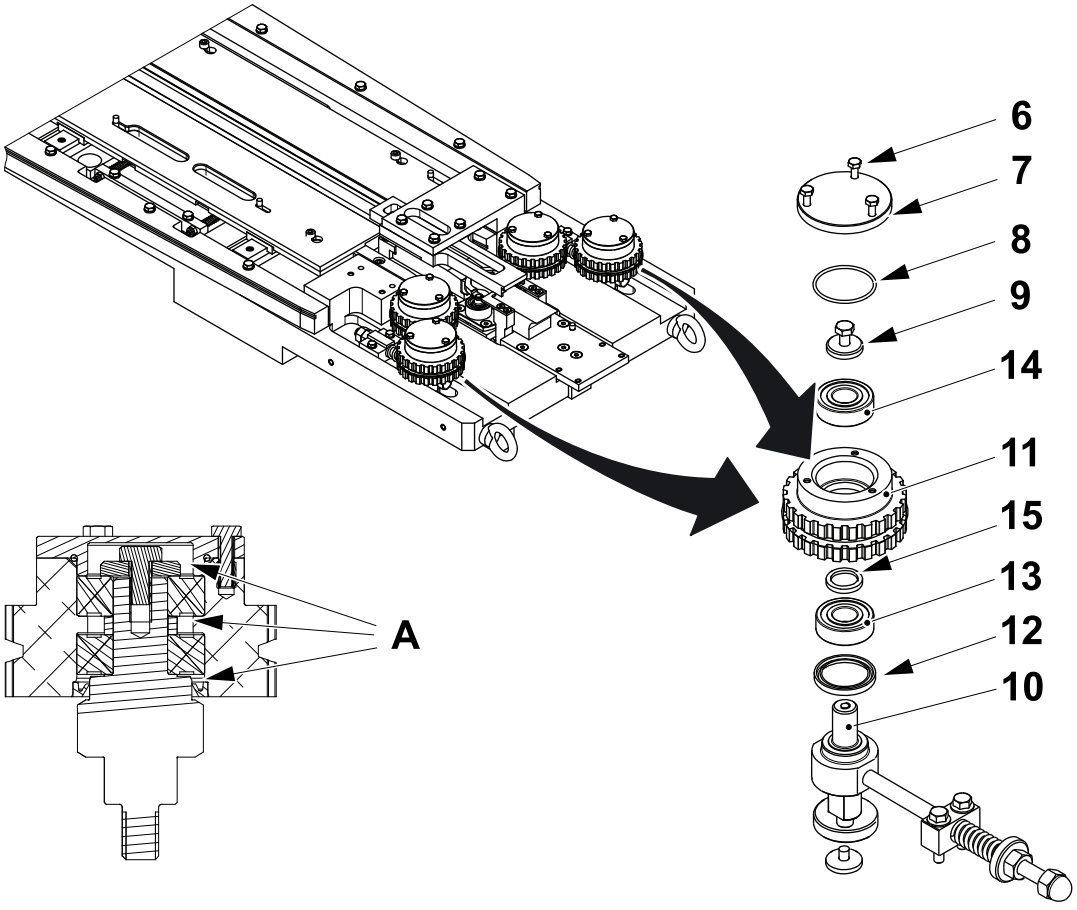

6 Screw	11 Toothed pulley
7 Cover	12 Bearing seal
8 O-ring	13 Bearing
9 Screw	14 Bearing
10 Shaft	15 Spacer

8.2.4 Cap Line

8.2.4-1 Cap Line - Set Spring Gap

Machine Status	Electrical supply disconnecting device in position O (OFF)
SPC Reference	2746928-0200

a) Adjust the nut (1) to set the distance **A** between the guide (2) making sure that the distance **A** is equal at both ends.

Note! The steering guide (2) are cap dependent, see latest SPC.

Theoretical Cap Neck Size			
Streamcap 200	16.6 mm	Slimcap 1000	21.4 mm
Streamcap 500	20.1 mm	Slimcap 2000	24.2 mm
Streamcap 1000	26.4 mm	HeliCap2 23	21.7 mm
		HeliCap27	24.8 mm

A = Cap Neck -0.2 mm

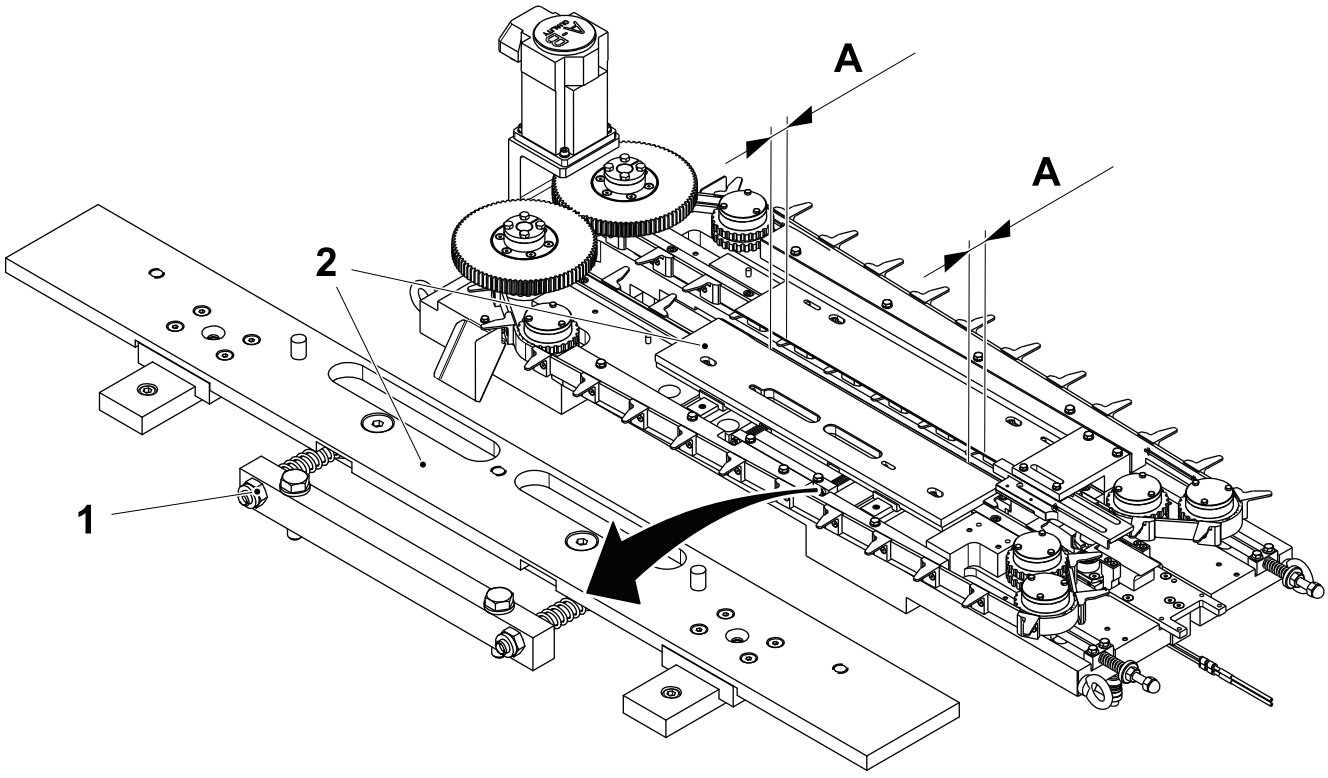

1 Nut
2 Guide

8.2.4-2 Cap Line - Set Guides (HeliCap2 23 Ony)

Machine Status	Electrical supply disconnecting device in position O (OFF)
SPC Reference	2746928-0200

a) Release the screws (1) and move the guide plates (2) outwards.

b) Place a cap at both ends of the cap guide (3).

c) Move the guide plates (2) until distance A from the caps is obtained.

d) Tighten the screws (1).

Note! The cap guides have to be set first see, 8.2.4-1 Cap Line - Set Spring Gap.

A = +0.2mm

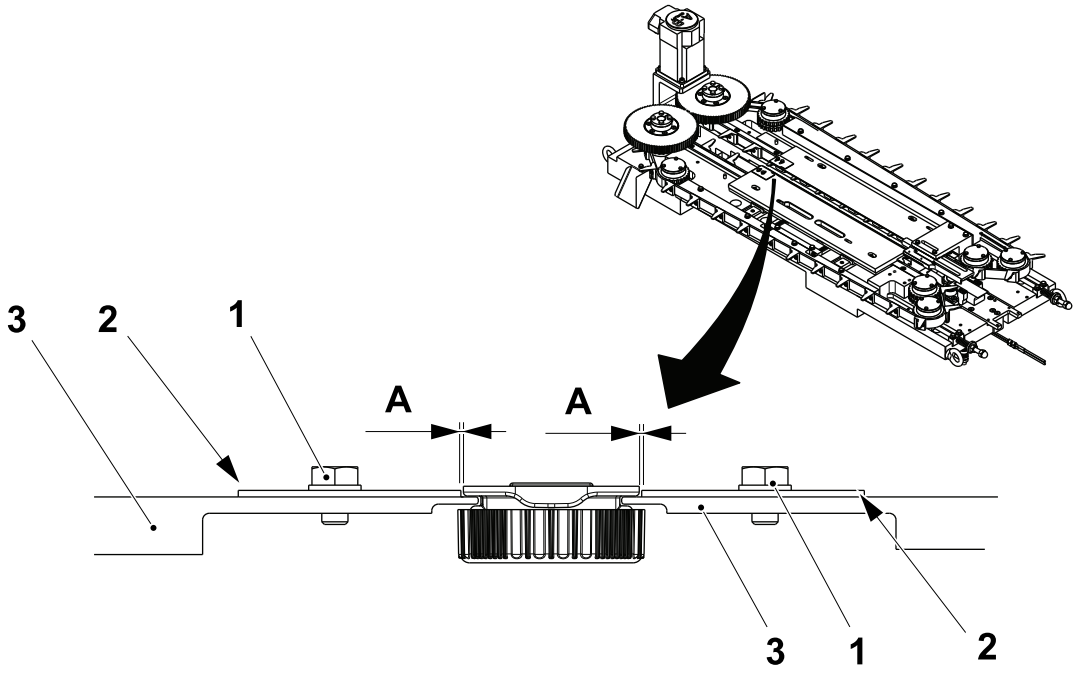

1 Screw
2 Guide plate
3 Cap guide

8.3 Feed Unit

8.3.1 Clamp Unit

8.3.1-1 Clamp Unit - Change Bushing

Machine Status	Electrical supply disconnecting device in position O (OFF)
SPC Reference	2746934-0200

a) Remove the screw (1) and the screw (2) by releasing the nut (3).

b) Change the five bushing (4).

c) Loosen the nut (5) and the nut (6).

d) Remove the damper (7), the shaft (8) and change the bushing (9).

e) Assemble in the reverse order and set, see 8.3.1-2 Clamp Unit - Set Spring and Sensor.

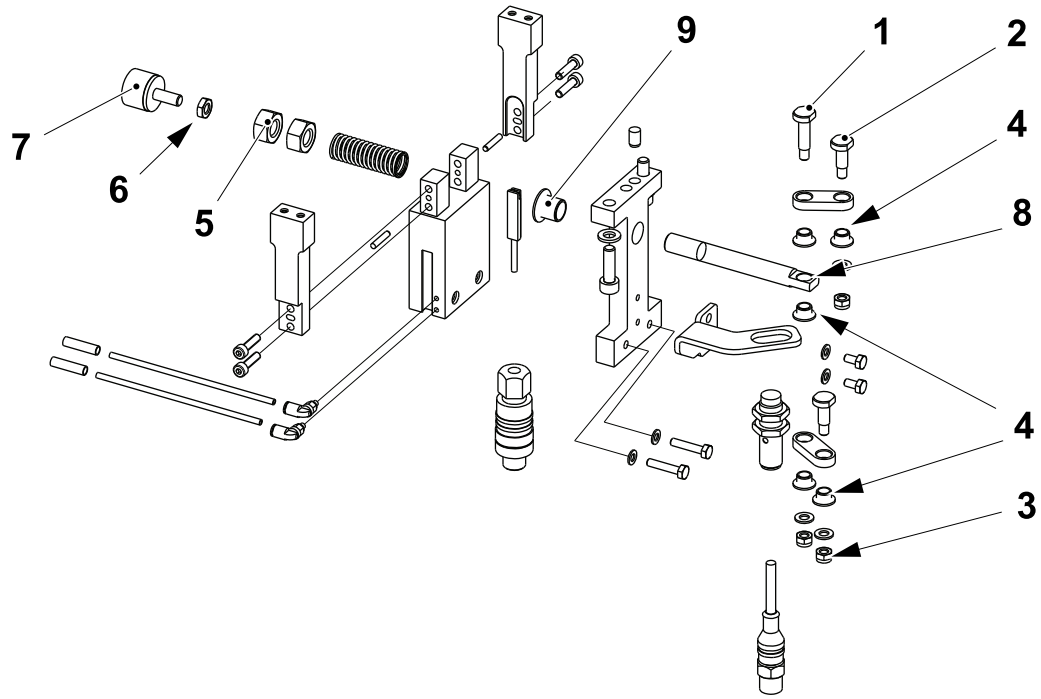

1 Screw
2 Screw
3 Nut
4 Bushing
5 Nut
6 Nut
7 Damper
8 Shaft
9 Bushing

8.3.1-2 Clamp Unit - Set Spring and Sensor

Machine Status	Electrical supply disconnecting device in position O (OFF)
SPC Reference	2746934-0200

a) Set the distance **A** on the sensor (1) by adjusting the nut (2).

Note! When the finger (3) are open the LED on the sensor (1) should be on.

A = 1.0 mm

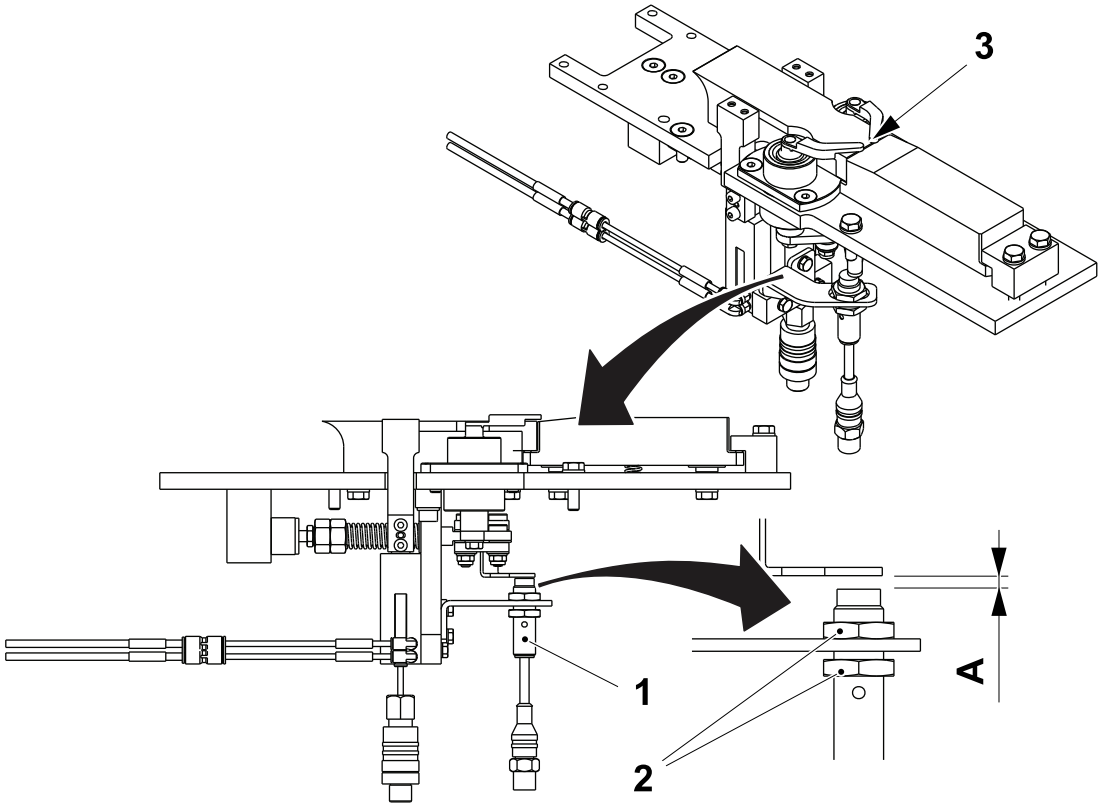

1 Sensor
2 Nut
3 Finger

(Cont'd)

(Cont'd)

b) Set the distance **B** between the finger (3) by adjusting the distance **C** using the nut (4) and the damper (5).

Note! Turning the damper (5) counter clockwise will increase the gap.

Note! If the stop fingers (6) trap the next cap (7) repeat step until position (8) is achieved.

c) Make sure that the cap (9) is in contact with the clamps (10) .

Cap	Theoretical Value
SlimCap 1000, 2000	B = 11 mm
StreamCap 1000	B = 11 mm
StreamCap 200, 500	B = 5 mm
HeliCap2 23	B = 5 mm
HeliCap27	B = 5 mm

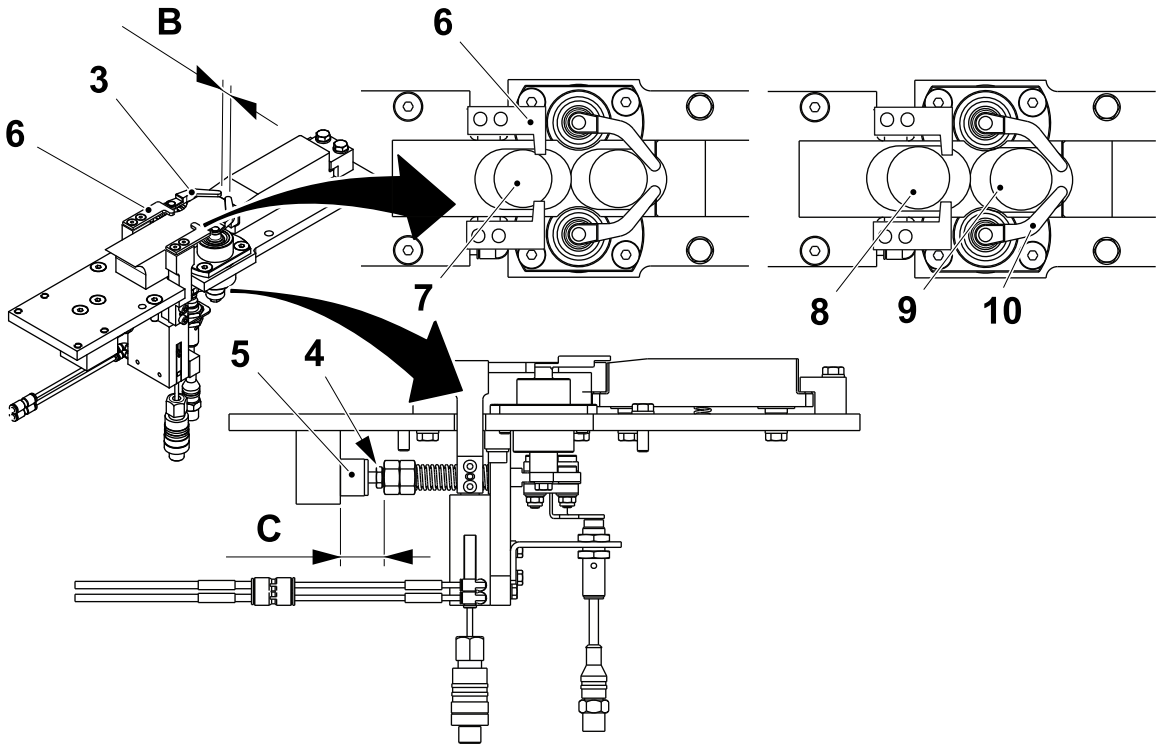

3 Finger
4 Nut
5 Damper
6 Stop finger
7 Next cap
8 Position
9 Cap
10 Clamp

(Cont'd)

(Cont'd)

d) Set the tension of the spring (11) by adjusting the nut (12) until the distance **D** is obtained.

D = 20 mm

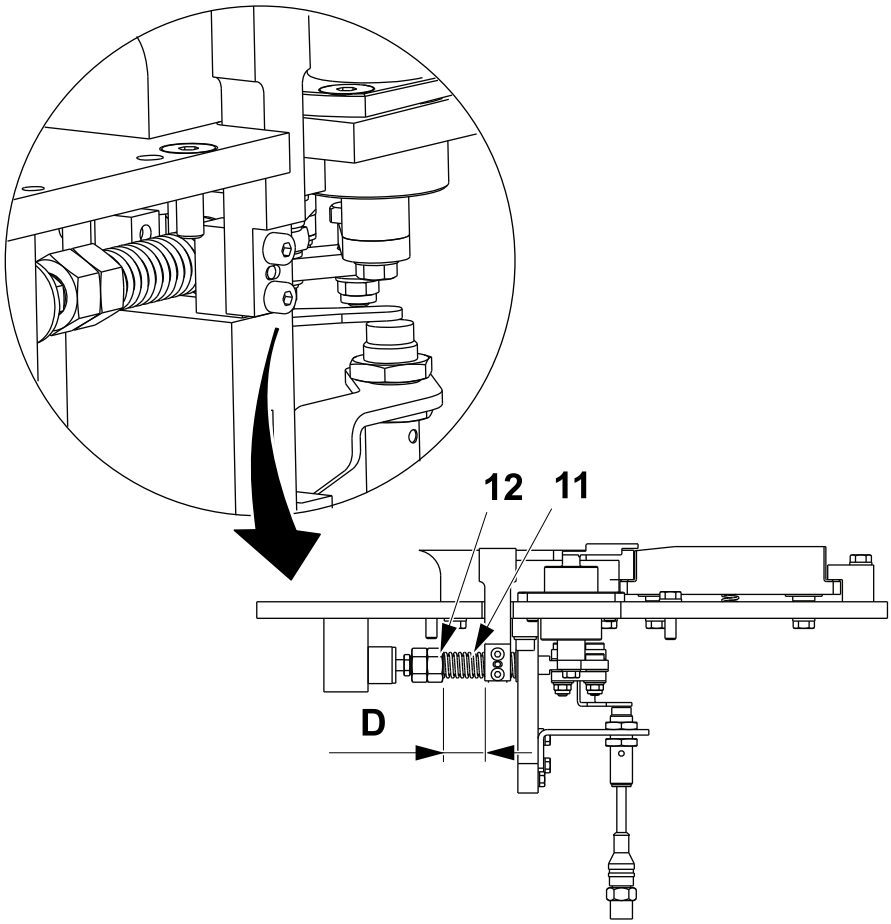

11 Spring
12 Nut

8.3.1-3 Clamp Unit - Set Stop Cylinder Sensor

Machine Status	Electrical supply disconnecting device in position O (OFF)
SPC Reference	2746934-0200

a) Release the screw (1) on the sensor (2).

b) Set the sensor (2) on the stop cylinder (3) so that when the fingers (4) are open the LED (5) is OFF and when the fingers (4) are closed the LED (5) is ON.

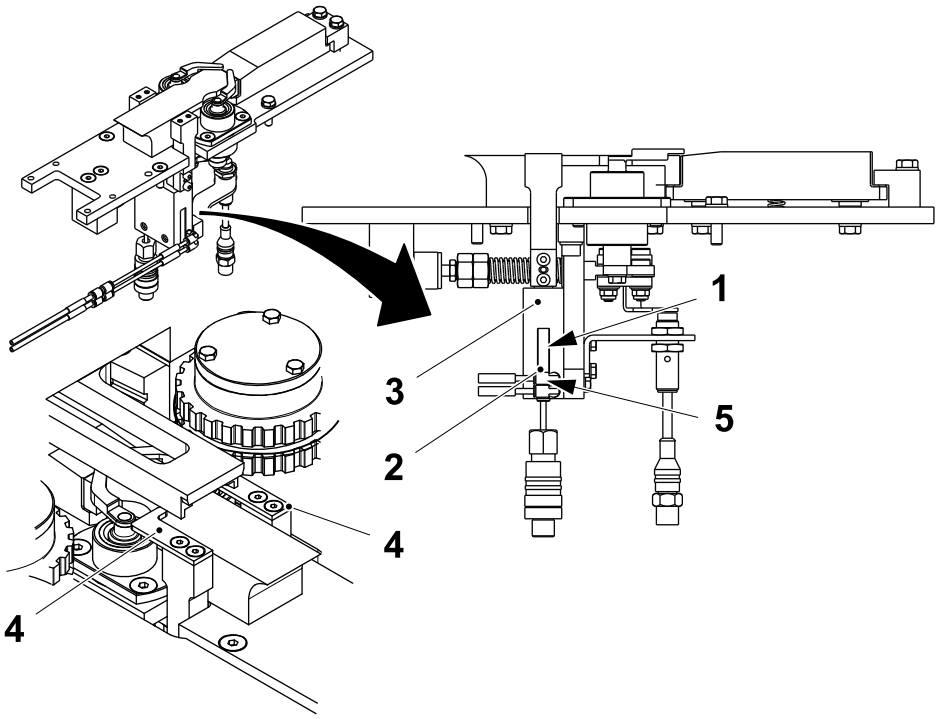

1 Screw
2 Sensor
3 Cylinder
4 Finger
5 LED

8.3.2 Height Adjustment

8.3.2-1 Height Adjustment- Set Roof

Machine Status	Electrical supply disconnecting device in position O (OFF)
SPC Reference	2746934-0200

Removal

a) Remove the screws (1) and the bracket assembly (2).

b) Remove the screws (3) and the roof (4).

c) Insert shims (5) until the distance **A**, see next page is reached.

Note! The bracket assembly (2) is cap dependent, see latest SPC.

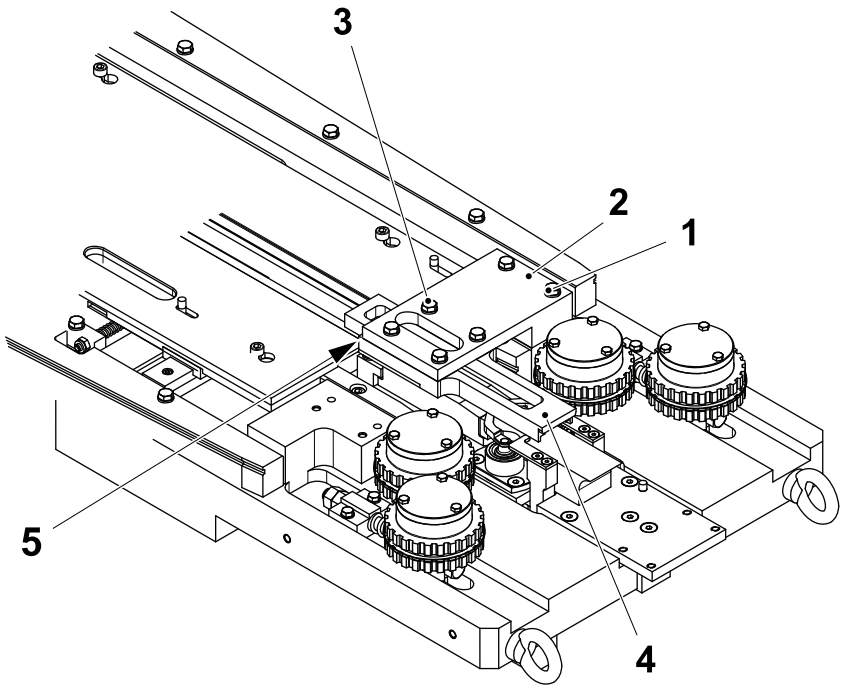

1 Screw
2 Bracket assembly
3 Screw
4 Roof
5 Shim

(Cont'd)

(Cont'd)

Section and Setting

Cap	Distance A
Slim Cap 1000	12.8 mm +0 / -0.2 mm
Stream Cap 200	13.6 mm ± 0.05 mm
Stream Cap 500 - 1000 Slim Cap 2000	18 mm +0 / -0.2 mm
HeliCap2 23	16.0 mm +0.1 mm
HeliCap27	18.4 mm +0.1 mm

StreamCap 330
HeliCap2 23

StreamCap 200
StreamCap 500
StreamCap 1000

SlimCap 1000
SlimCap 2000

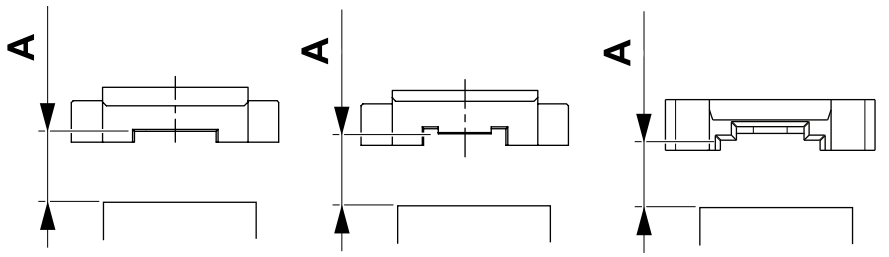

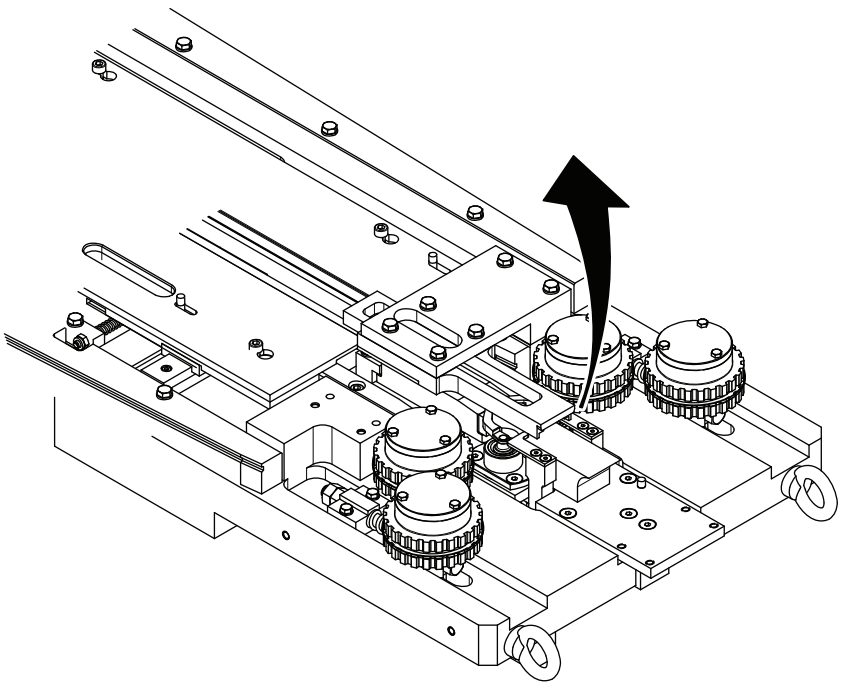

8.3.2-2 Height Adjustment - Overhaul

Machine Status	Electrical supply disconnecting device in position O (OFF)
SPC Reference	2746934-0200

Note! The roof has to be removed before starting, see 8.3.2-1 Height Adjustment-Set Roof.

a) Remove the screw (1) and the retainer block (2).

b) Remove the screw (3) and the spring plate (4).

c) Remove the bushing (5), the pin (6) and the spring (7).

d) Clean and inspect all parts and replace if necessary.

e) Assemble in the reverse order placing the spring in the middle.

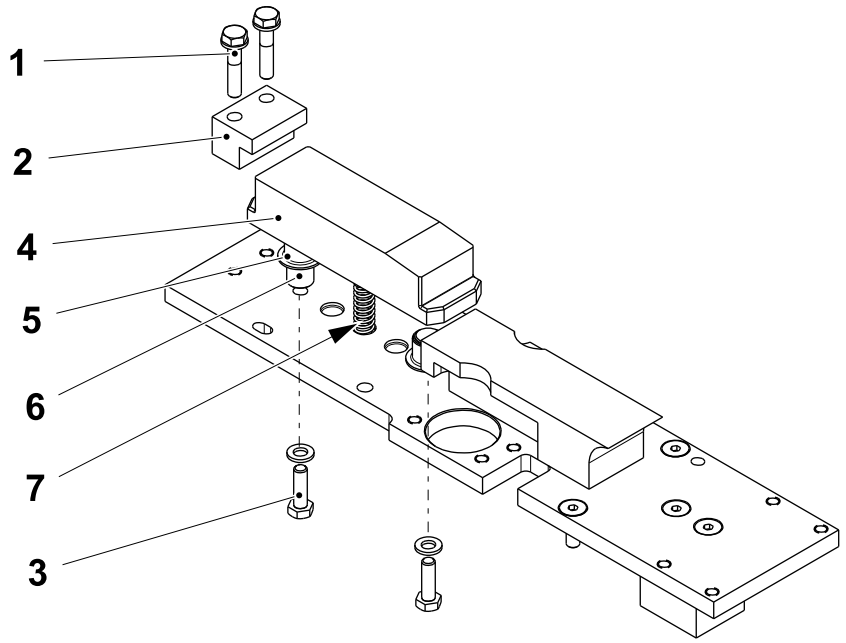

1 Screw
2 Block
3 Screw
4 Plate
5 Bushing
6 Pin
7 Spring

8.3.3 Finger

8.3.3-1 Finger - Check

Machine Status	Electrical supply disconnecting device in position O (OFF)
SPC Reference	2746934-0200

a) Move the fingers (1) by hand and check that they move freely, if not change the bearings in the finger assembly, see 8.3.3-2 Finger - Change.

b) Check the fingers (2) are perfectly aligned with the bracket (3) .

c) Make sure that when a cap passes through the fingers (2) there is no contact.

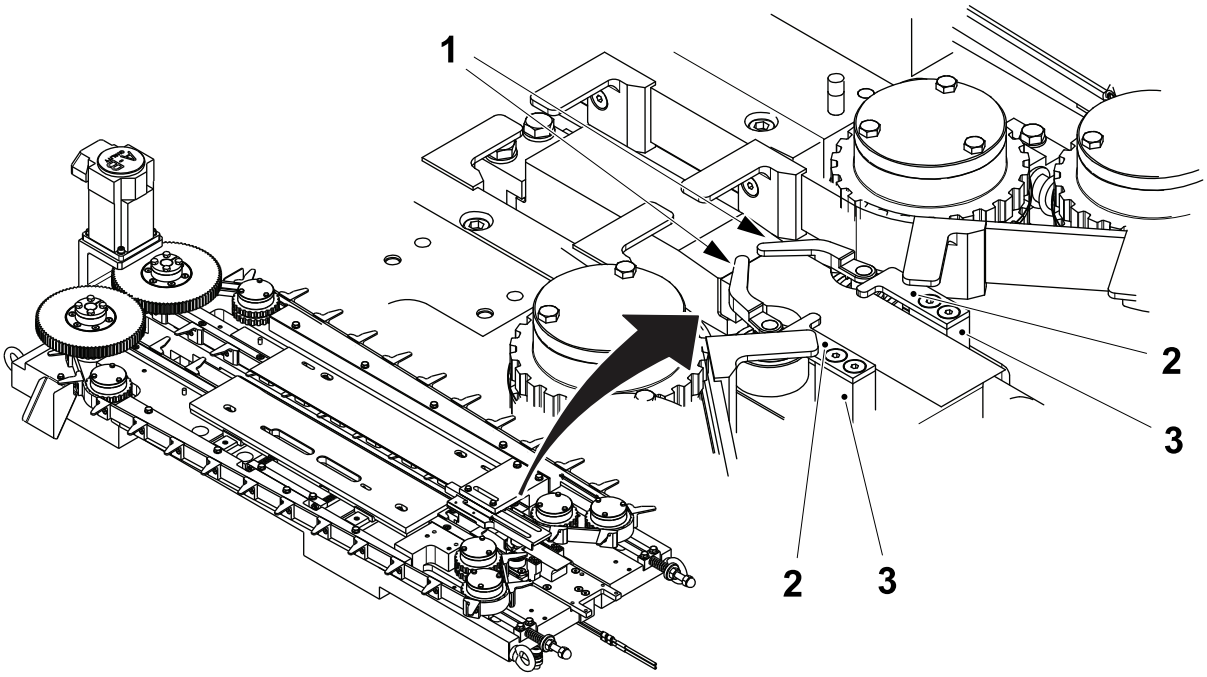

1 Finger
2 Finger
3 Bracket

8.3.3-2 Finger - Change

Machine Status	Electrical supply disconnecting device in position O (OFF)
Consumables	Grease - TP No. 344407-0000
SPC Reference	2746934-0200

a) Remove the cap conveyor, see 9.2.1-1 Conveyor - Removal and Assembly.

b) Remove the screws (1) and the guide rail (2).

c) Remove the screws (3) and the fingers (4).

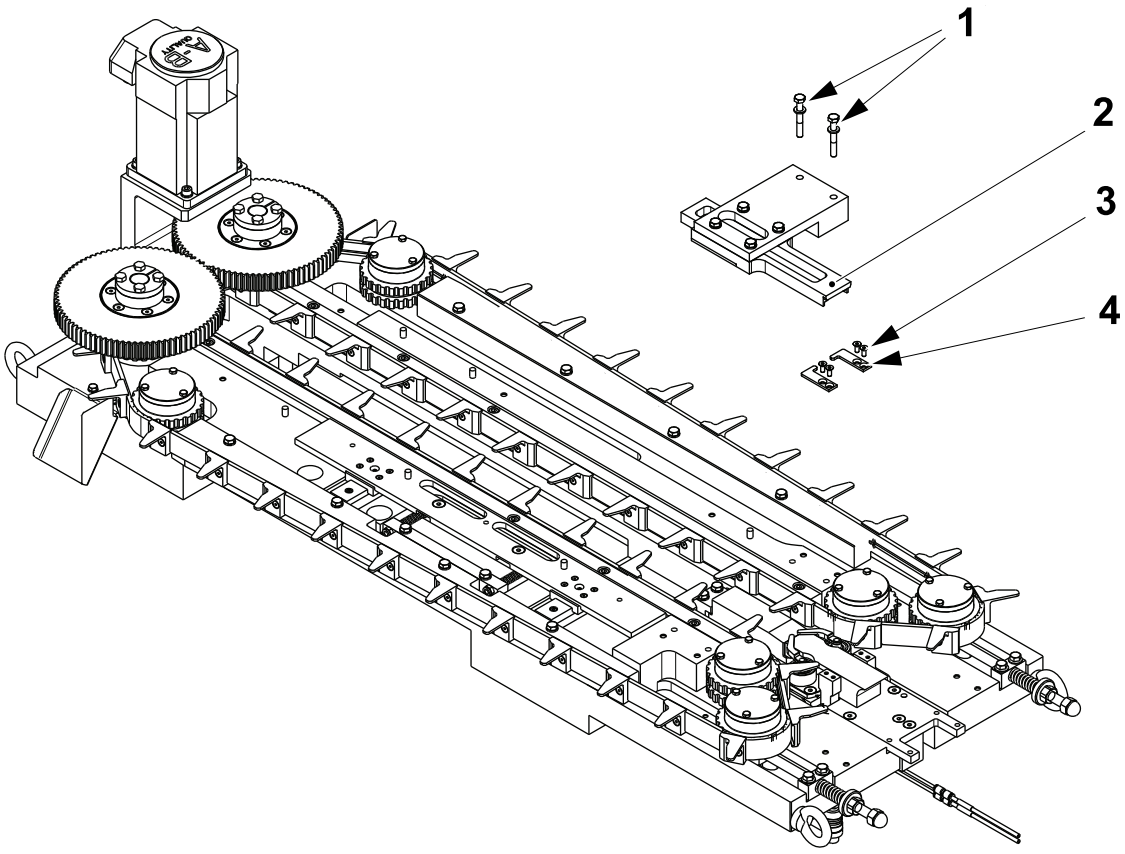

1 Screw
2 Guide rail
3 Screw
4 Finger

(Cont'd)

(Cont'd)

d) Remove the screws (5) and the guide (6).

e) Remove the screws (7) and the finger (8).

f) Remove the screws (9) and the housing (10).

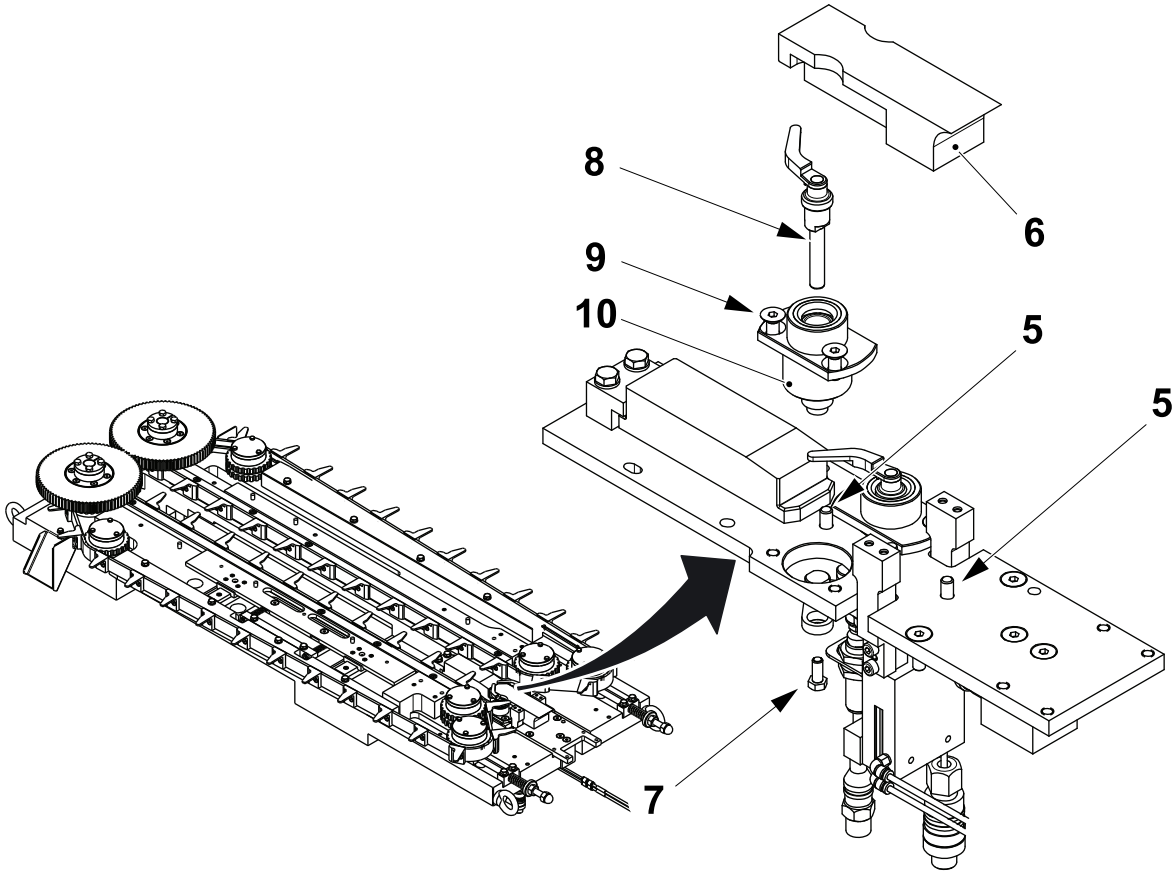

5 Screw
6 Guide
7 Screw
8 Finger
9 Screw
10 Housing

(Cont'd)

(Cont'd)

g) If necessary change the finger (8).

h) Change the seal ring (11) and the seal ring (12).

i) Remove the retaining ring (13) and change the bearing (14).

j) Assemble in the reverse order greasing the bearing (14) with Klübersynth UH1 14-151 (TP No. 344407-0000) when installed and setting the guide rail height, see 9.2.1-1 Conveyor - Removal and Assembly.

k) Using the same procedure, overhaul the other finger.

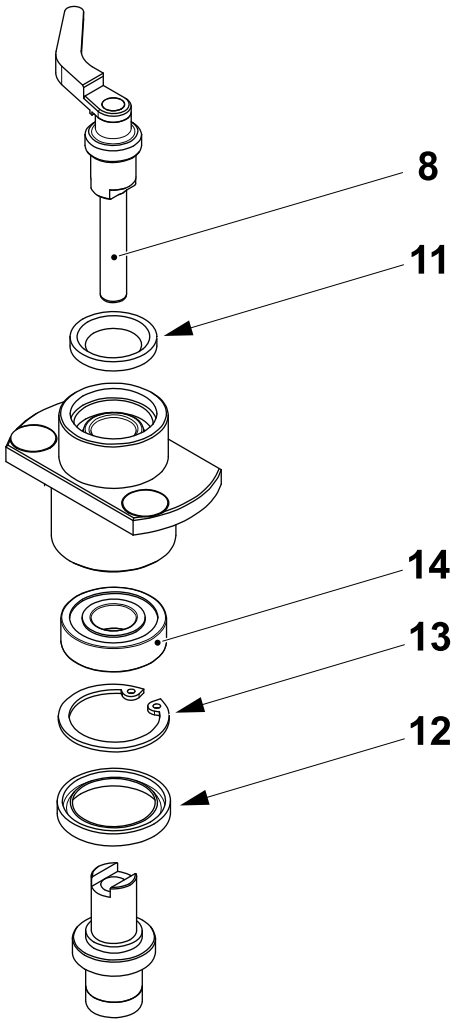

8 Finger
11 Seal ring
12 Seal ring
13 Retaining ring
14 Bearing

8.3.3-3 Guide Rail - Set (StreamCap 200)

Machine Status	Electrical supply disconnecting device in position O (OFF)
Special Equipment	Setting tool - 3034465-0000
SPC Reference	2746928-0200

Guide Rail - Set Height

Note! Valid for StreamCap 200 only.

Note! Use the setting tool 3034465-0000 (1) to set the correct height of the guide rail (2).

a) Put a thickness gauge between the setting tool 3034465-0000 (1) and the height adjustment (3).

b) Add or remove shims (4) to set the distance of 0.3 mm between the setting tool 3034465-0000 (1) and the height adjustment (3).

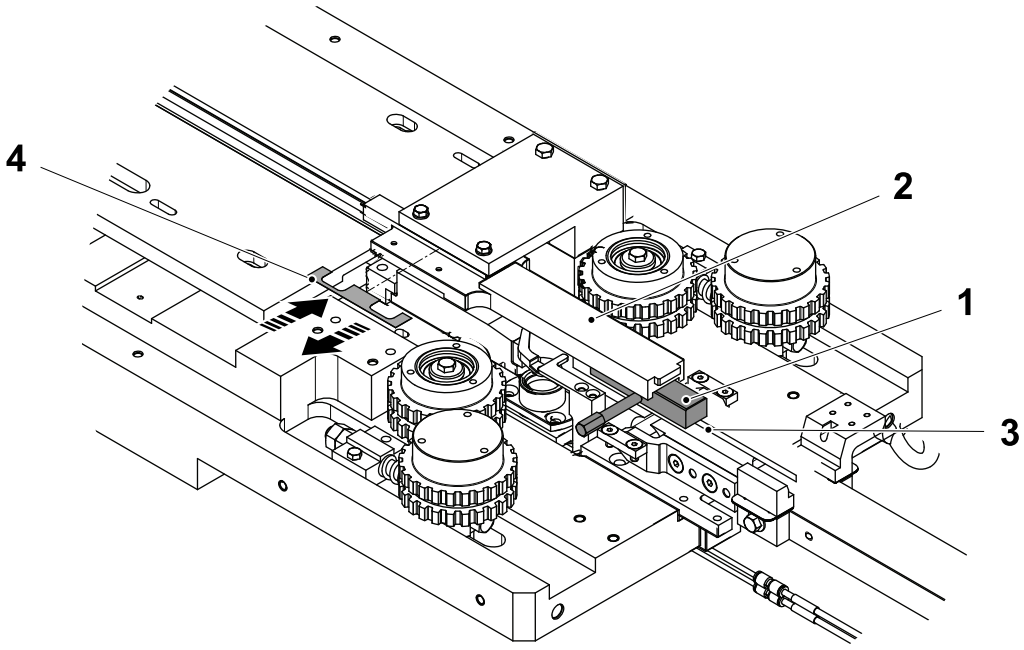

1 Setting tool 3034465-0000
2 Guide rail
3 Height adjustment
4 Shim

8.4 Carrier Belt

8.4.1 Timing Belt

8.4.1-1 Timing Belt - Check

Machine Status	Electrical supply disconnecting device in position O (OFF)
SPC Reference	2746929-0100

At both sides of the sequencer, check the timing belt (1) for signs of wear or damage. If either timing belt (1) is worn or damaged, change both belts, see 8.4.1-2 Timing Belt - Change.

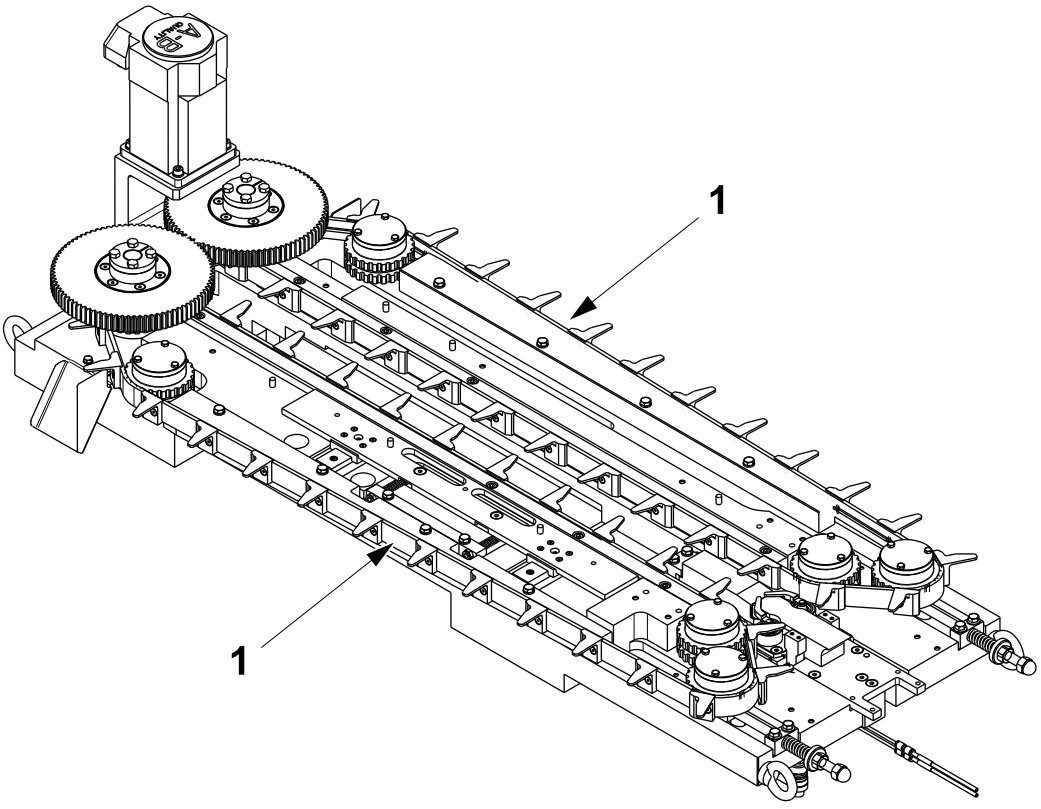

1 Timing belt

8.4.1-2 Timing Belt - Change

Machine Status	Electrical supply disconnecting device in position O (OFF)
Special Equipment	Template 2736458 Torque Wrench min. 50 Nm
SPC Reference	2746929-0100

Removal

WARNING

Risk of burns.

Nearby components may be hot.

a) Loosen the screws (1) and the screws (2) and remove the plate (3).

b) Loosen the screws (4) and the screws (5) and remove the plate (6).

c) Remove the screws (7) and the guide rail (8).

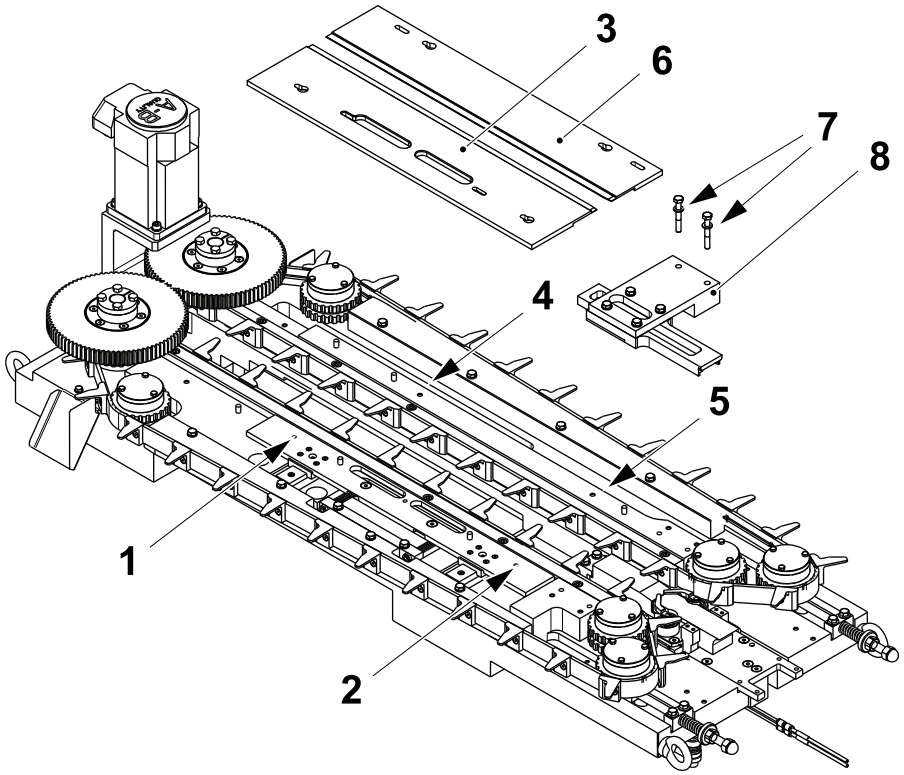

1 Screw
2 Screw
3 Plate
4 Screw
5 Screw
6 Plate
7 Screw
8 Guide rail

(Cont'd)

(Cont'd)

d) Remove the screws (9) and the servo drive (10).

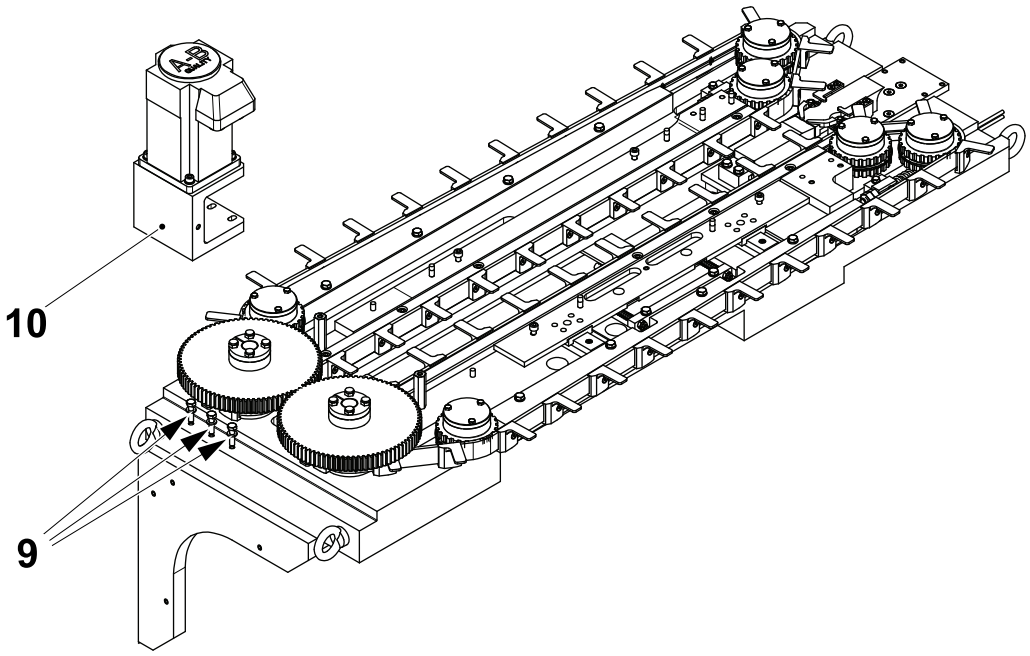

9 Screw
10 Servo drive

(Cont'd)

(Cont'd)

e) Loosen two of the screws (11) and remove the others.

f) Insert the removed screws into the extraction holes (12) and tighten them to extract the clamping element (13), see 8.4.1-3 Clamping Element - Removal and Installation.

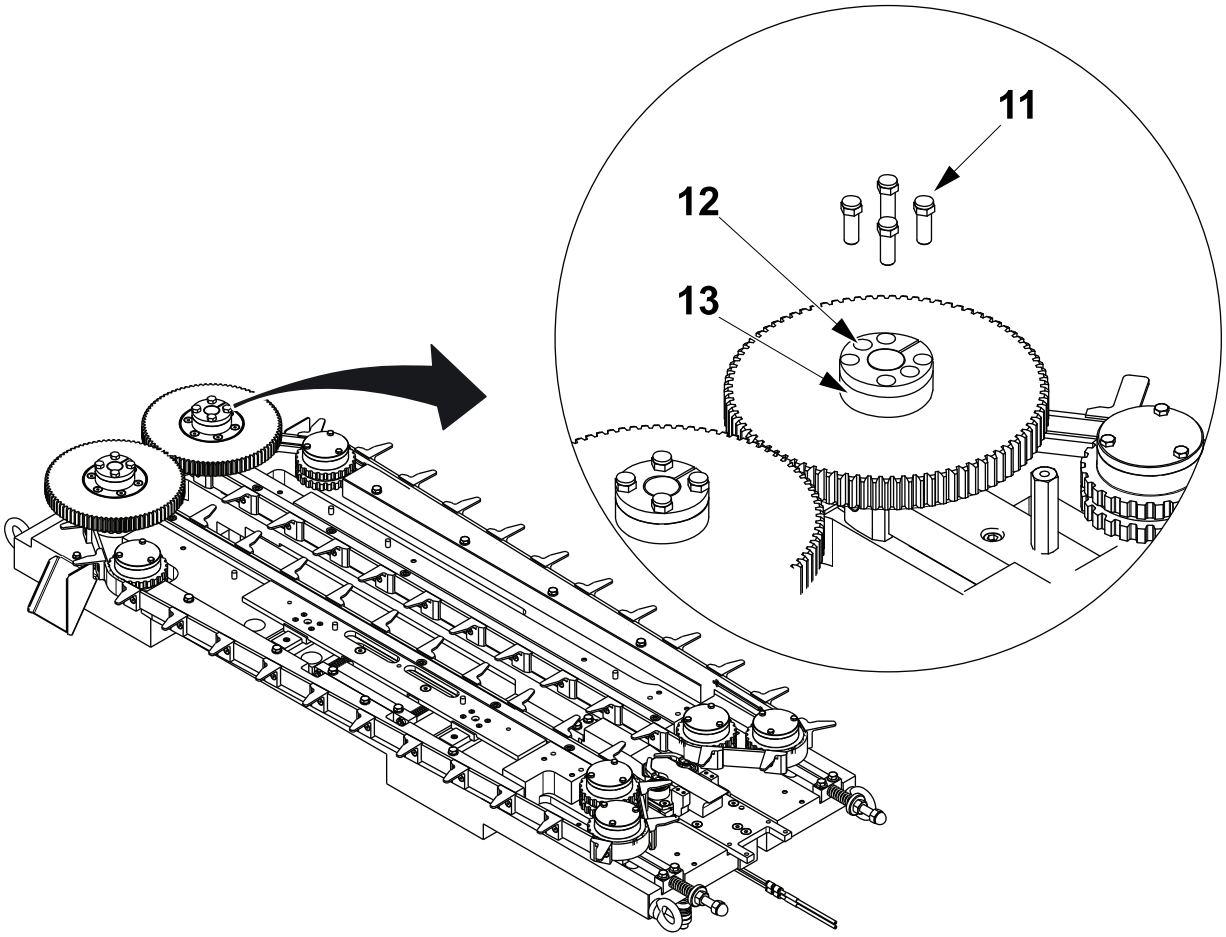

11 Screw
12 Extraction hole
13 Clamping element

(Cont'd)

(Cont'd)

g) Remove the gearwheel (14).

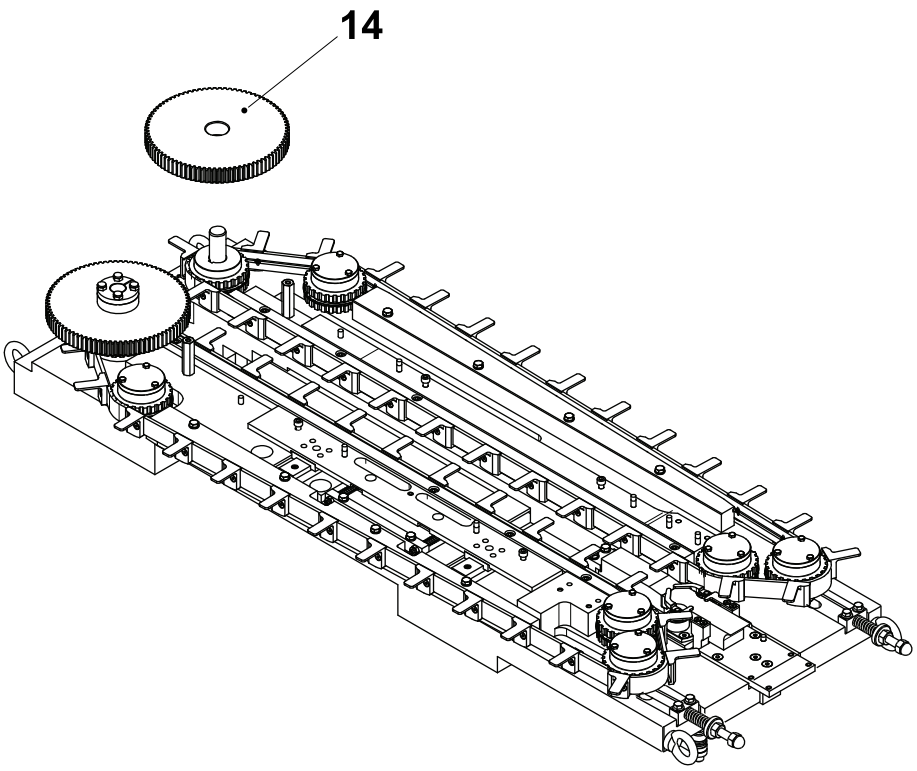

14 Gearwheel

(Cont'd)

(Cont'd)

h) Loosen the screw (15) at the bottom of the toothed pulley (16) to release the belt tension.

i) Pull the belt (17) as far as it will go in the direction shown and tighten the screw (15).

j) Remove the belt (17).

k) Repeat steps h) and j) for the other belt (18).

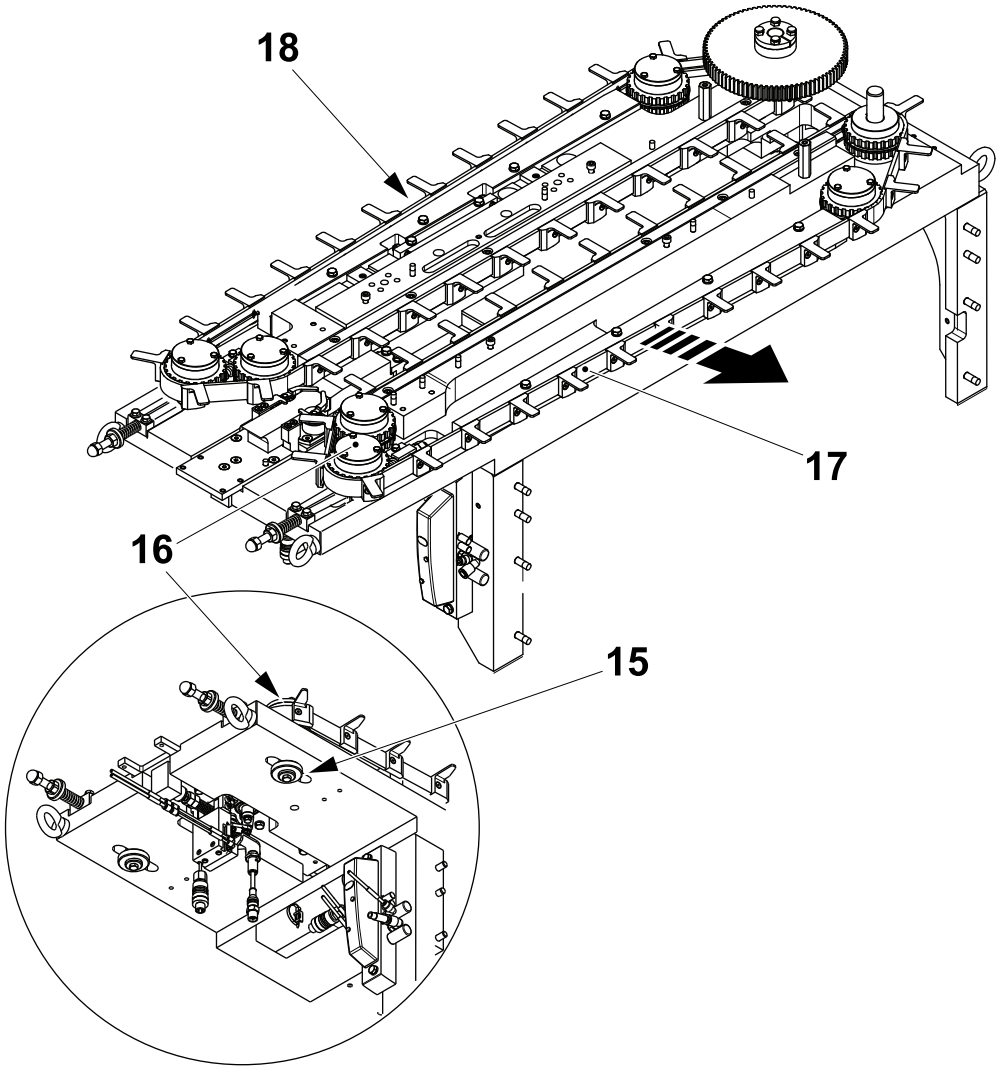

15 Screw
16 Toothed pulley
17 Belt
18 Belt

(Cont'd)

(Cont'd)

Assembly

WARNING

Risk of burns.
Nearby components may be hot.

a) Install the belt (1).

b) Loosen the screw (2) to release the belt tension. Tighten the screw (2).

c) Install the other belt (3).

d) Loosen the screw (4) to release the belt tension. Tighten the screw (4).

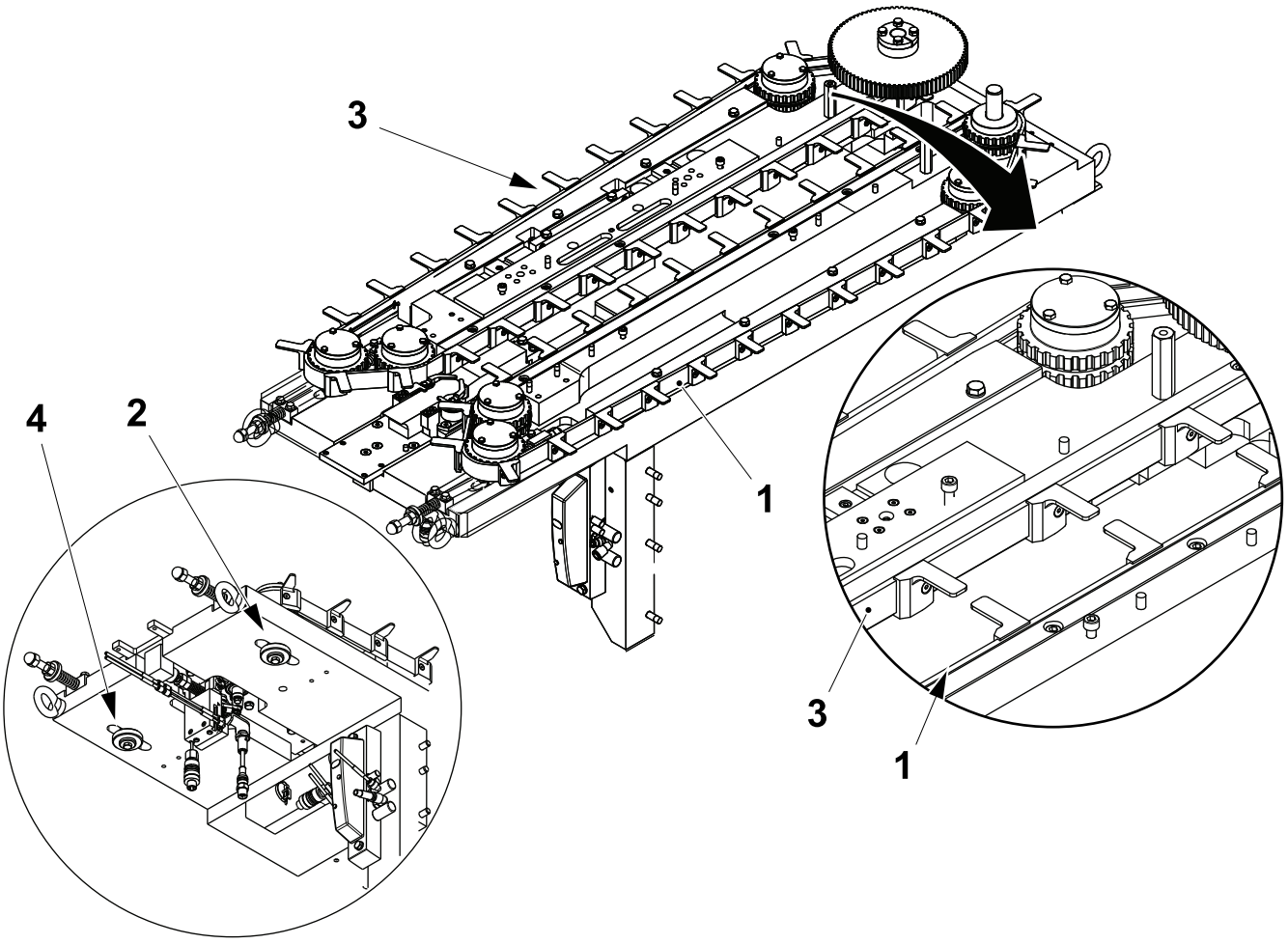

1 Belt
2 Screw
3 Belt
4 Screw

(Cont'd)

(Cont'd)

e) Install the gearwheel (5) and the clamping element (6).

f) Insert the screws (7) and tighten them so that the gearwheel (5) is held in position but not clamped onto the shaft.

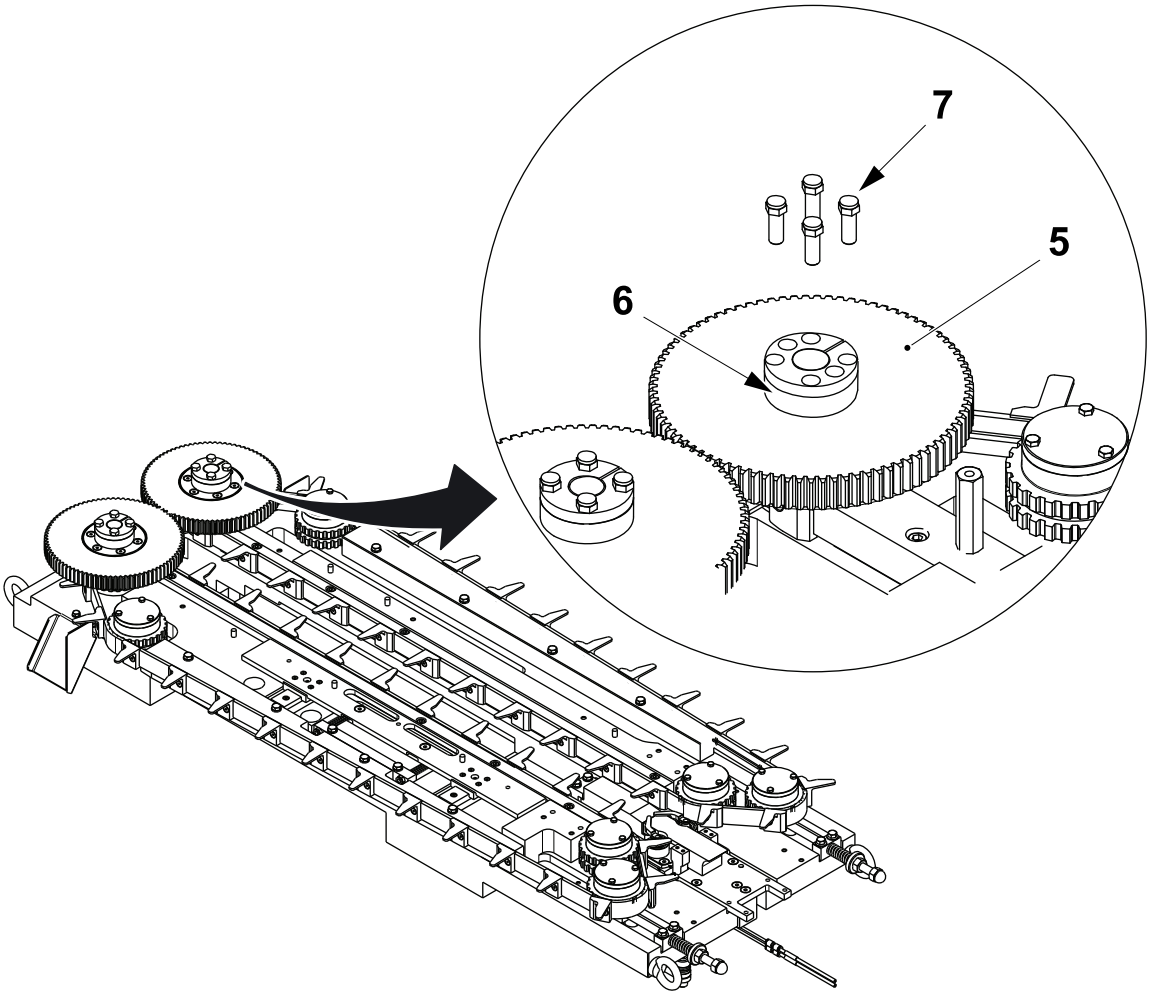

5 Gearwheel
6 Clamping element
7 Screw

(Cont'd)

(Cont'd)

g) Place the template (8) on the pins (9) and manually move the belts (10) until a finger (11) on each of the belts touches the side of the template (8).

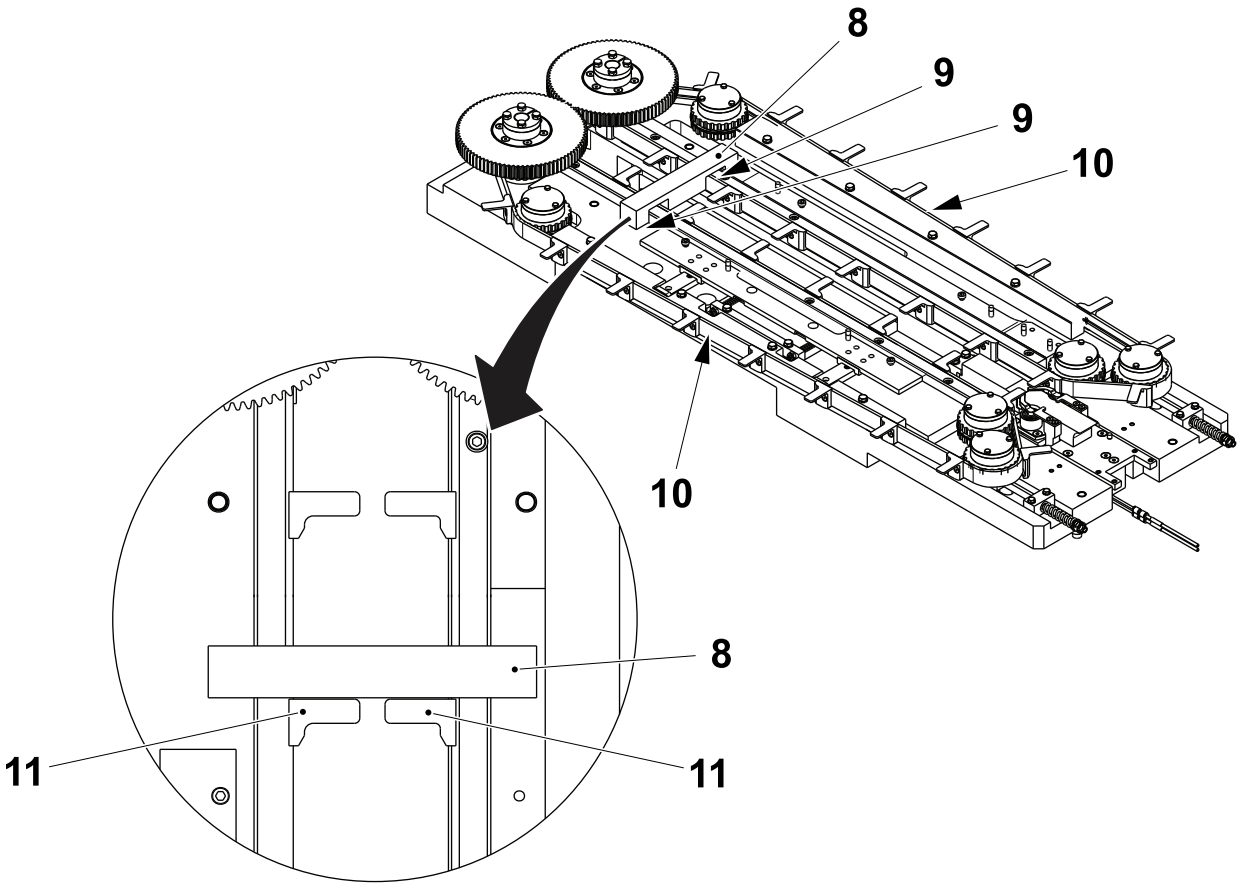

8 Template
9 Pin
10 Belt
11 Finger

(Cont'd)

(Cont'd)

h) Without moving the belt (1) and the belt (3), tighten the screws (7) in the clamping element (6), see 8.4.1-3 Clamping Element - Removal and Installation.

i) Install the remaining components in the reverse order.

j) Set the cap sequencer to zero, see 8.4.1-6 Timing Belt - Set Zero.

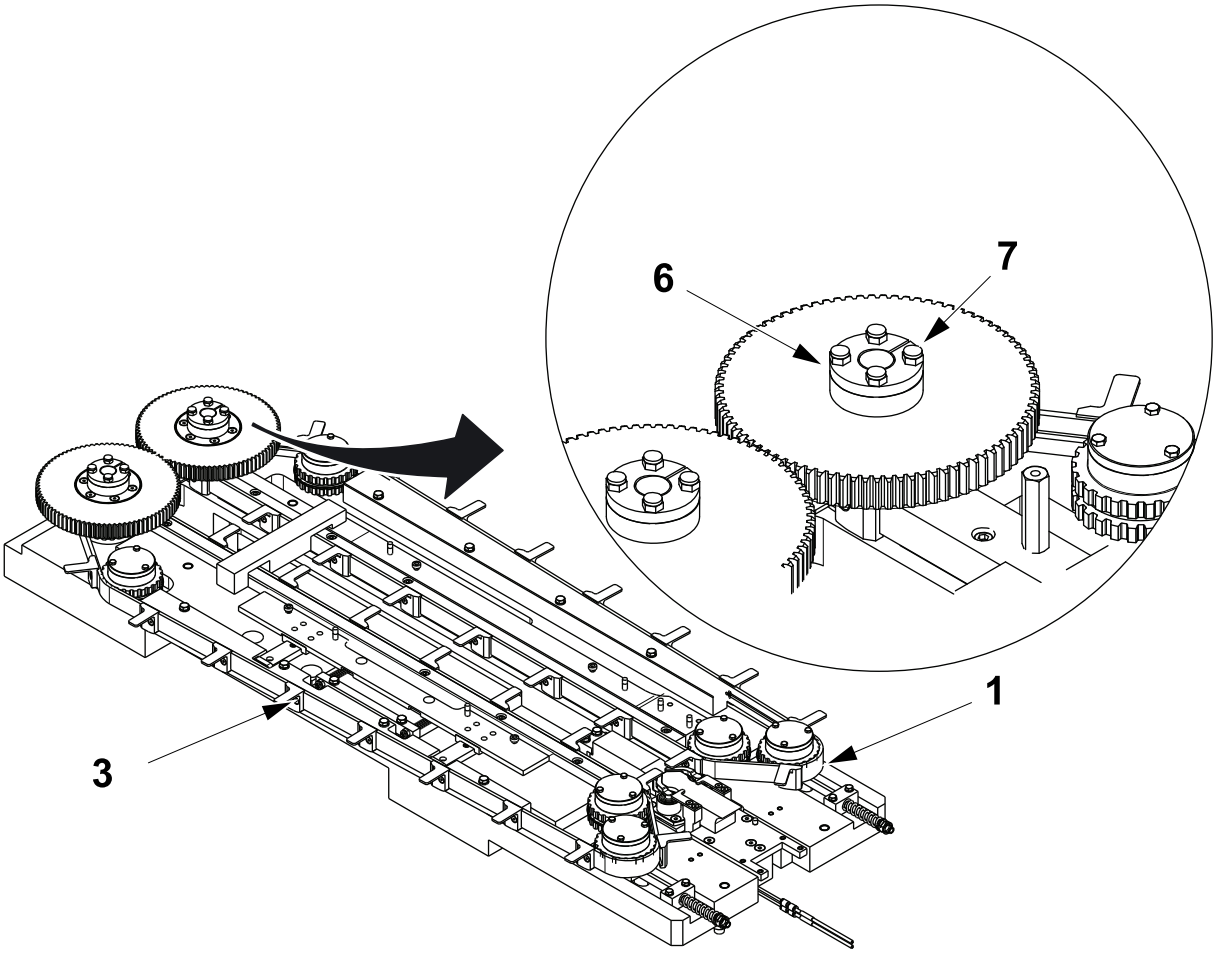

1 Belt
3 Belt
6 Clamping element
7 Screw

8.4.1-3 Clamping Element - Removal and Installation

Machine Status	Electrical supply disconnecting device in position O (OFF) Main air valve OFF
Special Equipment	Torque Wrench min. 17 Nm
Consumables	Grease - TP No. 344407-0000
SPC Reference	90458-2029

CAUTION
Risk of major damage to the machine!
Always tighten the screws crosswise using the method described below. Never adjust the tightening torque after locking, remove and start again.

a) Remove the screws (1) and insert them into the withdrawal holes (2) and tighten.

b) The inner surface **A** and the outer surface **B** of the clamping element must be cleaned before assembling.

Note! Lubricate the screws (1). Apply grease Klübersynth UH1 14-151 (TP No. 344407-0000) **only** onto the clamp inner surface **C**. Grease accidentally applied to other areas of the roller or shaft will cause slippage and should be removed.

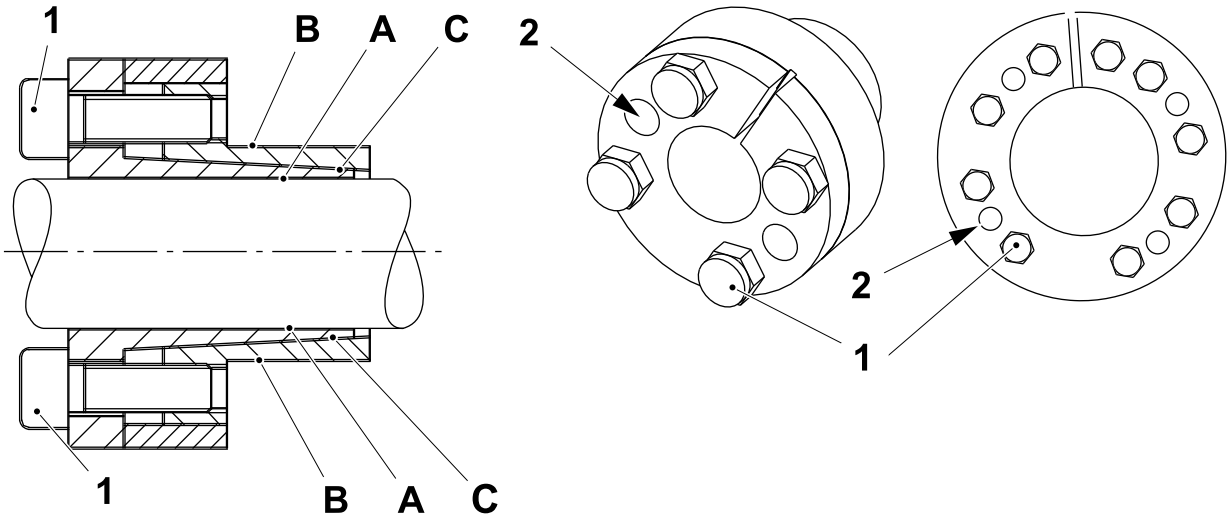

1 Screw
2 Withdrawal hole

(Cont'd)

(Cont'd)

Note! Lubricate the screws (1). Apply grease Klübersynth UH1 14-151 (TP No. 344407-0000) **only** onto the clamp inner surface **C**. Grease accidentally applied to other areas of the roller or shaft will cause slippage and should be removed.

c) Put the clamping element (3) in place and tighten the screws (1) crosswise, first by hand and then to **9 ±2 Nm** with the aid of a torque wrench.

d) Continue to tighten the screws crosswise to **17 ±2 Nm** with the aid of a torque wrench.

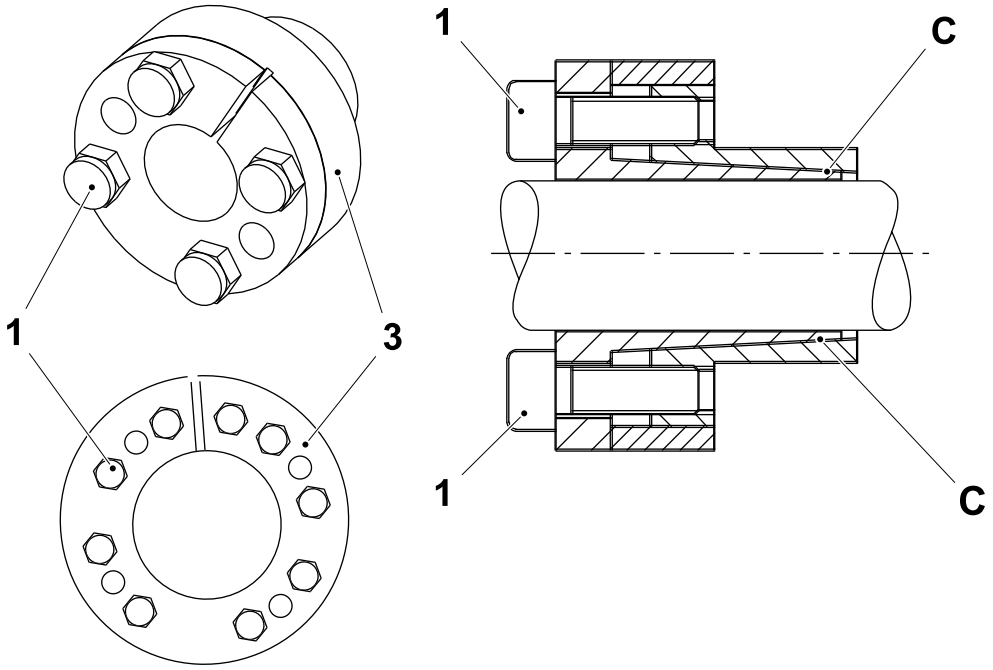

1 Screw
3 Clamping element

8.4.1-4 Timing Belt - Change Finger

Machine Status	Electrical supply disconnecting device in position O (OFF)
Consumables	THREAD LOCKING LOCTITE 2701 50 ML TP No. 344433-0050
SPC Reference	2746929-0100

a) Remove the screw (1) and the finger (2).

Note! On assembly use loctite on the screw (1) and make sure not to damage the insert (3) in the belt (4) when tightening.

b) Assemble in the reverse order.

Note! Use loctite when you tighten the screw (1) that fixes the finger (2).

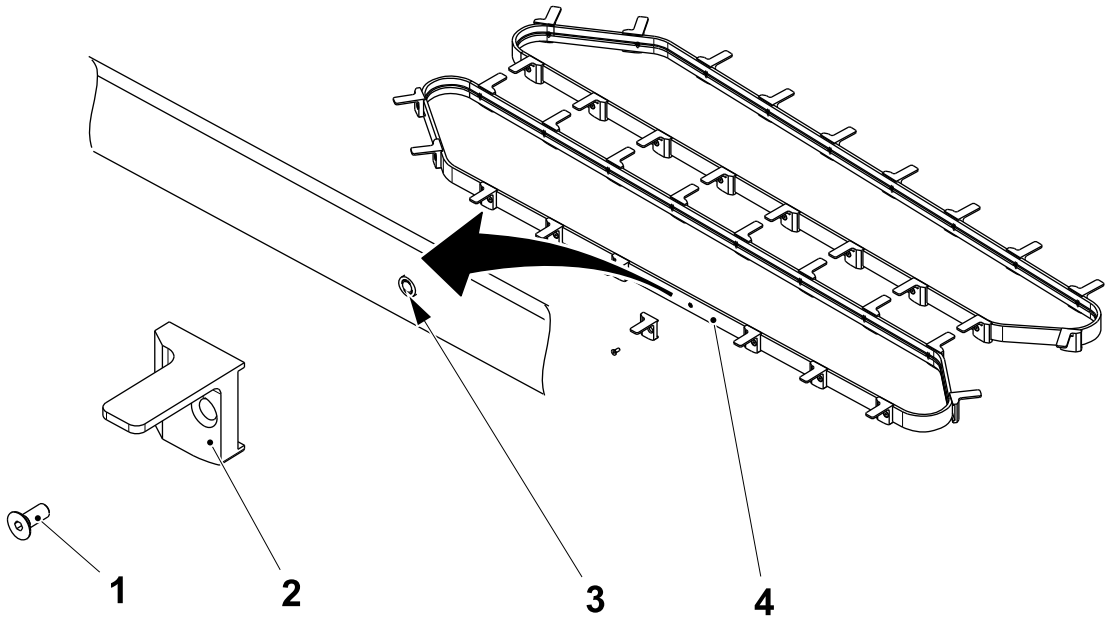

1 Screw
2 Finger
3 Insert
4 Belt

8.4.1-5 Timing Belt - Set Tension

Machine Status	Electrical supply disconnecting device in position O (OFF)
SPC Reference	2746929-0100

WARNING

Risk of burns.

Nearby components may be hot.

a) To set the tension of the belt (1), loosen the screw (2) and turn the lock nut (3) or the nut (4) until the distance A is obtained.

b) Tighten the screw (2).

c) Repeat steps a) and b) for the other belt (5) .

A = 40 mm ± 1.0 mm

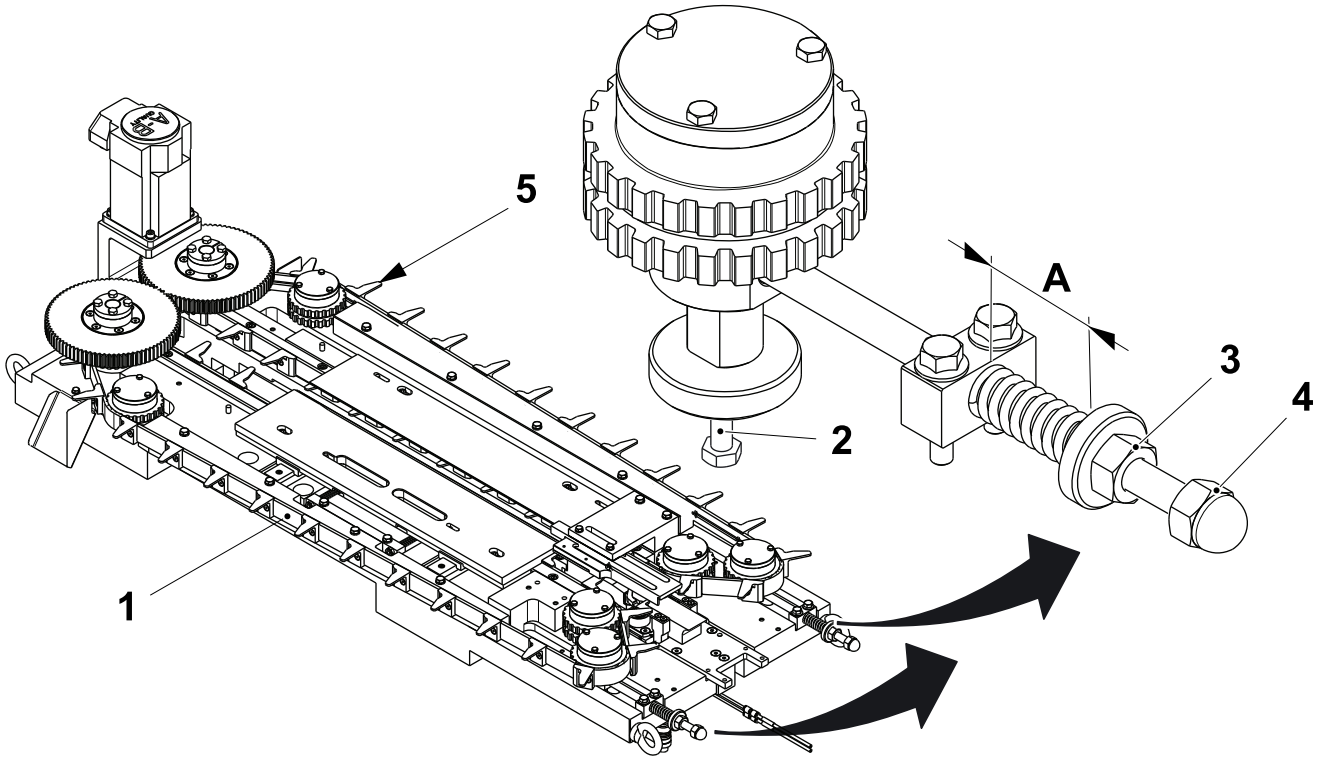

1 Belt
2 Screw
3 Lock nut
4 Nut
5 Belt

8.4.1-6 Timing Belt - Set Zero

Machine Status	Step 0
Special Equipment	Template 2736458-0000 Torque Wrench min. 50 Nm
SPC Reference	2746929-0100

a) Place the template tool (1) on to the pin (2) and move the finger (3) up to the side of the tool (1).

Note! If the finger (3) are not aligned with each other, refer to the procedure 8.4.1-2 Timing Belt - Change. Assembly from step e).

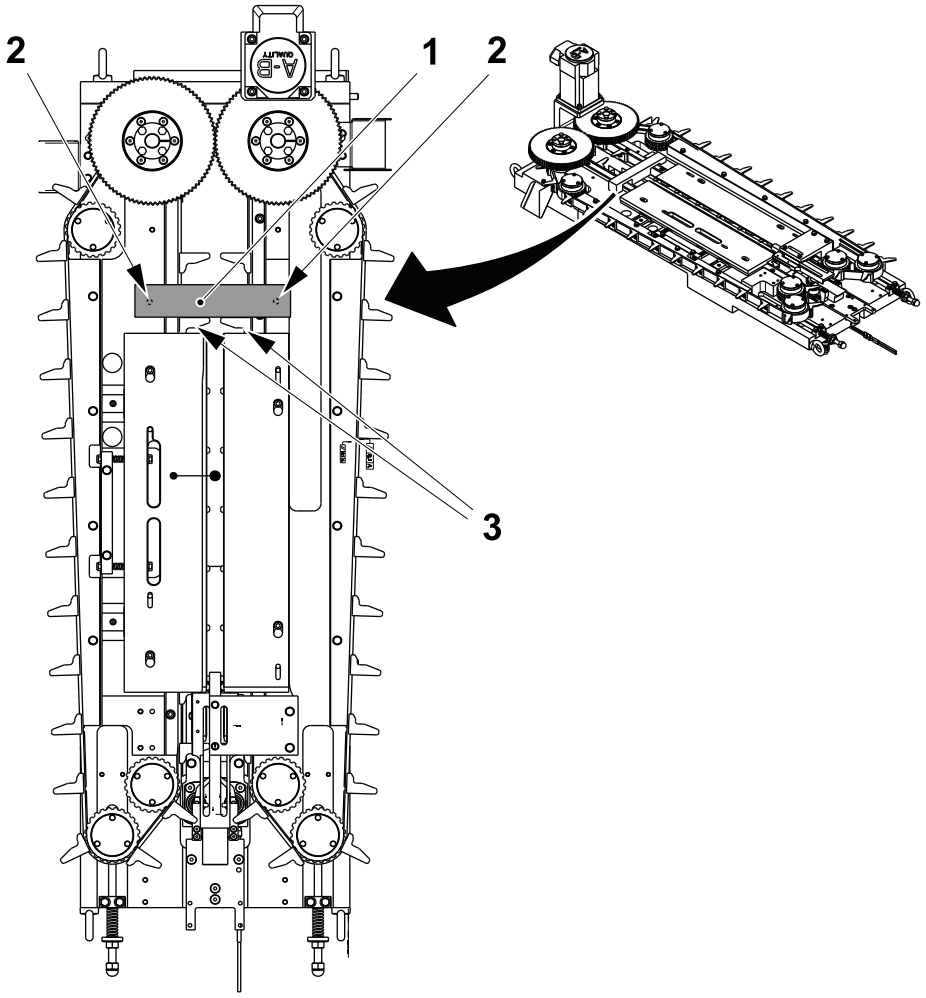

1 Tool
2 Pin
3 Finger

(Cont'd)

(Cont'd)

b) Log on as technician, see 1.1.1-1 HMI User Management - Log On as a User.

c) Touch the MAINTENANCE button (4).

d) Touch the CAP SEQUENCER button (5).

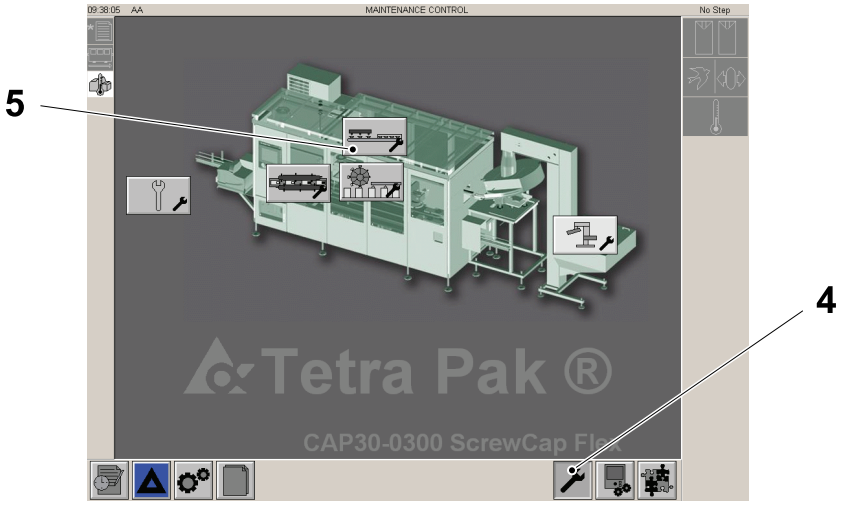

4 MAINTENANCE button
5 CAP SEQUENCER button

e) Touch the ZERO button (6).

f) Touch the ON button (7).

g) Touch the OK button (8) for at least three seconds. The background of the ON button (7) should go green.

h) Touch the EXIT button (9) to leave.

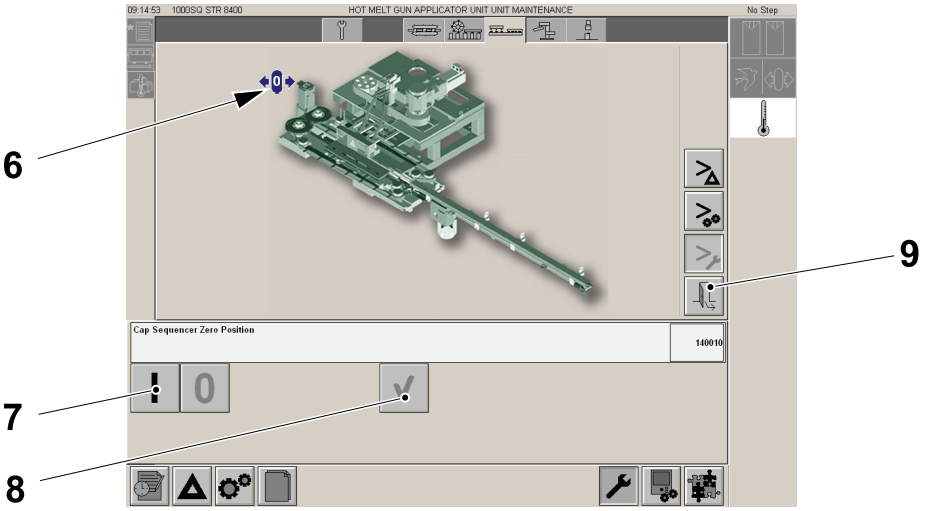

6 ZERO button
7 ON button
8 OK button
9 EXIT button

9 Cap Conveyor

Cap Conveyor - Description

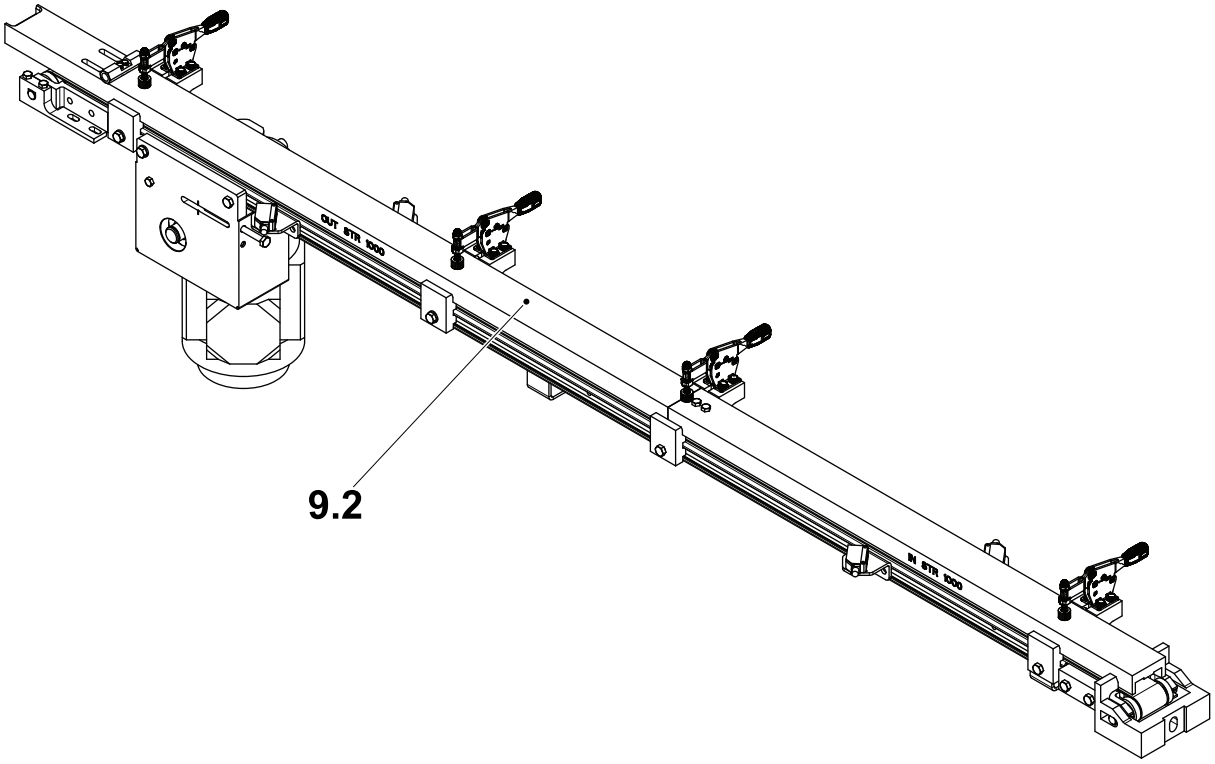

9.2 Conveyor

Cap Conveyor - Description 9-2

9.1 Functional Description 9-5

9.2 Conveyor 9-6

9.2.1 Conveyor - Overhaul 9-6

9.2.1-1 Conveyor - Removal and Assembly 9-6

9.2.1-2 Conveyor Belt - Change 9-8

9.2.1-3 Conveyor Belt - Set Tension 9-11

9.2.1-4 Conveyor Belt - Change Drive End Bearings 9-12

9.2.1-5 Conveyor Belt - Change Infeed End Bearings 9-15

9.2.1-6 Conveyor Belt - Set Alignment 9-16

9.2.1-7 Conveyor Belt - Set Conveyor to Cap Sequencer 9-17

9.2.1-8 Conveyor Roof - Set Height 9-18

9.2.1-9 Conveyor Roof - Set Height (StreamCap 200 Only) 9-19

9.2.1-10 Cap Conveyor - Check Settings 9-20

9.2.1-11 Conveyor Belt - Set Sensors 9-23

This page intentionally left blank

9.1 Functional Description

The Cap Conveyor transports caps from the Cap Sorter, see Cap Sorter - Description to the Cap Sequencer, see Cap Sequencer.

Caps are placed on the conveyor belt (1) at the end nearest to the sorter and transported under covers (2) to the Cap Infeed Unit at the end of conveyor (3).

The belt is driven by a single motor and gearbox (4) combination.

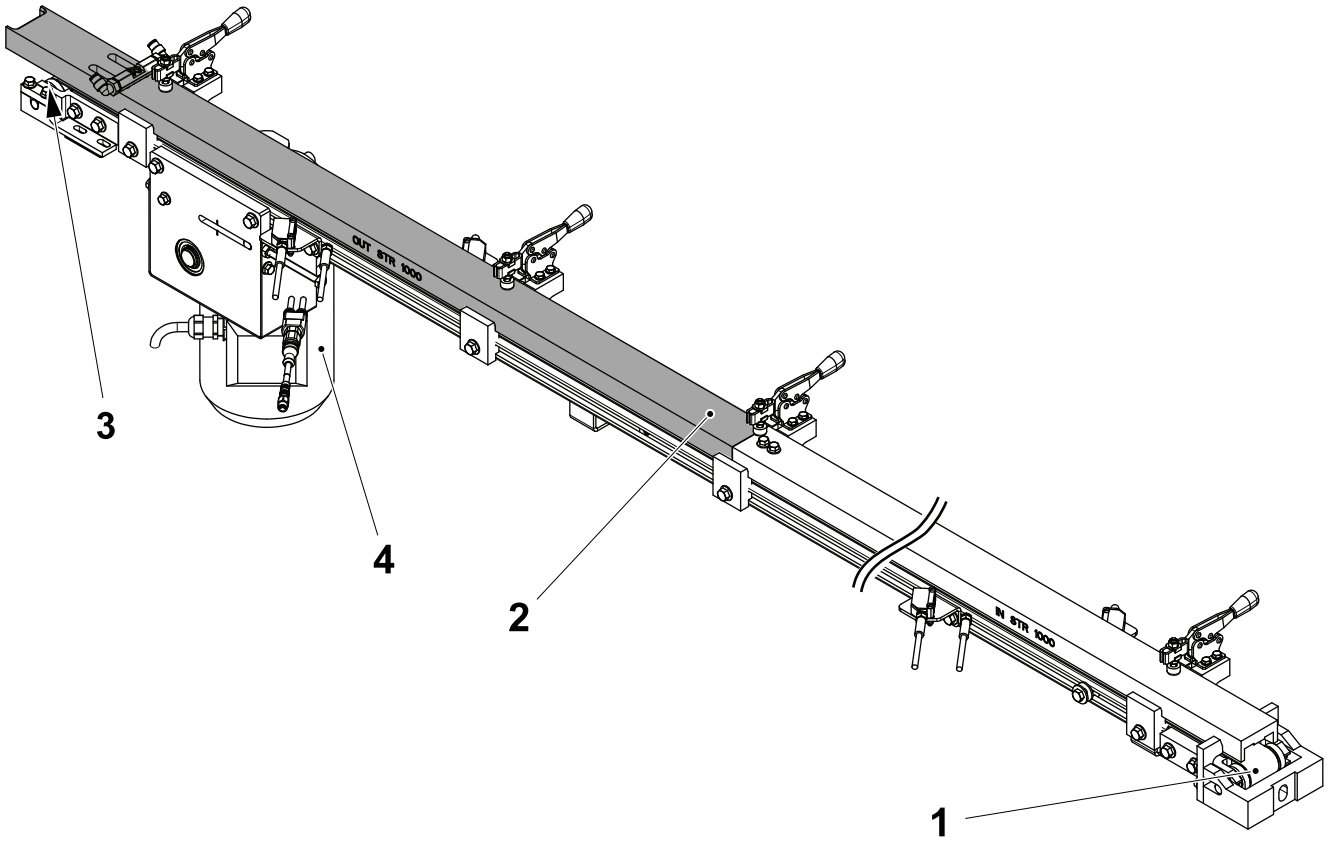

1 Conveyor belt
2 Cover
3 End of conveyor
4 Motor and gearbox

9.2 Conveyor

9.2.1 Conveyor - Overhaul

9.2.1-1 Conveyor - Removal and Assembly

Machine Status	Electrical supply disconnecting device in position O (OFF)
SPC Reference	2846413-0300

a) Release the sensor (3).

b) Remove the guide rail (1).

c) Disconnect the electrical sensor (4) from the motor (2).

d) Disconnect the connectors from the sensors (5) and the sensors (6).

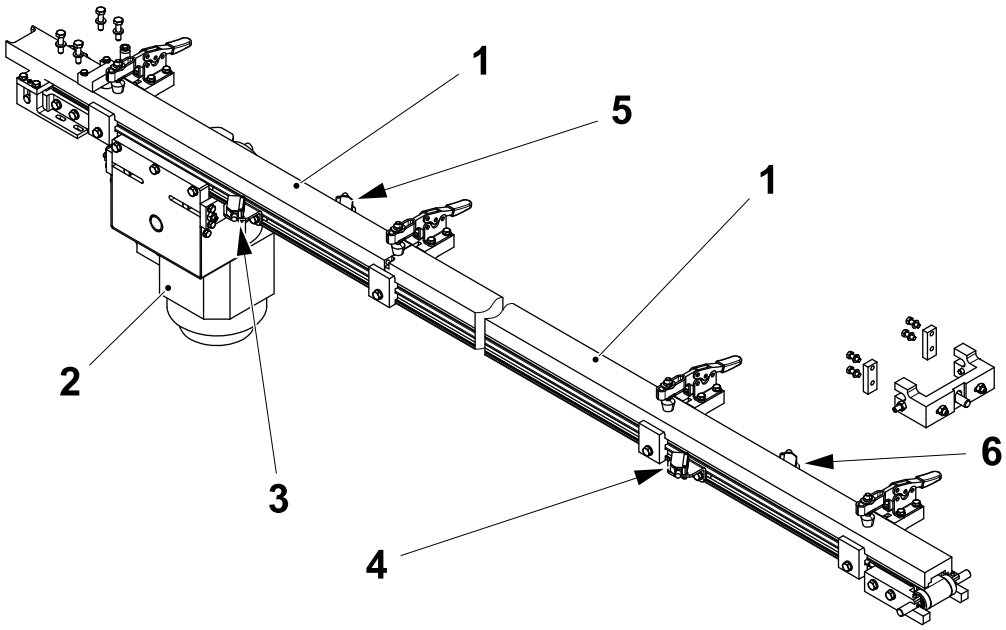

1 Guide rail
2 Motor
3 Sensor
4 Sensor
5 Sensor
6 Sensor

(Cont'd)

(Cont'd)

e) Remove the screws (7) and the plate (8).

f) At both sides of the bracket (9), loosen the screws (10) and the screws (11).

g) Remove the screws (12).

h) Remove the screws (13) and lift out the cap conveyor (14).

i) Assemble in the reverse order.

Note! Always install any guards that have been removed.

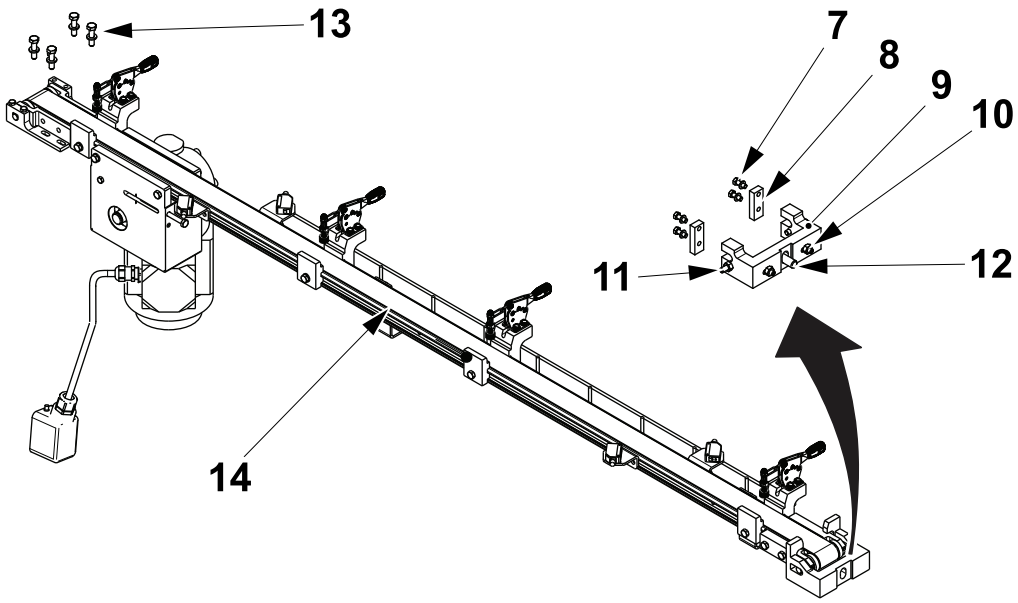

7 Screw
8 Plate
9 Bracket
10 Screw
11 Screw
12 Screw
13 Screw
14 Cap conveyor

9.2.1-2 Conveyor Belt - Change

Machine Status	Electrical supply disconnecting device in position O (OFF)
SPC Reference	2846413-0300

a) Remove the cap conveyor from the machine, see 9.2.1-1 Conveyor - Removal and Assembly.

b) Remove the screws (1).

c) At both sides of the plate (2), remove the screws (3) and the screws (4).

d) Remove the screw (5) and the plate (2).

e) At the end of the roller (6), measure and record the amount of the screws (7) protruding from the nuts (8).

f) Loosen the screws (7) and the nuts (8) to release the belt tension.

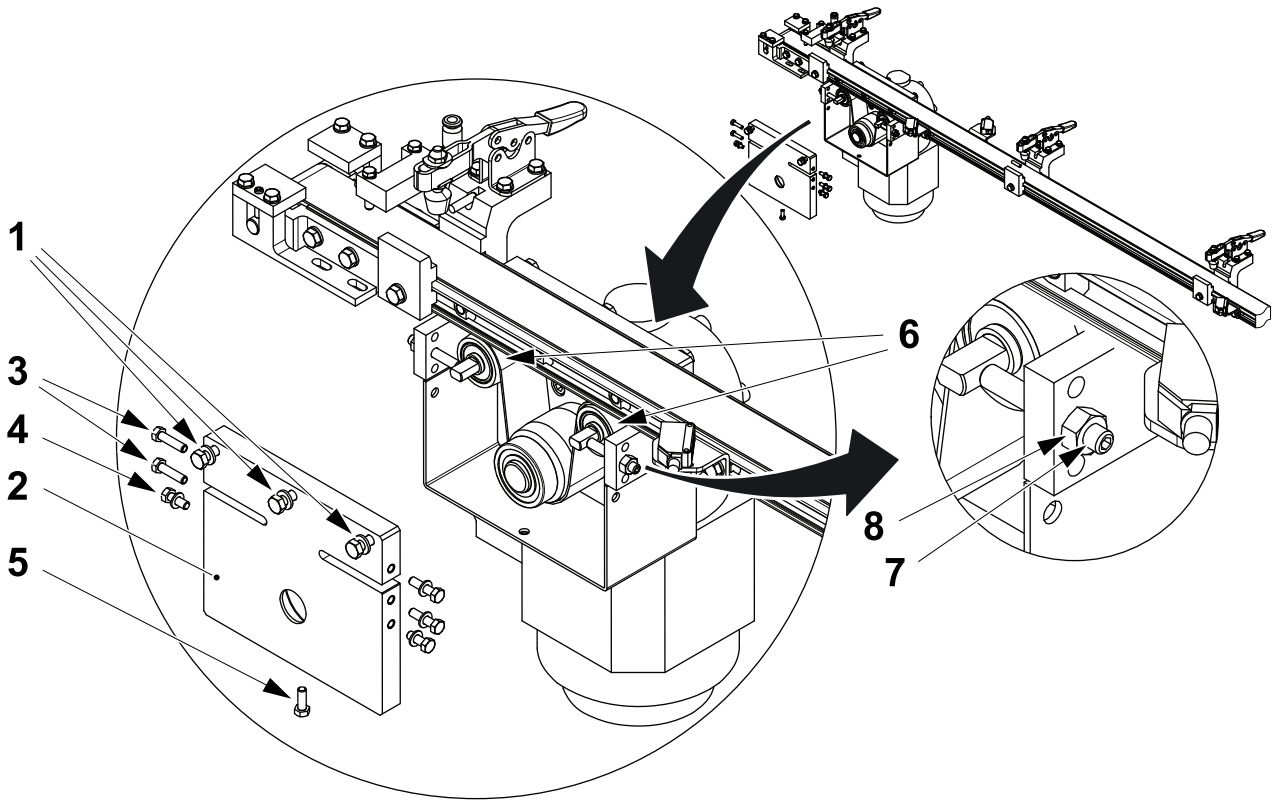

1 Screw
2 Plate
3 Screw
4 Screw
5 Screw
6 Roller
7 Screw
8 Nut

(Cont'd)

(Cont'd)

g) Change the belt (9).

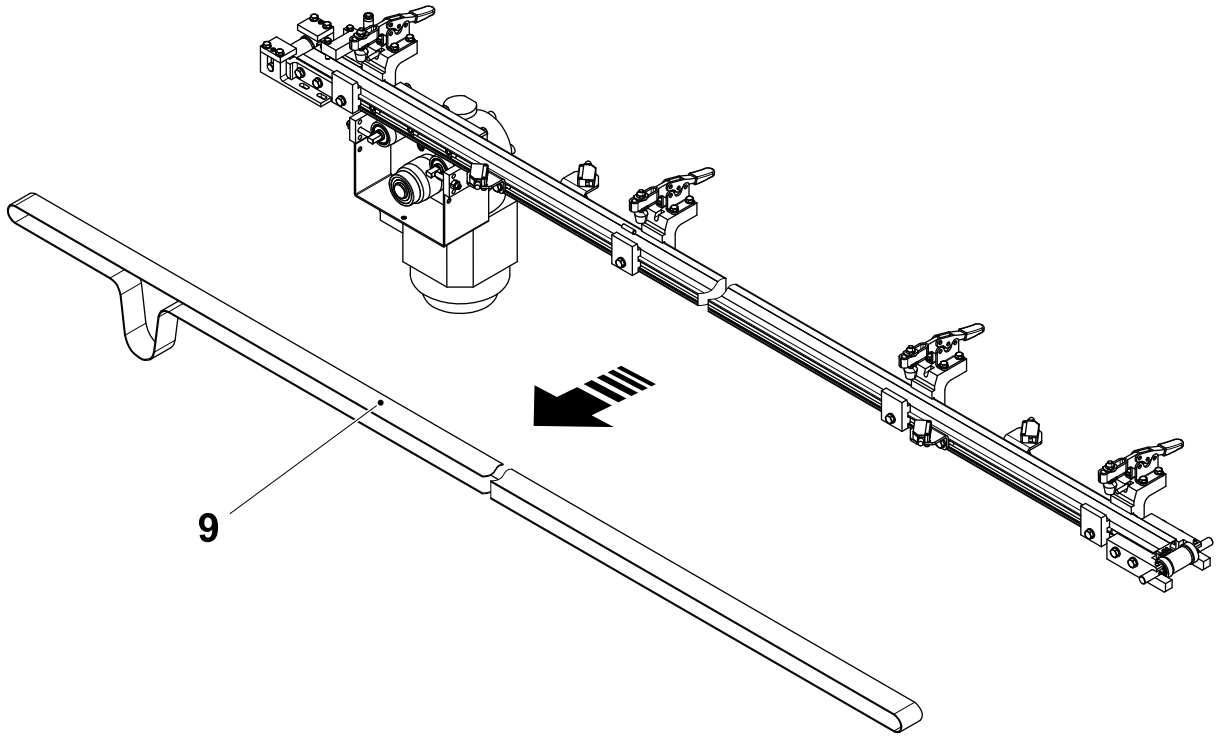

9 Belt

(Cont'd)

(Cont'd)

h) Tension the belt, with the screws (7) and the nuts (8) at sides of the roller (6), see step e) for the setting value.

i) Assemble the rest of the cap conveyor in the reverse order.

j) Install the cap conveyor, see 9.2.1-1 Conveyor - Removal and Assembly.

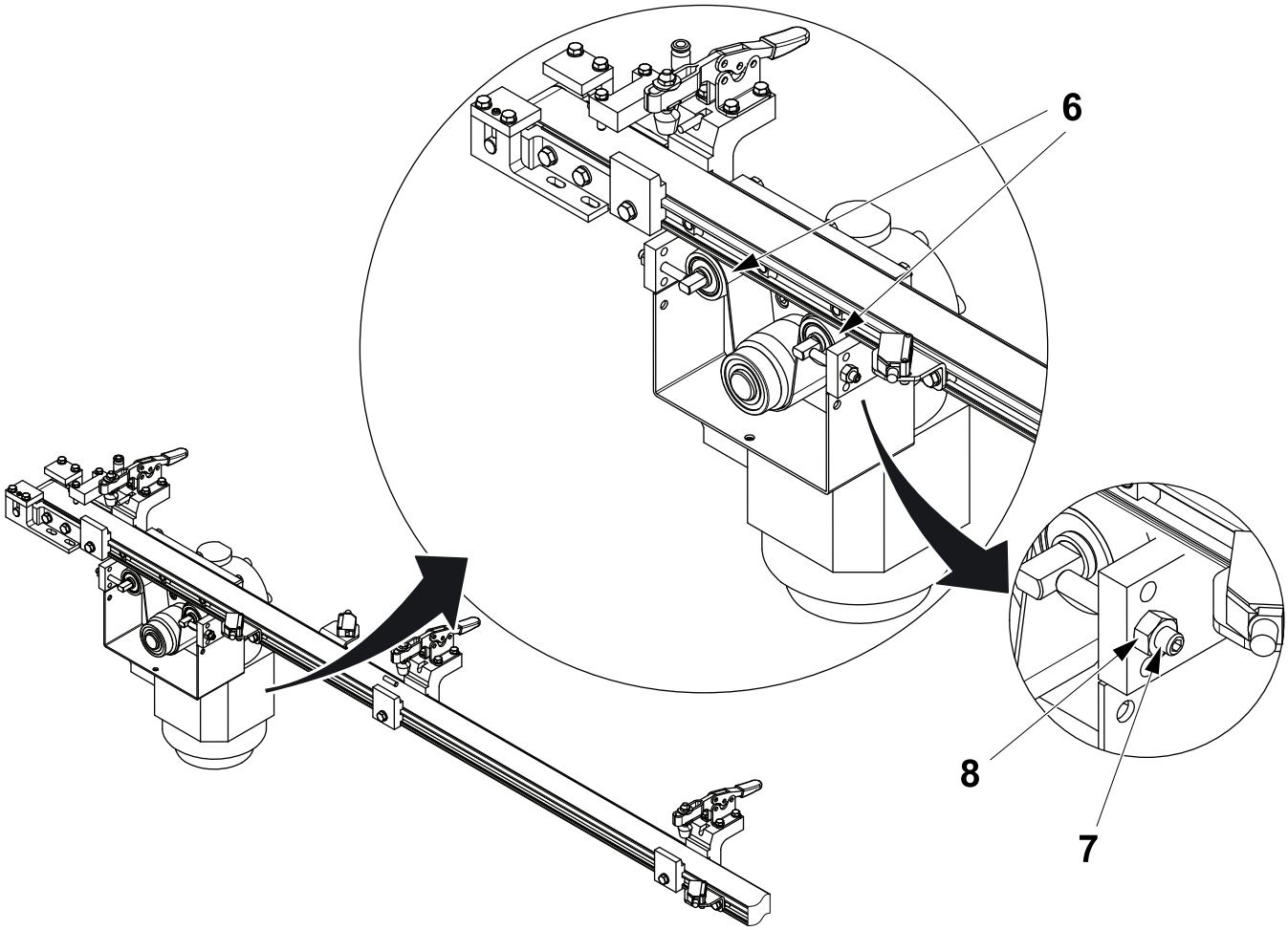

6 Roller
7 Screw
8 Nut

9.2.1-3 Conveyor Belt - Set Tension

Machine Status	Electrical supply disconnecting device in position O (OFF)
SPC Reference	2846413-0300

Tension the belt (1) with the nuts (2) at the sides of the rollers (3).

The belt (1) should be no more than 3 mm away from the bottom of the conveyor.

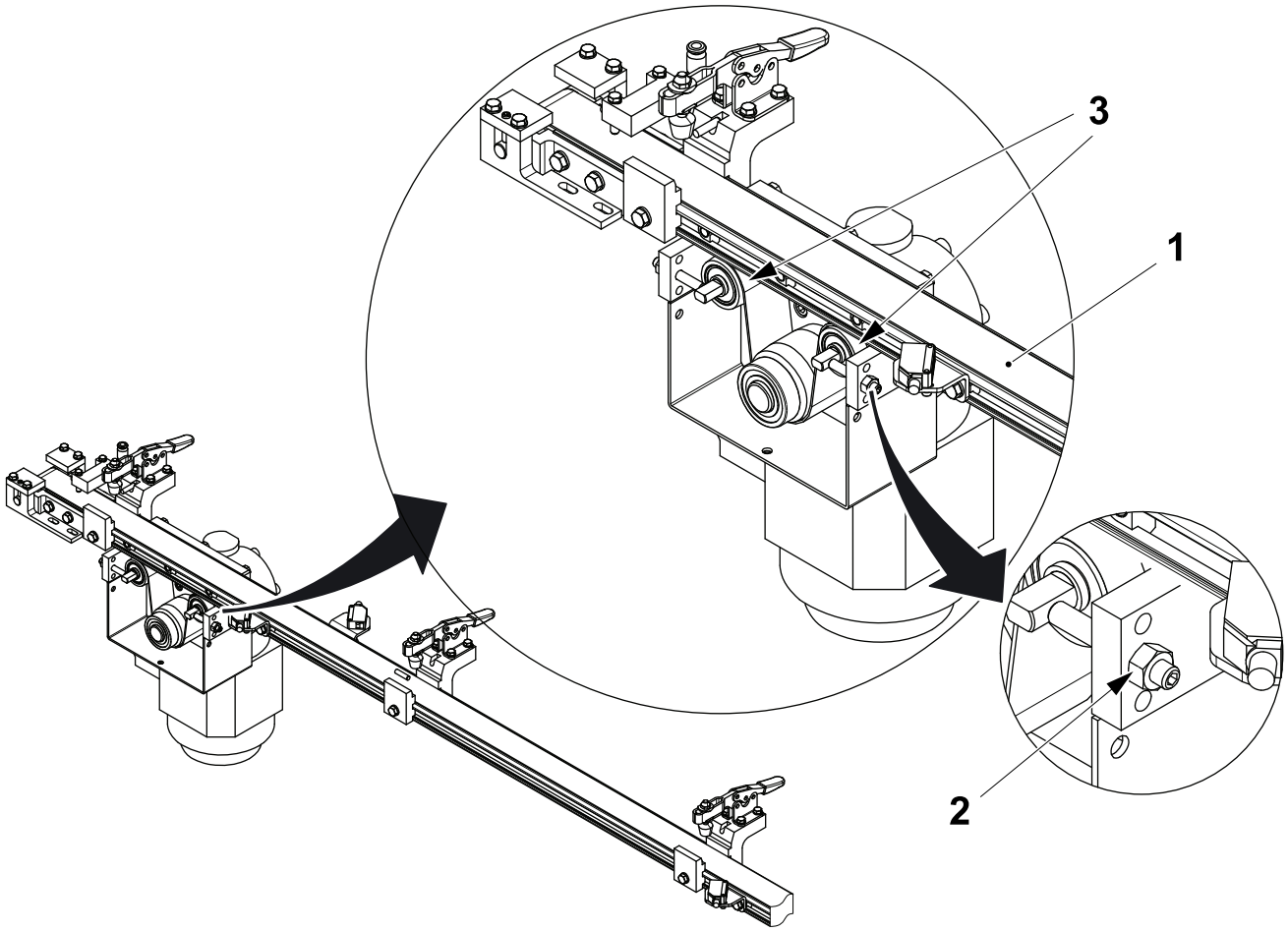

1 Belt
2 Nut
3 Roller

9.2.1-4 Conveyor Belt - Change Drive End Bearings

Machine Status	Electrical supply disconnecting device in position O (OFF)
SPC Reference	2846413-0300

a) Remove the cap conveyor from the machine, see 9.2.1-1 Conveyor - Removal and Assembly.

b) Remove the belt, see 9.2.1-2 Conveyor Belt - Change.

c) Change the bearing (1).

d) Remove the shafts (2) and change the seals (3) and the bearings (4).

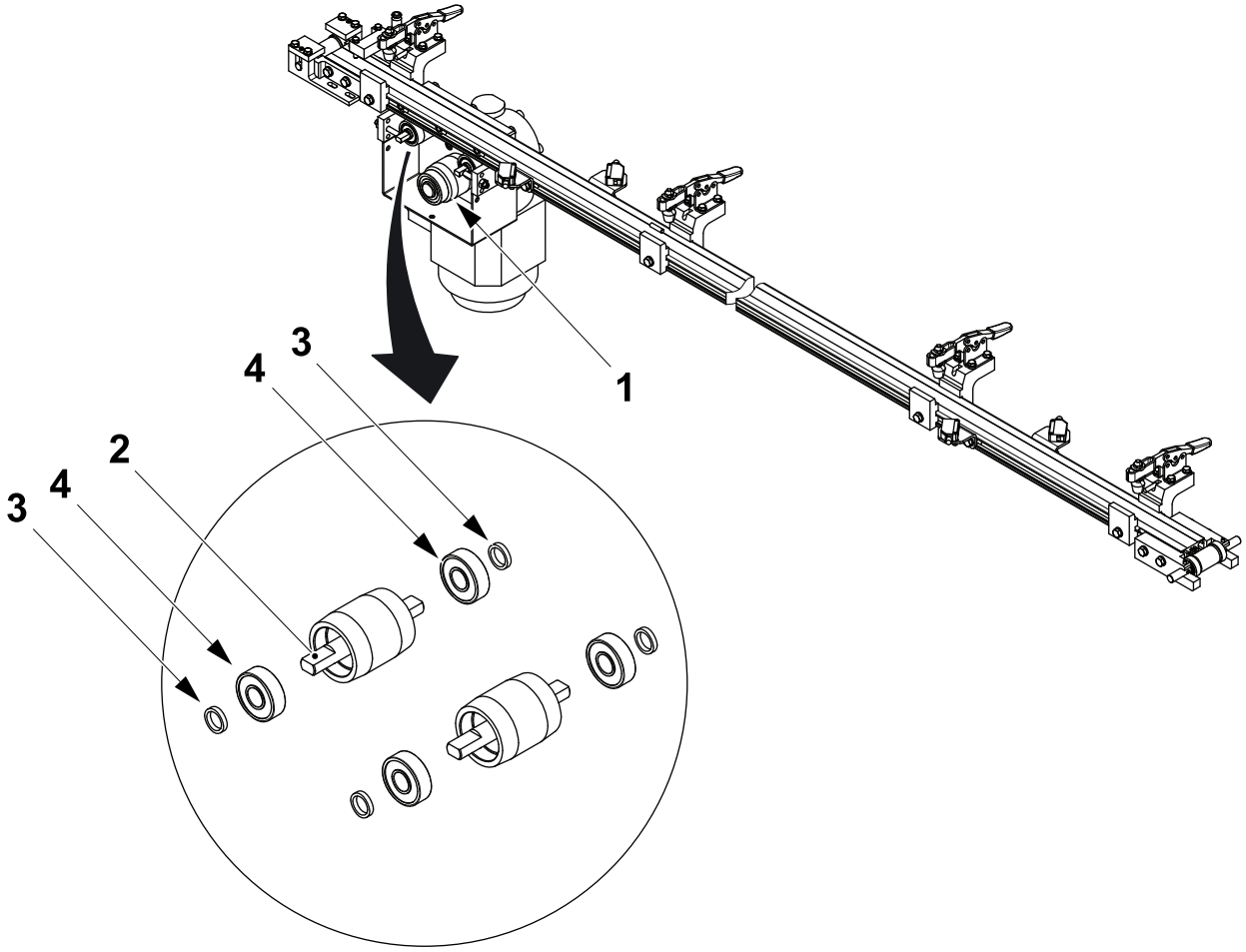

1 Bearing
2 Shaft
3 Seal
4 Bearing

(Cont'd)

(Cont'd)

e) At both sides of the conveyor, remove the screws (5) and the bracket (6).

f) Loosen the screws (7) to allow the shaft (8) to be removed.

g) Remove the shaft (8), the bracket (9) and the bracket (10).

h) At both ends of the shaft (8), remove the retaining rings (11) and the retaining rings (12).

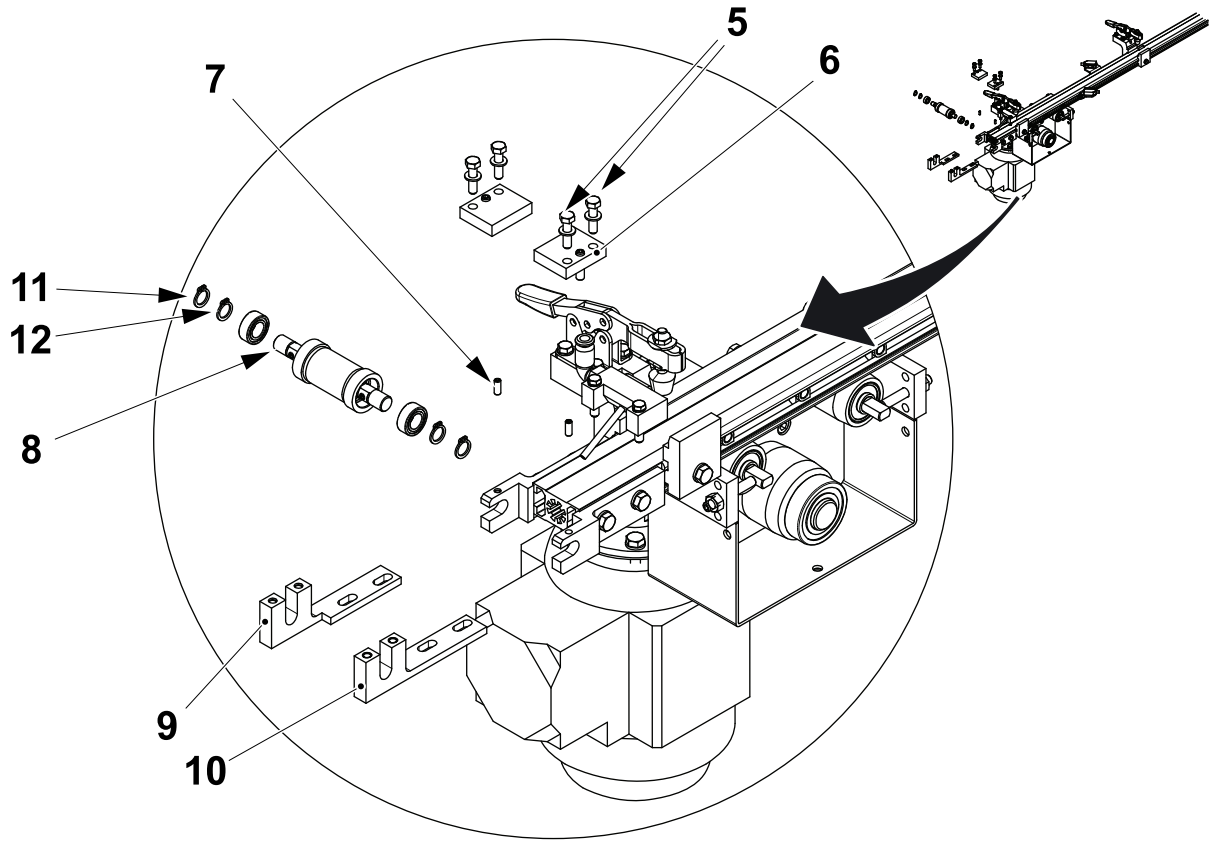

5 Screw
6 Bracket
7 Screw
8 Shaft
9 Bracket
10 Bracket
11 Retaining ring
12 Retaining ring

(Cont'd)

(Cont'd)

Note! If the grub screws (13) have to be moved to remove the bearings (14), their position will have to be set during assembly to ensure that the belt is aligned correctly, see 9.2.1-6 Conveyor Belt - Set Alignment.

i) Change the bearings (14).

j) Assemble in the reverse order.

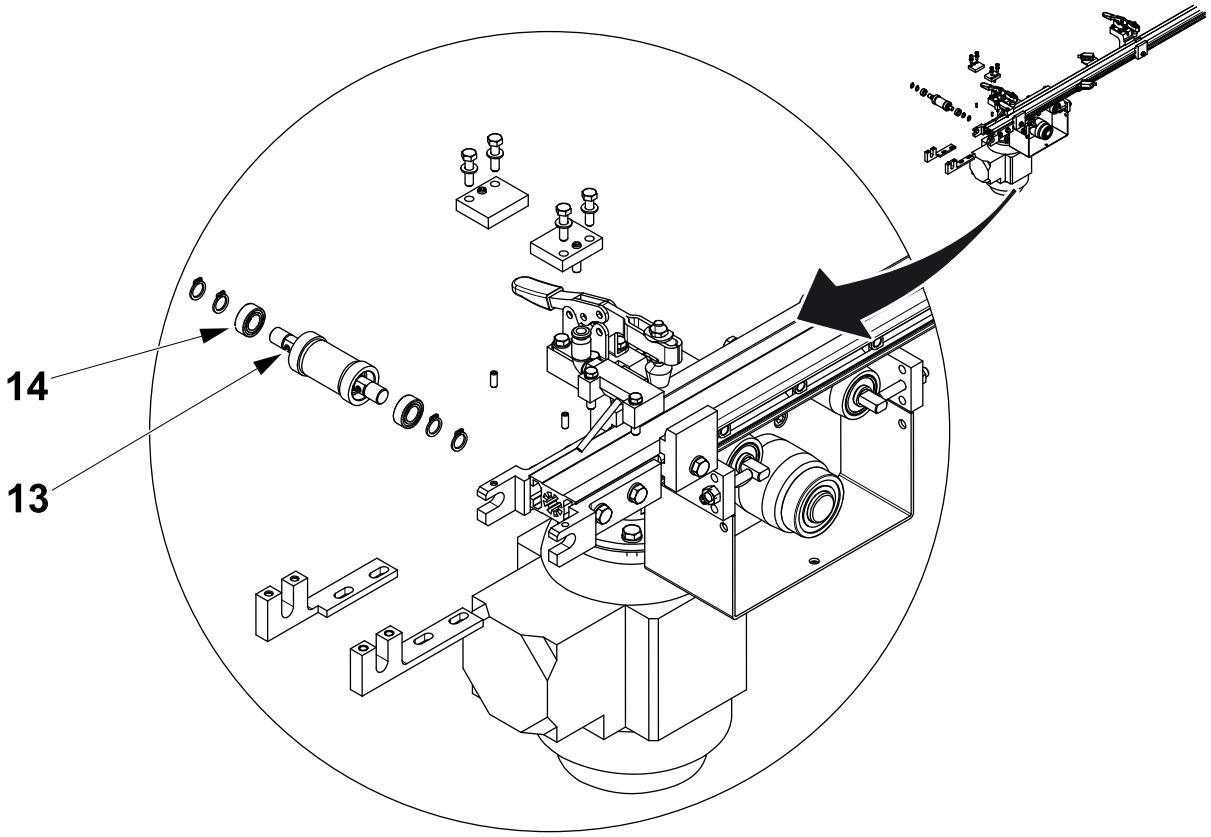

13 Screw
14 Bearing

9.2.1-5 Conveyor Belt - Change Infeed End Bearings

Machine Status	Electrical supply disconnecting device in position O (OFF)
SPC Reference	2846413-0300

a) Remove the cap conveyor from the machine, see 9.2.1-1 Conveyor - Removal and Assembly.

b) Remove the belt, see 9.2.1-2 Conveyor Belt - Change.

c) Loosen the screws (1) and remove the shaft (2).

d) Remove the retaining rings (3) and change the bearings (4).

Note! If the grub grub screws (5) have to be moved to remove the bearings (4), their position will have to be set during assembly to ensure the belt is aligned correctly. See 9.2.1-6 Conveyor Belt - Set Alignment.

e) Assemble in the reverse order.

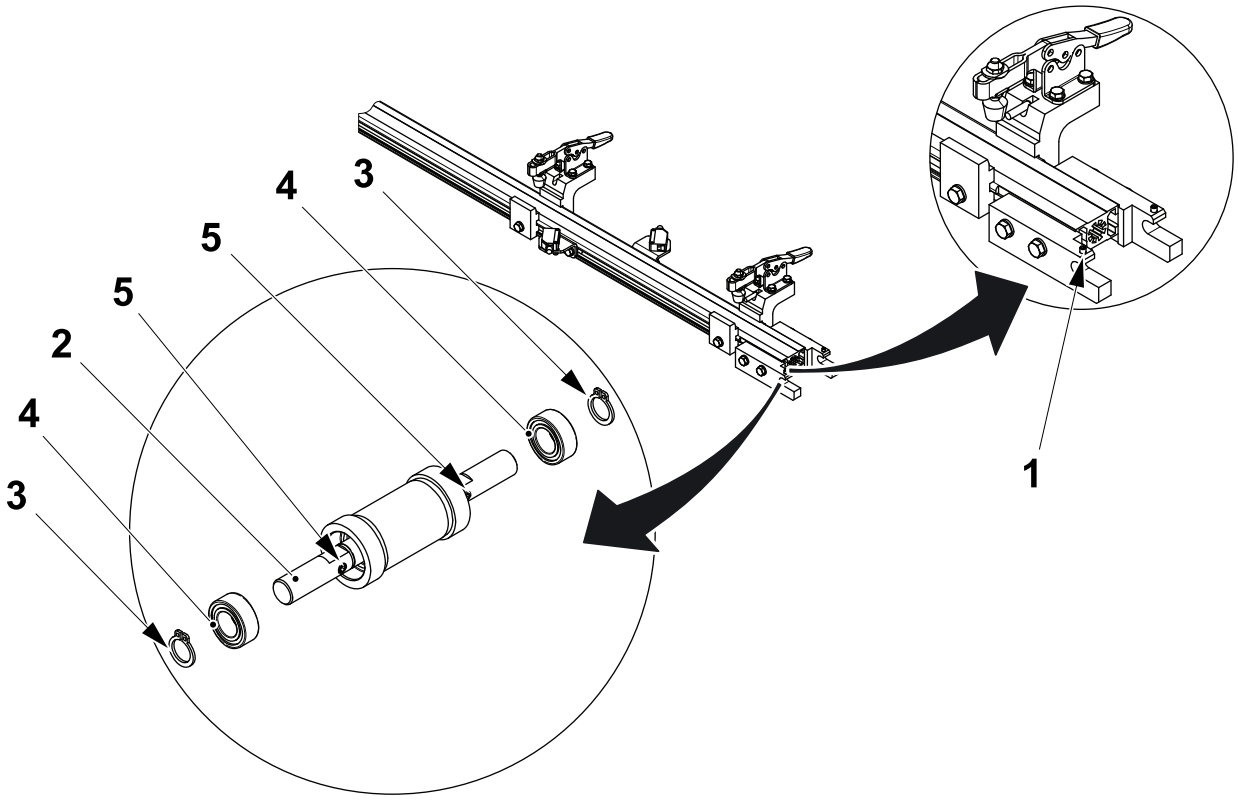

1 Screw
2 Shaft
3 Retaining ring
4 Bearing
5 Grub screw

9.2.1-6 Conveyor Belt - Set Alignment

Machine Status	Electrical supply disconnecting device in position O (OFF)
SPC Reference	2846413-0300

a) Support the conveyor (1) with the machines conveyor transportation bracket.

b) Remove any caps from in front of the sensors and empty the cap sorter of caps to allow the conveyor (1) to run.

Note! The belt tension should be set first. See 9.2.1-3 Conveyor Belt - Set Tension.

c) With the conveyor (1) running check the alignment of the belt on the roller (2).

d) Stop the conveyor (1) by opening a door or stepping down the machine.

e) Loosen the screws (3) and adjust the screws (4) until the belt is central on the roller (2).

f) Tighten the screws (3).

Note! After every modification allow the conveyor to run for five minutes and then check the alignment.

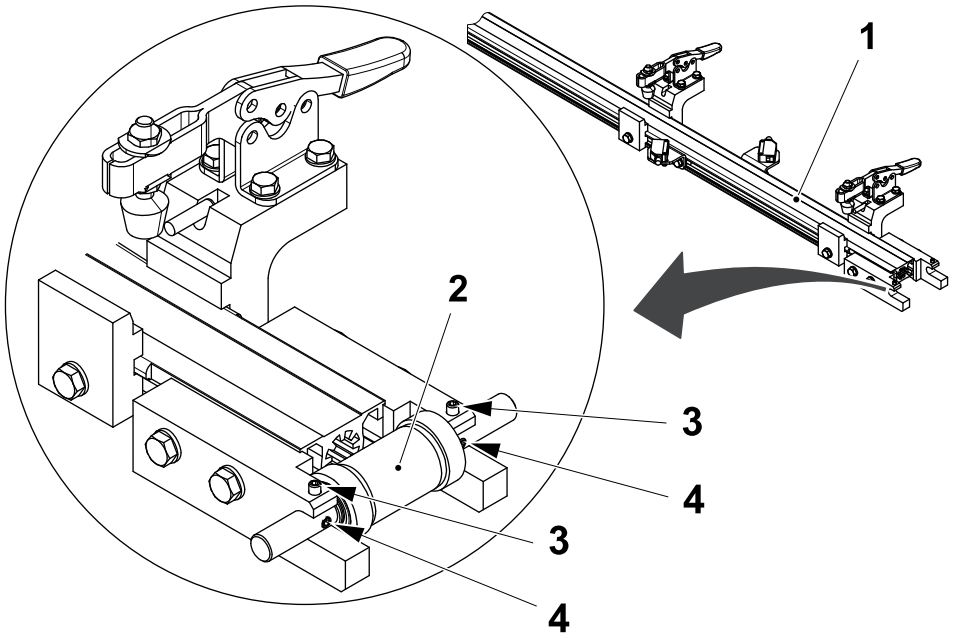

1 Conveyor
2 Roller
3 Screw
4 Screw

9.2.1-7 Conveyor Belt - Set Conveyor to Cap Sequencer

Machine Status	Electrical supply disconnecting device in position O (OFF)
SPC Reference	2846413-0300

Move the conveyor roof (1) so that it is as close as possible to the cap sequencer (2) without touching the leading edge (3).

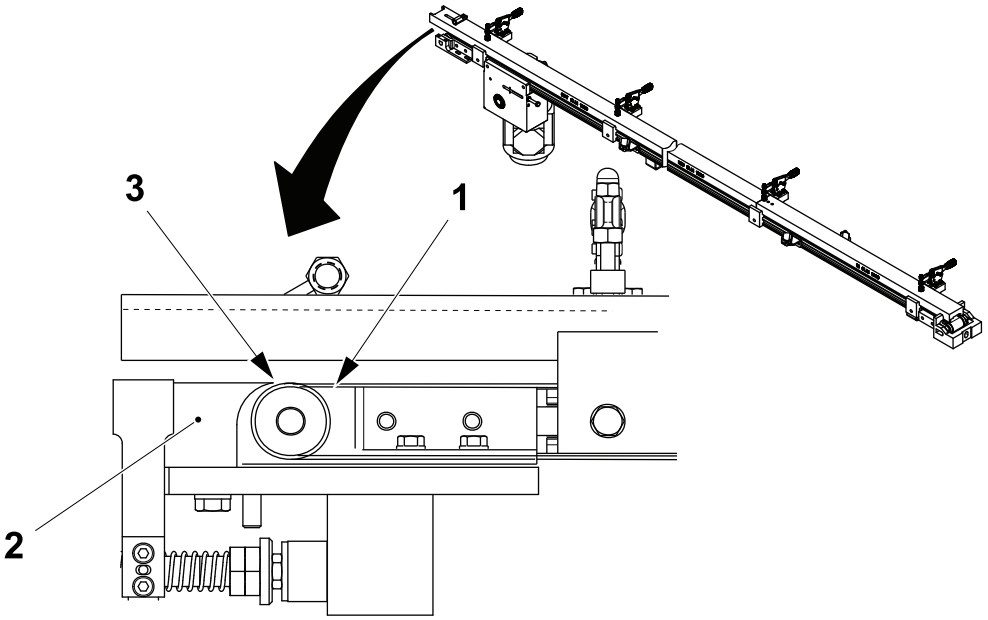

1 Conveyor roof
2 Cap sequencer
3 Leading edge

9.2.1-8 Conveyor Roof - Set Height

Machine Status	Electrical supply disconnecting device in position O (OFF)
SPC Reference	2846413-0300

Note! For StreamCap 200 see page, 9-19.

Set the distance **A** between the conveyor roof (1) and the cap sequencer (2) by adding shim (3).

Cap	Distance A
Slim Cap	12.8 mm
Stream Cap	18 mm
HeliCap2 23	16 mm +0.2 mm
HeliCap27	19 mm +0.2 mm

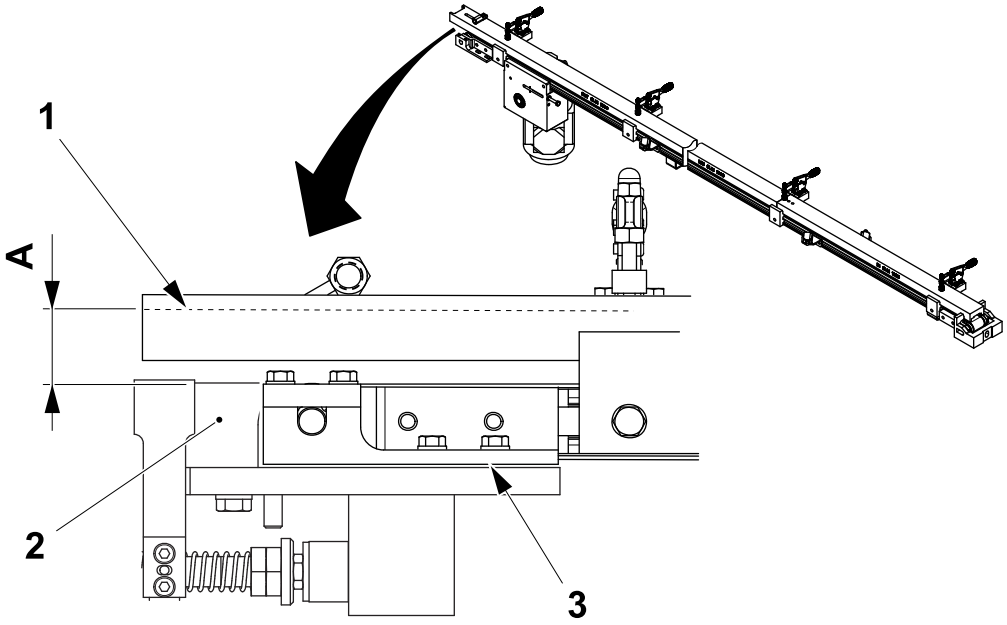

1 Conveyor roof
2 Cap sequencer
3 Shim

9.2.1-9 Conveyor Roof - Set Height (StreamCap 200 Only)

Machine Status	Electrical supply disconnecting device in position O (OFF)
Special Equipment	Setting tool TP Pn. 3034465-0000
SPC Reference	2846413-0300

Note! Use the setting tool (1) to set the correct height of the cover (2).

a) Put the setting tool (1) into the cap conveyor (3).

b) Loosen without removing the screw (4).

c) Add/remove shim (5) until the height of the cover (2) is level on the setting tool (1).

d) Put a 0.6 mm thickness gauge between the setting tool (1) and the cover (2).

e) Add or remove shim (5) to set the distance of 0.6 mm between the setting tool (1) and the cover (2).

f) Tighten the screw (4).

g) Move the setting tool (1) by using the pivot (6) and repeat for all the covers.

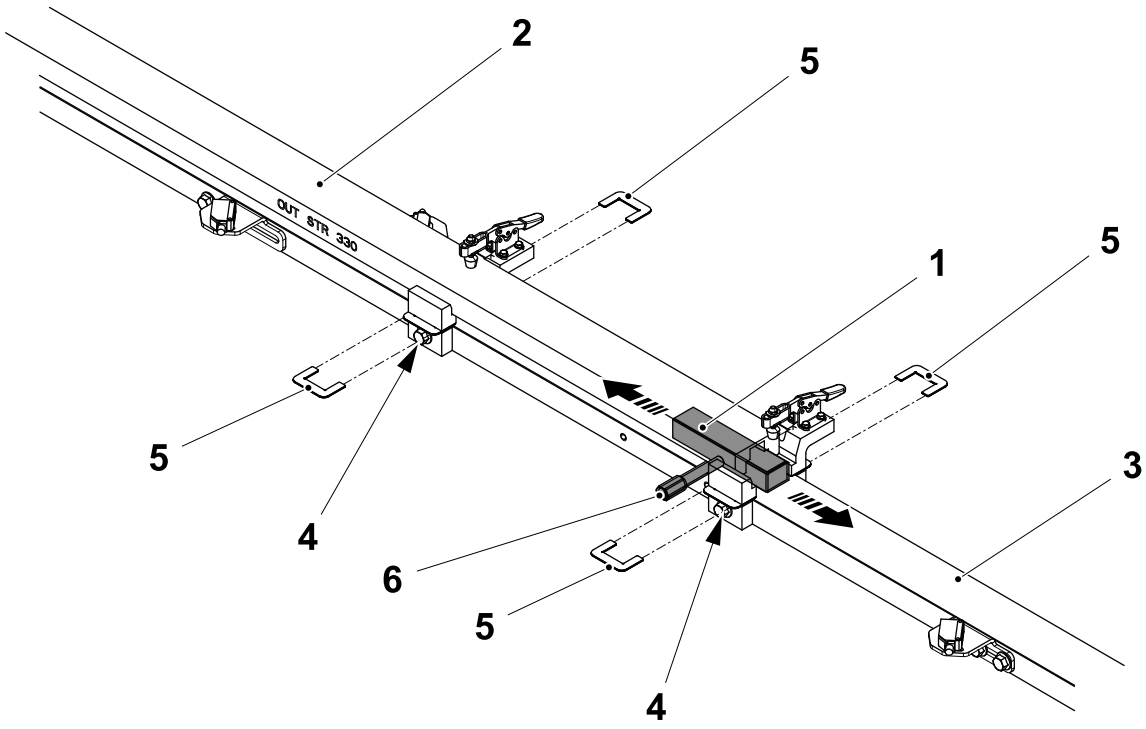

1 Setting tool
2 Cover
3 Cap conveyor
4 Screw
5 Shim
6 Pivot

9.2.1-10 Cap Conveyor - Check Settings

Machine Status	Electrical supply disconnecting device in position O (OFF)
SPC Reference	2846413-0300

With Cap Sequencer

Note! Valid for StreamCap 200 only.

a) Check that the cap sequencer height adjustment (1) and the cap conveyor belt (2) are level.

Note! In case that the height adjustment (1) and the belt (2) are not level, do as follows.

b) Loosen without remove the screw (3).

c) Add or remove shim (4).

d) Tighten the screw (3).

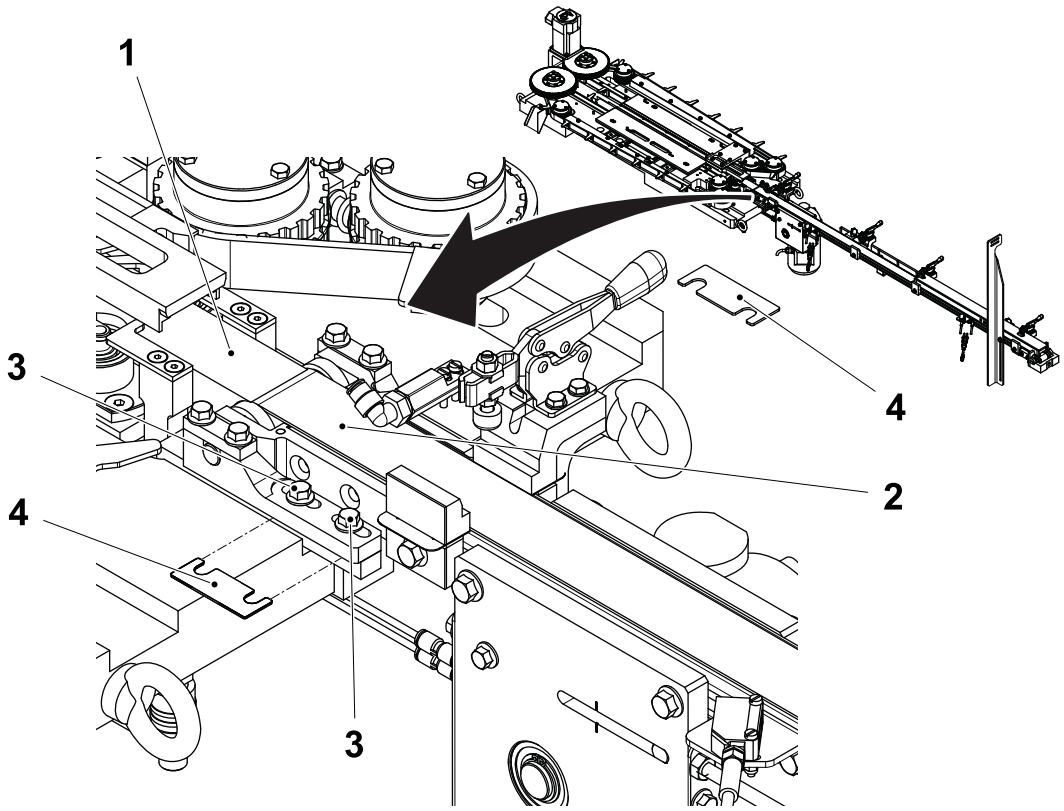

1 Height adjustment
2 Belt
3 Screw
4 Shim

(Cont'd)

(Cont'd)

With Cap Sorter

Note! Valid for StreamCap 200 only.

a) Check the distance **A** between the chute (1) and the cap conveyor belt (2) is 0.3 ÷ 0.5 mm.

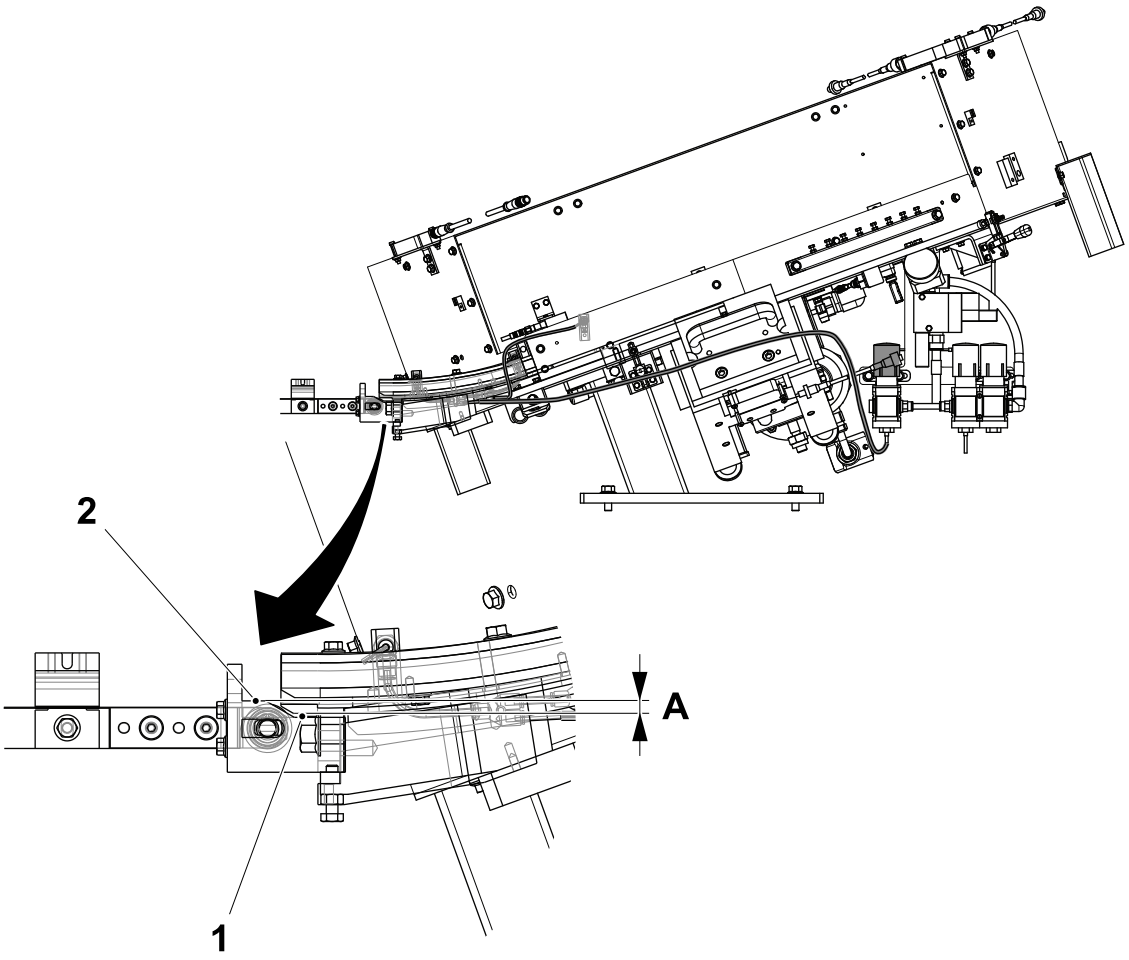

1 Chute
2 Belt

(Cont'd)

(Cont'd)

b) Check the chute (1) and the cap conveyor belt (2) are aligned.

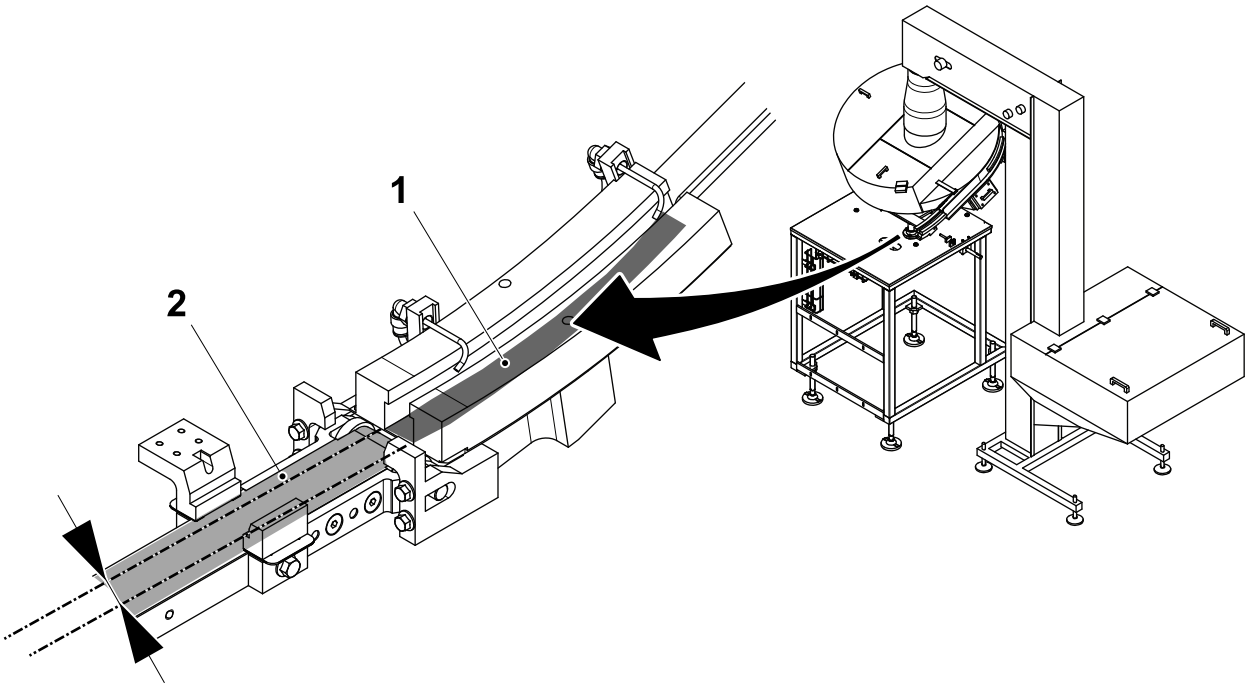

1 Chute
2 Belt

9.2.1-11 Conveyor Belt - Set Sensors

Machine Status	Electrical supply disconnecting device in position O (OFF)
SPC Reference	2846413-0300

a) Set the distance **A** between the motor plate (1) and the minimum queue transmitter sensor (2).

b) Set the distance **B** between the minimum queue receiver sensor (3) and the maximum queue receiver sensor (4).

Note! Set the time for starting and stopping the disc on the TPOP see, 5.4.1-12 Feeder - Set Sorter Speeds.

A = 20 mm ±5 mm
B= 810 mm

c) Loosen the screws (5) and move the sensors (6) upwards/downwards until it detects only the caps (7).

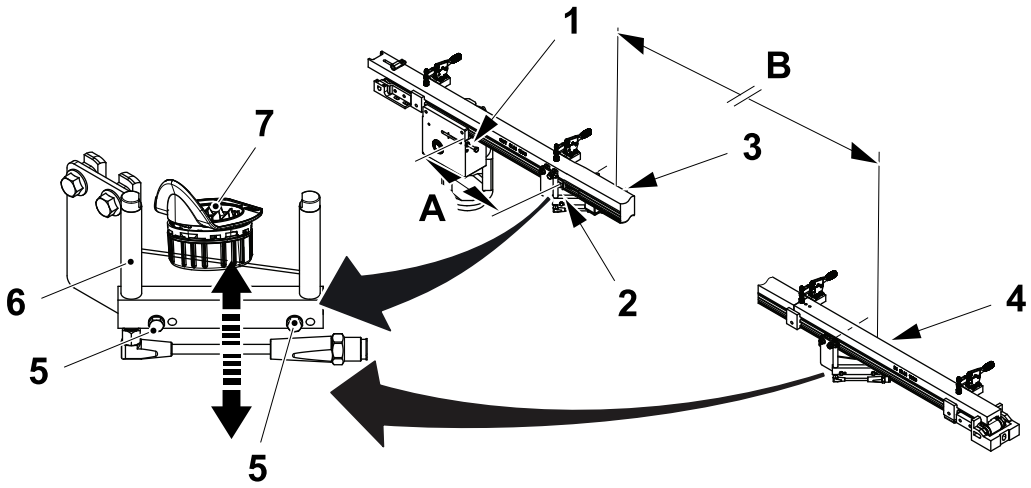

1 Motor plate
2 Transmitter sensor
3 Receiver sensor
4 Receiver sensor
5 Screw
6 Sensor
7 Caps

This page intentionally left blank

10 Electrical System

Electrical System - Description

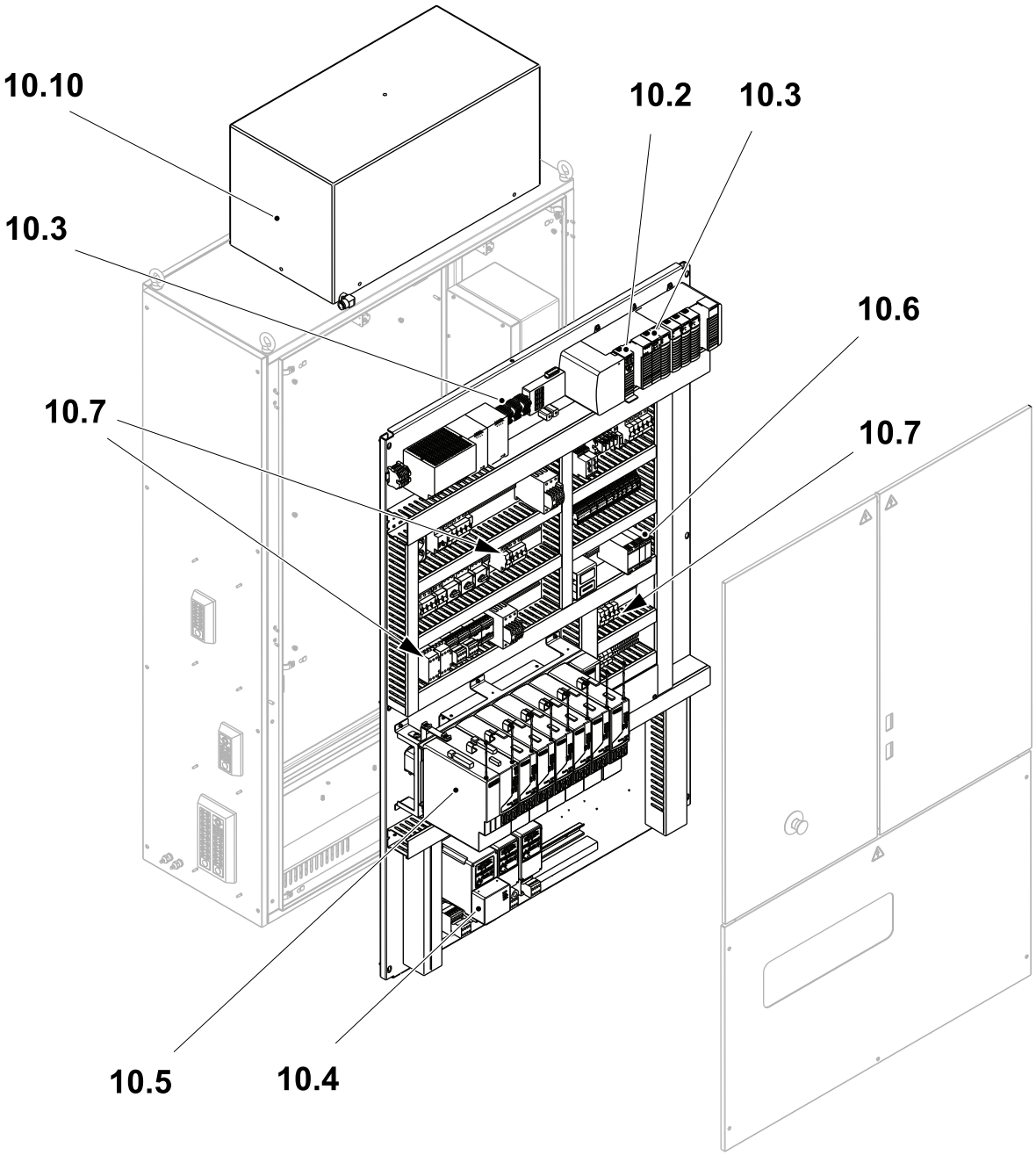

10.2 PLC
10.3 Distributed I/O and Network
10.4 Frequency Converter PowerFlex 4 and 40
10.5 Motor Drive Control
10.6 Safety System
10.7 Circuit Breaker
10.8 Sensors*
10.9 Control Panel*
10.10 Cooling System
10.11 Electrical Conversion*
10.12 PLMS Config*
10.13 CAP30 Development Step*

* Not Illustrated

Electrical System - Description 10-2

10.1 Functional Description 10-9

10.2 PLC 10-16

10.2.1 Preparation for PLC Communication 10-16

10.2.1-1 Preparation for PLC Communication - Configure PC Network Communications 10-16

10.2.1-2 Preparations for PLC Communication - Configure RSLinx 10-24

10.2.1-3 Preparations for PLC Communication - Set EtherNet Module IP Address 10-28

10.2.2 CPU Controller 10-34

10.2.2-1 CPU Module - Change Energy Storage Module (ESM) 10-34

10.2.2-2 CPU Controller - Change. 10-35

10.2.2-3 CPU Module - Load Firmware 10-41

10.2.2-4 CPU Module - Download Program 10-51

10.2.2-5 CPU Module - Troubleshoot 10-61

10.2.2-6 CPU - Upload Program 10-68

10.2.2-7 Install the ControlFlash Application Firmware Library. 10-72

10.2.2-8 PLC - Load FirmWare in PLC, Ethernet, DeviceNet and SERCOS Modules 10-78

10.2.2-9 Install the Driver for the First Kinetix Servo Driver 10-81

10.3 Distributed I/O and Network 10-90

10.3-1 Distributed I/O and Network - Overview 10-90

10.3.1 Distributed I/O and DeviceNet - I/O Modules 10-94

10.3.1-1 DeviceNet Scanner (A01K3004) Node 0. 10-94

10.3.1-2 DeviceNet Adaptor (22-COMM-D) Node 1 10-95

10.3.1-3 DeviceNet Adaptor (1734-ADN) Node 2 10-96

10.3.1-4 DeviceNet Armor Block 10-97

10.3.2 Distributed I/O and DeviceNet - DeviceNet Scanner 10-99

10.3.2-1 DeviceNet Scanner - Change. 10-99

10.3.2-2 DeviceNet Scanner - Set DeviceNet Scanner (A01K3004) Node Address and Baudrate 10-102

10.3.2-3 DeviceNet - DeviceNet on the Machine. 10-103

10.3.2-4 DeviceNet - Saving DeviceNet Files in a Computer. 10-110

10.3.2-5 DeviceNet - Loading a Program in a New DeviceNet Scanner. 10-111

10.3.2-6 DeviceNet - Loading a DeviceNet Program in a New Point I/O Module Adaptor. 10-114

10.3.3 Distributed I/O and DeviceNet - Troubleshooting. 10-117

10.3.3-1 Troubleshooting - General DeviceNet Error 10-117

10.3.3-2 Troubleshooting - DeviceNet Error Indications and Messages on DeviceNet Scanner (Node 0) 10-118

10.3.3-3 Troubleshooting - DeviceNet Error Indications on the PowerFlex40 Module 22-COMM-D Adaptor (Node 1). 10-124

10.3.3-4 Troubleshooting - DeviceNet Error Indications on the 1734-ADN Adaptor for the Point I/O Modules (Node 2). 10-128

10.3.3-5 Troubleshooting - DeviceNet Error Indications on the Armor Block I/O Module (Node 3) 10-132

10.3.3-6 Troubleshooting - DeviceNet Error Indications on the Armor Block I/O Module (Node 4) 10-134

10.3.3-7 Troubleshooting - DeviceNet Error Indications on the Armor Block I/O Module (Node 5) (ReCap Only) 10-134

10.3.3-8 Troubleshooting - DeviceNet Error Indications on the Armor Block I/O Module (Node 6) (ReCap Only) 10-135

10.3.4 Ethernet 10-135

10.3.4-1 EtherNet Module - Change 10-136

10.4 Frequency Converter PowerFlex 4 and 40 10-139

10.4.1 PowerFlex40 and PowerFlex 4 Frequency Converters 10-139

10.4.1-1 PowerFlex40 DeviceNet Adaptor - Change 10-140
10.4.1-2 Frequency Converter - Change 10-151
10.4.1-3 Frequency Converter - LED Description 10-156
10.4.1-4 Frequency Converters - Change Parameters 10-159
10.4.1-5 Frequency Converters - Fault Types 10-164
10.4.1-6 Frequency Converters - Identifying the Fault 10-165
10.4.1-7 Frequency Converters - Clearing a Fault Indication Manually 10-166
10.4.1-8 Frequency Converters - Clearing a Fault Indication Automatically 10-167

10.5 Motor Drive Control 10-171

10.5.1 Servo System - Overview 10-171

10.5.2 Servo System - Sercos Module 10-174

10.5.2-1 Sercos Module - Description 10-174
10.5.2-2 Sercos Module - Change 10-176

10.5.3 Servo Drive 10-179

10.5.3-1 Servo Drive - Description 10-179
10.5.3-2 Servo Drive - Change Drive 10-182
10.5.3-3 Servo Drive - Set Baud Rate 10-187

10.5.4 Servo System Troubleshooting 10-188

10.5.4-1 Troubleshooting - General 10-188
10.5.4-2 Troubleshooting - SERCOS Net Error Indication and Error Codes on the Integrated Axis Module and Axis Modules 10-189
10.5.4-3 SERCOS Module - Troubleshooting 10-199

10.6 Safety System 10-202

10.6.1 Safety System - Description 10-202

10.6.2 Pluto Maintenance 10-203

10.6.2-1 Pluto Maintenance - Connecting a PC to Pluto Module 10-203
10.6.2-2 Pluto Maintenance - Set the ID-FIX Address after Replacing an ID-FIX 10-210

10.6.2-3 Pluto Maintenance - Change Baud Rate, Error Code E26 10-216
10.6.2-4 Pluto Maintenance - Installing a Pluto Module in an Existing Application 10-218
10.6.2-5 Pluto Maintenance - Program Download from a PC to a Pluto Unit 10-219

10.6.3 Pluto Troubleshooting 10-225

10.6.3-1 Pluto Troubleshooting - Safety System Alarm on the Control Panel 10-225
10.6.3-2 Pluto Troubleshooting - Explanations of Inputs, Outputs and LEDs 10-226

10.7 Circuit Breaker 10-230

10.7.1 Automatic Fuses 10-230

10.7.1-1 Automatic Fuses - Set 10-230

10.7.2 Residual Current Device 10-231

10.7.2-1 Residual Current Device - Check Function 10-231

10.7.3 Power Supply - Current Control Relay 10-233

10.7.3-1 Check - Current Control Relay Function 10-233

10.8 Sensors 10-234

10.8.1 Belt Brake Package Sensor 10-234

10.8.1-1 Sensor (W20B0003) - Set Sensitivity 10-234

10.8.2 Cap Sorter Outfeed Congestion Sensor 10-236

10.8.2-1 Sensor (C50B2000) - Set 10-236

10.8.3 General Purpose Sensor 10-237

10.8.3-1 Sensor (W21B4002,W 21B4004,W 21B4006, W21B4008, W21B4024, W21B6002, W21B6004, C50B0013, G50B5000, G50B5004) - Set 10-237

10.9 Control Panel 10-240

10.9-1 Control Panel - Overview 10-240

10.9.1 Control Panel - Touch Screen 10-241

10.9.1-1 Touch Screen - TPOP SHUTDOWN 10-242
10.9.1-2 Touch Screen - Firmware Installation 10-243

10.9.1-3 Touch Screen Machine Setup - Calibrate Touch Screen 10-260
10.9.1-4 Touch Screen - New Application Software Installation 10-264
10.9.1-5 Touch Screen - Remove Existing Application Program 10-271
10.9.1-6 Touch Screen - Load New Application 10-275
10.9.1-7 Touch Screen - Check/Set Network Configuration 10-279
10.9.1-8 Touch Screen - Startup Options Setup 10-296
10.9.1-9 Touch Screen - Display Setup 10-302
10.9.1-10 Touch Screen - Time/Date/Regional Settings Setup 10-306
10.9.1-11 Touch Screen - Start-Up Language Setup 10-310
10.9.1-12 Touch Screen - Language Setup 10-316
10.9.1-13 Touch Screen - Create New Recipes 10-322
10.9.1-14 Touch Screen - Saving Recipe Settings 10-328
10.9.1-15 Recipe - Set Correct Values 10-329
10.9.1-16 Touch Screen - Delete Recipes 10-330
10.9.1-17 Touch Screen - Change Recipes 10-332
10.9.1-18 Photocell Package Check - Installation, Activation and Deactivation 10-334

10.10 Cooling System 10-339

10.10.1 Cooling Unit 10-339

10.10.1-1 Cooling Unit - Clean Filter 10-339
10.10.1-2 Cooling Unit - Change Filter 10-341
10.10.1-3 Cooling Unit - Check 10-342
10.10.1-4 Cooling Unit - Overhaul 10-344
10.10.1-5 Cooling Unit - Troubleshooting 10-350

10.10.2 Thermostat 10-351

10.10.2-1 Thermostat - Set-Up 10-351

10.11 Electrical Conversion 10-352

10.11.1 Variable Frequency Drive 10-352

10.11.1-1 Maintenance Instructions 10-352

10.11.2 Axis Module 10-352

10.11.2-1 Maintenance Instructions 10-352

10.11.3 Communication Unit 10-352

10.11.3-1 Maintenance Instructions 10-352

10.12 PLMS Config 10-353

10.12.1 PLMS - Install DE Config Files 10-353

10.13 CAP30 Development Step 10-354

10.13-1 Development Step - Setup 10-354

10.13-2 Development Step - Check 10-355

10.13-3 Development Step - Set 10-356

10.1 Functional Description

The Networks

The system uses networks for almost all communications.

There are three networks in the machine:

- The Ethernet: This is used for data exchange on the input side.
- The Sercos net: This is a fibre optic high speed link for the communication of motion data between the SERCOS module, in the Control Logic Rack and the Servo drivers of the Motor Drive Control
- The Device net: this is used for the transmission of data to and from the sensors and actuators via the I/O Modules and Armor Block Devices. The Device net is also used for the control of the Frequency Converters and the AC Motors connected to them.

The Control Panel (HMI)

The Control Panel is used to start, stop and supervise the machine from one common point. The control panel display (touch screen) is touch sensitive.

The operating panel is described in detail in the Operating Manual for this machine.

(Cont'd)

(Cont'd)

The Safety System

The Pluto PLC safety system provides a method of putting the machine in a mode that is safe to work with when an action is taken that could put the operator in danger or create a situation where the machinery could be damaged. The Pluto PLC communicates via the I/O bus with the system PLC.

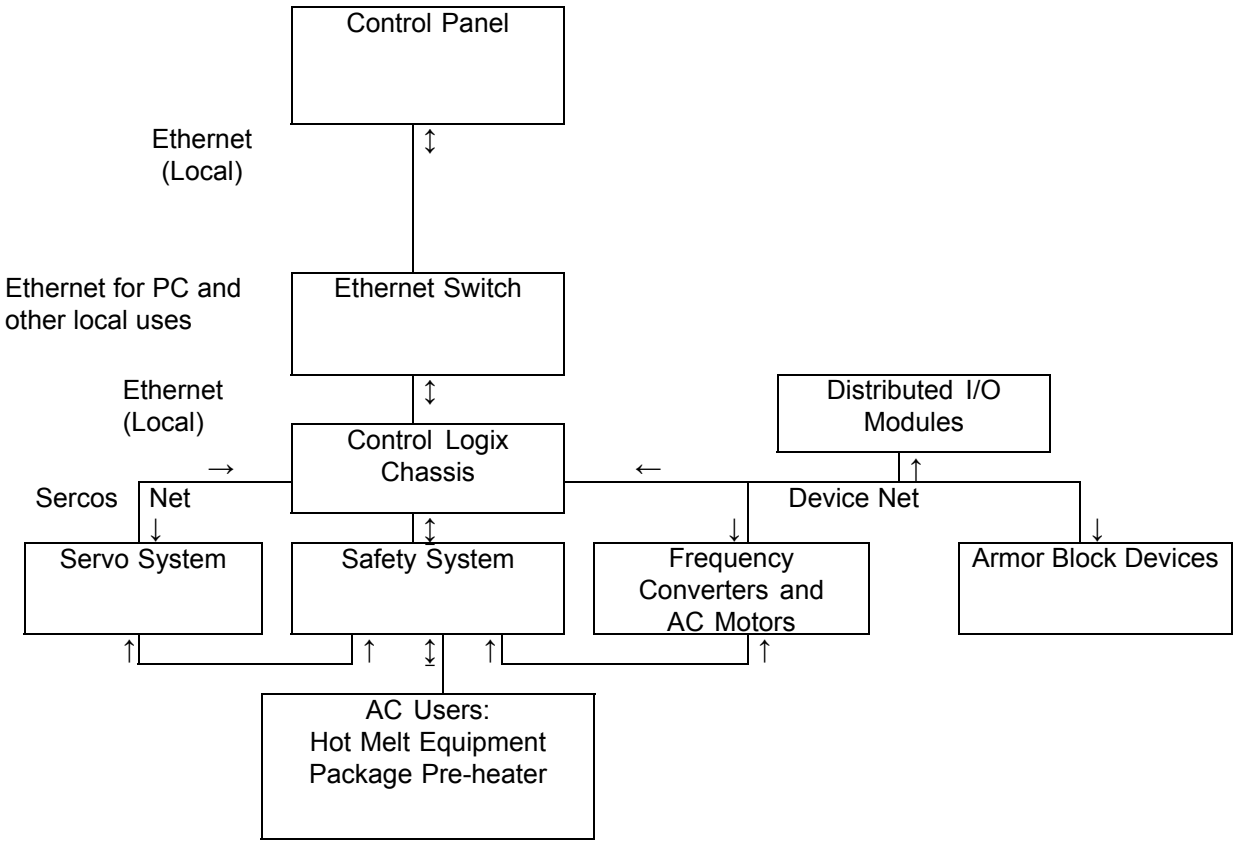

(Cont'd)

(Cont'd)

Control Logic Chassis - CPU Processor

The PLC Processor (A01K3001) uses upgradeable firmware to perform the tasks contained in PLC program. The PLC program can be loaded into the unit from a PC and, if necessary, the program in the PLC can be copied to a PC. System variables, entered via the Control Panel or the PC are also stored in the PLC.

A CompactFlash card is provided in the PLC module to allow a back-up of the system data and the PLC program to be made.

See 10.2 PLC for further information.

Control Logic Chassis - Ethernet Bridge Modules

There are two ethernet bridge modules. The bridge module (A01K3002) provides a link to external devices such as a line controller.

The other ethernet bridge module (A01K3003) is connected to the ethernet switch (A01X2000) to provide a connection to the Control Panel, the Vision System, if it is installed, and the host PC.

See 10.2 PLC for further information.

Control Logic Chassis - DeviceNet Bridge Scanner Modules

The devicenet scanner (A01X3004) provides a link between the PLC Processor, the Frequency Converters, the I/O modules. and the Armor Block modules.

See 10.3.1 Distributed I/O and DeviceNet - I/O Modules for further information.

Control Logix Chassis

PLC Processor (A01K3001)	Ethernet Bridge Module (A01K3002) Ethernet Bridge Module (A01K3003)	DeviceNet Bridge Scanner Module (A01X3004)	Digital Input Module (A01K3005) Digital Input Module (A01K3006)	Digital Output Module (A01K3007) Digital Output Module (A01K3008)	ReCap Machines Only Digital Output Module (A01K3009)	Sercos Module (A01K3010)

(Cont'd)

(Cont'd)

Control Logic Chassis - Digital Input Module

The digital input modules (A01K3005) and (A01K3006) receive digital signals from devices such as sensors and relays and distributes them in the electrical cabinet and the machine board.

These are "plug and play" devices and require no maintenance.

Control Logic Chassis - Digital Output Module

The two digital output modules (A01K3007) and (A01K3008) send signals to devices such as sensors, relays and valves and also distribute signals to components in the electrical cabinet and the machine board.

These are "plug and play" devices and require no maintenance.

Control Logic Chassis - Digital Output Module (ReCap Only)

The digital output module (A01K3009) sends signals to pneumatic panel to operate the additional valves used in Recap machines.

This is a "plug and play" device and requires no maintenance.

Control Logic Chassis - SERCOS Module

The SERCOS module (A01K3010), in the Control Logix Chassis, converts motion data from the PLC Processor into data that can be transmitted via the SErial Real time COmmunication System SERCOS digital interface to the Kinetix 6000 drivers.

See 10.5.1 Servo System - Overview for further information.

Power Supplies

The low voltage power supply unit (A01T2000) produces the stabilised 24V DC for Control Logix Power Supply (A01T3000) and other components in the machine.

The low voltage power supply unit (A81T4000) produces 24V DC for the DeviceNet.

(Cont'd)

(Cont'd)

Kinetix 6000 Servo Control (ScrewCap Only)

The kinetix servo control modules, convert the position or motion data arriving on the SERCOS net into servo motor power.

There is one module for each servo motor.

Servo motors are used where precise positioning or exact speeds are required.

See 10.5.1 Servo System - Overview for more information.

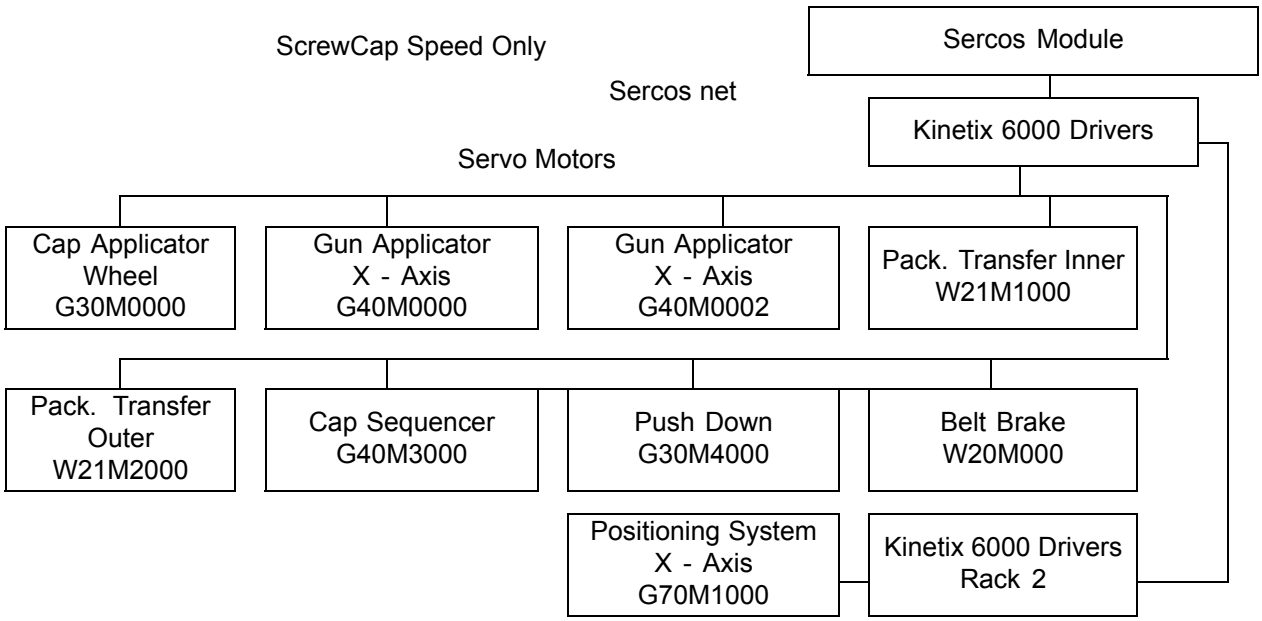

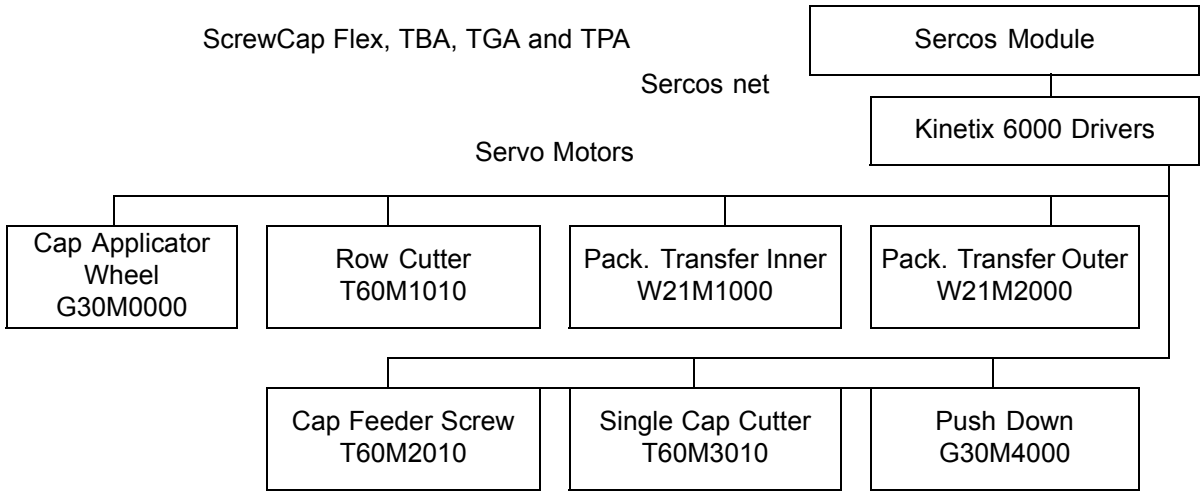

(Cont'd)

(Cont'd)

Kinetix 6000 Servo Control (ReCap Only)

The kinetix servo control modules, convert the position or motion data arriving on the SERCOS net into servo motor power.

There is one module for each servo motor.

Servo motors are used where precise positioning or exact speeds are required.

See 10.5.1 Servo System - Overview on page 10-171 for more information.

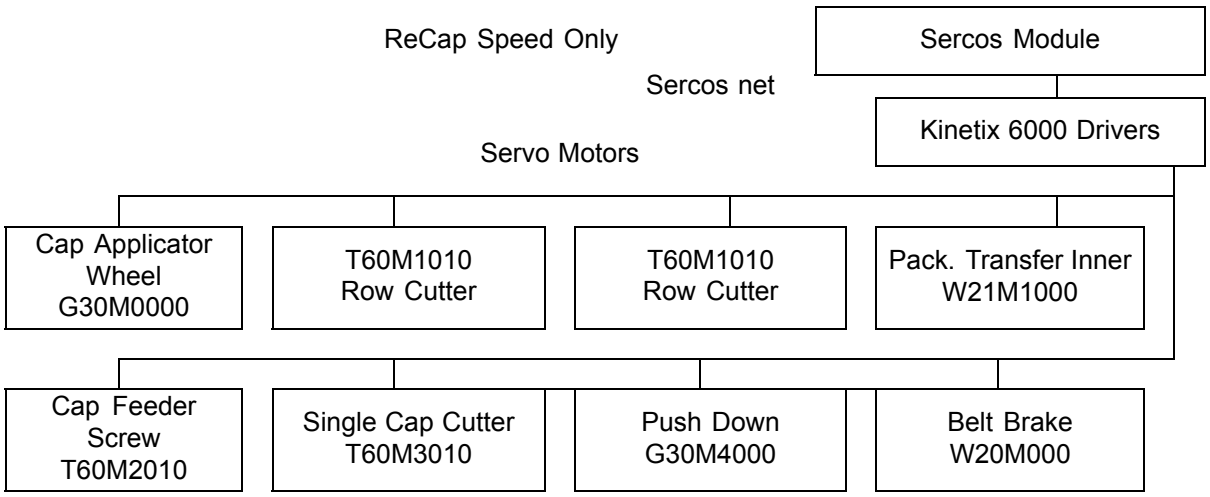

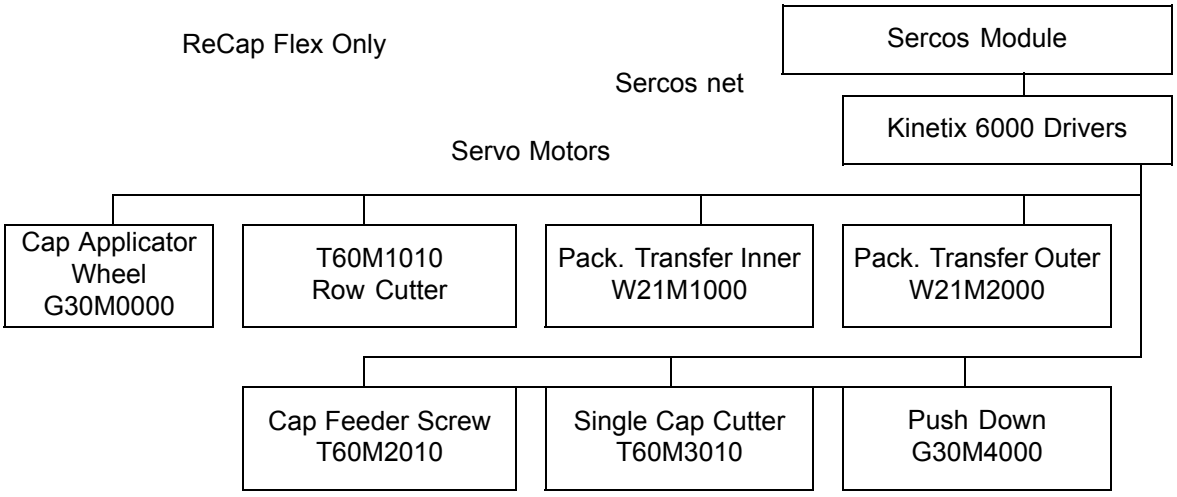

(Cont'd)

(Cont'd)

The Frequency Converters

Frequency converters are used to provide the drive power for the AC motors.

AC motors are used where a constant speed is required irrespective of their load.

There is one frequency converter for each AC motor.

The Distribution I/O Modules

The Distributed I/O Modules communicate with sensors and actuators in the system on one side and with the DeviceNet Bridge Module on the other.

See 10.3-1 Distributed I/O and Network - Overview for more information.

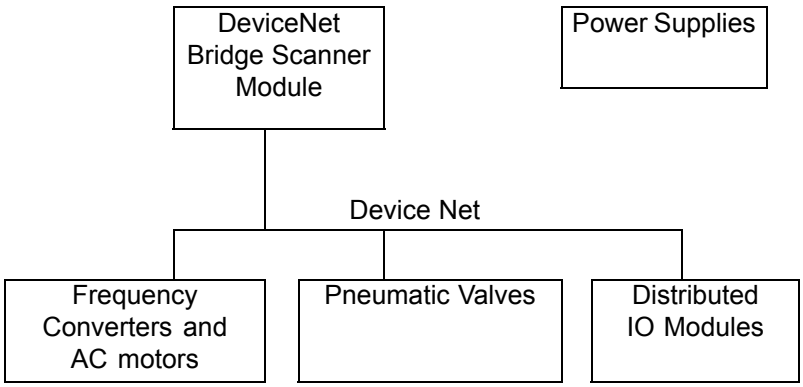

10.2 PLC

10.2.1 Preparation for PLC Communication

10.2.1-1 Preparation for PLC Communication - Configure PC Network Communications

Machine Status	Electrical supply disconnecting device in position I (ON)
Special Equipment	PC with CD drive
SPC Reference	2833407-0300

Before data can be sent to the PLC from the PC via an ethernet cable, the PC network settings must first be configured. The following procedure describes how to configure the PC network communications.

Note! If after configuring the PC network communications it is not possible to connect to the PLC, it is recommended to disable the PC firewall protection. Contact the local IT administrator for assistance in disabling the PC fire wall protection.

(Cont'd)

(Cont'd)

Disable Wireless Network Connection

a) Open the START MENU (1) on the PC and select SETTINGS (2) and then NETWORK CONNECTIONS (3) to open the NETWORK CONNECTIONS window (4).

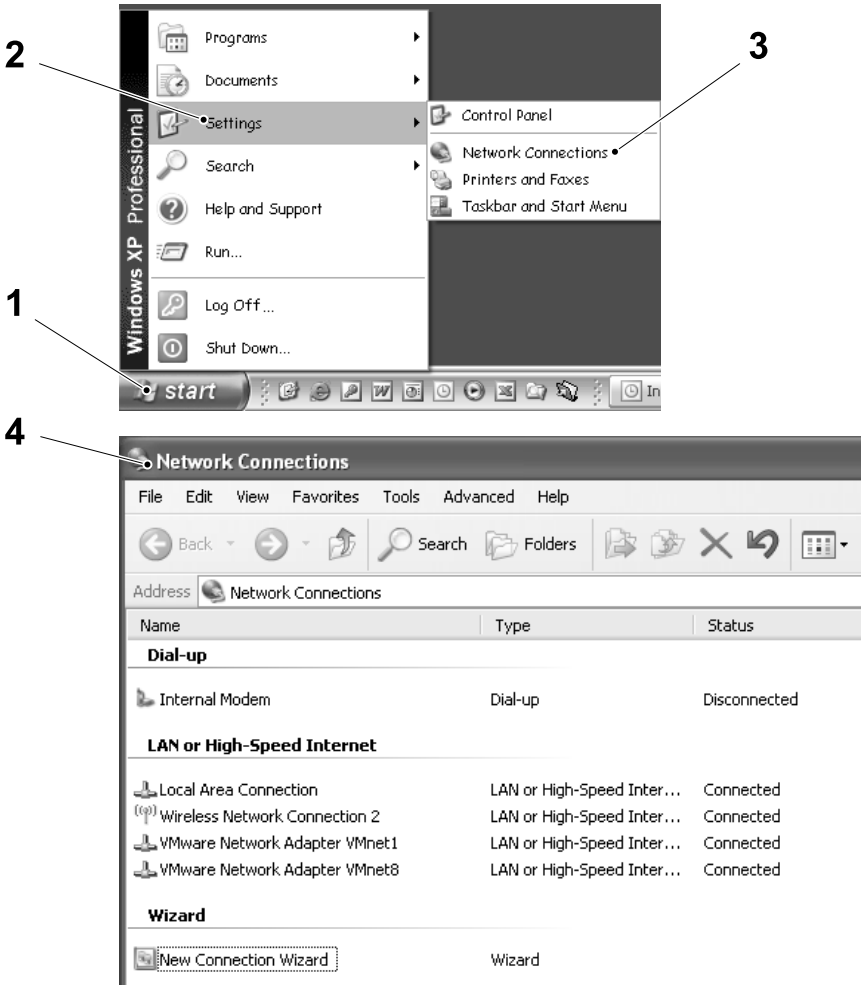

1 Start menu
2 Settings
3 Network Connections
4 Network Connections window

(Cont'd)

(Cont'd)

b) In the NETWORK CONNECTIONS window (4) select the WIRELESS NETWORK CONNECTION (5).

c) Right click the PC mouse and select DISABLE (6).

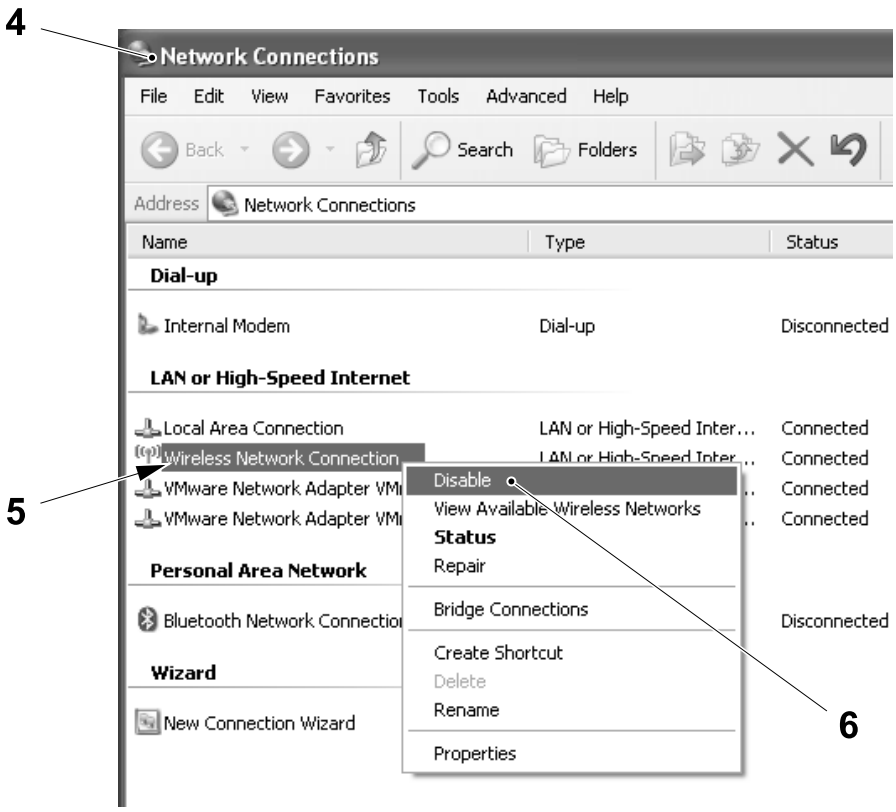

4 Network Connections window

5 Wireless network connection

6 Disable

(Cont'd)

(Cont'd)

Configure PC IP Address

a) Open the START MENU (1) on the PC and select SETTINGS (2) and then NETWORK CONNECTIONS (3) to open the NETWORK CONNECTIONS window (4).

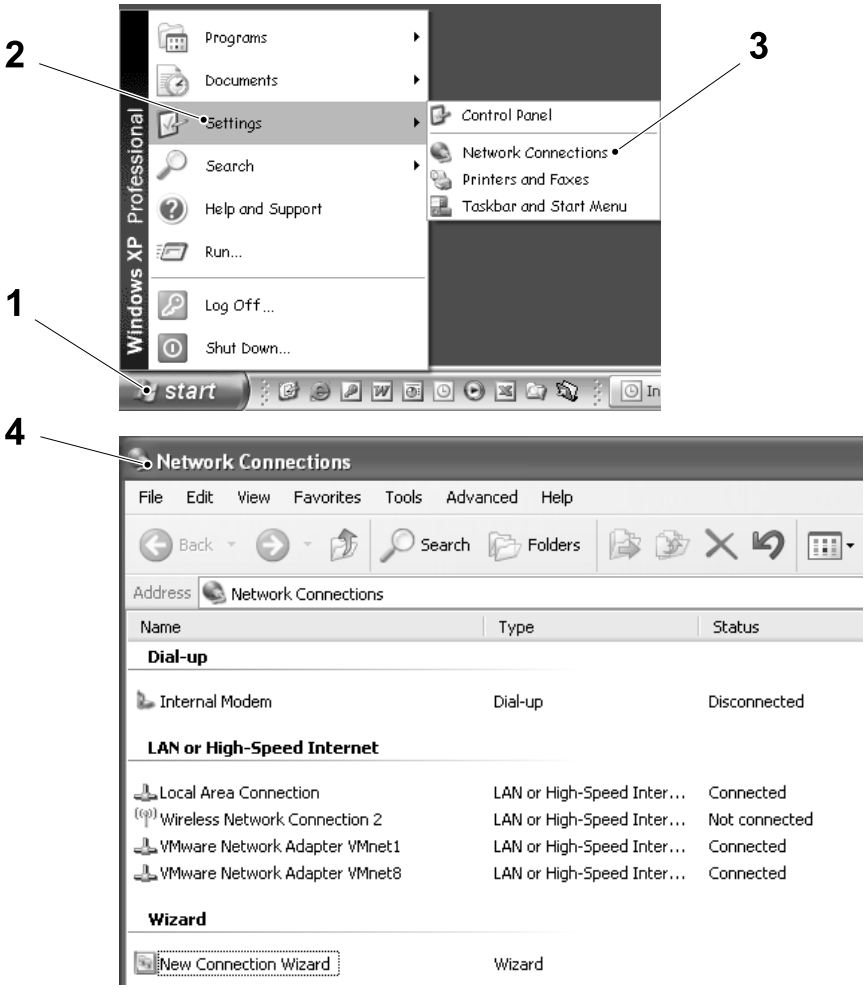

1 Start menu
2 Settings
3 Network connections
4 Network connections window

(Cont'd)

(Cont'd)

Note! The LOCAL AREA CONNECTION (5) is given only as an example, if multiple area connections are listed in the NETWORK CONNECTIONS window (4), select the required network connection.

b) In the NETWORK CONNECTIONS window (4) select the LOCAL AREA CONNECTION (5) and right click the PC mouse to select PROPERTIES window (6).

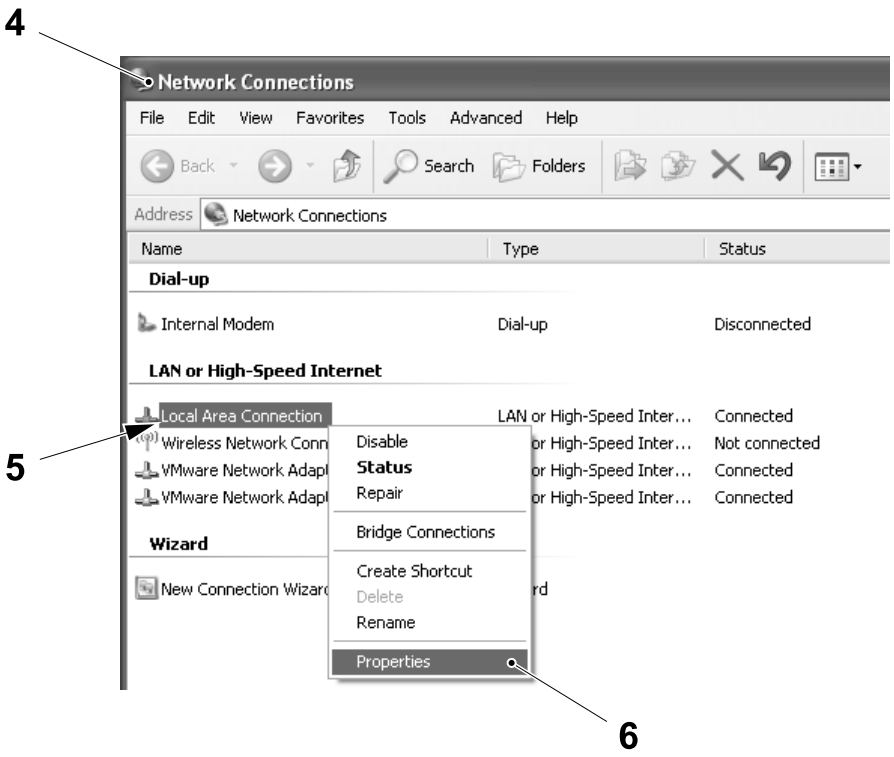

4 Network connections window
5 Local area connection
6 Properties window

(Cont'd)

(Cont'd)

c) In the LOCAL AREA CONNECTION PROPERTIES window (7) select INTERNET PROTOCOL (TCP/IP) (8) and then select PROPERTIES (9).

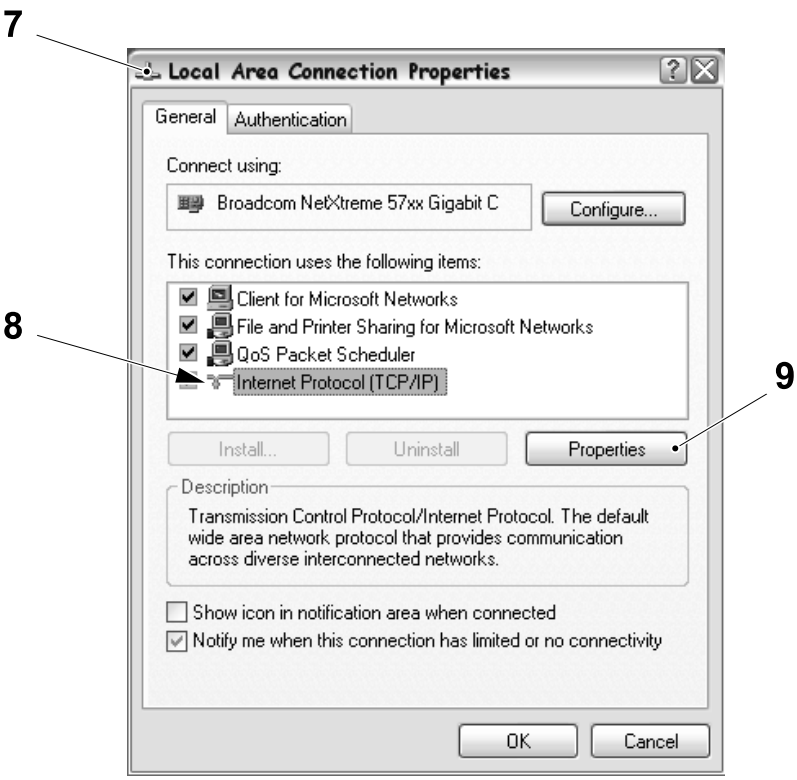

7 Local area connection properties window
8 Internet protocol (TCP/IP)
9 Properties

(Cont'd)

(Cont'd)

Note! The unique number "XXX" must be within the range of the permitted IP addresses if the firewall protection is configured to allow a range of IP addresses and higher than the number 100 to avoid possible conflicts with machine device IP addresses.

d) Check the `USE THE FOLLOWING IP ADDRESS` button (10) and the `USE THE FOLLOWING DNS SERVER ADDRESSES` button (11).

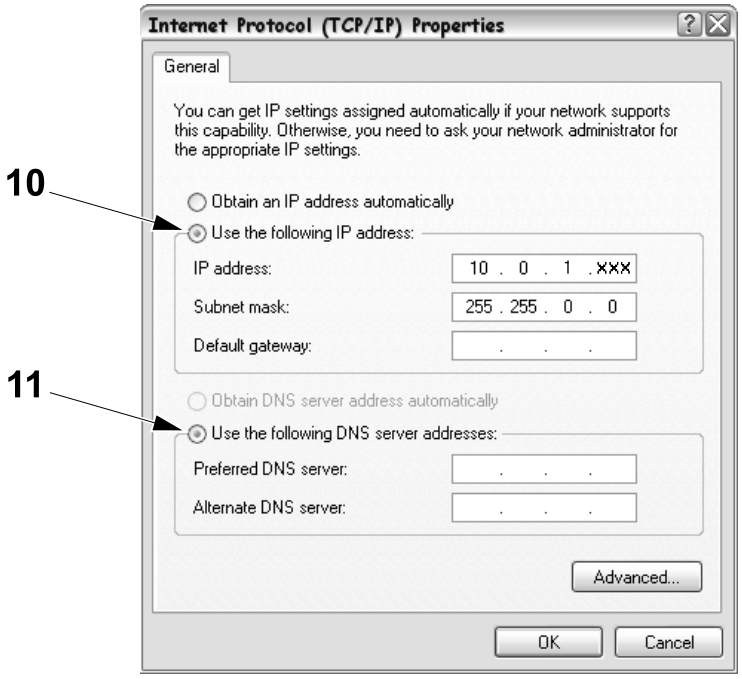

10 Use the following IP address button

11 Use the following DNS server addresses button

(Cont'd)

(Cont'd)

e) In the IP ADDRESS BOX (12) enter the IP address chosen for the PC. The IP address chosen must conform to the format 10.0.1.XXX. This must be a unique number that is not assigned previously to any PC or PLC connected to the same network.

f) In the SUBNET MASK BOX (13) enter the same subnet mask shown in the illustration below.

g) Select the OK button (14) to confirm the setting and close the window.

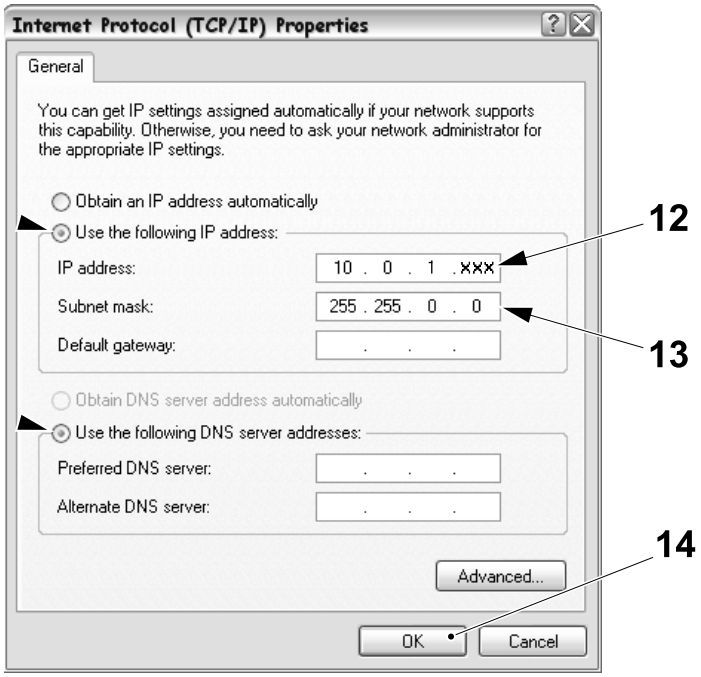

12 IP address box
13 SUBNET MASK box
14 OK button

10.2.1-2 Preparations for PLC Communication - Configure RSLinx

Machine Status	Electrical supply disconnecting device in position I (ON)
Special Equipment	PC with CD drive Ethernet communication cable
SPC Reference	2833407-0300

The RSLinx software enables seamless communication between the PC and the PLC and its components over different networks such as ethernet and DeviceNet. Before communication is possible, the network and IP addresses for the PC and PLC must be set in RSLinx as follows:

a) Open the START menu on the PC and select `PROGRAMS` (1), `ROCKWELL SOFTWARE` (2), `RSLINX` (3) and then `RSLINX CLASSIC` (4).

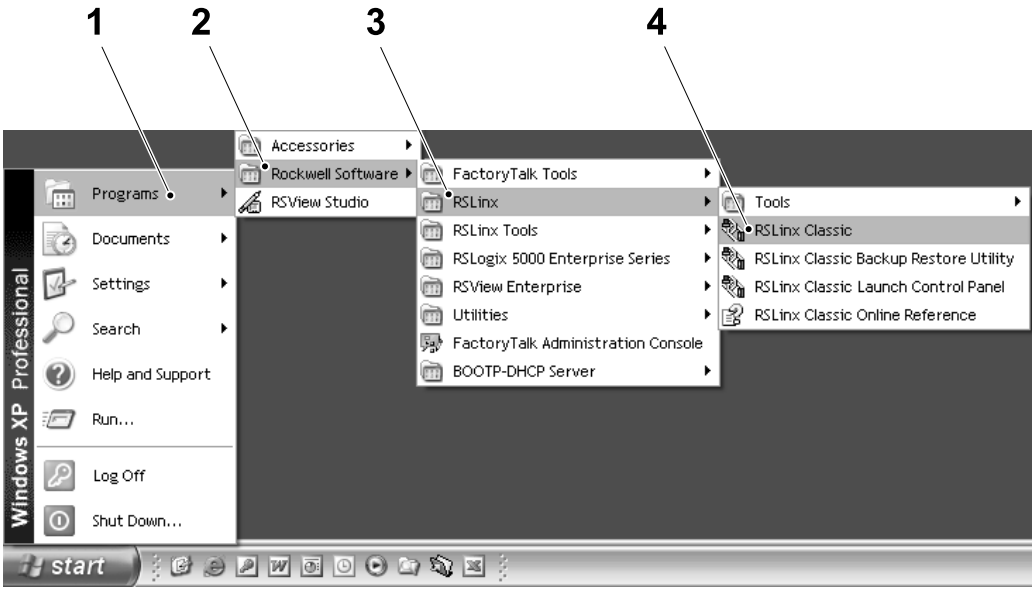

1 Programs
2 Rockwell software
3 RSLinx
4 RSLinx Classic

(Cont'd)

(Cont'd)

b) The RSLINX CLASSIC PROFESSIONAL window (5) appears, select the CONFIGURE DRIVERS button (6) .

c) In the CONFIGURE DRIVERS window (7) , select ETHERNET DEVICES (8) from the drop down menu.

d) Select the ADD NEW button (9).

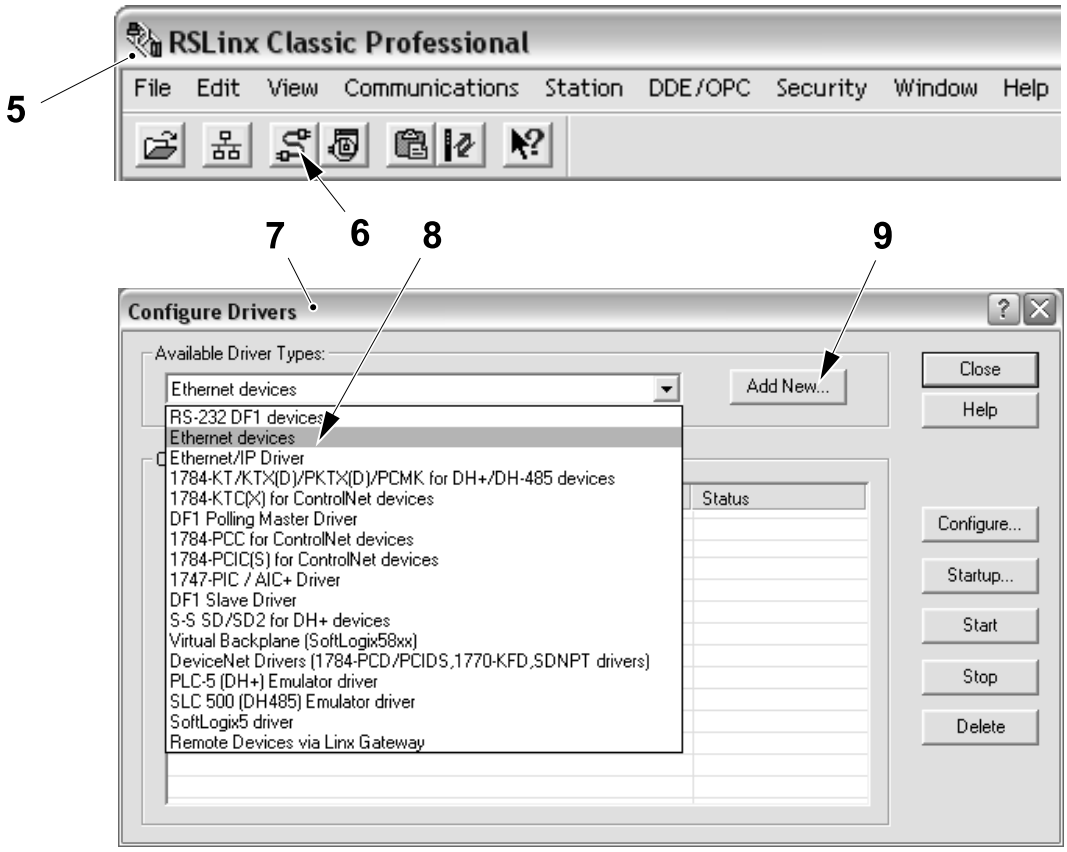

5 RSlinx classic professional window
6 Configure drivers button
7 Configure drivers window
8 Ethernet devices
9 ADD NEW button

(Cont'd)

(Cont'd)

e) Accept the default driver name that appears by selecting the OK button (10).

f) Enter the PC's IP address (set in 10.2.1-1 Preparation for PLC Communication - Configure PC Network Communications) in the HOST NAME field (11) and then select the ADD NEW button (12).

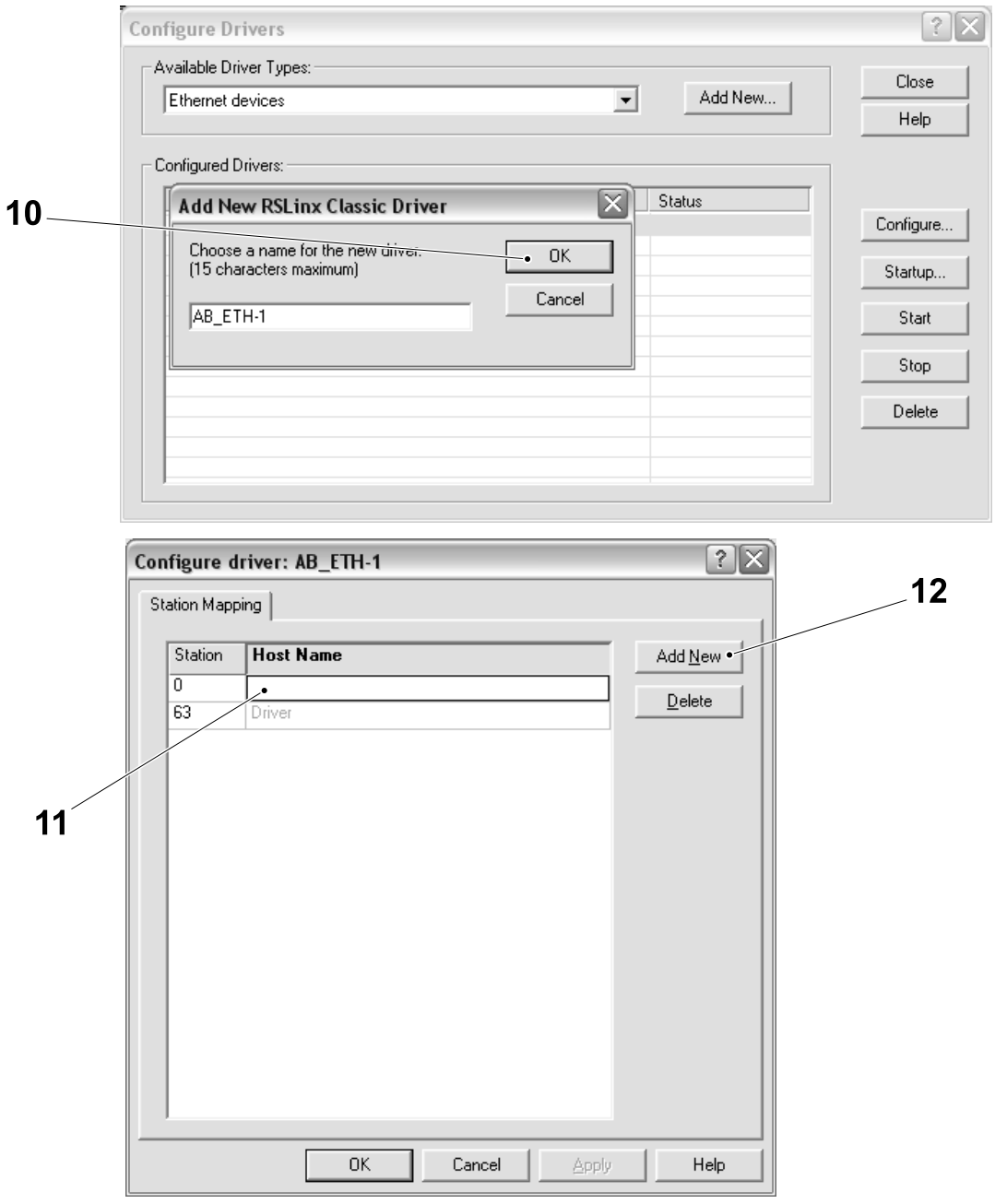

10 OK button
11 Host name field
12 ADD NEW button

(Cont'd)

(Cont'd)

g) Enter the IP address 10.0.1.80 for the PLC in the HOST NAME field (13).

h) Select the OK button (14) to save the configuration.



13 Host name field
14 OK button

10.2.1-3 Preparations for PLC Communication - Set EtherNet Module IP Address

Machine Status	Electrical supply disconnecting device in position I (ON)
Special Equipment	PC with CD Drive Latest Software CD see SPC Ethernet communication cable
SPC Reference	2833407-0300

Note! This procedure is for a new EtherNet module. If the module has been previously configured, skip this procedure.

Note! New EtherNet modules have a MAC address programmed as a factory setting. The MAC address must be changed to an IP address.

a) Using the ETHERNET COMMUNICATION cable (1), connect the PC (2) to any vacant ETHERNET CONNECTION port (3) on the ETHERNET switch (4).

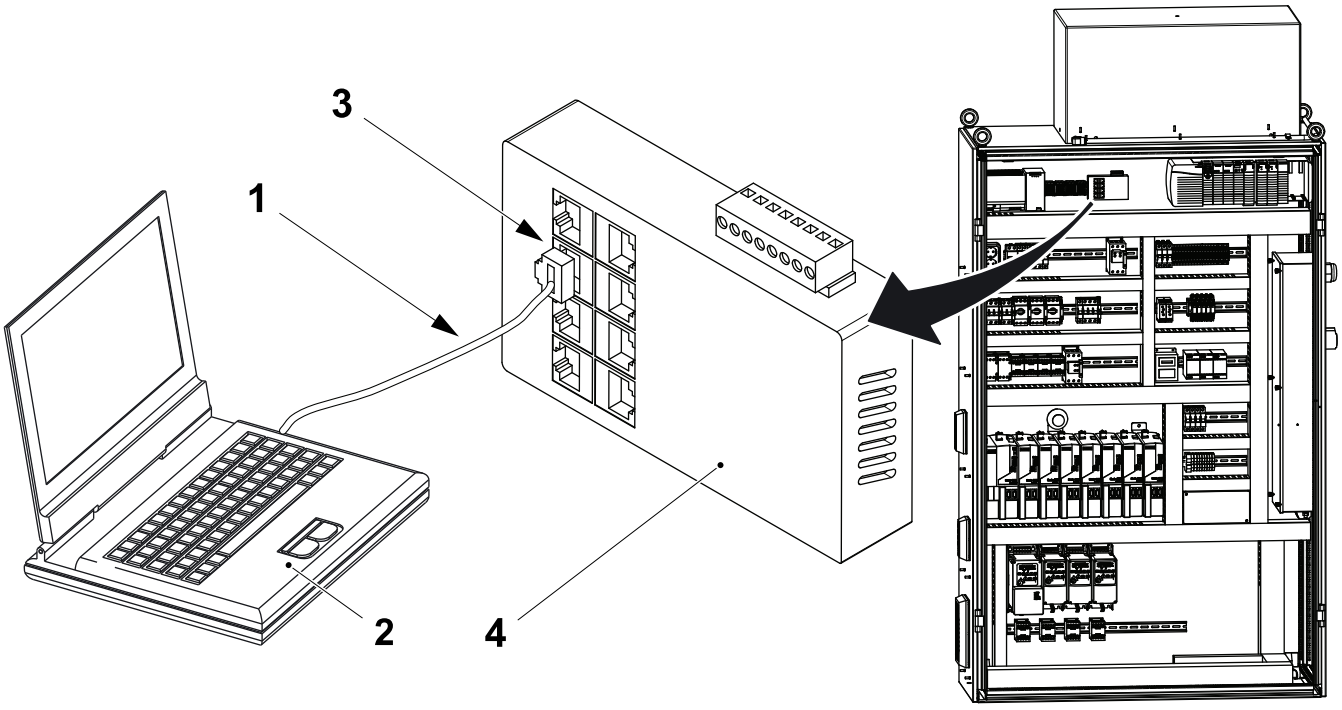

1 Ethernet communication cable
2 PC
3 Ethernet connection port
4 Ethernet switch

(Cont'd)

(Cont'd)

b) Make sure that the network cables between the Ethernet switch and the EtherNet module are connected.

c) Close the RSLINX PROGRAM as follows:

- Open the RSLINX GATEWAY window, see step a) in 10.2.1-2 Preparations for PLC Communication - Configure RSLinx.
- In the File menu, select `EXIT AND SHUTDOWN` (5).

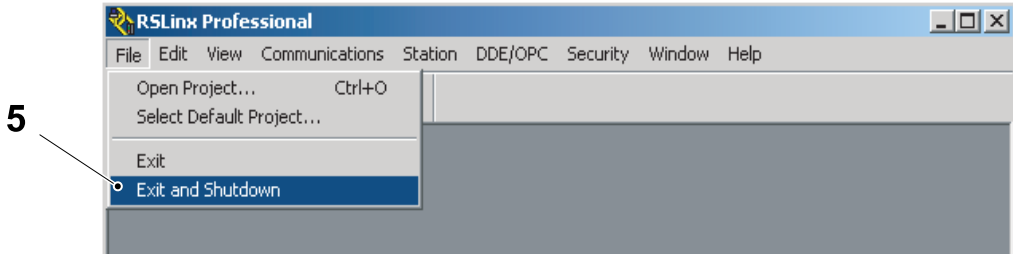

5 Exit and shutdown

d) Open the start menu on the PC and select `PROGRAM` (6), `ROCKWELL` software (7), `BOOTP DHCP` server (8) and `BOOTP DHCP` server (9).

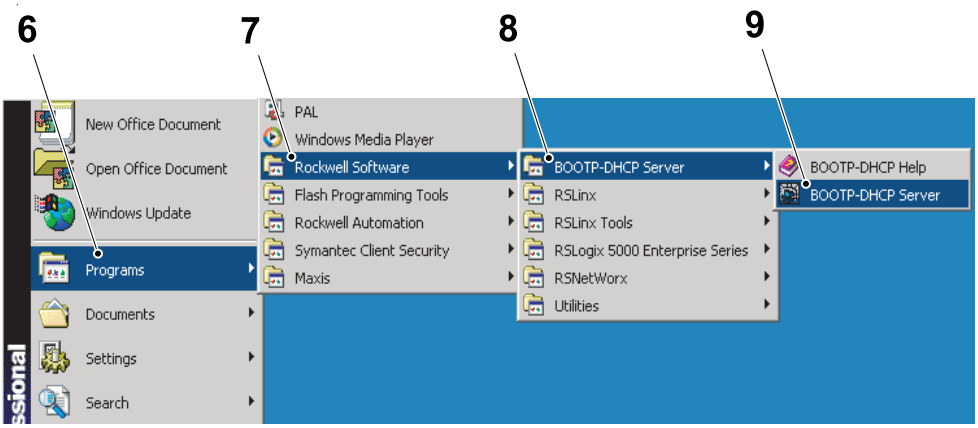

6 Program
7 Rockwell software
8 BOOTP DHCP server
9 BOOTP DHCP server

(Cont'd)

(Cont'd)

Note! If it is the first time the BOOT program is used, a network setting will be requested. If it is not, continue with step g).

e) Enter 255.255.0.0 as the SUBNET MASK (10) . All other settings should be set to 0.

f) Press the OK button (11) to confirm the setting.

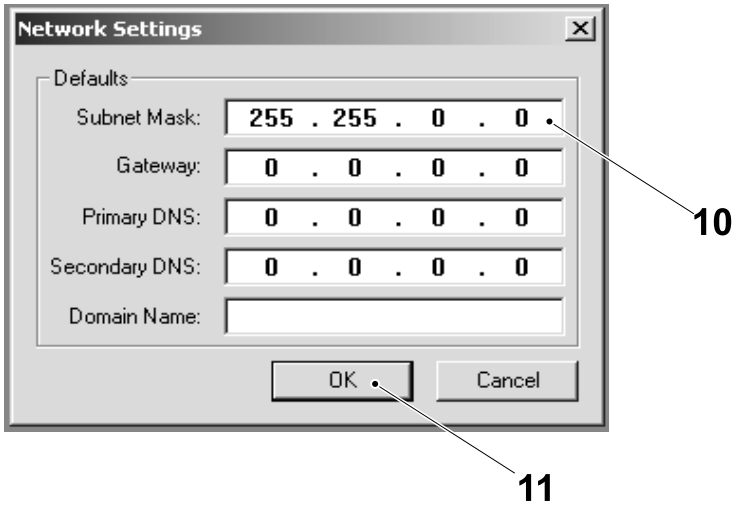

10 Subnet Mask
11 OK button

(Cont'd)

(Cont'd)

g) When the MAC address appears in the REQUEST HISTORY window (12) of the BOOT DHCP SERVER window (13), check that the same address is displayed on the EtherNet module and press the NEW button (14) to begin the conversion from the MAC address to an IP address.

h) When the MAC address appears in the RELATION LIST window (15), select the MAC address.

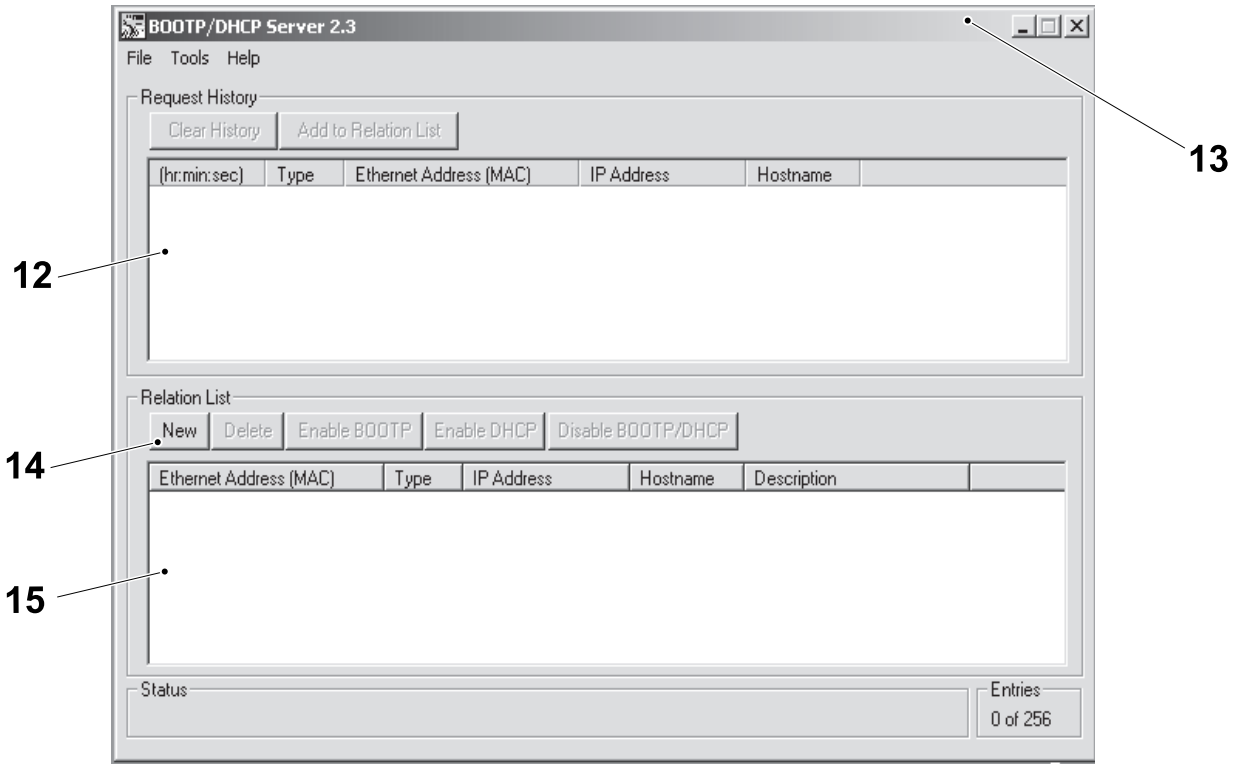

12 Reqest history window
13 Boot dhcp server window
14 NEW button
15 Relation list window

(Cont'd)

(Cont'd)

i) For the EtherNet module to be addressed, enter the MAC address in the ETHERNET ADDRESS (MAC) field (16) and the new IP address in the IP ADDRESS field (17) of the NEW ENTRY window (18) that appears.

j) Select the OK button (19). The new IP address will appear in the REQUEST HISTORY window (12) and on the EtherNet module.

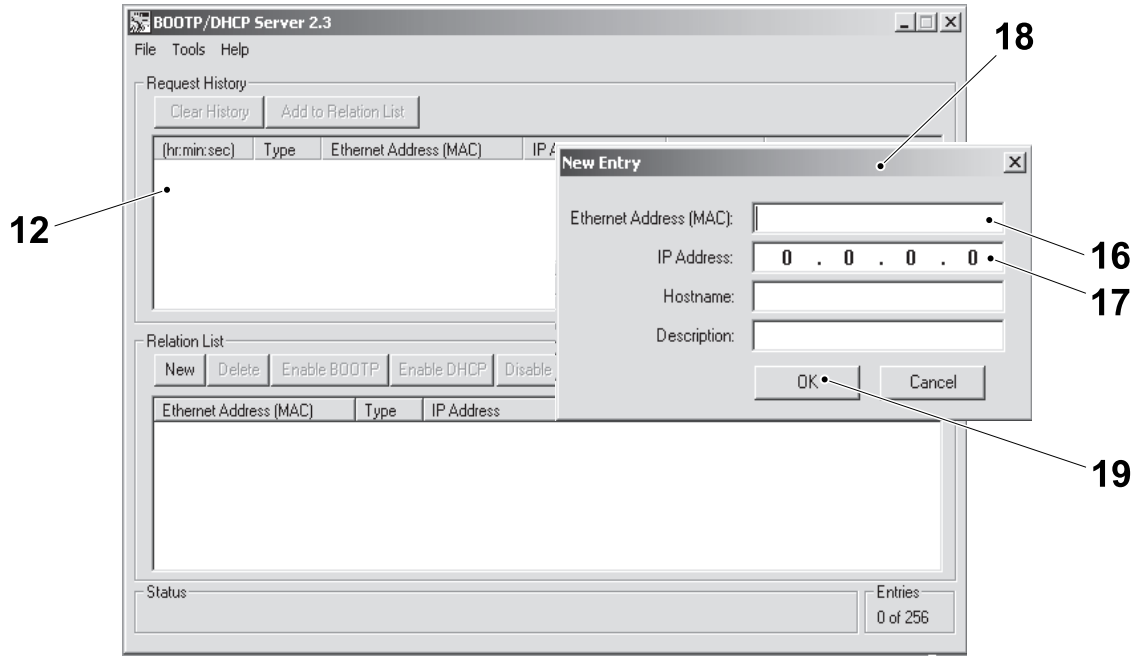

12 Reqest history window
16 ethernet address (MAC) field
17 IP address field
18 New entry window
19 OK button

(Cont'd)

(Cont'd)

k) Select the EtherNet module relation in the RELATION LIST window (15) and then select the DISABLE BOOTP/DHCP button (20).

l) To configure the other EtherNet module, select the NEW button (14) and repeat step i) on previous page to k).

m) After configuring an EtherNet module, check that the correct IP address appears on the display on the EtherNet module. If the display cycles data continuously, the configuration has not been completed successfully. Repeat the complete procedure for the module in question.

n) Disconnect the PC from the Ethernet switch.

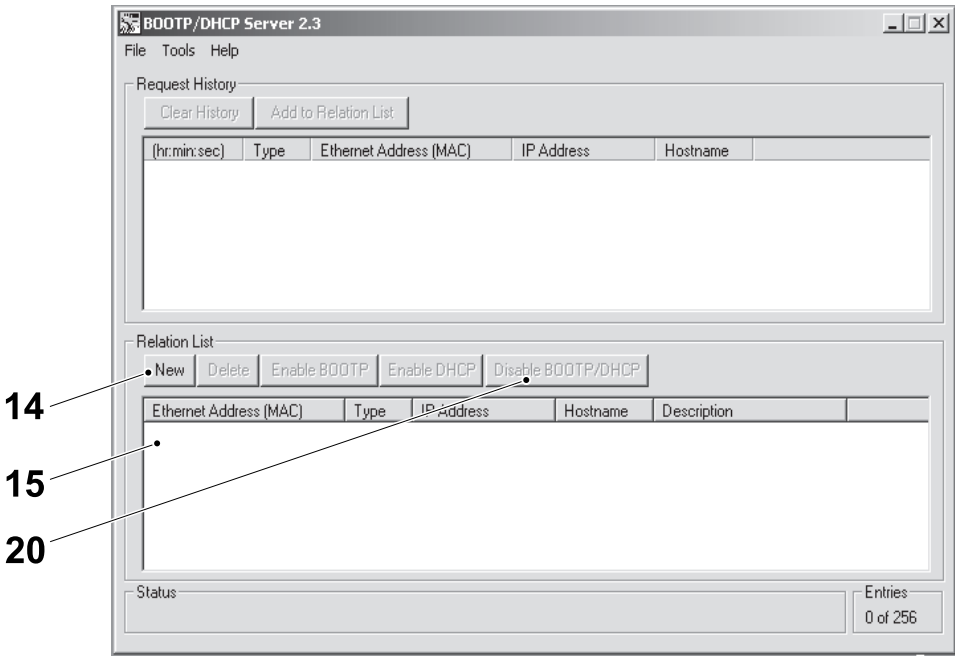

14 NEW button
15 Relation list window
20 DISABLE BOOTP/DHCP button

10.2.2 CPU Controller

10.2.2-1 CPU Module - Change Energy Storage Module (ESM)

Machine Status	Electrical supply disconnecting device in position I (ON)
SPC Reference	90603-5366

CAUTION
Loss of data.
Make sure that the electrical supply disconnecting device is turned to the ON position. Failure to do this may result in the data stored in the PLC being lost.

Note! Even if the power is turned off or the CPU module has been removed from the chassis, do not remove the Energy Storage Module (ESM) immediately. Wait until the OK status indicator changes from green to solid red to OFF before removing the ESM.

a) Remove the key (1).

b) Press down the lock (2) and pull out the Energy Storage Module (3) from the CPU module.

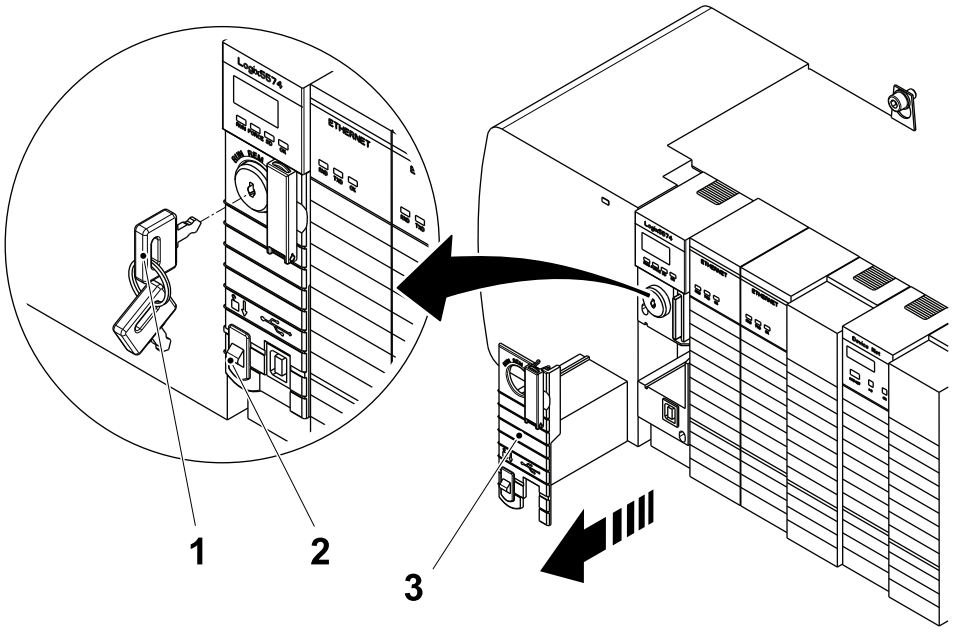

1 Key
2 Lock
3 Energy Storage Module

(Cont'd)

(Cont'd)

c) Align the guide (4) of the Energy Storage Module (3) with the groove (5) on the CPU module.

d) Slide the Energy Storage Module (3) back until it snaps into place.

e) The Energy Storage Module (3) begins charging after installation. The status is indicated by the message `ESM CHARGING` or `CHRG`.

Note! The messages `ESM CHARGING` or `CHRG` may take up to 15 seconds to be displayed.

Note! Allow the `ESM` to finish charging. To check that the `ESM` is fully charged, check that the messages `ESM CHARGING` or `CHRG` are no longer indicated.

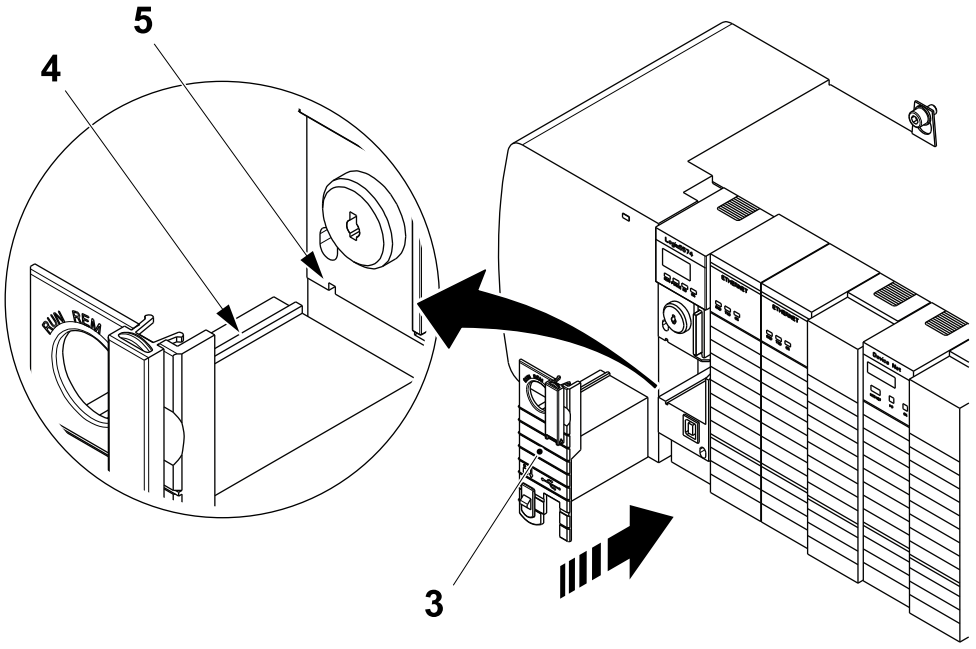

3 Energy Storage Module
4 Guide
5 Groove

10.2.2-2 CPU Controller - Change

Machine Status	Electrical supply disconnecting device in position O (OFF)
SPC Reference	90603-5366

Preparation

Note! New CPU modules are supplied with basic firmware. The correct firmware revision must be installed before the CPU program can be down-loaded to the CPU module.

(Cont'd)

(Cont'd)

Before changing the CPU controller:

- Use the RSLinx Classic program to verify and record the firmware version of the CPU program.
- Use the Flow Chart of Procedures for Changing the CPU controller on the next page to determine which procedures must be performed and their correct sequence.

  Note! It is recommended that the electrical supply disconnecting device is turned to the position "O" (OFF) before the PLC is removed or installed. The PLC may be removed or installed with the chassis power ON and the system operating, but doing this repeatedly may cause excessive wear to the contacts on the module and its mating connector. Worn contacts can create electrical resistance that may effect the operation of the module.

  Note! If the CPU module is removed with the power turned ON, all the devices connected to the CPU module will go to their configured default state.

  Note! A SD card fitted inside the CPU module is used to store a back-up of the CPU program. When the CPU module is changed, the SD card must be transferred from the old CPU module to the new CPU module.

(Cont'd)

(Cont'd)

Flow Chart of Procedures for Changing the CPU controller

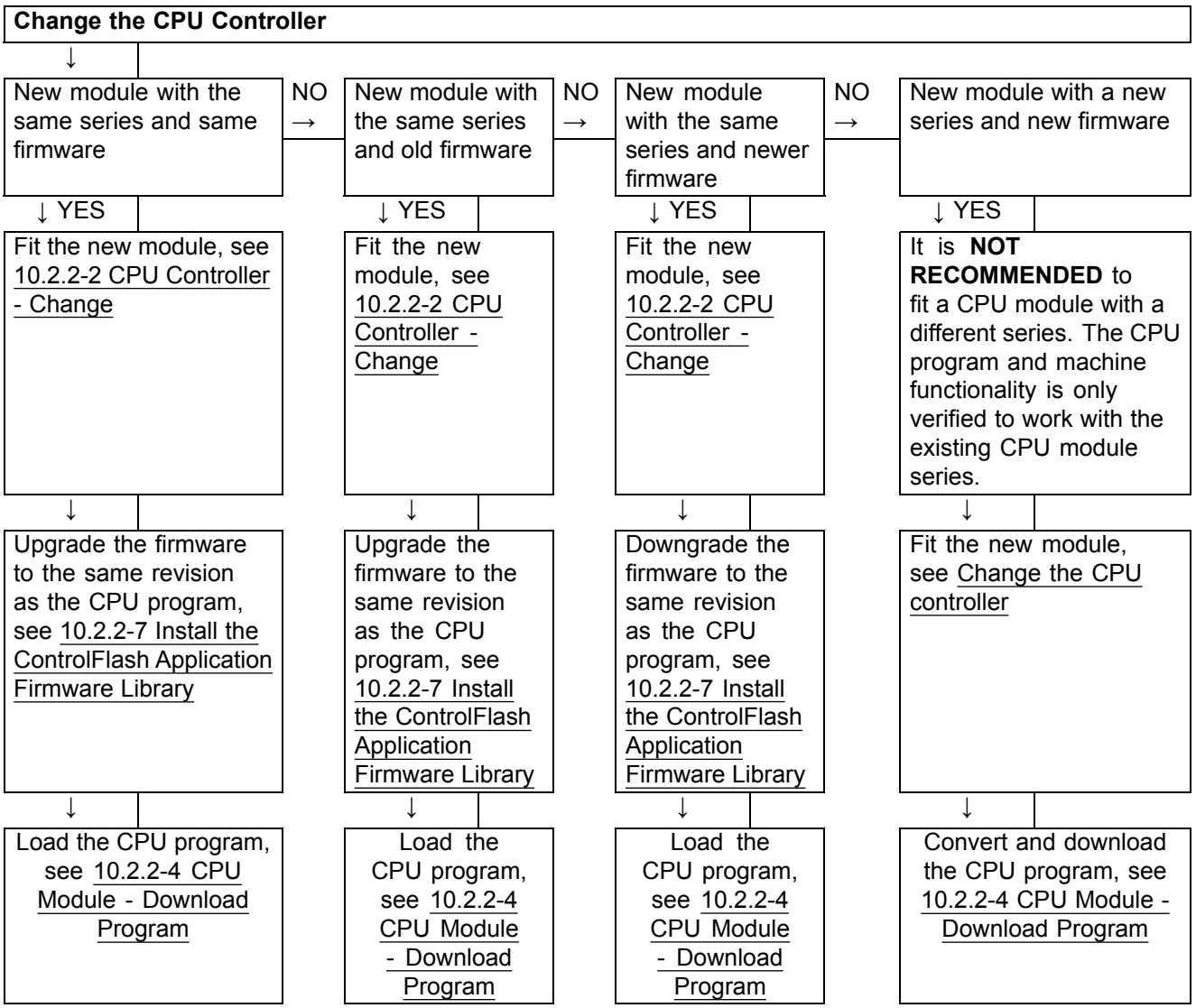

(Cont'd)

(Cont'd)

Change the CPU controller

a) Verify that the SD card is not in use by checking that the indicator is off.

b) Open the door (1) to access the SD card (2).

c) Press and release the SD card (2) to eject it.

d) Store the SD card (2) in a safe and clean place.

e) Press the locking tabs on the top and the bottom of the CPU.

f) Slide the CPU module out of the chassis.

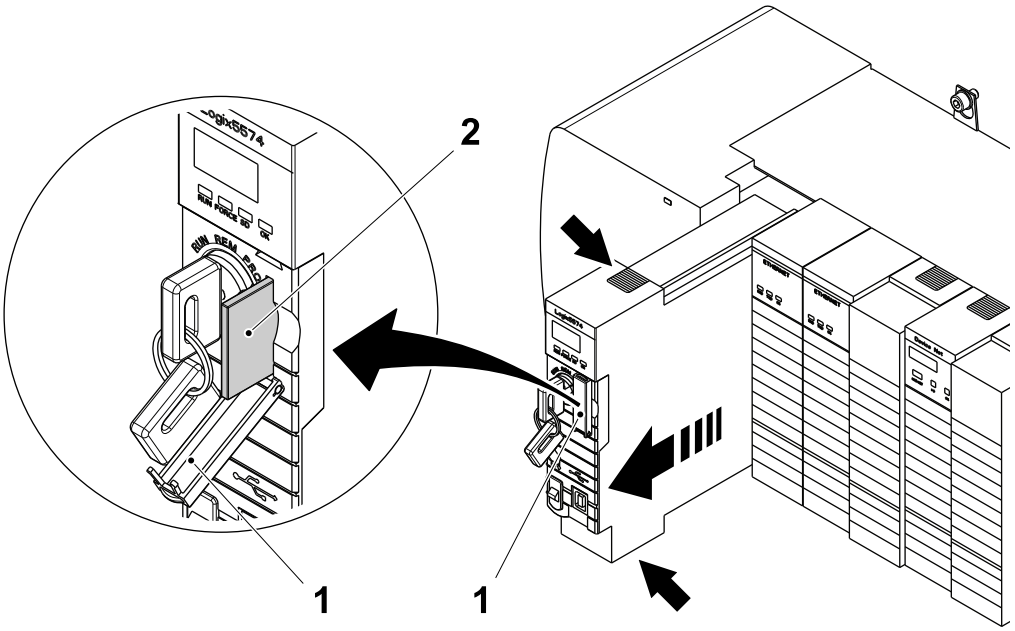

1 Door
2 SD card

(Cont'd)

(Cont'd)

g) Align the new CPU module with the top and the bottom guides in the chassis.

h) Slide the CPU module into the chassis. Make sure it is flush with the power supply or the other modules and the top and bottom latches are engaged.

i) Insert the key (3) into the new CPU module.

j) Turn the key (3) to the REM position.

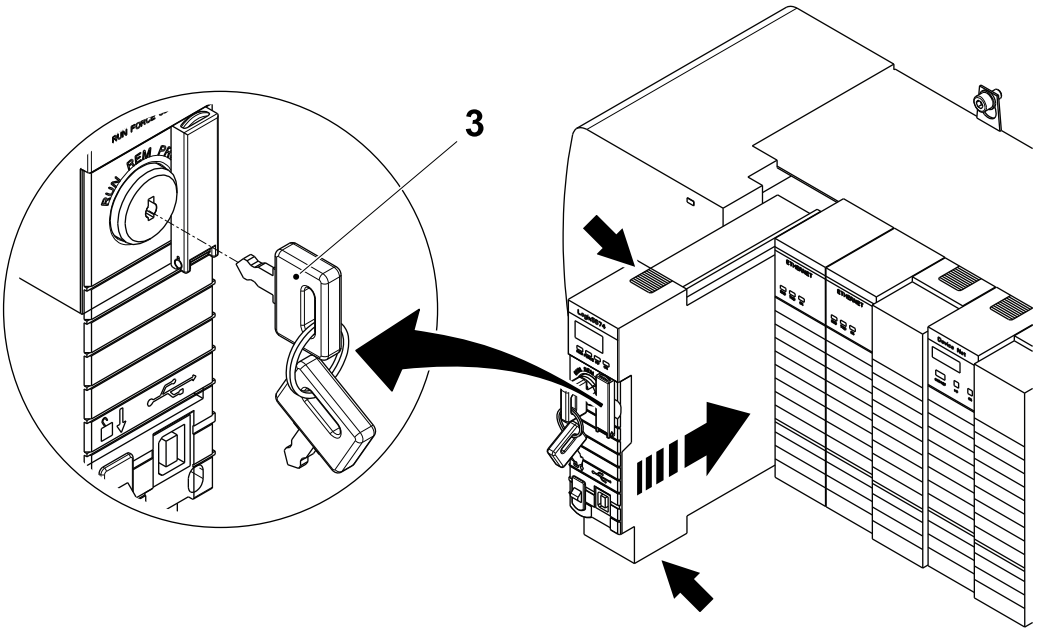

3 Key

(Cont'd)

(Cont'd)

k) Open the door (1) for the SD card.

l) Insert the SD card (2) into the slot.

m) Press gently the SD card (2) until it clicks into place.

n) Close the door (1).

o) Turn the electrical supply disconnecting device to the position I (ON).

p) Check the status of the CPU module according to the LED table in section 10.2.2-5 CPU Module - Troubleshoot.

q) If necessary, install the correct version of the firmware into the CPU module, see 10.2.2-8 PLC - Load FirmWare in PLC, Ethernet, DeviceNet and SERCOS Modules

r) Load the program into the CPU module, see 10.2.2-4 CPU Module - Download Program.

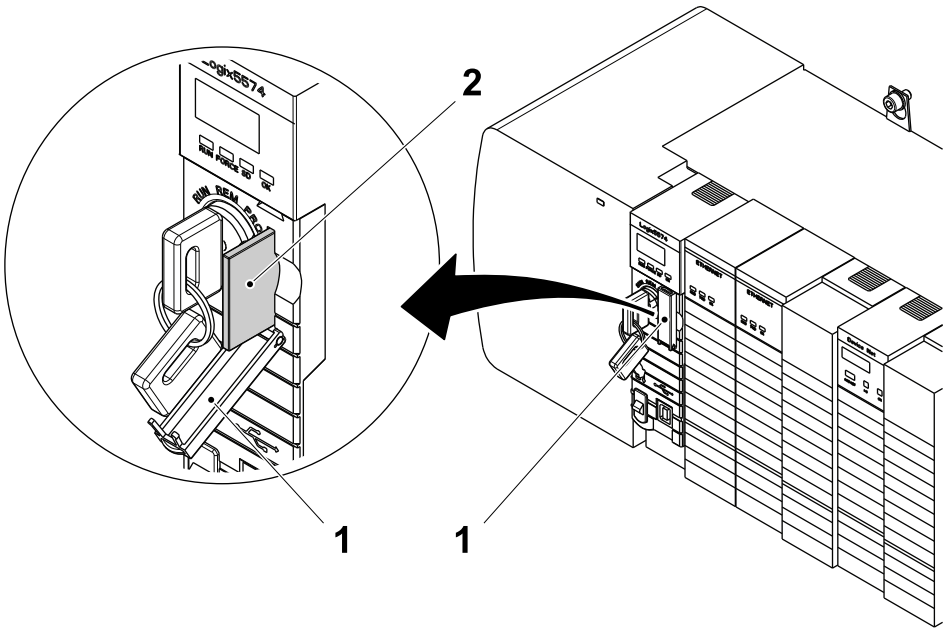

1 Door
2 SD card

10.2.2-3 CPU Module - Load Firmware

Machine Status	Electrical supply disconnecting device in position O (OFF)
Special Equipment	PC with CD Drive Ethernet communication cable
SPC Reference	90603-5366

CAUTION
Risk of damage to the equipment.
If a firmware download is interrupted, for example by a loss of power or if the communication fails between the module and the PC, the module will be corrupted.

Use the firmware setup table on the software CD to identify the correct firmware revision for the module to be flashed.

Note! The table lists the required firmware versions for all rack mounted or distributed devices. Do not upgrade or downgrade the device firmware unnecessarily.

a) Make sure that the PC is configured as described in 10.2.1-1 Preparation for PLC Communication - Configure PC Network Communications and in 10.2.1-2 Preparations for PLC Communication - Configure RSLinx.

b) Open the START menu on the PC and select PROGRAMS (1), FLASH PROGRAMMING TOOLS (2), and CONTROL FLASH (3).

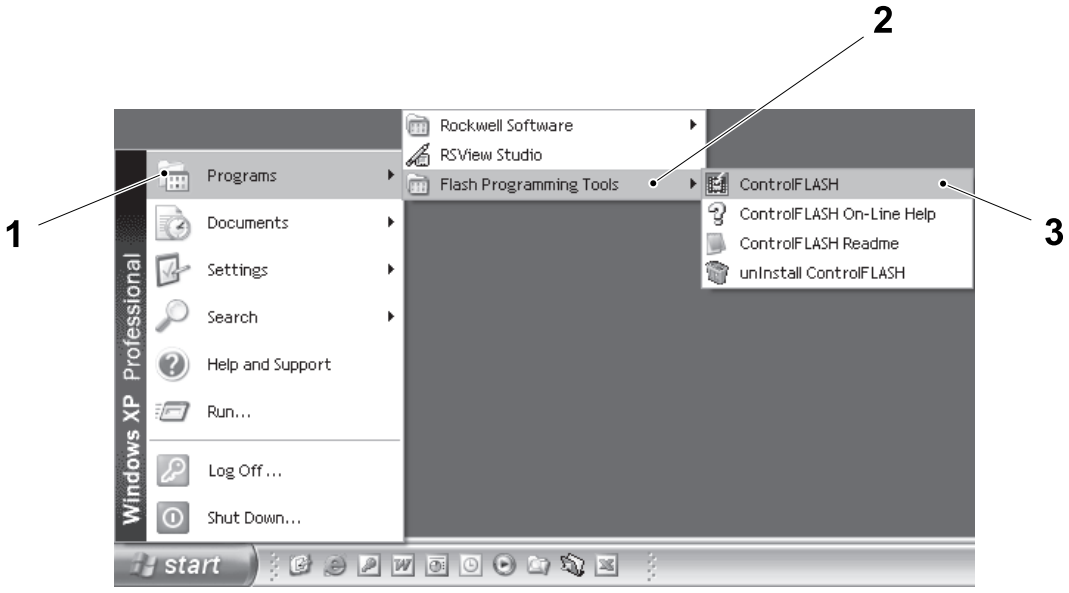

1 Programs
2 Flash programming tools
3 Control flash

(Cont'd)

(Cont'd)

c) Follow the instructions in the `CONTROL FLASH PROGRAM` window (4) to load the firmware.

Note! If the control FLASH program is not updated with the required firmware catalogue then continue with Update Control FLASH Catalogue and repeat 10.2.2-3 CPU Module - Load Firmware one more time.

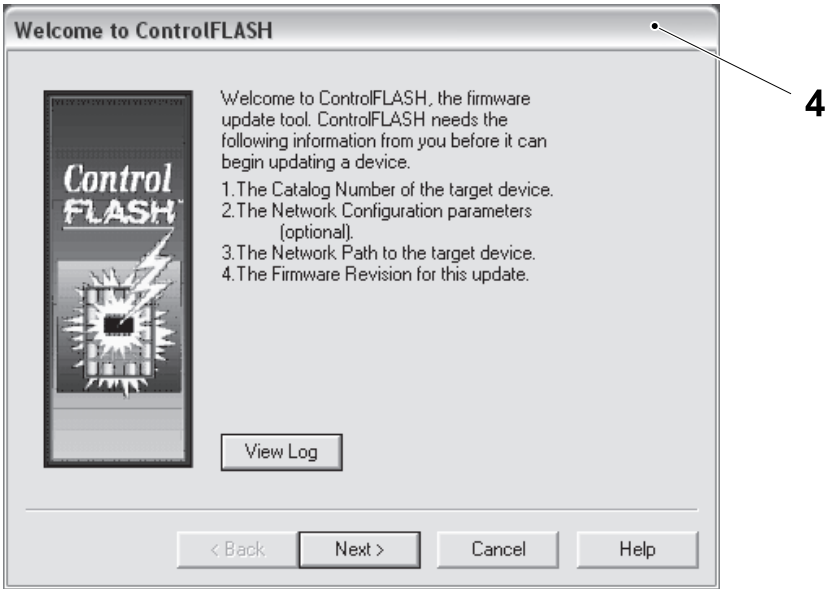

4 CONTROL FLASH PROGRAM window

(Cont'd)

(Cont'd)

Note! The firmware must be verified and if necessary upgraded for all Rockwell devices. Use the firmware setup table on the software CD to determine the catalogue number of the first device to be upgraded.

d) In the CATALOGUE NUMBER dialogue window, select and highlight the first device to be upgraded in the CATALOGUE LIST (5) as indicated in the illustration.

e) Select the NEXT button (6).

An ethernet device is shown as example

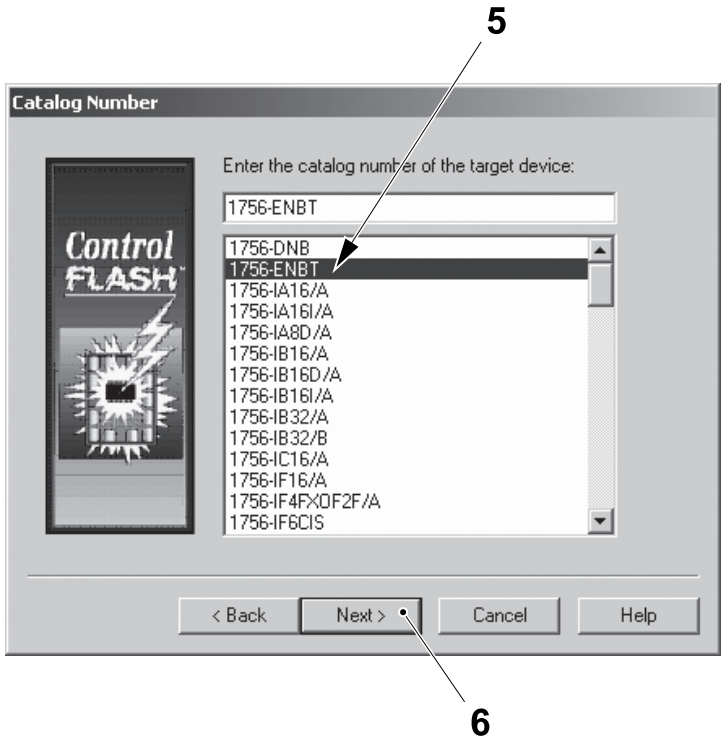

5 Catalogue list
6 Next button

(Cont'd)

(Cont'd)

Note! For the device 1756-ENBT/A only, select and highlight the backplane 1756-A7/A to verify the firmware. For all other devices select the appropriate icon as indicated in the illustration.

Note! To locate and verify the motion firmware(s), of the Kinetix servo drives click on the plus icon next to the 1756-M08SE, 8 Axis SERCOS interface to display the Sercos network and then click on the plus icon next to the Sercos network to fully expand and display all the devices.

f) In the dialogue window, browse the device tree and select and highlight the first device (7) to be upgraded as indicated in the illustration.

g) Select the OK button (8).

A = Ethernet Device
B = Other Device

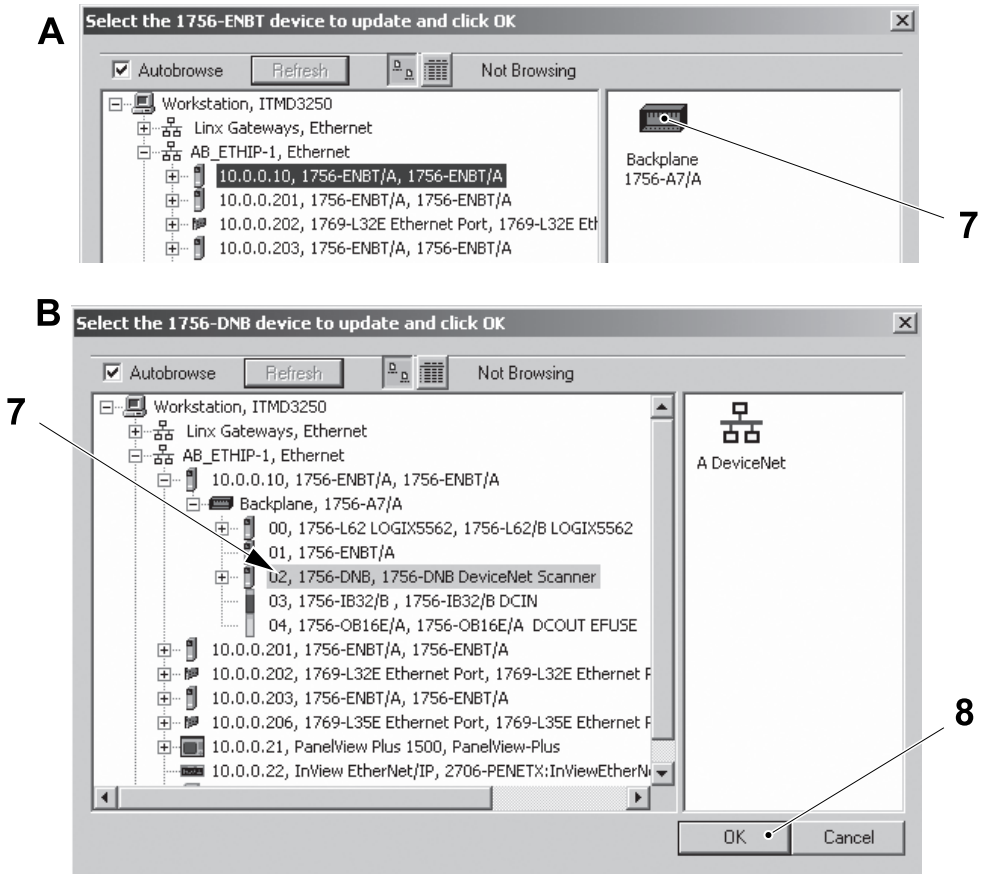

7 Device
8 Ok button

(Cont'd)

(Cont'd)

h) In the FIRMWARE REVISION dialogue window, check the current firmware revision number (9) with the firmware revision number indicated in the firmware setup table on the software CD.

i) If the firmware revision number (9) is:

- equal to or greater than the number indicated in the firmware setup table, select the BACK button (10) and select the next device from the catalogue dialogue window as indicated in item d)
- a lower revision number than the number indicated in the firmware setup table, select the NEXT button (11) to continue with the firmware upgrade.

Ethernet device dialog is shown as example

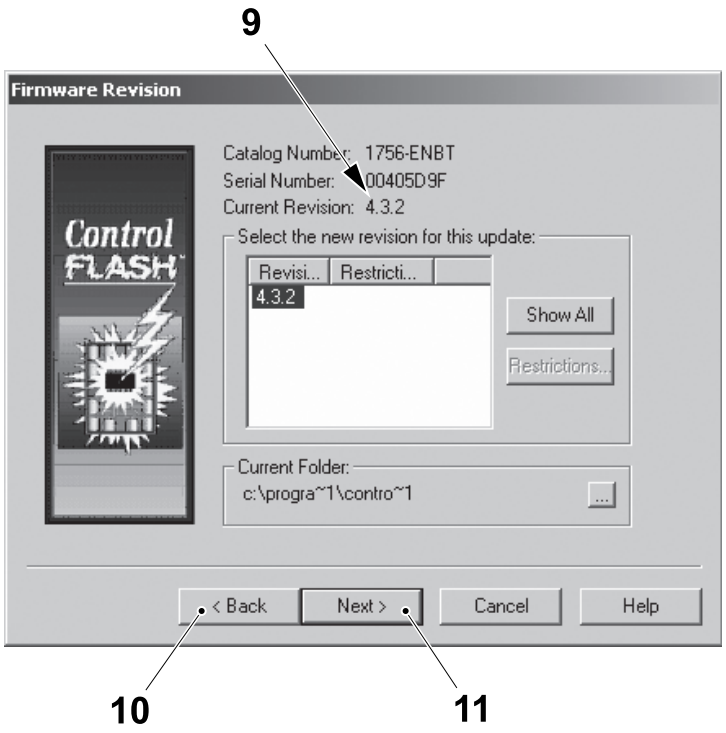

9 Firmware revision number
10 Back button
11 Next button

(Cont'd)

(Cont'd)

j) In the SUMMARY dialogue window, select the FINISH button (12) to upgrade the device firmware.

Ethernet device dialog is shown as example

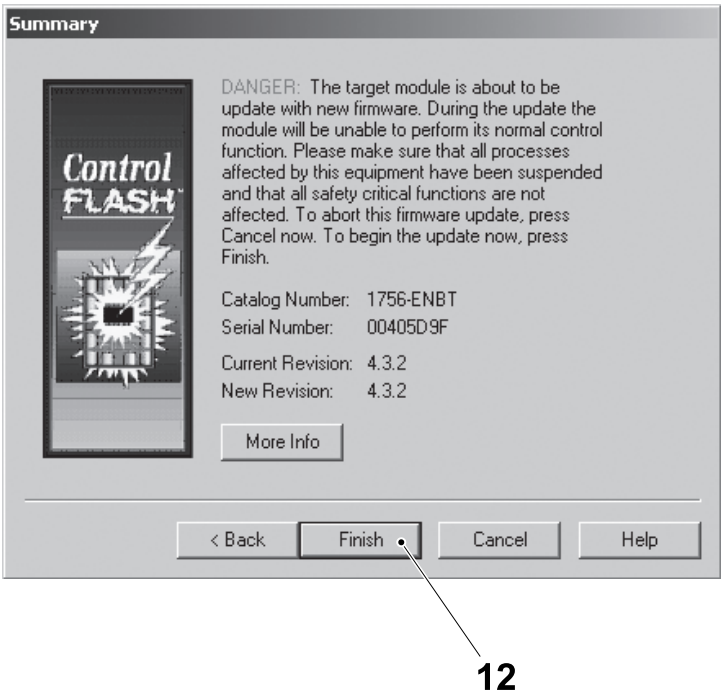

12 Finish button

(Cont'd)

(Cont'd)

CAUTION
Risk of damage to the equipment.
If a firmware download is interrupted, for example by a loss of power or if the communication fails between the device and the PC, the PLC card will be corrupted.

k) In the confirmation window, select the YES button (13).

l) At the end of the download, the UPDATE STATUS window opens, and shows the current revision number is equal to the new revision number.

m) Click the OK button (14).

n) Repeat the procedure for all the other Rockwell devices listed in the firmware setup table on the software CD.

Ethernet device dialog is shown as example

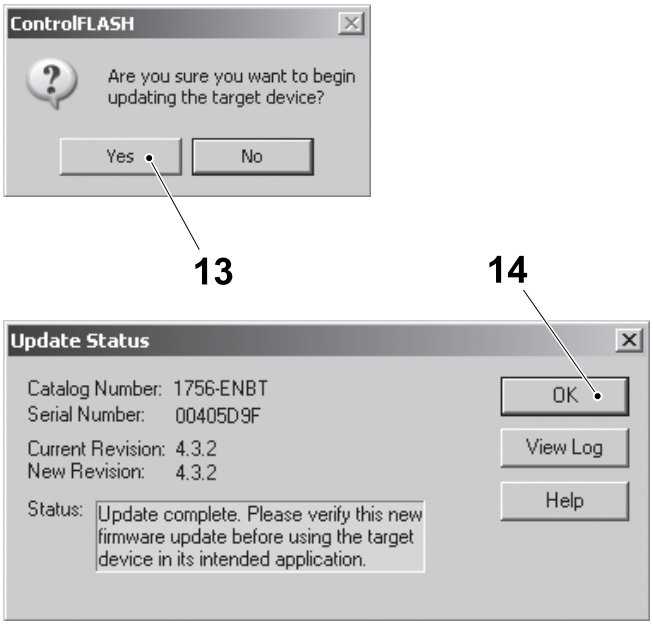

13 YES button
14 OK button

(Cont'd)

(Cont'd)

Update Control FLASH Catalogue

Note! Only use the following procedure if the required firmware catalogue was not loaded.

a) Insert the software CD into the PC CD drive.

b) Browse the CD to find the `FIRMWARE` folder (1) in the directory; `E:\FIRMWARE\`.

c) Copy the entire `FIRMWARE` folder (1) to the PC desktop.

Note! The `FIRMWARE` folder (1) contains all the ControlFLASH firmware upgrade kits for the CAP30 Applicator CPU cards.

d) Open the `FIRMWARE` folder (1), or the `CONTROLFLASH.MSI` to start the ControlFLASH program.

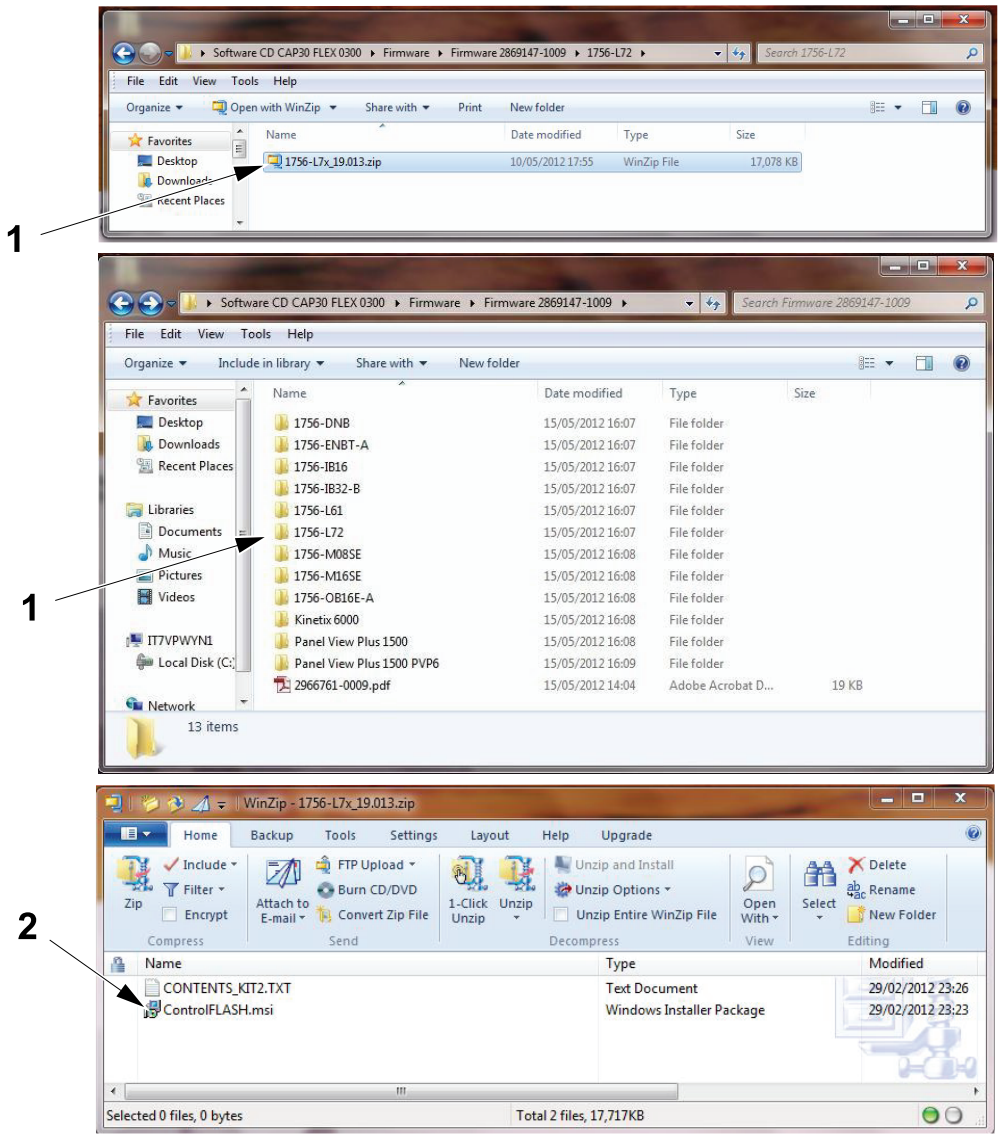

1 Firmware folder
2 Setup.exe file

(Cont'd)

(Cont'd)

Note! The following procedure describes the use of the ControlFLASH program version 4.00. Different versions of the ControlFLASH program may be included in the software CD, always follow the on-screen instructions provided by the ControlFLASH program.

e) In the `WELCOME` dialogue window, select the `NEXT` button (3).

f) In the `SOFTWARE LICENSE AGREEMENT` dialogue window, select the `YES` button (4).

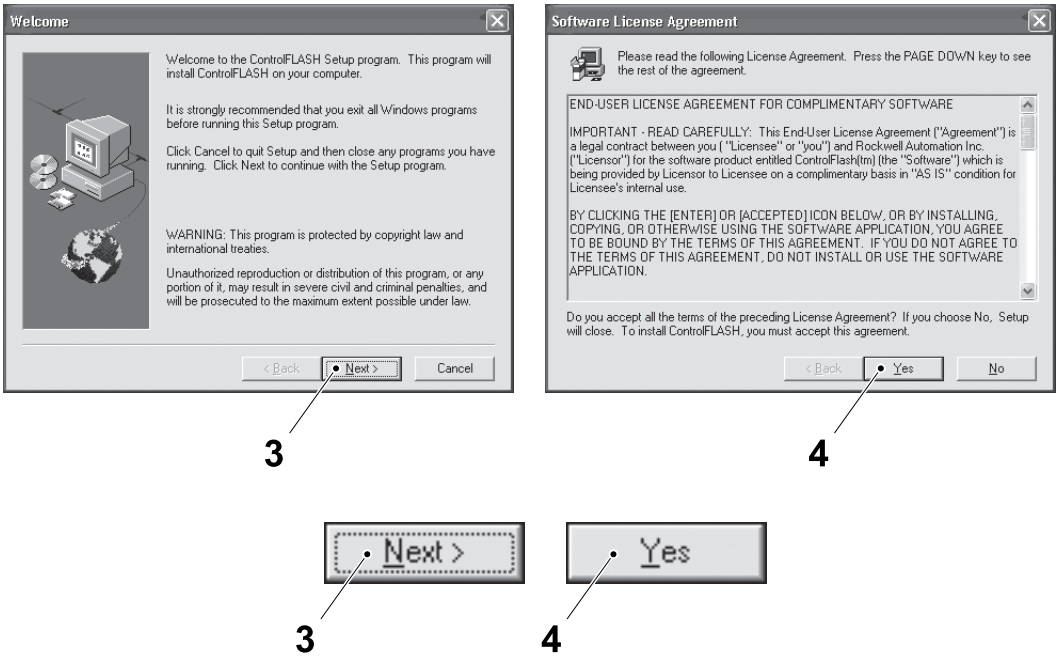

3 Next button
4 Yes button

(Cont'd)

(Cont'd)

g) In the CHOOSE DESTINATION LOCATION dialogue window, select the NEXT button (5) to start the installation.

h) In the SETUP COMPLETE dialogue window, deselect the two preselected check boxes (6).

i) Select the FINISH button (7).

j) Repeat the procedure to install the firmware catalogue updates in each of the other sub folders in the FIRMWARE SETUP folder.

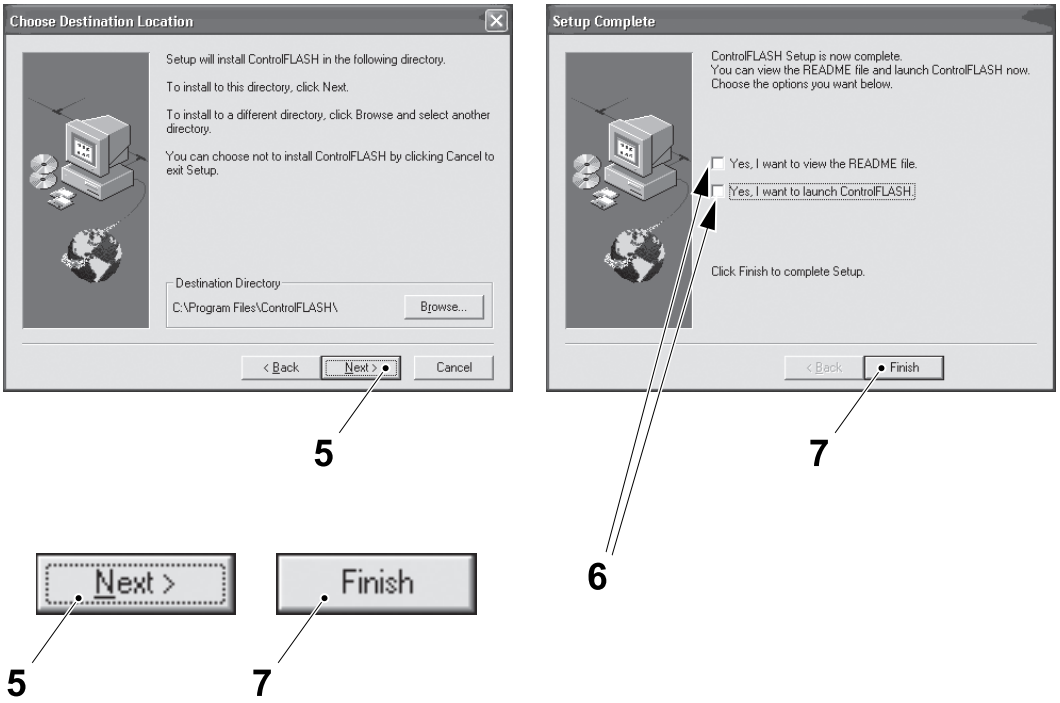

5 Next button
6 Check box
7 Finish button

10.2.2-4 CPU Module - Download Program

Machine Status	Electrical supply disconnecting device in position I (ON)
Special Equipment	Ethernet communication cable PC with CD drive
SPC Reference	2833407-0300

CAUTION
The downloading of a new software into the PLC will erase all the recipes.
Before the downloading it's recommended to write down all the setting values to restore the old recipes afterwards.

Note! To connect to the CPU module using an ethernet communication cable, the PC must first be configured for this type of communication. See 10.2.1-1 Preparation for PLC Communication - Configure PC Network Communications and 10.2.1-2 Preparations for PLC Communication - Configure RSLinx for more details.

a) Connect the ethernet communication cable between a vacant connection port on the ethernet switch (1) and the PC (2).

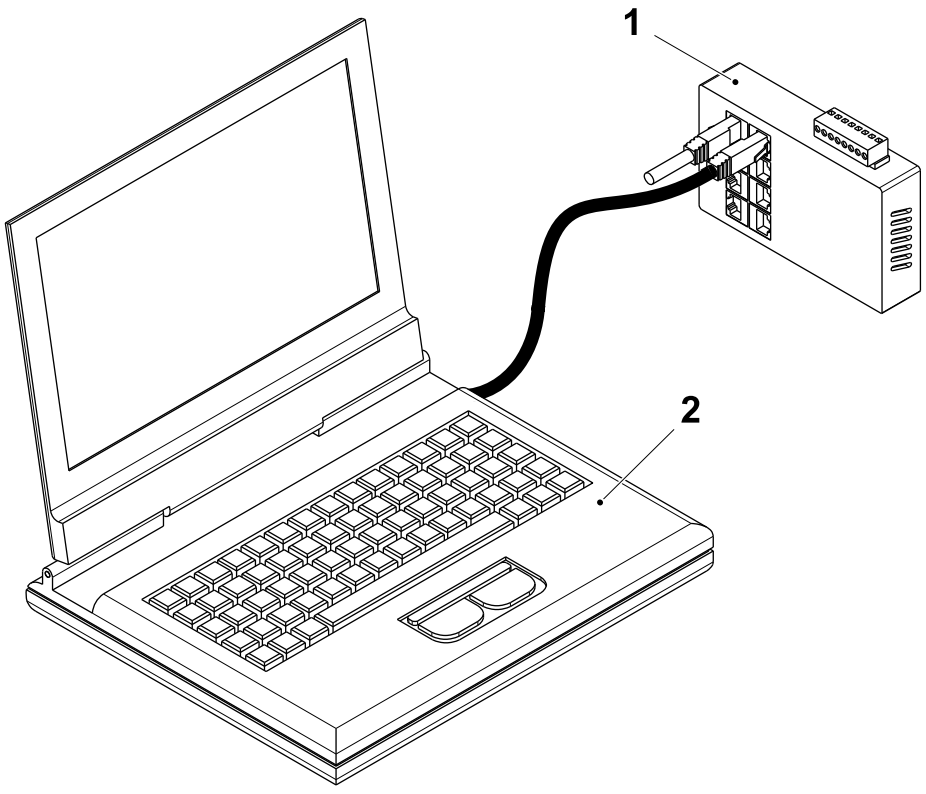

1 Ethernet switch
2 PC

(Cont'd)

(Cont'd)

Procedure

a) Make sure that the mains power switch is ON and the machine is at STEP 0.

b) Insert the CPU program CD into the PC CD drive.

c) Browse to the CD drive and copy the compressed program folder to the PC desktop and extract the program file with the format *.ADC.

d) Double click on the program file to automatically start the RSLogix program and open the program file.

e) Use the COMMUNICATION menu (1) in RSLogix and select GO ONLINE (2).

f) If the program:

- matches the program in the CPU Processor, an online connection will be established without any further messages. A download is not necessary.
- does not match the program in the CPU Processor, the CONNECTED TO GO ONLINE window (3) will appear.

g) Select the DOWNLOAD button (4).

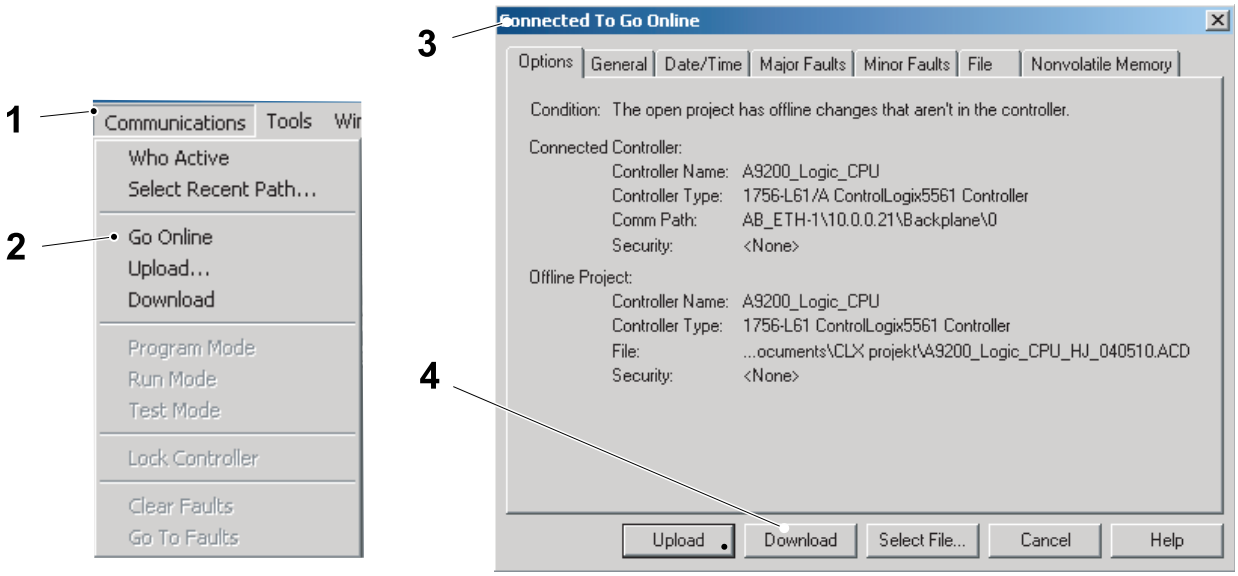

1 COMMUNICATION menu
2 GO ONLINE
3 CONNECTED TO GO ONLINE window
4 DOWNLOAD button

(Cont'd)

(Cont'd)

h) In the DOWNLOAD window (5), select the DOWNLOAD button (6).

Note! All the values and settings in the CPU Processor will be replaced with those from the down loaded program.

i) When the download is complete the Dialogue box (7) appears, select the YES button (8) to put the CPU in the RUN mode.

j) If the download is to:

- an existing CPU, cycle the CPU power supply to force the CPU to store the CPU program to the controller's memory. The download procedure is complete.
- a replacement CPU controller continue with the procedure that follows to set the nonvolatile memory .

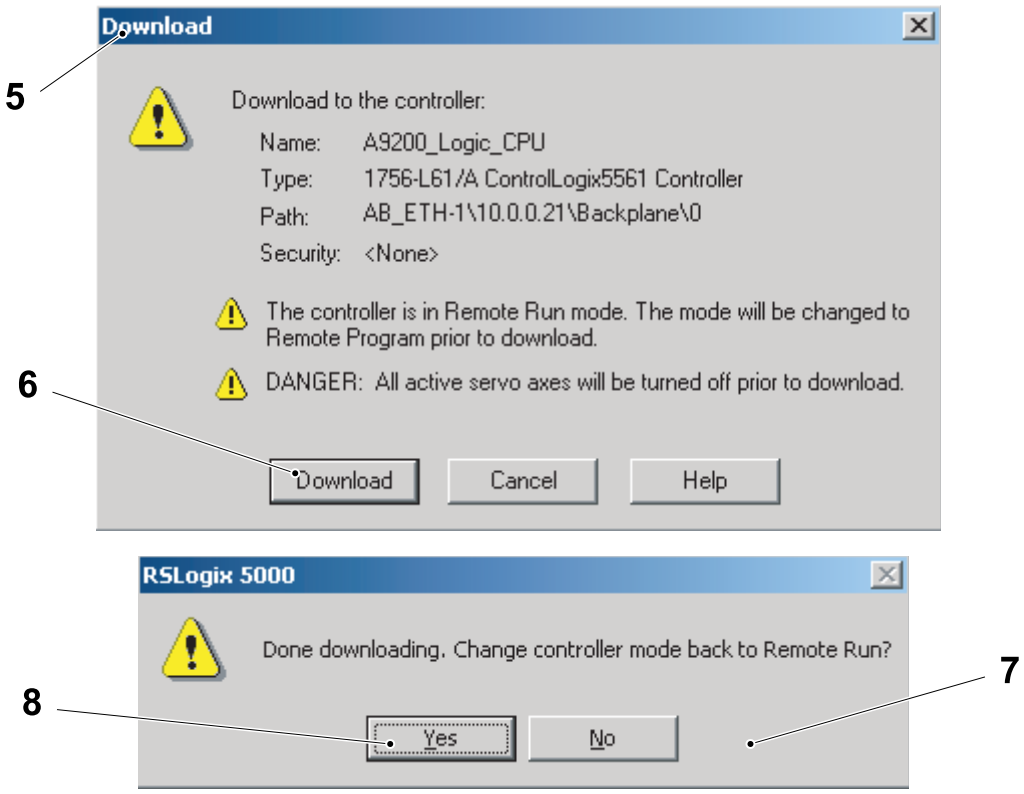

5 DOWNLOAD window
6 DOWNLOAD button
7 Dialogue box
8 YES button

(Cont'd)

(Cont'd)

Set Nonvolatile Memory

a) Select the COMMUNICATION menu (1) and then select GO ONLINE (2).

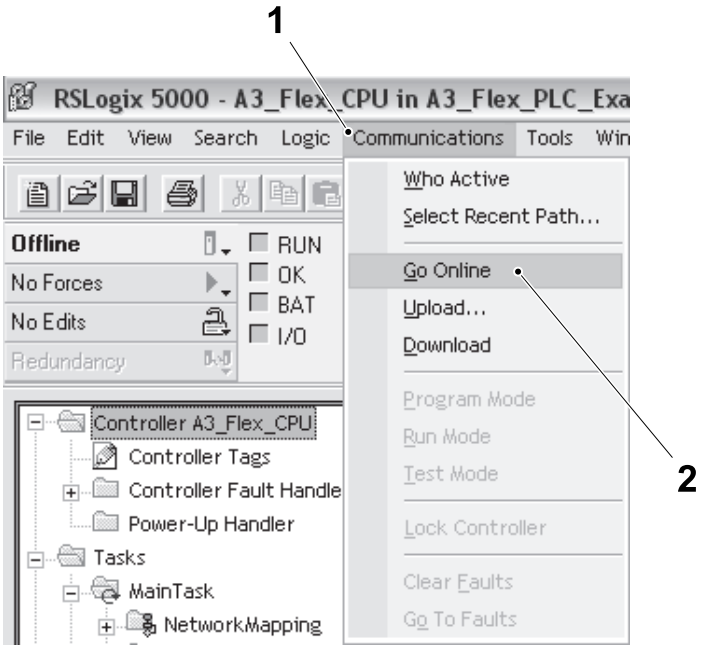

1 Communication menu
2 Go online

(Cont'd)

(Cont'd)

b) Select the COMMUNICATION menu (1), then select PROGRAM MODE (3).

c) When the RSLOGIX 5000 dialogue box (4) appears, select the YES button (5) to put the PLC in PROGRAM MODE.

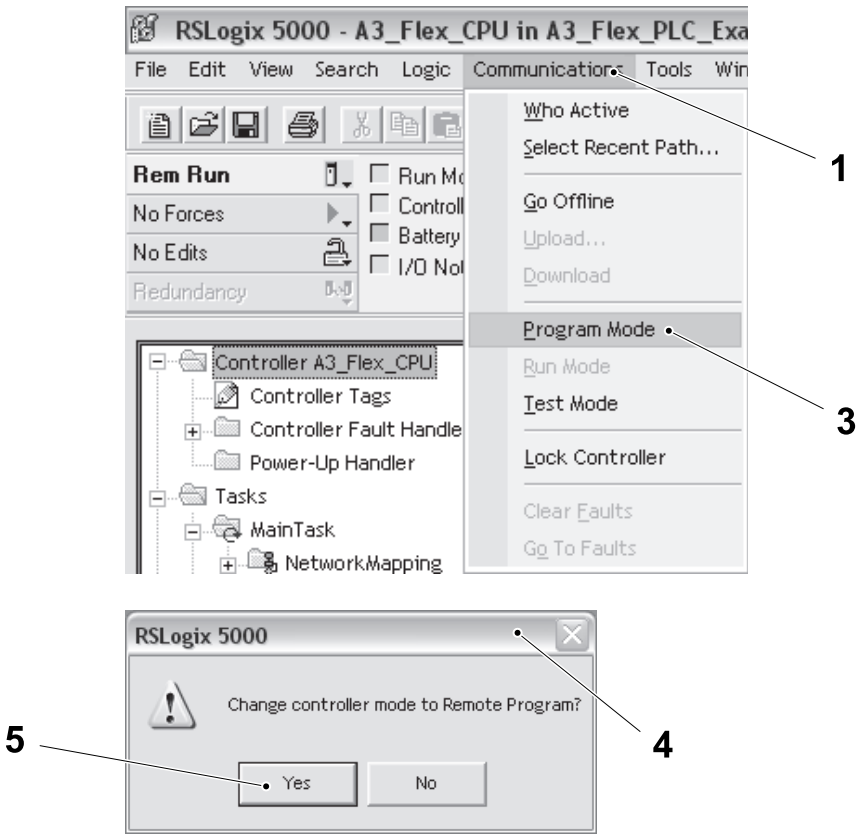

1 Communication menu
3 Program mode
4 Dialogue box
5 Yes button

(Cont'd)

(Cont'd)

d) In the RSLOGIX 5000 window (6) , select the CONTROLLER PROPERTIES button (7) .

e) The CONTROLLER PROPERTIES window (8).

f) Select the NONVOLATILE MEMORY tab (9).

g) Select the LOAD/STORE button (10).

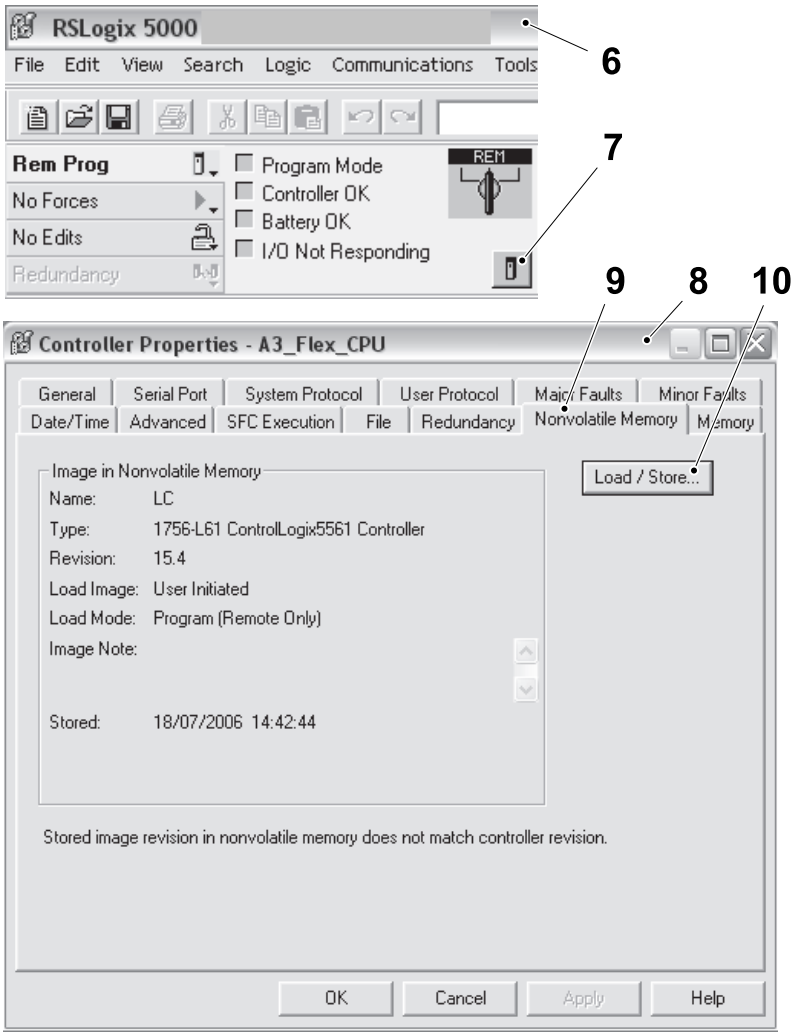

6 RSLOGIX 5000 window
7 CONTROLLER PROPERTIES button
8 CONTROLLER PROPERTIES window
9 NONVOLATILE MEMORY tab
10 LOAD/STORE button

(Cont'd)

(Cont'd)

h) In the NONVOLATILE MEMORY LOAD/STORE window (11), select ON CORRUPT memory (12) from the drop down list of the LOAD IMAGE option (13).

i) In the NONVOLATILE MEMORY LOAD/STORE window (11) , select PROGRAM (REMOTE ONLY) (14) from the drop down list of the LOAD MODE option (15) .

j) Select the STORE button (16) .

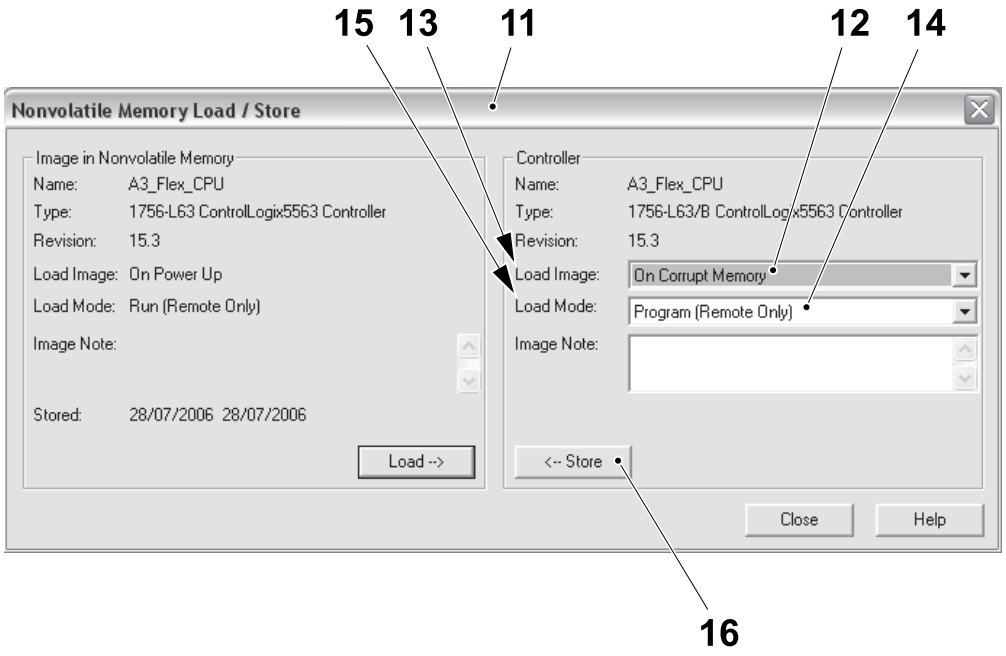

11 NONVOLATILE MEMORY LOAD/STORE window
12 ON CORRUPT memory
13 LOAD IMAGE option
14 PROGRAM (REMOTE ONLY)
15 LOAD MODE option
16 STORE button

(Cont'd)

(Cont'd)

k) Select the YES button (17) to confirm the store.

l) During the process a dialogue box indicates that the store is in progress, select the OK button (18).

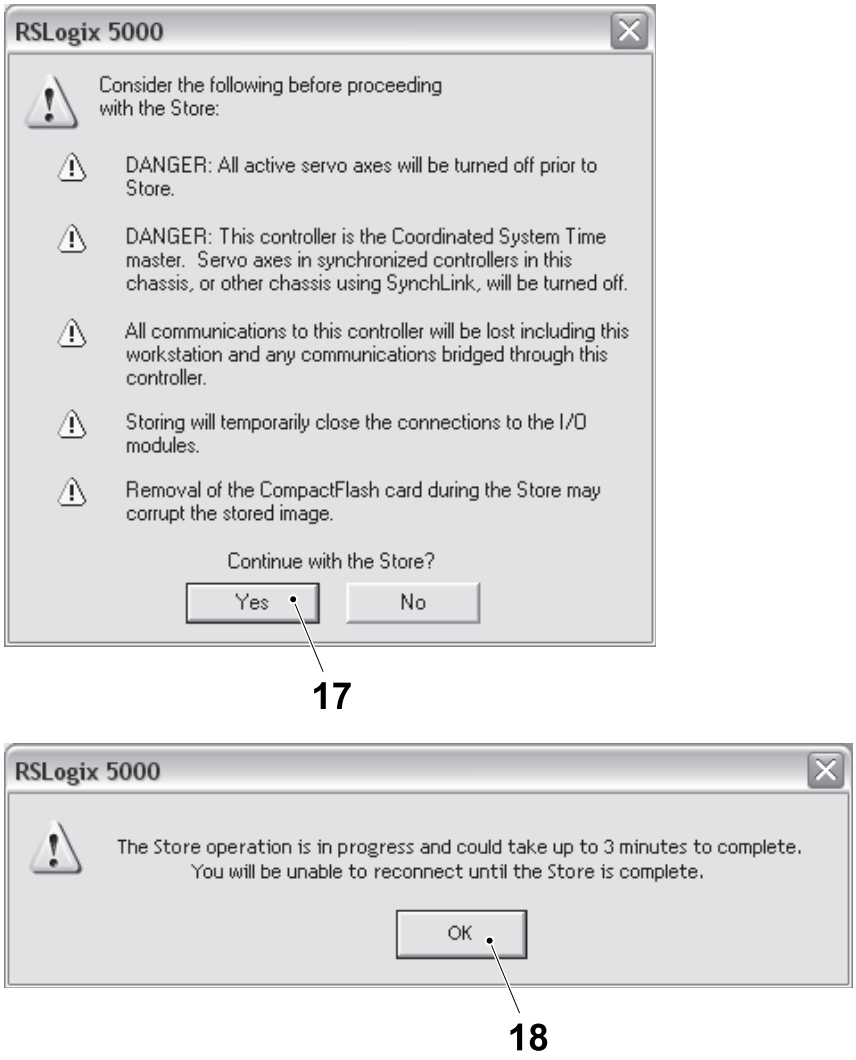

17 Yes button
18 OK button

(Cont'd)

(Cont'd)

m) Select the OK button (19) to close the CONTROLLER PROPERTIES window (8) window.

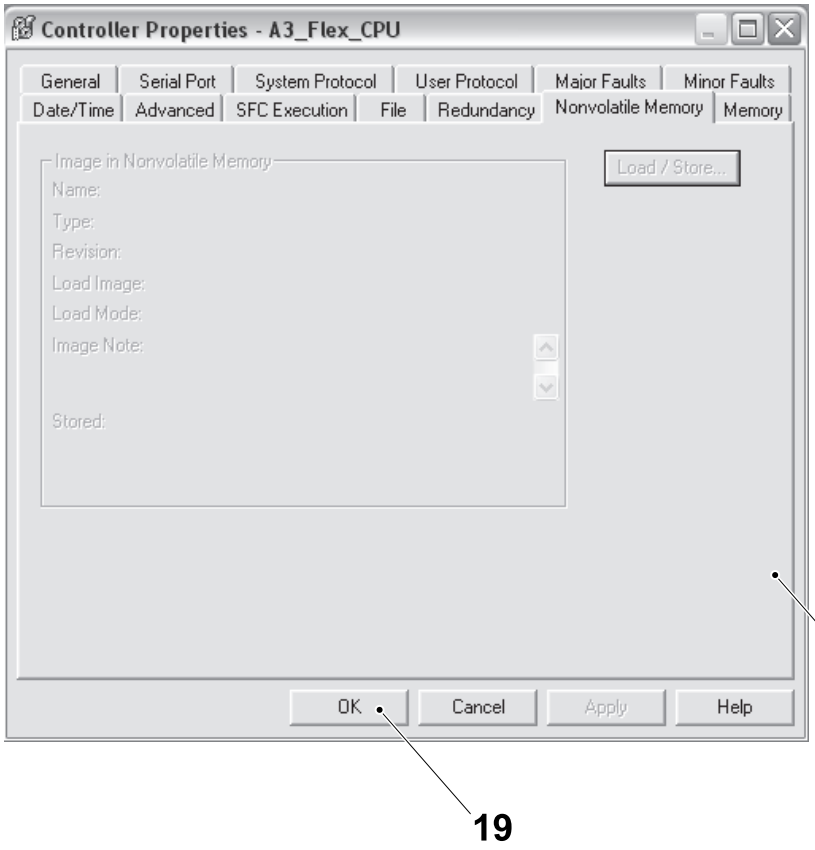

8 CONTROLLER PROPERTIES window

19 OK button

(Cont'd)

(Cont'd)

n) Select the COMMUNICATION menu (1) and then select GO ONLINE (2).

o) Select the COMMUNICATION menu (1) and then select RUN MODE (20) to put the PLC in RUN MODE.

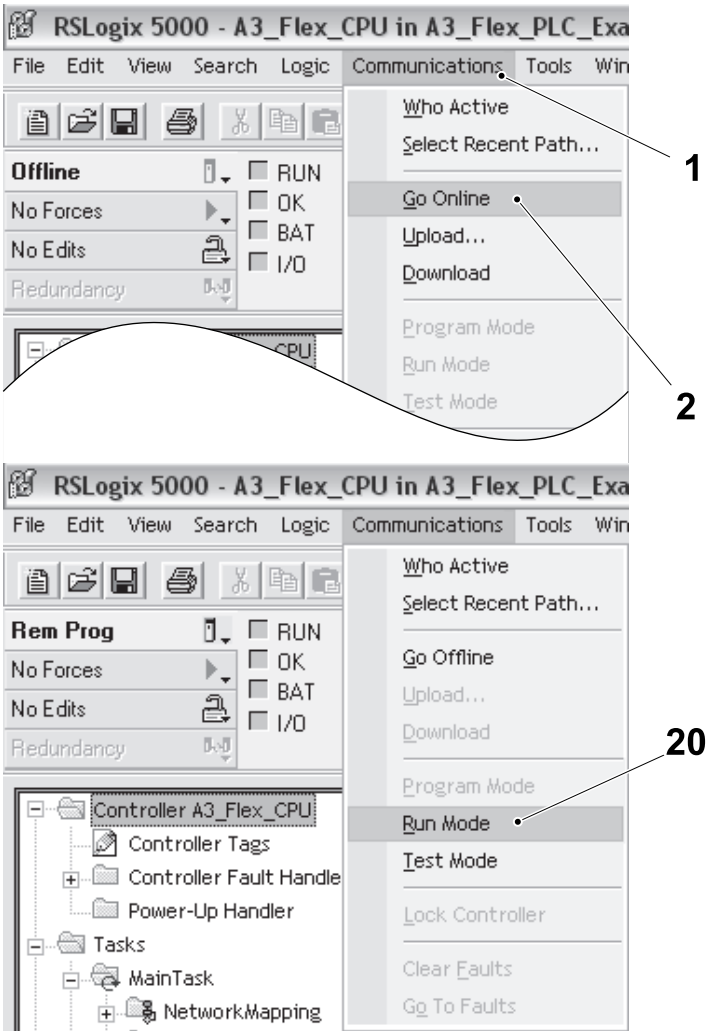

1 Communication menu
2 Go online
20 Run mode

10.2.2-5 CPU Module - Troubleshoot

Machine Status	Electrical supply disconnecting device in position I (ON)
SPC Reference	90603-5366

The CPU Module has a four-character scrolling status display (1) and four status indicators (2).

- the status display (1) scrolls messages that provide information about the firmware revision, Energy Storage Module (ESM) status, project status, and major faults.
- the status indicators (2) indicate the status of the controller.

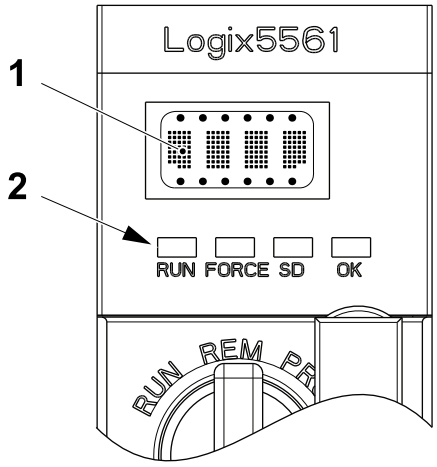

1 Status display
2 Status indicators

General Status Messages

Message	Description	Action
No message is indicated	The controller is off. A major non recoverable fault (MNRF) has occurred.	Check the OK indicator to determine if the controller is powered and determine the state of the controller
test	Power-up tests are being conducted by the controller	
pass	PASS Power-up tests have been successfully completed.	
SAVE	A project is being saved to the SD card at power down.	Allow the save to complete before removing the SD card or disconnecting the power.
load	A project is being loaded from the SD card at controller power up.	Allow the load to complete before removing the SD card or disconnecting power or removing the ESM module.

(Cont'd)

(Cont'd)

Message	Description	Action
updt	A firmware upgrade is being conducted from the SD card upon power up.	If the firmware to update upon power up is not desired, change the controller's Load Image property.
CHRG	The capacitor-based ESM is being charged.	
1756-L7x/X	The controller catalogue number and series.	
Rev XX.xxx	The major and minor revision of the controller's firmware.	
no project	No project is loaded on the controller.	Download the project to the controller or use a SD card to load a project to the controller
Project name	The name of the project that is currently loaded on the controller. The name indicated is based on the project name specified in RSLogix 5000 software.	
busy	The I/O modules associated with the controller are not yet fully-powered.	Allow time for power up and I/O module self-testing.
Corrupt Certificate Received	The security certificate associated with the firmware is corrupted.	Replace the firmware revision.
Corrupt Image Received	The firmware file is corrupted.	Replace the firmware revision.
ESM Not Present	An ESM is not present and the controller cannot save the application at power down.	Insert a compatible ESM, and, if using a capacitor-based ESM, do not remove power until the ESM is charged.
ESM Incompatible	The ESM is incompatible with the memory size of the controller.	Replace the incompatible ESM with a compatible ESM.
ESM Hardware Failure	A failure with the ESM has occurred and the controller is incapable of saving of the program in the event of a power down.	Replace the ESM before removing power to the controller so the controller program is saved.
ESM Energy Low	The capacitor-based ESM does not have sufficient energy to enable the controller to save the program in the event of a power down.	Replace the ESM.
ESM Charging	The capacitor-based ESM is charging.	Do not remove power until charging is complete.
Flash in Progress	A firmware upgrade initiated via ControlFLASH or AutoFlash utilities is in progress.	Allow the firmware upgrade to complete without interruption.

(Cont'd)

(Cont'd)

Message	Description	Action
Firmware Installation Required	The controller is using boot firmware and requires a firmware upgrade.	Upgrade controller firmware.
SD Card Locked	An SD card that is locked is installed.	

Major Recoverable Fault Messages

Major recoverable faults are indicated by the message `MAJOR FAULT TXX:CXX` on the controller status display. This table lists specific fault types, codes, and the associated messages as they are shown on the status display.

Note! For detailed descriptions and suggested recovery methods for major recoverable faults, see the Logix5000 Major, Minor, and I/O Fault Codes Programming Manual supplied by Rockwell Automation.

Type	Code	Message
1	1	Run Mode Powerup
1	60	Non-recoverable
1	61	Non-recoverable - Diagnostics Saved
1	62	Non-recoverable - Program Saved
3	16	I/O Connection Failure
3	20	Chassis Failure
3	23	Connection Failure
4	16	Unknown Instruction
4	20	Invalid Array Subscript
4	21	Control Structure LEN or POS < 0
4	31	Invalid JSR Parameter
4	34	Timer Failure
4	42	Invalid JMP Target
4	82	SFC Jump Back Failure
4	83	Value Out of Range
4	84	Stack Overflow
4	89	Invalid Target Step
4	90	Invalid Instruction
4	91	Invalid Context
4	92	Invalid Action
6	1	Task Watchdog Expired
7	40	Save Failure
7	41	Bad Restore Type
7	42	Bad Restore Revision
7	43	Bad Restore Checksum
8	1	Keyswitch Change Ignored

(Cont'd)

(Cont'd)

I/O Fault Codes

I/O faults indicated by the controller are shown in the status display in one of these formats; `I/O FAULT LOCAL:X #XXXX MESSAGE` or `I/O FAULT MODULENAME #XXXX MESSAGE` or `I/O FAULT MODULEPARENT:X #XXXX MESSAGE`.

The first part of the format is used to indicate the location of the faulted module. How the location is indicated depends on the I/O configuration and the module properties specified in RSLogix 5000 software.

The latter part of the format, #XXXX message, can be used to diagnose the type of I/O fault and potential corrective actions.

Take corrective action specific to the type of fault indicated.

Note! The status display shows `X I/O FAULTS` if multiple I/O faults are present: X is the number of I/O faults present. As each I/O fault is resolved, the number of faults indicated decreases and the next fault reported is indicated by the I/O Fault message.

Note! For details about each I/O fault code, see the Logix5000 Major, Minor, and I/O Fault Codes Programming Manual supplied by Rockwell Automation.

Code	Message	Code	Message
#0001	Connection Failure	#0110	Module Not Configured
#0002	Insufficient Resource	#0111	RPI Out of Range
#0003	Invalid Value	#0113	Out of Connections
#0004	IOI Syntax	#0114	Wrong Module
#0005	Destination Unknown	#0115	Wrong Device Type
#0006	Partial Data Transferred	#0116	Wrong Revision
#0007	Connection Lost	#0117	Invalid Connection Point
#0008	Service Unsupported	#0118	Invalid Configuration Format
#0009	Invalid Attribute Value	#0119	Module Not Owned
#000A	Attribute List Error	#011A	Out of Connection Resources
#000B	State Already Exists	#0203	Connection Timeout
#000C	Object Mode Conflict	#0204	Unconnected Message Timeout
#000D	Object Already Exists	#0205	Invalid Parameter
#000E	Attribute Not Settable	#0206	Message Too Large
#000F	Permission Denied	#0301	No Buffer Memory
#0010	Device State Conflict	#0302	Bandwidth Not Available
#0011	Reply Too Large	#0303	No Bridge Available
#0012	Fragment Primitive	#0304	ControlNet Schedule Error
#0013	Insufficient Command Data	#0305	Signature Mismatch
#0014	Attribute Not Supported	#0306	CCM Not Available
#0015	Data Too Large	#0311	Invalid Port
#0100	Connection In Use	#0312	Invalid Link Address

(Cont'd)

(Cont'd)

Code	Message	Code	Message
#0103	Transport Not Supported	#0315	Invalid Segment Type
#0106	Ownership Conflict	#0317	Connection Not Scheduled
#0107	Connection Not Found	#0318	Invalid Link Address
#0108	Invalid Connection Type	#0319	No Secondary Resources Available
#0109	Invalid Connection Size	#031E	No Available Resources
#031F	No Available Resources	#FE07	Invalid Output Connection
#0800	Network Link Offline	#FE08	Invalid Output Data Pointer
#0801	Incompatible Multicast RPI	#FE09	Invalid Output Data Size
#0814	Data Type Mismatch	#FE0A	Invalid Output Force Pointer
#FD01	Bad Backplane EEPROM	#FE0B	Invalid Symbol String
#FD02	No Error Code	#FE0C	Invalid Scheduled P/C Instance
#FD03	Missing Required Connection	#FE0D	Invalid Symbol Instance
#FD04	No CST Master	#FE0E	Module Firmware Updating
#FD05	Axis or GRP Not Assigned	#FE0F	Invalid Firmware File Revision
#FD06	SERCOS Transition Fault	#FE10	Firmware File Not Found
#FD07	SERCOS Init Ring Fault	#FE11	Firmware File Invalid
#FD08	SERCOS Comm Fault	#FE12	Automatic Firmware Update Failed
#FD09	SERCOS Init Node Fault	#FE13	Update Failed - Active Connection
#FD0A	Axis Attribute Reject	#FE14	Searching Firmware File
#FD1F	Safety I/O	#FE22	Invalid Connection Type
#FD20	No Safety Task	#FE23	Invalid Unicast Allowed
#FE01	Invalid Connection Type	#FF00	No Connection Instance
#FE02	Invalid Update Rate	#FF01	Path Too Long
#FE03	Invalid Input Connection	#FF04	Invalid State
#FE04	Invalid Input Data Pointer	#FF08	Invalid Path
#FE05	Invalid Input Data Size	#FF0B	Invalid Config
#FE06	Invalid Input Force Pointer	#FF0E	No Connection Allowed

(Cont'd)

(Cont'd)

Status Indicators

LED	Colour	Description
RUN (1)	Off	The controller is in Program or Test mode.
	Steady green	The controller is in Run mode.
FORCE (2)	Off	No tags contain I/O force values. I/O forces are inactive (disabled).
	Solid amber	I/O forces are active (enabled) though I/O force values may or may not be configured.
	Flashing amber	One or more input or output addresses have been forced to an On or Off state, but the forces have not been enabled.
SD (3)	Off	There is no activity.
	Flashing green	The controller is reading from or writing to the SD card. Do not remove the SD card while the controller is reading or writing.
	Solid green	
	Flashing red	The SD card does not have a valid file system.
	Solid red	The SD card is not recognized by the controller.

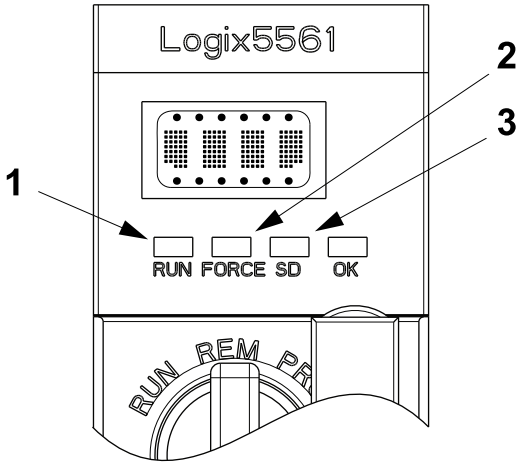

1 Run LED
2 Force LED
3 SD LED

(Cont'd)

(Cont'd)

LED	Colour	Description
OK (4)	Off	No power is applied.
	Flashing red	If the controller is new, then the controller requires a firmware update. Thestatus display (5) indicates `FIRMWARE INSTALLATION REQUIRED`. If the controller is **not** new, then a board major fault has occurred. For details about major recoverable faults, see the Logix5000 Major, Minor, and I/O Fault Codes Programming Manual, distributed by Rockwell Automation.
	Solid red	The controller is completing power-up diagnostics or The controller detected a non-recoverable fault, so it cleared the project from memory. or The charge of the capacitor in the ESM is being discharged upon power down. or The controller is powered, but is inoperable. or The controller is loading a project to nonvolatile memory.
	Solid green	The controller is ok.

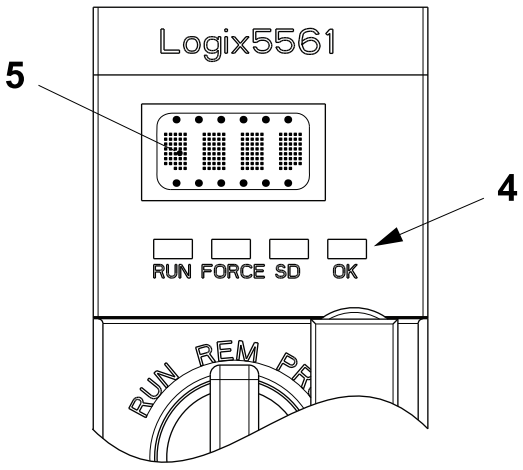

4 OK LED
5 Status display

10.2.2-6 CPU - Upload Program

Machine Status	Electrical supply disconnecting device in position I (ON)
Special Equipment	PC with CD Drive Ethernet communication cable
SPC Reference	2833407-0300

Note! To connect to the PLC using an ethernet communication cable, the PC must first be configured for this type of communication. See 10.2.1-1 Preparation for PLC Communication - Configure PC Network Communications and 10.2.1-2 Preparations for PLC Communication - Configure RSLinx for more details.

Note! It is possible to upload the current PLC program from the PLC to the PC. This might be necessary to compare the contents of the current and new PLC programs.

a) Connect the ethernet communication cable between a vacant connection port on the ethernet switch (1) and the PC (2).

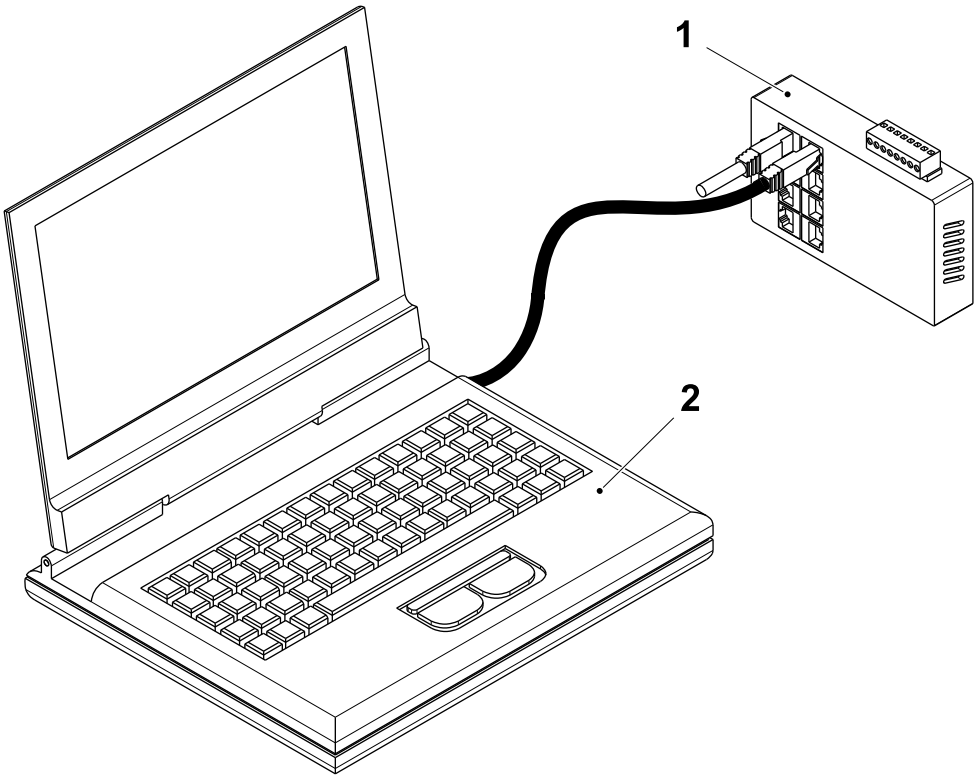

1 Ethernet switch
2 PC

(Cont'd)

(Cont'd)

b) Start the RSLogix program, select the COMMUNICATION menu (3) and then select GO ONLINE (4).

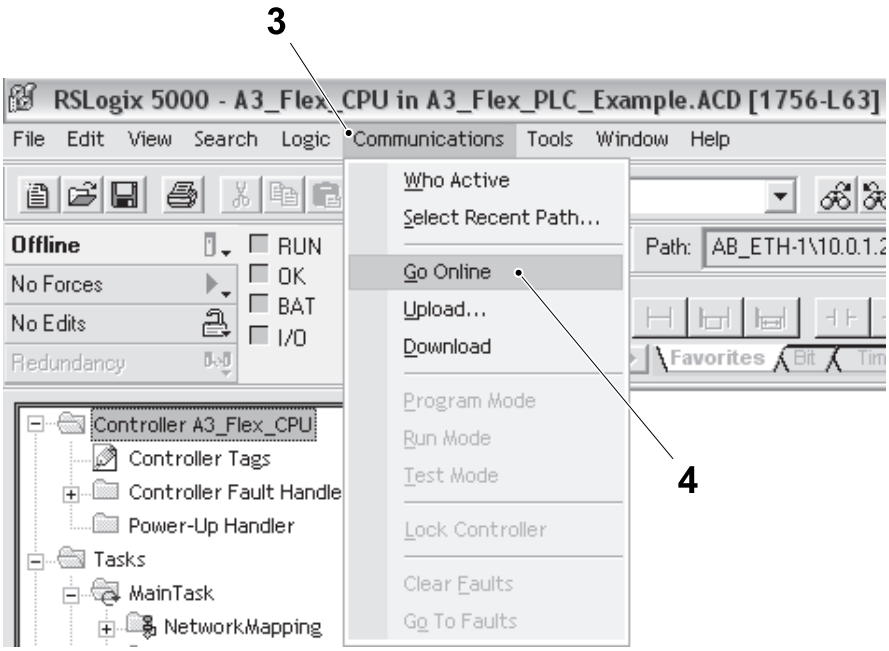

3 COMMUNICATION menu
4 GO ONLINE

(Cont'd)

(Cont'd)

c) In the CONNECTED TO GO ONLINE window (5), select the SELECT FILE button (6) .

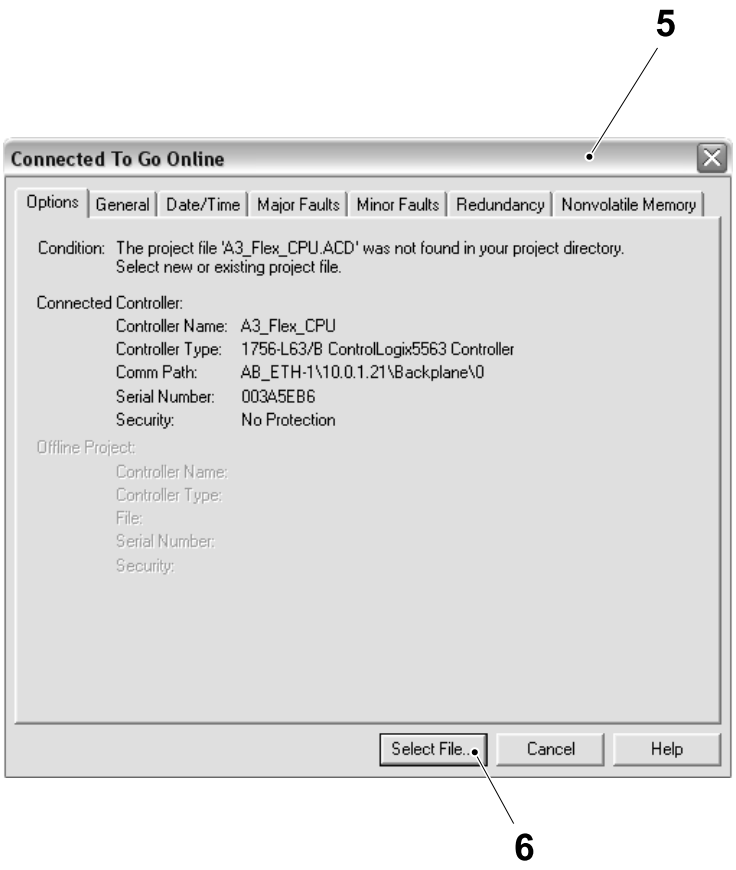

5 CONNECTED TO GO ONLINE window
6 SELECT FILE button

(Cont'd)

(Cont'd)

Note! Choose a unique name and file location for the program upload to avoid over writing other program files on the PC.

d) The enter new or select existing file window (7) is displayed, enter a name for the program upload in the `FILE NAME BOX` (8).

e) Select the `SELECT` button (9).

f) When the `RSLOGIX 5000 DIALOGUE BOX` (10) appears, select the `YES` button (11) to upload the PLC program to the PC.

Note! The upload process takes several minutes to complete.

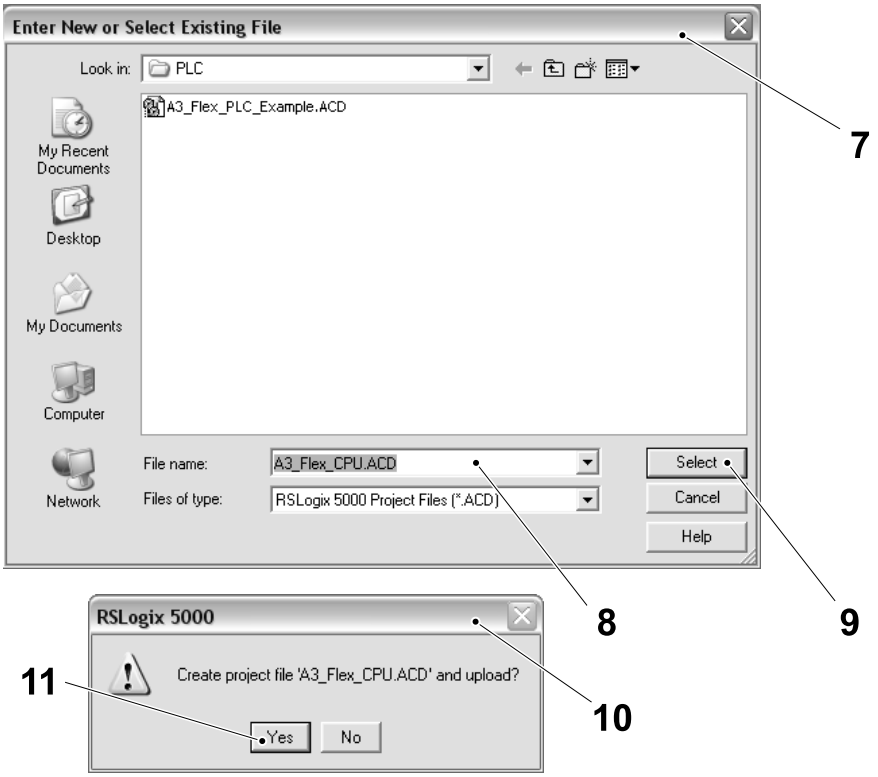

7 enter new or select existing file window
8 `FILE NAME BOX`
9 `SELECT` button
10 `RSLOGIX 5000 DIALOGUE BOX`
11 `YES` button

10.2.2-7 Install the ControlFlash Application Firmware Library

Machine Status	Electrical supply disconnecting device in position I (ON)
Special Equipment	Ethernet communication cable PC with CD drive RSLogix 5000 installed Latest Program CD see SPC

Note! Always use the latest version of the program CD.

Note! The firmware of the drivers of the servomotors has to be updated in all the machines. CAP 30/Speed is shown in the illustration as reference only.

a) Open the required (not the example shown) compressed folder (1).

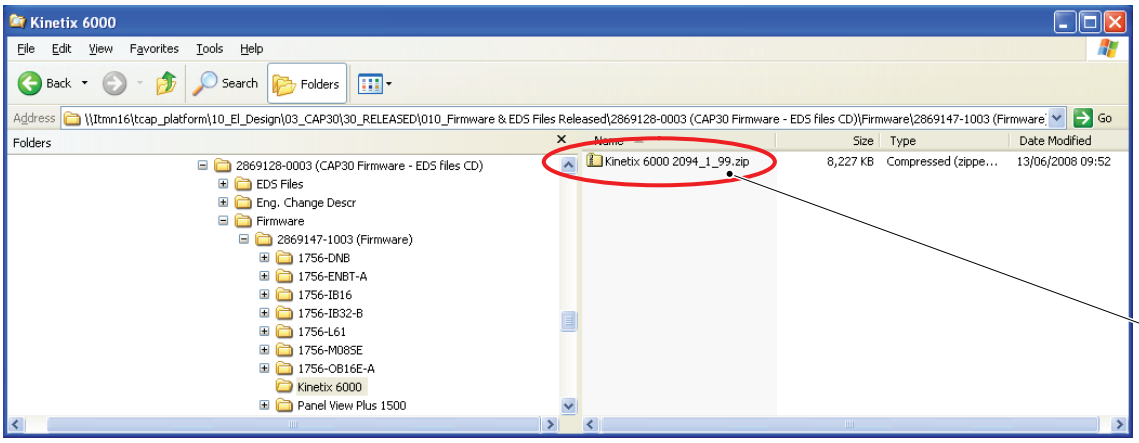

1 Compressed folder

b) Move the installation file (2) in the desktop of the PC and

c) Execute the installation file (2).

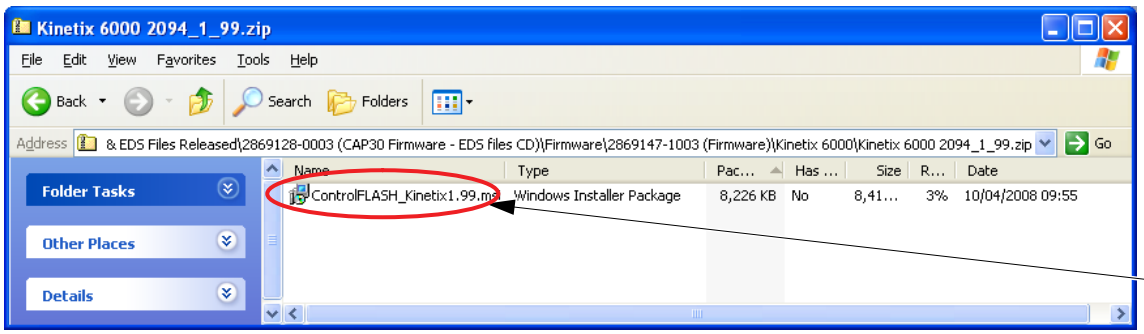

2 Installation file

(Cont'd)

(Cont'd)

d) Click on the NEXT button (3).

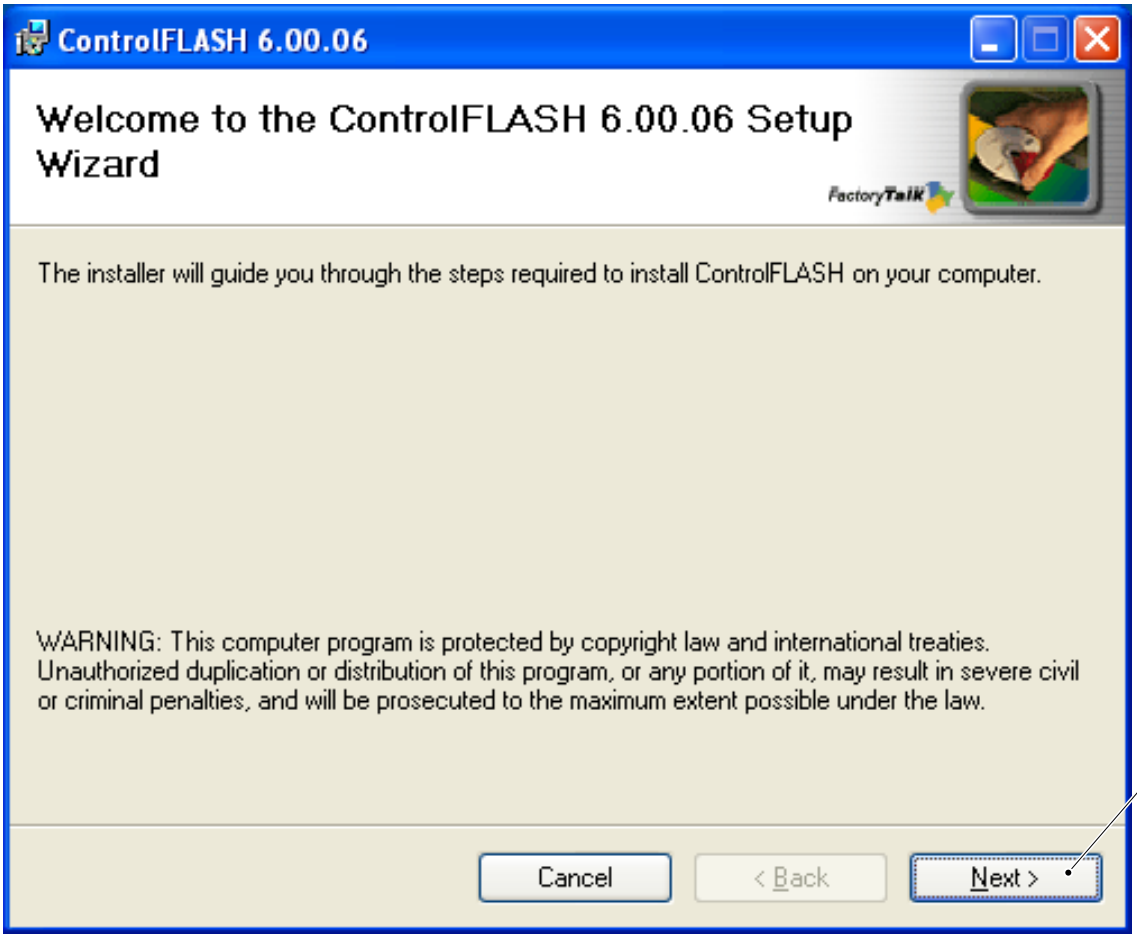

3 NEXT button

(Cont'd)

(Cont'd)

e) Select "I Agree"and then click on the NEXT button (4).

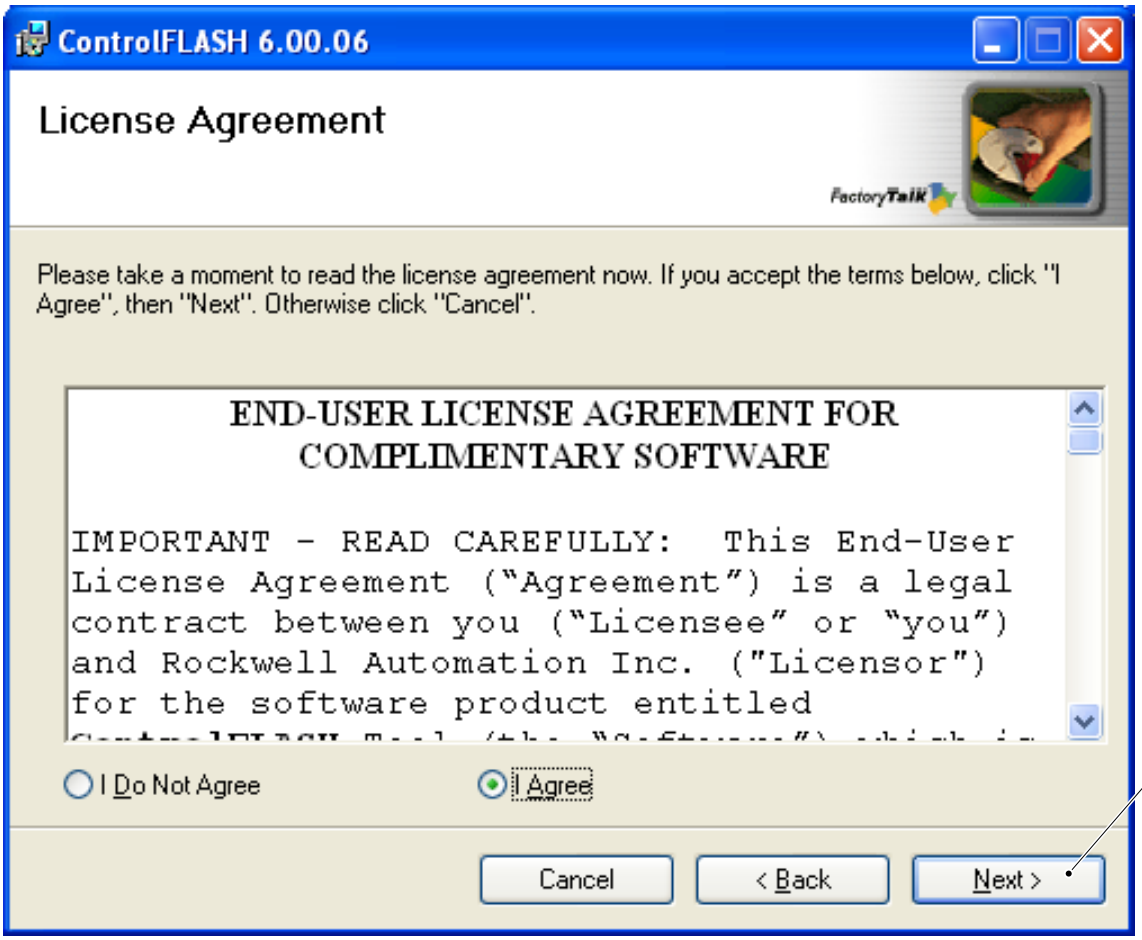

4 NEXT button

(Cont'd)

(Cont'd)

f) Select the folder for the installation and then click on the NEXT button (5).

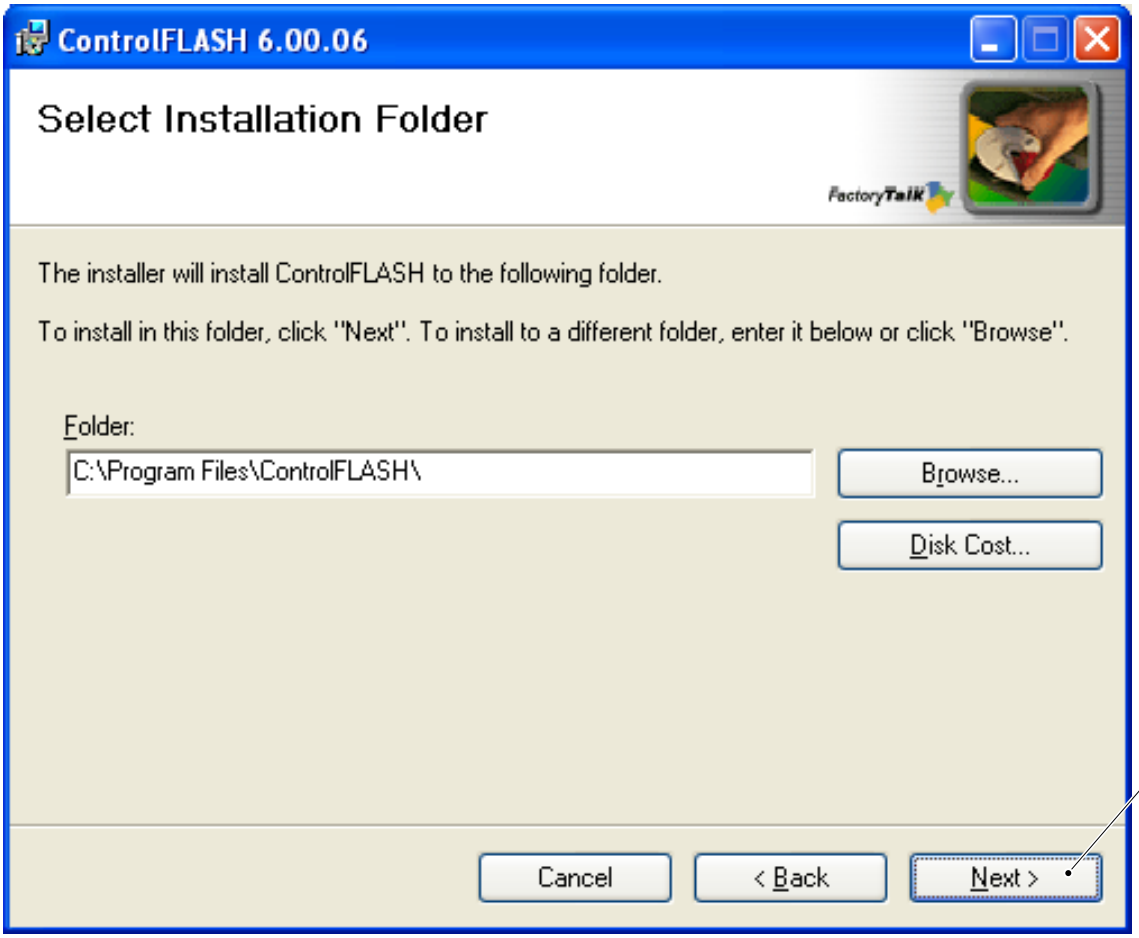

5 NEXT button

(Cont'd)

(Cont'd)

g) Click on the NEXT button (6) to start the installation.

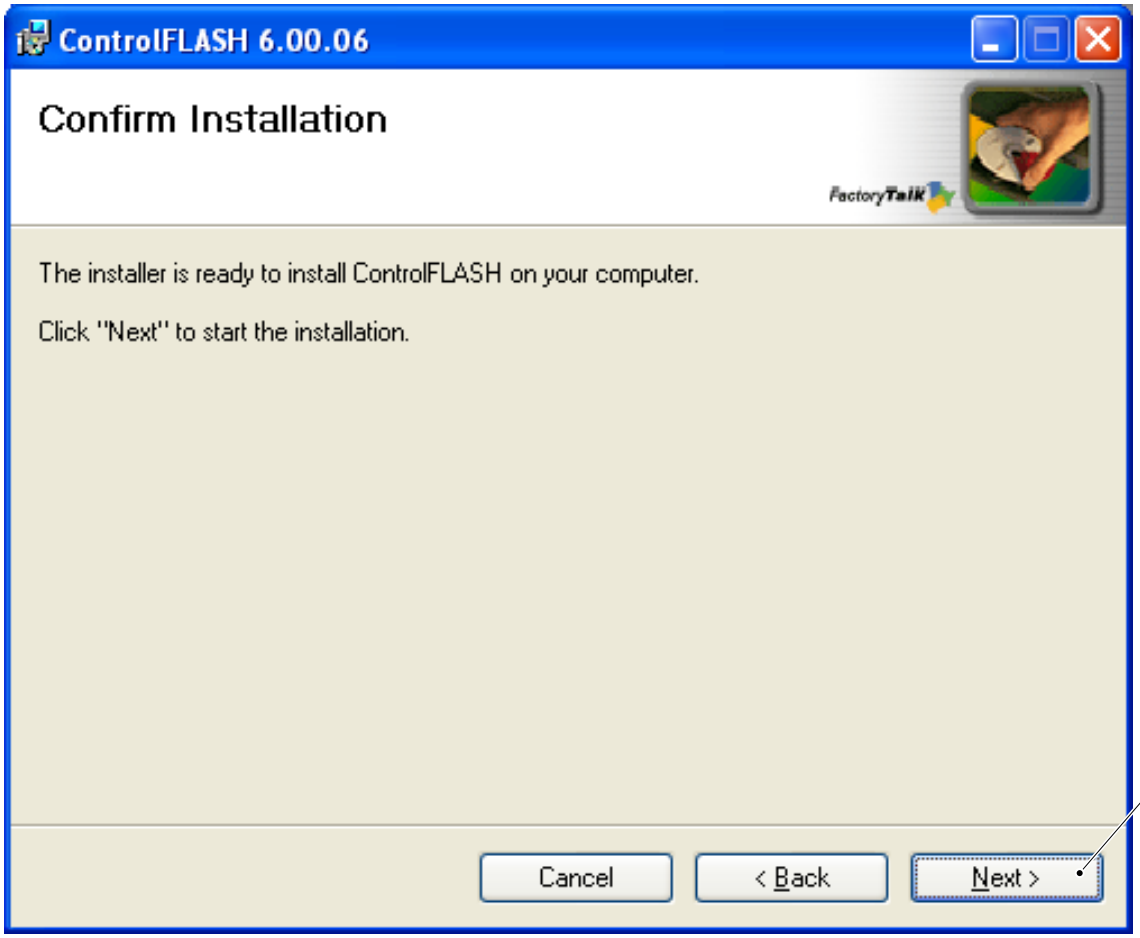

6 NEXT button

(Cont'd)

(Cont'd)

h) Click on the CLOSE button (7) to exit.

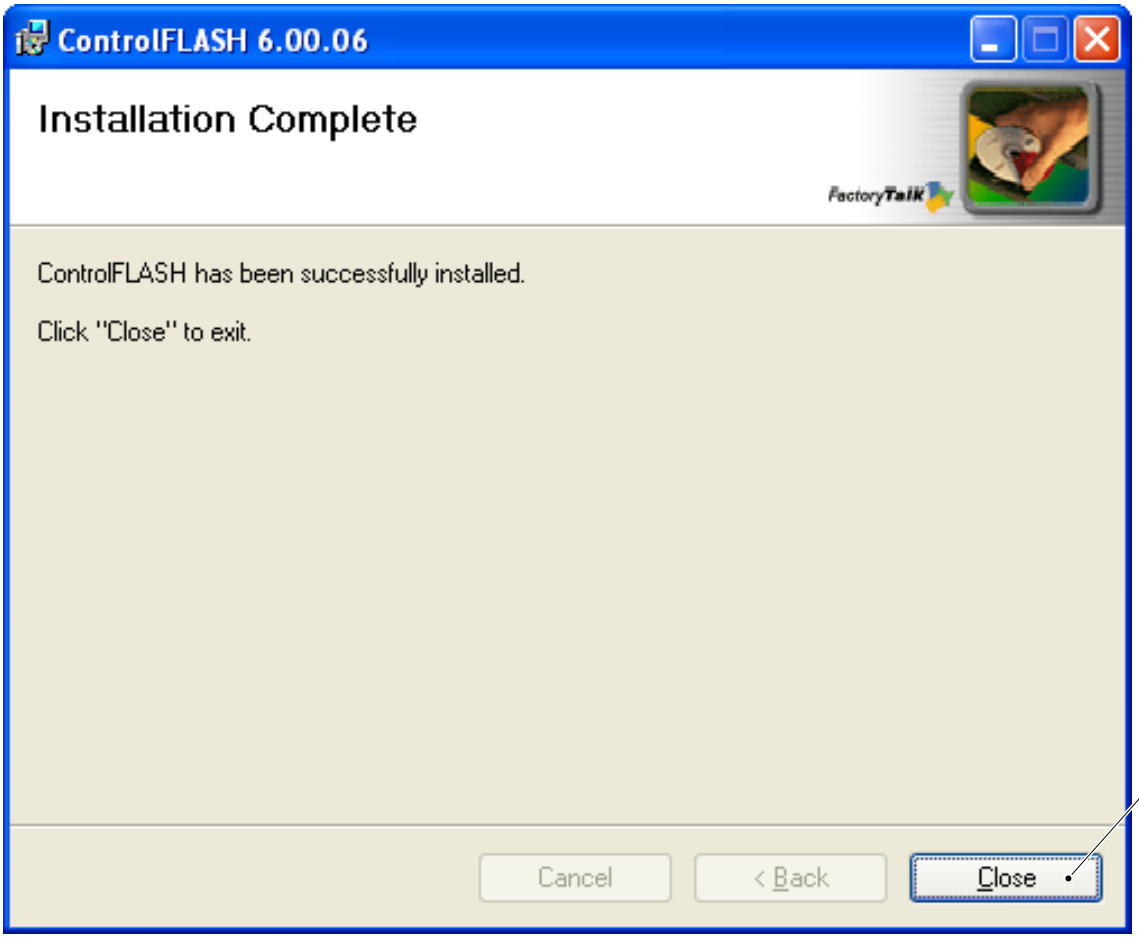

7 CLOSE button

10.2.2-8 PLC - Load FirmWare in PLC, Ethernet, DeviceNet and SERCOS Modules

Machine Status	Electrical supply disconnecting device in position I (ON)
Special Equipment	PC with CD Drive Latest Software CD see SPC Ethernet communication cable
SPC Reference	2833407-0300

CAUTION

Risk of damage to the equipment.

If a FirmWare update is interrupted, e.g. by a power loss on the machine, or if the communication fails between the device and the PC, the PLC Processor will be corrupted and must be sent for repair.

Note! The following procedure is valid for all PLC rack mounted or distributed modules requiring firmware.

Use the table below to identify the correct firmware revision for the module to be flashed.

PLC				
Slot No.	**Pos. No.**	**Module type**	**TP No.**	**Firmware revision**
1	01K301	1756-L61	90459-3142	13.36.1
2	01K302	1756-ENBT	90459-2477	3.2.6
3	01K303	1756-ENBT	90459-2477	3.2.6
4	01K304	1756-DNB	90600-4543	10.005
10	01K310	1756-M08SE	90459-2480	13.7

(Cont'd)

(Cont'd)

a) Make sure that the PC is configured as described in see 10.2.1-1 Preparation for PLC Communication - Configure PC Network Communications and 10.2.1-2 Preparations for PLC Communication - Configure RSLinx.

b) Open the start menu on the PC and select programs (1) , flash programming tools (2) and control flash (3).

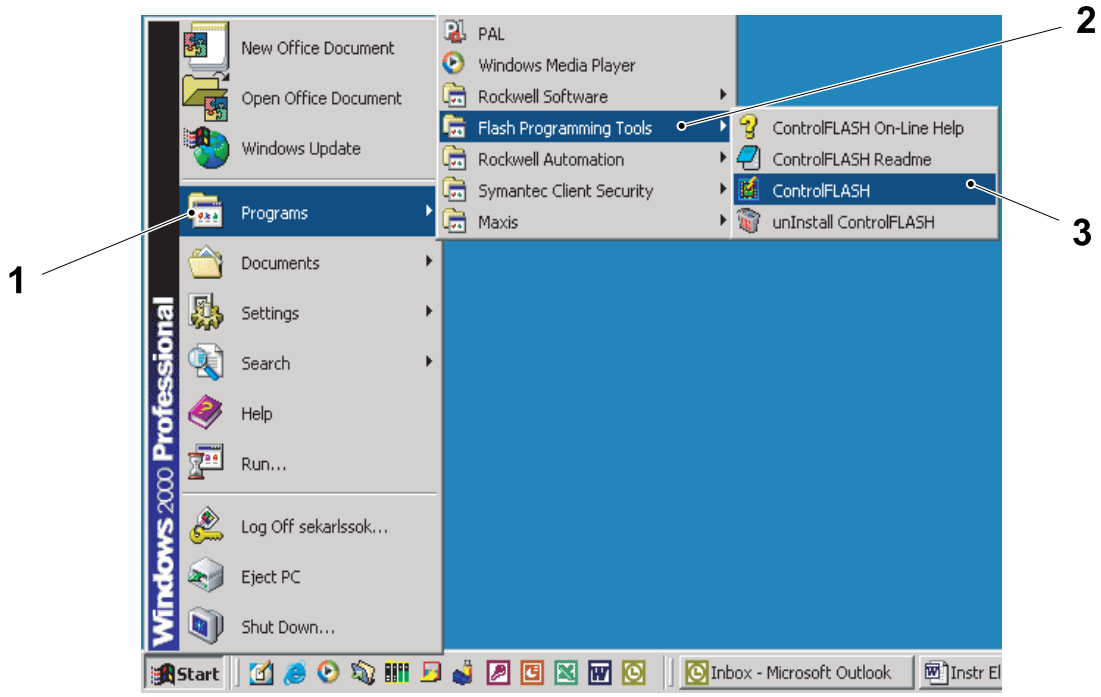

1 Programs
2 Flash programming tools
3 Control flash

(Cont'd)

(Cont'd)

c) Follow the instructions in the CONTROL FLASH PROGRAM window (4) to load the firmware.

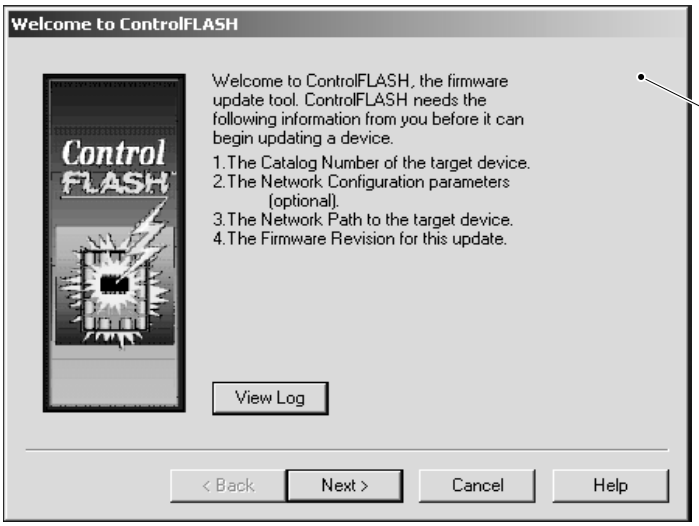

4 CONTROL FLASH PROGRAM window

10.2.2-9 Install the Driver for the First Kinetix Servo Driver

Machine Status	Electrical supply disconnecting device in position I (ON)
Special Equipment	PC with CD Drive Latest Software CD see SPC Ethernet communication cable
SPC Reference	2833407-0100

a) Launch RSLogix and enable the on-line connection with the PLC.

b) In the menu select tools (1) and then ControlFLASH (2).

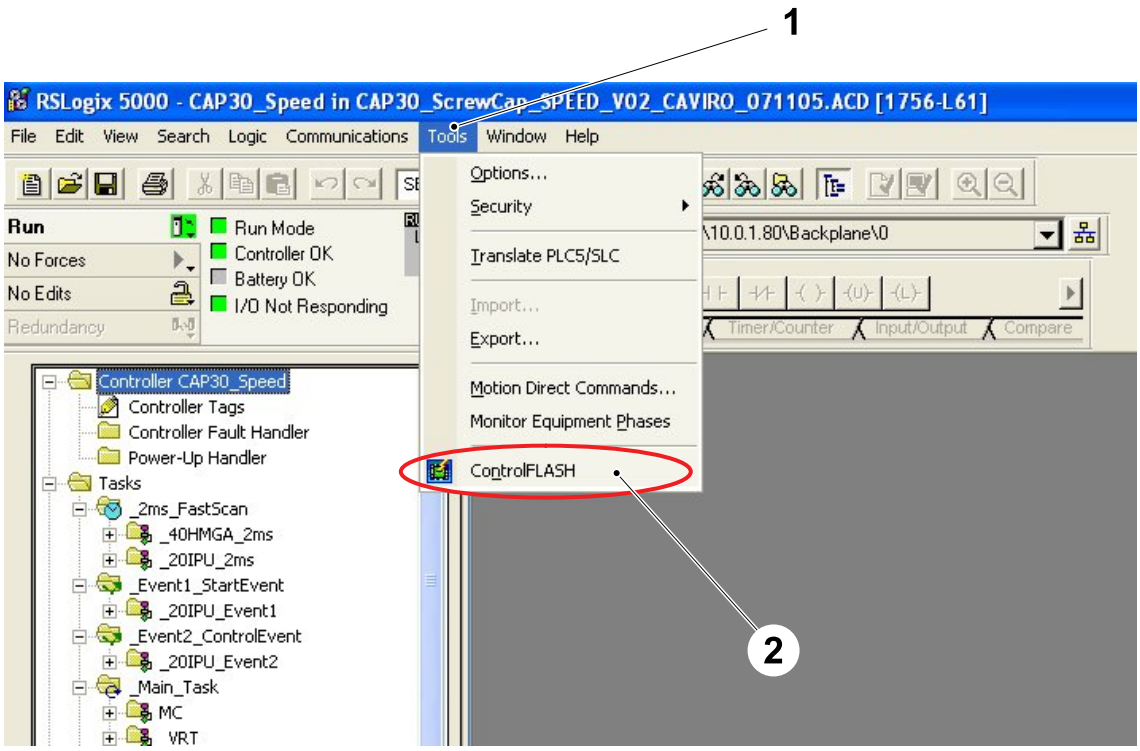

1 Tools
2 ControlFLASH

(Cont'd)

(Cont'd)

c) The ControlFLASH window (3) window appears as shown in picture.

d) Click on the NEXT button (4).



3 ControlFLASH window
4 NEXT button

(Cont'd)

(Cont'd)

e) Read the Code number (5) of the first Driver (6) starting from the left side of the Kinetix Rack, in the electrical cabinet.

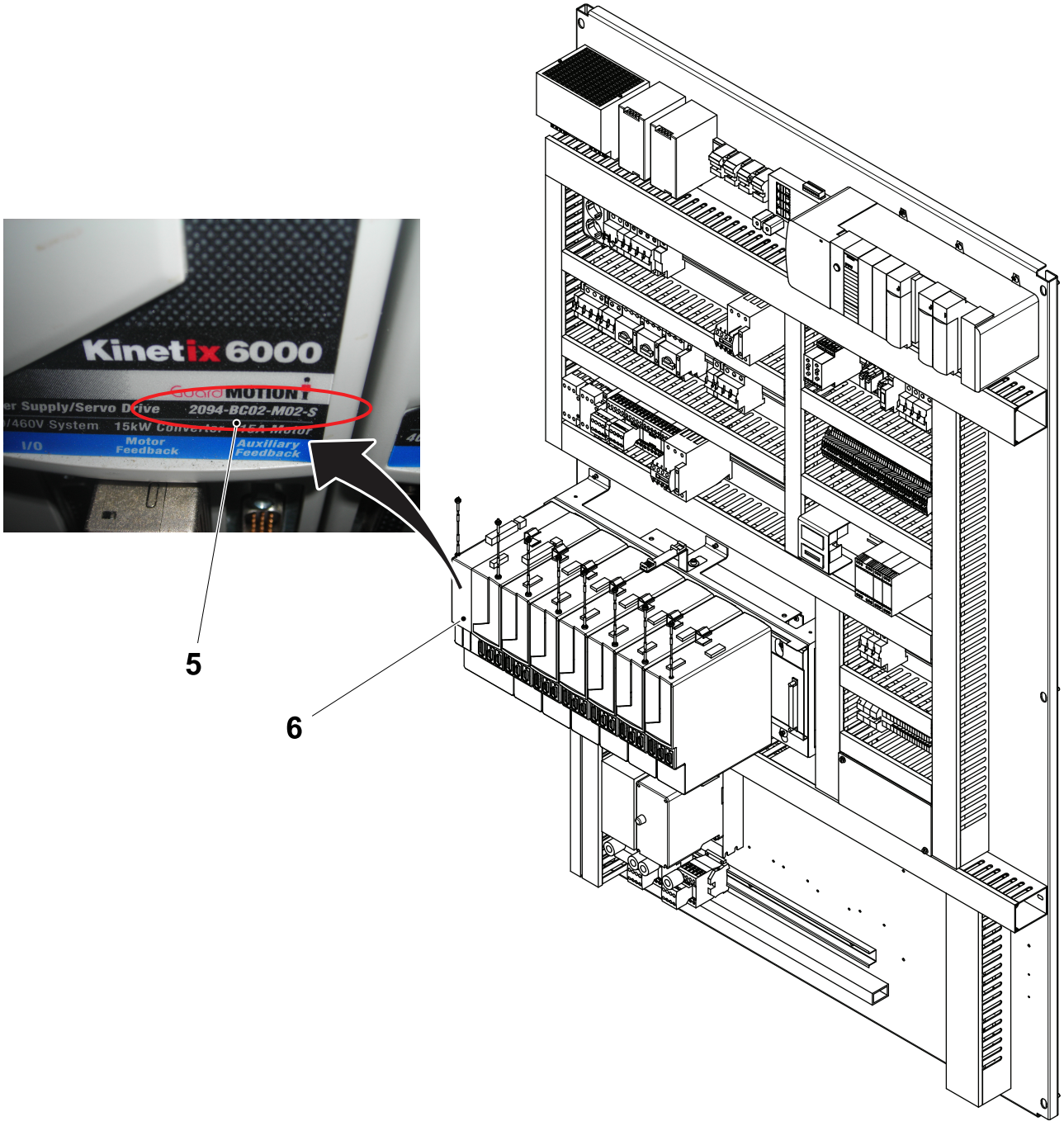

5 Code number
6 Driver

(Cont'd)

(Cont'd)

f) In the catalogue number window (7), scroll the search bar (8) and select the Code number (5) of the first driver.

g) Click on the NEXT button (9).

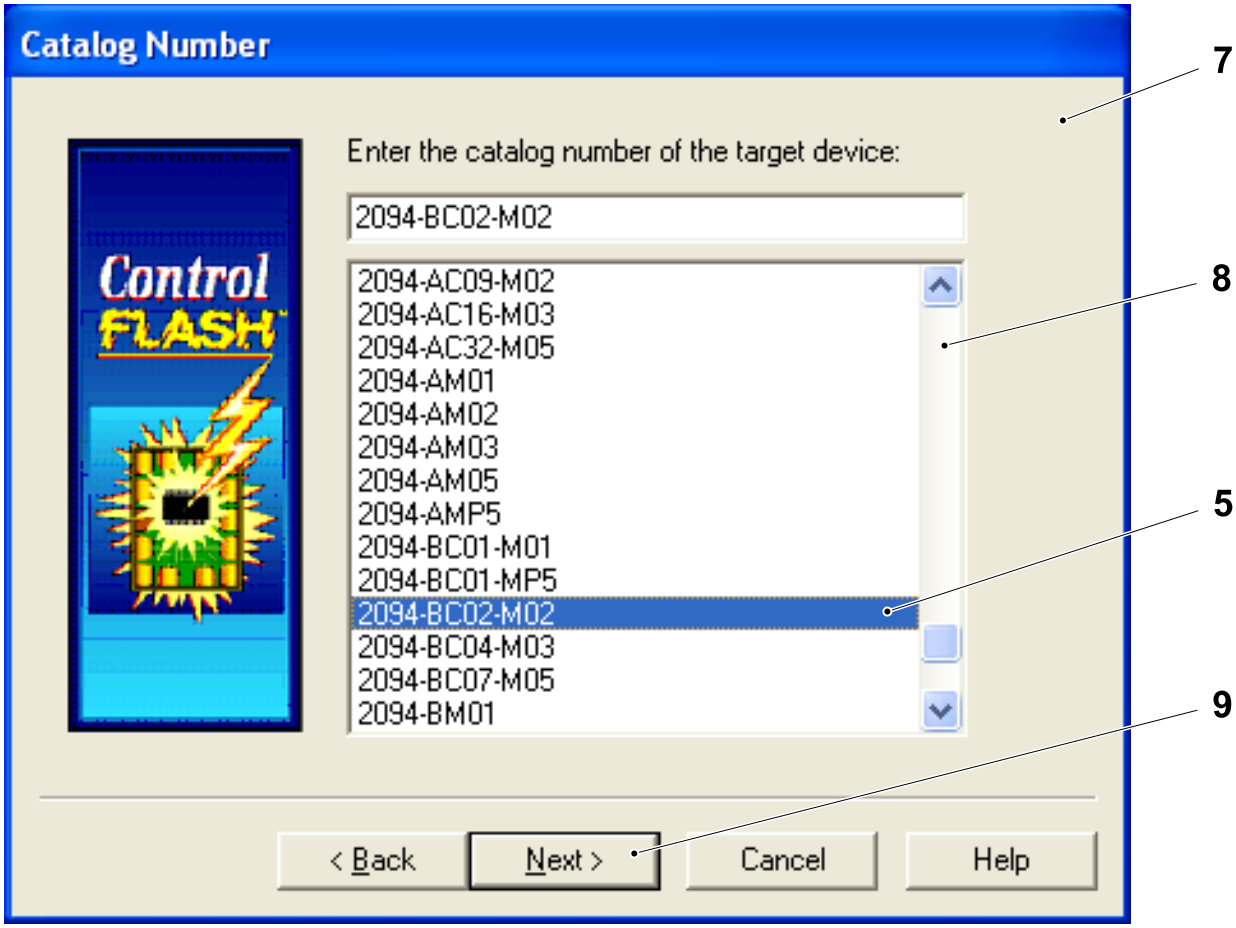

5 Code number
7 Catalogue number window
8 Search bar
9 NEXT button

(Cont'd)

(Cont'd)

h) Select the communication path (10) where the first driver is allocated.

i) Select the driver (11) that will be updated with the new firmware.

j) Click on the OK button (12).

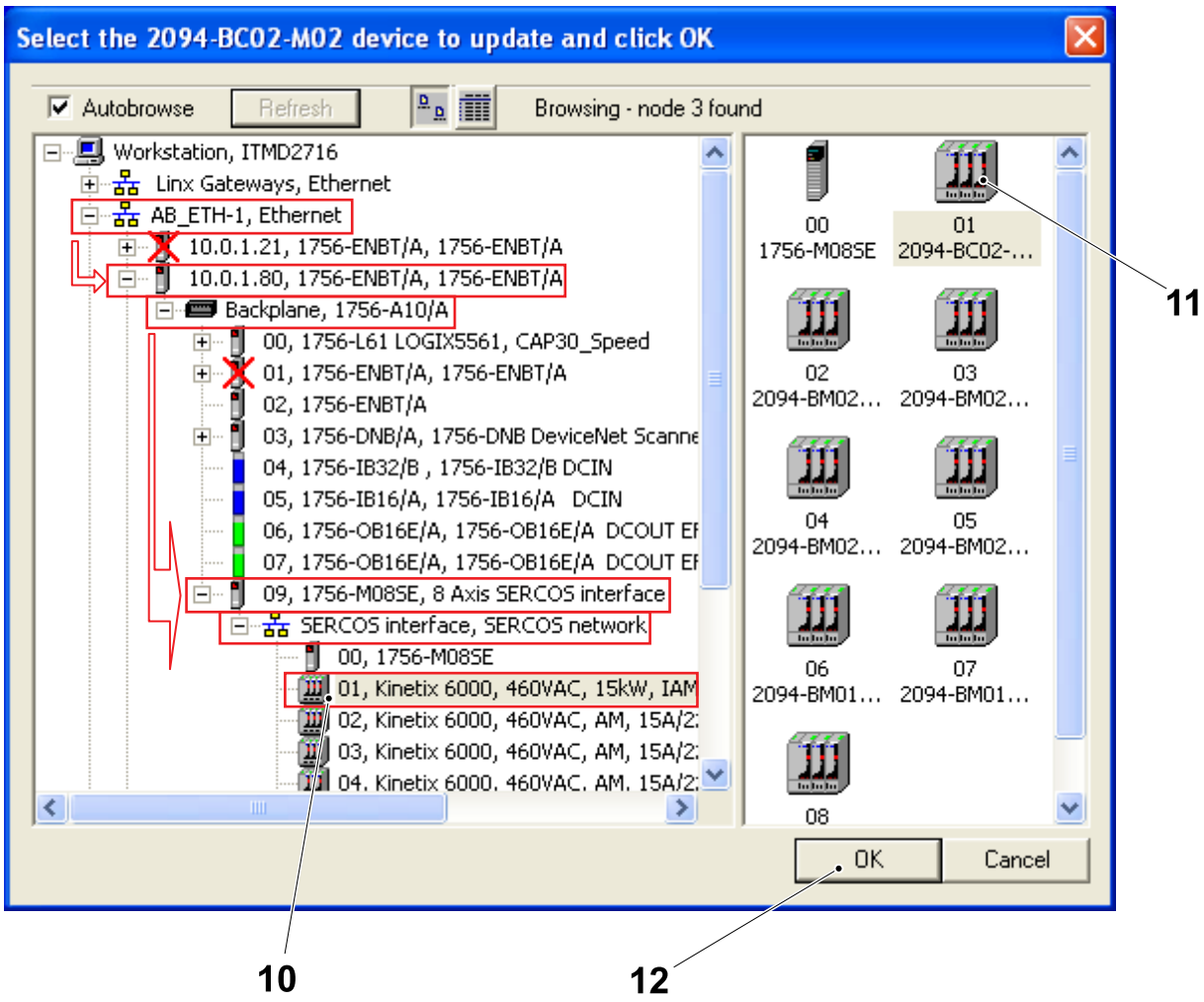

10 Communication path
11 Driver
12 OK button

(Cont'd)

(Cont'd)

k) Select the new revision 1.111 (13) in the firmware revision window by clicking on it.

l) Click on the NEXT button (14).

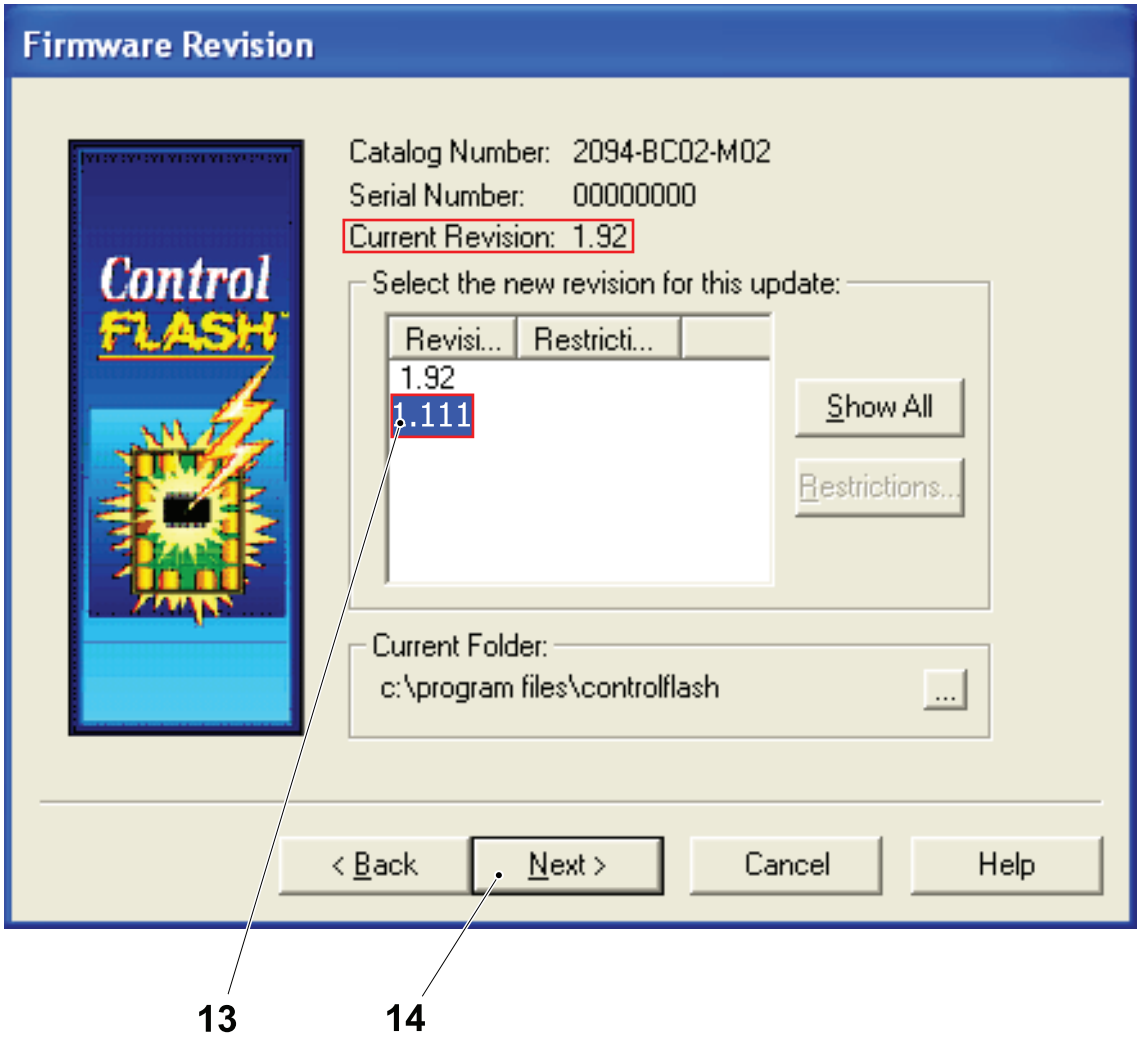

13 New Revision 1.111
14 NEXT button

(Cont'd)

(Cont'd)

m) Click on the FINISH button (15) in the summary window.

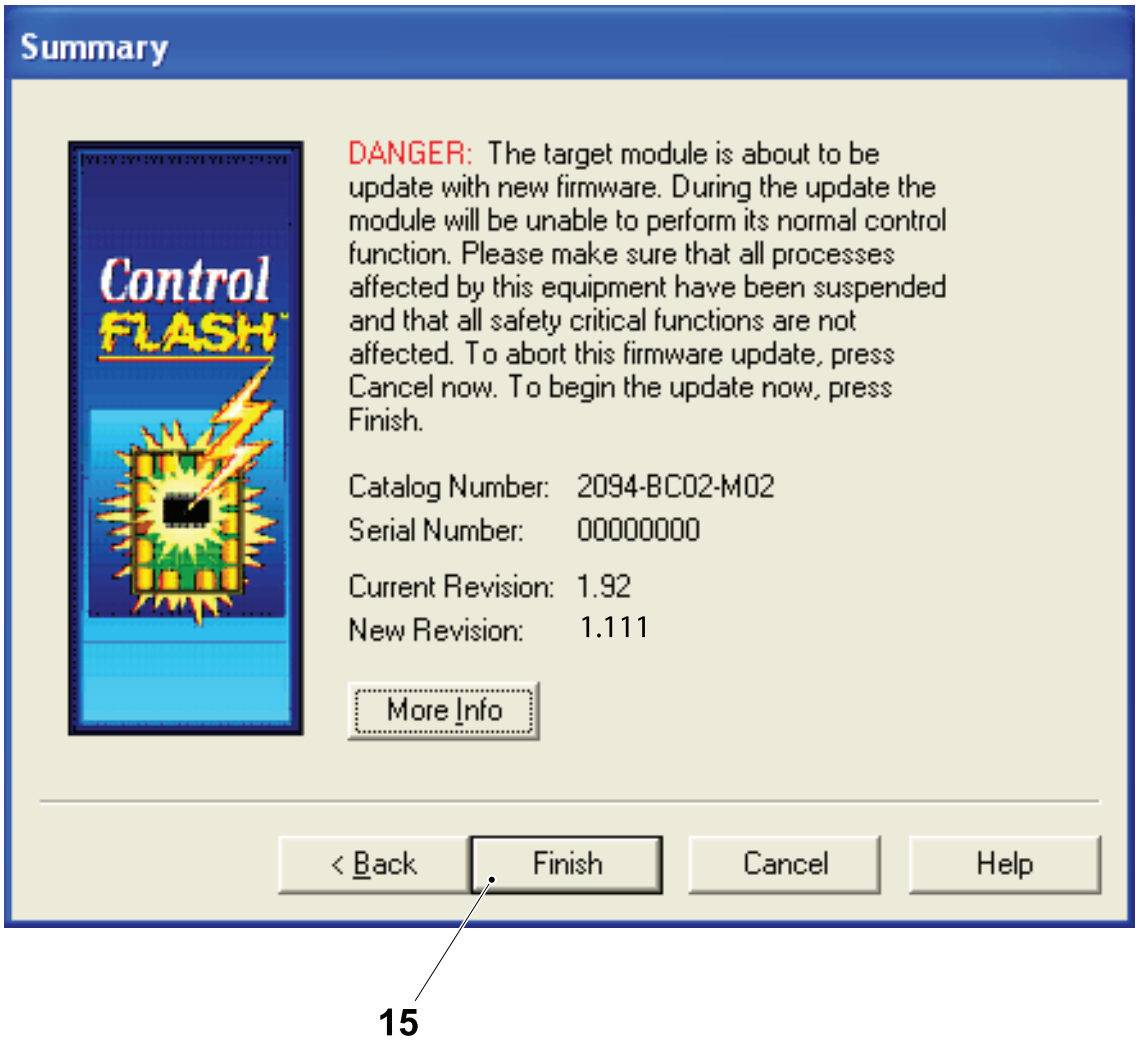

15 FINISH button

(Cont'd)

(Cont'd)

n) Click on the YES button (16).



16 YES button

o) Click on the OK button (17).

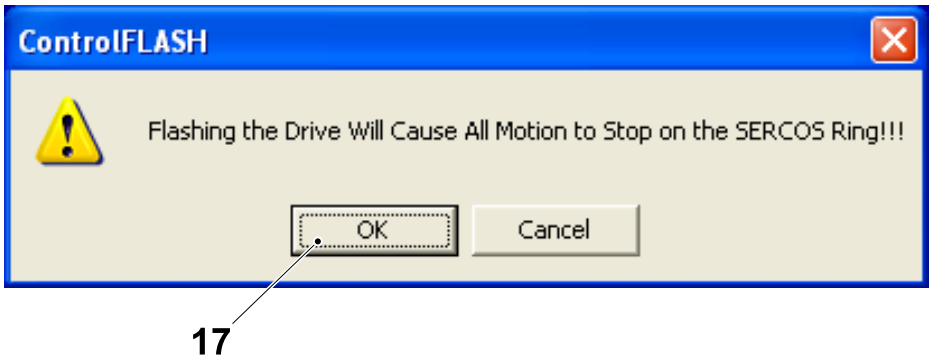

17 OK button

(Cont'd)

(Cont'd)

p) When the downloading of the firmware is finished, click on the OK button (18) in the update status window.

Note! After the installation of the first driver, the ControlFLASH tool returns to the first screen f).

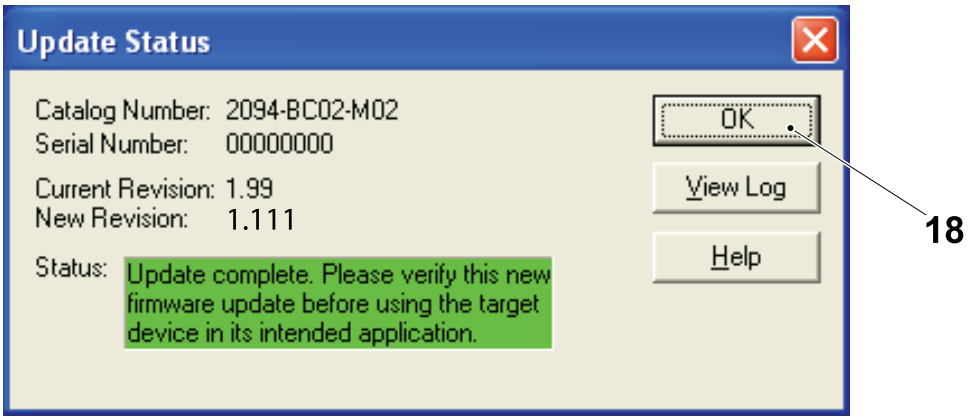

18 OK button

Install the Driver for the Next Kinetix Servo Driver

CAUTION
Always make sure to select the correct servo driver.
Carefully read the code number of the Kinetix servo driver.

a) Install the firmware in the next servo driver, see step f).

b) Repeat this procedure for all the servo drivers.

10.3 Distributed I/O and Network

10.3-1 Distributed I/O and Network - Overview

Machine Status	Electrical supply disconnecting device in position O (OFF)
SPC Reference	662911-0300

General

Distributed I/O is a generic term for I/O devices in the systems that communicate, via a network, to a component or components in the Control Logix Rack.

(Cont'd)

(Cont'd)

In This machine there are four such devices that communicate with the DNB DeviceNet Scanner (1) in the Control Logix Rack.

- The PowerFlex40 Module (2) (PF40) via a 22-COMM-D DeviceNet adaptor. The adaptor is integrated in the PowerFlex40 module. This adaptor has been assigned with Node address 1.
- The 10 Point I/O modules via a 1734-ADN DeviceNet adapter (3) . The adaptor has been assigned with Node address 2.

4 - Armor Block DeviceNet I/O Module
5 - Drop Lines
6 - Trunk Lines
7 - Electrical Cabinet
8 - Distribution Terminal
9 - Power Supply 24V DC
10 - DSI Communications
11 - Cap sorter sensors Node 3
12 - Cap sorter sensors Node 4
13 - Point I/O 20 in /20 out Node 2

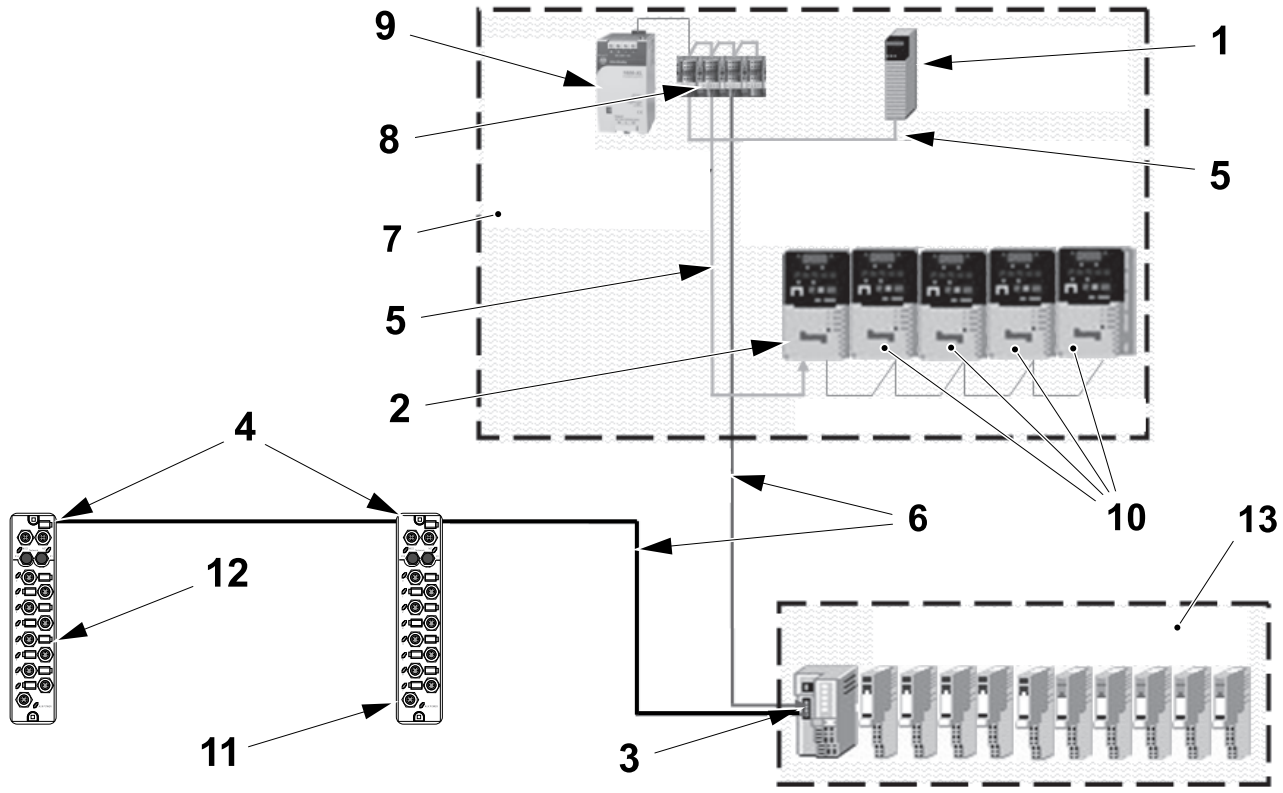

1 DeviceNet Scanner
2 PowerFlex40 Module
3 1734-ADN DeviceNet adapter

(Cont'd)

(Cont'd)

- Two Armor block DeviceNet I/O Module (4). These modules have been assigned with the Node addresses 3 and 4.

  Drop Line (5) is used to connect to modules in the Electrical Cabinet and Trunk Line (6) for connections to components in the machine.

4 - Armor Block DeviceNet I/O Module
5 - Drop Lines
6 - Trunk Lines
7 - Electrical Cabinet
8 - Distribution Terminal
9 - Power Supply 24V DC
10 - DSI Communications
11 - Cap sorter sensors Node 3
12 - Cap sorter sensors Node 4
13 - Point I/O 20 in /20 out Node 2

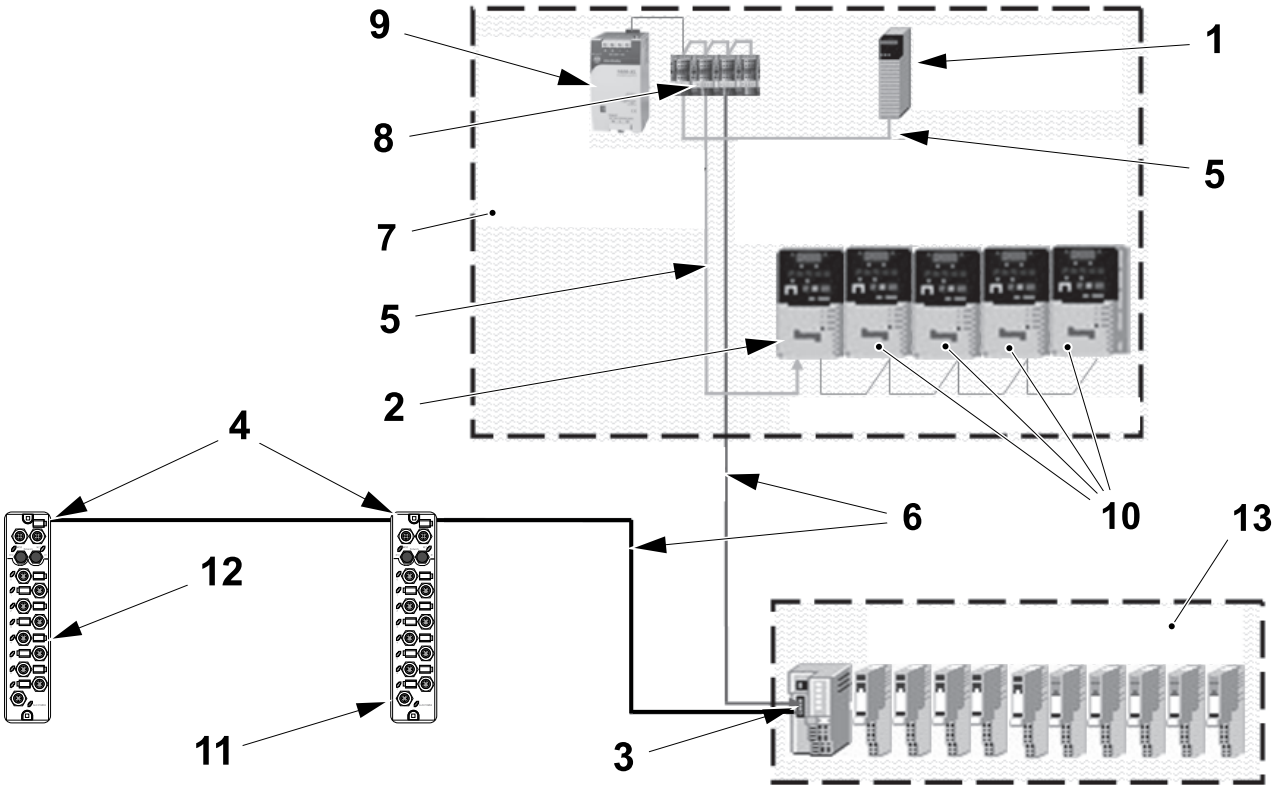

4 Armor block DeviceNet I/O Module
5 Drop Line
6 Trunk Line

Configuration Tools

The DeviceNet can be configured from a PC by using the RSLogix5000 and RSNetwork software.

(Cont'd)

(Cont'd)

Power Supplies and Cabling

The network is connected to a separate 24VDC power supply and has a terminating resistor (*TR*) (121 ohm), attached to the ends of the trunk line.

The network cable is colour coded to avoid wiring faults:

- +24 VDC (V+) Red
- CAN -H White
- Drain Shield or Bare
- CAN-L Blue
- +0 VDC (V-) Black

10.3.1 Distributed I/O and DeviceNet - I/O Modules

10.3.1-1 DeviceNet Scanner (A01K3004) Node 0

Machine Status	Electrical supply disconnecting device in position O (OFF)
SPC Reference	662911-0300 662905-0300

The DeviceNet Scanner (1) is located in the Control Logix Chassis. On the input side, the DeviceNet Scanner (1), communicates with the PLC via the back plane of the Control Logix Chassis. On the output side it communicates, via the DeviceNet, with the other DeviceNet modules.

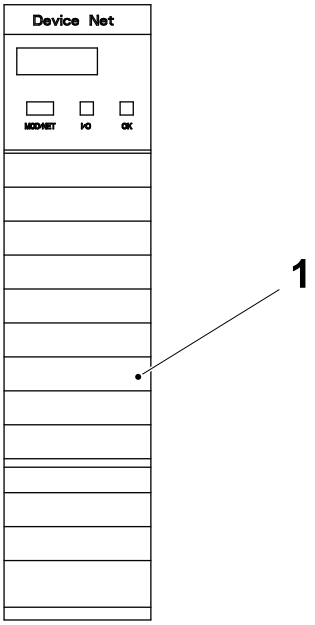

1 DeviceNet Scanner

Status indicators and an alphanumeric display are provided to report the status of the module and the DeviceNet.

If this module is changed, do the following:

- download the firmware to the module, see 10.2.2-7 Install the ControlFlash Application Firmware Library.
- set the Node address number and the baudrate, see 10.3.2-3 DeviceNet - DeviceNet on the Machine.
- load the DeviceNet program, 10.3.2-5 DeviceNet - Loading a Program in a New DeviceNet Scanner.

For DeviceNet troubleshooting information regarding this module, see 10.3.3-2 Troubleshooting - DeviceNet Error Indications and Messages on DeviceNet Scanner (Node 0).

10.3.1-2 DeviceNet Adaptor (22-COMM-D) Node 1

Machine Status	Electrical supply disconnecting device in position O (OFF)
SPC Reference	662911-0300 662905-0300

DeviceNet Adaptor (22-COMM-D) Node 1

The (22-COMM-D) DeviceNet adaptor (1) is mounted behind the cover (2) of the PowerFlex 40 drive (3) .

The DeviceNet adaptor (1) is used to set the Node address number and the baudrate.

Status indicators are provided to report the status of the module and the DeviceNet.

If this module is changed, do the following:

- set the Node address number and the baudrate, see 10.3.2-3 DeviceNet - DeviceNet on the Machine.
- load the DeviceNet program, 10.3.2-5 DeviceNet - Loading a Program in a New DeviceNet Scanner.

For DeviceNet troubleshooting information regarding this module, see 10.3.3-3 Troubleshooting - DeviceNet Error Indications on the PowerFlex40 Module 22-COMM-D Adaptor (Node 1).

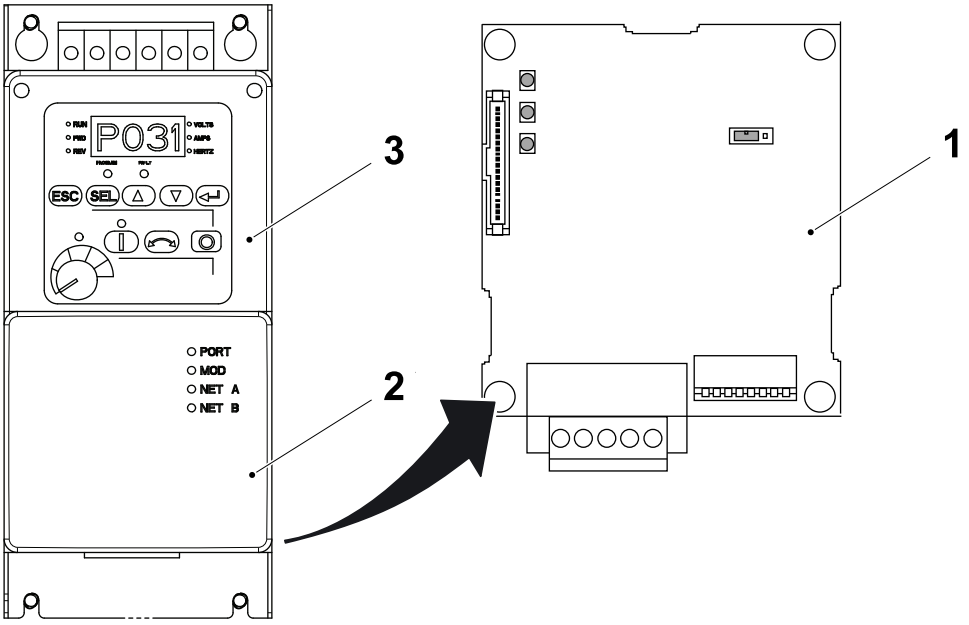

1 DeviceNet adaptor 2 Cover 3 PowerFlex 40 drive

10.3.1-3 DeviceNet Adaptor (1734-ADN) Node 2

Machine Status	Electrical supply disconnecting device in position I (ON)
SPC Reference	662911-0300 662905-0300

DeviceNet Adaptor (1734-ADN) Node 2

The DeviceNet Adaptor (1) is mounted in the Control Panel box and physically connected to the point I/O modules. On one side, the DeviceNet Adaptor (1) sends and receives I/O data, via the DeviceNet, to and from the DeviceNet Scanner. On the other side, the DeviceNet Adaptor (1) transfers outputs to the Point I/O output modules and receives data from the Point I/O input modules.

The DeviceNet Adaptor (1) is used to set the Node address number and the baudrate.

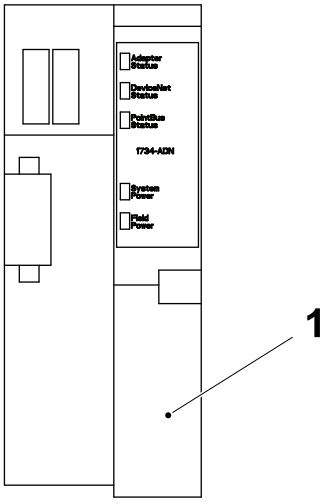

1 DeviceNet Adaptor

Status indicators are provided to report the status of the module and the DeviceNet.

If this module is changed, do the following:

- set the Node address number, see 10.3.2-3 DeviceNet - DeviceNet on the Machine
- load the DeviceNet program, see 10.3.2-6 DeviceNet - Loading a DeviceNet Program in a New Point I/O Module Adaptor.

For DeviceNet troubleshooting information regarding this module, see 10.3.3-2 Troubleshooting - DeviceNet Error Indications and Messages on DeviceNet Scanner (Node 0)

10.3.1-4 DeviceNet Armor Block

Machine Status	Electrical supply disconnecting device in position I (ON)
SPC Reference	662911-0300 662905-0300

For all Machines (Node 3 and 4)

These DeviceNet Armor Block Module (1) are used to monitor components in the machine and transmit the information via the DeviceNet to the PLC.

The Node address number is set by rotary switches on the module.

Status indicators are provided to report the status of the module and the DeviceNet.

If a module is changed, do the following:

- set the Node address number, see 10.3.2-2 DeviceNet Scanner - Set DeviceNet Scanner (A01K3004) Node Address and Baudrate on page 10-102, 10.3.2-3 DeviceNet - DeviceNet on the Machine on page 10-103.

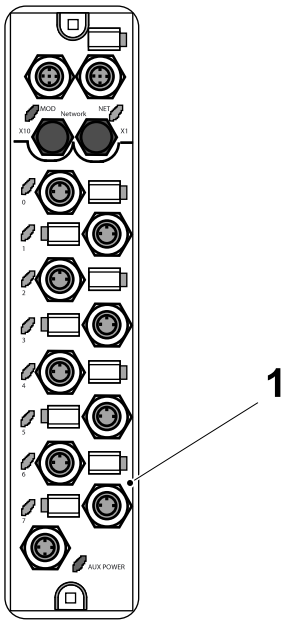

1 DeviceNet Armor Block Module

For DeviceNet troubleshooting information regarding this module, see 10.3.3-5 Troubleshooting - DeviceNet Error Indications on the Armor Block I/O Module (Node 3) and 10.3.3-6 Troubleshooting - DeviceNet Error Indications on the Armor Block I/O Module (Node 4).

(Cont'd)

(Cont'd)

For ReCap Machines Only (Node 5 and 6)

These DeviceNet Armor Block Module (1) are used to monitor components in the machine and transmit the information via the DeviceNet to the PLC.

The Node address number is set by rotary switches on the module.

Status indicators are provided to report the status of the module and the DeviceNet.

If a module is changed, do the following:

- set the Node address number, see 10.3.2-3 DeviceNet - DeviceNet on the Machine and Armor Block I/O Modules - Set Node Address.

For DeviceNet troubleshooting information regarding this module, see 10.3.3-7 Troubleshooting - DeviceNet Error Indications on the Armor Block I/O Module (Node 5) (ReCap Only) and 10.3.3-8 Troubleshooting - DeviceNet Error Indications on the Armor Block I/O Module (Node 6) (ReCap Only).

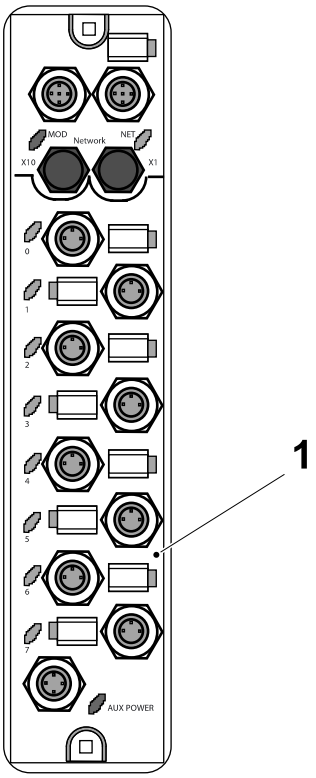

1 DeviceNet Armor Block Module

10.3.2 Distributed I/O and DeviceNet - DeviceNet Scanner

10.3.2-1 DeviceNet Scanner - Change

Machine Status	Electrical supply disconnecting device in position I (ON)
SPC Reference	2833407-0300

Preparation

Note! The firmware revision of the PLC controller maybe equal to, or newer than the firmware revision of the old PLC controller. If an attempt to go online is made with a newer firmware revision installed, this may create errors such as an unrecognised device or a device mismatch if the PC does not contain the very latest EDS files.

Before changing the PLC controller:

- Use the RSLinx Classic program to verify and record the firmware version of the PLC program.
- Use the Flow Chart of Procedures for Changing the DeviceNet Scanner to determine which procedures must be performed and their correct sequence.

(Cont'd)

(Cont'd)

Flow Chart of Procedures for Changing the DeviceNet Scanner

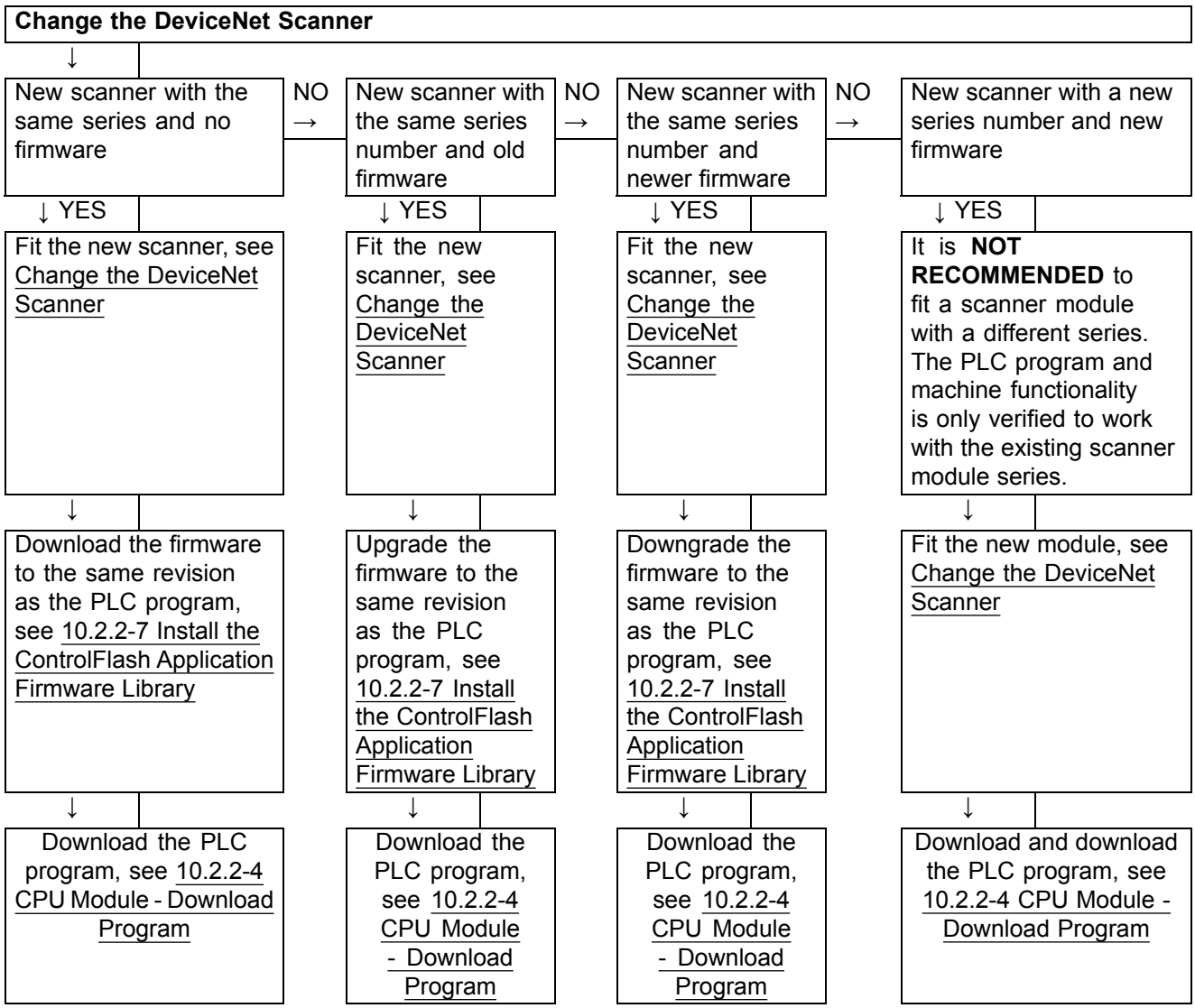

(Cont'd)

(Cont'd)

Change the DeviceNet Scanner

a) Press the locking tab (1) on the top and the bottom of the DeviceNet Scanner (2).

b) Slide the DeviceNet scanner (2) out of the chassis.

c) Align the new DeviceNet scanner (2) with the top and the bottom guides in the chassis.

d) Slide the DeviceNet scanner (2) into the chassis. Make sure it is flush with the power supply or the other modules and the top and bottom latches are engaged.

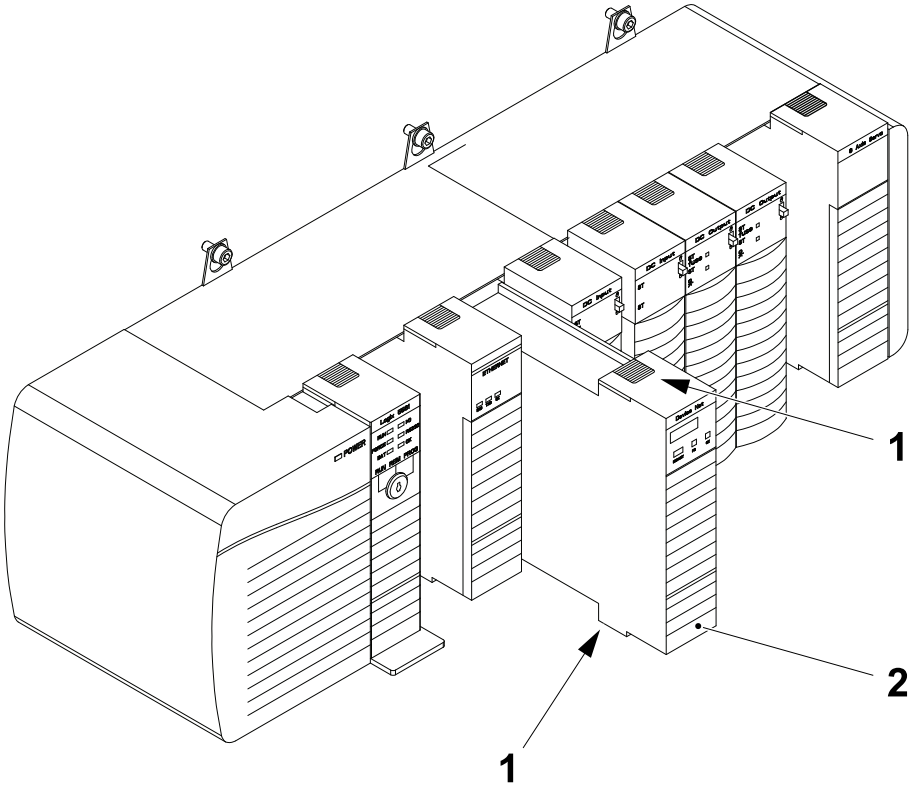

1 Locking tab
2 DeviceNet scanner

10.3.2-2 DeviceNet Scanner - Set DeviceNet Scanner (A01K3004) Node Address and Baudrate

Machine Status	Electrical supply disconnecting device in position I (ON)
SPC Reference	2833407-0300

DeviceNet Scanner Module Series C/D

Set the Switch for baud rate (1), the Switch for first node digit (2) and the Switch for second node digit (3) according to the table below.

Switch Number	Setting Position	Note
1	2	Sets the baud rate to 500 Kbps
2	0	Sets the first digit of the node address
3	0	Sets the second digit of the node address

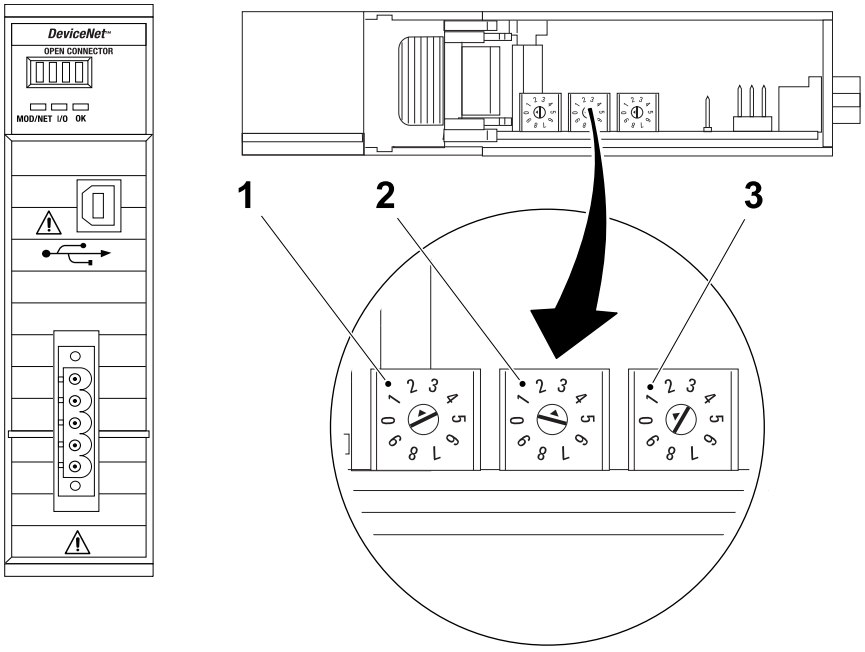

1 Switch for baud rate
2 Switch for first node digit
3 Switch for second node digit

10.3.2-3 DeviceNet - DeviceNet on the Machine

Machine Status	Electrical supply disconnecting device in position O (OFF)
Special Equipment	Latest Software CD see SPC Ethernet communication cable
SPC Reference	2779070-0100 662911-0200

Note! The firmware revision of the PLC controller maybe equal to, or newer than the firmware revision of the old PLC controller. If an attempt to go online is made with a newer firmware revision installed, this may create errors such as an unrecognised device or a device mismatch if the PC does not contain the very latest EDS files.

1734 DeviceNet Adaptor for Point I/O Module (A01K0320) - Change

Preparation

Before changing the DeviceNet adaptor:

- Use the Flow Chart of Procedure for Changing a 1734-Point I/O Adaptor to determine which procedures must be performed and their correct sequence.

Flow Chart of Procedure for Changing a 1734-Point I/O Adaptor

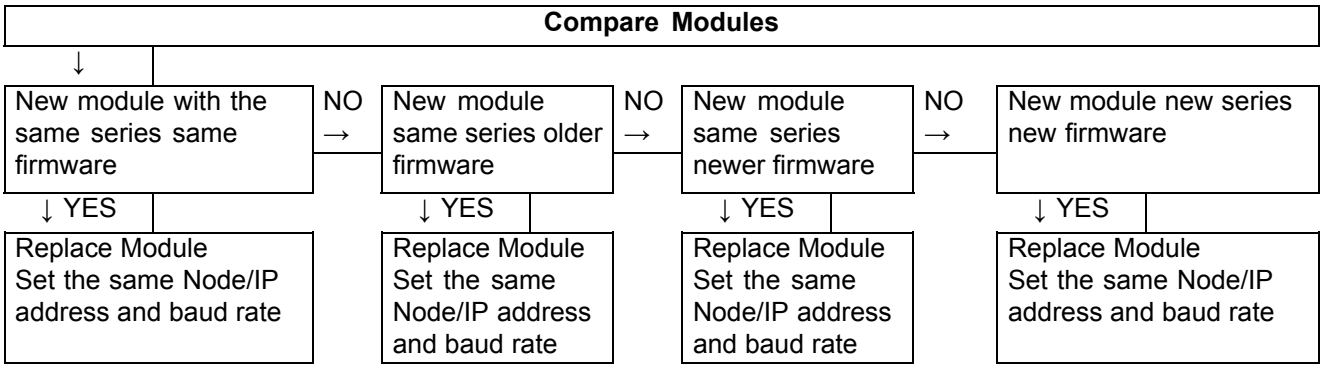

(Cont'd)

(Cont'd)

Remove

a) Disconnect the power connector (1) from the DeviceNet adaptor (2).

b) Disconnect the DeviceNet connector (3) from the DeviceNet adaptor (2).

c) Remove the first I/O slice (4).

d) Turn the screw (5) to the release position and pull out the adaptor (2).

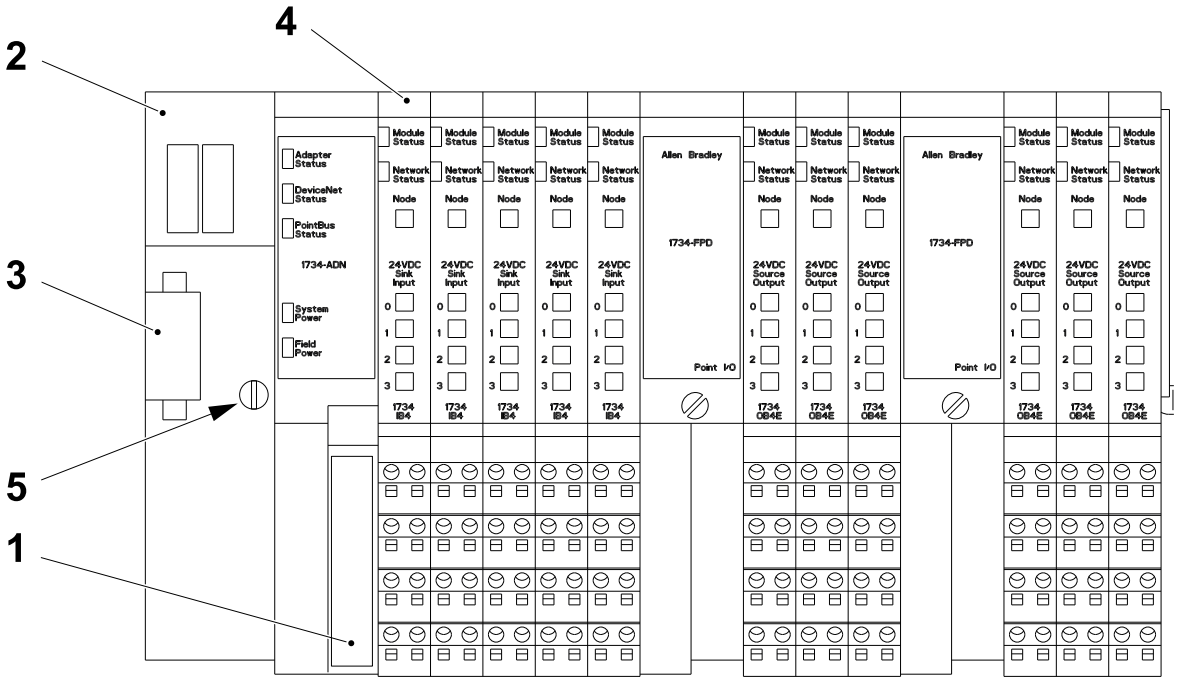

1 Power connector
2 DeviceNet adaptor
3 DeviceNet connector
4 first I/O slice
5 Screw

(Cont'd)

(Cont'd)

Install

a) Remove the blank connectors and the cover plate from the new adaptor.

b) Insert the new DeviceNet adaptor (1)and turn the screw (2).

c) Set the node address, see 1734 DeviceNet Adaptor for Point I/O Module (A01K3020) - Set Node Address.

d) Insert the first first I/O slice (3).

e) Connect the DeviceNet connector (4).

f) Connect the power connector (5).

g) The pointbus status led (6) will flash red to indicate that the local bus must be configured. Configure the bus as described in 10.3.2-5 DeviceNet - Loading a Program in a New DeviceNet Scanner.

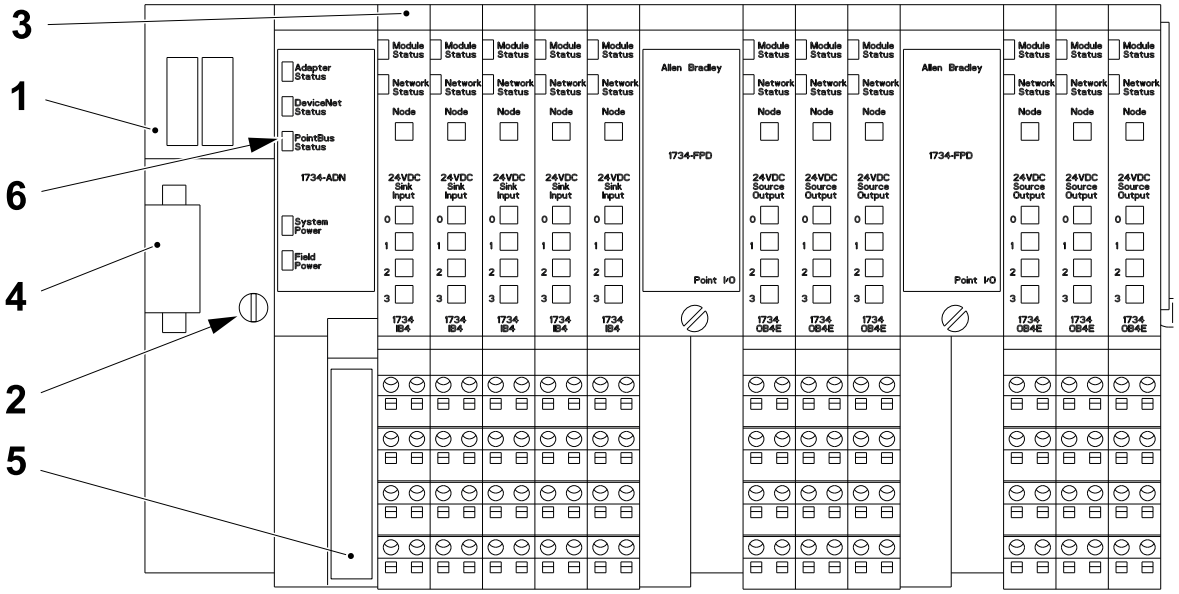

1 DeviceNet adaptor
2 Screw
3 First I/O slice
4 DeviceNet connector
5 Power connector
6 Pointbus status led

(Cont'd)

(Cont'd)

1734 DeviceNet Adaptor for Point I/O Module (A01K3020) - Set Node Address

Note! On this adaptor, the baudrate is set automatically.

Note! Thumb wheels (1) at the top of 1734 DeviceNet adaptor (2) are used to set the node address.

On the 1734 DeviceNet adaptor (2), use the Thumb wheels (1) to set the node address to 02.

Note! If the DeviceNet Scanner has been in the RUN position with an incorrect Baudrate setting, the ADN modules 24V supply power (not the network power) must be disconnected and reconnected again to make a new automatic Baudrate setting.

Disconnect the 24V connection cable on the ADN modules and reconnect it again.

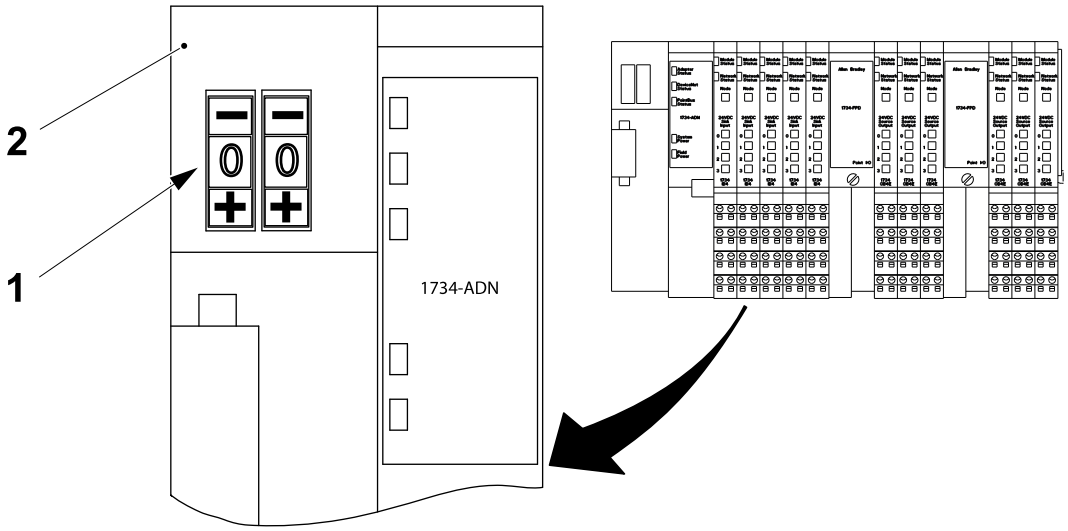

1 Thumb wheel
2 1734 DeviceNet adaptor

(Cont'd)

(Cont'd)

PowerFlex 40 Module (20T000) - Set Node address, Baudrate and Operating Mode

The position of the F/C switches (1) on the 22-COMM adaptor (2), under the front cover of the PowerFlex 40 frequency converter, determines the node address and the communication baud rate.

The position of the F/C switches 1 to 6 (3) determines the node address and the F/C switches 7 and 8 (4) determines the baudrate.

Set the F/C switches 1 to 6 (3) as shown in the following table to set the Node address to 1.

Set the F/C switches 7 and 8 (4) as shown in the following table to select the Auto Baud mode.

The position of the jumper (5) on the connector (6) determines the operating mode of the adaptor.

Set the jumper (5) to the left, as shown, to select the Multi Drive mode.

Switch No.	1	2	3	4	5	6	7	8
Switch Pos.	UP	DOWN	DOWN	DOWN	DOWN	DOWN	UP	UP

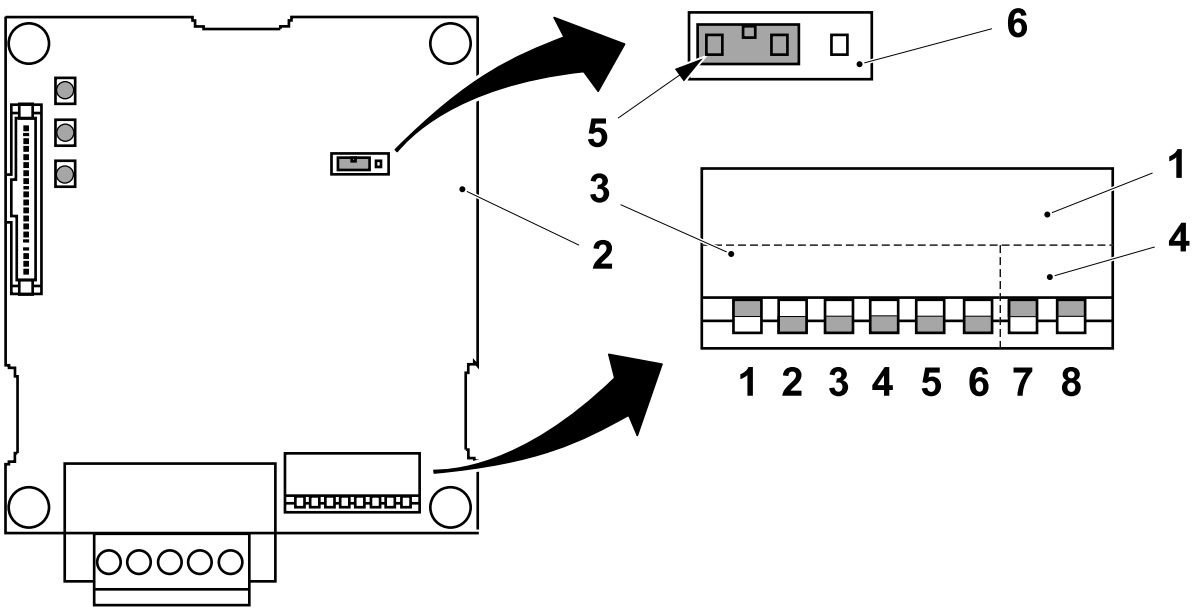

1 F/C switches
2 22-COMM adaptor
3 F/C switches 1 to 6
4 F/C switches 7 and 8
5 Jumper
6 Connector

(Cont'd)

(Cont'd)

Note! Behind the front cover of the PowerFlex 40 frequency converter there is another circuit card. On this circuit card there is a switch annotated SNK - SRC Switch (7). This switch must be set to the SRC Position (8).

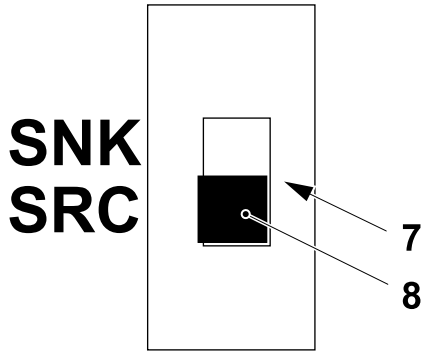

7 SNK - SRC Switch
8 SRC Position

(Cont'd)

(Cont'd)

Armor Block I/O Modules - Set Node Address

a) At the armor block module (1) referred to in the following table, remove the protective cap (2) from the X1 switch access hole (3).

b) Use a small screw driver to set the node address for that module.

c) Fit the protective cap (2).

d) Remove the protective cap (4) and check that the X10 switch (5) is set to 0, if not turn the X10 switch (5) to that position.

Machine Type	Module Number	Switch X1 Position	Switch X10 Position	Node address
All machines	W81K4120	3	0	3
ScrewCap Only	C81K4130	4	0	4
ReCap only	C81K4140	4	0	4
	C81K4150	5	0	5
	C81K4160	6	0	6

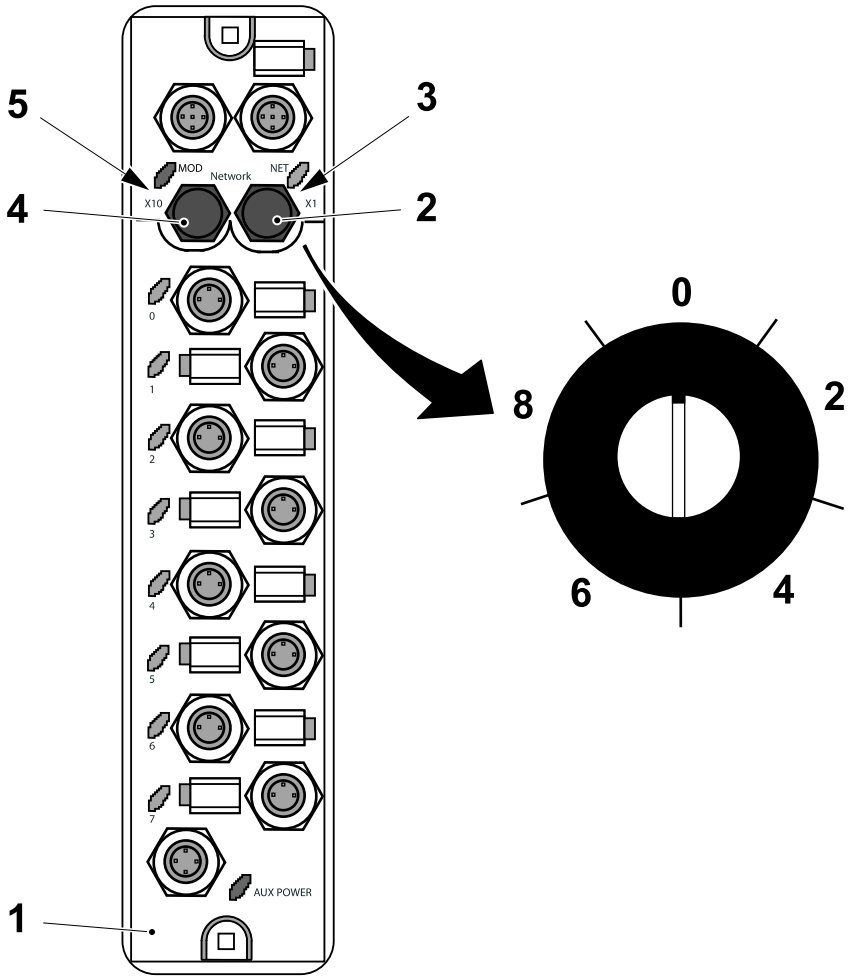

1 Armor block module
2 Protective cap
3 X1 switch access hole
4 Protective cap
5 X10 switch

10.3.2-4 DeviceNet - Saving DeviceNet Files in a Computer

Machine Status	Electrical supply disconnecting device in position I (ON)
SPC Reference	2833407-0300

Put the DeviceNet files in a folder with the following path way:

C:\180v program\Projects\Networks

Note! It is important that the files have this path way so that the Device Bridging function will work.

This function makes it possible to jump between the DeviceNet Scanner program and the Point I/O files program that are linked to this, and vice versa. If the files are placed in another folder the Device Bridging must be done again on all files in both directions.

10.3.2-5 DeviceNet - Loading a Program in a New DeviceNet Scanner

Machine Status	Electrical supply disconnecting device in position I (ON)
Special Equipment	Latest Software CD see SPC Ethernet communication cable
SPC Reference	2833407-0300

Note! To connect to the PLC using an ethernet communication cable, the PC must first be configured for this type of communication. See 10.2.1-1 Preparation for PLC Communication - Configure PC Network Communications on page 10-16 and 10.2.1-2 Preparations for PLC Communication - Configure RSLinx on page 10-24 for more details.

a) Set the address and baud rate for the DeviceNet scanner, see 10.3.2-2 DeviceNet Scanner - Set DeviceNet Scanner (A01K3004) Node Address and Baudrate on page 10-102.

b) Connect the ethernet communication cable between a vacant connection port on the Ethernet switch (1) and the PC (2).

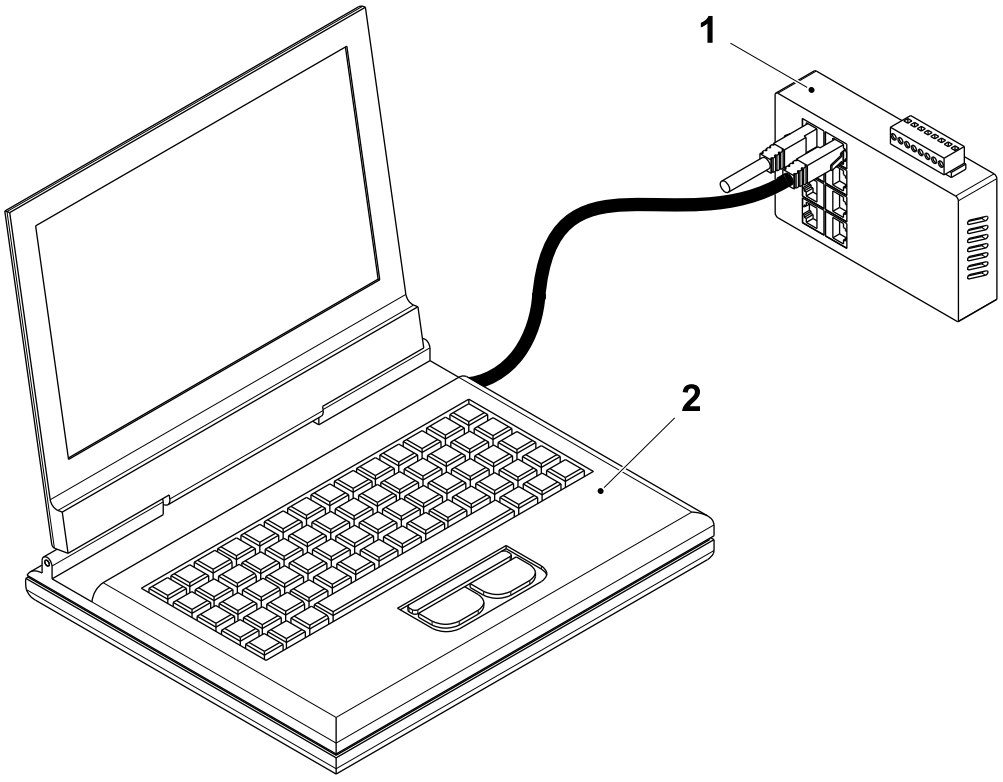

1 Ethernet switch
2 PC

(Cont'd)

(Cont'd)

Note! The DeviceNet Scanner that is being loaded must not be in the RUN position when loading the program.

c) Turn the key, on the Logic CPU, to the PROG mode position. The scanner will show IDLE in the display.

d) Insert the DeviceNet program CD into the PC CD drive.

e) Browse to the CD drive and copy the compressed program folder to the PC desktop and extract the program file.

f) Double click on the program file to automatically start the RSNetWorx program and open the program file.

g) Select theNetwork menu (3) and then select Online (4).

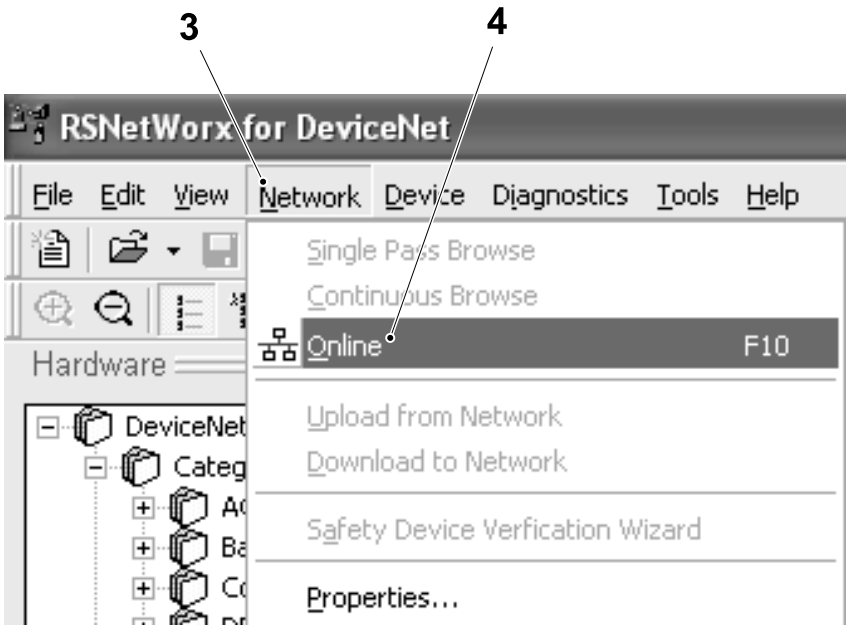

3 Network menu
4 Online

(Cont'd)

(Cont'd)

h) Highlight the Devicenet scanner (5) and right click the PC mouse, select Download to device (6) to start the download.

i) When the Dialogue box (7) appears, select the Yes button (8) to continue.

j) When the download is complete, close the RSNetWorx program and turn the key on the Rockwell PLC module to the REM mode position.

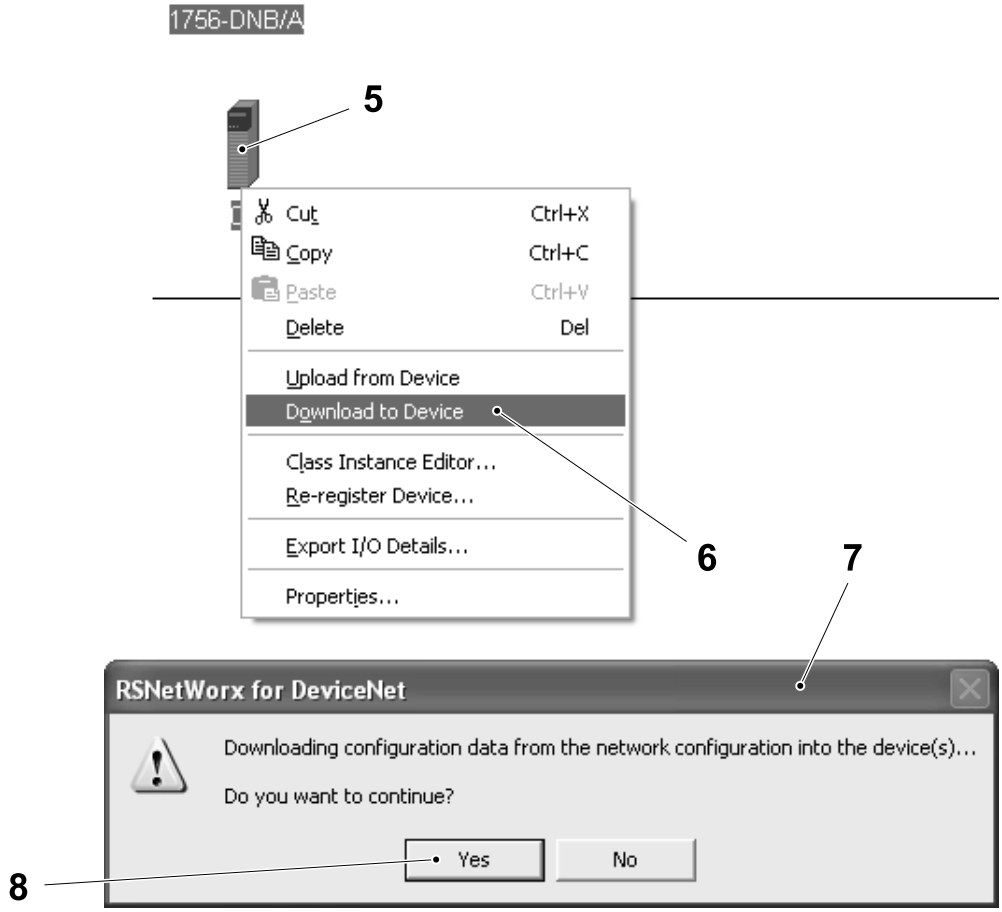

5 Devicenet scanner
6 Download to device
7 Dialogue box
8 Yes button

10.3.2-6 DeviceNet - Loading a DeviceNet Program in a New Point I/O Module Adaptor

Machine Status	Electrical supply disconnecting device in position I (ON)
Special Equipment	Latest Software CD see SPC Ethernet communication cable
SPC Reference	2833407-0100

Note! To connect to the PLC using an ethernet communication cable, the PC must first be configured for this type of communication. See 10.2.1-1 Preparation for PLC Communication - Configure PC Network Communications and 10.2.1-2 Preparations for PLC Communication - Configure RSLinx for more details.

a) Set the Node address for the DeviceNet adaptor, see 10.3.2-2 DeviceNet Scanner - Set DeviceNet Scanner (A01K3004) Node Address and Baudrate.

b) Connect the ethernet communication cable between a vacant connection port on the Ethernet switch (1) and the PC (2).

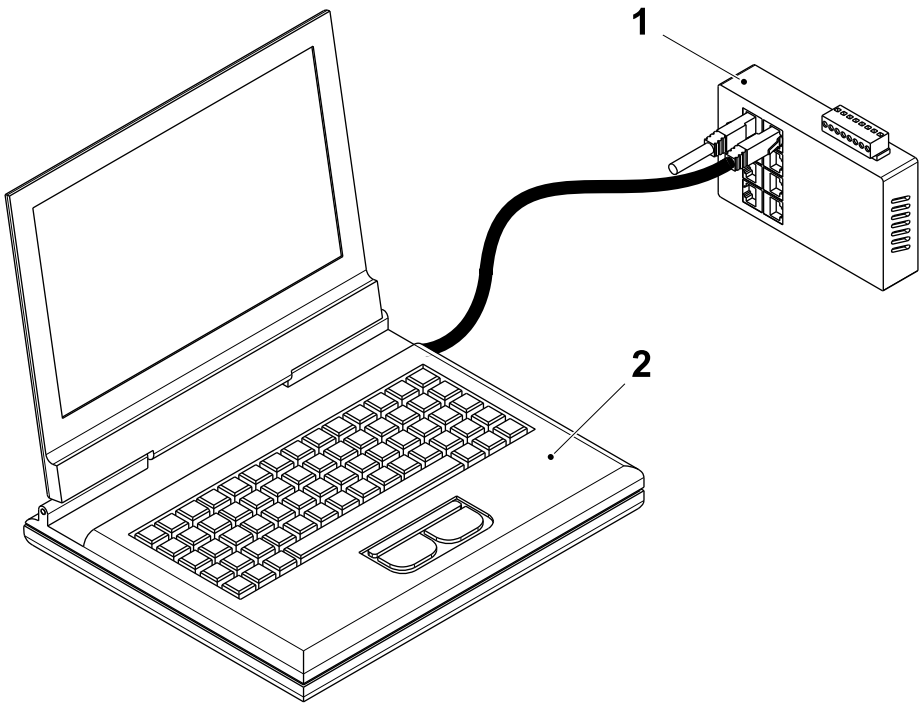

1 Ethernet switch
2 PC

(Cont'd)

(Cont'd)

c) Insert the DeviceNet program CD into the PC CD drive.

d) Browse to the CD drive and copy the compressed program folder to the PC desktop and extract the program file.

e) Double click on the program file to automatically start the RSNetWorx program and open the program file.

f) Select theNetwork menu (3) and then select Online (4).

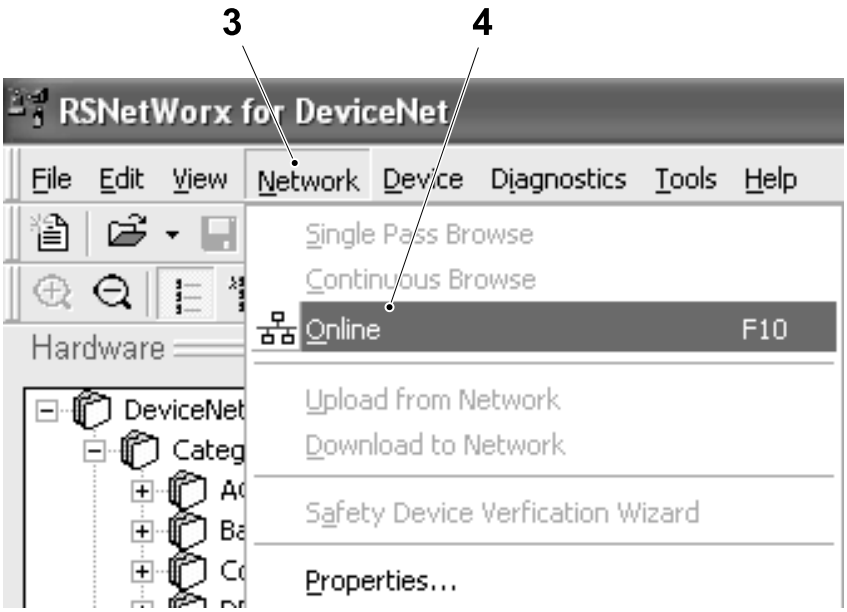

3 Network menu
4 Online

(Cont'd)

(Cont'd)

g) Highlight the 1734 DeviceNet Adaptor (5) and right click the PC mouse, select Download to device (6) to start the download.

h) When the DIALOGUE box (7) appears, select the YES button (8) to continue.

i) When the download is complete, close the RSNetWorx program.

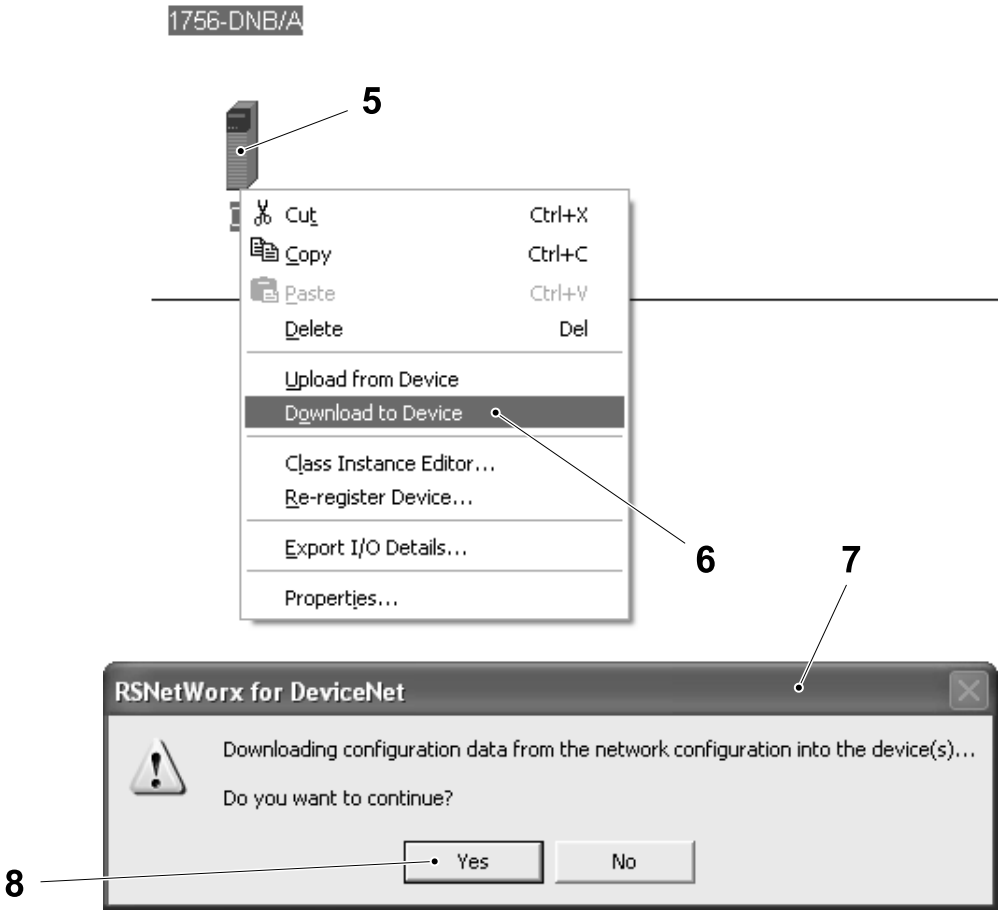

5 1734 DeviceNet Adaptor
6 Download to device
7 DIALOGUE box
8 YES button

10.3.3 Distributed I/O and DeviceNet - Troubleshooting

10.3.3-1 Troubleshooting - General DeviceNet Error

Machine Status	Electrical supply disconnecting device in position I (ON)
SPC Reference	2779070-0300

If an error occurs on the DeviceNet, this will be indicated by the appearance of the following `DEVICENET ERROR` icon (1) and the `DEVICENET ERROR` message (2) on the TPOP.

To continue with troubleshooting, see 10.3.3-2 Troubleshooting - DeviceNet Error Indications and Messages on DeviceNet Scanner (Node 0).

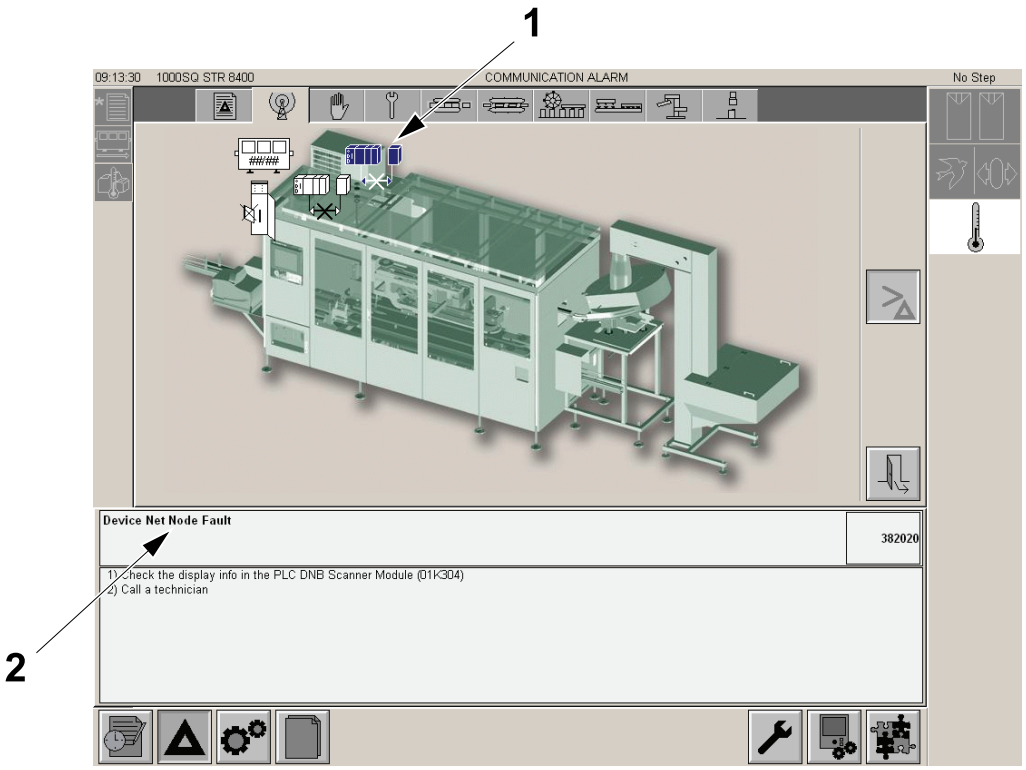

1 DeviceNet error icon
2 DeviceNet error message

10.3.3-2 Troubleshooting - DeviceNet Error Indications and Messages on DeviceNet Scanner (Node 0)

Machine Status	Electrical supply disconnecting device in position I (ON)
SPC Reference	2833407-0300

To locate the source of the error and then find the cause, proceed as follows:

a) At the Control Logix Chassis in the electrical cabinet, note the status indicated by the Alphanumeric display (1), the MOD/NET LED (2), the I/O LED (3) and the on the DeviceNet scanner (A01K3004) (5).

b) Use the following tables to determine the cause of the error.

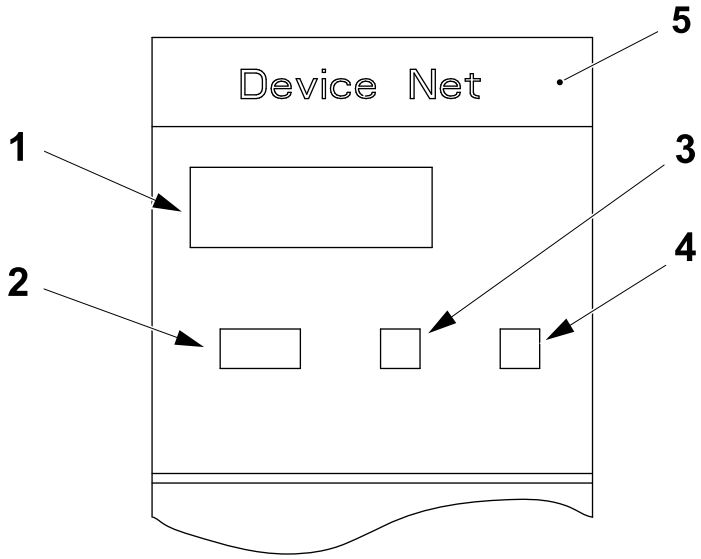

1 Alphanumeric display
2 MOD/NET LED
3 I/O LED
4 OK LED
5 DeviceNet scanner (A01K3004)

(Cont'd)

(Cont'd)

MOD/NET LED

Condition	Status	Indicates
off	No power or not on line	Device is not on-line. - The device has not completed the Dup_MAC_ID test - The device is not powered
green	Device operational AND on-line and connected	Device is operating normally and is on-line with connections established.
flashing green	Device operational AND on-line but not connected or device on-line and device needs commissioning	Device is operating normally and is on-line but with NO connections established. - The device has passed the Dup_MAC_ID test but has NO established connections to other Nodes
flashing red	Minor fault and/or connection time out	Recoverable fault and/or one or more I/O connection in timed out state
red	Critical fault or critical link failure	Device has an unrecoverable fault and may need to be replaced. Failed communication device. The device has detected an error (duplicate MAC ID or bus-off) that has rendered it incapable of communicating on the network.

I/O LED

Condition	Indicates
off	Scanner is not on-line
green	Scanner is in RUN mode, outputs are under control and inputs are being consumed
flashing green	Scanner is in IDLE mode, outputs are not under control and inputs are being consumed

(Cont'd)

(Cont'd)

OK LED

Condition	Status	Indicates
off	No power	No power applied to device. Apply chassis power. Verify module is completely inserted into chassis and backplane.
green	Device operational	Device is operating normally. The DNB has at least one connection to it from a controller.
flashing green	Device in stand-by	Device is operating correctly, however no controller is controlling it. Verify the DNB is correctly configured in the controllers I/O configuration
red	Unrecoverable fault or Device self testing	Device has an unrecoverable fault; change the device or Device is in self test during power up; wait until self test has finished

Alphanumeric Display

When there are no problems the alphanumeric display will toggle between the node address of the scanner module and the operating mode i.e.

A#00

run

When there is a problem, the alphanumeric display will display first the node address of the scanner followed by the node address of the device from where the error originated and finally the error code i.e.

A#00

N#01

E#72

The error messages are in the table that follows.

(Cont'd)

(Cont'd)

Condition	Status	Indicates
70	Scanner failed Duplicate Node Address check	Change the scanner address to the correct node address A#00
71	Illegal data in scan list table (node number alternately flashes)	Reconfigure the scan list table and remove any illegal data
72	Slave device stopped communicating (node number alternately flashes)	Inspect the slave devices and verify the connections
73	Device's identity information does not match electronic key in scan list table entry (node number alternately flashes)	Verify that the correct device is at this node number. Make sure that the device at the scrolling node address matches the desired electronic key (vendor, product code, product type, etc.)
74	Data overrun on port detected	Modify your configuration and check for invalid data. Check network communication traffic.
75	No traffic detected on network	Check the network configuration
76	No direct network traffic for scanner detected	None. The scanner hears other network communication but none for itself
77	Data size expected by the device does not match scan list entry (node number alternately flashes)	Reconfigure the module for the correct transmit and receive data sizes
78	Slave device is scan list table does not exist (node number alternately flashes)	Add the device to the network or delete the scan list entry for that device
79	Scanner has failed to transmit a message	Make sure the module is connected to the network. Check for disconnected cables
80	Scanner is in IDLE mode	Put controller in run mode. Enable RUN bit in Module Command Register
81	Scanner is in FAULT mode	Check Module Command Register for FAULT bit set

(Cont'd)

(Cont'd)

Condition	Status	Indicates
82	Error detected in sequence of fragmented I/O messages from device (node number alternately flashes)	Check scan list table entry for slave device
83	Slave device is returning error responses when scanner attempts to communicate with it (node number alternately flashes)	Check accuracy of scan list table entry. Check slave device configuration. Slave device may be in another master's scan list. Reboot slave device.
84	Scanner is initialising the DeviceNet network.	None. This code clears itself once scanner attempts to initialize all devices on the network.
85	Data size was incorrect for this device at runtime.	Slave device is transmitting incorrect length data. Try replacing slave device.
86	Device is producing zero length data (idle state) while scanner is in RUN mode.	Check device configuration and slave node status.
90	User has disabled communication port.	Check Module Command Register for DISABLE bit set.
91	Bus-off condition detected con comm. port. Scanner is detecting communication errors.	Check DeviceNet connections and physical media integrity. Check system for failed slave devices or other possible sources of network interference.
92	No network power detected on communication port.	Provide network power. Make sure that module drop cable is providing network power to scanner communication port.
95	Application FLASH update in progress.	None. Do not disconnect the module while application flash is in progress. If this is done existing data in the scanner's memory will be lost.
97	Scanner halted by user command.	Check Module Command Register for HALT bit set.
98	General firmware error.	Replace module.

(Cont'd)

(Cont'd)

Condition	Status	Indicates
A#00 to A#63	Normal operation. The numeric display matches the scanners node address on the DeviceNet network.	Do nothing.
IDLE	Scanner is in IDLE mode.	Put controller in RUN mode. Enable RUN bit in Module Command Register.
Network Disabled	User has disabled communication port.	Reconfigure the module. Check Module Command Register.
No Network Power	No network power detected on communication port.	Provide network power. Make sure that module drop cable is providing network power to scanner communication port.
NoRX	No scan list is active in the module or no messages have been received by the scanner.	Enter a scan list. Check DeviceNet connection on front of module.
NoTX	No direct network traffic for scanner device.	None. The scanner hears other network communication.

10.3.3-3 Troubleshooting - DeviceNet Error Indications on the PowerFlex40 Module 22-COMM-D Adaptor (Node 1)

Machine Status	Electrical supply disconnecting device in position I (ON)
SPC Reference	662911-0300

The PowerFlex40 module is connected to the DeviceNet via an adaptor.

The adaptor has four LED's that are visible through the front panel of the PowerFlex40 module (1).

To locate the source of the error and then find the cause, proceed as follows:

Note! The NET B LED (5) is not used for DeviceNet communications.

a) At the PowerFlex40 module (1) (W20T0000) in the Electrical Cabinet, check the status of the port led (2), mod led (3) and net a led (4).

b) Use the following tables to determine the cause of the error.

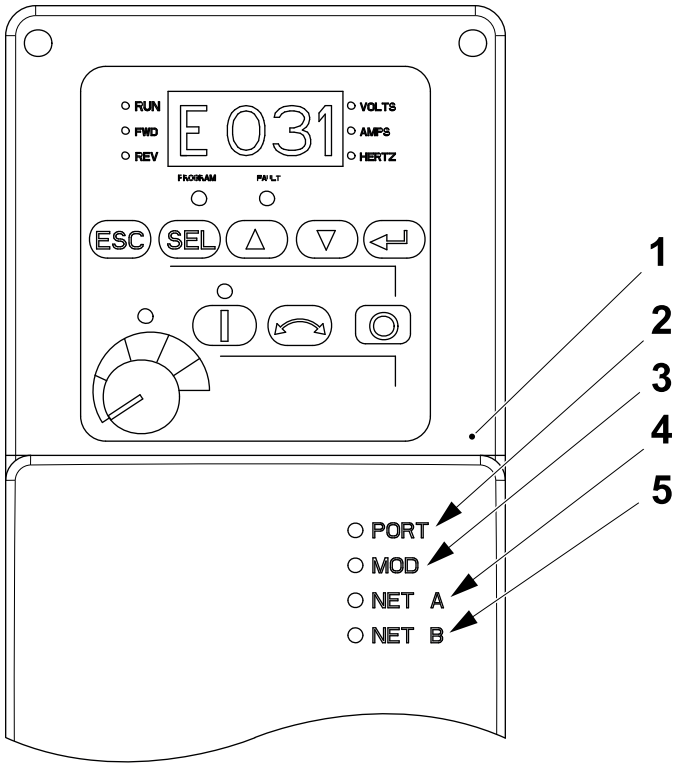

1 PowerFlex40 module
2 port led
3 mod led
4 net a led
5 net b led

(Cont'd)

(Cont'd)

Port Status LED

State	Status	Recommendation
off	The adaptor is not powered or connected correctly to the drive.	Use the ribbon cable to connect the adaptor securely to the drive. Apply power to the adaptor.
flashing red	The adaptor is not receiving communications from a drive, a connected drive has failed or a drive is missing.	Clear any drive faults. Check that all cables are securely connected. Cycle power to the drive.
red	The drive has refused an I/O connection from the adaptor. Another DSI peripheral is using the same DSI port as the adaptor.	Important: Cycle power to the adaptor after making the following correction. Check that all DSI cables are securely connected and undamaged. If necessary, replace any damaged cable.
flashing green	The adaptor is establishing an I/O connection to the drive or (DSI I/O Config) is configured for all I/O disabled.	None: This indication will turn GREEN or RED. Check the setting of parameter 15 (DSI I/O Config). The adaptor is operating normally if no DSI I/O is enabled.
green	The adaptor is properly connected and is communicating with the drive.	None.
orange	Daisy-chained devices in the Multi-Drive mode are not all Allen-Bradley devices.	Use correct devices

(Cont'd)

(Cont'd)

Mod Status LED

State	Status	Recommendation
off	The adaptor is not powered.	Use the ribbon cable to connect the adaptor securely to the drive. Apply power to the adaptor.
flashing red	The adaptor has failed the firmware test, a connected drive has failed or a drive is missing.	Clear any drive faults. Cycle power to the drive. If cycling power does not correct the problem, the parameter settings may have been corrupted. Restore default values reconfigure the adaptor. If restoring default values does not correct the problem, flash the adaptor with the latest firmware release. Determine which drive is missing or has failed. Check cabling and configuration settings.
red	The adaptor has failed the hardware test	Cycle power to the drive Replace the adaptor.
flashing green	The adaptor is operational but is not transferring I/O data.	Put the scanner in the RUN mode. Program the controller to recognise and transmit I/O data to the adaptor. Configure the adaptor for the program in the controller. The adaptor is operating normally if no DSI I/O is enabled.
green	The adaptor is operational and transferring I/O data.	None.

(Cont'd)

(Cont'd)

Net A Status LED

State	Status	Recommendation
off	The adaptor and/or the network is not powered or the adaptor is not connected correctly to the network.	Use the ribbon cable to connect the adaptor securely to the drive and the DeviceNet cable to connect it to the network. Connect the DeviceNet cable correctly to the DeviceNet plug. Apply power to the adaptor and the network.
flashing red	A DeviceNet I/O connection has timed out.	Put the scanner in the RUN mode, or apply power to the peer device that will send I/O data. Check the amount of traffic on the network.
red	Failed duplicate node detection test or bus off condition exists.	Configure the adaptor to use a unique node address on the DeviceNet. Configure the adaptor to use the correct baudrate. Ensure the network has the correct media installed.
flashing green	The adaptor is properly connected but is not communicating with any devices on the network.	Put the scanner in the RUN mode, or apply power to the peer device that will send I/O data. Configure a controller or peer device to recognise and transmit I/O to the adaptor. Configure the adaptor for the program in the controller or the I/O from the peer device.
green	The adaptor is properly connected and is communicating with devices on the network.	None.

10.3.3-4 Troubleshooting - DeviceNet Error Indications on the 1734-ADN Adaptor for the Point I/O Modules (Node 2)

Machine Status	Electrical supply disconnecting device in position I (ON)
SPC Reference	2779070-0300

To locate the source of the error and then find the cause, proceed as follows:

a) At the Point I/O Module (A01K3020) in the Operator Panel Box, check the `SYSTEM POWER` led (1), the `FIELD POWER` led (2), the `ADAPTOR STATUS` led (3), the `NETWORK STATUS` led (4) and the `POINTBUS STATUS` led (5).

b) Use the following tables to determine the cause of the error.

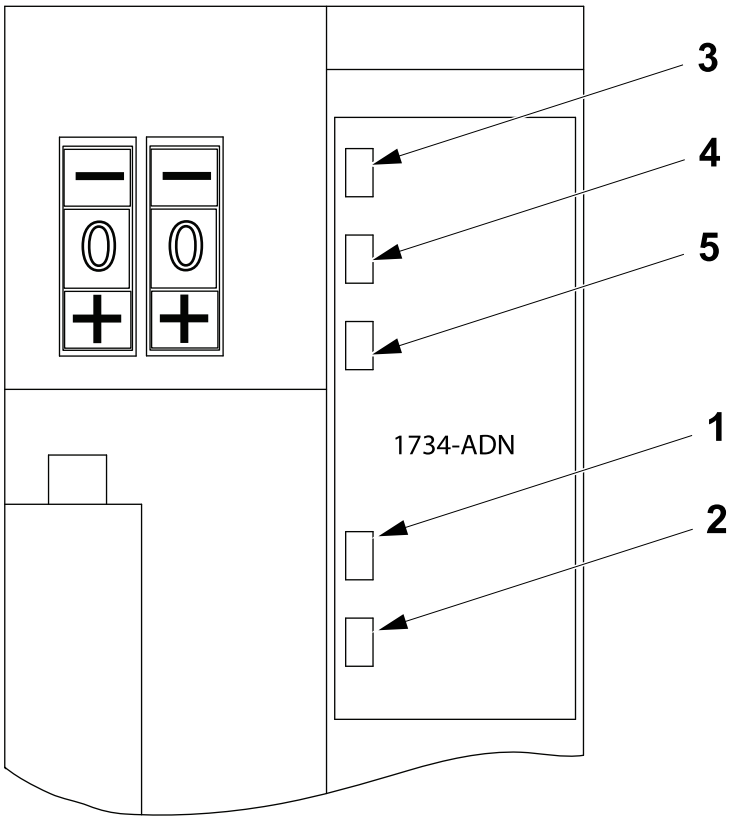

1 System power led
2 Field power led
3 Adaptor status led
4 Network status led
5 Pointbus status led

(Cont'd)

(Cont'd)

System Power LED

State	Status	Recommendation
off	Not active. Field power is OFF. DC-DC converter problem.	Check adaptor configuration. Turn Field power ON. Contact Tetra Pak Services.
green	System power is ON. DC-DC converter is active (5V)	None

Field Power LED

State	Status	Recommendation
off	Not active.	Check adaptor configuration. Turn Field power ON.
green	Power is ON with 24V present.	None

Adaptor Status LED

State	Status	Recommendation
off	No power is applied to the device.	Provide power to the adaptor.
green	Device is operating normally.	None
flashing green	Device needs to be commissioned because configuration is missing, incomplete or incorrect.	Check the configuration and re-commission the adaptor.
flashing red	Recoverable fault is present.	Make sure that it does not need a FLASH update.
red	Unrecoverable fault may require the adaptor to be changed.	Replace the adaptor.
flashing red/GREEN	Device is in self-test.	Wait for the self-test to finish.

(Cont'd)

(Cont'd)

Network Status LED

State	Status	Recommendation
off	Device is not online. Device is autobauding. Device has not completed the dup_MAC_id test.	Check the adaptor status indicator to determine if more time is required to complete the dup_MAC_id test or if power is required at the module.
flashing green	Device is online but has no connections in the established state	None
green	Device is online and has connections in the established state	None
flashing red	1 or more I/O connections are in a timed-out state.	Determine the cause of the time-out. An increase in packet rate may be required.
red	Critical link failure - communication device failed. Device detected error that prevents it from communicating on the network.	Make sure the device is using the correct MAC ID and baudrate.

(Cont'd)

(Cont'd)

Subnet and Pointbus Status LED

State	Status	Recommendation
off	Device is not online. Device has not completed the dup_MAC_id test. Device is not powered. Check module status indicator	Check the adaptor status indicator to determine if more time is required to complete the dup_MAC_id test or if power is required at the module.
flashing green	Device is online but has no connections in the established state	None
green	Device is online and has connections in the established state	None
flashing red	No scan list is available. I/O module is missing.	Make sure all I/O modules are connecting and using the correct MAC ID's. Check the "Cycling Node Status" parameter in RSnetWorx for DeviceNet.
red	Critical link failure - communication device failed. Device detected error that prevents it from communicating on the network.	Make sure an I/O module is not using MAC ID = 0. Make sure all backplane modules are correcting at the correct baudrate.

10.3.3-5 Troubleshooting - DeviceNet Error Indications on the Armor Block I/O Module (Node 3)

Machine Status	Electrical supply disconnecting device in position I (ON)
SPC Reference	662905-0300

a) At the Armor Block module (node 3), note the status indicated by the MOD LED (1), the Net LED (2), the Aux power LED (3) and the I/O LED (4).

b) Use the following tables to determine the cause of the error.

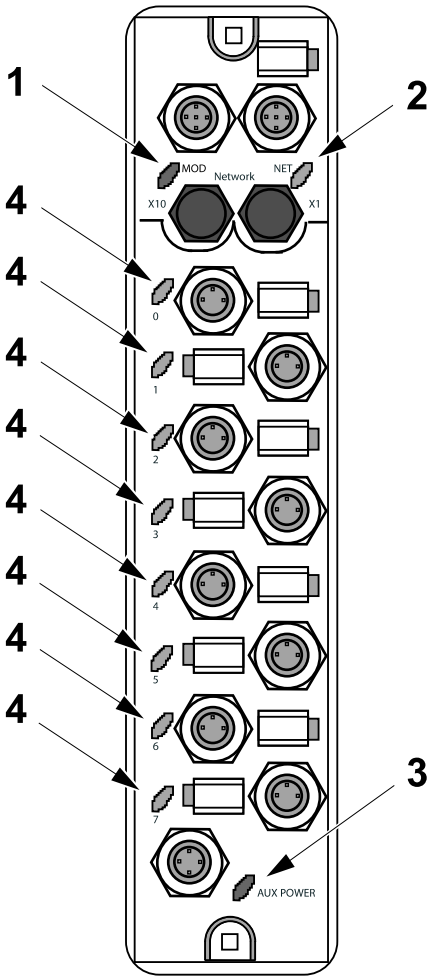

1 MOD LED
2 Net LED
3 Aux power LED
4 I/O LED

(Cont'd)

(Cont'd)

Net LED

State	Status	Description	Recommendation
off	No power or not on line	The module is not online.	Wait until module has completed the dup_MAC_id test or power the module.
green	Online Connected	Device is operating normally and is online with connections established.	None
flashing green	Online but not connected	The module is online with connections established.	Establish connections to other nodes.
red	Critical link failure	Failed communication module.	Check the communication and cycle power.
flashing red	Connection time out	An I/O connection has timed out	Cycle power to the module.

MOD LED

State	Status	Description	Recommendation
off	No power	There is no power applied to the module.	Apply power to the module.
green	Module operational	The module is operating normally.	None
flashing green	Module needs commissioning	The module needs commissioning due to missing, incomplete or an incorrect configuration.	Check the configuration and cycle power
flashing red	Minor fault	The module has a recoverable fault.	Check the configuration and cycle power
red	Critical fault	Watchdog timeout or the module has an unrecoverable fault.	Cycle power to the module. If this does not solve the problem contact the Tetra Pak service desk. The module may need to be changed.

(Cont'd)

(Cont'd)

Aux power LED

State	Status	Description	Recommendation
off	No auxiliary power	There is no auxiliary power applied to the module.	Apply auxiliary power to the module.
green	Auxiliary power present	There is auxiliary power applied to the module.	None

I/O LED

State	Status	Description	Recommendation
off	Output not energised or no valid input	Output is not energised or input not valid	None
yellow	Output energised or valid input	Output is energised or input is valid	None

10.3.3-6 Troubleshooting - DeviceNet Error Indications on the Armor Block I/O Module (Node 4)

Machine Status	Electrical supply disconnecting device in position I (ON)
SPC Reference	662905-0300

See, 10.3.3-5 Troubleshooting - DeviceNet Error Indications on the Armor Block I/O Module (Node 3) on page 10-132.

10.3.3-7 Troubleshooting - DeviceNet Error Indications on the Armor Block I/O Module (Node 5) (ReCap Only)

Machine Status	Electrical supply disconnecting device in position I (ON)
SPC Reference	662905-0300

See, 10.3.3-5 Troubleshooting - DeviceNet Error Indications on the Armor Block I/O Module (Node 3) on page 10-132.

10.3.3-8 Troubleshooting - DeviceNet Error Indications on the Armor Block I/O Module (Node 6) (ReCap Only)

Machine Status	Electrical supply disconnecting device in position I (ON)
SPC Reference	662905-0300

See, 10.3.3-5 Troubleshooting - DeviceNet Error Indications on the Armor Block I/O Module (Node 3) on page 10-132.

10.3.4 Ethernet

The Ethernet is used for data exchange on the input side of the PLC.

For more information about the Ethernet, see the following sections:

- 10.2.1-1 Preparation for PLC Communication - Configure PC Network Communications
- 10.2.1-2 Preparations for PLC Communication - Configure RSLinx
- 10.2.1-3 Preparations for PLC Communication - Set EtherNet Module IP Address.

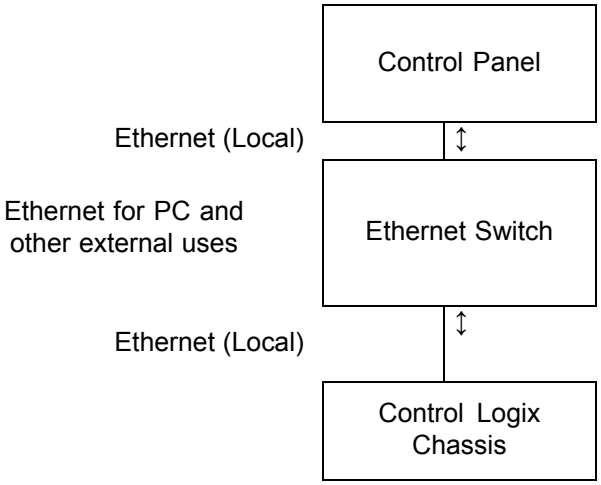

10.3.4-1 EtherNet Module - Change

Machine Status	Electrical supply disconnecting device in position I (ON)
SPC Reference	2833407-0300

Preparation

Note! The firmware revision of the PLC controller maybe equal to, or newer than the firmware revision of the old PLC controller. If an attempt to go online is made with a newer firmware revision installed, this may create errors such as an unrecognised device or a device mismatch if the PC does not contain the very latest EDS files.

(Cont'd)

(Cont'd)

Before changing the EtherNet Module:

- Use the RSLinx Classic program to verify and record the firmware version of the EtherNet Module. Use the flow chart below to determine which procedures must be performed and their correct sequence.

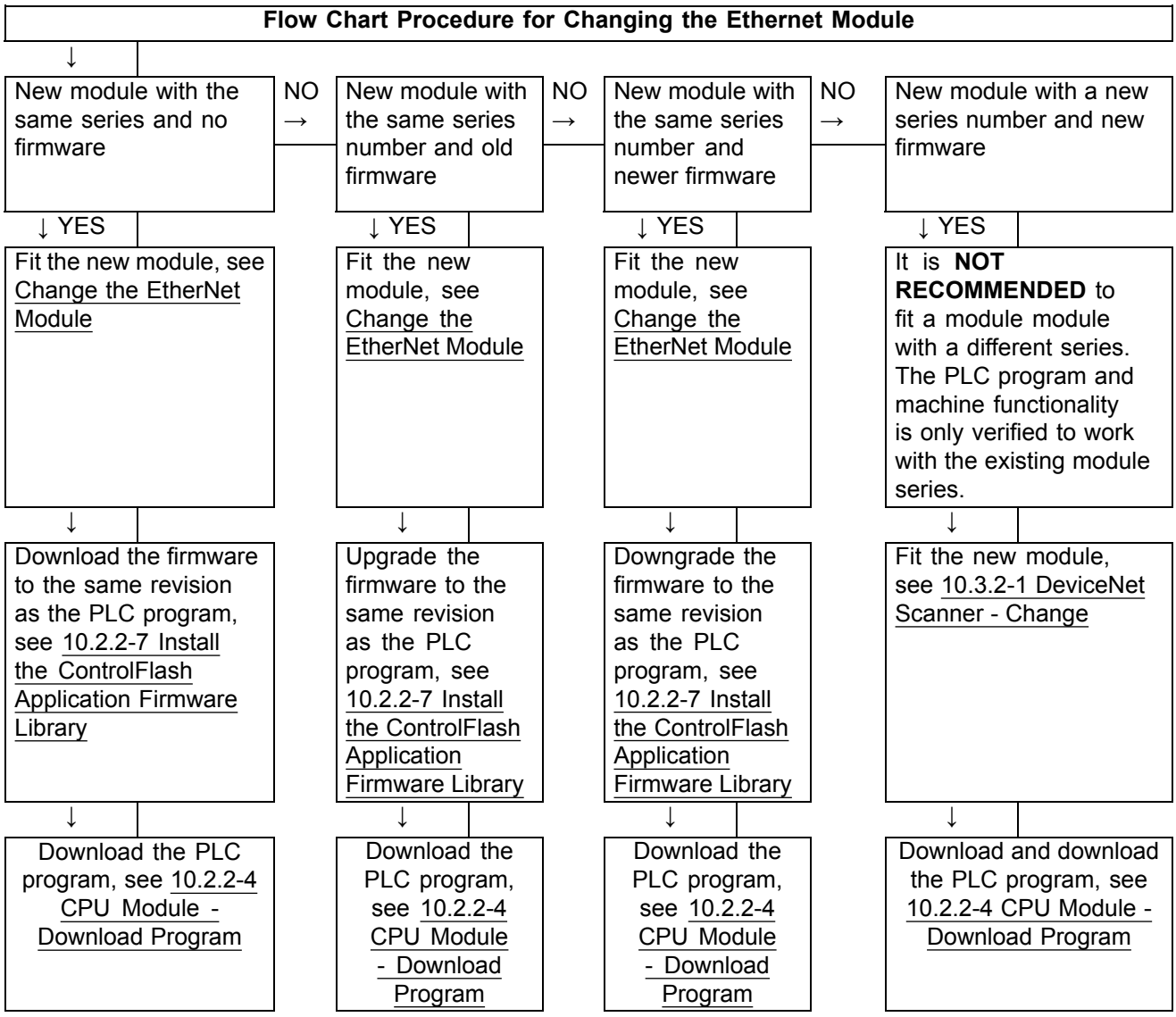

(Cont'd)

(Cont'd)

Change the EtherNet Module

a) Press the locking tab (1) on the top and the bottom of the EtherNet module (2).

b) Slide the EtherNet module (2) out of the chassis.

c) Align the new EtherNet module (2) with the top and the bottom guides in the chassis.

d) Slide the EtherNet module (2) into the chassis. Make sure it is flush with the power supply or the other modules and the top and bottom latches are engaged.

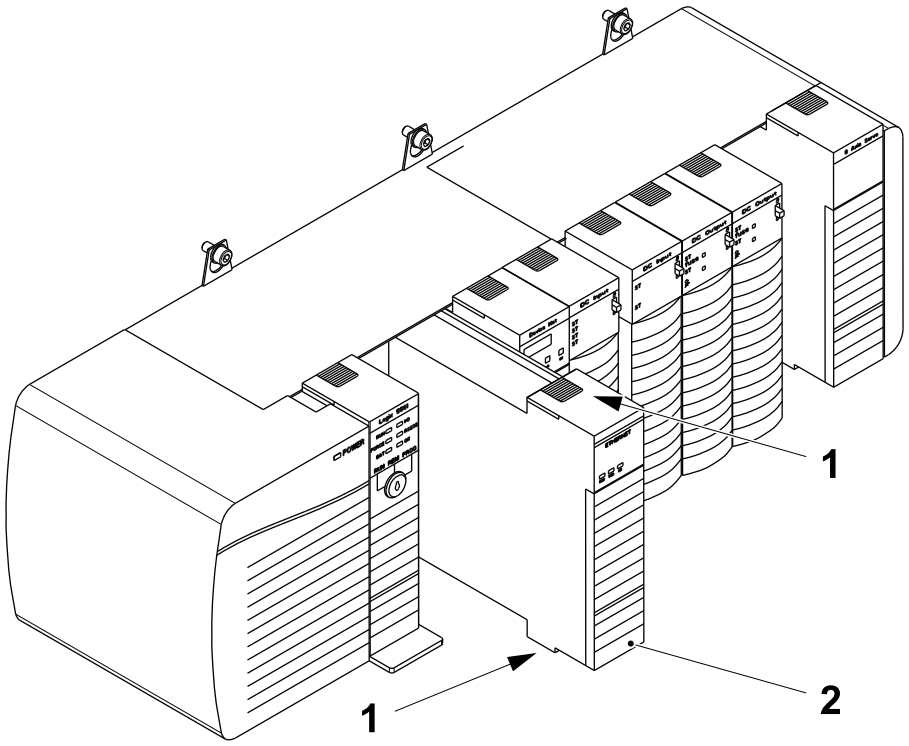

1 Locking tab
2 EtherNet module

10.4 Frequency Converter PowerFlex 4 and 40

10.4.1 PowerFlex40 and PowerFlex 4 Frequency Converters

General

The PowerFlex 40 (PF 40) (1) and the PowerFlex 4 (PF 4) (2) frequency converters are connected by links (3) to form a DSI network as shown.

The 22-COMM DeviceNet adaptor, mounted on the PF 40 module, provides the communications link between DNB scanner module in the PLC and the frequency converters.

The adaptor stores the parameters required to operate the frequency converters as a DSI system. A new adaptor must be configured to set these parameters.

The individual converters (PF 40 and PF 4) store there own motor control parameters. These parameters are set manually at each of the converters.

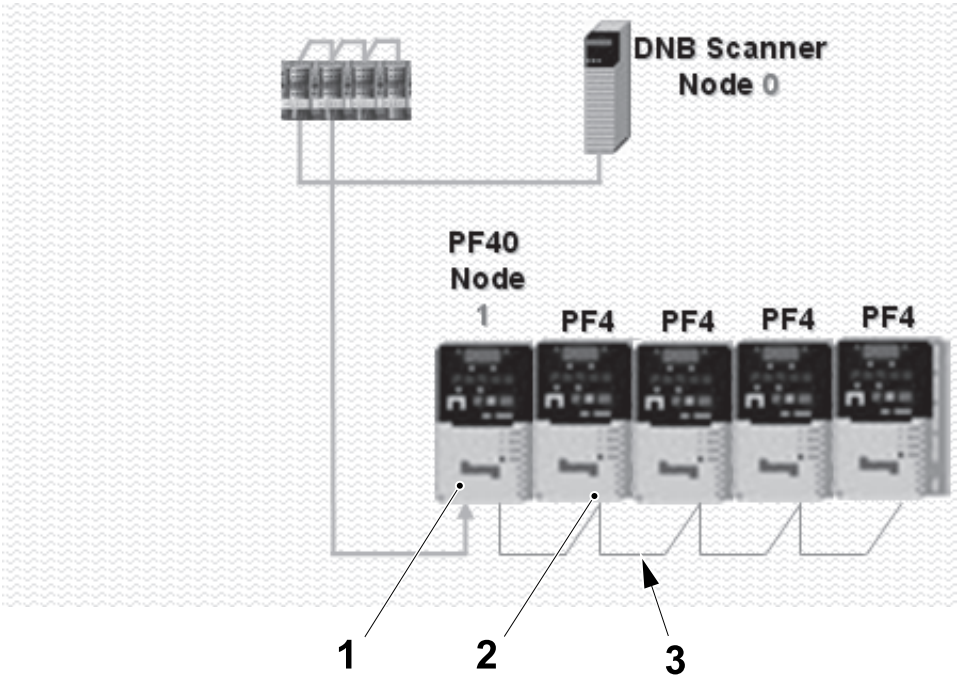

1 PowerFlex 40 (PF 40)
2 PowerFlex 4 (PF 4)
3 Links

10.4.1-1 PowerFlex40 DeviceNet Adaptor - Change

Machine Status	Electrical supply disconnecting device in position I (ON)
SPC Reference	90459-2614

Preparation

Note! The firmware revision of the PLC controller maybe equal to, or newer than the firmware revision of the old PLC controller. If an attempt to go online is made with a newer firmware revision installed, this may create errors such as an unrecognised device or a device mismatch if the PC does not contain the very latest EDS files.

Before changing the 22-COMM DeviceNet adaptor:

- Use the to determine which procedures must be performed and their correct sequence.

Flow Chart of Procedures for Changing a 22-COMM Adaptor

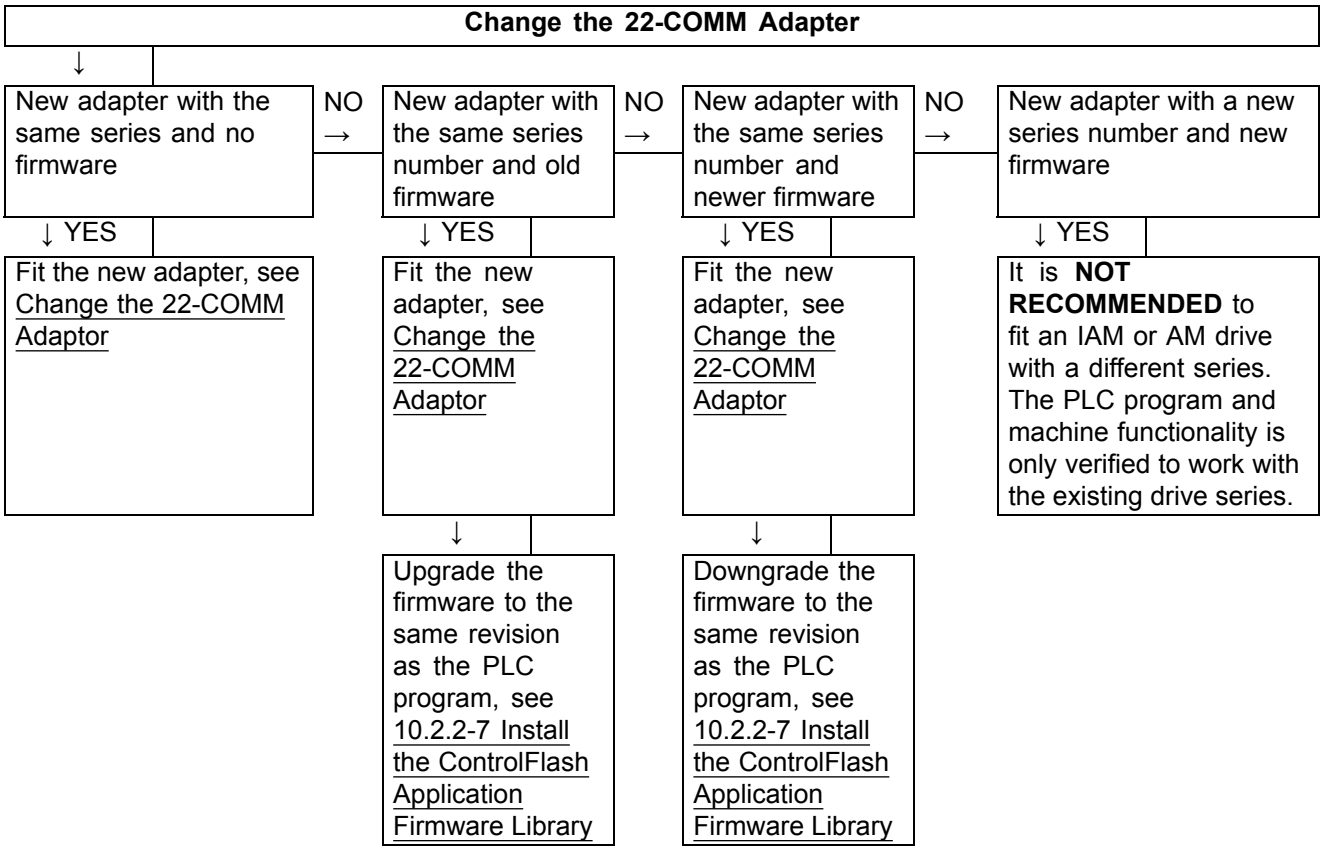

Note! If the PowerFlex4 or 40 DeviceNet Adaptor is new, make sure to set the parameters: A103=4 and A104=100, see Tables for Customising Inverter Values on page 10-163.

(Cont'd)

(Cont'd)

Set the Node Address and Baud Rate

The position of the F/C switches (1) on the 22-COMM adaptor (2), under the front cover of the PowerFlex 40 frequency converter, determines the node address and the communication baud rate.

The position of the F/C switches 1-6 determine the node address and the switches 7 and 8 determine the baud rate.

Set the F/C switches 1-6 as shown in the following table to set the Node address to 1.

Set the F/C switches 7 and 8 as shown in the following table to select the Auto Baud mode.

Switch No.	1	2	3	4	5	6	7	8
Switch Pos.	UP	DOWN	DOWN	DOWN	DOWN	DOWN	UP	UP

Note! When configuring the adaptor, the jumper (3) should be set to the right, see Configure the PowerFlex40 DeviceNet Adaptor.

The position of the jumper (3) on the connector (4) determines the operating mode of the adaptor.

Set the jumper (3) to the left as shown to select the MULTI DRIVE mode.

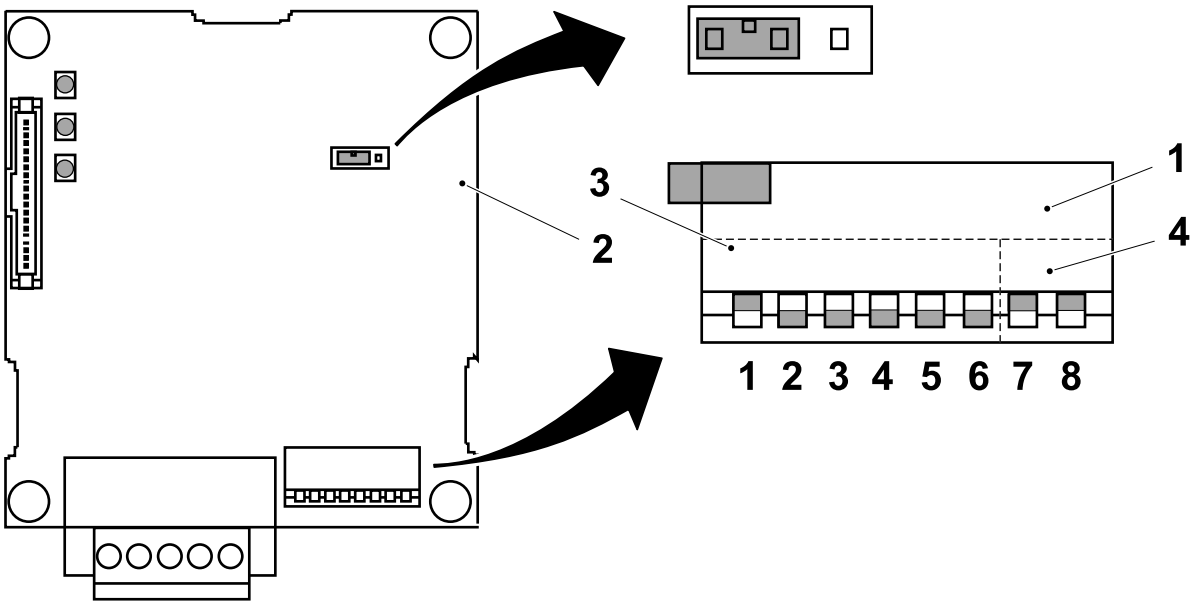

1 F/C switches
2 22-COMM adaptor
3 Jumper
4 Connector

(Cont'd)

(Cont'd)

Change the 22-COMM Adaptor

a) Remove the cover (1) from the front of the PowerFlex 40 drive (2) .

b) Disconnect the DeviceNet cable (3) and the Internal interface cable (4) from the 22-COMM adaptor (5).

c) Remove the screw (6) and change the 22-COMM adaptor (5) .

d) Install the new 22-COMM adaptor in the reverse order.

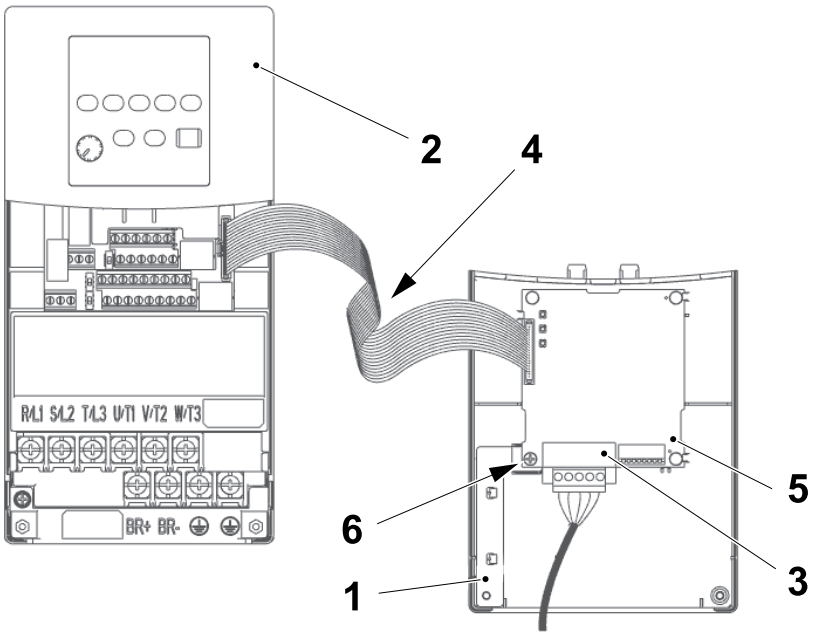

1 Cover
2 PowerFlex 40 drive
3 DeviceNet cable
4 internal interface cable
5 22-COMM adaptor
6 Screw

(Cont'd)

(Cont'd)

Configure the PowerFlex40 DeviceNet Adaptor

a) Step down the machine to `STEP0`.

b) Interrupt the DSI network (1) at the output (2) of the PF 40 module (3).

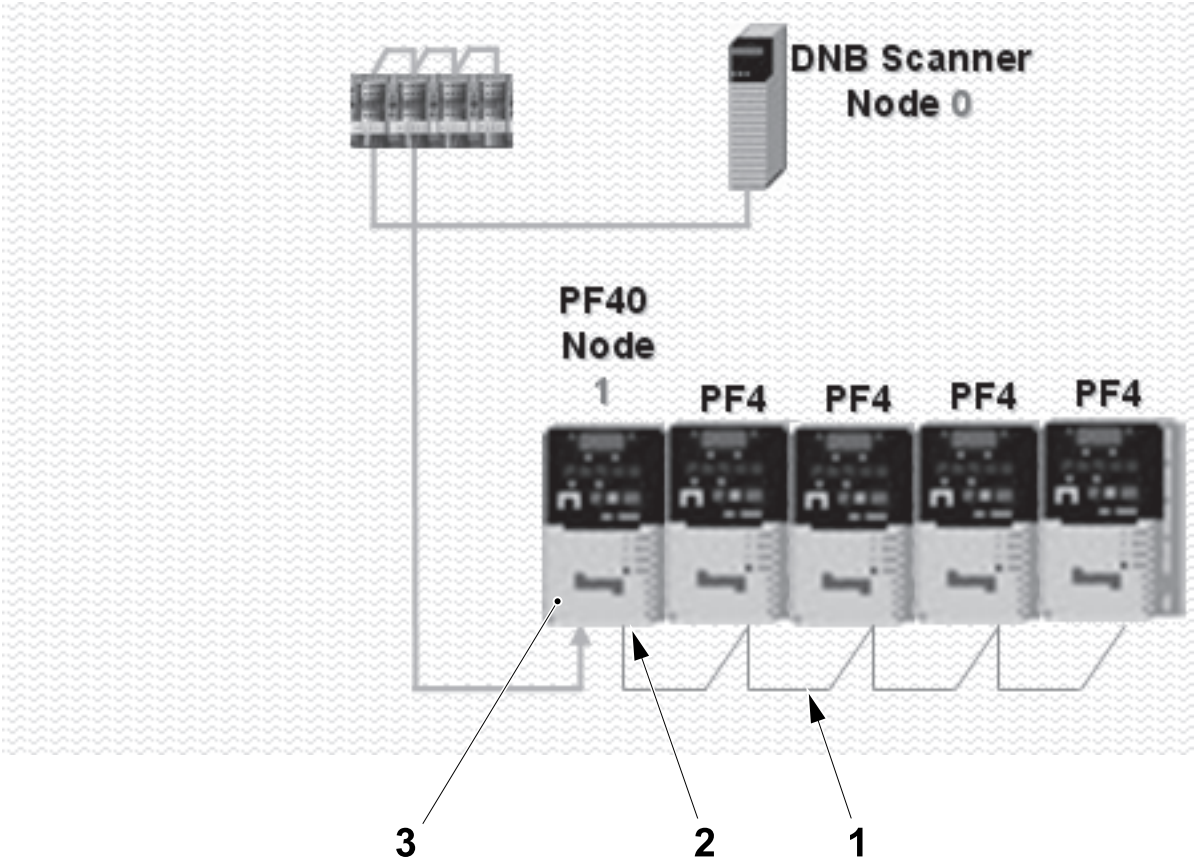

1 DSI network
2 Output
3 PF 40 module

(Cont'd)

(Cont'd)

c) With the machine in STEP0, on the 22-COMM adaptor (4)), move the jumper (5) on the connector (6) to the right as shown to select the SINGLE DRIVE operating mode.

d) Be sure that the address and the baud rate are correct according to Set the Node Address and Baud Rate on page 10-141, if the 22-COMM adaptor (4) is new.

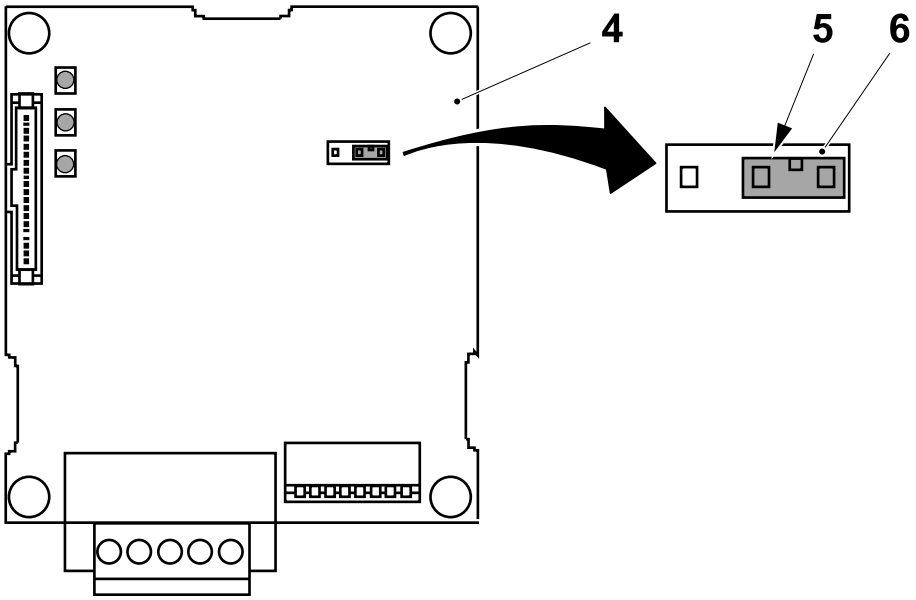

4 22-COMM adaptor
5 Jumper
6 Connector

(Cont'd)

(Cont'd)

e) Step up the machine to `STEP1`.

f) Open RSNetWorx.

g) Open a new file in RSNetWorx.

h) Select theNetwork menu (7) and then select Online (8).

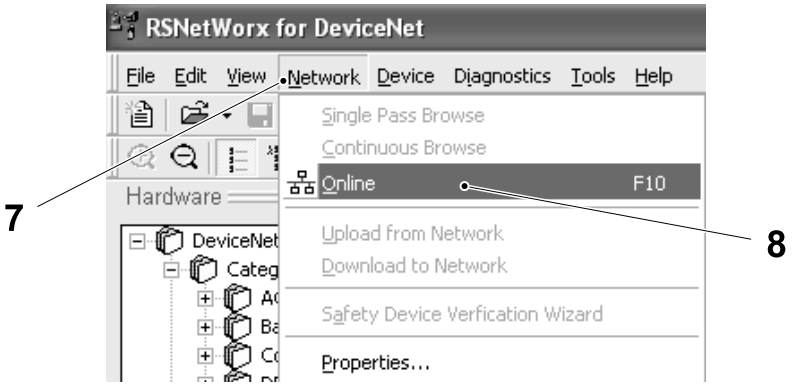

7 Network menu
8 Online

i) Browse to find and access the Main Net (9).

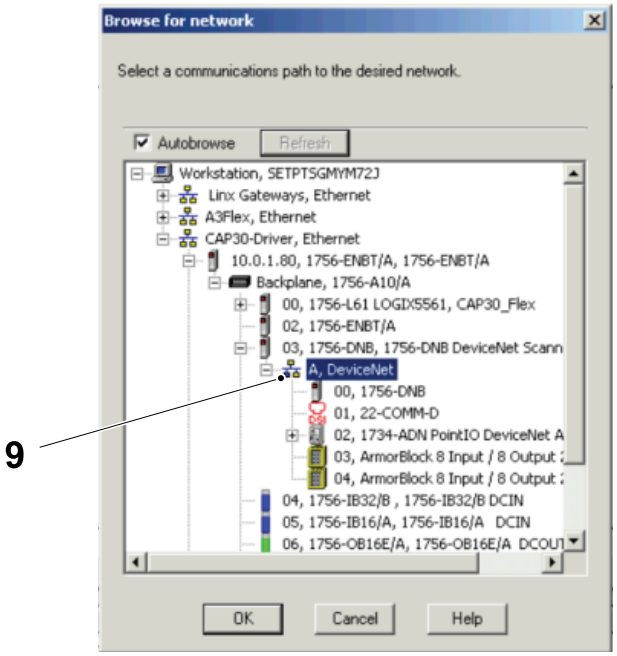

9 Main Net

(Cont'd)

(Cont'd)

j) Wait for the automatic scan of the network.



k) Double click on the Powerflex 40 icon (10) icon and select PARAMETERS.

l) Select UPLOAD in the PARAMETERS window.

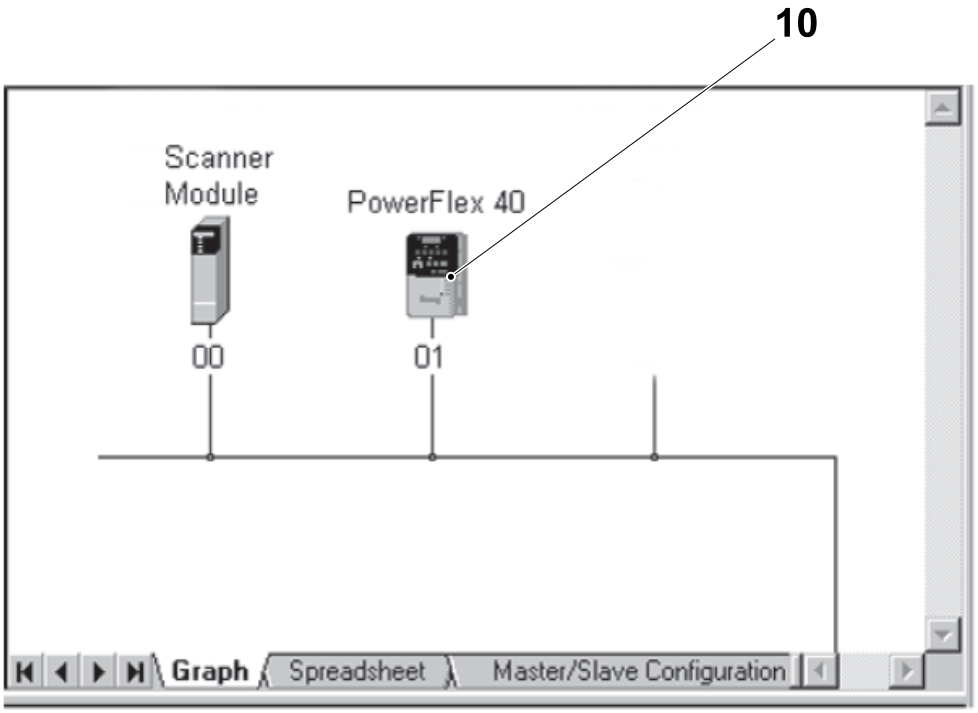

10 powerflex 40 icon

(Cont'd)

(Cont'd)

m) Scroll to end of the parameter list (11) and change the parameters shown in the following table.

n) Select OK when done.

Note! In the table Drv 0 - 2 means 3 drives are used Drv 0 - 4 means all.

Parameter	Value
DSI I/O Config	Drv 0 - 2 up to 0 - 4
Drive 0 Address	100
Drive 1 Address	101
Drive 2 Address	102
Drive 3 Address	103
Drive 4 Address	104

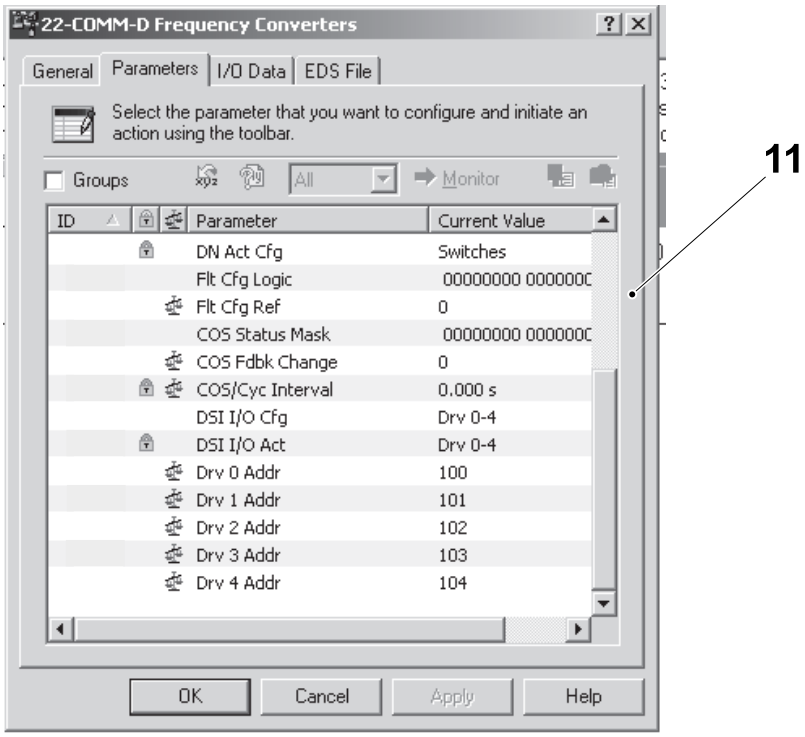

11 Parameter list

(Cont'd)

(Cont'd)

o) Step down the machine to `STEP0`.

p) Connect the DSI network (1) at the output (2) of the PF 40 module (3).

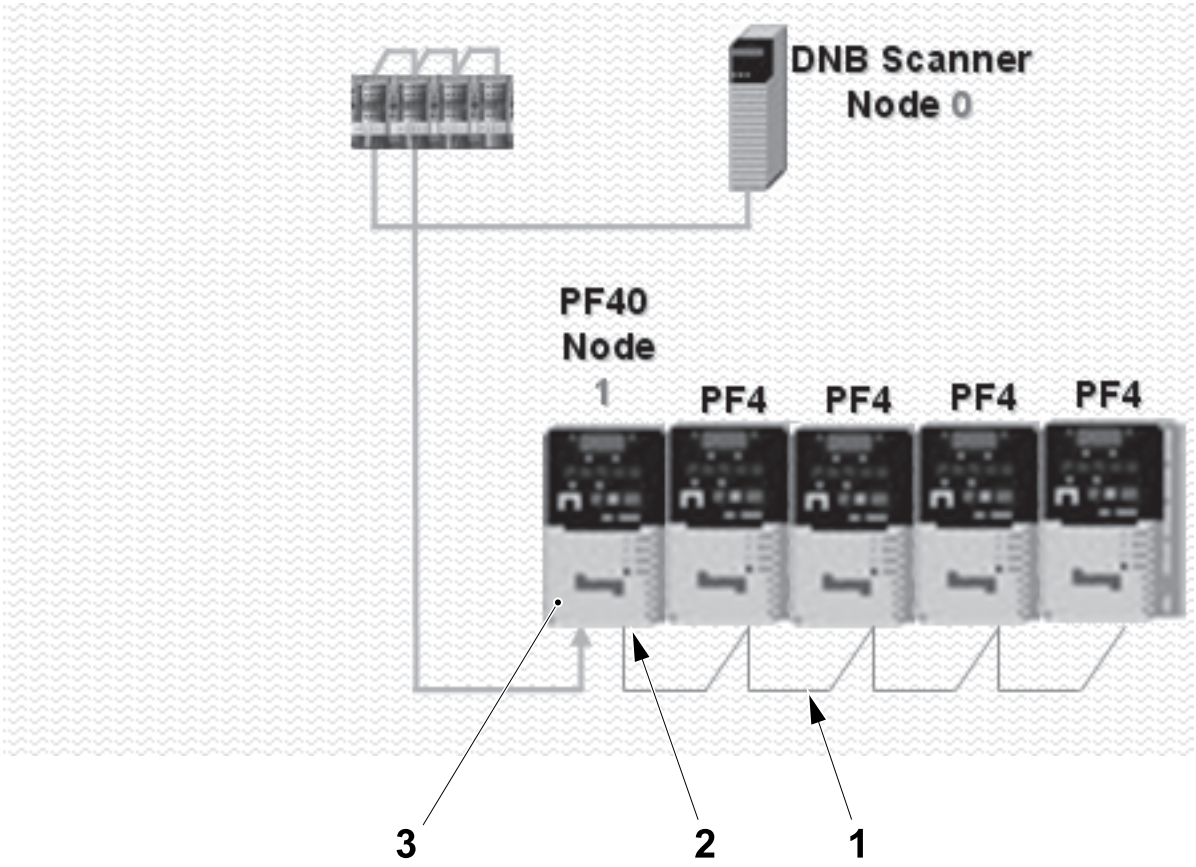

1 DSI network
2 Output
3 PF 40 module

(Cont'd)

(Cont'd)

q) On the 22-COMM adaptor (4), move the jumper (5) on the connector (6) to the left as shown to select the MULTI DRIVE operating mode.

Note! Reboot the drive before continuing.

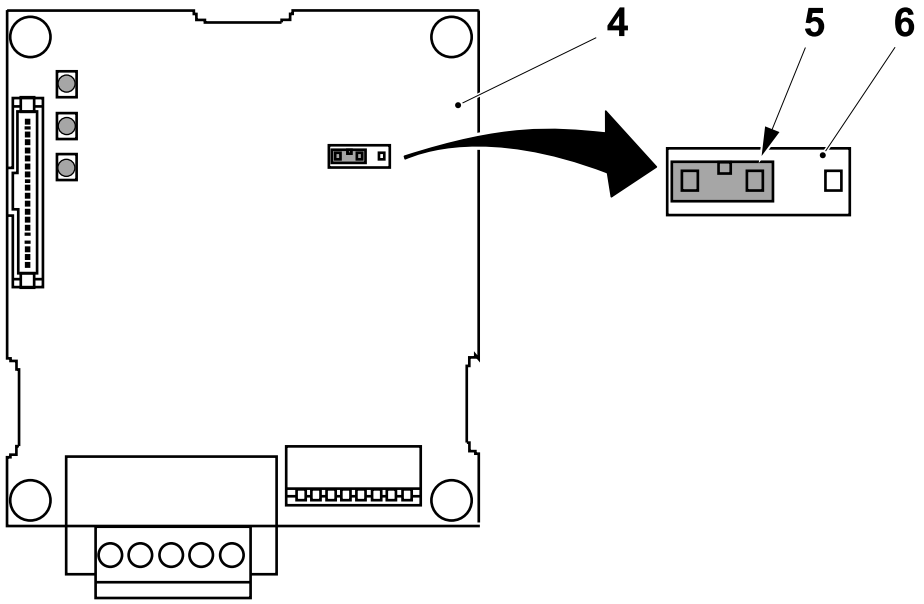

4 22-COMM adaptor
5 Jumper
6 Connector

r) Step up the machine to `STEP1`.

s) Only if the RSNetWorx was closed, open RSNetWorx.

t) Open a new file in RSNetWorx.

(Cont'd)

(Cont'd)

u) Select View –> Refresh (12) (or type F5) to update the view.

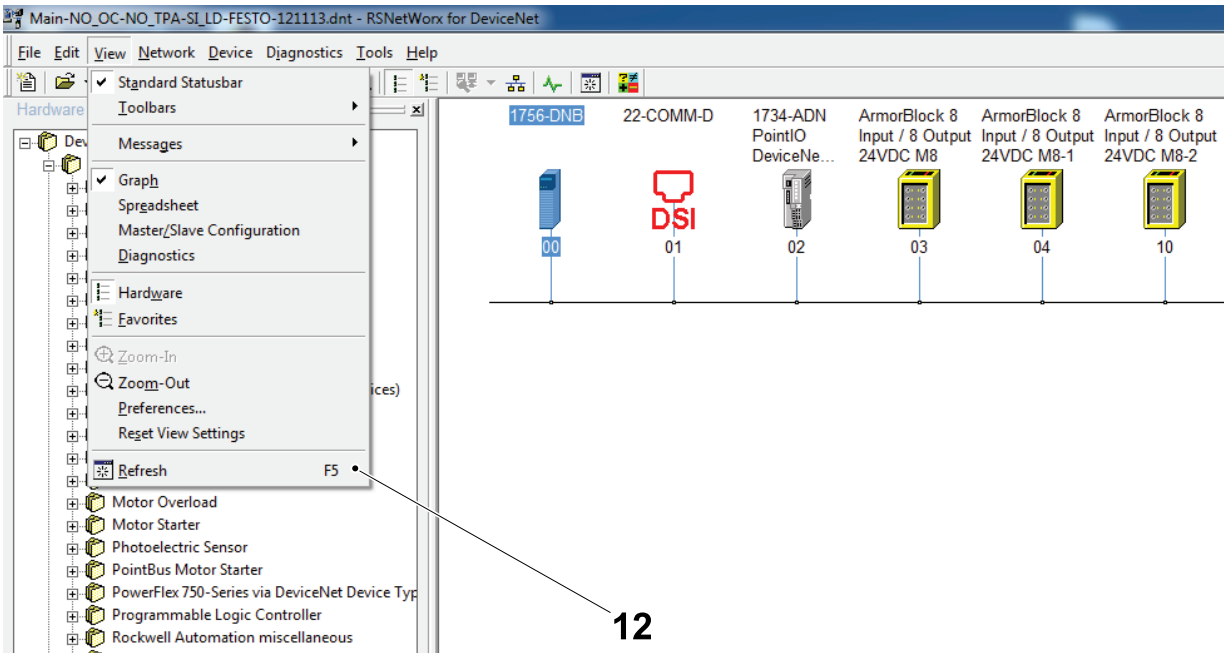

12 View –> Refresh

v) Check that the DSI icon (13) appears confirming that the adaptor has been configured correctly and the frequency converters are now recognised as part of the network as Node 1.

w) Exit RSNetWorx.

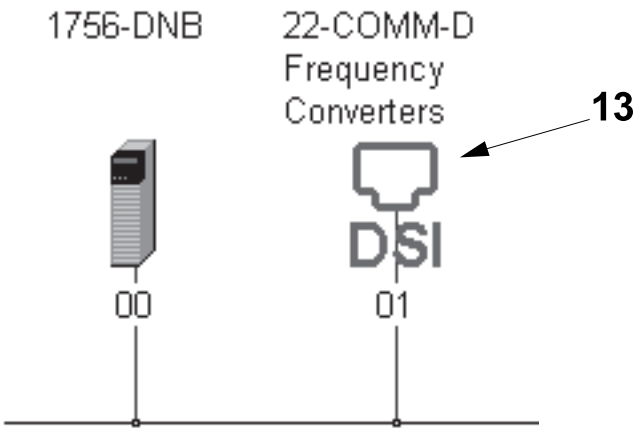

13 DSI icon

10.4.1-2 Frequency Converter - Change

Machine Status	Electrical supply disconnecting device in position O (OFF)
SPC Reference	90459-3441 90459-3450

For the PowerFlex 40 Module

a) Remove the cover (1) from the front of the PowerFlex 40 module (2).

b) Disconnect the DeviceNet cable (3) and the Internal interface cable (4) from the 22-COMM adaptor (5) and the PowerFlex 40 module (2).

c) Remove the screw (6) and the 22-COMM adaptor (5).

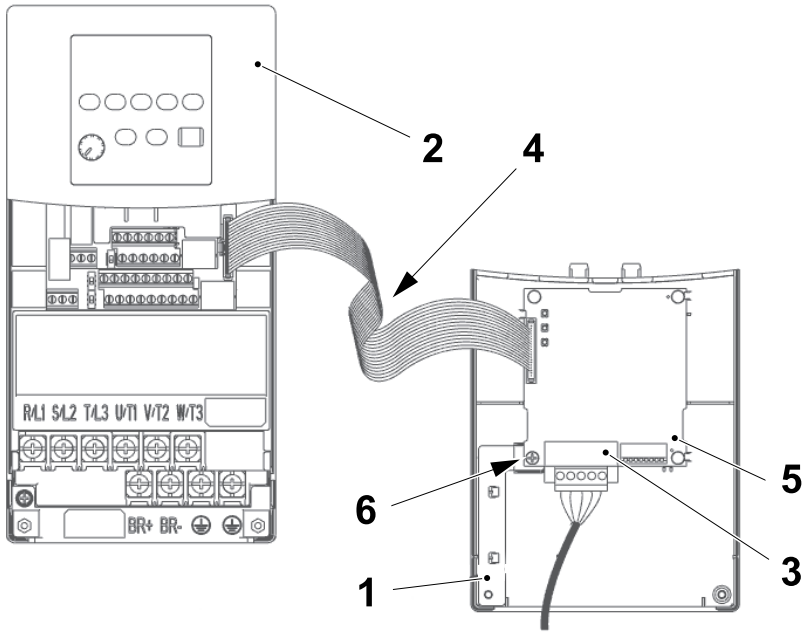

1 Cover
2 PowerFlex 40 module
3 DeviceNet cable
4 internal interface cable
5 22-COMM adaptor
6 Screw

(Cont'd)

(Cont'd)

d) Make a note of the electrical connections (7) at the base of the PowerFlex 40 module (2) and then disconnect all of the cables and wires.

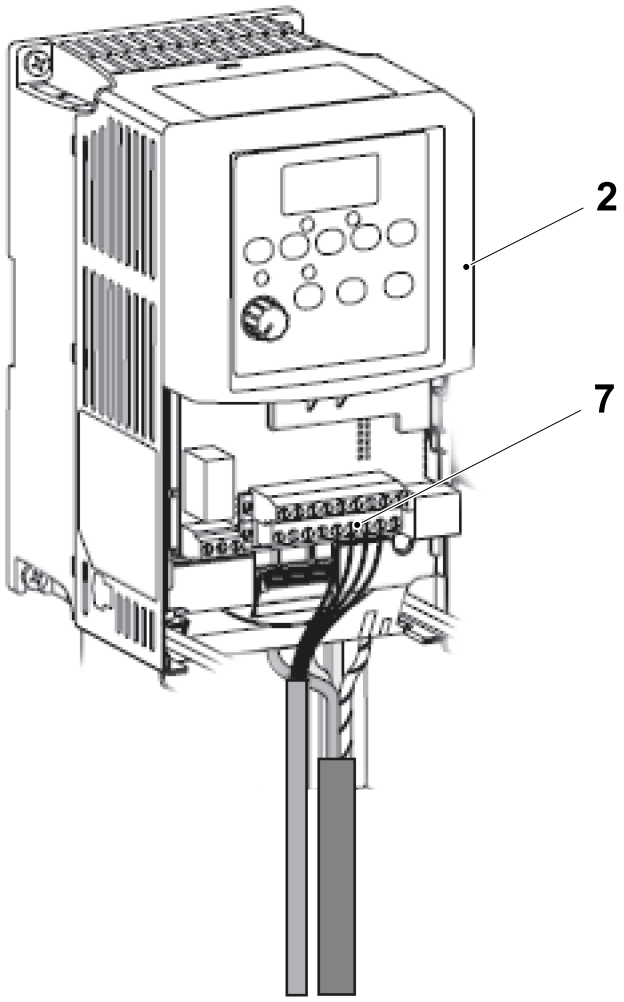

2 PowerFlex 40 module
7 Electrical connections

(Cont'd)

(Cont'd)

e) Remove the Screw (8) and the PowerFlex 40 module (2) .

f) Assemble in the reverse order.

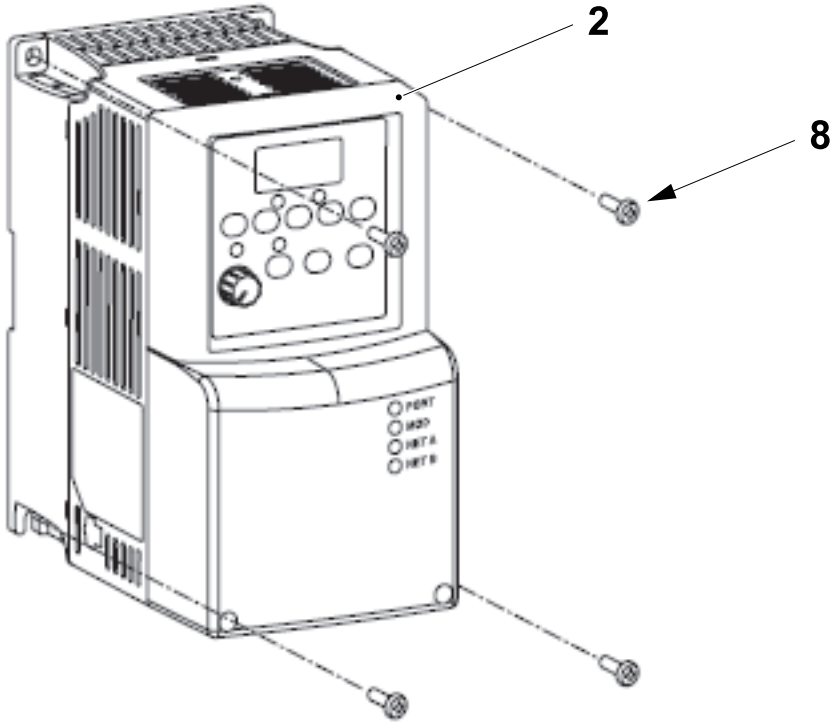

2 PowerFlex 40 module

8 Screw

(Cont'd)

(Cont'd)

For the PowerFlex 4 Modules

a) Make a note of the Electrical connections (1) at the base of the PowerFlex 4 module (2) and then disconnect all of the cables and wires.

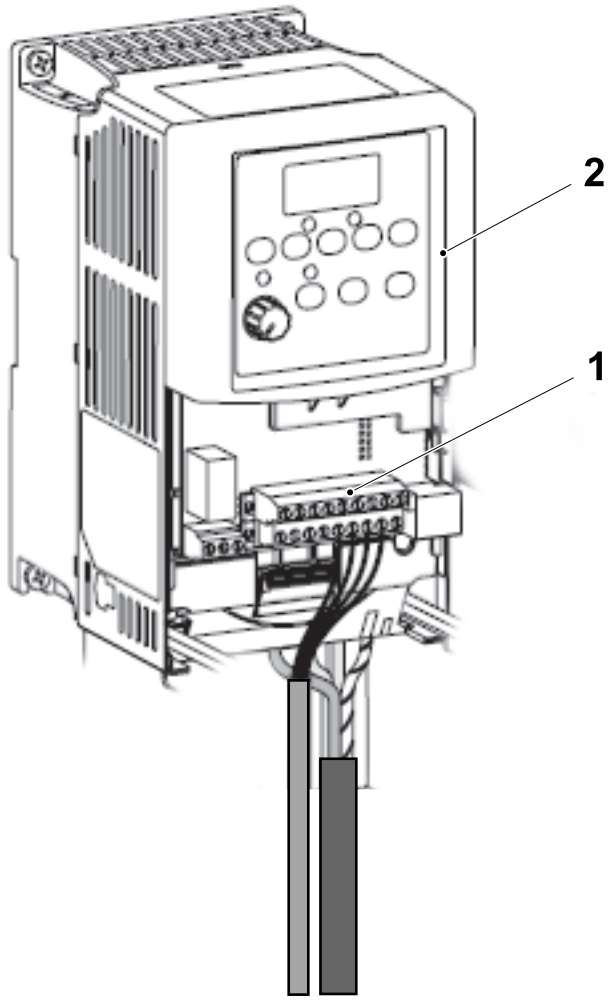

1 Electrical connections
2 PowerFlex 4 module

(Cont'd)

(Cont'd)

b) Make a note of thescrews (3) at the base of thePowerFlex 4 module (2) and then disconnect all of the cables and wires.

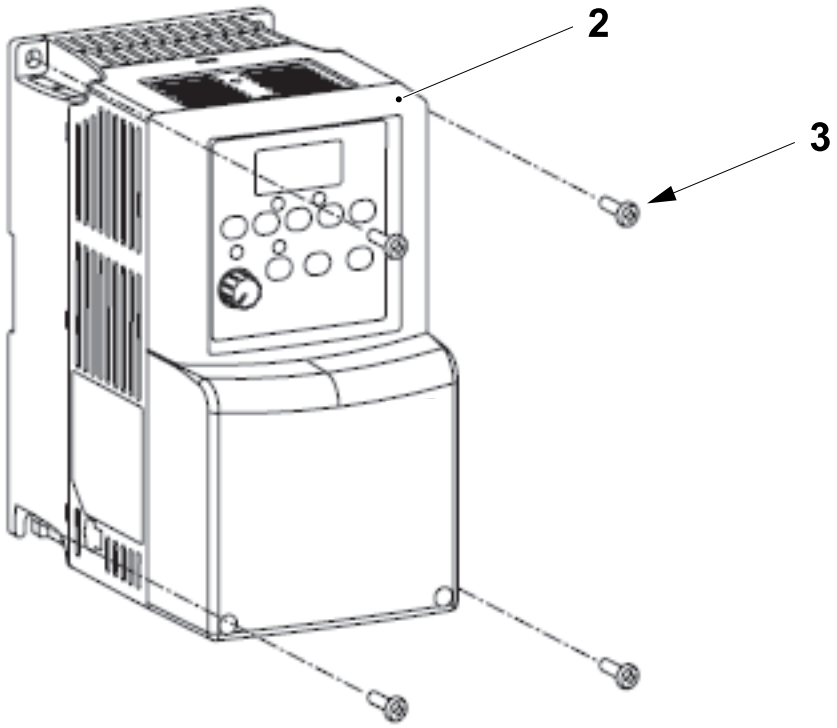

2 PowerFlex 4 module
3 Screw

10.4.1-3 Frequency Converter - LED Description

Machine Status	Electrical supply disconnecting device in position I (ON)
SPC Reference	90459-3441

The PowerFlex40 module is connected to the DeviceNet via an adaptor.

The adaptor has four LED's that are visible through the front panel of the PowerFlex40 module.

To locate the source of the error and then find the cause, proceed as follows:

a) At the PowerFlex40 module (1) (W20T0000) in the Electrical Cabinet, check the status of the Port LED (2), the Mod LED (3) and Net A LED (4).

b) Use the following tables to determine the cause of the error.

Note! The Net B LED (5) is not used for DeviceNet communications.

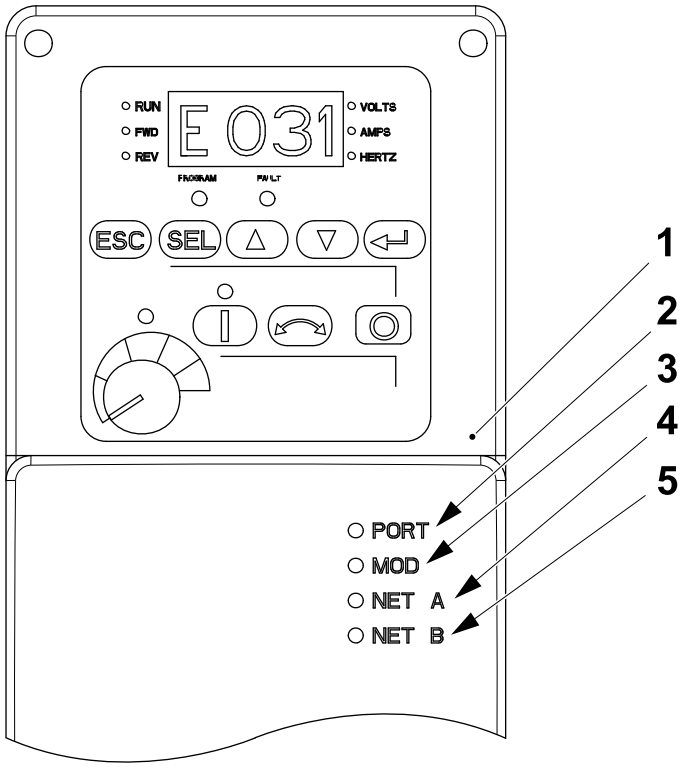

1 PowerFlex40 module
2 Port LED
3 Mod LED
4 Net A LED
5 Net B LED

(Cont'd)

(Cont'd)

Error Sorting

LED	Colour	Status	Action
Port Status (2)	Off	The adaptor is not powered or connected correctly to the drive.	Use the ribbon cable to connect the adaptor securely to the drive. Apply power to the adaptor.
Port Status (2)	Flashing red	The adaptor is not receiving communications from a drive, a connected drive has failed or a drive is missing.	Clear any drive faults. Check that all cables are securely connected. Cycle power to the drive.
Port Status (2)	Solid red	The drive has refused an I/O connection from the adaptor. Another DSI peripheral is using the same DSI port as the adaptor.	Important: Cycle power to the adaptor after making the following correction. Check that all DSI cables are securely connected and undamaged. If necessary, replace any damaged cable.
Port Status (2)	Flashing green	The adaptor is establishing an I/O connection to the drive or (DSI I/O Config) is configured for all I/O disabled.	None: This indication will turn GREEN or RED. Check the setting of parameter 15 (DSI I/O Config). The adaptor is operating normally if no DSI I/O is enabled.
Port Status (2)	Solid green	The adaptor is properly connected and is communicating with the drive.	None.
Port Status (2)	Orange	Daisy-chained devices in the Multi-Drive mode are not of the correct type.	Install the correct modules.

(Cont'd)

(Cont'd)

LED	Colour	Status	Action
Mod Status (3)	Off	The adaptor is not powered.	Use the ribbon cable to connect the adaptor securely to the drive. Apply power to the adaptor.
Mod Status (3)	Flashing red	The adaptor has failed the firmware test, a connected drive has failed or a drive is missing.	Clear any drive faults. Cycle power to the drive. If cycling power does not correct the problem, the parameter settings may have been corrupted. Restore default values reconfigure the adaptor. If restoring default values does not correct the problem, flash the adaptor with the latest firmware release. Determine which drive is missing or has failed. Check cabling and configuration settings.
Mod Status (3)	Solid red	The adaptor has failed the hardware test	Cycle power to the drive Replace the adaptor.
Mod Status (3)	Flashing green	The adaptor is operational but is not transferring I/O data.	Put the scanner in the RUN mode. Program the controller to recognise and transmit I/O data to the adaptor. Configure the adaptor for the program in the controller. The adaptor is operating normally if no DSI I/O is enabled.
Mod Status (3)	Solid green	The adaptor is operational and transferring I/O data.	None.

LED	Colour	Status	Action
Net A Status (3)	Off	The adaptor and/or the network is not powered or the adaptor is not connected correctly to the network.	Use the ribbon cable to connect the adaptor securely to the drive and the DeviceNet cable to connect it to the network. Connect the DeviceNet cable correctly to the DeviceNet plug. Apply power to the adaptor and the network.
Net A Status (3)	Flashing red	A DeviceNet I/O connection has timed out.	Put the scanner in the RUN mode, or apply power to the peer device that will send I/O data. Check the amount of traffic on the network.
Net A Status (3)	Solid red	red	Failed duplicate node detection test or bus off condition exists.
Net A Status (3)	Flashing green	The adaptor is properly connected but is not communicating with any devices on the network.	Put the scanner in the RUN mode, or apply power to the peer device that will send I/O data. Configure a controller or peer device to recognise and transmit I/O to the adaptor. Configure the adaptor for the program in the controller or the I/O from the peer device.
Net A Status (3)	Solid green	The adaptor is properly connected and is communicating with devices on the network.	None.

10.4.1-4 Frequency Converters - Change Parameters

Machine Status	Electrical supply disconnecting device in position I (ON)
SPC Reference	90459-3441 90459-3450

Note! The procedure for setting the parameters is the same for all frequency converters.

Note! Before setting the converter, make sure that the sink/source switch, located behind the removable cover, is set to the SRC position.

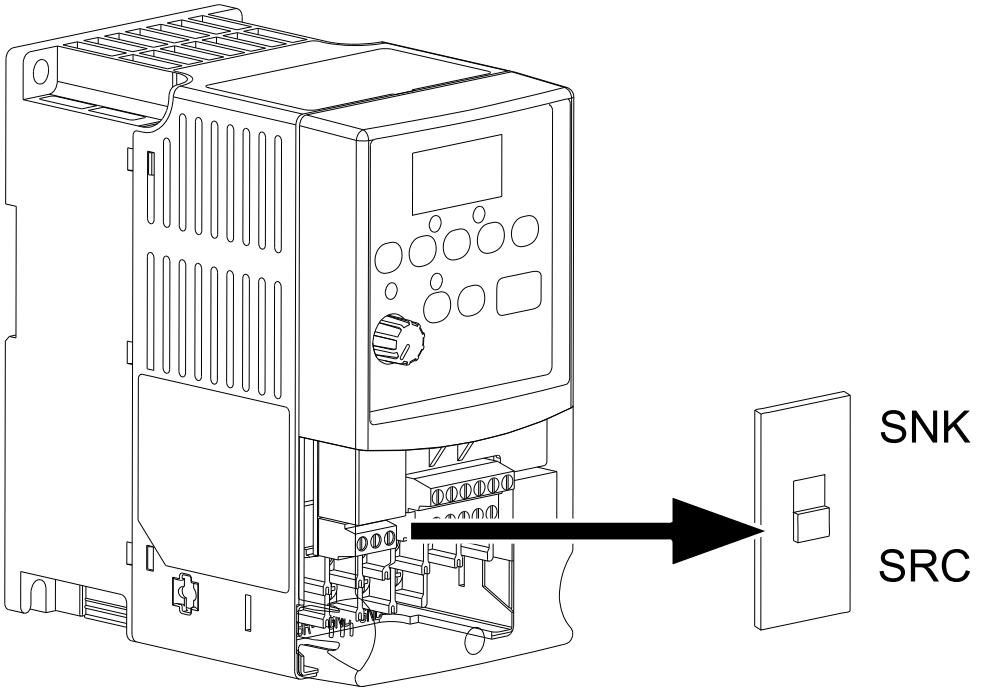

(Cont'd)

(Cont'd)

a) Press the ESC button (1) twice. The letter d, P, or A flashes.

b) Press theUP button (2) or the DOWN button (3) to scroll through the group menu (d, P or A).

c) Press the ⏎ ENTER button (4) or the SEL button (5) to enter a group. The digit on the right of the 3 digit parameter 031, in the example below flashes.

d) Press the UP button (2) or the DOWN button (3) to scroll through the parameters that are in the group.

e) Press the ⏎ ENTER button (4) or the SEL button (5) to view the value of a parameter. To return to the parameter number without editing, press the ESC button (1).

f) To edit a parameter value, press the ⏎ ENTER button (4) or the SEL button (5) to enter the program mode. The digit on the right flashes and the Program LED (6) turns red when the value can be edited.

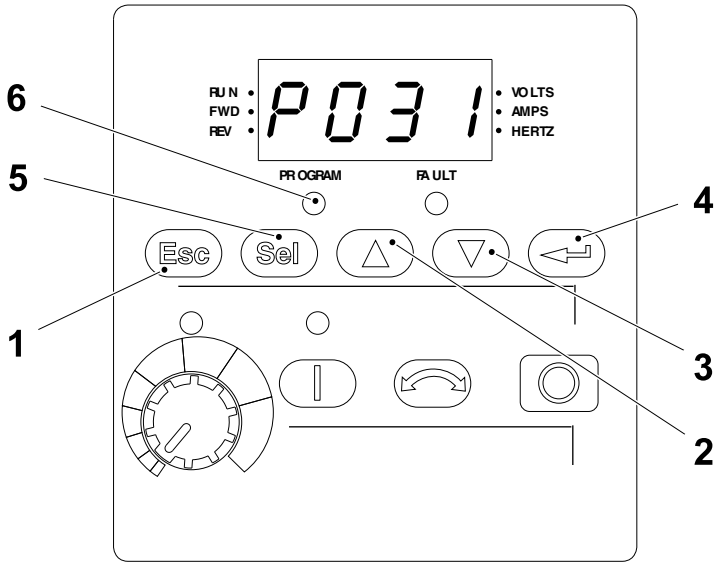

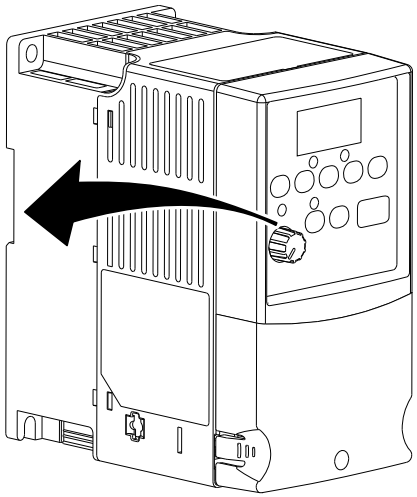

1 ESC button
2 UP button
3 DOWN button
4 ENTER button
5 SEL button
6 Program LED

(Cont'd)

(Cont'd)

g) Press the UP button (2) or the DOWN button (3) to change the parameter value. Press the SEL button (5) to move from digit to digit or from bit to bit. When a digit or bit flashes, it can be changed.

h) Press the ESC button (1) to cancel a change. The digit or bit stops flashing, the previous is restored and the Program LED (6) turns OFF or press the ⏎ ENTER button (4) to save a change. The digit or bit stops flashing and the Program LED (6) turns OFF.

i) Press the ESC button (1) to return to the parameter list.

j) Continue to press the ESC button (1) to leave the programming menu. When pressing the ESC button (1) does not change the display, d001 (output frequency) is displayed. Press the ⏎ ENTER button (4) or the SEL button (5) to enter the group menu.

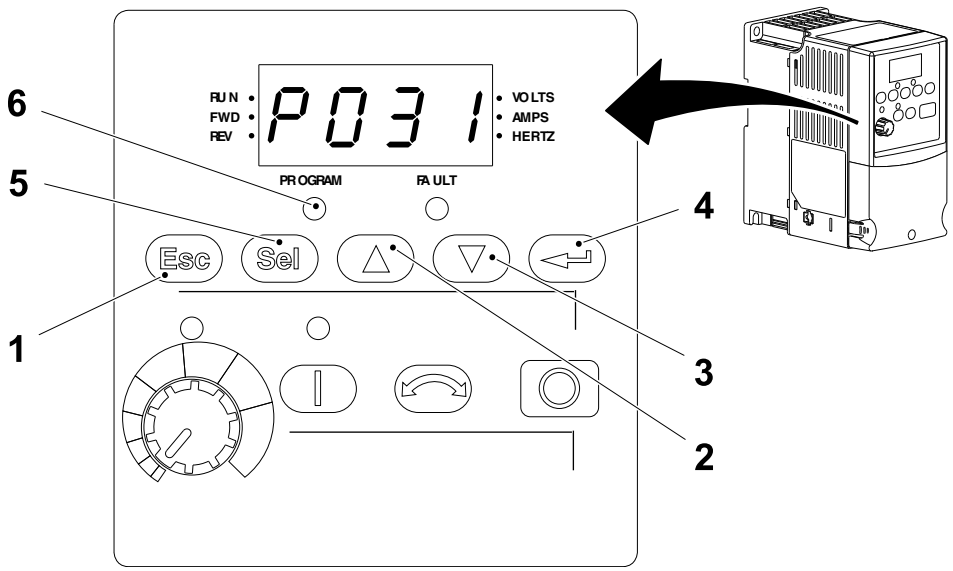

1 ESC button
2 UP button
3 DOWN button
4 ENTER button
5 SEL button
6 Program LED

(Cont'd)

(Cont'd)

Table showing Read Only Display Groups

Parameter	Function
d001	Output Frequency
d002	Commanded Frequency
d003	Output Current
d004	Output Voltage
d005	DC Bus Voltage
d006	Drive Status
d007	Fault Code 1
d008	Fault Code 2
d009	Fault Code 3
d010	Process Display
d012	Control Source
d013	Control In Status
d014	Dig In Status
d015	Comm In Status
d016	Control SW Version
d017	Drive Type
d018	Elapsed Run Time
d019	Testpoint Data
d020	0-10V Analog Input
d021	4-20 mA Analog Input

(Cont'd)

(Cont'd)

Tables for Customising Inverter Values

See the enclosed "Rockwell" manual for more details.

Basic Program Group							
Parameter	**Description**	**Unit**	**Belt Brake W20T0000**	**Package Line Conveyor W21T4000**	**Cap Sorter Disk C50T1000**	**Outfeed Package Conveyor W21T6000 ****	**Package Aligner W21T4010**
P031	Motor NP Volts	V	230	230	230	230	230
P032	Motor NP Hertz	Hz	50	50	50	50	50
P033	Motor OL Current	A	1.2	2.6	1.2	2.6	0.9
P034	Minimum Freq	Hz	0.0	0.0	0.0	0.0	0.0
P035	Maximum Freq	Hz	100	100	100	100	100
P036	Start Source		4	5	5	5	5
P037	Stop Mode		0	Default	Default	Default	Default
P038	Speed Reference		5	5	5	5	5
P039	Accel Time 1	Sec	0	3	1	3	3
P040	Decel Time 1	Sec	0.1	3	1	3	3
A080	*		0.5				
A081	*		2				
A103	*		4	4	4	4	4
A104	*		100	101	102	103 (104***)	103
A105	*		0	0	0	0	0
A107	*		0	0	0	0	0
***** The default values for these parameters are shown in the **Advanced Program Group** table ** This item is optional equipment. *** When Package Aligner is Installed.							

10.4.1-5 Frequency Converters - Fault Types

Machine Status	Electrical supply disconnecting device in position I (ON)
SPC Reference	90459-3441 90459-3450

Note! The fault codes in the format Fxxx are the same for PowerFlex40 and PowerFlex4 frequency converters.

There are two types of fault, this is explained in the following table:

Note! The Auto Restart (Reset/Run) feature allows the drive to perform a fault reset followed by a start attempt without user or application intervention. This provides for either remote or “unattended operation”. Only certain faults can be reset. Certain type 2 faults that indicate possible drive component malfunction can not be reset. Caution should be used when enabling this feature as the drive will attempt to issue its own START command based on user selected programming.

Fault Type	Fault Description	
1	Auto-Reset/Run	When this type of fault occurs and parameter A092 (Auto Rstrt Tries) is set to a value greater than “0”, a user configurable timer A093 (Auto Rstrt Delay), begins. When the timer reaches zero, the drive attempts to automatically reset the fault. If the condition that caused the fault is no longer present, the fault will be reset and the drive will be restarted.
2	Non-Resetable	This type of fault may require drive or motor repair, or is caused by wiring or programming error. The cause of the fault must be corrected before the fault can be cleared.

10.4.1-6 Frequency Converters - Identifying the Fault

Machine Status	Electrical supply disconnecting device in position I (ON)
SPC Reference	90459-3441 90459-3450

If a fault occurs the fault LED (1) on the front panel of the converter will flash to indicate the presence of a fault and the relevant fault code, F013 in the example below, will flash on the alphanumeric display (2).

a) Use the table on 10-168 to determine the type of fault that has occurred.

- If the fault is a type 1, follow the instructions 10.4.1-7 Frequency Converters - Clearing a Fault Indication Manually.
- If the fault is a type 2, follow the instructions 10.4.1-8 Frequency Converters - Clearing a Fault Indication Automatically.

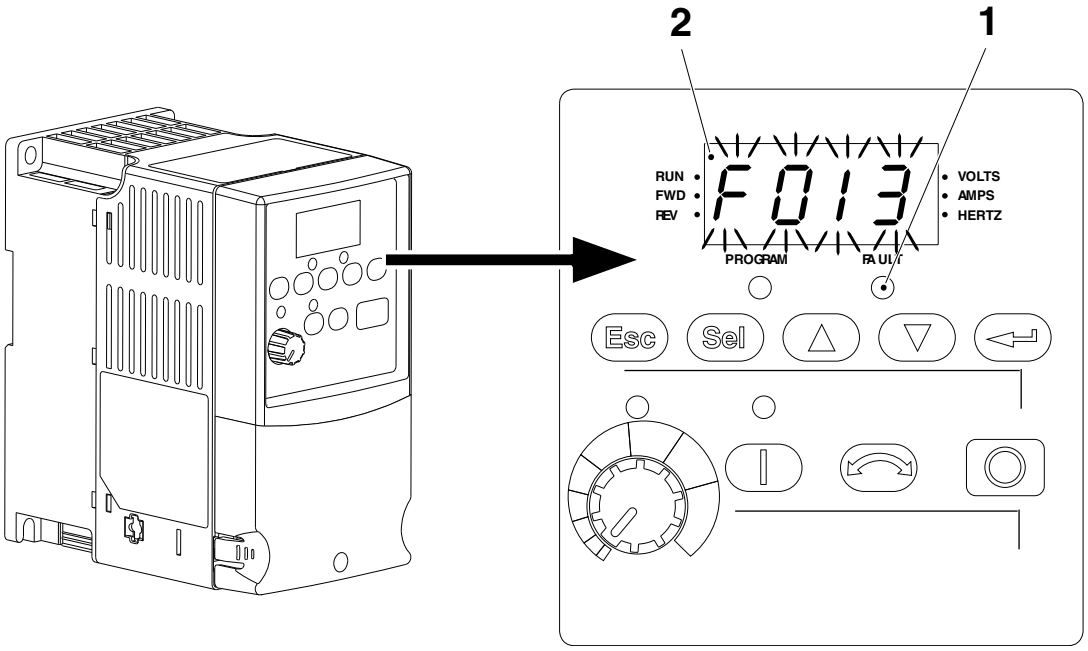

1 Fault LED
2 Alphanumeric display

10.4.1-7 Frequency Converters - Clearing a Fault Indication Manually

Machine Status	Electrical supply disconnecting device in position I (ON)
SPC Reference	90459-3441 90459-3450

a) When a fault occurs, press the Esc button (1) to acknowledge the alarm and to gain control of the control panel. The controls will be locked until the alarm is acknowledged. When the Esc button (1) is pressed the fault indication will be removed.

b) Use the control panel to access the parameter d007 (FAULT CODE 1), if necessary see 10.4.1-1 PowerFlex40 DeviceNet Adaptor - Change.

c) Locate and clear the cause of the fault, see 10-168.

d) After corrective action has been taken, clear the fault indication using one of the following methods:

- Press the Stop button (2) if the parameter P037 (STOP MODE) is set to a value between “0” and “3”
- Cycle drive power
- Set parameter A100 (FAULT CLEAR) to “1” or “2”.
- Cycle digital input if the parameters A051 - A052 (DIGITAL INX SEL) are set to option 7.

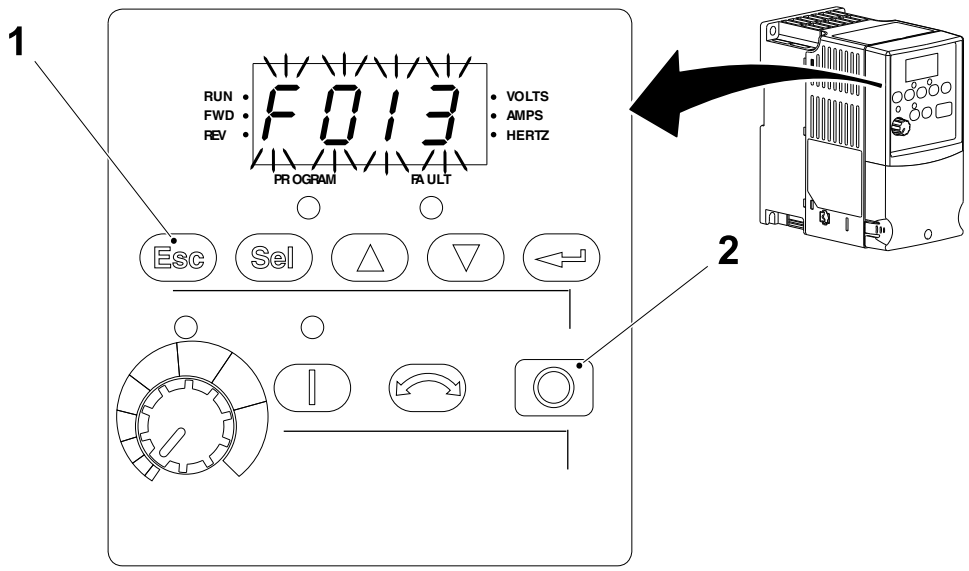

1 Esc button
2 Stop button

10.4.1-8 Frequency Converters - Clearing a Fault Indication Automatically

Machine Status	Electrical supply disconnecting device in position I (ON)
SPC Reference	90459-3441 90459-3450

Option 1: Clear a type 1 fault and restart the drive

a) When a fault occurs, press the Esc button (1) to acknowledge the alarm and to gain control of the control panel. The controls will be locked until the alarm is acknowledged. When the Esc button (1) is pressed the fault indication will be removed.

b) Use the control panel to set the parameter A092 (Auto Rstrt Tries) to any value other than “0”. If necessary see 10.4.1-1 PowerFlex40 DeviceNet Adaptor - Change.

c) Set parameter A093 (Auto Rstrt Delay) to any value other than “0”.

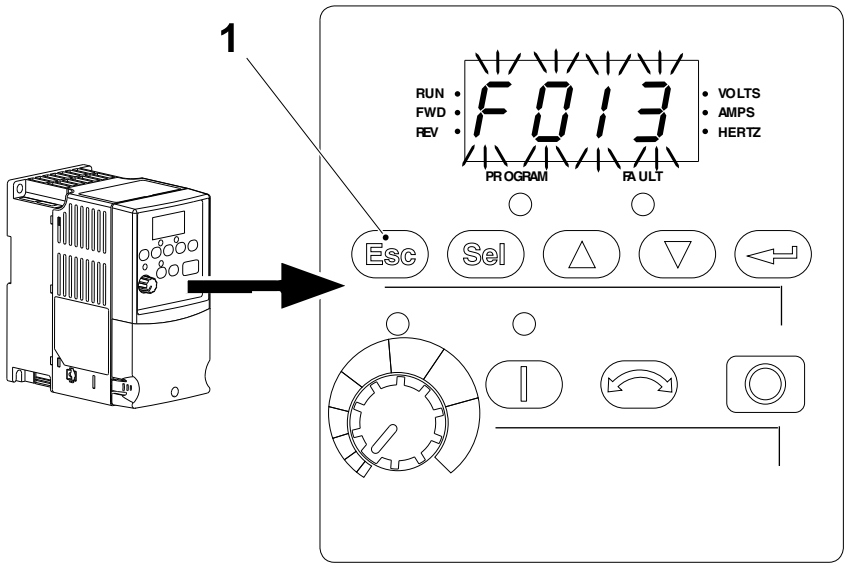

1 Esc button

(Cont’d)

(Cont'd)

Option 2: Clear an OverVoltage, UnderVoltage or Heatsink OverTemp fault without restarting the drive

a) When a fault occurs, press the Esc button (1) to acknowledge the alarm and to gain control of the control panel. The controls will be locked until the alarm is acknowledged. When the Esc button (1) is pressed the fault indication will be removed.

b) Use the control panel to set the parameter A092 (Auto Rstrt Tries) to any value other than "0". If necessary see 10.4.1-1 PowerFlex40 DeviceNet Adaptor - Change on page 10-140.

c) Set parameter A093 (Auto Rstrt Delay) to "0".

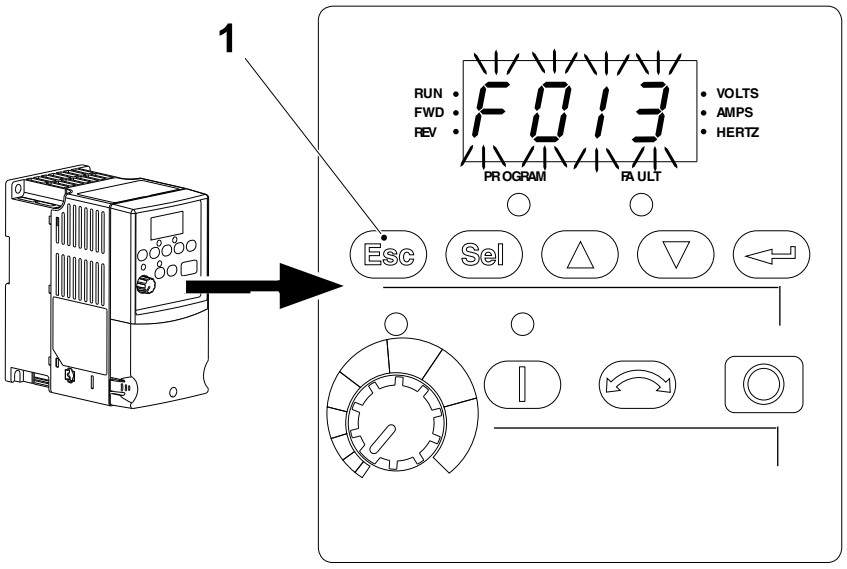

1 Esc button

Fault Code Descriptions

No.	Fault	Type	Description	Recommendation
F002	Auxiliary Input	1	Auxiliary input interlock is open	Check remote wiring. Verify communications programming for intentional fault
F003	Power Loss	2	DC bus voltage remained below 85% of normal	Monitor the incoming AC line for low voltage or line power interruption. Check input fuses.
F004	UnderVoltage	1	DC bus voltage fell below the minimum value	Monitor the incoming AC line for low voltage or line power interruption.
F005	OverVoltage	1	DC bus voltage exceeded the maximum value	Monitor the AC line for high line voltage or transient conditions. Bus overvoltage can also be caused by motor regeneration. Extend the decel. time or install the dynamic brake option.

(Cont'd)

(Cont'd)

No.	Fault	Type	Description	Recommendation
F006	Motor Stalled	1	Drive is unable to accelerate the motor	Increase parameters P039 and A067 (Accel Time x) or reduce the load so that the drive output current does not exceed the value set by parameter A089 (Current Limit1)
F007	Motor Overload	1	Internal electronic overload trip	An excessive motor load exists. Reduce the load so that the drive output current does not exceed the value set by parameter P033 (Motor OL Current).
f008	Heatsink OvrTmp	1	Heatsink temperature exceeds a predefined value	Check for blocked or dirty heatsink fins. Verify that the ambient temperature has not exceeded 40°C (104°F). Check fan.
f012	HW OverCurrent	2	The drive output current has exceeded the hardware current limit	Check programming. Check for excessive load, an incorrect value for parameter A084 (Boost Select), DC brake volts set too high or other causes of excess current.
f013	Ground Fault	2	A current path to earth has been detected at one or more of the drive output terminals	Check the motor and external wiring to the drive output terminals from a grounded condition.
f029	Analog Input Loss	1	An analog input is configured to fault on signal loss. A signal loss has occurred. Configure with parameter A122.	Check the parameters. Check for loose or broken connections at the inputs.
f033	Auto Rstrt Tries	2	Drive unsuccessfully attempted to reset a fault and resume running for the programmed number of parameter A092 (Auto Rstrt Tries)	Correct the cause of the fault and manually clear.
f038	Phase U to Gnd	2	A phase to ground has been detected between the drive and motor in this phase.	Check the wiring between the drive and the motor. Check the motor for a grounded phase. Replace the drive if the fault cannot be cleared.
f039	Phase V to Gnd	2	A phase to ground has been detected between the drive and motor in this phase.	Check the wiring between the drive and the motor. Check the motor for a grounded phase. Replace the drive if the fault cannot be cleared.
f040	Phase W to Gnd	2	A phase to ground has been detected between the drive and motor in this phase.	Check the wiring between the drive and the motor. Check the motor for a grounded phase. Replace the drive if the fault cannot be cleared.
f041	Phase UV Short	2	Excessive current has been detected between these two output terminals	Check the motor and drive output terminal wiring for a short circuit condition. Replace the drive if the fault cannot be cleared.

(Cont'd)

(Cont'd)

No.	Fault	Type	Description	Recommendation
f042	Phase UW Short	2	Excessive current has been detected between these two output terminals	Check the motor and drive output terminal wiring for a short circuit condition. Replace the drive if the fault cannot be cleared.
f043	Phase VW Short	2	Excessive current has been detected between these two output terminals	Check the motor and drive output terminal wiring for a short circuit condition. Replace the drive if the fault cannot be cleared.
f048	Parameters Defaulted		The drive was commanded to write default values to EEPROM.	Clear the fault or cycle power to the drive. Program the drive parameters as necessary.
f063	SW OverCurrent	1	Programmed value of parameter A098 (SW Current Trip) has been exceeded	Check load requirements and parameter A098 (SW Current Trip) setting.
f064	Drive Overload	2	Drive rating of 150% for 1 minute or 200% for 3 seconds has been exceeded.	Reduce load or extend Accel Time.
f070	Power Unit	2	Failure has been detected in the drive power section	Cycle power. Replace the drive if fault cannot be cleared.
f071	Net Loss		The communication network has failed	Cycle power Check communications cabling Check network adaptor setting Check external network status.
f080	SVC Autotune		The autotune function was either cancelled by the user or has failed.	Restart procedure.
f081	Comm Loss	2	RS485 (DSI) port stopped communicating.	If the adaptor was not intentionally disconnected, check the wiring to the port. If necessary, replace the wiring, port expander, adaptors or complete drive.
f100	Parameter Checksum	2	The checksum read from the board does not match the checksum calculated.	Set parameter P041 (Reset to Defaults) to option 1 "Reset Defaults"
f122	I/O Board Failure	2	Failure has been detected in the drive control and I/O section	Cycle power Replace the drive if the fault cannot be cleared.

10.5 Motor Drive Control

10.5.1 Servo System - Overview

The program in the CPU Processor (1) determines the actions to be taken by the servo motors in the machine. The CPU Processor (1) communicates with the servo control module, called the Sercos module (2) through the backplane of the Logic Control Chassis (3). The Sercos module (2) communicates with the Servo rack (4) via the SERCOS optical fibre SERCOS network (5) and the SERCOS network (6).

The Servo rack (4) contains one Integrated Axis Modules (7) and a number of Axis Modules (8).

Each of the Integrated Axis Modules (7) and Axis Modules (8) controls one servo motor.

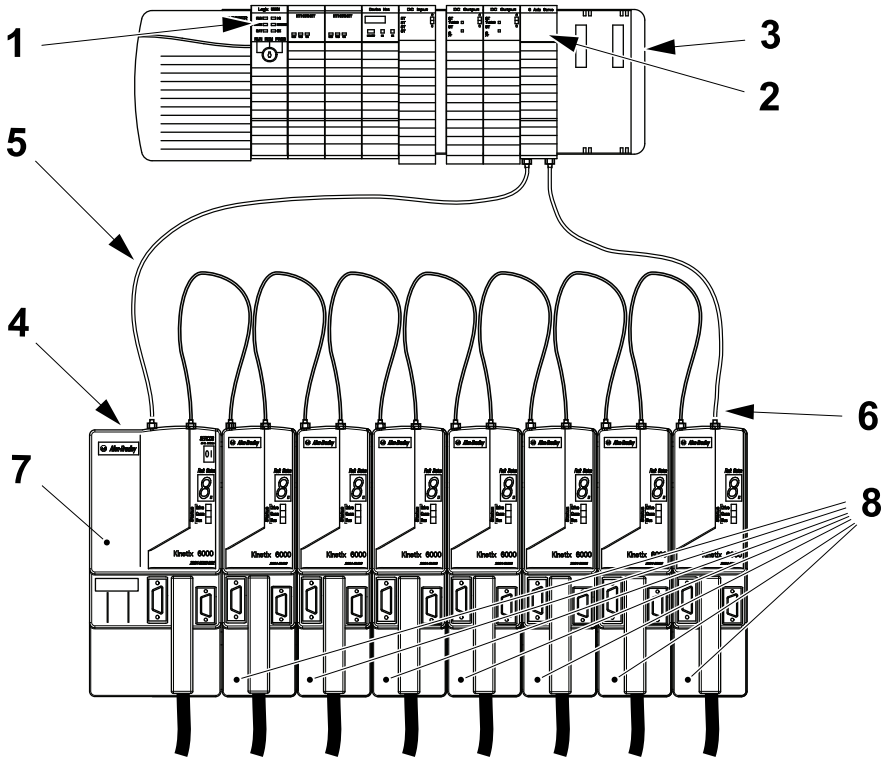

1 CPU Processor
2 Sercos module
3 Logic Control Chassis
4 Servo rack
5 SERCOS network
6 SERCOS network
7 Integrated Axis Module
8 Axis Module

(Cont'd)

(Cont'd)

The SERCOS module (2) and the servo drives (IAM and AM) Integrated Axis Modules (7) and Axis Modules (8) are connected to form a ring with the Tx port (9) of one module being connected to the Rx port (10) of the next.

The SERCOS module (2), the IAM (7) and the AM (8) transmit data from the Tx port (9) and receive data on the Rx port (10). The ports are located on top of the servo drives (IAM and AM) Integrated Axis Modules (7) and Axis Modules (8) , and on the bottom of the Sercos module (2) . The ports are clearly marked on the modules.

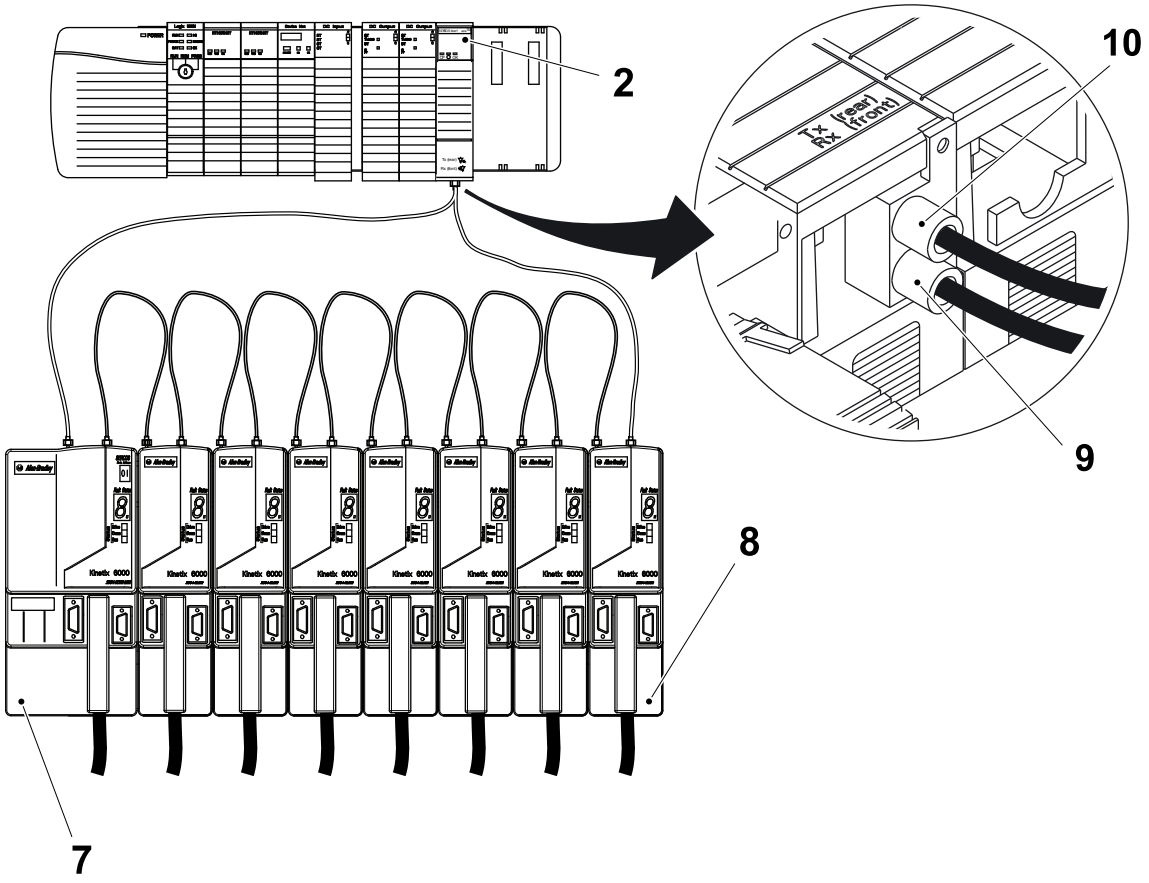

2 Sercos module
7 Integrated Axis Module
8 Axis Module
9 Tx port
10 Rx port

(Cont'd)

(Cont'd)

Note! Normally the AC voltages supplied to this machine are at 50Hz.

The Integrated Axis Modules (7) receives a 440V, 3 Phase, AC supply and a single phase 220 V .

The two supplies are distributed via the backplane of the servo rack to the Axis Modules (8) .

The drive power for a Servo drive motor (12) is provided through a power cable (13) and the motor position feedback is sent to its driver through the motor position feedback cable (14) .

The power connector (15) and the feedback connector (16) are not interchangeable so there is no possibility of an incorrect connection.

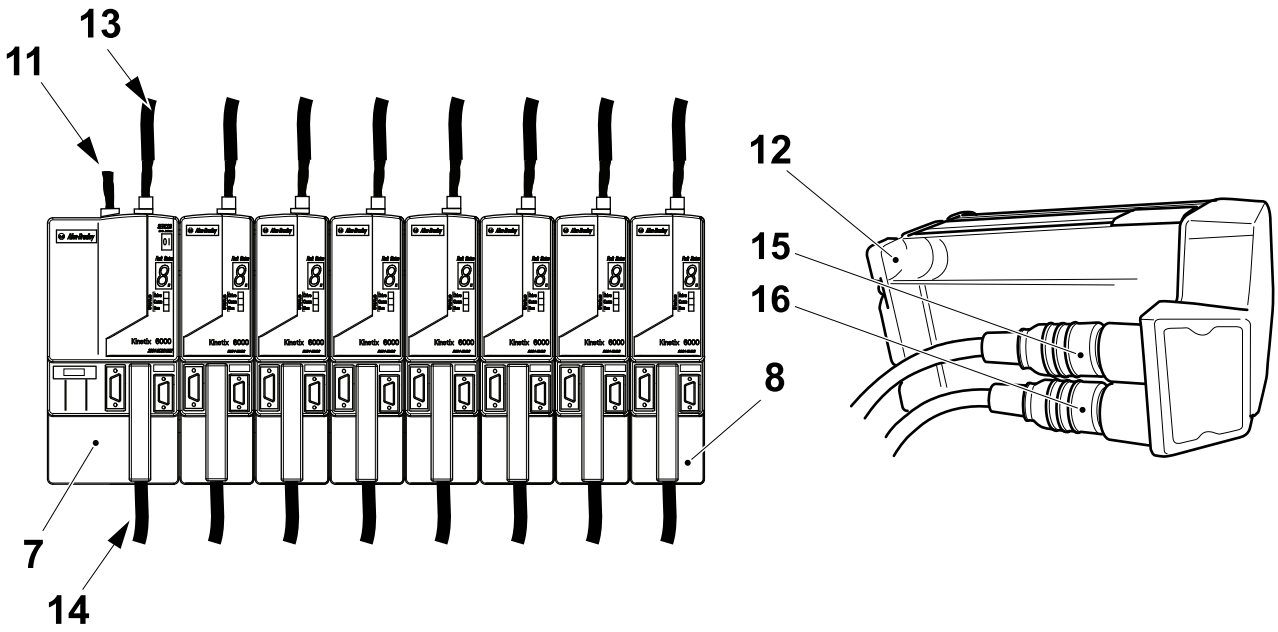

7 Integrated Axis Module
8 Axis Module
11 AC Supply
12 Servo drive motor
13 Power cable
14 Motor position feedback cable
15 Power connector
16 Feedback connector

10.5.2 Servo System - Sercos Module

10.5.2-1 Sercos Module - Description

Machine Status	Electrical supply disconnecting device in position I (ON)
SPC Reference	662911-0300

The SERCOS Module (1) is located in the Control Logix Chassis. On the input side, the SERCOS Module (1), communicates with the PLC via the backplane of the Control Logix Chassis. On the output side it communicates, via the SERCOS Net, with the Servo Drivers.

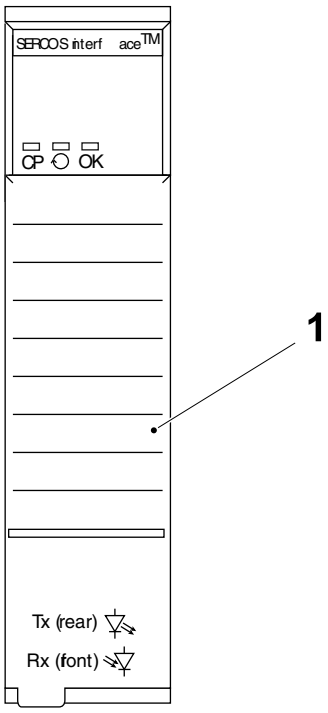

1 SERCOS Module

(Cont'd)

(Cont'd)

Status indicators are provided to report the status of the module and the SERCOS Net.

After a SERCOS Module (1) has been changed, the firmware in the module should be checked to see if it has the correct version and revision state. See 10.2.2-7 Install the ControlFlash Application Firmware Library.

For SERCOS module troubleshooting information, see 10.3.3 Distributed I/O and DeviceNet - Troubleshooting and 10.3.3-2 Troubleshooting - DeviceNet Error Indications and Messages on DeviceNet Scanner (Node 0).

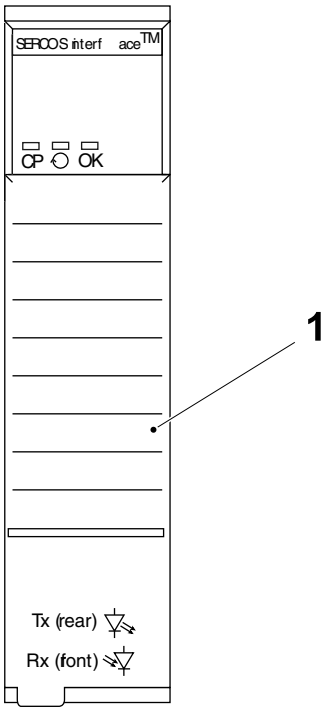

1 SERCOS Module

10.5.2-2 Sercos Module - Change

Machine Status	Electrical supply disconnecting device in position O (OFF)
SPC Reference	2833407-0300

Preparation

Before changing the Sercos module:

- Use the RSLinx Classic program to verify and record the firmware version of the existing Sercos module.
- Use the Flow Chart of Procedures for Changing the Sercos Module below to determine which procedures must be performed and their correct sequence.

Flow Chart of Procedures for Changing the Sercos Module

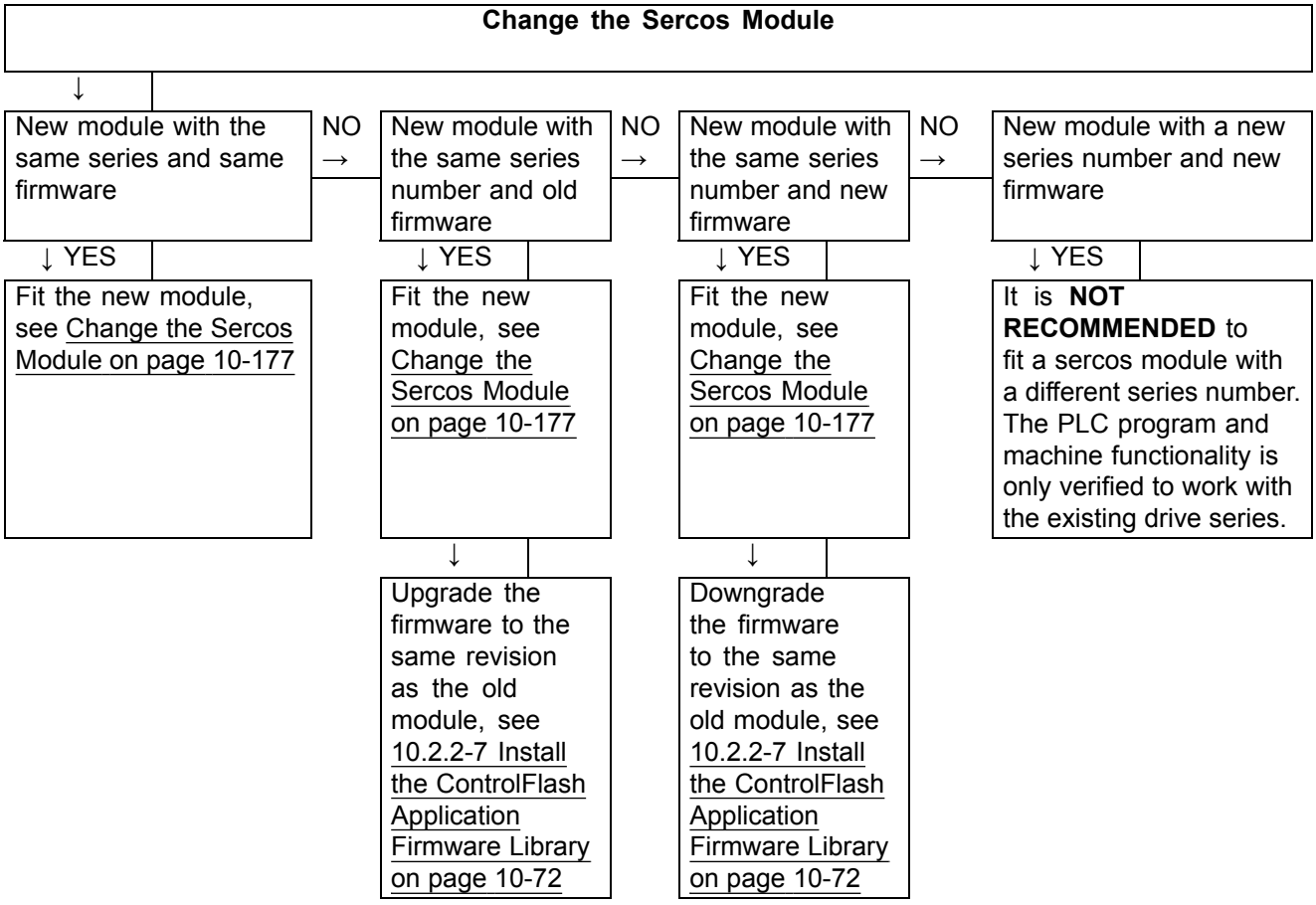

(Cont'd)

(Cont'd)

Change the Sercos Module

a) Mark the Receive connector, Rx (1) and the Transmit connector, Tx (2) and disconnect the connectors from the Sercos module (3).

b) Push in and hold the top and bottom Locking tab (4) on the Sercos module (3).

c) Pull out the Sercos module (3).

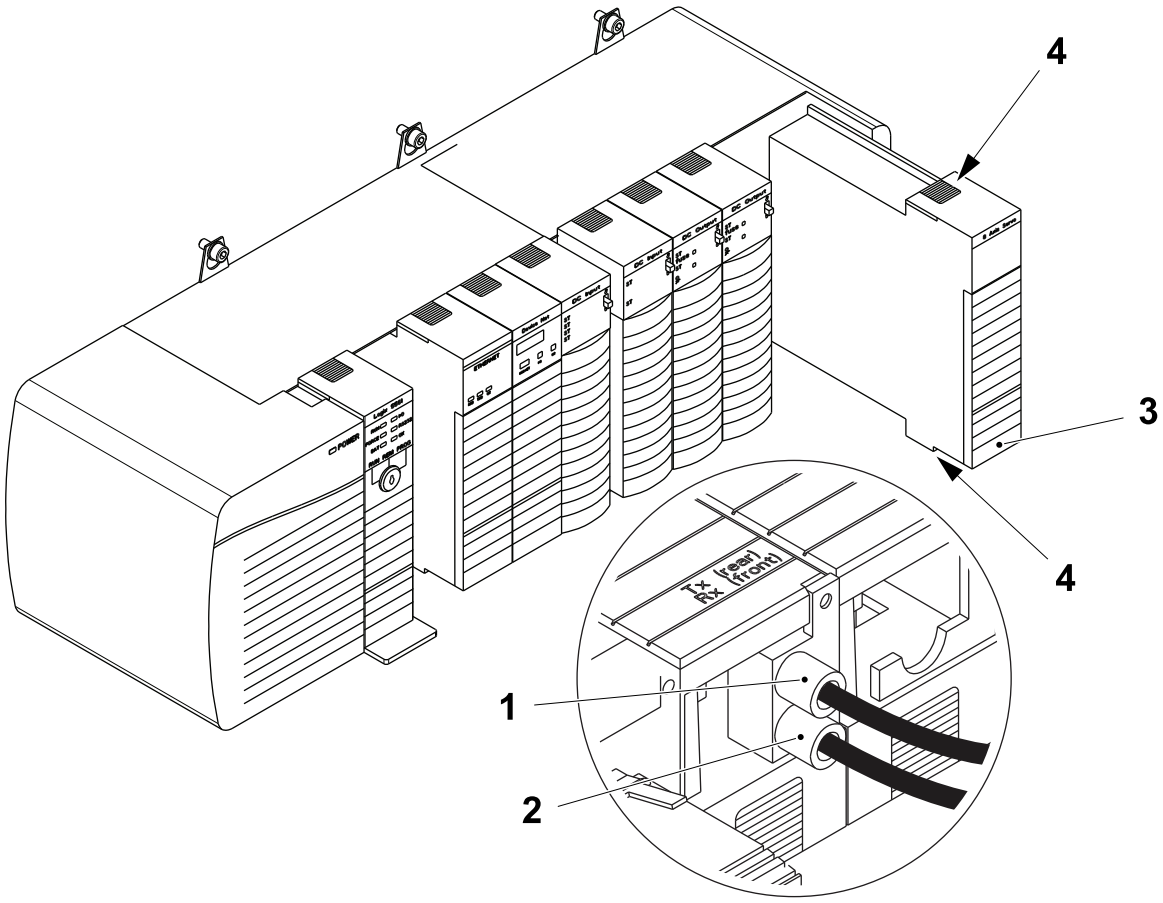

1 Receive connector, Rx
2 Transmit connector, Tx
3 Sercos module
4 Locking tab

(Cont'd)

(Cont'd)

d) Align the new Sercos module (3) with the top and the bottom guides in the chassis.

e) Slide the Sercos module (3) into the chassis. Make sure it is flush with the other modules and the top and bottom latches are engaged.

f) Connect the Receive connector, Rx (1) and the Transmit connector, Tx (2) to the Sercos module (3) .

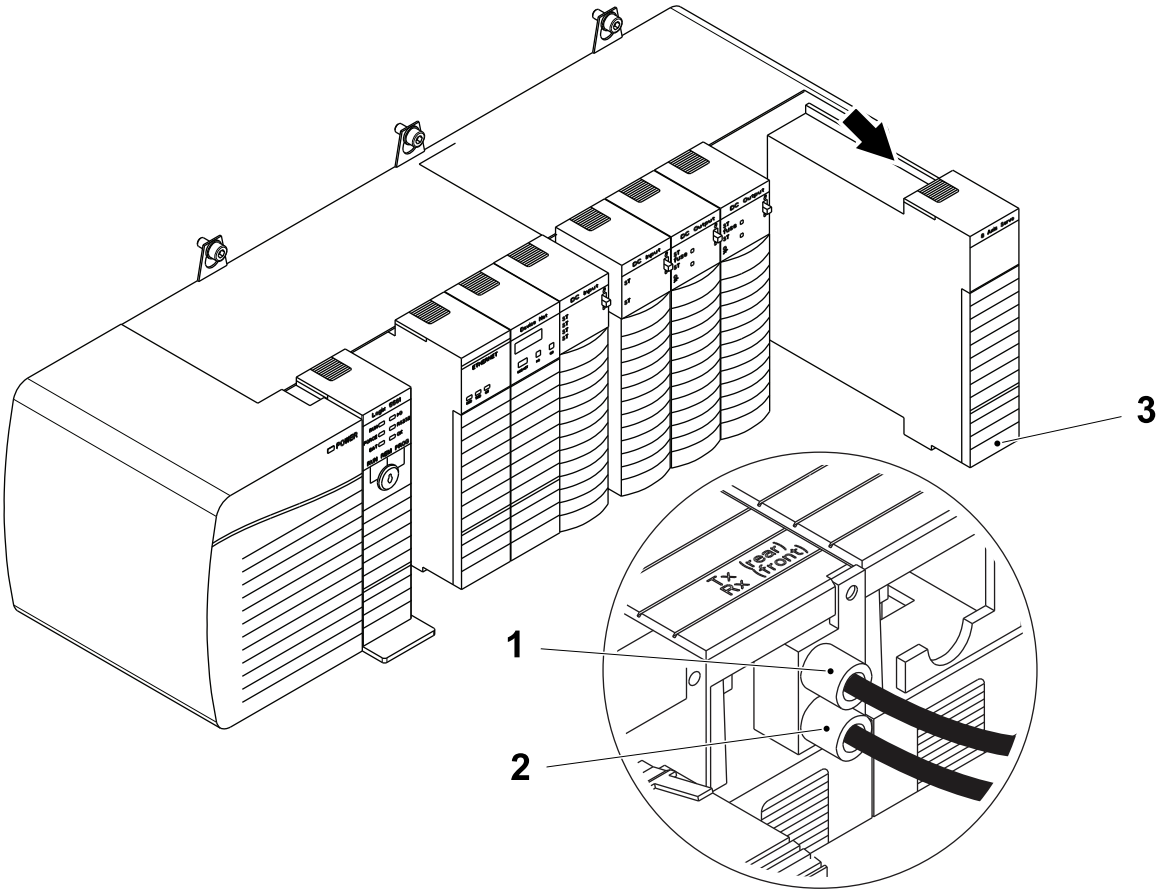

1 Receive connector, Rx
2 Transmit connector, Tx
3 Sercos module

10.5.3 Servo Drive

10.5.3-1 Servo Drive - Description

Machine Status	Electrical supply disconnecting device in position I (ON)
SPC Reference	662911-0300

Integrated Axis Module (IAM)

The Integrated Axis Module (1) receives drive data from the SERCOS module via the SERCOS net. It also receives feedback data from the servo drive motor it controls.

Status indicators and an alphanumeric display are provided to report the status of the module and the SERCOS Net.

The Integrated Axis Module (1) is assigned the Node number 1.

After the Integrated Axis Module (1) has been changed, do the following:

- set the Node address, see 10.5.3-2 Servo Drive - Change Drive
- set the baudrate and the optical power, see 10.5.3-3 Servo Drive - Set Baud Rate
- download the firmware, see 10.2.2-7 Install the ControlFlash Application Firmware Library.

For troubleshooting information, see 10.3.3 Distributed I/O and DeviceNet - Troubleshooting and 10.3.3-2 Troubleshooting - DeviceNet Error Indications and Messages on DeviceNet Scanner (Node 0).

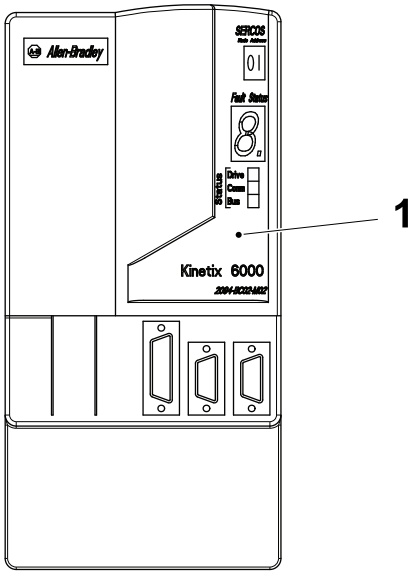

1 Integrated Axis Module

(Cont'd)

(Cont'd)

Axis Module (AM) Description

The Axis Module (1) receives drive data from the SERCOS module via the SERCOS net. It also receives feedback data from the servo drive motor it controls.

Status indicators and an alphanumeric display are provided to report the status of the module and the SERCOS Net.

Each servo drive has a node number which is determined by the base node number set on the IAM and a second digit which is determined by the rack-slot the drive is located in.

The Axis Module (1) receives AC and DC supplies from the backplane of the servo rack.

After the Axis Module (1) has been changed, no settings are required.

For troubleshooting information, see 10.3.3 Distributed I/O and DeviceNet - Troubleshooting and 10.3.3-2 Troubleshooting - DeviceNet Error Indications and Messages on DeviceNet Scanner (Node 0).

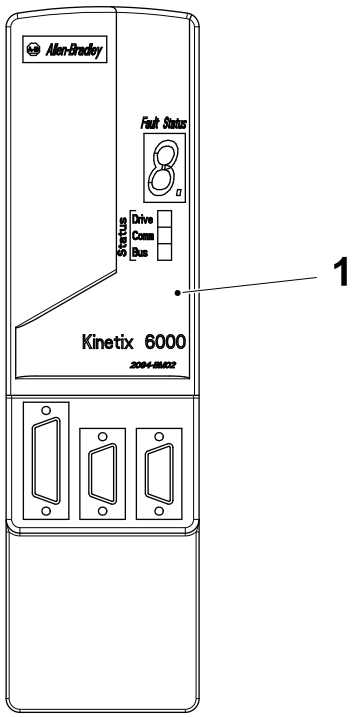

1 Axis Module

(Cont'd)

(Cont'd)

Servo Motor

A Servo motor (1) receives power from an Axis Module. This can be an Axis Module or the Integrated Axis Module. It provides position feedback data to the same Axis Module.

The Power connector (2) and the Feedback connector (3) are not interchangeable so there is no possibility of an incorrect connection.

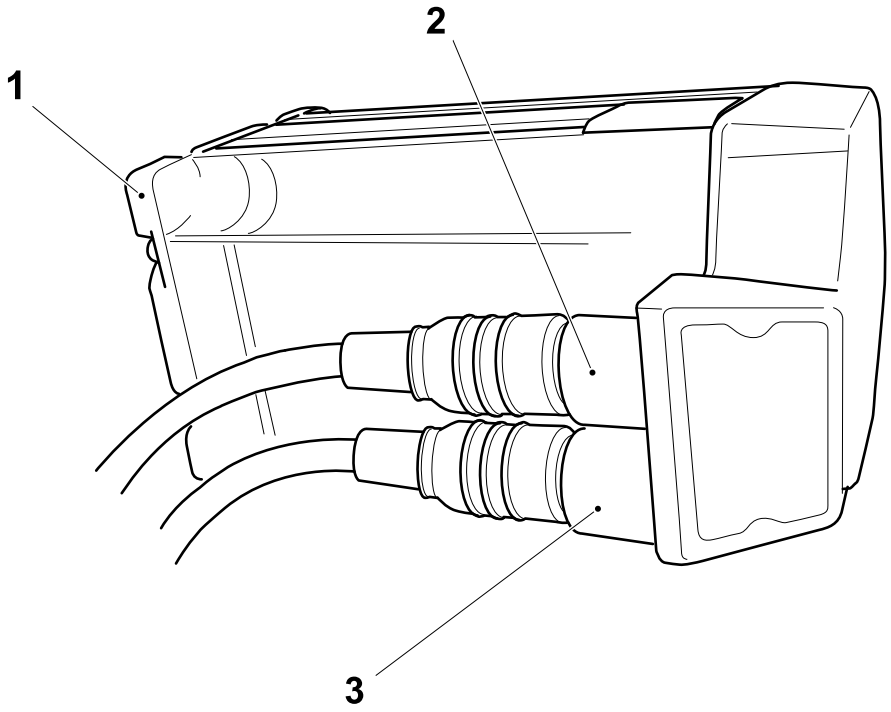

1 Servo motor
2 Power connector
3 Feedback connector

10.5.3-2 Servo Drive - Change Drive

Machine Status	Electrical supply disconnecting device in position O (OFF)
SPC Reference	662950-0300

Remove Drive

CAUTION
Risk of electric shock
Allow 5 minutes for the unit to discharge.

a) Make sure that all control and input power has been removed from the servo system. Wait five minutes for the DC bus to completely discharge before proceeding.

b) Mark and record the position of all connectors from the servo drive and then remove the connectors.

c) Use a screwdriver to remove the motor cable (1) from the cable shield clamp (2).

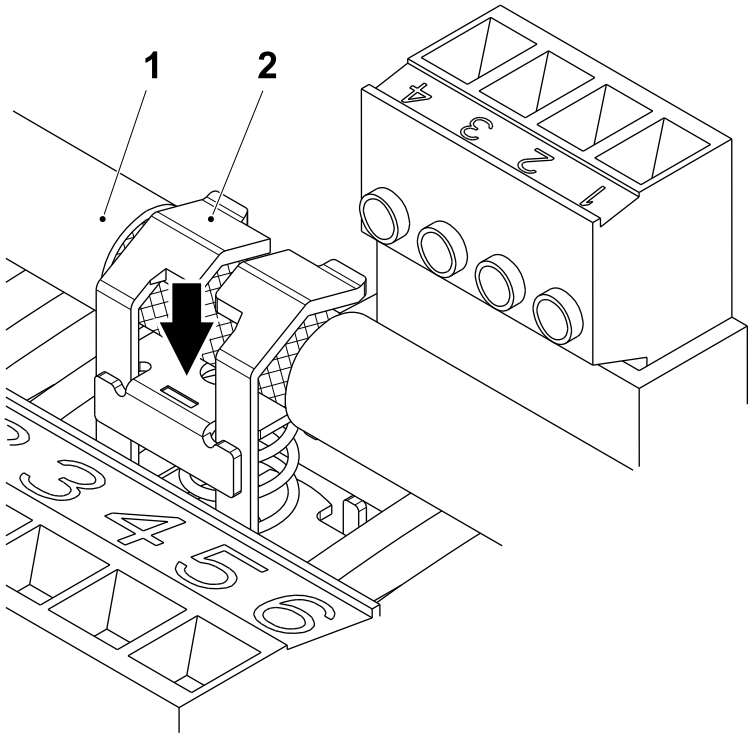

1 Motor cable
2 Clamp

(Cont'd)

(Cont'd)

d) Loosen the screw (3).

e) Grip the top and bottom of the servo drive (4) and gently pull it away from the connectors enough to clear the guide pin (5) (the servo drive will pivot on the top bracket). Lift the bracket out of the power rail slot (6) and remove the servo drive from the power rail.

f) If the servo drive to be changed is an IAM module, record the Node address (7) and Baude rate (8) settings.

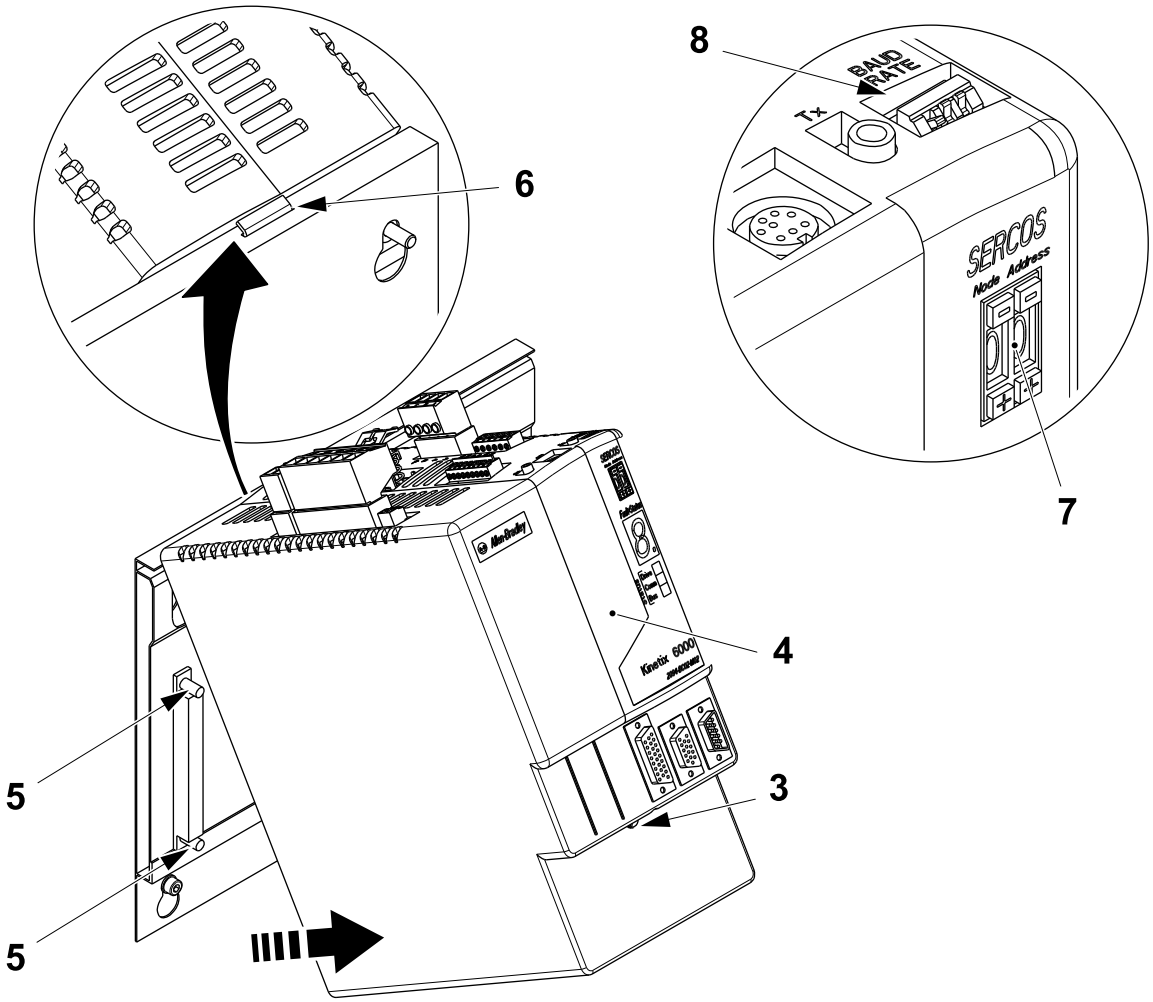

3 Screw
4 Servo drive
5 Guide pin
6 Power rail slot
7 Node address
8 Baude rate

(Cont'd)

(Cont'd)

Change Power Rail

CAUTION
Equipment damage.
To avoid damage to the power rail (1) during installation, do not remove the protective boots until the servo drive for each slot is ready for mounting.

a) Disconnect all power from the power rail (1) servo drives and remove all servo drives from the power rail (1).

b) Disconnect the braided ground strap (2) from the grounding stud (3).

c) Loosen the mounting bolts.

d) Lift the power rail (1) up and off the mounting bolts.

e) Align the replacement power rail (1) over the existing mounting bolts.

f) Tighten the mounting bolts.

g) Connect the braided ground strap (2) to the power rail grounding stud (3).

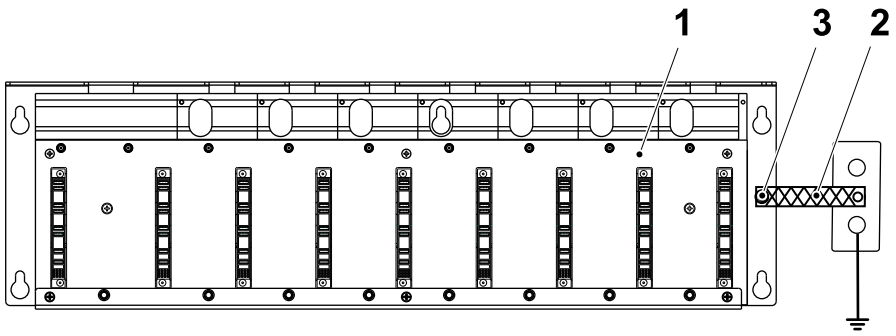

1 Power rail
2 Braided ground strap
3 Grounding stud

(Cont'd)

(Cont'd)

Fit New Servo Drive

CAUTION
Risk of damage to the equipment.
Make sure the guide pins (1) are correctly seated.

a) Attach the new servo drive mounting bracket (2) to the slot (3) in the power rail (4).

Note! The IAM has two power rail connectors and guide pins (1), all other servo drives have only one connector and one guide pins (1).

b) Align the guide pins (1) on the power rail (4) with the guide pin holes in the back of the servo drive (5).

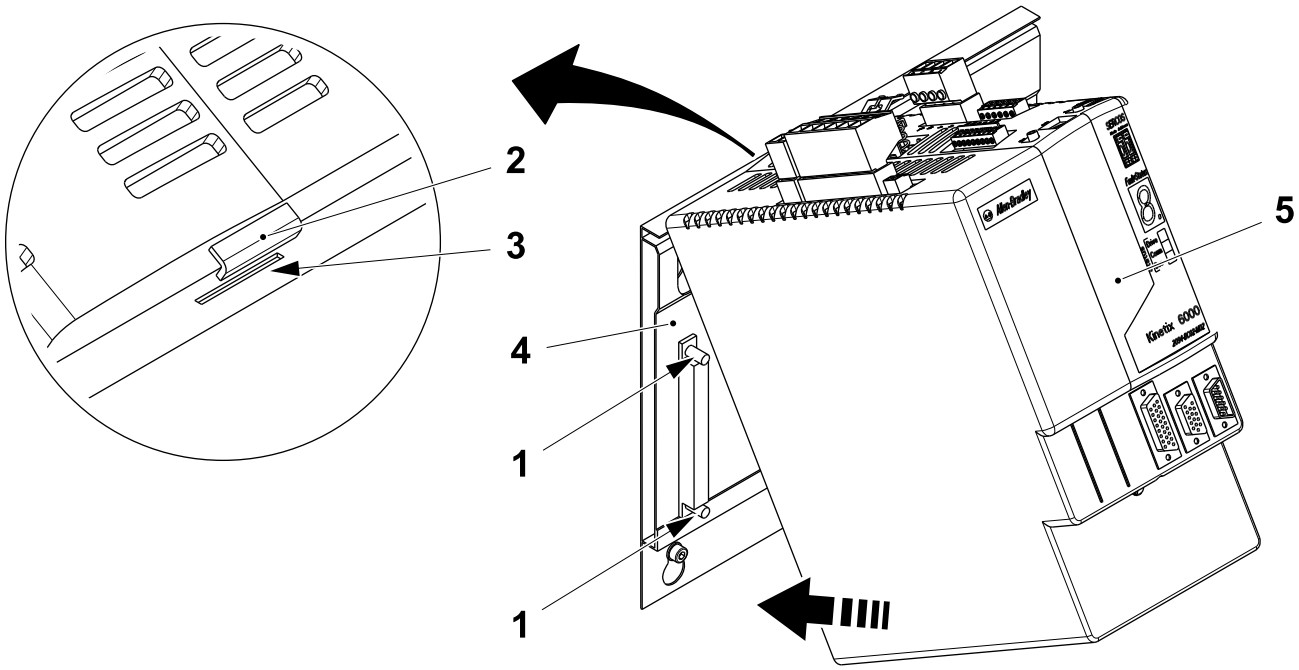

1 Guide pin
2 Mounting bracket
3 Slot
4 Power rail
5 Servo drive

(Cont'd)

(Cont'd)

c) Tighten the screw (6) to a torque of 2.26 Nm.

d) If the servo drive is an IAM, set the node address (7) and the baud rate (8) according to the setting recorded previously.

e) Connect the servo drive connectors and apply power to the system.

f) Check that the system is operating properly, see 10.5.4 Servo System Troubleshooting.

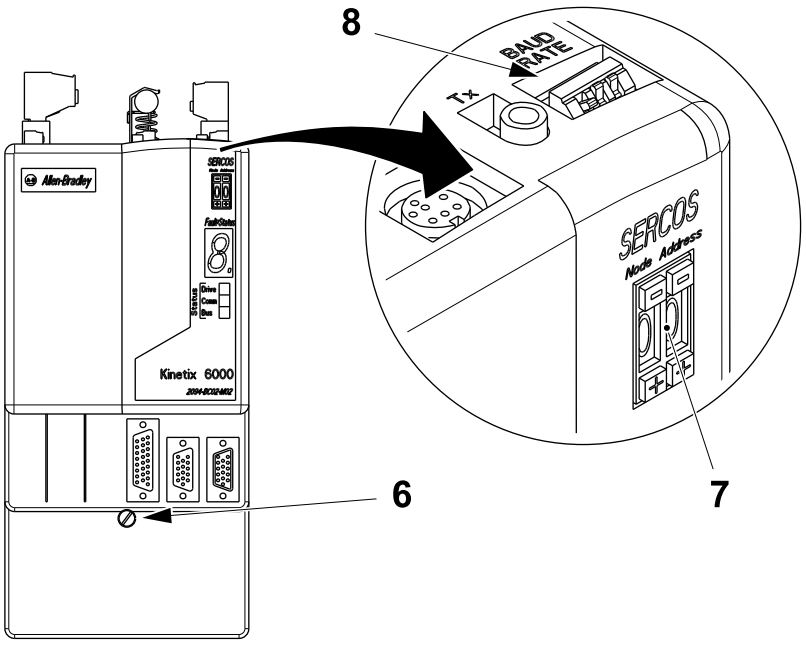

6 Screw
7 Node address
8 Baud rate

10.5.3-3 Servo Drive - Set Baud Rate

Machine Status	Electrical supply disconnecting device in position O (OFF)
SPC Reference	662911-0300

Use the DIP switches (1) , 1 to 3, to set the baudrate and the optical power level according to the table below.

Setting	Dip switch 1	Dip switch 2	Dip switch 3	Value
Optical Power Level	on			high
Baudrate		on	off	8M

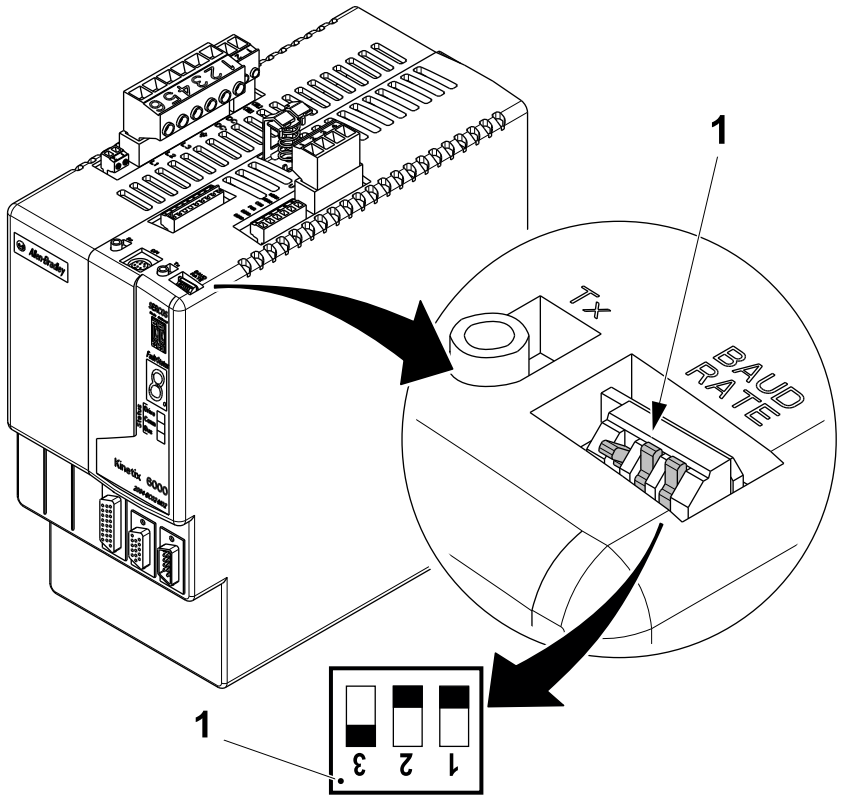

1 DIP switch

10.5.4 Servo System Troubleshooting

10.5.4-1 Troubleshooting - General

Machine Status	Electrical supply disconnecting device in position I (ON)
SPC Reference	662911-0300

If an error occurs on the SERCOSNet, this will be indicated by the appearance of the following sercosNet error icon (1) and the sercosNet error message (2) on the TPOP.

To continue with troubleshooting, see 10.5.4-2 Troubleshooting - SERCOS Net Error Indication and Error Codes on the Integrated Axis Module and Axis Modules.

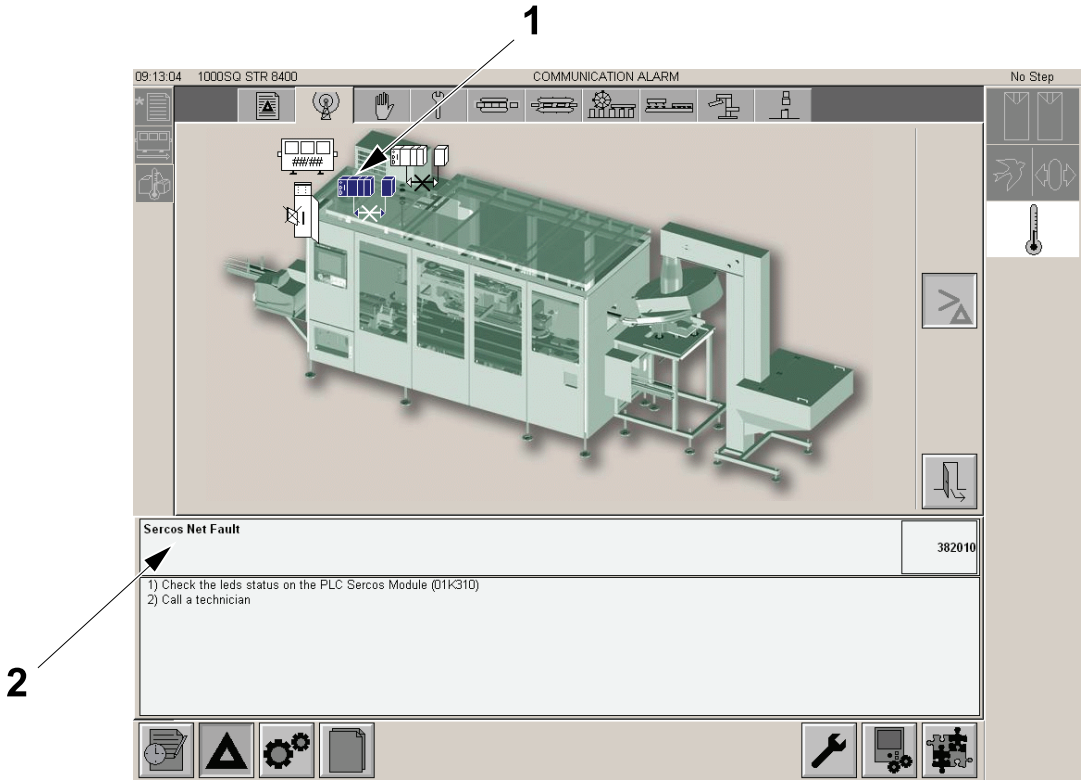

1 SercosNet error icon
2 SercosNet error message

10.5.4-2 Troubleshooting - SERCOS Net Error Indication and Error Codes on the Integrated Axis Module and Axis Modules

Machine Status	Electrical supply disconnecting device in position I (ON)
SPC Reference	662911-0300

To locate the source of the error and then find the cause, proceed as follows:

Note! The small control power LED (1) on the alphanumeric display (2) of the integrated Axis module (3) and the axis module (4), is the CONTROL POWER LED.

a) Note the status of the control power LED (1) if the control power LED (1) is OFF, check the power supplies at the servo rack. If the control power LED (1) is ON, continue with next step.

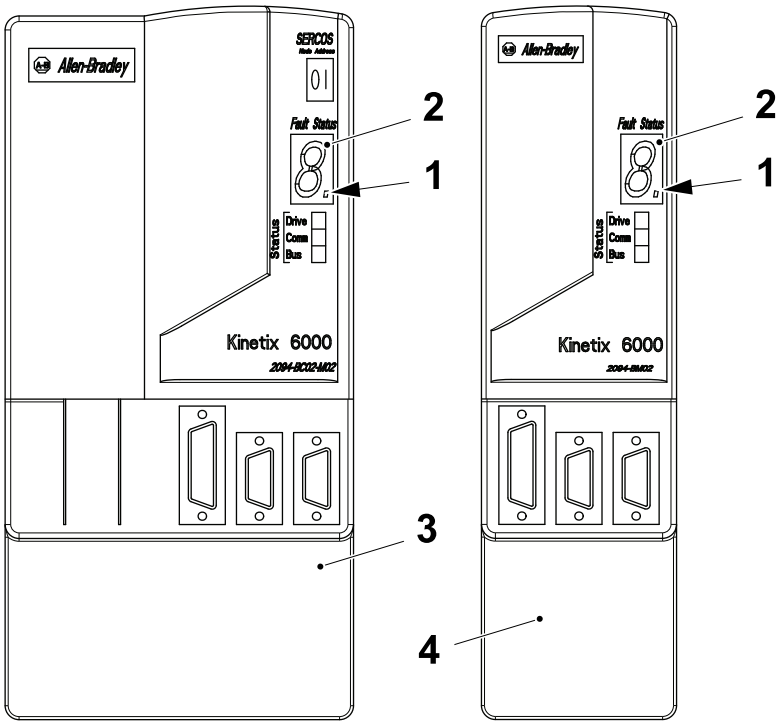

1 Control power LED
2 Alphanumeric display
3 Integrated Axis module
4 Axis module

(Cont'd)

(Cont'd)

b) Look at the status indicated by the alphanumeric display (2) and the Drive LED (5), Com LED (6) and Bus LED (7) on the integrated Axis module (3) and the axis module (4) .

c) Use the following tables to determine the cause of the error.

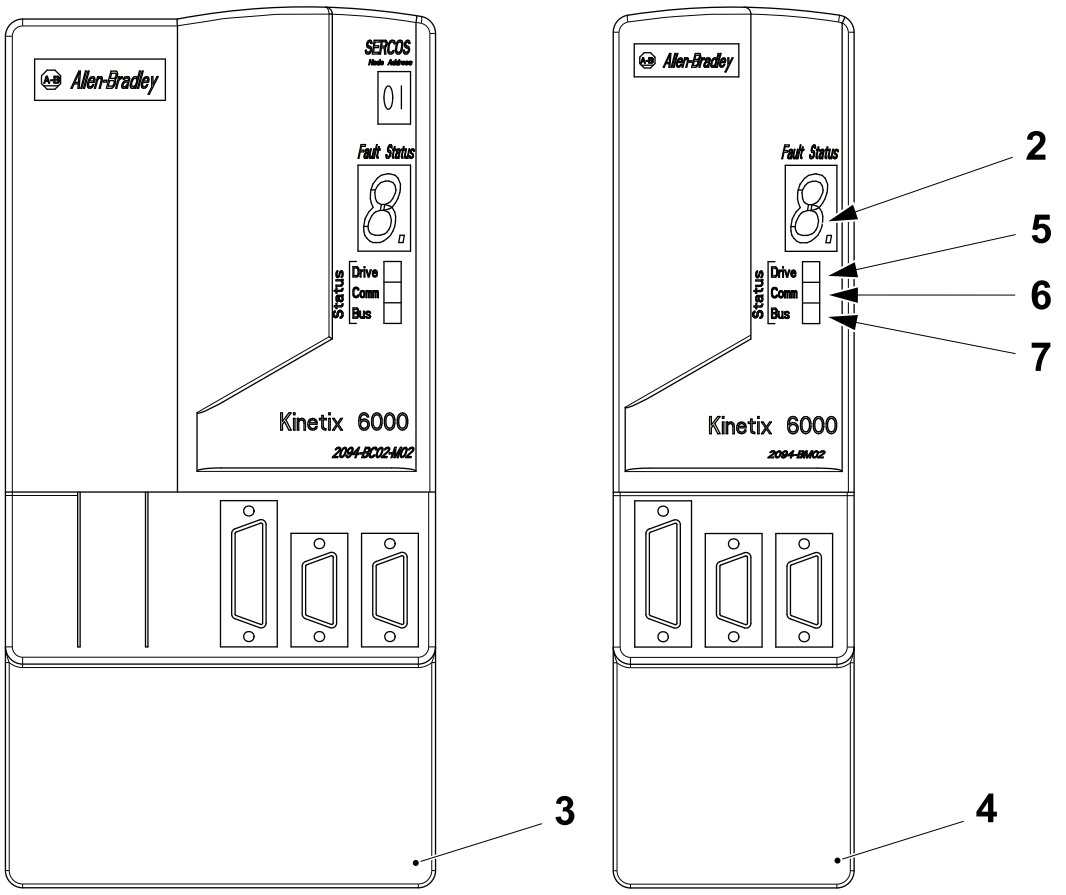

2 Alphanumeric display
3 Integrated Axis module
4 Axis module
5 Drive LED
6 Com LED
7 Bus LED

(Cont'd)

(Cont'd)

Troubleshooting Alphanumeric Display at Start-Up

At start-up, the alphanumeric display will toggle between the node address of each module and then display the operating mode i.e.

If	Is	Status	Do this
Integrated Axis Module or an axis module	Actively Cycling (Phase 0)	The drive is looking for a closed SERCOS ring. Wait for phase 1 or take corrective action to reach phase 1.	Check fibre optic connections
	Displaying a fixed 1 (Phase 1)	The drive is looking for active nodes. Wait for phase 2 or take corrective action to reach phase 2.	Check node addressing
	Displaying a fixed 2 (Phase2)	The drive is configuring nodes for communication. Wait for Phase 3 or take corrective action to reach phase 3.	Check program and drive configuration
	Displaying a fixed 3 (Phase 3)	The drive is configuring drive specific parameters. Wait for Phase 4 or take corrective action to reach phase 4.	Check motor catalogue against the selection (1)
	Displaying a fixed 4 (Phase 4)	The drive is configured and active.	Continue below
	Displaying an E followed by two numbers	Drive has an error.	Go to Troubleshooting IAM/AM LED's on page 10-191

Diagnostic information can be obtained from the module by highlighting the module name in PSLogix 5000. A pseudo key failure often indicates that the motor selection does not match the motor installed.

Troubleshooting IAM/AM LED's

After start-up, observe the status of the **LED's** on the **IAM** and the **AM** modules:

(Cont'd)

(Cont'd)

Drive LED

Condition	Status	Action
off	Normal condition	Go to COMM LED table.
permanent red	Drive is faulted	Go to Troubleshooting IAM/AM LED's on page 10-191

COMM LED

Condition	Status	Action
flashing green	Establishing communication with network	Wait for a permanent green.
permanent green	Communication is ready.	Go to BUS STATUS LED table.
off	No ring present	Verify correct fibre optical cable connections. Replace any damaged or broken fibre optical connections.

BUS STATUS LED

Condition	Status	Action
permanent green	DC bus is present. Axis is enabled. No faults or failures.	Verify Hardware Enable Input (IOD-2) is open. Verify MSO instruction is not commanded in RSLogix 5000. Recycle power to module.
flashing green	Bus is running, axis is disabled (normal condition)	Go to SERCOS STATUS LED table. See SERCOS Module - Troubleshooting (10.5.4-3)
10.5.4-3 SERCOS Module - Troubleshooting on page 10-199off	DC Bus not present	Go to 10.5.4-2 Troubleshooting - SERCOS Net Error Indication and Error Codes on the Integrated Axis Module and Axis Modules on page 10-189

(Cont'd)

(Cont'd)

Troubleshooting IAM/AM Problems with no Error Codes

The following list of problematic symptoms with no error codes is designed to help resolve problems.

Power (PWR) indicator not ON	No AC power or auxiliary logic power.	Verify AC control power is applied to the Kinetix 6000.
	Internal power supply malfunction.	Call your Allen-Bradley representative to return module for repair.
Motor jumps when first enabled.	Motor wiring error.	Check motor wiring. Run Hookup test in RSLogix 5000.
	Incorrect motor chosen.	Verify the proper motor is selected.
Digital I/O not working correctly	I/O power supply disconnected.	Verify connections and I/O power source.

Troubleshooting IAM/AM Problems with Error Codes

When a fault is detected, the 7-segment LED will display an E followed by the flashing of the two-digit error code, one digit at a time. This is repeated until the problem is cleared.

Error code	Fault message RSLogix (HIM)	Problem or symptom	Possible cause(s)	Action/solution
E00	BusUndervoltage Fault (Blown fuse)	A blown fuse was detected on the inverter PCB.	Blown fuse.	Call your Allen-Bradley representative to return module for repair.
E04	Motor Overtemp Fault (Motor Overtemp)	Motor thermal switch tripped	High motor ambient temperature and/or excessive current.	Operate within (not above) the continuous torque rating for the ambient temperature (40°C maximum). Lower ambient temperature, increase motor cooling.
			Motor wiring error.	Check motor wiring at MF connector on the IAM/AM.
			Incorrect motor selection.	Verify the proper motor has been selected.
E05	Drive Overcurrent Fault (Power Fault)	Self-protection of the Intelligent Power Module (IPM) is indicating a major power related fault condition.	Motor cables shorted.	Verify continuity of motor power cable and connector.
			Motor winding shorted internally.	Disconnect motor power cables from the motor. If the motor is difficult to turn by hand, it may need to be replaced.
			Kinetix 6000 temperature too high.	Check for clogged vents or defective fan. Ensure cooling is not restricted by insufficient space around the unit.

(Cont'd)

(Cont'd)

Error code	Fault message RSLogix (HIM)	Problem or symptom	Possible cause(s)	Action/solution
E05	Drive Overcurrent Fault (Power Fault)	Self-protection of the Intelligent Power Module (IPM) is indicating a major power related fault condition.	Operation above continuous power rating and/or product environmental ratings.	Verify ambient temperature is not too high. Operate within the continuous power rating. Reduce acceleration rates.
			Kinetix 6000 has a short circuit, overcurrent, or failed component.	Remove all power and motor connections, and preform a continuity check from the DC bus to the U, V, and W motor outputs. If a continuity exists, check for wire fibres between terminals, or send drive in for repair.
E06	HardOvertravel Fault (+/- Hard Overtravel)	Axis moved beyond the physical travel limits in the positive/negative direction.	Dedicated overtravel input is inactive.	Check wiring. Verify motion profile. Verify axis configuration in software.
E07	MotFeedback Fault (Motor Feedback Loss)	The feedback wiring is open, shorted, or missing.		Check motor encoder wiring. Run Hookup test in RSLogix 5000.
E09	BusUndervoltage Fault (Bus Under Voltage)	With three-phase power present, the DC bus voltage is below limits.	DC bus voltage for 460V system is below 275V DC bus voltage for 230V system is below 137V	Verify voltage level of the incoming AC power. Check AC power source for glitches or line drop. Install an uninterruptible power supply (UPS) on your AC input.
E10	DriveOvervoltage Fault (Bus Overvoltage)	The DC bus voltage is above limits.	Excessive regeneration of power. When the motor is driven by an external mechanical power source, it may regenerate too much peak energy through the Kinetix 6000's power supply. The system faults to save itself from an overload.	Change the deceleration or motion profile. Use a larger system (motor and Kinetix 6000). Install shunt module.
			DC bus voltage for 460V system is over 820V DC bus voltage for 230V system is over 410V	Verify input is within specifications.

(Cont'd)

(Cont'd)

Error code	Fault message RSLogix (HIM)	Problem or symptom	Possible cause(s)	Action/solution
E11	MotFeedback Fault (Illegal Hall State)	State of Hall feedback inputs is incorrect.	Bad connections.	Verify the Hall wiring at the MF connector on the IAM/AM. Verify 5V power supply to the encoder.
E16	Softovertravel Fault (+/- Software Overtravel)	Axis position exceeded maximum software setting.		Verify motion profile. Verify overtravel settings are appropriate.
E18	OverSpeed Fault (Overspeed Fault)	Motor speed has exceeded 150% of maximum rated speed. The 100% trip point is dedicated by the lesser of the the user velocity limits or the motor rated base speed.		Check cables for noise. Check tuning.
E19	PositionError Fault (Follow Error)	Position error limit was exceeded.		Increase the feed forward gain. Increase following error limit or time. Check position loop tuning. Verify sizing of system. Verify mechanical integrity of system within specification limits.
E20	MotFeedback Fault (Mtr Fdbk AQB)	Motor Encoder State Error	The motor encoder encountered an illegal transition.	Use shielded cables with twisted pair wires. Route the feedback away from potential noise sources. Check the system grounds. Replace the motor/encoder.
E21	AuxFeedback Fault (Aux Feedback Comm)	Communication was not established with an intelligent encoder.		Verify auxiliary encoder wiring.
E30	MotFeedback Fault (Motor Feedback Comm)	Communication was not established with an intelligent encoder.		Verify motor selection. Verify the motor supports automatic identification. Verify motor encoder wiring.
E34	GroundShort Fault (Ground Fault)	Excessive ground current in the converter was detected.	Wiring error.	Check motor power wiring. Check input power wiring (refer to Kinetix 6000 Installation Manual, publication 2094-IN001x-EN-P, regarding use of isolation transformer).
			Motor internal ground short.	Replace motor.
			Internal malfunction.	Disconnect motor power cable from drive and enable drive with current limit set to 0. If fault clears, then a wiring error or motor internal problem exists. If fault remains, call your A-B representative.
E35	DriveUndervoltage Fault (Precharge Fault)	Converter pre-charge cycle failed.	Low AC input voltage.	Check input AC voltage on all phases.
			Internal malfunction.	Call your A-B representative.

(Cont'd)

(Cont'd)

Error code	Fault message RSLogix (HIM)	Problem or symptom	Possible cause(s)	Action/solution
E36	DriveOvertemp Fault (System Overtemperature)	Converter thermal switch tripped.	Excessive heat exists in the power circuitry.	Reduce acceleration rates. Reduce duty cycle (ON/OFF) of commanded motion. Increase time permitted for motion. Use larger Kinetix 6000 converter. Check for clogged vents or defective fan. Ensure cooling is not restricted by insufficient space around the unit.
E37	PowerPhaseLoss Fault	One or more phases of the input AC power is missing. Axis was enabled when main (3-phase) power was removed. Expect the following symptoms with: Firmware v11: Shutdown, CED relay opens, motor coasts Firmware v12: Shutdown, motor stops		Check input AC voltage on all phases. Disable axis before removing power. Clear fault.
E38	SERCOSFault (SERCOS Ring Flt)	The SERCOS ring is not active after being active and operational.	Cable disconnected.	Check that the fibre cable is present and connected properly.
E39	DriveHardFault (Self Sense Flt)	Control hardware fault detected.	Motion required for self-sensing strartup commutation was obstructed.	Verify that there are no impediments to motion at startup, such as hard limits. Increase self-sensing current if high friction or load conditions exist. Check motor or encoder wiring using wiring diagnostics.
E43	DriveEnableInput (Drive Enable Flt)	Missing Drive Enable Input Signal	An attempt was made to enable the axis through software while the Drive Enable hardware input was inactive. The Drive Enable input transitioned from active to inactive while the axis was enabled.	Disable the Drive Enable Input fault. Verify that Drive Enable hardware input is active whenever the drive is enabled through software.
E50	SERCOSFault (Sercos Same ADDR)	Duplicate node address detected on SERCOS ring.		Verify that each SERCOS drive is assigned an unique node address.
E60	DriveHardFault (Unknown Axis)	Illegal ID bits detected.		Replace the module.
E61	AuxFeedback Fault (Aux Fdbk AQB)	Auxiliary Encoder State Error.	The auxiliary encoder encountered an illegal transition.	Use shielded cables with twisted pair wires. Route the feedback away from potential noise sources. Check the system grounds. Replace the motor/encoder..

(Cont'd)

(Cont'd)

Error code	Fault message RSLogix (HIM)	Problem or symptom	Possible cause(s)	Action/solution
E62	AuxFeedback Fault (Aux Fdbk Loss)	The feedback wiring is open, shorted, or missing.		Check the motor feedback cable connectors/wiring to the IAM/AM and motor.
E65	No Fault Message (condition indicated by on-screen message) (Hookup Fault)	Hookup procedure failed.	Motor or feedback device malfunction.	Check motor power/feedback wiring. Refer to on-screen message for resolution.
E66	No Fault Message (condition indicated by on-screen message) (Atune Flt)	Autotune procedure failed.	Motor or feedback device malfunction.	Check motor power/feedback wiring. Refer to on-screen message solution. Perform Hookup in RSLogix 5000. Consult RSLogix 5000 for help screen.
E67	DriveHard Fault (Task init)	Operation system failed.	Software initalisation fault detected due to hardware failure.	Cycle power. If fault persists, replace module.
E68	DriveHard Fault (SCANport (TM) Comm)	DPI communication failed.	The DPI device or cable is faulty.	Check DPI connections.
E69	HardDrive Fault (Objects init)	Non-volatile memory is corrupt due to control board hardware failure.		Load default parameters, save to non-volatile memory, and recycle power or reset the drive.
E70	DriveHard Fault (NV Mem Init)	Non-volatile memory is corrupt due to control board software error.		Load default parameters, save to non-volatile memory, and recycle power or reset the drive.
E71	DriveHard Fault (Memory Init)	RAM or flash memory validation failure.		Cycle power. If fault persists, replace module.
E72	DriveOvertemp Fault (Drive Overtemp)	Inverter thermal switch tripped.	The fan on the IAM or an AM failed.	Replace the failed module.
			The cabinet ambient temperature is above rating.	Check the cabinet temperature.
			The machine duty cycle requires an RMS current exceeding the continuous rating of the controller.	Change the command profile to reduce speed or increase time.
			The airflow access to the Kinetix 6000 is limited or blocked.	Check airflow and re-route cables away from the Kinetix 6000.
E73	GroundShort Fault (Backplane Comm)	Power rail CAN communications failed.		Check module for proper mount.
		Power rail connection shorted or open.		Check power rail and module for foreign objects.

(Cont'd)

(Cont'd)

Error code	Fault message RSLogix (HIM)	Problem or symptom	Possible cause(s)	Action/solution
E74	DriveOvercurrent Fault (BusOverCurrent)	DC link current exceeds rating.	Motor or transmission malfunction.	Check for proper motor sizing. Check/replace transmission device. Check/replace motor.
			IAM not properly sized.	Check for proper IAM sizing. Install larger kW rated IAM.
E75	DriveOvervoltage Fault (Shunt Time Out)	The IAM or AM has exceeded its shunt resistor continuous rating.		Use properly sized shunt or modify duty cycle of the application. System uses internal shunt for additional capacity.
E76	DriveHard Fault (Can Init)	DPI hardware initialisation fault detected.	Control board hardware failure.	Reset system. If fault persists, replace the module.
E77	DriveHard Fault (Module Mismatch)	Either 230V AM is installed on power rail with 460V IAM, or 460V AM is installed on power rail with 230V IAM.		Replace mismatched module.
E78	DriveHard Fault (SERCOS Init)	Control hardware fault detected.		Cycle power. If fault persists, replace module.
E79	Not applicable			
E80	Hardware Fault (CPLD FLT)	Control hardware fault detected.		Replace module.
All others	RESERVED			Call your local Allen-Bradley representative.

10.5.4-3 SERCOS Module - Troubleshooting

Machine Status	Electrical supply disconnecting device in position I (ON)
SPC Reference	2833407-0300

During power up, the module completes a self test that includes an indicator test. All LEDs go red for one second, green for one second, and off for one second.

To locate the source of an error and then find the cause, proceed as follows:

a) At the Control Logix Chassis in the electrical cabinet, note the status indicated by the SERCOS CP LED (1), the SERCOS ring LED (2) and the OK LED's (3) on the SERCOS Module (A01K3004).

b) Use the following tables to determine the cause of the error.

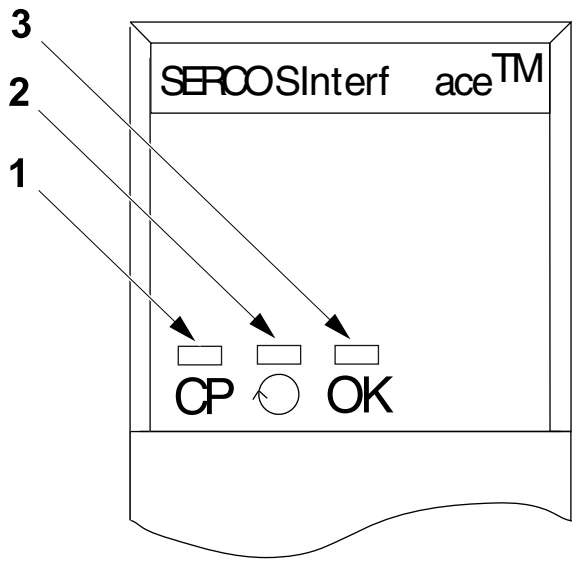

1 SERCOS CP LED
2 SERCOS ring LED
3 OK LED

(Cont'd)

(Cont'd)

Sercos CP (Communication Port) LED

If the Sercos CP LED is:	Then the module status is:
Solid Orange	In Phase -1: autobaud detection in progress.
Off	In Phase 0: looking for a closed ring.
Flashing Red	In Phase 1: looking for active nodes.
Alternating Red/Green	In Phase 2: configuring nodes for communication.
Flashing Green	In Phase 3: configuring device specific parameters
Solid Green	In Phase 4: configured and active.

Sercos Ring LED

If the Sercos Ring LED is:	Then the ring status is:	Take this action:
Solid Green	The ring, drive, and axes are configured and are actively communicating through to the nodes on the ring.	None
Flashing Red	The module has detected a setup or configuration fault with the ring.	Check your system setup and configuration as follows: - Ensure drive and axes addresses are correct. - Remove excess axes from ring. - Make sure application program has selected the proper Ring Cycle Period and Baud Rate.
Solid Red	The module has detected a hardware or installation fault with the ring.	Check your system hardware and installation as follows: - Make sure all cables are properly installed. - Make sure cable is of the correct type and length. - Make sure application program has configured the ring transmit level of the module to High when using specified cables. - Make sure the transmit levels of the drive are set appropriately. - Inspect cables for degradation. - Inspect drives for any faults and correct them.

(Cont'd)

(Cont'd)

If the Sercos Ring LED is:	Then the ring status is:	Take this action:
Off	The module has detected no ring data on its receiver or has not successfully completed phase 2.	Check your system and installation as follows: - Make sure all cables are properly installed - Inspect cable for degradation and breakage. - Inspect drives for faults.
Flashing Green	The ring, drive, or axes are not configured but, at least one has been identified.	Not a problem if the system has not been configured.If you are having trouble configuring the ring, drive, and axes: - Make sure that the application program is setup properly for the equipment in use.

OK LED

If the ok Ring LED is :	Then the ring status is:	Take this action:
Off	The module is not operating.	Apply chassis power. Verify the module is completely inserted into the chassis and backplane.
Flashing Green	The module has passed internal diagnostics, but has not established active communications.	None, if the module is not configured.
Steady Green	Data is being exchanged. The module is in the normal operating state.	None. The module is ready for action.
Flashing Red	A major recoverable failure has occurred. An NVS update is in progress.	If an NVS update is in progress, complete the NVS update. If an NVS update is not in progress: Reboot
Solid Red	A potential nonrecoverable fault has occurred.	Reboot the module. If the solid red persists, replace the module.

10.6 Safety System

10.6.1 Safety System - Description

The main component of the safety system is the Pluto Safety PLC (F09K0000). To increase the number of input and output possibilities, the main unit is assisted by two expansion relays (F09K0001 and F09K0003).

The pluto system monitors the:

- emergency stop buttons
- doors fitted with a safety switch
- covers fitted with a safety switch
- contactors for the ac motor driven units
- modules for the servo controlled units
- contactor for units using ac power.

When an emergency stop button is pushed, a door is opened or a cover is removed, an EMERGENCY STOP signal is sent to the system PLC Processor which takes the necessary actions to stop the motors in the machine.

When the emergency stop button is released, the door is closed or the cover is replaced, a reset is produced by the PLC Processor when it is triggered from the touch screen.

10.6.2 Pluto Maintenance

10.6.2-1 Pluto Maintenance - Connecting a PC to Pluto Module

Machine Status	Electrical supply disconnecting device in position I (ON)
Special Equipment	PC with Pluto Manager RS 232-C Communication Cable USB Communication Cable 90602-3870
SPC Reference	2839221-0200

Note! It is possible to connect the PC to the Pluto Module via RS-232 or via USB. Choose one of the two connections.

Connection via RS-232

To communicate with the main Pluto module, use the RS-232 communication cable (1) to connect the RS-232 connector (2) at the rear of a PC to the Pluto connector (3) at the front of the Pluto module.

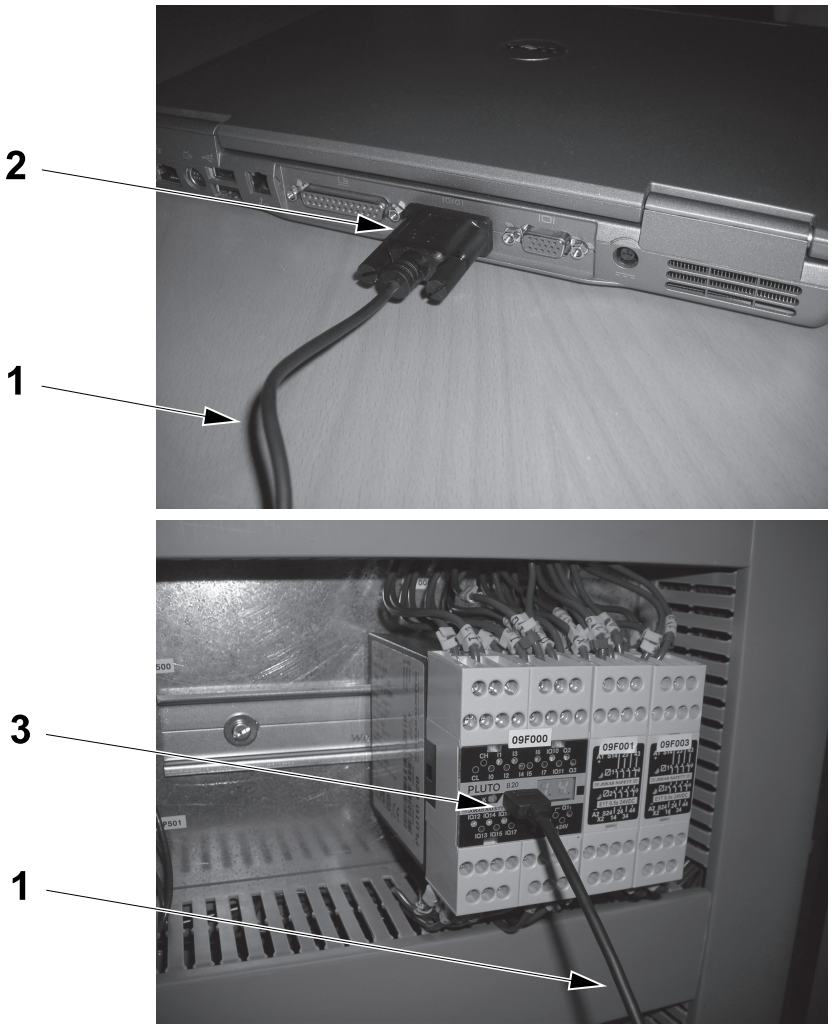

1 RS-232 communication cable
2 RS-232 connector
3 Pluto connector

(Cont'd)

(Cont'd)

Connection via USB

To communicate with the main Pluto module, use the USB communication cable (1) to connect the USB connector (2) at the rear of a PC to the Pluto connector (3) at the front of the Pluto module.

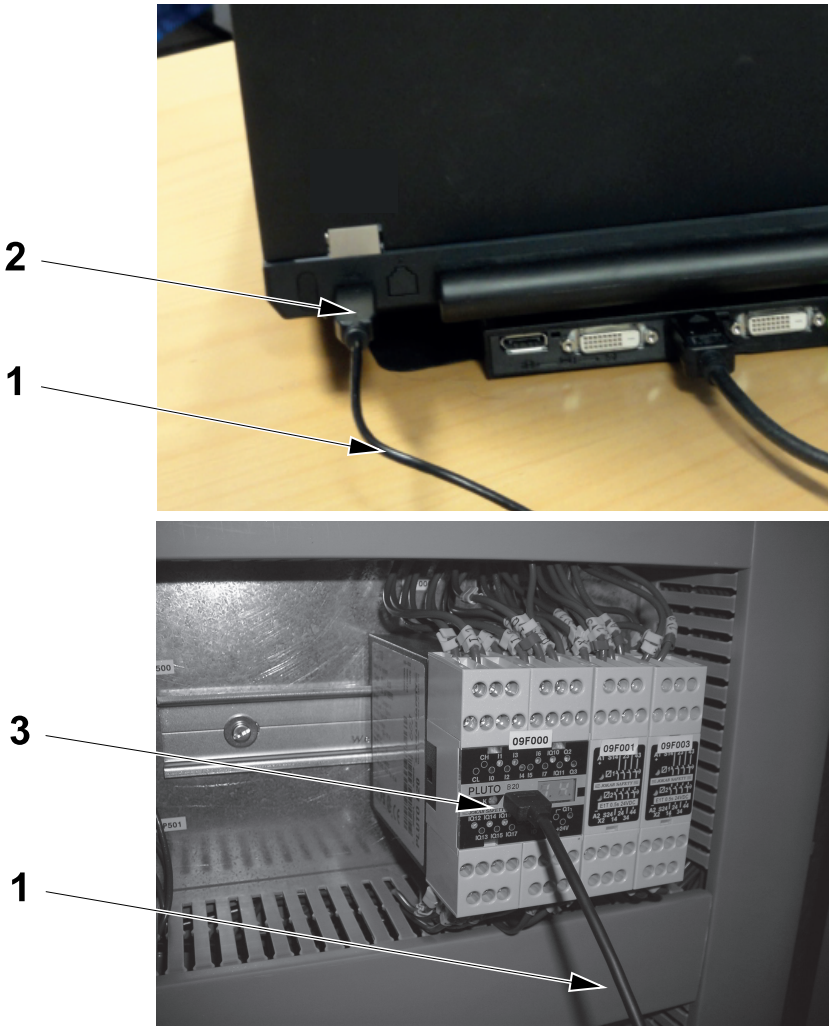

1 USB communication cable
2 USB connector
3 Pluto connector

(Cont'd)

(Cont'd)

USB Installation

Note! The following instruction is referred to a PC working with Window7 operating system.

a) Connect the pluto connector (1) to the Pluto device (2).

b) Connect the USB connector (3) to the PC (4).

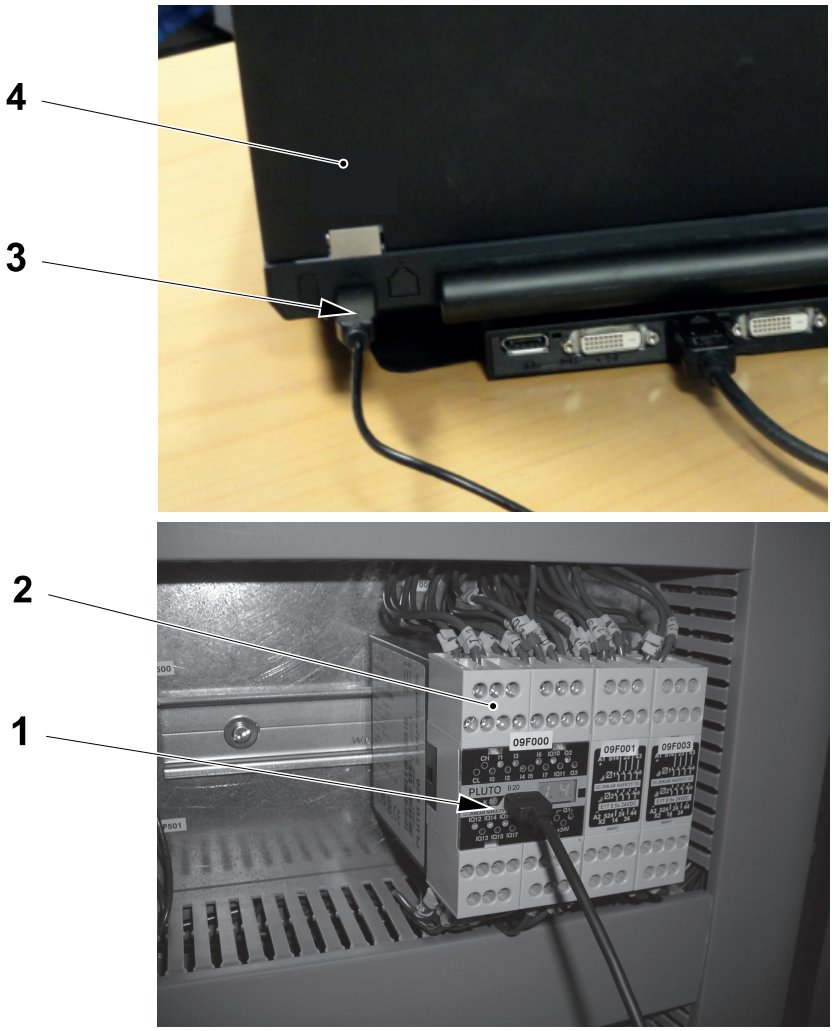

1 Pluto connector
2 Pluto device
3 USB connector
4 PC

(Cont'd)

(Cont'd)

c) Make sure that the PC is connected to internet and wait for the connection to the PC.

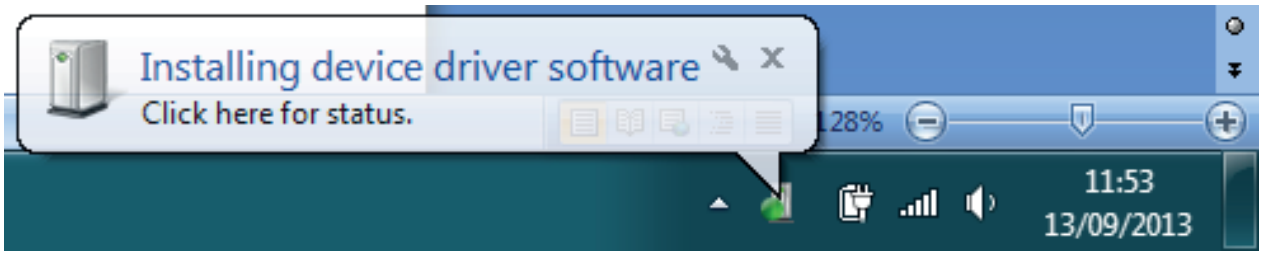

d) Wait for the PC to be updated.

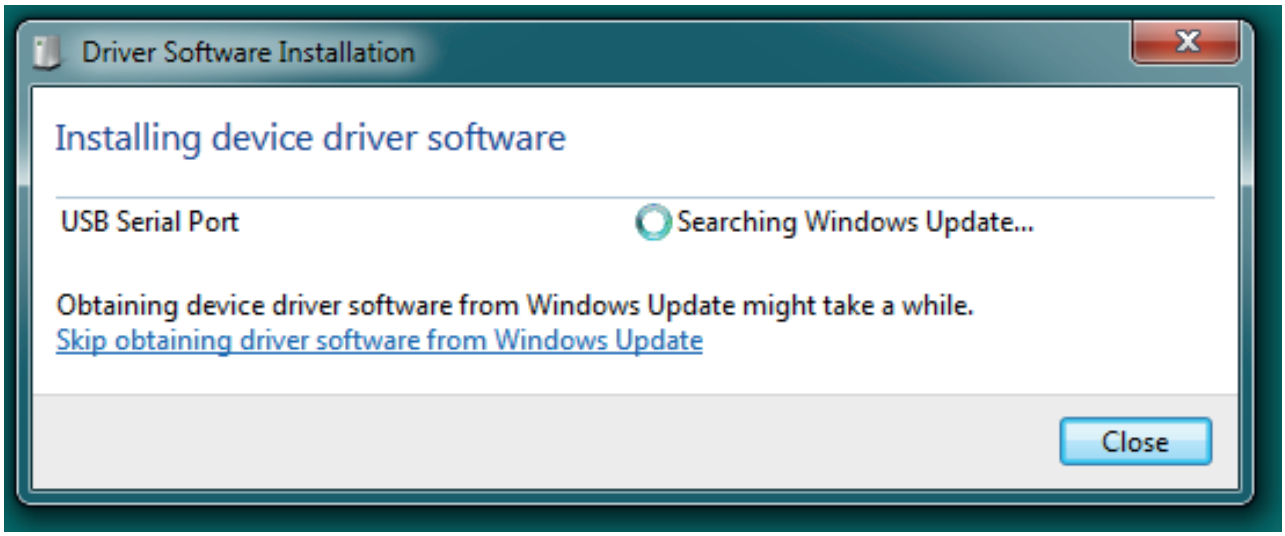

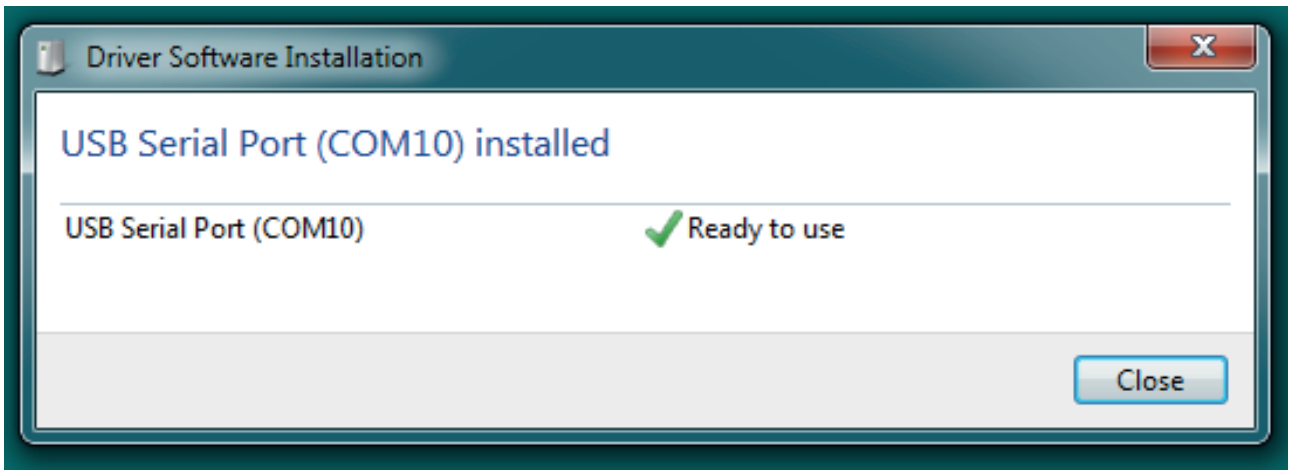

(Cont'd)

(Cont'd)

e) Click on START (5) and on CONTROL PANEL (6).

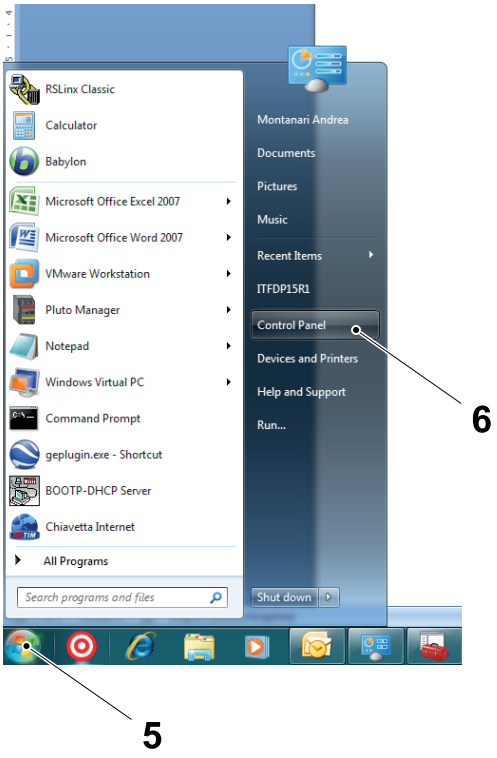

5 START
6 CONTROL PANEL

(Cont'd)

(Cont'd)

Note! The number of the USB Serial Port (8) is useful for later setup. In this example the number of the USB Serial Port (8) is "COM10".

f) Click on DEVICE MANAGER (7).

g) Read the USB Serial Port (8) that has been automatically selected.

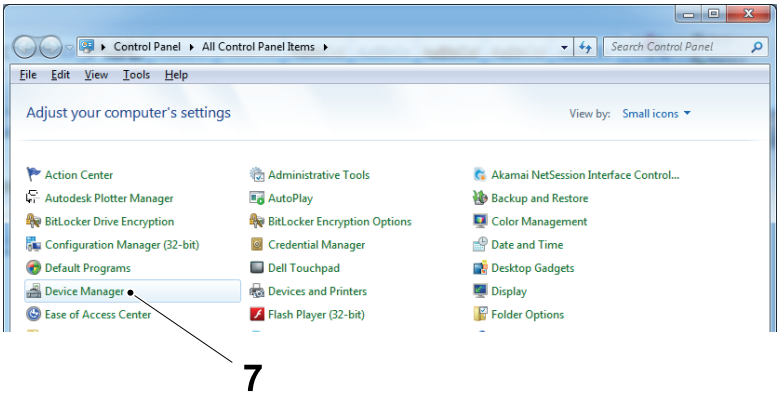

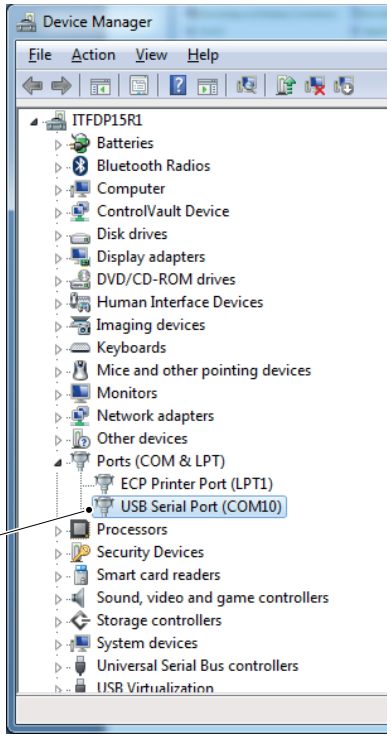

7 DEVICE MANAGER
8 USB Serial Port

h) Double click on the PLUTO MANAGER icon (9).

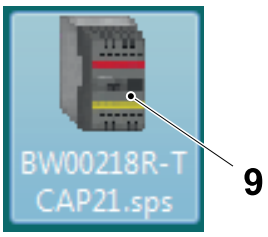

9 PLUTO MANAGER icon

(Cont'd)

(Cont'd)

Note! In this example the number of the USB Serial Port (8) is "COM10".

i) In the PLUTO MANAGER window (10), make sure that the communication port (11) is the same as the number of the USB Serial Port (8), see g).

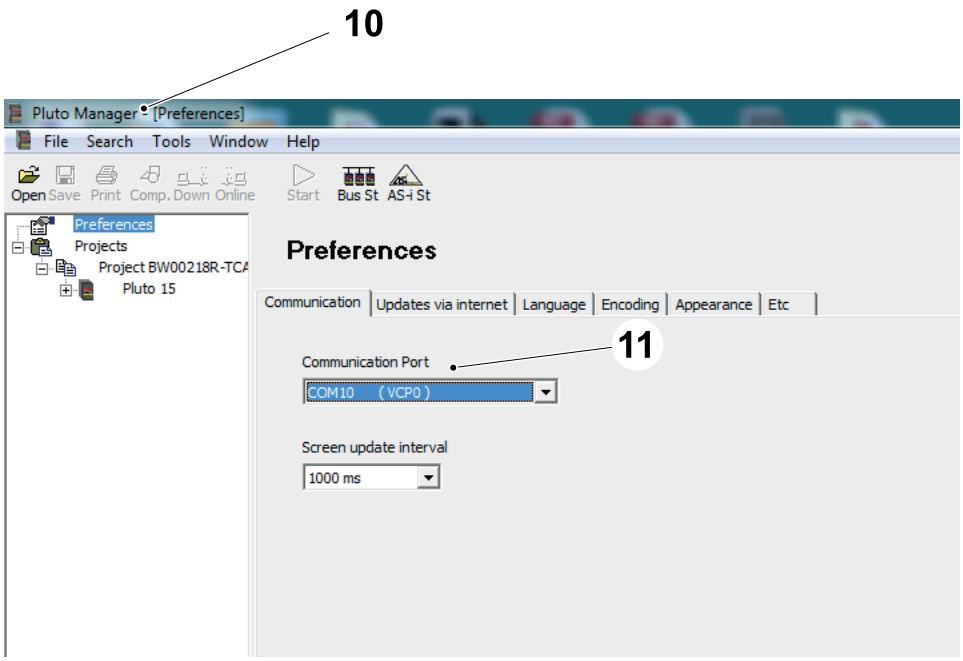

10 PLUTO MANAGER window
11 Communication port

10.6.2-2 Pluto Maintenance - Set the ID-FIX Address after Replacing an ID-FIX

Machine Status	Electrical supply disconnecting device in position I (ON)
Special Equipment	PC with Pluto Manager RS 232-C Communication Cable
SPC Reference	2839221-0200

Introduction

To enable the system PLC program to recognise a Pluto module, an ID code must be given to the module. This is done by connecting an external component, called ID-FIX (1), between the ID terminal (2) and the 0V terminal (3) at the front of the Pluto module (4). The unique code associated with the ID-FIX (1) must then be entered in the PLC program.

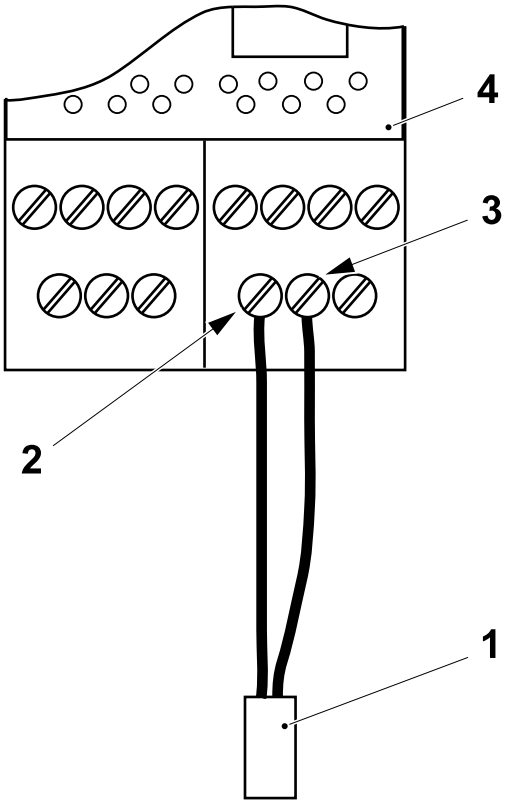

1 ID-FIX
2 ID terminal
3 0V terminal
4 Pluto module

(Cont'd)

(Cont'd)

Entering the ID-FIX Address

If an ID-FIX is replaced, the code for the ID-FIX must be entered in the PLC program as follows:

a) Connect the PC to the Pluto module, see 10.6.2-1 Pluto Maintenance - Connecting a PC to Pluto Module.

b) Open the Pluto Manager by clicking the PLUTO MANAGER icon (1).

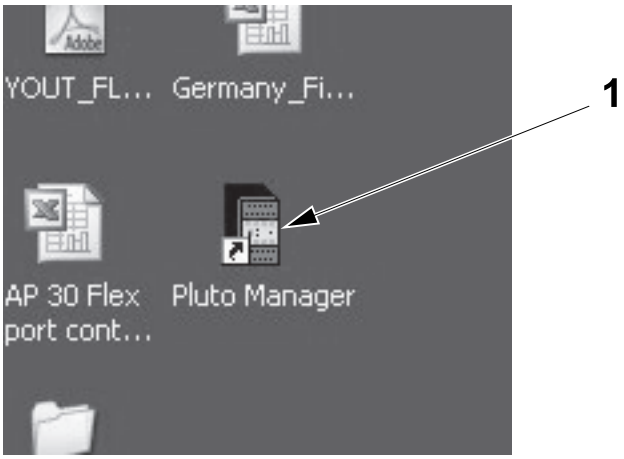

1 PLUTO MANAGER icon

c) In the Pluto Manager - [projects] (2), select Projects (3) and click Open (4).

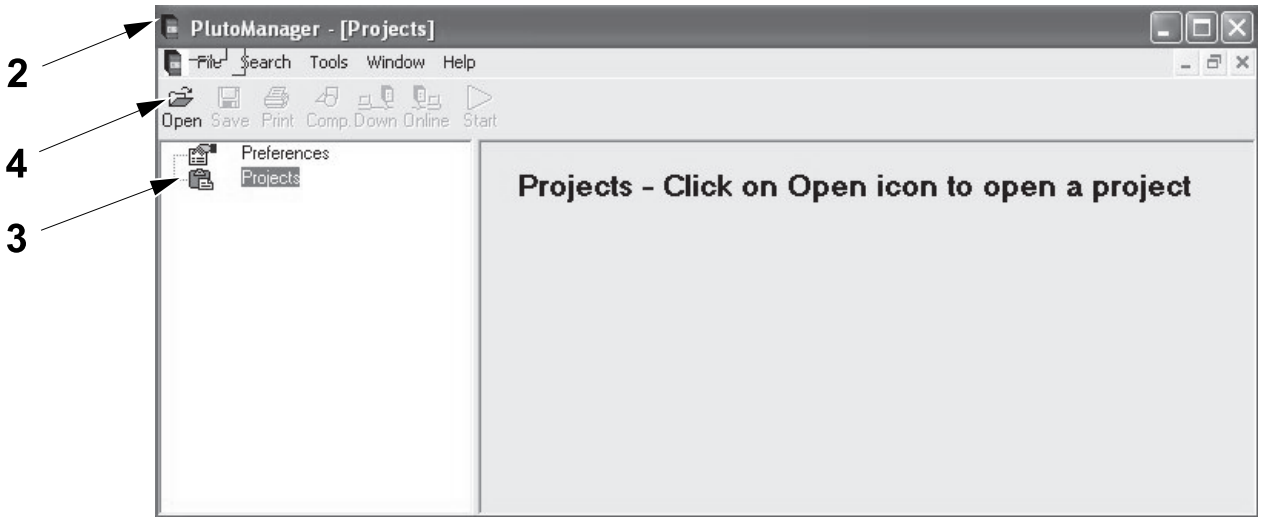

2 Pluto Manager - [projects]
3 Projects
4 Open

(Cont'd)

(Cont'd)

Note! The project number BW00159_2.SPS (5) shown below is an example.

d) Select a Project (5) and click Open (6).

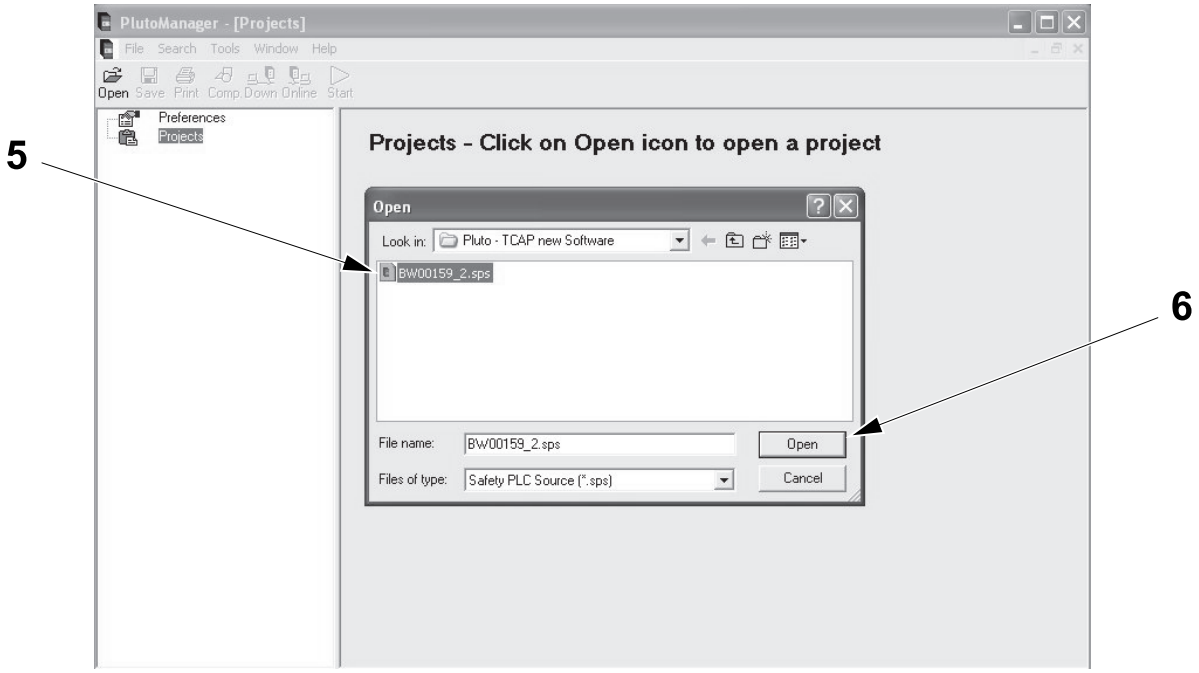

5 Project
6 Open

e) In the Project window (7) that opens, click on the icon Pluto 14 (8) .

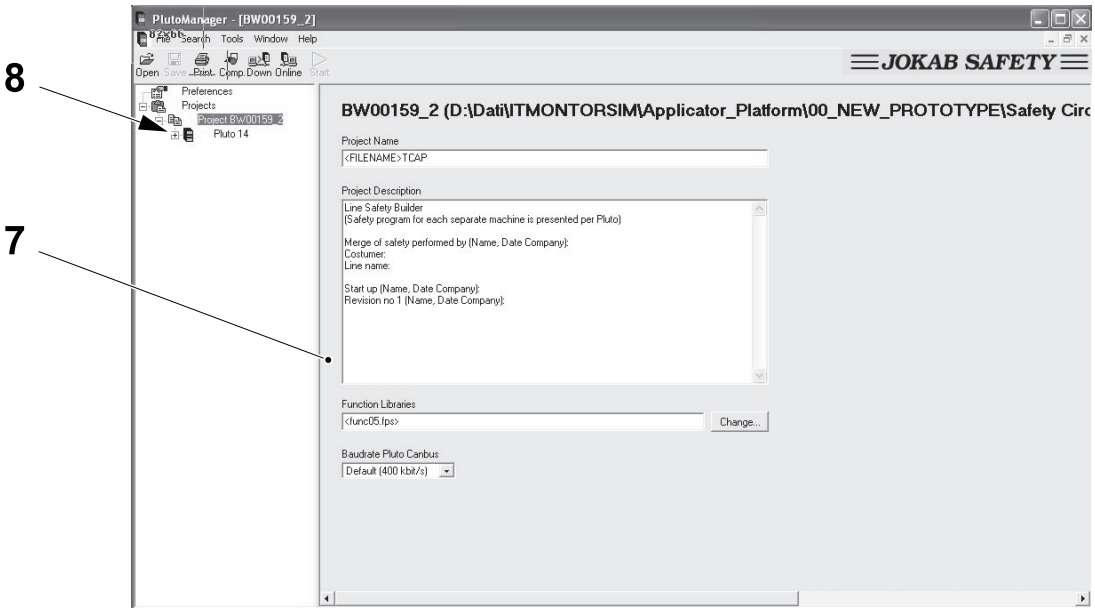

7 Project window
8 Pluto 14

(Cont'd)

(Cont'd)

f) The IDFIX number (14000009F000) appears in the IDFIX number window (9).

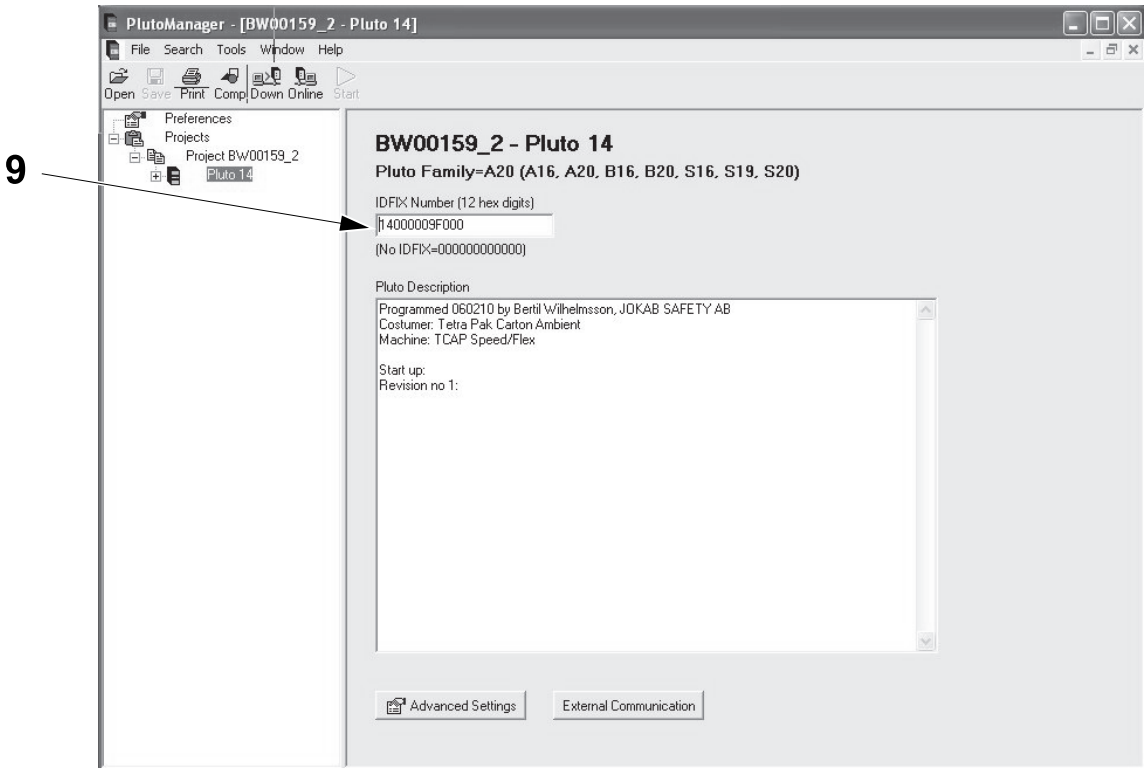

9 IDFIX number window

(Cont'd)

(Cont'd)

g) From the tools (10) pull down menu, select Write IDfix (11).

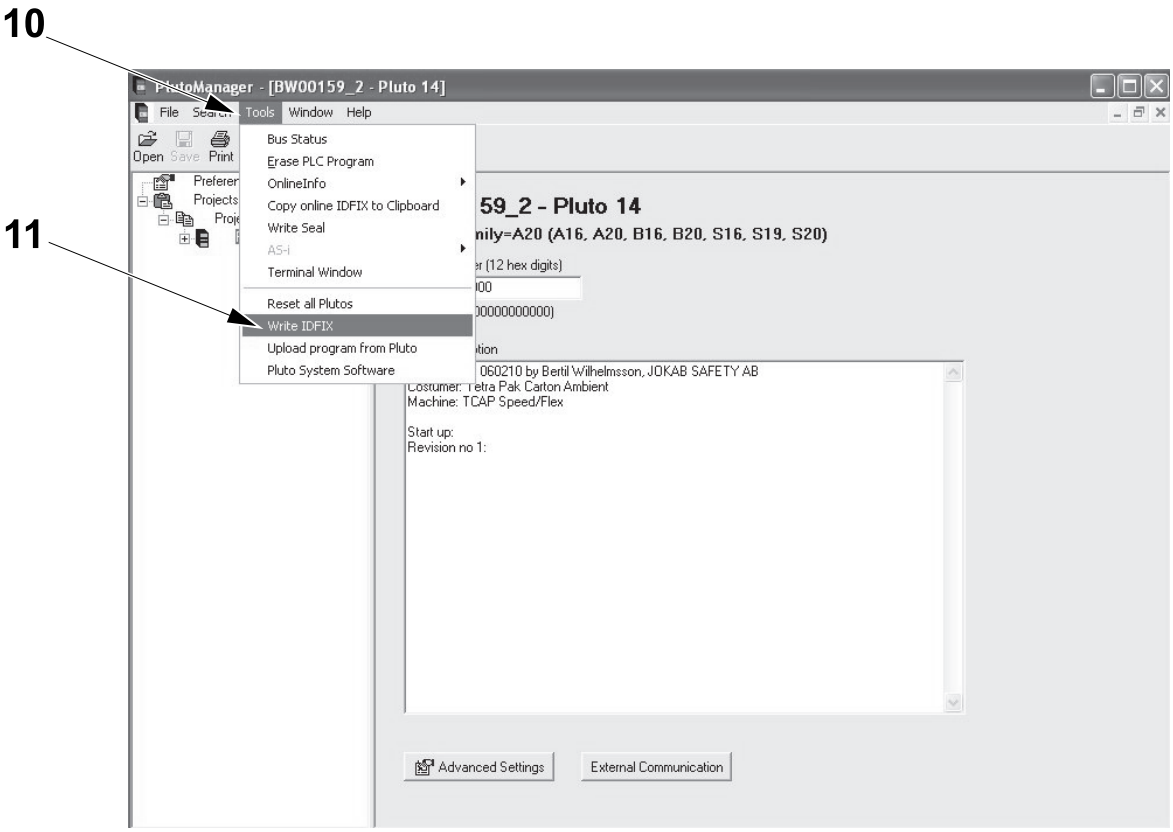

10 Tools
11 Write IDfix

(Cont'd)

(Cont'd)

CAUTION
Do not select the ERASE PROTECT ID (12). Doing so will prevent any further IDFIX changes being made.
Do not press the SUGGEST UNIQUE ID (13).

h) Write the IDFIX code, displayed in the IDFIX number window (9), in the ID number field (14) and select write id circuit (15).

i) Select close (16).

Note! The ID-FIX code for the Pluto module is shown below.

Unit	ID number
F09K0000	14000009F000

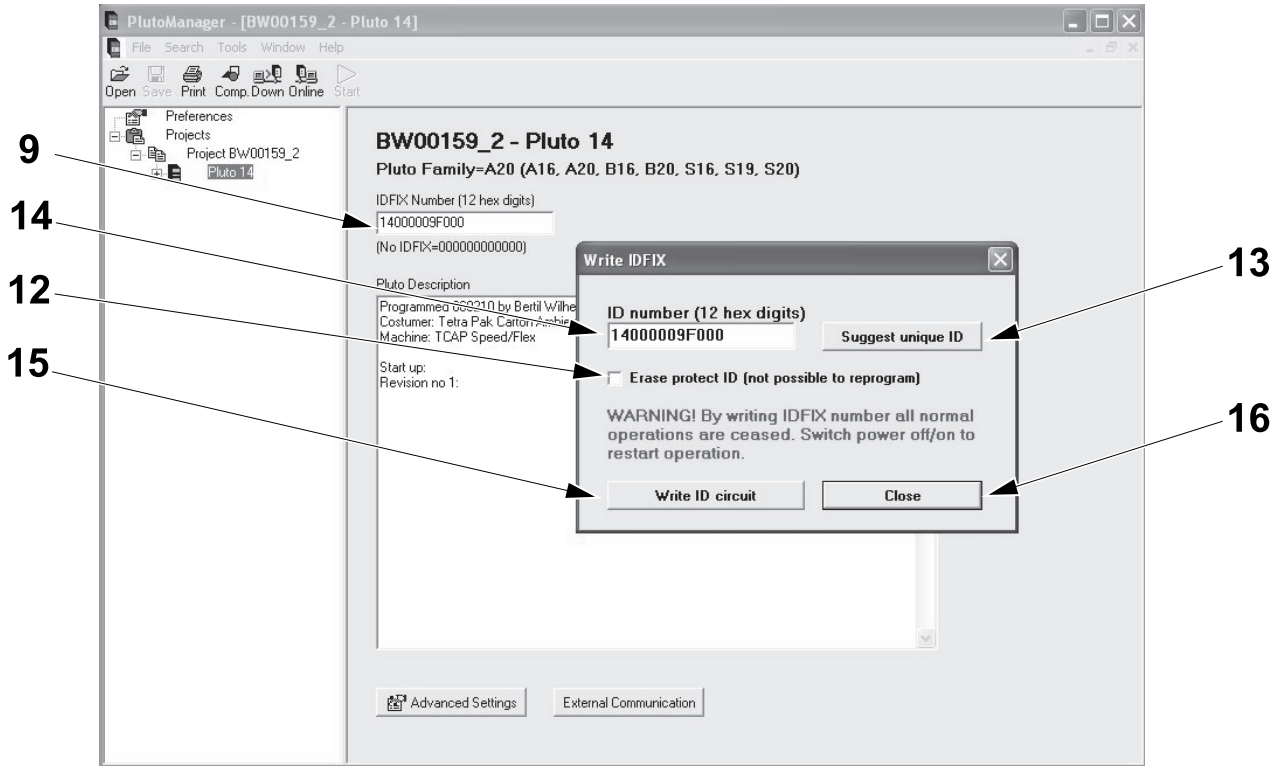

9 IDFIX number window
12 ERASE PROTECT ID
13 SUGGEST UNIQUE ID
14 ID number field
15 write id circuit
16 close

10.6.2-3 Pluto Maintenance - Change Baud Rate, Error Code E26

Machine Status	Electrical supply disconnecting device in position I (ON)
Special Equipment	PC with Pluto Manager RS 232-C Communication Cable
SPC Reference	2839221-0200

Note! It is not possible to change the baud rate of a Pluto module when it is in operation. If a unit is loaded with a program with a new baud rate, it will continue to function with the old baud rate and indicate the error code E26.

Note! If a Pluto module does not contain a program it will display the error code E20. If a program is loaded into the Pluto it will also display error code E26 to indicate that the module must be rebooted to start with the programmed baud rate.

The baud rate can be changed by turning the power OFF and ON to reboot the system

or

by using the Pluto Manager as follows:

a) Connect the PC to the Pluto module, see 10.6.2-1 Pluto Maintenance - Connecting a PC to Pluto Module.

b) Open the Pluto Manager by clicking the PLUTO MANAGER icon (1).

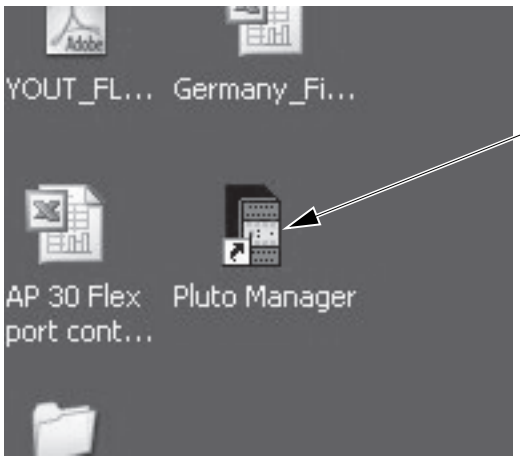

1 PLUTO MANAGER icon

(Cont'd)

(Cont'd)

c) Click on Tools (2) and select Reset all Plutos (3).

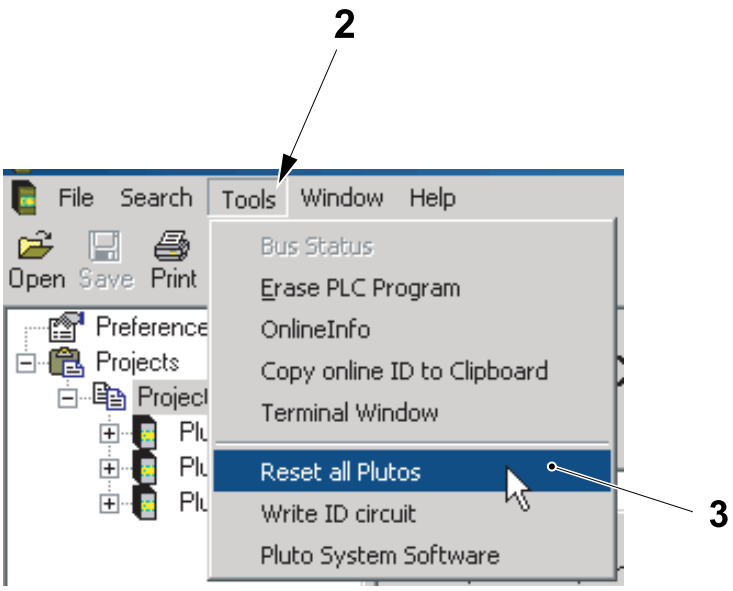

2 Tools
3 Reset all Plutos

10.6.2-4 Pluto Maintenance - Installing a Pluto Module in an Existing Application

Machine Status	Electrical supply disconnecting device in position I (ON)
Special Equipment	PC with Pluto Manager RS 232-C Communication Cable
SPC Reference	2839221-0200

No PLC Program in Pluto

When a system comprises of more than one Pluto module they are loaded with a common program. The modules check each other to confirm that they contain exactly the same version of the program. With a program mismatch the modules do not accept each others I/O data.

If a new Pluto module belonging to a program project is connected to the bus that is already connected to one or more Pluto modules, two possible situations may arise depending upon the status of the new Pluto module.

The new Pluto does not contain a PLC program (message code E20) but it is fitted with the correct IDFIX circuit. When this is the case the new Pluto can be programmed using its self programming function. To do this proceed as follows:

a) Press the 'K'-button (1) on the Pluto front panel for two seconds. The display flashes 'L' indicating that the system is ready for self programming.

b) Press the 'K'-button (1) on the Pluto front panel for two seconds. The display flashes 'L' indicating that the system is ready for self programming.

c) The program load is started. This is indicated by a steady 'L' on the display.

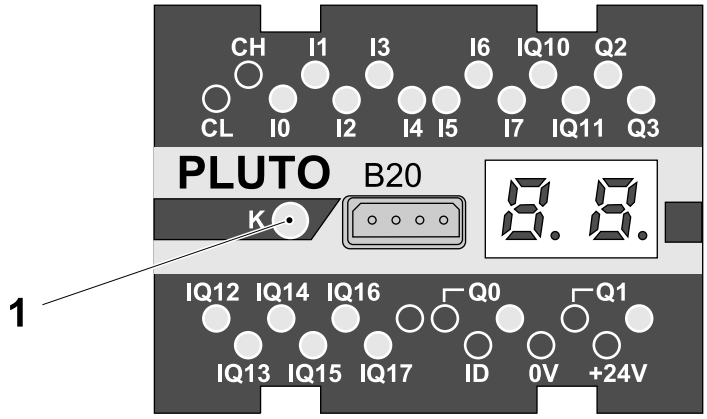

1 K button

Pluto has correct ID-Fix but wrong program version

In this situation, all Pluto modules of the project will display the error code E27 indicating that the new Pluto module with the incorrect software has been detected. The units will run the PLC program, but will not accept I/O data from the new Pluto module.

(Cont'd)

(Cont'd)

To correct this situation, download the correct version of the program to all of the units in the project, all of them will be updated with the same version. To download the program, see 10.6.2-5 Pluto Maintenance - Program Download from a PC to a Pluto Unit.

10.6.2-5 Pluto Maintenance - Program Download from a PC to a Pluto Unit

Machine Status	Electrical supply disconnecting device in position I (ON)
Special Equipment	PC with Pluto Manager RS 232-C Communication Cable
SPC Reference	2839221-0200

Note! The program must be compiled before it can be downloaded. A fault message is shown if the program is not compiled.

a) Connect the PC to the Pluto module.

b) Open the Pluto Manager by clicking the PLUTO MANAGER icon (1) .

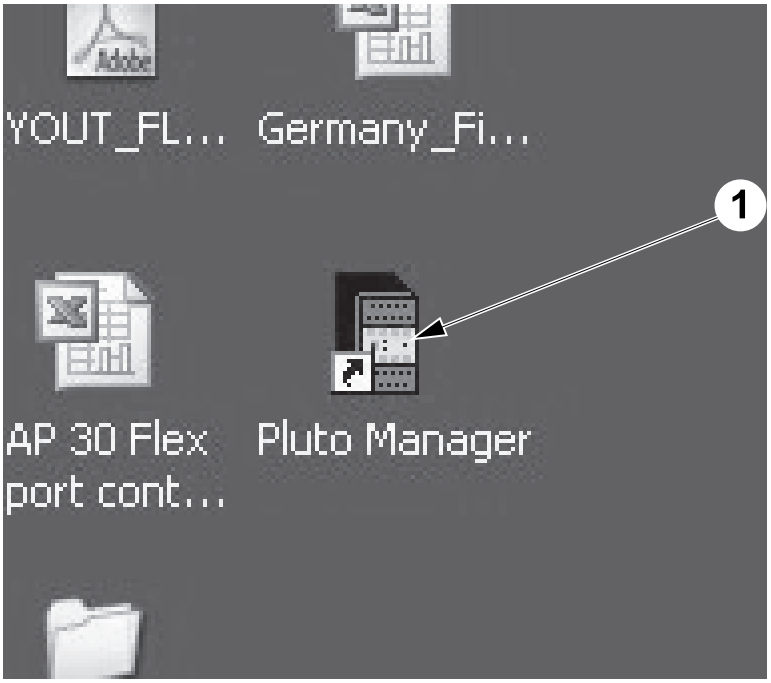

1 PLUTO MANAGER icon

(Cont'd)

(Cont'd)

c) In the pluto manager - [projects] (2), select Projects (3) and click Open (4).

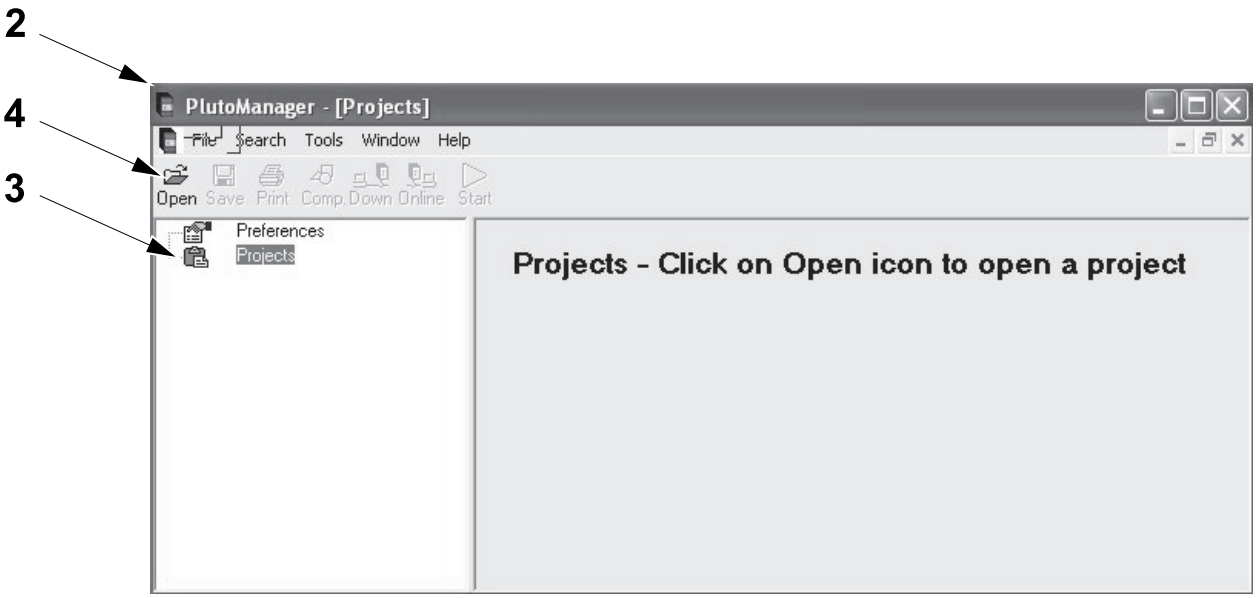

2 PLUTO MANAGER-[PROJECTS]
3 Projects
4 Open

(Cont'd)

(Cont'd)

Note! The project number BW00159_2.SPS is shown below as an example.

d) Select a Project (5) and click Open (6).

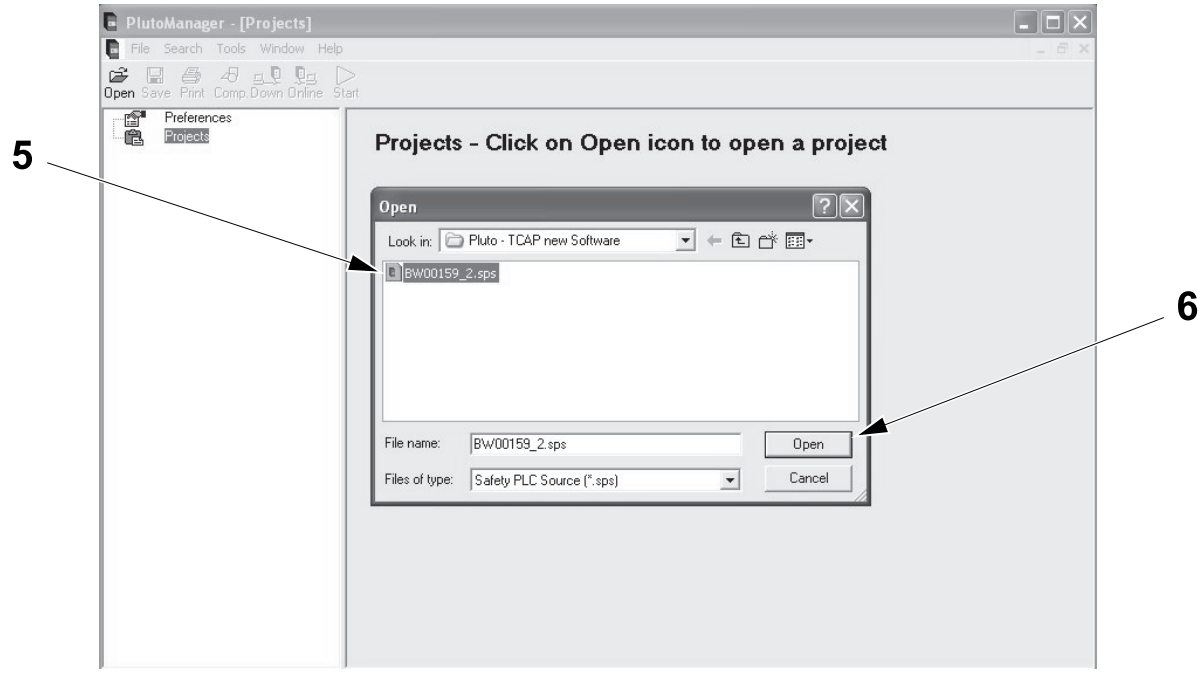

5 Project
6 Open

e) Press the down button (7) in the tool bar.

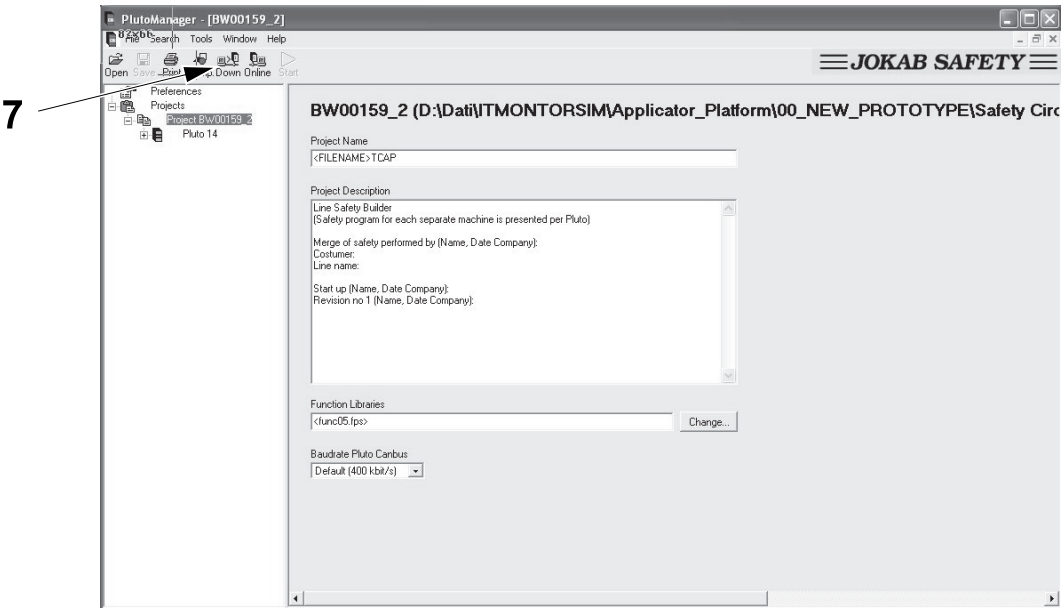

7 Down button

(Cont'd)

(Cont'd)

f) If the unit is not loaded with a password, a dialogue box appears asking for a new password.

g) Type the password "abc80" in the Password field (8) .

h) Type the same password in the Confirm Password field (9) and click the OK button (10).

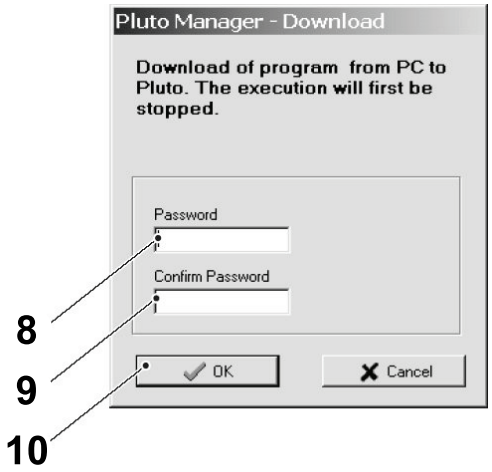

8 Password field
9 Confirm Password field
10 OK button

i) If the unit is loaded with a password, a dialogue box appears asking for the password.

j) Type the password "abc80" in the Password field (11).

k) Click the OK button (12).



11 Password field
12 OK button

(Cont'd)

(Cont'd)

l) If the fault message COULDN'T ESTABLISH CONNECTION appears there is no connection at all.

If the fault message CONNECTION TIME OUT appears the communication is interrupted.

- If any of these two fault messages appears check that the communication cable is correctly connected.

m) If everything is OK a dialogue box appears telling that the file is downloaded together with the question START PROGRAM EXECUTION (13) .

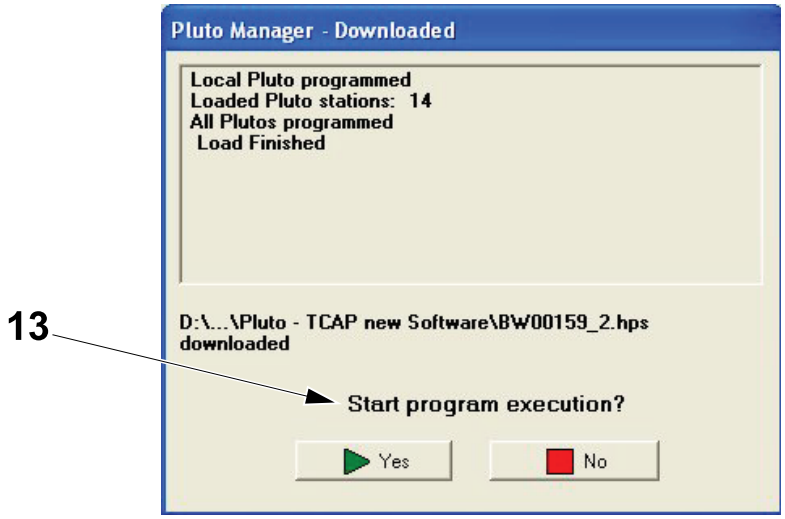

13 START PROGRAM EXECUTION

(Cont'd)

(Cont'd)

Note! A warning is given if the program project is for several Pluto stations and all stations are not connected to the bus.

n) Click the Yes button (14).

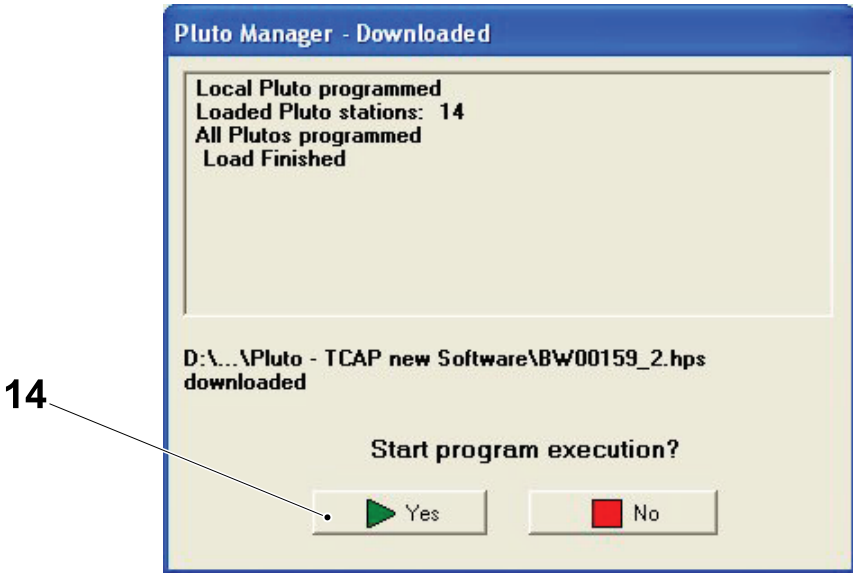

14 Yes button

10.6.3 Pluto Troubleshooting

10.6.3-1 Pluto Troubleshooting - Safety System Alarm on the Control Panel

Machine Status	Electrical supply disconnecting device in position I (ON)
Special Equipment	PC with Pluto Manager RS 232-C Communication Cable
SPC Reference	2839221-0200

The symbol (1) indicates that the PLC monitors all safety doors and EMERGENCY STOP buttons are OK but the system has not been reset.

Note! The PLC can only monitor the channel which has a constant +24V DC.

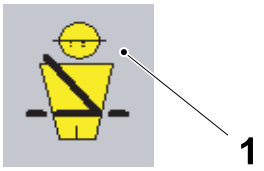

1 Safety System Alarm symbol

Two channel fault

a) **Reason 1:** One of the channels (inputs) may have been temporarily interrupted but is now OK.

- **Symptom 1:** The system has tripped but will not automatically reset when the input is OK again.
- **Indication 1**: The LED associated with the faulty input flashes as does the information output to the PLC.
- **Reset 1:** Open and close both channels (for example by opening and closing a door in the affected circuit) and reset the alarm.

b) **Reason 2:** One or both channels are permanently OFF.

- **Symptom 2**: The system has tripped and cannot be reset.
- **Indication 2:** The LED associated with the faulty input is OFF.
- **Reset 2:** Repair the faulty circuit, open and close both channels (for example by opening and closing a door in the affected circuit) and reset the alarm.

(Cont'd)

(Cont'd)

Feedback fault

a) **Reason:** One of the feedback circuits has not been closed when the output has tripped.

- **Symptom:** It is not possible to reset the system.
- **Indication:** The LED associated with the faulty input (feedback circuit) is OFF and the information output to the PLC is ON.
- **Reset:** Repair the faulty circuit or contactor and reset the alarm.

10.6.3-2 Pluto Troubleshooting - Explanations of Inputs, Outputs and LEDs

Machine Status	Electrical supply disconnecting device in position I (ON)
Special Equipment	PC with Pluto Manager RS 232-C Communication Cable
SPC Reference	2839221-0200

For more detailed information on connections, refer to the circuit diagram.

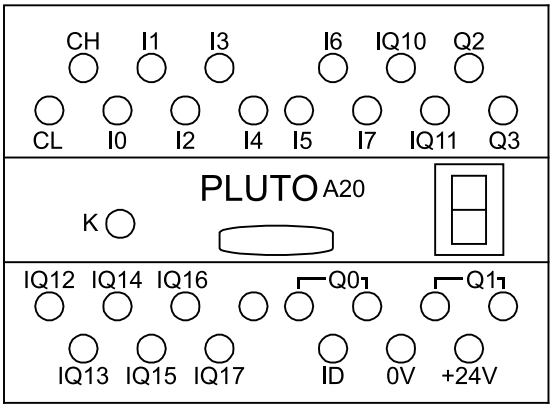

(Cont'd)

(Cont'd)

Pluto 09F00

CL	CAN bus
CH	CAN bus
I0	Input emergency stops on the machine (+24V)
I1	Input emergency stops on the machine (Pulse)
I2	Not used
I3	Not used
I4	Input power ON, cap conveyor and belt brake and Servos
I5	Input power ON, package line conveyor, outfeed conveyor, cap elevator and mains power
I6	Input power ON
I7	Input power ON
Q0	Doors Closed (L32)
Q1	No Emergency Stop (L22)
Q2	Mains power ON, AC users
Q3	Output to expansion units 09F003
IQ10	Output pulse to safety circuits
IQ11	Input from applicator doors
IQ12	Input doors
IQ13	Input cap sorter
IQ14	Safety Relay reset from PLC
IQ15	Power On step from PLC
IQ16	Emergency stop to PLC
IQ17	Safety relay error message to PLC
ID	Identifier on the CAN bus
0V	0V
+24V	+24V DC (L12)

Message and fault code list

General Status messages

No:	Description
-	Power up
n	Run mode for station number 0-9. (n = station number)
P nn	Run mode for station number 10-31. (nn = station number)
L	Program load mode state. Flashing 'L', ready for self programming (program found in other unit).
H	Program execution stopped from PC computer.

(Cont'd)

(Cont'd)

User faults

No:	Fault and possible reason	Reset action
E10	Dynamic output short circuited to foreign voltage	Remedy of fault
E11	IQ_for illuminated push button function. Missing diode	Remedy of fault
E12	Short circuit between two dynamic inputs	Remedy of fault
E13	Static output Q10...Q17 short circuited to 0V or Q2-Q3 overloaded	Reset button, power off/on
E14	Static output Q10...Q17 short circuited to 24V	Remedy of fault
E15	Power supply below 18V	Reset button, power off/on
E16	Power supply above 30V	Reset button, power off/on
E17		
E18	CAN-bus fault. (Short circuit, termination resistor, etc.)	Remedy of fault+ reset button
E19	Other unit same station ID on CAN-bus.	
E20	PLC-program not loaded	Load of program
E21	PLC-program CRC-error	Re-load with valid PLC-program
E22	Identifier problem. External identifier can not be read.	Power off/on
E23	Unmatched ID. Identifier does not match declaration in program.	Exchange of identifiers or re-declaration of identifier in program
E24	Erroneous PLC-code. Invalid PLC-instructions.	Reload with valid code
E25	For version A16. Non existing output used in program.	
E26	Baud rate conflict. Unit programmed for other baud rate than current bus baud rate.	Reprogramming
E27	Wrong checksum for unit member in common program.	Reprogramming or reboot

I/O faults

No:	Fault and possible reason	Reset action
E40	Error output Q0-Q3	Remedy of fault + reset button
E41	Error output Q2 or Q3. Overload or foreign voltage.	Remedy of fault + reset button
E42	Error output Q0 or Q1. (No answer from relay monitoring)	Remedy of fault + reset button
E43	Error output Q0 or Q1. (Self test of transistors)	Power off/on
E45	Analogue functions not calibrated.	System must be calibrated
E49	Error calibration values, analogue functions	Recalibration

(Cont'd)

(Cont'd)

CPU faults

No:	Fault and possible reason	Reset action
E50	a/b twin input data diff	Power off/on
E51	a/b twin output data diff	Power off/on
E59	Calibration analogue functions CRC fault	Power off/on
E60	Twin self test monitoring	Power off/on
E61	Timer IRQ monitoring	Power off/on
E62	Internal serial communication	Power off/on
E63	Boot-flash CRC	Power off/on
E64	OS-flash CRC	Power off/on
E65	PLC-flash CRC	Power off/on
E66	5 volt under/over voltage monitoring	Power off/on
E67	CPU-test error	Power off/on
E68	Ram-test error	Power off/on
E69	Scan cycle time over run	Power off/on
E70	System, sum of system and stack monitoring	Power off/on
E71	Pluto used for IDFIX writing. Normal operation ceased	Power off/on
E80	Undefined self-test error	Power off/on

User Errors

No:	Fault and possible reason	Reset action
UE00	Emergency stop inputs, one channel missing, one remaining	Power off/on
UE10	Emergency stop inputs, both channels missing	Power off/on
UE24	Missing feedback - L42 Applicator Frequency Converter	
UE25	Missing feedback - L22 Emergency stop circuit	Power off/on
UE26	Missing feedback - L32 - L42 - L43 - L44	Power off/on
UE27	Missing feedback - L72	Power off/on
UE29	Feedback not cycling - L42	Power off/on
UE34	Constant reset	Power off/on

10.7 Circuit Breaker

10.7.1 Automatic Fuses

10.7.1-1 Automatic Fuses - Set

Machine Status	Electrical supply disconnecting device in position O (OFF)
SPC Reference	2833407-0300

Set the current rating of each overload protection according to the fuse panel label located in the door of the electrical cabinet or according to the EM.

10.7.2 Residual Current Device

10.7.2-1 Residual Current Device - Check Function

Machine Status	Electrical supply disconnecting device in position I (ON) Main air valve OFF
SPC Reference	2833407–030

DANGER

Hazardous voltage.
Electric shock will cause death or serious injury. Change the A01F7001 Residual current device (1) if it does not trip immediately.

Note! The residual current device is not fitted and not valid for machines in compliance with the UL or CSA requirements.

The A01F7001 Residual current device (1) must always be tested before using the Socket outlet (2).

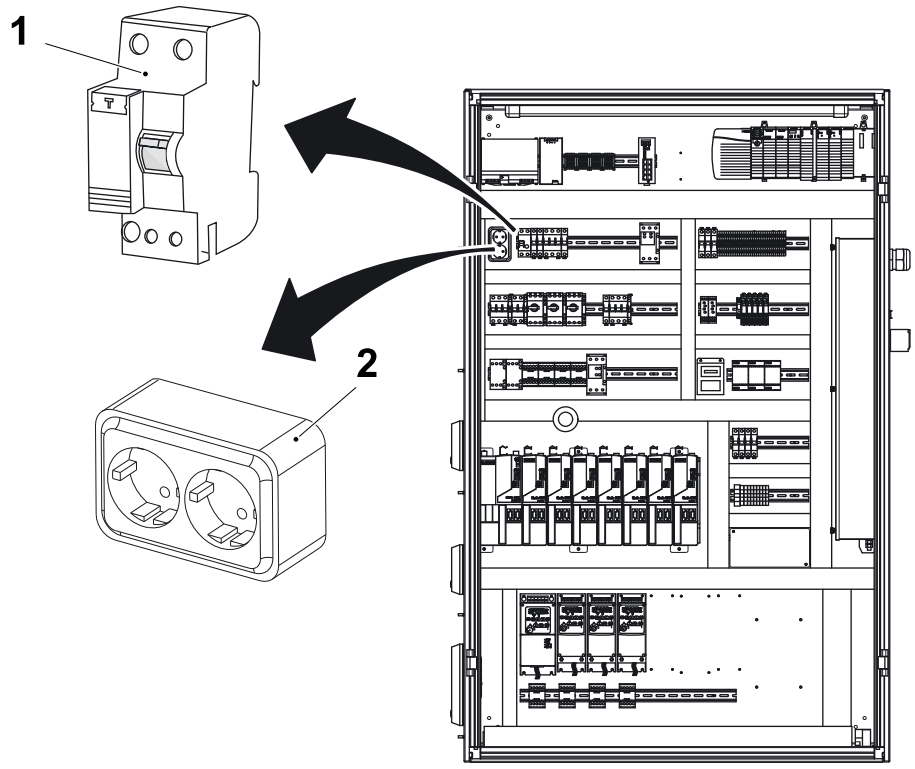

1 A01F7001 Residual current device
2 Socket outlet

(Cont'd)

(Cont'd)

a) Make sure that the switch (3) is in its up position (position "1").

b) Press the Test button (4) .

c) The earth fault breaker must trip immediately (the switch (3) will jump to the lower position"0").

d) If the earth fault breaker does not trip immediately, change the earth fault breaker.

e) Move the switch (3) to its upper position.

f) Turn OFF the power supply disconnecter.

Note! The residual current device should be checked once a month.

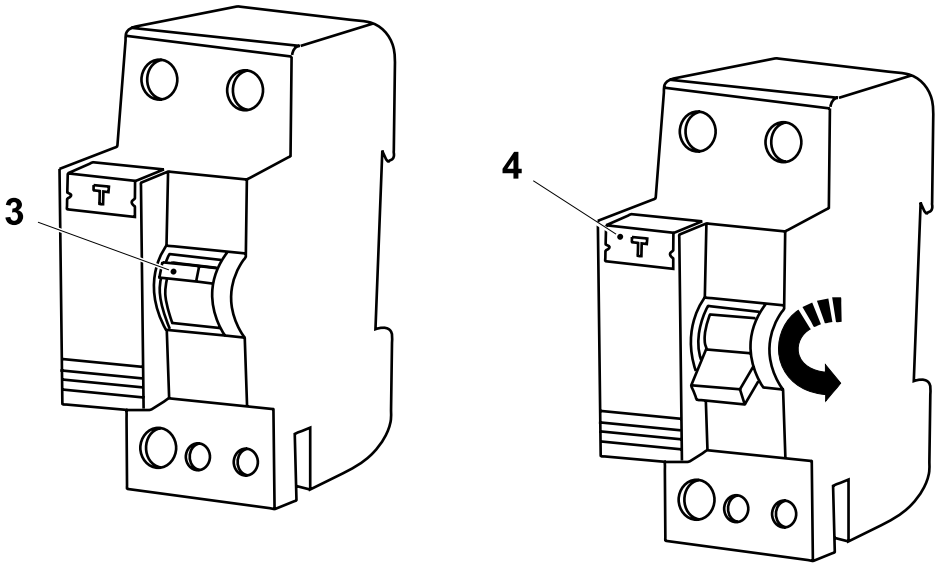

3 Switch
4 Test button

10.7.3 Power Supply - Current Control Relay

10.7.3-1 Check - Current Control Relay Function

Machine Status	Electrical supply disconnecting device in position I (ON) Main air valve OFF
SPC Reference	90600-4731

Use a screwdriver to set the element function as follows:

a) Switch SV value (1) to 30.

b) Switch Hystereris (2) to 0 (fully counter clockwise).

c) Potentiometer T (3) to 0 (fully counter clockwise).

d) Potentiometer lock (4) to 0 (fully counter clockwise).

Note! The LED PWR (5) switches OFF if a malfunction occurs during PRODUCTION.

e) LED relay output (6) and LED alarm (7) alarm.

f) Set the selectors on the bottom of the relay to Selector (OFF) (8) and Selector (ON) (9) as shown below.

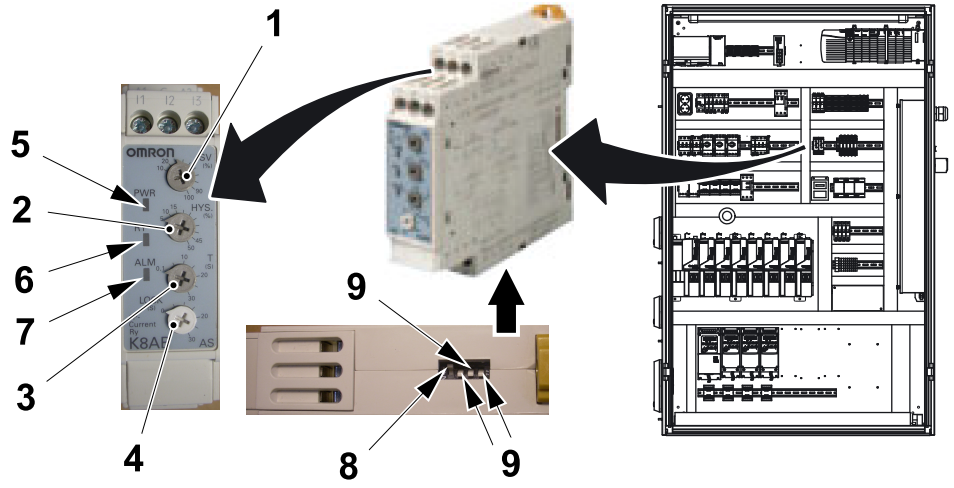

1 Switch SV value
2 Switch Hystereris
3 Potentiometer T
4 Potentiometer Lock
5 LED PWR
6 LED relay output
7 LED alarm
8 Selector (OFF)
9 Selector (ON)

10.8 Sensors

10.8.1 Belt Brake Package Sensor

10.8.1-1 Sensor (W20B0003) - Set Sensitivity

Machine Status	Electrical supply disconnecting device in position I (ON)
SPC Reference	90600-4732

Standard Setting

a) Check that there are no objects between the sensor (1) and the receiver (2).

b) Line up the sensor (1) with the receiver (2) .

- The green led (3) and yellow led (4) should be ON.

c) Press the button (5) for 3 seconds or more so that the yellow led (4) goes out.

d) The teach-in is initiated when both LED's blink. Press the teach-in button to store the sensitivity.

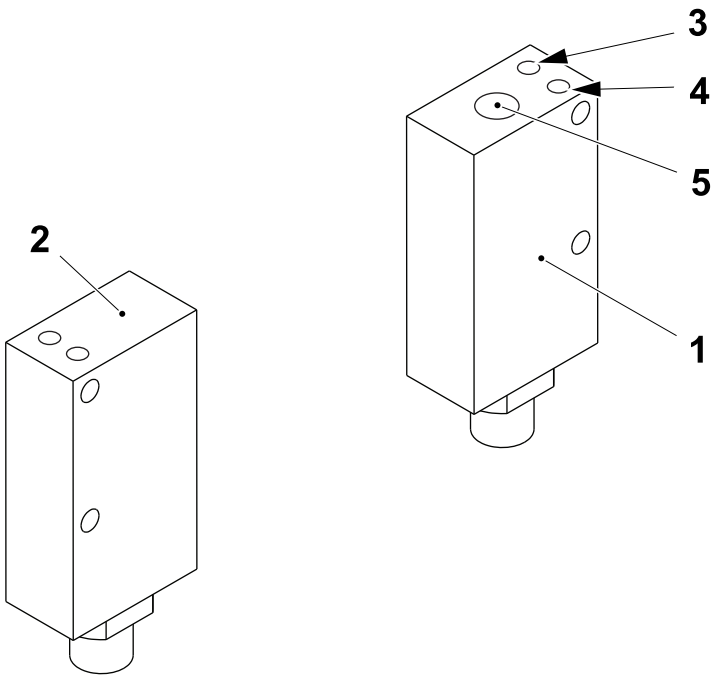

1 Sensor
2 Receiver
3 Green led
4 Yellow led
5 Button

(Cont'd)

(Cont'd)

Precise Setting

a) Press the button (5) for 5 seconds or more.

b) The teach-in is initiated when both the green led (3) and the yellow led (4) blink. Press the teach-in button (5) to store the sensitivity.

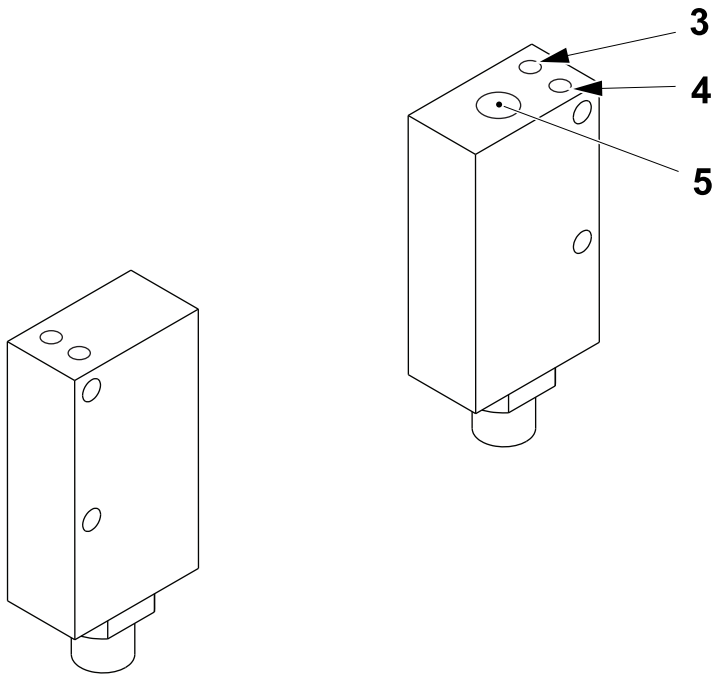

3 Green led
4 Yellow led
5 Button

10.8.2 Cap Sorter Outfeed Congestion Sensor

10.8.2-1 Sensor (C50B2000) - Set

Machine Status	Electrical supply disconnecting device in position I (ON)
SPC Reference	90459-7366

a) With the green power LED (1) on, place a cap under the sensor (2) .

b) Turn the sensitivity control knob (3) anti clockwise to maximum and check that the yellow LED (4) is on.

c) Now turn the control knob (3) slowly clockwise with the red spot (5) showing on the lid until the yellow LED (4) goes out.

d) Now move the cap so that the red spot (6) is showing on the frame of the cap and check that yellow LED (4) comes on.

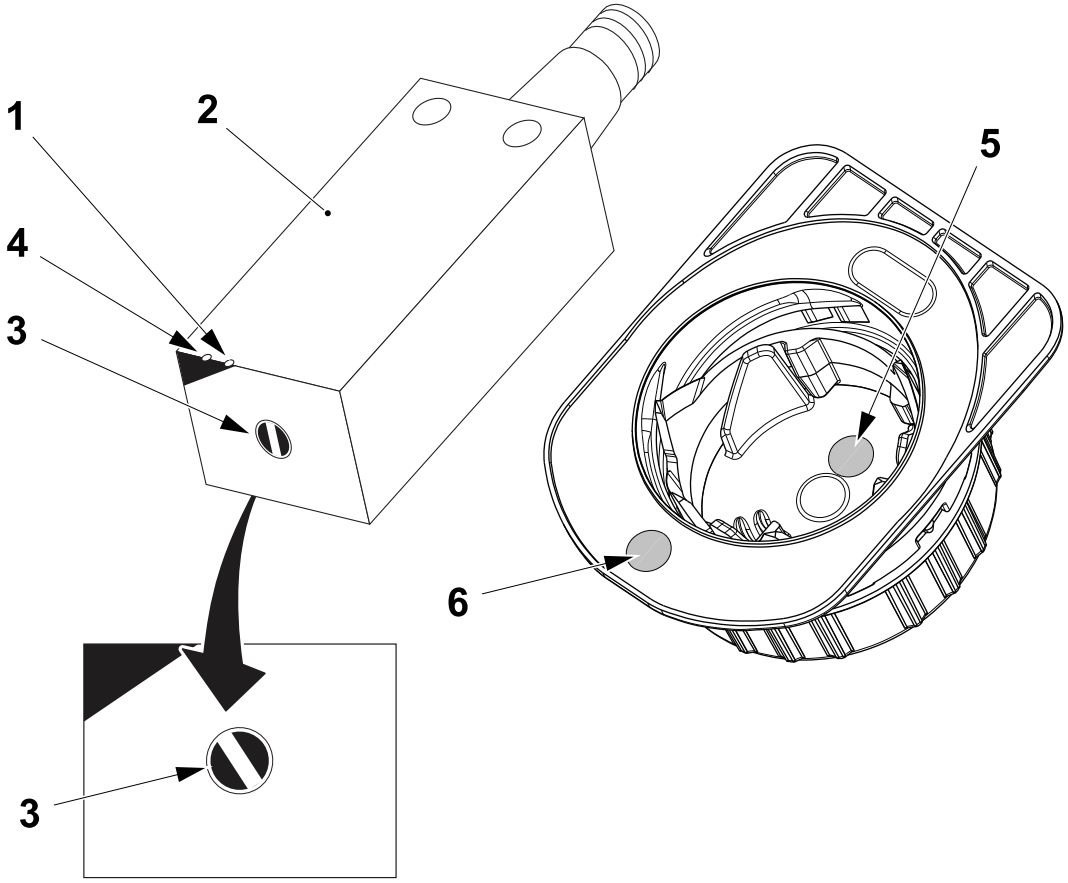

1 Green Power LED
2 Sensor
3 Control knob
4 Yellow LED
5 Red Spot
6 Red Spot

10.8.3 General Purpose Sensor

10.8.3-1 Sensor (W21B4002,W 21B4004,W 21B4006, W21B4008, W21B4024, W21B6002, W21B6004, C50B0013, G50B5000, G50B5004) - Set

Machine Status	Electrical supply disconnecting device in position I (ON)
SPC Reference	90459-5529

a) Line up the sensor (1) with the reflector (2) .

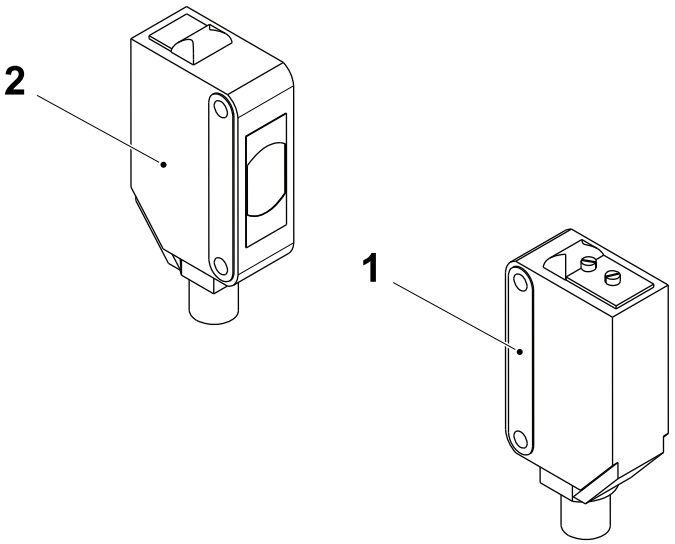

1 Sensor
2 Reflector

(Cont'd)

(Cont'd)

Note! The min/max knob (3) sets the sensitivity and the D/L knob (4) sets the dark background/light background function.

b) Turn the min/max knob (3) to the middle of its range.

c) Turn the D/L knob (4) to the D position.

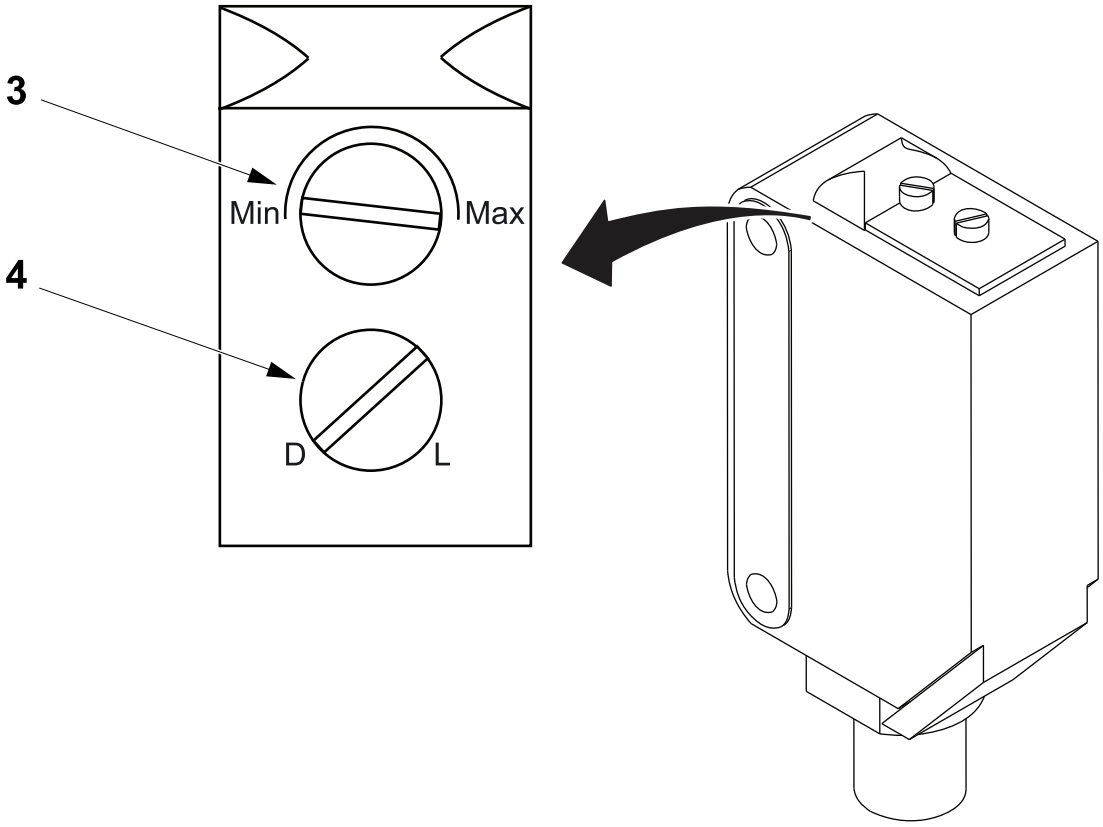

3 min/max knob
4 D/L knob

(Cont'd)

(Cont'd)

Note! The stability LED (6) is on whenever power is supplied to the sensor.

d) Put a package between the sensor and the reflector and check that the operation LED (5) comes on.

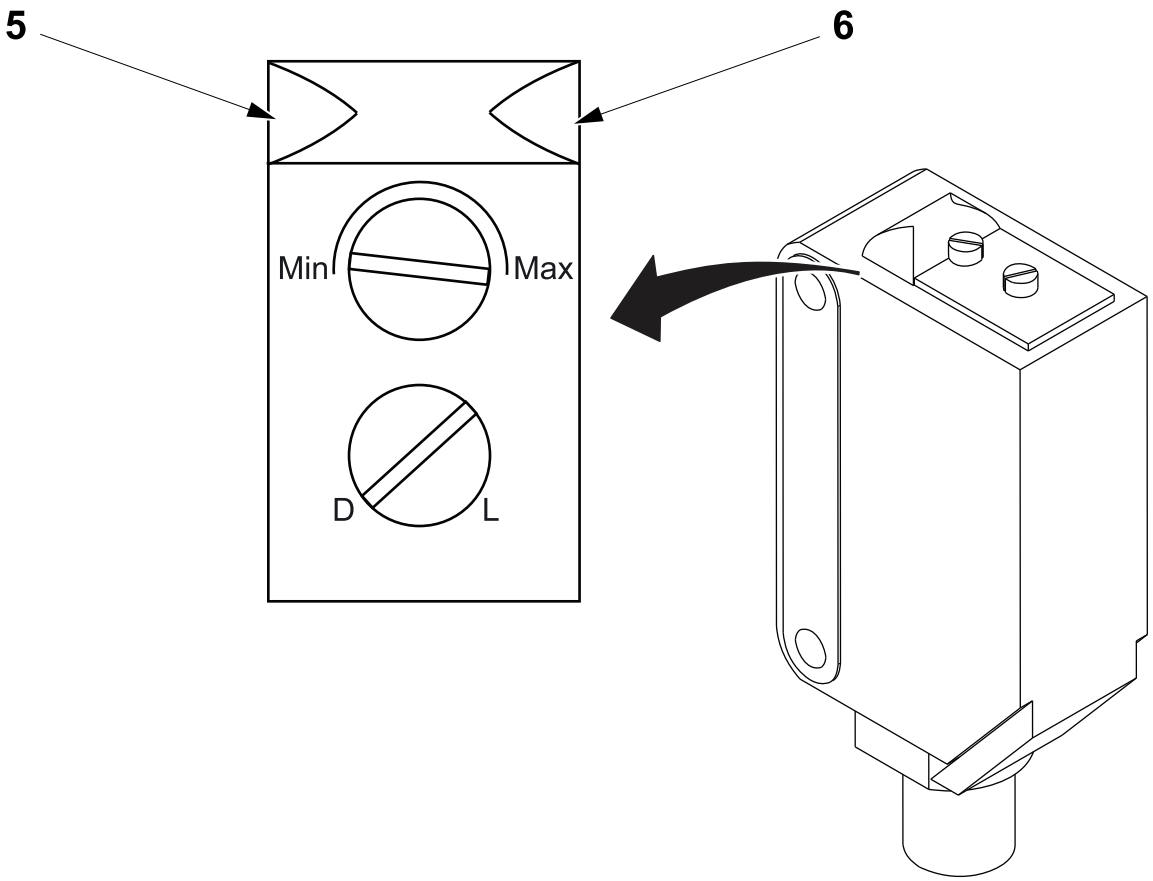

5 Operation LED
6 Stability LED

10.9 Control Panel

10.9-1 Control Panel - Overview

SPC Reference	90600-0980

The Control Panel is used to start, stop and supervise the machine from one common point. It has two main parts:

- The Touch screen display (1)
- The Operator pushbutton panel (2) .

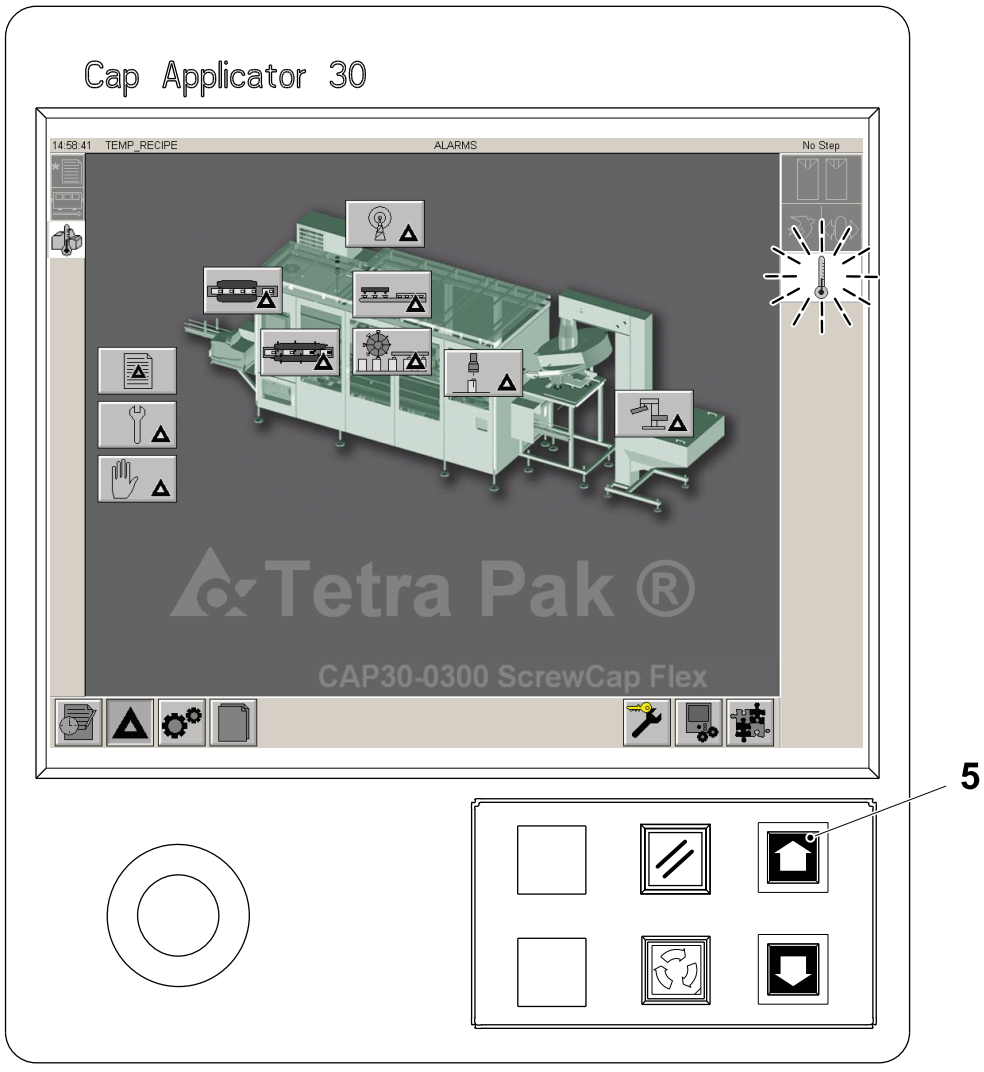

1 Touch screen display
2 Operator pushbutton panel

10.9.1 Control Panel - Touch Screen

This section describes the maintenance procedures associated with the touch screen display. The procedures must be performed in a specific order according to the situation. Proceed as follows:

- 10.9.1-1 Touch Screen - TPOP SHUTDOWN
- 10.9.1-2 Touch Screen - Firmware Installation
- 10.9.1-3 Touch Screen Machine Setup - Calibrate Touch Screen
- 10.9.1-4 Touch Screen - New Application Software Installation
- 10.9.1-5 Touch Screen - Remove Existing Application Program
- 10.9.1-6 Touch Screen - Load New Application
- 10.9.1-7 Touch Screen - Check/Set Network Configuration
- 10.9.1-8 Touch Screen - Startup Options Setup
- 10.9.1-9 Touch Screen - Display Setup
- 10.9.1-10 Touch Screen - Time/Date/Regional Settings Setup
- 10.9.1-11 Touch Screen - Start-Up Language Setup
- 10.9.1-12 Touch Screen - Language Setup
- 10.9.1-13 Touch Screen - Create New Recipes
- 10.9.1-14 Touch Screen - Saving Recipe Settings

10.9.1-1 Touch Screen - TPOP SHUTDOWN

Machine Status	Electrical supply disconnecting device in position I (ON)
Special Equipment	PC with CD drive Secure Digital Reader Secure Digital Card TP No. 90604-3590 for Firmware see SPC
SPC Reference	2779070-0300

Note! Always use the latest version of Firmware and Software.

a) Login as Service technician in the TPOP, see 1.1.1-1 HMI User Management - Log On as a User.

b) In the SERVICE window, touch the SHUTDOWN button (1) to shutdown the TPOP.

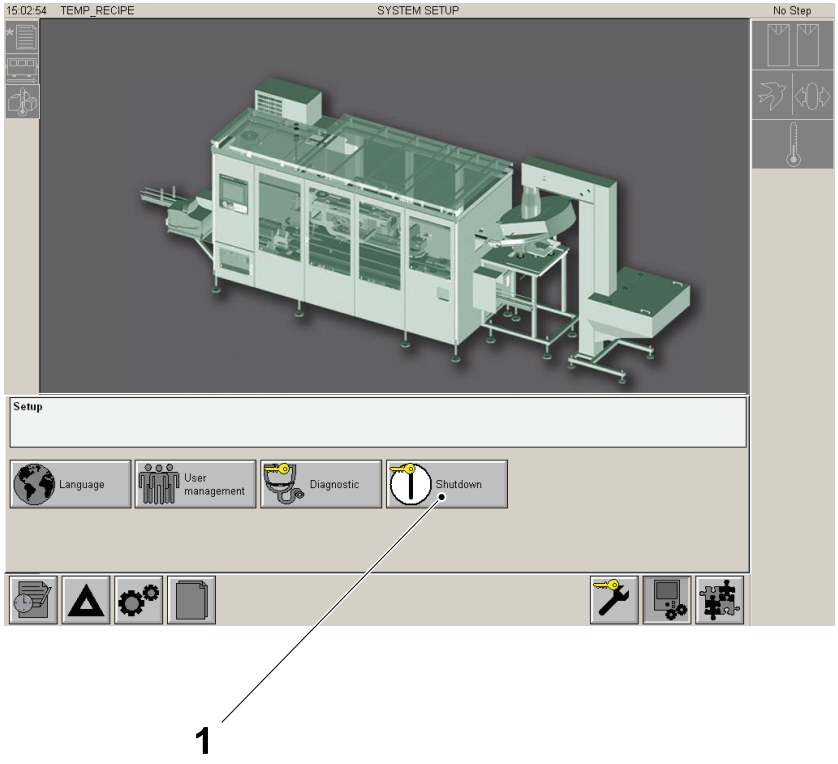

1 SHUTDOWN button

10.9.1-2 Touch Screen - Firmware Installation

Machine Status	Electrical supply disconnecting device in position I (ON)
Special Equipment	PC with CD Drive and Secure Digital card reader and Secure Digital card Software CD TP No. XXXXXXX-0XXX TetraPak Installer Version 1.2
SPC Reference	2779070-0300

a) In the `CONFIGURATION WINDOW` (1) touch the `TERMINAL SETTING BUTTON` (2).

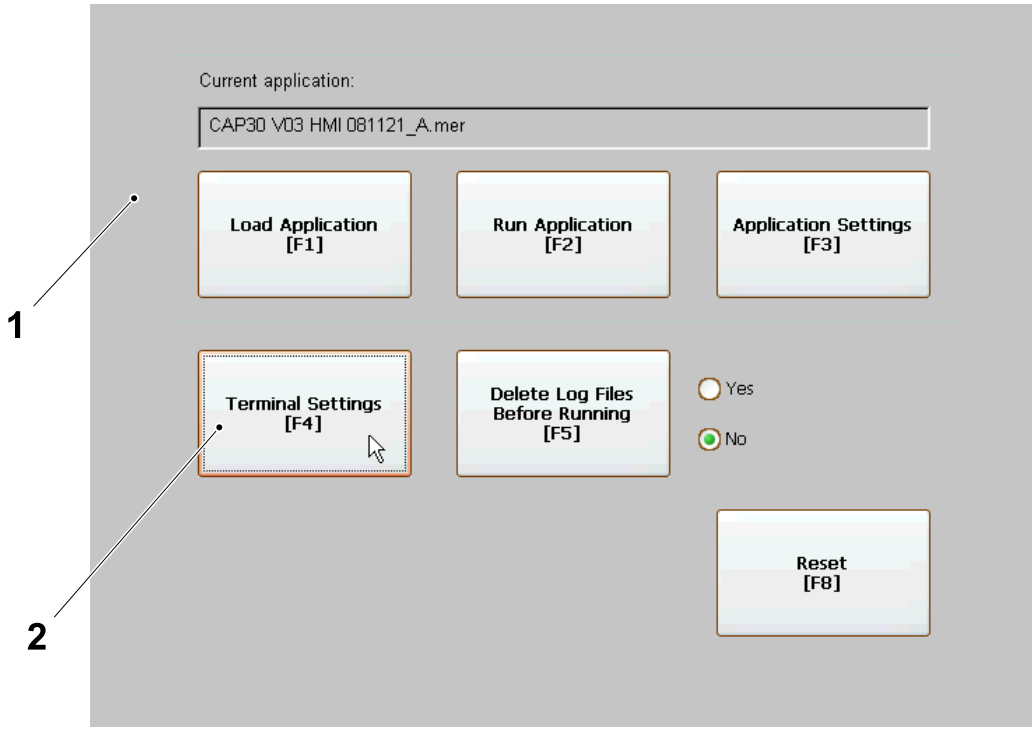

1 Configuration window
2 Terminal setting button

(Cont'd)

(Cont'd)

b) Select File management (3) and touch ENTER button (4).

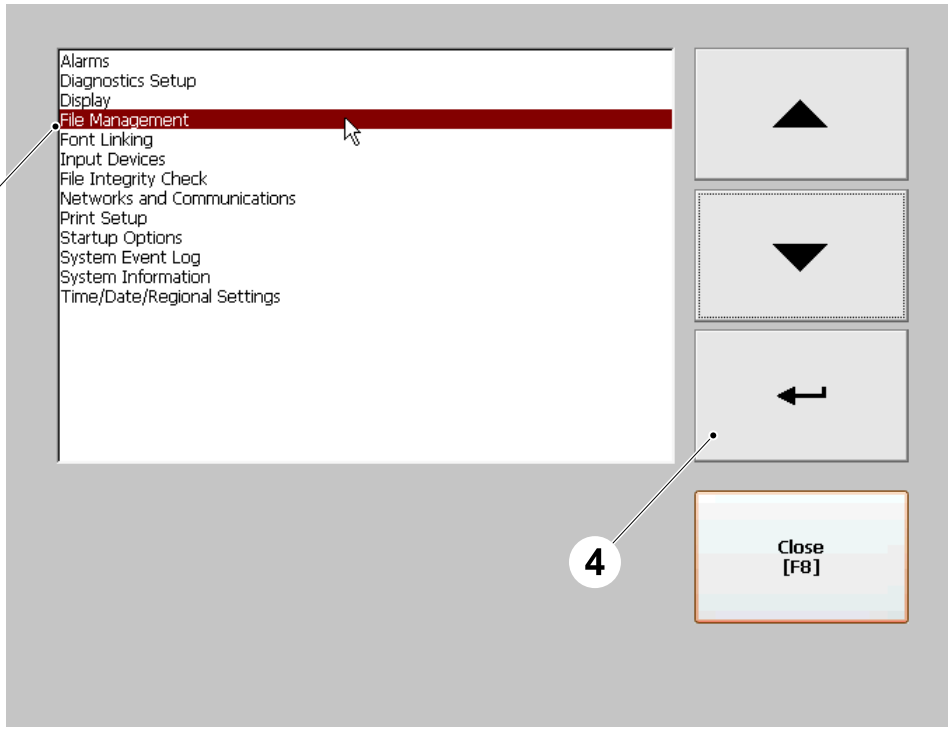

3 File management
4 ENTER button

(Cont'd)

(Cont'd)

c) Touch the ARROW button (5) to select "Delete Files".

d) Touch ENTER button (4) .

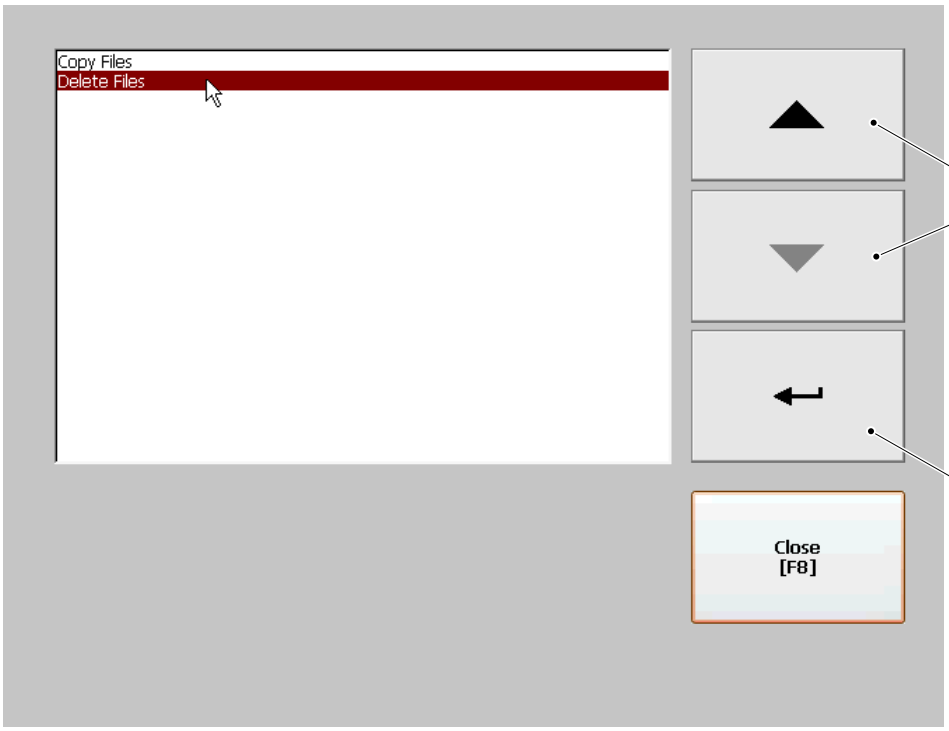

4 ENTER button
5 ARROW button

(Cont'd)

(Cont'd)

e) Select "Delete Applications" and touch ENTER button (4) .

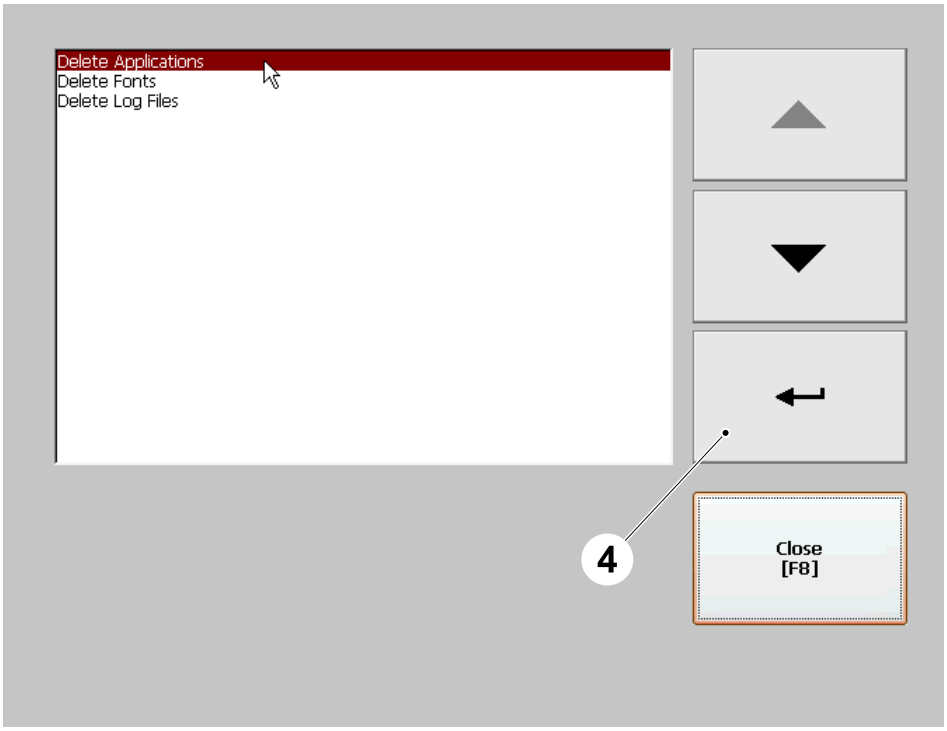

4 ENTER button

(Cont'd)

(Cont'd)

f) Touch Delete button (6) to remove all the Firmware applications (7) if any are present, if not and the field appears empty go to step Install New Firmware.

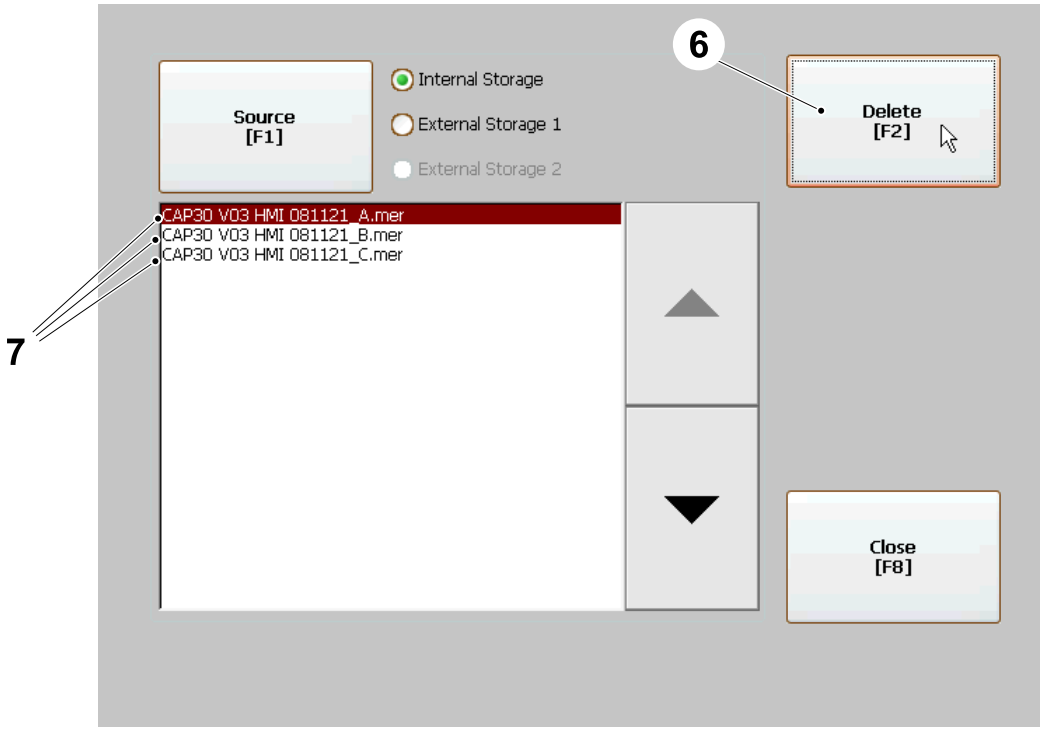

6 Delete button
7 Firmware applications

(Cont'd)

(Cont'd)

g) Touch YES button (8) to confirm.

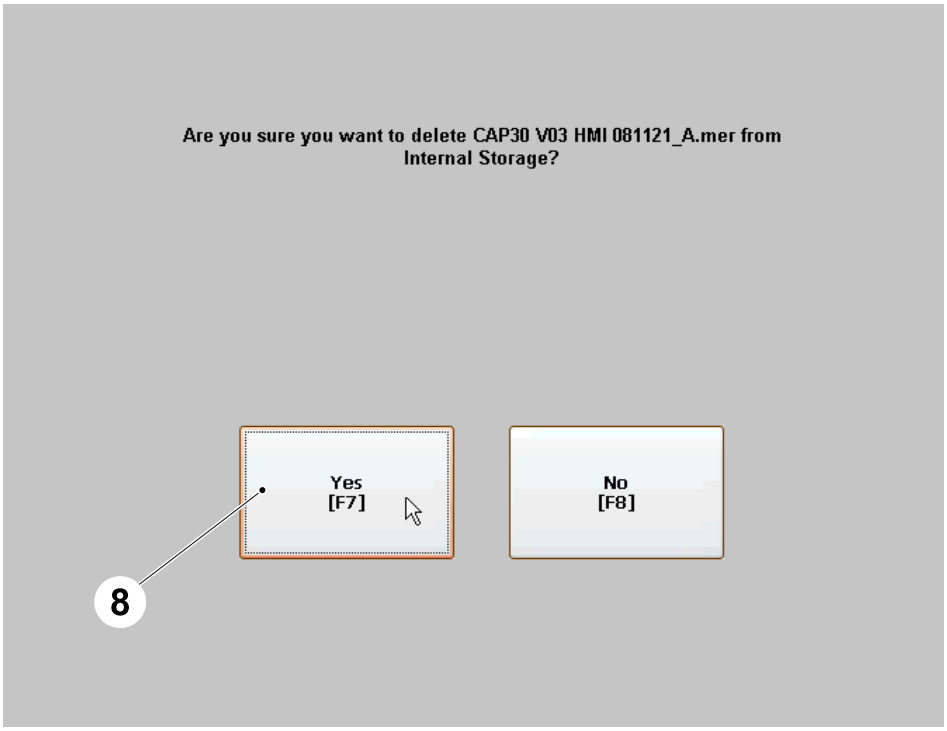

8 YES button

(Cont'd)

(Cont'd)

h) Delete all the applications by repeating the instructions from f) on page 10-247.

i) When all the applications are deleted, touch Close button (9) until the configuration window is displayed.

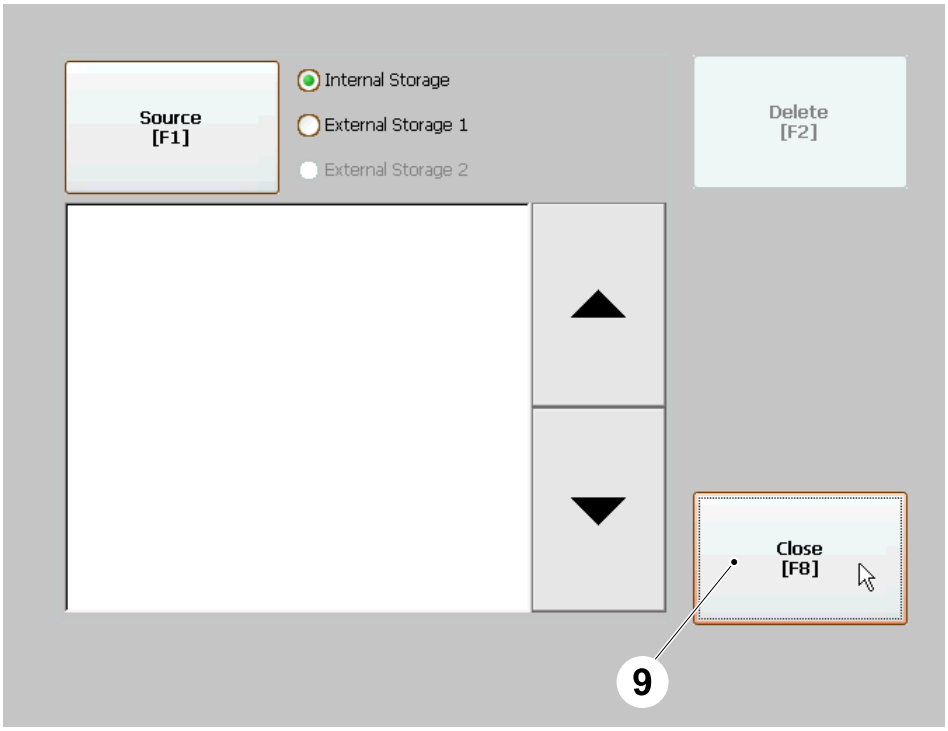

9 Close button

(Cont'd)

(Cont'd)

j) In the CONFIGURATION WINDOW (1) touch the Reset button (10).

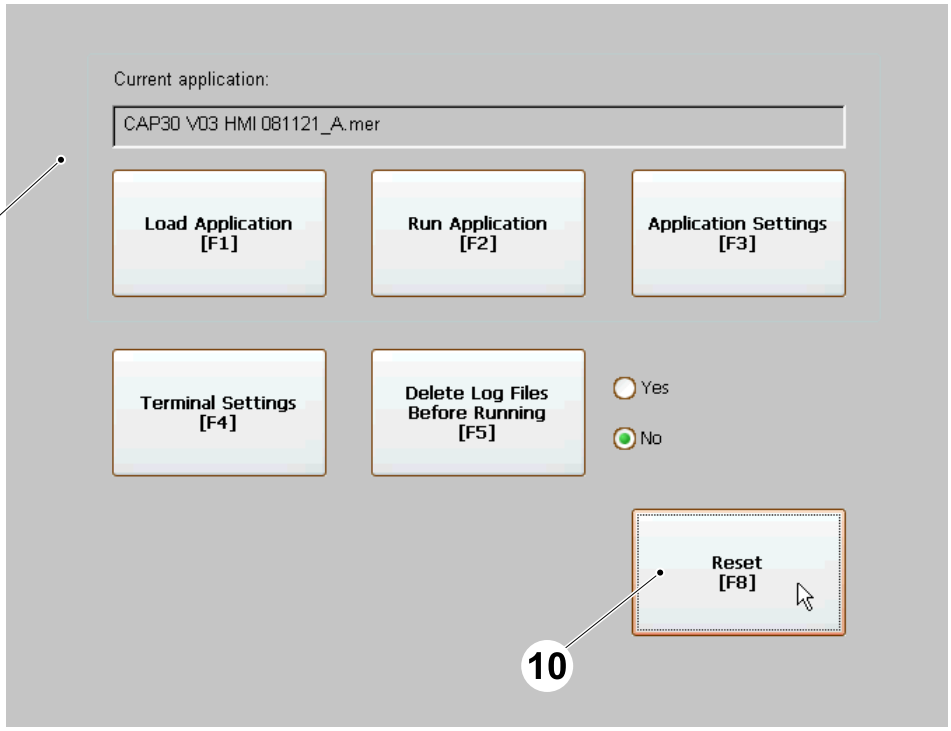

1 Configuration window
10 Reset button

(Cont'd)

(Cont'd)

k) Touch YES button (8) to confirm.

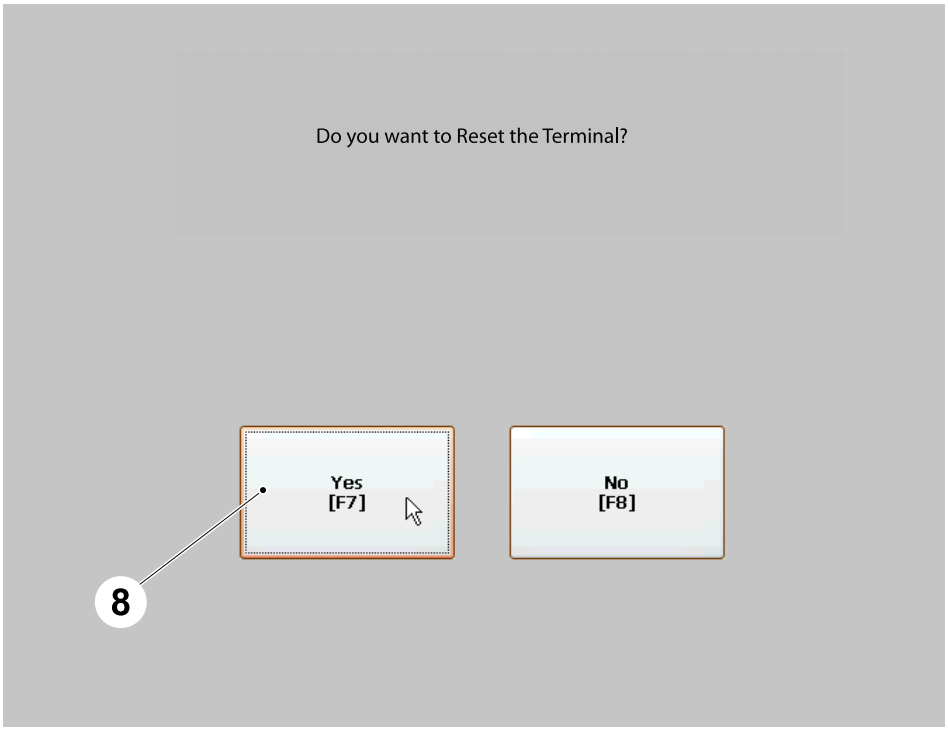

8 YES button

(Cont'd)

(Cont'd)

l) When the TPOP reboots, touch OK button (11) in the ERROR window (12) .

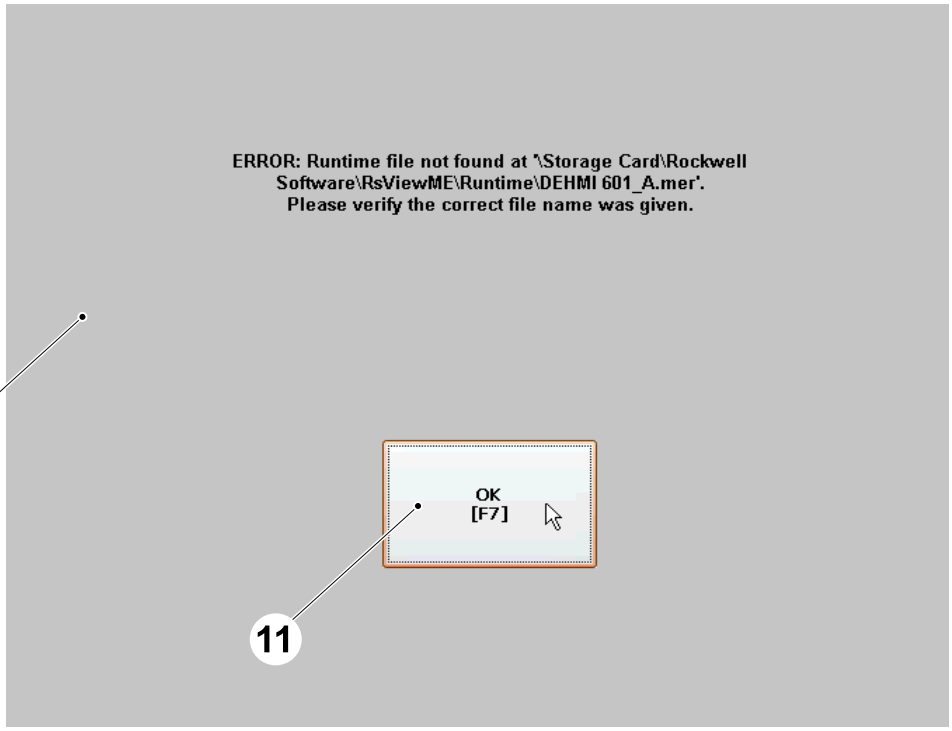

11 OK button
12 ERROR window

(Cont'd)

(Cont'd)

Copy Firmware to Secure Digital Card

Note! Use a formatted secure digital card.

a) Connect the Secure Digital Reader (1) to the PC (2) .

b) Insert the software CD into the PC CD drive and the Secure Digital Card (3) in the Secure Digital Reader (1) .

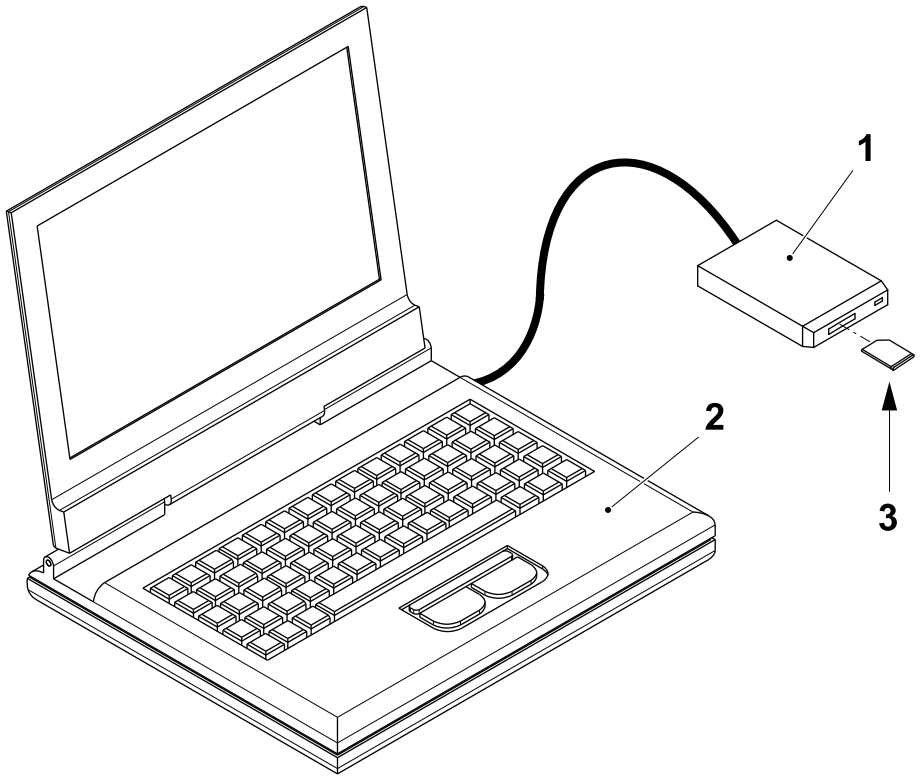

1 Secure Digital Reader
2 PC
3 Secure Digital Card

(Cont'd)

(Cont'd)

c) Browse the software CD and locate the subfolder shown in picture below.

d) Make sure that the Secure Digital Card is inside the Secure Digital Reader, then copy the file **Autorun.exe** and the folder **Upgrade** from the software CD to the Secure Digital Card.

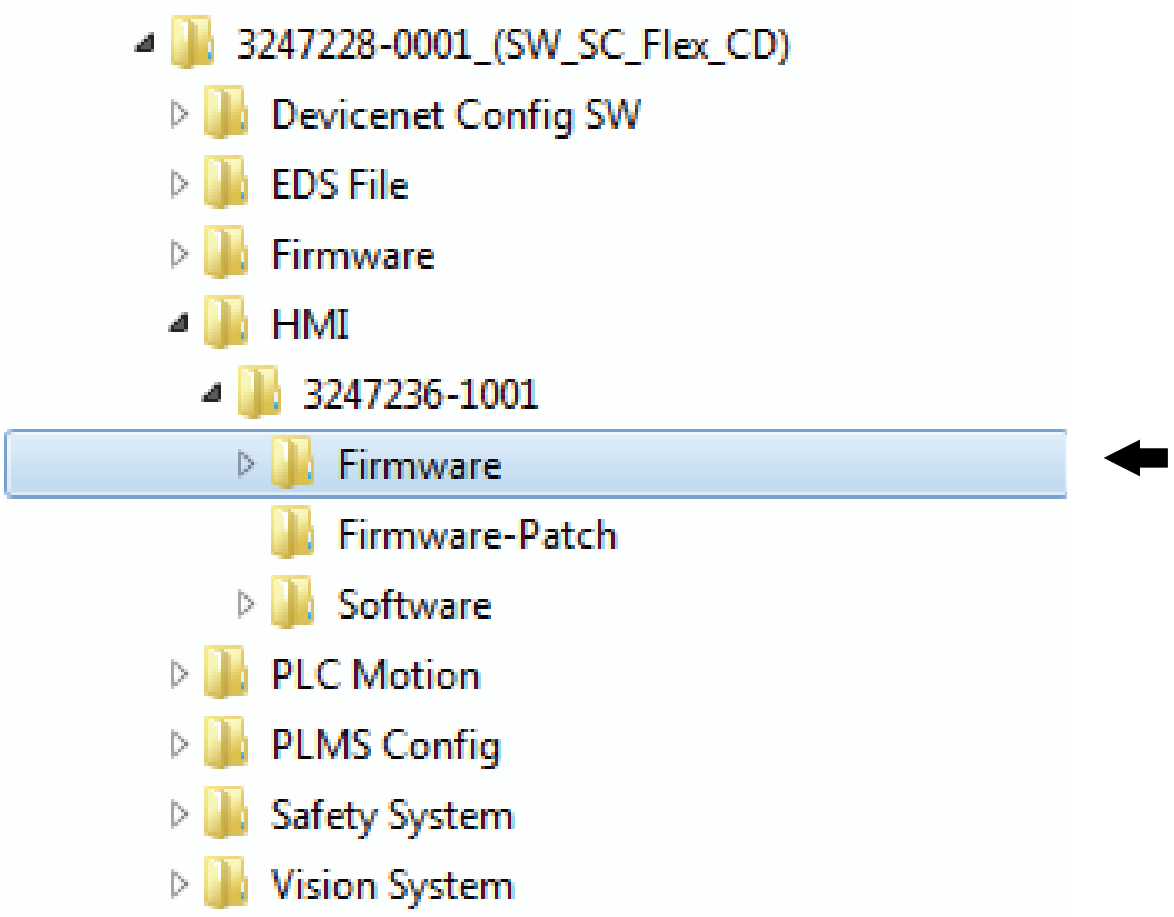

(Cont'd)

(Cont'd)

e) Remove the Secure Digital Card (3).

f) Disconnect the Secure Digital Reader (1) from the PC (2).

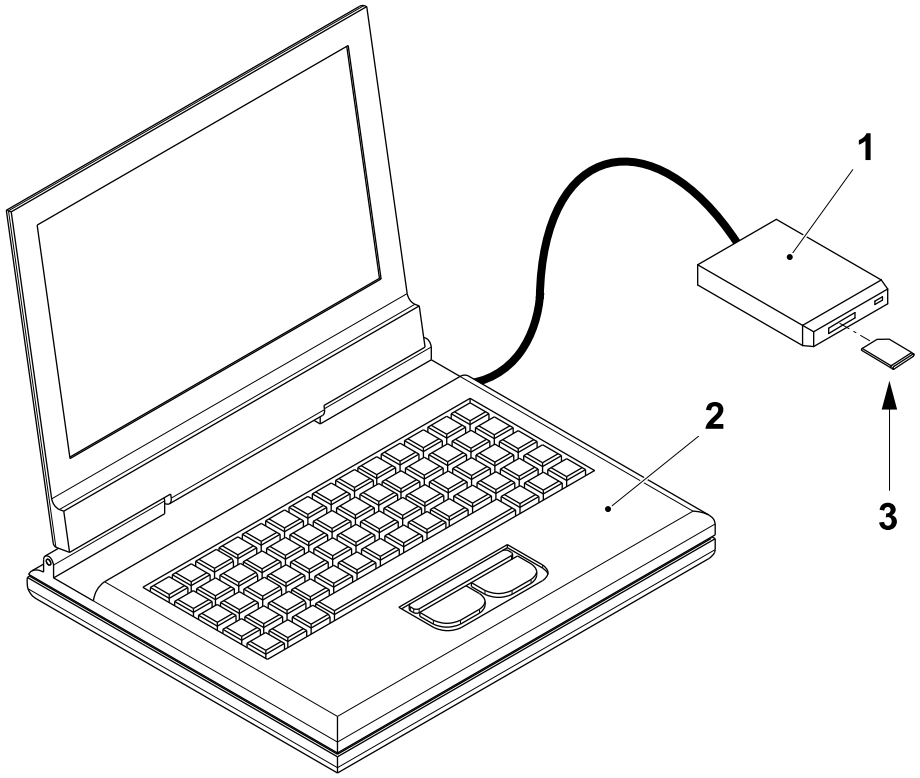

1 Secure Digital Reader
2 PC
3 Secure Digital Card

(Cont'd)

(Cont'd)

Install New Firmware

a) Remove the screw (1) and open the panel (2) to access the rear of the TPOP.

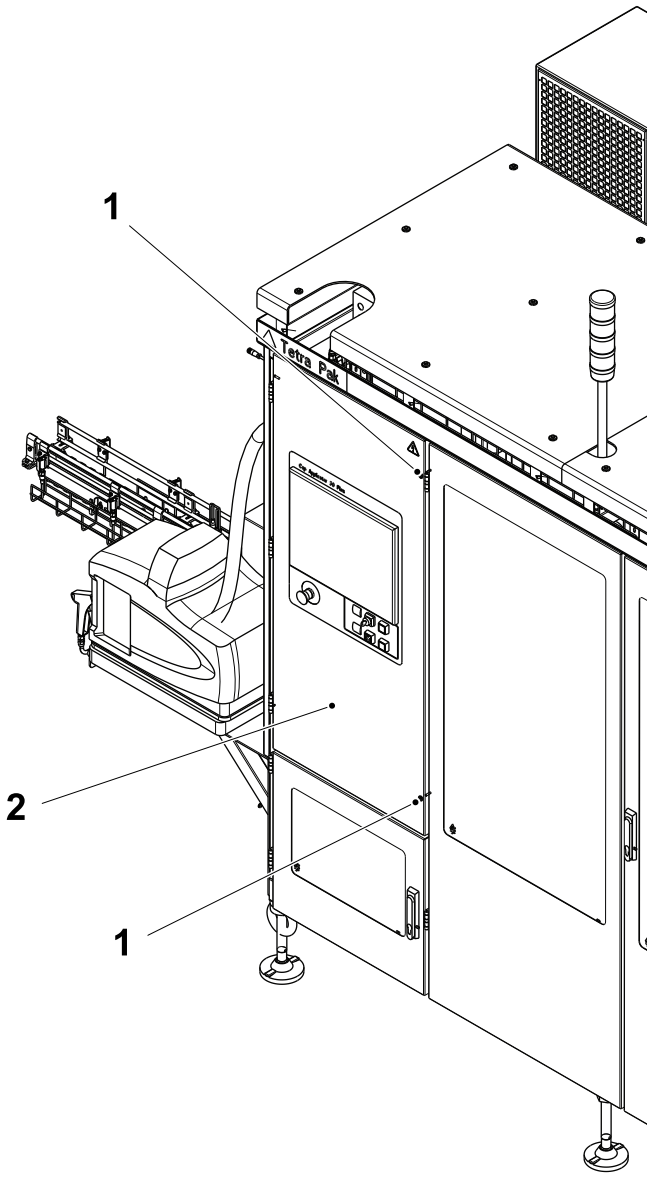

1 Screw
2 Panel

(Cont'd)

(Cont'd)

b) Insert the Secure digital card (3) with the new Firmware inside the slot (4), making sure that the cut edge (5) is placed on the outer side.

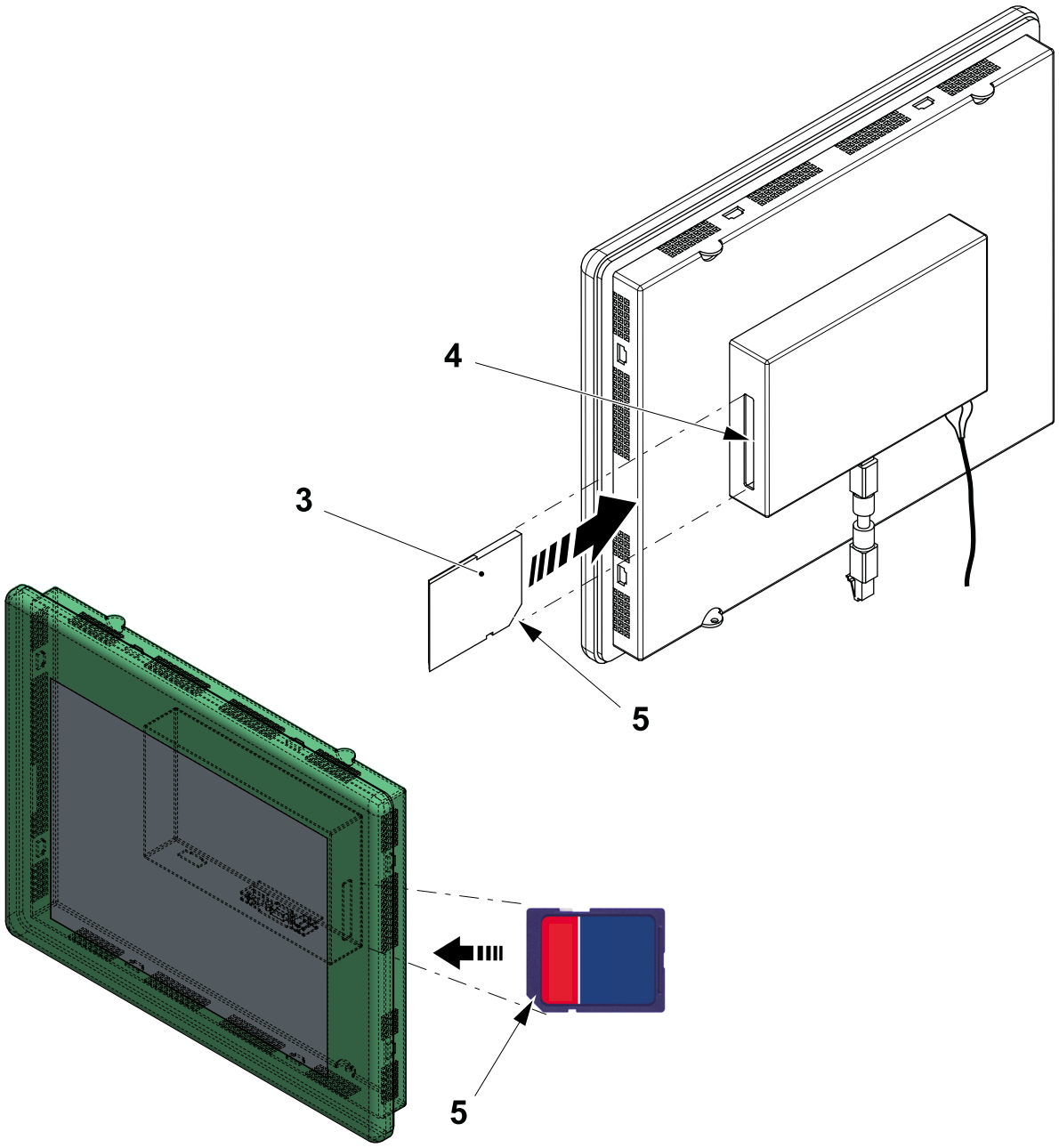

3 Secure digital card
4 Slot
5 Edge

(Cont'd)

(Cont'd)

c) When the Firmware upgrade card window (6) appears, check the versions of the Firmware and touch the Upgrade button (7) to upgrade to the latest version.

d) In case the Firmware is already updated, touch the Exit button (8) and proceed from 10.9.1-4 Touch Screen - New Application Software Installation.

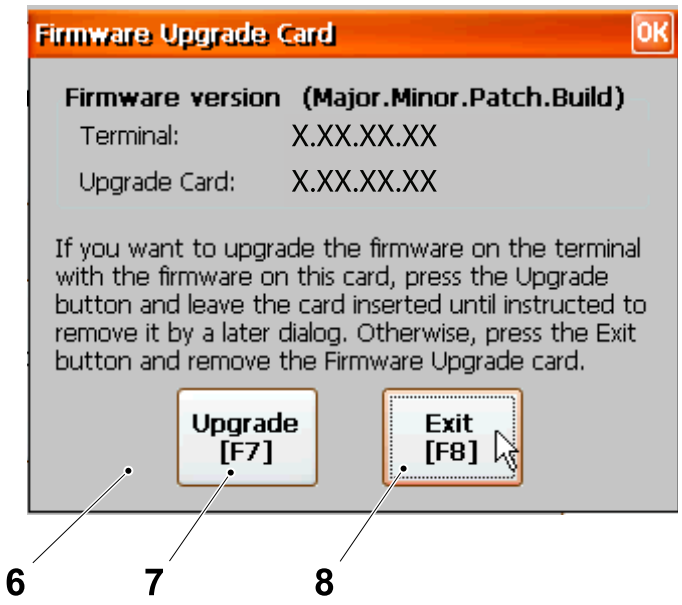

6 Firmware upgrade card window
7 Upgrade button
8 Exit button

(Cont'd)

(Cont'd)

e) Wait for the TPOP to finish the uploading of Firmware.

f) Calibrate the touch sensor area of the TPOP according to the instructions described in the paragraph 10.9.1-3 Touch Screen Machine Setup - Calibrate Touch Screen on page 10-260.

g) Remove the Secure Digital card.

h) Touch RESET button (9).

i) The panel reboots.

j) Set the IP address of the panel, see 10.9.1-7 Touch Screen - Check/Set Network Configuration.

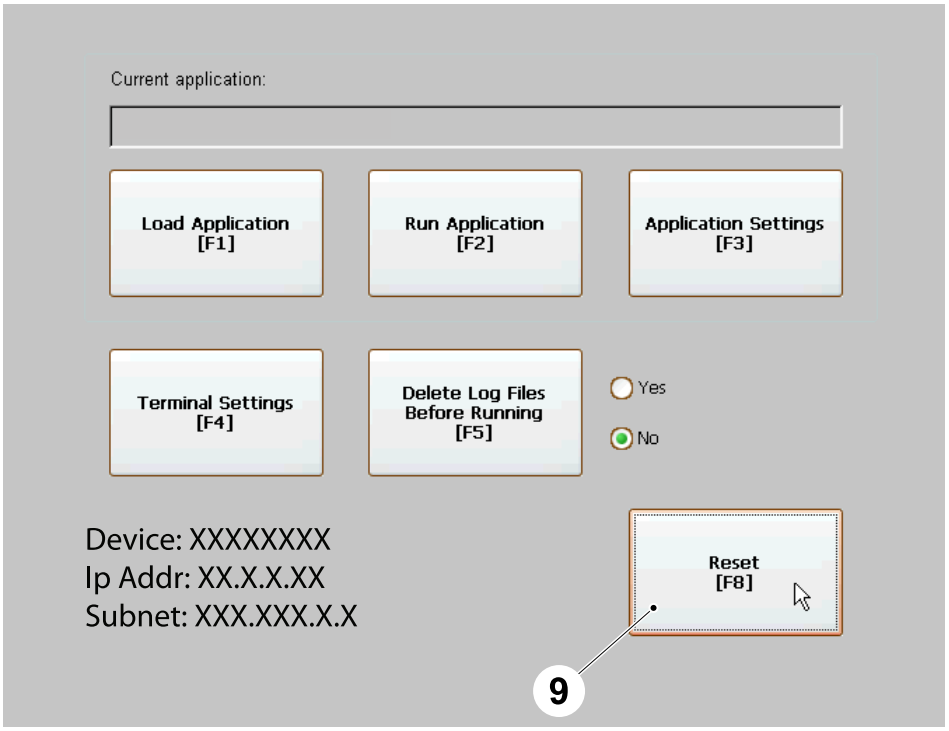

9 RESET button

10.9.1-3 Touch Screen Machine Setup - Calibrate Touch Screen

Machine Status	Electrical supply disconnecting device in position I (ON)
Special Equipment	PC with CD Drive Secure Digital Reader Secure Digital Card TP No. 90604-3590 for Firmware see SPC
SPC Reference	2779070-0300

a) Shut down the TPOP, see 10.9.1-1 Touch Screen - TPOP SHUTDOWN.

b) In the MAIN window, touch the `TERMINAL SETTING BUTTON` (1).

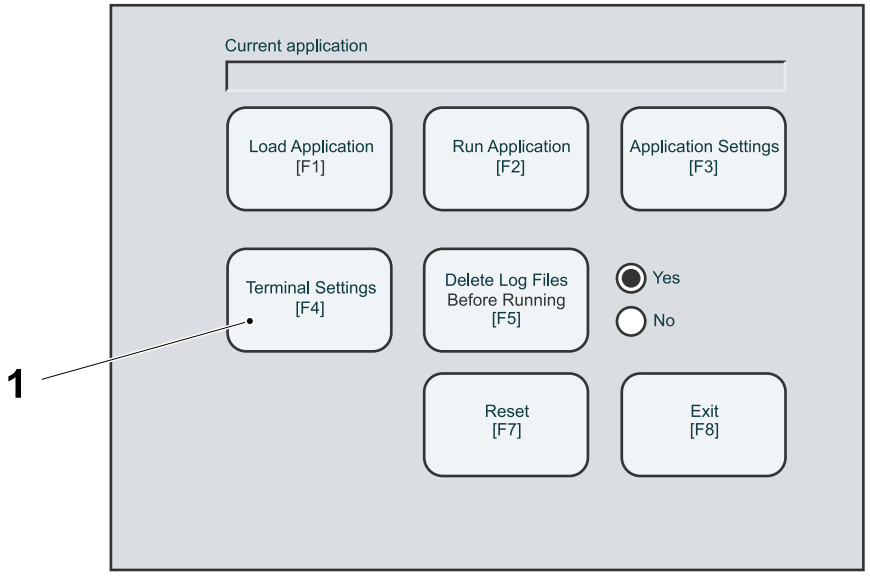

1 Terminal setting button

(Cont'd)

(Cont'd)

c) Select Input Devices (2) and touch ENTER button (3).

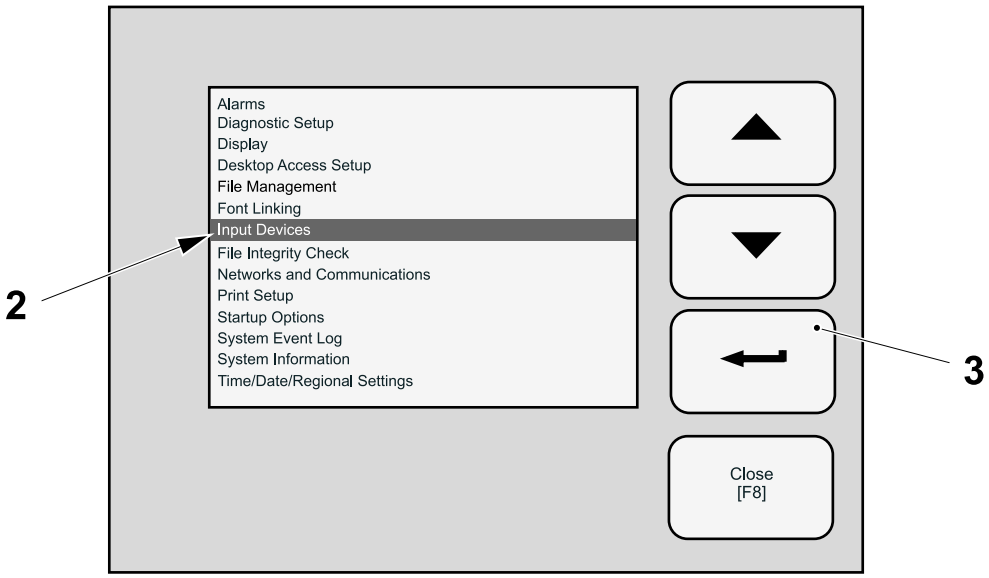

2 Input Devices
3 ENTER button

d) Touch the Touch Screen (4) and touch the ENTER button (3)

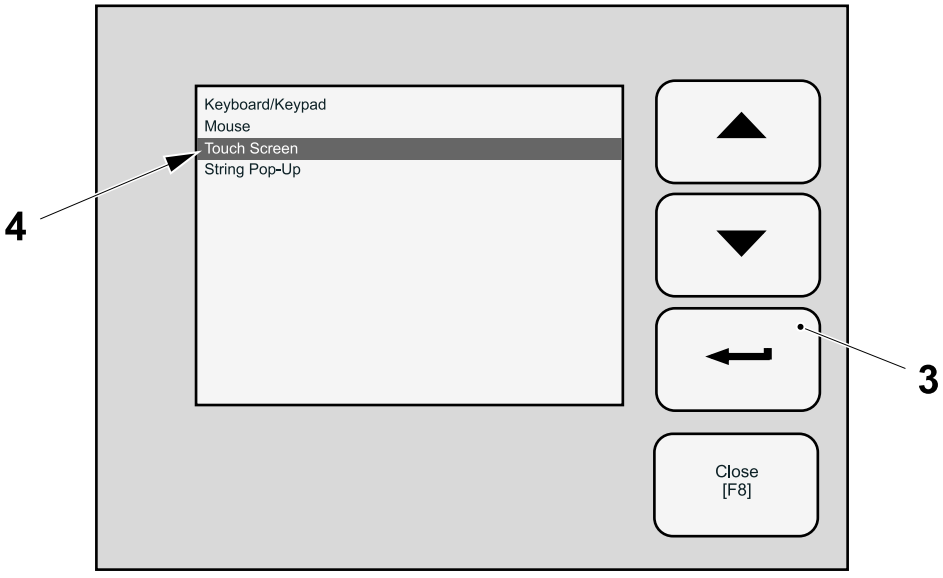

3 ENTER button
4 Touch Screen

(Cont'd)

(Cont'd)

e) Select the CALIBRATION (5) and touch ENTER button (3) .

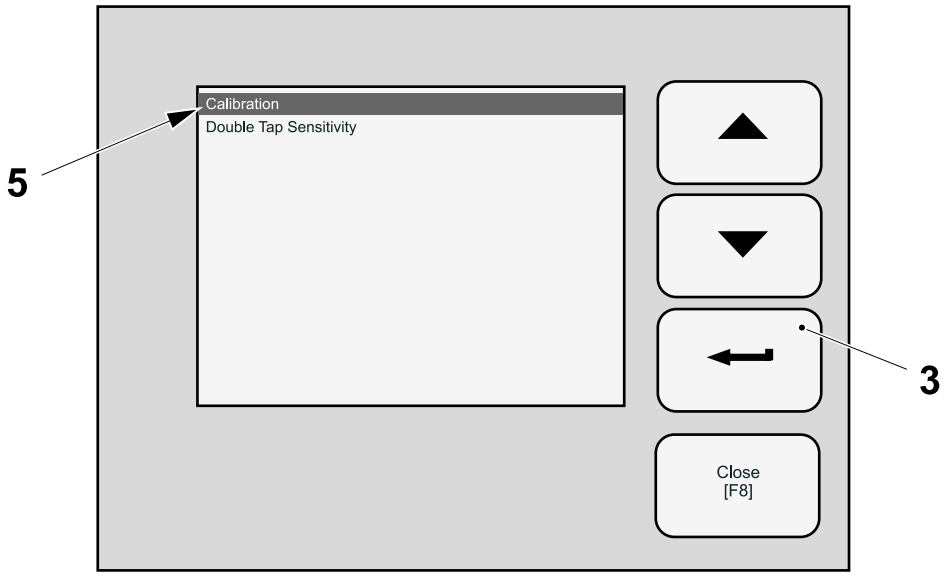

3 ENTER button

5 CALIBRATION

(Cont'd)

(Cont'd)

f) Follow the instructions on the touch screen to calibrate it. Using a pointed object (not too pointed) touch in the middle of the cross that will appear at the screen centre and on each corner of the screen, as shown in the pictures from 1 to 5.

g) Touch the screen again within 30 seconds to confirm the new calibration, or wait 30 seconds to reset the previous calibration.

h) Repeatedly press the CLOSE button until the MAIN window appears.

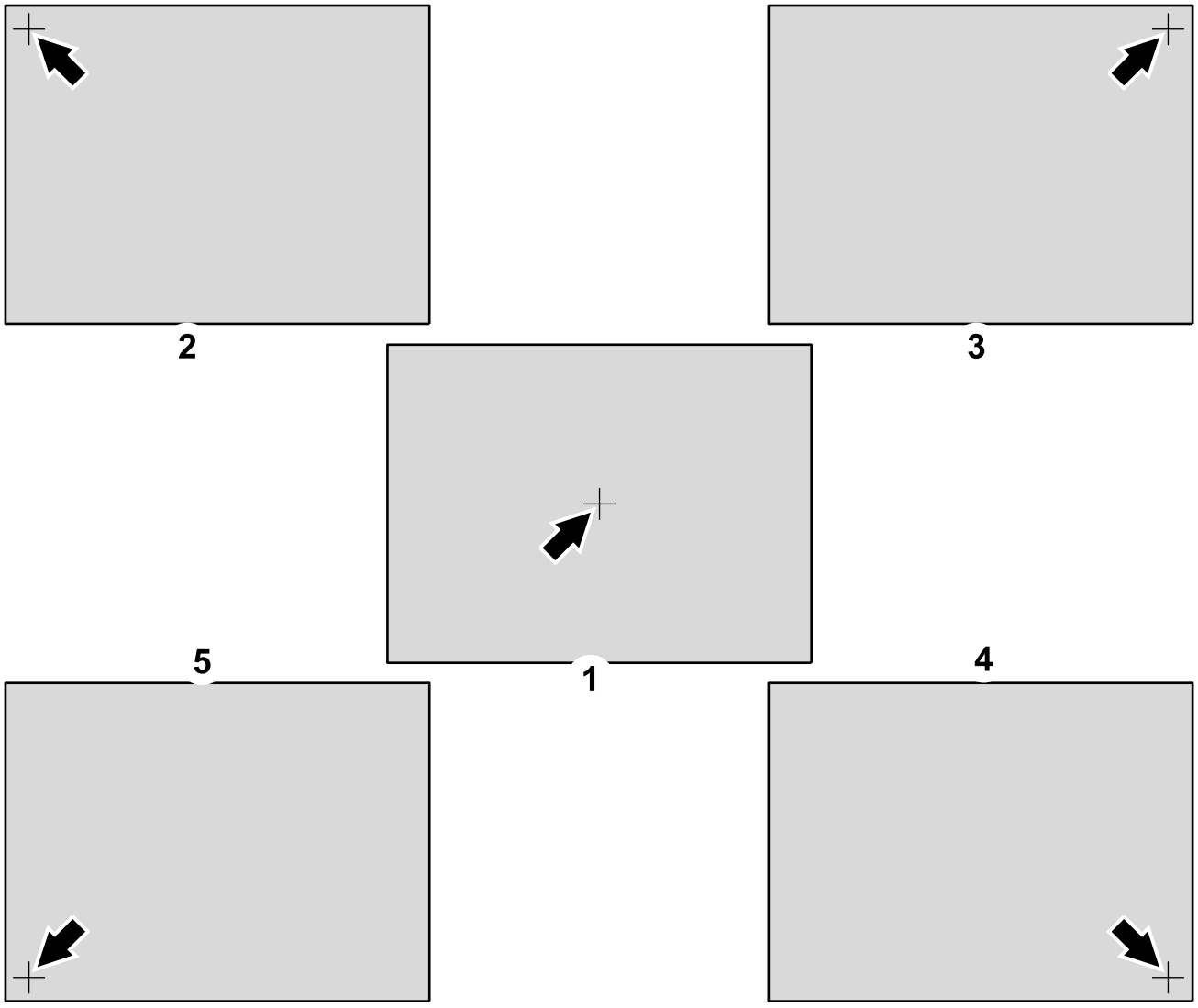

10.9.1-4 Touch Screen - New Application Software Installation

Machine Status	Electrical supply disconnecting device in position I (ON)
Special Equipment	PC with CD Drive and Secure Digital card reader Secure Digital card Software CD TP No. XXXXXXX-XXXX TetraPak Installer Version 1.2
SPC Reference	2779070-0300

Note! Use a formatted Secure Digital card.

a) Browse the software CD drive to the folder **../HMI/3247236-100X/PVP6 1500-SD Card/**, then copy all the folders and files from the CD to the root of the Secure Digital card.

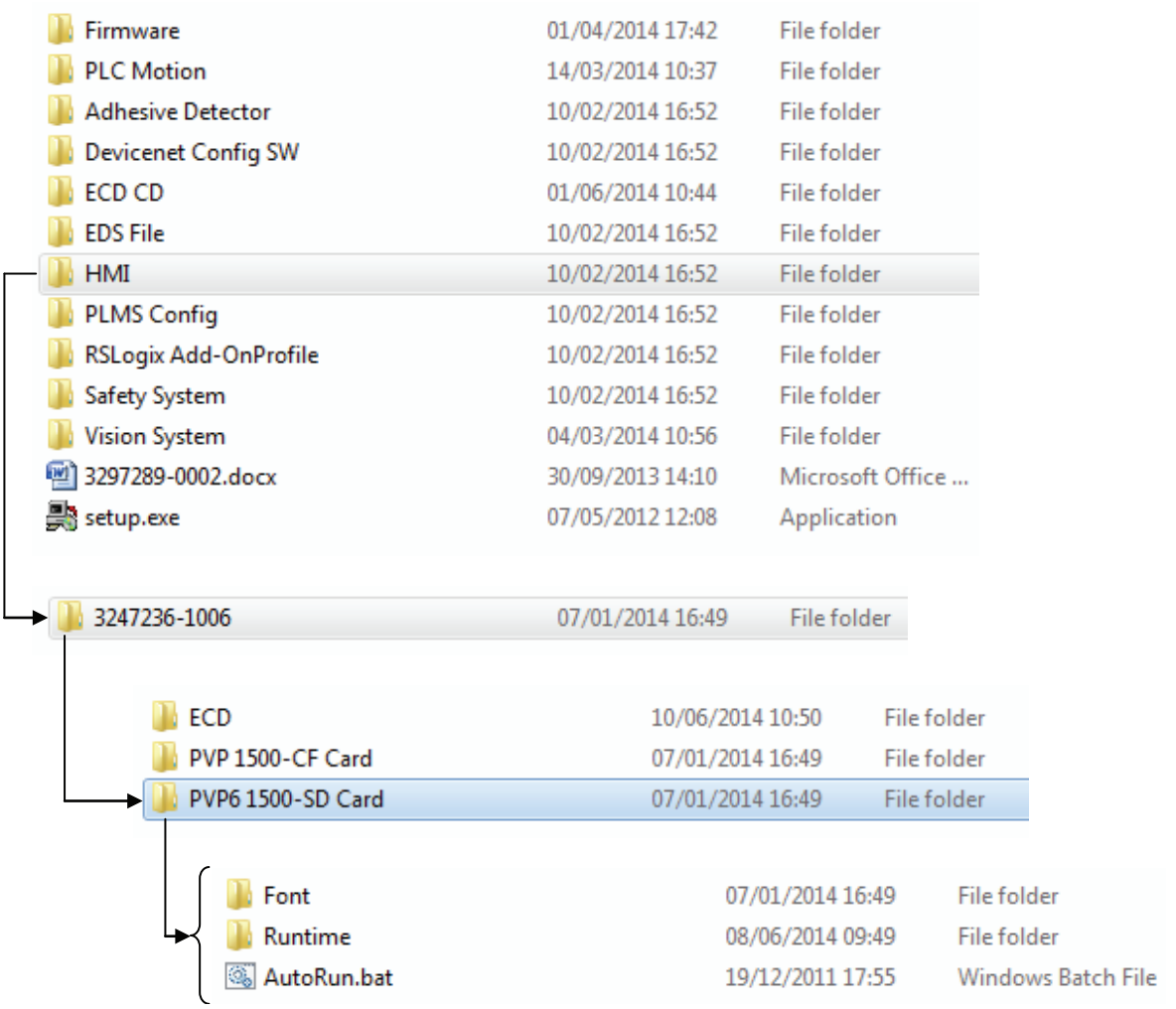

(Cont'd)

(Cont'd)

b) Delete all projects (*.mer-files) from TPOP panel if not empty, see 10.9.1-5 Touch Screen - Remove Existing Application Program.

c) When the TPOP reboots, wait for the Configuration window (1) to appear.

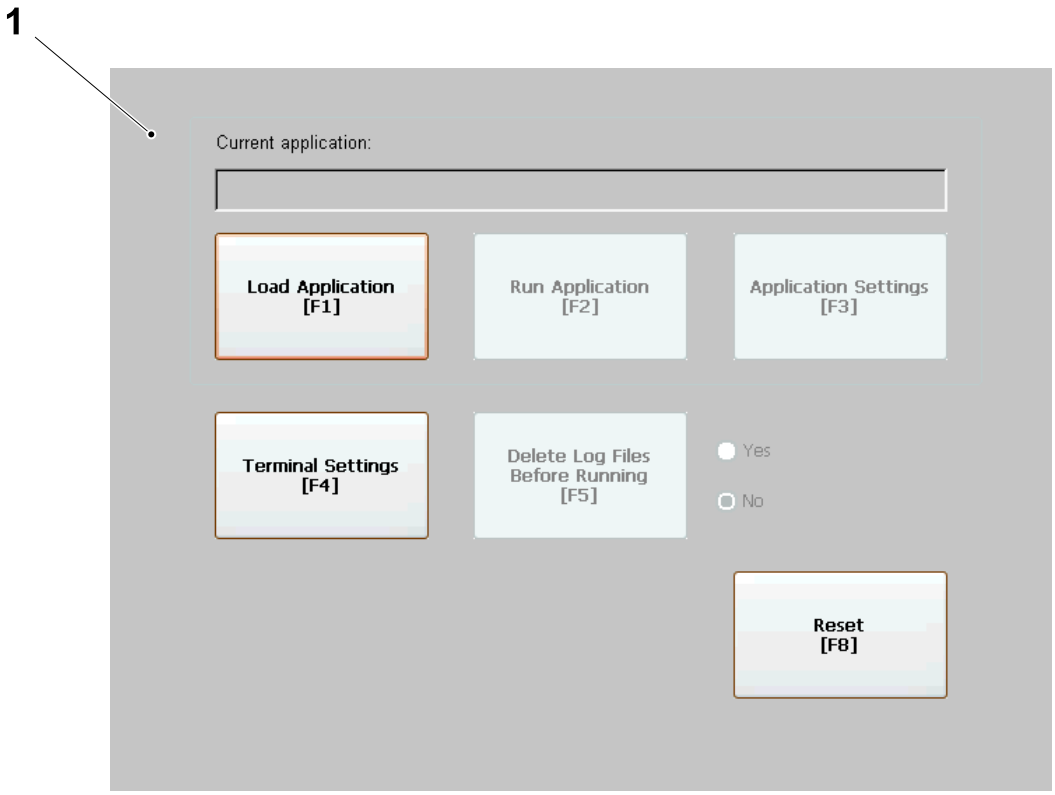

1 Configuration window

(Cont'd)

(Cont'd)

d) Insert the Secure Digital Card (2), with the new Software, inside the slot (3) , making sure that the cut edge (4) is placed on the lower side.

Note! The new software application will be installed automatically.

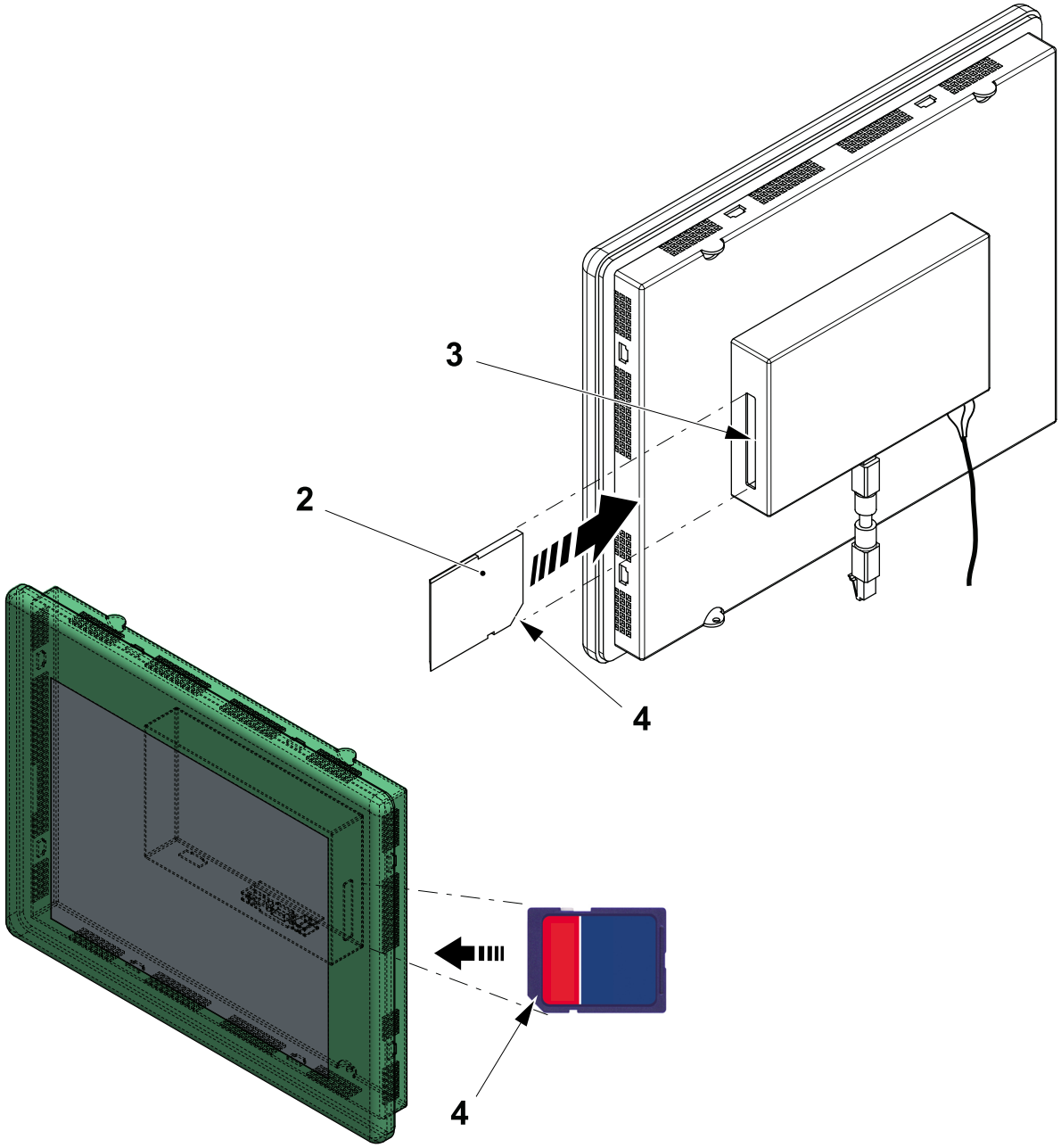

2 Secure Digital Card
3 Slot
4 Edge

(Cont'd)

(Cont'd)

e) When the installation is completed, the window below appears.

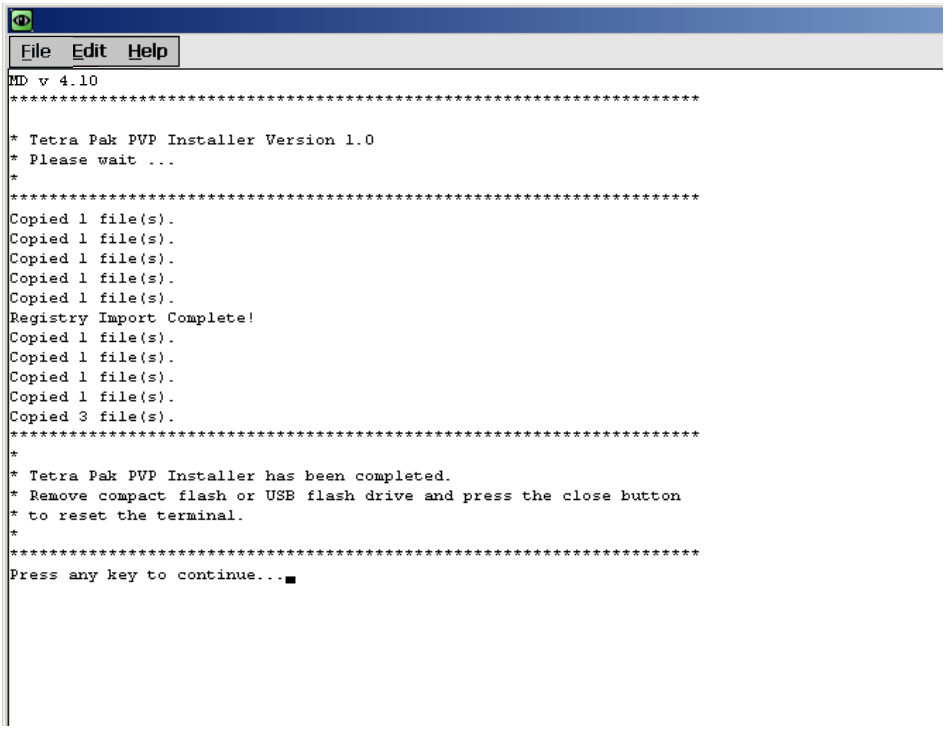

(Cont'd)

(Cont'd)

f) Remove the Secure Digital Card (2) with the new Application.

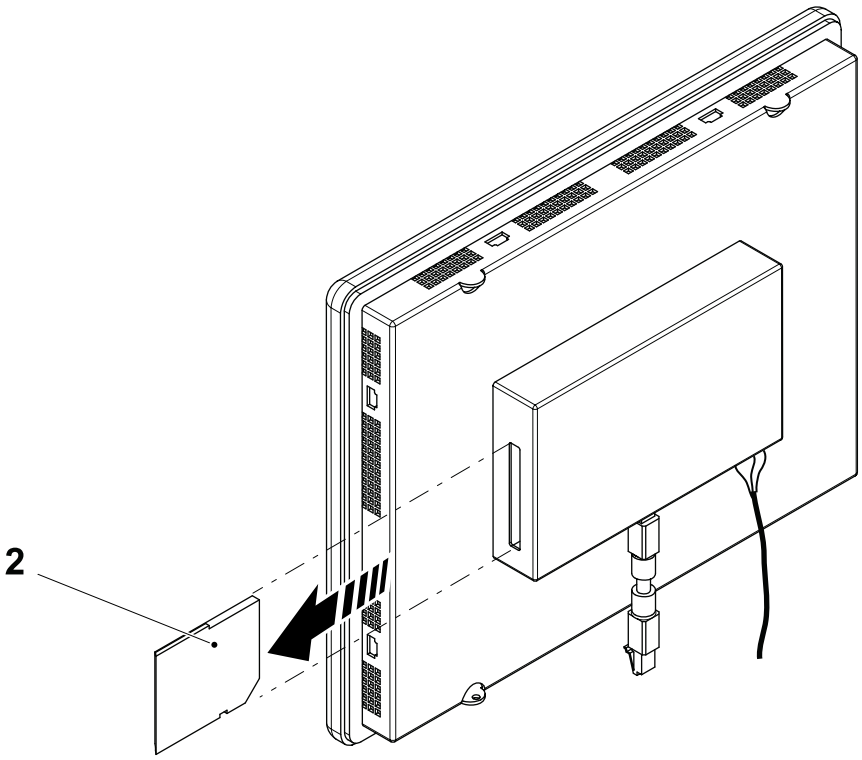

2 Secure Digital Card

(Cont'd)

(Cont'd)

g) Touch File and then Close.

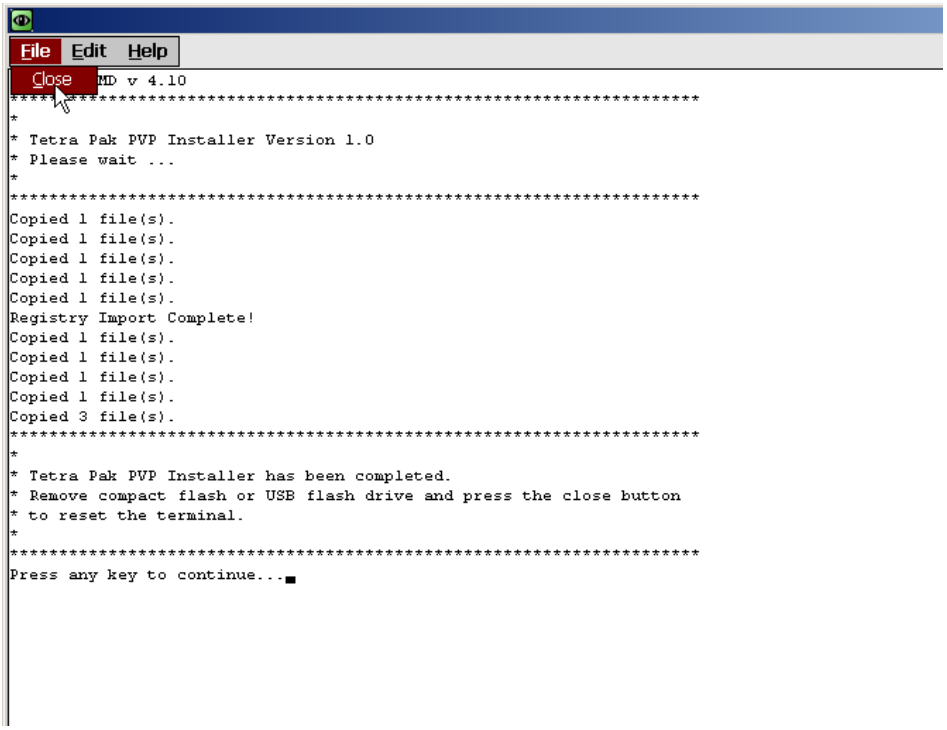

(Cont'd)

(Cont'd)

h) In the configuration window (5) touch the LOAD APPLICATION button (6) .

i) Load the new application, see 10.9.1-6 Touch Screen - Load New Application.

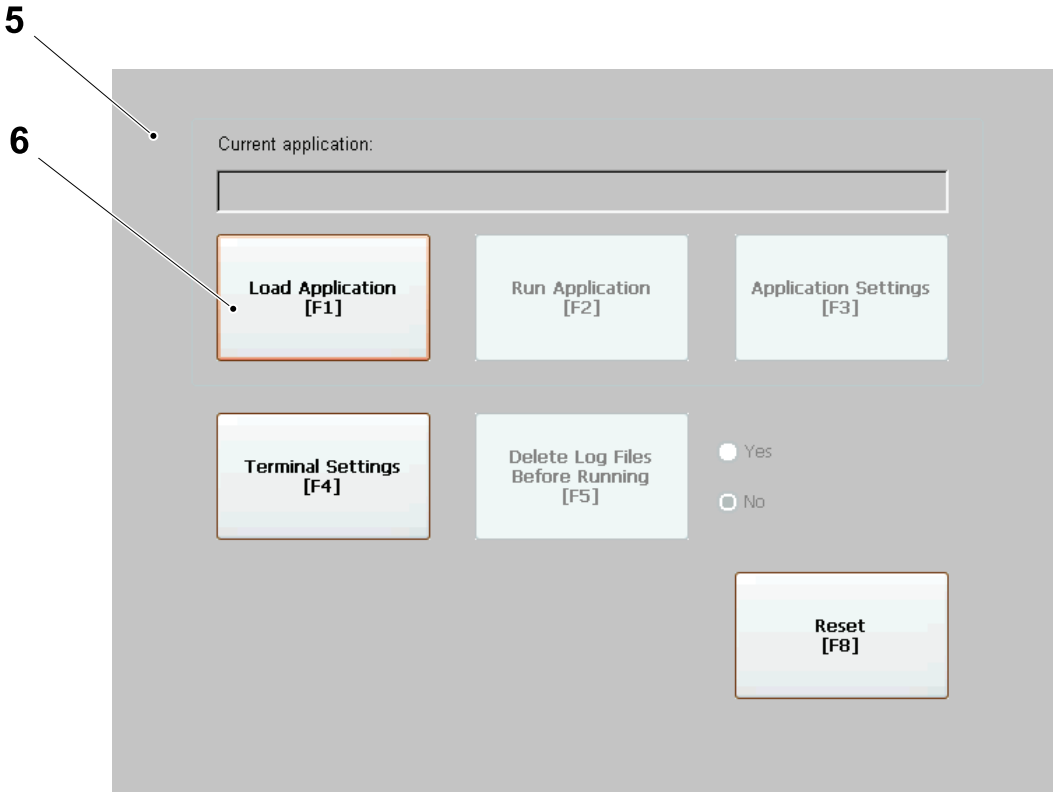

5 Configuration window
6 LOAD APPLICATION button

10.9.1-5 Touch Screen - Remove Existing Application Program

Machine Status	Electrical supply disconnecting device in position I (ON)
SPC Reference	90604-3805

Before a new application program can be installed, all files associated with the old program must be deleted to make space in the memory for the new program.

a) Shut down the TPOP, see 10.9.1-1 Touch Screen - TPOP SHUTDOWN.

b) In the MAIN window, press the TERMINAL SETTING button (1) .

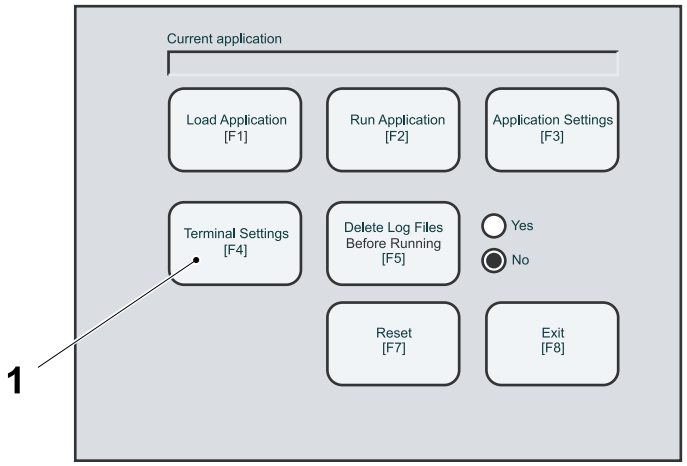

1 TERMINAL SETTING button

c) Select the FILE MANAGMNET (2) and press the ENTER button (3) .

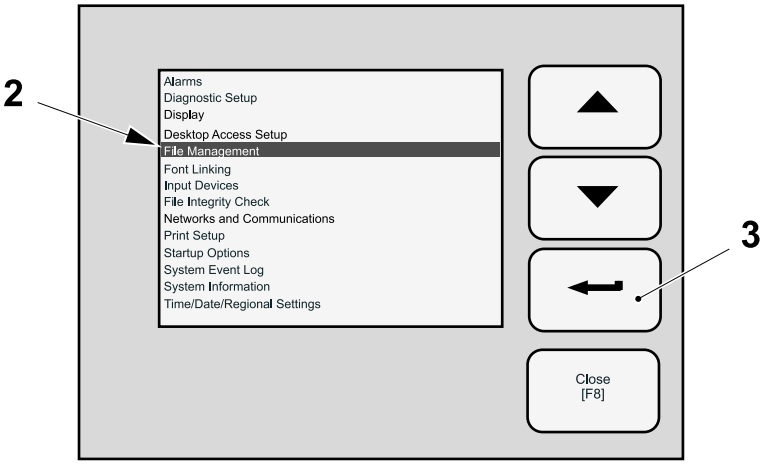

2 FILE MANAGMNET
3 ENTER button

(Cont'd)

(Cont'd)

d) Select DELETE FILES (4) and press the ENTER button (3) .

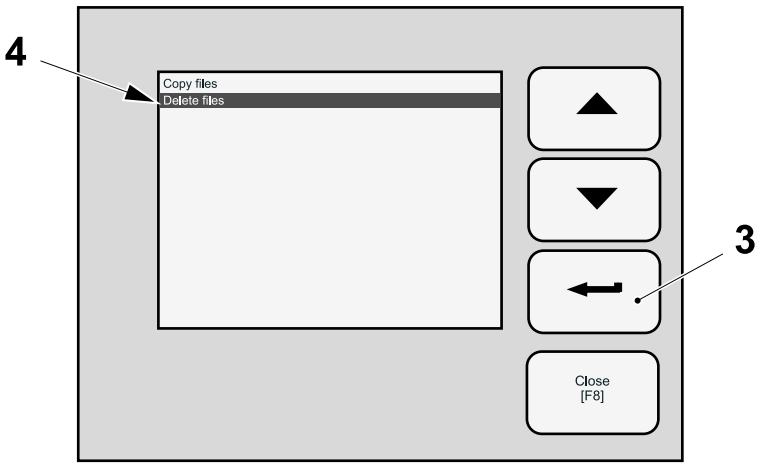

3 ENTER button
4 DELETE FILES

e) Select DELETE APPLICATIONS (5) and press the ENTER button (3).

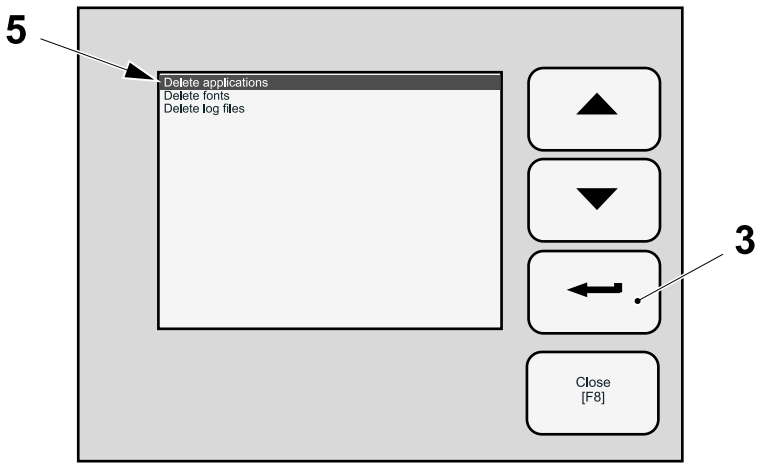

3 ENTER button
5 DELETE APPLICATIONS

(Cont'd)

(Cont'd)

f) Select one of the APPLICATION PROGRAMS (6) to be deleted and press the DELETE button (7) .

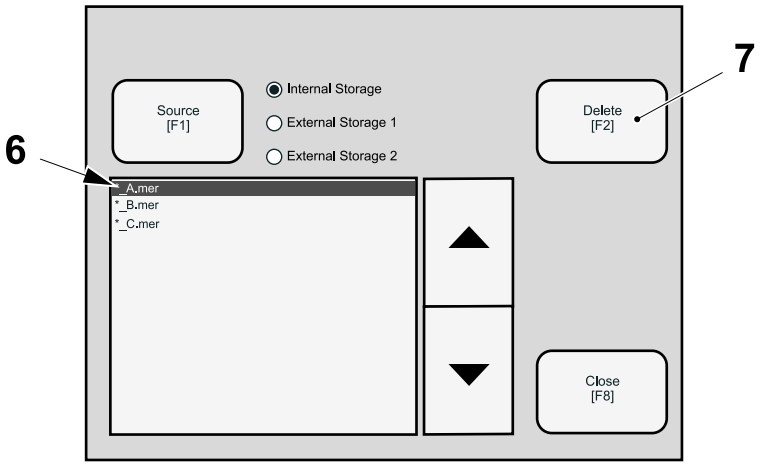

6 APPLICATION PROGRAMS
7 DELETE button

g) Press the YES button (8) to confirm.

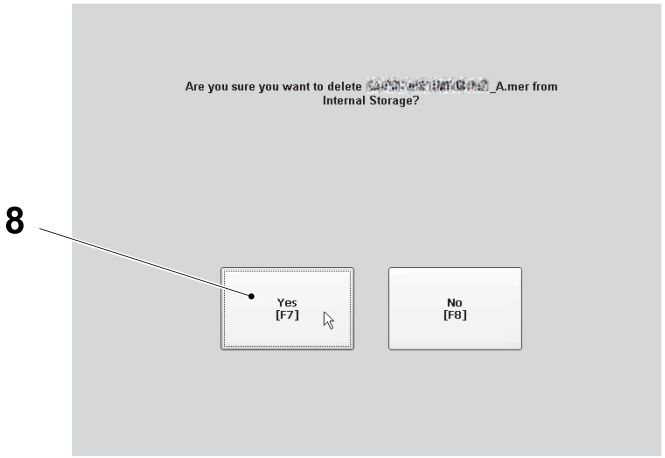

8 YES button

(Cont'd)

(Cont'd)

h) Delete any other application program, applying the items and on the previous page, then press the CLOSE button (9) .

i) Repeatedly press the CLOSE button (9) until the MAIN window appears.



9 CLOSE button

10.9.1-6 Touch Screen - Load New Application

Machine Status	Electrical supply disconnecting device in position I (ON)
SPC Reference	2779070-0300

a) When the TPOP reboots, in the Configuration window (1) touch the Load application button (2) .

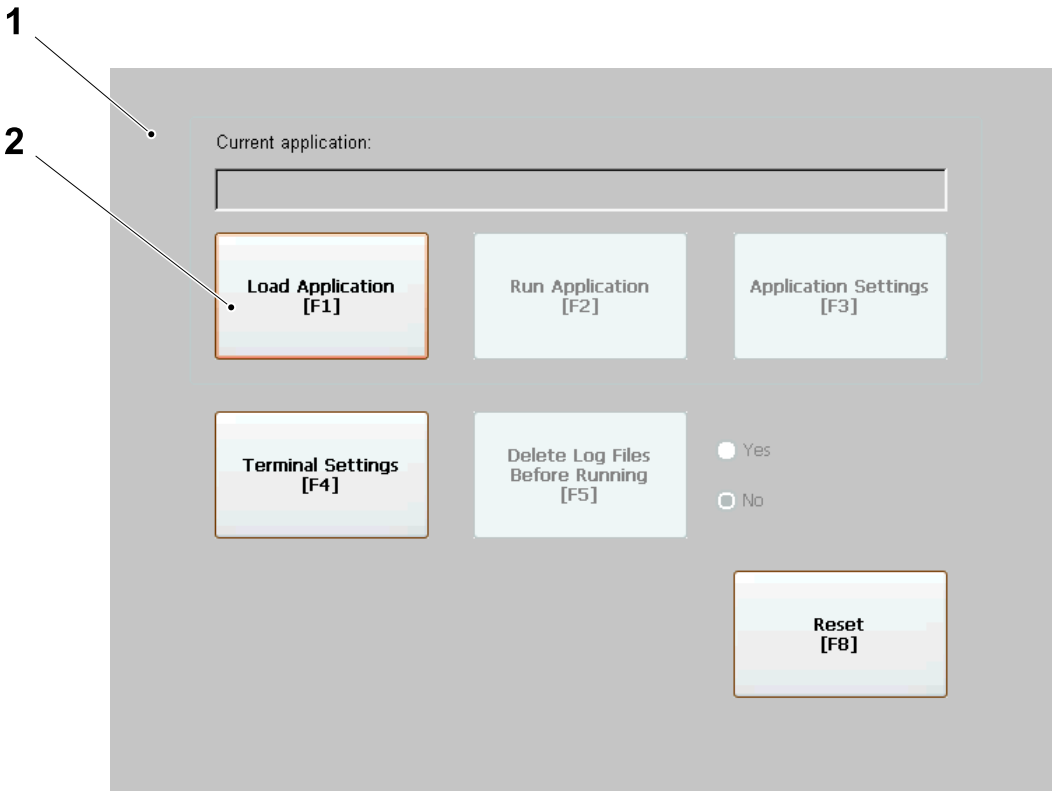

1 Configuration window
2 Load application button

(Cont'd)

(Cont'd)

b) Touch the ARROW button (3) and select the proper application of the TPOP that matches the desired language, see the table on 10-278.

c) Touch the LOAD button (4).

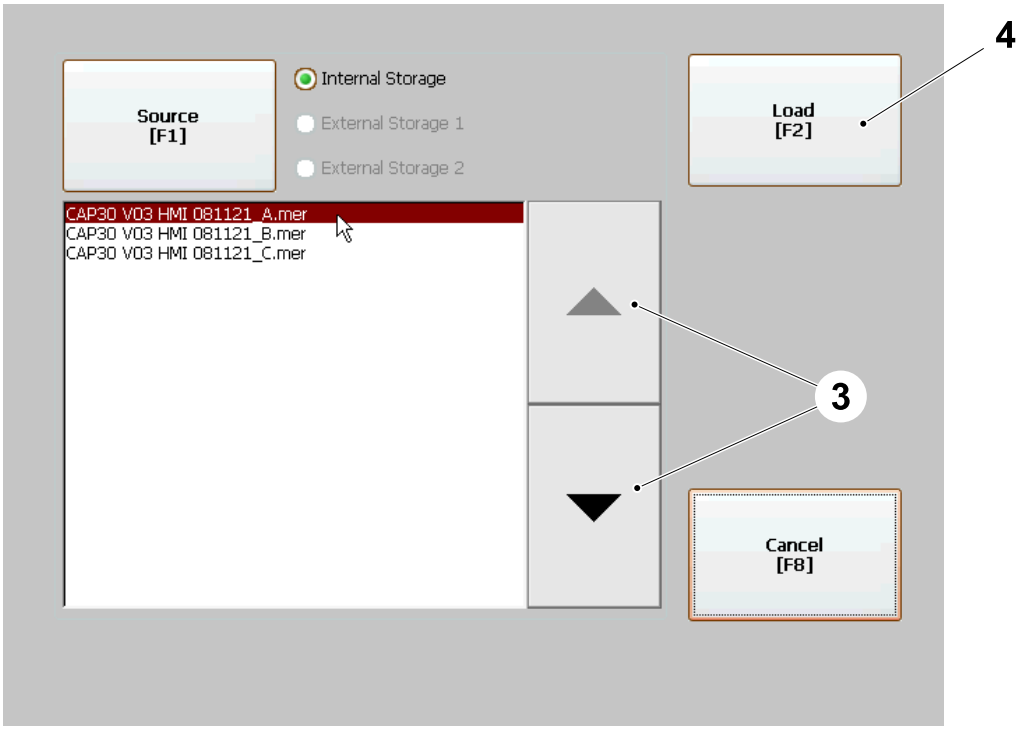

3 ARROW button
4 LOAD button

(Cont'd)

(Cont'd)

d) Touch YES button (5) to confirm.

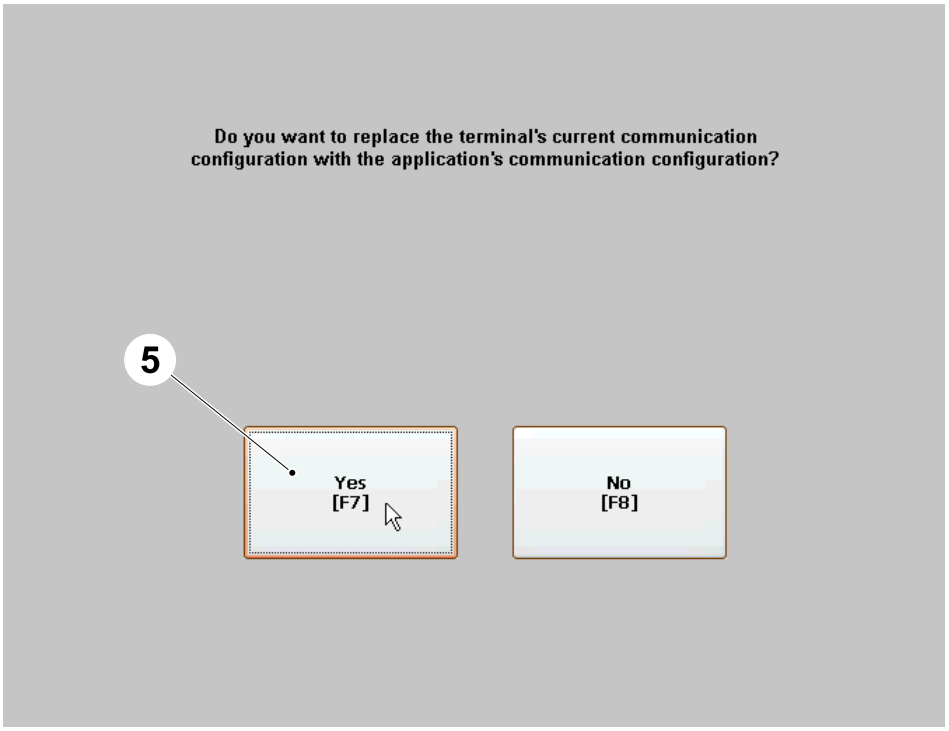

5 YES button

e) Wait for the TPOP to upload the selected application.

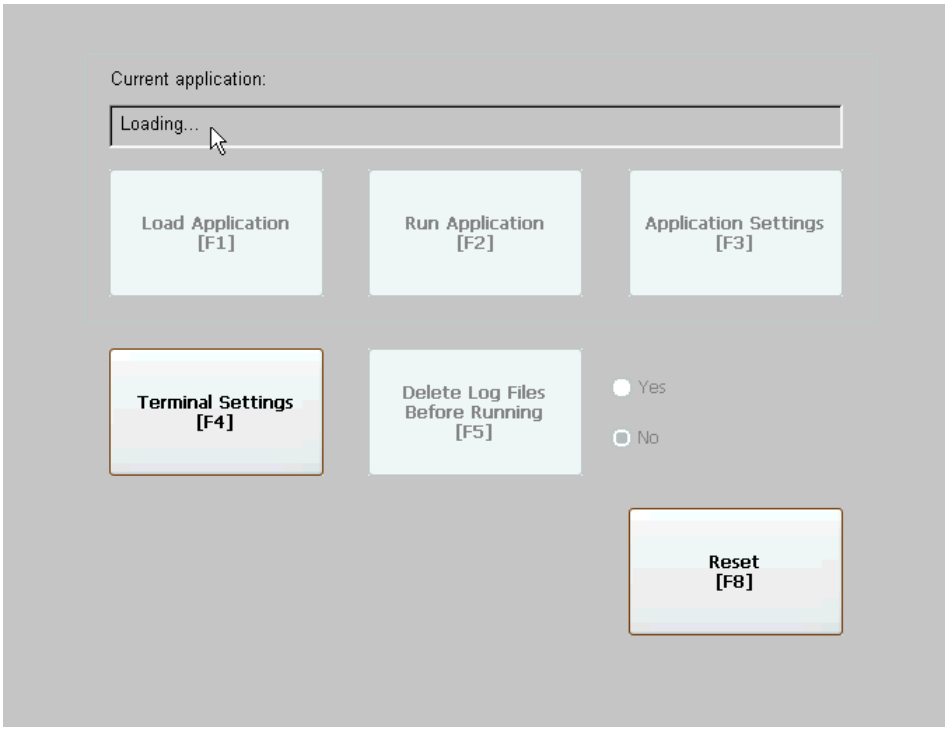

(Cont'd)

(Cont'd)

Language Table

Note! In the table below there are all the languages available for the TPOP. The languages of the group **A** are available in the application program named XXXXXX_A.mer and consequently for the group **B** and **C.**

Note! English is available in all the three groups.

LANGUAGE GROUP A	LANGUAGE GROUP B	LANGUAGE GROUP C
English	English	English
Swedish	Czech	Arabic
German	Croatian	Persian
French	Slovenian	Malay
Spanish	Slovak	Japanese
Italian	Romanian	Simplified Chinese
Portuguese	Bulgarian	Thai
Danish	Hungarian	Korean
Greek	Russian	Traditional Chinese
Finnish	Latvian	Vietnamese
Polish	Estonian	
Dutch	Lithuanian	
Norwegian	Serbian	
Turkish		

Note! If your language is not shown above you should contact TetraPak for more information.

10.9.1-7 Touch Screen - Check/Set Network Configuration

Machine Status	Electrical supply disconnecting device in position I (ON)
SPC Reference	2779070-0300

Note! Check the application program (1) on the configuration window (2).

a) Touch `TERMINAL SETTINGS` button (3).

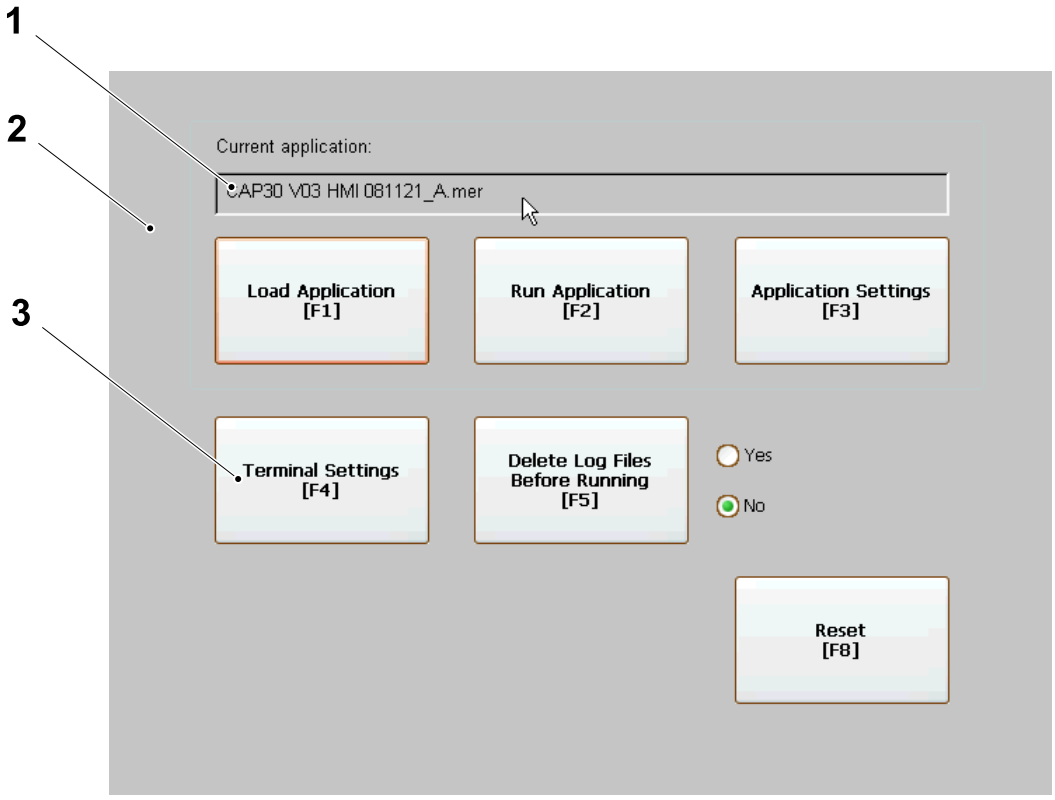

1 Application program
2 Configuration window
3 Terminal settings button

(Cont'd)

(Cont'd)

b) Touch the ARROW button (4) and select "Network and Communications".

c) Touch ENTER button (5) to confirm.

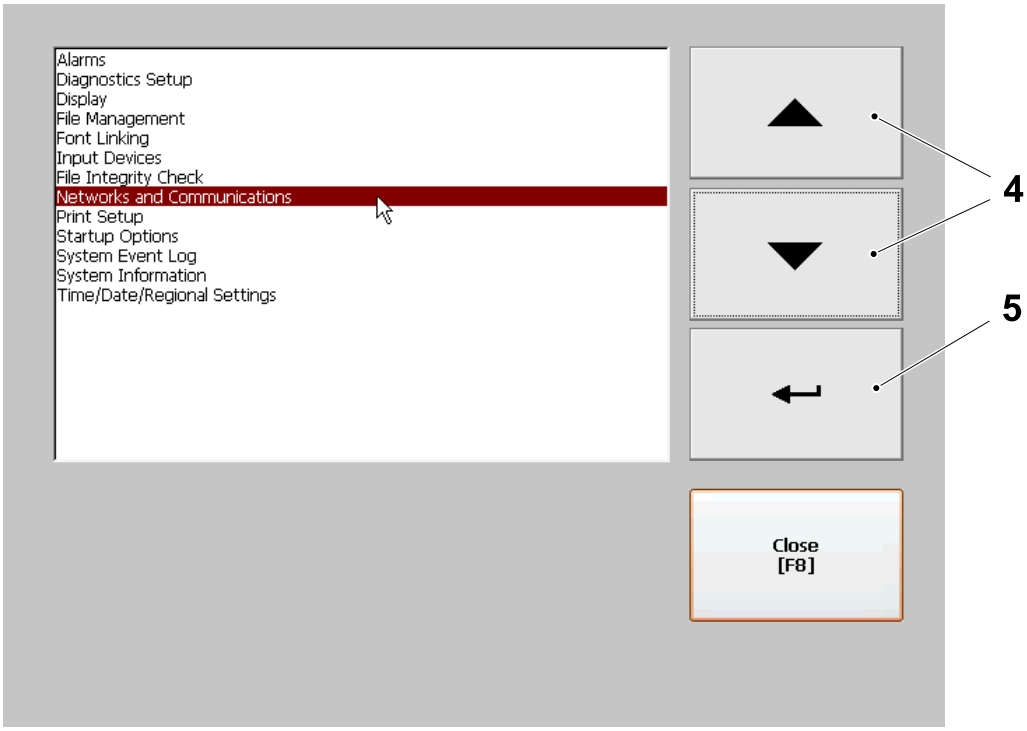

4 ARROW button
5 ENTER button

(Cont'd)

(Cont'd)

d) Touch the ARROW button (4) and select "Network Connections".

e) Touch ENTER button (5) to confirm.

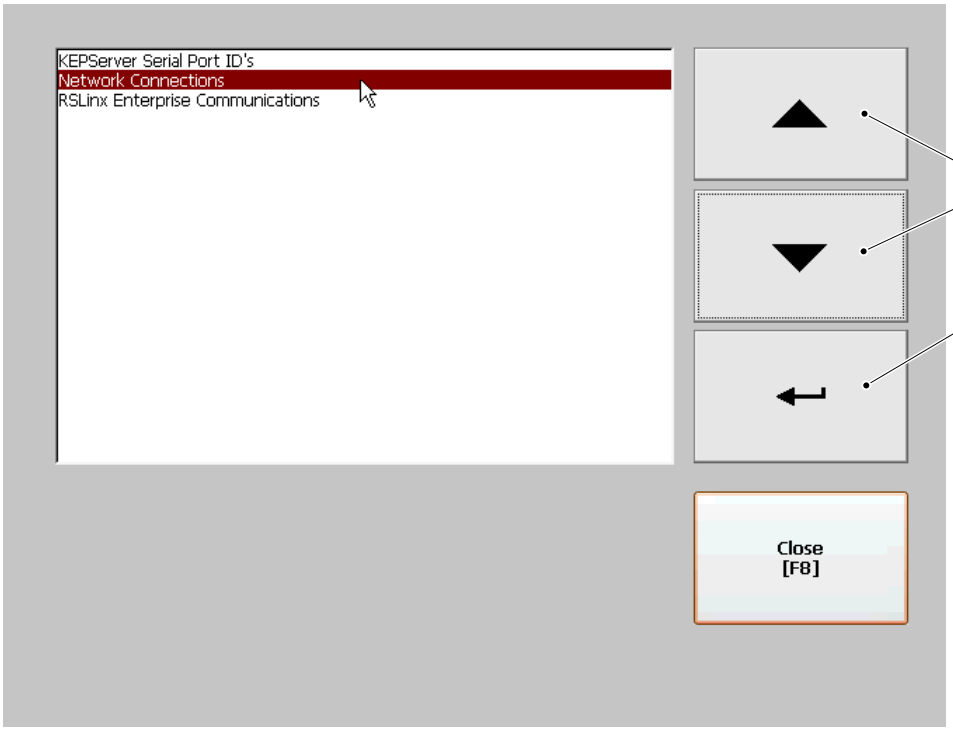

4 ARROW button
5 ENTER button

(Cont'd)

(Cont'd)

f) Touch the ARROW button (4) and select "Network Adaptors".

g) Touch ENTER button (5) to confirm.

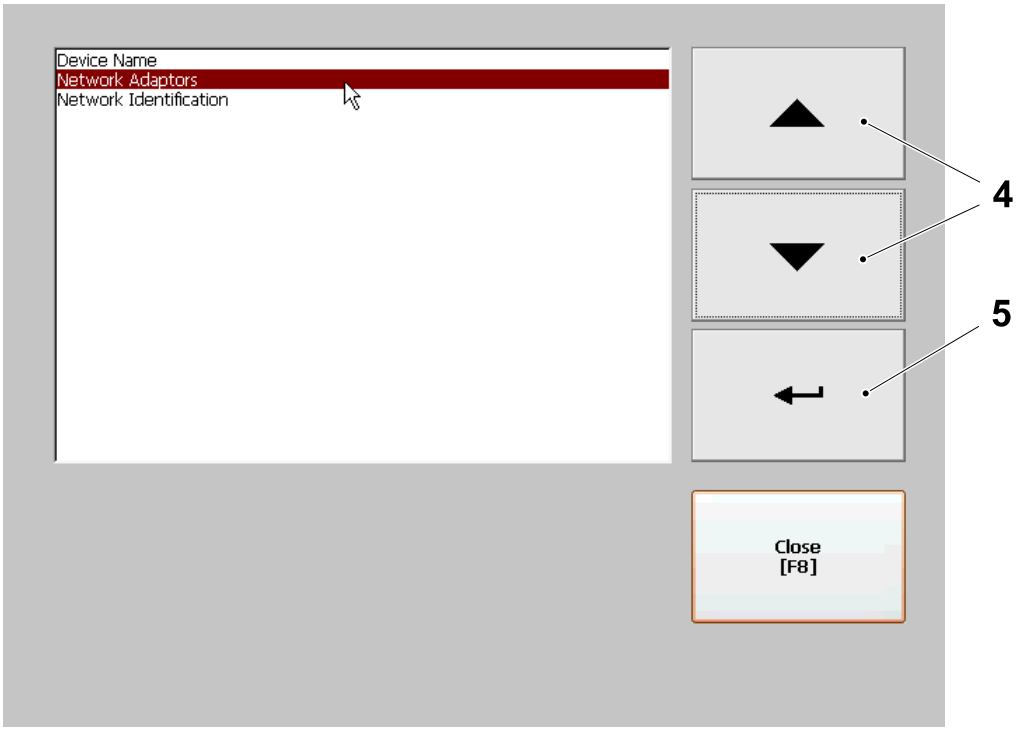

4 ARROW button

5 ENTER button

(Cont'd)

(Cont'd)

h) Check it's selected "Built-in Ethernet Controller" and touch `IP ADDRESS` button (6).

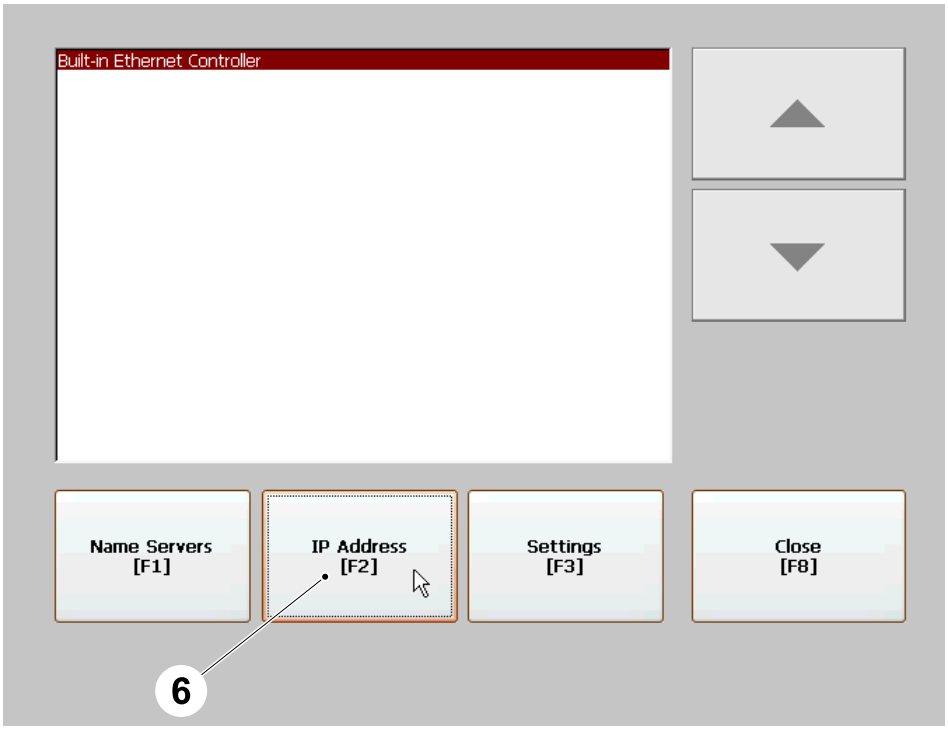

6 IP Address button

(Cont'd)

(Cont'd)

Note! Check that checkbox (7) is selected. If not, touch checkbox (7).

i) Touch `IP ADDRESS` button (6) .

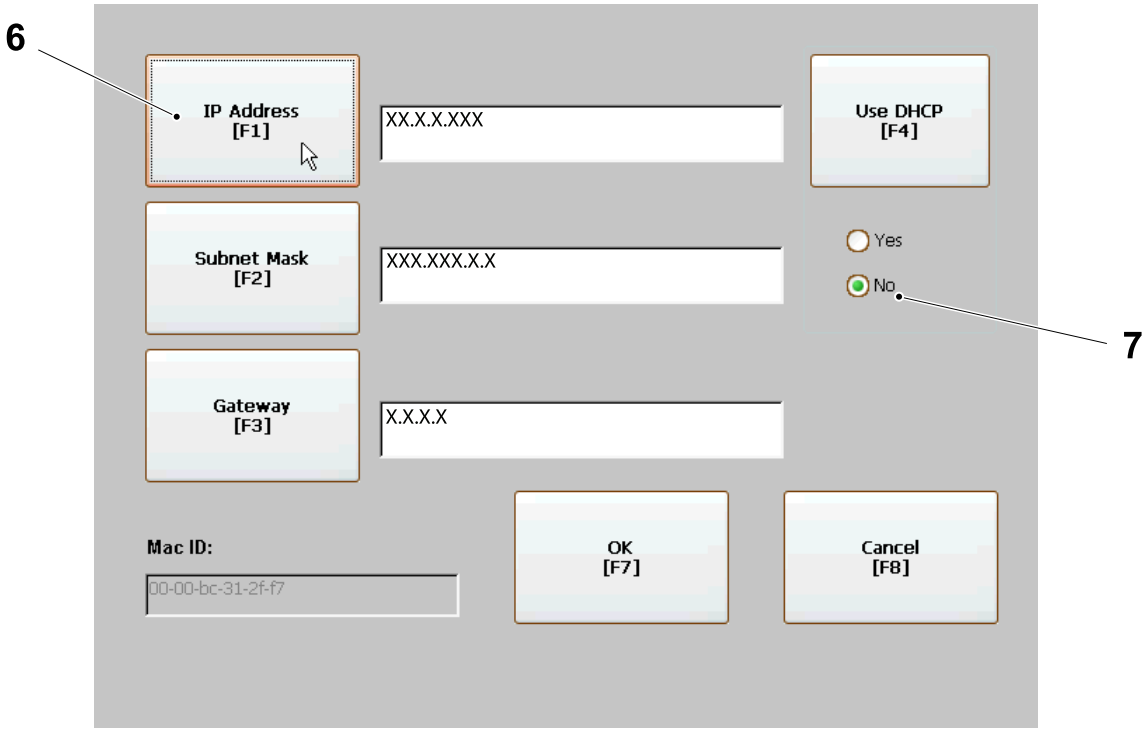

6 IP Address button

7 Checkbox

(Cont'd)

(Cont'd)

j) Enter the correct IP Address (8).

k) Touch ENTER button (5) to confirm.

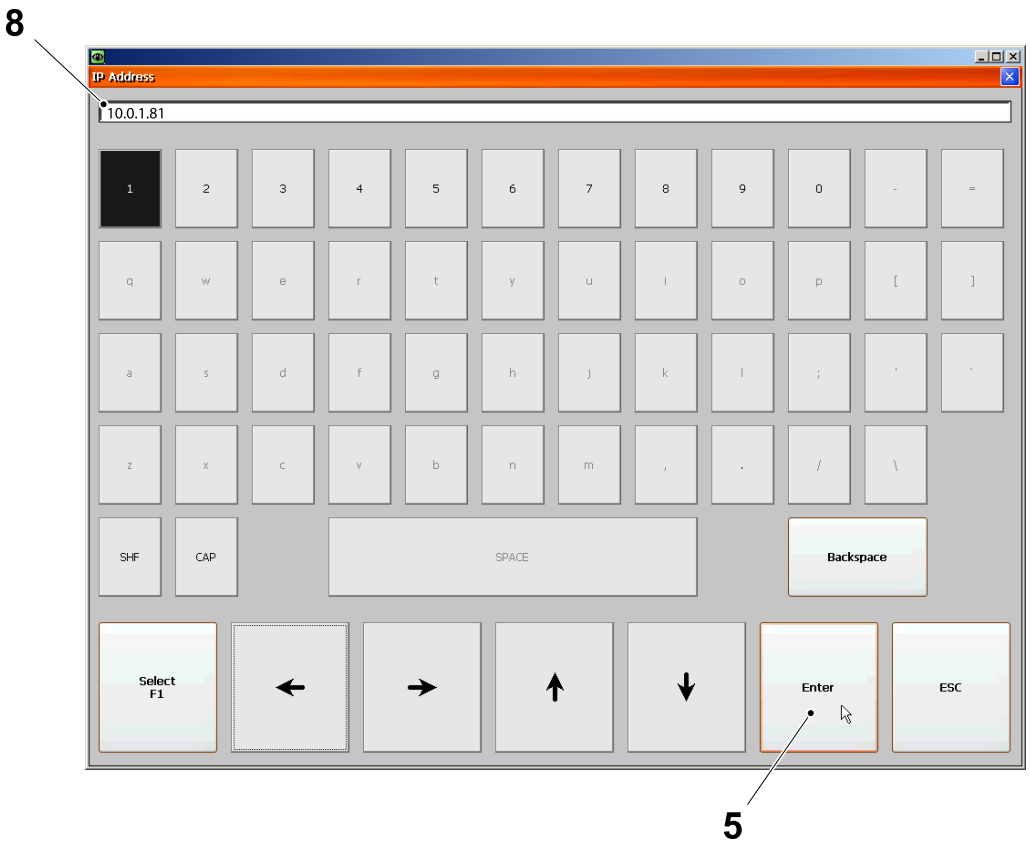

5 ENTER button

8 IP Address

(Cont'd)

(Cont'd)

l) Touch SUBNET MASK button (9).

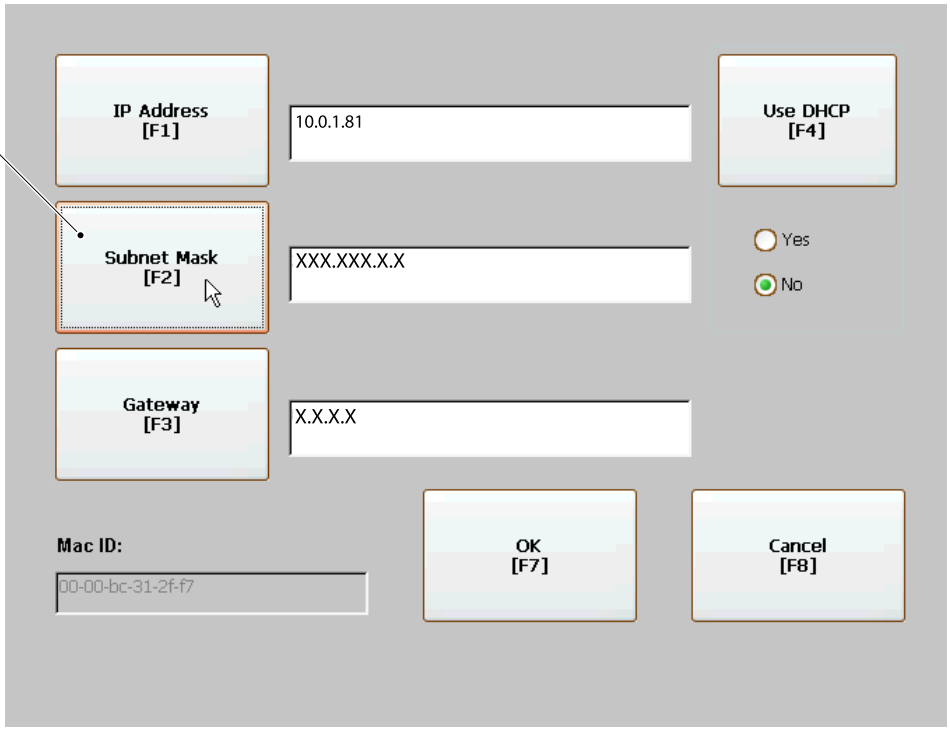

9 Subnet Mask button

(Cont'd)

(Cont'd)

m) Enter the correct Subnet Mask Code (10).

n) Touch ENTER button (5) to confirm.

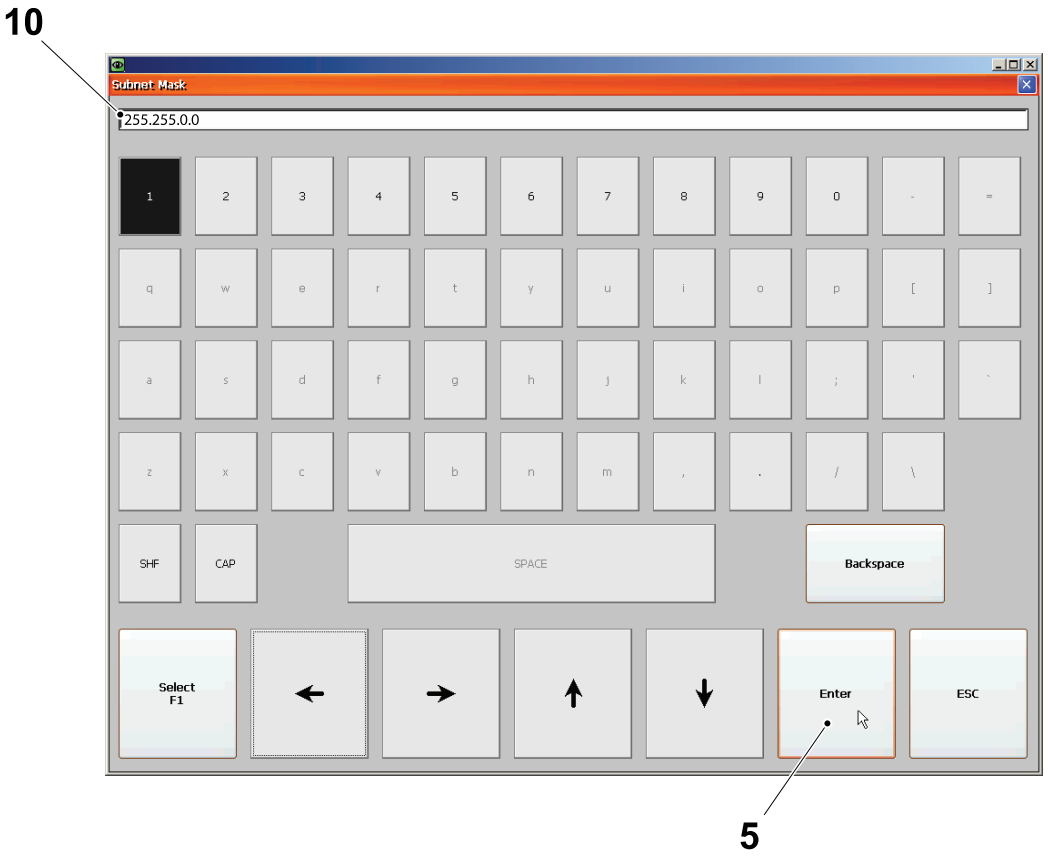

5 ENTER button
10 Subnet Mask Code

(Cont'd)

(Cont'd)

o) Touch the GATEWAY button (11).

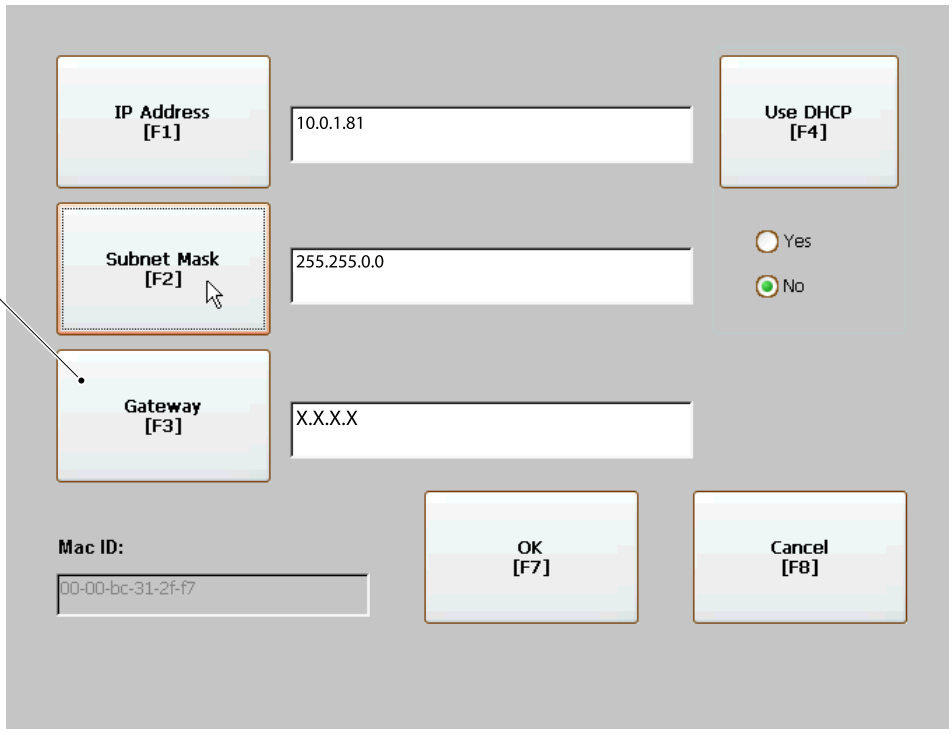

11 Gateway button

(Cont'd)

(Cont'd)

p) Enter the correct Gateway Code (12).

q) Touch ENTER button (5) to confirm.



5 ENTER button
12 Gateway Code

(Cont'd)

(Cont'd)

r) Touch the OK button (13) .

Note! In the window below there's the complete right address.

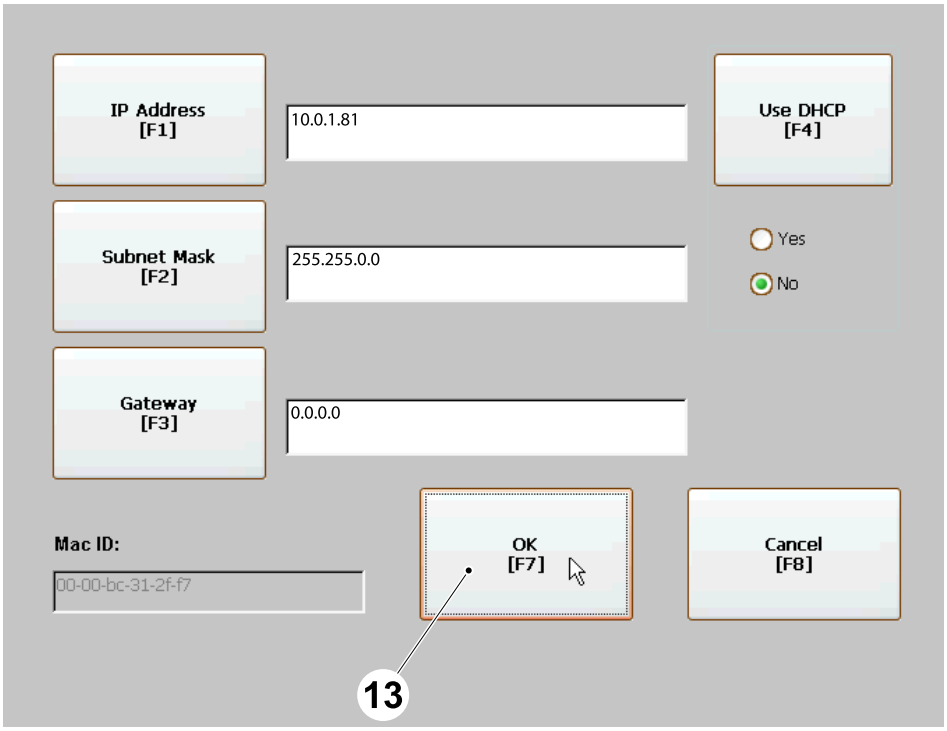

13 OK button

(Cont'd)

(Cont'd)

s) Touch the OK button (13) .

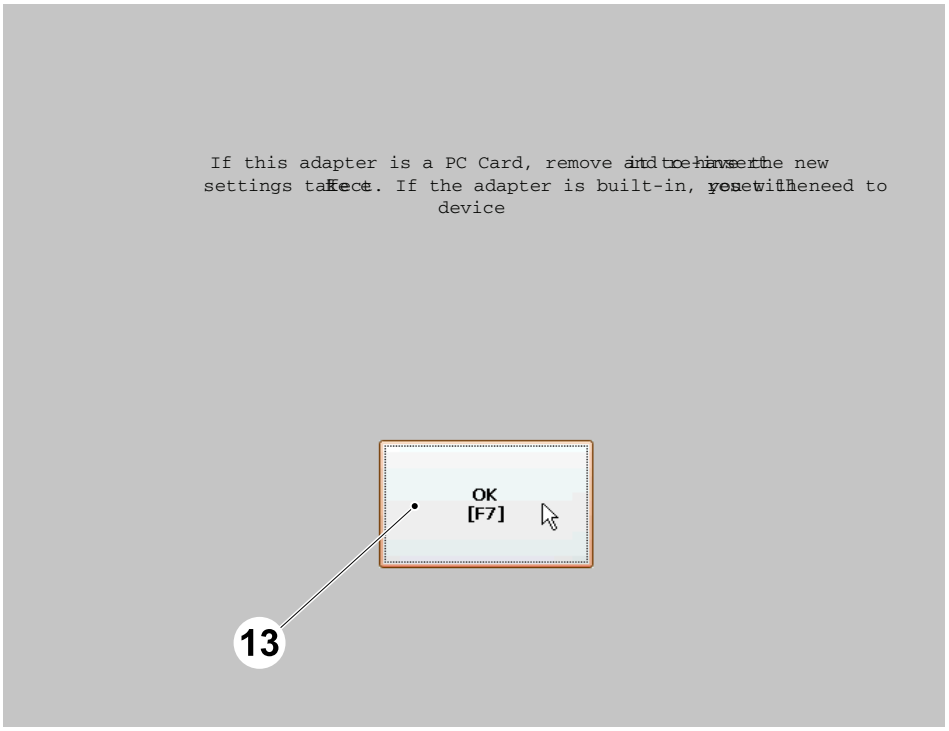

13 OK button

(Cont'd)

(Cont'd)

t) Touch CLOSE button (14).

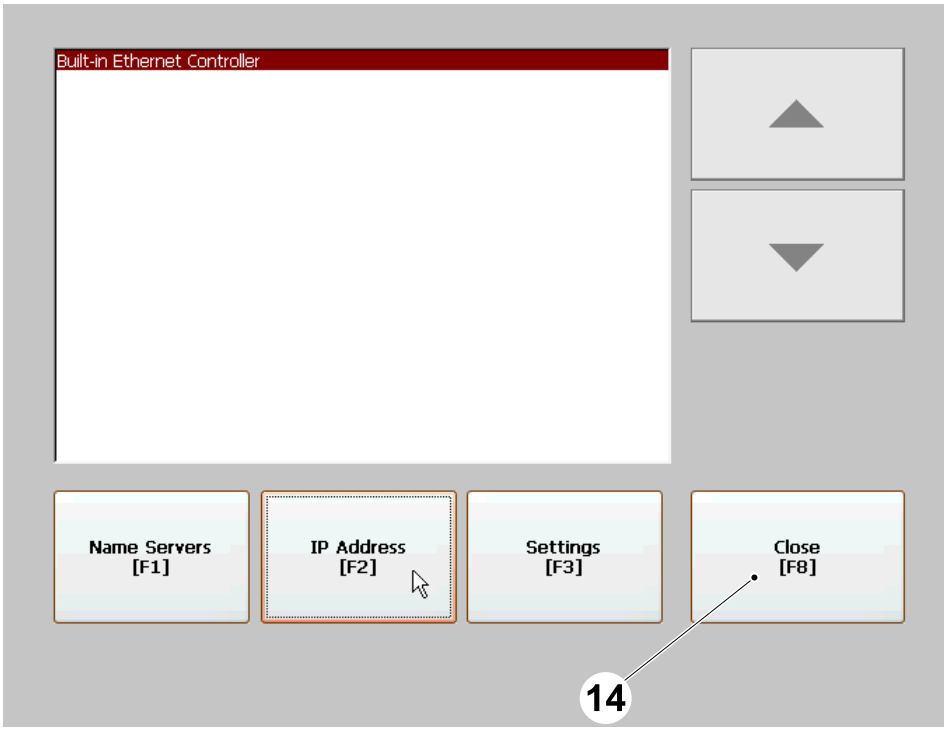

14 CLOSE button

(Cont'd)

(Cont'd)

u) Touch the CLOSE button (14) .

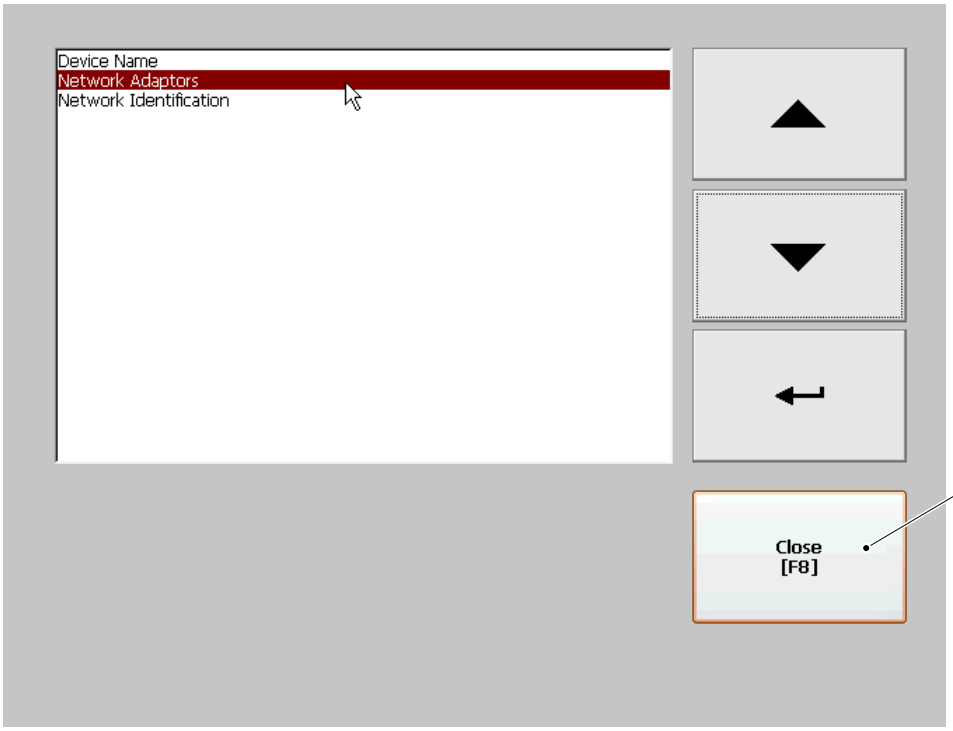

14 CLOSE button

(Cont'd)

(Cont'd)

v) Touch the CLOSE button (14) .

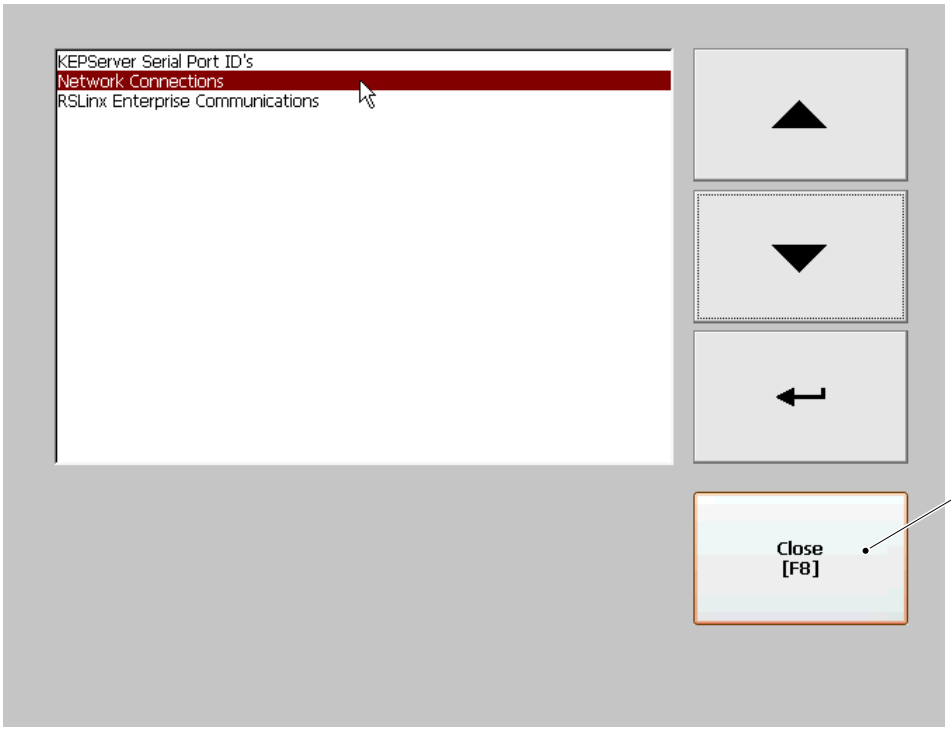

14 CLOSE button

(Cont'd)

(Cont'd)

w) Touch the RESET button (15).

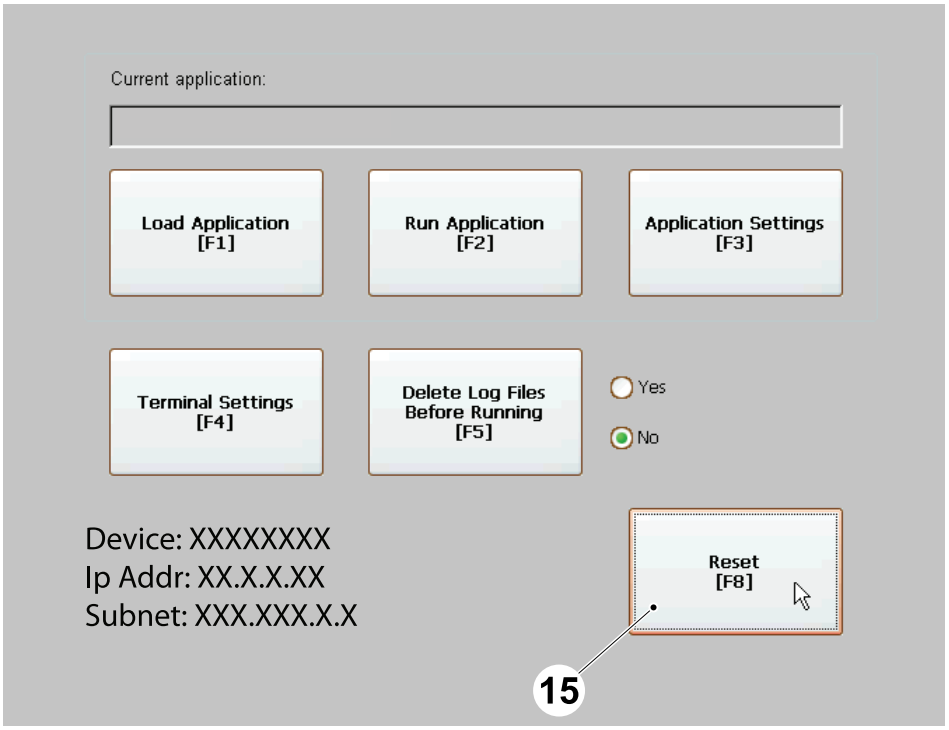

15 RESET button

10.9.1-8 Touch Screen - Startup Options Setup

Machine Status	Electrical supply disconnecting device in position I (ON)
SPC Reference	2779070-0300

a) Touch the ARROW button (1) and select “Startup Options“.

b) Touch ENTER button (2) to confirm.

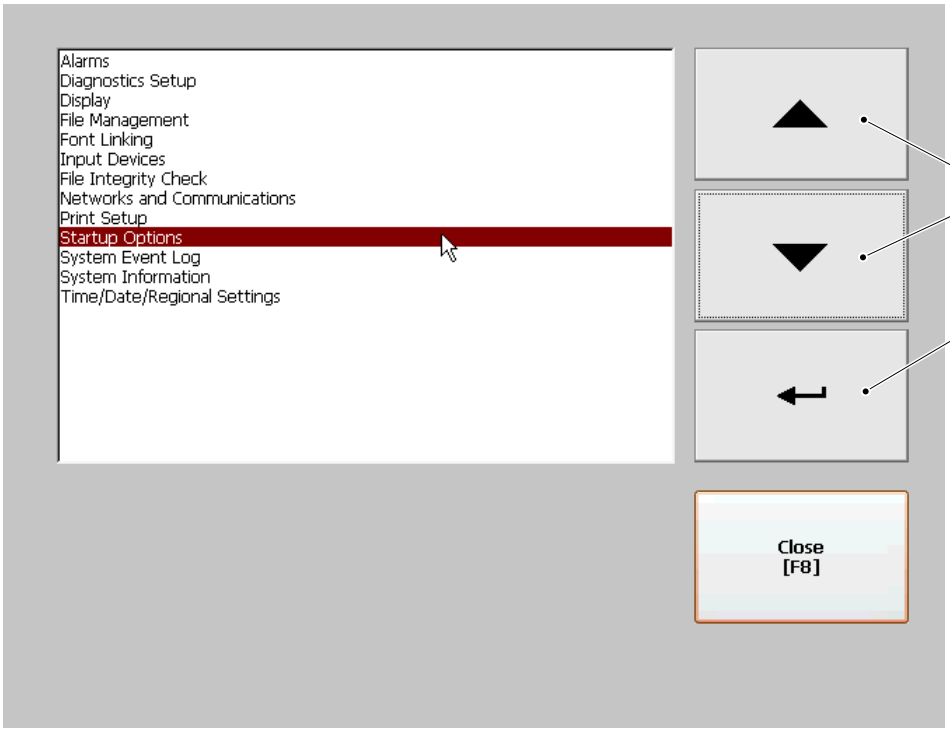

1 ARROW button
2 ENTER button

(Cont’d)

(Cont'd)

c) Touch the ARROW button (1) and select "FactoryTalk View ME Station Startup".

d) Touch ENTER button (2) to confirm.

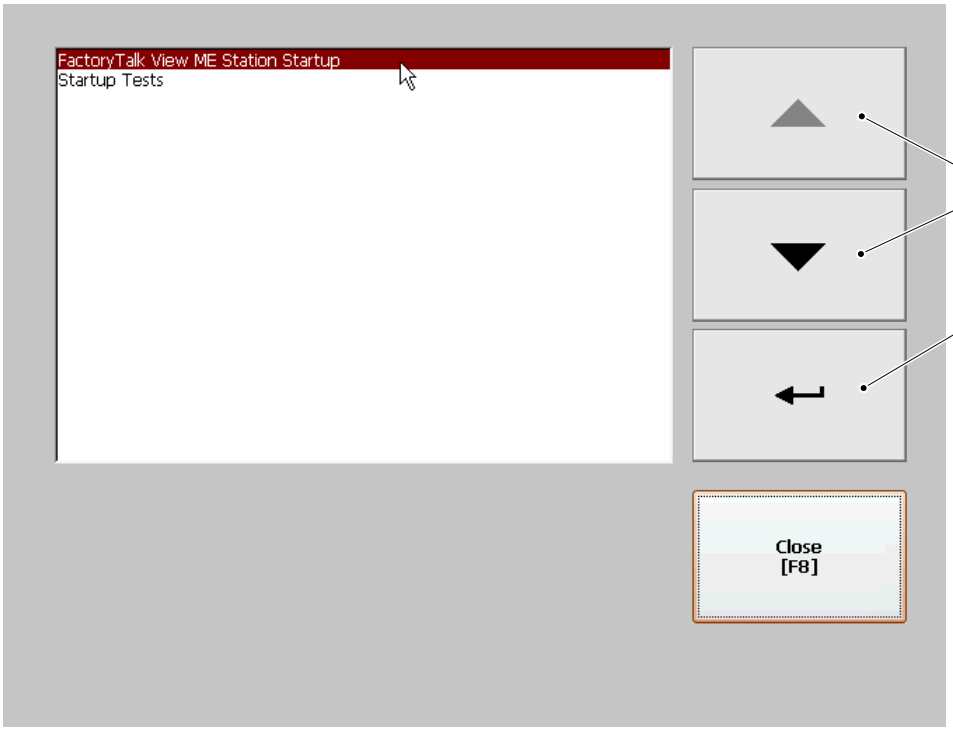

1 ARROW button
2 ENTER button

(Cont'd)

(Cont'd)

e) Touch Run Current Application (3).

f) Touch the RUN OPTIONS button (4).

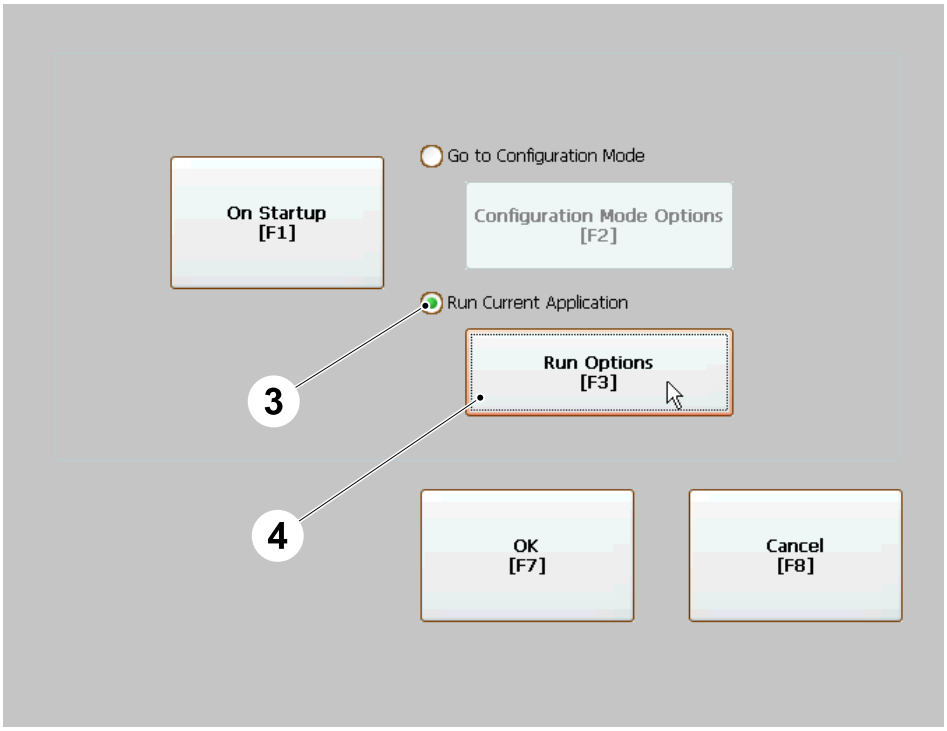

3 Run Current Application
4 Run Options button

(Cont'd)

(Cont'd)

g) Touch the YES button (5) to activate "Replace RSLinx Enterprise Communications".

h) Touch the YES button (6) to activate "Delete Log Files On Every Power Cycle".

i) Touch the OK button (7) to confirm.

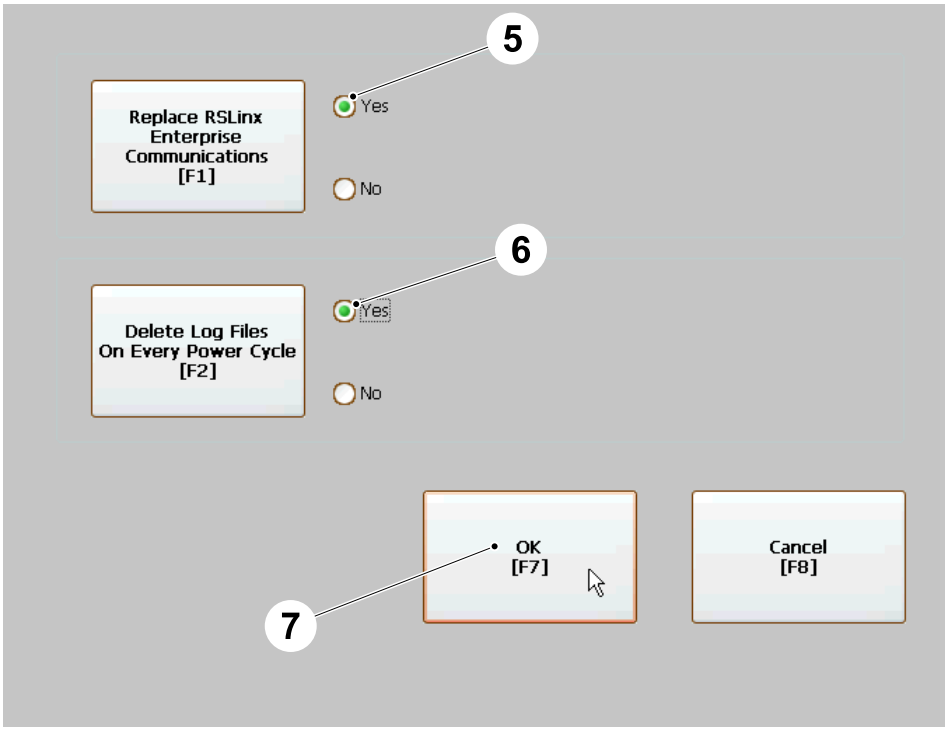

5 Yes button
6 Yes button
7 OK button

(Cont'd)

(Cont'd)

j) Touch the OK button (7) .

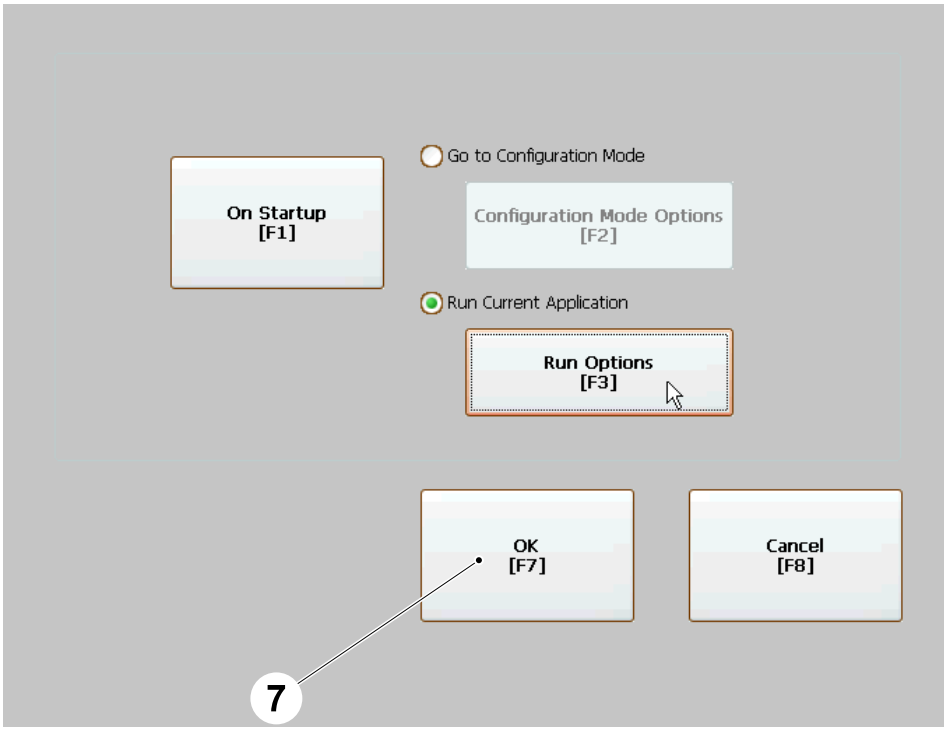

7 OK button

(Cont'd)

(Cont'd)

k) Touch the CLOSE button (8).

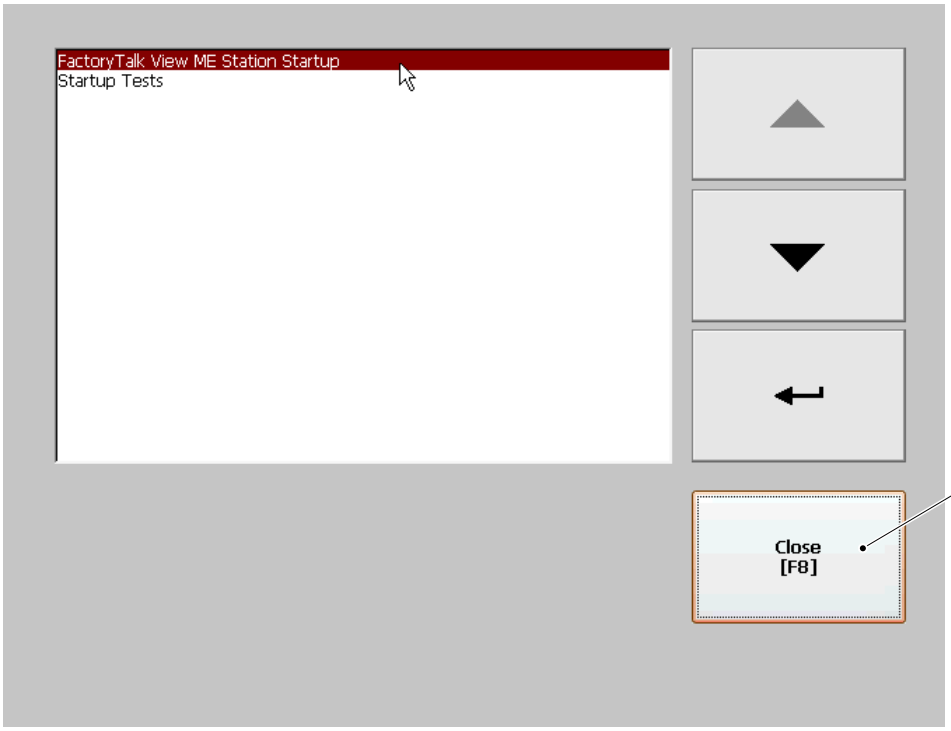

8 CLOSE button

10.9.1-9 Touch Screen - Display Setup

Machine Status	Electrical supply disconnecting device in position I (ON)
SPC Reference	2779070-0300

a) Touch the ARROW button (1) to select “Display“.

b) Touch the ENTER button (2) to confirm.

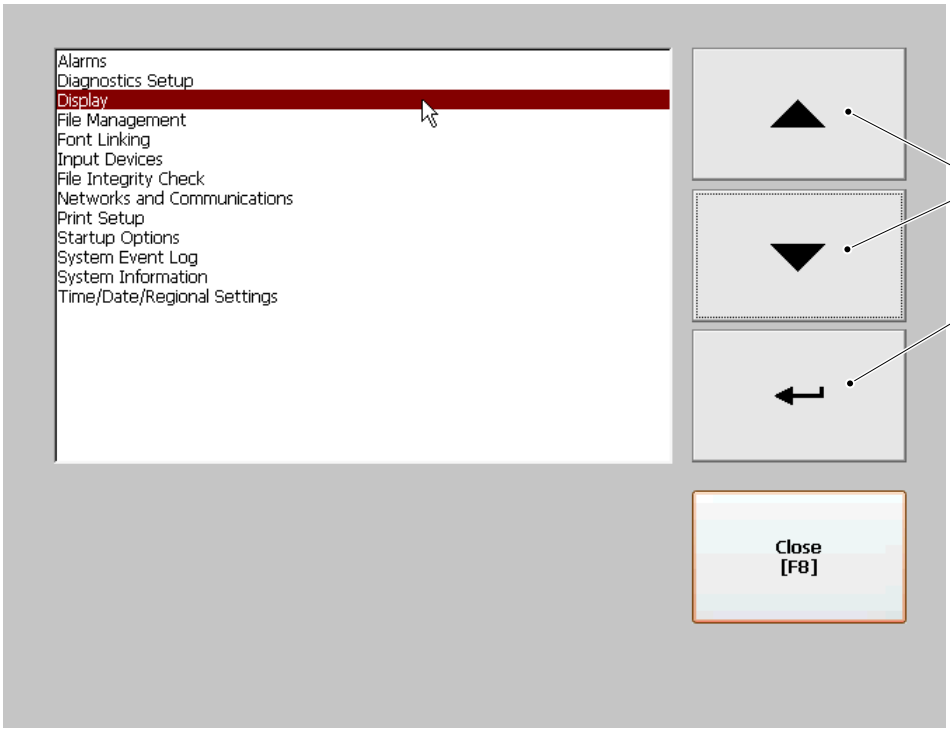

1 ARROW button
2 ENTER button

(Cont’d)

(Cont'd)

c) Touch the ARROW button (1) to select "Screen Saver".

d) Touch the ENTER button (2) to confirm.

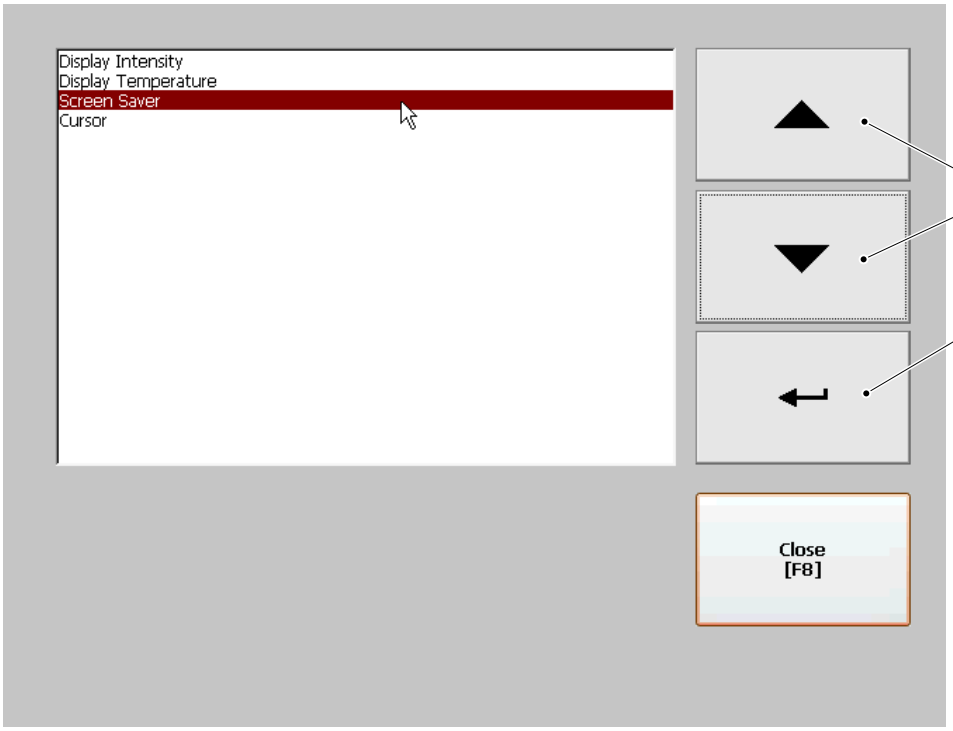

1 ARROW button
2 ENTER button

(Cont'd)

(Cont'd)

e) Touch the DISABLED button (3) to select no active screen saver.

f) Touch the OK button (4) to confirm.

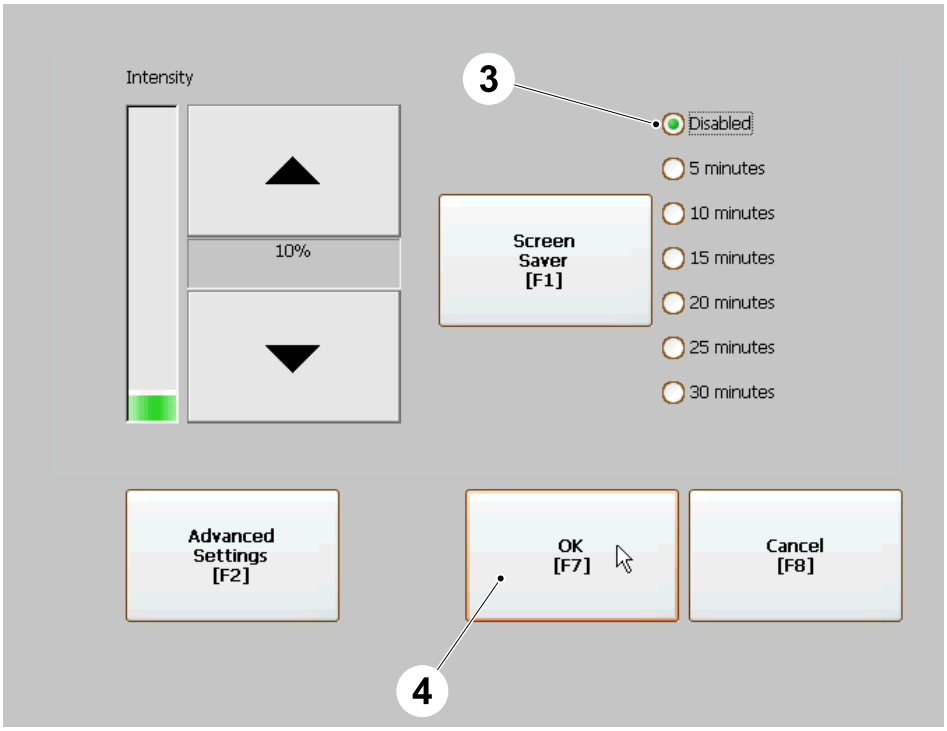

3 Disabled button
4 OK button

(Cont'd)

(Cont'd)

g) Touch the CLOSE button (5) to exit.

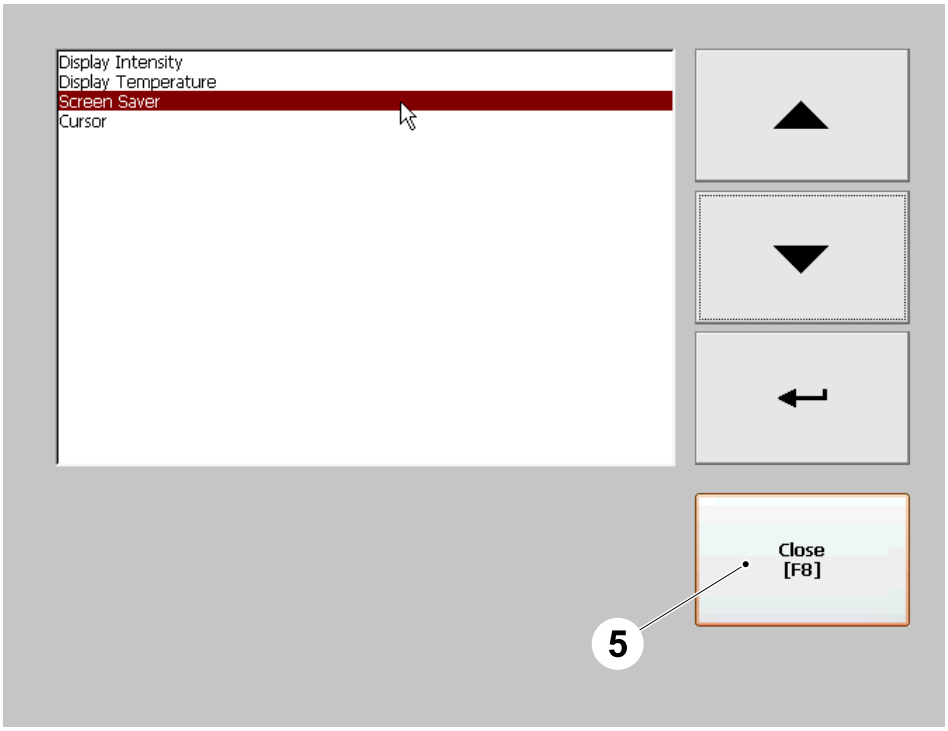

5 CLOSE button

10.9.1-10 Touch Screen - Time/Date/Regional Settings Setup

Machine Status	Electrical supply disconnecting device in position I (ON)
SPC Reference	2779070-0300

a) Touch the ARROW button (1) to select “Time/Date/Regional Settings“.

b) Touch ENTER button (2) to confirm.

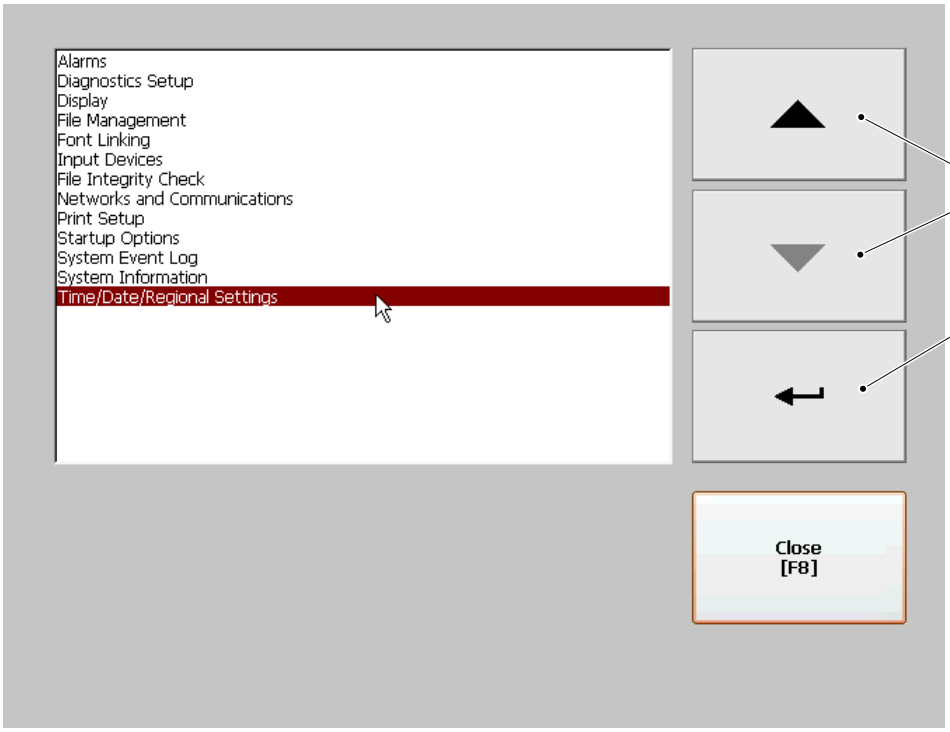

1 ARROW button
2 ENTER button

(Cont’d)

(Cont'd)

c) Touch the ARROW button (1) to select "Time Zone".

d) Touch the ENTER button (2) to confirm.

e) Set the proper Time Zone.

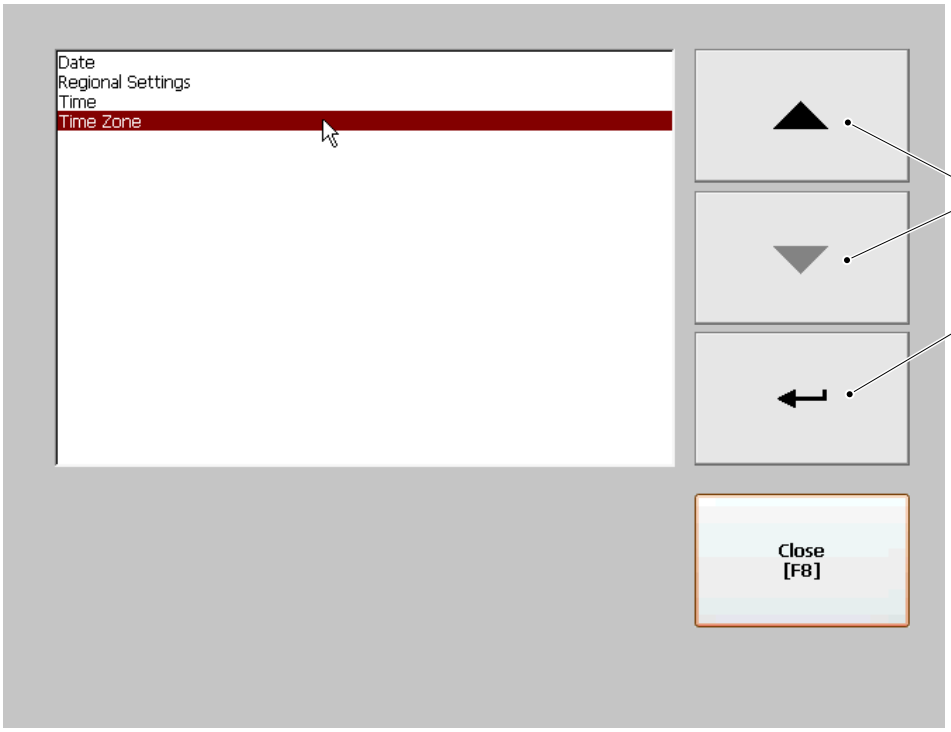

1 ARROW button

2 ENTER button

(Cont'd)

(Cont'd)

f) Touch the ARROW button (1) to select "Date".

g) Touch the ENTER button (2) to confirm.

h) Set the current Date.

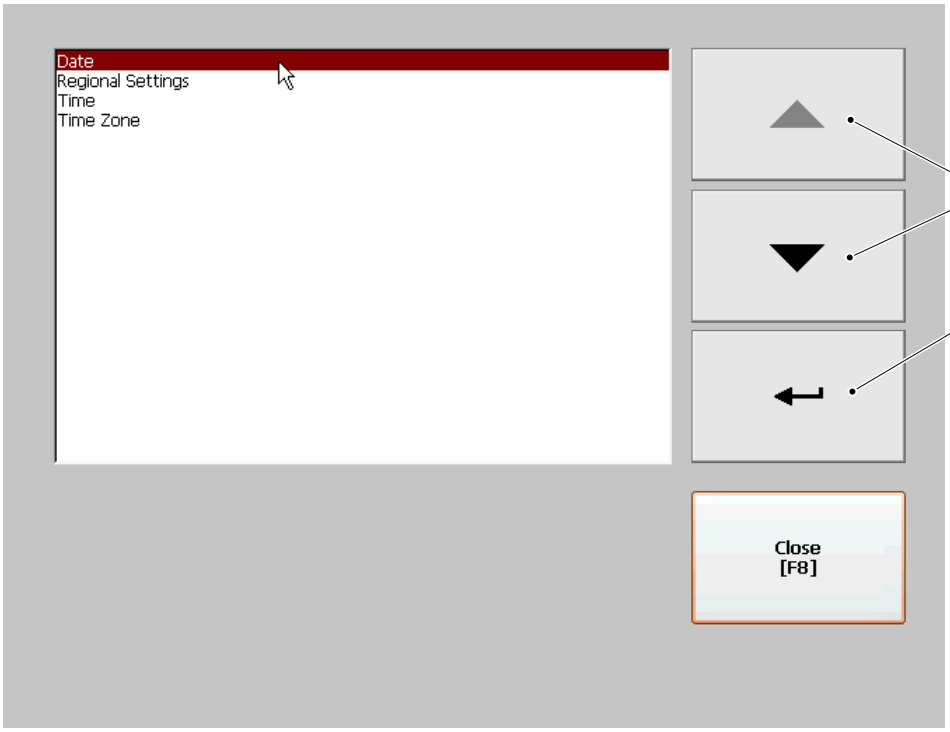

1 ARROW button

2 ENTER button

(Cont'd)

(Cont'd)

i) Touch the ARROW button (1) to select "Time".

j) Touch the ENTER button (2) to confirm.

k) Set the current Time.

l) Touch the CLOSE button (3) to display the configuration window.

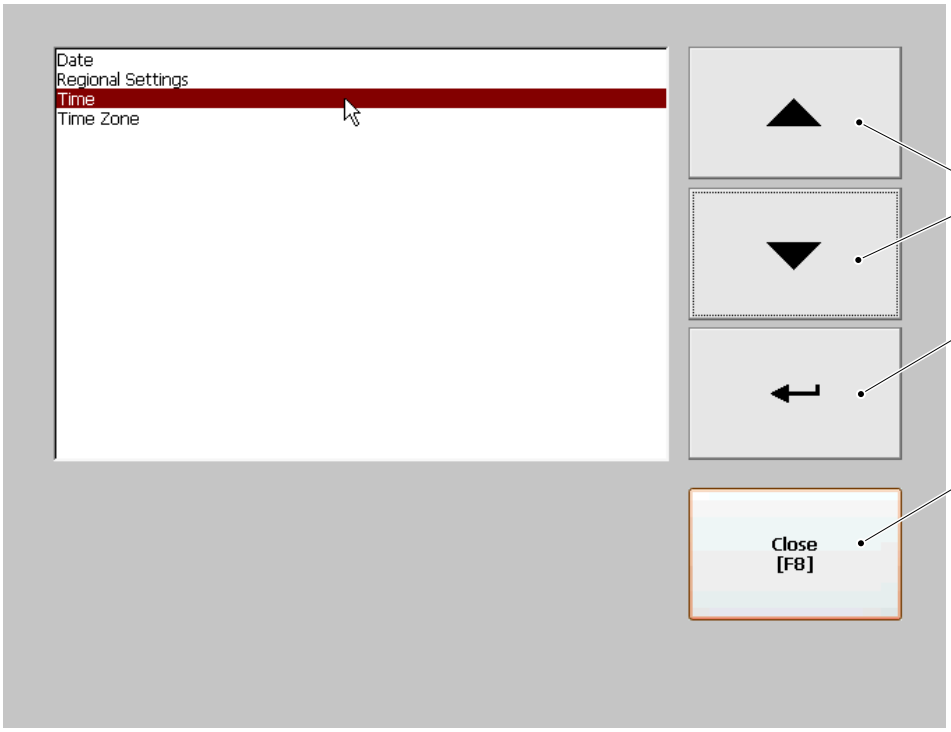

1 ARROW button
2 ENTER button
3 Close button

10.9.1-11 Touch Screen - Start-Up Language Setup

Machine Status	Electrical supply disconnecting device in position I (ON)
SPC Reference	2779070-0300

a) In the Configuration window (1) touch the APPLICATION SETTINGS button (2).

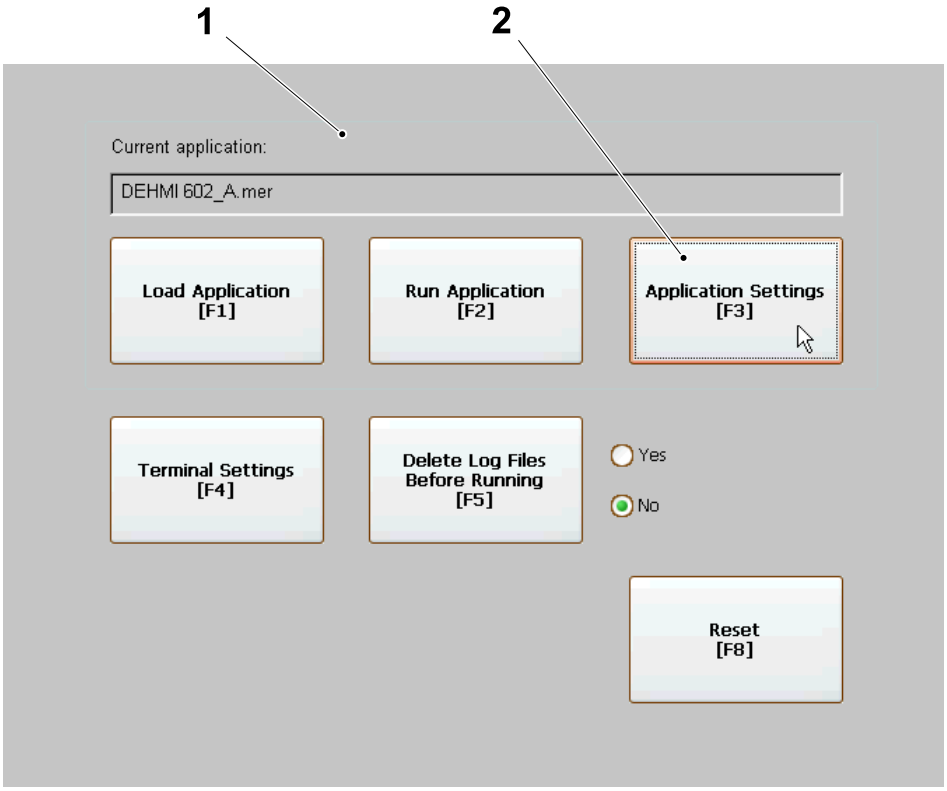

1 Configuration window
2 Application settings button

(Cont'd)

(Cont'd)

b) Touch the ARROW button (3) to select "Startup Language".

c) Touch the ENTER button (4) to confirm.

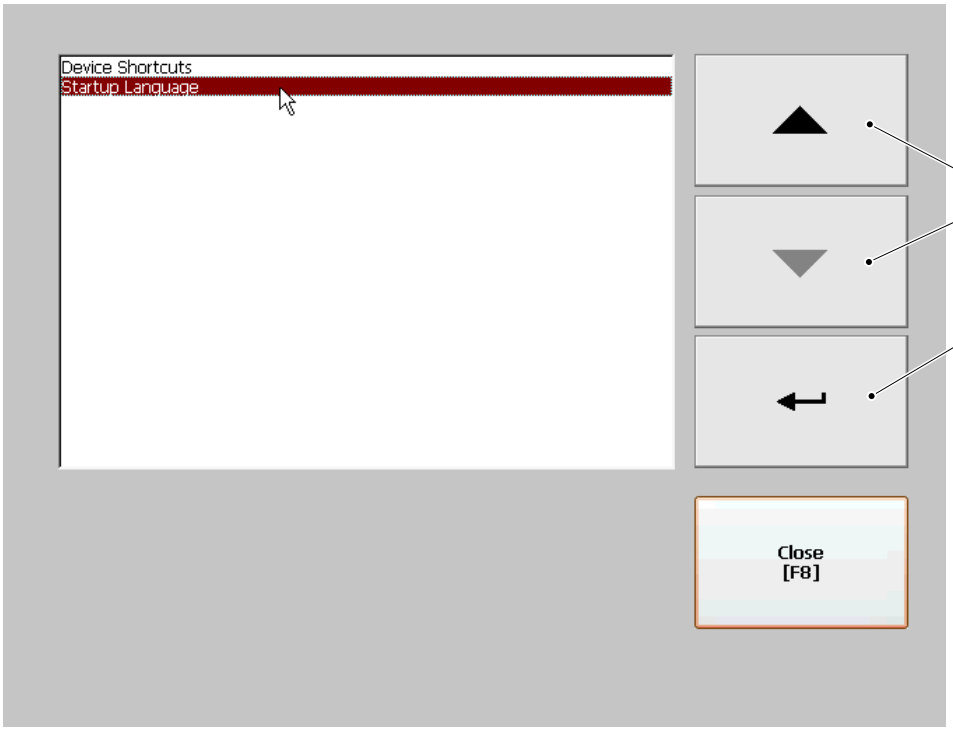

3 ARROW button
4 ENTER button

(Cont'd)

(Cont'd)

d) Touch the Start in Last Runtime Language (5) to make the TPOP select the active language after every reboot.

e) Touch the ENTER button (6) to confirm.

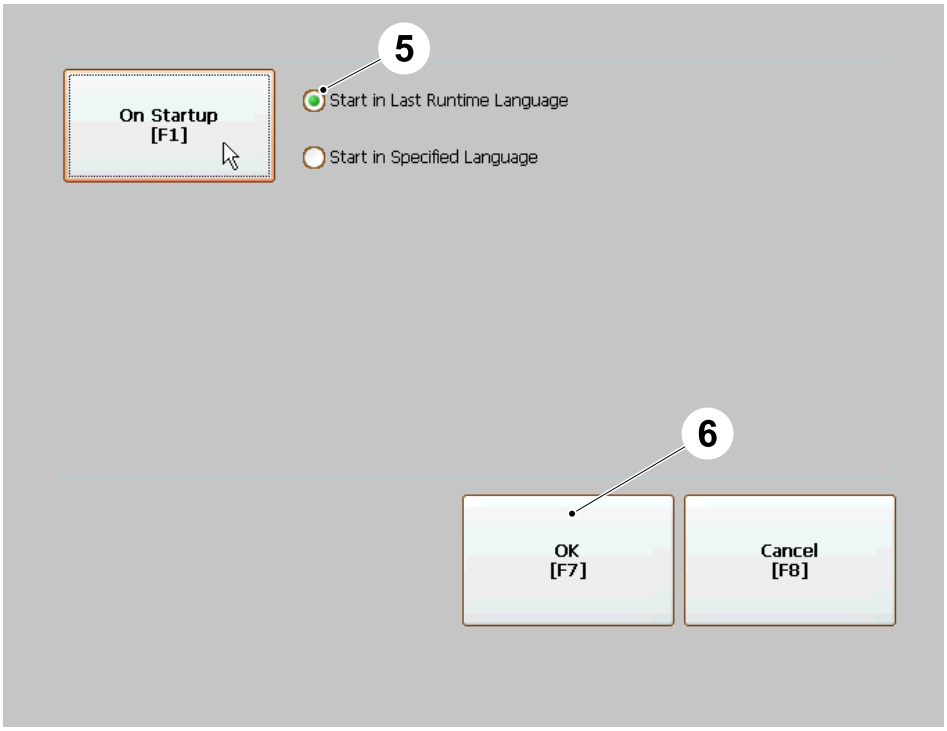

5 Start in Last Runtime Language
6 ENTER button

(Cont'd)

(Cont'd)

f) Touch the CLOSE button (7) to exit.

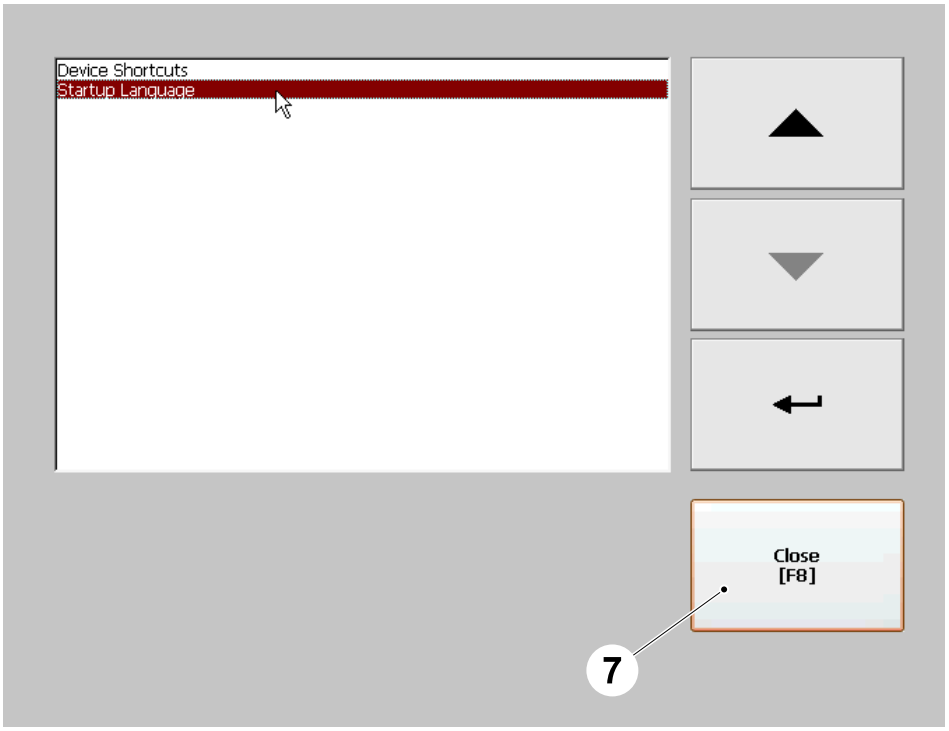

7 CLOSE button

(Cont'd)

(Cont'd)

Reboot the TPOP

a) In the Configuration window (1) touch the `RESET` button (2).

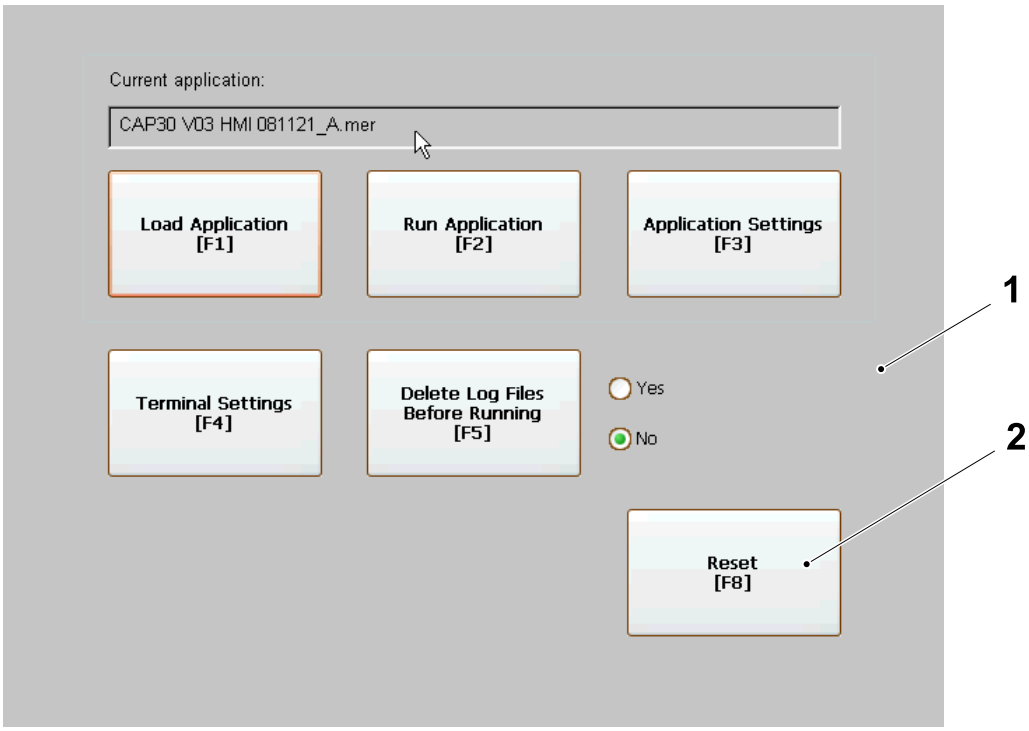

1 Configuration window
2 Reset button

(Cont'd)

(Cont'd)

b) Touch the YES button (3) to confirm.

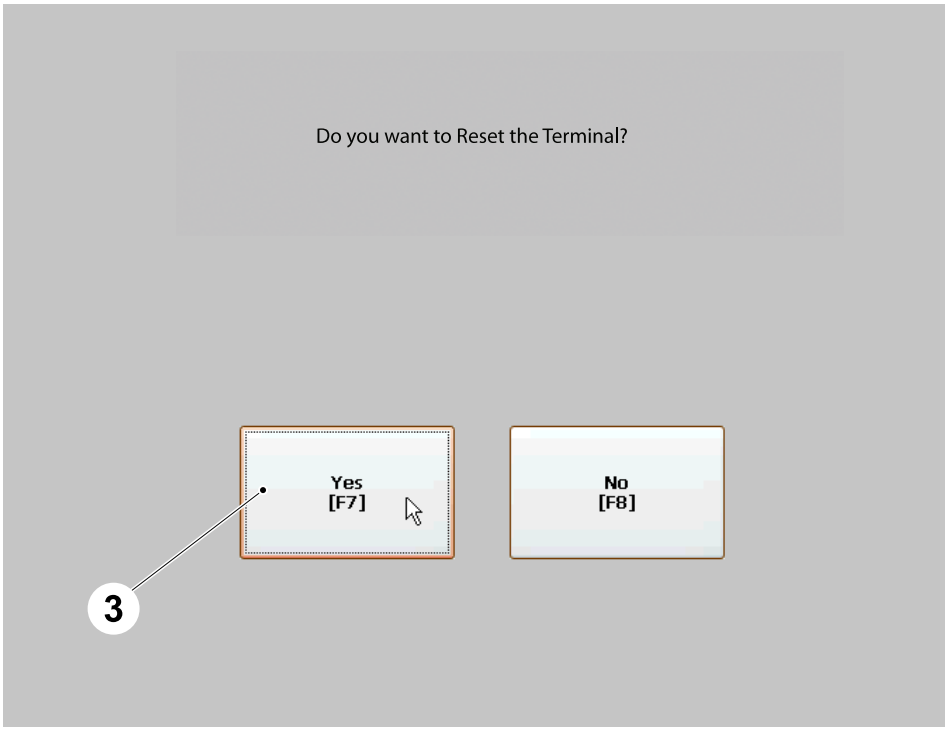

3 YES button

10.9.1-12 Touch Screen - Language Setup

Machine Status	Electrical supply disconnecting device in position I (ON)
SPC Reference	2779070-0300

Language Installation

Note! After the installation of the new application of the TPOP it's necessary to install and then activate the desired languages.

a) Access the TPOP as a Service Technician, see 1.1.1-1 HMI User Management - Log On as a User.

b) Touch the SYSTEM SETUP button (1) to display the Setup window.

c) Touch the LANGUAGE ENTER button (2) .

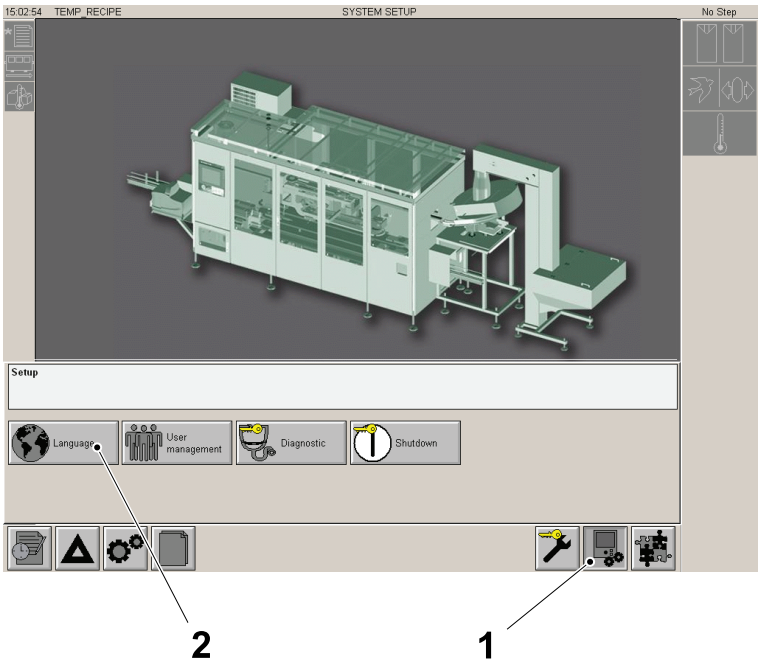

1 SYSTEM SETUP button
2 LANGUAGE ENTER button

(Cont'd)

(Cont'd)

d) Touch the LANGUAGE SETUP button (3) to display all the LANGUAGE button (4).

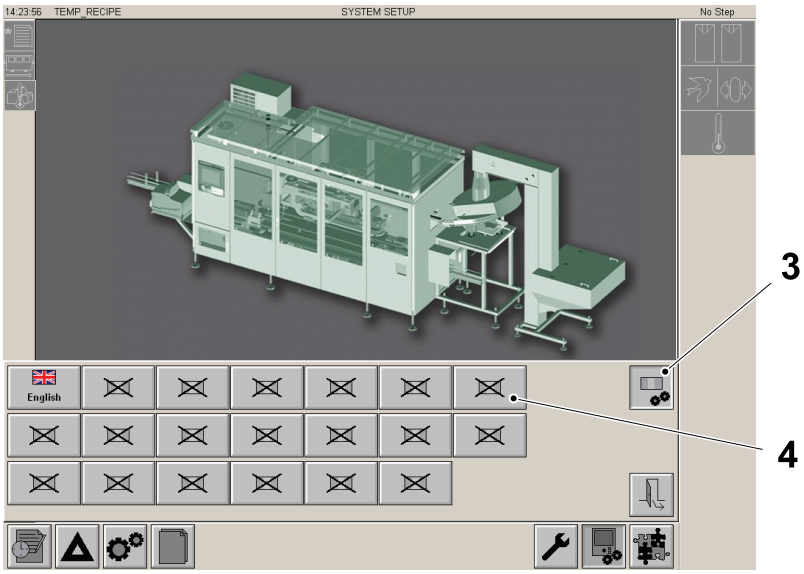

3 LANGUAGE SETUP button
4 LANGUAGE button

e) Touch several times the LANGUAGE button (4) until the Icon (5) of the desired language is shown.

f) Touch the LANGUAGE SETUP button (3) to end the language installation.

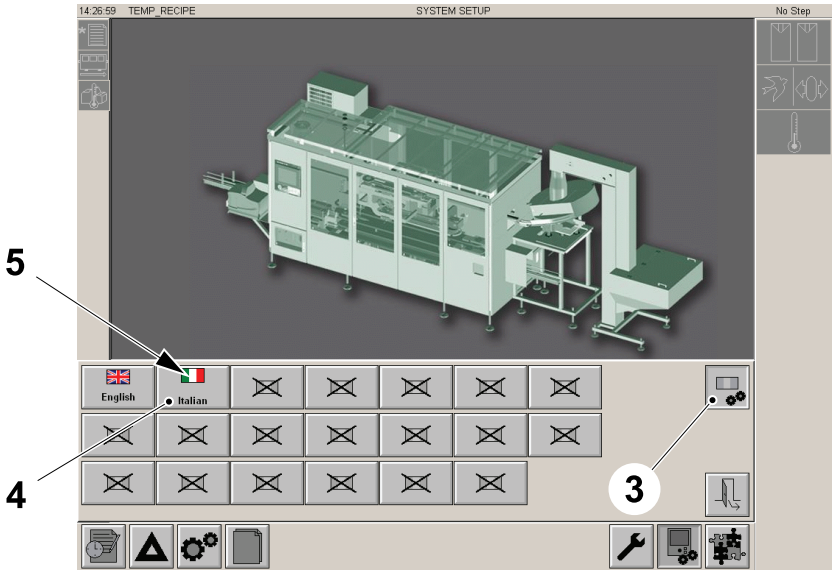

3 LANGUAGE SETUP button
4 LANGUAGE button
5 Icon

(Cont'd)

(Cont'd)

Logout from Service technician in the TPOP

a) Touch the SYSTEM SETUP button (1) to display the Setup window.

b) Touch the USER MANAGEMENT button (2).

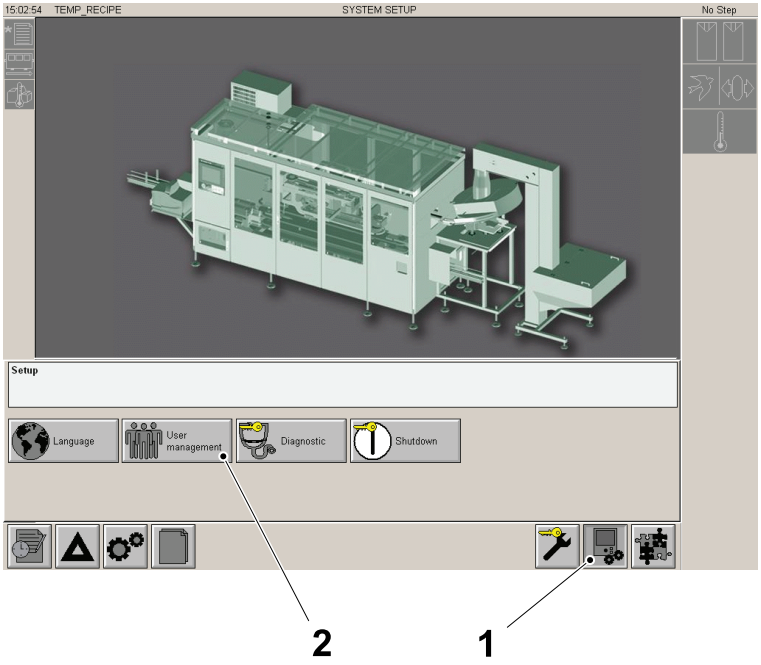

1 SYSTEM SETUP button
2 USER MANAGEMENT button

(Cont'd)

(Cont'd)

c) Touch the LOGOUT button (3) .

d) Touch the EXIT button (4).

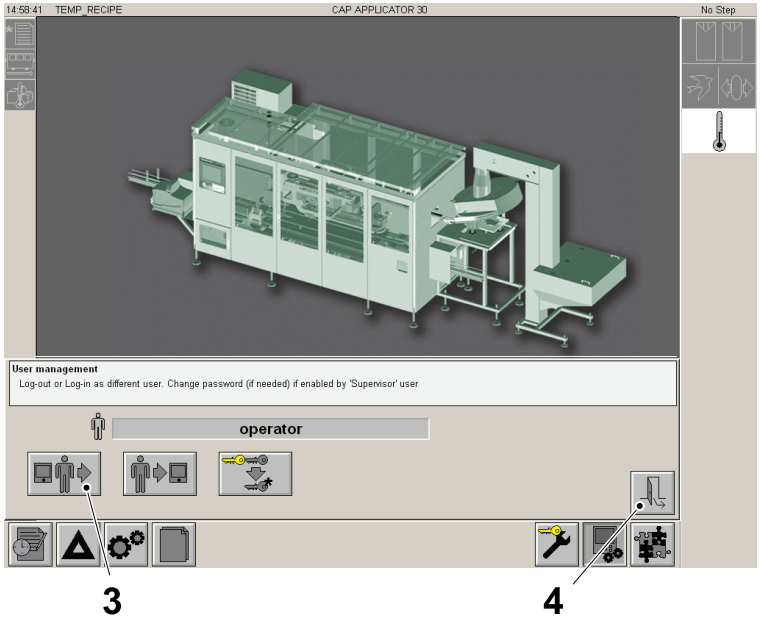

3 LOGOUT button
4 EXIT button

(Cont'd)

(Cont'd)

Language Activation

Note! After the installation of the new application of the TPOP it's necessary to install and then activate the desired languages.

a) Touch the `SYSTEM SETUP` button (1) to display the Setup window.

b) Touch the `LANGUAGE ENTER` button (2) .

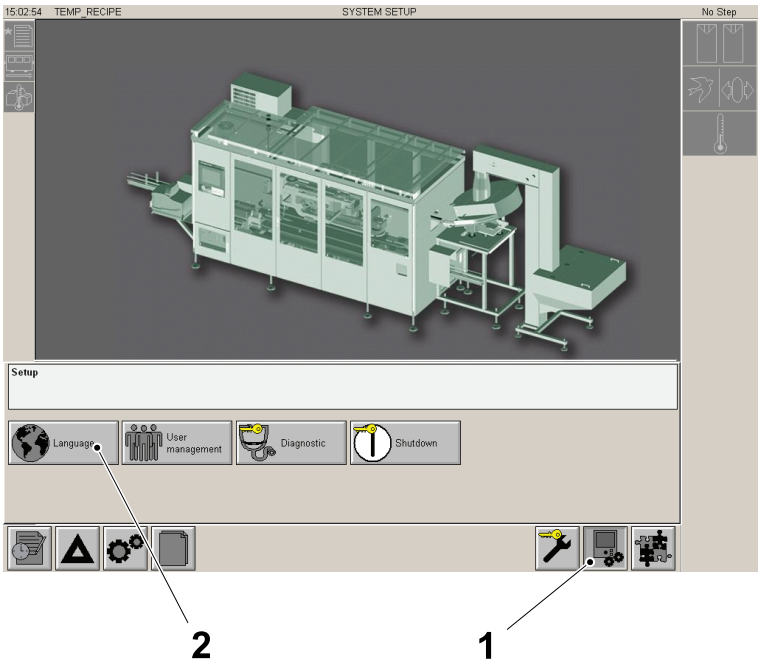

1 SYSTEM SETUP button
2 LANGUAGE ENTER button

(Cont'd)

(Cont'd)

c) Touch the required LANGUAGE button (3) to change the language.

d) Touch the EXIT button (4) .

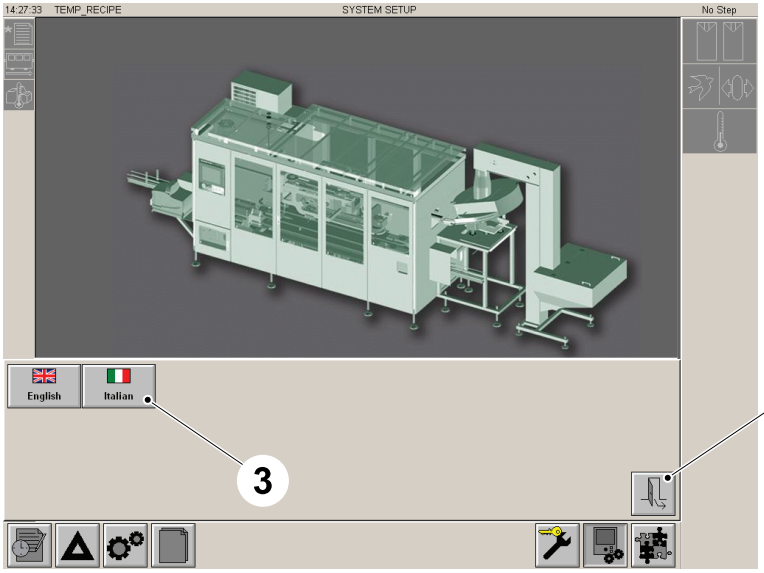

3 LANGUAGE button
4 EXIT button

10.9.1-13 Touch Screen - Create New Recipes

General Description

Create a new recipe in case the recipes have been deleted or in case of a package conversion.

The machine can produce only if a recipe has been selected. Each recipe includes the machine settings necessary for a specific type of production.

To create a new recipe for example package TPA 1000 Sq, proceed as follows:

a) Set the machine to STEP 0.

b) Access the TPOP as a Service Technician, see 1.1.1-1 HMI User Management - Log On as a User.

c) Touch the `RECIPE` button (1) to open the recipe window.

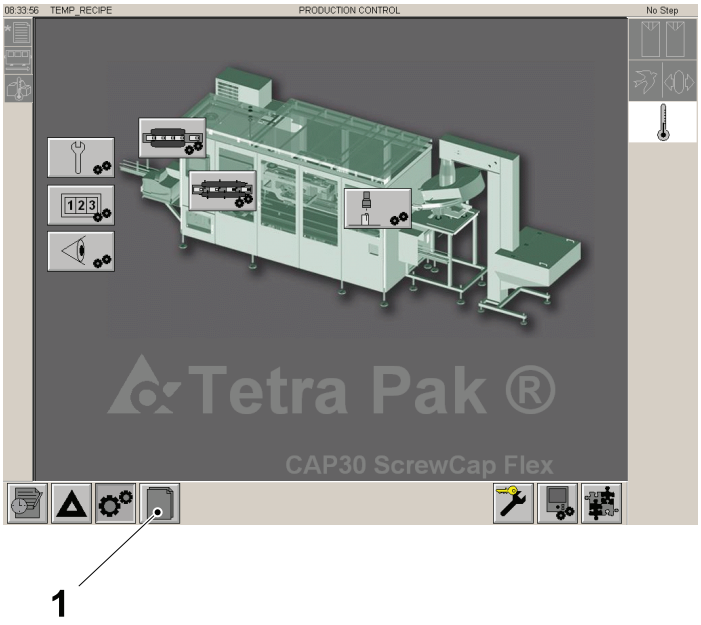

1 Recipe button

(Cont'd)

(Cont'd)

d) Touch the NEW RECIPE button (2).

Note! The Recipe name (3) stays the same at this time.

e) Touch the configuration of the package button (4).

f) Touch the ARROW button (5) to see the available packages and stop on the desired one.

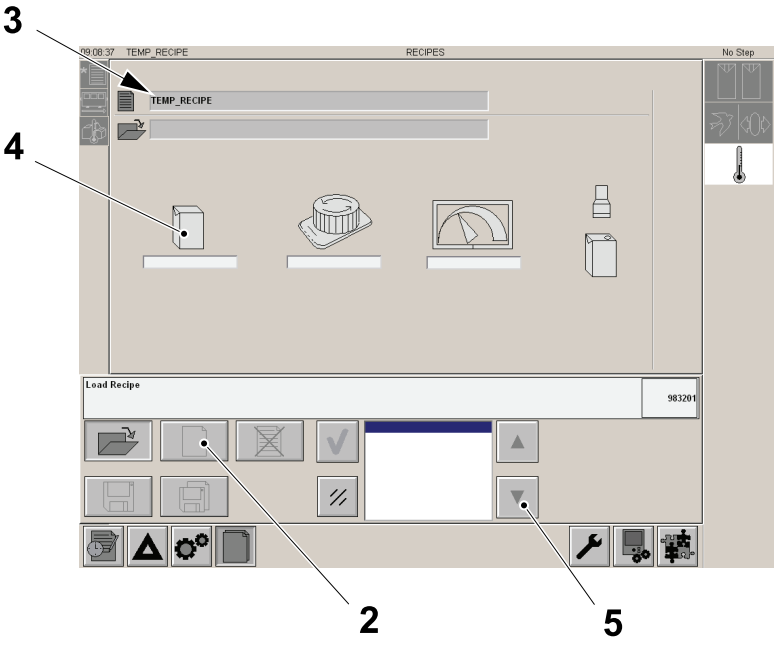

2 NEW recipe button
3 Recipe name
4 Configuration of the package button
5 ARROW button

(Cont'd)

(Cont'd)

g) Touch the cap button (6) to select the cap.

h) Touch the ARROW button (5) to see the available caps for the selected package and stop on the desired one.

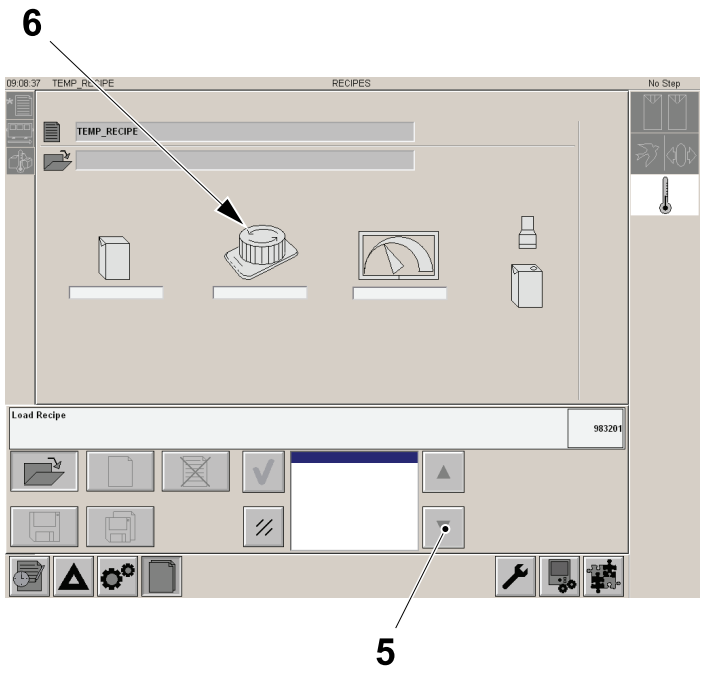

5 ARROW button
6 Cap button

(Cont'd)

(Cont'd)

i) Touch the machine SPEED button (7) to select the speed of the machine for this cap/package configuration.

j) Touch the ARROW button (5) to see the available speeds and stop on the desired one.

Note! The speed of the machine must be set 20% higher than the speed of the filling machine. For example, if the speed of the filling machine is 6000 p/h, a good setting for the speed is 7200 p/h.

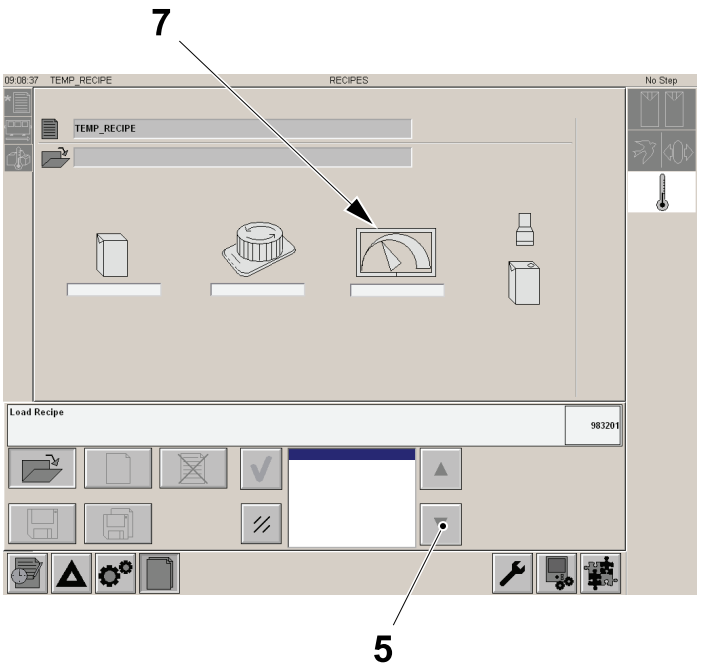

5 ARROW button
7 Speed button

(Cont'd)

(Cont'd)

Note! The steps k) and l) only if Positioning Device is used.

k) Touch the PACKAGING MATERIAL SELECTION button (8).

l) Touch the ARROW button (5) to select the metalised non-metalised package configuration.

m) Touch the OK button (9).

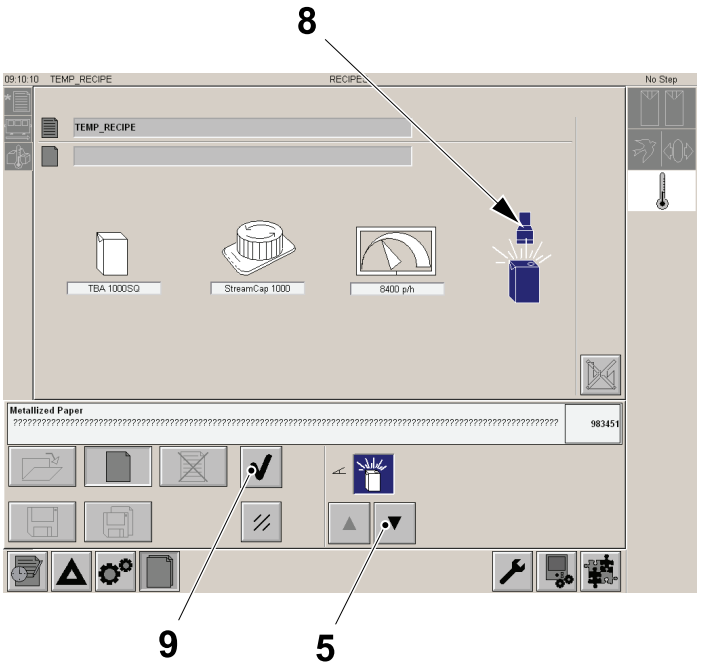

5 ARROW button
8 Packaging material selection button
9 Ok button

(Cont'd)

(Cont'd)

n) When the Keyboard window (10) appears, type the name of the recipe. A good example can be:
   - TPA1000Sq7200M if metalised
   - TPA1000Sq7200 if non metalised

o) Touch the `ENTER` button (11) to confirm.

p) Touch the `EXIT` button (12) to quit.

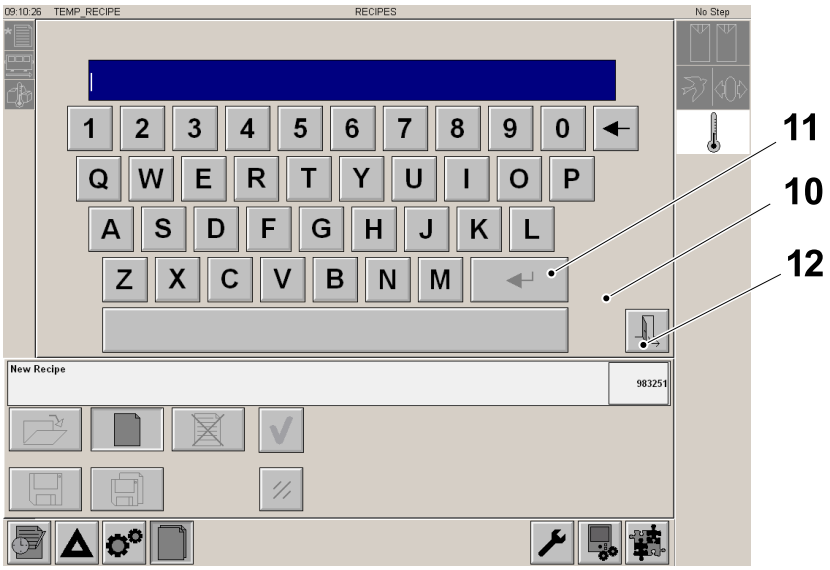

10 Keyboard window
11 ENTER button
12 EXIT button

10.9.1-14 Touch Screen - Saving Recipe Settings

Machine Status	Electrical supply disconnecting device in position I (ON)
SPC Reference	2779070-0300

To save any change made to a machine setting in a recipe, proceed as follows:

a) Touch the RECIPE button (1) and the activeRECIPE name (2) will appear.

b) Touch the SAVE button (3) .

c) Touch the OK button (4) to confirm. The changes will be saved as default values in the recipe.

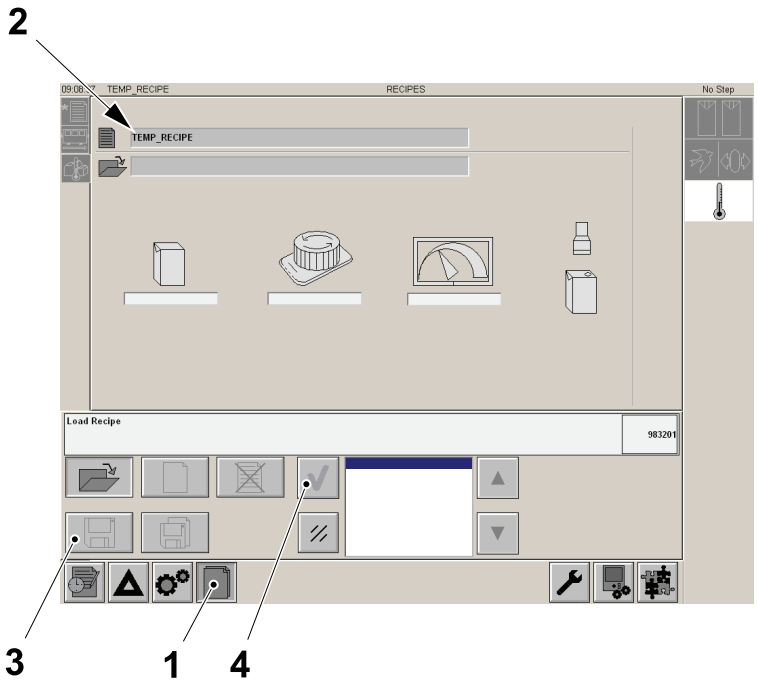

1 Recipe button
2 Recipe name
3 Save button
4 OK button

10.9.1-15 Recipe - Set Correct Values

Machine Status	Electrical supply disconnecting device in position I (ON)
SPC Reference	2779070-0300

Set the correct values of the recipe

To set the correct values of the recipe insert the new settings according to the Final Inspection Report and the MM. The settings are as follows:

a) Package infeed start angle, see 1.1.2.5-8 Set Package Infeed Start Angle.

b) Package infeed running angle, see 1.1.2.5-9 Set Package Infeed Running Angle.

c) Belt brake speed, see 1.1.2.5-6 Set Belt Brake Speed.

d) Package conveyor speed, see 1.1.2.5-5 Set Package Conveyor Speed.

e) Set Package length, see 2.3.3.1-9 Set - Package Length Y.

f) The settings of the hotmelt gun, see 4.4-10 Hotmelt Gun - Set.

g) Cap position Y setting, see 2.3.3.1-7 Set - Cap Position Y Direction.

Note! Save the recipe after all the new values are set, see 10.9.1-14 Touch Screen - Saving Recipe Settings on page 10-328.

Note! As soon as the new recipe is saved the machine will automatically load it.

10.9.1-16 Touch Screen - Delete Recipes

Machine Status	Electrical supply disconnecting device in position I (ON)
SPC Reference	2779070-0300

To delete a recipe, proceed as follows:

a) Set the machine to STEP 0.

b) Touch the RECIPE button (1) to open the recipe window.

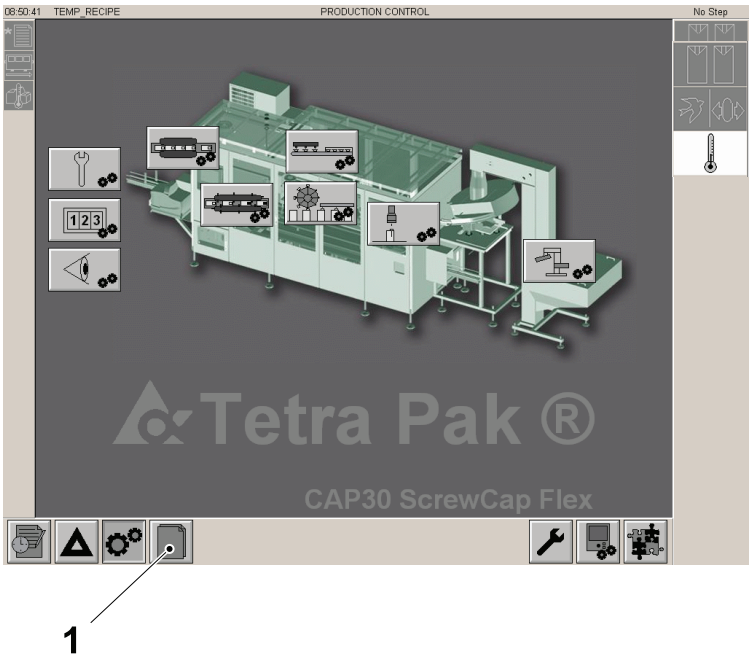

1 Recipe button

(Cont'd)

(Cont'd)

c) Touch the ARROW button (2) to scroll the recipes and stop in the recipe to be deleted.

d) Touch the DELETE button (3) to delete the recipe.

e) Touch the CONFIRM button (4) .

Note! It is not possible to delete the active recipe.

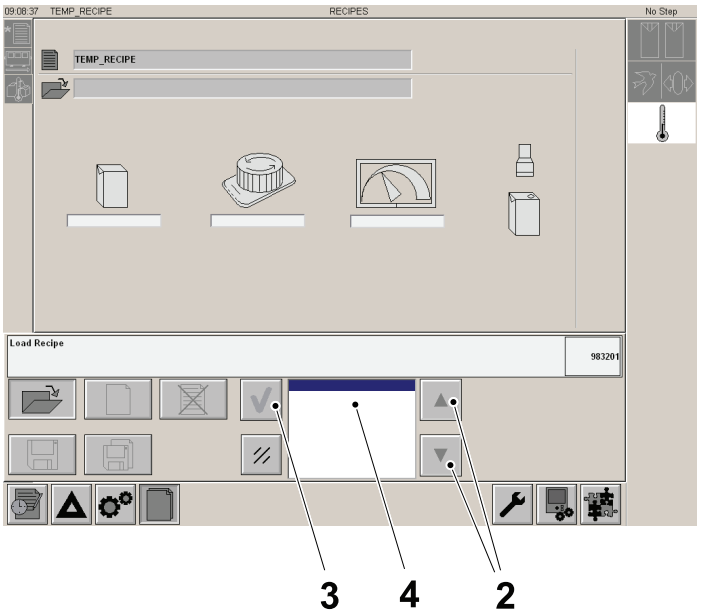

2 ARROW button
3 DELETE button
4 Confirm button

10.9.1-17 Touch Screen - Change Recipes

Machine Status	Electrical supply disconnecting device in position I (ON)
SPC Reference	2779070-0300

To change the recipe in the machine, proceed as follows:

a) Set the machine to STEP 0.

b) Touch the RECIPE button (1) to open the recipe window.

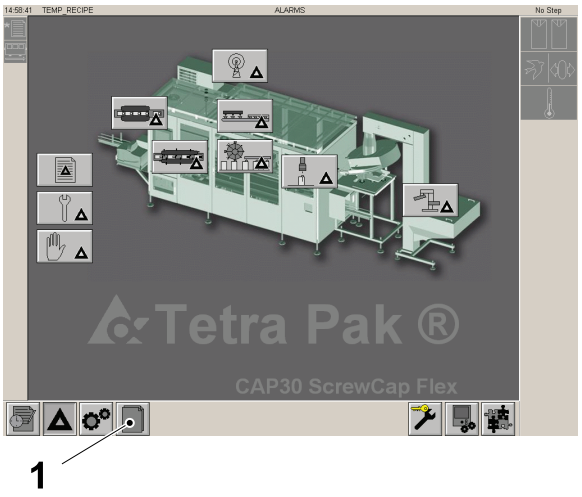

1 Recipe button

(Cont'd)

(Cont'd)

c) Touch the RECIPE button (2) .

d) Touch the ARROW button (3) to scroll the recipes and stop on the recipe to be selected.

e) Touch the OK button (4) to select the recipe.

f) Check the configuration name in the Field (5) is correct.

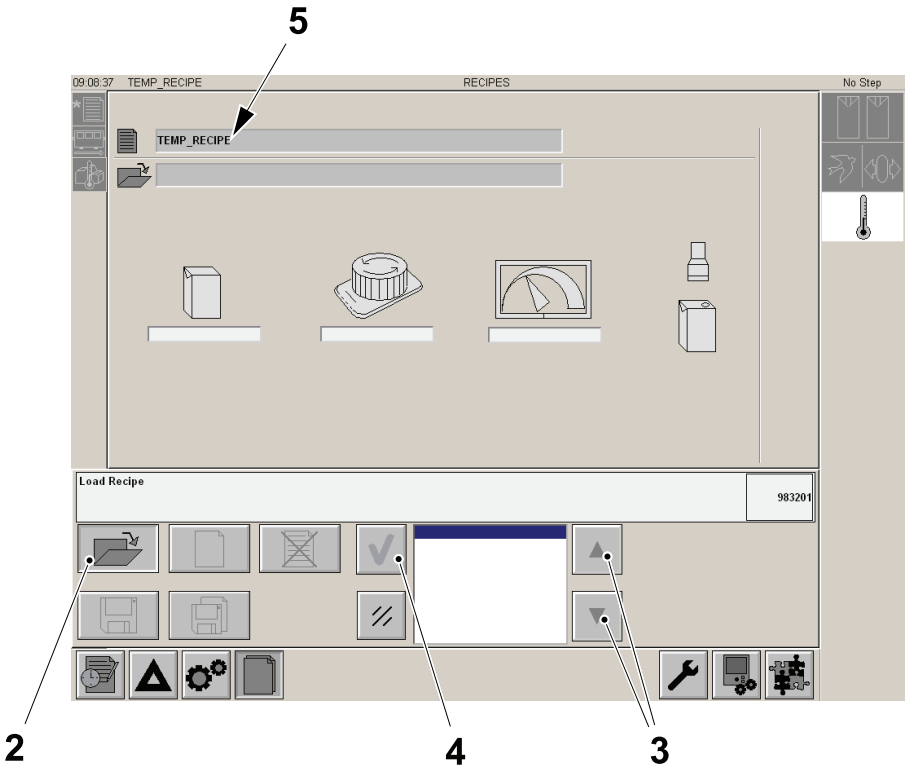

2 Recipe button
3 ARROW button
4 OK button
5 Field

10.9.1-18 Photocell Package Check - Installation, Activation and Deactivation

Machine Status	Electrical supply disconnecting device in position I (ON) Main air valve ON
SPC Reference	2779070-0300

Installation

a) Login to the TPOP as service technician, see 1.1.1-1 HMI User Management - Log On as a User on page 1-6

b) Step down the machine to STEP0.

c) Touch the OPTION button (1) then in the configuration window, touch the PHOTOCELL PACKAGE CHECK OPTION icon (2) and the INSTALLATION icon (3) turns blue.

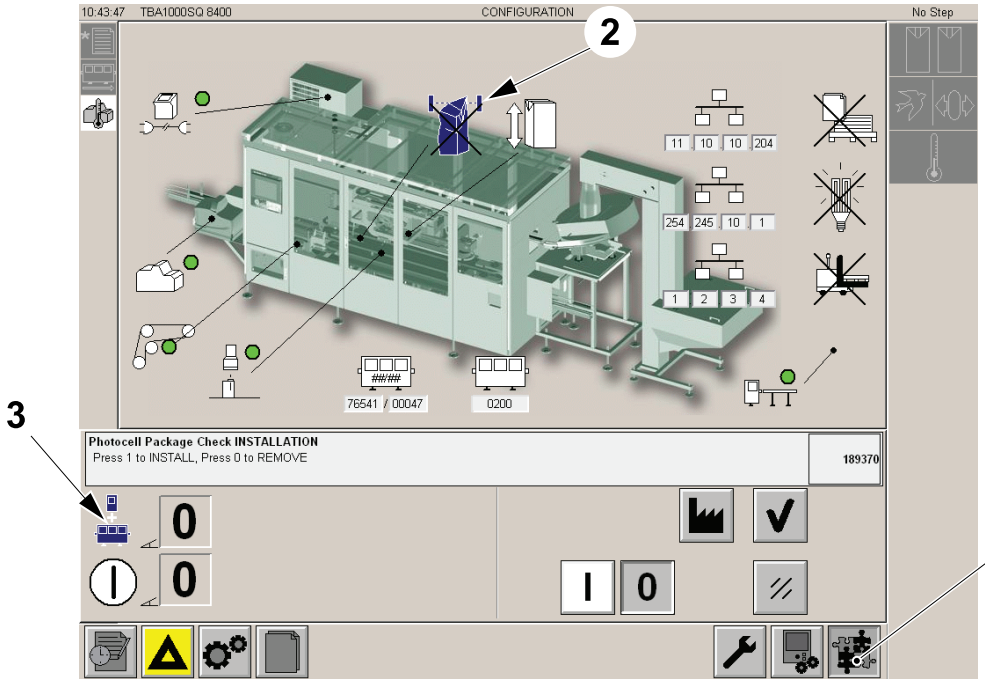

1 OPTION button
2 PHOTOCELL PACKAGE CHECK OPTION icon
3 INSTALLATION icon

(Cont'd)

(Cont'd)

d) Touch the ON button (4) then in the OK button (5). Ready to be activated icon.

Note! The ON icon (6) appears, the INSTALLED icon (7) turns white and the Ready to be ACTIVATED icon (8) turns blue.

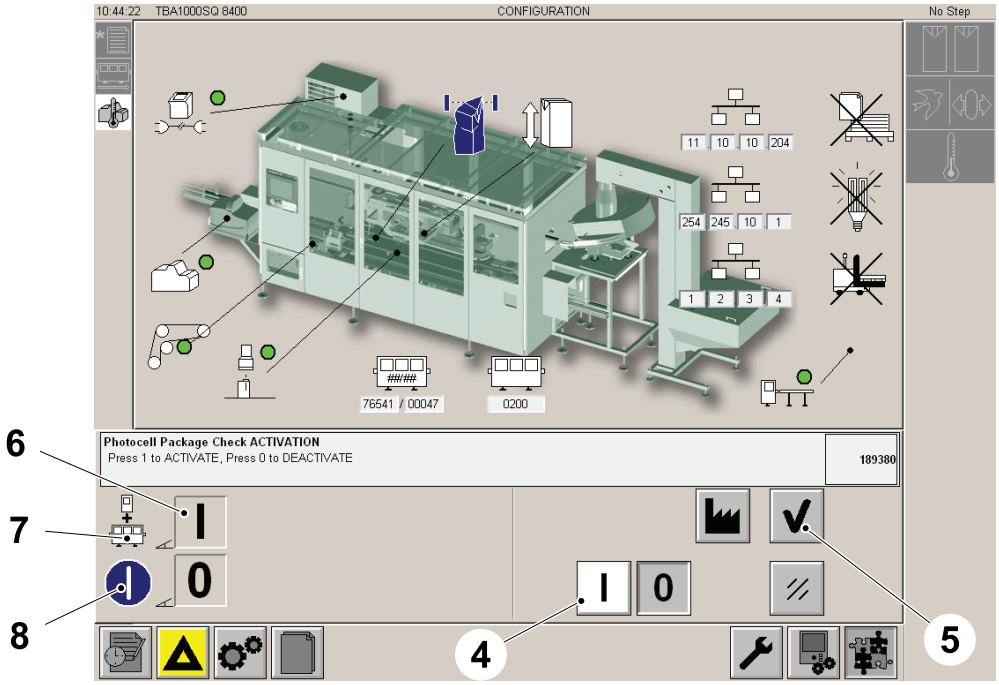

4 ON button
5 OK button
6 ON icon
7 INSTALLED icon
8 ACTIVATED icon

(Cont'd)

(Cont'd)

Activation

a) Touch the ON button (1) and the OK button (2) to activate the photocell package check.

Note! The ON icon (3) appears and the ACTIVATED icon (4) turns green to indicate that the Photocell Package Check is activated.

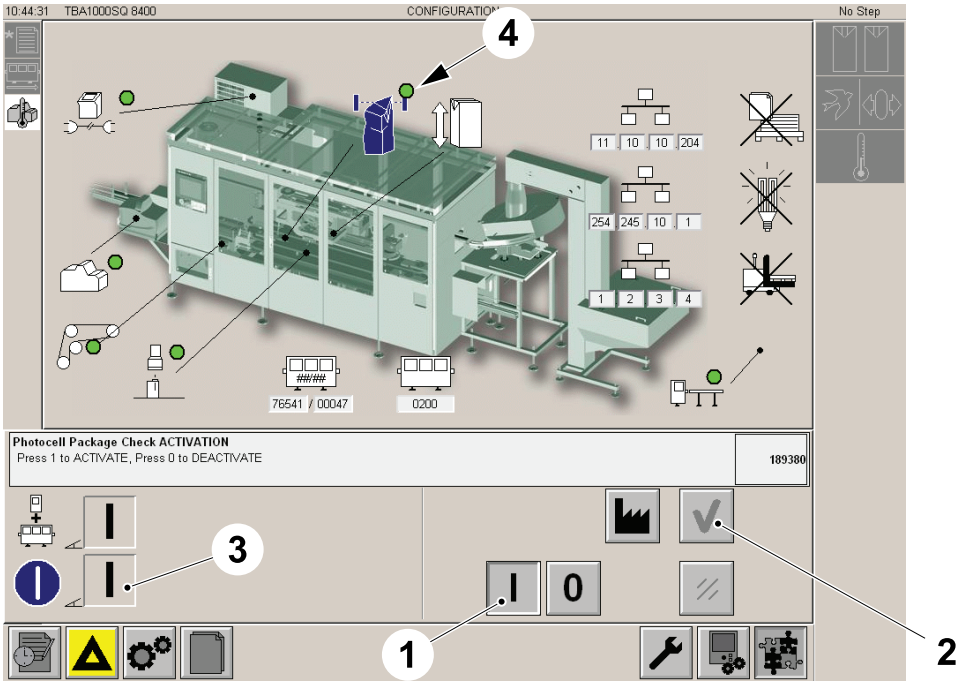

1 ON button
2 OK button
3 ON icon
4 ACTIVATED icon

(Cont'd)

(Cont'd)

Deactivation

a) Touch the OFF button (1) then the OK button (2).

Note! The OFF icon (3) appears and the NOT ACTIVATED icon (4) goes back to blue only to indicate that the Photocell Package Check is not activated.

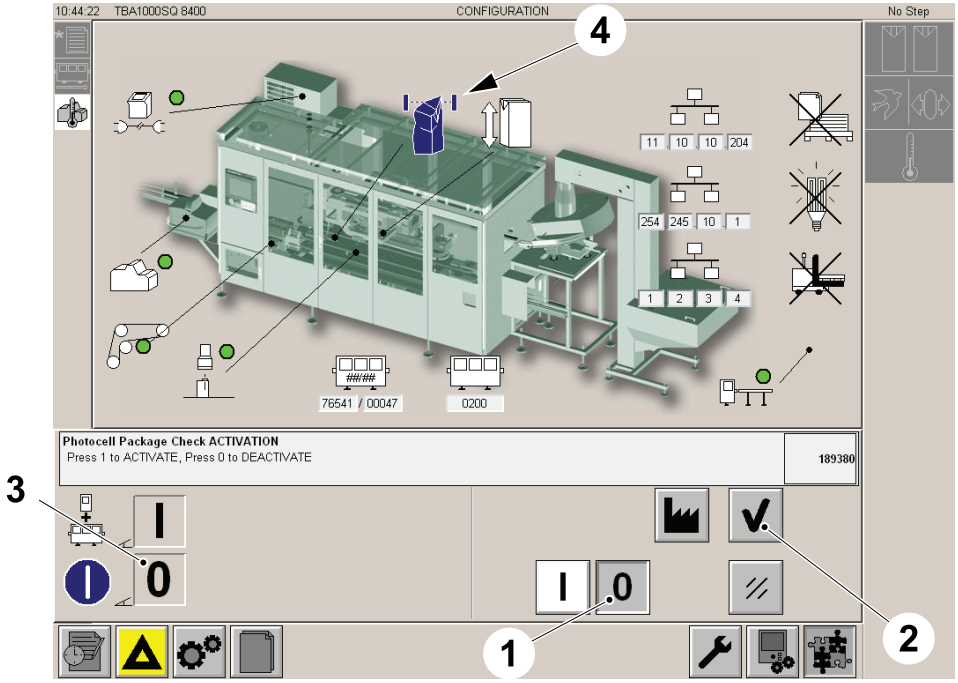

1 OFF button
2 OK button
3 OFF icon
4 NOT ACTIVATED icon

(Cont'd)

(Cont'd)

Un-install

a) Deactivate the Photocell Package Check, see Deactivation.

b) Touch the OFF button (1) then the OK button (2).

c) The ON icon (3) appears, the INSTALLED icon (4) turns white and the Ready to be ACTIVATED icon (5) turns blue.

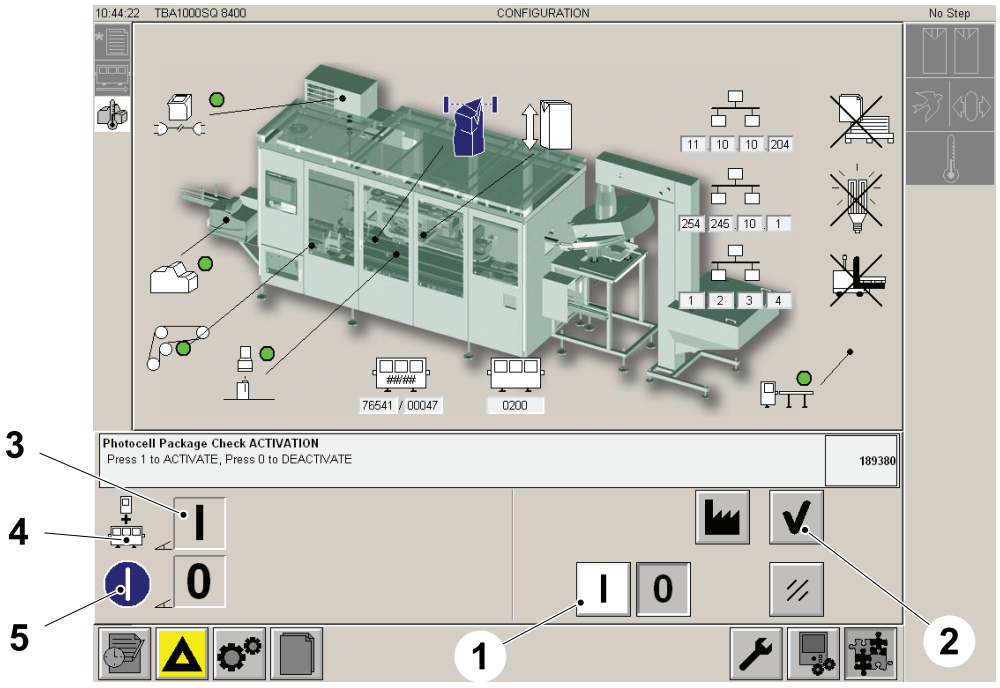

1 OFF button
2 OK button
3 ON icon
4 INSTALLED icon
5 ACTIVATED icon

10.10 Cooling System

10.10.1 Cooling Unit

10.10.1-1 Cooling Unit - Clean Filter

Machine Status	Electrical supply disconnecting device in position I (ON) Main air valve ON
SPC Reference	2833406-0300

WARNING

Refrigerant gas.

Cooling media R134A. Always follow the Manufacturers Data Sheet as specified in the Safety Precautions.

CAUTION

Risk of damage to the equipment.

Only the procedures described may be performed by Tetra Pak or Tetra Pak trained customer technicians. In all other cases contact Tetra Pak.

(Cont'd)

(Cont'd)

a) Remove the screw (1) .

b) Remove the cover (2) and the filter (3) .

c) Clean the filter (3) with compressed air.

d) Assemble in the reverse order.

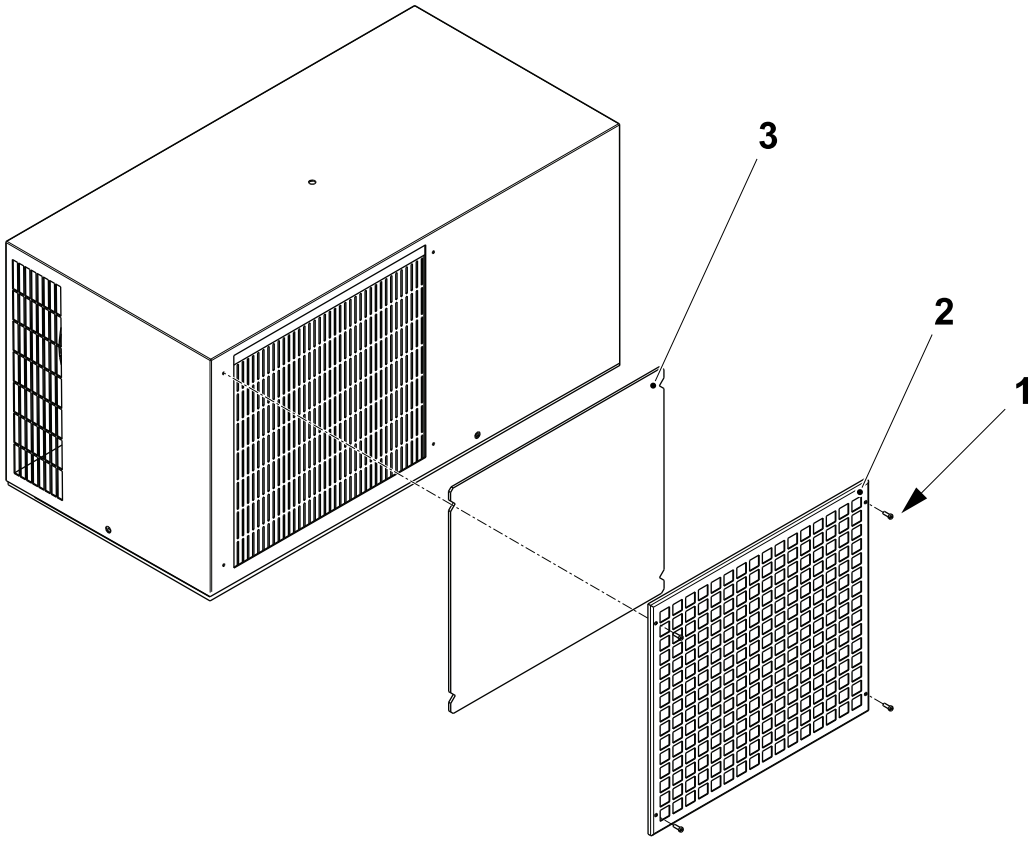

1 Screw
2 Cover
3 Filter

10.10.1-2 Cooling Unit - Change Filter

Machine Status	Electrical supply disconnecting device in position I (ON) Main air valve ON
SPC Reference	2833406-0300

WARNING

Refrigerant gas.

Cooling media R134A. See the Safety Precautions.

CAUTION

Risk of damage to the equipment.

Only the procedures described may be performed by Tetra Pak or Tetra Pak trained customer technicians. In all other cases contact Tetra Pak.

a) Remove the screw (1) .

b) Remove the cover (2) and the filter (3).

c) Change the filter (3).

d) Assemble in the reverse order.

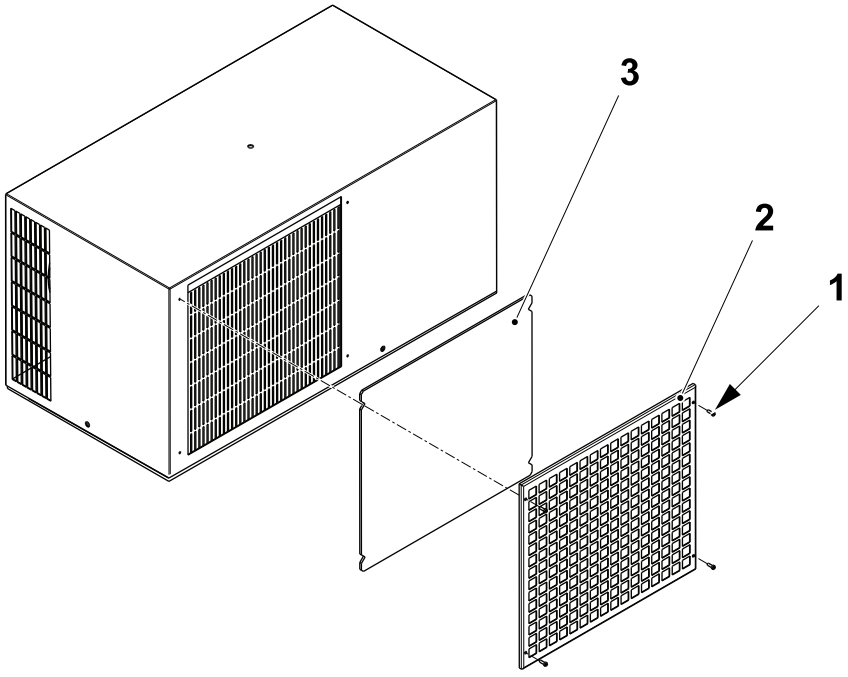

1 Screw
2 Cover
3 Filter

10.10.1-3 Cooling Unit - Check

Machine Status	Electrical supply disconnecting device in position I (ON) Main air valve ON
SPC Reference	2833406-0300

DANGER

Hazardous voltage.
Will shock, burn or cause death. Follow the lockout procedure before performing this procedure.

CAUTION
Risk of damage to the equipment.
Only the procedures described may be performed by Tetra Pak or Tetra Pak trained customer technicians. In all other cases contact Tetra Pak.

a) Remove the screw (1) and the cover (2) .

b) Clean heat exchanger unit (3) with compressed air, blow the compressed air through from the inner side of the heat exchanger unit (3) to the outside of the cooling unit.

c) Clean any build up of dirt from the fan blades (4) .

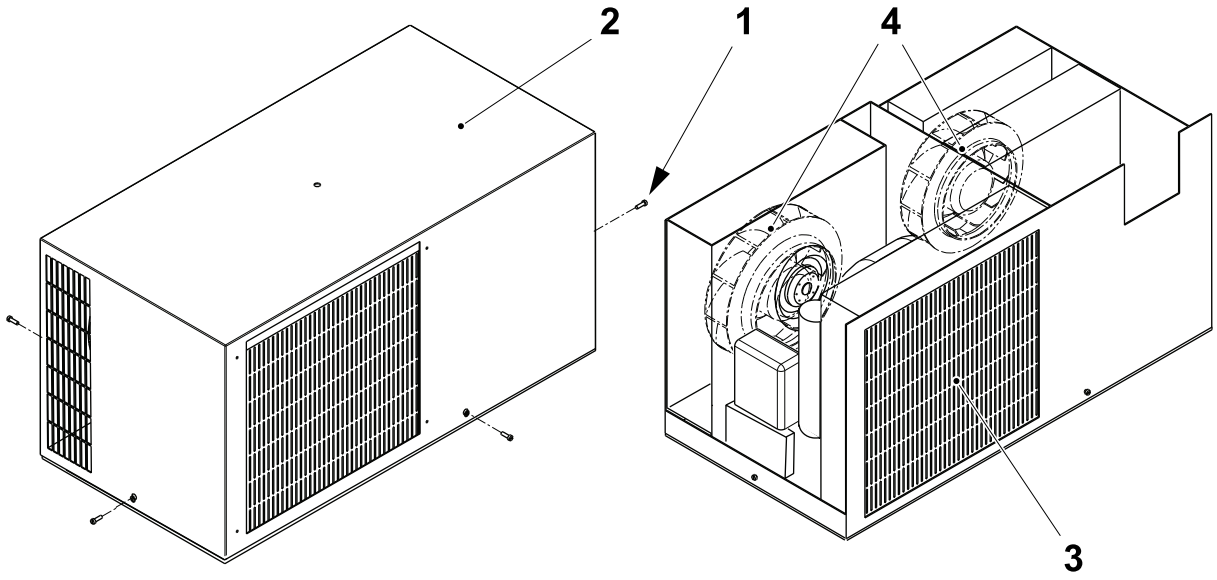

1 Screw
2 Cover
3 Heat exchanger unit
4 Fan blade

(Cont'd)

(Cont'd)

d) Check for oil leakages on the copper pipe connections, if oil is leaking from the pipe connections, contact Tetra Pak

e) Check that the compressor (5) is securely fastened to the cooling unit base

f) Check that the fans (6) are securely fixed and there is not excessive radial play. To change the fans, see 10.10.1-4 Cooling Unit - Overhaul.

g) Assemble in the reverse order.

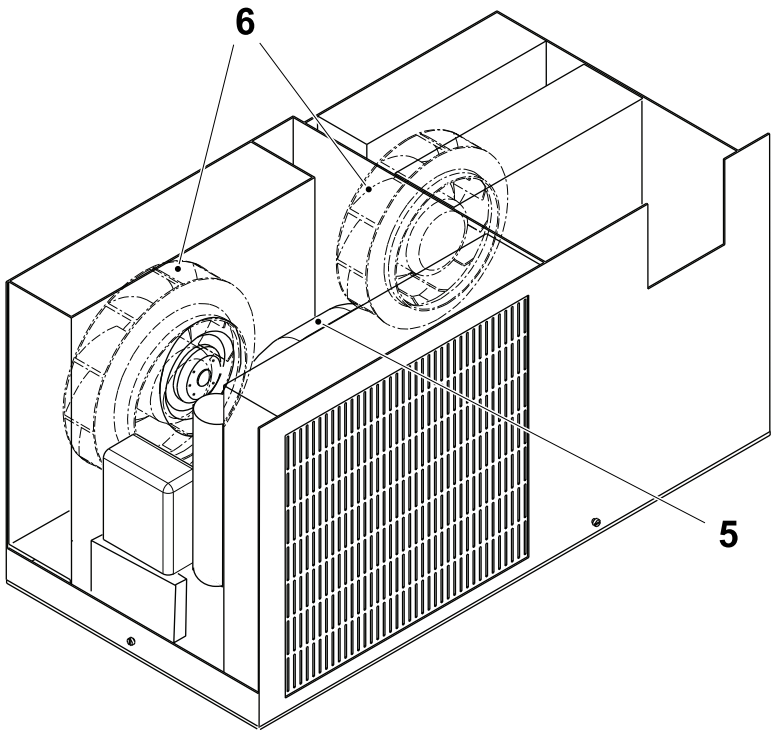

5 Compressor
6 Fan

10.10.1-4 Cooling Unit - Overhaul

Machine Status	Electrical supply disconnecting device in position I (ON) Main air valve ON
SPC Reference	2833406-0300

DANGER

Hazardous voltage.
Will shock, burn or cause death. Follow the lockout procedure before performing this procedure.

WARNING

Refrigerant gas.
Cooling media R134A. See the Safety Precautions.

CAUTION

Risk of damage to the equipment.
Only the procedures described may be performed by Tetra Pak or Tetra Pak trained customer technicians. In all other cases contact Tetra Pak.

Note! If the cooling unit is removed from the electrical cabinet it is advisable to fit a new gasket to ensure a sufficient seal between the electrical cabinet and the cooling unit. Apply the self adhesive side of the new gasket to the cooling unit base.

(Cont'd)

(Cont'd)

a) Remove the screw (1) and the cover (2).

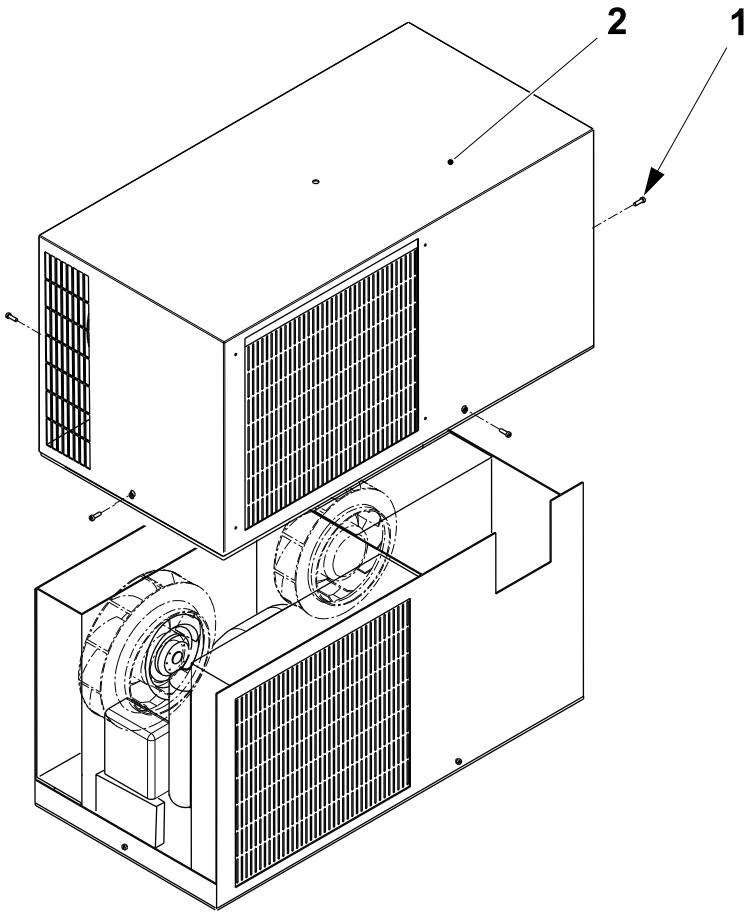

1 Screw
2 Cover

(Cont'd)

(Cont'd)

Change the Condenser Fan

a) Disconnect the electrical cable (1) from the connection block (2) making a note of which wire is connected where.

b) Remove the screw (3) and the fan (4).

c) Assemble in the reverse order.

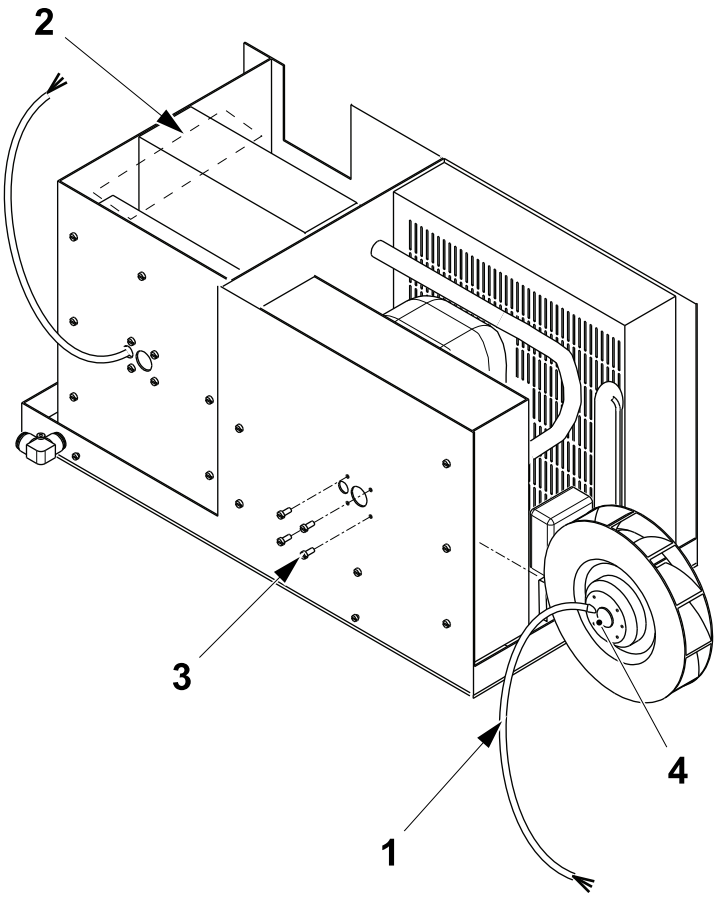

1 Cable
2 Connection block
3 Screw
4 Fan

(Cont'd)

(Cont'd)

Change the Expansion Chamber Fan

CAUTION
Risk of damage to the equipment.
Take care to fit the fan (6) with the correct screw (5), the screw (3) may damage the fan.

a) Disconnect the electrical cable (1) from the electrical connection box (2).

b) Remove the screw (3) and the Cover (4).

c) Remove the screw (5) and the fan (6).

d) Assemble in the reverse order.

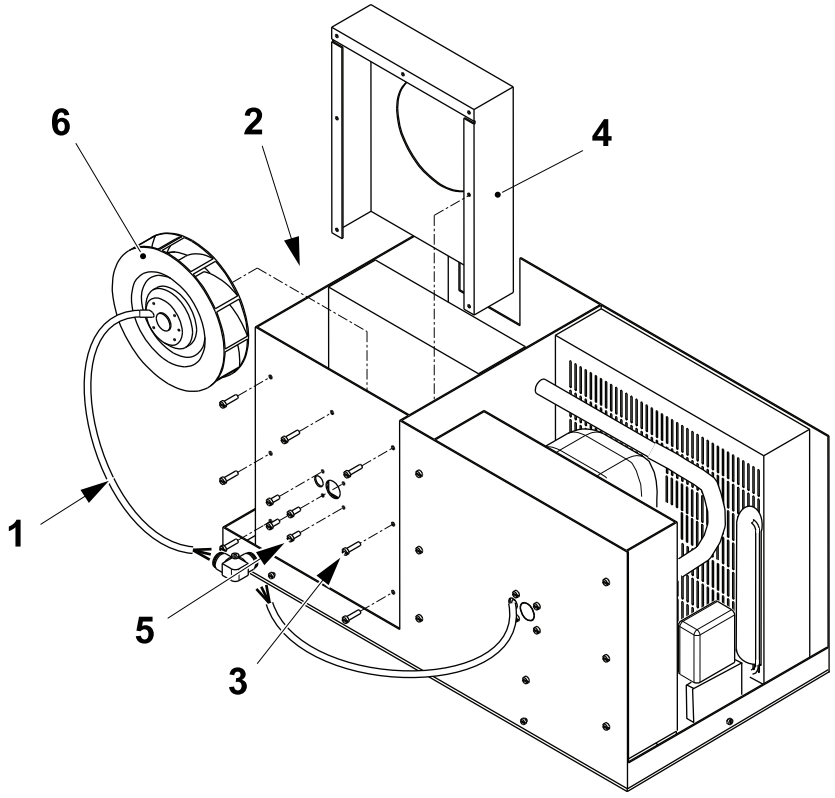

1 Electrical cable
2 Connection box
3 Screw
4 Cover
5 Screw
6 Fan

(Cont'd)

(Cont'd)

Change the Anti-freeze Thermostat

a) Remove the thermostat (1) from the expansion chamber unit (2).

b) Remove the screw (3) and the thermostat unit (4).

c) Assemble in the reverse order.

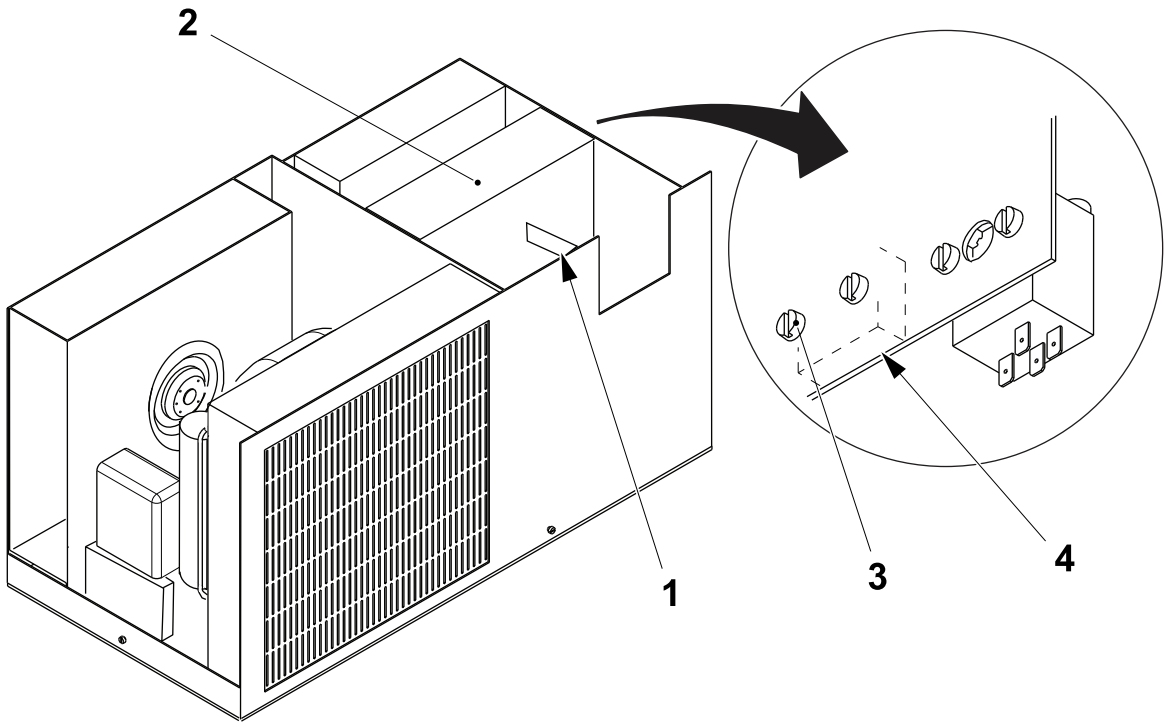

1 Thermostat
2 Expansion chamber unit
3 Screw
4 Thermostat unit

(Cont'd)

(Cont'd)

Change the Cabinet Temperature Thermostat

a) Remove the electrical connections from the thermostat (1).

b) Remove the screw (2) and the cabinet temperature thermostat (1).

c) Assemble the new thermostat unit (1) placing the thermostat sensor (3) into the airflow.

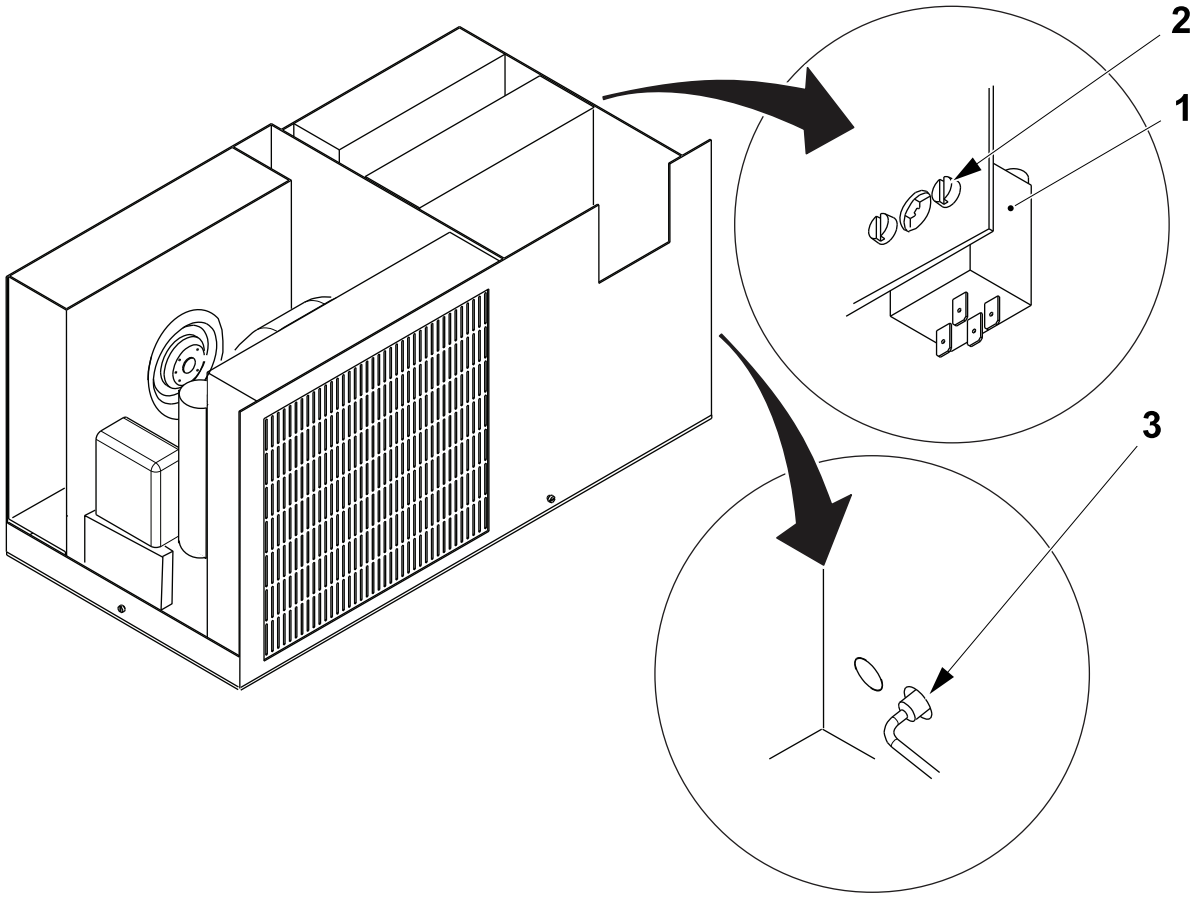

1 Thermostat
2 Screw
3 Thermostat sensor

10.10.1-5 Cooling Unit - Troubleshooting

Machine Status	Electrical supply disconnecting device in position I (ON) Main air valve ON
SPC Reference	2833406-0300

CAUTION
Risk of damage to the equipment.
Only the procedures described may be performed by Tetra Pak or Tetra Pak trained customer technicians. In all other cases contact Tetra Pak.

If the cooling unit fails to operate or is operating insufficiently use the table below to determine the possible cause and actions to be taken.

Description	Possible Cause	Action
The cooling unit will not start.	No mains power supply to the cooling unit.	Check the circuit breaker and connections to the mains power supply.
Only the inside fan runs. Practically no electric consumption	The electrical cabinet internal thermostat has tripped or is wrongly set. The freeze thermostat has tripped.	Check the electrical cabinet internal thermostat and if necessary set to 35°C.
Normal operation. Insufficient cooling. High electric consumption	Condenser coil or filter dirty. Faulty condenser fan. Electric panel not properly sealed.	Check coil and air filter. Check the fans. Remove any obstacles. Close the cabinet doors.
The fan runs but the compressor does not run. Low electric consumption	Compressor internal protection has tripped probably due to too many frequent start ups or insufficient refrigerant gas	Contact Tetra Pak.
Normal operation. Low electric consumption and compressor very hot.	Insufficient or complete lack of refrigerant gas.	Contact Tetra Pak.
Compressor never stops.	Check that the thermostat contacts or any switch contacts are not stuck.	Replace the necessary faulty part.
During operation a lot of condensation forms and is drained off.	Cabinet not sealed sufficiently. Cabinet doors open. Holes in cabinet walls.	Improve the cabinet sealing. Close the cabinet doors. Fill any holes in the cabinet.

10.10.2 Thermostat

10.10.2-1 Thermostat - Set-Up

Machine Status	Electrical supply disconnecting device in position I (ON) Main air valve ON
SPC Reference	2835457-0200

Note! The thermostat (1) is used to monitor the temperature inside the electrical cabinet. When the temperature exceeds the one set in the thermostat (1), a blue alarm appears.

a) Turn the regulator (2) and set the temperature limit to 38°C.

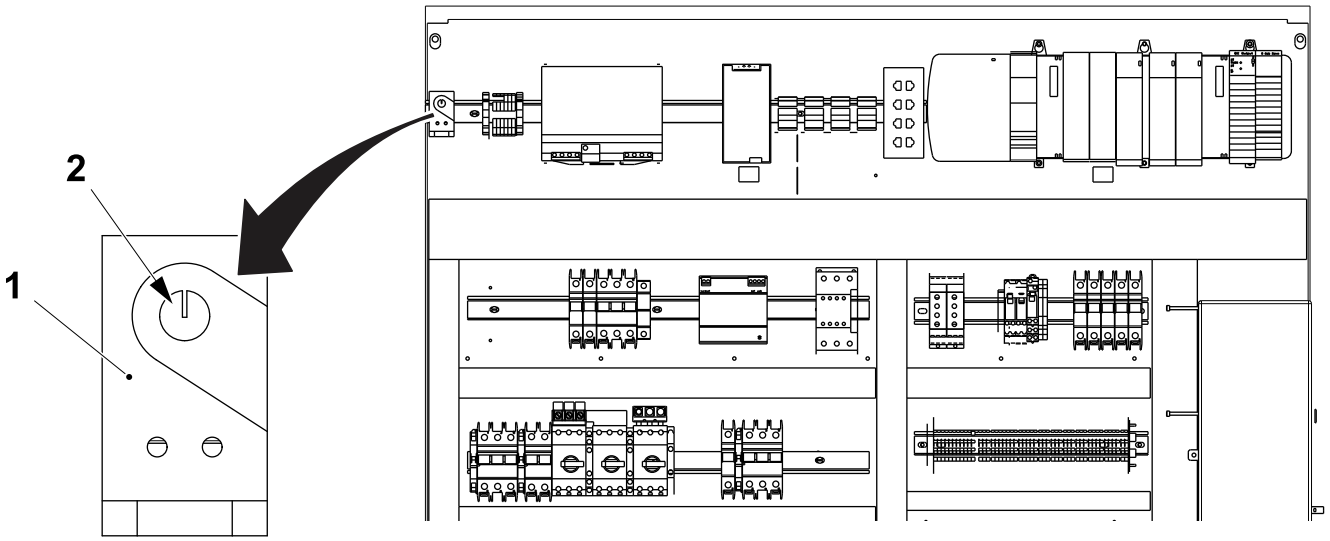

1 Thermostat
2 Regulator

10.11 Electrical Conversion

10.11.1 Variable Frequency Drive

10.11.1-1 Maintenance Instructions

Machine Status	Electrical supply disconnecting device in position I (ON)
SPC Reference	662911-0300

For maintenance instructions, see 10.4.1 PowerFlex40 and PowerFlex 4 Frequency Converters on 10-139.

10.11.2 Axis Module

10.11.2-1 Maintenance Instructions

Machine Status	Electrical supply disconnecting device in position I (ON)
SPC Reference	662911-0300

For maintenance instructions, see 10.5.3 Servo Drive on 10-179.

10.11.3 Communication Unit

10.11.3-1 Maintenance Instructions

Machine Status	Electrical supply disconnecting device in position I (ON)
SPC Reference	662911-0300

For maintenance instructions, see 12.4 Communication Unit on 12-15.

10.12 PLMS Config

10.12.1 PLMS - Install DE Config Files

The CONFIG file of each DE (and Tetra Pak LC30) must be installed on the filling machine IPC.

The instructions for this can be found in the filling machines MM under HMI and PLMS - Install DE Config Files.

10.13 CAP30 Development Step

10.13-1 Development Step - Setup

Machine Status	Electrical supply disconnecting device in position I (ON) Main air valve ON
SPC Reference	662950-0300

CAUTION
Risk of Damge to Equipment
The wrong setting of the development step may cause wrong behaviour of CAP30 machine and may bring to property damage.

Note! The new software for CAP30 machines introduces the setting for the development step of the machine. This setting configures the software for the proper development step of the CAP30.

a) Login the TPOP as service technician, see 1.1.1-1 HMI User Management - Log On as a User.

b) Touch the CONFIGURATION button (1).

c) In the CONFIGURATION window, the CAP30 DEVELOPMENT STEP button (2) is shown in picture below.

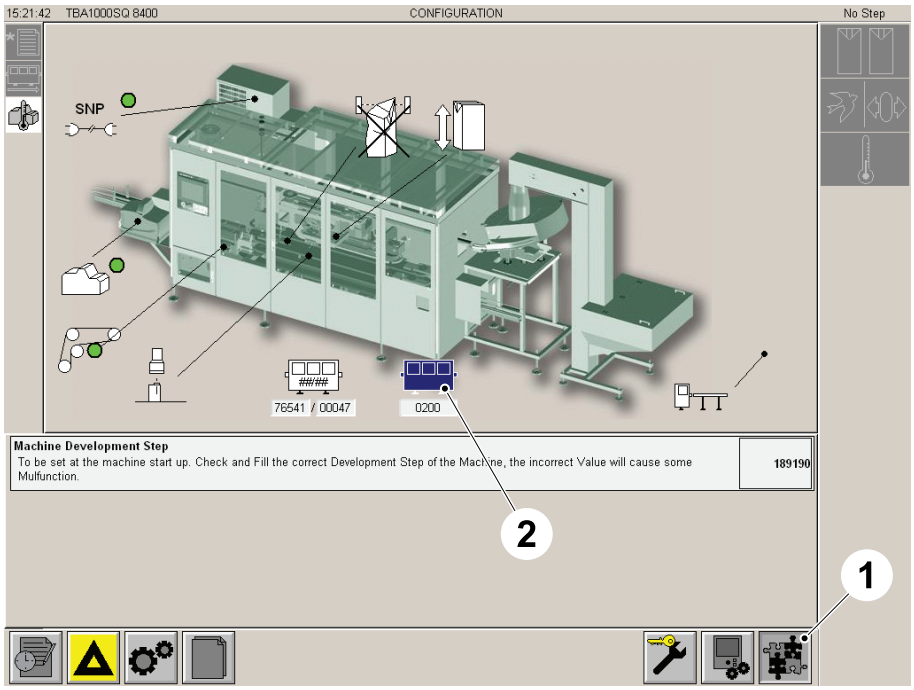

1 CONFIGURATION button
2 CAP30 DEVELOPMENT STEP button

10.13-2 Development Step - Check

Machine Status	Electrical supply disconnecting device in position O (OFF)
SPC Reference	662950-0300

a) Check the CAP30 machine plate (1) .

b) Check the CAP30 development step in the machine number (2) of the CAP30 machine plate (1).

Note! For CAP30 Flex the machine number is 662950-0100, 662950-0200 or 662950-0300 and the development steps are -0100, -0200 and -0300.

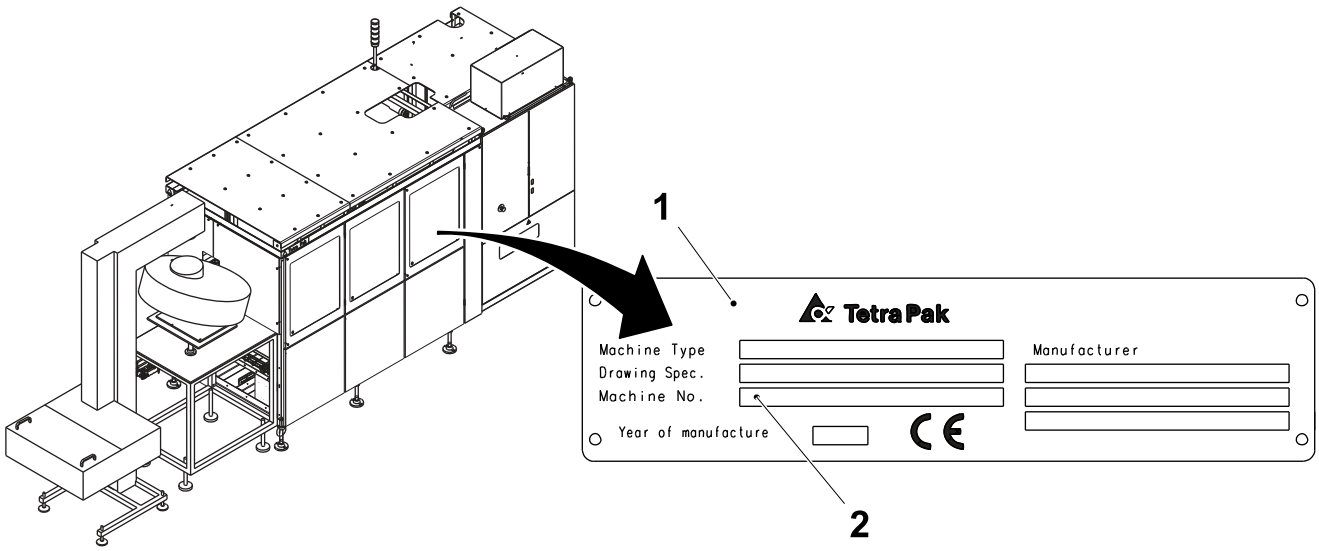

1 CAP30 machine plate
2 Machine number

10.13-3 Development Step - Set

Machine Status	Electrical supply disconnecting device in position I (ON) Main air valve ON
SPC Reference	662950-0300

a) In the CONFIGURATION window (1), touch the CAP30 DEVELOPMENT STEP button (2).

b) Touch the ARROW keys (3) to setup the correct development step.

c) Touch the OK button (4) to confirm.

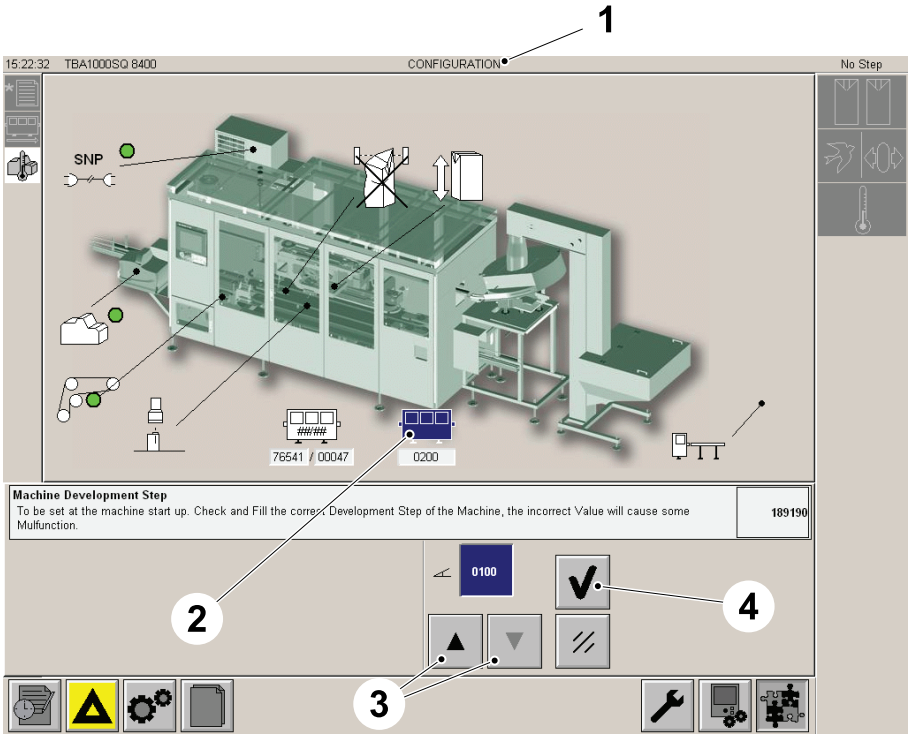

1 CONFIGURATION window
2 CAP30 DEVELOPMENT STEP button
3 ARROW keys
4 OK button

(Cont'd)

(Cont'd)

d) Once the DEVELOPMENT STEP (5) is setup it is visible in the main window of the TPOP, as shown in the illustration.

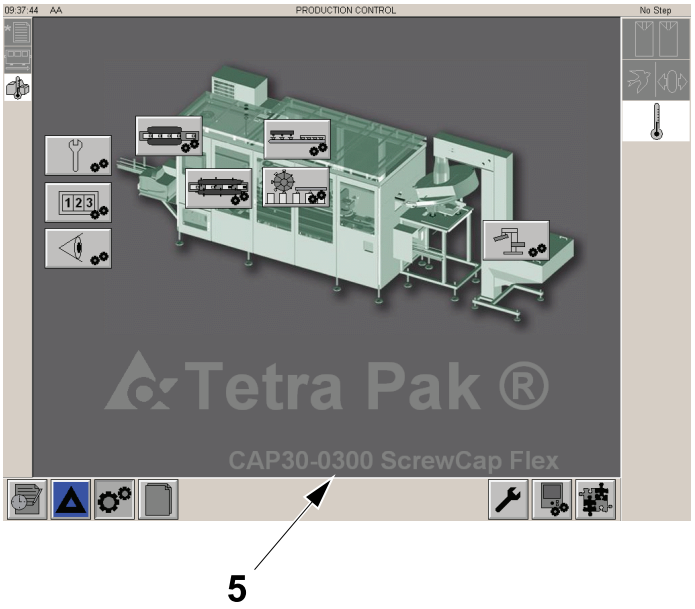

5 DEVELOPMENT STEP

This page intentionally left blank

11 Regular Accessories

Regular Accessories

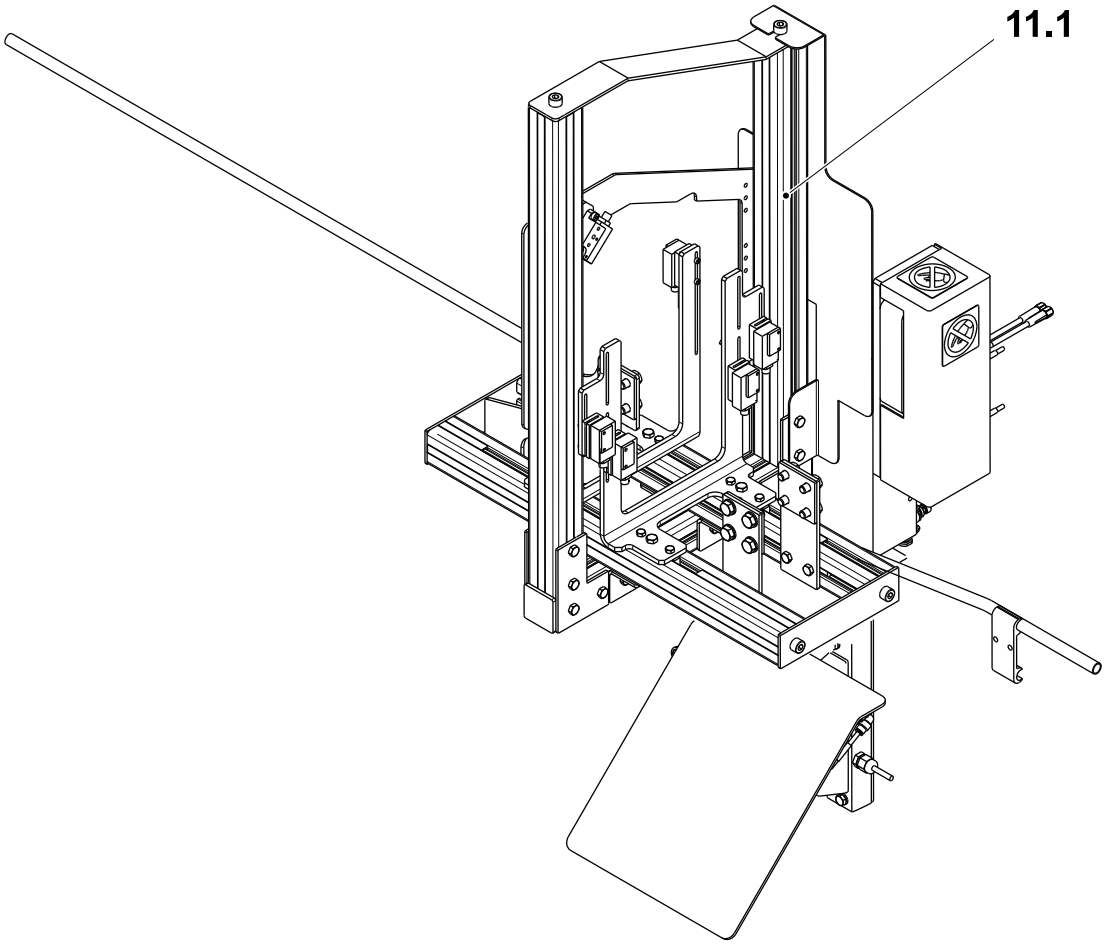

11.1 Cap Detector

Regular Accessories 11-2

11.1 Cap Detector 11-5

11.1.1 Functional Description - Screw Cap 11-5

11.1-1 Cap Detector - Check 11-6

11.1-2 Cap Detector - Set 11-7

11.2 Cap Detector - Package Ejector Timing 11-16

11.2-1 Cap Detector - Package Ejector Timing Setting 11-16

11.2-2 Cap Detector - Fine Setting 11-20

11.2-3 Different Waste Package Counters 11-22

11.2-4 Cap Ejector - Set Pressure 11-25

11.2-5 Cap Ejector - Set Height 11-26

This page intentionally left blank

11.1 Cap Detector

11.1.1 Functional Description - Screw Cap

The cap detector is mounted at the discharge (front) end of the machine and is used to remove packages without caps from the conveyor. These packages are sensed by the photocell (1) . The sensor (2) read if a cap is present.

Make sure the sensor does not read the anti-tampering ring. This device also ejects packages when the cap is found out of position by the vision system which can be adjusted on the HMI.When no cap is found the package is removed by the pusher (3).

If a cap leaves the package but stays on the conveyor this will be detected by the photocell (4) and removed by a jet of air from the nozzle (5).

The mounting holes (6) are for other volumes.

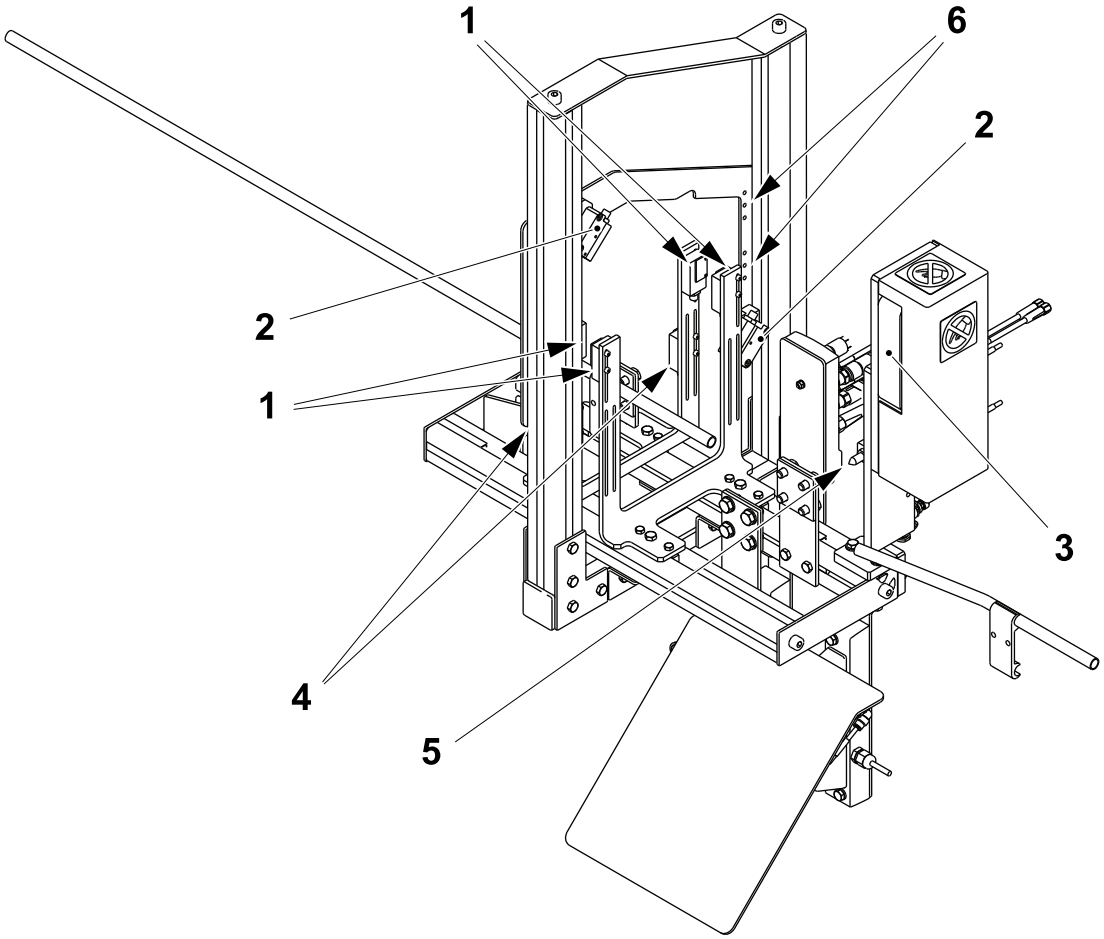

1 Photocell
2 Sensor
3 Pusher
4 Photocell
5 Nozzle
6 Mounting holes

11.1-1 Cap Detector - Check

Machine Status	Electrical supply disconnecting device in position O (OFF)
SPC Reference	2986247-0200

Check each of the following parts for wear:

a) Link head (1).

b) Cylinder (2).

c) Pusher (3).

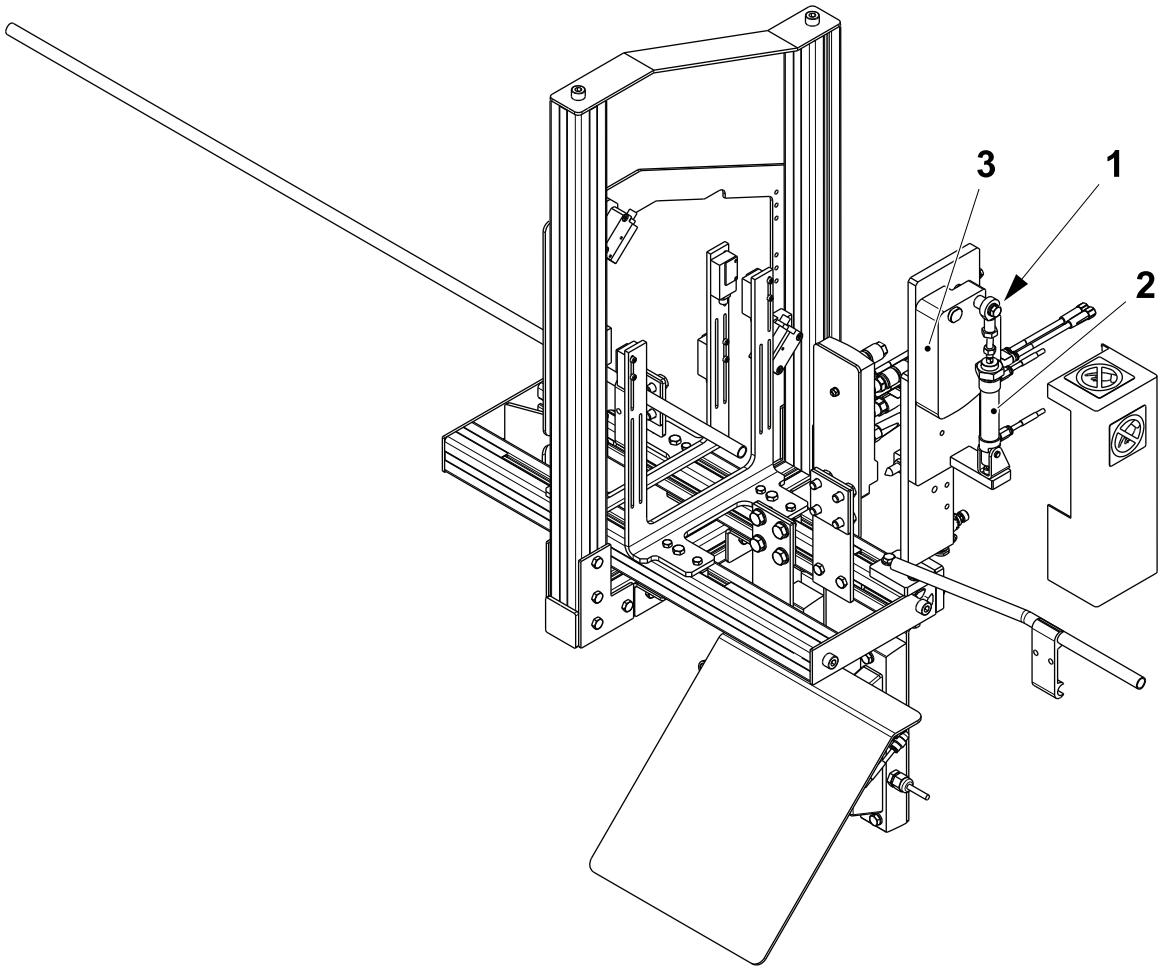

1 Link head
2 Cylinder
3 Pusher

11.1-2 Cap Detector - Set

Machine Status	Electrical supply disconnecting device in position O (OFF)
SPC Reference	2986247-0200

Set Cap Position Photocells

a) Release the screw (1) and remove the screw (2) placing it in the correct hole on the bracket (3) for the required photocell (4) package position.

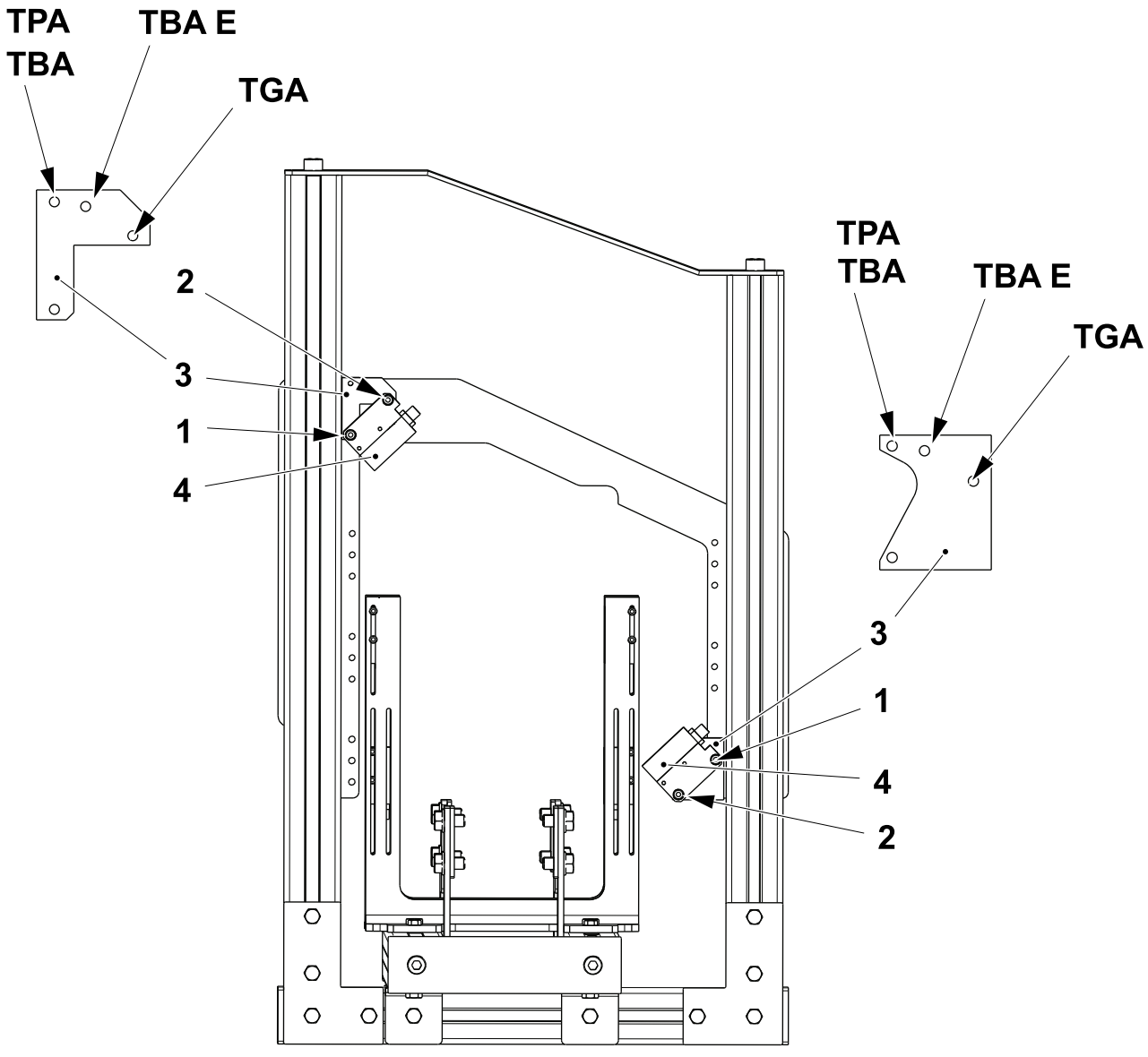

1 Screw
2 Screw
3 Bracket
4 Photocell

(Cont'd)

(Cont'd)

b) Select the combination best suited for your package by removing the screw (5) and moving the bracket (3).

c) Set the distance **H and J** between the top of the photocell bracket (3) and the top of the support (6) by releasing and tightening the screws (7).

For Packages use A - D	**H ± (mm)**	**J ± (mm)**	**For Packages use A - G**	**H ± (mm)**	**J ± (mm)**
TGA 500 Sq	164	263	TBA 200 E	183	253
TGA 750 Sq	224	323	TBA 250 E	206	276
TGA 1000 Sq	274	443	TBA 500 Sq	195	195
TGA 1000 Crystal/Leaf	246	487	TPA 500 Sq	285	285
For Packages use B - F	**H ± (mm)**	**J ± (mm)**	**For Packages use C - E**	**H ± (mm)**	**J ± (mm)**
TPA 750 Sq	305	305	TBA 1500 S	379	379
TPA 1000 Sq	360	360	TBA 2000 S	372	372
TBA 1000 Sq	330	330	TGA 1500 S	274	453
TBA 1000 S	327	327			

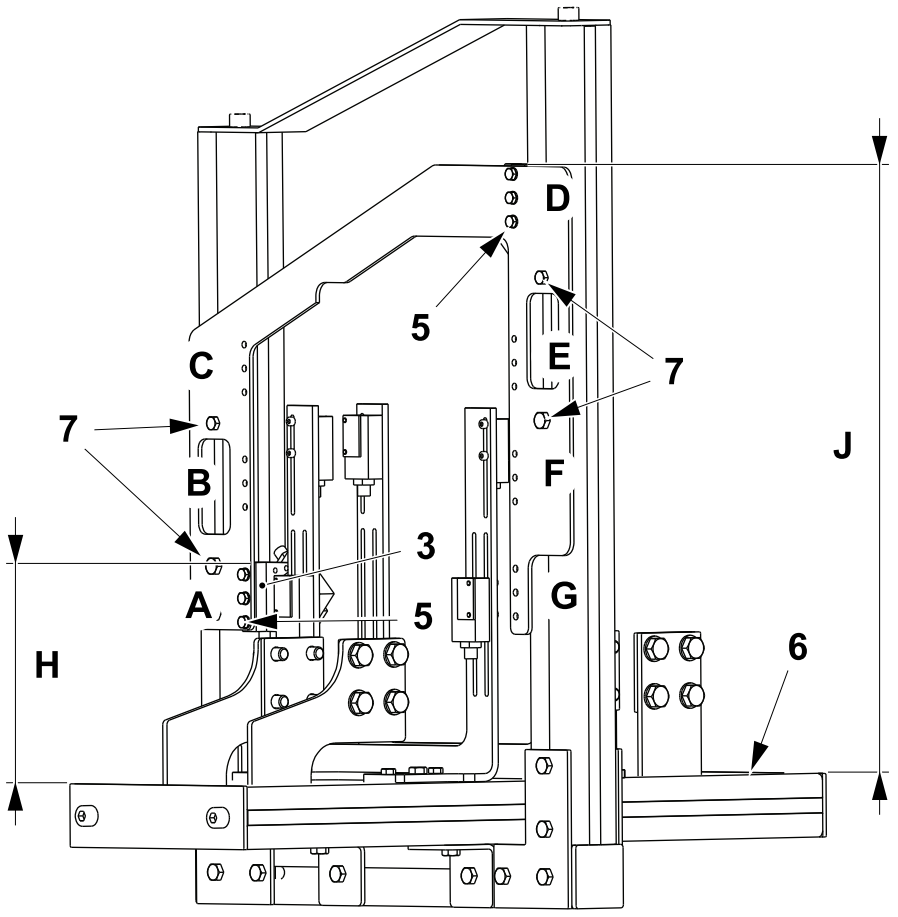

3 Bracket
5 Screw
6 Support
7 Screw

(Cont'd)

(Cont'd)

d) Place a package (8) on the conveyor so that the beam (9) just starts to read the cap (10) .

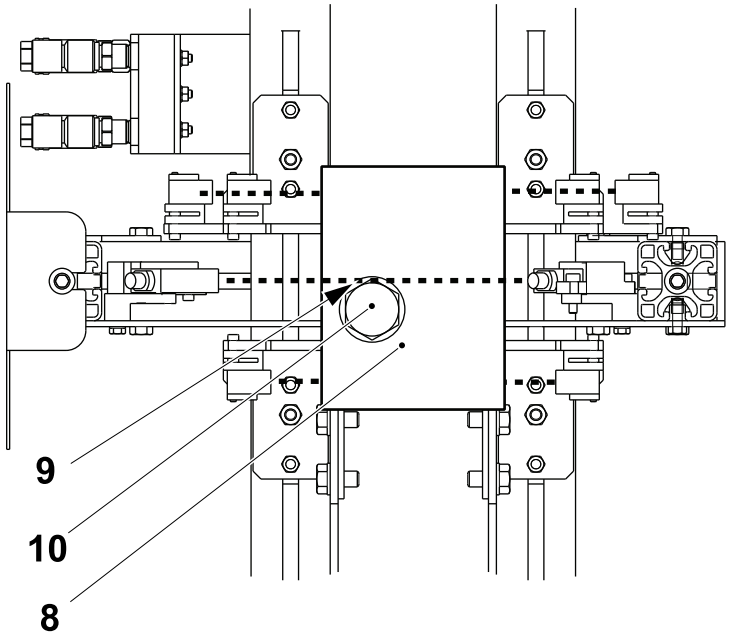

8 Package
9 Beam
10 Cap

(Cont'd)

(Cont'd)

Set Cap Detector with Lifting Device

a) Select the combination best suited for your package by removing the screw (1) and moving the bracket (2).

b) Set the distance **H and J** between the top of thephotocell (3) and (4) and the top of thesupport (5) by releasing and tightening the screw (1).

For Packages use	H ± (mm)	For Packages use	J ± (mm)
TPA 1000 S	242	TPA 750 Sq	193
TBA 1000 Sq	214	TBA 500 Sq	118
TBA 2000 S	252		

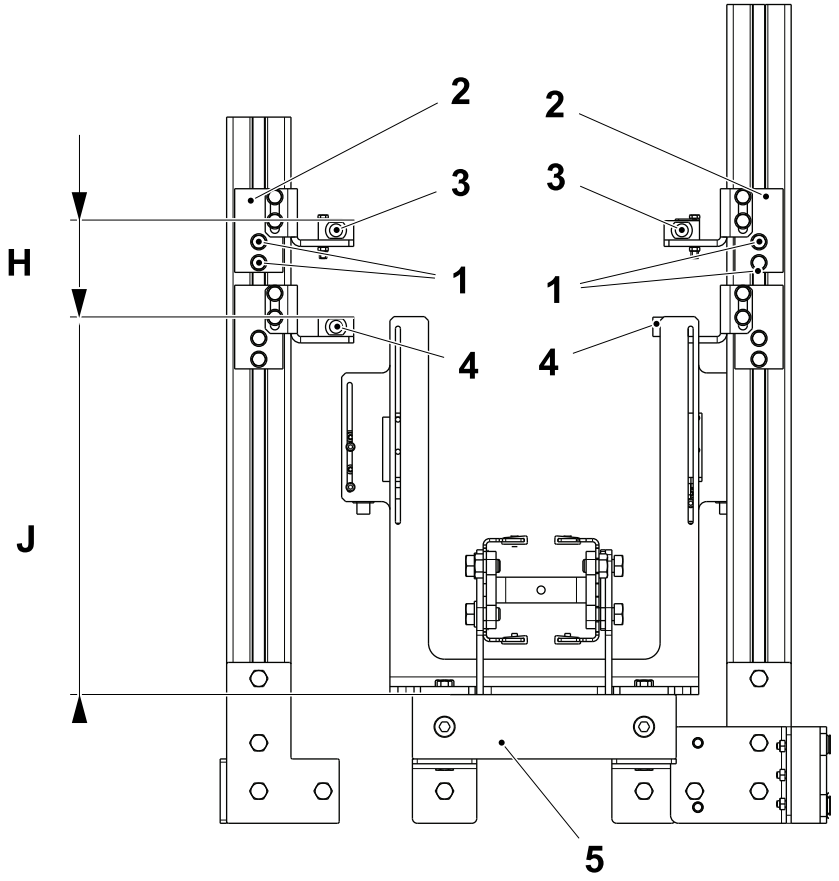

1 Screw
2 Bracket
3 Photocell
4 Photocell
5 Support

(Cont'd)

(Cont'd)

Set Cap Detector with Lifting Device (Only TGA)

Note! Connect the group of the photocell for the kind the package.

a) Put the package (1) in the middle of the cap detector.

b) Release the screw (2) and (6) and move the bracket (3) and (7) until the laser (5) is in the middle of the cap (4).

c) When you find the correct position tighten the screws (2) and (4).

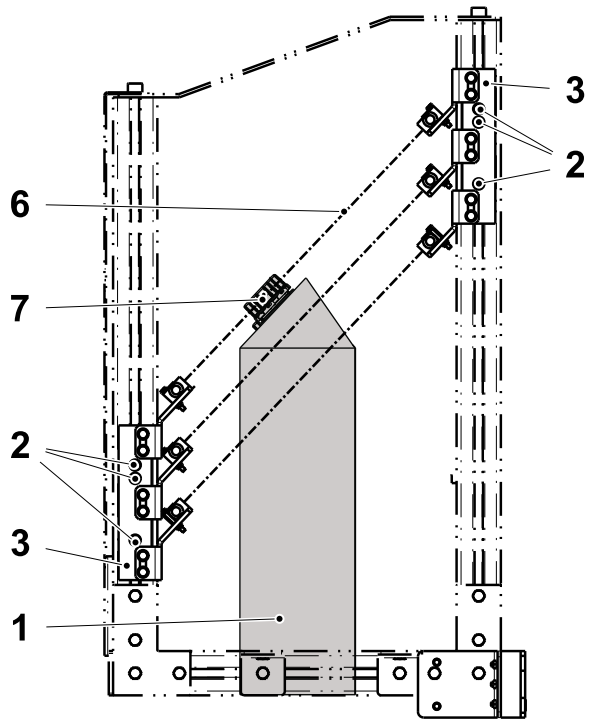

1 Package
2 Screw
3 Bracket
4 Cap
5 Laser
6 Screw
7 Bracket

(Cont'd)

(Cont'd)

Fine Setting - Cap and Package Transmitter Photocells

a) When the mounting screw (1) have been tighten on the bracket (2) that holds the sensor (3), the adjustment screw (4) can be turned to correct the transmitter beam.

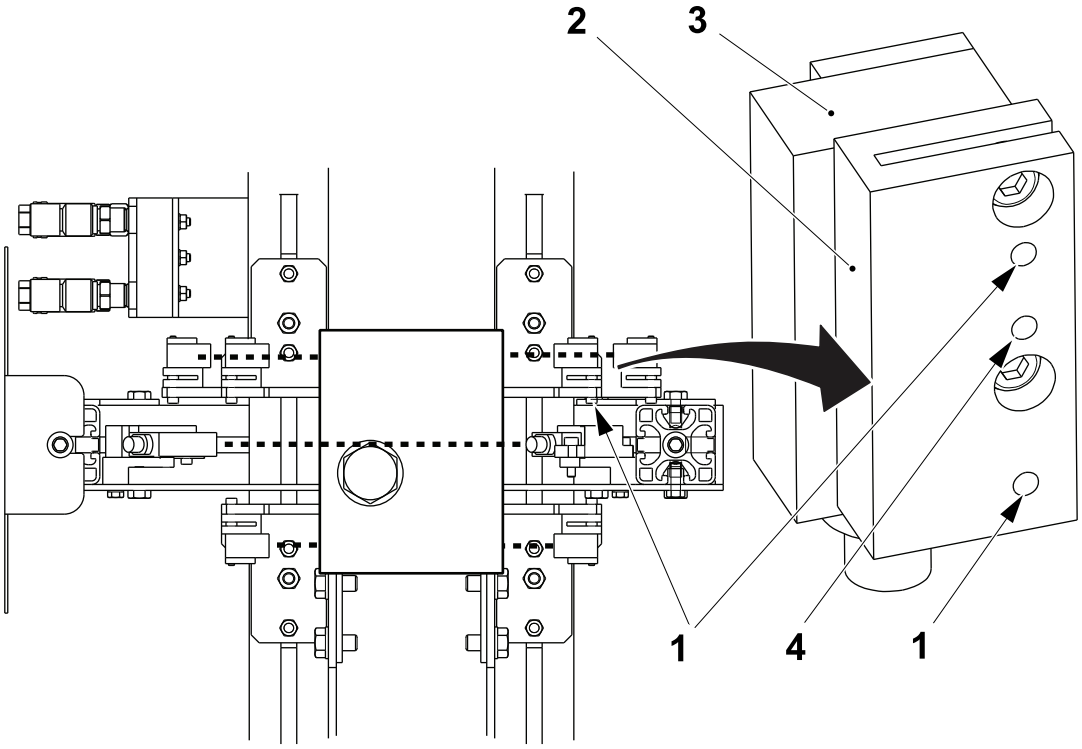

1 Mounting screw
2 Bracket
3 Sensor
4 Adjustment screw

(Cont'd)

(Cont'd)

Set Cap and Package Photocells

a) Set the distance **A** between the plate (1) and the phtocell (2) by releasing and tightening the screws (3) .

b) Set the distance **B** between the plate (1) and the photocell (4) by releasing and tightening the screws (5) .

Package	A ± (mm)	B ± (mm)
TBA 500 Sq, TBA 1000 Sq, TBA 1000 S, TBA 1500 S, TBA 2000 S, TPA 500 Sq,TPA 750 Sq, TPA 1000 Sq	100	165
TBA 200 E, TBA 250 E, TGA 500 Sq, TGA 750 Sq, TGA 1000 Sq, TGA 15000 Sq, TGA 1000 Crystal/Leaf	100	150

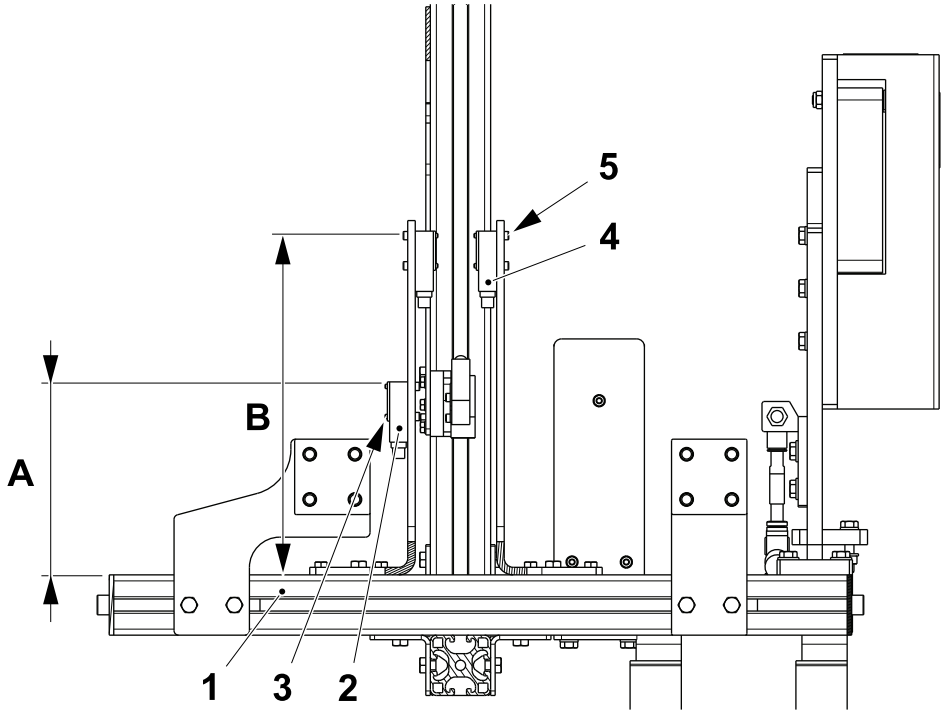

1 Plate
2 Photocell
3 Screw
4 Photocell
5 Screw

(Cont'd)

(Cont'd)

Set Y Distance

a) Release the screws (1) and set the nozzle (2) to blow over the conveyor belt and under the guide bar.

b) Place a package with the cap properly applied in front of the photocells.

c) Release the screws (3) and move the bracket (4) until beam (5) from the photocell (6) are 5mm inside the edge of the package on both sides. Be sure that the beam (7) from the cap position photocell is still in the correct position which is just starting to read the cap.

Note! If the Vision System is installed and during the production the machine wastes too many packages, check the vision system is working correctly. Then increase the 5mm to 6 -7mm. When below 5mm the device behaviour is unstable.

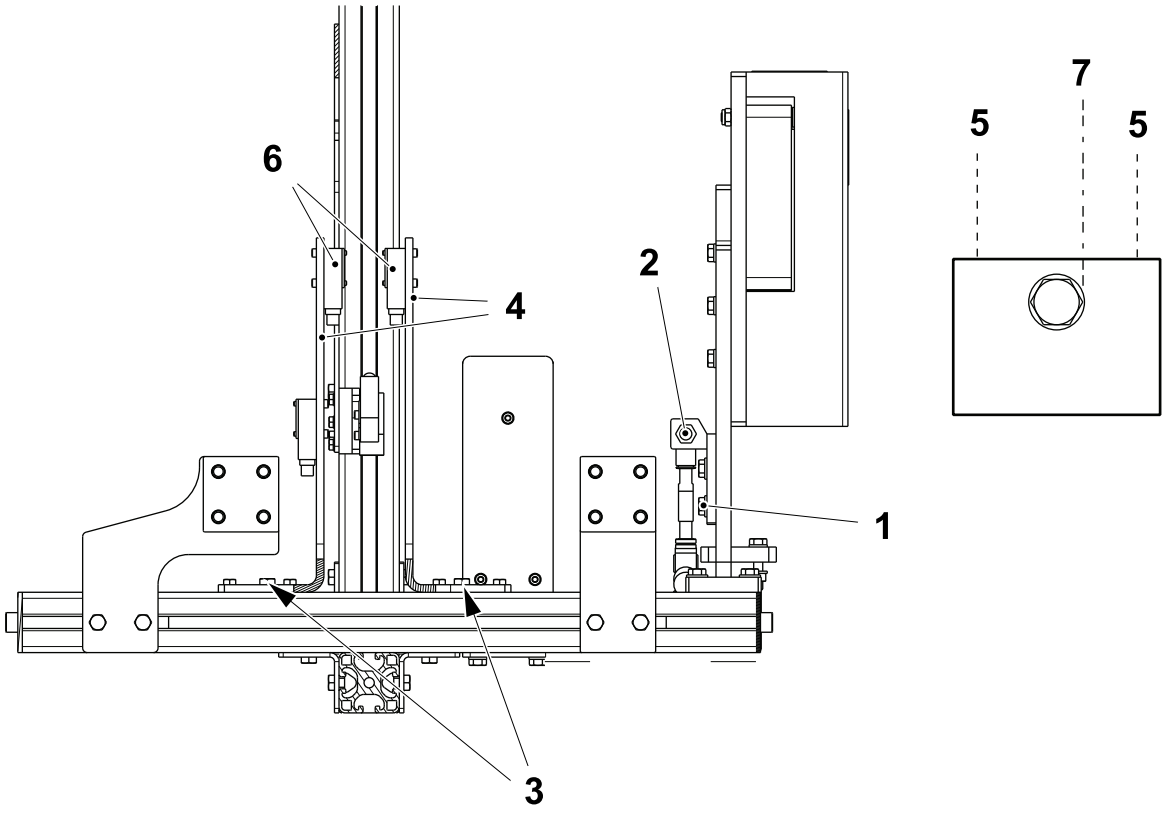

1 Screw
2 Nozzle
3 Screw
4 Bracket
5 Beam
6 Photocell
7 Beam

(Cont'd)

(Cont'd)

d) The following table contains the base settings for the different packages. Follow the procedure on the next page to finish the setting.

Package	A Dimension	B Dimension	Package	A Dimension	B Dimension
TBA 200SQ	30	230	TPA 500SQ	47	240
TBA 250SQ	30	230	TPA 750SQ	59	240
TBA 200E	24	230	TPA 1000SQ	56.5	240
TBA 250E	24	230	TGA 500	46	240
TBA 1000S	68	266	TGA 750	46	240
TBA 1500S	86	266	TGA 1000	46	240
TBA 2000S	104	266	TGA 1500	61	240
TBA 500SQ	55	240	TGA 1000 Crystal/Leaf	56	240
TBA 1000SQ	50	240			

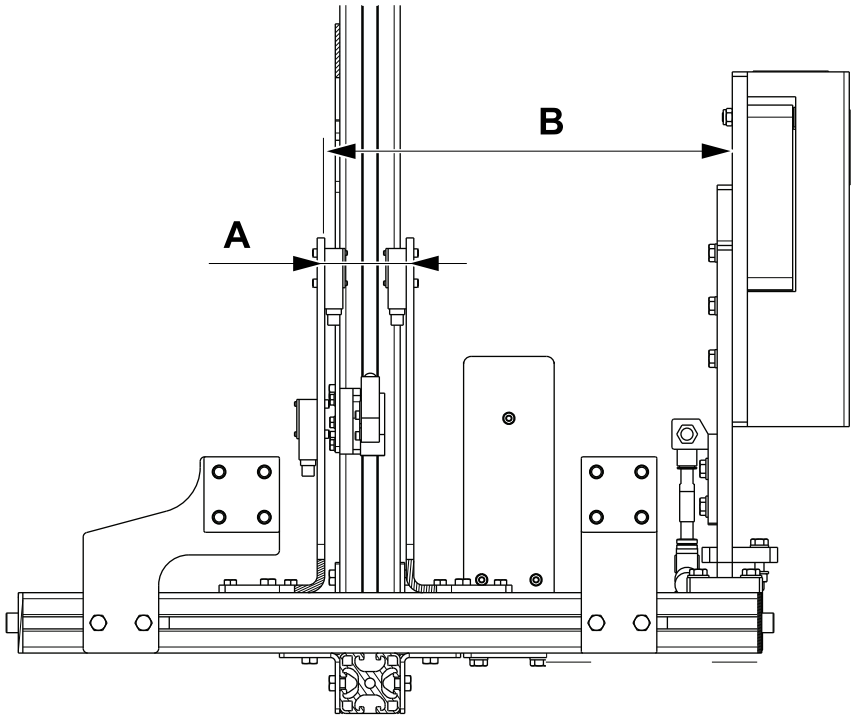

11.2 Cap Detector - Package Ejector Timing

11.2-1 Cap Detector - Package Ejector Timing Setting

Machine Status	Electrical supply disconnecting device in position I (ON)
SPC Reference	2986247-0200

Description

Note! This setting should only be done when the machine is functioning correctly, with or without the vision system. With the vision system the cap ejector will discard packages that have incorrectly positioned caps.

The reason for this setting is to eject those package that will receive caps with glue not at the correct temperature and packages likely to be miss fed at the restart. This occurs when the machine goes into a fast stop, for example the queue congestion sensor is covered. When the machine restarts the caps held in the cap holders between the hotmelt guns and the pushdown fingers will have glue not at temperature, but the packages already with caps held on by the pushdown will be good and must pass by the ejector.

(Cont'd)

(Cont'd)

Procedure

a) Make a fast stop by preventing the packages from leaving the machine.

b) Open the door and mark the second package (1) under a pushdown finger.

c) Remove any loose package (2) after the belt brake and before the package transfer, also the last package in the belt brake that is in front of the photocells.

d) Remove any packages in front of the outfeed sensor.

e) Close the doors and reset the alarms.

f) Restart the machine making sure that either you or someone else can see the cap detector.

g) Start counting the packages when they start being ejected, this may be before or after the marked package.

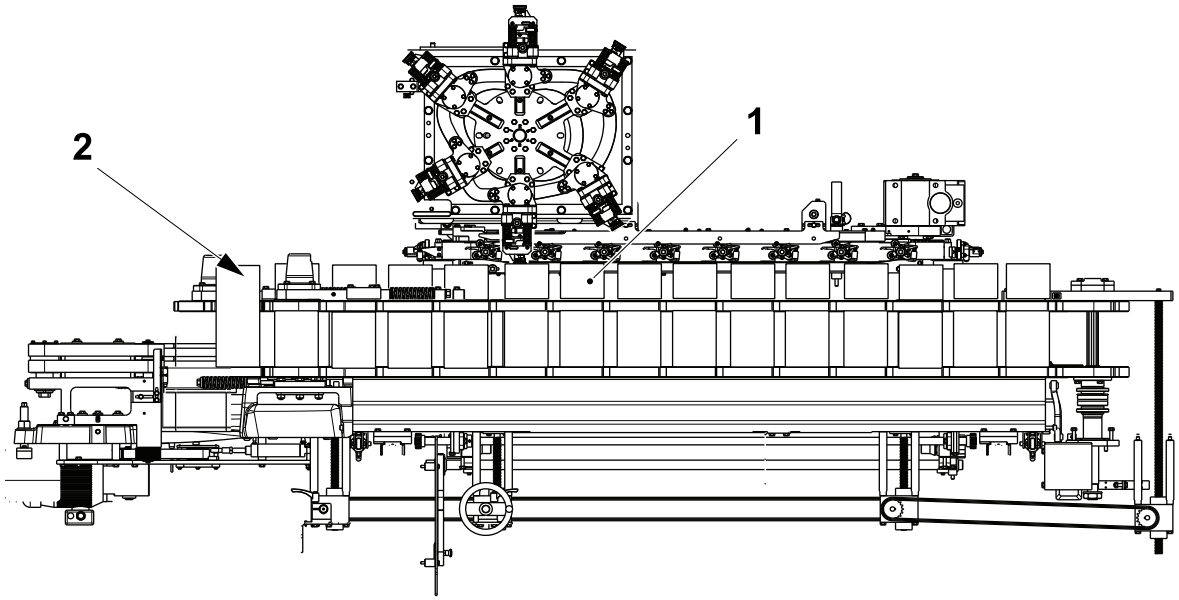

1 Second package
2 Loose package

(Cont'd)

(Cont'd)

h) Login and enter password, see 1.1.1-1 HMI User Management - Log On as a User.

i) Touch the SETTING button (3) and then the PACKAGE TRANSFER button (4).

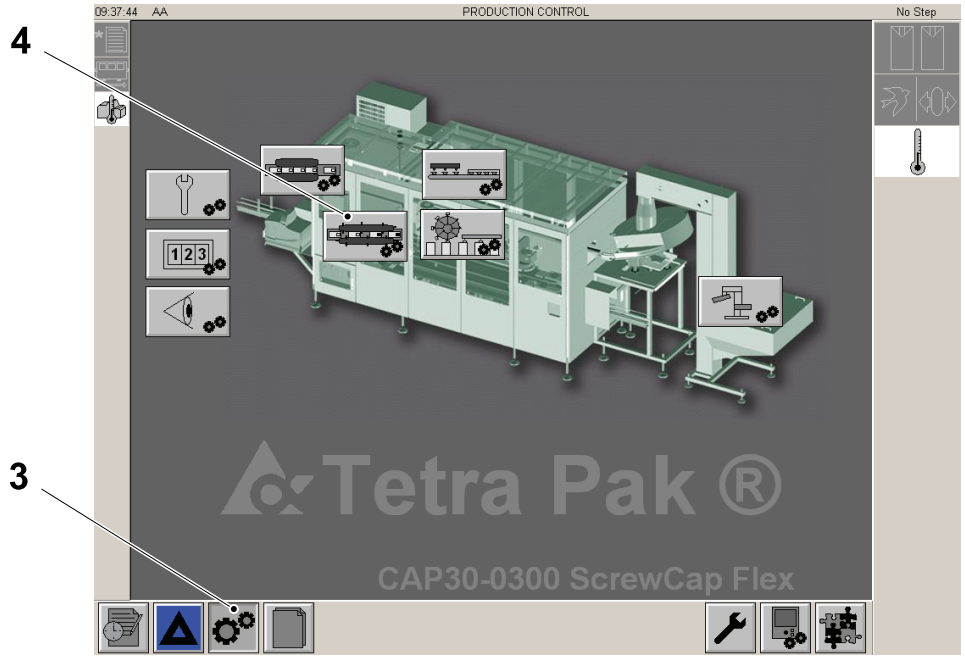

3 SETTING button
4 PACKAGE TRANSFER button

(Cont'd)

(Cont'd)

j) Touch the WASTE DEVICE ICON (5) and then the DEFAULT SETTING ICON (6).

k) Using theUP-DOWN button (7) set the number in the VALUE WINDOW (8) and then touch the OK button (9).

l) Confirm that the number has been changed in the DEFAULT WINDOW (10).

m) Touch the EXIT button (11) to leave.

n) If the marked package is the first package to be discarded all is correct. If for example three packages before the marked package are discarded, increase the default number by three. If three packages after the marked package are discarded then decrease the default number by three.

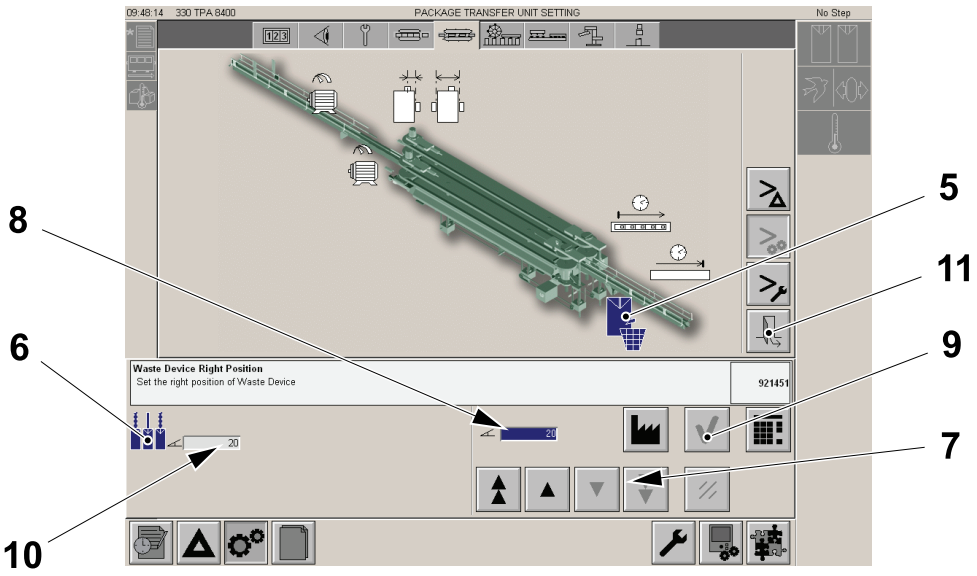

5 WASTE DEVICE ICON
6 DEFAULT SETTING ICON
7 UP-DOWN button
8 VALUE WINDOW
9 OK button
10 DEFAULT WINDOW
11 EXIT button

11.2-2 Cap Detector - Fine Setting

Machine Status	Electrical supply disconnecting device in position I (ON)
SPC Reference	2986247-0200

Note! See 11.2-1 Cap Detector - Package Ejector Timing Setting.

Note! The fine tuning permits a better centring of the waste device ejector.

a) In the PACKAGE TRANSFER SETTING window (1), touch the WASTE DEVICE icon (2).

b) Touch the PACKAGE WASTE RANGE button (3).

c) Use the ARROW keys (4) or the NUMERIC button (5) to set the number in the VALUE window (6) to zero, as a starting value.

d) Touch the OK button (7).

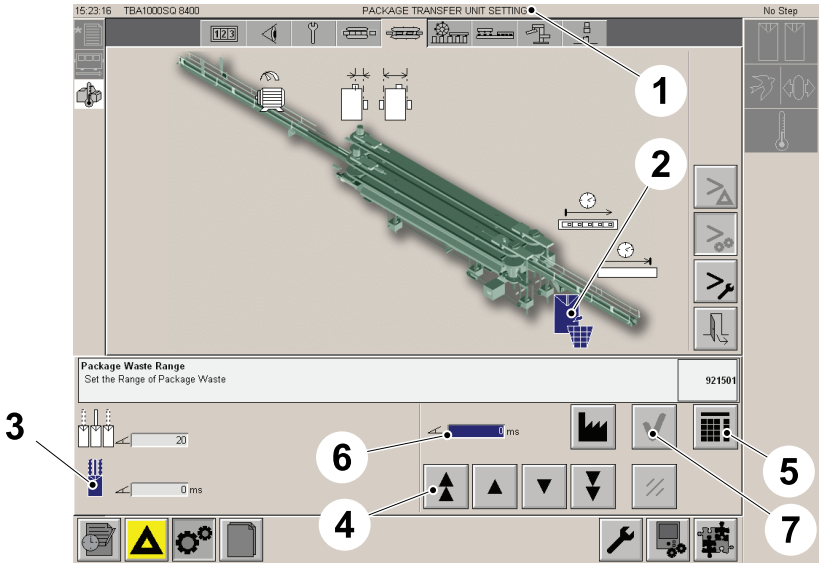

1 PACKAGE TRANSFER SETTING window
2 WASTE DEVICE icon
3 PACKAGE WASTE RANGE button
4 ARROW keys
5 NUMERIC button
6 VALUE window
7 OK button

(Cont'd)

(Cont'd)

e) Modify the fine setting when the package ejector (8) is not working in the centre of the package (9).

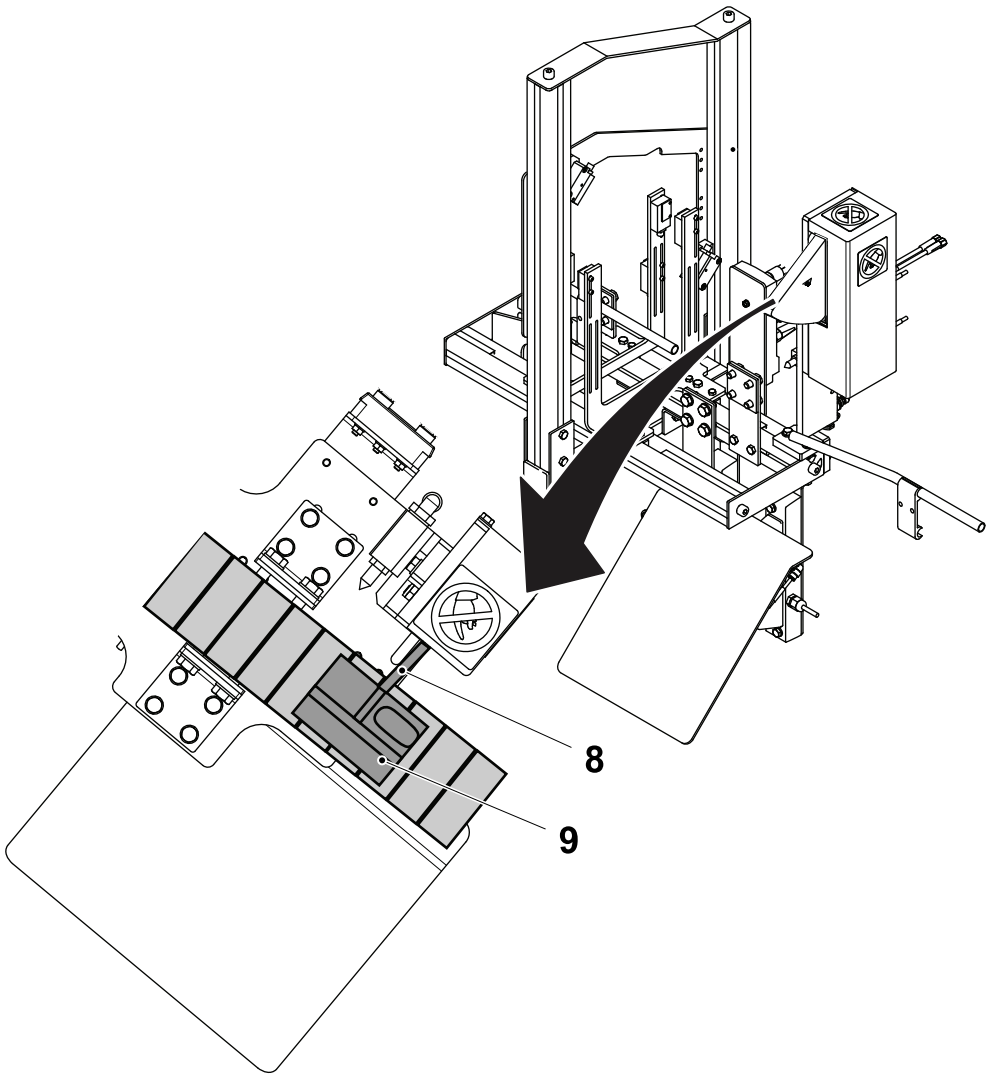

8 Package ejector
9 Package

11.2-3 Different Waste Package Counters

Check

a) Touch the PRODUCTION CONTROL button (1) .

b) In the PRODUCTION CONTROL window, touch the PACKAGE COUNTER button (2).

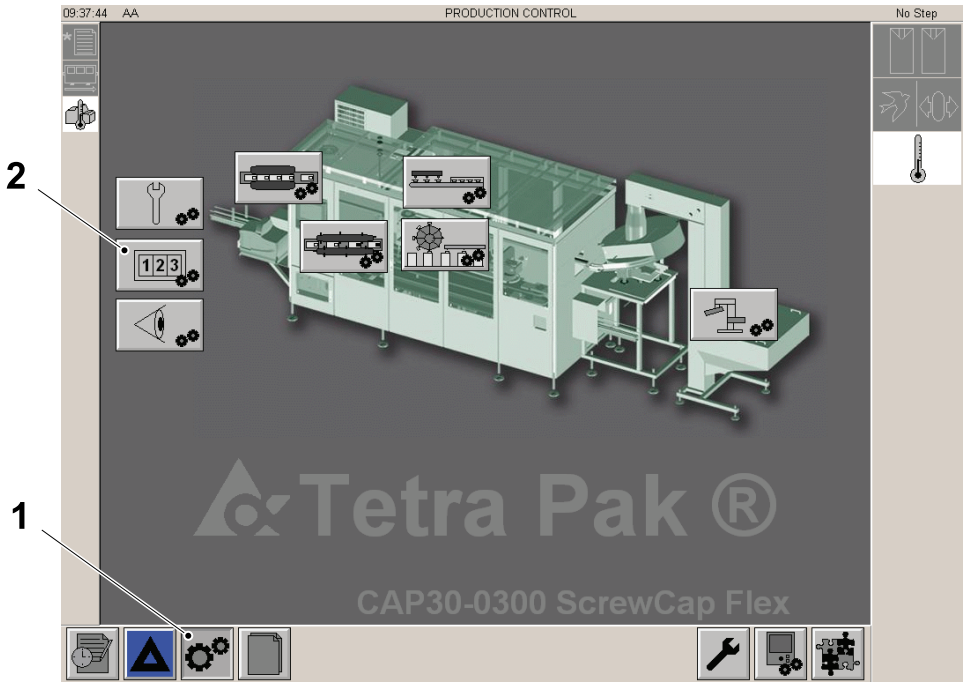

1 PRODUCTION CONTROL button
2 PACKAGE COUNTER button

(Cont'd)

(Cont'd)

c) In the Package counter window (3) there are the following information:

- Packages that entered into the machine (4)
- Packages that went out of the machine (5)
- Packages discarded by the machine (6).

d) It is possible to reset the counters by touching the ZERO buttons (7).

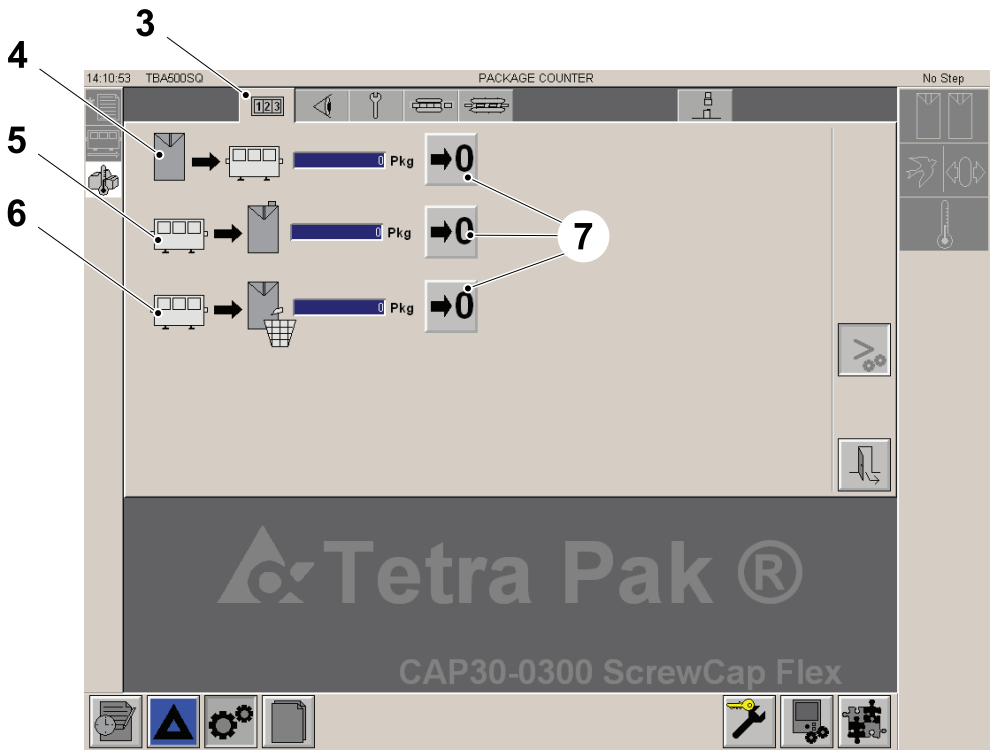

3 Package counter window
4 Packages that entered into the machine
5 Packages that went out of the machine
6 Packages discarded by the machine
7 ZERO buttons

(Cont'd)

(Cont'd)

Overview Waste Reason

a) Touch the PACKAGES DISCARDED BY THE MACHINE button (1) to display informations about the wasted packages:

- Packages discarded by the cap detector (2)
- Packages discarded after a fast stop (3) .

b) The following are visible only if the cap positioning device is active.

- Packages discarded by the positioning device after a detection of an X-Axis out of range (4)
- Packages discarded by the positioning device after a detection of an Y-Axis out of range (5)
- Packages discarded by positioning device after a not found hole in the package (6).

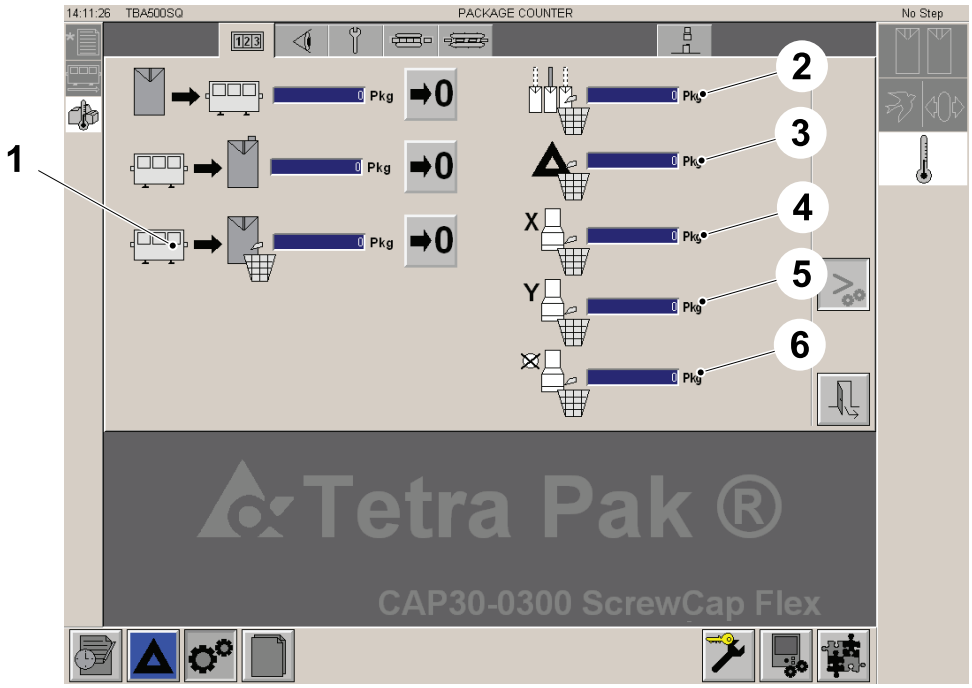

1 PACKAGES DISCARDED BY THE MACHINE button
2 Packages discarded by the cap detector
3 Packages discarded after a fast stop
4 X-Axis out of range
5 Y-Axis out of range
6 Hole in the package

11.2-4 Cap Ejector - Set Pressure

Machine Status	Electrical supply disconnecting device in position I (ON) Main air valve ON
SPC Reference	2986247-0200

To set the correct operation of the cap ejector do as follows:

a) Turn the knob (1) until only the caps are ejected.

Note! When the pressure is to high the package is also ejected.

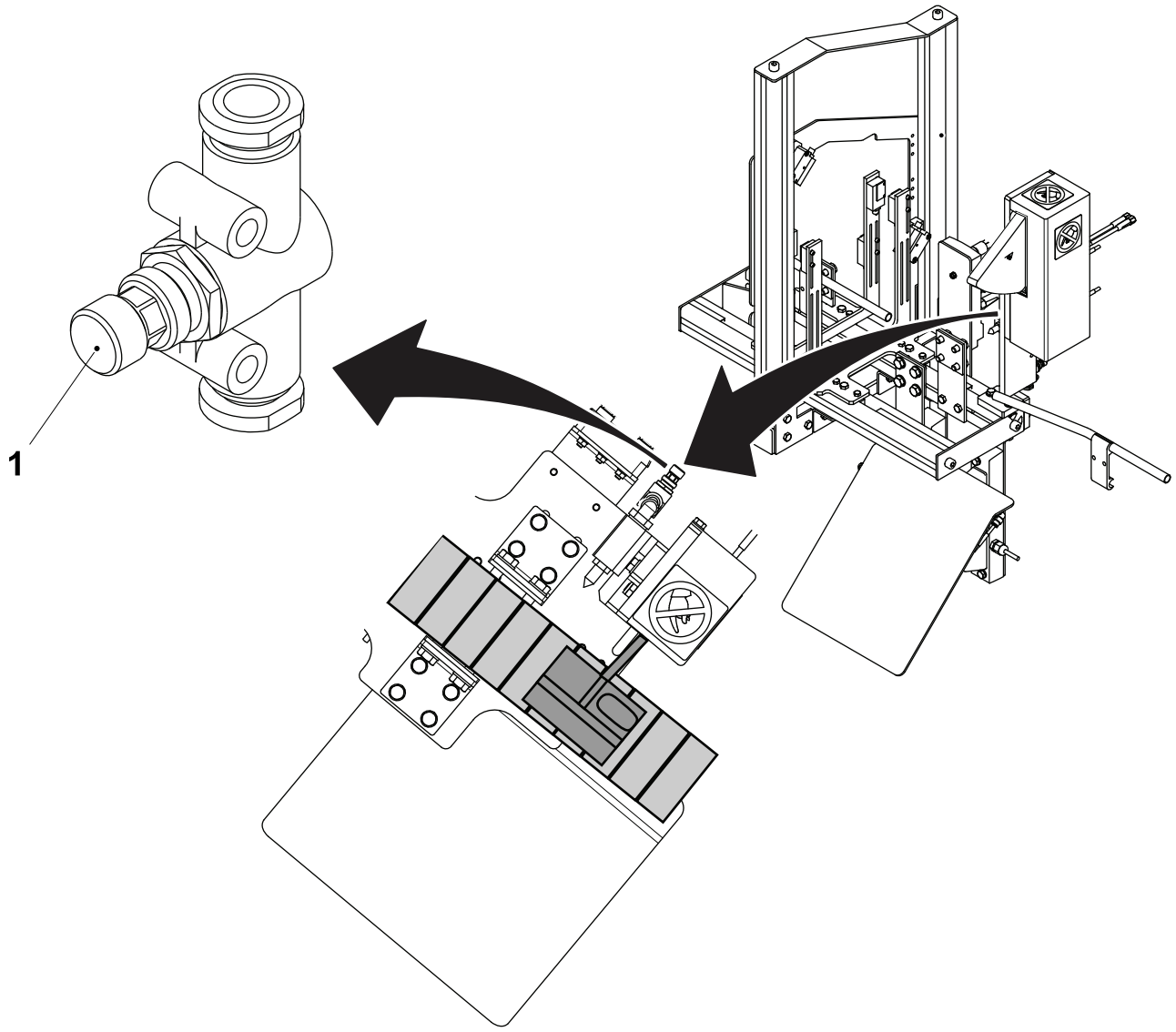

1 Knob

11.2-5 Cap Ejector - Set Height

Machine Status	Electrical supply disconnecting device in position I (ON) Main air valve ON
SPC Reference	2986247-0200

Move the ejector (1) by removing and installing the screws (2) from the bottom hole (3).

The ejector (1) must be mounted in the lower position for portion packages, as shown for all other.

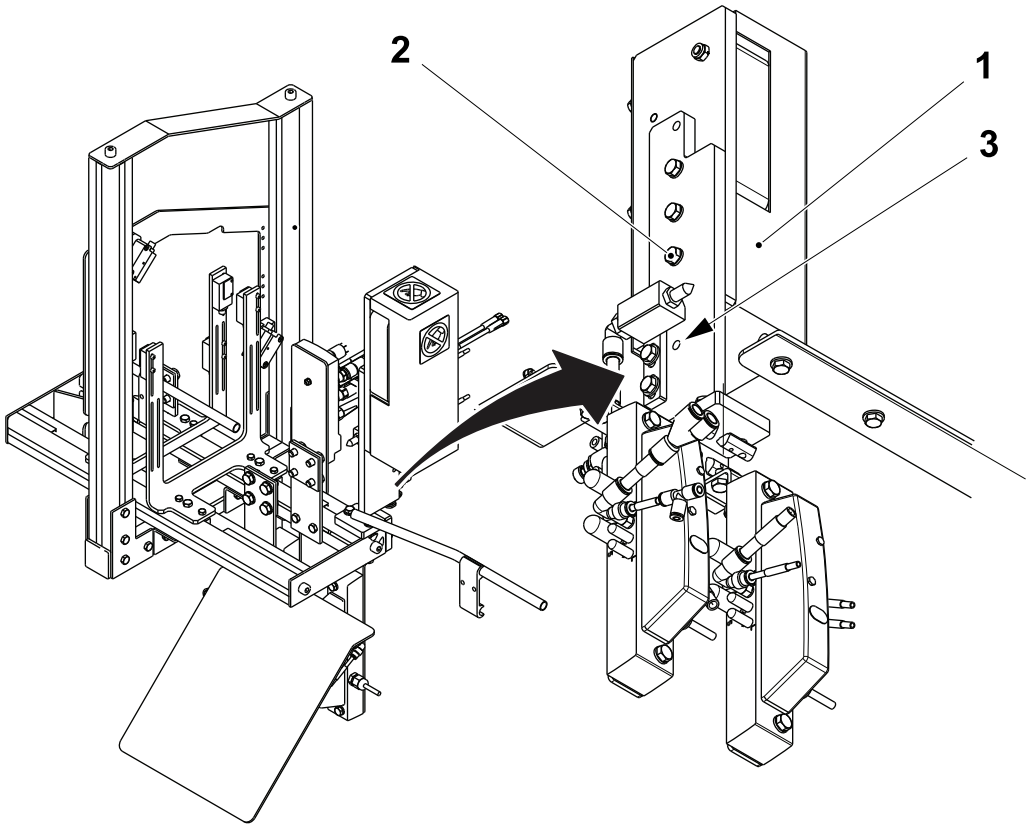

1 Ejector
2 Screw
3 Bottom hole

12 Optional Equipment

Optional Equipment

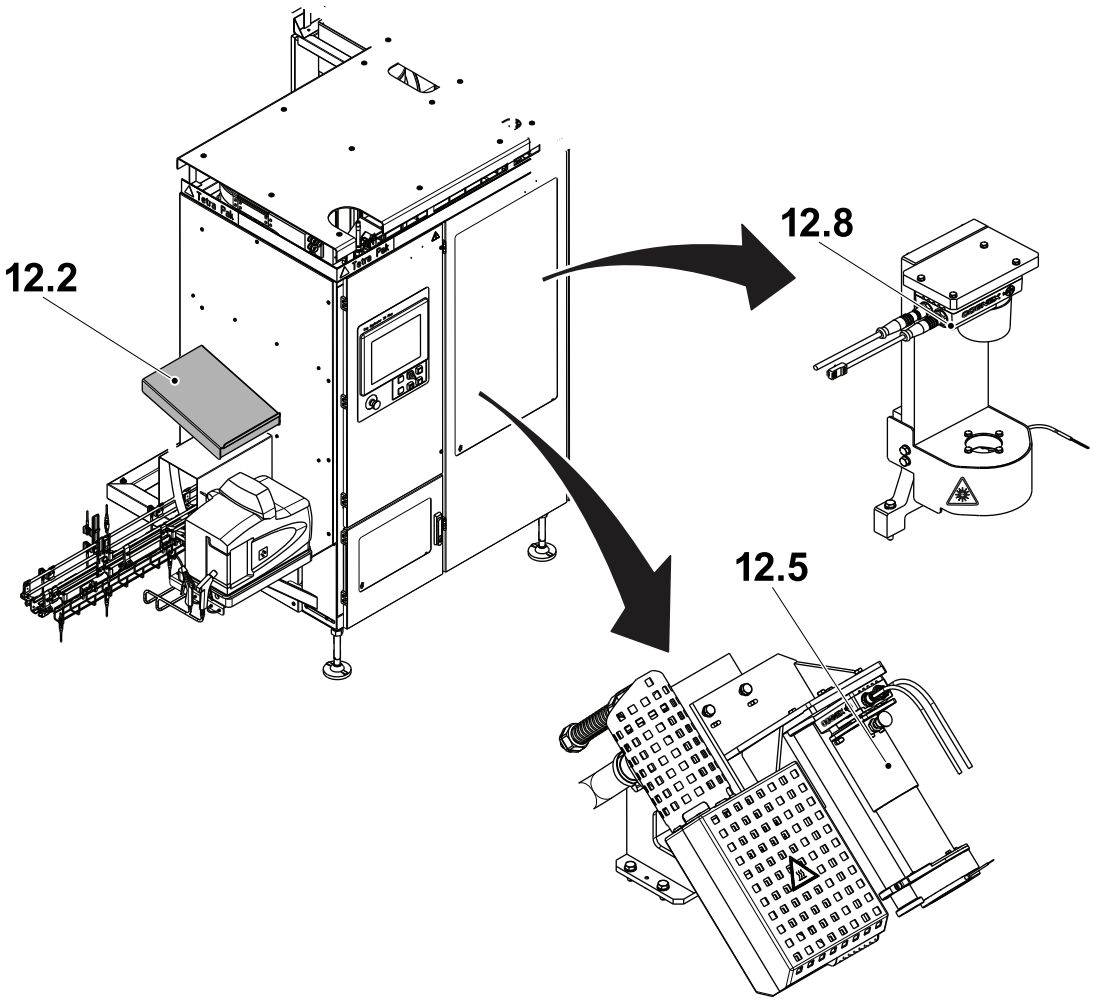

12.2 Glue Shelf

12.3 Sensor Group - Line Switching*

12.4 Communication Unit*

12.5 Vision System (Mandatory for TGA/TPA and HeliCap)

12.6 Line Controller*

12.7 Lifting Device*

12.8 Adhesive Detector

* Not Illustrated

Optional Equipment 12-2

12.1 Optional Equipment 12-11

12.2 Glue Shelf 12-12

12.2.1 Glue Shelf Description 12-12

12.2.1-1 Glue Shelf Change 12-12

12.2.1-2 Glue Shelf Installation 12-13

12.3 Sensor Group - Line Switching 12-14

12.3.1 Sensor Group - Description 12-14

12.3.1-1 Sensor Group - Setting 12-14

12.4 Communication Unit 12-15

12.4.1 Communication Unit Description 12-15

12.4.1-1 Ethernet Connections 12-15

12.4.1-2 QuickServer Connections 12-16

12.5 Vision System (Mandatory for TGA/TPA and HeliCap) 12-19

12.5.1 Functional Description 12-19

12.5.2 Introduction to this Chapter 12-19

12.5.3 Setting Procedures for this Chapter 12-20

12.5.4 PC Configuration 12-23

12.5.4.1 Software Requirements 12-23

12.5.4.1-1 Laptop to Camera Connection 12-23

12.5.4.1-2 Laptop to Machine Connection 12-23

12.5.4.2 Laptop Configuration 12-23

12.5.4.2-1 Laptop Firewall Configuration 12-23

12.5.4.2-2 Laptop IP Address Assignment 12-23

12.5.4.2-3 Installing IN-SIGHT EXPLORER 12-24

12.5.4.2-4 Vision System - Installation / Activation from the TPOP 12-33

12.5.4.2-5 Vision System - Deactivation from the TPOP 12-36

12.5.5 General Functions 12-38

12.5.5.1 Begin Camera Communication with In-Sight Explorer 12-38

12.5.5.1-1 Starting In-Sight Explorer 12-38

12.5.5.1-2 Verifying Camera Presence in In-Sight Explorer Database 12-42

12.5.5.1-3 Establishing Communication with the Camera 12-47

12.5.5.1-4 Communication Error 12-49

12.5.5.2 Setting Line Status of the Camera 12-50

12.5.5.2-1 Setting the On-Line Status of the Camera 12-50

12.5.5.2-2 Setting the Off-Line Status of the Camera 12-52

12.5.5.3 Loading the Application Program in the In-Sight 5100 12-54

12.5.5.3-1 Setting the Correct Line Status of the Camera 12-54

12.5.5.3-2 Loading the Application Program into the Camera 12-55

12.5.5.4 Saving the Application Program in the In-Sight5100 Camera 12-58

12.5.5.4-1 Basic Settings 12-58

12.5.5.4-2 Saving the Application Program in the Flash Memory 12-59

12.5.5.5 Closing the In-Sight Explorer Tool 12-60

12.5.5.5-1 Basic settings 12-60

12.5.5.5-2 Closing In-Sight Explorer 12-61

12.5.6 CUSTOM VIEW 12-62

12.5.6.1 CUSTOM VIEW Description 12-62

12.5.6.2 CUSTOM VIEW Access 12-63

12.5.6.3 CUSTOM VIEW Usable Elements 12-64

12.5.6.3-1 Parameter Cells 12-64

12.5.6.3-2 Reset Button 12-65

12.5.6.3-3 Statistic Button 12-66

12.5.6.3-4 Blue and Grey Cells 12-67

12.5.6.4 CUSTOM VIEW Element Descriptions 12-68

12.5.6.4-1 Command Mode (Read/Write) 12-68

12.5.6.4-2 Manual Mode (Read/Write) 12-69

12.5.6.4-3 Message Index (Read/Clear) 12-70

12.5.6.4-4 Alarms LED (Read Only) 12-71
12.5.6.4-5 Result Values 12-73
12.5.6.4-6 Statistic Window. 12-74
12.5.6.4-7 General Offset X & Y Window 12-75
12.5.6.4-8 Calibration Region Position (Read/Write) 12-76
12.5.6.4-9 Exposure Set-up (Read/Write) 12-77
12.5.6.4-10 Gain Set-up (Read/Write) 12-79
12.5.6.4-11 Hole Tolerance (Read/Write) 12-79

12.5.7 Troubleshooting 12-80

12.5.7.1 Camera LED's 12-80

12.5.7.1-1 General Description 12-80
12.5.7.1-2 Conditions Immediately before Production 12-81
12.5.7.1-3 Conditions During Production. 12-82

12.5.7.2 Using In-Sight Explorer for Troubleshooting. 12-83

12.5.7.2-1 General 12-83
12.5.7.2-2 Configuring the Laptop and Initiating Communication between the Laptop and the Camera 12-83
12.5.7.2-3 Using CUSTOM VIEW for Troubleshooting 12-84

12.5.8 Camera 12-85

12.5.8.1 Initial Start Up 12-85

12.5.8.1-1 Adding a New Sensor to Network 12-85

12.5.8.2 Start up Setting 12-91

12.5.8.2-1 Setting Procedure 12-91

12.5.8.3 Discrete Output Settings 12-93

12.5.8.3-1 Setting Procedure 12-93

12.5.9 Application 12-99

12.5.9.1 Procedures 12-99

12.5.9.1-1 Loading an Application Program in the In-Sight5100 Camera 12-99
12.5.9.1-2 Saving an Application Program in the In-Sight5100 Camera 12-99

12.5.10 Illumination 12-100

12.5.10.1 Adjusting the Height of the Illumination 12-100

12.5.10.1-1 Adjustment Procedure 12-100
12.5.10.1-2 Switching the Illuminator ON/OFF. 12-103

12.5.11 Lens 12-104

12.5.11.1 Adjusting the Light Intensity and Focus 12-104

12.5.11.1-1 Preparation 12-104
12.5.11.1-2 Setting the Light Intensity 12-105
12.5.11.1-3 Setting the Focus Ring. 12-106

12.5.12 Exposure to Template 12-107

12.5.12.1 Introduction to Calibration 12-107

12.5.13 Mechanical Setup and Calibration. 12-108

12.5.13-1 Setup Procedure 12-108

12.5.14 Exposure to Package 12-118

12.5.14.1 Procedures 12-118

12.5.14.1-1 Moving the Package into Position 12-118
12.5.14.1-2 Hole Research Setup 12-120

12.5.15 Hole Tolerance Setup 12-129

12.5.15.1 Procedures 12-129

12.5.15.1-1 Camera trouble shooting 12-129

12.5.16 General Offset 12-130

12.5.16.1 Checks with Positioning System Turned Off 12-130
12.5.16.2 Check Cap Position on PLH in X and Y Axis. 12-131
12.5.16.3 Check Cap Position on PLH for all 6 Cap Holders. 12-131

12.5.17 Setting Machine Using Vision System 12-132

12.5.17.1 Procedures 12-132

12.5.17.1-1 Turning On the Vision System 12-132
12.5.17.1-2 Setting the General Offset Values and the Single Cap Holder Value to Zero 12-133
12.5.17.1-3 Making Corrections to the General Offset Values. 12-142
12.5.17.1-4 Making Corrections to the Delta Tolerance 12-145

12.5.18 Cap Offset. 12-148

12.5.18.1 Procedures 12-148

12.5.18.1-1 Check Package Hole Position 12-148
12.5.18.1-2 Check Package Hole Position - HeliCap Only 12-149
12.5.18.1-3 Position of the Cap on Package Table 12-154
12.5.18.1-4 Check Cap Position on PLH for All Cap Holders 12-155

12.5.19 Trend 12-155

12.5.19.1 Procedures 12-155

12.5.19.1-1 Check Package Hole Position 12-155
12.5.19.1-2 Using the Trend Screen 12-156

12.6 Line Controller 12-157

12.6.1 Bar Code Scanner 12-157

12.6.1-1 TPOP - Configure and Test Bar Code Reader 12-157
12.6.1-2 Bar Code Scanner - Change 12-165

12.6.2 Line Communication 12-167

12.6.2-1 TPOP Line Communication - Install 12-167
12.6.2-2 TPOP Packaging Plant Integration (PPI) Option - Set 12-172
12.6.2-3 TPOP - Activate LGV Option 12-176
12.6.2-4 TPOP - Activate Energy Saving 12-179
12.6.2-5 TPOP - Activate Interlocking Stop for PPI 12-182

12.7 Lifting Device 12-185

12.7-1 Touch Screen - Lifting Device Zero Positioning 12-185
12.7-2 Touch Screen - Lifting Device Fine Adjustment 12-194
12.7-3 Touch Screen - JOG Function 12-198

12.7.1 Home Sensors 12-211

12.7.1-1 Applicator Unit - Set the Home Sensors 12-211
12.7.1-2 Cap Conveyor - Set the Home Sensors 12-212
12.7.1-3 Set Home Sensor G40B2025 12-213

12.7.2 Collision Sensors 12-214

12.7.2-1 Set Collision Sensor G30B0028 12-214

12.7.2-2 Set Collision Sensor G40B2026 12-216

12.7.3 Drive Motors - Removal - Installation and Diagnosis 12-217

12.7.3-1 Diagnosis 12-217

12.7.3-2 Drive Motor - Cap Sorter (C50M1020) 12-219

12.7.3-3 Drive Motor - Applicator Unit (G30M0020 and G30M0021) 12-219

12.7.3-4 Drive Motor - Package Line Inner (W21M1020) 12-219

12.7.3-5 Drive Motor - Package Line Outer (W21M2020) 12-219

12.7-4 Cap Detector - Lifting Device 12-219

12.8 Adhesive Detector 12-220

12.8.1 Functional Description 12-220

12.8.1-1 Adhesive Detector Coloured Caps - Sensor Replacement 12-225

12.8.1-2 Adhesive Detector Coloured Caps - Sensor Set-up 12-226

12.8.2 General Functions 12-230

12.8.2.1 Camera Installation 12-230

12.8.2-1 Touch Screen - Adhesive Detector Installation 12-230

12.8.2-2 Adding a New Sensor to Network 12-234

12.8.2-3 Starting In-Sight Explorer 12-241

12.8.2-4 Verifying Camera Presence in In-Sight Explorer Database 12-246

12.8.2-5 Establishing Communication with the Camera 12-251

12.8.2-6 Communication Error 12-253

12.8.2-7 Setting the On-Line Status of the Camera 12-254

12.8.2-8 Setting the Off-Line Status of the Camera 12-256

12.8.2-9 Loading the Application Program in the In-Sight 5600 12-258

12.8.2-10 Loading the Application Program into the Camera 12-259

12.8.2-11 Saving the Application Program in the In-Sight 5600 Camera 12-261
12.8.2-12 Closing the In-Sight Explorer Tool 12-263
12.8.2-13 Start up Setting Procedure 12-265
12.8.2-14 Discrete Setting Procedure 12-267
12.8.2-15 Firmware Check 12-274
12.8.2-16 Firmware Update Procedure 12-277
12.8.2-17 Using In-Sight Explorer 12-281
12.8.2-18 Procedures for Application 12-282
12.8.2-19 Adhesive Detector Custom View 12-283
12.8.2-20 Adhesive Detector Calibration 12-299
12.8.2-21 Adhesive Detector Calibration Procedure 12-308
12.8.2-22 Adhesive Detector Trigger Setting 12-312
12.8.2-23 Adhesive Detector Alarms and Checks 12-318
12.8.2-24 Touch Screen - Disable Adhesive Detector 12-324

12.8.3 Troubleshooting 12-325

12.8.3.1 Camera LED's 12-325

12.8.3.1-1 General Description 12-325
12.8.3.1-2 Conditions Immediately before Production 12-326
12.8.3.1-3 Conditions During Production 12-327

12.8.3.2 Using In-Sight Explorer for Troubleshooting 12-328

12.8.3.2-1 General 12-328
12.8.3.2-2 Configuring the Laptop and Initiating Communication between the Laptop and the Camera 12-328
12.8.3.2-3 Using CUSTOM VIEW for Troubleshooting 12-329

This page intentionally left blank

12.1 Optional Equipment

This chapter covers the equipment considered as optional;

- Glue Shelf
- Sensor Group - Line Switching
- Communication Unit
- Vision System
- Vision System tool.

12.2 Glue Shelf

12.2.1 Glue Shelf Description

The glue shelf is a convenient storage place for the glue packages.

12.2.1-1 Glue Shelf Change

SPC Reference	2842806-0100

a) Remove the screw (1), the shelf (2) and the spacer (3).

b) Only if damaged remove the screw (4) and the cross bar (5).

c) Only if damaged remove the screw (6) and the angle bracket (7).

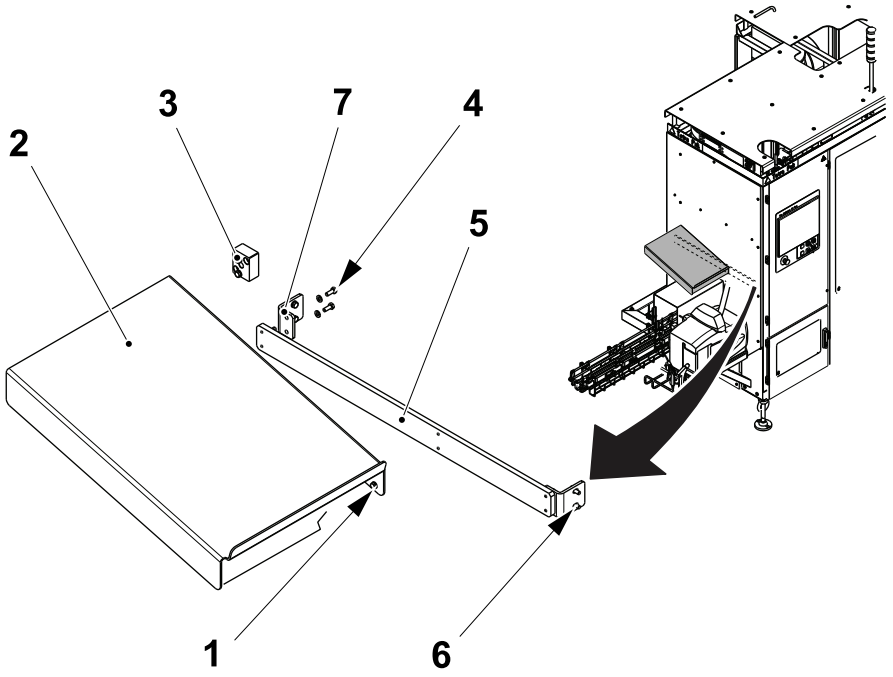

1 Screw
2 Shelf
3 Spacer
4 Screw
5 Cross bar
6 Screw
7 Angle bracket

12.2.1-2 Glue Shelf Installation

SPC Reference	2842806-0100

a) Fasten the cross bar (1) to the angle brackets (2) using the screw (3).

b) Fasten the angle brackets (2) to the frame using the screw (4).

c) Fasten the shelf (5) by passing the screw (6) through the machine cover (7) and into the cross bar (1) at one end and the frame at the other end using the spacer (8).

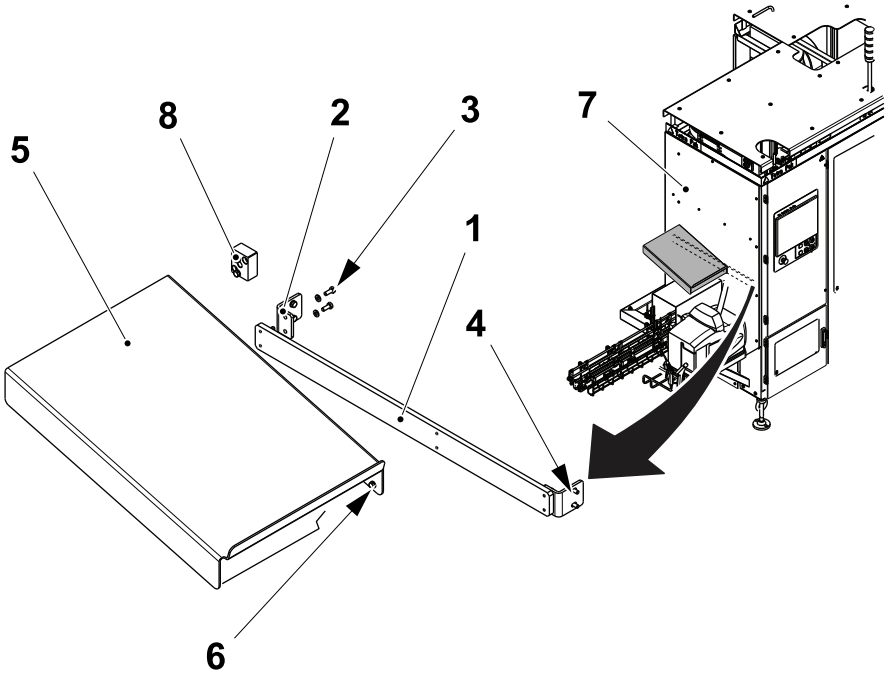

1 Cross bar
2 Angle bracket
3 Screw
4 Screw
5 Shelf
6 Screw
7 Cover
8 Spacer

12.3 Sensor Group - Line Switching

12.3.1 Sensor Group - Description

This sensor indicates to the Cap30 which downstream equipment is being used.

12.3.1-1 Sensor Group - Setting

SPC Reference	2930179-0200

a) Adjust the nut (1) until the sensor (2) is distance **A** from the switch arm (3).

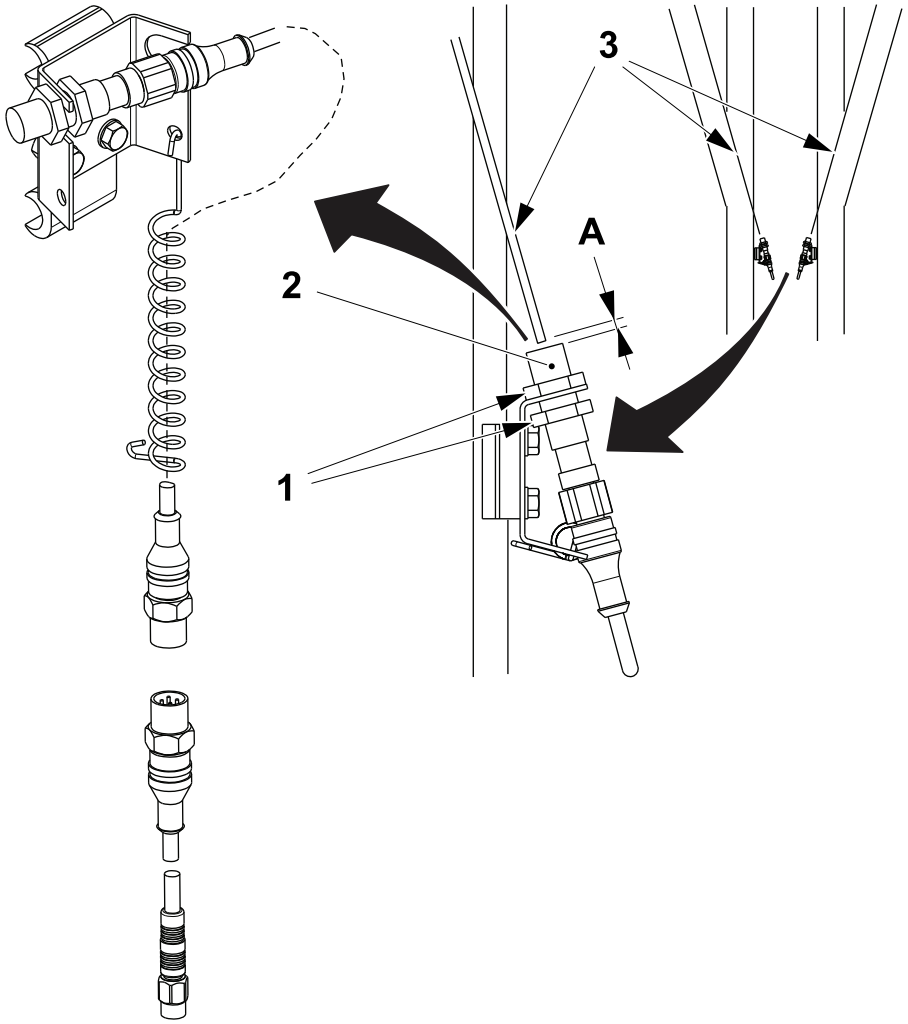

1 Nut
2 Sensor
3 Switch Arm

12.4 Communication Unit

12.4.1 Communication Unit Description

This is a switching unit.

12.4.1-1 Ethernet Connections

Machine Status	Electrical supply disconnecting device in position O (OFF)
SPC Reference	90604-5464

This is a Ethernet\IP system 10/100mb (1) and a SNP protocol system line (2) data exchange unit called Quick Server Gateway (3).

This equipment is delivered preloaded with the configuration for Tetrapak.

4 -120ohm
5 - PLMS Logger - GESNO I/O server
6 - RS485 connection
7 - SNP ID;7200
8 - ControlLogix\CompacLogix

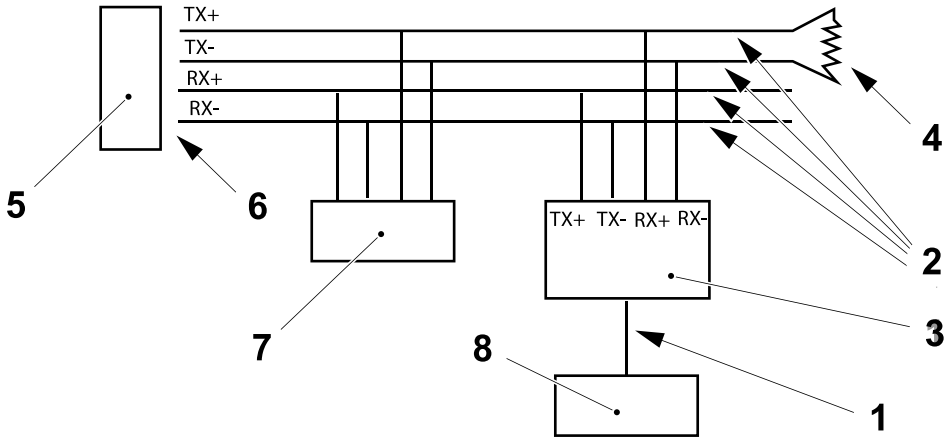

1 Ethernet\IP system 10/100mb
2 SNP protocol system line
3 Quick Server Gateway
4 120 ohm
5 PLMS Logger - GESNO I/O server
6 RS485 connection RS485 connection
7 SNP ID;7200
8 ControlLogix\CompacLogix

12.4.1-2 QuickServer Connections

Machine Status	Electrical supply disconnecting device in position O (OFF)
SPC Reference	90604-5464

RS485 Connections

The RS485 port connections are as follows;

- terminal 1 = TX+ (1)
- terminal 2 = TX- (2)
- terminal 3 = RX+ (3)
- terminal 4 = RX- (4)
- terminal 5 = shield (5).

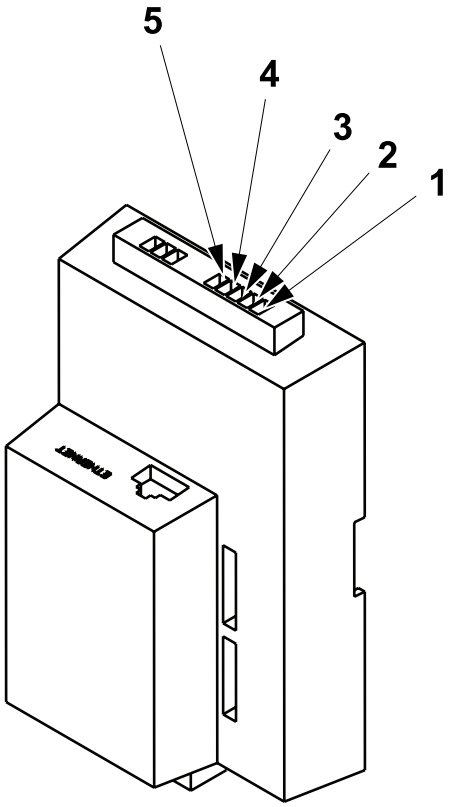

1 Terminal 1 = TX+
2 Terminal 2 = TX-
3 Terminal 3 = RX+
4 Terminal 4 = RX-
5 Terminal 5 = shield

(Cont'd)

(Cont'd)

Power Connections

The power connections are as follows;

- terminal 1 = 24V (1)
- terminal 2 = 0V (2)
- terminal 3 = Ground (3) .

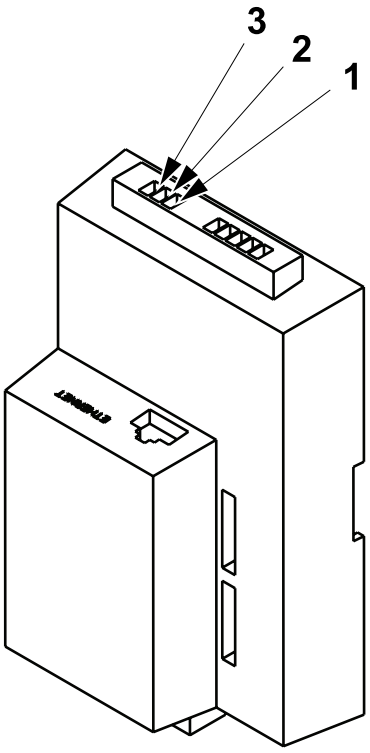

1 Terminal 1 = 24V
2 Terminal 2 = 0V
3 Terminal 3 = Ground

(Cont'd)

(Cont'd)

Ethernet Connections

The Ethernet port pins are as follows, Pin 1;Transmit+ (1), Pin 2;Transmit- (2), Pin 3;Receive+ (3), Pin 4;Reserved (4), Pin 5;Reserved (5), Pin 6;Receive- (6), Pin 7;ReservedPin 7;Reserved (7) and Pin 8;Reserved Pin 8;Reserved (8).

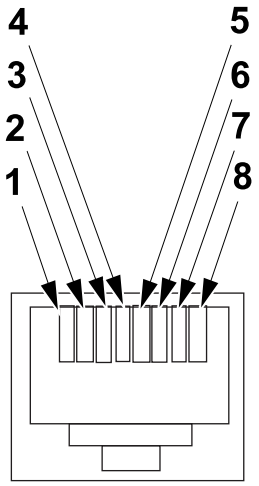

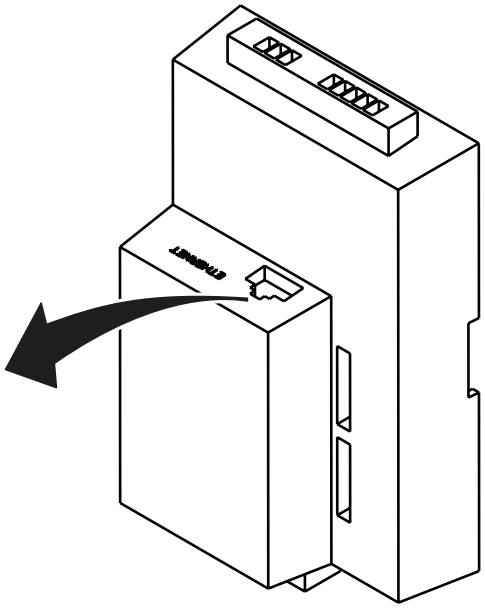

1 Pin 1;Transmit+
2 Pin 2;Transmit-
3 Pin 3;Receive+
4 Pin 4;Reserved
5 Pin 5;Reserved
6 Pin 6;Receive-
7 Pin 7;Reserved
8 Pin 8;Reserved

12.5 Vision System (Mandatory for TGA/TPA and HeliCap)

12.5.1 Functional Description

The Vision System is used to position the cap more accurately on top of the package.

The Vision System has thee main parts:

- A camera mounted in the machine body at the infeed end
- an additional servo motor in the cap applicator unit, see 7.2.1-5 Release and Application Cam - TBA,TGA and TPA with Vision System.

The camera takes a digital photograph of the area around the prefabricated hole on the top of each package. The photograph is then processed in the camera to locate the hole and calculate the position of the centre of the hole relative to the system reference (X-axis and Y-axis cross wires).

The calculated values are in pixels.

A conversion between the calculated pixel values and a millimetre equivalent is made to allow the vision system to provide measurements with the same units as those used by the machine.

The offset X and Y values are sent to the PLC which produces position correction data for the cap applicator.

The Y correction is achieved by changing the synchronisation between the applicator wheel and the package transfer.

For X-axis correction, the X-axis correction value is fed to an additional servo motor that moves a cam in or out to reposition the cap holders.

12.5.2 Introduction to this Chapter

This chapter is divided in two main parts:

- Paragraphs 12.5.4 PC Configuration on page 12-23 to 12.5.7 Troubleshooting on page 12-80, of which this is a part,

The paragraphs above describe procedures and elements that are used often when performing the procedures described in paragraphs below.

and

- Paragraphs 12.5.8 Camera on page 12-85 to 12.5.15 Hole Tolerance Setup on page 12-129

12.5.3 Setting Procedures for this Chapter

The following charts show the procedures to follow for each maintenance action.

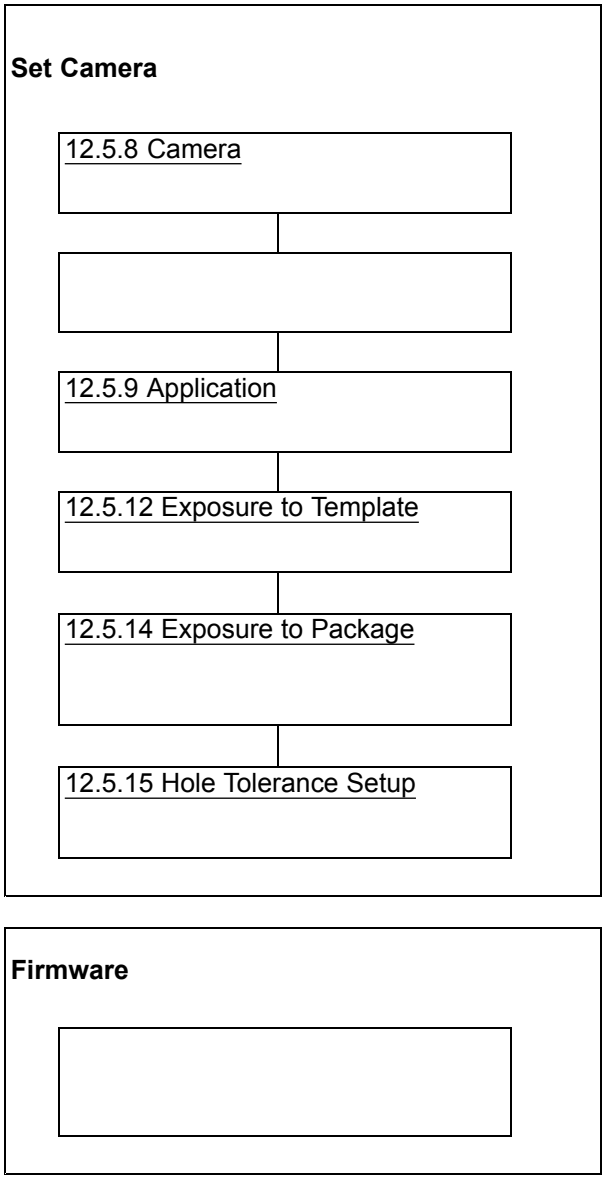

(Cont'd)

(Cont'd)

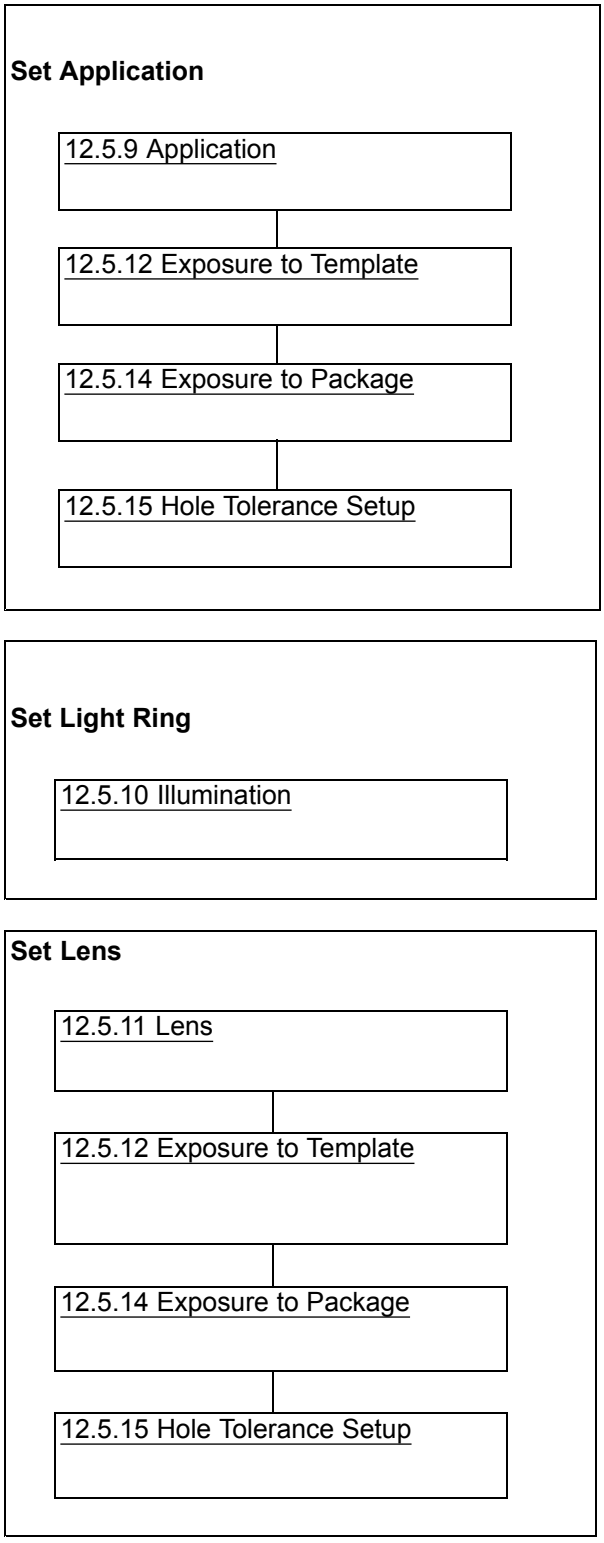
Set Application
12.5.9 Application
12.5.12 Exposure to Template
12.5.14 Exposure to Package
12.5.15 Hole Tolerance Setup
Set Light Ring
12.5.10 Illumination
Set Lens
12.5.11 Lens
12.5.12 Exposure to Template
12.5.14 Exposure to Package
12.5.15 Hole Tolerance Setup

(Cont'd)

(Cont'd)

Set General Offset

12.5.16 General Offset

Set Cap Offset

12.5 Vision System (Mandatory for TGA/TPA and HeliCap)

Trend

12.5.19 Trend

Set Exposure to Template

12.5.12 Exposure to Template

Set Exposure to Package

12.5.14 Exposure to Package

Hole Tolerance Setup

12.5.15 Hole Tolerance Setup

12.5.4 PC Configuration

12.5.4.1 Software Requirements

The Cognex Tool required for Start-up is the **In-Sight Explorer** to the latest version, see the SPC.

12.5.4.1-1 Laptop to Camera Connection

Machine Status	Electrical supply disconnecting device in position O (OFF)
SPC Reference	2873924-0300

Connect the laptop to the camera with a crossover ethernet cable.

12.5.4.1-2 Laptop to Machine Connection

Machine Status	Electrical supply disconnecting device in position O (OFF)
SPC Reference	2873924-0300

Connect the PC to the ethernet switch, see 10.2.1-3 Preparations for PLC Communication - Set EtherNet Module IP Address.

12.5.4.2 Laptop Configuration

12.5.4.2-1 Laptop Firewall Configuration

Machine Status	Electrical supply disconnecting device in position I (ON)
SPC Reference	662916-0300

Disable the Firewall Protection, see 10.2.1-1 Preparation for PLC Communication - Configure PC Network Communications.

12.5.4.2-2 Laptop IP Address Assignment

Machine Status	Electrical supply disconnecting device in position I (ON)
SPC Reference	662916-0300

Set an IP address for the PC, see 10.2.1-1 Preparation for PLC Communication - Configure PC Network Communications.

12.5.4.2-3 Installing IN-SIGHT EXPLORER

Machine Status	Electrical supply disconnecting device in position I (ON)
Special Equipment	CD-ROM with In-Sight Explorer
SPC Reference	662916-0300

a) Insert the In-Sight Explorer CD-ROM in the appropriate drive on the laptop.

b) Start the In-Sight Explorer by double clicking on "Cognex In-Sight Software X.X.X.exe" (LATEST VERSION (1)) see SPC.

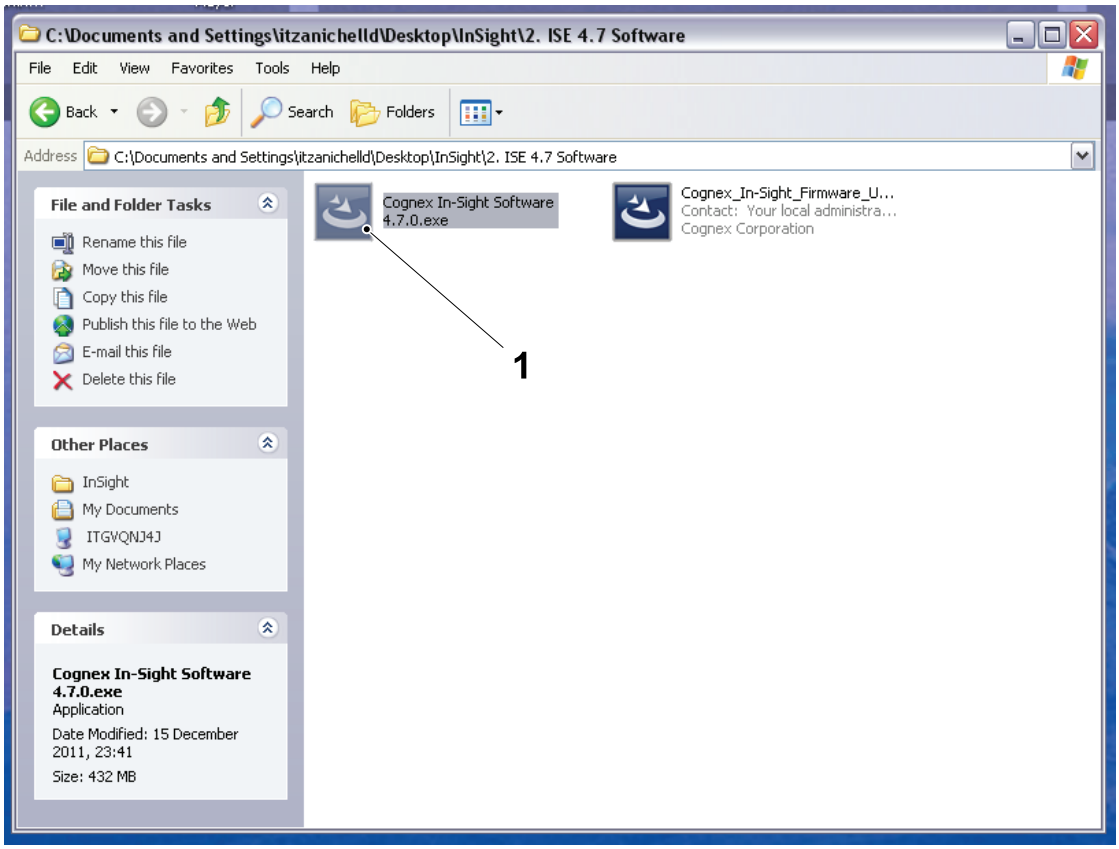

1 LATEST VERSION

(Cont'd)

(Cont'd)

c) Wait for the software to self extract.

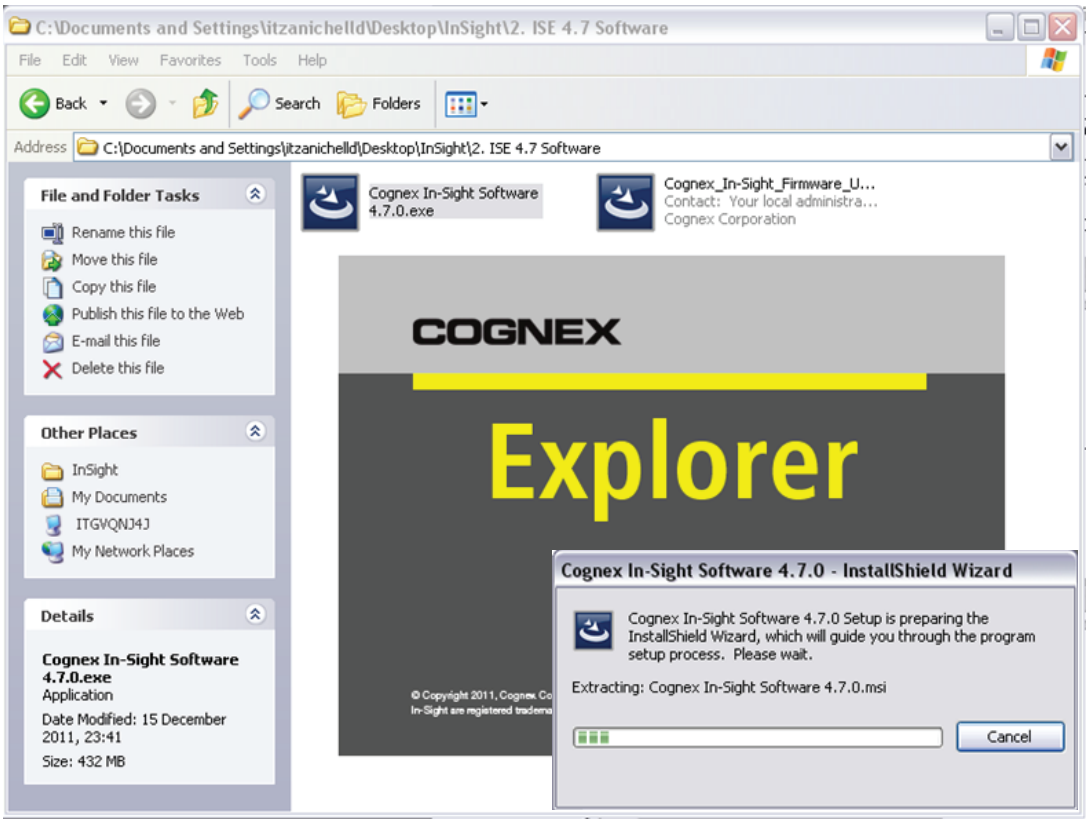

(Cont'd)

(Cont'd)

d) Click on NEXT (2) .

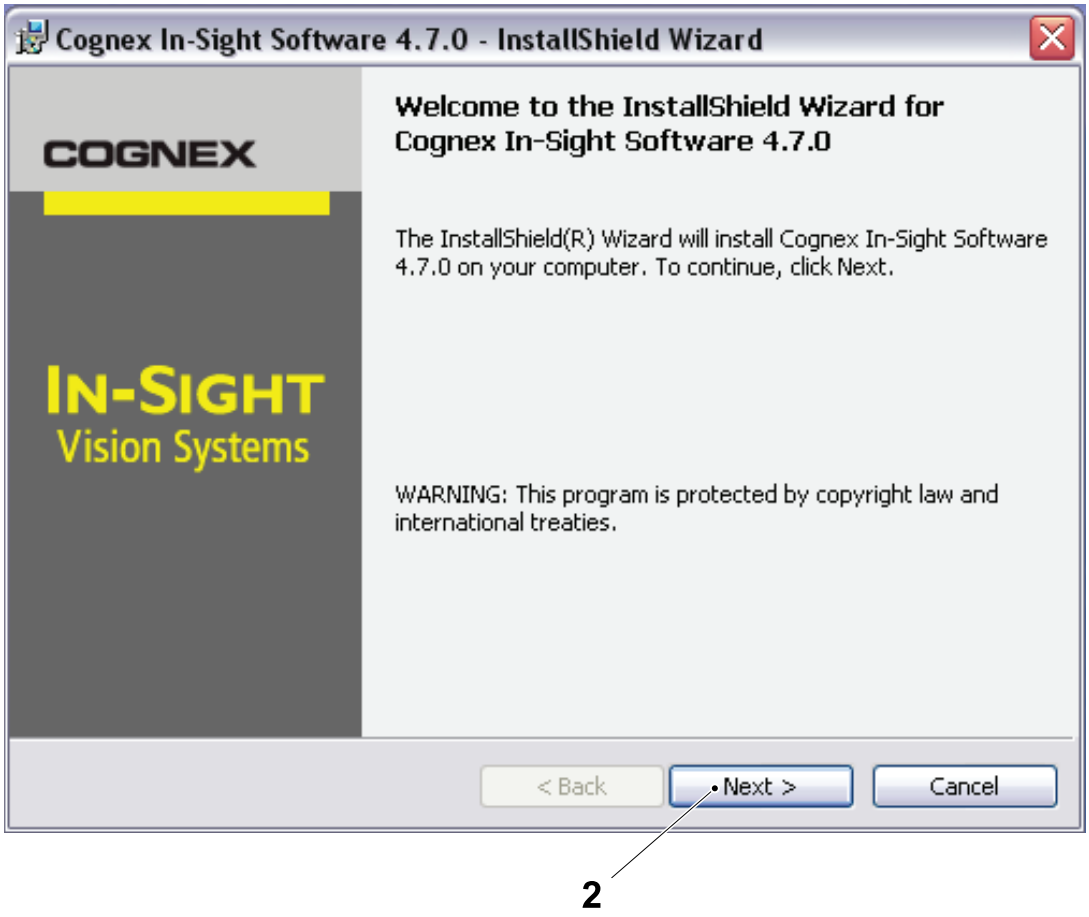

2 NEXT

(Cont'd)

(Cont'd)

e) Click the I accept the terms in the license agreement (3).

f) Click NEXT (2).

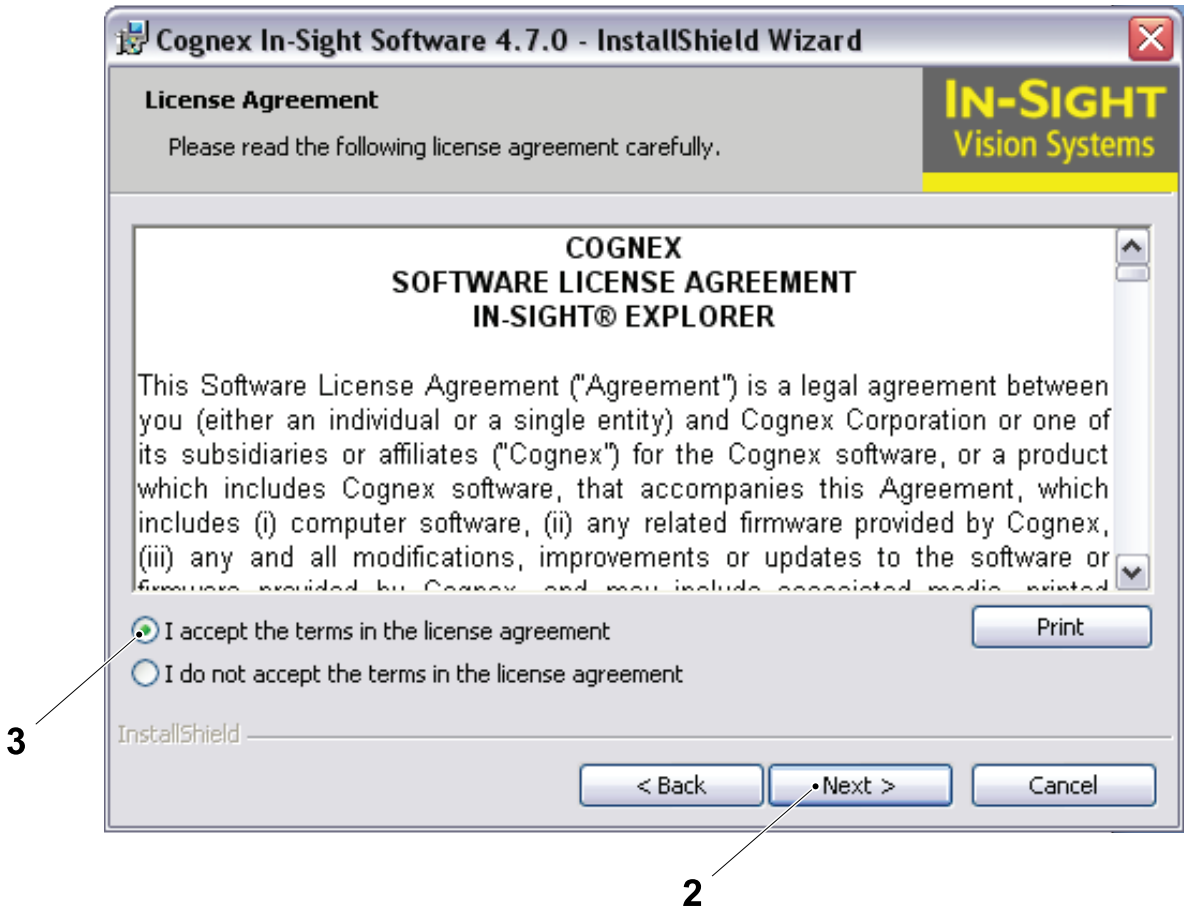

2 NEXT

3 I accept the terms in the license agreement

(Cont'd)

(Cont'd)

g) Select NEXT (2) .

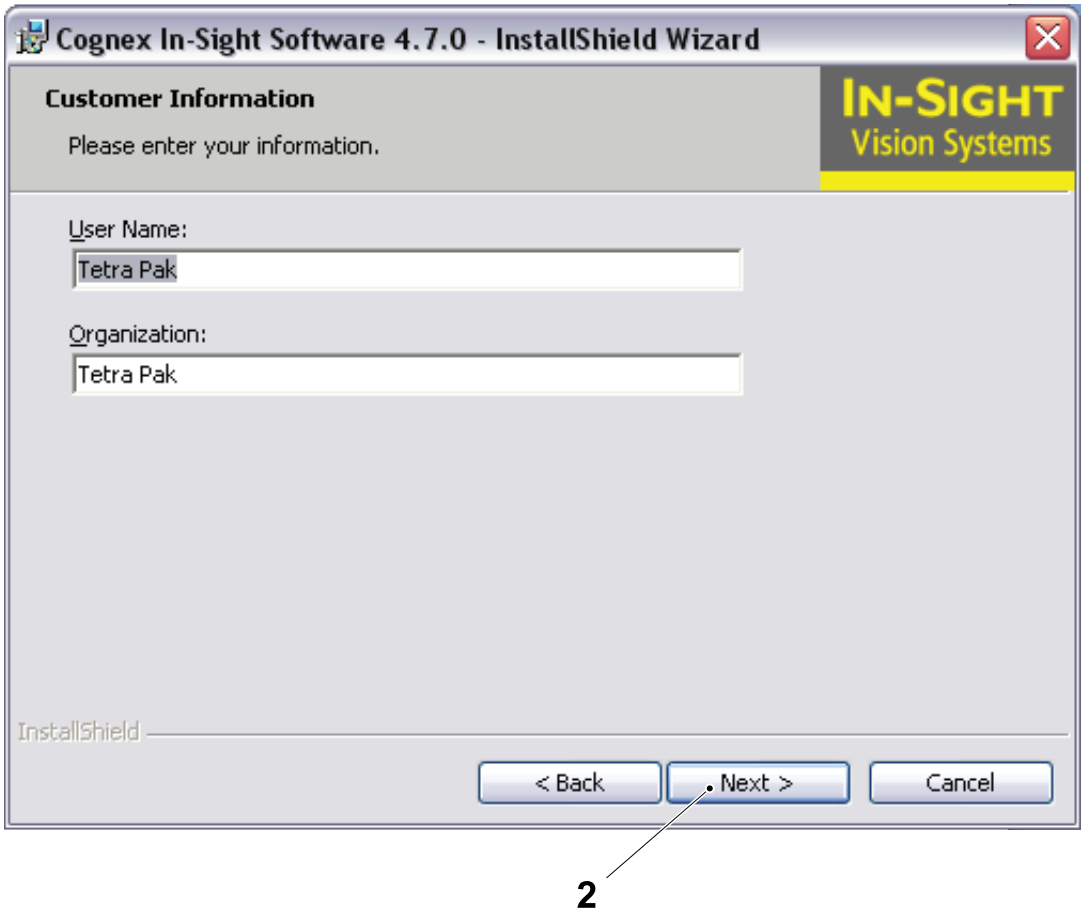

2 NEXT

(Cont'd)

(Cont'd)

h) Click COMPLETE (4).

i) Click NEXT (2).

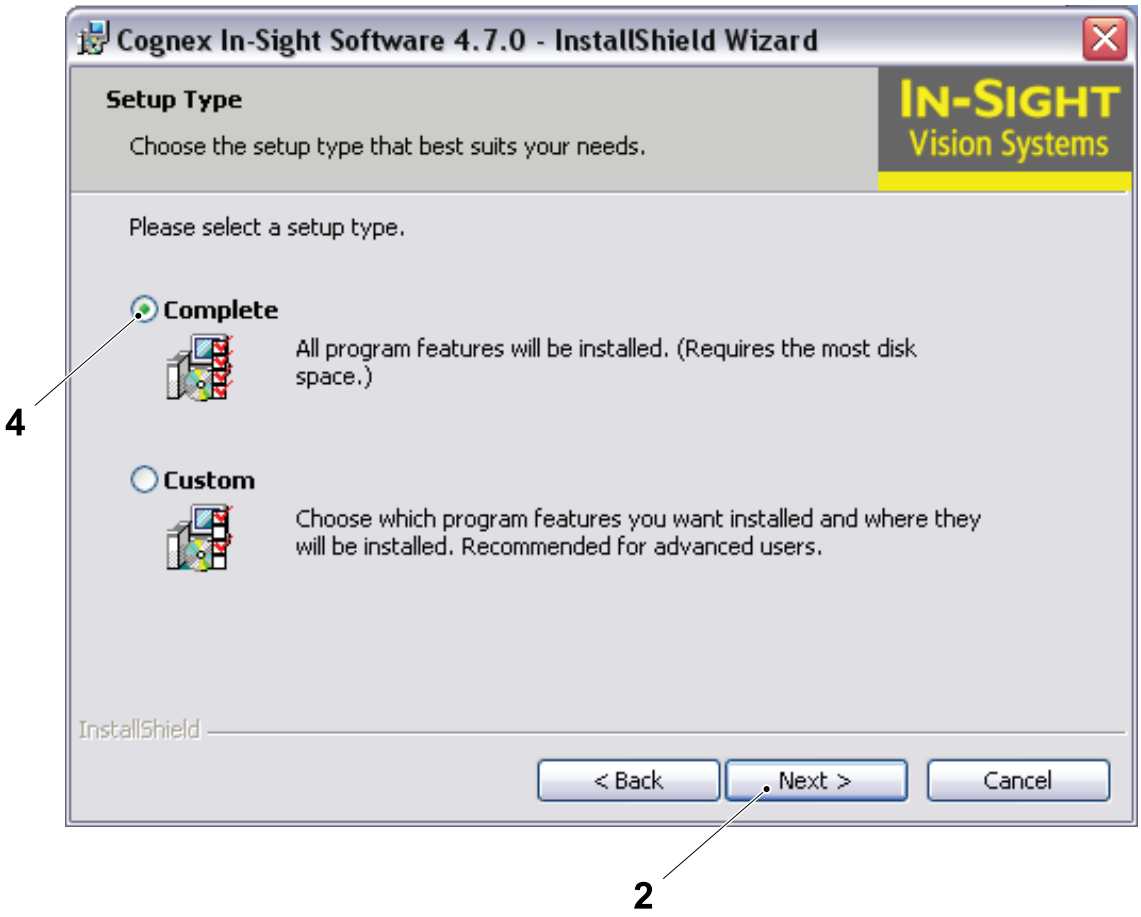

2 NEXT

4 COMPLETE

(Cont'd)

(Cont'd)

j) Click on INSTALL (5).

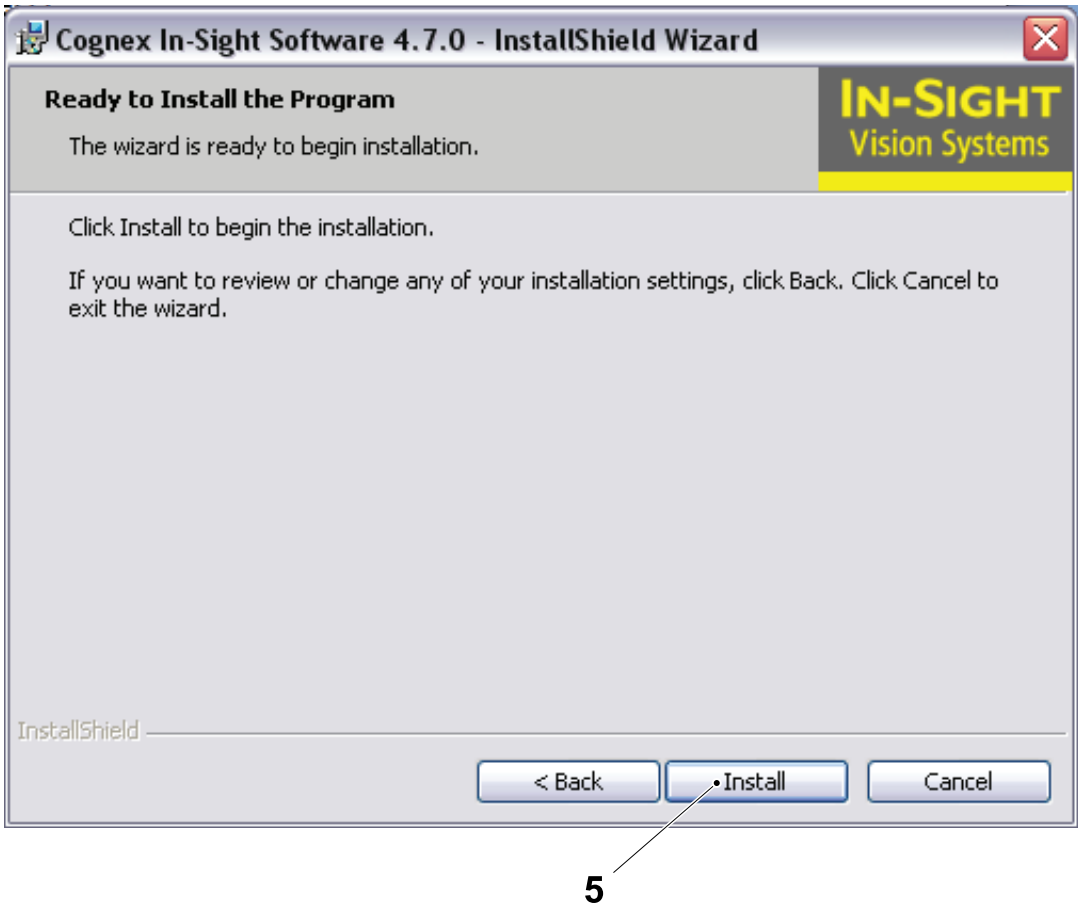

5 INSTALL

(Cont'd)

(Cont'd)

k) Wait while the installation is proceeding.

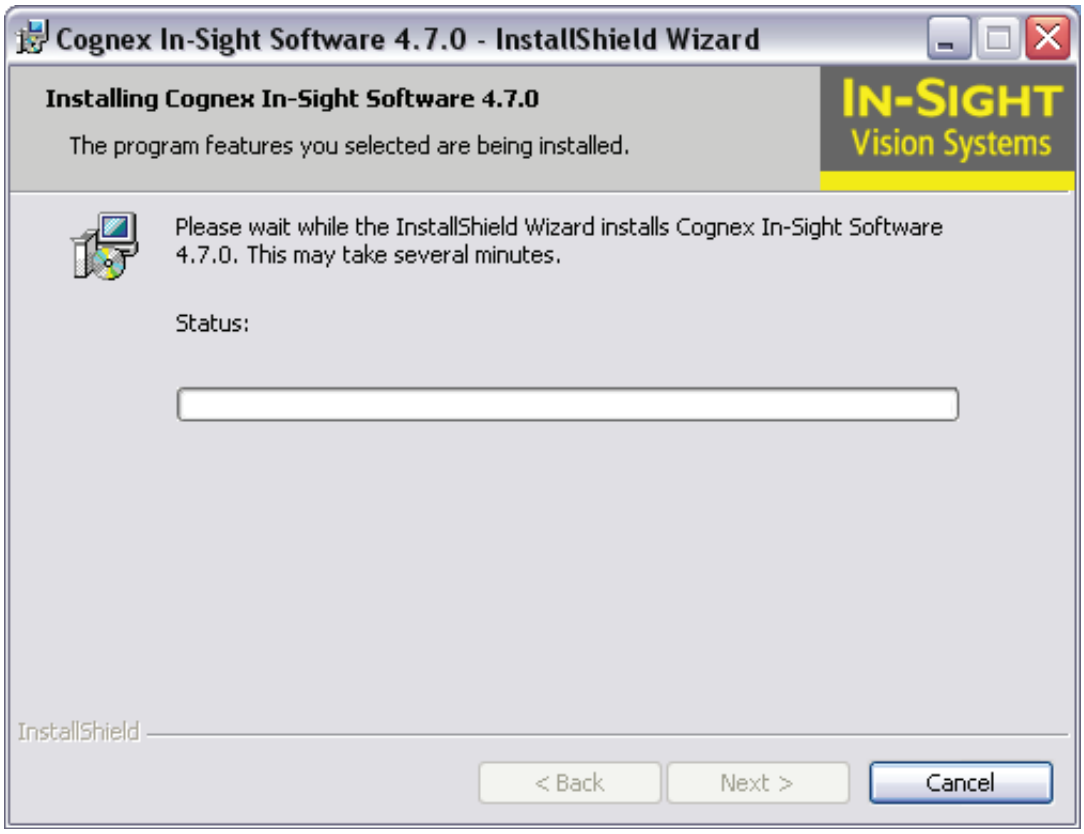

(Cont'd)

(Cont'd)

l) Click FINISH (6) .

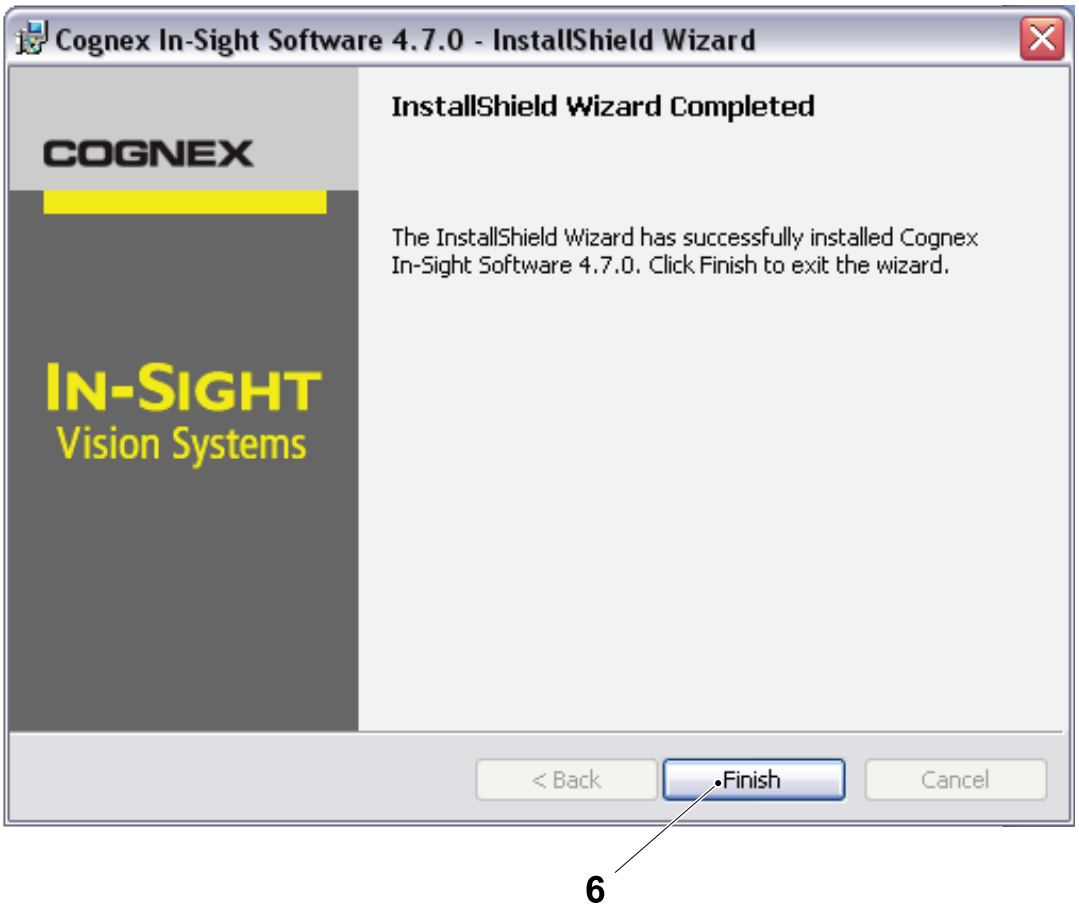

6 FINISH

12.5.4.2-4 Vision System - Installation / Activation from the TPOP

Machine Status	Electrical supply disconnecting device in position I (ON) Main air valve ON
SPC Reference	2802386-0300

a) Step down the machine to STEP0.

b) Touch the OPTION button (1) then touch the POSITIONING SYSTEM icon (2) and the CAP POSITIONING SYSTEM option (3) option will appear.

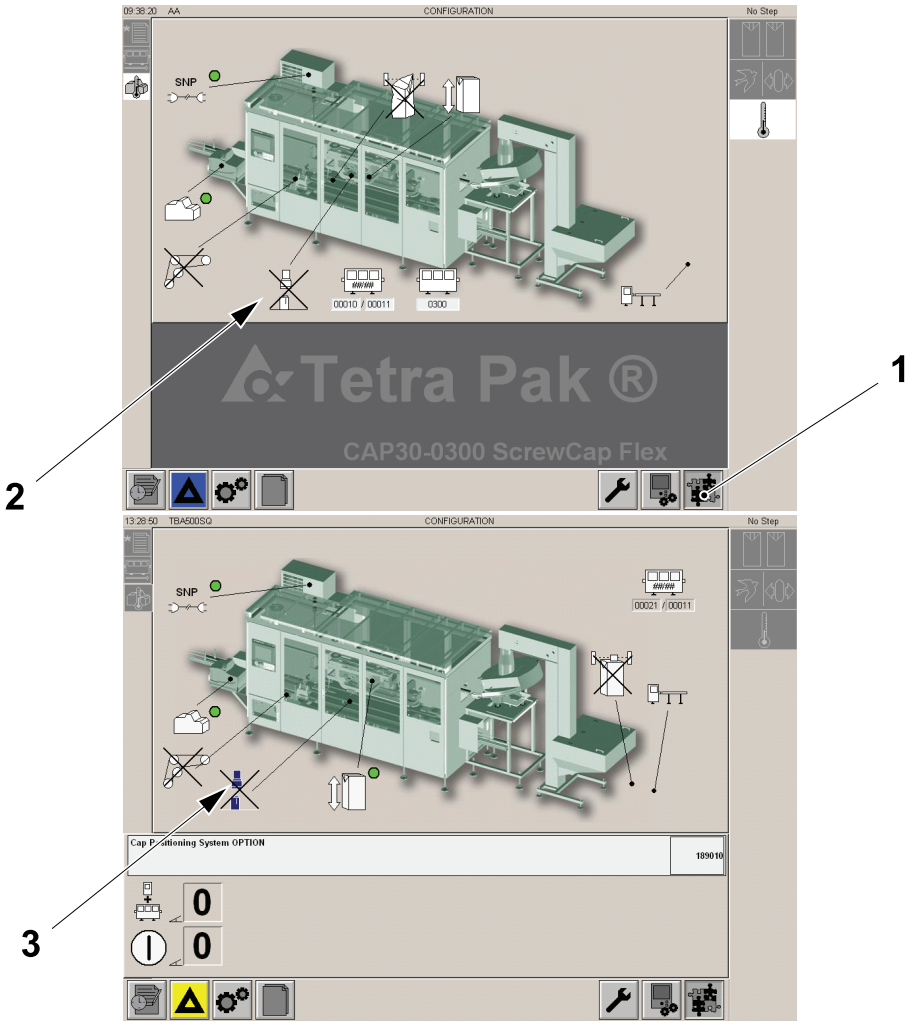

1 OPTION button
2 POSITIONING SYSTEM icon
3 CAP POSITIONING SYSTEM option

(Cont'd)

(Cont'd)

Installation

a) Touch the INSTALLATION icon (1) and then the SELECT icon (2).

b) Confirm using the CONFIRM button (3) to install the positioning system.

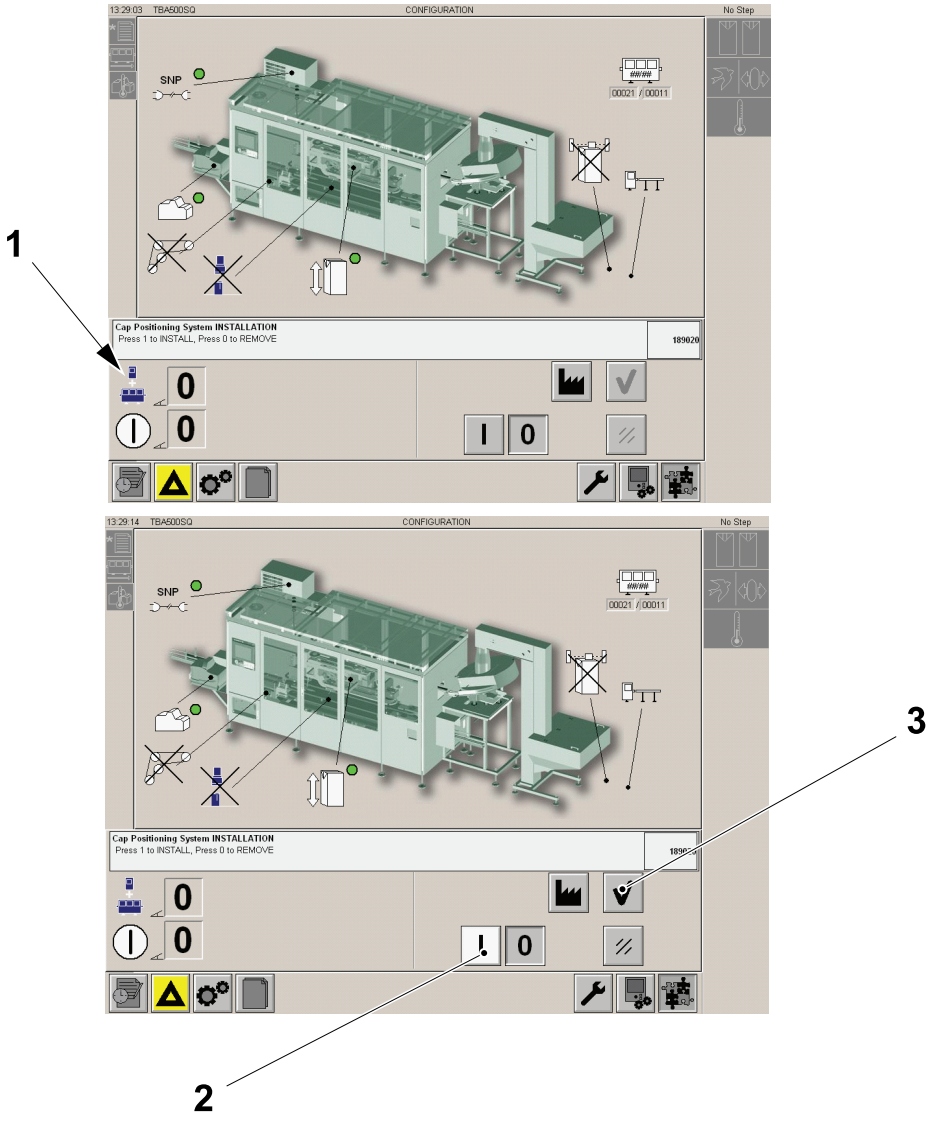

1 INSTALLATION icon
2 SELECT button
3 CONFIRM button

(Cont'd)

(Cont'd)

Activation

a) Touch the ACTIVATION icon (1).

b) Touch the SELECT Icon (2) and confirm using the CONFIRM button (3) to activate the POSITION SYSTEM ACTIVATED (4).

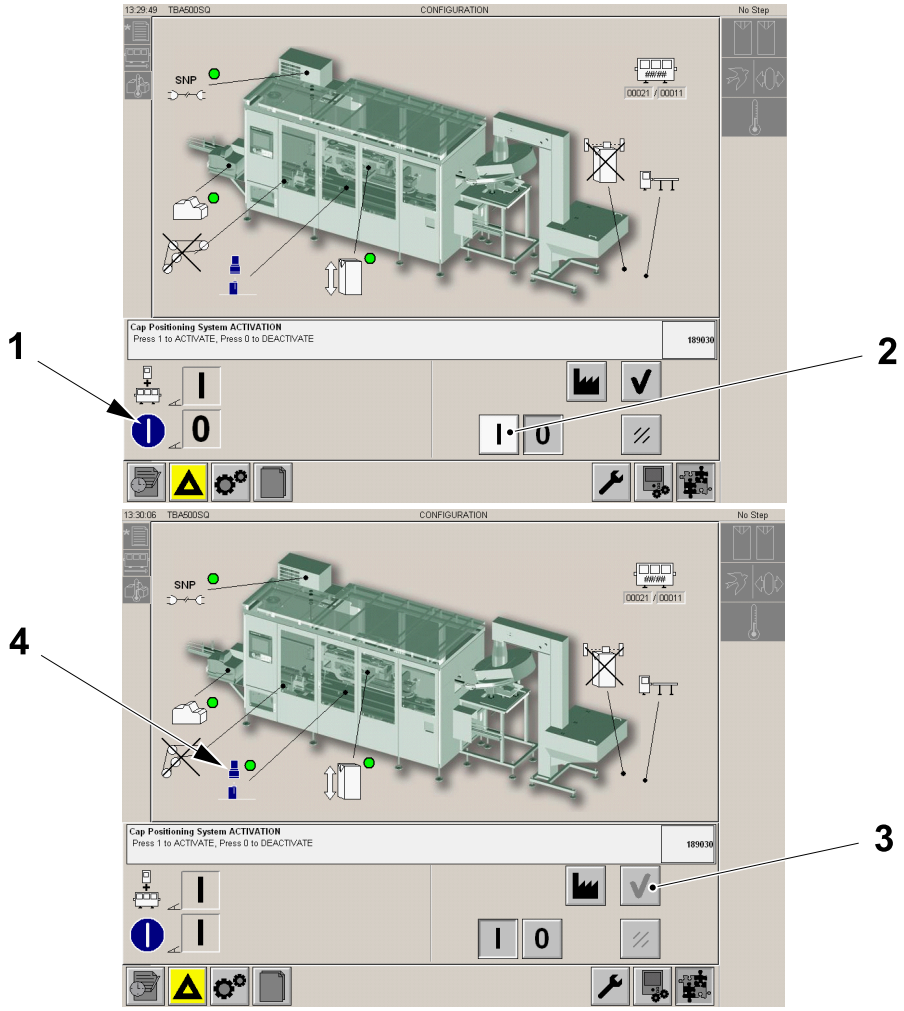

1 ACTIVATION icon
2 SELECT Icon
3 CONFIRM button
4 POSITION SYSTEM ACTIVATED

12.5.4.2-5 Vision System - Deactivation from the TPOP

Machine Status	Electrical supply disconnecting device in position I (ON) Main air valve ON
SPC Reference	2802386-0300

a) Step down the machine to STEP0.

b) In the OPTION SCREEN (1), touch the POSITIONING SYSTEM icon (2) and then CAP POSITIONING SYSTEM OPTION (3) will appear.

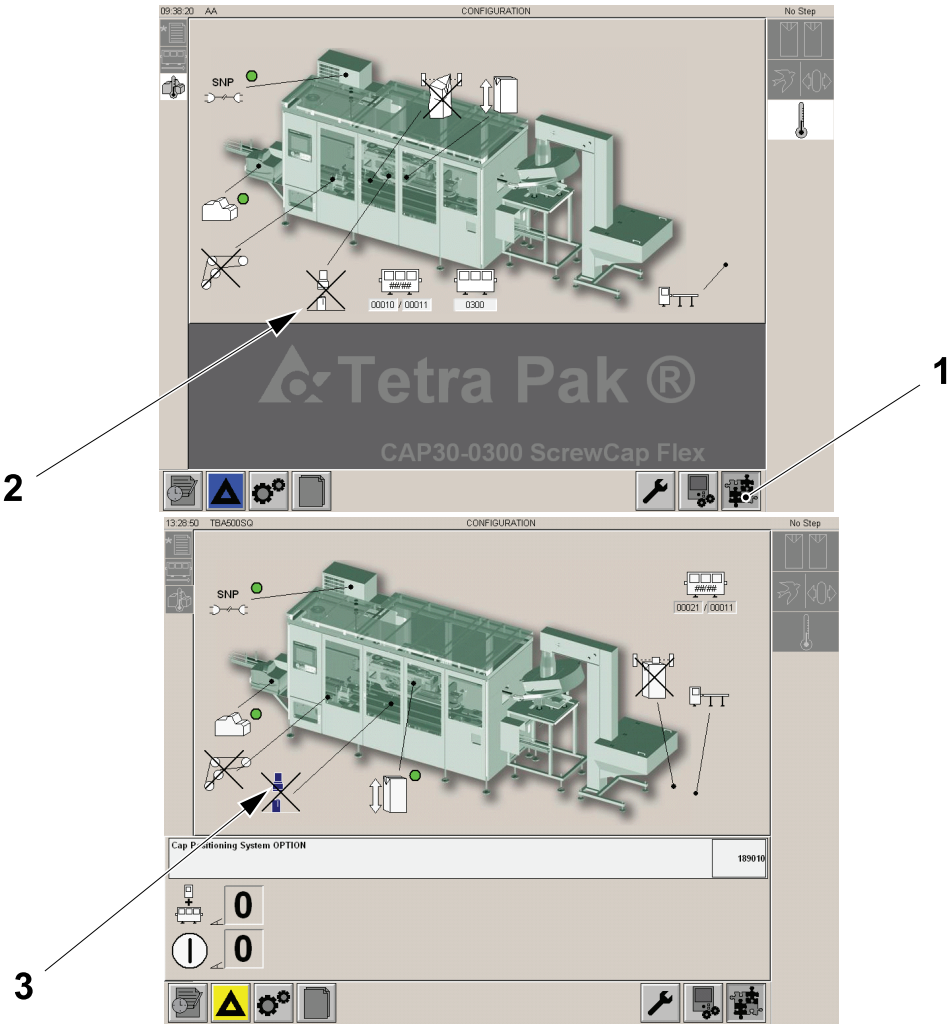

1 OPTION SCREEN
2 POSITIONING SYSTEM icon
3 CAP POSITIONING SYSTEM OPTION

(Cont'd)

(Cont'd)

c) Touch the DEACTIVATION icon (4).

d) Touch the SELECTicon (5) and then confirm using the CONFIRM button (6) to deactivate the POSITIONING SYSTEM (7).

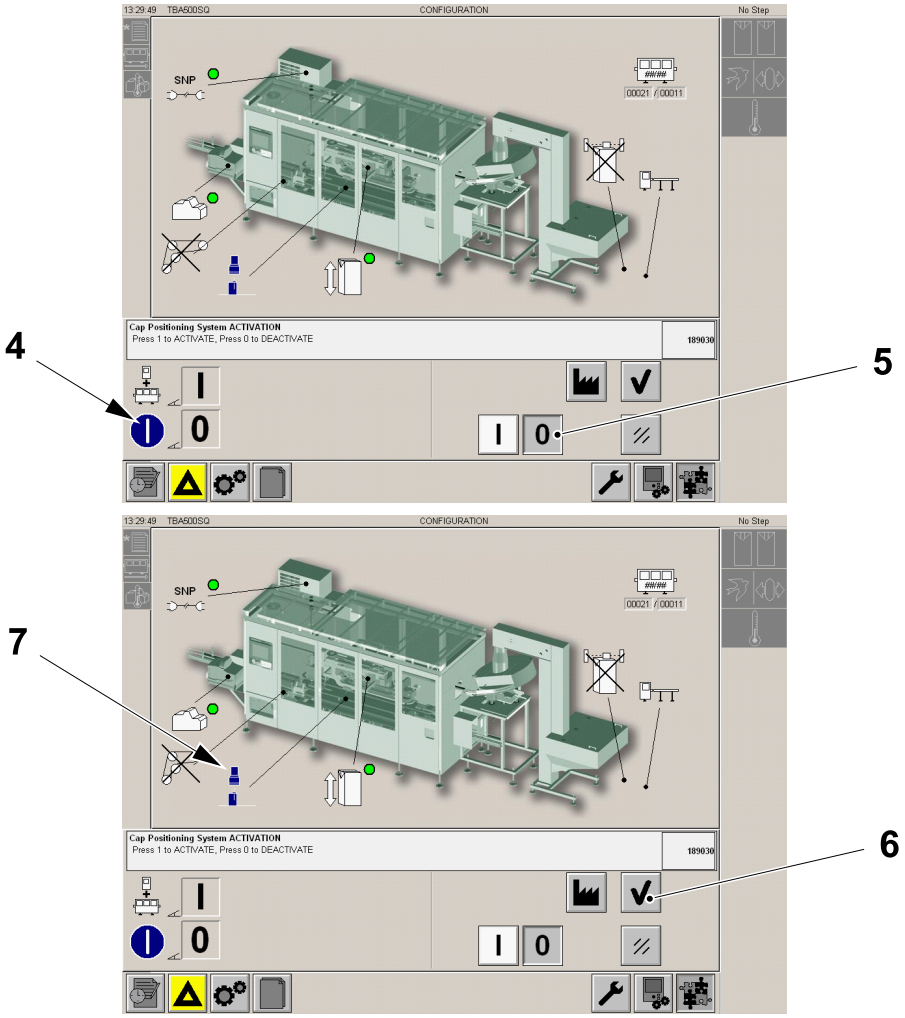

4 DEACTIVATION icon
5 SELECTicon
6 CONFIRM button
7 POSITIONING SYSTEM

12.5.5 General Functions

12.5.5.1 Begin Camera Communication with In-Sight Explorer

12.5.5.1-1 Starting In-Sight Explorer

Machine Status	Electrical supply disconnecting device in position I (ON)
SPC Reference	662916-0300

a) At the laptop, double click on the IN-SIGHT EXPLORER icon (1).

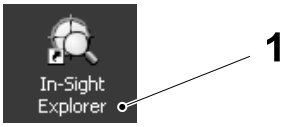

1 IN-SIGHT EXPLORER icon

Note! If the laptop is not connected to the network, after a new installation of the IN-SIGHT EXPLORER the following warning may appear (see picture below).

b) Click OK (2) and follow from the next paragraph, see Configure In-Sight Explorer.

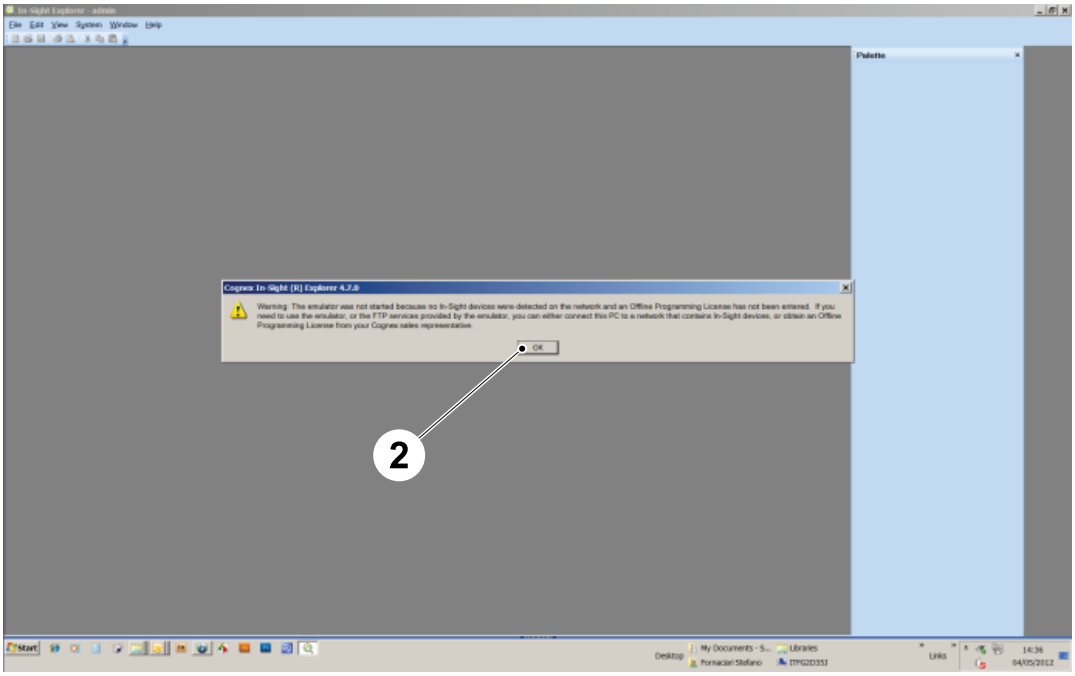

2 OK

Configure In-Sight Explorer

Note! After a new installation of the IN-SIGHT EXPLORER, the default view is the "Easy Builder" window. To put the "Spreadsheet" window as default do as follows.

(Cont'd)

(Cont'd)

a) In the Easy Builder window (1), click System (2) and then Option (3).

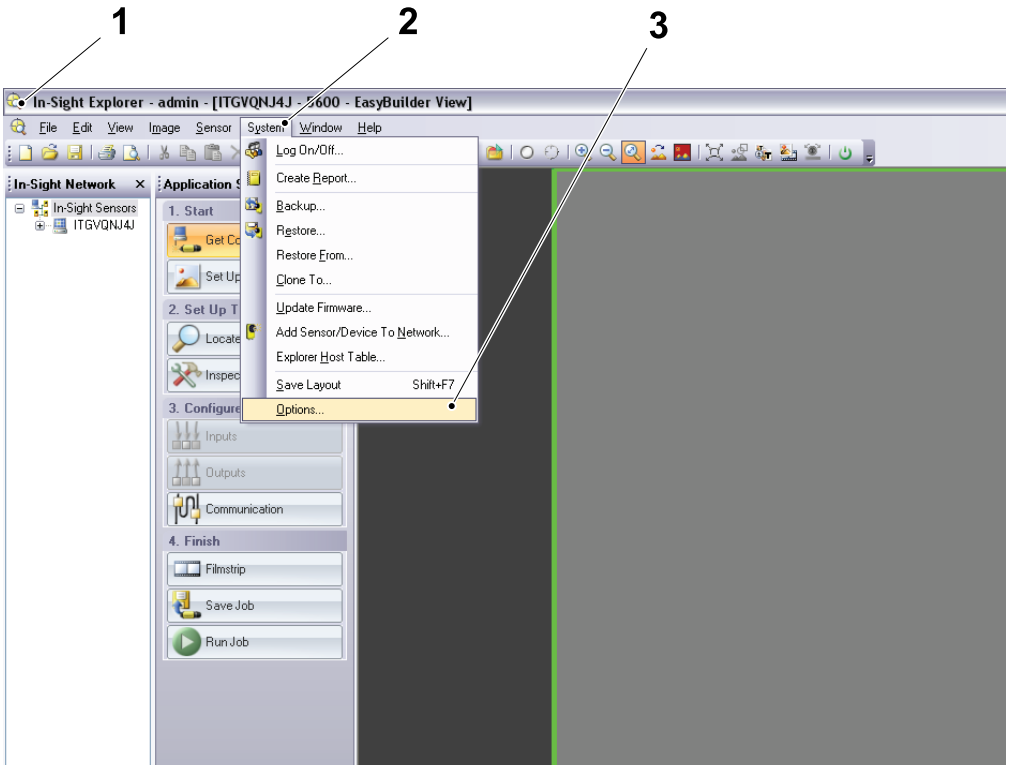

1 Easy Builder window
2 System
3 Option

(Cont'd)

(Cont'd)

b) In the Option window (4), click Job View (5).

c) Click and check theMake Spreadsheet View the Default View check box (6).

d) Click OK (7).

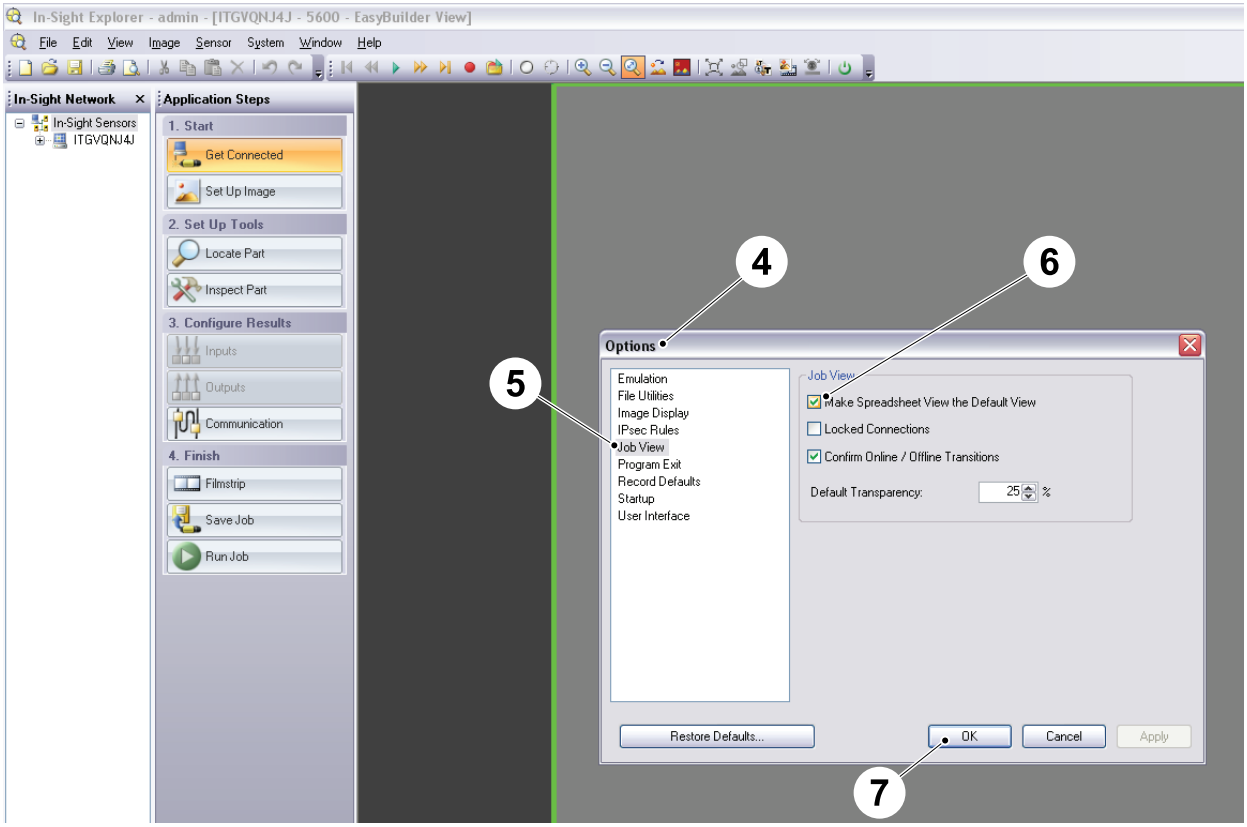

4 Option window
5 Job View
6 Make Spreadsheet View the Default View check box
7 OK

(Cont'd)

(Cont'd)

e) Click the button (8) to close the application.

f) Click YES button (9) to confirm the settings

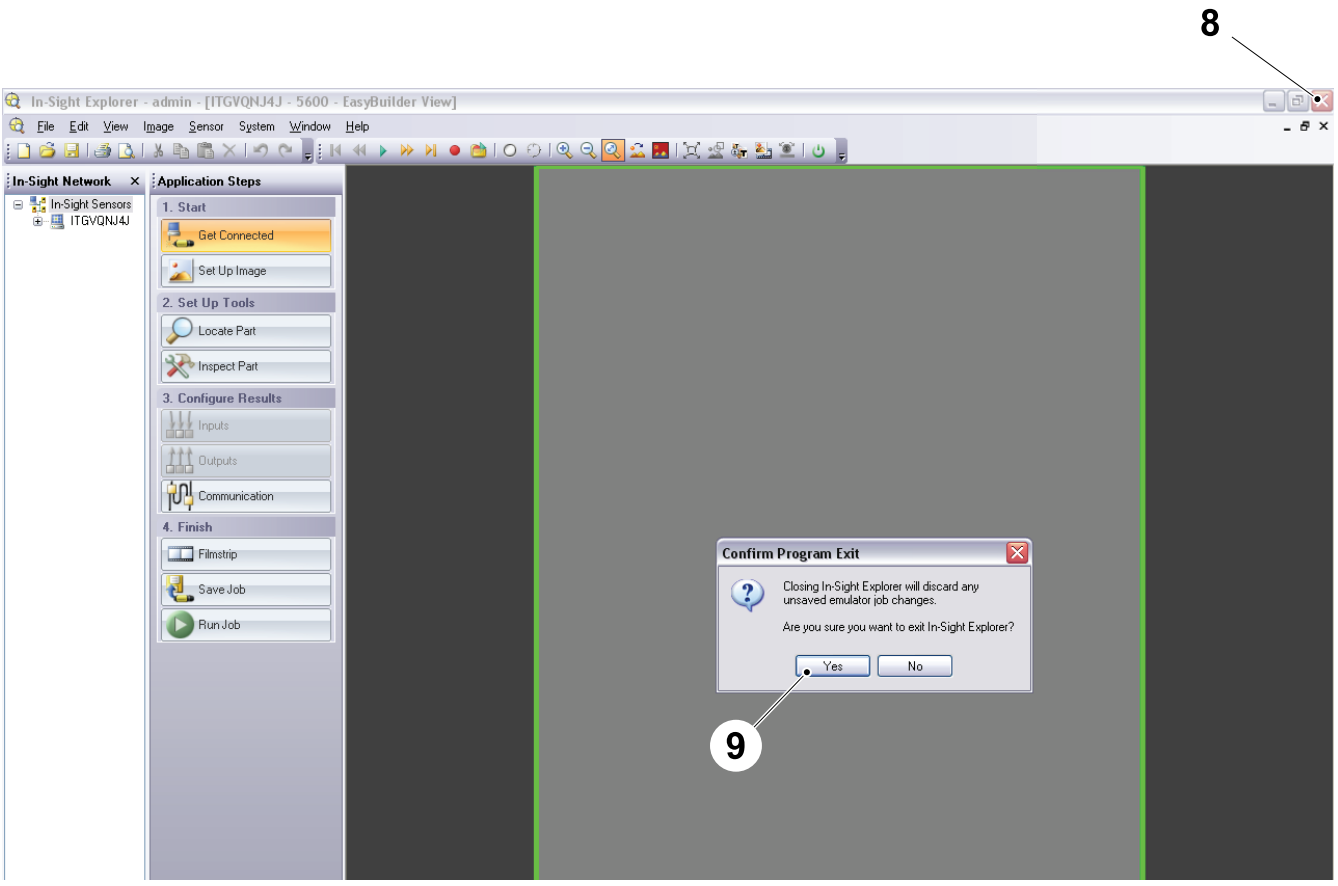

8 Button

9 YES button

12.5.5.1-2 Verifying Camera Presence in In-Sight Explorer Database

Machine Status	Electrical supply disconnecting device in position I (ON)
SPC Reference	662916-0300

a) Check that the IN-SIGHT5100 icon (1) is present in the IN-SIGHT NETWORK ZONE (2) of the host table (3). If the IN-SIGHT5100 icon (1) is present, as shown below, continue from 12.5.5.1-3 Establishing Communication with the Camera.

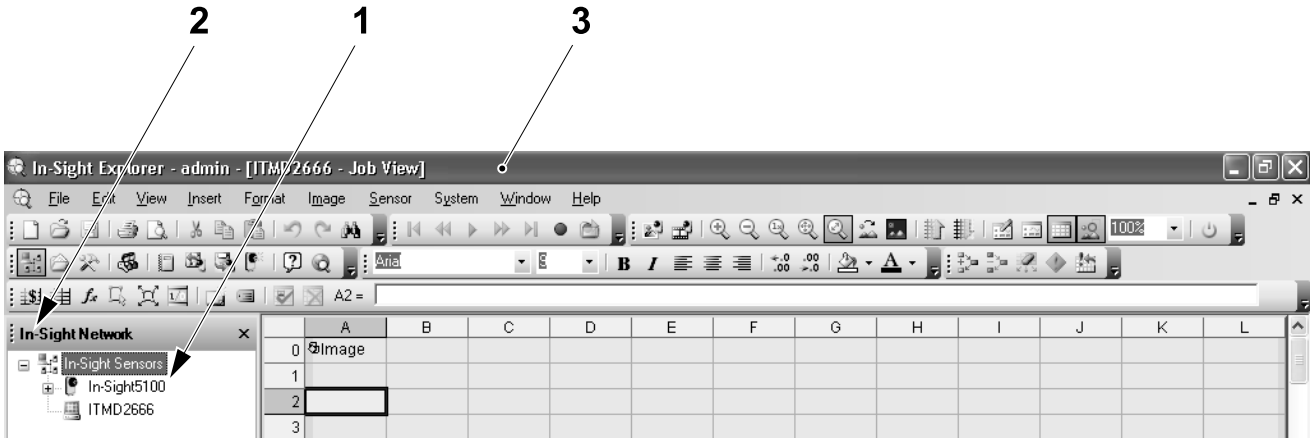

1 IN-SIGHT5100 icon
2 IN-SIGHT NETWORK ZONE
3 Host table

(Cont'd)

(Cont'd)

b) If the IN-SIGHT5100 camera icon is not present in the IN-SIGHT NETWORK ZONE (2) of the host table (3) , continue with step c) below.

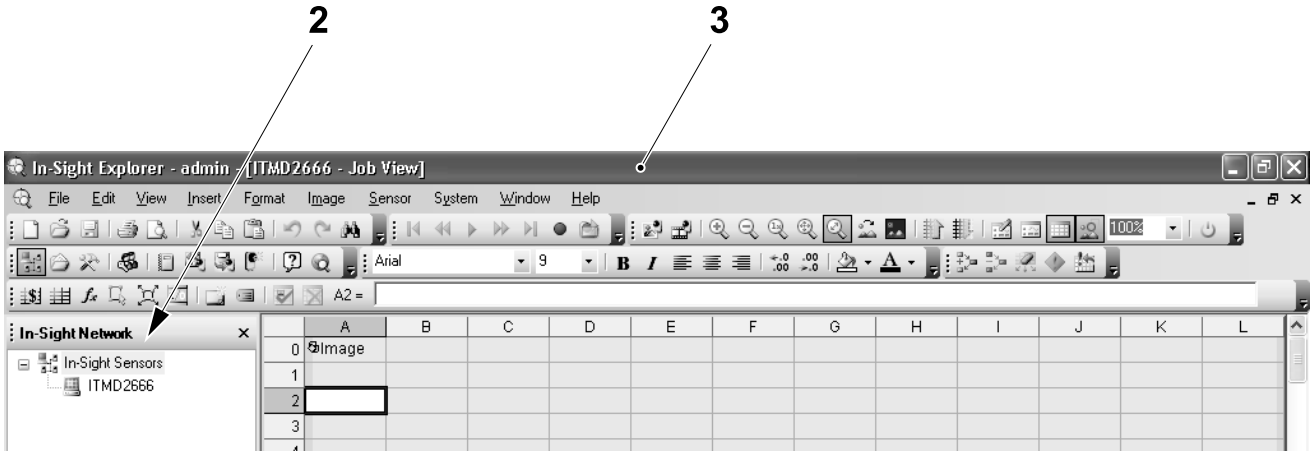

2 IN-SIGHT NETWORK ZONE

3 Host table

c) In the IN-SIGHT NETWORK ZONE (2), right click on the IN-SIGHT SENSORS icon (4).

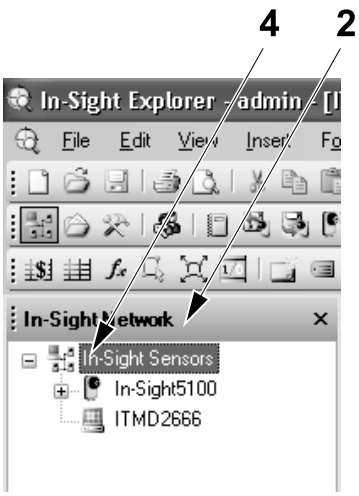

2 IN-SIGHT NETWORK ZONE

4 IN-SIGHT SENSORS icon

(Cont'd)

(Cont'd)

d) From the pull-down menu that appears, select the EXPLORER HOST TABLE OPTION (5).

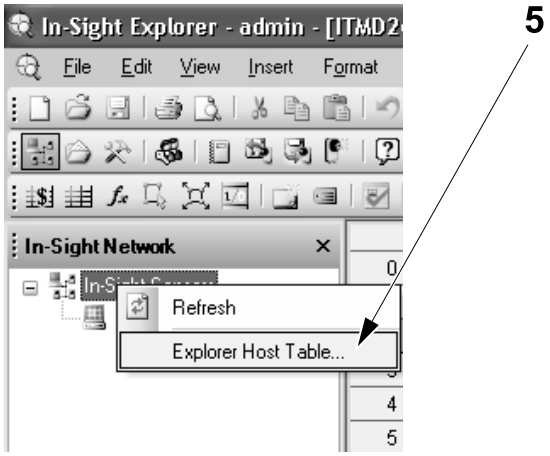

5 EXPLORER HOST TABLE OPTION

e) In the EXPLORER HOST TABLE SETUP OPTION (6), click on the ADD button (7).

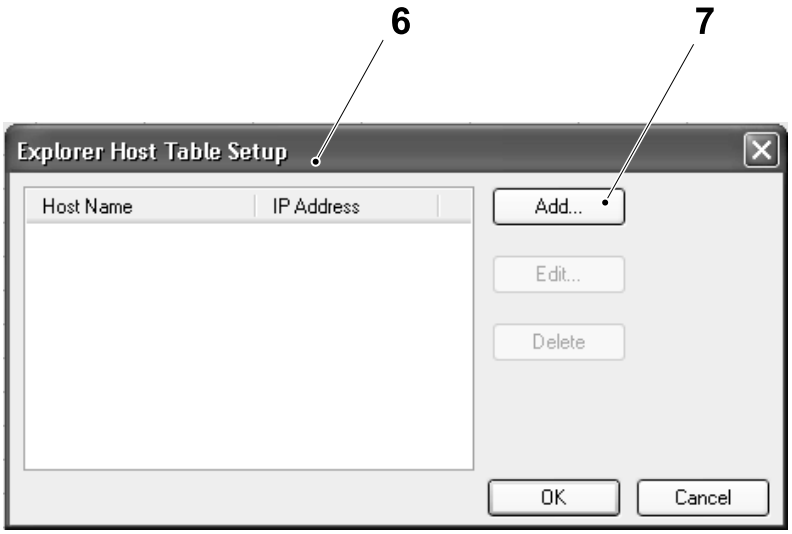

6 EXPLORER HOST TABLE SETUP OPTION

7 ADD button

(Cont'd)

(Cont'd)

f) In the ADD HOST WINDOW (8), enter the data shown below in the HOST NAME FIELD (9) and IP ADDRESS FIELD (10) and then click on the OK button (11).

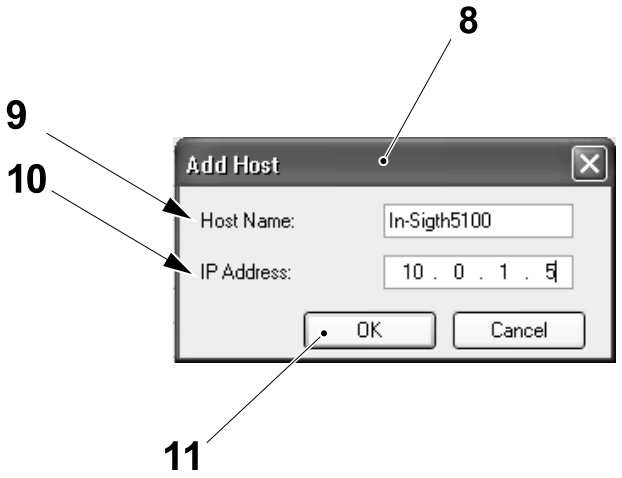

8 ADD HOST WINDOW
9 HOST NAME FIELD
10 IP ADDRESS FIELD
11 OK button

g) The HOST NAME and IP ADDRESS will appear in the EXPLORER HOST TABLE SETUP OPTION (6) , click on the OK button (12).

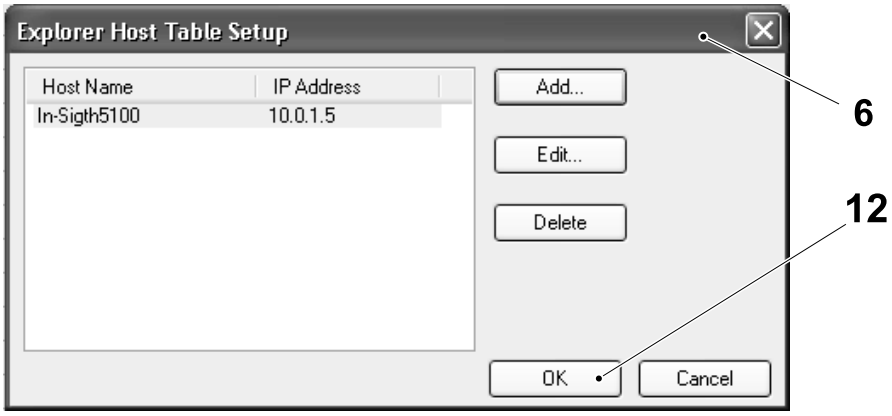

6 EXPLORER HOST TABLE SETUP OPTION
12 OK button

(Cont'd)

(Cont'd)

h) The IN-SIGHT5100 icon (1) is now present in the IN-SIGHT NETWORK ZONE (2) of the host table (3) .

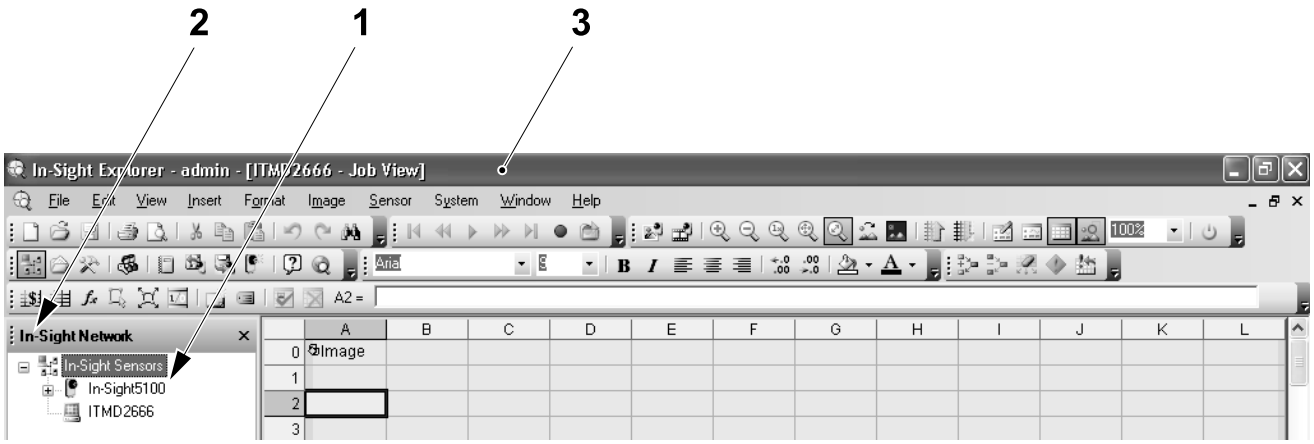

1 IN-SIGHT5100 icon

2 IN-SIGHT NETWORK ZONE

3 Host table

12.5.5.1-3 Establishing Communication with the Camera

Machine Status	Electrical supply disconnecting device in position I (ON)
SPC Reference	662916-0300

a) In the IN-SIGHT NETWORK ZONE (1), double click on the IN-SIGHT5100 icon (2) and check that the following data is displayed:

- the ON LINE/OFF LINE STATUS (3)
- the APPLICATION PROGRAM NAME (4)
- a background silhouette (5).

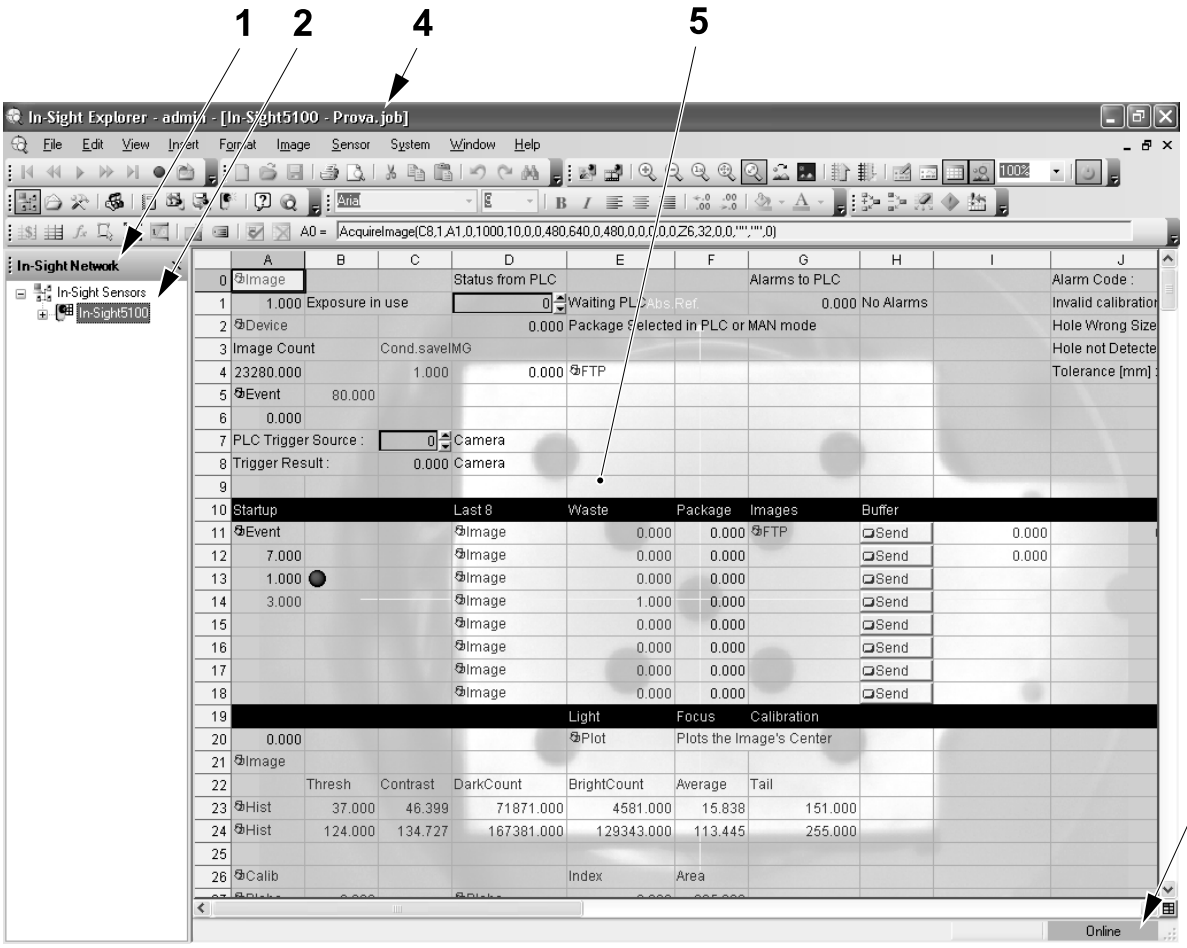

1 IN-SIGHT NETWORK ZONE
2 IN-SIGHT5100 icon
3 ON LINE/OFF LINE STATUS
4 APPLICATION PROGRAM NAME
5 BACKGROUND SILHOUETTE

(Cont'd)

(Cont'd)

b) If the above data is not shown but replaced by an error message, see 12.5.5.1-4 Communication Error.

c) If the above data is not shown, and there is no error message, double click on the IN-SIGHT5100 icon (2) again to try to establish communications.

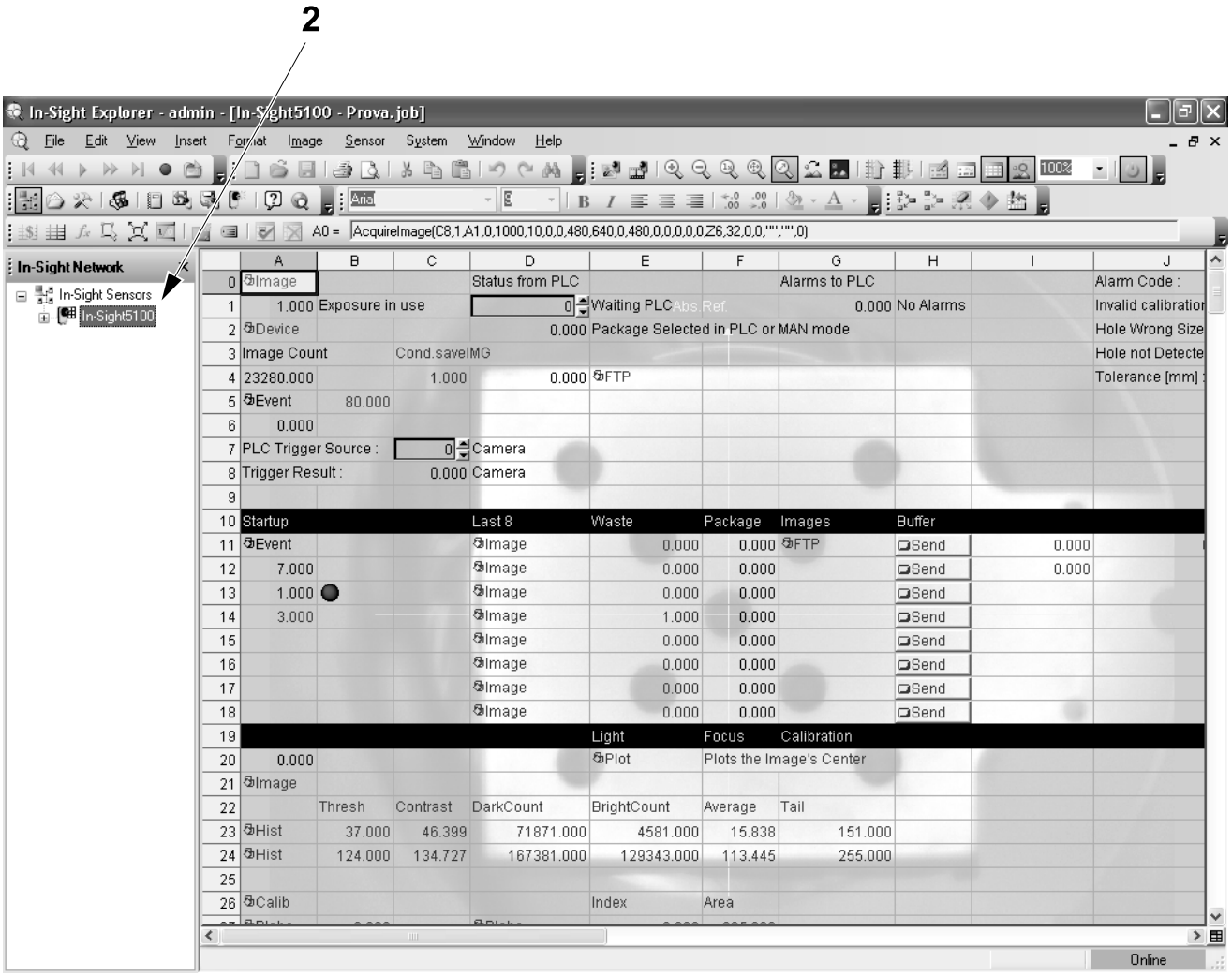

2 IN-SIGHT5100 icon

12.5.5.1-4 Communication Error

Machine Status	Electrical supply disconnecting device in position I (ON)
SPC Reference	662916-0300

If the CONNECTION ERROR message (1) appears when trying to establish communications check the following:

- the ethernet and power supply cables to the camera
- the ethernet cable from the laptop to the switch in the electrical cabinet
- the IP address of the laptop
- the firewall in the laptop.

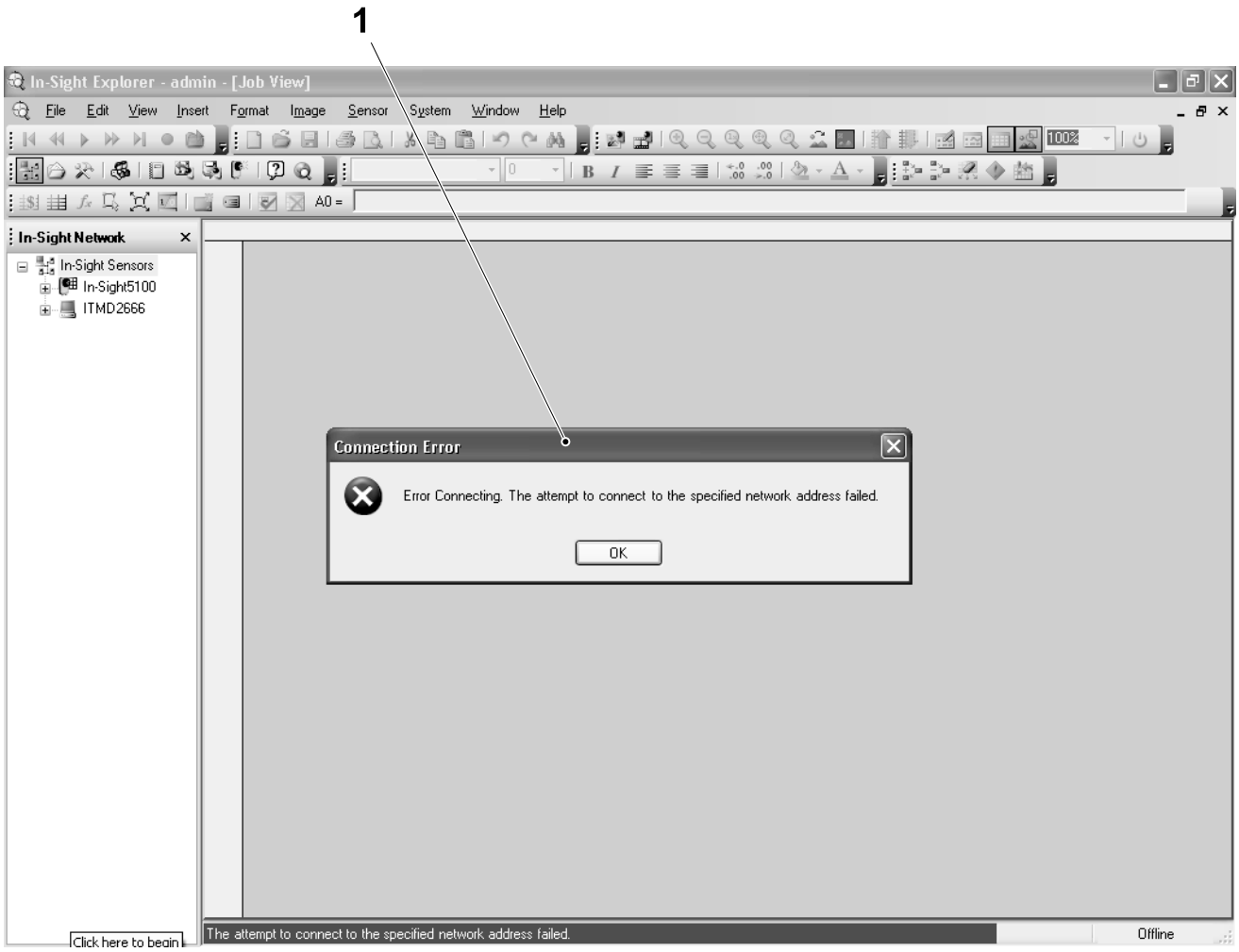

1 CONNECTION ERROR message

12.5.5.2 Setting Line Status of the Camera

12.5.5.2-1 Setting the On-Line Status of the Camera

Machine Status	Electrical supply disconnecting device in position I (ON)
SPC Reference	662916-0300

a) In the host table (1), select the sensor (2) and then ONLINE (3) from the pulldown window (4).

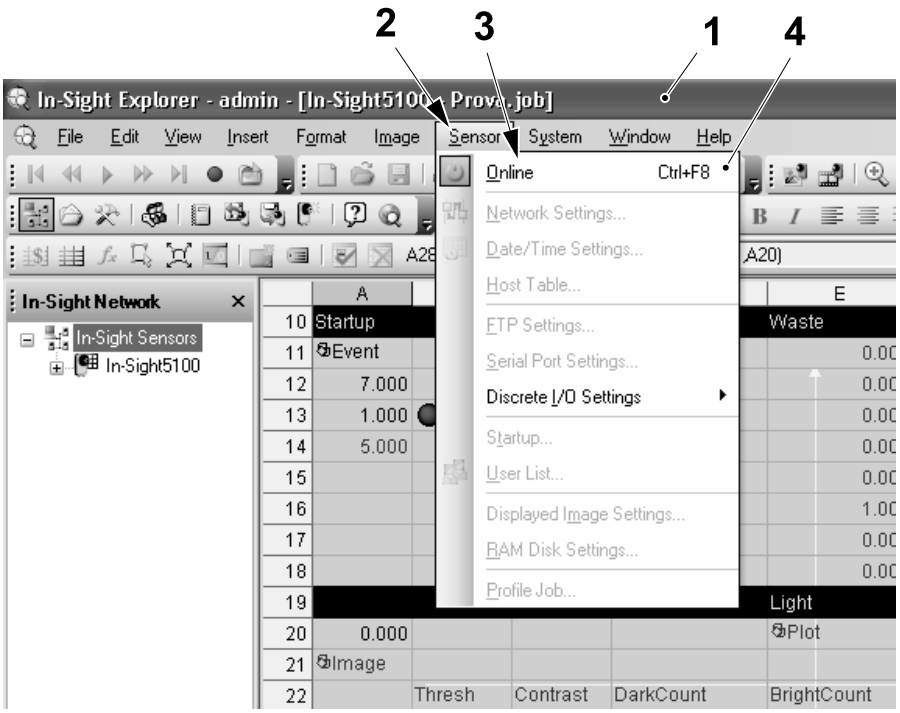

1 Host table
2 Sensor
3 ONLINE
4 Pulldown window

(Cont'd)

(Cont'd)

Note! If the confirmation feature is disabled in the IN-SIGHT EXPLORER tool, the following CONFIRM GO ONLINE WINDOW (5) will not appear, go to step c).

b) Click on the YES button (6) in the CONFIRM GO ONLINE WINDOW (5).

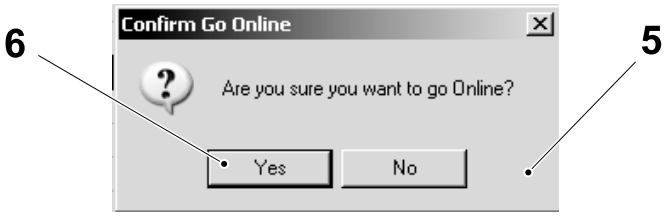

5 CONFIRM GO ONLINE WINDOW
6 YES button

c) Check that the Online status (7) is displayed.

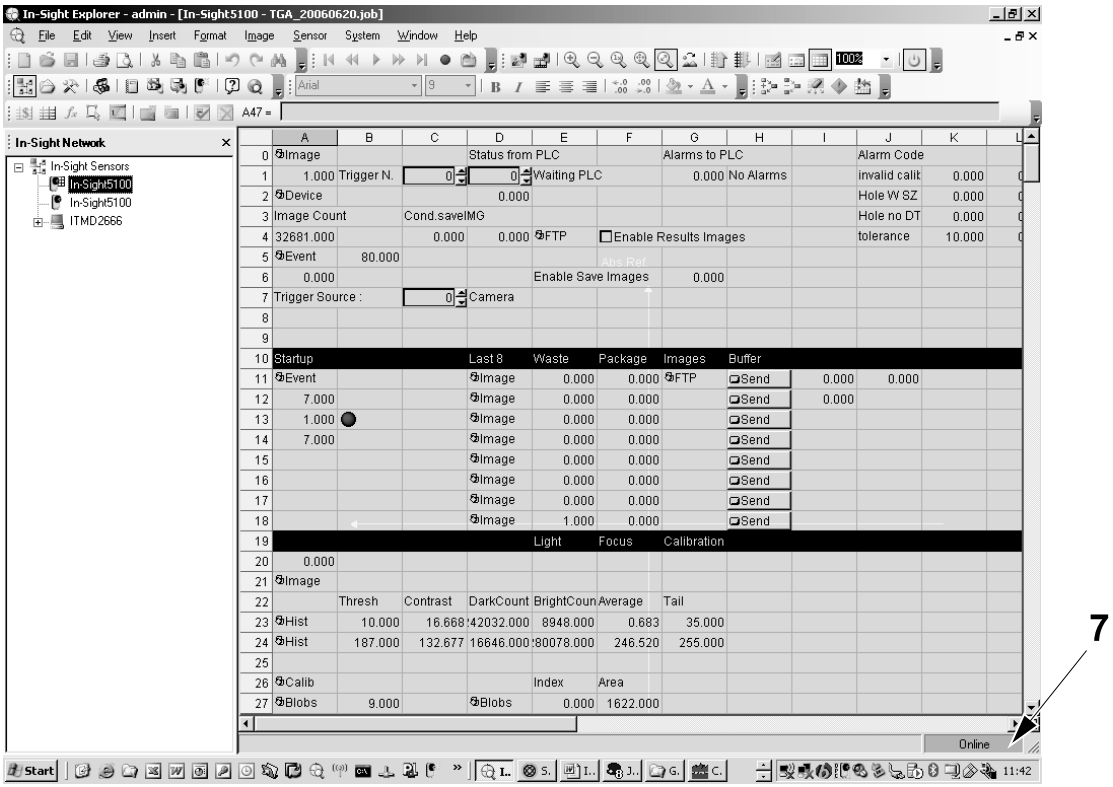

7 Online status

12.5.5.2-2 Setting the Off-Line Status of the Camera

Machine Status	Electrical supply disconnecting device in position I (ON)
SPC Reference	662916-0300

a) In the host table (1), select sensor (2) and then ONLINE (3) from the pulldown window (4).

Note! The ONLINE (3) toggles the status ON and OFF. There is no OFFLINE icon.

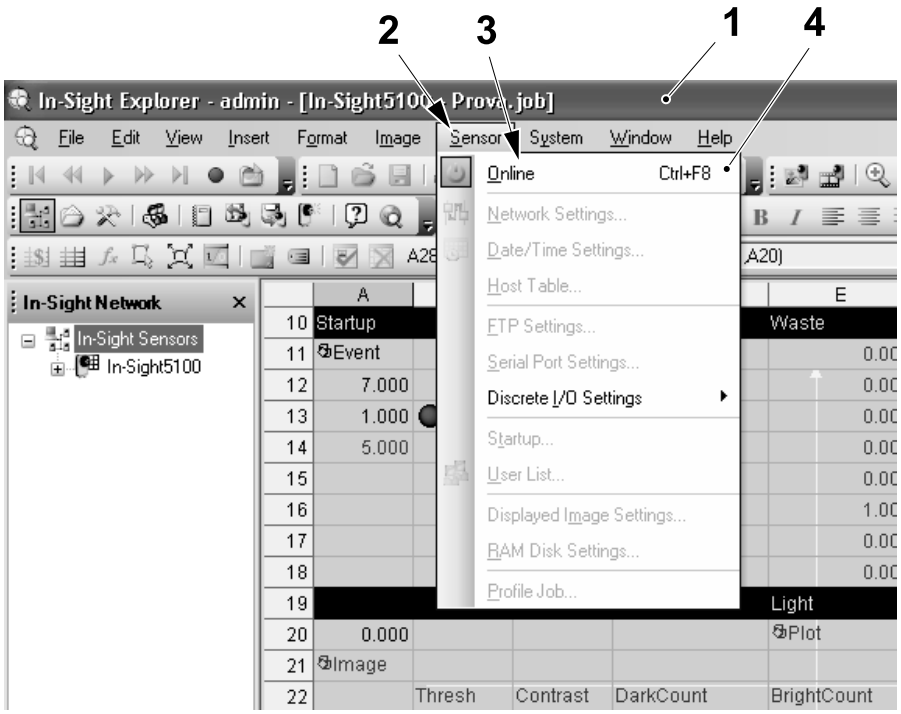

1 Host table
2 sensor
3 ONLINE
4 Pulldown window

(Cont'd)

(Cont'd)

Note! If the confirmation feature is disabled in the IN-SIGHT EXPLORER tool, the following CONFIRM GO OFFLINE WINDOW (5) will not appear, go to step c).

b) Click on the YES button (6) in the CONFIRM GO OFFLINE WINDOW (5).

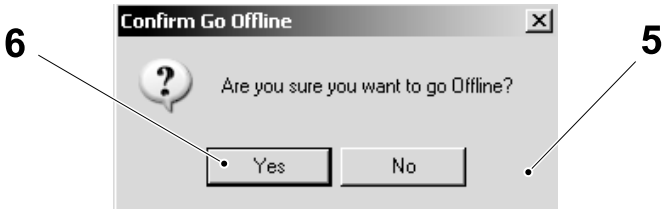

5 CONFIRM GO OFFLINE WINDOW
6 YES button

c) Check that the OFFLINE STATUS (7) is displayed.

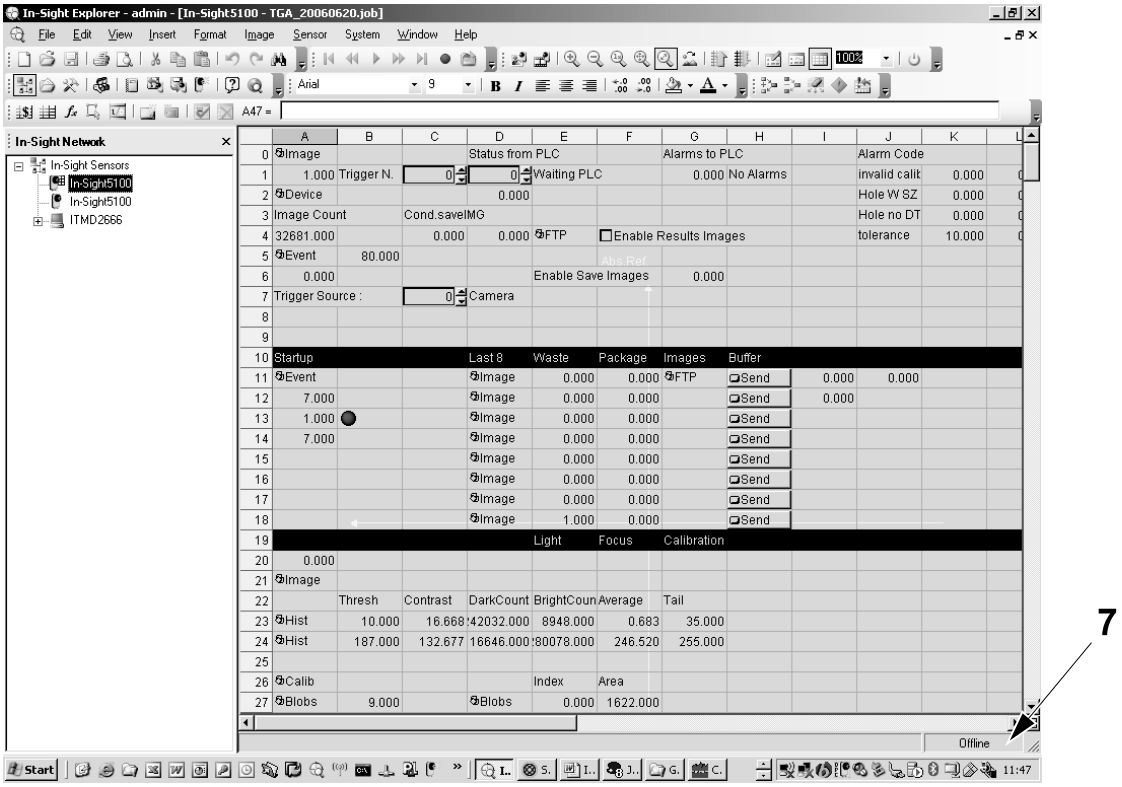

7 OFFLINE STATUS

12.5.5.3 Loading the Application Program in the In-Sight 5100

12.5.5.3-1 Setting the Correct Line Status of the Camera

Machine Status	Electrical supply disconnecting device in position I (ON)
SPC Reference	662916-0300

Set the camera OFFLINE, see 12.5.5.2-2 Setting the Off-Line Status of the Camera.

12.5.5.3-2 Loading the Application Program into the Camera

Machine Status	Electrical supply disconnecting device in position I (ON)
SPC Reference	662916-0300

a) Browse the CD and open the “XXXX_VISIONSYSTEM” folder.

b) Open the “VISIONSYSTEM_CONFIGURATION” Excel file and identify the program to install, according to the actual machine configuration.

c) In the host table (1), select `FILE` (2) and then `OPEN JOB` from the pulldown window that appears.

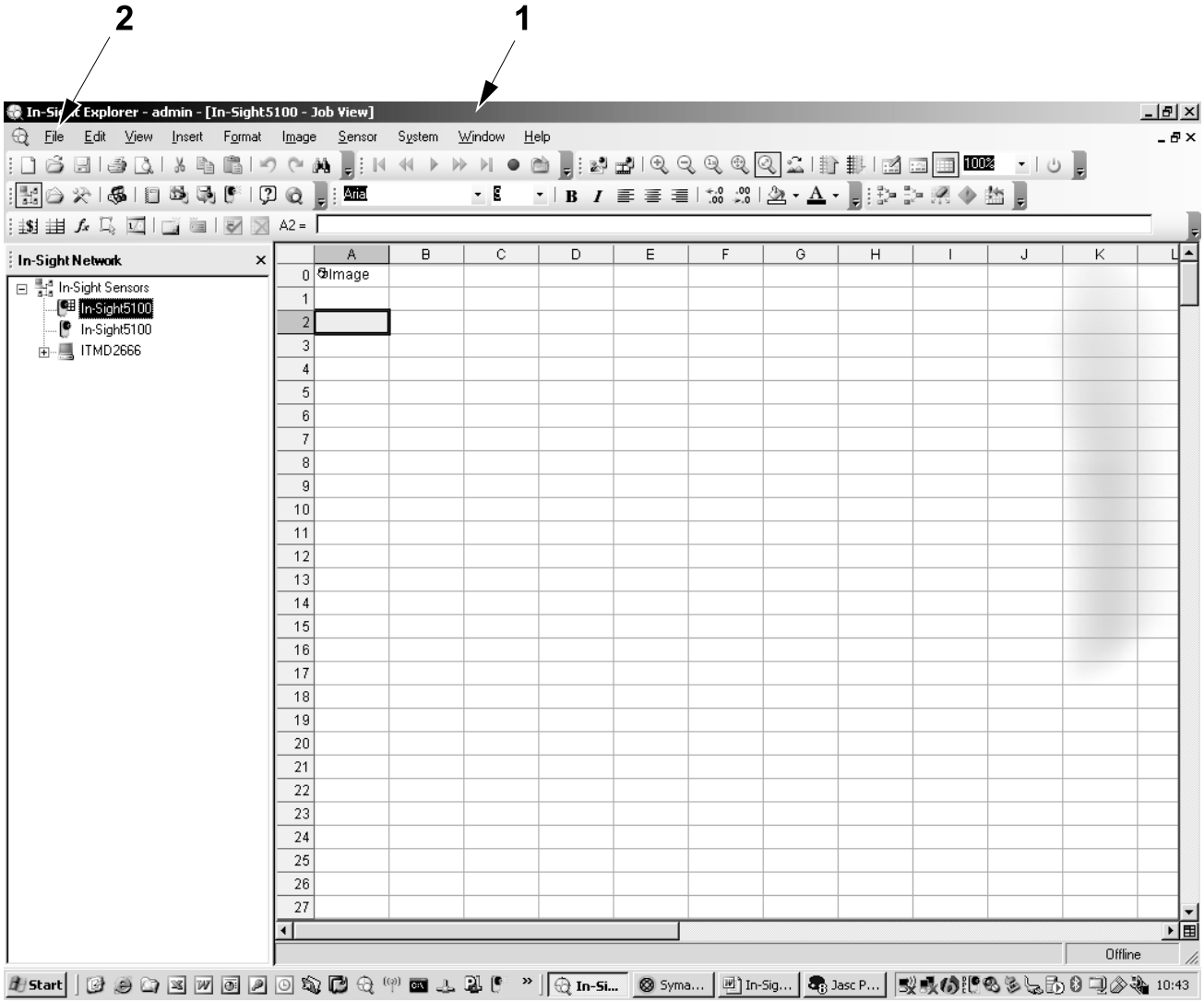

1 Host table
2 `FILE`

(Cont’d)

(Cont'd)

d) In the IN-SIGHT OPEN WINDOW (3) scroll down to locate the folder (4) containing the application program.

e) Select the file name with the .JOB EXTENSION FILE (5) that has been identified at point b) and click on OPEN button (6).

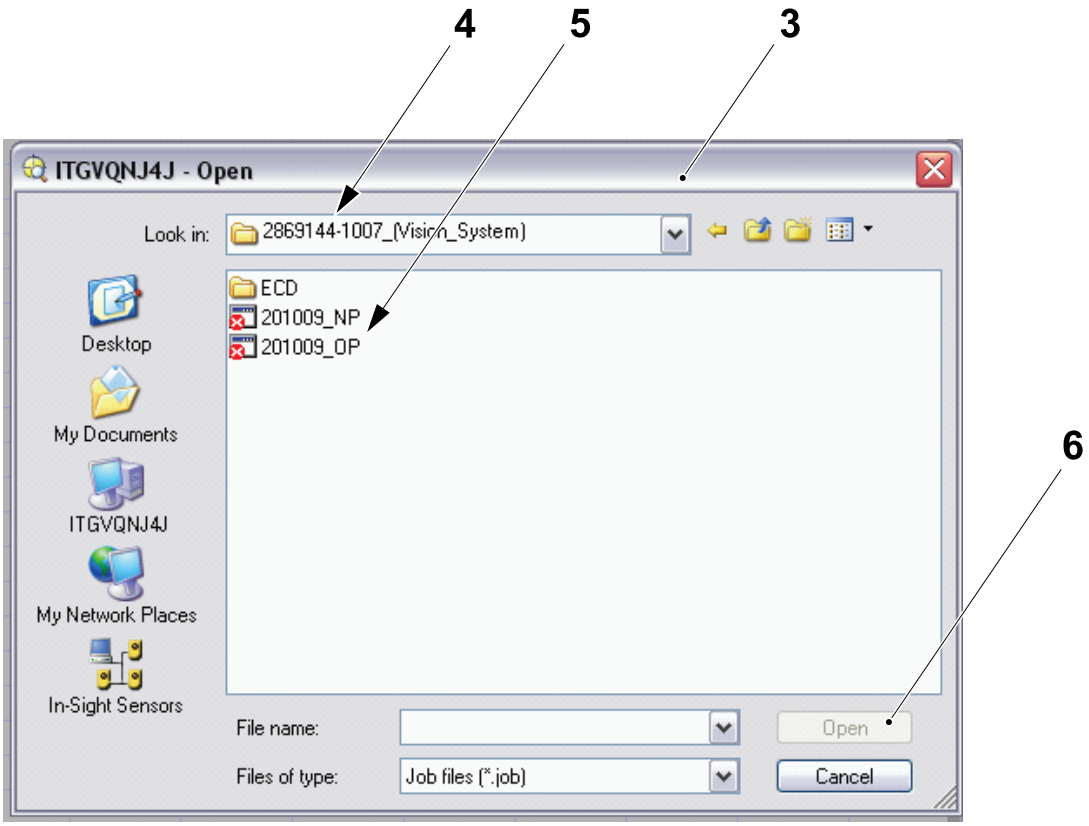

3 IN-SIGHT OPEN WINDOW
4 Folder
5 .JOB EXTENSION FILE
6 OPEN button

(Cont'd)

(Cont'd)

Note! At this point of the procedure, the application program is loaded in the camera but **not** stored in the flash memory. The program will not run until the camera is set ONLINE. Before putting the camera ONLINE save the application program as described below. This is important, read the next Note.

Note! If the application program is not saved in the flash memory, the camera will lose the new application program at the next power cycle. The camera will restart with the old program even if the new and the original programs have the same name.

f) In the LOAD FILE WINDOW (7) window, click on the YES button (8).

g) Save the application program in the camera, see 12.5.5.4-1 Basic Settings.

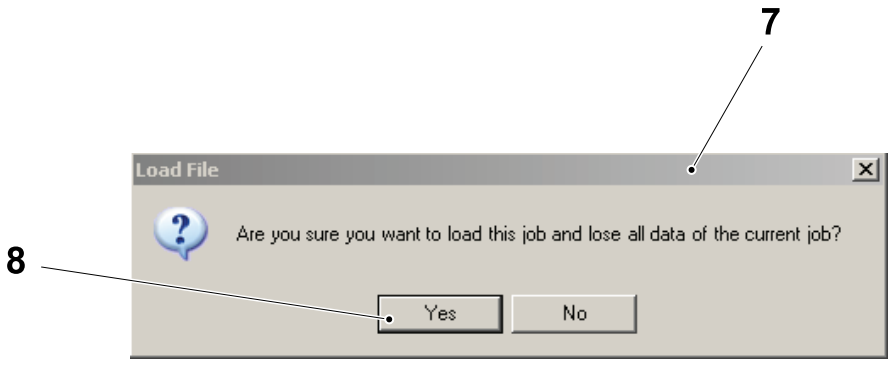

7 LOAD FILE WINDOW
8 YES button

12.5.5.4 Saving the Application Program in the In-Sight5100 Camera

12.5.5.4-1 Basic Settings

Machine Status	Electrical supply disconnecting device in position I (ON)
SPC Reference	662916-0300

CAUTION
The camera must be OFFLINE to ensure that the application program is saved correctly.
Make sure that the camera is OFFLINE, see 12.5.5.2-2 Setting the Off-Line Status of the Camera.

CAUTION
The values must be set correctly.
A number of CUSTOM VIEW values must be set correctly to ensure that the application program is saved correctly.

a) Make sure that the following CUSTOM VIEW values are set correctly, if not, set the (command mode) PLC CMD VALUE (1) and the (manual mode) VS MAN MODE VALUE (2) to 0 and in that order. See 12.5.6.4-1 Command Mode (Read/Write) and 12.5.6.4-2 Manual Mode (Read/Write) for further information.

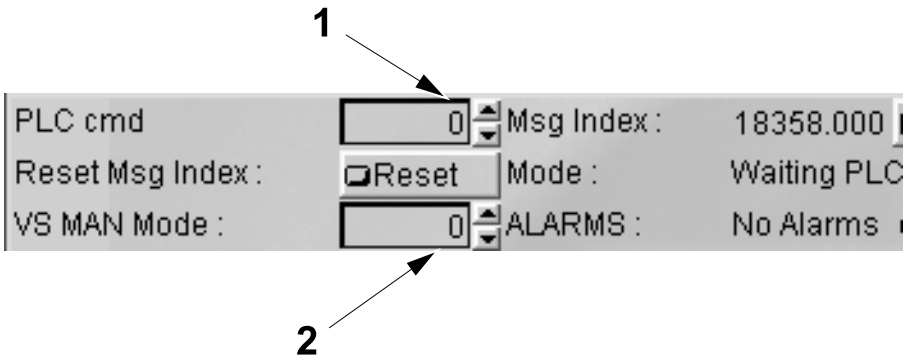

1 PLC CMD VALUE
2 VS MAN MODE VALUE

12.5.5.4-2 Saving the Application Program in the Flash Memory

Machine Status	Electrical supply disconnecting device in position I (ON)
SPC Reference	662916-0300

a) In the host table (1), select FILE (2) and then SAVE JOB AS from the pull down window that appears.

b) In the IN-SIGHT5100 - save as window (3), select IN-SIGHT SENSORS (4), to display the cameras present on the ethernet network.

c) Select the IN-SIGHT 5100 CAMERA (5) to display a list of jobs already in the camera.

d) Select the job name from the top of the screen that will be used at start-up and add to the list.

e) Click on the SAVE button (6).

f) Set the camera ONLINE, see 12.5.5.2-1 Setting the On-Line Status of the Camera.

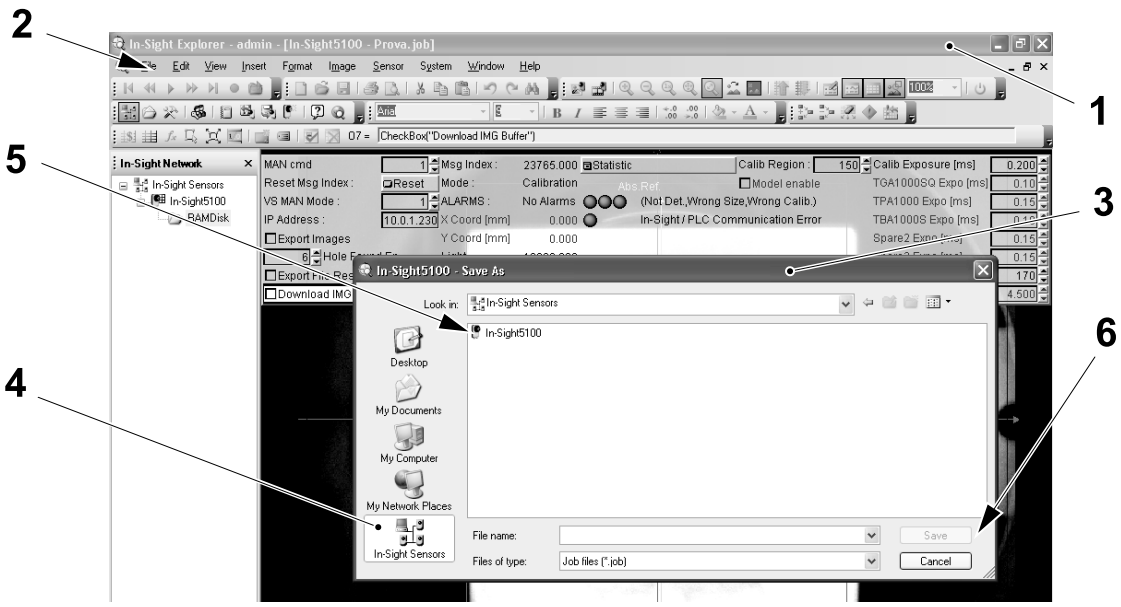

1 Host table
2 FILE
3 IN-SIGHT5100 - save as window
4 IN-SIGHT SENSORS
5 IN-SIGHT 5100 CAMERA
6 SAVE button

12.5.5.5 Closing the In-Sight Explorer Tool

12.5.5.5-1 Basic settings

Machine Status	Electrical supply disconnecting device in position I (ON)
SPC Reference	662916-0300

CAUTION

The camera must be OFFLINE to ensure that the application program is saved correctly.

Make sure that the camera is OFFLINE, see 12.5.5.2-1 Setting the On-Line Status of the Camera on page 12-50.

CAUTION

The values must be set correctly.

A number of CUSTOM VIEW values must be set correctly to ensure that the application program is saved correctly.

a) Make sure that the following CUSTOM VIEW values are set correctly, if not, set the (command mode) PLC CMD VALUE (1) and the (manual mode) VS MAN MODE VALUE (2) to 0 and in that order. See 12.5.6.4-1 Command Mode (Read/Write) on page 12-68 and 12.5.6.4-2 Manual Mode (Read/Write) on page 12-69 for further information.

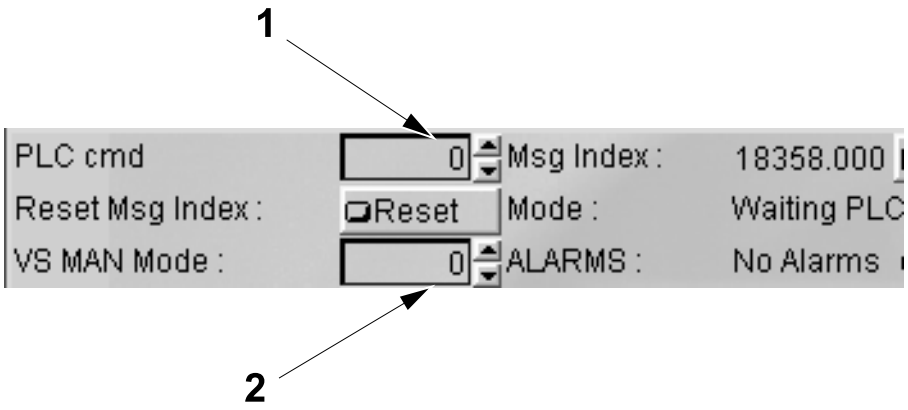

1 PLC CMD VALUE
2 VS MAN MODE VALUE

12.5.5.5-2 Closing In-Sight Explorer

Machine Status	Electrical supply disconnecting device in position I (ON)
SPC Reference	662916-0300

In the host table (1), select FILE (2) and then EXIT or use the RED CROSS (3) to initiate the program close procedure.

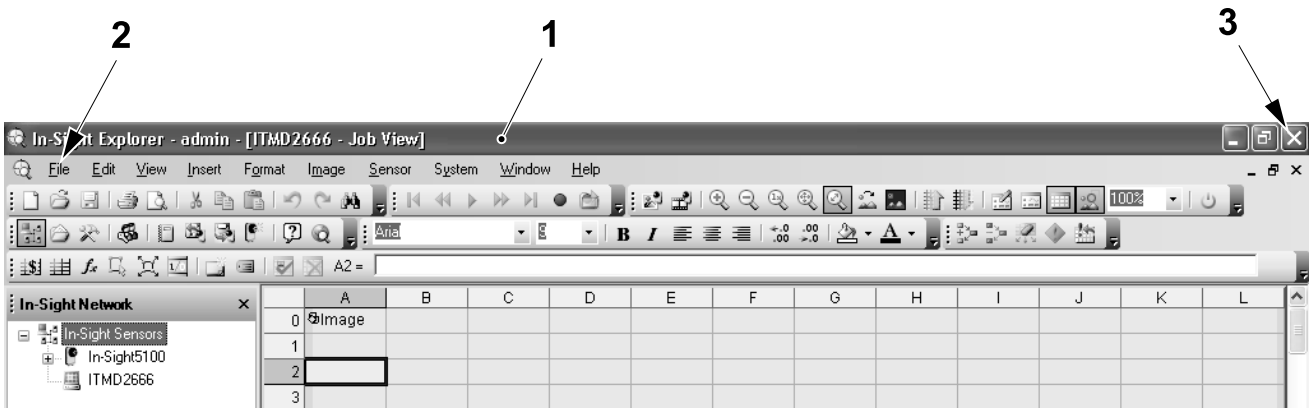

1 Host table
2 FILE
3 RED CROSS

In the CONFIRM PROGRAM EXIT WINDOW (4) click on the YES button (5) to close the program completely.

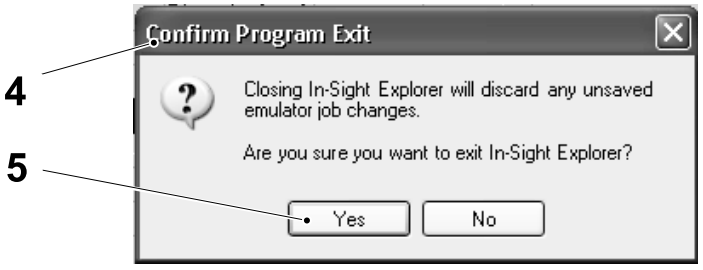

4 CONFIRM PROGRAM EXIT WINDOW
5 YES button

12.5.6 CUSTOM VIEW

12.5.6.1 CUSTOM VIEW Description

CAUTION
Incorrect analysis.
Incorrect use of the CUSTOM VIEW can lead to an incorrect analysis being made.

The CUSTOM VIEW (1) is the part of the host table (2) where all of the configuration parameters for the application are displayed.

It is possible to select the kind of research and their parameters of configuration.

When the IN-SIGHT EXPLORER is in communication with the camera, it is possible to access the application program in the camera and view the parameters and the camera status.

In the ONLINE mode, it is possible to modify some of the parameters present in the CUSTOM VIEW (1). In the OFFLINE mode it is possible to modify or delete part of the program and change the behaviour of the analysis.

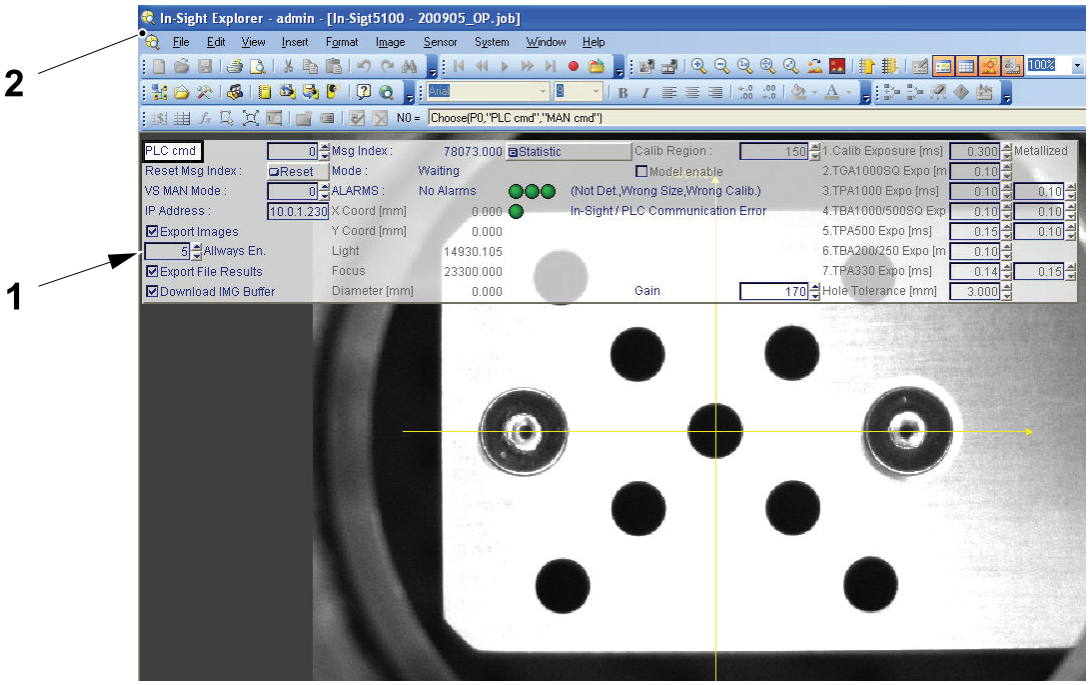

1 CUSTOM VIEW
2 Host table

12.5.6.2 CUSTOM VIEW Access

The CUSTOM VIEW (1) can be toggled ON and OFF with the F6 function key on the laptop keyboard.

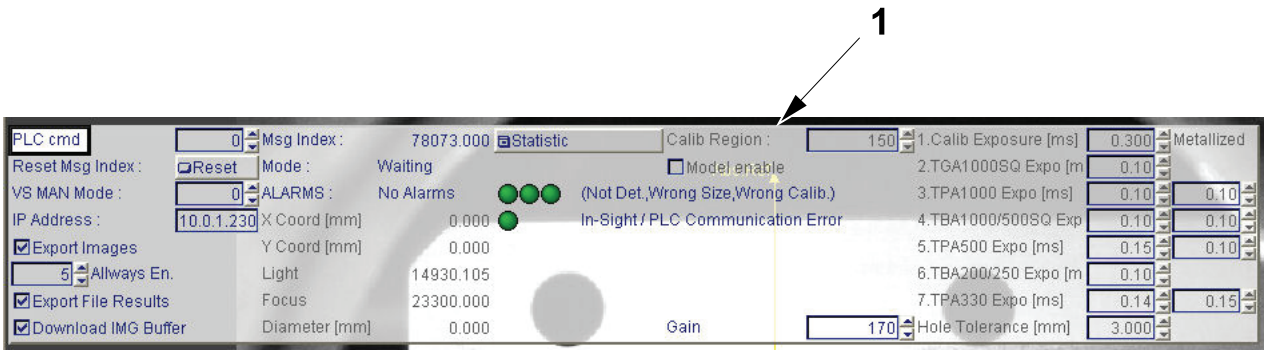

1 CUSTOM VIEW

12.5.6.3 CUSTOM VIEW Usable Elements

12.5.6.3-1 Parameter Cells

Machine Status	Electrical supply disconnecting device in position I (ON)
SPC Reference	662916-0300

Note! The illustration below is an example of a parameter cell.

Note! A parameter value cannot be modified unless the cell (1) is **blue**. See 12.5.6.3-4 Blue and Grey Cells.

- For any parameter, the assigned value is shown in a cell (1) to the right of the parameter name (2).
- A parameter value can be modified using one of the following methods:
  a) Click on the value and then use the ARROW KEYS (3) to raise or lower the value as required. When the correct value has been entered, <PRESS ENTER> on the laptop keyboard.
  b) Click on the value and then type the required value in the cell using the laptop keyboard. When the correct value has been entered, <PRESS ENTER> on the laptop keyboard.

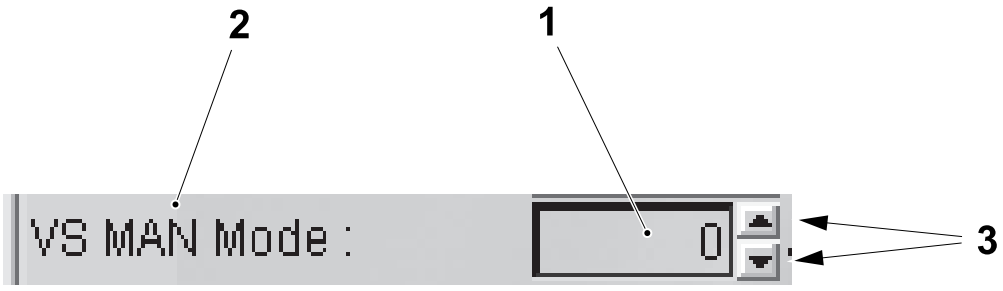

1 Cell
2 Parameter name
3 ARROW KEYS

12.5.6.3-2 Reset Button

Machine Status	Electrical supply disconnecting device in position I (ON)
SPC Reference	662916-0300

In this application there is only one function button, the RESET button (1).

This button is assigned to the MESSAGE INDEX COUNTER (2). See 12.5.6.4-3 Message Index (Read/Clear).

Click on the RESET button (1) to clear the MESSAGE INDEX COUNTER (2).

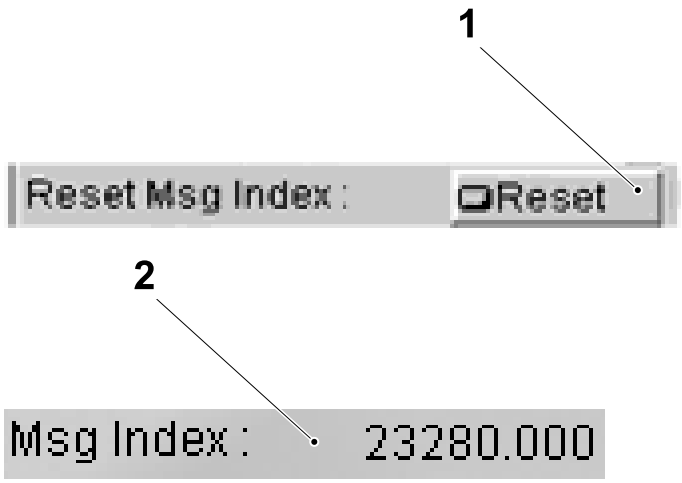

1 RESET button
2 MESSAGE INDEX COUNTER

12.5.6.3-3 Statistic Button

Machine Status	Electrical supply disconnecting device in position I (ON)
SPC Reference	662916-0300

The STATISTIC button (1) starts a statistical analysis of the last 20 hole samples and displays the results in a separate STATISTIC WINDOW (2), see 12.5.6.4-6 Statistic Window.

Click on the STATISTIC button (1) to start the statistical analysis.

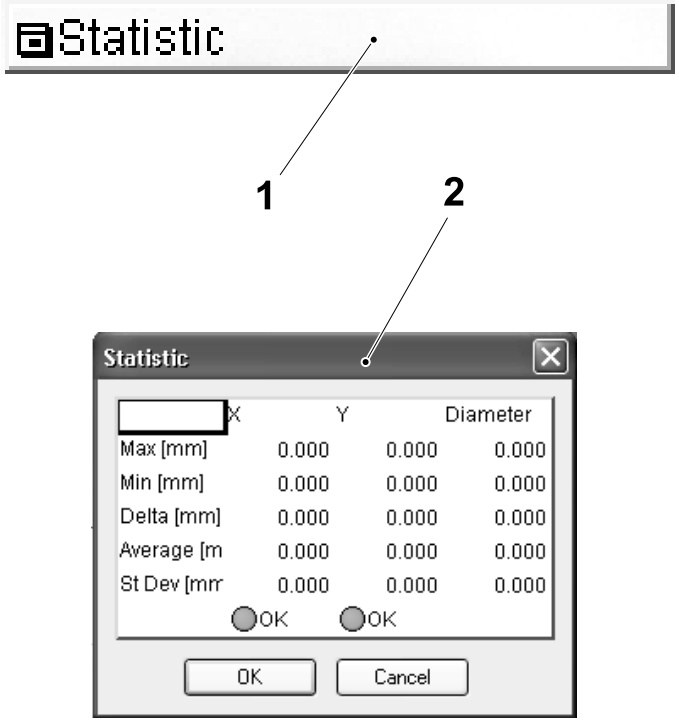

1 STATISTIC button
2 STATISTIC WINDOW

12.5.6.3-4 Blue and Grey Cells

Machine Status	Electrical supply disconnecting device in position I (ON)
SPC Reference	662916-0300

If a cell (1) in the CUSTOM VIEW is **blue** this indicates that the parameter value (2) can be modified and the associated function button is enabled.

If a cell (1) in the CUSTOM VIEW is **grey** this indicates that the cell is momentarily disabled and the parameter value (2) is frozen. The associated function button is disabled.

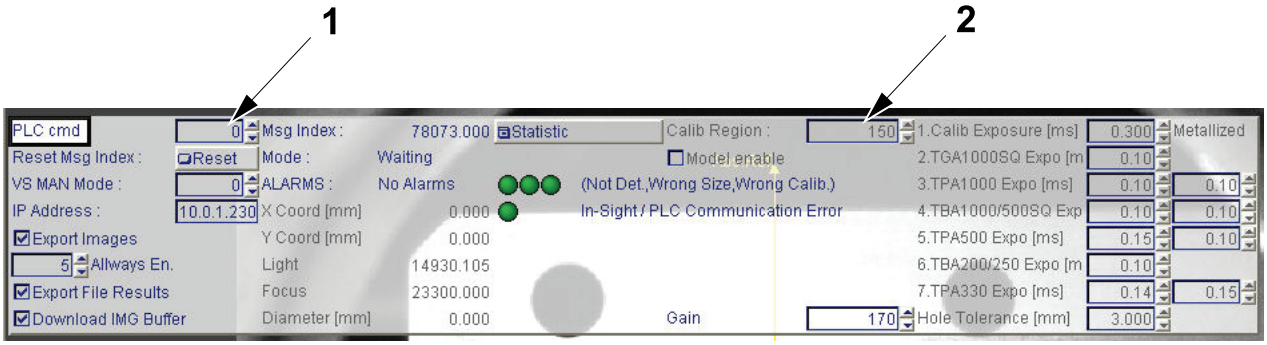

1 Cell
2 Parameter name

12.5.6.4 CUSTOM VIEW Element Descriptions

12.5.6.4-1 Command Mode (Read/Write)

Machine Status	Electrical supply disconnecting device in position I (ON)
SPC Reference	662916-0300

The COMMAND MODE ELEMENT (1) gives access to the processes shown in the table below.

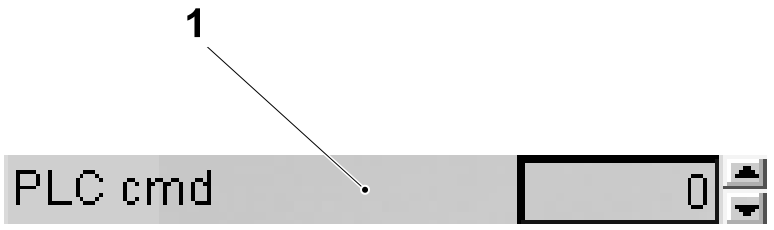

1 COMMAND MODE ELEMENT

COMMAND MODE ((READ/WRITE) ELEMENT

Value	Text	Process
0	PLC Cmd	The type of analysis to be performed is defined by the PLC.
1	MAN Cmd	The type of analysis to be performed is defined by manual input entered in the CUSTOM VIEW.

12.5.6.4-2 Manual Mode (Read/Write)

Machine Status	Electrical supply disconnecting device in position I (ON)
SPC Reference	662916-0300

The MANUAL MODE ELEMENT (1) gives access to the processes shown in the table below.

When the MANUAL MODE ELEMENT (1) is set to 0, the WAITING PLC message (2) is displayed. Setting the element to any other value (1 to 9) displays the appropriate mode message. See the table below.

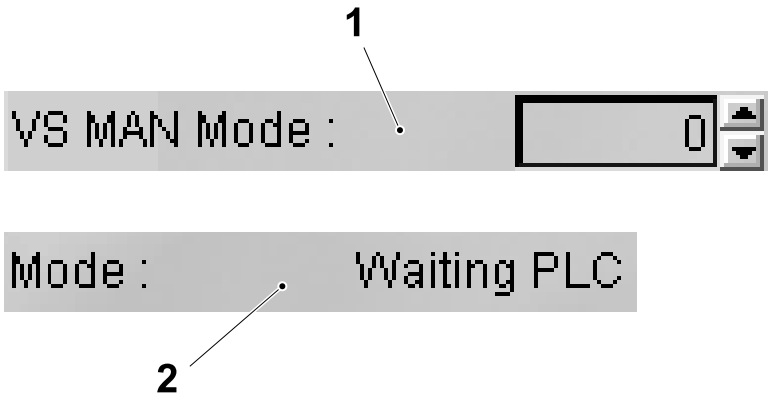

1 MANUAL MODE ELEMENT
2 WAITING PLC message

MANUAL MODE ((READ/WRITE) ELEMENT OP

Value	Text	Process
1	Calibration	The camera is running the calibration program
2	TGA 1000SQ	TGA 1000Sq/750Sq/500Sq Hole Analysis
3	TPA1000	TPA 1000Sq/750Sq Hole Analysis
4	TBA1000/500SQ	TBA 1000/500Sq Hole Analysis
5	TPA 500	TPA 500 Hole Analysis
6	TBA 200/250	TBA 200/250 Hole Analysis
7		

MANUAL MODE ((READ/WRITE) ELEMENT NP

Value	Text	Process
1	Calibration	The camera is running the calibration program
8	HeliCap 2 23	Helicap2 23 Hole Analysis
9	HeliCap 27	Helicap27 Hole Analysis
10	DreamCap 26	Dreamcap26 Hole Analysis

12.5.6.4-3 Message Index (Read/Clear)

Machine Status	Electrical supply disconnecting device in position I (ON)
SPC Reference	662916-0300

The MESSAGE INDEX COUNTER (1) records each time the camera receives a trigger pulse and an analysis is executed. This value is read only and used in the PLC to determine when new data is required.

The MESSAGE INDEX COUNTER (1) can be reset to zero using the RESET button (2), see 12.5.6.3-2 Reset Button on page 12-65.

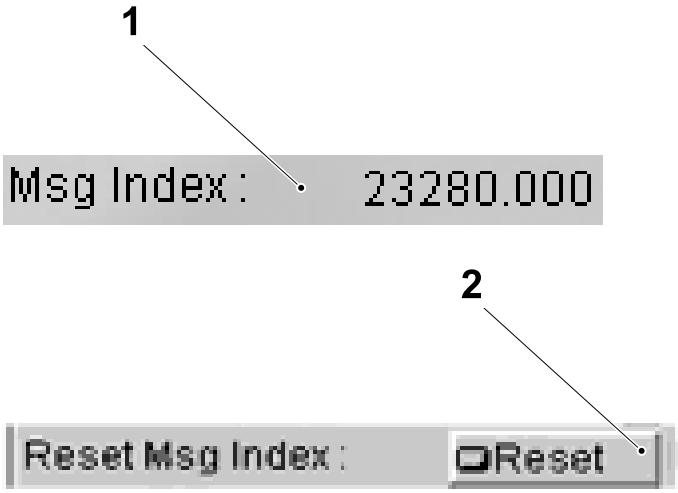

1 MESSAGE INDEX COUNTER
2 RESET button

12.5.6.4-4 Alarms LED (Read Only)

Machine Status	Electrical supply disconnecting device in position I (ON)
SPC Reference	662916-0300

There are two forms of alarm messages, the ALARMS STRING MESSAGE (1) and the ALARM LED (2).

The ALARMS STRING MESSAGE (1) that may appear, are described in the table below.

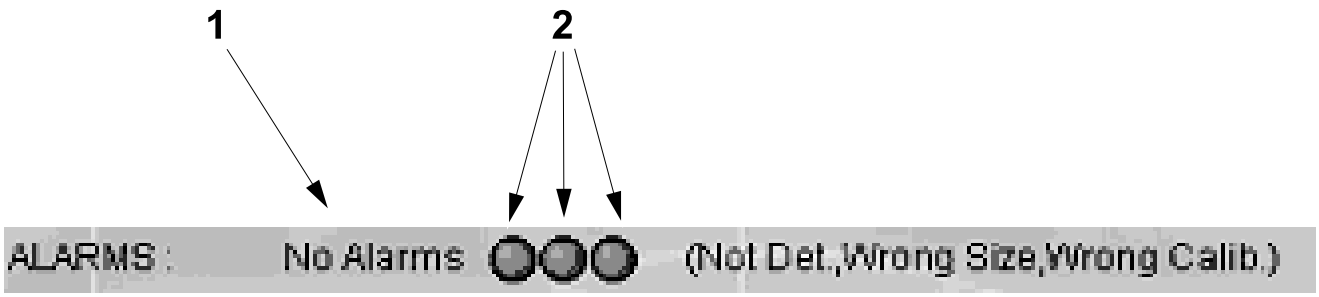

1 ALARMS STRING MESSAGE
2 ALARM LED

ALARM STRING MESSAGES

Alarm String Text	Meaning
No Alarms	The result of the current analysis is OK
Invalid Calibration	The calibration result is wrong
Hole Wrong Size	The hole size is out of tolerance
Hole Not Detected	The hole is not detected.

(Cont'd)

(Cont'd)

The LED (3), LED (4) and LED (5) indications that may appear, are described in the table below.

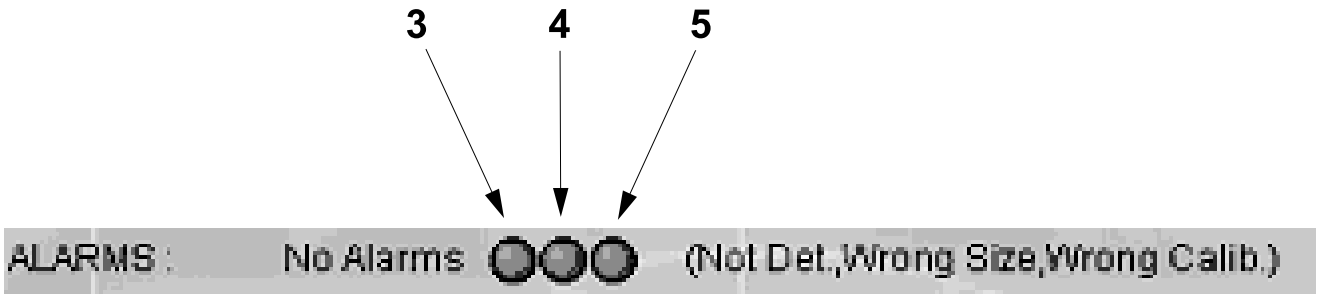

3 LED
4 LED
5 LED

ALARM LED INDICATION

Alarm LED	Meaning
3	The hole is not detected (Green = OK, Red =KO)
4	The hole size is out of tolerance (Green = OK, Red =KO)
5	The calibration result is wrong (Green = OK, Red =KO)

12.5.6.4-5 Result Values

Machine Status	Electrical supply disconnecting device in position I (ON)
SPC Reference	662916-0300

The result values (1) that appear on the CUSTOM VIEW spreadsheet are described in the table below.

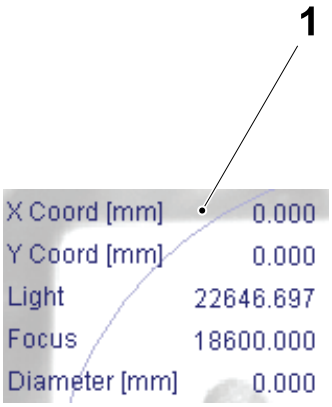

1 Result values

RESULT VALUES

Result Value Text	Meaning
X Coord [mm]	Centre Hole Position X Axis [mm]
Y Coord [mm]	Centre Hole Position Y Axis [mm]
Light	Picture light
Focus	Picture focus
Diameter [mm]	Hole diameter [mm]

12.5.6.4-6 Statistic Window

Machine Status	Electrical supply disconnecting device in position I (ON)
SPC Reference	662916-0300

The STATISTIC window (1) shows the results of a statistical analysis on the last 20 hole samples.

The statistical analysis is started and the STATISTIC window (1) displayed when the STATISTIC button (2) is pressed, see 12.5.6.3-3 Statistic Button on page 12-66.

The window shows for the X and Y diameters of each hole the:

- minimum value
- maximum value
- difference between minimum and maximum values
- average value
- standard deviation.

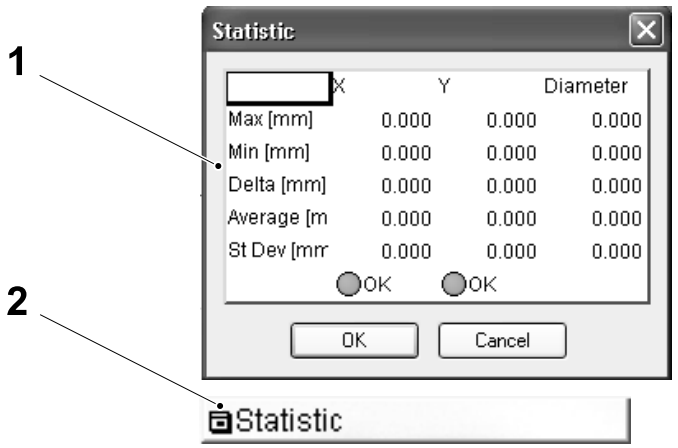

1 statistic window
2 statistic button

Note! For X and Y there are two LED's that provide the following information:

RESULT VALUES

LED Colour	Meaning
Green	Standard Deviation < 0.05 mm
Yellow	0.05 mm <= Standard Deviation <= 0.1 mm
Red	Standard Deviation >0.1 mm

12.5.6.4-7 General Offset X & Y Window

Machine Status	Electrical supply disconnecting device in position I (ON)
SPC Reference	662916-0300

The General Offset X / General Offset Y windows show the camera analyses results performed on the packages that pass under the camera in Production.

a) Press the buttons General Offset X (1) /General Offset Y (2) to see the Window (3).

Note! The Value (4) and the Value (5) represent, respectively, the values that must be inserted into the general offset's field on the HMI, with the **signs inverted**.

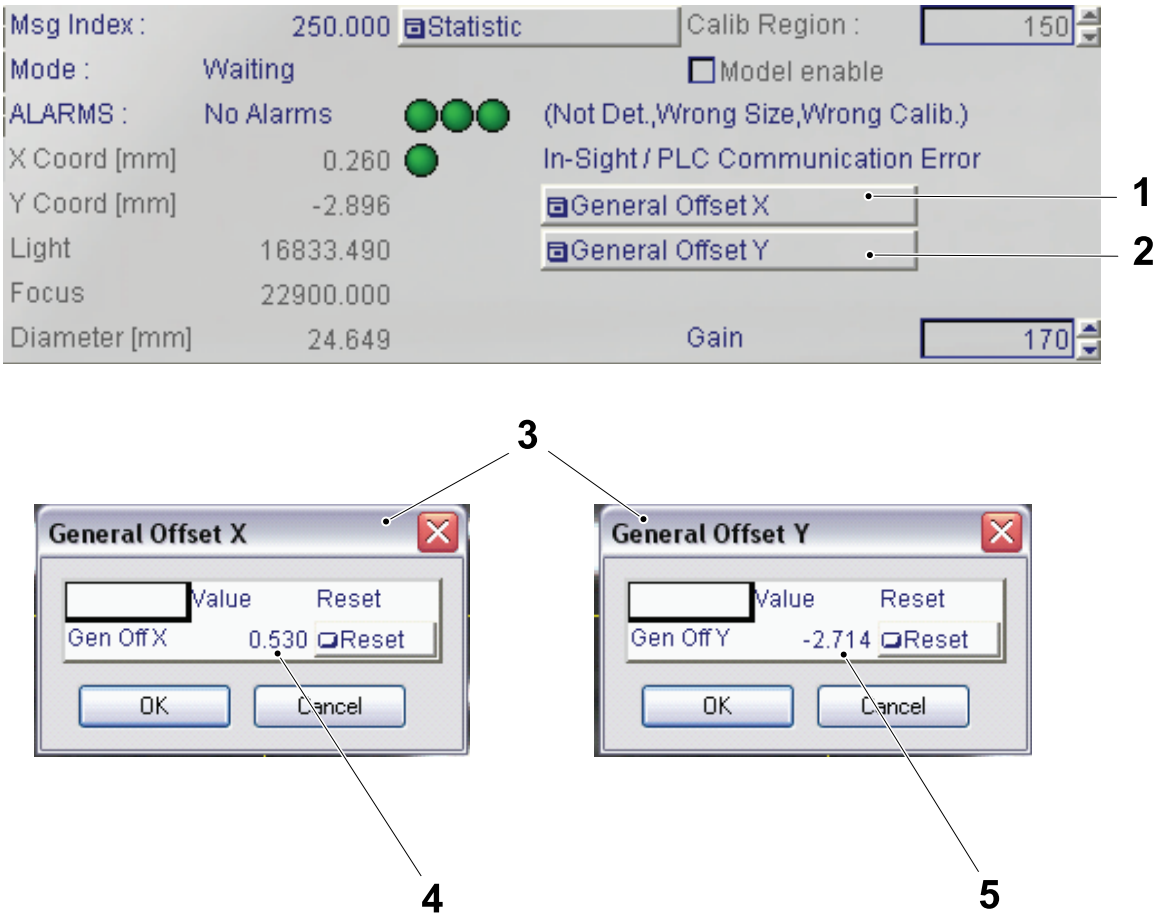

1 General Offset X
2 General Offset Y
3 Window
4 Value
5 Value

12.5.6.4-8 Calibration Region Position (Read/Write)

Machine Status	Electrical supply disconnecting device in position I (ON)
SPC Reference	662916-0300

The CALIB REGION ELEMENT (1) allows the calibration position to be moved as follows:

- reducing the value moves the region to the left
- increasing the value moves the region to the right.

See 12.5.6.3-1 Parameter Cells on page 12-64 to change the value.



1 CALIB REGION ELEMENT

12.5.6.4-9 Exposure Set-up (Read/Write)

Machine Status	Electrical supply disconnecting device in position I (ON)
SPC Reference	662916-0300

To change from one package to another, metallised or non metallised you have to change the recipe, see 10.9.1-17 Touch Screen - Change Recipes on page 10-332.

Once the recipe has been selected and with the Insight online, the machine has to be stepped up to production for a few seconds only and then stepped down. This will notify the program of the changes made and highlite the package selection (1) in the window. To change the Setting value (2) you first have to change the VN MAN Mode (3) to the same number as the package selection (1). Then change the PLC cmd (4) to 1. Now you can change the Setting value (2).

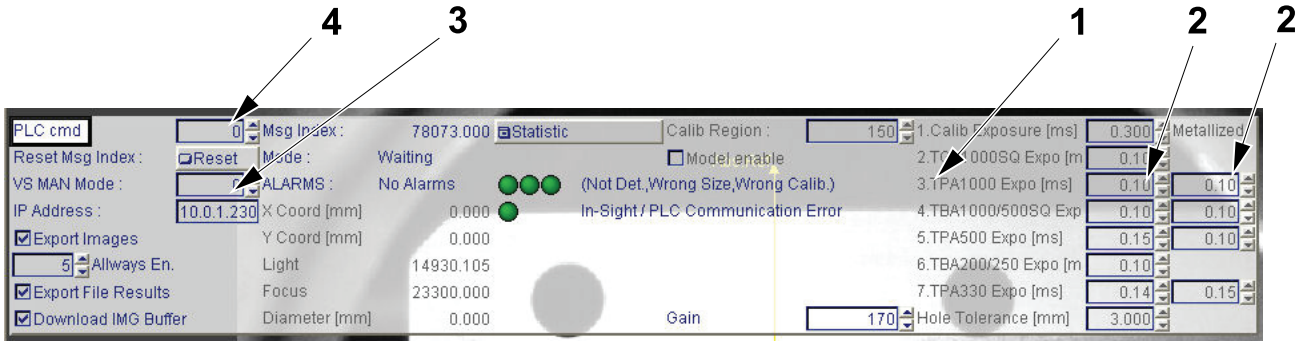

1 Package selection
2 Setting value
3 VN MAN Mode
4 PLC cmd

(Cont'd)

(Cont'd)

The exposure value (5) for non metallised and exposure value (6) for metallised assign a specific level of light to each analysis. Increasing the value increases the brightness of the picture. Decreasing the value decreases the brightness of the picture. The value must be adjusted to obtain a picture that highlights the edge of the hole and produces an accurate and repeatable measurement.

The value is a time and must be kept as low as possible to prevent an error being caused by the movement of the package during the moment that the picture is captured. The permitted values are:

Min = 0,01ms Max=0,9ms

The following table shows the meaning of exposure for exposure value (5) and exposure value (6) for various closure types.

The **PLC cmd** must be returned to 0 first and then **VS MAN Mode** returned to 0.

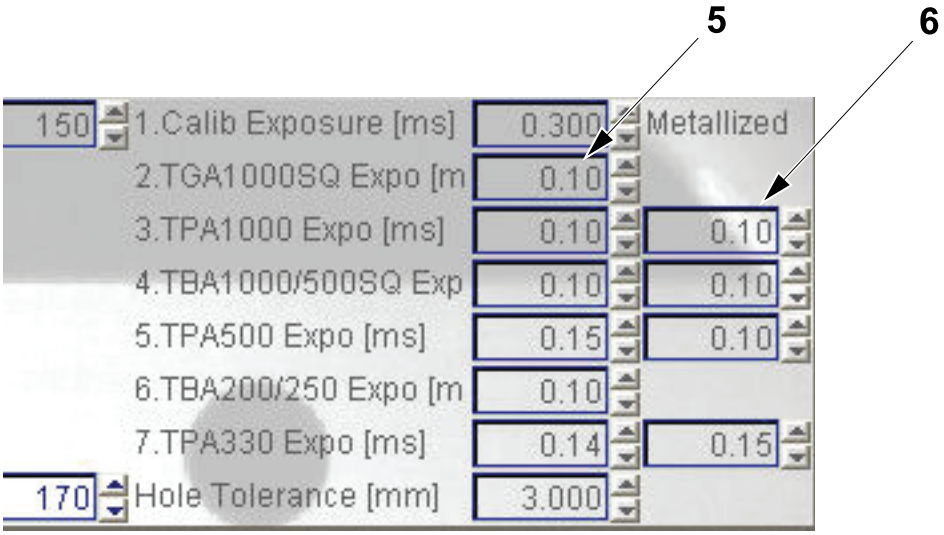

5 Exposure value
6 Exposure value

12.5.6.4-10 Gain Set-up (Read/Write)

Machine Status	Electrical supply disconnecting device in position I (ON)
SPC Reference	662916-0300

This GAIN VALUE (1) is the same for all analysis. It is used together with the exposure values, see 12.5.6.4-9 Exposure Set-up (Read/Write) on page 12-77 to define the general brightness of the picture and helps to keep the exposure value at a low level.



1 GAIN VALUE

12.5.6.4-11 Hole Tolerance (Read/Write)

Machine Status	Electrical supply disconnecting device in position I (ON)
SPC Reference	662916-0300

The hole tolerance [mm] value (1) is the tolerance that is used to generate the HOLE WRONG SIZE alarm, see 12.5.6.4-4 Alarms LED (Read Only) on page 12-71.

The tolerance is part of the diameter calculation and is:

Min = 0.0 mm, Max=10.0 mm, Default=3 mm



1 hole tolerance [mm] value

12.5.7 Troubleshooting

12.5.7.1 Camera LED's

12.5.7.1-1 General Description

Machine Status	Electrical supply disconnecting device in position I (ON)
SPC Reference	662916-0300

The LED's on the end of the camera are for the following purposes:

CAMERA LEDS

LED	Purpose	Normal Condition
1	Network status LED	GREEN when a network connection is detected
2	Network traffic LED	FLASHES GREEN when a network connection is detected
3	Power LED	GREEN when power is applied
4	User 0 LED (Red)	FLASHES RED when the trigger is given
5	User 1 LED (Green)	ON when the Vision System ONLINE and OFF when the Vision System is OFFLINE

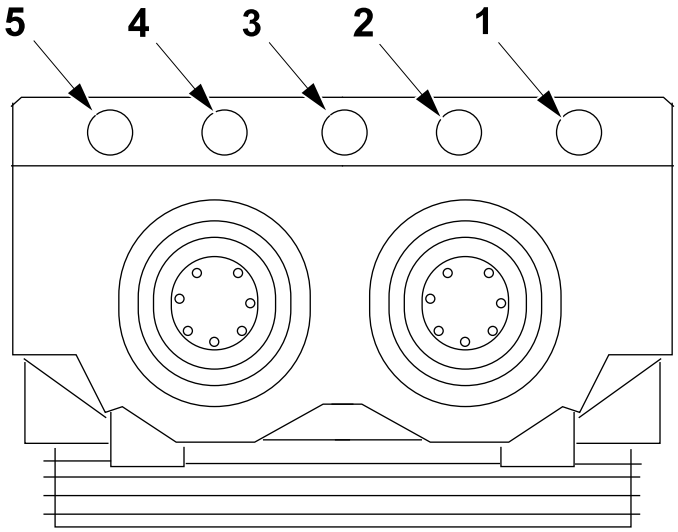

1 Network status LED
2 Network traffic LED
3 Power LED
4 User 0 LED
5 User 1 LED

12.5.7.1-2 Conditions Immediately before Production

Machine Status	Electrical supply disconnecting device in position I (ON)
SPC Reference	662916-0300

Before entering production, check that the LED's indicate as follows:

camera leds

LED	Purpose	Normal Condition
1	Network status LED	GREEN
2	Network traffic LED	FLASHES GREEN
3	Power LED	GREEN
4	User 0 LED (Red)	OFF
5	User 1 LED (Green)	GREEN

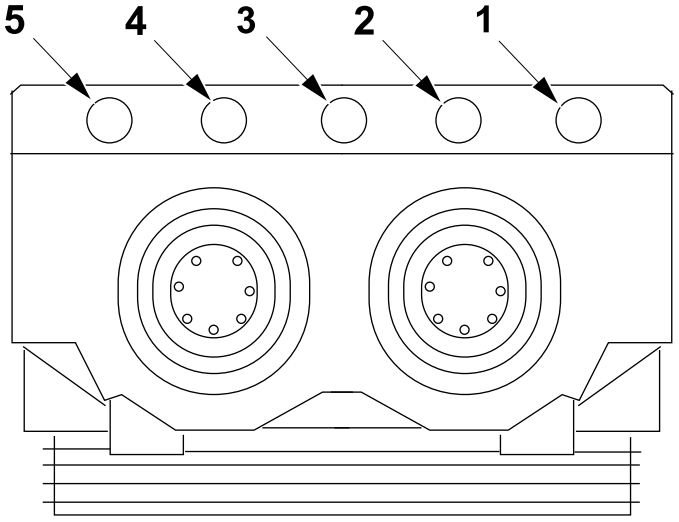

1 Network status LED
2 Network traffic LED
3 Power LED
4 User 0 LED
5 User 1 LED

12.5.7.1-3 Conditions During Production

Machine Status	Electrical supply disconnecting device in position I (ON)
SPC Reference	662916-0300

When the machine is in production, check that the LED's indicate as follows:

CAMERA LEDS

LED	Purpose	Normal Condition
1	Network status LED	Green
2	Network traffic LED	Flashes green
3	Power LED	Green
4	User 0 LED (Red)	FLASHES RED when the trigger is given
5	User 1 LED (Green)	GREEN

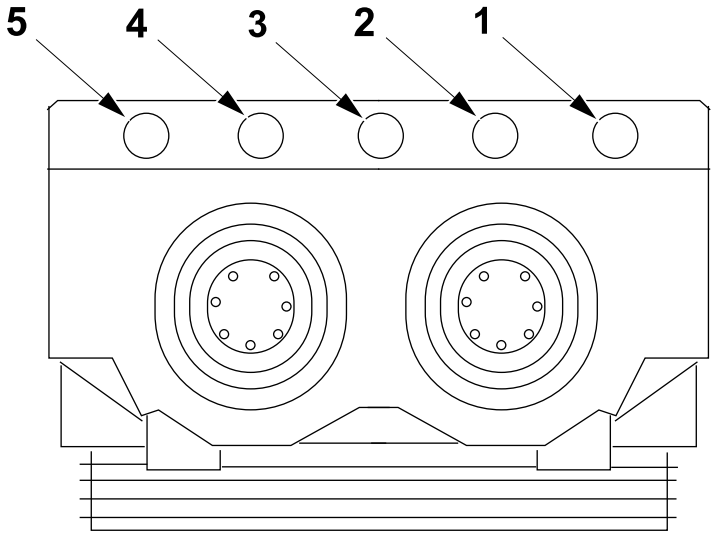

1 Network status LED
2 Network traffic LED
3 Power LED
4 User 0 LED
5 User 1 LED

12.5.7.2 Using In-Sight Explorer for Troubleshooting

12.5.7.2-1 General

Machine Status	Electrical supply disconnecting device in position I (ON)
SPC Reference	662916-0300

During production, it is possible to use IN-SIGHT EXPLORER running on a laptop PC as a troubleshooting tool.

12.5.7.2-2 Configuring the Laptop and Initiating Communication between the Laptop and the Camera

a) Configure the laptop, see 12.5.4 PC Configuration.

b) Commence communications, see 12.5.5 General Functions up to and including 12.5.5.1-3 Establishing Communication with the Camera.

c) Make sure that the camera is ONLINE, see 12.5.5.2-1 Setting the On-Line Status of the Camera.

12.5.7.2-3 Using CUSTOM VIEW for Troubleshooting

Machine Status	Electrical supply disconnecting device in position I (ON)
SPC Reference	662916-0300

a) Select the CUSTOM VIEW, see 12.5.6.2 CUSTOM VIEW Access on page 12-63.

b) Check the camera trigger functionality by looking to see that the MESSAGE INDEX (1) increments at each trigger pulse.

c) Check the mechanical alignment between the picture hole centre (2) and the system reference centre (3).

d) Check the picture focus (4) of the photo. If the focus is abnormal reset the focus, see 12.5.11.1 Adjusting the Light Intensity and Focus on page 12-104.

e) Check if an ALARM LED (5) is ON due to a hole not being detected or a hole being out of tolerance when a package is presence. If there is no package a hole not detected alarm will be present. If errors are detected in the hole research, repeat the hole research set up, see 12.5.14.1-2 Hole Research Setup on page 12-120.

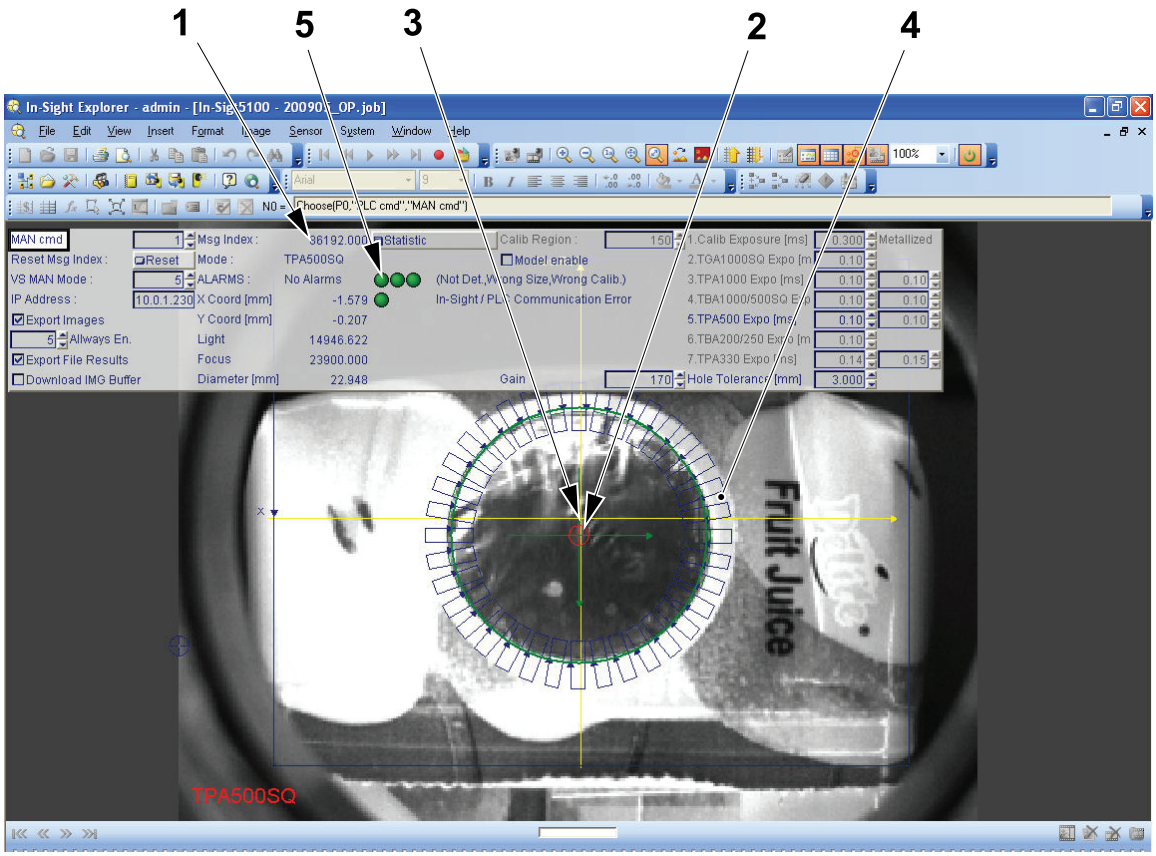

1 MESSAGE INDEX
2 Hole centre
3 System reference centre
4 Picture focus
5 ALARM LED

12.5.8 Camera

12.5.8.1 Initial Start Up

12.5.8.1-1 Adding a New Sensor to Network

Machine Status	Electrical supply disconnecting device in position I (ON)
SPC Reference	662916-0300

Note! This procedure is valid for all cameras that must be installed on the machine.

a) Open InSight Explorer.

b) Click the `System` tab (1) and then `Add sensor/device to network` (2).



1 `System` tab
2 `Add sensor/device to network`

(Cont'd)

(Cont'd)

c) Check data.

Note! In the window that opens, it's possible to see the camera name (assigned as default from the Vendor), the type, the MAC Address and a default IP address.

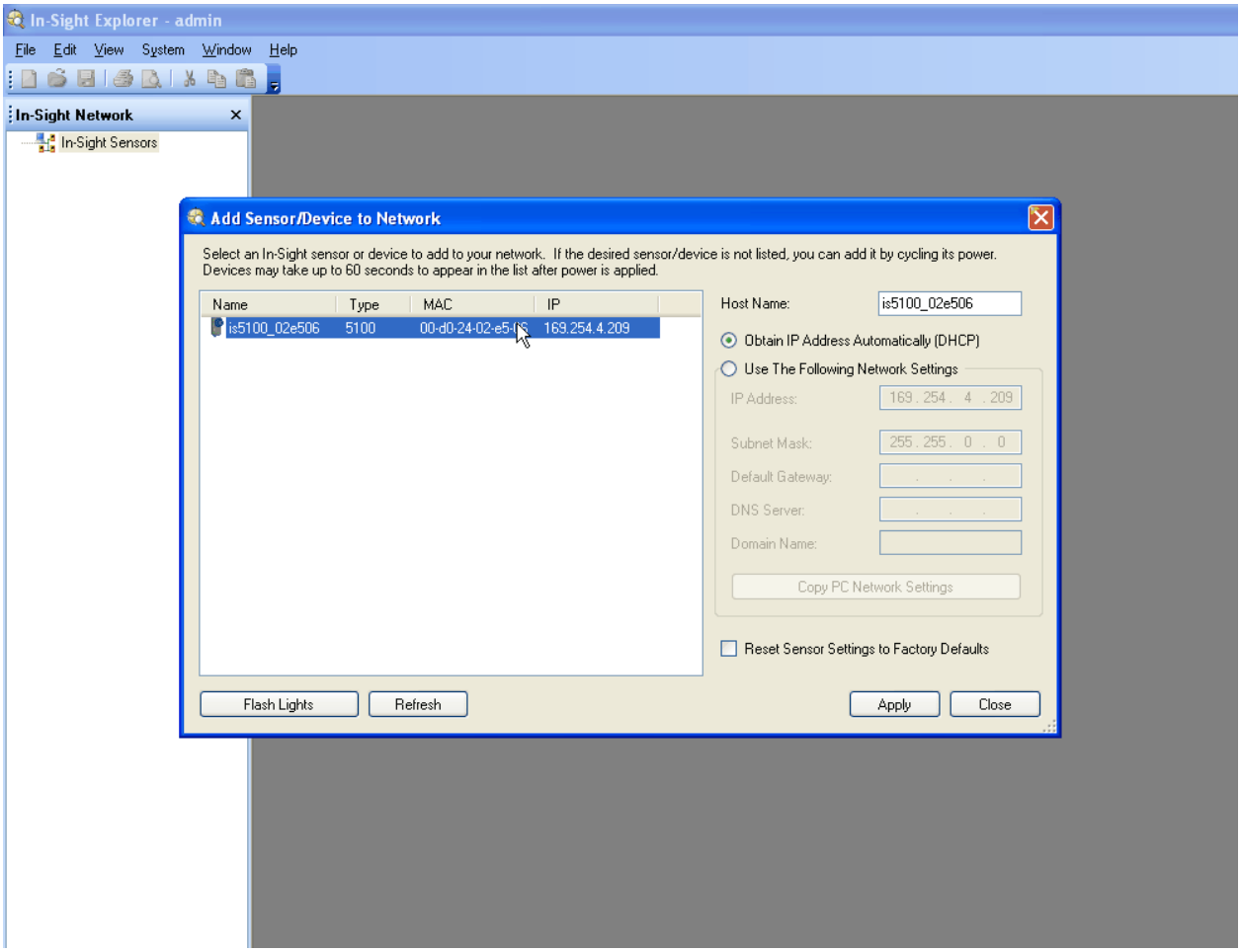

(Cont'd)

(Cont'd)

d) Click on the `camera` (3) of interest (on the list on the left).

e) Erase the default name from `Host Name` field (4).

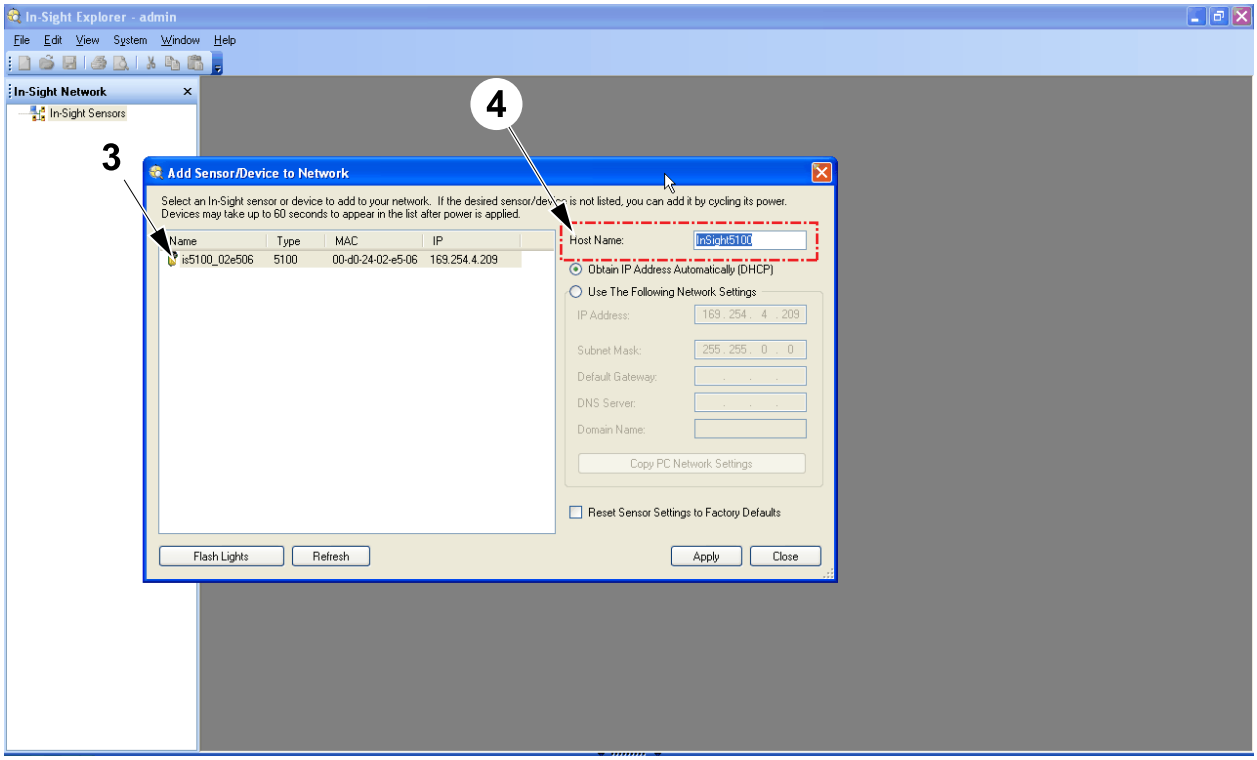

3 `Camera`
4 `Host Name`

(Cont'd)

(Cont'd)

f) Click and assign the correct "Host Name" in the `Host Name` field (5).

Camera	Name
Positioning Device	InSight5100

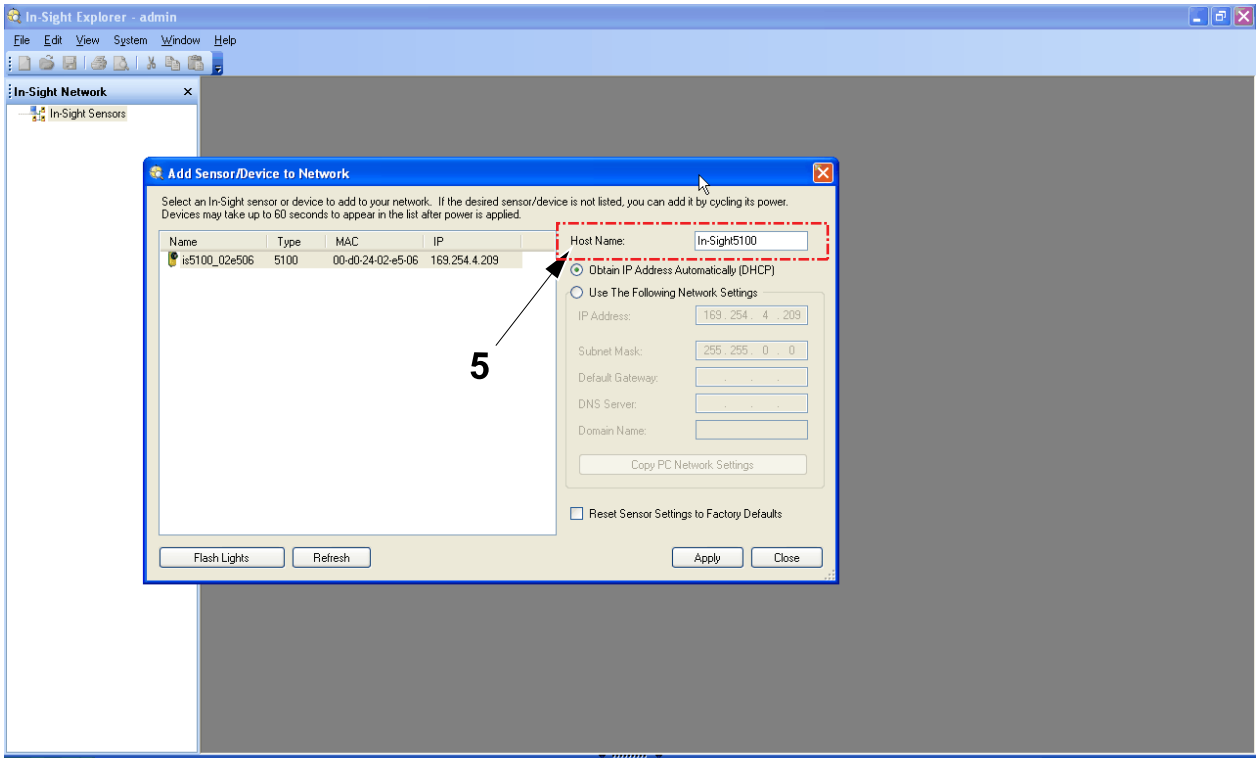

5 `Host Name` field

(Cont'd)

(Cont'd)

g) Click on Use the `following network settings` (6).

h) Set the correct value for IP Address and Subnet Mask:

Camera	Name
Positioning Device	10.0.1.5
Subnet Mask	255.255.0.0

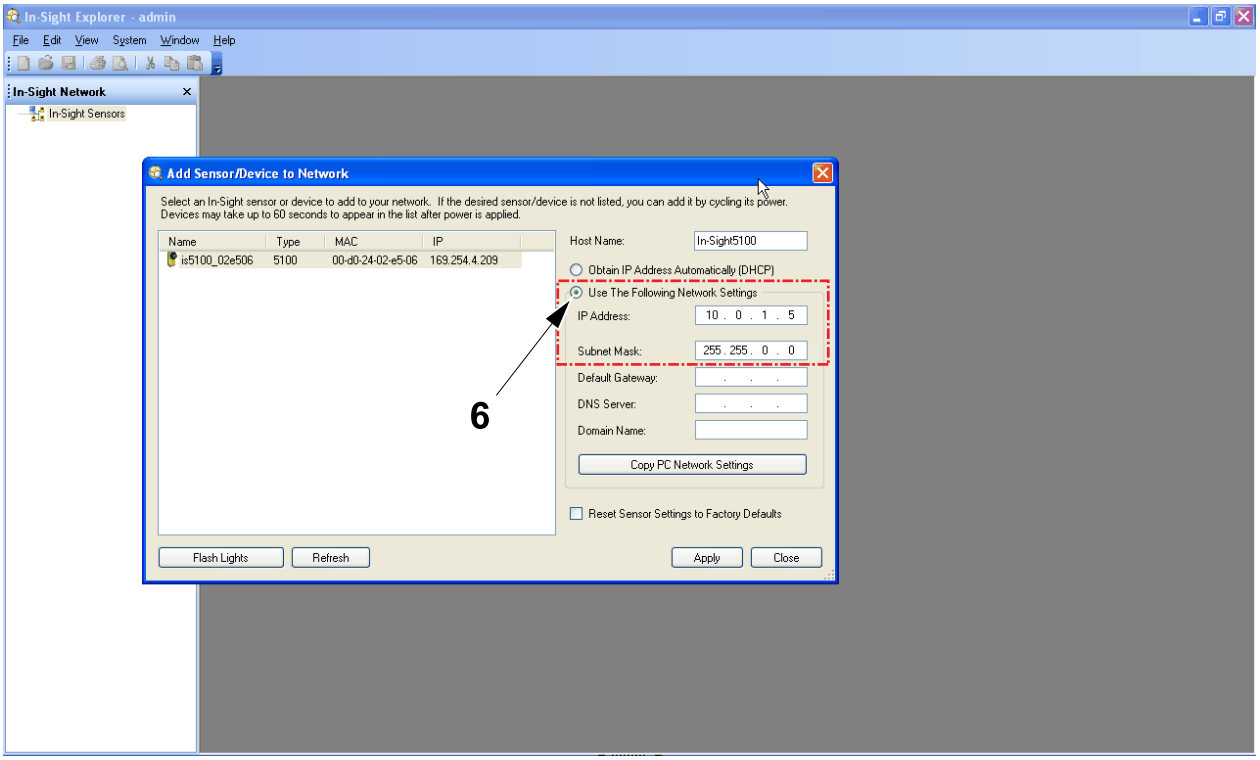

6 `Following network settings`

(Cont'd)

(Cont'd)

i) Click `Apply` (7).

j) Click `OK` (8) and `close` (9).

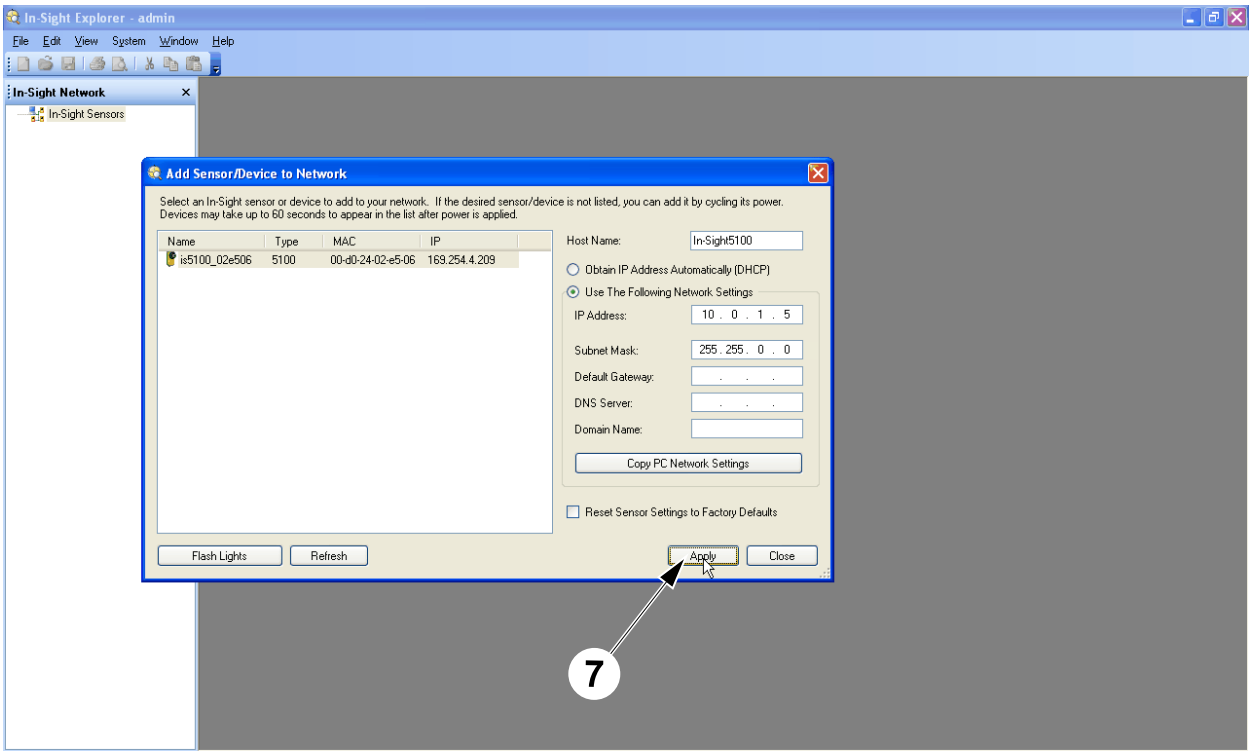

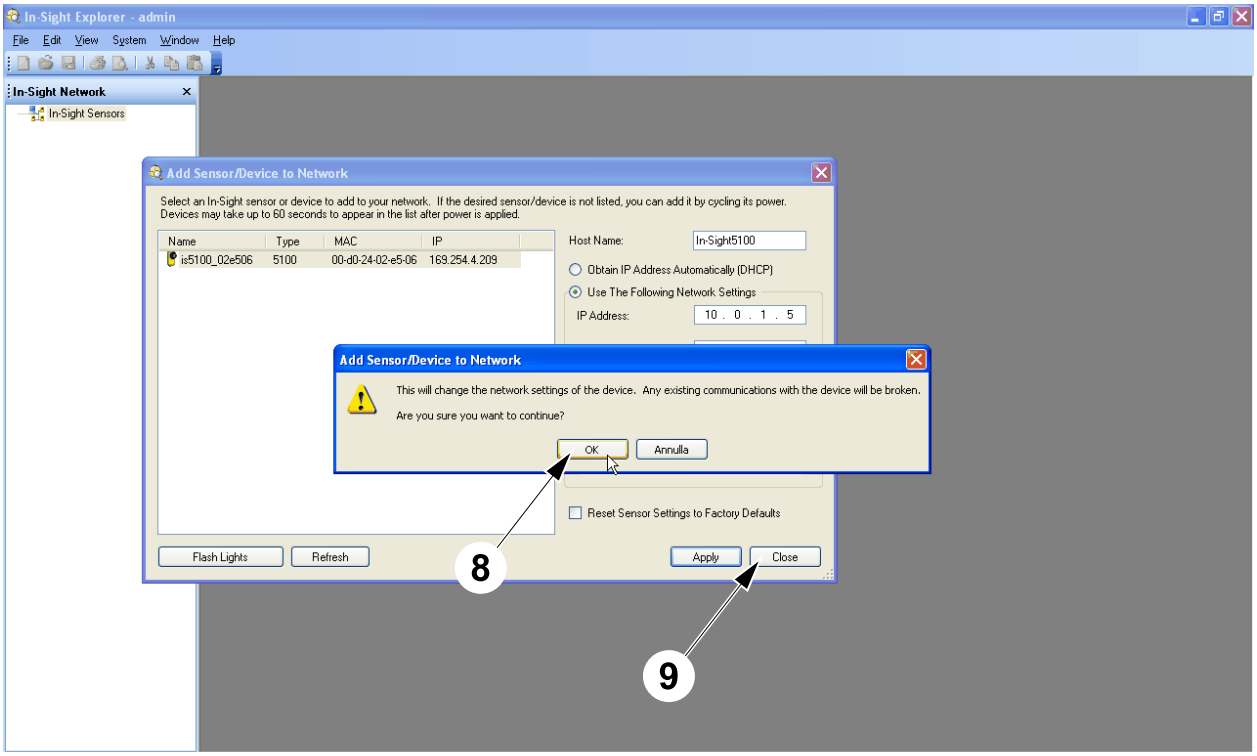

7 `Apply` 8 `OK` 9 `Close`

12.5.8.2 Start up Setting

12.5.8.2-1 Setting Procedure

Machine Status	Electrical supply disconnecting device in position I (ON)
SPC Reference	662916-0300

With this setting it is possible to define the job to be used at start up and the camera status at power up.

a) In the host table (1), select and then `STARTUP` (3) from the pulldown window (4).

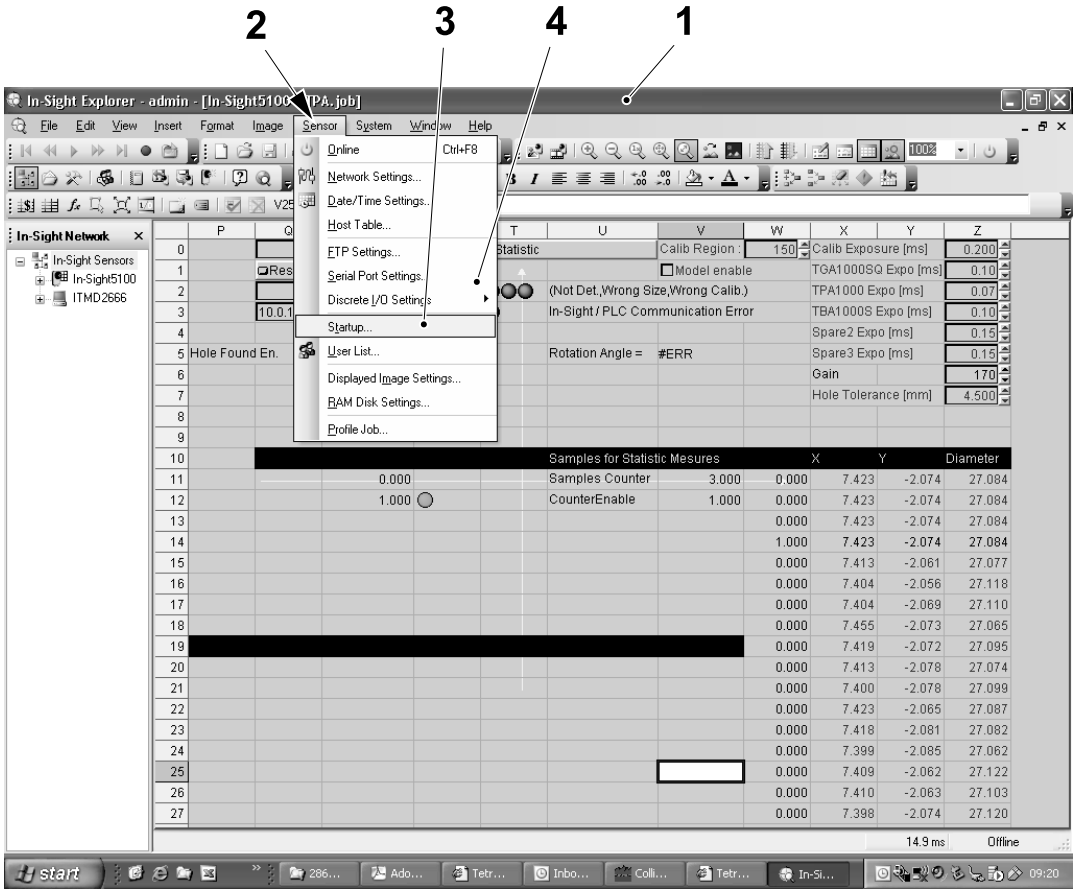

1 Host table
2 `SENSOR`
3 `STARTUP`
4 Pulldown window

(Cont'd)

(Cont'd)

b) In the STARTUP WINDOW (5) click the ONLINE checkbox (6) .

c) Scroll through the available jobs in the JOB field (7) and select the latest application required for the next startup.

d) Click on the OK button (8).

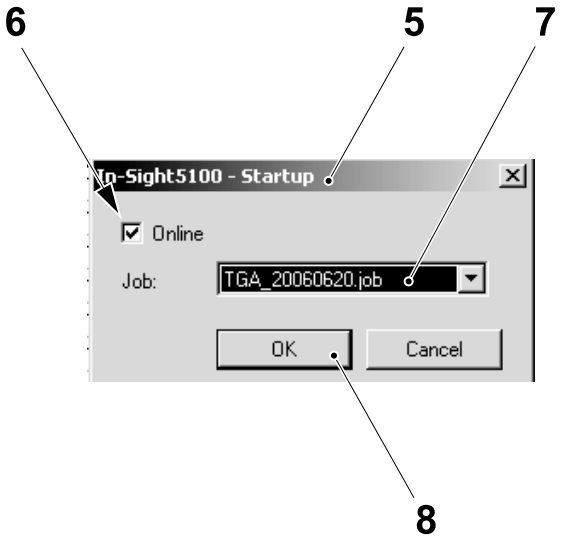

5 STARTUP WINDOW
6 ONLINE checkbox
7 JOB field
8 OK button

12.5.8.3 Discrete Output Settings

12.5.8.3-1 Setting Procedure

Machine Status	Electrical supply disconnecting device in position I (ON)
SPC Reference	662916-0300

The some of the discrete outputs of the camera can be set via the host table.

a) In the host table (1), select `SENSOR` (2) and then `DISCRETE I/O SETTINGS` (3) and then `OUTPUT SETTINGS` (4).

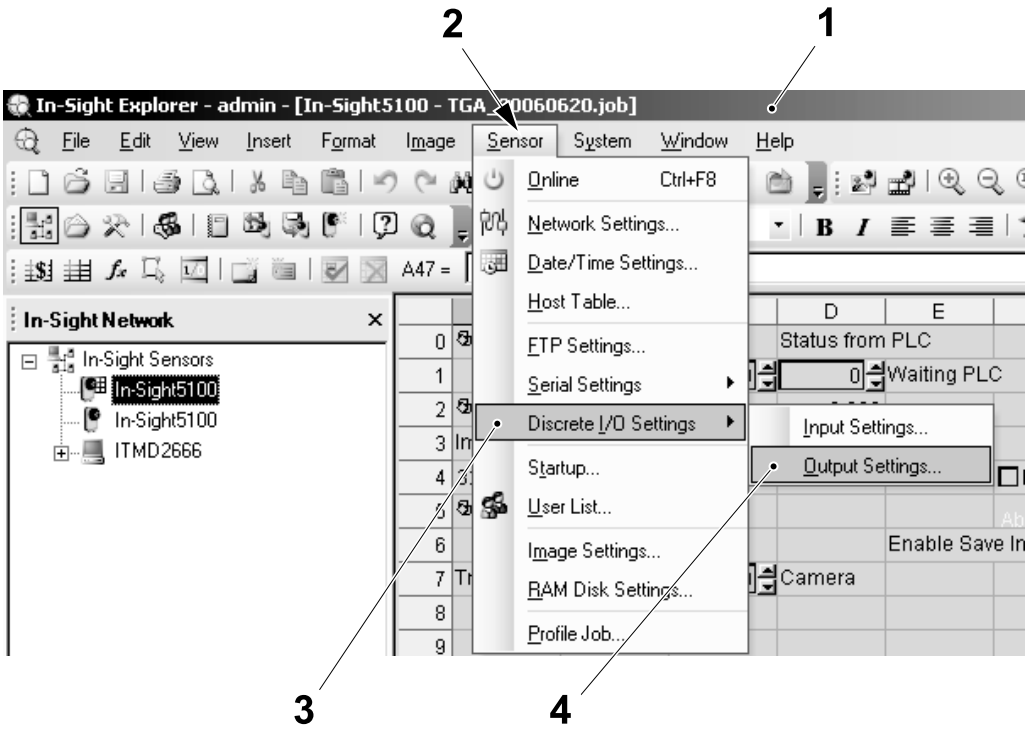

1 Host table
2 `SENSOR`
3 `DISCRETE I/O SETTINGS`
4 `OUTPUT SETTINGS`

(Cont'd)

(Cont'd)

Note! The discrete LINE 0 is not used.

b) The on DISCRETE OUTPUT SETTINGS window (5) shows the three OUTPUT DISCRETE (6), OUTPUT DISCRETE (7) and the OUTPUT DISCRETE (8) that are used. The discrete's can be set using the DETAILS button (9) and the DETAILS button (10).

c) To set the LINE 0 OUTPUT DISCRETE (6) , click on the details button (9).

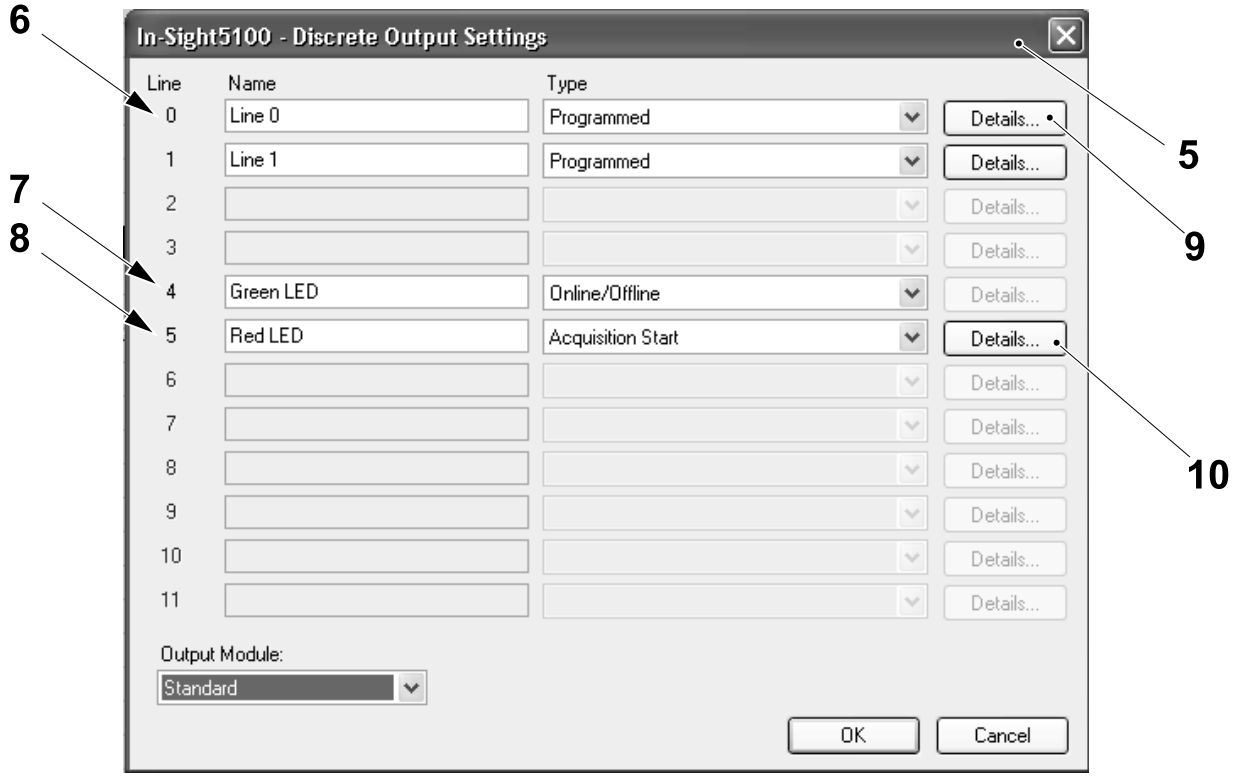

5 DISCRETE OUTPUT SETTINGS window
6 OUTPUT DISCRETE
7 OUTPUT DISCRETE
8 OUTPUT DISCRETE
9 DETAILS button
10 DETAILS button

(Cont'd)

(Cont'd)

d) The INLINE 0 OUTPUT DETAILS WINDOW (11), make sure that the PULSE checkbox (12) is not selected. and click on the OK button (13).

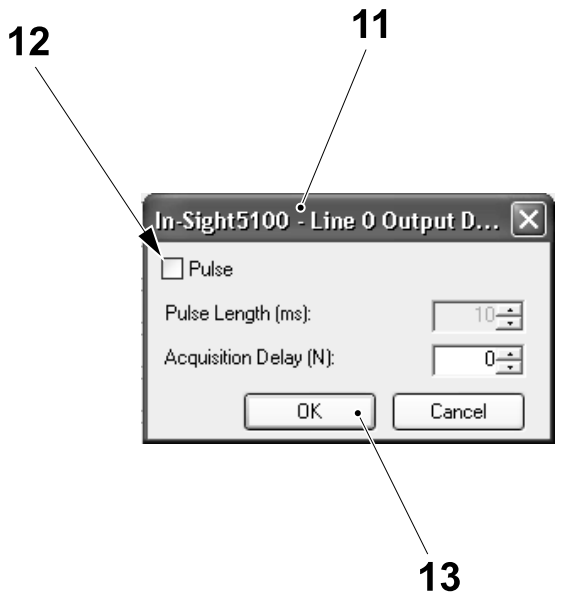

11 Line 0 output details window
12 Pulse checkbox
13 OK button

(Cont'd)

(Cont'd)

e) To set the LINE 5 (Red LED) OUTPUT DISCRETE (8) , click on the DETAILS button (10).

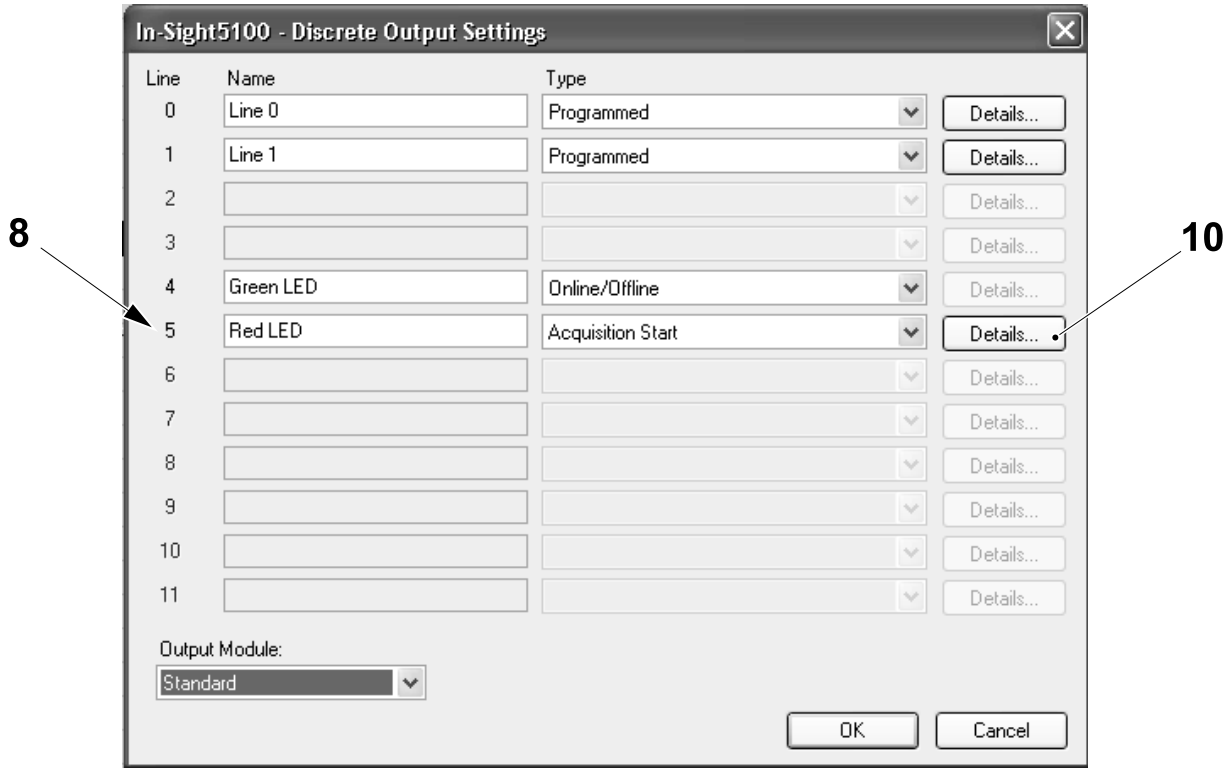

8 OUTPUT DISCRETE
10 DETAILS button

f) In line 5 output details window (14), set the pulse length [mm] (15) to the value shown below and click on the OK button (16).

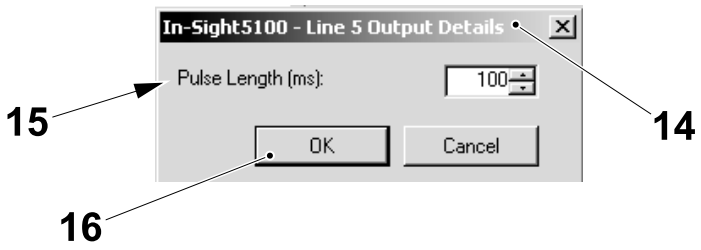

14 Line 5 output details window
15 Pulse length [mm]
16 OK button

(Cont'd)

(Cont'd)

g) Click on the OK button (17).

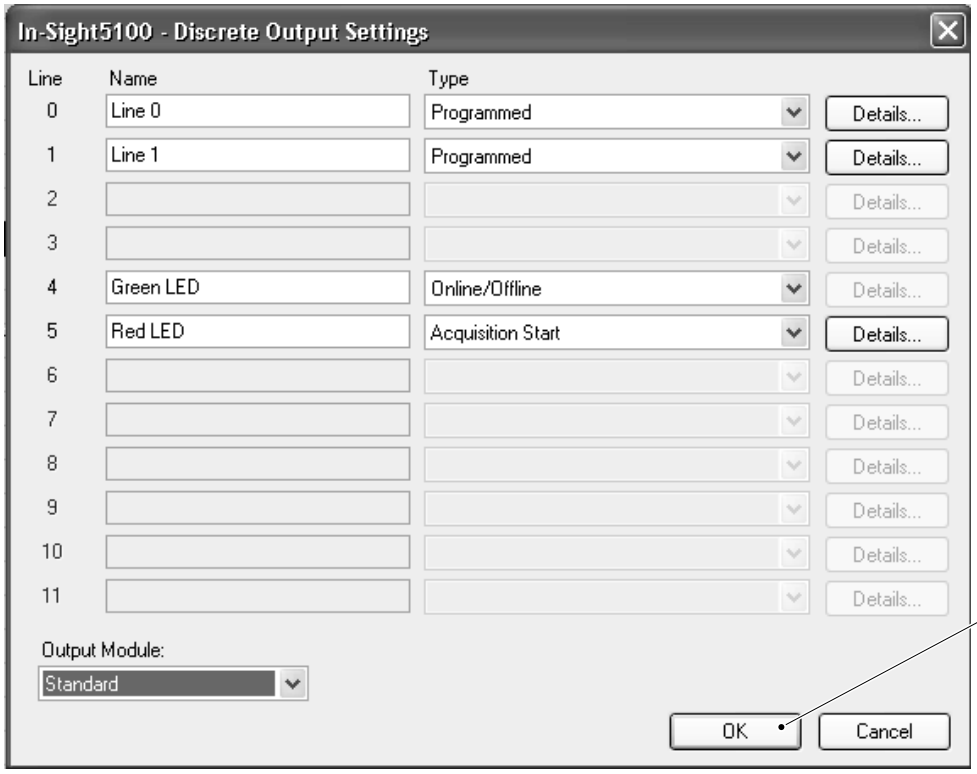

17 OK button

(Cont'd)

(Cont'd)

h) Reboot the camera by disconnecting and connecting the power cable.

i) In the IN-SIGHT NETWORK ZONE (18), double click on the IN-SIGHT5100 icon (19).

j) Check that the correct name is displayed at the top of the host table (20) and camera status is displayed as ONLINE STATUS (21).

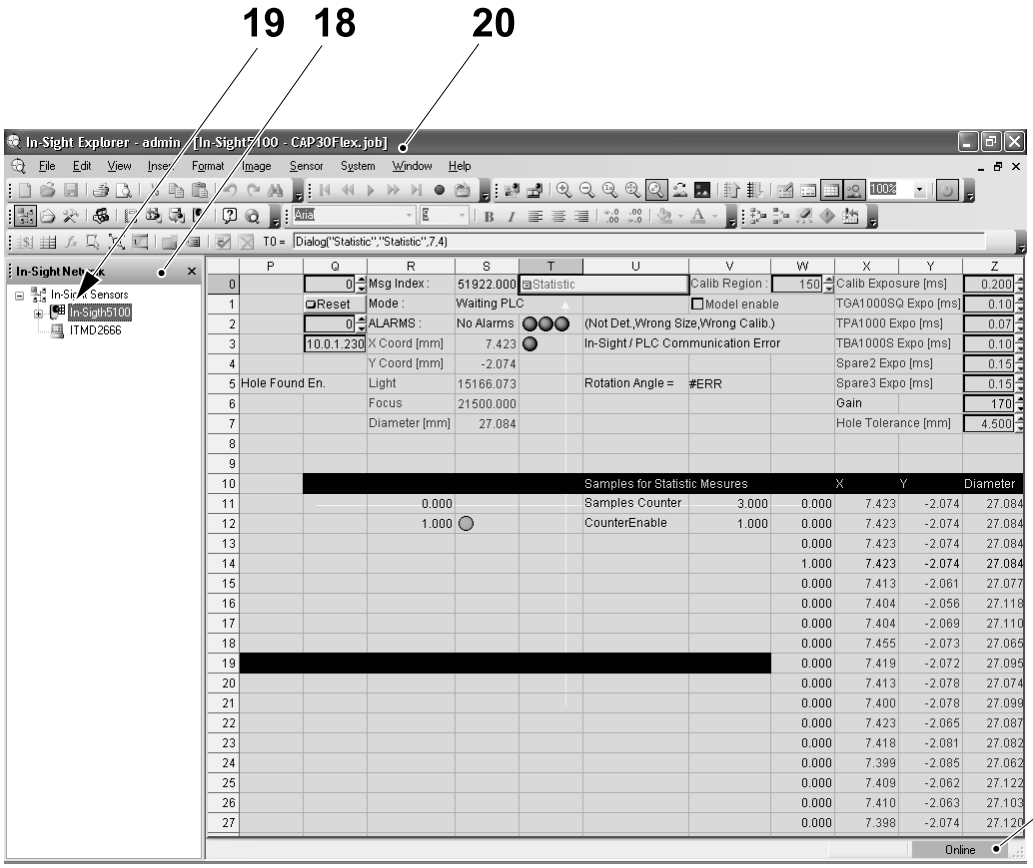

18 IN-SIGHT NETWORK ZONE
19 IN-SIGHT5100 icon
20 Host table
21 ONLINE STATUS

12.5.9 Application

12.5.9.1 Procedures

12.5.9.1-1 Loading an Application Program in the In-Sight5100 Camera

Machine Status	Electrical supply disconnecting device in position I (ON)
SPC Reference	662916-0300

Follow the instructions in 12.5.5.3-2 Loading the Application Program into the Camera.

12.5.9.1-2 Saving an Application Program in the In-Sight5100 Camera

Machine Status	Electrical supply disconnecting device in position I (ON)
SPC Reference	662916-0300

Follow the instructions in 12.5.5.4 Saving the Application Program in the In-Sight5100 Camera.

12.5.10 Illumination

12.5.10.1 Adjusting the Height of the Illumination

12.5.10.1-1 Adjustment Procedure

Machine Status	Electrical supply disconnecting device in position I (ON)
Special Equipment	Vision System Tool - TP No. 3087823-0100
SPC Reference	662916-0300

a) Install the calibration tool (1) on the frame (2) with the screw (3).

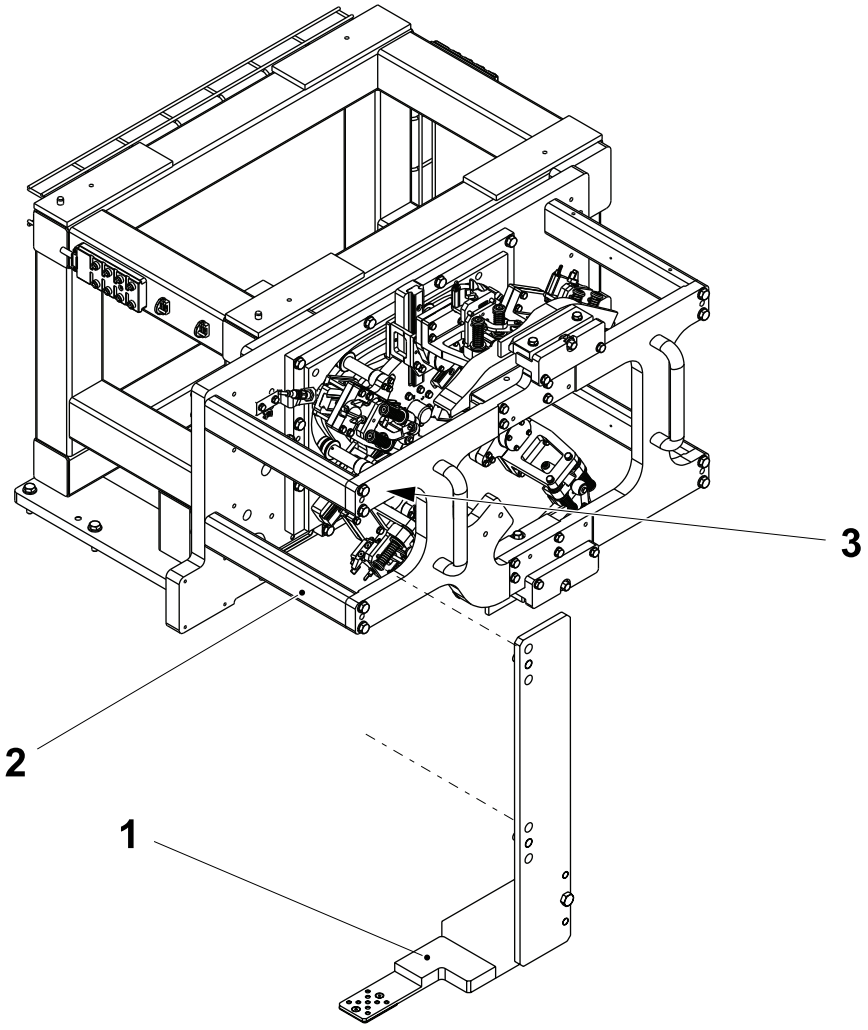

1 Calibration tool
2 Frame
3 Screw

(Cont'd)

(Cont'd)

b) Set the distance **A** between the upper surface of the calibration tool (1) 3087823-0100 and the bottom surface of the glass of the illumination (4).

A = 20mm

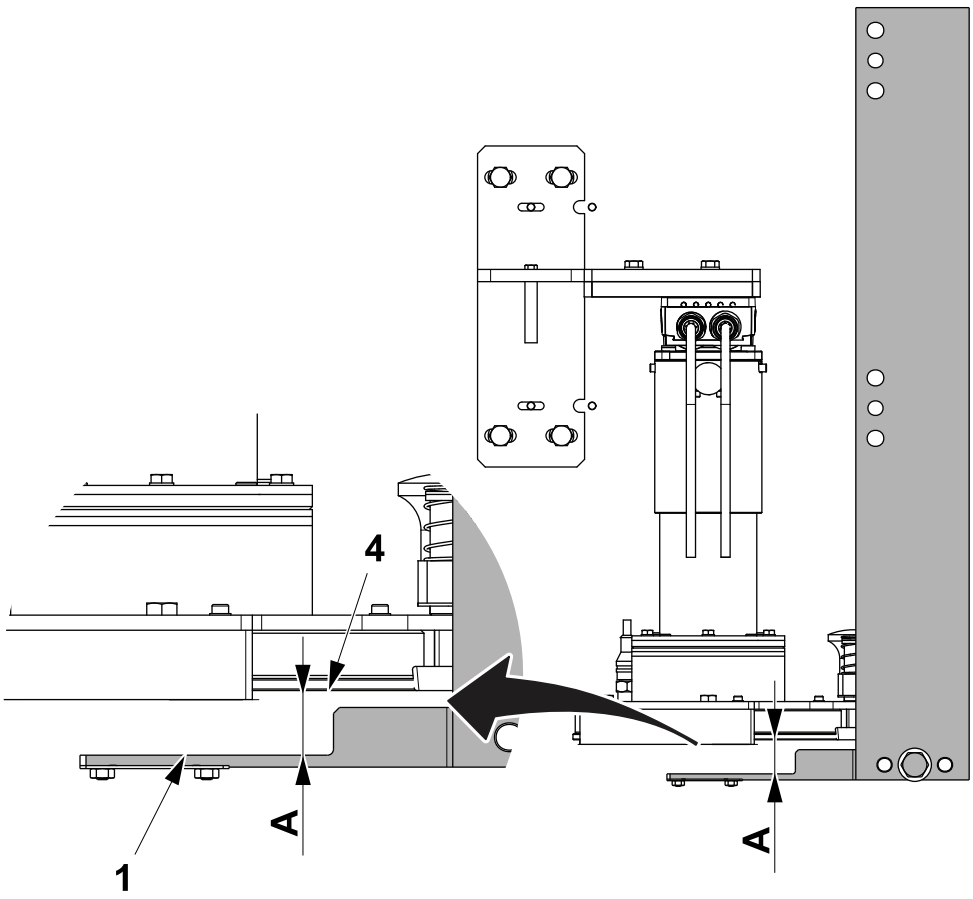

1 Calibration tool
4 Illumination

(Cont'd)

(Cont'd)

c) The Illumination is designed not to illuminate in 90 degrees of its diameter, see illustrations below.

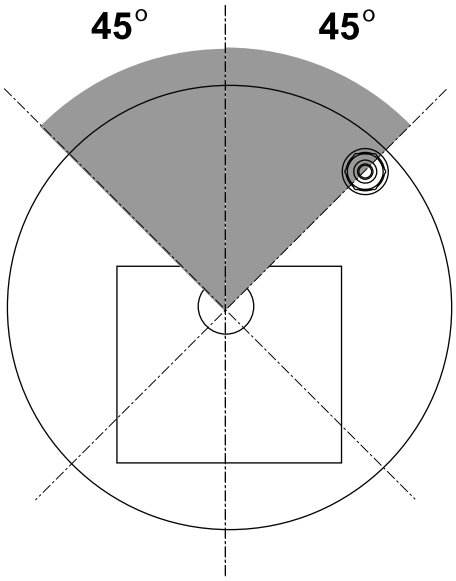

12.5.10.1-2 Switching the Illuminator ON/OFF

Machine Status	Electrical supply disconnecting device in position I (ON)
SPC Reference	662916-0300

a) Logon as a user see, 1.1.1-1 HMI User Management - Log On as a User on page 1-6.

b) Touch the MAINTENANCE button (1) then the POSITIONING SYSTEM icon (2).

c) Touch the TOUCH THE ILLUMINATOR icon (3) and then the ON button (4).

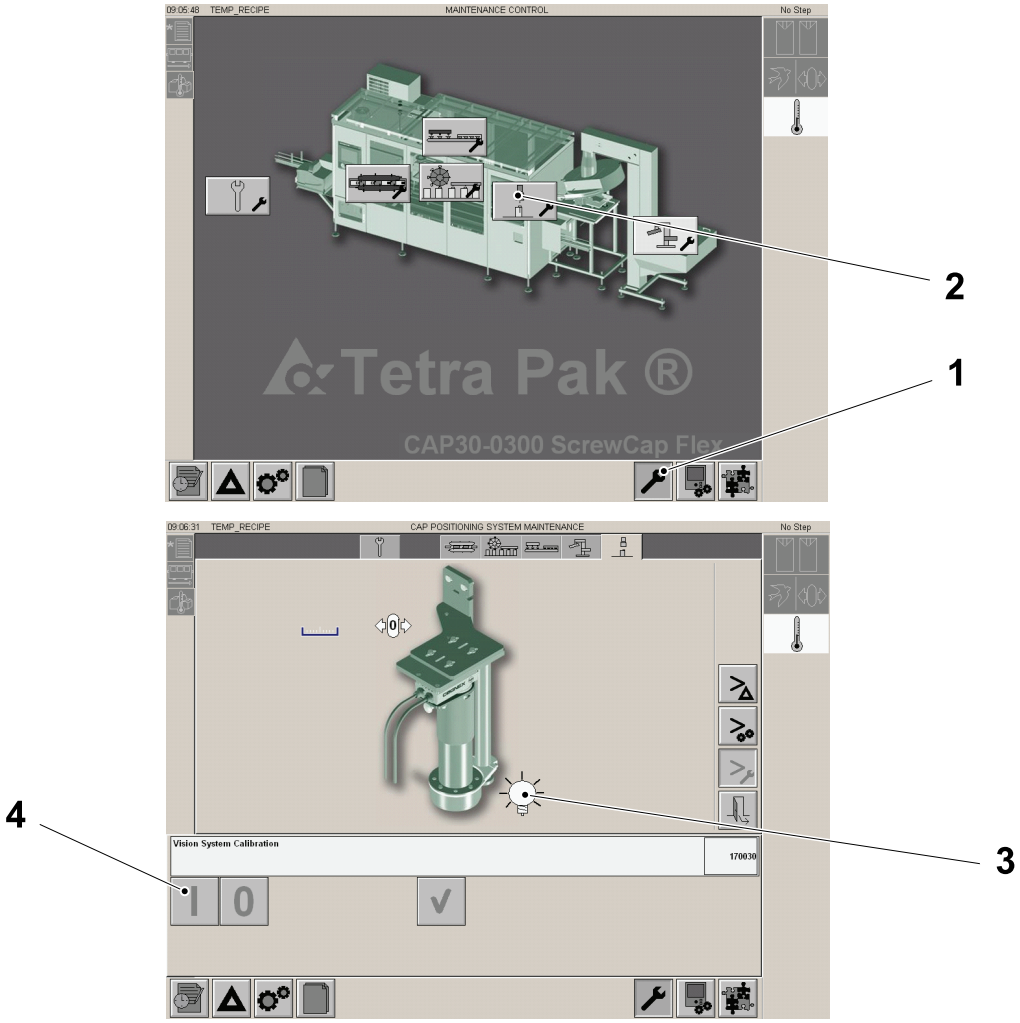

1 MAINTENANCE button
2 POSITIONING SYSTEM icon
3 TOUCH THE ILLUMINATOR icon
4 ON button

12.5.11 Lens

12.5.11.1 Adjusting the Light Intensity and Focus

12.5.11.1-1 Preparation

Machine Status	Electrical supply disconnecting device in position I (ON)
SPC Reference	662916-0300

a) Before adjusting the light intensity or focus make sure that the light ring has been set correctly, see 12.5.10.1 Adjusting the Height of the Illumination on page 12-100.

b) Open the external cover (tube) of the camera. Remove the lens cover from the camera.

c) With the template installed see 12.5.10.1-1 Adjustment Procedure on page 12-100, enable the positioning system at the TPOP.

d) Switch on the illuminator at the TPOP, see 12.5.10.1-2 Switching the Illuminator ON/OFF on 12-103.

e) Step up the machine to the PREHEATING.

f) Connect the laptop to the camera, see 12.5.4 PC Configuration on page 12-23.

g) Begin communications between the laptop and the camera, see 12.5.5.1 Begin Camera Communication with In-Sight Explorer on page 12-38.

h) Select CUSTOM VIEW using function key F6 on the laptop keyboard.

i) Set the VS MAN MODE element (1) to 1 (CALIBRATION) and the command mode element (2) to 1 (MAN CMD), see 12.5.6.4-2 Manual Mode (Read/Write) on page 12-69 and 12.5.6.4-1 Command Mode (Read/Write) on page 12-68.

j) Make sure that the camera is ONLINE. If not put the camera ONLINE, see 12.5.5.2-1 Setting the On-Line Status of the Camera on page 12-50. The camera will now produce a trigger automatically.



1 VS MAN MODE ELEMENT
2 MAN CMD ELEMENT

12.5.11.1-2 Setting the Light Intensity

Machine Status	Electrical supply disconnecting device in position I (ON)
SPC Reference	662916-0300

Set the lens light ring as follows:

a) Loosen the locking knob (1).

b) If the lens has a scale ring, adjust the scale ring until the white mark is centred between the marks 1.4 and 2.

Note! If step b) does not work after following the synchronisation list, see 12.5.3 Setting Procedures for this Chapter on page 12-20, change the setting to mark 3 and try again.

c) Lock the knob (1) .

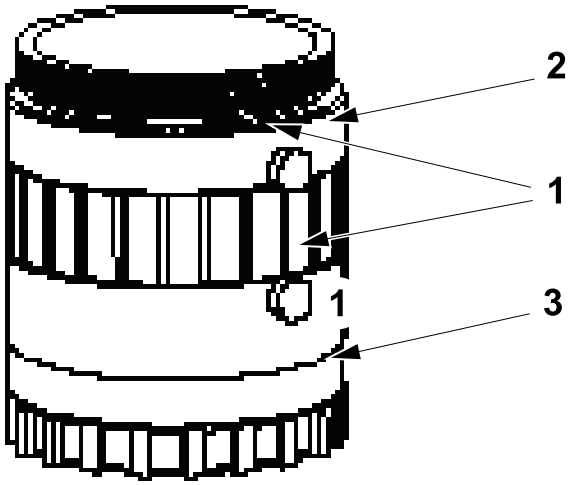

1 Knob
2 Light
3 Focus

12.5.11.1-3 Setting the Focus Ring

Machine Status	Electrical supply disconnecting device in position I (ON)
SPC Reference	662916-0300

Set the focus ring as follows:

a) Loosen the locking knob.

b) Adjust the ring until the 9 holes of the template are displayed with well defined edges and the complete picture is well focused.

c) Lock the knob.

d) Install and close the covers, see 12.5.11.1-1 Preparation on page 12-104.

e) Return the MAN cmd values to 0 and then VS MAN Mode values to 0.

f) Switch off the illuminator using the TPOP, see 12.5.10.1-2 Switching the Illuminator ON/OFF on page 12-103.

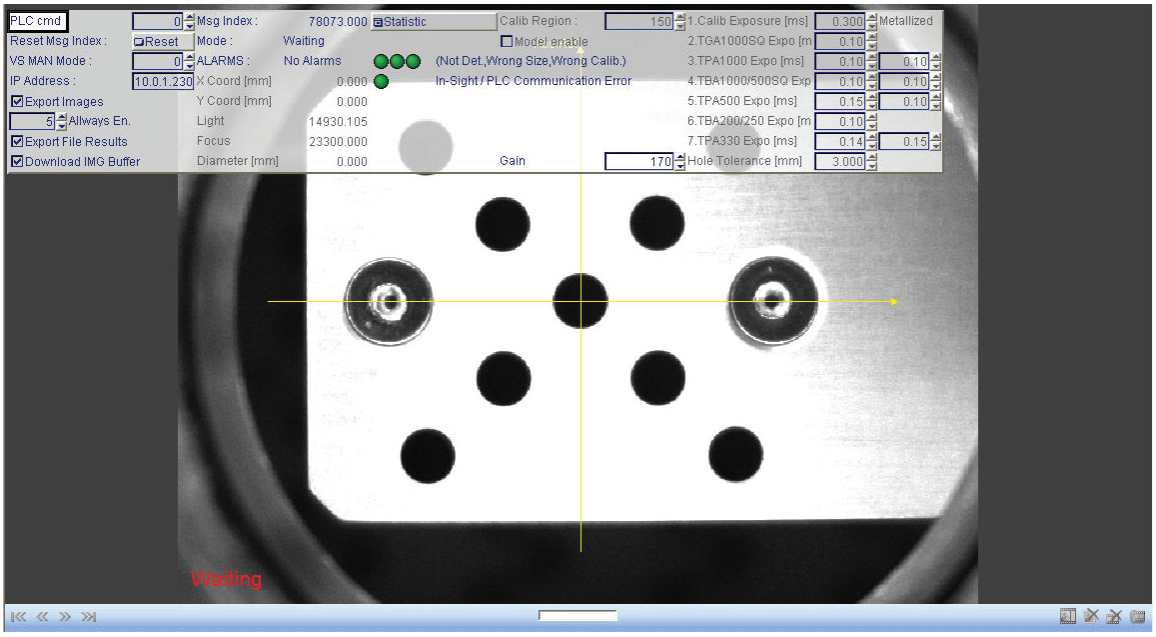

12.5.12 Exposure to Template

12.5.12.1 Introduction to Calibration

The calibration procedure does the following:

- It defines the origin of the system reference in the X and Y axis.
- It provides a conversion between actual pixels measurement and theoretical measurement that are made in millimetres. This allows the vision system to provide measurements with the same units as those used by the machine.
- To do this the vision system uses a special tool that has a matrix of 9 holes of known dimensions and at known positions.
- The vision system research software tries to locate the 9 holes in an appropriate zone of the picture. If the 9 holes are detected and all are of the correct size and are in the correct position, the vision system defines the centre position of each hole and distances between them. These values are in pixels. By comparing the pixel values and theoretical values measured in millimetres, the vision system is able to define the conversion factor.
  The centre of the centre hole is defined as the origin of the system reference.
  The conversion factor is defined for a set distance between the camera and the template. For this reason there is no Z adjustment in the camera bracket and the template surface is at the same height as the top of the package.

12.5.13 Mechanical Setup and Calibration

12.5.13-1 Setup Procedure

Machine Status	Electrical supply disconnecting device in position I (ON)
SPC Reference	662916-0300

a) Install the calibration tool, see 12.5.10.1-1 Adjustment Procedure on page 12-100.

b) Connect the laptop to the camera, see 12.5.4 PC Configuration on page 12-23.

c) Begin communication between the laptop and the camera, see 12.5.5.1 Begin Camera Communication with In-Sight Explorer on page 12-38.

d) Select CUSTOM VIEW using function key F6 on the laptop keyboard.

e) Set the `VS MAN MODE ELEMENT` (1) to 1 (`CALIBRATION`) and the `COMMAND MODE ELEMENT` (2) to 1 (`MAN CMD`), see 12.5.6.4-2 Manual Mode (Read/Write) on page 12-69 and 12.5.6.4-1 Command Mode (Read/Write) on page 12-68.

f) Switch on the illuminator using the TPOP, see 12.5.10.1-2 Switching the Illuminator ON/OFF on page 12-103.

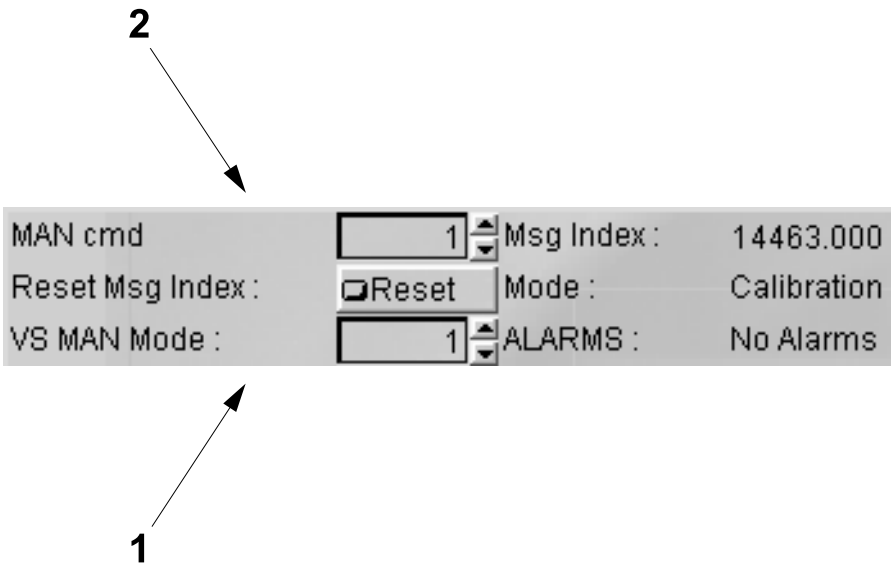

1 `VS MAN MODE ELEMENT`
2 `COMMAND MODE ELEMENT`

(Cont'd)

(Cont'd)

g) Make sure that the camera is ONLINE. If not put the camera ONLINE see 12.5.5.2-1 Setting the On-Line Status of the Camera on page 12-50. The camera will now produce a trigger automatically.

h) In this condition the camera generates an automatic trigger and executes the calibration research. The following picture shows the actual condition. The value of the message index counter (3) increases continuously, and the picture captured from the camera is continuously refreshed. If the nine holes of the template are not completely within the Violet rectangle (4) or the centre of the Violet cross (5) is out of the central hole, perform the camera mechanical alignment procedure, go to step i). If there is no misalignment, go to step l).

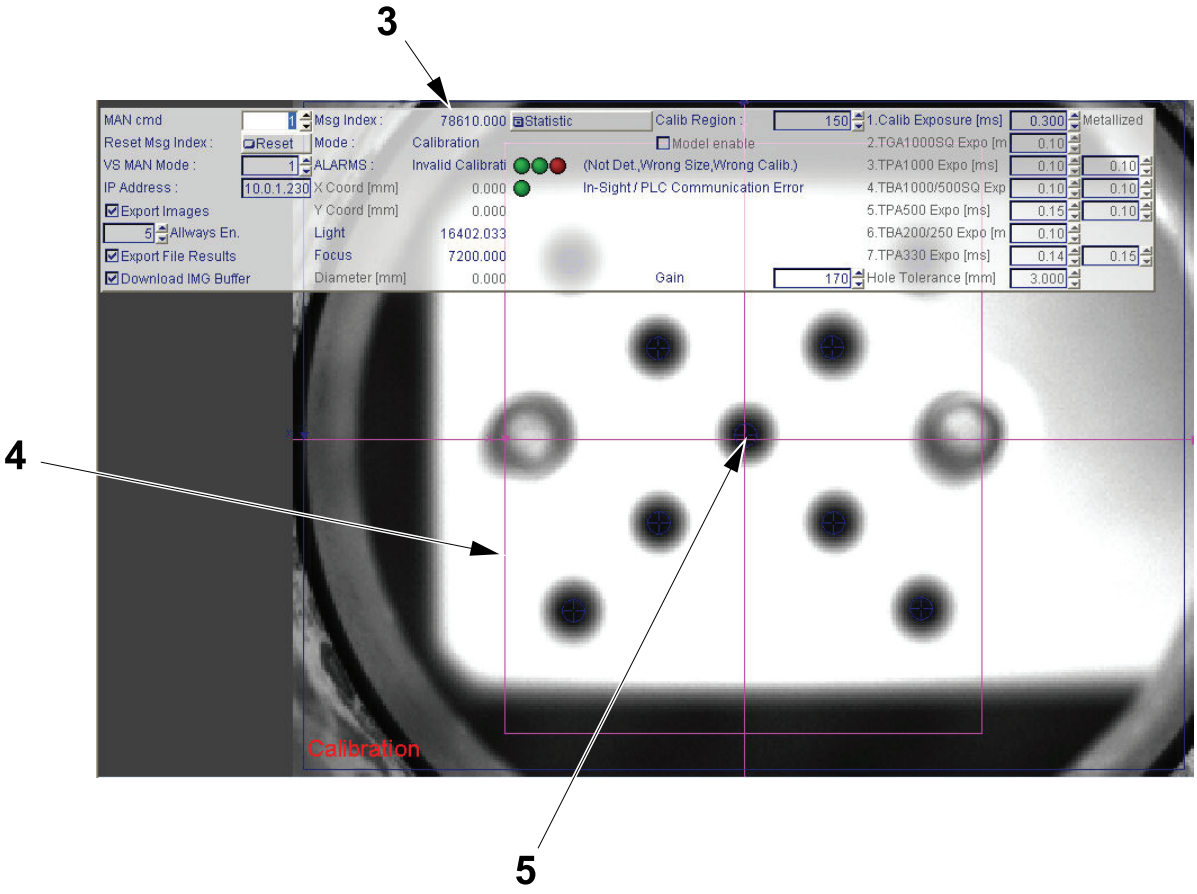

3 MESSAGE INDEX COUNTER
4 VIOLET RECTANGLE
5 VIOLET CROSS

(Cont'd)

(Cont'd)

Note! The horizontal axis of the camera corresponds with the Y axis of the CAP30 machine. The vertical axis corresponds with the X axis of the CAP30.

Note! The Violet cross (5) indicates the centre of the picture.

Note! The Yellow cross (6) indicates the centre of the hole.

i) Loosen the screw (7) holding the camera bracket (8) in position.

j) Move the camera bracket (8) in X and Y directions to align as accurately as possible, the centre of the Violet cross (5) with the centre of the Yellow cross (6) as shown in the illustration below.

k) Tighten the screw (7) to secure the camera bracket (8) in position.

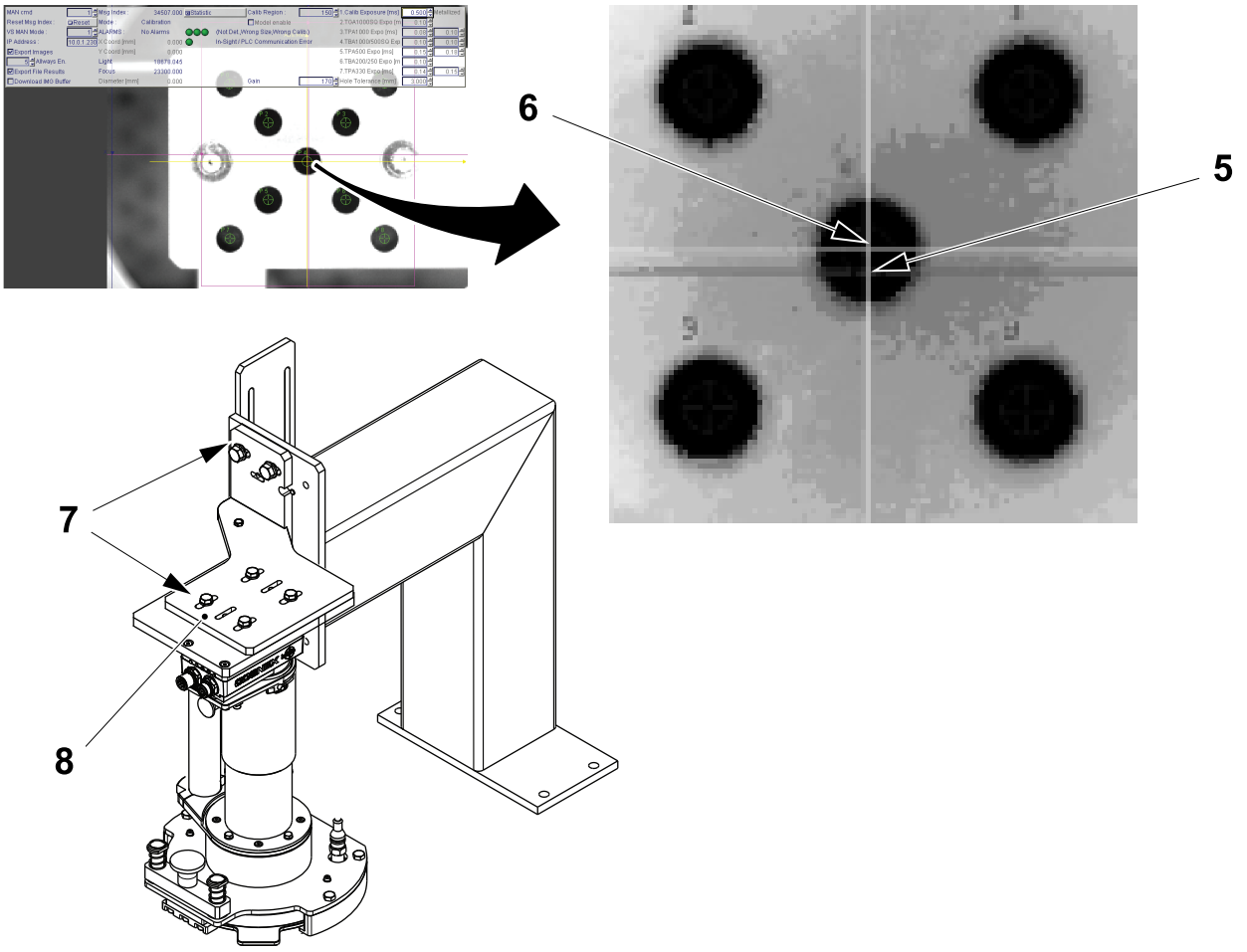

5 VIOLET CROSS
6 YELLOW CROSS
7 Screw
8 Bracket

(Cont'd)

(Cont'd)

l) Checks the ALARMS STRING FIELD (9) and verify that during the automatic triggering sequence, the string constantly NO ALARMS and the three ALARM LED,s (10) are constantly green. For further details, see 12.5.6.4-4 Alarms LED (Read Only) on page 12-71.

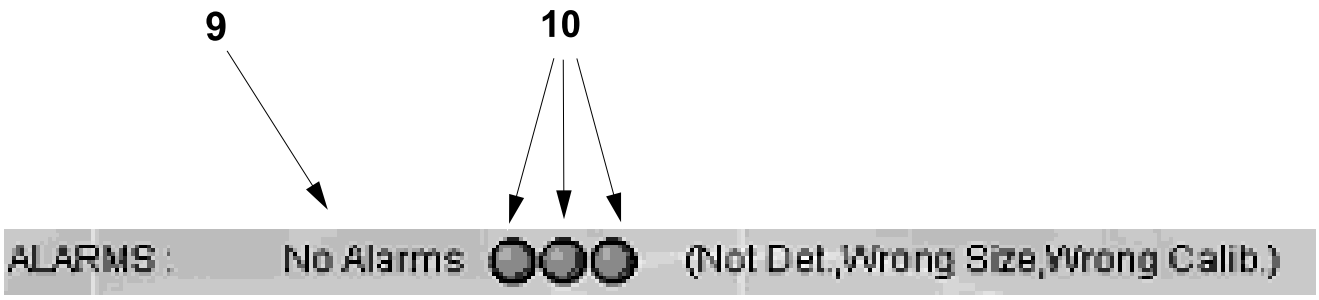

9 ALARMS STRING FIELD
10 ALARM LED

(Cont'd)

(Cont'd)

m) When the research result is correct, the camera is able to define the origin of the axis and the factor for pixel to millimetre conversion. A good result is confirmed when the Yellow cross (6), representing the X and Y axis crossing point, is positioned centrally in the picture. This condition is called SCENARIO 1. When this is the case skip to step u) on page 12-117. When the result of the research is not correct, continue below from step s) on page 12-117.

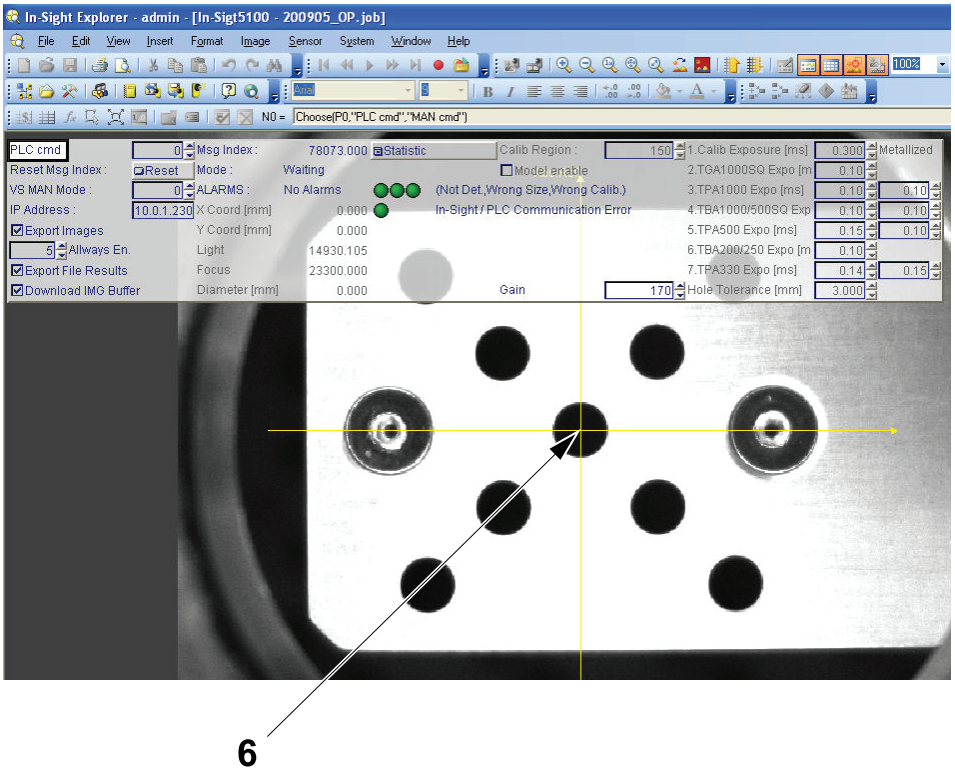

6 YELLOW CROSS

(Cont'd)

(Cont'd)

n) If the calibration result is incorrect and the cause is a wrong value of CALIBRATION EXPOSURE (11) the situation illustrated below will occur.

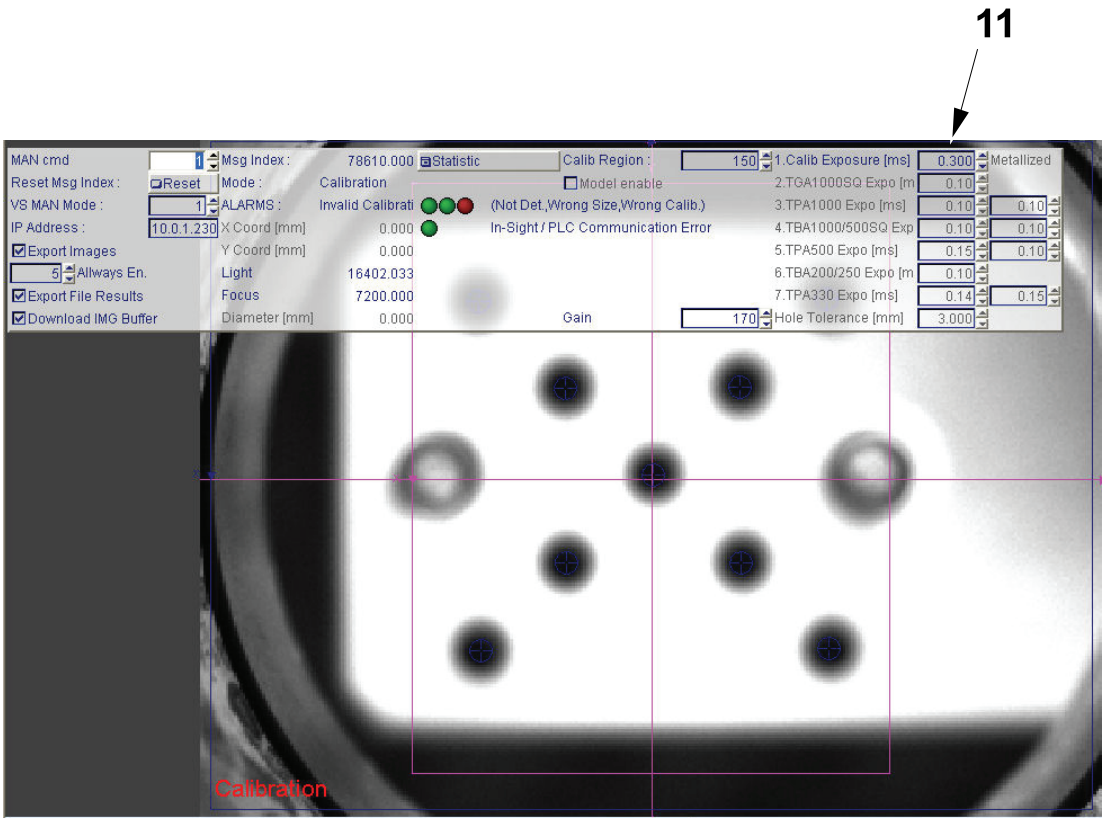

11 CALIBRATION EXPOSURE

(Cont'd)

(Cont'd)

o) The ALARMS STRING INVALID CALIB (12) and the third ALARM LED (13) is red. The picture shows a high light intensity that causes some of the calibration holes to be hidden. In this condition the CALIBRATION EXPOSURE must be reduced. This is called SCENARIO 2.

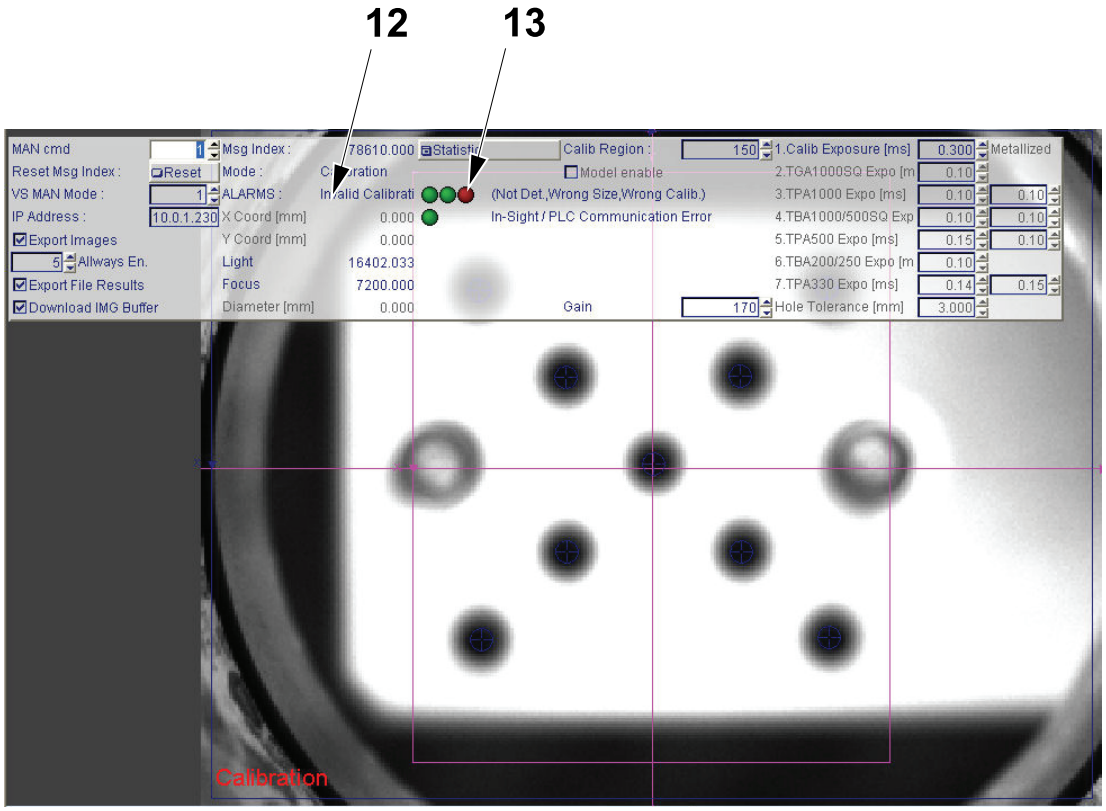

12 ALARMS STRING INVALID CALIB
13 ALARM LED

(Cont'd)

(Cont'd)

p) The following illustration shows the opposite situation with a low exposure that causes a dark picture with a poor definition of the holes relative to the background. This is called SCENARIO 3.

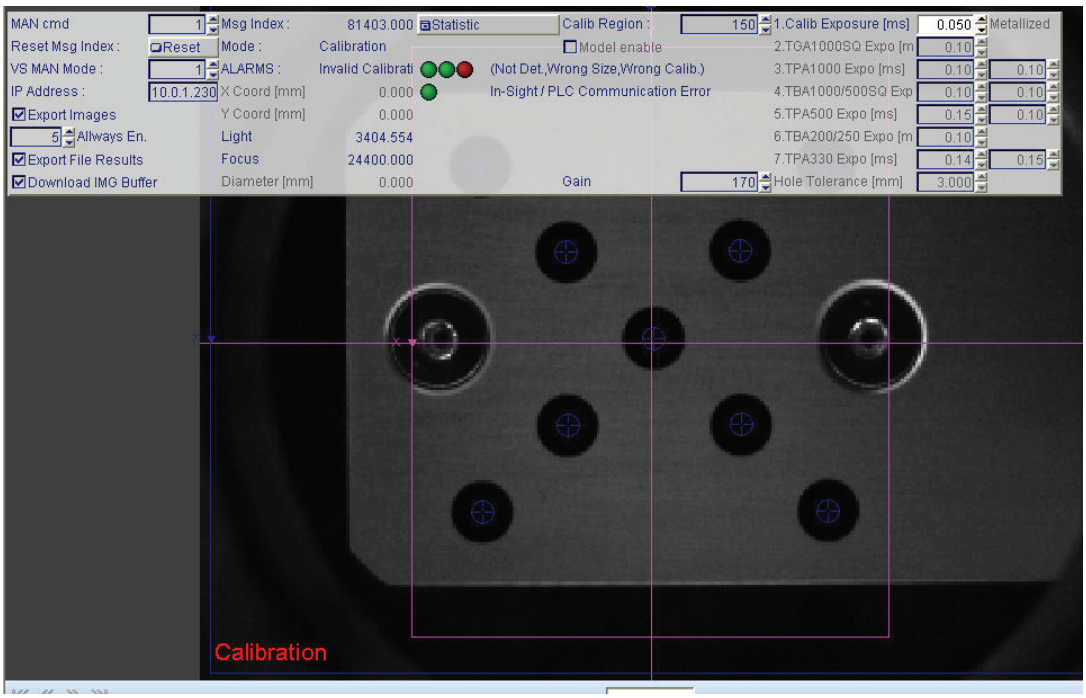

(Cont'd)

(Cont'd)

q) To set the correct exposure level change the CALIB EXPOSURE [ms] value (14), see 12.5.6.4-9 Exposure Set-up (Read/Write) on page 12-77.

- Start with a value of 0.1 or lower, the result should be the same as SCENARIO 3.
- Increase the exposure in steps of 0.05 checking the result each time the value is changed, confirming with enter or touching another cell.
- Record the last value that gives an incorrect result. This will be Minimum Exposure Value.
- Continue to increase the value until the condition passes from SCENARIO 1 to SCENARIO 2. Take a note of the first value that generates a SCENARIO 2 condition. This will be the maximum exposure value.

r) Set the CALIB EXPOSURE [ms] value (14) to the average between the minimum and maximum values.

Note! The calibration Exposure Value is typically in the range 0.100 to 0.300 with a minimum value of 0.05 and a maximum value of 1.0.

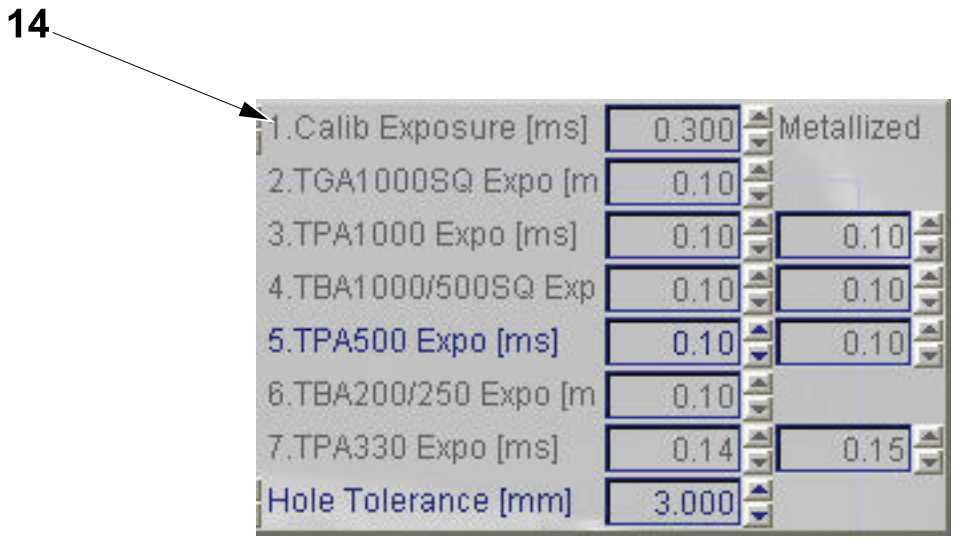

14 CALIB EXPOSURE [ms] value

(Cont'd)

(Cont'd)

s) Calibration failure.

Note! If the calibration fails for all exposure values, there are three possible causes:

- the lens light intensity is incorrect, repeat the procedure in 12.5.11.1-2 Setting the Light Intensity on page 12-105.
- the lens focus setting is incorrect, repeat the procedure in 12.5.11.1-3 Setting the Focus Ring on page 12-106.
- the picture gain value is not the default value of 170, repeat the procedure in 12.5.6.4-10 Gain Set-up (Read/Write) on page 12-79.

t) Set the COMMAND MODE ELEMENT (15) to 0 (PLC CMD) and the VS MAN MODE ELEMENT (16) to 0 (WAITING PLC), see 12.5.6.4-1 Command Mode (Read/Write) on page 12-68 and 12.5.6.4-2 Manual Mode (Read/Write) on page 12-69.

u) Switch off the illuminator using the TPOP, see 12.5.10.1-2 Switching the Illuminator ON/OFF on page 12-103.

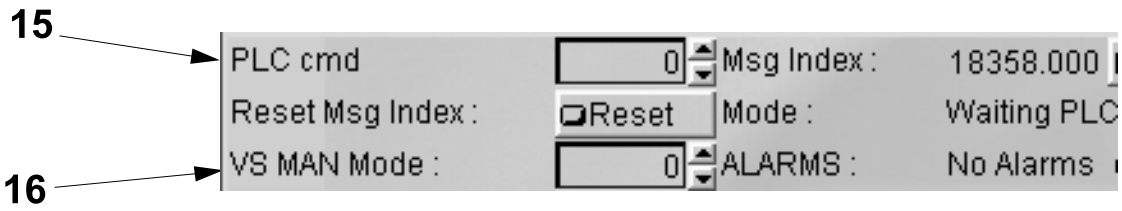

15 COMMAND MODE ELEMENT
16 VS MAN MODE ELEMENT

v) If the CALIB EXPOSURE value has been changed, save the application (.job) in the camera, see 12.5.5.4 Saving the Application Program in the In-Sight5100 Camera on page 12-58.

w) Leave the camera ONLINE.

x) Close the IN-SIGHT EXPLORER see 12.5.5.5 Closing the In-Sight Explorer Tool on page 12-60 and disconnect the laptop.

12.5.14 Exposure to Package

12.5.14.1 Procedures

12.5.14.1-1 Moving the Package into Position

Machine Status	step 0
SPC Reference	662916-0300

a) Place a package on the conveyor so that it rests against a package transfer inner belt tooth.

b) With the machine in STEP 2, touch the MAINTENANCE button (1).

c) Touch the SERVICE button (2).

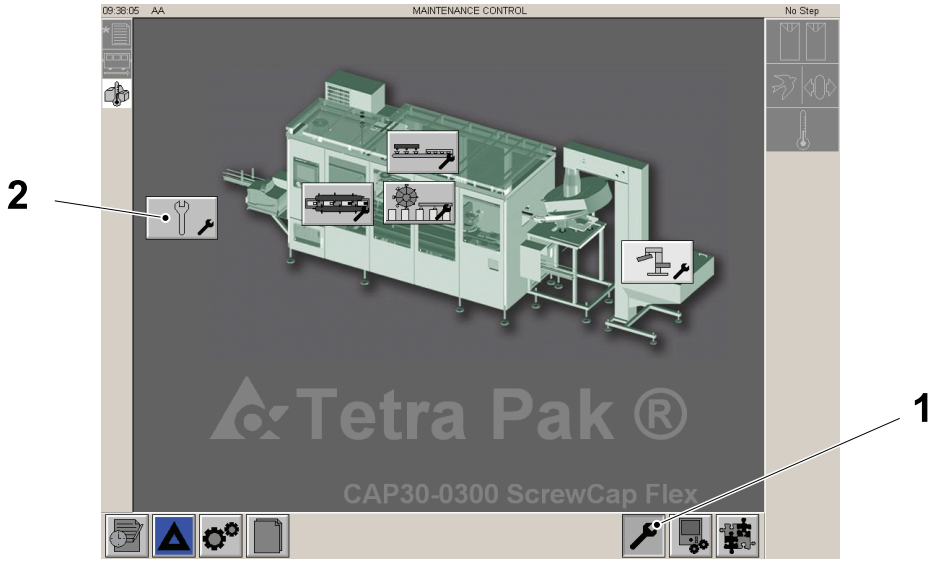

1 MAINTENANCE button
2 SERVICE button

(Cont'd)

(Cont'd)

d) Touch the INCHING button (3).

Note! The value in the window (4) should be 288 degrees.

e) If the value in the window (4) is correct go to step i). If the value is incorrect continue with step f).

f) Touch the SETTING button (5) to modify the value in the window (4) .

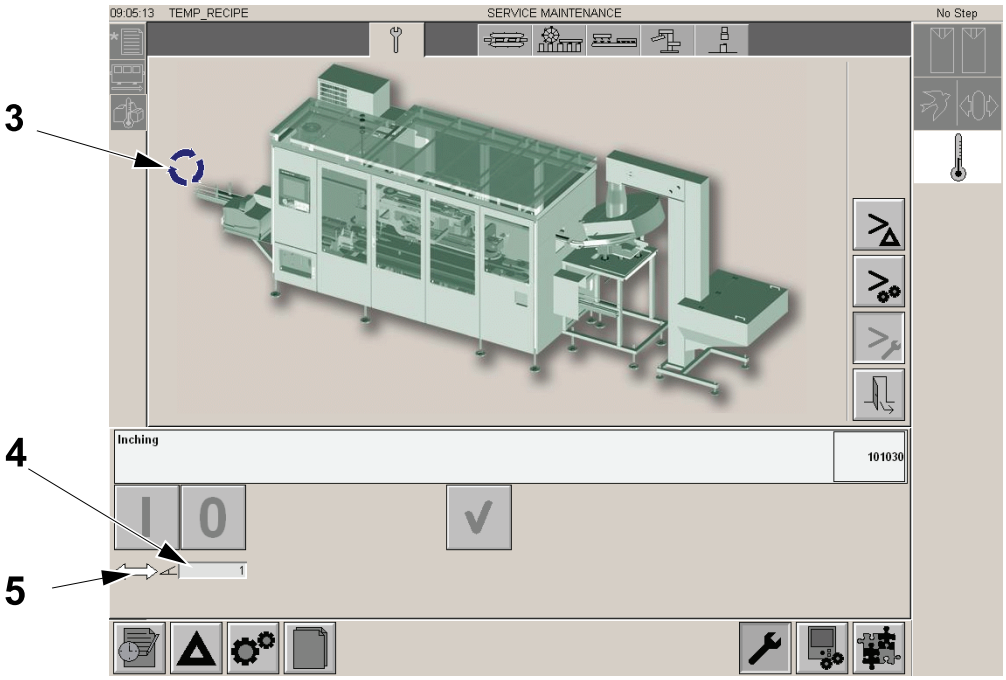

3 INCHING button
4 Window
5 SETTING button

(Cont'd)

(Cont'd)

g) Using the Up and down buttons (6) set the number in the DEGREES window (7) to read 288 Degrees.

h) Touch the OK button (8).

i) Check that the value set in step g) appears in the window (4) .

j) Touch the ON button (9).

k) Touch the OK button (10).

l) Touch the EXIT button (11) to leave.

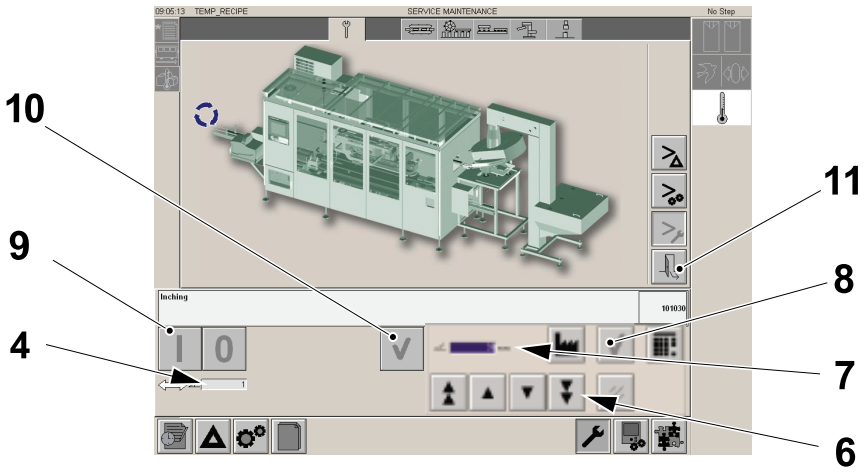

4 Window
6 Up and down buttons
7 DEGREES window
8 OK button
9 ON button
10 OK button
11 EXIT button

12.5.14.1-2 Hole Research Setup

Machine Status	Electrical supply disconnecting device in position I (ON)
SPC Reference	662916-0300

a) Install the calibration tool, see 12.5.10.1 Adjusting the Height of the Illumination on page 12-100.

b) Connect the laptop to the camera, see 12.5.4 PC Configuration on page 12-23.

c) Begin communication between the laptop and the camera, see 12.5.5.1 Begin Camera Communication with In-Sight Explorer on page 12-38.

d) Select CUSTOM VIEW using the function key F6 on the laptop keyboard.

(Cont'd)

(Cont'd)

e) Set the VS MAN MODE ELEMENT (1) according to the table below and the COMMAND MODE ELEMENT (2) to 1, see 12.5.6.4-1 Command Mode (Read/Write) on page 12-68 and 12.5.6.4-2 Manual Mode (Read/Write) on page 12-69.

f) Switch on the illuminator using the TPOP, see 12.5.10.1-2 Switching the Illuminator ON/OFF on page 12-103.

MANUAL MODE ((READ/WRITE) ELEMENT OP

Value	Text	Process
1	Calibration	The camera is running the calibration program
2	TGA 1000SQ	TGA 1000Sq/750Sq/500Sq Hole Analysis
3	TPA1000	TPA 1000Sq/750Sq Hole Analysis
4	TBA1000/500SQ	TBA 1000/500Sq Hole Analysis
5	TPA 500	TPA 500 Hole Analysis
6	TBA 200/250	TBA 200/250 Hole Analysis
7		

MANUAL MODE ((READ/WRITE) ELEMENT NP

Value	Text	Process
1	Calibration	The camera is running the calibration program
8	HeliCap 2 23	Helicap2 23 Hole Analysis
9	HeliCap 27	Helicap27 Hole Analysis
10	DreamCap 26	Dreamcap26 Hole Analysis

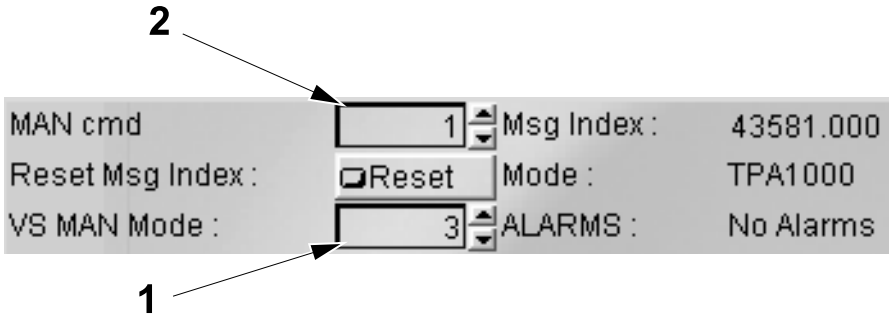

1 VS MAN MODE ELEMENT
2 COMMAND MODE ELEMENT

(Cont'd)

(Cont'd)

g) Make sure that the camera is ONLINE. If not put the camera ONLINE, see 12.5.5.2-1 Setting the On-Line Status of the Camera on page 12-50.

In this condition the Camera generates an automatic trigger and executes the hole research. The following illustration shows the actual condition. The MESSAGE INDEX counter (3) increases continuously, and the picture captured from the camera is continuously refreshed. The INSIGHT EXPLORER shows the picture of the package with the system reference composed by the X and Y axis. If the research finds the hole, the result is given graphically by a green circle (4) that defines the hole edge, and a small red cross (5) that shows the centre of the hole. In the results area of the CUSTOM VIEW there are the X X value (6), the Y value (7) and diameter value (8) expressed in millimetres.

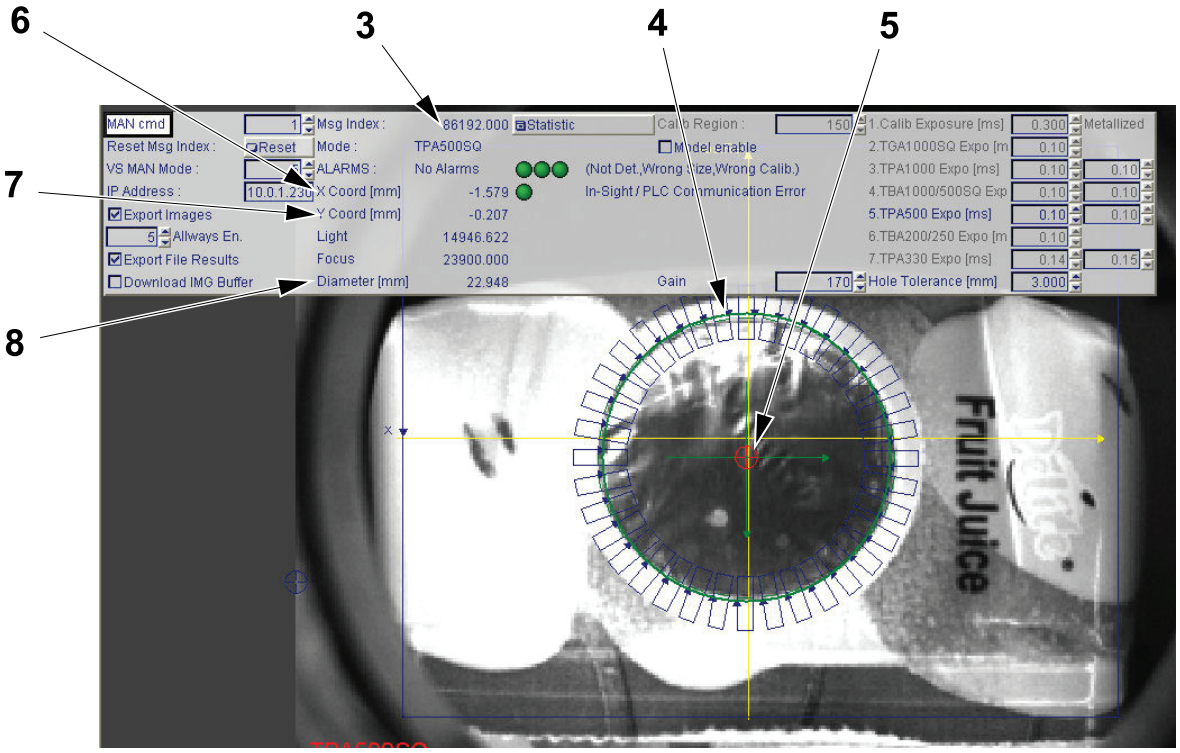

3 MESSAGE INDEX counter
4 Green circle
5 Red cross
6 X value
7 Y value
8 Diameter value

(Cont'd)

(Cont'd)

h) Checks the ALARMS STRING FIELD (9) and verify that during the automatic triggering sequence, the string constantly NO ALARMS and the threeALARMS LEDs (10) are constantly green. For further details, see 12.5.6.4-4 Alarms LED (Read Only) on page 12-71.

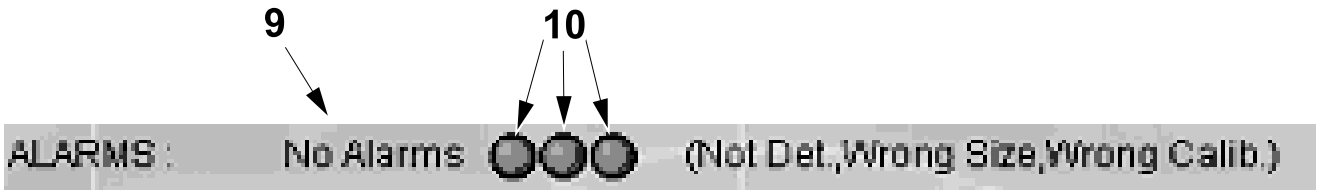

9 ALARMS STRING FIELD
10 ALARMS LED

i) Display the STATISTIC WINDOW (11) and check that the results are the same as those in the illustration below with two green alarm ALARM LED (12) and the ALARM LED (13). If necessary refer to 12.5.6.4-6 Statistic Window on page 12-74.

j) When this the case, the accuracy of the measurement is acceptable. This is called SCENARIO 1.

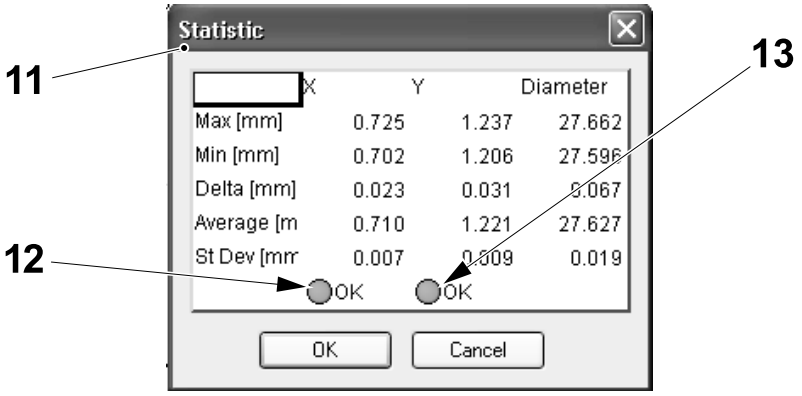

11 STATISTIC WINDOW
12 ALARM LED
13 ALARM LED

(Cont'd)

(Cont'd)

k) If the condition of the exposure is wrong and the research does not locate a hole, we can have two scenarios.

l) SCENARIO 2, where the exposure is too high, the picture is too bright, the hole is not detected and the first LED (14) is red.

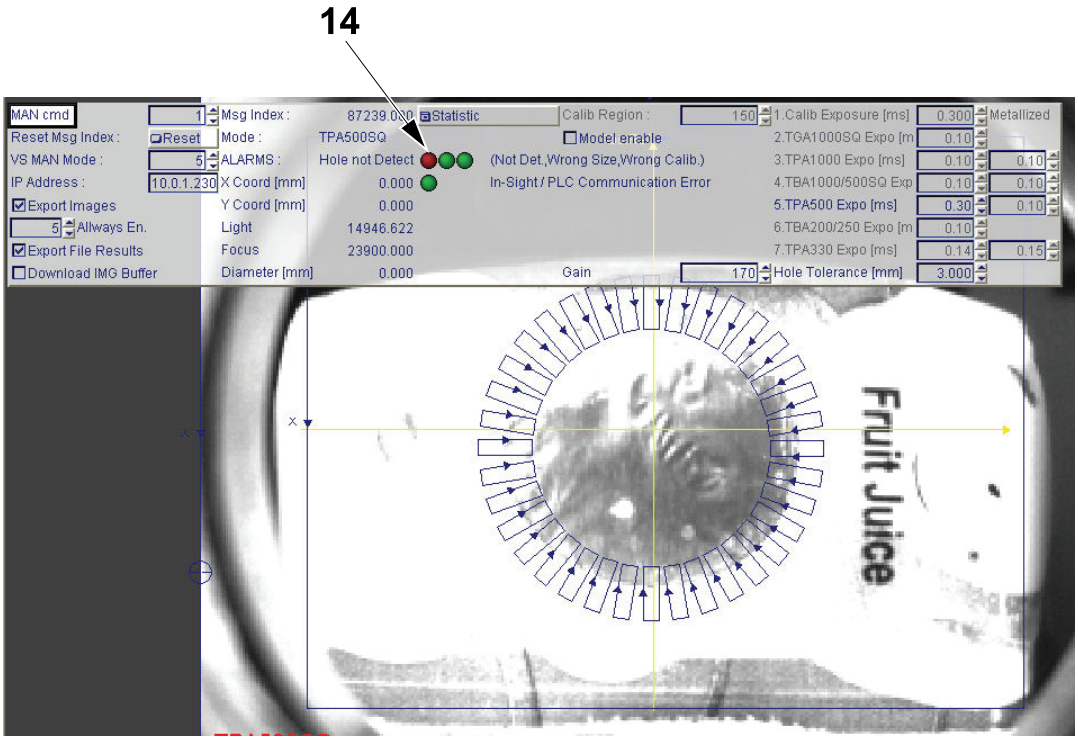

14 LED

(Cont'd)

(Cont'd)

m) Or SCENARIO 3 where the exposure is too low, the picture is too dark, the hole is not detected and the first LED (14) is red.

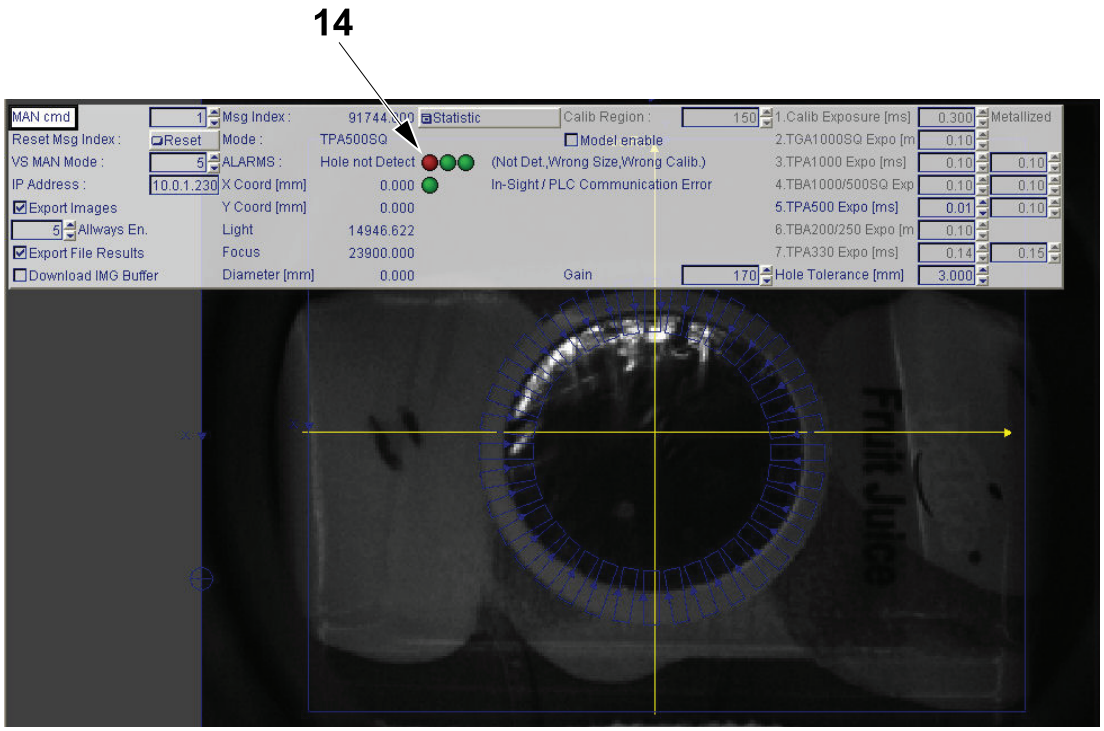

14 LED

(Cont'd)

(Cont'd)

Note! The Calibration Exposure Value is typically in the range 0.100 – 0.200. with a minimum value of 0.00 and a maximum value of 10.0.

n) If the situation is similar to SCENARIO 2 or SCENARIO 3, do the following:

- Start with a Value (15) of 0.05. In this condition, the result should be the same as SCENARIO 3.
- Increase the exposure in steps of 0.02 checking the results using the LED (16) in the ALARMS STRING FIELD (17) and the STATISTIC WINDOW (11) . If necessary refer to 12.5.6.4-6 Statistic Window on page 12-74. When the situation is the same as shown in the following illustration with a YELLOW LED (18) and a RED LED (19) . This means that the hole is found but the accuracy of the measurement is not acceptable.

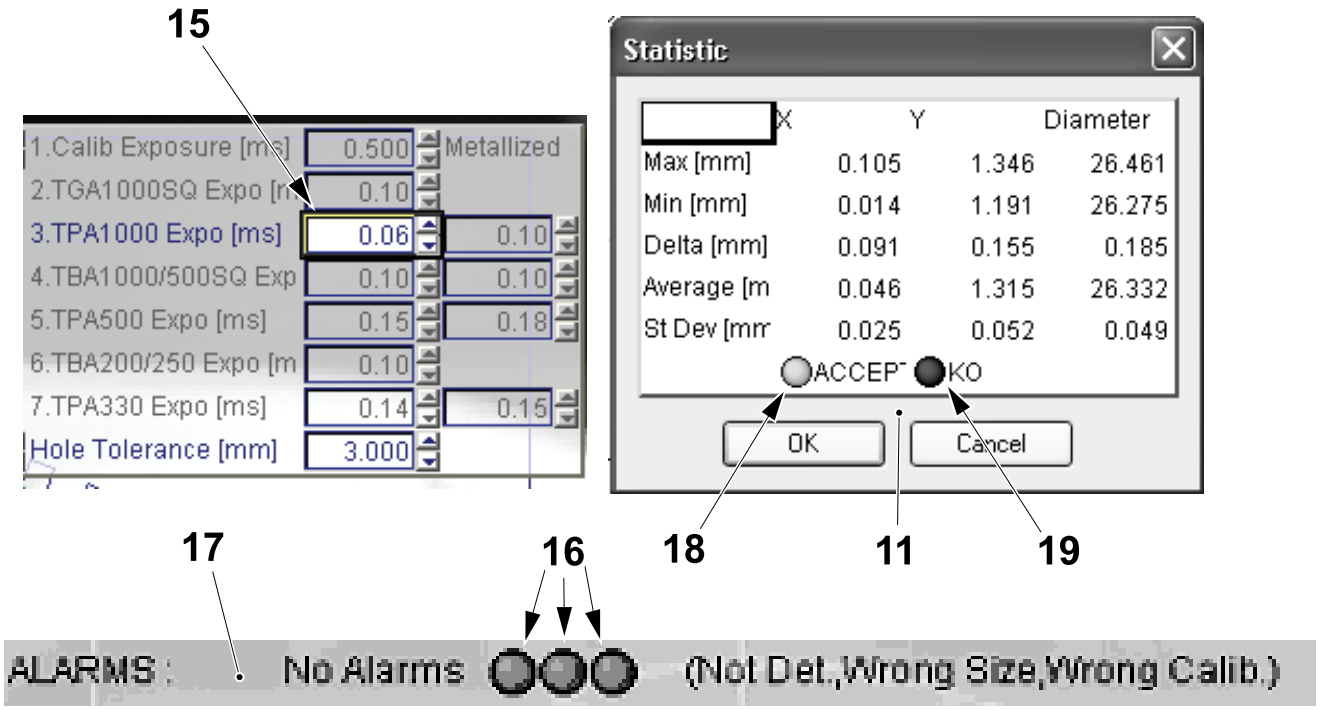

11 STATISTIC WINDOW
15 Value
16 LED
17 ALARMS STRING FIELD
18 YELLOW LED
19 RED LED

(Cont'd)

(Cont'd)

Note! The Calibration Exposure Value is typically in the range 0.100 – 0.200. with a minimum value of 0.00 and a maximum value of 10.0.

o) Continuation if the situation is similar to SCENARIO 2 or SCENARIO 3, do the following:

- Continue to increase the Exposure value in steps of 0.02 until both OK LED (20) and the OK LED (21) are green.
- Stop the exposure setup when the LED (16) , the OK LED (20) and the OK LED (21) in the STATISTIC WINDOW (11) are permanently green.
- The green alarm LED (16) indicate that the hole is always found. The green OK LED (20) and the OK LED (21) in the STATISTIC WINDOW (11) indicate that, in X and Y direction, the difference between the maximum and minimum values of a sample of 20 measurements stay within 0.05mm.



11 STATISTIC WINDOW
16 LED
20 GREEN OK LED
21 GREEN OK LED

(Cont'd)

(Cont'd)

p) Set the COMMAND MODE ELEMENT (2) to 0 (PLC CMD) and the VS MAN MODE ELEMENT (1) to 0 (WAITING PLC), see 12.5.6.4-1 Command Mode (Read/Write) on page 12-68 and 12.5.6.4-2 Manual Mode (Read/Write) on page 12-69.

Note! If the Exposure value for the package size and the Hole Tolerance has not been changed skip the following step.

q) Save the application (.job) in the camera, see 12.5.5.4 Saving the Application Program in the In-Sight5100 Camera on page 12-58.

r) Make sure that the camera is ONLINE. If not put the camera ONLINE, see 12.5.5.2-1 Setting the On-Line Status of the Camera on page 12-50.

s) Close the IN-SIGHT EXPLORER, see 12.5.5.5 Closing the In-Sight Explorer Tool on page 12-60 and disconnect the laptop.

t) Switch off the illuminator using the TPOP, see 12.5.10.1-2 Switching the Illuminator ON/OFF on page 12-103.

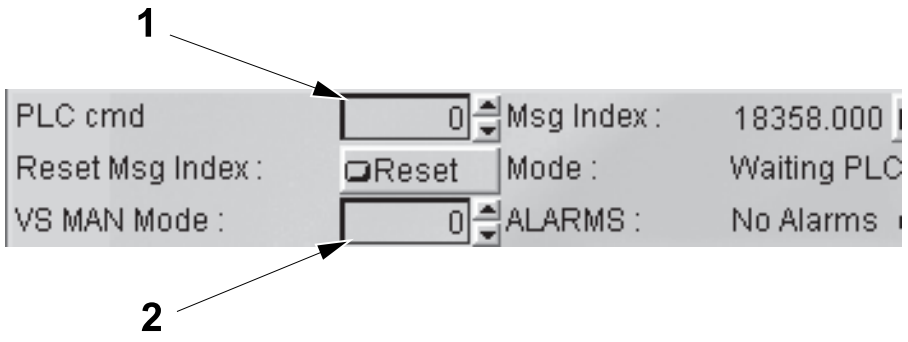

1 VS MAN MODE ELEMENT

2 COMMAND MODE ELEMENT

12.5.15 Hole Tolerance Setup

12.5.15.1 Procedures

12.5.15.1-1 Camera trouble shooting

Machine Status	Electrical supply disconnecting device in position I (ON)
SPC Reference	662916-0300

a) If the hole is found but the measured diameter is out of tolerance in the CUSTOM VIEW this situation is as shown in the illustration below. The SECOND LED (1) in the ALARMS LED field (2) is red. This condition is wrong.

b) The table below shows the causes for the above incorrect condition and how to solve it.

Cause	Solution
The exposure value is too high and part of the hole edge has disappeared	Repeat the procedure in 12.5.14 Exposure to Package on page 12-118
There is a large miss alignment between the surface of the calibration tool and the top of the package caused by a difference in the package height or in the setting of the applicator unit height.	Increase the hole tolerance in the CUSTOM VIEW field. See 12.5.6.4-11 Hole Tolerance (Read/Write) on page 12-79. The default value is 3 mm.
The tolerance value for the diameter measurement is too low.	

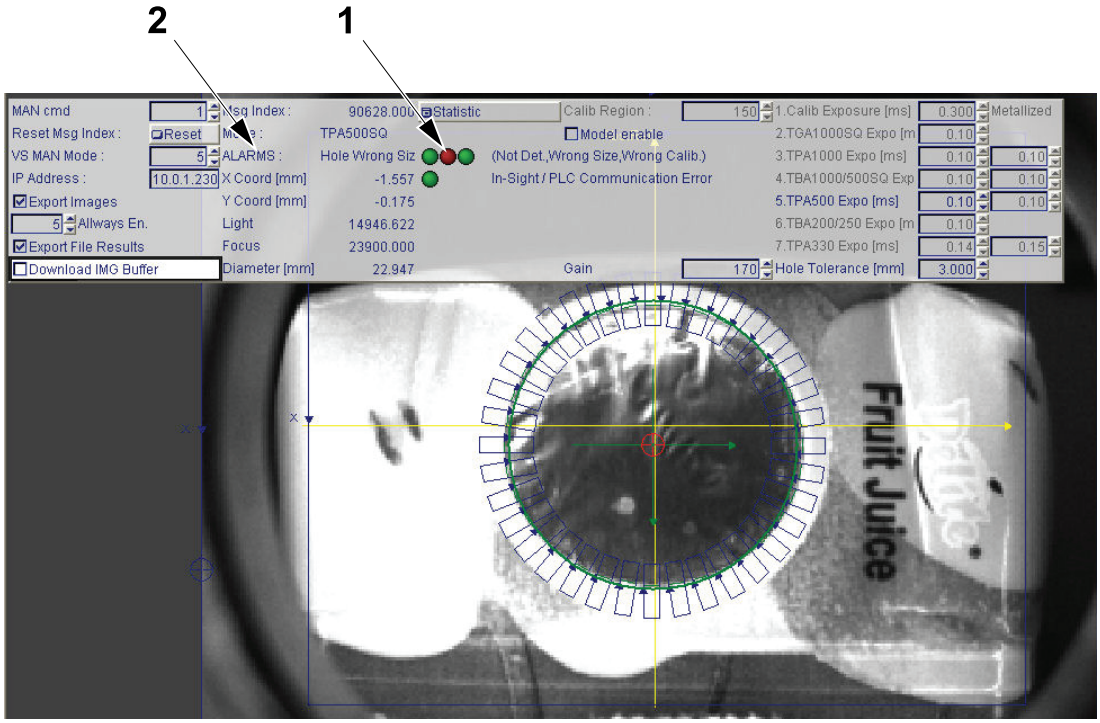

1 SECOND LED
2 ALARMS LED field

12.5.16 General Offset

12.5.16.1 Checks with Positioning System Turned Off

Note! General offset setting both with and without Positioning system must be performed with packages that were produced at the same time. No stops or paper changes should have taken place. The suggestion is to fill a helix and work with those packages.

Check Package Hole Position

Switch off the Positioning Device, see 12.5.4.2-5 Vision System - Deactivation from the TPOP on page 12-36.

Using the appropriate template, check the position of the hole, see Package Checks Screw Cap in the CAP30 OM.

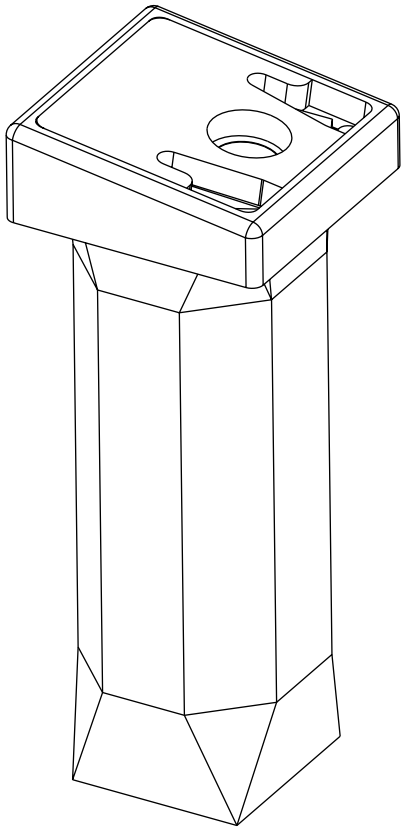

12.5.16.2 Check Cap Position on PLH in X and Y Axis.

Switch off the Positioning Device, see 12.5.4.2-5 Vision System - Deactivation from the TPOP on page 12-36.

Using the appropriate template, check the position of the PLH, see Package Checks Screw Cap in the CAP30 OM.

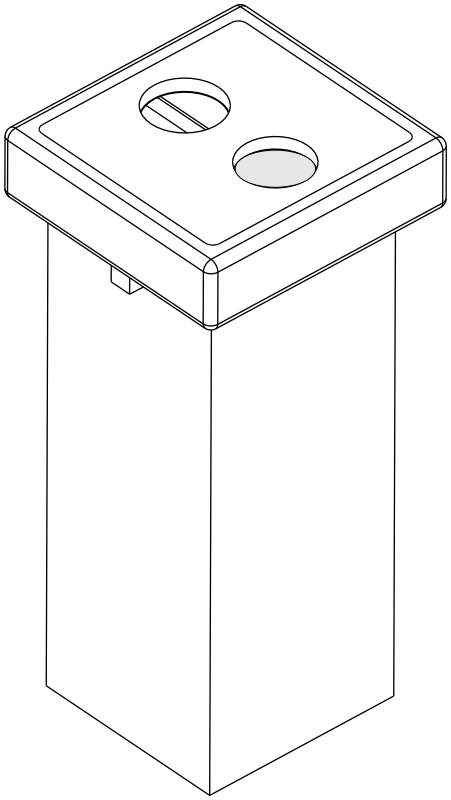

12.5.16.3 Check Cap Position on PLH for all 6 Cap Holders.

Using the appropriate template, check the position of the PLH, see Package Checks Screw Cap in the CAP30 OM.

Also see, 12.5.16.2 Check Cap Position on PLH in X and Y Axis..

12.5.17 Setting Machine Using Vision System

12.5.17.1 Procedures

12.5.17.1-1 Turning On the Vision System

Machine Status	Electrical supply disconnecting device in position I (ON)
SPC Reference	662916-0300

See, 12.5.4.2-4 Vision System - Installation / Activation from the TPOP on page 12-33.

12.5.17.1-2 Setting the General Offset Values and the Single Cap Holder Value to Zero

Machine Status	Electrical supply disconnecting device in position I (ON)
SPC Reference	662916-0300

Offset Values to Zero

a) Log on as a user, see 1.1.1-1 HMI User Management - Log On as a User on page 1-6.

b) Touch the SYSTEM SETTING button (1) and the CAP POSITION button (2) to display the CAP POSITION window (3).

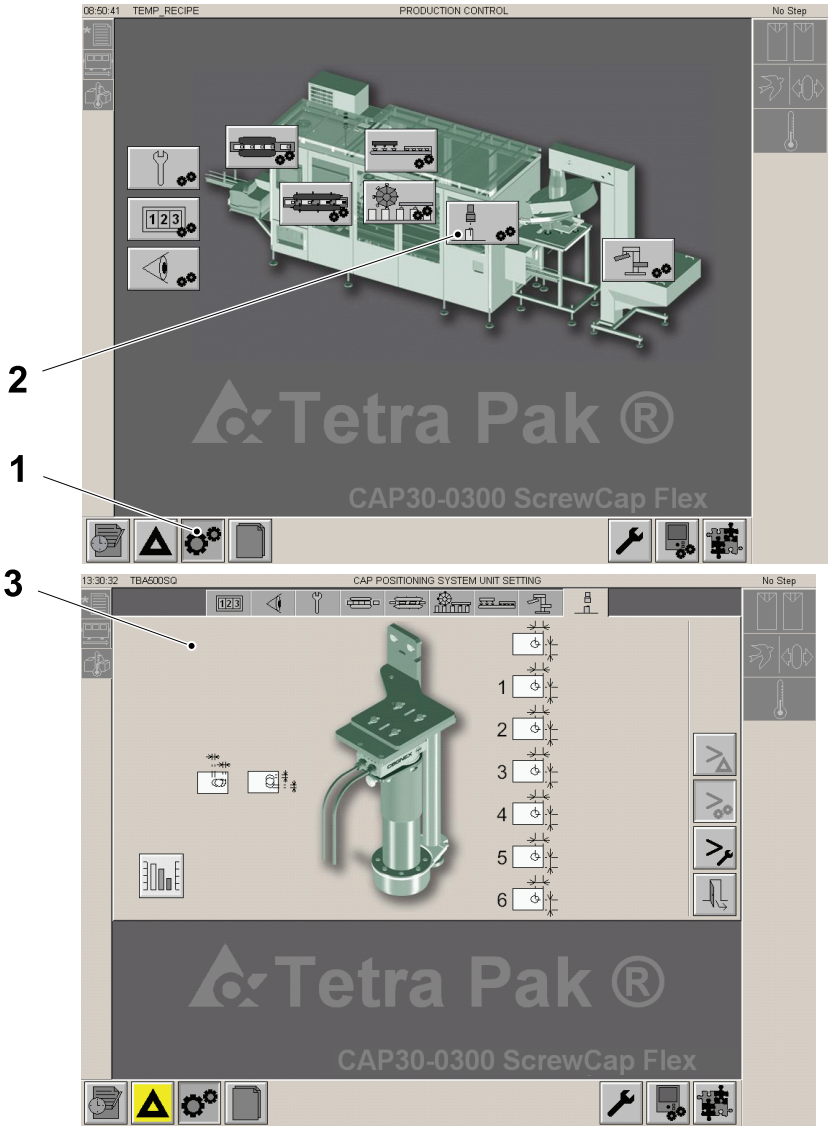

1 SYSTEM SETTING button

2 CAP POSITION button

3 CAP POSITION window

(Cont'd)

(Cont'd)

Note! The general GENERAL OFFSET button (4) changes all offsets at the same time.

c) Touch the GENERAL OFFSET button (4) and the OFFSET Y button (5) or the OFFSET X button (6).

d) Adjust using the UP DOWN arrows (7) until zero is seen in the VALUE WINDOW (8) and then touch the OK button (9).

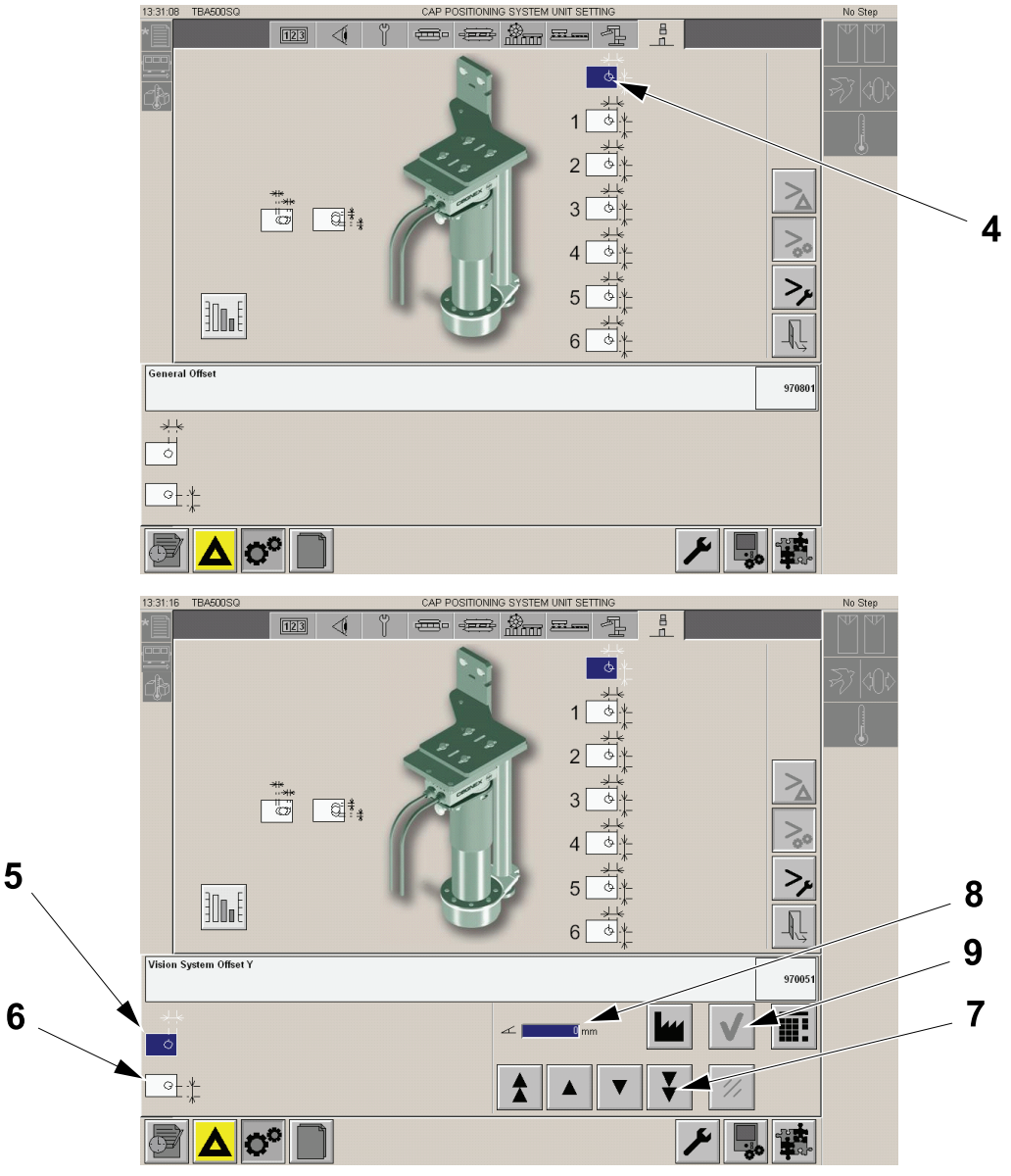

4 GENERAL OFFSET button
5 OFFSET Y button
6 OFFSET X button
7 UP DOWN arrows
8 VALUE WINDOW
9 OK button

(Cont'd)

(Cont'd)

Note! The CAP HOLDER OFFSET button (10) changes one offset at a time.

e) Touch one of the CAP HOLDER OFFSET button (10) and the OFFSET Y button (5) or the OFFSET X button (6).

f) Adjust using the UP DOWN arrows (7) until zero is seen in the VALUE WINDOW (8) and then touch the OK button (9).

g) Repeat for the other cap holders.

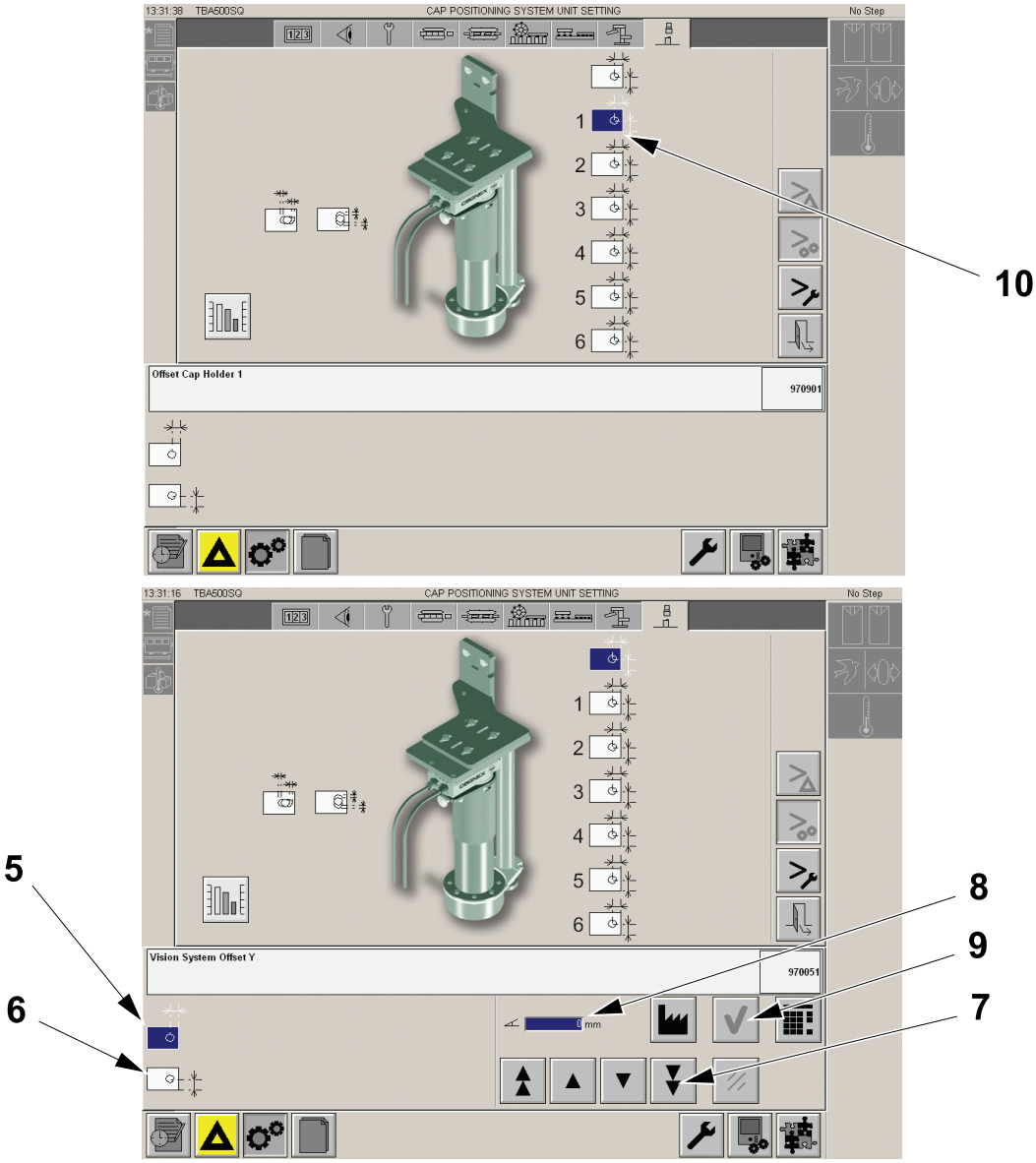

5 OFFSET Y button
6 OFFSET X button
7 UP DOWN arrows
8 VALUE WINDOW
9 OK button
10 Cap holder offset button

(Cont'd)

(Cont'd)

Reading the Actual Correction Value

a) Feed packages that have passed the visual examination checks into the machine and touch the trend button (1).

Note! This is required so that compensation can be made for the package under the camera. The goal is to have the correction across the zero line in both the X and Y direction.

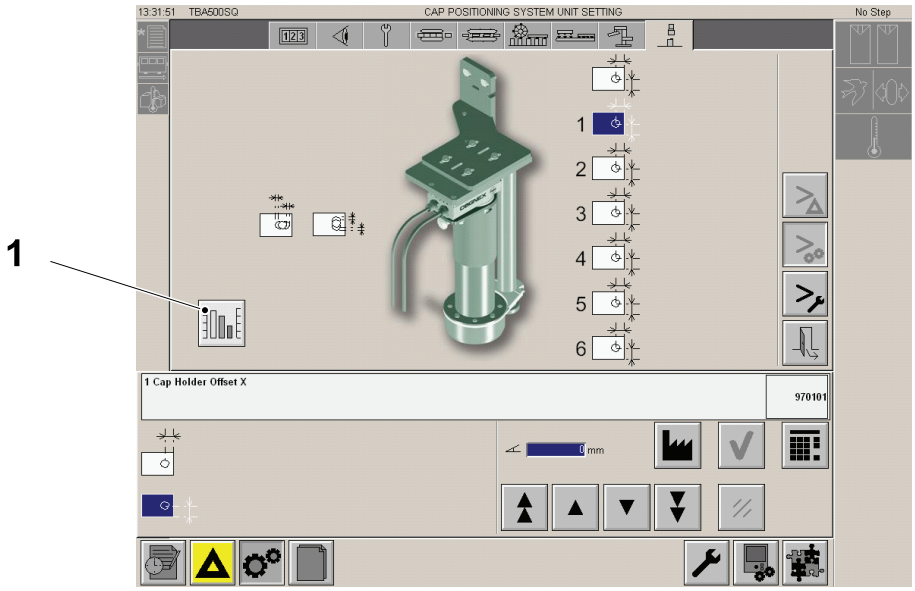

1 Trend button

(Cont'd)

(Cont'd)

b) Check that the camera analysis was successful and the ANALYSIS INDICATOR (2) is green. If not check the camera setup.

c) Read the X OFFSET value (3) and the Y OFFSET value (4) correction values from the TREND WINDOW (5).

d) Make the general offset corrections, see 12.5.17.1-3 Making Corrections to the General Offset Values on page 12-142 to compensate the correction.

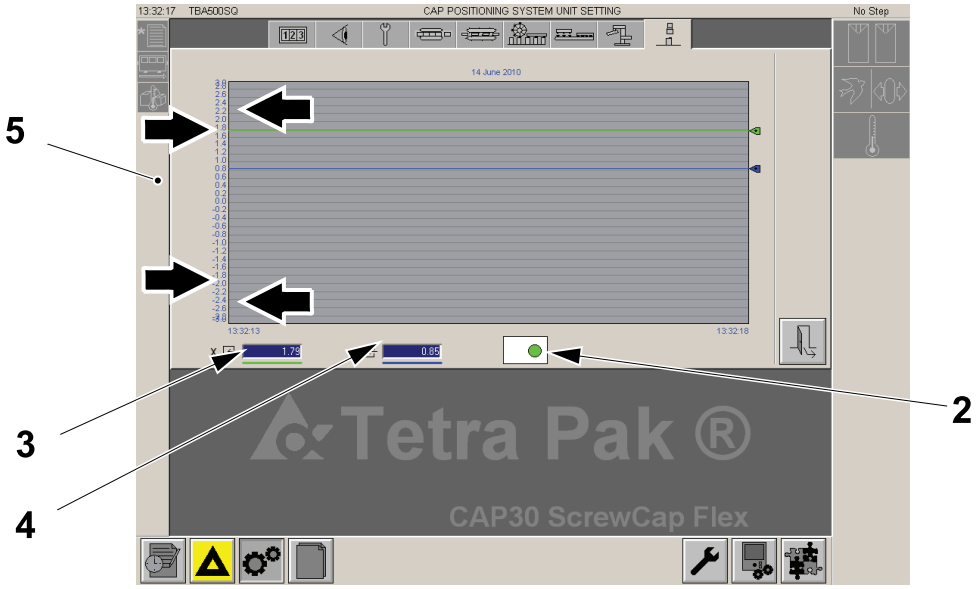

2 ANALYSIS INDICATOR
3 X OFFSET value
4 Y OFFSET value
5 TREND WINDOW

(Cont'd)

(Cont'd)

Reading the Actual Correction Value

Note! This procedure is an alternative to the prceeding one starting on page 12-133. There is no requirement to do both.

Note! The General Offset X (1) shows but does not function for the DreamCap

a) Press the and GENERAL OFFSET Y (2) buttons in the custom view.

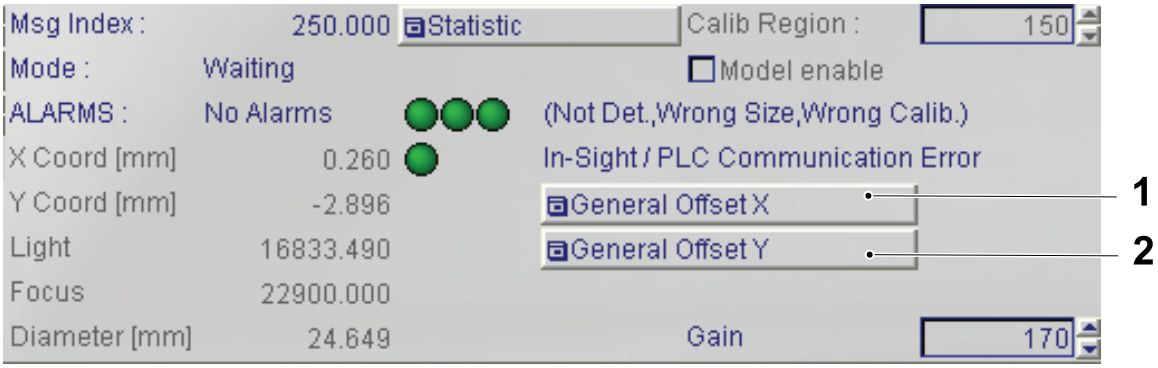

1 GENERAL OFFSET X
2 GENERAL OFFSET Y

b) Press the RESET button (3) and the RESET button (4) to set to zero the GENERAL OFFSET X and GENERAL OFFSET Y values previously memorized.

c) Press OK button (5) to exit the windows.

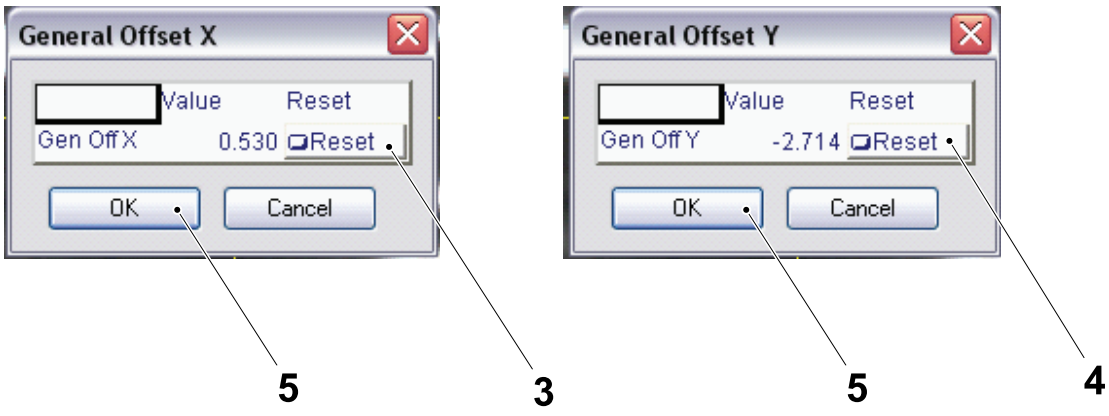

3 RESET button
4 RESET button
5 OK button

(Cont'd)

(Cont'd)

Note! Feed approximately **30 packages** that have passed the visual examination checks into the machine and put it in production.

d) After this production batch is finished, press the and GENERAL OFFSET Y (2) buttons and look at the value (6) and the value (7).

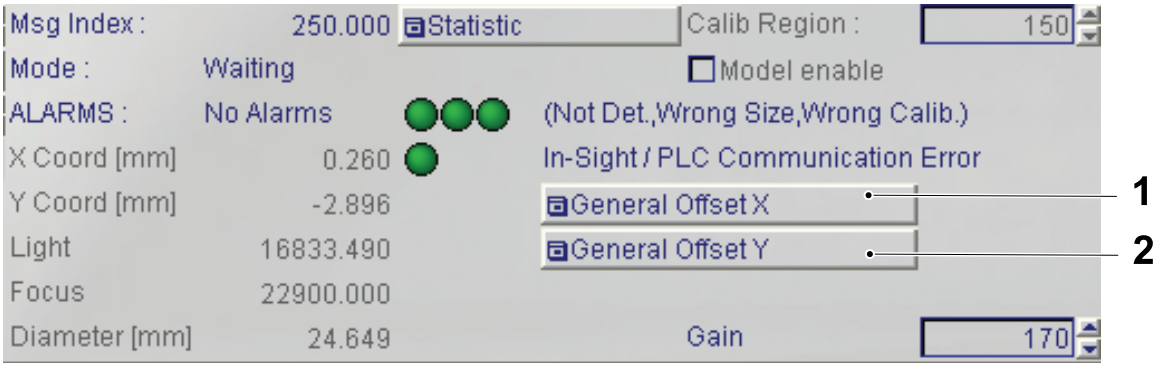

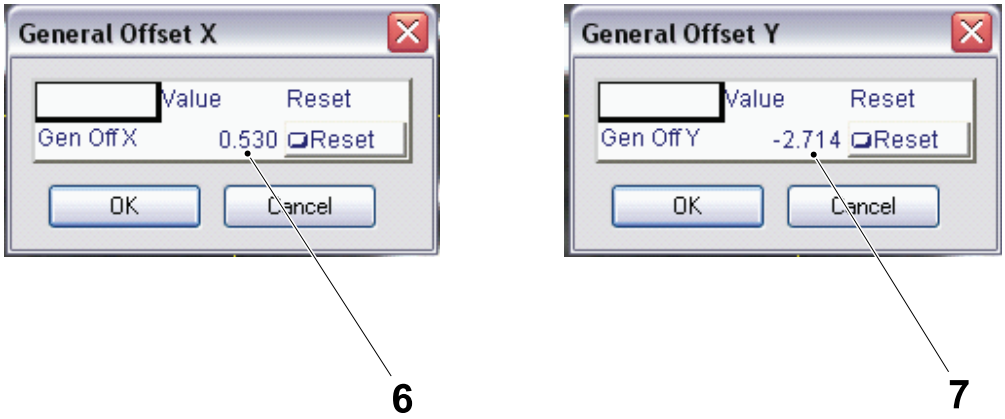

2 GENERAL OFFSET Y
6 Value
7 Value

(Cont'd)

(Cont'd)

e) Insert those values **with the signs inverted** into the `AXIS WINDOW X` (8) and the `AXIS WINDOW Y` (9) Axis windows.

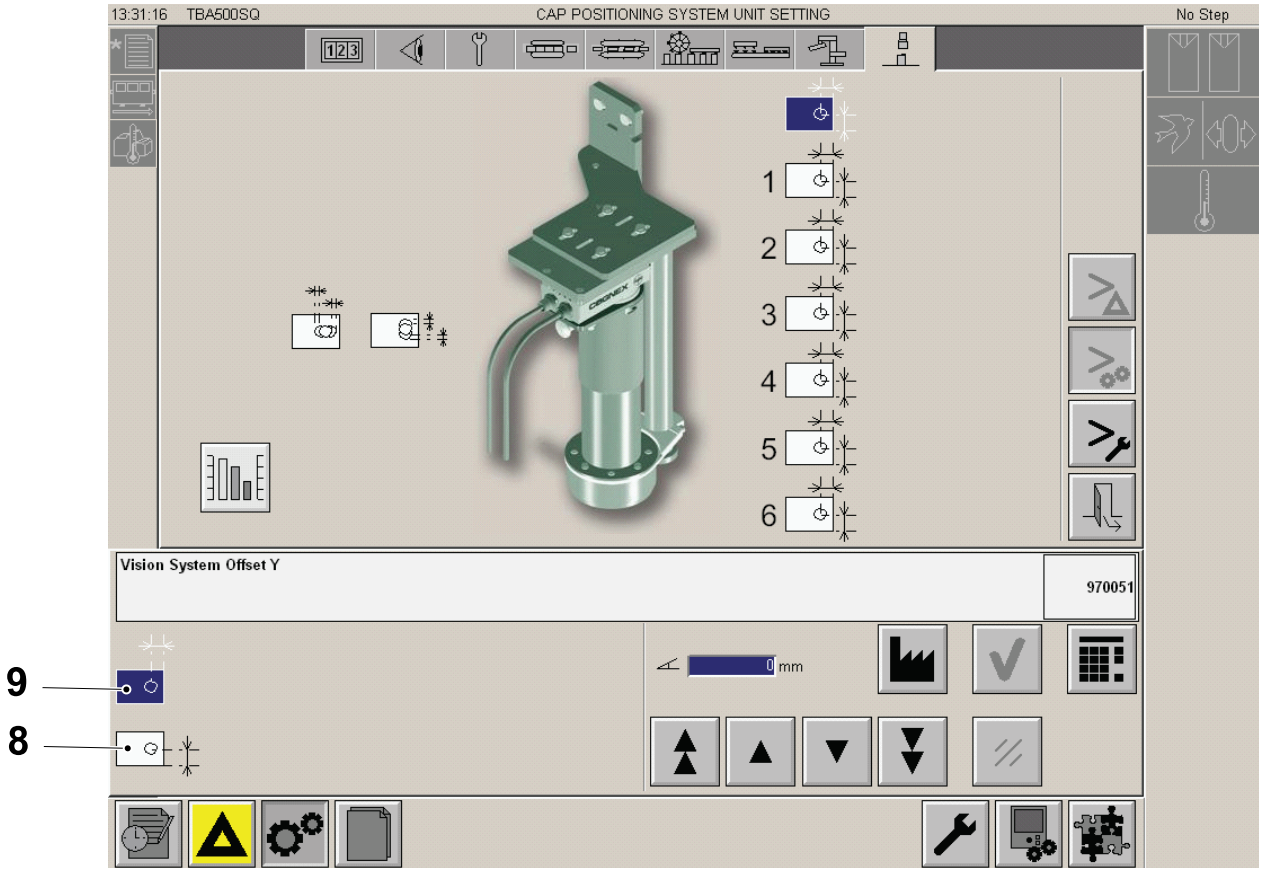

8 `AXIS WINDOW X`
9 `AXIS WINDOW Y`

(Cont'd)

(Cont'd)

f) To enter values for axis correction, proceed as follows:

- Touch the AXIS WINDOW X (8) .
- Use the keyboard, access by the KEYBOARD button (10), or the ARROW KEY (11) to set the correction value in the window (12).
- Touch the OK button (13).
- Repeat the above steps for the Y-axis by touching the AXIS WINDOW Y (9) .
- On completion, touch the EXIT button (14).

g) When the X and Y values are correct save them in the recipe, see 10.9.1-14 Touch Screen - Saving Recipe Settings on page 10-328.

Note! This procedure must be intended as a guide to set the general offset; the numbers found in the "General Offset X and Y Windows" are NOT EXACTLY the perfect values that fulfil all the packages but are calculated means that help the technician setting the machine. If this one find that the setting done in this way is not the best suited for his cap application, he will be allowed to modify it to adjust the cap positions.

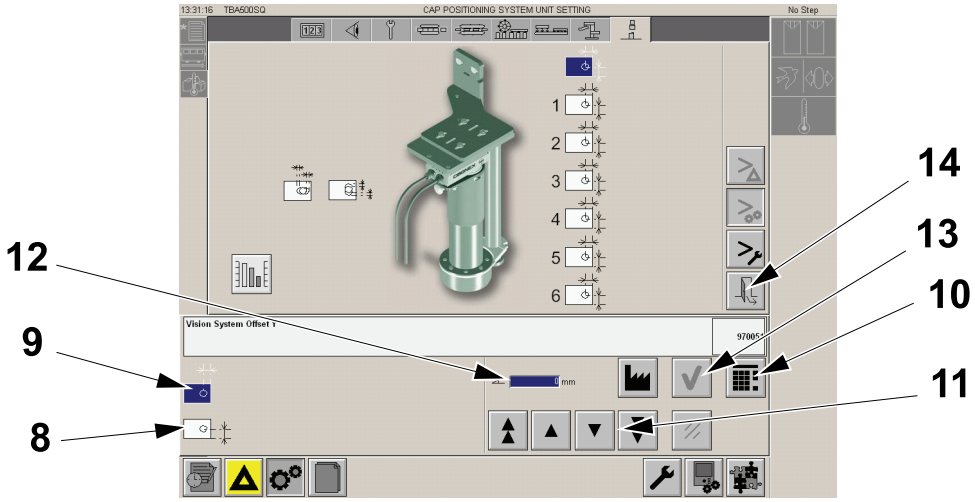

8 AXIS WINDOW X
9 AXIS WINDOW Y
10 KEYBOARD button
11 ARROW KEY
12 WINDOW
13 OK button
14 EXIT button

12.5.17.1-3 Making Corrections to the General Offset Values

Machine Status	Electrical supply disconnecting device in position I (ON)
SPC Reference	662916-0300

The size of correction that can be made at any single time is limited to:

+ or - 2 mm for the X-axis

and

+ or - 3 mm for the Y-axis correction

This means that a correction exceeding the above values must be corrected by changing the general offset value. This may require repeating the offset correction procedure a number of times.

a) Using packages that have been checked for correctness pass them under the camera.

b) Read the `X CORRECTION` value (1) and the `Y CORRECTION` value (2) from the `TREND WINDOW` (3) when packages are passing under the camera making a note of the values.

c) Calculate the average for both X and Y for use in the step d).

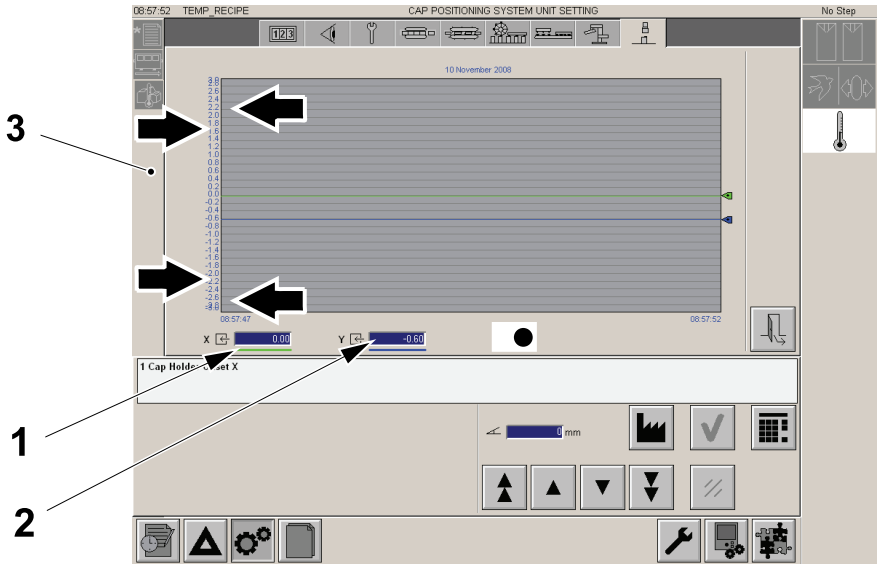

1 `X CORRECTION` value
2 `Y CORRECTION` value
3 `TREND WINDOW`

(Cont'd)

(Cont'd)

d) Make corrections to the general offset values, as follows:

- If the X CORRECTION value (1) has a POSITIVE sign, enter the same value with a NEGATIVE sign in the X Axis offset window (4).
- If the X CORRECTION value (1) has a NEGATIVE sign, enter the same value with a POSITIVE sign in the X Axis offset window (4).
- If the Y CORRECTION value (2) has a POSITIVE sign, enter the same value with a NEGATIVE sign in the Y Axis offset window (5).
- If the Y CORRECTION value (2) has a NEGATIVE sign, enter the same value with a POSITIVE sign in the Y Axis offset window (5).

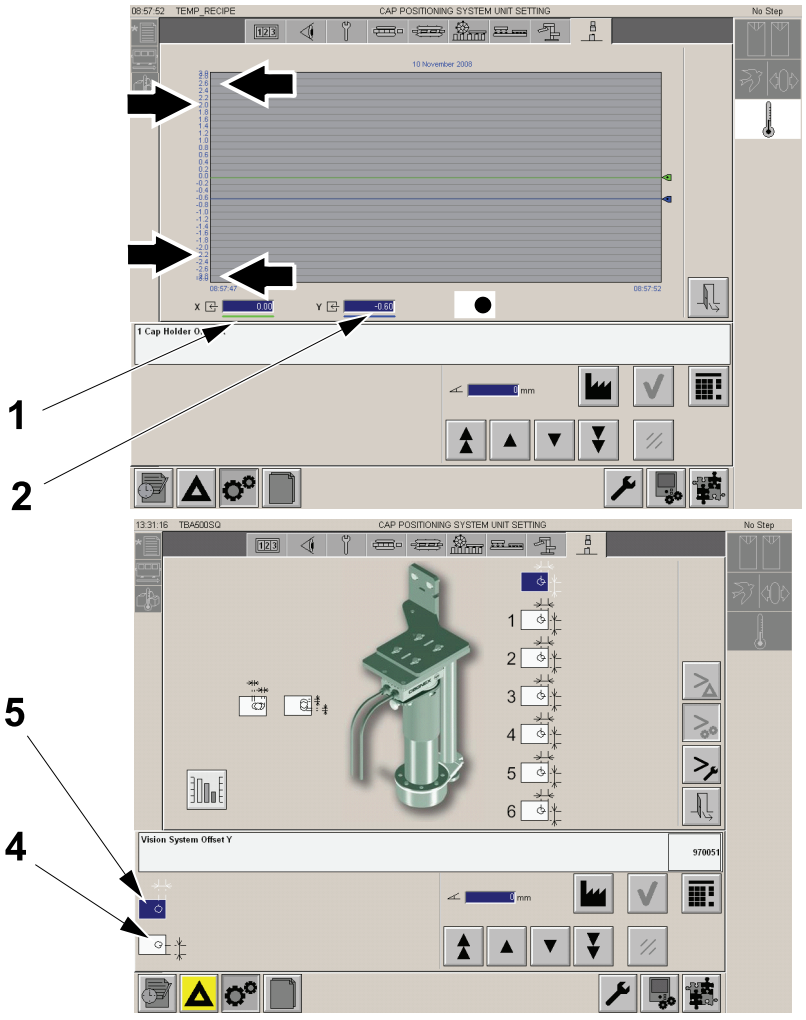

1 X CORRECTION value
2 Y CORRECTION value
4 X Axis offset window
5 Y Axis offset window

(Cont'd)

(Cont'd)

e) To enter values for axis correction, proceed as follows:

- Touch the X AXIS OFFSET WINDOW (6).
- Use the keyboard, access by the KEYBOARD button (7), or the ARROW KEY (8) to set the correction value in the Window (9).
- Touch the OK button (10).
- Repeat the above steps for the Y-axis by touching the Y AXIS OFFSET WINDOW (11).
- On completion, touch the EXIT button (12).

f) Repeat the above procedure as many times as necessary until corrections are as close as possible to zero.

g) When the X and Y values are correct save them in the recipe, see 10.9.1-14 Touch Screen - Saving Recipe Settings on page 10-328.

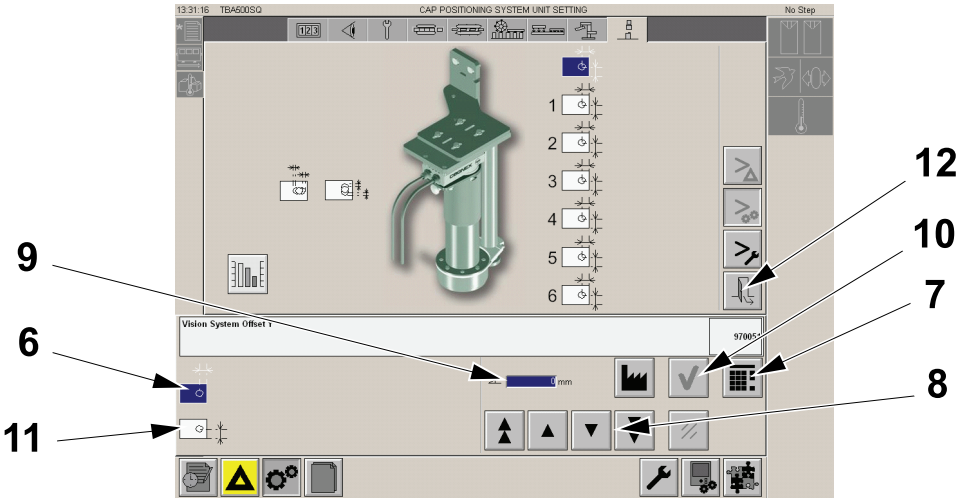

6 X AXIS OFFSET WINDOW
7 KEYBOARD button
8 ARROW KEY
9 Window
10 OK BUTTON
11 Y AXIS OFFSET WINDOW
12 EXIT button

12.5.17.1-4 Making Corrections to the Delta Tolerance

Machine Status	Electrical supply disconnecting device in position I (ON)
SPC Reference	662916-0300

a) Login the TPOP as service technician, see 1.1.1-1 HMI User Management - Log On as a User on page 1-6, if required.

b) Touch the `PRODUCTION CONTROL` button (1) and the `CAP POSITIONING SYSTEM UNIT SETTING` button (2).

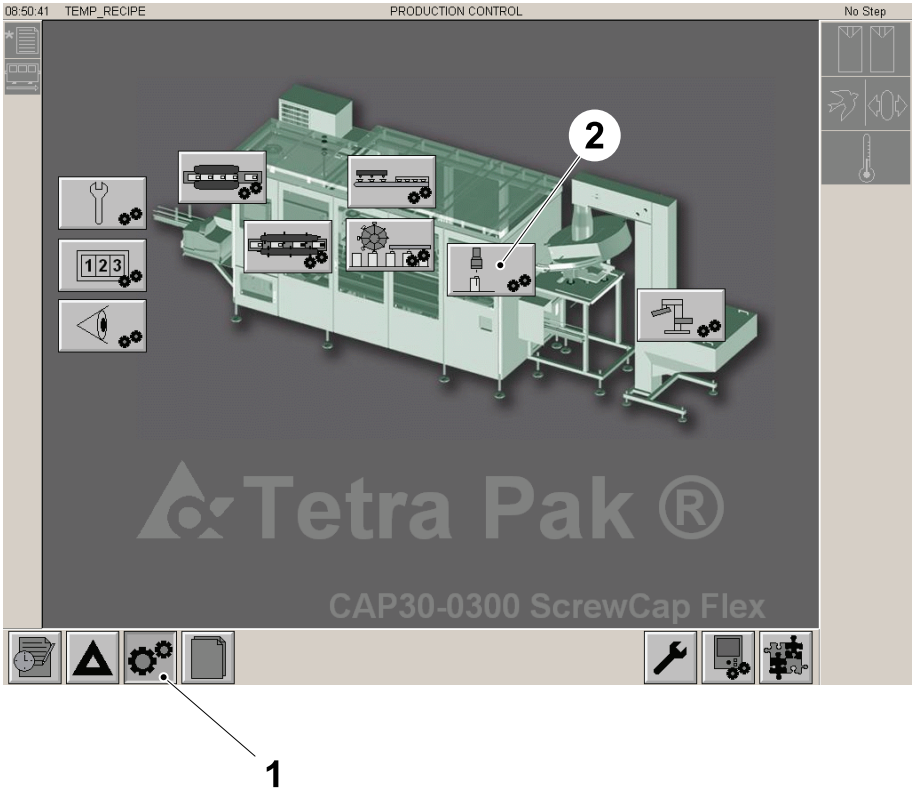

1 PRODUCTION CONTROL button
2 CAP POSITIONING SYSTEM UNIT SETTING button

(Cont'd)

(Cont'd)

c) The CAP POSITIONING SYSTEM UNIT SETTING window (3) shows:

- Vision System Delta Tolerance Axis Y (4) .
- Vision System Delta Tolerance Axis X (5).

Note! X not used for DreamCap.

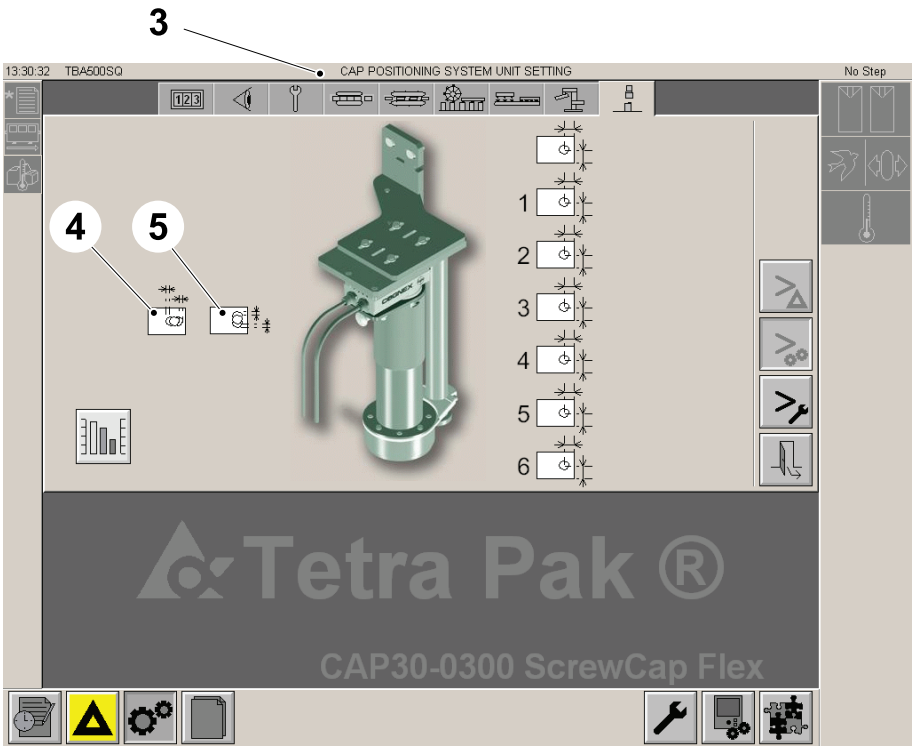

3 CAP POSITIONING SYSTEM UNIT SETTING window
4 Vision System Delta Tolerance Axis Y
5 Vision System Delta Tolerance Axis X

(Cont'd)

(Cont'd)

Delta Tolerance X and Y Setup

Note! The high or low tolerances permit to the positioning device to be less or more precise in the detection of waste packages.

a) `DELTA TOLERANCE AXIS Y` button (1).

b) Use the keyboard, access by the `KEYBOARD` button (2) , or the `ARROW` button (3) to set the tolerance value in the `WINDOW` (4).

c) Touch the `OK` button (5).

d) Repeat the above steps for the X-axis by touching the `DELTA TOLERANCE AXIS X` button (6).

Note! Y only for DreamCap.

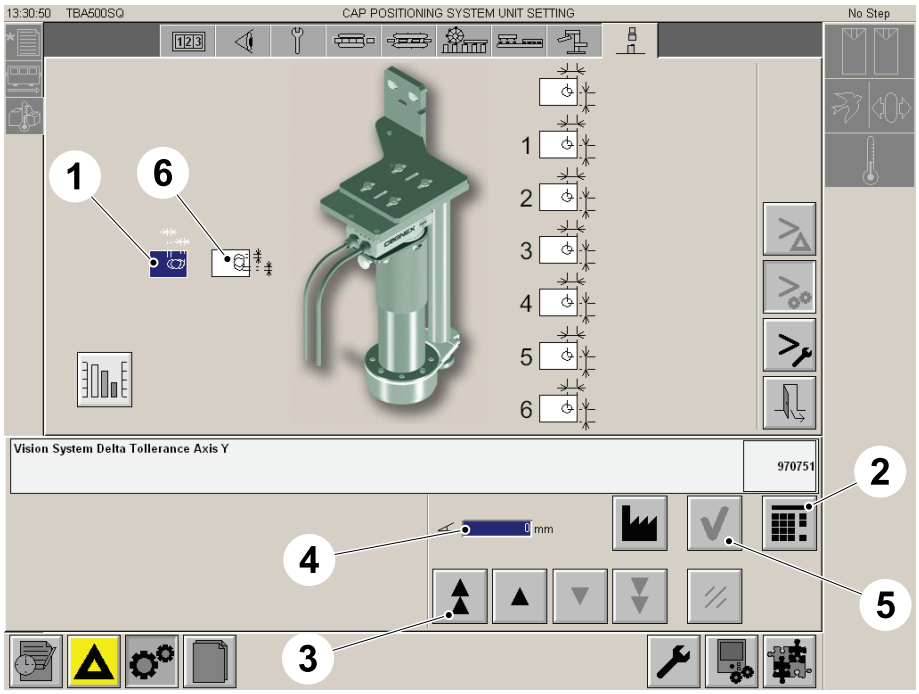

1 `DELTA TOLERANCE AXIS Y` button
2 `KEYBOARD` button
3 `ARROW` button
4 `WINDOW`
5 `OK` button
6 `DELTA TOLERANCE AXIS X` button

12.5.18 Cap Offset

12.5.18.1 Procedures

12.5.18.1-1 Check Package Hole Position

Machine Status	Electrical supply disconnecting device in position I (ON)
SPC Reference	662913-0300

Using new packages and the appropriate template, check the position of the hole, see CAP30 OM, Chapter 5 Checks.

12.5.18.1-2 Check Package Hole Position - HeliCap Only

Machine Status	Electrical supply disconnecting device in position I (ON) Main air valve ON
SPC Reference	662916-0300

Note! Before perform this fine setting the machine must be already set-up by means of the positioning device, see 12.5.3 Setting Procedures for this Chapter. This fine setting is performed before the machine goes in STEP3 PRODUCTION.

a) Perform a package sample and collect six consecutive packages from the conveyor after the machine, see 4.4-11 Hotmelt Gun - Check on page 4-52.

b) Open the caps (1) and empty the packages (2) .

c) Cut the packages (2) and remove the grey area shown in the picture.

d) Number (3) the samples from 1 to 6 by means of a pen.

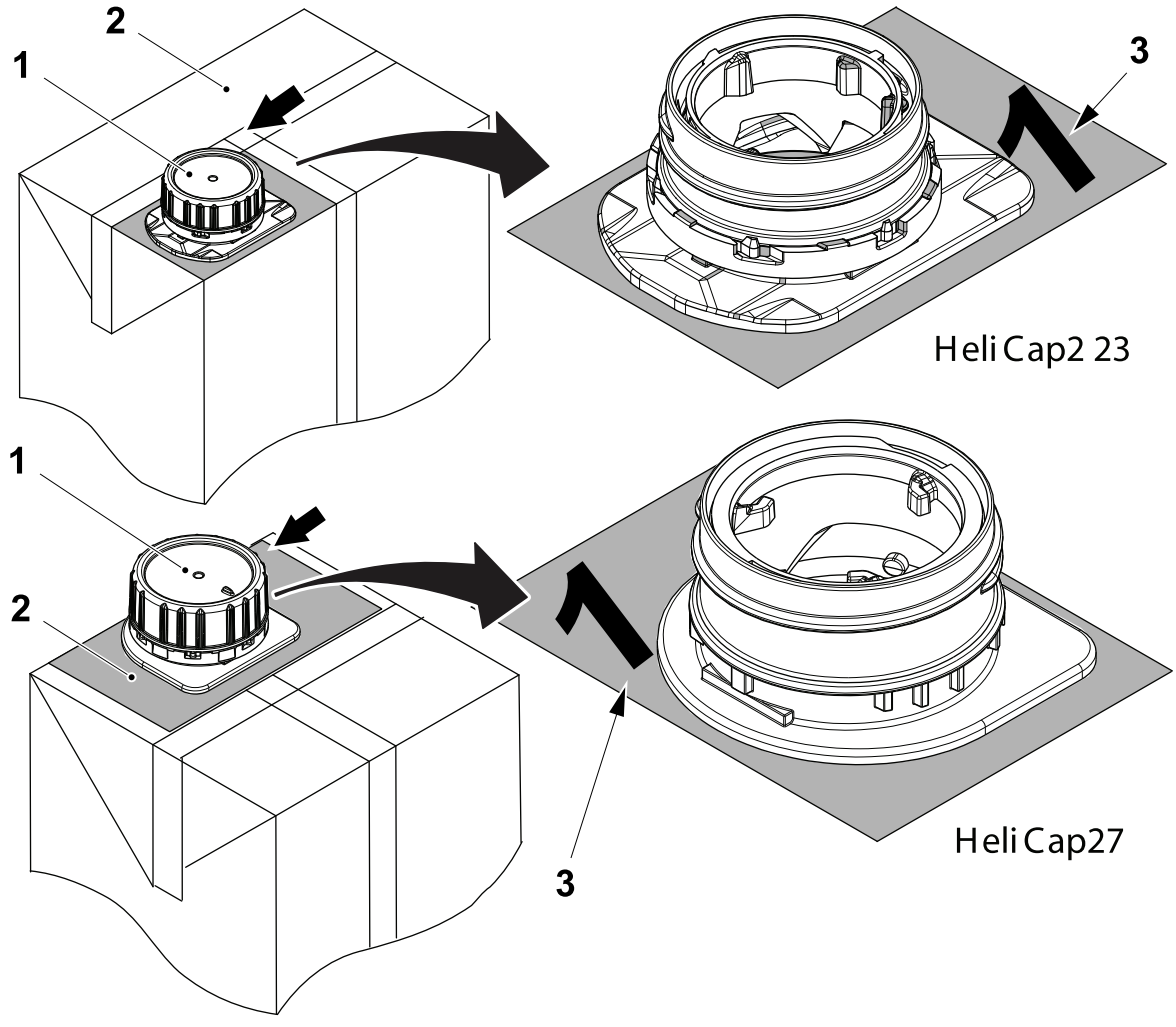

1 Cap
2 Package
3 Number

(Cont'd)

(Cont'd)

e) Remove the aluminium layer (4) from the bottom of the cap (5).

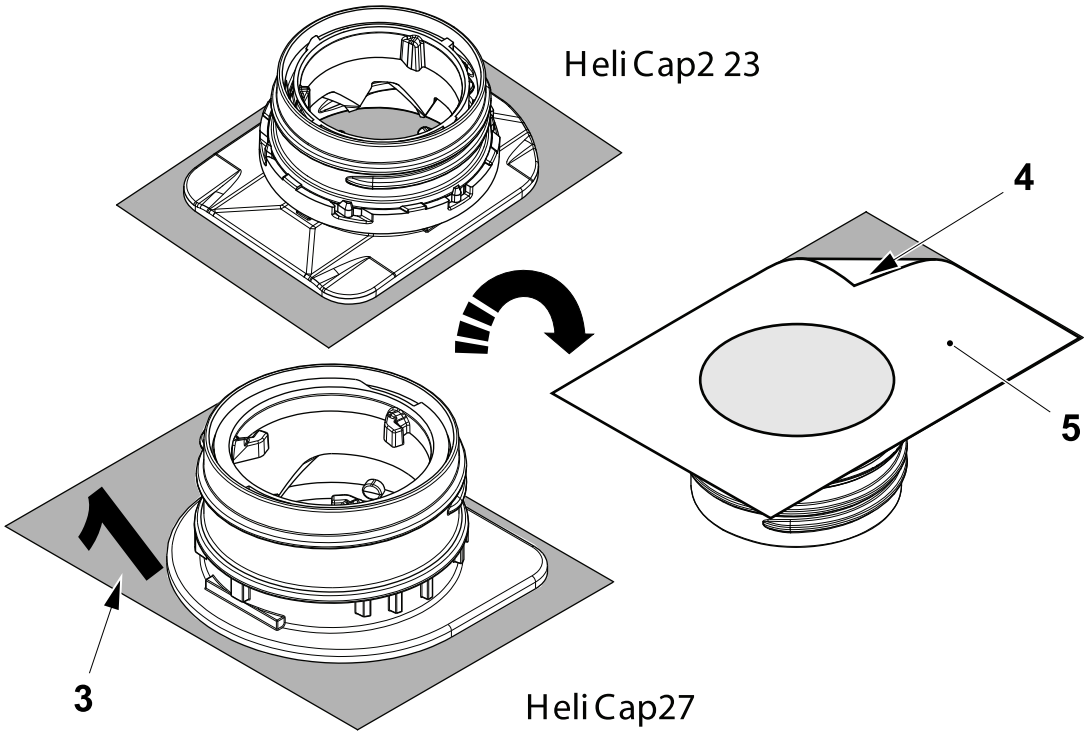

4 Aluminium layer
5 Bottom of the cap

(Cont'd)

(Cont'd)

f) Insert the bottom of the cap (5) into the Template (6) and check that it doesn't rotate.

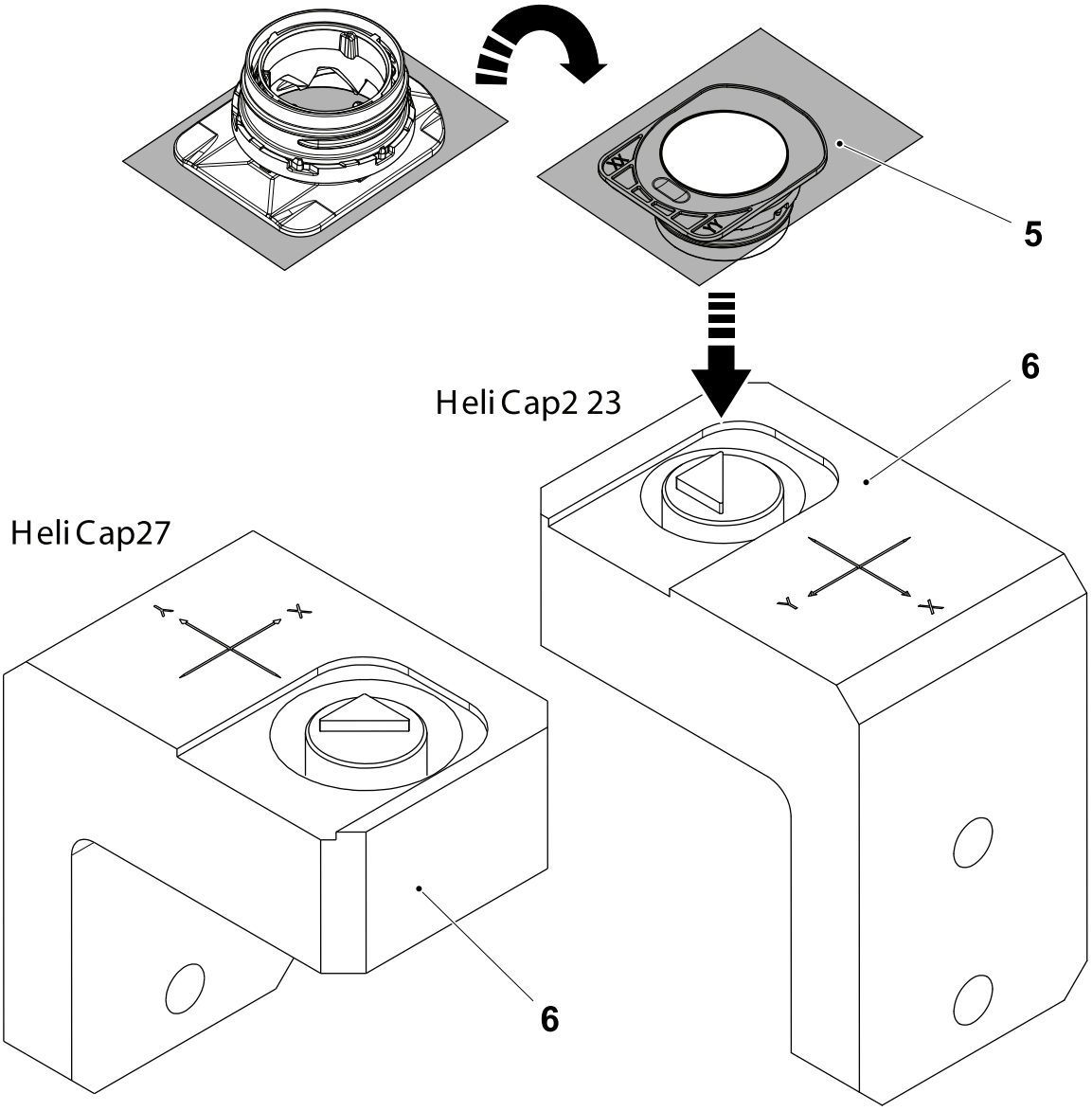

5 Bottom of the cap
6 Template

(Cont'd)

(Cont'd)

For HeliCap2 23 Only

Note! Use a (digital) caliper to check the position of the cap on package.

a) Measure the maximum distance **Y** between the `Y-REFERENCE` (1) the template and the packaging material (2).

b) Measure the maximum distance **X** between the `X-REFERENCE` (3) of the template and the packaging material (2).

Note! Be sure that the measure is taken between the template and the board of the hole: the caliper shouldn't touch the cap.

c) Put the measures in the tables of pages 12-154.

d) Repeat from a) to b) for all the 6 packages.

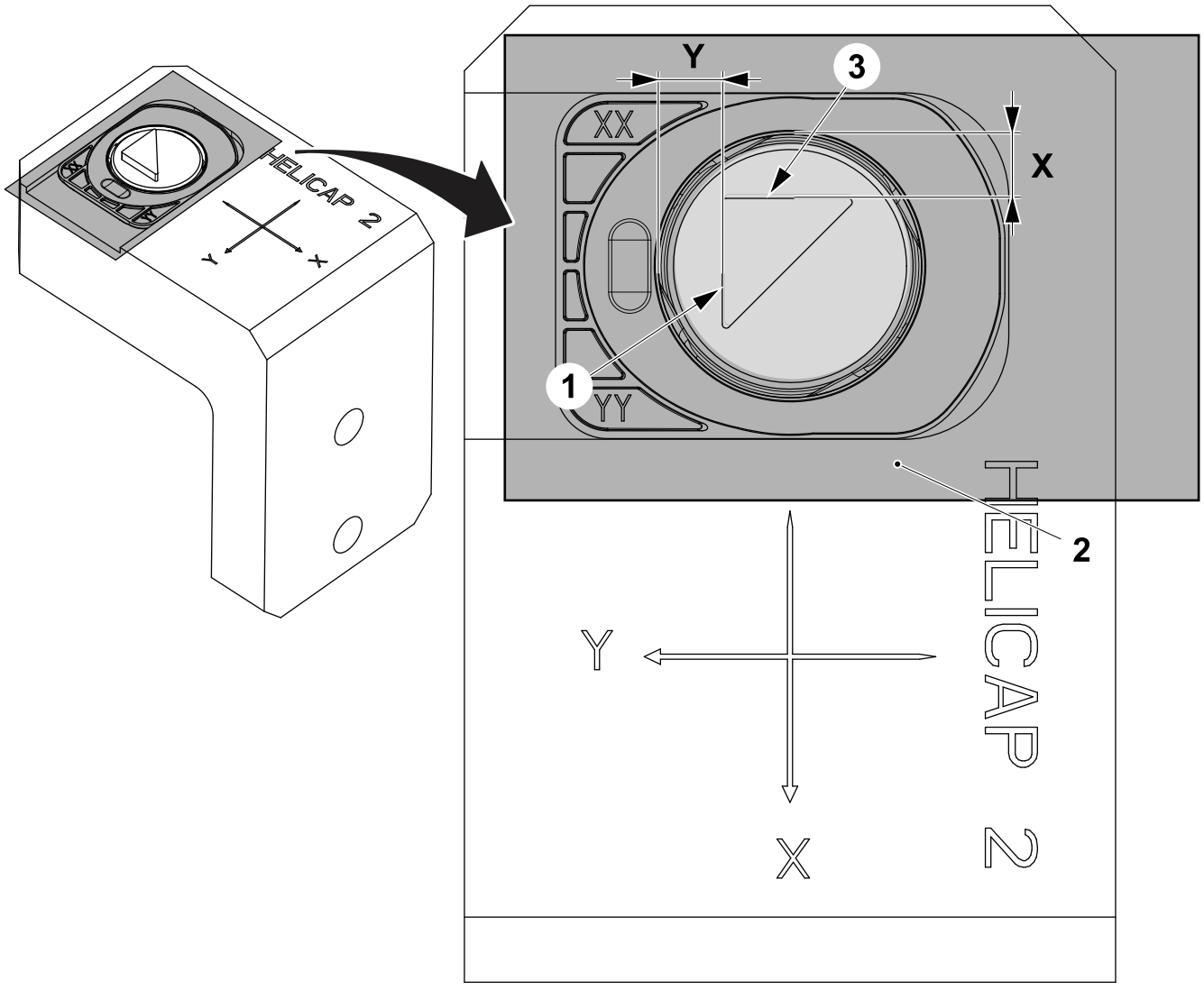

1 `Y-REFERENCE`
2 Packaging material
3 `X-REFERENCE`

(Cont'd)

(Cont'd)

For HeliCap 27 Only

Note! Use a (digital) caliper to check the position of the cap on package.

a) Measure the maximum distance **Y** between the Y-REFERENCE (1) the template and the packaging material (2).

b) Measure the maximum distance **X** between the X-REFERENCE (3) of the template and the packaging material (2).

Note! Be sure that the measure is taken between the template and the board of the hole: the caliper shouldn't touch the cap.

c) Put the measures in the tables of pages 12-154.

d) Repeat from a) to b) for all the 6 packages.

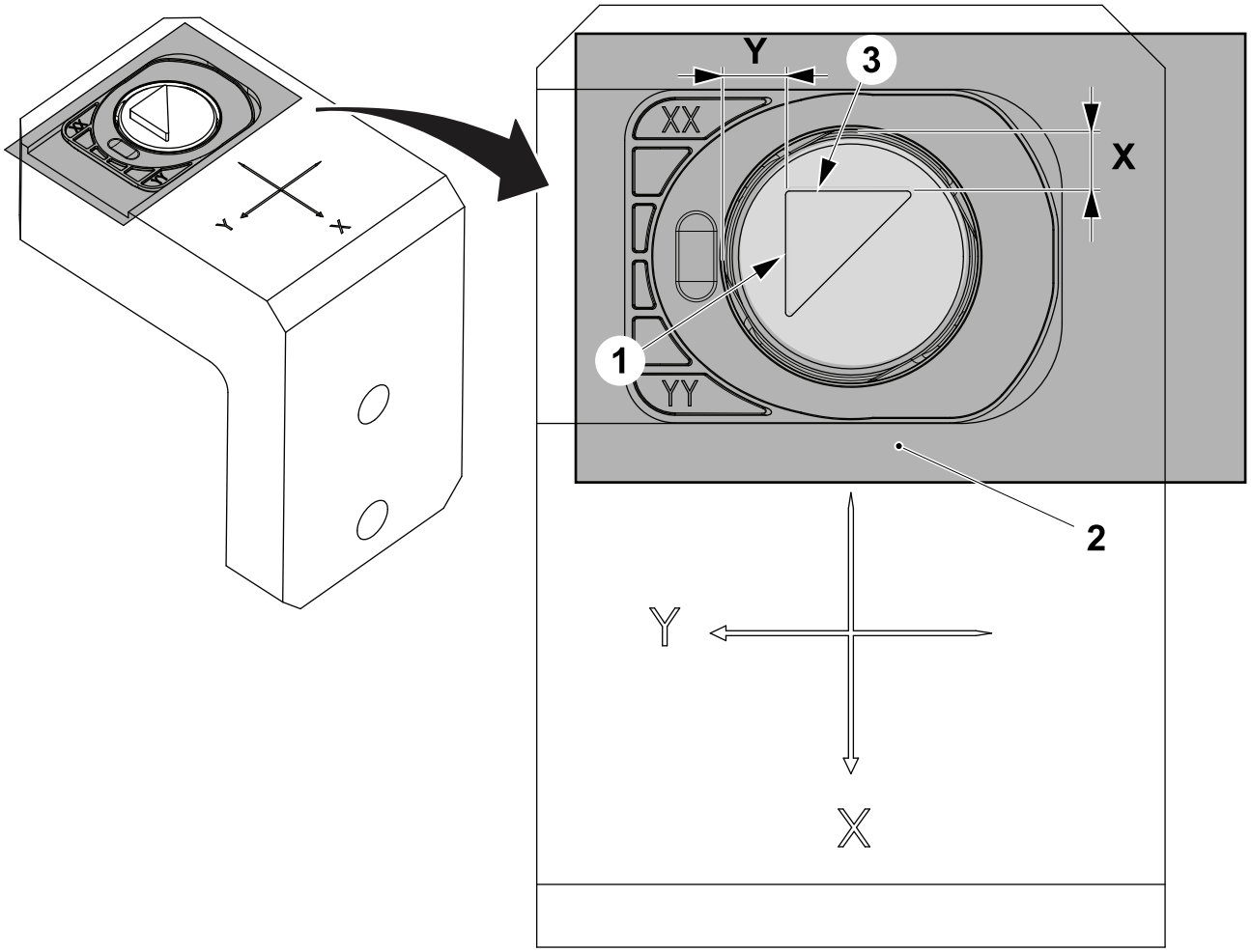

1 Y-REFERENCE
2 Packaging material
3 X-REFERENCE

12.5.18.1-3 Position of the Cap on Package Table

a) Repeat from a) on page 12-152 to b) on page 12-153 another two times.

b) Calculate the average values of columns **X** and **Y** between the 3 values collected for every cap holder.

Package Number	Distance X	Distance Y
1(first sample)		
1(second sample)		
1(third sample)		
Average 1		

Package Number	Distance X	Distance Y
2(first sample)		
2(second sample)		
2(third sample)		
Average 2		

Package Number	Distance X	Distance Y
3(first sample)		
3(second sample)		
3(third sample)		
Average 3		

Package Number	Distance X	Distance Y
4(first sample)		
4(second sample)		
4(third sample)		
Average 4		

Package Number	Distance A	Distance B
5(first sample)		
5(second sample)		
5(third sample)		
Average 5		

Package Number	Distance A	Distance B
6(first sample)		
6(second sample)		
6(third sample)		
Average 6		

(Cont'd)

(Cont'd)

c) Subtract '5' to every average and put these values in the following table:

Package Number	Offset
1	
2	
3	
4	
5	
6	

d) Check the offsets:

- If the offsets are less than ±0.5mm no further action is necessary
- If the offsets are more or less the same value, correct their position according to the 12.5.17.1-3 Making Corrections to the General Offset Values on page 12-142.
- In case of different offsets, perform a correction to the single cap holder, see 12.5.17.1-2 Setting the General Offset Values and the Single Cap Holder Value to Zero on page 12-133.

12.5.18.1-4 Check Cap Position on PLH for All Cap Holders

Machine Status	Electrical supply disconnecting device in position I (ON)
SPC Reference	662916-0300

Check the cap position on the PLH in the X and Y axis, see CAP30 OM, Chapter 5 Internal Cap Position.

12.5.19 Trend

12.5.19.1 Procedures

12.5.19.1-1 Check Package Hole Position

Machine Status	Electrical supply disconnecting device in position I (ON)
SPC Reference	662916-0300

Using new packages and the appropriate template, check the position of the hole, see CAP30 OM, Chapter 5 Checks.

12.5.19.1-2 Using the Trend Screen

Machine Status	Electrical supply disconnecting device in position I (ON)
SPC Reference	662916-0300

Run the machine in production and check that the TREND POSITION (1) stays around zero.

Check that the CAMERA ANALYSIS (2) is always green.

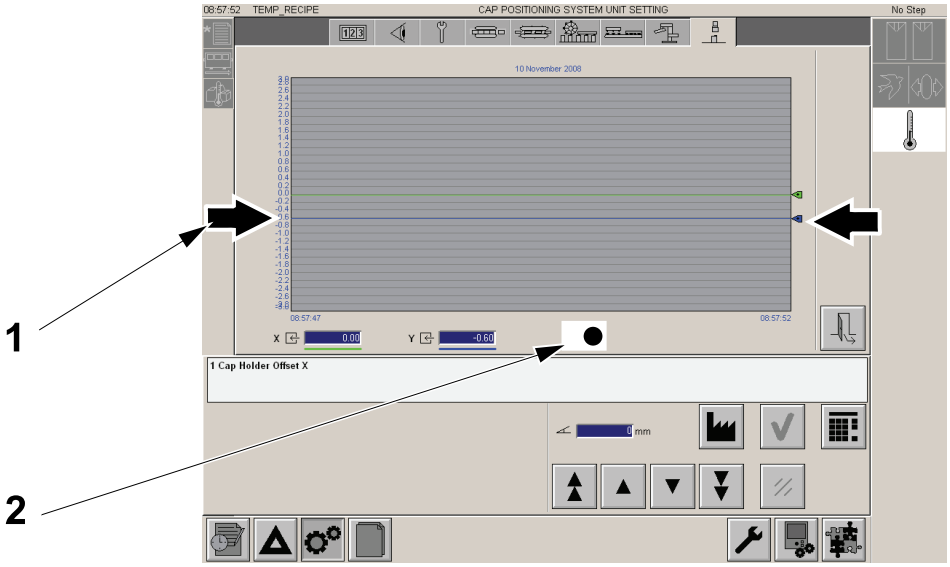

1 TREND POSITION
2 CAMERA ANALYSIS

12.6 Line Controller

12.6.1 Bar Code Scanner

12.6.1-1 TPOP - Configure and Test Bar Code Reader

Machine Status	Electrical supply disconnecting device in position O (OFF) Main air valve OFF
SPC Reference	3134551-0200

To setup the bar code scanner for use with the TPOP and PLMS operator sheet, perform the following configuration and testing procedures in the given order.

Configuration

a) Reset the bar code scanner to the default factory settings by scanning the following bar code.

b) Wait for five seconds after the bar code has been scanned. Shown below is the Bar Code Factory Setting.

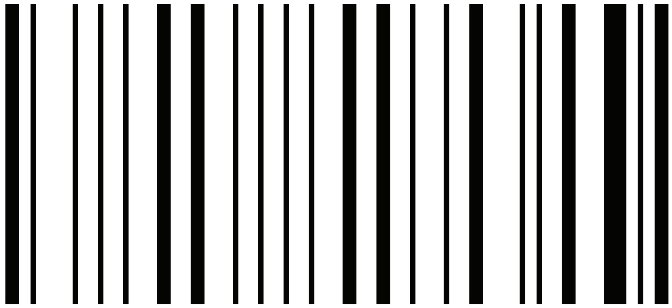

c) Set the scanner for use with the Tetra Pak operator sheet by scanning the following two bar codes.

d) Wait for five seconds after each bar code has been scanned.

e) Perform the Configuration Test on page 12-158.

Shown below is the Bar Codes for the Tetra Pak operator sheet.



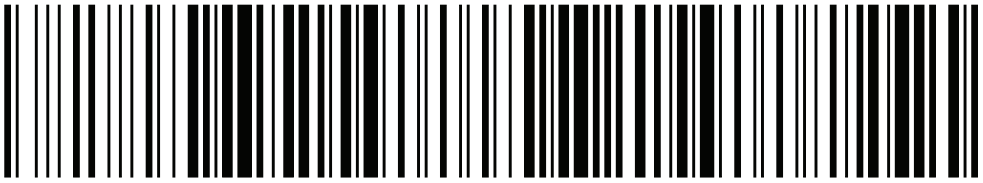

(Cont'd)

(Cont'd)

Configuration Test

a) Navigate to the operator sheet on the TPOP and select the first operator sheet item to be entered.

b) To check that the bar code scanner is correctly configured to terminate the scanned entry with the TAB command and not with the CARRIAGE RETURN command, scan the bar code below.

After scanning the bar code, check that:

- the text displayed in the operator sheet is as indicated in the illustration
- the next operator sheet dialogue box has opened and is ready for the next entry to be scanned.

c) If after scanning the bar code the operator sheet is not as described above, repeat the 12.6.1-1 TPOP - Configure and Test Bar Code Reader on page 12-157.

Shown below are the Bar Code test for Tab Terminator.

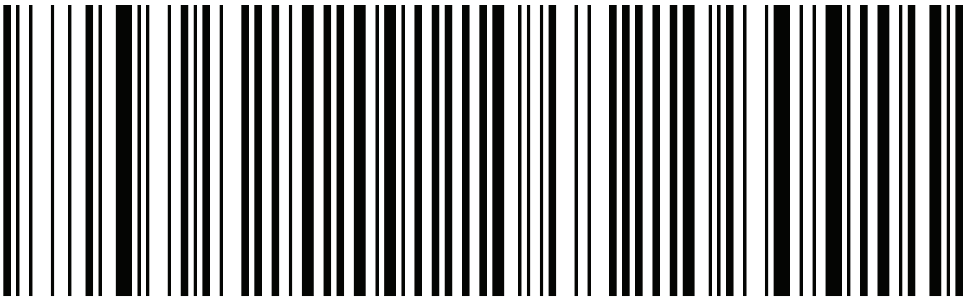

Code 128 Tab Test

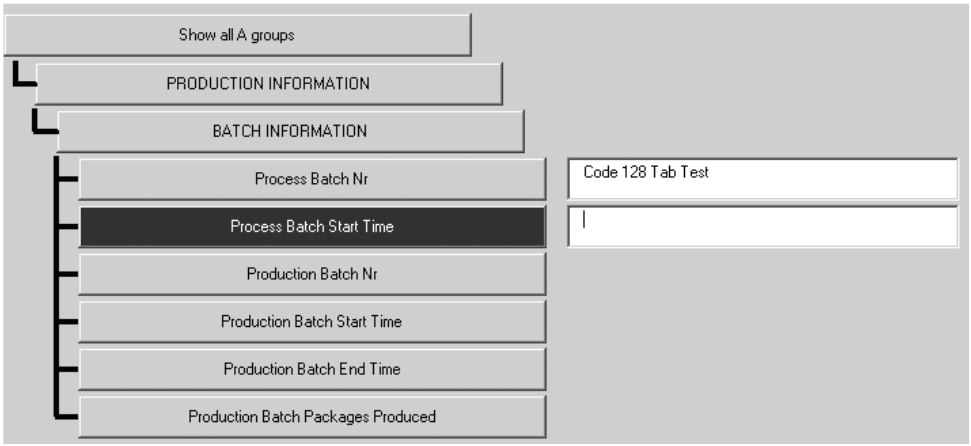

(Cont'd)

(Cont'd)

d) To check that the bar code scanner is correctly configured to register bar codes with text characters all in upper case, scan the bar code below.

After scanning the bar code, check that:

- the text displayed in the operator sheet is as indicated in the illustration.
- the next operator sheet dialogue box has opened and is ready for the next entry to be scanned.

e) If after scanning the bar code the operator sheet is not as described above, repeat the Configuration Test on page 12-158.

Shown below is the bar code test for all upper case characters.

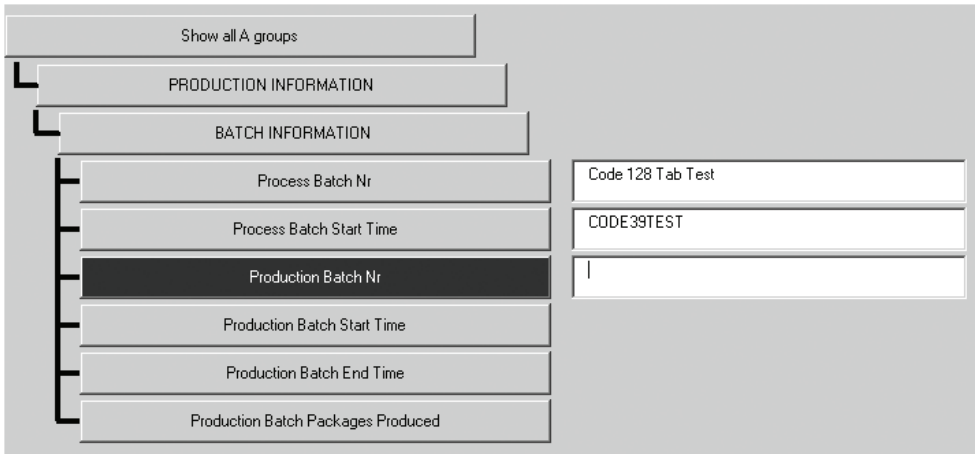

(Cont'd)

(Cont'd)

f) To check that the bar code scanner is correctly configured to register bar codes with text characters mixed in both upper case and lower case, scan the bar code below.

After scanning the bar code, check that:

- the text displayed in the operator sheet is as indicated in the illustration.
- the next operator sheet dialogue box has opened and is ready for the next entry to be scanned.

g) If after scanning the bar code the operator sheet is not as described above, repeat the Configuration Test on page 12-158.

Shown below is the bar code test for mixed upper and lower case characters.

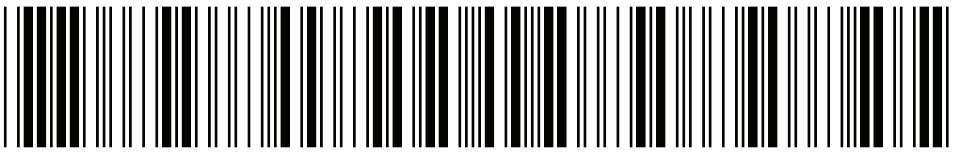

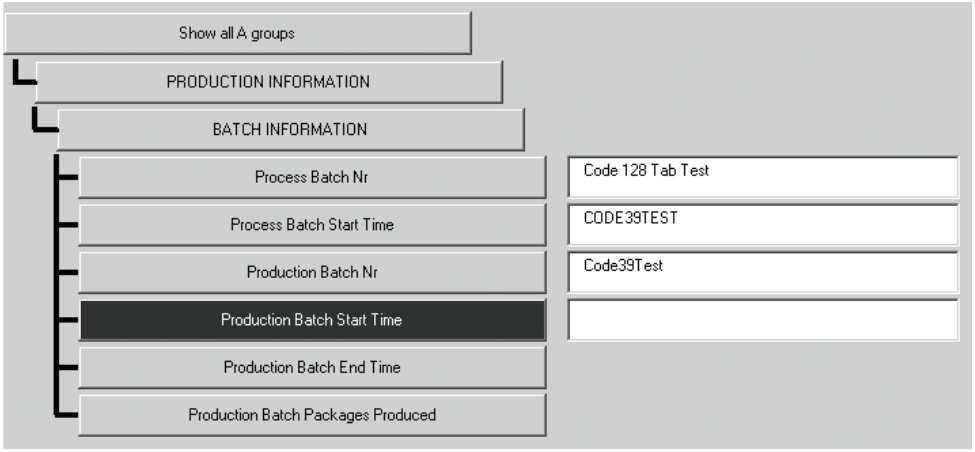

(Cont'd)

(Cont'd)

h) To check that the bar code scanner is correctly configured to register bar codes that require the replacement of separators with the special pipe text character (also known as broken bar), scan the bar code below.

After scanning the bar code, check that:

- the text displayed in the operator sheet is as indicated in the illustration
- in particular, that the special pipe text character positioned ninth from the end of the string is as indicated (by the arrow) in the illustration.
- the next operator sheet dialogue box has opened and is ready for the next entry to be scanned.

i) If after scanning the bar code the operator sheet is not as described above, repeat the Configuration Test on page 12-158.

Shown below is the bar code for character replacement.

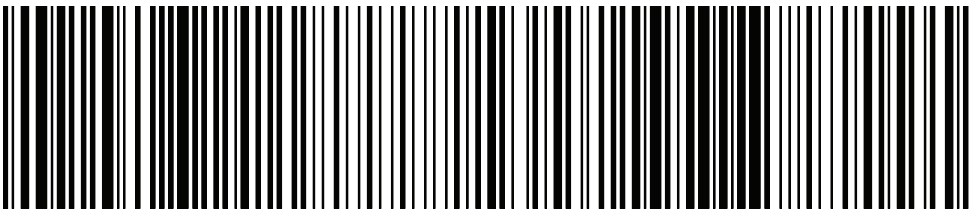

(01) 97329001153109(10) 10100514612040014(11) 060828

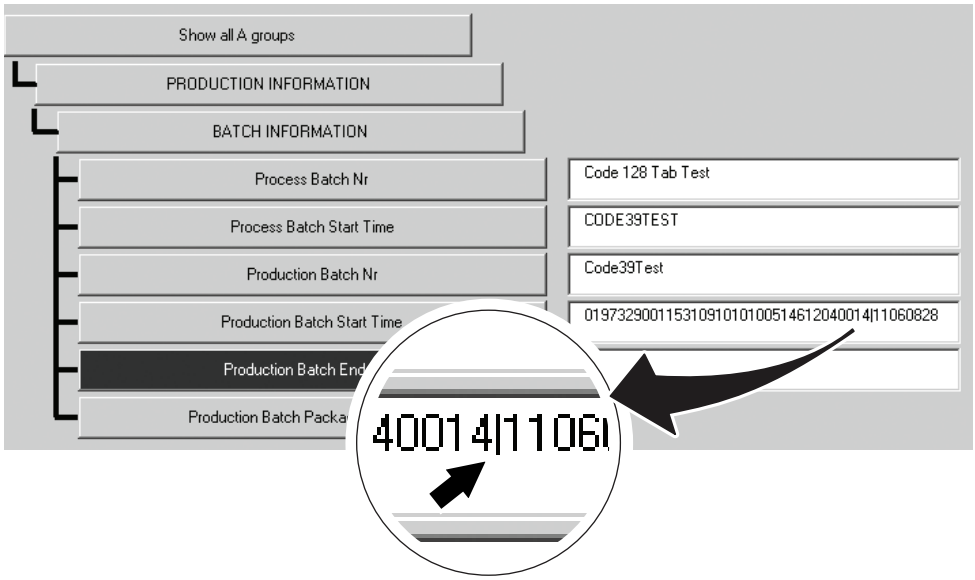

(Cont'd)

(Cont'd)

j) To check that the bar code scanner is correctly configured to register bar codes that require removal of parenthesis text characters, scan the bar code below.

After scanning the bar code, check that:

- the text displayed in the operator sheet is as indicated in the illustration
- in particular, the text is displayed and formatted without parenthesis text characters as indicated in the illustration
- the next operator sheet dialogue box has opened and is ready for the next entry to be scanned.

k) If after scanning the bar code the operator sheet is not as described above, repeat the Configuration for Non-Operator Sheet Usage on page 12-163.

Shown below is the bar code for parenthesis removal.

l) The configuration test in now complete. If the bar code scanner will be used for the purpose of registering non-operator sheet bar coded information to the TPOP, continue with Configuration for Non-Operator Sheet Usage on page 12-163.

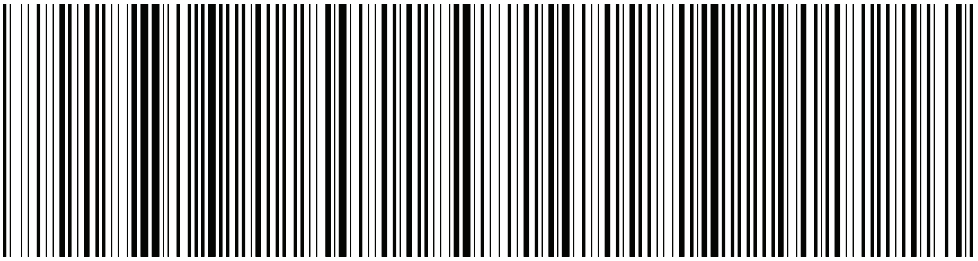

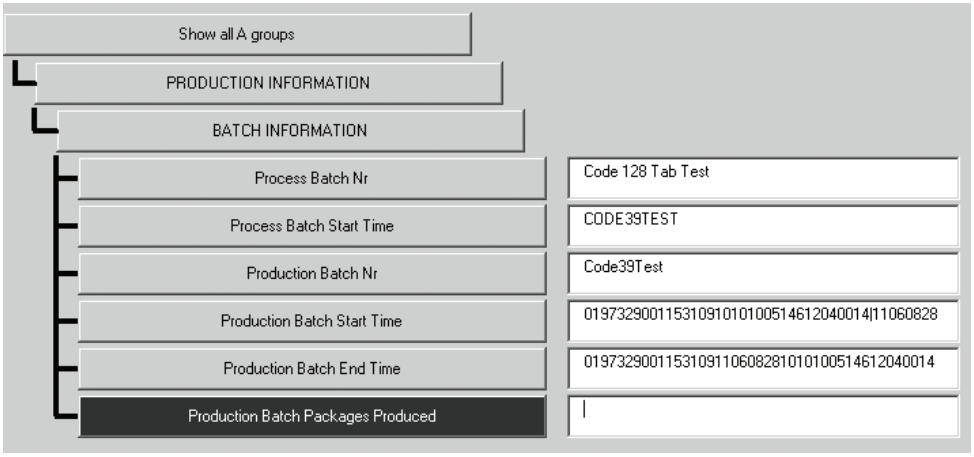

(Cont'd)

(Cont'd)

Configuration for Non-Operator Sheet Usage

Note! The following configuration must only be performed if the bar code scanner will be used for registering non-operator sheet bar coded information to the TPOP.

Note! The following procedure must always be performed after the Configuration Test on page 12-158.

a) To configure the bar code scanner to terminate the scanned entry with the CARRIAGE RETURN command and not with the TAB command, scan the bar code below.

The Bar Code for CR Terminator is shown below.

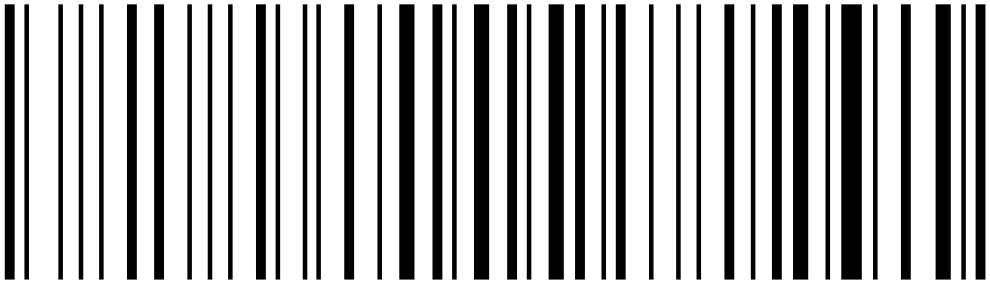

(Cont'd)

(Cont'd)

b) To check that the bar code scanner is correctly configured to register bar codes with text characters mixed in both upper case and lower case, scan the bar code below.

After scanning the bar code, check that:

- the text displayed in the operator sheet is as indicated in the illustration.
- the next operator sheet dialogue box has opened and is ready for the next entry to be scanned.

c) If after scanning the bar code the operator sheet is not as described above, repeat the Configuration for Non-Operator Sheet Usage on page 12-163

Below is the Bar Code Test for CR Terminator.

Code 128 Tab Test

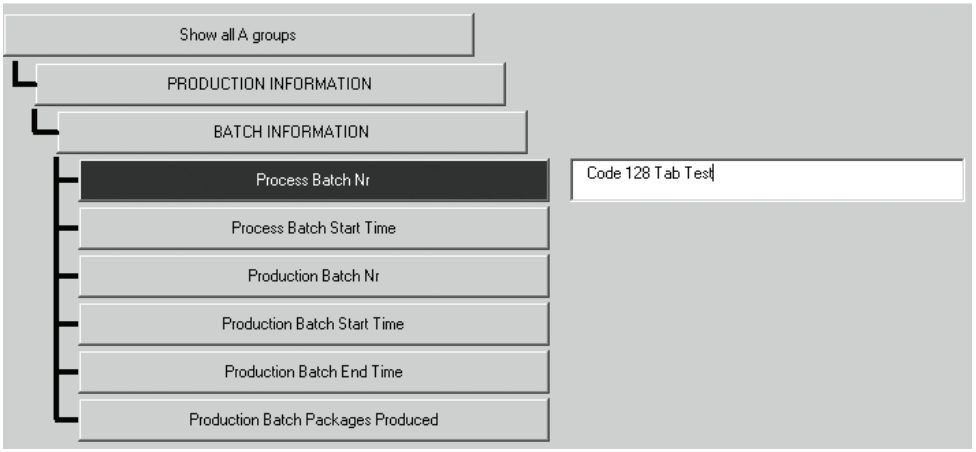

12.6.1-2 Bar Code Scanner - Change

Machine Status	Electrical supply disconnecting device in position O (OFF) Main air valve OFF
SPC Reference	3134551-0200

Note! Identify the bar code scanner model fitted to the filling machine, for the Powerscan D8300 model see 12-165. For the Dragon D131 model follow the procedure below.

Bar Code Scanner Model Dragon D131

a) Remove the screw (1) and the cable strain relief plate (2).

b) Remove the cover (3).

c) Remove the cable connector (4) from the bar code scanner (5) together with the plastic boot (6) and the rubber gasket (7).

d) Open the plastic boot (6) and remove it from the cable connector (4).

e) Remove the rubber gasket (7) from the cable connector (4).

f) Change the cable and assemble in the reverse order.

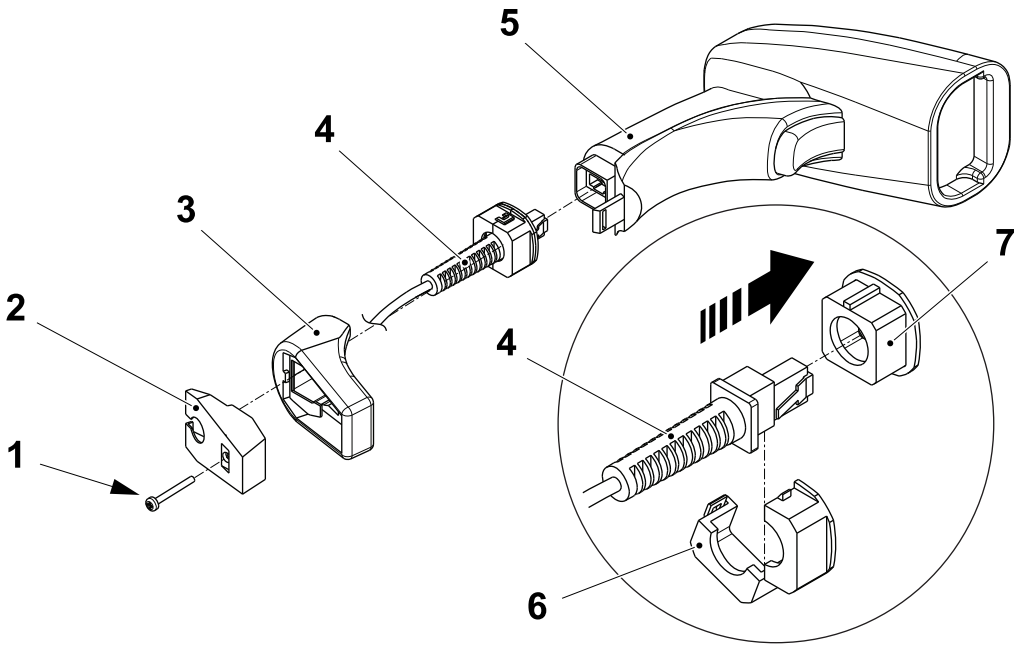

1 Screw
2 Cable strain relief plate
3 Cover
4 Cable connector
5 Bar code scanner
6 Plastic boot
7 Rubber gasket

(Cont'd)

(Cont'd)

Bar Code Scanner Model Powerscan D8300

a) Remove the screw (1) and the cable strain relief plate (2).

b) Remove the cover (3).

c) Remove the cable connector (4) from the bar code scanner (5) together with the plastic boot (6) and the rubber gasket (7) .

d) Remove the plastic boot (6) and the rubber gasket (7) from the cable connector (4).

Note! Make sure that the plastic boot (6) is fitted with the tab (8) correctly aligned with the slot (9) in the rubber rubber gasket (7). The plastic boot (6) must be fitted with the arrow (10) pointing towards the front of the bar code scanner (5).

e) Change the cable and assemble in the reverse order.

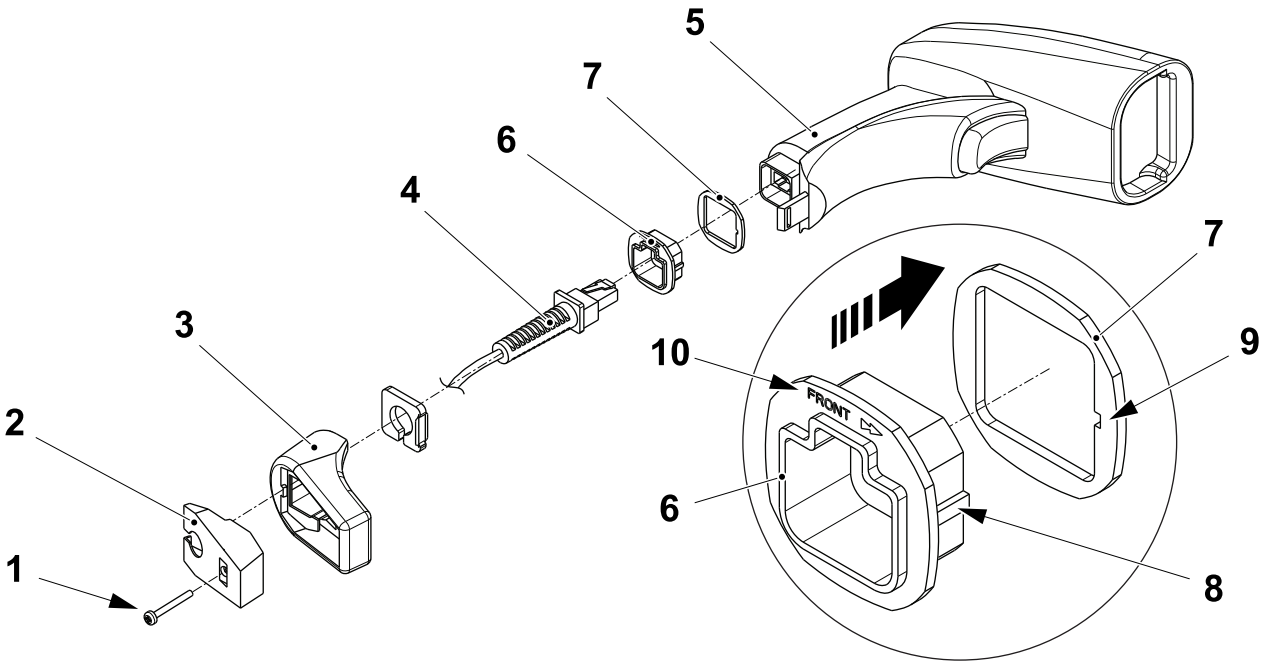

1 Screw
2 Cable strain relief plate
3 Cover
4 Cable connector
5 Bar code scanner
6 Plastic boot
7 Rubber gasket
8 Tab
9 Slot
10 Arrow

12.6.2 Line Communication

12.6.2-1 TPOP Line Communication - Install

Machine Status	Electrical supply disconnecting device in position I (ON) Main air valve ON
SPC Reference	2779070-0300

Machine Line Communication - Set

a) Login the TPOP as service technician, see 1.1.1-1 HMI User Management - Log On as a User.

b) Step down the machine to STEP0.

c) Touch the `CONFIGURATION` button (1).

Note! A cross over the `LINE COMMUNICATION` icon (2), means that the option has not been installed.

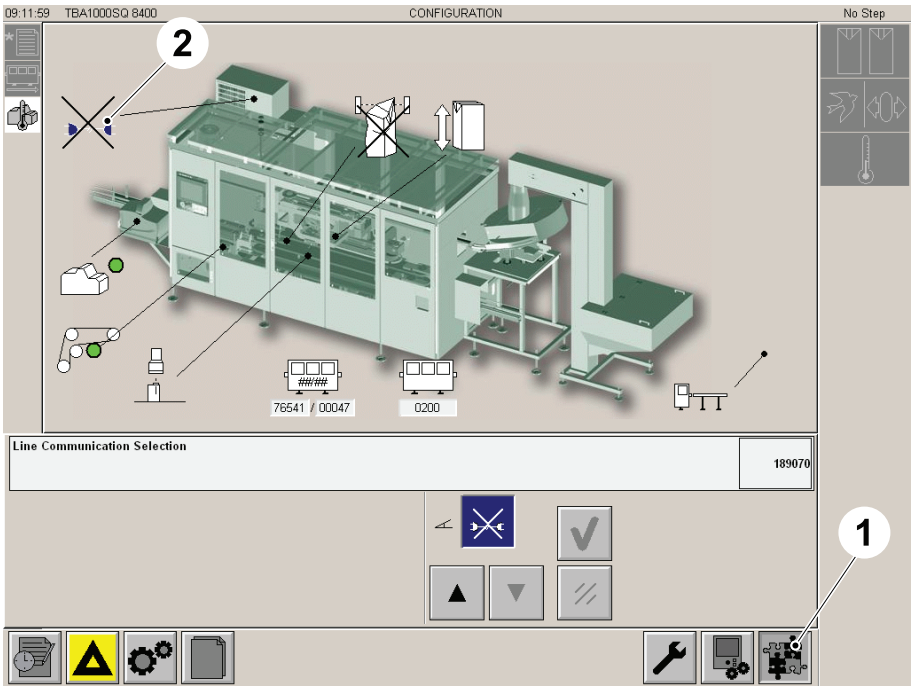

1 Configuration button
2 Line communication icon

(Cont'd)

(Cont'd)

d) Touch the LINE COMMUNICATION SELECTION icon (3).

e) Touch the ARROW key (4) to select the correct line communication of the machine.

f) Touch the OK button (5) to confirm.

Note! The LINE CONTROLLER SELECTION (6) must be set according to the actual line configuration or the machine will not work. The available selections for LINE COMMUNICATION are shown in the illustration below.

Note! A GREEN dot (7) close to the LINE COMMUNICATION SELECTION icon (3), means that the line communication has been activated.

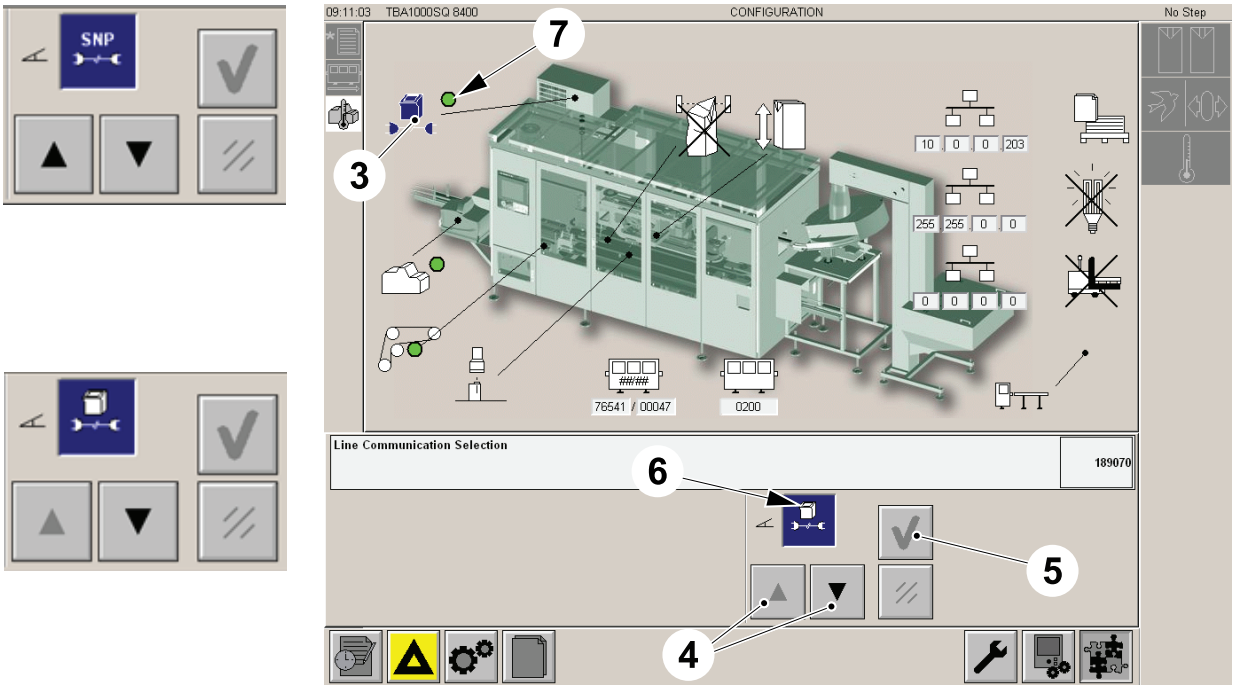

3 Line communication selection icon
4 Arrow key
5 Ok button
6 Line controller selection
7 Green dot

(Cont'd)

(Cont'd)

Line Communication Ethernet Card IP Address - Set

Note! Valid only for line controller communication .

a) Touch the IP ADDRESS icon (1).

b) Touch the FIELD1 icon (2).

c) Insert the correct value (203) for the Field1, by means of the ARROW key (3) or the NUMERIC button (4).

d) Touch the OK button (5) to confirm.

e) Repeat from b) to enter the values in the other fields.

Note! The correct IP Address for the Ethernet Card is 10.0.0.203.

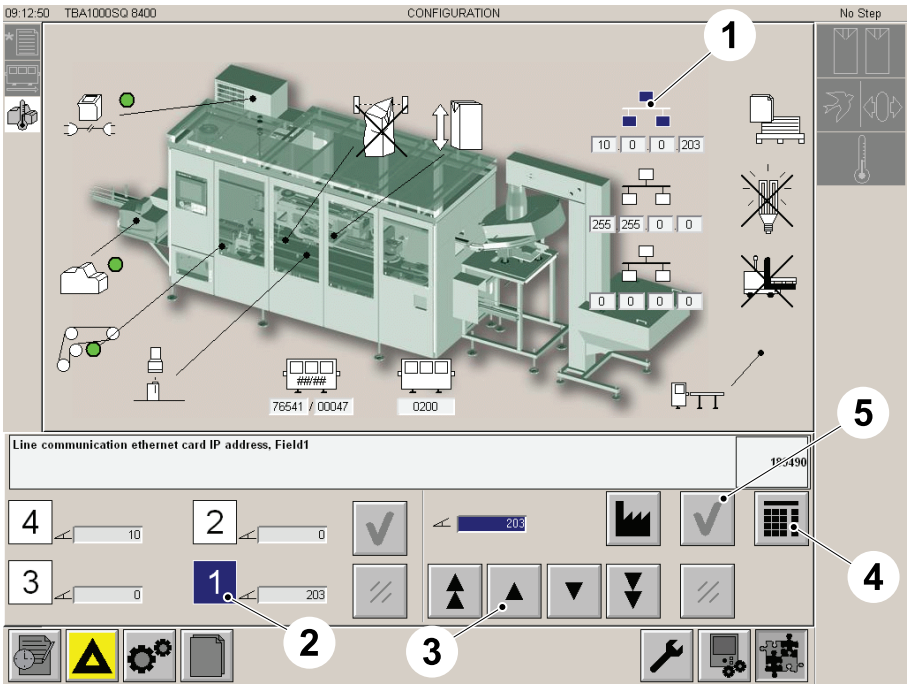

1 IP Address icon
2 Field1 icon
3 Arrow key
4 Numeric button
5 OK button

(Cont'd)

(Cont'd)

Line Communication Ethernet Card IP Subnet Mask - Set

Note! Valid only for line controller communication .

a) Touch the IP SUBNET MASK icon (1).

b) Touch the FIELD1 icon (2).

c) Insert the correct value (0) for the Field1, by means of the ARROW key (3) or the NUMERIC button (4).

d) Touch the OK button (5) to confirm.

e) Repeat from b) to enter the values in the other fields.

Note! The correct IP Subnet Mask for the Ethernet Card is 255.255.0.0.

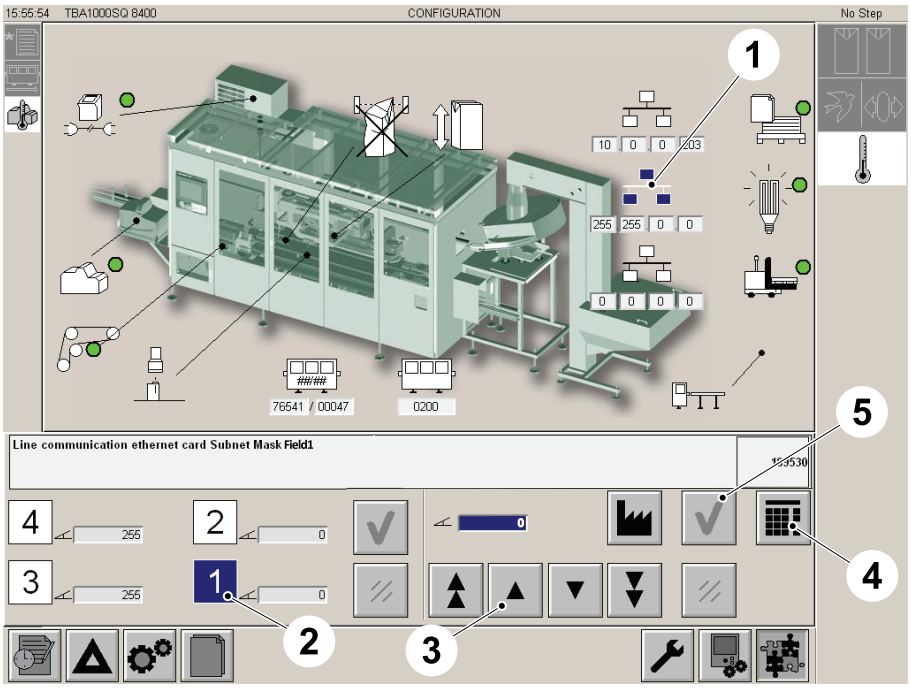

1 IP Subnet Mask icon
2 Field1 icon
3 Arrow key
4 Numeric button
5 OK button

(Cont'd)

(Cont'd)

Line Communication Ethernet Card IP Subnet Mask - Set

Note! Valid only for line controller communication .

a) Touch the ETHERNET CARD GATEWAY icon (1).

b) Touch the FIELD1 icon (2).

c) Insert the correct value (0) for the Field1, by means of the ARROW key (3) or the NUMERIC button (4).

d) Touch the OK button (5) to confirm.

e) Repeat from b) to enter the values in the other fields.

Note! The correct Ethernet Card Gateway is 0.0.0.0.

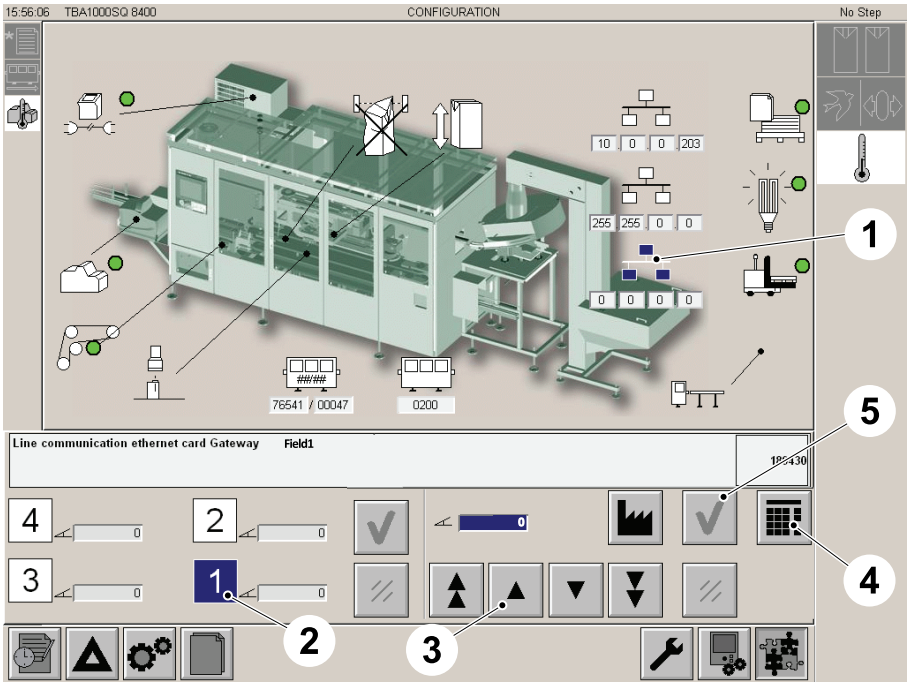

1 Ethernet Card Gateway icon
2 Field1 icon
3 Arrow key
4 Numeric button
5 OK button

12.6.2-2 TPOP Packaging Plant Integration (PPI) Option - Set

Machine Status	Electrical supply disconnecting device in position I (ON) Main air valve ON
SPC Reference	2779070-0300

PPI Installation

a) Login the TPOP as service technician, see 1.1.1-1 HMI User Management - Log On as a User.

b) Step down the machine to STEP0.

c) Touch the CONFIGURATION button (1).

Note! A cross over the PPI icon (2), means that the option has not been installed and activated.

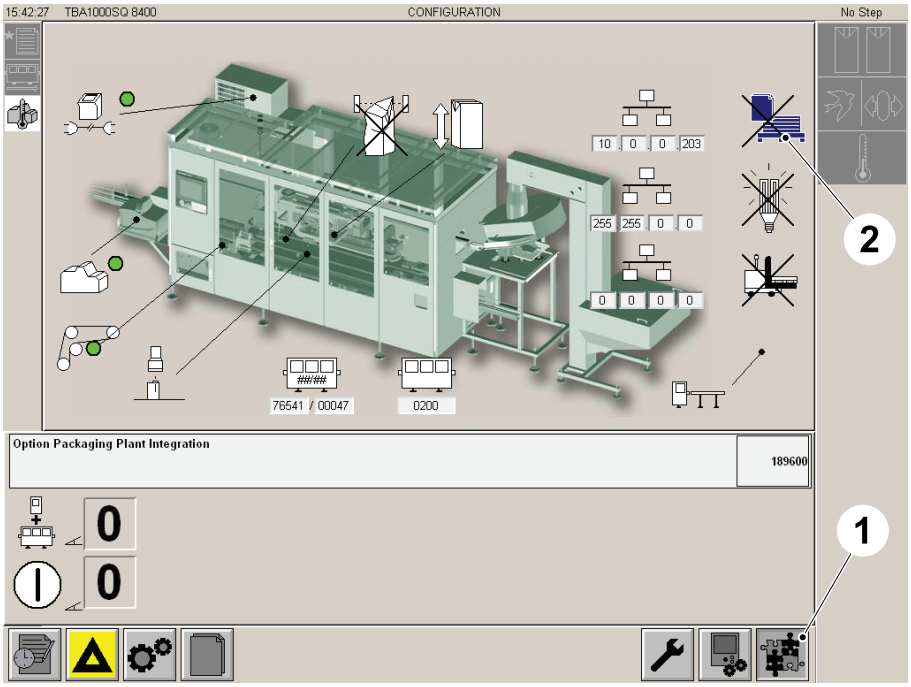

1 Configuration button
2 PPI icon

(Cont'd)

(Cont'd)

d) Touch the INSTALLATION icon (3).

e) Touch the ON button (4) to activate the PPI.

f) Touch the OK button (5) to confirm the installation.

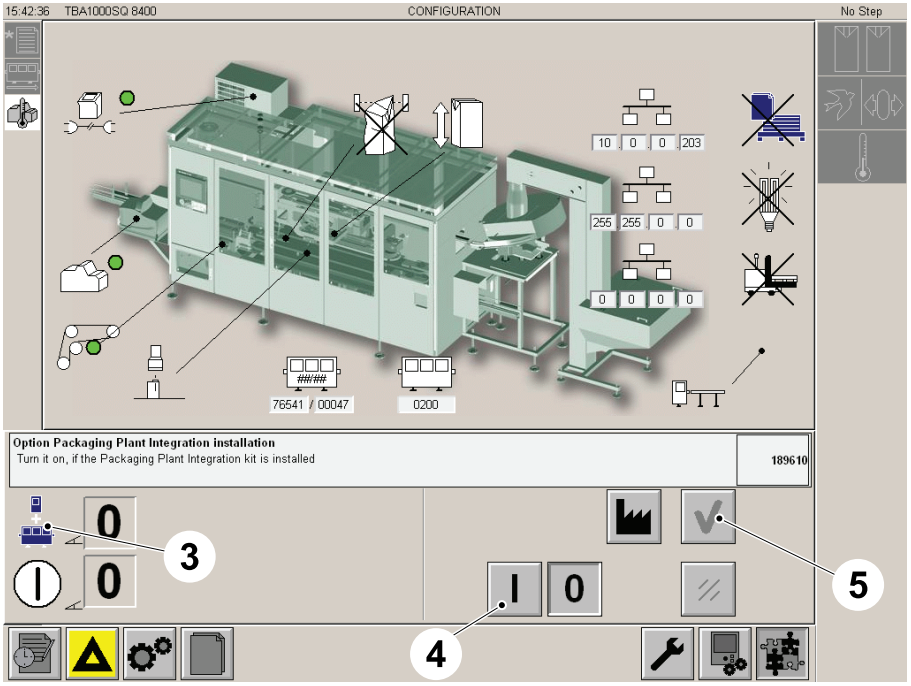

3 Installation icon
4 On button
5 Ok button

(Cont'd)

(Cont'd)

Activation

a) Touch the PPI icon (1).

b) Touch the ACTIVATE icon (2).

c) Touch the ON button (3) to activate the PPI.

d) Touch the OK button (4) to confirm the activation.

Note! A GREEN DOT (5) close to the PPI icon (1), means that the PPI has been activated.

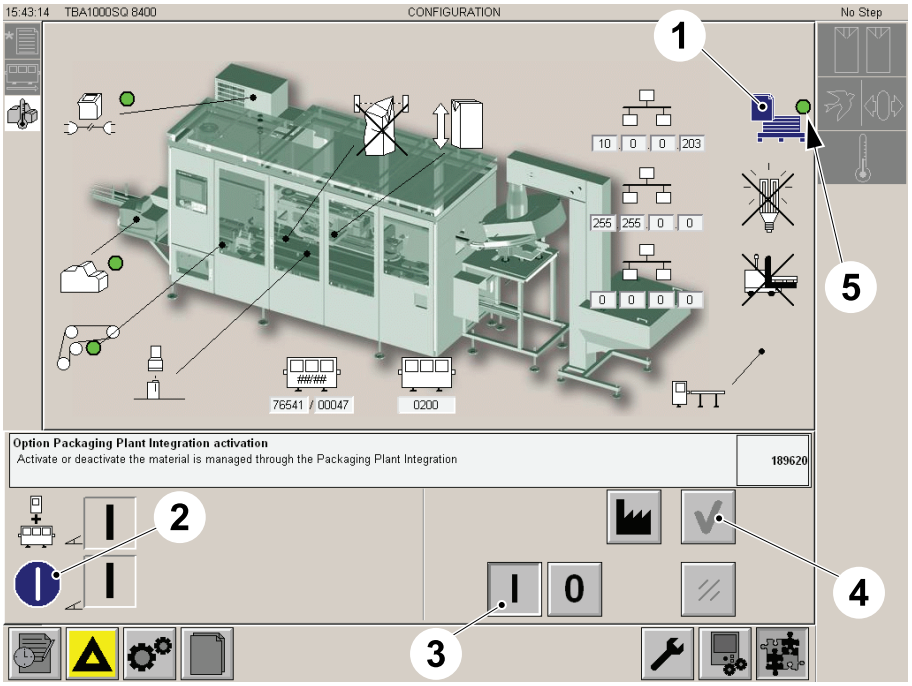

1 PPI icon
2 Activate icon
3 On button
4 Ok button
5 Green dot

(Cont'd)

(Cont'd)

Deactivation

a) Touch the PPI icon (1).

b) Touch the ACTIVATE icon (2).

c) Touch the OFF button (3) to deactivate the PPI.

d) Touch the OK button (4) to confirm.

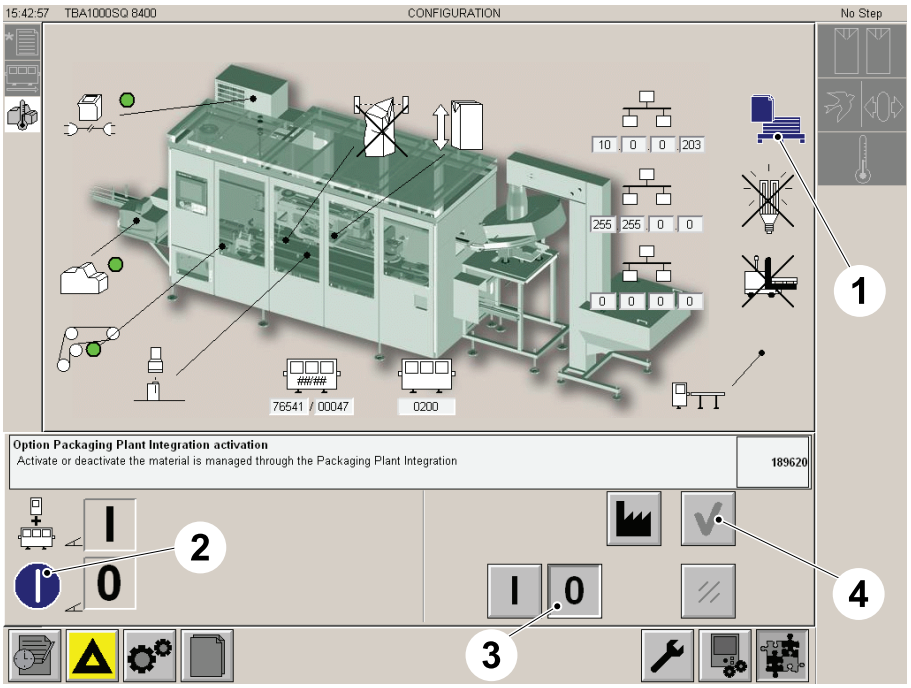

1 PPI icon
2 Activate icon
3 Off button
4 Ok button

12.6.2-3 TPOP - Activate LGV Option

Machine Status	Electrical supply disconnecting device in position I (ON) Main air valve ON
SPC Reference	2779070-0300

a) Login the TPOP as service technician, see 1.1.1-1 HMI User Management - Log On as a User.

b) Step down the machine to STEP0.

c) Touch the CONFIGURATION button (1).

Note! A cross over the LGV icon (2), means that the option has not been activated.

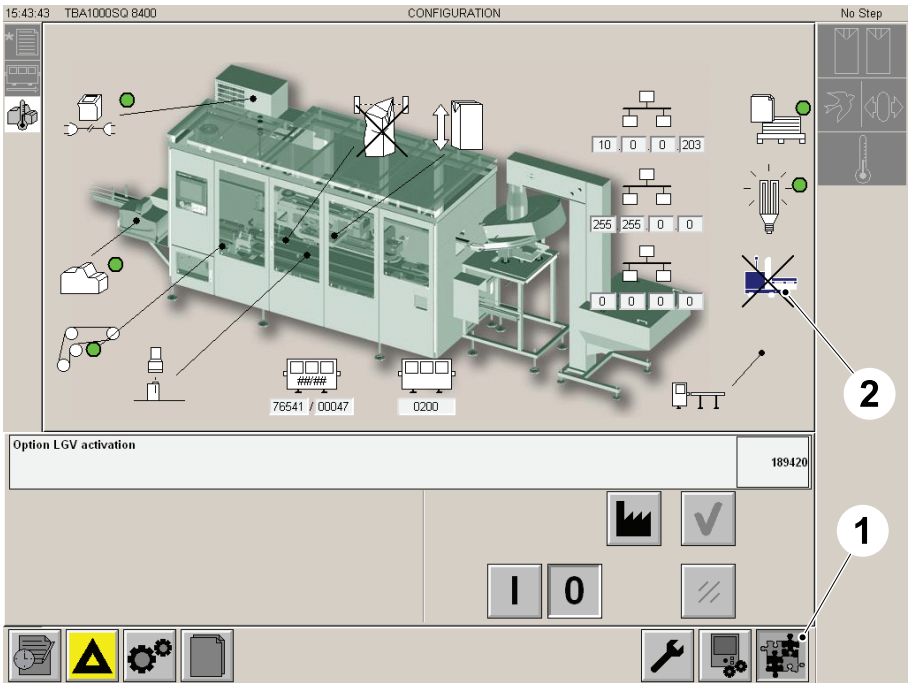

1 Configuration button
2 LGV icon

(Cont'd)

(Cont'd)

Activation

a) Touch the LGV icon (1).

b) Touch the ON button (2) to activate the LGV.

c) Touch the OK button (3) to confirm the activation.

Note! A GREEN DOT (4) close to the LGV icon (1), means that the LGV has been activated.

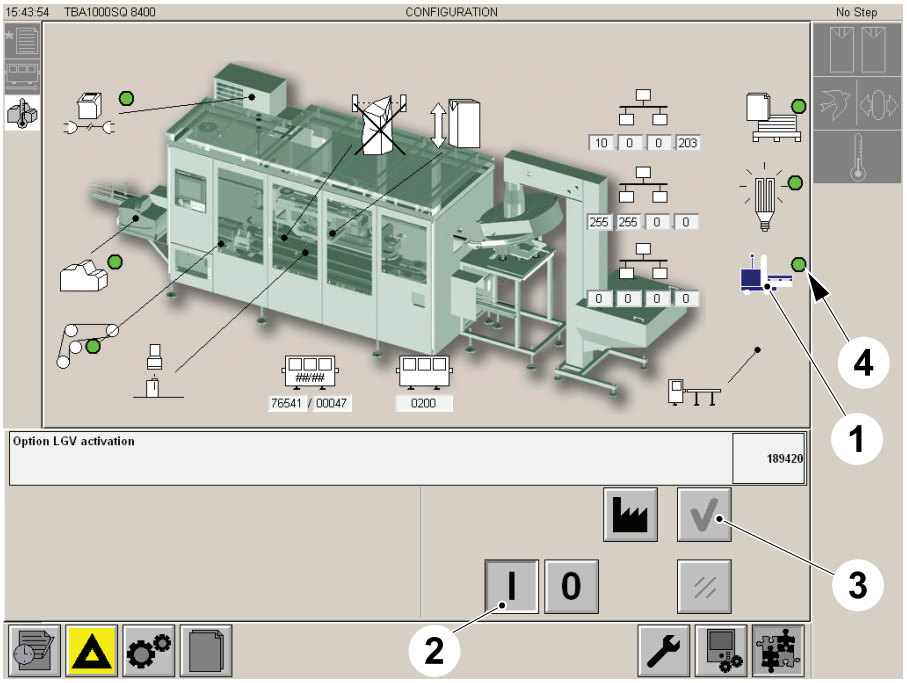

1 LGV icon
2 ON button
3 OK button
4 Green dot

(Cont'd)

(Cont'd)

Dectivation

a) Touch the LGV icon (1).

b) Touch the OFF button (2) to deactivate the LGV option.

c) Touch the OK button (3) to confirm.

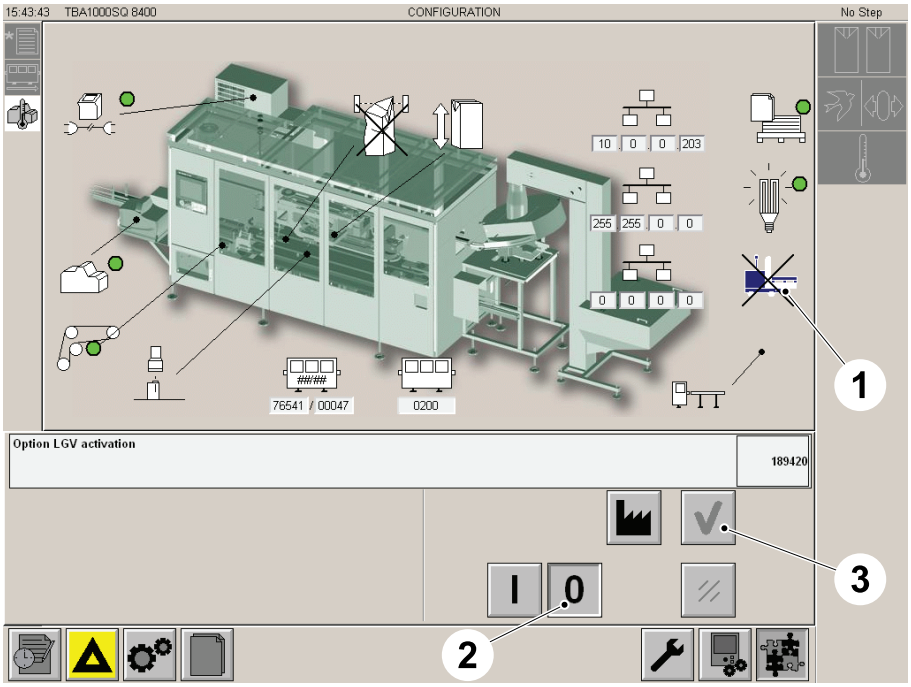

1 LGV icon
2 OFF button
3 OK button

12.6.2-4 TPOP - Activate Energy Saving

Machine Status	Electrical supply disconnecting device in position I (ON) Main air valve ON
SPC Reference	2779070-0300

This procedure allows to activate the automatic step up of the machine, if there are the step up conditions.

Note! The energy saving works correctly only if it is activated also in the LC (Line Controller) and the CAP30 machines has the `LINE CONTROLLER COMMUNICATION` (1).

a) Login the TPOP as service technician, see 1.1.1-1 HMI User Management - Log On as a User.

b) Step down the machine to STEP0.

c) Touch the `CONFIGURATION` button (2).

Note! A cross over the `ENERGY SAVING` icon (3) , means that the option has not been activated.

d) In the CONFIGURATION window, touch the `ENERGY SAVING` icon (3).

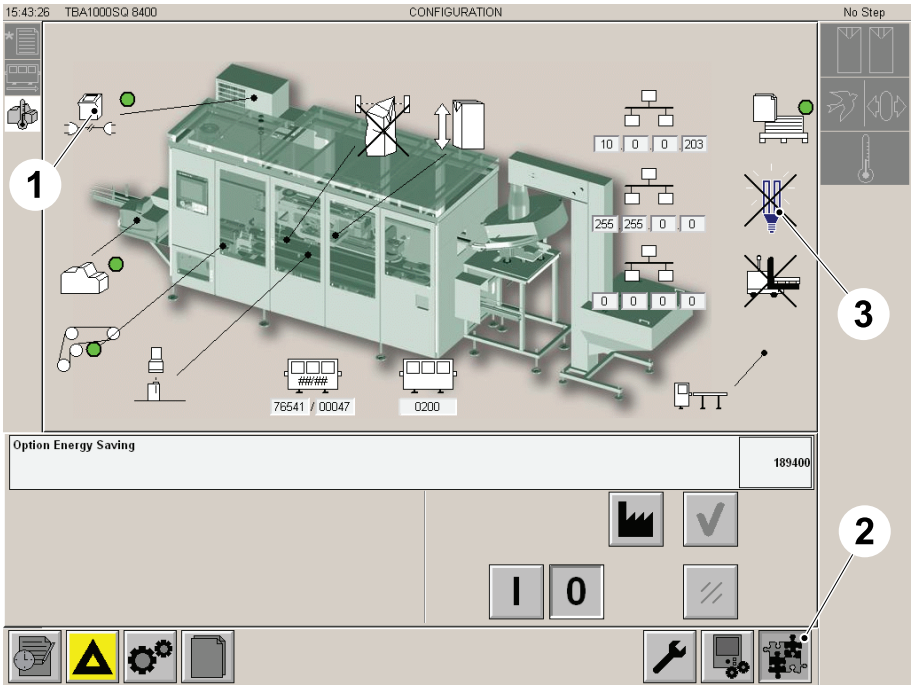

1 Line controller communication
2 Configuration button
3 Energy saving icon

(Cont'd)

(Cont'd)

Activation

a) Touch the ENERGY SAVING icon (1).

b) Touch the ON button (2) to activate the ENERGY SAVING.

c) Touch the OK button (3) to confirm the activation.

Note! A GREEN DOT (4) close to the ENERGY SAVING icon (1), means that the ENERGY SAVING has been activated.

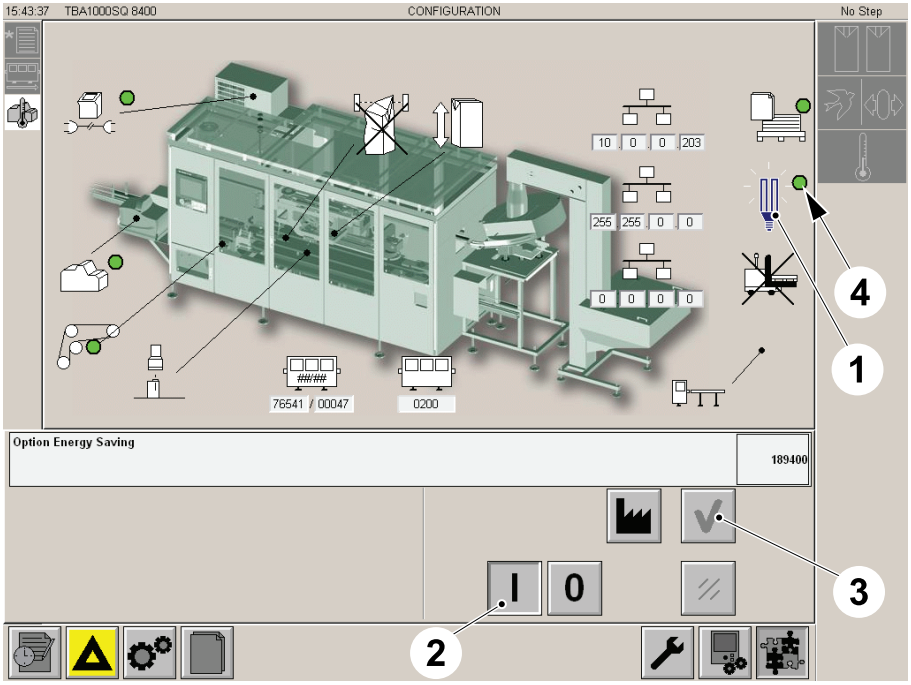

1 Energy saving icon
2 ON button
3 OK button
4 Green dot

(Cont'd)

(Cont'd)

Deactivation

a) Touch the ENERGY SAVING icon (1).

b) Touch the OFF button (2) to deactivate the ENERGY SAVING.

c) Touch the OK button (3) to confirm the activation.

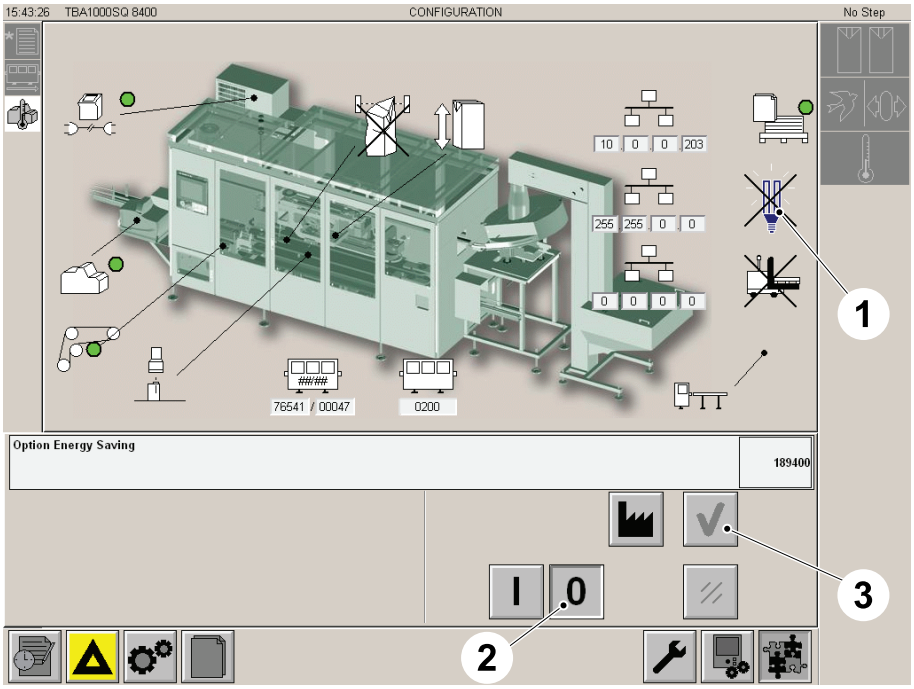

1 Energy saving icon
2 OFF button
3 OK button

12.6.2-5 TPOP - Activate Interlocking Stop for PPI

Machine Status	Electrical supply disconnecting device in position I (ON) Main air valve ON
SPC Reference	2779070-0300

When this procedure is active the machine stops the production, in case of wrong material code (Material mismatch yellow alarm).

When this procedure is not active the machine continues the production, in case of wrong material code (Material mismatch blue alarm).

a) Login the TPOP as service technician, see 1.1.1-1 HMI User Management - Log On as a User.

b) Step down the machine to STEP0.

c) Touch the MAINTENANCE button (1) to enter the MAINTENANCE window (2).

d) Touch the PPI icon (3).

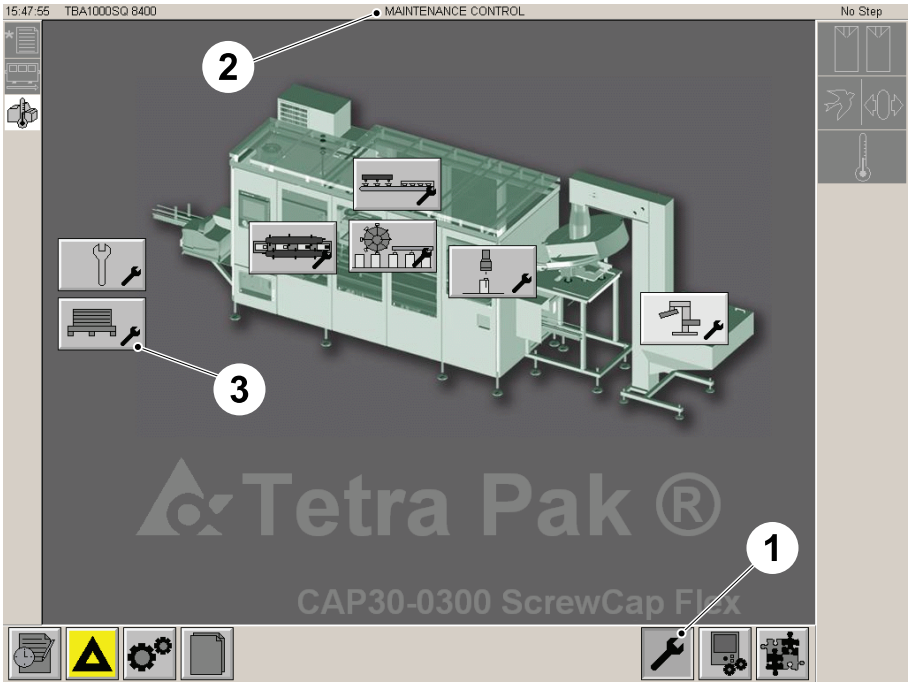

1 Maintenance button
2 Maintenance window
3 PPI icon

(Cont'd)

(Cont'd)

Activation

a) Touch the INTERLOCKING STOP icon (1).

b) Touch the ON button (2) to activate the INTERLOCKING STOP.

c) Touch the OK button (3) to confirm the activation.

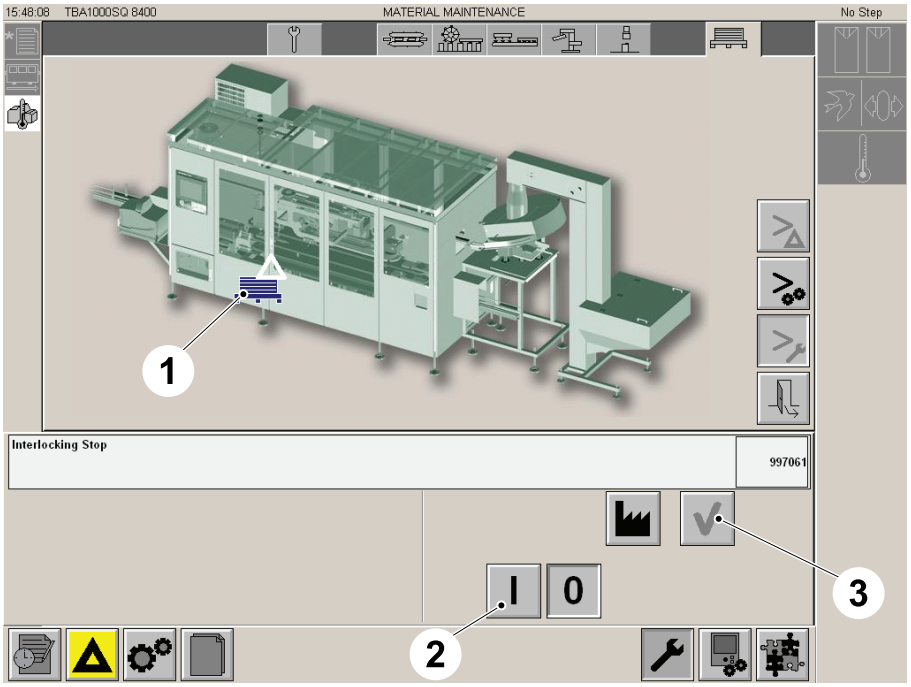

1 Interlocking stop icon
2 ON button
3 OK button

(Cont'd)

(Cont'd)

Deactivation

a) Touch the INTERLOCKING STOP icon (1).

b) Touch the OFF button (2) to deactivate the INTERLOCKING STOP.

c) Touch the OK button (3) to confirm.

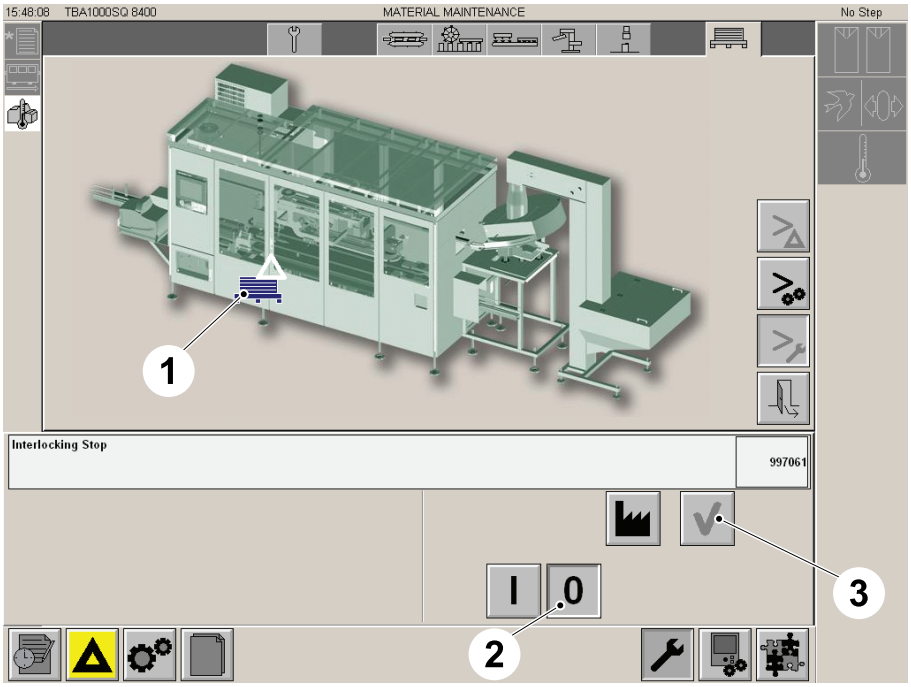

1 Interlocking stop icon
2 OFF button
3 OK button

12.7 Lifting Device

Machines that are fitted with the Lifting Device are **Only Valid** for the following;

- - TBA500SQ / TBA1000SQ
- - TPA750SQ / TPA1000SQ
- - TGA500SQ / TGA750SQ / TGA1000SQ

To select a recipe (shape and volume), see 10.9.1-17 Touch Screen - Change Recipes.

12.7-1 Touch Screen - Lifting Device Zero Positioning

Machine Status	Electrical supply disconnecting device in position I (ON) STEP0
SPC Reference	2779070-0300

Description

In this paragraph is described the zero positioning procedure. The zero positioning procedure is necessary during the installation of the lifting device and in case of a specific alarm. Every time a recipe is selected the machine sets up correctly without the need of a new zero positioning procedure.

(Cont'd)

(Cont'd)

Reset the Lifting Device Fine Adjustment

Note! To apply correctly the zero positioning procedure it's necessary to check that the lifting device fine adjustments are set to zero. Proceed as follows:

a) If required, log on the TPOP as service technician, see 1.1.1-1 HMI User Management - Log On as a User.

b) Step up the machine to STEP 1 - PREHEATING.

c) Touch the MAINTENANCE button (1).

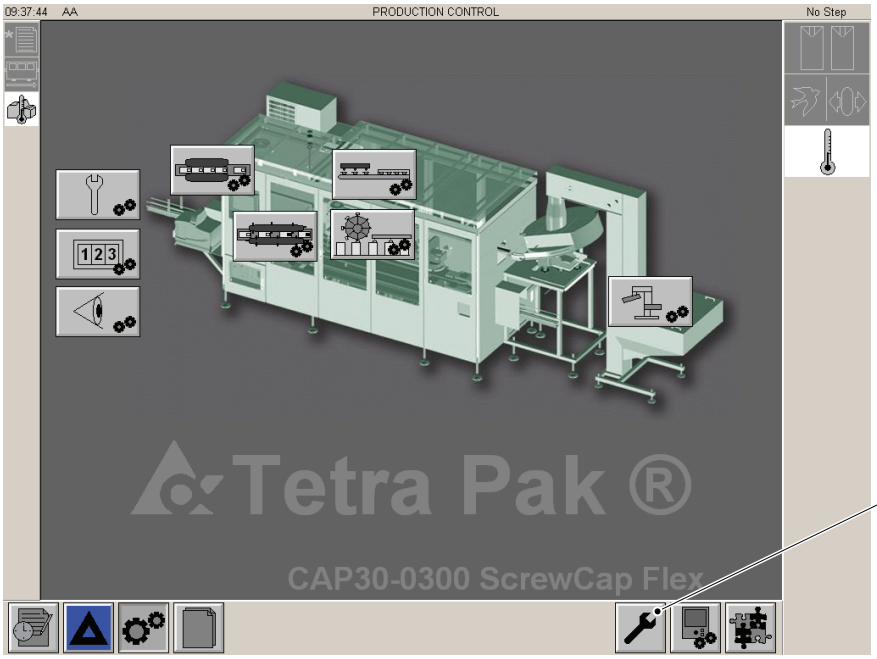

1 MAINTENANCE button

(Cont'd)

(Cont'd)

d) Touch the APPLICATOR UNIT MAINTENANCE button (2).

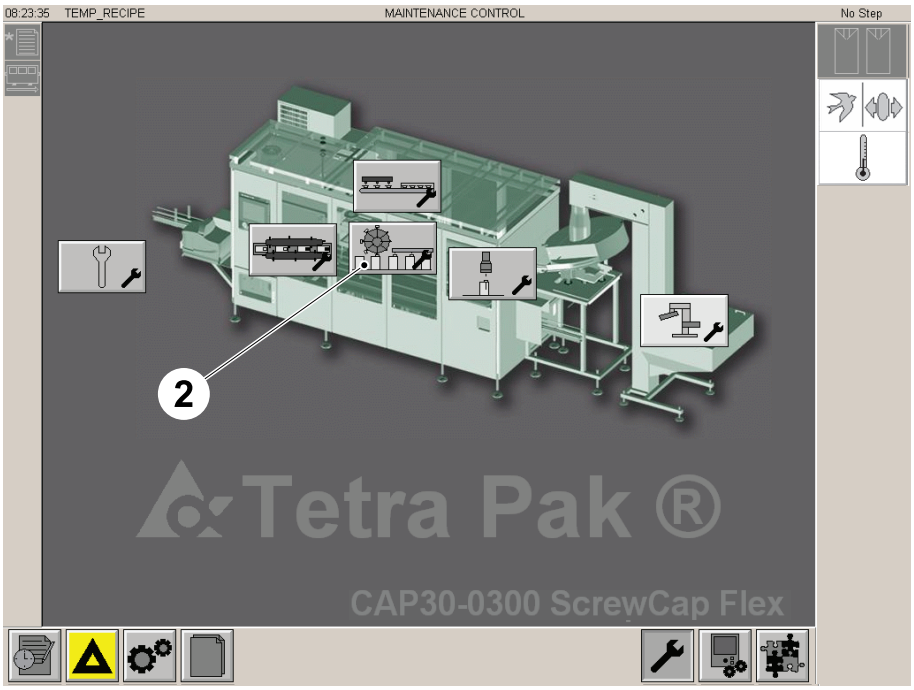

2 APPLICATOR UNIT MAINTENANCE button

(Cont'd)

(Cont'd)

e) Touch the APPLICATOR UNIT FINE ADJUSTMENT icon (3).

f) Set to zero the fine adjustment of the height of the applicator unit by touching the FACTORY button (4).

g) Touch the OK button (5).

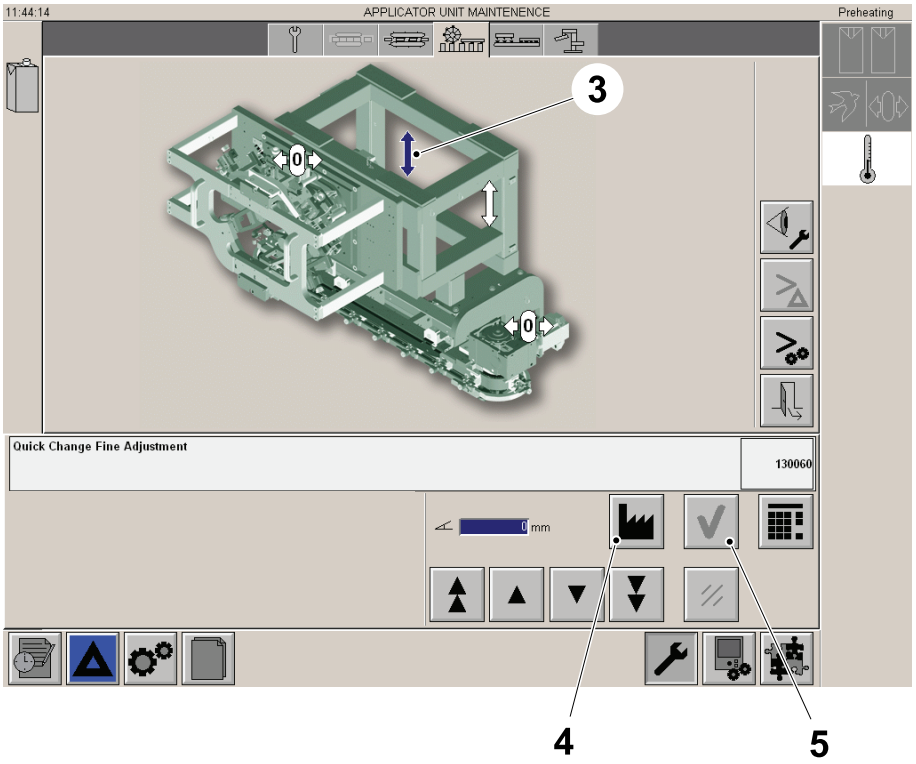

3 APPLICATOR UNIT FINE ADJUSTMENT icon
4 FACTORY button
5 OK button

(Cont'd)

(Cont'd)

h) Touch the CAP SORTER MAINTENANCE UNIT button (6).

i) Touch the CAP SORTER FINE ADJUSTMENT icon (7).

j) Set to zero the fine adjustment of the height of the applicator unit by touching the FACTORY button (4).

k) Touch the OK button (5).

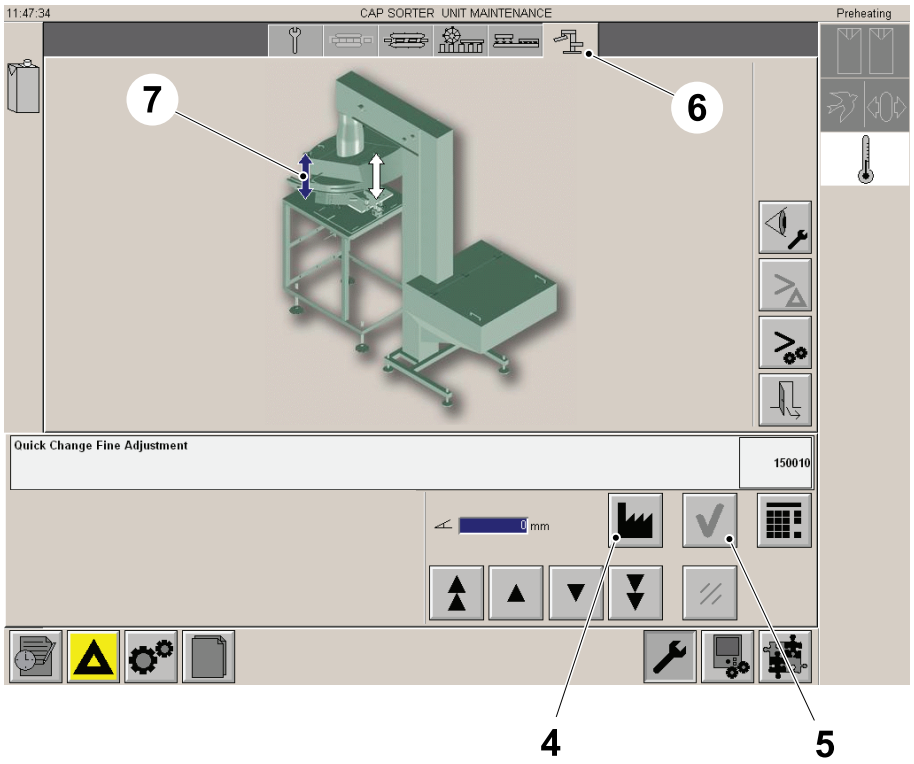

4 FACTORY button

5 OK button

6 CAP SORTER MAINTENANCE UNIT button

7 CAP SORTER FINE ADJUSTMENT icon

(Cont'd)

(Cont'd)

Zero Positioning Procedure

a) Step the machine to STEP 1 PREHEATING.

b) Touch the MAINTENANCE button (1).

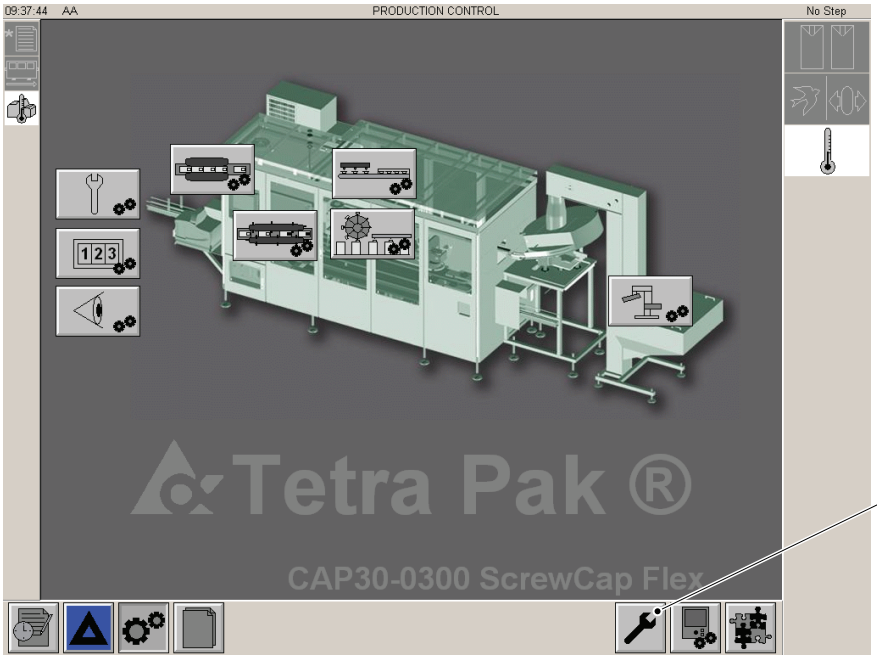

1 MAINTENANCE button

(Cont'd)

(Cont'd)

c) Touch the SERVICE button (2).

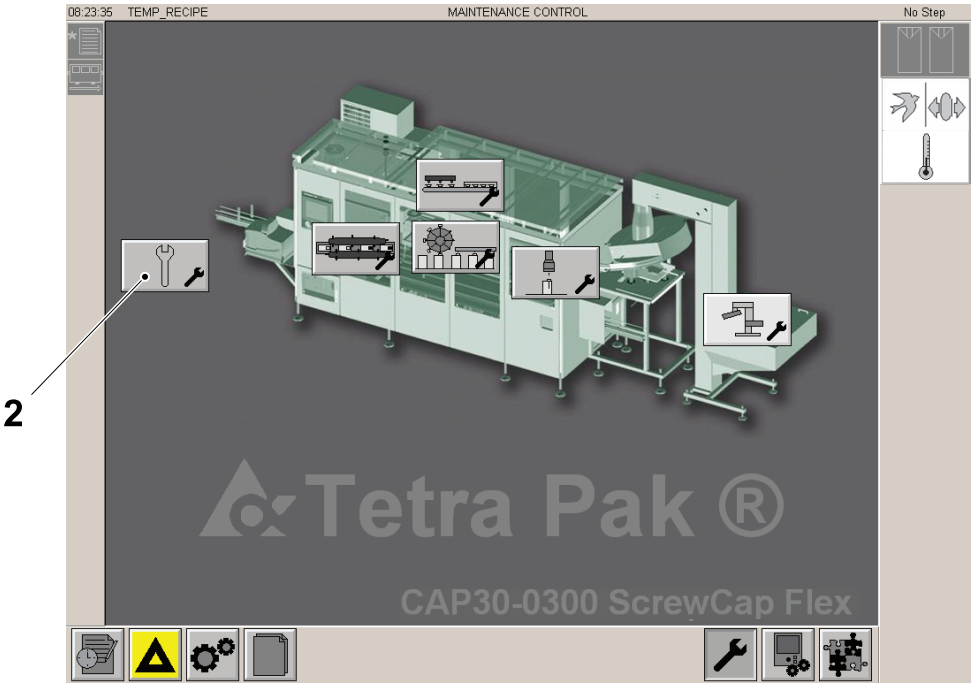

2 SERVICE button

(Cont'd)

(Cont'd)

d) Touch the ZERO POSITIONING icon (3).

e) Touch the ON button (4) and the OK button (5).

Note! The machine finds its zero positions and then sets up according to the active recipe. This operation requires a certain time. The zero positioning procedure can be stopped any time by touching the OFF button (6).

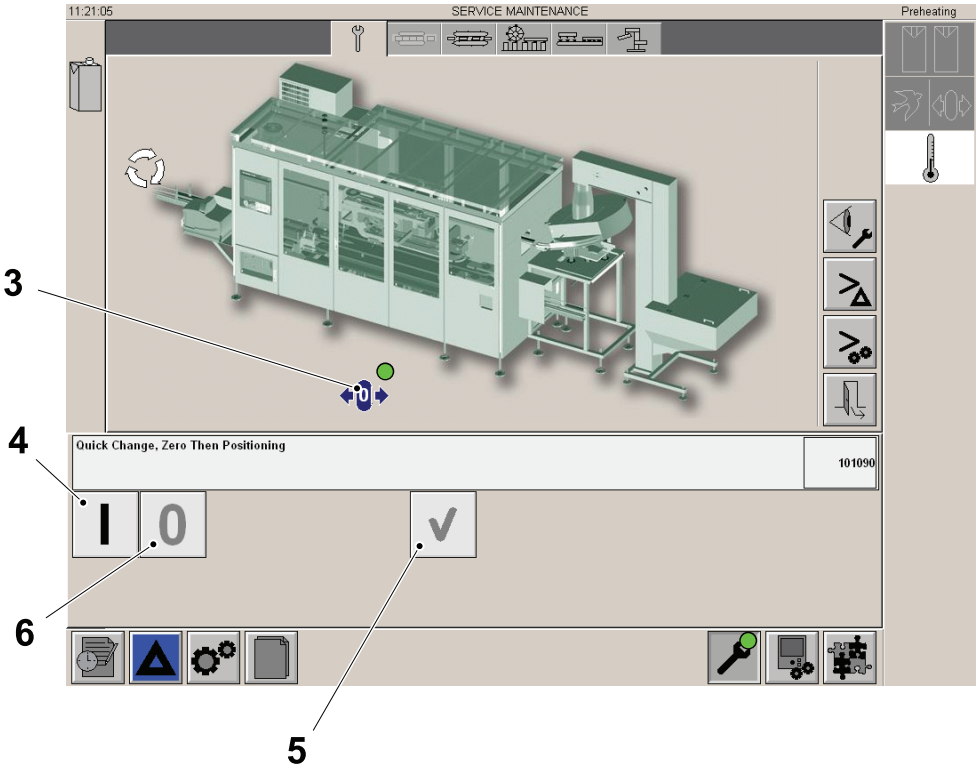

3 ZERO POSITIONING icon
4 ON button
5 OK button
6 OFF button

(Cont'd)

(Cont'd)

Note! If the zero positioning procedure of the kit is not activated after a certain time the machine is in STEP 1 - PREHEATING it appears the lifting device positioning fault alarm.

f) Touch the ALARM button (7) to acknowledge the lifting device positioning fault alarm in the alarm acknowledge screen and restart the zero positioning procedure, see a) on page 12-190.

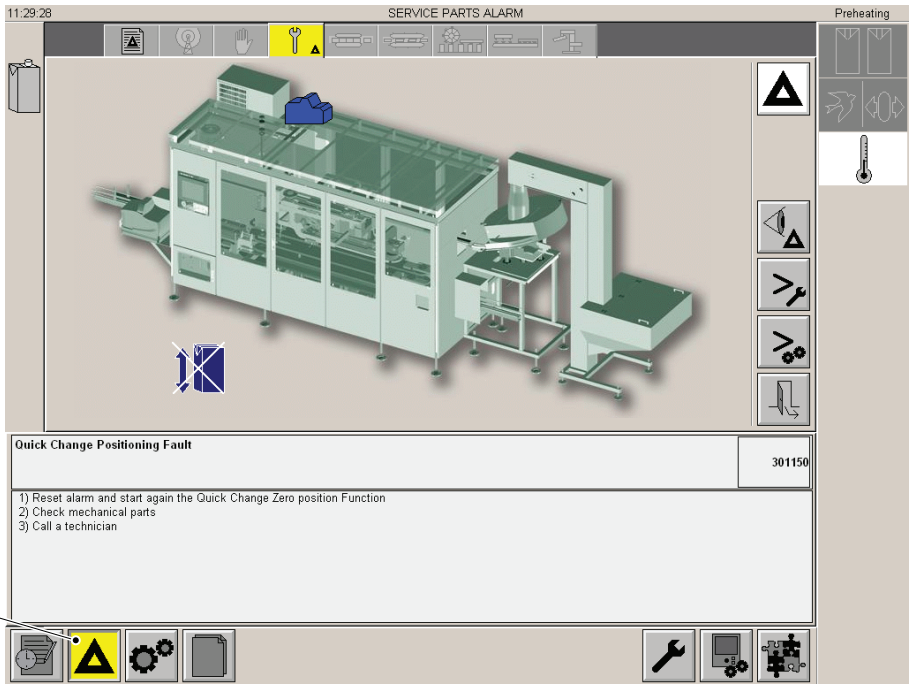

7 ALARM button

12.7-2 Touch Screen - Lifting Device Fine Adjustment

Machine Status	Electrical supply disconnecting device in position I (ON)
SPC Reference	2779070-0300

Applicator Unit

The fine adjustment is required to adjust the position of the fingers of the push down on the caps. The first fine adjustment after the installation of the kit is explained below. The other fine adjustments of the be applied automatically also to the cap sorter.applicator unit will

a) If required, log on the TPOP as service technician, see 1.1.1-1 HMI User Management - Log On as a User.

b) Step the machine to STEP 1 - PREHEATING.

c) Touch the MAINTENANCE button (1).

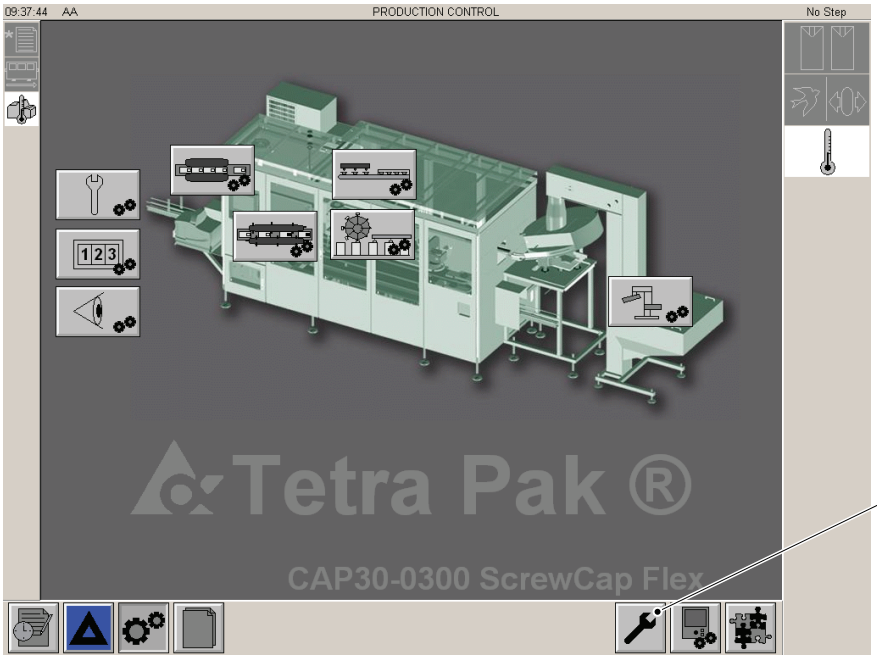

1 MAINTENANCE button

(Cont'd)

(Cont'd)

d) Touch the APPLICATOR UNIT MAINTENANCE button (2).

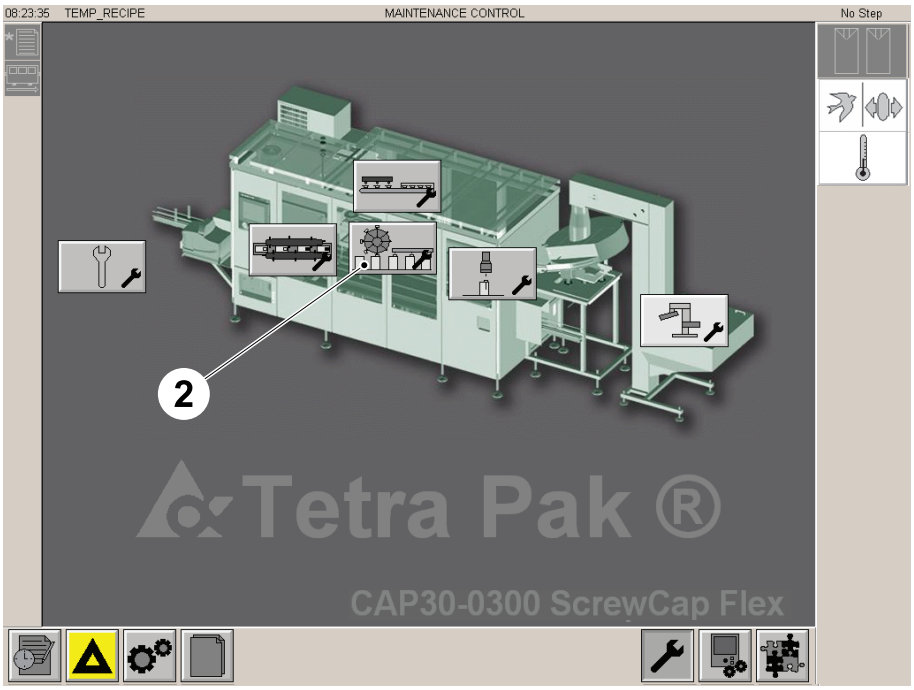

2 APPLICATOR UNIT MAINTENANCE button

(Cont'd)

(Cont'd)

e) Touch the APPLICATOR UNIT FINE ADJUSTMENT icon (3).

f) Insert the value in mm to change the height of the applicator unit by using the ARROW button (4) or by touching the NUMERIC button (5).

Note! The values can be ±3 mm maximum.

g) Touch the OK button (6) to apply the fine adjustment.

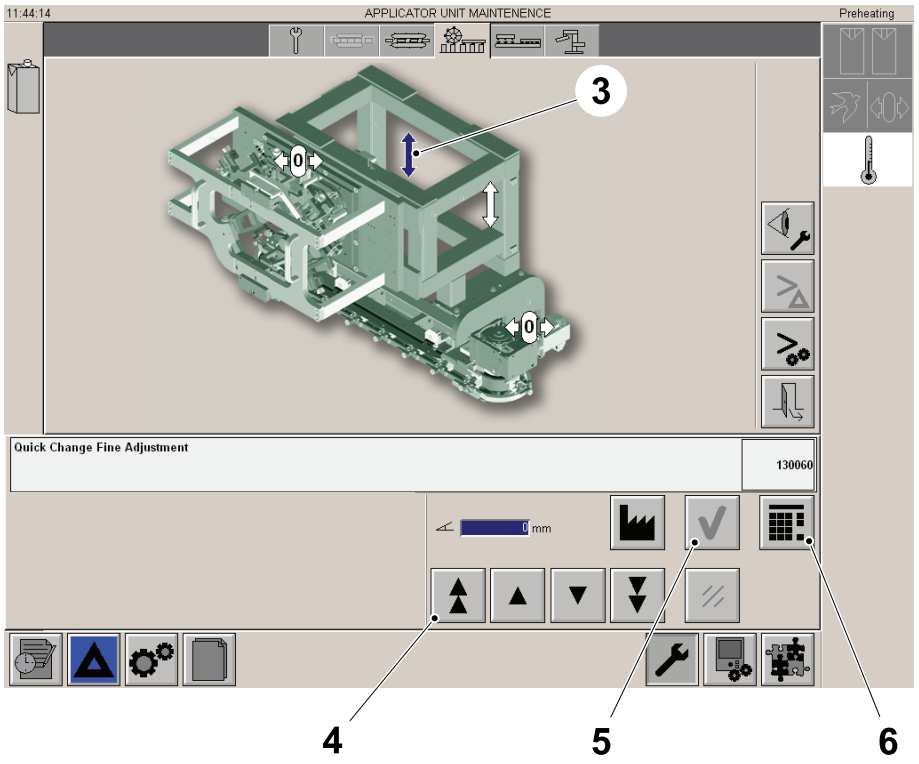

3 APPLICATOR UNIT FINE ADJUSTMENT icon
4 ARROW button
5 NUMERIC button
6 OK button

(Cont'd)

(Cont'd)

Correct the Position of the Cap Sorter

Note! After the fine adjustment of the applicator unit, it's necessary to level the cap conveyor by applying the same adjustment also onto the cap sorter.

a) Touch the CAP SORTER UNIT MAINTENANCE button (1).

b) Touch the CAP SORTER FINE ADJUSTMENT icon (2).

c) Insert the value in mm to change the height of the applicator unit by using the ARROW button (3) or by touching the NUMERIC button (4).

Note! The values can be ±3 mm maximum.

d) Touch the OK button (5) to apply the fine adjustment.

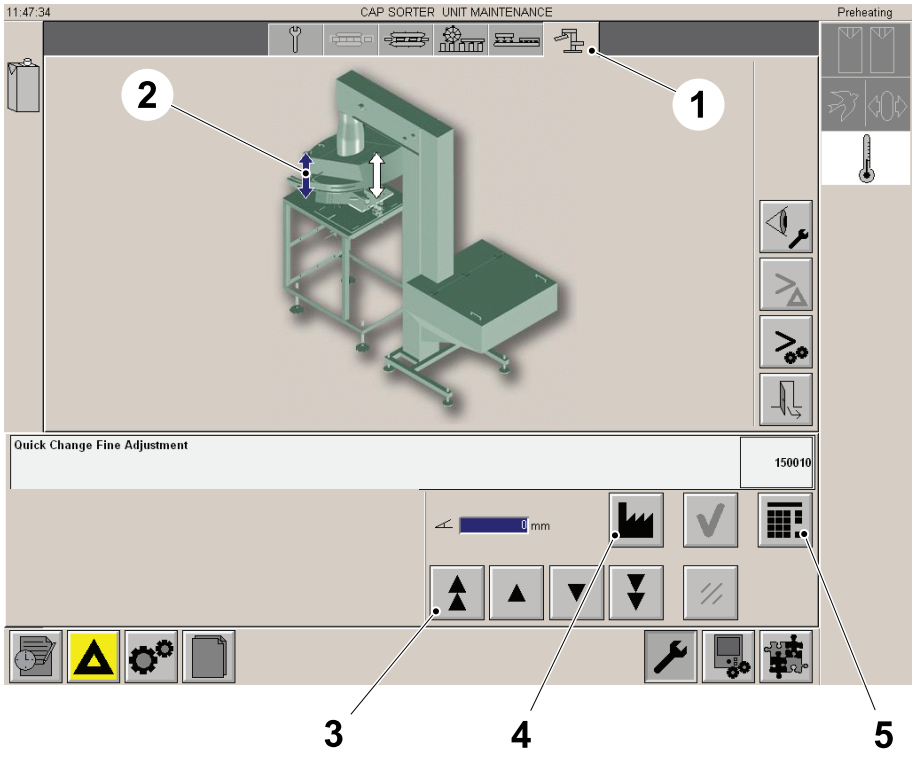

1 CAP SORTER UNIT MAINTENANCE button
2 CAP SORTER FINE ADJUSTMENT icon
3 ARROW button
4 NUMERIC button
5 OK button

12.7-3 Touch Screen - JOG Function

Machine Status	Electrical supply disconnecting device in position I (ON)
SPC Reference	2779070-0300

CAUTION
The JOG Function is required only in case of collision of any parts of the machine during the operations of the lifting device.
The JOG function is used to resolve an alarm condition occurred during the operations of the lifting device.

Note! After a JOG operation a new zero positioning procedure is required, 12.7-1 Touch Screen - Lifting Device Zero Positioning.

a) If required, log on the TPOP as new user, see 1.1.1-1 HMI User Management - Log On as a User.

b) Step the machine to STEP 1 - PREHEATING.

Note! The alarm acknowledge screen is shown.

c) Touch the MAINTENANCE button (1).

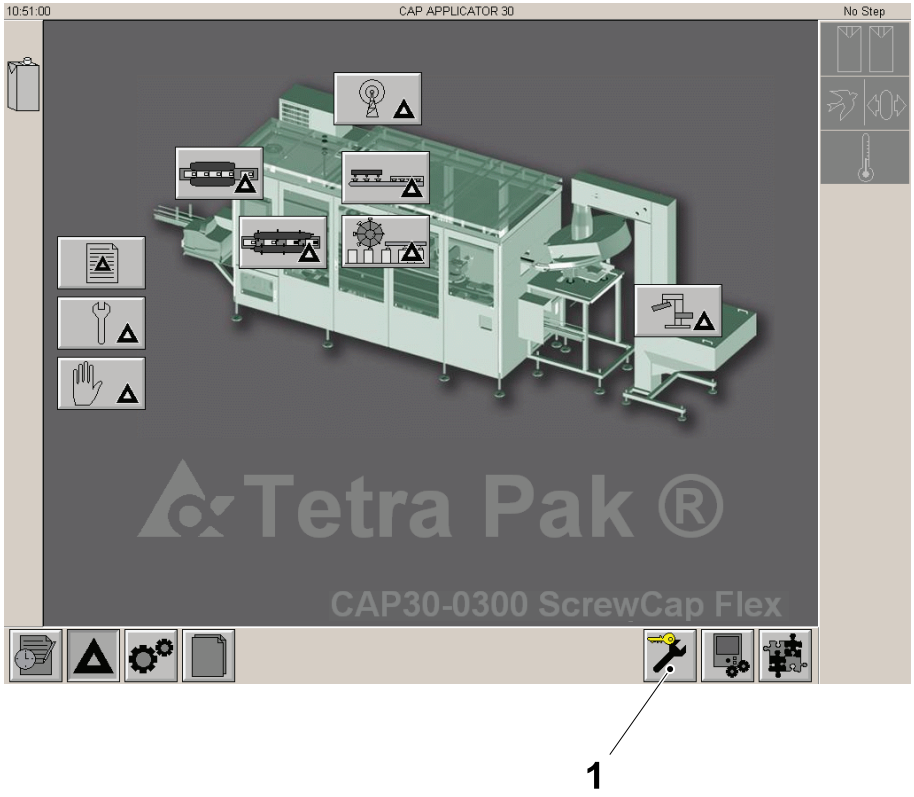

1 MAINTENANCE button

(Cont'd)

(Cont'd)

Cap Sorter JOG Function

a) Touch the CAP SORTER MAINTENANCE button (1).

b) Touch the JOG icon (2).

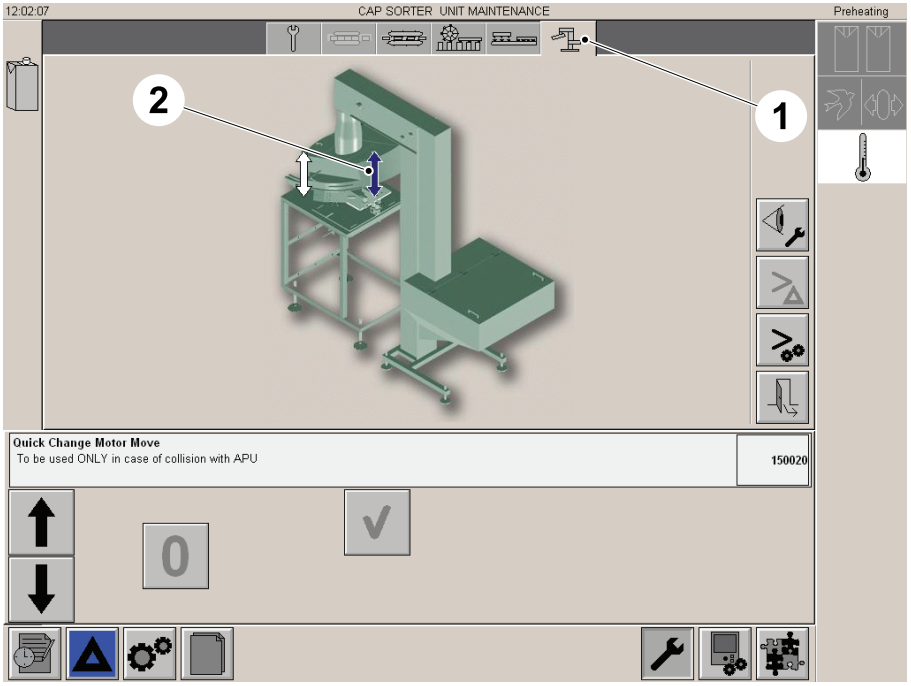

1 CAP SORTER MAINTENANCE button
2 JOG icon

(Cont'd)

(Cont'd)

c) Touch the UP ARROW button (3) to select the movement.

d) Keep touched the OK button (4) to operate the movement.

e) Release the OK button (4) to end the movement.

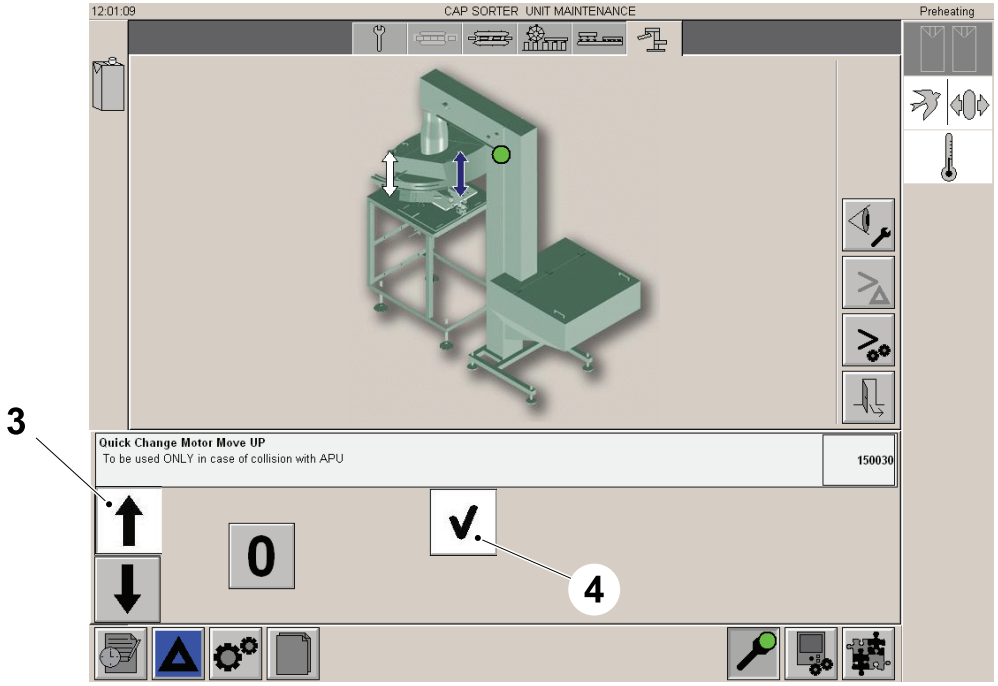

3 UP ARROW button
4 OK button

(Cont'd)

(Cont'd)

f) Touch the UP ARROW button (5) to select the movement.

g) Keep touched the OK button (4) to operate the movement.

h) Release the OK button (4) to end the movement.

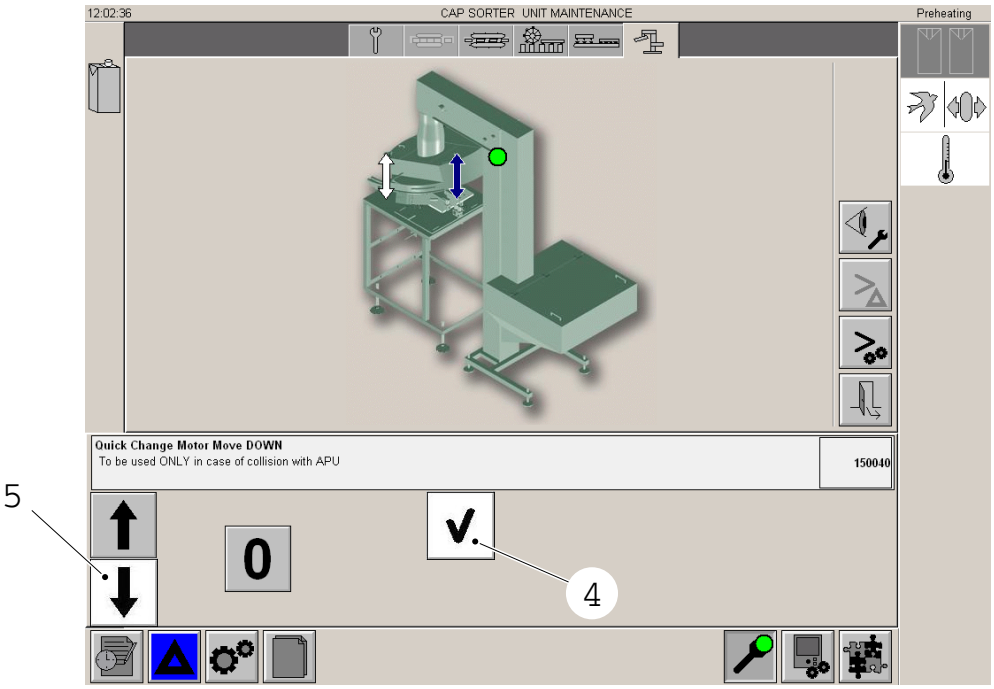

4 OK button

5 DOWN ARROW button

(Cont'd)

(Cont'd)

Applicator JOG Function

a) Touch the APPLICATOR UNIT MAINTENANCE button (1).

b) Touch the JOG icon (2).

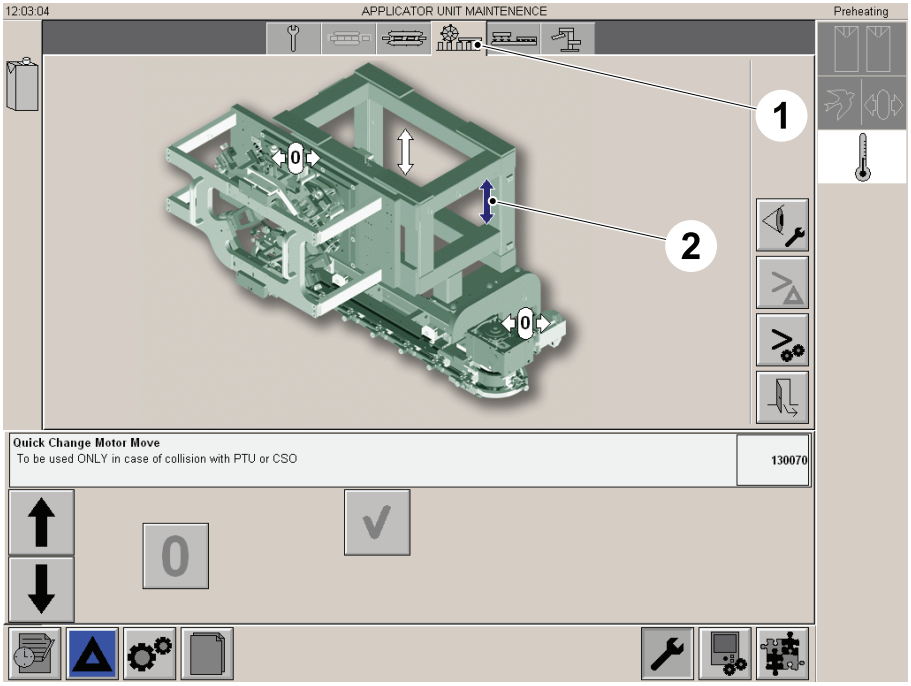

1 APPLICATOR UNIT MAINTENANCE button
2 JOG icon

(Cont'd)

(Cont'd)

c) Touch the UP ARROW button (3) to select the movement.

d) Keep touched the OK button (4) to operate the movement.

e) Release the OK button (4) to end the movement.

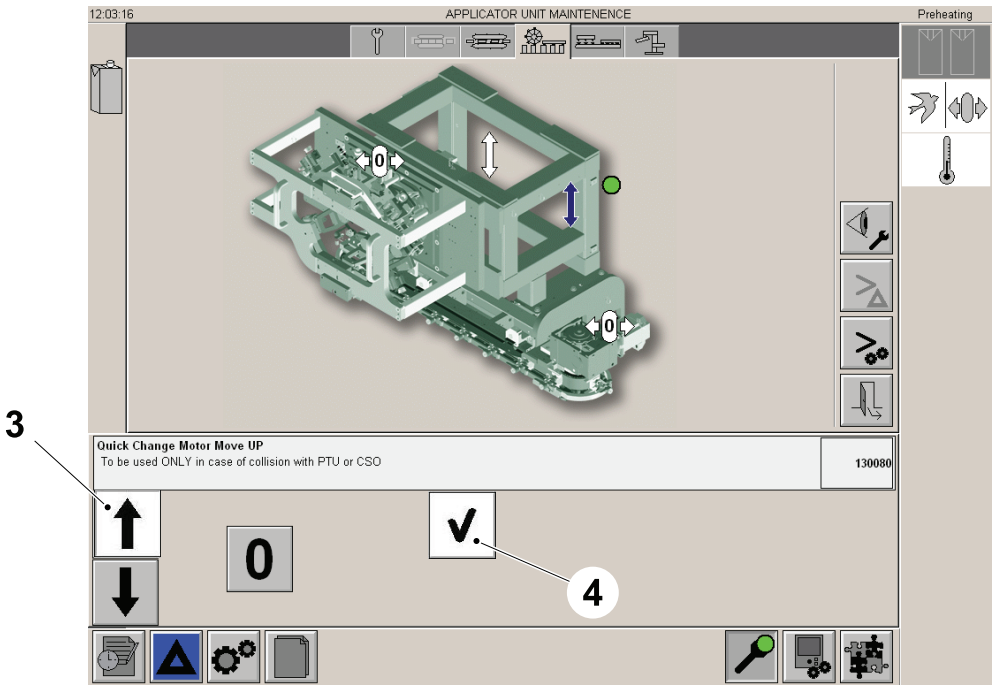

3 UP ARROW button
4 OK button

(Cont'd)

(Cont'd)

f) Touch the UP ARROW button (5) to select the movement.

g) Keep touched the OK button (4) to operate the movement.

h) Release the OK button (4) to end the movement.

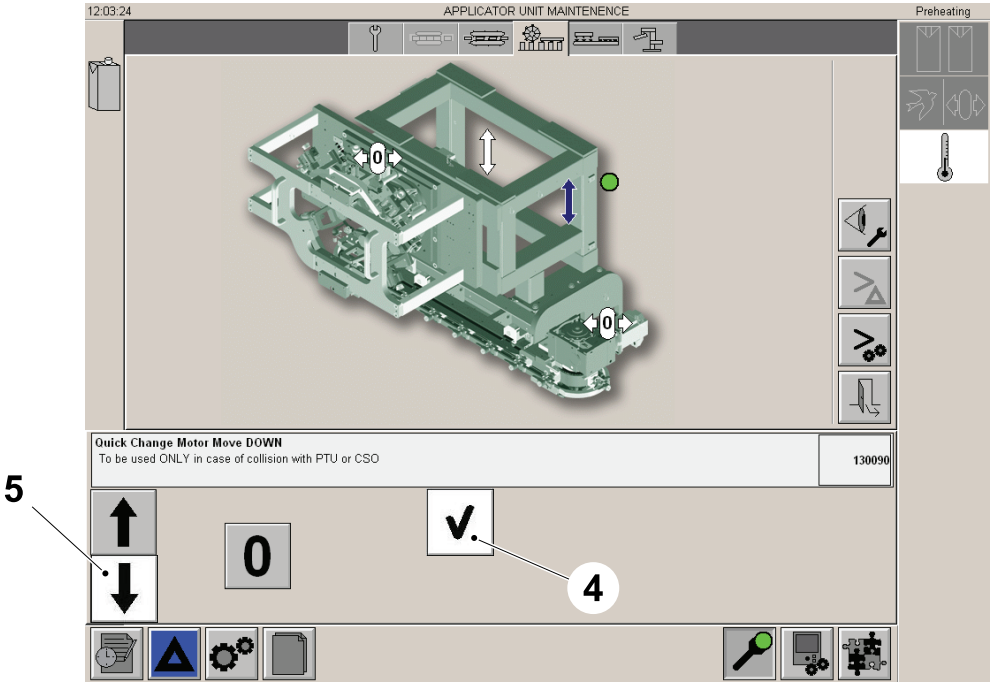

4 OK button

5 UP ARROW button

(Cont'd)

(Cont'd)

Outer Package Transfer JOG Function

a) Touch the PACKAGE TRANSFER MAINTENANCE button (1).

b) Touch the JOG icon (2).

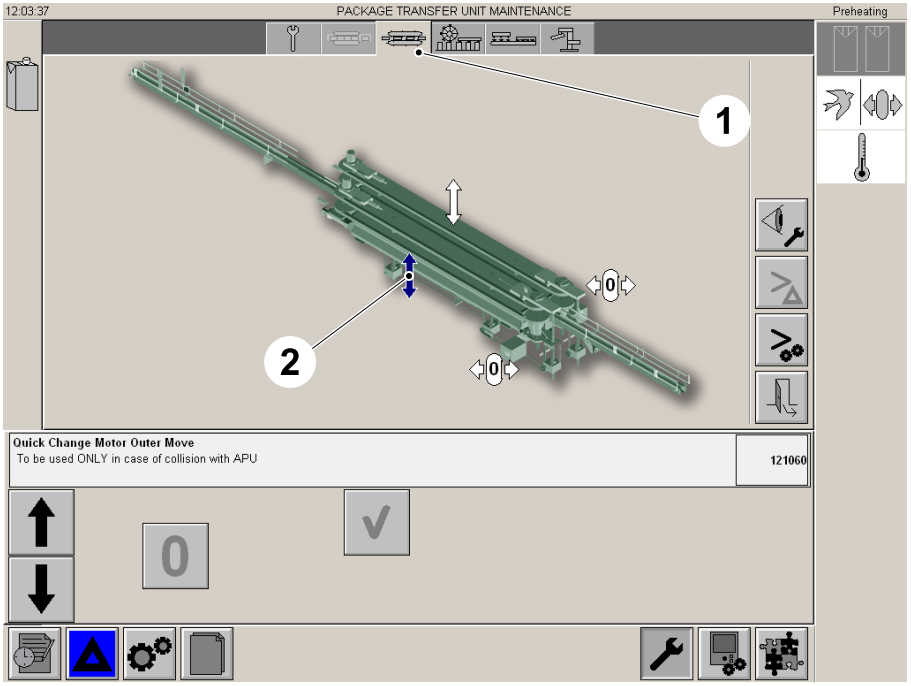

1 PACKAGE TRANSFER MAINTENANCE button
2 JOG icon

(Cont'd)

(Cont'd)

c) Touch the UP ARROW button (3).

d) Touch the OK button (4).

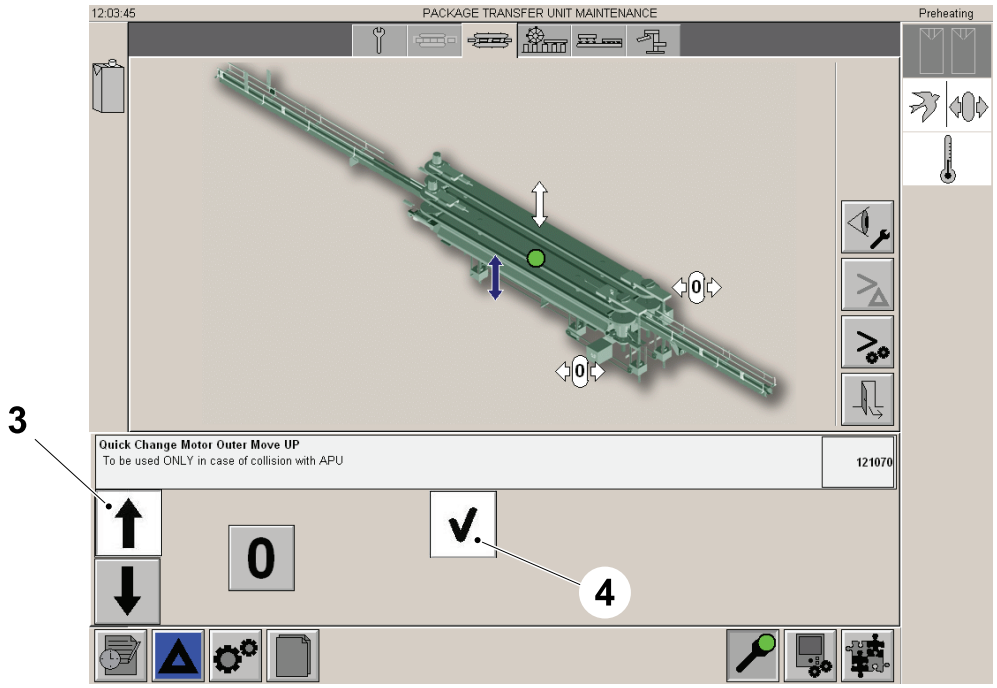

3 UP ARROW button
4 OK button

(Cont'd)

(Cont'd)

e) Touch the DOWN ARROW button (5).

f) Keep touched the OK button (4) to operate the movement.

g) Release the OK button (4) to end the movement.

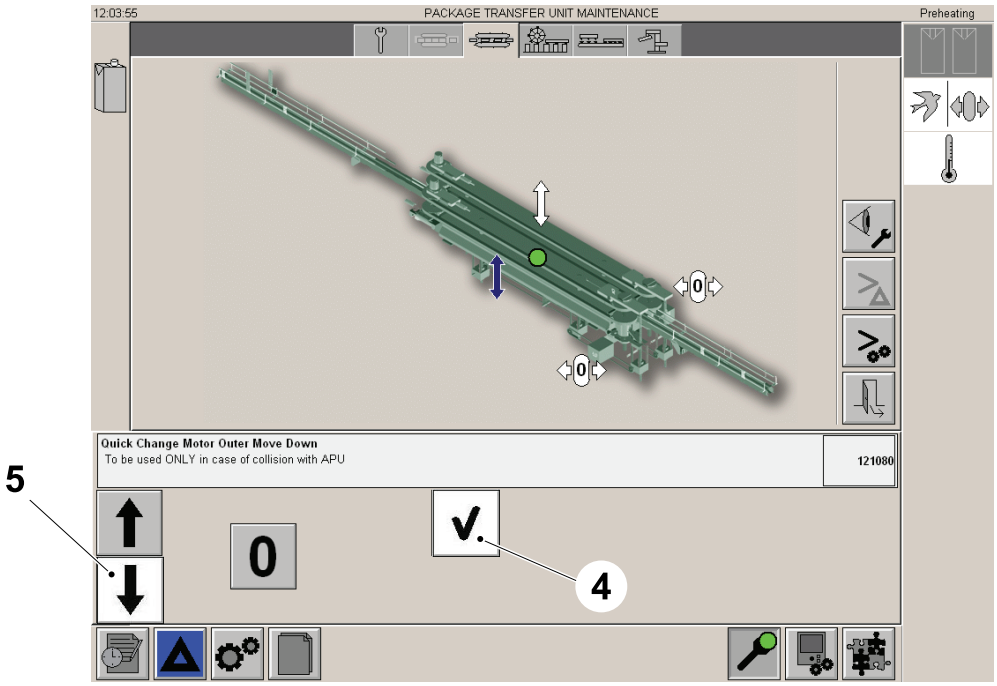

4 OK button

5 DOWN ARROW button

(Cont'd)

(Cont'd)

Inner Package Transfer JOG Function

a) Touch the PACKAGE TRANSFER MAINTENANCE button (1).

b) Touch the JOG icon (2).

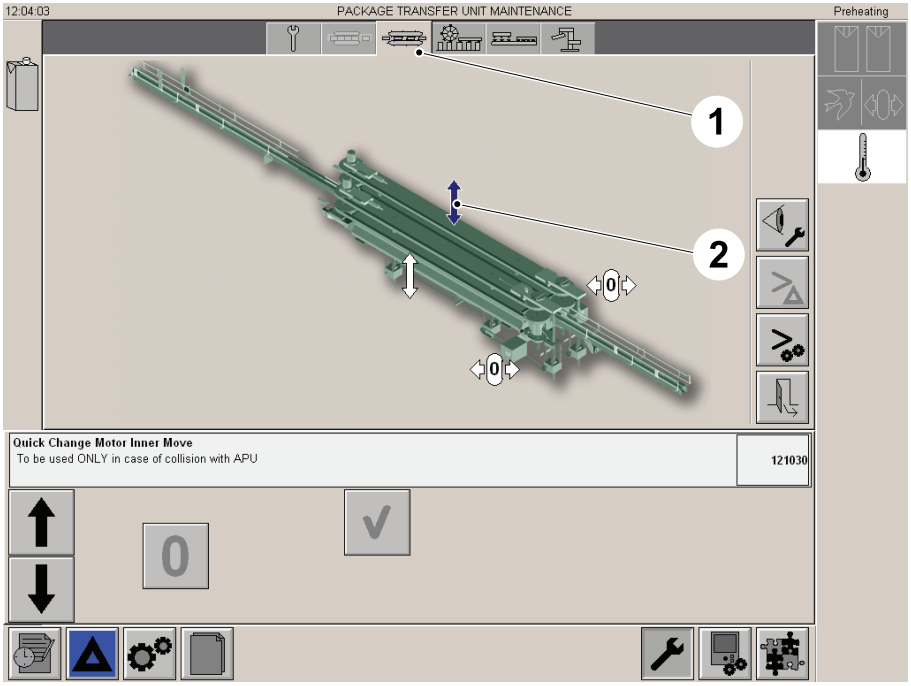

1 PACKAGE TRANSFER MAINTENANCE button
2 JOG icon

(Cont'd)

(Cont'd)

c) Touch the UP ARROW button (3).

d) Touch the OK button (4).

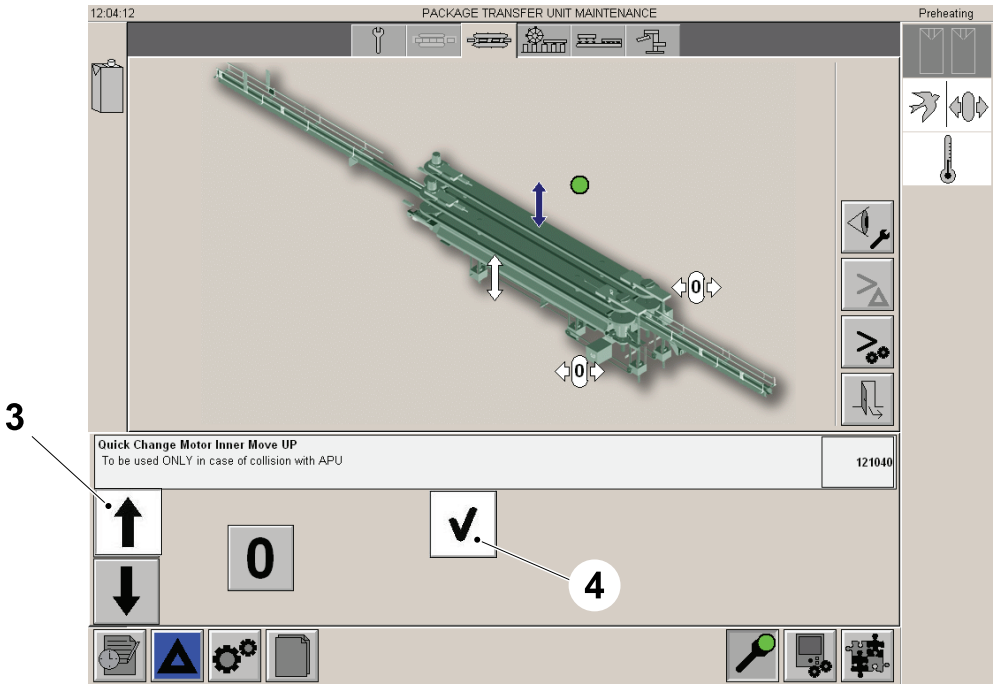

3 UP ARROW button
4 OK button

(Cont'd)

(Cont'd)

e) Touch the DOWN ARROW button (5).

f) Keep touched theOK button (4) to operate the movement.

g) Release theOK button (4) to end the movement.

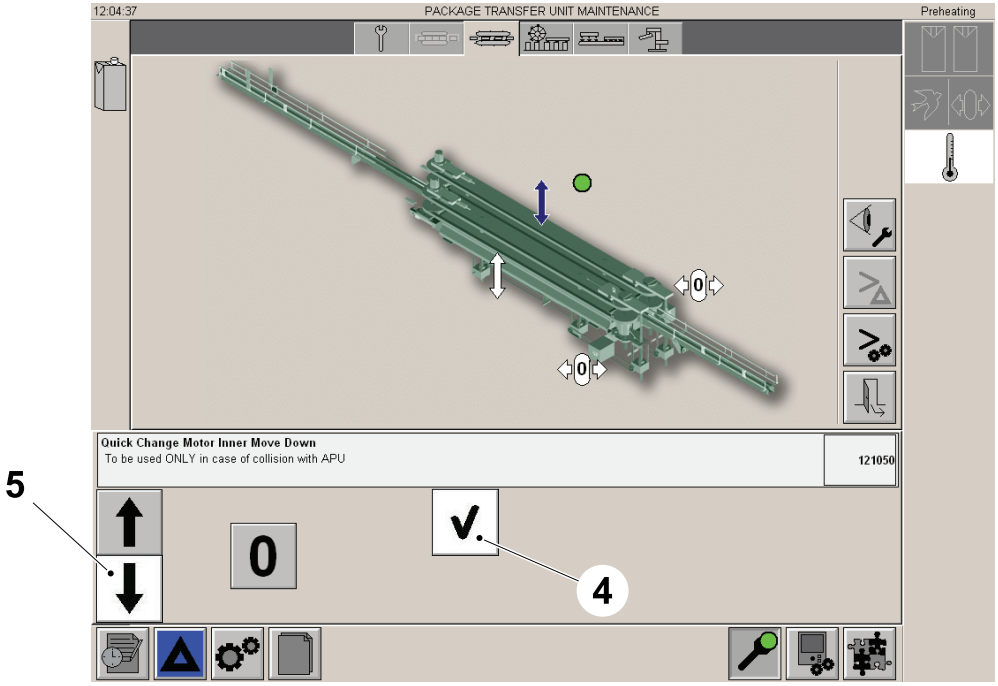

4 OK button

5 DOWN ARROW button

12.7.1 Home Sensors

12.7.1-1 Applicator Unit - Set the Home Sensors

Machine Status	Electrical supply disconnecting device in position O (OFF) Main air valve OFF
SPC Reference	662908-0300

a) Put a spirit level (1) on the package line (2) and check if the package line (2) is level.

b) The couple of sensors G30B1023 and G30B0027 (3) and the couple of sensors G30B1022 and G30B0025 (4) must have the same distance from the package line (2).

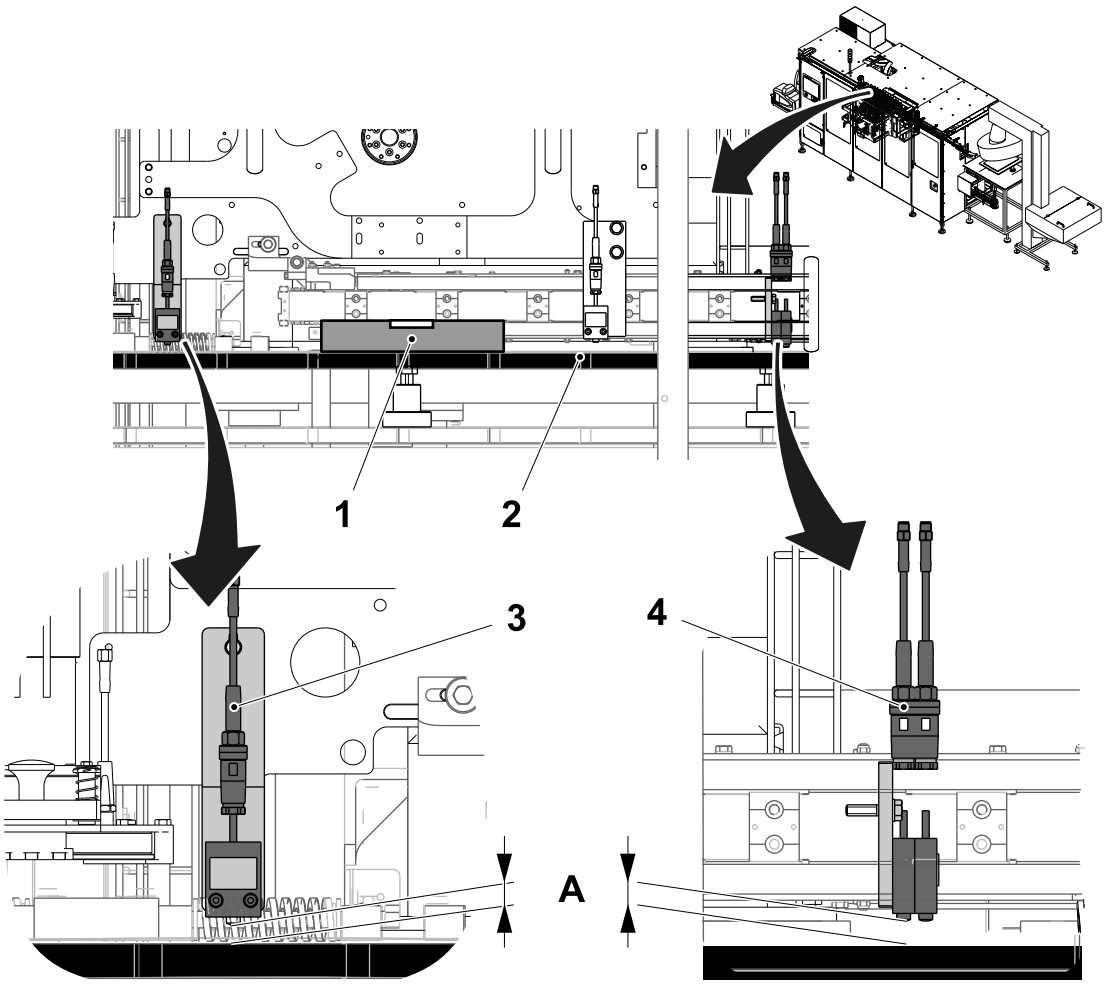

1 Spirit level
2 Package line
3 Sensors G30B1023 and G30B0027
4 Sensors G30B1022 and G30B0025

12.7.1-2 Cap Conveyor - Set the Home Sensors

Machine Status	Electrical supply disconnecting device in position O (OFF) Main air valve OFF
SPC Reference	662908-0300

a) Remove the screw (1).

b) Put a spirit level (2) on the cap conveyor (3) and check if the spirit level (2) is level.

c) Set the cap conveyor (3) level by using the cap sorter jog options, see 12.7-3 Touch Screen - JOG Function.

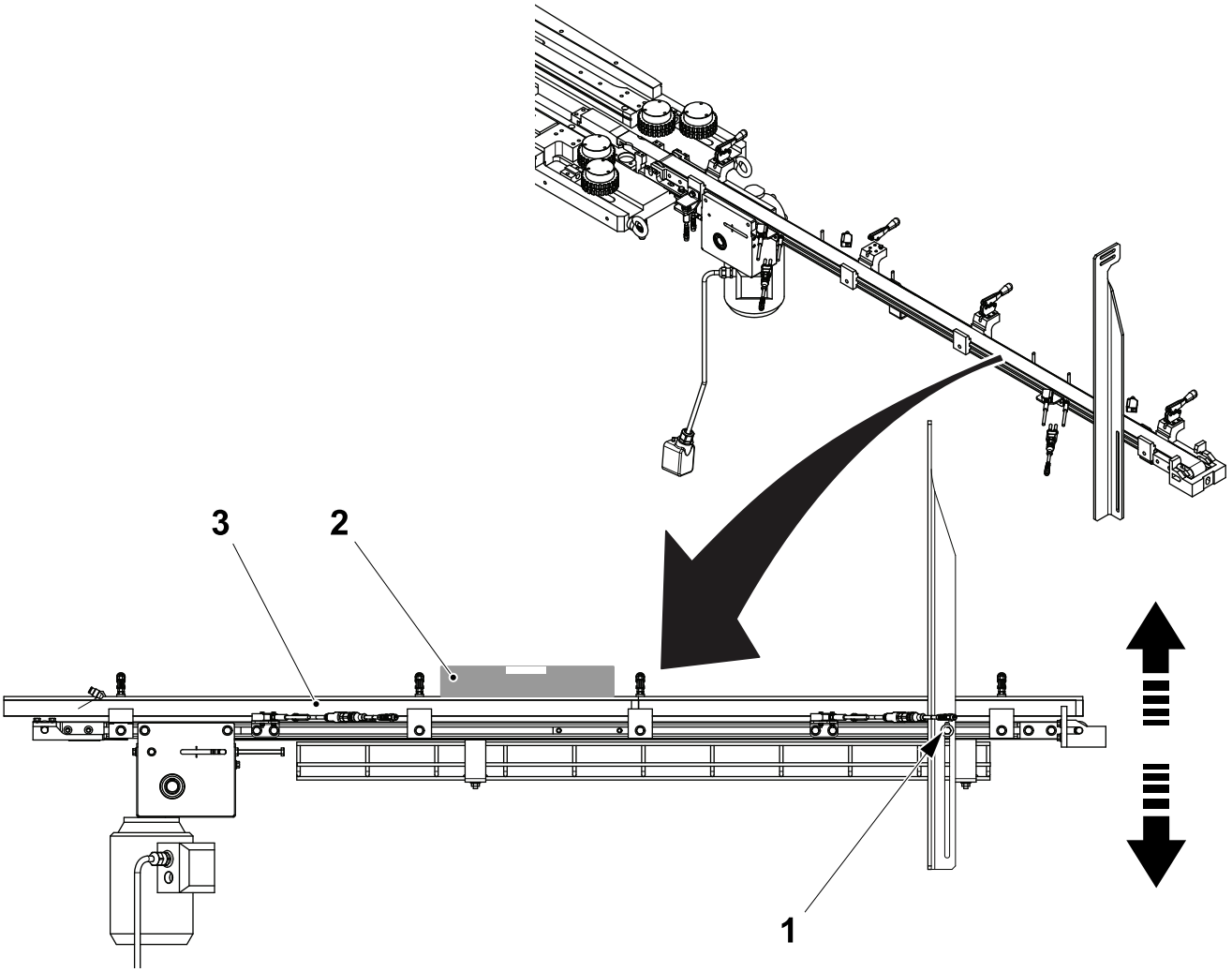

1 Screw
2 Spirit level
3 Cap conveyor

12.7.1-3 Set Home Sensor G40B2025

Machine Status	Electrical supply disconnecting device in position O (OFF) Main air valve OFF
SPC Reference	662916-0300

Note! Make sure that the support (1) is as high as possible.

a) Loosen the screws (2) and move the bracket (3) till the distance **A** is obtained from the support (1).

b) Tighten the screws (2).

A = 4.4 ± 0.2 mm

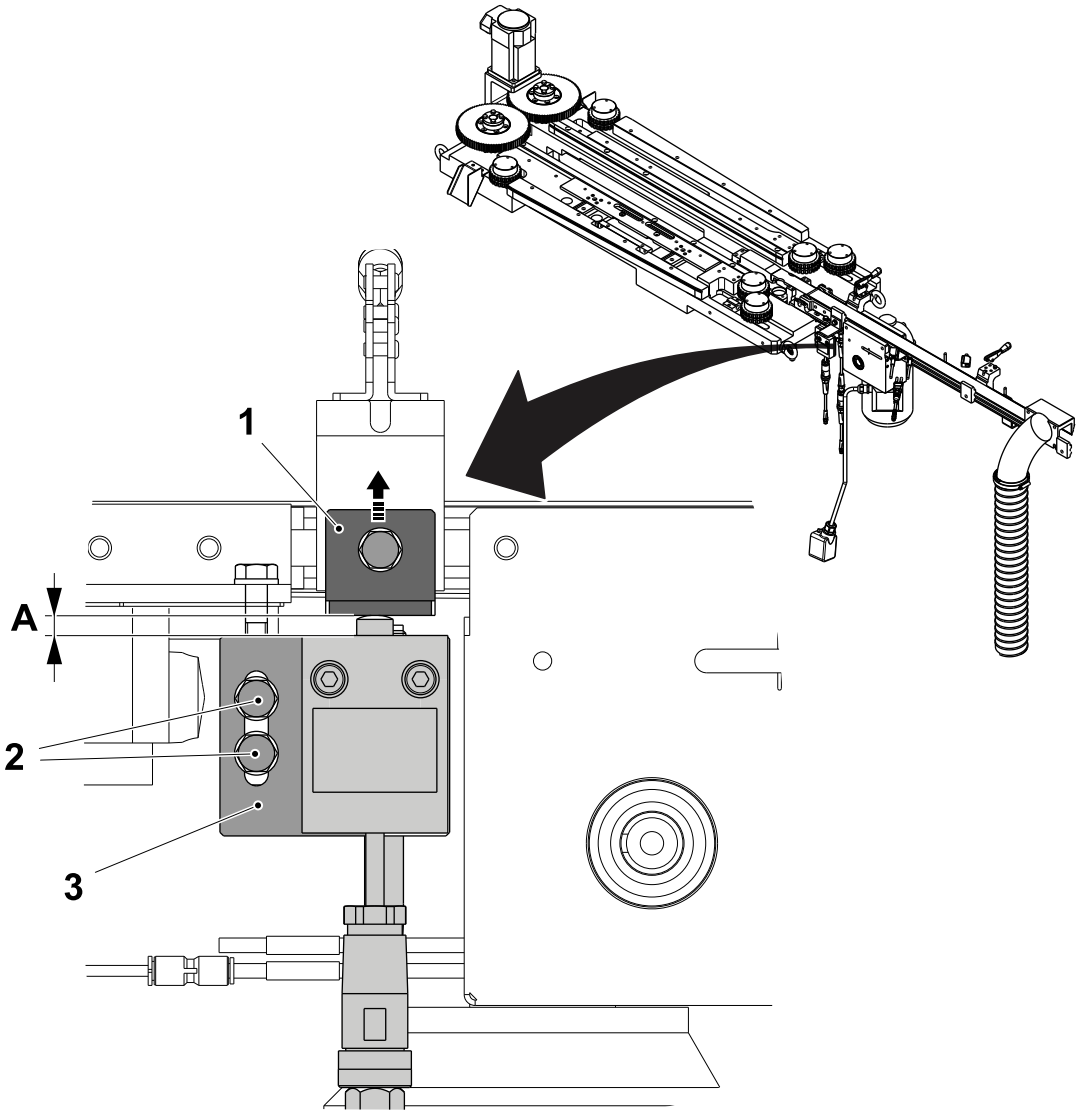

1 Support
2 Screw
3 Bracket

12.7.2 Collision Sensors

12.7.2-1 Set Collision Sensor G30B0028

Machine Status	Electrical supply disconnecting device in position O (OFF)
SPC Reference	662916-0300

CAUTION
Risk of collision
Make sure that the collision sensor avoids any contact between the applicator unit and the package line.

(Cont'd)

(Cont'd)

a) Loosen the screws (1) to move the bracket (2).

b) The bracket (2) must have the distance **A** from the mounting plate (3).

Note! The distance **A** must be taken from the bracket (2) and not from the sensor G30B0028 (4).

c) Tighten the screws (1) for fix the bracket after have take the distance.

Package	**A ± (mm)**
TBA / TPA	130 ± 0.2 mm
TGA	90 ± 0.2 mm

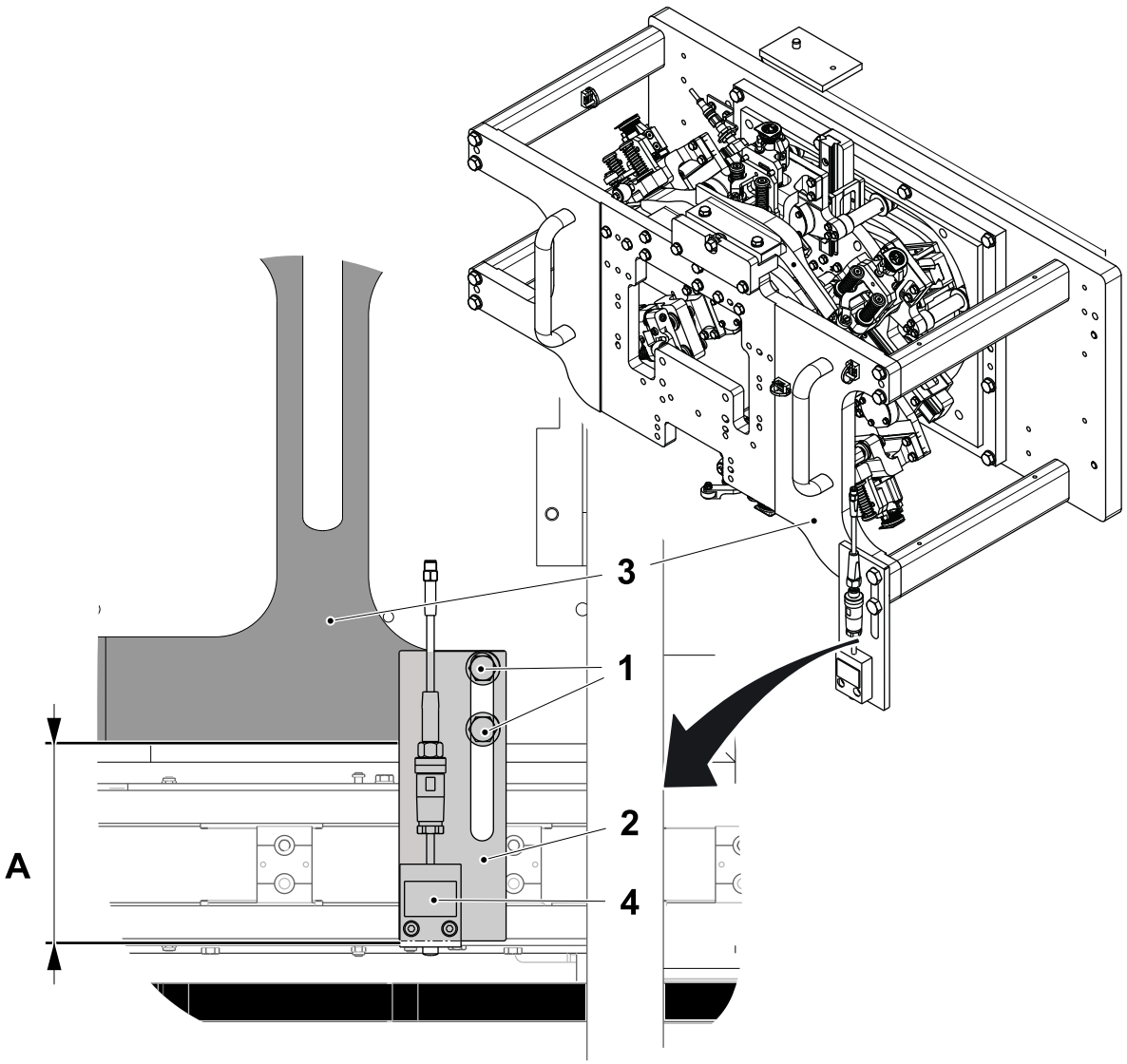

1 Screw
2 Bracket
3 Mounting plate
4 Sensor G30B0028

12.7.2-2 Set Collision Sensor G40B2026

Machine Status	Electrical supply disconnecting device in position O (OFF) Main air valve OFF
SPC Reference	662916-0300

a) Loosen the nuts (1) and move the sensor (2) till the distance **A** is obtained from the support (3).

b) Tighten the nuts (1).

A = 4.4 ± 0.2 mm

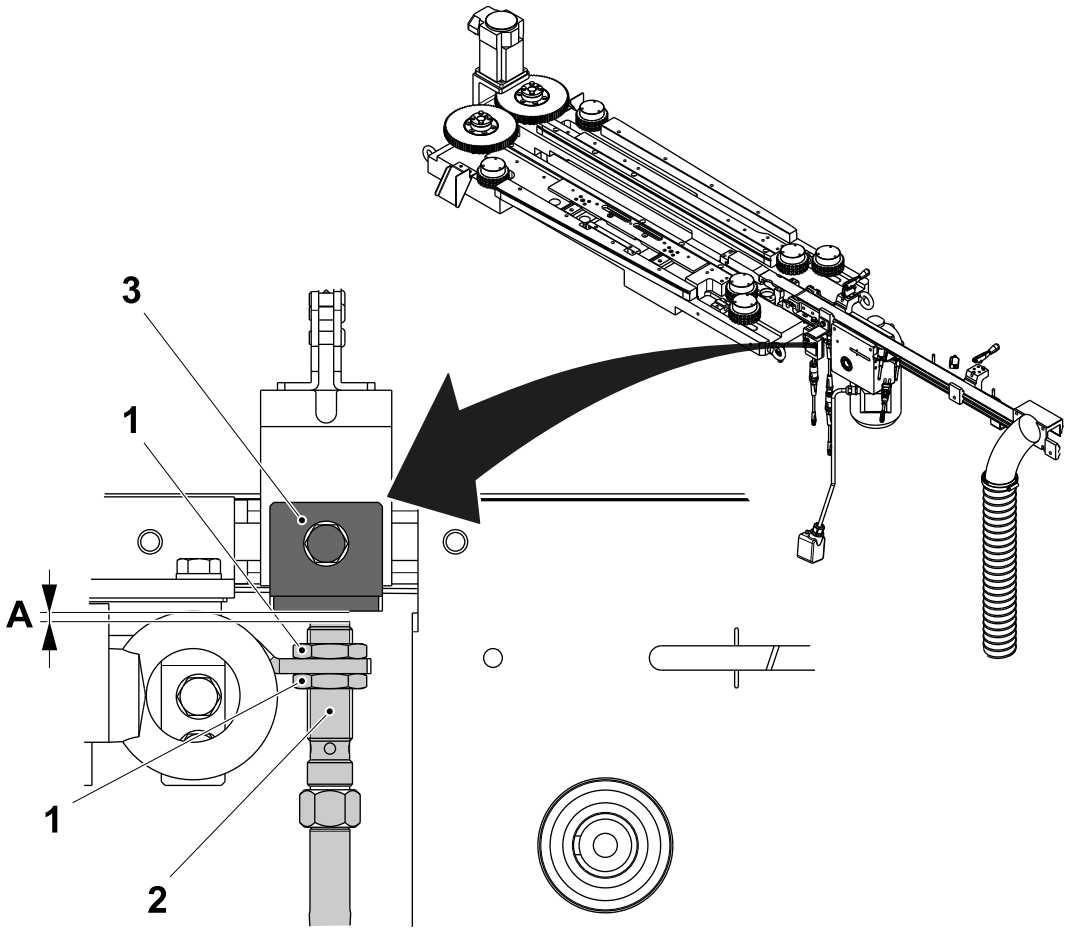

1 Nuts
2 Sensor
3 Support

12.7.3 Drive Motors - Removal - Installation and Diagnosis

12.7.3-1 Diagnosis

Machine Status	Electrical supply disconnecting device in position I (ON)
SPC Reference	662916-0300

LED Status Displays

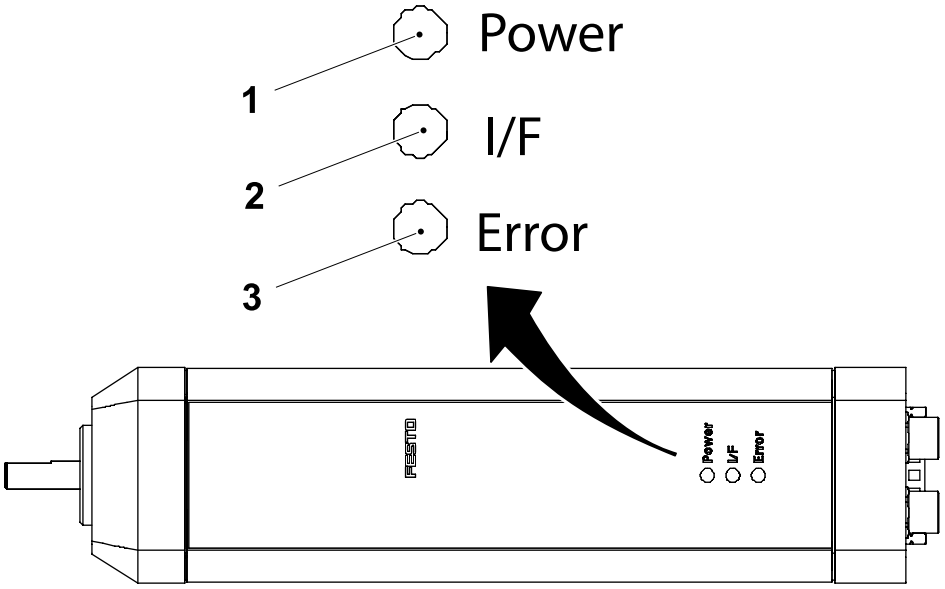

1 Power
2 I/F
3 Error

POWER (1)

Green LED		**Power Supply**
☀	ON	Load and logic voltages applied.
☀	FLASHING	Logic voltage is applied. Load voltage is **NOT** applied.
○	OUT	No voltage is apllied.

(Cont'd)

(Cont'd)

I/F (2)

I/F			Bus status [1]
Green LED			**"Network"**
	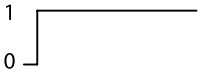	ON	**"Operational"** - System in "operational" state.
	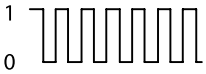	FLASHING	**"Device in Standby"** - MTR−DCI not yet place in the "Operational" state by the master.
Red			**"Modules"**
		OUT	**"No Power / BUS−Off"** - No bus connection or bus voltage not present.
	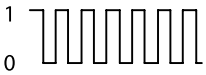	FLASHING	**Warning "Minor fault"** - A recoverable fault has occurred, e.g. timeout when establishing a connection.
	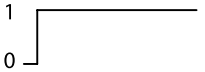	ON	**Fault "Unrecoverable fault"** - A irrecoverable fault has occurred, e.g. a duplicate MAC ID was recognised.
[1] Combined network and module status display as per the DeviceNet specification			

ERROR (3)

Red LED		Fault Display
	ON	Fault. Device not ready for operation. Check cause and rectify.
	FLASHING	Warning. Check cause and rectify if necessary;
	OUT	No internal fault reported.

12.7.3-2 Drive Motor - Cap Sorter (C50M1020)

Configure the switches of the motor according to the EM.

12.7.3-3 Drive Motor - Applicator Unit (G30M0020 and G30M0021)

Configure the switches of the motor according to the EM.

12.7.3-4 Drive Motor - Package Line Inner (W21M1020)

Configure the switches of the motor according to the EM.

12.7.3-5 Drive Motor - Package Line Outer (W21M2020)

Configure the switches of the motor according to the EM.

12.7-4 Cap Detector - Lifting Device

Machine Status	Electrical supply disconnecting device in position O (OFF)

Setup the cap detector, see 11.1-2 Cap Detector - Set.

12.8 Adhesive Detector

12.8.1 Functional Description

Adhesive Detector is a vision system, based on a Cognex In-Sight camera, installed in the machine with the aim to check, in the cap's bottom part, glue quantity and quality. Glue integrity is the key to prevent liquid runoff and to guarantee package integrity especially during the transportation.

The principle is based on UV light reemission from the glue and filtered inside a specific frequency bandwidth to properly identify and separate glue from the background.

The In-Sight camera is triggered when the cap with the glue ring is under the UV light illuminator.

The acquired image is then binarized in order to separate the glue ring from the background (segmentation process). Then the profile of the ring is subdivided in hundreds sectors and each sector is then examined with the caliper tool function.

The picture below is an example of the expected recording from the camera: one can clearly see the light ring of glue (high contrast). Also the border of the cap is visible, but its boundary shows a little contrast with the background, as expected.

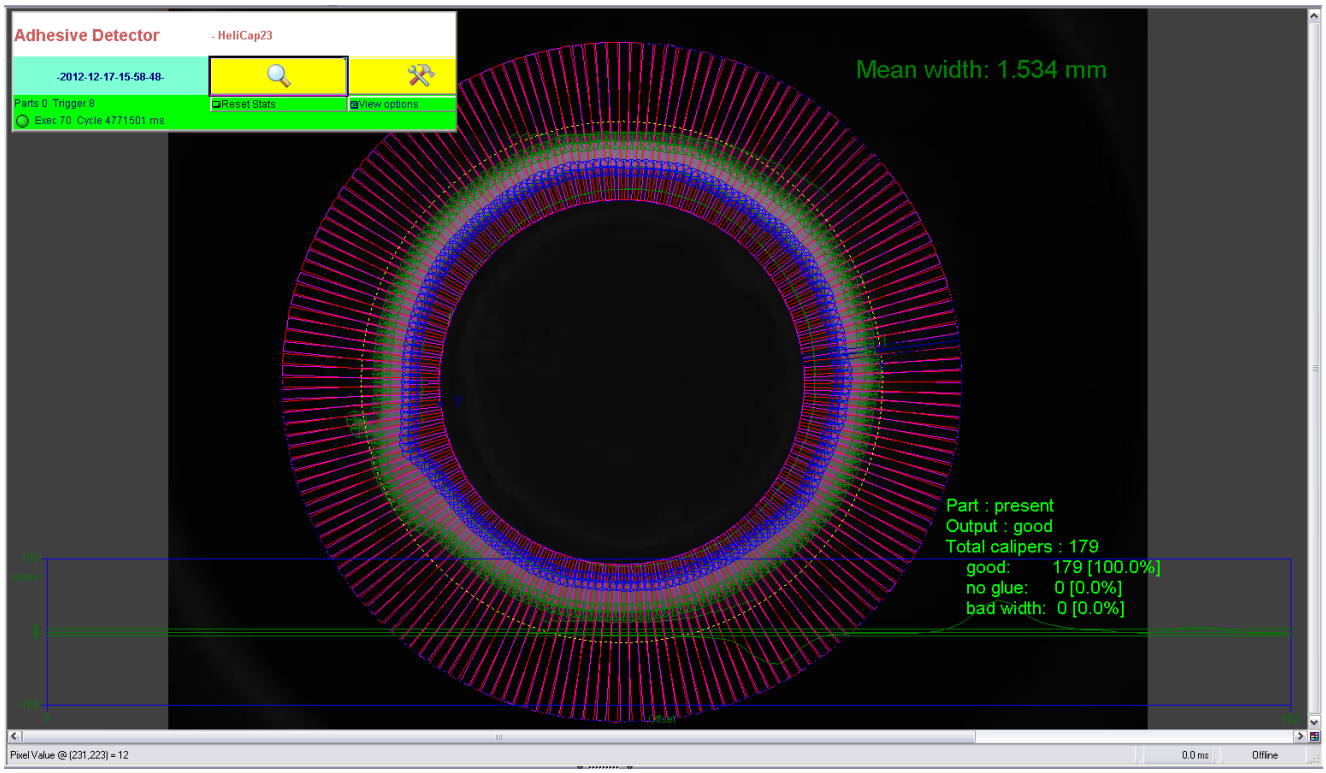

(Cont'd)

(Cont'd)



Detail of the acquired image: the glue ring appear as light grey on a dark background

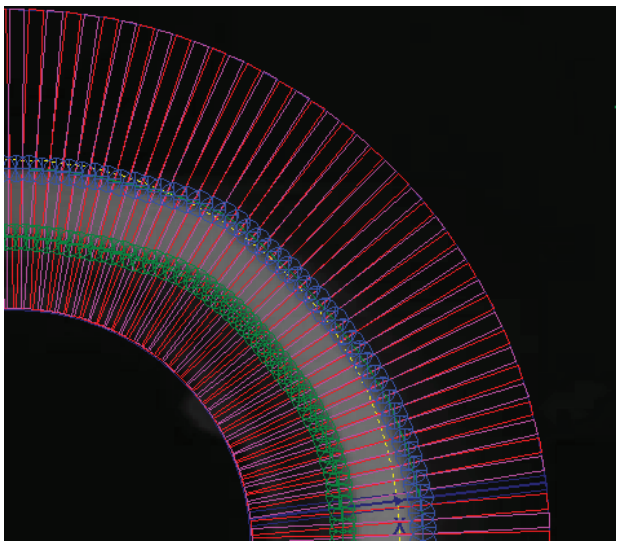

Detail of the acquired image with the overlay graphics: the green and blue circles are obtained caliper per caliper and represents the inner and outer border of the glue ring respectively, in every section into which the analyses tool subdivide the glue

The Adhesive Detector is able to distinguish the following bad conditions:

- Open pattern;
- Too much glue;
- Too less glue;

For each bad detection, the package associated to these is ejected by the waste device.

(Cont'd)

(Cont'd)

Examples of good and bad detections

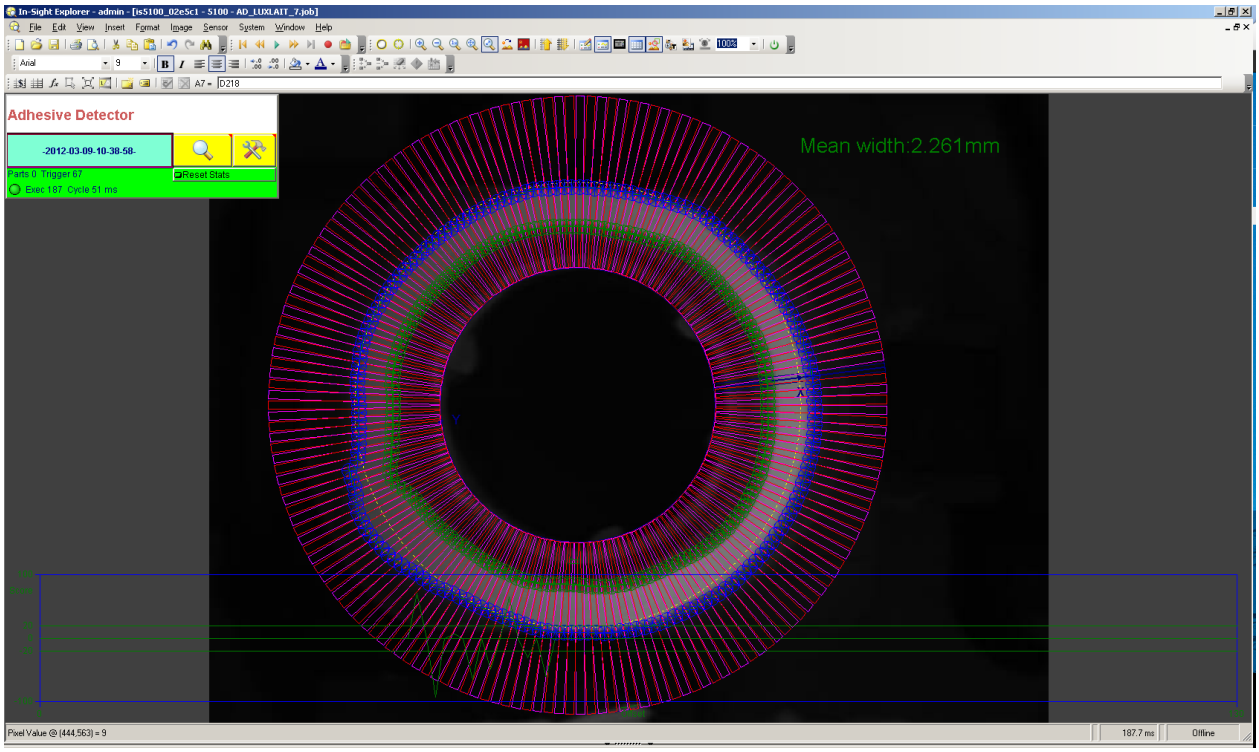

GOOD

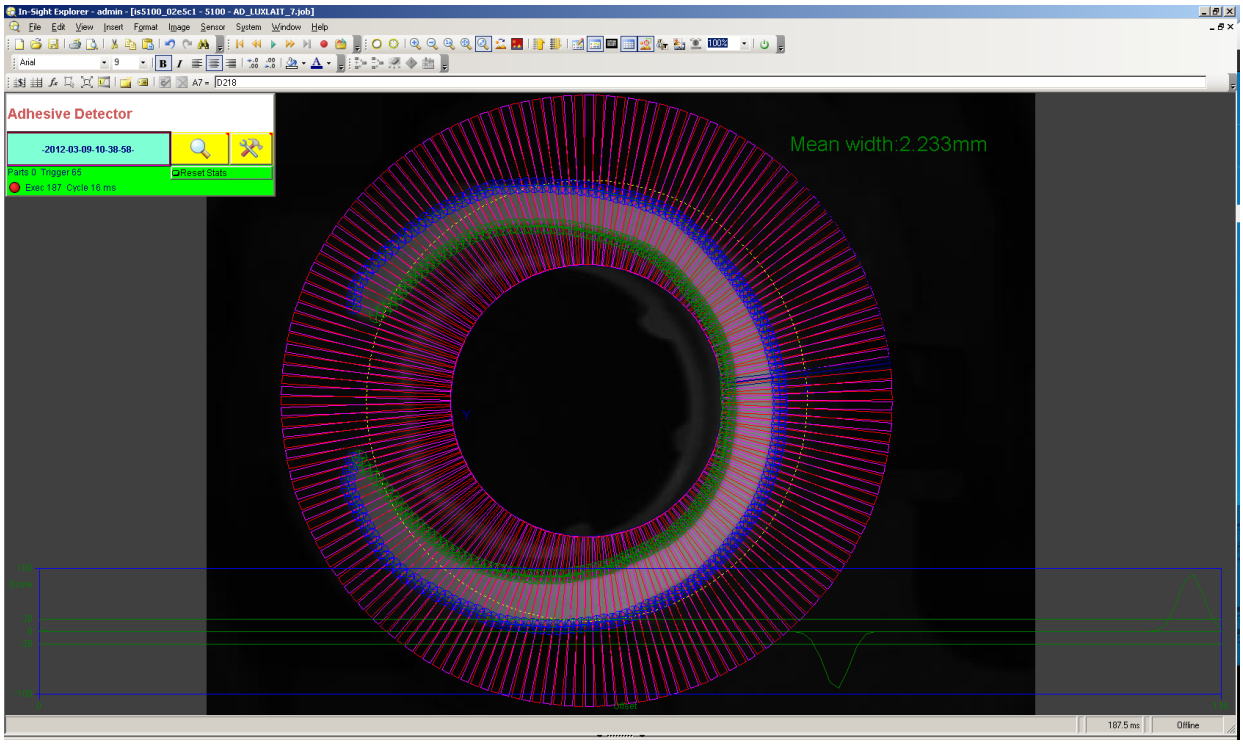

BAD – Open pattern

(Cont'd)

(Cont'd)

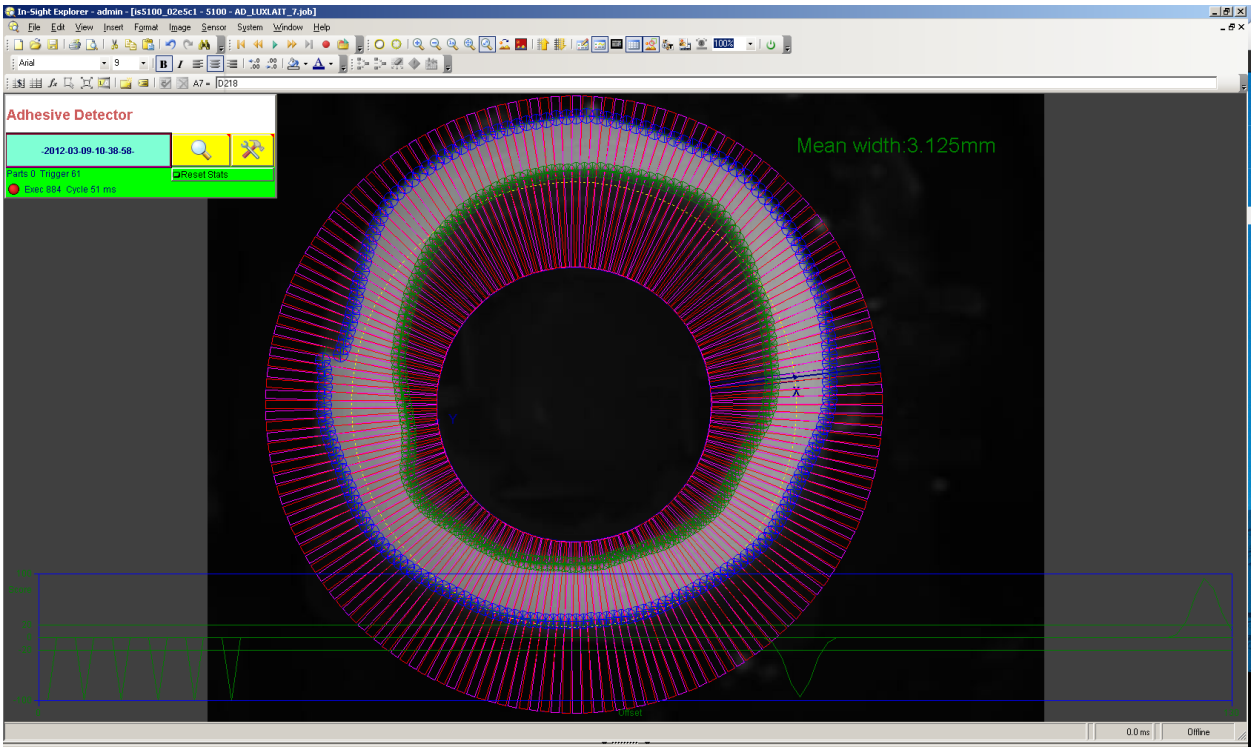

BAD – Too much glue

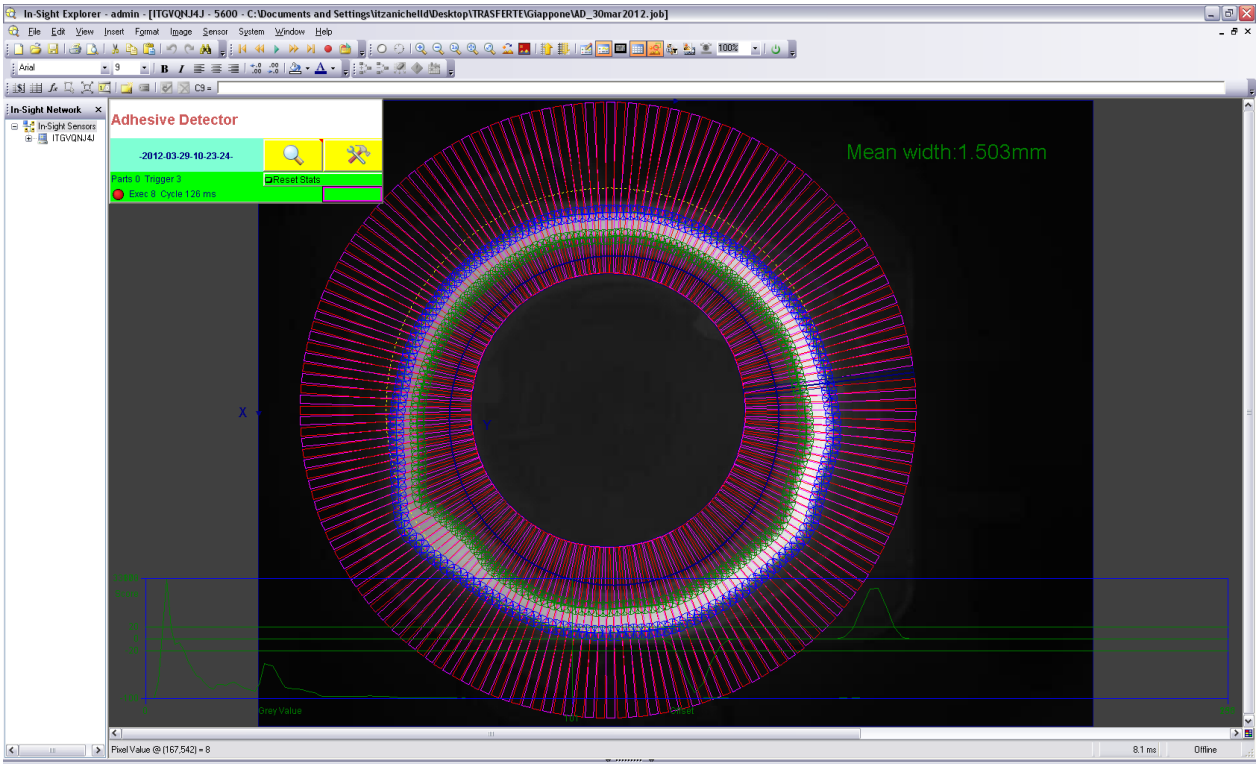

BAD – Too less glue

(Cont'd)

(Cont'd)

Adhesive Detector Coloured Caps Kit

This kit consists of:

- The sensor (1)
- The bracket (2)
- The tool (3).

Note! In case of coloured caps, this kit makes the machine to auto adjust its settings. See 12.8.1-1 Adhesive Detector Coloured Caps - Sensor Replacement and 12.8.1-2 Adhesive Detector Coloured Caps - Sensor Set-up.

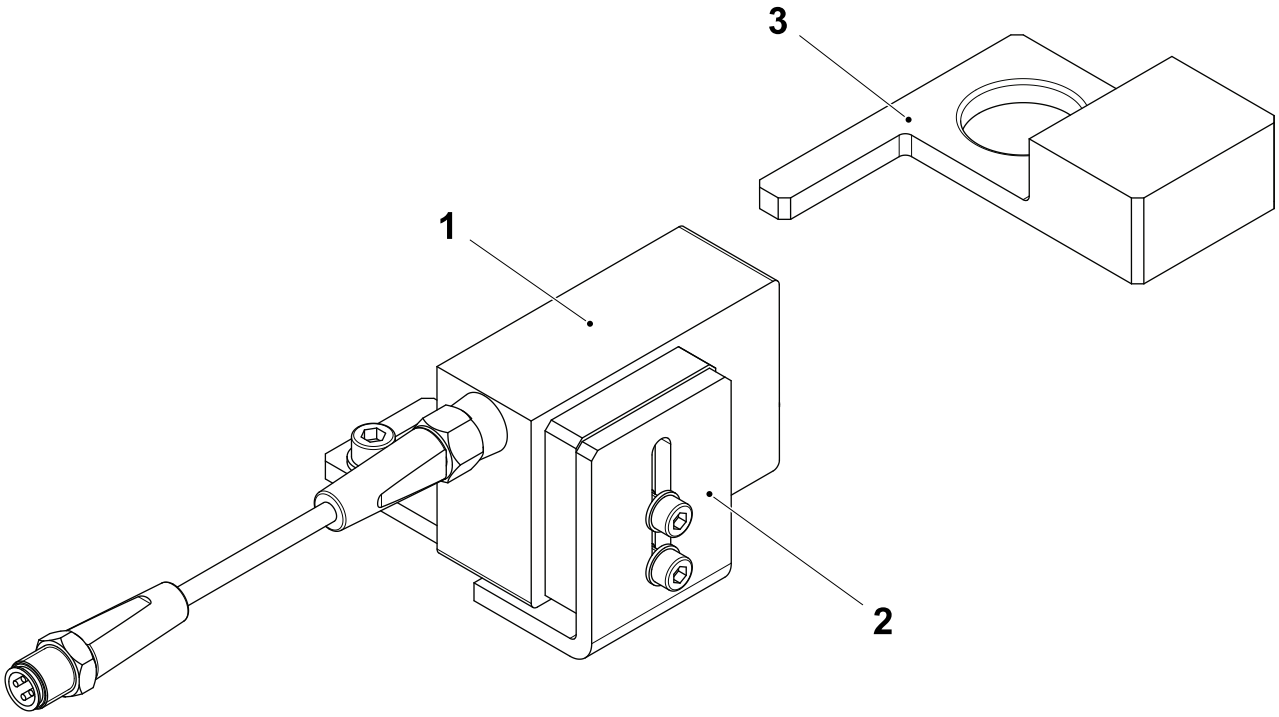

1 Sensor 2 Bracket 3 Tool

12.8.1-1 Adhesive Detector Coloured Caps - Sensor Replacement

Machine Status	Electrical supply disconnecting device in position O (OFF) Main air valve OFF
SPC Reference	3321588-0200

a) Loosen the screws (1) and remove the bracket (2) and the sensor (3).

b) Loosen the screws (4) and remove the sensor (3).

c) Disconnect the cable (5) and replace the sensor (3).

d) Assemble in the reverse order.

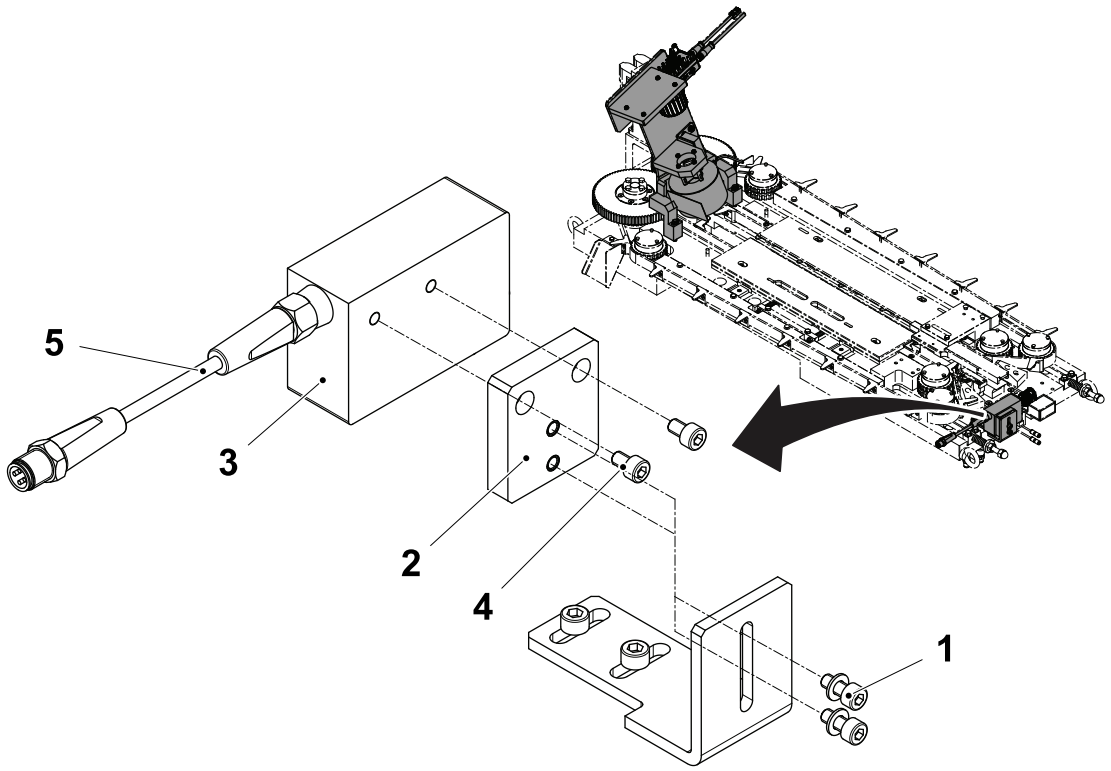

1 Screw
2 Bracket
3 Sensor
4 Screw
5 Cable

12.8.1-2 Adhesive Detector Coloured Caps - Sensor Set-up

Machine Status	Electrical supply disconnecting device in position O (OFF) Main air valve OFF
Special Equipment	Tool 3384311-0000 valid for StreamCap1000 Tool 3384312-0000 valid for HeliCap2 23 Tool 3384313-0000 valid for HeliCap 27
SPC Reference	3321588-0200

Install the Tool

a) Open the locking levers (1) and remove the guide rail (2).

b) Position the tool (3) in contact (4) with the sensor (5) and with the hole (6) in the middle of the cap conveyor (7).

c) Close the locking lever (8) to fix the tool (3) in position.

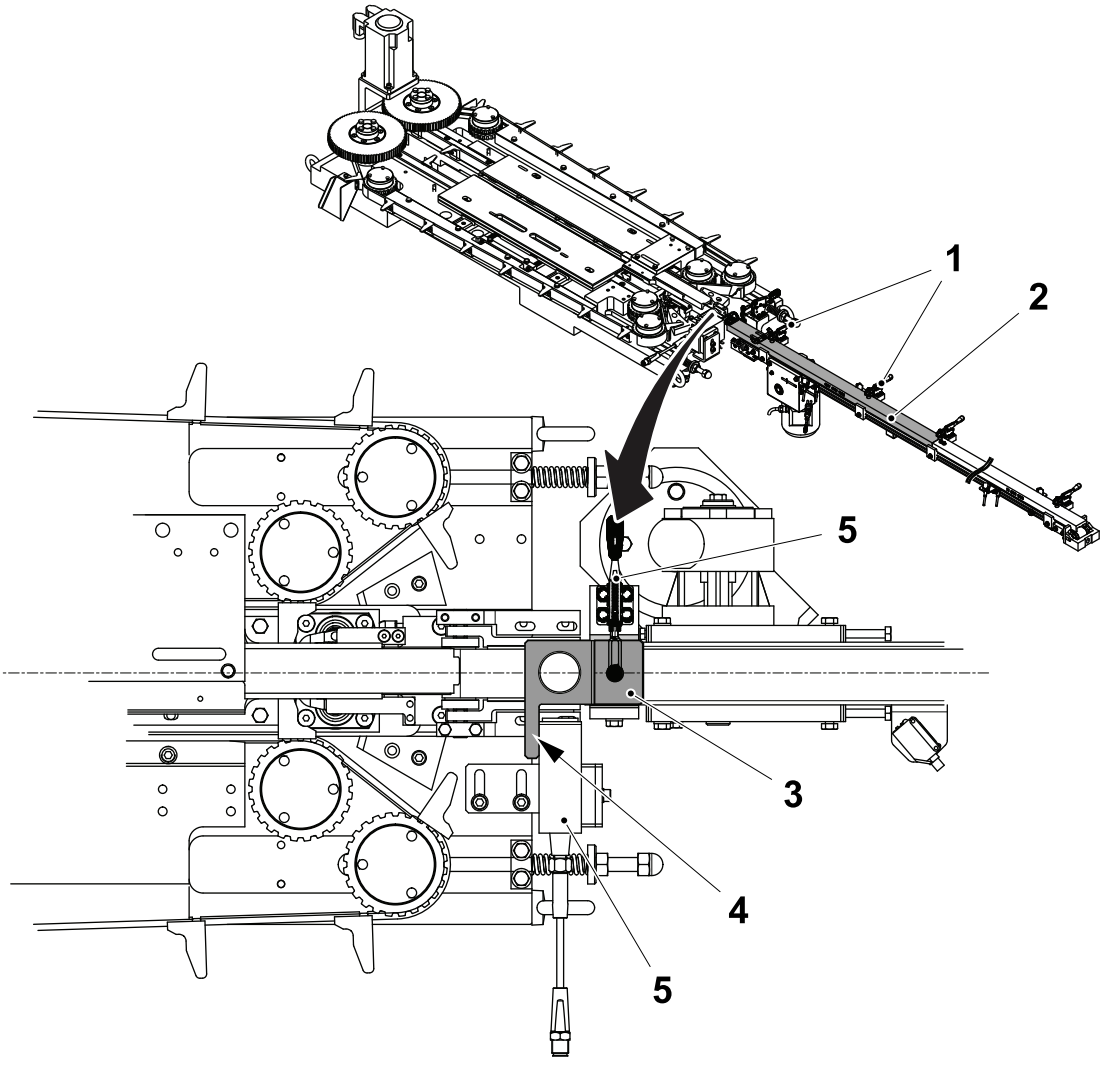

1 Locking lever
2 Guide rail
3 Tool
4 Contact
5 Sensor
6 Hole
7 Cap conveyor
8 Locking lever

(Cont'd)

(Cont'd)

Set the Sensor

a) Fit the cap (1) in the tool (2).

b) Loosen the screws (3) and move the sensor (4) until the distance **A** from the tool (2) is obtained.

c) Loosen the screws (5) and move the sensor (4) until the light (6) is centred in the middle of the cap (1).

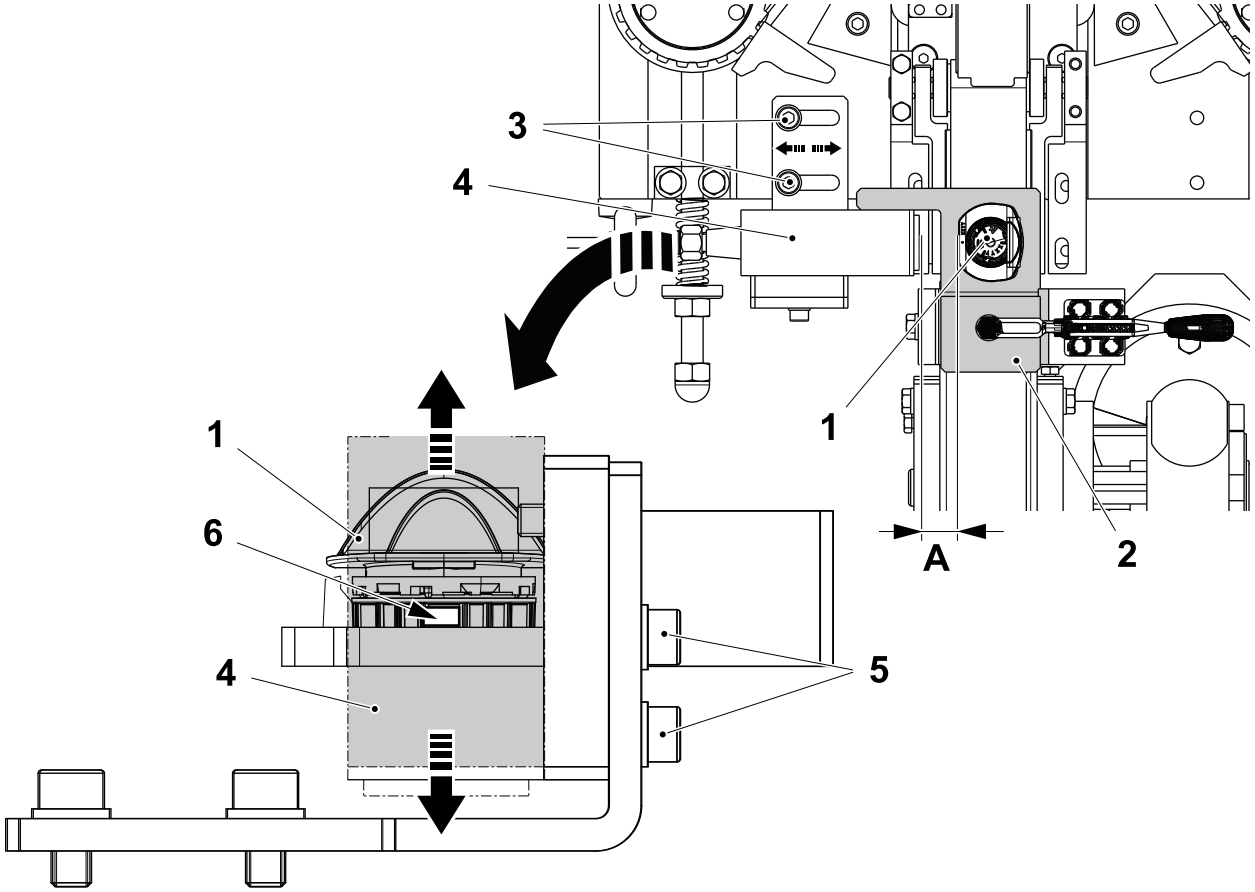

A = 20 mm

1 Cap
2 Tool
3 Screw
4 Sensor
5 Screw
6 Light

(Cont'd)

(Cont'd)

Program the Sensor

a) Position the light spot (1) on the cap (2), click SET BUTTON (3) (for more than 1sec), until the red light begins to flash.

b) Select the tolerance range pushing "+" KEY (4) via the quality indicator:
   - 5 LEDs pulsate: ex-works setting
   - 7 LEDs pulsate: CORRECT SETTING

c) Click the SET BUTTON (3) to confirm.

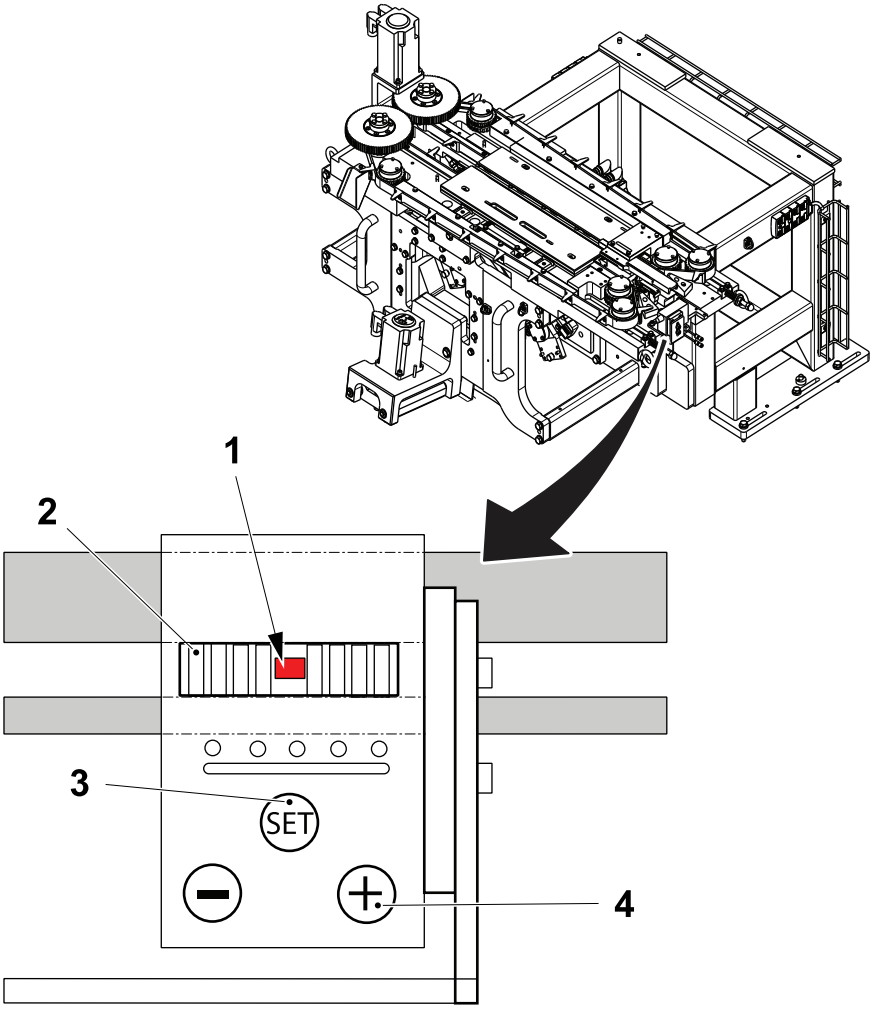

1 Light spot
2 Cap
3 SET BUTTON
4 "+" KEY

(Cont'd)

(Cont'd)

Remove the Tool

a) Open the locking lever (1) and remove the tool (2).

b) Open the locking levers (3) and install the guide rail (4).

c) Close the locking levers (3).

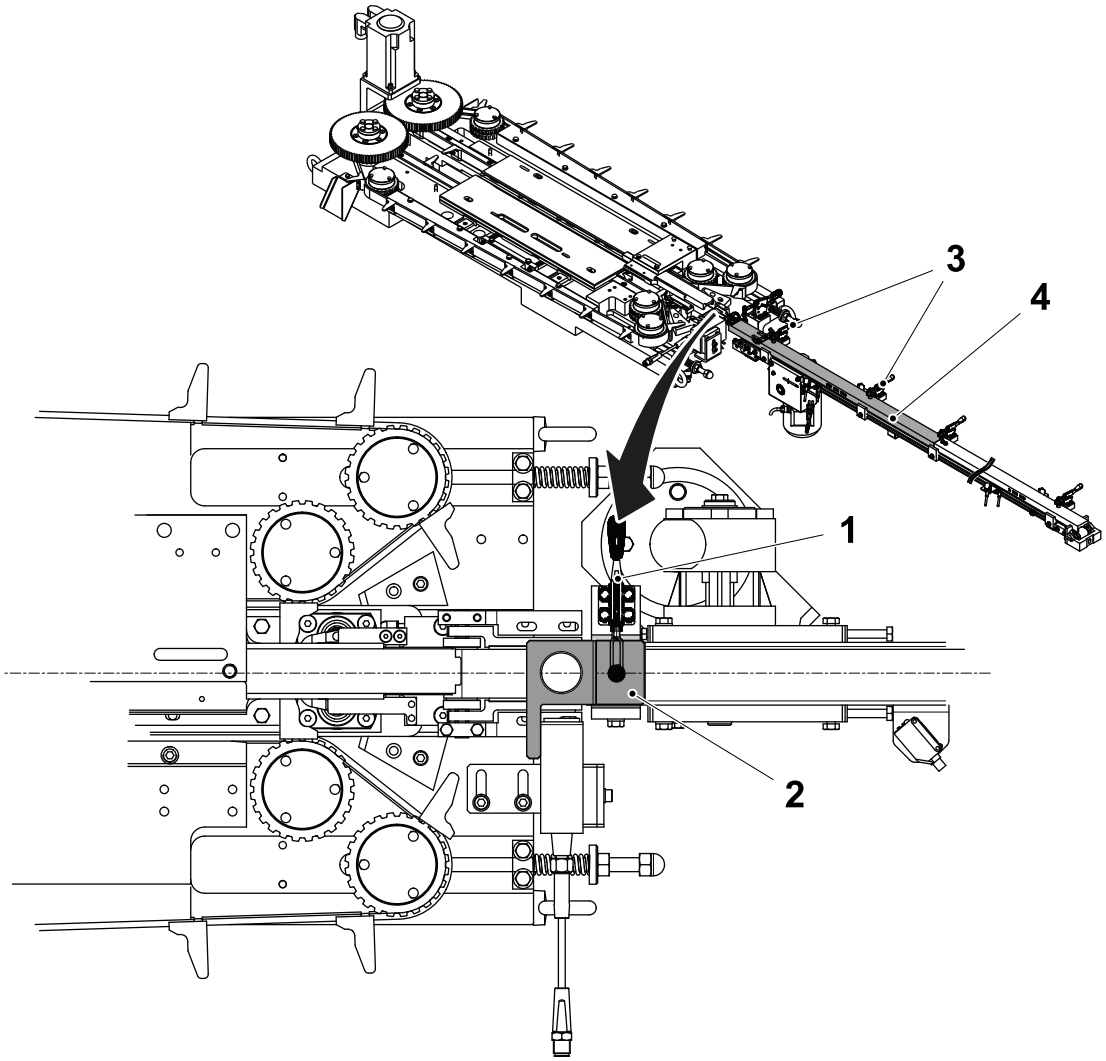

1 Locking lever
2 Tool
3 Locking lever
4 Guide rail

12.8.2 General Functions

12.8.2.1 Camera Installation

Note! The Cognex Tool required for Start-up is the In-Sight Explorer version 4.7 or higher.

Laptop to Camera Connection

a) Connect the laptop to the camera with a crossover ethernet cable.

Laptop to Machine Connection

a) Connect the PC to the ethernet switch, see 10.2.1-3 Preparations for PLC Communication - Set EtherNet Module IP Address.

Laptop Firewall Configuration

a) Connect the PC to the ethernet switch, see 10.2.1-1 Preparation for PLC Communication - Configure PC Network Communications.

Laptop IP Address Assignment

a) Set an IP address for the PC, see 10.2.1-1 Preparation for PLC Communication - Configure PC Network Communications.

12.8.2-1 Touch Screen - Adhesive Detector Installation

Machine Status	Electrical supply disconnecting device in position I (ON)
SPC Reference	2779070-0300

Touch Screen - Login As Service Technician

a) Step the machine to STEP 0.

Note! The alarm acknowledge screen is shown.

Touch Screen - Create a New Recipe

a) Insert in the recipe all the previously saved data.

(Cont'd)

(Cont'd)

Touch Screen - Install the Adhesive Detector

a) Touch the CONFIGURATION button (1).

b) Touch the option for the ADHESIVE DETECTOR icon (2).

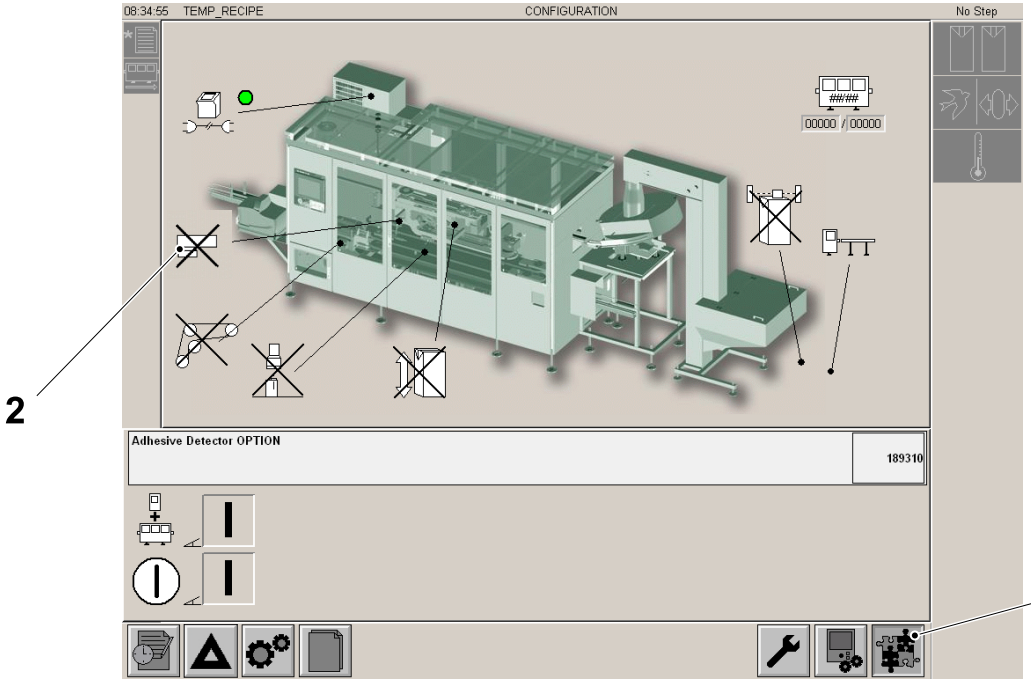

1 CONFIGURATION button

2 ADHESIVE DETECTOR icon

(Cont'd)

(Cont'd)

c) Touch the INSTALLATION icon (3).

d) Touch the ON button (4) and the OK button (5).

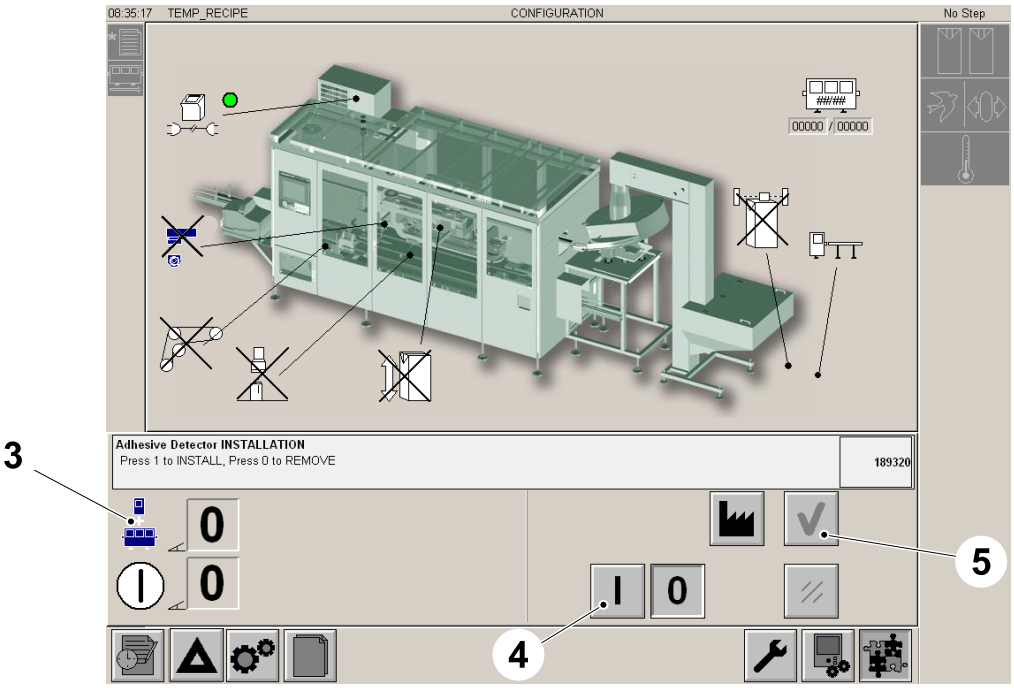

3 INSTALLATION icon
4 ON button
5 OK button

(Cont'd)

(Cont'd)

Enable the Adhesive Detector

a) Touch the ACTIVATION button (1).

b) Touch the ON button (2) and the OK button (3).

Note! The activation is confirmed by the green dot (4).

Note! When required is possible to deactivate the adhesive detector, see 12.8.2-24 Touch Screen - Disable Adhesive Detector.

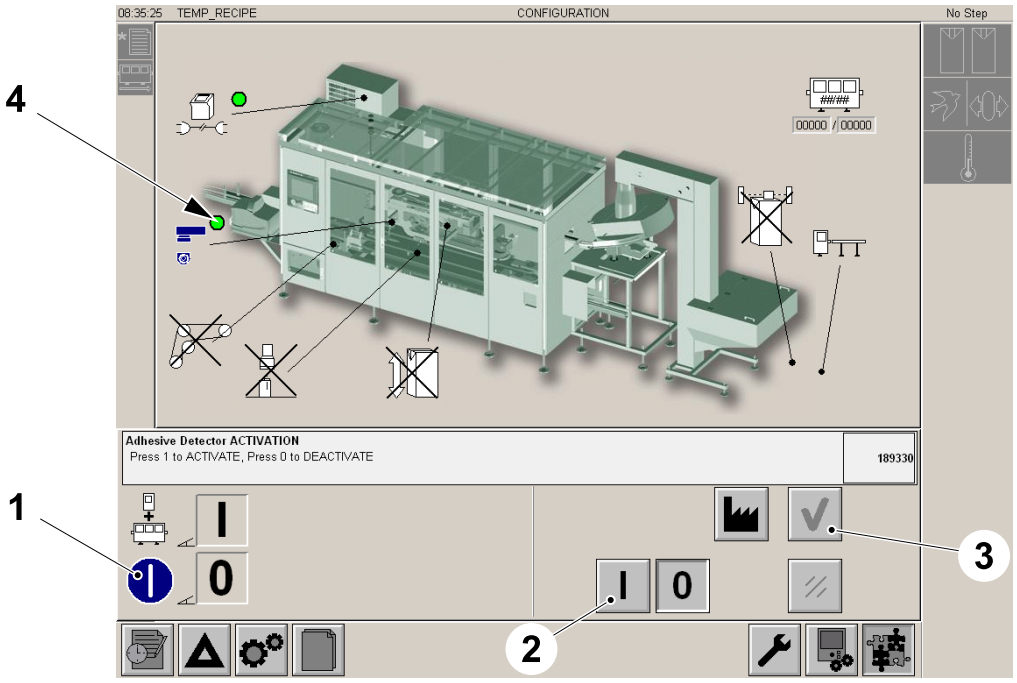

1 ACTIVATION button
2 ON button
3 OK button
4 Dot

12.8.2-2 Adding a New Sensor to Network

Machine Status	Electrical supply disconnecting device in position I (ON)
SPC Reference	662916-0300

Note! This procedure is valid for all cameras that must be installed on the machine.

a) Open InSight Explorer.

b) Click the `System` tab (1) and then `Add sensor/device to network` (2).



1 `System` tab
2 `Add sensor/device to network`

(Cont'd)

(Cont'd)

c) Check data.

Note! In the window that opens, it's possible to see the camera name (assigned as default from the Vendor), the type, the MAC Address and a default IP address.

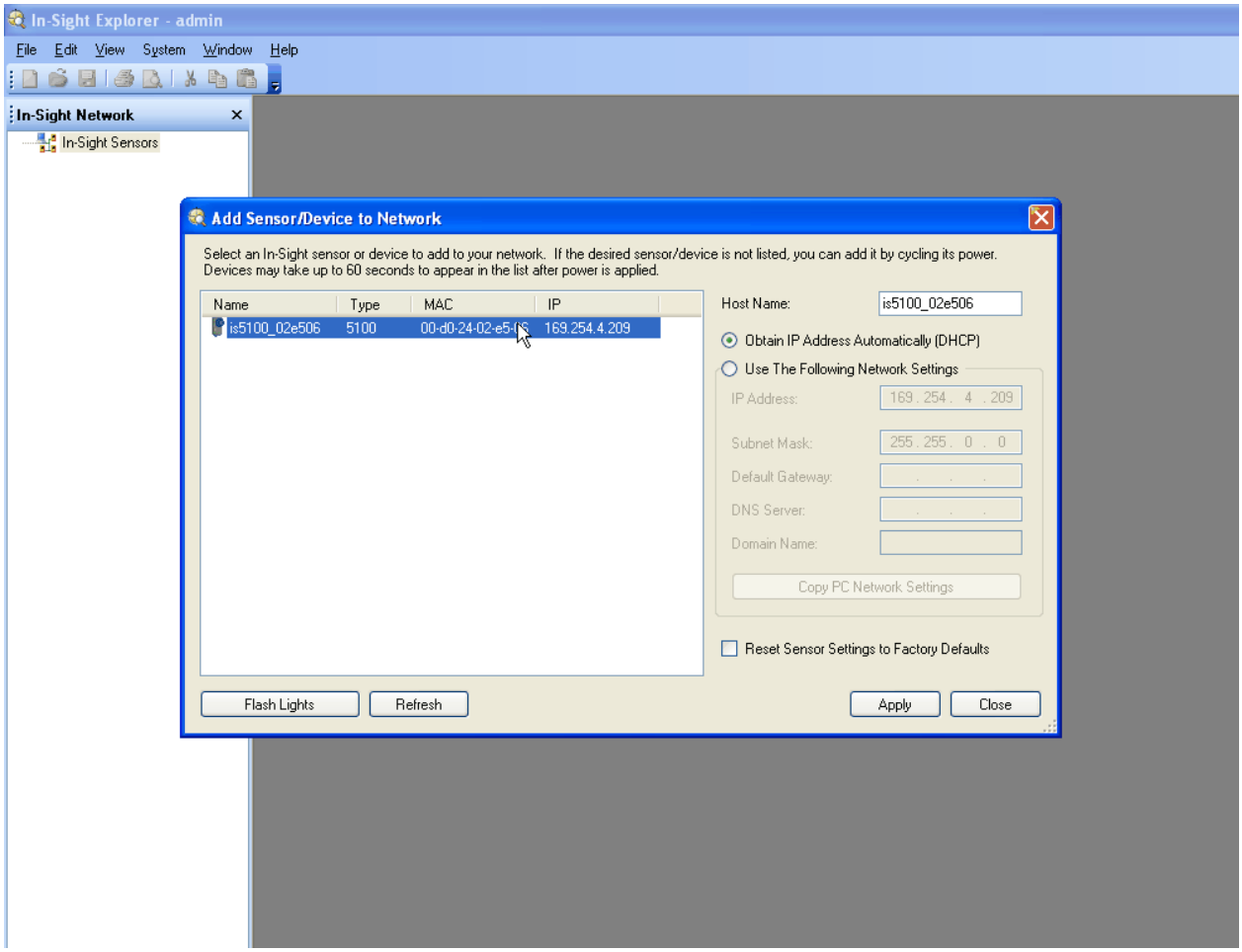

(Cont'd)

(Cont'd)

d) Click on the `camera` (3) of interest (on the list on the left).

e) Erase the default name from `Host Name` field (4).

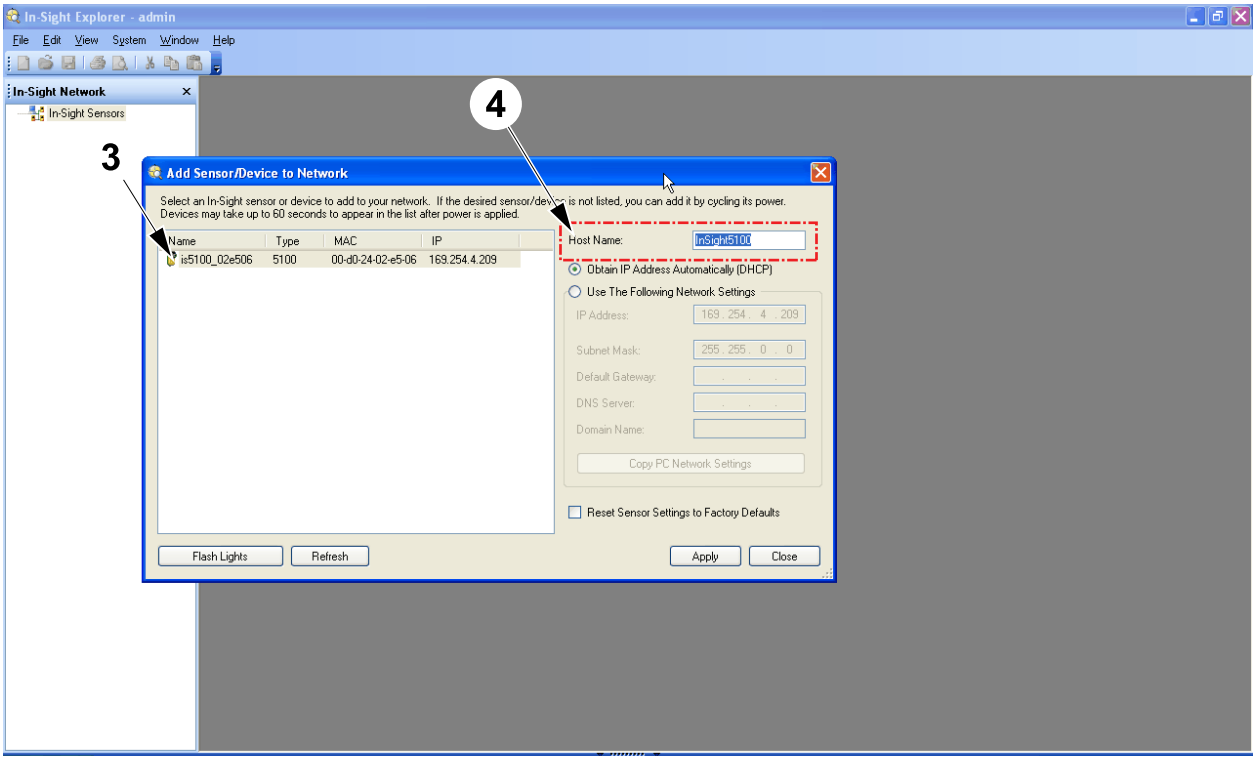

3 `Camera`
4 `Host Name`

(Cont'd)

(Cont'd)

f) Click and assign the correct "Host Name" in the `Host Name` field (5).

Camera	**Name**
Positioning Device	InSight5100
Adhesive Detector	**AdhesiveDetector**

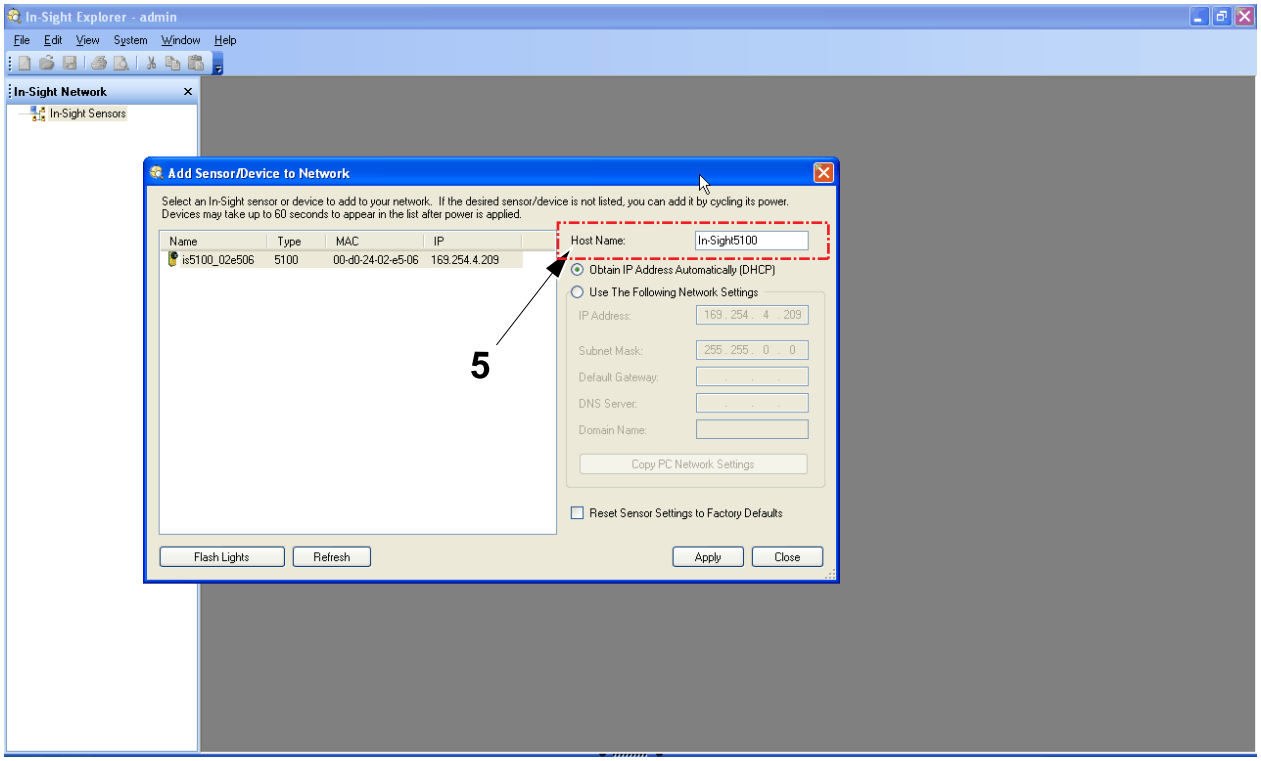

5 `Host Name` field

(Cont'd)

(Cont'd)

g) Click on Use the `following network settings` (6).

h) Set the correct value for IP Address and Subnet Mask:

Camera	**Name**
Positioning Device	10.0.1.5
Adhesive Detector	**10.0.1.6**
Subnet Mask	**255.255.0.0**

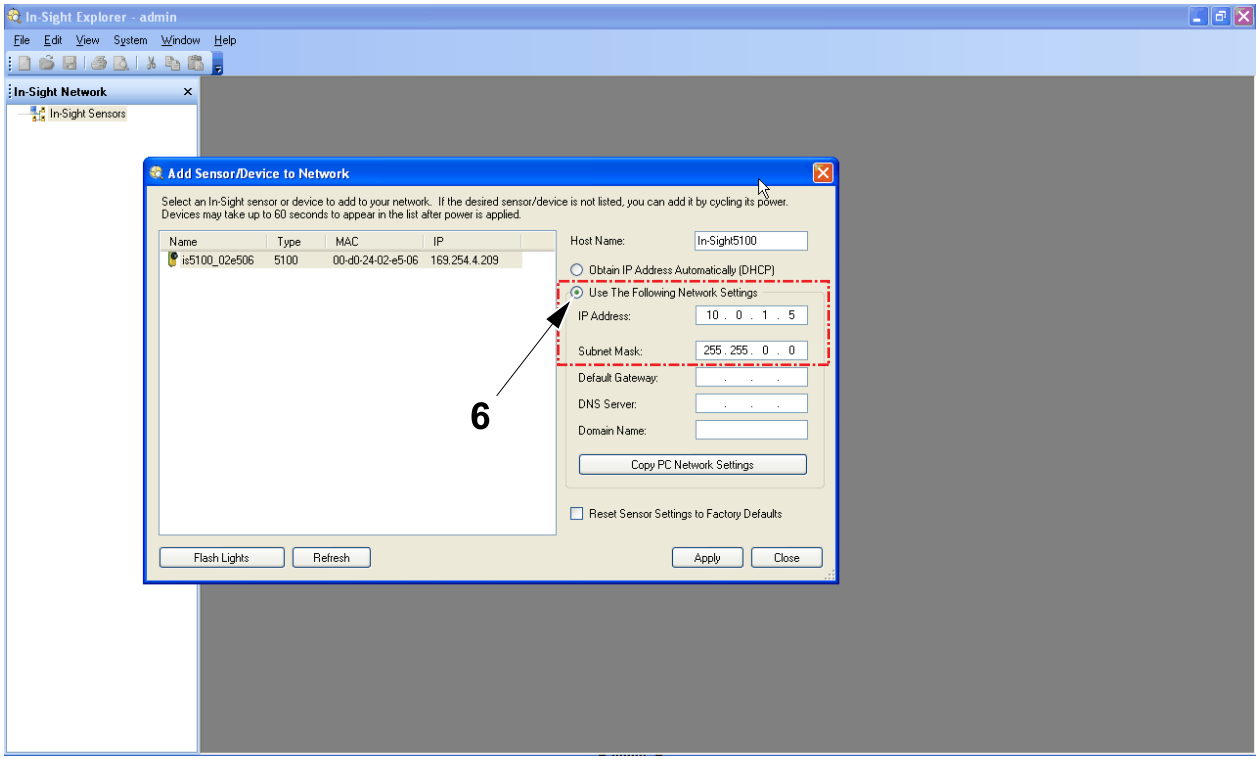

6 `Following network settings`

(Cont'd)

(Cont'd)

i) Click `Apply` (7).

j) Click `OK` (8).

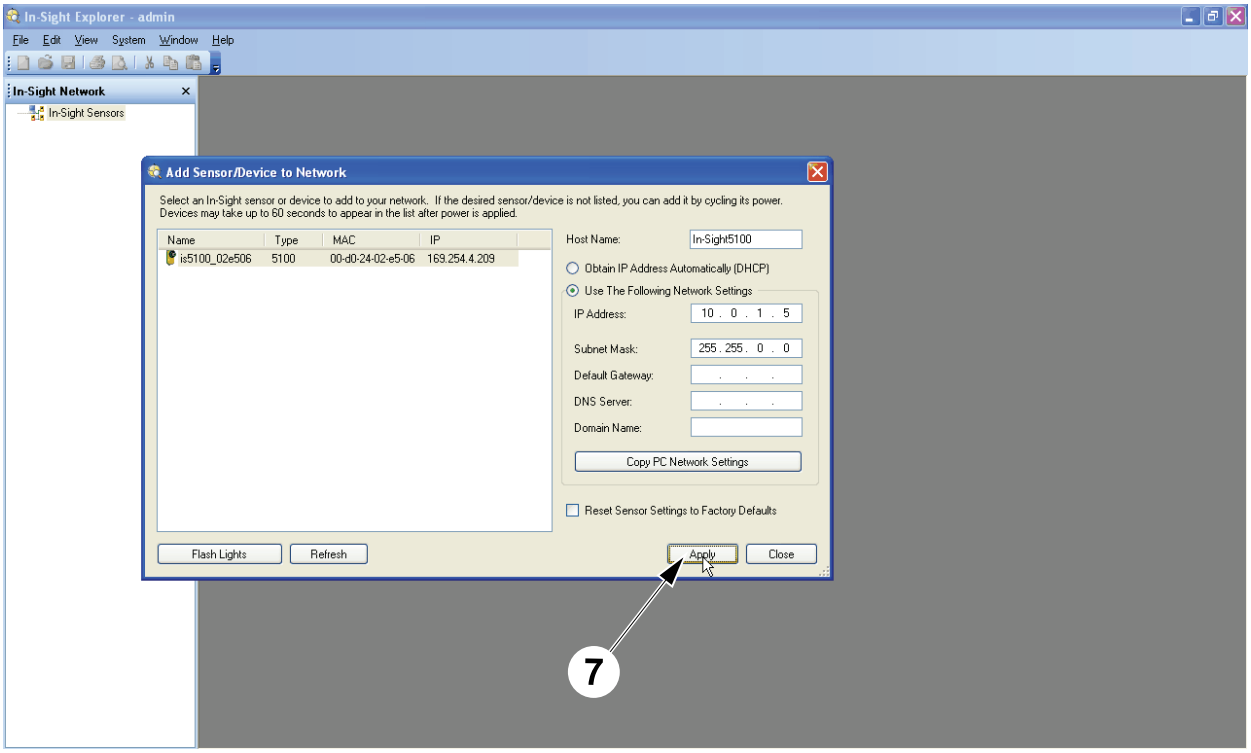

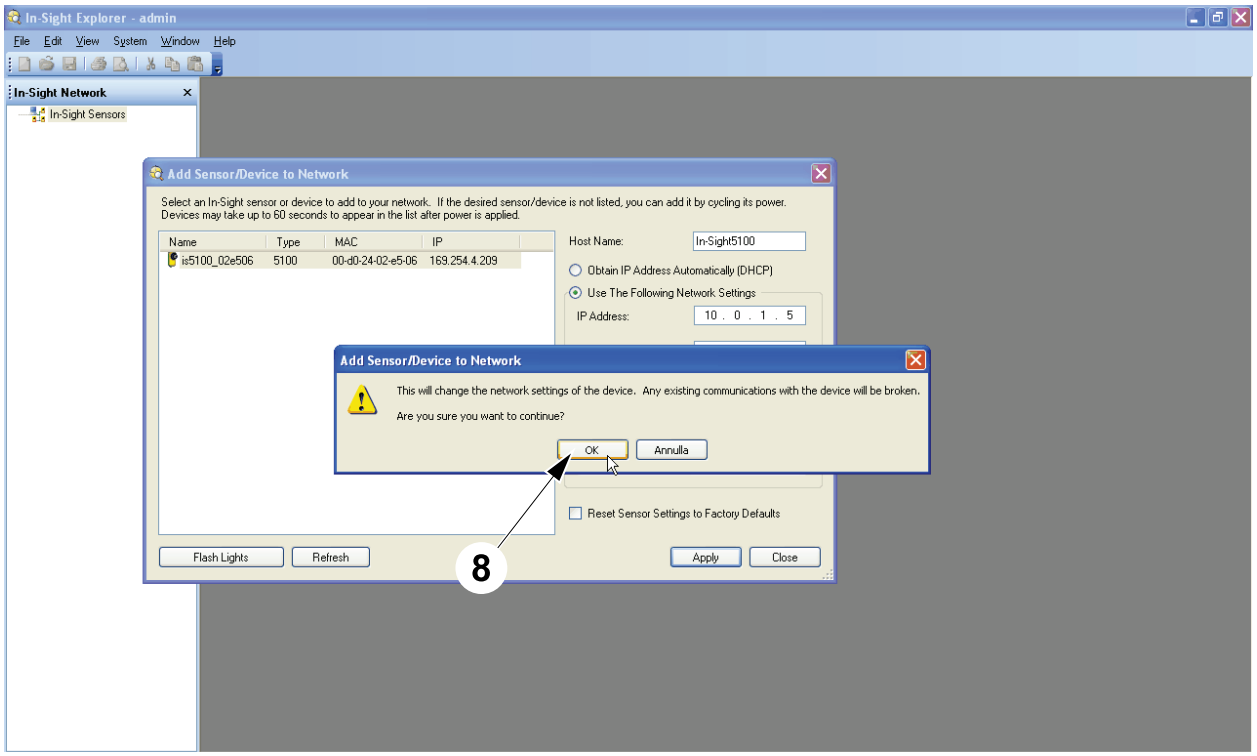

7 `Apply` 8 `OK`

(Cont'd)

(Cont'd)

k) Following the message in the window, `manually cycle camera power` (9).

l) Disconnect and reconnect the 24 volt cable.

m) Click `OK` (10).

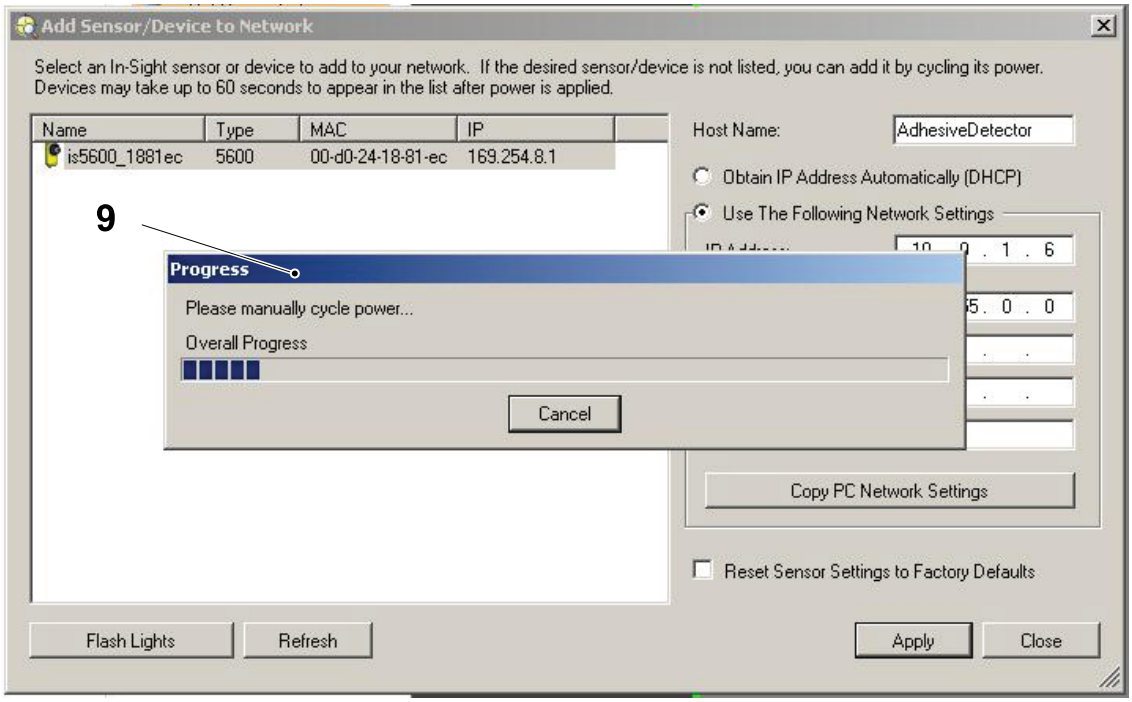

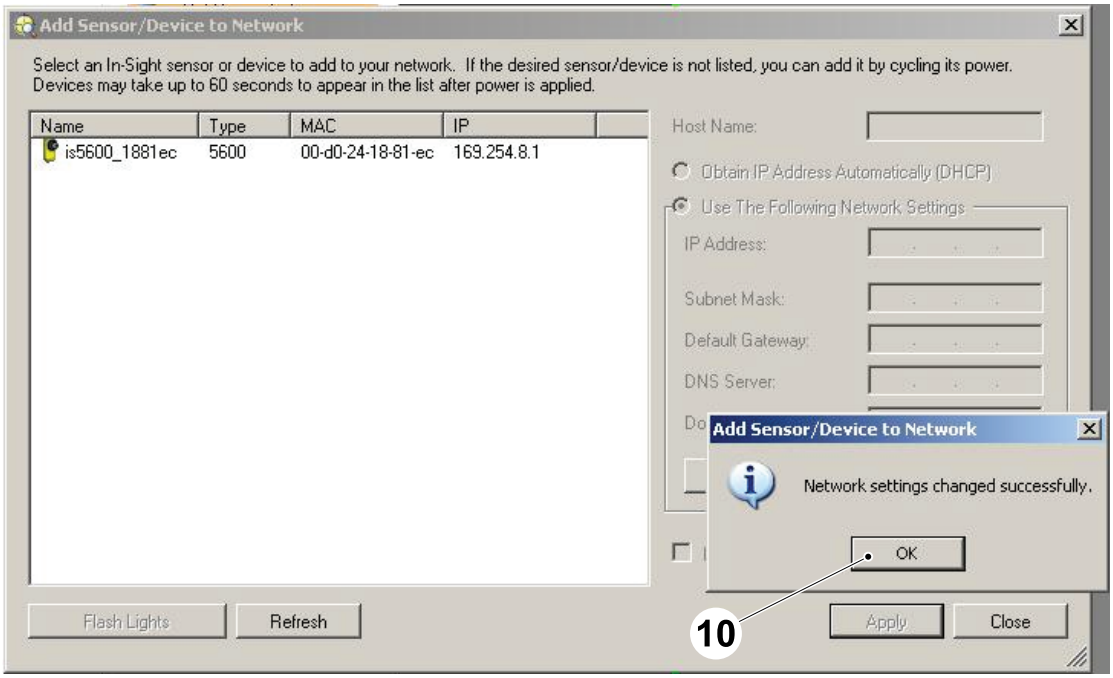

9 `Manually cycle camera power`

10 `OK`

(Cont'd)

(Cont'd)

n) Click `Close` (11) .

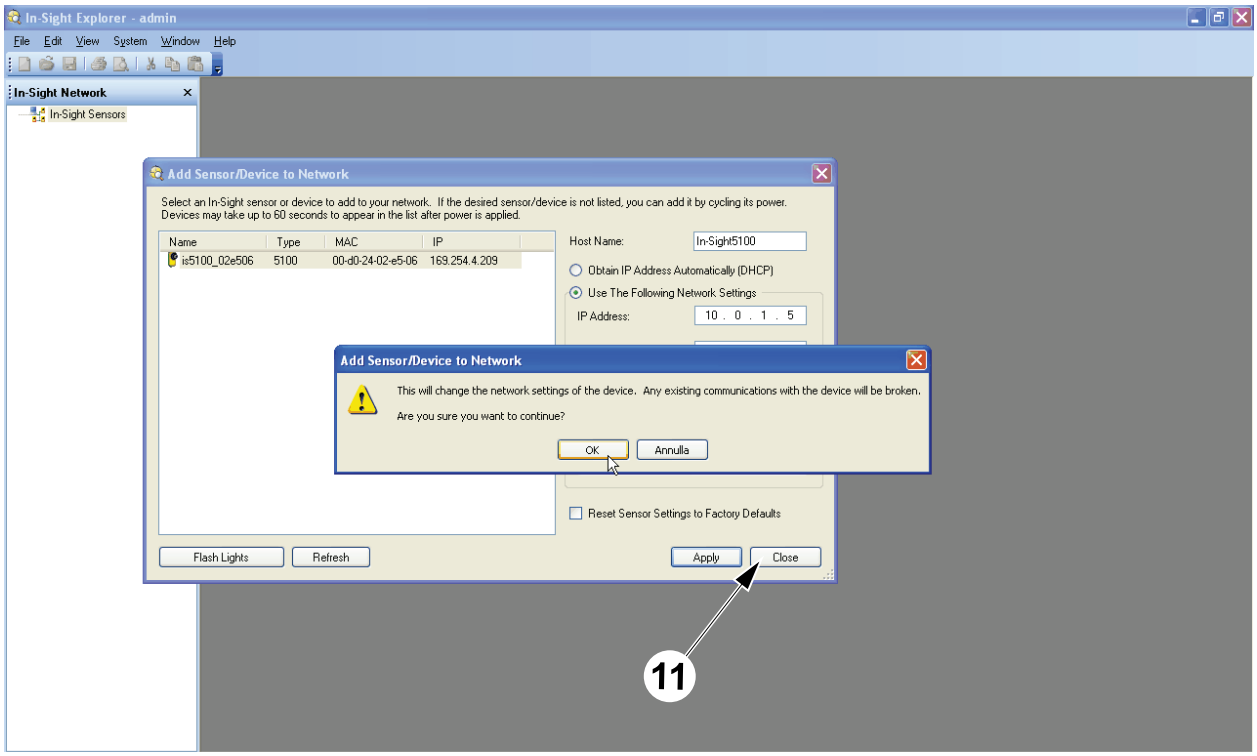

11 `Close`

12.8.2-3 Starting In-Sight Explorer

Machine Status	Electrical supply disconnecting device in position I (ON)
SPC Reference	662916-0300

a) At the laptop, double click on the `IN-SIGHT EXPLORER` icon (1).

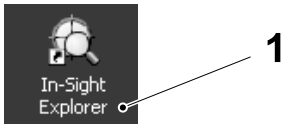

1 `IN-SIGHT EXPLORER` icon

(Cont'd)

(Cont'd)

Note! If the laptop is not connected to the network, after a new installation of the IN-SIGHT EXPLORER the following warning may appear (see picture below).

b) Click OK (2) and follow from the next paragraph, see Configure In-Sight Explorer.

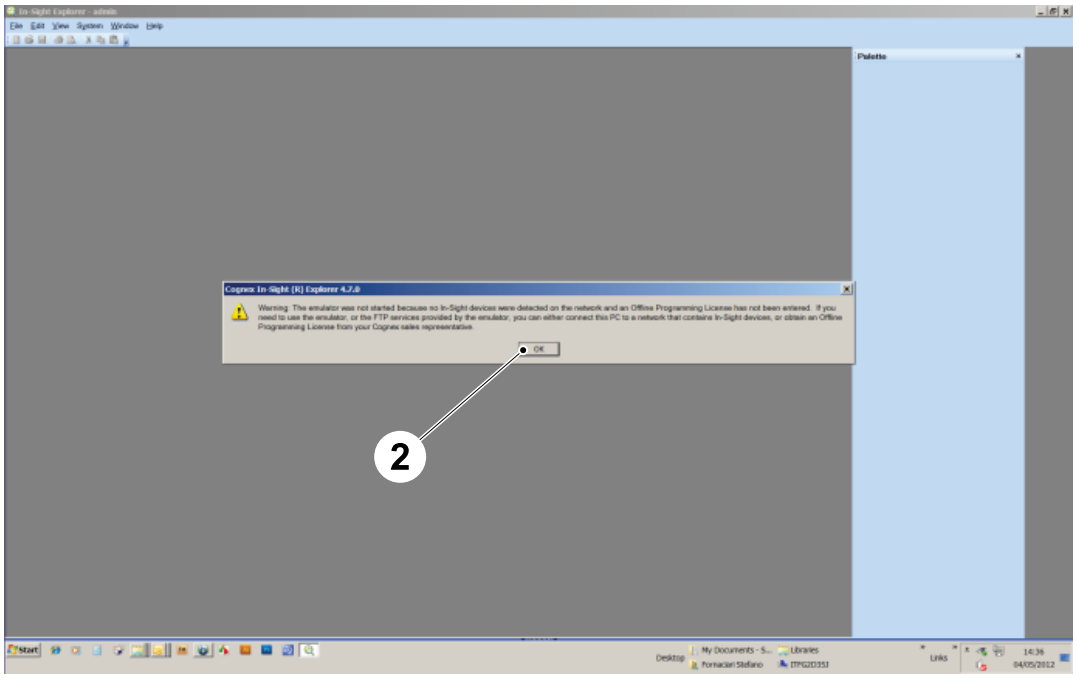

2 OK

(Cont'd)

(Cont'd)

Configure In-Sight Explorer

Note! After a new installation of the IN-SIGHT EXPLORER, the default view is the "Easy Builder" window. To put the "Spreadsheet" window as default do as follows.

a) In the Easy Builder window (1), click System (2) and then Option (3).

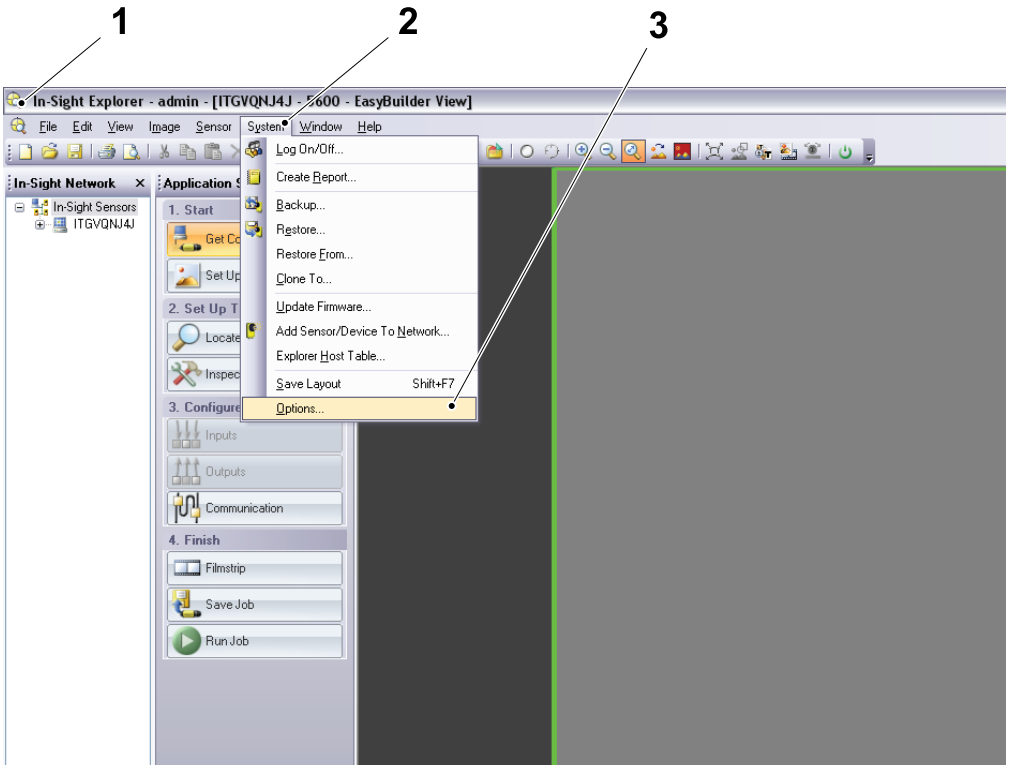

1 Easy Builder window
2 System
3 Option

(Cont'd)

(Cont'd)

b) In the Option window (4), click Job View (5).

c) Click and check the Make Spreadsheet View the Default View check box (6).

d) Click OK (7).

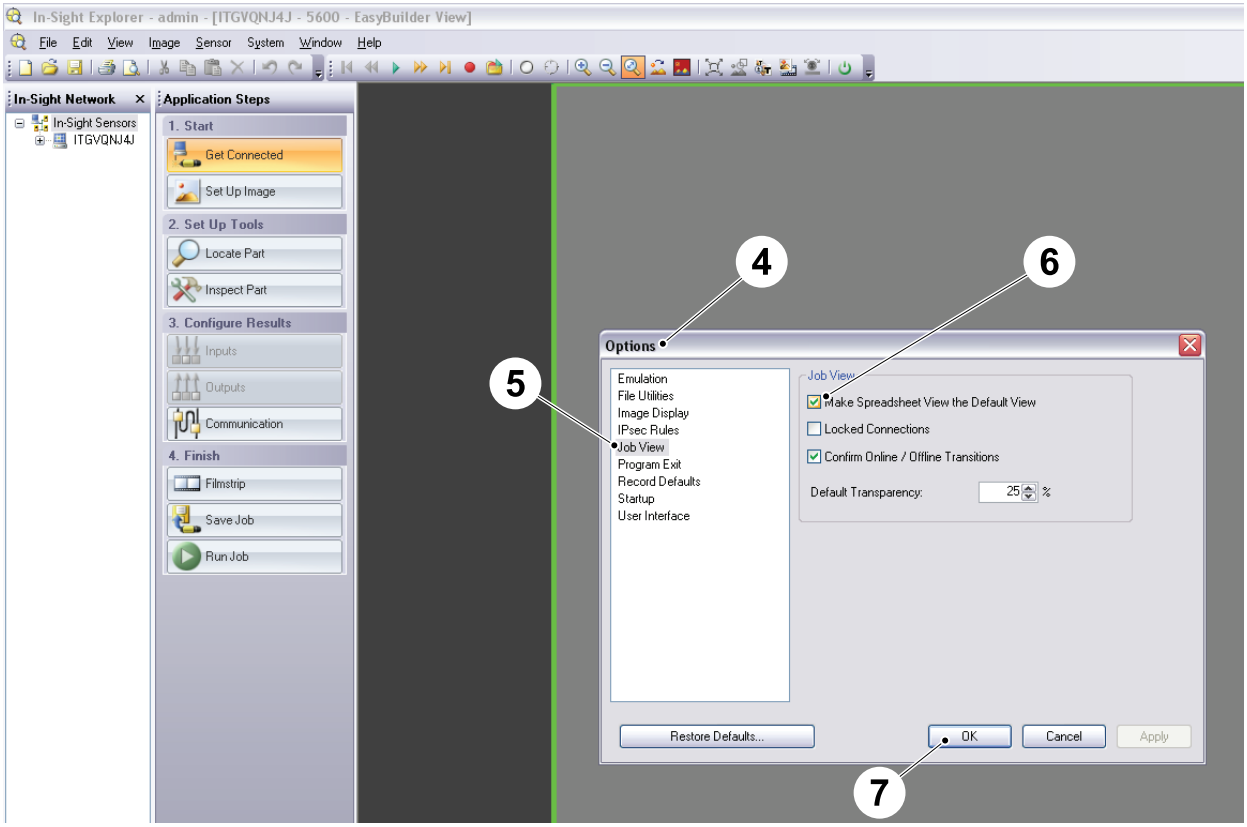

4 Option window
5 Job View
6 Make Spreadsheet View the Default View check box
7 OK

(Cont'd)

(Cont'd)

e) Click the button (8) to close the application.

f) Click YES button (9) to confirm the settings

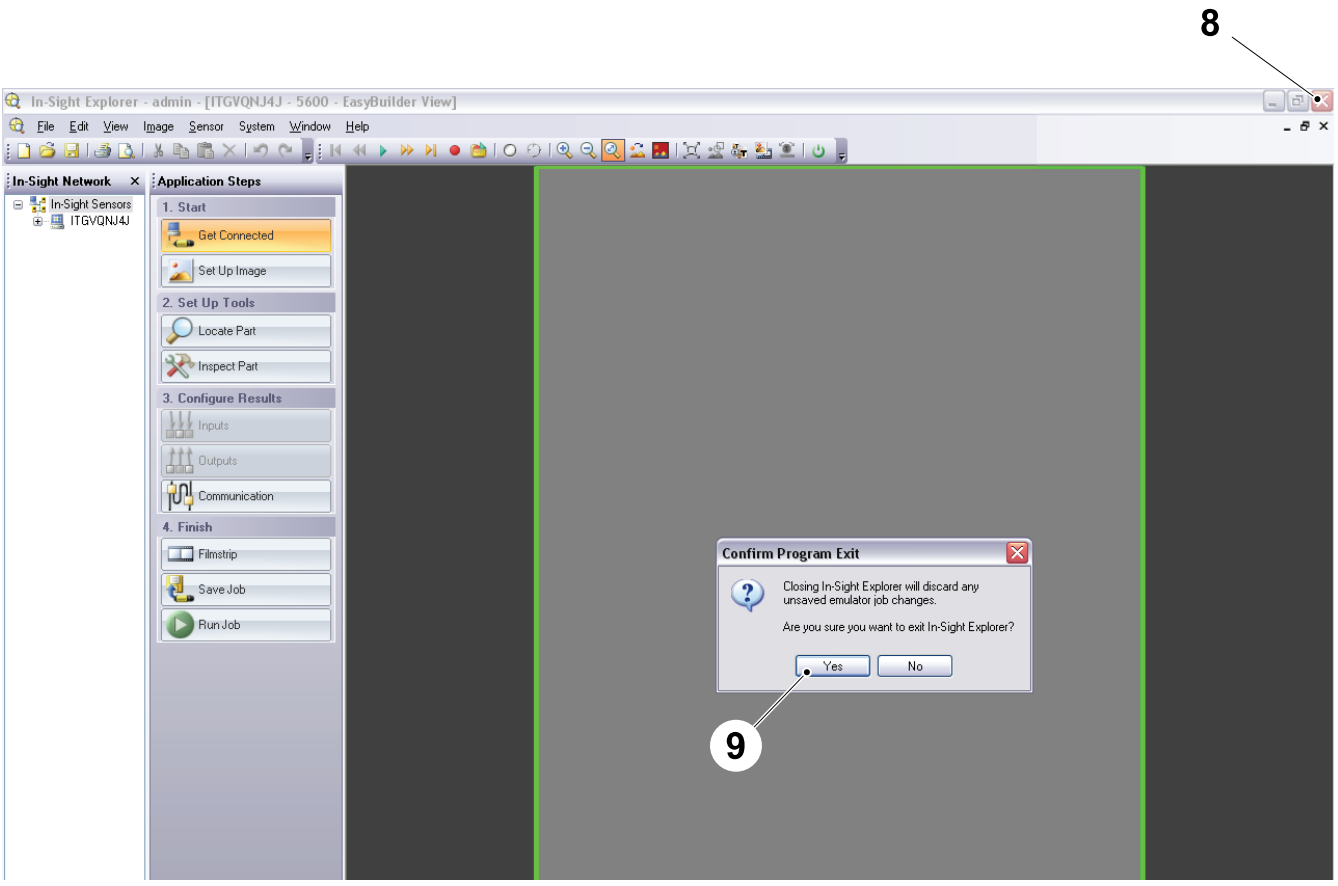

8 Button

9 YES button

12.8.2-4 Verifying Camera Presence in In-Sight Explorer Database

Machine Status	Electrical supply disconnecting device in position I (ON)
SPC Reference	662916-0300

a) Check that the ADHESIVE DETECTOR icon (1) is present in the IN-SIGHT NETWORK zone (2) of the host table (3). If the ADHESIVE DETECTOR icon (1) is present, as shown below, continue from 12.8.2-5 Establishing Communication with the Camera.

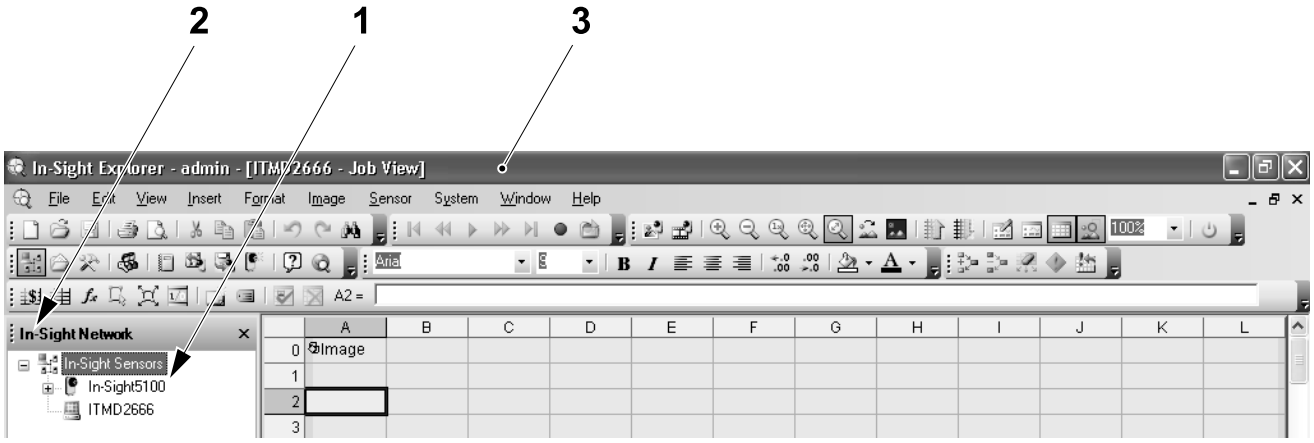

1 ADHESIVE DETECTOR icon
2 IN-SIGHT NETWORK zone
3 Host table

(Cont'd)

(Cont'd)

b) If the ADHESIVE DETECTOR CAMERA icon is not present in the IN-SIGHT NETWORK zone (2) of the host table (3), continue with the next steps c).

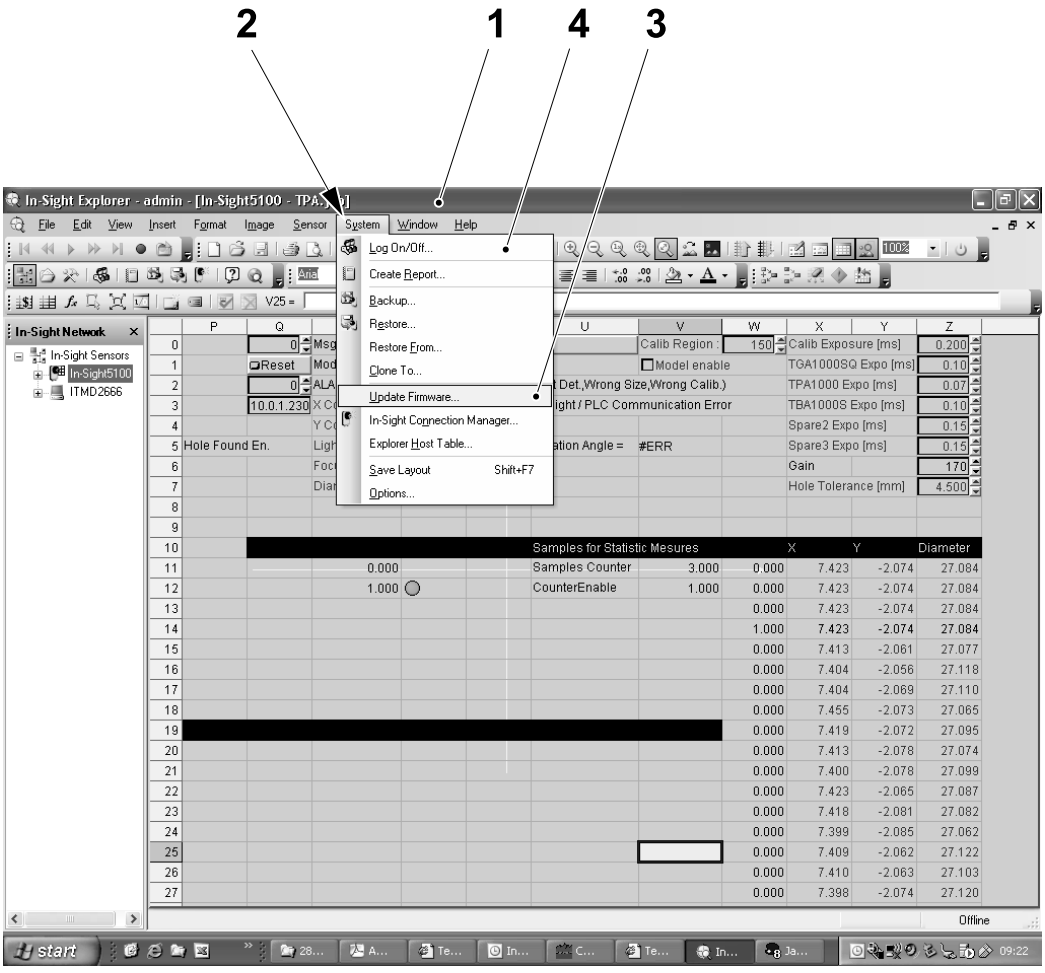

2 IN-SIGHT NETWORK zone

3 Host table

(Cont'd)

(Cont'd)

c) In the IN-SIGHT NETWORK zone (2), right click on the IN-SIGHT SENSORS icon (4).

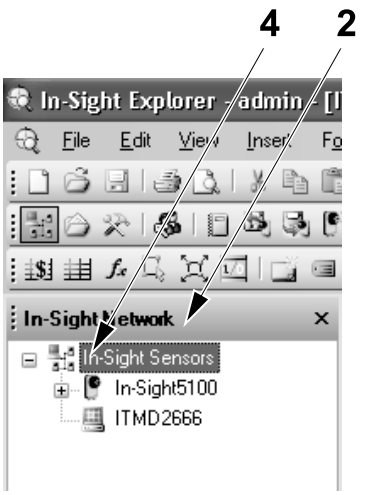

2 IN-SIGHT NETWORK zone

4 IN-SIGHT SENSORS icon

d) From the pull-down menu that appears, select the EXPLORER HOST TABLE option (5).

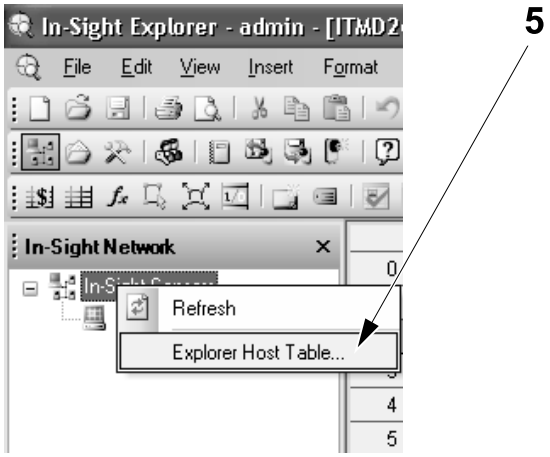

5 EXPLORER HOST TABLE option

(Cont'd)

(Cont'd)

e) In the EXPLORER HOST TABLE SETUP window (6), click on the ADD button (7).

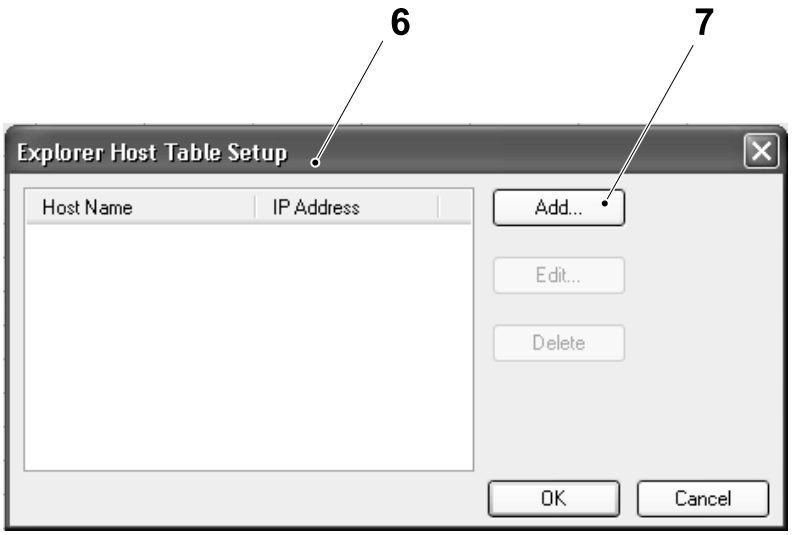

6 EXPLORER HOST TABLE SETUP window
7 ADD button

f) In the ADD HOST window (8), enter the data shown below in the host name field (9) and IP address field (10) and then click on the OK button (11).

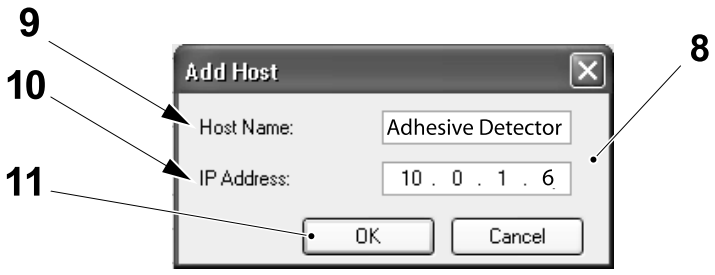

8 ADD HOST window
9 host name field
10 IP address field
11 OK button

(Cont'd)

(Cont'd)

g) The host name and IP address will appear in the EXPLORER HOST TABLE SETUP window (6), click on the OK button (12).

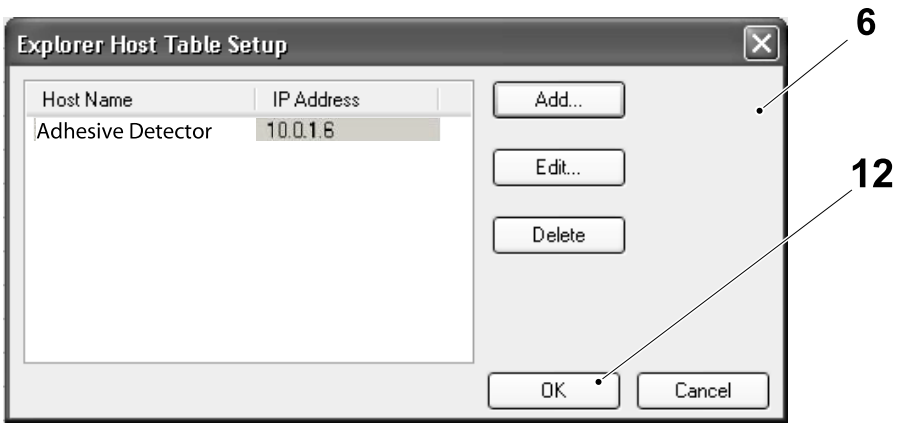

6 EXPLORER HOST TABLE SETUP window

12 OK button

h) The ADHESIVE DETECTOR icon (1) is now present in the IN-SIGHT NETWORK zone (2) of the host table (3).

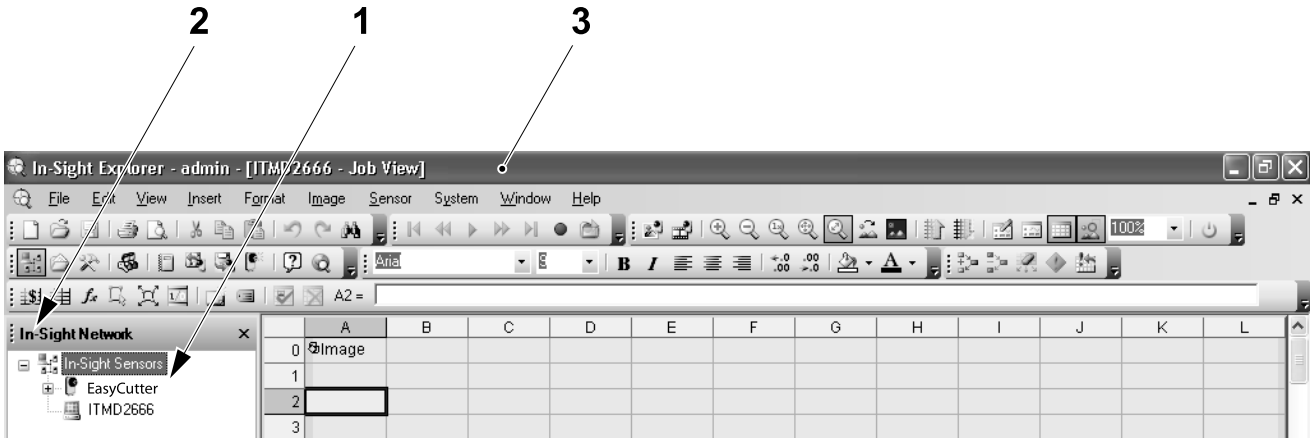

1 ADHESIVE DETECTOR icon

2 IN-SIGHT NETWORK zone

3 Host table

12.8.2-5 Establishing Communication with the Camera

Machine Status	Electrical supply disconnecting device in position I (ON)
SPC Reference	662916-0300

a) In the IN-SIGHT NETWORK zone (1), double click on the ADHESIVE DETECTOR icon (2) and check that the following data is displayed:
- the ON LINE/OFF LINE status (3),
- the application program name (<name>.job) (4),
- a background silhouette of the camera (5).

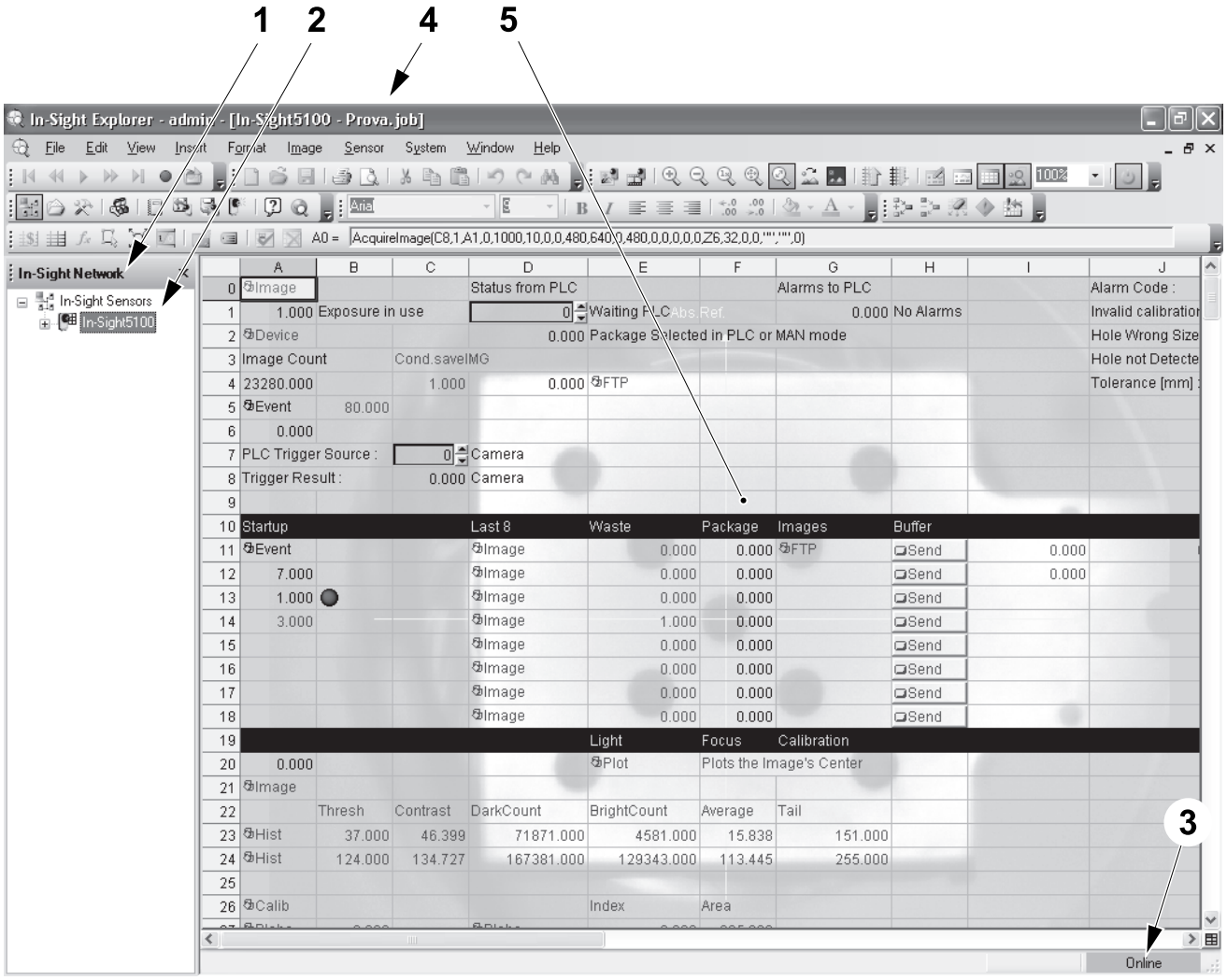

1 IN-SIGHT NETWORK zone
2 ADHESIVE DETECTOR icon
3 ON LINE/OFF LINE status
4 Application program name
5 Background silhouette

(Cont'd)

(Cont'd)

b) If the above data is not shown but replaced by an error message, go to 12.8.2-6 Communication Error.

c) If the above data is not shown, and there is no error message, double click on the IN-SIGHT5600 icon (2) again to try to establish communications.

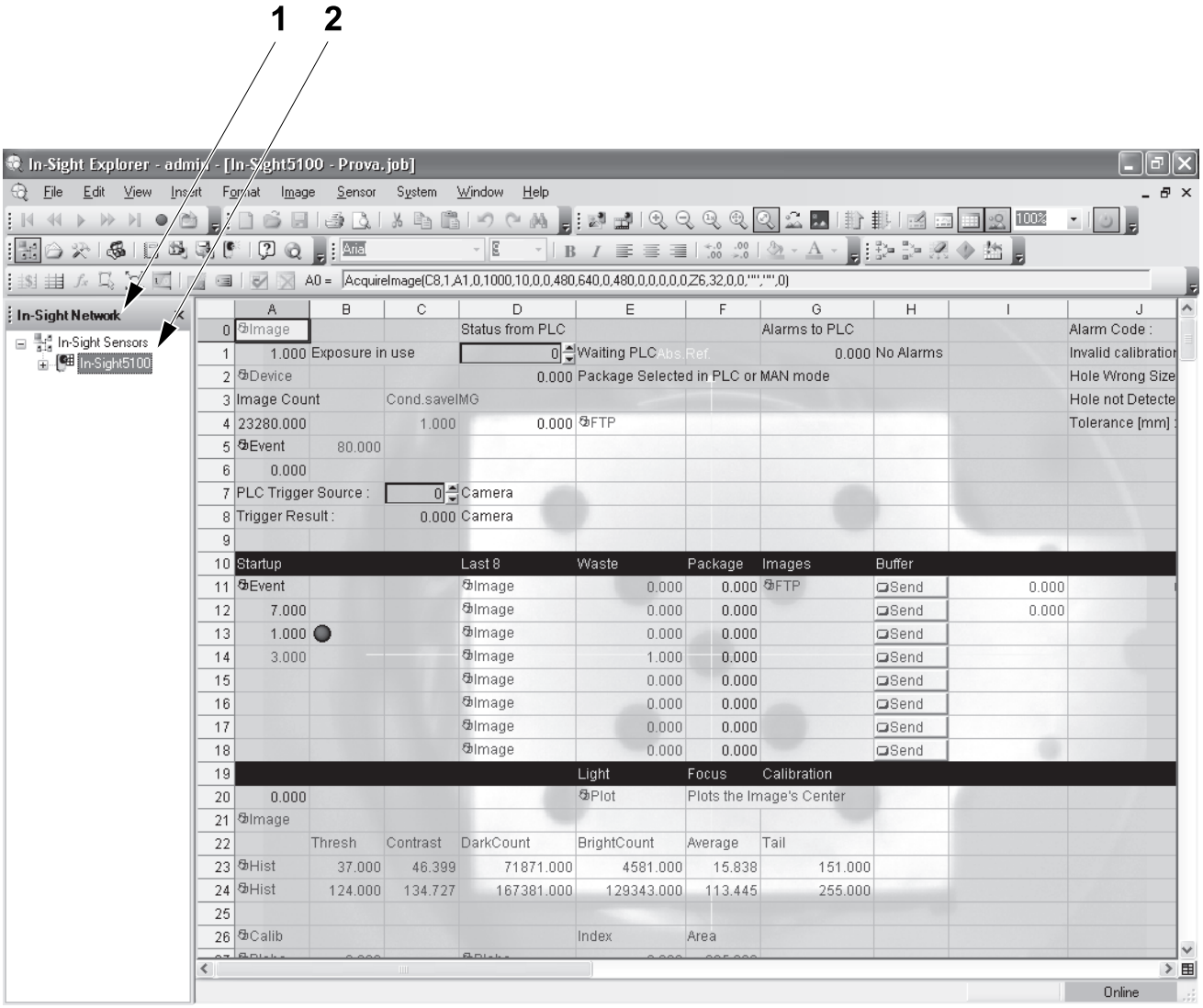

1 IN-SIGHT NETWORK zone

2 IN-SIGHT5600 icon

12.8.2-6 Communication Error

Machine Status	Electrical supply disconnecting device in position I (ON)
SPC Reference	662916-0300

a) If the connection error message (1) appears when trying to establish communications check the following:

- the ethernet and power supply cables to the camera,
- the ethernet cable from the laptop to the switch in the electrical cabinet,
- the IP address of the laptop,
- the firewall in the laptop.

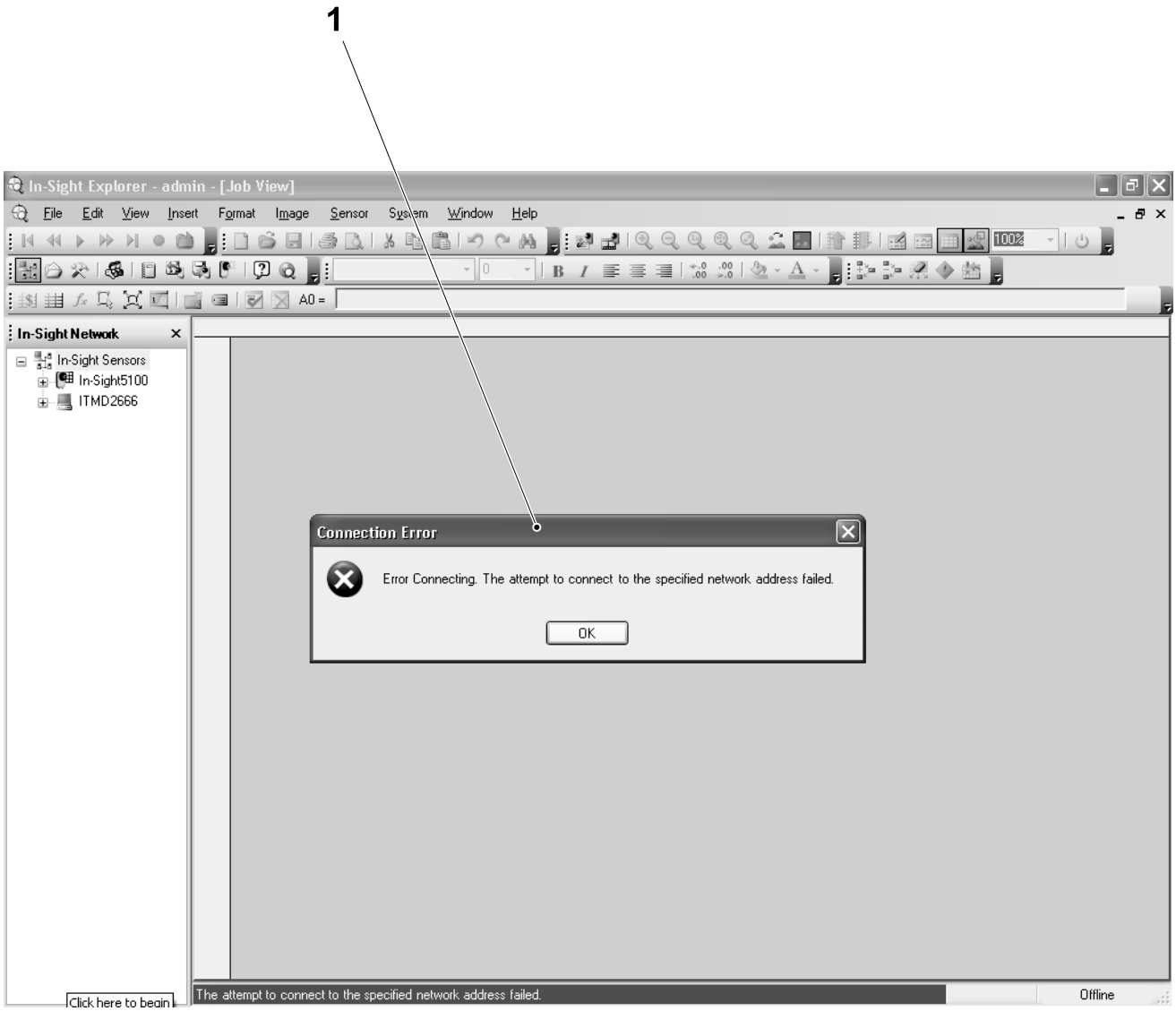

1 Connection error message

12.8.2-7 Setting the On-Line Status of the Camera

Machine Status	Electrical supply disconnecting device in position I (ON)
SPC Reference	662916-0300

a) In the host table (1), select `sensor` (2) and then `online` (3) from the `PULL DOWN` window (4).

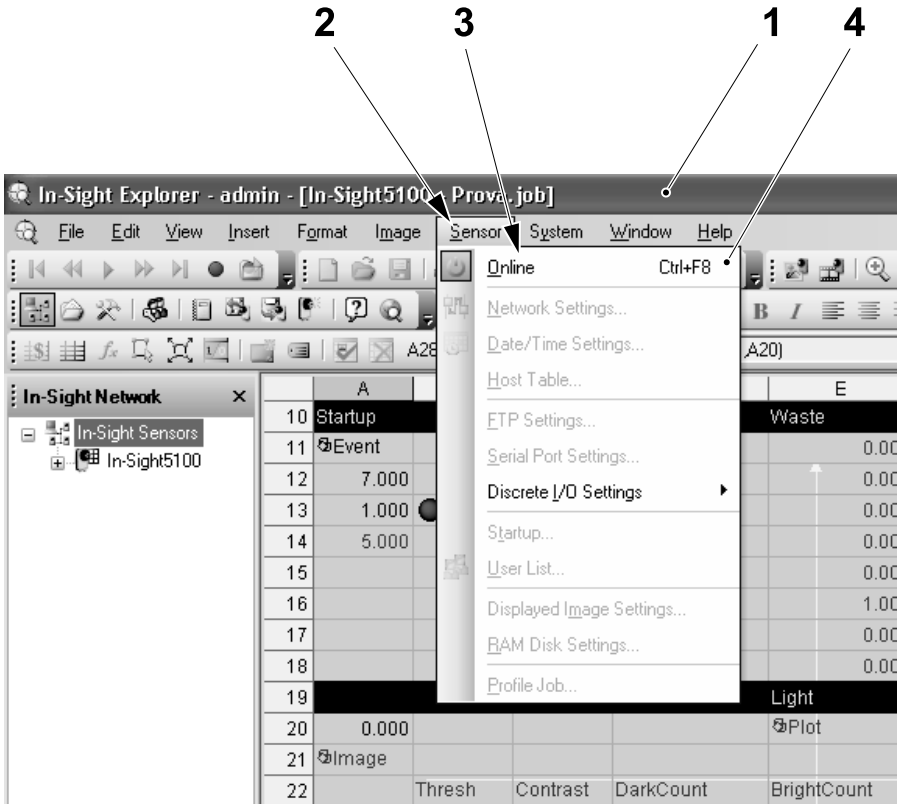

1 Host table
2 `Sensor`
3 `Online`
4 `PULL DOWN` window

Note! If the confirmation feature is disabled in the in-sight explorer tool, the following window (6) will not appear, go to step .

b) Click on the `YES` button (5) in the `CONFIRM GO ON LINE` window (6).

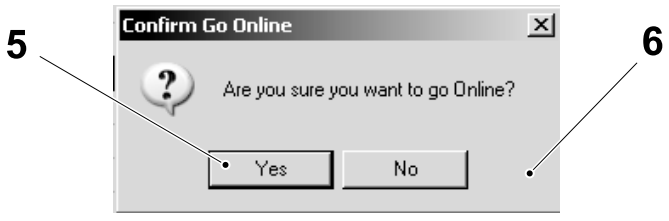

5 `YES` button
6 `CONFIRM GO ON LINE` window

(Cont'd)

(Cont'd)

c) Check that the `online` status (7) is displayed.

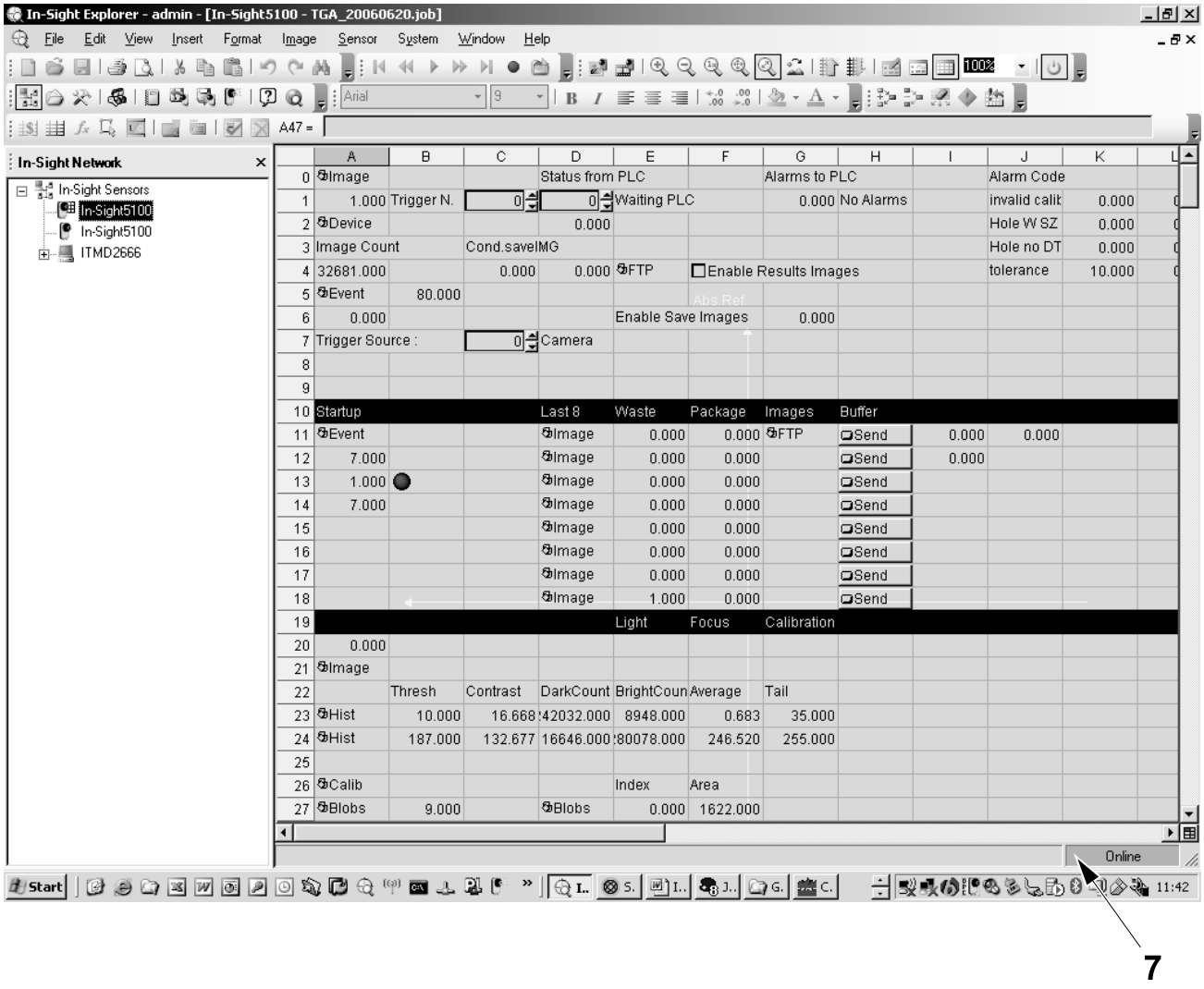

7 `Online` status

12.8.2-8 Setting the Off-Line Status of the Camera

Machine Status	Electrical supply disconnecting device in position I (ON)
SPC Reference	662916-0300

Note! The ONLINE icon (3) toggles the status on and off. There is no offline icon.

a) In the host table (1), select SENSOR (2) and then ONLINE (3) from the PULL DOWN window (4).

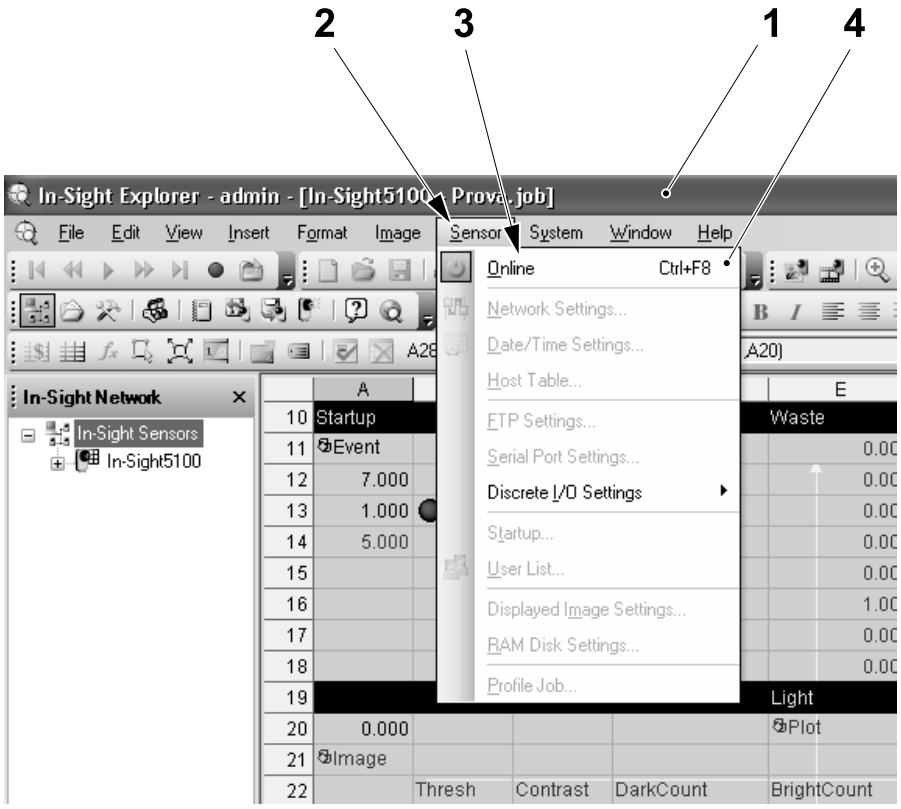

1 Host table
2 SENSOR
3 ONLINE
4 PULL DOWN window

(Cont'd)

(Cont'd)

Note! If the confirmation feature is disabled in the in-sight explorer tool, the following window (6) will not appear, go to step c).

b) Click on the YES button (5) in the confirm go CONFIRM GO OFFLINE window (6).

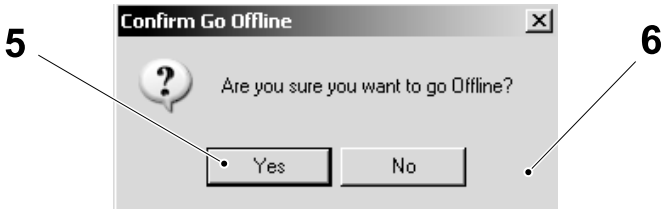

5 YES button
6 CONFIRM GO OFFLINE window

c) Make sure that the offline status (7) is displayed.

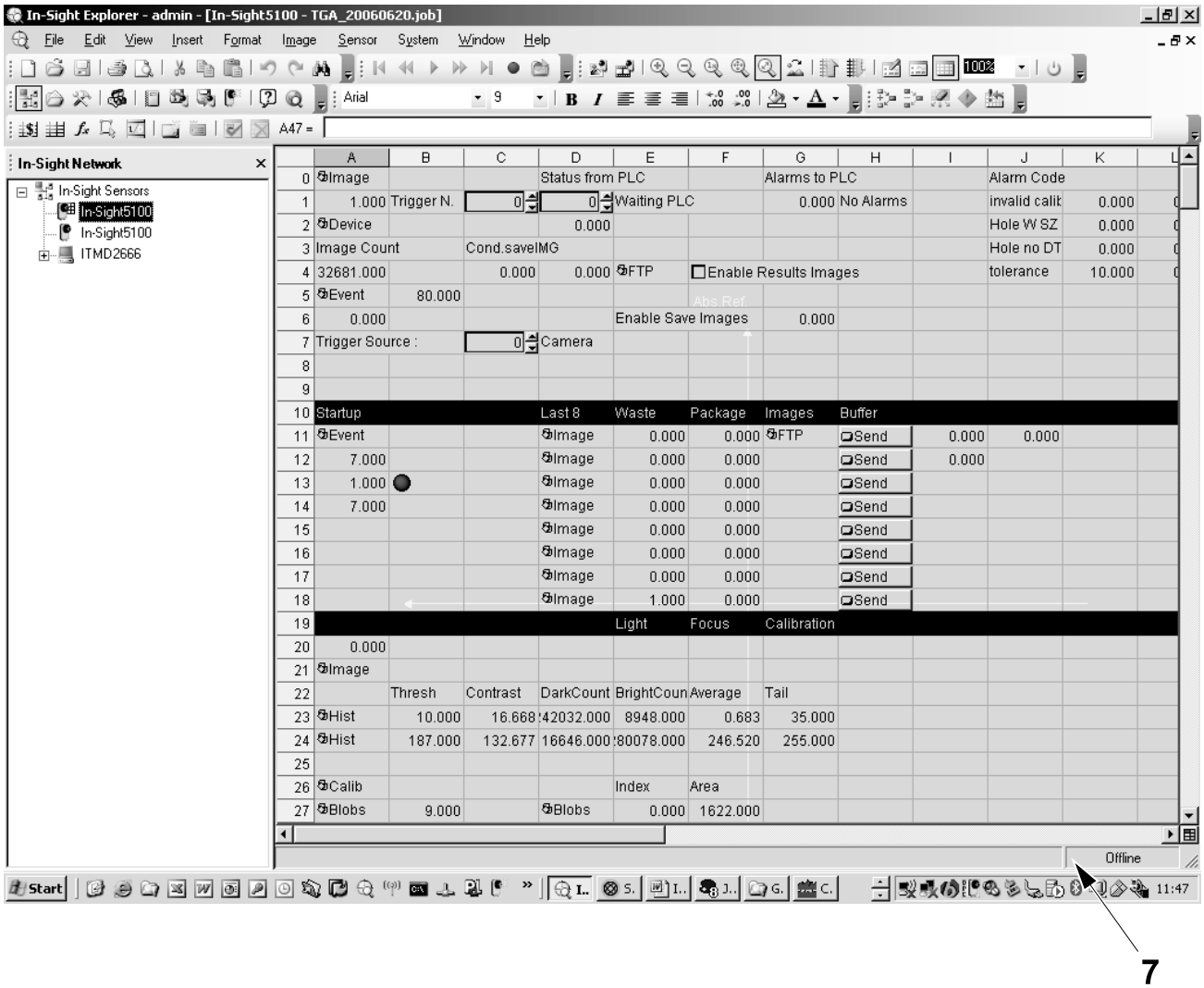

7 Offline status

12.8.2-9 Loading the Application Program in the In-Sight 5600

Machine Status	Electrical supply disconnecting device in position I (ON)
SPC Reference	662916-0300

Setting the Correct Line Status of the Camera

a) Set the camera offline, see 12.8.2-8 Setting the Off-Line Status of the Camera.

12.8.2-10 Loading the Application Program into the Camera

Machine Status	Electrical supply disconnecting device in position I (ON)
SPC Reference	662916-0300

a) In the host table (1), select `file` (2) and then open job from the `PULLDOWN` window that appears.

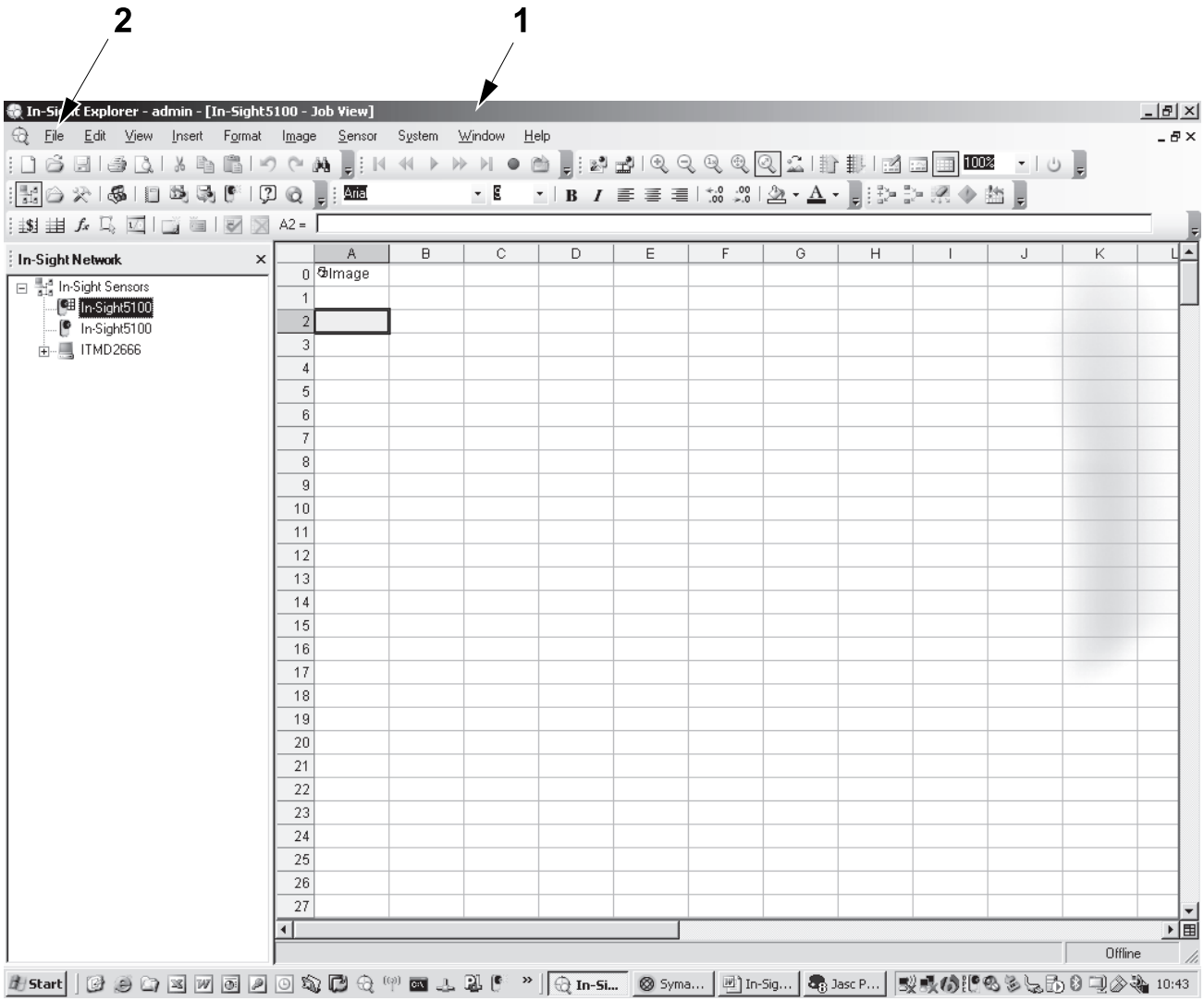

1 Host table 2 `File`

(Cont'd)

(Cont'd)

b) In the IN-SIGHT OPEN window (3) scroll down to locate the folder (4) containing the application program.

c) Select the file name XXXXXXX with the .job extension (5) and click on OPEN (6).

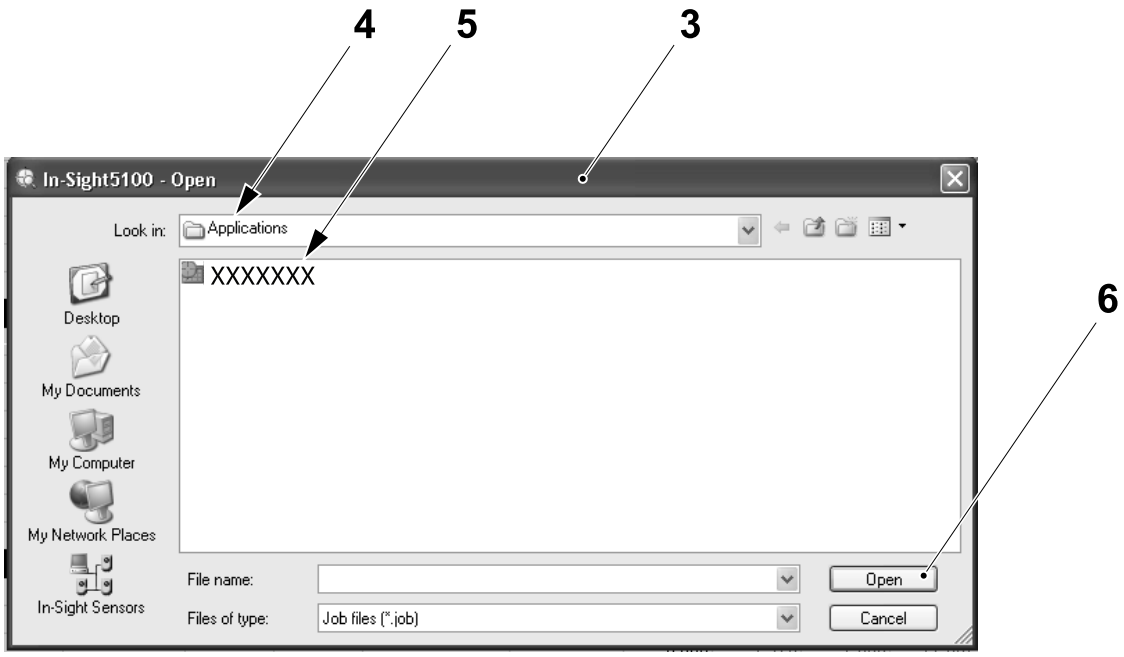

3 IN-SIGHT OPEN window
4 Folder
5 .JOB extension file
6 OPEN button

(Cont'd)

(Cont'd)

d) In the LOAD FILE window (7), click on the YES button (8).

Note! At this point of the procedure, the application program is loaded in the camera but **not** stored in the flash memory. The program will not run until the camera is set ONLINE. Before putting the camera ONLINE save the application program as described below. This is important, see the next note.

Note! If the application program is not saved in the flash memory, the camera will lose the new application program at the next power cycle. The camera will restart with the old program even if the new and the original programs have the same name.

e) Save the application program in the camera, see 12.8.2-11 Saving the Application Program in the In-Sight 5600 Camera.

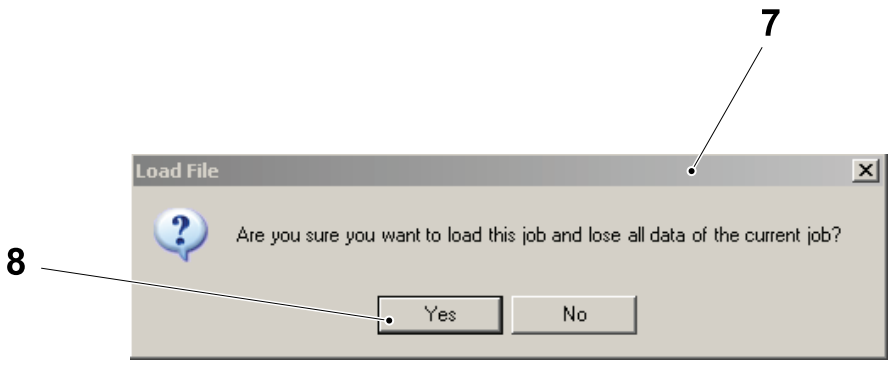

7 LOAD FILE window
8 YES button

12.8.2-11 Saving the Application Program in the In-Sight 5600 Camera

Machine Status	Electrical supply disconnecting device in position I (ON)
SPC Reference	662916-0300

Basic Settings

CAUTION
The camera must be offline to ensure that the application program is saved correctly.
Make sure that the camera is offline, see 12.8.2-8 Setting the Off-Line Status of the Camera.

(Cont'd)

(Cont'd)

Saving the Application Program in the Flash Memory

a) In the host table (1), select `file` (2) and then save job as from the pull down window that appears.

b) In the `ADHESIVE DETECTOR - SAVE AS` window (3), select `in-sight sensors` (4), to display the cameras present on the ethernet network.

c) Select the `Adhesive detector camera` (5) to display a list of jobs already in the camera.

d) Select the job name that will be used.

e) Click on the `SAVE` (6) button.

f) Set the camera online, see 12.8.2-7 Setting the On-Line Status of the Camera.

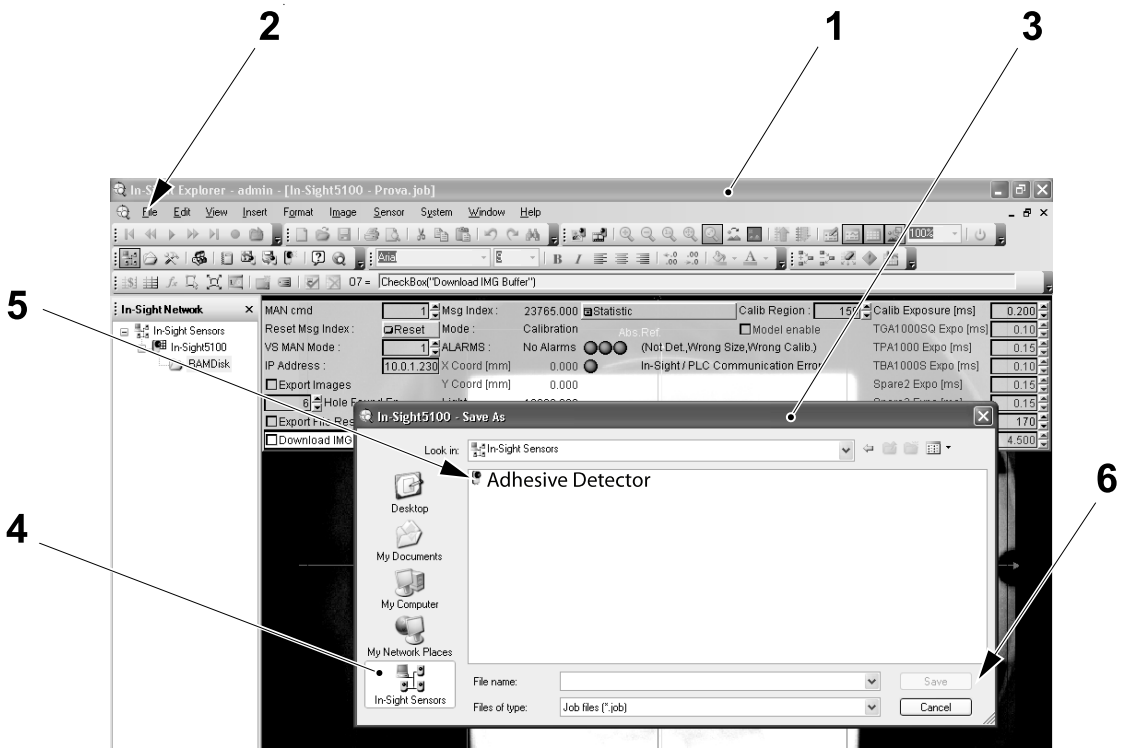

1 Host table
2 `File`
3 `ADHESIVE DETECTOR - SAVE AS` window
4 `In-sight sensors`
5 `Adhesive detector camera`
6 `SAVE` button

12.8.2-12 Closing the In-Sight Explorer Tool

Machine Status	Electrical supply disconnecting device in position I (ON)
SPC Reference	3254965-0100

Basic settings

CAUTION

The camera must be online to ensure that the application program functions correctly.

Make sure that the camera is online, see 12.8.2-7 Setting the On-Line Status of the Camera.

(Cont'd)

(Cont'd)

Closing In-Sight Explorer

a) In the host table (1), select `file` (2) and then exit or use the red cross (3) to initiate the program close procedure.

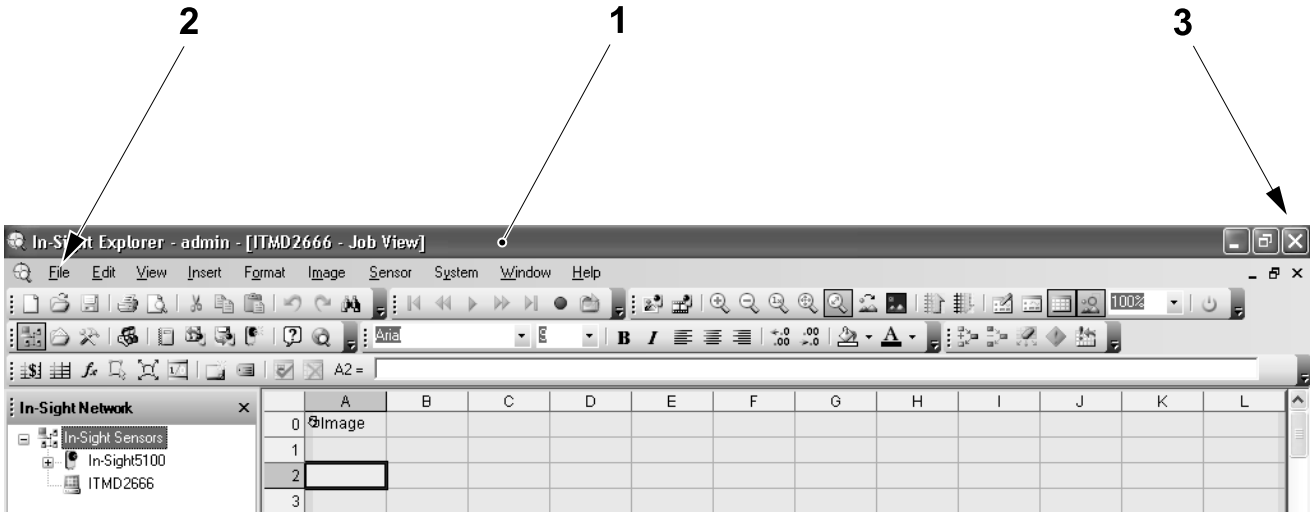

1 Host table
2 `File`
3 Red cross

b) In the confirm program exit window (4) click on the yes button (5) to close the program completely.

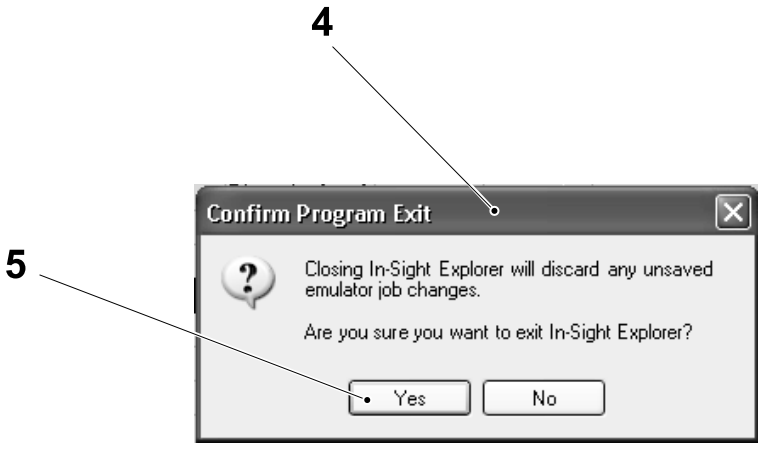

4 `CONFIRM PROGRAM EXIT` window
5 `YES` button

12.8.2-13 Start up Setting Procedure

Machine Status	Electrical supply disconnecting device in position I (ON)
SPC Reference	662916-0300

Note! With this setting it is possible to define the job to be used at start up and the camera status at power up.

a) In the host table (1), select `sensor` (2) and then `startup` (3) from the `PULL DOWN` window (4).

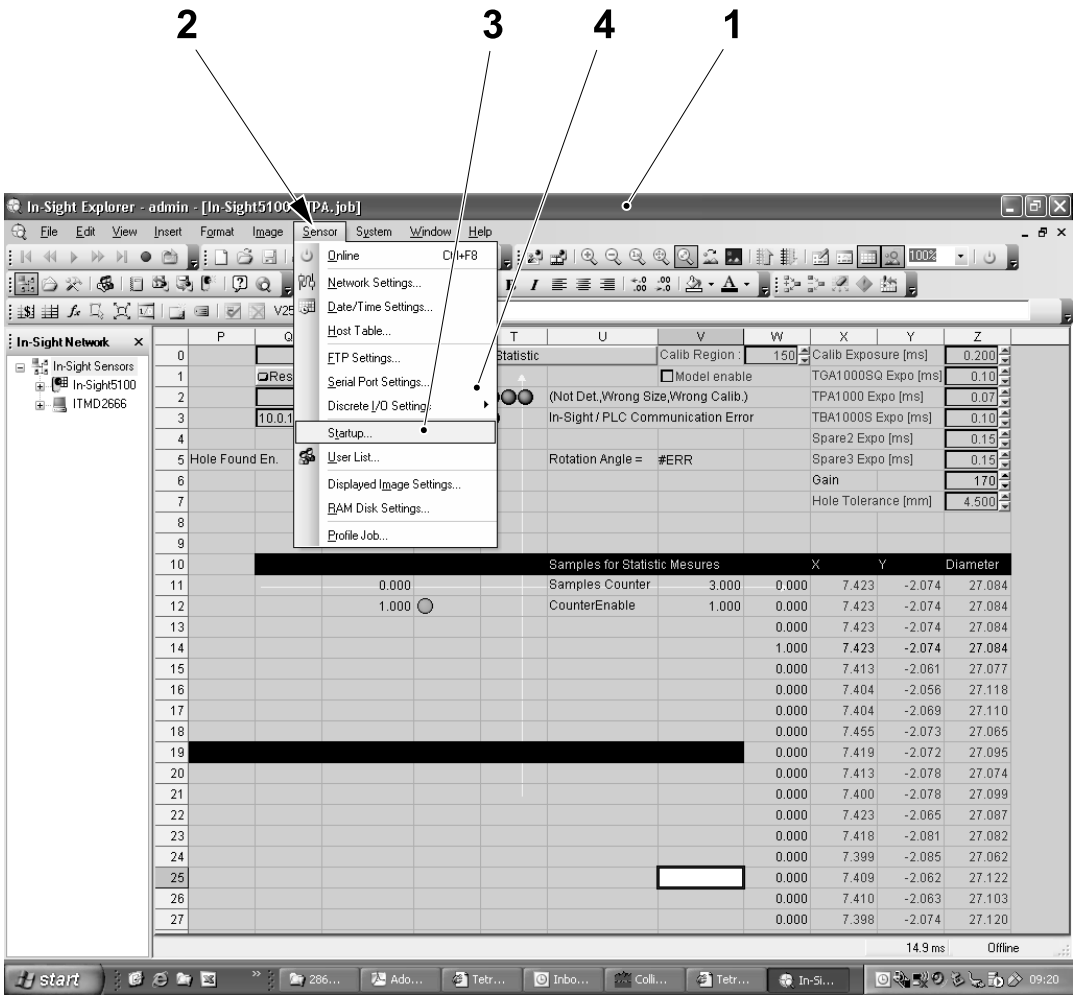

1 Host table
2 `Sensor`
3 `Startup`
4 `PULL DOWN` window

(Cont'd)

(Cont'd)

b) In the STARTUP window (5) click the online checkbox (6).

c) Scroll through the available jobs in the job field (7) and select the application required at startup.

d) Click on the OK button (8).

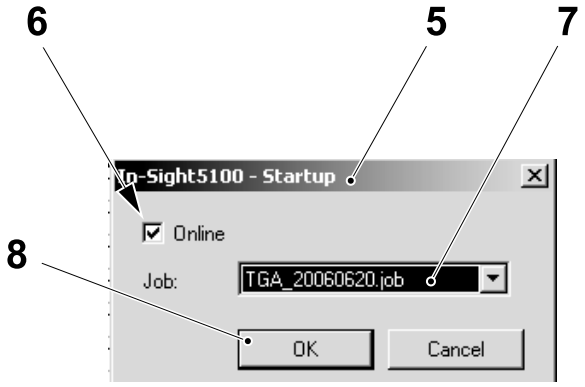

5 STARTUP window
6 Online checkbox
7 Job field
8 OK button

12.8.2-14 Discrete Setting Procedure

Machine Status	Electrical supply disconnecting device in position I (ON)
SPC Reference	662916-0300

Note! Some of the discrete outputs of the camera can be set via the host table.

a) In the host table (1), select `sensor` (2) and then `discrete i/o settings` (3) and then `output settings` (4).

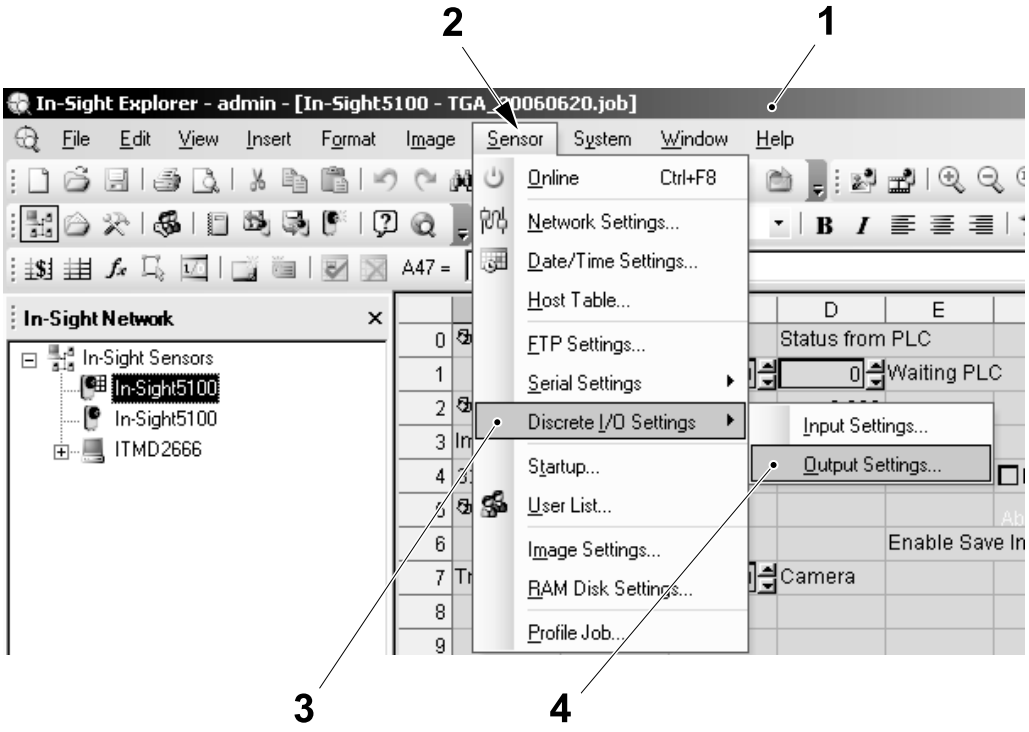

1 Host table
2 `Sensor`
3 `Discrete I/O Settings`
4 `Output Settings`

(Cont'd)

(Cont'd)

Note! The discrete `line 0` is not used.

b) The `DISCRETE OUTPUT SETTINGS` window (5) shows the 4 `Output Discrete`'s (6), (7), (8) and (9)that are used. The discrete's can be set using the `DETAILS` buttons (10) and (11).

c) To set the `Output Discrete`'s (6), click on the `DETAILS` buttons (10).

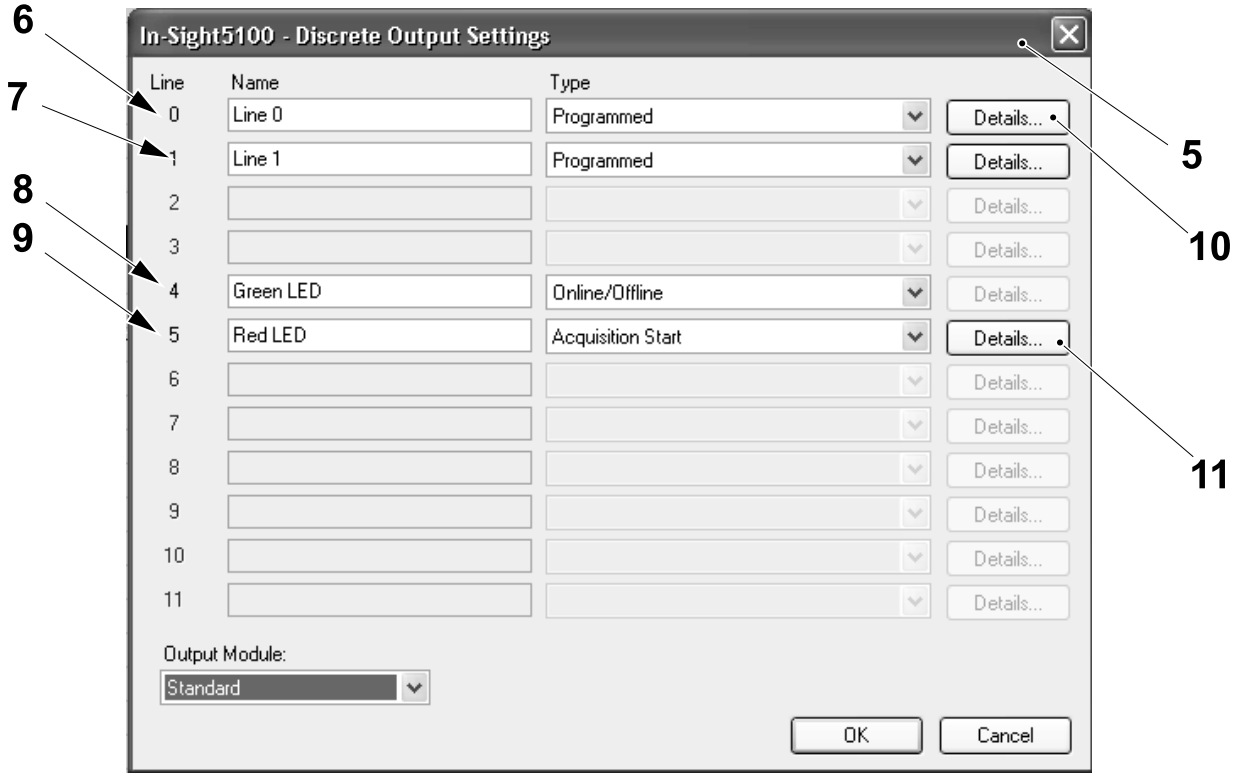

5 `DISCRETE OUTPUT SETTINGS` window
6 `Output Discrete - Line 0`
7 `Output Discrete - Line 1`
8 `Output Discrete - Line 4`
9 `Output Discrete - Line 5`
10 `DETAILS` button
11 `DETAILS` button

(Cont'd)

(Cont'd)

d) In `LINE 0 OUTPUT DETAILS` window (12), make sure that the `pulse` check box (13) is not selected. and click on the `OK` button (14).

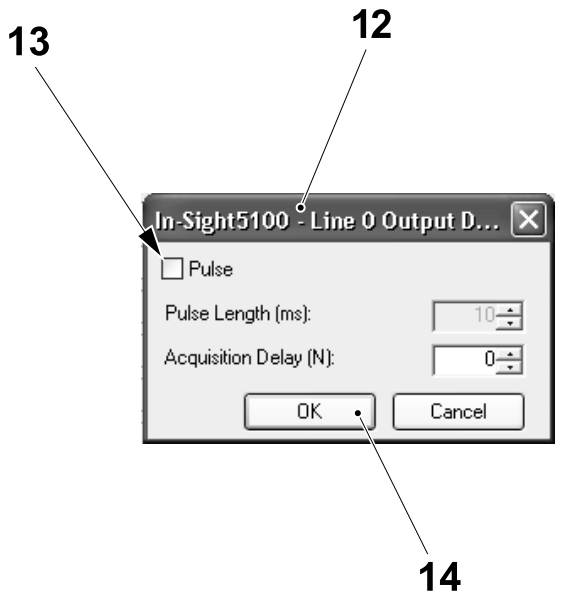

12 `LINE 0 OUTPUT DETAILS` window
13 `Pulse` check box
14 `OK` button

(Cont'd)

(Cont'd)

e) To set the `Line 1 discrete` (7), click on the `drop down list` (15) and select "`STROBE`".

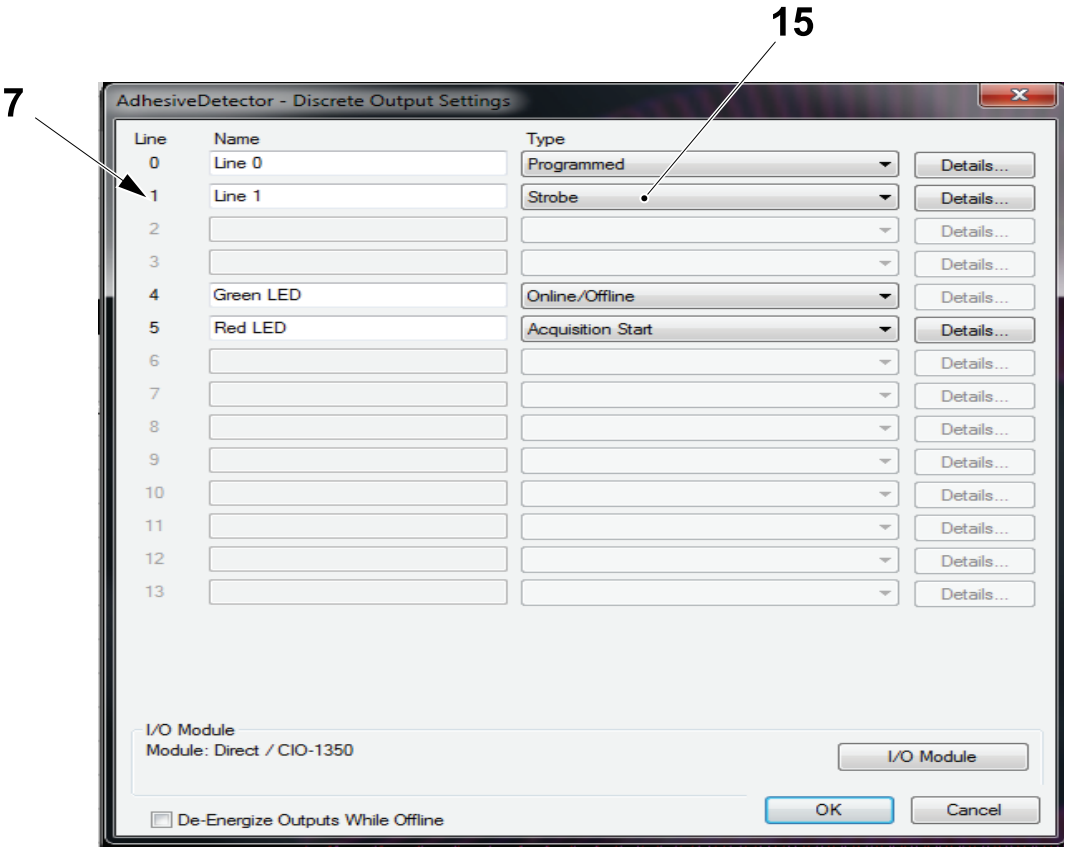

7 `Output Discrete - Line 1`

15 `Drop Down List`

(Cont'd)

(Cont'd)

f) To set the `Line 4 discrete` (8), click on the `drop down list` (16) and select "`Online/Offline`".

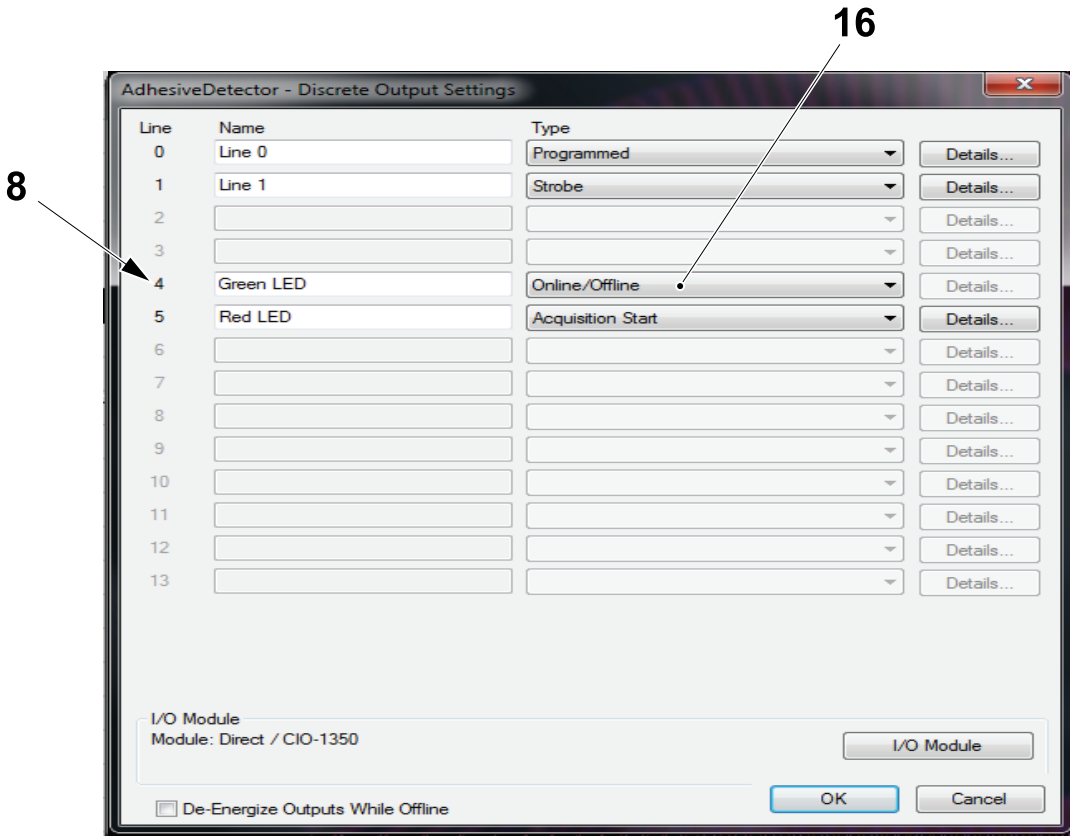

8 `Output Discrete - Line 4` 16 `Drop Down List`

(Cont'd)

(Cont'd)

g) To set the `Line 5 discrete` (9) (Red LED), click on the `drop down list` (17) and select "`Acquisition Start`".

h) Click on the `DETAILS` button (18), write "`100`" (19) in the box and click the `OK` button (20).

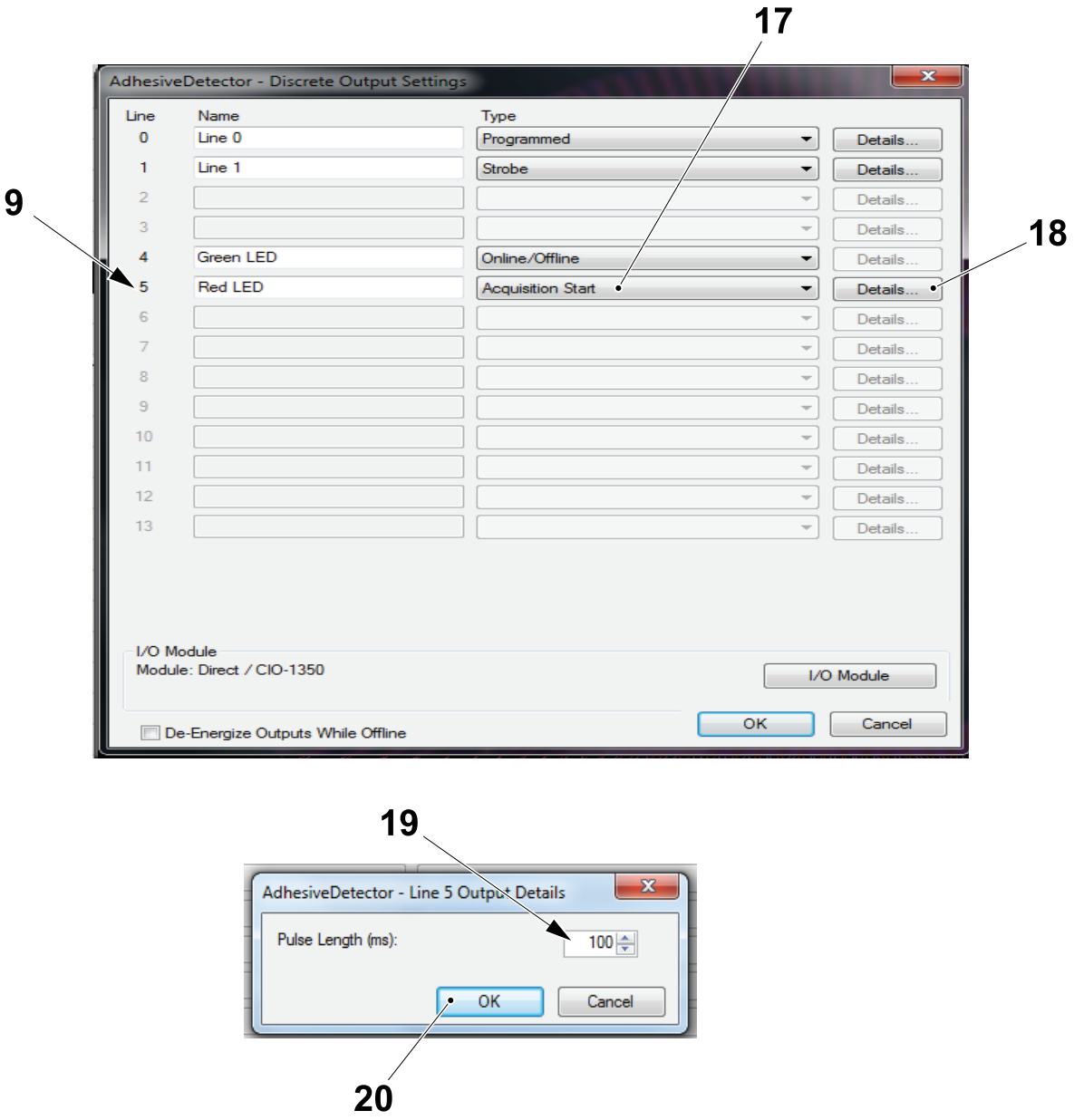

9 `Output Discrete - Line 5`
17 `Drop Down List`
18 `DETAILS` button
19 100
20 `OK` button

(Cont'd)

(Cont'd)

i) Click on the OK button (21).

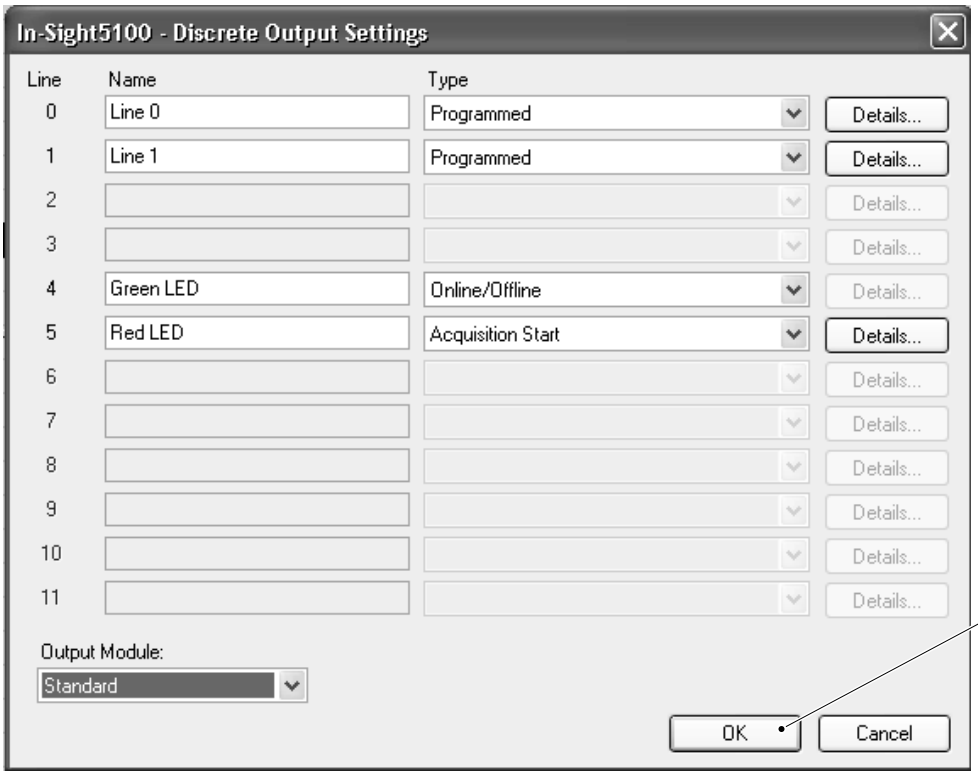

21 OK button

(Cont'd)

(Cont'd)

j) Save the program.

k) Reboot the camera by disconnecting and connecting the power cable.

l) In the `in-sight network` zone (22), double click on the `ADHESIVE DETECTOR` icon (23).

m) Check that the correct name is displayed at the top of the host table (24) and camera status is displayed as `online` (25).

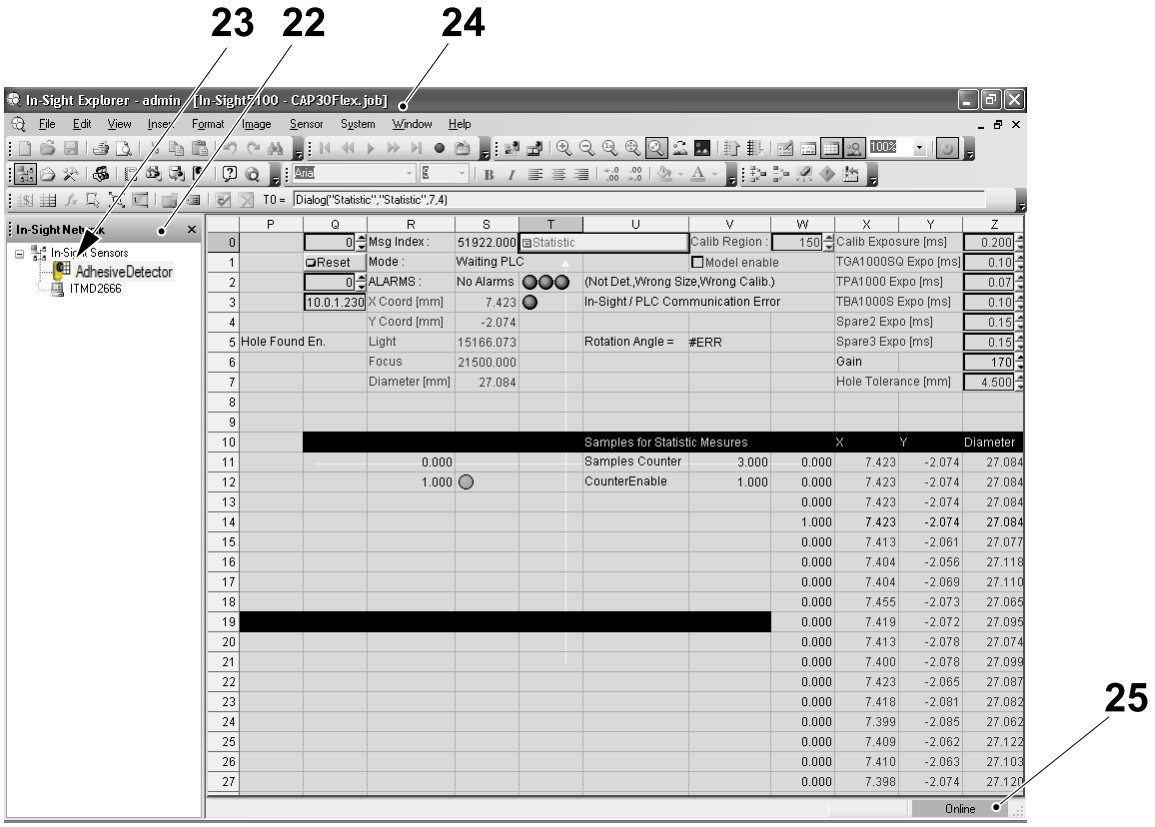

22 `In-Sight Network` zone

23 `ADHESIVE DETECTOR` icon

24 Host table

25 `Online` status

12.8.2-15 Firmware Check

Machine Status	Electrical supply disconnecting device in position I (ON)
SPC Reference	662916-0300

Begin Communication with In-Sight Explorer

a) Follow the instructions in 12.5.5.1 Begin Camera Communication with In-Sight Explorer.

(Cont'd)

(Cont'd)

Verify the Firmware Release Version

a) In the host table (1), right click on the `ADHESIVE DETECTOR` icon (2) and select `properties` (3) from the `PULLDOWN` menu (4) that appears.

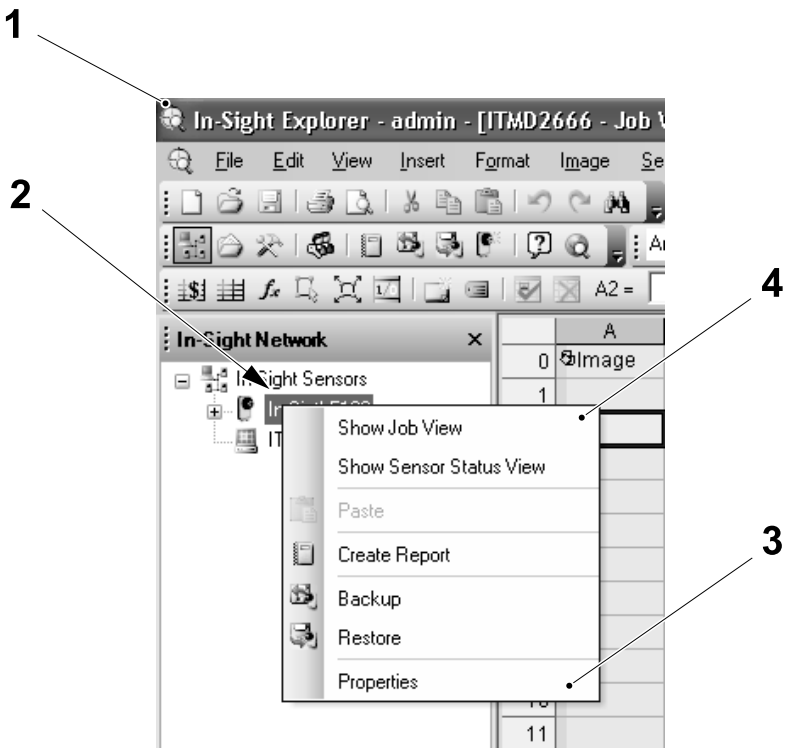

1 Host table

2 `ADHESIVE DETECTOR` icon

3 `Properties`

4 `PULLDOWN` menu

(Cont'd)

(Cont'd)

b) In the PROPERTIES window (5) check the firmware version (6) that is installed in the camera.

c) If the version is from 4.7, click on the CLOSE button (7) to complete the procedure.

d) If the version of the firmware is 4.7 or above, go to 12.8.2-16 Firmware Update Procedure.

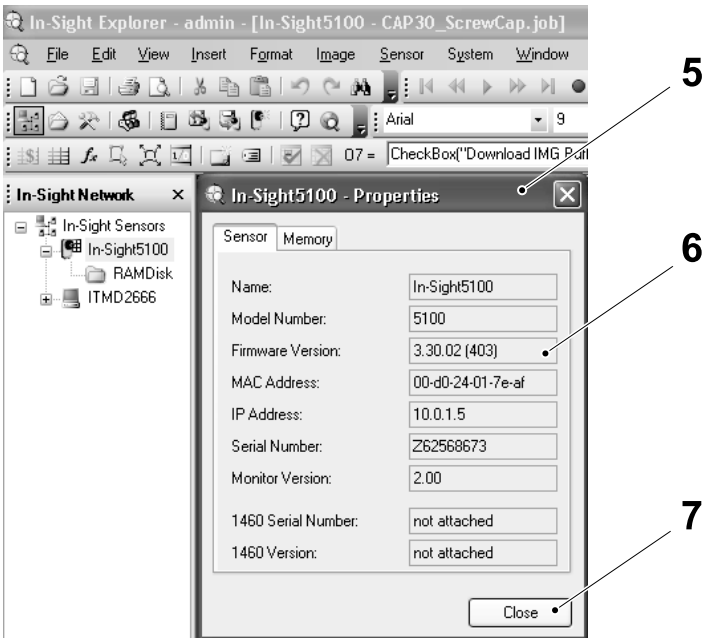

5 PROPERTIES window 6 Firmware version 7 CLOSE button

12.8.2-16 Firmware Update Procedure

Machine Status	Electrical supply disconnecting device in position I (ON)
SPC Reference	662916-0300

CAUTION
Updating the firmware can erase the IP address configuration, the start-up configuration or the discrete output configuration.
After a firmware update check the above configurations and reinstall if necessary.

a) Open InSight Explorer 4.7 (or subsequent version).

b) In the host table (1), select `system` (2) and then select `update firmware` (3) from the `PULLDOWN` menu (4) that appears.

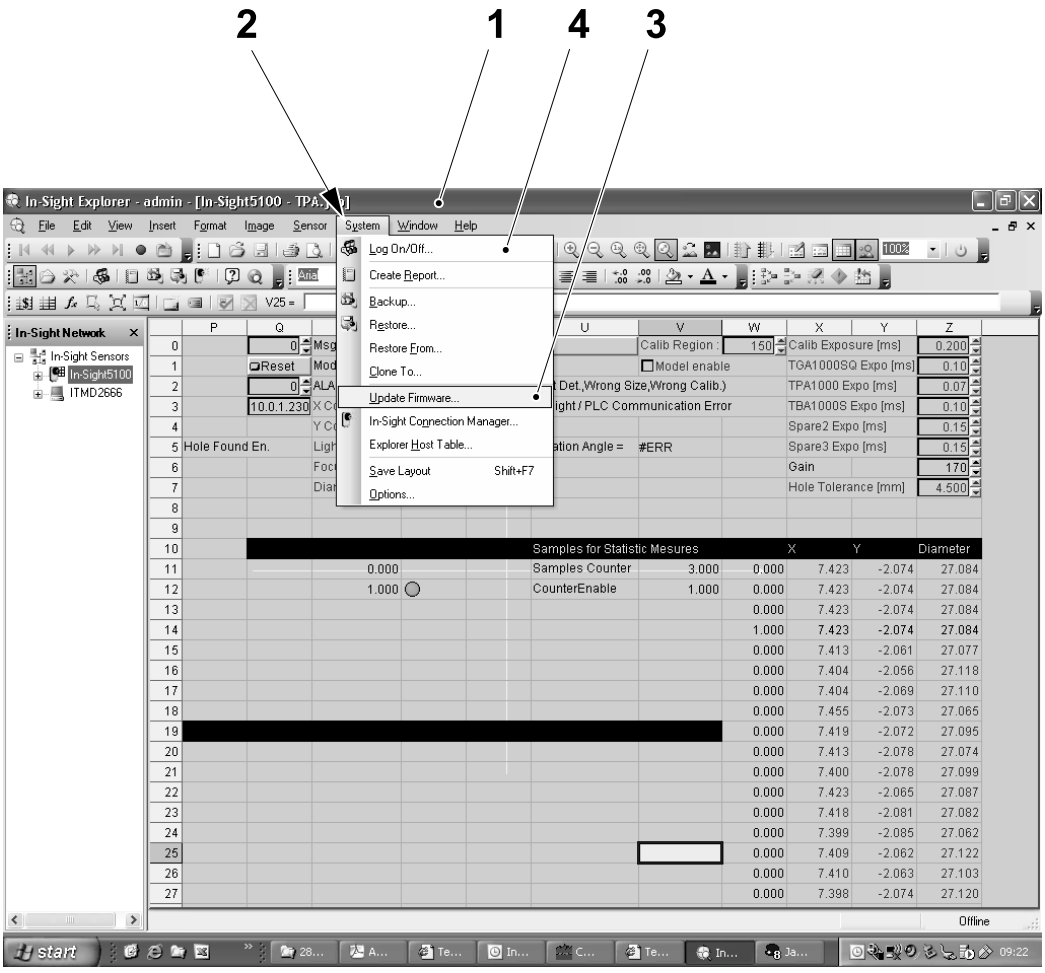

1 Host table
2 `System`
3 `Update firmware`
4 `PULLDOWN` menu

(Cont'd)

(Cont'd)

c) In the UPDATE FIRMWARE window (5), select the latest version of the firmware to be loaded (6) and then click on the UPGRADE FIRMWARE button (7).

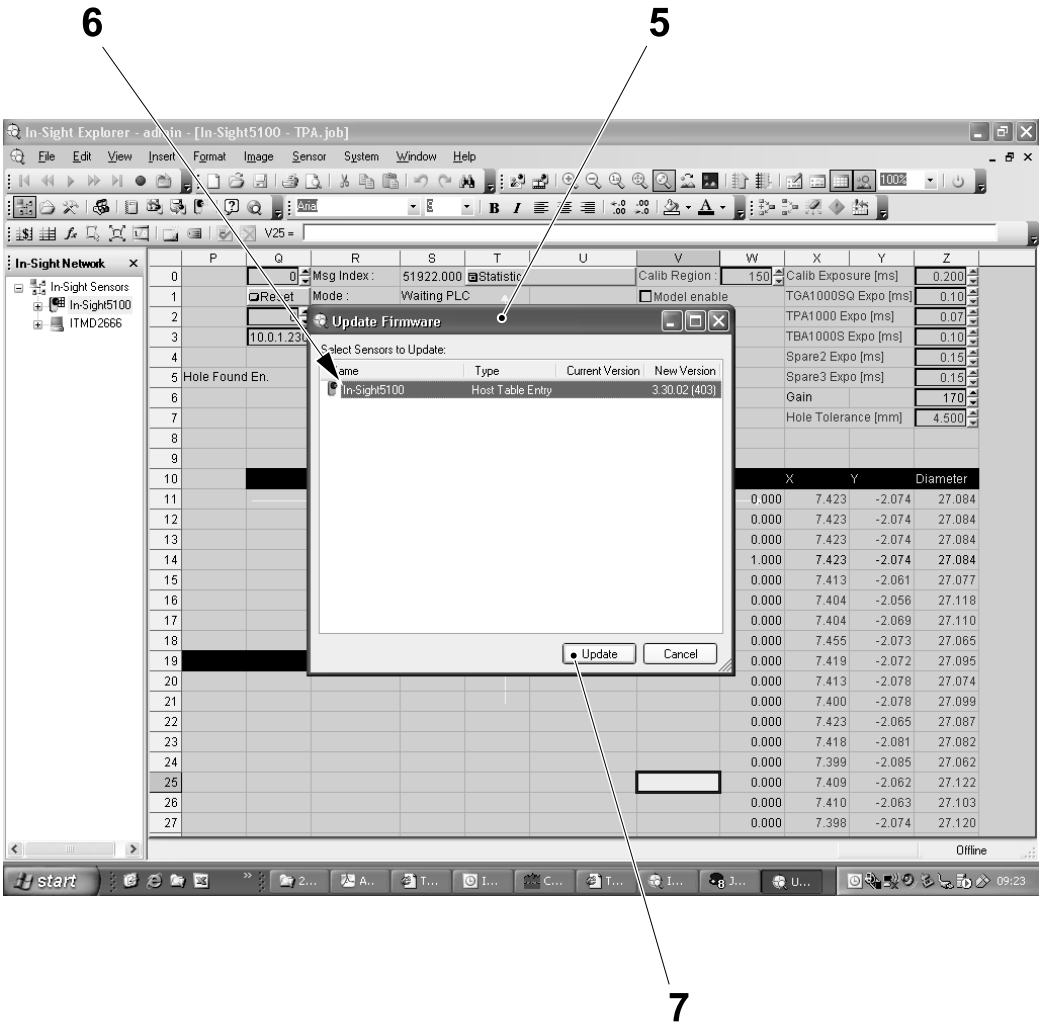

5 UPDATE FIRMWARE window

6 Latest firmware version

7 UPGRADE FIRMWARE button

(Cont'd)

(Cont'd)

d) Press the OK button (8).

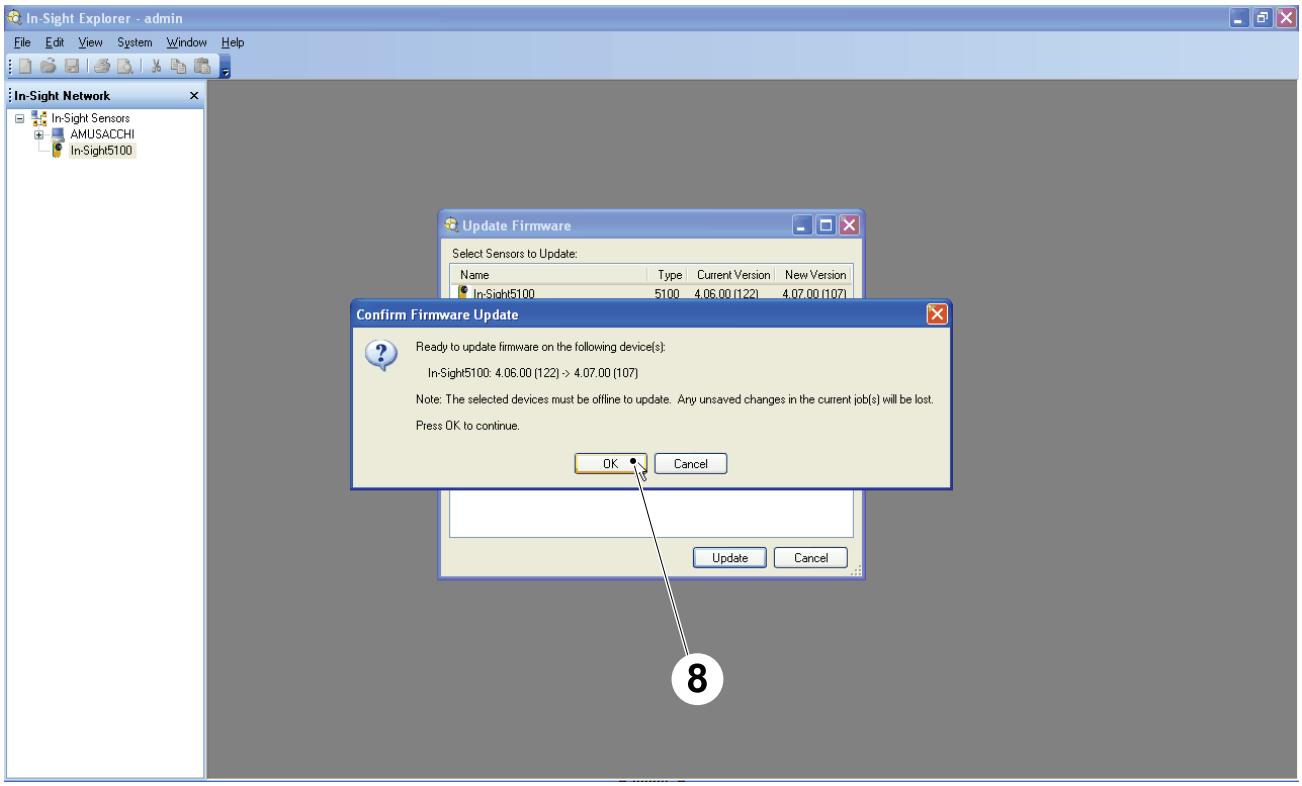

8 OK button

(Cont'd)

(Cont'd)

e) Wait until the end of the process.

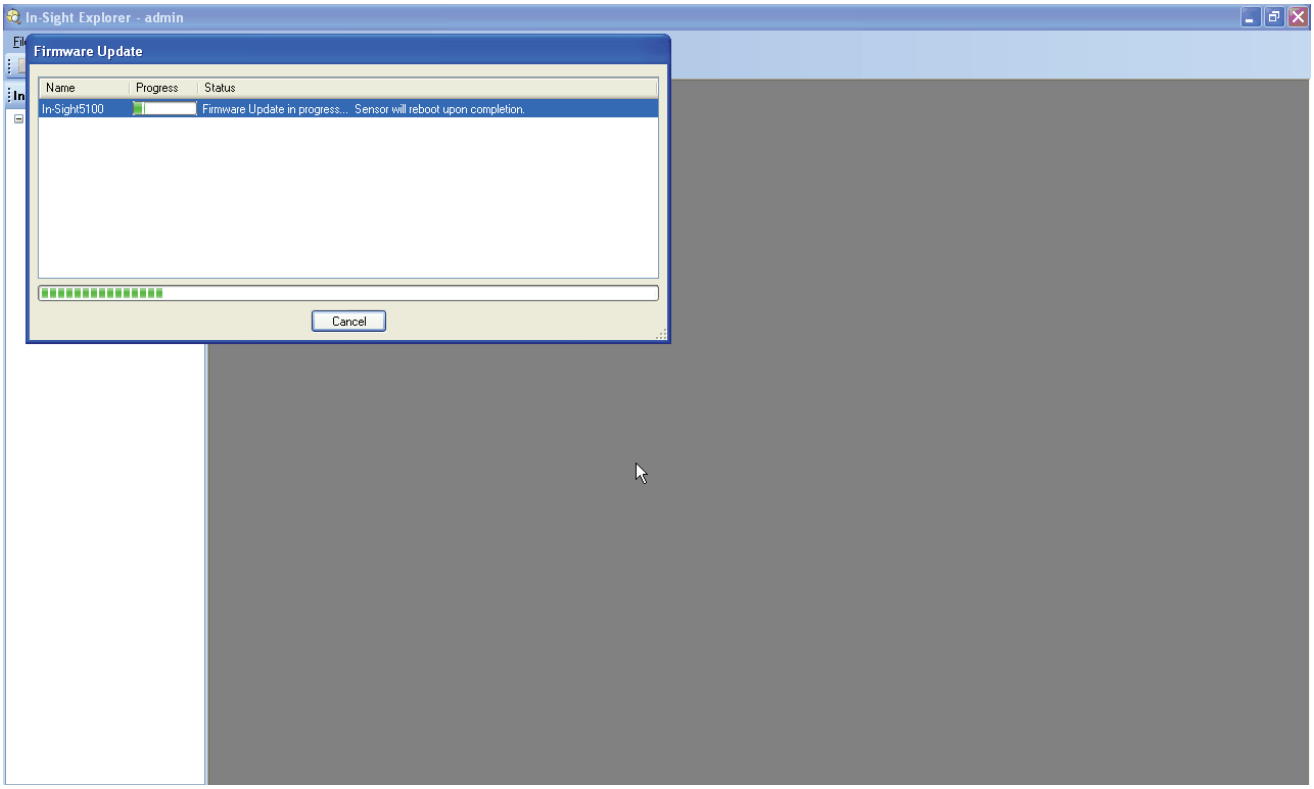

(Cont'd)

(Cont'd)

f) Press the OK button (9).

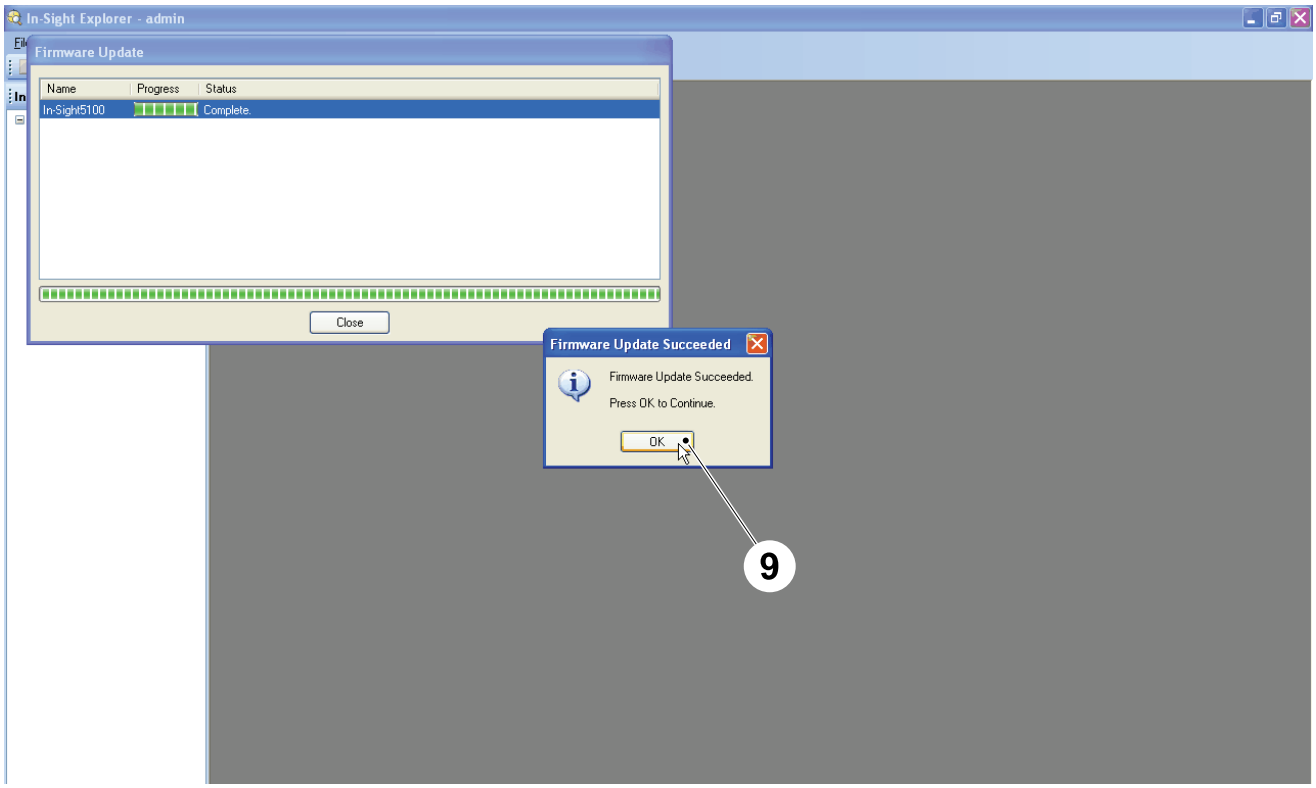

9 OK button

12.8.2-17 Using In-Sight Explorer

Machine Status	Electrical supply disconnecting device in position I (ON) Main air valve ON
SPC Reference	662916-0300

During PRODUCTION, it is possible to use In-sight explorer running on a laptop PC as a troubleshooting tool.

Configuring the Laptop and Initiating Communication between the Laptop and the Camera

a) Configure the laptop, see on page 12-230.

b) Commence communications, see 12.8.2-2 Adding a New Sensor to Network up to and including 12.8.2-5 Establishing Communication with the Camera.

c) Make sure that the camera is online, see 12.8.2-7 Setting the On-Line Status of the Camera.

12.8.2-18 Procedures for Application

Machine Status	Electrical supply disconnecting device in position I (ON)
SPC Reference	662916-0300

Loading an Application Program in the In-Sight5600 Camera

a) Follow the instructions in 12.8.2-9 Loading the Application Program in the In-Sight 5600.

Saving an Application Program in the In-Sight 5600 Camera

a) Follow the instructions in 12.8.2-11 Saving the Application Program in the In-Sight 5600 Camera.

Setting the Light Intensity

Set the lens light ring as follows:

a) Loosen the locking knob 1.

b) Adjust the scale ring until the white mark is centred between "2" and "4".

c) Lock the knob 1.

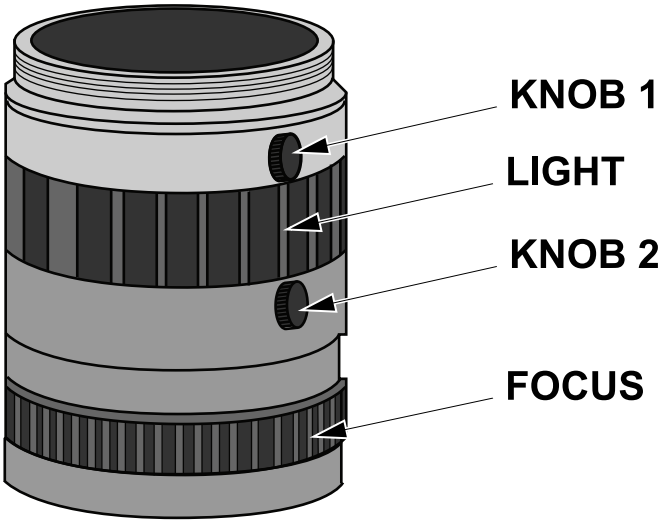

12.8.2-19 Adhesive Detector Custom View

Machine Status	Electrical supply disconnecting device in position I (ON)
SPC Reference	662916-0300

The Adhesive Detector has a custom view, with:

- Name (1),
- Date (2),
- Graphics and data log tab (3),
- System settings tab (4),
- Trigger counter (5),
- Reset statistics button (6),
- Status light and job time execution (7).
- Type of cap under analyse (8)
- View options (9)

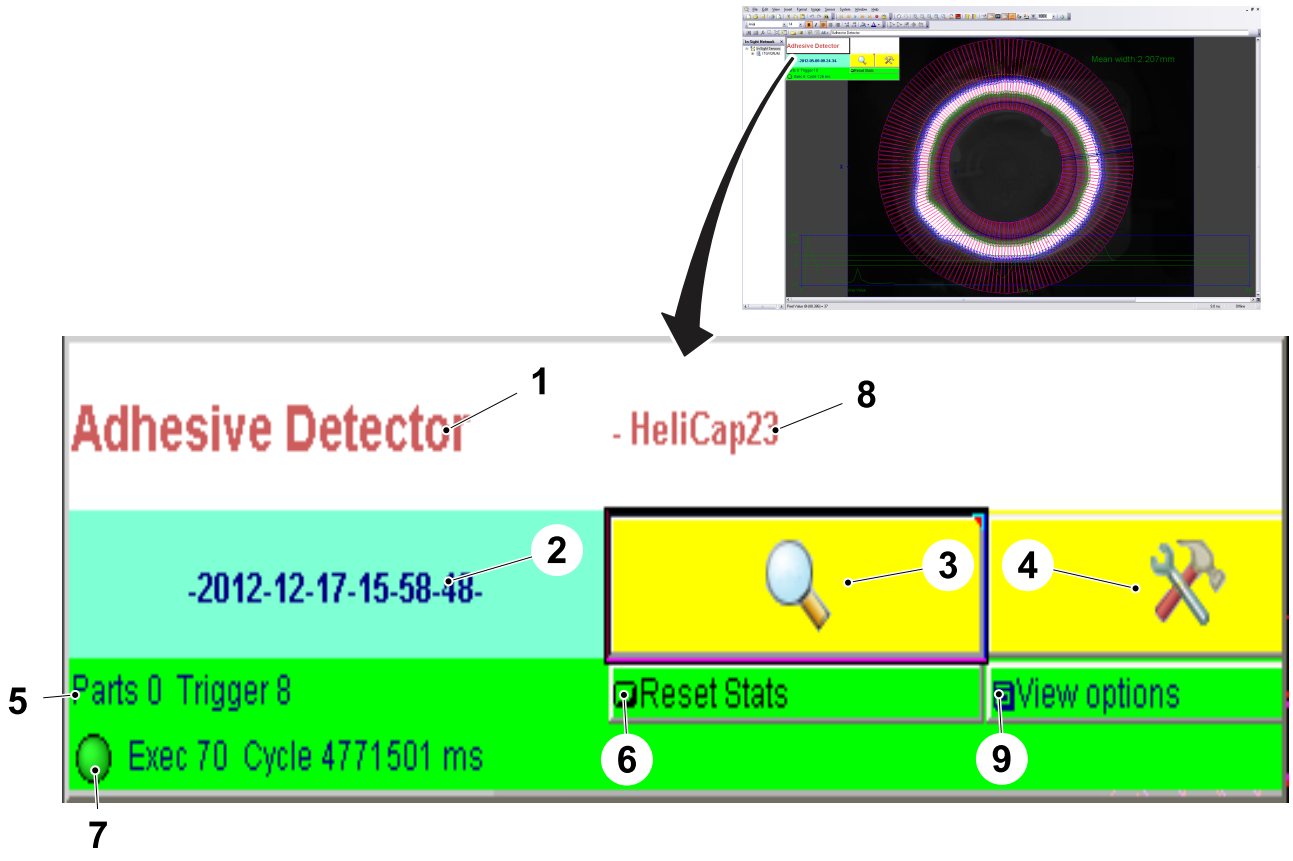

1 Name
2 Date
3 Graphics and data log tab
4 System settings tab
5 Trigger counter
6 Reset statistics button
7 Status light and job time execution
8 Type of cap under analyse
9 View options

(Cont'd)

(Cont'd)

Graphics and Data Log Tab

Note! This button allows to find some data/information reserved to technicians and designers.

- `Machine Name` (1) (Cap 30 ScrewCap or DreamCap);
- `Host name` (2): the name of the sensor (in this picture ITGVQNJ4J, normally it's Adhesive Detector);
- `Data log disk` (3): reserved for designer, used to collect information if needed (NOT EDITABLE);
- `DATA LOG FOLDER` (4): reserved for designer, used to collect information if needed (NOT EDITABLE);
- `SAVE REJECT IMAGES AND SAVE GOOD IMAGES` (5): used to select whether saving only bad or even good images in specific folders;
- `RESET FTP IMAGE COUNT` button (6): button used to reset the numeric value of appended pictures inside the folders.

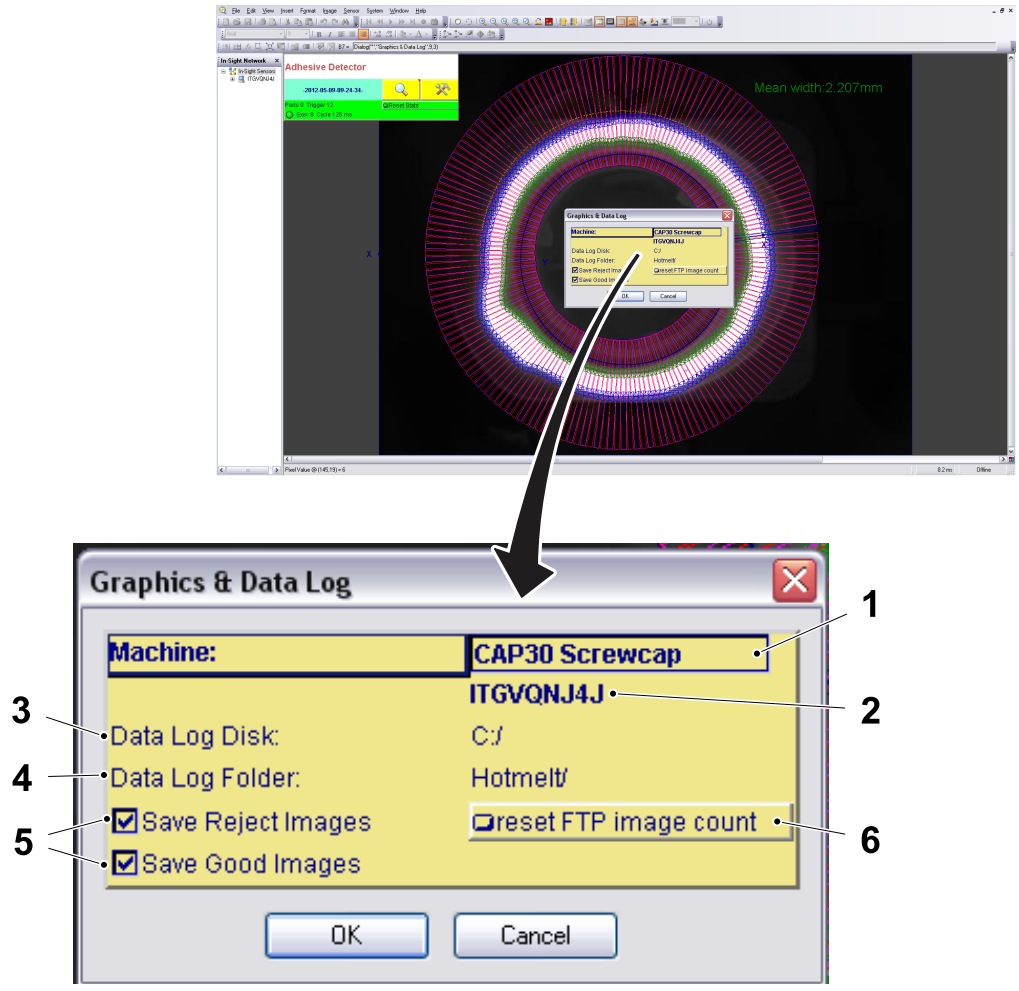

1 `Machine Name`
2 `Host name`
3 `Data log disk`
4 `DATA LOG FOLDER`
5 `SAVE REJECT IMAGES AND SAVE GOOD IMAGES`
6 `RESET FTP IMAGE COUNT` button

(Cont'd)

(Cont'd)

System Settings Tab

Here there are all the settings and actions that are needed to be performed before starting to use the system.

- `Acquisition Settings` (1): it shows whether the trigger is done by the camera or it's set in continuous mode (NOT EDITABLE);
- `Focusing Sequence` (2): this section is used to adjust the optical focus ring; if you click on "start focus tool", a specific tool provides help to the technician during the setting phase see Set the Camera Focus on page 12-304;
- `Calibration area control` (3) :this section is used to start the calibration phase; the traffic light is used to communicate whether the calibration is good or not.
- `Communication` (4): this section should be used only by designers or technicians and it includes the IP Address where to communicate data and, eventually, a specific log file (NOT EDITABLE).

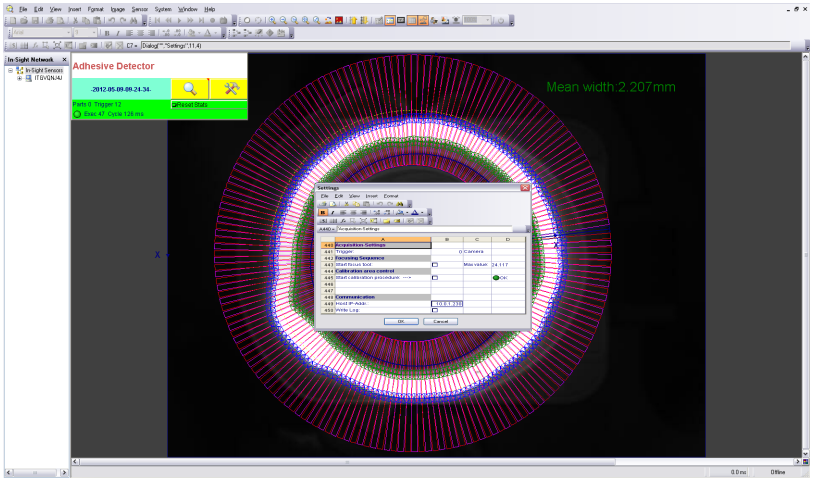

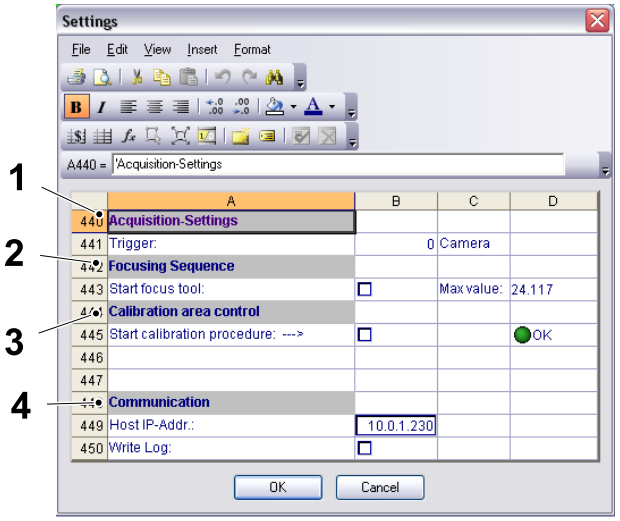

1 `Acquisition Settings` 2 `Focusing Sequence` 3 `Calibration area control` 4 `Communication`

(Cont'd)

(Cont'd)

Trigger Counter

This section is used to visually check how many triggers (1) the system gave ("triggers") and how many caps (2) were really present ("parts").

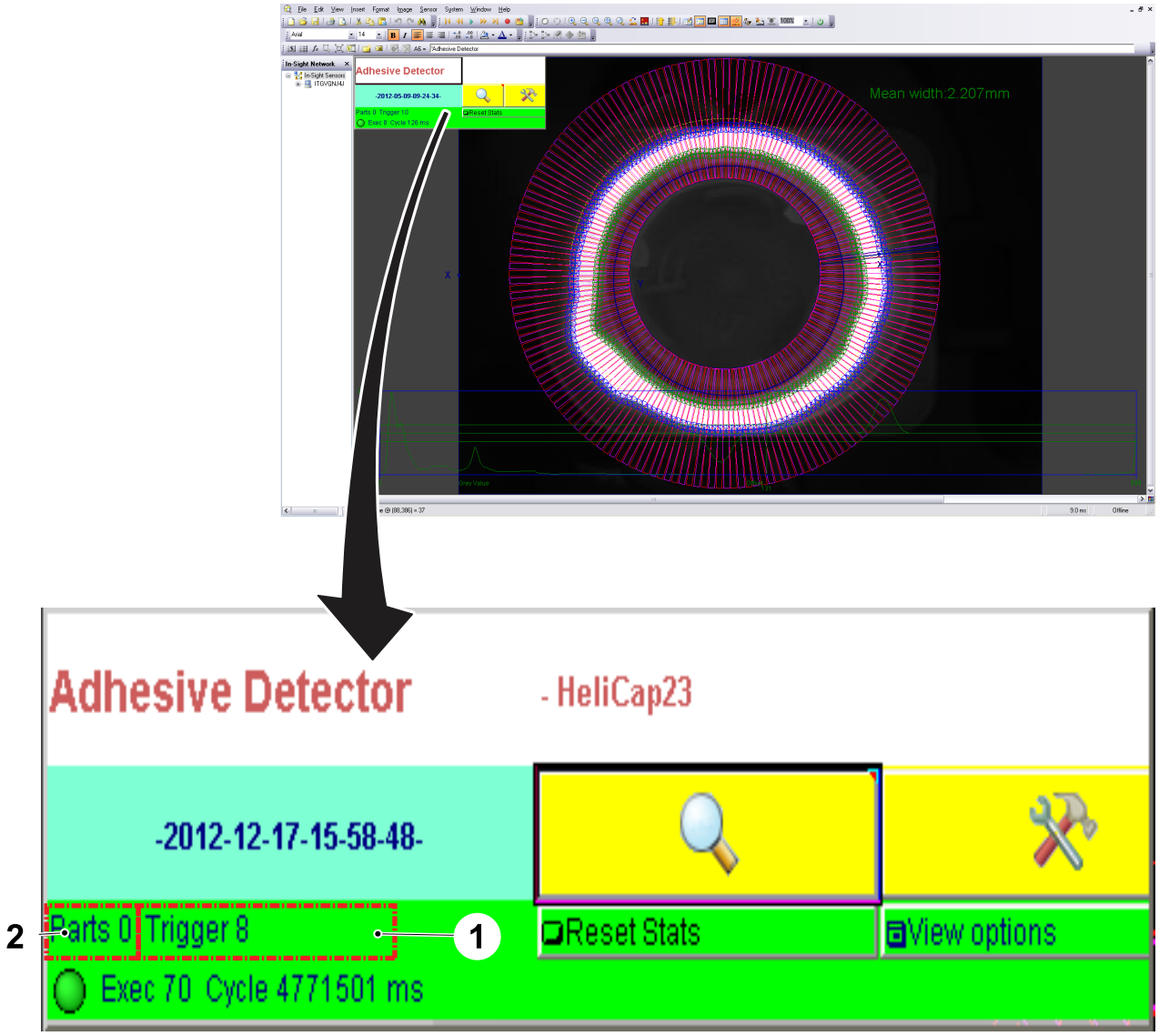

1 Triggers
2 Parts

(Cont'd)

(Cont'd)

Status Light and Job Time Execution

This section is used to check how is the status during:

CALIBRATION	IN PRODUCTION
Template is not recognized and calibration is bad: status light RED	Part is not present or applied glue has defectiveness: status light RED
Template is recognized and calibration is good: status light GREEN	Part is present and applied glue has not defectiveness: status light GREEN

Execution: shows how long is the job execution;

Cycle: shows how much time occurs between two consecutive acquisitions.

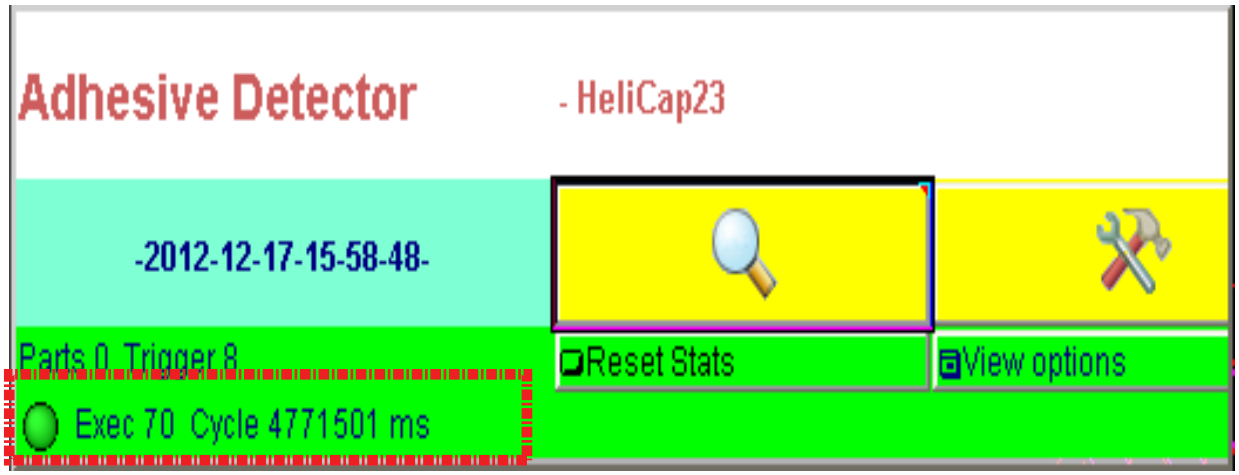

(Cont'd)

(Cont'd)

View options Tab

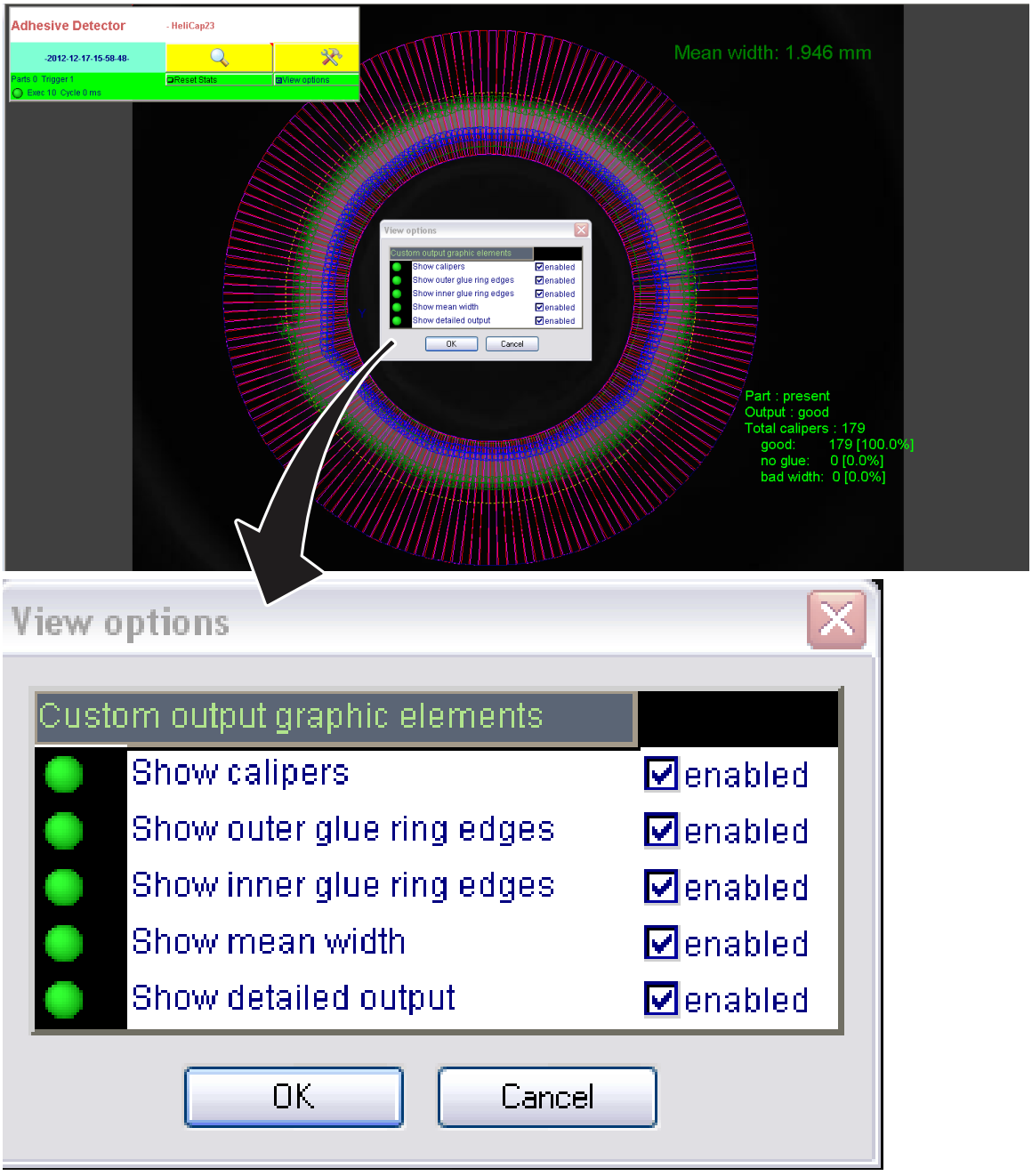

This section is used to customize which graphical elements can be shown or not onto the analyzed cap:

- Show caliper: if enabled, this checkbox allows the calipers to be shown inside the custom view.

(Cont'd)

(Cont'd)

Enabled

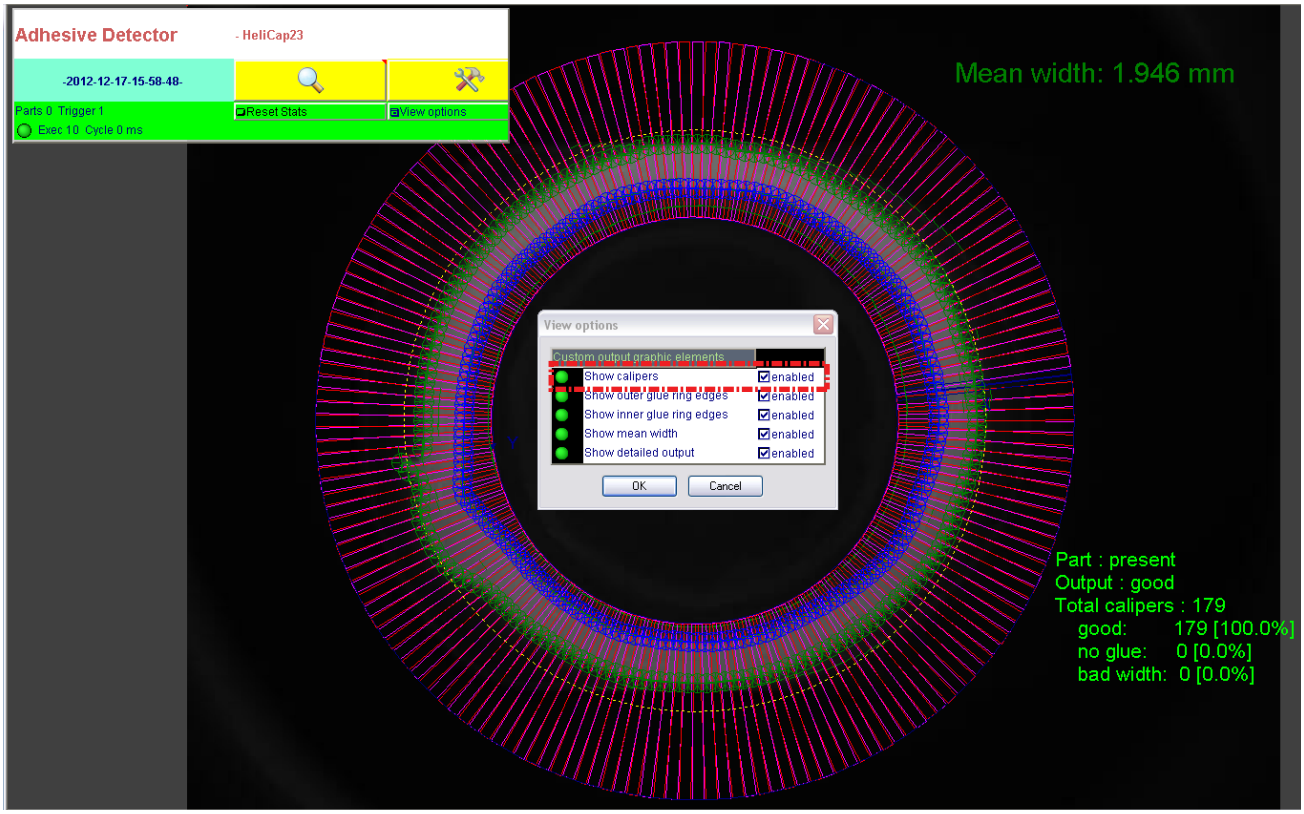

(Cont'd)

(Cont'd)

Disabled

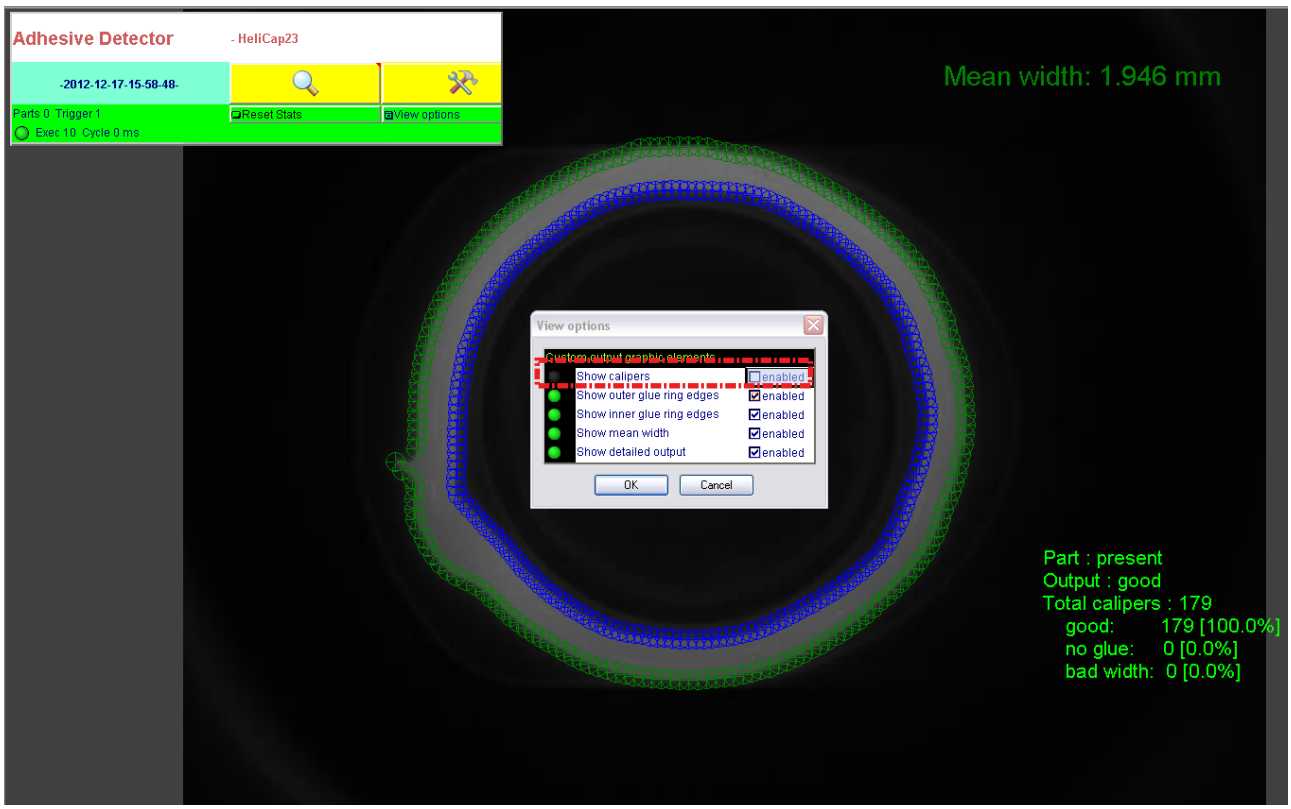

- Show outer glue ring edges: if enabled, this checkbox allows the "green dots" (representing the starting point of the glue, from outside to inside) to be shown inside the custom view.

(Cont'd)

(Cont'd)

Enabled

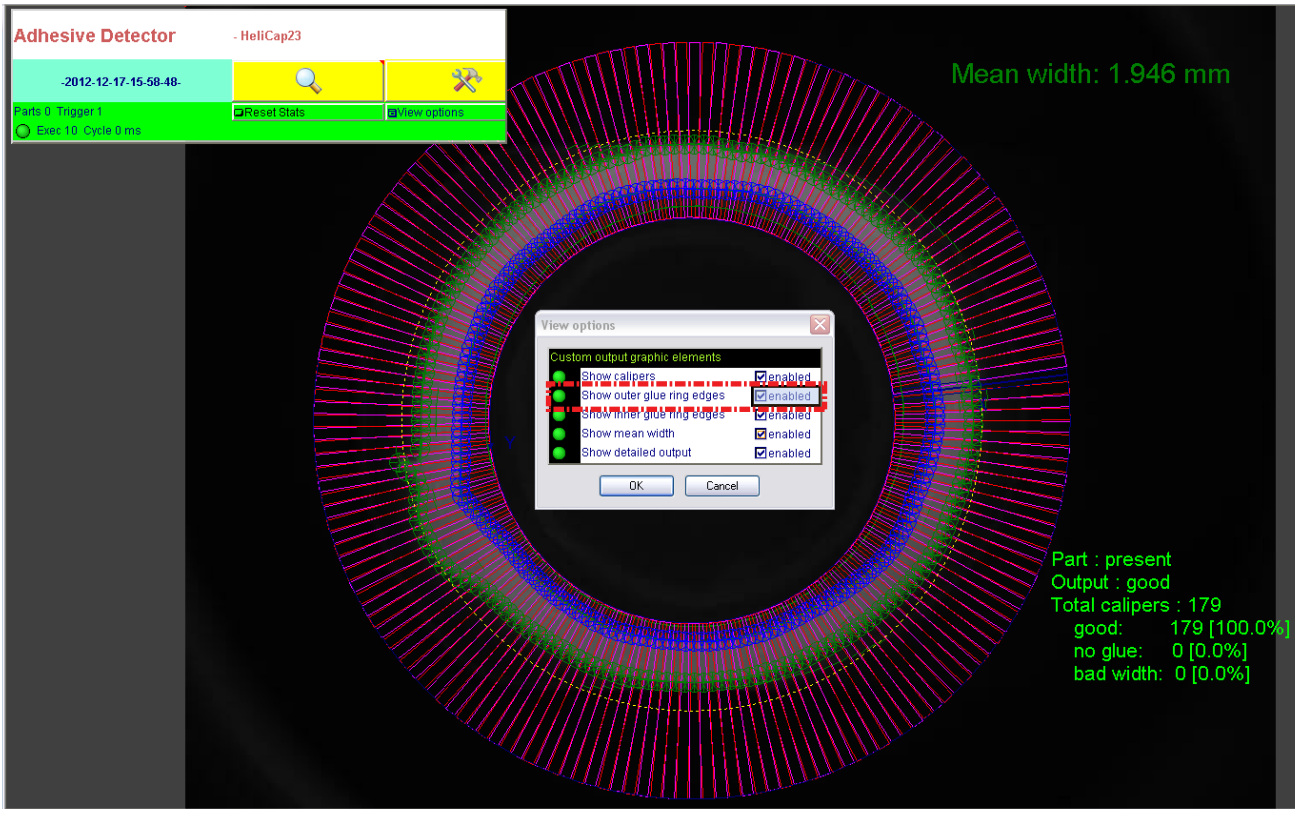

(Cont'd)

(Cont'd)

Disabled

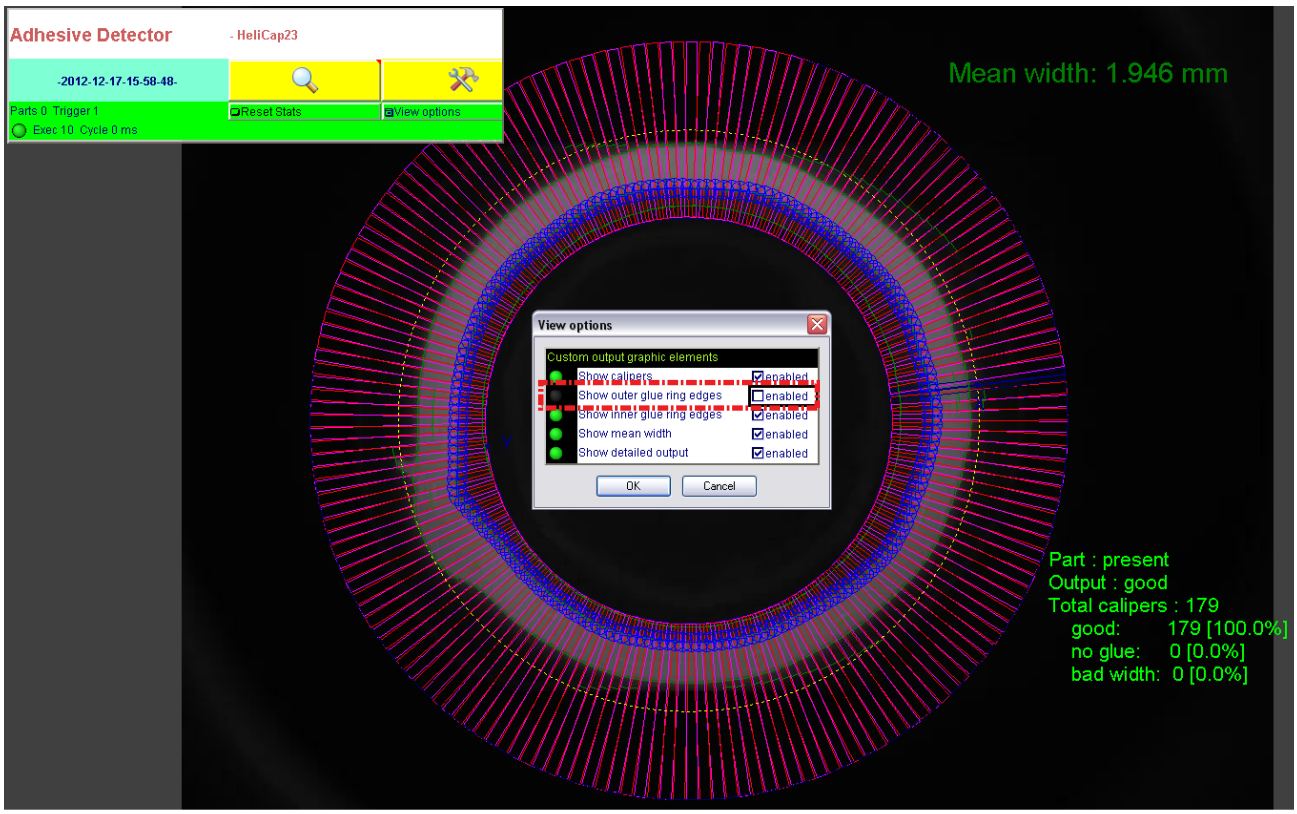

- Show inner glue ring edges: if enabled, this checkbox allows the "blue dots" (representing the ending point of the glue, from outside to inside) to be shown inside the custom view.

(Cont'd)

(Cont'd)

Enabled

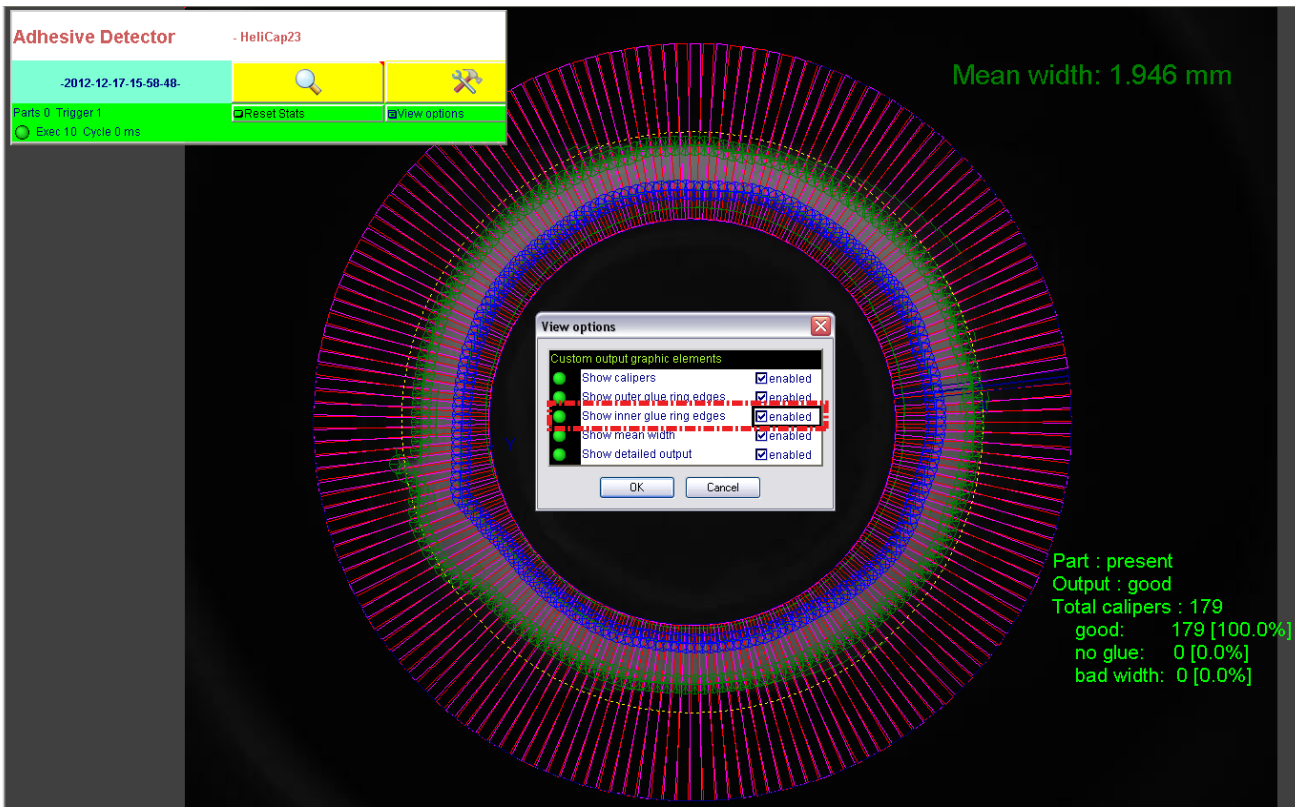

(Cont'd)

(Cont'd)

Disabled

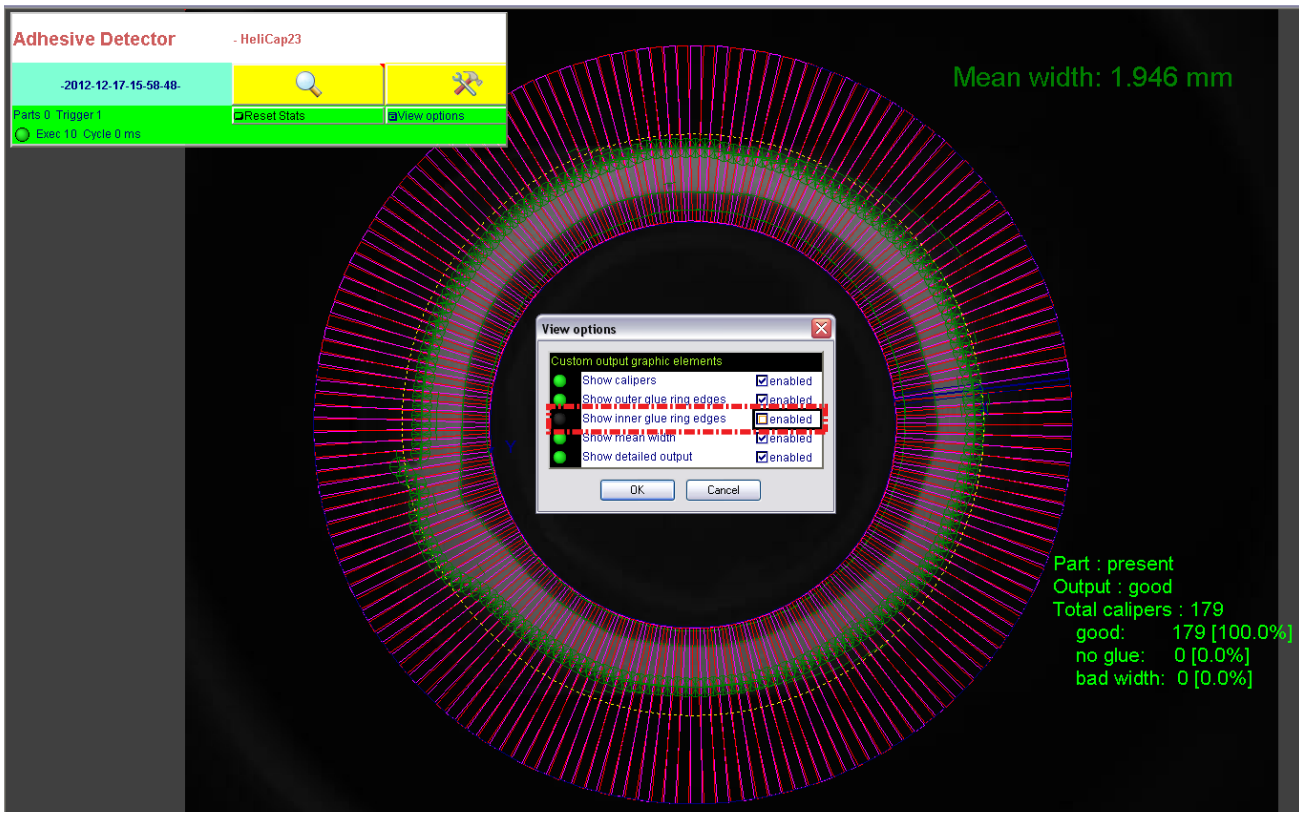

- Show mean width: if enabled, this checkbox allows the string, representing the medium width of the glue (expressed in mm), to be shown inside the custom view.

(Cont'd)

(Cont'd)

Enabled

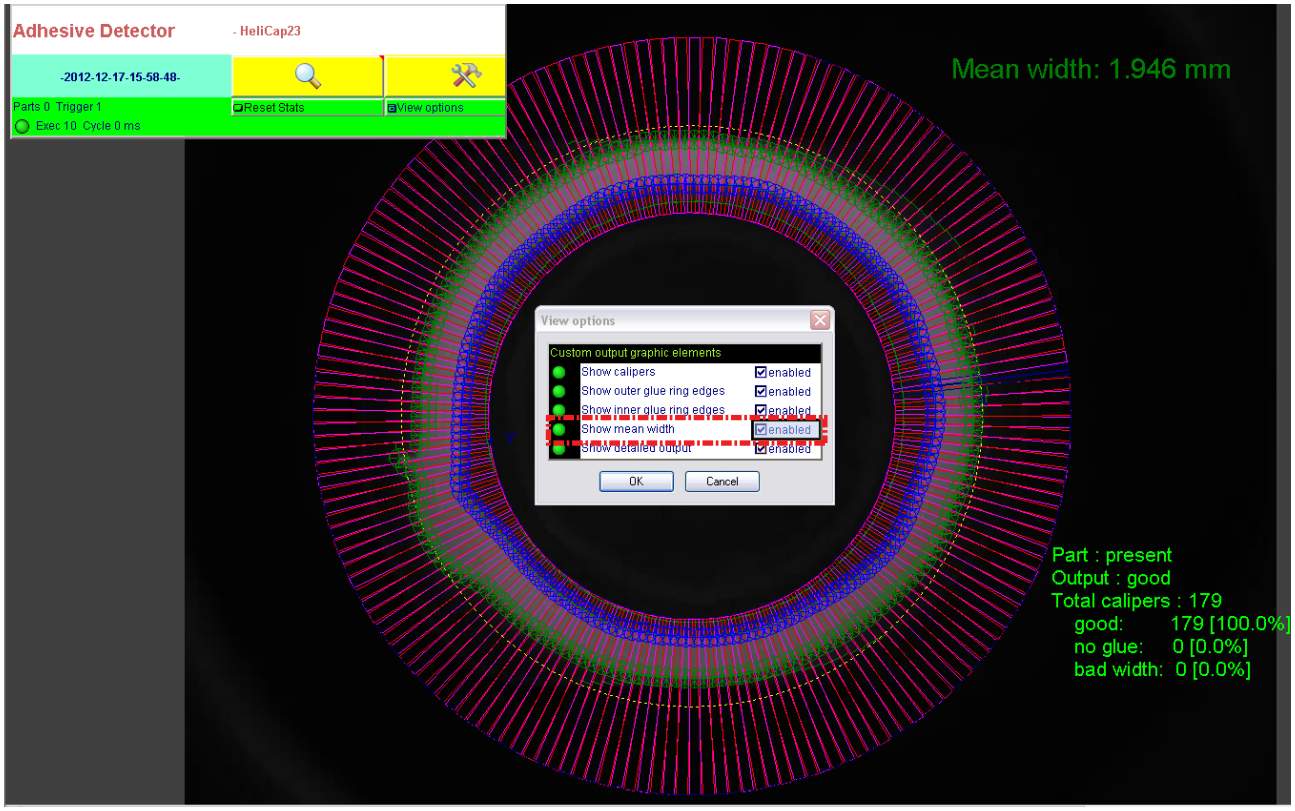

(Cont'd)

(Cont'd)

Disabled

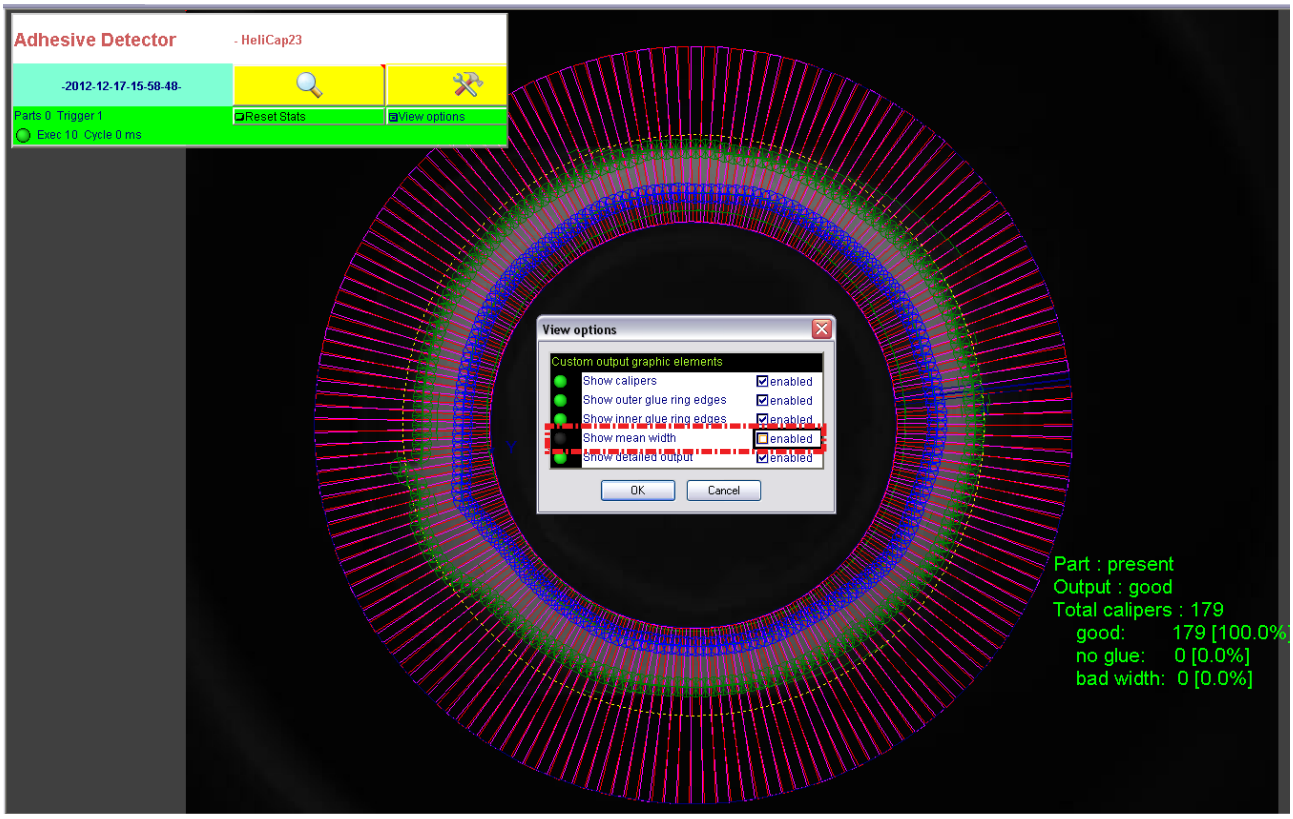

- Show detailed output: if enabled, this checkbox allows the detailed analyses result (part present or not, if the overall analyses output is good or not, how many calipers, on the whole, are good, with no glue or with a bad width) to be shown inside the custom view.

(Cont'd)

(Cont'd)

Enabled

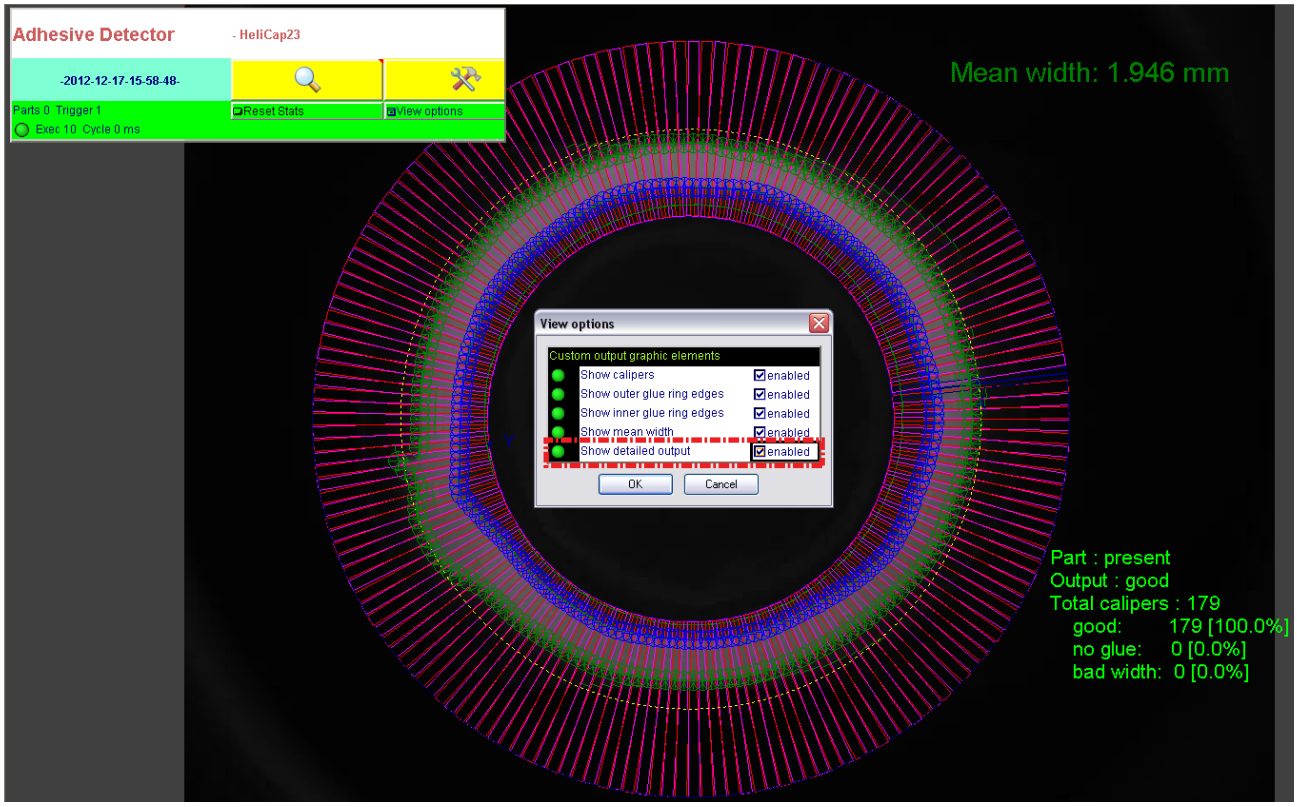

(Cont'd)

(Cont'd)

Disabled

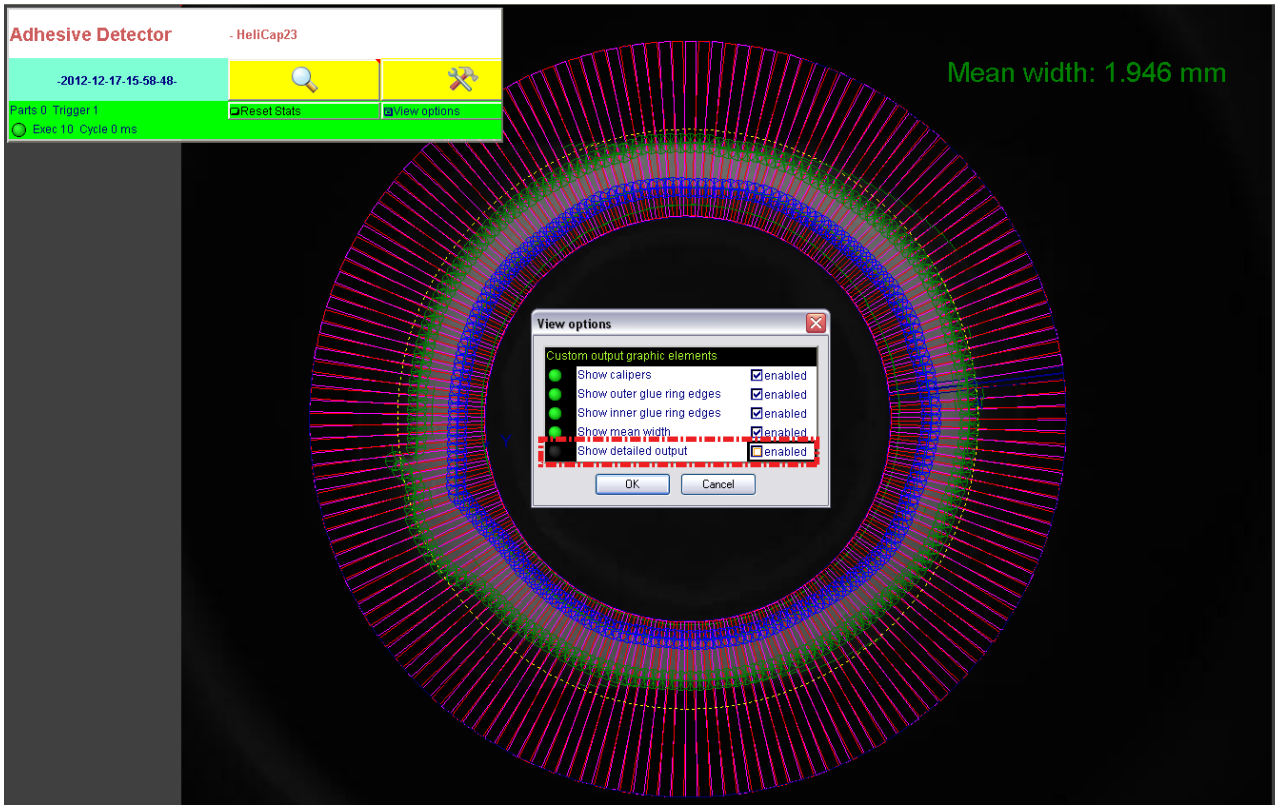

12.8.2-20 Adhesive Detector Calibration

Machine Status	Electrical supply disconnecting device in position I (ON)
Special Equipment	Adhesive detector tool - Streamcap 1000 TP No. 3203756-0000 TP No. 3203757-0000 HeliCap2 23 TP No. 3224301-0000 TP No. 3203757-0000 HeliCap 27 TP No. 3224303-0000 TP No. 3203757-0000
SPC Reference	662916-0300

Set the Hotmelt gun applicator

WARNING
Risk of burns.
Nearby components may be hot.

a) Make sure that the main air supply is turned ON.

b) Make sure that the main power supply is turned ON.

c) Step up the machine to STEP 2 PREPARATION.

d) Use the INCHING button (1) to move the hotmelt gun applicator (2) until it reaches almost the right end stroke point.

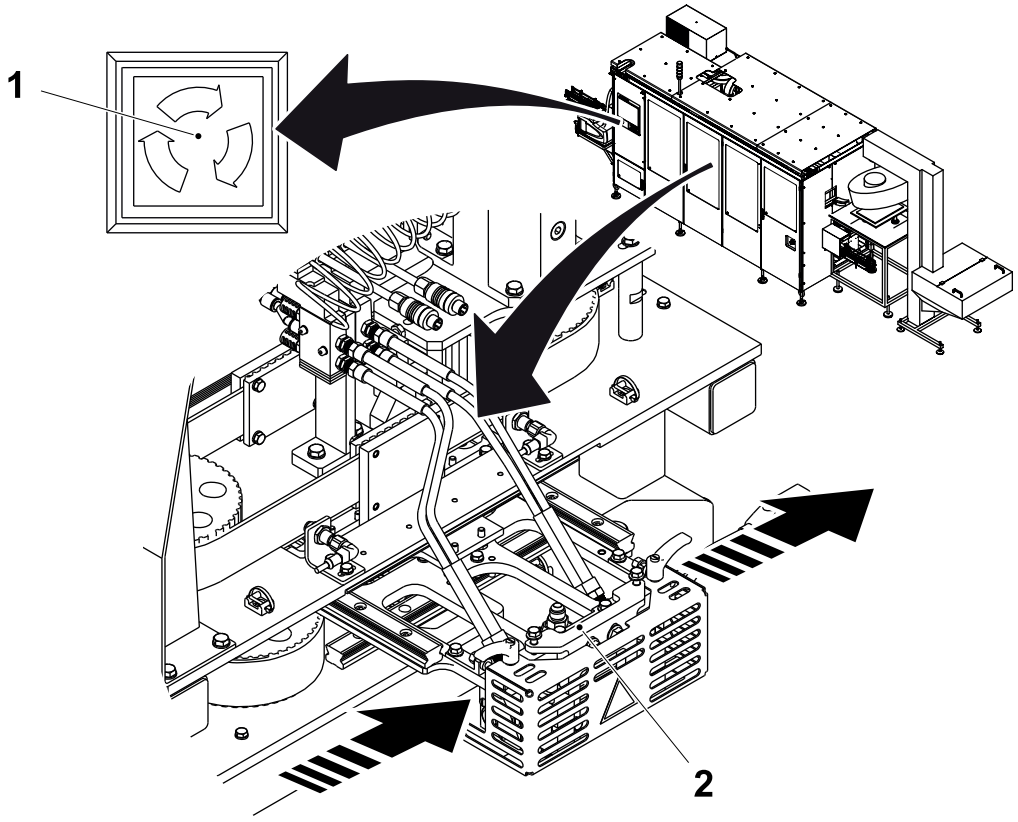

1 INCHING button 2 Hotmelt gun applicator

(Cont'd)

(Cont'd)

Install the Calibration Tool

Note! For each cap there is a different tool.

a) Insert the calibration tool (1) between the guides (2).

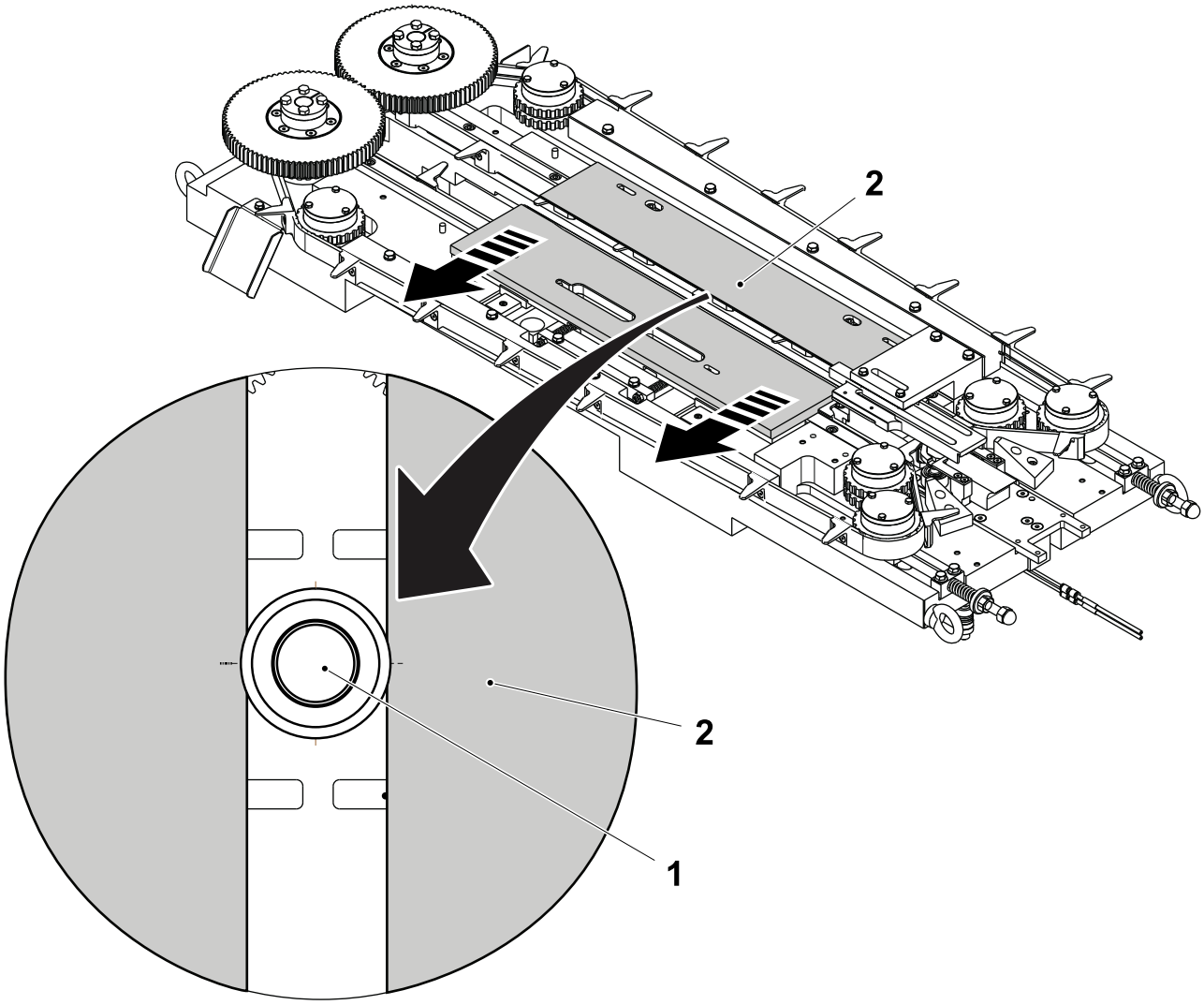

1 Calibration tool 2 Guide

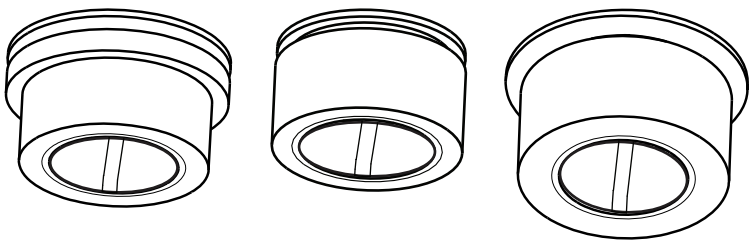

Streamcap 1000 Helicap 23 Helicap 27

(Cont'd)

(Cont'd)

Note! Position the tool DreamCap with the black sloping toward the operator side.

Inching

Note! Until the calibration tool is under the camera.

a) Touch the SYSTEM SETUP button (1) to login as a service technician, see 1.1.1-1 HMI User Management - Log On as a User.

b) Touch the SERVICE button (2).

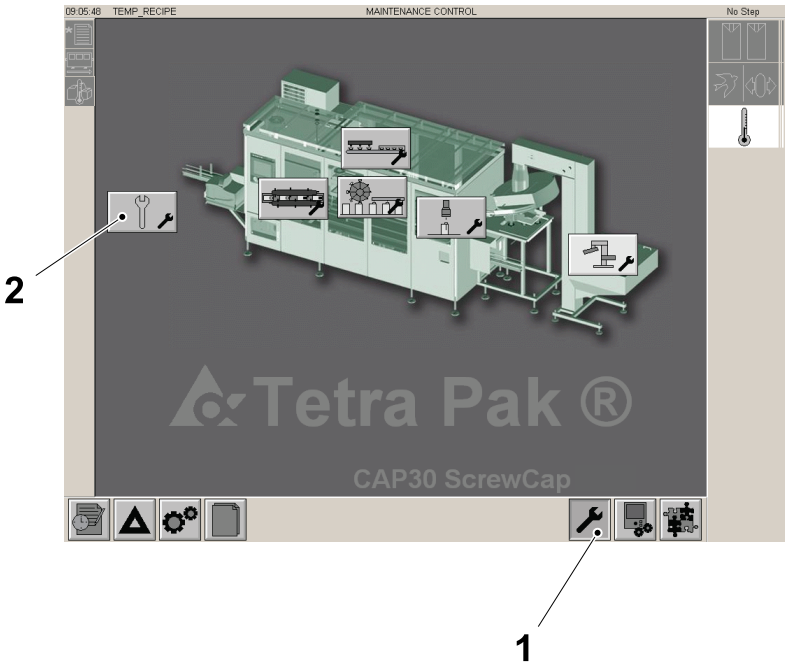

1 SYSTEM SETUP button
2 SERVICE button

(Cont'd)

(Cont'd)

c) Touch the INCHING button (3).

d) Touch the SETTING button (5) to modify the value in the window (4).

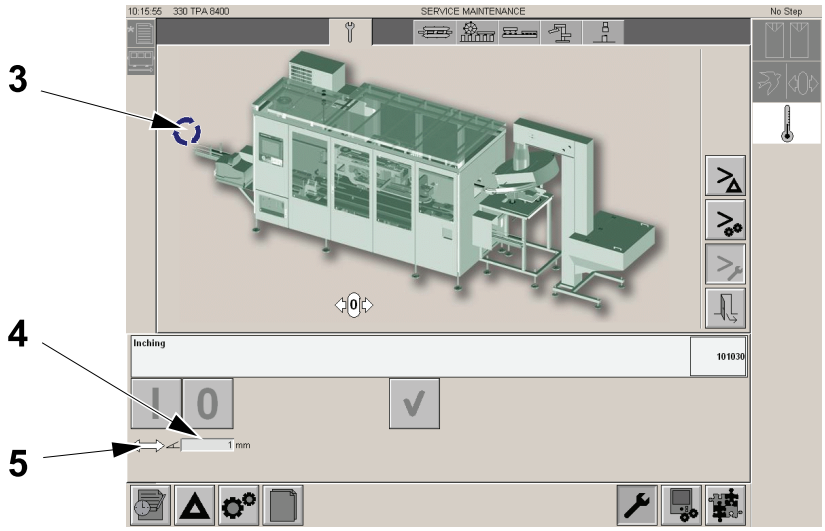

3 INCHING button 4 Window 5 SETTING button

(Cont'd)

(Cont'd)

e) Using the KEYBOARD button (6) and set the number in the DEGREES window (7) to read:

Machine	Cap	Degrees
ScrewCap Flex	HeliCap 2 23 HeliCap 2 27 Streamcap 1000	206 degrees

f) Touch the OK button (8).

g) Check that the value set in step d) appears in the window (4).

h) Touch the ON button (9).

i) Touch the OK button (10).

j) Touch theOFF button (12).

Note! Use the OK button (10) until the tool is under the camera.

k) Touch the EXIT button (11) to leave.

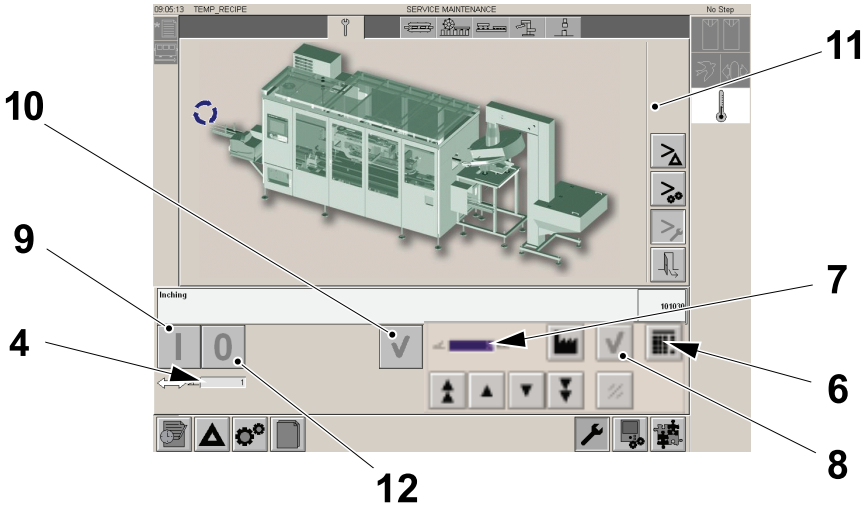

4 Window
6 KEYBOARD button
7 DEGREES
8 OK button
9 ON button
10 OK button
11 EXIT button
12 OFF button

(Cont'd)

(Cont'd)

Set the Camera Focus

WARNING

Risk of personal injury.

Always wear **Special Glasses** and **Special Gloves** to avoid injuries caused by UV radiation.

a) Loosen the locking knob 2.

b) Set ONLINE whit the camera, see 12.8.2-7 Setting the On-Line Status of the Camera.

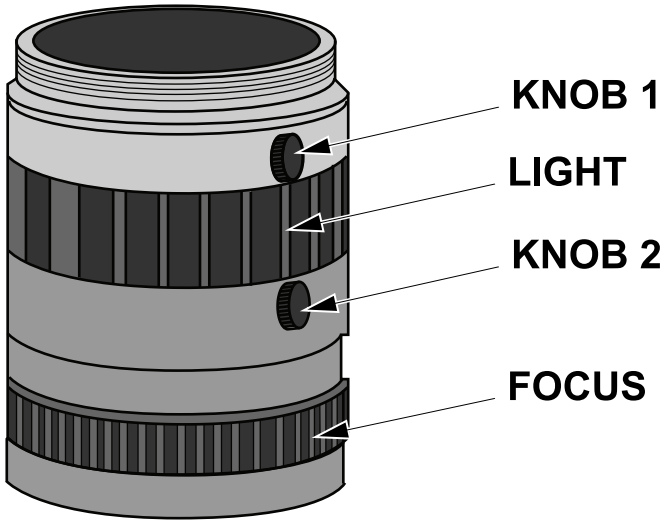

(Cont'd)

(Cont'd)

Note! With the tool, inside the cap holder, under the camera.

c) Click the GRAPHICS button (1).

d) Click the SYSTEM SETTINGS button (2).

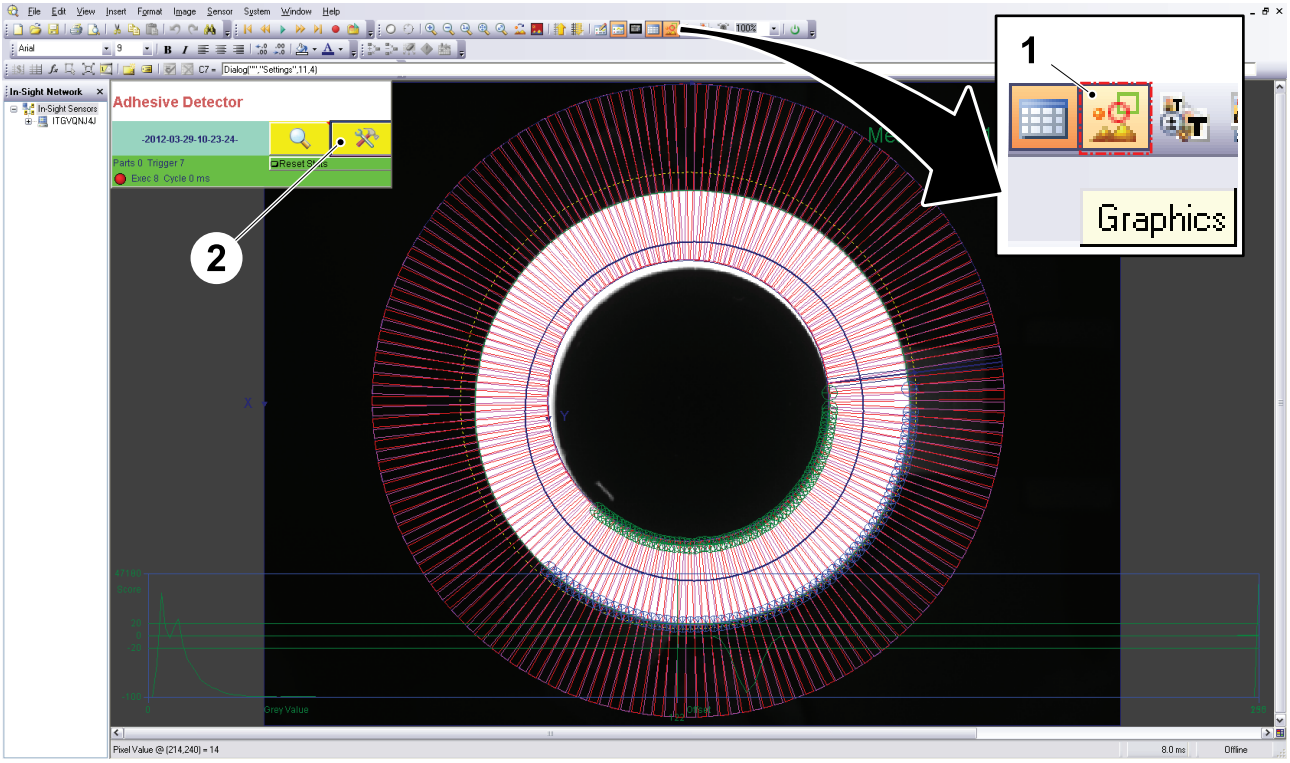

1 GRAPHICS button
2 SYSTEM SETTINGS button

(Cont'd)

(Cont'd)

e) On the SETTINGS window (3), under the focusing sequence (4), check the checkbox start focus tool (5).

f) Keep open the SETTINGS window (3) and move it to the side.

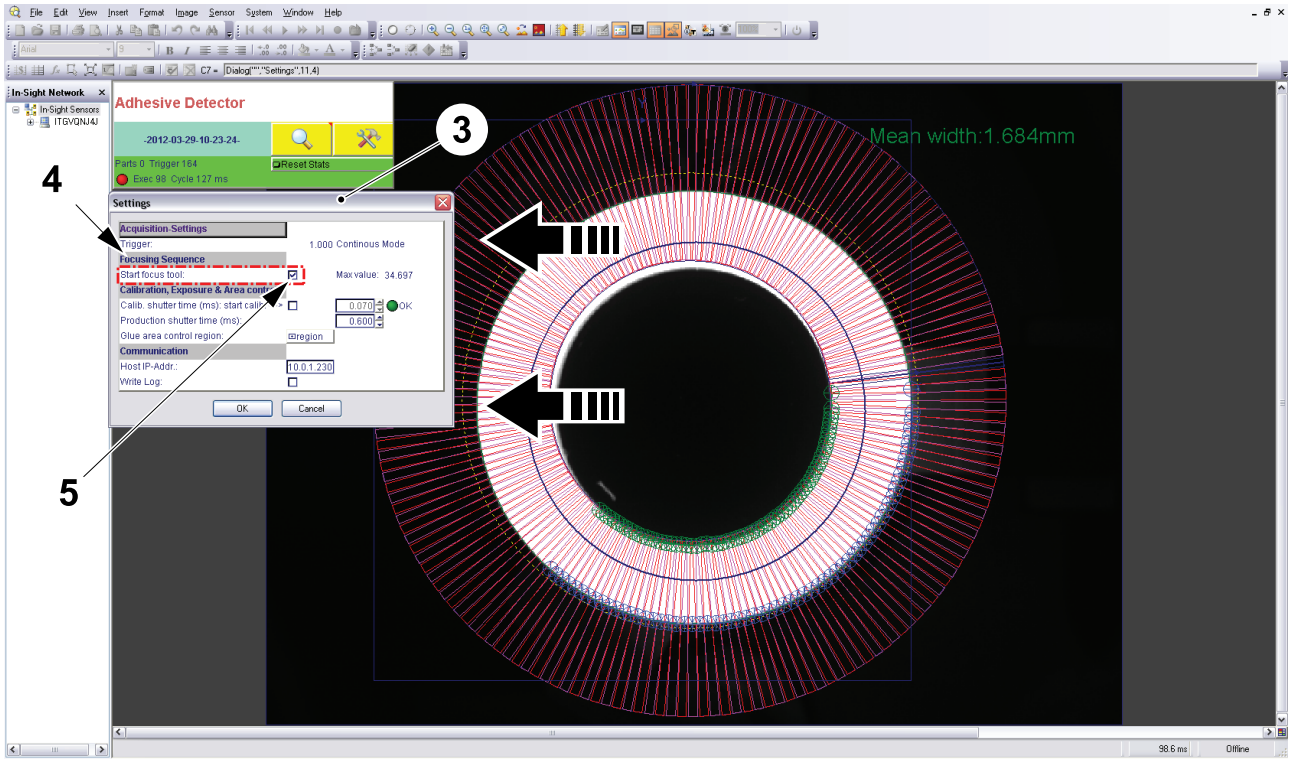

3 SETTINGS window

4 Focusing sequence

5 Checkbox start focus tool

(Cont'd)

(Cont'd)

g) Rotating the focus ring (6), it's possible to see the cell focus ring (6) of focus changing.

Note! When it reaches the position where this value is maximized, uncheck the checkbox `start focus tool` (5), press `OK` button (8), go offline and save.

h) Press the `GRAPHICS` button (9) to visualize again all the graphics.

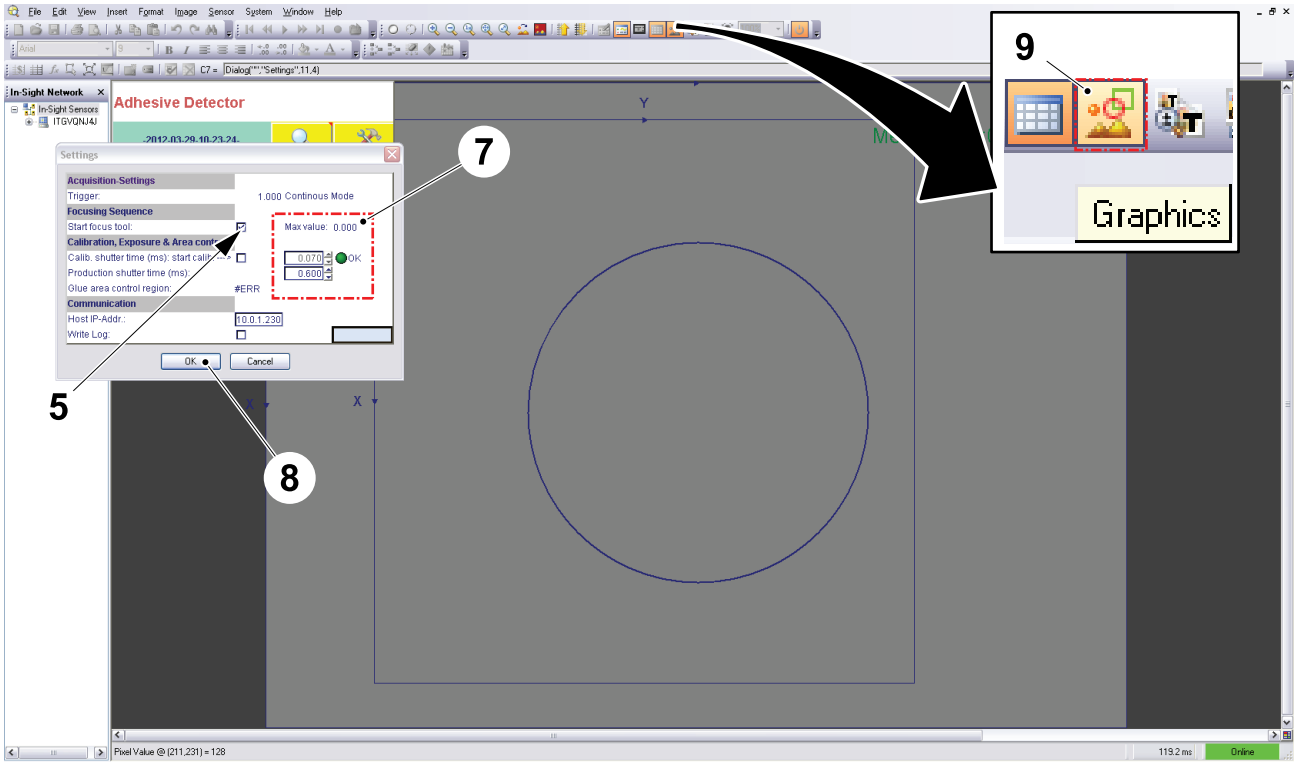

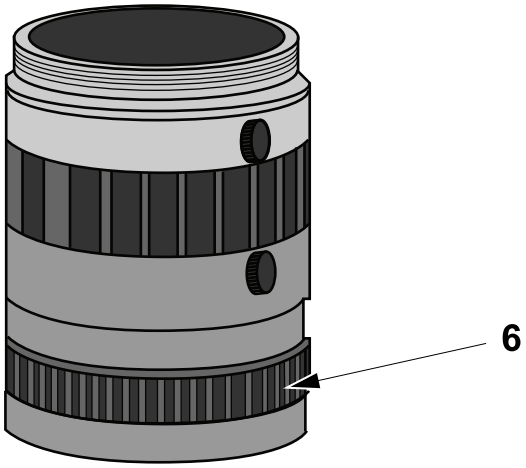

5 Checkbox `start focus tool`

6 Focus ring

7 `Max` value

8 `OK` button

9 `GRAPHICS` button

(Cont'd)

(Cont'd)

Note! If the tool is not centred under the adhesive detector.

i) Loosen the screws (10) and move the adhesive detector (11) until the tool is centred.

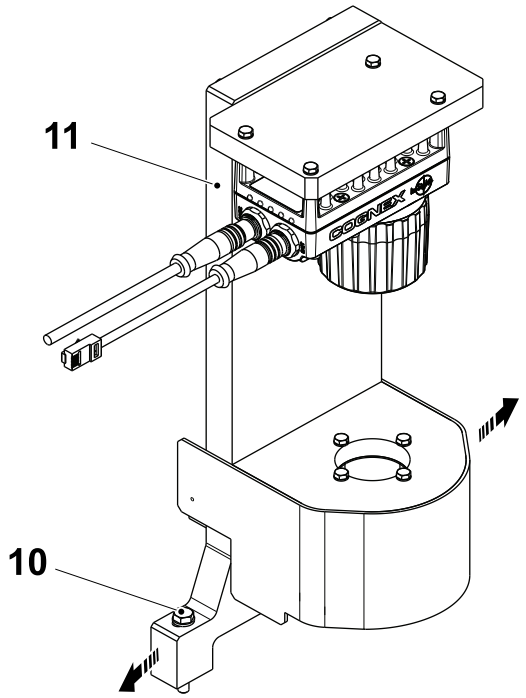

10 Screw
11 Adhesive detector

12.8.2-21 Adhesive Detector Calibration Procedure

Machine Status	Electrical supply disconnecting device in position I (ON)
SPC Reference	3254965-0100

WARNING
Risk of personal injury.
Always wear **Special Glasses** and **Special Gloves** to avoid injuries caused by UV radiation.

Note! the calibration is globally valid and independent from the type of cap selected.

(Cont'd)

(Cont'd)

Exposure to calibration tool

Note! Make the procedure after having performed the focus adjustment, and with the calibration template in position.

a) Set the camera ONLINE, see 12.8.2-7 Setting the On-Line Status of the Camera.

b) Press the `SYSTEM SETTINGS` button.

c) Check the checkbox `START CALIBRATION PROCEDURE` (1).

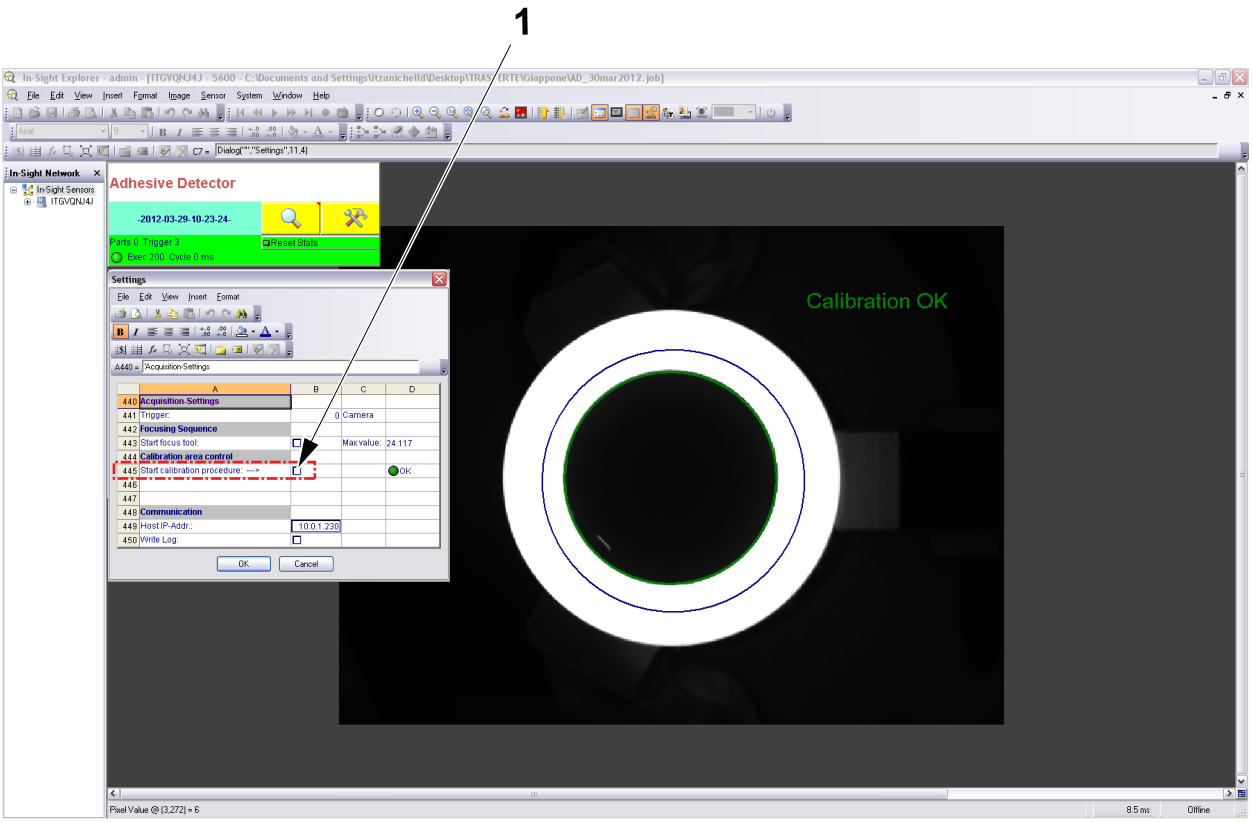

1 `START CALIBRATION PROCEDURE`

(Cont'd)

(Cont'd)

d) An automatic procedure will start, doing a conversion between pixels and millimeters, until the status light is green and the text next to is OK (2), the circle is green (3) and the string calibration OK (4) appears onto the screen.

Note! The procedure is correct when in the checkbox, appear the status light green OK (2), the circle green (3) and the string calibration OK (4).

Note! if the status light is red (5) and the string calibration KO (6) appears on to the screen it's needed to perform again the step c).

e) Uncheck the START CALIBRATION PROCEDURE (1), press OK button (7), Go offline and then save.

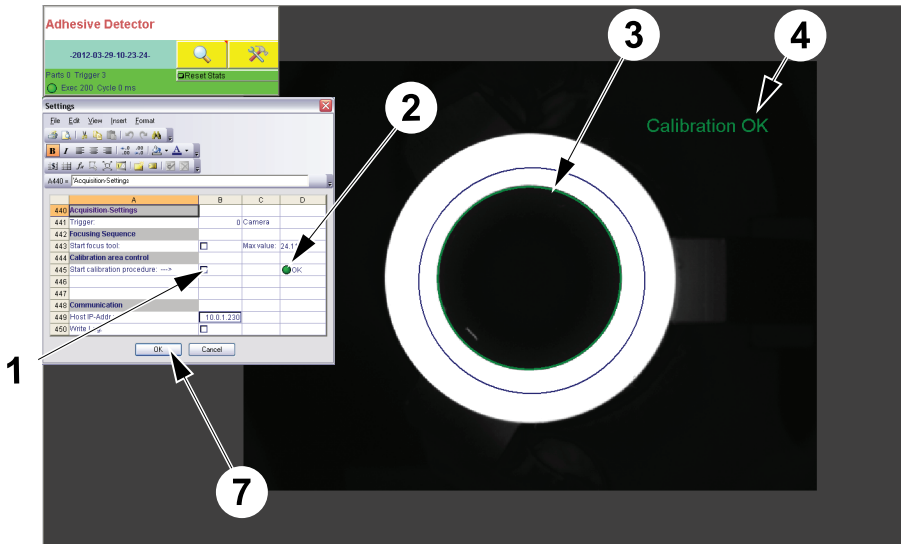

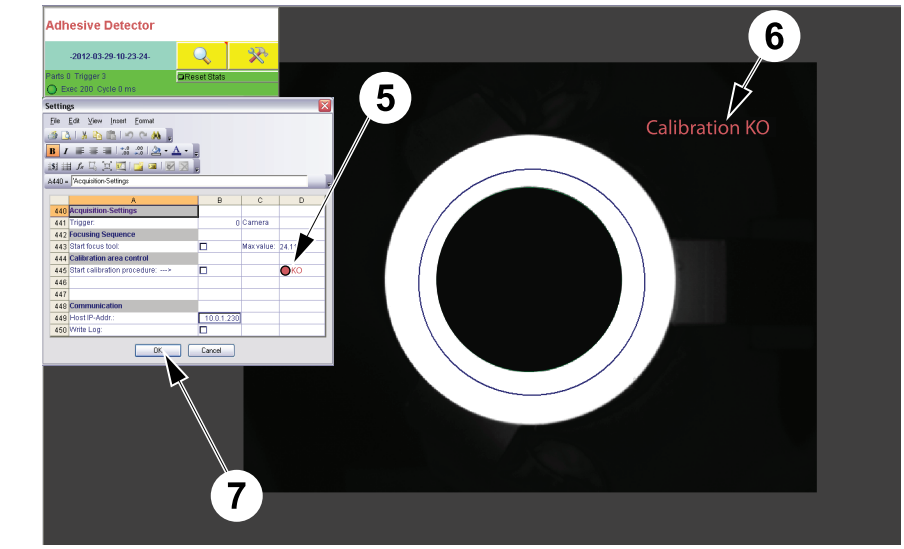

1 START CALIBRATION PROCEDURE
2 Status OK
3 Circle green
4 Calibration OK
5 Status KO
6 Calibration KO
7 OK button

(Cont'd)

(Cont'd)

Check the Cap Position Correctness

a) With the machine ready for production, perform a pattern test.

b) Check the correctness of glue amount and pattern.

c) Set the camera OFFLINE, see 12.8.2-7 Setting the On-Line Status of the Camera.

d) Take one of the caps with the just applied glue and, after having placed it inside the cap sequencer guides, see 12.8.2-20 Adhesive Detector Calibration inch it in the correct position under the camera.

e) Go in `LIVE MODE` (1) with the camera and check if the cap is in its correct position, see the procedure 12.8.2-22 Adhesive Detector Trigger Setting.

f) Go offline and save.

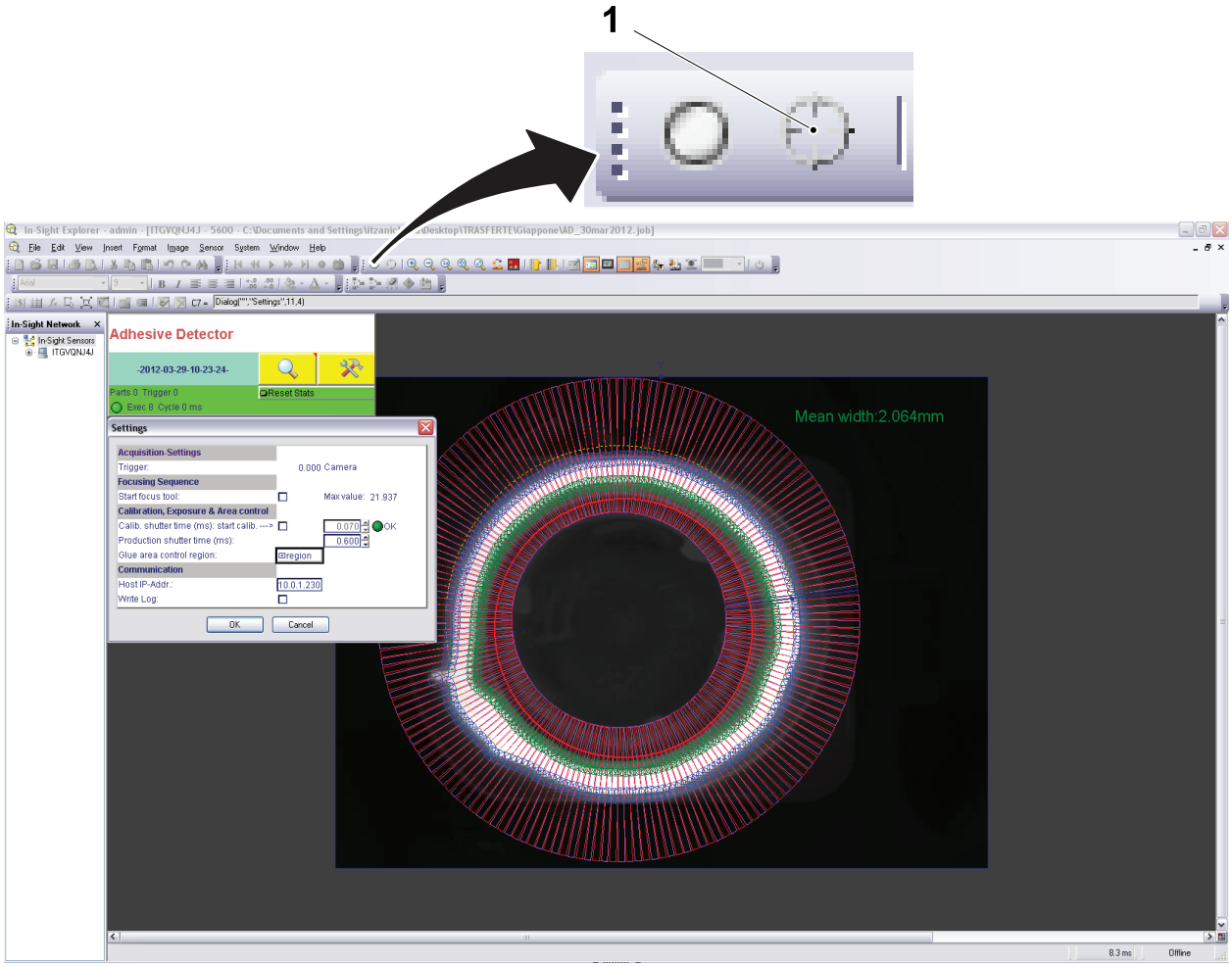

1 `LIVE MODE`

12.8.2-22 Adhesive Detector Trigger Setting

Machine Status	Electrical supply disconnecting device in position I (ON)
SPC Reference	662916-0300

This procedure is for adjusting, in a proper way, the adhesive detector trigger, used to acquire and elaborate images; due to different mechanical settings that can vary from one machine to another one, in fact, there can be the need to change a default set value.

Examples

GOOD TRIGGER:

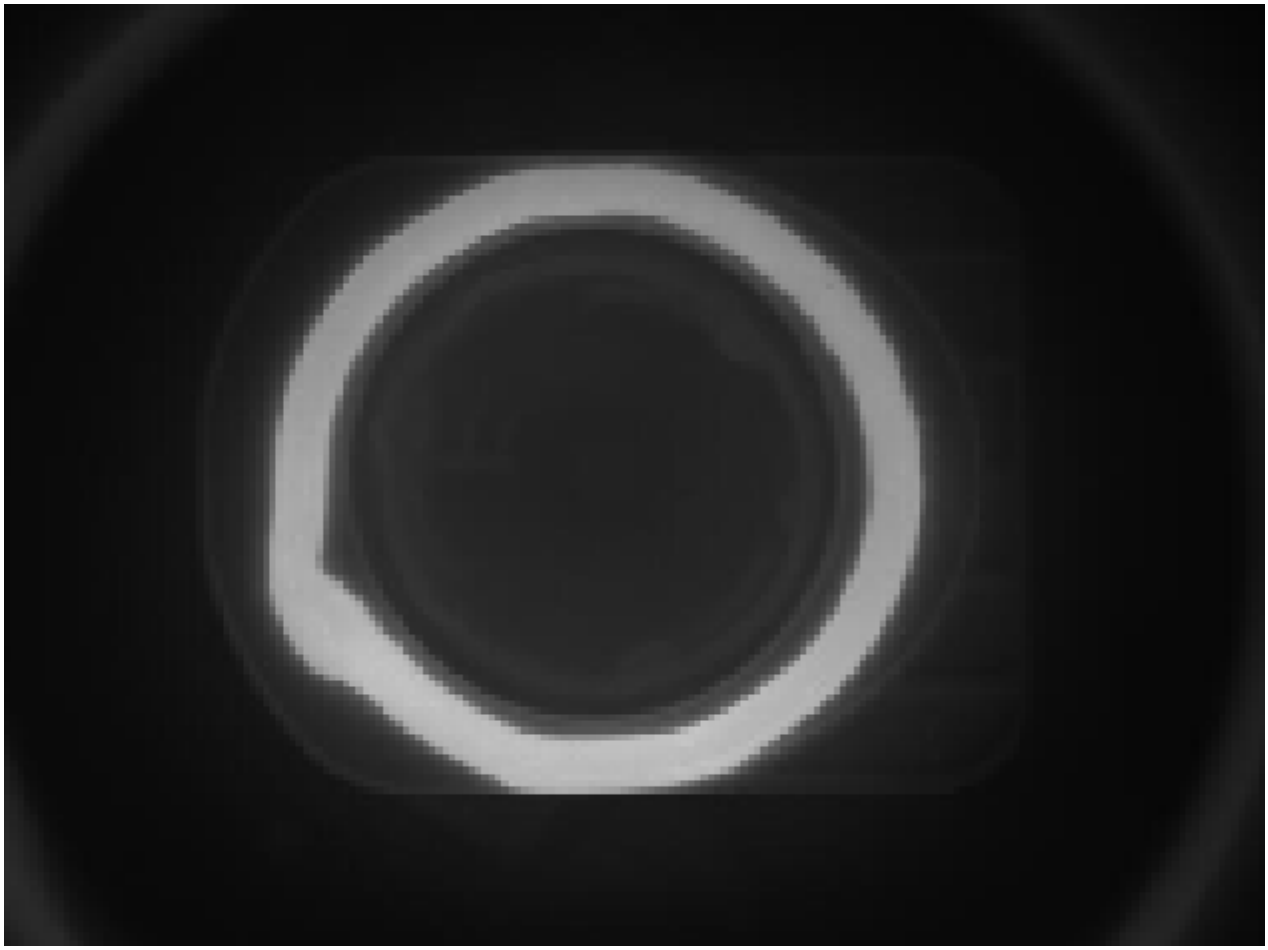

(Cont'd)

(Cont'd)

TRIGGER TOO EARLY:

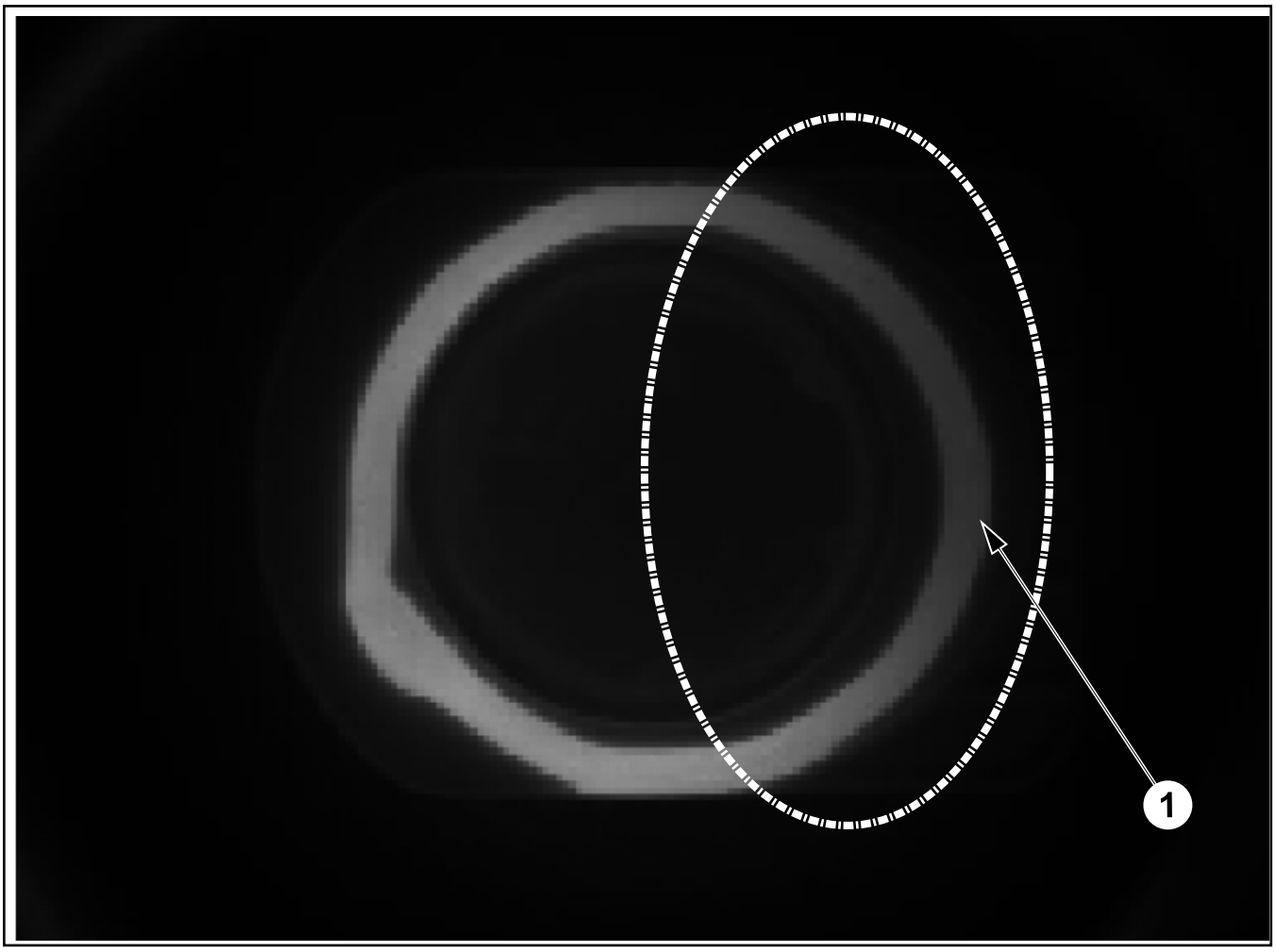

Note! Too dark zone (1).

(Cont'd)

(Cont'd)

TRIGGER TOO LATE:

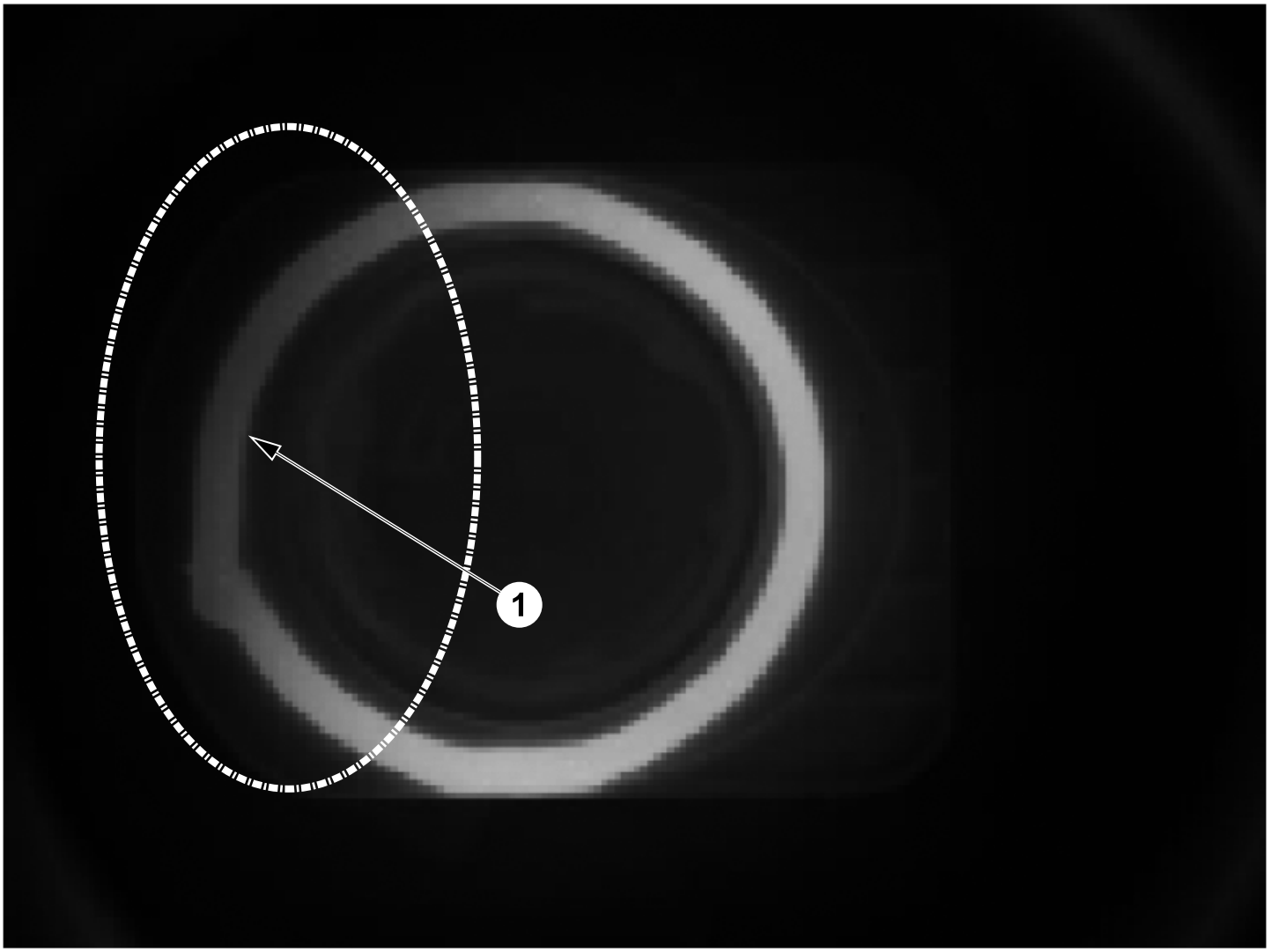

Note! Too dark zone (1).

(Cont'd)

(Cont'd)

If the cap taken image is in the centre of the field of view, switch off the LIVE MODE and save.

If the cap taken image is NOT in the centre of the field of view, there's the possibility to adjust the default trigger position of +/- 10 degrees to, as previously said, get the image in the middle of the screen.

a) Switch off the `LIVE MODE` (1).

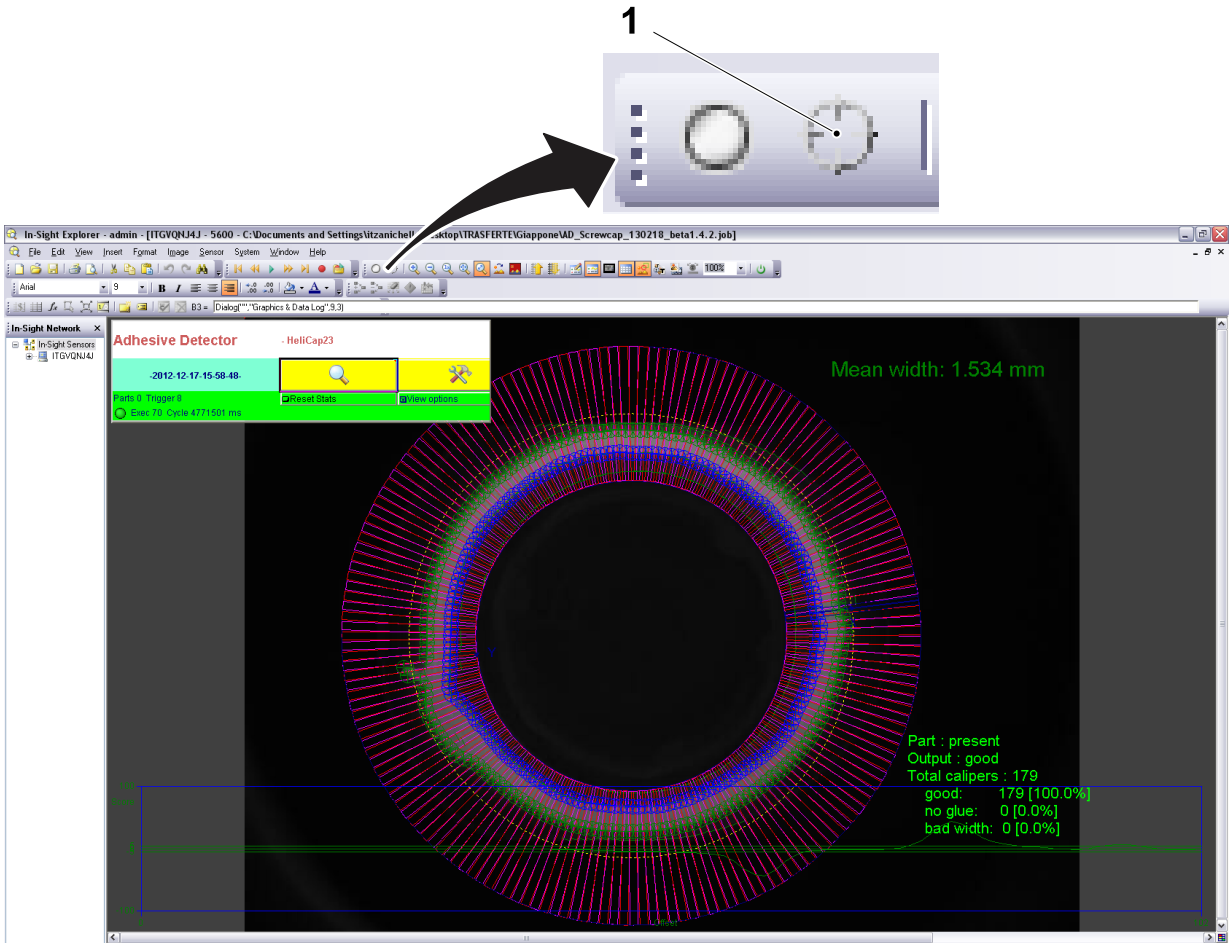

1 `LIVE MODE`

(Cont'd)

(Cont'd)

b) Touch the PRODUCTION CONTROL BUTTON (2) of the control panel and then touch HOTMELT GUN APPLICATOR BUTTON (3).



2 PRODUCTION CONTROL BUTTON
3 HOTMELT GUN APPLICATOR BUTTON

(Cont'd)

(Cont'd)

c) Touch the ADHESIVE DETECTOR TRIGGER button (4) .

d) Touch the KEYBOARD button (5).

Note! Cap30 Flex shown in picture.

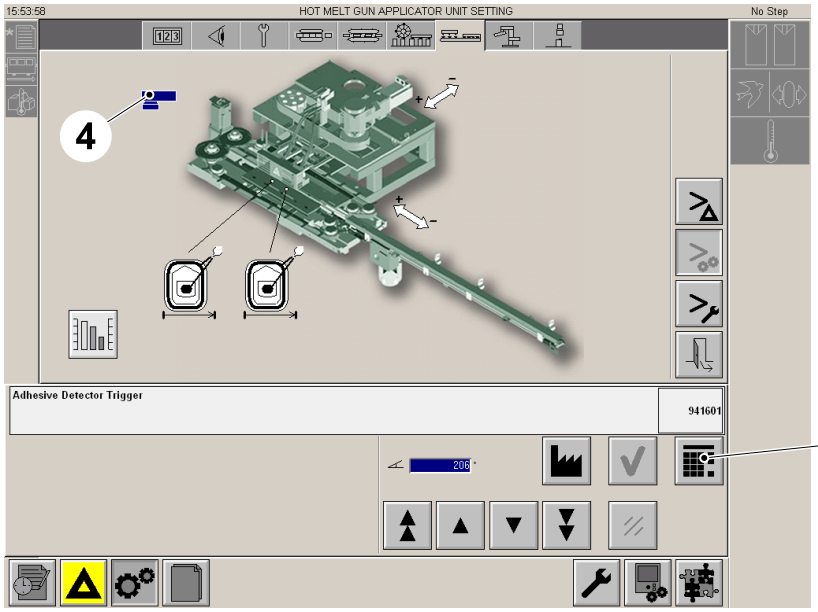

4 ADHESIVE DETECTOR TRIGGER button

5 KEYBOARD button

e) Depending on machine type, on the screen it will be written a standard value, as per the following table.

Machine	Cap	Degrees
ScrewCap Flex	HeliCap 2 23 HeliCap 2 27 Streamcap 1000	206 degrees

Starting from this, it's possible to anticipate or to delay triggers maximum +/- 10 degrees.

If the trigger is too early, this value has to be increased.

If the trigger is too late, this value has to be decreased.

f) Repeat the inching procedure see the 12.8.2-20 Adhesive Detector Calibration, using the value just set instead of the one in the table.

g) Switch on the LIVE MODE (1).

h) If the cap is in the correct position, switch LIVE MODE (1) off, save the recipe and save the program.

i) If the cap in NOT in the correct position, switch LIVE MODE (1) off and repeat the procedure until everything is set.

12.8.2-23 Adhesive Detector Alarms and Checks

Machine Status	Electrical supply disconnecting device in position I (ON)
SPC Reference	662916-0300

The Adhesive Detector has two alarms:

- Blue alarm or warning , regarding glue defects.
- Yellow alarm, regarding communication problem.

The Adhesive Detector has, also, a trend that shows, in a quality manner, how the two (for a Flex machine) or three (for a Speed machine) guns are giving the glue.

Yellow alarm: Adhesive Detector Communication Fault

Note! This means that Adhesive detector camera is no more communicating with the PLC. In this case, you should check:

a) Camera ethernet cable is connected to the main switch inside the cabinet.

b) Through “InSight Explorer” program, the camera is ONLINE (check it on the right corner: there must be a green rectangle with Online string inside or looking at the first LED on the left of camera’s body).

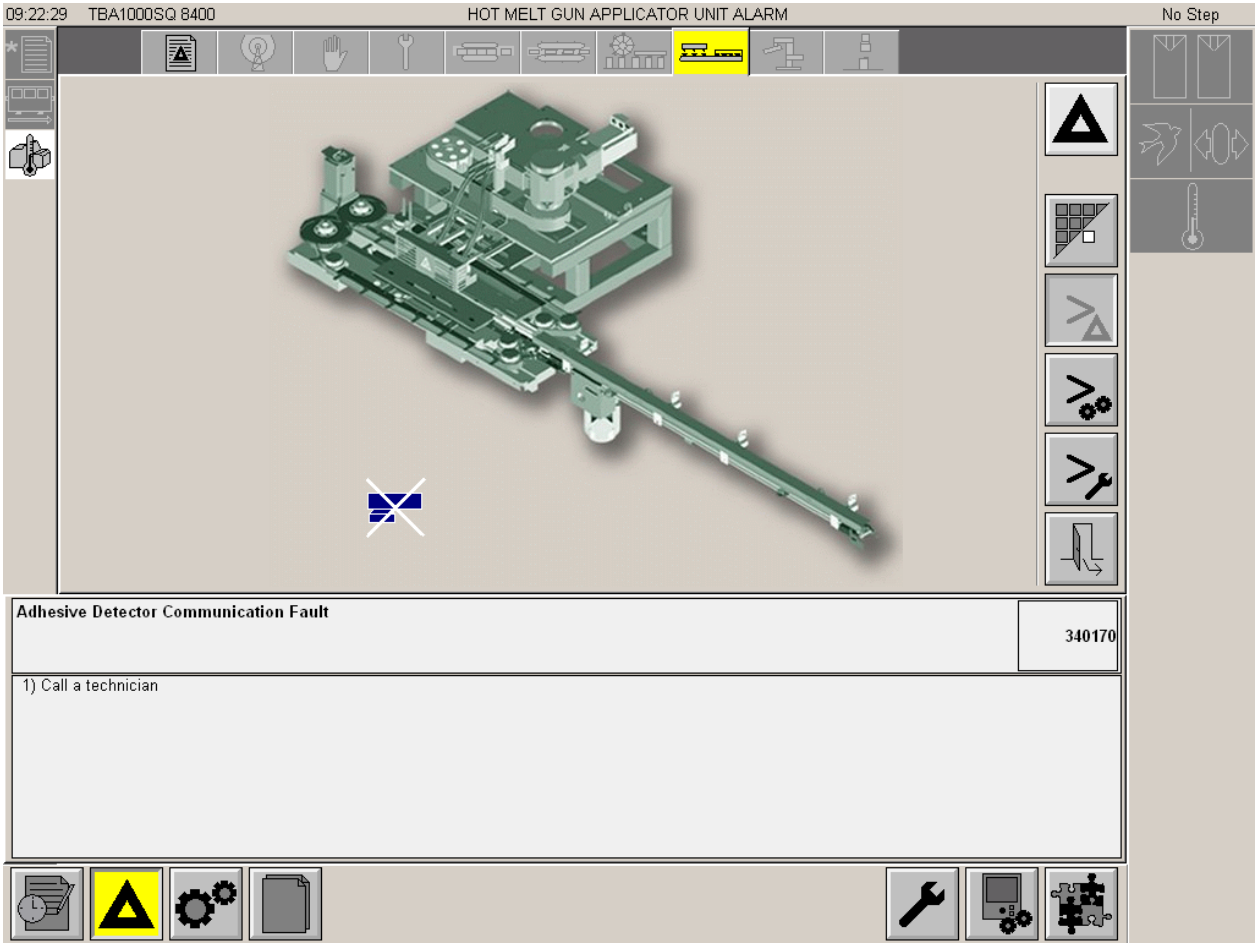

(Cont’d)

(Cont'd)

Blue alarm: Glue amount

Note! This means that one or more guns provided too much or too less glue for, at least, three caps over ten. In this occurrence, you have to:

a) Stop the machine.

b) Perform a pattern test.

- If the glue applied on caps seems to be regular, start again the CAP 30 (maybe it could have happened that a nozzle was stuck with glue but it resolved naturally its problem ejecting a glue dot during production).
- If the glue applied is too less, perform a guns purge and clean the nozzle, see 4.4-6 Perform a Gun Purge Operation.
- If the glue applied is too much, reduce the tank pressure.

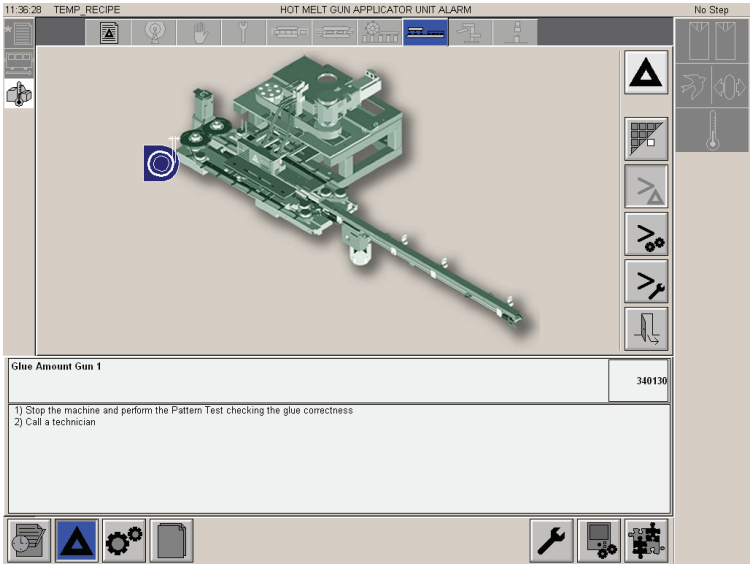

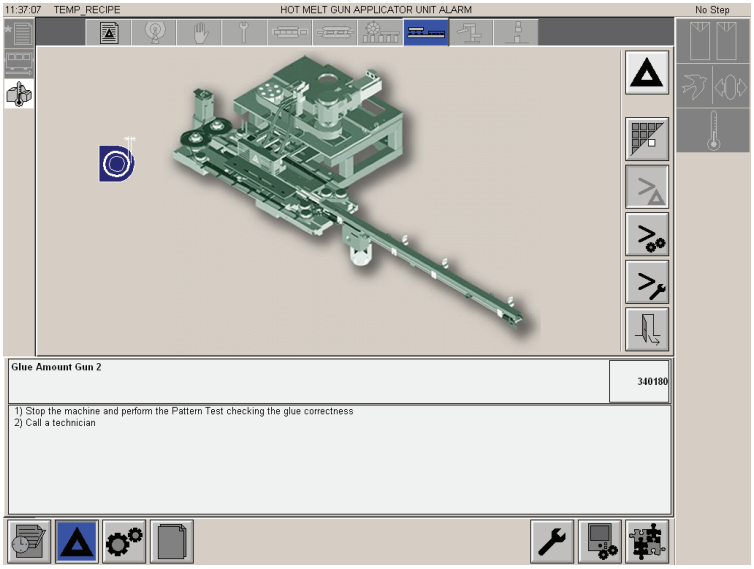

(Cont'd)

(Cont'd)

Blue alarm: Bead abnormality

Note! This means that one or more guns weren't able to close the pattern or sprayed glue inside the cutter or outside cap edges for, at least, three caps over ten. In this occurrence you have to:

a) Stop the machine.

b) Perform a pattern test.

- If the glue applied on caps seems to be regular, start again the CAP 30 (maybe it could have happened that a nozzle was stuck with glue but it resolved naturally its problem ejecting a glue dot during production).
- If the glue bead is open or inside the cutter or outside the edges, and you haven't changed the guns start/stop point, perform a guns purge and clean the nozzle, see 4.4-6 Perform a Gun Purge Operation.

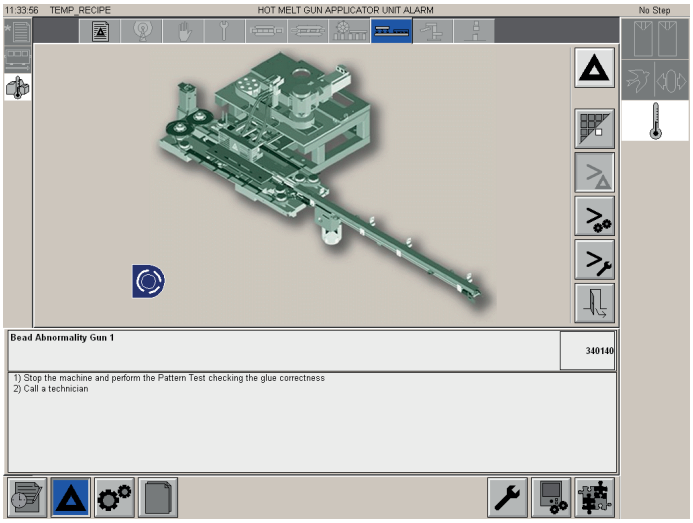

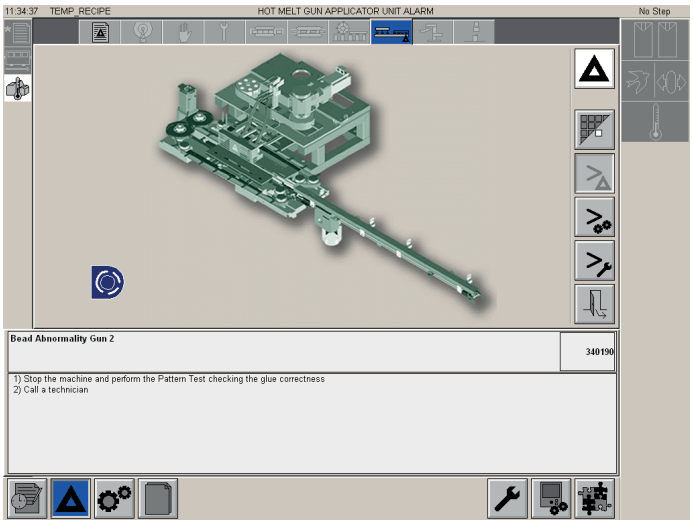

(Cont'd)

(Cont'd)

Adhesive Detector Gun Trends

The Adhesive Detector Gun Trend is giving information on how the guns are providing the glue onto the caps. The information is QUALITATIVE, and not QUANTITATIVE: it shows, in fact, the upper and lower limit of acceptability for what concern the glue amount for every different cap, the proceeding of the guns and if the guns are inside or outside these limits. No numeric values are provided.

a) To see the graph, touch the PRODUCTION CONTROL button (1) .

b) Touch the HMGA button (2) .

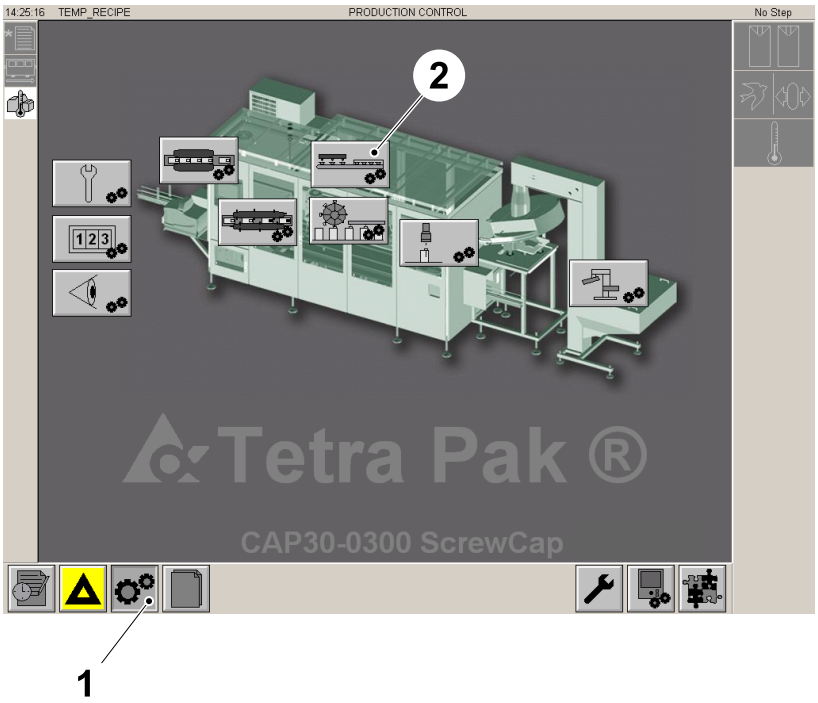

1 PRODUCTION CONTROL button

2 HMGA button

(Cont'd)

(Cont'd)

c) Touch the TREND button (3).

Note! Cap30 Flex shown in picture.

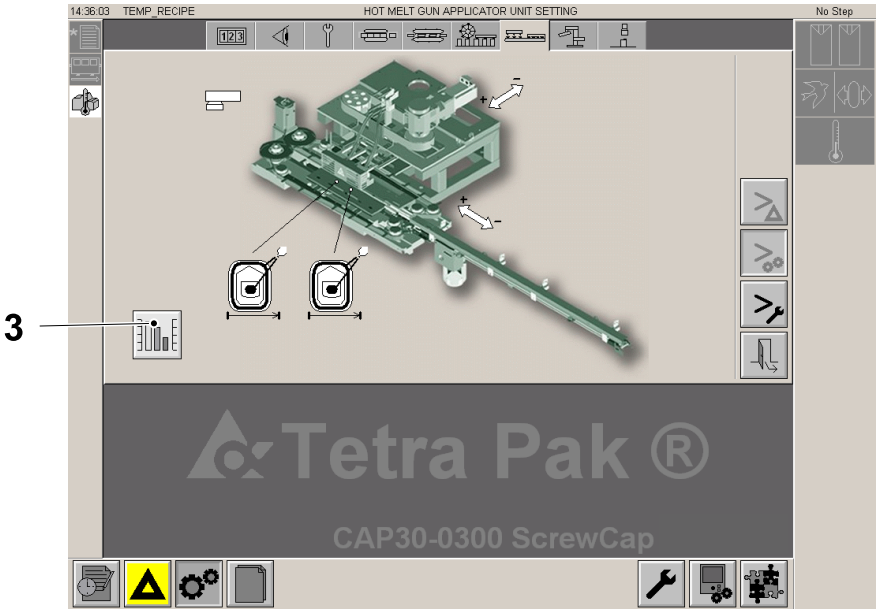

3 TREND button

(Cont'd)

(Cont'd)

d) On the page that appears, it's possible to see the two guns for FLEX (4) or three guns for SPEED (5) guns and the upper limit (6) and lower limit (7).

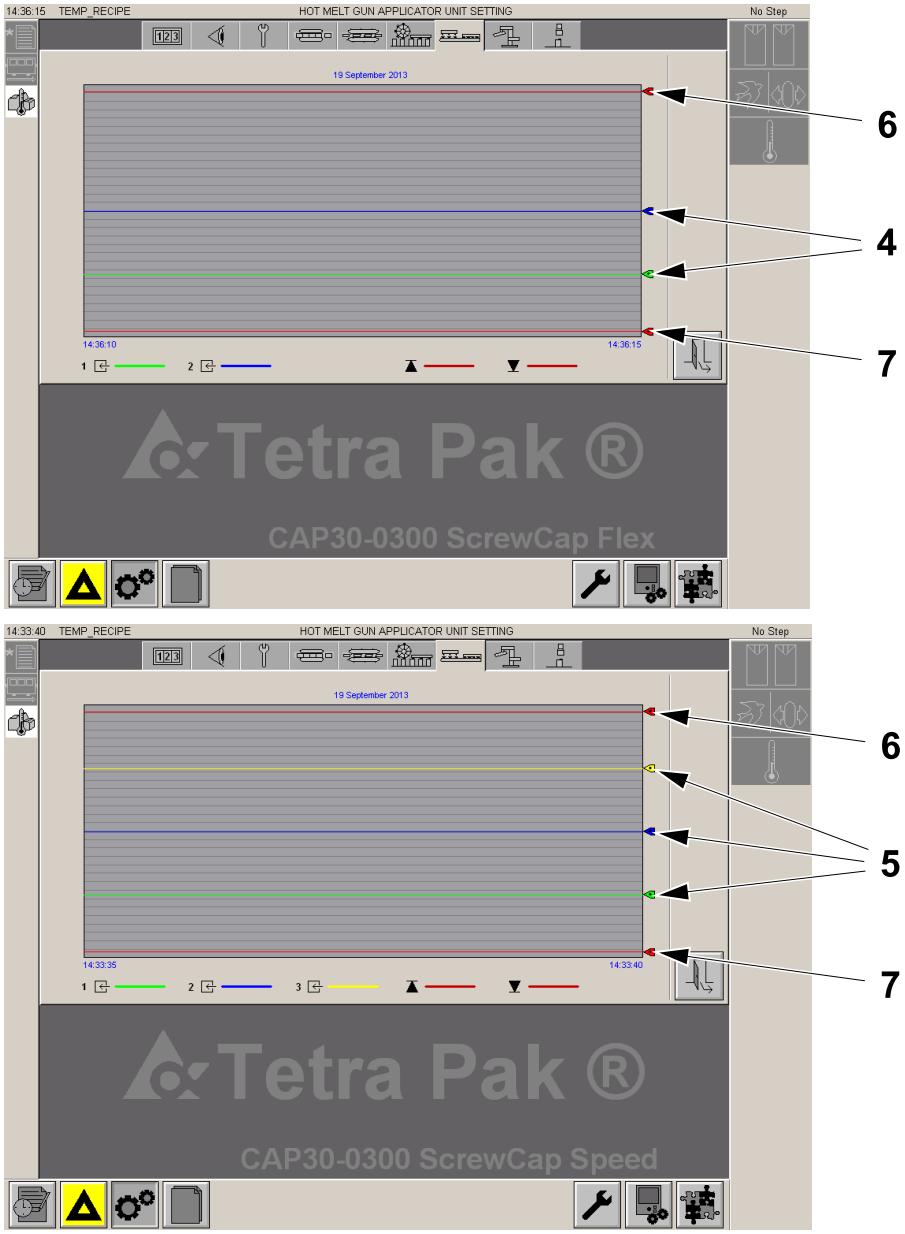

4 Two guns for FLEX
5 Three guns for SPEED
6 Upper limit
7 Lower limit

12.8.2-24 Touch Screen - Disable Adhesive Detector

Machine Status	Electrical supply disconnecting device in position I (ON)
SPC Reference	2779070-0300

Note! If required, it is possible to disable the Adhesive Detector.

a) Touch the ACTIVATION button (1).

b) Touch the OFF button (2) and the OK button (3).

Note! The deactivation is confirmed by the disappearing of the green dot (4).

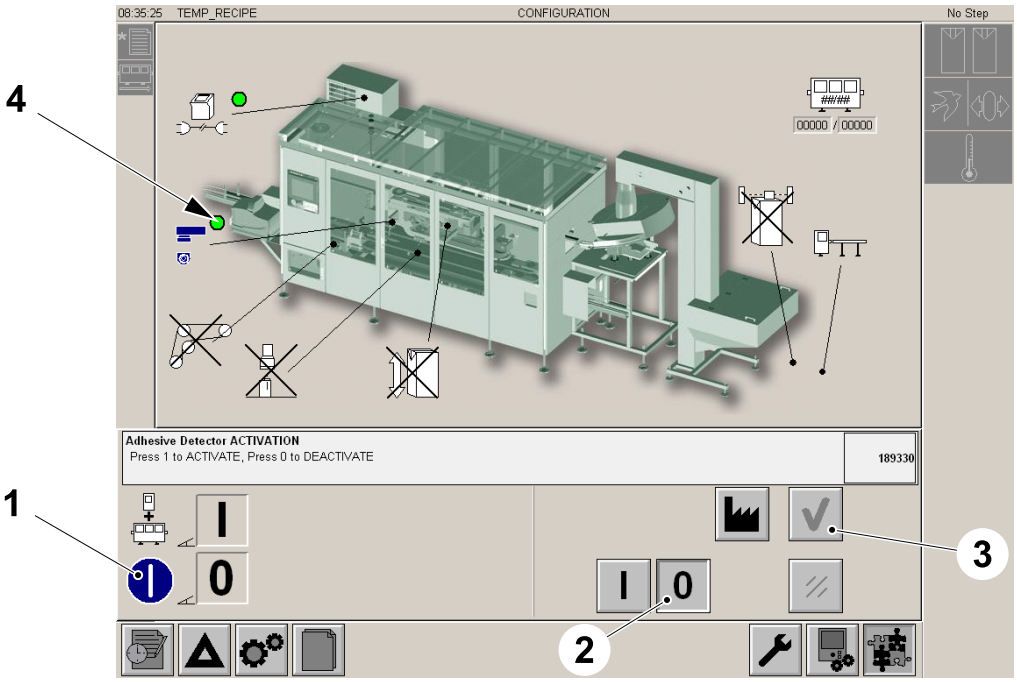

1 ACTIVATION button
2 OFF button
3 OK button
4 Dot

12.8.3 Troubleshooting

12.8.3.1 Camera LED's

12.8.3.1-1 General Description

Machine Status	Electrical supply disconnecting device in position I (ON)
SPC Reference	662916-0300

The LED's on the end of the camera are for the following purposes:

CAMERA LEDS

LED	Purpose	Normal Condition
1	Network status LED	GREEN when a network connection is detected
2	Network traffic LED	FLASHES GREEN when a network connection is detected
3	Power LED	GREEN when power is applied
4	User 0 LED (Red)	FLASHES RED when the trigger is given
5	User 1 LED (Green)	ON when the Vision System ONLINE and OFF when the Vision System is OFFLINE

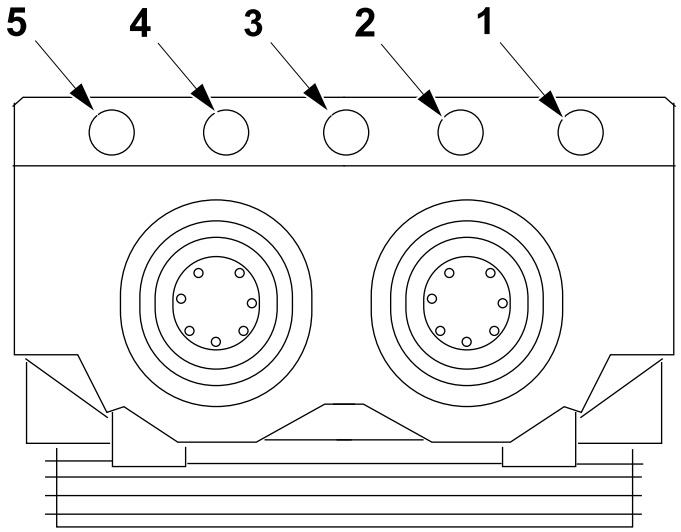

1 Network status LED
2 Network traffic LED
3 Power LED
4 User 0 LED
5 User 1 LED

12.8.3.1-2 Conditions Immediately before Production

Machine Status	Electrical supply disconnecting device in position I (ON)
SPC Reference	662916-0300

Before entering production, check that the LED's indicate as follows:

camera leds

LED	Purpose	Normal Condition
1	Network status LED	GREEN
2	Network traffic LED	FLASHES GREEN
3	Power LED	GREEN
4	User 0 LED (Red)	OFF
5	User 1 LED (Green)	GREEN

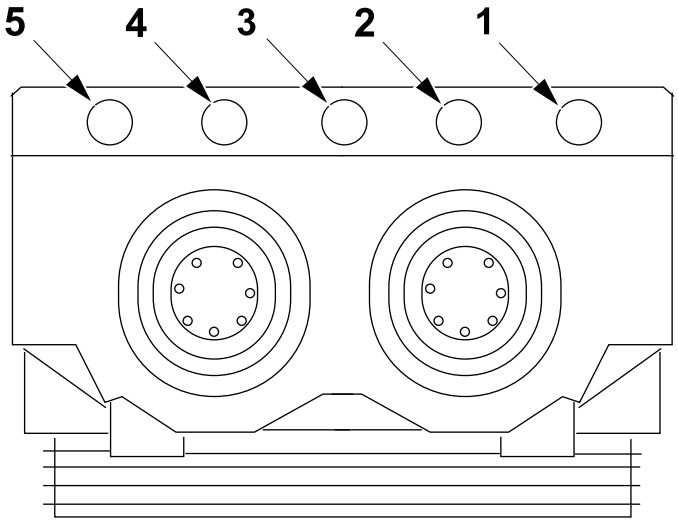

1 Network status LED
2 Network traffic LED
3 Power LED
4 User 0 LED
5 User 1 LED

12.8.3.1-3 Conditions During Production

Machine Status	Electrical supply disconnecting device in position I (ON)
SPC Reference	662916-0300

When the machine is in production, check that the LED's indicate as follows:

CAMERA LEDS

LED	Purpose	Normal Condition
1	Network status LED	Green
2	Network traffic LED	Flashes green
3	Power LED	Green
4	User 0 LED (Red)	FLASHES RED when the trigger is given
5	User 1 LED (Green)	GREEN

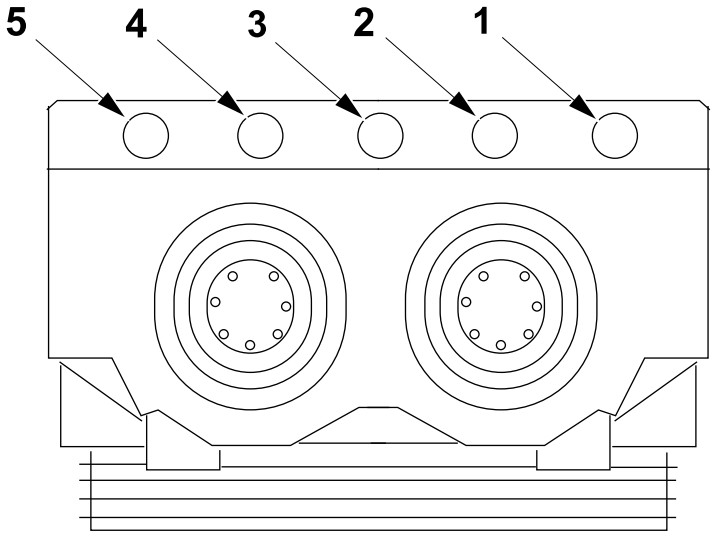

1 Network status LED
2 Network traffic LED
3 Power LED
4 User 0 LED
5 User 1 LED

12.8.3.2 Using In-Sight Explorer for Troubleshooting

12.8.3.2-1 General

Machine Status	Electrical supply disconnecting device in position I (ON)
SPC Reference	662916-0300

During production, it is possible to use IN-SIGHT EXPLORER running on a laptop PC as a troubleshooting tool.

12.8.3.2-2 Configuring the Laptop and Initiating Communication between the Laptop and the Camera

a) Configure the laptop, see 12.5.4 PC Configuration.

b) Commence communications, see 12.8.2 General Functions up to and including 12.5.5.1-3 Establishing Communication with the Camera.

c) Make sure that the camera is ONLINE, see 12.5.5.2-1 Setting the On-Line Status of the Camera.

12.8.3.2-3 Using CUSTOM VIEW for Troubleshooting

Machine Status	Electrical supply disconnecting device in position I (ON)
SPC Reference	662916-0300

a) Select the CUSTOM VIEW pressing the F6 function key on the laptop keyboard.

b) Check the camera trigger functionality by seeing that the MESSAGE INDEX (1) increments at each trigger pulse.

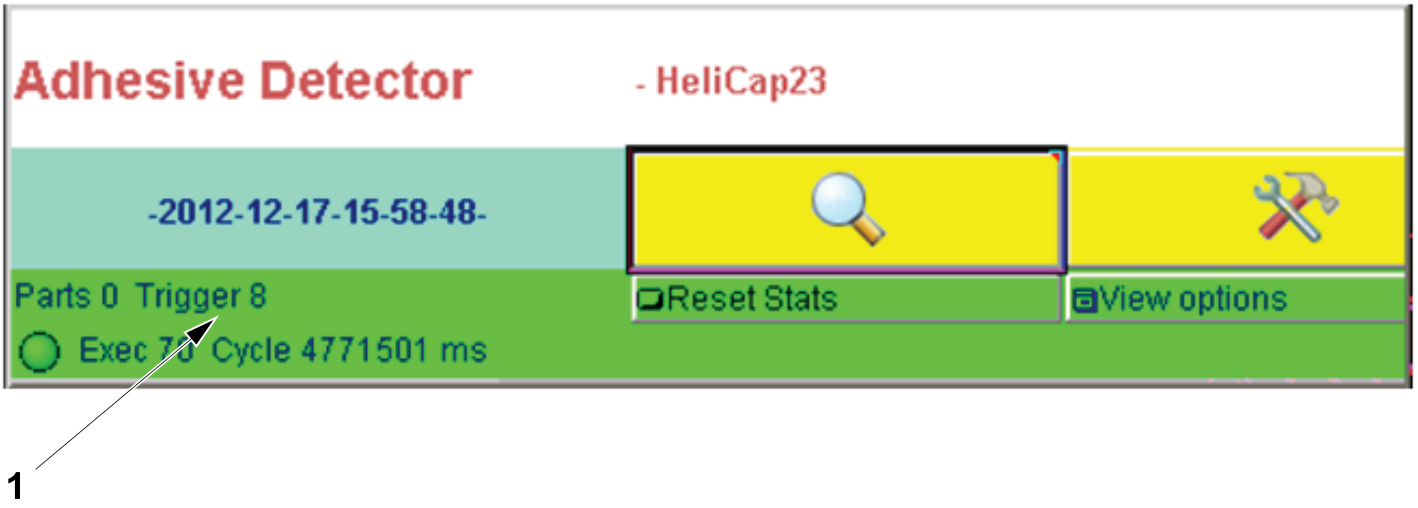

1 MESSAGE INDEX

(Cont'd)

(Cont'd)

c) Check the picture focus of the photo. Reset the focus in case of "abnormal focus", see 12.8.2-20 Adhesive Detector Calibration.

d) Check the picture exposure of the photo. Make sure that the image is not totally dark, see the picture (2).

Note! The picture (2) is totally dark when:

1) The limit switch is not close to the cover or it is broken, see Limit Switch Checks on page 12-331.

2) The power supply of the camera is broken, see Power Supply Checks on page 12-332.

3) The UV illumination is broken, see Replace the UV illumination on page 12-334.

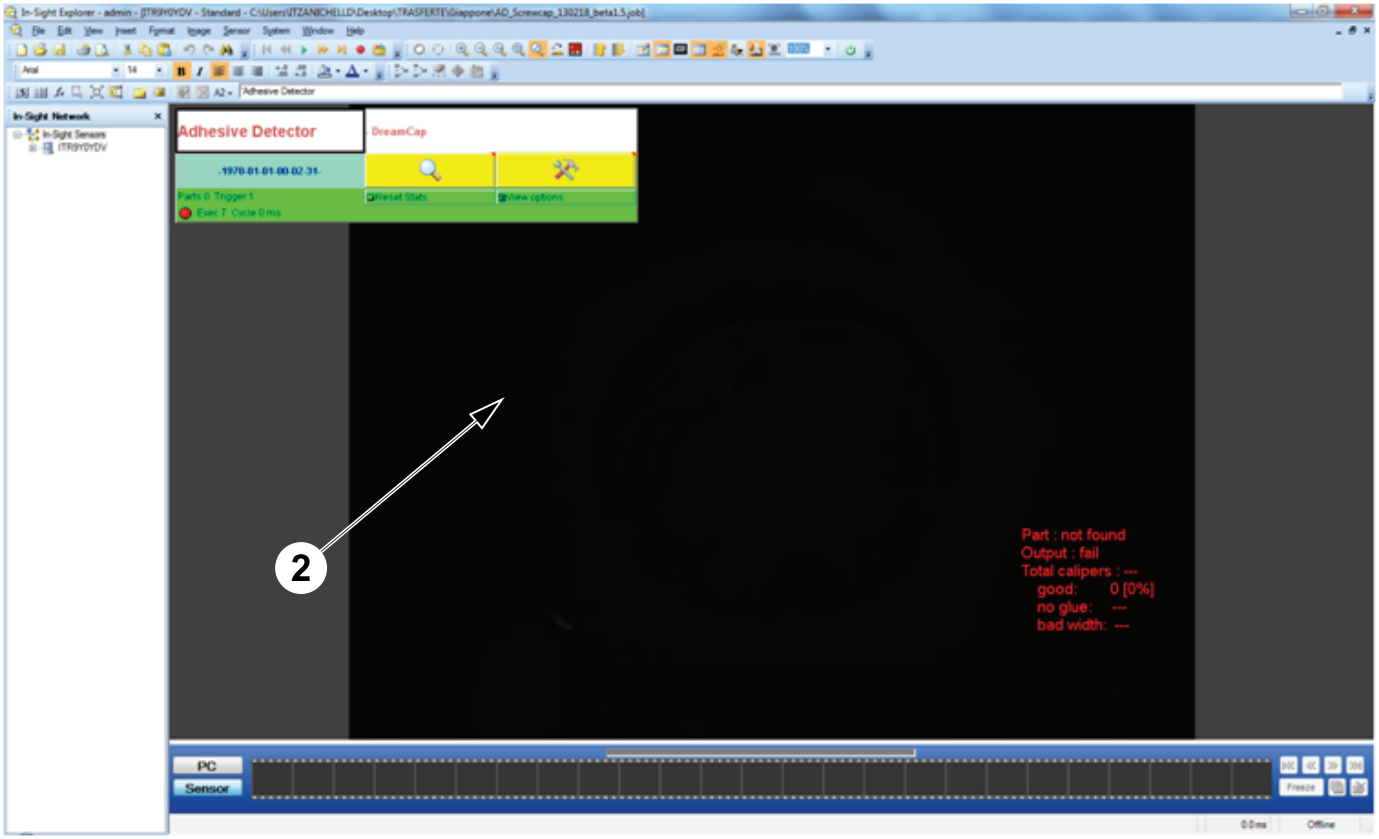

2 Picture

(Cont'd)

(Cont'd)

Limit Switch Checks

a) Make sure that the limit switch (1) works properly.

Note! The limit switch (1) must read the cover (2).

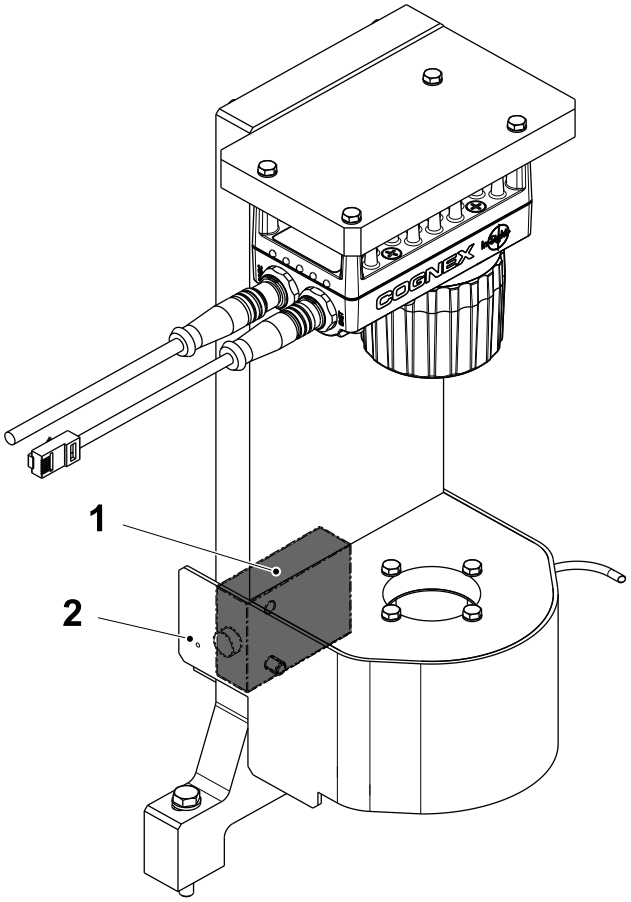

1 Limit switch
2 Cover

(Cont'd)

(Cont'd)

Power Supply Checks

a) Make sure that the power supply (1) works properly.

Note! The power supply (1) doesn' t work correctly if it doesn't give any signal (2), when the PLC triggers the output (3), see picture in the next page.

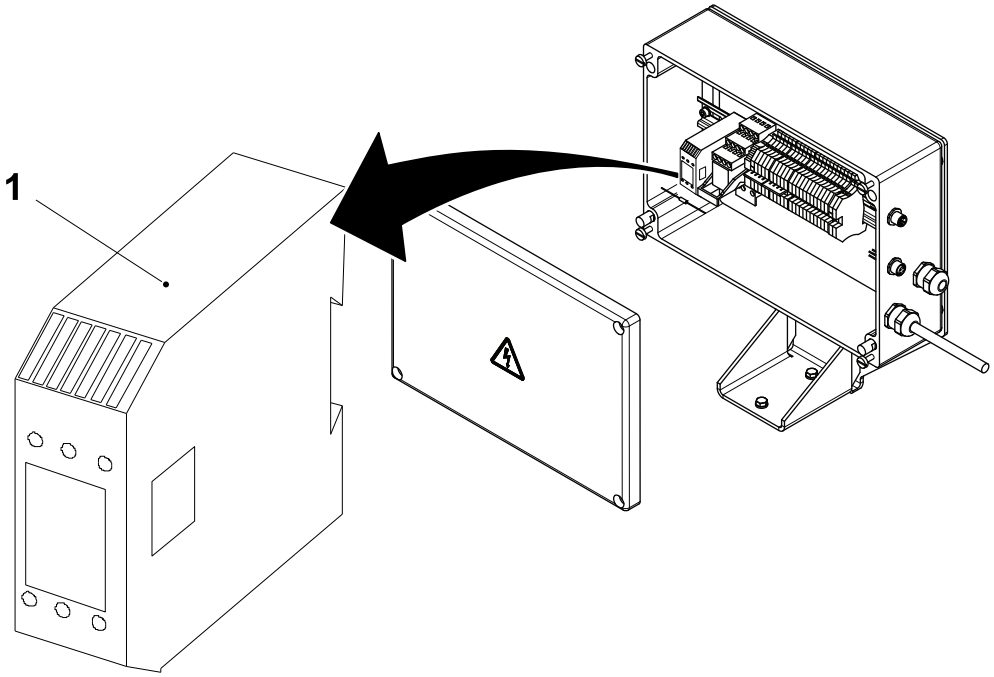

1 Power supply

(Cont'd)

(Cont'd)

b) Change the power supply (1) when doesn't work properly.

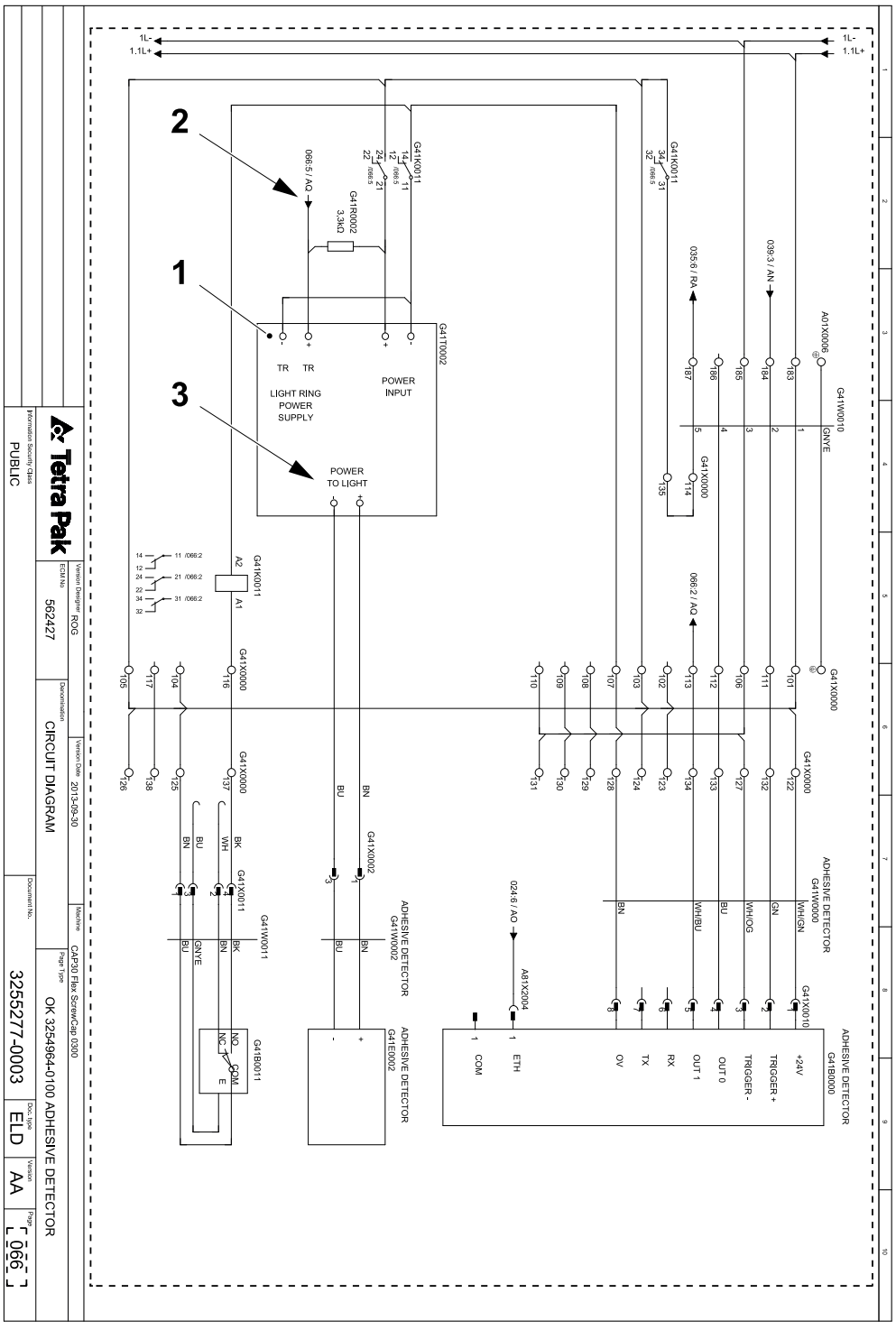

1 Power supply 2 PLC Signal 3 Transformer Output

(Cont'd)

(Cont'd)

Replace the UV illumination

Note! It is necessary to replace the UV illumination when the picture (2) of is still dark, but the limit switch (1) of page 12-331 and the power supply (1) of page 12-332 work properly.

a) Disconnect the cable (1).

b) Loosen the screws (2) and remove the UV illumination (3).

c) Install the new UV illumination (3) and tighten the screws (2).

d) Connect the cable (1).

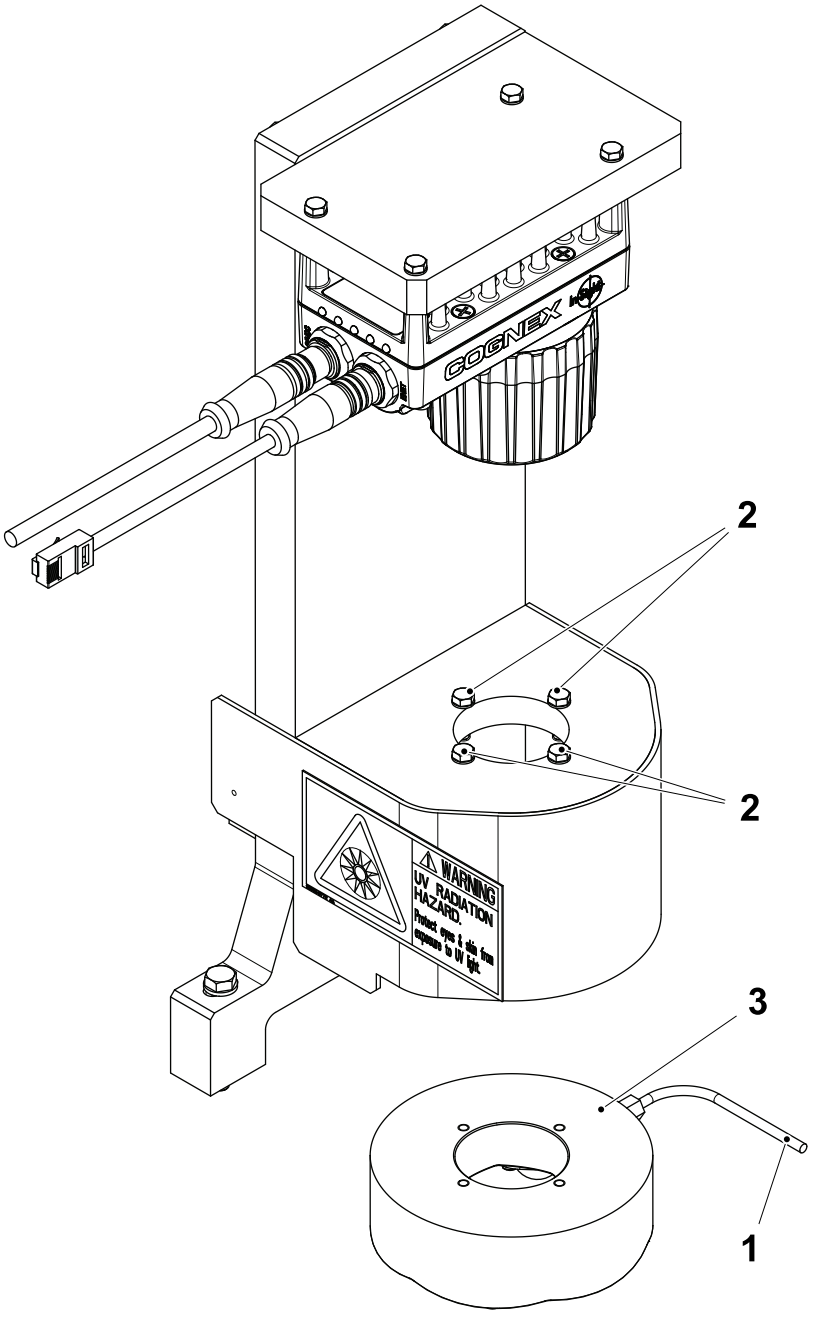

1 Cable 2 Screw 3 UV illumination

13 General

General - How to use this Chapter

This chapter provides the standard values for setting the Tetra Cap Applicator and information on the lubricants and cleaning compounds used with Tetra Pak machines.

General - How to use this Chapter 13-2

13.1 Technical Data CAP30 13-5

13.1-1 Adhesive Weight/Temperature/Nozzle 13-5

13.1-2 Equipment Pressure 13-11

13.1-3 Hotmelt Specification 13-12

13.2 Templates and Tools 13-13

13.3 Consumables 13-18

13.3.1 CAP30 Lubricants 13-18

13.3.2 Cleaning Compounds 13-19

13.3.2.1 Cleaning Compound Table 13-19

13.4 Safety Functions 13-22

13.4-1 Safety Functions - Check 13-22

This page intentionally left blank

13.1 Technical Data CAP30

13.1-1 Adhesive Weight/Temperature/Nozzle

Note! The glue approximate pressure is only an indicator, the glue amount/weight is the driver and must be achieved. See Check Glue Amount on page 4-63.

Note! The glue pressure must be within the range of 1- 5Bar. If higher than 5 or lower than 1 the glue circuit must be overhauled (change filters, purge the system).

Note! The pump ratio is changed from 14:1 to 6:1 with the "piston pump conversion" kit 90601-0226. The pump ratio is changed from 6:1 to 14:1 with the "pump piston" kit 90459-1984.

Henkel National 134 - 135B					
Cap	**Pump Ratio**	**Glue Amount**	**Temperature ºC (ºF)**	**Nozzle Cap Gap mm**	**Nozzle Part Number and Hole Size**
SlimCap 2000	14:1	0.25g ± 0.02		3.5-4	90458-0651 0.25mm
SlimCap 1000	14:1	0.2g ± 0.02		3.5-4	90439-0155 0.31mm
Tank			190 (374)		
Hose			195 (383)		
Guns			200 (392)		
Package Storage Temperature Range			Min. 4 (39.2) Max. 35 (95)		

(Cont'd)

(Cont'd)

Tetra Pak® CapFix 100					
Cap	**Pump Ratio**	**Glue Amount**	**Temperature ºC (ºF)**	**Nozzle Cap Gap mm**	**Nozzle Part Number and Hole Size**
SlimCap 2000	14:1	0.25g ± 0.02		3.5-4	90458-0651 0.25mm
SlimCap 1000	14:1	0.2g ± 0.02		3.5-4	90439-0155 0.31mm
Tank			190 (374)		
Hose			195 (383)		
Guns			200 (392)		
Package Storage Temperature Range			Min. 4 (39.2) Max. 50 (122)		

Tetra Pak® CapFix 100					
Cap	**Pump Ratio**	**Glue Amount**	**Temperature ºC (ºF)**	**Nozzle Cap Gap mm**	**Nozzle Part Number and Hole Size**
HeliCap2 23	6:1	0.11g ± 0.02		3.5-4	90459-3197 0.36mm
Tank			180 (356)		
Hose			185 (365)		
Guns			190 (374)		
Package Storage Temperature Range			Min. 4 (39.2) Max. 50 (122)		

(Cont'd)

(Cont'd)

Jowat 250.00					
Cap	**Pump Ratio**	**Glue Amount**	**Temperature ºC (ºF)**	**Nozzle Cap Gap mm**	**Nozzle Part Number and Hole Size**
StreamCap 1000 for TGA 1000 SQ	14:1	0.12g ± 0.02		1.8-2	90459-3197 0.36mm
StreamCap 1000 for TPA 1000 SQ	14:1	0.15g ± 0.02		1.8-2	90459-3197 0.36mm
StreamCap 1000 for TBA 1000 SQ	14:1	0.12g ± 0.02		1.8-2	90459-3197 0.36mm
StreamCap 500	14:1	0.12g ± 0.02		1.8-2	90459-3197 0.36mm
StreamCap 200	14:1	0.10g ± 0.02		1.8-2	90439-0155 0.31mm
HeliCap 27 for TBA 1000 SQ	14:1	0.12g ± 0.02		1.8-2	90459-3197 0.36mm
HeliCap 27 for TPA	14:1	0.15g ± 0.02		1.8-2	90459-3197 0.36mm
HeliCap 27 for TGA 1000 SQ	14:1	0.12g ± 0.02		1.8-2	90459-3197 0.36mm
Tank			195 (383)		
Hose			200 (392)		
Guns			205 (401)		
Package Storage Temperature Range			Min. 10 (50) Max. 50 (122)		

(Cont'd)

(Cont'd)

Jowat 250.80					
Cap	**Pump Ratio**	**Glue Amount**	**Temperature ºC (ºF)**	**Nozzle Cap Gap mm**	**Nozzle Part Number and Hole Size**
StreamCap 1000 for TGA 1000 SQ	14:1	0.12g ± 0.02		1.8-2	90459-3197 0.36mm
StreamCap 1000 for TPA 1000 SQ	14:1	0.15g ± 0.02		1.8-2	90459-3197 0.36mm
StreamCap 1000 for TBA 1000 SQ	14:1	0.12g ± 0.02		1.8-2	90459-3197 0.36mm
StreamCap 500 for TPA	14:1	0.12g ± 0.02		1.8-2	90459-3197 0.36mm
StreamCap 200 for TBA	14:1	0.10g ± 0.02		1.8-2	90439-0155 0.31mm
Tank			195 (383)		
Hose			200 (392)		
Guns			205 (401)		
Package Storage Temperature Range			Min. 4 (39.2) Max. 35 (95)		

(Cont'd)

(Cont'd)

Leuenberger PS 880					
Cap	**Pump Ratio**	**Glue Amount**	**Temperature ºC (ºF)**	**Nozzle Cap Gap mm**	**Nozzle Part Number and Hole Size**
StreamCap 1000 for TGA 1000 SQ	14:1	0.12g ± 0.02		2-2.5	90439-0155 0.31mm
StreamCap 1000 for TPA 1000 SQ	14:1	0.15g ± 0.02		2-2.5	90439-0155 0.31mm
StreamCap 1000 for TBA 1000 SQ	14:1	0.12g ± 0.02		2-2.5	90439-0155 0.31mm
StreamCap 500 for TPA	14:1	0.12g ± 0.02		2-2.5	90458-0651 0.25mm
StreamCap 200 for TBA	14:1	0.10g ± 0.02		2-2.5	90458-0651 0.25mm
HeliCap 27 for TBA 1000 SQ	6:1	0.12g ± 0.02		2-2.5	90439-0155 0.31mm
HeliCap 27 for TPA	6:1	0.15g ± 0.02		2-2.5	90439-0155 0.31mm
HeliCap 27 for TGA 1000 SQ	6:1	0.12g ± 0.02		2-2.5	90439-0155 0.31mm
HeliCap 27 for TGA Leaf / Crystal	6:1	0.15g ± 0.02		2-2.5	90439-0155 0.31mm
Tank			195 (383)		
Hose			200 (392)		
Guns			205 (401)		
Package Storage Temperature Range			Min. 4 (39.2) Max. 50 (122)		

(Cont'd)

(Cont'd)

Tetra Pak® CapFix 500					
Cap	**Pump Ratio**	**Glue Amount**	**Temperature ºC (ºF)**	**Nozzle Cap Gap mm**	**Nozzle Part Number and Hole Size**
StreamCap 1000 for TGA 1000 SQ	14:1	0.12g ± 0.02		2-2.5	90439-0155 0.31mm
StreamCap 1000 for TPA 1000 SQ	14:1	0.15g ± 0.02		2-2.5	90439-0155 0.31mm
StreamCap 1000 for TBA 1000 SQ	14:1	0.12g ± 0.02		2-2.5	90439-0155 0.31mm
StreamCap 500	14:1	0.12g ± 0.02		2-2.5	90458-0651 0.25mm
StreamCap 200	14:1	0.10g ± 0.02		2-2.5	90439-0155 0.31mm
Tank			190 (374)		
Hose			195 (383)		
Guns			200 (392)		
Package Storage Temperature Range			Min. 4 (39.2) Max. 50 (122)		

Tetra Pak® CapFix 600					
Cap	**Pump Ratio**	**Glue Amount**	**Temperature ºC (ºF)**	**Nozzle Cap Gap mm**	**Nozzle Part Number and Hole Size**
HeliCap 27 for TBA SQ	6:1	0.12g ± 0.02		3-4	90459-3197 0.36mm
HeliCap 27 for TPA SQ	6:1	0.15g ± 0.02		3-4	90459-3197 0.36mm
HeliCap 27 for TGA SQ	6:1	0.12g ± 0.02		3-4	90459-3197 0.36mm
HeliCap 27 for TGA Crystal/Leaf	6:1	0.15g ± 0.02		3-4	90459-3197 0.36mm
Tank			190 (374)		
Hose			195 (383)		
Guns			200 (392)		
Package Storage Temperature Range			Min. 4 (39.2) Max. 50 (122)		

(Cont'd)

(Cont'd)

Tetra Pak® CapFix 570 **Note!** To be used under extreme hot temperature conditions and to be evaluated case by case. Cap applicator cleaning interval might be affected.					
Cap	**Pump Ratio**	**Glue Amount**	**Temperature ºC (ºF)**	**Nozzle Cap Gap mm**	**Nozzle Part Number and Hole Size**
StreamCap 1000 for TGA 1000 SQ	14:1	0.12g ± 0.02		1.8-2	90459-3197 0.36mm
StreamCap 1000 for TPA 1000 SQ	14:1	0.15g ± 0.02		1.8-2	90459-3197 0.36mm
StreamCap 1000 for TBA 1000 SQ	14:1	0.12g ± 0.02		1.8-2	90459-3197 0.36mm
HeliCap 27 for TBA SQ	14:1	0.12g ± 0.02		1.8-2	90459-3197 0.36mm
HeliCap 27 for TPA SQ	14:1	0.15g ± 0.02		1.8-2	90459-3197 0.36mm
HeliCap 27 for TGA SQ	14:1	0.12g ± 0.02		1.8-2	90459-3197 0.36mm
HeliCap 27 for TGA Crystal/Leaf	14:1	0.15g ± 0.02		1.8-2	90459-3197 0.36mm
Tank			180 (356)		
Hose			185 (365)		
Guns			190 (374)		

13.1-2 Equipment Pressure

This table gives the pressure settings for the applicator.

Function	**Unit**	**Value**
Main air supply	Bar (MPa)	6.0 (0.6)
Hotmelt guns and valve group	Bar (MPa)	5.0 (0.5)
Air blow infeeder (lower) S1	Bar (MPa)	1.0 (0.1)
Air blow infeeder (upper) S2	Bar (MPa)	3.0 (0.3)
Air blow infeeder (upper) S3	Bar (MPa)	4.0 (0.4)

13.1-3 Hotmelt Specification

Type	TP Number	Use
Henkel National 134-135B	90459-4083	SlimCap
Tetra Pak® CapFix 100	1606000-0000	SlimCap HeliCap2 23
Jowat 250.00	344481-5000	StreamCap HeliCap27
Jowat 250.80	344484-5080	StreamCap For chilled storage applications
Leuenberger PS 880	90602-3996	StreamCap HeliCap27
Tetra Pak® CapFix 500	1606002-0000	StreamCap
Tetra Pak® CapFix 570	1606003-0000	StreamCap HeliCap27
Tetra Pak® CapFix 600	1606004-0000	HeliCap27

13.2 Templates and Tools

Illustration	Description
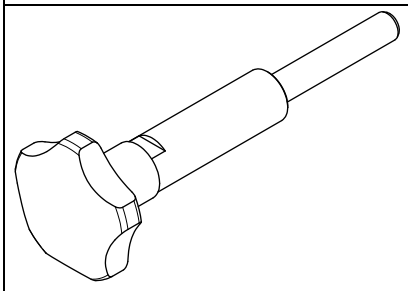	Zero Setting Template TP No. 2715750-0100 7 Applicator Unit
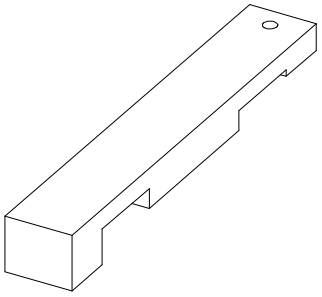	Zero Alignment Template TP No. 2736458-0000 8 Cap Sequencer
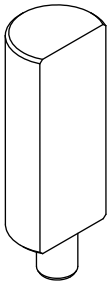	Zero Alignment:- TP No. 3044285-0000 2 Package Line
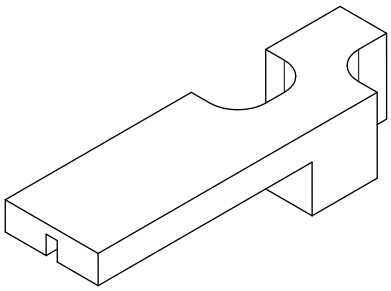	Zero Alignment: - TGA, TBA 1000 Slimcap TBA 2000 Slimcap, TBA 1000 Streamcap TP No. 2788137-0000 2 Package Line
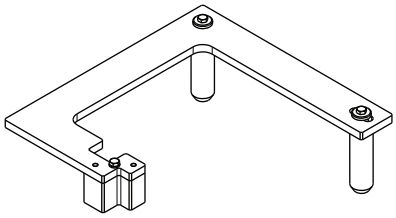	Zero Alignment: - TBA 200 Streamcap TP No. 2939208-0100 2 Package Line

(Cont'd)

(Cont'd)

Illustration	Description
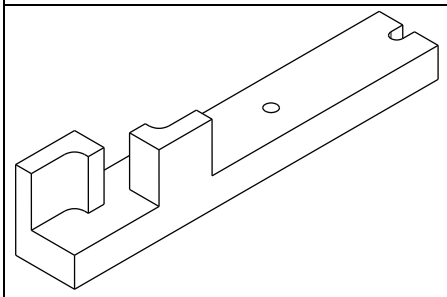	Zero Alignment: - TPA 500 and 1000 Streamcap TP No. 2873935-0000 2 Package Line
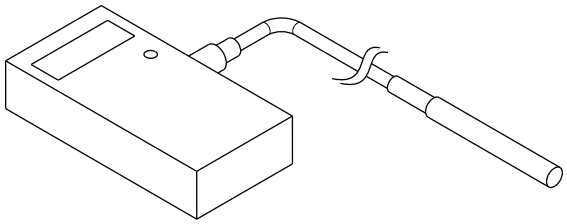	Belt Tension TP No. 90459-2181 2 Package Line
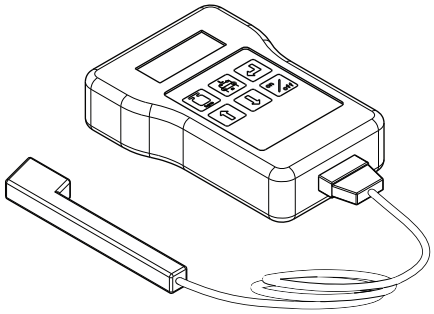	Belt Tension TP No. 90600-3415 2 Package Line
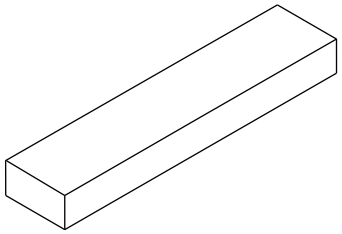	Belt Tension TP No. 3034465-0001 9 Cap Conveyor
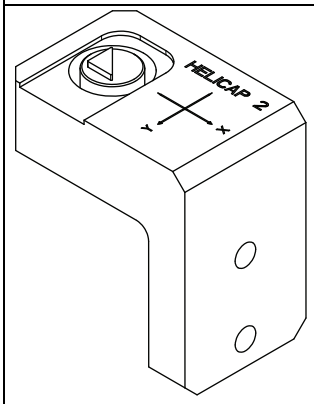	Cap / Hole Position TP No. 3047350-0102 12.5.16 General Offset

(Cont'd)

(Cont'd)

Illustration	Description
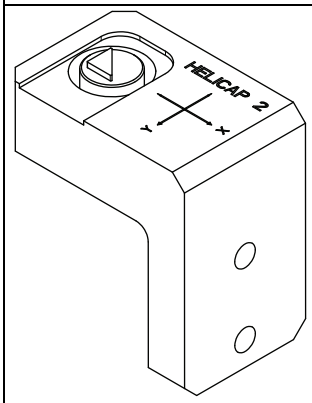	Cap / Hole Position TP No. 3047350-0103 12.5.16 General Offset
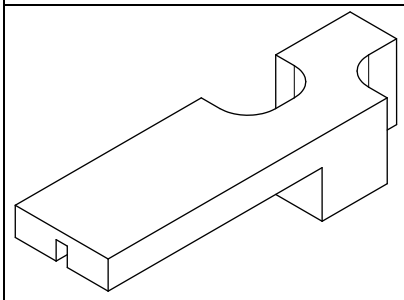	Zero Alignment: - TGA, TBA 1000 Slimcap TBA 2000 Slimcap, TBA 1000 Streamcap TP No. 2788137-0000 2 Package Line
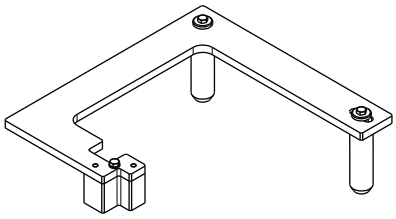	Zero Alignment: - TBA 200 Streamcap TP No. 2939208-0100 2 Package Line
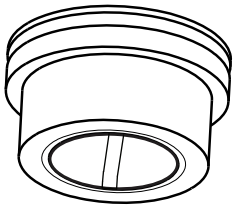	Adhesive Detector Tool Streamcap 1000 TP No. 3203756-0000 TP No. 3203757-0000 12.8.2-20 Adhesive Detector Calibration
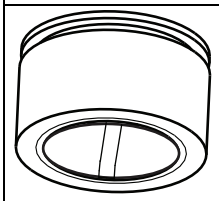	Adhesive Detector Tool HeliCap2 23 TP No. 3224301-0000 TP No. 3203757-0000 12.8.2-20 Adhesive Detector Calibration
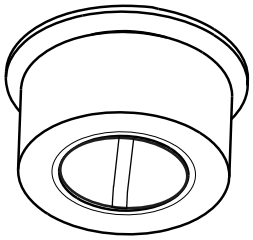	Adhesive Detector Tool HeliCap 27 TP No. 3224303-0000 TP No. 3203757-0000 12.8.2-20 Adhesive Detector Calibration

(Cont'd)

(Cont'd)

Illustration	Description
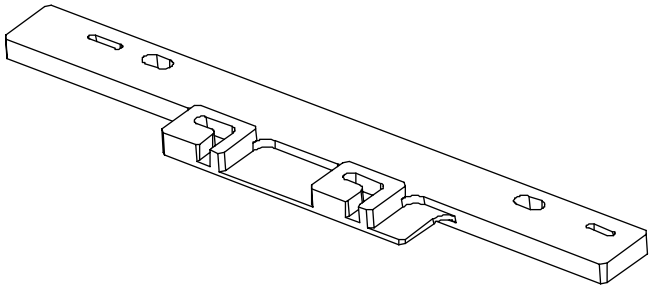	Hotmelt Guns Setting Guide TP No. 3047353-0000 4.4-10 Hotmelt Gun - Set
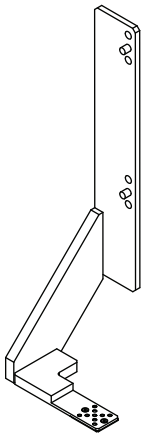	Vision System Tool TP No. 3087823-0100 **Note!** Valid for TPA Packages. 12.5.10.1-1 Adjustment Procedure
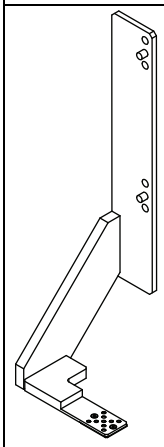	Vision System Tool TP No. 3087823-0100 **Note!** Valid for TBA Packages except TBA Edge. 12.5.10.1-1 Adjustment Procedure
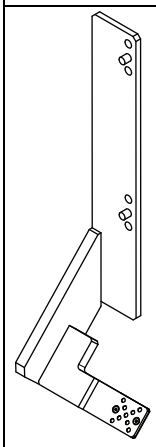	Vision System Tool TP No. 3087823-0100 **Note!** Valid for TGA Packages. 12.5.10.1-1 Adjustment Procedure

(Cont'd)

(Cont'd)

Illustration	Description
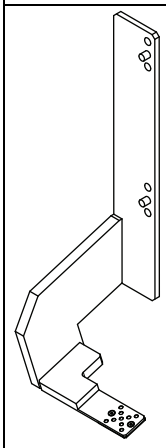	Vision System Tool TP No. 3087823-0100 **Note!** Valid for TBA Edge Packages. 12.5.10.1-1 Adjustment Procedure
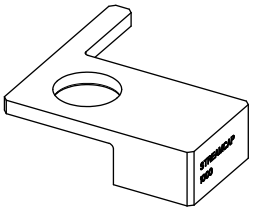	Adhesive Detector Coloured Caps Tool **Note!** Valid for StreamCap 1000. TP No. 3384311-0000 12.8.1-2 Adhesive Detector Coloured Caps - Sensor Set-up
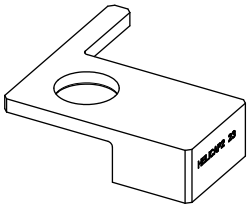	Adhesive Detector Coloured Caps Tool **Note!** Valid for HeliCap2 23. TP No. 3384312-0000 12.8.1-2 Adhesive Detector Coloured Caps - Sensor Set-up
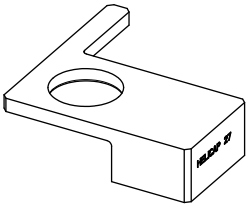	Adhesive Detector Coloured Caps Tool **Note!** Valid for HeliCap 27. TP No. 3384313-0000 12.8.1-2 Adhesive Detector Coloured Caps - Sensor Set-up

13.3 Consumables

13.3.1 CAP30 Lubricants

WARNING

Risk of personal injury!

Certain lubricants can cause injury if they come into contact with the eyes, skin, mucous membranes, or clothing. Always follow the manufacturer's instructions for handling chemical products.

The table below lists only a selection of lubricants with their respective designations.

Lubricant specifications may be ordered from:

Tetra Pak Technical Service - Parts Supply Chain, Ruben Rausings gata, SE-221 86 LUND, Sweden

Lubricants Used In CAP30 Machines

Lubricant Description	**TP Part No. (used when ordering from Tetra Pak)**	**Supplier**	**Product Designation**	**Lube Type**
Grease	344407-0000 Reference for purchasing: 344407-0285 (45g) 344407-0591 (400g) 344407-0037 (1kg) 344407-0177 (25kg)	Klüber	Klübersynth UH1 14-151	H1
Lubrication oil (To be used with the oil gun)	344414-0000 Reference for purchasing: 344414-0764 (5 l) 344414-0766 (20 l) 344414-0335 (200 l)	Klüber	Klüberoil 4 UH1 320-N	H1 PAO base
Central lubrication oil (To be used in the central lubrication unit)	90606-3683 Reference for purchasing: RM 2000T (5 l)	Specialist Lubrications Ltd	Food Grade Lubricant with PTFE	H1

13.3.2 Cleaning Compounds

WARNING

Risk of explosion.

Cleaning with not recommended cleaning agents, for example agents including alcohol, could cause explosion. Use only Tetra Pak recommended cleaning agents when cleaning or disinfecting parts that can come into contact with hydrogen peroxide.

It is strongly recommended, in order to optimize the cleaning efficiency, to use water characterised by the following physicochemical parameters:

- water quality; chlorine free, drinkable water
- pH; between 7 and 8 pH units
- water hardness; between 5 and 10 °f French degrees of hardness (between 3 and 6 German degrees of hardness)
- chlorides; lower than 50 ppm
- silicates; lower than 10 ppm (in order to reduce the formation of solid deposits difficult to be removed)

13.3.2.1 Cleaning Compound Table

Comparable qualities from other suppliers may be selected in compliance with the technical requirements listed in the table. All cleaning compounds must comply with local legal requirements.

The supplier recommendations for concentration and temperature should be followed. When dosing the products automatically, the concentration should be checked.

Note! The concentration of formulated products indicated in the table is the manufacturers expected concentration of use and is reported as an example of the optimal concentration of use.

Do not manually dilute a concentrated or formulated product for use with an integrated cleaning system.

Furthermore, for CIP cleaning the use concentration of a formulated product may not match the filling machine preset value for concentration monitoring and may require specialist adjustment.

(Cont'd)

(Cont'd)

Cleaning Type	TP Code		Detergent Type	Examples 20141103									
				Raw Material				Formulated Products					
				Name	Max Conc. w/w	Use Conc. w/w	Use Temp. °C (*)	Ecolab	Use Conc. w/w	Use Temp. °C (*)	Sealed Air	Use Conc. w/w.	Use Temp. °C (*)
CIP	A	1	Alkali	NaOH	30%	1.50%	80	Mip CA	1.5%	80	VC 11	2.0%	80
	B	1	Acid	HNO_3	50%	1.00%	60	P3-horolith FL	1.0%	60	VA 5	1.0%	60
External Cleaning (automatic)	C	1	Alkali foam (**)					P3-Topactive LA	2.0%	20 - 40	VF 9	3.0%	20 - 40
		2	Alkali solution (***)					P3-mip FPC	2.0%	55	VK 12	1.0%	55
		3	Acid foam (****)					P3-Topax 56	2.0%	25	VF 11	2.0%	25
		4	Disinfection foam (****)					P3-Topax 990	2.0%	25	VS 1	1.0%	25
Manual Cleaning (wiping)	D	1	Alkali					P3-mip FPC	2.0%	25	VK 12	1.0%	25
Manual Disinfection (immersion)	F	3	Acid solution	Peracetic acid solution	15%	200ppm	25	Oxonia Active	0.50%	25	VT 6	0.15%	25
Manual Disinfection (spraying)	G	1	Alcoholic solution	Isopropanol			25	Spitaderm	Pure	25	VT 29	pure	25
		2	Alcoholic solution	Ethanol			25	Alcodes	Pure	25	VT 29	pure	25
		3	Acid solution	Peracetic acid solution	15%	200ppm	25	Oxonia Active	0.50%	25	VT 6	0.15%	25
Hand Disinfection	H	1						P3-Manodes gel	pure	25	H34	pure	25
PullTab Patch Sealing Plate Manual Cleaning	J	1	Solvent	Acetone CAS No 67-64-1 Technical Grade (*****)	Pure	25							

(Cont'd)

(Cont'd)

* 25 °C to the optimal ambient temperature.

** To be used on TBA/21, TBA/22, TP A3/Flex, TP A3/CompactFlex, TP A3/Speed, TB/21, TP C3/Flex.

*** To be used on TBA/8, TBA/9, TBA/19, TB/8, TB/9, TB/19.

**** To be used on TP C3/Flex

***** Acetone is a flammable solvent and the grade has to fulfil requirements for pharmaceutical use or food processing operations according to USO or NF or FCC.

13.4 Safety Functions

13.4-1 Safety Functions - Check

Machine Status	preparation

Make sure that the machine can not be inched if:

a) any of the doors or covers are open

b) any EMERGENCY STOP is pushed

c) any crank is in the cranking position.

For the location of safety components, see the sections and in the chapter.

Make sure that when any EMERGENCY STOP is pushed the machine resets to step ZERO.

Check that the warning sign labels are present and readable. Replace any missing and /or illegible signs, see in the chapter.

Also see the Optional Equipment documentation.

A

Adding a New Sensor to Network 12-85, 12-234
Adhesive Detector Alarms and Checks 12-318
Adhesive Detector Calibration 12-299
Adhesive Detector Calibration Procedure 12-308
Adhesive Detector Coloured Caps - Sensor Replacement 12-225
Adhesive Detector Coloured Caps - Sensor Set-up 12-226
Adhesive Detector Custom View 12-283
Adhesive Detector Trigger Setting 12-312
Adhesive Preservation Activation 4-72
Adhesive Preservation Hooter Activation 4-81
Adhesive Preservation Hooter Deactivation 4-82
Adhesive Preservation Settings 4-74
Adhesive Weight/Temperature/Nozzle 13-5
Adjustment Procedure 12-100
Alarms LED (Read Only) 12-71
Applicator Unit - Set the Home Sensors 12-211
Automatic Fuses - Set 10-230

B

Bar Code Scanner - Change 12-165
Basic settings 12-60
Basic Settings 12-58
Belt Brake - Lubricate the Grease Nipples 6-39
Belt Stretcher - Change Bearings 2-57, 3-29
Belt Stretcher - Set Belt Tension 3-31
Blowing System - Check 6-18
Blowing System - Set Blowing Device 6-19
Blue and Grey Cells 12-67
Brake Unit - Change Belt 2-10
Brake Unit - Check 2-15
Brake Unit - Check Ball Bearing 2-17
Brake Unit - Check Belt Tension 2-8
Brake Unit - Check Belts 2-9
Brake Unit - Set Belt Tension 2-11
Brake Unit - Set Position 2-13
Brake Unit - Set Sensor 2-16
BYPASS Mode - Switch On the Hotmelt Unit 6-63

C

Calibration Region Position (Read/Write) 12-76
Cam Module - Removal 7-16
Camera trouble shooting 12-129
Cams - Set Applicator Cam - TBA 7-9
Cams - Set Picking 7-6
Cams - Set Release Cam - TBA 7-10
Cap Conveyor - Check Settings 9-20
Cap Conveyor - Set the Home Sensors 12-212
Cap Detector - Check 11-6
Cap Detector - Fine Setting 11-20
Cap Detector - Lifting Device 12-219
Cap Detector - Package Ejector Timing Setting 11-16
Cap Detector - Set 11-7
Cap Ejector - Set Height 11-26
Cap Ejector - Set Pressure 11-25
Cap Holder - Change Roller and Bushings 7-20
Cap Holder - Check 7-19
Cap Holder - Set Y Position 7-21
Cap Line - Set Guides (HeliCap2 23 Ony) 8-17
Cap Line - Set Spring Gap 8-16
Cap Sorter - Add or Remove shims 5-57
Cap Sorter - Replace Gearbox 5-62
Cap Sorter - Set X, Y and Z Position 5-35
Cap Sorter - Troubleshooting 5-45
Central Lubrication - Check Level Switch 6-33
Central Lubrication - Check Pressure Switch 6-34
Check - Current Control Relay Function 10-233
Check Bead Pattern 4-61
Check Cap Position on PLH for All Cap Holders 12-155
Check Guide Roller Inner 2-108
Check Package Hole Position 12-148, 12-155
Check Package Hole Position - HeliCap Only 12-149
Clamp Unit - Change Bushing 8-18
Clamp Unit - Set Spring and Sensor 8-19
Clamp Unit - Set Stop Cylinder Sensor 8-22
Clamping Element - Removal and Installation 4-86, 8-41
Closing In-Sight Explorer 12-61
Closing the In-Sight Explorer Tool 12-263
Coarse Setting Inner Package Positioner Zero 2-75
Coarse Setting Outer Package Positioner Zero 2-90
Command Mode (Read/Write) 12-68
Communication Error 12-49, 12-253
Conditions During Production 12-82, 12-327
Conditions Immediately before Production 12-81, 12-326
Configuring the Laptop and Initiating Communication between the Laptop and the Camera 12-83, 12-328
Control Panel - Overview 10-240
Conveyor - Removal and Assembly 9-6
Conveyor Belt - Change 9-8

Conveyor Belt - Change Drive End Bearings..... 9-12
Conveyor Belt - Change Infeed End Bearings..... 9-15
Conveyor Belt - Set Alignment..... 9-16
Conveyor Belt - Set Conveyor to Cap Sequencer..... 9-17
Conveyor Belt - Set Sensors 9-23
Conveyor Belt - Set Tension 9-11
Conveyor Roof - Set Height..... 9-18
Conveyor Roof - Set Height (StreamCap 200 Only)..... 9-19
Conveyor Speeds Fine Settings..... 1-32
Conveyor Support - Set Height 6-6
Cooling Unit - Change Filter 10-341
Cooling Unit - Check.....10-342
Cooling Unit - Clean Filter 10-339
Cooling Unit - Overhaul.....10-344
Cooling Unit - Troubleshooting.....10-350
CPU - Upload Program 10-68
CPU Controller - Change 10-35
CPU Module - Change Energy Storage Module (ESM) 10-34
CPU Module - Download Program 10-51
CPU Module - Load Firmware 10-41
CPU Module - Troubleshoot 10-61
Cylinder Speed - Set Regulator Valve 2-64

D

Delay On Stand-By Description 4-76
Delay On Stand-By Setting..... 4-77
Delay On To Step Zero..... 4-79
Development Step - Check.....10-355
Development Step - Set 10-356
Development Step - Setup 10-354
DeviceNet - DeviceNet on the Machine 10-103
DeviceNet - Loading a DeviceNet Program in a New Point I/O Module Adaptor.....10-114
DeviceNet - Loading a Program in a New DeviceNet Scanner 10-111
DeviceNet - Saving DeviceNet Files in a Computer 10-110
DeviceNet Adaptor (1734-ADN) Node 2 10-96
DeviceNet Adaptor (22-COMM-D) Node 1.....10-95
DeviceNet Armor Block 10-97
DeviceNet Scanner - Change 10-99
DeviceNet Scanner - Set DeviceNet Scanner (A01K3004) Node Address and Baudrate 10-102
DeviceNet Scanner (A01K3004) Node 0 10-94
Diagnosis.....12-217
Different Waste Package Counters 11-22
Discrete Setting Procedure.....12-267
Display Trend Curve 1-38
Distributed I/O and Network - Overview.....10-90
Drive - Change Bearings 2-30
Drive - Change Belt 2-28
Drive - Check Belt..... 2-27
Drive - Motor and Gearbox 2-55
Drive Motor - Applicator Unit (G30M0020 and G30M0021) 12-219
Drive Motor - Cap Sorter (C50M1020).....12-219
Drive Motor - Change..... 4-83
Drive Motor - Package Line Inner (W21M1020).....12-219
Drive Motor - Package Line Outer (W21M2020).....12-219
Drive Pulley - Change Bearing..... 8-9
Drive Unit - Change Motor..... 3-26

E

Elevator - Check Belt Tension..... 5-7
Elevator - Lubricate..... 5-20
Elevator - Overhaul..... 5-9
Elevator - Set Conveyor Belt Tension 5-8
Equipment Pressure 13-11
Establishing Communication with the Camera 12-47, 12-251
Ethernet Connections 12-15
EtherNet Module - Change.....10-136
Exposure Set-up (Read/Write).....12-77

F

Fan System - Check 6-12
Fan System - Clean Fan Filter 6-13
Feeder - Change Brush..... 5-34
Feeder - Change Discharger 5-28
Feeder - Check Air Injectors 5-23
Feeder - Check Function..... 5-21
Feeder - Fine Checks 5-49
Feeder - Set Air Injector Positions..... 5-24
Feeder - Set Cam Positions..... 5-27
Feeder - Set Cap Level 5-39
Feeder - Set Cap Sensor 5-40
Feeder - Set Guide 5-42
Feeder - Set Segments and Brushes 5-41
Feeder - Set Sorter Speeds..... 5-43
Fine Setting Inner Package Positioner Zero..... 2-83
Fine Setting Outer Package Positioner Zero 2-93
Finger - Change 8-27

Finger - Check 8-26
Firmware Check 12-274
Firmware Update Procedure 12-277
Frequency Converter - Change 10-151
Frequency Converter - LED Description 10-156
Frequency Converters - Change Parameters 10-159
Frequency Converters - Clearing a Fault Indication Automatically 10-167
Frequency Converters - Clearing a Fault Indication Manually 10-166
Frequency Converters - Fault Types 10-164
Frequency Converters - Identifying the Fault 10-165

G

Gain Set-up (Read/Write) 12-79
Gearbox - Change 4-85
General 12-83, 12-328
General Description 12-80, 12-325
General Offset X & Y Window 12-75
Glue Shelf Change 12-12
Glue Shelf Installation 12-13
Gripper Cam - Z Adjustment TBA, TPA, TGA 7-8
Guide - Removal and Installation 8-6
Guide Bracket - Change Roller and Bushings 7-31
Guide Bracket - Check 7-28
Guide Bracket - Set X Position (No Positioning Device Only) 7-39
Guide Bracket - Set X Position (With Positioning Device) 7-40
Guide Rail - Set (StreamCap 200) 8-30
Guide Roller Inner - Set X Position 2-107
Guide Roller Outer - Set X Direction 2-110
Guide Roller Outer (TPA Only) Set Height 2-109

H

Heating Element - Change 6-14
Heating Element - Set 6-16
Height Adjustment - Check 6-70
Height Adjustment - Overhaul 8-25
Height Adjustment - Set 6-71
Height Adjustment- Set Roof 8-23
HMI User Management - Change User Password 1-10
HMI User Management - Log On as a User 1-6
Hole Research Setup 12-120
Hole Tolerance (Read/Write) 12-79
Hotmelt Equipment - Change Filter 6-57
Hotmelt Equipment - Change Hotmelt Unit 6-53
Hotmelt Equipment - Check 6-45
Hotmelt Equipment - Empty Tank 6-46
Hotmelt Equipment - F2 Alarm 6-59
Hotmelt Equipment - Set Pressure 6-62
Hotmelt Gun - Change Filter 4-36
Hotmelt Gun - Change Gun 4-34
Hotmelt Gun - Change Heater /Thermocouple 4-37
Hotmelt Gun - Change Nozzle 4-21
Hotmelt Gun - Check 4-52
Hotmelt Gun - Check Nozzles 4-22
Hotmelt Gun - Clean Nozzle 4-23
Hotmelt Gun - Remove and Install Cover 4-20
Hotmelt Gun - Set 4-44
Hotmelt Gun - Set Temperature 4-19
Hotmelt Panel Overview 6-43
Hotmelt Specification 13-12

I

Infeed Package Guide Rollers - Set (TGA-TPA Only) 2-104
Infeed Package Guides - Set (TBA 200 E and TBA 250 E) 2-111
Infeed Package Setting Screen 1-27
Infeed Rail Change 6-72
Infeed Speeds and Angles (Flex ScrewCap) 1-29
Install the ControlFlash Application Firmware Library 10-72
Install the Driver for the First Kinetix Servo Driver 10-81
Installation of Spring 2-35, 2-41
Installing IN-SIGHT EXPLORER 12-24

L

Laptop Firewall Configuration 12-23
Laptop IP Address Assignment 12-23
Laptop to Camera Connection 12-23
Laptop to Machine Connection 12-23
Loading an Application Program in the In-Sight5100 Camera 12-99
Loading the Application Program in the In-Sight 5600 12-258
Loading the Application Program into the Camera 12-55, 12-259
Lubrication Unit (Pushdown) 6-29

M

Maintenance Instructions 10-352
Making Corrections to the Delta Tolerance 12-145
Making Corrections to the General Offset Values 12-142
Manual Mode (Read/Write).....12-69
Memorizing Inner Package Positioner Zero Position 2-88
Memorizing the Outer Package Positioner Zero Position 2-98
Message Index (Read/Clear).....12-70
Moving the Package into Position 12-118

O

Outfeed Conveyor - Setting Speed..... 1-50
Outfeed Package Guides - Set 2-114

P

Package Aligner - Change Belt.....2-118
Package Aligner - Set Angle.....2-120
Package Aligner - Set Position 2-121
Package Aligner - Set Speed.....2-116
Package Aligner from the TPOP 2-124
Package Line - Lubricate the Grease Nipples..... 6-37
Package Line - Set Photocell.....2-130
Package Transfer Unit Setting Screen..... 1-26
Parameter Cells.....12-64
Perform a Gun Purge Operation 4-29
Photocell Package Check - Installation, Activation and Deactivation 10-334
PLC - Load FirmWare in PLC, Ethernet, DeviceNet and SERCOS Modules.....10-78
Pluto Maintenance - Change Baud Rate, Error Code E26 10-216
Pluto Maintenance - Connecting a PC to Pluto Module 10-203
Pluto Maintenance - Installing a Pluto Module in an Existing Application 10-218
Pluto Maintenance - Program Download from a PC to a Pluto Unit 10-219
Pluto Maintenance - Set the ID-FIX Address after Replacing an ID-FIX.....10-210
Pluto Troubleshooting - Explanations of Inputs, Outputs and LEDs.....10-226
Pluto Troubleshooting - Safety System Alarm on the Control Panel 10-225
Pneumatic Panel - Check..... 6-22
Pneumatic Panel - Clean Filter Regulator..... 6-26
Pneumatic Panel - Description..... 5-6
Pneumatic Panel - Set Filter Regulator..... 6-28
Pneumatic Panel - Set Pressure Switch 6-24
Position of the Cap on Package Table.....12-154
PowerFlex40 DeviceNet Adaptor - Change 10-140
Preparation 12-104
Preparation 2-44
Preparation for PLC Communication - Configure PC Network Communications 10-16
Preparations for PLC Communication - Configure RSLinx 10-24
Preparations for PLC Communication - Set EtherNet Module IP Address.....10-28
Pressure Finger - Change Bushings and Rollers 3-16
Pressure Finger - Check Bushings and Rollers 3-15
Procedure 2-47
Procedures for Application 12-282
Pulley - Change Bearing 4-6
Pushdown - Lubricate the Grease Nipples..... 6-40
Pushdown Lubrication - Clean Conveyor Lubricant Tank..... 6-35
Pushdown Lubrication - Fault Finding 6-36

Q

QuickServer Connections.....12-16

R

Recipe - Set Correct Values 10-329
Release and Application Cam - TBA,TGA and TPA with Vision System.....7-11
Release the Lower Belt 2-33, 2-39
Release the Upper Belt 2-38
Release the Upper Belt 2-32
Removal and Installation of the Belts 2-34, 2-40
Reset Button 12-65
Residual Current Device - Check Function 10-231
Result Values 12-73

S

Safety Functions - Check 13-22
Saving an Application Program in the In-Sight5100 Camera 12-99

Saving the Application Program in the Flash Memory....12-59
Saving the Application Program in the In-Sight 5600 Camera....12-261
Sensor (C50B2000) - Set....10-236
Sensor (W20B0003) - Set Sensitivity....10-234
Sensor (W21B4002,W 21B4004,W 21B4006, W21B4008, W21B4024, W21B6002, W21B6004, C50B0013, G50B5000, G50B5004) - Set....10-237
Sensor Group - Setting....12-14
Sensors - Cap Holder No.1 Position.... 7-41
Sercos Module - Change....10-176
Sercos Module - Description....10-174
SERCOS Module - Troubleshooting....10-199
Servo Drive - Change Drive....10-182
Servo Drive - Description....10-179
Servo Drive - Set Baud Rate....10-187
Set - Cap Position X Direction.... 2-65
Set - Cap Position Y Direction.... 2-66
Set - Package Length Y.... 2-71
Set - Package Width X.... 2-70
Set - Wheel Pushdown Offset.... 2-73
Set Bead Pattern.... 4-64
Set Belt Brake Speed....1-36, 2-17
Set Belt Tension - Right.... 2-36
Set Belts Alignment - Left.... 2-43
Set Belts Alignment - Right.... 2-37
Set Belts Tension - Left.... 2-42
Set Collision Sensor G30B0028....12-214
Set Collision Sensor G40B2026....12-216
Set Home Sensor G40B2025....12-213
Set Hotmelt Pressure to Machine Speed.... 1-49
Set Package Conveyor Speed.... 1-33
Set Package Infeed Running Angle.... 1-46
Set Package Infeed Running Angle Range.... 1-48
Set Package Infeed Start Angle.... 1-43
Set Tank, Hose and Gun Temperatures.... 6-60
Set X Cam.... 3-10
Set Y Cam.... 3-6
Set Z Cam.... 3-8
Set Zero.... 3-12
Setting Procedure.... 12-91, 12-93
Setting the Correct Line Status of the Camera....12-54
Setting the Focus Ring....12-106
Setting the General Offset Values and the Single Cap Holder Value to Zero....12-133
Setting the Light Intensity....12-105
Setting the Off-Line Status of the Camera.... 12-52, 12-256
Setting the On-Line Status of the Camera.... 12-50, 12-254
Setup Procedure....12-108
Star Wheel - Change.... 7-46
Star Wheel - Change Inner Cam Follower Bearings.... 7-47
Star Wheel - Change Outer Cam Follower Bearings.... 7-45
Star Wheel - Set Zero Position.... 7-42
Start up Setting Procedure....12-265
Starting In-Sight Explorer.... 12-38, 12-241
Statistic Button....12-66
Statistic Window....12-74
Switching the Illuminator ON/OFF....12-103

T

Thermostat - Set-Up....10-351
Timing Belt - Change.... 3-19, 4-88, 8-32
Timing Belt - Change Finger.... 8-43
Timing Belt - Change Guides.... 3-24
Timing Belt - Check....3-18, 8-31
Timing Belt - Removal.... 4-8
Timing Belt - Set Position Sensors....4-17, 4-98
Timing Belt - Set Tension.... 8-44
Timing Belt - Set Zero.... 8-45
Toothed Pulley - Change Bearing....8-7, 8-12
Touch Screen - Adhesive Detector Installation....12-230
Touch Screen - Change Recipes....10-332
Touch Screen - Check/Set Network Configuration....10-279
Touch Screen - Create New Recipes....10-322
Touch Screen - Delete Recipes....10-330
Touch Screen - Disable Adhesive Detector....12-324
Touch Screen - Display Setup....10-302
Touch Screen - Firmware Installation....10-243
Touch Screen - JOG Function....12-198
Touch Screen - Language Setup....10-316
Touch Screen - Lifting Device Fine Adjustment....12-194
Touch Screen - Lifting Device Zero Positioning....12-185
Touch Screen - Load New Application....10-275
Touch Screen - New Application Software Installation....10-264
Touch Screen - Remove Existing Application Program....10-271
Touch Screen - Saving Recipe Settings....10-328
Touch Screen - Start-Up Language Setup....10-310
Touch Screen - Startup Options Setup....10-296

Touch Screen - Time/Date/Regional Settings Setup 10-306
Touch Screen - TPOP SHUTDOWN..... 10-242
Touch Screen Machine Setup - Calibrate Touch Screen 10-260
TPOP - Activate Energy Saving 12-179
TPOP - Activate Interlocking Stop for PPI..... 12-182
TPOP - Activate LGV Option 12-176
TPOP - Change..... 6-68
TPOP - Configure and Test Bar Code Reader 12-157
TPOP Line Communication - Install 12-167
TPOP Packaging Plant Integration (PPI) Option - Set..... 12-172
Troubleshooting - DeviceNet Error Indications and Messages on DeviceNet Scanner (Node 0)..... 10-118
Troubleshooting - DeviceNet Error Indications on the 1734-ADN Adaptor for the Point I/O Modules (Node 2)..... 10-128
Troubleshooting - DeviceNet Error Indications on the Armor Block I/O Module (Node 3)..... 10-132
Troubleshooting - DeviceNet Error Indications on the Armor Block I/O Module (Node 4)..... 10-134
Troubleshooting - DeviceNet Error Indications on the Armor Block I/O Module (Node 5) (ReCap Only)..... 10-134
Troubleshooting - DeviceNet Error Indications on the Armor Block I/O Module (Node 6) (ReCap Only)..... 10-135
Troubleshooting - DeviceNet Error Indications on the PowerFlex40 Module 22-COMM-D Adaptor (Node 1)..... 10-124
Troubleshooting - General..... 10-188
Troubleshooting - General DeviceNet Error 10-117
Troubleshooting - SERCOS Net Error Indication and Error Codes on the Integrated Axis Module and Axis Modules..... 10-189
Turning On the Vision System 12-132

U

Upper Inner Package Positioner - Set X Direction..... 2-102
Upper Left Package Positioner - Set Height 2-100
Upper Right Package Positioner - Set Height 2-101
Using CUSTOM VIEW for Troubleshooting..... 12-84, 12-329
Using In-Sight Explorer 12-281
Using the Trend Screen 12-156

V

Verifying Camera Presence in In-Sight Explorer Database..... 12-42, 12-246
Vision System - Deactivation from the TPOP..... 12-36
Vision System - Installation / Activation from the TPOP..... 12-33
Vision System Cam Module - Overhaul 7-15

Tetra Pak®

Label for 40 mm binder ***Note!*** *This page is generated* ***automatically.***

CAP30/Flex ScrewCap
662950-0300 Issue 2014-11
Doc. No. MM-3202353-0112

CAP30/Flex ScrewCap 1(2)
662950-0300 Issue 2014-11
Doc. No. MM-3202353-0112

CAP30/Flex ScrewCap
662950-0300 Issue 2014-11
Doc. No. MM-3202353-0112

CAP30/Flex ScrewCap 2(2)
662950-0300 Issue 2014-11
Doc. No. MM-3202353-0112

CAP30/Flex ScrewCap
662950-0300 Issue 2014-11
Doc. No. MM-3202353-0112

CAP30/Flex ScrewCap 1(2)
662950-0300 Issue 2014-11
Doc. No. MM-3202353-0112

CAP30/Flex ScrewCap
662950-0300 Issue 2014-11
Doc. No. MM-3202353-0112

CAP30/Flex ScrewCap 2(2)
662950-0300 Issue 2014-11
Doc. No. MM-3202353-0112

CAP30/Flex ScrewCap
662950-0300 Issue 2014-11
Doc. No. MM-3202353-0112

CAP30/Flex ScrewCap1(3)
662950-0300 Issue 2014-11
Doc. No. MM-3202353-0112

CAP30/Flex ScrewCap
662950-0300 Issue 2014-11
Doc. No. MM-3202353-0112

CAP30/Flex ScrewCap 2(3)
662950-0300 Issue 2014-11
Doc. No. MM-3202353-0112

CAP30/Flex ScrewCap
662950-0300 Issue 2014-11
Doc. No. MM-3202353-0112

CAP30/Flex ScrewCap 3(3)
662950-0300 Issue 2014-11
Doc. No. MM-3202353-0112

CAP30/Flex ScrewCap
662950-0300 Issue 2014-11
Doc. No. MM-3202353-0112

CAP30/Flex ScrewCap3(3)
662950-0300 Issue 2014-11
Doc. No. MM-3202353-0112

Label for 55 mm binder ***Note!*** *This page is generated* ***automatically.***

CAP30/Flex ScrewCap
662950-0300 Issue 2014-11
Doc. No. MM-3202353-0112

CAP30/Flex ScrewCap 1(2)
662950-0300 Issue 2014-11
Doc. No. MM-3202353-0112

CAP30/Flex ScrewCap
662950-0300 Issue 2014-11
Doc. No. MM-3202353-0112

CAP30/Flex ScrewCap 2(2)
662950-0300 Issue 2014-11
Doc. No. MM-3202353-0112

CAP30/Flex ScrewCap
662950-0300 Issue 2014-11
Doc. No. MM-3202353-0112

CAP30/Flex ScrewCap 1(3)
662950-0300 Issue 2014-11
Doc. No. MM-3202353-0112

CAP30/Flex ScrewCap
662950-0300 Issue 2014-11
Doc. No. MM-3202353-0112

CAP30/Flex ScrewCap 2(3)
662950-0300 Issue 2014-11
Doc. No. MM-3202353-0112

CAP30/Flex ScrewCap
662950-0300 Issue 2014-11
Doc. No. MM-3202353-0112

CAP30/Flex ScrewCap 3(3)
662950-0300 Issue 2014-11
Doc. No. MM-3202353-0112

CAP30/Flex ScrewCap
662950-0300 Issue 2014-11
Doc. No. MM-3202353-0112

CAP30/Flex ScrewCap 3(3)
662950-0300 Issue 2014-11
Doc. No. MM-3202353-0112

CAP30/Flex ScrewCap
662950-0300 Issue 2014-11
Doc. No. MM-3202353-0112

CAP30/Flex ScrewCap
662950-0300 Issue 2014-11
Doc. No. MM-3202353-0112

CAP30/Flex ScrewCap
662950-0300 Issue 2014-11
Doc. No. MM-3202353-0112

CAP30/Flex ScrewCap 1(3)
662950-0300 Issue 2014-11
Doc. No. MM-3202353-0112

CAP30/Flex ScrewCap 1(2)
662950-0300 Issue 2014-11
Doc. No. MM-3202353-0112

CAP30/Flex ScrewCap 2(3)
662950-0300 Issue 2014-11
Doc. No. MM-3202353-0112

CAP30/Flex ScrewCap 2(2)

662950-0300 Issue 2014-11

Doc. No. MM-3202353-0112

CAP30/Flex ScrewCap 3(3)

662950-0300 Issue 2014-11

Doc. No. MM-3202353-0112