MM

Maintenance Manual

CAP30/Flex ReCap

662950-0300

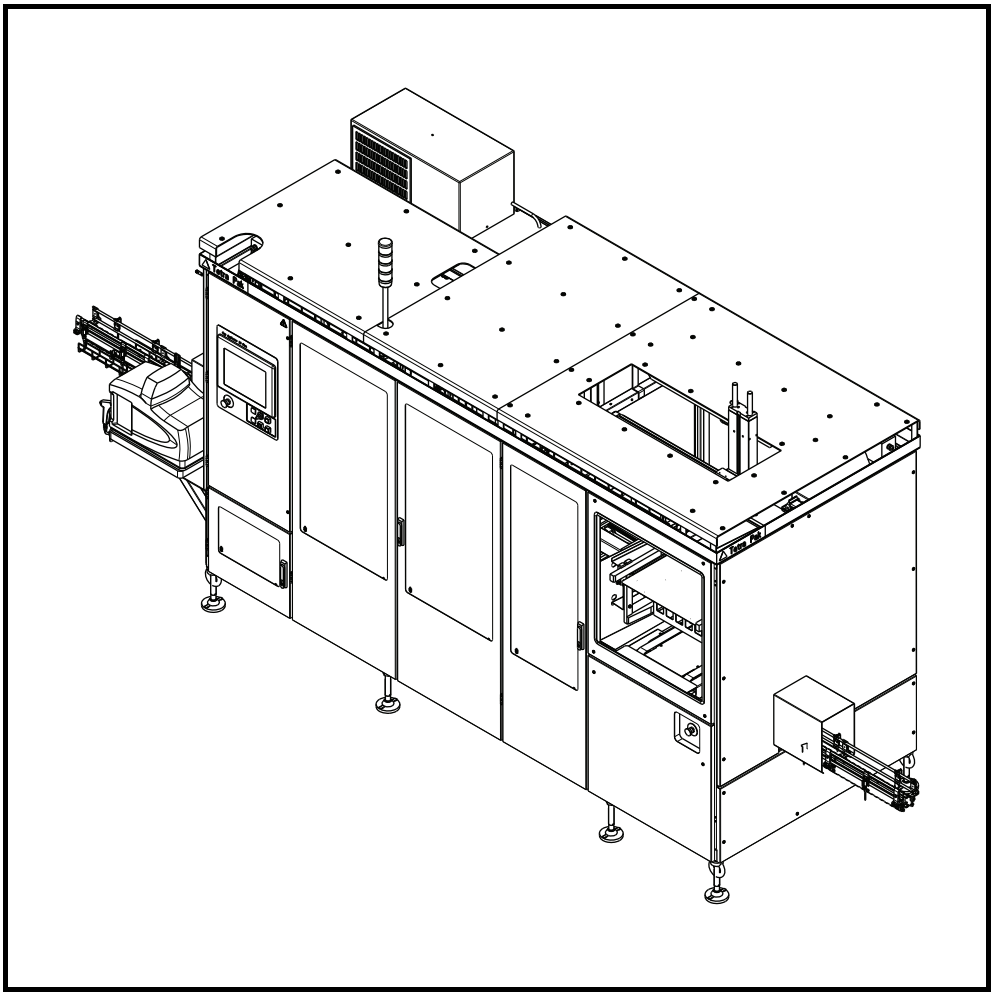

WARNING

Read and follow all safety precaution instructions throughout this manual and on safety signs attached to this equipment.

Failure to follow all safety precaution instructions could result in death or serious injury.

Tetra Pak®

Doc. No. MM-3202360-0109

Copyright © 2014 Tetra Pak International S.A.

All rights reserved. No part of this document may be reproduced or copied in any form or by any means without written permission from Tetra Pak Packaging Solutions.

, Tetra Pak, and all other trademarks displayed in this document are the property of the Tetra Pak International SA. Tetra Pak Packaging Solutions together with Tetra Pak International SA form part of ‘the Tetra Pak Group’. The content of this manual is in accordance with the design and construction of the machine or equipment at the time of publishing. The Tetra Pak Group reserves the right to introduce design modifications without prior notice.

The English language version of this document contains the original instructions. All other language versions are translations of the original instructions.

This document was produced and printed by:

Tetra Pak Packaging Solutions
Via Delfini 1
41123 MODENA
Italy

Doc. No. MM-3202360-0109

Issue 2014-11

This manual is valid for:

Series No. / Machine No.
Year of Manufacture Sign.

MM
Maintenance Manual

CAP30/Flex ReCap
662950-0300

i Introduction
ii Safety Precautions
1 Machine Synchronisation
2 Package Line
3 Push Down
4 Machine Body
5 Applicator Unit
6 ReCap Cutting and Feeding
7 ReCap Magazine
8 Electrical System
9 Regular Accessories
10 Optional Equipment
11 General

Machine or equipment configurations that this manual is valid for are described on the next page.

Doc. No. MM-3202360-0109
Issue 2014-11

Tetra Pak®
Tetra Pak Packaging Solutions

Valid for:

Name	Drawing Specification and Development Step	Additional Information
CAP30/Flex ReCap	662950-0300	Volume and Package Shape: TBA 500 S ReCap 2 A3 TBA 1000 B ReCap 3 TBA 1000 S ReCap 3 TBA 1000 Sq ReCap 3 TBA 1500 S ReCap 3 TBA 2000 S ReCap 3

Update Log for Doc. No. MM-3202360-0109

This table shows all changes made to this manual, including installed rebuilding kits, added or removed pages. Page numbering on added pages begins with UP.

Date	Installed Kit	Added Pages (Doc. No.)	Removed Pages	Signature

Date	Installed Kit	Added Pages (Doc. No.)	Removed Pages	Signature

i Introduction

About the Introduction Chapter

This chapter contains basic information about this manual and the related Tetra Pak equipment.

About the Introduction Chapter i-2

Abbreviations and Terminology i-5

Manual Information i-6

Delivered Manuals i-6

CM i-6

EM i-6

IM i-6

MM i-6

OM i-6

RM i-6

SPC i-6

TeM i-7

UP i-7

Page Layout i-8

Page Numbering i-9

Typographical Conventions i-9

Symbols i-9

Machine Introduction i-10

Intended Use of the Equipment i-10

Manufacturer i-10

Identification i-11

CE Classification i-11

Machine Plate i-11

Orientation i-12

Hygiene i-13

Microbiological Pollution i-13

How to Use This MM i-14

Procedures i-14

Procedure Start Table i-14
TPMS i-15
How TPMS Works i-15
TPMS Maintenance Recommendation Overview i-16
Assistance and Inquiries i-18

Abbreviations and Terminology

Abbreviation/Terminology	Meaning	Translation
ANSI	American National Standards Institute	American National Standards Institute
APU	Applicator Unit	Applicator Unit
CAP	Cap Applicator	Cap Applicator
CE	Communautés Européennes/European Communities	Communautés Européennes/European Communities
COMMs	Communications	Communications
Cont'd	Continued	Continued
CPS	Cap Positioning System	Cap Positioning System
CSO	Cap Sorter	Cap Sorter
Deg.	Degree	Degree
Doc.	Document	Document
EEA	European Economic Area	European Economic Area
EM	Electrical Manual	Electrical Manual
HMGU	Hotmelt Gun Unit	Hotmelt Gun Unit
IM	Installation Manual	Installation Manual
IPU	Infeed Package Unit	Infeed Package Unit
ISO	International Standards Organization	International Standards Organization
MM	Maintenance Manual	Maintenance Manual
ms	milli-second	milli-second
No.	Number	Number
O.E.	Optional Equipment	
OM	Operation Manual	Operation Manual
Pos	Position	Position
psi	Pound per square inch	Pound per square inch
PTU	Package Transfer Unit	Package Transfer Unit
PVC	Polyvinyl chloride	Polyvinyl chloride
QuTI-P	Quality and Technical Issues Platform	Quality and Technical Issues Platform
S	Slim (package shape)	Slim (package shape)
SPC	Spare Parts Catalogue	Spare Parts Catalogue
Sq	Square (package shape)	Square (package shape)
TBA	Tetra Brik® Aseptic	Tetra Brik® Aseptic
TGA	Tetra Gemina Aseptic	Tetra Gemina Aseptic
TP	Tetra Pak	Tetra Pak
TPA	Tetra Prisma Aseptic	Tetra Prisma Aseptic
V	Volt	Volt

Manual Information

The Tetra Pak Group recommends reading all delivered manuals carefully. Make sure that the delivered manuals are available to personnel who operate or maintain the equipment.

It is important to keep this manual for the lifetime of the equipment and to pass the manual on to any subsequent holder or user.

Any item that is named specifically in this manual is to be considered a designated item for the equipment. Designated items are verified by the Tetra Pak Group for use with the equipment.

The Tetra Pak Group will not be held responsible for any damage, loss, injury, or death caused by not following the instructions in the manuals that accompany this equipment, or by a failure to use designated items specified in the manuals that accompany this equipment.

Delivered Manuals

Manuals delivered with this equipment:

CM

The Conversion Manual provides technicians with information on converting the equipment between different production modes.

EM

The Electrical Manual provides technicians with information about the equipment's electrical system.

IM

The Installation Manual provides technicians with information required to safely install the equipment.

MM

The Maintenance Manual provides technicians with information on maintaining the equipment.

OM

The Operation Manual provides the operator with information on handling and operating the equipment before, during, and after production.

RM

The Rebuilding Manual provides technicians with information required to safely install a kit to an installed machine or equipment.

SPC

The Spare Parts Catalogue provides the information necessary to order spare parts from the Tetra Pak Group.

TeM

The Technical Manual provides technicians with information which can be:

- information required to safely install the equipment
- information required to maintaining the equipment
- information about the machine's/equipment's electrical system
- information necessary to order spare parts from the Tetra Pak Group
- other technical information

UP

The Update Pages provides new pages to update existing machine manuals.

Page Layout

Every main page in a manual contains a header and a footer. The page header contains the chapter name (1) and the section name (2). The page footer contains the page number (3), and the document number (4). See also the Page Numbering section.

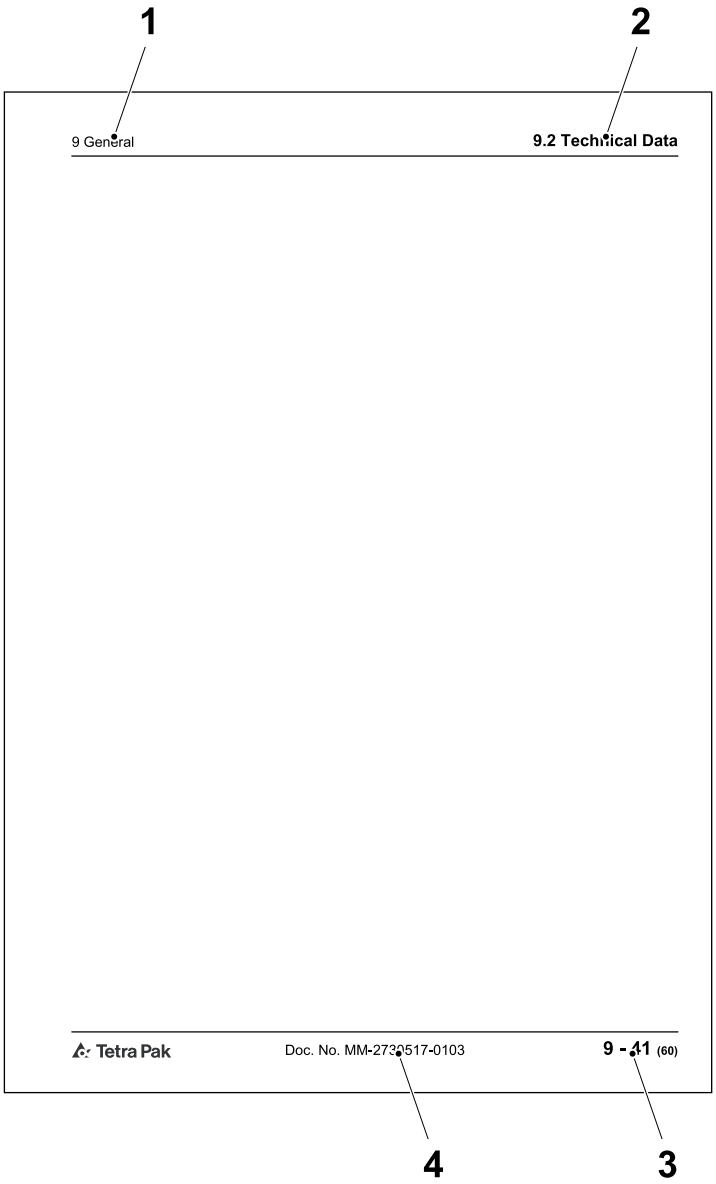

1 Chapter name
2 Section name
3 Page number
4 Document number

Page Numbering

A page number has three parts:

- chapter number (1)
- consecutive page number (2) within the chapter
- total number of pages (3) in the chapter

Note! The letters UP may replace the chapter number (1) if the manual includes update pages. The consecutive page number (2) and the total number of pages (3) of update pages do not follow the existing sequential page numbering of the chapter.

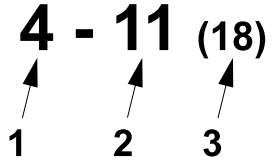

1 Chapter number
2 Consecutive page number
3 Total number of pages

Typographical Conventions

Controls on the operator panel, emergency stop devices, and program steps are printed in CAPITAL LETTERS.

Menu names, button names and other text displayed in software are printed in COURIER.

Cross-references are underlined.

Symbols

Symbols used in illustrations.

	A pointer arrow indicates the position of an object.
	A zoom arrow indicates that an object view is enlarged. The arrow points towards the enlarged view of the object.
	A rotation movement arrow indicates rotational movement of an object. The arrow points in the direction of rotation.
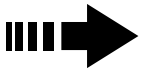	A straight movement arrow indicates movement of an object. The arrow points in the direction of movement.

Machine Introduction

Intended Use of the Equipment

The intended use of this Tetra Pak equipment is to apply a closure onto a package.

Tetra Brik Aseptic Slim packages must have opening tabs. The opening tabs are applied by a PullTab unit which is incorporated in to the filling machine. All other packages must have pre-laminated holes.

All other use is prohibited. Tetra Pak will not be held responsible for injury or damage if the equipment is used for any other purpose than the intended use described above.

Manufacturer

This Tetra Pak equipment has been manufactured by

Tetra Pak Packaging Solutions

Via Delfini 1

41123 MODENA

Italy

Identification

CE Classification

This equipment complies with the basic health and safety regulations of the European Economic Area (EEA).

Machine Plate

The illustration below shows an example of the machine plate and its location on the equipment. The machine plate carries data needed when contacting Tetra Pak concerning this specific equipment.

Make sure that the equipment data in the front pages of this manual corresponds to the machine plate data and the machine specification.

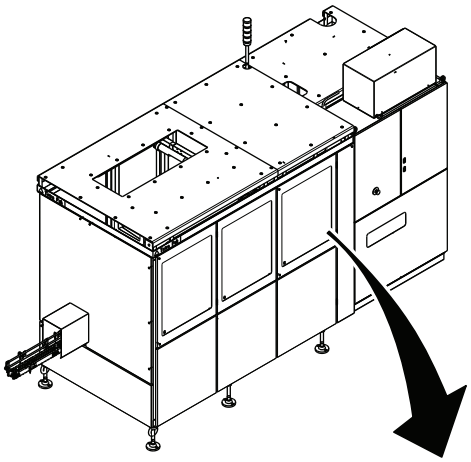

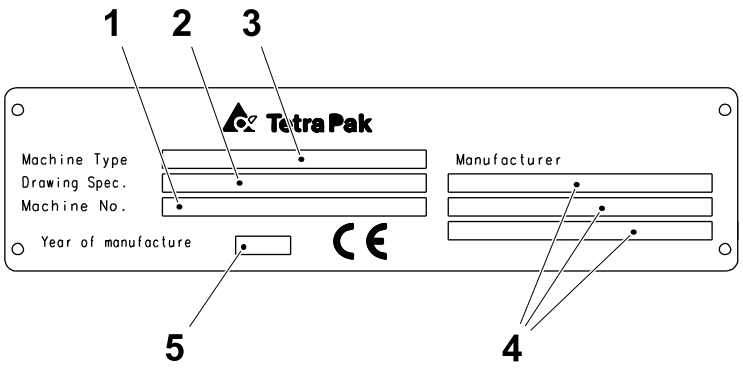

1 Machine serial number
2 Drawing specifications
3 Machine type
4 Manufacturer
5 Year of manufacture

Orientation

The illustration below shows the orientation of the equipment. This orientation information will be used throughout this manual. The arrows indicate the flow of material.

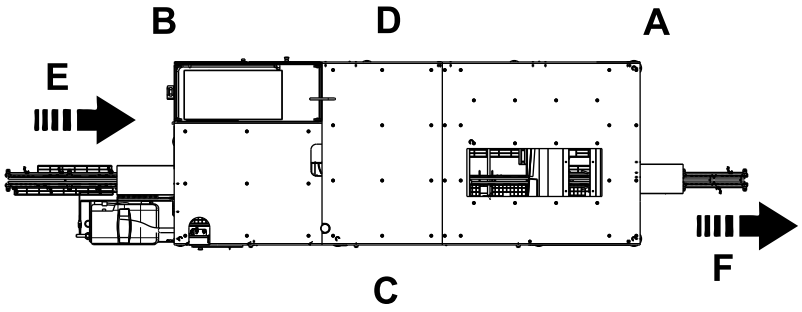

A Front
B Back
C Left-hand side
D Right-hand side
E Infeed
F Outfeed

Hygiene

Microbiological Pollution

To avoid microbiological pollution of the packaging material:

- Never clean the floors or the equipment when the equipment is in production
- Compressed air used for cleaning purposes is to be used only for cleaning filters and should only be used outside of the filling room (area) or in the final folder compartment of the filling machine
- Disinfect your hands before touching anything that may come into contact with the product. Use disinfectant code H. See the Technical Data chapter
- Keep your hands and gloves clean
- Always wear some type of hair protection (cap or hairnet) and clean clothes (preferably white)
- Do not wear a watch, ring, necklace, earrings, or any other exposed jewellery.

How to Use This MM

Procedures

The name of the chapters and sections in the MM correspond to the groups in the structure of the equipment. Procedures correspond to a chapter or a section:

- The hyphens indicate that it is a procedure heading. The example shows a heading for Procedure number 3 in Section 1.5.
- The text after the second hyphen tells what type of procedure it is. Check, Change, and Set are common procedure types.

1.5-3 Outfeed Servo - Change Bearings

Maintenance procedures in this manual are connected to the Tetra Pak Maintenance System, TPMS. See the TPMS section.

Procedure Start Table

Procedures in this manual begin with a table providing information needed to perform the procedure.

- Machine Status (1) shows actuator status, program step, and any other machine status necessary to begin the procedure.
- Special Equipment (2) shows a list of personal protective equipment and special tools that are not normally carried by a service technician, but are needed in the procedure.
- Consumables (3) shows items, such as lubricants, that are required to perform the procedure. Consumables do not include replacement parts.
- SPC Reference (4) shows the assembly number, found in the index of the SPC.

1	Machine Status	Electrical supply disconnecting device in position O (OFF) Main air valve OFF Main water valve OFF
2	Special Equipment	Hook spanner TP No. 777170-0105 Dial indicator
3	Consumables	Lint-free cloths
4	SPC Reference	2501234-0100

1 Machine Status
2 Special Equipment
3 Consumables
4 SPC Reference

TPMS

TPMS is the maintenance methodology to handle all maintenance-related work processes from development and the whole life cycles for Tetra Pak® machines and equipment. The TPMS methodology is reliability-centred (best industry practice) and aims at finding the right combination of predetermined, condition-based, and corrective maintenance. In maintenance, the challenge is to find the right level of investment in parts and labour effort to achieve the desired performance, quality, and reliability. Thanks to TPMS, it is possible to create maintenance plans with a good balance between what is invested and what it received in return.

How TPMS Works

Users around the globe continuously feed the system with maintenance data. The data is continuously evaluated and then utilised to improve maintenance recommendations and customer-specific scheduling of maintenance tasks. TPMS takes a holistic approach to maintenance by including the actions needed to contribute to plant efficiency. With this advanced maintenance management tool, the maintenance checklists are designed to include latest updates of our recommendations to meet the demands for fewer unscheduled stops, reduced waste, and less interference with production.

TPMS Maintenance Recommendation Overview

With the Tetra Pak Group's extensive experience of managing maintenance on Tetra Pak® packaging lines, together with our advanced maintenance management tools, we can support you in tailoring the right maintenance plans (checklists) to follow the maintenance system in a consistent way. Using TPMS is a foundation to having your machine run at its best. Checklists can be managed and delivered directly from your local Tetra Pak service station. In the checklist you will find information concerning what tasks shall be done and when they shall be done. Furthermore, the document reference will give guidance as to how to perform the work. The document references are MM, SPC, OM, RM, EM, and TeM.

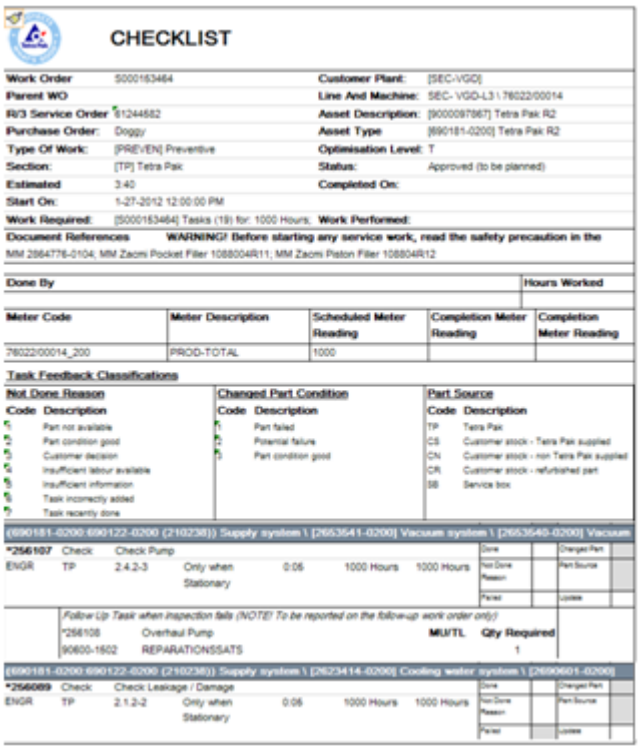

CHECKLIST

Work Order	5000163464	**Customer Plant:**	[SEC-VGO]
Parent WO		**Line And Machine:**	SEC- VGO-L3 \ 76022/00014
R/3 Service Order	61244682	**Asset Description:**	[9000097867] Tetra Pak R2
Purchase Order:	Doggy	**Asset Type**	[690181-0200] Tetra Pak R2
Type Of Work:	[PREVEN] Preventive	**Optimisation Level:**	T
Section:	[TP] Tetra Pak	**Status:**	Approved (to be planned)
Estimated	3:40	**Completed On:**	
Start On:	1-27-2012 12:00:00 PM		
Work Required:	[5000163464] Tasks (19) for: 1000 Hours;	**Work Performed:**	

Document References **WARNING! Before starting any service work, read the safety precaution in the**
MM 2864776-0104; MM Zaomi Pocket Filter 1088004R11; MM Zaomi Piston Filter 108804R12

Done By	**Hours Worked**

Meter Code	**Meter Description**	**Scheduled Meter Reading**	**Completion Meter Reading**	**Completion Meter Reading**
76022/00014_200	PROD-TOTAL	1000		

Task Feedback Classifications

Not Done Reason		**Changed Part Condition**		**Part Source**	
Code	**Description**	**Code**	**Description**	**Code**	**Description**
1	Part not available	1	Part failed	TP	Tetra Pak
2	Part condition good	2	Potential failure	CS	Customer stock - Tetra Pak supplied
3	Customer decision	3	Part condition good	CN	Customer stock - non Tetra Pak supplied
4	Insufficient labour available			CR	Customer stock - refurbished part
5	Insufficient information			SB	Service box
6	Task incorrectly added				
7	Task recently done				

((690181-0200 690122-0200 (210238)) Supply system \ [2653541-0200] Vacuum system \ [2653540-0200] Vacuum

*256107	Check:	Check Pump					Done	Changed Part
ENGR	TP	2.4.2-3	Only when Stationary	0:05	1000 Hours	1000 Hours	Not Done Reason	Part Source
							Failed	Update

Follow Up Task when inspection fails (NOTE! To be reported on the follow-up work order only)

*256108	Overhaul Pump	MU/TL	Qty Required
90600-1502	REPARATIONSSATS		1

((690181-0200 690122-0200 (210238)) Supply system \ [2623414-0200] Cooling water system \ [2690601-0200]

*256089	Check:	Check Leakage / Damage					Done	Changed Part
ENGR	TP	2.1.2-2	Only when Stationary	0:05	1000 Hours	1000 Hours	Not Done Reason	Part Source
							Failed	Update

Note! The layout of the checklist is subject to change.

For those customers that intend to set up their own maintenance system and plans, the Tetra Pak Group can on a upon-request basis provide a maintenance recommendation overview for the specific equipment, including tasks required to keep the equipment in good condition. The recommendation will be provided free of charge for up to a year after delivery.

(Cont'd)

(Cont'd)

The following items can be found in the maintenance recommendation overview:

Task Code	Trade	Task Action	Task Description	Document Reference	Interval
Number of the task	Skill required to perform the task	Check, Change, Turn, and so on	Work description	Where info can be found on how to perform this task	When the task shall be performed

Task Code	Trade	Task Action	Task Description	Document Reference	Interval
*2812811	ENGR	Change	Change Shaft / Cylinder	1.4.4-1	
Superstructure \ [2528076-0100] Sterile air system \ [1499158-0100] Air super-heater					
*181142	ENGR	Delime	Delime Heat exchanger	1.4.5-2	3000 Hours
Superstructure \ [2528076-0100] Sterile air system \ [1538166-0100] Air valve					
*3732	ENGR	Change	Change Seal ring / Plain bearing	1.4.6-2	9000 Hours
*2806794	ENGR	Check	Check Shaft / Cylinder	1.4.6-2	1000 Hours
*2807375	ENGR	Change	Change Shaft / Cylinder	1.4.6-2	

The Tetra Pak Group's Maintenance recommendations are continuously updated and improved based on user feedback.

Note! Contact the local Tetra Pak® office for additional information and support regarding TPMS.

Assistance and Inquiries

For assistance when operating this equipment, or other inquiries, comments, or suggestions, submit the questions or give feedback by using the QuTI-P tool. Type QuTI-P in the address field of your browser. If access to QuTI-P is not available, request access by contacting the Global Service Desk.

If access to the Tetra Pak® intranet is not available, contact the nearest Tetra Pak representative.

ii Safety Precautions

Description

Safety Precaution Instructions

WARNING

Read and understand this manual before using the machine.
Failure to follow safety precautions and instructions can result in death or serious injury.

Definition of Lockout Procedure

A lockout procedure is a procedure to put each necessary energy isolating device in its safe position to prevent the energisation of the equipment, such as when a maintenance procedure should be carried out.

A lockout is the use of a device, for example, a padlock, to make sure that an energy isolating device cannot be operated.

An energy isolating device is a mechanical device that physically prevents transmission or release of energy, such as an electrical supply disconnecting device.

Description ii-2

Safety Messages Description..... ii-5

Personnel Requirements ii-6

Skilled Person ii-6

Instructed Person ii-6

Safety Signs..... ii-7

Locations of Safety Signs ii-9

Protective Devices ii-10

Emergency Stop..... ii-10

Emergency Stop Buttons ii-11

Safeguards..... ii-12

Indicating Tower..... ii-14

Audible Alarm ii-15

Safe Manual Handling ii-16

Personal Protection ii-17

Noise ii-17

Entanglement..... ii-17

Hazardous Substances..... ii-18

Disposal of Chemical Substances..... ii-18

Personal Protective Equipment ii-18

Supply Systems..... ii-19

Power Supply..... ii-19

Residual Voltage..... ii-20

Electrical Cabinet ii-20

Socket Outlet..... ii-21

Air Supply..... ii-22

Hotmelt Equipment ii-23

General ii-23
Hotmelt Unit ii-24
Hotmelt Wheel ii-25

Additional Information ii-26
Package Heater ii-26
Waste Device ii-27
Equipment for Lifting and Moving Loads ii-28

Safety Messages Description

A safety message is always accompanied by a safety alert symbol and a signal word.

The safety alert symbol is used to alert about potential personal injury hazards. To avoid hazards, obey all safety messages that follow this symbol.

The following safety alert symbols and signal words are used in this manual to inform the user of hazards.

DANGER	Danger indicates an imminently hazardous situation which, if not avoided, **will** result in **death or serious injury**.
WARNING	Warning indicates a potentially hazardous situation which, if not avoided, **could** result in **death or serious injury**.
CAUTION	Caution indicates a potentially hazardous situation which, if not avoided, **may** result in **minor or moderate injury.** It may also be used to alert against unsafe practices.
CAUTION	Caution without the safety alert symbol indicates a potentially hazardous situation which, if not avoided, **may** result in **property damage**.

Personnel Requirements

Note! Personnel includes all persons working on or near this equipment.

Only skilled or instructed persons are allowed to work with this equipment.

Skilled Person

A skilled person must have relevant education and experience to enable him or her to identify hazards, analyse risks, and avoid hazards which electricity, machinery, chemicals, other energies, and supply systems on this equipment can create.

Skilled persons must meet local regulations, such as certifications and qualifications for working with these energies and systems.

Instructed Person

An instructed person must be adequately advised or supervised by a skilled person. The skilled person enables the instructed person to identify hazards, analyse risks, and avoid hazards which electricity, machinery, chemicals, other energies, and supply systems on this equipment can create.

Safety Signs

WARNING

Damaged or missing safety signs.
Safety signs are used to indicate safety hazards. If the signs are missing or damaged, they can not fulfil this function. Replace all missing or damaged safety signs immediately.

Safety signs are attached to the equipment. The table below lists all the signs that are used, and illustrations show their locations on the equipment. Each position number refers to two standards of a safety sign in the table, but only one is used on the equipment.

- Make sure that each safety sign is legible and in its correct position after installation and maintenance.
- Replace all missing or damaged safety signs immediately.

Pos	ISO Standard	ANSI Standard
1	 	**Hazardous voltage.** Will shock, burn, or cause death. Follow lockout procedure before maintenance.
2	 	**Hot surface.** Do not touch. Follow lockout procedure before maintenance.
3	 	**Risk of equipment damage.** Do not let water into this area.

(Cont'd)

(Cont'd)

Pos	ISO Standard	ANSI Standard
4		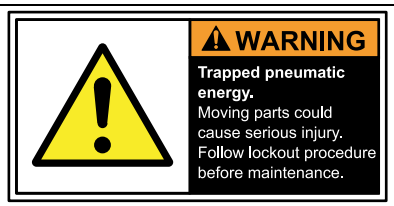
	Trapped pneumatic energy. Moving parts could cause serious injury. Follow lockout procedure before maintenance.	
5		
	Do not reach in. Moving parts may cause injury. Follow instructions for safe work practice.	
6		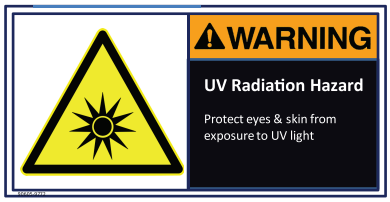
	Risk of UV Radiation. Do not see and touch when the UV lamp is in function. Follow lockout procedure before maintenance.	
7	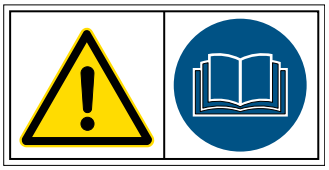	Not applicable
	Risk of electric shock. This equipment can cause currents greater than 10 mA in the electrical power supply protective conductor (PE). Connect the equipment to the electric power supply source in accordance with applicable local or national regulations.	

Locations of Safety Signs

The illustration shows where the safety signs are located. The position numbers refer to the table in the Safety Signs section.

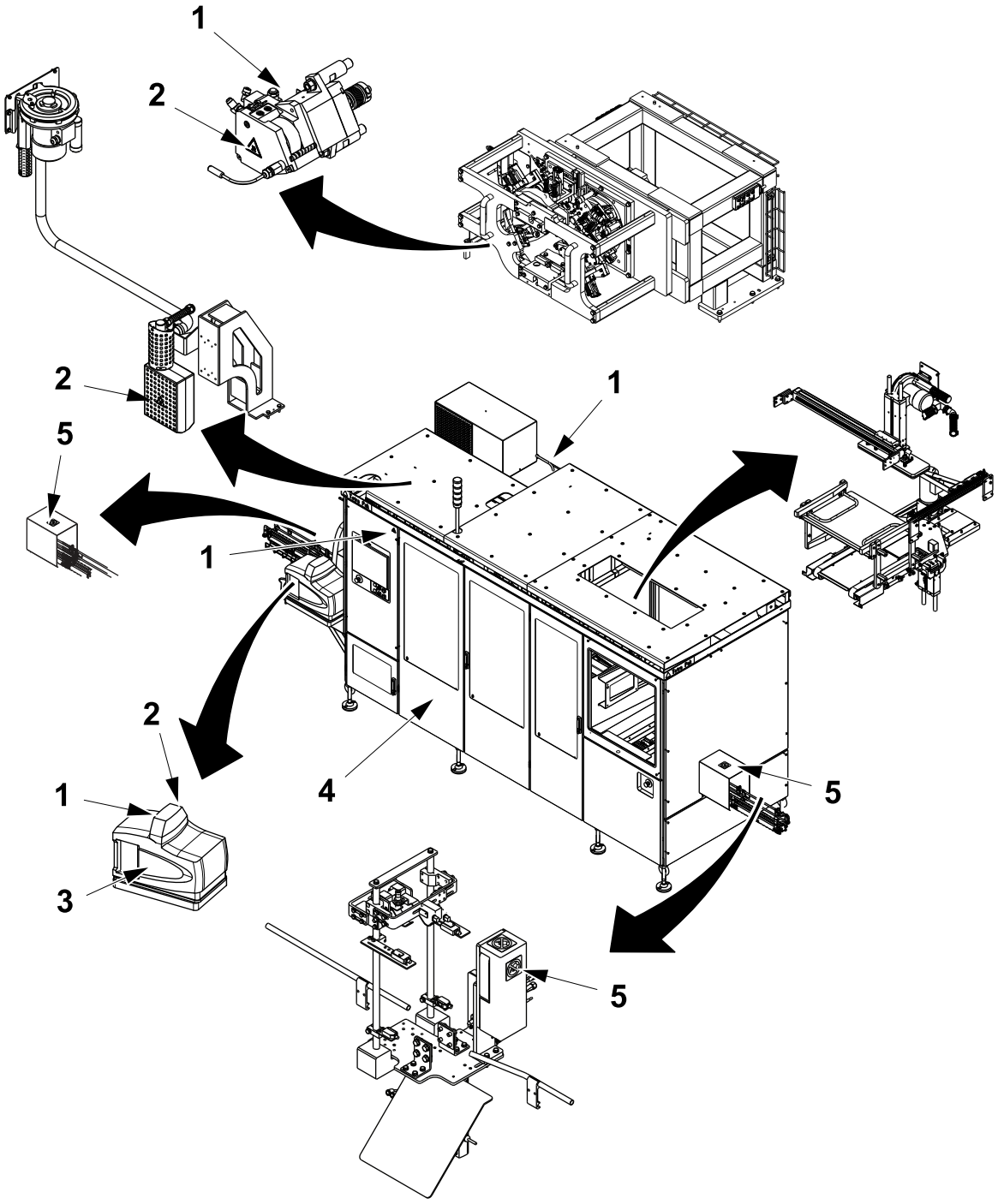

Protective Devices

There are different kinds of protective device designed to ensure safe use of the equipment. See the sections below.

WARNING

Hazardous zones.
Hazardous zones are safeguarded and provided with protective devices. Do not inch or run this equipment if any protective device is inoperative.

Change inoperative components of the safety system immediately.

For the locations of safeguards and/or other protective devices not mentioned in this section, see the Maintenance Manual.

Emergency Stop

DANGER

Hazardous voltage.
Will shock, burn, or cause death.
Hazardous voltage remains ON after activating an EMERGENCY STOP.

Emergency stop devices are used to stop this equipment immediately in a hazardous situation. Learn the positions of all emergency stop devices and how to use them.

Instructions for a normal production stop are included in the Stop chapter of the Operation Manual.

Emergency Stop Buttons

Push one of the EMERGENCY STOP buttons to stop this equipment immediately.

The location of each EMERGENCY STOP button is shown by an arrow.

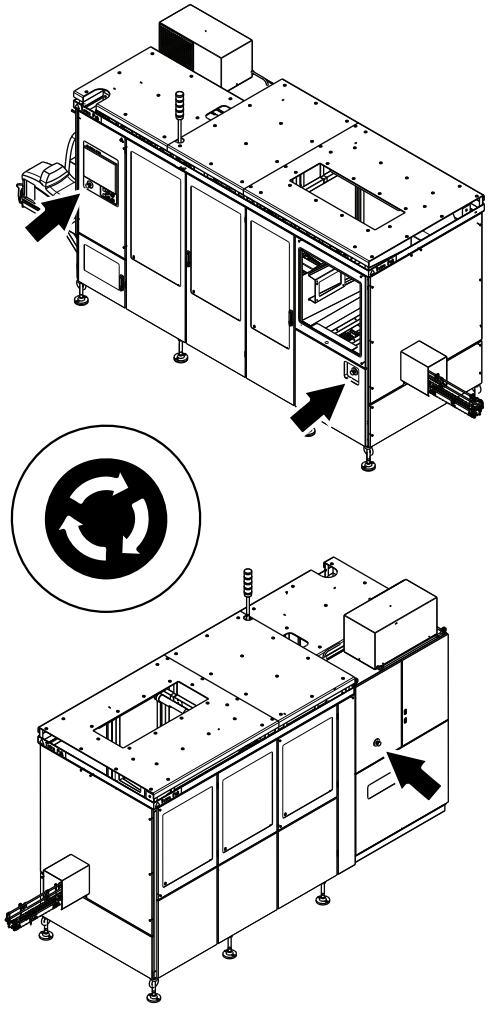

Safeguards

WARNING
Moving machinery parts.
Never defeat or bypass the interlocking devices.

Movable guards, for example, doors and covers leading to hazardous zones, are fitted with interlocking devices where required. These devices are usually electric safety switches that are parts of the safety system and must never be defeated, bypassed, or otherwise made inoperative.

Where movable guards (doors) are equipped with means to be locked in a nonclosed position, any person with the intention to preside, for any reason, behind such a guard must lock the guard in the nonclosed position by use of a padlock.

Note! For work on the electrical equipment, the electrical power must also be disconnected.

CAUTION
Corners and edges.
Close the doors, guards, or parts of the equipment unless they must be open during work.

CAUTION
Burn hazard.
Parts of the equipment protected by guards may be hot after operation. Allow components to cool down or use personal protective equipment.

After installation and maintenance, and before this equipment is inched or run, check that all safeguards are in place and that they operate correctly.

(Cont'd)

(Cont'd)

CAUTION
Equipment damage.
The equipment can be damaged if it is not stopped in the correct way. Never stop this equipment by opening a movable guard, for example, a door or cover, equipped with an interlocking device.

The location of each interlocking device is shown by an arrow.

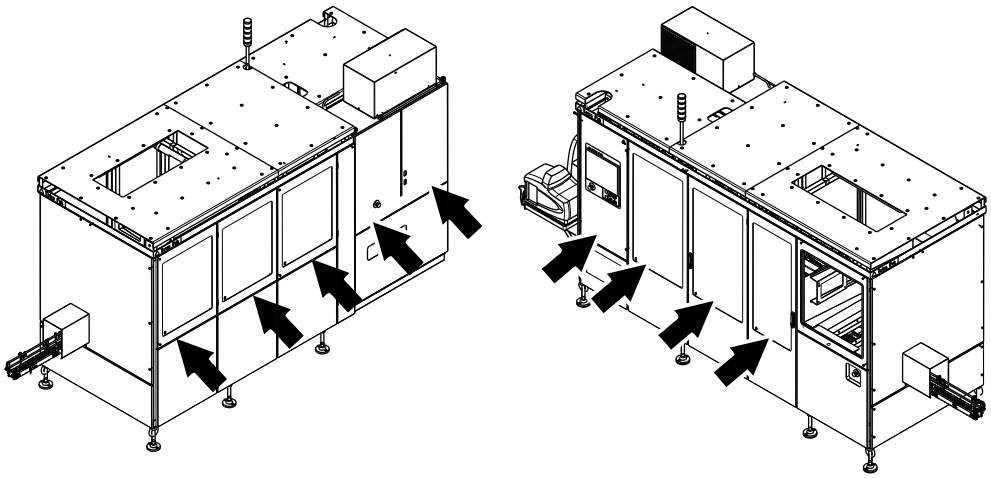

Movable guards with an electromagnetic door lock installed are shown by an arrow.

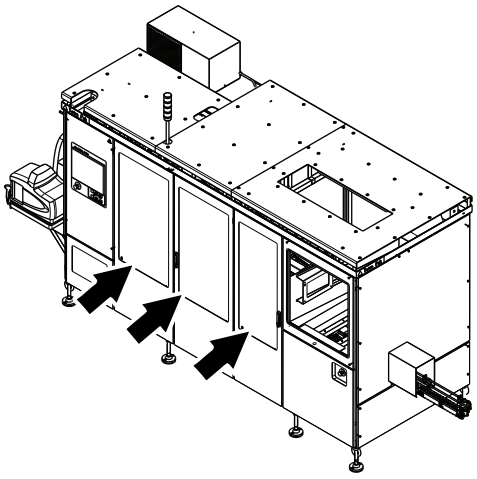

Indicating Tower

An indicating tower is a column of warning lights:

- A red light (1) indicates a hazardous condition. This is a situation that requires immediate action.
- A yellow light (2) indicates an abnormal or impending critical condition. This is a condition calling for action by the operator.
- A blue light (3) indicates that operator action is required.
- A green light (4) indicates a normal condition.

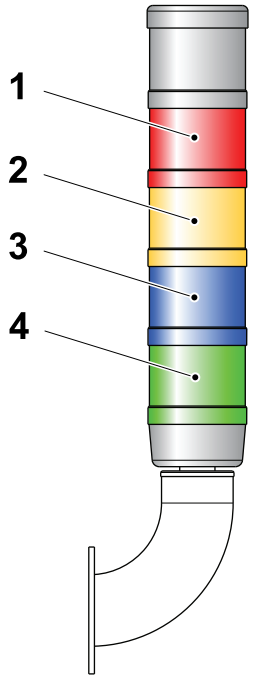

1 Red light
2 Yellow light
3 Blue light
4 Green light

Audible Alarm

The audible alarm (1) produces a warning signal every time this equipment is about to start. The warning signal sounds for approximately three seconds prior to starting to alert personnel.

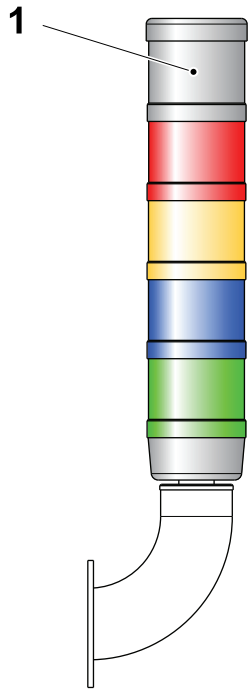

1 Audible alarm

Safe Manual Handling

Use mechanical lifting aids whenever possible. If mechanical lifting aids are not available, do not attempt to lift loads over 23 kg without the assistance of a colleague. Avoid lifting below knee height and above shoulder height. If it is necessary to lift from the floor, follow the instructions below to reduce the risk of back and disc injuries.

- Use safety shoes and be sure that the surface of the floor is not slippery.
- Get close to the load.
- Take a wide stance and find the best positions for your feet.
- Bend your hips and knees, and use your leg muscles.
- Keep the load close to your body.
- Do not twist your body while moving the load.
- Take small steps when turning.

In order to reduce the risk of injury to discs and back muscles, be careful to not bend or twist your back when lifting. Keep the load close to your body to reduce the strain on your back.

To reduce the ergonomic risks to each individual operator, job rotation is recommended, so that recovery and variety are provided.

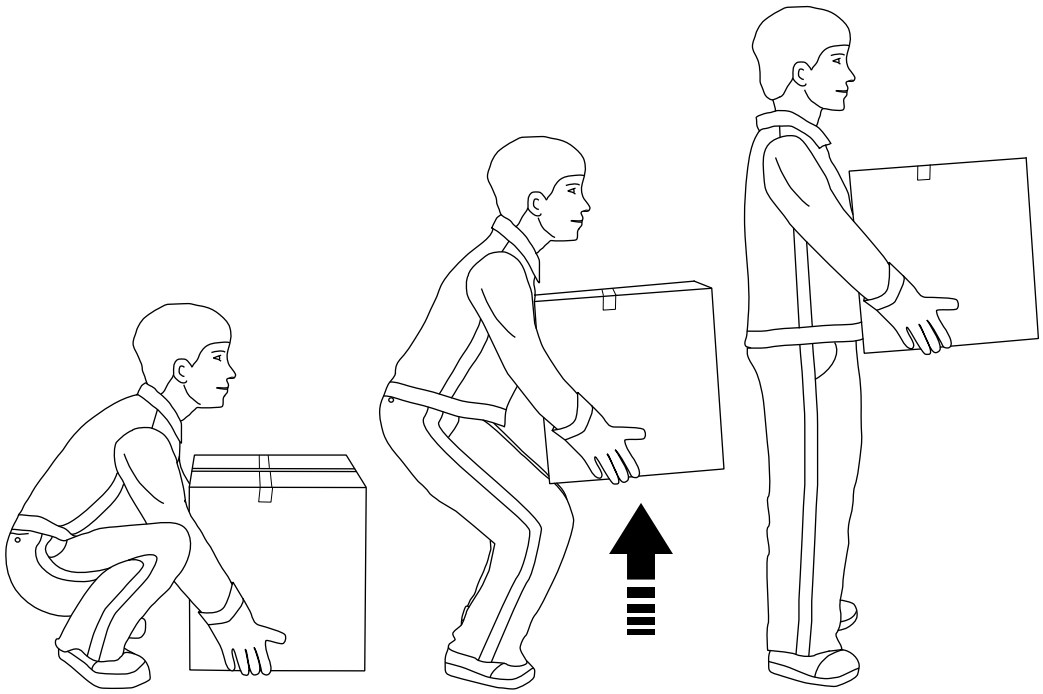

Personal Protection

This section applies to all personnel at all times when this equipment is in operation. For special personal protective equipment required when handling hazardous substances, see the Hazardous Substances section.

Noise

WARNING

Hazardous noise.
Can cause impaired hearing.
Wear hearing protection whenever this equipment is in operation.

CAUTION

Hazardous noise.
May cause impaired hearing.
Hearing protection is recommended whenever this equipment is in operation.

Entanglement

WARNING

Risk of entanglement.
Do not wear jewellery or loose clothing when working on or near this equipment.
Restrain long hair with, for example, clips or rubber bands.

Hazardous Substances

WARNING

Contact with chemicals can cause death, serious injury, or illness.
Always read and follow the instructions in the safety data sheet supplied by the manufacturer or local supplier, when handling chemicals.

Make sure that

- the safety data sheet is available
- preparations have been done to ensure that the stated safety measures in the safety data sheet can be followed
- the locations of the first aid equipment are learned in order to act immediately in case of an accident

Disposal of Chemical Substances

Always read and follow the disposal instructions in the safety data sheet supplied by the manufacturer or local supplier.

It is strongly recommended that used chemical containers are

- disposed of according to the instructions immediately after use
- not used as disposal containers for other chemicals in order to avoid uncontrolled chemical reactions within the container

Personal Protective Equipment

The personal protective equipment for hydrogen peroxide is

- protective goggles (for instance, TP No. 90303-11), tight fitting
  If there is a risk of splashes, a visor is a suitable complement
- protective gloves made of neoprene (for instance, TP No. 90303-12), nitrile, or butyl rubber
- protective apron (for instance, TP No. 90303-13), or protective suit when handling larger amounts
- protective shoes or boots made of PVC, PE plastic, or rubber
- proper respiratory equipment, if ventilation is insufficient

Supply Systems

Power Supply

DANGER

Hazardous voltage and moving machinery.
The electrical supply disconnecting device must be in position O (OFF) and secured with a lock before any maintenance that requires the electrical supply to be disconnected. See the Machine Status section of the MM Procedure Start Table.

Note! The key to the lock must be removed by the technician and retained in his/her possession until all work is completed.

DANGER

Hazardous voltage can be present with the power supply switched off.
Circuits identified by orange-coloured conductors are not disconnected by the main electrical supply disconnecting device. The location of the electrical supply disconnecting device of these circuits is described in the Maintenance Manual procedures that include work on these types of circuit.

Certain maintenance procedures may require power supply systems to be on. These exceptions are clearly stated in the Maintenance Manual.

The illustrations show the electrical supply disconnecting device and its location.

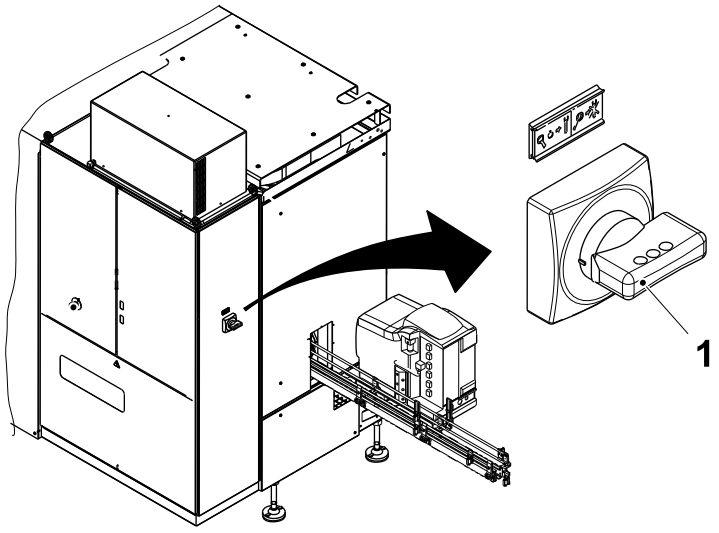

1 Electrical supply disconnecting device

Residual Voltage

DANGER

Hazardous voltage.
Will shock, burn, or cause death.
After the electrical supply disconnecting device is turned to position O (OFF), residual voltage remains in the capacitor circuits. Wait five minutes before opening the enclosure containing these circuits. Ensure that no residual voltage remains on the capacitors before touching them.

Electrical Cabinet

DANGER

Hazardous voltage.
Will shock, burn, or cause death.
Parts behind doors to the electrical cabinet may be live. The electrical supply disconnecting device must be turned to position O (OFF) and secured with a lock before maintenance inside the electrical cabinet.

Note! The key to the lock must be removed by the technician and retained in his/her possession until all work is completed.

Make sure that the electrical cabinet doors are closed after working inside the electrical cabinet. Doors with locks must be locked.

The location of each electrical cabinet is shown by an arrow.

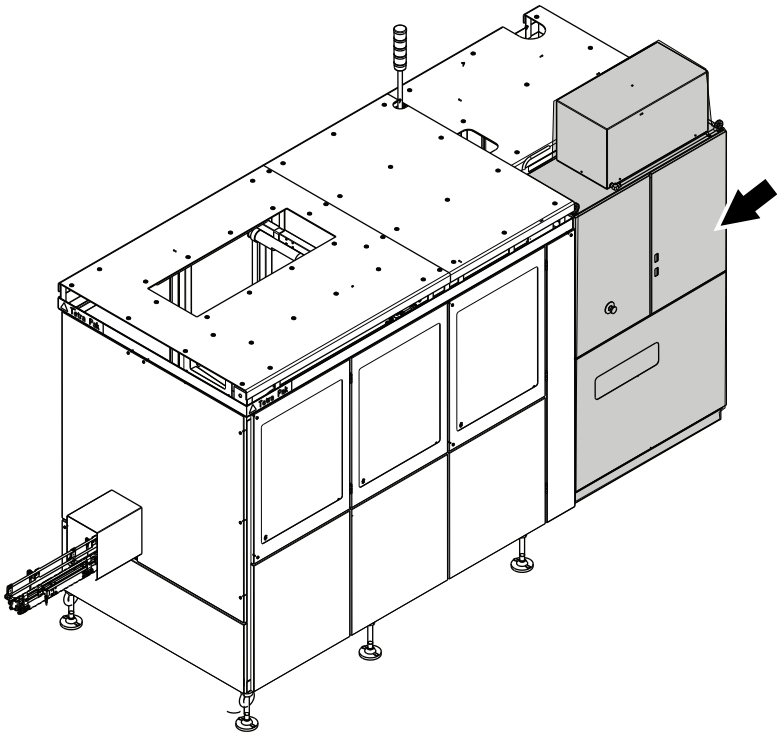

Socket Outlet

WARNING

Hazardous voltage.
Can shock, burn, or cause death.
Read the Maintenance Manual before using this socket outlet.

The socket outlet (1) is connected to a residual current device (2) to protect users against electrical shock if there is an earth fault in the connected equipment. The residual current device must be tested each time before the socket outlet is being used. See the MM for test procedure.

The illustrations show the socket outlet, the residual current device, and their locations.

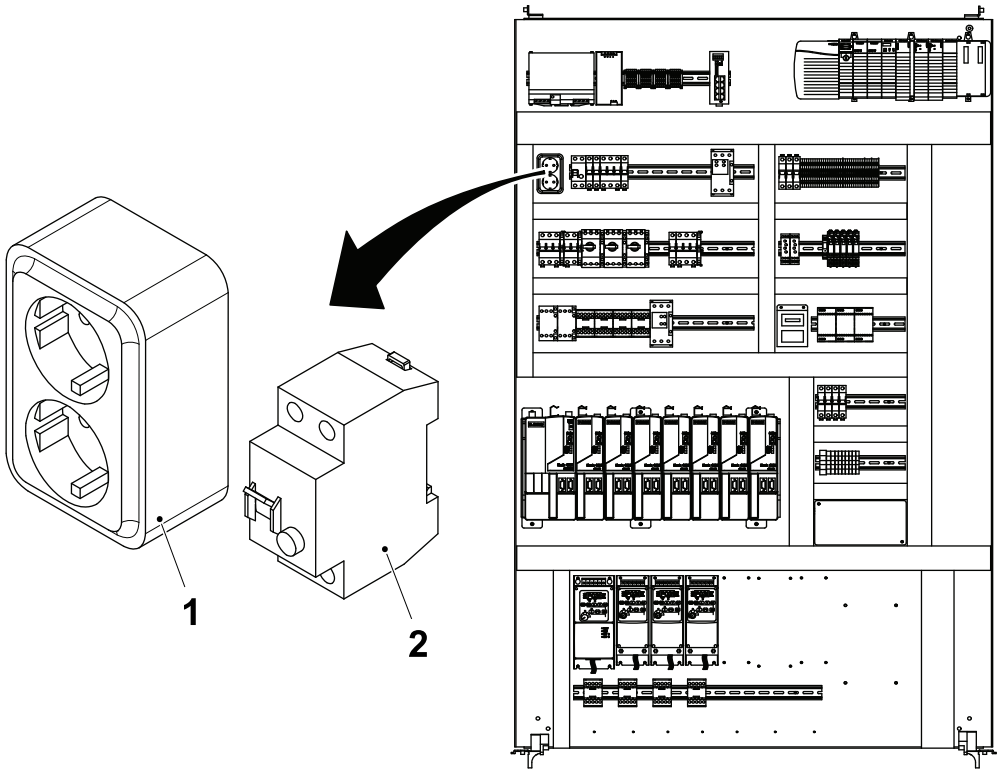

1 Socket outlet
2 Residual current device

Air Supply

WARNING

Compressed air and moving machinery.
Close the air supply valve and lock it, and safely release compressed air from the air system before any maintenance that requires the air supply to be closed. See the Machine Status section of the MM Procedure Start Table.

Note! The key to the lock must be removed by the technician and retained in his/her possession until all work is completed.

Certain maintenance procedures may require air supply systems to be on. These exceptions are clearly stated in the Maintenance Manual.

The illustrations show the main air valve (1), the lock (2), and their location.

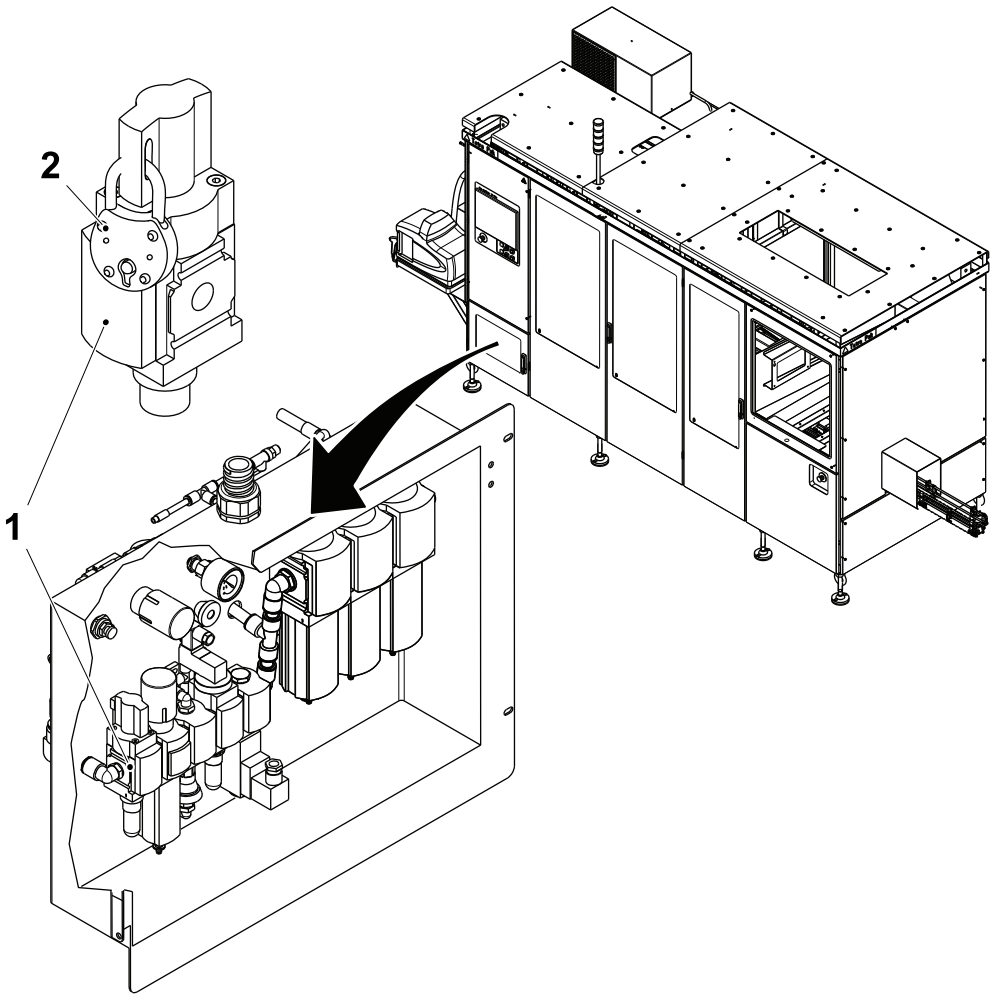

1 Main air valve
2 Lock

Hotmelt Equipment

General

DANGER

Risk of electrical shock.
The voltage is 400V inside the hotmelt unit. Risk of immediate danger to life from electrical shock.

WARNING

Risk of personal injury.
All service work on the hotmelt unit must be carried out by authorized personnel. Always wear safety glasses, protective gloves, and other protective clothing to avoid injuries caused by splashing hotmelt material. Failure to relieve any air or adhesive pressure could cause serious injuries from burning when the hotmelt filter is detached or flushed. Never remove any part or component until the air and the electrical supply to the machine have been disconnected and the pressure of the hotmelt in the system has been relieved.

WARNING

Risk of hotmelt vapours.
When the tank lid is open, hotmelt vapours could be released. Vent the application area or wear a respirator.

Note! Always refer to the documentation provided from Nordson Corporation before doing any kind of work on the hotmelt equipment. The Nordson hotmelt manual is included with the delivery from Tetra Pak. The information in this manual only deals with what is specific for this machine.

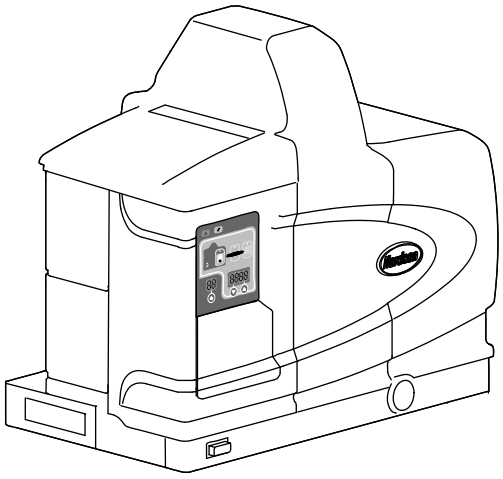

Hotmelt Unit

CAUTION

Risk of damage to the equipment

Never flush water or any other liquid towards the hotmelt unit when cleaning the machine. Failure to obey could result in damage to equipment.

WARNING

Risk of burns.

During PREHEATING and PREPARATION the hotmelt unit becomes hot. Do not touch the hotmelt unit and beware of the entrapped heat inside the unit when service is performed.

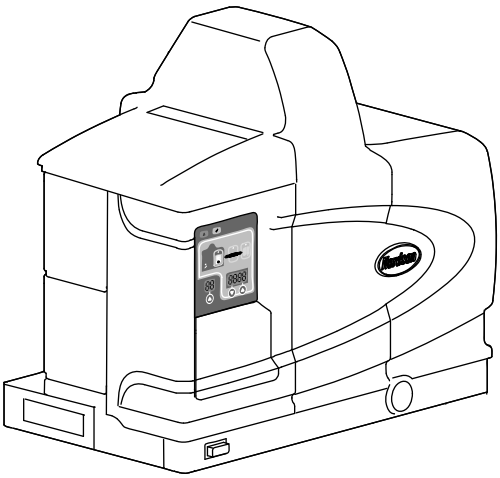

Hotmelt Wheel

WARNING

Risk of burns.

During PREHEATING, PREPARATION and PRODUCTION the hotmelt wheel (1) is hot. There is a risk of servere burns. Do not touch the hotmelt wheel (1) and beware of the entrapped heat when service is performed.

CAUTION

Risk of damage to equipment.

Never flush water or any other liquids towards the hotmelt wheel (1) when cleaning the machine. Failure to obey could result in damage to equipment.

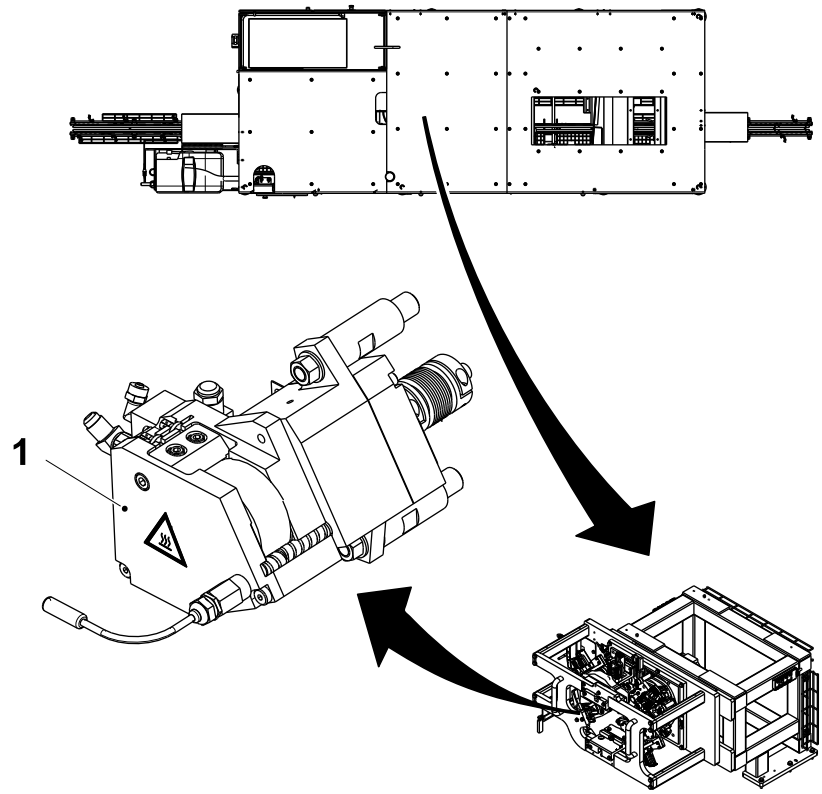

1 Hotmelt Wheel

Additional Information

Package Heater

WARNING

Risk of Burns

The package heater is very hot and there is risk of severe burns. Never touch the package heater.

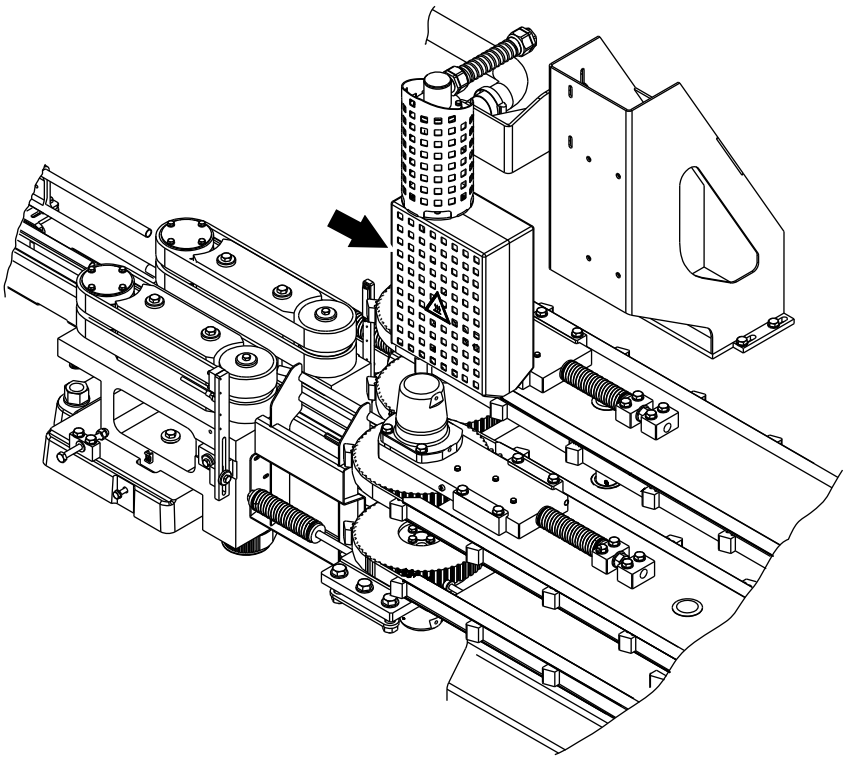

Waste Device

WARNING

Risk of personal injury

Never put any part of the body, such as a hand, near the waste device when the machine is working. There is a risk of injury caused by the movable pusher.

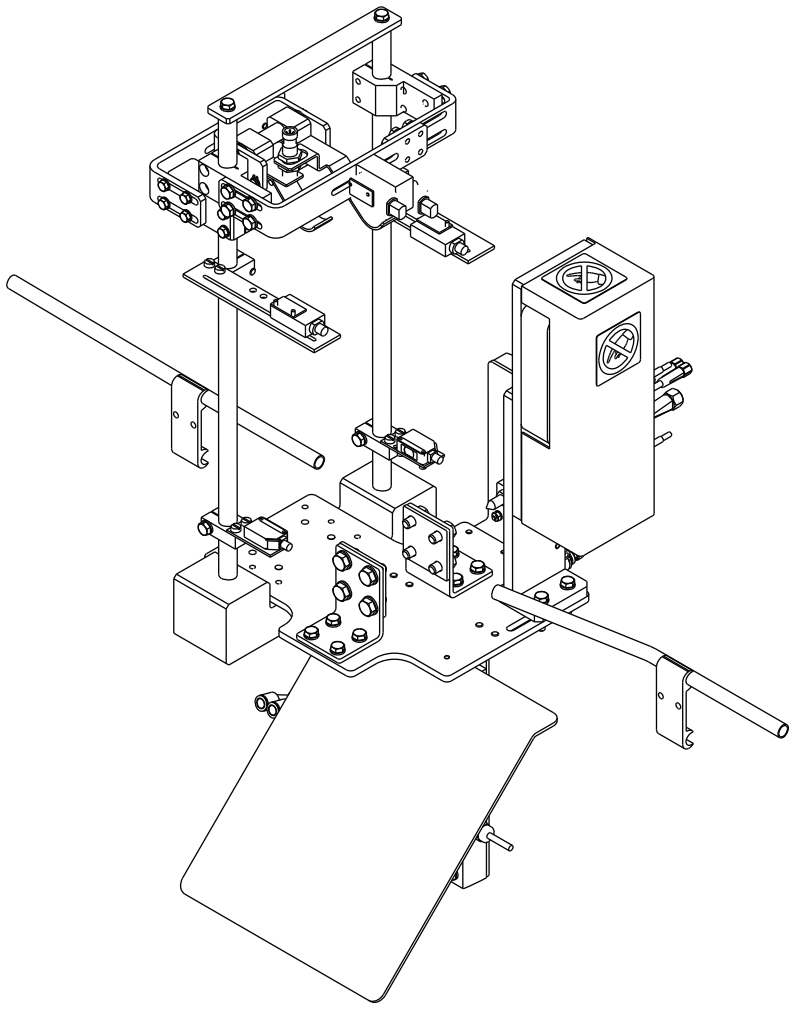

Equipment for Lifting and Moving Loads

WARNING

Risk of crushing injury

Make sure that the capacity of the lifting equipment is adequate and that the equipment itself is in good working order.

If lifting tackle has to be joined to make up the necessary length, make sure that the joints are secure and have the same lifting capacity as the rest of the lifting tackle.

Always engage safety clips fitted to lifting hooks to prevent the lifting tackle from slipping off.

Use ropes or poles to steady and manoeuvre suspended loads. Do not use hands or feet.

Make sure that the route and destination are free from obstacles before moving a suspended load. It must be possible to quickly and safely lower the load to the floor in an emergency.

When depositing loads, keep lifting tackle in place until the stability of the load has been substantiated.

1 Machine Synchronisation

Machine Synchronisation - Description

This section lists the machine settings in the order they should be carried out on the machine.

Note! The package production speed of the Cap30 should be equal to the filling machine plus 20 percent unless the down stream equipment is slower. In this case the Cap30 should match the down stream equipment speed .

Machine Synchronisation - Description 1-2

1.1 Machine Synchronisation 1-5

1.1.1 Settings 1-5

1.1.1.1 Password. 1-5

1.1.1-1 HMI User Management - Log On as a User 1-6

1.1.1-2 HMI User Management - Change User Password 1-10

1.1.2 Machine Settings 1-16

1.1.2.1 Basic Setting Sequence (ReCap) 1-16

1.1.2.2 Zero Setting Sequence (with no mechanical adjustment). 1-24

1.1.2.3 Package Change - Setting Sequence 1-25

1.1.2.4 Package Infeed - Performance Settings 1-26

1.1.2.5 HMI Setting Screens 1-27

1.1.2.5-1 Package Transfer Unit Setting Screen. 1-27

1.1.2.5-2 Infeed Package Setting Screen 1-28

1.1.2.5-3 Infeed Speeds and Angles (Flex-ReCap) 1-30

1.1.2.5-4 Set Package Conveyor Speed. 1-31

1.1.2.5-5 Set Belt Brake Speed 1-34

1.1.2.5-6 Display Trend Curve 1-36

1.1.2.5-7 Set Package Infeed Start Angle. 1-41

1.1.2.5-8 Set Package Infeed Running Angle 1-44

1.1.2.5-9 Set Package Infeed Running Angle Range 1-46

1.1.2.5-10 Outfeed Conveyor - Setting Speed. 1-48

This page intentionally left blank

1.1 Machine Synchronisation

1.1.1 Settings

1.1.1.1 Password

The table below shows the user name and passwords in the machine as it leaves production. The machine defaults to the operator profile which has no password.

To login as a user see, 1.1.1-1 HMI User Management - Log On as a User on page 1-6.

To change these settings see, 1.1.1-2 HMI User Management - Change User Password on page 1-10.

User Profile	User Name	Password	Access Description
Supervisor	supervisor	shiftsup	Access to: - user administration - production control settings and functions - maintenance control settings and functions - create and delete recipes - software installation and configuration - Shutdown - diagnostic - partial access to the configuration window
Service technician	technician	custtech	Access to: - production control settings and functions - maintenance control settings and functions - create and delete recipes - software installation and configuration - partial access to the configuration window
Pwroperator	pwroperator	Not Used	Not Used on the Cap30
Operator (default user with logon)			Access to: - production control settings and functions - Alarm management - basic alarm management

1.1.1-1 HMI User Management - Log On as a User

This procedure describes how to login to the HMI and how to access the restricted password protected sections of the HMI. The level of access permitted is defined by the user profile, see 1.1.1 Settings on page 1-5.

The machine defaults to the operator profile which has no password.

The technician or supervisor requires a password to access the setting screens as follows:

a) To login touch the SYSTEM SETUP button (1).

Note! Items like the positioning system only appear on the screen below when installed.

Note! After 15 minutes of HMI inactivity the user is automatically logged out, but it is always recommended to log out using the LOGOUT button, at the end of the operation.

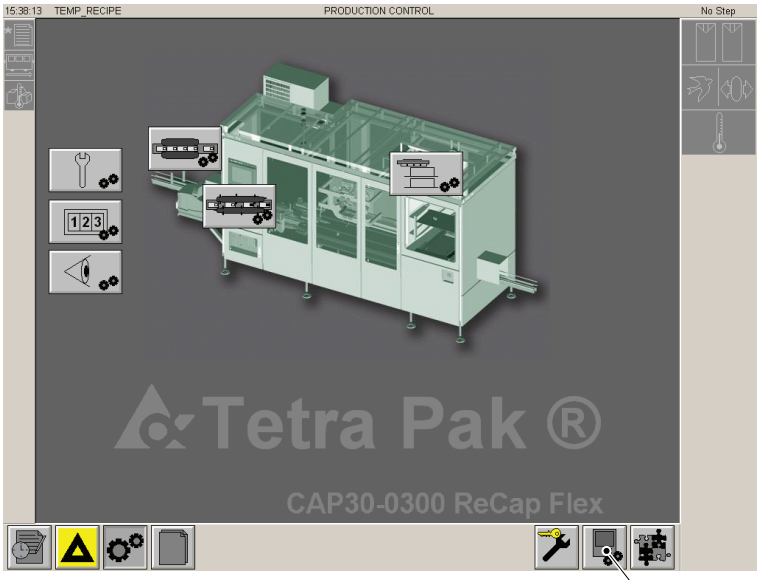

1 SYSTEM SETUP button

(Cont'd)

(Cont'd)

b) On the setup window the following buttons are displayed:

- LANGUAGE button (2)
- USER MANAGEMENT button (3)
- DIAGNOSTIC button (4)
- SHUT DOWN button (5).

Note! The DIAGNOSTIC button (4) and the SHUT DOWN button (5) are not available to the operator.

c) Touch the USER MANAGEMENT button (3).

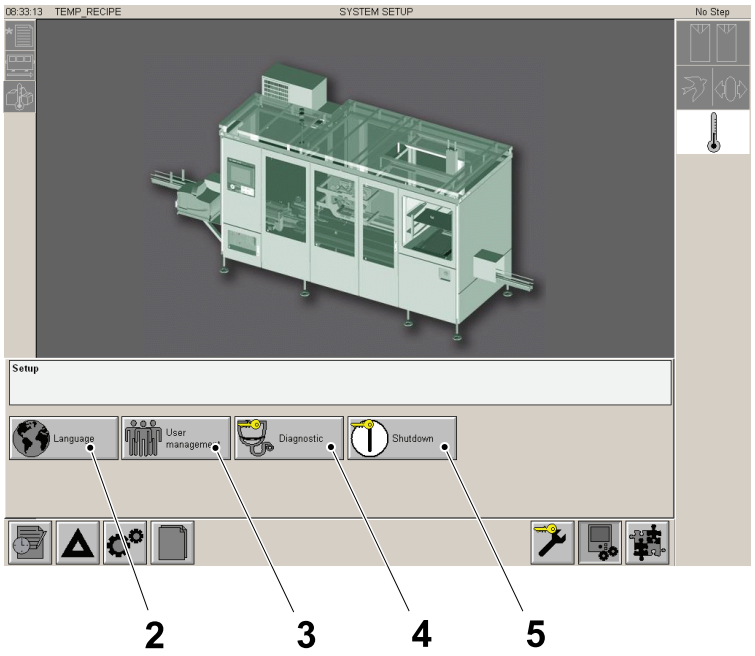

2 LANGUAGE button
3 USER MANAGEMENT button
4 DIAGNOSTIC button
5 SHUT DOWN button

(Cont'd)

(Cont'd)

d) On the User Management window the following buttons are displayed:

- LOGOUT button (6)
- LOGIN button (7)
- Locked CHANGE PASSWORD button (8).

Note! The CHANGE PASSWORD button (8) is not enabled until logged on by the supervisor, see 1.1.1-2 HMI User Management - Change User Password on page 1-10.

The actual user is shown in the window (9).

e) Touch the LOGIN button (7).

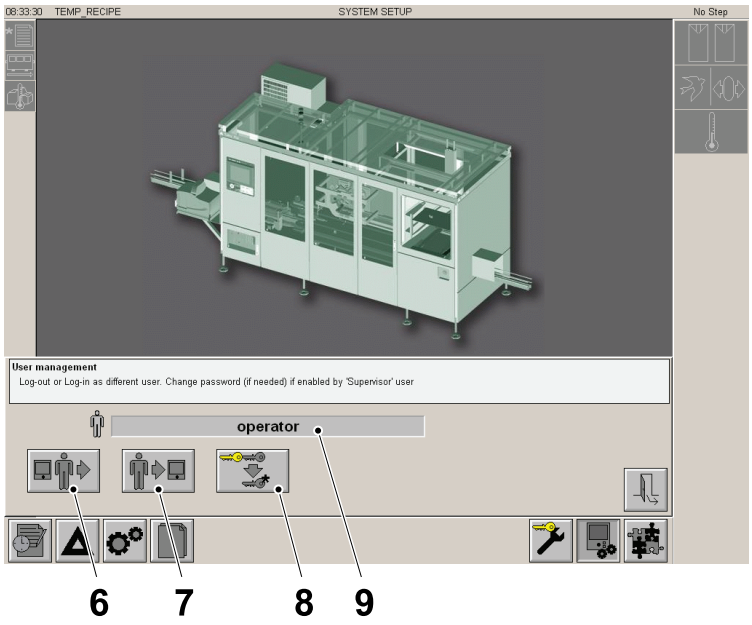

6 LOGOUT button
7 LOGIN button
8 CHANGE PASSWORD button
9 Window

(Cont'd)

(Cont'd)

f) On the LOGIN window (10) touch the USER button (11) and then type the user name and enter.

g) On the LOGIN window (10) touch the PASSWORD button (12) to display the key board, then type the password and enter.

h) Touch the ENTER button (13) to confirm the password or the ESC button (14) to close the LOGIN window (10).

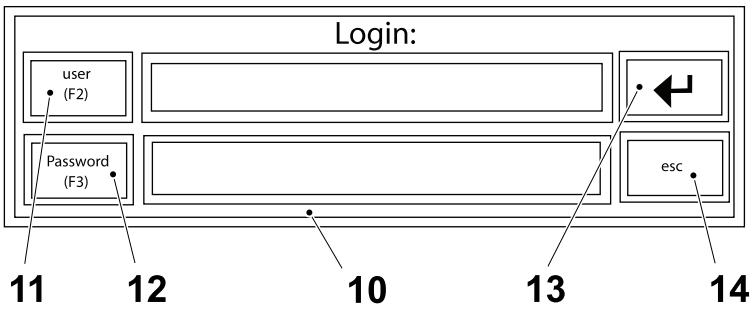

10 Login window
11 User button
12 Password button
13 Enter button
14 Esc button

1.1.1-2 HMI User Management - Change User Password

CAUTION
Risk of unplanned machine stoppage.
If the default passwords are changed and subsequently forgotten, the HMI software must be reinstalled. Perform 8.9.1-4 Touch Screen - New Application Software Installation on page 8-268, in order to restore the default passwords and have the access to the restricted sections of the HMI.

The user with the profile “supervisor” has the authority to set and change the passwords for the user profiles of “technician” and “pwroperator”. To change the password of either the user profiles proceed as follows:

a) Log on to the HMI as the user profile “supervisor”, see 1.1.1-1 HMI User Management - Log On as a User on page 1-6.

b) In the `USER MANAGEMENT` window, touch the:

- `ENABLE TECHNICIAN CHANGE PASSWORD` button (1) for the user profile "technician".

  Note! The Pwroperator `CHANGE PASSWORD` button (2) is not used on the Cap30.

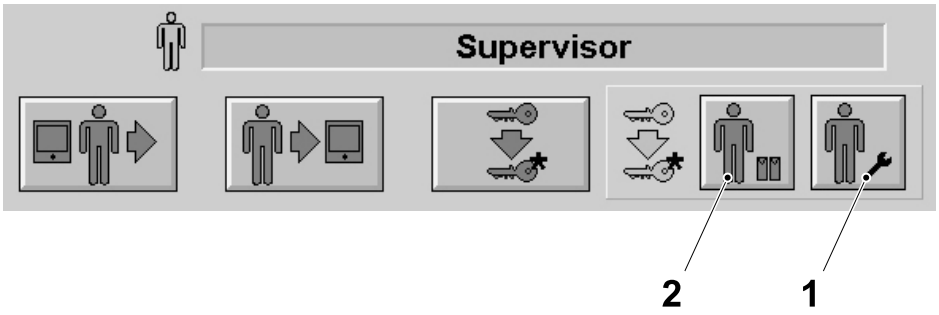

1 `ENABLE TECHNICIAN CHANGE PASSWORD` button
2 Pwroperator change password button

(Cont’d)

(Cont'd)

c) Touch the LOG OFF button (3).

d) Log on to the HMI using the user profile chosen in item b), see 1.1.1-1 HMI User Management - Log On as a User on page 1-6.

e) The CHANGE PASSWORD button (4) is now enabled in the USER MANAGEMENT window, touch the CHANGE PASSWORD button (4) to display the CHANGE PASSWORD window (5).

Note! An old password, can be reused only if the password has been changed at least 5 times, or if the HMI software has been reinstalled.

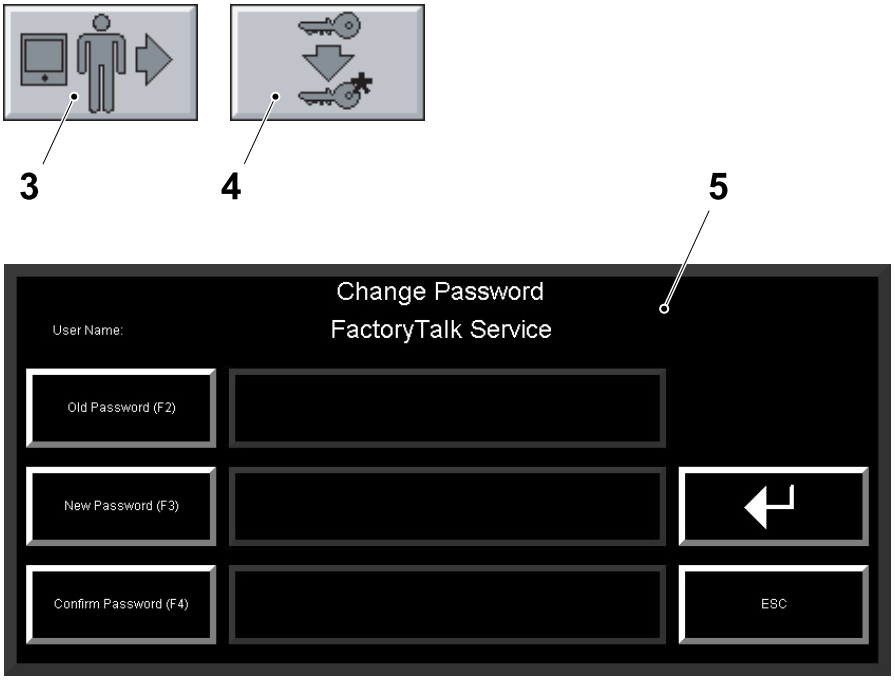

3 LOG OFF button
4 CHANGE PASSWORD button
5 CHANGE PASSWORD window

(Cont'd)

(Cont'd)

f) Touch the OLD PASSWORD button (6) to display the KEYBOARD (7).

g) Use the KEYBOARD (7) to type the current password, then touch the ENTER button (8).

h) Touch the NEW PASSWORD button (9) to display the KEYBOARD (7).

i) Use the KEYBOARD (7) to type the new password, then touch the ENTER button (8).

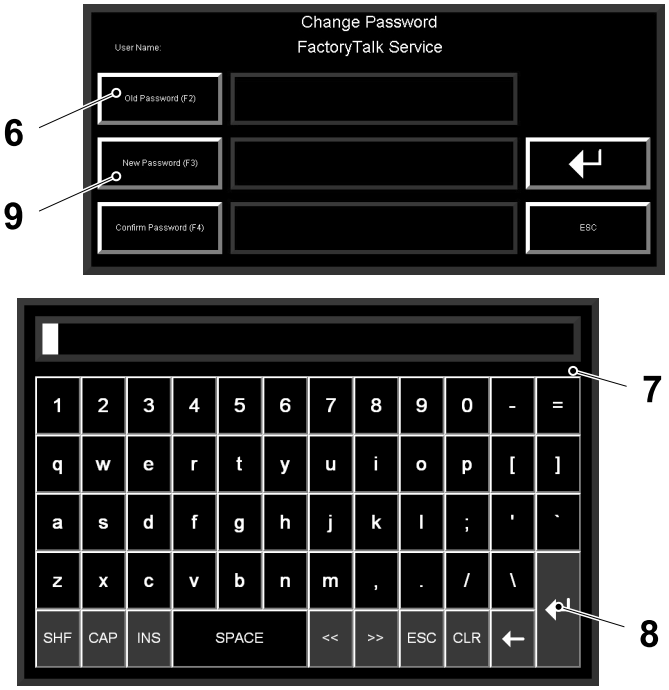

6 OLD PASSWORD button
7 KEYBOARD
8 ENTER button
9 NEW PASSWORD button

(Cont'd)

(Cont'd)

j) Touch the CONFIRM PASSWORD button (10) to display the KEYBOARD (7).

k) Use the KEYBOARD (7) to type and repeat the new password, then touch the ENTER button (8).

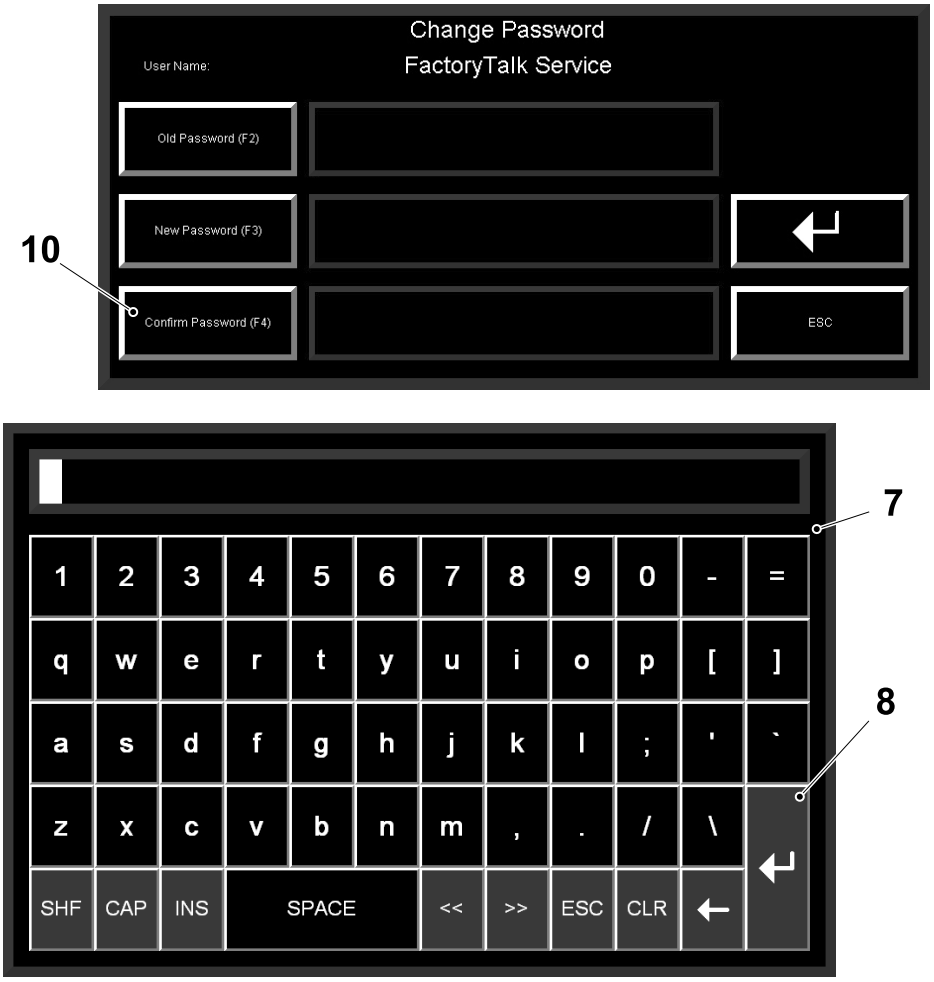

7 KEYBOARD

8 ENTER button

10 CONFIRM PASSWORD button

(Cont'd)

(Cont'd)

l) Touch the ENTER button (11) to finalise the password change procedure.

m) If necessary repeat the procedure to change the password for the other user profile. The password for the user profile "supervisor" can be changed by logging on as the "supervisor" and selecting the CHANGE PASSWORD button (4) in the USER MANAGEMENT window.

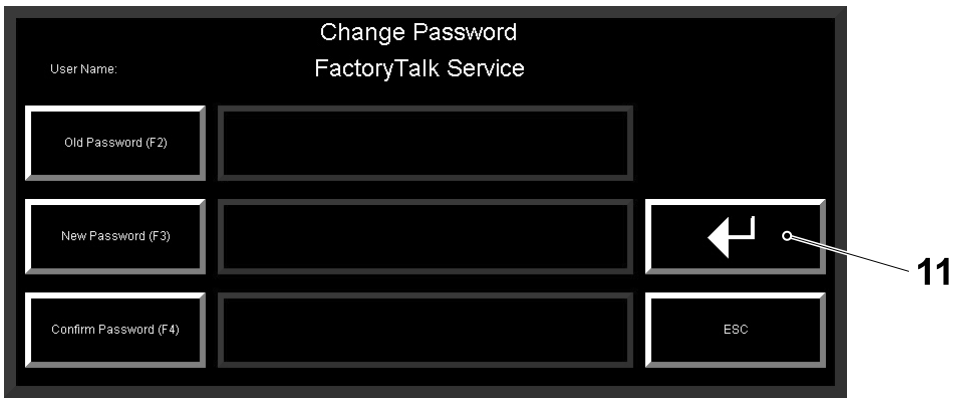

11 ENTER button

(Cont'd)

(Cont'd)

Note! If the ENABLE CHANGE PASSWORD buttons are not deselected by the "supervisor" profile, the CHANGE PASSWORD button remains visible and accessible in the profiles for the "pwroperator" and "technician".

n) Touch the LOG OFF button (3).

o) Log on to the HMI using the user profile "supervisor", see 1.1.1-2 HMI User Management - Change User Password on page 1-10.

p) In the USER MANAGEMENT window, depending on which button was selected in item b) on page 1-10, deselect the:

- ENABLE TECHNICIAN CHANGE PASSWORD button (1) for the user profile "technician".

If necessary repeat the procedure to change the password for the other user profile. The password for the user profile "supervisor" can be changed by logging on as the "supervisor" and selecting the CHANGE PASSWORD button in the USER MANAGEMENT window.

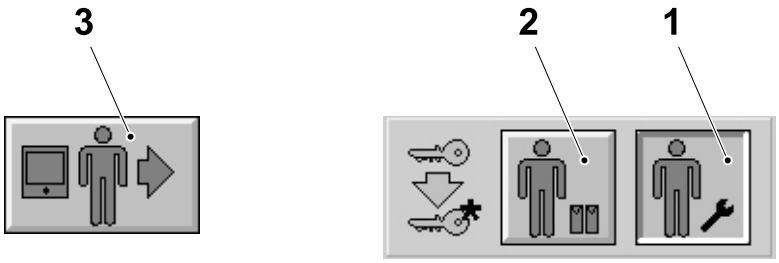

1 ENABLE TECHNICIAN CHANGE PASSWORD button

2 Pwroperator change password button

3 LOG OFF button

1.1.2 Machine Settings

1.1.2.1 Basic Setting Sequence (ReCap)

Note! The package production speed of the Cap30 should be equal to the filling machine plus 20 percent unless the down stream equipment is slower. In this case the Cap30 should match the down stream equipment speed.

Machine synchronisation settings must be performed in sequence according to the flowchart below. These settings are performed before the first start-up or commissioning of the cap applicator.

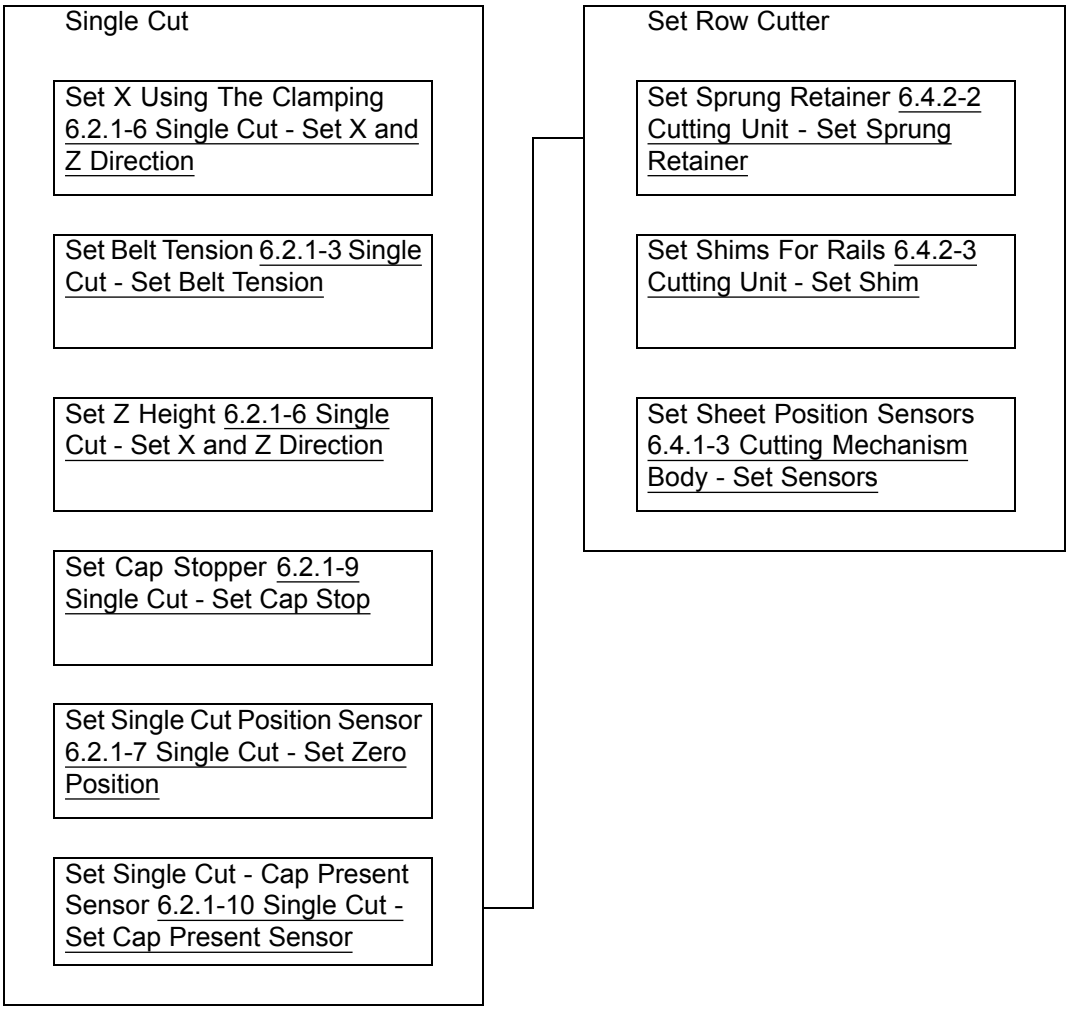

(Cont'd)

(Cont'd)

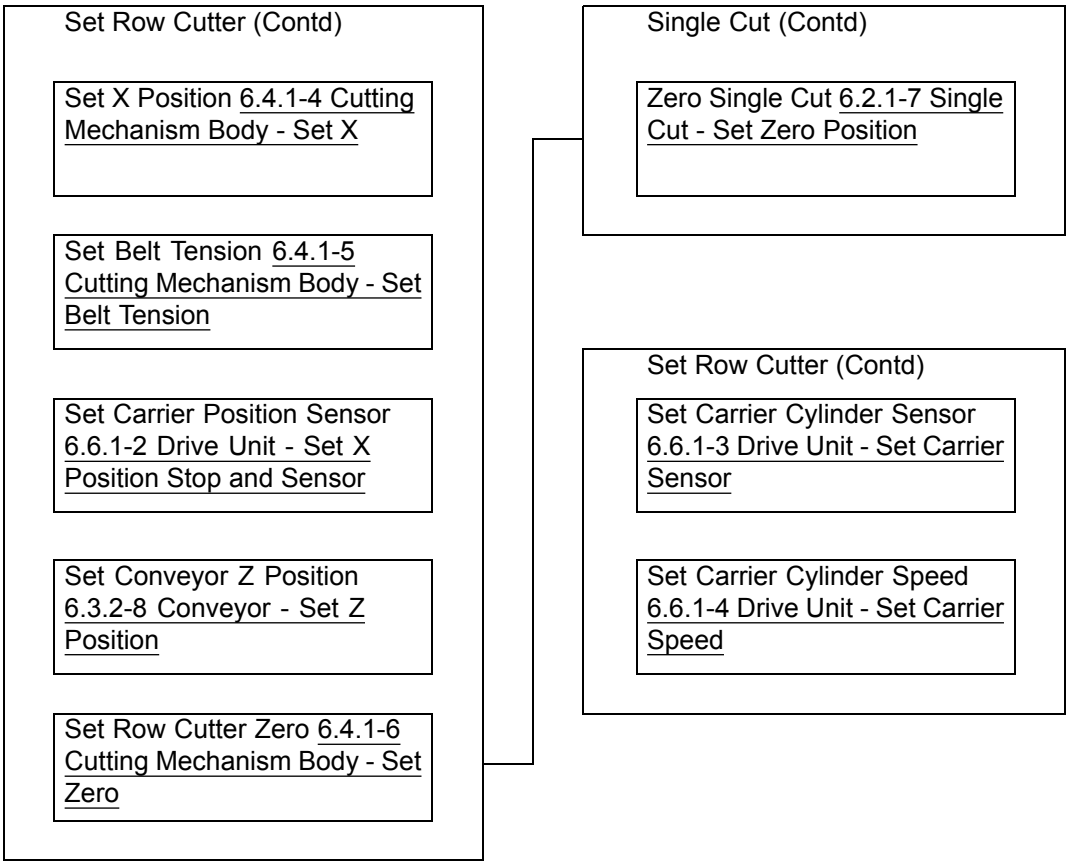
Set Row Cutter (Contd)
Set X Position 6.4.1-4 Cutting Mechanism Body - Set X
Set Belt Tension 6.4.1-5 Cutting Mechanism Body - Set Belt Tension
Set Carrier Position Sensor 6.6.1-2 Drive Unit - Set X Position Stop and Sensor
Set Conveyor Z Position 6.3.2-8 Conveyor - Set Z Position
Set Row Cutter Zero 6.4.1-6 Cutting Mechanism Body - Set Zero
Single Cut (Contd)
Zero Single Cut 6.2.1-7 Single Cut - Set Zero Position
Set Row Cutter (Contd)
Set Carrier Cylinder Sensor 6.6.1-3 Drive Unit - Set Carrier Sensor
Set Carrier Cylinder Speed 6.6.1-4 Drive Unit - Set Carrier Speed

(Cont'd)

(Cont'd)

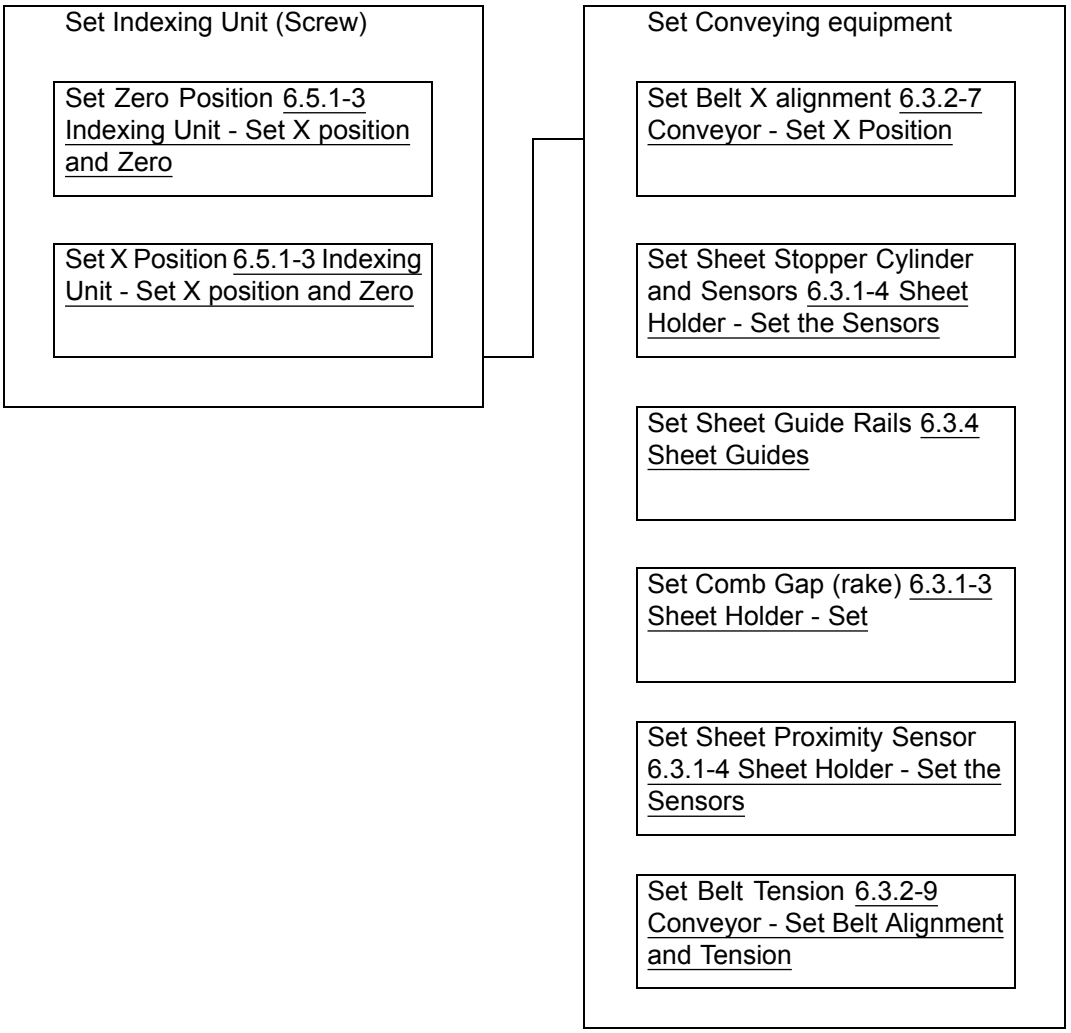
Set Indexing Unit (Screw)
Set Zero Position 6.5.1-3 Indexing Unit - Set X position and Zero
Set X Position 6.5.1-3 Indexing Unit - Set X position and Zero
Set Conveying equipment
Set Belt X alignment 6.3.2-7 Conveyor - Set X Position
Set Sheet Stopper Cylinder and Sensors 6.3.1-4 Sheet Holder - Set the Sensors
Set Sheet Guide Rails 6.3.4 Sheet Guides
Set Comb Gap (rake) 6.3.1-3 Sheet Holder - Set
Set Sheet Proximity Sensor 6.3.1-4 Sheet Holder - Set the Sensors
Set Belt Tension 6.3.2-9 Conveyor - Set Belt Alignment and Tension

(Cont'd)

(Cont'd)

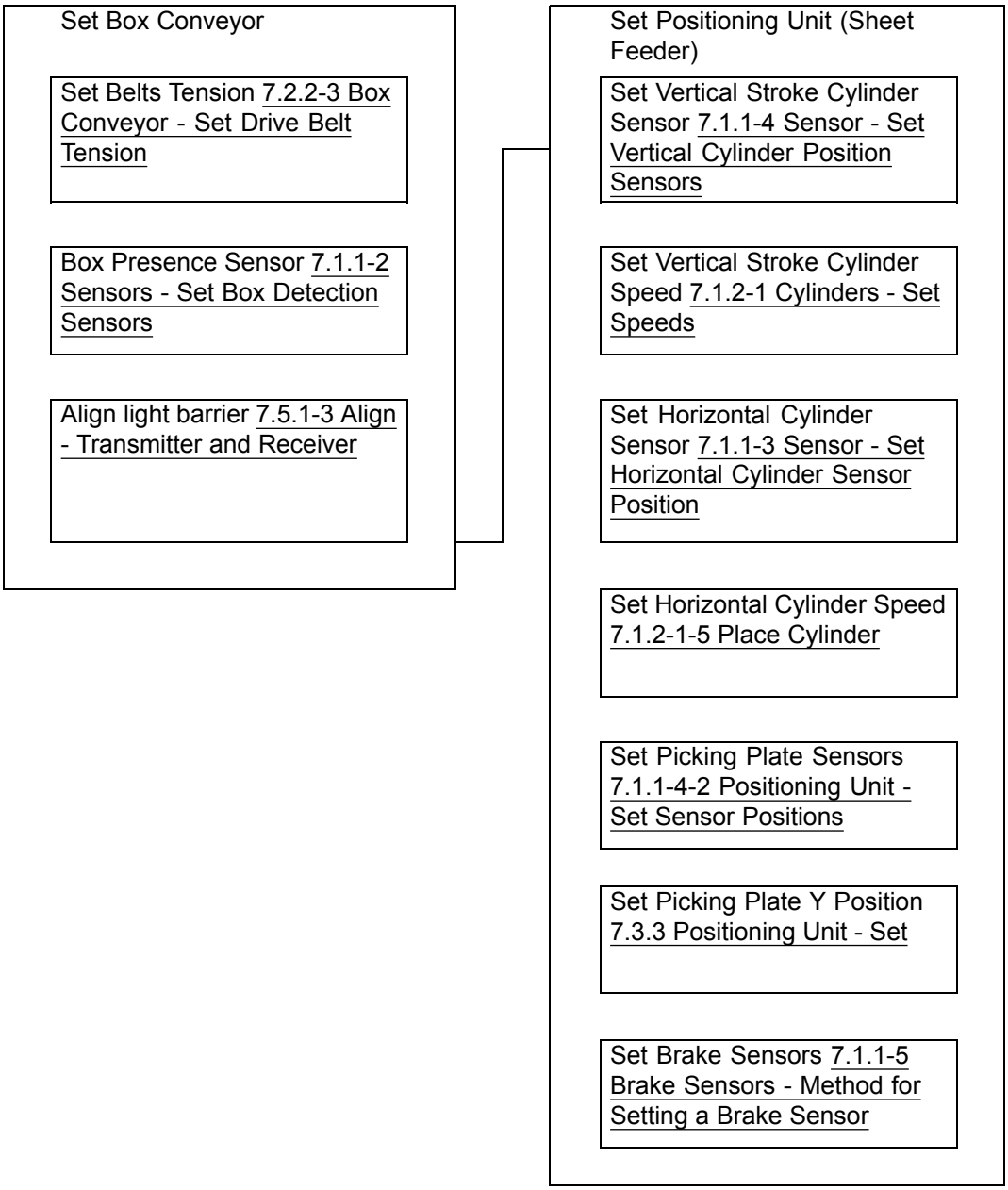
Set Box Conveyor
Set Belts Tension 7.2.2-3 Box Conveyor - Set Drive Belt Tension
Box Presence Sensor 7.1.1-2 Sensors - Set Box Detection Sensors
Align light barrier 7.5.1-3 Align - Transmitter and Receiver
Set Positioning Unit (Sheet Feeder)
Set Vertical Stroke Cylinder Sensor 7.1.1-4 Sensor - Set Vertical Cylinder Position Sensors
Set Vertical Stroke Cylinder Speed 7.1.2-1 Cylinders - Set Speeds
Set Horizontal Cylinder Sensor 7.1.1-3 Sensor - Set Horizontal Cylinder Sensor Position
Set Horizontal Cylinder Speed 7.1.2-1-5 Place Cylinder
Set Picking Plate Sensors 7.1.1-4-2 Positioning Unit - Set Sensor Positions
Set Picking Plate Y Position 7.3.3 Positioning Unit - Set
Set Brake Sensors 7.1.1-5 Brake Sensors - Method for Setting a Brake Sensor

(Cont'd)

(Cont'd)

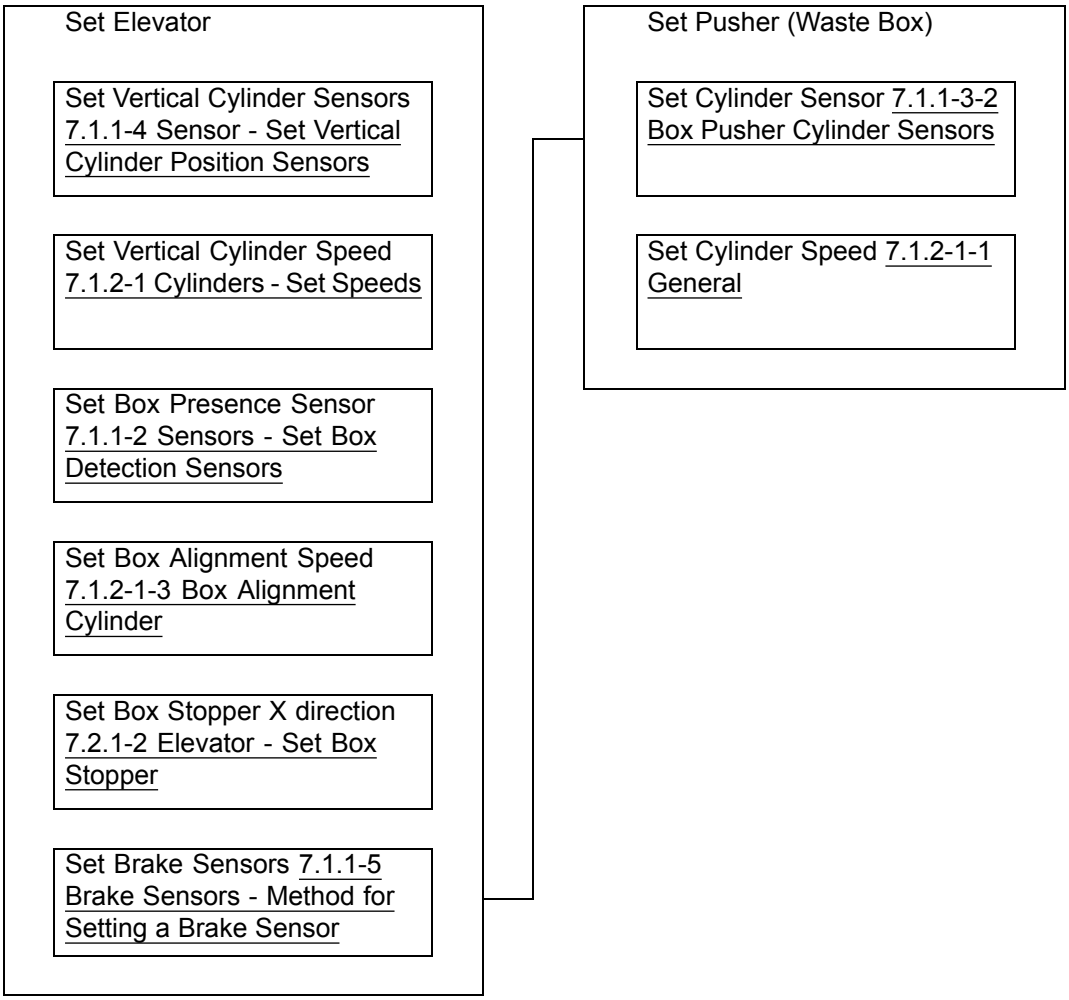
Set Elevator
Set Vertical Cylinder Sensors 7.1.1-4 Sensor - Set Vertical Cylinder Position Sensors
Set Vertical Cylinder Speed 7.1.2-1 Cylinders - Set Speeds
Set Box Presence Sensor 7.1.1-2 Sensors - Set Box Detection Sensors
Set Box Alignment Speed 7.1.2-1-3 Box Alignment Cylinder
Set Box Stopper X direction 7.2.1-2 Elevator - Set Box Stopper
Set Brake Sensors 7.1.1-5 Brake Sensors - Method for Setting a Brake Sensor
Set Pusher (Waste Box)
Set Cylinder Sensor 7.1.1-3-2 Box Pusher Cylinder Sensors
Set Cylinder Speed 7.1.2-1-1 General

(Cont'd)

(Cont'd)

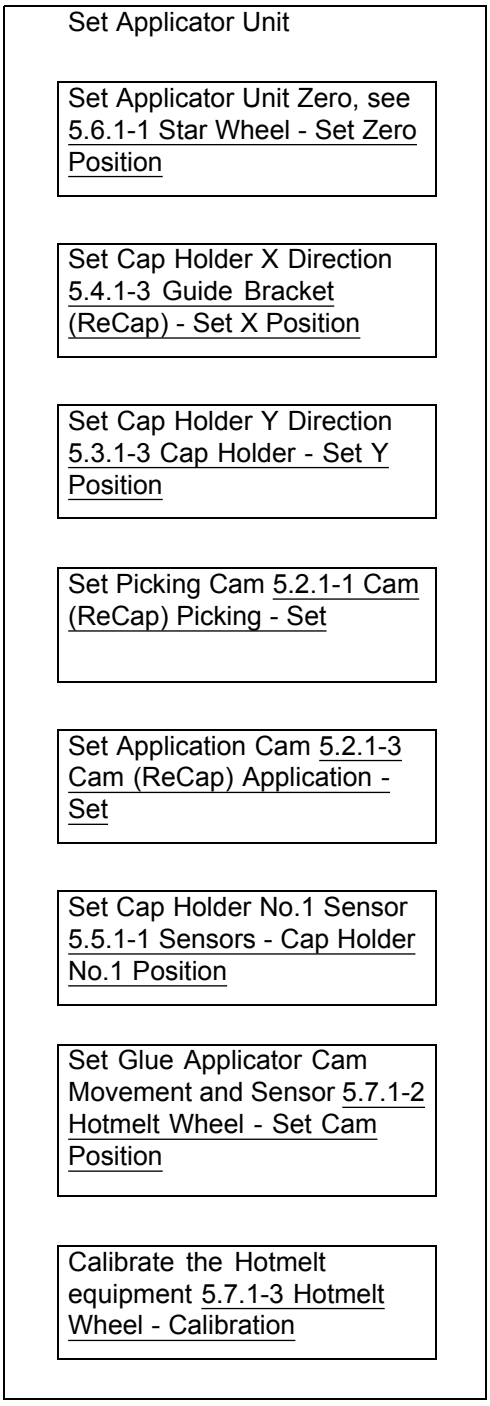
Set Applicator Unit
Set Applicator Unit Zero, see 5.6.1-1 Star Wheel - Set Zero Position
Set Cap Holder X Direction 5.4.1-3 Guide Bracket (ReCap) - Set X Position
Set Cap Holder Y Direction 5.3.1-3 Cap Holder - Set Y Position
Set Picking Cam 5.2.1-1 Cam (ReCap) Picking - Set
Set Application Cam 5.2.1-3 Cam (ReCap) Application - Set
Set Cap Holder No.1 Sensor 5.5.1-1 Sensors - Cap Holder No.1 Position
Set Glue Applicator Cam Movement and Sensor 5.7.1-2 Hotmelt Wheel - Set Cam Position
Calibrate the Hotmelt equipment 5.7.1-3 Hotmelt Wheel - Calibration

(Cont'd)

(Cont'd)

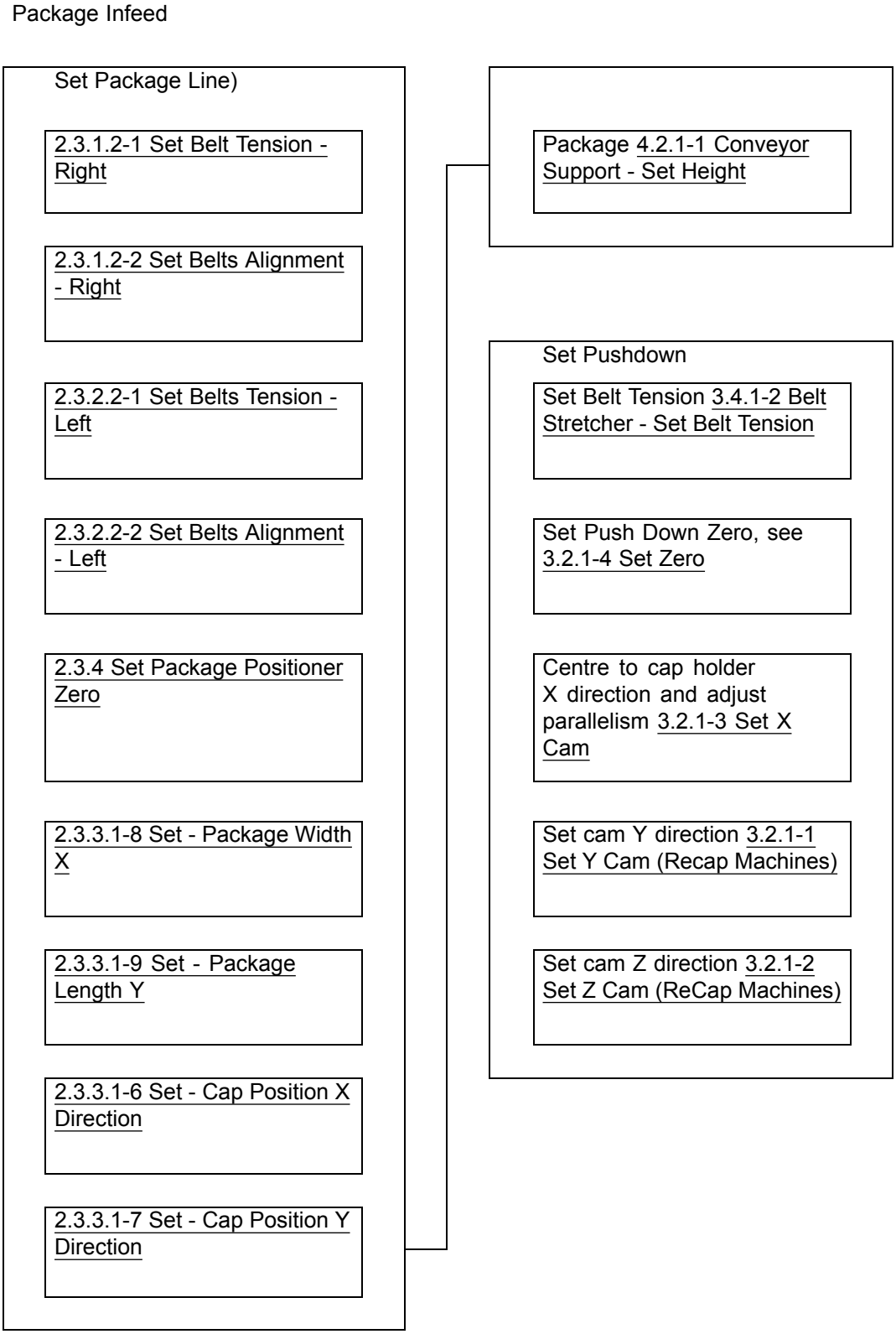
Package Infeed
Set Package Line)
2.3.1.2-1 Set Belt Tension - Right
2.3.1.2-2 Set Belts Alignment - Right
2.3.2.2-1 Set Belts Tension - Left
2.3.2.2-2 Set Belts Alignment - Left
2.3.4 Set Package Positioner Zero
2.3.3.1-8 Set - Package Width X
2.3.3.1-9 Set - Package Length Y
2.3.3.1-6 Set - Cap Position X Direction
2.3.3.1-7 Set - Cap Position Y Direction
Package 4.2.1-1 Conveyor Support - Set Height
Set Pushdown
Set Belt Tension 3.4.1-2 Belt Stretcher - Set Belt Tension
Set Push Down Zero, see 3.2.1-4 Set Zero
Centre to cap holder X direction and adjust parallelism 3.2.1-3 Set X Cam
Set cam Y direction 3.2.1-1 Set Y Cam (Recap Machines)
Set cam Z direction 3.2.1-2 Set Z Cam (ReCap Machines)

(Cont'd)

(Cont'd)

Package Infeed (Contd)

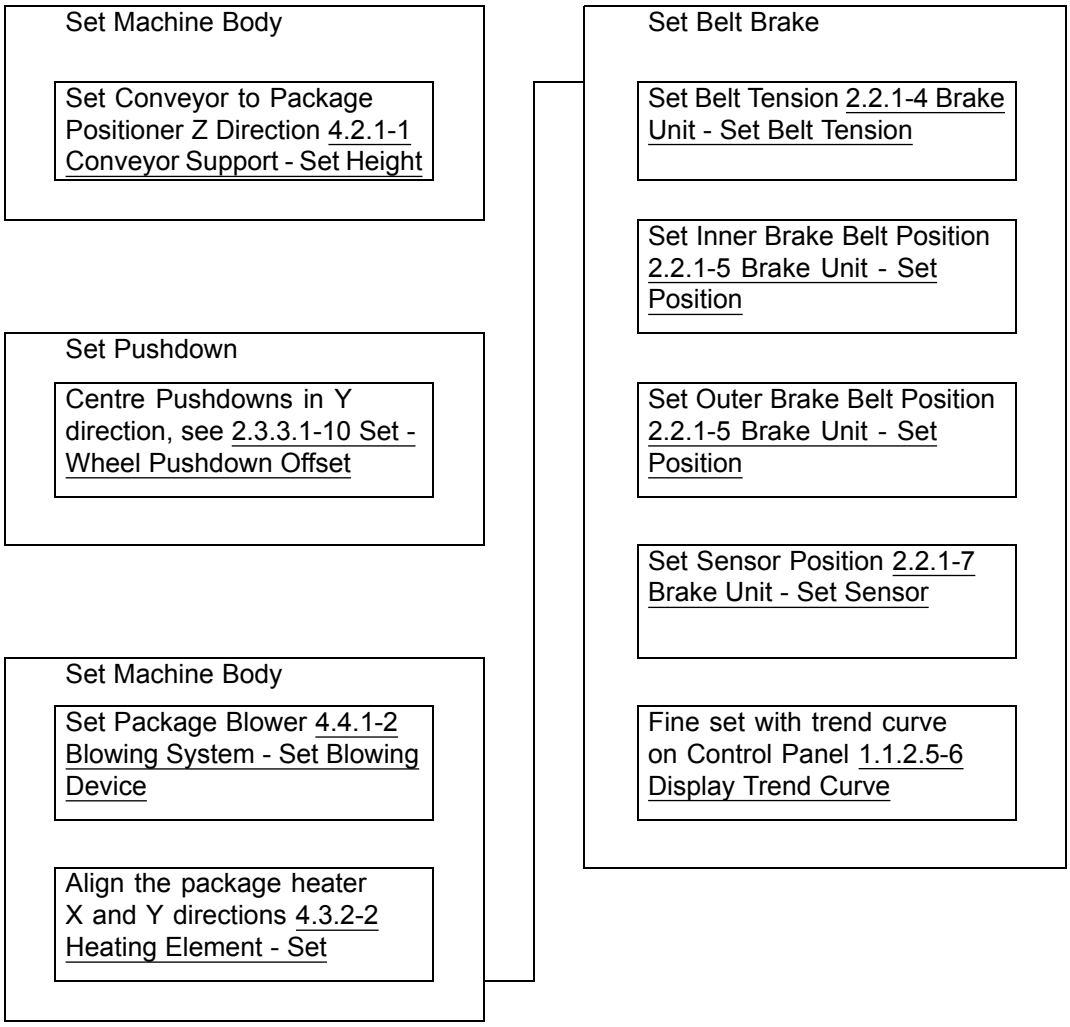

1.1.2.2 Zero Setting Sequence (with no mechanical adjustment).

Machine synchronisation settings must be performed in sequence according to the flowchart below. These settings are performed before the first start-up or commissioning of the cap applicator.

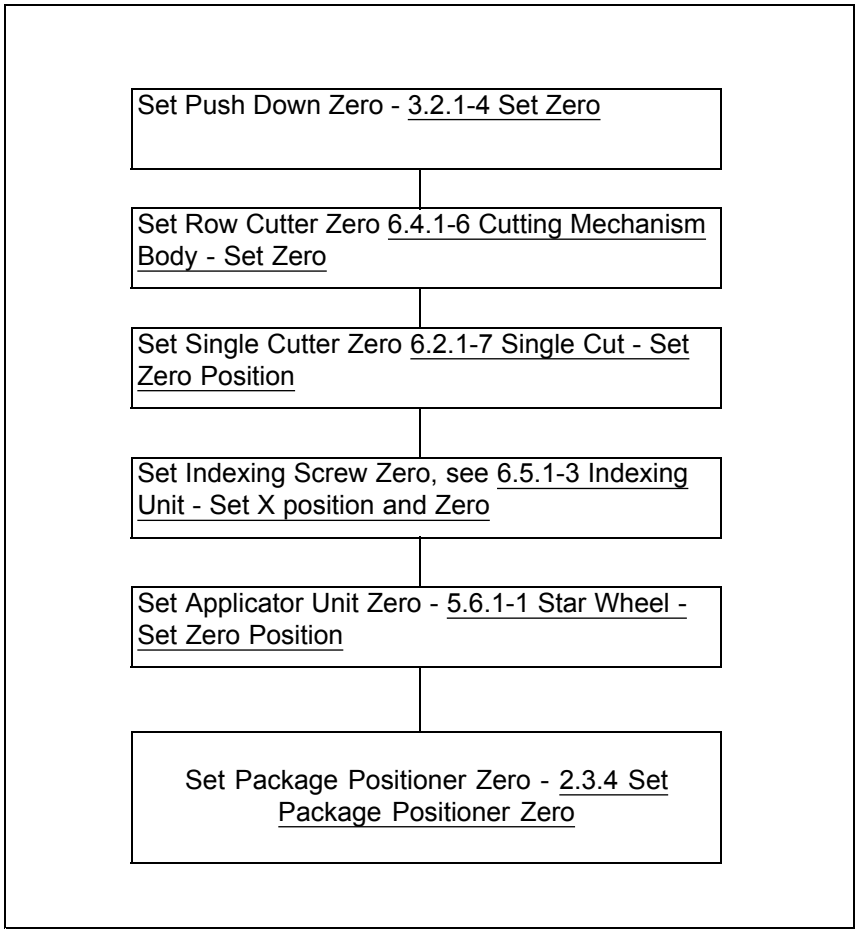

1.1.2.3 Package Change - Setting Sequence

The setting sequence must be performed according to the flowchart below. These settings are performed before the first start-up after changing the cap applicator.

Package Setting Sequence

Procedure Order	**Page**
8.9.1-13 Touch Screen - Create New Recipes	8-326
9.1-2 Cap Detector (ReCap) - Set	9-8
2.3.5-1 Upper Left Package Positioner - Set Height	2-94
2.3.5-2 Upper Right Package Positioner - Set Height	2-95
2.3.3.1-8 Set - Package Width X	2-68
2.3.3.1-9 Set - Package Length Y	2-69
2.3.1.2-2 Set Belts Alignment - Right	2-32
2.3.2.2-2 Set Belts Alignment - Left	2-38
2.2.1-5 Brake Unit - Set Position	2-13
4.4.1-2 Blowing System - Set Blowing Device	4-20
4.8.1-2 Height Adjustment - Set	4-79
5.4.1-3 Guide Bracket (ReCap) - Set X Position	5-27
4.2.1-1 Conveyor Support - Set Height	4-8

1.1.2.4 Package Infeed - Performance Settings

Package infeed performance settings must be performed in sequence according to the flowchart below.

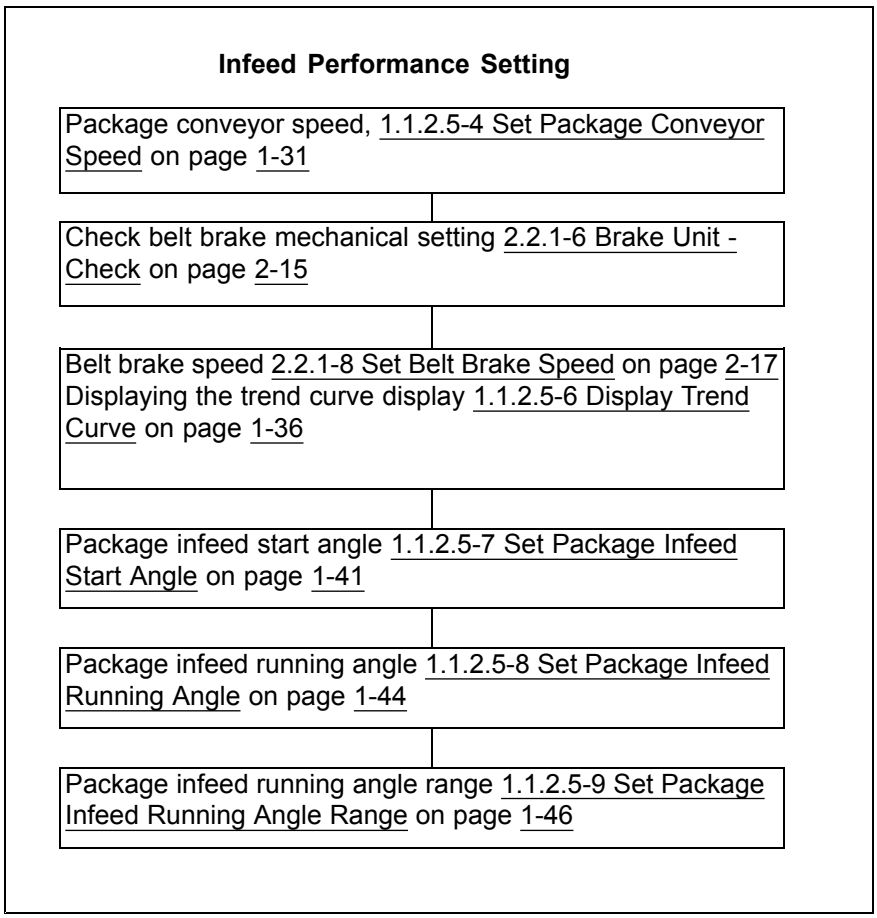

1.1.2.5 HMI Setting Screens

1.1.2.5-1 Package Transfer Unit Setting Screen

Introduction

A number of settings can be made at the control panel to ensure that the packages leaving the belt unit are fed into the package positioner at the correct speed and are correctly spaced.

The setting that can be made from the PACKAGE TRANSFER UNIT SETTING screen is:

a) The PACKAGE CONVEYOR SPEED button (1). This setting is needed to ensure the positive location of a package in the package positioner. The conveyor speed must be 15% higher than that of the package positioner.

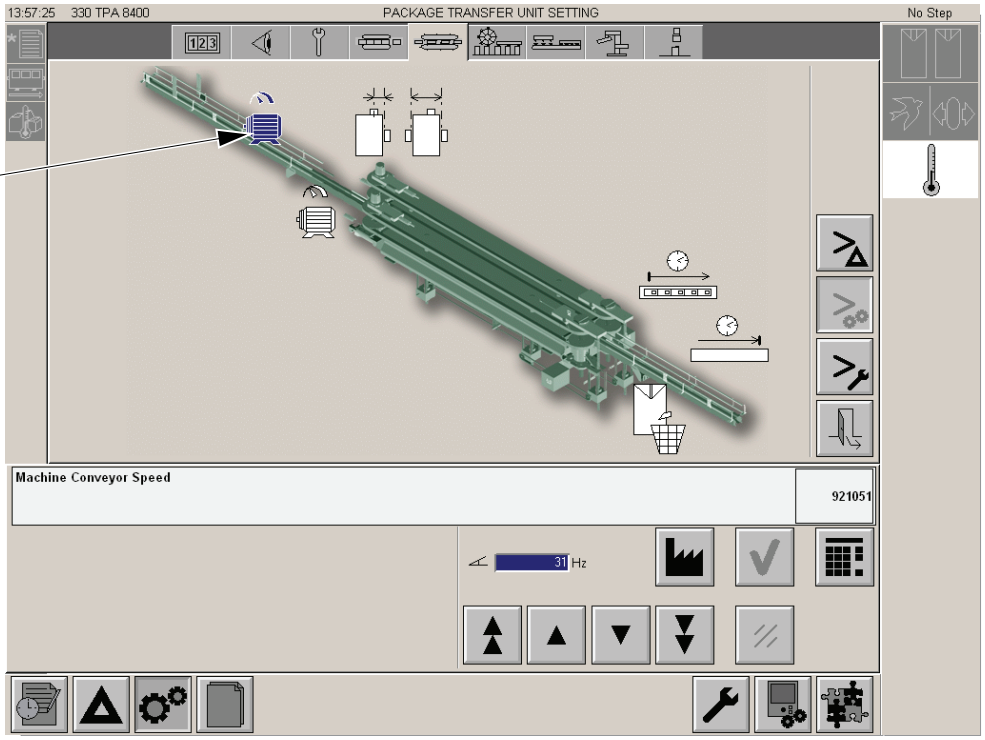

1 Package Conveyor Speed button

1.1.2.5-2 Infeed Package Setting Screen

The settings that can be made from the INFEED PACKAGE SETTING screen are:

- The PACKAGE INFEED START ANGLE button (1). At this angle, the belt brake drive motor receives a start command and the first package is released by the belt brake. The angle value is related to the inner package transfer axis.
- The PACKAGE INFEED RUNNING ANGLE button (2). At this angle, the following package should reach the photocell at the outlet of the belt brake. The photocell is connected to a regulator that controls the belt brake motor speed. To prevent self oscillation, a limit is applied to the output of the regulator.

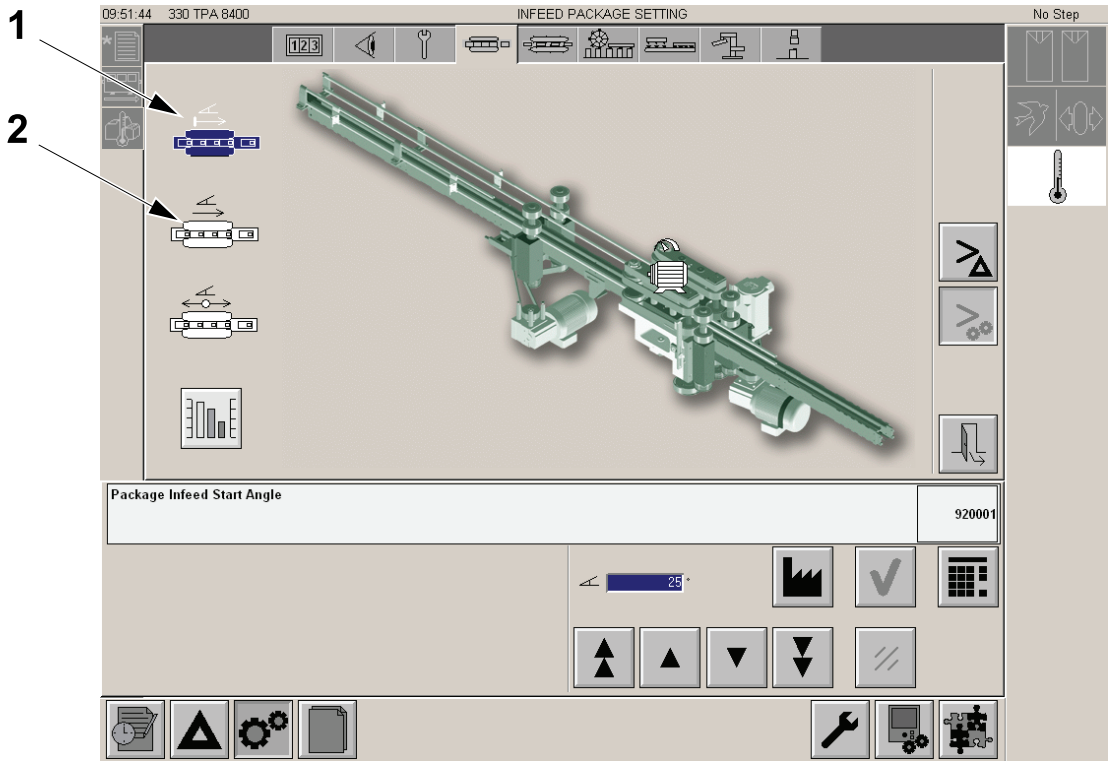

1 PACKAGE INFEED START ANGLE button
2 PACKAGE INFEED RUNNING ANGLE button

(Cont'd)

(Cont'd)

- The PACKAGE INFEED RANGE ANGLE button (3). These settings are used to define the maximum and minimum allowable belt brake running angles. When a package arrives at an angle that is out of the range, the package is stopped and held by the belt brake and a restart is then made.
- The TREND button (4). This is a graph that shows the actual running angle of the packages compared with the desired running angle and the maximum and minimum allowable running angles.
- The BELT BRAKE SPEED button (5). This setting is used to adjust the belt brake speed.

  Note! All default angles and speeds are defined in the table on the following page.

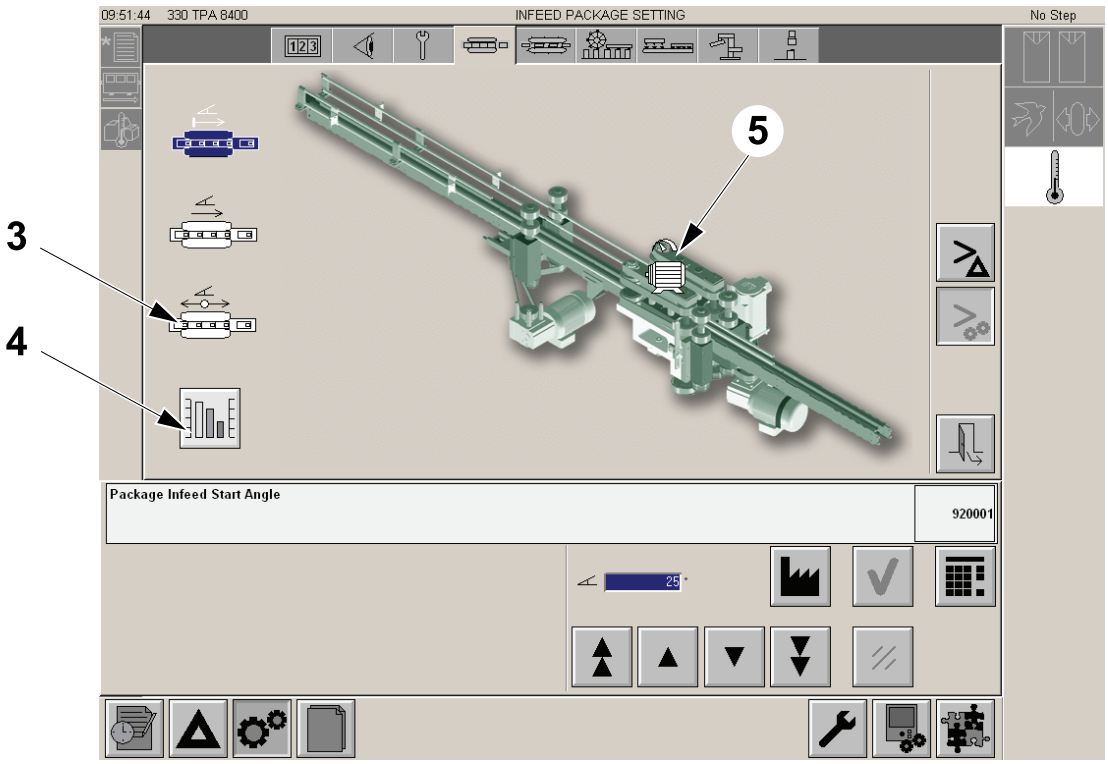

3 PACKAGE INFEED RANGE ANGLE button
4 TREND button
5 BELT BRAKE SPEED button
6 Input pusher Speed button
7 Acceleration Pusher Speed button

1.1.2.5-3 Infeed Speeds and Angles (Flex-ReCap)

The following table defines the correct default values for the infeed motor speeds and angles.

1) This is using the drive unit (25 m/min at 50Hz). Using proportion it is possible to calculate the speed in m/min

2) The first angle is the start angle, the second is the running angle. They are adjustable between ±30 deg.

3) The belt brake speed should be fine set using the infeed graph.

Package Volume	Package Speed	Package Conveyor Drive (Hz) (1)	Infeed Angles (2)	Infeed Angle Range	Belt Brake Drive (Hz) (3)
TBA 500 S	8400 9600	45 52	65º - 45º	±40º	48 55
TBA 1000 Sq	8400 9600	44 50	355º - 340º	±40º	48 55
TBA 1000 B	8400 9600	41 47	345º - 350º	±40º	62 71
TBA 1000 S	8400 9600	45 52	65º - 45º	±40º	59 68
TBA 1500 S	6600 7200	38 43	65º - 45º	±40º	50 53
TBA 2000 S	6000 6600	39 43	70º - 50º	±40º	48 52

1.1.2.5-4 Set Package Conveyor Speed

Note! The correct package conveyor speed is the package transfer speed +15%.

Note! The default value for the package conveyor speed is defined in the table on the previous page, (Select the correct drive unit speed).

Note! The package transfer speed is pre-defined and cannot be changed but it can be used as a reference to set the package conveyor speed.

a) To change the package conveyor speed, touch the SETTING button (1) and then the PACKAGE POSITIONER button (2).

Note! Items like the positioning system only appear on the screen below when installed.

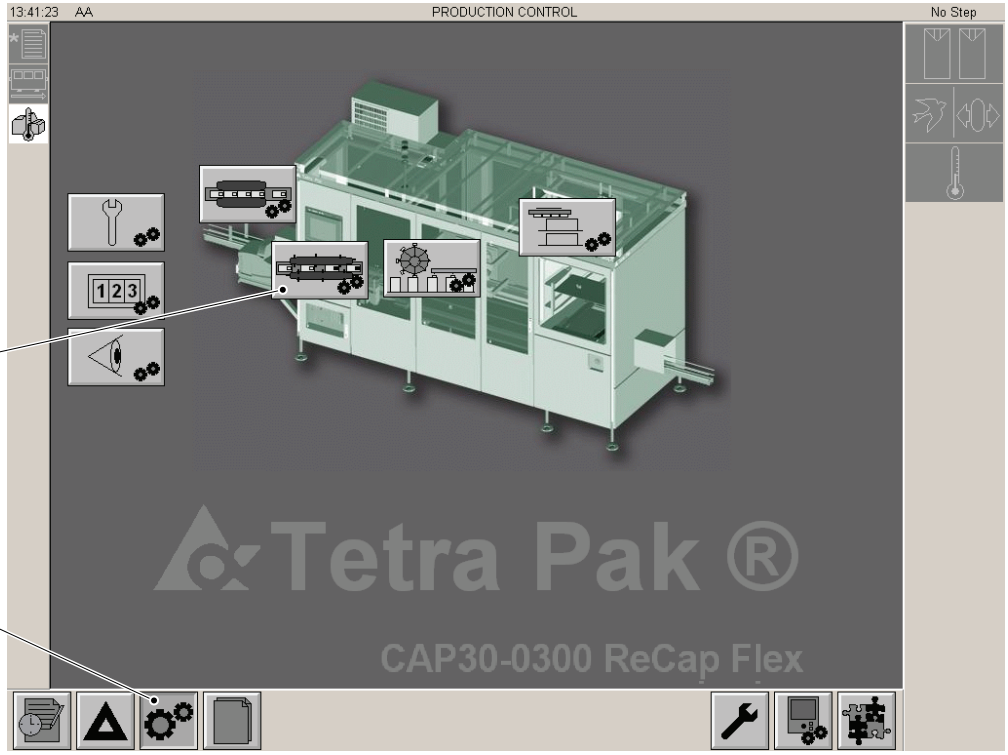

1 SETTING button
2 PACKAGE POSITIONER button

(Cont'd)

(Cont'd)

b) Touch the CONVEYOR SPEED icon (3).

c) To change the SPEED VALUE (Hz) (4), use the ARROW keys (5) or the keyboard which is accessible via the KEYBOARD button (6).

d) Introduce the value by clicking the OK button (7).

e) Repeat steps c) and d) until the conveyor and the package transfer are running at the same speed.

f) The indicated SPEED VALUE (Hz) (4) is the present running speed of the package conveyor and the package positioner.

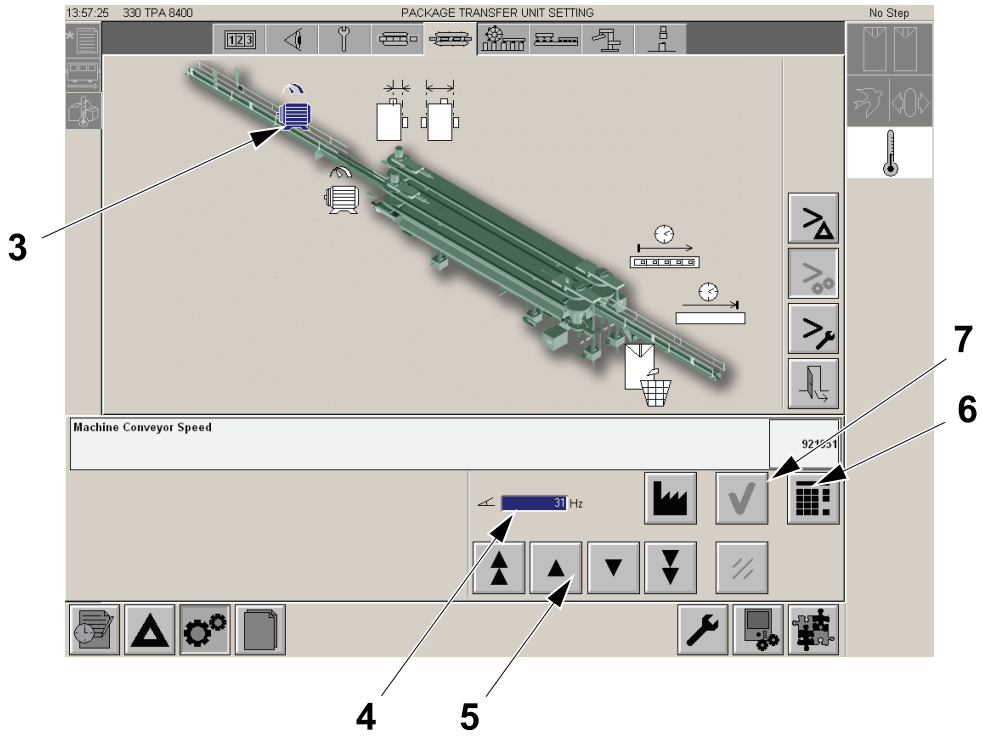

3 CONVEYOR SPEED icon
4 SPEED VALUE (Hz)
5 ARROW KEYS
6 KEYBOARD button
7 OK button

(Cont'd)

(Cont'd)

g) Increase the indicated SPEED VALUE (Hz) (4) by +15% to set the correct package conveyor speed.

h) Touch the EXIT button (8).

i) When the correct speed is obtained, store the corrected value in the appropriate recipe, see 8.9.1-14 Touch Screen - Saving Recipe Settings on page 8-332.

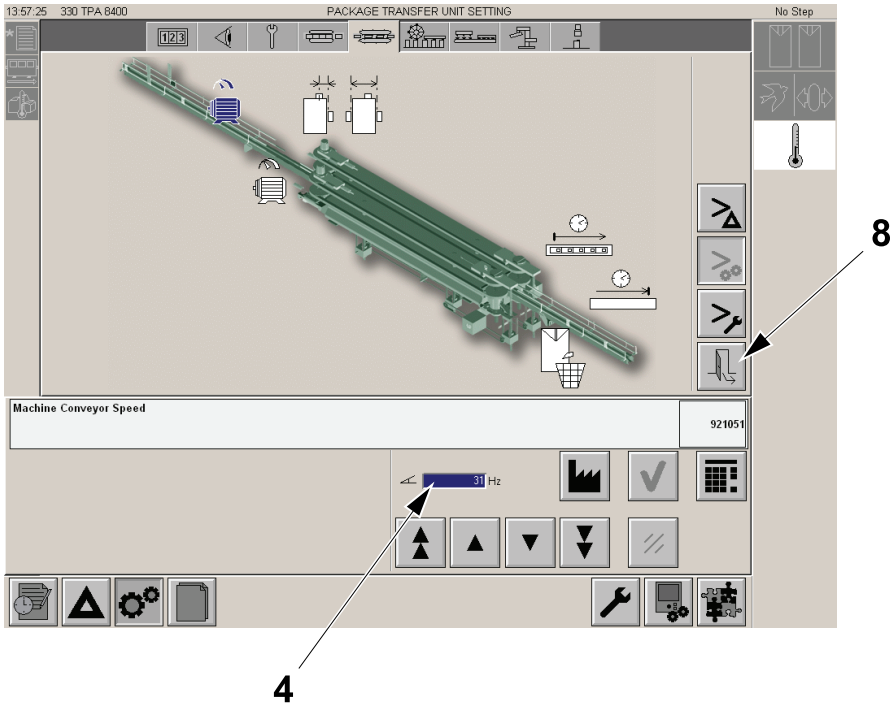

4 SPEED VALUE (Hz)
8 EXIT button

1.1.2.5-5 Set Belt Brake Speed

Note! The default value for the belt brake speed is defined in the 1.1.2.5-3 Infeed Speeds and Angles (Flex-ReCap) on page 1-30.

a) To set the belt brake speed, touch the SETTING button (1) and then the INFEED PACKAGE UNIT button (2).

Note! Items like the positioning system only appear on the screen below when installed.

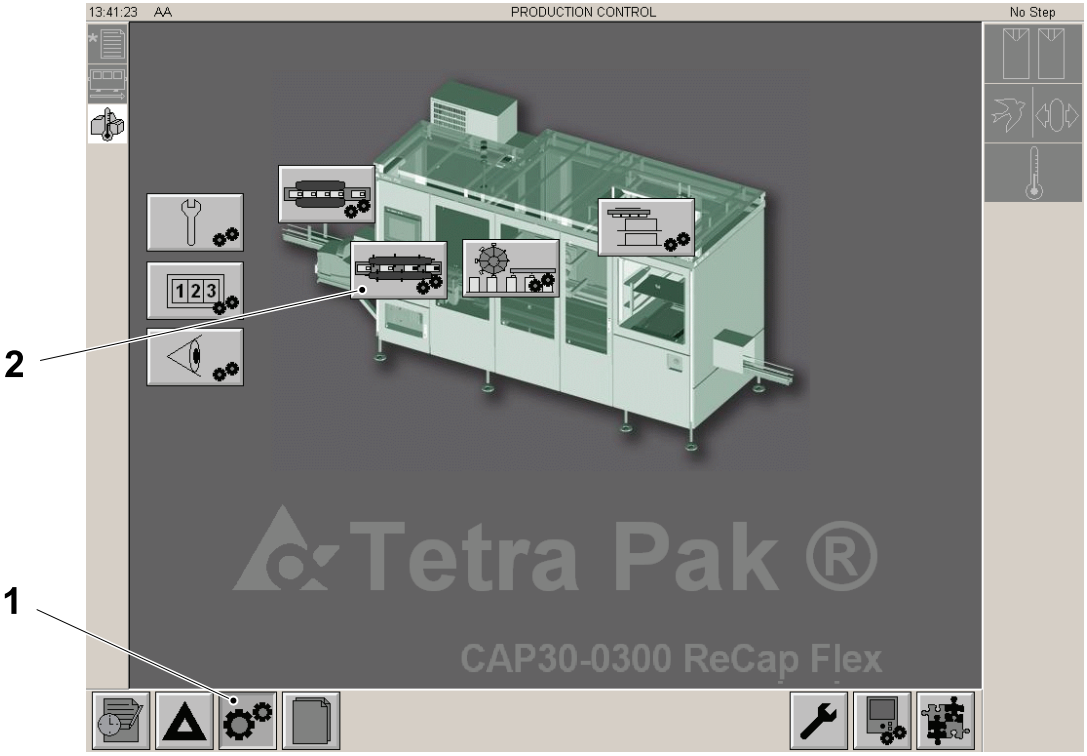

1 SETTING button
2 INFEED PACKAGE UNIT button

(Cont'd)

(Cont'd)

b) Touch the BELT BRAKE SPEED icon (3).

c) To increase or decrease the SPEED VALUE (4), use the ARROW KEYS (5) or the keyboard which is accessible via the KEYBOARD button (6).

d) Introduce the value by clicking the OK button (7).

e) Touch the EXIT button (8) .

f) To set the correct speed, use the trend curve, see 1.1.2.5-6 Display Trend Curve on page 1-39.

g) When the correct result is obtained store the corrected values in the appropriate recipe, see 8.9.1-14 Touch Screen - Saving Recipe Settings on page 8-332.

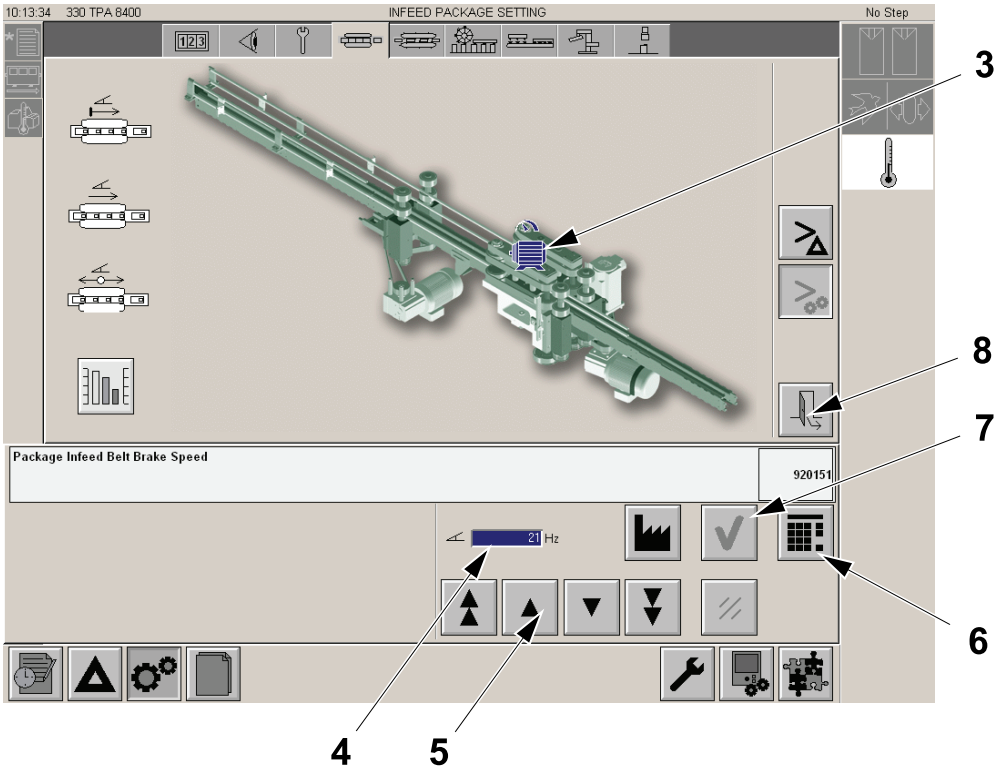

3 BELT BRAKE SPEED button
4 SPEED VALUE
5 ARROW KEYS
6 KEYBOARD button
7 OK button
8 EXIT button

1.1.2.5-6 Display Trend Curve

a) To open the trend curve graph, touch the SETTING button (1) and then the INFEED PACKAGE UNIT button (2).

b) Touch the PACKAGE INFEED TREND button (3).

c) To use the trend curve, refer to Using the Trend Curve to Correct Belt Brake Speed. on page 1-39.

Note! Items like the positioning system only appear on the screen below when installed.

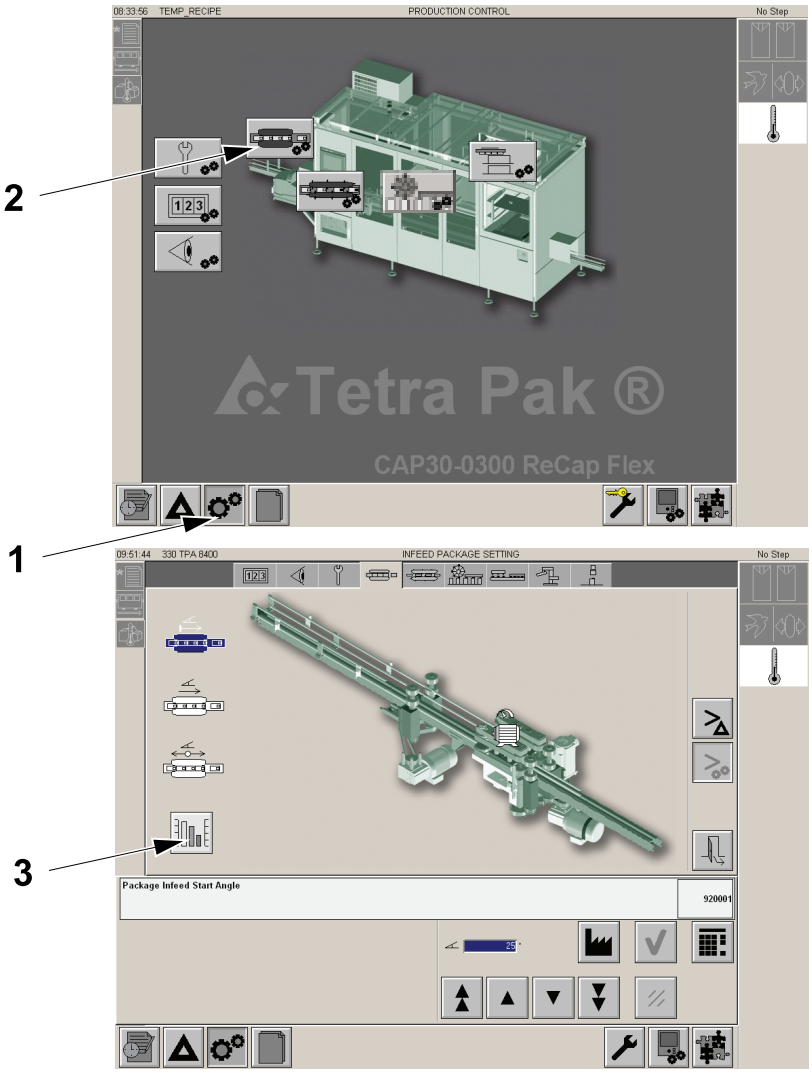

1 SETTING button
2 INFEED PACKAGE UNIT button
3 PACKAGE INFEED TREND button

(Cont'd)

(Cont'd)

Normal Presentation

The following illustration is an example of the Trend Screen.

The illustration shows the DESIRED RUNNING ANGLE (1), the MAXIMUM ALLOWABLE RUNNING ANGLE (2), the MINIMUM ALLOWABLE RUNNING ANGLE (3) the actual RUNNING ANGLE OF LAST PACKAGES (4) leaving the belt unit.

Note! The DESIRED RUNNING ANGLE (1) is the BLUE line and the actual RUNNING ANGLE OF LAST PACKAGES (4) is the GREEN line.

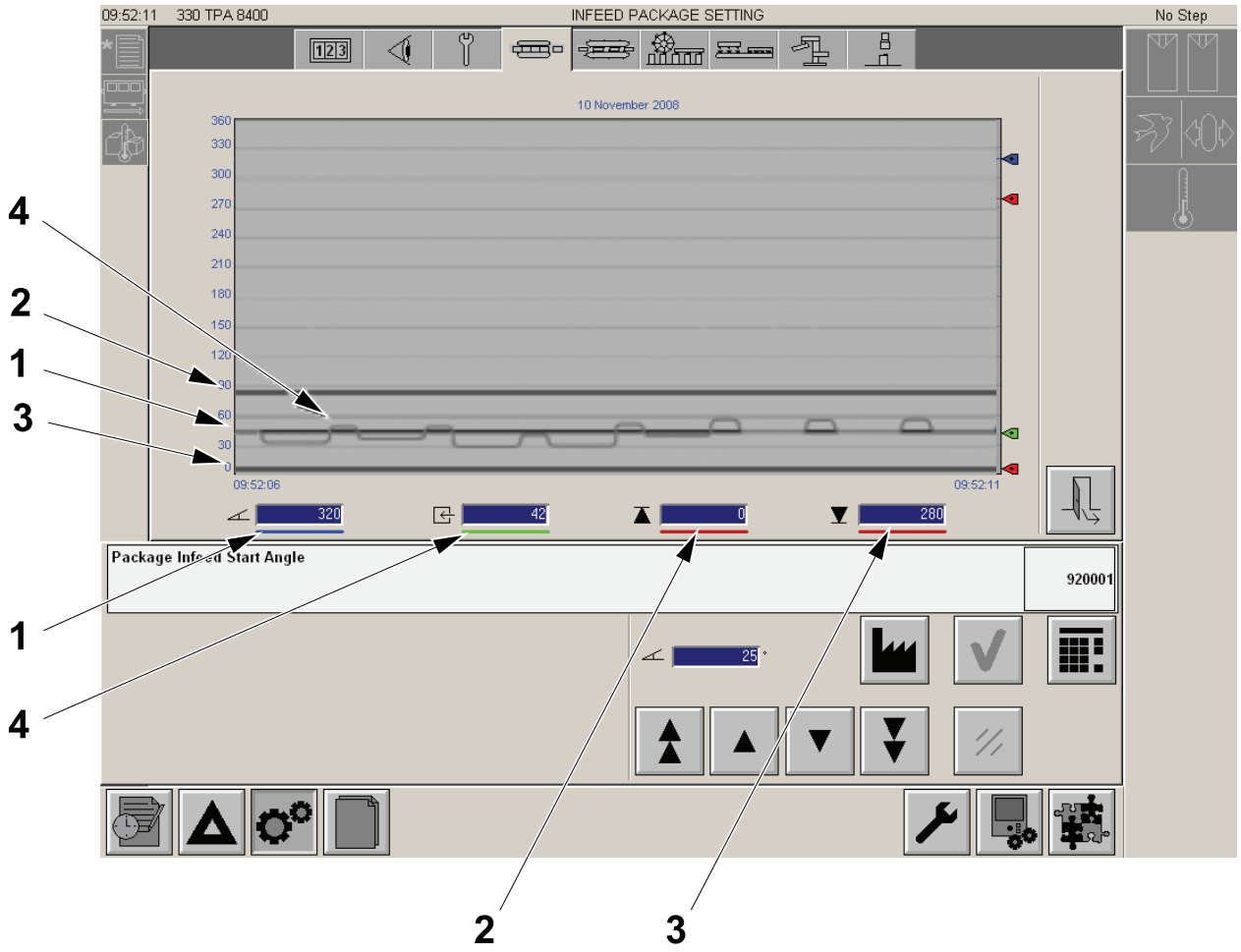

1 DESIRED RUNNING ANGLE
2 MAXIMUM ALLOWABLE RUNNING ANGLE
3 MINIMUM ALLOWABLE RUNNING ANGLE
4 RUNNING ANGLE OF LAST PACKAGE

(Cont'd)

(Cont'd)

The following example of the Trend Screen shows what can happen when the DESIRED RUNNING ANGLE (1) is near to 360 degrees. The MAXIMUM ALLOWABLE RUNNING ANGLE (2) will appear at the bottom of the screen and the MINIMUM ALLOWABLE RUNNING ANGLE (3) will be at the top of the screen. The actual RUNNING ANGLE OF LAST PACKAGES (4) that has just left the belt unit at the left hand end. This may be at the top of the screen as shown below or the bottom of the screen. The actual RUNNING ANGLE OF LAST PACKAGES (4) that have recently left the belt unit will appear split as shown.

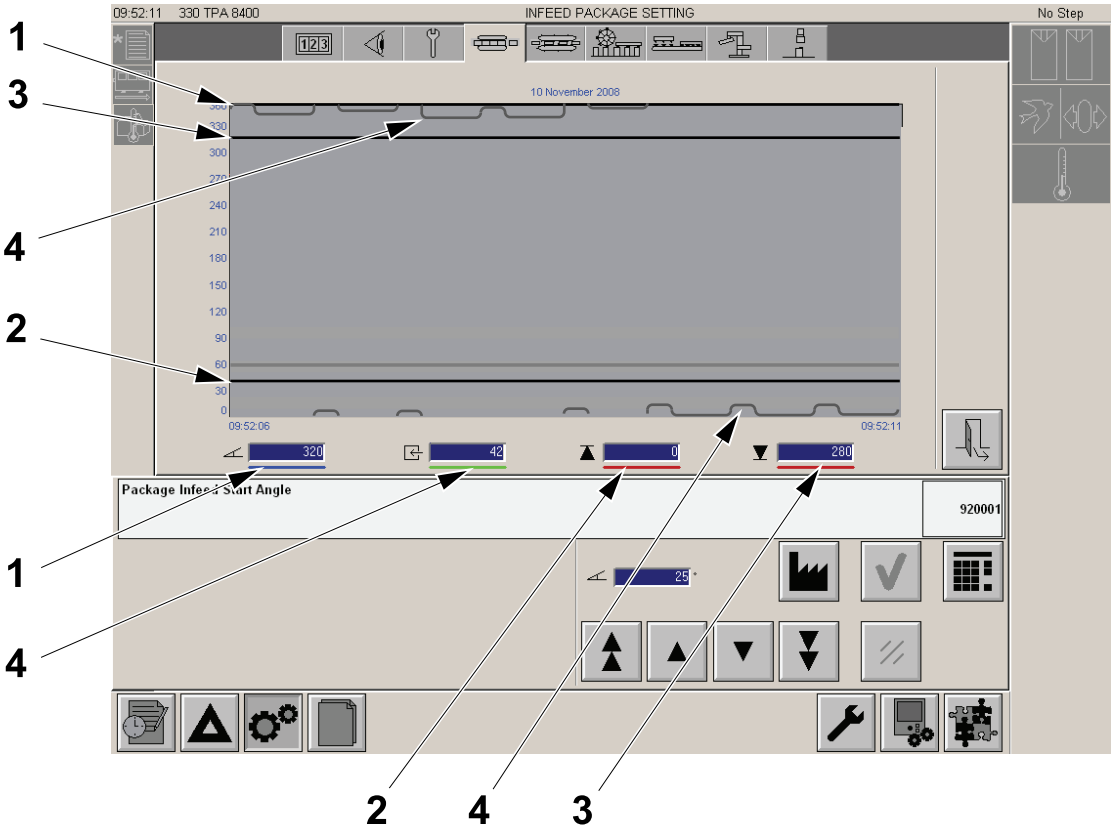

1 DESIRED RUNNING ANGLE

2 MAXIMUM ALLOWABLE RUNNING ANGLE

3 MINIMUM ALLOWABLE RUNNING ANGLE

4 RUNNING ANGLE OF LAST PACKAGE

(Cont'd)

(Cont'd)

Using the Trend Curve to Correct Belt Brake Speed.

Note! The machine must be in PRODUCTION to use the TREND curve.

The illustrations below shows three examples A, B and C of a trend curve.

In the example **A**, the RUNNING ANGLE (1) straddles the DESIRED RUNNING ANGLE (2) indicating optimum belt brake speed.

In example **B**, the RUNNING ANGLE (1)) is consistently between the DESIRED RUNNING ANGLE (2) and the MAXIMUM ALLOWABLE RUNNING ANGLE (3). This indicates that the packages are arriving **too late**. This error should be corrected by **increasing** the belt brake speed. See 1.1.2.5-5 Set Belt Brake Speed on page 1-34.

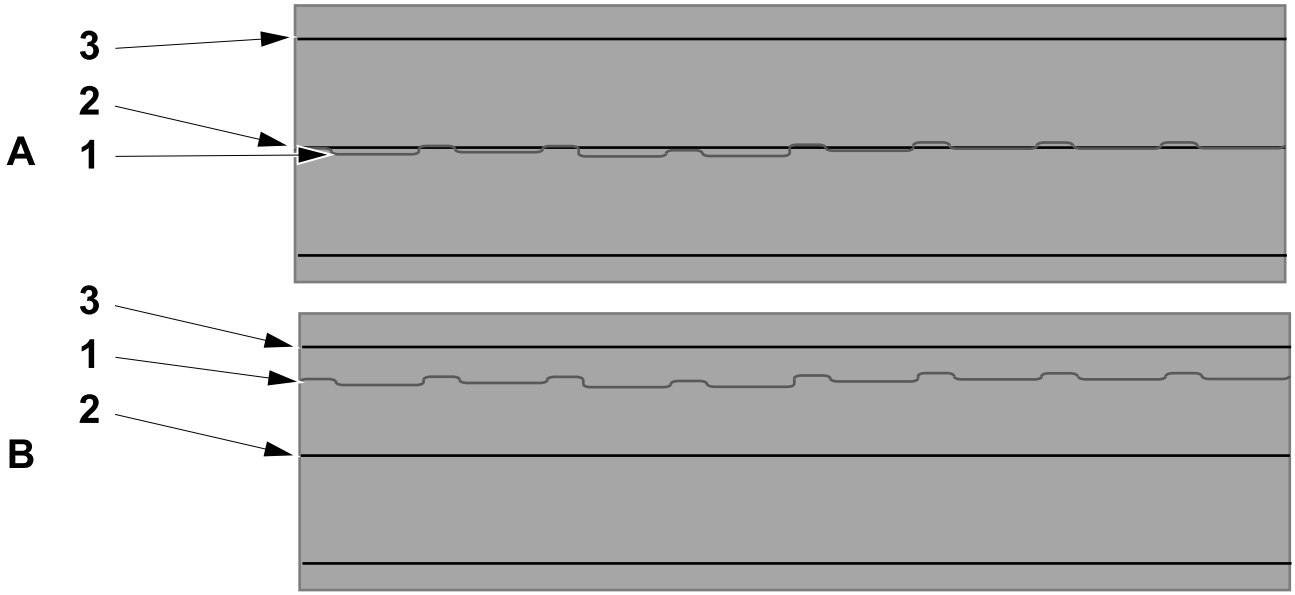

1 RUNNING ANGLE
2 DESIRED RUNNING ANGLE
3 MAXIMUM ALLOWABLE RUNNING ANGLE

(Cont'd)

(Cont'd)

In example **C**, the RUNNING ANGLE (1) is consistently between the DESIRED RUNNING ANGLE (2) and the MINIMUM ALLOWABLE RUNNING ANGLE (4). This indicates that the packages are arriving **too early**. This error should be corrected by **reducing** the belt brake speed. See 1.1.2.5-5 Set Belt Brake Speed on page 1-34.

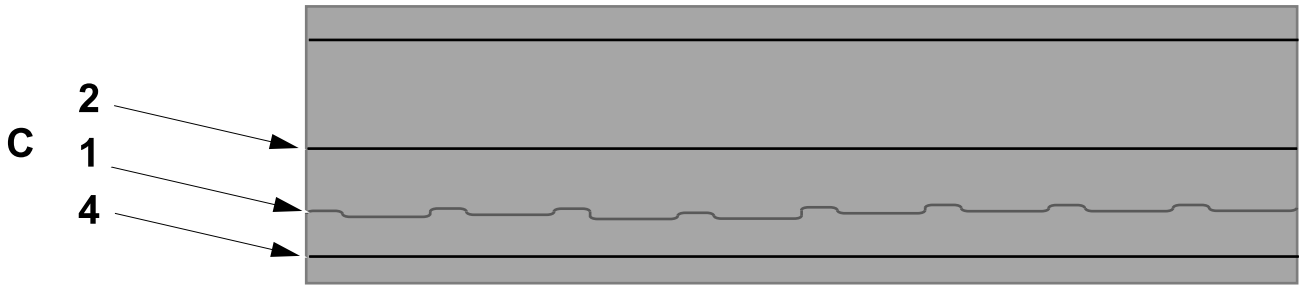

1 RUNNING ANGLE
2 DESIRED RUNNING ANGLE
4 MINIMUM ALLOWABLE RUNNING ANGLE

1.1.2.5-7 Set Package Infeed Start Angle

Note! The default value for the belt brake speed is defined in the 1.1.2.5-3 Infeed Speeds and Angles (Flex-ReCap) on page 1-30.

a) To set the Package Infeed Start Angle, touch the SETTING button (1) and then the INFEED PACKAGE UNIT button (2).

Note! Items like the positioning system only appear on the screen below when installed.

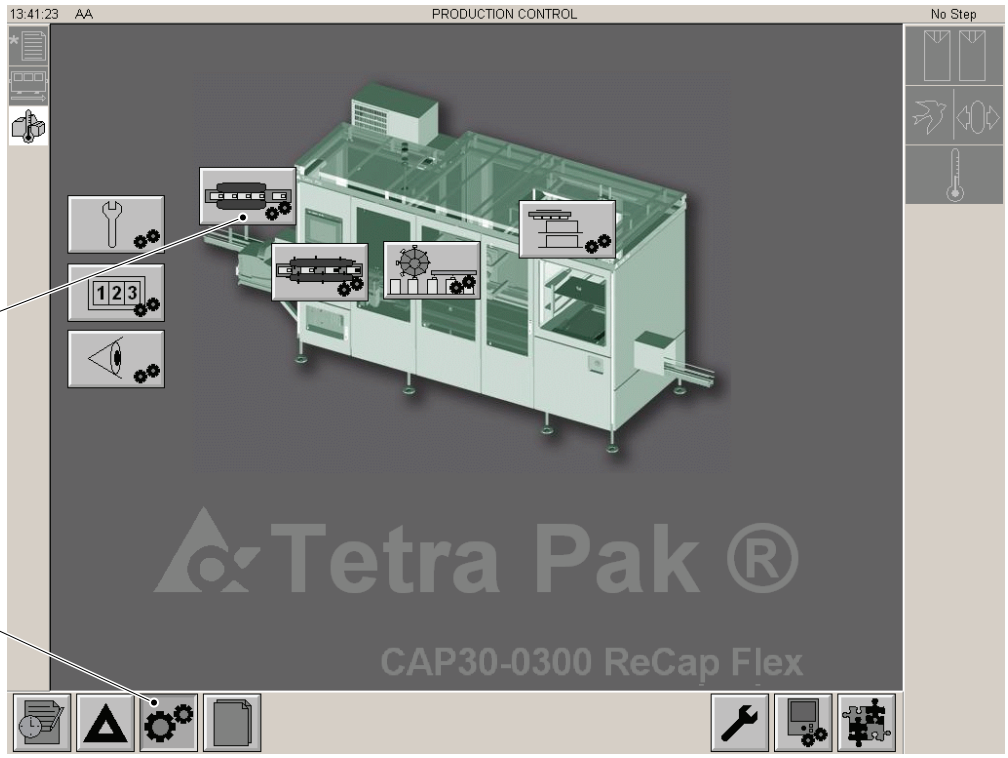

1 SETTING button
2 INFEED PACKAGE UNIT button

(Cont'd)

(Cont'd)

b) Touch the PACKAGE INFEED START ANGLE button (3).

c) To increase or decrease the START ANGLE VALUE (4), use the keyboard button ARROW KEYS (5) or the keyboard which is accessible via the KEYBOARD button (6).

d) Introduce the value by clicking the OK button (7).

e) Touch the EXIT button (8).

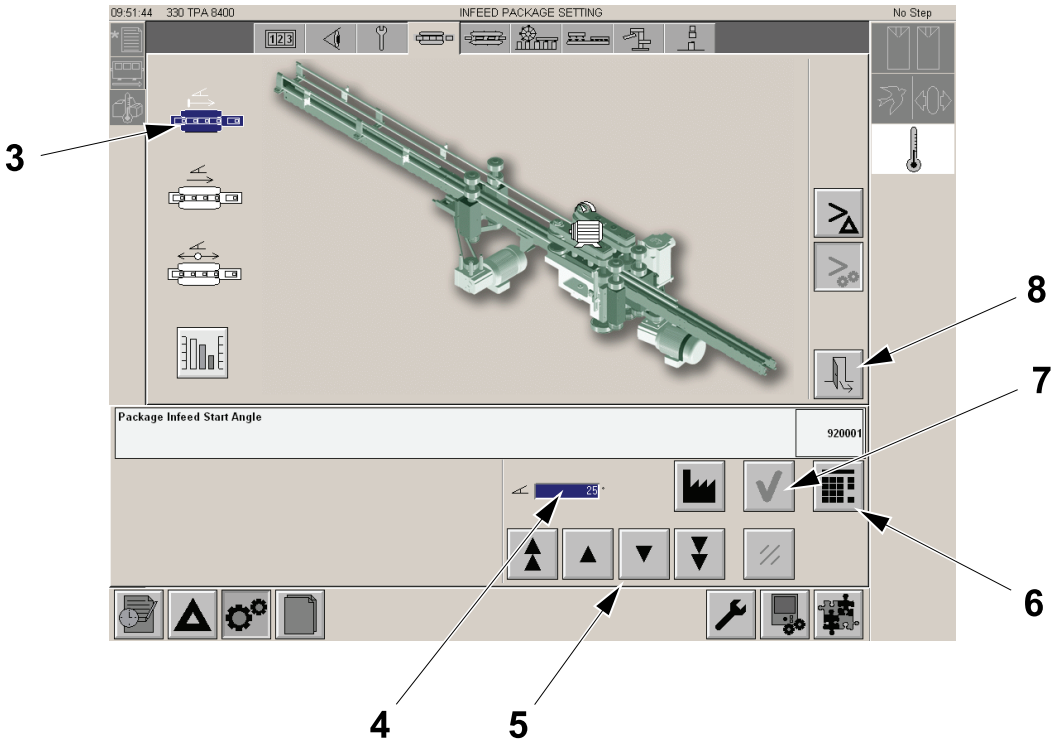

3 PACKAGE INFEED START ANGLE button
4 START ANGLE VALUE
5 ARROW KEYS
6 KEYBOARD button
7 OK button
8 EXIT button

(Cont'd)

(Cont'd)

Note! When the correct infeed start angle is obtained, the package (9) should be in firm contact with the belt tooth (10) before the belt tooth (10) is aligned with the front of the pulley (11).

f) When the correct result is obtained store the corrected values in the appropriate recipe, see 8.9.1-14 Touch Screen - Saving Recipe Settings.

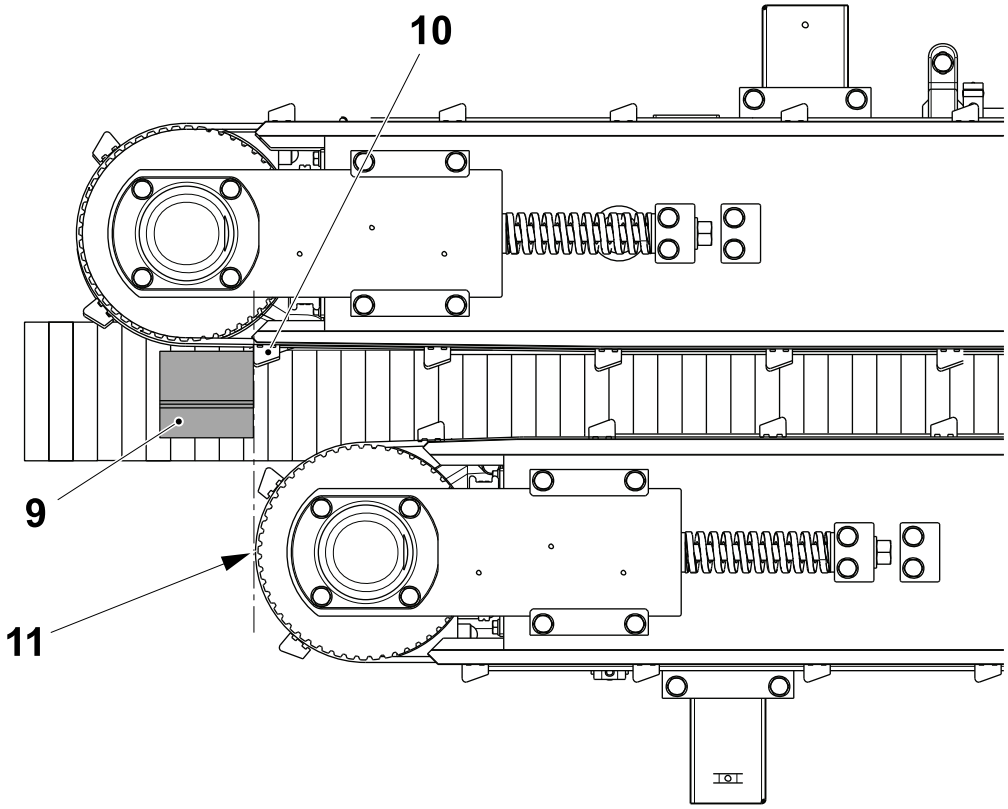

9 Package
10 Belt tooth
11 Pulley

1.1.2.5-8 Set Package Infeed Running Angle

Note! The default value for the belt brake speed is defined in the 1.1.2.5-3 Infeed Speeds and Angles (Flex-ReCap) on page 1-30.

a) To set the package infeed running angle, touch the `SETTING` button (1) and then the `INFEED PACKAGE UNIT` button (2).

Note! Items like the positioning system only appear on the screen below when installed.

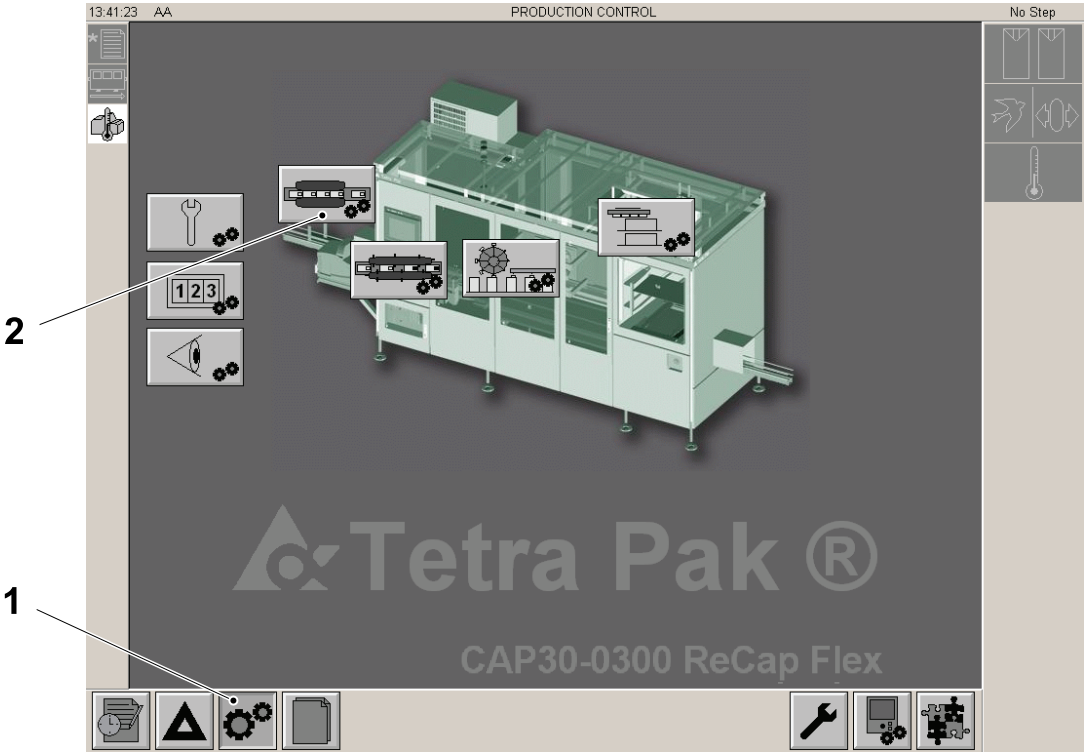

1 `SETTING` button
2 `INFEED PACKAGE UNIT` button

(Cont'd)

(Cont'd)

b) Touch the PACKAGE INFEED RUNNING ANGLE button (3).

c) To increase or decrease the RUNNING ANGLE (4), use the ARROW KEYS (5) or the keyboard which is accessible via the KEYBOARD button (6).

d) Introduce the value by clicking the OK button (7).

e) Touch the EXIT button (8).

f) When the correct result is obtained store the corrected values in the appropriate recipe, see 8.9.1-14 Touch Screen - Saving Recipe Settings.

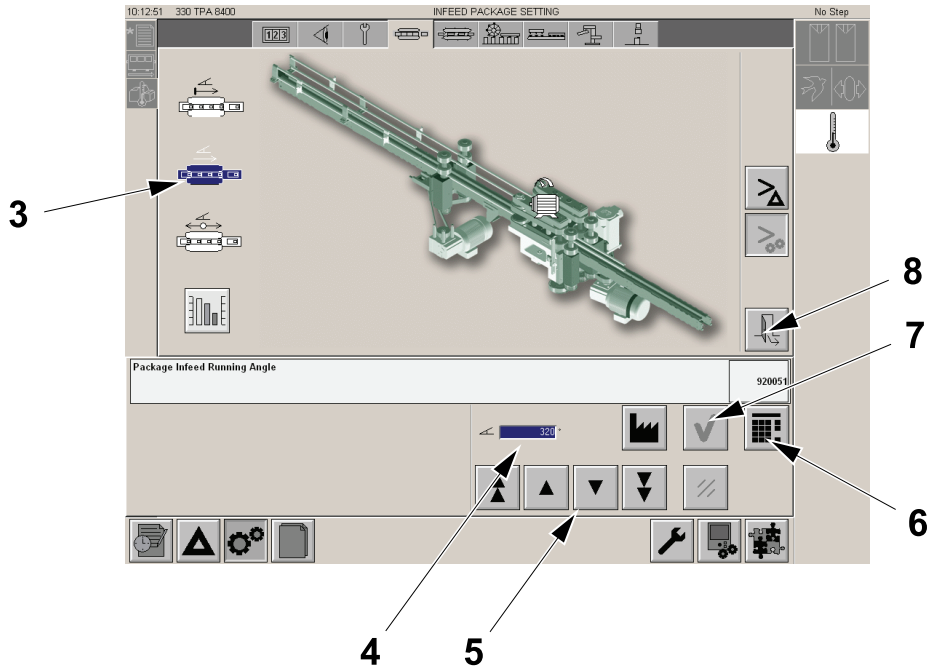

3 PACKAGE INFEED RUNNING ANGLE button
4 Running Angle
5 Arrow keys
6 keyboard button
7 OK button
8 EXIT button

1.1.2.5-9 Set Package Infeed Running Angle Range

The value set for the Package Infeed Running Angle Range will have a positive and negative component centred around the desired running angle. For example, if the desired running angle is 60 degrees and the running angle range is 40 degrees. The maximum allowable running angle will be 100 degrees and the minimum allowable running angle will be 20 degrees.

Note! The default value for the belt brake speed is defined in the 1.1.2.5-3 Infeed Speeds and Angles (Flex-ReCap) on page 1-30.

a) To set the belt brake range, touch the `SETTING` button (1) and then the `INFEED PACKAGE UNIT` button (2).

Note! Items like the positioning system only appear on the screen below when installed.

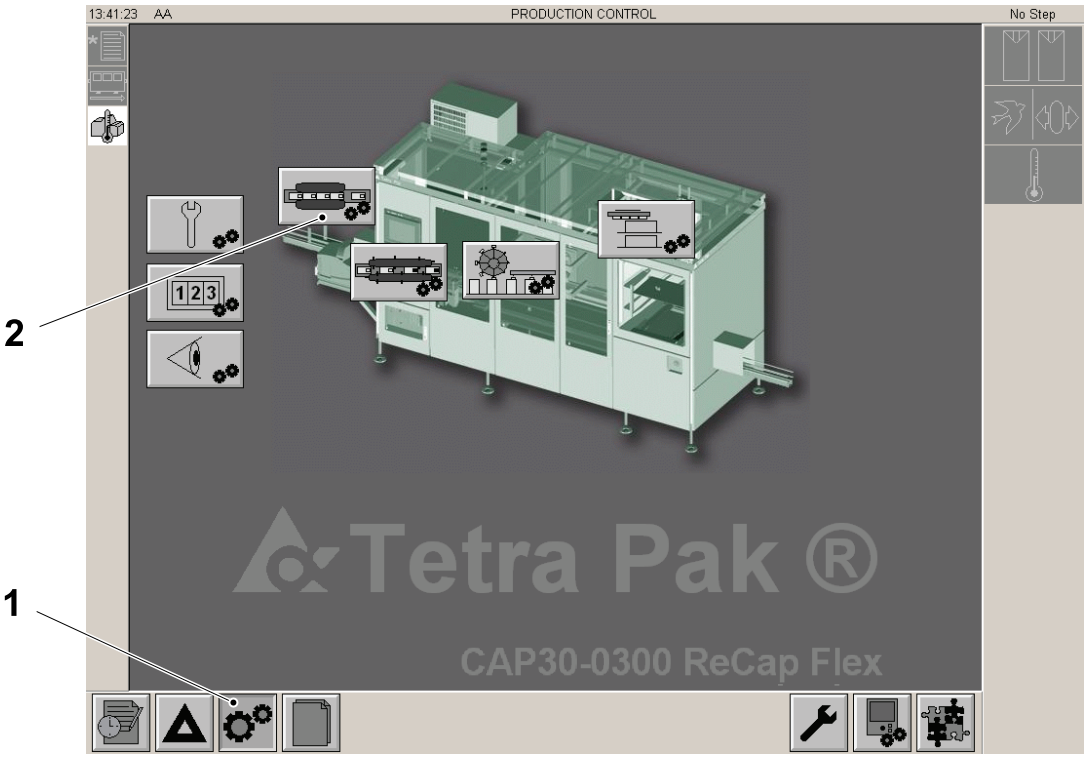

1 `SETTING` button
2 `INFEED PACKAGE UNIT` button

(Cont'd)

(Cont'd)

b) Touch the PACKAGE INFEED RUNNING ANGLE RANGE button (3).

c) To increase or decrease the ANGLE RANGE VALUE (4), use the ARROW KEYS (5) or the keyboard which is accessible via the KEYBOARD button (6).

d) Introduce the value by clicking the OK button (7).

e) Touch the EXIT button (8).

f) When the correct result is obtained store the corrected values in the appropriate recipe, see 8.9.1-14 Touch Screen - Saving Recipe Settings.

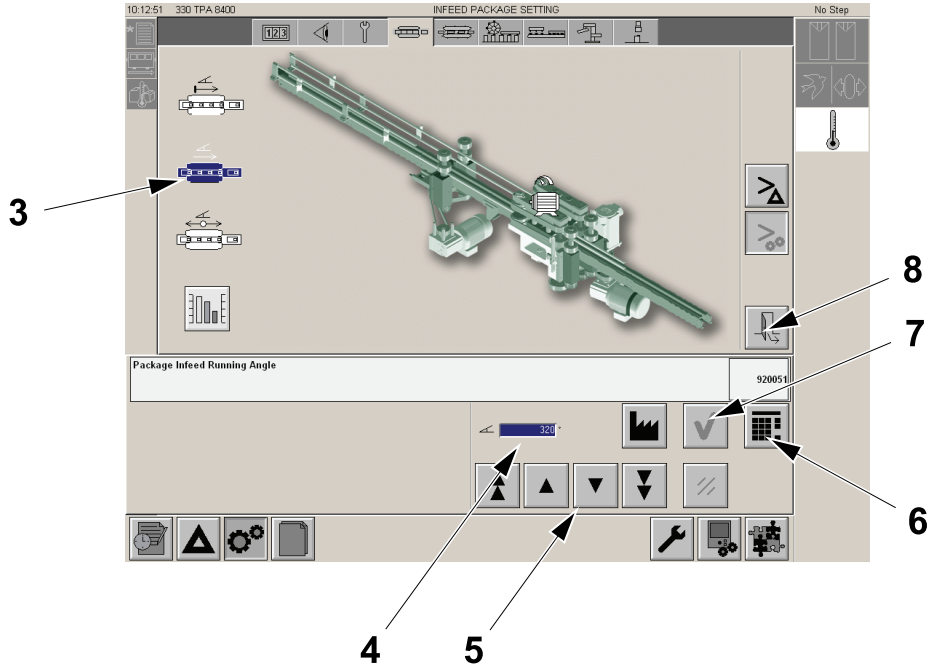

3 PACKAGE INFEED RUNNING ANGLE RANGE button
4 ANGLE RANGE VALUE
5 ARROW KEYS
6 ARROW KEYS
7 OK button
8 EXIT button

1.1.2.5-10 Outfeed Conveyor - Setting Speed

It's possible to set the speed of the outfeed conveyor to optimise the exit of the packages from the machine. The actual speed to be set is dependant on the installation.

To access the selection, do as follows:

a) Touch the PRODUCTION CONTROL button (1) .

b) In the PRODUCTION CONTROL window, touch the PACKAGE TRANSFER button (2) .

Note! Items like the positioning system only appear on the screen below when installed.

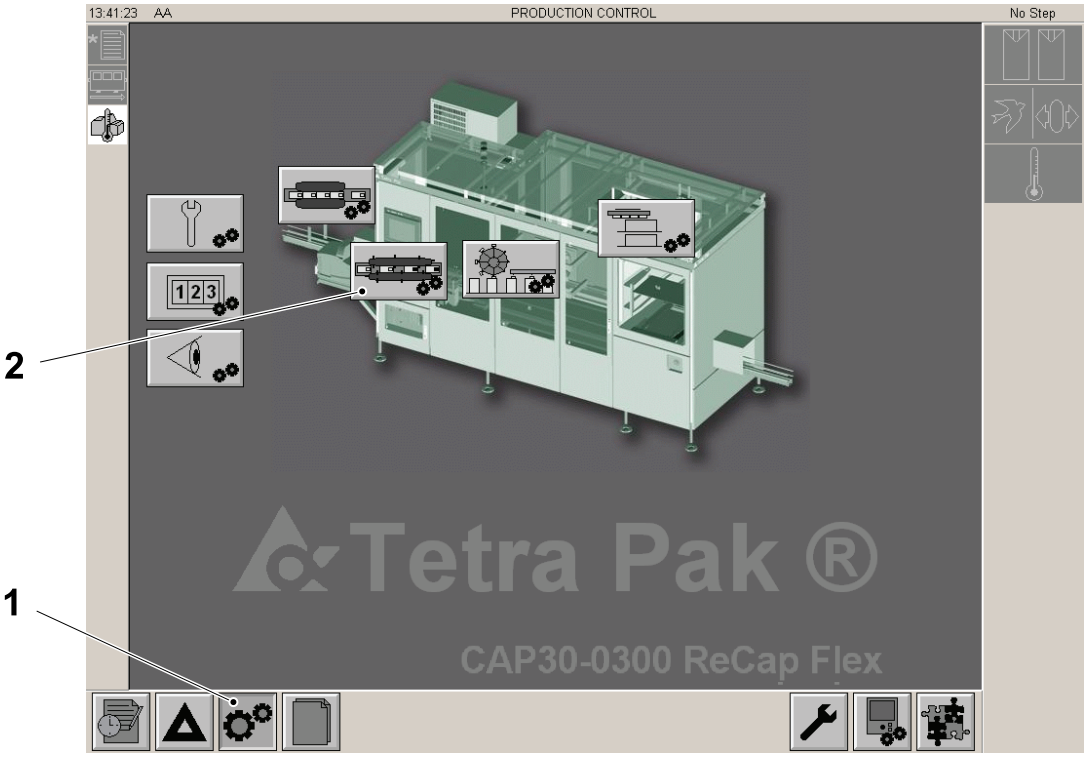

1 PRODUCTION CONTROL button
2 PACKAGE TRANSFER button

(Cont'd)

(Cont'd)

c) In the package transfer setting unit window (3), touch the OUTFEED CONVEYOR SPEED icon (4).

d) Use the ARROW KEY (5) or the NUMERIC button (6) to set the number in the VALUE WINDOW (7) to the correct value.

Note! When the value in the VALUE WINDOW (7) is zero the outfeed conveyor speed and the package conveyor speed are the same. The outfeed conveyor speed can be increased up to 40%. The outfeed conveyor speed can be decreased down to -40%.

e) Touch the OK button (8)

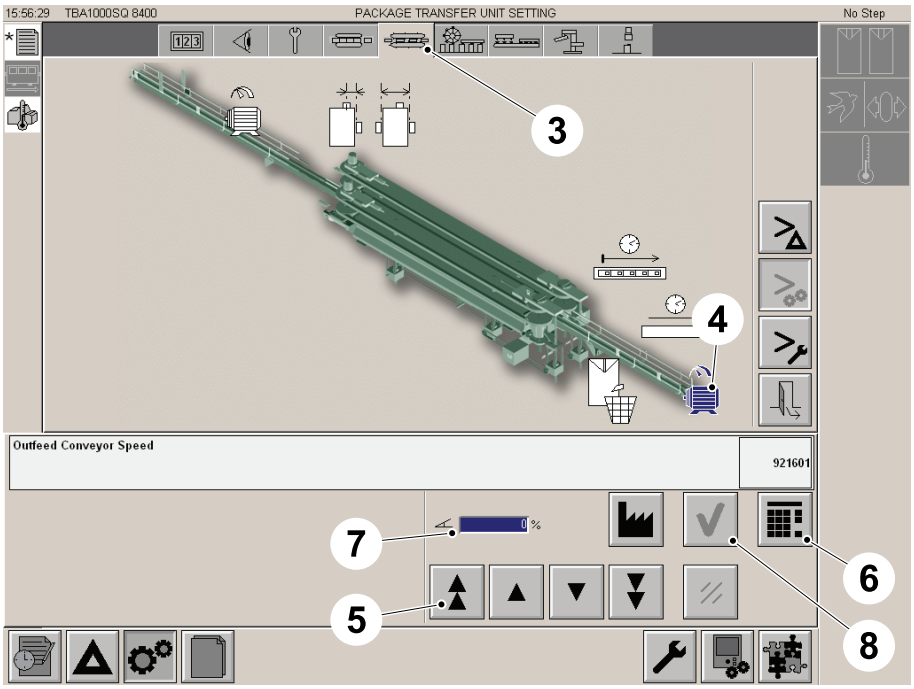

3 Package transfer setting unit window
4 OUTFEED CONVEYOR SPEED icon
5 ARROW KEY
6 NUMERIC button
7 VALUE WINDOW
8 OK button

This page intentionally left blank

2 Package Line

Package Line - Description

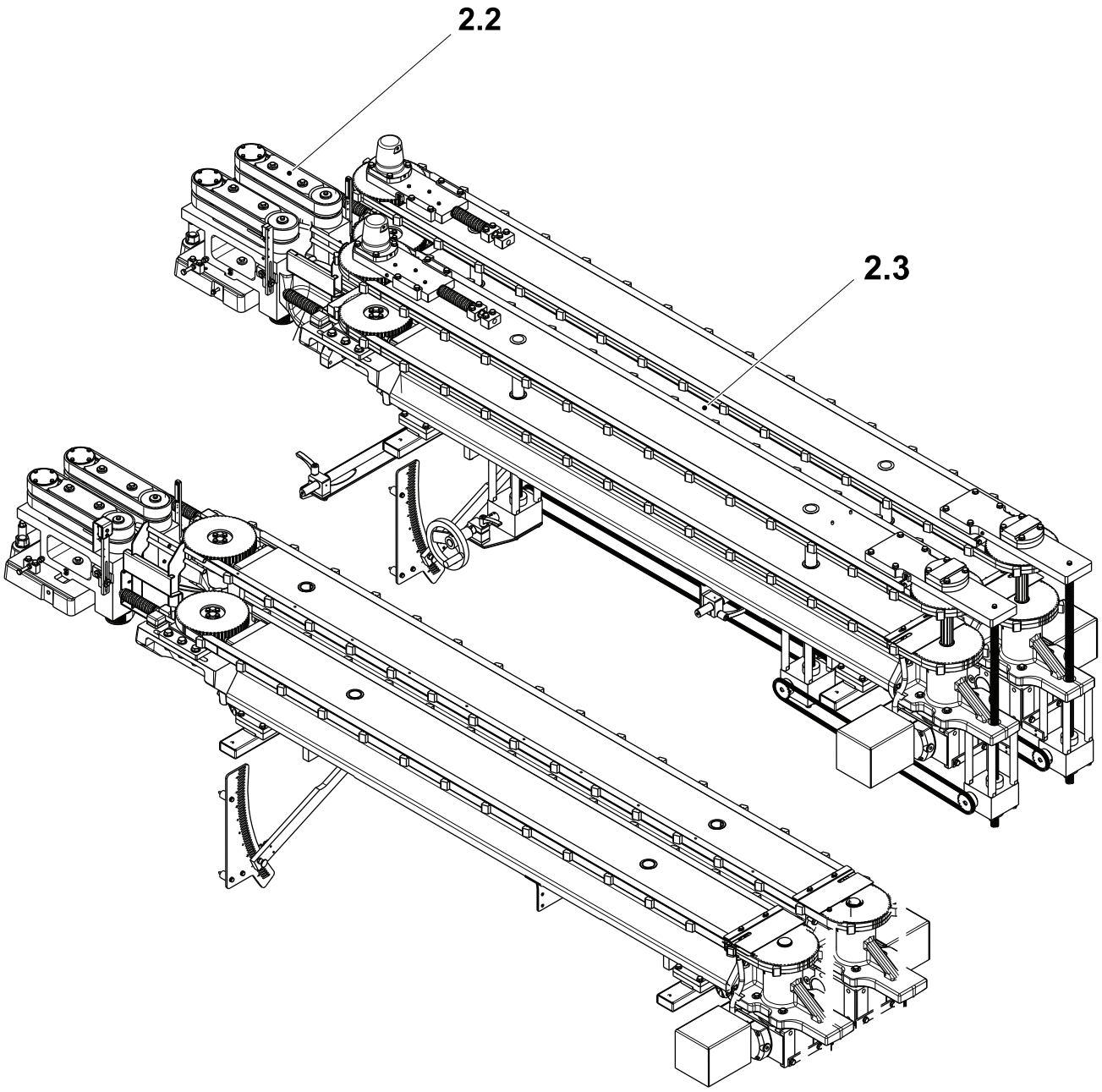

2.2 Belt Brake

2.3 Package Positioner

Package Line - Description 2-2

2.1 Functional Description 2-7

2.2 Belt Brake 2-8

2.2.1 Brake Unit 2-8

2.2.1-1 Brake Unit - Check Belt Tension 2-8
2.2.1-2 Brake Unit - Check Belts 2-9
2.2.1-3 Brake Unit - Change Belt 2-10
2.2.1-4 Brake Unit - Set Belt Tension 2-11
2.2.1-5 Brake Unit - Set Position 2-13
2.2.1-6 Brake Unit - Check 2-15
2.2.1-7 Brake Unit - Set Sensor 2-16
2.2.1-8 Set Belt Brake Speed 2-17
2.2.1-9 Brake Unit - Check Ball Bearing 2-17

2.2.2 Drive 2-27

2.2.2-1 Drive - Check Belt 2-27
2.2.2-2 Drive - Change Belt 2-28
2.2.2-3 Drive - Change Bearings 2-30

2.3 Package Positioner 2-32

2.3.1 Package Positioner (Right) 2-32

2.3.1.1 Package Positioner (Right) - Change Belts 2-32

2.3.1.1-1 Release the Upper Belt 2-32
2.3.1.1-2 Release the Lower Belt 2-33
2.3.1.1-3 Removal and Installation of the Belts 2-34
2.3.1.1-4 Installation of Spring 2-35

2.3.1.2 Package Positioner (Right) - Set Tension 2-36

2.3.1.2-1 Set Belt Tension - Right 2-36
2.3.1.2-2 Set Belts Alignment - Right 2-37

2.3.2 Package Positioner (Left) 2-38

2.3.2.1 Package Positioner (Left) Change Belts 2-38

2.3.2.1-1 Release the Upper Belt 2-38
2.3.2.1-2 Release the Lower Belt 2-39
2.3.2.1-3 Removal and Installation of the Belts 2-40

2.3.2.1-4 Installation of Spring 2-41
2.3.2.2 Package Positioner (Left) Set Tension 2-42
2.3.2.2-1 Set Belts Tension - Left 2-42
2.3.2.2-2 Set Belts Alignment - Left 2-43
2.3.3 Drive 2-44
2.3.3.1 Drive - Change Bearings 2-44
2.3.3.1-1 Preparation 2-44
2.3.3.1-2 Procedure 2-47
2.3.3.1-3 Drive - Motor and Gearbox 2-55
2.3.3.1-4 Belt Stretcher - Change Bearings 2-58
2.3.3.1-5 Cylinder Speed - Set Regulator Valve 2-64
2.3.3.1-6 Set - Cap Position X Direction 2-65
2.3.3.1-7 Set - Cap Position Y Direction 2-66
2.3.3.1-8 Set - Package Width X 2-68
2.3.3.1-9 Set - Package Length Y 2-69
2.3.3.1-10 Set - Wheel Pushdown Offset 2-71
2.3.4 Set Package Positioner Zero 2-73
2.3.4.1 Set Package Positioner Zero - Setting 2-73
2.3.4.1-1 Coarse Setting Inner Package Positioner Zero 2-73
2.3.4.1-2 Fine Setting Inner Package Positioner Zero 2-77
2.3.4.1-3 Memorizing Inner Package Positioner Zero Position 2-82
2.3.4.1-4 Coarse Setting Outer Package Positioner Zero 2-84
2.3.4.1-5 Fine Setting Outer Package Positioner Zero 2-87
2.3.4.1-6 Memorizing the Outer Package Positioner Zero Position 2-92
2.3.5 Upper Package Positioner - Set 2-94
2.3.5-1 Upper Left Package Positioner - Set Height 2-94
2.3.5-2 Upper Right Package Positioner - Set Height 2-95
2.3.5-3 Upper Inner Package Positioner - Set X Direction 2-96

2.4 Package Handling 2-98

2.4.1 Package Guides 2-98

2.4.1-1 Outfeed Package Guides - Set 2-98

This page intentionally left blank

2.1 Functional Description

The Package Line has the following main components:

- Belt Brake
- Package Positioner

Packages arriving at the infeed end of the machine form a queue at the entrance of the belt brake.

The belt brake slows the packages as they pass and then releases them individually into the package positioner. The space between consecutive packages is such that synchronisation is achieved at the cap applicator unit.

The package positioner collects the correctly spaced packages and moves them at a constant speed, first, to a position below the cap applicator unit where the cap is applied and then to the outfeed end of the machine where the packages are transferred to the outfeed conveyor.

2.2 Belt Brake

2.2.1 Brake Unit

2.2.1-1 Brake Unit - Check Belt Tension

Machine Status	Electrical supply disconnecting device in position O (OFF) Main air valve OFF
SPC Reference	2766990-0200 2766991-0200

a) Check the tension of the . It should be possible to move each belt the distance **A**, at the centre.

b) If necessary, adjust the tension, see 2.2.1-4 Brake Unit - Set Belt Tension.

A = 5 ±1 mm

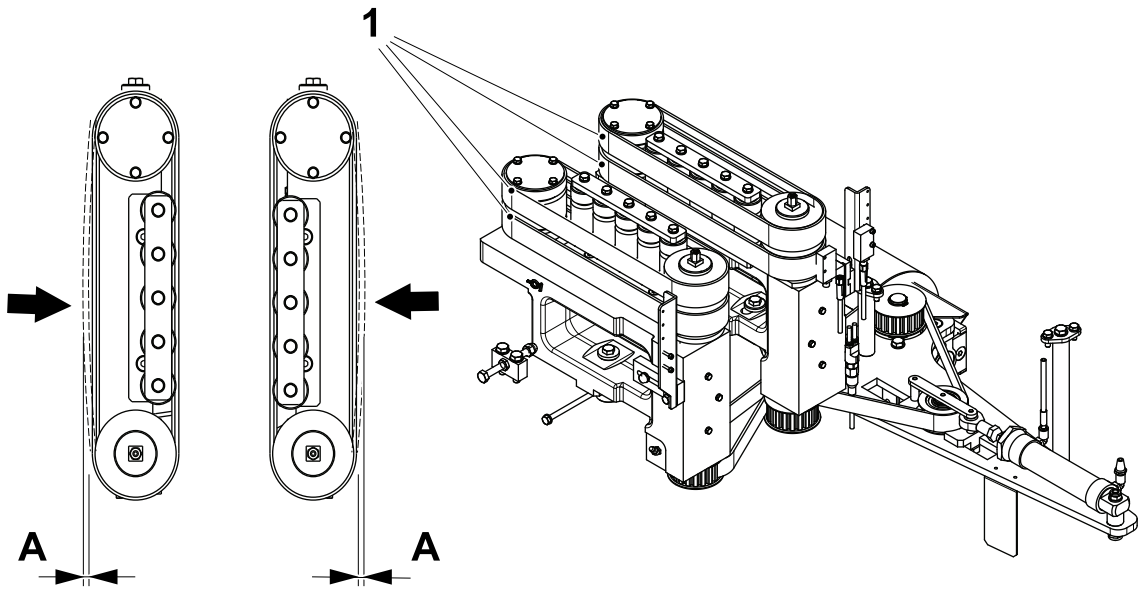

1 Belt

2.2.1-2 Brake Unit - Check Belts

Machine Status	Electrical supply disconnecting device in position O (OFF) Main air valve OFF
SPC Reference	2766990-0200 2766991-0200

Check the for wear or damage. If necessary, change the belts, see 2.2.1-3 Brake Unit - Change Belt.

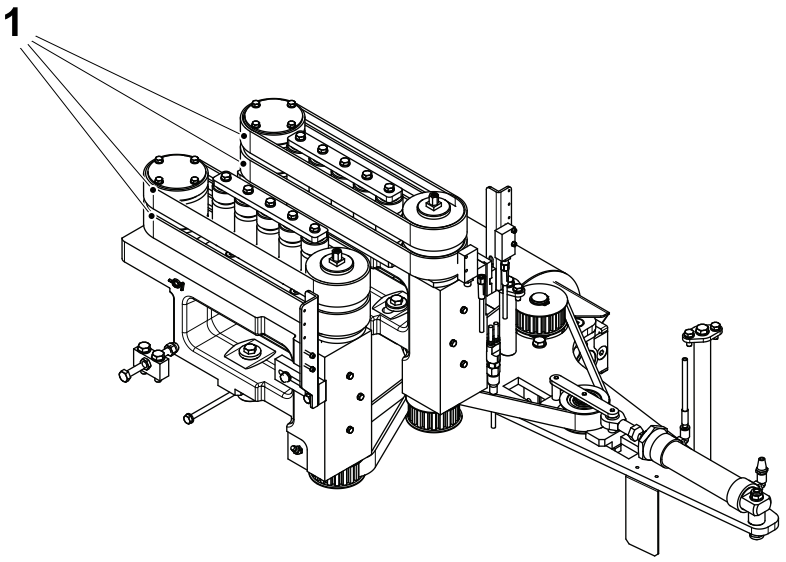

1 Belts

2.2.1-3 Brake Unit - Change Belt

Machine Status	Electrical supply disconnecting device in position O (OFF) Main air valve OFF
SPC Reference	2766990-0200 2766991-0200

a) Loosen the and loosen the to release the belt tension.

b) Remove the .

c) Install the new belts and assemble in the reverse order.

d) Repeat the procedure for the other belts.

e) Tension the belts, see 2.2.1-4 Brake Unit - Set Belt Tension.

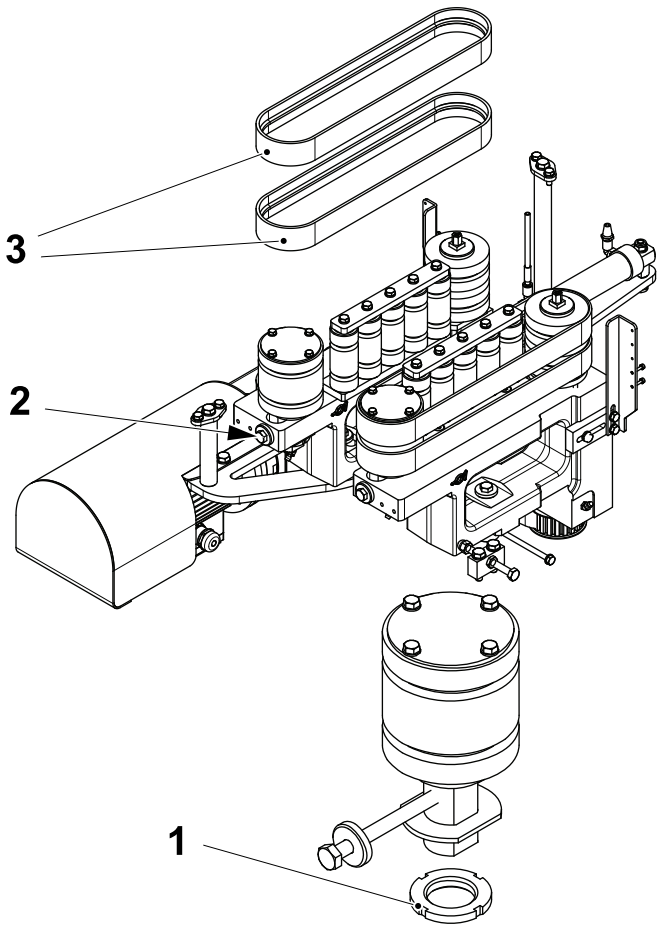

1 Nut
2 Screw
3 Belt

2.2.1-4 Brake Unit - Set Belt Tension

Machine Status	Electrical supply disconnecting device in position O (OFF) Main air valve OFF
Special Equipment	TP No. 90600-3415 TP No. 90459-2181
SPC Reference	2766990-0200 2766991-0200

a) Loosen the nut (1).

b) Use the screw (2) adjust the tension of the belt (3). The tension should be set to 250N (80 Hz) using the tool TP No.90600-3415 or TP No. 90459-2181 for each of the belts.

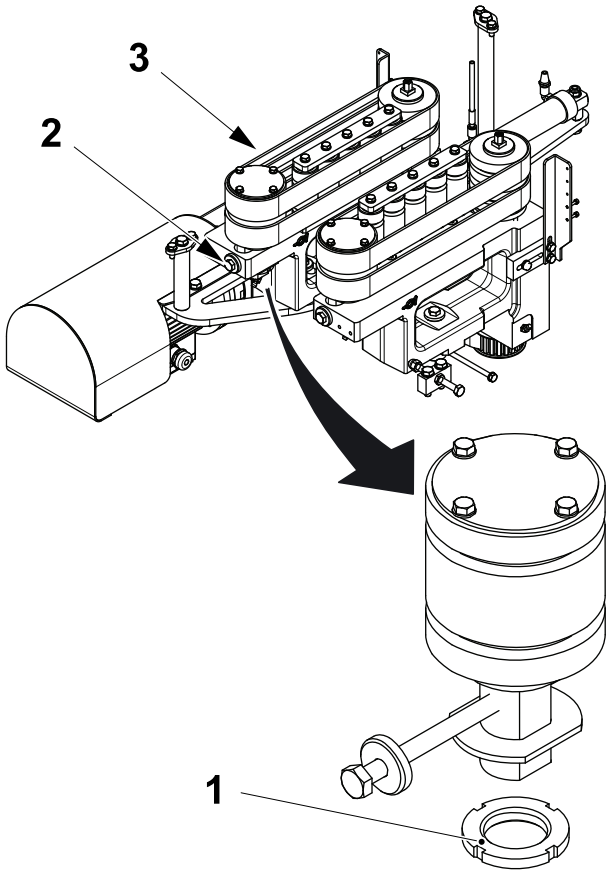

1 Nut
2 Screw
3 Belt

(Cont'd)

(Cont'd)

c) Without moving the screw (2) tighten the nut (1).

d) Repeat the procedure for the other belts.

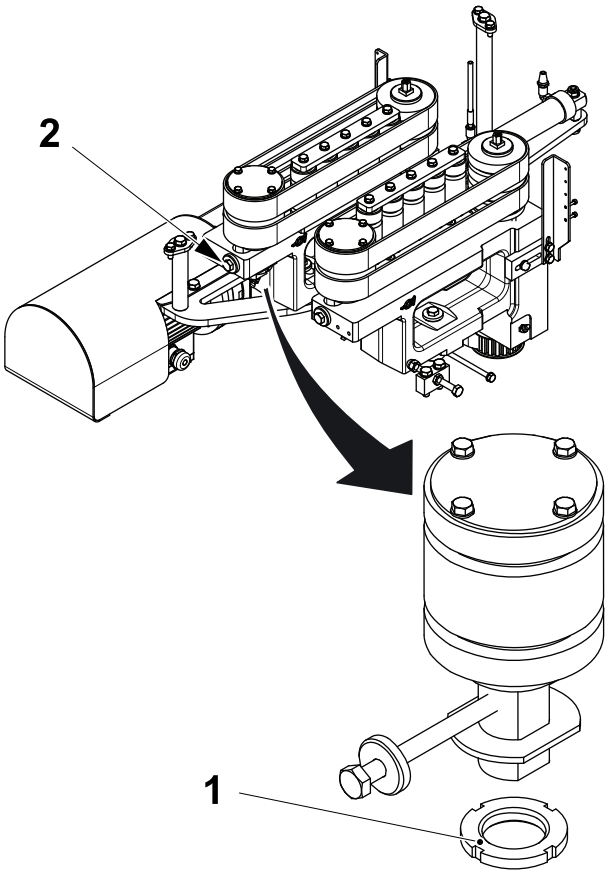

1 Nut
2 Screw

2.2.1-5 Brake Unit - Set Position

Machine Status	Electrical supply disconnecting device in position O (OFF) Main air valve OFF
SPC Reference	2766990-0200 2766991-0200

Inner Brake Position

a) Make sure that the main air supply is turned OFF and release the air pressure from the cylinder see, 2.2.2-2 Drive - Change Belt the first page only.

b) Loosen the screw (1).

c) Slide the inner inner brake (2) until the distance **A** from the surface of the transfer belt (3) is obtained.

d) Without moving the inner brake (2), tighten the screw (1).

A = 1 - 3 mm

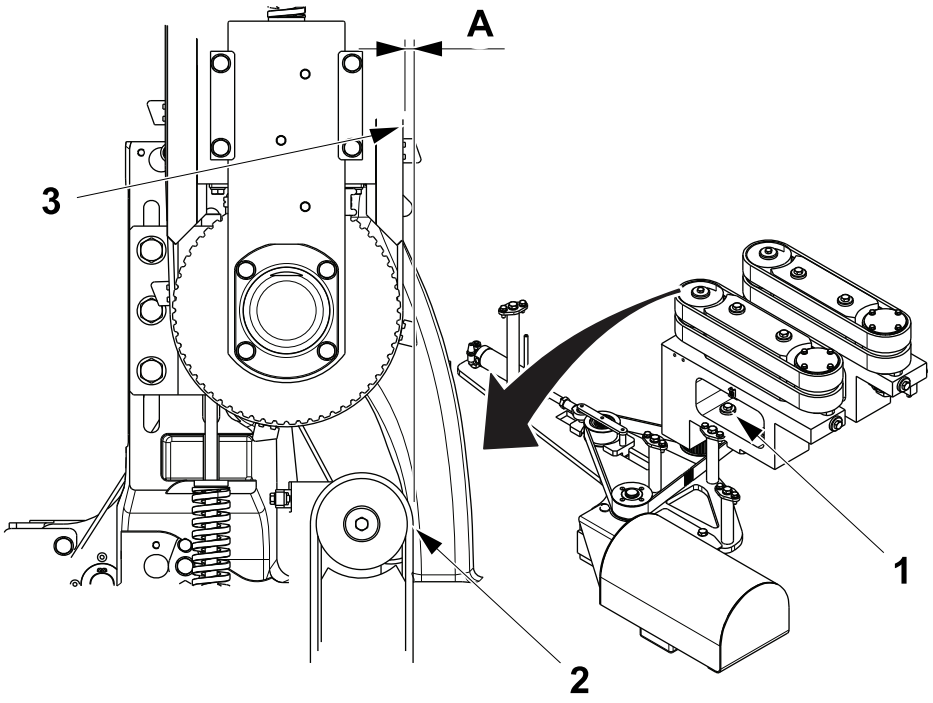

1 Screw
2 Inner brake
3 Transfer belt

(Cont'd)

(Cont'd)

Outer Brake Position

a) Loosen the screw (1) and release the outer brake (2).

b) Use the screw (3) and the screw (4) to adjust the position of the outer brake (2) until parallel and the distance **A** is obtained.

c) Without moving the outer brake (2), tighten the screw (1).

d) Check that the drive belt under the belt brake is located correctly and turn the main air supply ON.

Note! Check in production that the first package is always stopped in the correct position, see 2.2.1-6 Brake Unit - Check.

A = Package size -1mm

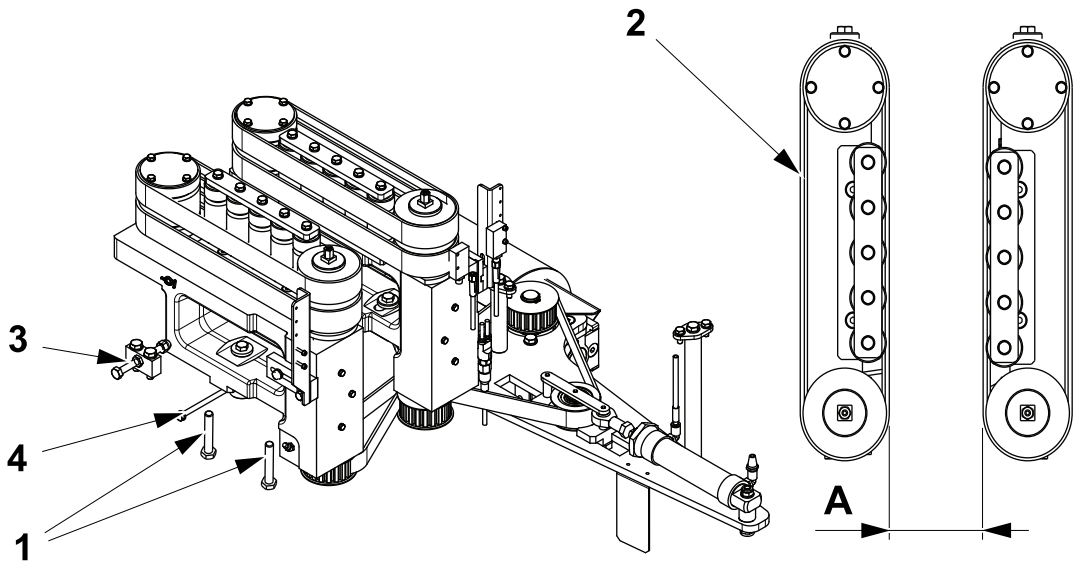

1 Screw
2 Outer brake
3 Screw
4 Screw

2.2.1-6 Brake Unit - Check

Machine Status	Electrical supply disconnecting device in position O (OFF) Main air valve OFF
SPC Reference	2766990-0200 2766991-0200

a) Check that the belt brake stops and holds a package in the end of belt brake position (1) shown. If not adjust the sensor until the correct position is obtained, see 2.2.1-7 Brake Unit - Set Sensor.

b) Check that the belt brake holds the package when there is a queue in the package direction (2) . If not adjust the belt brake until the front package is held in the end of belt brake position (1) shown.

Note! Distance A equals 5 mm before the end of belt brake position (1) and 15 mm after, this is OK if sustainable.

A = 20mm max

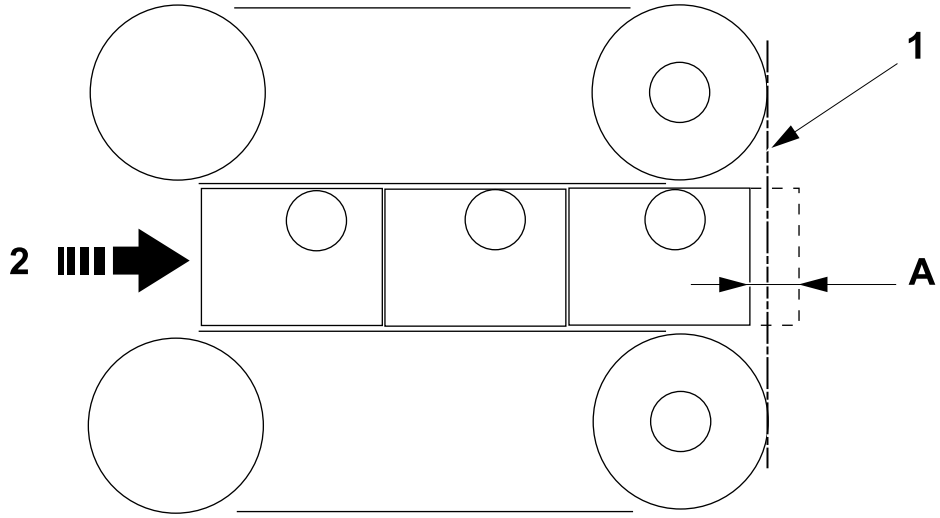

1 End of Belt Brake Position
2 Package direction

2.2.1-7 Brake Unit - Set Sensor

Machine Status	Electrical supply disconnecting device in position O (OFF) Main air valve OFF
SPC Reference	2766990-0200 2766991-0200

a) Loosen the screw (1) and screw (2) as required.

b) Move the bracket (3), the bracket (4) and the bracket (5) holding the sensors (6) so that the beam (7) passes through the gap without striking the shafts (8).

Note! The hole (9) may be used to position the sensors (6) for different package types.

c) Tighten the screw (1) and the screw (2).

d) The sensors (6) should be the distance **A** from the belts front edge (10).

e) To set the sensors (6) electrically see 8.8.2 General Purpose Sensor.

Note! Every time the position is changed the infeed start angle and the running angle should be set again, see 1.1.2.5-7 Set Package Infeed Start Angle and 1.1.2.5-8 Set Package Infeed Running Angle.

A = 20 mm

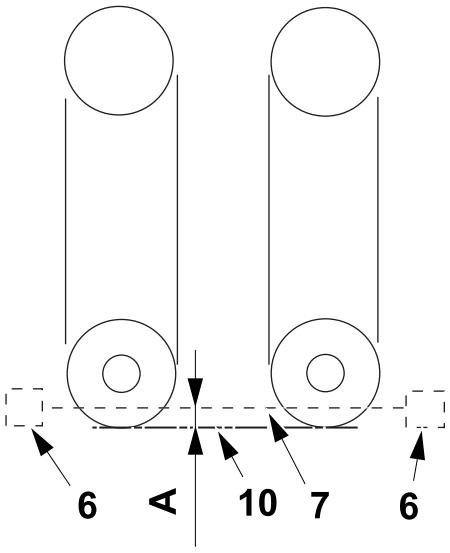

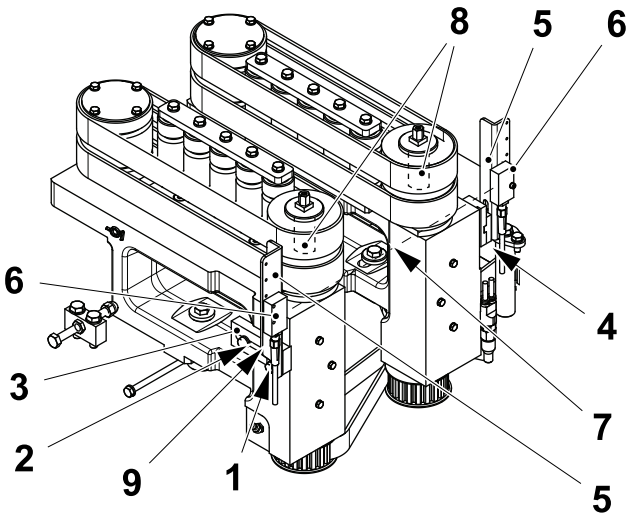

1 Screw
2 Screw
3 Bracket
4 Bracket
5 Bracket
6 Sensor
7 Beam
8 Shaft
9 Hole
10 Front edge

2.2.1-8 Set Belt Brake Speed

Machine Status	Electrical supply disconnecting device in position I (ON) Main air valve OFF
SPC Reference	2766990-0200 2766991-0200

To set the Belt Brake speed, see 1.1.2.4 Package Infeed - Performance Settings, and 1.1.2.5-5 Set Belt Brake Speed.

2.2.1-9 Brake Unit - Check Ball Bearing

Machine Status	Electrical supply disconnecting device in position O (OFF) Main air valve OFF
SPC Reference	2766990-0200 2766991-0200

Note! Perform this procedure every 1000 hours.

Remove Belt

a) Step down the machine to STEP0.

b) Remove the belt (1), see 2.2.2-2 Drive - Change Belt.

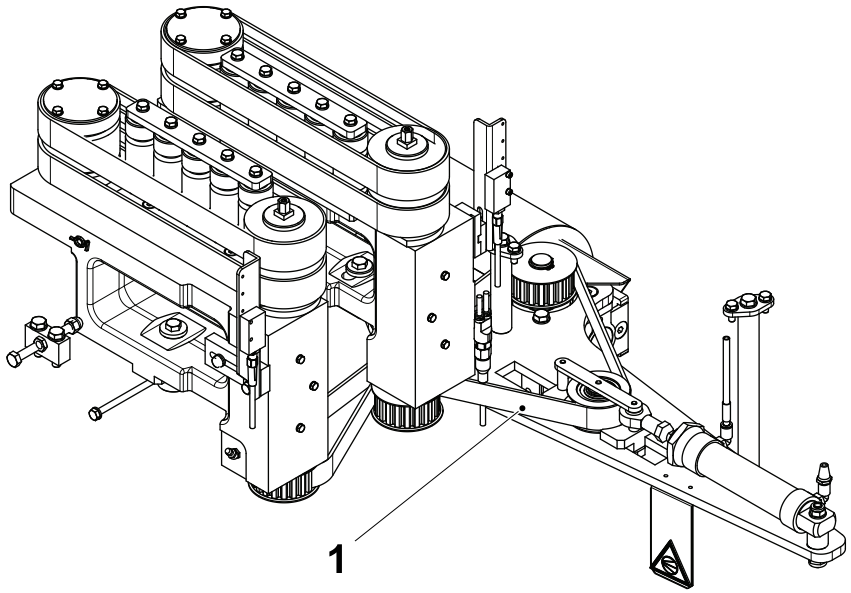

1 Belt

(Cont'd)

(Cont'd)

Remove Belts

a) Loosen the nuts (1) and the screws (2) to release the belt tension.

b) Remove the belts (3).

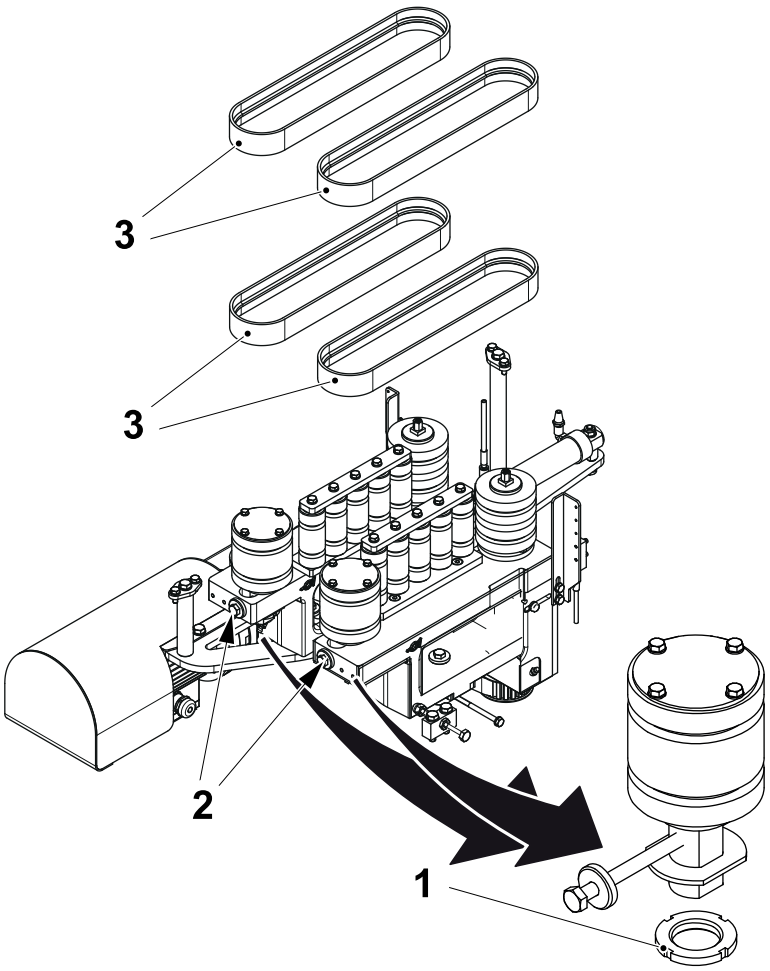

1 Nut
2 Screw
3 Belt

(Cont'd)

(Cont'd)

Check the Ball Bearing

a) Manually move and rotate the shafts (1).

b) Make sure that there aren't any noises or backlashes.

c) If the shafts (1) have backlashes or generate noises, replace the ball bearing, see Remove the Shaft on page 2-20.

d) Manually move and rotate the shafts (2).

e) Make sure that there aren't any noises or backlashes.

f) If the shafts (2) have backlashes or generate noises, replace the ball bearing, see Change the Ball Bearing on page 2-23.

g) In case there are no backlashes or noises, see Install Belt on page 2-25.

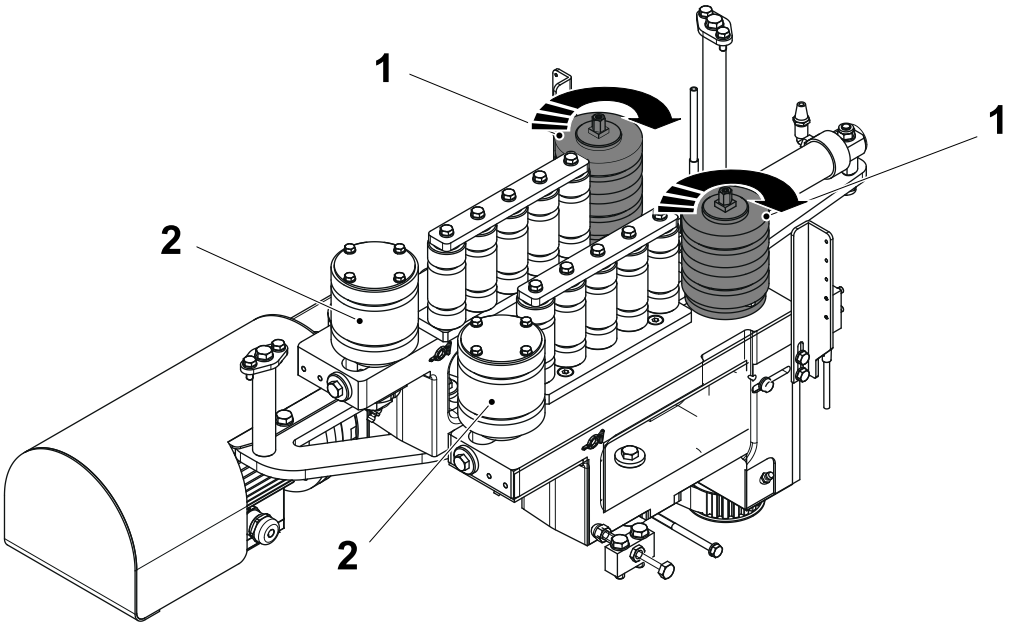

1 Shaft
2 Shaft

(Cont'd)

(Cont'd)

Remove the Shaft

a) Loosen the screw (1) and remove the washer (2) and the pulley (3).

b) Remove the key (4).

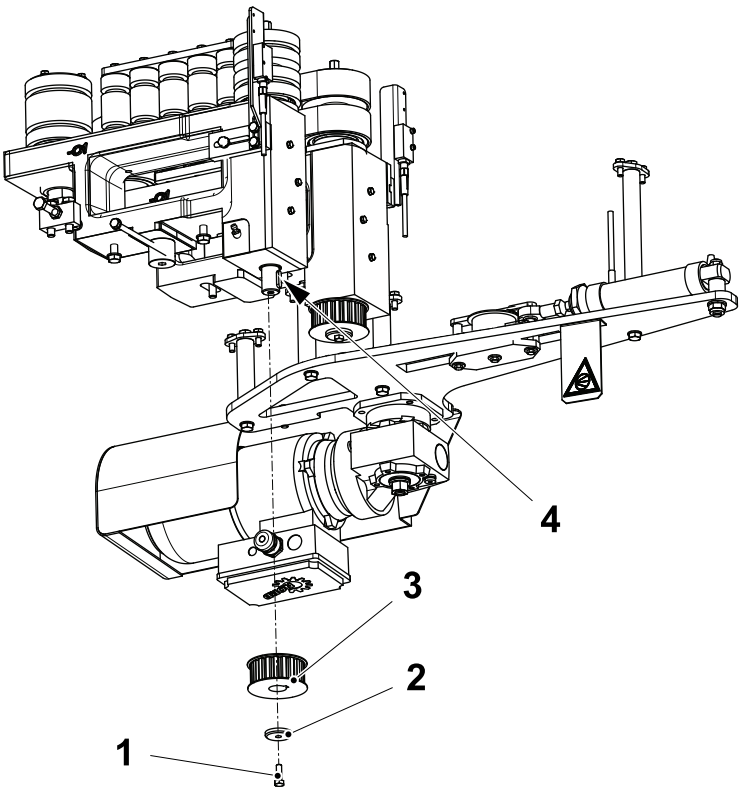

1 Screw
2 Washer
3 Pulley
4 Key

(Cont'd)

(Cont'd)

c) Remove the shaft (5).

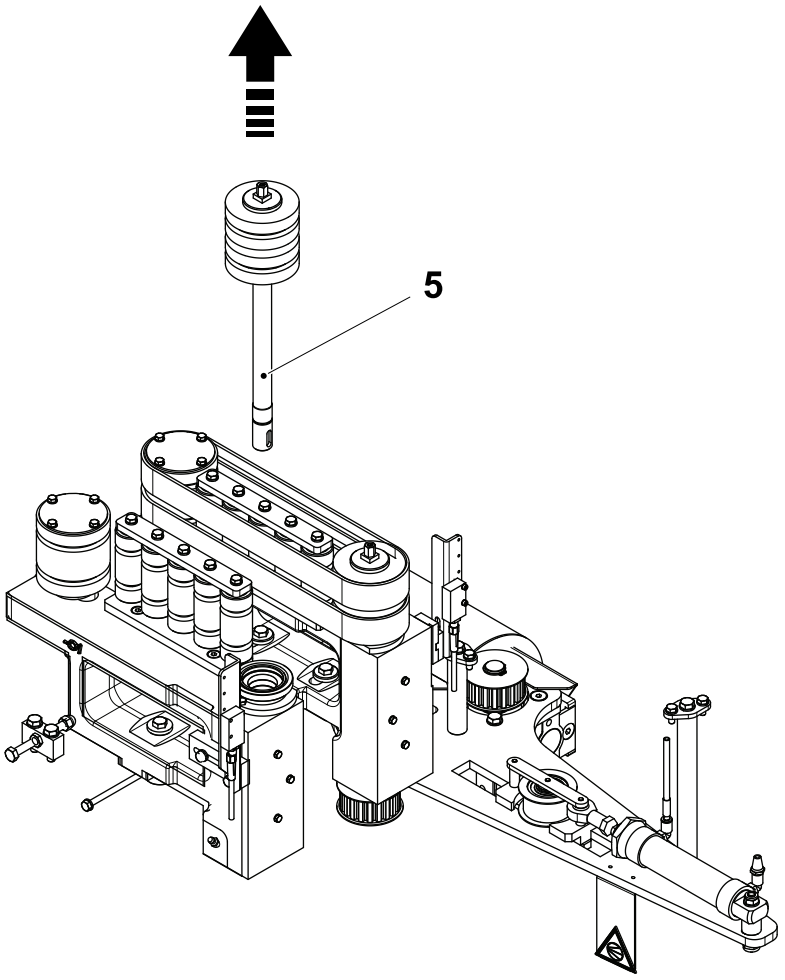

5 Shaft

(Cont'd)

(Cont'd)

Change the Ball Bearing

a) Loosen the screw (1) and remove the flange (2).

b) On the workbench, remove the ball bearing (3), the O-Ring (4) and the radial seal (5).

c) Change the ball bearing (3), the O-Ring (4) and the radial seal (5).

d) Remove the ball bearing (6), the O-Ring (7) and the radial seal (8).

e) Change the ball bearing (6), the O-Ring (7) and the radial seal (8).

f) Assemble in reverse order.

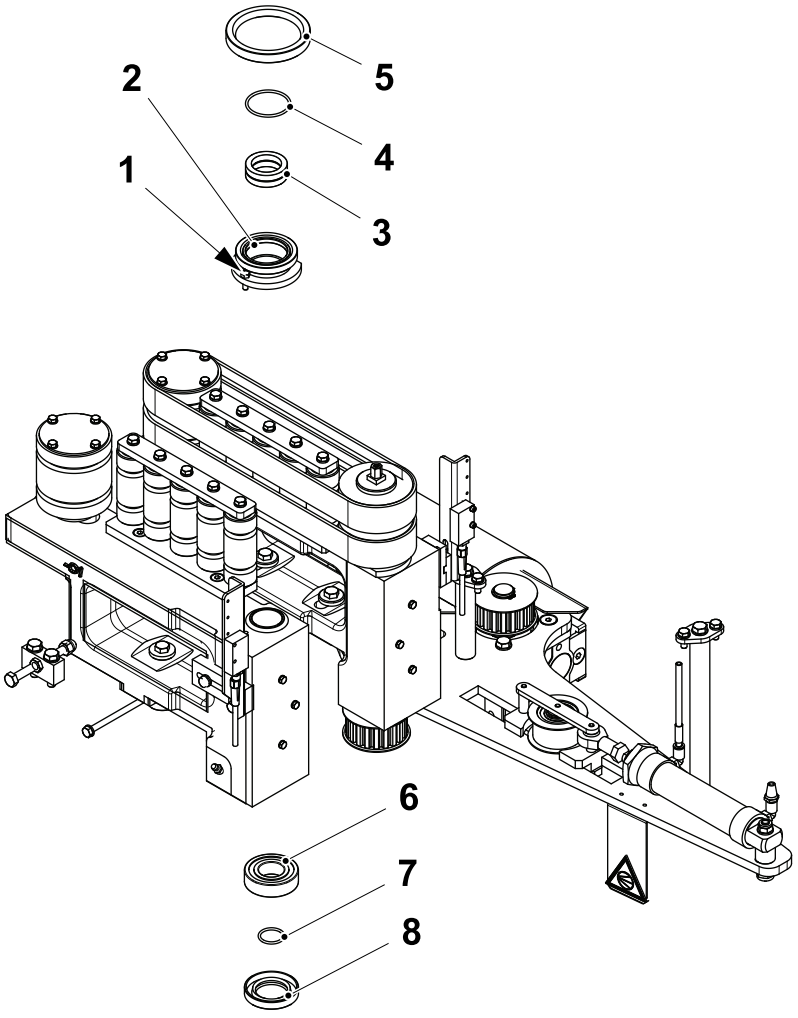

1 Screw
2 Flange
3 Ball bearing
4 O-Ring
5 Radial Seal
6 Ball Bearing
7 O-Ring
8 Radial Seal

(Cont'd)

(Cont'd)

Change the Ball Bearing

a) Loosen and remove the nut (1).

b) Loosen and remove the screw (2).

c) Remove the pulley (3).

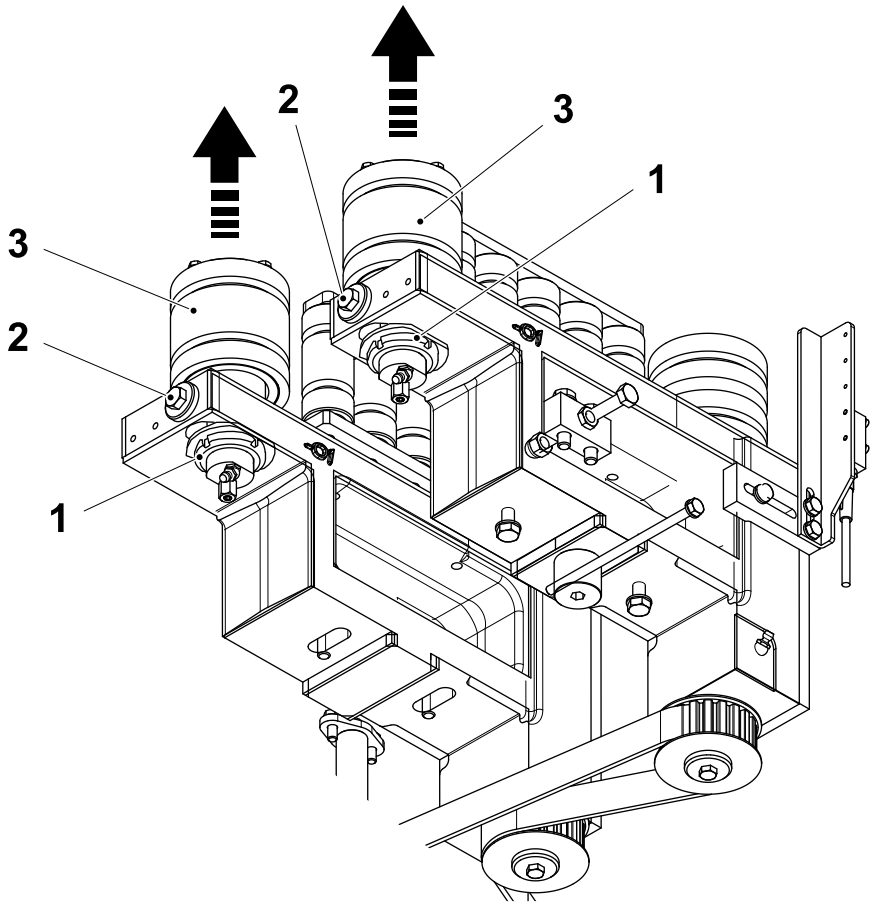

1 Nut 2 Screw 3 Pulley

(Cont'd)

(Cont'd)

d) On the workbench, loosen the screws (4) and remove the cover (5).

e) Remove the pulley (6) and replace the O-ring (7).

f) Loosen the nut (8) and replace the ball bearing (9).

g) Replace the radial seal (10).

h) Assemble in reverse order.

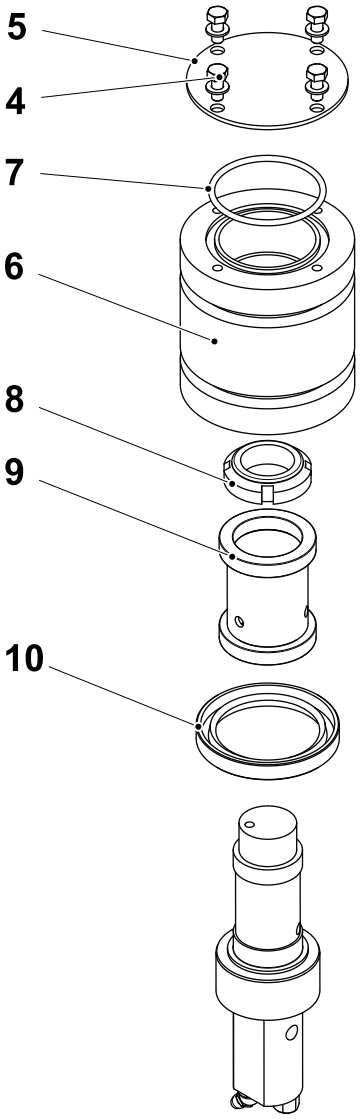

4 Screw
5 Cover
6 Pulley
7 O-ring
8 Nut
9 Ball bearing
10 Radial seal

(Cont'd)

(Cont'd)

Install Belt

a) Make sure that the machine is in STEP0.

b) Install the belt (1), see 2.2.2-2 Drive - Change Belt.

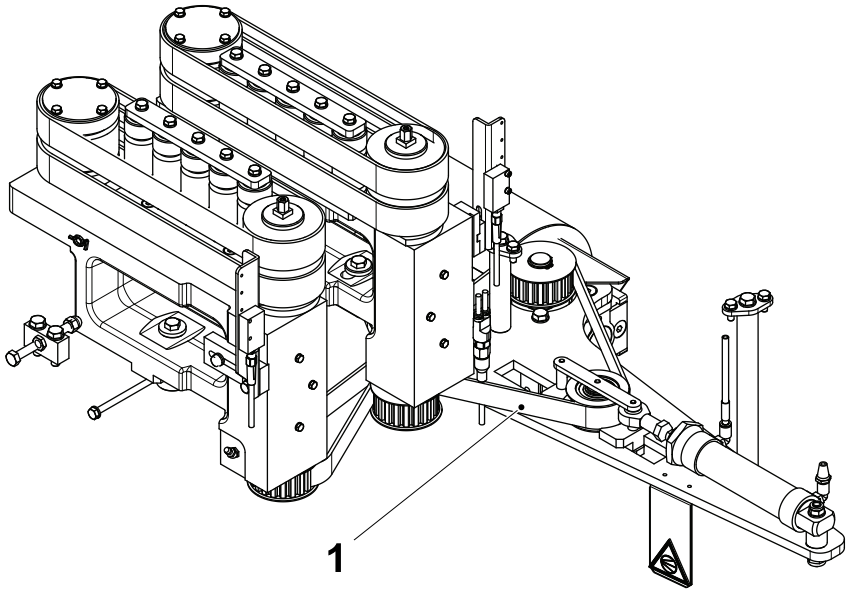

1 Belt

(Cont'd)

(Cont'd)

Install Belts

a) Loosen the nuts (1) and the screws (2).

b) Install the belts (3).

c) Tension the belts, see 2.2.1-4 Brake Unit - Set Belt Tension.

Note! A wrong setting of belt tension can cause bearing failure.

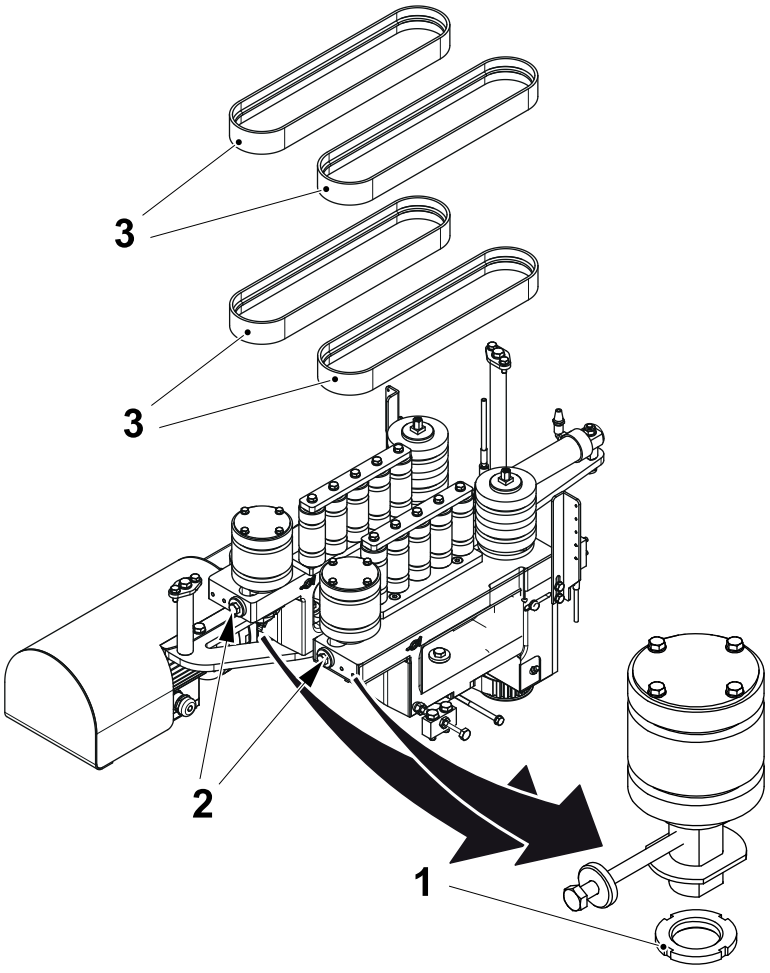

1 Nut
2 Screw
3 Belt

d) Make sure that the belts are correctly located and then switch the main air supply ON.

2.2.2 Drive

2.2.2-1 Drive - Check Belt

Machine Status	Electrical supply disconnecting device in position O (OFF) Main air valve OFF
SPC Reference	2766994-0300

a) Check the for wear or damage. If necessary, change the belt, see 2.2.2-2 Drive - Change Belt.

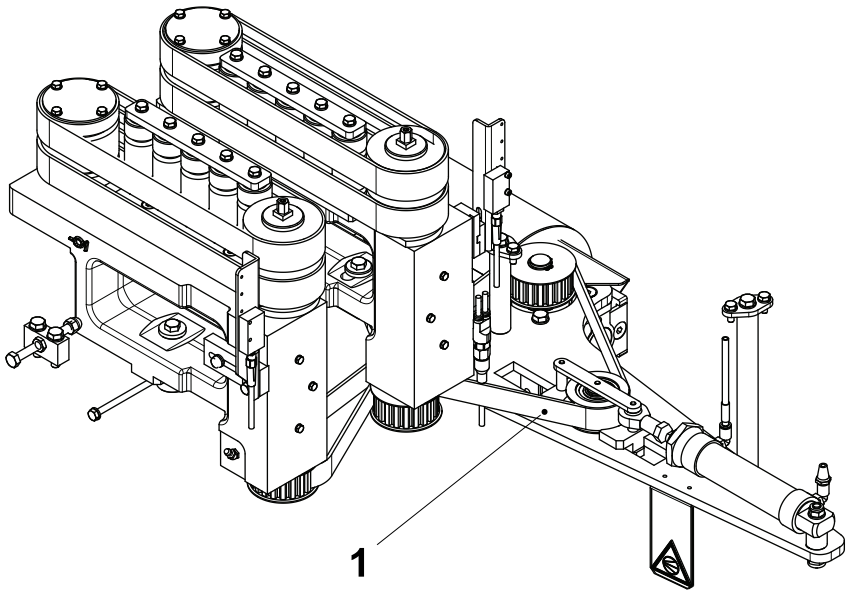

1 Drive belt

2.2.2-2 Drive - Change Belt

Machine Status	Electrical supply disconnecting device in position O (OFF) Main air valve OFF
SPC Reference	2766994-0300

a) Make sure that the main air supply is turned OFF.

b) Release the air from the cylinders by opening the valve (1) .

c) Close the valve (1) when the air has been expelled.

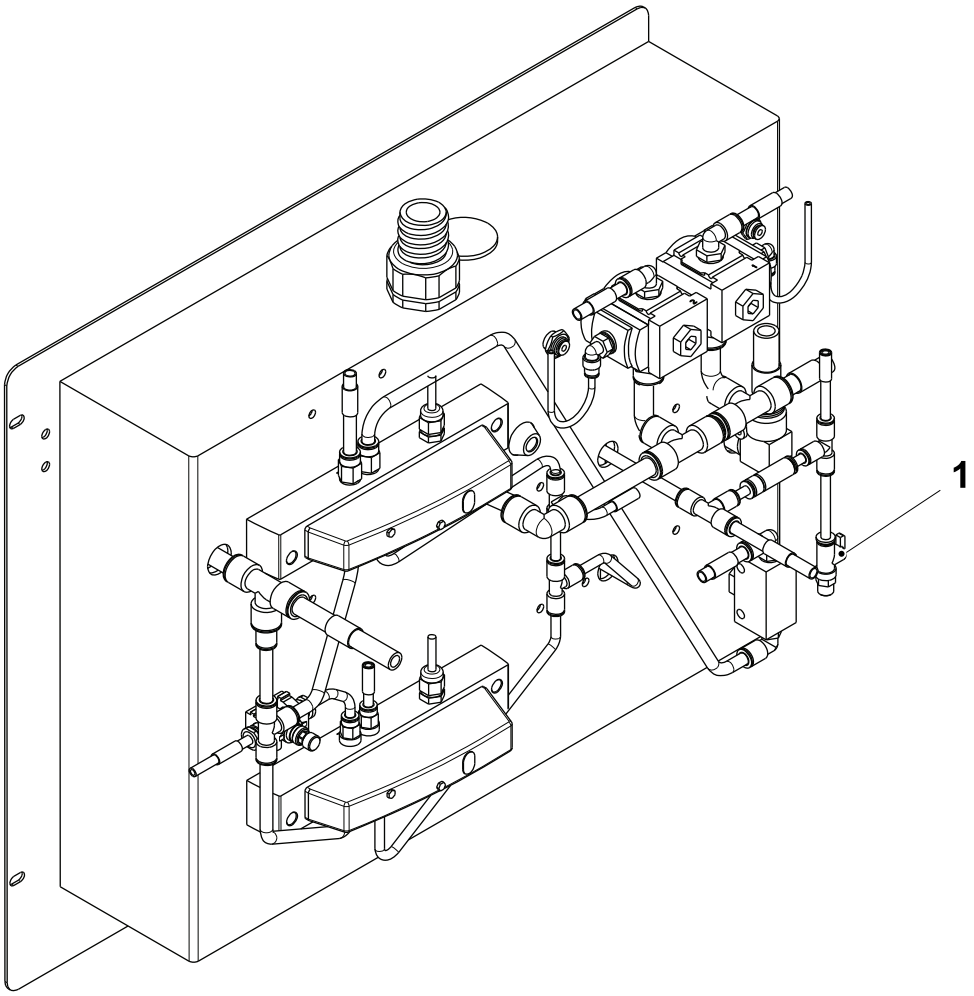

1 Valve

(Cont'd)

(Cont'd)

Note! When changing the drive belt, **do not** remove the screw (2).

d) Remove the screw (3) and the screw (4).

e) Move the plate (5) out of the way and remove the belt (6) .

f) Install a new belt and assemble in the reverse order.

g) Check that the belts are correctly located and switch the main air supply ON.

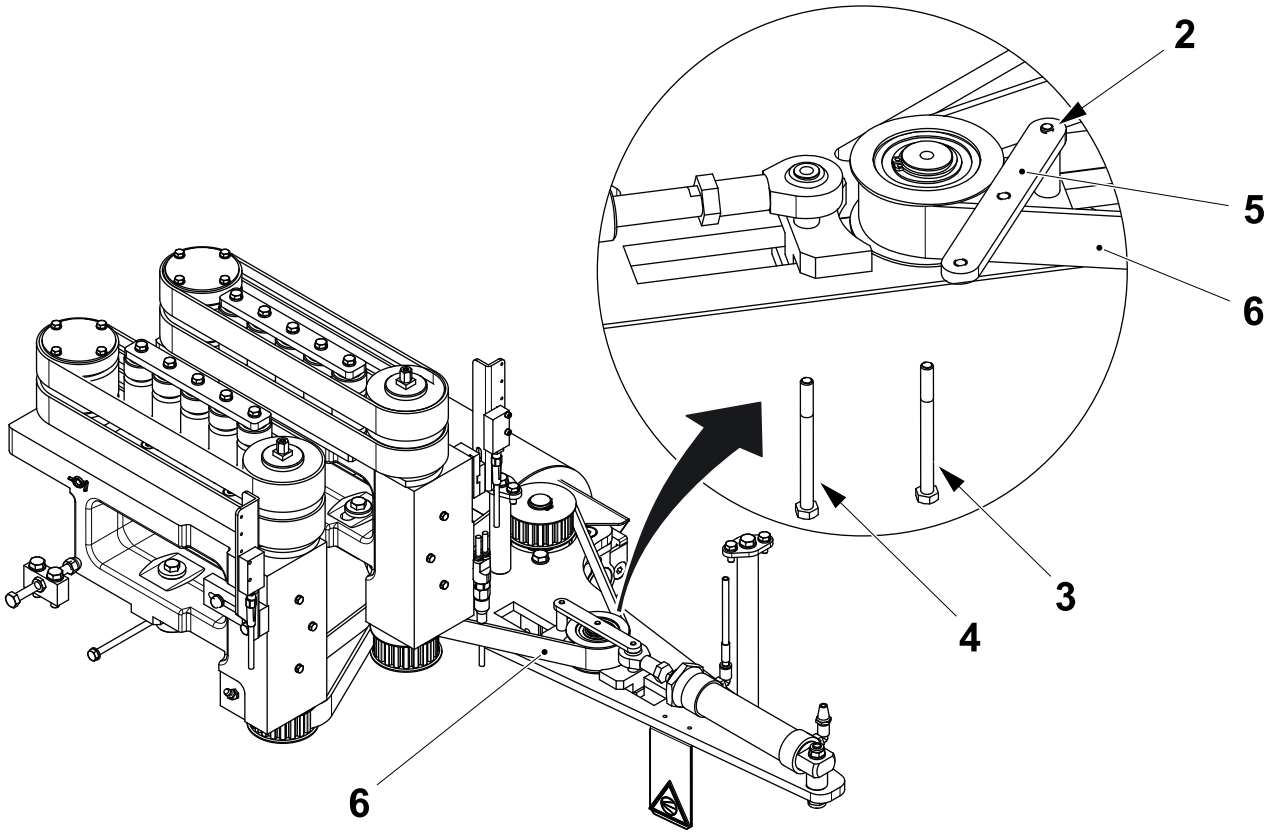

2 Screw
3 Screw
4 Screw
5 Plate
6 Belt

2.2.2-3 Drive - Change Bearings

Machine Status	Electrical supply disconnecting device in position O (OFF) Main air valve OFF
SPC Reference	2766994-0300

a) Make sure that system air is turned OFF and the pressure has been released, see 2.2.2-2 Drive - Change Belt.

b) Remove the belt (1), see 2.2.2-2 Drive - Change Belt steps d) and e).

c) Remove the roller (2).

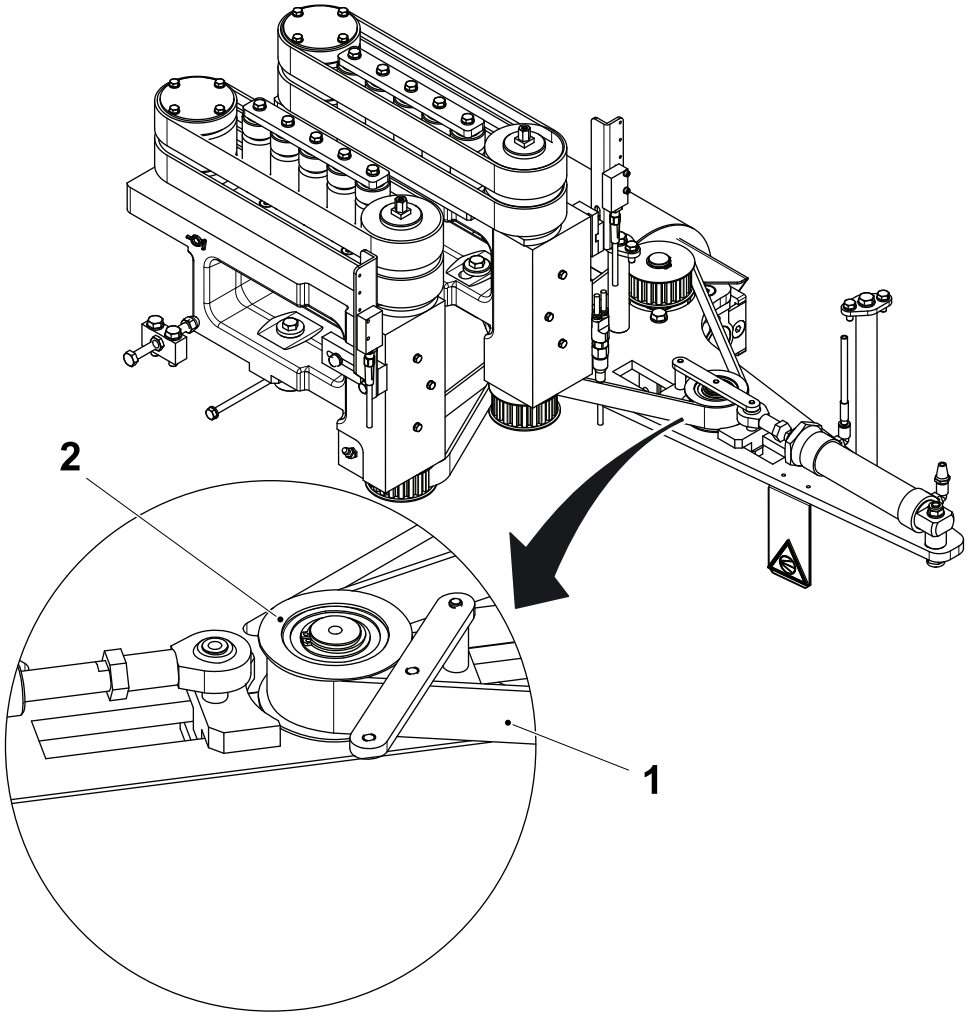

1 Belt
2 Roller

(Cont'd)

(Cont'd)

d) Remove the retaining ring (3) and push out the pin (4).

e) Extract the ball bearing (5) from the roller (2). Change the ball bearings.

f) Assemble in the reverse order.

Note! Always check that the belts are located correctly before Stepping Up.

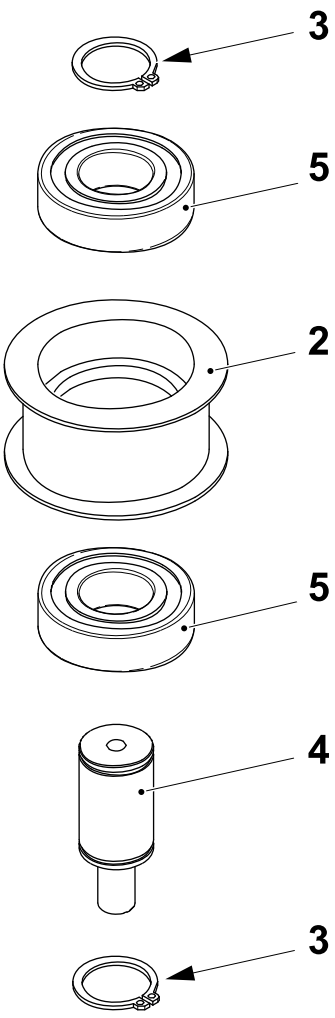

2 Roller
3 Retaining ring
4 Pin
5 Ball bearing

2.3 Package Positioner

2.3.1 Package Positioner (Right)

2.3.1.1 Package Positioner (Right) - Change Belts

2.3.1.1-1 Release the Upper Belt

Machine Status	Electrical supply disconnecting device in position O (OFF) Main air valve OFF
SPC Reference	3199892-0100

Note! Only if upper belt is present.

a) Loosen the screw (1).

b) Compress the spring (2) with its screw to reduce the belt (3) tension.

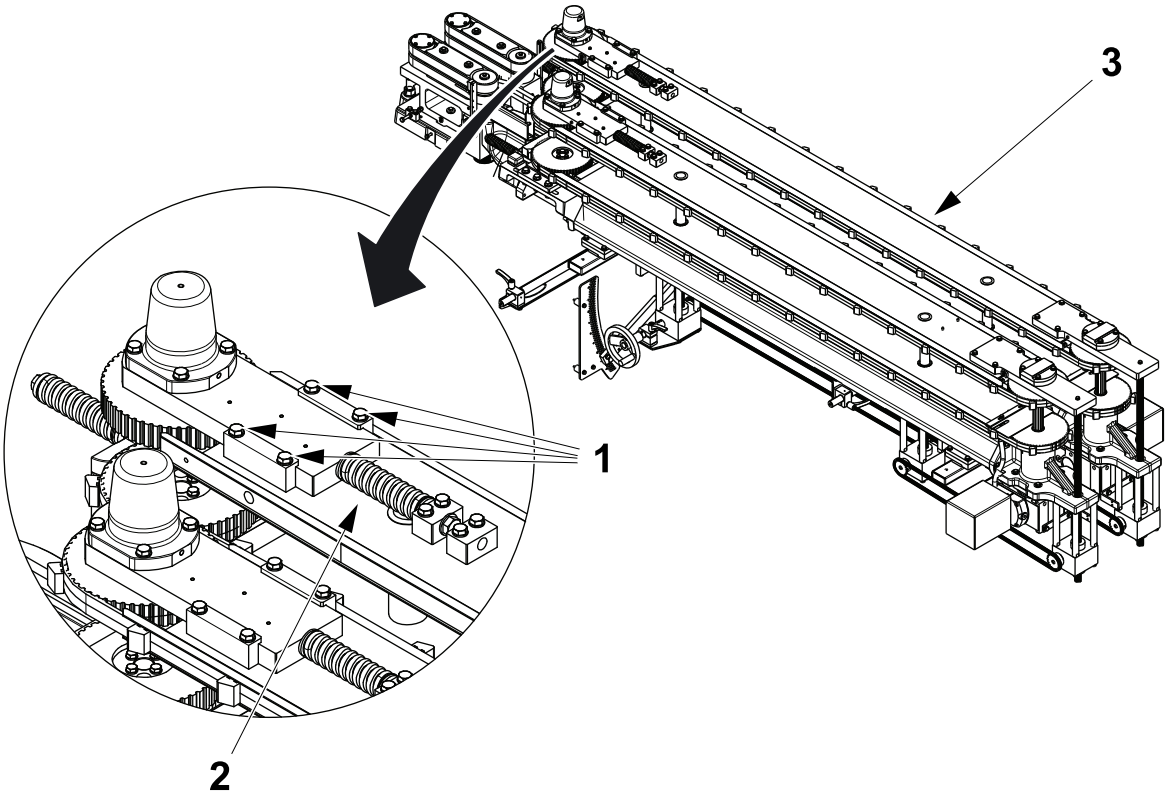

1 Screw
2 Spring
3 Belt

2.3.1.1-2 Release the Lower Belt

Machine Status	Electrical supply disconnecting device in position O (OFF) Main air valve OFF
SPC Reference	3199892-0100

Note! The distance **A** is the length of the spring (1) in its compressed state.

a) Measure and record the length **A** of the spring (1).

b) Loosen the three screw (2).

c) Decompress the spring (1) with its screw to reduce the belt (3) tension.

Note! In case of removal of the screw during the loosening see, 2.3.1.1-4 Installation of Spring.

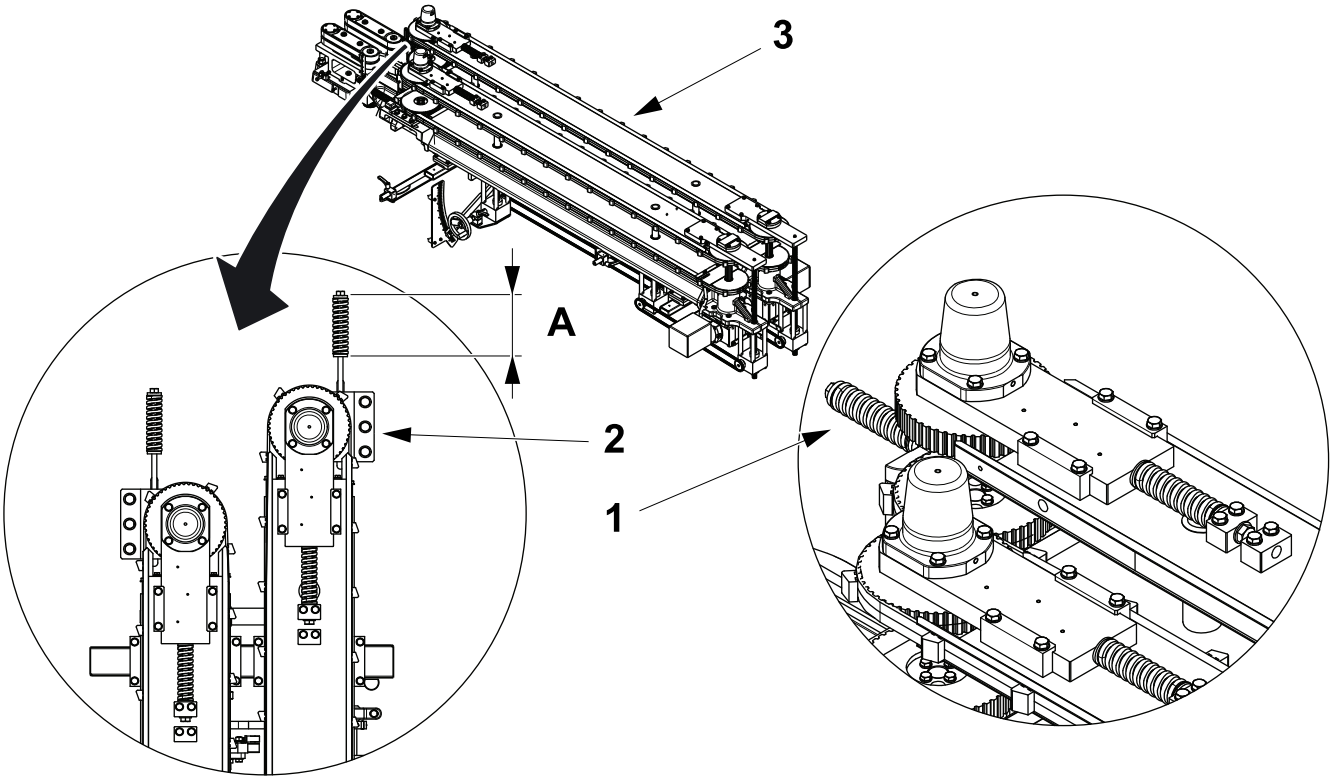

1 Spring
2 Screw
3 Belt

2.3.1.1-3 Removal and Installation of the Belts

Machine Status	Electrical supply disconnecting device in position O (OFF) Main air valve OFF
SPC Reference	3199892-0100

a) Release the screw (1).

b) Remove the old and install the new belt.

Note! Belts are package dependant, refer to the SPC.

c) Tighten the screw (1).

d) Set the belt tension see, 2.3.1.2 Package Positioner (Right) - Set Tension.

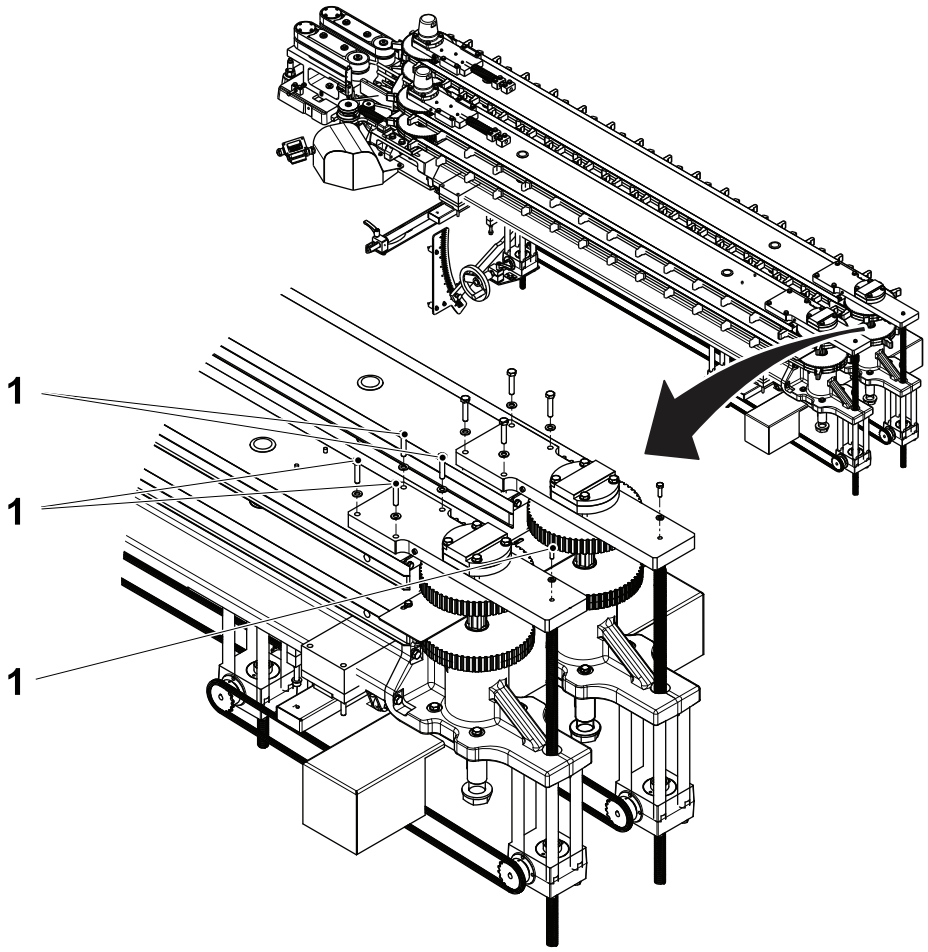

1 Screw

2.3.1.1-4 Installation of Spring

Machine Status	Main air valve ON
SPC Reference	3199892-0100

In case of removal of the screw (1) during the loosening, it is necessary to do as follows. Remove the washer (2), fit the screw (1) and tighten it until the three screw (3) are in position. Tighten the three screw (3), remove the screw (1), fit the washer (2) and the screw (1).

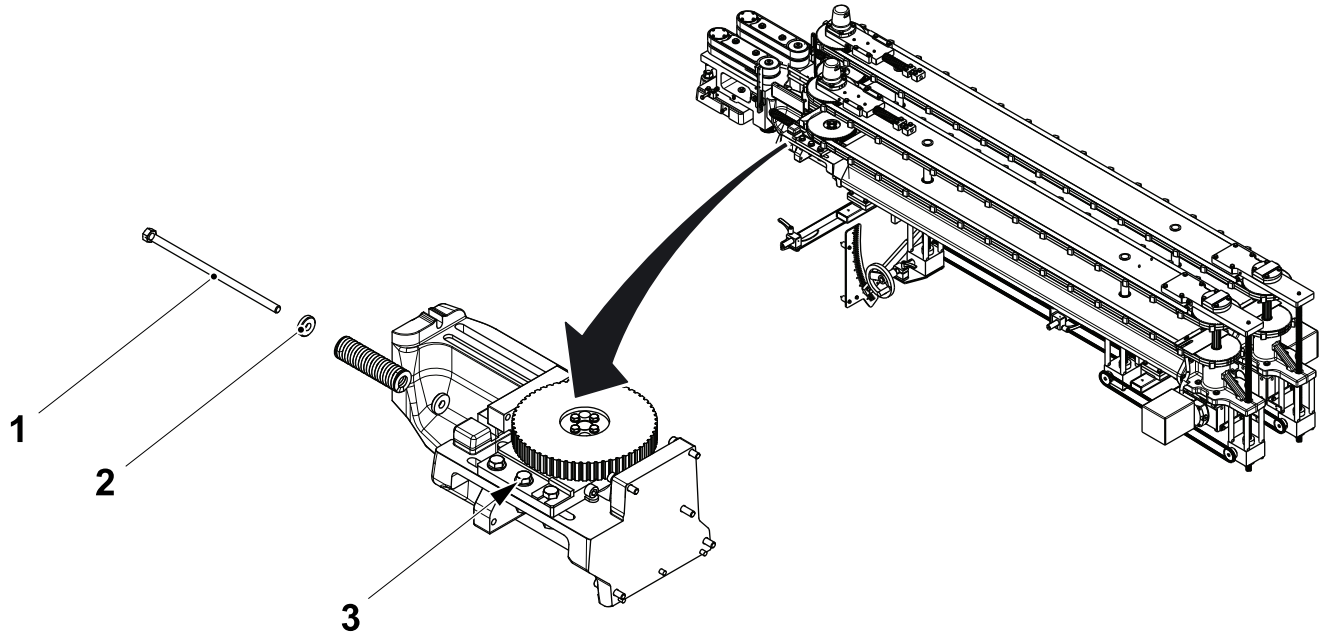

1 Screw
2 Washer
3 Screw

2.3.1.2 Package Positioner (Right) - Set Tension

2.3.1.2-1 Set Belt Tension - Right

Machine Status	Electrical supply disconnecting device in position O (OFF) Main air valve OFF
SPC Reference	3199892-0100

Note! The distance **A** is the length of the in its released state.

a) Loosen the four screw (1).

b) Release the screw (2) and the spring (3) to apply pressure on the plate (4) and the belt.

c) Tighten the screw (1).

d) Measure the distance **A** on the spring (3).

e) Loosen the three screws (5).

f) Release the screw (6) and adjust until the distance **B** on the spring (7) is the same as the distance **A** on the spring (3).

g) Tighten the screws (5).

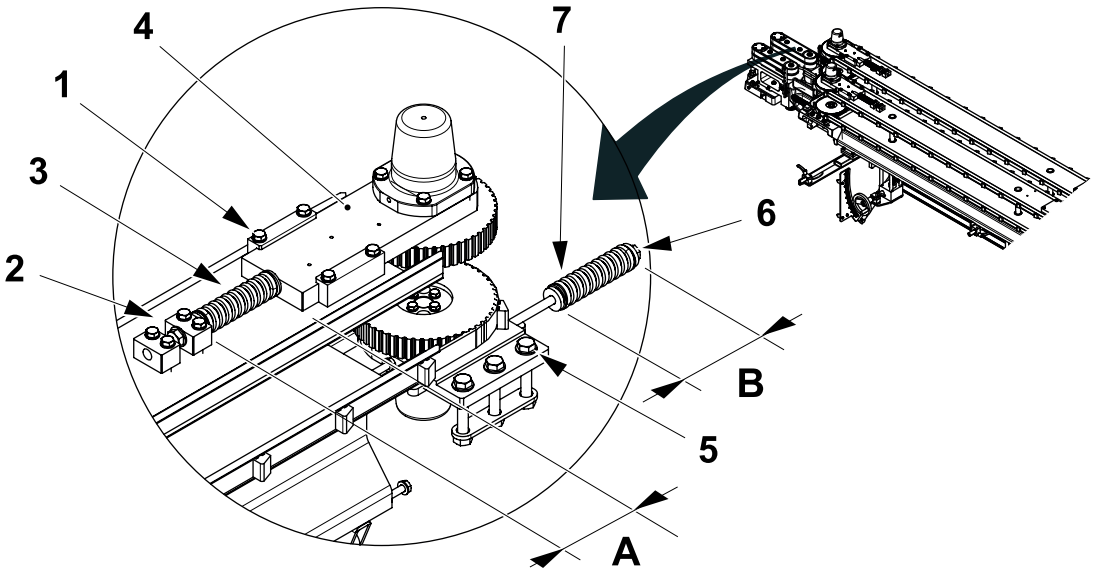

1 Screw
2 Screw
3 Spring
4 Plate
5 Screw
6 Screw
7 Spring

2.3.1.2-2 Set Belts Alignment - Right

Machine Status	Electrical supply disconnecting device in position O (OFF) Main air valve OFF
SPC Reference	3199892-0100

a) Release the three screw (1) at the bottom of the drive.

b) Rotate the pulley (2) to set the lower belt carrier (3) the distance **A** behind the upper belt carrier (4).

c) Without moving the pulley (2), tighten the screw (1).

A = 2 mm

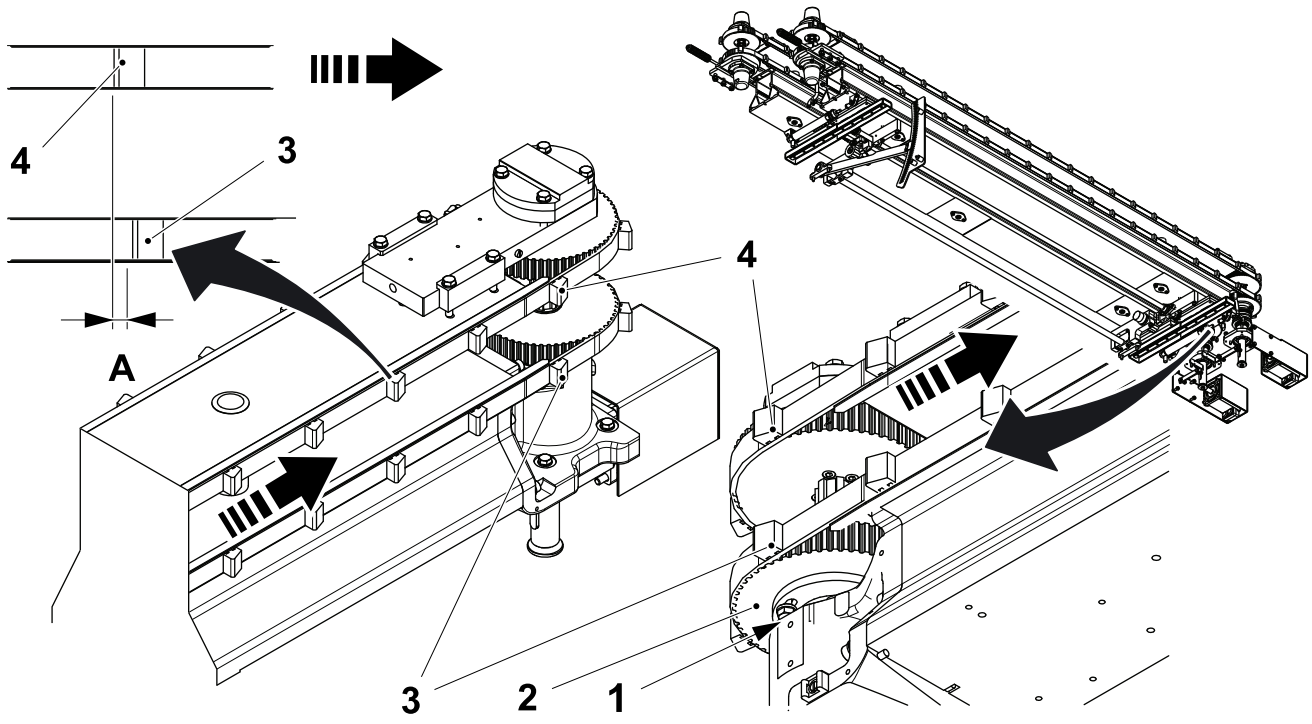

1 Screw
2 Pulley
3 Lower belt carrier
4 Upper belt carrier

2.3.2 Package Positioner (Left)

2.3.2.1 Package Positioner (Left) Change Belts

2.3.2.1-1 Release the Upper Belt

Machine Status	Electrical supply disconnecting device in position O (OFF) Main air valve OFF
SPC Reference	3199892-0100

Note! Only if upper belt is present.

a) Loosen the screws (1).

b) Compress the spring (2) with its screw to reduce the belt (3) tension.

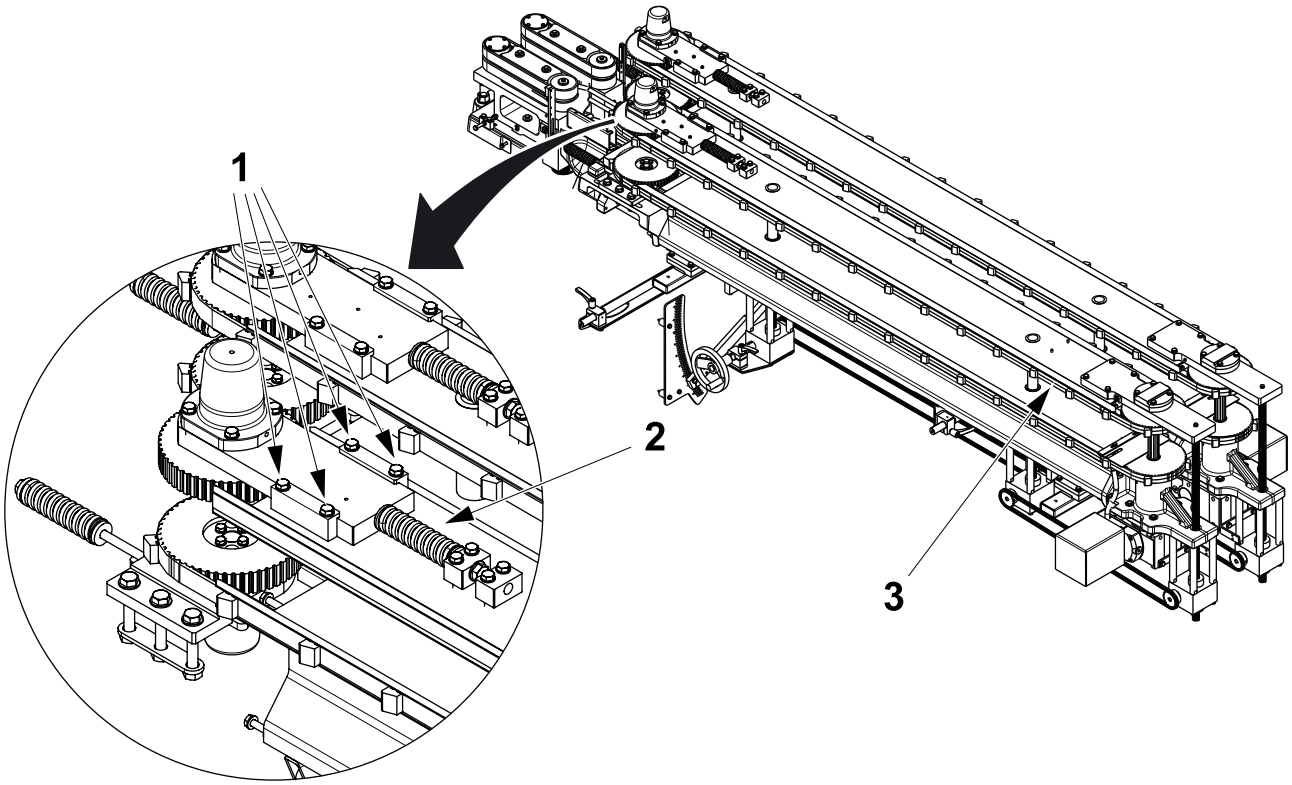

1 Screw
2 Spring
3 Belt

2.3.2.1-2 Release the Lower Belt

Machine Status	Electrical supply disconnecting device in position O (OFF) Main air valve OFF
SPC Reference	3199892-0100

Note! The distance **A** is the length of the spring (1) in its compressed state.

a) Measure and record the length **A** of the spring (1).

b) Loosen the three screws (2).

c) Decompress the spring (1) with its screw to reduce the belt (3).

Note! In case of removal of the screw during the loosening see, 2.3.2.1-4 Installation of Spring.

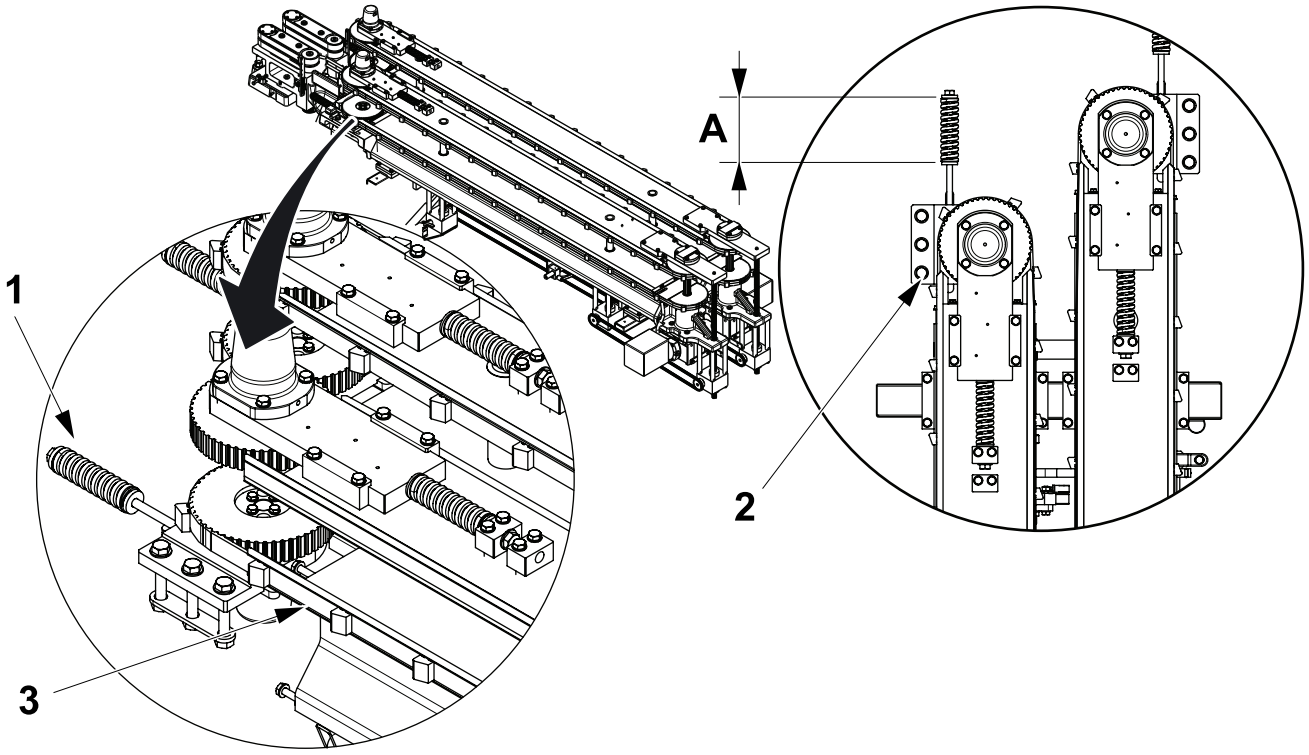

1 Spring
2 Screw
3 Belt

2.3.2.1-3 Removal and Installation of the Belts

Machine Status	Electrical supply disconnecting device in position O (OFF) Main air valve OFF
SPC Reference	3199892-0100

a) Release the screws (1).

b) Remove the old and install the new belt. .

Note! Belts are package dependant, refer to the SPC.

c) Tighten the screws (1).

d) Set the belt tension see, 2.3.2.2-1 Set Belts Tension - Left

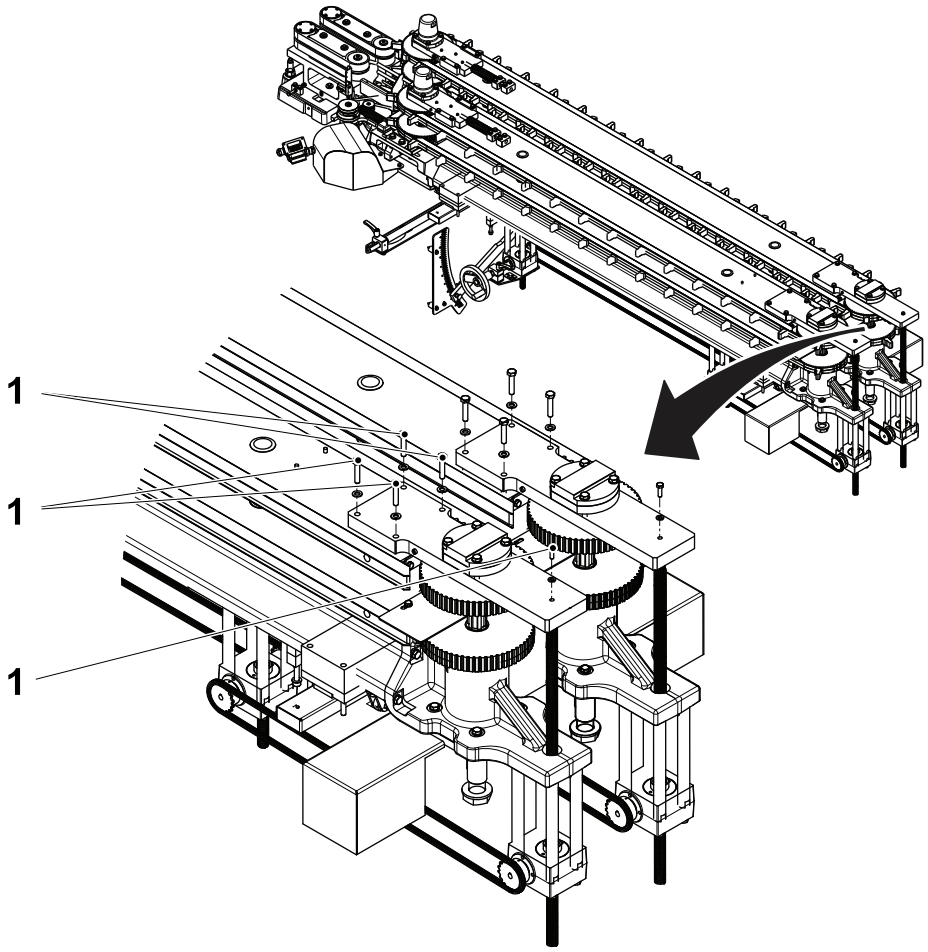

1 Screw

2.3.2.1-4 Installation of Spring

Machine Status	Electrical supply disconnecting device in position O (OFF) Main air valve OFF
SPC Reference	3199892-0100

In case of removal of the screw (1) during the loosening, it's necessary to do as follows. Remove the washer (2), fit the screw (1) and tighten it until the three screws (3) are in position. Tighten the three screws (3), remove the screw (1), fit the washer (2) and the screw (1).

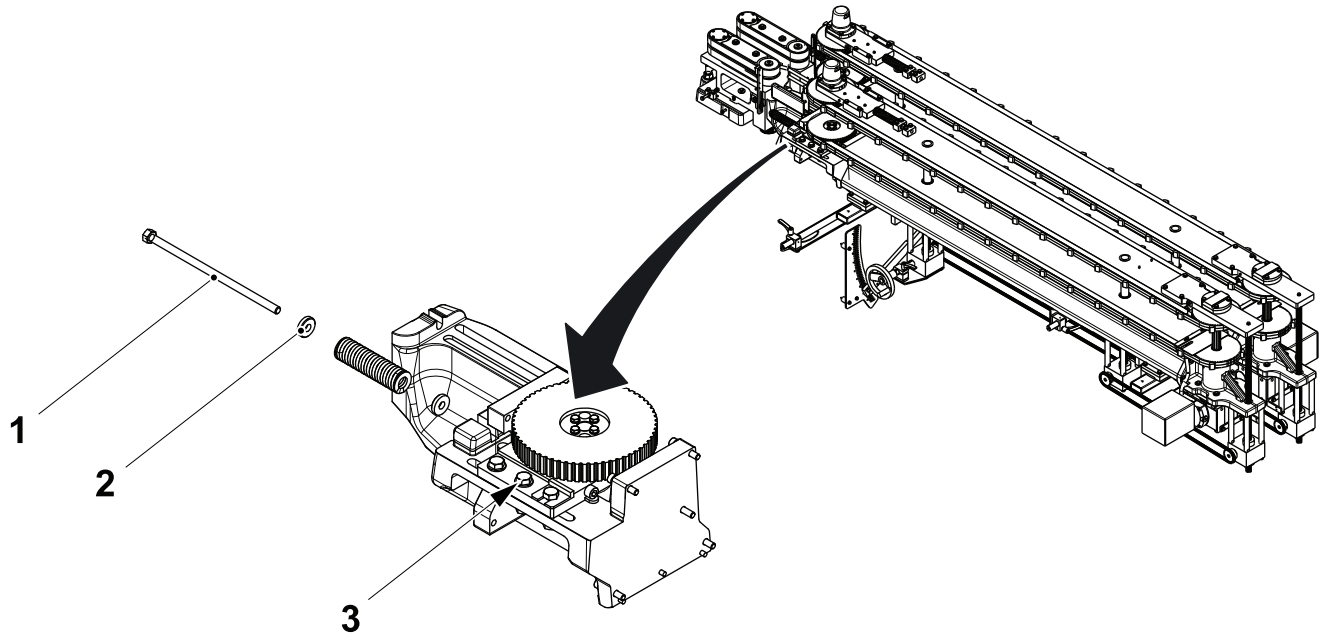

1 Screw
2 Washer
3 Screw

2.3.2.2 Package Positioner (Left) Set Tension

2.3.2.2-1 Set Belts Tension - Left

Machine Status	Electrical supply disconnecting device in position O (OFF) Main air valve OFF
SPC Reference	3199892-0100

Note! The distance **A** is the length of the in its released state.

a) Loosen the four screws (1).

b) Release the screw (2) and the spring (3) to apply pressure on the plate (4) and the belt.

c) Tighten the screws (1).

d) Measure the distance **A** on the spring (3).

e) Loosen the three screws (5).

f) Release the screw (6) and adjust until the distance **B** on the spring (7) is the same as the distance **A** on the spring (3).

g) Tighten the screws (5).

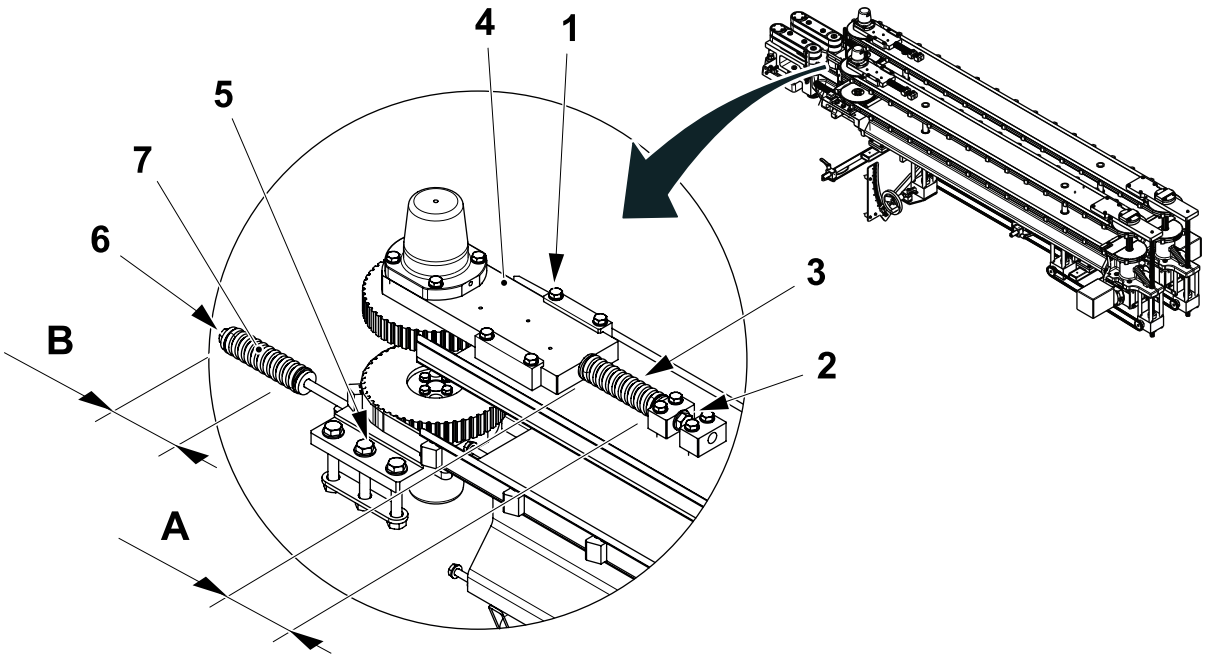

1 Screw
2 Screw
3 Spring
4 Plate
5 Screw
6 Screw
7 Spring

2.3.2.2-2 Set Belts Alignment - Left

Machine Status	Electrical supply disconnecting device in position O (OFF) Main air valve OFF
SPC Reference	3199892-0100

a) Release the three screws (1) at the bottom of the drive.

b) Rotate the pulley (2) to set the lower belt carriers (3) distance **A** behind the upper belt carriers (4).

c) Without moving the pulley (2), tighten the screws (1).

A = 2 mm

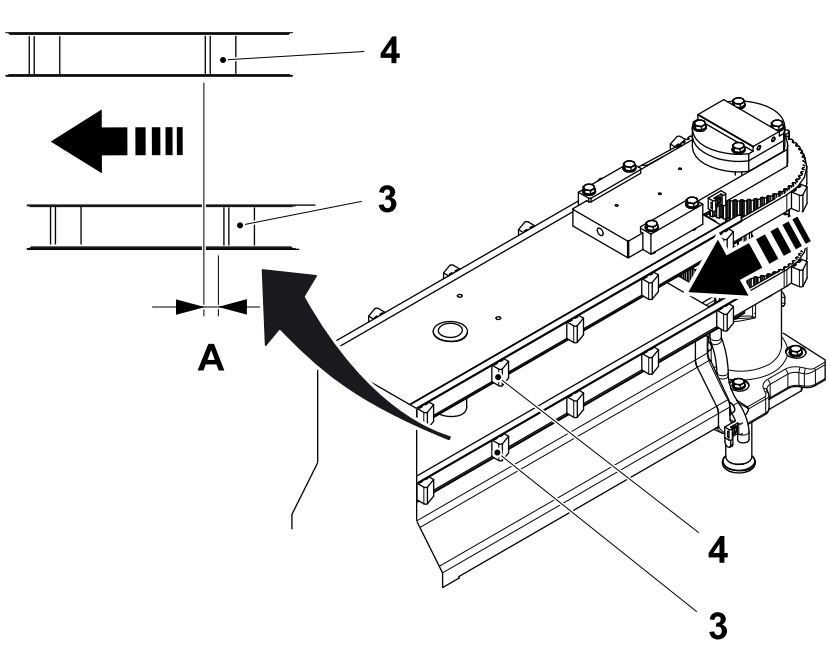

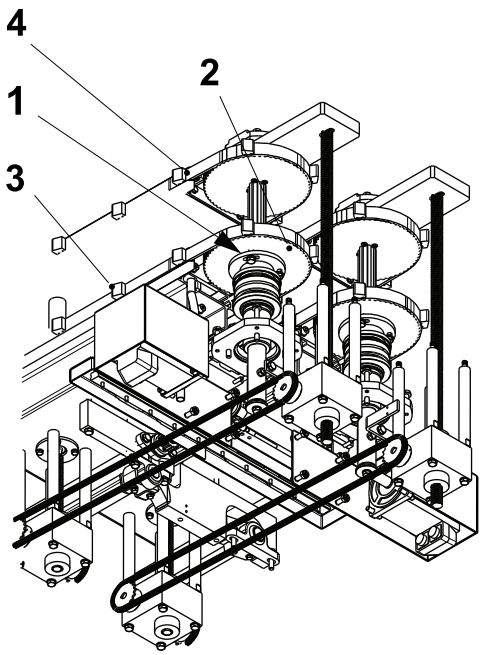

1 Screw
2 Pulley
3 Lower belt carrier
4 Upper belt carrier

2.3.3 Drive

2.3.3.1 Drive - Change Bearings

2.3.3.1-1 Preparation

Machine Status	Electrical supply disconnecting device in position O (OFF) Main air valve OFF
SPC Reference	3199886-0100 3199887-0100

Note! Only steps b) and c) applicable for TBA 200 Sq and TBA 250Sq.

Note! The oil pipes require some form of blanking caps and plugs to prevent leakage.

a) Disconnect the oil pipes from the bellows (1).

b) Disconnect the oil pipes from the housing (2).

c) Release the belt tension, see 2.3.1.1 Package Positioner (Right) - Change Belts and 2.3.2.1 Package Positioner (Left) Change Belts.

d) Before releasing the gearbox (3) record the distance **A**.

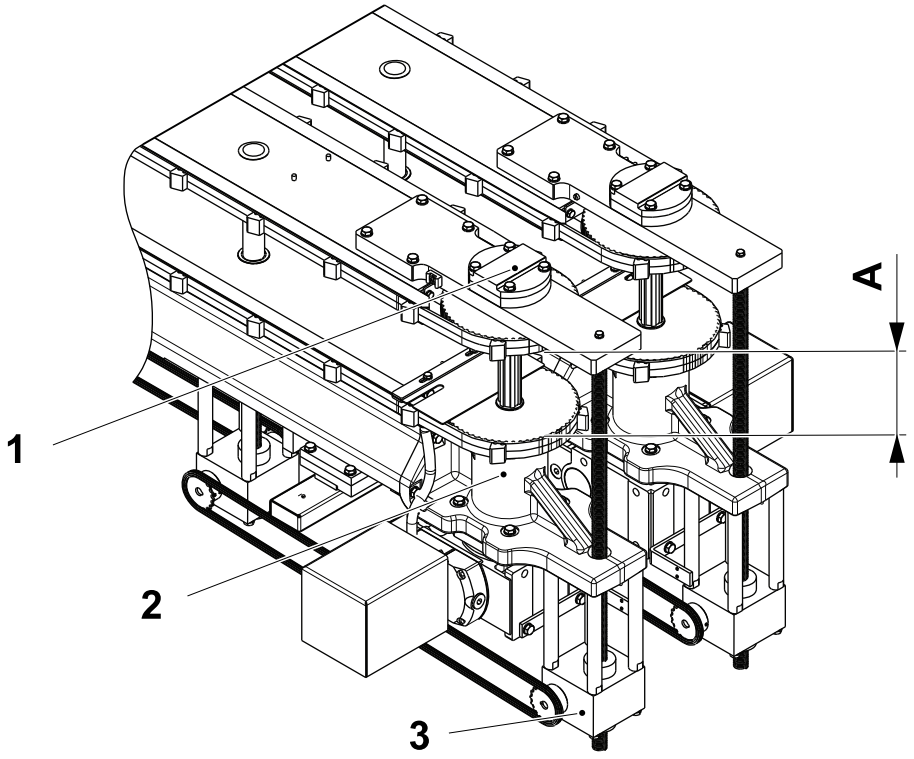

1 Bellows
2 Housing
3 Gearbox

(Cont'd)

(Cont'd)

Note! The relative position of the chain (4) and the sprocket (5) and the sprocket (6) must be kept to prevent the package line being distorted when it is moved up or down.

e) At both ends of the chain (4), feed cable ties (7) through the links of the chain (4) and tighten them to prevent the chain (4) moving with respect to the sprocket (5) and the sprocket (6).

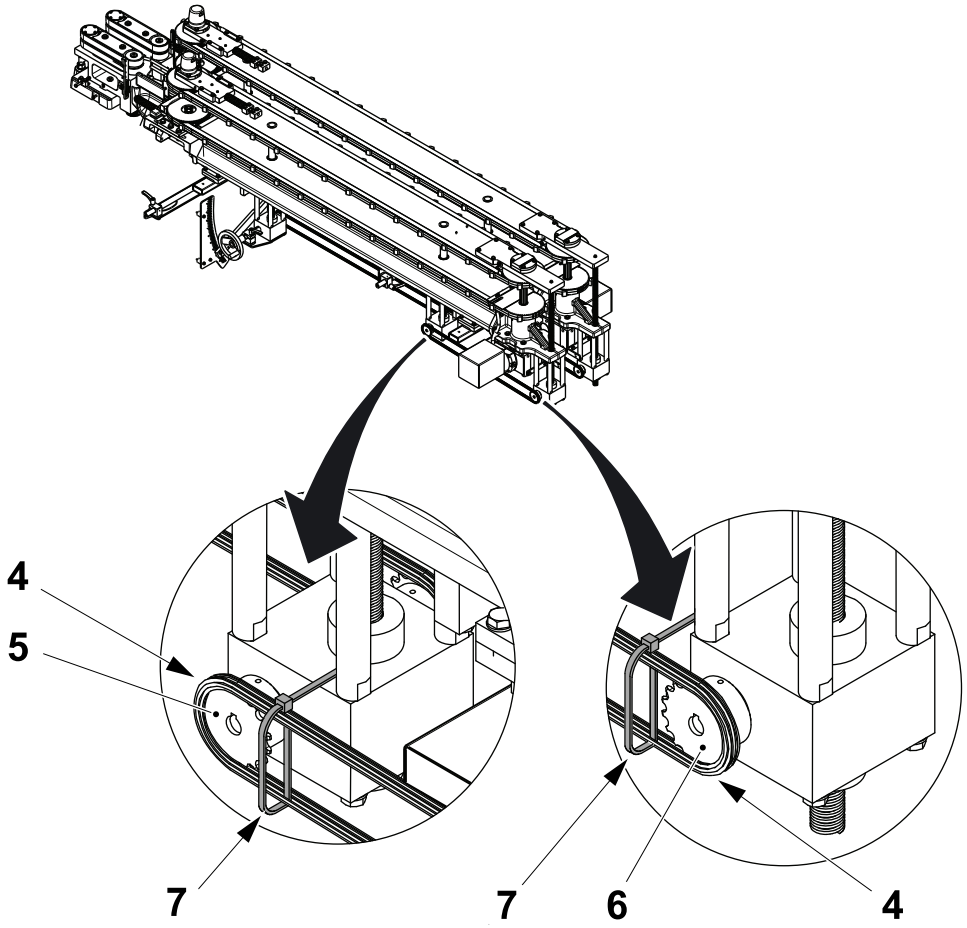

4 Chain
5 Sprocket
6 Sprocket
7 Cable Tie

(Cont'd)

(Cont'd)

f) Place a beam (8) beneath the gearbox (3) to prevent it dropping when the screw (9) and the screw (10) are removed.

g) Remove the screw (9) and the screw (10) and separate the gearbox (3) from the shaft (11).

h) Rest the gearbox (3) on the beam (8).

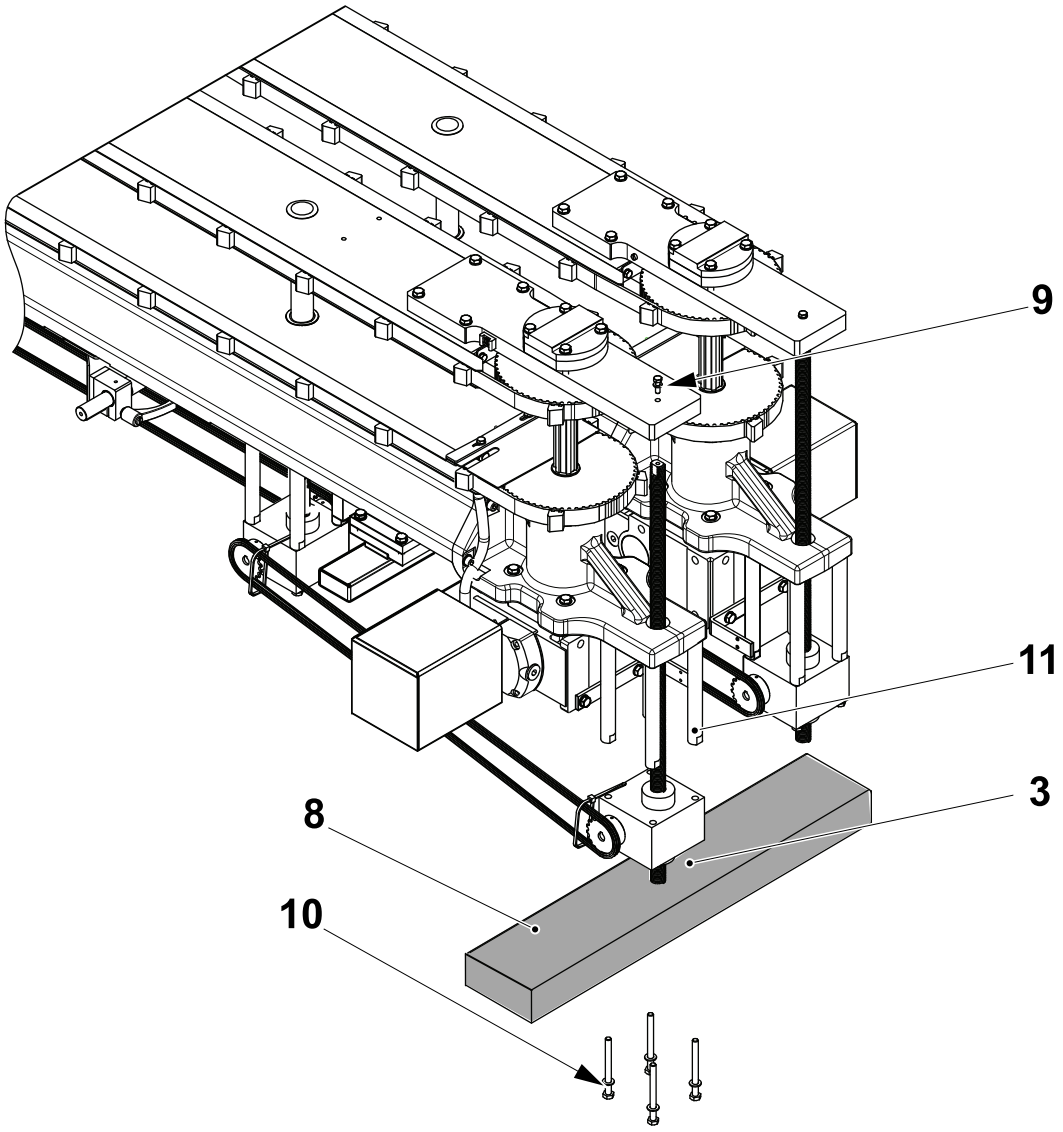

3 Gearbox
8 Beam
9 Screw
10 Screw
11 Shaft

2.3.3.1-2 Procedure

Machine Status	Electrical supply disconnecting device in position O (OFF) Main air valve OFF
SPC Reference	3199886-0100 3199887-0100

a) Remove the screws (1), the screws (2) and the bellows (3).

b) Remove the nut (4).

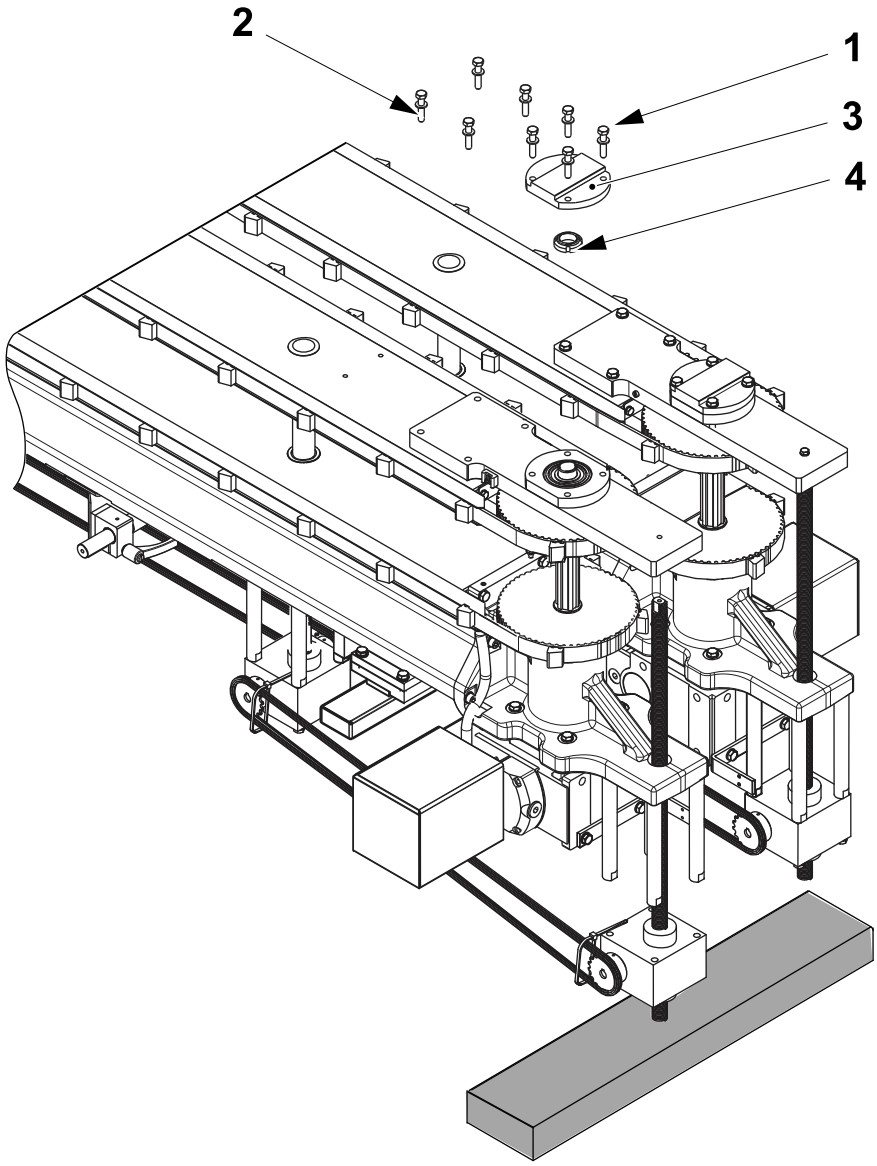

1 Screw
2 Screw
3 Bellows
4 Nut

(Cont'd)

(Cont'd)

c) Remove the plate (5).

d) Remove the spacer (6).

e) Extract and change the bearing (7).

f) Change the O-ring (8) and the seal ring (9).

g) Remove the belt (10) (not applicable to TBA 200 and 250 Sq).

h) Remove the belt (11).

i) Remove the shaft and pulley (12).

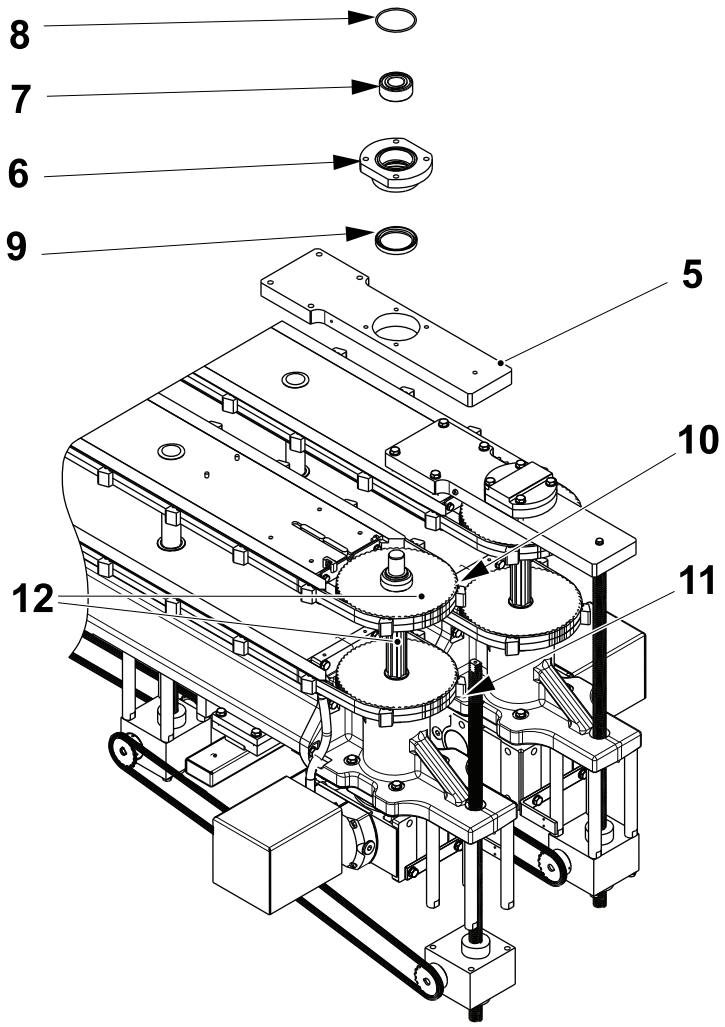

5 Plate
6 Spacer
7 Bearing
8 O-ring
9 Seal ring
10 Belt
11 Belt
12 Shaft and pulley

(Cont'd)

(Cont'd)

Note! Before removing the drive/gearbox assembly (13), make sure that all hose and cable fixings are disconnected from it.

j) Remove the six screw (14), the two cover (15) and the drive/gearbox assembly (13) from the frame (16).

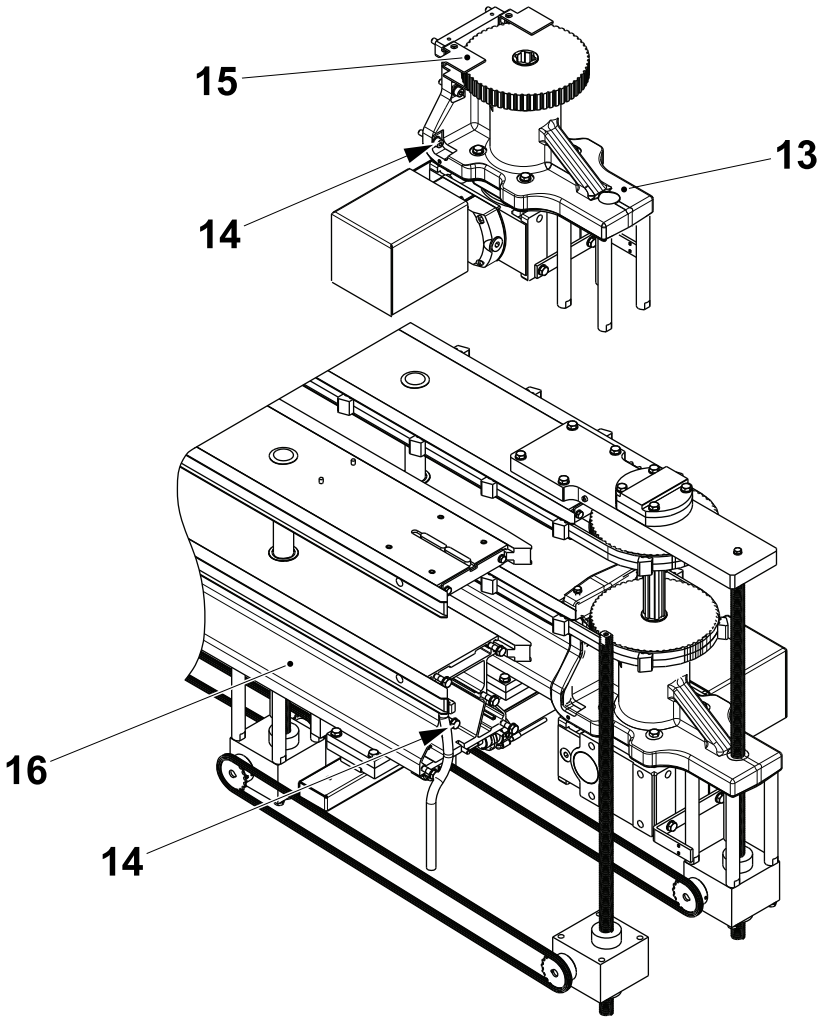

13 Drive/Gearbox assembly
14 Screw
15 Cover
16 Frame

(Cont'd)

(Cont'd)

k) Remove the nut (17) and the washer (18) from the end of the shaft assembly (19).

l) Remove the four screws (20) and separate the bracket (21) from the gearbox (22). Retain the key key (23) for the assembly.

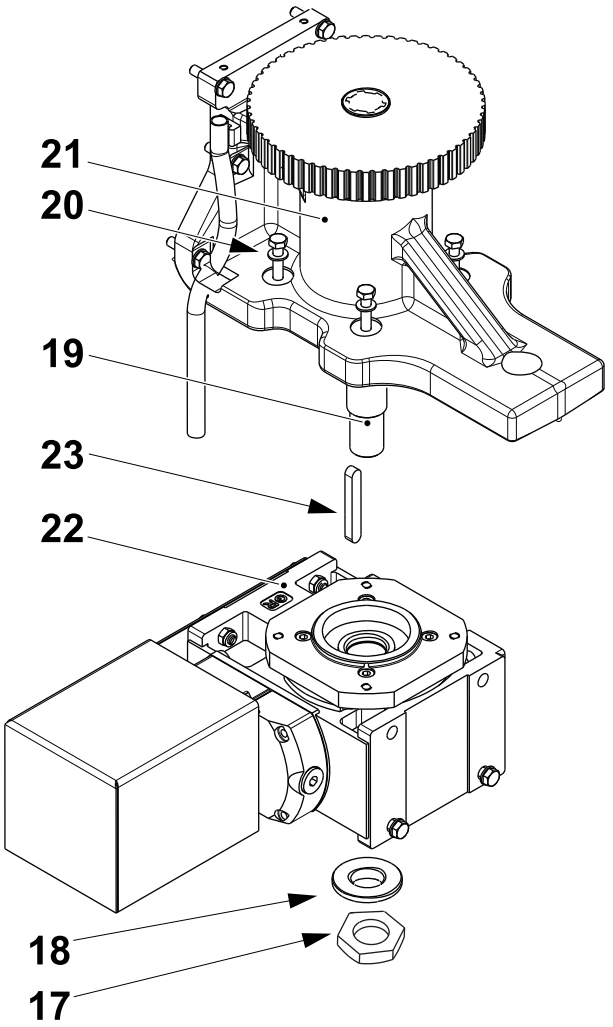

17 Screw/Nut
18 Washer
19 Shaft assembly
20 Screw
21 Bracket
22 Gearbox
23 Key

(Cont'd)

(Cont'd)

m) Remove the screws (24) and the toothed pulley (25).

n) Remove the screws (26), the bushing (27) and the plate (28)

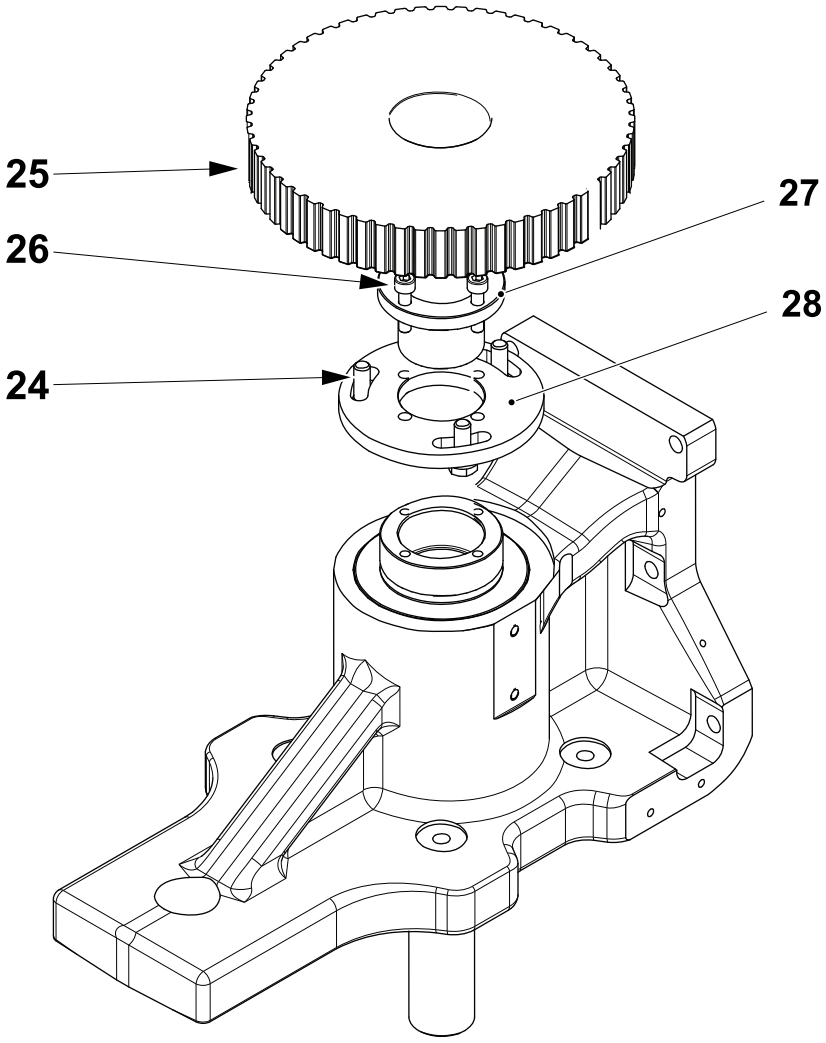

24 Screw
25 Toothed pulley
26 Screw
27 Bushing
28 Plate

(Cont'd)

(Cont'd)

o) Remove the seal ring (29) and the seal ring (30) from the housing (31).

p) Remove the retaining ring (32) from the housing (31) and pull out the lower shaft assembly (19).

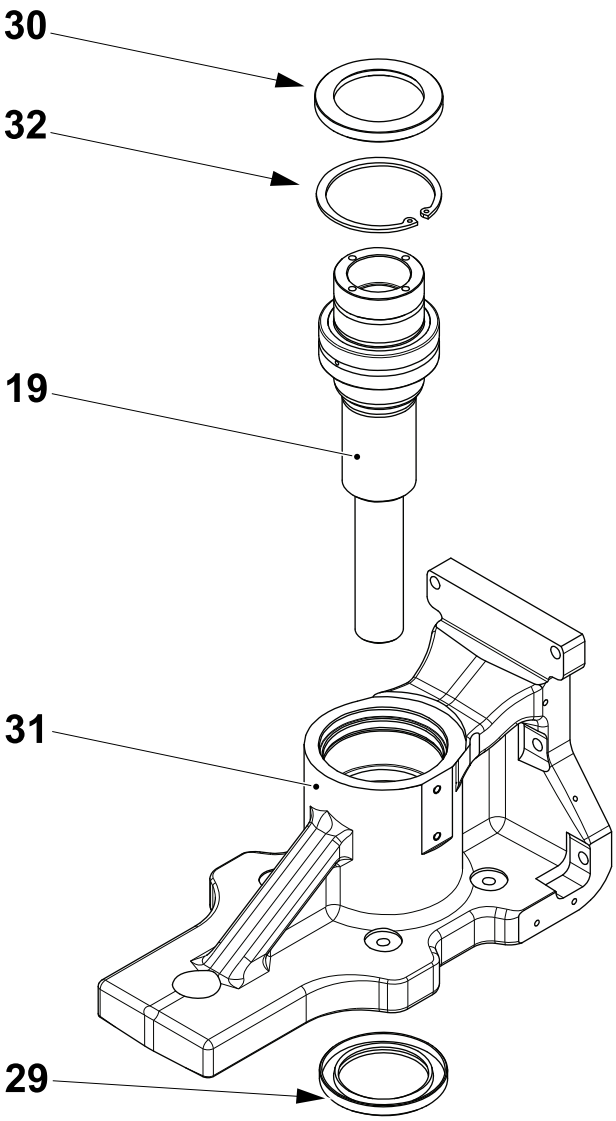

19 Shaft assembly
29 Seal ring
30 Seal ring
31 Housing
32 Retaining ring

(Cont'd)

(Cont'd)

q) Remove the retaining ring (33) from the shaft assembly (19).

r) Remove the spacer (34) and the O-ring (35).

s) Remove the bearing (36).

t) Remove the spacer (37) and the O-ring (38).

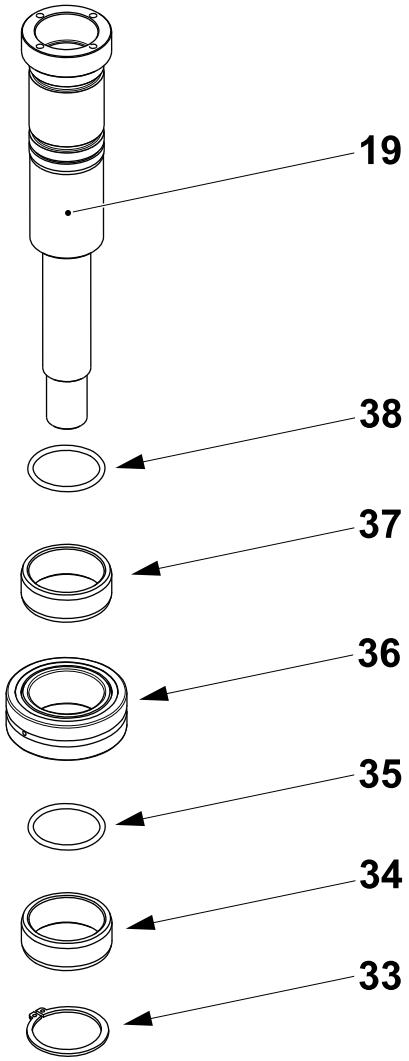

19 Shaft assembly
33 Retaining ring
34 Spacer
35 O-ring
36 Bearing
37 Spacer
38 O-ring

(Cont'd)

(Cont'd)

u) Assemble in the reverse order.

v) Install the belts, see 2.3.1.1 Package Positioner (Right) - Change Belts.

w) Repeat steps a) to v) for the other drive (39).

Note! The servo motors should now be set to zero, see 2.3.4 Set Package Positioner Zero.

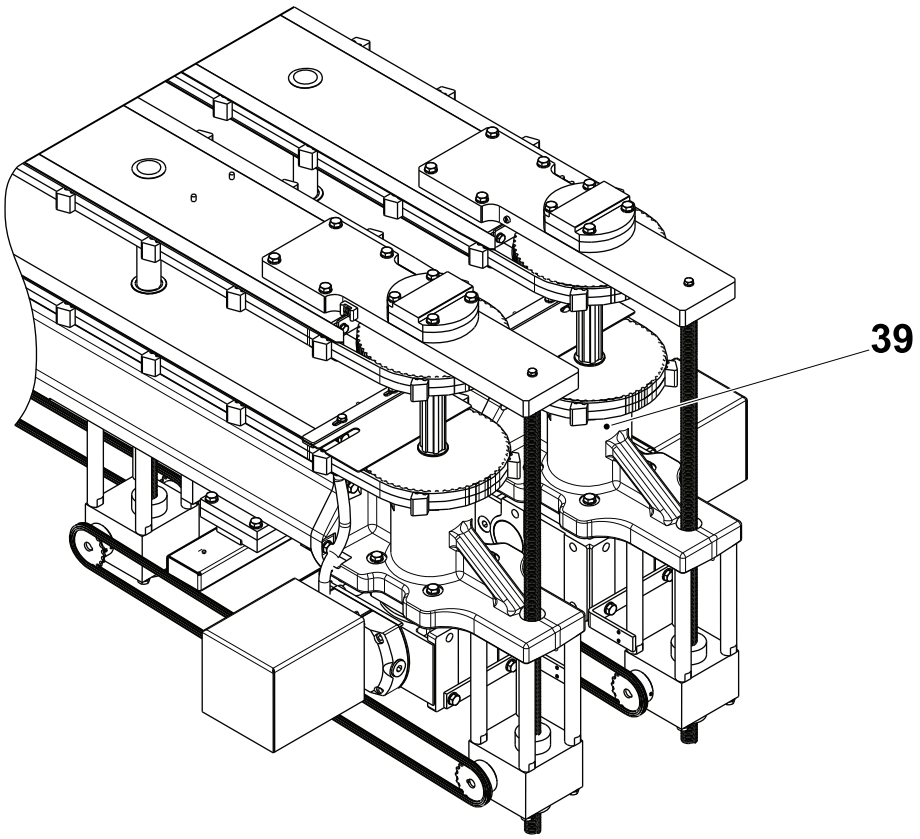

39 Drive

2.3.3.1-3 Drive - Motor and Gearbox

Machine Status	Electrical supply disconnecting device in position O (OFF) Main air valve OFF
SPC Reference	3199874-0100 3199891-0100

Separation

There may or may not be a plug (1).

The access hole (2) may be in a different location.

There is one screw (3) in the clamp (4).

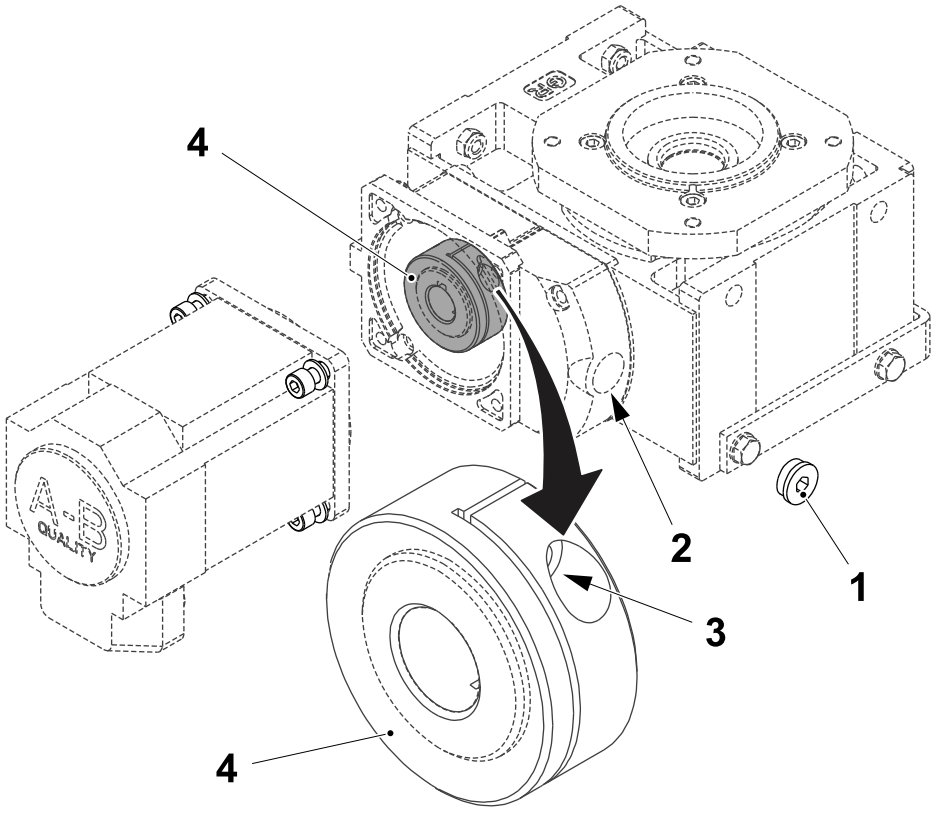

1 Plug
2 Access hole
3 Screw
4 Clamp

(Cont'd)

(Cont'd)

a) If fitted, remove the plug (1).

b) Using the access hole (2), locate the screw (3) in the clamp (4) with a 5 mm allen key and loosen the screw (3).

c) Remove the screw (5) and separate the motor (6) from the gearbox (7).

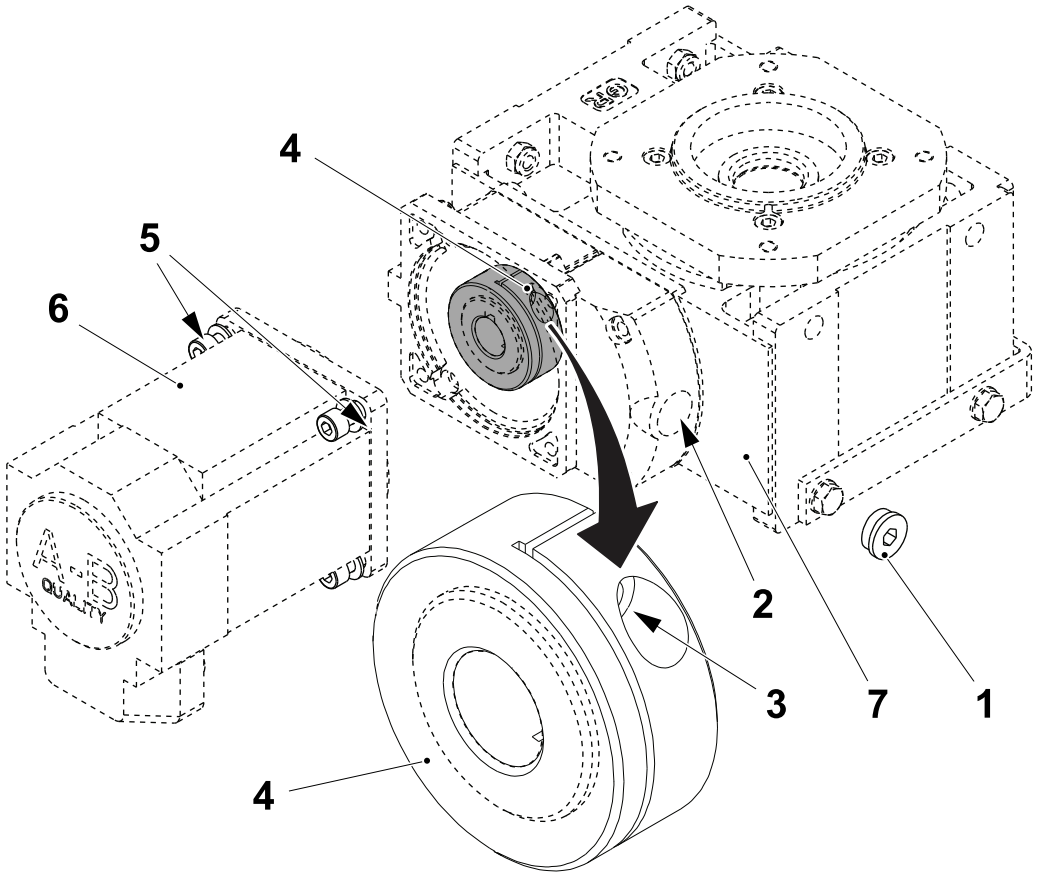

1 Plug
2 Access hole
3 Screw
4 Clamp
5 Screw
6 Motor
7 Gearbox

(Cont'd)

(Cont'd)

Assembly

a) Install the motor (1) so that the screw (2) loosely hold it.

b) Tighten the screw (3) ensuring that the clamp (4) is at the end of the drive gearbox shaft (5) so that it clamps securely onto the drive motor shaft (6).

c) Tighten completely the screw (2) that hold the motor (1).

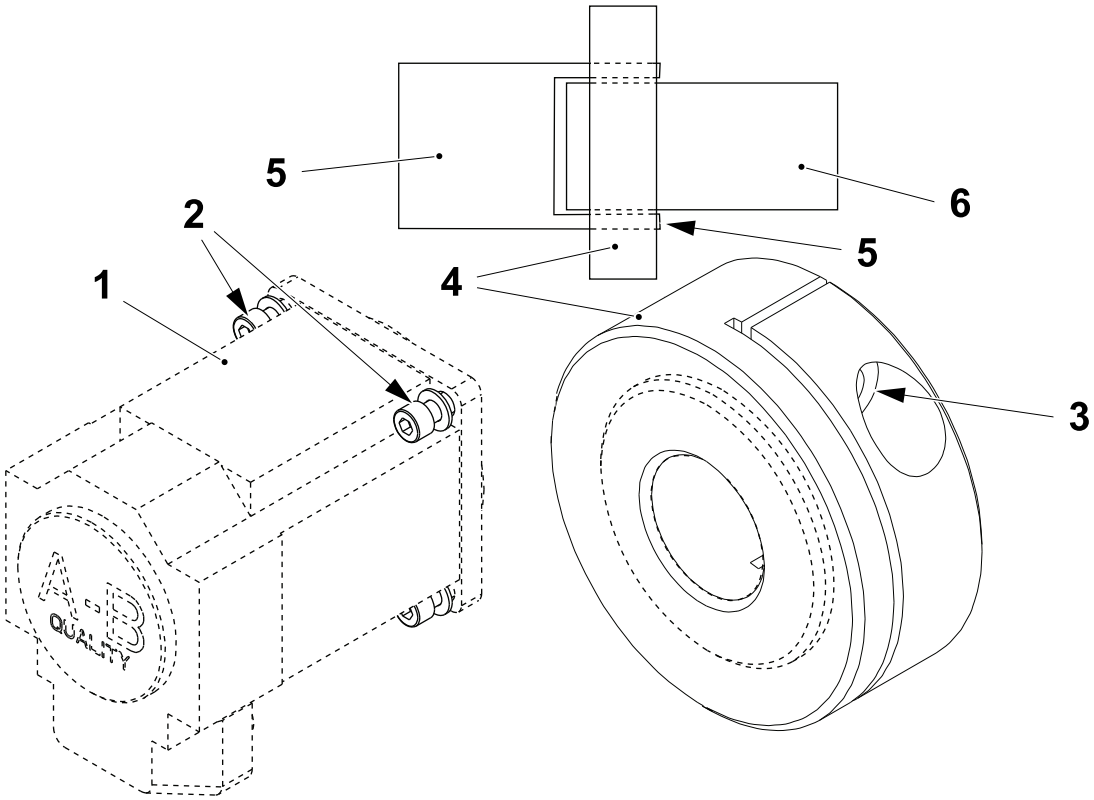

1 Motor
2 Screw
3 Screw
4 Clamp
5 Gearbox shaft
6 Drive motor shaft

2.3.3.1-4 Belt Stretcher - Change Bearings

Machine Status	Electrical supply disconnecting device in position O (OFF) Main air valve OFF
SPC Reference	2766954-0200 2769743-0200

Upper Assemblies

a) Remove the belts, see 2.3.1.1 Package Positioner (Right) - Change Belts and 2.3.2.1 Package Positioner (Left) Change Belts.

b) Remove the screw (1) and the bracket (2)

c) Remove the screw (3) and the bellows assembly (4).

d) Repeat steps b) and c) for the other bellows assembly (5).

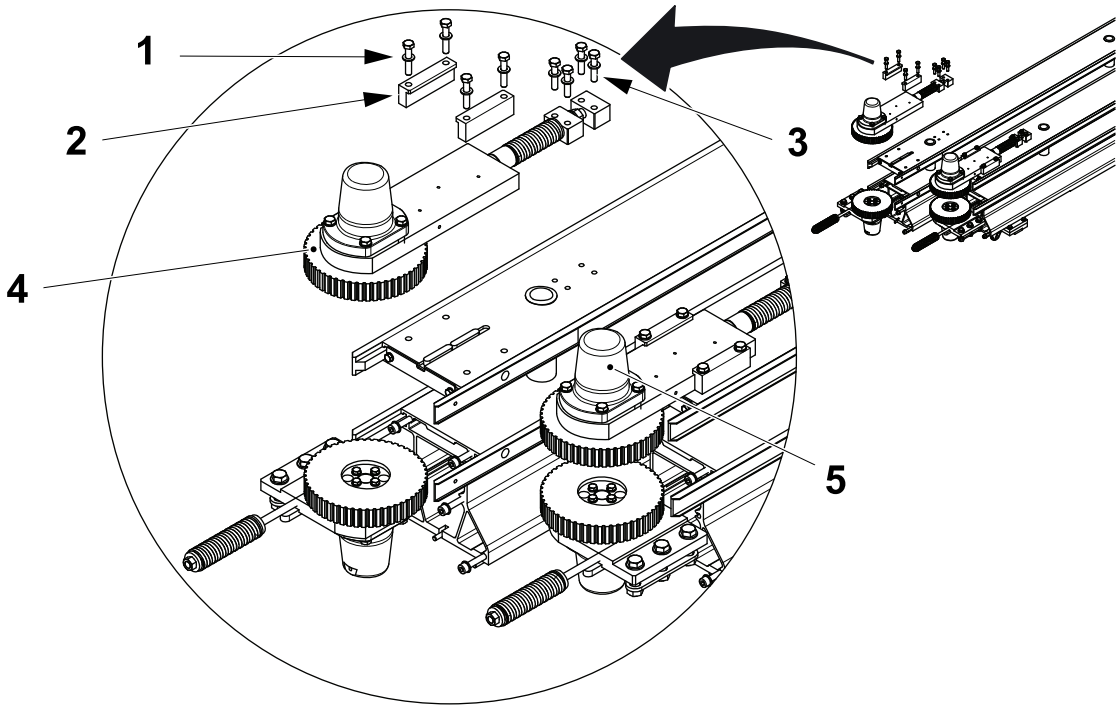

1 Screw
2 Bracket
3 Screw
4 Bellows assembly
5 Bellows assembly

(Cont'd)

(Cont'd)

e) Remove the screw (6) and the toothed pulley (7) from the shaft (8).

f) Remove the screw (9) from the bellows (10).

g) Remove the seal ring (11) from the bellows (10).

h) Remove the retaining ring (12) and pull out the shaft (8).

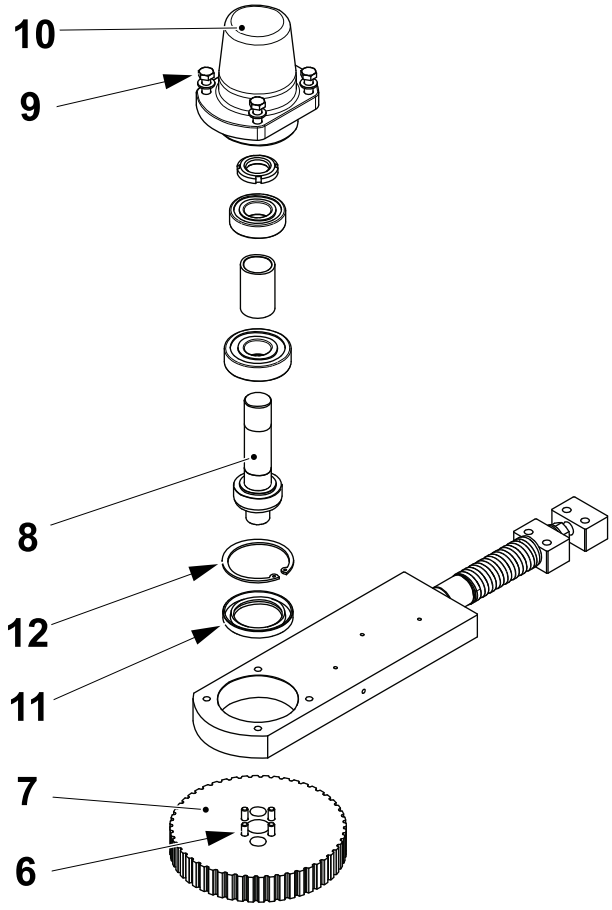

6 Screw
7 Toothed pulley
8 Shaft
9 Screw
10 Bellows
11 Seal ring
12 Retaining ring

(Cont'd)

(Cont'd)

i) Remove the nut (13), the bearing (14), the spacer (15) and the bearing (16) from the shaft (8).

j) Change the seal ring (11), the retaining ring (12), the bearing (14) and the bearing (16).

k) Assemble in the reverse order.

l) Install the belts, see 2.3.1.1 Package Positioner (Right) - Change Belts and 2.3.2.1 Package Positioner (Left) Change Belts.

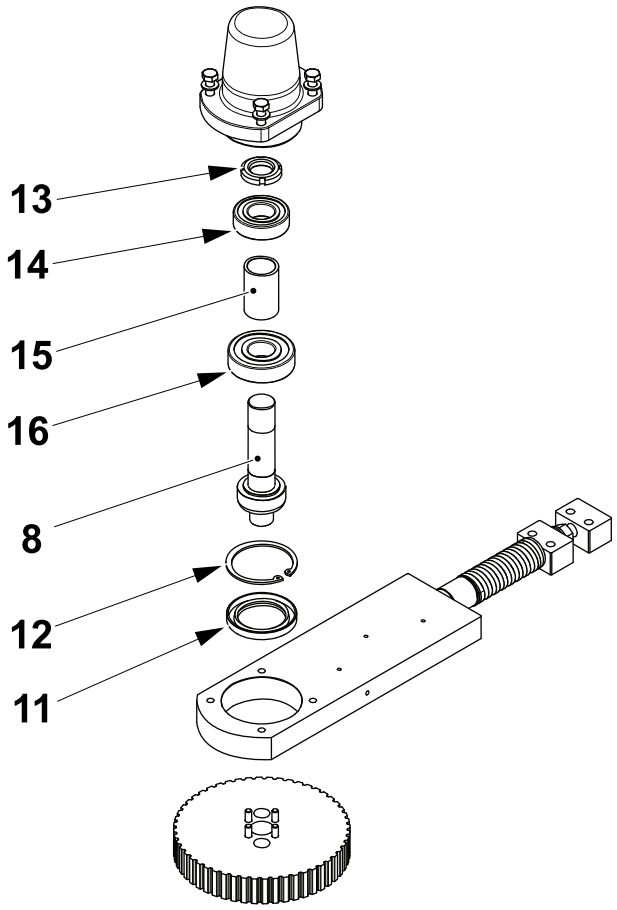

8 Shaft
11 Seal ring
12 Retaining ring
13 Nut
14 Bearing
15 Spacer
16 Bearing

(Cont'd)

(Cont'd)

Lower Assemblies

a) Remove the belts, see 2.3.1.1 Package Positioner (Right) - Change Belts and 2.3.2.1 Package Positioner (Left) Change Belts.

b) Remove the screw (1) and the bellows assembly (2).

c) Repeat step b) for the other bellows assembly (3).

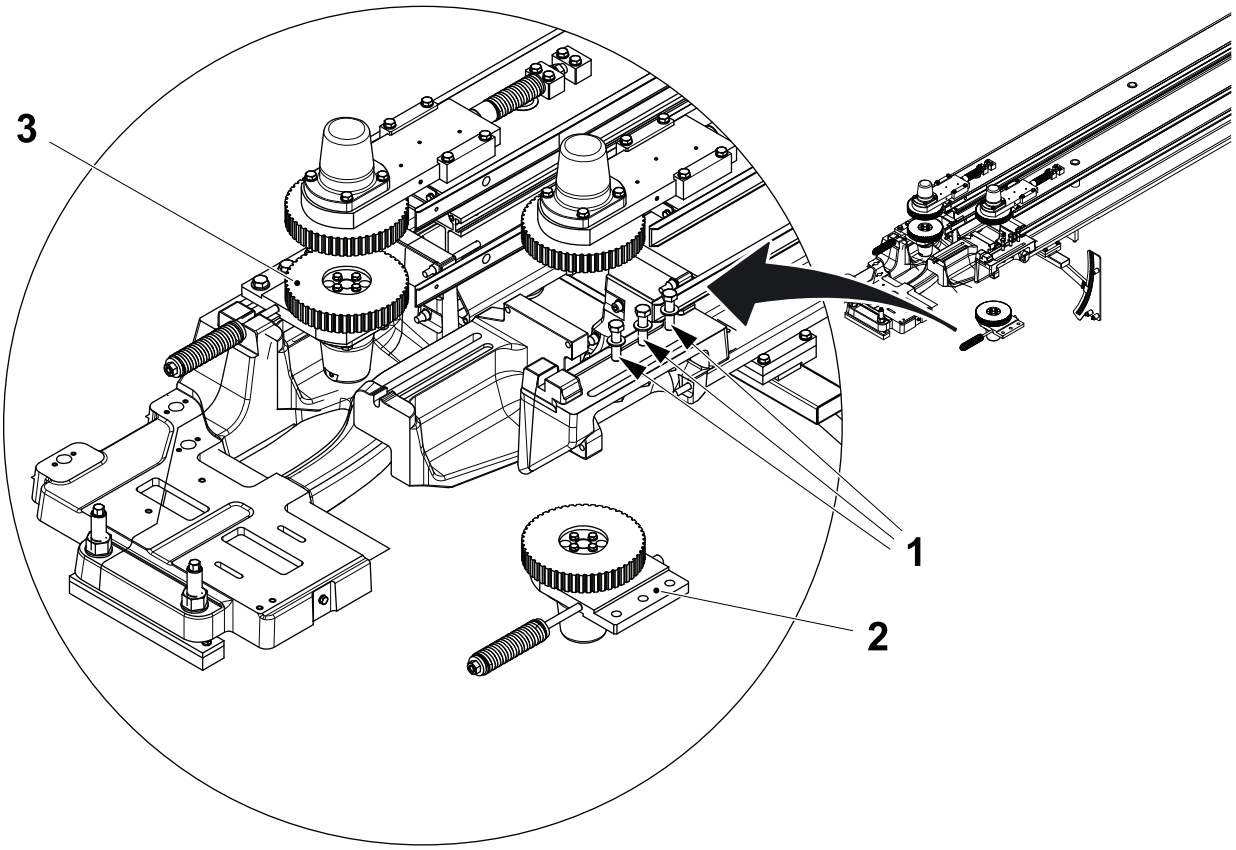

1 Screw
2 Bellows assembly
3 Bellows assembly

(Cont'd)

(Cont'd)

d) Remove the screw (4) and the toothed pulley (5) from the shaft (6).

e) Remove the screw (7) from the bellows (8).

f) Remove the seal ring (9) from the bellows (8).

g) Remove the retaining ring (10) and pull out the shaft (6).

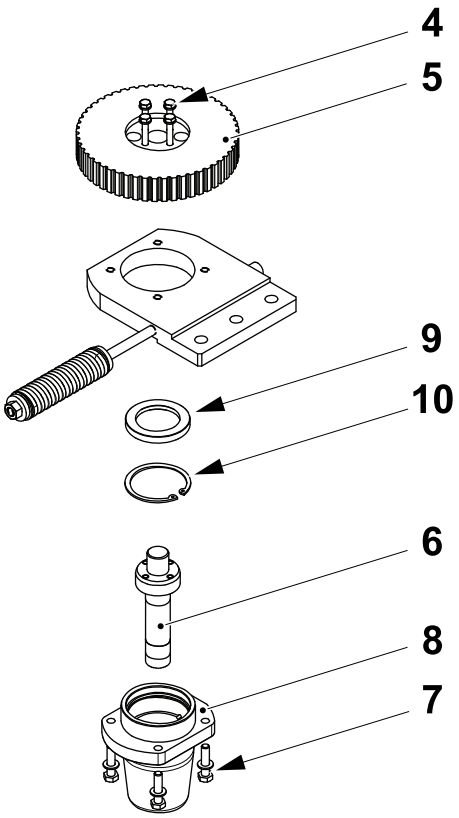

4 Screw
5 Toothed pulley
6 Shaft
7 Screw
8 Bellows
9 Seal ring
10 Retaining ring

(Cont'd)

(Cont'd)

h) Remove the nut (11), the bearing (12), the spacer (13) and the bearing (14) from the shaft (6).

i) Change the seal ring (9) , the retaining ring (10), the bearing (12) and the bearing (14).

j) Assemble in the reverse order.

k) Install the belts, see 2.3.1.1 Package Positioner (Right) - Change Belts and 2.3.2.1 Package Positioner (Left) Change Belts.

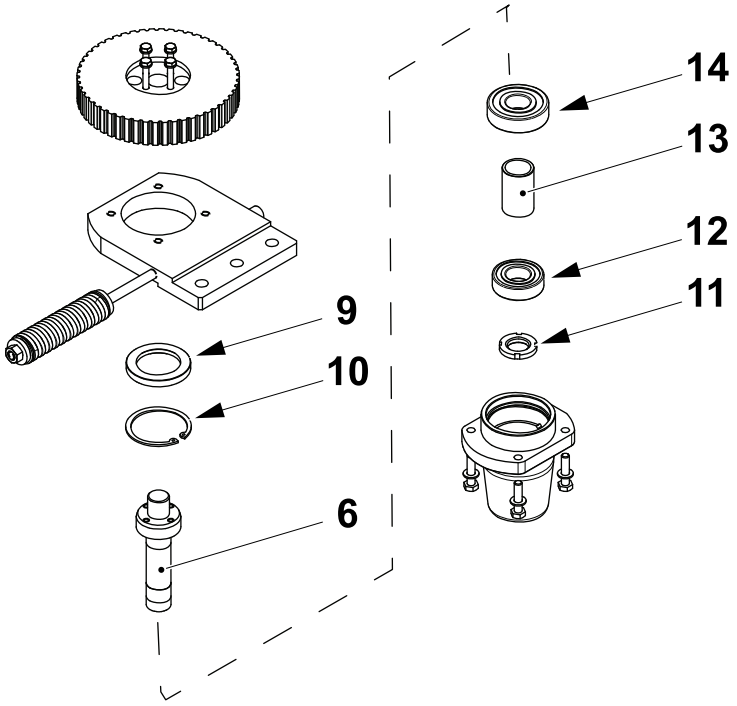

6 Shaft
9 Seal ring
10 Retaining ring
11 Nut
12 Bearing
13 Spacer
14 Bearing

2.3.3.1-5 Cylinder Speed - Set Regulator Valve

Machine Status	Electrical supply disconnecting device in position I (ON) Main air valve ON
SPC Reference	2838650-0200

a) Turn the regulator valve (1) to increase or decrease the speed so that the cylinder (2) returns the left hand package positioner (3).

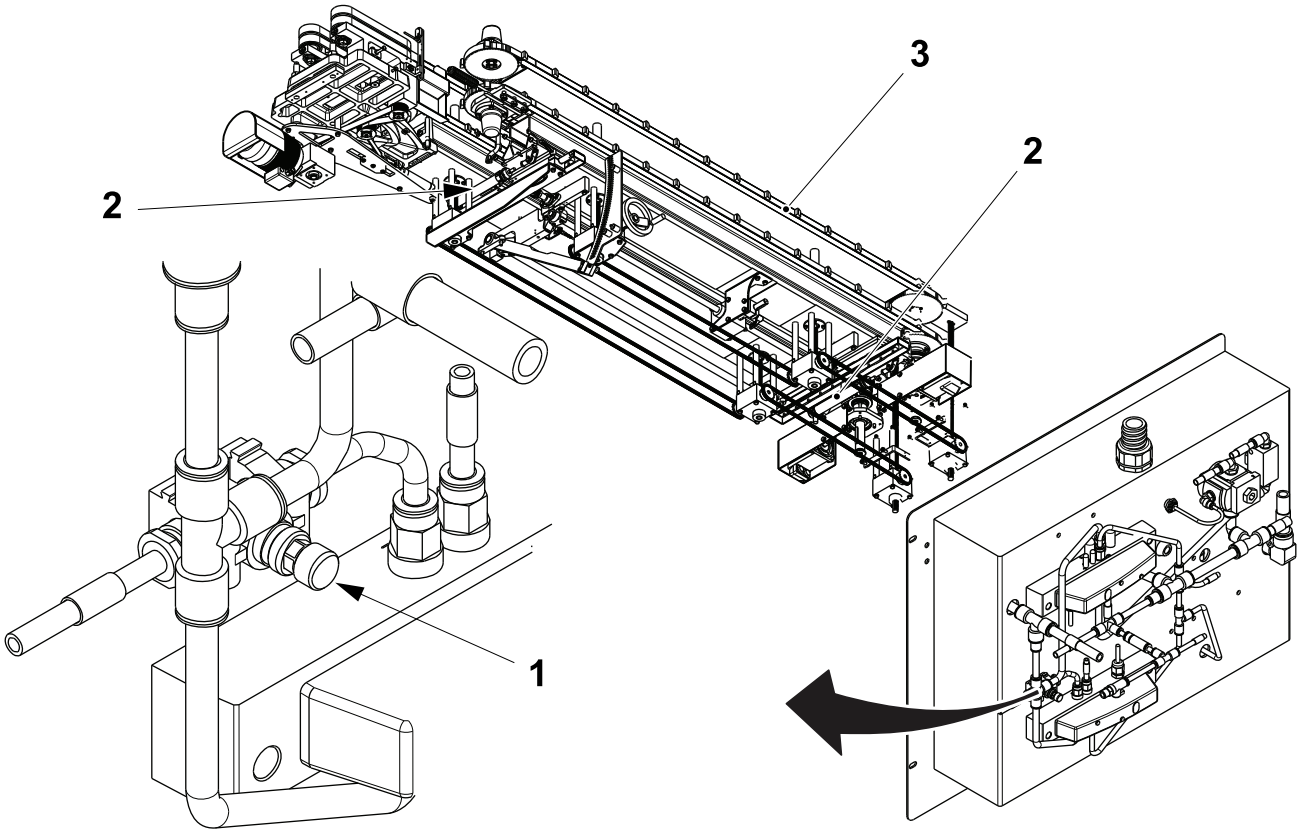

1 Regulator valve
2 Cylinder
3 Package positioner

2.3.3.1-6 Set - Cap Position X Direction

Machine Status	Electrical supply disconnecting device in position O (OFF) Main air valve OFF
SPC Reference	2838650-0200

a) Pull the knob (1) out and move the lever (2) in the direction of the arrow **A** this will move the positioner in the direction of the arrow **B**.

b) Pull the knob (1) out and move the lever (2) in the direction of the arrow **C** this will move the positioner in the direction of the arrow **D** .

c) Each hole (3) on the plate is a movement of 0.2 mm.

Note! After any positional change the packages will require testing, see OM chapter 5 for details.

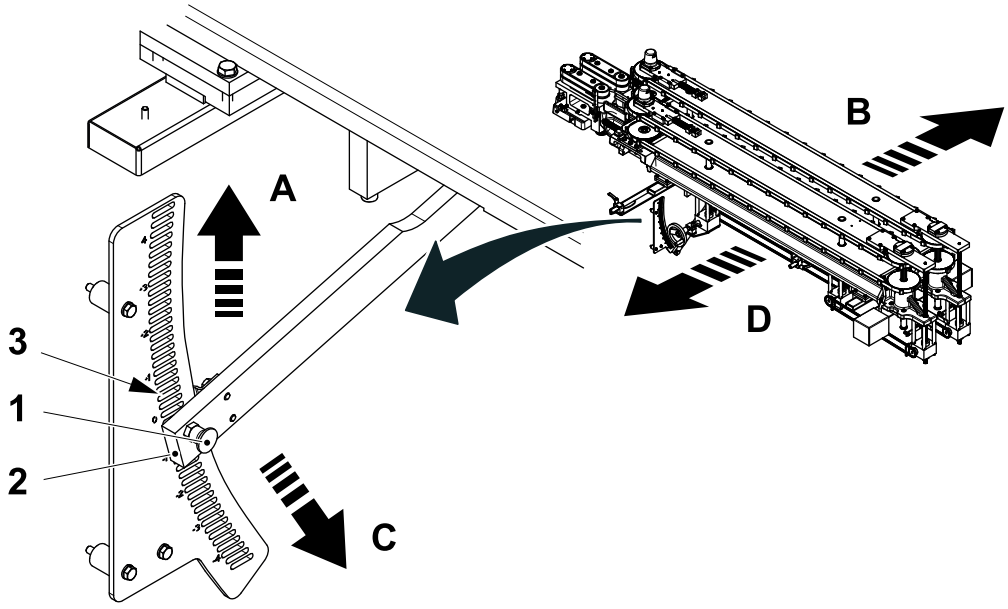

1 Knob
2 Lever
3 Hole

2.3.3.1-7 Set - Cap Position Y Direction

Machine Status	Electrical supply disconnecting device in position O (OFF) Main air valve OFF
SPC Reference	2838650-0200

a) Touch the SETTING button (1) and then the PACKAGE POSITIONER button (2).

Note! Items like the positioning system only appear on the screen below when installed.

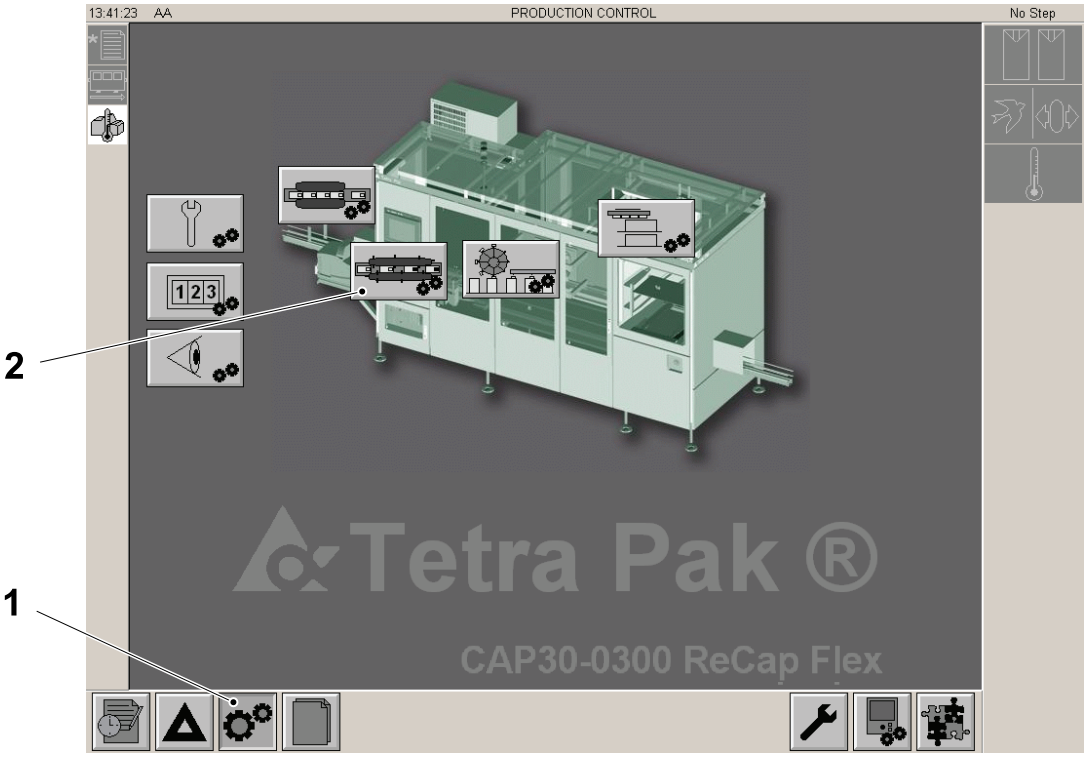

1 Setting button
2 Package positioner button

(Cont'd)

(Cont'd)

b) Touch the CAP POSITION ICON (3).

c) To increase or decrease the CAP POSITION VALUE (4), use the ARROW KEYS (5) or the keyboard which is accessible via the KEYBOARD button (6).

d) Introduce the value by clicking the OK button (7).

e) Touch the EXIT button (8).

f) Step the machine down to PRE-HEATING and then back up to PREPARATION to apply the new cap position value.

g) When the correct result is obtained store the corrected values in the appropriate recipe, see 8.9.1-14 Touch Screen - Saving Recipe Settings.

Note! After any positional change the packages will require testing, see OM chapter 5 for details.

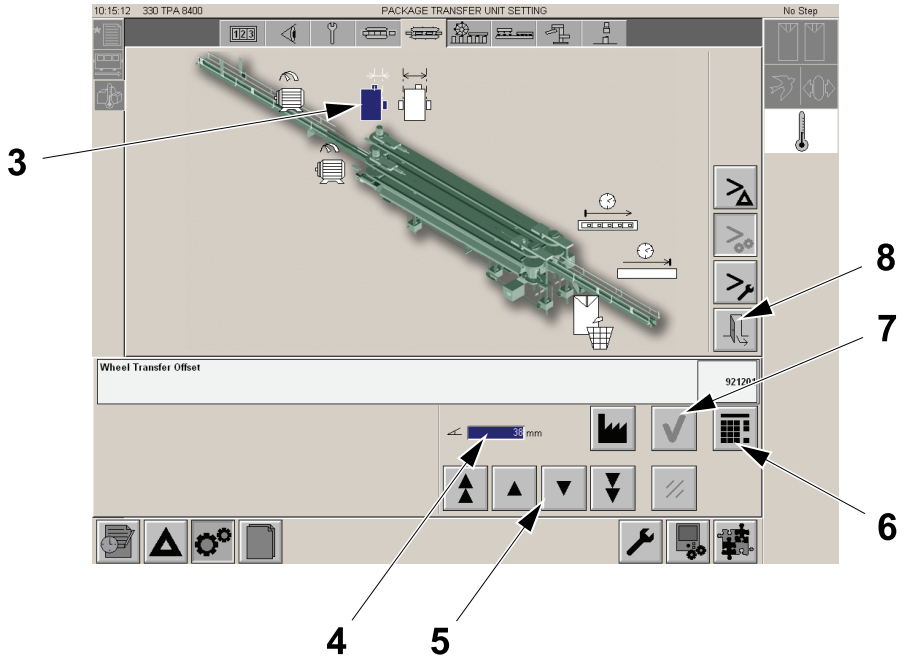

3 Cap position icon
4 Cap Position Valve
5 Arrow keys
6 Keyboard button
7 Ok button
8 Exit button

2.3.3.1-8 Set - Package Width X

Machine Status	Electrical supply disconnecting device in position O (OFF) Main air valve OFF
SPC Reference	2838650-0200

Basic Setting

a) Measure the package in the X direction.

b) Turn the handle (1) to increase or decrease the distance **A** of the left hand package positioner (2) .

Note! The package must not be squeezed.

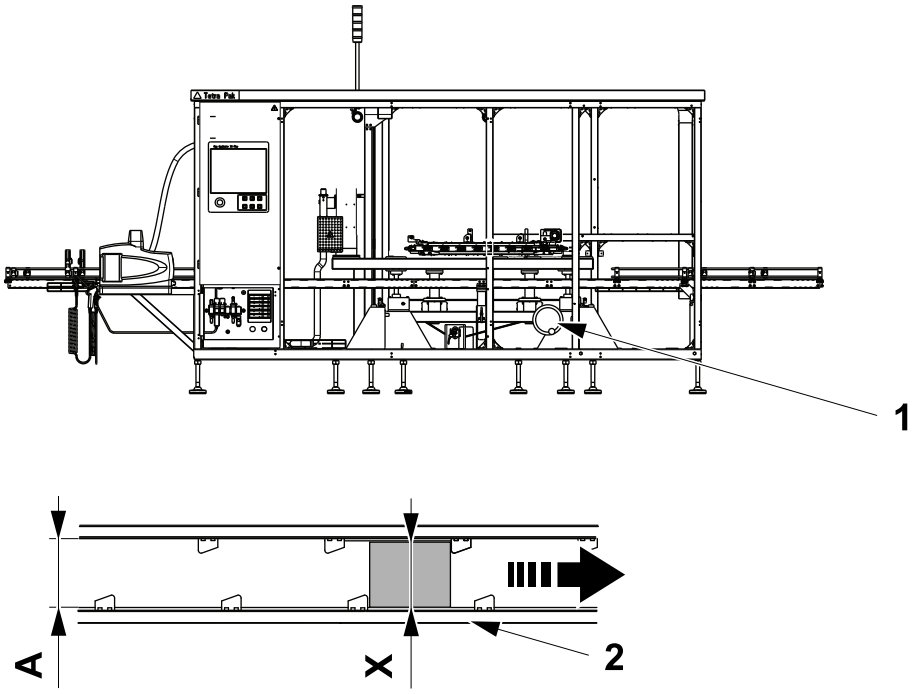

1 Handle
2 Positioner

2.3.3.1-9 Set - Package Length Y

Machine Status	Electrical supply disconnecting device in position I (ON) Main air valve ON
SPC Reference	2838643-0200

a) Measure the package in the **Y** direction.

b) To set the dimension **A**, touch the `SETTING` button (1) and then the `PACKAGE POSITIONER` button (2).

Note! The package must not be squeezed.

Note! Items like the positioning system only appear on the screen below when installed.

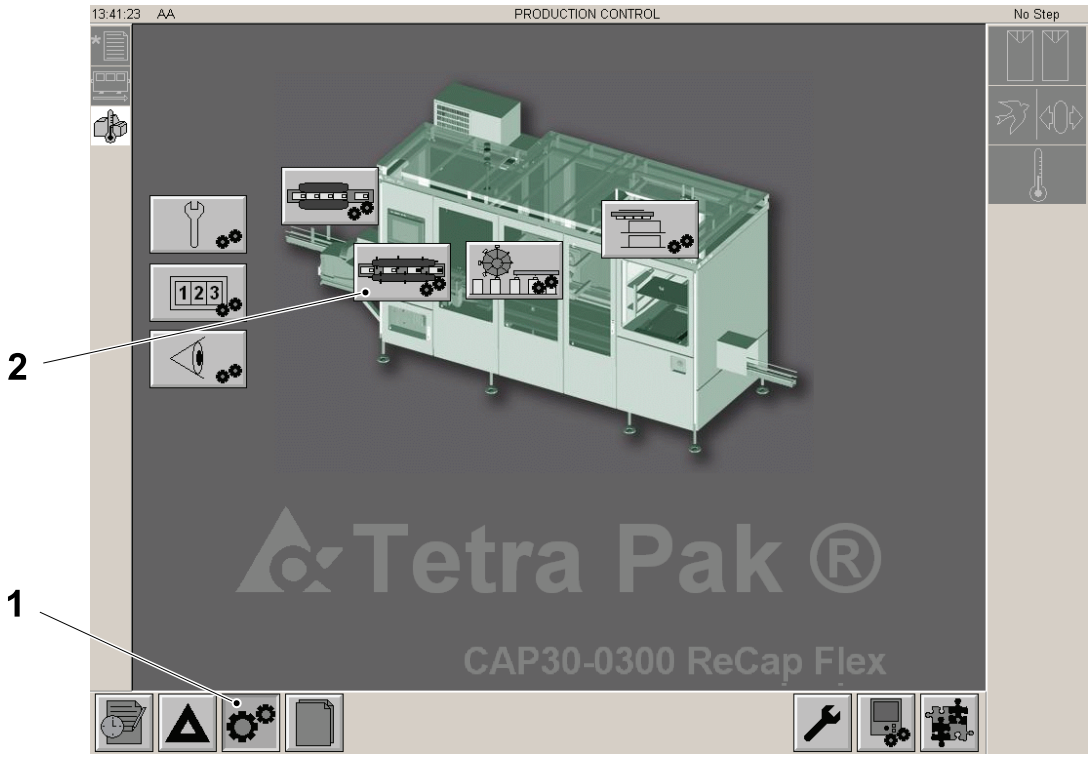

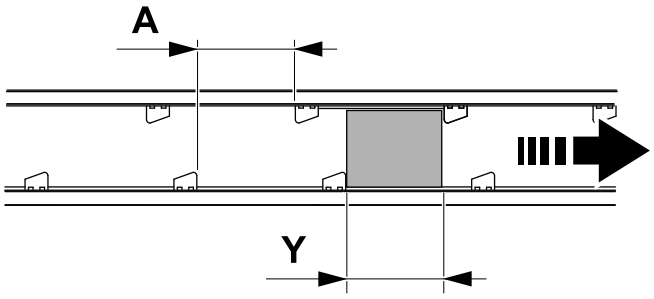

1 Setting button
2 Package positioner button

(Cont'd)

(Cont'd)

c) Touch the PACKAGE WIDTH ICON (3).

d) To increase or decrease the VALUE (4), use the ARROW KEYS (5) or the keyboard which is accessible via the KEYBOARD button (6).

e) Introduce the value by clicking the OK button (7).

f) Touch the EXIT button (8).

g) Step the machine down to PRE-HEATING and then back up to PREPARATION to apply the new package width value.

h) When the correct result is obtained store the corrected values in the appropriate recipe, see 8.9.1-16 Touch Screen - Delete Recipes.

Note! The correct setting is when the package is held but not squeezed.

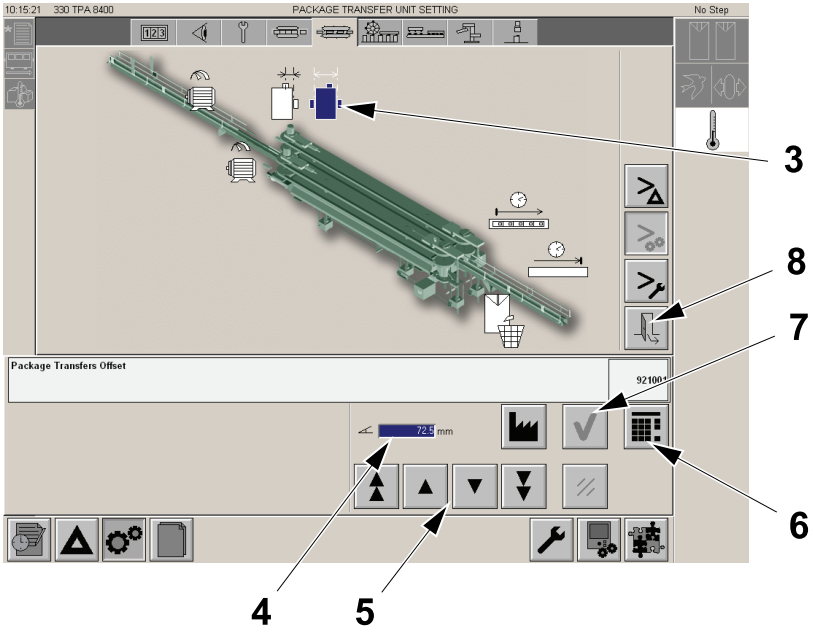

3 Package width icon
4 Value
5 Arrow keys
6 keyboard button
7 Ok button
8 Exit button

2.3.3.1-10 Set - Wheel Pushdown Offset

Machine Status	Electrical supply disconnecting device in position I (ON) Main air valve ON
SPC Reference	2838650-0200

a) To move the pushdown into the centre of the cap touch the SETTING button (1) and then the PACKAGE POSITIONER button (2).

Note! Items like the positioning system only appear on the screen below when installed.

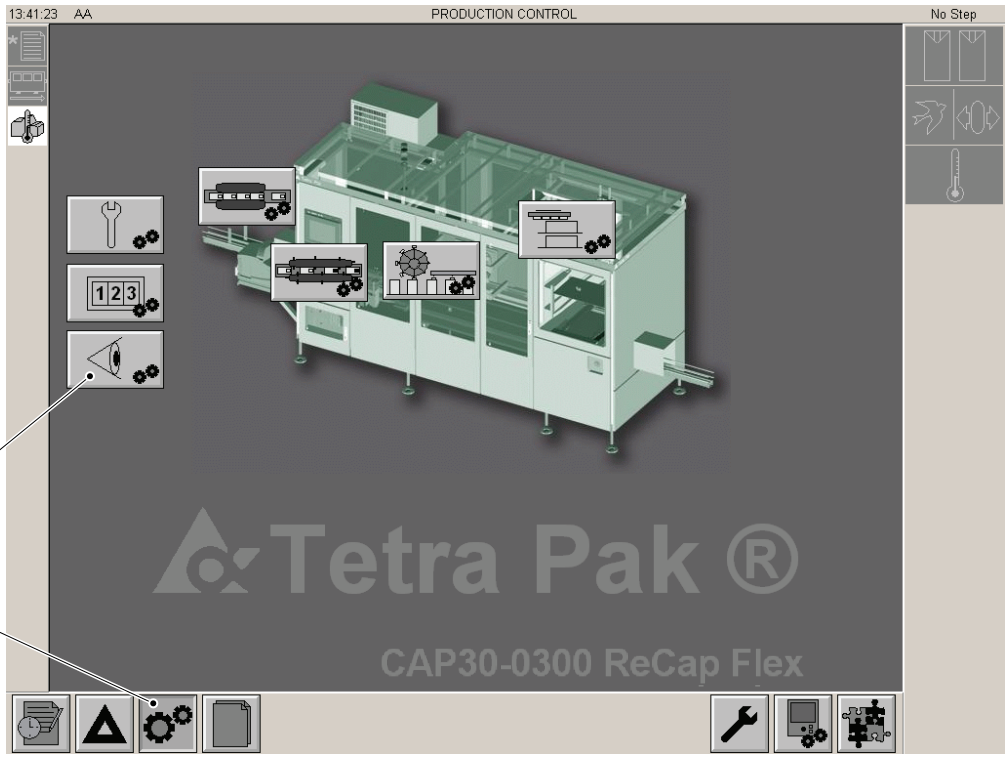

1 Setting button
2 Package positioner button

(Cont'd)

(Cont'd)

b) Touch the WHEEL PUSHDOWN OFFSET ICON (3).

c) To increase or decrease the Y position of the pushdown (±5 mm maximum), change the Value (4) using the ARROW KEYS (5) or the keyboard which is accessible via the KEYBOARD button (6).

d) Introduce the value by clicking the OK button (7).

e) Touch the EXIT button (8).

f) Step the machine down to PRE-HEATING and then back up to PREPARATION to apply the new value.

g) When the correct result is obtained (pushdown centred on the cap) store the corrected values in the appropriate recipe, see 8.9.1-14 Touch Screen - Saving Recipe Settings.

Note! After any positional change the packages will require testing, see OM chapter 5 for details.

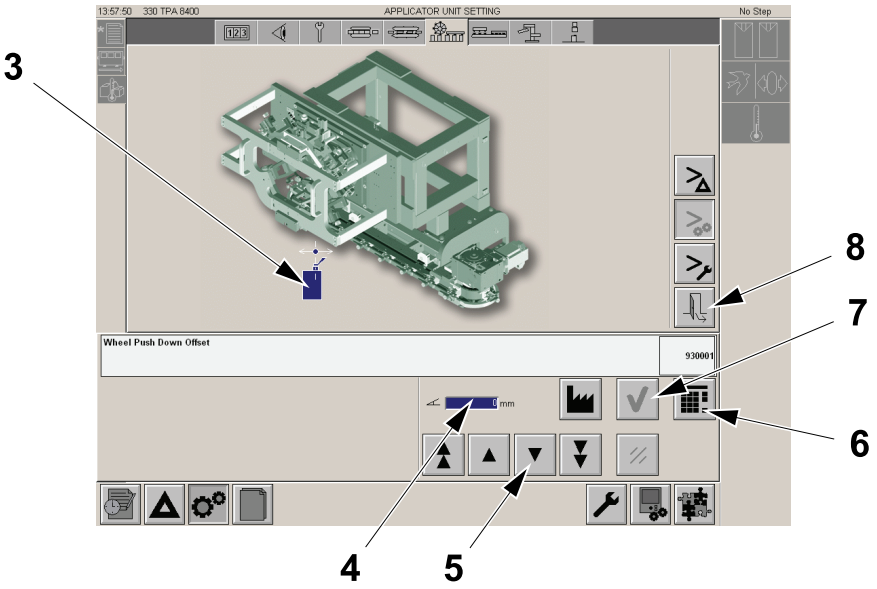

3 Wheel pushdown offset icon
4 Value
5 Arrow keys
6 Keyboard button
7 Ok button
8 Exit button

2.3.4 Set Package Positioner Zero

2.3.4.1 Set Package Positioner Zero - Setting

2.3.4.1-1 Coarse Setting Inner Package Positioner Zero

Machine Status	Electrical supply disconnecting device in position O (OFF) Main air valve OFF
Special Equipment	Zero Alignment tool TP No. 2788137-0000
SPC Reference	662901-0300

a) Place the template (1) on the package positioner (2).

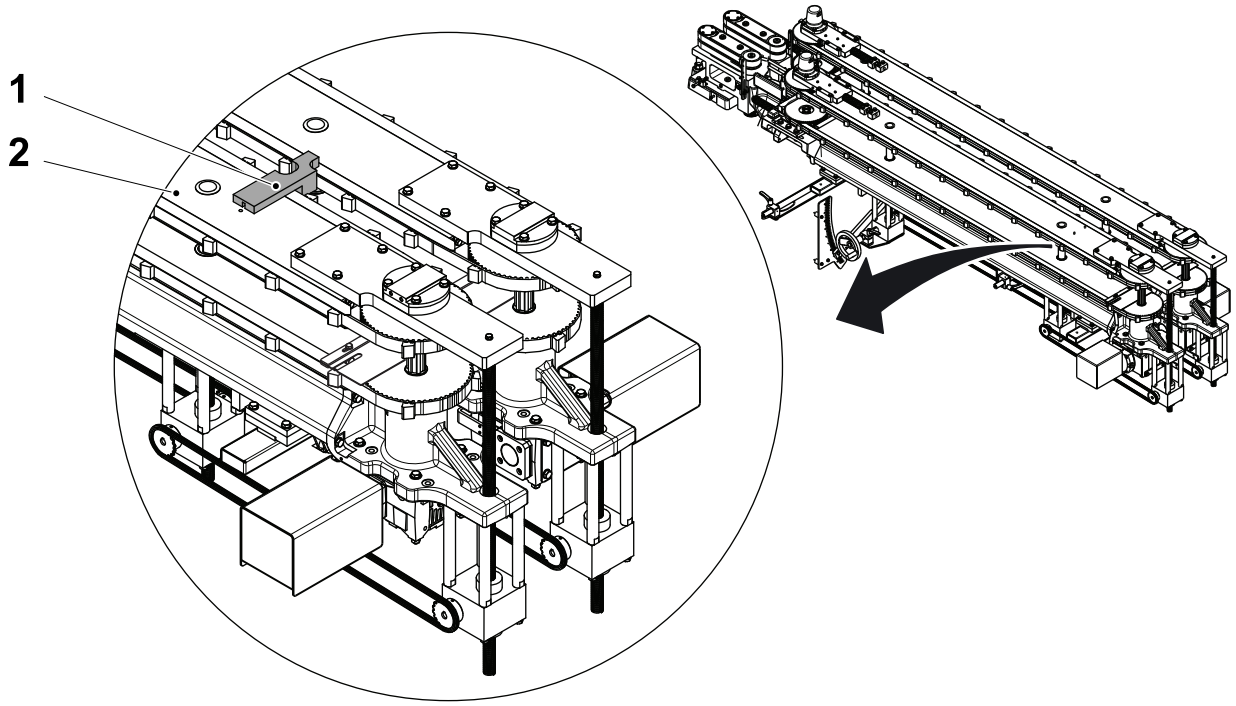

1 Template
2 Package positioner

(Cont'd)

(Cont'd)

b) Attach a piece of paper (3) to the surface of the inner package positioner (4) package so that it is in line with the template (1) as shown.

Note! The line (5) is the centre-line of the pins the templates locate on.

c) Draw a line (5) on the paper that is in line with the part of the part of template (6) indicated below. This is the mechanical zero position for the inner package positioner.

d) Remove the template (1).

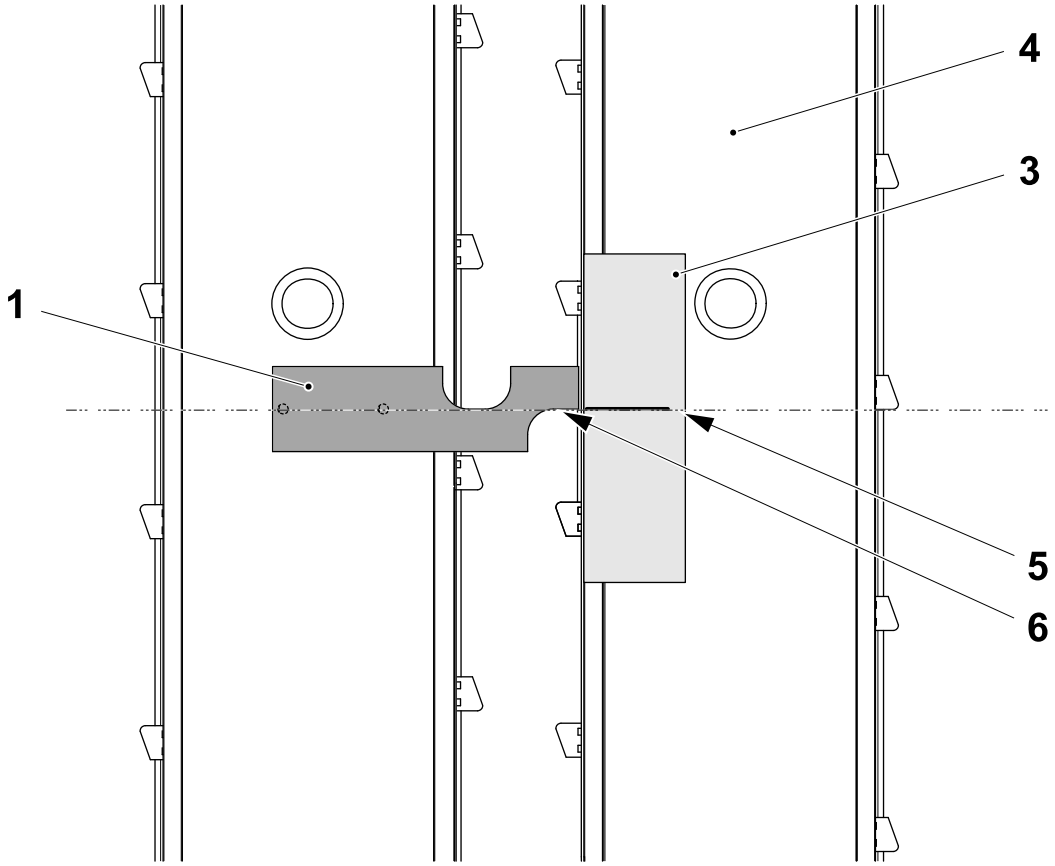

1 Template
3 Paper
4 Inner package positioner
5 Line
6 Part of template

(Cont'd)

(Cont'd)

Note! The arrow indicates the direction of movement of the belt (7) and the belt (8) relative to the position of the line (5) on the paper.

e) Using the INCHING button (9) on the control panel, inch the nearest tooth (10) on the belt (7) toward the line (5) on the paper (3).

Note! The INCHING button (9) on the control panel allows the package positioner to be inched in increments of approximately 0.4 mm.

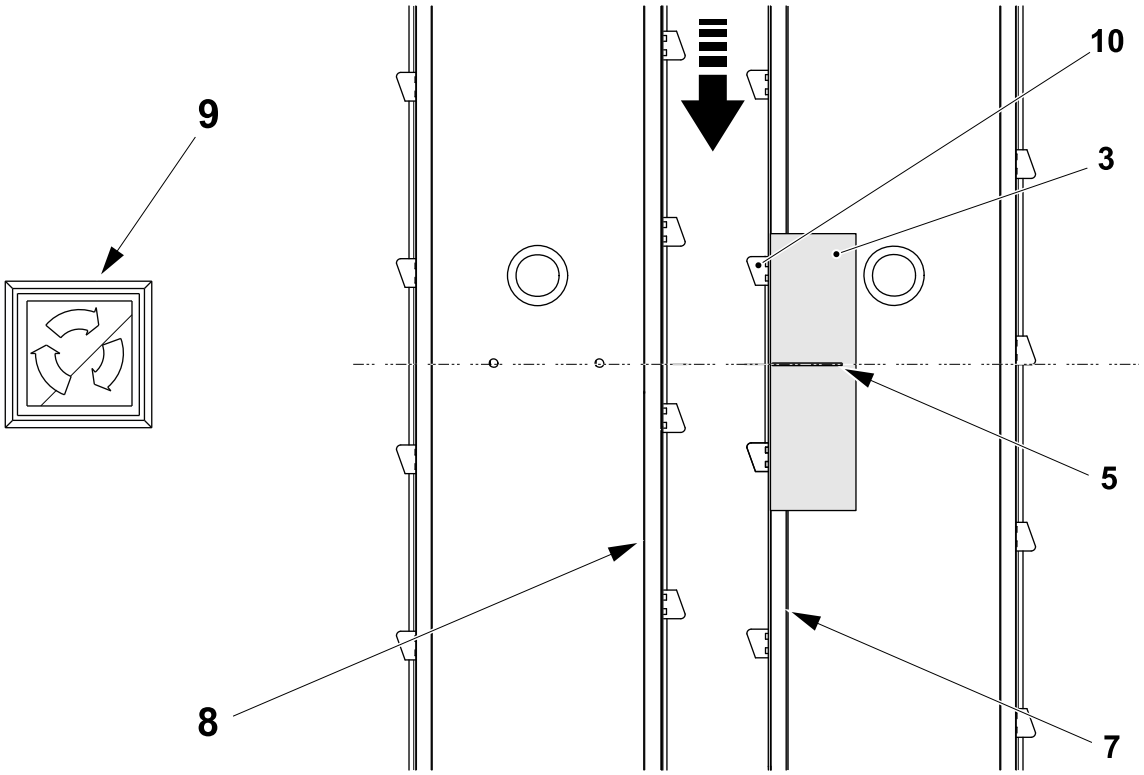

3 Paper
5 Line
7 Belt
8 Belt
9 Inch button
10 Tooth

(Cont'd)

(Cont'd)

f) Stop inching when the working surface (11) of the tooth (10) is near to the line (5) but has not reached it.

g) Measure the distance between the working surface (11) of the tooth (10) and the line (5). Note the distance **A** for use in the fine setting.

h) Continue with the fine setting if necessary, see 2.3.4.1-2 Fine Setting Inner Package Positioner Zero.

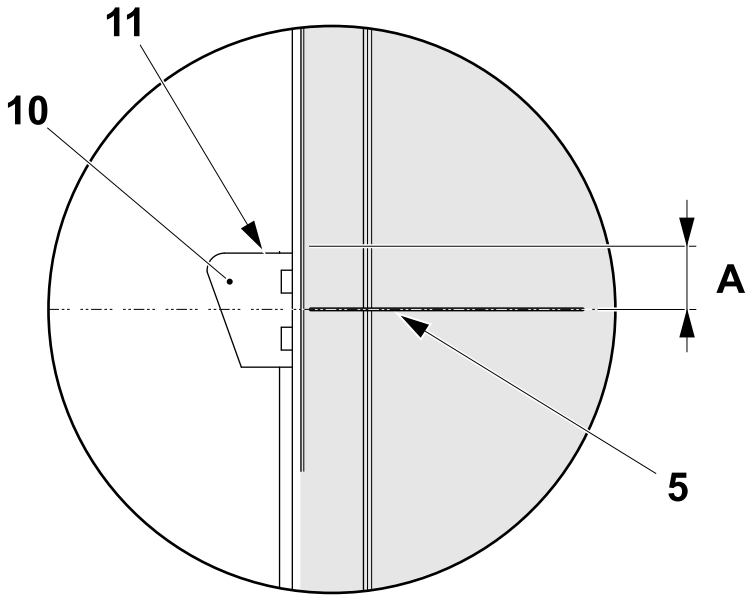

5 Line
10 Tooth
11 Working surface

2.3.4.1-2 Fine Setting Inner Package Positioner Zero

Machine Status	Electrical supply disconnecting device in position I (ON) Main air valve ON
SPC Reference	662901-0300

a) Touch the SETTINGS button (1).

b) Touch the OVERVIEW button (2) to display the OVERVIEW window.

Note! Items like the positioning system only appear on the screen below when installed.

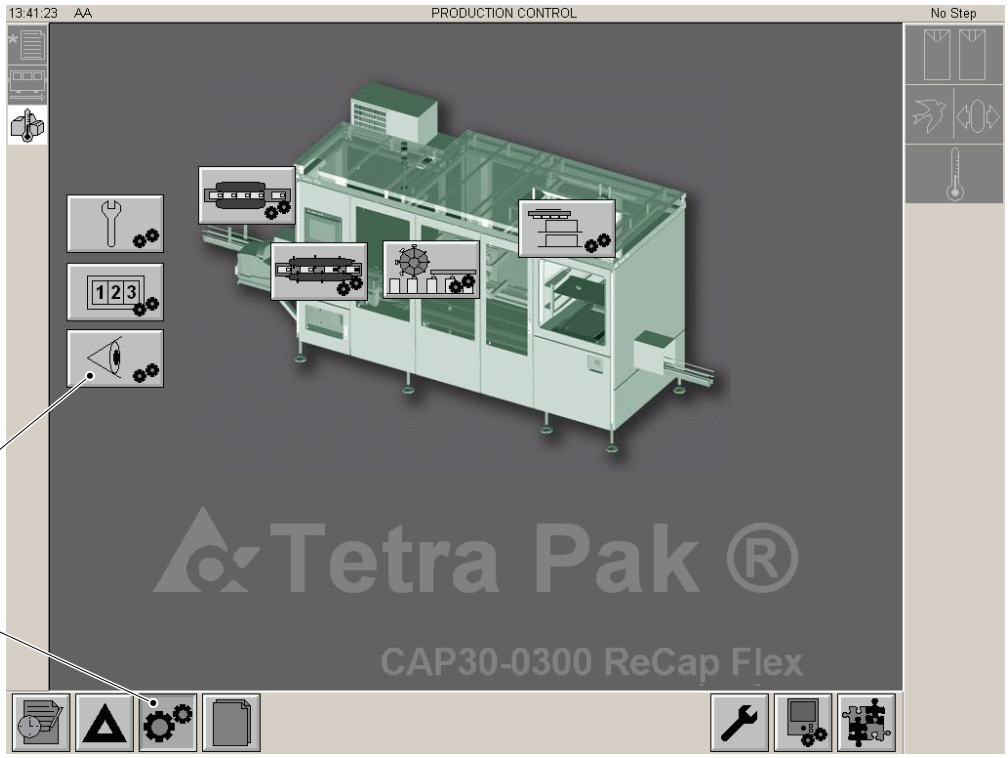

1 Settings button
2 Overview button

(Cont'd)

(Cont'd)

c) On the overview window (3) touch the virtual master axis actual position window (4) and read the value. This value is the theoretical virtual axis value of the machine to which all motors are aligned. Note this value for use in step h).

d) Touch the EXIT button (5).

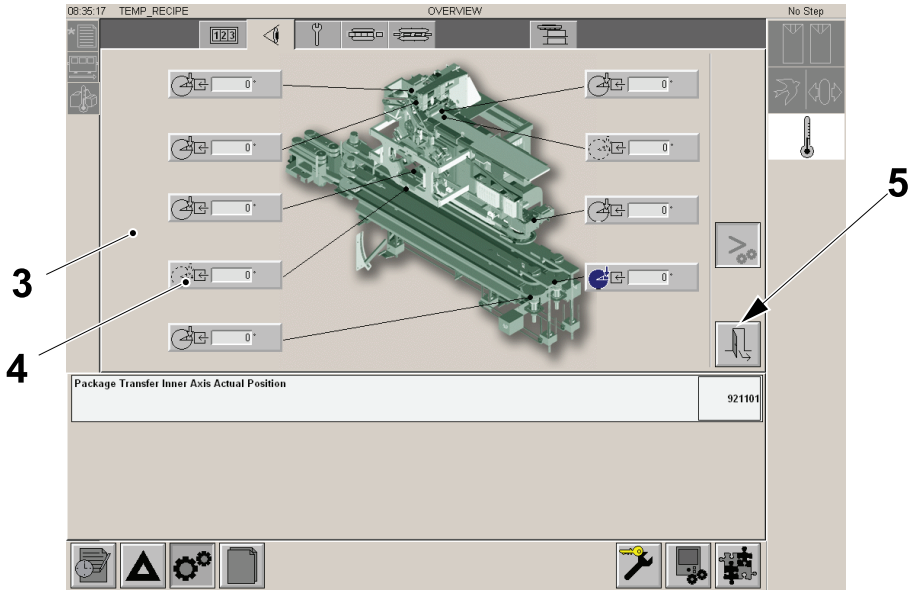

3 Overview window
4 Virtual master axis actual position window
5 EXIT button

(Cont'd)

(Cont'd)

e) Step up the machine to STEP 2.

f) Touch the MAINTENANCE button (6) and then the SERVICE button (7).

Note! Items like the positioning system only appear on the screen below when installed.

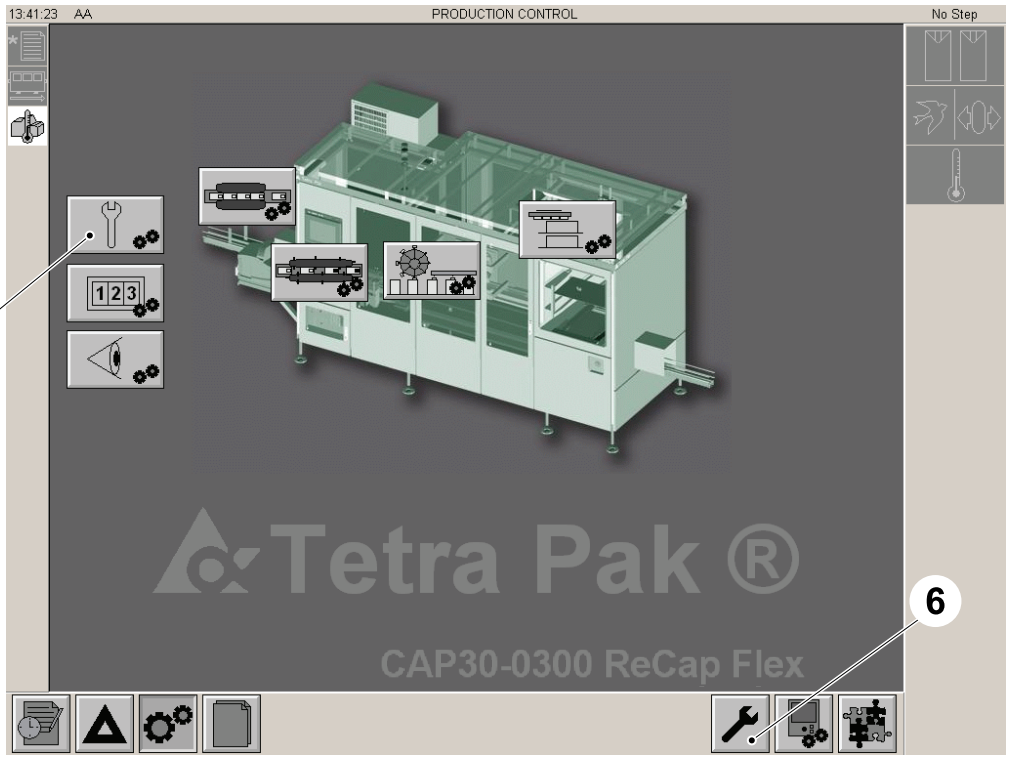

6 MAINTENANCE button
7 SERVICE button

(Cont'd)

(Cont'd)

g) Touch the INCHING button (8) to display the inching window (9) .

Note! The inching window (9) allows the package positioner to be inched in increments of approximately 0.4 mm.

Note! The angle value displayed in the window (10) is the value to be changed to move the package positioner to the zero position.

Note! Do not try to inch to the zero position in one go. It is better to repeat steps i) to m) until the zero position is obtained.

Note! The value should be increased to inch the package positioner with a conversion factor of 1° to 0.4 mm.

h) From the value measured in the 2.3.4.1-1 Coarse Setting Inner Package Positioner Zero step g), calculate the value to be entered in the window (10) to move the package positioner nearer to the zero position.

i) Touch the SETTING button (11) to modify the value in the window (10).

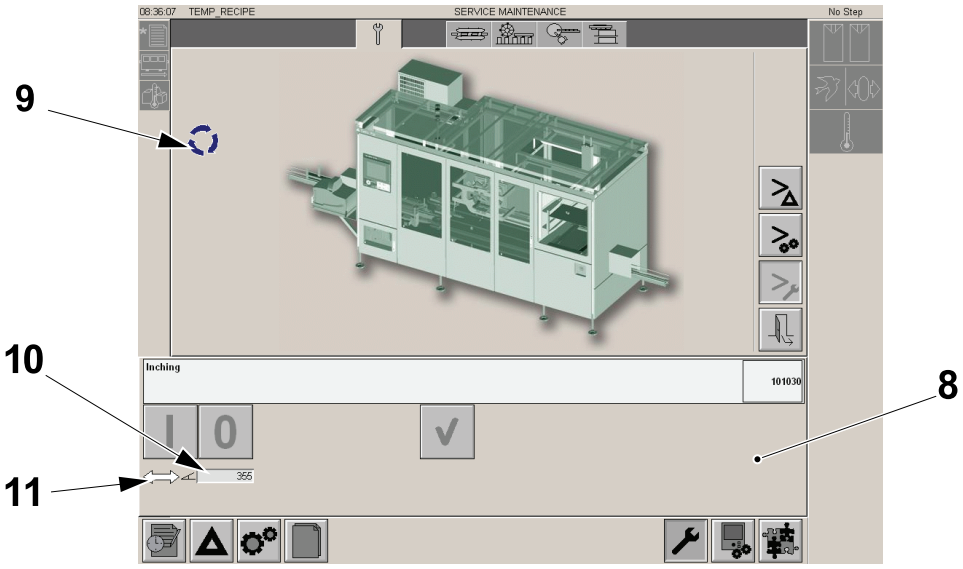

8 INCHING button
9 Inching window
10 Window
11 SETTING button

(Cont'd)

(Cont'd)

j) Using the UP AND DOWN buttons (12) set the number in the degrees window (13) to indicate the desired value. Touch the OK button (14).

k) Touch the ON button (15).

l) Touch the OK button (16). The package positioner will inch to the new position.

m) Touch the EXIT button (17) to leave.

n) Repeat the procedure from step of the 2.3.4.1-1 Coarse Setting Inner Package Positioner Zero to step m) above until the working surface (18) of the belt tooth (19) is aligned with the line (20) on the paper. When it is, save the inner package positioner zero position in the memory, see 2.3.4.1-3 Memorizing Inner Package Positioner Zero Position.

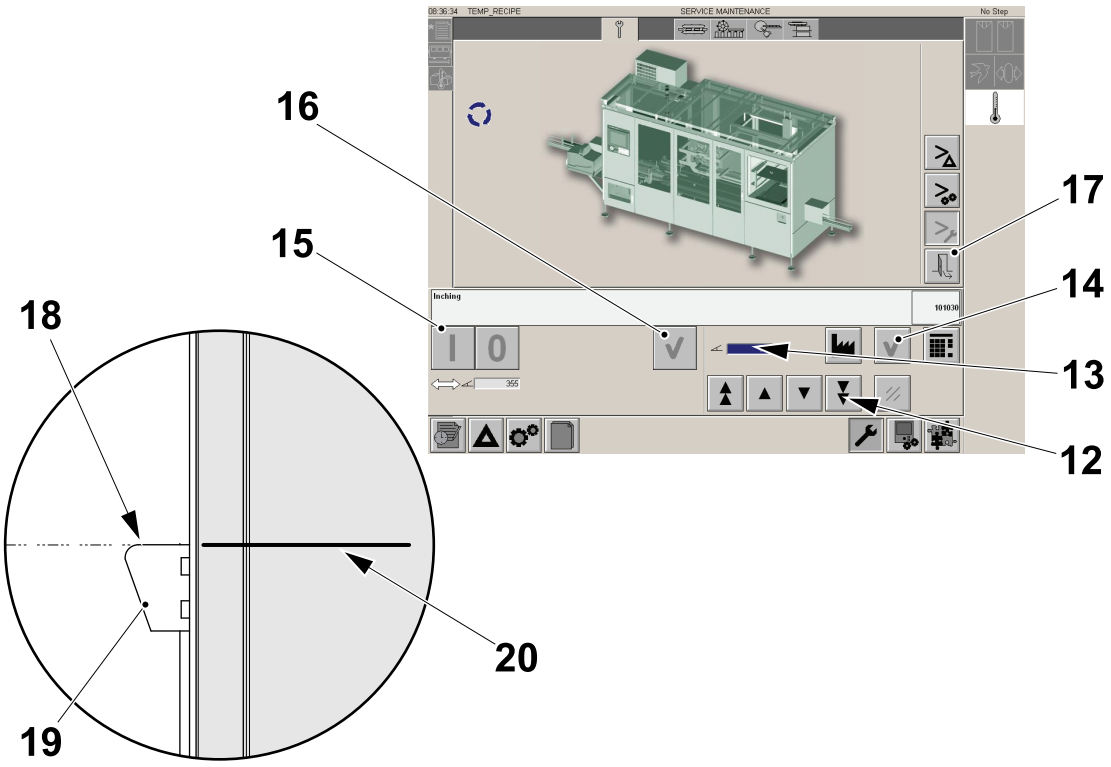

12 UP AND DOWN buttons
13 Degrees window
14 OK button
15 ON button
16 OK button
17 EXIT button
18 Working surface
19 Belt tooth
20 Line

2.3.4.1-3 Memorizing Inner Package Positioner Zero Position

Machine Status	Electrical supply disconnecting device in position I (ON) Main air valve ON
SPC Reference	662901-0300

This procedure stores to memory the zero position of the Inner Package Positioner that has been located with the 2.3.4.1-1 Coarse Setting Inner Package Positioner Zero and the 2.3.4.1-2 Fine Setting Inner Package Positioner Zero procedures.

Note! On completion of this procedure, the package positioner will remain at the zero position until the machine is stepped up. When the machine is stepped up to STEP 2 or higher the package positioner will move to an offset position determined by the values entered for the Y-axis package dimension and Y-axis cap position, see 2.3.3.1-9 Set - Package Length Y and 2.3.3.1-7 Set - Cap Position Y Direction.

a) Make sure the machine is at `STEP 0`.

b) Touch the `SYSTEM SETUP` button (1) and follow the login procedure see, 1.1.1-1 HMI User Management - Log On as a User.

c) Touch the `PACKAGE POSITIONER` button (2).

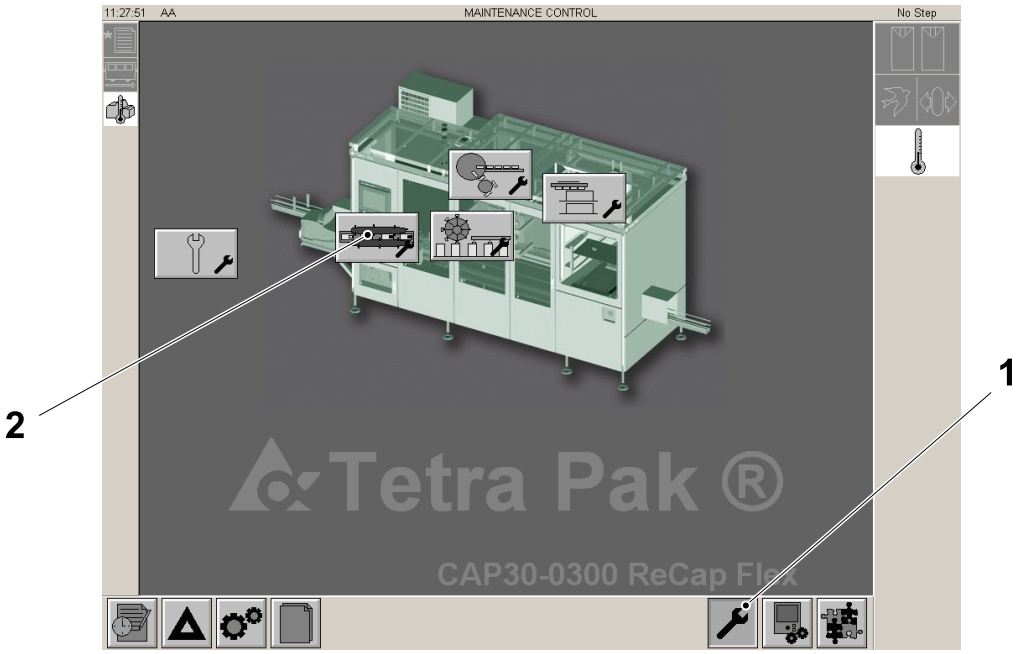

1 System Setup button
2 Package positioner button

(Cont'd)

(Cont'd)

d) Touch the ZERO button (3).

e) Touch the ON button (4).

f) Touch the OK button (5) for at least three seconds. The background of the ON button (4) will go green and the zero value for inner package positioner will be stored to memory.

g) Touch the EXIT button (6).

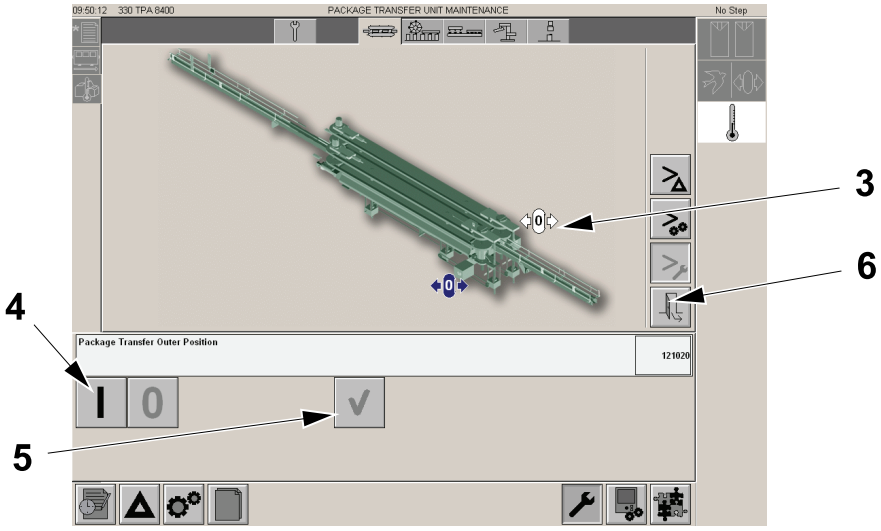

3 Zero button
4 ON button
5 OK button
6 Exit button

2.3.4.1-4 Coarse Setting Outer Package Positioner Zero

Machine Status	Electrical supply disconnecting device in position I (ON) Main air valve ON
SPC Reference	662901-0300

a) Set the inner package positioner (1) to zero see, 2.3.4.1-1 Coarse Setting Inner Package Positioner Zero.

b) Attach a piece of paper (2) to the surface of the outer package positioner (3) so that it is opposite the paper (4) on the inner package positioner (1).

c) Draw a line (5) on the piece paper (2) so that it is in line with the line (6) already drawn on the inner package positioner. The new line is the mechanical zero position for the outer package positioner (3).

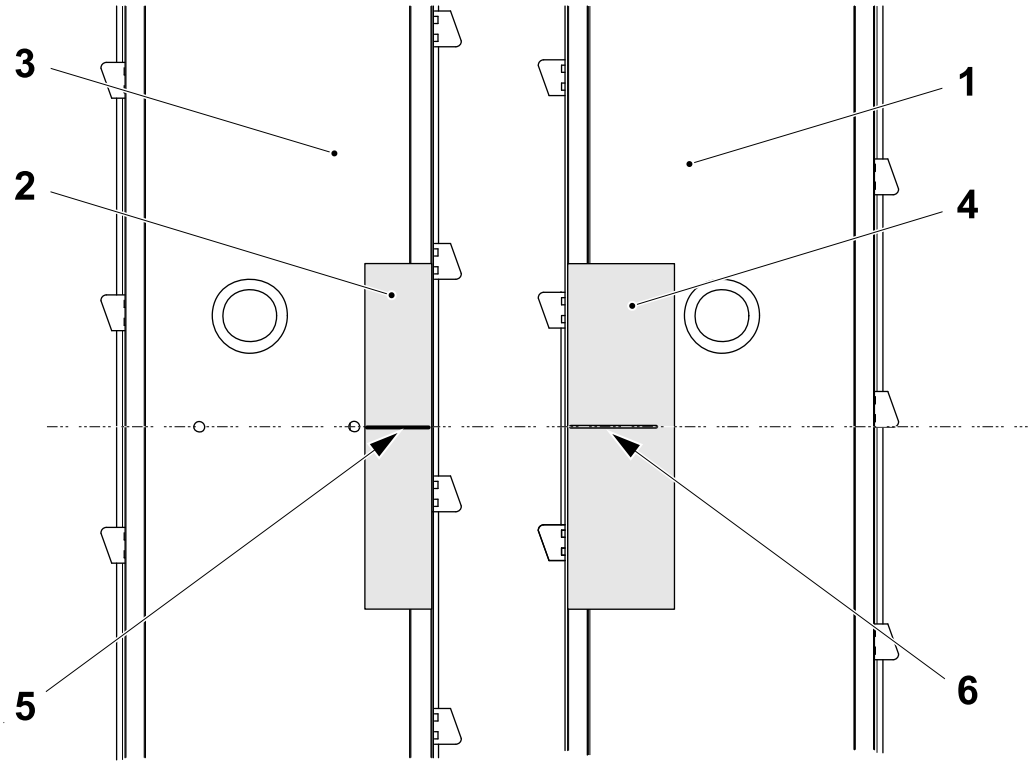

1 Inner package positioner
2 Paper
3 Outer package positioner
4 Paper
5 Line
6 Line

(Cont'd)

(Cont'd)

Note! The arrow indicates the direction of movement of the belt (7) and the belt (8) relative to the position of the line (5) on the paper (2).

d) Using the INCH BUTTON (9) on the control panel, inch the nearest tooth (10) on the belt (7) toward the line (5) on the paper (2).

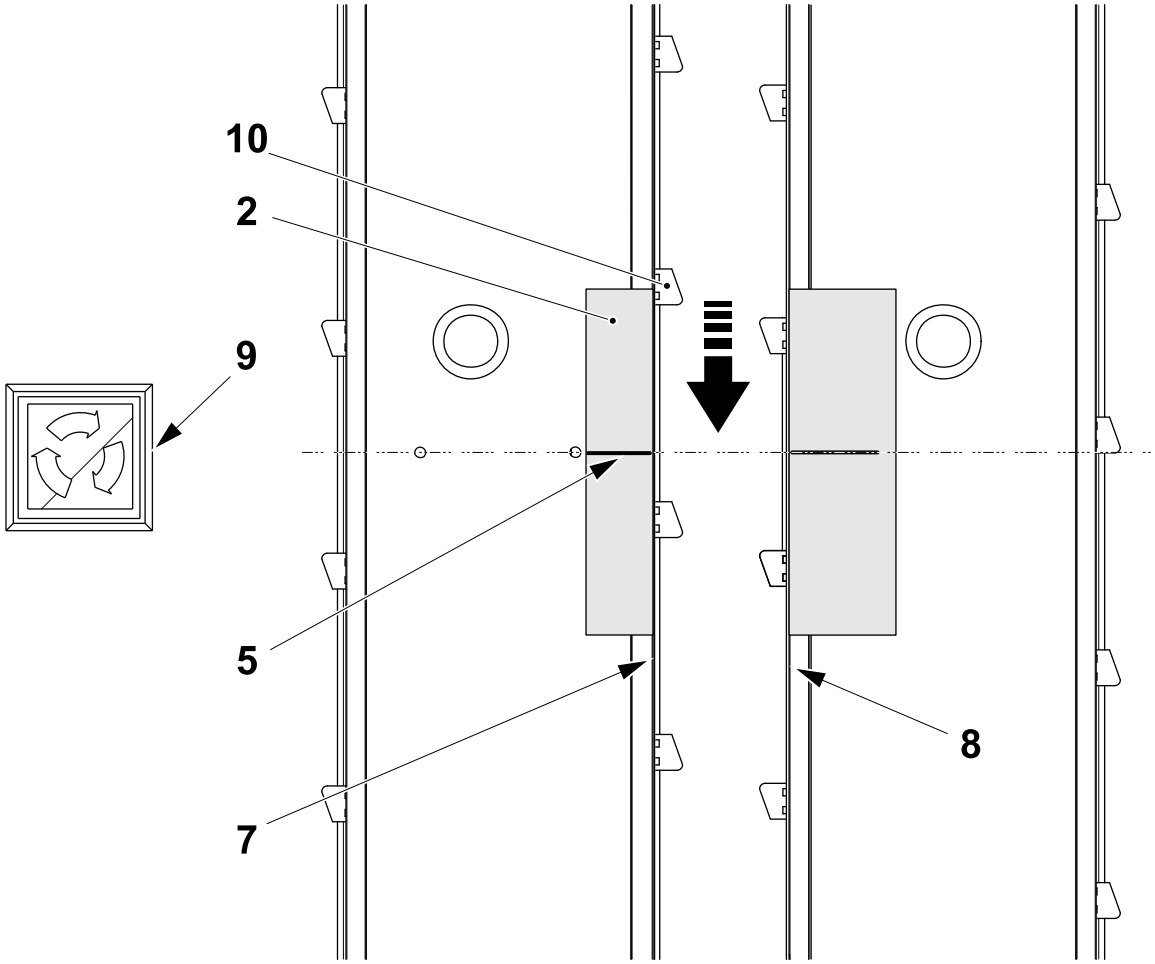

2 Paper
5 Line
7 Belt
8 Belt
9 Inch button
10 Tooth

(Cont'd)

(Cont'd)

e) Stop inching when the working surface (11) of the tooth (10) is near to the line (5) but has not reached it.

f) Measure the distance **A** between the working surface (11) of the tooth (10) and the line (5). Note the distance **A** for use in the fine setting.

g) Continue with the fine setting, see 2.3.4.1-5 Fine Setting Outer Package Positioner Zero.

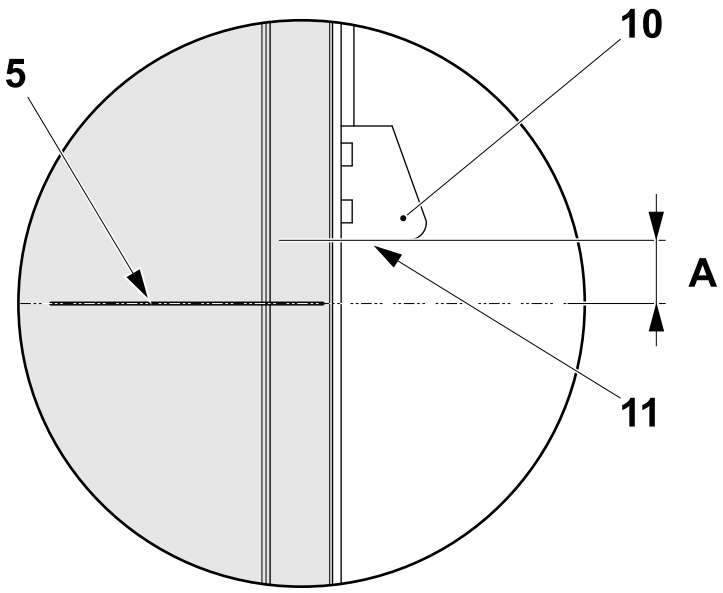

5 Line
10 Tooth
11 Working surface

2.3.4.1-5 Fine Setting Outer Package Positioner Zero

Machine Status	Electrical supply disconnecting device in position I (ON) Main air valve ON
SPC Reference	662901-0300

a) Touch the SETTING button (1).

b) Touch the OVERVIEW button (2) to display the OVERVIEW window.

Note! Items like the positioning system only appear on the screen below when installed.

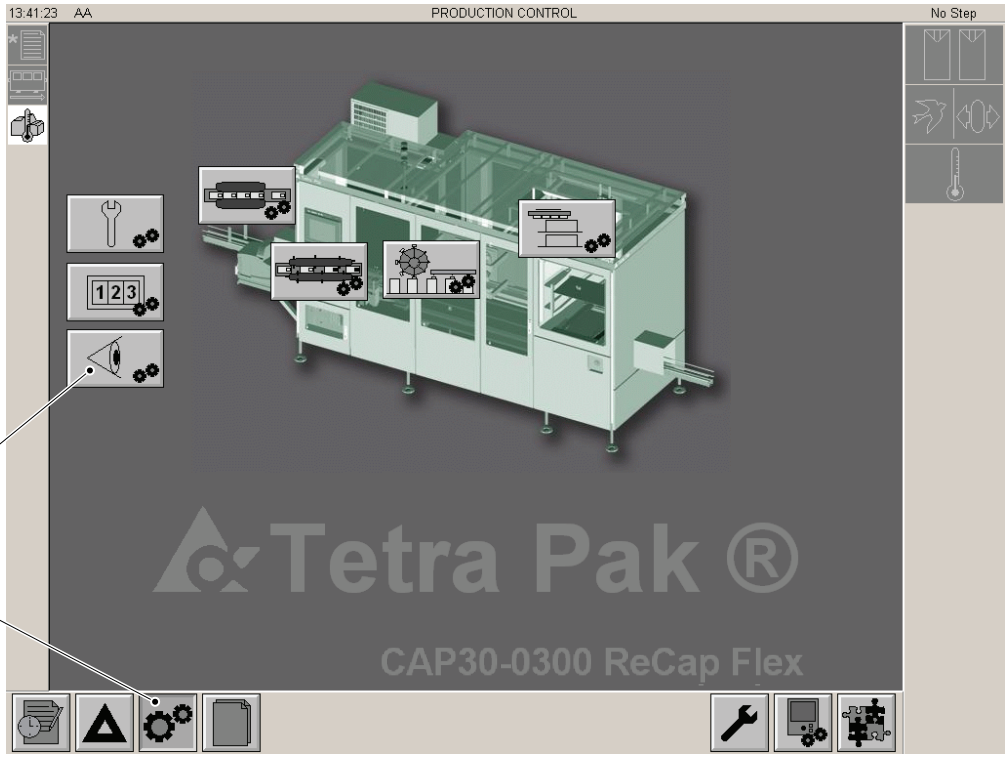

1 SETTING button
2 OVERVIEW button

(Cont'd)

(Cont'd)

c) On the OVERVIEW window (3) touch the VIRTUAL MASTER AXIS ACTUAL POSITION window (4) and read the value in the ANGLE VALUE window (5). This value is the theoretical virtual axis value of the machine to which all motors are aligned. Note this value for use in step h).

d) Touch the EXIT button (6).

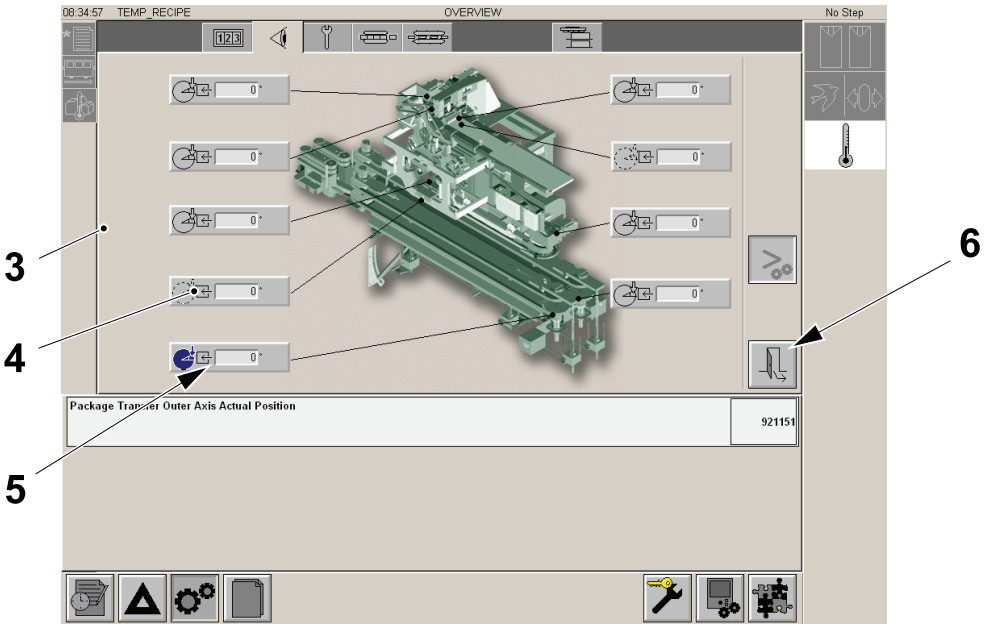

3 Overview window
4 Virtual master axis actual position window
5 Angle value window
6 Exit button

(Cont'd)

(Cont'd)

e) Step up the machine to STEP 2.

f) Touch the MAINTENANCE button (7) and then the SERVICE button (8).

Note! Items like the positioning system only appear on the screen below when installed.

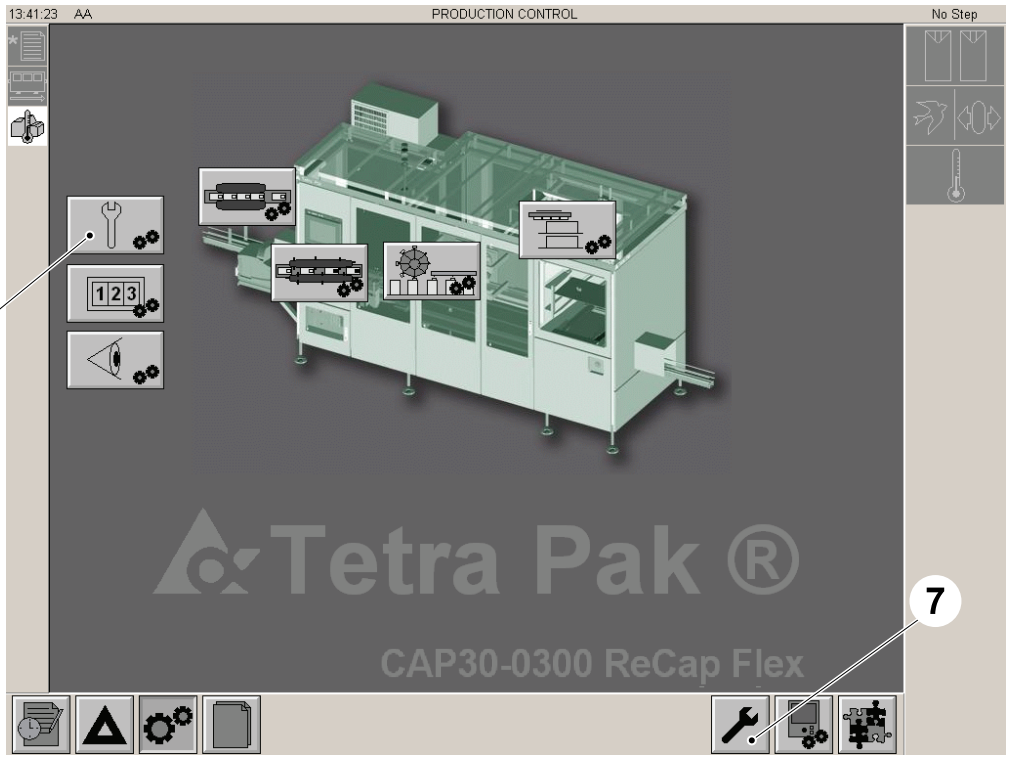

7 MAINTENANCE button
8 SERVICE button

(Cont'd)

(Cont'd)

Note! The INCHING window (9) allows the package positioner to be inched in increments of approximately 0.4 mm.

Note! Do not try to inch to the zero position in one go. It is better to repeat steps i) to m) until the zero position is obtained.

Note! The angle value displayed in the window (10) is the value to be changed to move the package positioner to the zero position.

g) Touch the INCHING button (11) to display the INCHING window (9).

h) From the value measured in the 2.3.4.1-4 Coarse Setting Outer Package Positioner Zero step , calculate the value to be entered in the INCHING button (11) to move the package positioner nearer to the zero position.

i) Touch the SETTING button (12) to modify the value in the window (10).

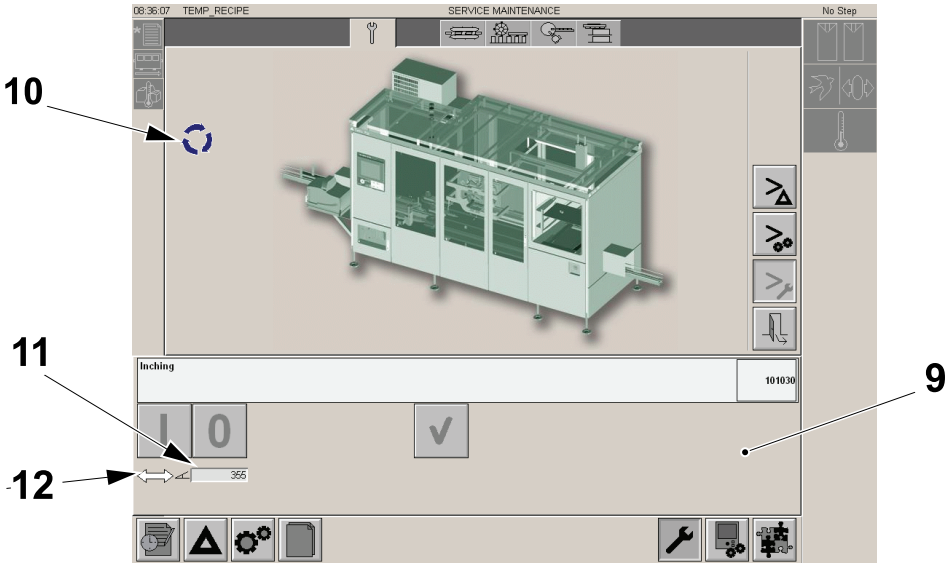

9 Inching window
10 Window
11 INCHING button
12 SETTING button

(Cont'd)

(Cont'd)

The value should be increased to inch the package positioner with a conversion factor of 1° to 0.4 mm.

j) Using the UP AND DOWN buttons (13) set the number in the DEGREES window (14) to indicate the desired value.Touch the OK button (15).

k) Touch the ON button (16).

l) Touch the OK button (17) for at least three seconds. The background of the OK button (15) will go green and the package positioner will inch to the new position.

m) Touch the EXIT button (18) to leave.

n) Repeat the procedure from step of the 2.3.4.1-4 Coarse Setting Outer Package Positioner Zero to step m) above until the working surface (19) of the belt tooth (20) is aligned with the line (21) on the paper. When it is, save the outer package positioner zero position in the memory, see 2.3.4.1-6 Memorizing the Outer Package Positioner Zero Position.

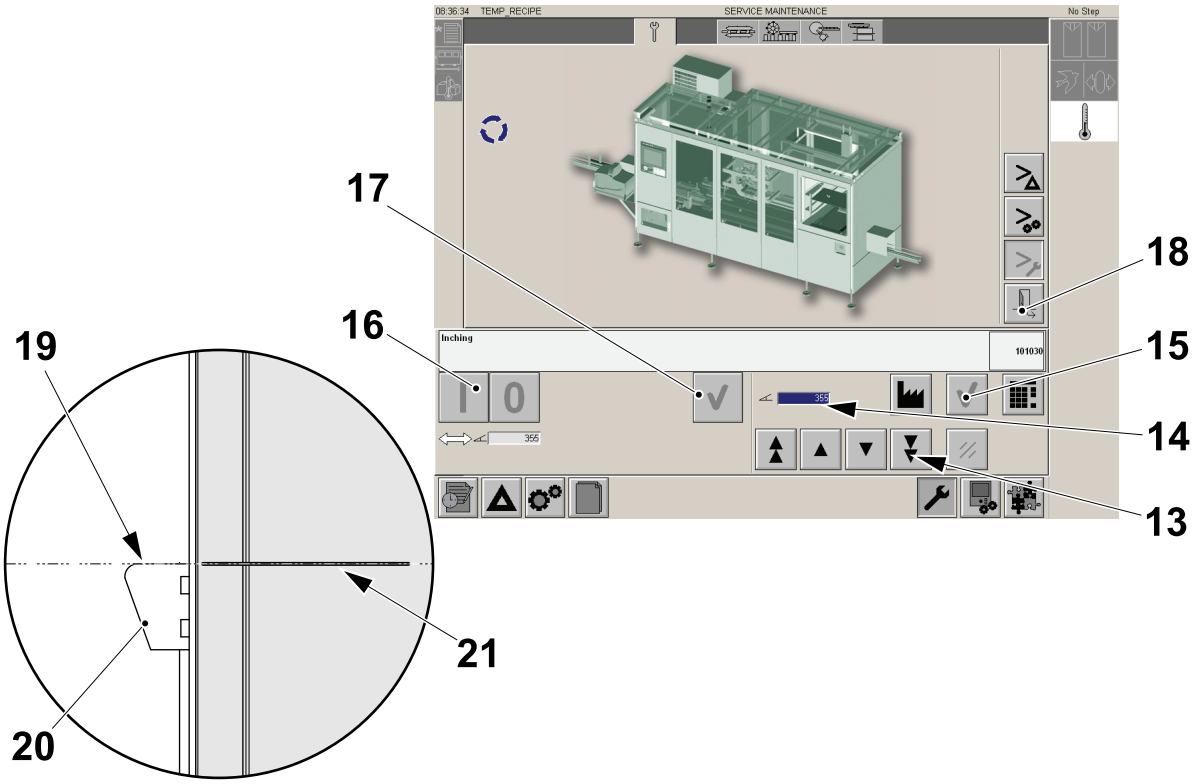

13 UP AND DOWN buttons	18 EXIT button
14 Degrees window	19 Working surface
15 OK button	20 Tooth
16 ON button	21 Line
17 OK button	

2.3.4.1-6 Memorizing the Outer Package Positioner Zero Position

Machine Status	Electrical supply disconnecting device in position I (ON) Main air valve ON
SPC Reference	662901-0300

This procedure stores to memory the zero position of the Outer Package Positioner that has been located with the 2.3.4.1-4 Coarse Setting Outer Package Positioner Zero and the 2.3.4.1-5 Fine Setting Outer Package Positioner Zero procedures.

Note! On completion of this procedure, the package positioner will remain at the zero position until the machine is stepped up. When the machine is stepped up to STEP 2 or higher the package positioner will move to an offset position determined by the values entered for the Y-axis package dimension and Y-axis cap position, see 2.3.3.1-9 Set - Package Length Y and 2.3.3.1-7 Set - Cap Position Y Direction.

Note! Make sure the machine is at STEP 0.

a) Touch the SYSTEM SETUP BUTTON (1) to enter your login, see 1.1.1-1 HMI User Management - Log On as a User.

b) Touch the MAINTENANCE button (2).

c) Touch the PACKAGE POSITIONER button (3).

Note! Items like the positioning system only appear on the screen below when installed.

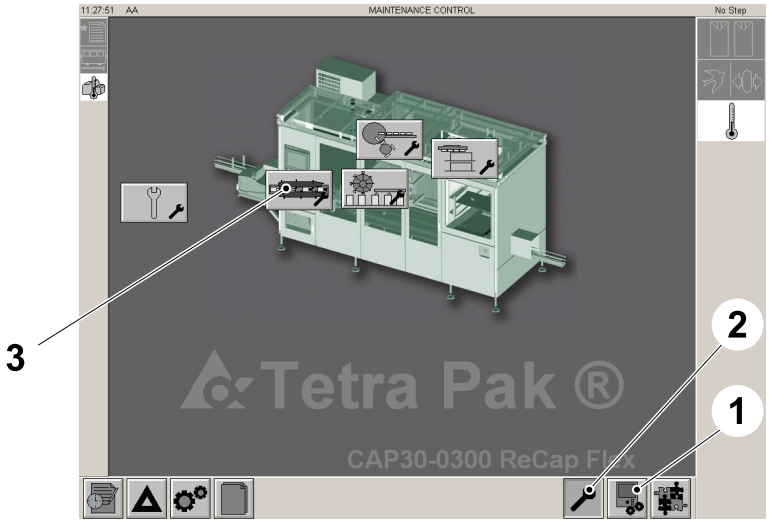

1 SYSTEM SETUP button
2 MAINTENANCE button
3 PACKAGE POSITIONER button

(Cont'd)

(Cont'd)

d) Touch the ZERO button (4) for the outer package positioner.

e) Touch the ON button (5).

f) Touch the OK button (6) for at least three seconds. The background of the ON button (5) will go green and the zero value for inner package positioner will be stored to memory.

g) Touch the EXIT button (7).

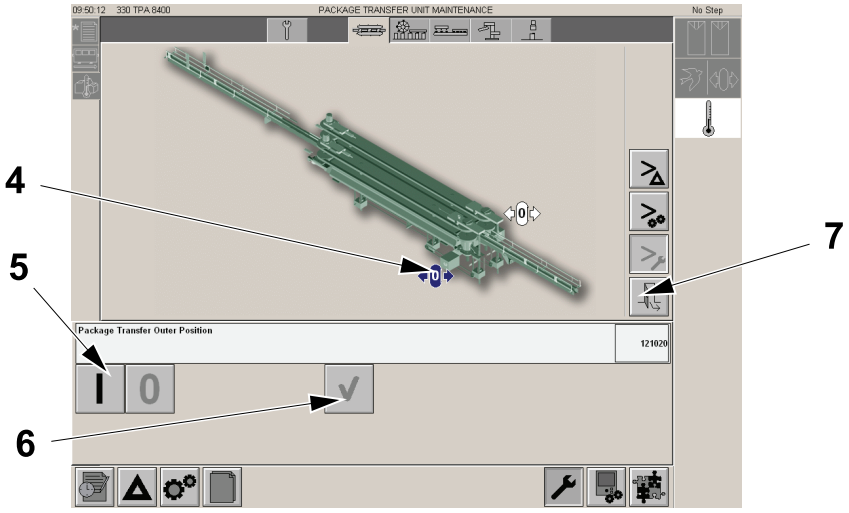

4 ZERO button
5 ON button
6 OK button
7 EXIT button

2.3.5 Upper Package Positioner - Set

2.3.5-1 Upper Left Package Positioner - Set Height

Machine Status	Electrical supply disconnecting device in position O (OFF) Main air valve OFF
SPC Reference	662901-0300

a) Turn the lock (1).

b) Turn the handle (2) to set the distance **A** from the inside of the top of the belt unit (3) to the top of the lower belt unit (4).

c) Turn the lock (1) to lock the shaft.

Package	**A** ±1 (mm) Theoretical	**A** ±1 (mm) Actual
TBA 500 Sq	61	
TBA 1000 B	68.5	
TBA 1000 S	100	
TBA 1000 Sq	95	
TBA 1500 S	141	
TBA 2000 S	141	

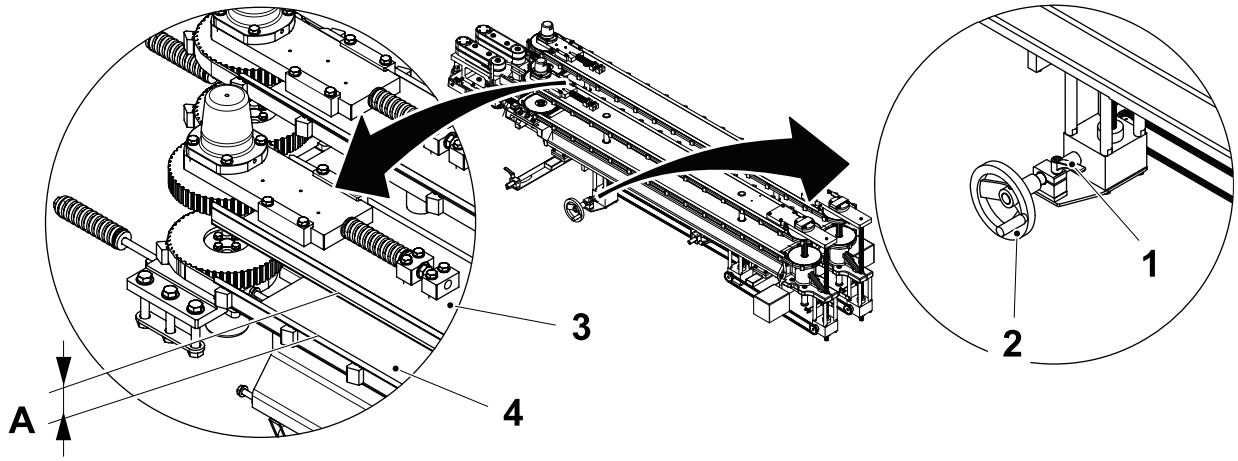

1 Lock
2 Handle
3 Belt unit
4 Belt unit

2.3.5-2 Upper Right Package Positioner - Set Height

Machine Status	Electrical supply disconnecting device in position O (OFF) Main air valve OFF
SPC Reference	662901-0300

a) Turn the lock (1).

b) Turn thehandle (2) to set the distance **A** from the inside of the top of the belt unit (3) to the top of the lower belt unit (4).

c) Turn the lock (1) to lock the shaft.

Package	**A** ±1 (mm) Theoretical	**A** ±1 (mm) Actual
TBA 500 Sq	61	
TBA 1000 B	68.5	
TBA 1000 S	100	
TBA 1000 Sq	95	
TBA 1500 S	141	
TBA 2000 S	141	

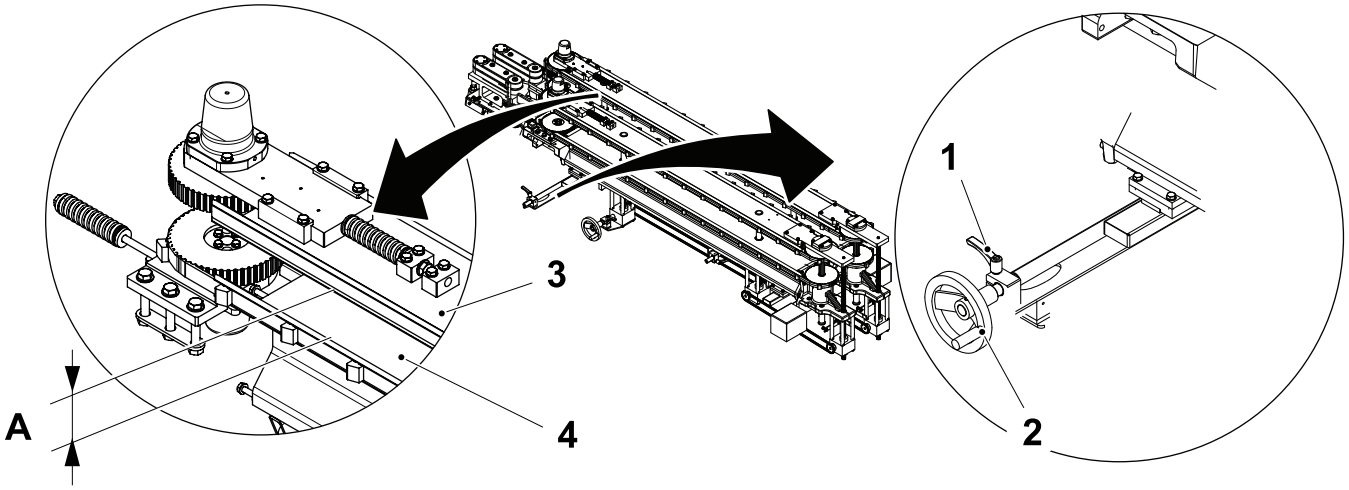

1 Lock
2 Handle
3 Belt unit
4 Belt unit

2.3.5-3 Upper Inner Package Positioner - Set X Direction

Machine Status	Electrical supply disconnecting device in position I (ON) Main air valve ON
Special Equipment	Template 3044285-0000
SPC Reference	2838653-0200

a) Pull the knob (1) out.

b) Set the lever (2) to the Zero position on the scale (3).

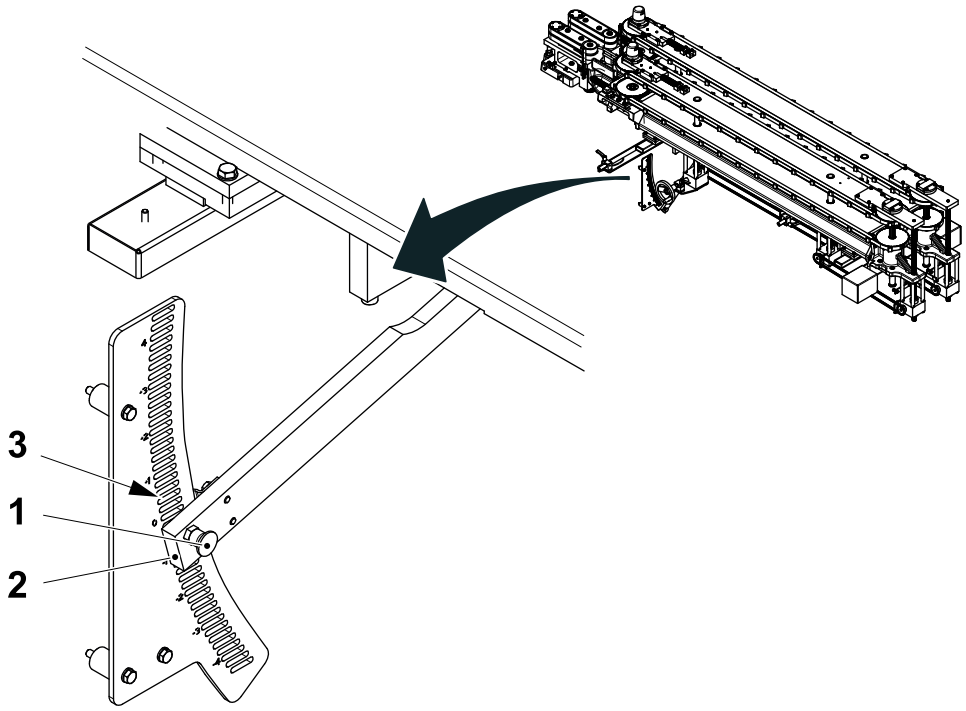

1 Knob
2 Lever
3 Scale

(Cont'd)

(Cont'd)

c) Release the four screws (4) .

d) Insert the two templates (5) (one at each end) into the hole (6) .

e) With the inner package transfer (7) pushed up against the templates (5) tighten the screws (4).

f) Remove the setting tools.

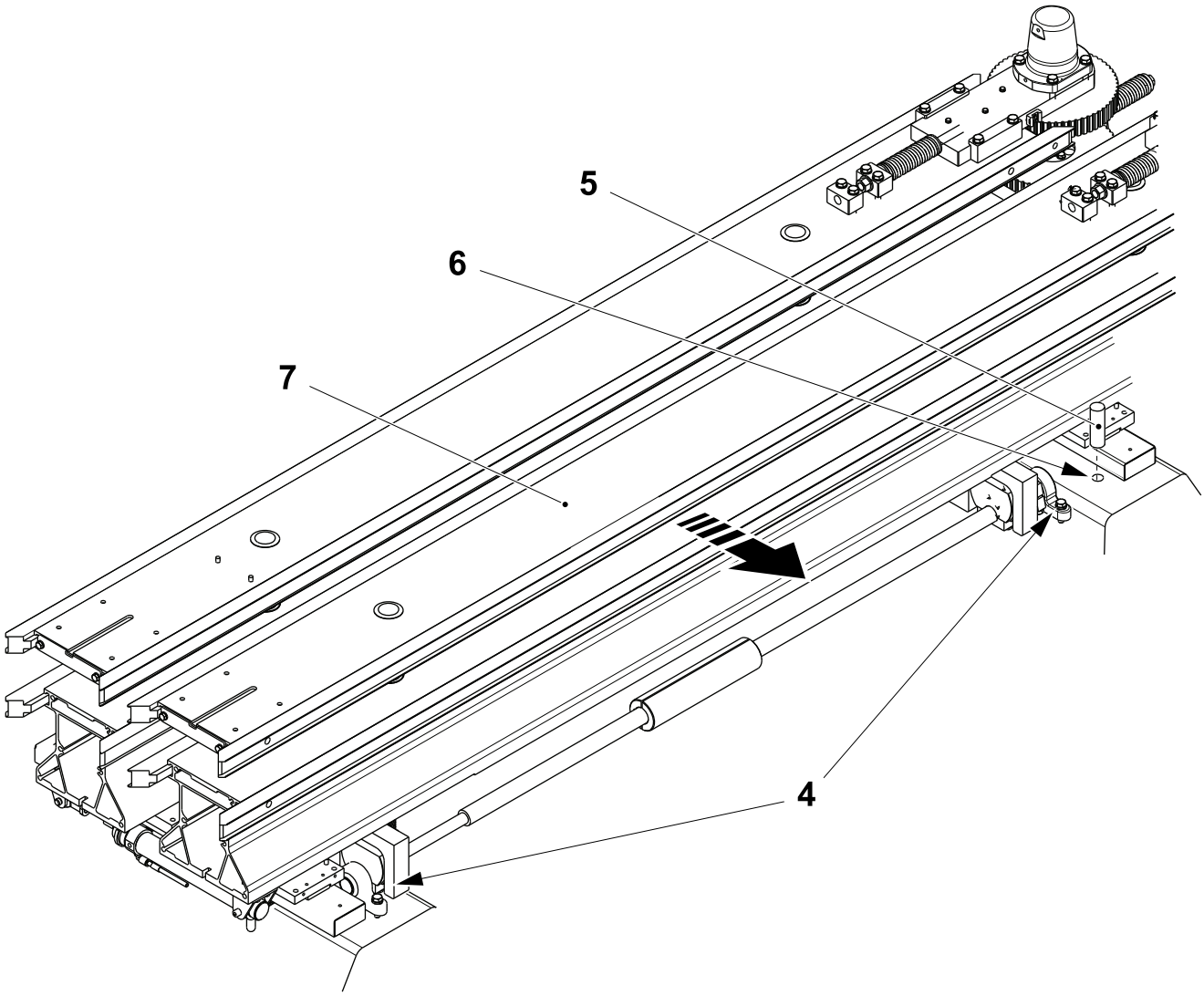

4 Screw
5 Template
6 Hole
7 Inner package transfer

2.4 Package Handling

2.4.1 Package Guides

2.4.1-1 Outfeed Package Guides - Set

Machine Status	Electrical supply disconnecting device in position O (OFF) Main air valve OFF
SPC Reference	3199892-0100 3199893-0100

a) Loosen the screws (1) and move the plate (2) until the plate (3) is distance A from the conveyor top (4). Tighten the screws (1).

b) Loosen the screws (5) and move the plate (3) until it is the distance B behind the belt (6).

c) Make sure that the package congestion outfeed sensors (7) work properly.

A = 2mm
B = 2mm

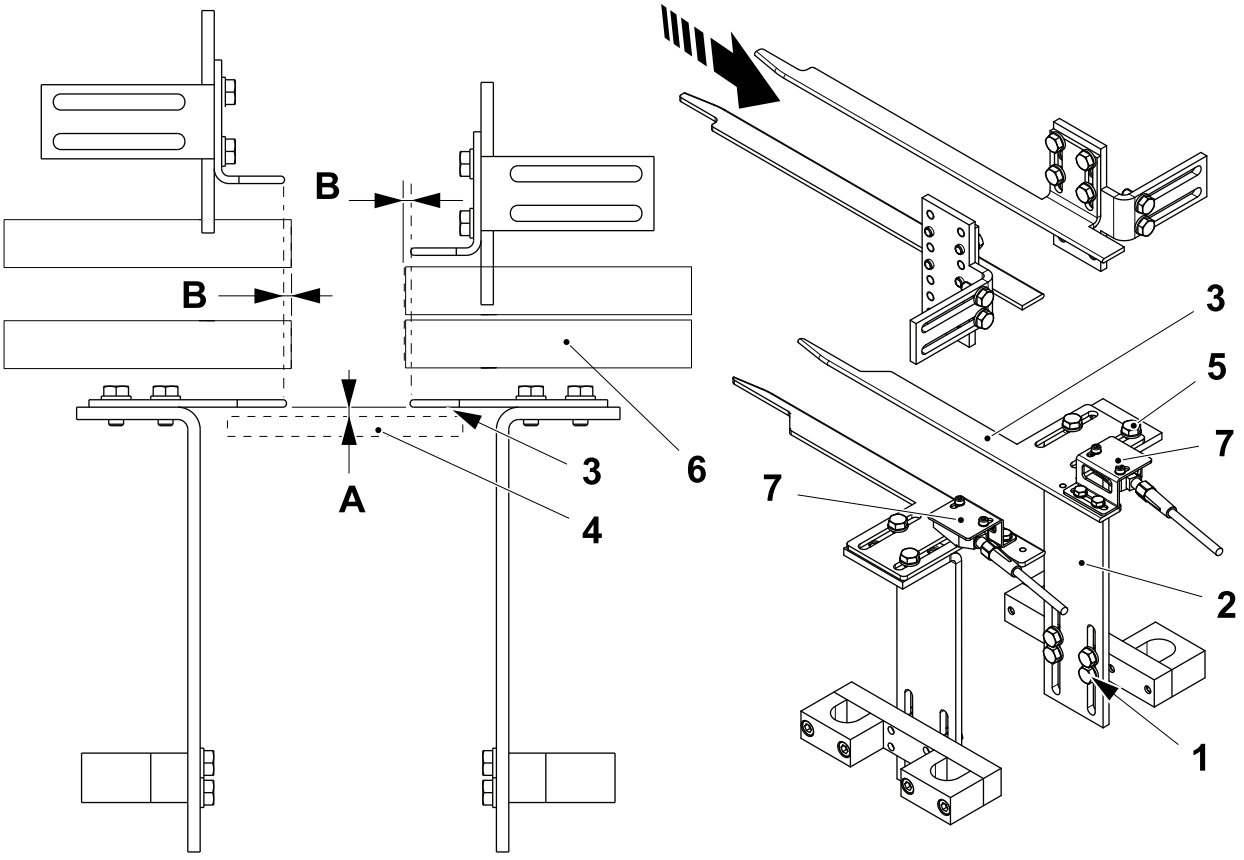

1 Screw
2 Plate
3 Plate
4 Conveyor top
5 Screw
6 Belt
7 Package congestion outfeed sensor

(Cont'd)

(Cont'd)

d) Loosen the screws (8) and move the bracket (9) until the plate (10) is the distance B behind the belt (6) . Tighten the.belt (6) .

e) Loosen the screws (8) and move the screws (11) and move the plate (10) until it is the distance C from the top of wheel (12). Tighten the screws (11) .

f) Repeat steps a) and e).

B = 2mm
C = 15mm

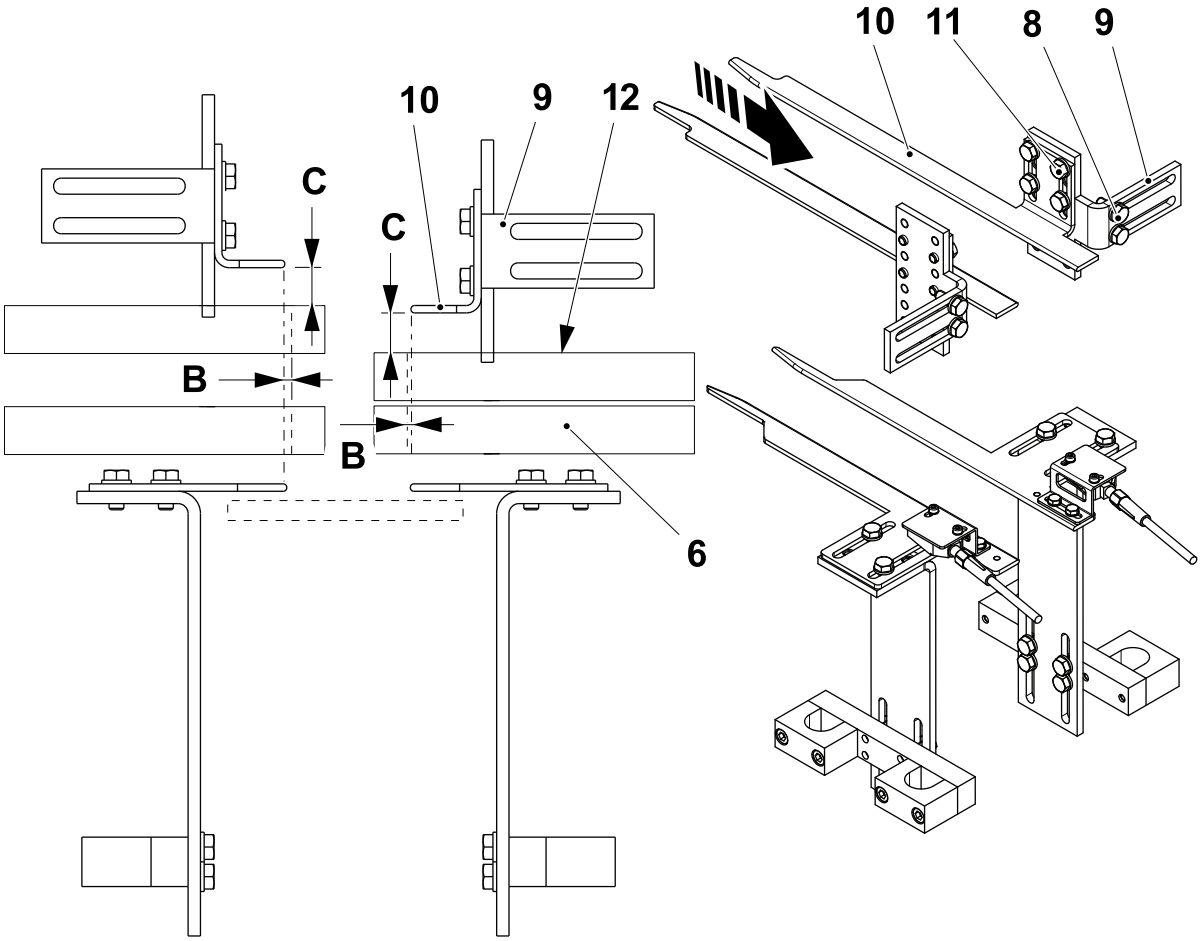

6 Belt
8 Screw
9 Bracket
10 Plate
11 Screw
12 Top of wheel

This page intentionally left blank

3 Push Down

Push Down - Description

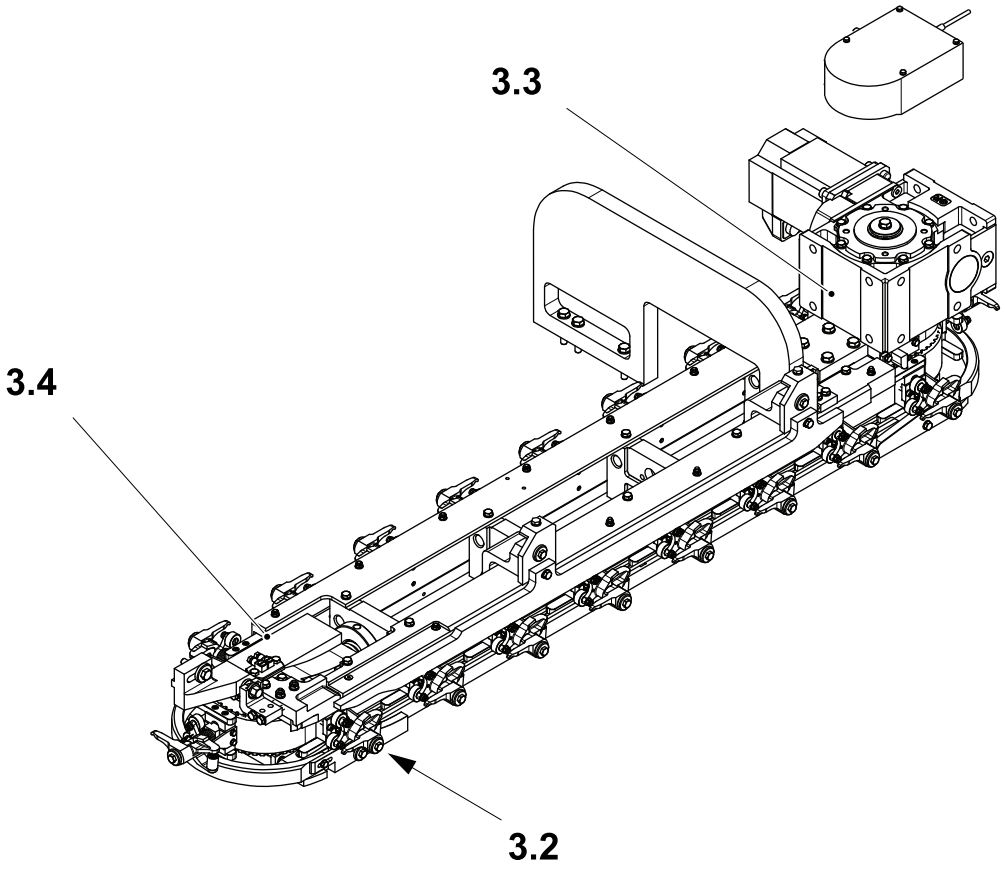

3.2 Push Down

3.3 Drive

3.4 Belt Stretcher

Push Down - Description 3-2

3.1 Functional Description 3-5

3.2 Push Down 3-6

3.2.1 Set X, Y, Z and Zero 3-6

3.2.1-1 Set Y Cam (Recap Machines) 3-6

3.2.1-2 Set Z Cam (ReCap Machines) 3-8

3.2.1-3 Set X Cam 3-9

3.2.1-4 Set Zero 3-11

3.2.2 Cap Holder 3-14

3.2.2-1 Pressure Finger - Check Bushings and Rollers 3-14

3.2.2-2 Pressure Finger - Change Bushings and Rollers 3-15

3.3 Drive 3-17

3.3.1 Drive - Check 3-17

3.3.1-1 Timing Belt - Check 3-17

3.3.1-2 Timing Belt - Change 3-18

3.3.1-3 Timing Belt - Change Guides 3-23

3.3.1-4 Drive Unit - Change Motor 3-25

3.4 Belt Stretcher 3-28

3.4.1 Belt Stretcher - Change 3-28

3.4.1-1 Belt Stretcher - Change Bearings 3-28

3.4.1-2 Belt Stretcher - Set Belt Tension 3-30

This page intentionally left blank

3.1 Functional Description

The push down, located below the applicator unit, applies pressure to the top of each cap as it is applied to the top of a package and maintains that pressure until the package reaches the end of the package positioner.

To perform this action the cap holder (1), spaced equally around a moving belt, are moved into the holding position as they pass beneath the cam (2) and allowed to drop back into the free position at the end of the cam (2).

The belt is kept at the correct tension by the belt stretcher (3) and moved by the drive unit (4).

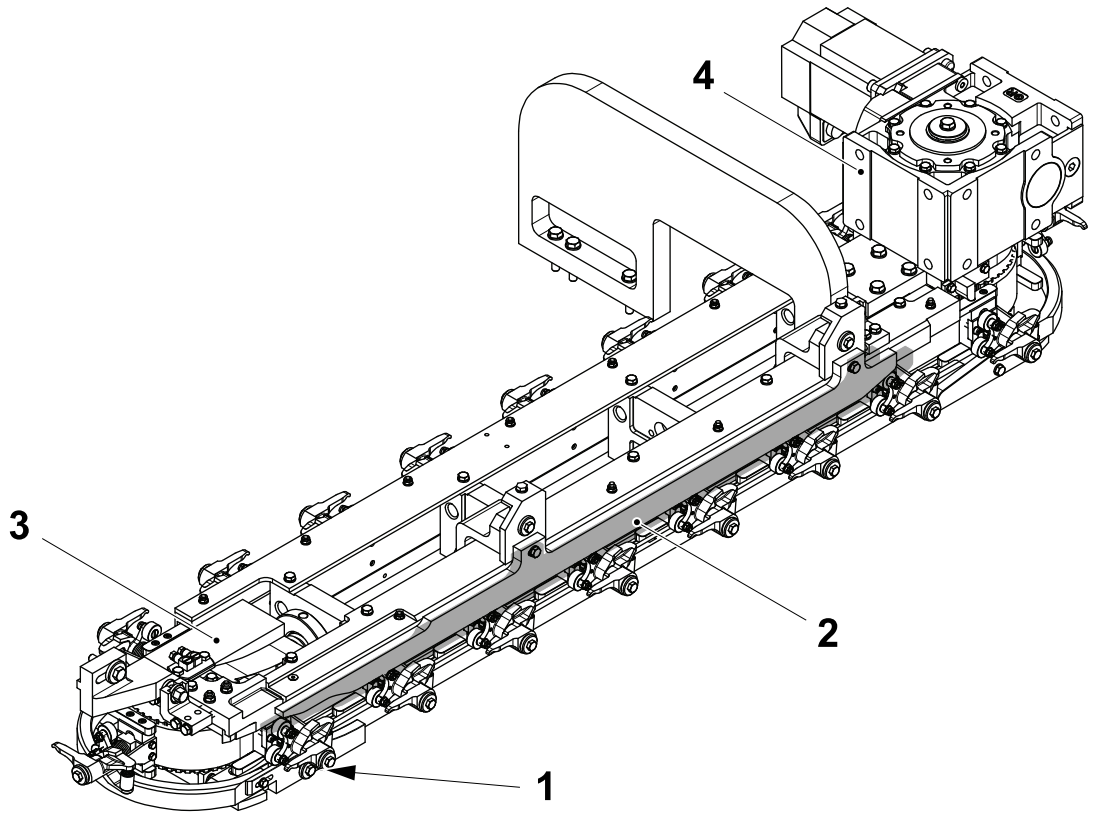

1 Cap holder
2 Cam
3 Belt stretcher
4 Drive unit

3.2 Push Down

3.2.1 Set X, Y, Z and Zero

3.2.1-1 Set Y Cam (Recap Machines)

Machine Status	Electrical supply disconnecting device in position O (OFF) Main air valve OFF
SPC Reference	662902-0200

a) Inch the machine to 350 degrees and check that the pushdown (1) in the cap holder is at its reference mark (2) on the cam (3).

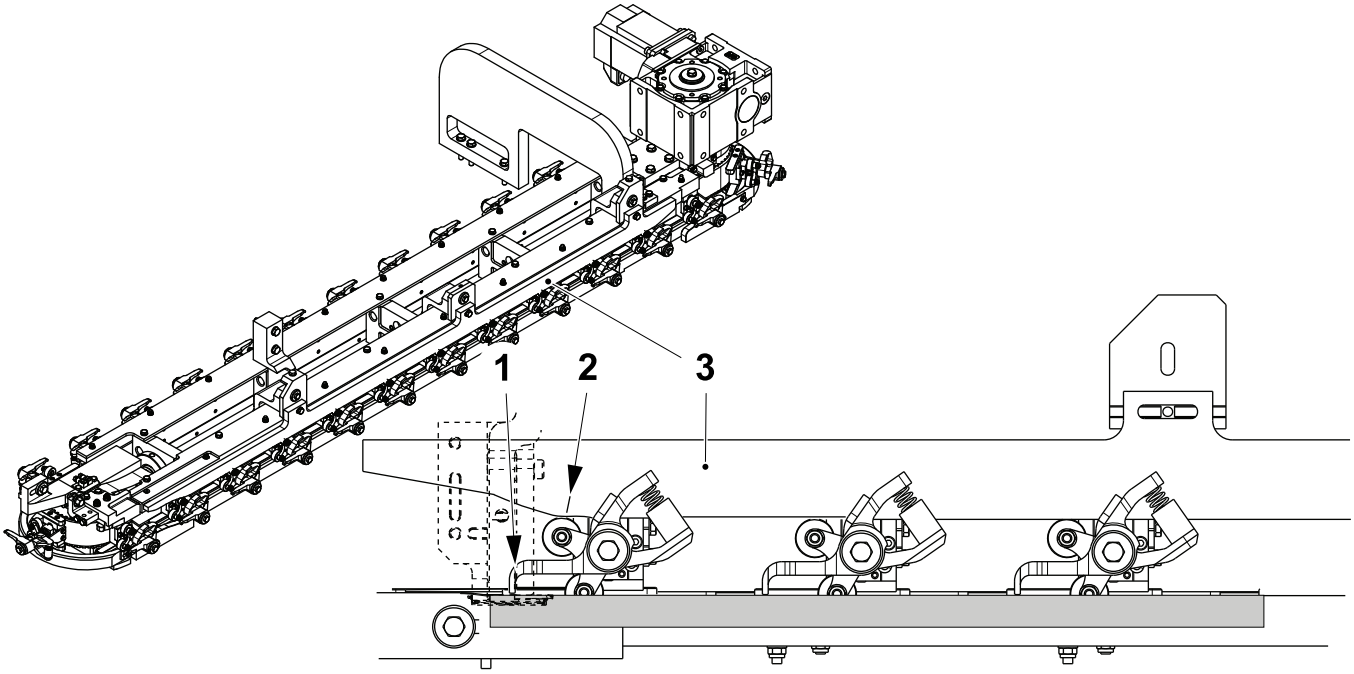

1 Pushdown
2 Reference mark
3 Cam

(Cont'd)

(Cont'd)

b) Place a straight edge (4) under the pushdown (5), release the screws (6) and move the cam (3) until the pushdown (1) in the cap holder starts to touch the straight edge (4). Tighten the screws (6).

Note! Removing the cap holder (7) will help during this setting.

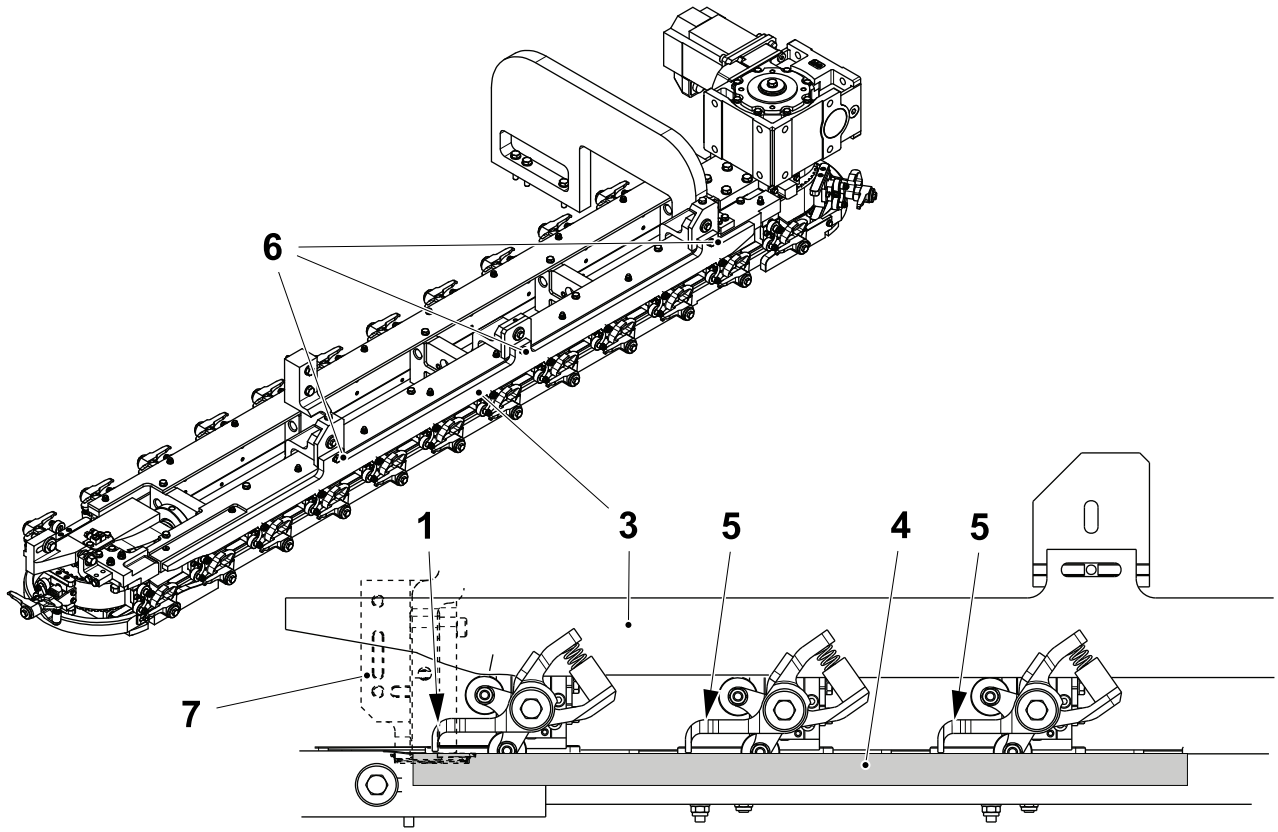

1 Pushdown
3 Cam
4 Straight edge
5 Pushdown
6 Screw
7 Cap holder

3.2.1-2 Set Z Cam (ReCap Machines)

Machine Status	Electrical supply disconnecting device in position O (OFF) Main air valve OFF
SPC Reference	662902-0200

CAUTION
Application pressure
Do not set the pushdown pressure here, see 4.2.1-1 Conveyor Support - Set Height.

Note! This adjustment is for the pushdown fingers to the applicator only.

a) Inch the machine to 350 degrees and check that the bottom of the cap holder puller (1) is the distance **A** from the bottom of the pushdown height (2).

b) Release the screws (3) and turn the screws (4) to raise or lower the height of the pushdown height (2).

Note! Keep the distance **B** equal at both ends of the pushdown.

A = 1.5mm

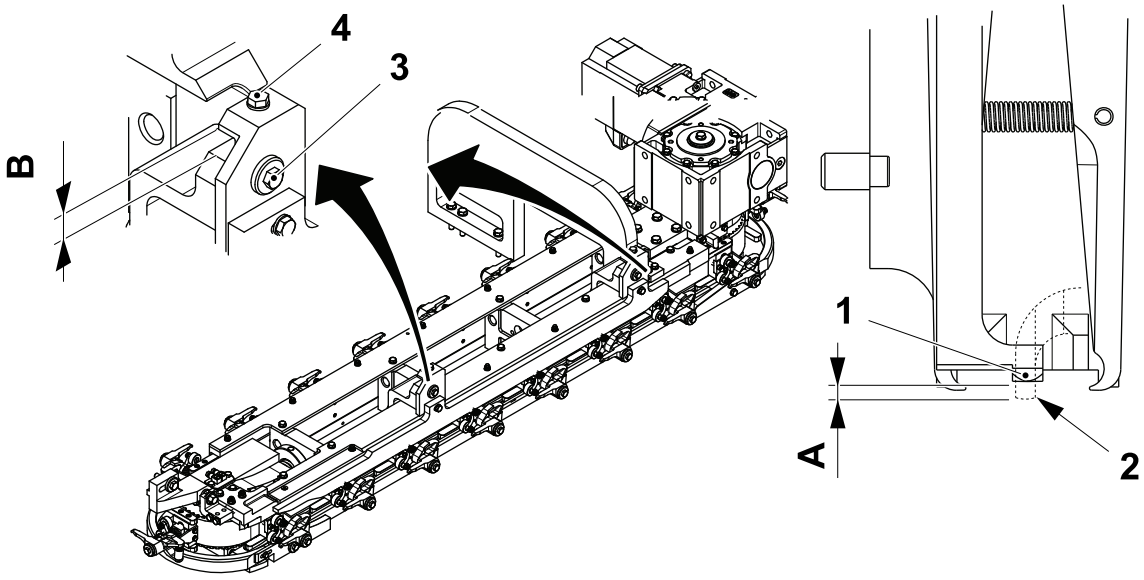

1 Cap holder puller
2 Pushdown height
3 Screw
4 Screw

3.2.1-3 Set X Cam

Machine Status	Electrical supply disconnecting device in position O (OFF) Main air valve OFF
SPC Reference	662902-0200

a) Release the screws (1).

Note! Verify that the push down is in the middle of the cap. If not adjust the distance A, see next page.

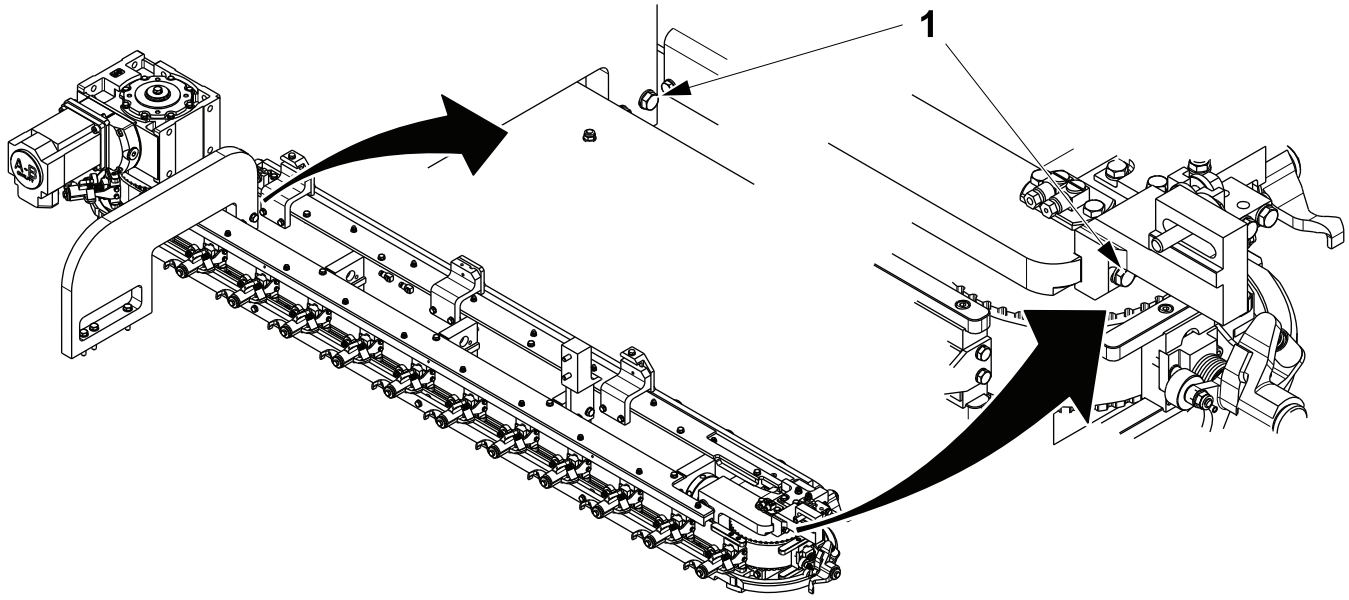

1 Screw

(Cont'd)

(Cont'd)

b) Turn the two screws (2) to move the pushdown (3) and set the distance A so that the pushdown is centred on the cap. Tighten the screws (1).

c) Check that the distance B is equal between the cam (4) and the belt (5) at both ends.

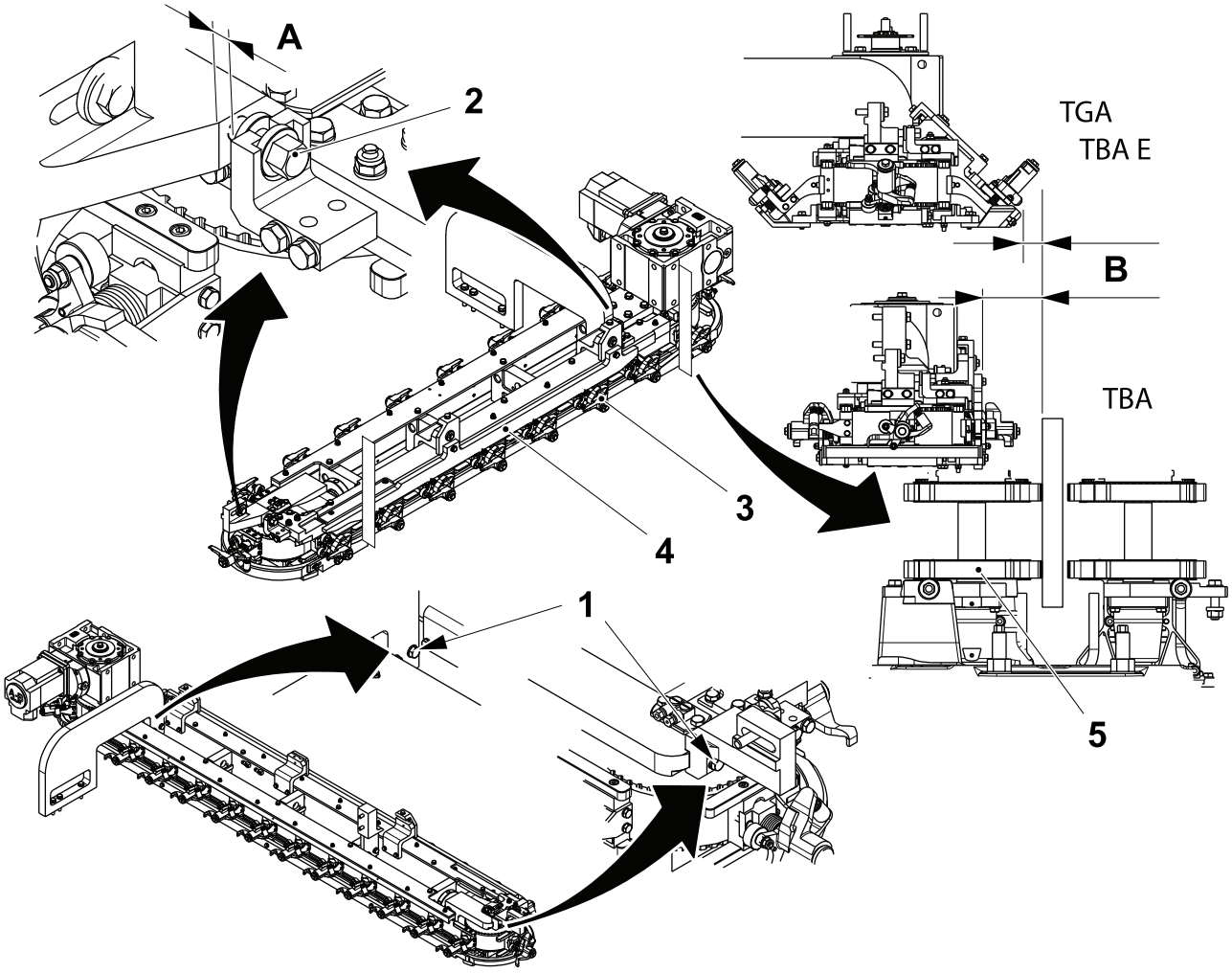

1 Screw
2 Screw
3 Pushdown
4 Cam
5 Belt

3.2.1-4 Set Zero

Machine Status	Electrical supply disconnecting device in position O (OFF) Main air valve OFF
SPC Reference	662902-0200

a) Using a straight edge (1), align the leading edge of a pushdown holder (2) with the front surface of the zero tool (3).

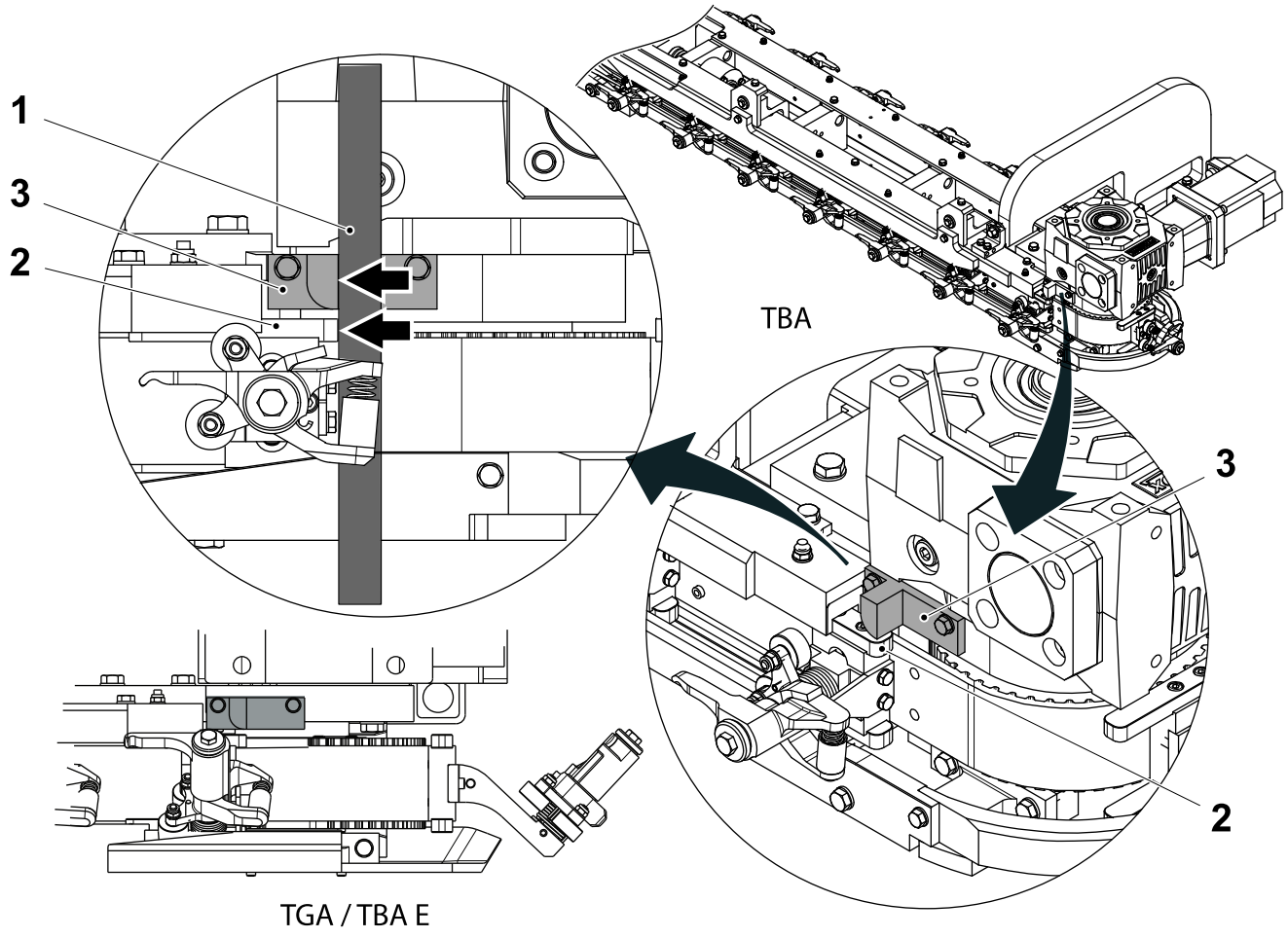

1 Straight edge
2 Pushdown holder
3 Zero tool

(Cont'd)

(Cont'd)

b) Turn the main power on.

c) Touch the SYSTEM SETUP button (4) and login see, 1.1.1-1 HMI User Management - Log On as a User.

d) Touch the MAINTENANCE button (5).

e) Touch the APPLICATOR UNIT button (6).

Note! Items like the positioning system only appear on the screen below when installed.

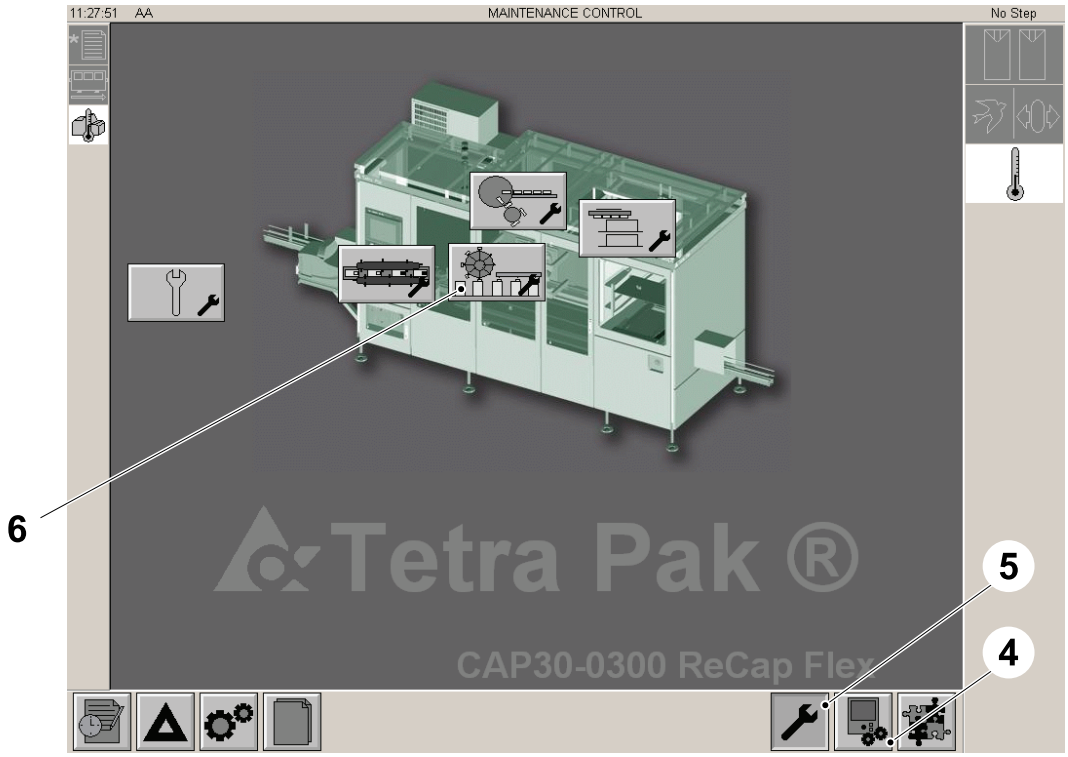

4 System setup button
5 Maintenance button
6 Applicator unit button

(Cont'd)

(Cont'd)

f) Touch the ZERO button (7).

g) Touch the ON button (8).

h) Touch the OK button (9) for three seconds. The background of the ON button (8) should go green.

i) Touch the EXIT button (10).

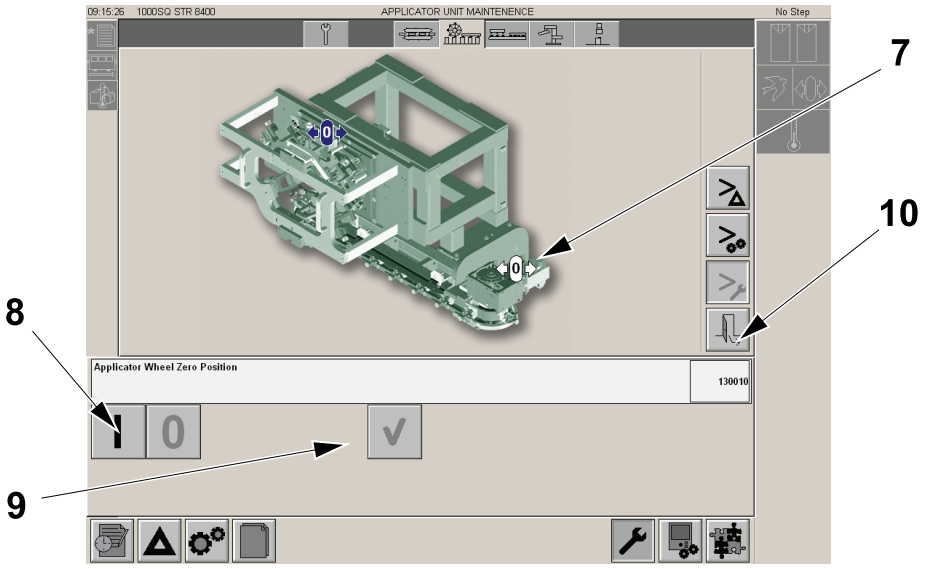

7 Zero button
8 ON button
9 OK button
10 Exit button

3.2.2 Cap Holder

3.2.2-1 Pressure Finger - Check Bushings and Rollers

Machine Status	Electrical supply disconnecting device in position O (OFF)
SPC Reference	2751667-0200

WARNING
Risk of burns.
Nearby components may be hot.

a) Check the bushing (1) and the roller (2) of the cap holder for signs of wear or damage, see 3.2.2-2 Pressure Finger - Change Bushings and Rollers.

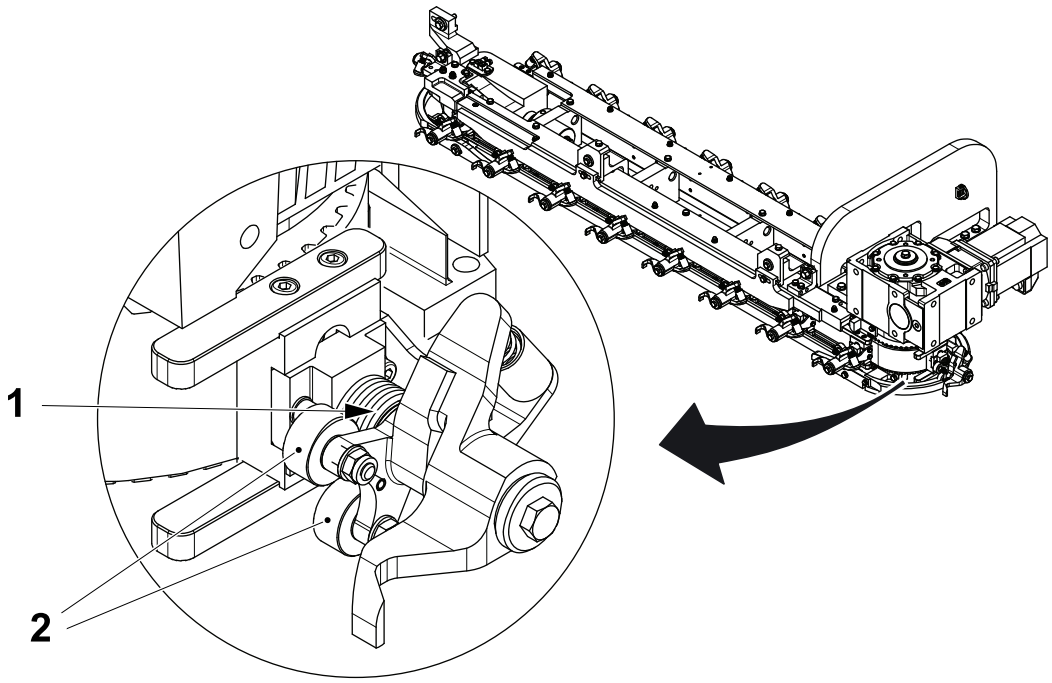

1 Bushing
2 Roller

3.2.2-2 Pressure Finger - Change Bushings and Rollers

Machine Status	Electrical supply disconnecting device in position O (OFF)
SPC Reference	2751667-0200

WARNING
Risk of burns.
Nearby components may be hot.

a) Remove the screw (1), the washer (2) and the arm (3), collecting the sleeve (4) and the spring (5).

b) Change the bushing (6).

c) Remove the arm (7), the bushing (8) and the bushing (9).

Note! The items arm (3), spring (5) and arm (7) and cap dependant, screwcap shown.

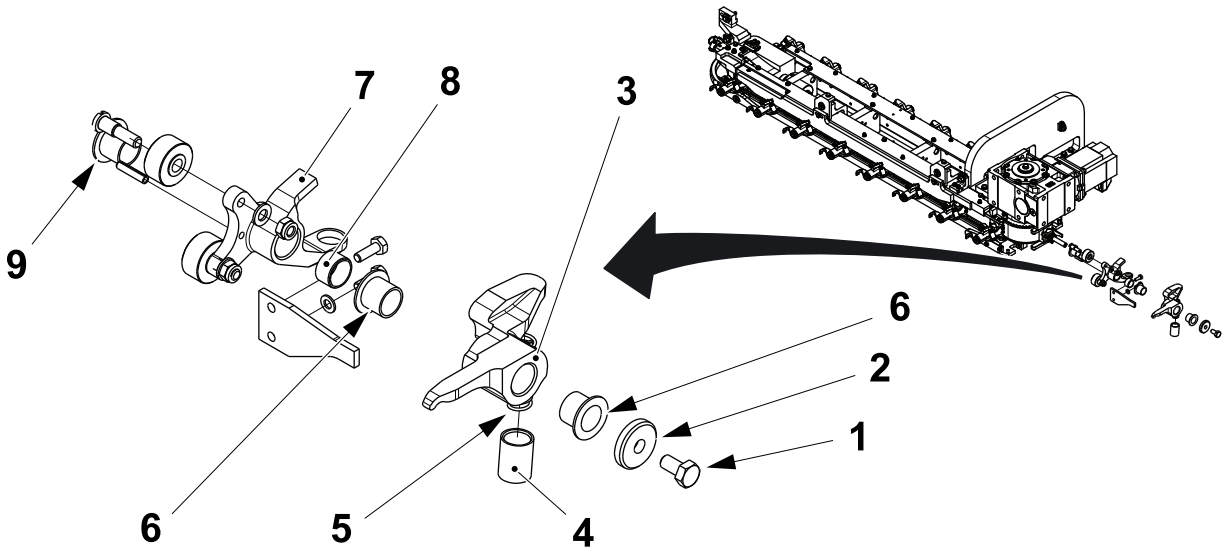

1 Screw
2 Washer
3 Arm
4 Sleeve
5 Spring
6 Bushing
7 Arm
8 Bushing
9 Bushing

(Cont'd)

(Cont'd)

WARNING
Risk of burns.
Nearby components may be hot.

d) Remove the nut (10), the washer (11), the shaft (12) and the rollers (13) .

e) Assemble in the reverse order.

f) Repeat the procedure for the other cap holders.

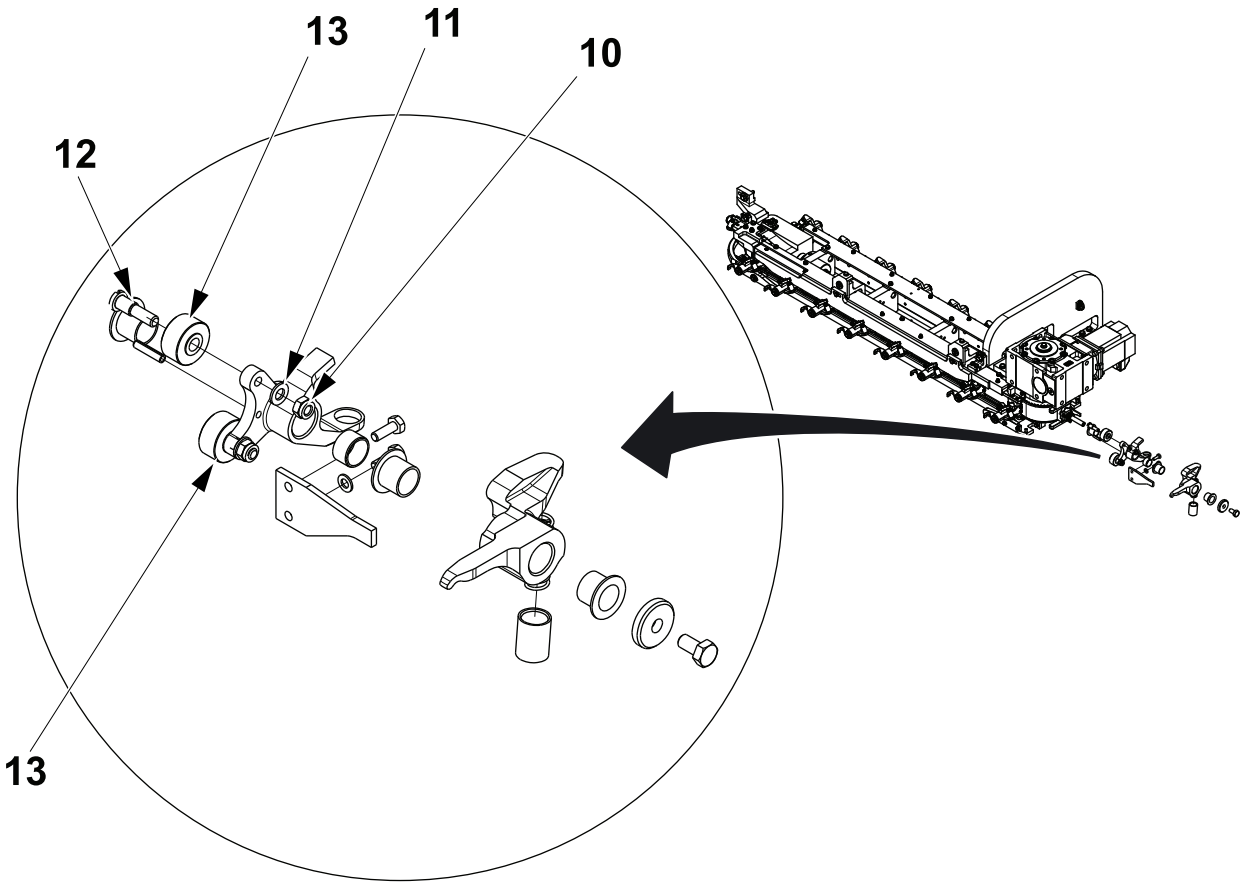

10 Nut
11 Washer
12 Shaft
13 Roller

3.3 Drive

3.3.1 Drive - Check

3.3.1-1 Timing Belt - Check

Machine Status	Electrical supply disconnecting device in position O (OFF)
SPC Reference	2802647-0200

WARNING

Risk of burns.

Nearby components may be hot.

a) Check the belt (1) for signs of wear or damage. If necessary, change the belt, see 3.3.1-2 Timing Belt - Change.

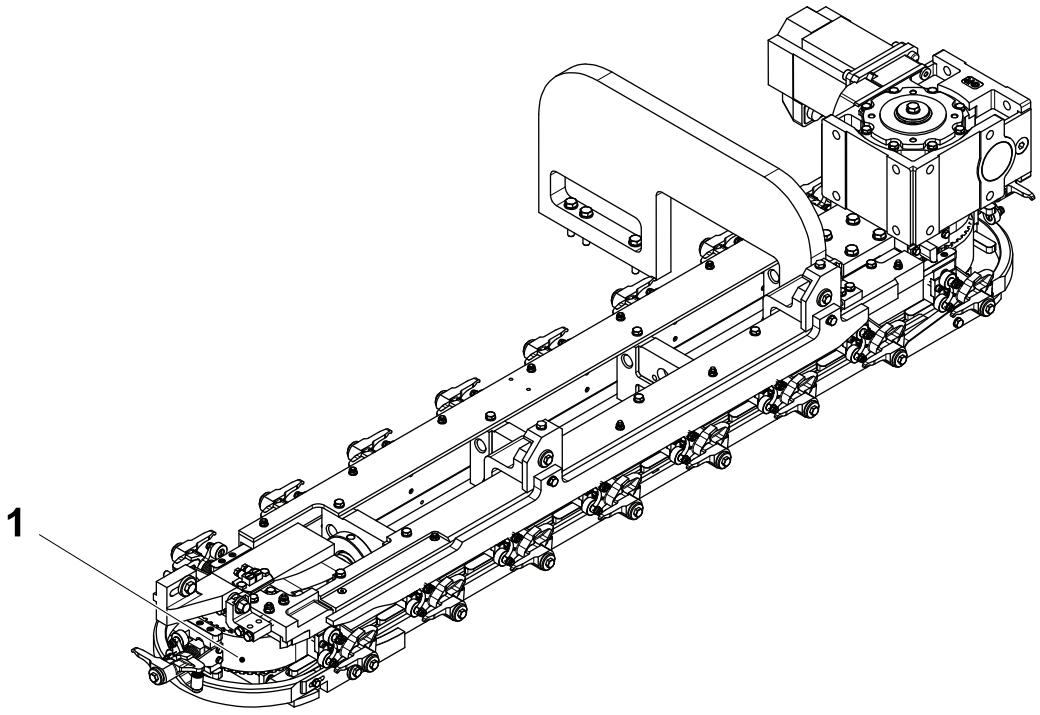

1 Belt

3.3.1-2 Timing Belt - Change

Machine Status	Electrical supply disconnecting device in position O (OFF) Main air valve OFF
SPC Reference	2802647-0200

WARNING

Risk of burns.

Nearby components may be hot.

Note! The oil pipes will require blanking with caps and plugs to prevent leakage.

a) Disconnect the oil pipe (1) at the position shown.

Note! Protect the surface of the package transfer with packaging material.

b) Disconnect the electrical connectors from the motor connector block (2).

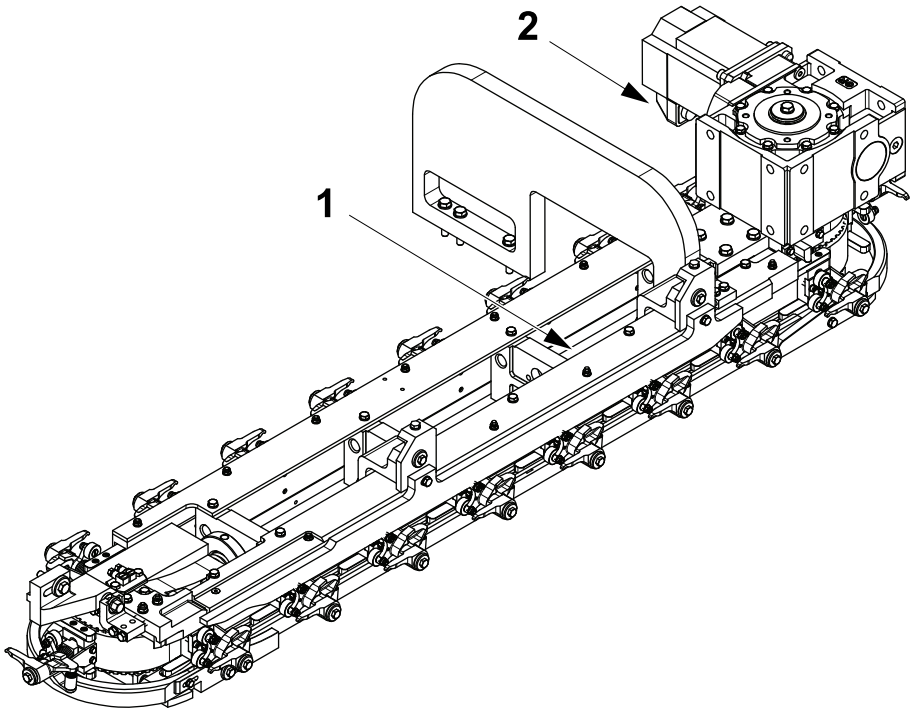

1 Oil pipe
2 Connector block

(Cont'd)

(Cont'd)

WARNING
Heavy Assembly
This assembly is heavy and requires two people to move it.

c) Remove the screw (3) and the screws (5).

d) Remove the pushdown (6) from below the cap applicator unit (7).

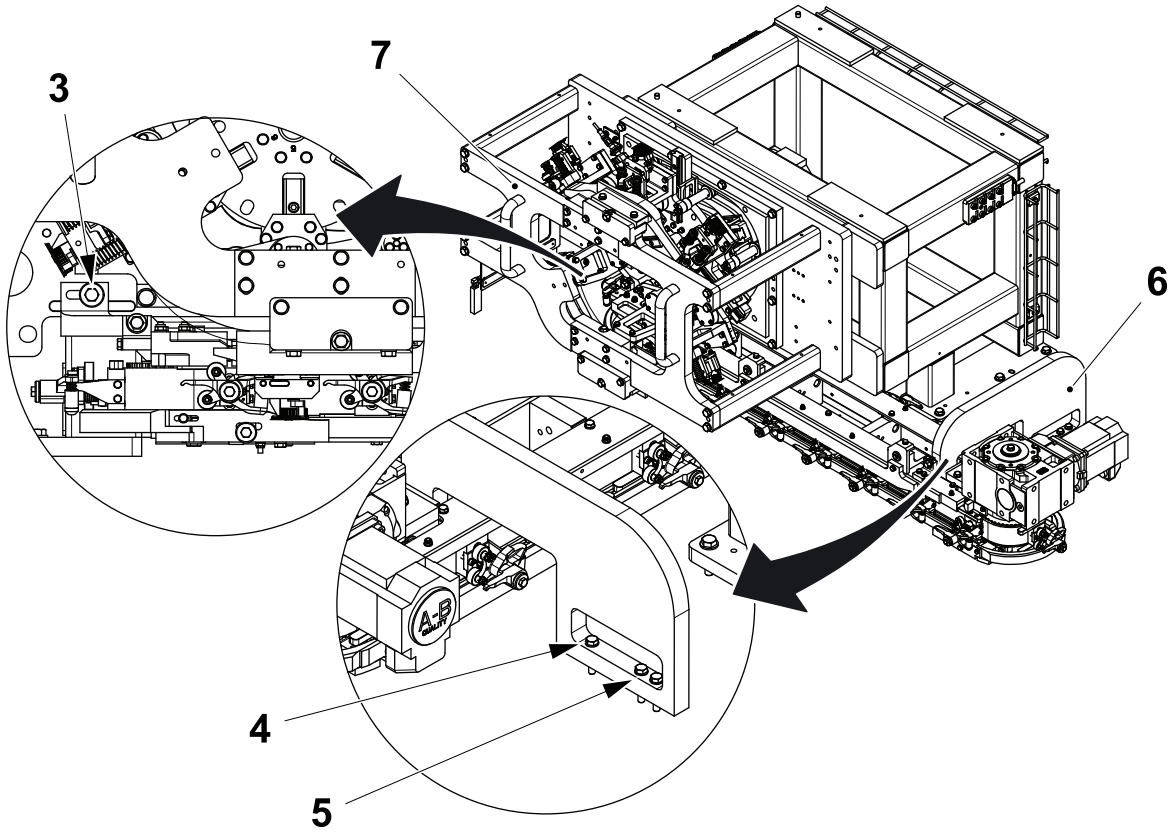

3 Screw
4 Screw
5 Screw
6 Pushdown
7 Cap applicator unit

(Cont'd)

(Cont'd)

Note! Do Not touch the nut (8) .

e) At the end of the pushdown, loosen the screw (9) and turn the flange (10) to reduce the tension applied by the belt stretcher (11).

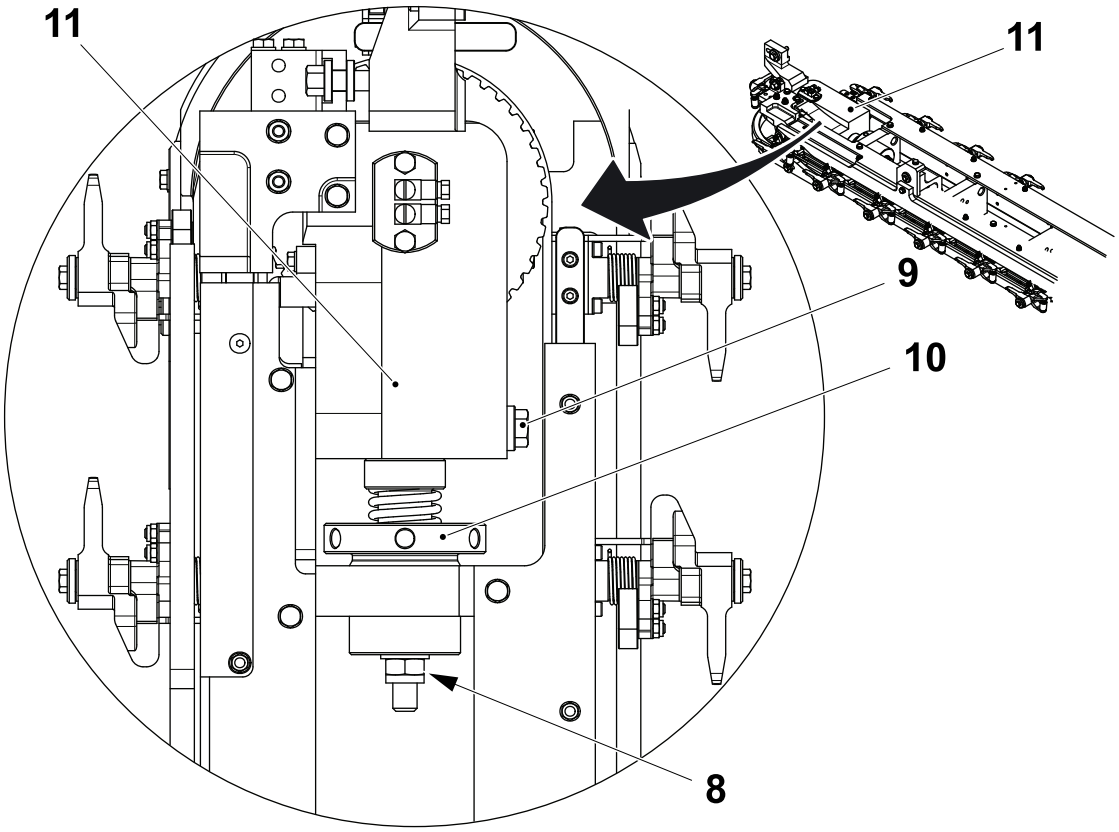

8 Nut
9 Screw
10 Flange
11 Belt stretcher

(Cont'd)

(Cont'd)

f) At the four corners of the unit, remove the screw (12) from the brackets (13).

g) Remove the row of screws (14), the row of screws (15) and separate the belt section (16) of the unit from the drive unit/frame section (17).

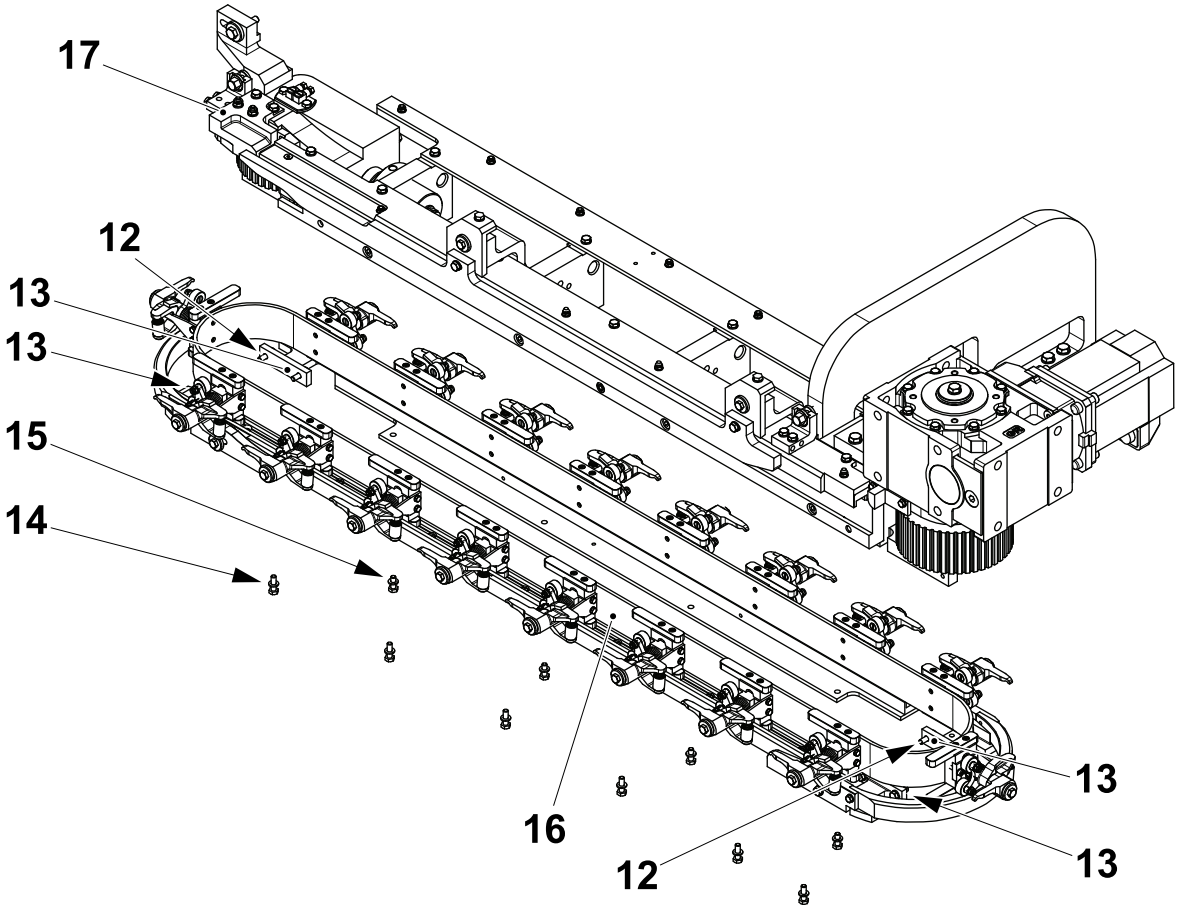

12 Screw
13 Bracket
14 Row of screws
15 Row of screws
16 Belt section
17 Drive unit/frame section

(Cont'd)

(Cont'd)

h) Remove the belt (18) from the guide section (19). Change the belt.

i) Assemble in the reverse order.

j) Set the belt tension see, 3.4.1-2 Belt Stretcher - Set Belt Tension.

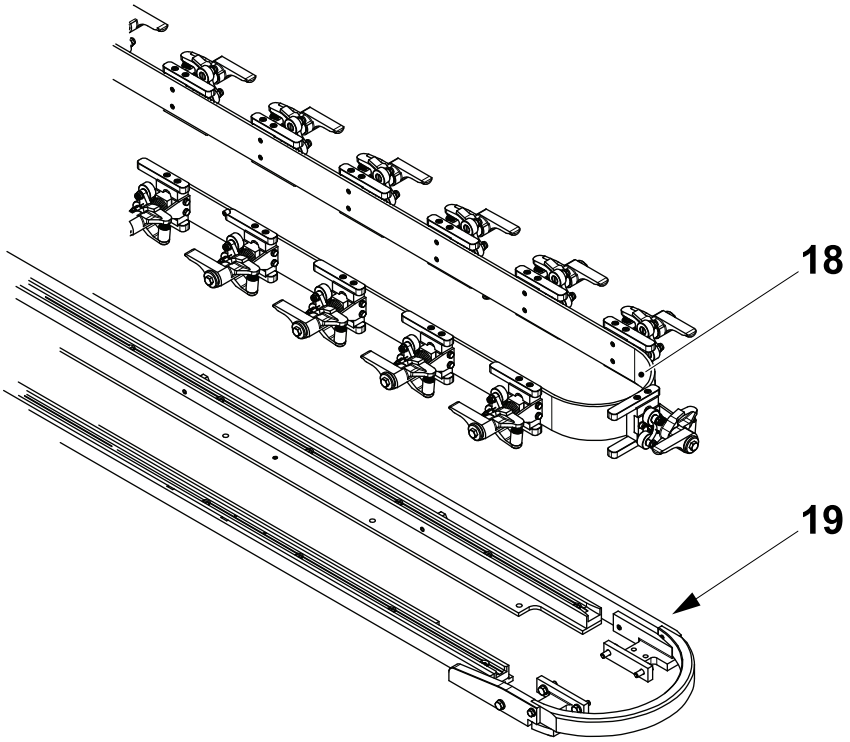

18 Belt
19 Guide section

3.3.1-3 Timing Belt - Change Guides

Machine Status	Electrical supply disconnecting device in position O (OFF) Main air valve OFF
SPC Reference	2802647-0200

WARNING

Risk of burns.

Nearby components may be hot.

a) Remove the belts, see 3.3.1-2 Timing Belt - Change.

b) For the lower front guide (1), remove the row of screws (2) and change the lower front guide (1).

c) For the lower rear guide (3), remove the row of screws (4) and the cam (5).

d) Remove the row of screws (6) and change the lower rear guide (3).

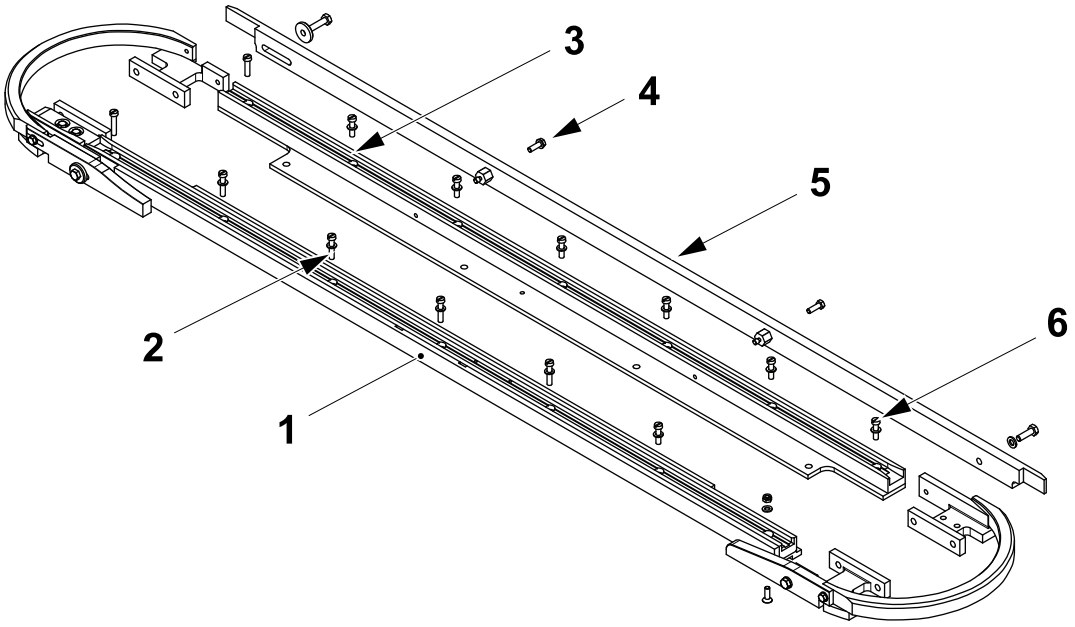

1 Lower front guide
2 Row of screws
3 Lower rear guide
4 Row of screws
5 Cam
6 Row of screws

(Cont'd)

(Cont'd)

e) For the upper front guide (7), remove the row of screws (8) and change the upper front guide (7).

f) For the upper rear guide (9), remove the row of screws (10) and change the upper rear guide (9).

g) Assemble in the reverse order.

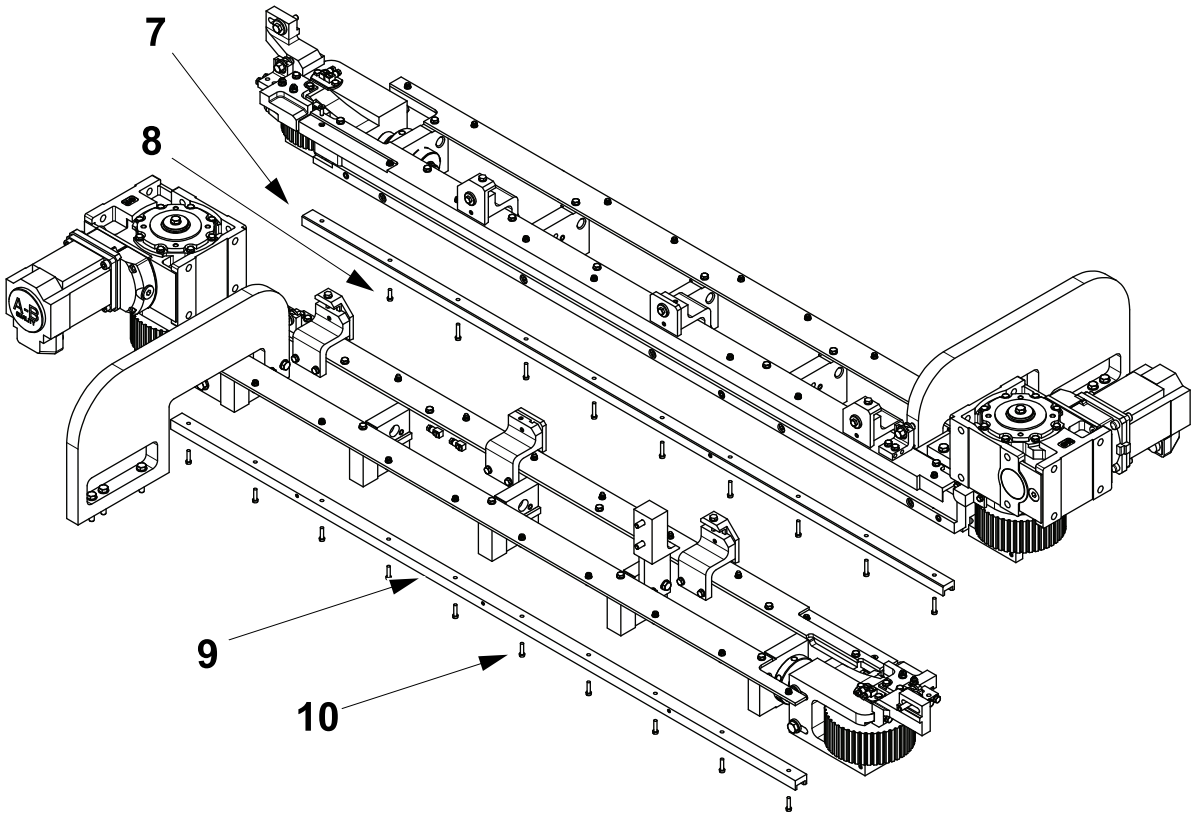

7 Upper front guide
8 Row of screws
9 Upper rear guide
10 Row of screws

3.3.1-4 Drive Unit - Change Motor

Machine Status	Electrical supply disconnecting device in position O (OFF)
SPC Reference	2802647-0200

Separation

Disconnect the electrical connections.

There may or may not be a plug (1).

The access hole (2) may be in a different location or more than one.

There is one screw (3) in the clamp (4).

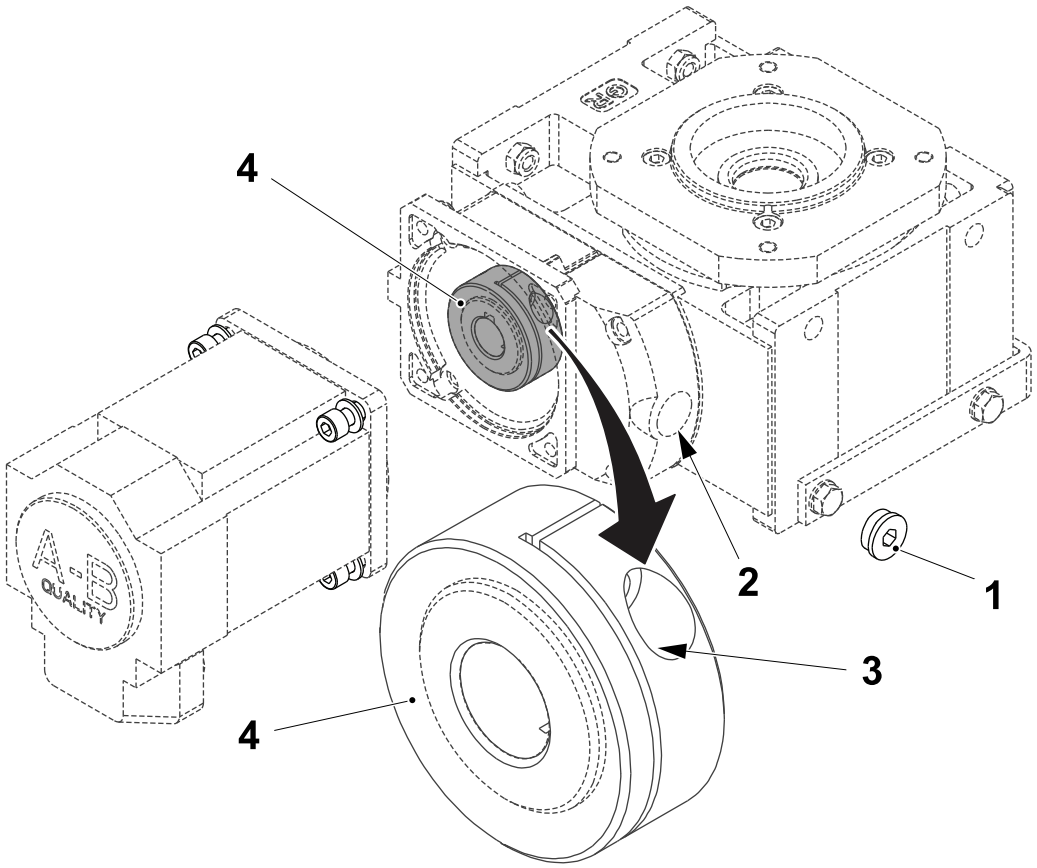

1 Plug
2 Access hole
3 Screw
4 Clamp

(Cont'd)

(Cont'd)

a) If fitted, remove the plug (1).

b) Using the access hole (2), locate the screw (3) in the clamp (4) with a 5 mm allen key and loosen the screw (3).

c) Remove the screws (5) and separate the motor (6) from the gearbox (7).

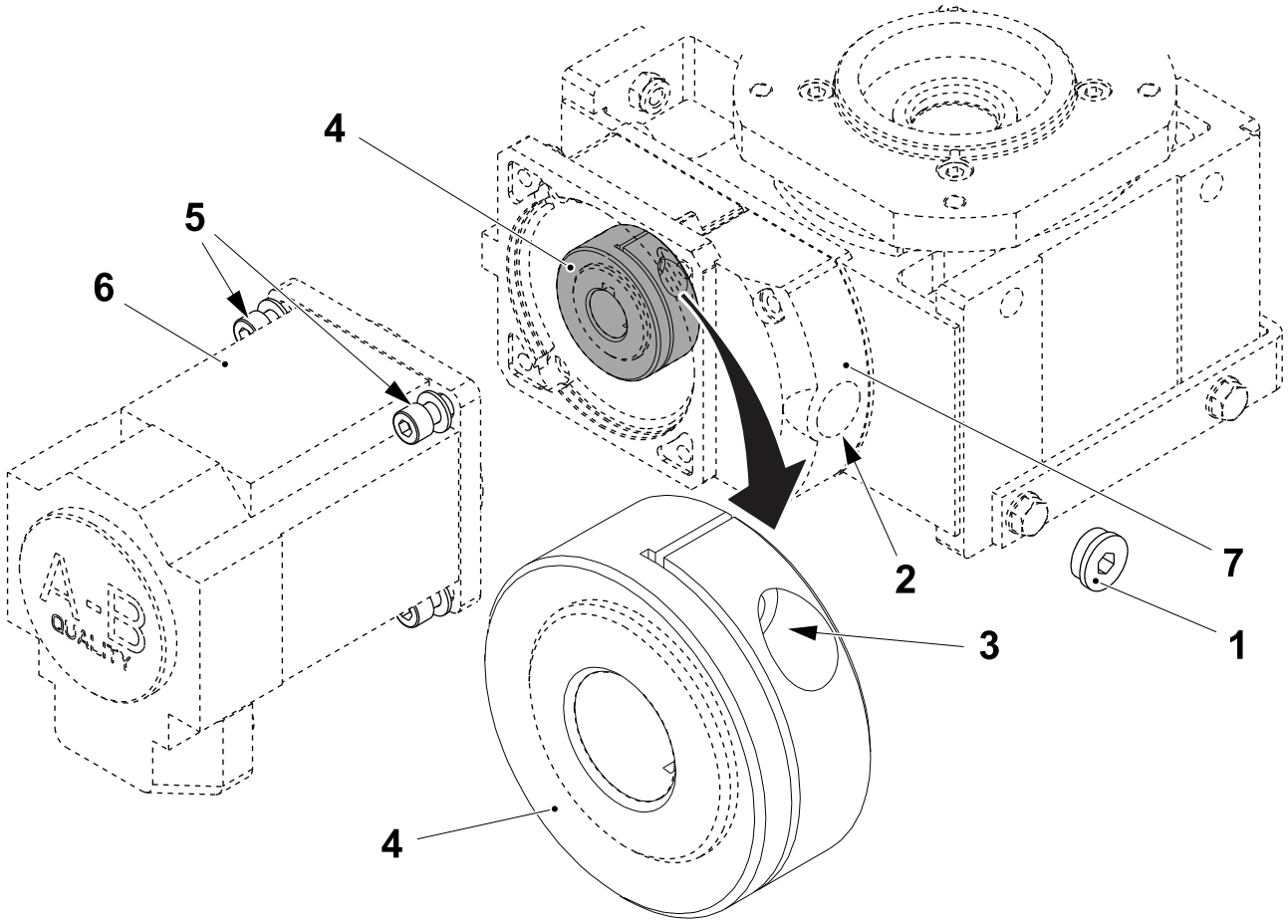

1 Plug
2 Access hole
3 Screw
4 Clamp
5 Screw
6 Motor
7 Gearbox

(Cont'd)

(Cont'd)

Assembly

a) Install the motor (1) so that the screws (2) loosely holds it.

b) Tighten the screw (3) ensuring that the clamp (4) is at the end of the drive gearbox shaft (5) so that it clamps securely onto the dive motor shaft (6).

c) Tighten completely the screws (2) that holds the motor (1).

d) Connect the electrical connections.

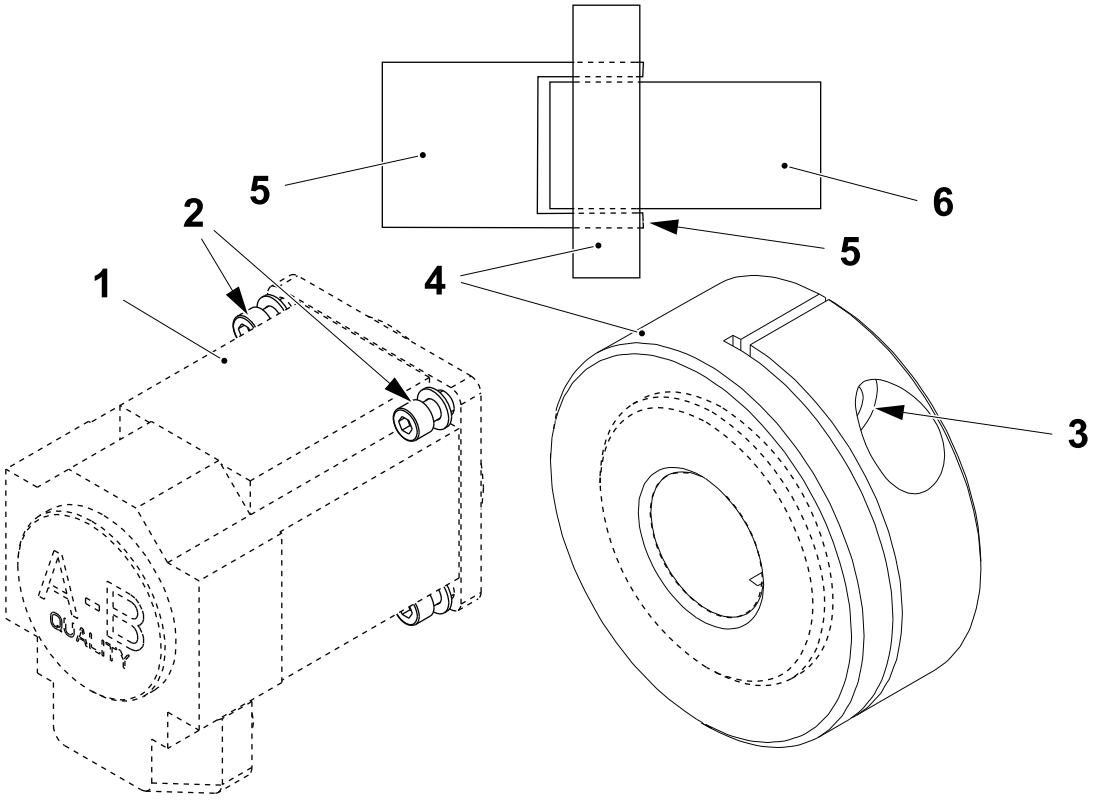

1 Motor
2 Screw
3 Screw
4 Clamp
5 Gearbox shaft
6 Drive motor shaft

3.4 Belt Stretcher

3.4.1 Belt Stretcher - Change

3.4.1-1 Belt Stretcher - Change Bearings

Machine Status	Electrical supply disconnecting device in position O (OFF)
SPC Reference	2802645-0200

CAUTION
Risk of burns.
Nearby components may be hot.

a) Remove the pushdown (1), see 3.3.1-2 Timing Belt - Change steps a) to i). Do not remove the belt.

b) Remove the screws (2) and the screw (3) and the washer (4).

c) Pull out the shaft (5).

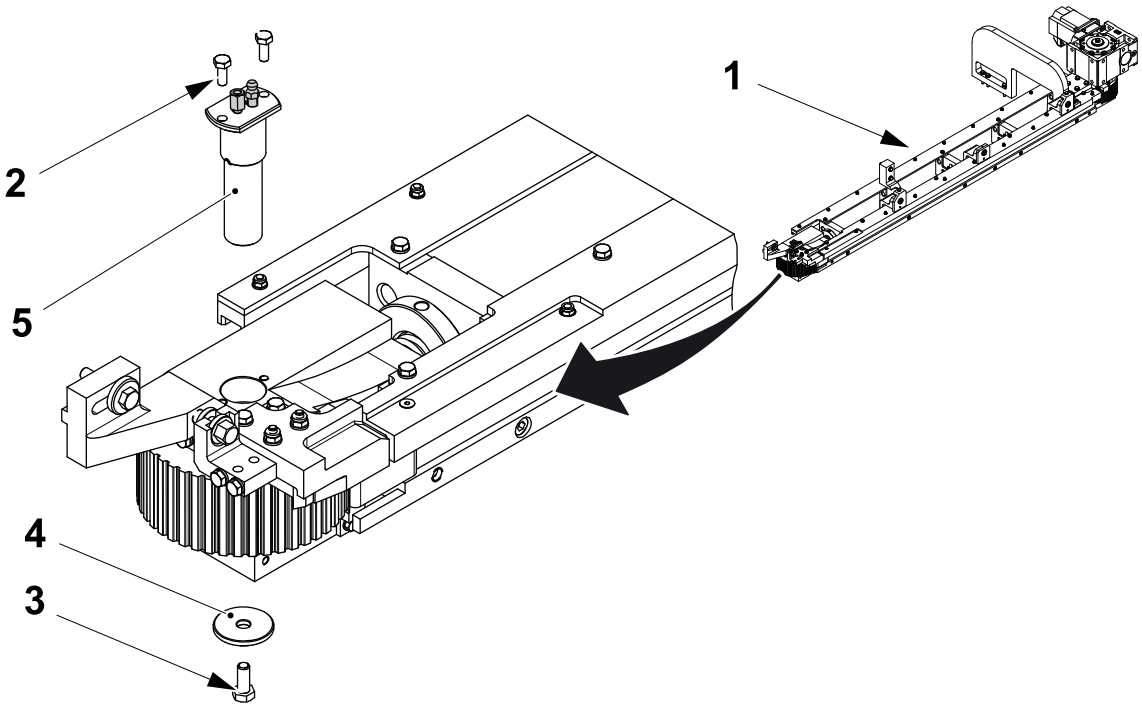

1 Pushdown
2 Screw
3 Screw
4 Washer
5 Shaft

(Cont'd)

(Cont'd)

d) Remove the sleeve (6).

e) Remove the seal ring (7) and the seal ring (8).

f) Remove the retaining ring (9) and the retaining ring (10).

g) Change the bearing (11) and the bearing (12).

h) If necessary, change the spacer (13) or the toothed pulley (14).

i) Assemble in the reverse order.

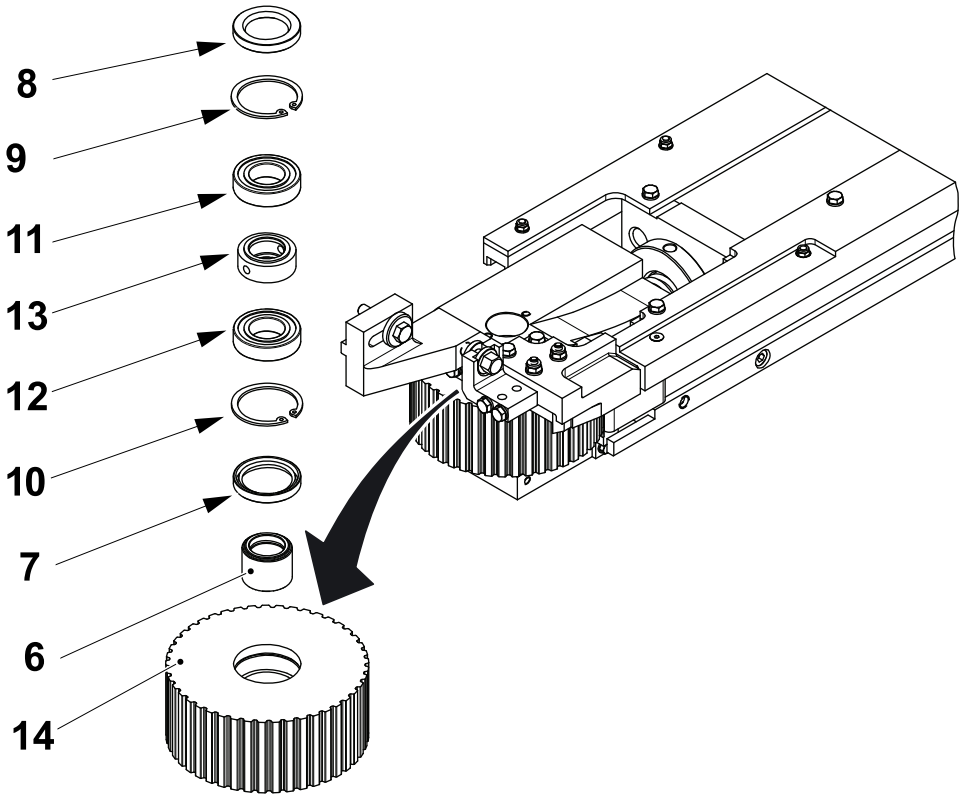

6 Sleeve
7 Seal ring
8 Seal ring
9 Retaining ring
10 Retaining ring
11 Bearing
12 Bearing
13 Spacer
14 Toothed pulley

3.4.1-2 Belt Stretcher - Set Belt Tension

Machine Status	Electrical supply disconnecting device in position O (OFF)
SPC Reference	2802645-0200

a) Release the two screws (1).

Note! Do not touch the nut (2).

b) Turn the flange (3) until the distance A is obtained.

A = 32mm

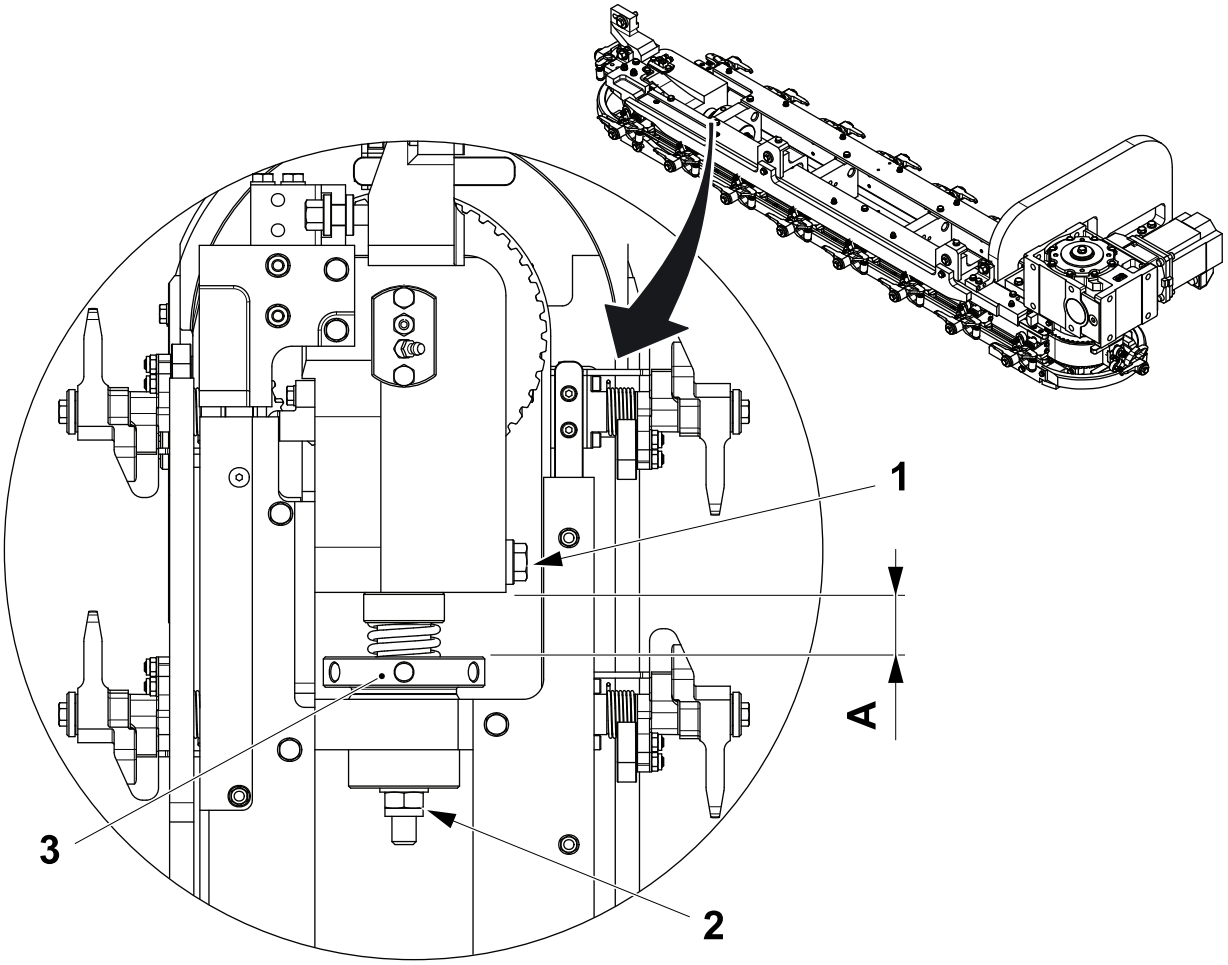

1 Screw
2 Nut
3 Flange

4 Machine Body

Machine Body - Description

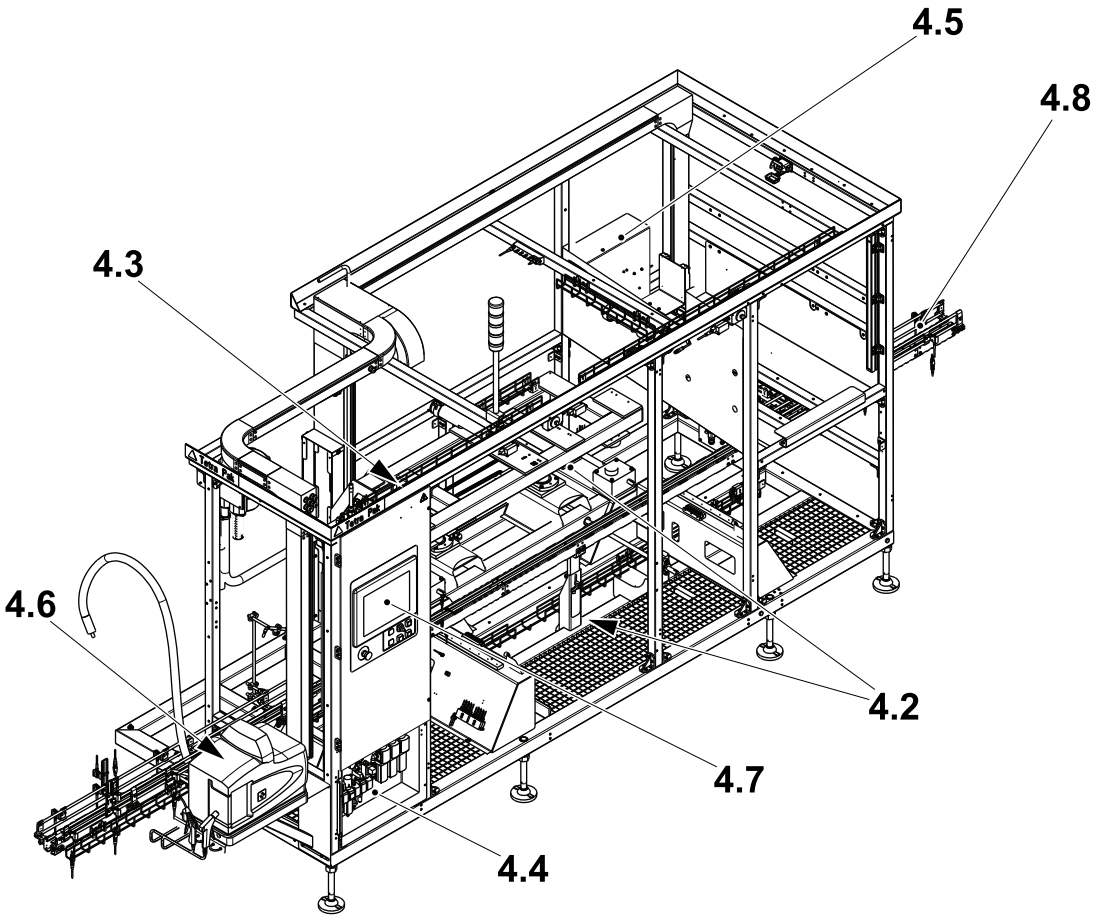

4.2 Package

4.3 Line Heater

4.4 Air Supply

4.5 Machine Lubrication

4.6 Hotmelt Unit

4.7 Operator Interface

4.8 Machine Body

Machine Body - Description 4-2

4.1 Functional Description 4-7

4.2 Package 4-8

4.2.1 Height Adjustment 4-8

4.2.1-1 Conveyor Support - Set Height 4-8

4.2.2 Conveyor Sensor Positions 4-11

4.3 Line Heater 4-13

4.3.1 Fan System 4-13

4.3.1-1 Fan System - Check 4-13

4.3.1-2 Fan System - Clean Fan Filter 4-14

4.3.2 Heating Element 4-15

4.3.2-1 Heating Element - Change 4-15

4.3.2-2 Heating Element - Set 4-17

4.4 Air Supply 4-19

4.4.1 Blowing System 4-19

4.4.1-1 Blowing System - Check 4-19

4.4.1-2 Blowing System - Set Blowing Device 4-20

4.4.2 Pneumatic Panel - Description 4-21

4.4.2-1 Pneumatic Panel - Check 4-23

4.4.2-2 Pneumatic Panel - Set Pressure Switch 4-25

4.4.2-3 Pneumatic Panel - Clean Filter Regulator 4-27

4.4.2-4 Pneumatic Panel - Set Filter Regulator 4-29

4.5 Machine Lubrication 4-30

4.5.1 Lubrication Unit (Pushdown) 4-30

4.5.1-1 Lubrication Unit (Pushdown). 4-30

4.5.1.1 Lubrication Unit - Functional Description. 4-32

4.5.2 Central Lubrication - Check 4-34

4.5.2-1 Central Lubrication - Check Level Switch 4-34

4.5.2-2 Central Lubrication - Check Pressure Switch 4-35

4.5.2-3 Pushdown Lubrication - Clean Conveyor Lubricant Tank 4-36
4.5.2-4 Pushdown Lubrication - Fault Finding 4-37
4.5.3 Nipple Lubrication 4-38
4.5.3-1 Package Line - Lubricate the Grease Nipples 4-38
4.5.3-2 Belt Brake - Lubricate the Grease Nipples 4-40
4.5.3-3 Pushdown - Lubricate the Grease Nipples 4-41
4.6 Hotmelt Unit 4-42
4.6.1 Functional Description 4-42
4.6.1-1 Hotmelt Panel Overview 4-44
4.6.2 Hotmelt Equipment 4-46
4.6.2-1 Hotmelt Equipment - Check 4-46
4.6.2-2 Hotmelt Equipment - Empty Tank 4-47
4.6.2-3 Hotmelt Equipment - Change Filter. 4-54
4.6.2-4 Hotmelt Equipment - F2 Alarm. 4-56
4.6.2-5 Set Tank, Hose and Gun Temperatures. 4-57
4.6.2-6 Hotmelt Equipment - Set Pressure 4-59
4.6.2-7 BYPASS Mode - Switch On the Hotmelt Unit 4-60
4.6.2.1 Adhesive Preservation - Setup 4-65
4.6.2.1-1 Adhesive Preservation Activation 4-65
4.6.2.1-2 Adhesive Preservation Settings. 4-67
4.6.2.1-3 Delay On Stand-By Description. 4-69
4.6.2.1-4 Delay On Stand-By Setting. 4-70
4.6.2.1-5 Delay On To Step Zero. 4-72
4.6.2.1-6 Adhesive Preservation Hooter Activation 4-74
4.6.2.1-7 Adhesive Preservation Hooter Deactivation 4-75
4.7 Operator Interface 4-76
4.7.1 Operator Interface - TPOP 4-76
4.7.1-1 TPOP - Change 4-76
4.8 Machine Body 4-78
4.8.1 Conveyor - Height Adjustment. 4-78

4.8.1-1 Height Adjustment - Check 4-78
4.8.1-2 Height Adjustment - Set 4-79
4.8.2 Conveyor Infeed Rail 4-80
4.8.2-1 Infeed Rail Change 4-80

This page intentionally left blank

4.1 Functional Description

The machine body consists of the following;

- The package conveyor complete with sensors for moving and regulating the packages.
- The package heater which preheats the PE layer of the package to make the hotmelt bond of the cap stronger. The heat is delivered to the package by a fan.
- The air supply which is regulated by the pneumatic panel.
- The lubrication unit for the continuous lubrication of the bearings.
- The hotmelt unit which preheats the hotmelt and supplies it to the hotmelt wheel via a hose.
- The TPOP for the Human Machine Interface (HMI), Alarms, Displays and Setting ect,.
- The height adjustment via the applicator unit adjust. This gives the height flexibility required for the different package sizes.

4.2 Package

4.2.1 Height Adjustment

4.2.1-1 Conveyor Support - Set Height

Machine Status	Electrical supply disconnecting device in position O (OFF) Main air valve OFF
SPC Reference	2769738-0100

a) Release the two screws (1) that hold each of the end bracket (2) and the locking lever (3).

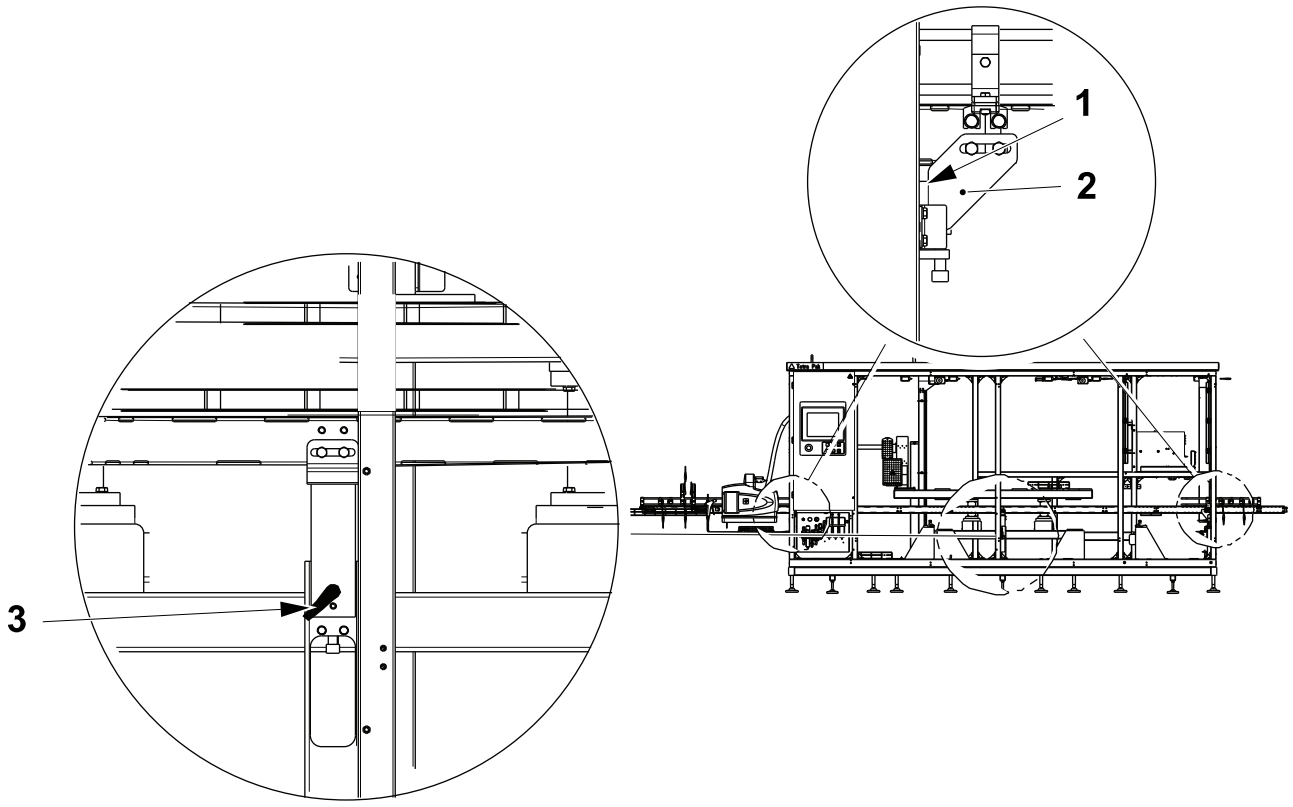

1 Screw
2 Bracket
3 Locking lever

(Cont'd)

(Cont'd)

b) Raise or lower the conveyor to obtain distance **A** (the distance between the top of the chain conveyor (4) and the bottom of the belt tooth (5)) by the adjusting screw (6).

Package Type	Distance A (mm)
TBA Family	5
TBA Portion	20

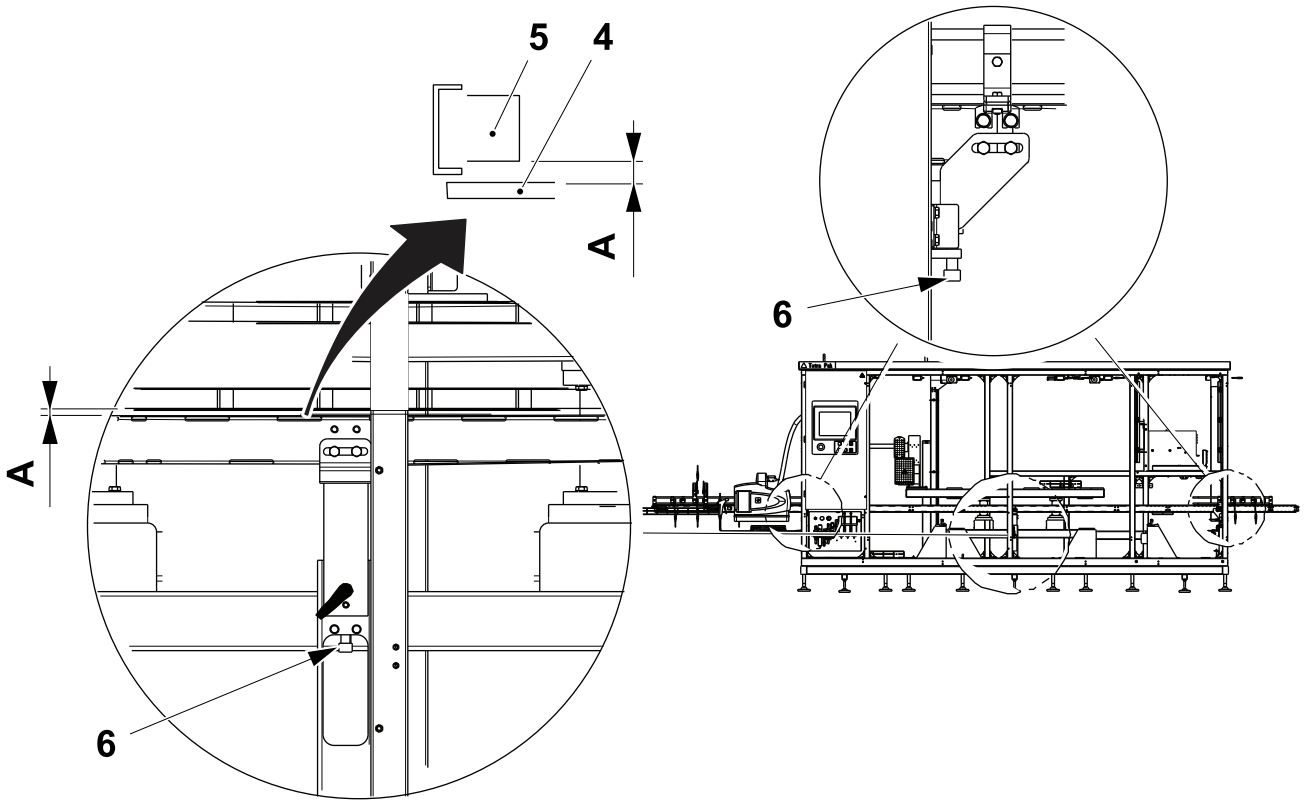

4 Conveyor
5 Belt tooth
6 Adjusting screw

(Cont'd)

(Cont'd)

c) Tighten the locking lever (3) and the screws (1).

Note! Make sure that the conveyor is level in the (Y) direction and square in the (X) direction, also check the packages for squareness.

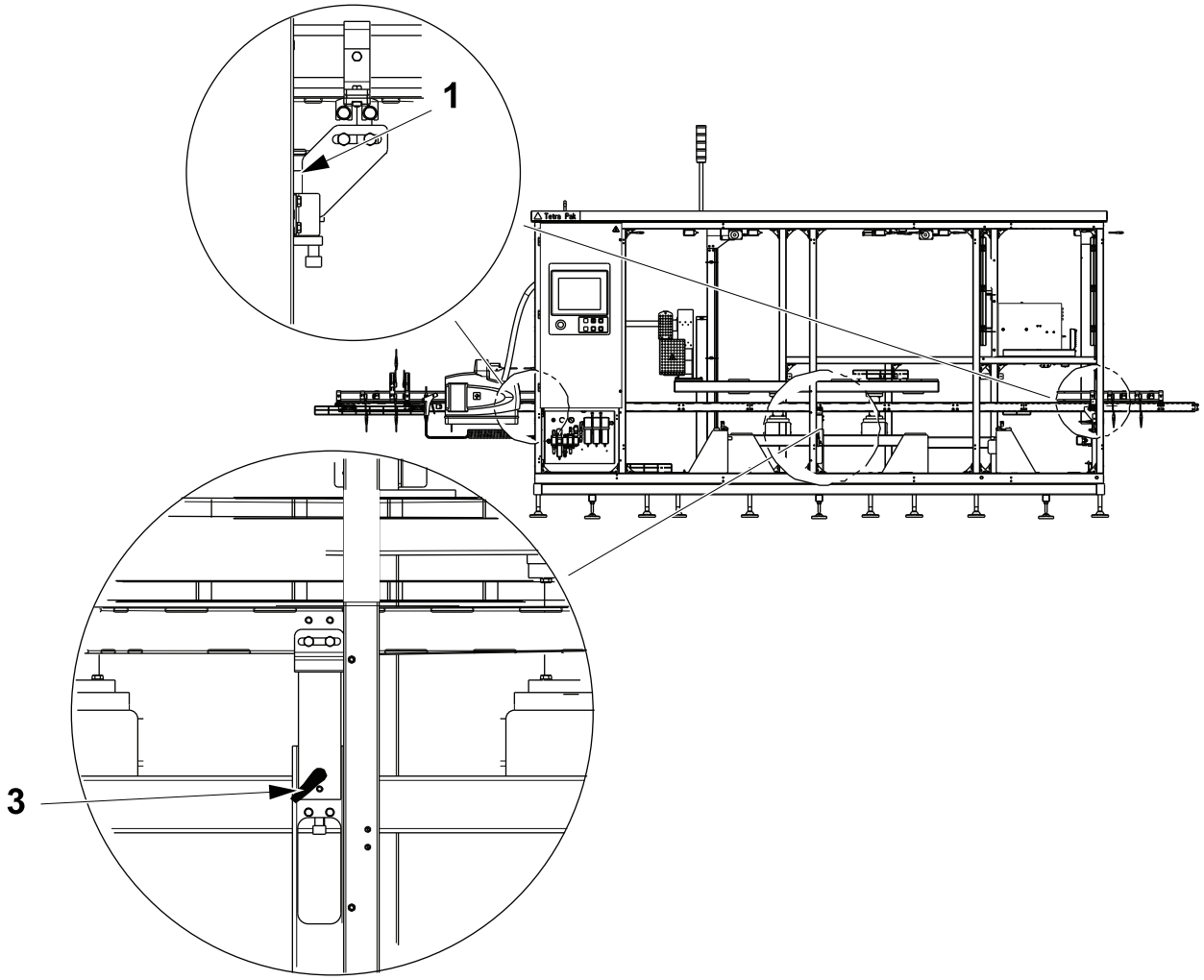

1 Screw
3 Locking lever

4.2.2 Conveyor Sensor Positions

The too long package queue sensor (1) is installed **1 m** before the DE unit (2) (distance **A**). This sensor is used to start the machine when it is in production stand by waiting for packages. In the presence of the line controller the sensor can be positioned closer to the machine, see Installation in TP A3 iLines in CM. The illustration below shows the location of the long package queue sensor (3), fallen package sensor (4), short package queue sensor (5) which matches caps to packages and are all referenced to the rear of belt brake (6).

Note! Check for gaps between packages and that the packages stop in the correct position, adjust as necessary.

A = 1m
B = 500mm
C = 800mm

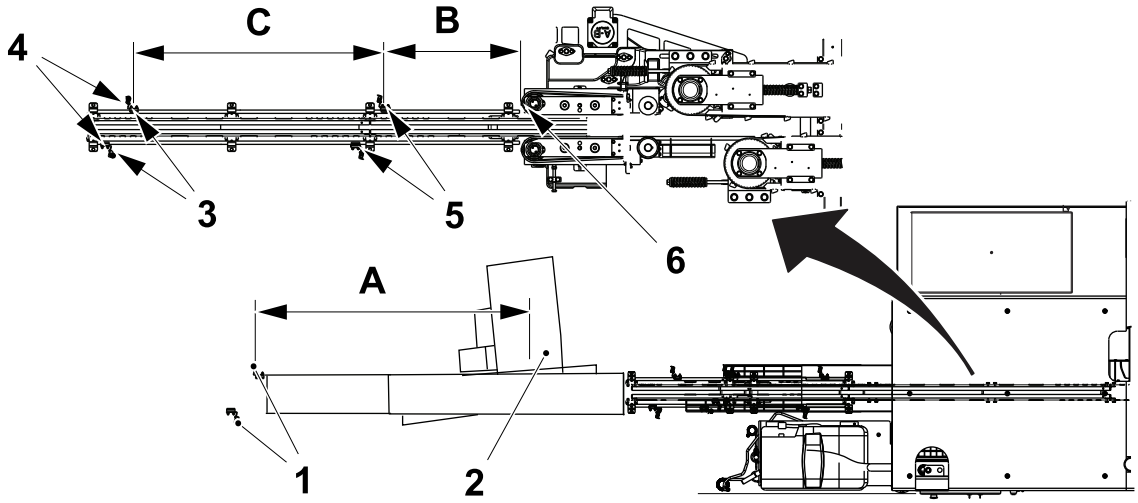

1 Too long package queue sensor
2 DE unit
3 Long package queue sensor
4 Fallen package sensor
5 Short package queue sensor
6 Rear of belt brake

(Cont'd)

(Cont'd)

As well as the end of bearing housing (7) also shown is the location of the outfeed congestion package sensor (8) and the cap detector photo-electric sensor (9), see for the distances **D** and **E**.

Note! The maximum distance of the queue Outfeed Left Line (10) is 5 m. The extension cable part number is: 351411-0050 (not included in machine delivery).

The queue Outfeed Left Line (10) is installed at the discharge end of the cap applicator and after the DE unit (11). Where there is only one DE unit installed, the queue Outfeed Left Line (10) sensor is installed after the DE unit (12) (distance **F**).

F = 1m

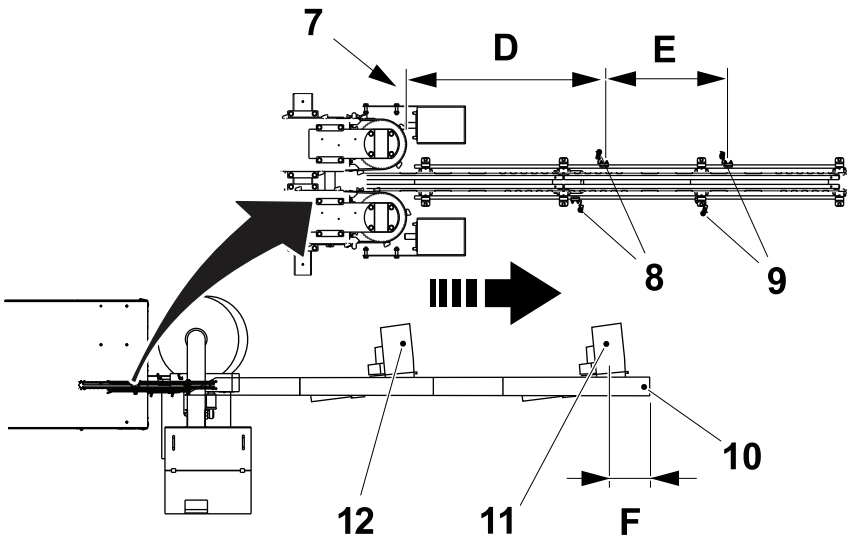

7 End of bearing housing
8 Outfeed congestion package sensor
9 Cap detector photo-electric sensor
10 Queue Outfeed Left Line
11 DE unit
12 DE unit

4.3 Line Heater

4.3.1 Fan System

4.3.1-1 Fan System - Check

Machine Status	Electrical supply disconnecting device in position I (ON) Main air valve ON
SPC Reference	2773622-0200

WARNING

Risk of burns.

The preheating equipment is very hot. Failure to observe this information could result in severe burns.

a) The heating Element (1) and the fan (2) are alarmed for malfunction.

b) Check that the filter (3) is clean.

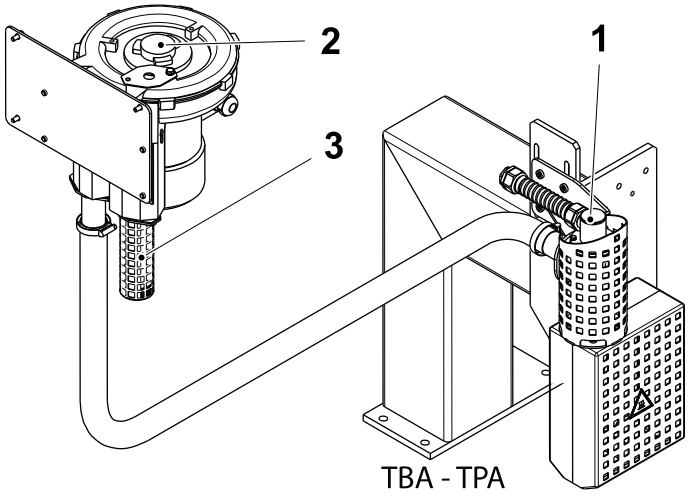

1 Heating Element
2 Fan
3 Filter

4.3.1-2 Fan System - Clean Fan Filter

Machine Status	Electrical supply disconnecting device in position I (ON) Main air valve ON
SPC Reference	2773622-0200

a) Remove the screw (1), the cover (2) and the gasket (3) .

b) Clean the filter (4).

c) Assemble in the reverse order.

Note! A restrictor (5) must be fitted when running at 60Hz.

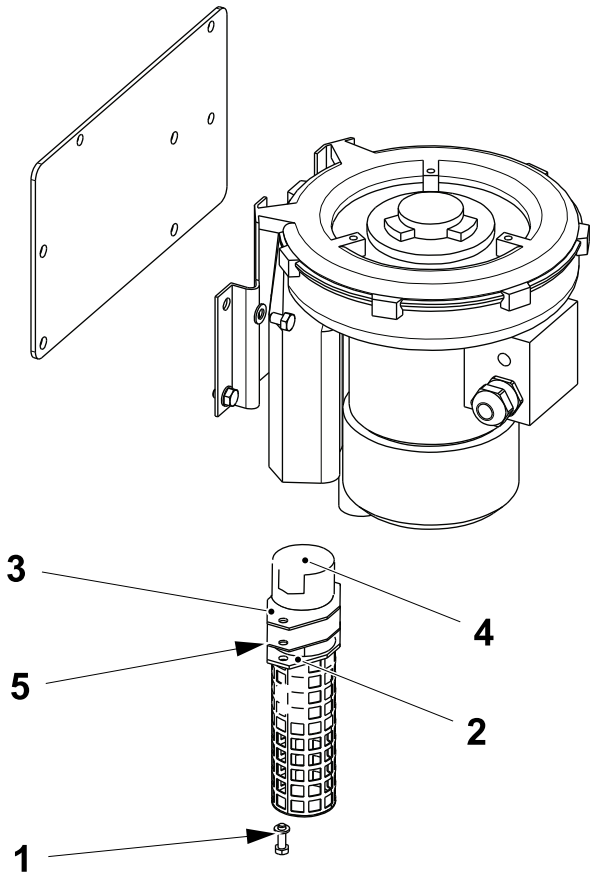

1 Screw
2 Cover
3 Gasket
4 Filter
5 Restrictor

4.3.2 Heating Element

4.3.2-1 Heating Element - Change

Machine Status	Electrical supply disconnecting device in position O (OFF) Main air valve OFF
SPC Reference	3203761-0100

WARNING

Risk of burns.

The preheating equipment is very hot. Failure to observe this information could result in severe burns.

a) Change the heating element (1) by removing the four screws (2), the pipe bend (3), and the flange seal (4).

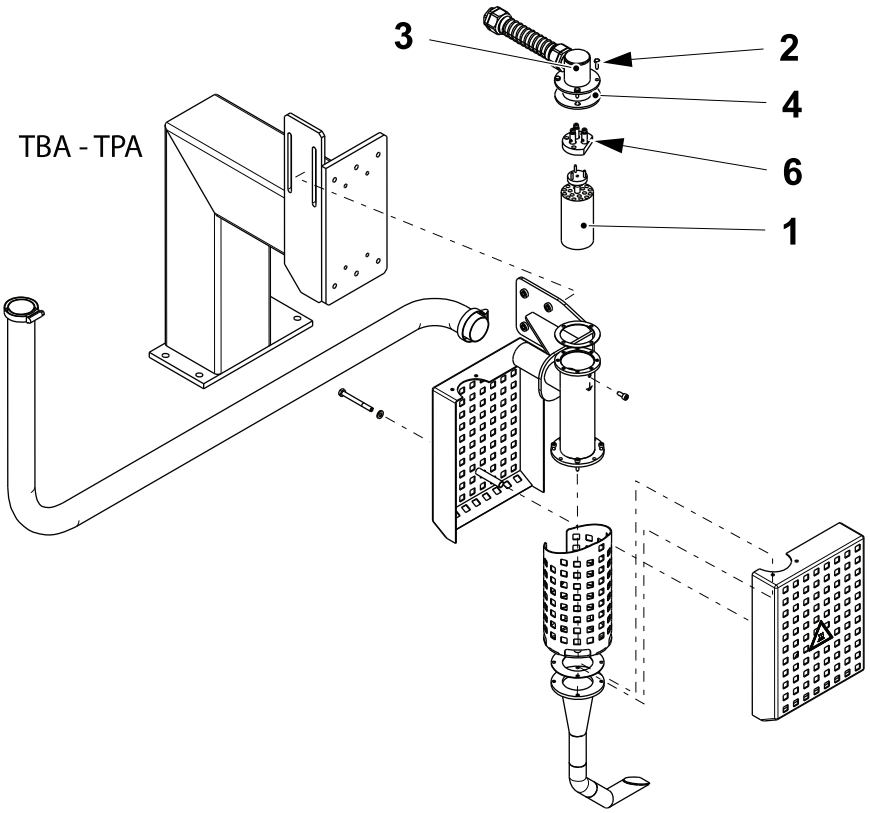

1 Heating element
2 Screw
3 Pipe bend
4 Flange seal

(Cont'd)

(Cont'd)

b) Release the earth cable screw (5) making sure not to drop the nut.

c) Disconnect the heating element (1) from the female plug (6).

d) Assemble in the reverse order replacing the flange seal (4).

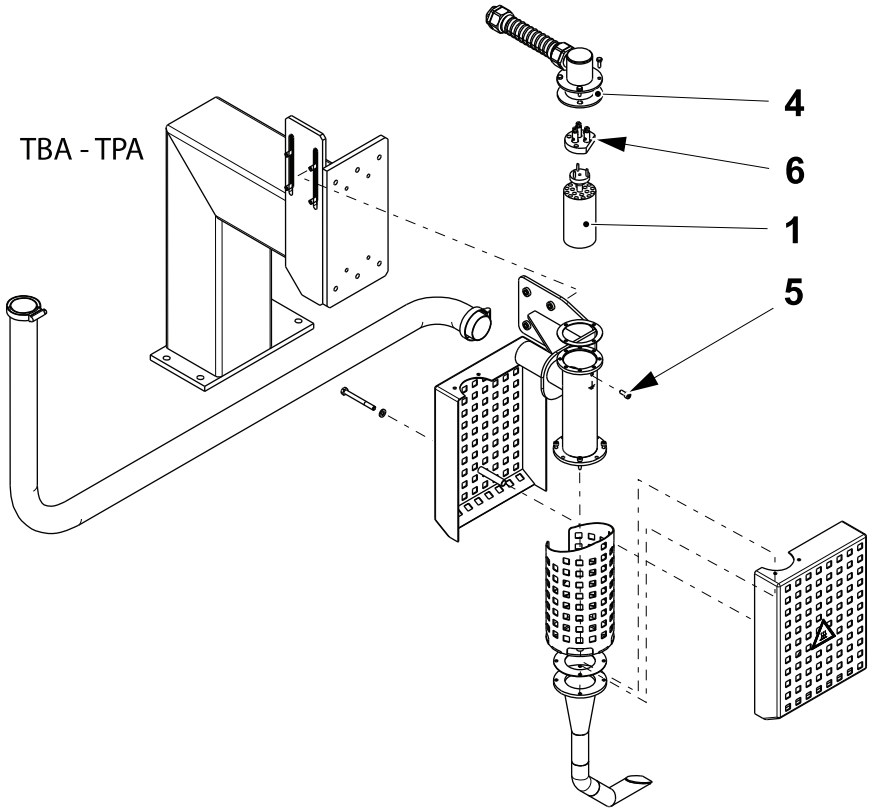

1 Heating element
4 Flange seal
5 Screw
6 Female plug

4.3.2-2 Heating Element - Set

Machine Status	Electrical supply disconnecting device in position O (OFF) Main air valve OFF
SPC Reference	3203761-0100

WARNING

Risk of burns.

The preheating equipment is very hot. Failure to observe this information could result in severe burns.

Note! It is very important that the preheating system is correctly set and that the element is working properly, otherwise there will be problems with liftng the PullTab strip.

a) Release the four screws (1) and set the distance **A** between the heating element nozzle (2) and the package top (3).

Note! The nozzle (2) is volume/cap dependent. See latest SPC.

A = 8 ± 1 mm

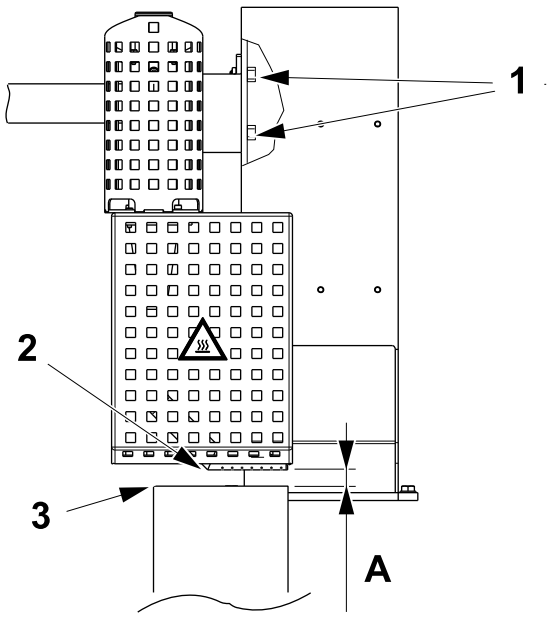

1 Screw
2 Nozzle
3 Package top

(Cont'd)

(Cont'd)

b) Centre the nozzle over the laminated hole (4) or pulltab (5).

Tighten the screws (1).

Note! The nozzle (2) is volume/cap dependent. See latest SPC.

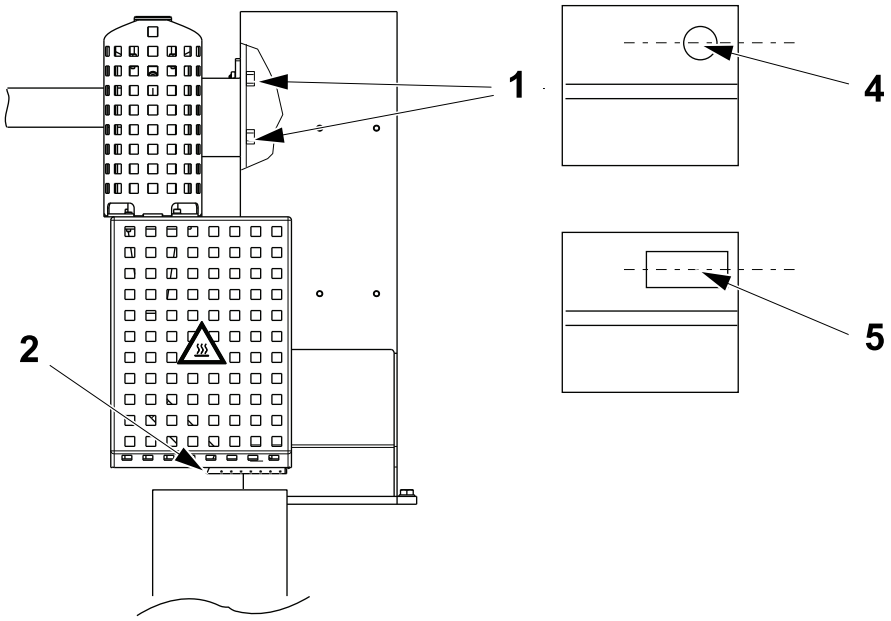

1 Screw
2 Nozzle
4 Hole
5 Pulltab

4.4 Air Supply

4.4.1 Blowing System

4.4.1-1 Blowing System - Check

Machine Status	Electrical supply disconnecting device in position I (ON) Main air valve ON
SPC Reference	2838672-0200

a) Make sure that the packages are under the air nozzle (1) which should remove moisture from that part of the package where the cap is to be applied.

b) Check that the pull tab strips are not being raised by the air jet.

c) See 4.4.2 Pneumatic Panel - Description for pneumatic panel (2) settings.

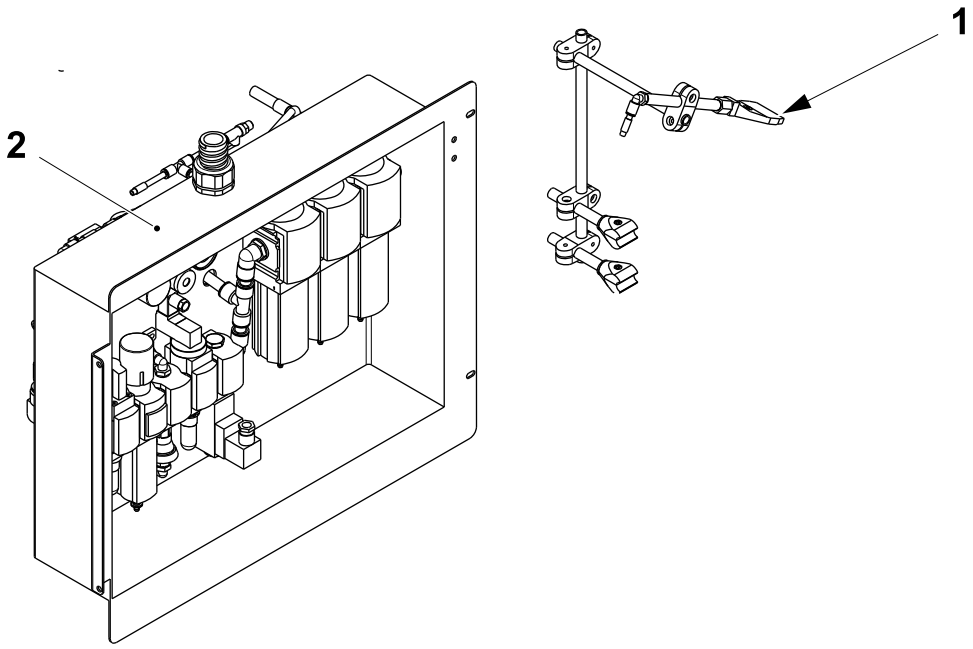

1 Air nozzle
2 Pneumatic panel

4.4.1-2 Blowing System - Set Blowing Device

Machine Status	Electrical supply disconnecting device in position I (ON) Main air valve ON
SPC Reference	2838672-0200

a) Release the screws (1) and set the nozzle (2) to the distance **A** above the package.

b) Tighten the screws (1).

c) The force of the air blown is controlled by the throttle check valve (3) .

A = 5 - 10 mm

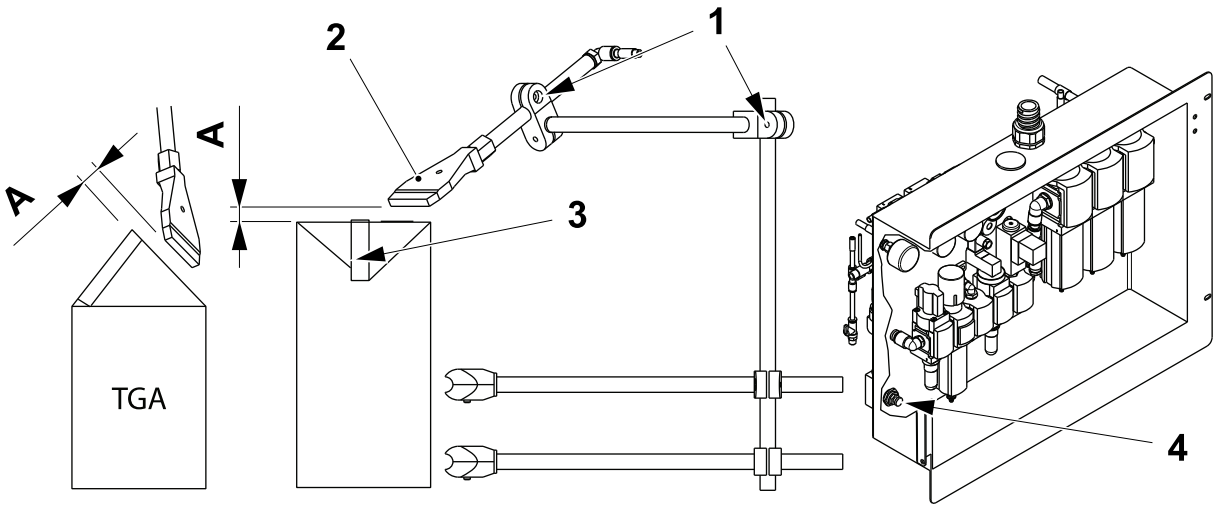

1 Screw
2 Nozzle
3 Throttle check valve

4.4.2 Pneumatic Panel - Description

Pneumatic Panel Front

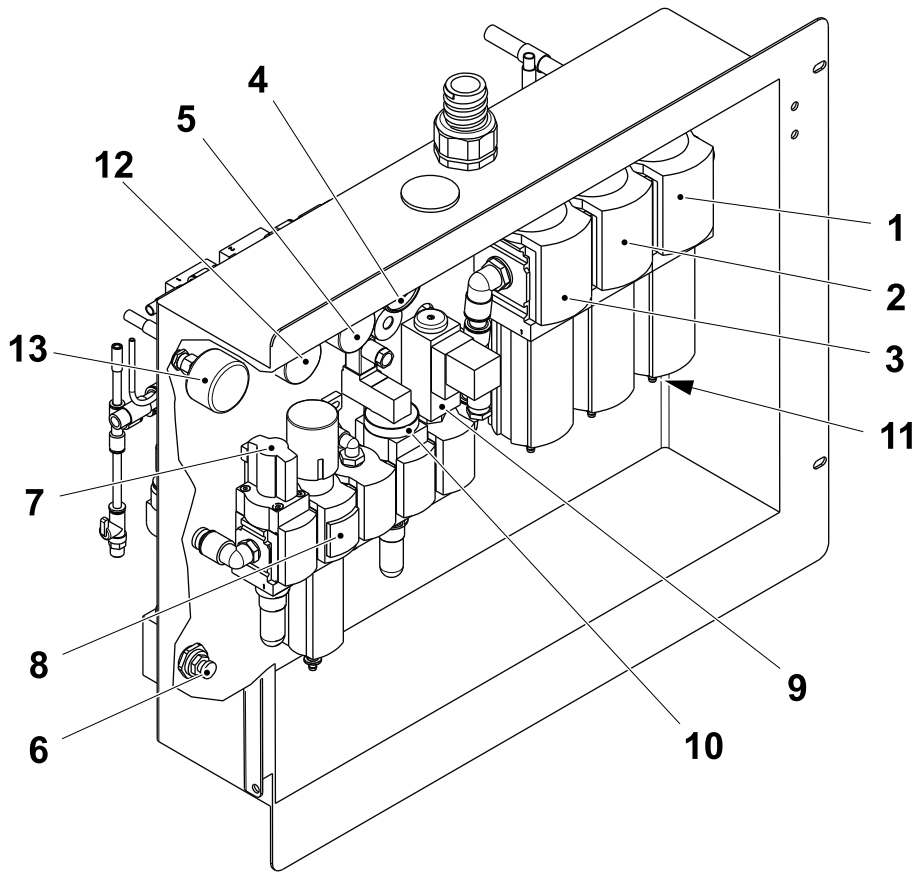

1 Filter (Oil) K01V8054
2 Filter (Air) K01V8053
3 Filter (Air) K01V8052
4 Pressure gauge 4K0P1050
5 Pressure regulator 4K0R1050
6 Throttle check valve K21R3054
7 Shutoff valve K01Q8050
8 Filter regulator K01V8050
9 Shutoff valve K01K8000
10 Pressure guard K01B8001
11 Drain valve
12 Pressure regulator K01R5000
13 Pressure gauge K01P5000

(Cont'd)

(Cont'd)

Pneumatic Panel Back

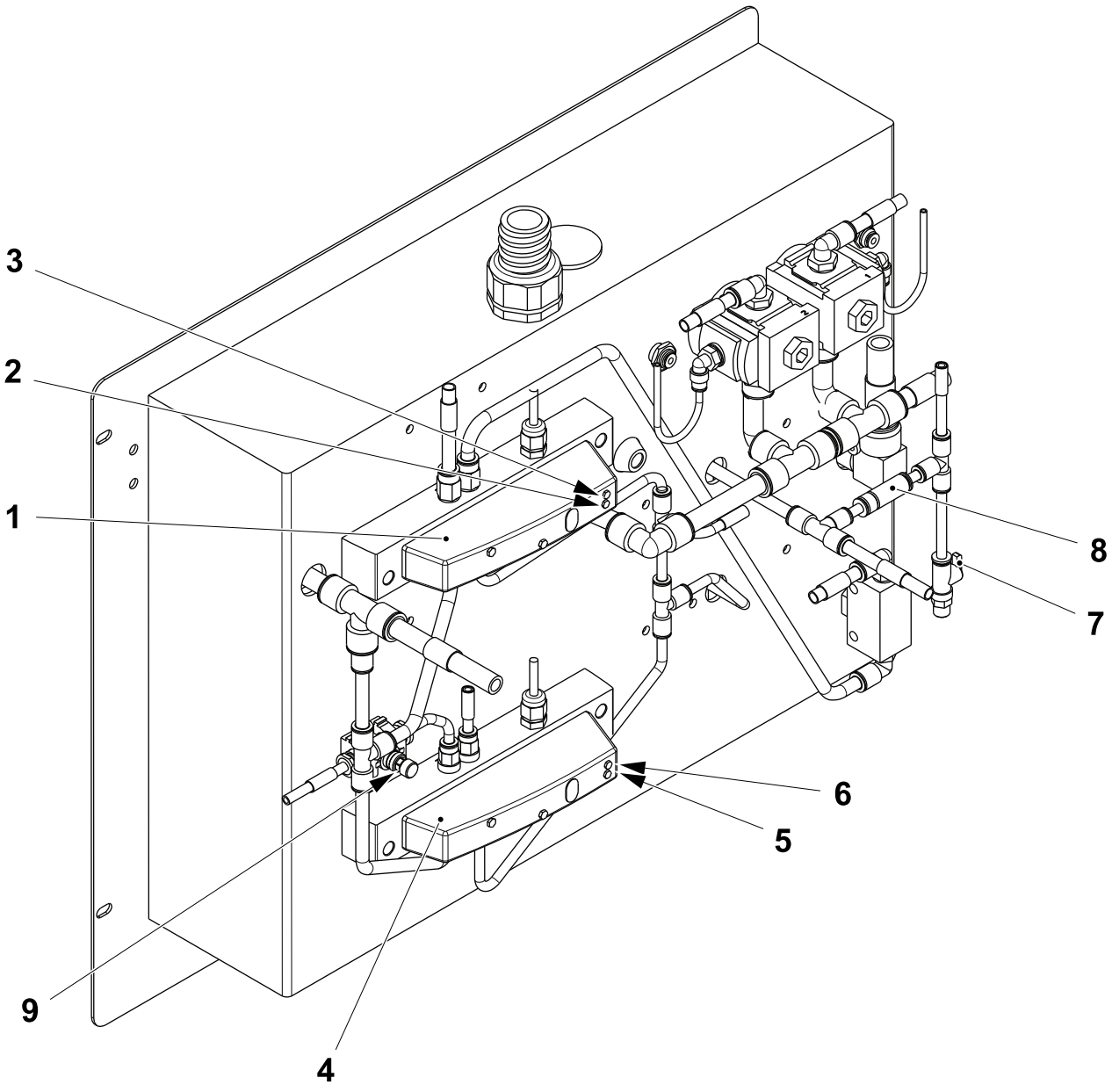

1 Sub base K20U3050
2 LED 14 K40K2003
3 LED 12 K40K2003
4 Sub base K01U9050
5 LED 14 K40K2003
6 LED 12 K40K2003
7 Release valve K20Q0052
8 Non return valve K21Q0051
9 Flow control valve K21R0054

4.4.2-1 Pneumatic Panel - Check

Machine Status	Electrical supply disconnecting device in position I (ON) Main air valve ON
SPC Reference	2838672-0200

Note! The pressure switch (1) can also be activated by variations of the incoming air pressure.

a) Check that the working pressure is 6.0 Bar.

b) If the pressure switch (1) is actuated too often, the air filter (2) may be clogged. If necessary, clean or replace the filter.

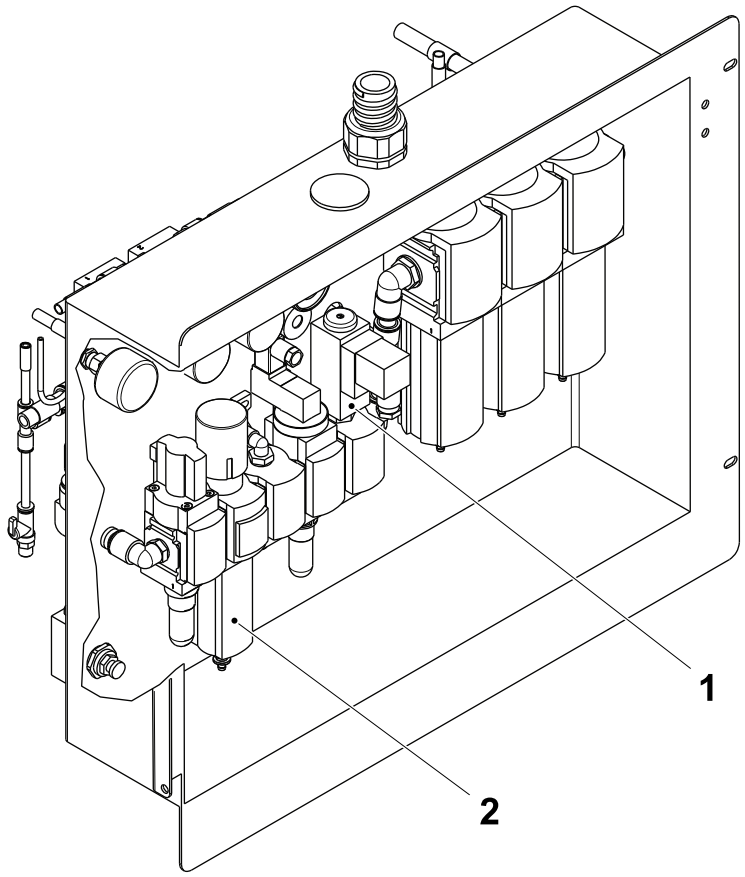

1 Pressure switch
2 Air filter

(Cont'd)

(Cont'd)

Note! The pressure switch (1) can also be activated by variations of the incoming air pressure.

c) The air filter (2), the air filter (3) and the air filter (4) are bled automatically. The oil filter (5) requires manual bleeding from the bleed valve (6) when the level has reached a maximum value.

d) The pressure switch (1) is activated when the air pressure drops below 0.38 MPa (3.8 Bar).

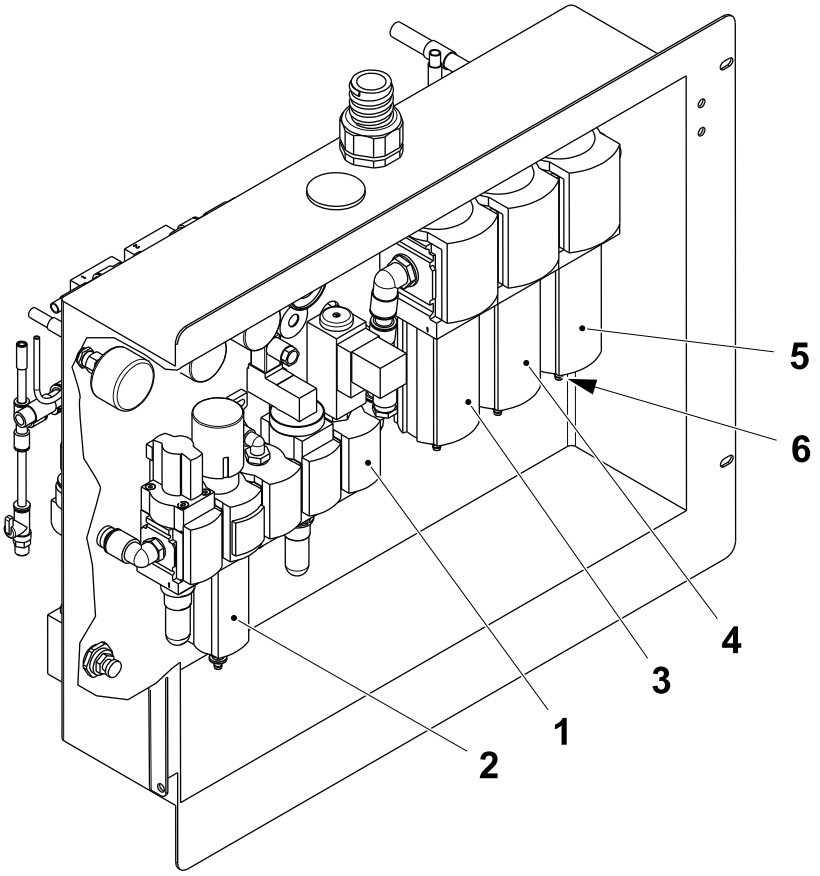

1 Pressure switch
2 Air filter
3 Air filter
4 Air filter
5 Oil filter
6 Bleed valve

4.4.2-2 Pneumatic Panel - Set Pressure Switch

Machine Status	Electrical supply disconnecting device in position I (ON) Main air valve ON
SPC Reference	2838672-0200

a) Using a screw driver, locate the setting screw (1) at the top of the pressure switch (2) by removing the plug (3).

b) Reduce the working pressure to 3.8 Bar.

c) Turn the setting screw (1) fully counter clockwise and step up the machine to STEP 2.

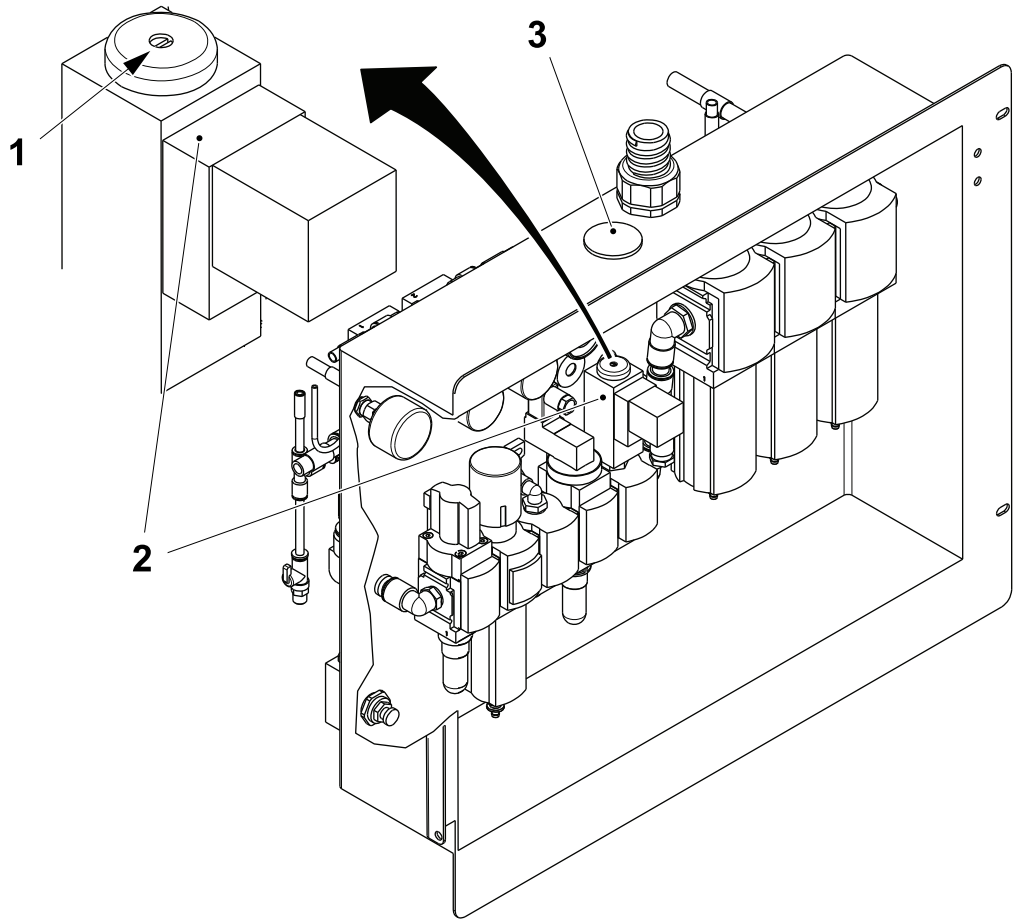

1 Setting screw
2 Pressure switch
3 Plug

(Cont'd)

(Cont'd)

d) Slowly turn the setting screw (1) clockwise until the Led (4) (inside the operator interface (5)) on the I/A01K3024 goes out.

e) Slowly turn the setting screw (1) counter clockwise until the Led (4) comes back on.

f) Set the working pressure to 6.0 Bar.

g) Replace the plug (3) .

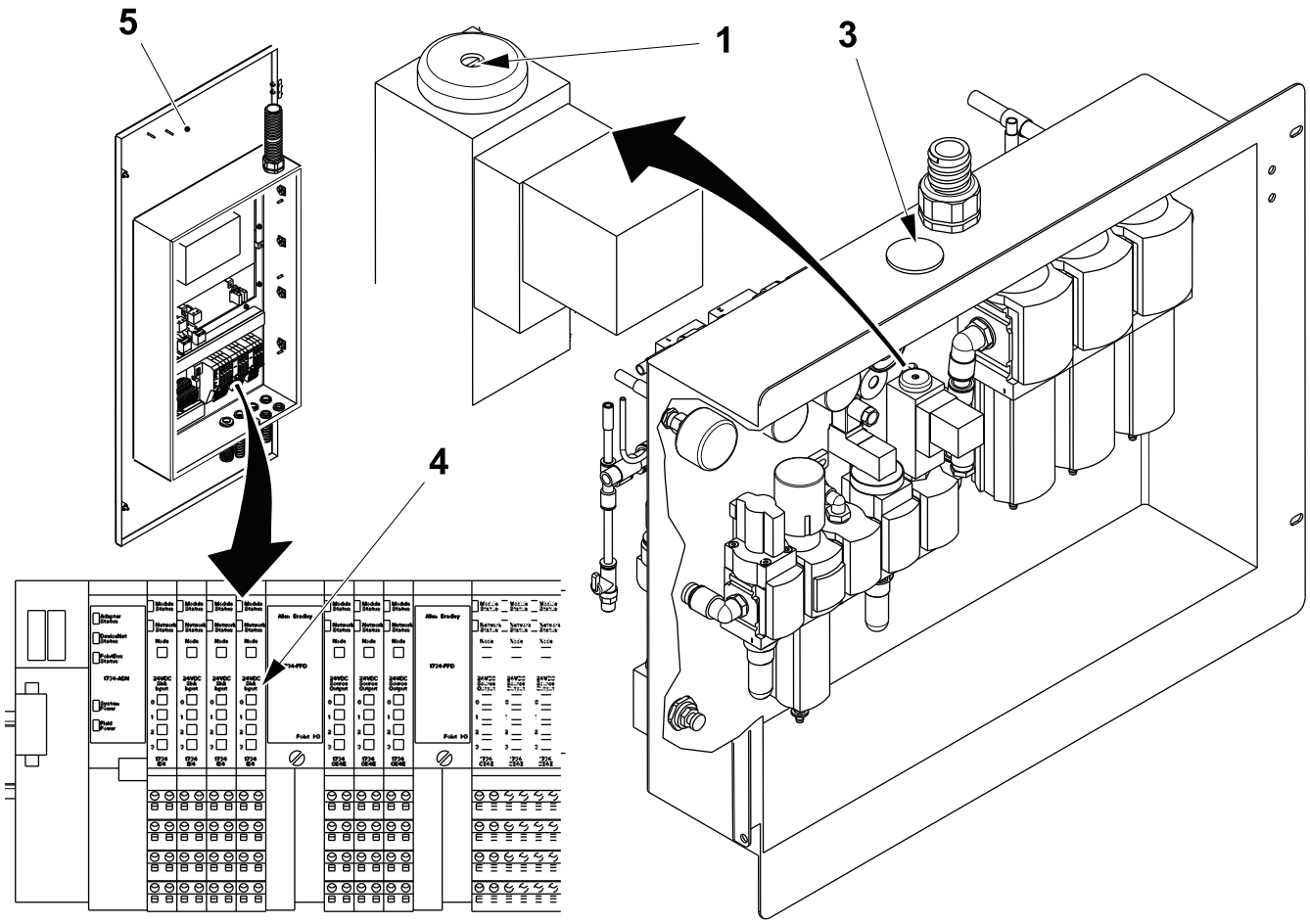

1 Setting screw
3 Plug
4 Led
5 Operator Interface

4.4.2-3 Pneumatic Panel - Clean Filter Regulator

Machine Status	Electrical supply disconnecting device in position I (ON) Main air valve ON
SPC Reference	2838672-0200

Air Filters

a) Press down and rotate the shut off valve (1) clockwise.

Note! The position shown in the illustration is OFF.

b) Press down on the blue button (2) and hold while rotating the filter housing (3).

c) Clean the internal filter by blowing air through it. If necessary replace the internal filter.

d) Assemble in the reverse order.

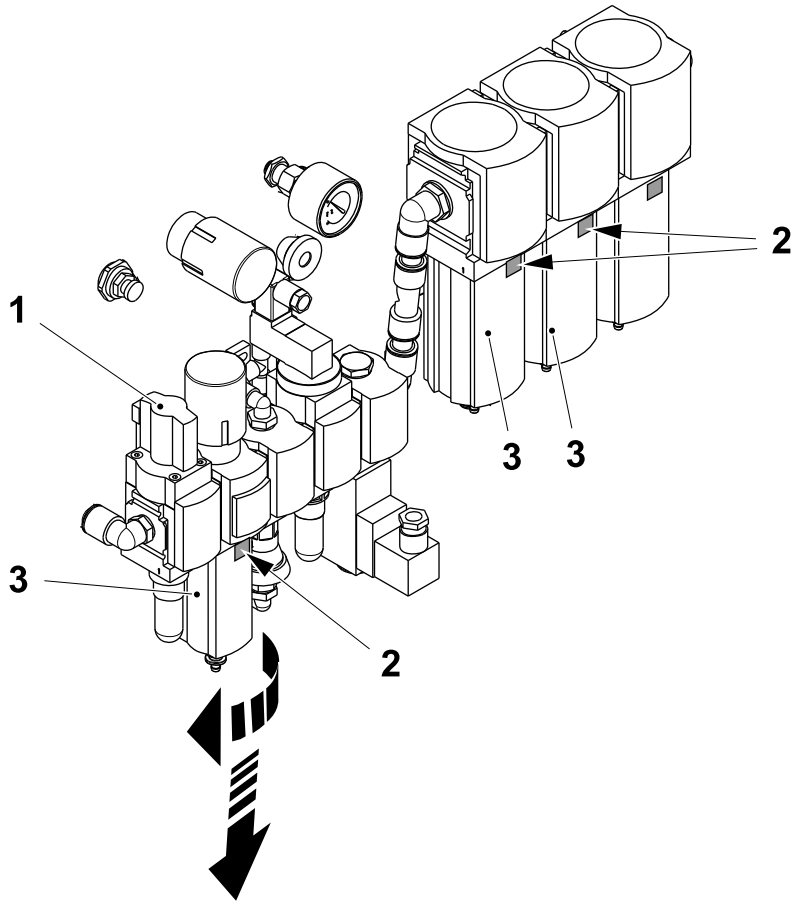

1 Shut off valve
2 Blue button
3 Filter housing

(Cont'd)

(Cont'd)

Oil Filter

a) Press down and rotate the shut off valve (1) clockwise.

b) Using the drain valve (2) empty any contents of the filter housing (3).

c) Press down on the blue button (4) and hold while rotating and pulling down on the filter housing (3).

d) Unscrew the filter element (5).

e) Replace and assemble in the reverse order.

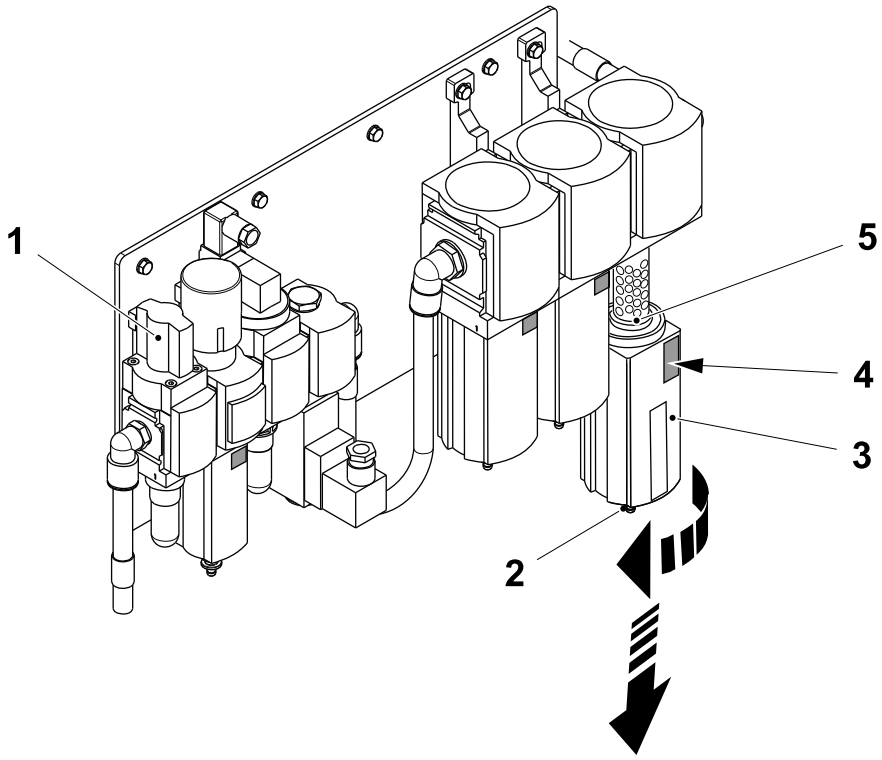

1 Shut off valve
2 Drain valve
3 Filter housing
4 Blue button
5 Filter element

4.4.2-4 Pneumatic Panel - Set Filter Regulator

Machine Status	Electrical supply disconnecting device in position I (ON) Main air valve ON
SPC Reference	2838672-0200

a) Press down and rotate the shut off valve (1) to switch the air on.

b) Rotate the pressure regulator knob (2) until the gauge (3) indicates 6.0 Bar / 0.6 MPa.

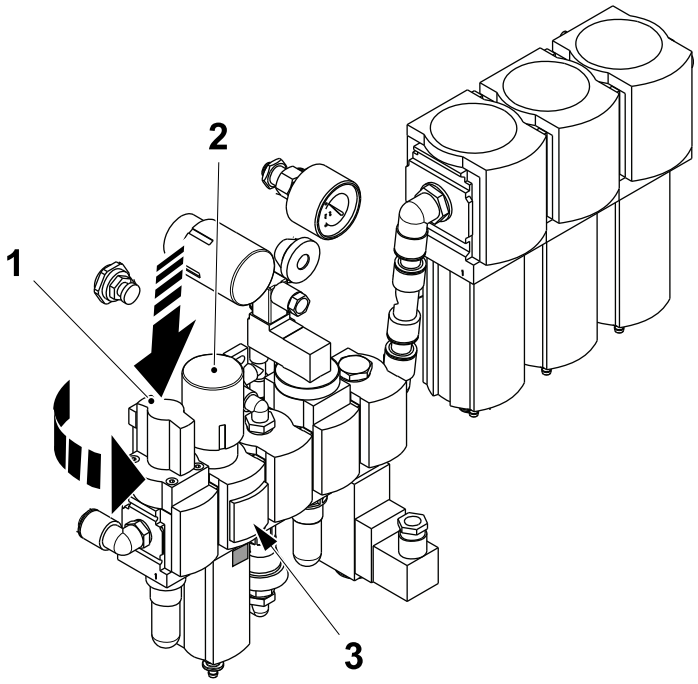

1 Shut off valve
2 Pressure regulator knob
3 Gauge

4.5 Machine Lubrication

4.5.1 Lubrication Unit (Pushdown)

4.5.1-1 Lubrication Unit (Pushdown)

Consumables	Food Grade Lubricant with PTFE, RM 2000T TP No. 90606-3683
SPC Reference	3208664-0100

System Functional Description

The lubrication system is a one-way automatic system. This means that the system to the pushdown must be bled to achieve functionality.

There is no manual lubrication button as to do so would force conveyor lubricant through the seals on the pushdown.

Conveyor lubricant is fed from the central lubrication pump through the main line distribution blocks and into the non return valves.

- The pump keeps the conveyor lubricant under pressure for a short while then the system is decompressed to a pressure of approximately 0.1 - 0.3 MPa.
- If the remaining pressure is to low air might enter the system.

A = 10 seconds	1 = Lubrication during production
B = 4 Hours	2 = Control of pressure
C = 8 seconds	3 = Control of oil level

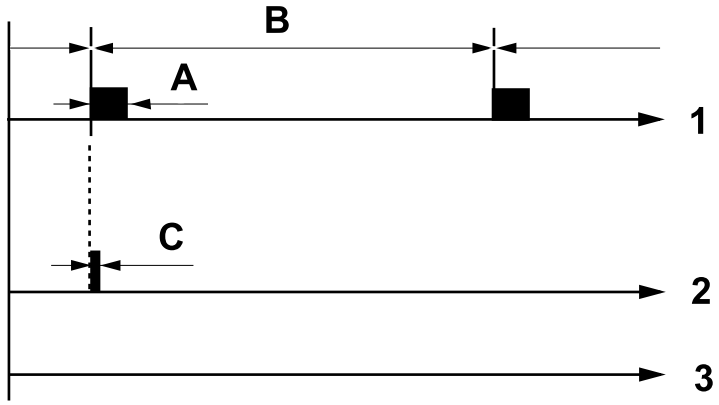

(Cont'd)

(Cont'd)

The time needed for the compression, depends on the viscosity of the lubricant, running temperature and the size of the system.

During production (drive motor on) the lubrication sequence "lubrication during running" is activated.

The lubrication sequences is:

- Automatic lubrication during production = one lubrication pulse **A** every fourth hour **B**.
- Should the system not depressurise within **C** a blue alarm is indicated and sounds.

A = 10 seconds	1 = Lubrication during production
B = 4 Hours	2 = Control of pressure
C = 8 seconds	3 = Control of lubricant level

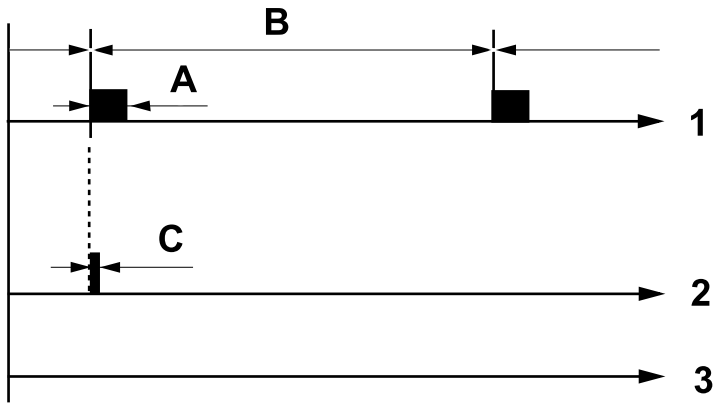

4.5.1.1 Lubrication Unit - Functional Description

The central lubrication unit consists of the level guard (1) and the pneumatic pump (2) which is built into the conveyor lubricant reservoir (3). The conveyor lubricant reservoir (3) is equipped with the air inlet pipe (4), the air exhaust (5), the air breather (6), and the main conveyor lubricant pipe (7). There is also a low pressure switch (8) and an conveyor lubricant filter (9).

Note! The air breather (6) can vary in shape.

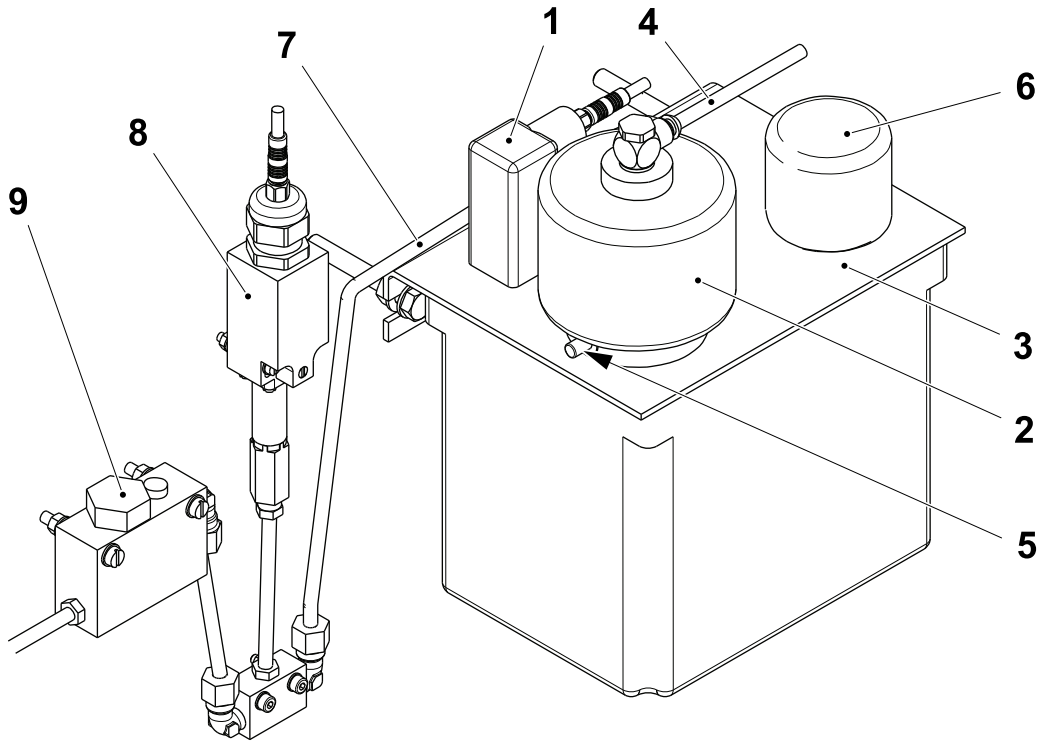

1 Level guard
2 Pneumatic pump
3 Conveyor lubricant reservoir
4 Air inlet pipe
5 Air exhaust
6 Air breather
7 Main conveyor lubricant pipe
8 Low pressure switch
9 Conveyor lubricant filter

(Cont'd)

(Cont'd)

The conveyor lubricant pump is equipped with a level guard. A warning light is activated at minimum level and a timer which counts 60 minutes starts. If the conveyor lubricant reservoir is not refilled within this time limit, the machine stops.

The minimum level is set at a level which prevents the suction pipe from sucking in from the surface level of the conveyor lubricant, where there might be dirt which is lighter than the conveyor lubricant.

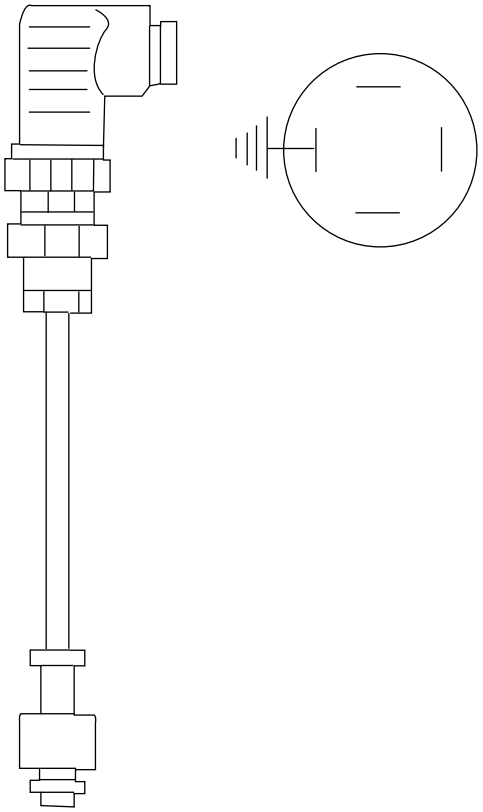

4.5.2 Central Lubrication - Check

4.5.2-1 Central Lubrication - Check Level Switch

Machine Status	Production
SPC Reference	3208664-0100

Level Switch V01B9001

a) Check the V01B9001 level switch (1) by pushing up the level switches magnetic float (2) to its top position. Make sure the recessed section is uppermost.

b) With a wiring tester check continuity between contact (3) and the contact (4), if there is no continuity change the level switch (1).

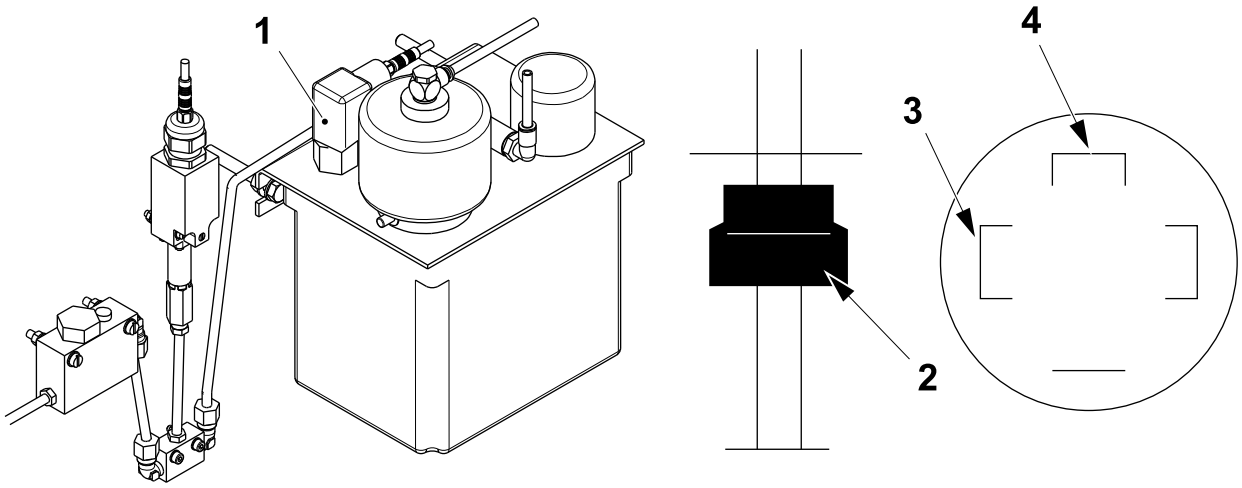

1 Level switch
2 Magnetic float
3 Contact
4 Contact

4.5.2-2 Central Lubrication - Check Pressure Switch

Machine Status	Production
SPC Reference	3208664-0100

Pressure Switch V01B9002

Remove the cap and check that the pin (1) moves when the solenoid valve for the lubrication pump is actuated and the connection of the switch (2) is closed.

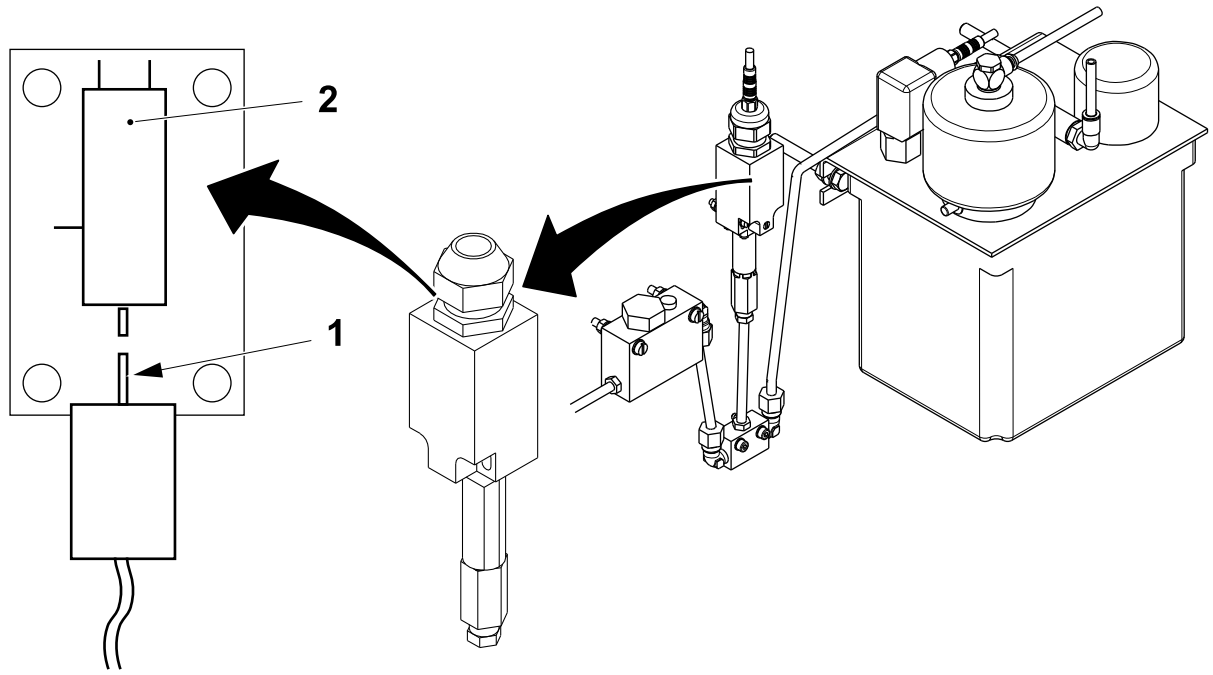

1 Pin
2 Switch

4.5.2-3 Pushdown Lubrication - Clean Conveyor Lubricant Tank

Machine Status	Electrical supply disconnecting device in position O (OFF) Main air valve OFF
Consumables	Food Grade Lubricant with PTFE, RM 2000T TP No. 90606-3683
SPC Reference	3208664-0100

a) Remove the screws (1) and drain any pollutants from the reservoir (2).

b) Clean the reservoir (2) and refill with new conveyor lubricant.

c) Install the reservoir (2) and tighten the screws (1).

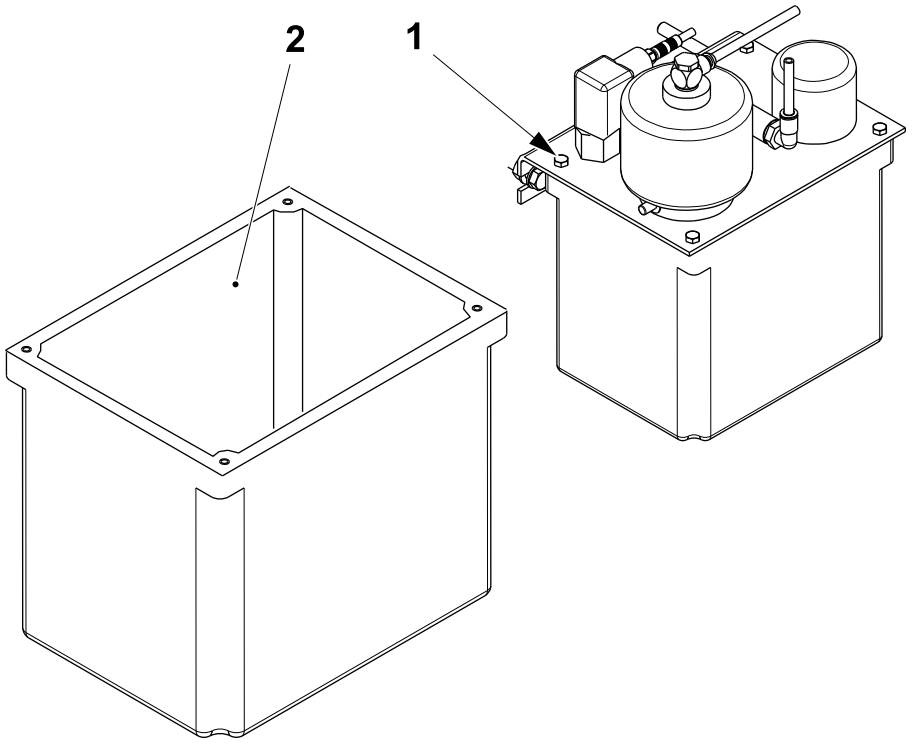

1 Screw
2 Reservoir

4.5.2-4 Pushdown Lubrication - Fault Finding

Machine Status	Electrical supply disconnecting device in position I (ON) Main air valve ON
SPC Reference	3208664-0100

If No Pressure Builds Up In System

To find the fault, do the following:

a) Check the conveyor lubricant level.

b) Disconnect one conveyor lubricant hose and check if there is pressure in the hose when the solenoid valve is opened.

c) If there is still no pressure, disconnect the air hose at the pump and check if there is air pressure in the hose when the solenoid valve is opened. Use a pressure gauge (range 0 - 10 bar) to check that the air pressure to the pump is approximately 6 bar.

d) Check all pressure lines and manifolds (distribution blocks) for leakage.

e) If all these checks have been carried out without finding any fault, replace the pump. Check the lubrication system after replacing the pump.

If Conveyor Lubricant Is Not Delivered To One Or More Of The Lubrication Points

To find the fault, do the following:

a) Check the main conveyor lubricant line concerned is clear of obstructions.

b) Check the capacity of the pump with the aid of a pressure gauge in accordance with the directives on periodical maintenance.

4.5.3 Nipple Lubrication

4.5.3-1 Package Line - Lubricate the Grease Nipples

Machine Status	Electrical supply disconnecting device in position I (ON) Main air valve ON
Special Equipment	Oil Gun - TP No. 3243399-0101 Lubrication Equipment (manual pumps or pneumatic pumps)
Consumables	Oil - TP No. 344414-0000
SPC Reference	2838648-0200

Install the Oil Gun

Note! It's recommended to use a lubrication equipment (1) such as: manual pumps or pneumatic pumps.

Note! The hose (2) in the oil gun (3) is suitable to reach the grease nipples that are in difficult positions.

Note! The oil gun (3) is equipped with a pressure regulator to avoid too high pressures of the oil.

a) Remove any oil guns (4) from the lubrication equipment (1) and install the oil gun (3).



1 Lubrication equipment 2 Hose 3 Oil gun 4 Oil guns

(Cont'd)

(Cont'd)

Lubricate the Grease Nipples

Note! It's recommended that the nipples are oiled every 5000 hours with Kluberoil 4 UH1 320-N (TP No. 344414-0000).

a) Oil through the grease nipple (1) using the oil gun (2).

Note! The proper quantity of oil is reached when the oil comes out of the non-return valve (3).

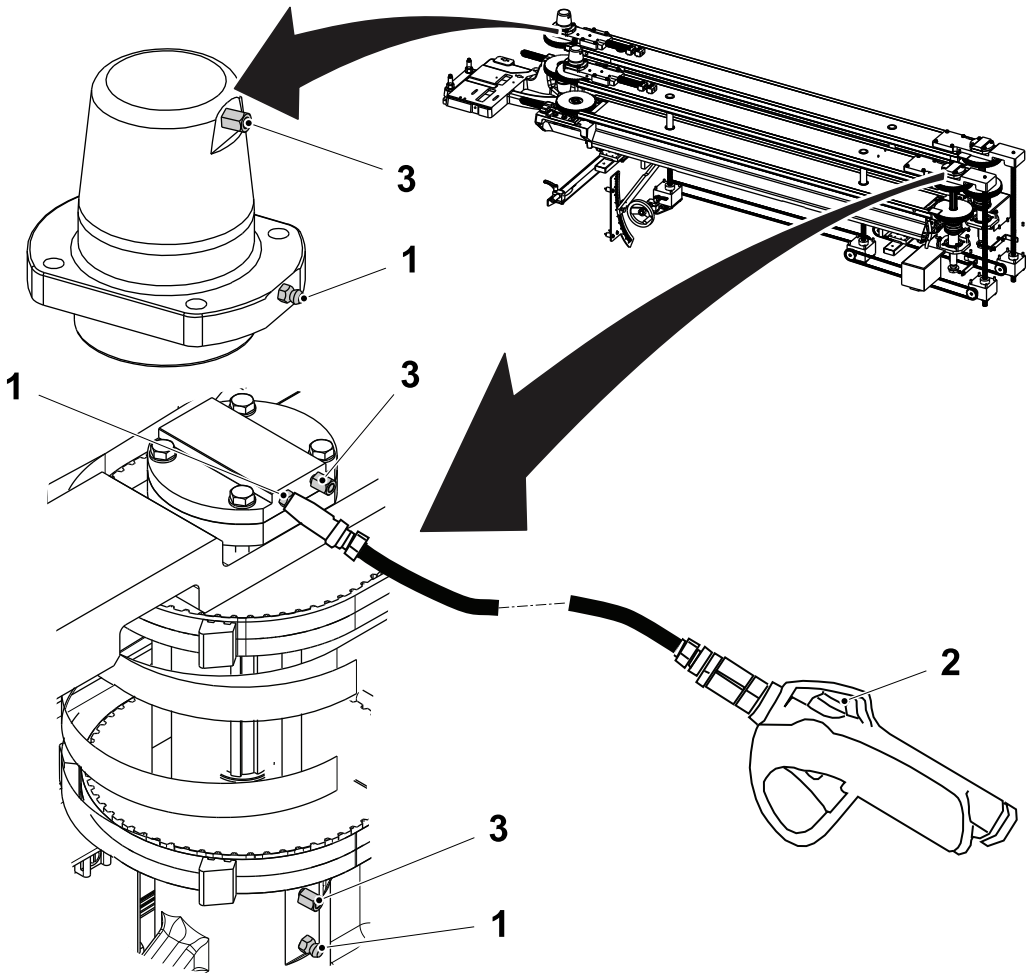

1 Grease nipple
2 Oil gun
3 Non-return valve

4.5.3-2 Belt Brake - Lubricate the Grease Nipples

Machine Status	Electrical supply disconnecting device in position I (ON) Main air valve ON
Special Equipment	Oil Gun - TP No. 3243399-0101
Consumables	Oil - TP No. 344414-0000
SPC Reference	2838648-0200

Note! It's recommended that the nipples are oiled every 5000 hours with Kluberoil 4 UH1 320-N (TP No. 344414-0000).

a) Install the oil gun (2), see Install the Oil Gun on page 4-38.

b) Oil through the grease nipple (1) using the oil gun (2).

Note! The proper quantity of grease is reached when the grease comes out of the non return valve (3).

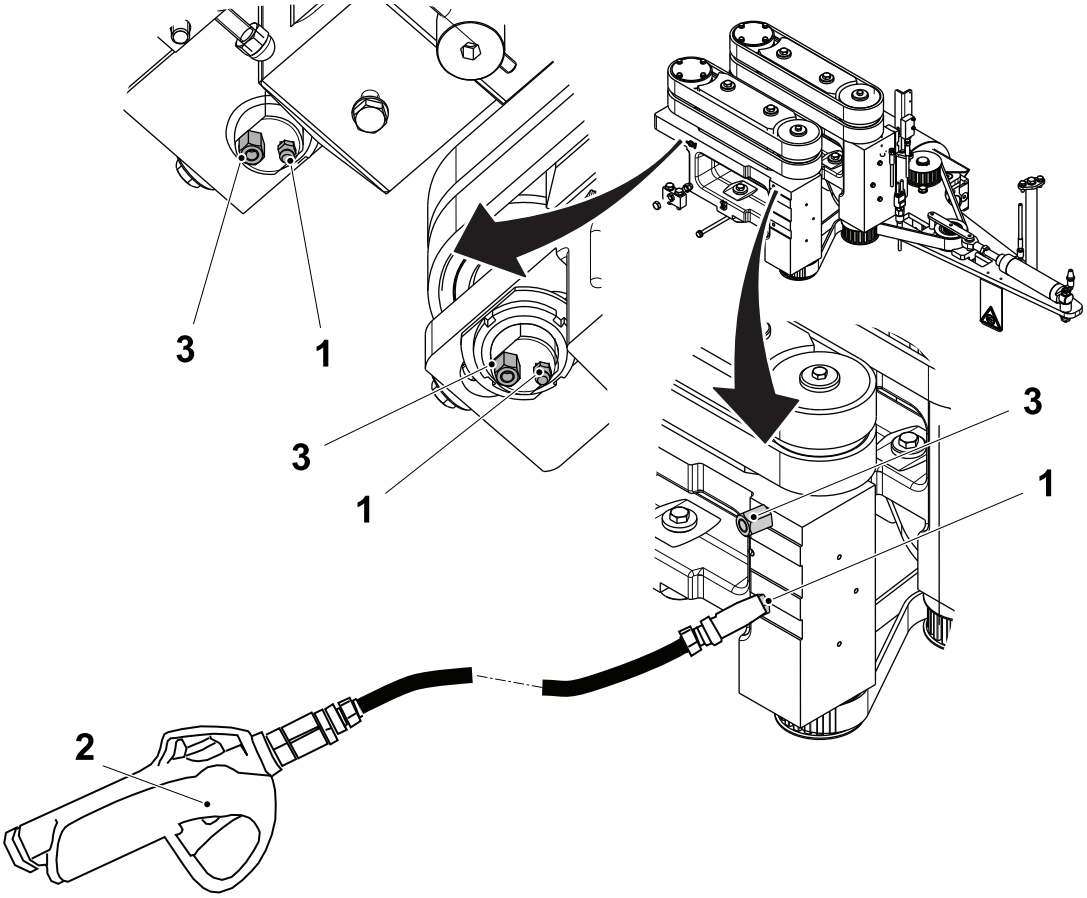

1 Grease nipple 2 Oil gun 3 Non return valve

4.5.3-3 Pushdown - Lubricate the Grease Nipples

Machine Status	Electrical supply disconnecting device in position I (ON) Main air valve ON
Special Equipment	Oil Gun - TP No. 3243399-0101
Consumables	Oil - TP No. 344414-0000
SPC Reference	2838648-0200

Note! It's recommended that the nipples are oiled every 5000 hours with Kluberoil 4 UH1 320-N (TP No. 344414-0000).

a) Install the oil gun (2), see Install the Oil Gun on page 4-38.

b) Oil through the grease nipple (1) using the oil gun (2).

Note! The proper quantity of grease can be reached when the grease exit to the non return valve (3).

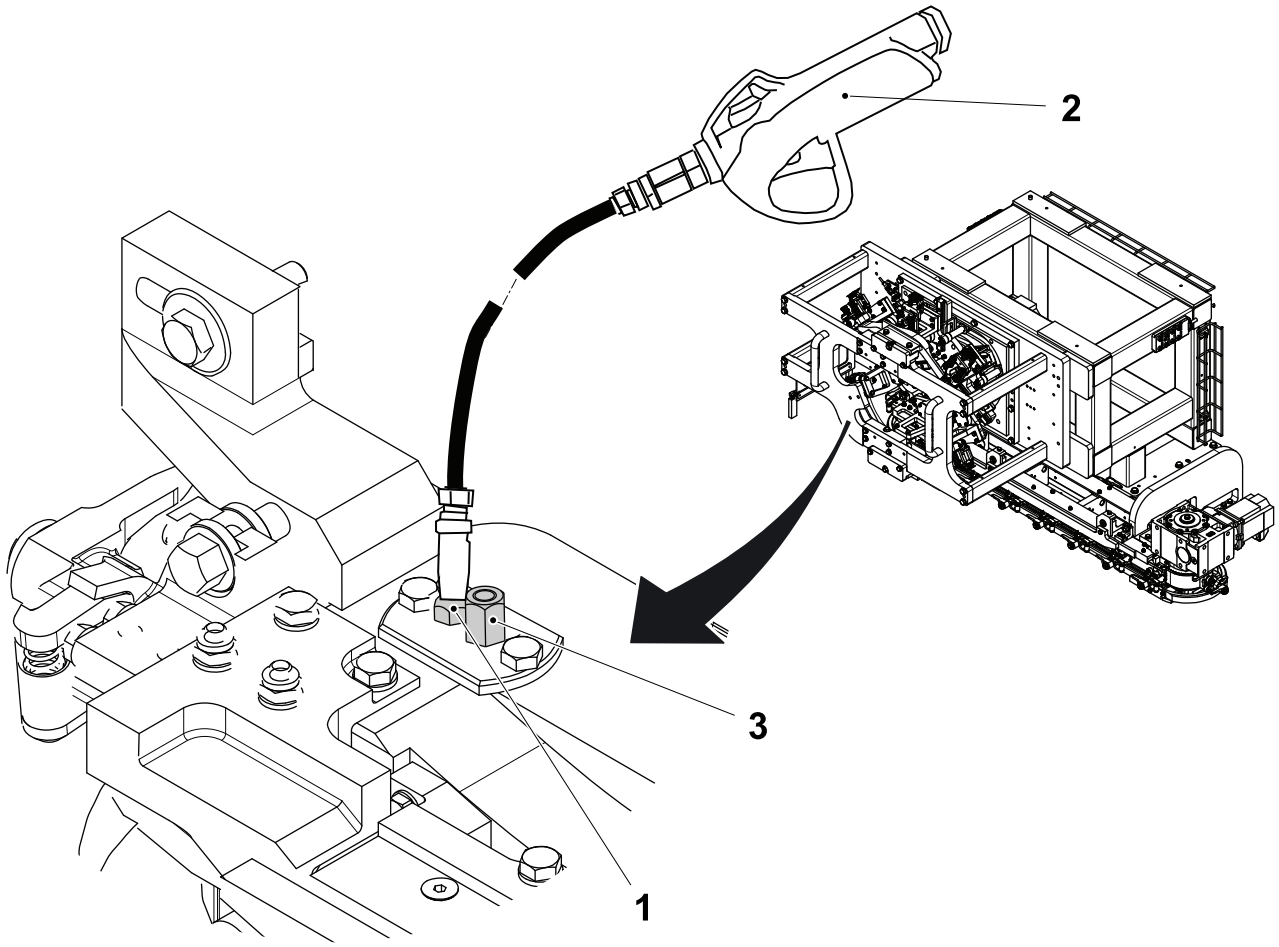

1 Grease nipple
2 Oil Gun
3 Non return valve

4.6 Hotmelt Unit

4.6.1 Functional Description

DANGER

Risk of immediate danger to life.
The voltage is 400V inside the hotmelt unit. There is risk of immediate danger to life through electrical shock if the warning signs are ignored.

WARNING

Risk of personal injury.
Carefully follow the safety instructions in the ii Safety Precautions chapter and the Nordson manual.

Note! The hotmelt wheel (1) are part of the Screw Cap Hotmelt Applicator and are described further in Chapter 5.7 Hotmelt Wheel.

The hotmelt equipment consists of the hotmelt wheel (1), the hotmelt unit (2), the hose (3) and the hotmelt tank (4). The tank (4), the hose (3) and the hotmelt wheel (1) are electrically heated.

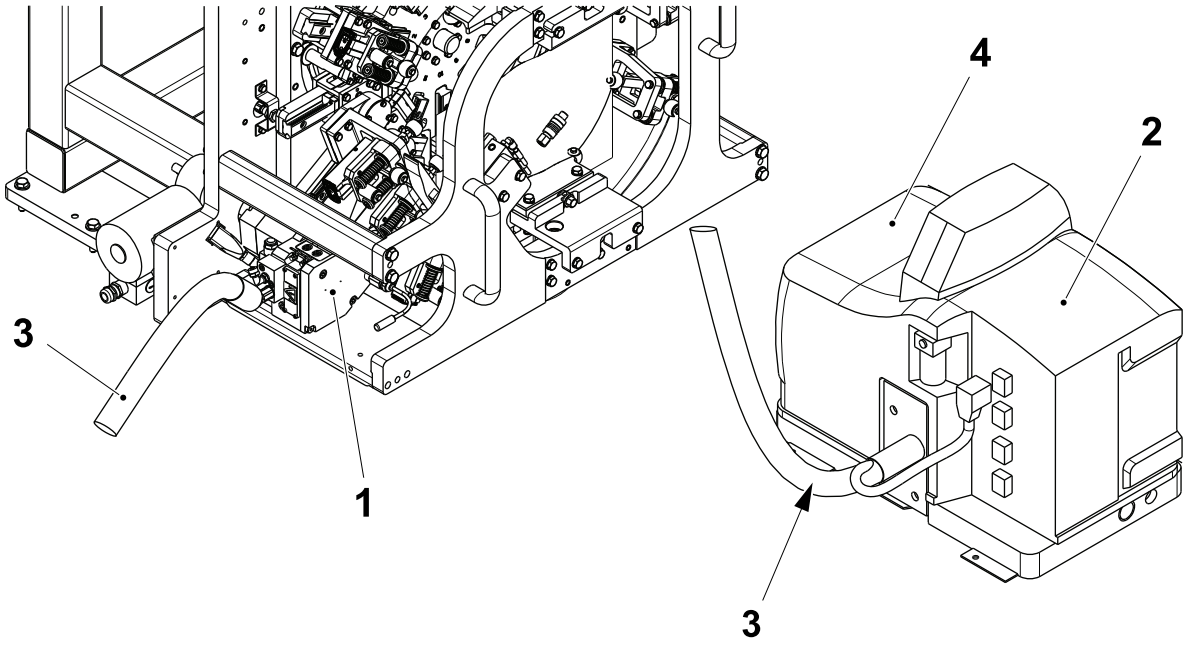

1 Hotmelt wheel
2 Hotmelt unit
3 Hose
4 Tank

(Cont'd)

(Cont'd)

When the system is turned ON, the tank (4), hose (3) and the hotmelt wheel (1) are heated. When the tank, the hose and the guns are within 3°C (37.5°F) of their set point temperatures a time delay starts, see . The time delay provides additional time for the adhesive in the tank to melt. During the time delay, the green ready LED (5) flashes. When the green ready LED (5) is fixed, the hotmelt equipment is ready.

The adhesive passes through the hotmelt pump into a distribution manifold. The adhesive then flows through a filter into the hose (3) and to the hotmelt wheel (1).

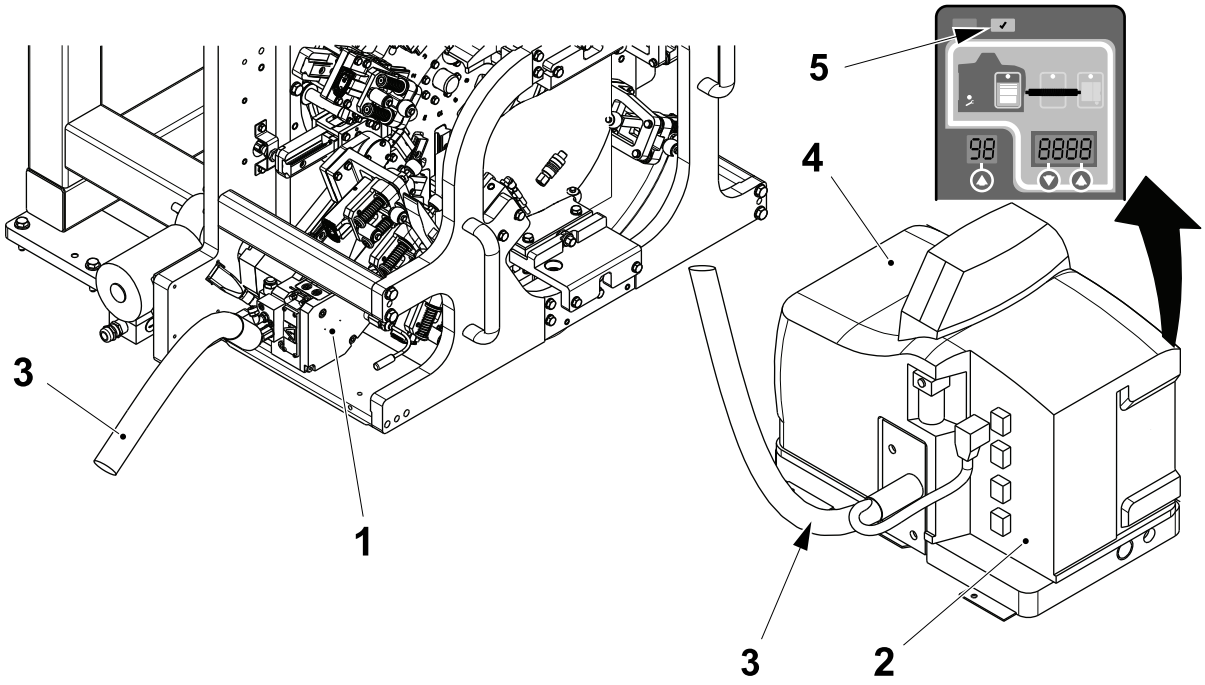

1 Hotmelt wheel
3 Hose
4 Tank
5 Ready LED

4.6.1-1 Hotmelt Panel Overview

Machine Status	Electrical supply disconnecting device in position I (ON) Main air valve ON
SPC Reference	2758511-0200

Panel Overview

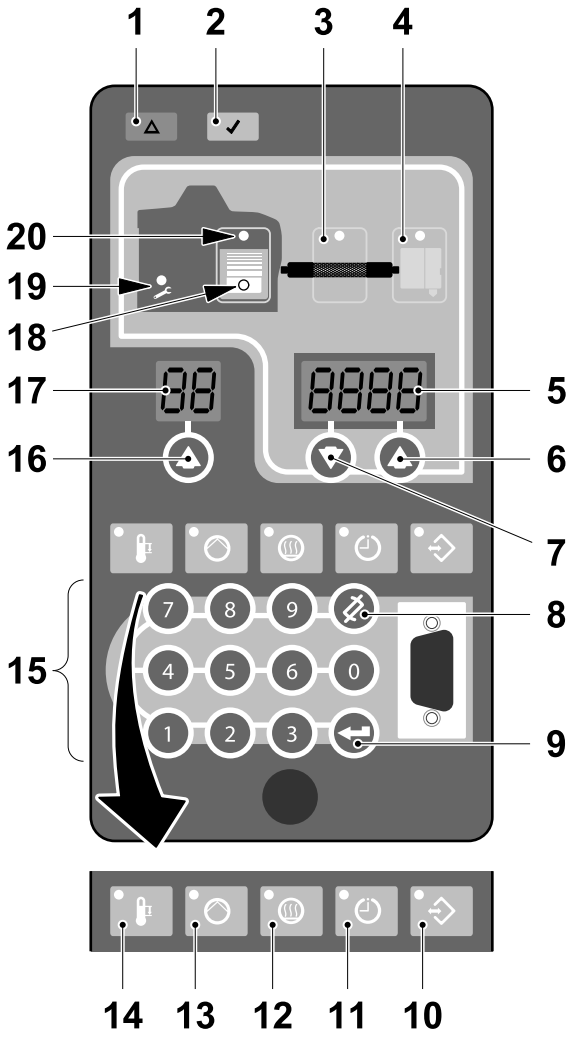

1 Fault LED
2 Ready LED
3 Hose Key
4 Gun Key
5 Multipurpose display
6 Up Key for Multipurpose display
7 Down Key for Multipurpose display
8 CLEAR/RESET key
9 ENTER key
10 SETUP key
11 SEVEN DAY CLOCK key
12 HEATER key
13 PUMP key
14 STANDBY key
15 Keypad
16 UP key for selector display
17 Selector key
18 Low level LED (Not used)
19 Service LED (filter change required)
20 TANK key

(Cont'd)

(Cont'd)

Parameter Description

Parameter	Parameter Name	Purpose	Setting
4	Ready Time Delay	A timer that delays the activation of the Ready LED after the tank, hose and gun are at the set point temperature. This allows additional time for the hotmelt material to melt.	For Jowathern 250.00 - 10 minutes
20	Temperature Units	Sets the display temperature units to Celsius or Fahrenheit. 0 = Celsius, 1 = Fahrenheit	Celsius
21	Over Temperature Delta Value	Sets the number of degrees (delta value) that any heated component can exceed its assigned set point before an over temperature fault occurs	5 Deg C
22	Under temperature Delta Value	Sets the number of degrees (delta value) that any heated component can drop below its assigned set point before an under temperature fault occurs	5 Deg C
30	Standard Input 1	Hose/Wheel/ Enable/Disable	6
31	Standard Input 2	Stand-by NO/OFF	1
40 (or 8)	Standard Output 1	Ready and Pump is ON	2

4.6.2 Hotmelt Equipment

4.6.2-1 Hotmelt Equipment - Check

Machine Status	Electrical supply disconnecting device in position I (ON) Main air valve ON
SPC Reference	2758511-0200

WARNING

Risk of burns.

Hot adhesive. Wear safety glasses, protective gloves and other protective clothing to avoid injuries from the hot adhesive.

Note! The hotmelt unit must be at operating temperature. To do this the machine must be at STEP 1.

a) Check the hose (1) and the connection (2) for wear, damage and leaks. Change parts if necessary.

b) Look at the colour of the hotmelt in the tank. The colour should be light yellow. If the hotmelt material has become brown, empty the tank and fill with new hotmelt, see 4.6.2-2 Hotmelt Equipment - Empty Tank on next page.

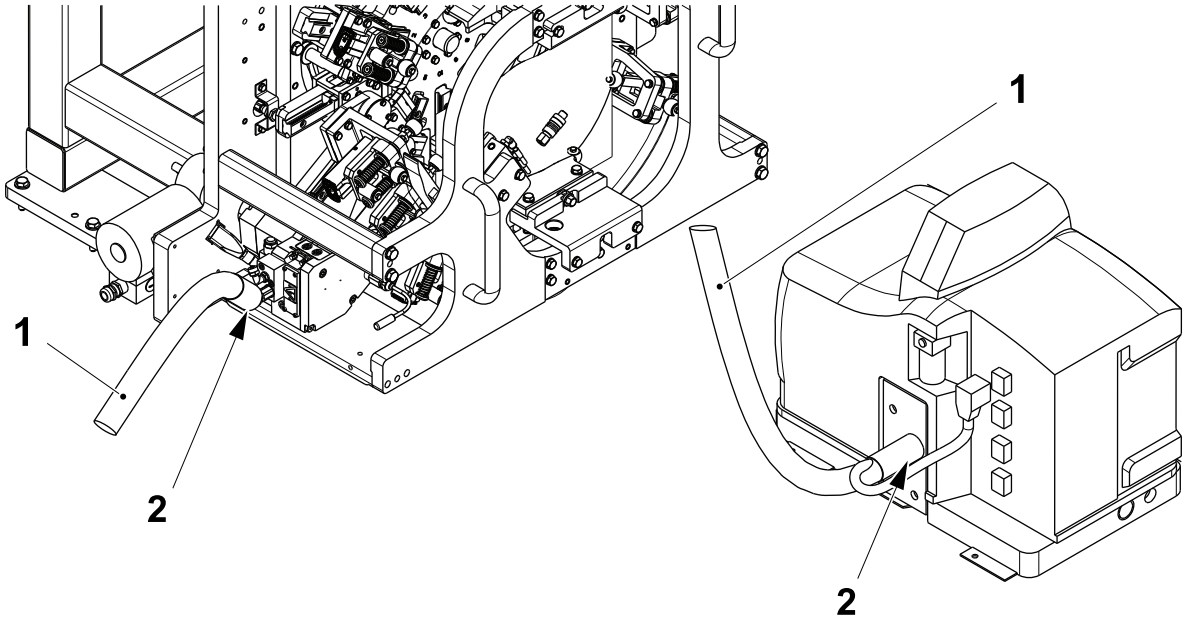

1 Hose
2 Connection

4.6.2-2 Hotmelt Equipment - Empty Tank

Machine Status	Electrical supply disconnecting device in position I (ON) Main air valve ON step 2
SPC Reference	2758511-0200

Purge the Hotmelt Hose

a) Loosen the nut (1) and remove the hose (2).

Note! Leave the hose (2) connected to the cable (3). The cable (3) is long enough to operate.

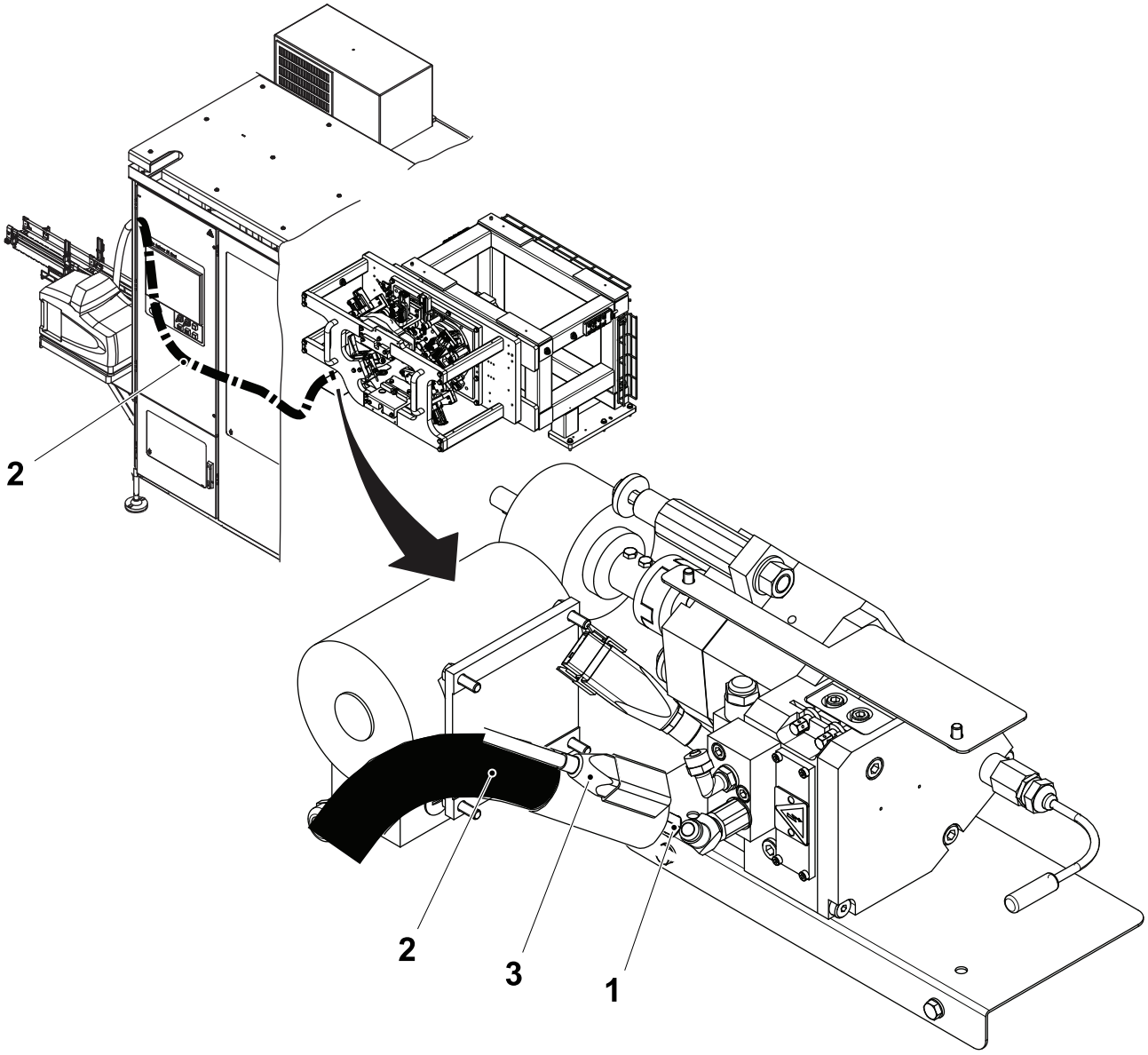

1 Nut
2 Hotmelt hose
3 Cable

(Cont'd)

(Cont'd)

b) Make sure that the main air supply valve (4) is turned ON.

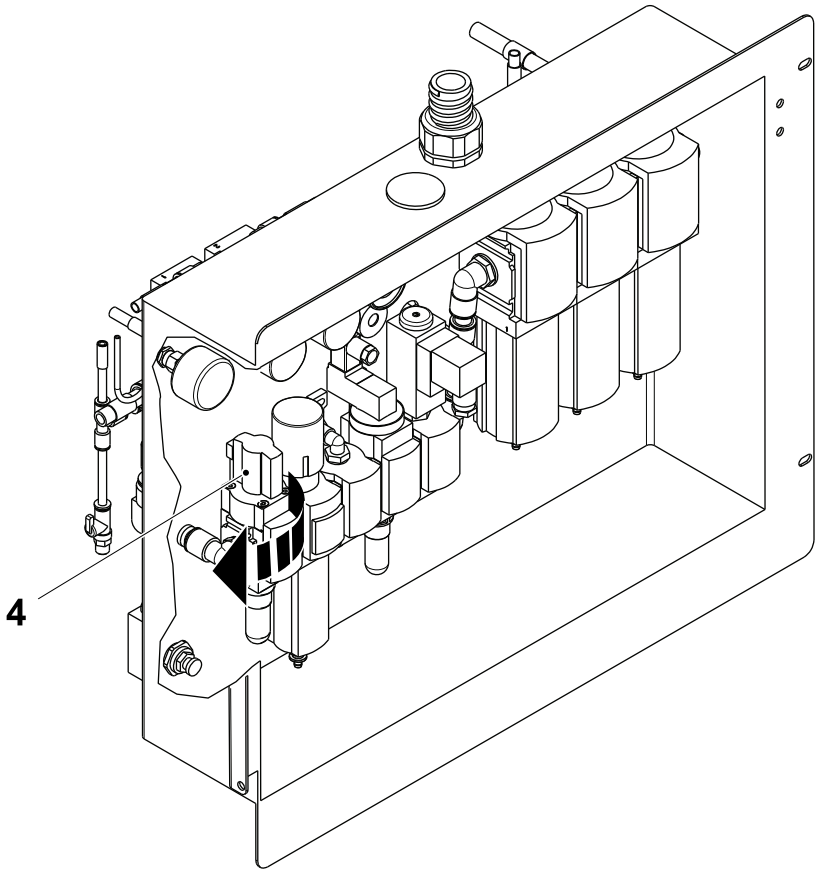

4 Valve

(Cont'd)

(Cont'd)

c) Turn the pressure regulator (5) in a counter clockwise direction to reduce the operating air pressure to 0 bar. The pressure is shown on the gauge (6).

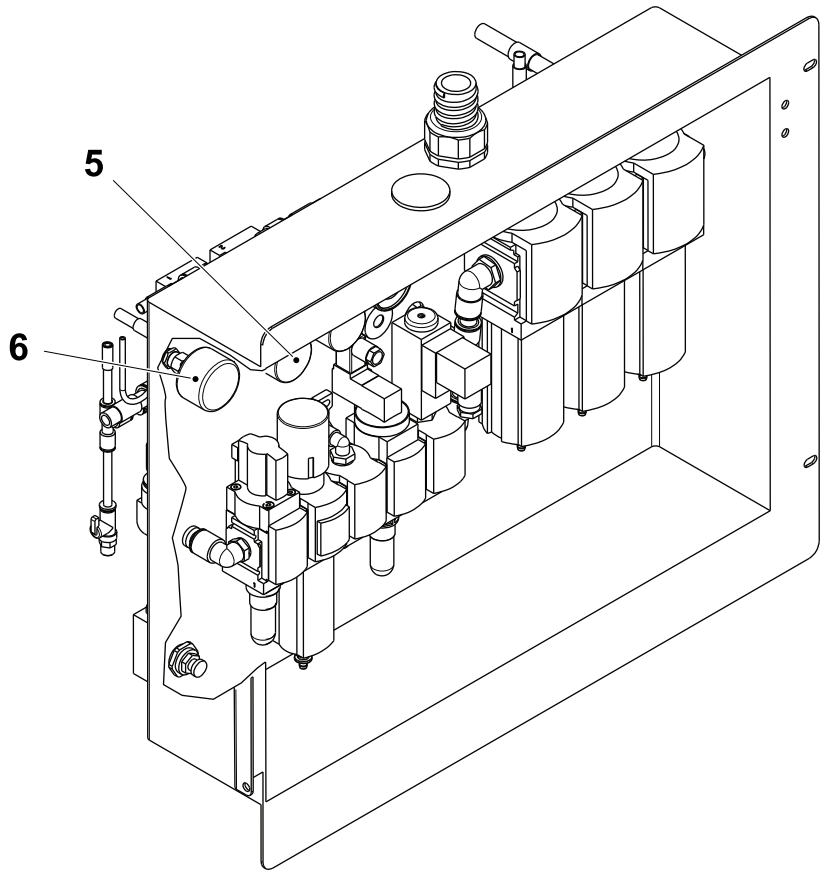

5 Regulator
6 Gauge

(Cont'd)

(Cont'd)

WARNING

Risk of burns.

Hot adhesive. Wear safety glasses, protective gloves and other protective clothing to avoid injuries from hot adhesive.

Note! The hotmelt equipment must be at operating temperature.

Note! Do not let hotmelt adhesive go onto machine parts.

d) Put the hose (2) into a can (7).

e) Step up the machine at STEP 2.

f) Set the pressure of the hotmelt unit at about 1 bar (0.1 MPa).

g) Hold the hose while the hotmelt is filling the can (7).

h) Set the pressure of the hotmelt unit at zero as soon as the new hotmelt is coming from the hose.

i) Assemble in the reverse order.

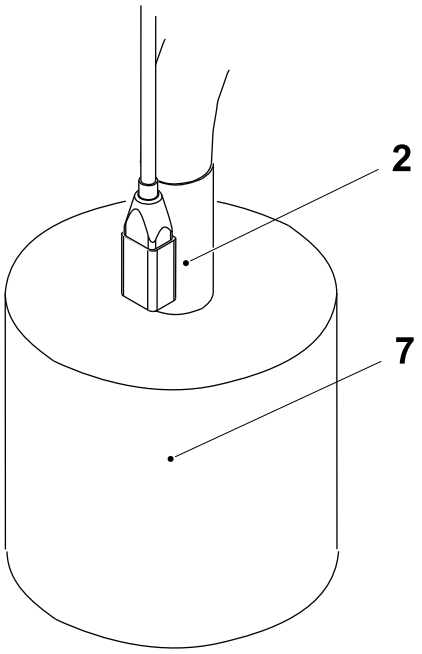

2 Hotmelt hose

7 Can

(Cont'd)

(Cont'd)

Empty Tank

a) Make sure that the main air supply valve (1) is turned ON.

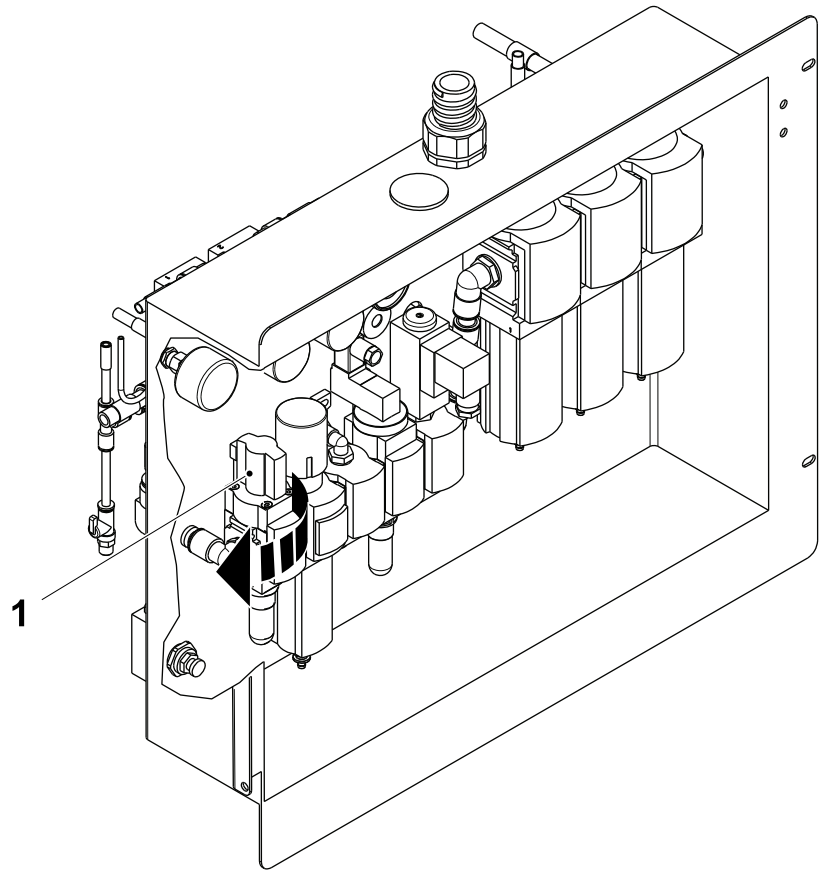

1 Valve

(Cont'd)

(Cont'd)

WARNING

Risk of burns.

Hot adhesive. Wear safety glasses, protective gloves and other protective clothing to avoid injuries from hot adhesive.

Note! The hotmelt equipment must be at operating temperature.

Note! Do not let hotmelt adhesive go onto machine parts.

b) Step up the machine to Step 2.

c) Turn the pressure regulator (2) in a counter clockwise direction to reduce the operating air pressure to 1.4 bar (0.14 MPa). The pressure is shown on the gauge (3).

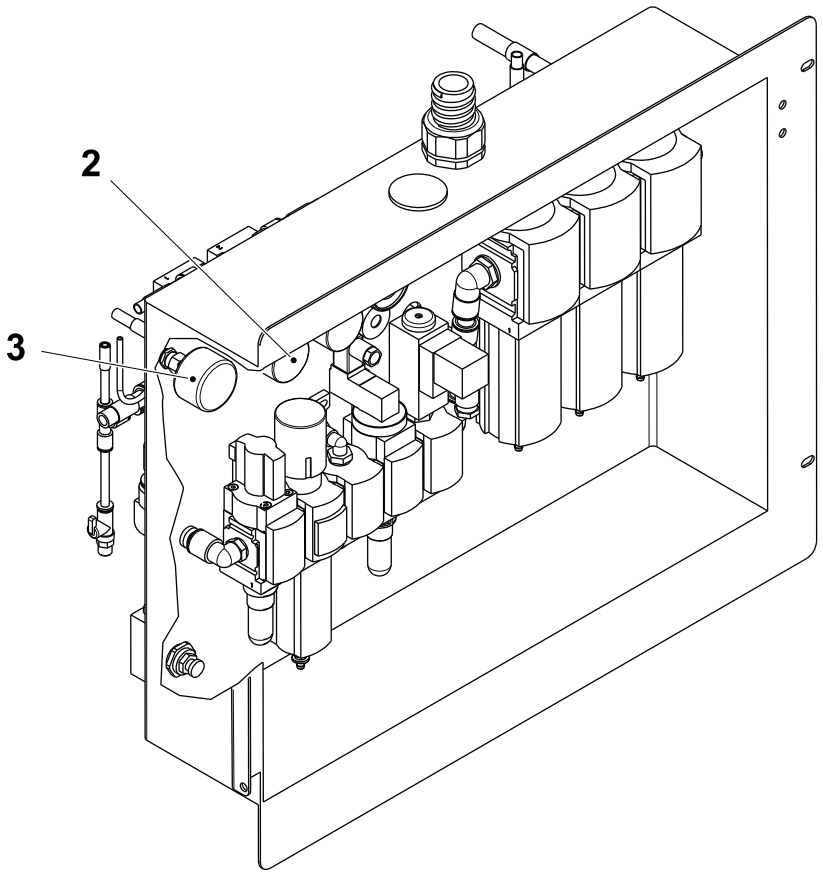

2 Regulator
3 Gauge

(Cont'd)

(Cont'd)

d) Pull down the drain chute (4) and put a container under the drain chute.

e) Slowly turn the drain valve (5) counterclockwise until the adhesive begins to flow.

f) Empty the tank (6).

g) Close the drain valve (5) in a clockwise direction and push up the drain chute (4).

h) If required, fill the tank (6) with adhesive. For recommended type of hotmelt material, see 11.1.1 Pressure/Adhesive/Temperature.

i) Set the air pressure regulator, see 4.6.2-6 Hotmelt Equipment - Set Pressure.

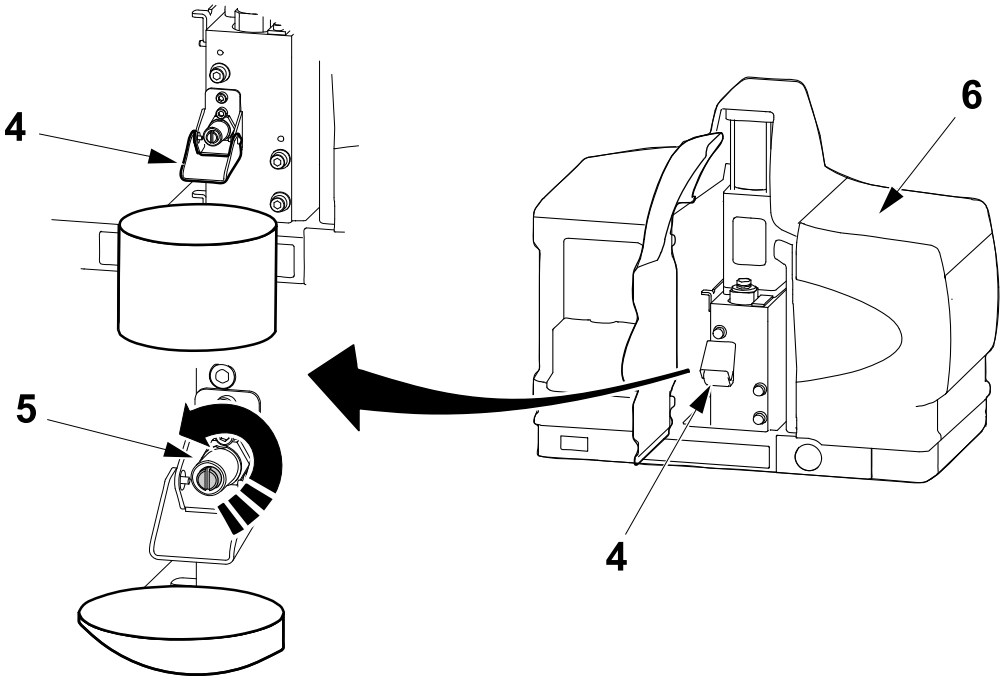

4 Drain chute
5 Drain valve
6 Tank

4.6.2-3 Hotmelt Equipment - Change Filter

Machine Status	Electrical supply disconnecting device in position O (OFF) Main air valve OFF
SPC Reference	2758511-0200

WARNING

Risk of burns.

Hot adhesive. Wear safety glasses, protective gloves and other protective clothing to avoid injuries from hot adhesive.

Note! The hotmelt equipment must be at operating temperature.

Note! Do not let hotmelt adhesive go onto machine parts.

a) Release the air pressure, see 4.6.2-2 Hotmelt Equipment - Empty Tank.

b) Put a container below the drain chute (1) and slowly open the drain valve (2) to relieve system pressure.

c) Remove the filter (3).

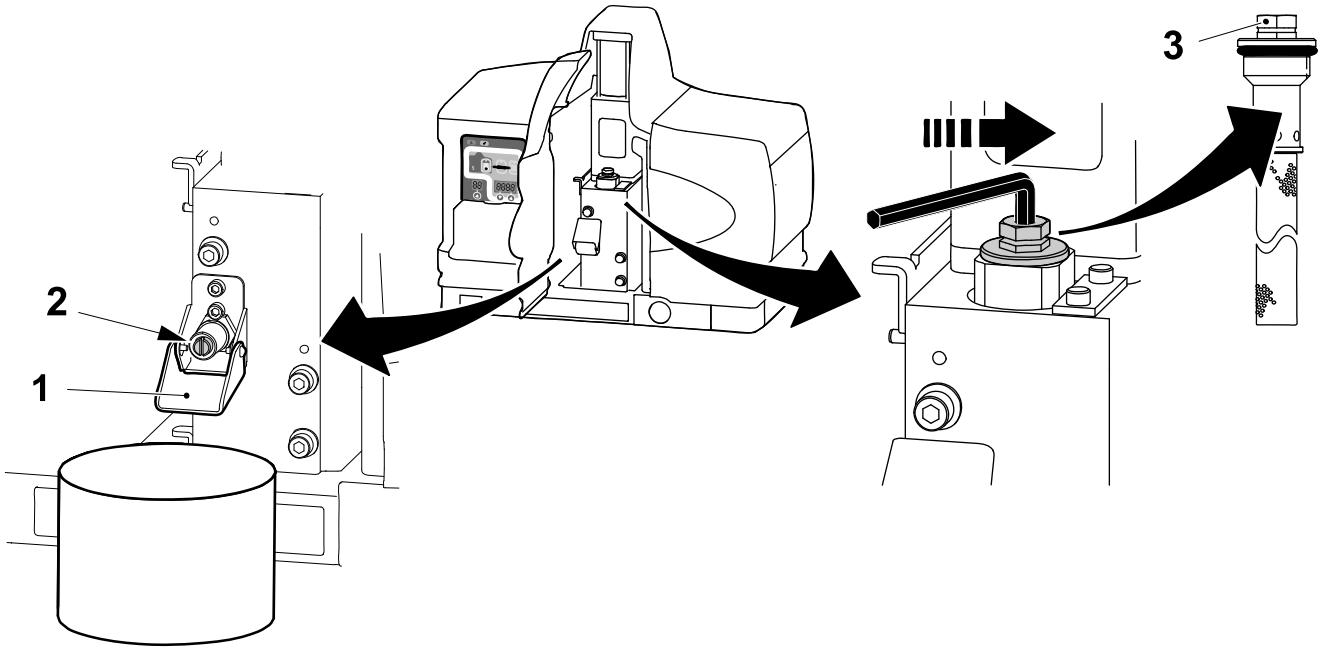

1 Drain chute
2 Drain valve
3 Filter

(Cont'd)

(Cont'd)

d) Before the new filter is installed, check that the O-ring (4) is in good condition and if necessary replace the O-ring (4).

e) Install the filter (3) and tighten to 4.5 Nm (40 in.lb.).

f) Close the drain valve (2).

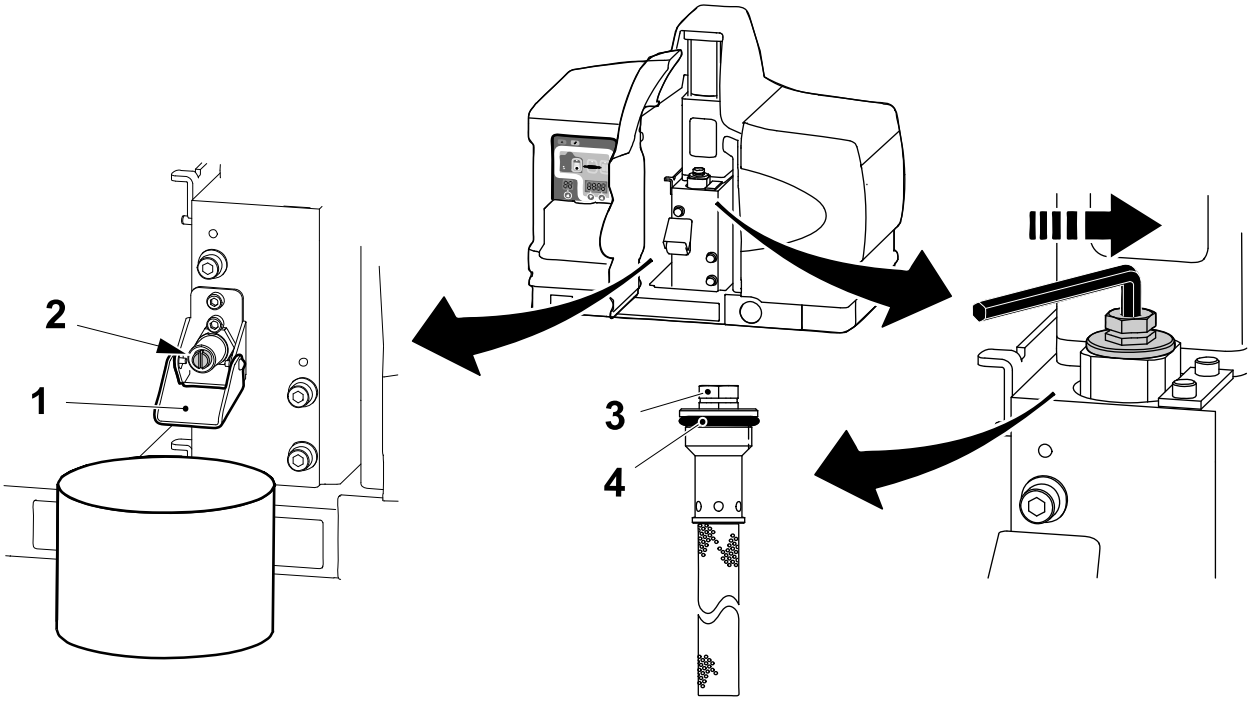

2 Drain valve
3 Filter
4 O-ring

4.6.2-4 Hotmelt Equipment - F2 Alarm

Machine Status	Electrical supply disconnecting device in position I (ON) Main air valve ON STEP2
SPC Reference	2758511-0200

Note! If the guns have cooled down, an alarm “F2” locks the hotmelt unit. The hotmelt unit needs to be reset and reheated.

a) Press the CLEAR/RESET-key (1).

b) Press the HEATER-key (2).

c) The hotmelt unit starts to heat up.

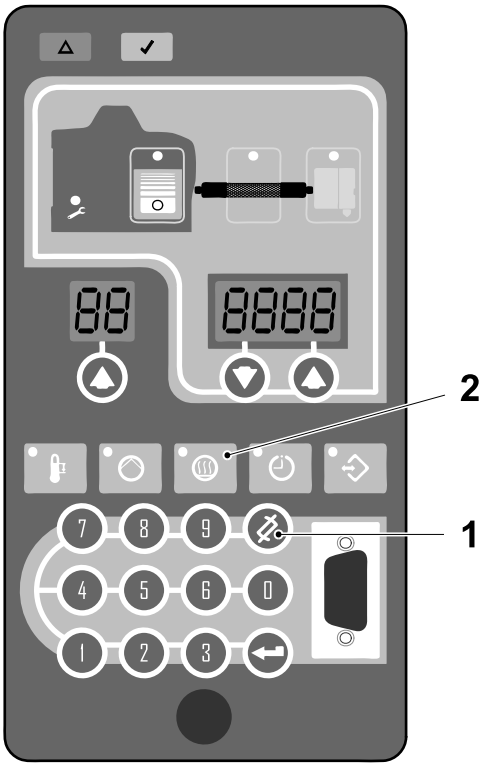

1 CLEAR/RESET-key
2 HEATER-key

4.6.2-5 Set Tank, Hose and Gun Temperatures

Machine Status	Electrical supply disconnecting device in position I (ON) Main air valve ON
SPC Reference	2758511-0200

Note! See 11.1.1 Pressure/Adhesive/Temperature for temperature values.

a) Press the TANK-key (1), the HOSE-key (2) or the Gun-key (3) for three seconds.

b) The digit “1” appears in the selector display (4).

c) Use the UP-key (5) or the keypad (6) to change the digit in the selector display (4).

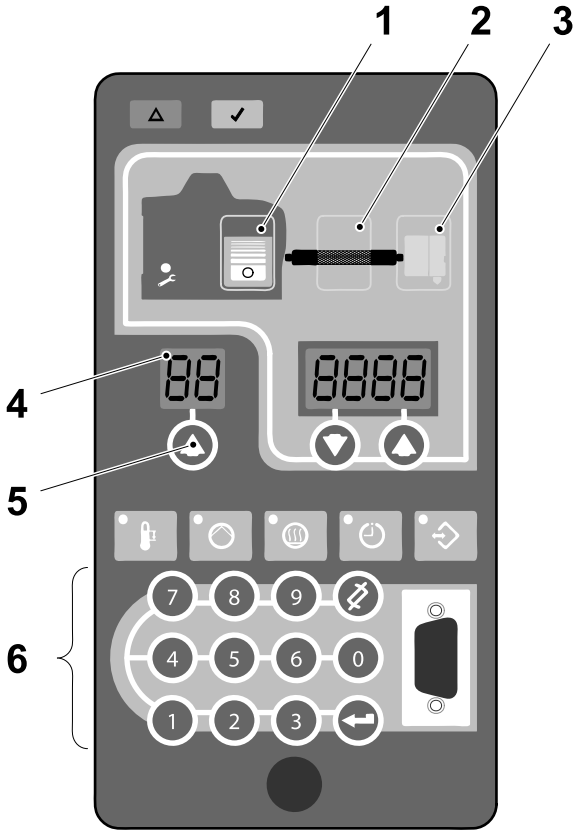

1 TANK-key
2 HOSE-key
3 Gun-key
4 Selector display
5 UP-key
6 Keypad

(Cont’d)

(Cont'd)

d) Press the ENTER-key (7) to confirm the selected digit.

e) The multipurpose display (8) starts to flash.

f) Press the DOWN-key (9), the UP-key (10), or the keypad (6) to enter the required value.

g) Press the ENTER-key (7) to confirm the required value.

h) Either continue to set more temperature values or press the SETUP-key (11) twice to exit the setup procedure.

Note! If the current setting can not be changed, the display is password protected. For further information read Nordson Pro Blue Adhesive Melters Manual, Chapter 4, "Enter the Melter Password".

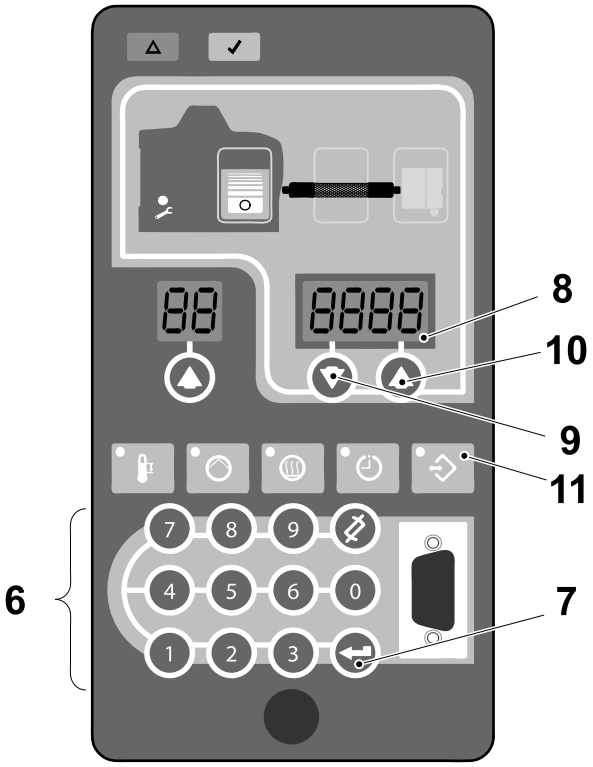

6 Keypad
7 ENTER-key
8 Multipurpose display
9 DOWN-key
10 UP-key
11 SETUP-key

4.6.2-6 Hotmelt Equipment - Set Pressure

Machine Status	Electrical supply disconnecting device in position I (ON) Main air valve ON
SPC Reference	2758511-0200

WARNING

Risk of burns.

Hot adhesive. Wear safety glasses, protective gloves and other protective clothing to avoid injuries from hot adhesive.

a) To change the hotmelt unit pressure turn the regulator (1) clockwise to increase the pressure.

b) STEP DOWN the machine to allow the pressure to dissipate.

c) STEP UP the machine and read the setting on the pressure gauge (2).

Note! Make adjustments in small increments.

d) Repeat steps a) to c) until the correct pressure is reached.

e) Check glue bead size by weighing ten caps without glue, ten with glue, see Chapter 3 in the OM.

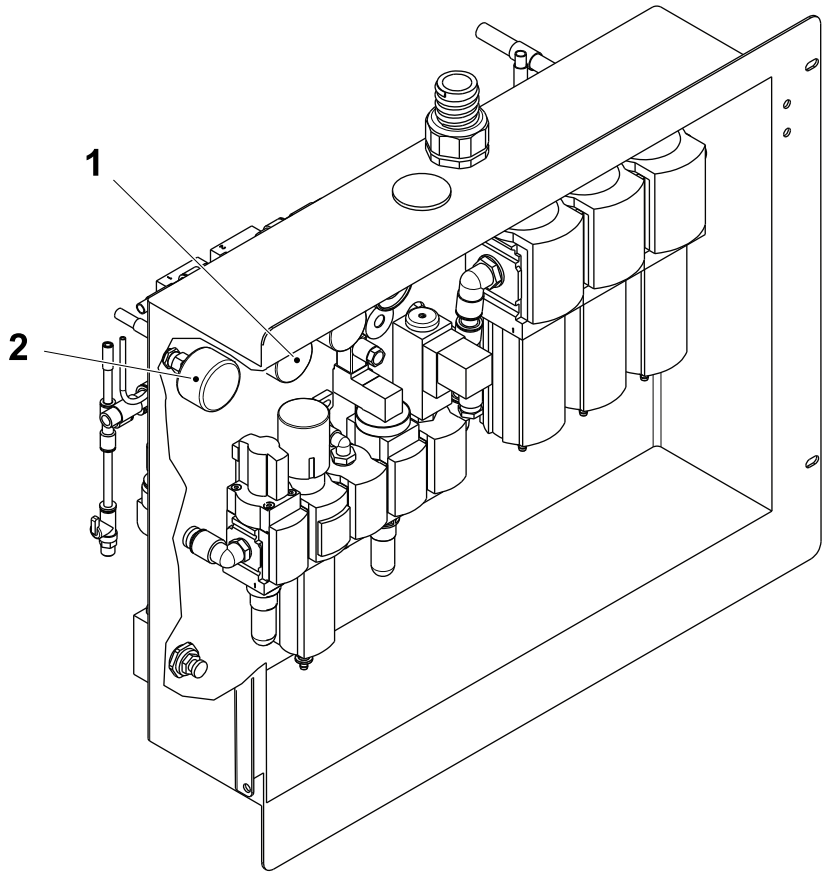

1 Regulator
2 Gauge

4.6.2-7 BYPASS Mode - Switch On the Hotmelt Unit

Machine Status	Electrical supply disconnecting device in position I (ON) Main air valve ON
SPC Reference	662950-0300

In BYPASS mode it is possible to switch-ON the hotmelt unit. To access the selection, do as follows:

a) Touch the PRODUCTION CONTROL button (1).

b) In the PRODUCTION CONTROL window, touch the SERVICE PARTS button (2).

Note! Items like the positioning system only appear on the screen below when installed.

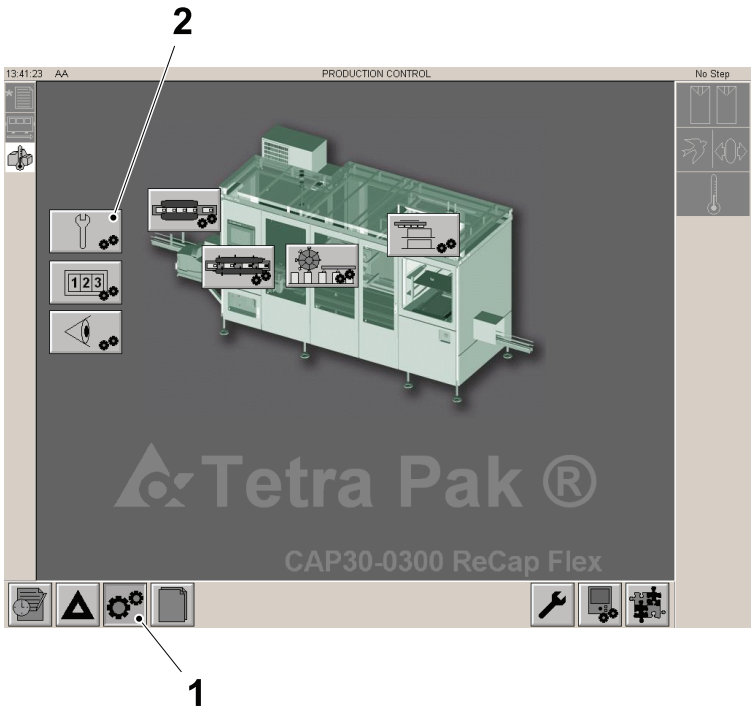

1 PRODUCTION CONTROL button
2 SERVICE PARTS button

(Cont'd)

(Cont'd)

Bypass Activation

Note! When the bypass mode is active, no caps are applied on the packages that pass through the machine.

To enable the bypass mode do as follows:

a) Step down the machine to STEP 0.

b) Touch the BYPASS icon (1).

Note! The icon (2) shows if the bypass is active.

c) Touch the icon (3).

d) Touch the ON button (4).

e) Touch the OK button (5).

Note! When the bypass is active the icon (6) is lighted ON.

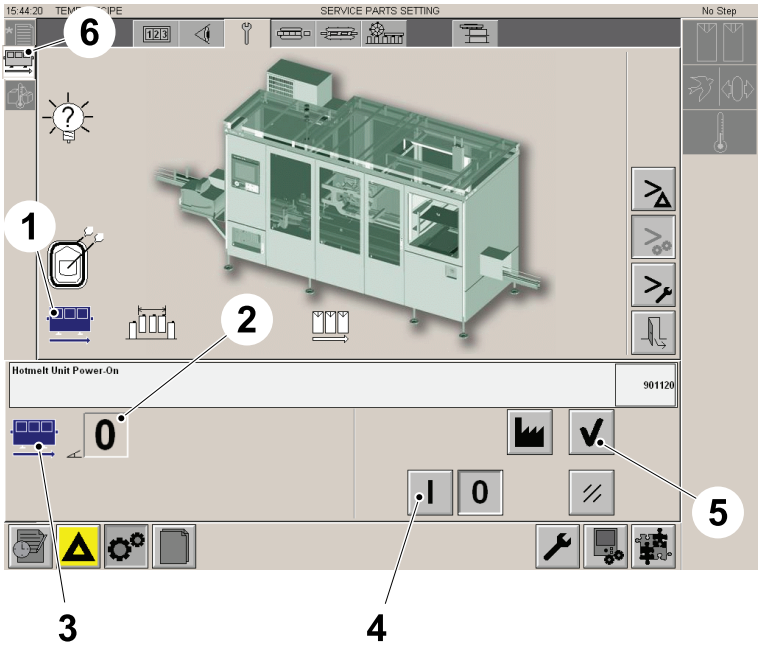

1 BYPASS icon
2 icon
3 icon
4 ON button
5 OK button
6 icon

(Cont'd)

(Cont'd)

Bypass Deactivation

To Disable the bypass mode do as follows:

a) Step down the machine to STEP 0.

b) Touch the BYPASS iconBYPASS icon (1).

Note! The icon (2) shows if the bypass is active.

c) Touch the icon (3).

d) Touch the OFF button (4).

e) Touch the OK button (5).

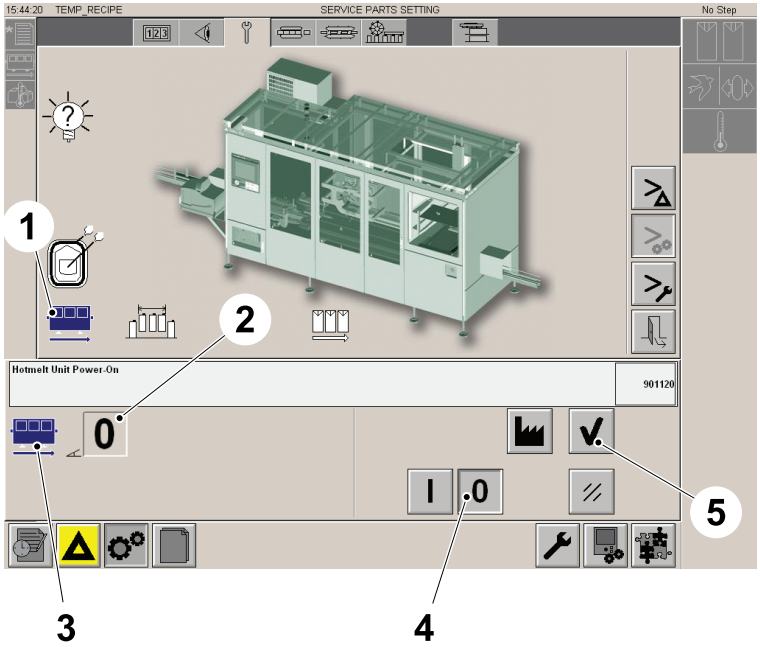

1 BYPASS icon
2 icon
3 icon
4 OFF button
5 OK button

(Cont'd)

(Cont'd)

Hotmelt Unit Activation

Note! After the activation of the Bypass, the machine can be stepped-up.

Note! When the BYPASS is active, it is possible to switch on the hotmelt unit (1).

To switch on the hotmelt unit, do as follows:

a) Touch the HOTMELT POWER-ON icon (2).

b) Touch the ON button (3).

c) Touch the OK button (4).

Note! Every time that the BYPASS is deactivated the HOTMELT POWER-ON function is automatically switched off.

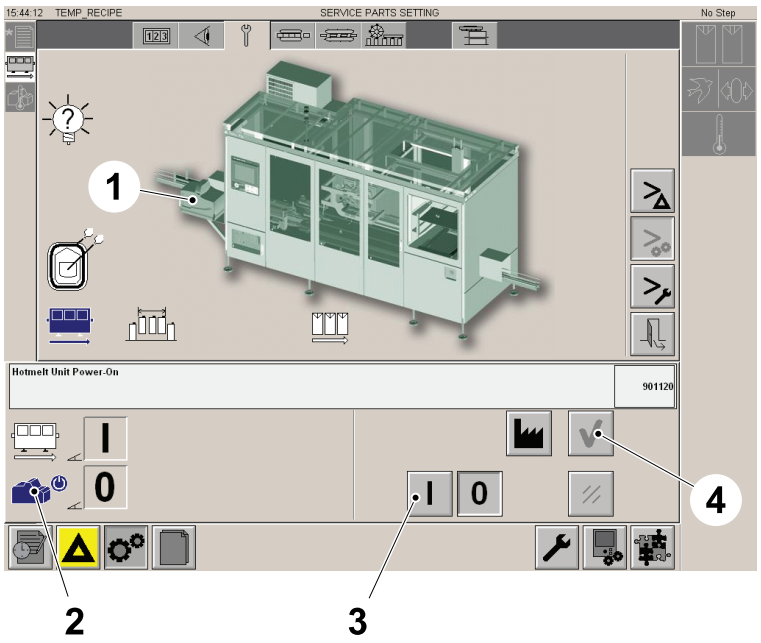

1 Hotmelt unit
2 HOTMELT POWER-ON icon
3 ON button
4 OK button

(Cont'd)

(Cont'd)

Hotmelt Unit Deactivation

To switch off the hotmelt unit (1), do as follows:

a) Touch the HOTMELT POWER-ON icon (2).

b) Touch the OFF button (3).

c) Touch the OK button (4).

Note! Every time that the BYPASS is deactivated also the HOTMELT POWER-ON function is automatically switched off.

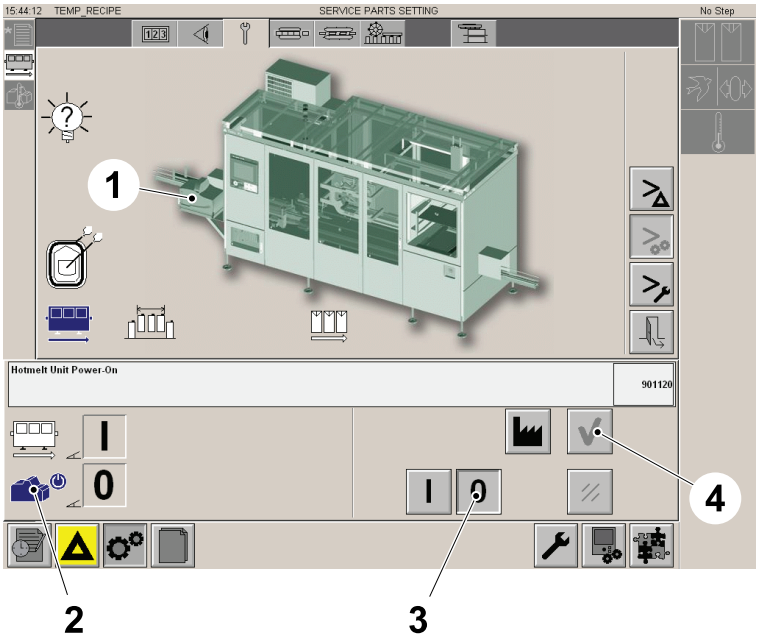

1 Hotmelt unit
2 HOTMELT POWER-ON icon
3 OFF button
4 OK button

4.6.2.1 Adhesive Preservation - Setup

4.6.2.1-1 Adhesive Preservation Activation

Machine Status	Electrical supply disconnecting device in position I (ON) Machine in Step0
SPC Reference	2779070-0300

In this paragraph is described the adhesive preservation functionality. The adhesive preservation functionality has been introduced to automatically stand-by and then switch-off the hotmelt circuit when the machine is not operating.

a) Step down the machine to STEP 0.

b) Login the TPOP as service technician, see 1.1.1-1 HMI User Management - Log On as a User.

c) Touch the `CONFIGURATION` button (1), the `HOTMELT PRESERVATION` button (2) and the `ACTIVATION` icon (3) to access the activation screen of the adhesive preservation.

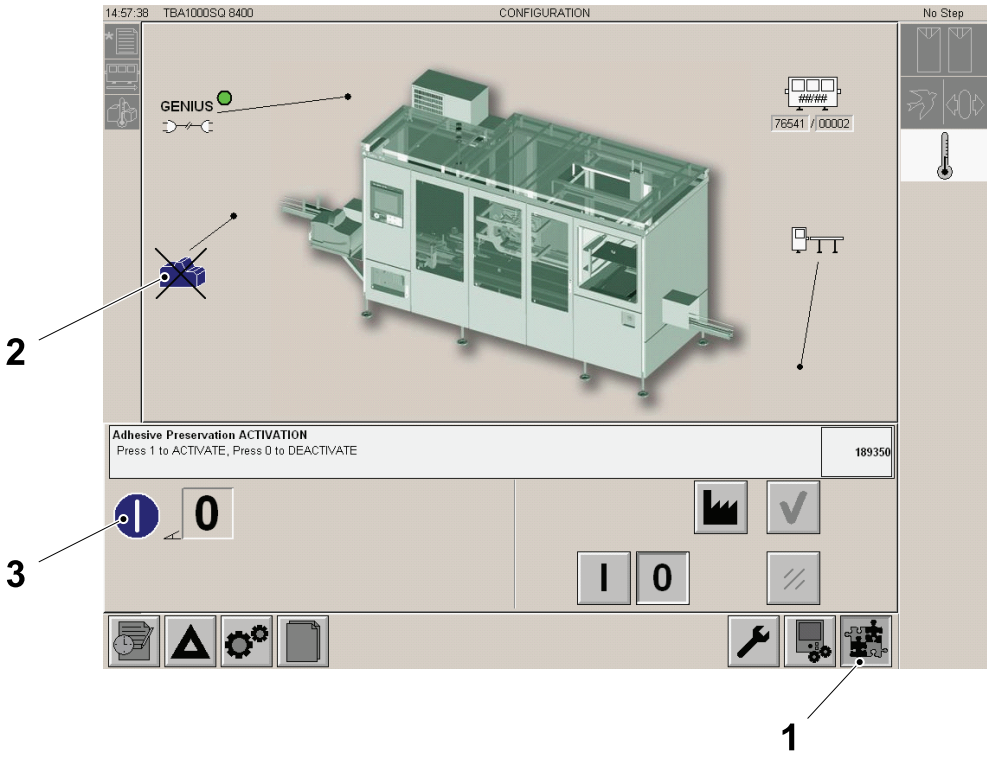

1 CONFIGURATION button
2 `HOTMELT PRESERVATION` button
3 `ACTIVATION` icon

(Cont'd)

(Cont'd)

d) Touch the ON button (4) and the OK button (5) to activate the adhesive preservation.

Note! The OFF icon changes to the ON button (6), the GREEN dot (7), the Icon (8) comes on and all show that the adhesive preservation functionality has been activated.

Note! When the adhesive preservation is active, also the delay on stand-by and the delay on to step zero are active and need to be set, see 4.6.2.1-1 Adhesive Preservation Activation on page 4-65.

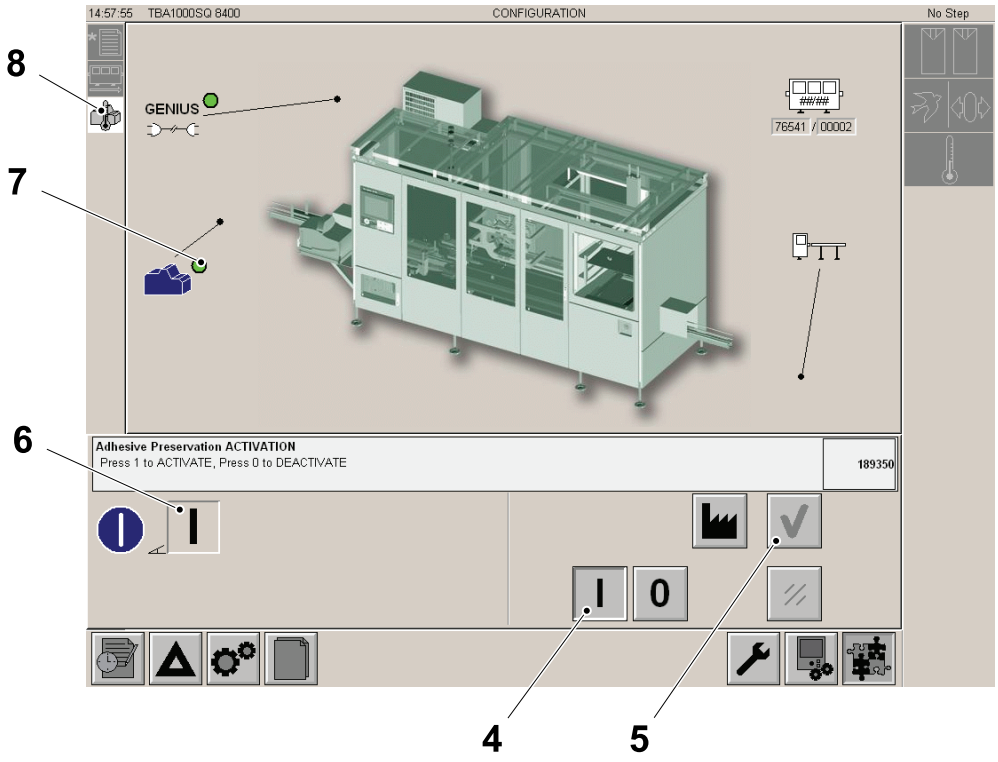

4 ON button
5 OK Button
6 ON button
7 Green dot
8 Icon

4.6.2.1-2 Adhesive Preservation Settings

Machine Status	Electrical supply disconnecting device in position I (ON) Machine in Step0
SPC Reference	2779070-0300

a) Login the TPOP as service technician, see 1.1.1-1 HMI User Management - Log On as a User, if required.

b) Touch the `PRODUCTION CONTROL` button (1) and the `SERVICE PARTS` button (2).

Note! Items like the positioning system only appear on the screen below when installed.

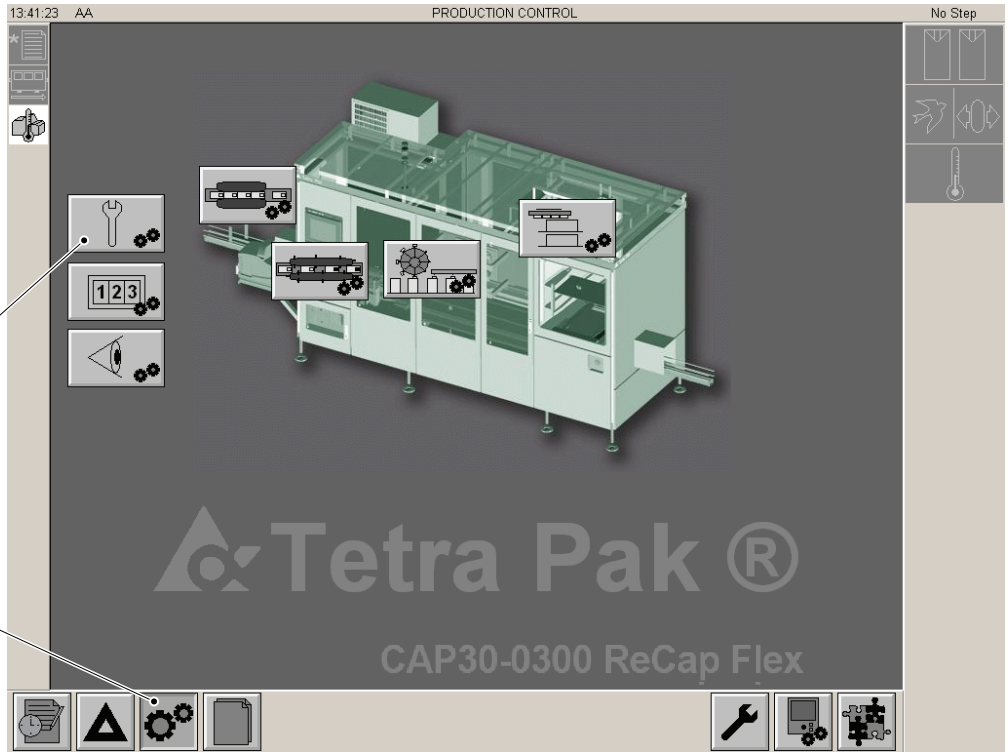

1 PODUCTION CONTROL button
2 SERVICE PARTS button

(Cont'd)

(Cont'd)

c) Touch the ADHESIVE PRESERVATION icon (3).

Note! The available functions of the adhesive preservation are the DELAY ON STAND BY (4), the DELAY ON TO STEP ZERO (5) and the Audible alarm (6).

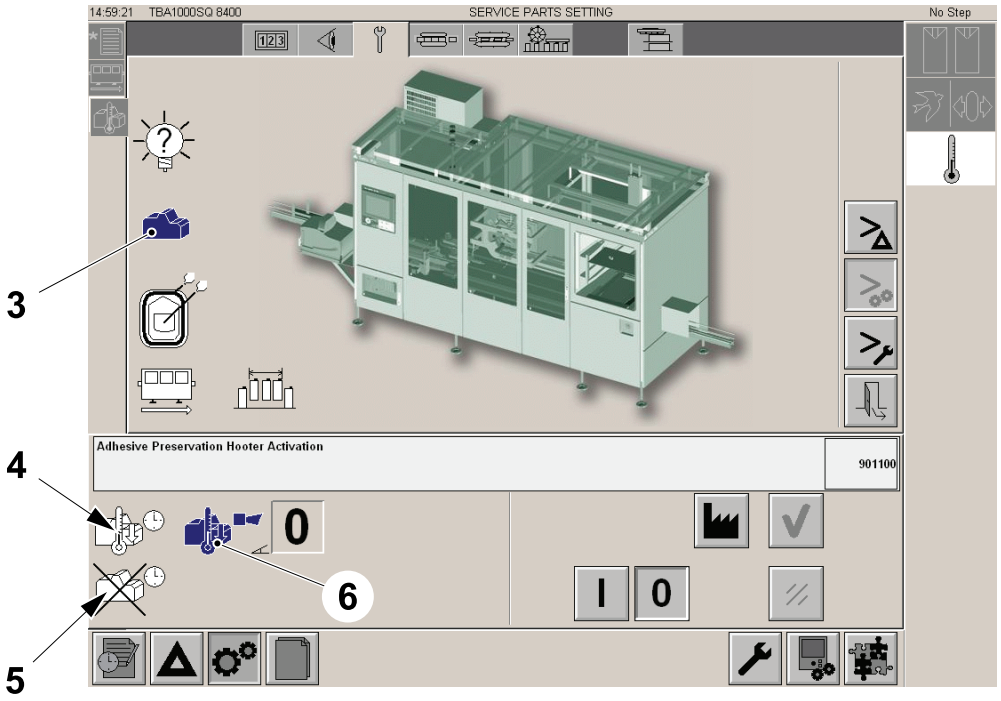

3 Adhesive preservation icon
4 Delay on stand by
5 Delay on to step zero
6 Audible alarm

4.6.2.1-3 Delay On Stand-By Description

Machine Status	Electrical supply disconnecting device in position I (ON) Machine in Step0
SPC Reference	2779070-0300

When during the PRODUCTION there are no packages and the package conveyor stops, the machine starts a counter called delay on stand-by.
The delay on stand-by is a programmable time in minutes after which the temperature of the hotmelt circuit is lowered by 50 degrees and the machine goes down to STEP1 PREHEATING. When the hotmelt starts to cool down the ADHESIVE PRESERVATION icon (1) flashes and the hooter starts ringing if it's active, see 4.6.2.1-6 Adhesive Preservation Hooter Activation.

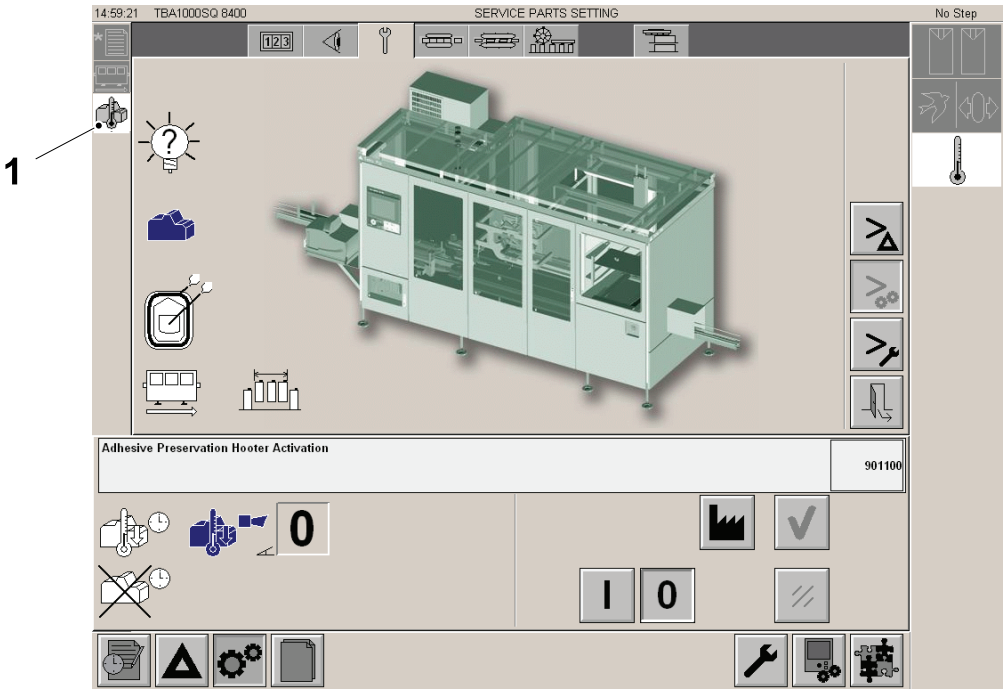

1 Adhesive preservation icon

4.6.2.1-4 Delay On Stand-By Setting

Machine Status	Electrical supply disconnecting device in position I (ON) Main air valve ON Machine in Step0
SPC Reference	2779070-0300

a) Touch the DELAY ON STAND-BY button (1).

b) Insert the value in minutes to wait before the machine is put in STEP1, by using the ARROW button (2) or by touching the NUMERIC button (3).

c) Touch the OK button (4).

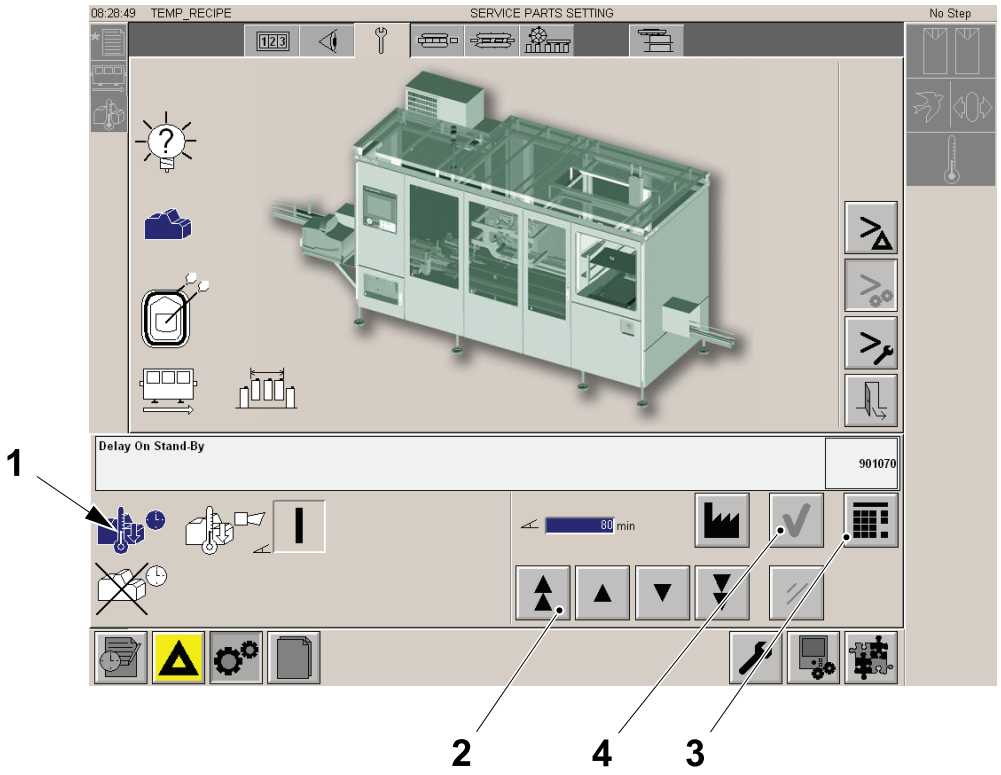

1 DELAY ON STAND-BY button
2 ARROW button
3 NUMERIC button
4 OK button

(Cont'd)

(Cont'd)

d) When the machine has to go back in full operation, press the `STEP UP` button (5) to restore the operating temperature of the hotmelt circuit.

Note! Items like the positioning system only appear on the screen below when installed.

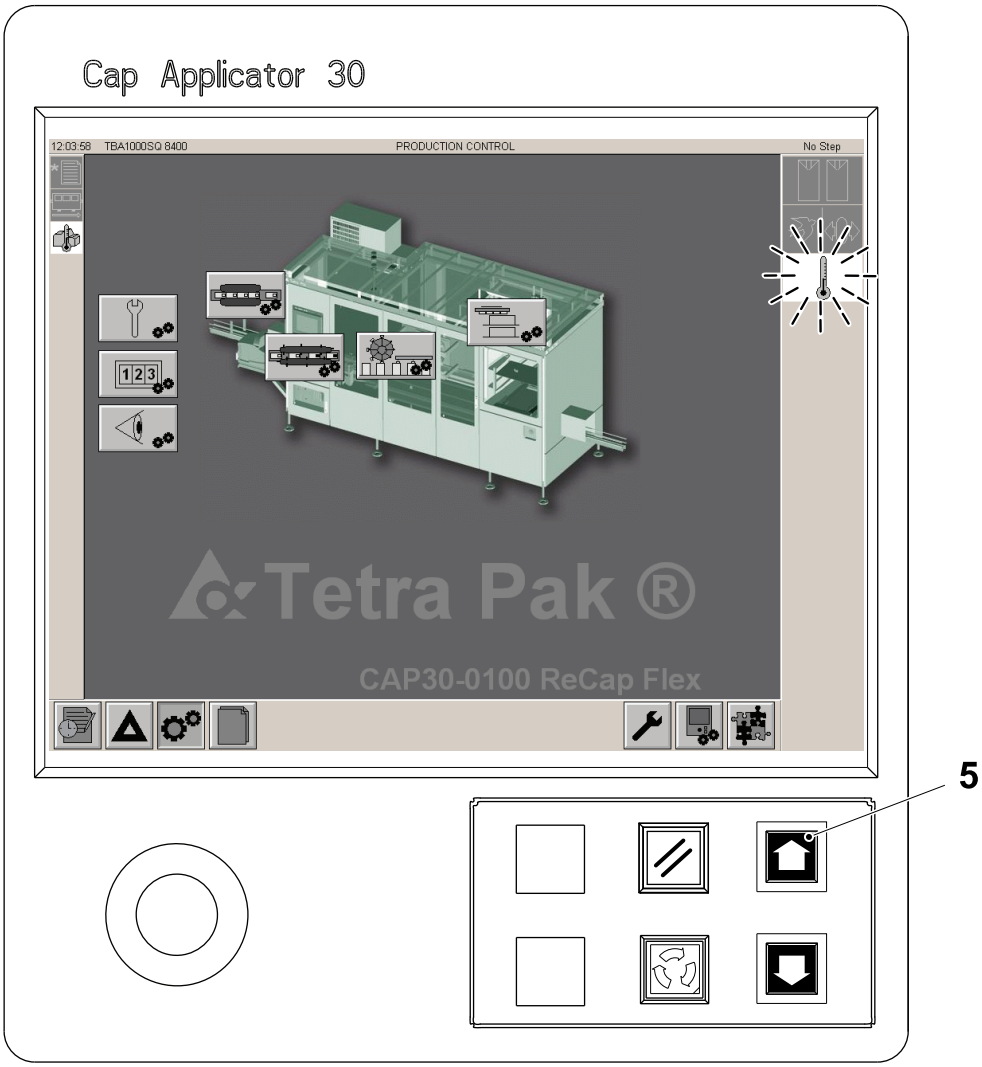

5 STEP UP button

4.6.2.1-5 Delay On To Step Zero

Machine Status	Electrical supply disconnecting device in position I (ON) Machine in Step0
SPC Reference	2779070-0300

Description

When the delay on stand-by time has passed and the machine is already at STEP1 PREHEATING, the counter called delay on to step zero starts. The delay on step zero is a programmable time in minutes after which the hotmelt circuit is switched-off and the machine goes down to STEP0.

Delay On To Step Zero Setting

a) Touch the DELAY ON TO STEP ZERO button (1).

b) Insert the value in minutes to wait before the machine is put in STEP0, by using the ARROW button (2) or by touching the NUMERIC button (3).

c) Touch the OK button (4).

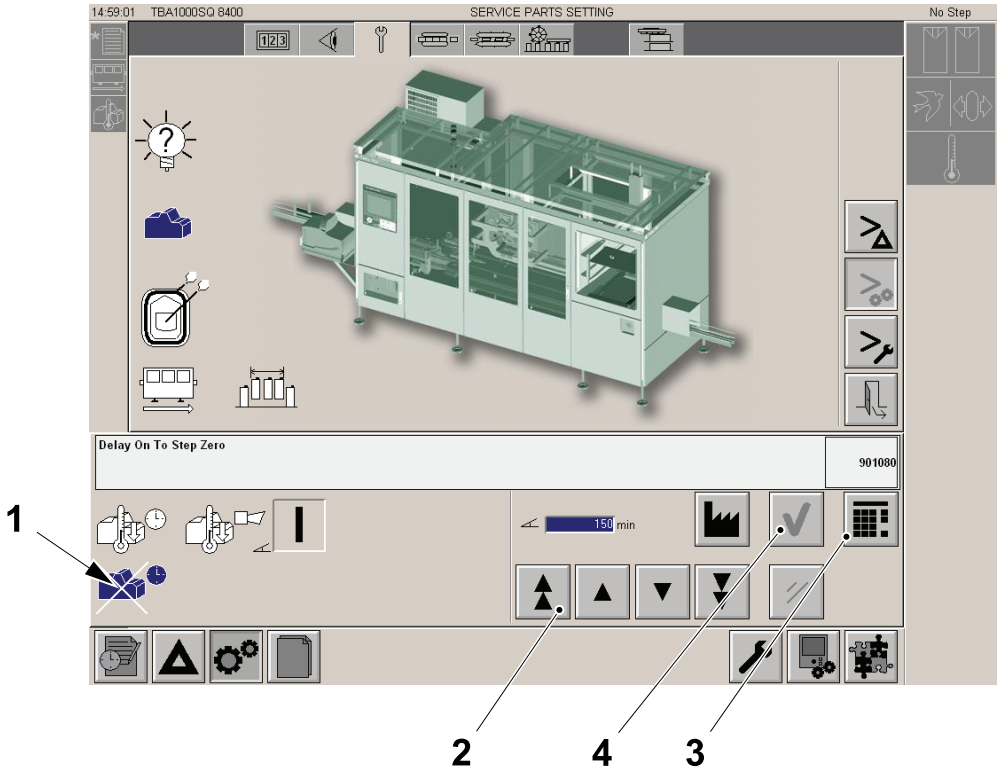

1 DELAY ON TO STEP ZERO button
2 ARROW button
3 NUMERIC button
4 OK button

(Cont'd)

(Cont'd)

d) When the machine has to go back in full operation, press the `STEP UP` button (5) to switch-on the hotmelt circuit.

Note! Items like the positioning system only appear on the screen below when installed.

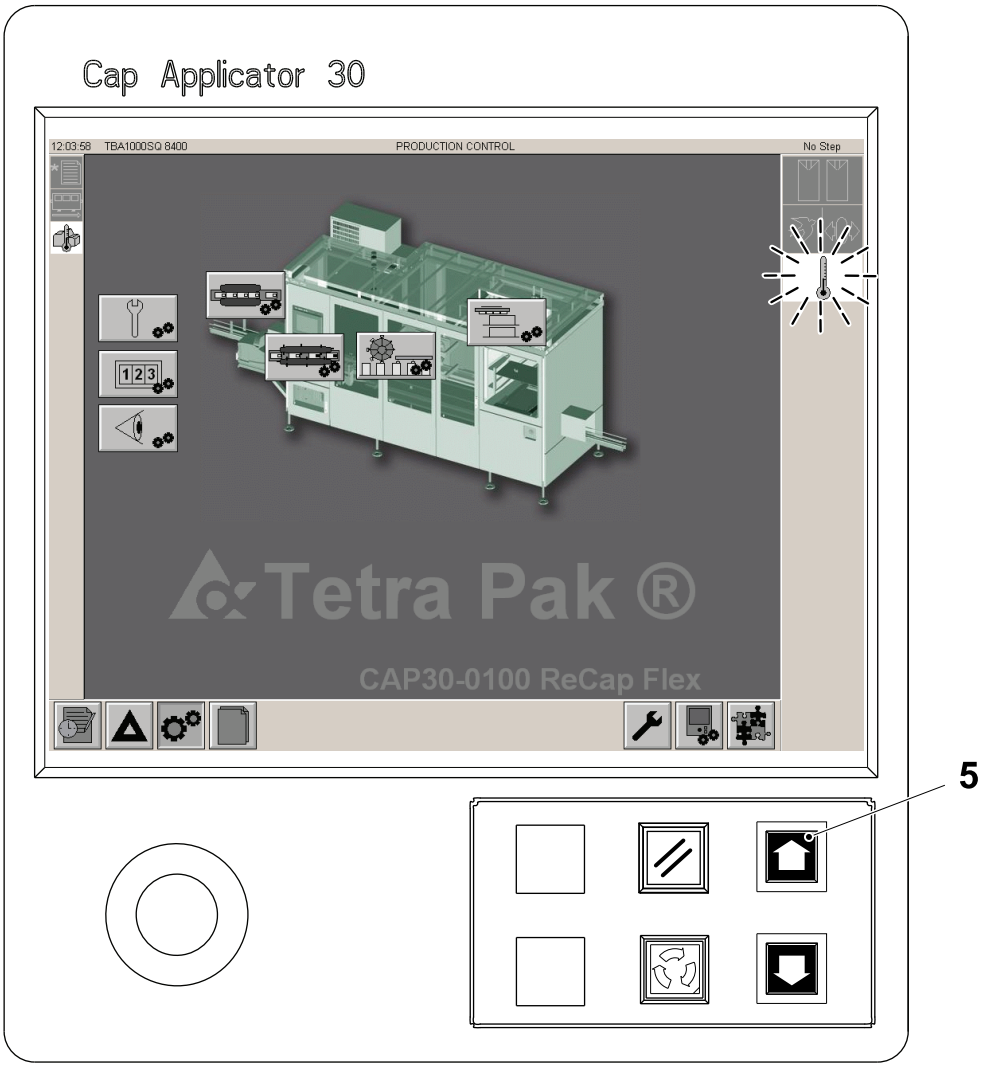

5 STEP UP button

4.6.2.1-6 Adhesive Preservation Hooter Activation

Machine Status	Electrical supply disconnecting device in position I (ON) Machine in Step0
SPC Reference	2779070-0300

When the hooter function is activated the audible alarm sounds when the adhesive preservation goes to STAND-BY.

a) Login the TPOP as service technician, see 1.1.1-1 HMI User Management - Log On as a User, if required.

b) Touch the HOOTER ACTIVATION icon (1) .

c) Touch the ON button (2) to activate the hooter function.

d) Touch the OK button (3) to confirm and the ON button (4) appears.

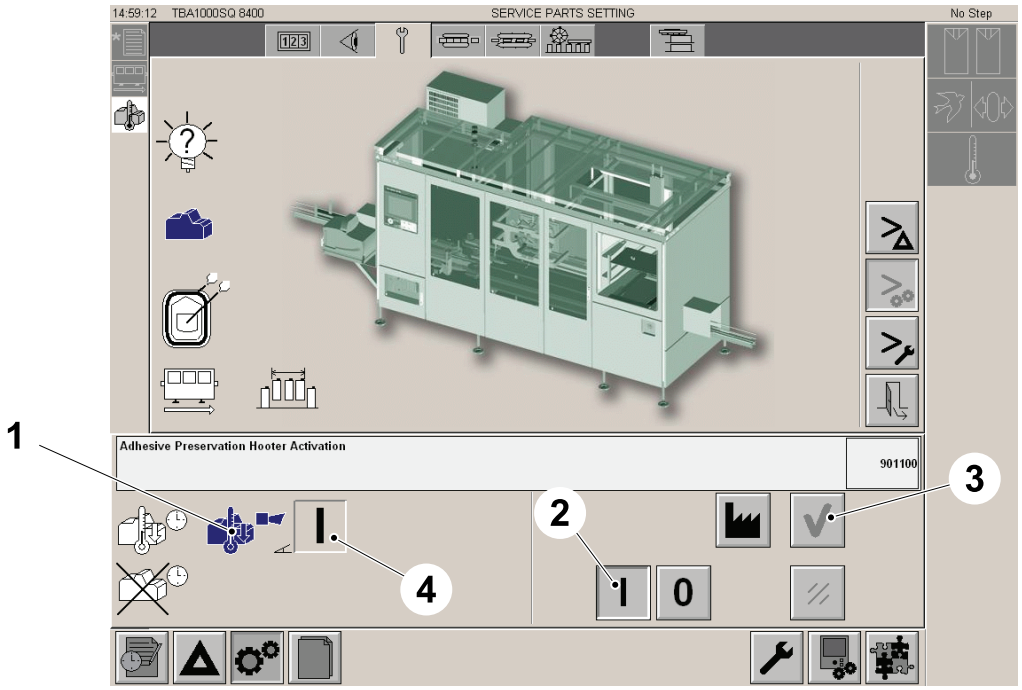

1 HOOTER ACTIVATION ICON
2 ON button
3 OK button
4 On button

4.6.2.1-7 Adhesive Preservation Hooter Deactivation

Machine Status	Electrical supply disconnecting device in position I (ON) Machine in Step0
SPC Reference	2779070-0300

a) Login the TPOP as service technician, see 1.1.1-1 HMI User Management - Log On as a User, if required.

b) Touch the HOOTER ACTIVATION icon (1).

c) Touch the OFF button (2) to deactivate the hooter function.

d) Touch the OK button (3) to confirm and the OFF button (4) appears.

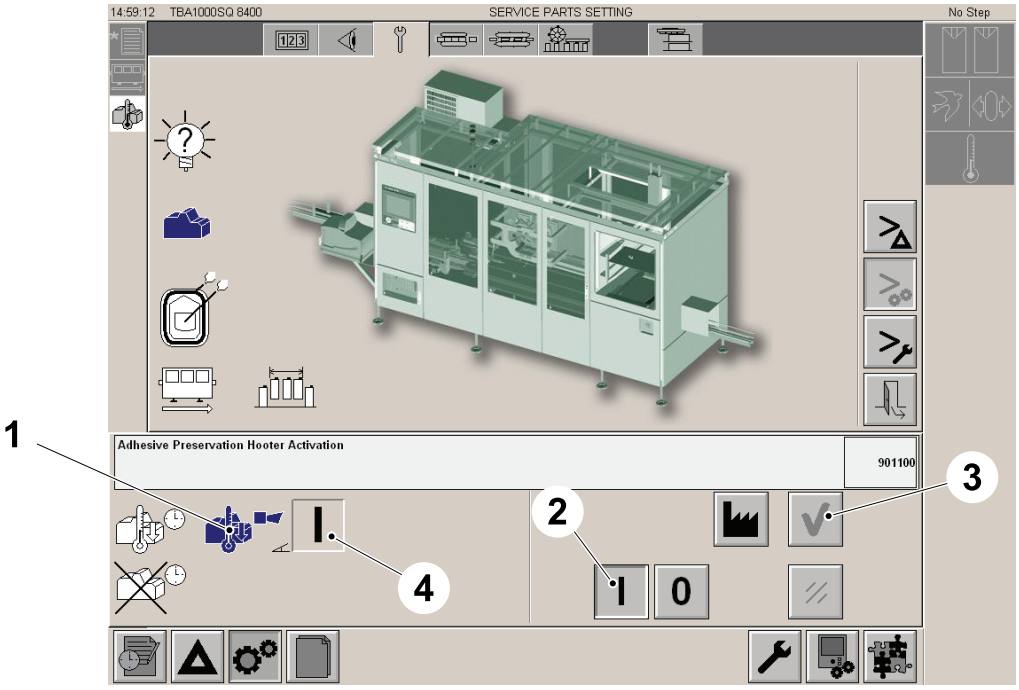

1 HOOTER ACTIVATION button
2 Off button
3 OK button
4 Off button

4.7 Operator Interface

4.7.1 Operator Interface - TPOP

4.7.1-1 TPOP - Change

Machine Status	Electrical supply disconnecting device in position O (OFF) Main air valve OFF
SPC Reference	2779070-0300

DANGER

Hazardous voltage and moving machinery.
The power supply disconnector must be turned off and secured with a lock before any maintenance.

Note! The key to the lock must be removed by the technician and retained in his/her possession until all work is completed.

a) Release the two screw (1) and open the door (2).

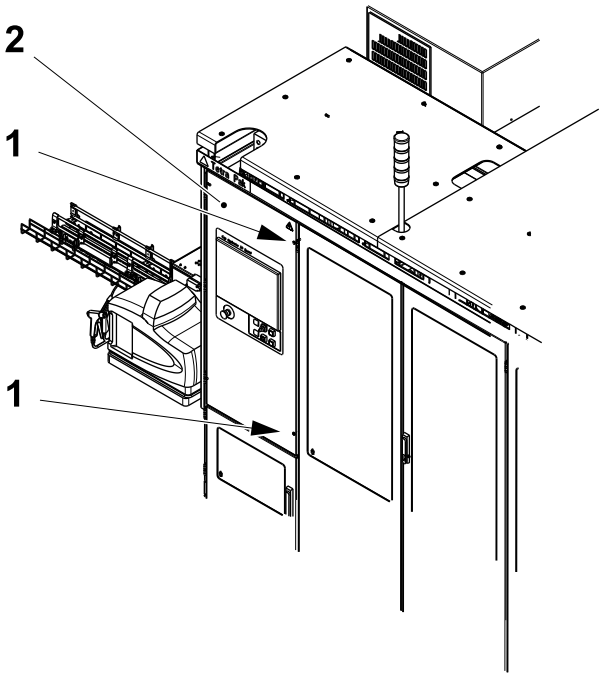

1 Screw
2 Door

(Cont'd)

(Cont'd)

b) Release the door (3) by turning the lock (4) with the key supplied.

c) Disconnect the electrical connections from the TPOP making a note from where.

d) Tape or hold the panel (5), release the eight screw (6) and remove the panel (5) from the front of the door (2).

e) Assemble in the reverse order. For the control panels firmware ect., see 8.9.1 Control Panel - Touch Screen.

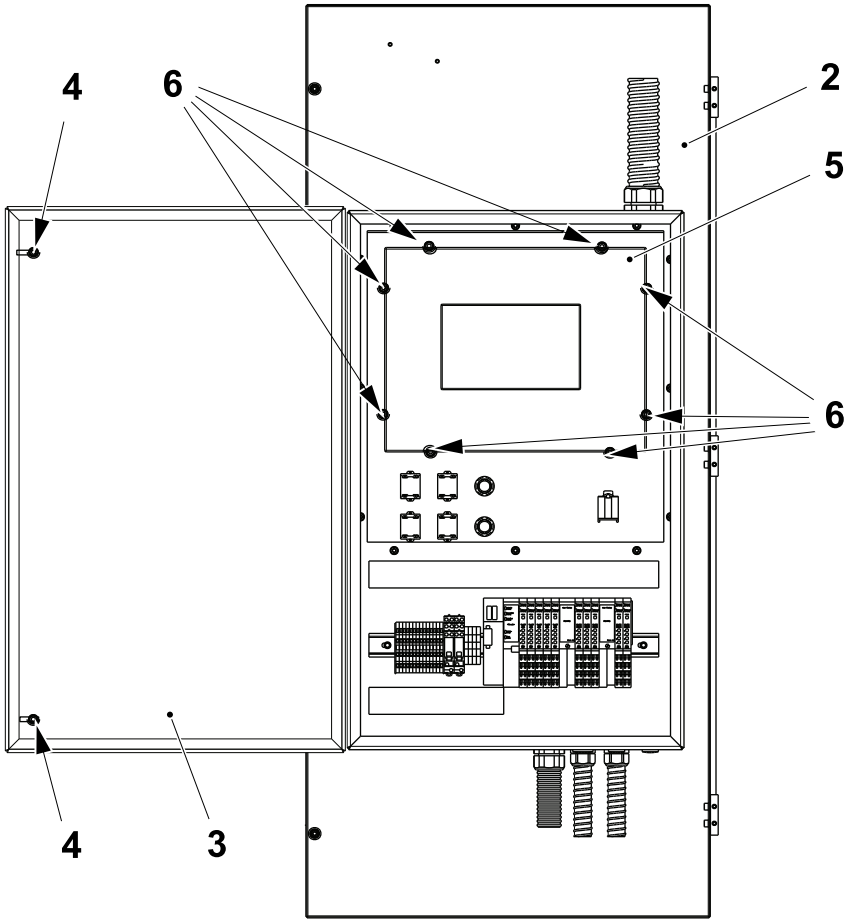

2 Door
3 Door
4 Lock
5 Panel
6 Screw

4.8 Machine Body

4.8.1 Conveyor - Height Adjustment

4.8.1-1 Height Adjustment - Check

Machine Status	Electrical supply disconnecting device in position O (OFF) Main air valve OFF
SPC Reference	2769738-0100

a) Make sure that all parts are free from dirt.

b) When it is necessary to adjust the height make sure that the lock (1) is released.

c) Make sure that the machine body (2) moves freely when the handle (3) is turned.

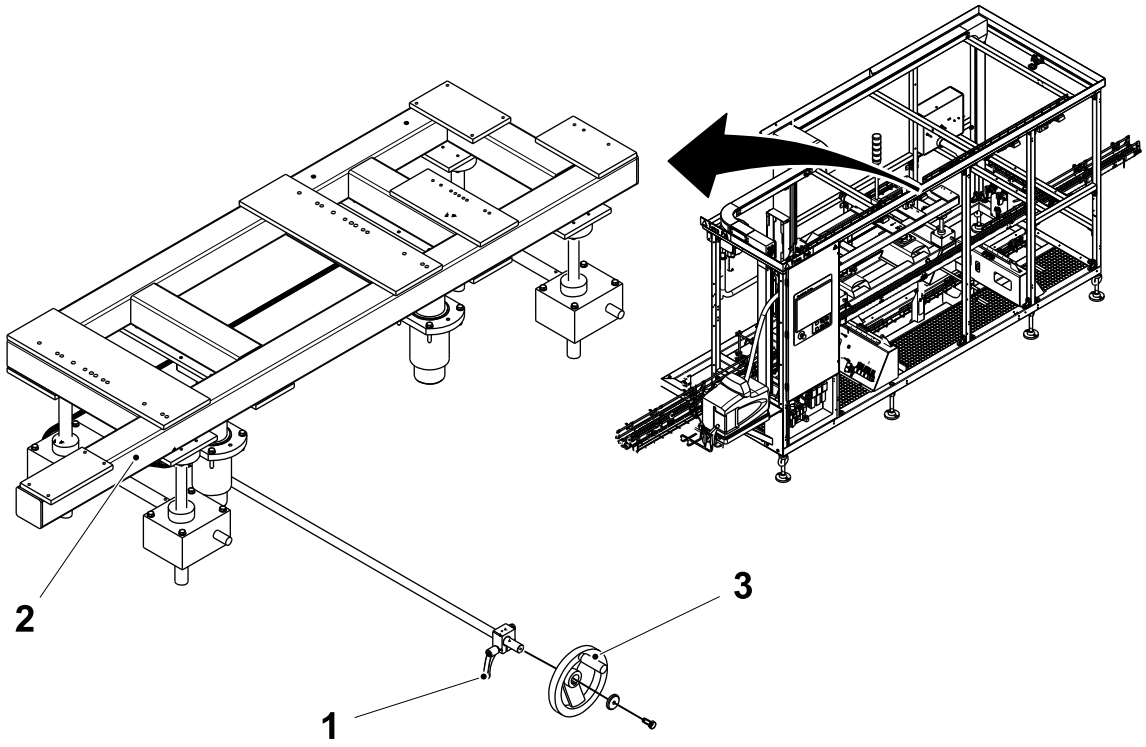

1 Lock
2 Machine body
3 Handle

4.8.1-2 Height Adjustment - Set

Machine Status	Electrical supply disconnecting device in position O (OFF) Main air valve OFF
SPC Reference	2769738-0100

CAUTION
Risk of damage to equipment
After making a small adjustment to the height adjust the cap sorter.

Set the distance **A** from the top of the conveyor belt (1) to the bottom of the pushdown finger (2) by turning the handle (3).

Note! Make sure that the conveyor is level (Y) and square (X), also check the packages for squareness.

A = Package height + Cap height
less 1 mm for All except Helicap2 23
less 2.5 mm for Helicap2 23 Only

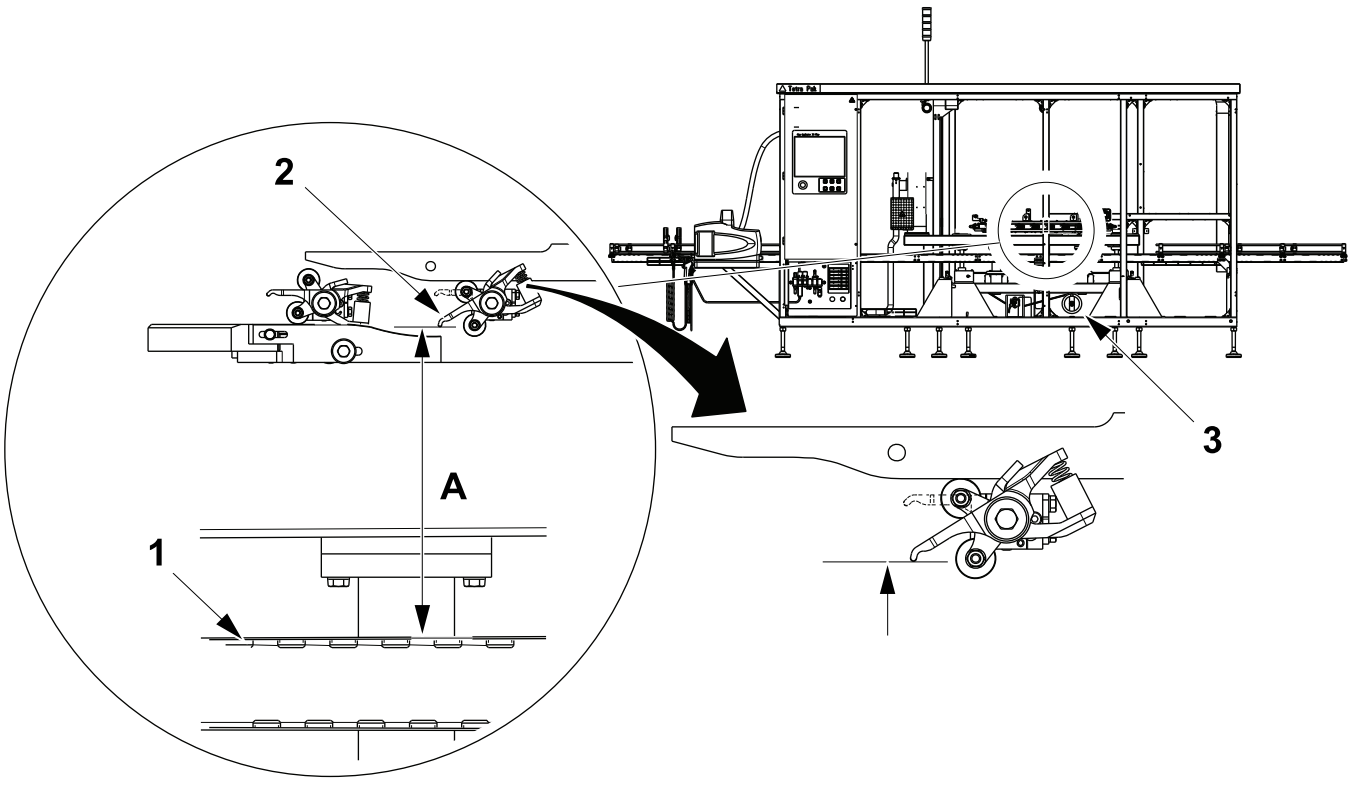

1 Conveyor belt
2 Pushdown finger
3 Handle

4.8.2 Conveyor Infeed Rail

4.8.2-1 Infeed Rail Change

Machine Status	Electrical supply disconnecting device in position O (OFF) Main air valve OFF
SPC Reference	662905-0100

Note! Valid for All to TPA and vice-versa

a) Release the screw (1) and change the screw (1).

A = TBA and TGA
B = TPA

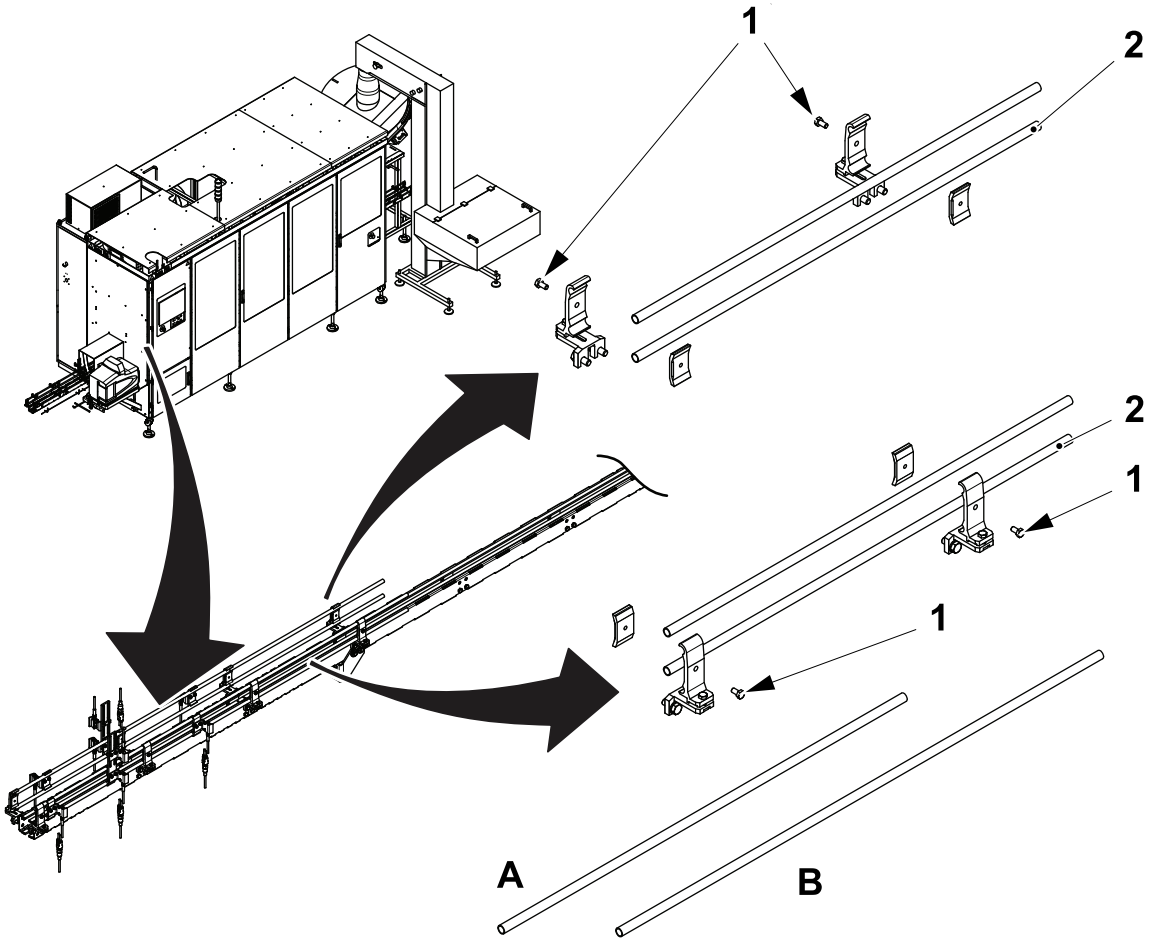

1 Screw
2 Rail

5 Applicator Unit

Applicator Unit - Description

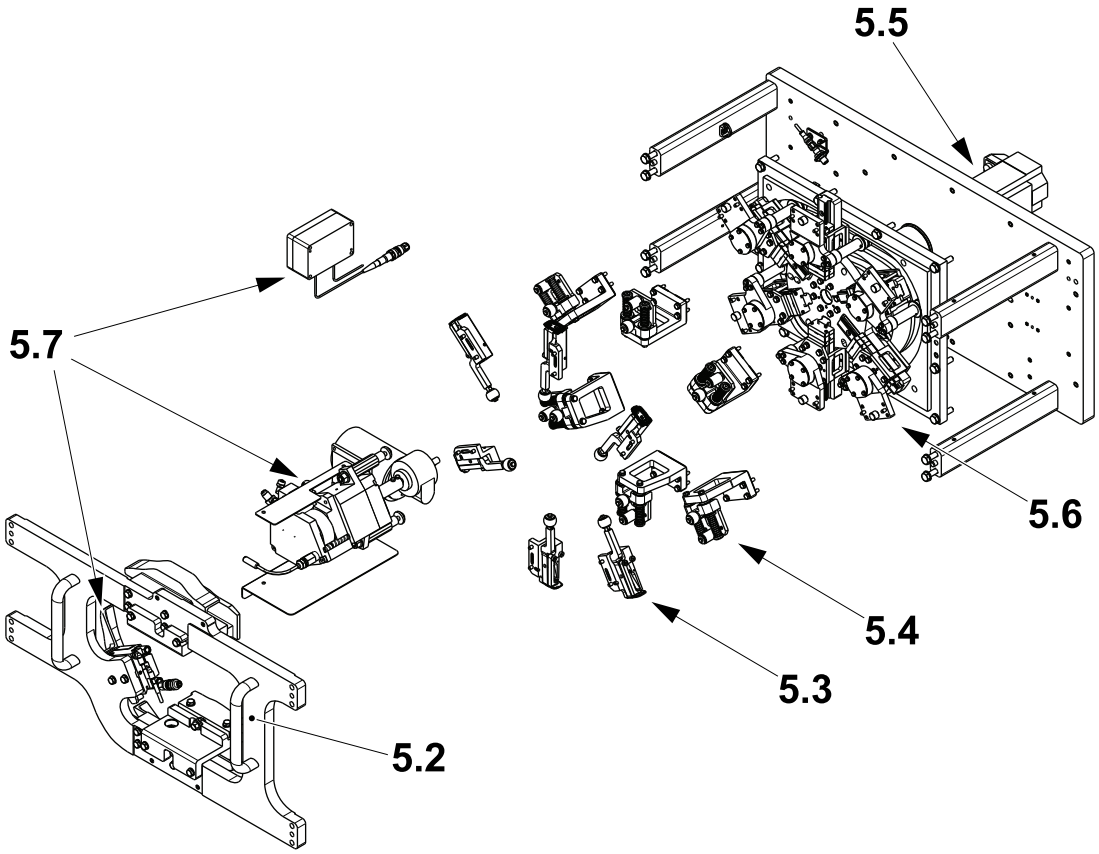

5.2 Cam Module

5.3 Cap Holders Group

5.4 Cap Carrier

5.5 Drive Unit

5.6 Transfer Unit

5.7 Hotmelt Wheel

Applicator Unit - Description 5-2

5.1 Applicator Unit - Functional Description 5-5

5.2 Cam Module 5-6

5.2.1 Cams - Settings 5-6

5.2.1-1 Cam (ReCap) Picking - Set. 5-6

5.2.1-2 Cam (ReCap) Gripper - Set 5-8

5.2.1-3 Cam (ReCap) Application - Set 5-11

5.2.1-4 Cam (ReCap) Release - Set. 5-12

5.2.2 Cam Module - Change 5-13

5.2.2-1 Cam Module - Removal 5-13

5.3 Cap Holders Group 5-15

5.3.1 Cap Holder 5-15

5.3.1-1 Cap Holder - Check 5-15

5.3.1-2 Cap Holder - Change Roller and Bushings 5-16

5.3.1-3 Cap Holder - Set Y Position 5-17

5.4 Cap Carrier 5-25

5.4.1 Guide Bracket 5-25

5.4.1-1 Guide Bracket (ReCap) - Check 5-25

5.4.1-2 Guide Bracket (ReCap) - Change Roller and Bushings 5-26

5.4.1-3 Guide Bracket (ReCap) - Set X Position 5-27

5.5 Drive Unit 5-28

5.5.1 Sensors 5-28

5.5.1-1 Sensors - Cap Holder No.1 Position. 5-28

5.6 Transfer Unit 5-29

5.6.1 Star Wheel 5-29

5.6.1-1 Star Wheel - Set Zero Position. 5-29

5.6.1-2 Star Wheel - Change Outer Cam Follower Bearings. 5-32

5.6.1-3 Star Wheel - Change 5-33

5.6.1-4 Star Wheel - Change Inner Cam Follower Bearings 5-34

5.7 Hotmelt Wheel 5-35

5.7.1 Functional Description 5-35

5.7.1-1 Hotmellt Wheel - Change Cylinder 5-37

5.7.1-2 Hotmelt Wheel - Set Cam Position 5-38

5.7.1-3 Hotmelt Wheel - Calibration 5-43

5.7.1-4 Hotmelt Wheel - Change Hotmelt 5-46

5.1 Applicator Unit - Functional Description

The applicator unit is made up from the following:

- Cam module, this module carries the picking, gripping, application and release cams.
- Cap holder group collects and transfers the caps to the packages.
- Cap carrier groups mount on to the star wheel and carries the cap holder groups.
- Drive unit rotates the star wheel via a servo motor.
- Transfer unit has built in cam tracks and is fitted with a sensor.
- Each of the cap holders collects a cap after the adhesive has been applied and is rotated via the star wheel on the transfer unit (which is driven by the drive unit) until in a position to place the cap on a package.
- Cams on the cam module determine how, when and where the cap holder (mounted on the cap carrier group) collects and releases the cap.

5.2 Cam Module

5.2.1 Cams - Settings

5.2.1-1 Cam (ReCap) Picking - Set

Machine Status	Electrical supply disconnecting device in position O (OFF) Main air valve OFF
SPC Reference	2839315-0200

Coarse Setting

Note! Before setting the cams set the cap holder group see 5.4.1-3 Guide Bracket (ReCap) - Set X Position.

a) Inch the machine to 360 degrees.

b) Release the screws (1) and use the screw (2) set the position of the picking cam (3) so that the stroke at the springs is the distance **A**.

c) Tighten the screws (1).

A = 22mm

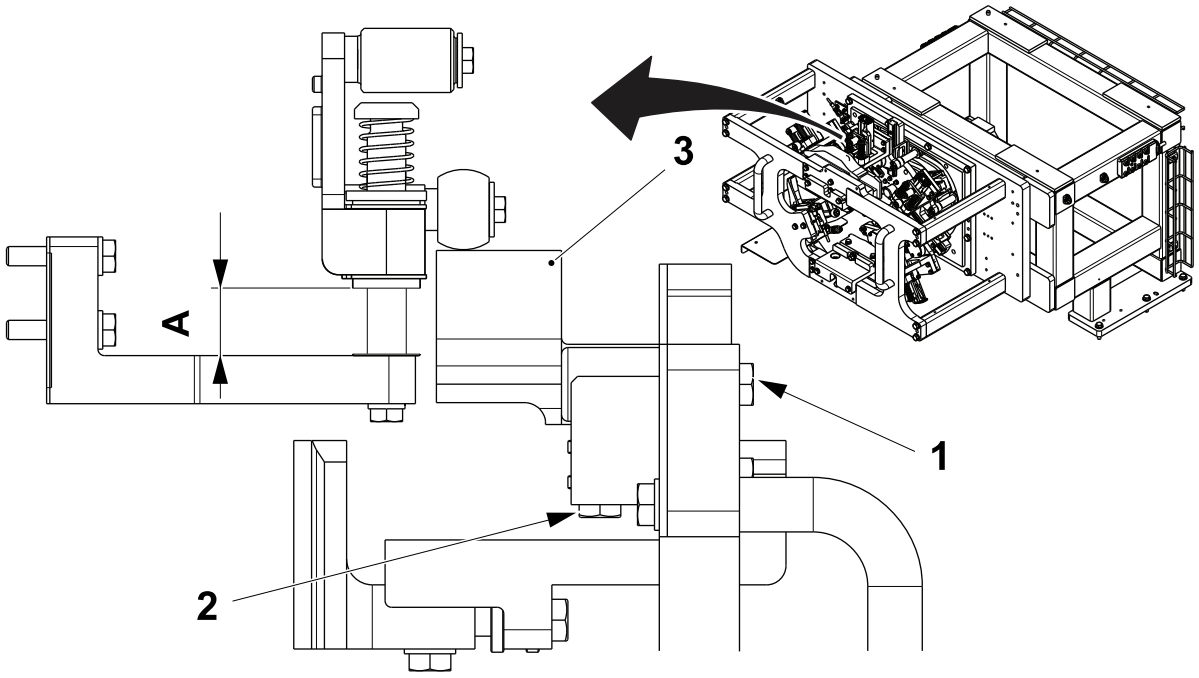

1 Screw
2 Screw
3 Picking cam

(Cont'd)

(Cont'd)

Fine Setting

a) Perform the coarse setting, see Coarse Setting.

b) Release the screws (1) and place a cap in the single cut. Inch the machine until the cap holder (2) starts to collect the cap (3).

c) Use the screw (4) to raise the part of the cap holder (2) to the position where the cap (3) moves upward very slightly and then stop.

d) Tighten the screws (1).

e) Inch the machine further and make sure that:

- the cap (3) **does not** lift any higher
- the part of the cap holder (2) makes contact with the cap (3) at the point where the upper surface of cap (5) meets the curved surface of cap (6).

Note! Repeat from step b) until correct.

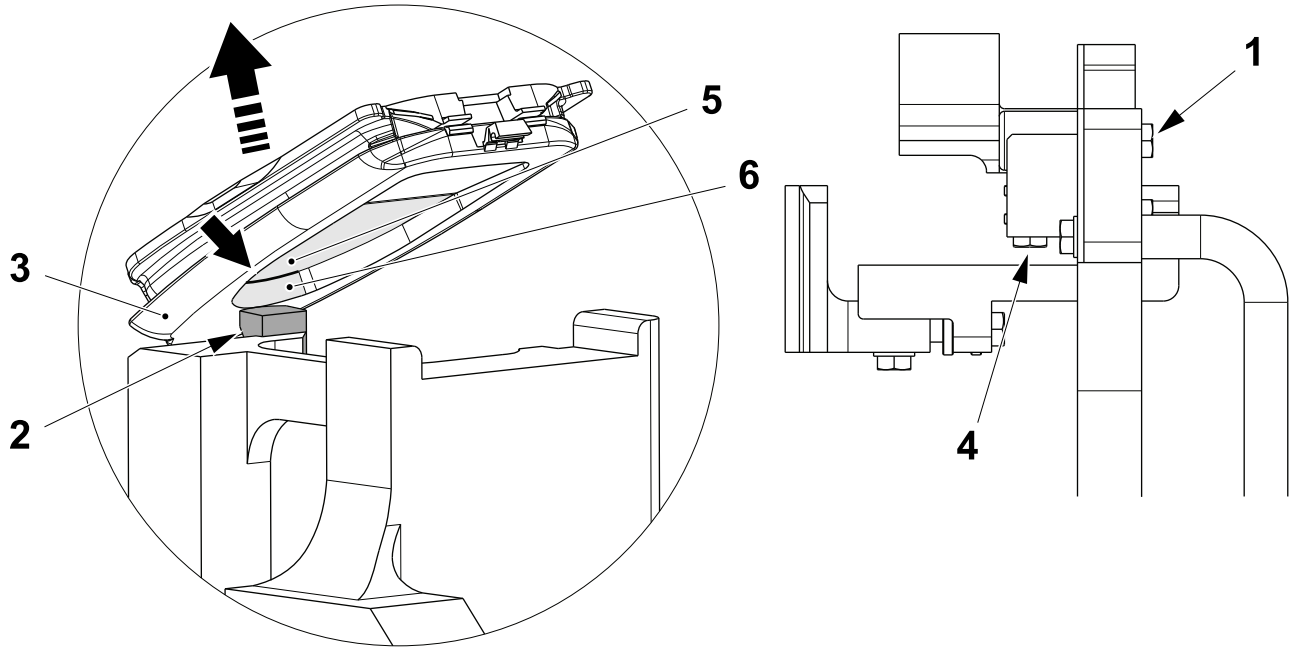

1 Screw
2 Cap holder
3 Cap
4 Screw
5 Upper surface of cap
6 Curved surface of cap

5.2.1-2 Cam (ReCap) Gripper - Set

Machine Status	Electrical supply disconnecting device in position O (OFF) Main air valve OFF
SPC Reference	2869315-0200

Note! Before setting the cam (1), set the cap holder group see 5.4.1-3 Guide Bracket (ReCap) - Set X Position.

The gripper cam has two settings, the X direction that determines the distance that the grippers open and the Y direction that determines when the grippers close.

Opening Distance

a) Release the screws (2).

b) Using the screw (3), adjust the gripper cam (1) to change the distance **A**.

c) Tighten the screws (2).

d) Check that the distance **A** is equal at each end of the cam (1).

Note! Check that the grippers (4) clear the cap (5) when they are open.

A = 9mm

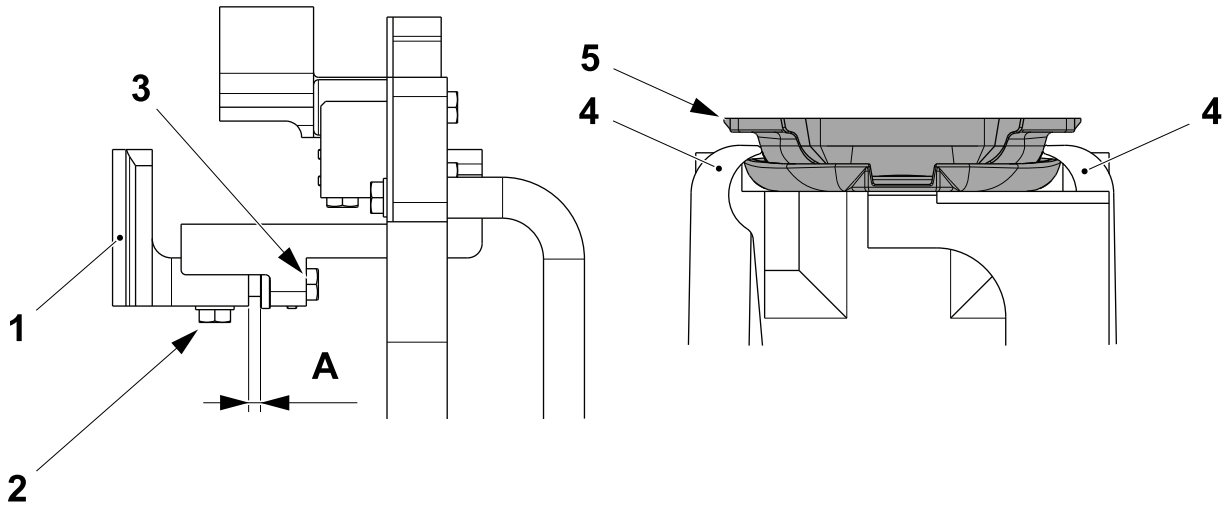

1 Cam
2 Screw
3 Screw
4 Grippers
5 Cap

(Cont'd)

(Cont'd)

Timing Information

After a cap (1) has been placed on the cap holder by the single cutter it should be gripped by the grippers (2) at the correct moment.

The correct moment is when the cap (1) has been taken by the carrier (3) and comes into contact with the surface (4). The grippers (2) should close immediately. Example **A**.

If the grippers (2) too early, the cap has a tendency to fly off the front of the cap holder. Example **B**.

If the grippers (2) close to late, the front of the cap has a tendency to lift and cause a jam. Example **C**.

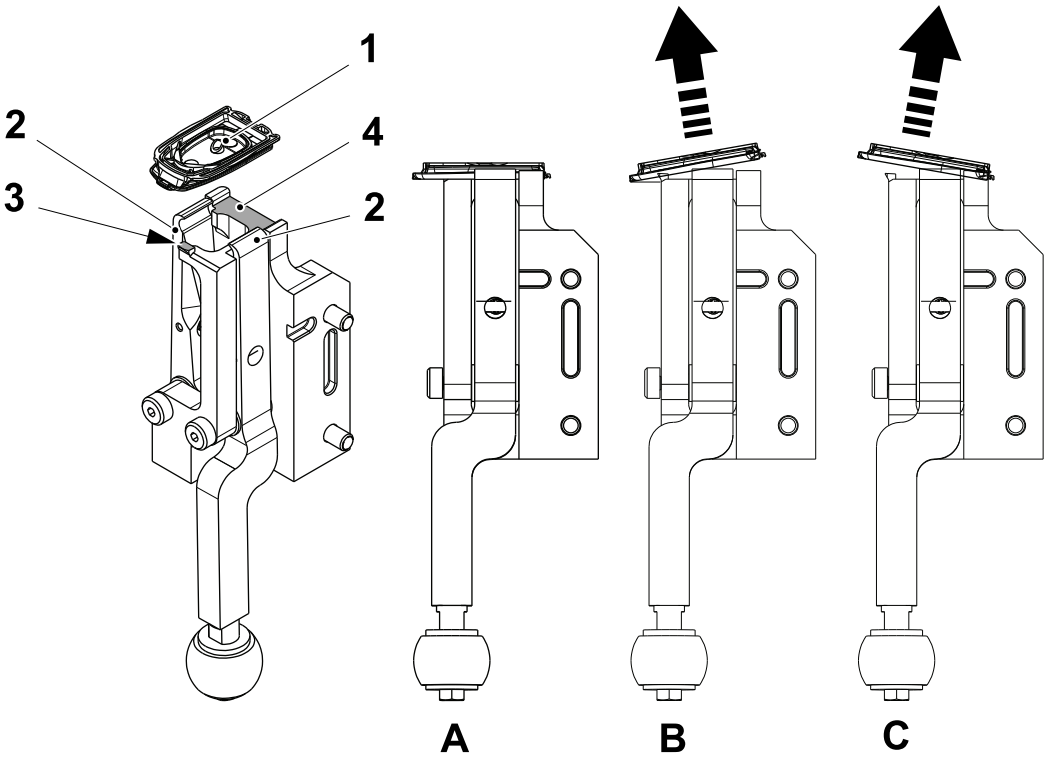

1 Cap
2 Gripper
3 Carrier
4 Surface

(Cont'd)

(Cont'd)

Timing Procudure

a) Loosen the screws (1).

b) Move the bracket (2) as shown to move the cam (3) relative to the position of the guide bracket (4).

c) Tighten the screws (1).

d) Step up the machine to STEP 2.

e) Place a cap into the single cutter and close the doors.

f) Inch the machine and check the gripper timing.

g) Repeat the procedure until the correct timing is obtained.

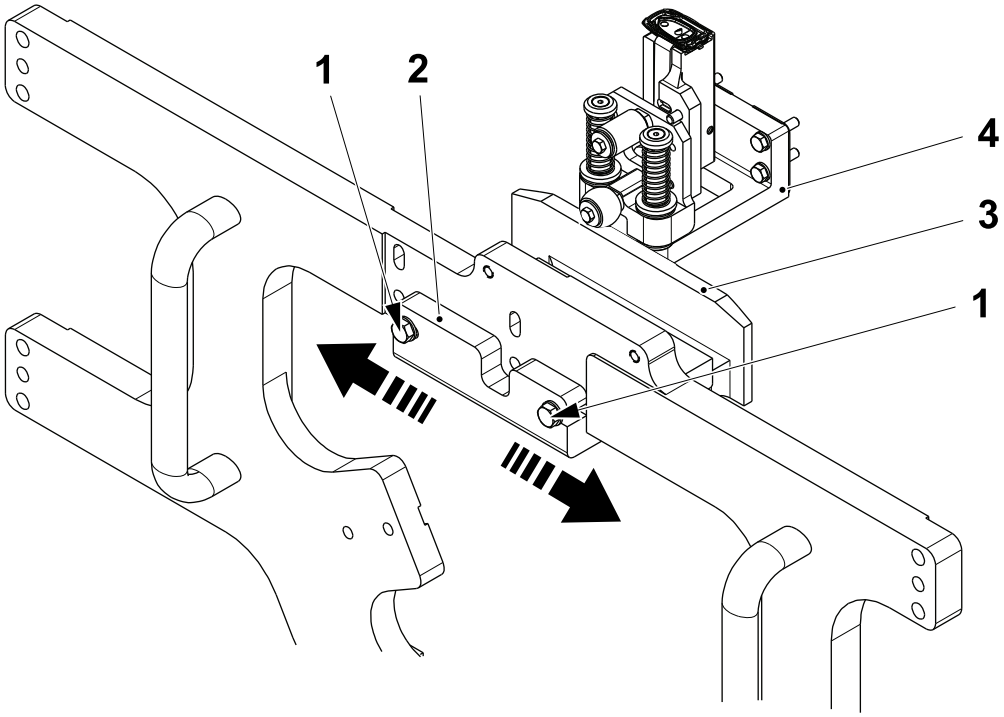

1 Screw
2 Bracket
3 Cam
4 Guide bracket

5.2.1-3 Cam (ReCap) Application - Set

Machine Status	Electrical supply disconnecting device in position O (OFF) Main air valve OFF
SPC Reference	2839315-0200

a) Inch the machine to 360 degrees.

b) Release the screws (1) and then use the screw (2) to adjust the position of the applicator cam (3) until the stroke at the spring is the distance **A**.

c) Tighten the screws (1).

A = 20mm ±0.5

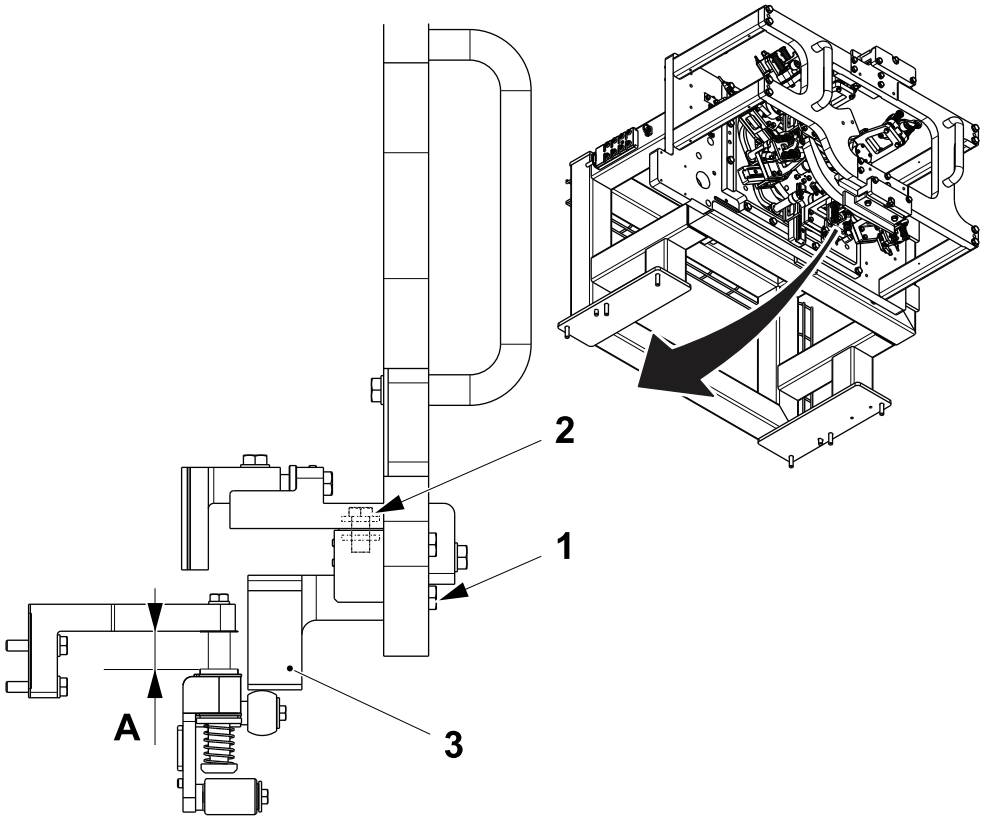

1 Screw
2 Screw
3 Applicator cam

5.2.1-4 Cam (ReCap) Release - Set

Machine Status	Electrical supply disconnecting device in position O (OFF) Main air valve OFF
SPC Reference	2839315-0200

Note! Before setting the cams, set the cap holder group see 5.3.1-3 Cap Holder - Set Y Position.

a) Release the screws (1) and then use the screw (2) to adjust the release cam (3) to set the distance **A** making sure that the cap is still being gripped.

b) Tighten the screws (1).

Note! Make sure that the distance **A** is equal at both ends of the release cam (3) .

A = 9mm

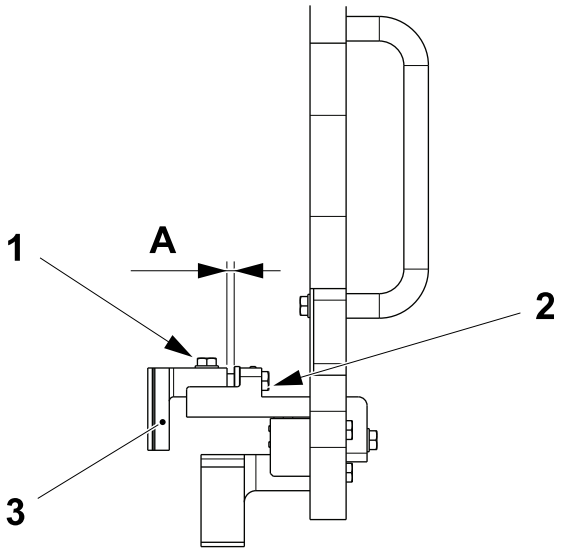

1 Screw
2 Screw
3 Release cam

5.2.2 Cam Module - Change

5.2.2-1 Cam Module - Removal

Machine Status	Electrical supply disconnecting device in position O (OFF) Main air valve OFF
SPC Reference	2839315-0200

Cam Module - Removal Preparation

WARNING

The cam module is heavy!

Because of the weight there may be the necessity of two or three people.

a) Record the setting **A** of the cam (1), see 5.2.1 Cams - Settings.

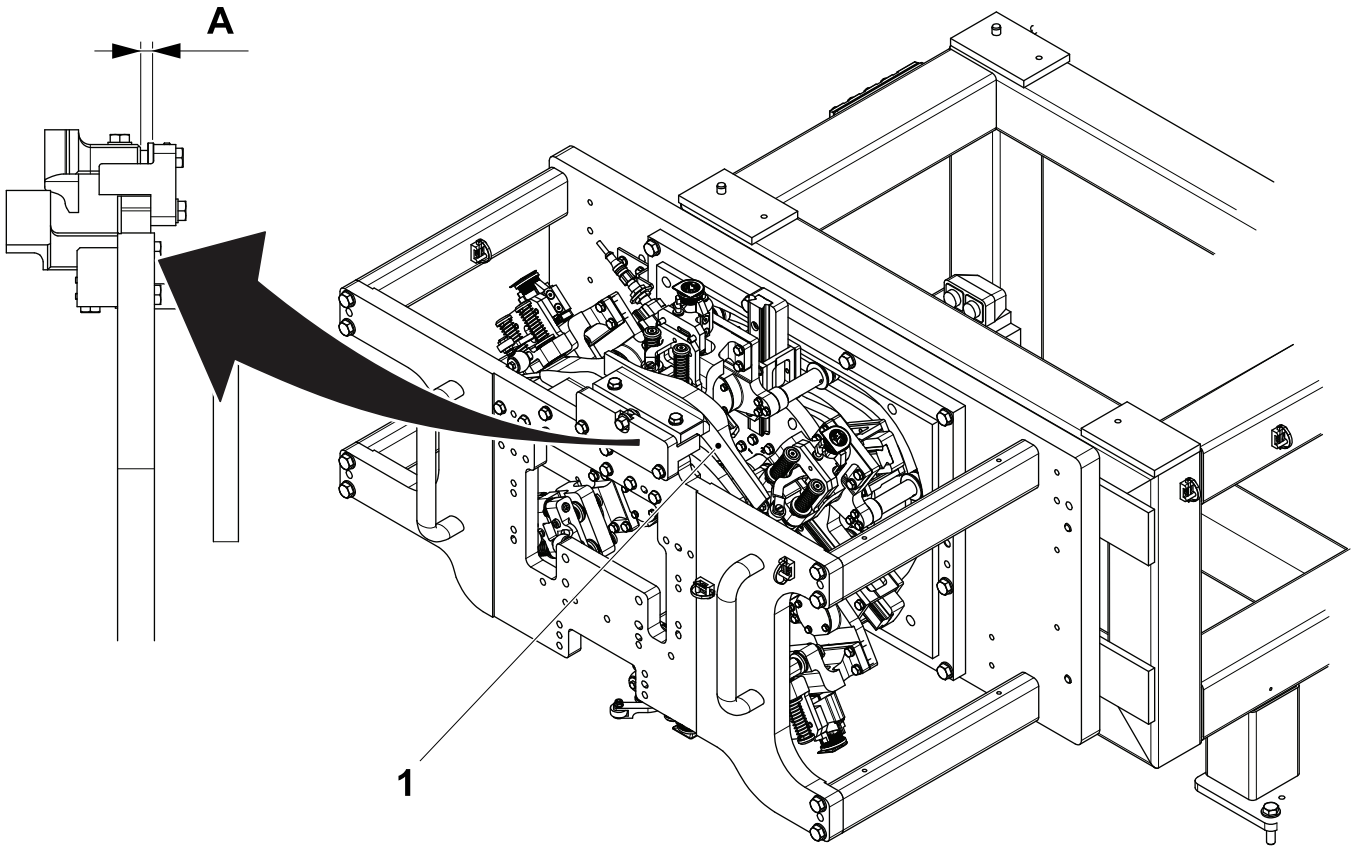

1 Cam

(Cont'd)

(Cont'd)

Cam Module Removal

a) Remove the eight screw (1) and the cam module (2).

Note! Before assembly remove the screw (3) and the cap holder (4).

b) Assemble in the reverse order.

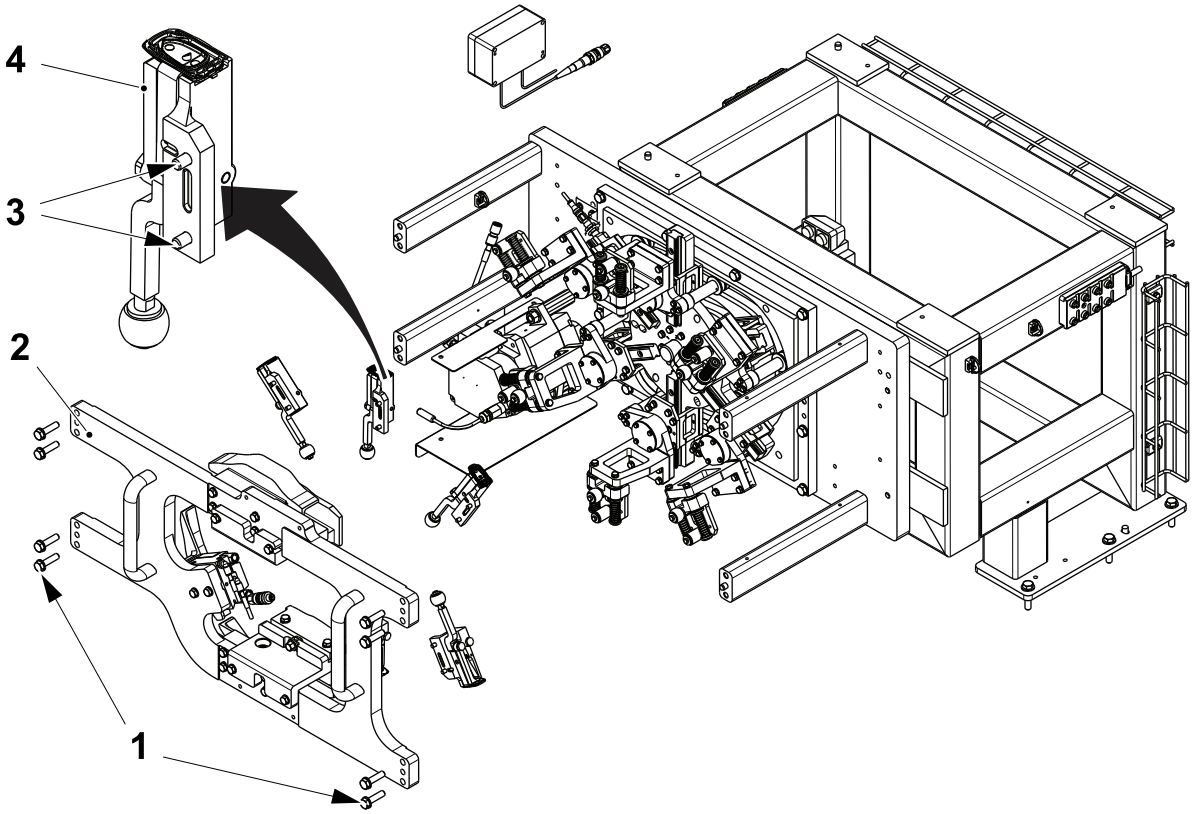

1 Screw
2 Cam module
3 Screw
4 Cap holder

5.3 Cap Holders Group

5.3.1 Cap Holder

5.3.1-1 Cap Holder - Check

Machine Status	Electrical supply disconnecting device in position O (OFF) Main air valve OFF
Consumables	THREAD LOCKING LOCTITE 2701 50 ML TP No. 344433-0050
SPC Reference	2895163-0200

a) Check that the roller (1) is not damaged or worn and that it rotates freely.

b) Check that the spring (2) still returns the arm (3).

c) Replace if necessary.

Note! Use loctite when you tighten the screws that fix the spring (2).

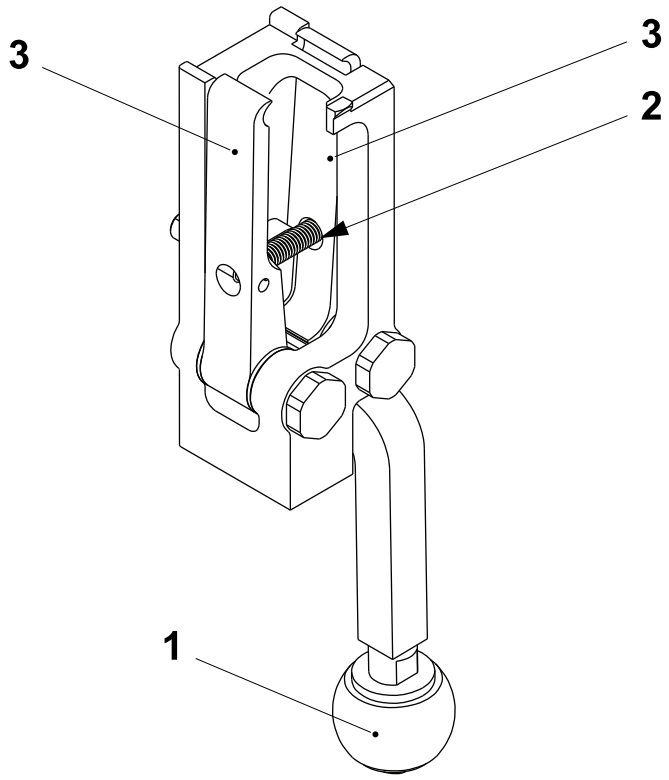

1 Roller
2 Spring
3 Arm

5.3.1-2 Cap Holder - Change Roller and Bushings

Machine Status	Electrical supply disconnecting device in position O (OFF) Main air valve OFF
SPC Reference	2703670-0100

a) Remove the cam module, see .

b) Remove the two screw (1) and the cap holder (2).

c) Remove the nut (3) and the washer (4).

d) Remove the roller (5) and the shaft (6) .

e) Remove the screws (7) and the bushings (8).

f) Remove the pins (9) and the spring (10) .

g) Assemble in the reverse order.

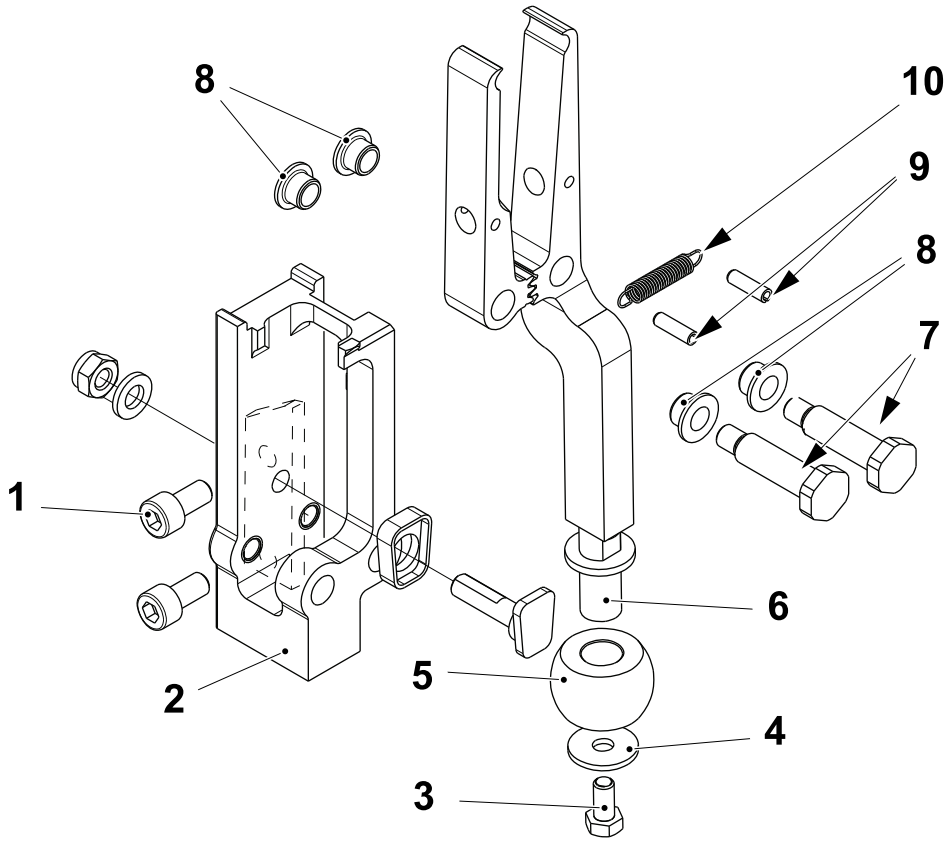

1 Screw
2 Cap holder
3 Nut
4 Washer
5 Roller
6 Shaft
7 Screw
8 Bushing
9 Pin
10 Spring

5.3.1-3 Cap Holder - Set Y Position

Machine Status	Electrical supply disconnecting device in position O (OFF) Main air valve OFF
SPC Reference	2895163-0200

Set Y Position at Control Panel

Note! Before setting the Y position of the cap holders, set the X position of the individual guide brackets, see 5.4.1-3 Guide Bracket (ReCap) - Set X Position.

a) Touch the MAINTENANCE button (1) to login see, 1.1.1-1 HMI User Management - Log On as a User.

b) Touch the MAINTENANCE button (1).

c) Touch the SERVICE button (2).

Note! Items like the positioning system only appear on the screen below when installed.

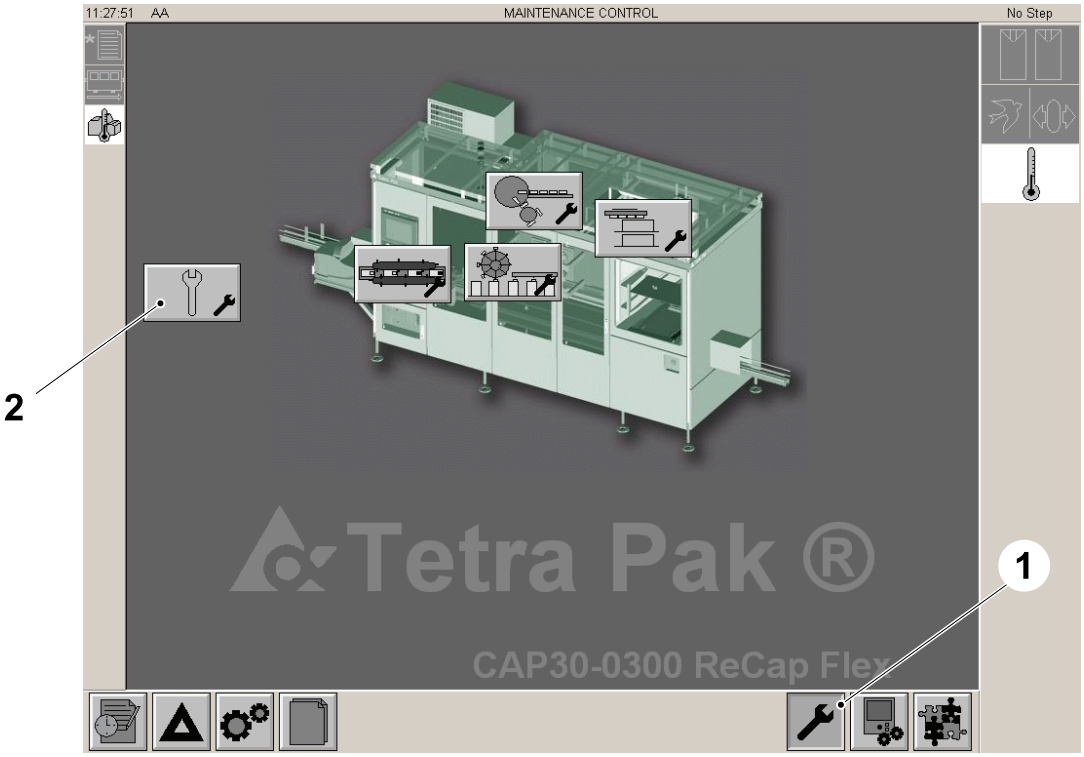

1 MAINTENANCE button
2 SERVICE button

(Cont'd)

(Cont'd)

d) Touch the INCHING button (3).

Note! The value in the window (4) should be 180 degrees.

e) If the value in the window (4) is correct go to step j). If the value is incorrect continue with step f).

f) Touch the SETTING button (5) to modify the value in the window (4).

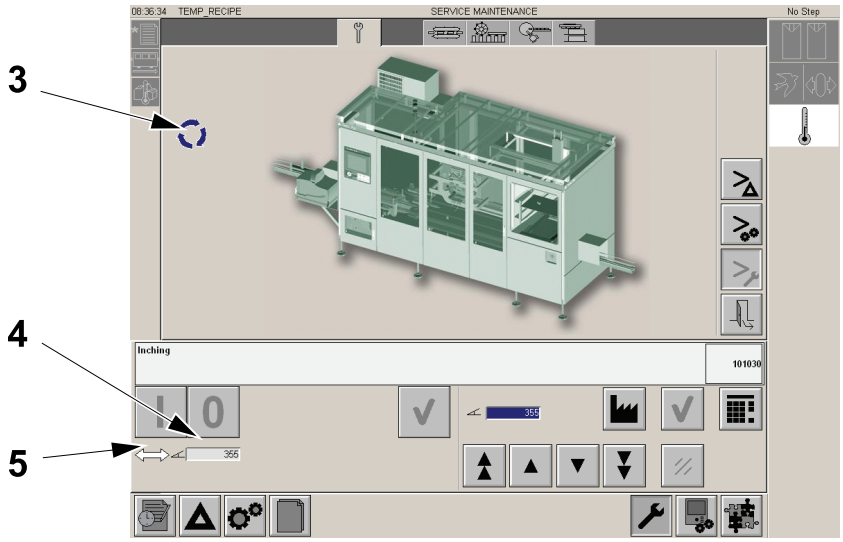

3 INCHING button
4 Window
5 SETTING button

(Cont'd)

(Cont'd)

g) Using the up and down buttons (6) set the number in the degrees window (7) to read 180 Degrees.

h) Touch the OK button (8).

i) Check that the value set in step g) appears in the window (4).

j) Touch the ON button (9).

k) Touch the OK button (10).

l) Touch the EXIT button (11) to leave.

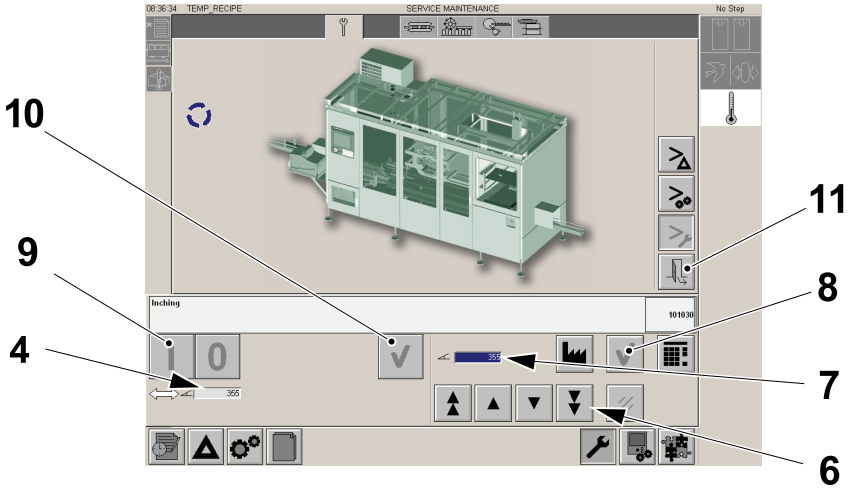

4 Window
6 Up and down buttons
7 Degrees window
8 OK button
9 ON button
10 OK button
11 EXIT button

(Cont'd)

(Cont'd)

Set Y Position at Transfer Unit

a) Open the doors and make sure that the hole (1) lines up with the hole in the plate (2) and insert the pin (3).

b) If problems are encountered inserting the pin (3), the machine zero settings should be done again see, 5.6.1-1 Star Wheel - Set Zero Position.

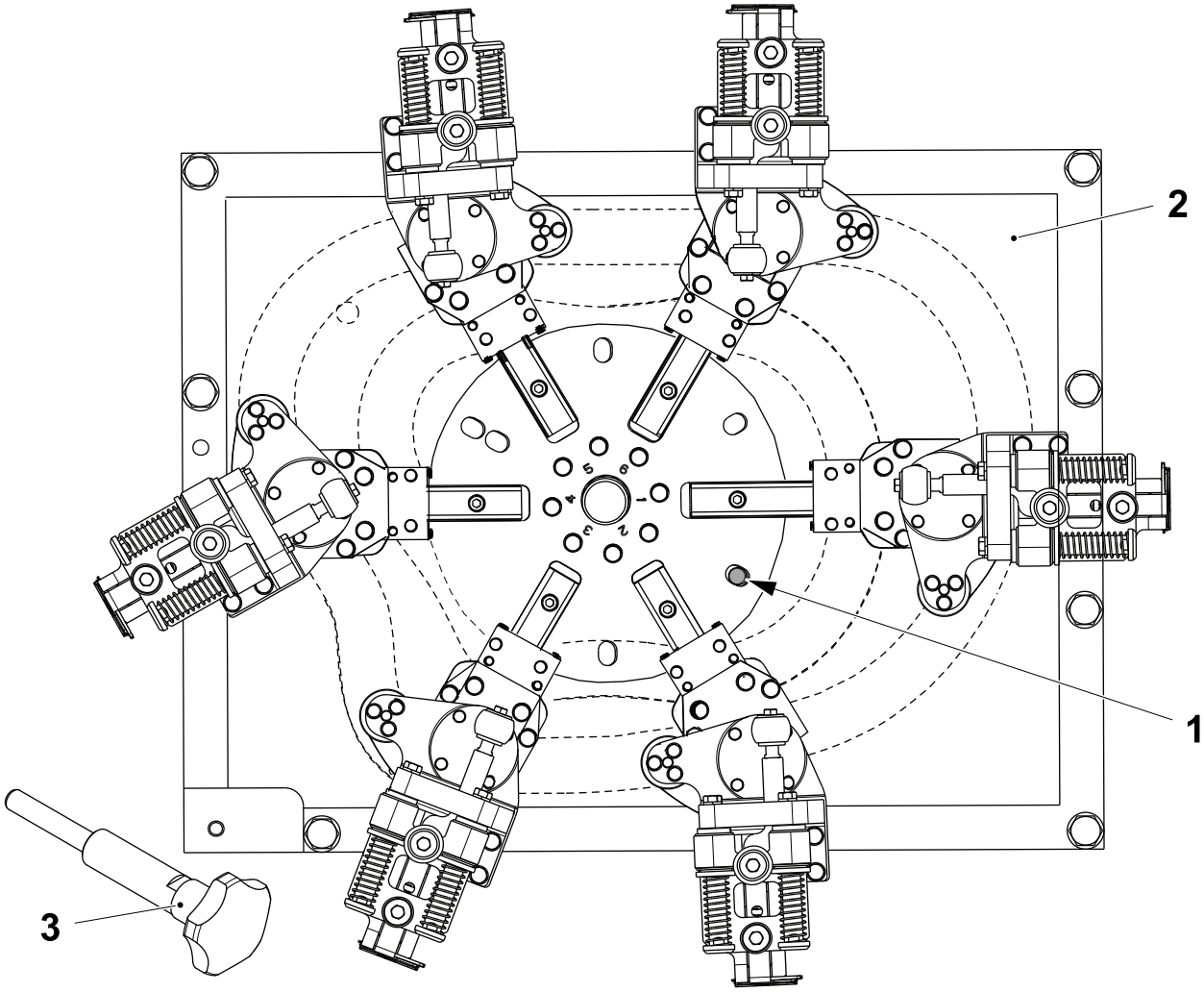

1 Hole
2 Plate
3 Pin

(Cont'd)

(Cont'd)

Set Y Position at Cap Carrier

a) At cap holder No 1 (1), centralise the guide bracket (2) relative to the cam follower (3). To do this loosen the four screw (4) and align the edges with the cam follower (3) or turn the eccentric cam (5) for fine adjustment. When the guide bracket (2) and the cam follower (3) are aligned, tighten the screw (4). Repeat for all positions.

b) Measure the distance **A** between the top surface of the cap holder No 1 (1) and the lower surface of the support (6) for all positions and average the distance **A**.

c) Set the average of distance **A** at all positions.

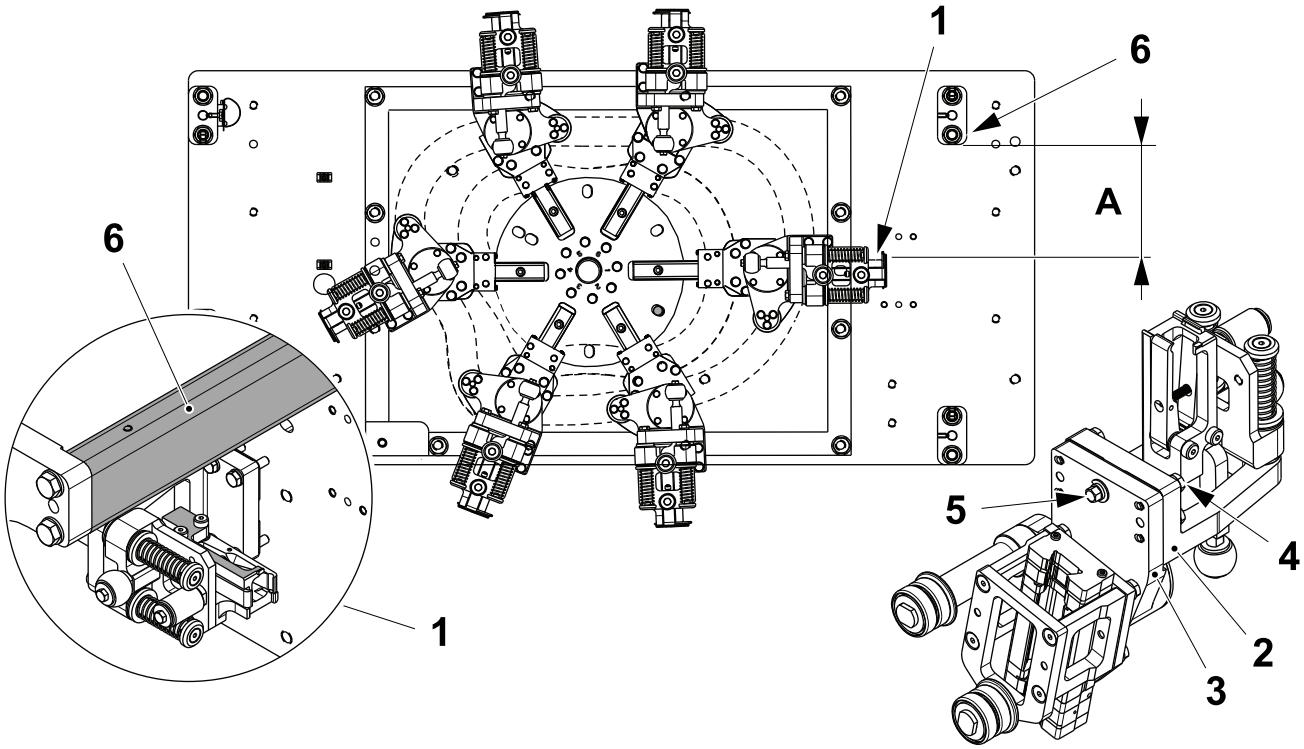

1 Cap Holder No 1
2 Guide bracket
3 Cam follower
4 Screw
5 Eccentric cam
6 Support

(Cont'd)

(Cont'd)

d) Remove the pin (7).

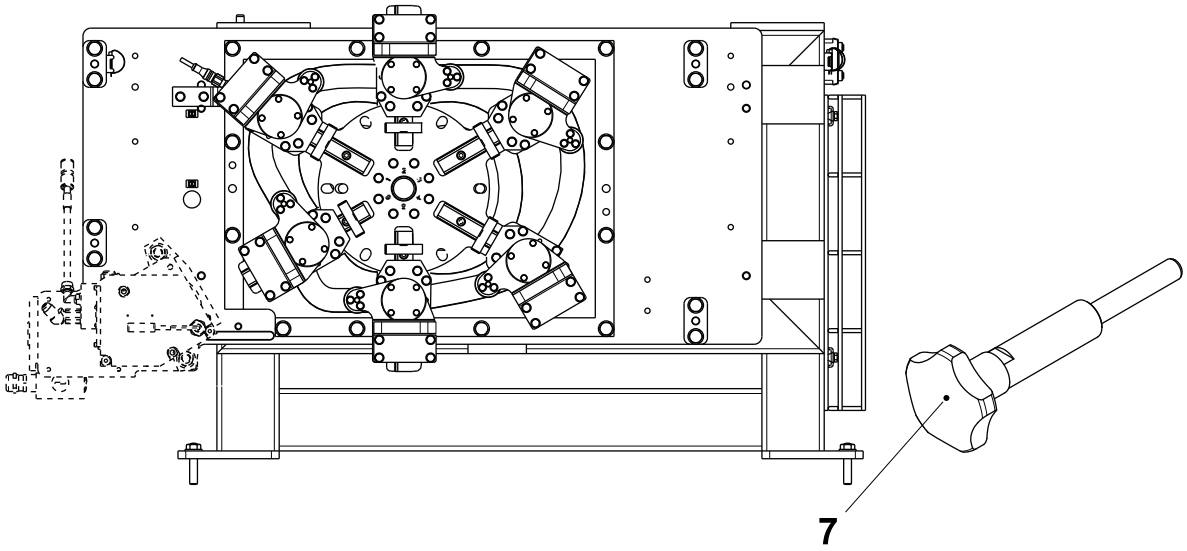

7 Pin

(Cont'd)

(Cont'd)

e) Touch the MAINTENANCE button (8).

f) Touch the SERVICE button (9).

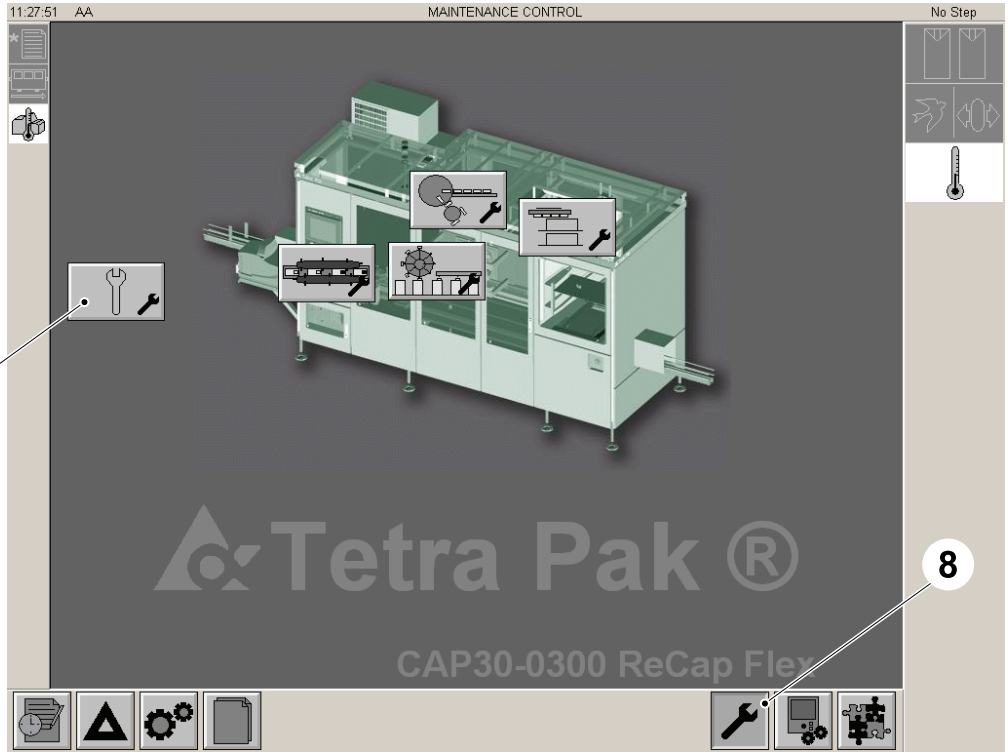

8 MAINTENANCE button
9 SERVICE button

(Cont'd)

(Cont'd)

g) Touch the OK button (10) to move the next cap carrier to the horizontal position.

h) Insert the pin (7) again.

i) Adjust the horizontal cap carrier, if necessary refer to step a) on page 5-21 until the distance **A** is obtained again.

j) Remove the pin (7).

k) Repeat items g) to j) for the other cap carriers.

Note! After any positional change the packages will require testing, see OM chapter 5 for details.

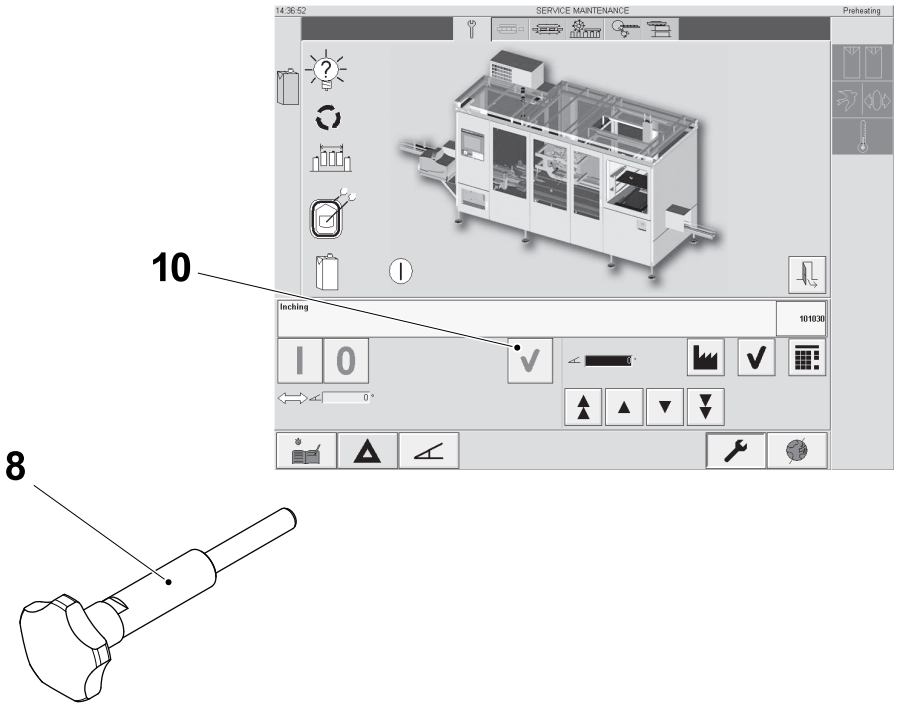

7 Pin

10 OK button

5.4 Cap Carrier

5.4.1 Guide Bracket

5.4.1-1 Guide Bracket (ReCap) - Check

Machine Status	Electrical supply disconnecting device in position O (OFF) Main air valve OFF
SPC Reference	2746939-0200

a) Check that the roller (1) and the roller (2) are not damaged or worn and rotate freely.

b) Check that the spring (3) return the roller carrier.

c) Replace if necessary.

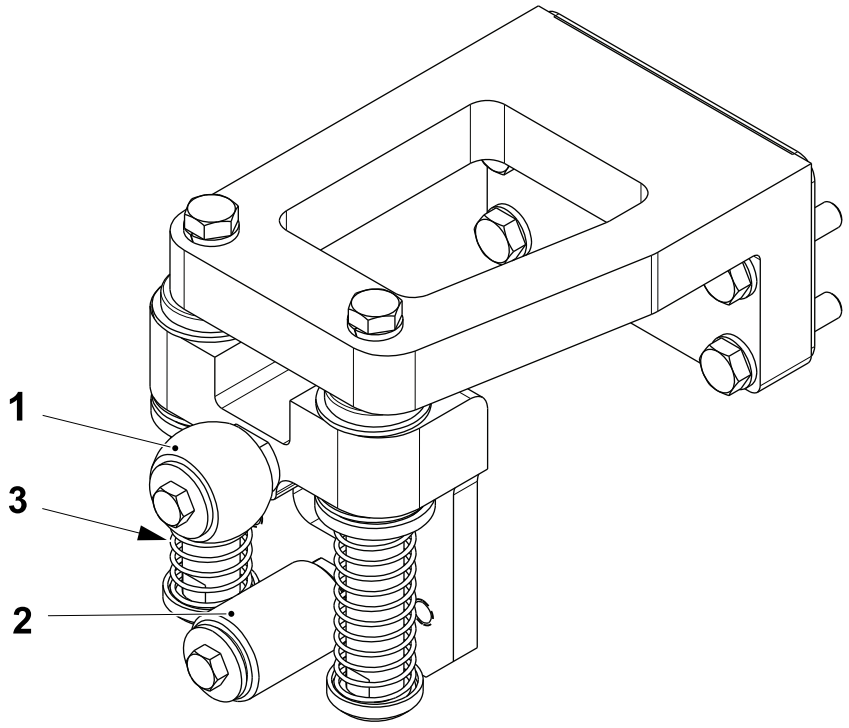

1 Roller
2 Roller
3 Spring

5.4.1-2 Guide Bracket (ReCap) - Change Roller and Bushings

Machine Status	Electrical supply disconnecting device in position O (OFF) Main air valve OFF
SPC Reference	2746939-0200

a) Remove the screws (1) and the shafts (2).

b) Remove the washers (3) and the spring (4).

c) Remove the retaining ring (5) and the bushing (6).

d) Remove the screw (7), the washer (8) and the roller (9).

e) Remove the screw (10), the washer (11) and the roller (12).

f) Assemble in the reverse.

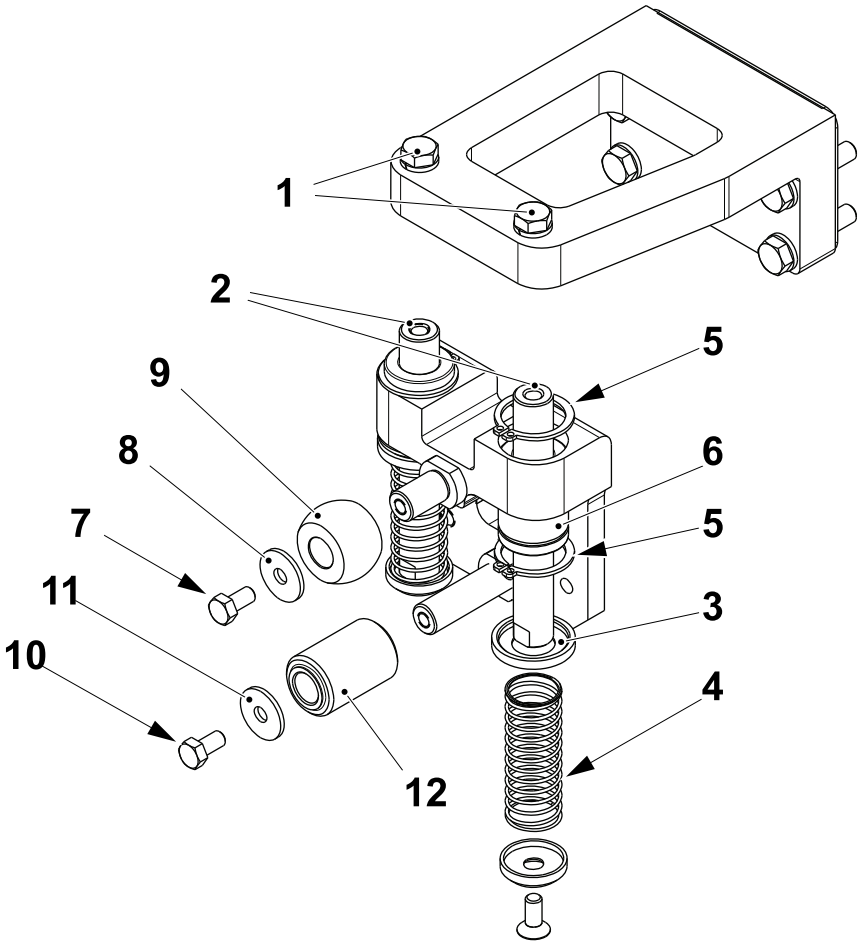

1 Screw
2 Shaft
3 Wahser
4 Spring
5 Retaining ring
6 Bushing
7 Screw
8 Washer
9 Roller
10 Screw
11 Washer
12 Roller

5.4.1-3 Guide Bracket (ReCap) - Set X Position

Machine Status	Electrical supply disconnecting device in position I (ON) Main air valve OFF
SPC Reference	2746939-0200

a) Inch the machine to 0 degrees and centre the cap carrier (1) with the single cutter (2) by increasing or decreasing the number of shim (3) behind the guide bracket (4).

b) Repeat for all cap carriers.

Note! Be sure the single cutter is closed and the single cutter X position has been adjusted before.

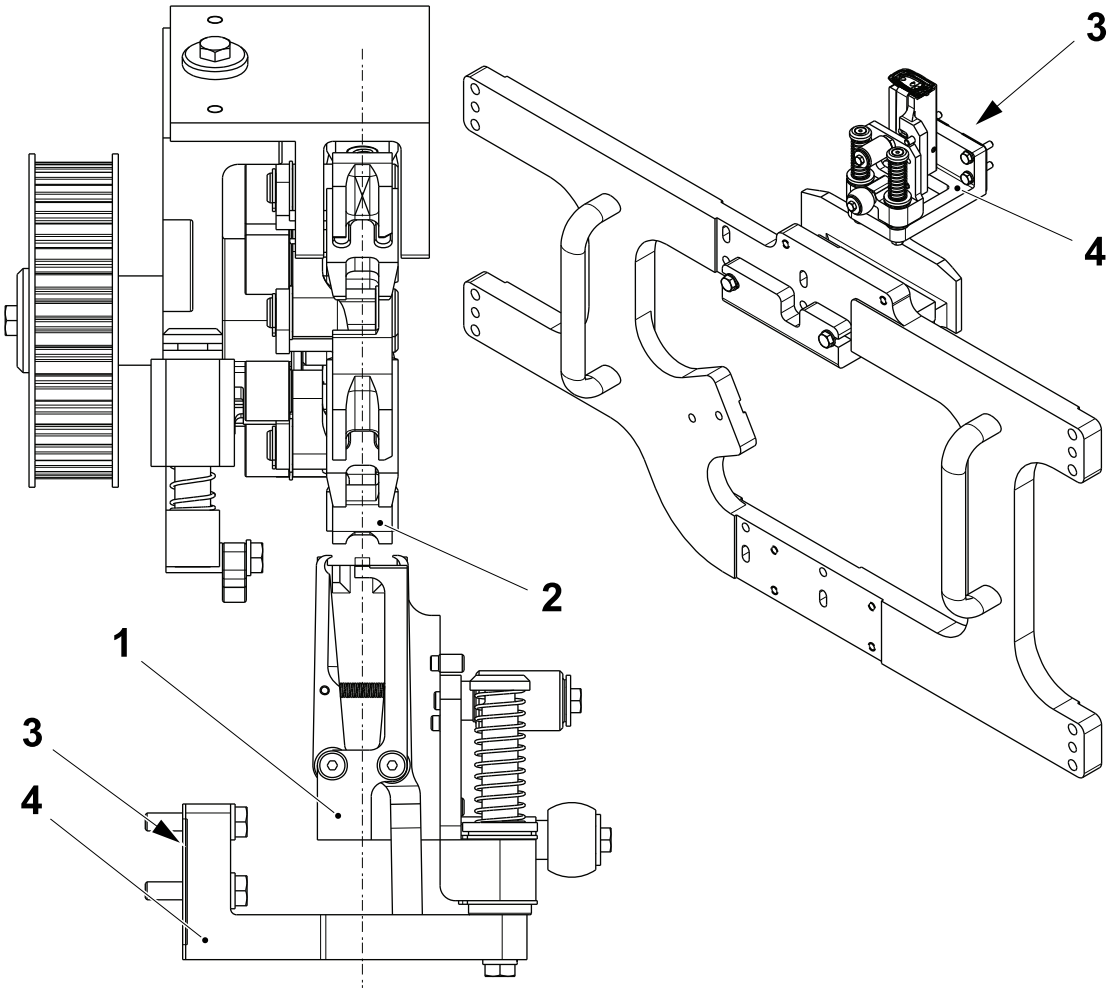

1 Cap carrier
2 Single cutter
3 Shim
4 Guide bracket

5.5 Drive Unit

5.5.1 Sensors

5.5.1-1 Sensors - Cap Holder No.1 Position

Machine Status	Electrical supply disconnecting device in position O (OFF) Main air valve OFF
SPC Reference	2837072-0200

Set the sensor (1) to the distance **A**.

Note! Check that only cap holder number 1 activates the sensor.

A = 2mm

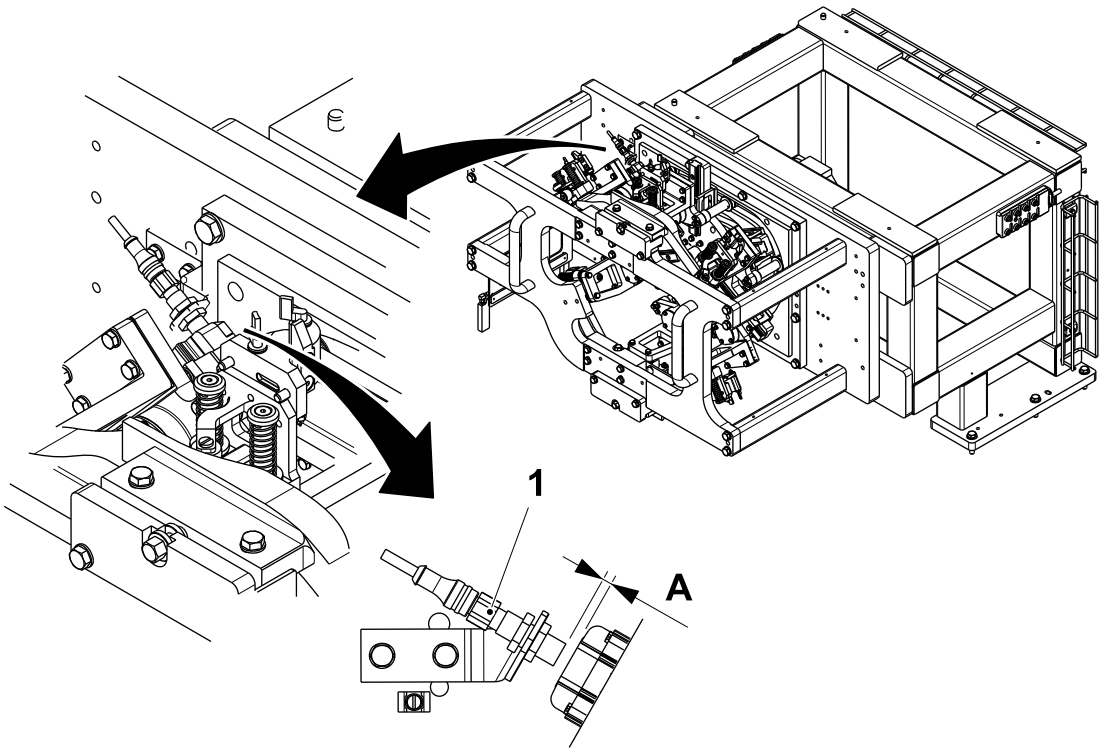

1 Sensor

5.6 Transfer Unit

5.6.1 Star Wheel

5.6.1-1 Star Wheel - Set Zero Position

Machine Status	Electrical supply disconnecting device in position O (OFF) Main air valve OFF
SPC Reference	2751656-0100

a) Manually turn the star wheel until the hole (1) can be aligned with the hole in the plate (2).

b) Insert the pin (3).

c) Close all doors and guards.

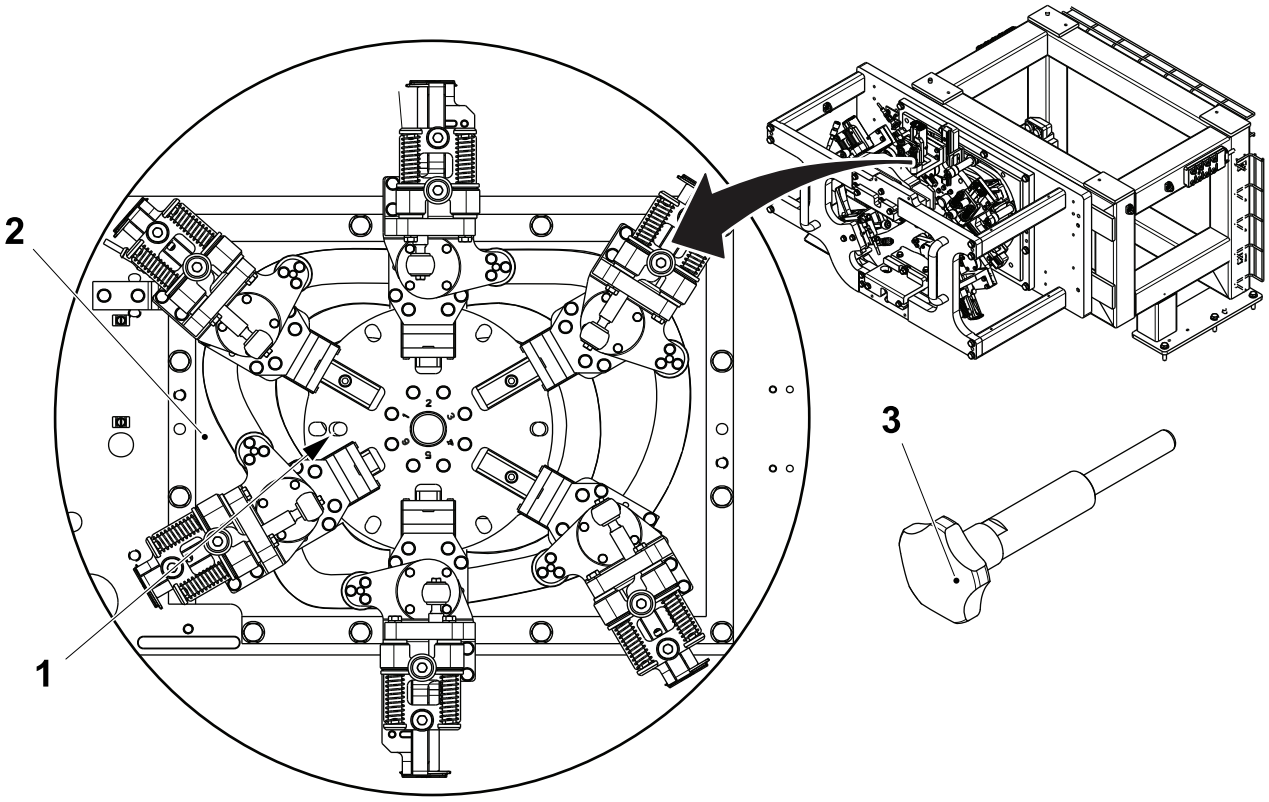

1 Hole
2 Plate
3 Pin

(Cont'd)

(Cont'd)

d) Turn the main power on and login see, 1.1.1-1 HMI User Management - Log On as a User.

e) Touch the MAINTENANCE button (4).

Note! Items like the positioning system only appear on the screen below when installed.

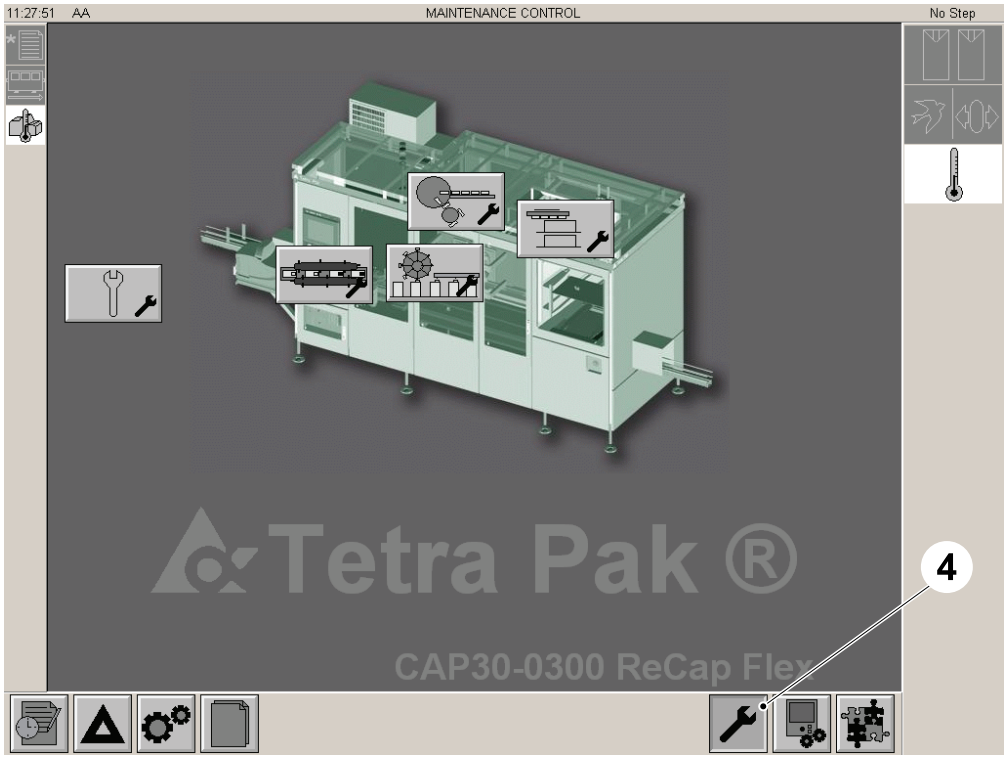

4 MAINTENANCE button

(Cont'd)

(Cont'd)

f) Touch the APPLICATOR UNIT button (5).

g) Touch the ZERO button (6).

h) Touch the ON button (7).

i) Touch the OK button (8) for three seconds. The background of the ON button (7) should go green.

j) Touch the EXIT button (9).

Note! The pin must be removed before starting the machine.

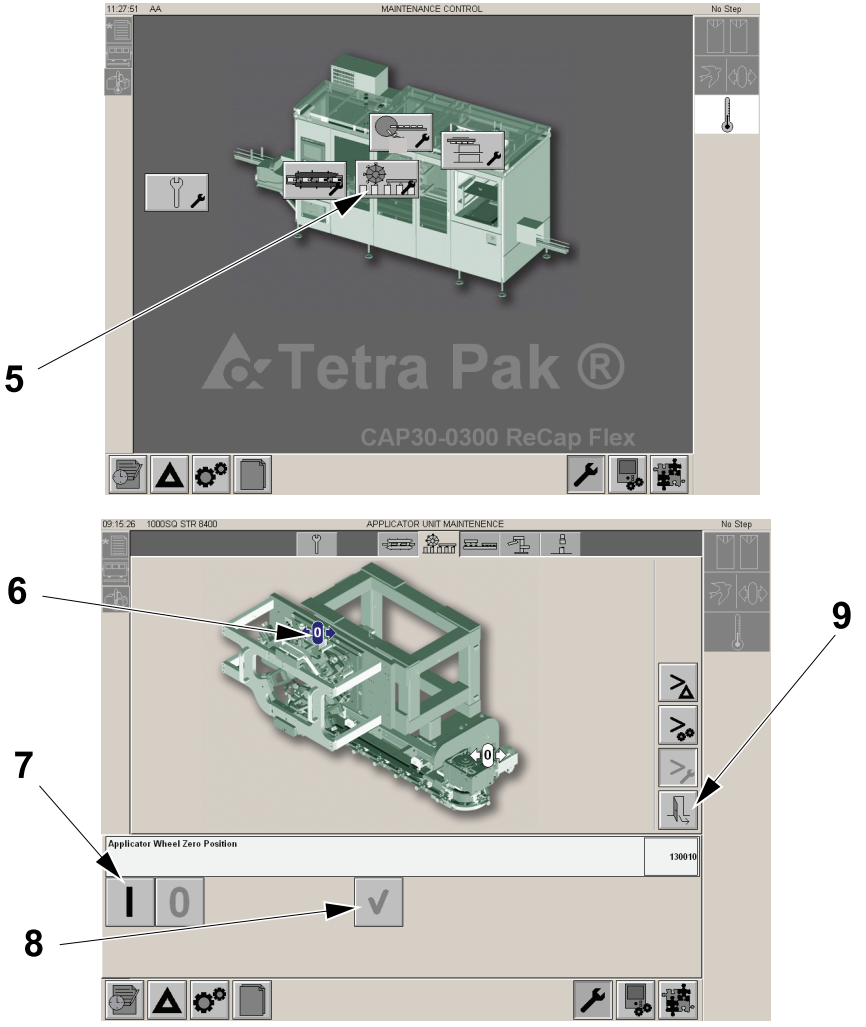

5 APPLICATOR UNIT button
6 ZERO button
7 ON button
8 OK button
9 EXIT button

5.6.1-2 Star Wheel - Change Outer Cam Follower Bearings

Machine Status	Electrical supply disconnecting device in position O (OFF) Main air valve OFF
SPC Reference	2746938-0200

a) Remove the screw (1) and the cover (2).

b) Release the outer cam follower (3) from the inner cam follower by removing the screw (4) and the washer (5).

c) Remove the seal (6), the bearing (7) and the spacer (8).

d) Remove the screw (9) and the shaft (10) only if necessary.

e) Remove the screw (11), the bearing (12) and the spacer (13).

f) Assemble in the reverse order.

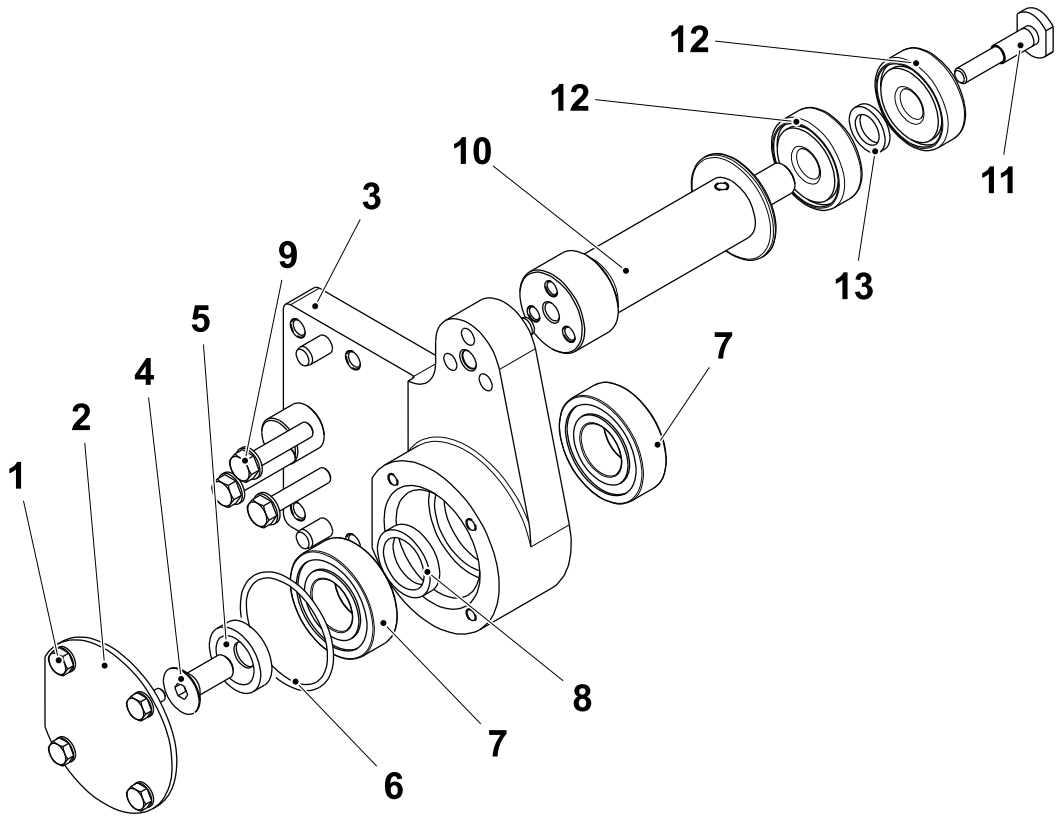

1 Screw
2 Cover
3 Outer cam follower
4 Screw
5 Washer
6 Seal
7 Bearing
8 Spacer
9 Screw
10 Shaft
11 Screw
12 Bearing
13 Spacer

5.6.1-3 Star Wheel - Change

Machine Status	Electrical supply disconnecting device in position O (OFF) Main air valve OFF
SPC Reference	2746938-0200

a) Remove the cam module and the cap holder, see 5.3.1-2 Cap Holder - Change Roller and Bushings.

b) Remove the screws (1) and the star wheel (2).

c) Assemble in the reverse order.

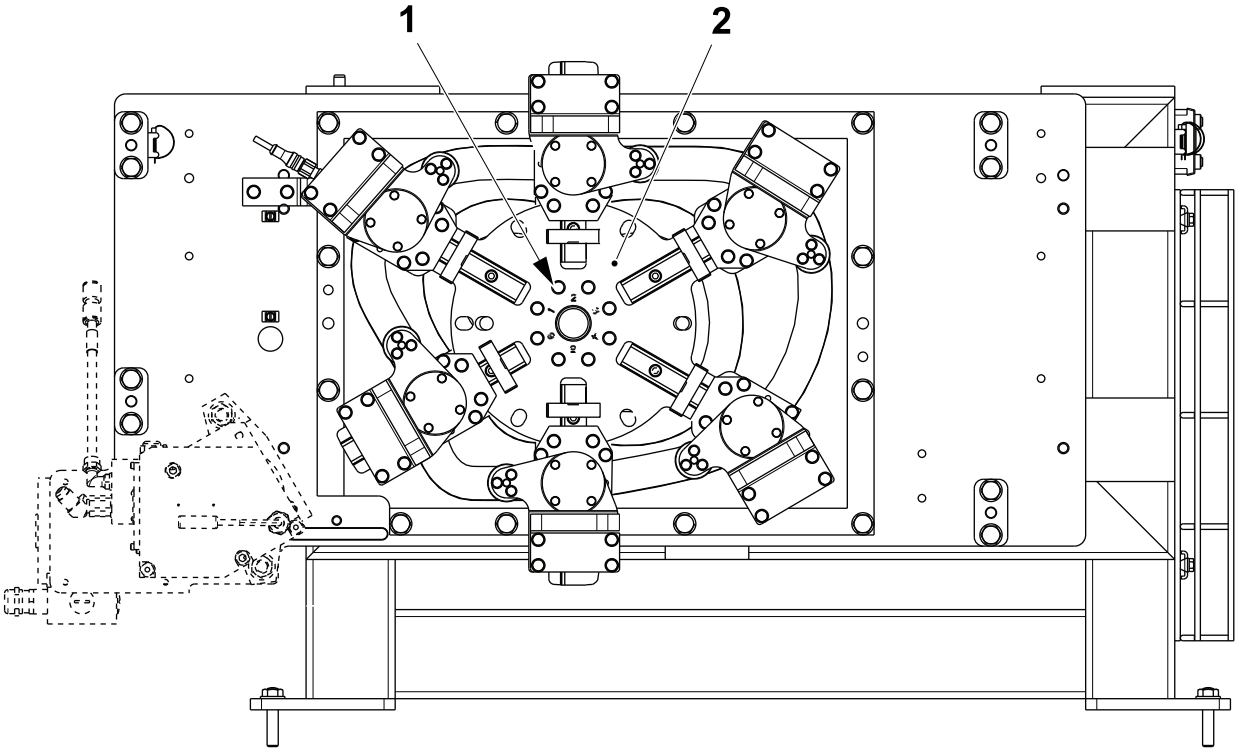

1 Screw
2 Star wheel

5.6.1-4 Star Wheel - Change Inner Cam Follower Bearings

Machine Status	Electrical supply disconnecting device in position O (OFF) Main air valve OFF
SPC Reference	2746939-0200

a) Remove the cam module, the cap holder, see 5.2.2-1 Cam Module - Removal, the outer cam follower, see 5.6.1-2 Star Wheel - Change Outer Cam Follower Bearings steps a) to b) and the star wheel, see 5.6.1-3 Star Wheel - Change.

b) Remove the screw (1), the bearing (2) and the spacer (3).

c) Remove the screw (4) and the shaft (5).

d) Remove the screw (6) and the plate (7).

e) Remove the screw (8) and the plate (9).

f) Remove the screw (10), the plate (11) and the slider (12).

g) Assemble in the reverse order.

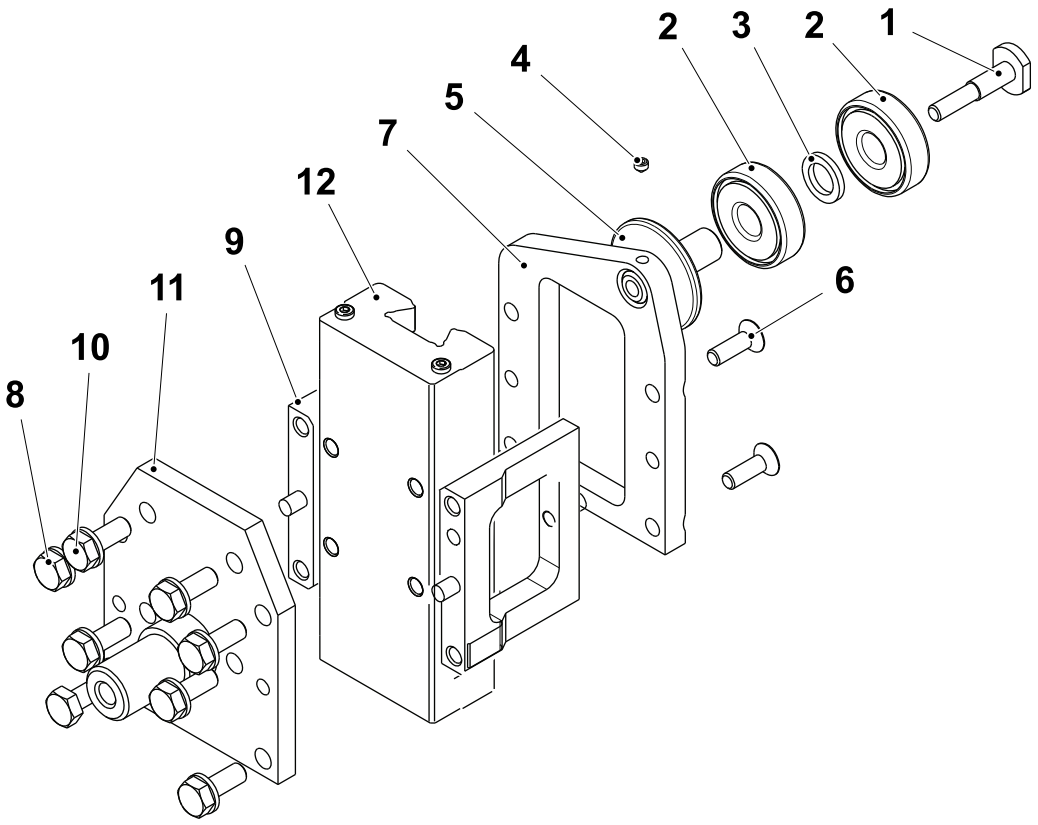

1 Screw
2 Bearing
3 Spacer
4 Screw
5 Shaft
6 Screw
7 Plate
8 Screw
9 Plate
10 Screw
11 Plate
12 Slider

5.7 Hotmelt Wheel

5.7.1 Functional Description

DANGER

Risk of immediate danger to life.
The voltage is 400V inside the hotmelt unit. There is risk of immediate danger to life through electrical shock if the warning signs are ignored.

WARNING

Risk of personal injury.
Carefully follow all of the instructions in the ii Safety Precautions Chapter and the Nordson manual.

The hotmelt equipment consists of the tank (1), the hose (2) and the wheel applicator (3). The hose (2) and the wheel applicator (3) are electrically heated. The level of hotmelt is controlled by the level controller (4) via the sensor (5).

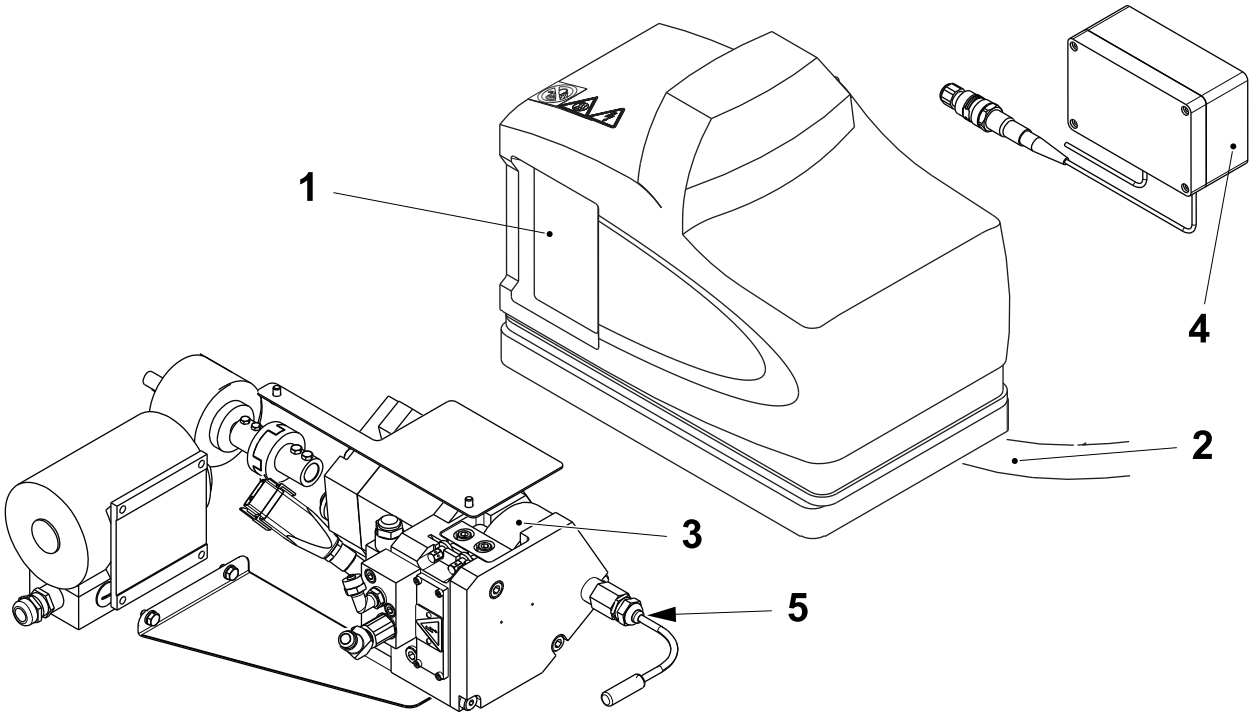

(Cont'd)

(Cont'd)

When the system is turned ON, the tank (1) and the hose (2) are heated. When the tank (1), the hose (2) and the wheel applicator (3) are within 3°C (37.5°F) of their set point temperatures, a time delay starts. The time delay provides additional time for the adhesive in the tank to melt. During the time delay, the green ready LED (6) flashes. When the green ready LED (6) is fixed, the hotmelt equipment is ready.

The adhesive passes through the hotmelt pump into a distribution manifold. The adhesive then flows through a filter into the hose (2) and to the wheel applicator (3).

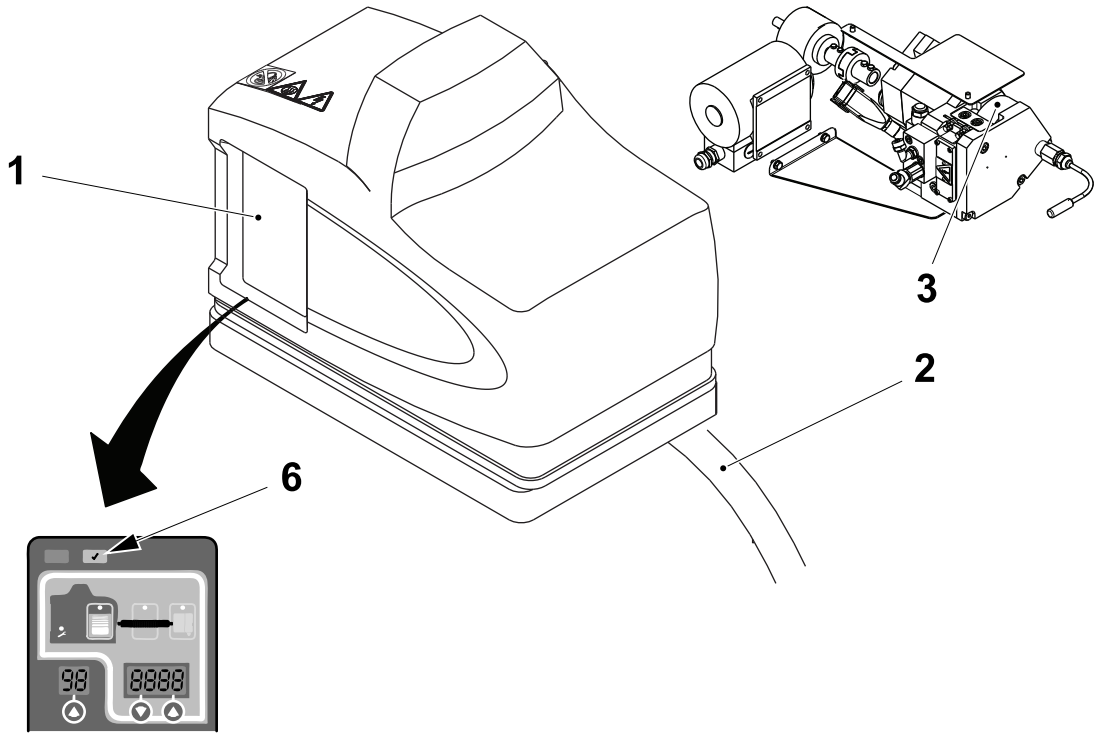

5.7.1-1 Hotmellt Wheel - Change Cylinder

Machine Status	Electrical supply disconnecting device in position I (ON) Main air valve OFF
SPC Reference	2780369-0200

a) Remove the push in connector (1).

b) Remove the connector (2).

c) Remove the six screws (3) and the cam (4).

d) Remove the two screws (5) and the cylinder (6).

e) Assemble in the reverse order.

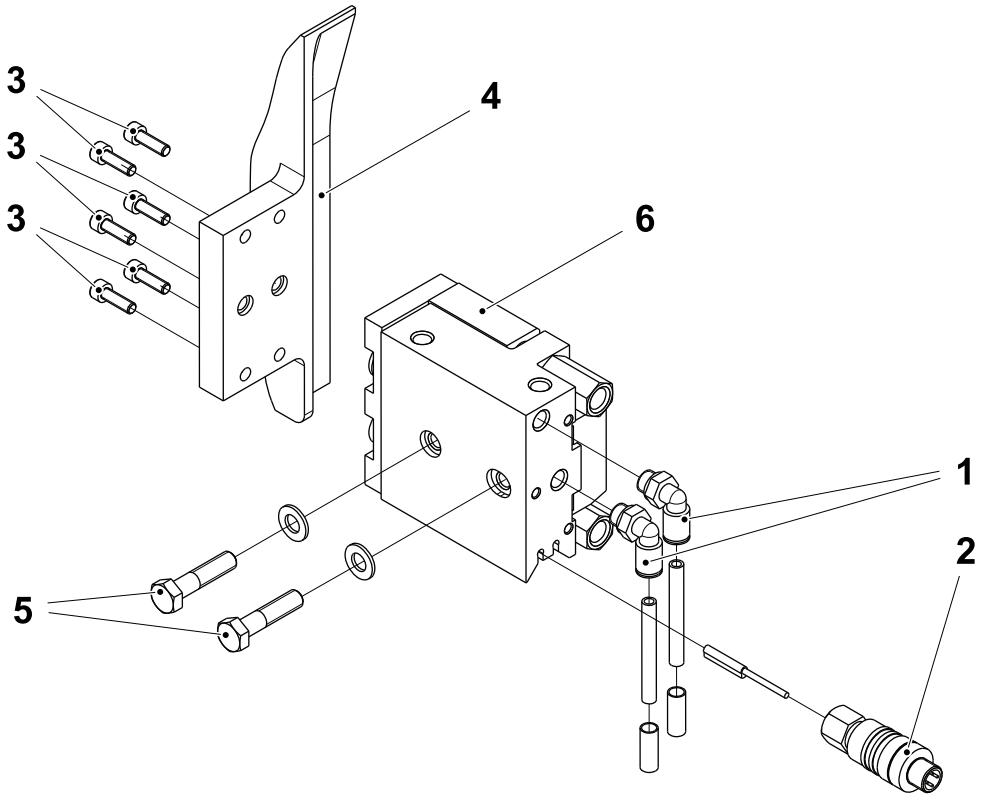

1 Push in connector
2 Connector
3 Screw
4 Cam
5 Screw
6 Cylinder

5.7.1-2 Hotmelt Wheel - Set Cam Position

Machine Status	Electrical supply disconnecting device in position I (ON) Main air valve OFF
SPC Reference	2839315-0200

The distance between the surface of cap (1) to which hotmelt is applied, and the surface of wheel (2), that applies the hotmelt, is set by adjusting the forward position of the cam (3).

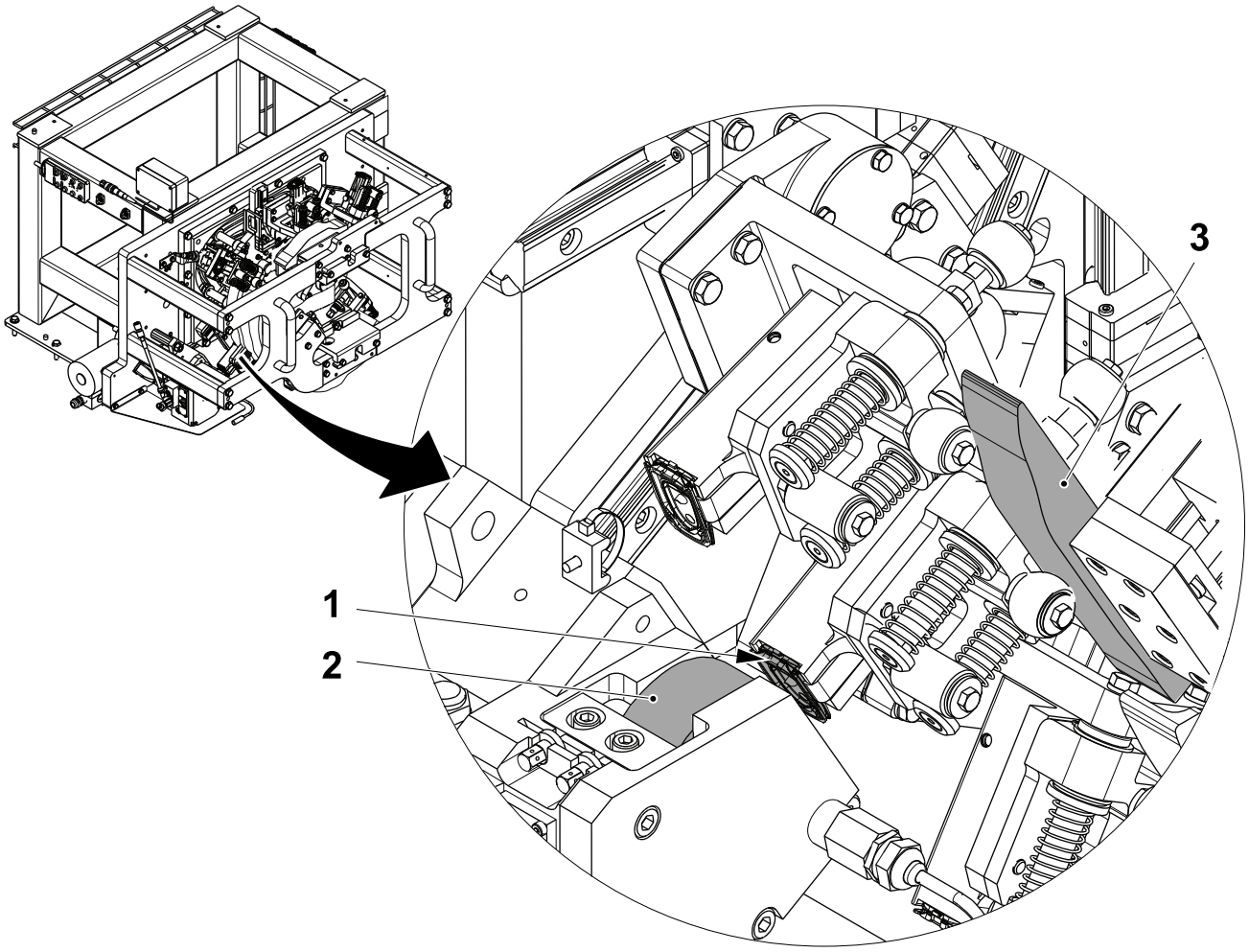

1 Surface of cap
2 Surface of wheel
3 Cam

(Cont'd)

(Cont'd)

Return Position

WARNING

Risk of burns

The wheel applicator (1) is very hot. Failure to observe this could result in burn injuries.

a) Make sure the air is turned OFF.

b) Loosen the nut (2) then adjust the screw (3) until the roller (4) leaves the cam (5). Now turn a little in the opposite direction so that the cam (5) and the roller (4) are always in contact.

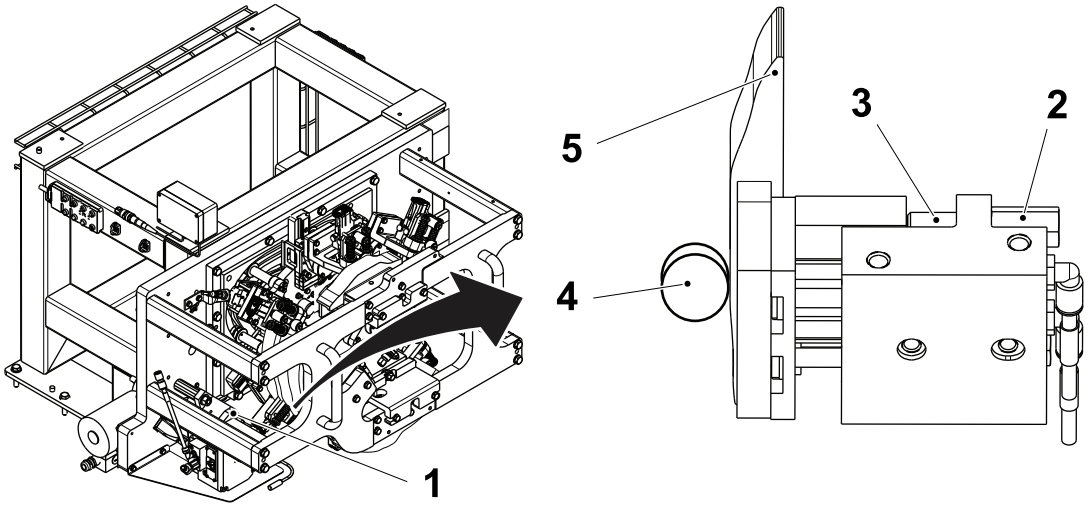

1 Wheel applicator
2 Nut
3 Screw
4 Roller
5 Cam

(Cont'd)

(Cont'd)

Forward Position

WARNING

Risk of burns

The wheel applicator (1) is very hot. Failure to observe this could result in burn injuries.

a) Make sure the air is turned OFF.

b) Loosen the nut (2) then adjust the screw (3) so that the cap (4) just touches the roller (5).

c) Check the hotmelt pattern, see Hotmelt Quantity Adujustment.

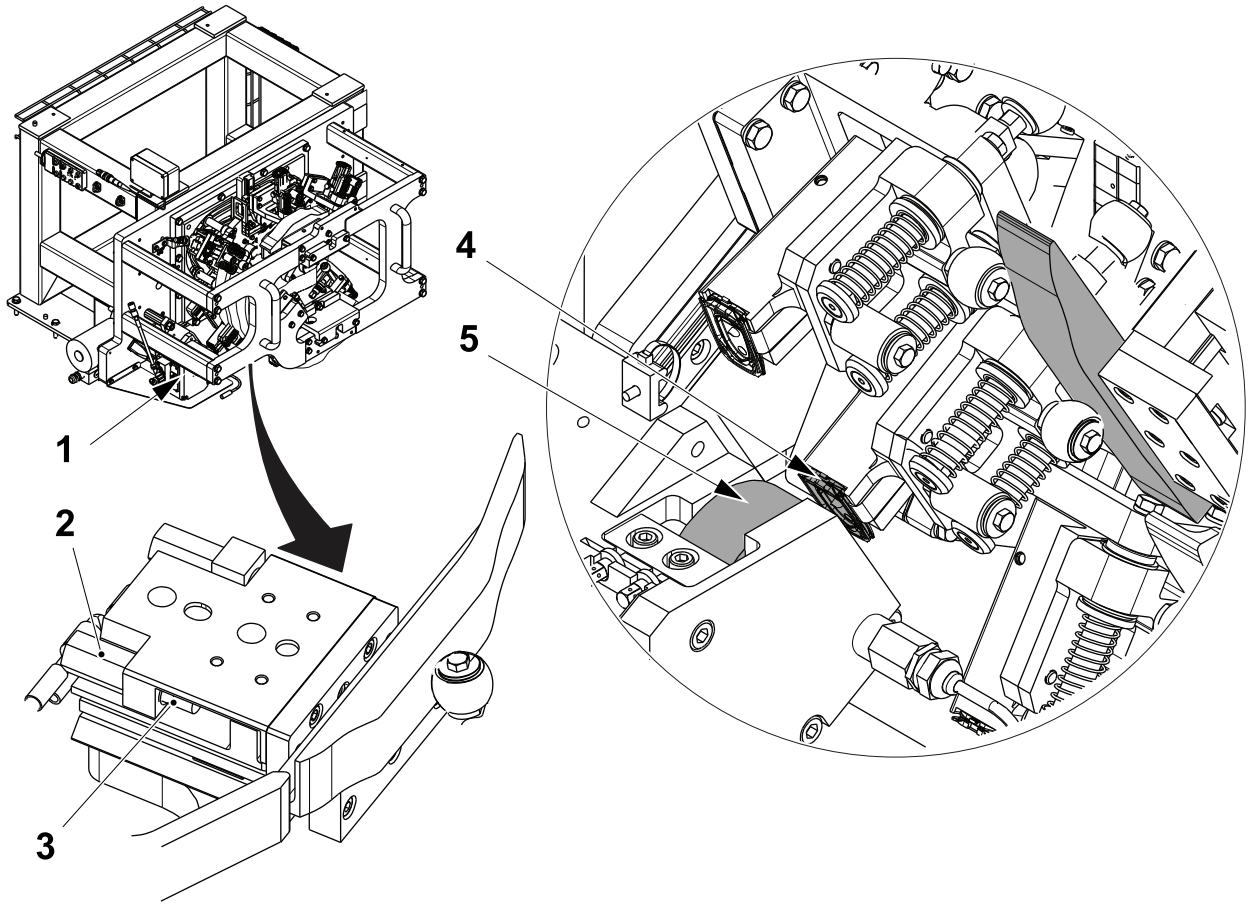

1 Wheel applicator
2 Nut
3 Screw
4 Cap
5 Roller

(Cont'd)

(Cont'd)

Sensor (G30B2001) Position - Set

a) With the cylinder (1) fully extended, release the screw (2) and slide the sensor (3) towards the cam (4) until the LED illuminates.

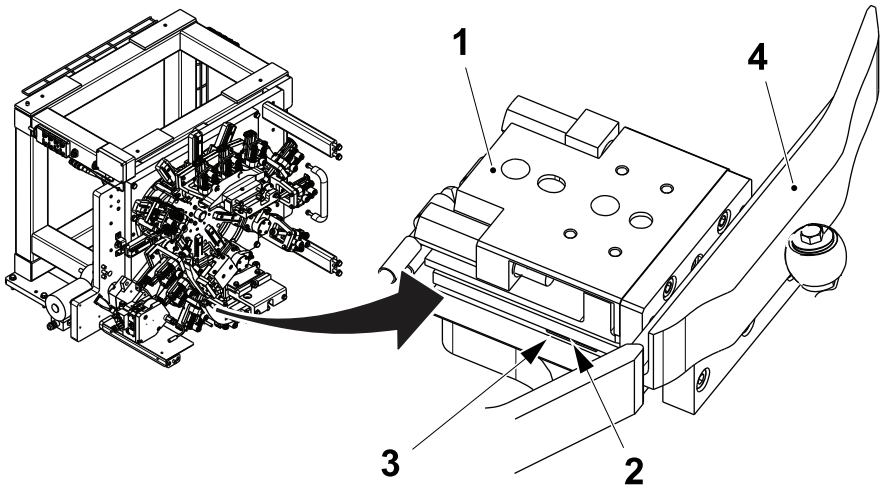

1 Cylinder
2 Screw
3 Sensor
4 Cam

(Cont'd)

(Cont'd)

Hotmelt Quantity Adujustment

Depending on the distance between the wheel applicator and the cap, the result is as follows:

- If an uneven pattern of hotmelt is applied to the cap the distance is to small and requires increasing, see Forward Position.
- If the distance is correct, an even pattern of hotmelt is applied to the cap.
- If the hotmelt is pressed outside of the edges of the cap the distance is to large and requires decreasing, see Forward Position

Note! If during production the cap holders start collecting hotmelt, check again the forward and backward positions.

Note! Always adjust in small steps.

A = Distance to small
B = Correct distance
C = Distance to large

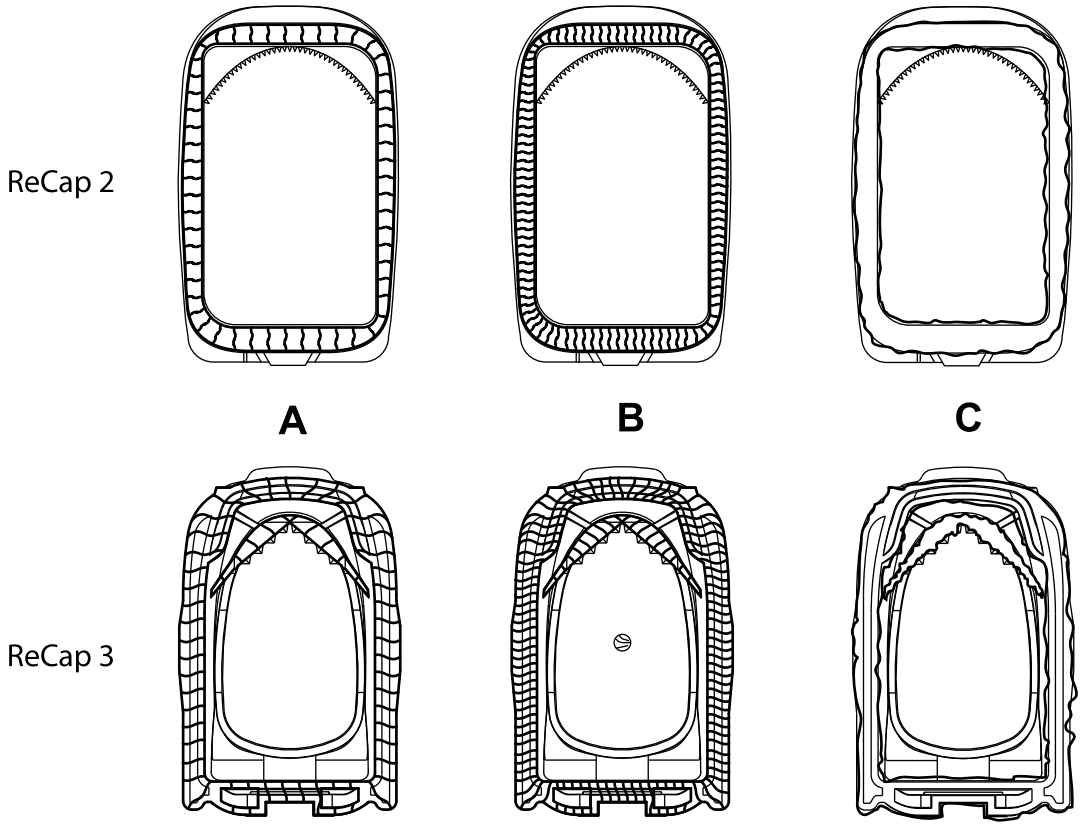

5.7.1-3 Hotmelt Wheel - Calibration

Machine Status	Electrical supply disconnecting device in position I (ON) Main air valve ON
SPC Reference	2703755-0200

Note! Calibration should only be required after changing the hotmelt, the sensor or the control box.

a) Step up to STEP1 and wait for the hotmelt unit to reach the correct temperature.

b) Touch the MAINTENANCE button (1) after you have logged in, see 1.1.1-1 HMI User Management - Log On as a User. In this condition there is no hotmelt pumped from the unit to the hotmelt wheel.

c) Open the drain plug (2) on the hotmelt wheel (3) to drain the hotmelt and return the plug when finished.

Note! Always replace the O-ring after removing the plug.

d) Touch the APPLICATOR UNIT APPLICATION UNIT button (4)).

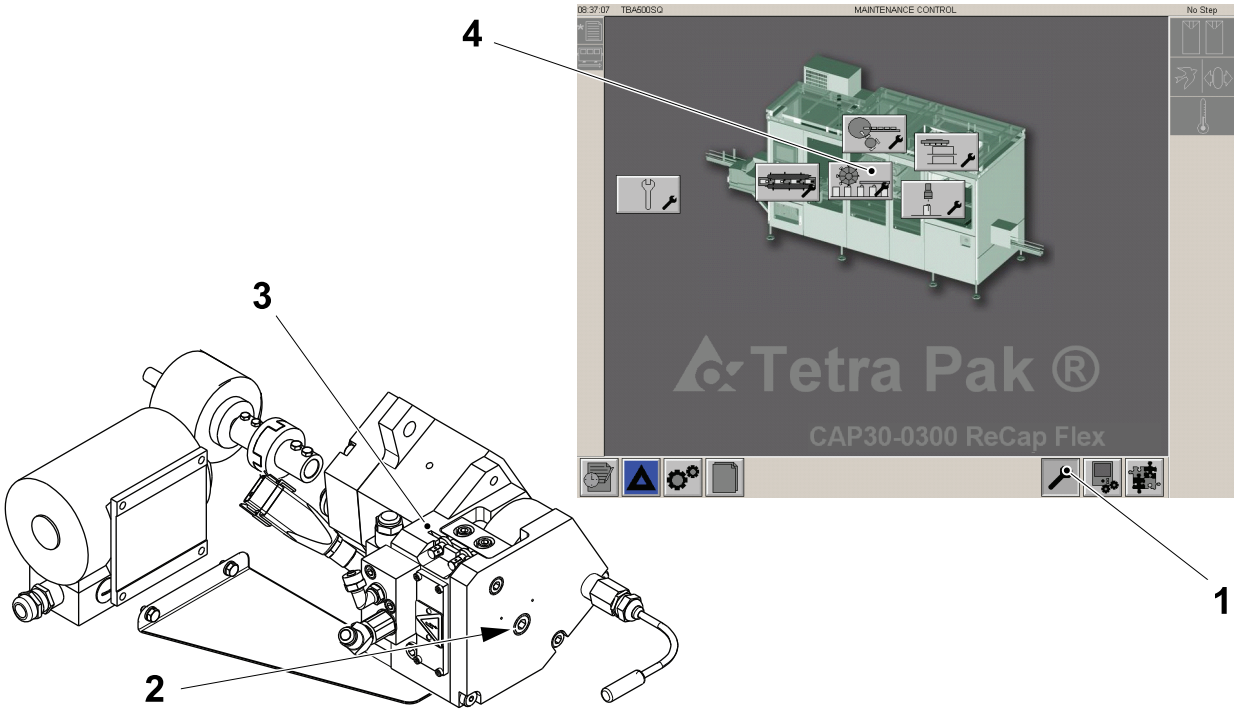

1 MAINTENANCE button
2 Drain plug
3 Hotmelt wheel
4 APPLICATION UNIT button

(Cont'd)

(Cont'd)

e) Touch the HOTMELT WHEELicon (5).

f) Touch the MANUAL FILL button (6).

g) Step up to STEP2.

h) Touch the OK button (7).

Note! Touching the OK button (7) turns the hotmelt pump on for 0.5 seconds.

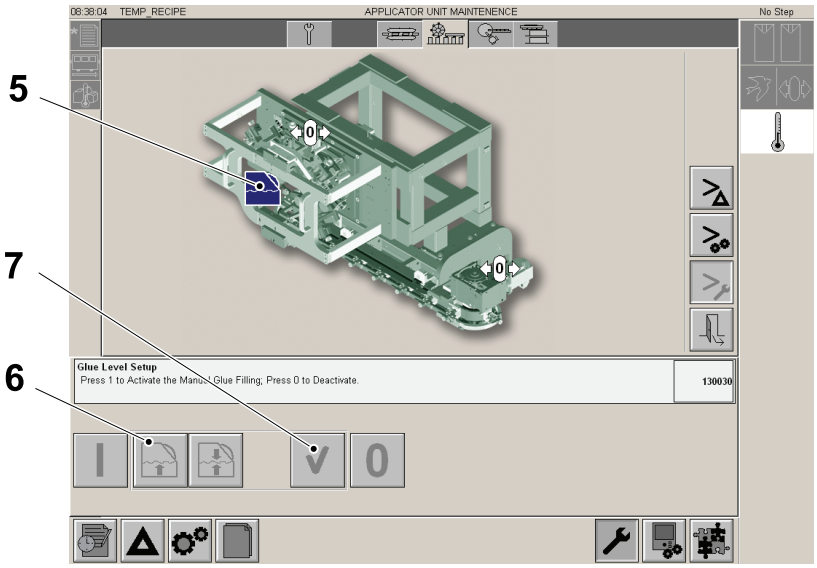

5 HOTMELT WHEEL ON
6 MANUAL FILL button
7 OK button

(Cont'd)

(Cont'd)

i) Check for hotmelt (8) at the point where the roller (9) and the roller (10) come together.

j) Repeat steps h) and i) until a thin even layer of hotmelt (8) can be seen.

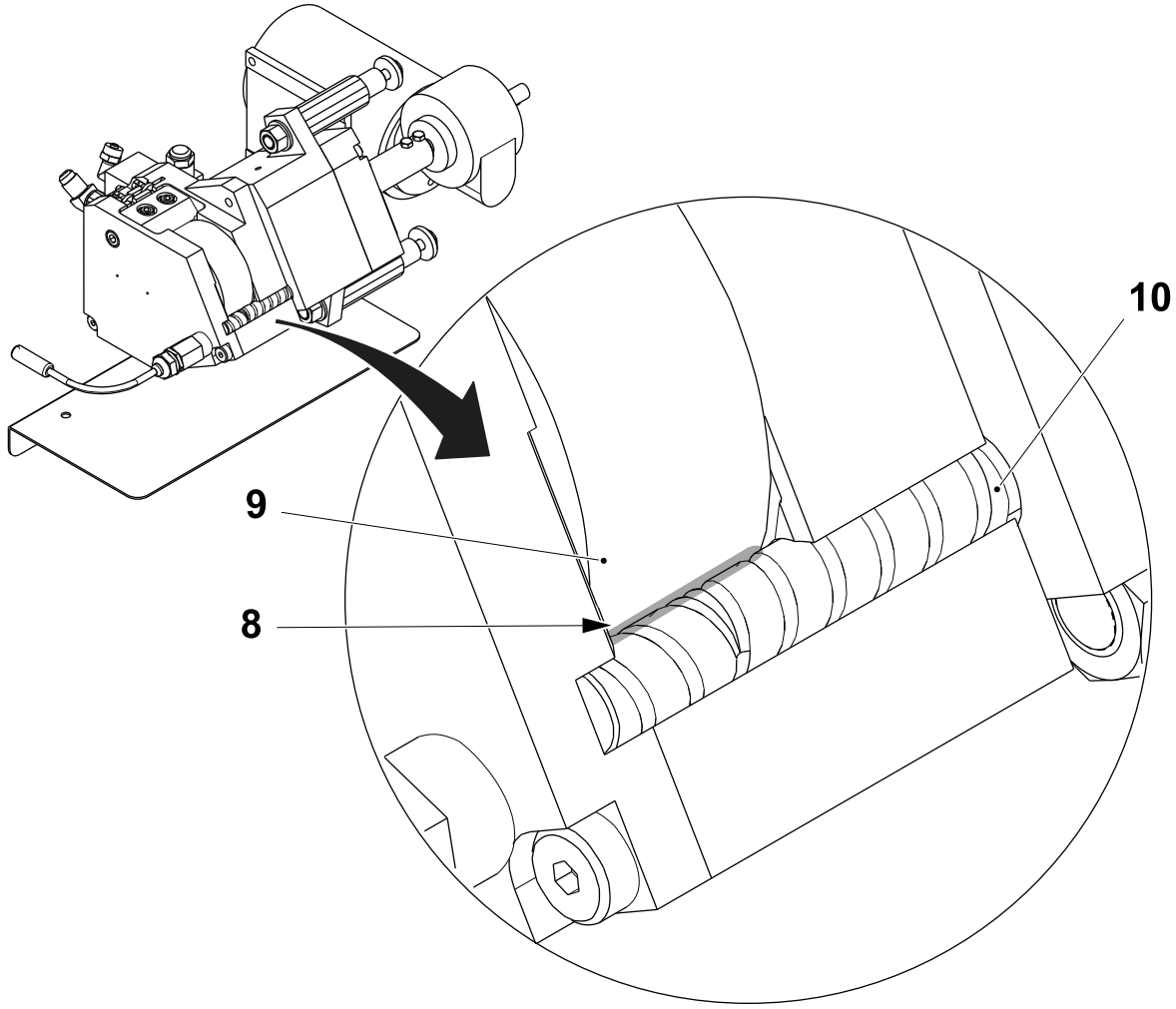

8 Hotmelt
9 Roller
10 Roller

(Cont'd)

(Cont'd)

k) When hotmelt is seen, press the SENSOR CALIBRATION button (11) followed by the OK button (7) . The SENSOR CALIBRATION button (11) will become green.

l) Touch the EXIT button (12).

Note! If during production there is hotmelt leaking from the rollers, the calibration should be repeated reducing the amount of hotmelt in step i).

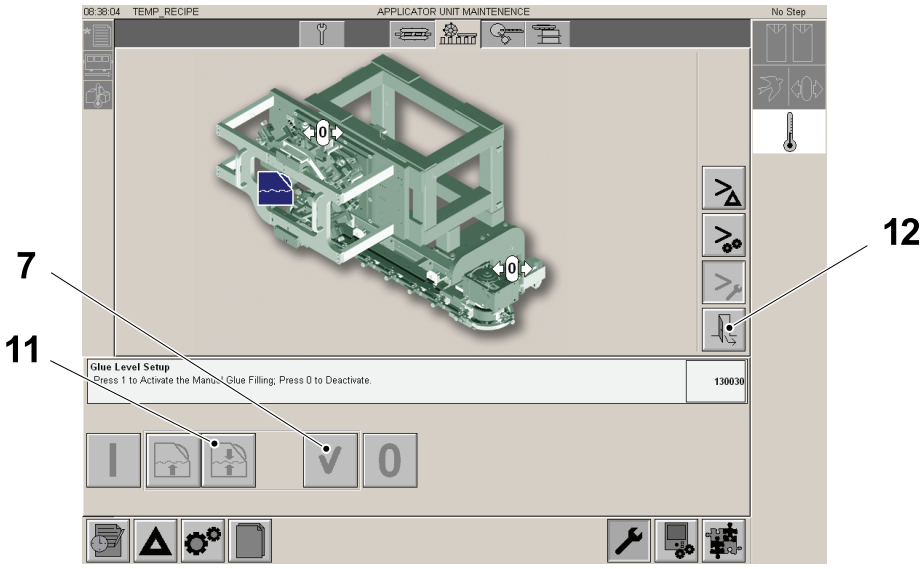

7 OK button
11 SENSOR CALIBRATION button
12 EXIT button

5.7.1-4 Hotmelt Wheel - Change Hotmelt

Machine Status	Electrical supply disconnecting device in position I (ON) Main air valve ON
SPC Reference	2703755-0200

Hotmelt Unit - Empty Tank

WARNING

Risk of Burns

The hotmelt equipment is very hot. Failure to observe this could result in burn injuries.

a) Empty the hotmelt tank, see 4.6.2-2 Hotmelt Equipment - Empty Tank.

b) Replace with new hotmelt when empty.

(Cont'd)

(Cont'd)

Hotmelt Wheel Application Unit - Drain

WARNING

Risk of Burns

The hotmelt WHEEL APPLICATOR UNIT (1) is very hot. Failure to observe this could result in burn injuries.

a) Empty the hotmelt tank, see 4.6.2-2 Hotmelt Equipment - Empty Tank.

b) Step up to STEP1 and wait for the hotmelt unit to reach the correct temperature.

c) Touch the MAINTENANCE button (2) after you have logged in, see 1.1.1-1 HMI User Management - Log On as a User.

Note! In this condition there is no hotmelt pumped from the hotmelt unit to the hotmelt wheel.

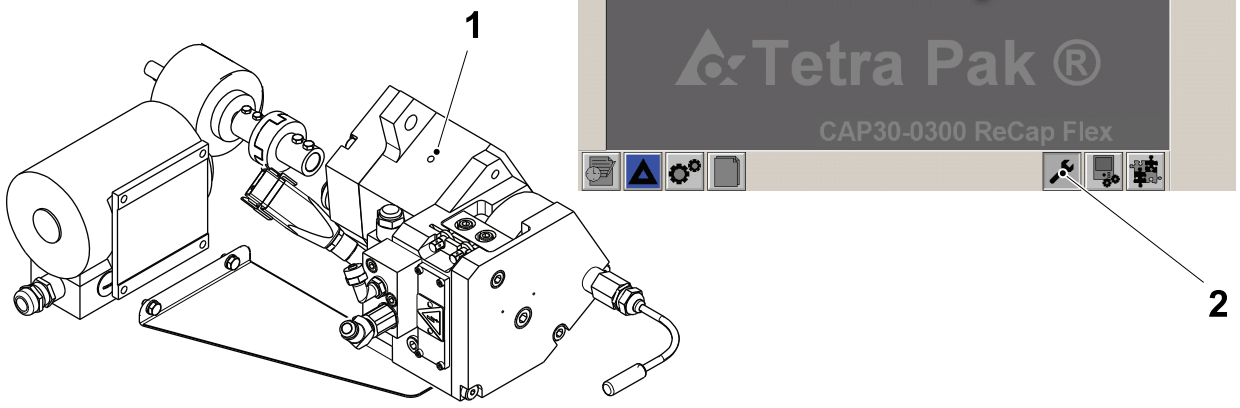

1 WHEEL APPLICATOR UNIT
2 MAINTENANCE button

(Cont'd)

(Cont'd)

d) Open the drain plug (3) on the WHEEL APPLICATOR UNIT (1) to drain the hotmelt. and return the plug when finished.

Note! Always replace the O-ring after removing the plug.

e) Touch the APPLICATION MAINTENANCE button (4) .

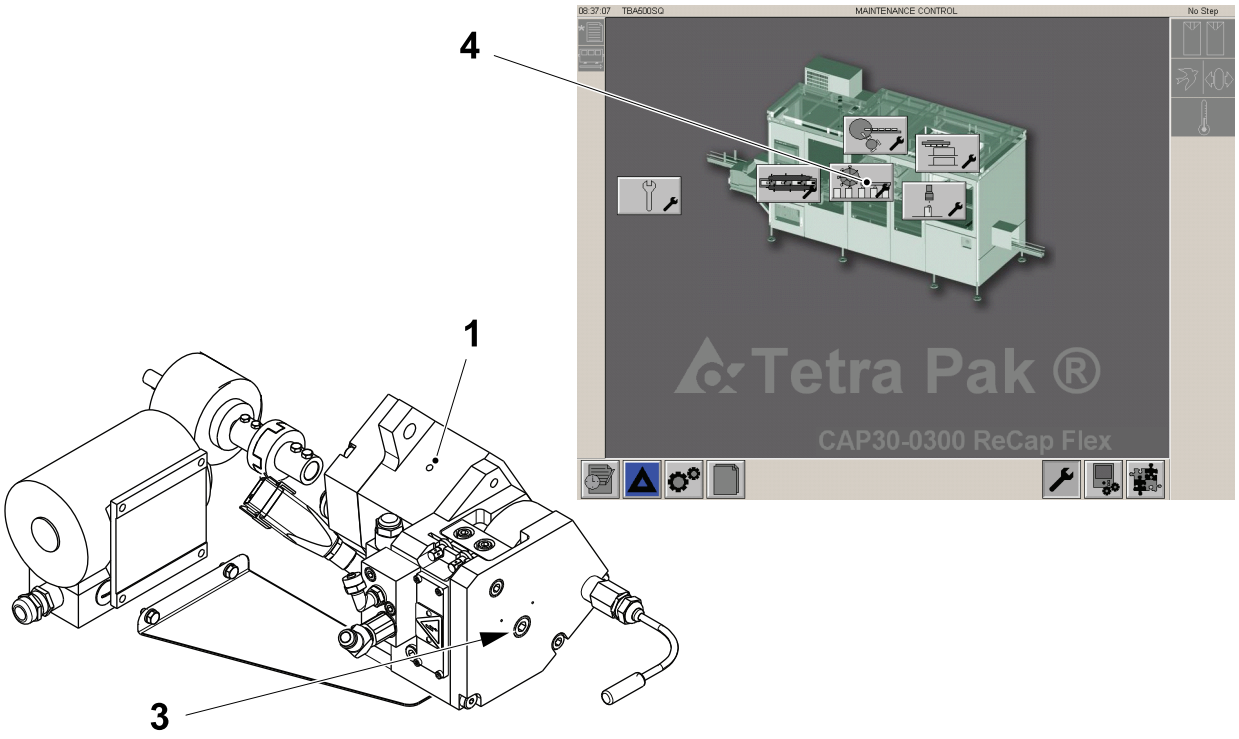

1 WHEEL APPLICATOR UNIT
3 Drain plug
4 APPLICATION MAINTENANCE button

6 ReCap Cutting and Feeding

ReCap Cutting and Feeding - Description

SPC Reference	662909-0400

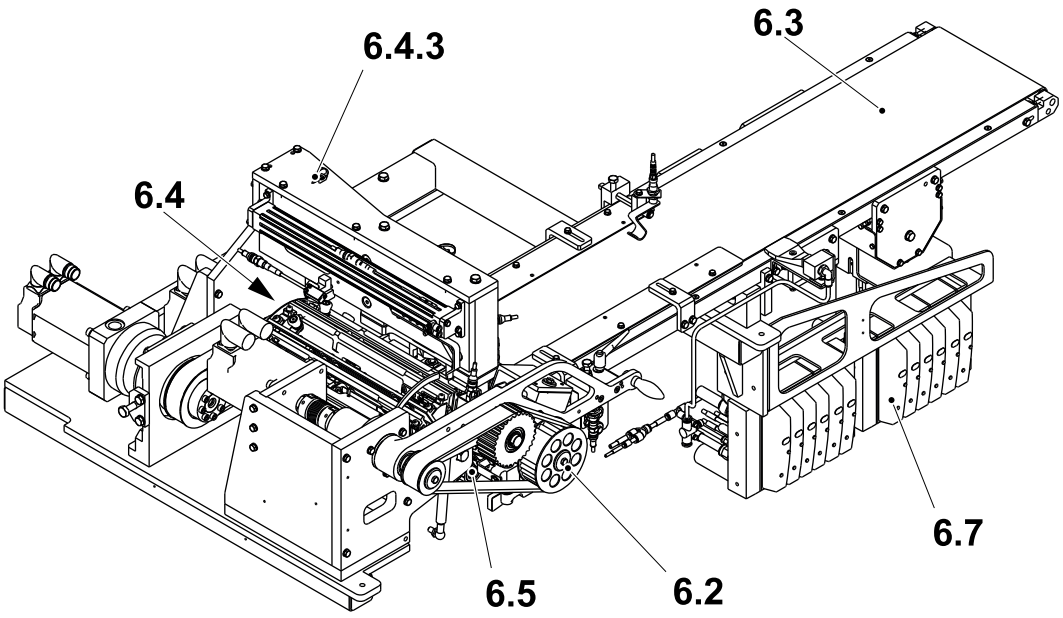

6.2 Cutting Unit
6.3 Conveying Equipment
6.4 Row Cutter
6.5 Indexing Unit
6.4.3 Drive Unit
6.7 Pneumatic Unit

ReCap Cutting and Feeding - Description 6-2

6.1 Functional Description - ReCap Cutting and Feeding 6-7

6.1.1 ReCap Cutting and Feeding - Troubleshooting 6-7

6.1.1-1 Row Cutter - Jam Clearance 6-8

6.2 Cutting Unit 6-11

6.2.1 Cutting Unit - Overhaul 6-11

6.2.1-1 Single Cut - Check Belt 6-11
6.2.1-2 Single Cut - Change Belt 6-12
6.2.1-3 Single Cut - Set Belt Tension 6-13
6.2.1-4 Single Cut - Removal and Assembly 6-14
6.2.1-5 Single Cut - Change Bearings 6-15
6.2.1-5-1 Change Drive End Bearings 6-15
6.2.1-5-2 Change Guide Roller Bearings 6-16
6.2.1-5-3 Remove Single Cut Roller 6-17
6.2.1-5-4 Change Cap Carrier Bushings and Rollers 6-18
6.2.1-5-5 Change Cam Holder Bushings 6-19
6.2.1-6 Single Cut - Set X and Z Direction 6-20
6.2.1-7 Single Cut - Set Zero Position 6-23
6.2.1-8 Single Cut - Set Sensor Position 6-31
6.2.1-9 Single Cut - Set Cap Stop 6-32
6.2.1-10 Single Cut - Set Cap Present Sensor 6-33

6.2.2 Drive Unit - Overhaul 6-36

6.2.2-1 Drive Unit - Change 6-36

6.3 Conveying Equipment 6-38

6.3.1 Sheet Holder 6-38

6.3.1-1 Sheet Holder - Removal 6-38
6.3.1-2 Sheet Holder - Overhaul 6-39
6.3.1-3 Sheet Holder - Set 6-41
6.3.1-4 Sheet Holder - Set the Sensors 6-43

6.3.2 Conveyor 6-45

6.3.2-1 Conveyor - Change 6-45

6.3.2-2 Conveyor - Check 6-46
6.3.2-3 Conveyor - Change Belt 6-47
6.3.2-4 Conveyor - Drive Overhaul 6-49
6.3.2-5 Conveyor - Rollers Overhaul 6-50
6.3.2-6 Conveyor - Framework Change. 6-51
6.3.2-7 Conveyor - Set X Position 6-52
6.3.2-8 Conveyor - Set Z Position 6-53
6.3.2-9 Conveyor - Set Belt Alignment and Tension 6-54

6.3.3 Sheet Detector 6-57

6.3.3-1 Sheet Detector - Change. 6-57
6.3.3-2 Sheet Detector - Set 6-58
6.3.3-3 Sheet Blower - Set 6-59

6.3.4 Sheet Guides 6-60

6.3.4-1 Sheet Guides - Set 6-60
6.3.4-2 Sheet Guides - Set Height 6-61

6.4 Row Cutter 6-62

6.4.1 Row Cutter - Change 6-62

6.4.1-1 Removal 6-62
6.4.1-2 Cutting Mechanism Body - Change 6-65
6.4.1-3 Cutting Mechanism Body - Set Sensors 6-67
6.4.1-4 Cutting Mechanism Body - Set X. 6-68
6.4.1-5 Cutting Mechanism Body - Set Belt Tension 6-69
6.4.1-6 Cutting Mechanism Body - Set Zero. 6-70

6.4.2 Cutting Unit 6-73

6.4.2-1 Cutting Unit - Change 6-73
6.4.2-2 Cutting Unit - Set Sprung Retainer 6-76
6.4.2-3 Cutting Unit - Set Shim. 6-77

6.4.3 Drive Unit 6-78

6.4.3-1 Drive Unit - Change 6-78
6.4.3-2 Clamping Element - Removal and Installation 6-80

6.5 Indexing Unit 6-82

6.5.1 Indexing Unit - Overhaul. 6-82

6.5.1-1 Indexing Unit - Change 6-82

6.5.1-2 Indexing Unit - Proximity Switch Check / Set 6-87

6.5.1-3 Indexing Unit - Set X position and Zero 6-88

6.5.1-3-1 Set X Position 6-88

6.5.1-3-2 Set Zero 6-89

6.5.1-4 Indexing Unit - Check X Direction 6-92

6.6 Drive Unit 6-93

6.6.1 Drive Unit - Overhaul. 6-93

6.6.1-1 Drive Unit - Change 6-93

6.6.1-2 Drive Unit - Set X Position Stop and Sensor 6-94

6.6.1-3 Drive Unit - Set Carrier Sensor 6-95

6.6.1-4 Drive Unit - Set Carrier Speed 6-96

6.6.1-4-1 Carrier Cylinder 6-96

6.6.1-5 Drive Unit - Align Comb with Shim 6-98

6.7 Pneumatic Unit 6-99

6.7.1 Pneumatic Unit - Panel 6-99

6.7.1-1 Pneumatic Unit - Panel Front 6-99

6.7.1-2 Pneumatic Unit - Panel Back 6-100

This page intentionally left blank

6.1 Functional Description - ReCap Cutting and Feeding

The ReCap Cutting and Feeding supplies single caps from the sheets of caps located in the box.

A sheet of caps from the box in the magazine, via the sheet carrier (see 7 ReCap Magazine) is dropped on to the . The delivers the sheet of caps to the through the sheet holder part of the . The sheet holder is lowered over the sheet while the cuts the row of caps from the sheet. The row of caps are fed into the via the which is driven by the . At the the caps are collected by the applicator unit for delivery to the package via the hotmelt wheel.

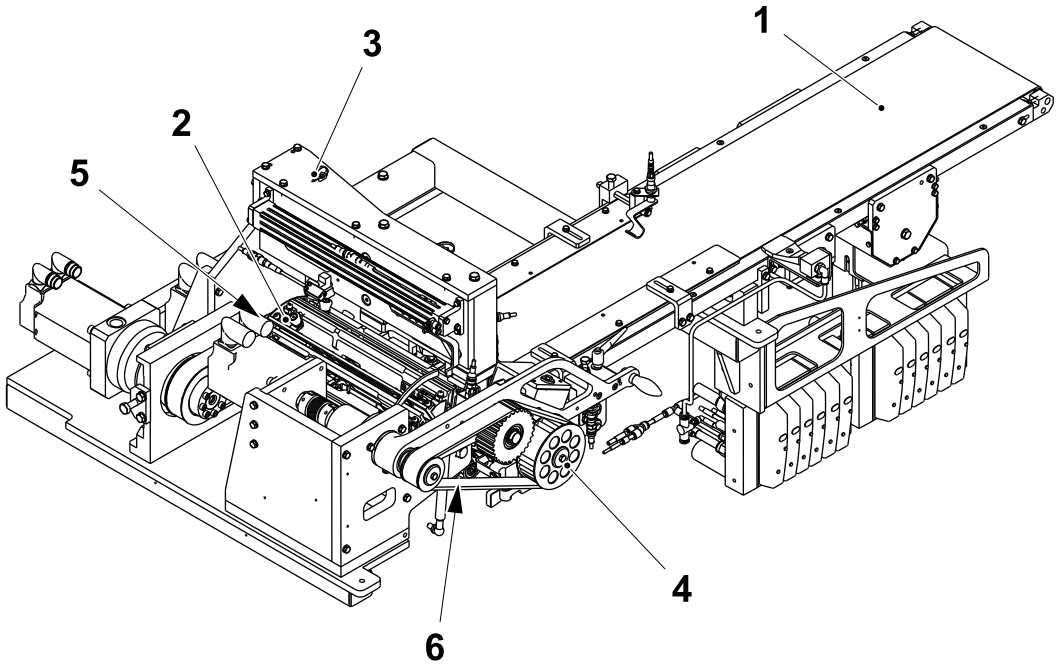

1 Conveyor belt
2 Row cutter
3 Drive unit
4 Single cap cutter
5 Cap carrier
6 Indexing unit

6.1.1 ReCap Cutting and Feeding - Troubleshooting

Cap Jam in Row Cutter

When the sheet of caps is pushed into the row cutter and both triggers are hit, the sheet holder moves down and the row cutter will rotate. If any of the other caps in that row have become detached from the rest of the sheet, when the wheel rotates a jam is probable.

When the row cutter stops due to a jam it is signalled by an alarm.

6.1.1-1 Row Cutter - Jam Clearance

SPC Reference	662909-0400

a) Release the lever (1) and move the single cut (2) up.

b) Release the sheet holder (3) and remove any caps and residue.

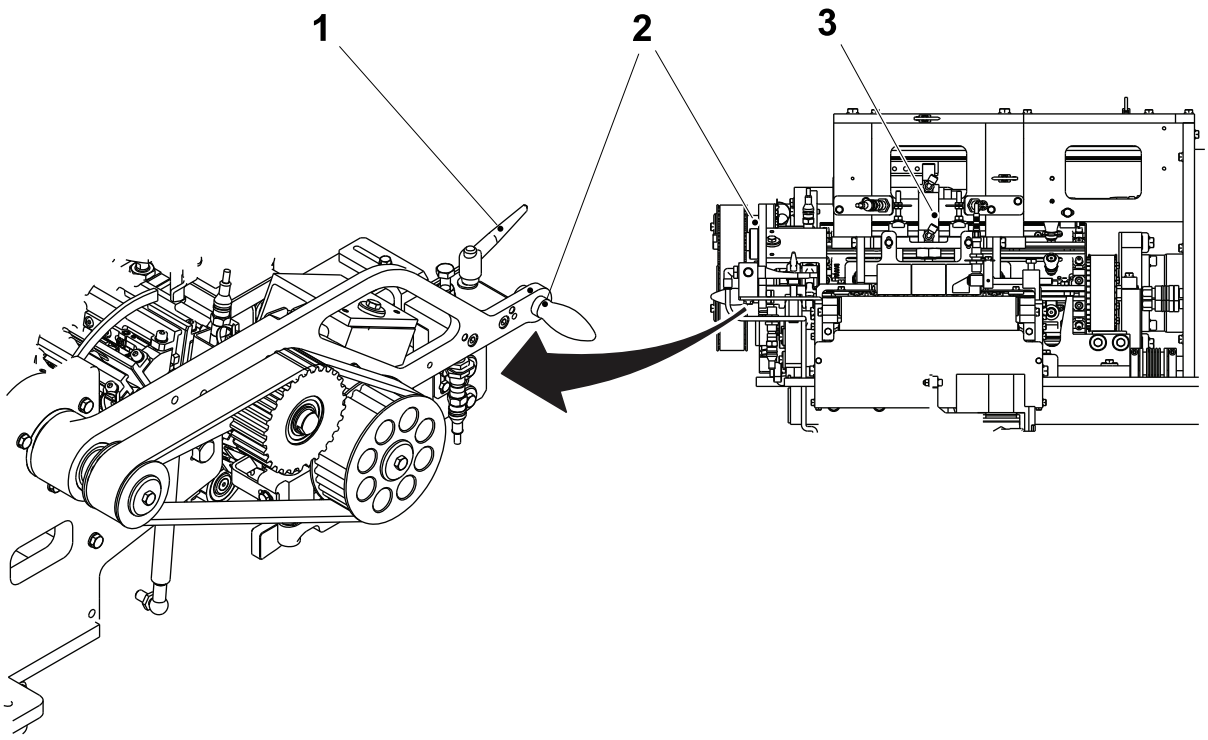

1 Lever
2 Single cut
3 Sheet holder

(Cont'd)

(Cont'd)

c) If step b) is not possible release the lever (4) by pushing it away from you and move the slider (5) away from the row cutter (6).

d) Move the carrier roller (7) to its start point (the end away from the single cut) each time before you rotate the row cutter (6).

e) Rotate the indexing wheel to the zero mark (8).

f) Rotate the row cutter (6) in a clockwise direction until the trapped caps drop from the slider (5).

Note! Make sure that all cap parts and residue are removed.

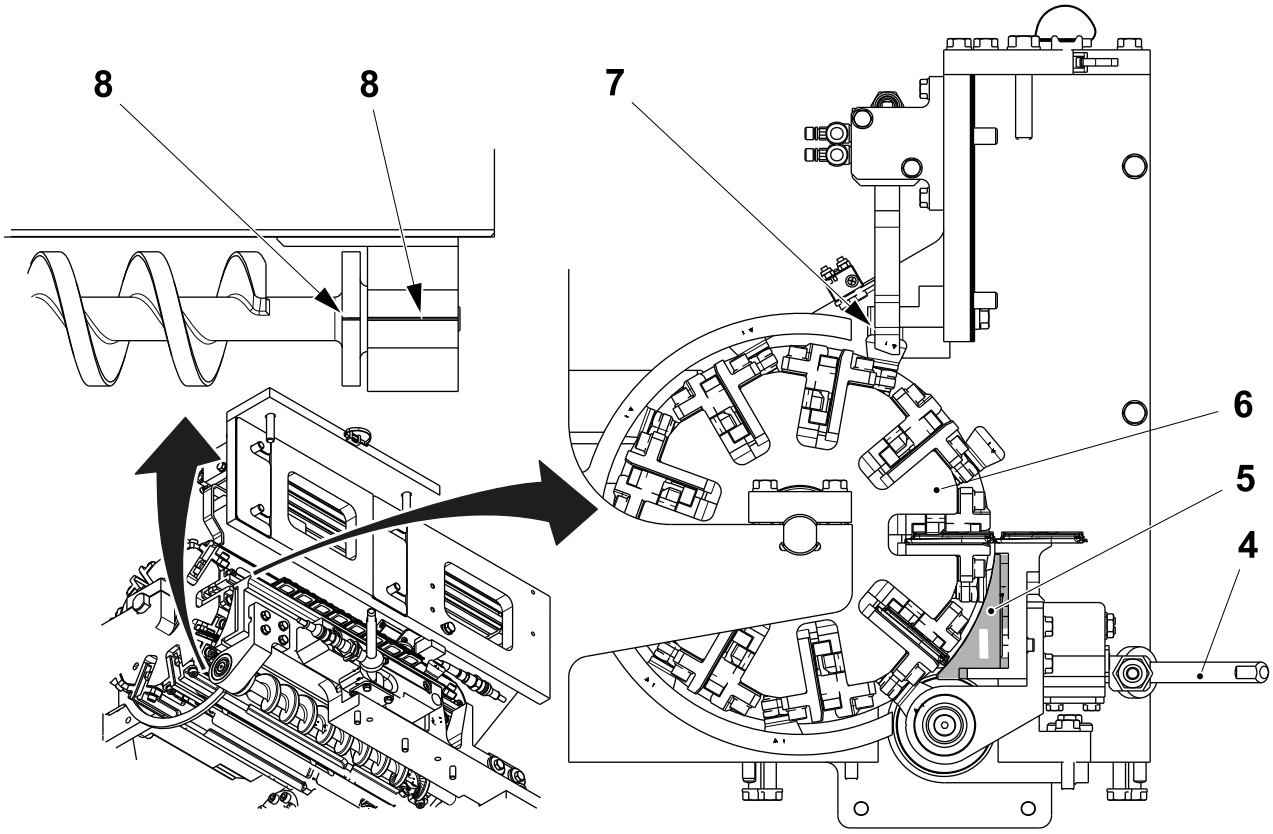

4 Lever
5 Slider
6 Row cutter
7 Carrier roller
8 Zero mark

(Cont'd)

(Cont'd)

g) Pull down the single cut (2) and tighten the lever (1) to retain it.

h) Close all guards, doors and covers.

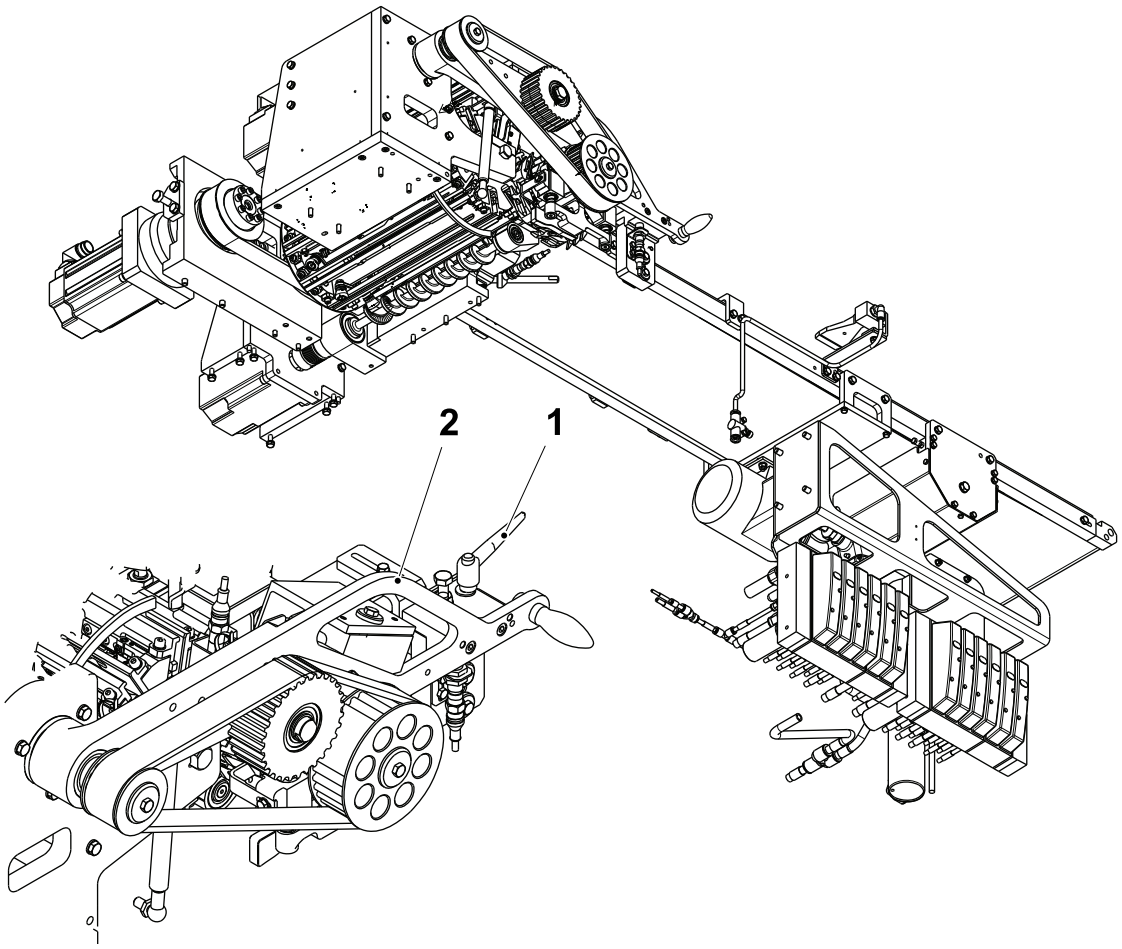

1 Lever
2 Single cut

6.2 Cutting Unit

6.2.1 Cutting Unit - Overhaul

6.2.1-1 Single Cut - Check Belt

Machine Status	Electrical supply disconnecting device in position O (OFF)
SPC Reference	2835403-0400

a) Visually check that the belt (1) is not damaged or worn, if necessary change, see 6.2.1-2 Single Cut - Change Belt.

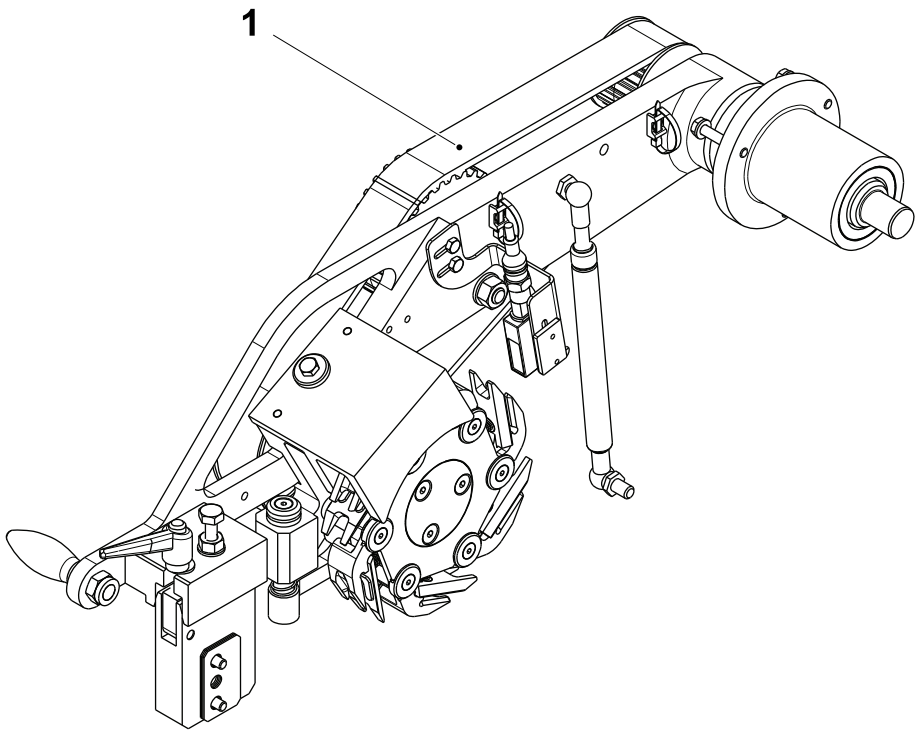

1 Belt

6.2.1-2 Single Cut - Change Belt

Machine Status	Electrical supply disconnecting device in position O (OFF)
SPC Reference	2835403-0400

a) Release the nut (1), and the toothed pulley (2) will release, then remove the belt (3).

b) Install belt (3), rotate the toothed pulley (2) and tighten the nut (1).

c) Set the belt tension see 6.2.1-3 Single Cut - Set Belt Tension.

d) Zero the servo motor again, see 6.2.1-7 Single Cut - Set Zero Position.

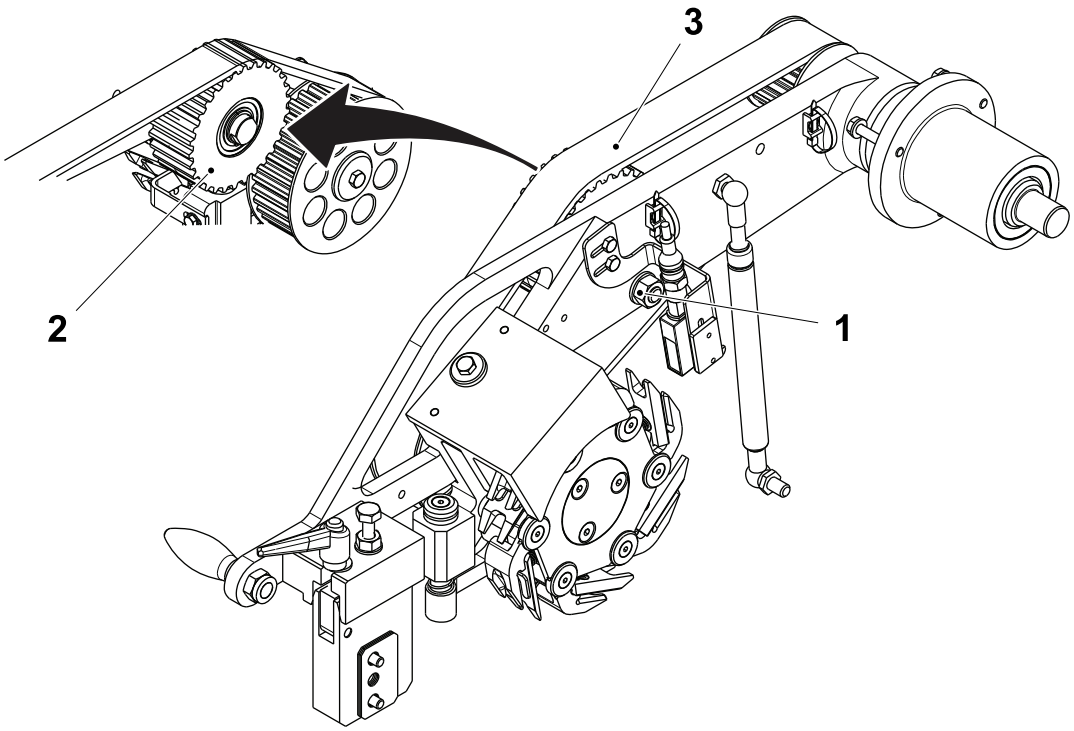

1 Nut
2 Toothed Pulley
3 Belt

6.2.1-3 Single Cut - Set Belt Tension

Machine Status	Electrical supply disconnecting device in position O (OFF)
SPC Reference	2835403-0400

a) Release the nut (1) and turn the shaft of the toothed pulley (2) until the belt (3) reaches it's correct tension.
   - Measuring the belt tension using a "belt tension measuring meter" the tension should be about 60 - 70 Hz.
   - Measure it in the middle of the belt and produce vibrations hitting the belt with a spanner.

b) Tighten the nut (1).

c) Check the servo motor zero, set again if necessary, see 6.2.1-7 Single Cut - Set Zero Position.

A = 5mm

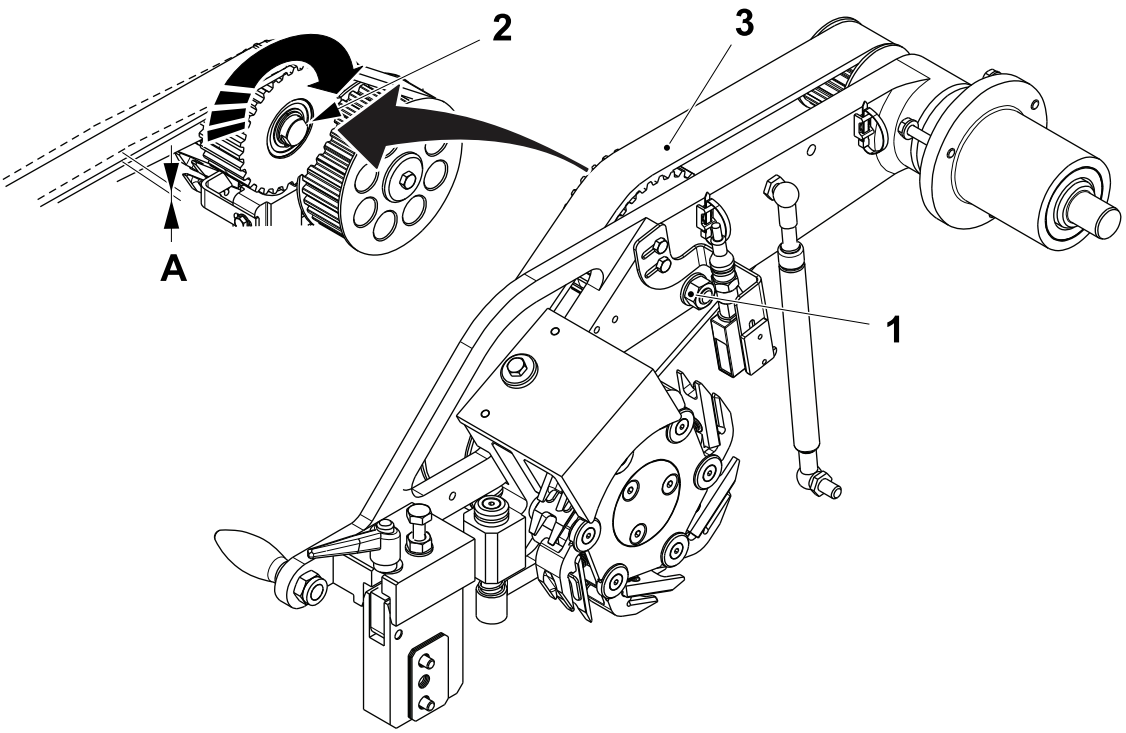

1 Nut
2 Toothed Pulley
3 Belt

6.2.1-4 Single Cut - Removal and Assembly

Machine Status	Electrical supply disconnecting device in position O (OFF)
SPC Reference	2835403-0400

a) Release the handle (1) that holds the single cut in position.

b) Raise the single cut unit (2) into its upper position.

c) Release the clip (3) that fastens the cylinder (4).

d) Release the screw (5) and the coupling (6).

e) Remove the screws (7) and the single cut unit (2).

f) Assemble in the reverse order.

g) Zero the single cut, see 6.2.1-7 Single Cut - Set Zero Position.

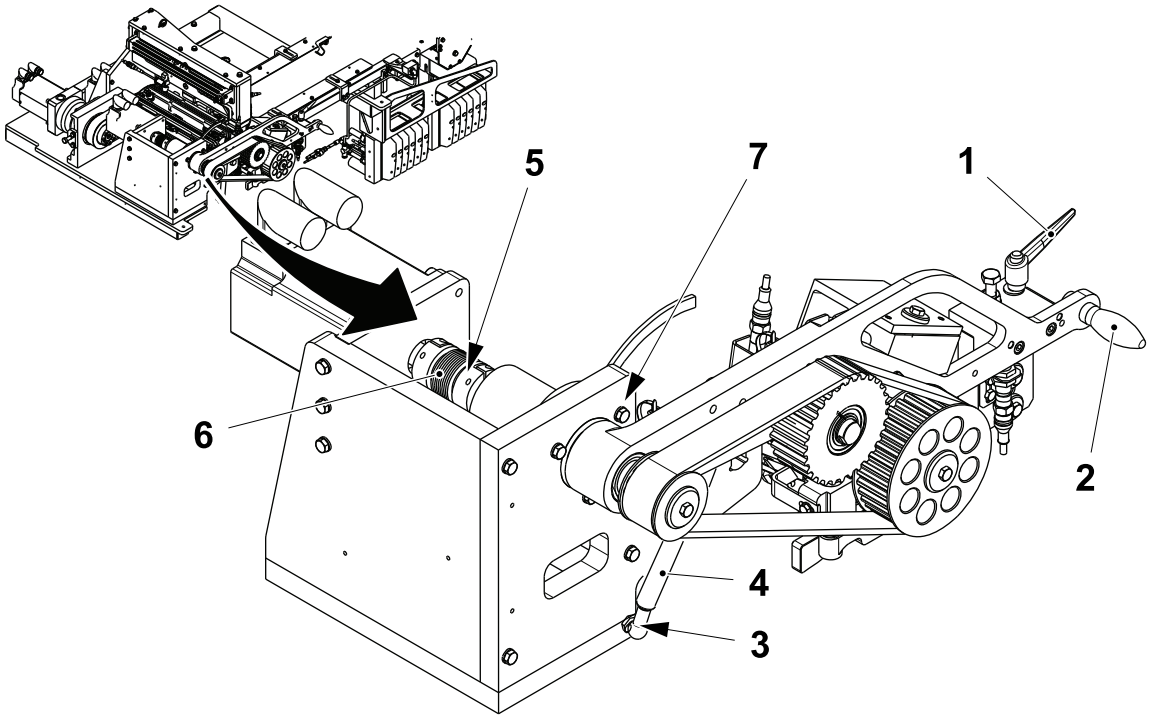

1 Handle
2 Single cut unit
3 Clip
4 Cylinder
5 Screw
6 Coupling
7 Screw

6.2.1-5 Single Cut - Change Bearings

Machine Status	Electrical supply disconnecting device in position O (OFF)
SPC Reference	2835403-0400

6.2.1-5-1 Change Drive End Bearings

a) Remove the screw (1), the washer (2) and the toothed pulley (3).

b) Remove the key (4) and the housing (5).

c) Remove the seal (6), the bearings (7) and the spacer (8) from the shaft (9).

d) Remove the retaining ring (10), the spacers (11) and the bearings (12).

e) Assemble in the reverse order.

f) Zero the single cut, see 6.2.1-7 Single Cut - Set Zero Position.

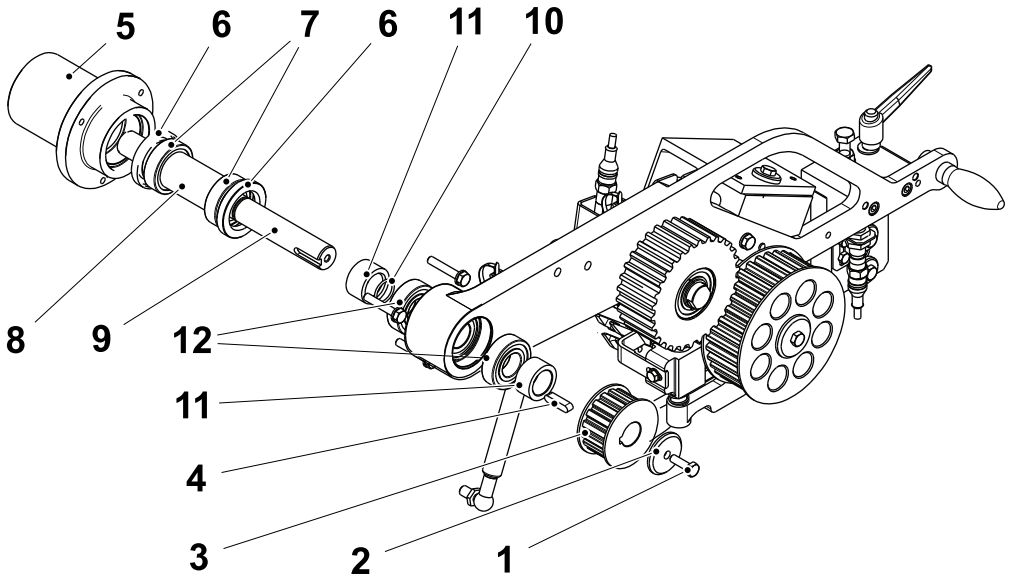

1 Screw
2 Washer
3 Toothed Pulley
4 Key
5 Housing
6 Seal
7 Bearing
8 Spacer
9 Shaft
10 Retaining ring
11 Spacer
12 Bearing

6.2.1-5-2 Change Guide Roller Bearings

a) Remove the nut (1) and the washer (2).

b) Remove the retaining rings (3), the bearings (4) and the toothed pulley (5) from the eccentric shaft (6).

c) Assemble in the reverse order.

d) Zero the single cut, see 6.2.1-7 Single Cut - Set Zero Position.

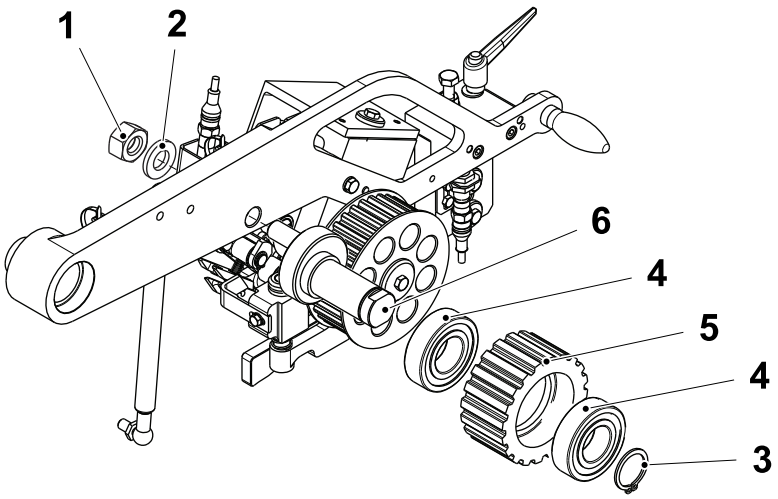

1 Nut
2 Washer
3 Retaining ring
4 Bearing
5 Toothed Pulley
6 Shaft

6.2.1-5-3 Remove Single Cut Roller

a) Remove the screw (1), the washer (2) and the cap carrier unit (3).

b) If necessary remove the screw (4), the washer (5) and the guide (6).

c) Remove the screw (7), the washer (8) and the toothed pulley (9).

d) Remove the key (10), the spacer (11), the screws (12) and the shaft (13).

e) Assemble in the reverse order.

f) Zero the single cut, see 6.2.1-7 Single Cut - Set Zero Position.

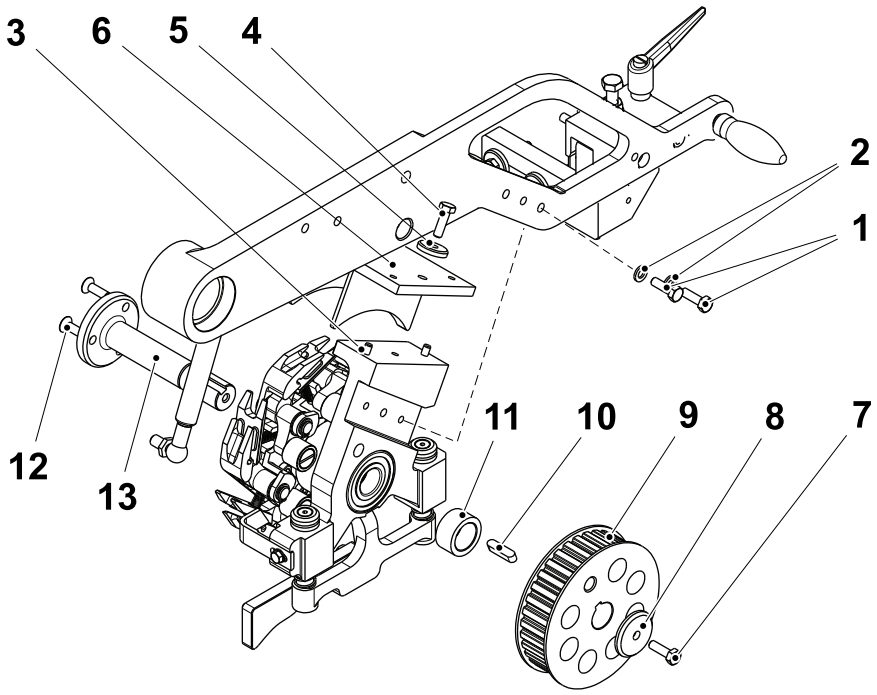

1 Screw
2 Washer
3 Carrier unit
4 Screw
5 Washer
6 Guide
7 Screw
8 Washer
9 Toothed pulley
10 Key
11 Spacer
12 Screw
13 Shaft

6.2.1-5-4 Change Cap Carrier Bushings and Rollers

a) Remove the retaining ring (1), the screws (2) and the retaining plate (3).

b) Remove the shaft (4) and the roller (5).

c) Remove the bushing (6) from the arm (7).

d) Assemble in the reverse order checking that the spring (8) is in place.

e) Zero the single cut, see 6.2.1-7 Single Cut - Set Zero Position.

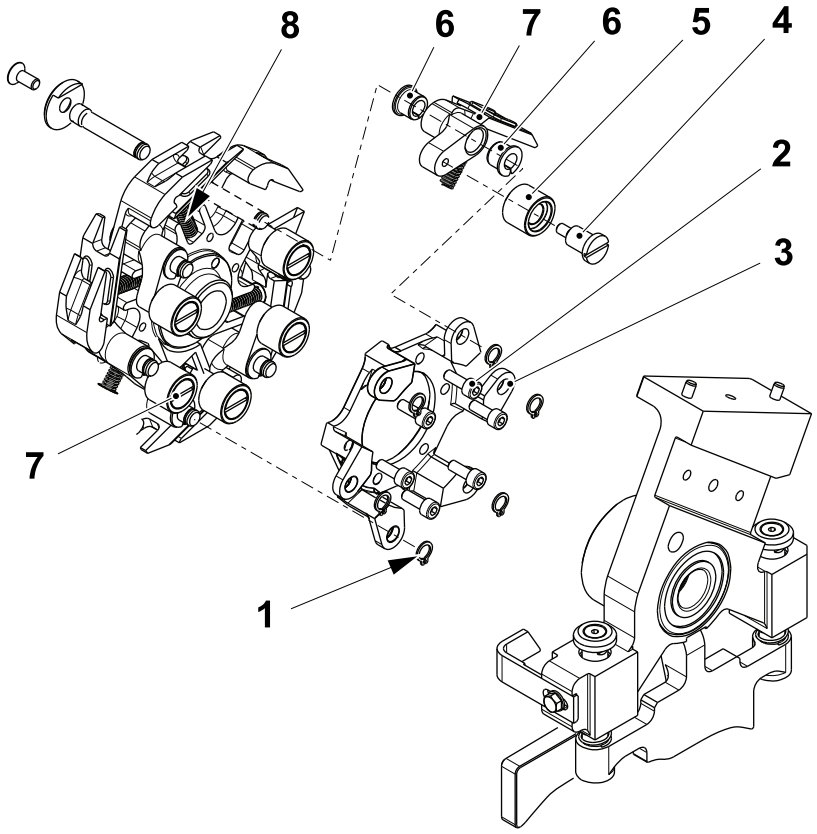

1 Retaining ring
2 Screw
3 Retaining plate
4 Shaft
5 Roller
6 Bushing
7 Arm
8 Spring

6.2.1-5-5 Change Cam Holder Bushings

a) Remove the screws (1) and the washer (2).

b) Remove the screws (3), the shaft (4) and the spring (5) from the cam holder (6).

c) Remove the retaining ring (7) and the bushings (8).

d) Remove the screw (9) and the cam (10).

e) Assemble in the reverse order.

f) Zero the single cut, see 6.2.1-7 Single Cut - Set Zero Position.

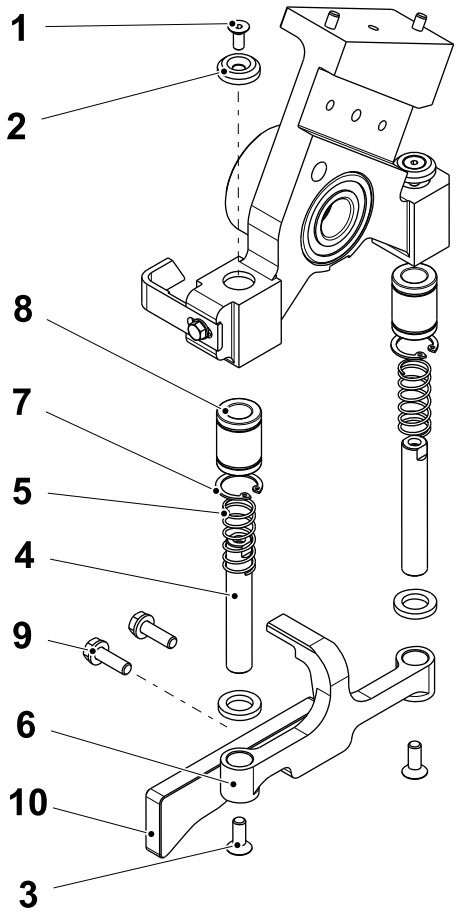

1 Screw
2 Washer
3 Screw
4 Shaft
5 Spring
6 Cam holder
7 Retaining ring
8 Bushing
9 Screw
10 Cam

6.2.1-6 Single Cut - Set X and Z Direction

Machine Status	Electrical supply disconnecting device in position O (OFF)
SPC Reference	2835403-0400

Set X Direction

a) Release the belt (1) tension, see 6.2.1-2 Single Cut - Change Belt.

b) Insert shims (2) as required.

c) When the bracket (3) and the single cut unit (4) locate freely in the X direction, tighten the screws (5).

Note! The bracket (3) and the single cut unit (4) must locate freely.

d) Set the belt (1) tension, see 6.2.1-3 Single Cut - Set Belt Tension.

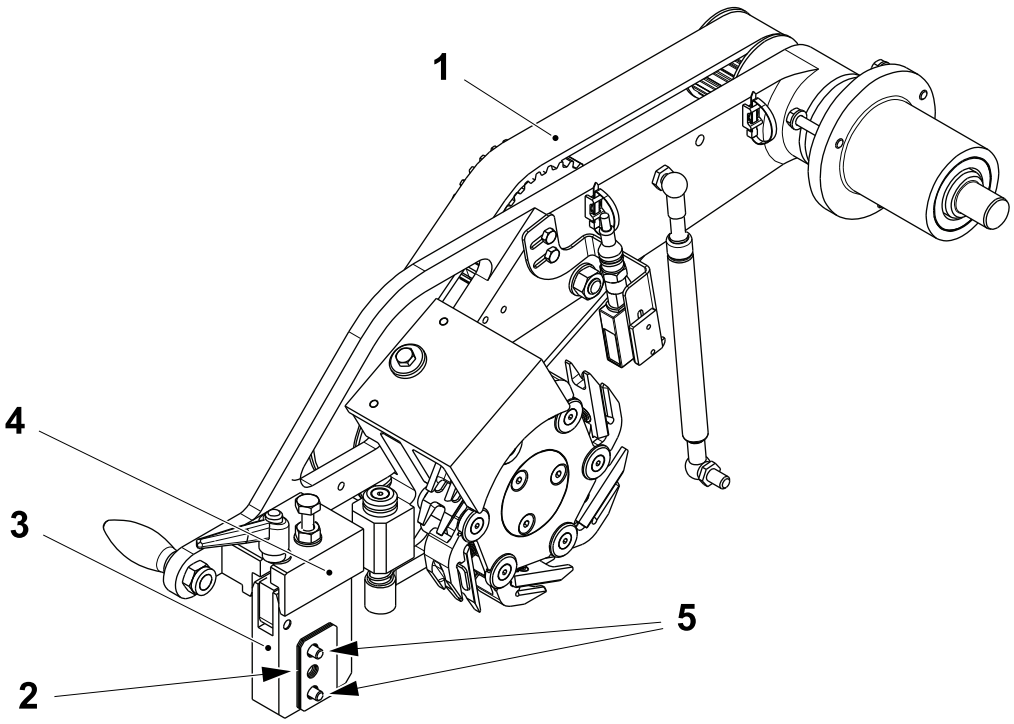

1 Belt
2 Shim
3 Bracket
4 Single cut unit
5 Screw

(Cont'd)

(Cont'd)

Set Z Direction - Coarse Setting

a) Make sure that the belt (1) has been tensioned, see 6.2.1-3 Single Cut - Set Belt Tension.

b) Release the lever (2) and adjust the nut (3) and screw (4) until the distance **A** is obtained.

Note! The coarse setting is the start point, the actual measure can be different.

A = 5.5 mm ReCap 3
A = 6.0 mm ReCap 2

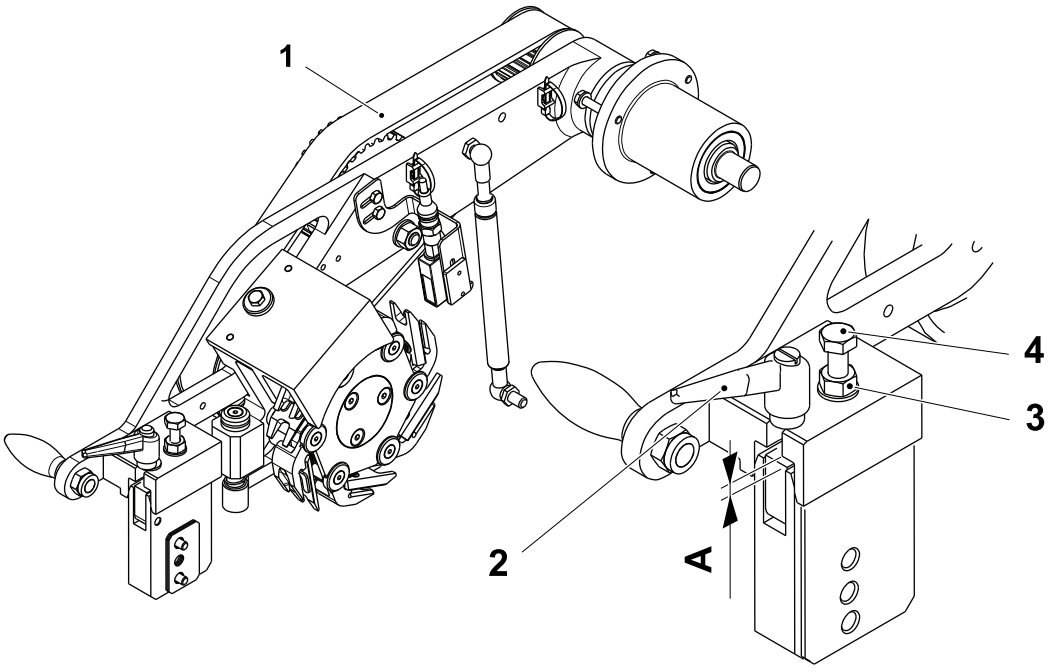

1 Belt
2 Lever
3 Nut
4 Screw

(Cont'd)

(Cont'd)

Set Z Direction - Fine Setting

a) Lift the single cut unit (3) and insert the template (4) into the row cutter and then lower the single cut unit (3) sliding the template (4) into its jaws, see 6.2.1-7 Single Cut - Set Zero Position.

b) Loosen the nut (1) and adjust the Z position of the single cut unit (3) by turning the screw (2) until the lower jaw (5) and the template (4) are parallel. Tighten the nut (1). Make sure that the row cutter and the single cutter are in their zero position during the setting (to check, use the procedures in the following pages).

c) Set the cap present sensor, see 6.2.1-7 Single Cut - Set Zero Position.

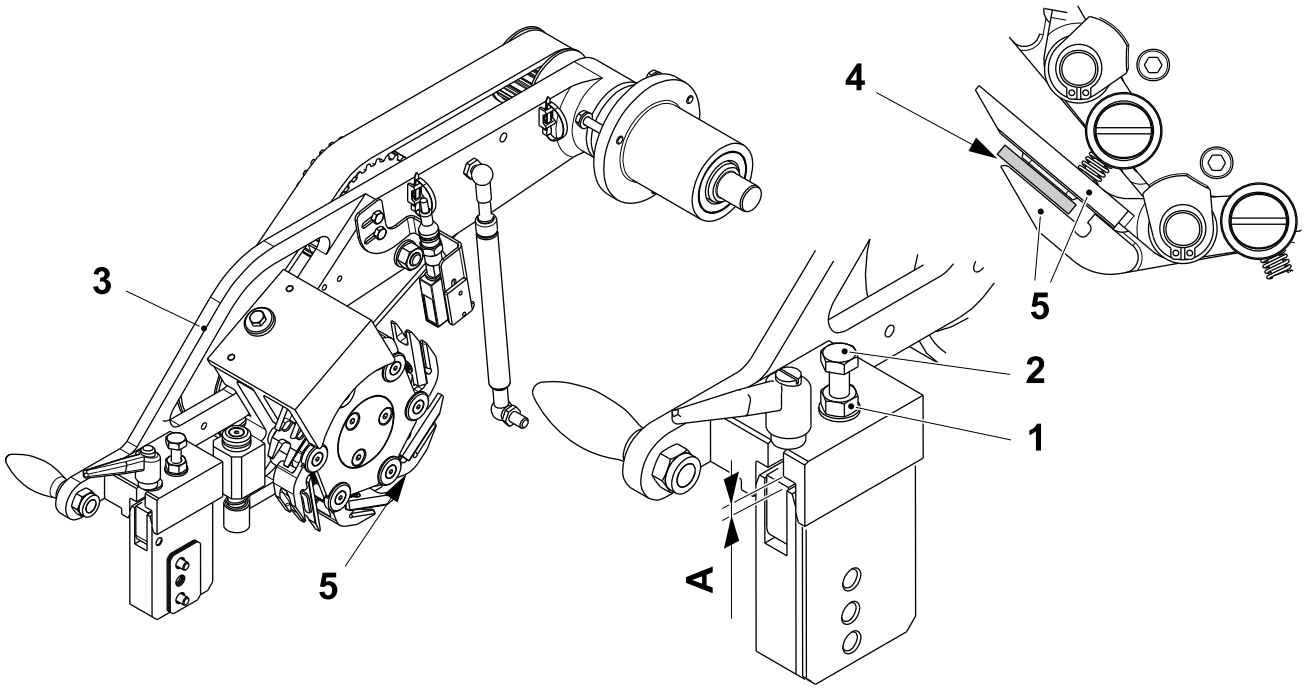

1 Nut
2 Screw
3 Single cut unit
4 Template
5 Lower jaw

6.2.1-7 Single Cut - Set Zero Position

Machine Status	STEP 2
Special Equipment	Tool 3141449-0100
SPC Reference	2835403-0400

Note! If the cap stopper is already set mark its position, if not see 6.2.1-9 Single Cut - Set Cap Stop.

a) Check if the row cutter is in its zero position by touching the SETTINGS button (1), then the OVERVIEW button (2).

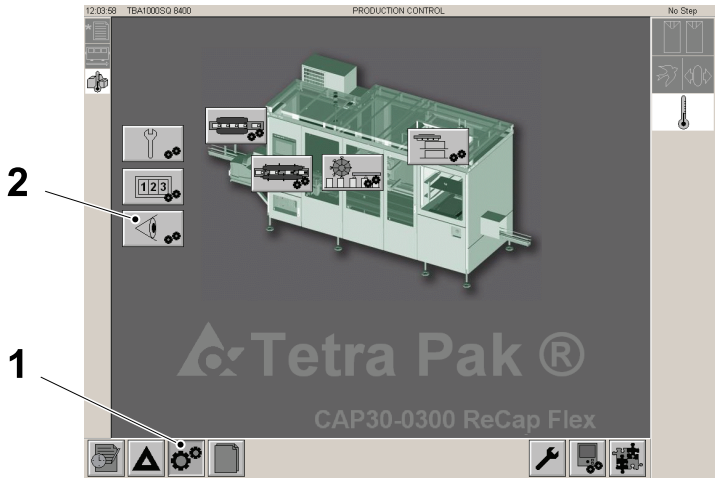

1 SETTINGS button
2 OVERVIEW button

(Cont'd)

(Cont'd)

b) Touch the ROW CUTTER ACTUAL POSITION button (3) and then read the value in the angle VALUE window (4). If the row cutter is not in its zero position manually move it until it is in its zero position.

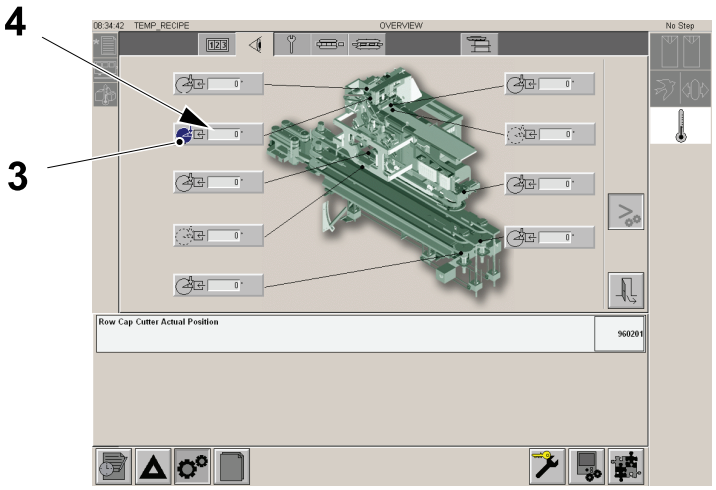

3 ROW CAP CUTTER ACTUAL POSITION button
4 VALUE window

(Cont'd)

(Cont'd)

CAUTION
Damage to equipment
The machine must NOT be used until the template (5) is removed.

c) Remove the screw (6) and the cap stopper (7).

d) Release the lever (8) and lift the single cut (9) up.

Note! Move the carrier away to allow for the template (5).

e) Insert the template (5) into the row cutter (10), lower the single cut (9).

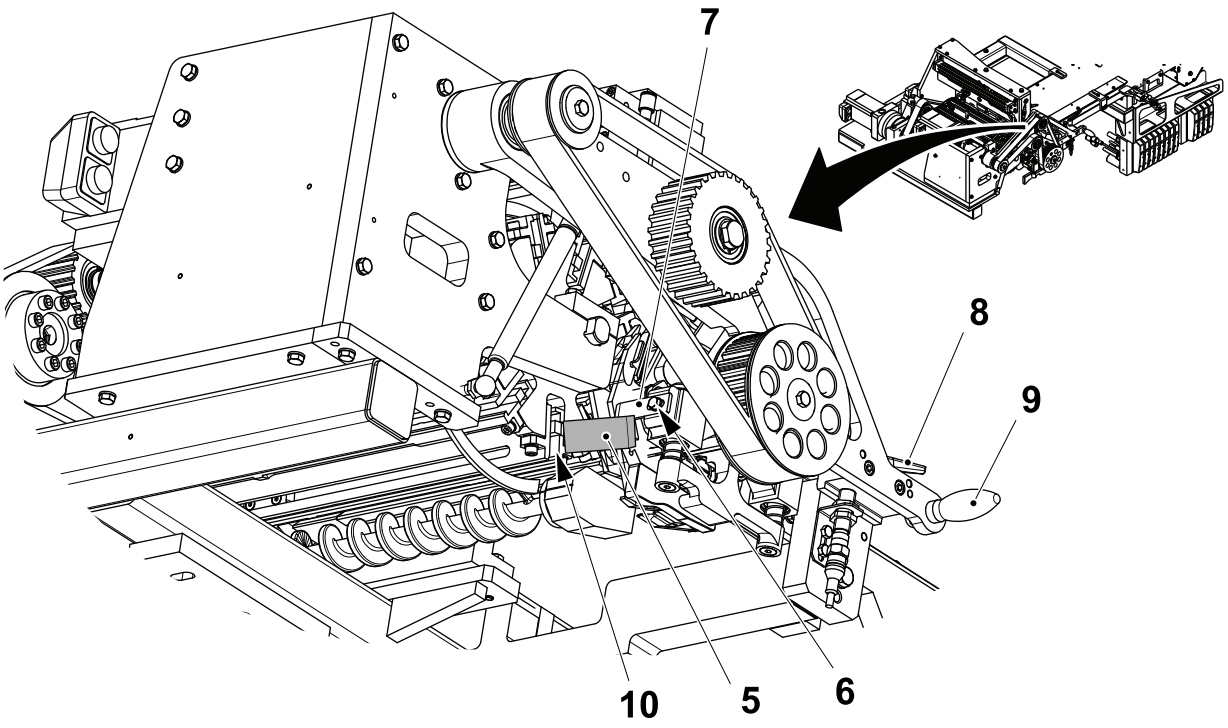

5 Template
6 Screw
7 Cap stopper
8 Lever
9 Single cut
10 Row cutter

(Cont'd)

(Cont'd)

CAUTION
Damage to equipment
The machine must NOT be used until the template (5) is removed.

f) Rotate the single cut (9) until the template (5) is parallel with the lower jaw (11). It may be necessary to raise or lower the single cut, see 6.2.1-6 Single Cut - Set X and Z Direction.

Note! Make sure that the template in the row cutter is touching the slider (12) during the setting.

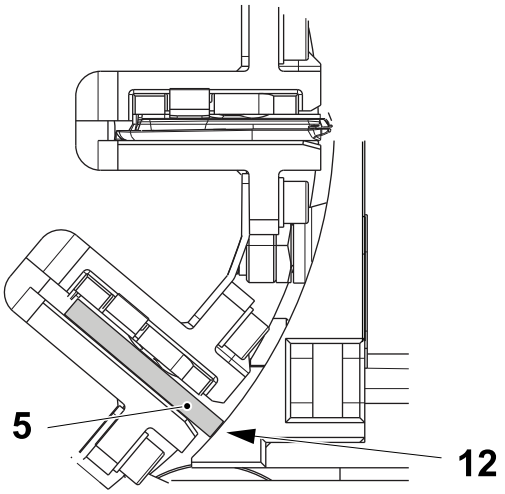

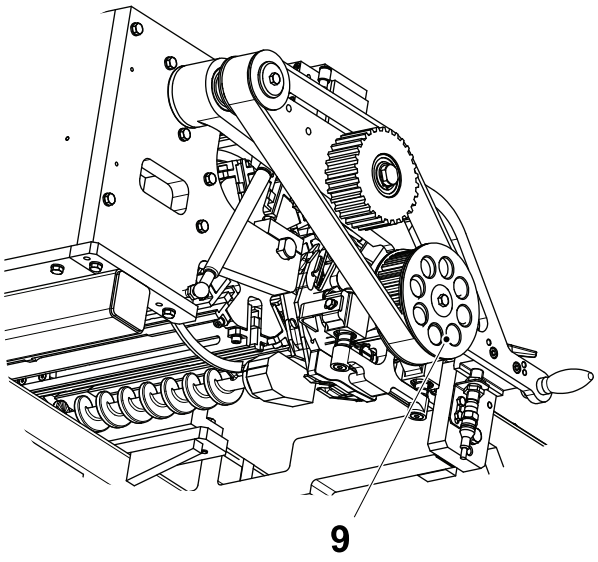

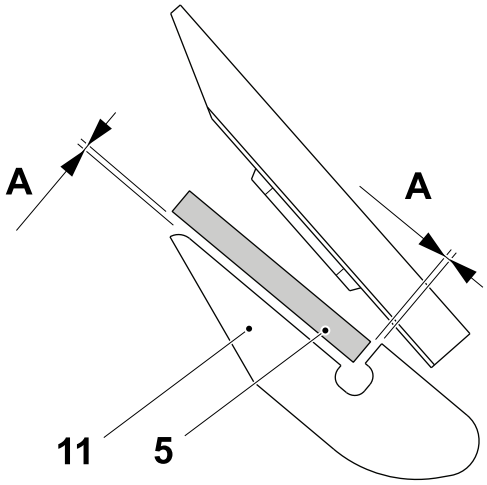

A = 0.2 mm
5 Template
9 Single cut
11 Lower jaw
12 Slider

(Cont'd)

(Cont'd)

CAUTION
Damage to equipment
The machine must NOT be used until the template is removed.

g) Check the row cutter is still at zero by touching the SETTINGS button (1), then the OVERVIEW button (2), the ROW CUTTER ACTUAL POSITION button (3) and reading the value in the angle VALUE window (4).

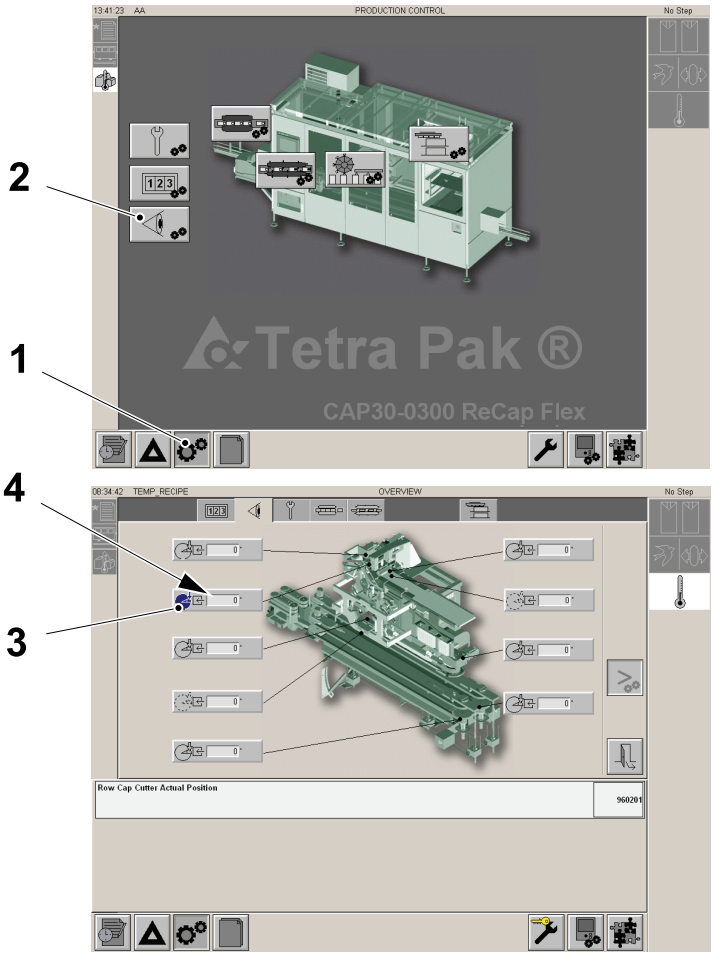

1 SETTINGS button
2 OVERVIEW button
3 ROW CAP CUTTER ACTUAL POSITION button
4 VALUE window

(Cont'd)

(Cont'd)

CAUTION
Damage to equipment
The machine must NOT be used until the template is removed.

h) If the row cutter is not at 0 manually move it to the zero position checking the angle VALUE window (4).

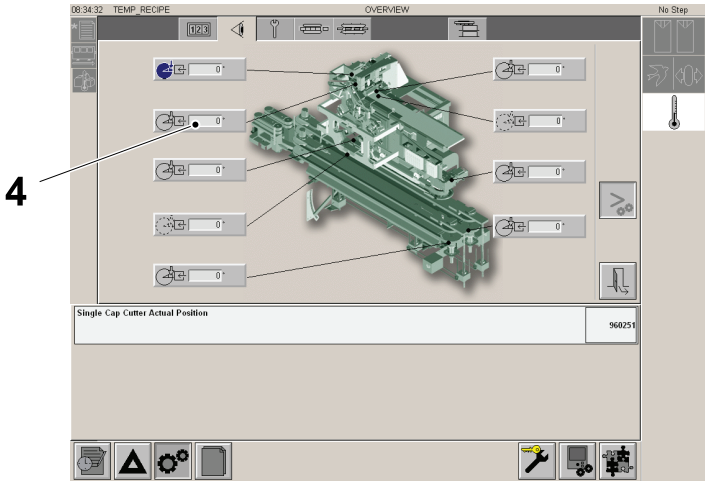

4 VALUE window

i) Logon as a user, see 1.1.1-1 HMI User Management - Log On as a User.

j) Touch the MAINTENANCE button (13).

k) Touch the CUTTING AND FEEDING button (14).

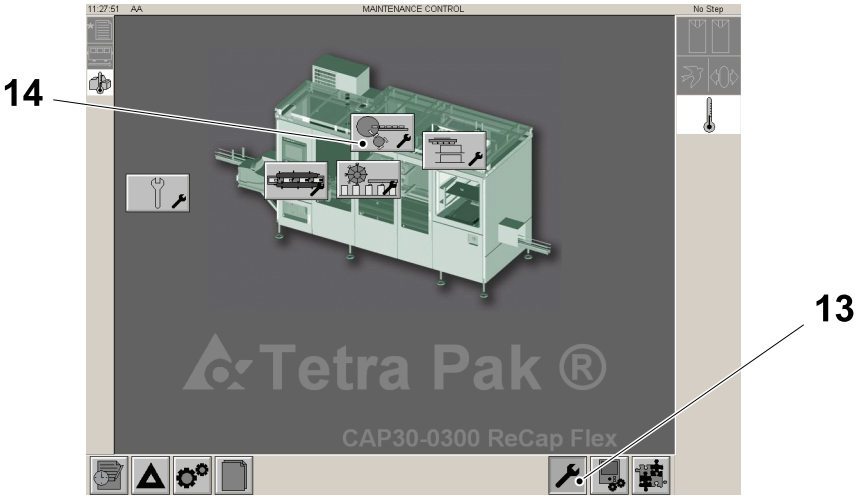

13 MAINTENANCE button
14 CUTTING AND FEEDING button

(Cont'd)

(Cont'd)

l) Touch the ZERO button (15).

m) Touch the ENABLE button (16), this will start flashing.

n) Touch the OK button (17) for three seconds. The background of the ENABLE button (16) should go green.

o) Touch the EXIT button (18).

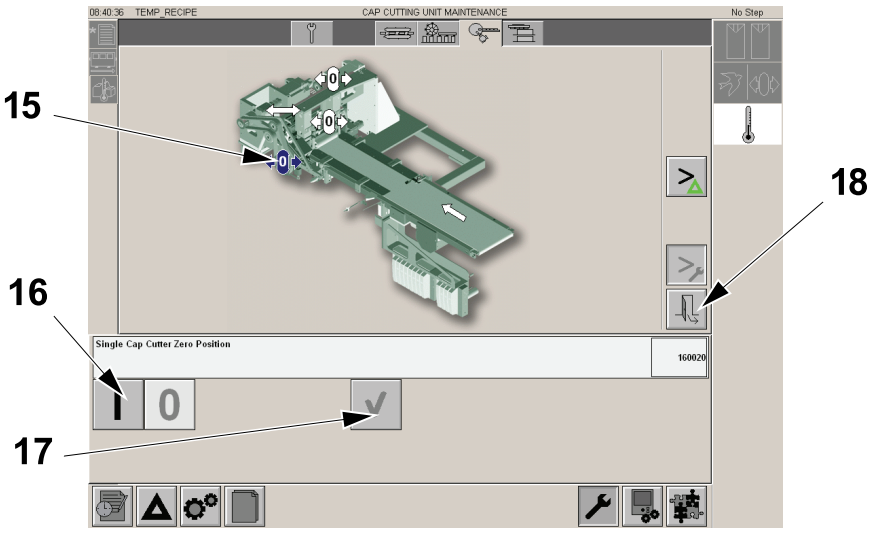

15 ZERO button
16 ENABLE button
17 OK button
18 EXIT button

(Cont'd)

(Cont'd)

CAUTION
Damage to equipment
The machine must NOT be used until the template (5) is removed.

p) Remove the template (5), then install the screw (6) and cap stopper (7). Adjust into position after assembly, see 6.2.1-9 Single Cut - Set Cap Stop.

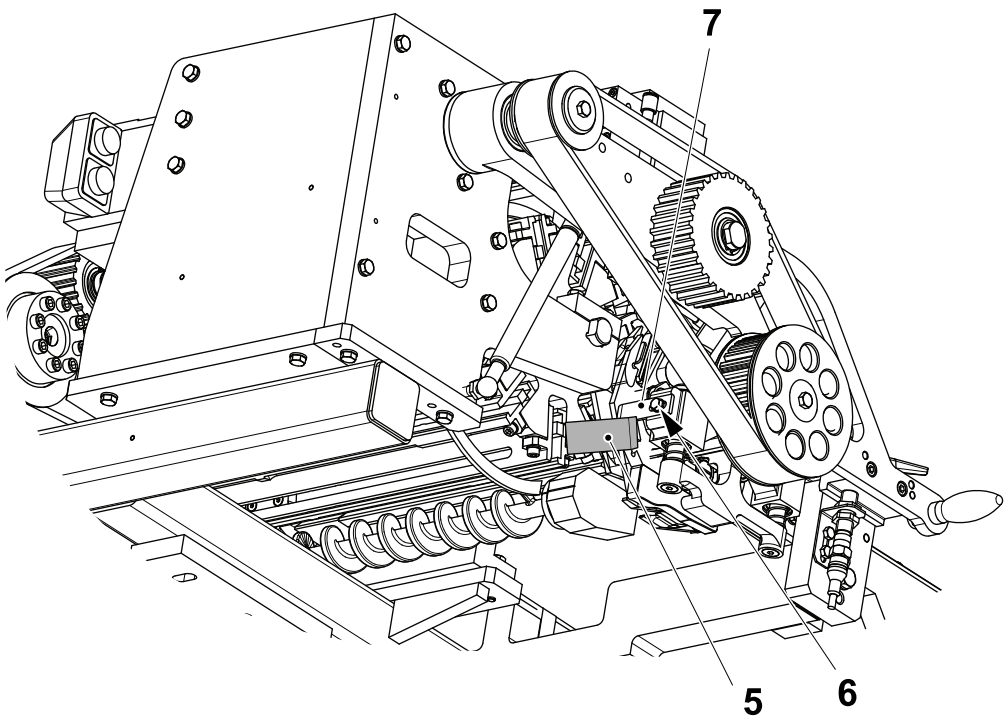

5 Template
6 Screw
7 Cap stopper

6.2.1-8 Single Cut - Set Sensor Position

Machine Status	STEP 2
SPC Reference	2835403-0400

a) Release the nut (1) and move the sensor (2) downward until the LED comes on.

b) Turn the nut (1) to move the sensor in an upward direction until the LED goes out.

c) Tighten the nut (1) making sure that the LED is off.

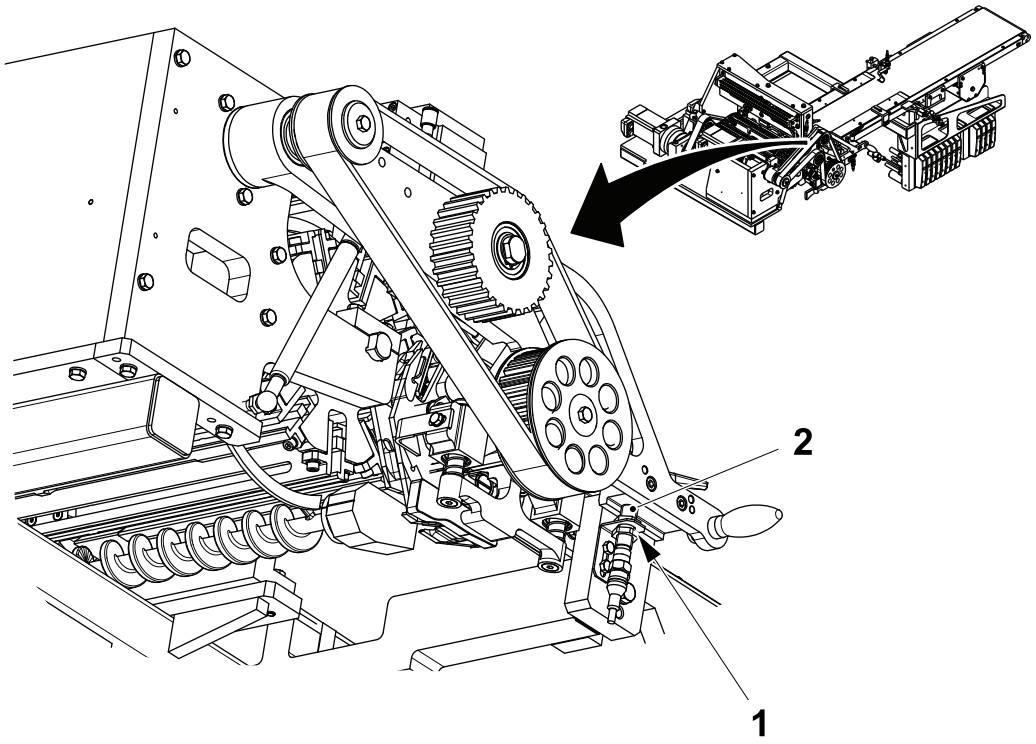

1 Nut
2 Sensor

6.2.1-9 Single Cut - Set Cap Stop

Machine Status	Electrical supply disconnecting device in position O (OFF)
SPC Reference	2835403-0400

a) Loosen the screw (1) and clamp the cap (2) into the single cut (3) using your hand then adjust the cap stop (4) until the cap is centred in the single cut (3).

b) Tighten the screw (1).

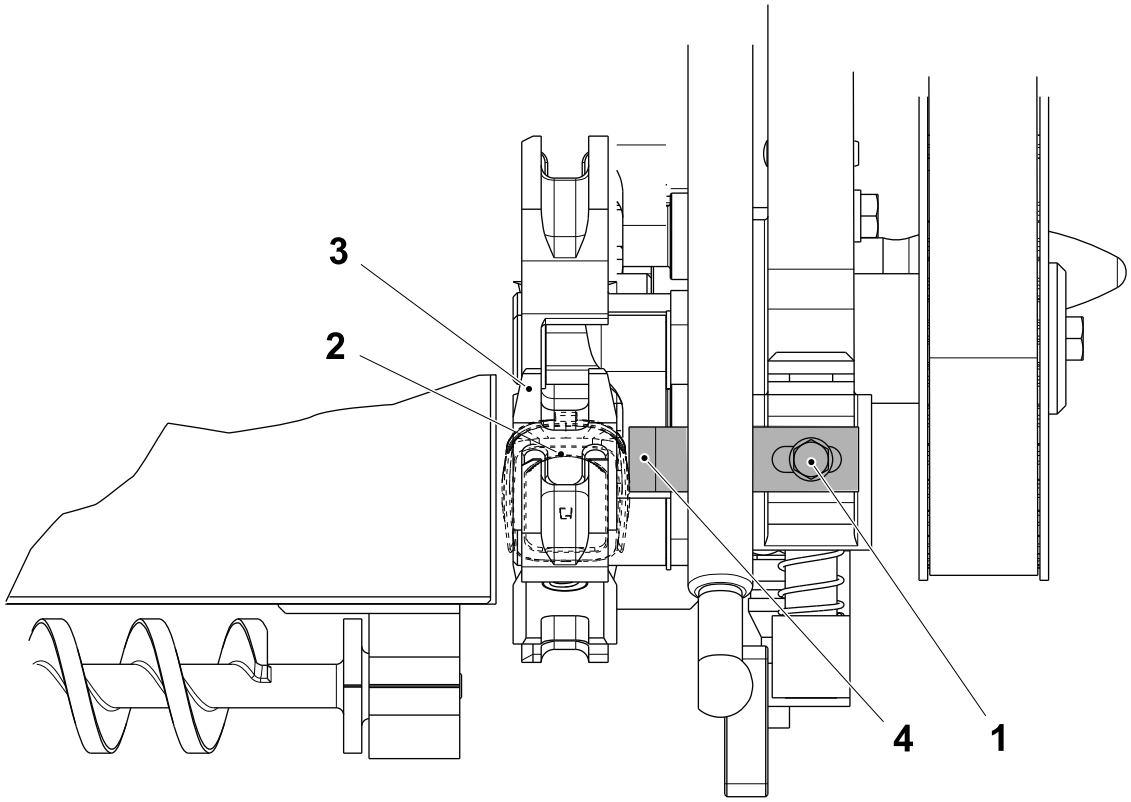

1 Screw
2 Cap
3 Single cut
4 Cap Stop

6.2.1-10 Single Cut - Set Cap Present Sensor

Machine Status	Electrical supply disconnecting device in position O (OFF)
SPC Reference	2835403-0400

a) Touch the SETTINGS button (1).

b) Touch the OVERVIEW button (2) to display the OVERVIEW window.

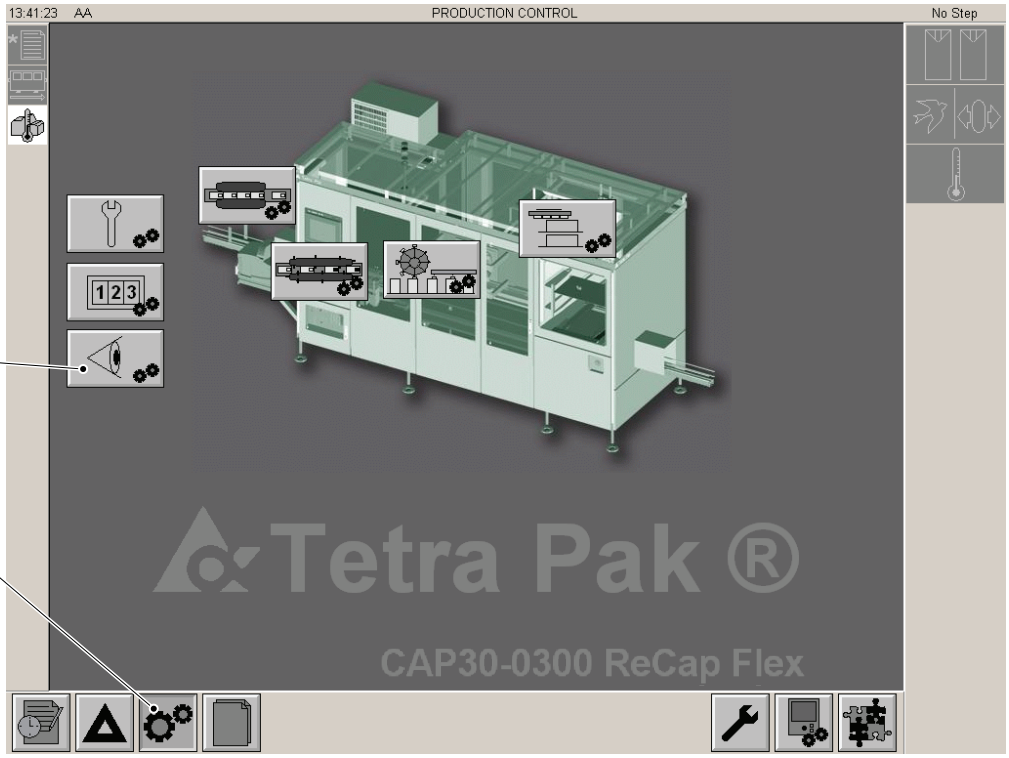

1 SETTINGS button
2 OVERVIEW button

(Cont'd)

(Cont'd)

c) In the OVERVIEW window (3) touch the SINGLE CUT ACTUAL POSITION window (4) and read the value in the ANGLE VALUE window (5) .

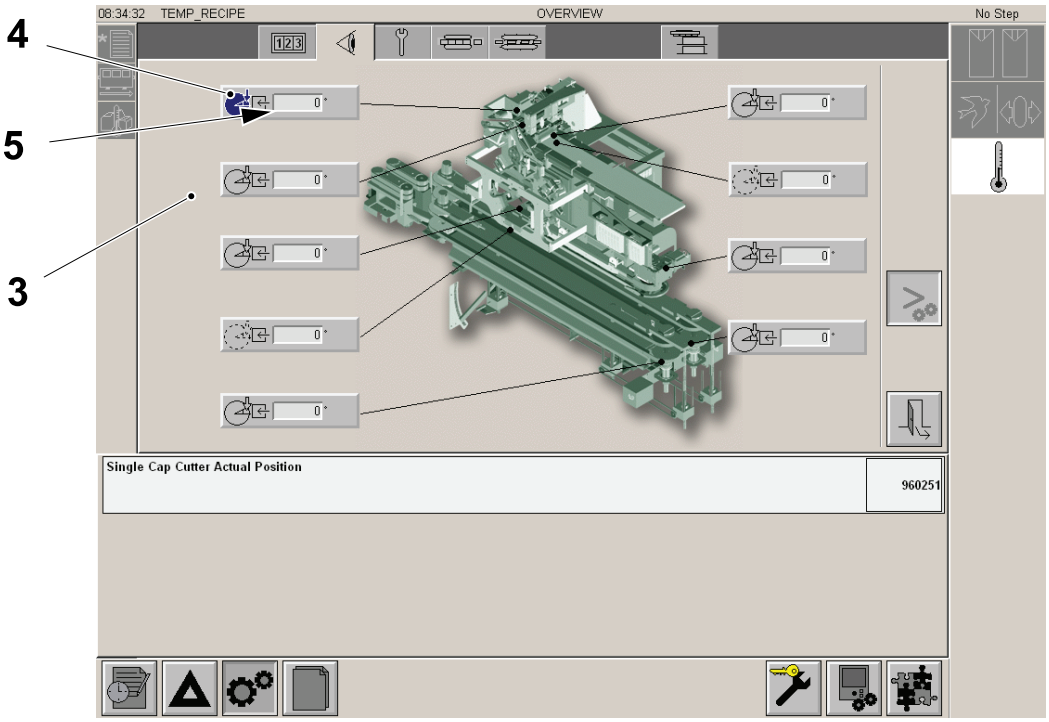

3 OVERVIEW window
4 SINGLE CUT ACTUAL POSITION window
5 ANGLE VALUE window

(Cont'd)

(Cont'd)

d) Turn the single cut until 0 appears in the ANGLE VALUE window (5).

e) Adjust the sensor (6) by releasing the screws (7) and moving the sensor (6) until the beam (8) appears on the cap (9).

f) Tighten the screws (7).

g) Check that the 0 is still in the ANGLE VALUE window (5).

Note! When changing to blue caps set the sensitivity of the sensor again, see 8.8.4-1 Sensor (W21B3012, W21B3014) - Set.

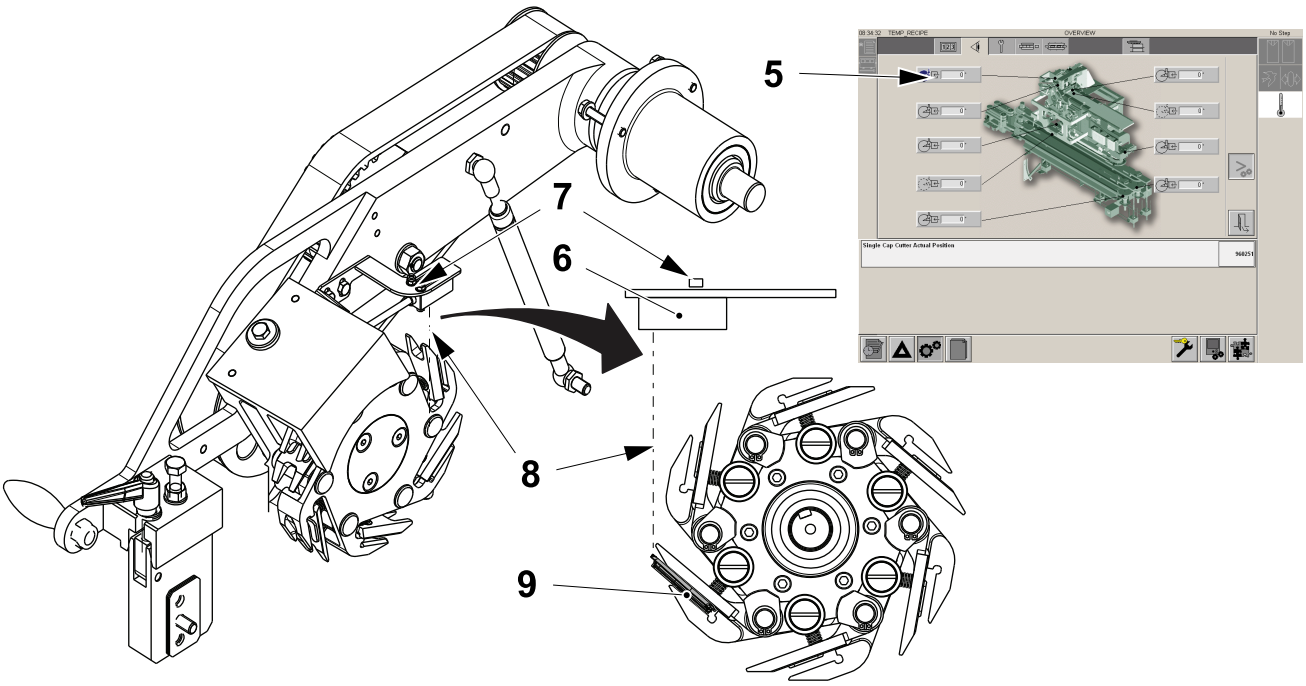

5 ANGLE VALUE window
6 Sensor
7 Screw
8 Beam
9 Cap

6.2.2 Drive Unit - Overhaul

6.2.2-1 Drive Unit - Change

Machine Status	Electrical supply disconnecting device in position O (OFF)
SPC Reference	2715714-0200

Removal

a) Release the screw (1) and the coupling (2).

b) Remove the four screws (3) and the drive (4).

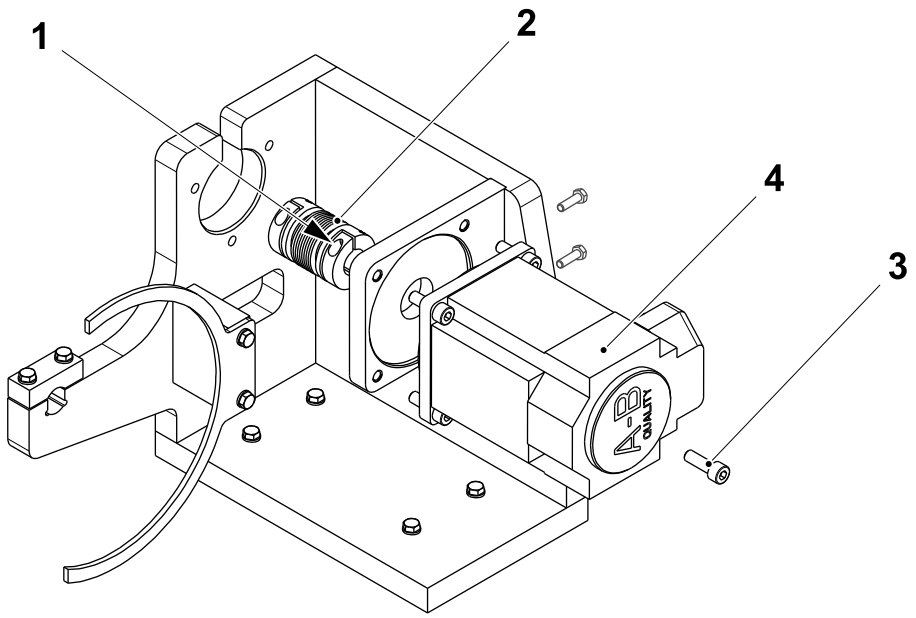

1 Screw
2 Coupling
3 Screw
4 Drive

(Cont'd)

(Cont'd)

Assembly

a) Loosen the screws (5) and install the drive (4) with the screws (3).

b) Lightly tighten the screws (3) and (5) making sure that the coupling (2) is still in line and moves freely.

c) Tighten completely the screw (1), then the screws (5) and finally the screws (3).

d) Set zero, see 6.2.1-7 Single Cut - Set Zero Position.

Note! If noise or vibration occurs assembly should be done again.

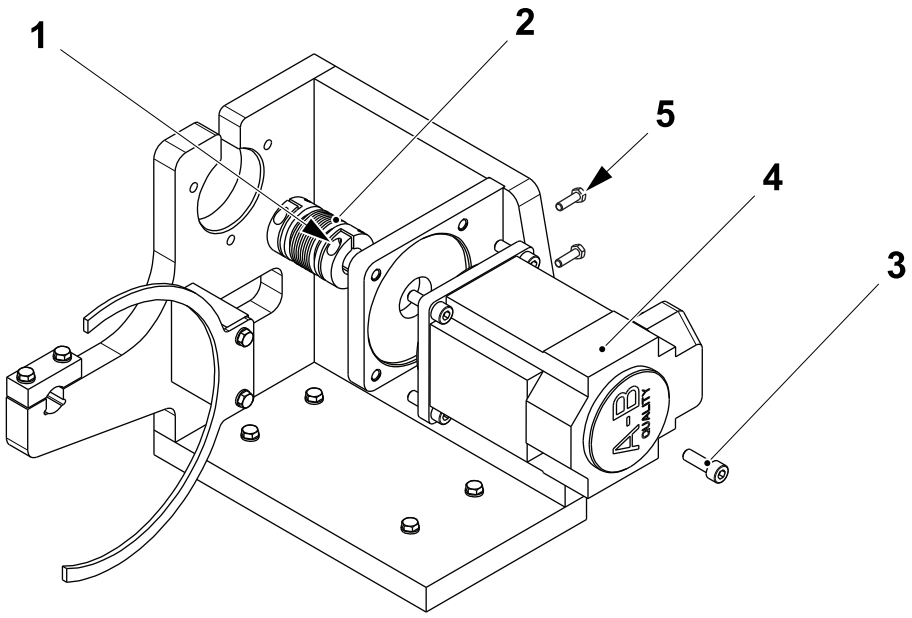

1 Screw
2 Coupling
3 Screw
4 Drive
5 Screw

6.3 Conveying Equipment

6.3.1 Sheet Holder

6.3.1-1 Sheet Holder - Removal

Machine Status	Electrical supply disconnecting device in position O (OFF)
SPC Reference	2703794-0200

a) Disconnect the air pipe and the sensor connections.

b) Remove the screws (1) and the cylinder (2).

c) Remove the screws (3), the four screws (4) and the sheet holder (5).

Note! Check that the sheet holder (5) is parallel.

d) Assemble in the reverse order.

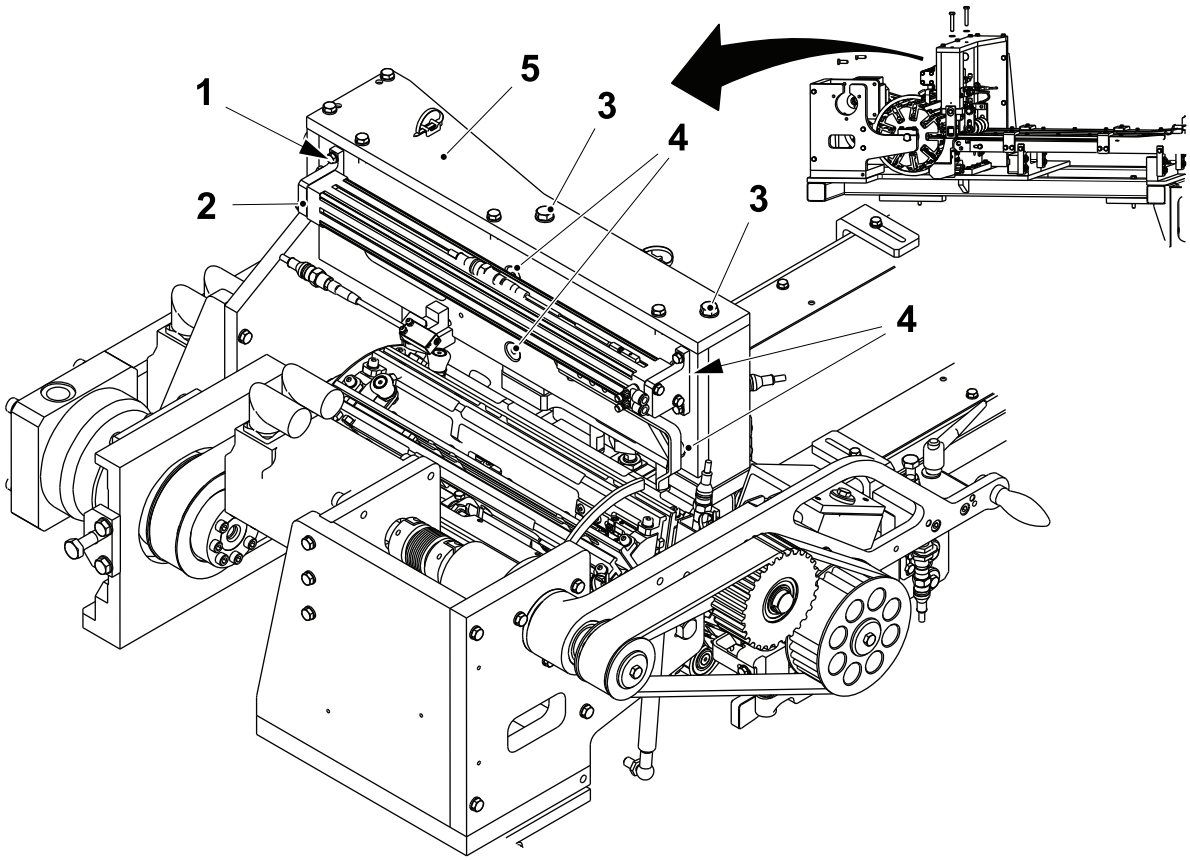

1 Screw
2 Cylinder
3 Screw
4 Screw
5 Sheet holder

6.3.1-2 Sheet Holder - Overhaul

Machine Status	Electrical supply disconnecting device in position O (OFF)
SPC Reference	2703794-0200

a) Remove the retaining rings (1), the washers (2) and the rollers (3) from the shaft (4).

b) Remove the screws (5) and the comb (6).

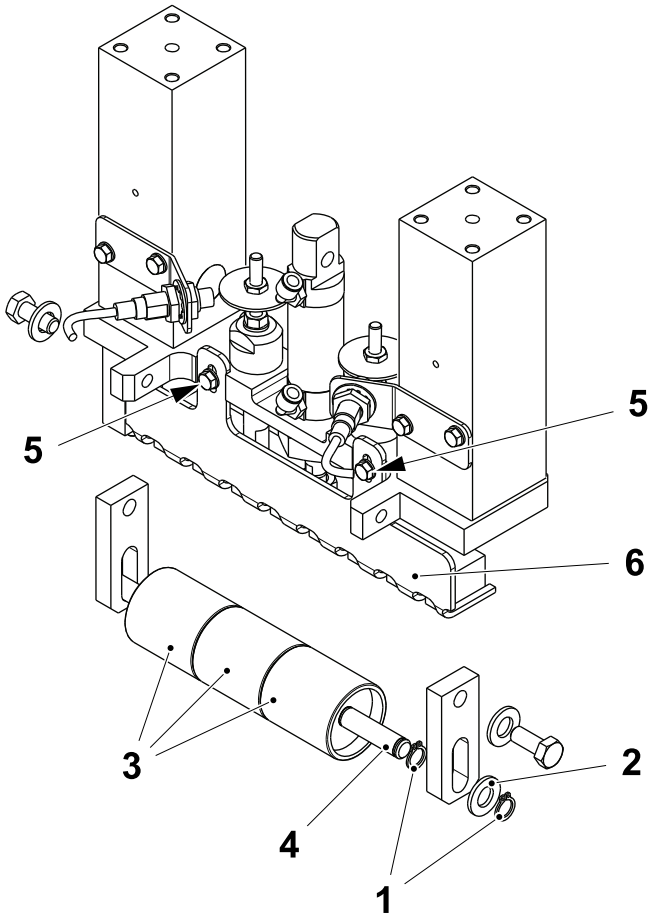

1 Retaining rings
2 Washers
3 Rollers
4 Shaft
5 Screws
6 Comb

(Cont'd)

(Cont'd)

c) Remove the nut (7), the sensor activator (8), the nuts (9) and (10), the washer (11) and the stop (12) from the shaft (13).

d) Release the nut (14), the shaft (15), the spacer (16) and the stopper (17).

e) Release the nut (18) and the cylinder (19).

f) Remove the bushings (20).

g) Assemble in the reverse order.

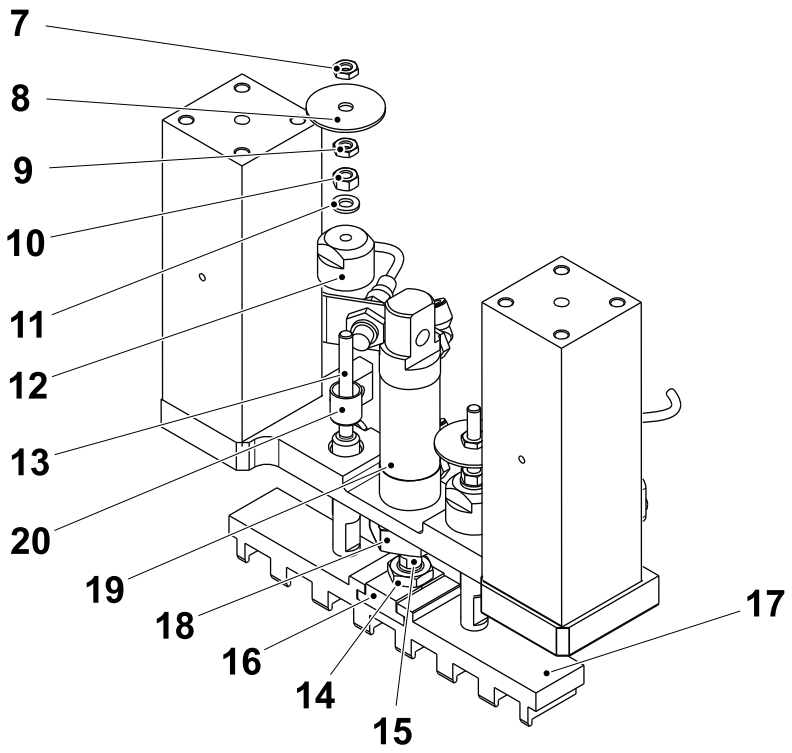

7 Nut
8 Activator
9 Nut
10 Nut
11 Washer
12 Stop
13 Shaft
14 Nut
15 Shaft
16 Spacer
17 Stopper
18 Nut
19 Cylinder
20 Bushing

6.3.1-3 Sheet Holder - Set

Machine Status	Electrical supply disconnecting device in position O (OFF)
SPC Reference	2703794-0200

a) Release the screws (1) and set the distance **A** between the bottom plate (2) and the bottom of the comb (3).

Note! Distance **A** is minimum along the length of the comb (3).

A = 4.5 mm minimum for ReCap 2
A = 6.0 mm minimum for ReCap 3

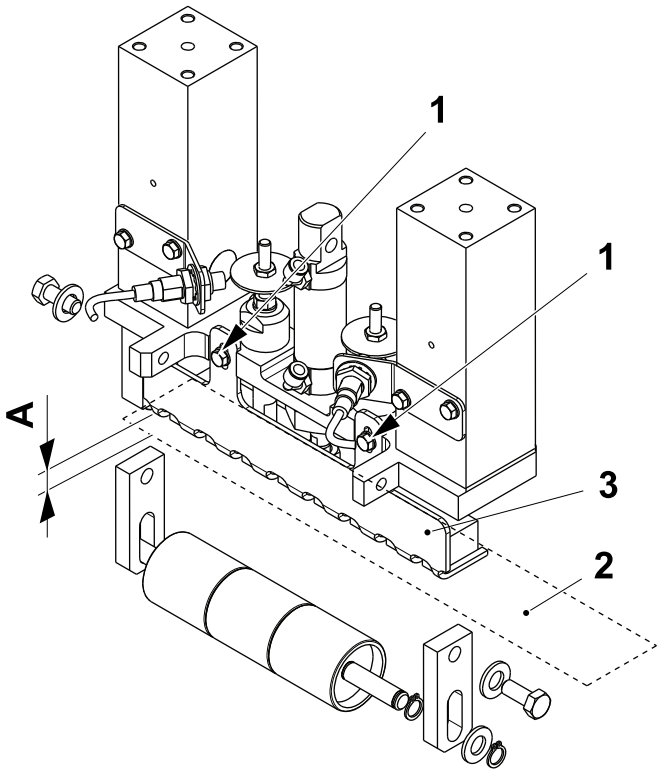

1 Screws
2 Bottom plate
3 Comb

(Cont'd)

(Cont'd)

b) Release the nut (4) and set the distance **A** between the bottom plate (2) and the bottom of the stopper (5) using the plastic stopper (6).

c) Check that the stopper is still parallel after the setting.

Note! Distance **A** is minimum along the length of the stopper (5).

A = 4.5 mm minimum for ReCap 2
A = 6.0 mm minimum for ReCap 3

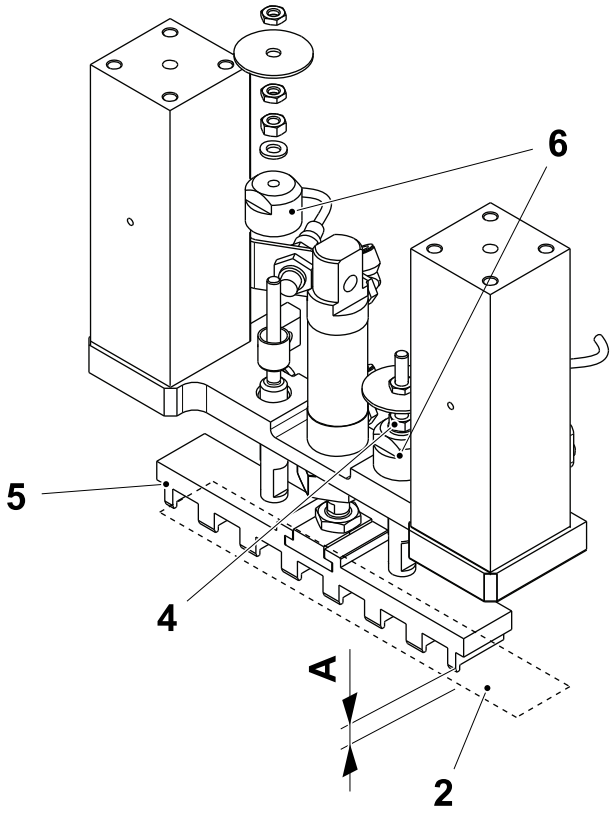

2 Bottom plate
4 Nut
5 Stopper
6 Plastic stopper

6.3.1-4 Sheet Holder - Set the Sensors

Machine Status	Electrical supply disconnecting device in position I (ON)
SPC Reference	2703794-0200

a) Set the sensors (1) to the distance **A** from the triggers (2) and (3) by adjusting the nuts (4).

b) Push the cylinder (5) to the bottom of its stroke with caps under it.

A = 2 mm

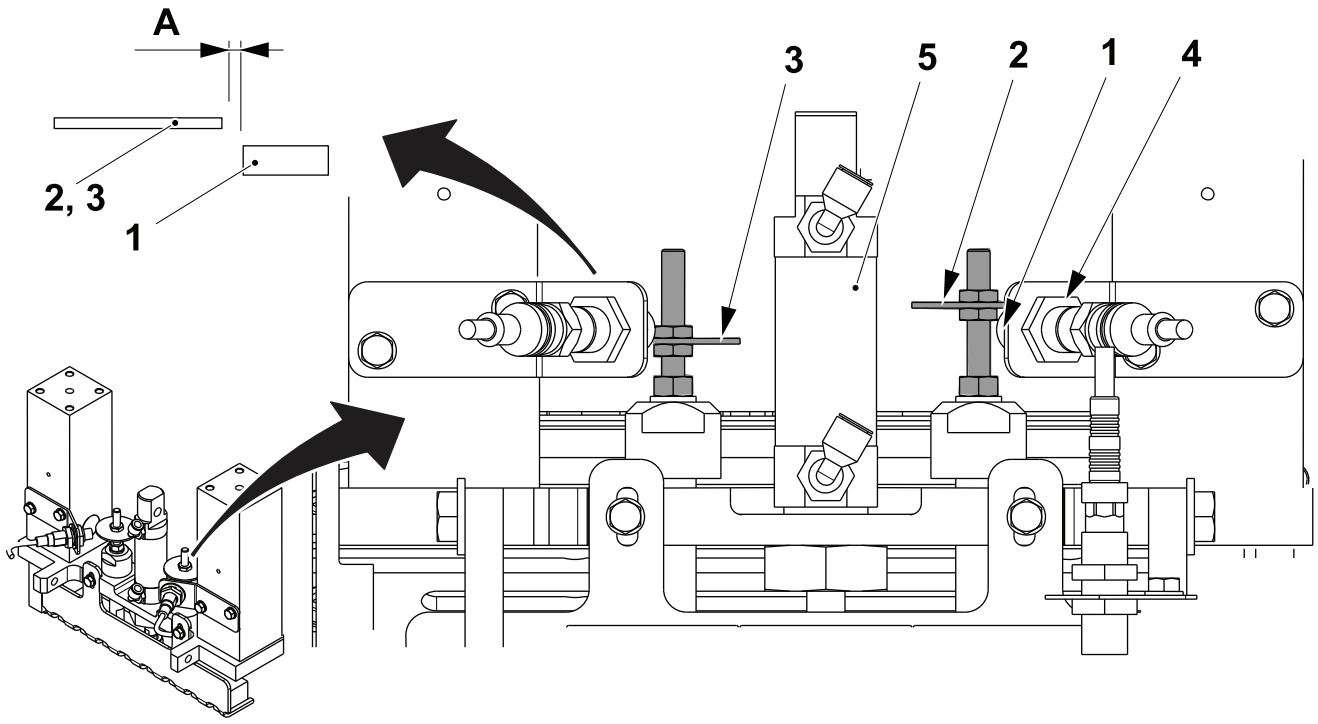

1 Sensor
2 Trigger
3 Trigger
4 Nut
5 Cylinder

(Cont'd)

(Cont'd)

c) Move the trigger (3) by adjusting the nuts (6) so that the sensor LED is activated. Tighten the nuts (6).

d) Lift the cylinder (5).

e) Adjust the position of the trigger (2) by adjusting the nuts (7) until the distance **B** is obtained. Tighten the nuts (7) .

f) Check that one sensor reads when up and the other when down.

B = 15mm

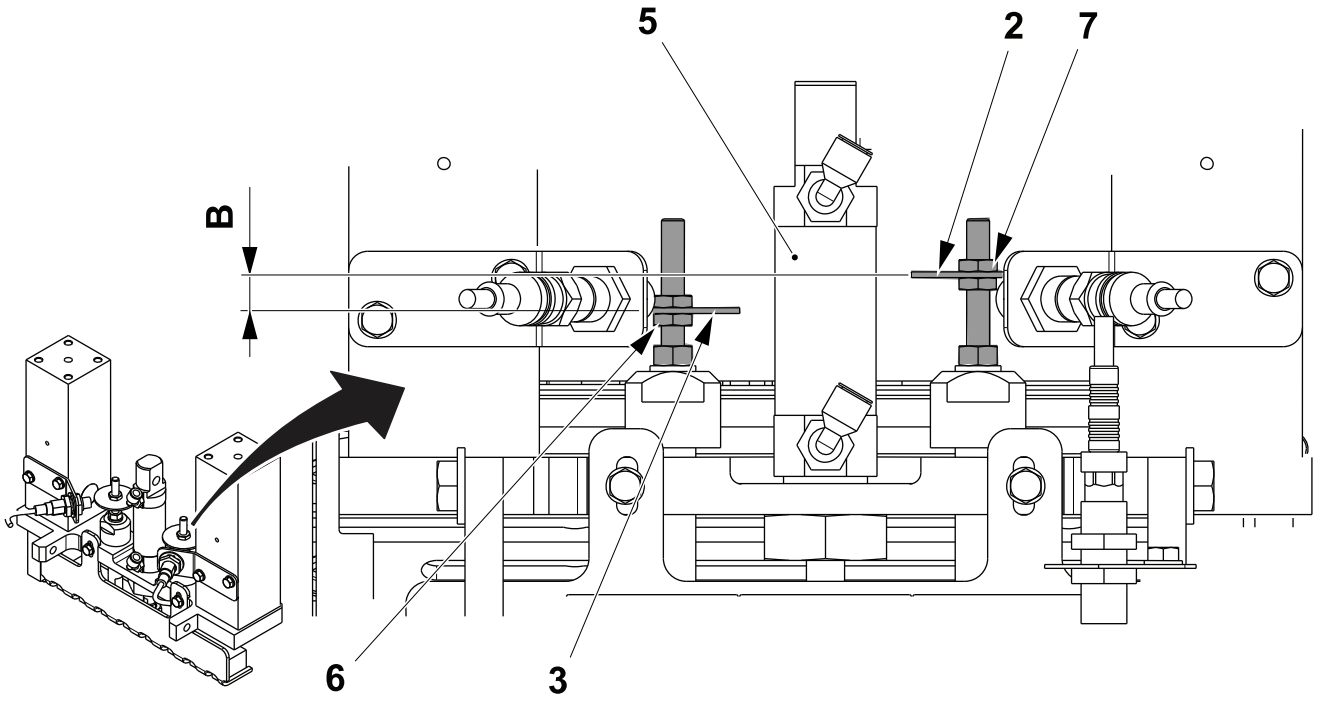

2 Trigger
3 Trigger
5 Cylinder
6 Nut
7 Nut

6.3.2 Conveyor

6.3.2-1 Conveyor - Change

Machine Status	Electrical supply disconnecting device in position O (OFF)
SPC Reference	2703794-0200

a) Disconnect the electrical connections.

b) Disconnect the air hose (1).

c) Mark the position of the conveyor.

d) Remove the four screws (2) and the conveyor (3).

e) Assemble in the reverse order.

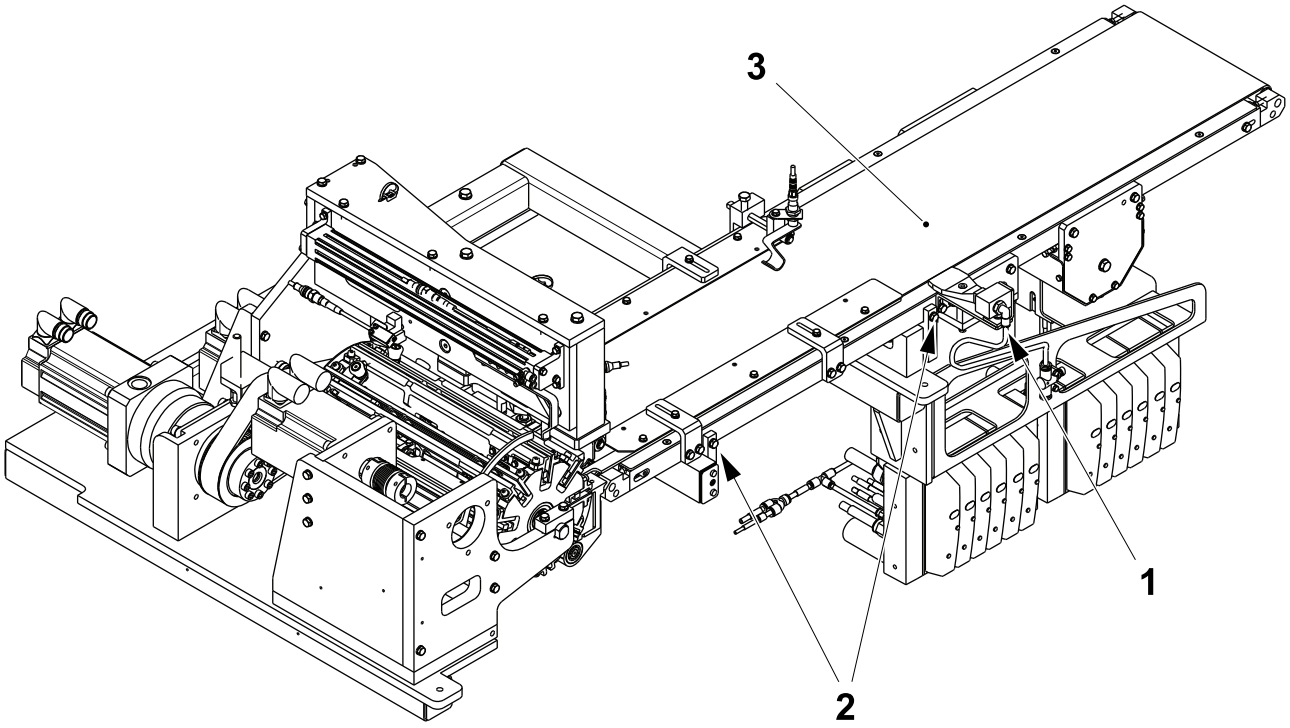

1 Air hose
2 Screw
3 Conveyor

6.3.2-2 Conveyor - Check

Machine Status	Electrical supply disconnecting device in position O (OFF)
SPC Reference	2703794-0200

Check each of the following parts for wear:

- the bending rollers (1)
- the bending rollers (2)
- the drive rollgers (3)
- the drive belt (4).

Change all worn parts.

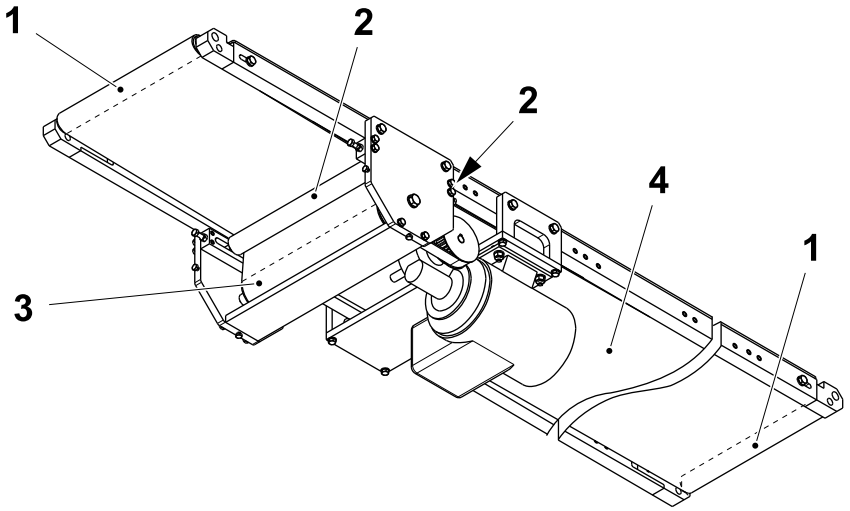

1 Roller
2 Roller
3 Roller
4 Belt

6.3.2-3 Conveyor - Change Belt

Machine Status	Electrical supply disconnecting device in position O (OFF)
SPC Reference	2703794-0200

a) Remove the screws (1) and the cover (2).

b) Release the screws (3) and move the drive unit (4) until you are able to remove the belt (5) from the toothed pulley (6).

c) Remove the screws (7) and the drive unit (4).

d) Release the tension on the conveyor belt (8) by releasing the screws (9).

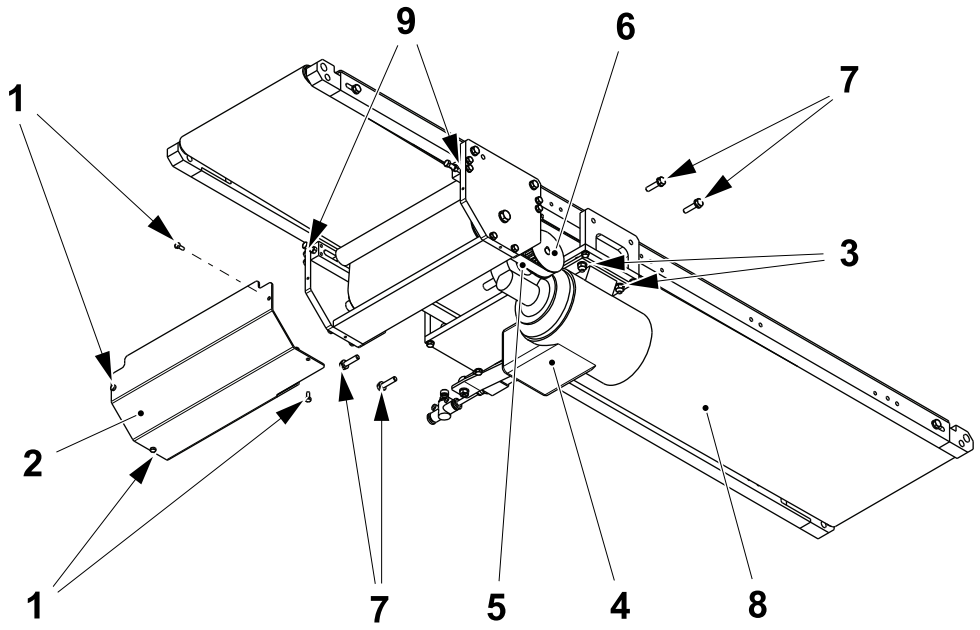

1 Screw
2 Cover
3 Screw
4 Drive unit
5 Belt
6 Toothed pulley
7 Screw
8 Conveyor belt
9 Screw

(Cont'd)

(Cont'd)

e) Remove the screws (10), (11) and (12) and the end plate (13).

f) Remove the rollers (14).

g) Remove the belt (15) from the drive roller (16).

h) Remove the conveyor belt (8).

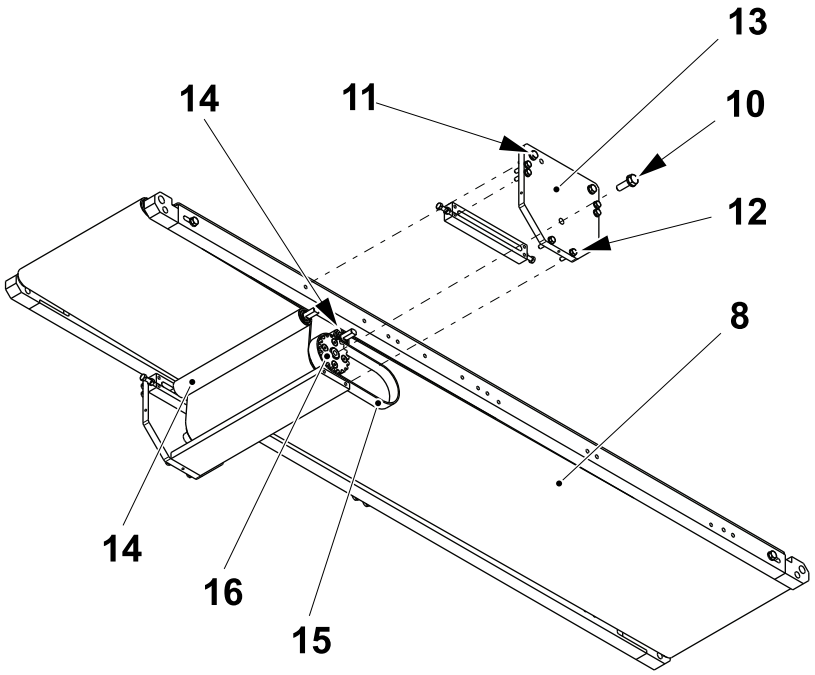

8 Conveyor belt
10 Screw
11 Screw
12 Screw
13 End plate
14 Roller
15 Belt
16 Drive roller

6.3.2-4 Conveyor - Drive Overhaul

Machine Status	Electrical supply disconnecting device in position O (OFF)
SPC Reference	2703794-0200

a) Remove the screws (1), the motor (2), the screw (3) and the toothed pulley (4).

b) Remove the screws (5) and (6), the guard (7) and the supports (8).

c) Remove the screws (9) and the adjustment brackets (10).

d) Assemble in the reverse order but remember to install the three rollers and the conveyor belt.

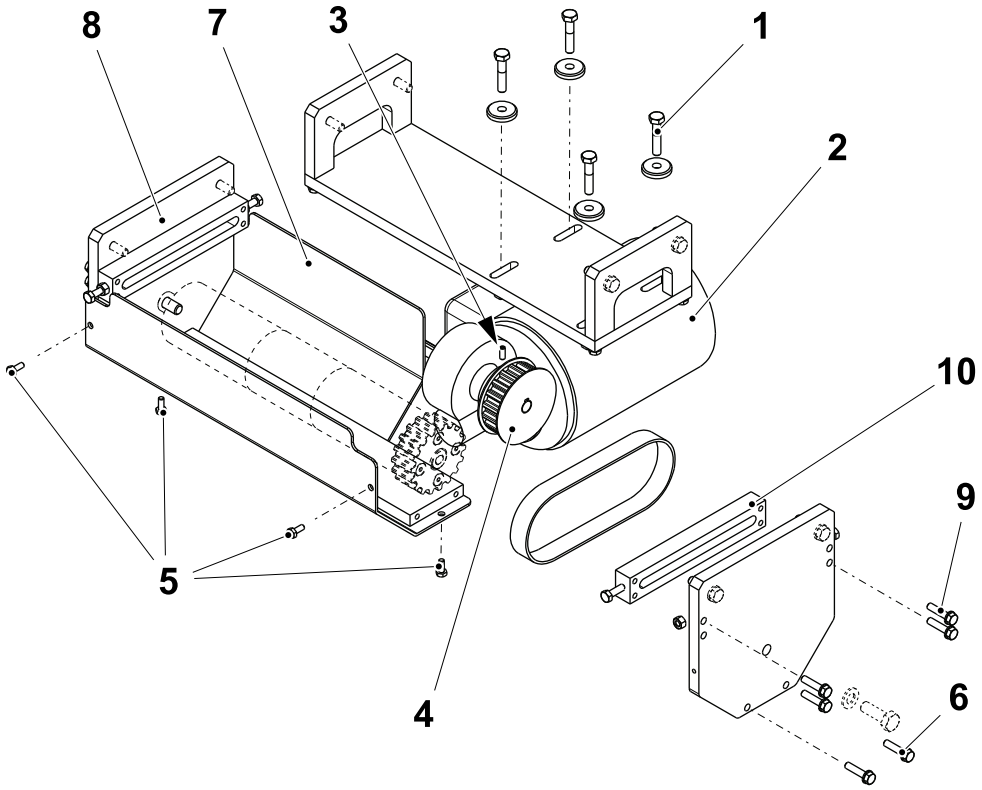

1 Screw
2 Motor
3 Screw
4 Toothed pulley
5 Screw
6 Screw
7 Guard
8 Support
9 Screw
10 Adjustment bracket

6.3.2-5 Conveyor - Rollers Overhaul

Machine Status	Electrical supply disconnecting device in position O (OFF)
SPC Reference	2703794-0200

a) Remove the retaining ring (1), the bearings (2) and the rollers (3) from the shaft (4).

b) Remove the retaining ring (5), the bearings (6) and the rollers (7) from the shaft (8).

c) Remove the screws (9) and the gear (10).

d) Remove the retaining ring (11), the bearings (12) and the rollers (13) from the shaft (14).

e) Assemble in the reverse order.

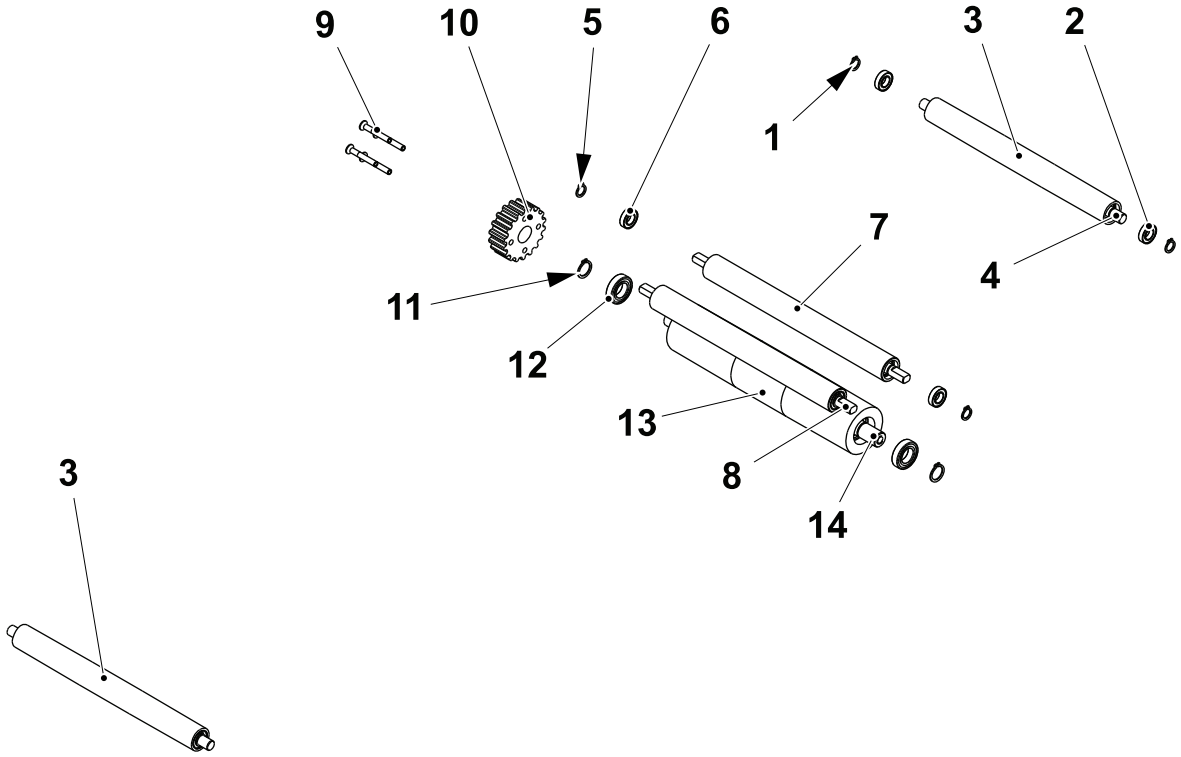

1 Retaining ring
2 Bearing
3 Roller
4 Shaft
5 Retaining ring
6 Bearing
7 Roller
8 Shaft
9 Screw
10 Gear
11 Retaining ring
12 Bearing
13 Roller
14 Shaft

6.3.2-6 Conveyor - Framework Change

Machine Status	Electrical supply disconnecting device in position O (OFF)
SPC Reference	2703794-0200

a) Release the screws (1), the brackets (2) and the rollers (3).

b) Remove the belt (4).

c) Assemble in the reverse order.

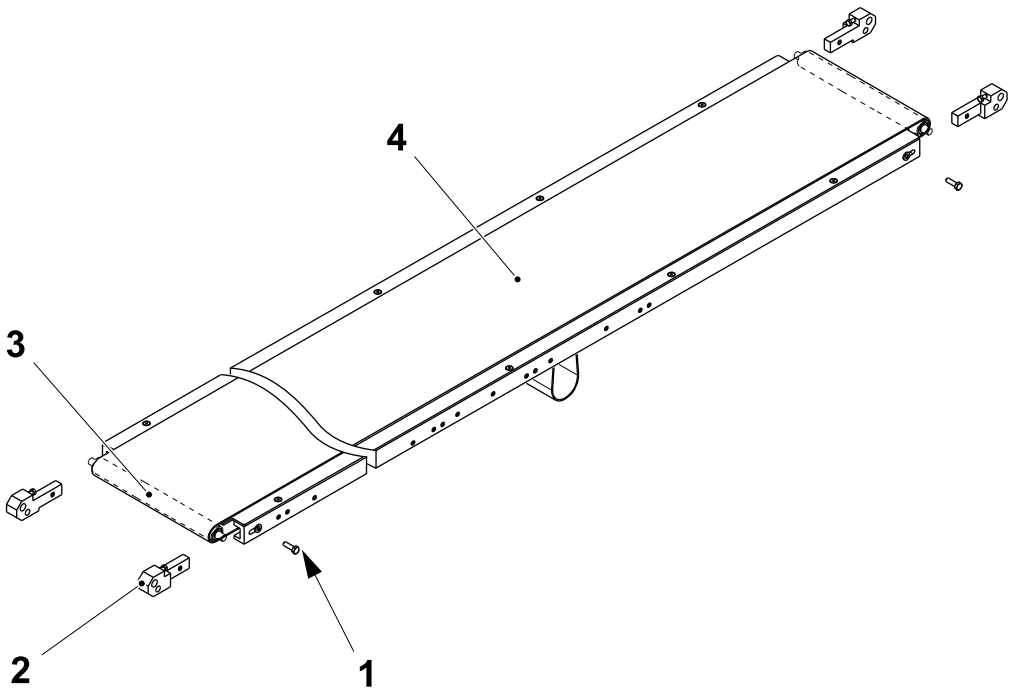

1 Screw
2 Bracket
3 Roller
4 Belt

6.3.2-7 Conveyor - Set X Position

Machine Status	Electrical supply disconnecting device in position O (OFF)
SPC Reference	2703794-0200

a) To set the X position use the set sheet guides procedure, see 6.3.4-1 Sheet Guides - Set.

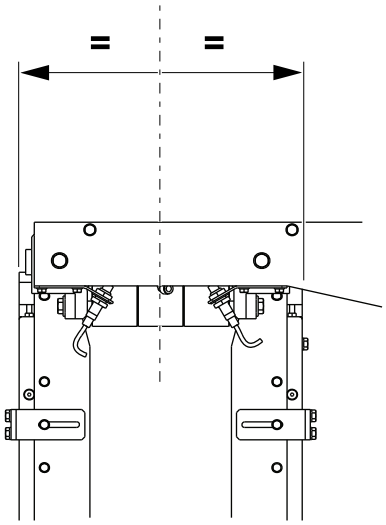

6.3.2-8 Conveyor - Set Z Position

Machine Status	Electrical supply disconnecting device in position O (OFF)
SPC Reference	2703794-0200

a) Release the eight screws (1) and set the distance **A**.

b) Make sure that the distance **A** is the same on the left-hand and right-hand sides of the conveyor (2).

Note! Check that the height at the four brackets which are adjusted by the screws (1), all have the same dimension.

A = 0.0 - 0.5 mm
B = 2 mm

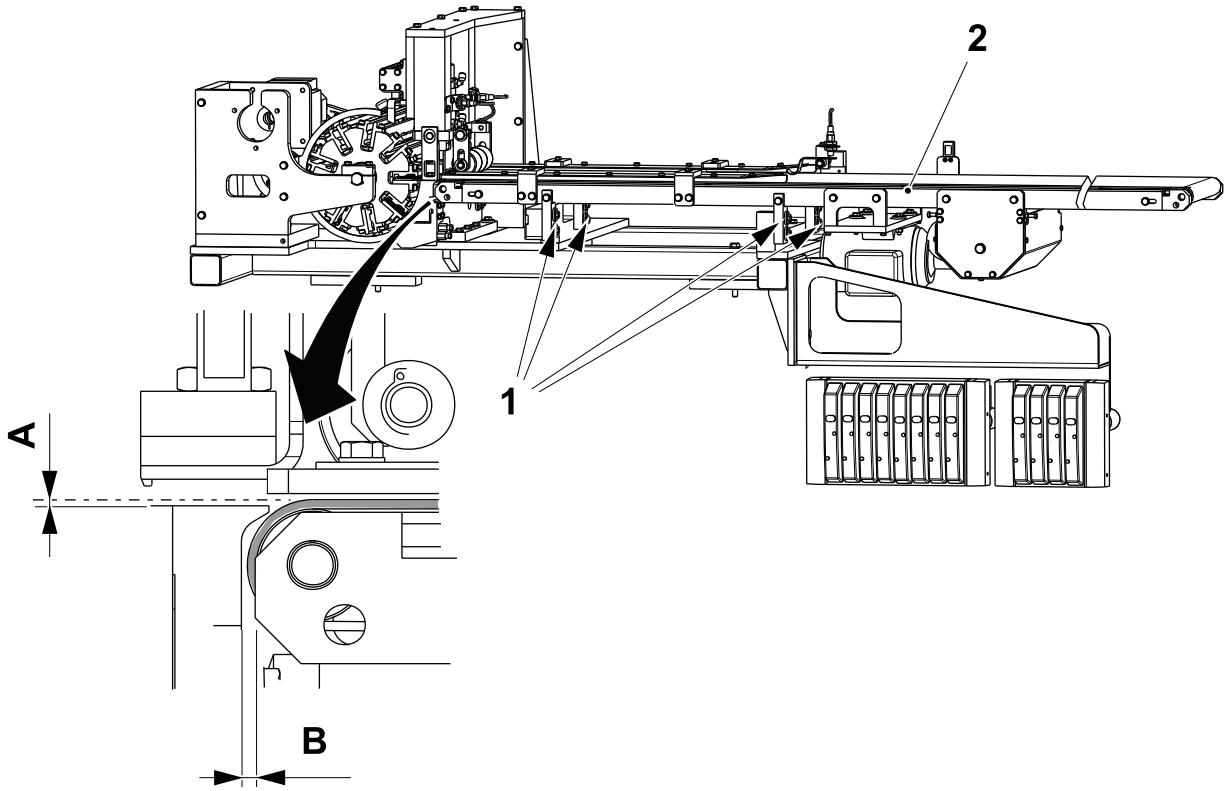

1 Screw
2 Conveyor

6.3.2-9 Conveyor - Set Belt Alignment and Tension

Machine Status	Electrical supply disconnecting device in position O (OFF)
SPC Reference	2703794-0200

Tension of the Conveyor Belt

Note! Only make very small adjustments when setting the conveyor belt before running the machine. It is easy to obtain a bad function.

a) Loosen the nuts (1) and adjust the tension of the belt by means of the screw (2). Tighten the nuts (1) making sure that the roller (3) is parallel to the upper drive roller (4).

Note! Do not set the tension on the row cutter side.

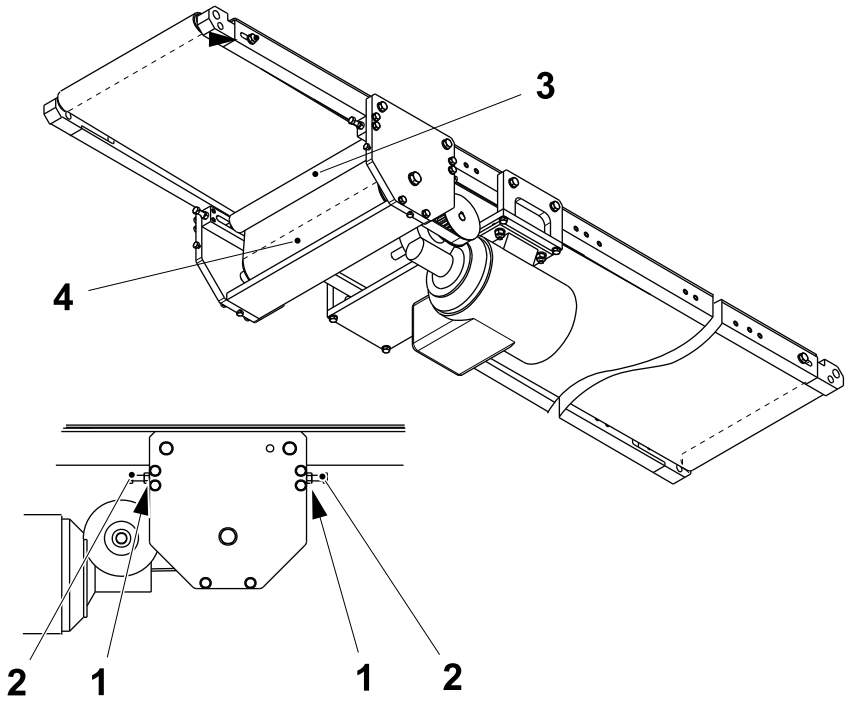

1 Nut
2 Screw
3 Roller
4 Drive roller

(Cont'd)

(Cont'd)

Conveyor Belt

a) The conveyor belt (1) must stay centred on the rollers when in motion. If necessary, adjust by means of the screws (2) and (3).

Note! Do not set the tension on the row cutter side.

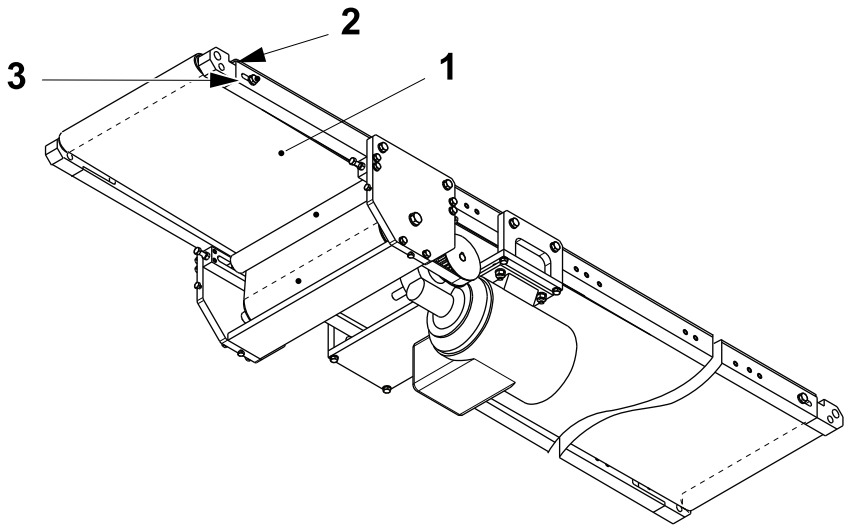

1 Belt
2 Screw
3 Screw

(Cont'd)

(Cont'd)

Conveyor Belt Alignment Check

a) Logon as a user, see 1.1.1-1 HMI User Management - Log On as a User.

b) Touch the MAINTENANCE button (1) then the CUTTING AND FEEDING button (2).

c) Touch the conveyor ARROW icon (3).

d) Touch the ACTIVATE button (4) then the CONFIRM button (5).

Note! The conveyor will start moving as soon as the confirm button is touched and a green light appears.

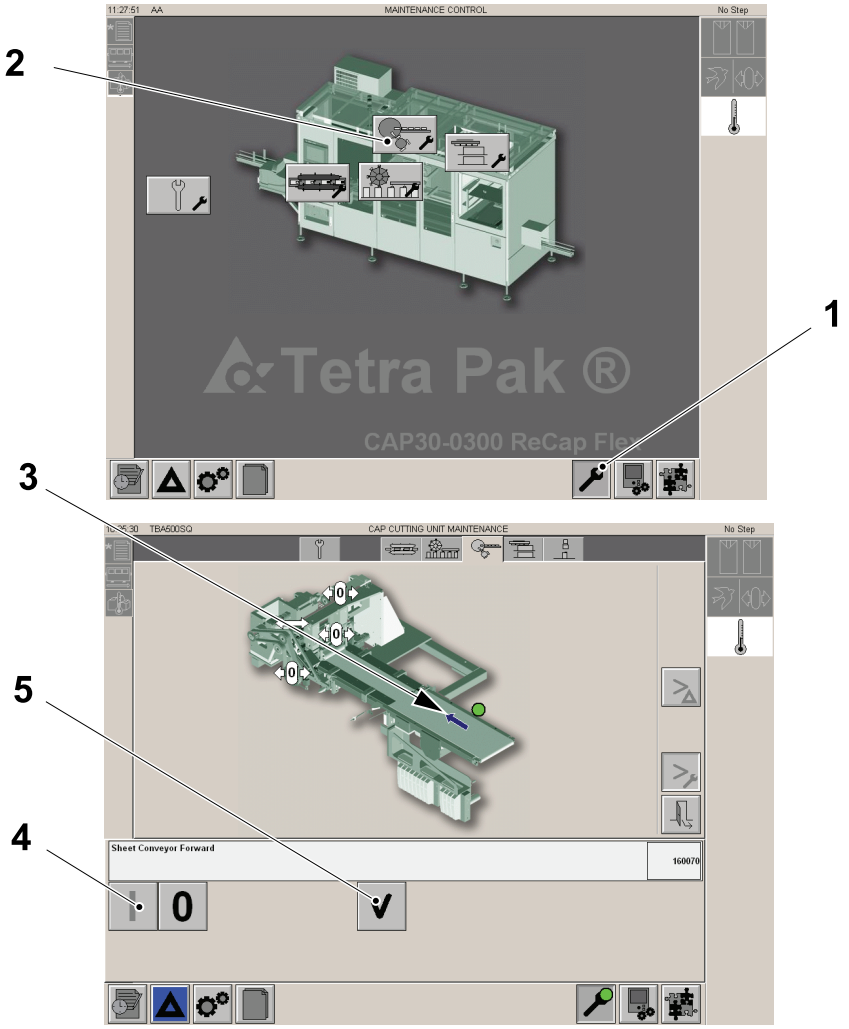

1 MAINTENANCE button
2 CUTTING AND FEEDING button
3 ARROW icon
4 ACTIVATE button
5 CONFIRM button

6.3.3 Sheet Detector

6.3.3-1 Sheet Detector - Change

Machine Status	Electrical supply disconnecting device in position O (OFF)
SPC Reference	2703794-0200

a) Disconnect the cable to the sensor (1).

b) Remove the screws (2) and the mounting block (3).

c) Remove the retaining ring (4) and the trigger (5).

d) Assemble in the reverse order.

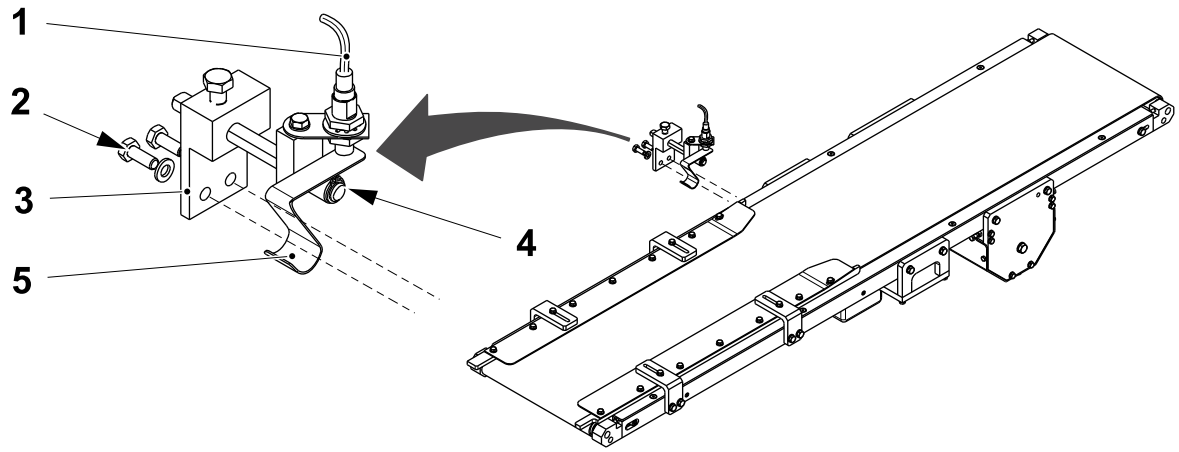

1 Sensor connection
2 Screw
3 Mounting block
4 Retaining ring
5 Trigger

6.3.3-2 Sheet Detector - Set

Machine Status	Electrical supply disconnecting device in position I (ON)
SPC Reference	2703794-0200

a) Release the nuts (1).

b) Release the screw (2) and move the sensor (3) over the trigger (4).

c) Without a sheet of caps adjust the sensor (3) until the LED is ON.

d) With a sheet of caps under the trigger (4), check that the LED is OFF.

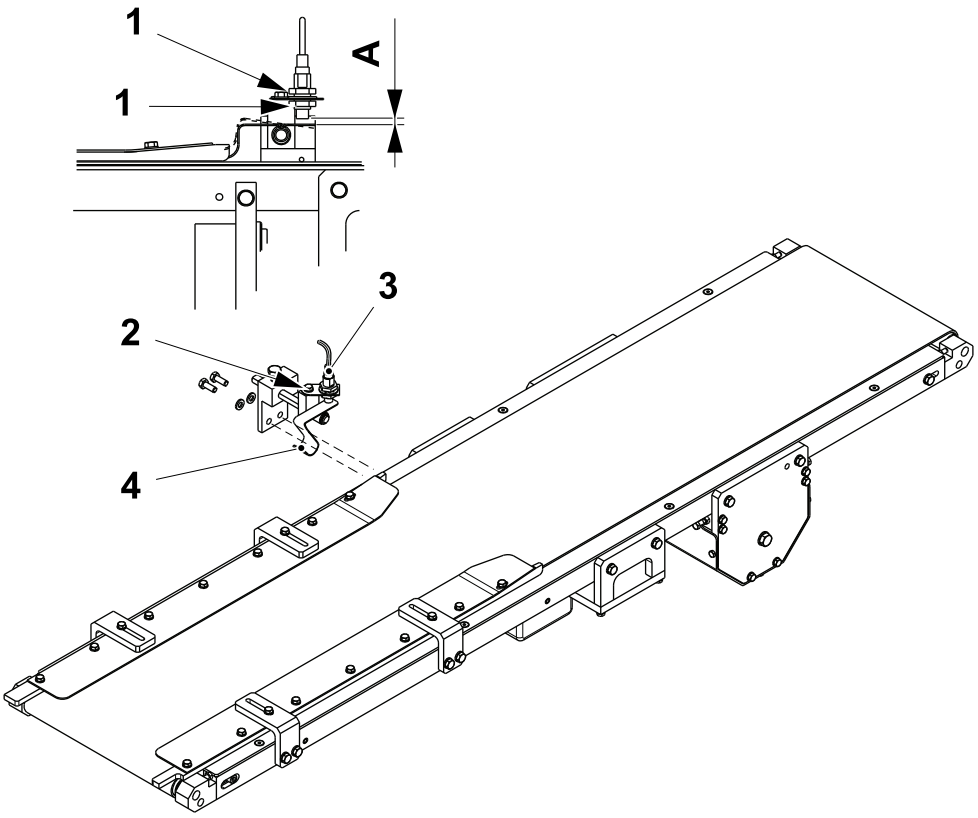

A = 2 mm
1 Nut
2 Screw
3 Sensor
4 Trigger

6.3.3-3 Sheet Blower - Set

Machine Status	Electrical supply disconnecting device in position I (ON)
SPC Reference	2703794-0200

a) Place a sheet strip of caps on the conveyor (1).

b) Release the screws (2) and (3) until the bracket (4) and the blower (5) are the correct height and direction.

c) Adjust the air pressure using the regulator (6).

d) When the single row can be removed without disturbing the rest of the sheet of caps the setting is complete.

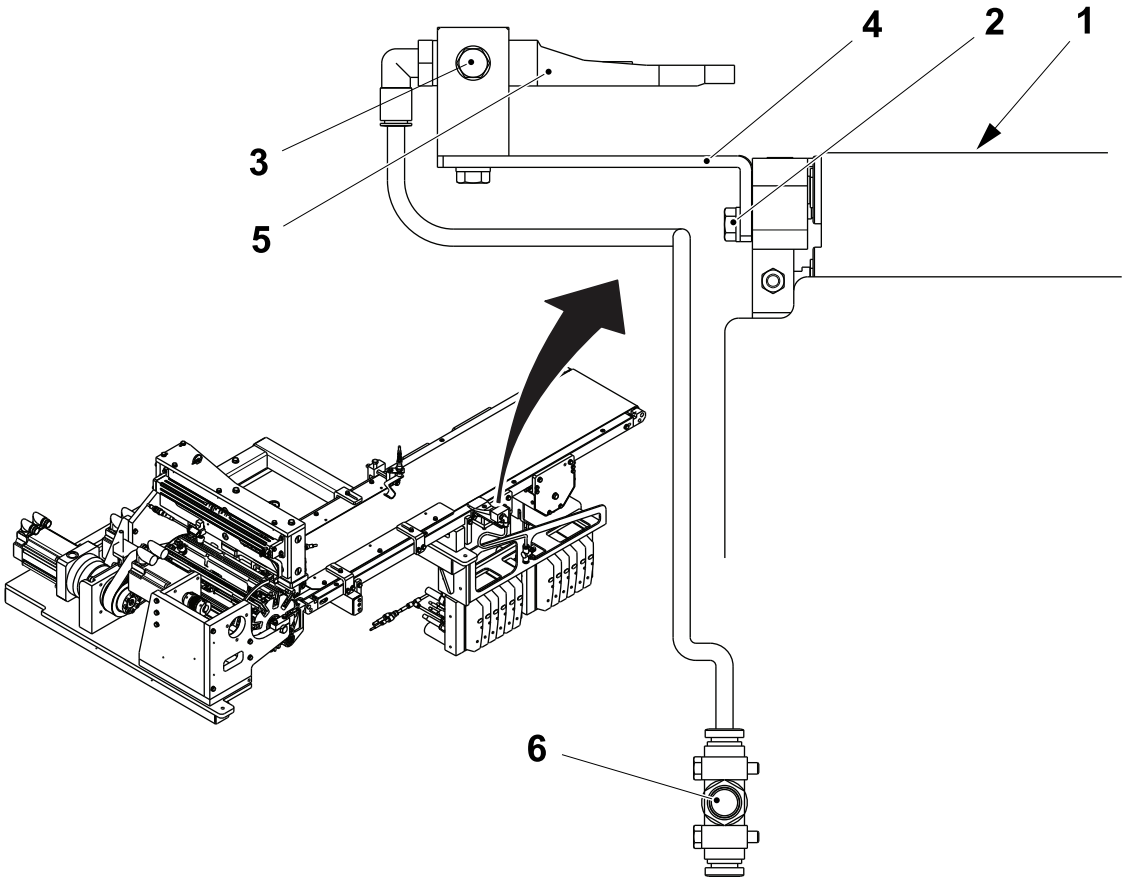

1 Conveyor
2 Screw
3 Screw
4 Bracket
5 Blower
6 Regulator

6.3.4 Sheet Guides

6.3.4-1 Sheet Guides - Set

Machine Status	Electrical supply disconnecting device in position O (OFF)
SPC Reference	2703794-0200

a) Release the screws (1) and move the guide units (2) so that the sheet is delivered with the four outer caps (3) in line with the grooves (4) in the row cutter (5) without trapping the sheet.

b) Check that the clearance between the guide units (2) and the sheet is the distance **A**.

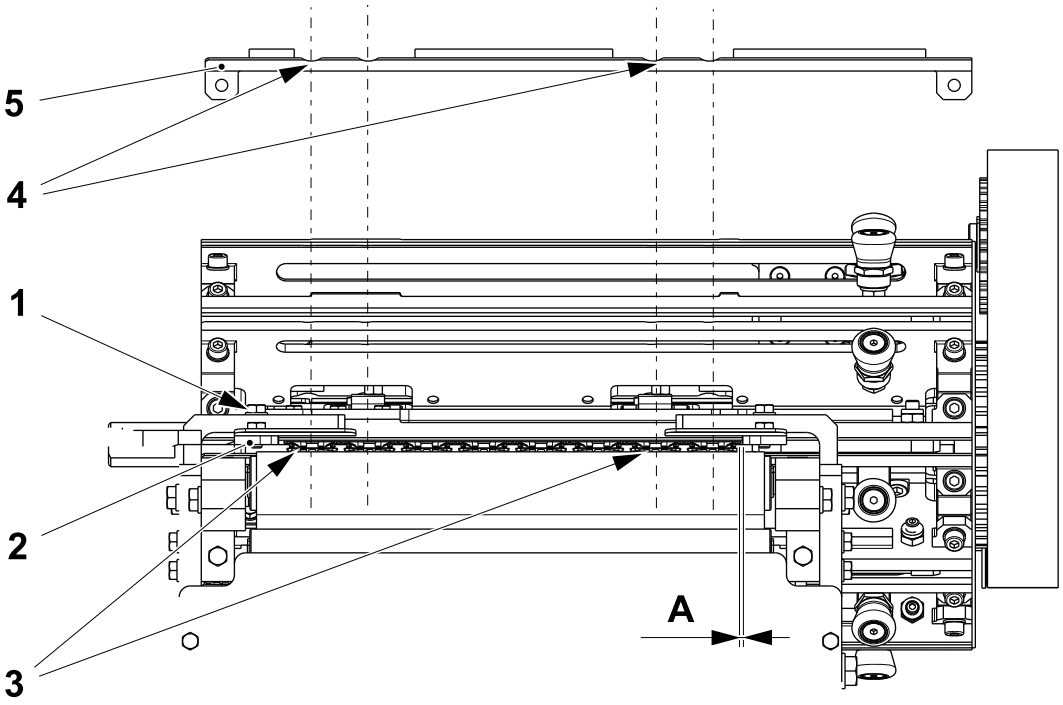

A = 1.5 mm

1 Screw
2 Guide unit
3 Cap
4 Groove
5 Row cutter

6.3.4-2 Sheet Guides - Set Height

Machine Status	Electrical supply disconnecting device in position O (OFF)
SPC Reference	2703794-0200

a) Release the screws (1) and move the guide units (2) until the distance **A** is obtained.

A = 6 mm for ReCap 2
A = 7 mm for ReCap 3

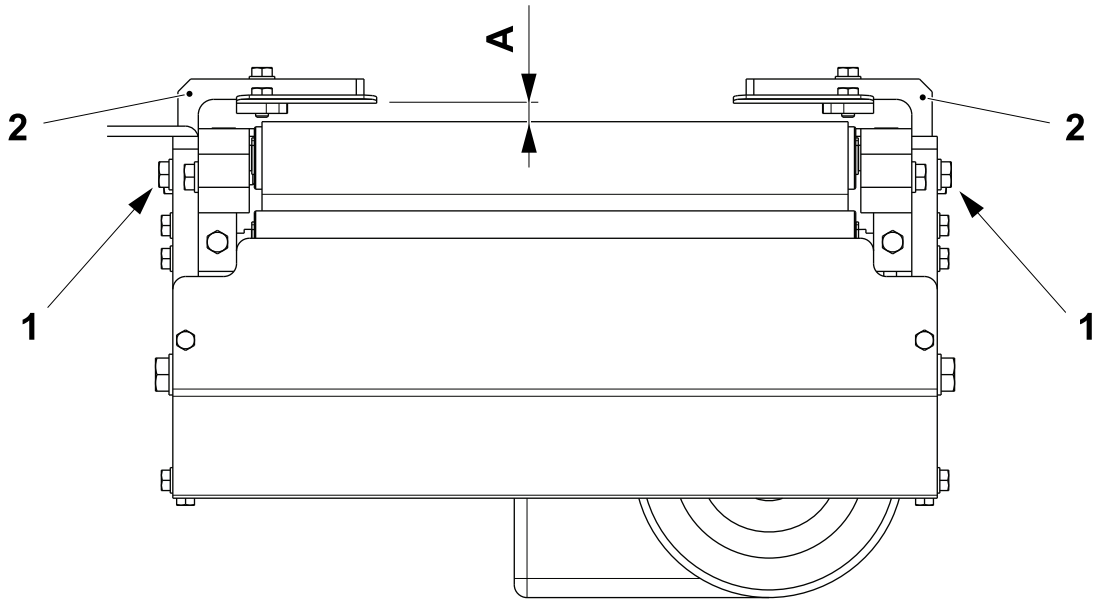

1 Screw
2 Guide unit

6.4 Row Cutter

6.4.1 Row Cutter - Change

6.4.1-1 Removal

Machine Status	Electrical supply disconnecting device in position O (OFF)
SPC Reference	2703810-0300

a) Disconnect the sensors cables T60W1001 and T60W1004 from terminals 1 and 5 of the distribution frame 30X120 (1).

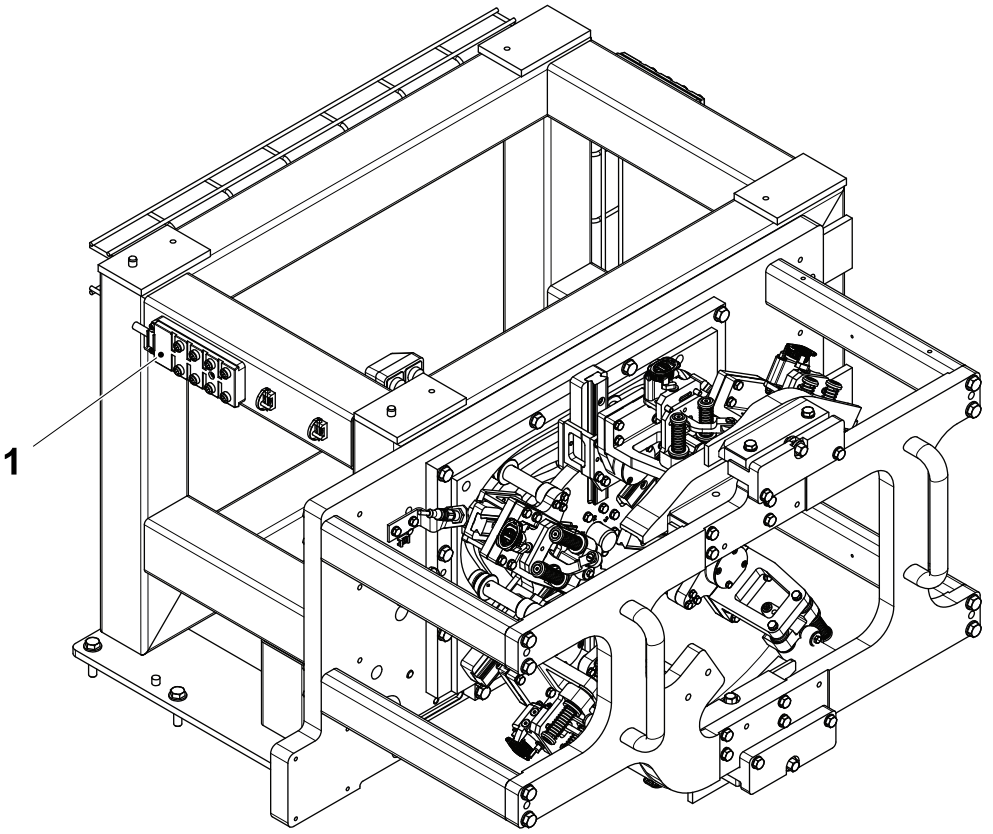

1 Distribution frame 30X120

(Cont'd)

(Cont'd)

b) Tighten the screw (2) and remove the belt (3).

c) If required, loosen the screws (4) and remove the flange (5).

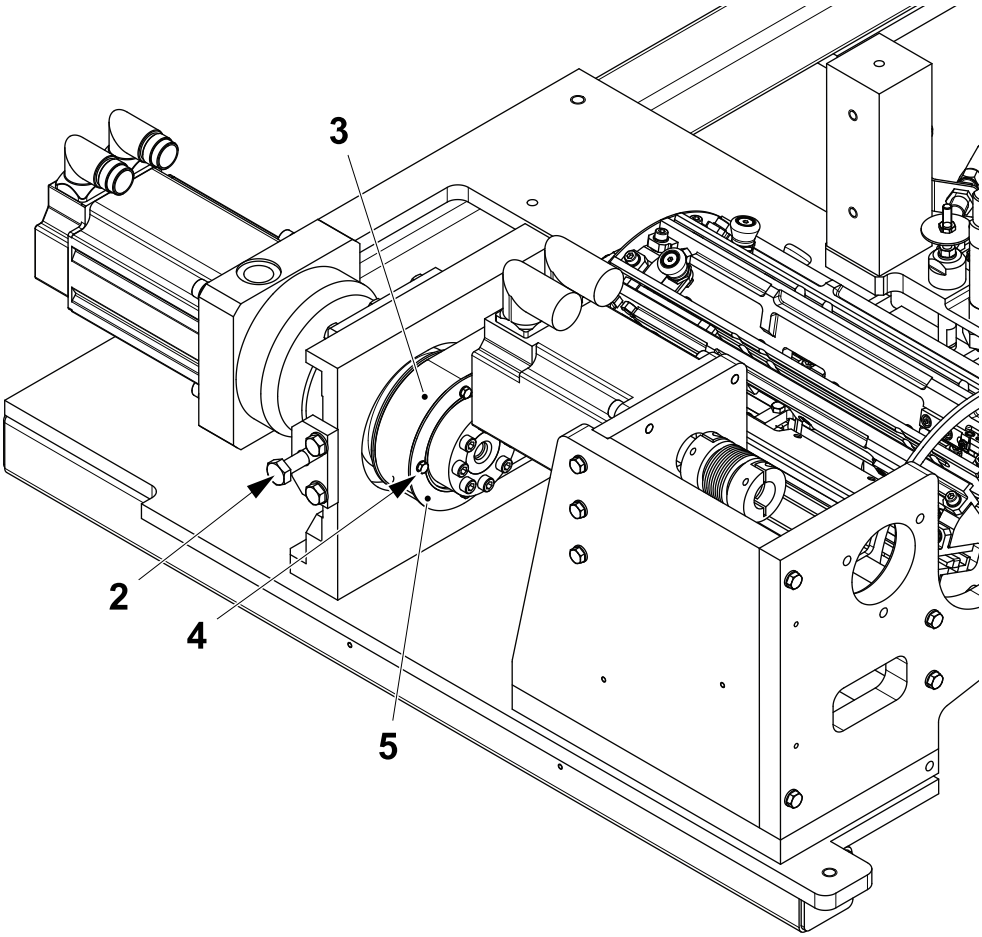

2 Screw
3 Belt
4 Screw
5 Flange

(Cont'd)

(Cont'd)

d) Remove the screws (6), the washers and the clamping blocks (7).

e) Remove the screws (8) and the drive unit (9).

f) Assemble in the reverse order.

g) Set new zero, see 6.4.1-6 Cutting Mechanism Body - Set Zero.

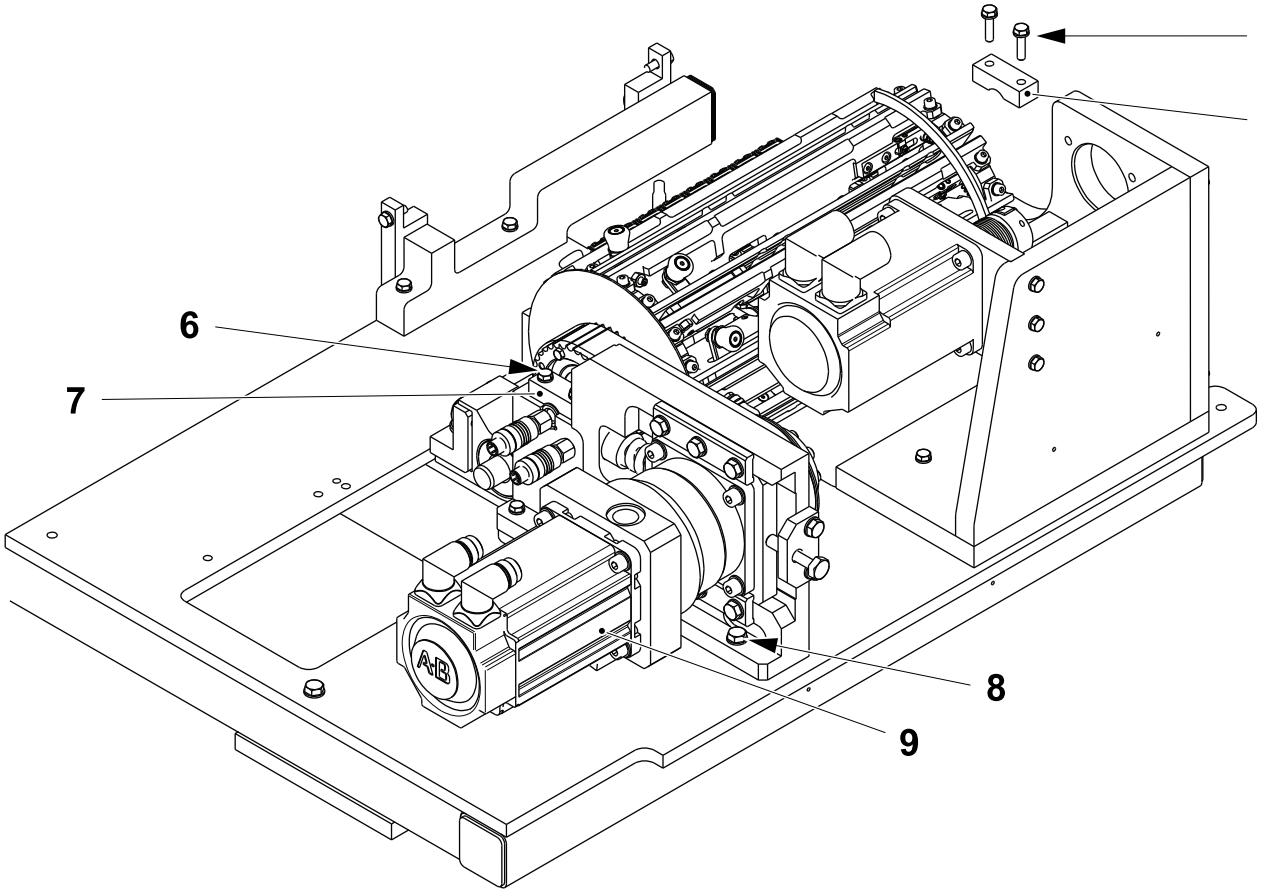

6 Screw
7 Clamping block
8 Screw
9 Drive unit

6.4.1-2 Cutting Mechanism Body - Change

Machine Status	Electrical supply disconnecting device in position O (OFF)
SPC Reference	2703810-0300

a) Remove the screws (1) and the cutting units (2).

b) Remove the screws (3), the toothed pulley (4) and the plate (5).

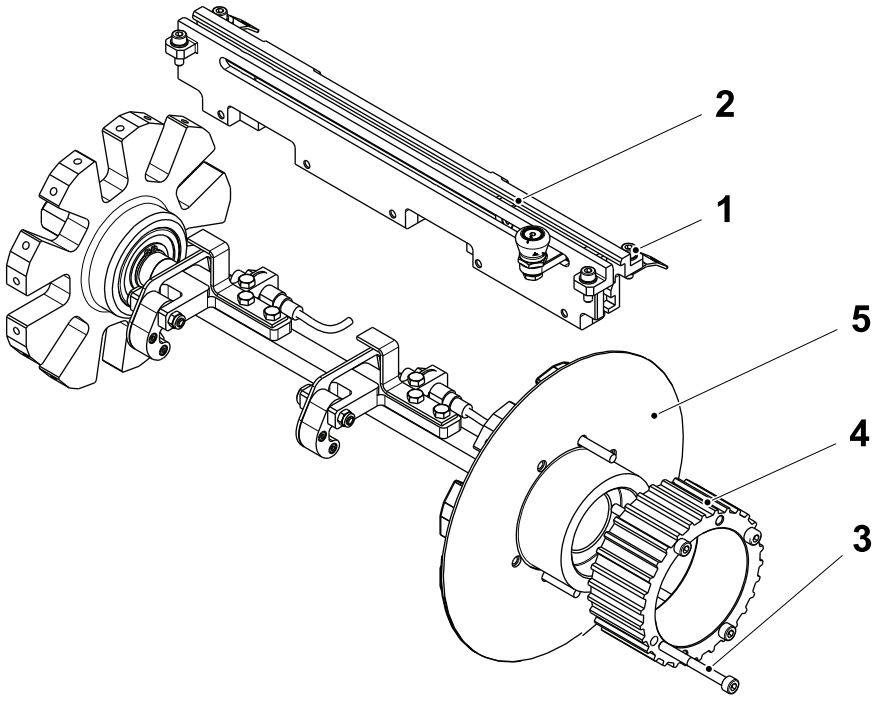

1 Screw
2 Cutting unit
3 Screw
4 Toothed Pulley
5 Plate

(Cont'd)

(Cont'd)

c) Remove the retaining ring (6), the bearing (7), the end section (8), the bearing (9) and the end section (10) from the shaft (11).

d) Change the sensor (12) and the flag (13) only if necessary.

Note! The cable for the sensor enters through the hole (14).

e) Assemble in the reverse order.

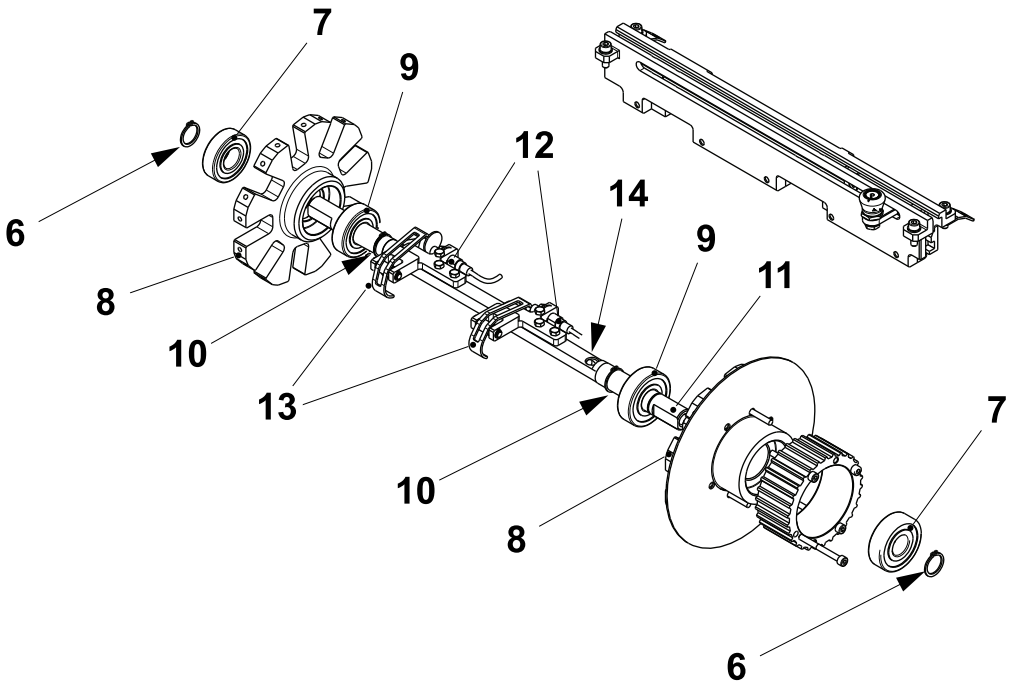

6 Retaining ring	9 Bearing	12 Sensor
7 Bearing	10 End section	13 Flag
8 End section	11 Shaft	14 Hole

6.4.1-3 Cutting Mechanism Body - Set Sensors

Machine Status	Electrical supply disconnecting device in position I (ON)
SPC Reference	2703810-0300

a) Remove only as many as necessary of the screws (1), the cutting units (2) and the shims (3) to obtain access.

Note! Make sure that the shims are returned to the side they came from.

b) Adjust the sensor (4) by releasing the nuts (5).

c) Set the distance **A** between the sensor (4) and the flag (6).

d) Assemble in the reverse order.

Note! Check that the sensors are only activated when the sheet of cap is completely in the row cutter.

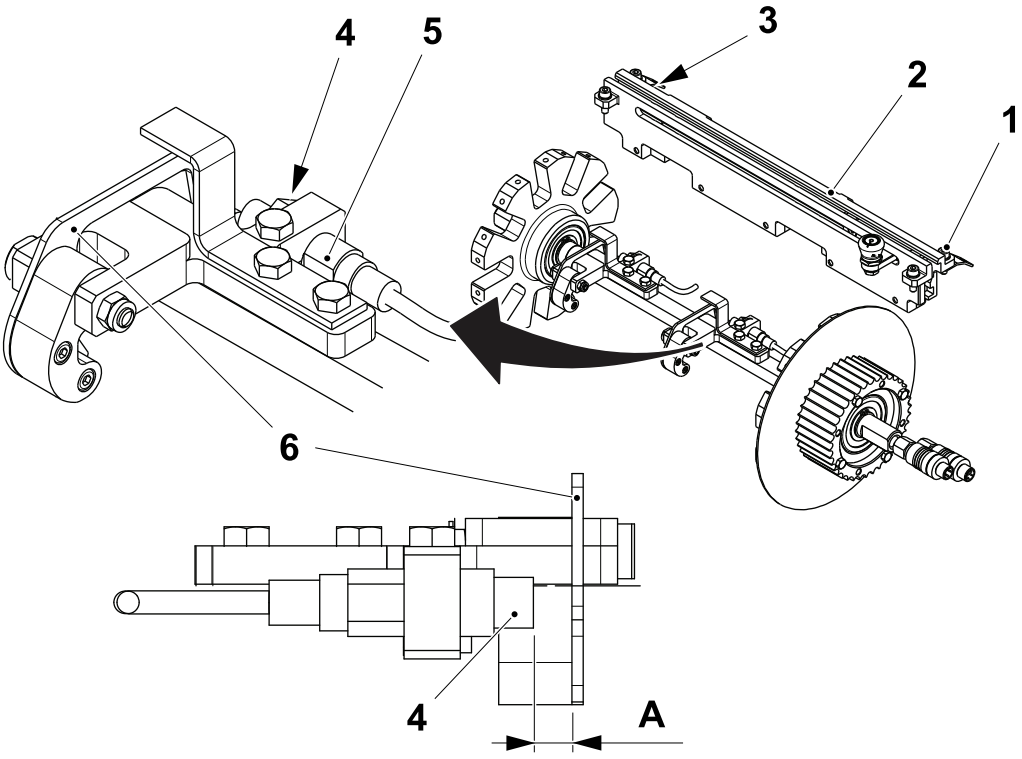

A = 2 mm

1 Screw
2 Cutting unit
3 Shim
4 Sensor
5 Nut
6 Flag

6.4.1-4 Cutting Mechanism Body - Set X

Machine Status	Electrical supply disconnecting device in position O (OFF)
SPC Reference	2703810-0300

a) Release the screws (1), the clamping block (2) and move the row cutter (3) until the distance **A** is obtained.

Note! Distance **A** is between the row cutter (3) and the side of the lower jaw of the cap holder (4) part.

b) Tighten the screws (1).

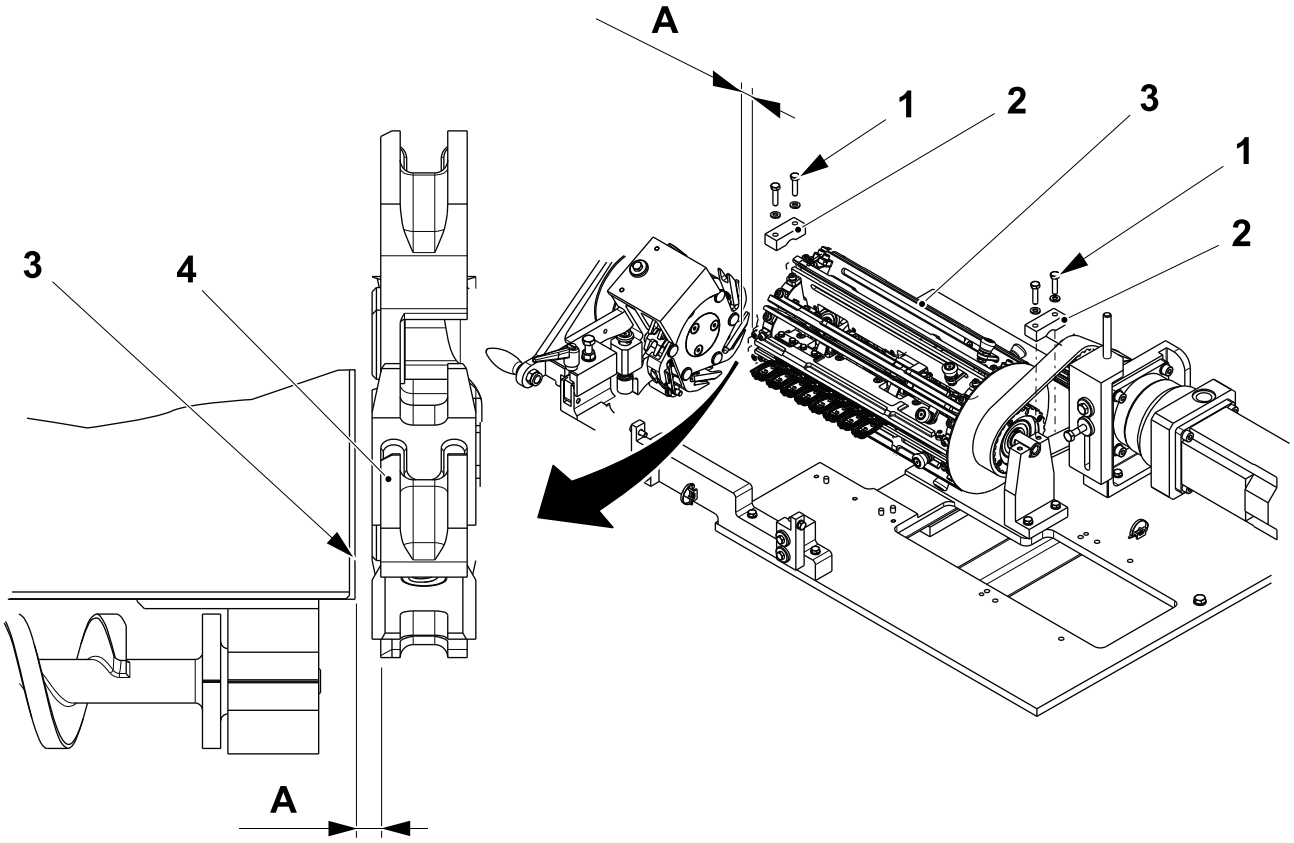

A = 4.5 mm
1 Screw
2 Clamping block
3 Row cutter
4 Lower cap holder

6.4.1-5 Cutting Mechanism Body - Set Belt Tension

Machine Status	Electrical supply disconnecting device in position O (OFF)
SPC Reference	2703810-0300

a) Make sure that the belt (1) is located on the toothed pulley's correctly.

b) Release the screw (2) until it no longer touches the plate (3).

c) Set new zero, see 6.4.1-6 Cutting Mechanism Body - Set Zero.

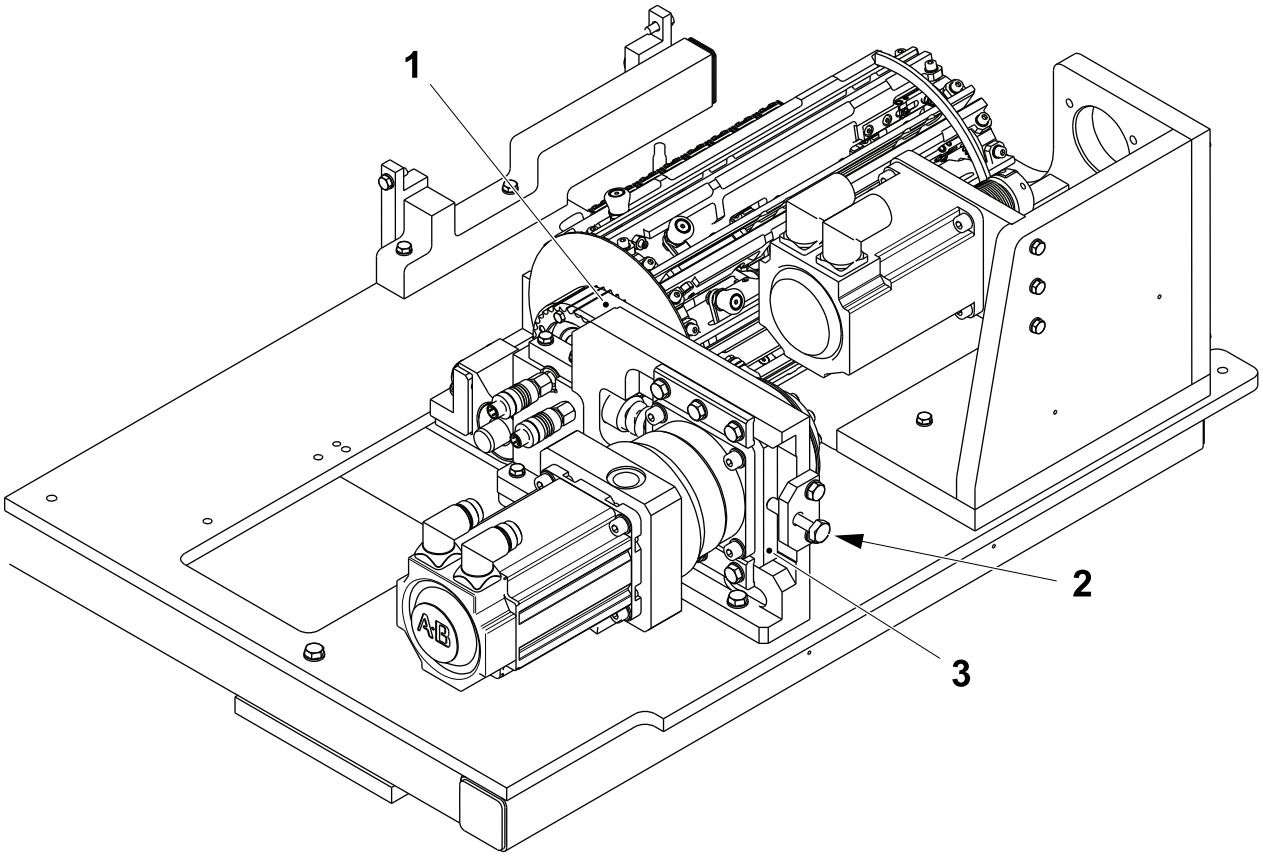

1 Belt
2 Screw
3 Plate

6.4.1-6 Cutting Mechanism Body - Set Zero

Machine Status	Electrical supply disconnecting device in position O (OFF)
SPC Reference	2703810-0300

Note! When the lever (1) is in lifted the ratchet is disengaged and allows the handle to move freely. When the lever is down you can lock or unlock the template (2) by turning the lever normally.

a) Rotate the lever (1) anticlockwise and release the template (2).

b) Rotate the template (2) and place it inside the row cutter (3).

c) Rotate the lever (1) clockwise to fix the template (2) inside the row cutter (3).

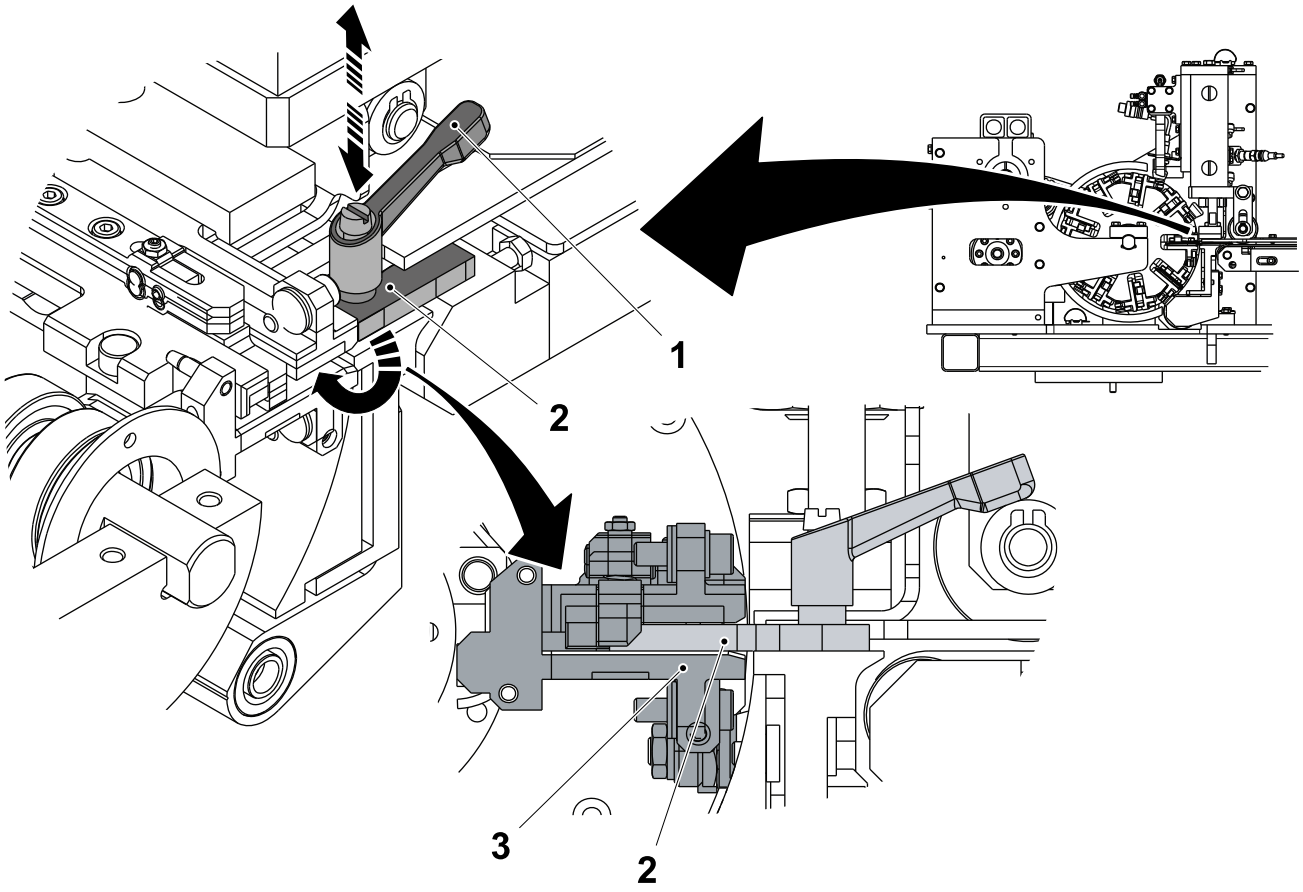

1 Lever
2 Template
3 Row cutter

(Cont'd)

(Cont'd)

d) Log on as a user, see 1.1.1-1 HMI User Management - Log On as a User.

e) Touch the `MAINTENANCE` button (4).

f) Touch the `SERVICE` button (5).

g) Touch the `CUTTING AND FEEDING` button (6).

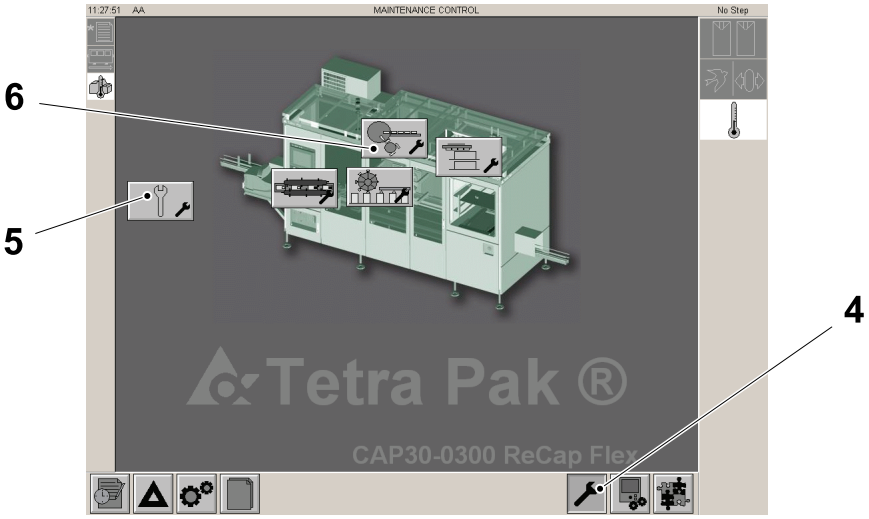

4 `MAINTENANCE` button
5 `SERVICE` button
6 `CUTTING AND FEEDING` button

(Cont'd)

(Cont'd)

CAUTION
Damage to equipment.
The template MUST be locked in a position that it does not interfere with the row cutter, after the setting.

h) Touch the ROW CUTTER button (7).

i) Touch the ENABLE button (8).

j) Touch the OK button (9) for three seconds. The background of the ENABLE button (8) should go green.

k) Touch the EXIT button (10).

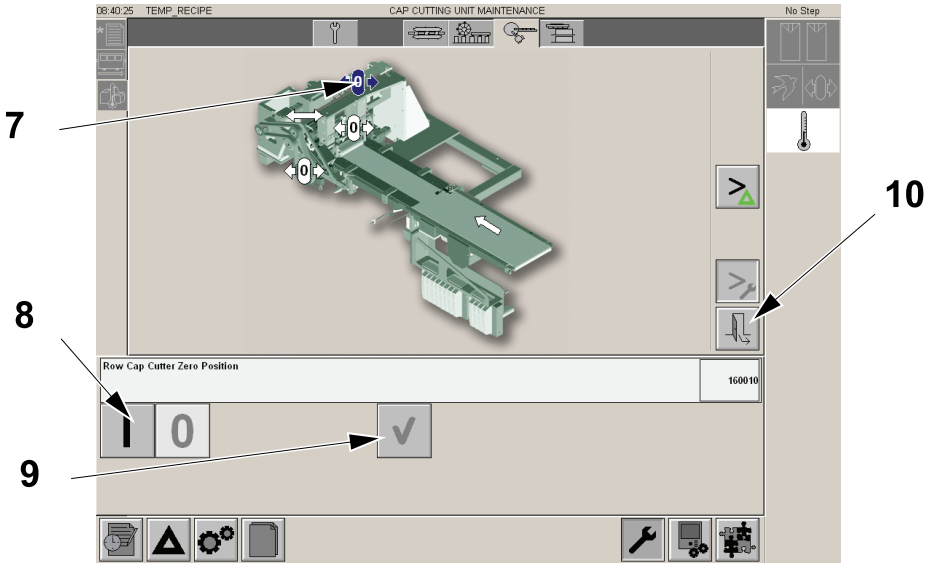

7 ROW CUTTER button
8 ENABLE button
9 OK button
10 EXIT button

6.4.2 Cutting Unit

6.4.2-1 Cutting Unit - Change

Machine Status	Electrical supply disconnecting device in position O (OFF)
SPC Reference	2703820-0200

a) Remove the screws (1), the shims (2), the screws (3) and separate the two guides (4) and (5).

b) Remove the screw (6), the washer (7) and the roller (8).

c) Remove the nut (9), the washer (10) and the shaft (11).

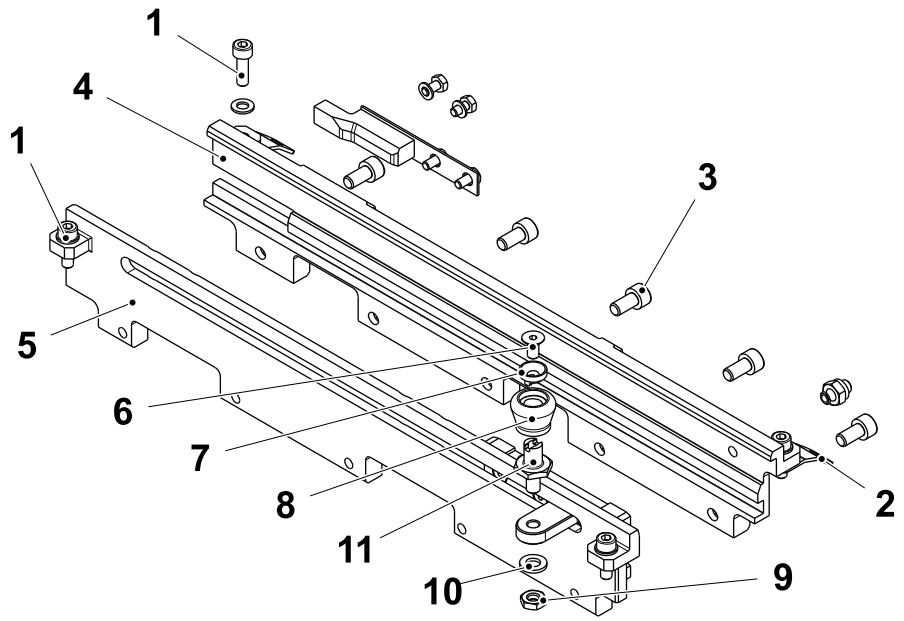

1 Screw
2 Shim
3 Screw
4 Guide
5 Guide
6 Screw
7 Washer
8 Roller
9 Nut
10 Washer
11 Shaft

(Cont'd)

(Cont'd)

d) Disassemble the slider (12).

e) Remove the screws (13) and separate the arm (14) from the slide (15).

f) Do not remove the stop screw (16) unless necessary.

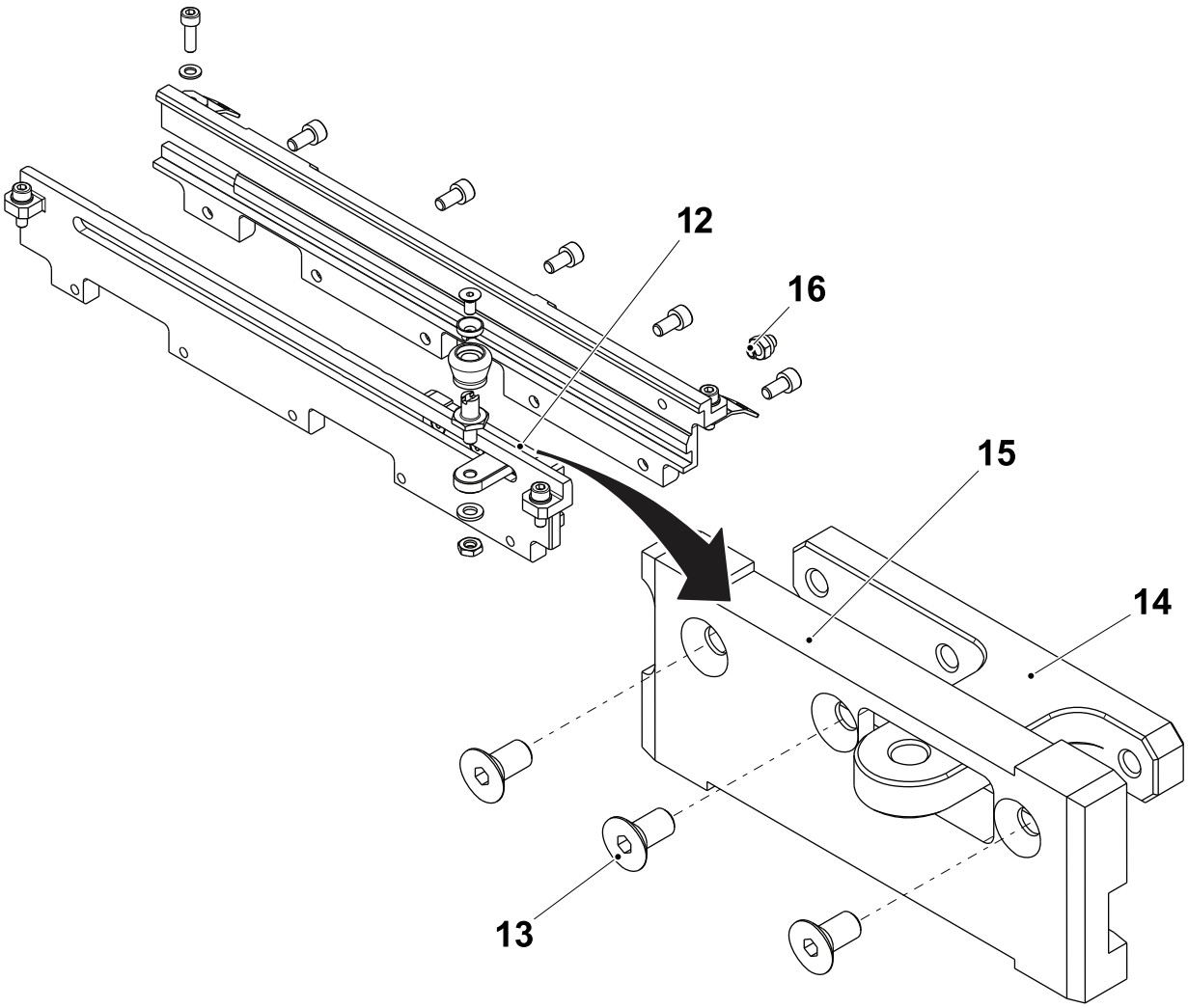

12 Slider
13 Screw
14 Arm
15 Slide
16 Stop screw

(Cont'd)

(Cont'd)

g) Remove the screws (17) and the spring (18).

h) Remove the pin (19) from the block (20).

i) Release the nut (21) and the screw (22).

j) Remove the pin (23) from the block (20) to release the arm (24).

k) Change the bushes (25) if necessary.

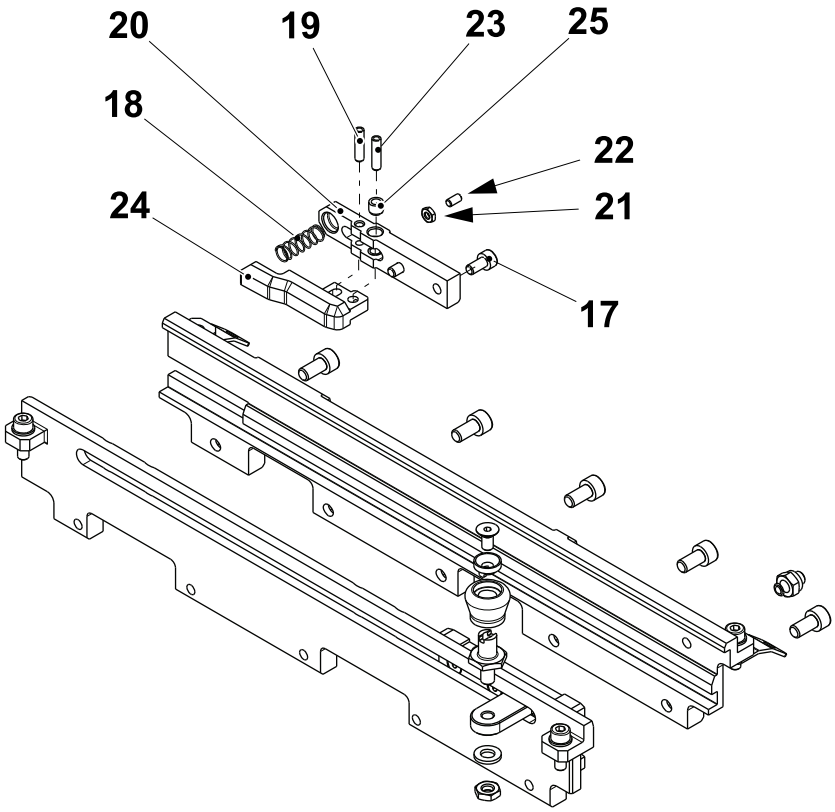

17 Screw	20 Block	23 Pin
18 Spring	21 Nut	24 Arm
19 Pin	22 Screw	25 Bush

6.4.2-2 Cutting Unit - Set Sprung Retainer

Machine Status	Electrical supply disconnecting device in position O (OFF)
SPC Reference	2703820-0200

a) Release the nut (1) and adjust the screw (2) so that the ball locates in the hole (3) on the back of the carrier (4).

Note! This is approximately the distance **A**.

b) Tighten the nut (1).

c) Repeat for the other carriers.

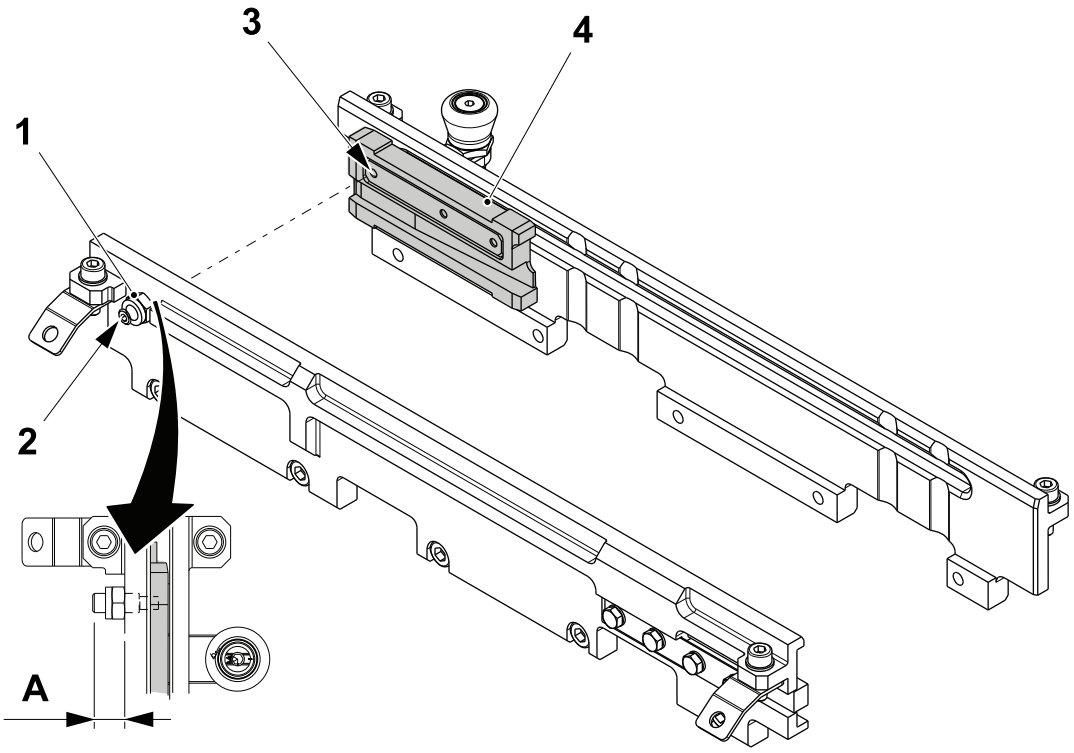

A = Approx. 10 mm
1 Nut
2 Screw
3 Hole
4 Carrier

6.4.2-3 Cutting Unit - Set Shim

Machine Status	Electrical supply disconnecting device in position O (OFF)
SPC Reference	2703820-0200

a) Adjust the shims (1) as required by removing the screws (2) until the distance **A** (these are base settings which will vary dependant on caps) is obtained on both sides.

Note! If adjusted check the trigger sensors, see 6.4.1-3 Cutting Mechanism Body - Set Sensors.

A = 1.2 mm for ReCap 2
A = 2.5 mm for ReCap 3

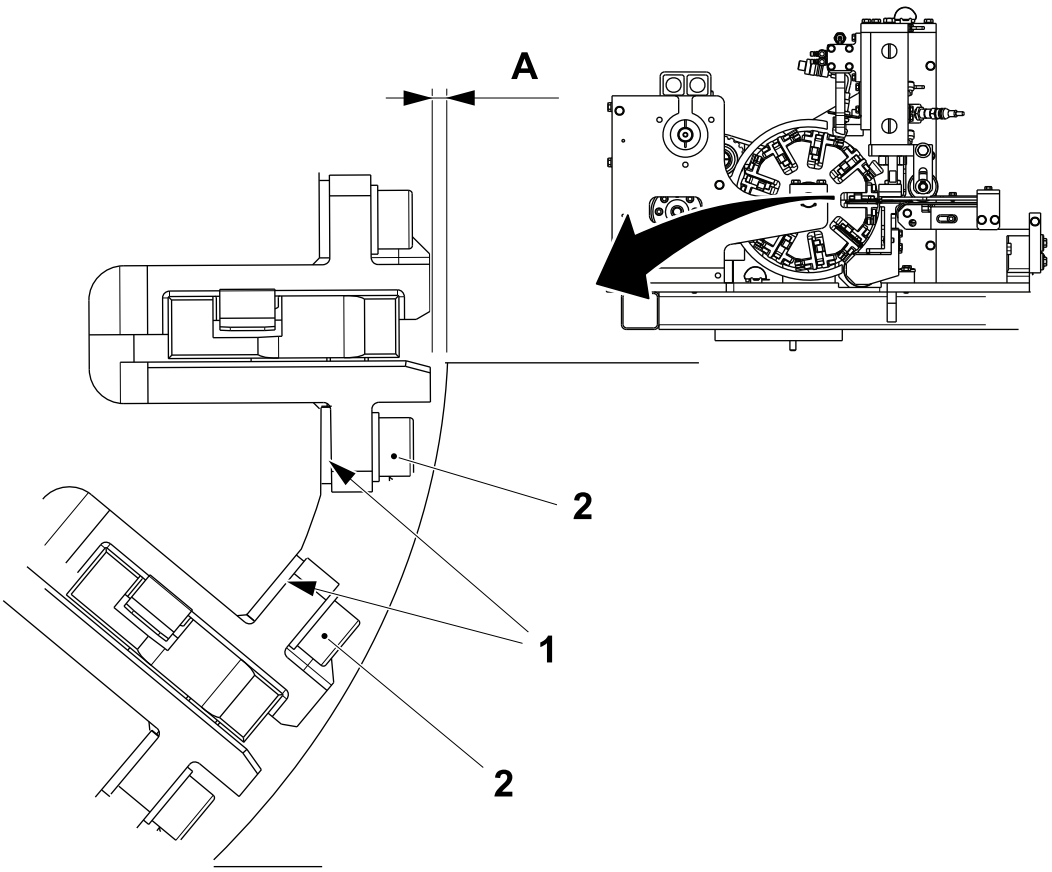

1 Shim
2 Screw

6.4.3 Drive Unit

6.4.3-1 Drive Unit - Change

Machine Status	Electrical supply disconnecting device in position O (OFF)
SPC Reference	2715713-0300

a) Disconnect the electrical connections to the motor.

b) Tighten the screw (1) until the belt (2) is loose and can be removed.

c) If required, loosen the screws (3) and remove the flange (4).

d) Remove the screws (5) and the bracket (6).

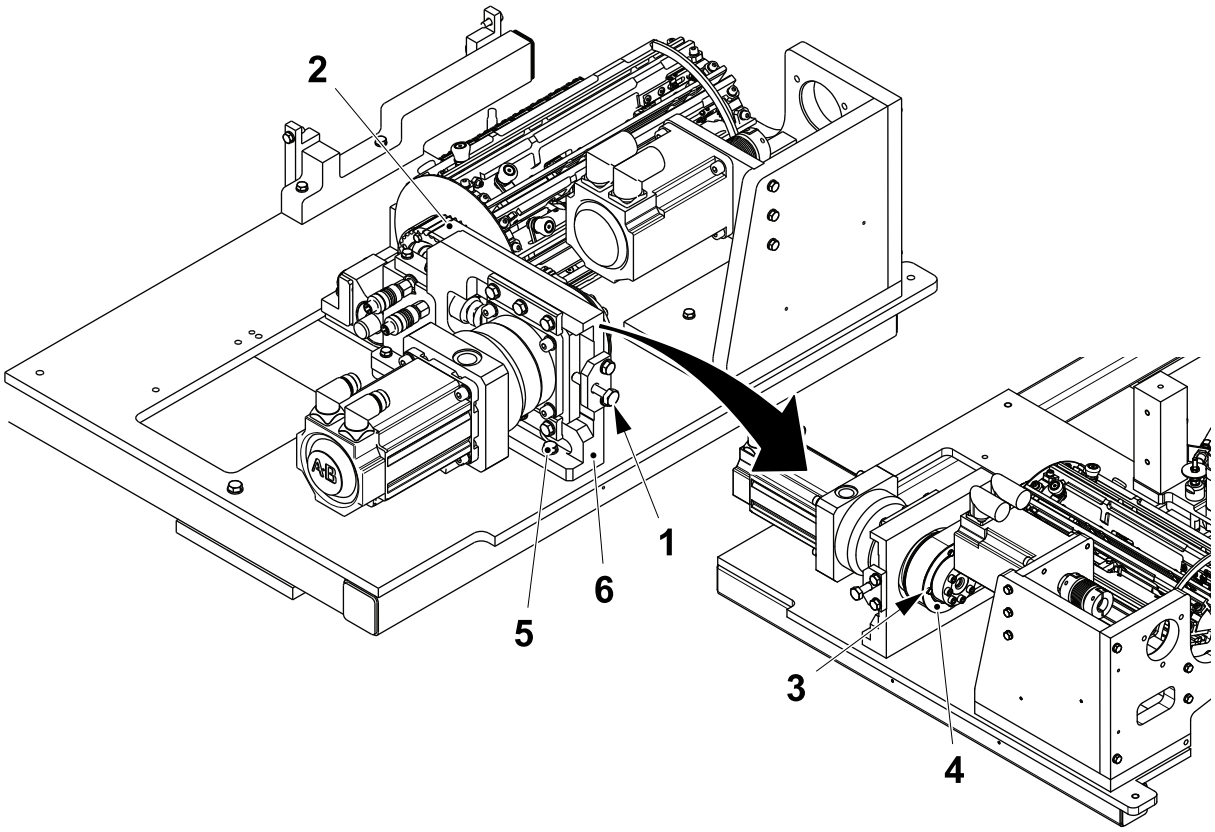

1 Screw
2 Belt
3 Screw
4 Flange
5 Screw
6 Bracket

(Cont'd)

(Cont'd)

e) Remove the toothed pulley (7), by releasing the clamping element (8), see 6.4.3-2 Clamping Element - Removal and Installation.

f) Remove the screws (9) and the motor (10).

g) Assemble in the reverse order, see 6.4.3-2 Clamping Element - Removal and Installation.

h) Set new zero, see 6.4.1-6 Cutting Mechanism Body - Set Zero.

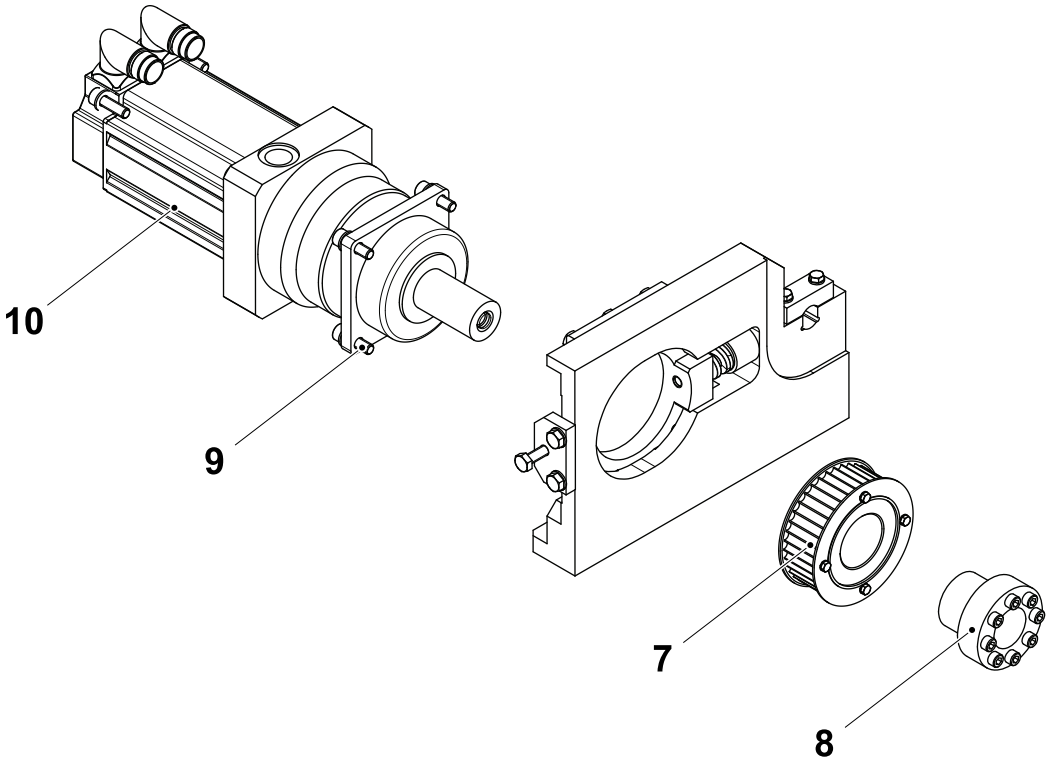

7 Toothed Pulley
8 Clamping Element
9 Screw
10 Motor

6.4.3-2 Clamping Element - Removal and Installation

Machine Status	Electrical supply disconnecting device in position O (OFF) Main air valve OFF
Special Equipment	Torque Wrench min. 17 Nm
Consumables	Grease - TP No. 344407-0000
SPC Reference	90458-2029

CAUTION
Risk of major damage to the machine!
Always tighten the screws (1) crosswise using the method described below. Never adjust the tightening torque after locking, remove and start again.

a) Remove the screws (1) and insert them into the withdrawal holes (2) and tighten.

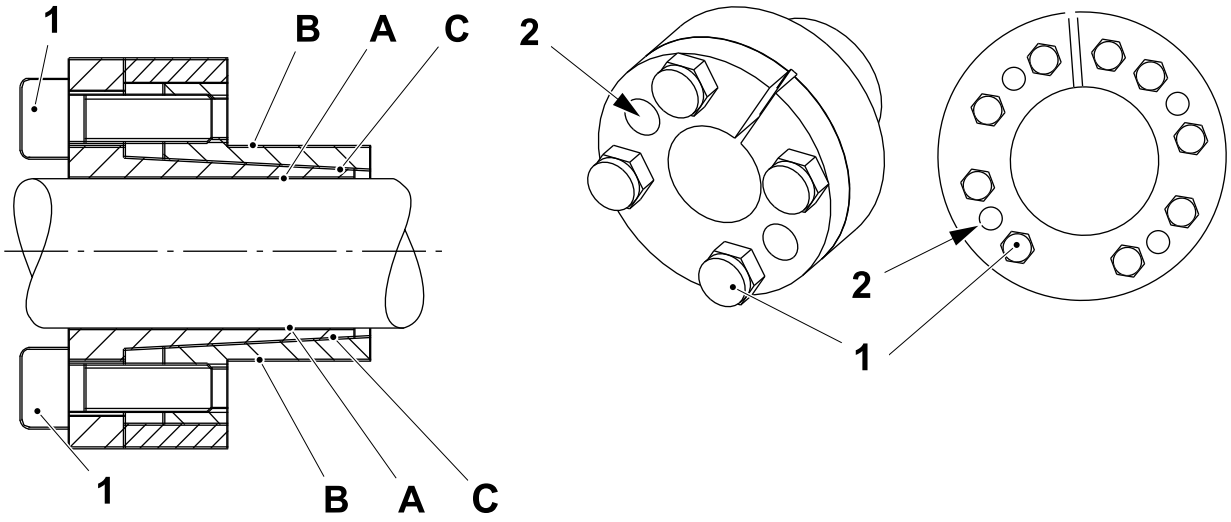

1 Screw
2 Withdrawal hole

(Cont'd)

(Cont'd)

The inner surface **A** and the outer surface **B** of the clamping element (3) must be cleaned before assembling.

Note! Lubricate the screws (1). Apply grease Klübersynth UH1 14-151 (TP No. 344407-0000) **only** onto the clamps inner surface **C**. Grease accidentally applied to other areas of the roller or shaft will cause slippage.

b) Put the clamping element (3) in place and tighten the screws (1) crosswise, first by hand and then to **9 ±2 Nm** with the aid of a torque wrench.

c) Continue to tighten the screws (1) crosswise to **17 ±2 Nm** with the aid of a torque wrench.

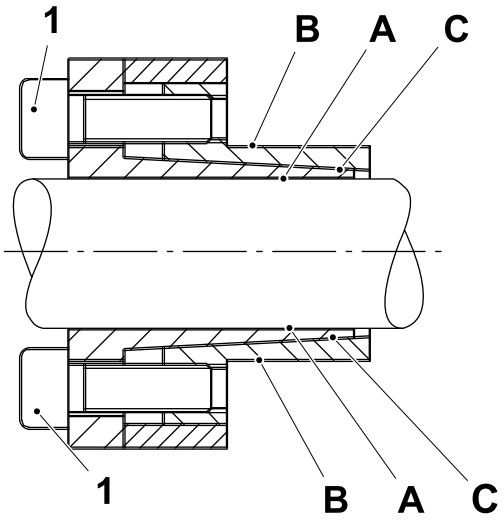

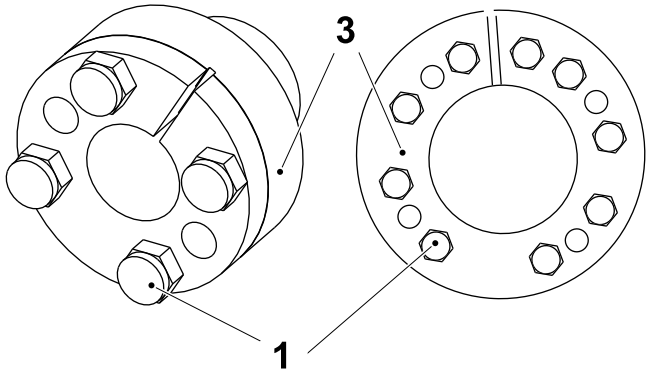

1 Screw
3 Clamping element

6.5 Indexing Unit

6.5.1 Indexing Unit - Overhaul

6.5.1-1 Indexing Unit - Change

Machine Status	Electrical supply disconnecting device in position O (OFF)
Consumables	Grease TP Pn. 90296-68 Loctite TP Pn. 344431-0050
SPC Reference	2715730-0400

a) Push the lever (1) to move the slider (2) away from the row cutter.

b) Release the screw (3) and the screws (4).

c) Remove the housing (5) complete with the indexing screw (6) from the housing (7).

Note! On assembly fill housings (5) and (7) with grease.

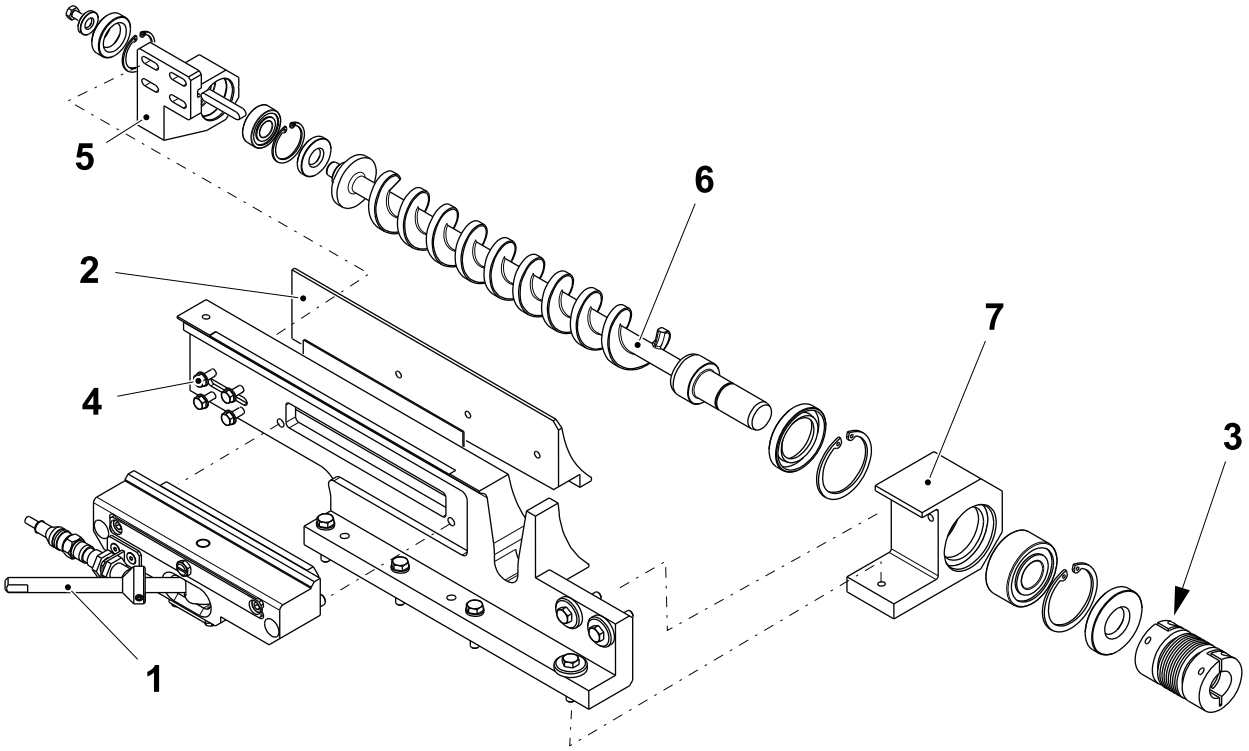

1 Lever
2 Slider
3 Screw
4 Screw
5 Housing
6 Screw
7 Housing

(Cont'd)

(Cont'd)

d) Release the screw (8) and remove the washer (9) and the seal (10).

e) Remove the seal (11) and the indexing screw (6).

f) Remove the retaining rings (12) and the bearing (13) from the housing (5).

Note! On assembly use loctite on the screw (8).

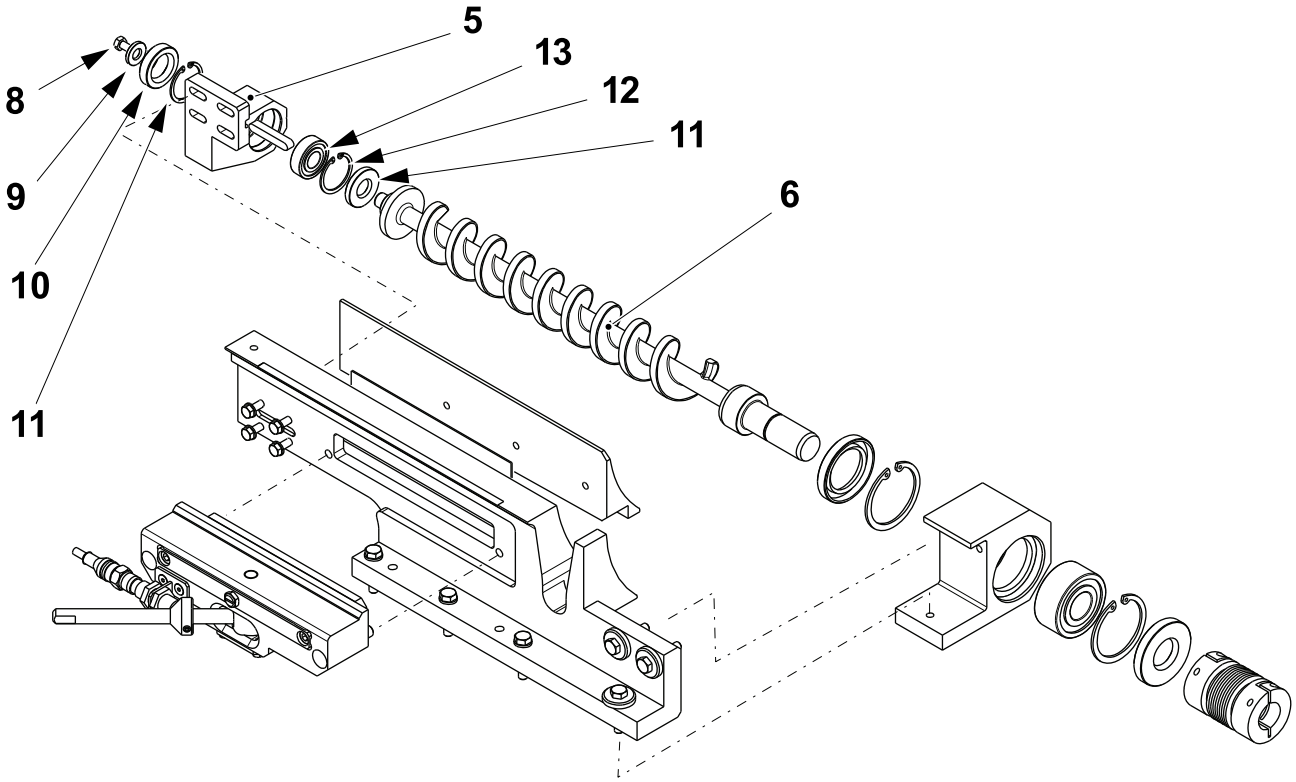

5 Housing
6 Screw
8 Screw
9 Washer
10 Seal
11 Seal
12 Rretaining ring
13 Bearing

(Cont'd)

(Cont'd)

g) Remove the three screws (14) and the housing (5).

h) Remove the seal (15) and the retaining rings (16).

i) Remove the bearing (17) from the housing (5).

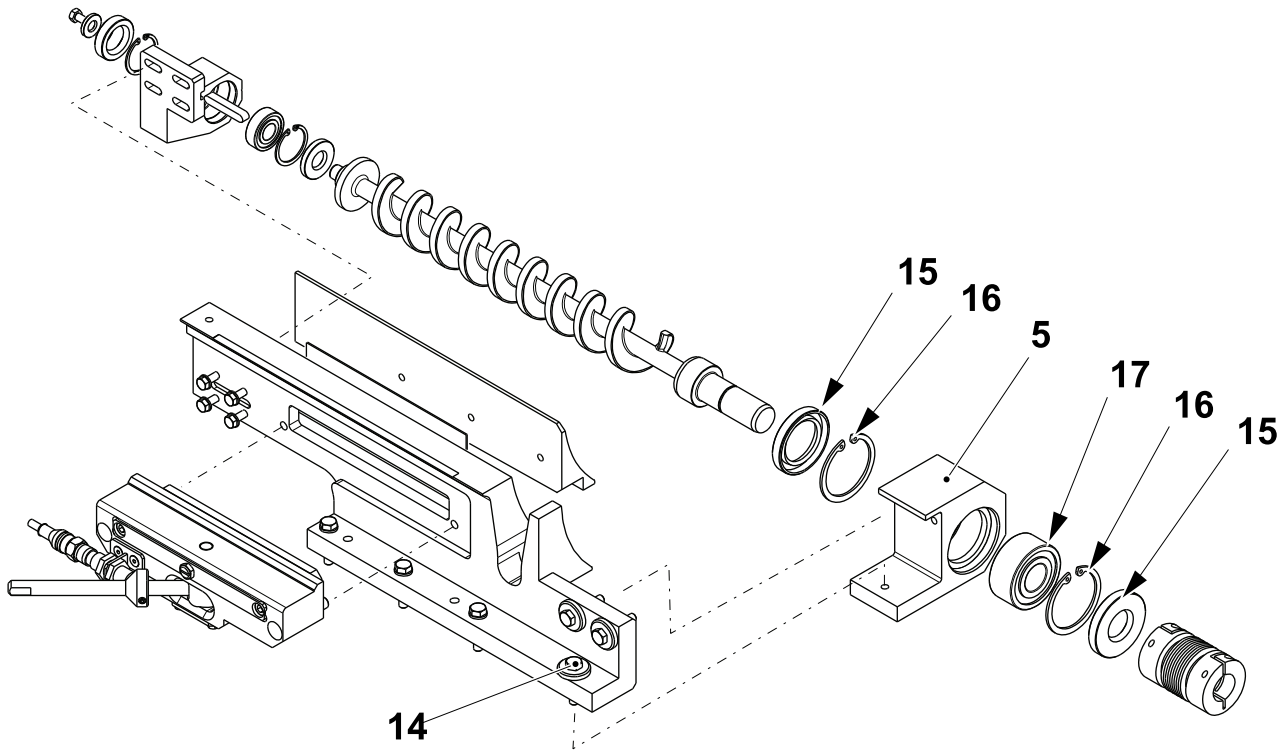

5 Housing
14 Screw
15 Seal
16 Rretaining ring
17 Bearing

(Cont'd)

(Cont'd)

j) Disconnect the sensor (18).

k) Remove the screws (19), the slider (2) and the shim (20).

l) Remove the screws (21) and the guide (22).

m) Remove the screws (23) and the bottom plate (24).

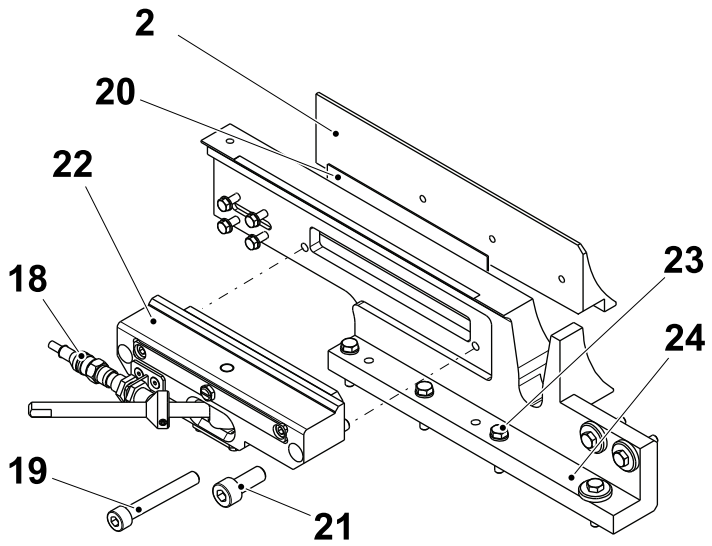

2 Slider
18 Sensor
19 Screw
20 Shim
21 Screw
22 Guide
23 Screw
24 Bottom plate

(Cont'd)

(Cont'd)

n) Remove the sensor (25), screw (26) and the bracket (27).

o) Release the nut (28) and the screw (with spring and ball) (29).

p) Remove the lever (1).

q) Release the screw (30) and remove the sensor activator (31).

r) Remove the screws (32), the plate (33) the eccentric cam (34) and the plate (35) from the guide (22).

s) Assemble in the reverse order.

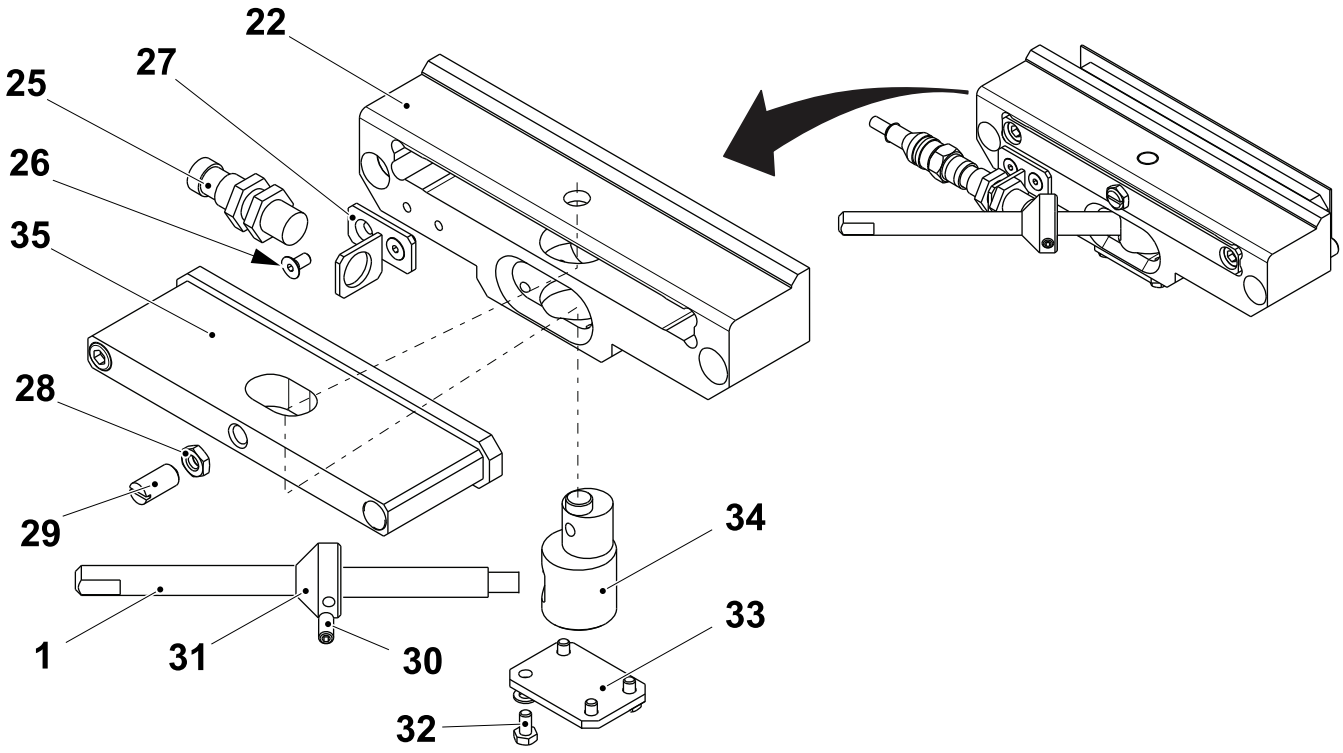

1 Lever
22 Guide
25 Sensor
26 Screw
27 Bracket
28 Nut
29 Screw (with spring and ball)
30 Screw
31 Sensor activator
32 Screw
33 Plate
34 Eccentric cam
35 Plate

6.5.1-2 Indexing Unit - Proximity Switch Check / Set

Machine Status	Electrical supply disconnecting device in position O (OFF)
SPC Reference	2715730-0400

a) Check the proximity switch (1) is working properly.

Note! When the lever (2) is in position **A** the proximity switch (1) should be ON, when the lever (2) is in position **B** the proximity switch (1) should be OFF.

b) Loosen the grub screw (3) and set the position of the spacer (4), if necessary.

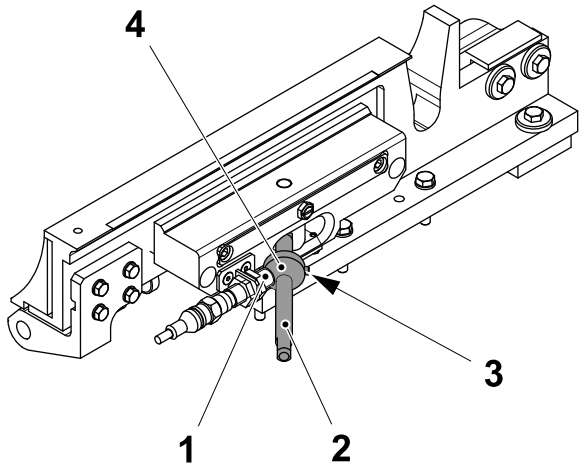

POSITION **A**

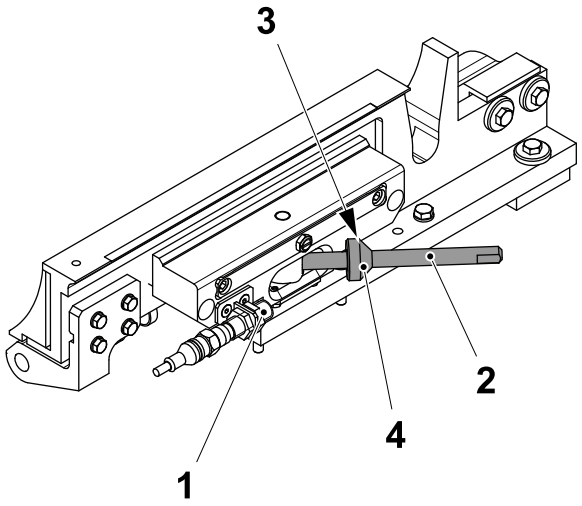

POSITION **B**

1 Proximity switch
2 Lever
3 Grub screw
4 Spacer

6.5.1-3 Indexing Unit - Set X position and Zero

Machine Status	Electrical supply disconnecting device in position O (OFF)
SPC Reference	2715730-0400

6.5.1-3-1 Set X Position

a) Before setting, check the protrusion of the slider (1) from the row cutter (2). The distance **A** should be 1.5 mm (this is a base setting which will vary with caps) when the screw is at its zero mark (3) and the roller is touching the indexing screw (4). If not 1.5 mm adjust as follows.

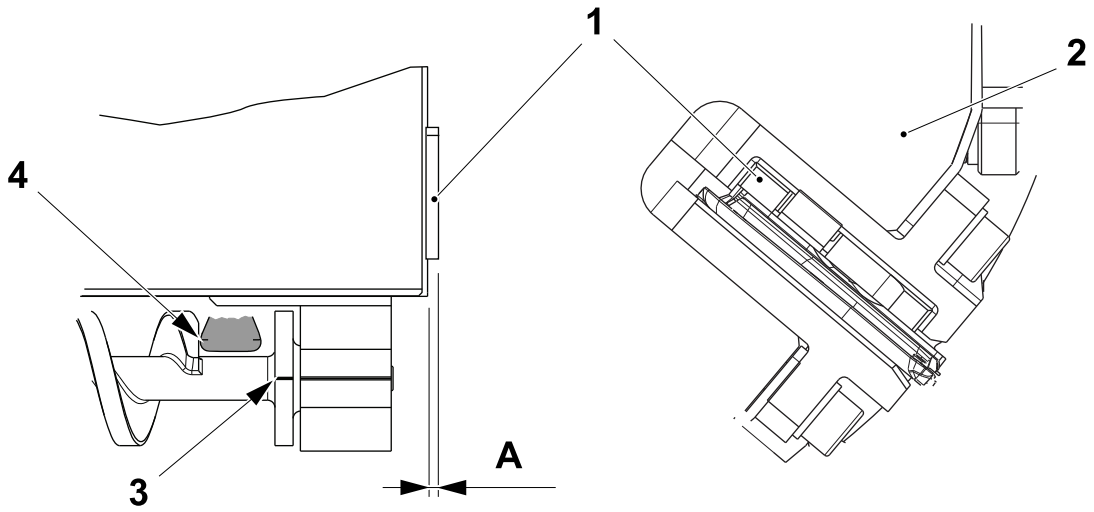

A = 1.5 mm
1 Slider
2 Row cutter
3 Zero mark
4 Indexing screw

(Cont'd)

(Cont'd)

b) Adjust by releasing the screw (5) and the screws (6) that retain the blocks (7).

c) Check the correction to the slider position and if correct tighten the screws (6).

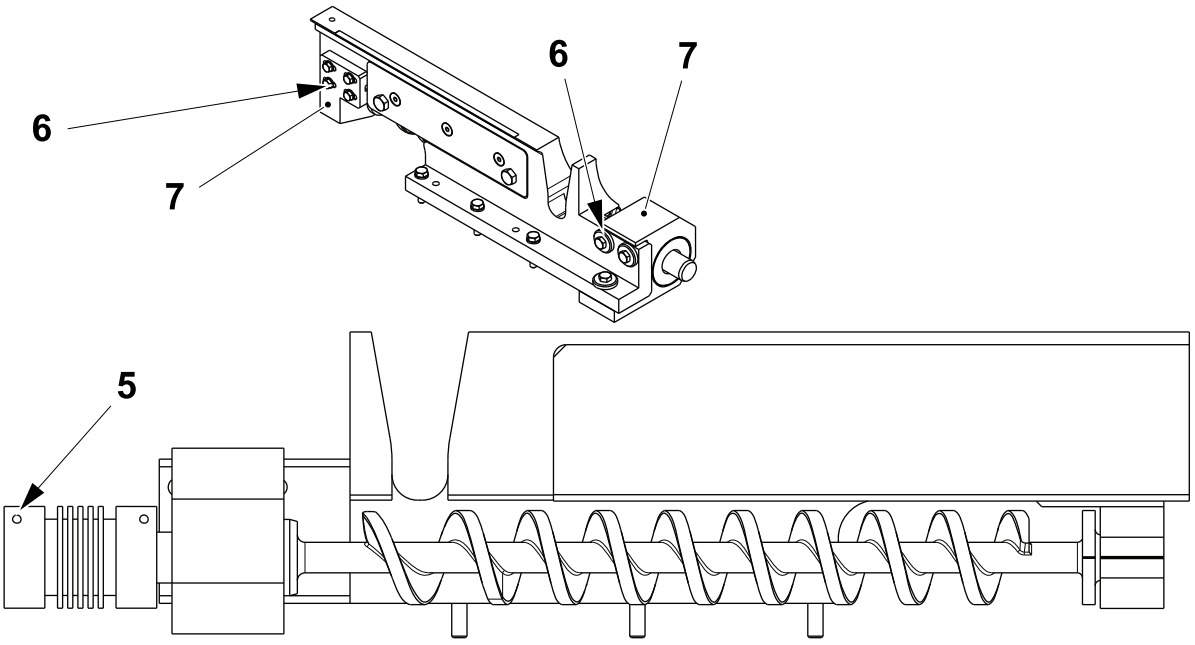

5 Screw
6 Screw
7 Blocks

6.5.1-3-2 Set Zero

a) Rotate the indexing screw (2), until the zero mark (1) lines up with the housing zero mark (3).

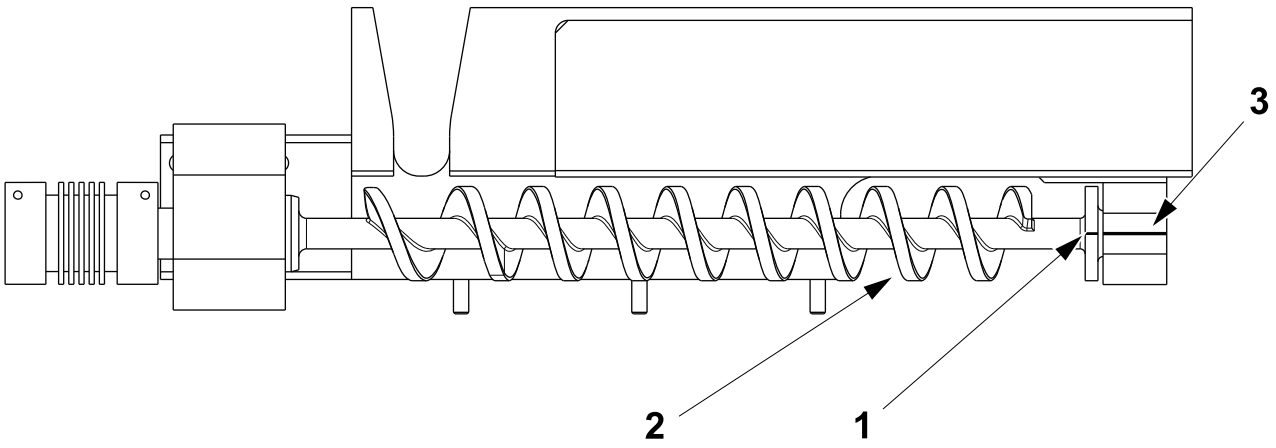

1 Zero mark
2 Indexing screw
3 Zero mark

(Cont'd)

(Cont'd)

b) Turn the main power on.

c) Touch the MAINTENANCE button (4) and log on as a user, see 1.1.1-1 HMI User Management - Log On as a User.

d) Touch the MAINTENANCE button (4).

e) Touch the CUTTING AND FEEDING button (5).

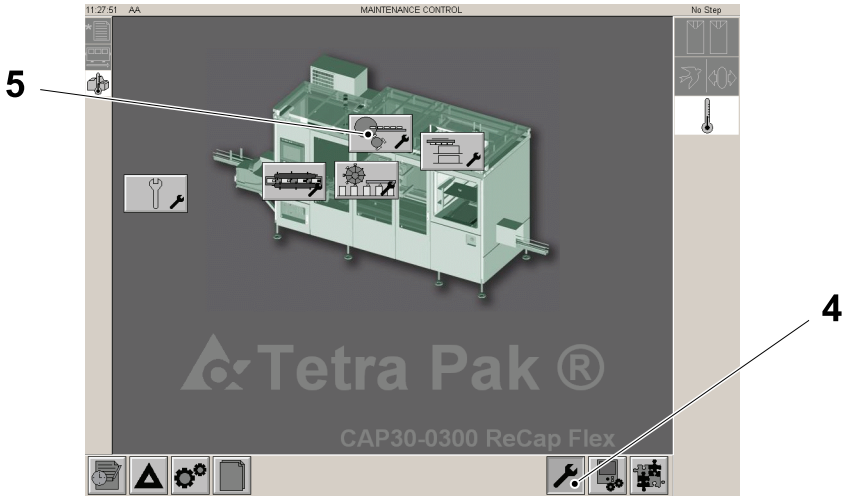

4 MAINTENANCE button
5 CUTTING AND FEEDING button

(Cont'd)

(Cont'd)

f) Touch the INDEXING button (6).

g) Touch the ENABLE button (7).

h) Touch the OK button (8) for three seconds. The background of the ENABLE button (7) should go green.

i) Touch the EXIT button (9).

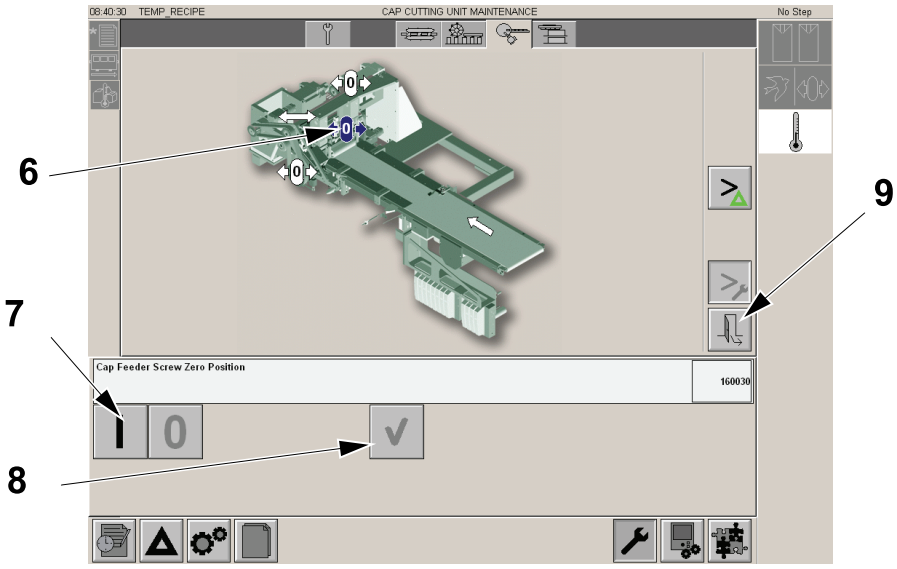

6 INDEXING button
7 ENABLE button
8 OK button
9 EXIT button

6.5.1-4 Indexing Unit - Check X Direction

Machine Status	Electrical supply disconnecting device in position O (OFF)
SPC Reference	2715730-0400

a) Set the servo motor to zero, see 6.5.1-3 Indexing Unit - Set X position and Zero.

b) Place a row of caps into the row cutter (1) and turn ready for the next row to be fed in moving the caps to the single cut feed position (2).

c) Manually turn the indexing unit until the screen reads 822 deg, the cap should touch the cap stopper when the single cut is in position.

Note! If a cap does not touch the cap stopper mechanical adjustment of the indexing unit should be made.

d) Check all the caps of a row except the last. For the last the cap carrier should be out of the row cutter by 1 - 1.5mm.

	Cap	1st	2nd	3rd	4th	5th	6th	7th	8th
Screw Phase	ReCap2	720 degrees	1080 degrees	1440 degrees	1800 degrees	2160 degrees	2520 degrees	2880 degrees	3240 degrees
Screw Phase	ReCap3	822 degrees	1167 degrees	1512 degrees	1856 degrees	2197 degrees	2537 degrees	2880 degrees	3240 degrees

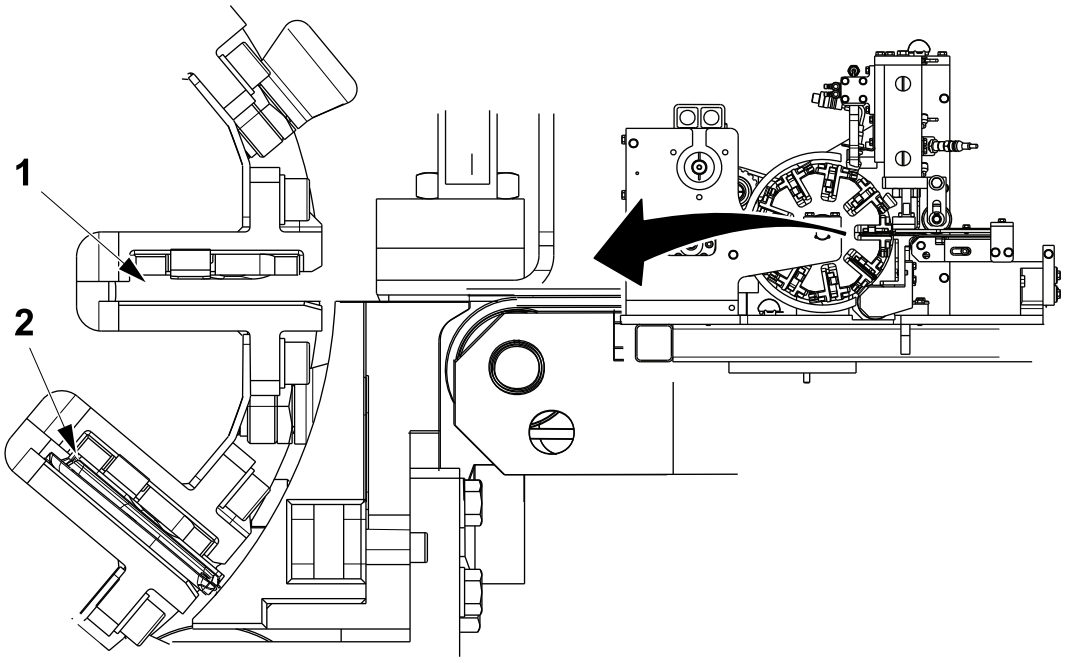

1 Row cutter
2 Single cut feed position

6.6 Drive Unit

6.6.1 Drive Unit - Overhaul

6.6.1-1 Drive Unit - Change

Machine Status	Electrical supply disconnecting device in position O (OFF)
SPC Reference	2715770-0200

a) Release the screw (1), the screws (2) and the motor (3).

b) Assemble in the reverse order.

c) Set zero, see 6.5.1-3 Indexing Unit - Set X position and Zero.

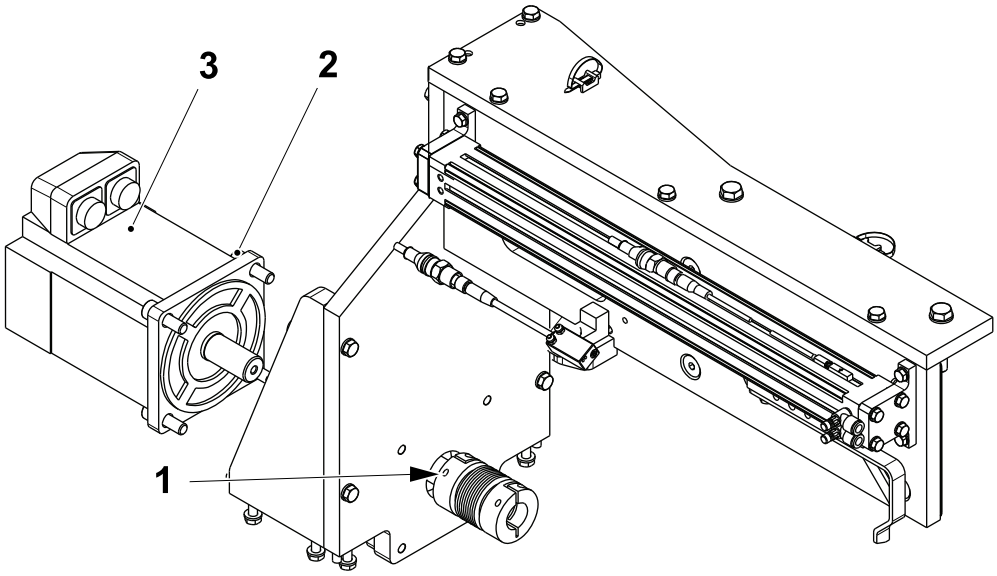

1 Screw
2 Screw
3 Motor

6.6.1-2 Drive Unit - Set X Position Stop and Sensor

Machine Status	Electrical supply disconnecting device in position O (OFF)
SPC Reference	2715770-0200

a) Release the screw (1) and set the stop (2)at the distance **A**.

b) The sensor (3) should activate when the roller (4) is touching the stop (2).

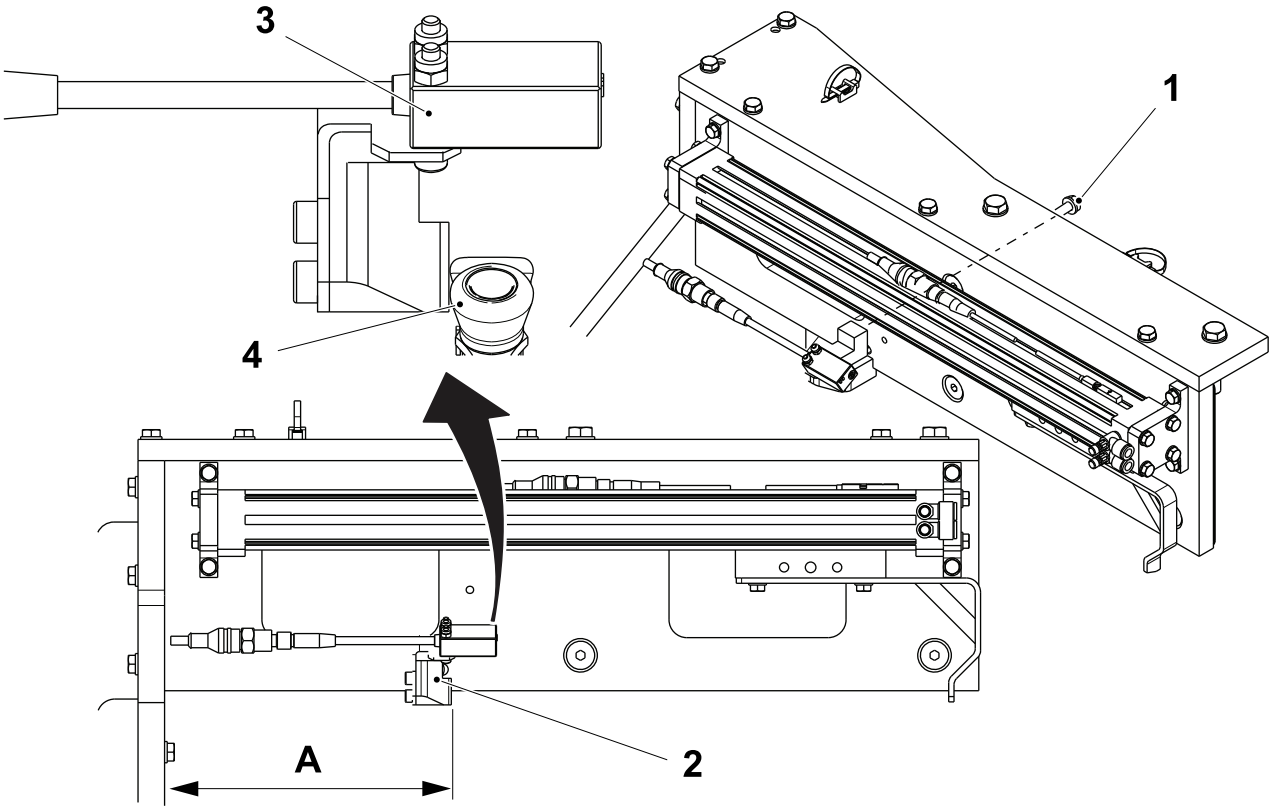

A = 162 mm
1 Screw
2 Stop
3 Sensor
4 Roller

6.6.1-3 Drive Unit - Set Carrier Sensor

Machine Status	Electrical supply disconnecting device in position O (OFF)
SPC Reference	2715770-0200

a) Set the position of the sensor (1) by releasing the screw (2) and moving the sensor (1) until the LED (3) indicates that the carrier is in its home position (4).

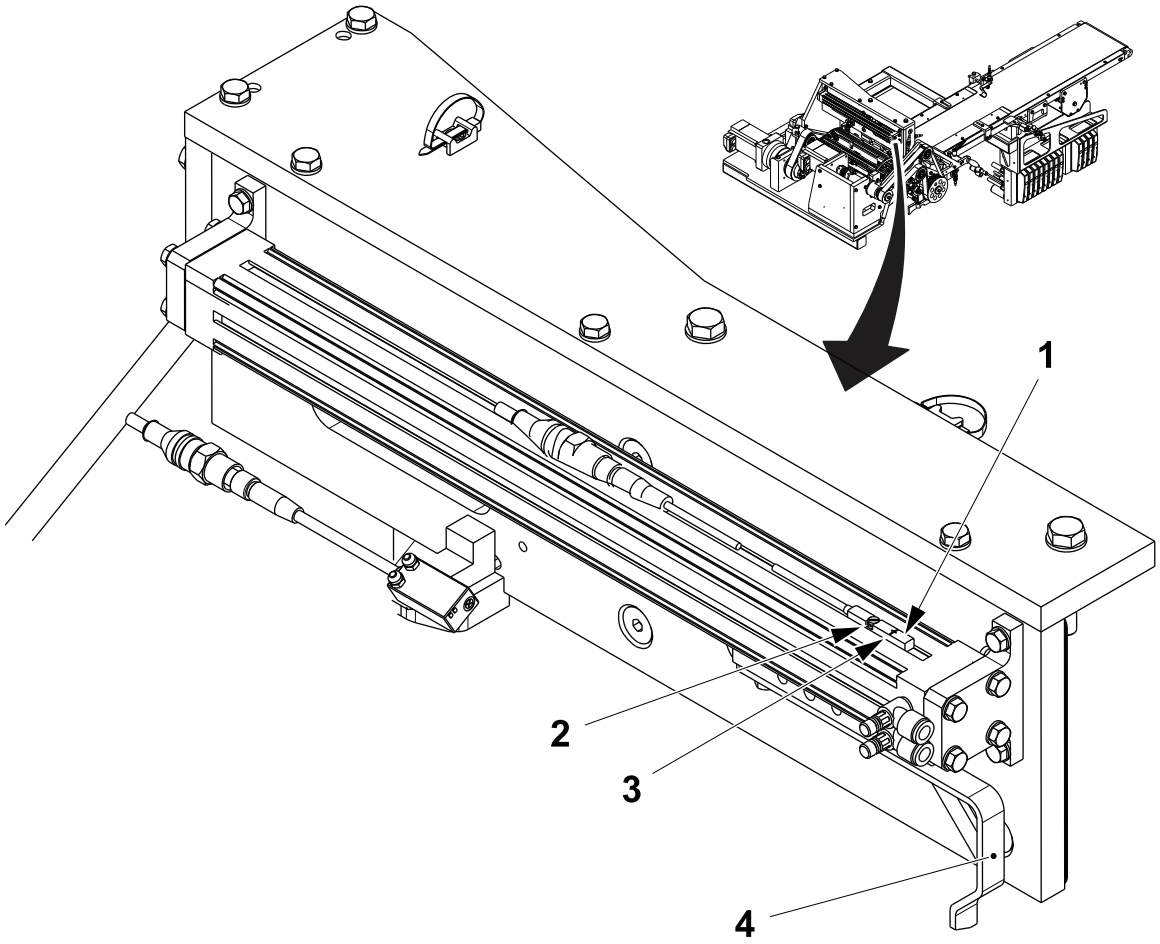

1 Sensor
2 Screw
3 LED
4 Home position

6.6.1-4 Drive Unit - Set Carrier Speed

Machine Status	Electrical supply disconnecting device in position O (OFF)
SPC Reference	2715770-0200

6.6.1-4-1 Carrier Cylinder

Note! Check that the working pressure is 6.0 Bar / 0.6 MPa.

a) Touch the CARRIER icon (1).

b) Touch the FORWARD button (2) or BACKWARD button (3) to move the carrier cylinder in the desired direction.

c) Read the speed value given in the S window (4) for the forward and backward movement. Adjust as required until the correct value in the table is obtained.

Direction	Speed
Forward	0.5 Sec
Backward	0.5 Sec

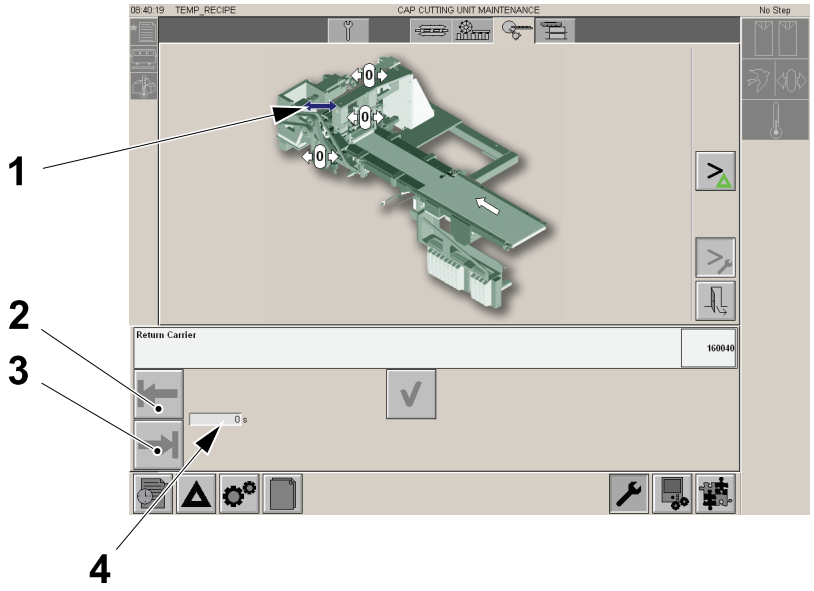

1 CARRIER icon
2 FORWARD button
3 BACKWARD button
4 S window

(Cont'd)

(Cont'd)

d) To adjust the forward speed, use the regulator (5).

e) To adjust the backward speed, use the regulator (6).

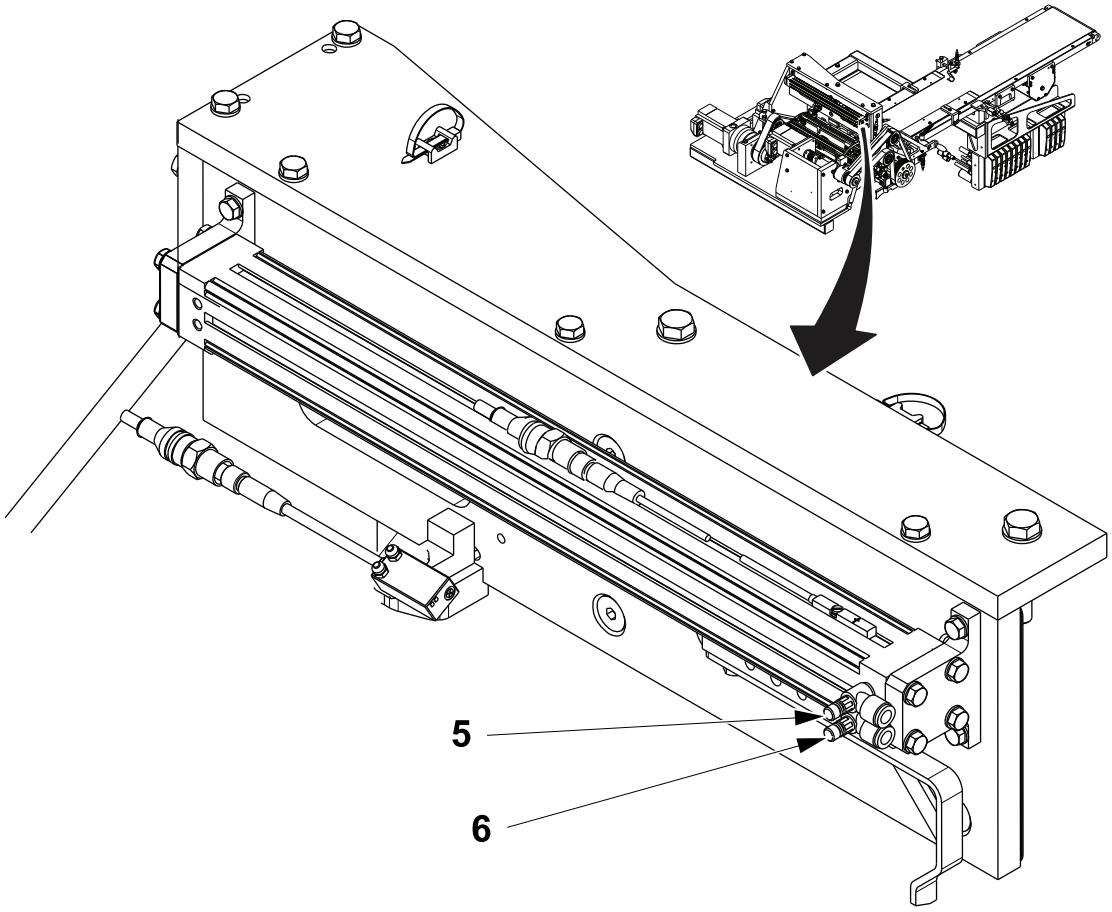

5 FORWARD speed regulator

6 BACKWARD speed regulator

6.6.1-5 Drive Unit - Align Comb with Shim

Machine Status	Electrical supply disconnecting device in position O (OFF) Main air valve OFF
SPC Reference	2715770-0200

Note! Check the alignment between the comb (1) and the slider (2) before adding the shims (3).

a) Release the screws (4) just enough to insert the shims (3) required to align the comb (1) into and along the length of the gap between the row cutter (5) and the stopper (6). The Gap should be distance **A**.

A = 1.0 - 1.5 mm

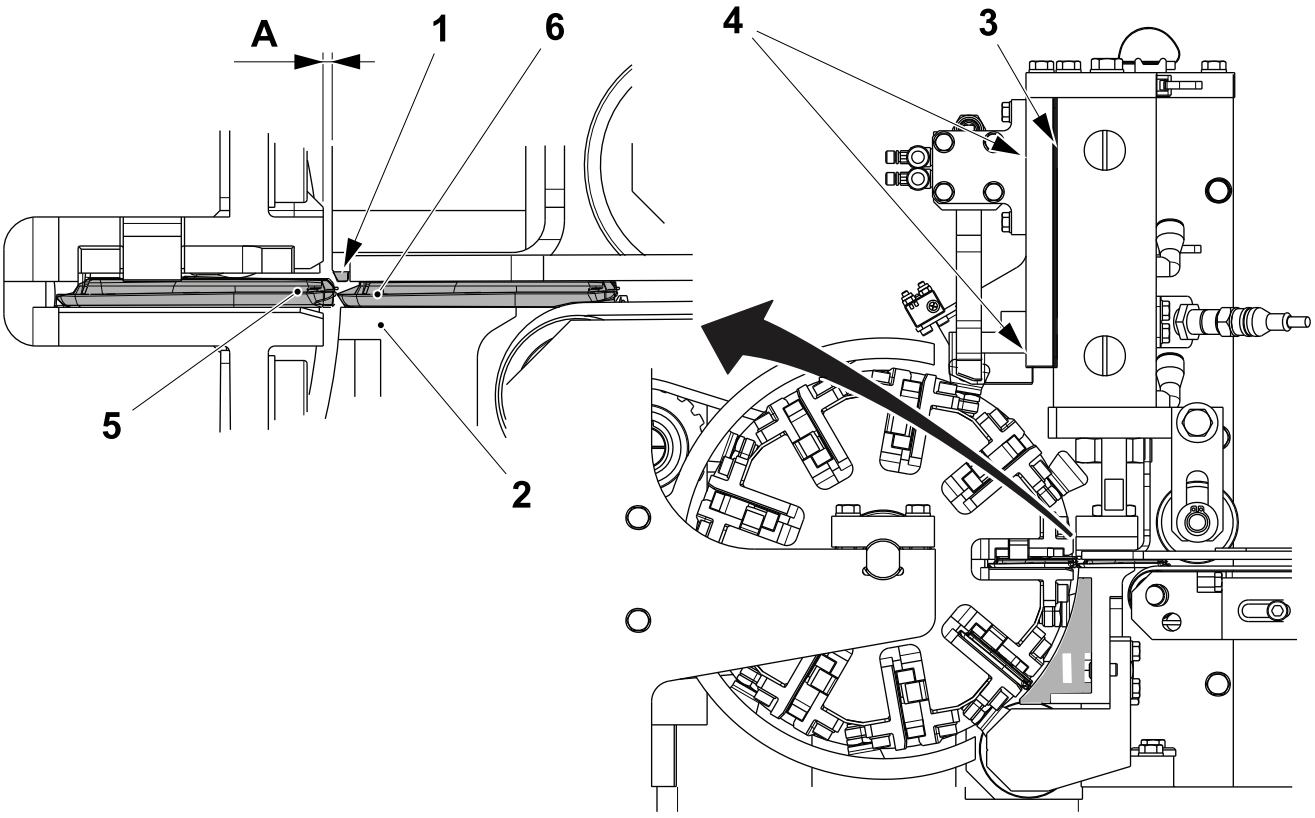

1 Comb
2 Slider
3 Shims
4 Screws
5 Row cutter
6 Stopper

6.7 Pneumatic Unit

6.7.1 Pneumatic Unit - Panel

6.7.1-1 Pneumatic Unit - Panel Front

SPC Reference	2812002-0300

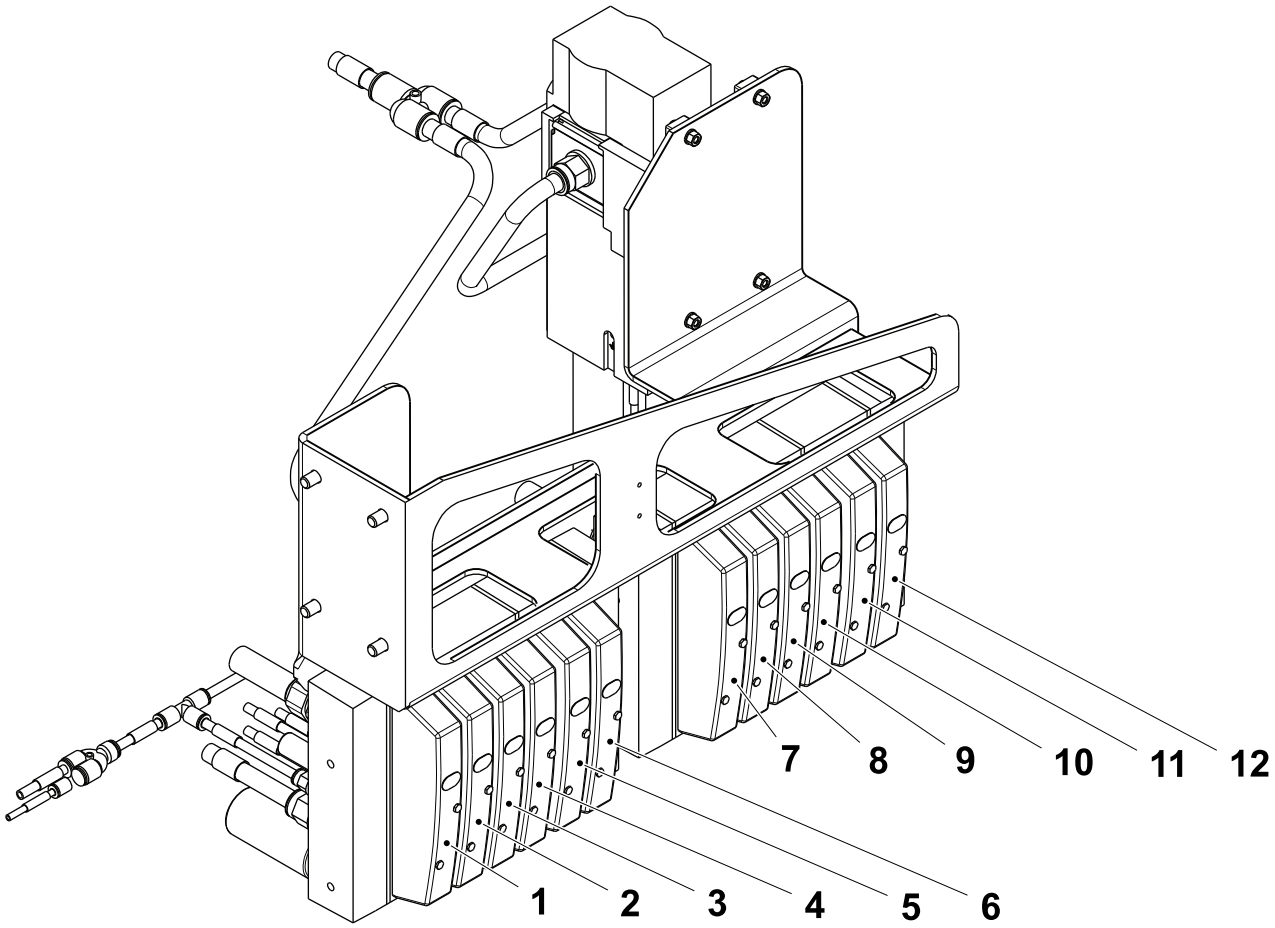

1	C60K1000 Screw elevator	7	C60K6000 Pick up cylinder to down position C60K6005 Pick up to up position
2	C60K0000 Cap sheet holder	8	C60K6001 Place cylinder to forward position
3	G30K2000 Glue wheel cam	9	C60K4000 Magazine box ejector
4	C60K6004 Quick vacuum sheet release	10	C60K4001 Magazine box elevator
5	C60K6003 Sheet plate G30K3002 Glue wheel	11	C60K6002 Magazine box elevator up C60K4003 Magazine box elevator down
6	C60K0010 Air blow cap sheet conveyor	12	C60K4002 Align box in elevator

6.7.1-2 Pneumatic Unit - Panel Back

SPC Reference	2812002-0300

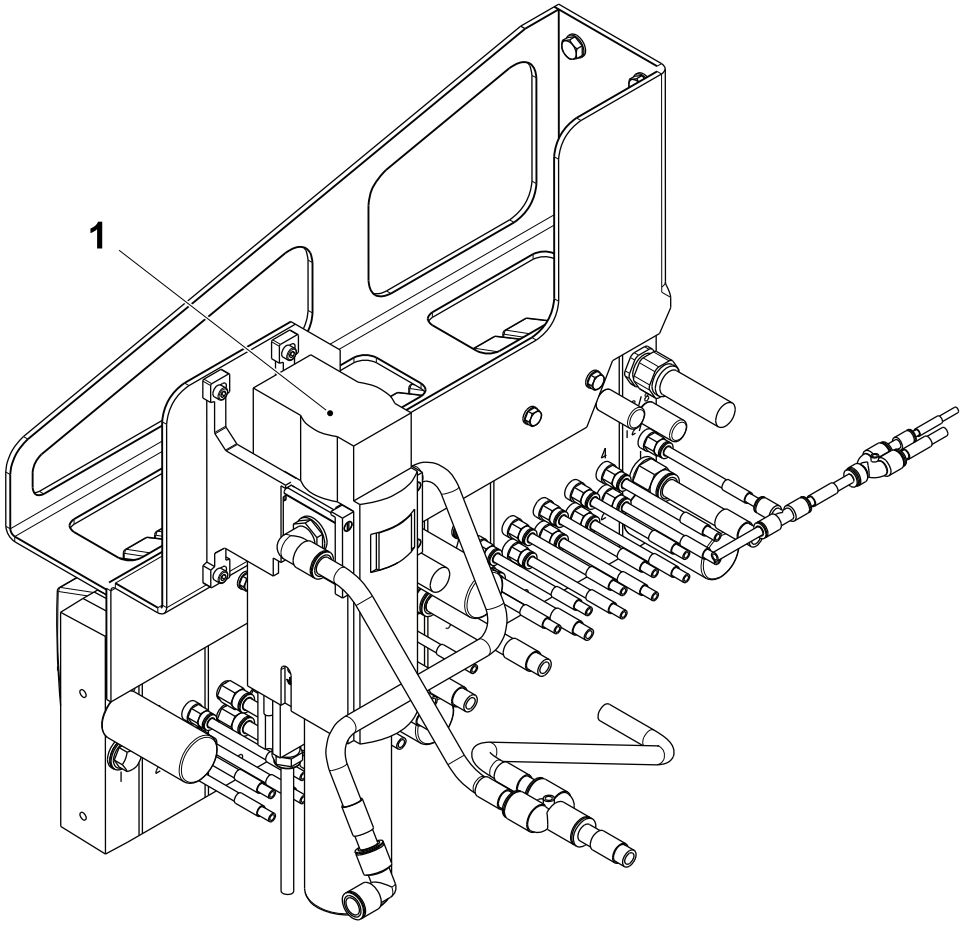

1 C60K6012 Shutoff valve

7 ReCap Magazine

ReCap Magazine - Description

SPC Reference	662910-0200

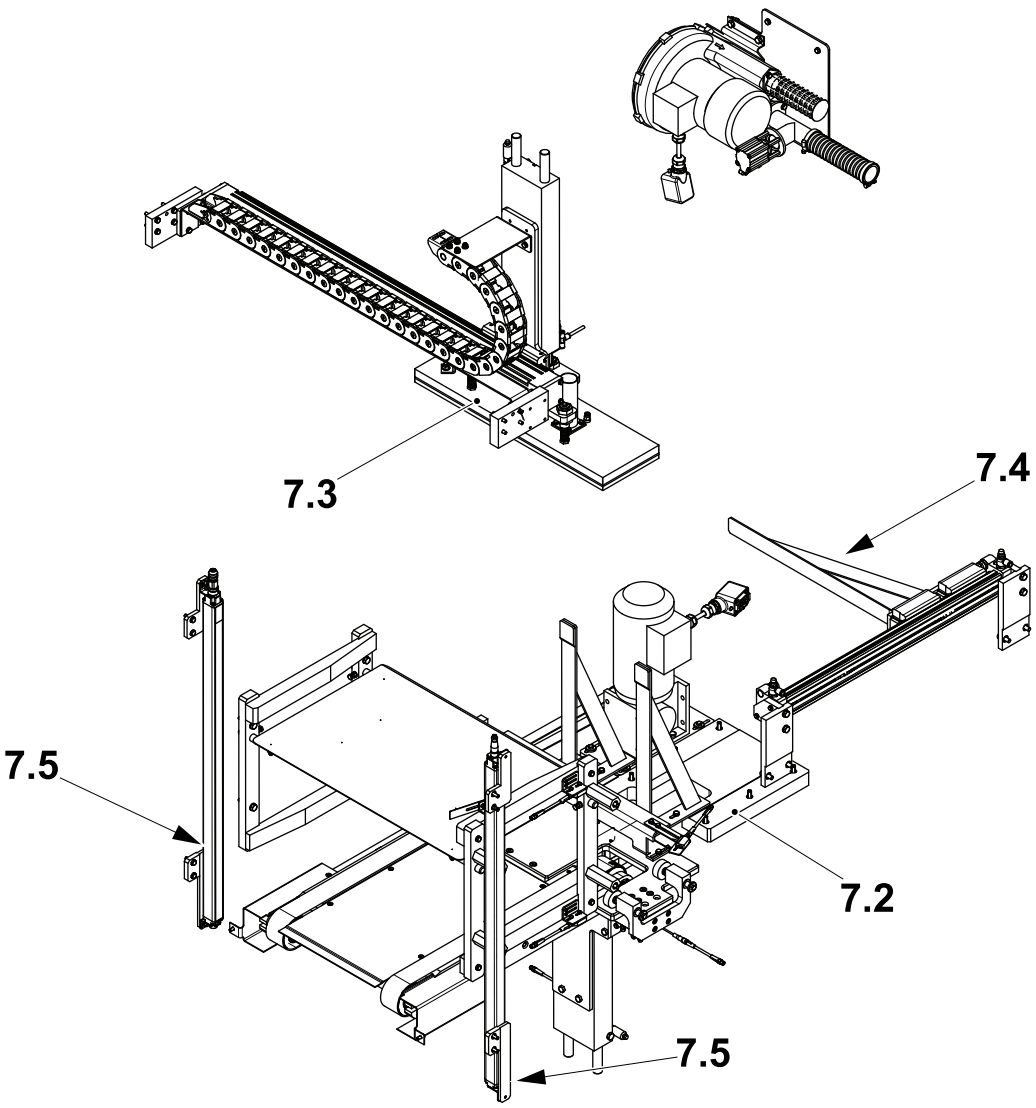

7.2 ReCap Magazine - Lift
7.3 ReCap Magazine - Positioning Unit
7.4 ReCap Magazine - Pusher
7.5 ReCap Magazine - Light Barrier

ReCap Magazine - Description 7-2

7.1 Functional Description 7-5

7.1.1 Position Sensors 7-7

7.1.1-1 Sensors - Method for Setting a Sensor Position 7-7

7.1.1-2 Sensors - Set Box Detection Sensors 7-10

7.1.1-3 Sensor - Set Horizontal Cylinder Sensor Position 7-11

7.1.1-3-1 Cap Handling Device Horizontal Cylinder Sensors 7-11

7.1.1-3-2 Box Pusher Cylinder Sensors 7-12

7.1.1-4 Sensor - Set Vertical Cylinder Position Sensors 7-13

7.1.1-4-1 Elevator Cylinder Sensors 7-13

7.1.1-4-2 Positioning Unit - Set Sensor Positions 7-14

7.1.1-5 Brake Sensors - Method for Setting a Brake Sensor 7-17

7.1.2 Cylinders 7-18

7.1.2-1 Cylinders - Set Speeds 7-18

7.1.2-1-1 General 7-18

7.1.2-1-2 Elevator Cylinder 7-19

7.1.2-1-3 Box Alignment Cylinder 7-21

7.1.2-1-4 Pick Up Cylinder 7-22

7.1.2-1-5 Place Cylinder 7-24

7.1.2-1-6 Box Eject Cylinder 7-26

7.2 ReCap Magazine - Lift 7-28

7.2.1 Lift - Elevator 7-28

7.2.1-1 Elevator - Change Cylinder 7-28

7.2.1-2 Elevator - Set Box Stopper 7-30

7.2.2 Lift - Box Conveyor 7-31

7.2.2-1 Box Conveyor - Change Drive Belt 7-31

7.2.2-2 Box Conveyor - Change Conveyor Belts 7-33

7.2.2-3 Box Conveyor - Set Drive Belt Tension 7-36

7.2.2-4 Box Conveyor - Set Conveyor Belt Tension 7-37

7.2.2-5 Box Conveyor - Change Bearings. 7-38
7.2.2-6 Box Conveyor - Change for Box Size. 7-43

7.3 ReCap Magazine - Positioning Unit 7-44

7.3.1 Positioning Unit - Drive Unit 7-44

7.3.1-1 Drive Unit - Change Horizontal Cylinder 7-44
7.3.1-2 Drive Unit - Change Vertical Cylinder. 7-47

7.3.2 Positioning Unit - Sheet Carrier 7-52

7.3.2-1 Sheet Carrier - Overhaul 7-52
7.3.2-2 Sheet Carrier - Change Rubber Mat. 7-53

7.3.3 Positioning Unit - Set 7-55

7.3.3-1 Positioning Unit - Setting 7-55

7.4 ReCap Magazine - Pusher 7-56

7.4.1 Pusher - Cylinder. 7-56

7.4.1-1 Pusher - Change Cylinder. 7-56

7.5 ReCap Magazine - Light Barrier. 7-58

7.5.1 Light Barrier - Transmitter and Receiver. 7-58

7.5.1-1 Receiver - Change 7-58
7.5.1-2 Transmitter - Change 7-60
7.5.1-3 Align - Transmitter and Receiver 7-61
7.5.1-4 Check - Transmitter and Receiver. 7-64
7.5.1-5 LED Information. 7-65

7.1 Functional Description

The caps are delivered in boxes (1), in which they are joined together in sheets by plastic tabs. The box is opened at the top by the operator and then placed on the magazine conveyor (2).

The magazine moves the box of caps into position under the cap handling device (3). The vacuum for the cap handling device (3) is created by the vacuum system (4).

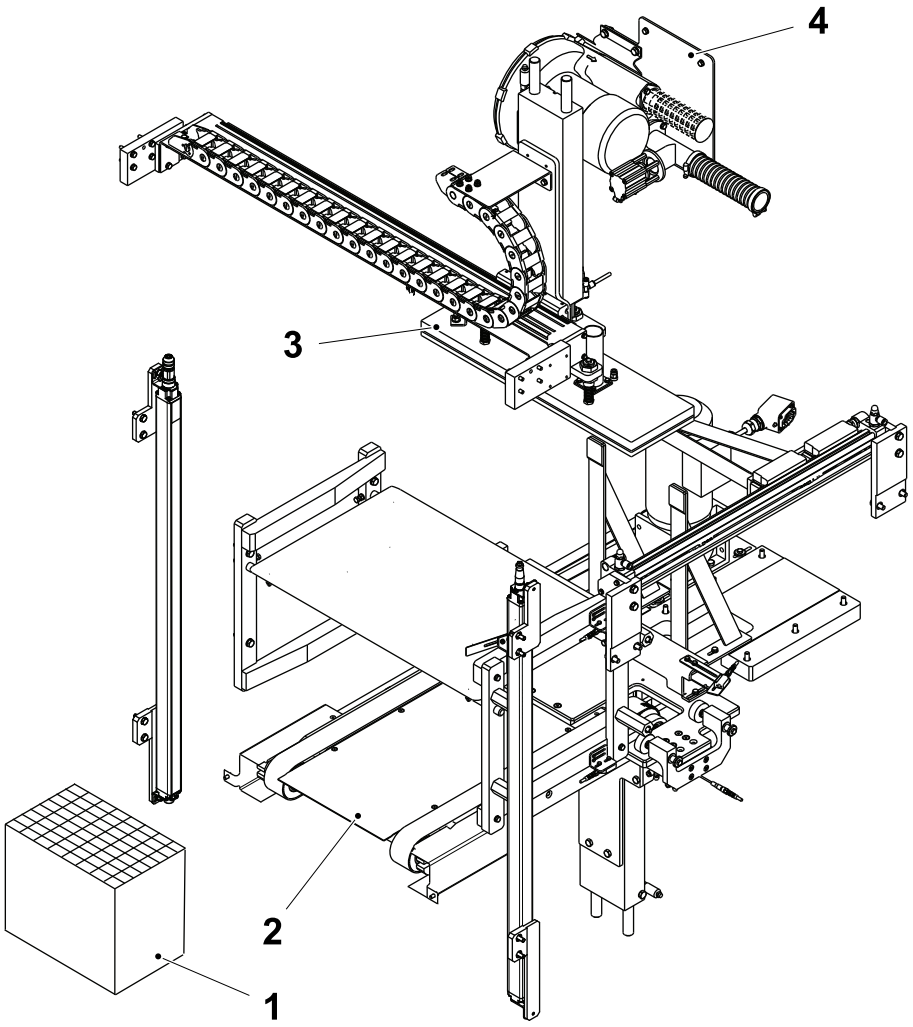

1 Box
2 Conveyor
3 Cap handling device
4 Vacuum system

(Cont'd)

(Cont'd)

In the magazine, the box is raised by the lift (5) so that the bottom sheet of caps can be picked up by the cap handling device (3).

The empty box is then pushed out by the pusher (6) into the waste position (7) and the cycle starts again.

The light barrier transmitter (8) and receiver (9) are part of the safety system that bring moving parts to a stop when boxes are being inserted or removed.

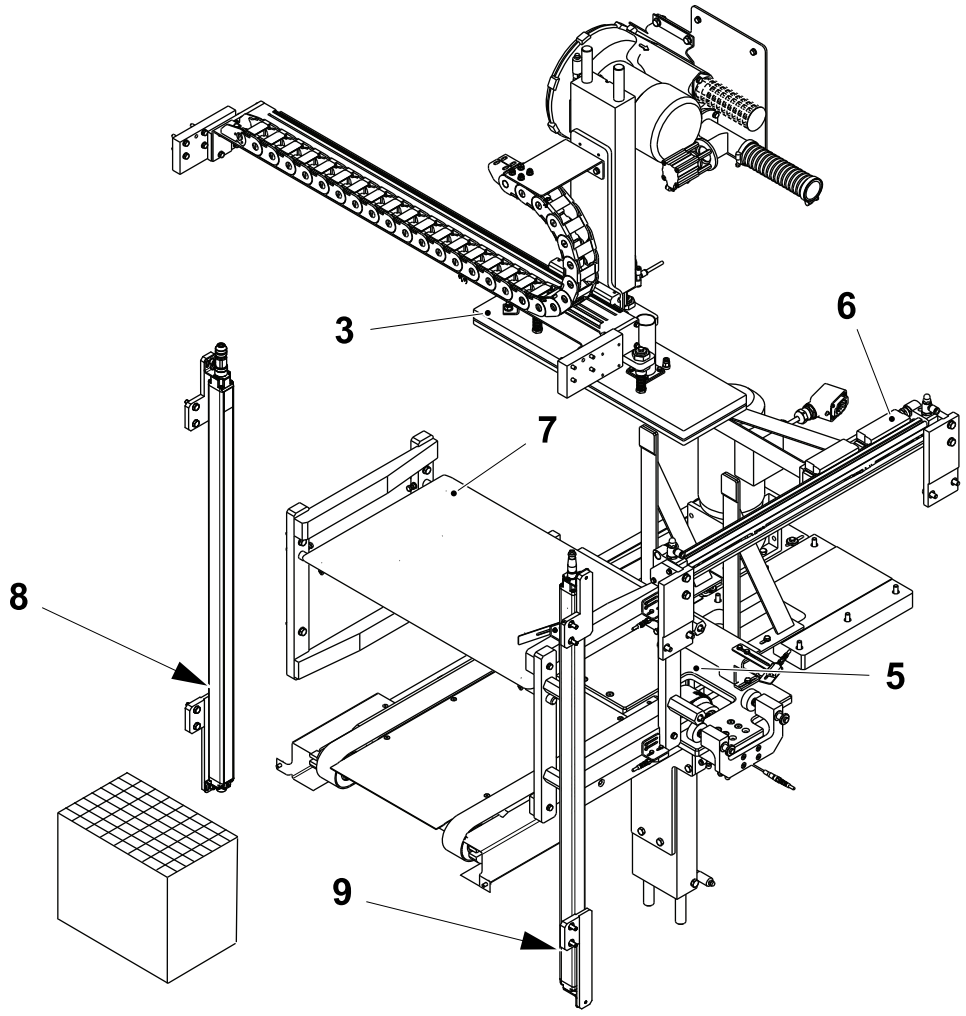

3 Cap handling device
5 Lift
6 Pusher
7 Waste position
8 Transmitter
9 Receiver

7.1.1 Position Sensors

7.1.1-1 Sensors - Method for Setting a Sensor Position

Machine Status	Electrical supply disconnecting device in position I (ON) Main air valve ON
SPC Reference	662910-0200

a) Touch the MAINTENANCE button (1) after the login, see 1.1.1-1 HMI User Management - Log On as a User.

b) Touch the MAGAZINE MAINTENANCE button (2).

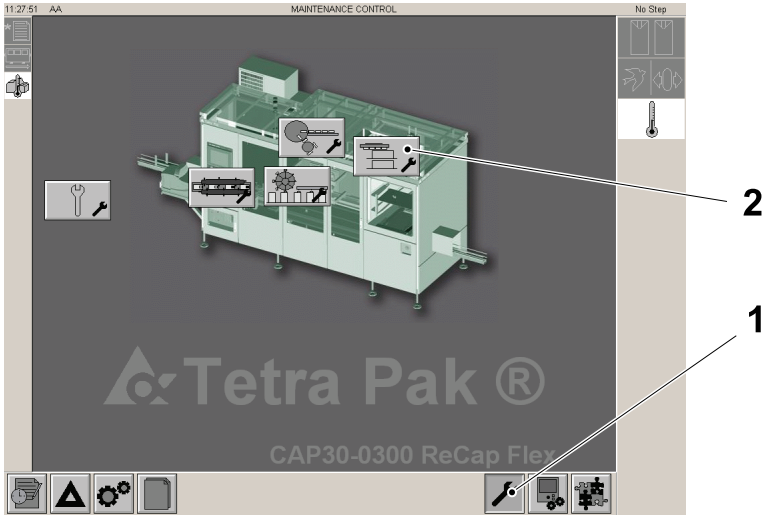

1 MAINTENANCE button
2 MAGAZINE MAINTENANCE button

(Cont'd)

(Cont'd)

c) Touch the icon, for example the CAP HANDLING DEVICE HORIZONTAL CYLINDER icon (3).

d) Touch the FORWARD (4) or BACKWARD (5) arrow to move the cylinder in the desired direction.

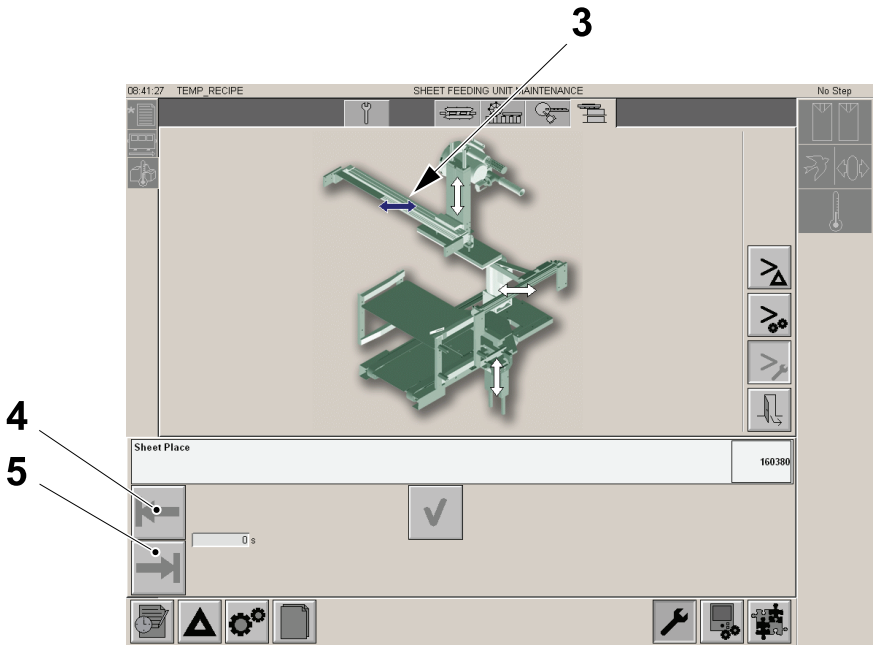

3 CAP HANDLING DEVICE HORIZONTAL CYLINDER icon
4 FORWARD button
5 BACKWARD button

(Cont'd)

(Cont'd)

e) Loosen the screw (6) in the sensor (7) and move the sensor (7) toward the centre of the cylinder (8) so that the LED (9) is off.

f) Move the sensor (7) toward the end of the cylinder (8) until the LED (9) just comes on and tighten the screw (6) in the sensor (7) .

g) Repeat the procedure at the other end of the cylinder (8).

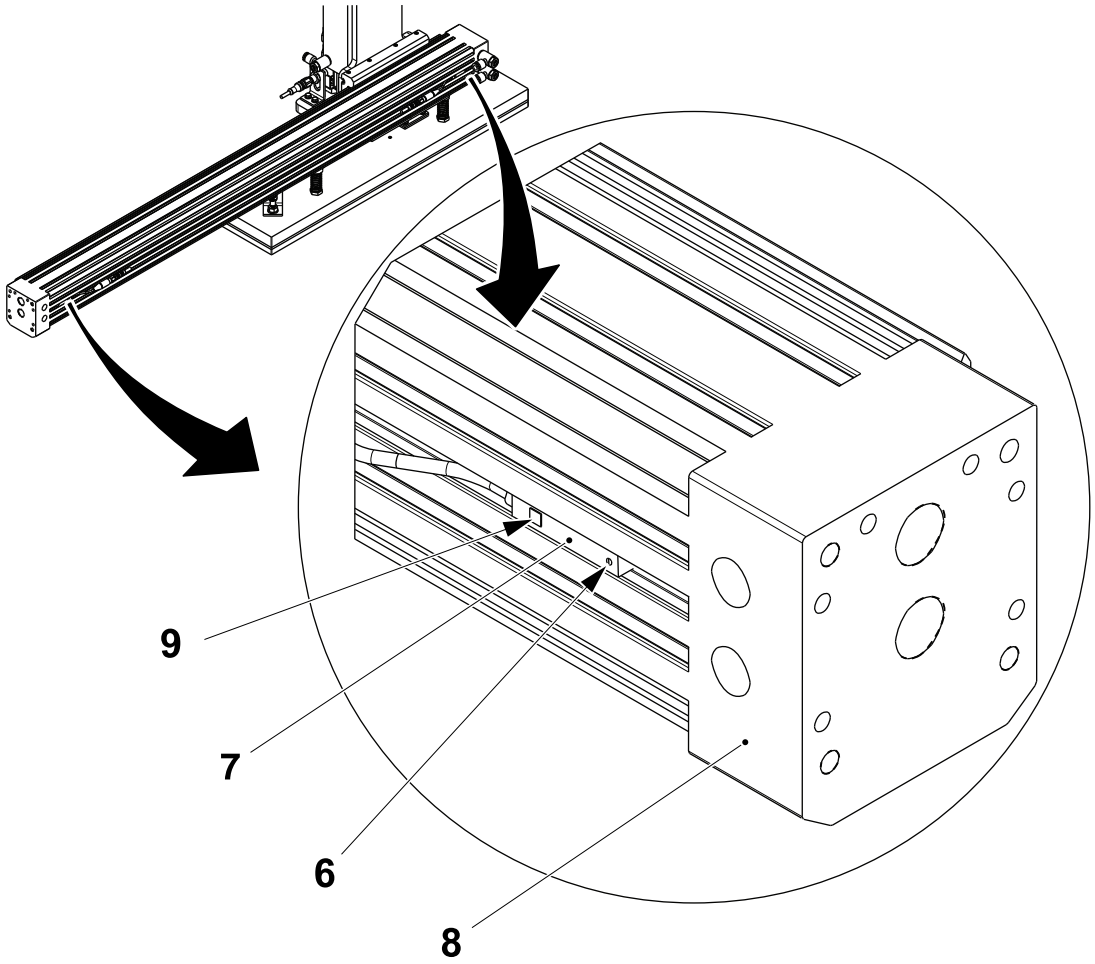

6 Screw
7 Sensor
8 Cylinder
9 LED

7.1.1-2 Sensors - Set Box Detection Sensors

Machine Status	Electrical supply disconnecting device in position I (ON) Main air valve ON
SPC Reference	662910-0200

a) Locate the box detection sensors (1) and then use a box to set them, see 8.8 Sensors.

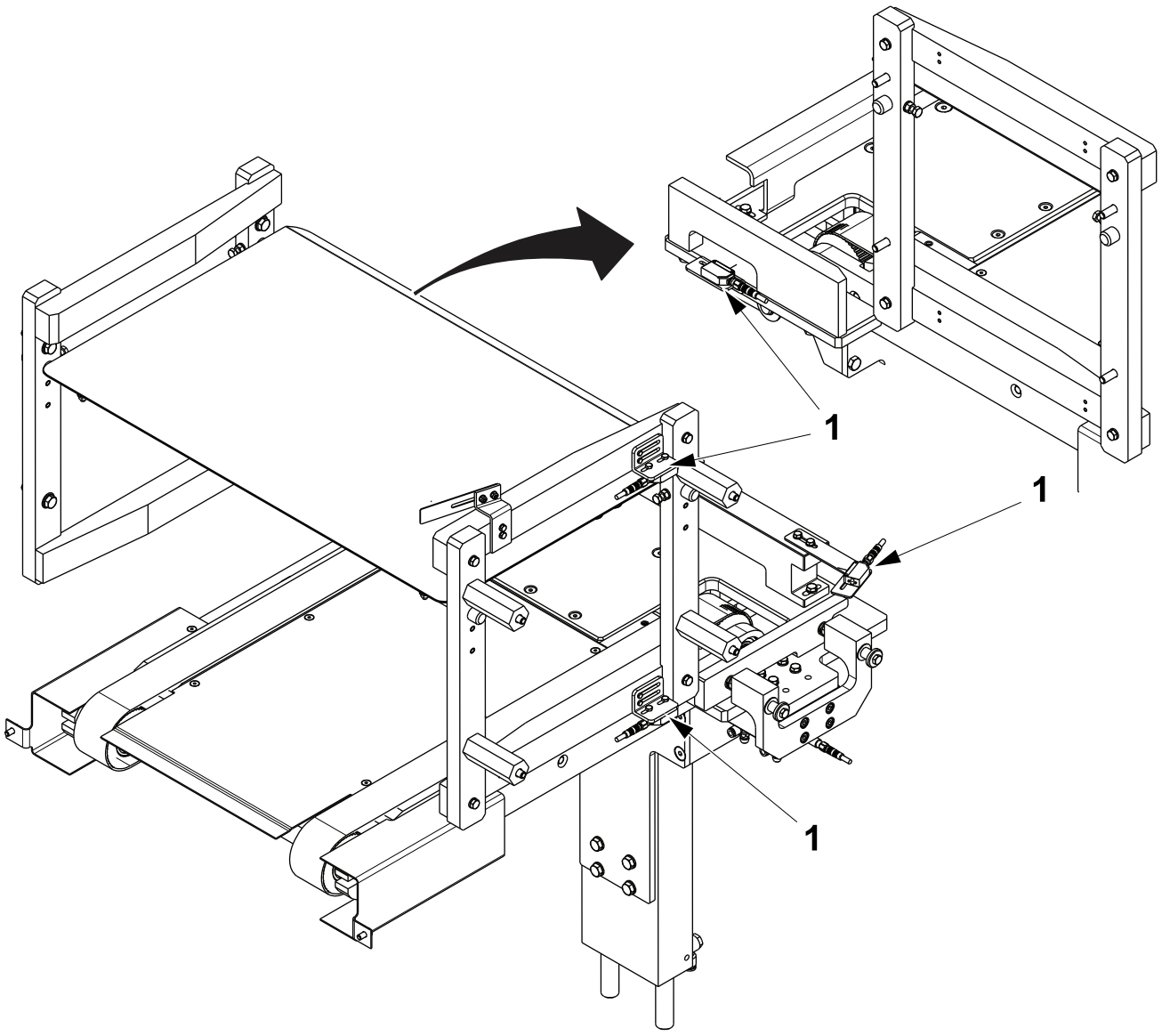

1 Sensor

7.1.1-3 Sensor - Set Horizontal Cylinder Sensor Position

7.1.1-3-1 Cap Handling Device Horizontal Cylinder Sensors

a) Set the sensors (1) and (2), see 7.1.1-1 Sensors - Method for Setting a Sensor Position.

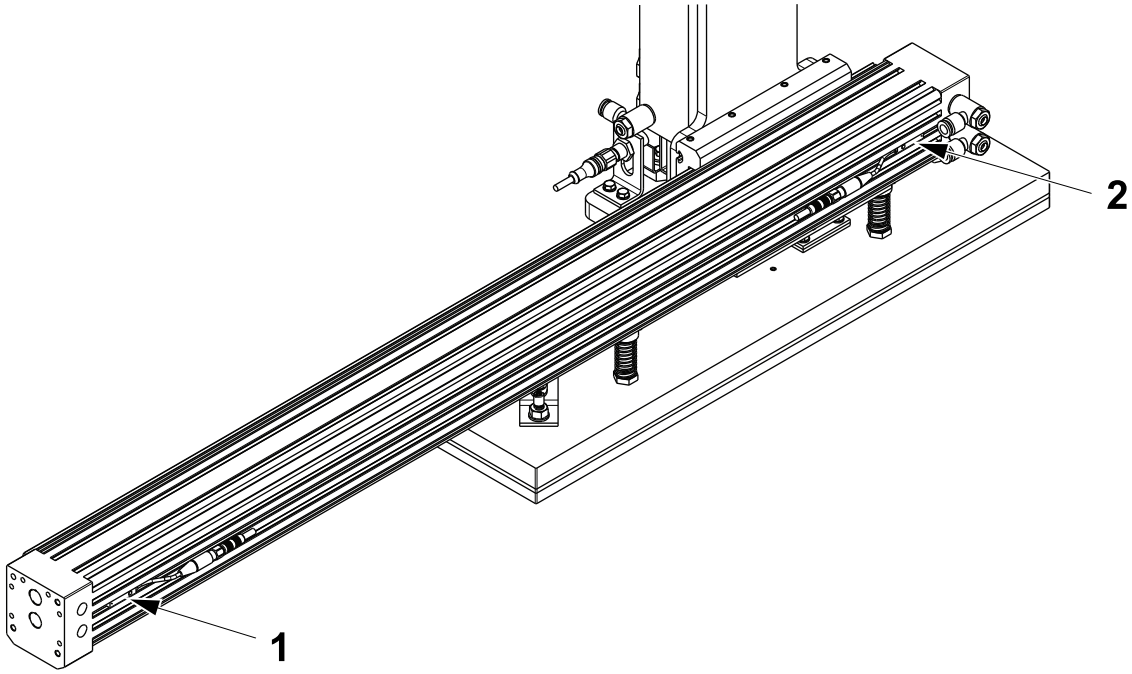

1 Sensor
2 Sensor

7.1.1-3-2 Box Pusher Cylinder Sensors

a) Set the sensors (1) and (2), see 7.1.1-1 Sensors - Method for Setting a Sensor Position.

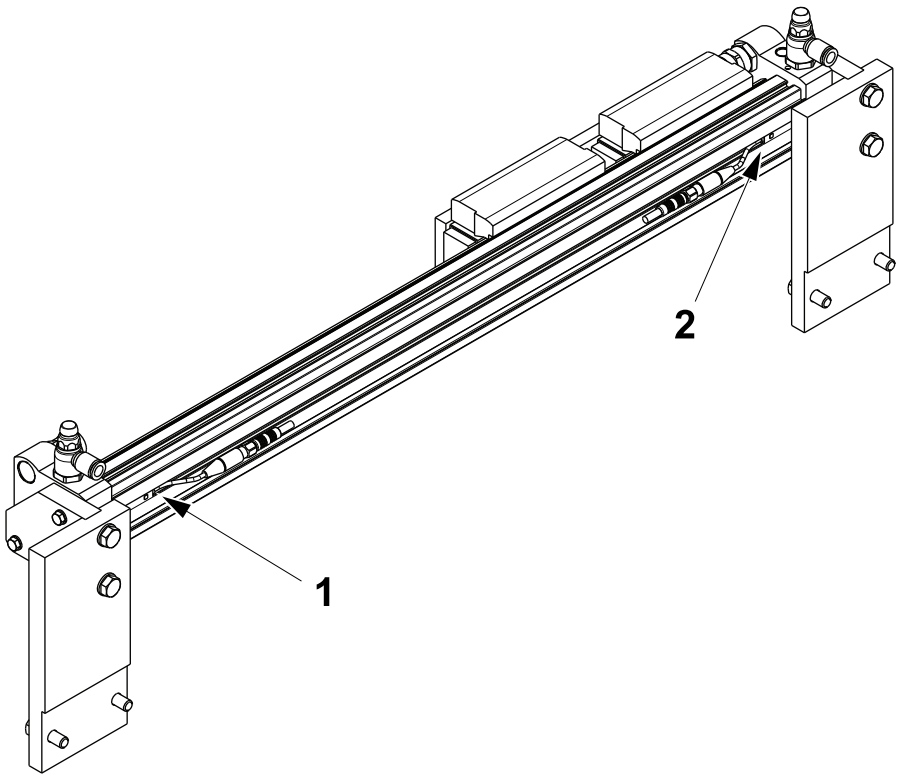

1 Sensor
2 Sensor

7.1.1-4 Sensor - Set Vertical Cylinder Position Sensors

Machine Status	Electrical supply disconnecting device in position I (ON) Main air valve ON
SPC Reference	662910-0200

7.1.1-4-1 Elevator Cylinder Sensors

a) Set the sensors (1) and (2), see 7.1.1-1 Sensors - Method for Setting a Sensor Position.

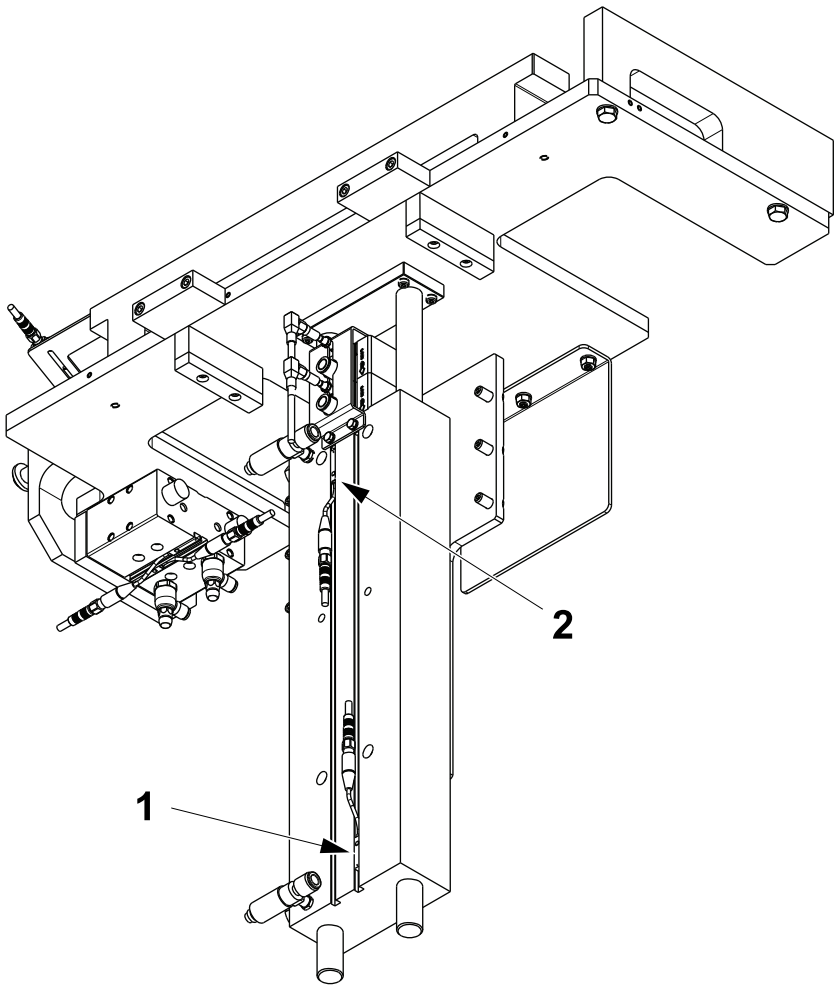

1 Sensor
2 Sensor

7.1.1-4-2 Positioning Unit - Set Sensor Positions

a) Set the sensors (1), see 7.1.1-1 Sensors - Method for Setting a Sensor Position

Note! The sensor (2) is used to detect the last sheet.

b) Insert box see step o).

c) Move the sensor (2) until the LED just comes on. Tighten into position.

d) Set the top of the sensor (3) to the distance **A** from the top of the cylinder (4).

Note! Check the behaviour of the sheet during placing. The sheet should be released from about 20mm, if necessary increase or decrease the distance **A**. Increasing the distance will lower the sheet. The distance **A** is volume dependant.

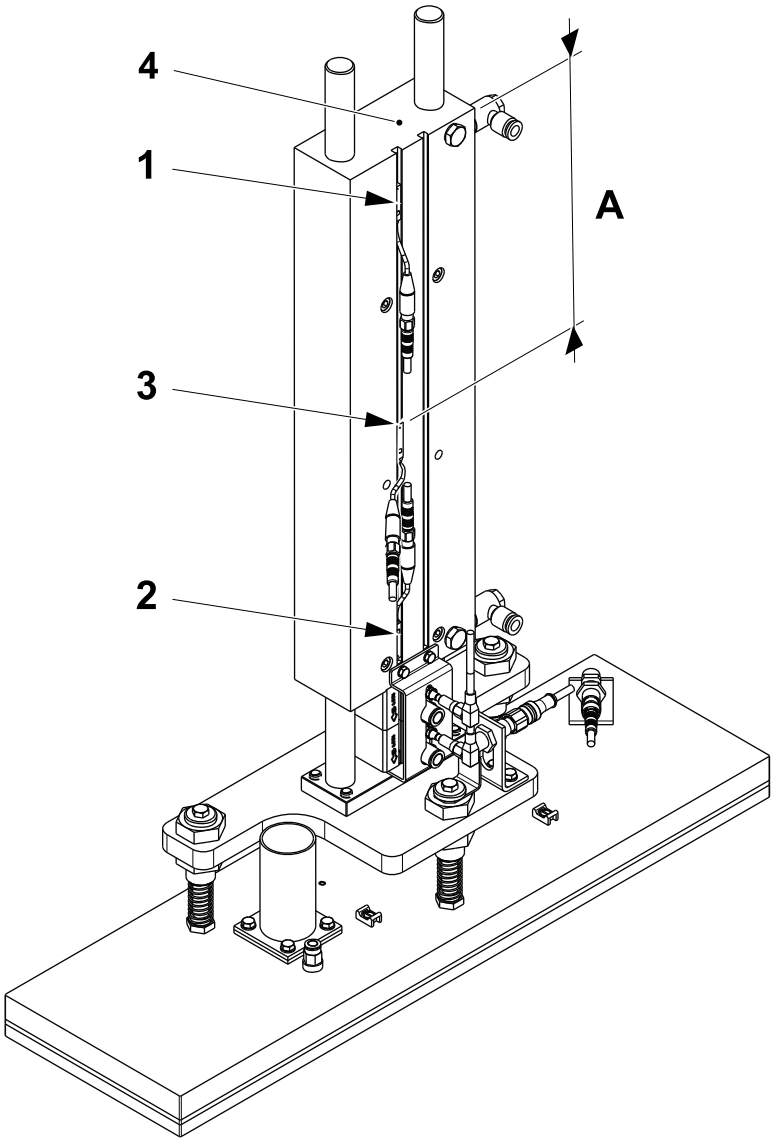

A = 156 mm

1 Sensor
2 Sensor
3 Sensor
4 Cylinder

(Cont'd)

(Cont'd)

e) Loosen the lock nut on the sensor (5).

f) Raise the plate (6) approximately 10 mm by hand and then move the sensor (5) until the LED in the sensor (5) turns on.

g) Without moving the sensor (5) tighten the lock nut on the sensor (5).

h) Loosen the lock nut on the sensor (7).

i) Raise the actuator (8) until the bottom of the actuator (8) is level with the bottom of the plate (6).

j) Without moving the actuator (8) move the sensor (7) until the LED in the sensor (7) turns on. Lock the sensor (7) in position.

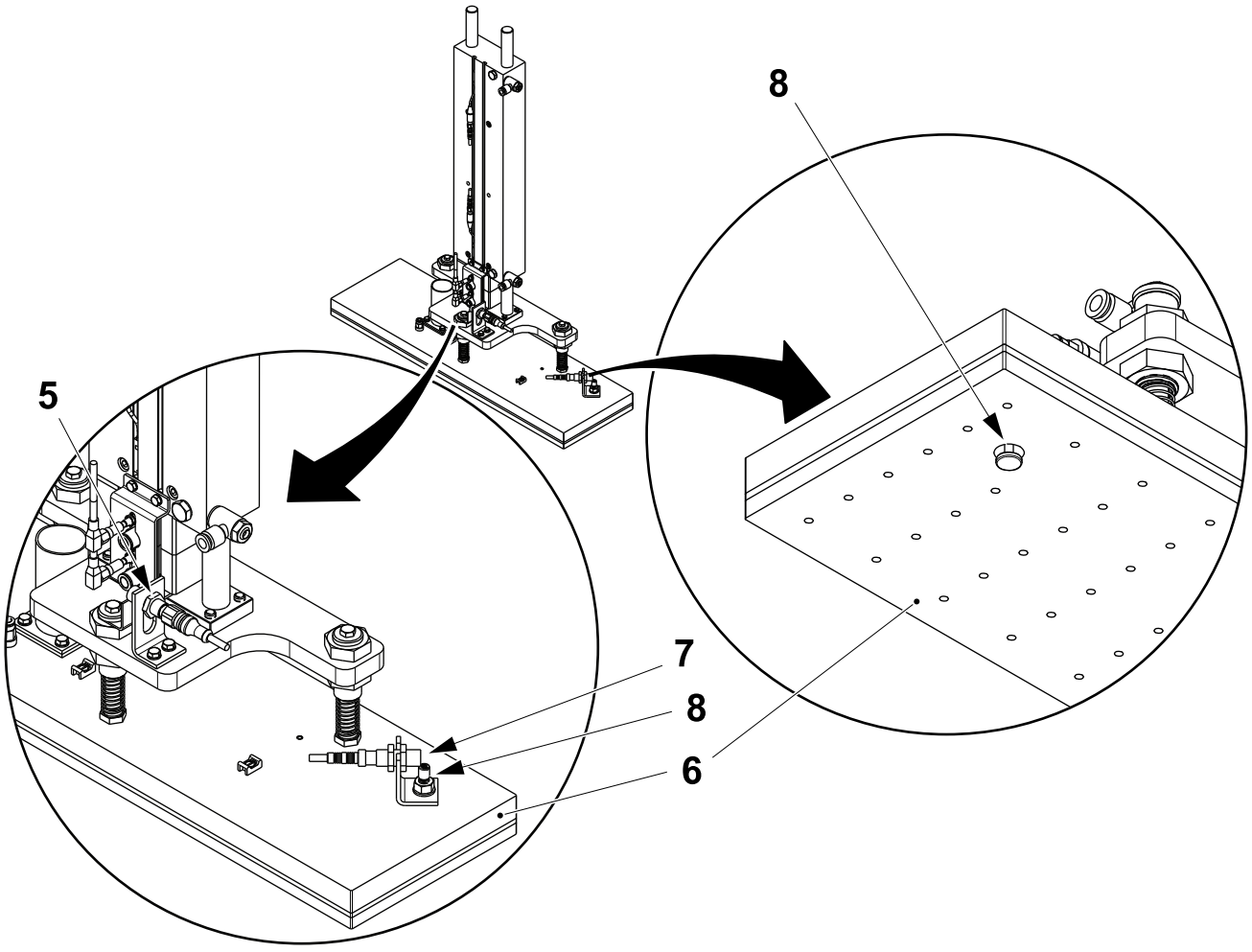

5 Sensor
6 Plate
7 Sensor
8 Actuator

(Cont'd)

(Cont'd)

k) Raise the elevator to the upper position.

l) Place a box with 4 or 5 sheets of caps on the elevator platform.

m) Place a full box on the conveyor.

n) Run the machine.

o) Check the elevator sensor (2) as follows:

- If the machine ejects an empty box with no alarms displayed, the sensor (2) have been set correctly and no further adjustment is required.
- If a box is ejected with a sheet inside or a stop alarm occurs place a box with 1 sheet of caps on the elevator and raise the elevator, if necessary refer to 7.1.2-1-2 Elevator Cylinder.
- Move the pick up down, if necessary refer to 7.1.2-1-4 Pick Up Cylinder.
- Move the sensor (2) toward the middle of the cylinder and then back until the led in the centre just comes on.

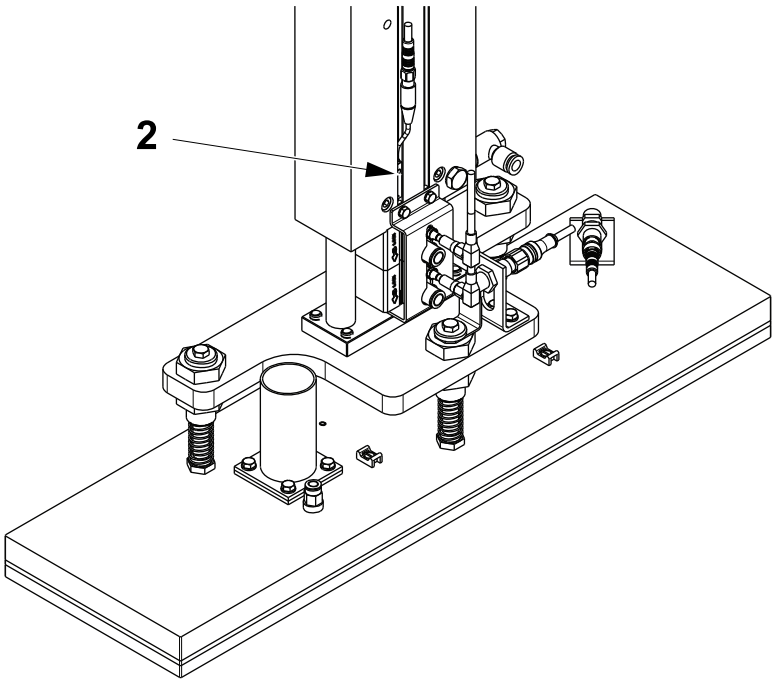

2 Sensor

7.1.1-5 Brake Sensors - Method for Setting a Brake Sensor

Machine Status	Electrical supply disconnecting device in position I (ON)
SPC Reference	662910-0200

a) Adjust the sensors (1) using the nuts (2) until the distance **A** is obtained with the tab in the brake off position (3).

b) The LED should be on when the tab is in the brake off position (3).

c) The LED should be off when the tab is in the brake on position (4) on the brakes (5).

Note! The sensors (1) are very sensitive.

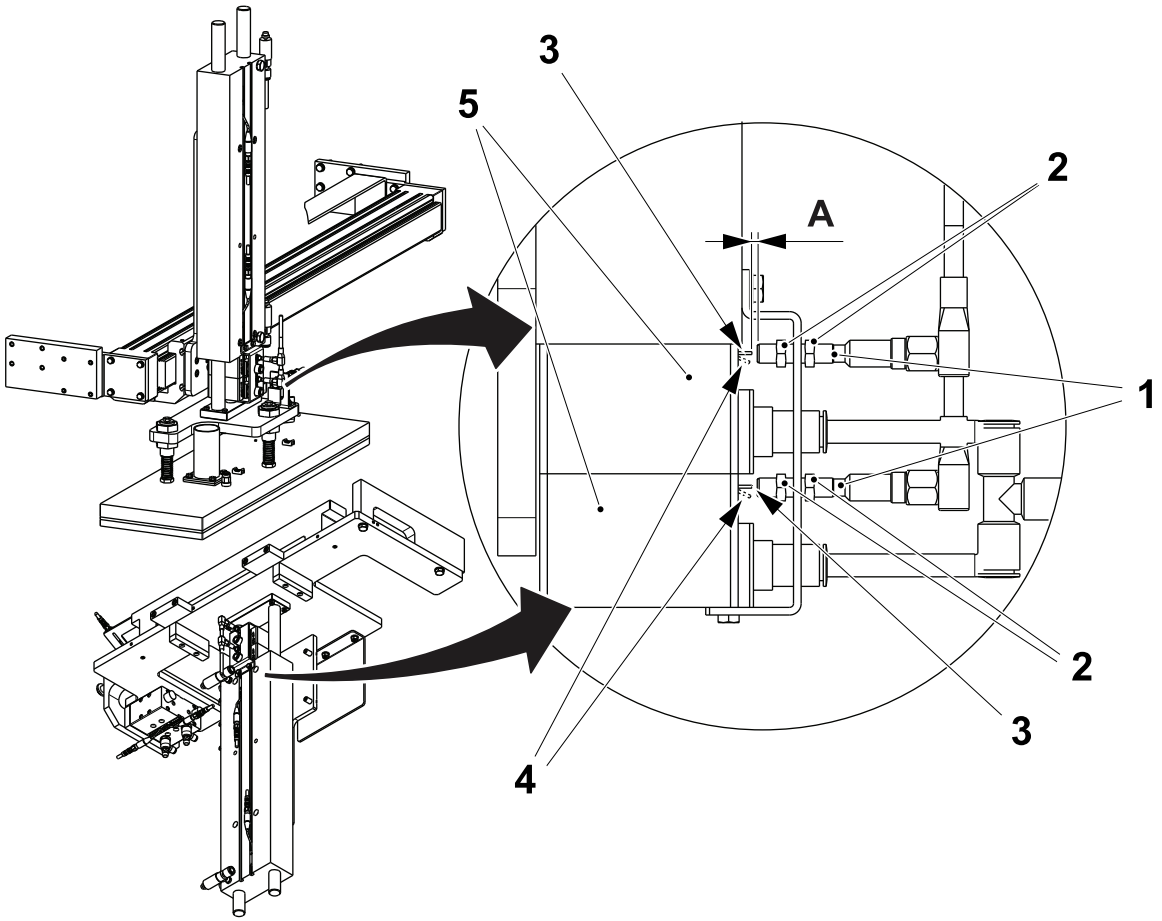

A = 2 mm

1 Sensor
2 Nut
3 Brake off position
4 Brake on position
5 Brake

7.1.2 Cylinders

7.1.2-1 Cylinders - Set Speeds

Machine Status	Electrical supply disconnecting device in position I (ON) Main air valve ON
SPC Reference	662910-0200

7.1.2-1-1 General

Set the magazine cylinder speeds as follows:

a) Logon as a user, see 1.1.1-1 HMI User Management - Log On as a User.

b) Touch the MAINTENANCE button (1).

c) Touch the MAGAZINE MAINTENANCE button (2).

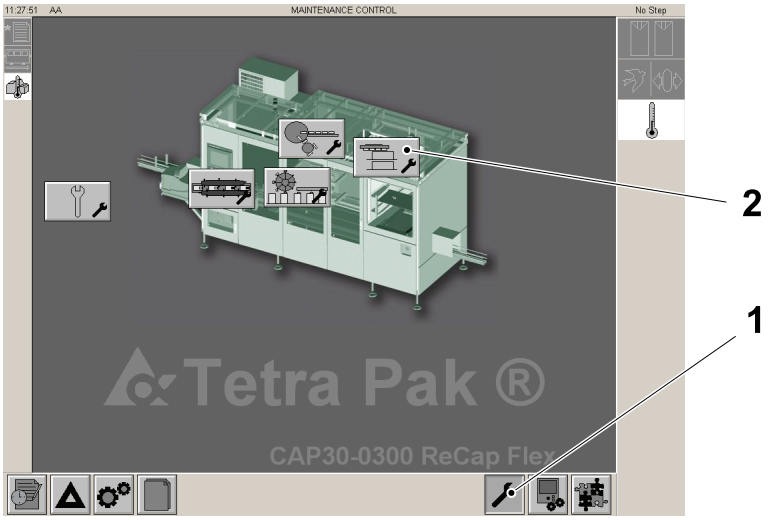

1 MAINTENANCE button
2 MAGAZINE MAINTENANCE button

7.1.2-1-2 Elevator Cylinder

Note! Check that the working pressure is 6.0 Bar / 0.6 MPa.

a) Touch the ELEVATOR icon (1).

b) Touch the UP (2) or DOWN (3) arrows to move the elevator cylinder in the desired direction.

c) Read the speed value given in the S window (4) for the up and down movement. Adjust as required until the correct value in the table is obtained.

Direction	Speed
Up	3.0 Sec
Down	2.0 Sec

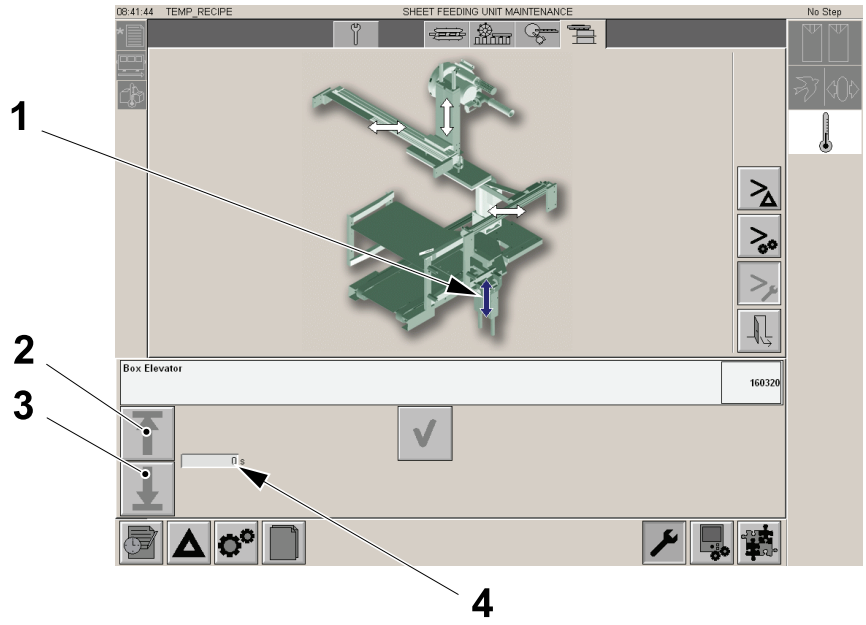

1 ELEVATOR icon
2 UP button
3 DOWN button
4 S window

(Cont'd)

(Cont'd)

d) To adjust the up speed, use the regulator (5).

e) To adjust the down speed, use the regulator (6).

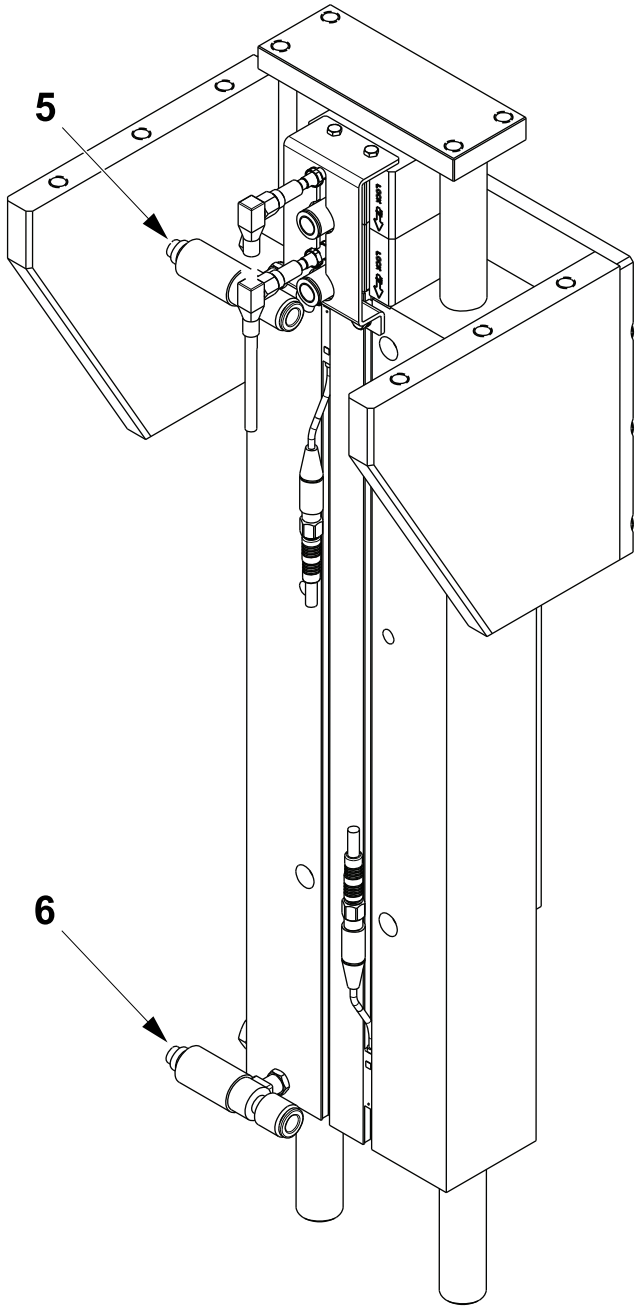

5 UP speed regulator
6 DOWN speed regulator

7.1.2-1-3 Box Alignment Cylinder

a) Adjust the speed of the alignment cylinder (1) (so that it completes its stroke before the elevator cylinder (2) completes its stroke) by turning the pressure regulators (3).

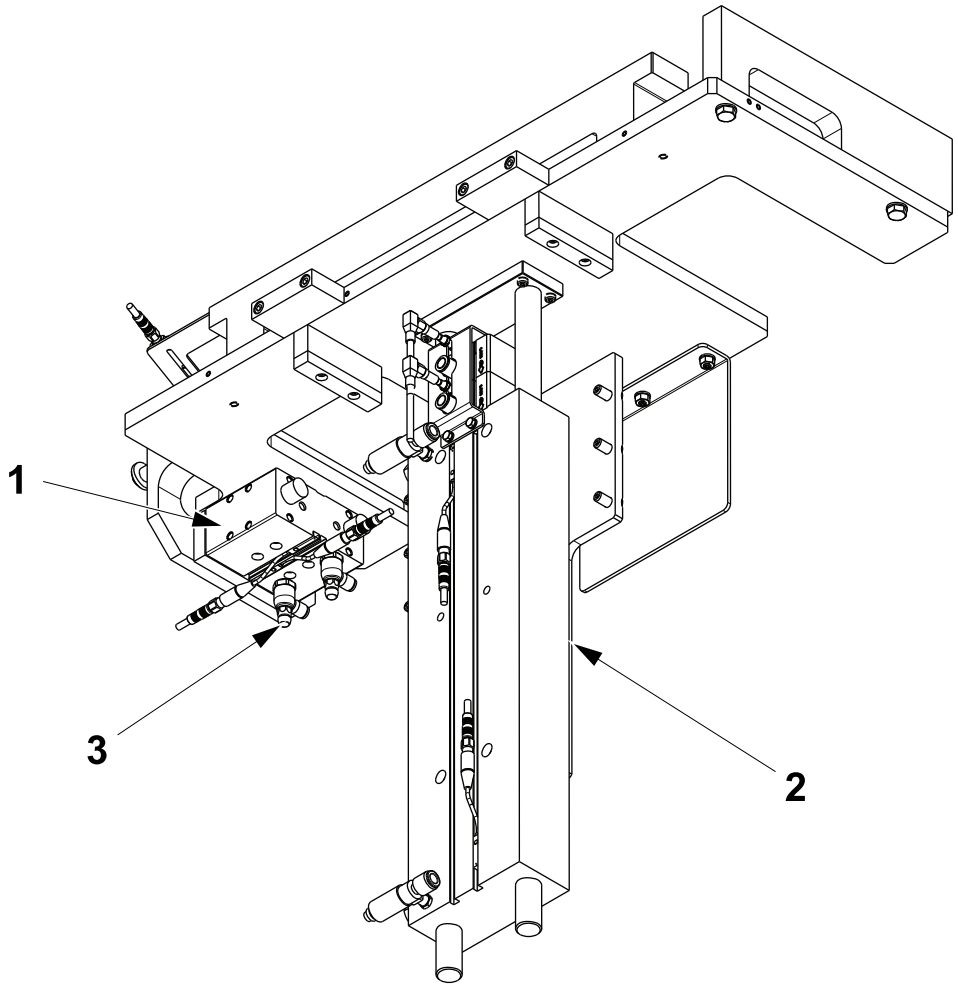

1 Alignment cylinder
2 Elevator cylinder
3 Regulator

7.1.2-1-4 Pick Up Cylinder

Note! Check that the air pressure is set to 2.0 Bar, see 4.4.2 Pneumatic Panel - Description for the down stroke.

Note! Put an empty box inside the elevator (in this way the pick up cylinder down movement does not interfere with the alignment cylinder) and lift the elevator to have the possibility of moving the pick up upwards and downward.

a) Touch the PICK UP icon (1).

b) Touch the UP (2) or DOWN (3) buttons to move the pick up cylinder in the desired direction.

c) Read the speed value given in the S window (4) for the up movement. Adjust as required until the correct value in the table is obtained.

Note! This adjustment is only for the pick up cylinders upward speed.

Direction	Speed
Up	3.0 Sec
Down	N/A

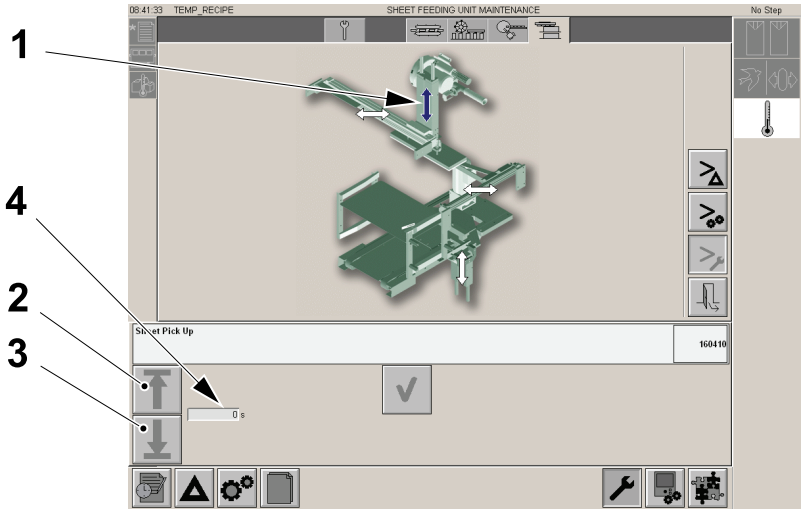

1 PICK UP icon
2 UP button
3 DOWN button
4 S window

(Cont'd)

(Cont'd)

d) To adjust the up speed, use the regulator (5).

e) To adjust the down speed, use the regulator (6).

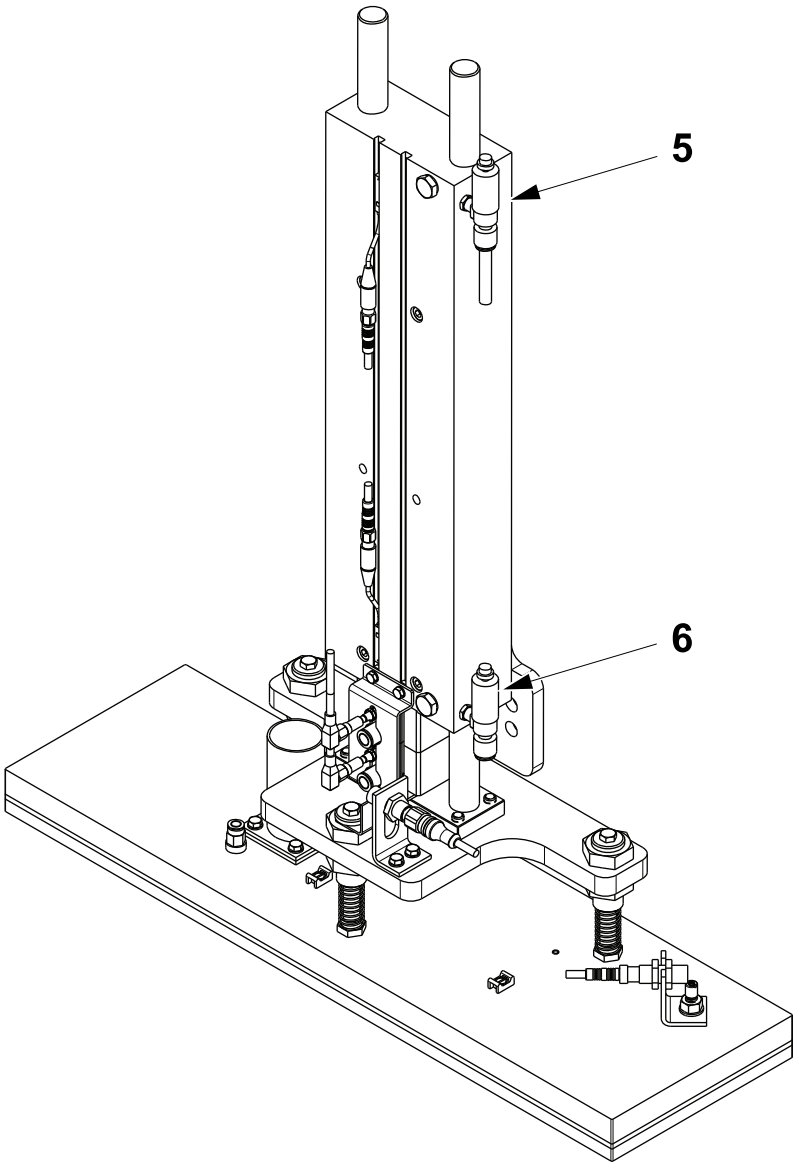

5 UP speed regulator
6 DOWN speed regulator

7.1.2-1-5 Place Cylinder

Note! Check that the working pressure is 6.0 Bar / 0.6 MPa.

a) Touch the PLACE icon (1).

b) Touch the PLACE (2) or RETURN (3) buttons to move the place cylinder in the desired direction.

c) Read the speed value given in the S window (4) for the up and down movement. Adjust as required until the correct value in the table is obtained.

Direction	Speed
Place	2.5 Sec
Return	2.5 Sec

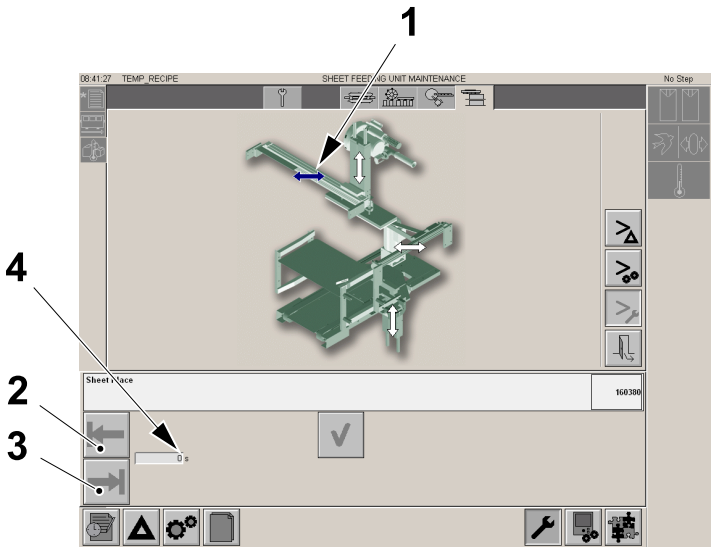

1 PLACE icon
2 PLACE button
3 RETURN button
4 S window

(Cont'd)

(Cont'd)

d) To adjust the place speed, use the regulator (5).

e) To adjust the return speed, use the regulator (6).

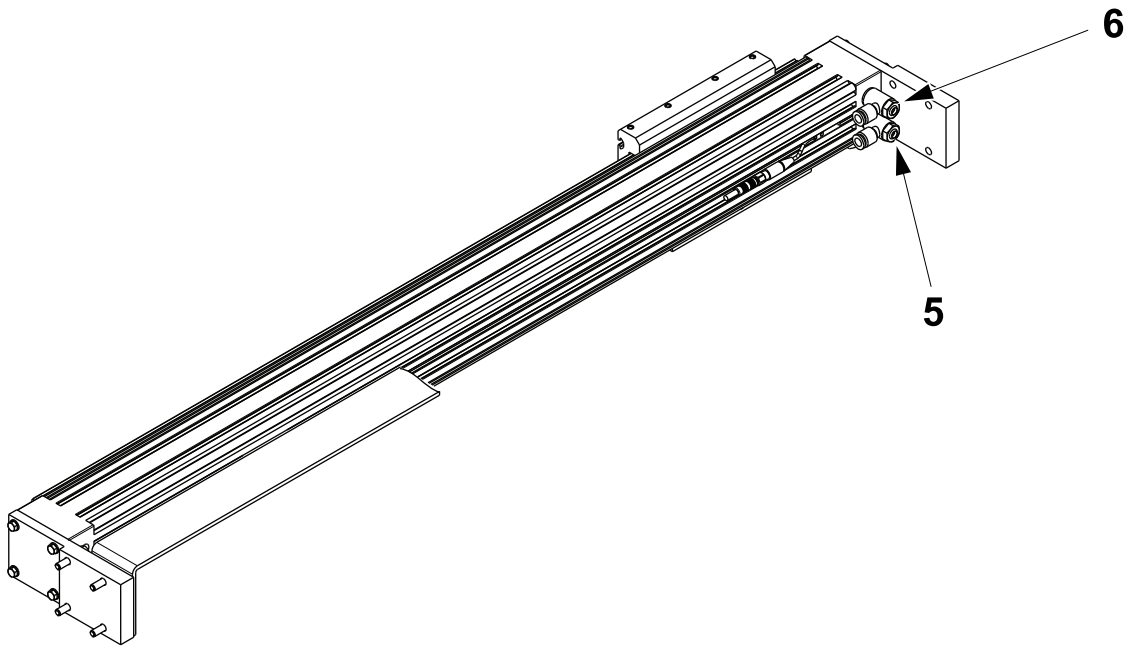

5 RETURN speed regulator
6 PLACE speed regulator

7.1.2-1-6 Box Eject Cylinder

Note! Check that the working pressure is 6.0 Bar / 0.6 MPa.

a) Touch the BOX EJECT icon (1).

b) Touch the EJECT (2) or RETURN (3) buttons to move the box eject cylinder in the desired direction.

c) Read the speed value given in the S window (4) for the up and down movement. Adjust as required until the correct value in the table is obtained.

Direction	Speed
Eject	1.5 Sec
Return	1.5 Sec

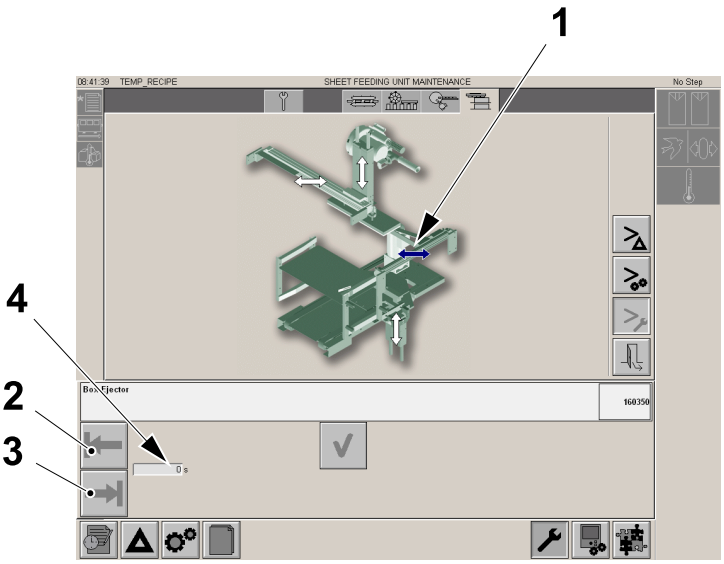

1 BOX EJECT icon
2 EJECT button
3 RETURN button
4 S window

(Cont'd)

(Cont'd)

d) To adjust the eject speed, use the regulator (5).

e) To adjust the return speed, use the regulator (6).

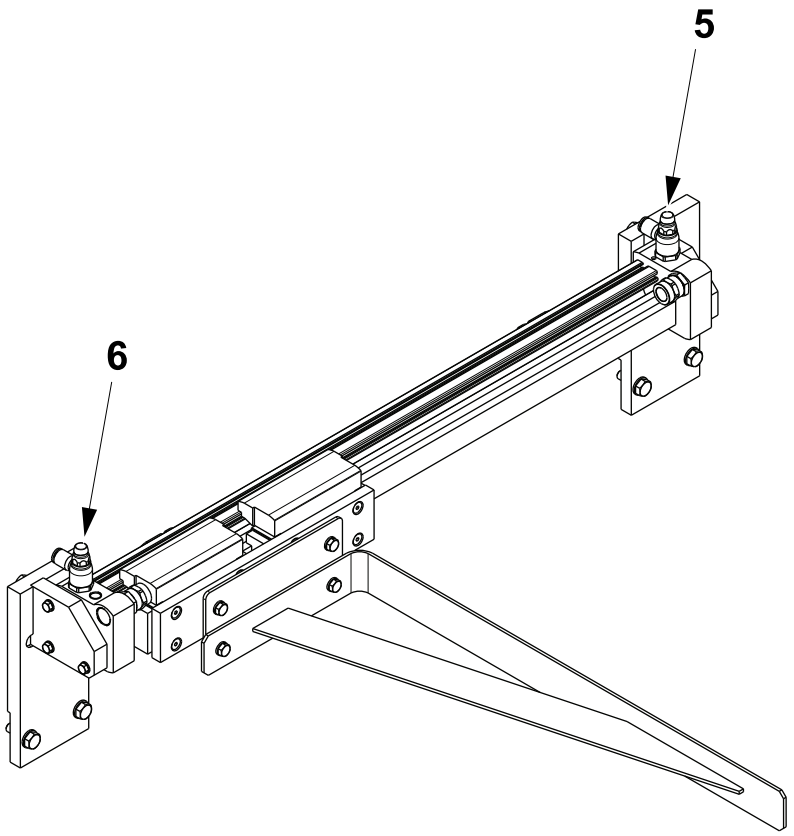

5 EJECT speed regulator
6 RETURN speed regulator

7.2 ReCap Magazine - Lift

7.2.1 Lift - Elevator

7.2.1-1 Elevator - Change Cylinder

Machine Status	Electrical supply disconnecting device in position O (OFF) Main air valve OFF
SPC Reference	2792484-0200

a) At the rear of the cylinder assembly (1), disconnect the cables from the sensors (2), the cables from the brake sensors (3) and the air hoses from the connectors/regulators (4).

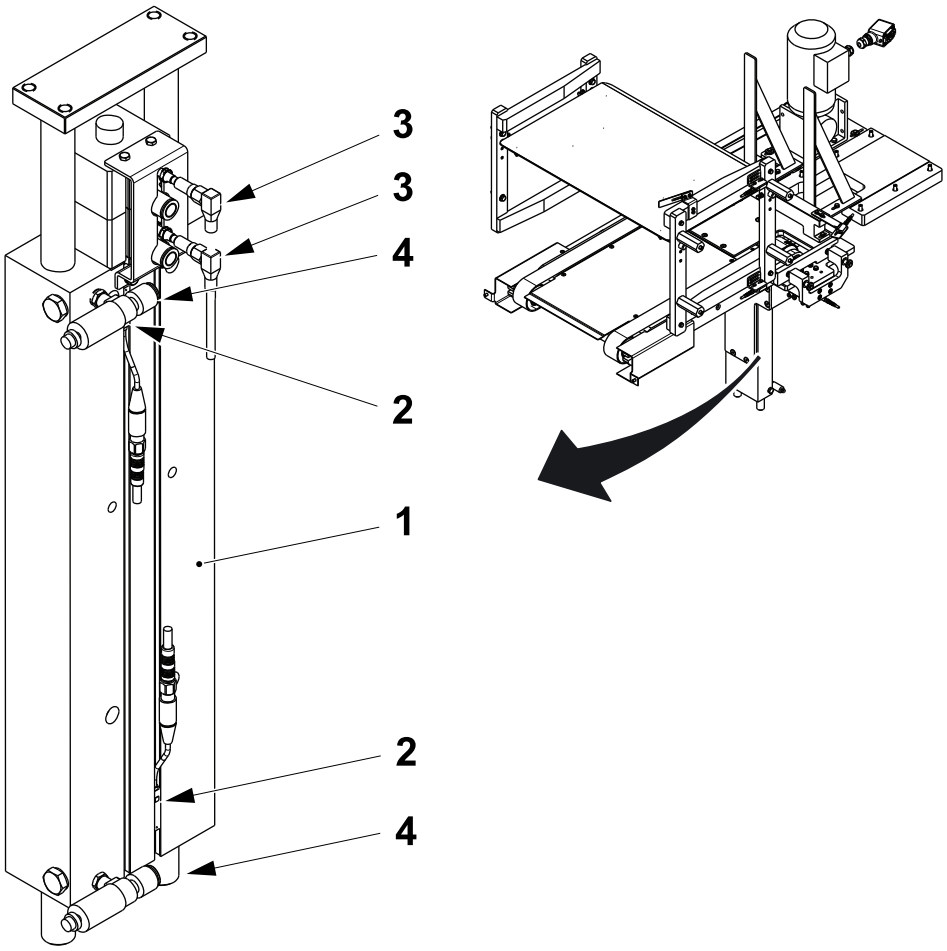

1 Cylinder assembly
2 Sensor
3 Brake sensor
4 Connectors/regulators

(Cont'd)

(Cont'd)

b) Remove the screws (5) and (6) and the cylinder assembly (1).

c) Remove the regulators and the sensors from the cylinder assembly (1).

d) Change the cylinder assembly (1).

e) Assemble in the reverse order installing the sensors, the regulators and trying to set the cylinder brake before installing the cylinder.

f) Check the movement of the cylinder assembly (1). See 7.1.2-1 Cylinders - Set Speeds.

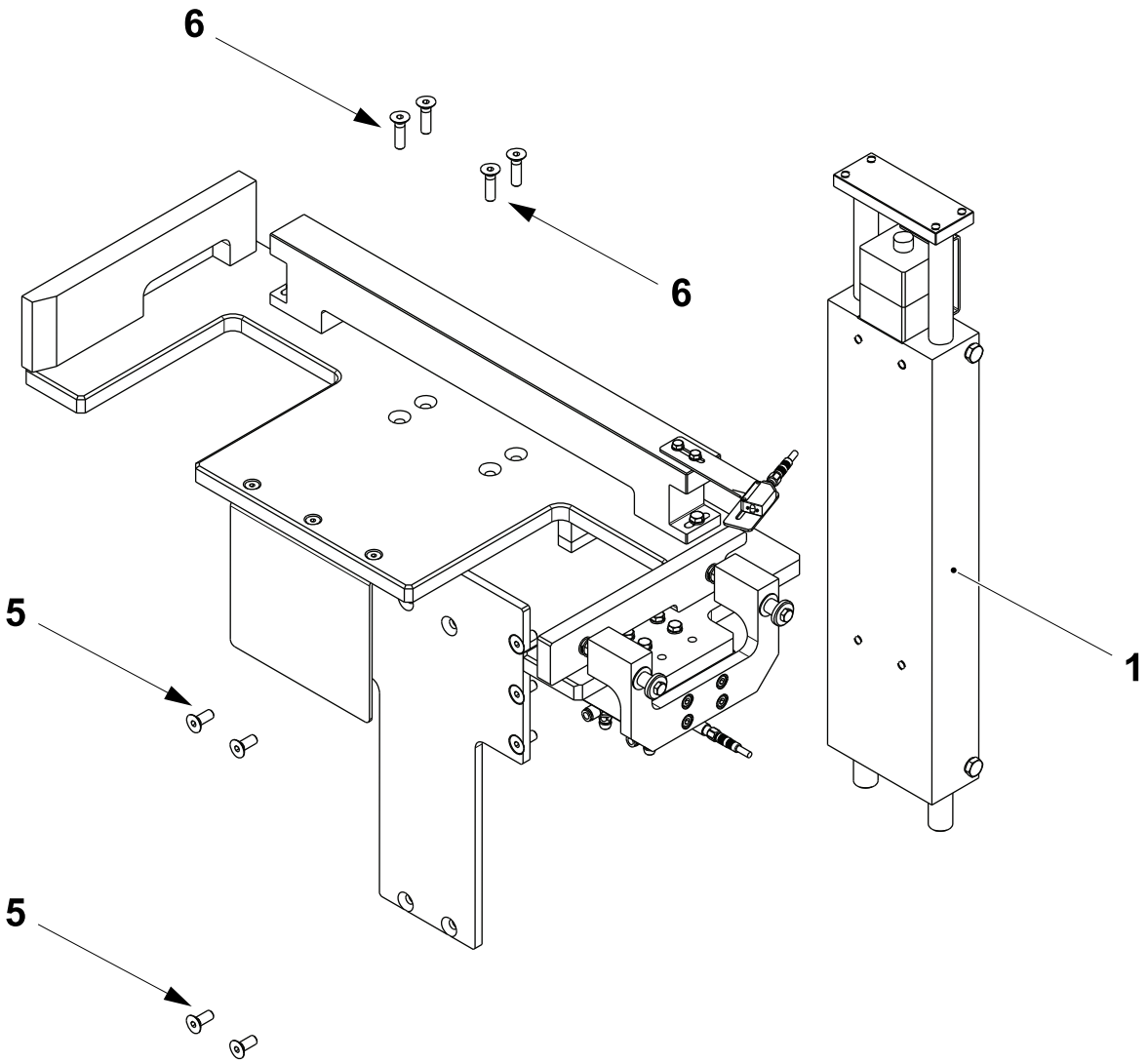

1 Cylinder assembly
5 Screw
6 Screw

7.2.1-2 Elevator - Set Box Stopper

Machine Status	Electrical supply disconnecting device in position O (OFF) Main air valve OFF
SPC Reference	2792484-0200

a) Loosen the screws (1) at both sides of the box stopper (2).

b) Move the box stopper (2) until it is the distance **A** from the edge of the plate (3) and parallel to it.

c) Tighten the screws (1).

Note! Check when the pickup collects the caps that they are centred on the pickup plate.

A = 20 mm for ReCap 2
A = 31 mm for ReCap 3

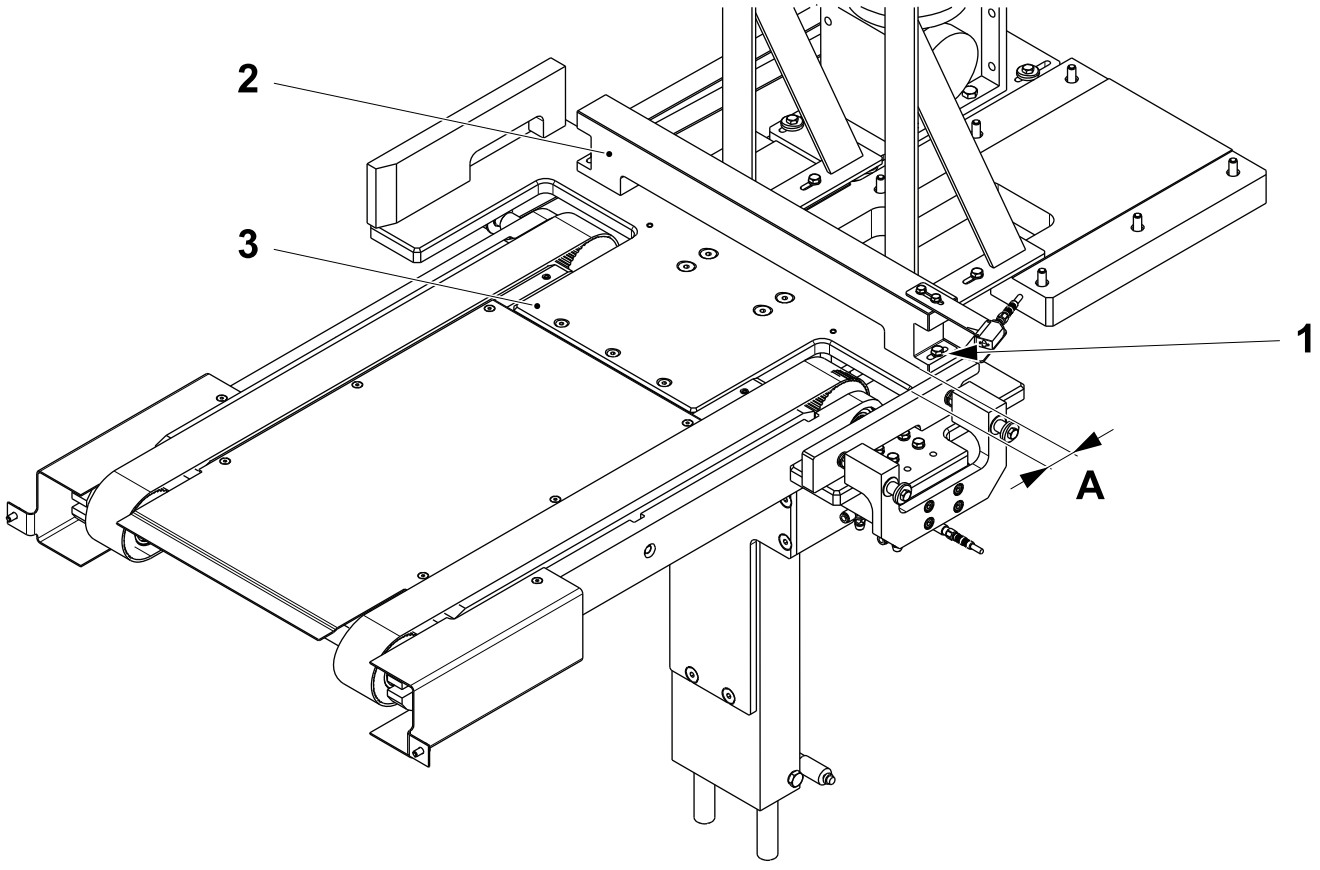

1 Screw
2 Box stopper
3 Plate

7.2.2 Lift - Box Conveyor

7.2.2-1 Box Conveyor - Change Drive Belt

Machine Status	Electrical supply disconnecting device in position O (OFF) Main air valve OFF
SPC Reference	2792484-0200

a) Raise the elevator to the upper position to give better access to the pulley (1).

b) Release the tension on the belt (2) by releasing the screws (3).

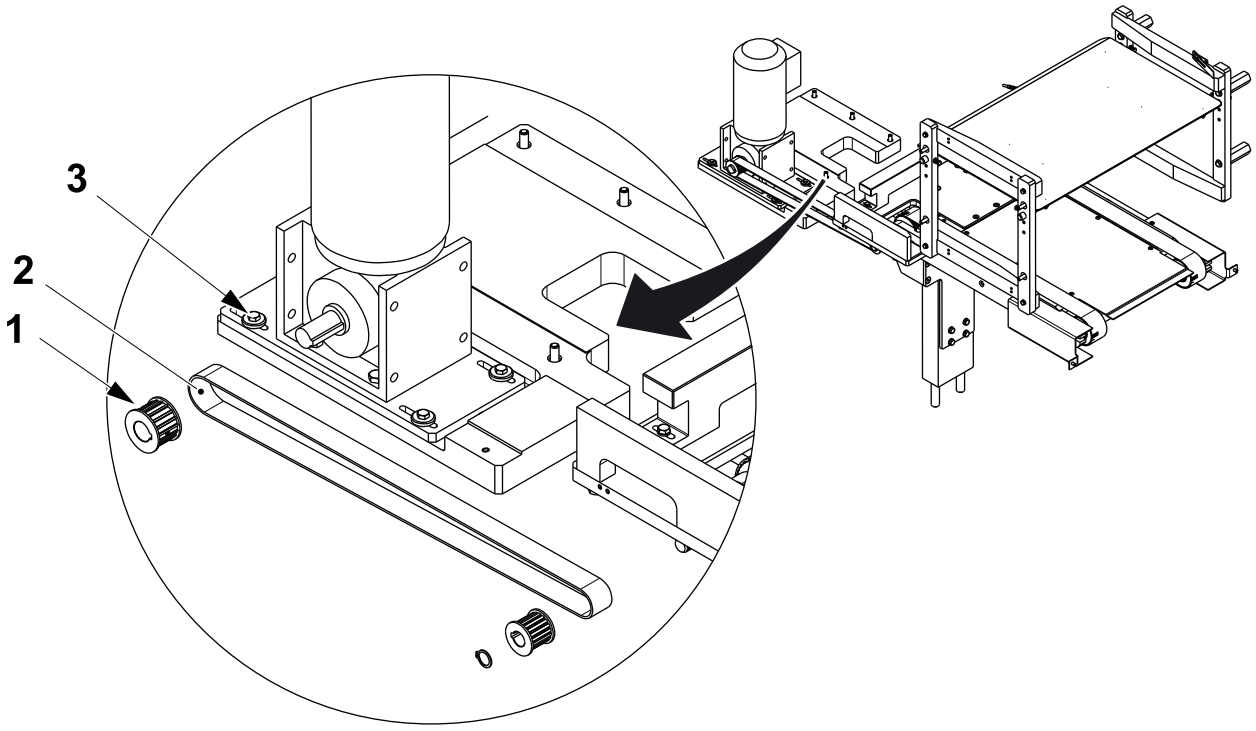

1 Pulley
2 Belt
3 Screw

(Cont'd)

(Cont'd)

c) Check and replace the belt (2) if necessary as follows.

d) Loosen the grub screw (4) in the pulley (1).

e) Remove the retaining ring (5) from the shaft (6).

f) Pull the pulleys (1) and (7) off the shafts (6) and (8).

g) Change the belt (2).

h) Assemble in the reverse order.

i) Tension the belt, see 7.2.2-3 Box Conveyor - Set Drive Belt Tension.

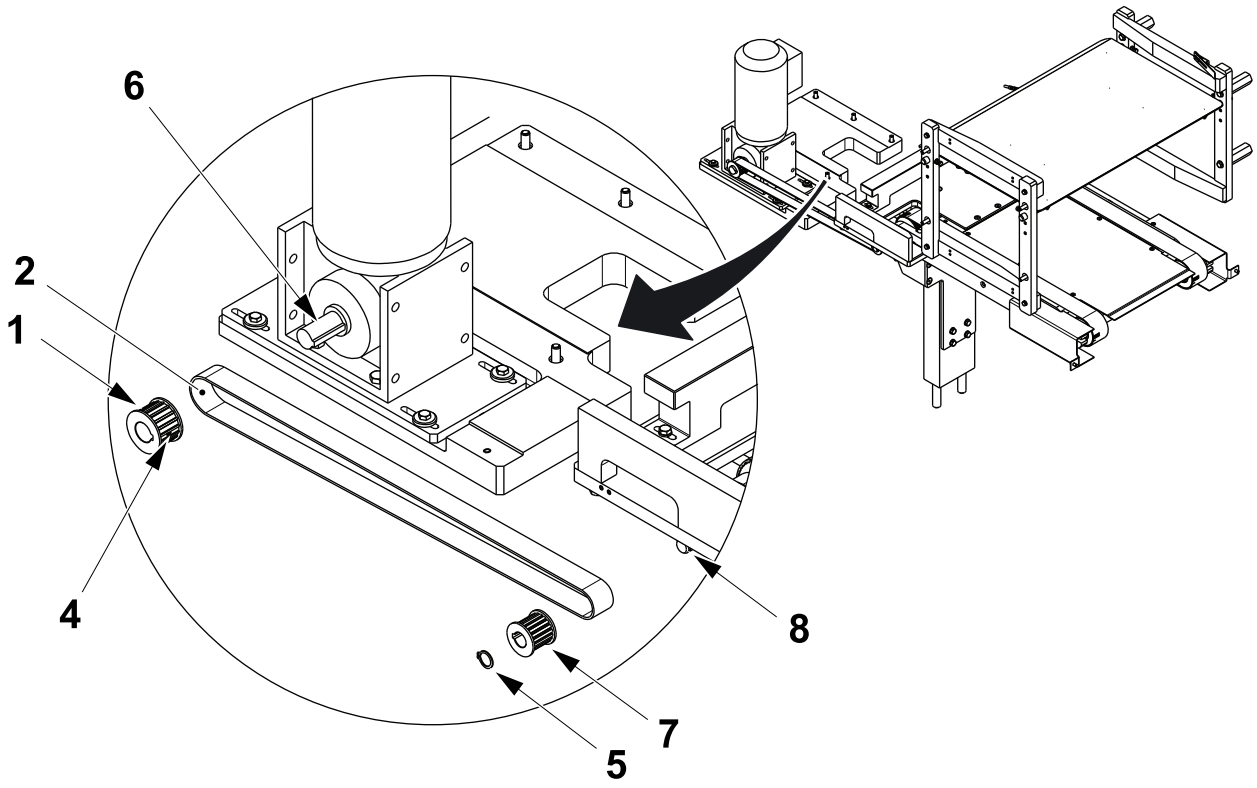

1 Pulley
2 Belt
4 Screw
5 Retaining ring
6 Shaft
7 Pulley
8 Shaft

7.2.2-2 Box Conveyor - Change Conveyor Belts

Machine Status	Electrical supply disconnecting device in position O (OFF) Main air valve OFF
SPC Reference	2792484-0200

a) Remove the drive belt (1), see 7.2.2-1 Box Conveyor - Change Drive Belt.

b) Remove the screws (2) and (3) and the cover (4).

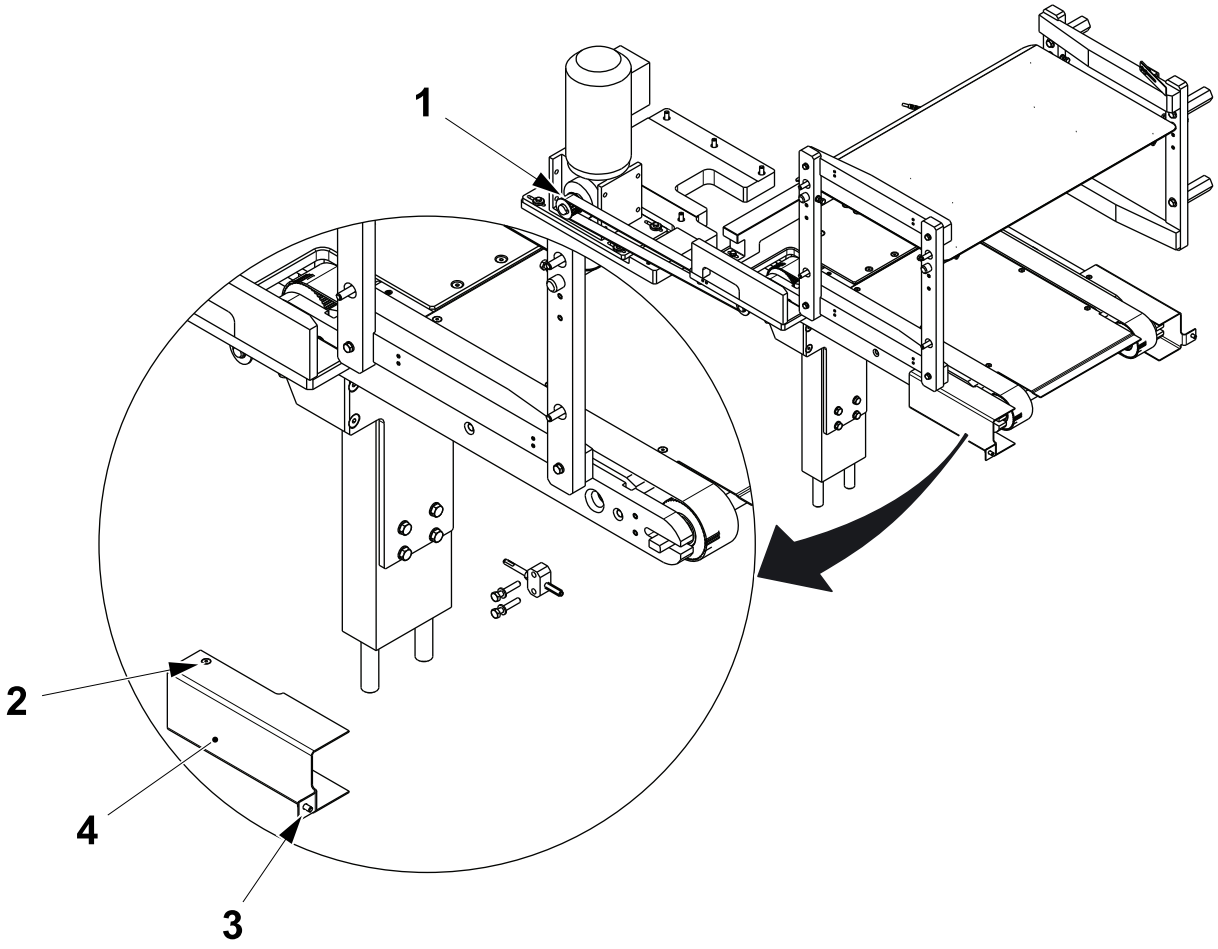

1 Drive belt
2 Screw
3 Screw
4 Cover

(Cont'd)

(Cont'd)

c) Measure the distance of the stop (5) setting.

d) Release the tension on the belt (6) by turning the nut (7).

e) Change the belt (6) and set the tension, see 7.2.2-4 Box Conveyor - Set Conveyor Belt Tension.

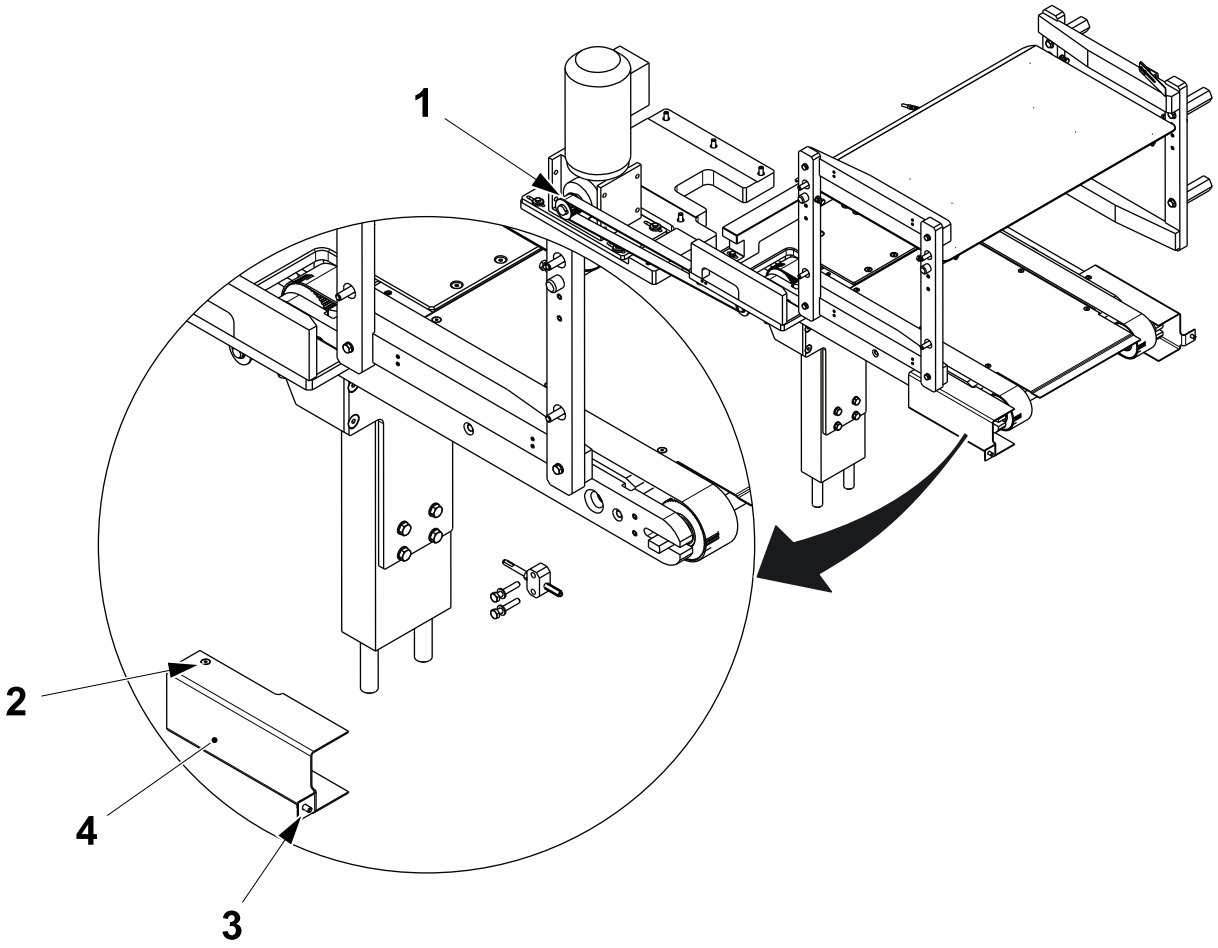

5 Stop
6 Belt
7 Nut

(Cont'd)

(Cont'd)

f) Remove the screws (8) and (9) and the cover (10).

g) Measure the distance of the stop (11) setting.

h) Release the tension on the belt (12) by turning the nut (13).

i) Change the belt (12).

j) Assemble in the reverse order.

k) Set belt tension, see 7.2.2-4 Box Conveyor - Set Conveyor Belt Tension.

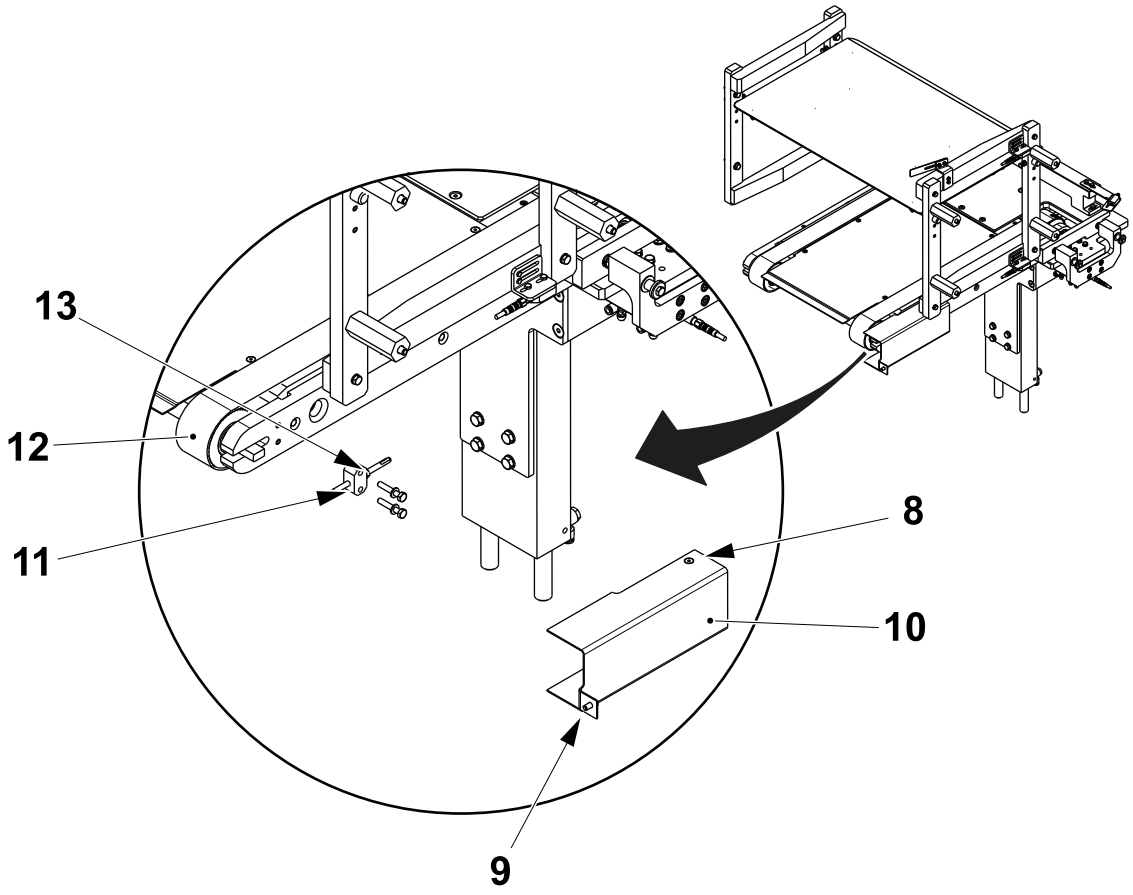

8 Screw	11 Stop
9 Screw	12 Belt
10 Cover	13 Nut

7.2.2-3 Box Conveyor - Set Drive Belt Tension

Machine Status	Electrical supply disconnecting device in position O (OFF) Main air valve OFF
SPC Reference	2792484-0200

a) Loosen the screws (1).

b) Move the bracket (2) to set the belt tension. It should be possible to move the belt (3) the distance **A** at its centre.

c) When the belt tension is correct, tighten the screws (1).

d) Check the tension again. If the tension is incorrect, repeat the procedure.

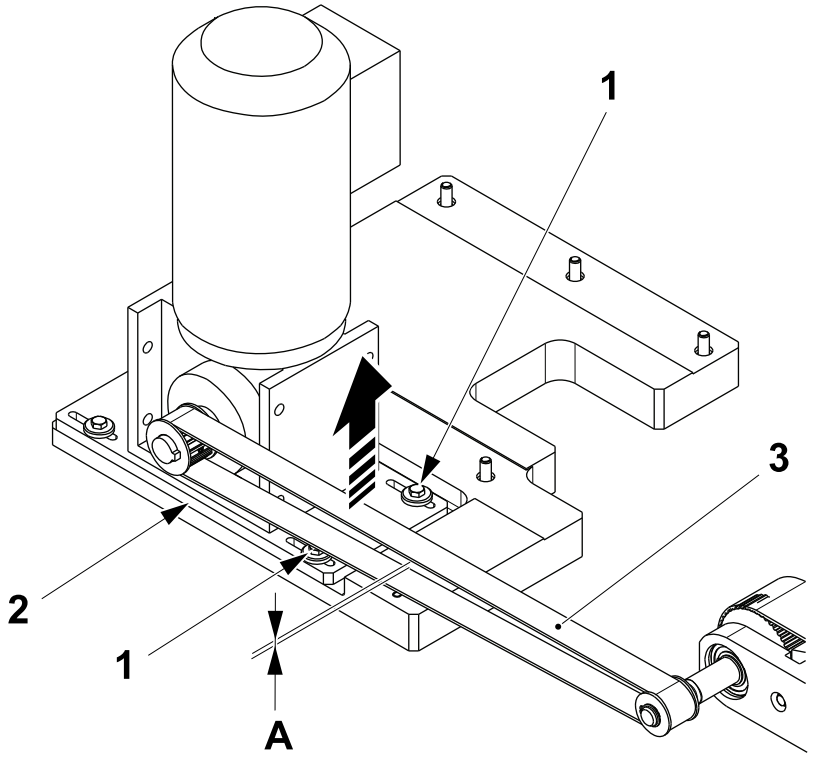

A = 5 mm
1 Screw
2 Bracket
3 Belt

7.2.2-4 Box Conveyor - Set Conveyor Belt Tension

Machine Status	Electrical supply disconnecting device in position O (OFF) Main air valve OFF
SPC Reference	2792484-0200

a) Loosen the nut (1).

b) Rotate the shaft (2) to set the belt tension. It should be possible to move the belt (3) the distance **A** at its centre.

c) When the belt tension is correct, tighten the nut (1).

d) Check the tension again. If the tension is incorrect, repeat steps from a) to c).

e) Repeat the procedure for the other belt.

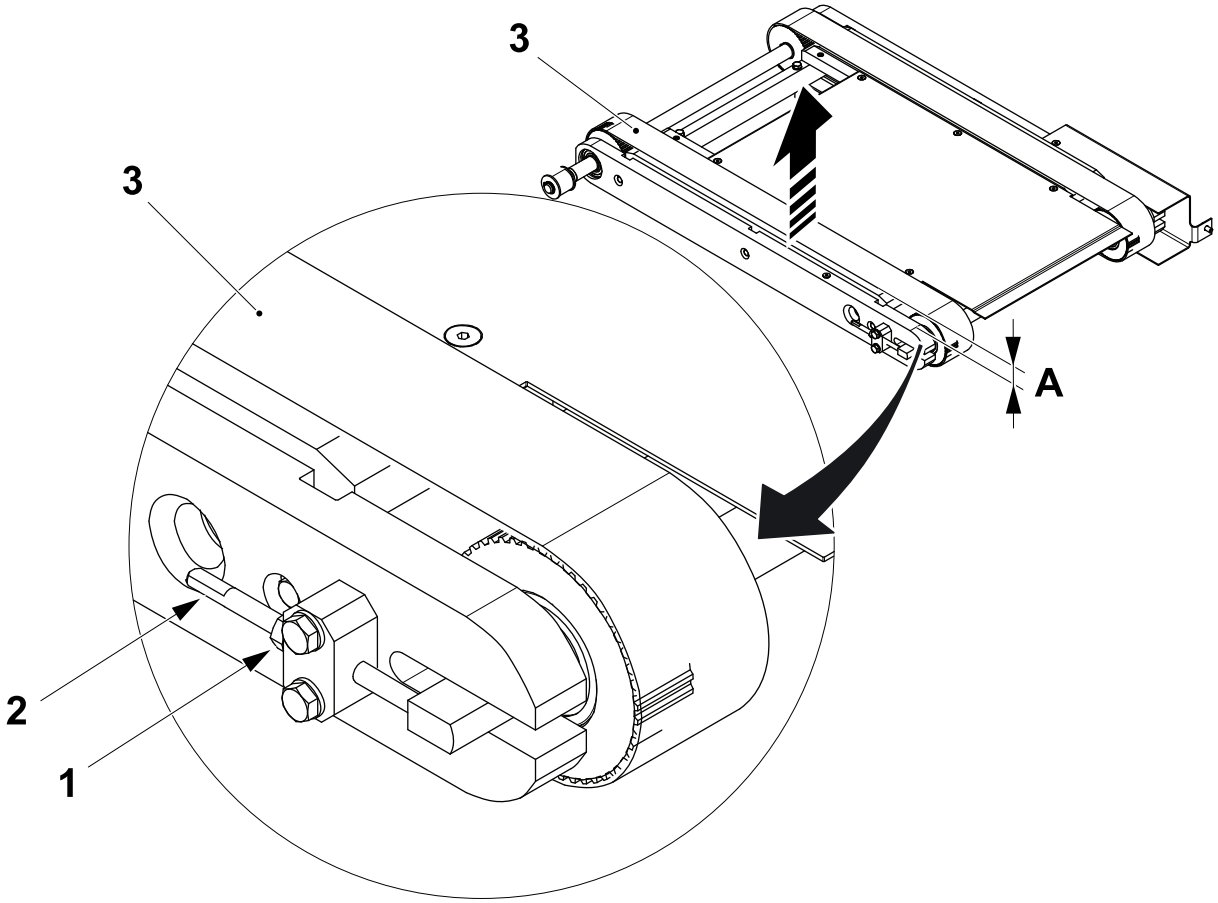

A = 5 mm
1 Nut
2 Shaft
3 Belt

7.2.2-5 Box Conveyor - Change Bearings

Machine Status	Electrical supply disconnecting device in position O (OFF) Main air valve OFF
SPC Reference	2792484-0200

a) Remove the drive belt (1), see 7.2.2-1 Box Conveyor - Change Drive Belt.

b) Remove the conveyor belts (2) and (3), see 7.2.2-2 Box Conveyor - Change Conveyor Belts.

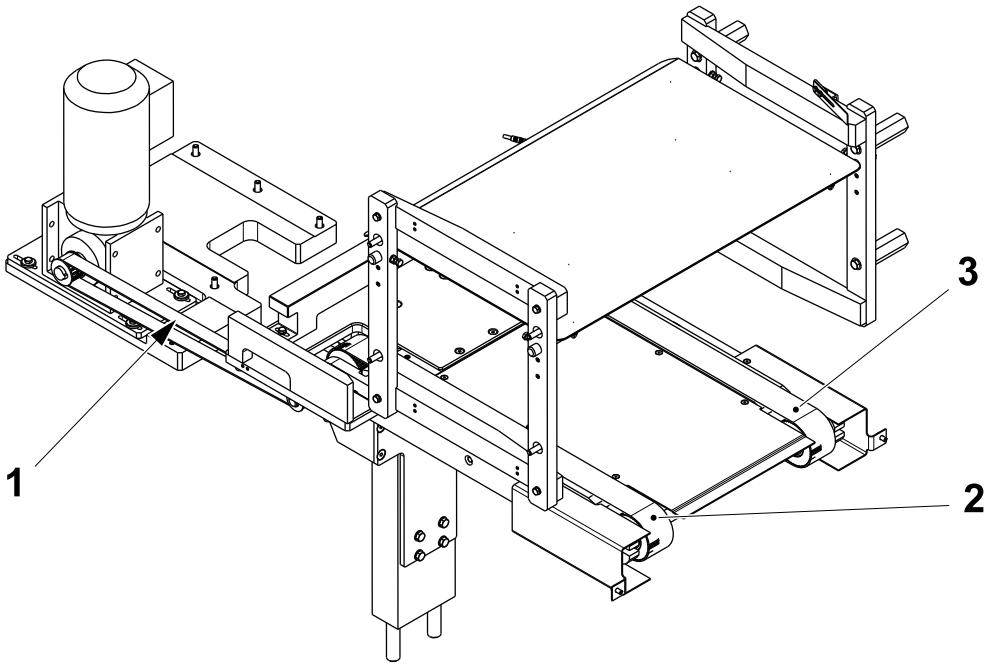

1 Drive belt
2 Conveyor belt
3 Conveyor belt

(Cont'd)

(Cont'd)

c) Remove the shaft (4).

d) Remove retaining rings (5).

e) Pull the pulleys (6) off the shaft (4).

f) Extract and change the bearings (7).

g) Remove the cover (8).

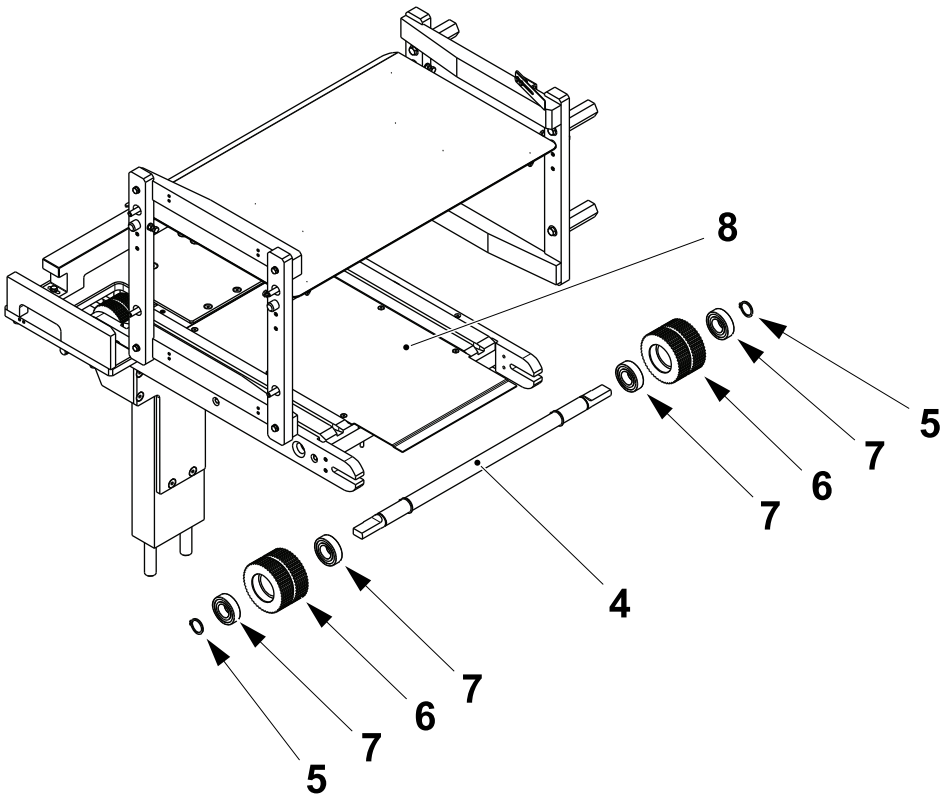

4 Shaft
5 Retaining ring
6 Pulley
7 Bearing
8 Cover

(Cont'd)

(Cont'd)

Note! To gain access to the rear two screws (9) it is necessary to lift the elevator plate (10) or remove the machine side panel.

h) Remove the six screws (9) and the frame (11).

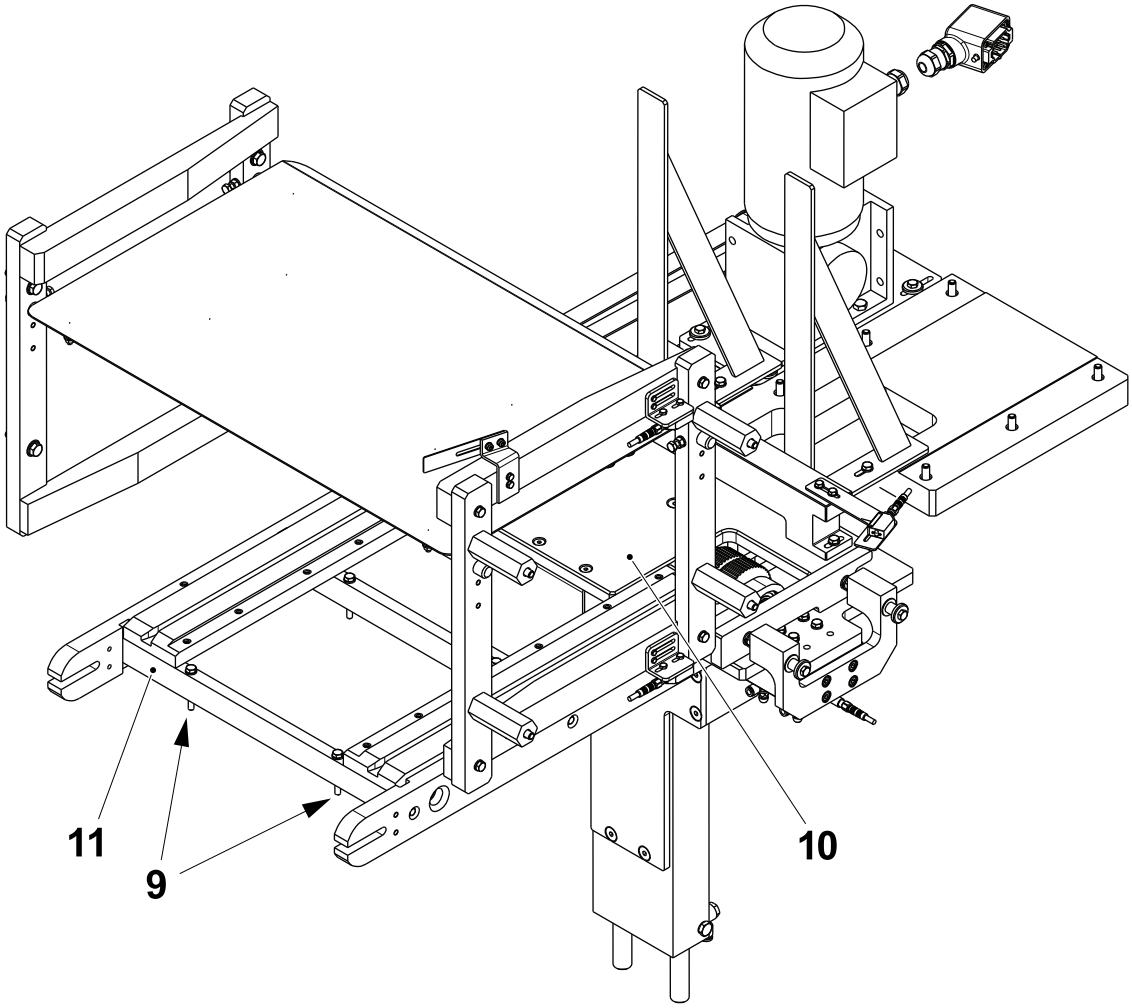

9 Screw
10 Elevator plate
11 Frame

(Cont'd)

(Cont'd)

Note! The retaining ring (12) and the key (13) are for one of the drive pulleys, see 7.2.2-1 Box Conveyor - Change Drive Belt.

i) Remove the retaining ring (12) and the key (13).

j) Remove the retaining rings (14).

k) Remove the inner retaining rings (15) and slide the pulleys (16) toward the centre of the shaft (17).

l) Remove the keys (18) and the outer retaining rings (19).

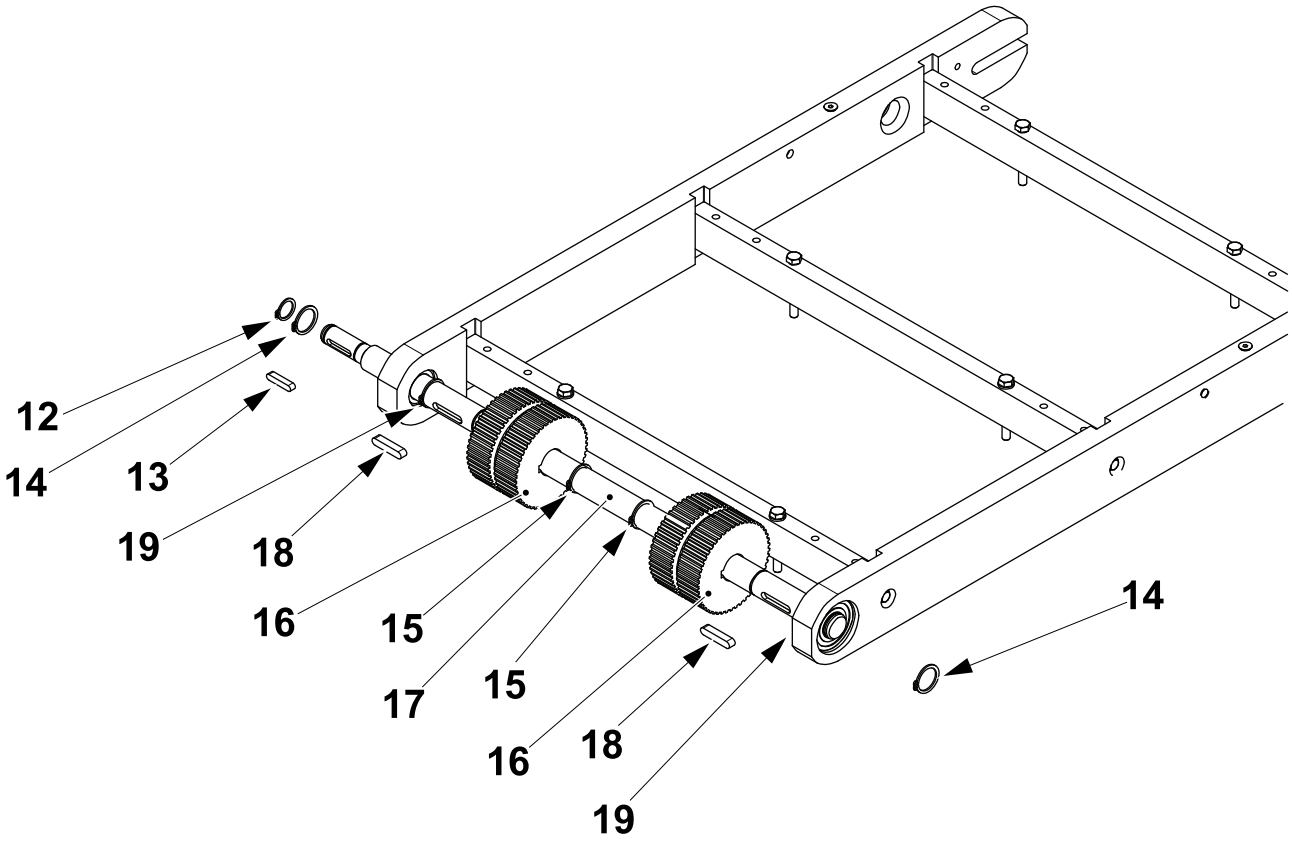

12 Retaining ring
13 Key
14 Retaining ring
15 Retaining ring
16 Pulley
17 Shaft
18 Key
19 Retaining ring

(Cont'd)

(Cont'd)

m) Remove the shaft (17) and the pulleys (16).

n) Extract the bearings (20) from the frame (11).

o) Change the bearings (20).

p) Assemble in the reverse order.

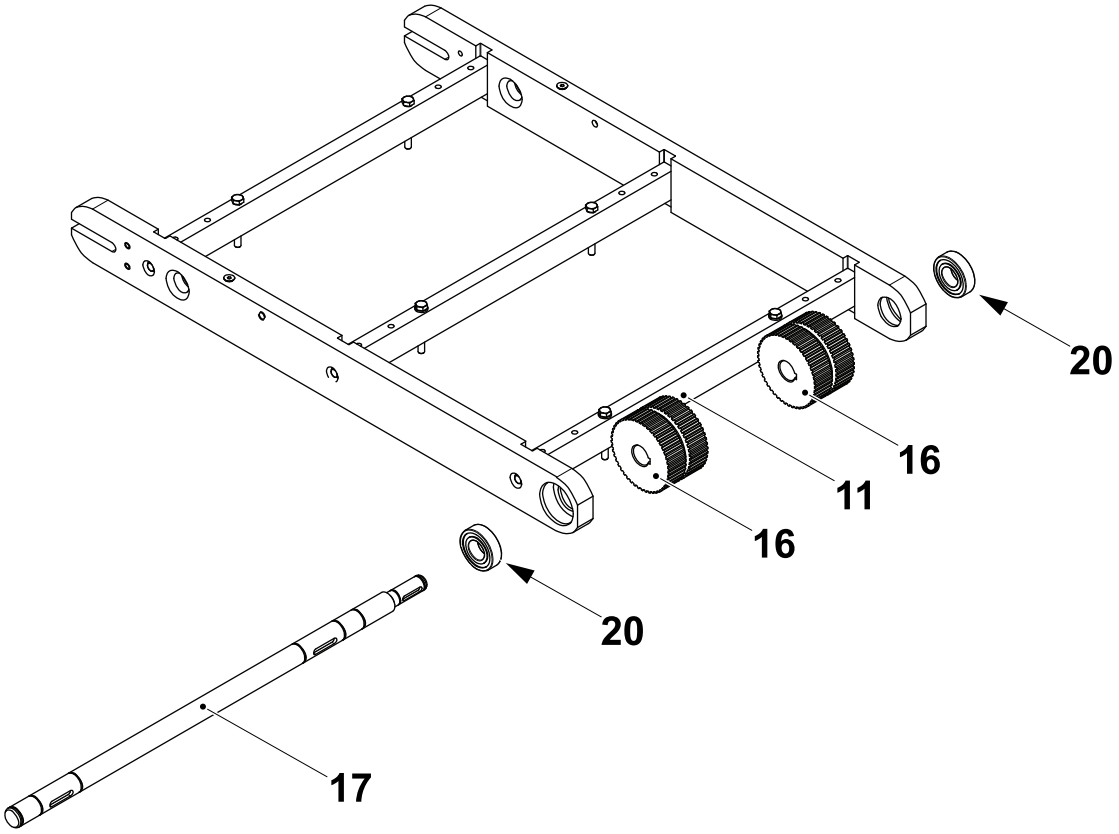

11 Frame
16 Pulley
17 Shaft
20 Bearing

7.2.2-6 Box Conveyor - Change for Box Size

Machine Status	Electrical supply disconnecting device in position O (OFF) Main air valve OFF
SPC Reference	2792484-0200

a) Insert the four spacers (1) when ReCap 2 is to be used.

b) Remove the spacers (1) if present, when ReCap 3 is to be used.

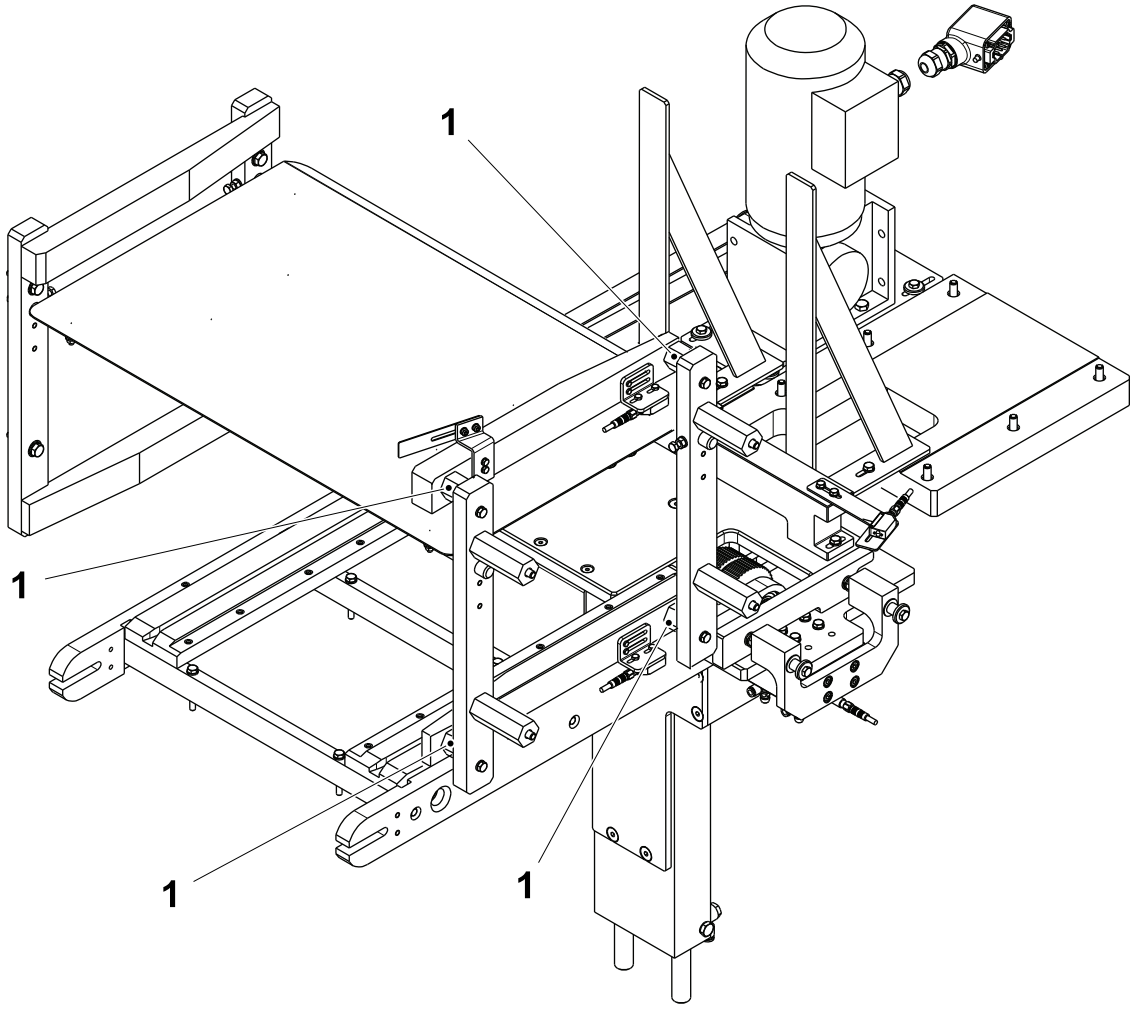

1 Spacer

7.3 ReCap Magazine - Positioning Unit

7.3.1 Positioning Unit - Drive Unit

7.3.1-1 Drive Unit - Change Horizontal Cylinder

Machine Status	Electrical supply disconnecting device in position O (OFF) Main air valve OFF
SPC Reference	2715960-0200

a) Disconnect the connectors (1) from the sensors (2).

b) Remove the sensors (2) from the cylinder (3).

c) Disconnect the air hoses from the connectors (4).

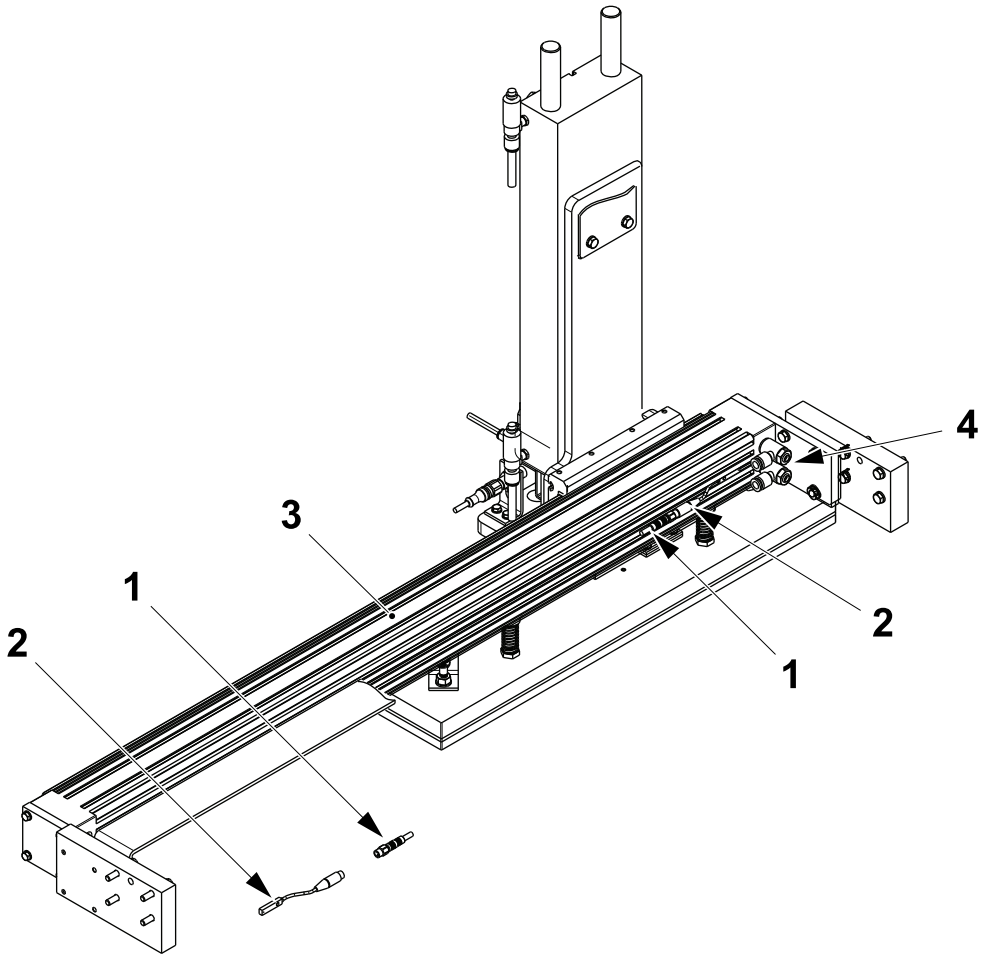

1 Connector
2 Sensors
3 Cylinder
4 Connector

(Cont'd)

(Cont'd)

d) At both ends of the cylinder (3), remove the screws (5) securing the cylinder (3) in position on the brackets (6).

e) Remove the screws (7) and remove the cylinder (3) from the cylinder (8).

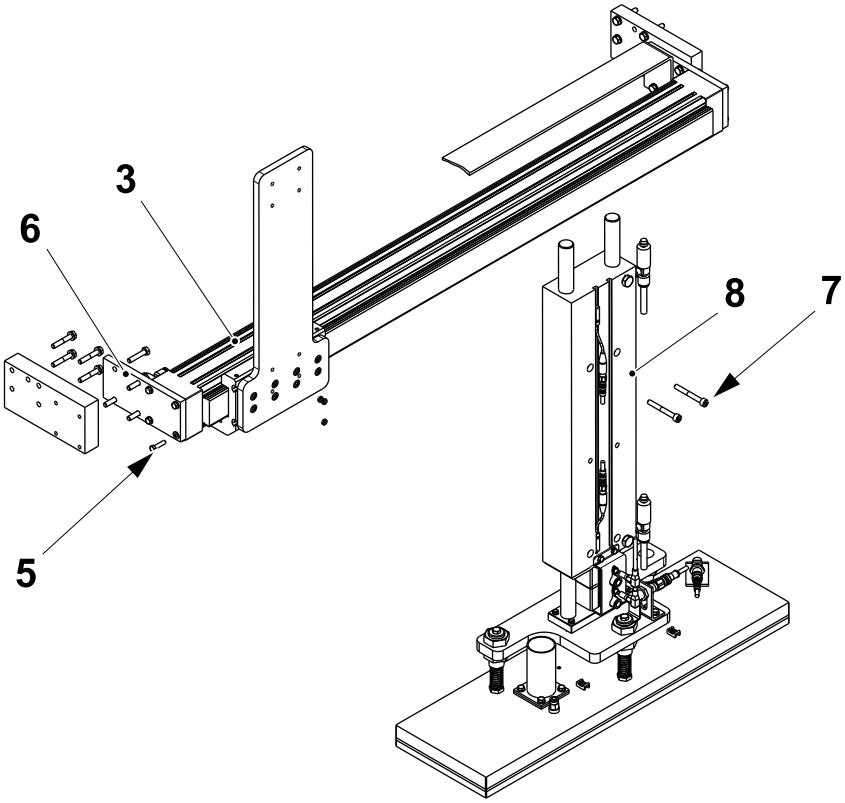

3 Cylinder
5 Screw
6 Bracket
7 Screw
8 Cylinder

(Cont'd)

(Cont'd)

f) Remove the screws (9) and the plate (10).

g) Assemble in the reverse order.

h) Set the sensors, see 7.1.1-3 Sensor - Set Horizontal Cylinder Sensor Position.

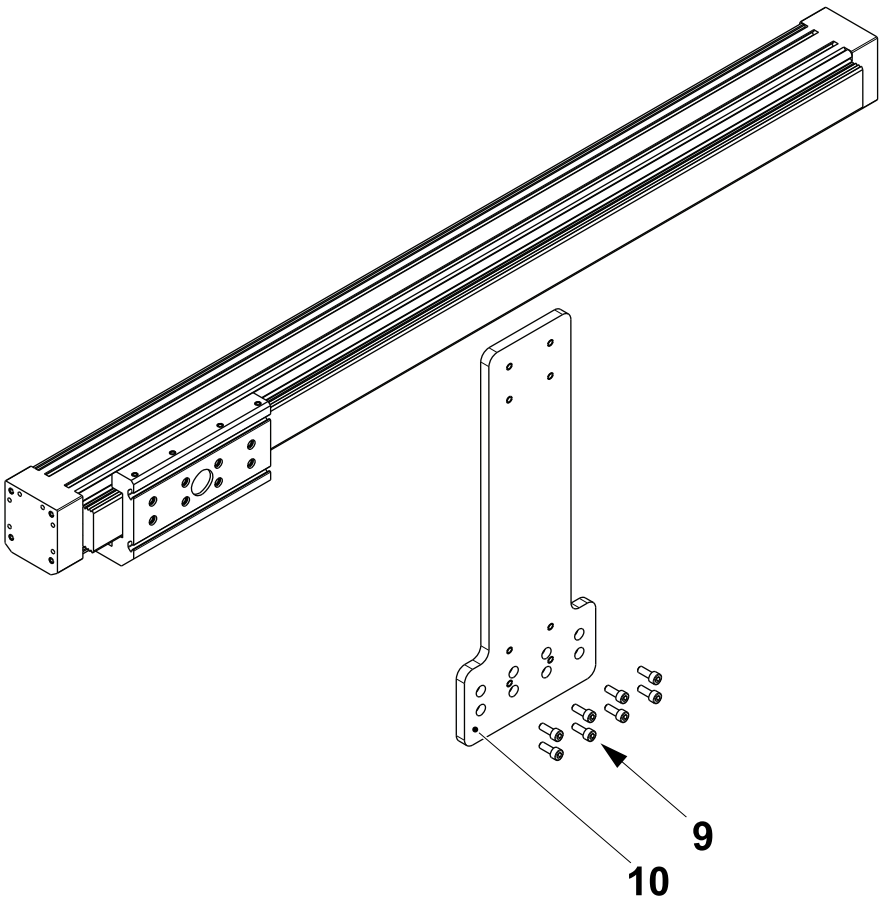

9 Screw
10 Plate

7.3.1-2 Drive Unit - Change Vertical Cylinder

Machine Status	Electrical supply disconnecting device in position O (OFF) Main air valve OFF
SPC Reference	2715960-0200

a) At the rear of the vertical cylinder assembly (1), disconnect the cables from the sensors (2).

b) Disconnect the cables from the brake sensors (3).

c) At the ends of the vertical cylinder assembly (1), disconnect the air hoses from the connector/regulators (4).

d) Disconnect any other connection from the vacuum assembly (5).

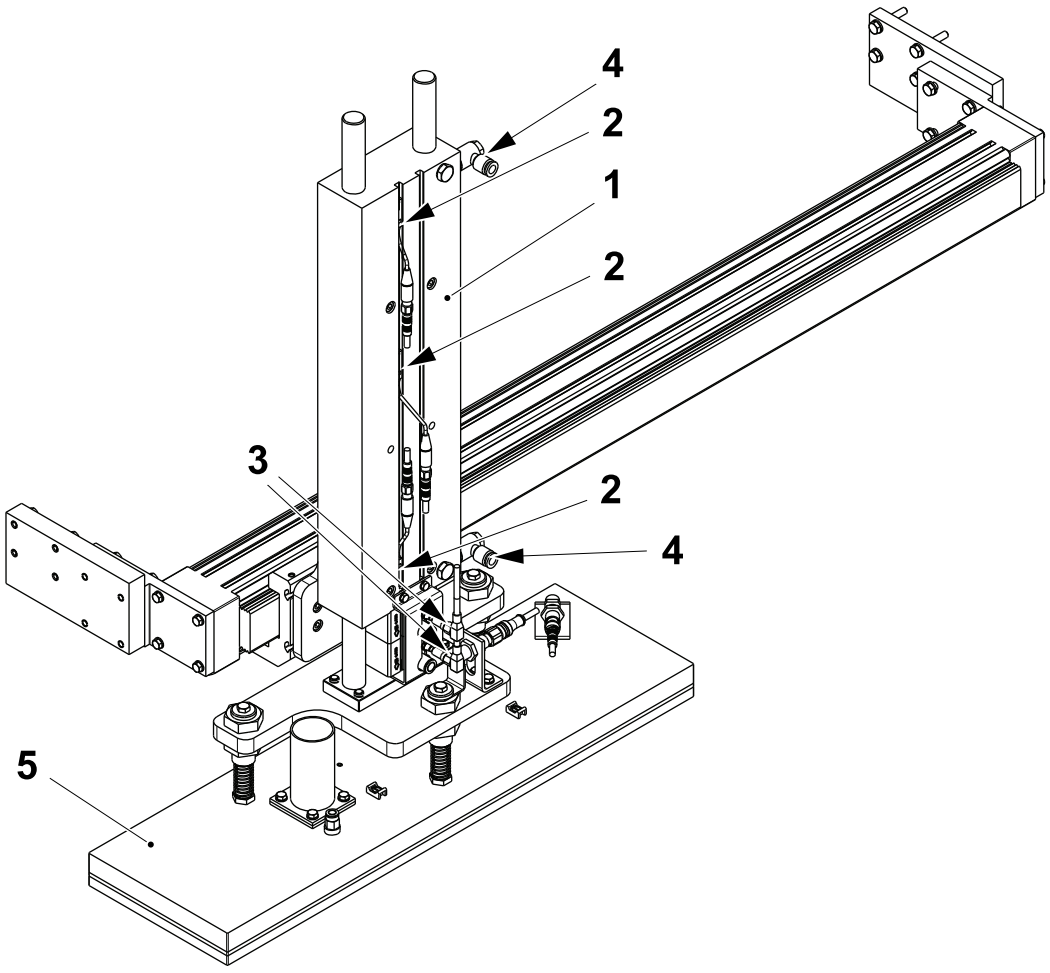

1 Vertical cylinder assembly
2 Sensor
3 Sensor
4 Connector/regulators
5 Vacuum assembly

(Cont'd)

(Cont'd)

e) Remove the screws (6) and the vertical cylinder assembly (1).

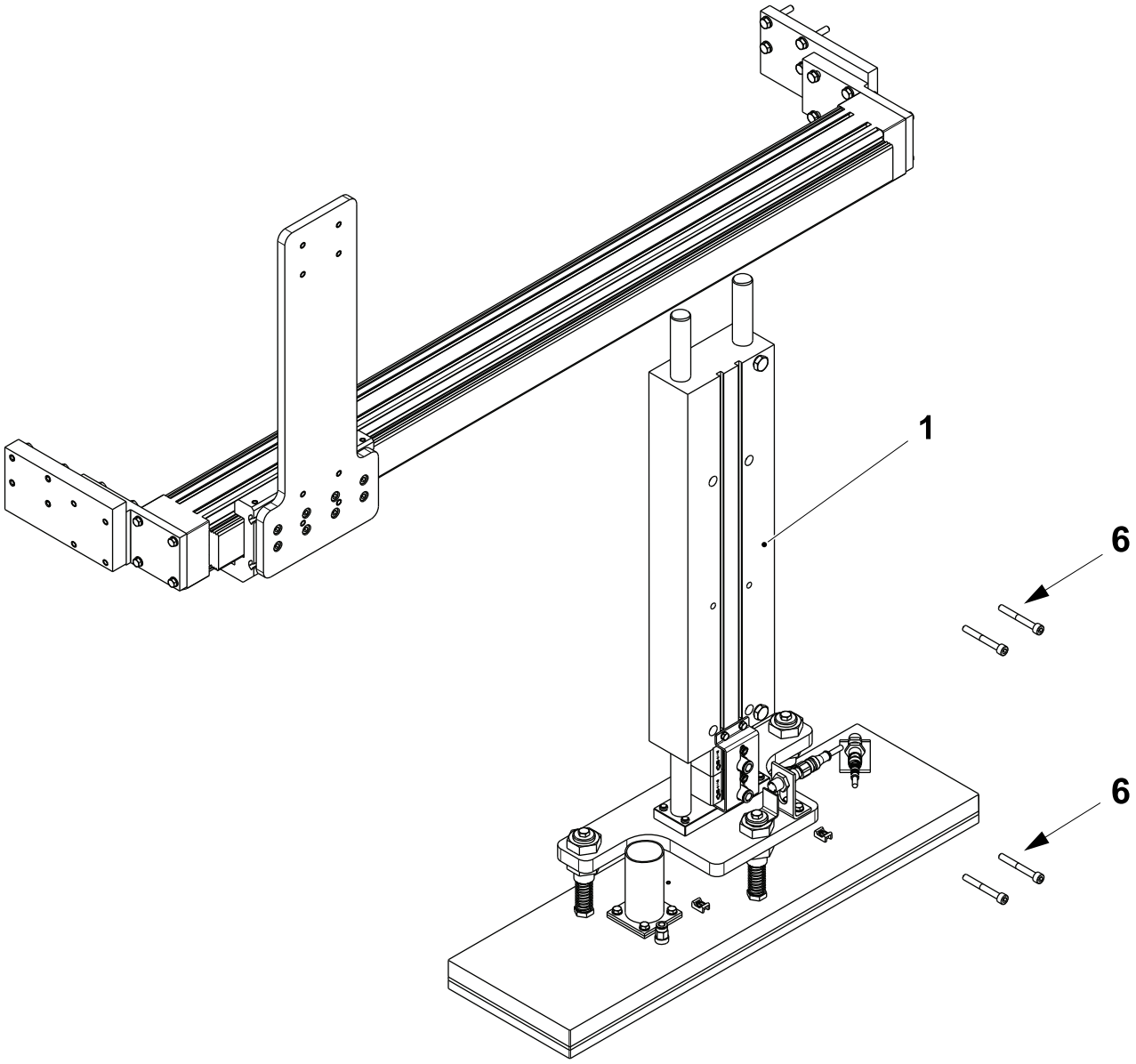

1 Vertical cylinder assembly

6 Screw

(Cont'd)

(Cont'd)

f) From beneath the plate (7) remove the screws (8) and separate the vacuum assembly (5) from the vertical cylinder assembly (1).

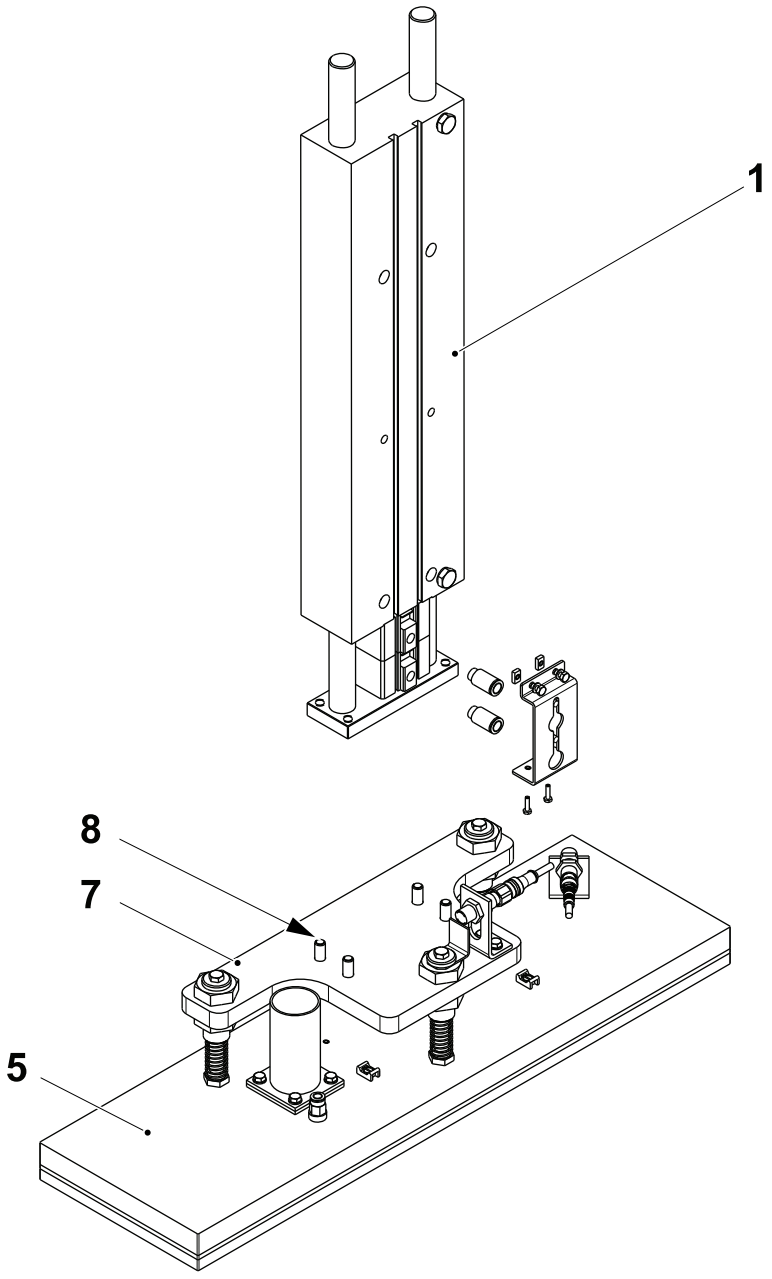

1 Vertical cylinder assembly
5 Vacuum assembly
7 Plate
8 Screw

(Cont'd)

(Cont'd)

g) Remove the sensors (2) and (3) from the vertical cylinder assembly (1).

Note! Assemble the sensors before installation.

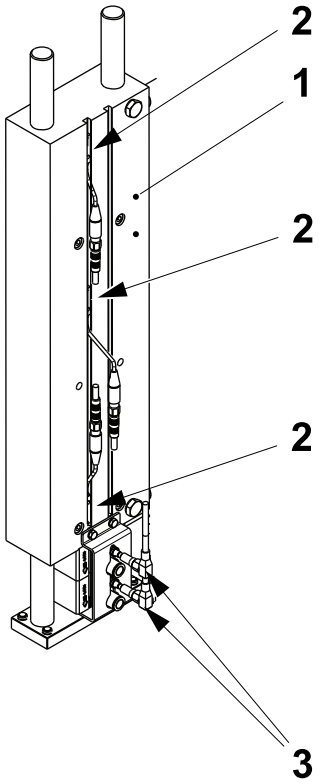

1 Vertical cylinder assembly
2 Sensor
3 Sensor

(Cont'd)

(Cont'd)

h) Remove the screws (9) and (10) and the cover (11) from the vertical cylinder assembly (1).

i) Remove the adaptors (12) from the vertical cylinder assembly (1).

j) Assemble in the reverse order.

k) Set the sensors, see 7.1.1-4 Sensor - Set Vertical Cylinder Position Sensors.

Note! Check that the air pressure is set to 2.0 Bar, see 4.4.2 Pneumatic Panel - Description for the down stroke.

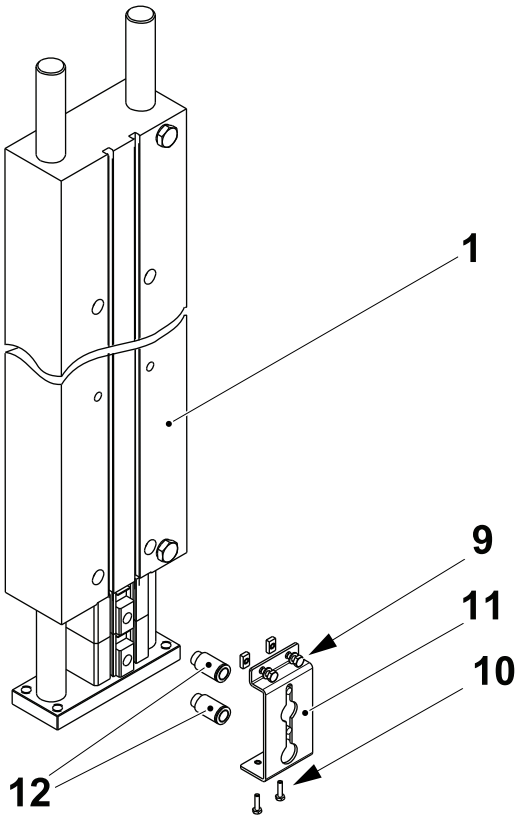

1 Vertical cylinder assembly
9 Screw
10 Screw
11 Cover
12 Adaptor

7.3.2 Positioning Unit - Sheet Carrier

7.3.2-1 Sheet Carrier - Overhaul

Machine Status	Electrical supply disconnecting device in position O (OFF) Main air valve OFF
SPC Reference	2715960-0200

a) Disconnect the air hoses any other connector from the sheet carrier (1).

b) From beneath the plate (2), remove the screws (3) securing the sheet carrier (1) in position under the cylinder (4).

c) Overhaul the sheet carrier (1) as necessary.

d) Assemble in the reverse order.

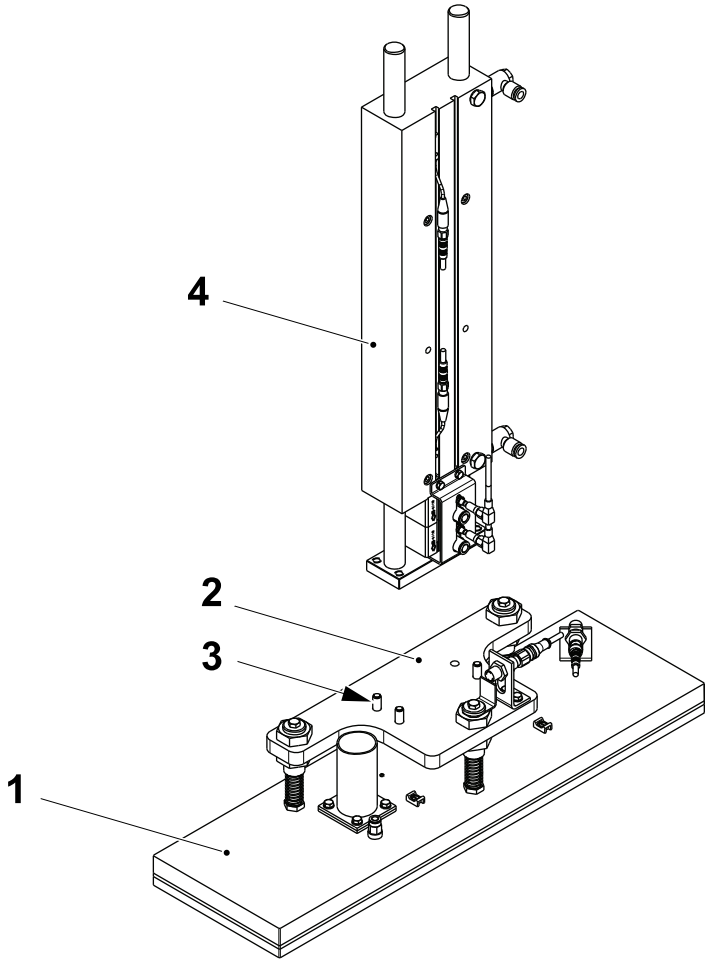

1 Sheet carrier
2 Plate
3 Screw
4 Cylinder

7.3.2-2 Sheet Carrier - Change Rubber Mat

Machine Status	Electrical supply disconnecting device in position O (OFF) Main air valve OFF
SPC Reference	2715960-0200

a) Disconnect the air hoses any other connector from the sheet carrier (1).

b) From beneath the plate (2), remove the screws (3) securing the sheet carrier (1) in position under the cylinder (4).

c) Take the sheet carrier (1) to a suitable place to remove the rubber mat.

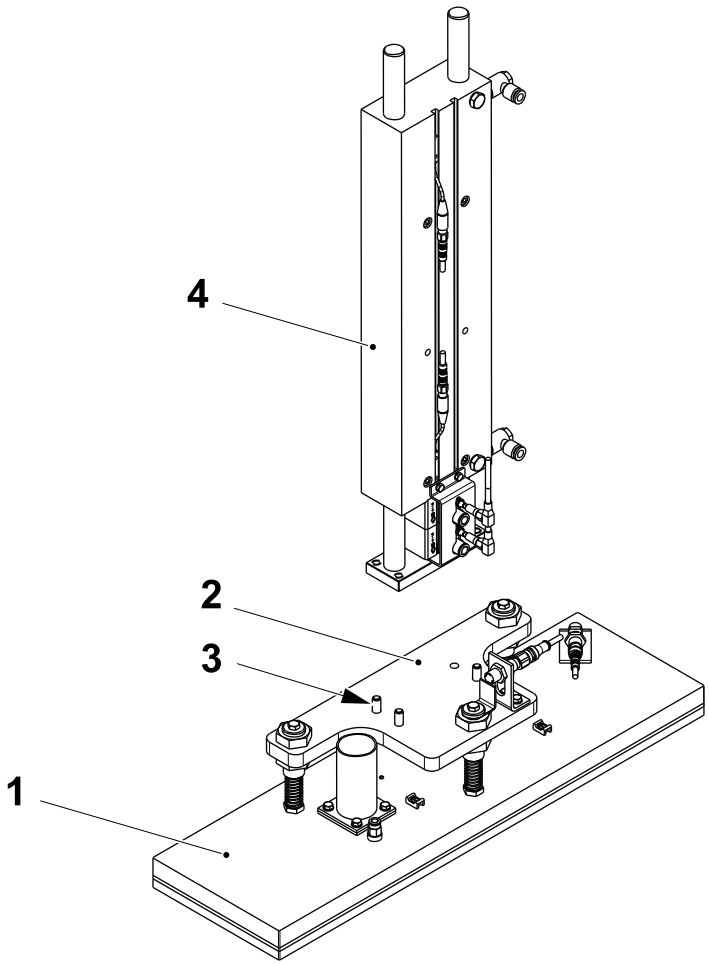

1 Sheet carrier
2 Plate
3 Screw
4 Cylinder

(Cont'd)

(Cont'd)

d) Remove the rubber mat (5) with the aid of a scrapper taking care not to damage the sheet present sensing device (6).

e) Using a suitable solvent carefully remove the remaining adhesive.

Note! The plate must be clear of all adhesive residue before attempting to stick the new rubber mat on.

f) Assemble in the reverse order.

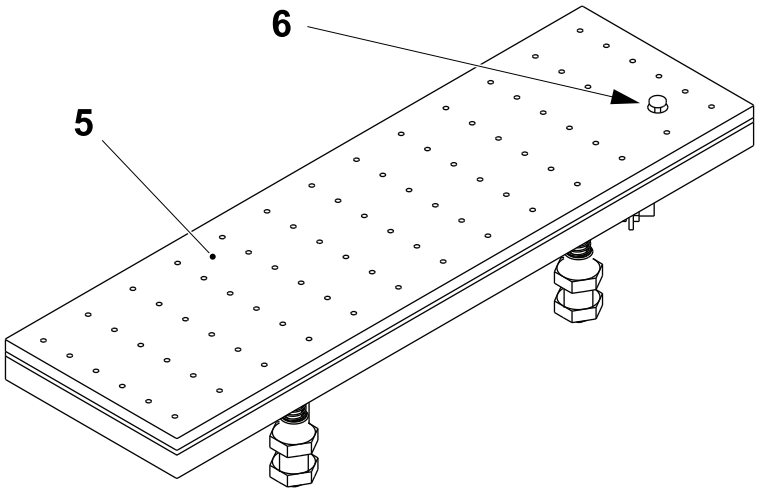

5 Rubber mat
6 Sheet present sensing device

7.3.3 Positioning Unit - Set

7.3.3-1 Positioning Unit - Setting

Machine Status	Electrical supply disconnecting device in position O (OFF) Main air valve OFF
SPC Reference	2715960-0200

a) Set the distance **A** between the sheet carrier (1) and the top of the cap box (2) by adjusting the nuts (3).

b) Centre the sheet carrier (1) in the Y direction by loosening the screws (4) and sliding the plate (5) in its the elongated holes.

Note! Collect a sheet of caps and check the position.

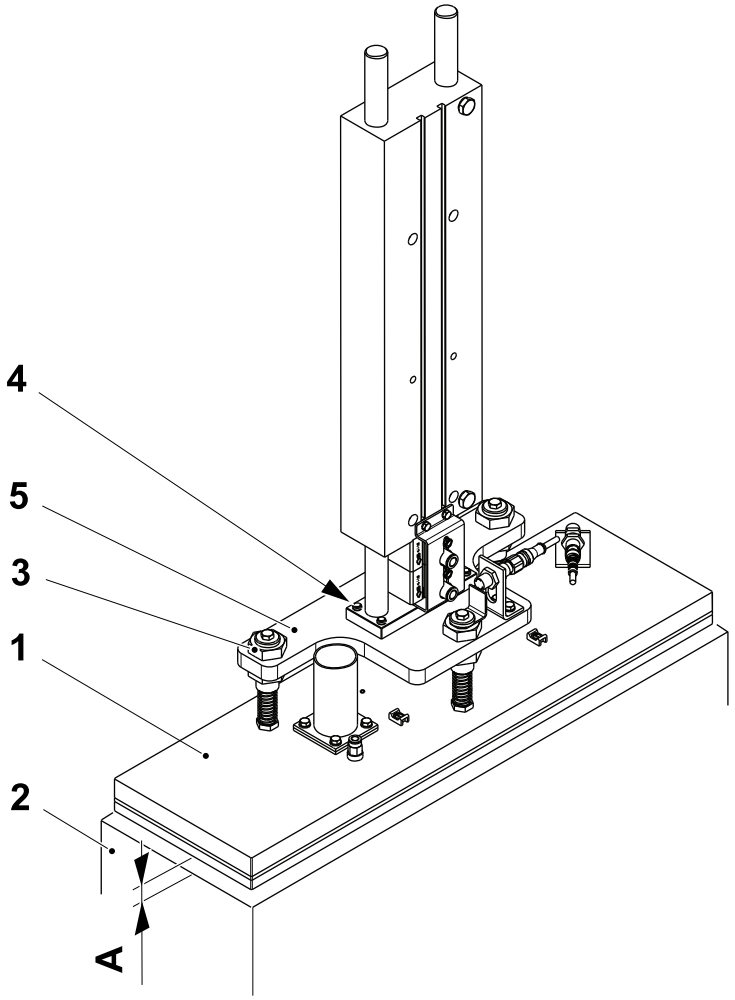

1 Sheet carrier
2 Cap box
3 Nut
4 Screw
5 Plate

7.4 ReCap Magazine - Pusher

7.4.1 Pusher - Cylinder

7.4.1-1 Pusher - Change Cylinder

Machine Status	Electrical supply disconnecting device in position O (OFF) Main air valve OFF
SPC Reference	2792486-0200

a) Remove the screws (1) and the pusher arm (2).

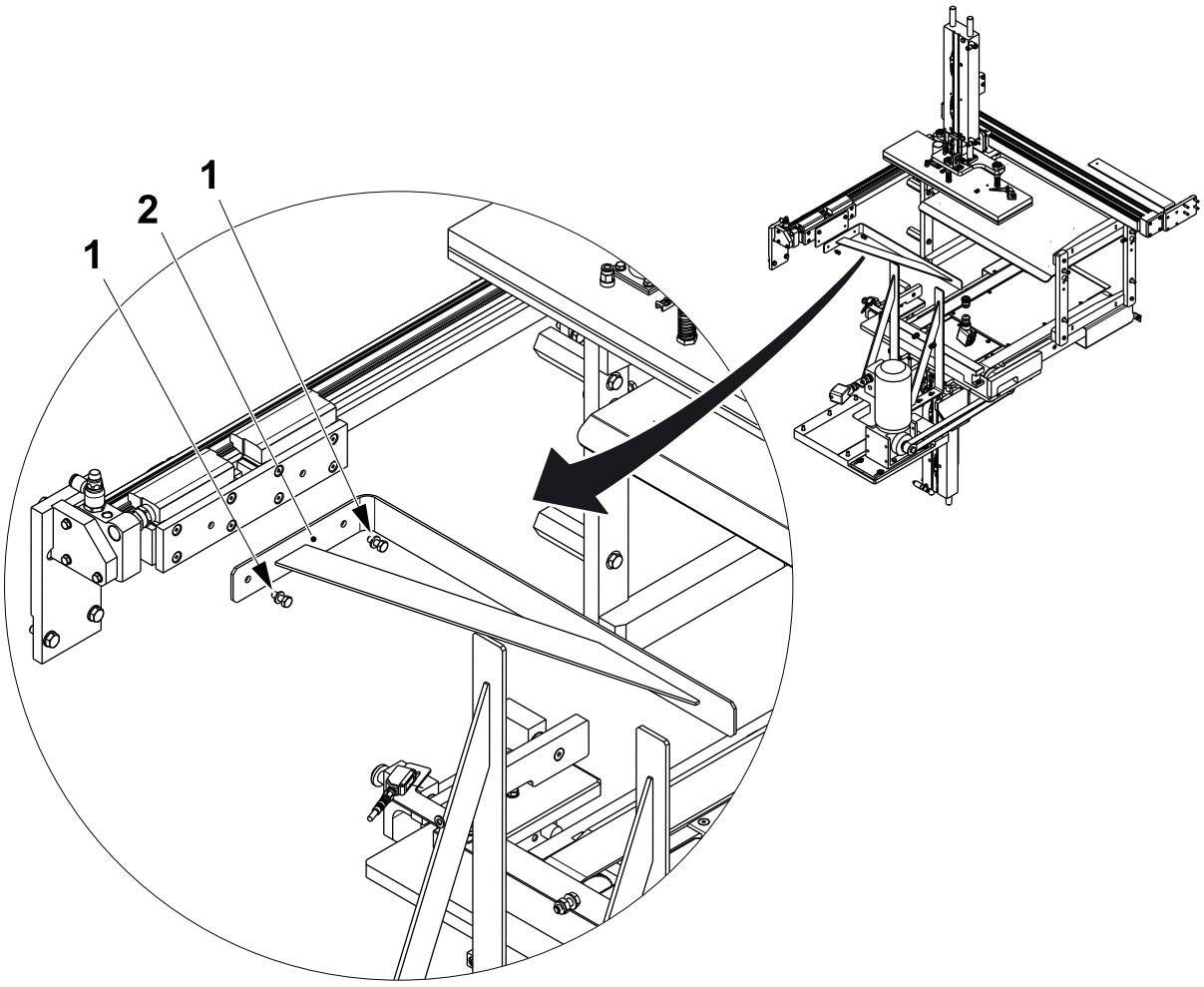

1 Screw
2 Arm

(Cont'd)

(Cont'd)

b) Disconnect the air hoses from the connectors (3).

c) Remove the connectors (4) from the sensors (5) and then remove the sensors (5).

d) At both ends of the cylinder (6), remove the screws (7) securing the cylinder (6) in position on the brackets (8) and lift out the cylinder (6).

e) Remove the screws (9) and the plate (10).

f) Change the cylinder (6).

g) Assemble in the reverse order.

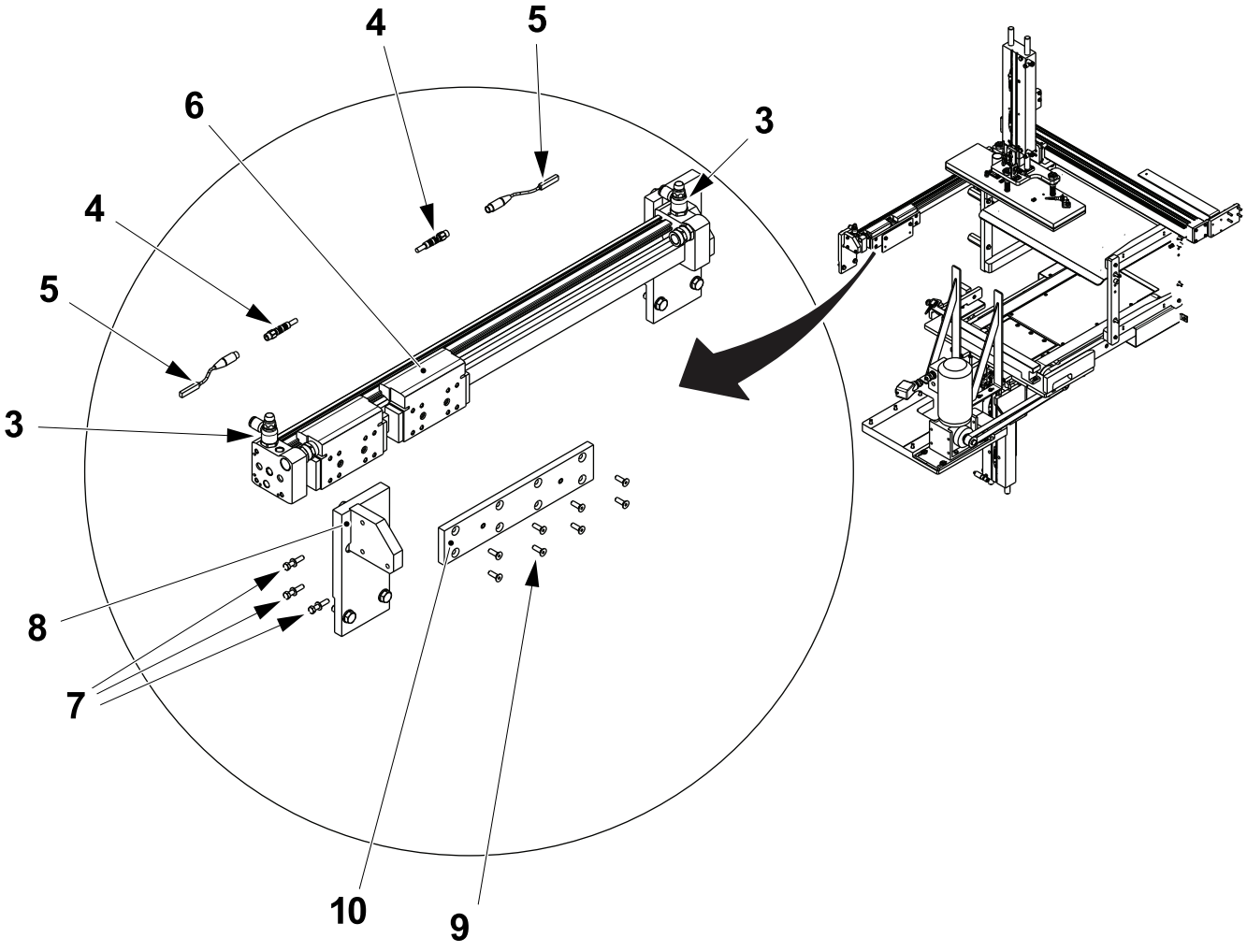

3 Connector
4 Connector
5 Sensor
6 Cylinder
7 Screw
8 Bracket
9 Screw
10 Plate

7.5 ReCap Magazine - Light Barrier

7.5.1 Light Barrier - Transmitter and Receiver

7.5.1-1 Receiver - Change

Machine Status	Electrical supply disconnecting device in position O (OFF) Main air valve OFF
SPC Reference	2779794-0300

Note! The transmitter and the receiver can be fitted in either sides. Normally the receiver is installed on the left side, see the picture.

a) Disconnect the connector (1) from the light barrier receiver (2).

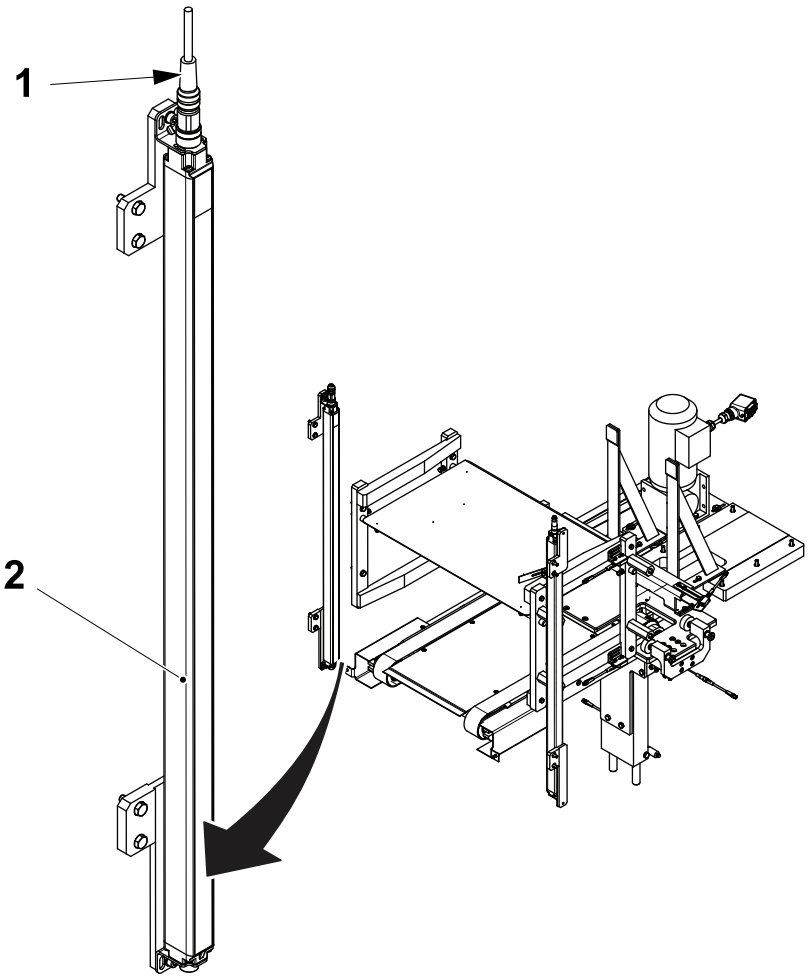

1 Connector
2 Receiver

(Cont'd)

(Cont'd)

b) Remove the 2 screws (3) securing the light barrier receiver (2) in position and change the light barrier receiver (2).

c) Install the new receiver in the reverse order.

d) Turn the mains power to on and check that the LED display (4) is on.

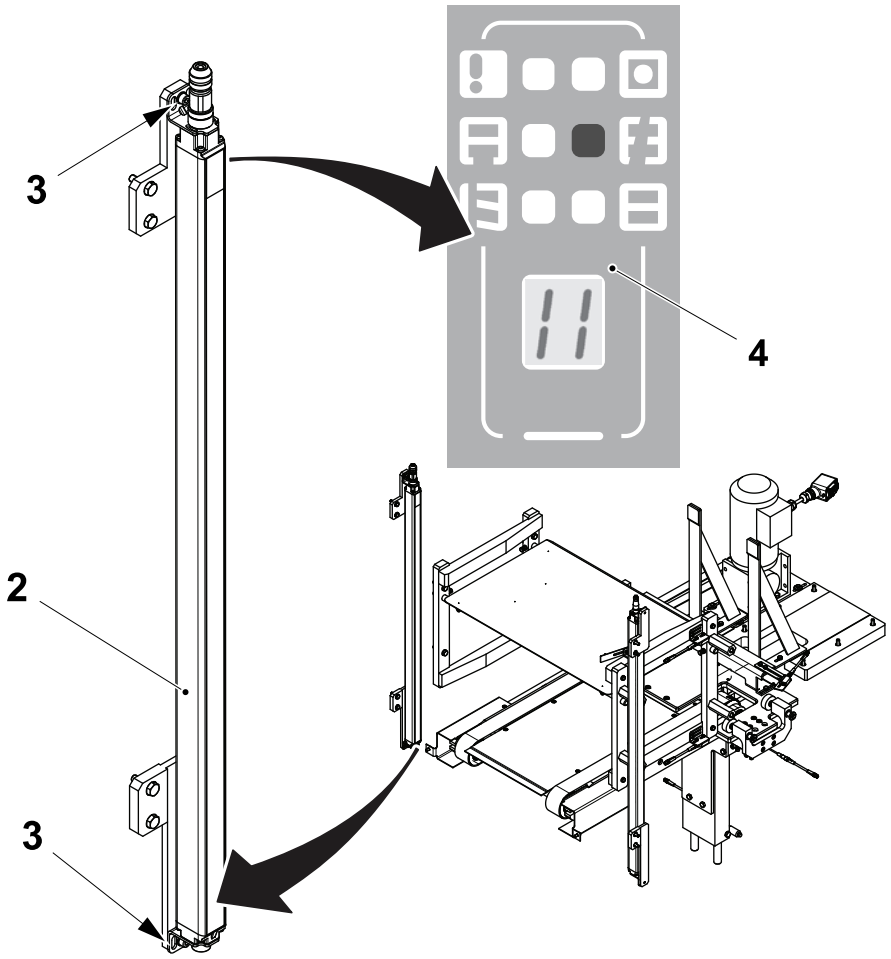

2 Receiver
3 Screw
4 LED Display

7.5.1-2 Transmitter - Change

Machine Status	Electrical supply disconnecting device in position O (OFF) Main air valve OFF
SPC Reference	2779794-0300

Note! The transmitter and the receiver can be fitted in either sides. Normally the transmitter is installed on the right side, see the picture.

a) Disconnect the connector (1) from the light barrier transmitter (2).

b) Remove the 2 screws (3) securing the light barrier transmitter (2) in position and change the light barrier transmitter (2).

c) Install the new transmitter in the reverse order.

d) Turn the mains power to on and check that the LED display (4) is on.

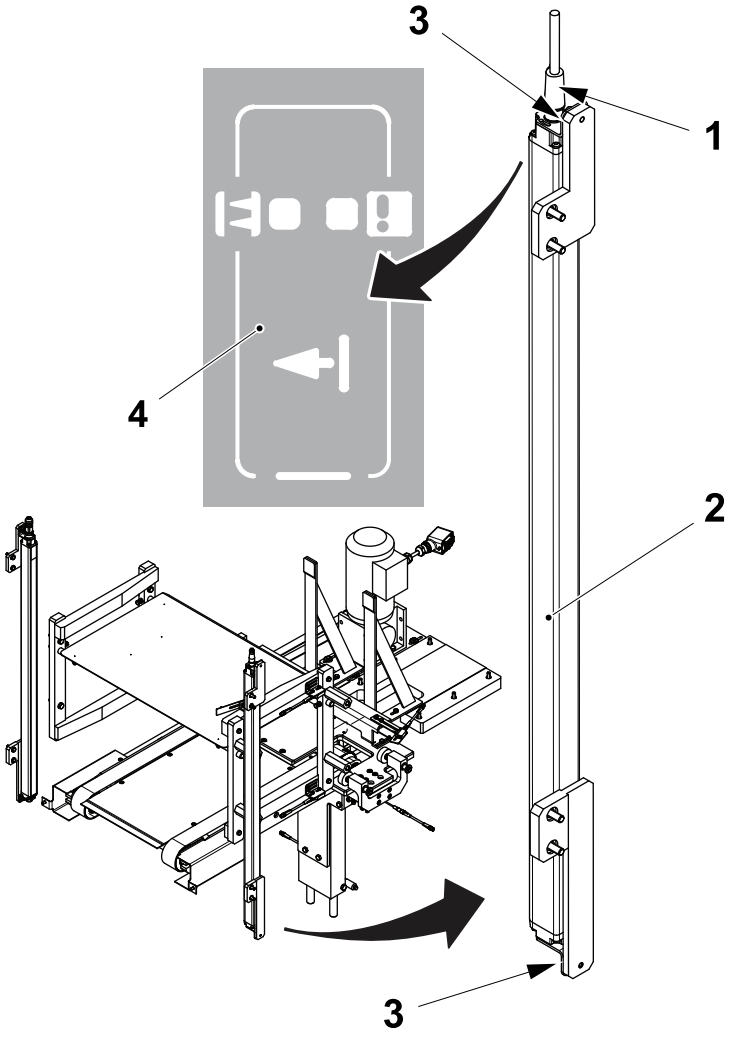

1 Connector
2 Transmitter
3 Screw
4 LED Display

7.5.1-3 Align - Transmitter and Receiver

Machine Status	Electrical supply disconnecting device in position O (OFF) Main air valve OFF
Special Equipment	Torx Key Set
SPC Reference	2779794-0300

Note! The transmitter and the receiver can be fitted in either sides. Normally the receiver is installed on the left side, see the picture.

Note! The transmitter and the receiver must be fitted parallel to each other and at the same height.

Note! The 7-segment LED display (4) in the receiver shows the current signal quality for 30 seconds.

a) Use the slotted brackets (1) to move the relative positions of the transmitter (2) and then of the receiver (3) until the LED display (4) of the receiver (3) shows that the barriers are aligned, see Alignment on page 7-62.

b) Tighten the screws in the slotted brackets (1) when this is achieved.

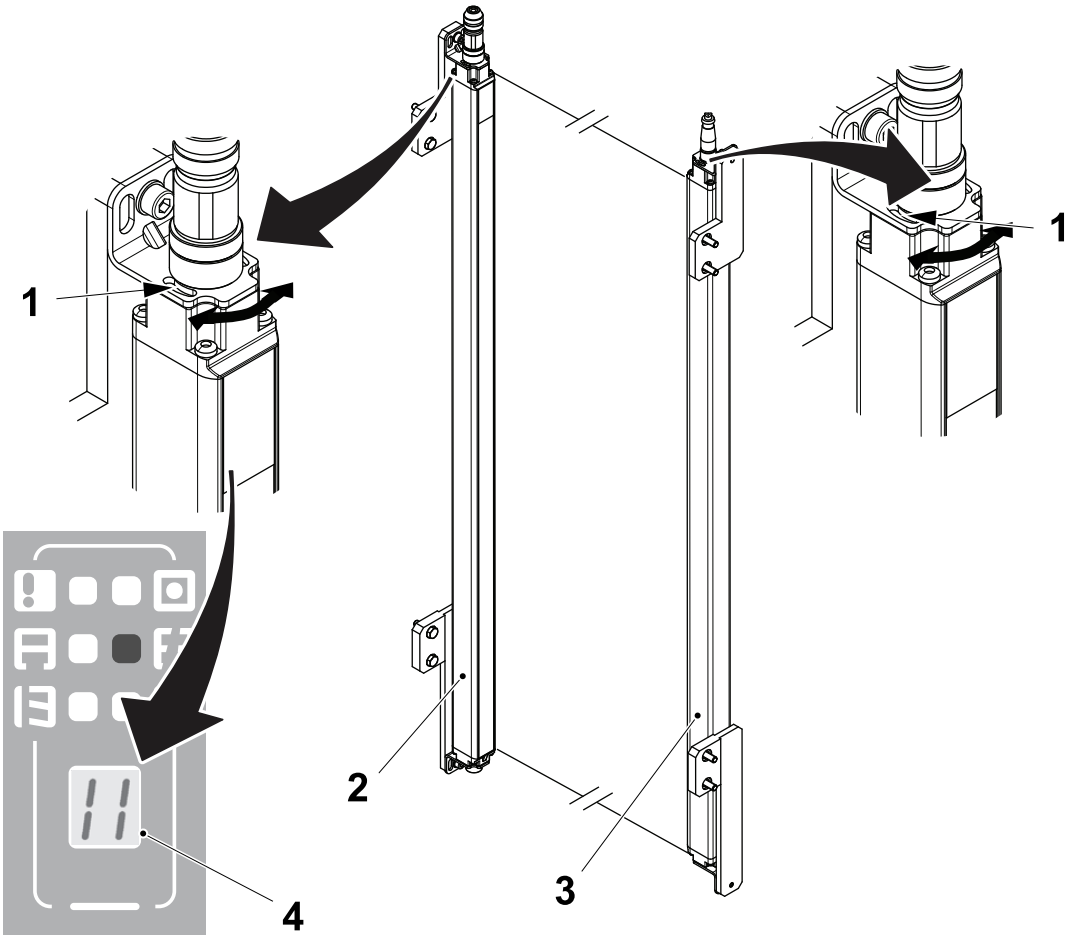

1 Slotted bracket
2 Transmitter
3 Receiver
4 LED display

(Cont'd)

(Cont'd)

Alignment

a) Align the barriers to have the situation "both sensors parallel" (2) shown in the picture.

Note! In the picture is shown the situation of "receiver not parallel" (1) and "both sensors parallel" (2).

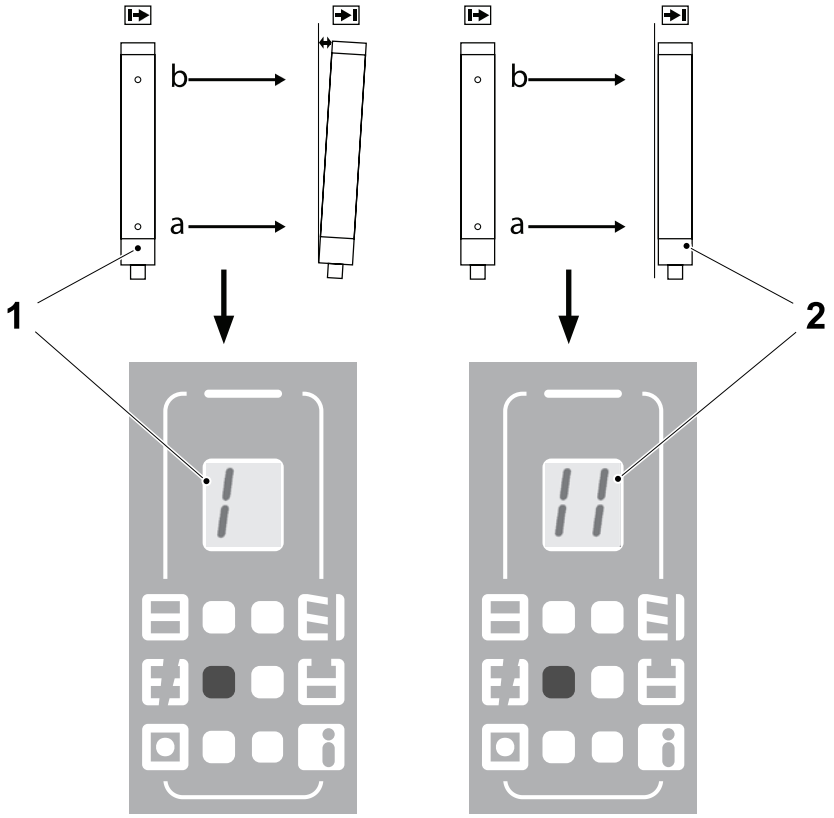

1 Receiver not parallel
2 Both sensors parallel

(Cont'd)

(Cont'd)

Status Display

a) Follow the indications according to the status display. See the table.

Note! The light barriers perform an internal self-test after the operating voltage is switched on and the protection field is enabled. When a fault is detected, an error number e.g. E1 is displayed at the receiver. Each fault display is followed by a one-second delay.

Status display	Indication
	2 segments left-hand side = signal strength of the **second** beam (a) 2 segments right-hand side = signal strength of the **last** beam (b)
	Signal strength (a) 25% to 50% Signal strength (b) 0%
	Signal strength (a) 50% to 100% Signal strength (b) 0%
	Signal strength (a) 50% to 100% Signal strength (b) 25% to 50%
	Signal strength (a) 50% to 100% Signal strength (b) 50% to 100%
	Inadequate alignment of the sensors (height offset, not parallel)

7.5.1-4 Check - Transmitter and Receiver

Machine Status	Electrical supply disconnecting device in position O (OFF) Main air valve OFF
SPC Reference	2779794-0300

Note! The transmitter and the receiver can be fitted in either sides. Normally the receiver is installed on the left side, see the picture.

a) On each barrier (1), make sure that the LED display (2) is cleaned.

b) On each barrier (1), make sure that the LED display (2) is on and indicates the correct working of the barriers, see 7.5.1-5 LED Information.

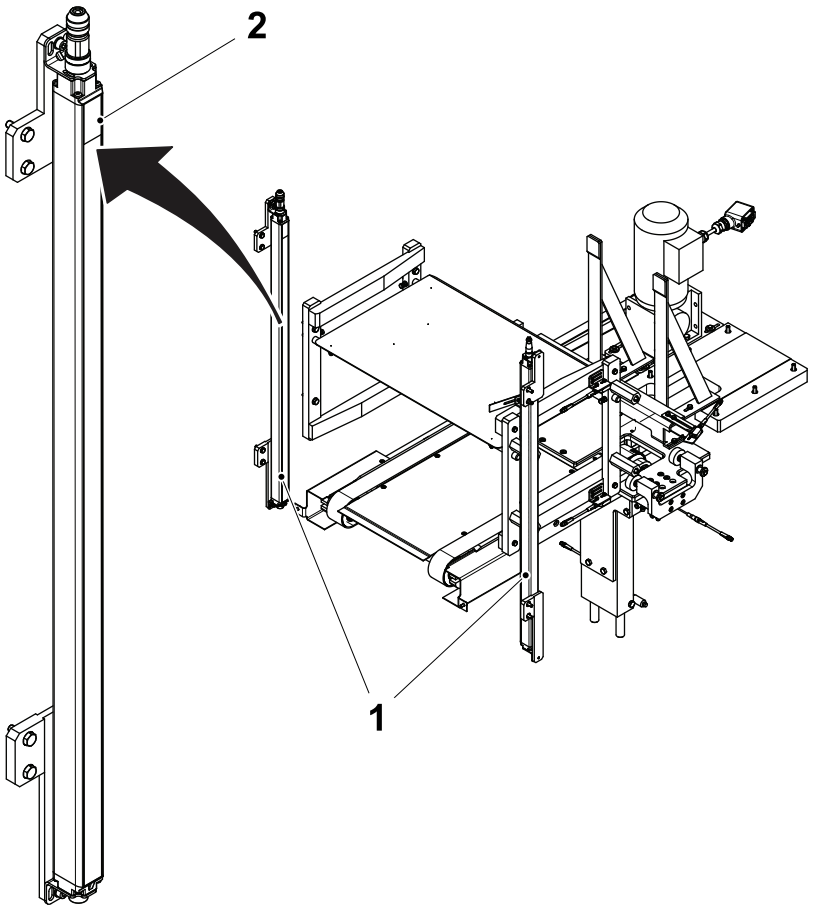

1 Barrier
2 LED display

7.5.1-5 LED Information

Machine Status	Electrical supply disconnecting device in position O (OFF) Main air valve OFF
SPC Reference	2779794-0300

Note! The transmitter and the receiver can be fitted in either sides. Normally the receiver is installed on the left side.

Receiver LED	Description
1-OSSD ON (Green)	Safety outputs Signal condition ON
2-OSSD OFF (Red)	Safety outputs Signal condition OFF
3-Restart (Yellow)	Input for command device
4-Signal reception (Orange)	Safety-monitoring module of Signal reception
5-Blanking (Blue)	Protection field(s) inactive (blanking)
6-Information (Yellow-Green)	Beam coding A

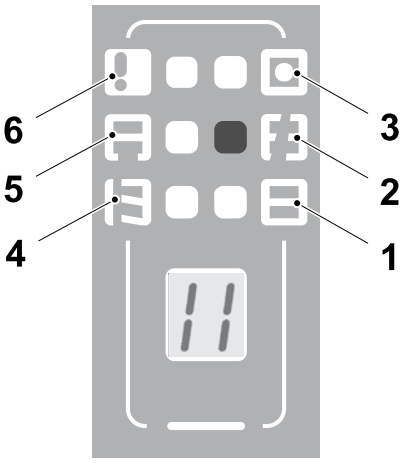

Transmitter LED	Description
1-Information (Green)	Function display, Beam coding A
2-Transmitting (Orange)	Transmitter active

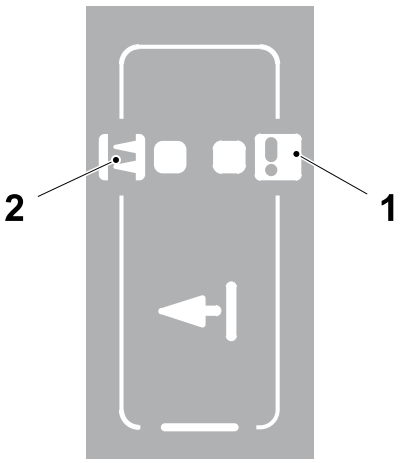

(Cont'd)

(Cont'd)

Receiver LED	Status LED	Description
OSSD ON	ON	Protection field clear
OSSD OFF	ON	Protection field interrupted, system or configuration error
	ON	Error output refer to Fault diagnostic table
Restart	ON	Restart interlock (manual reset) active, signal expected at input restart interlock
Signal reception	ON/flashing	Signal reception too low, check alignment and installation height between transmitter and receiver
		Cleaning the black profile cover
	OFF	Alignment between transmitter and receiver OK, when the OSSD are enabled
Blanking	1 flash	Fixed blanking of the protection field(s)
	2 flash	Floating blanking, max. 1 beam
	3 flash	Floating blanking, 2 beams
	4 flash	Floating (max. 1 beam) and fixed blanking of protection field(s)
	5 flash	Floating (2 beams) and fixed blanking of protection field(s)
	6 flash	Fixed blanking with movable edge region
Information	flashing	Beam coding A is active

Transmitter LED	Status LED	Description
Transmitting	ON	Standard operation, transmitter active
	flashing	Configuration error
Information	flashing	Beam coding A is active

Fault diagnostic

Note! The light barriers performs an internal self-test after the operating voltage is switched on and the protection field is enabled. When a fault is detected, an error number e.g. E1 is displayed at the receiver. Each fault display is followed by a one-second delay.

Status display	Fault feature	Action
	Wiring error operating mode not defined (automatic or restart mode)	Check all connections at the receiver, Jumper connection 1 or jumper connection 2 present?
	Supply voltage	UB = 24V/DC+/- 10%, check voltage source and primary voltage, note: after the fault message E2 has been displayed three times, a reset is executed.
	Error output (e), OSSD1 or OSSD2	Check the connections of both outputs, short-circuit of both OSSD, connection to level 0V or 24V, deactivate external (relay) cross-wire short monitoring
	Contactor control (EDM)	EDM active: check connections of both NC contacts, EDM not active: check level at Pin 8, open input

(Cont'd)

(Cont'd)

	Beam blanking	Check the blanking area(s) of fixed or floating objects with the selected parameter setting, fault elimination - repeat configuration in the parameter setting, possibly adjust P 1, P 2, P 3
	Configuration error in parameter setting	Check parameter setting and save/adopt with "S." or delete/reset with "C."
	System error	Restart the system, if E 7 display persists, exchange components

Note! The error display is reset after elimination of the error cause and after the receiver has been switched back on. The error indication displays a 3-digit system error code for every 10th display.

This page intentionally left blank

8 Electrical System

Electrical System - Description

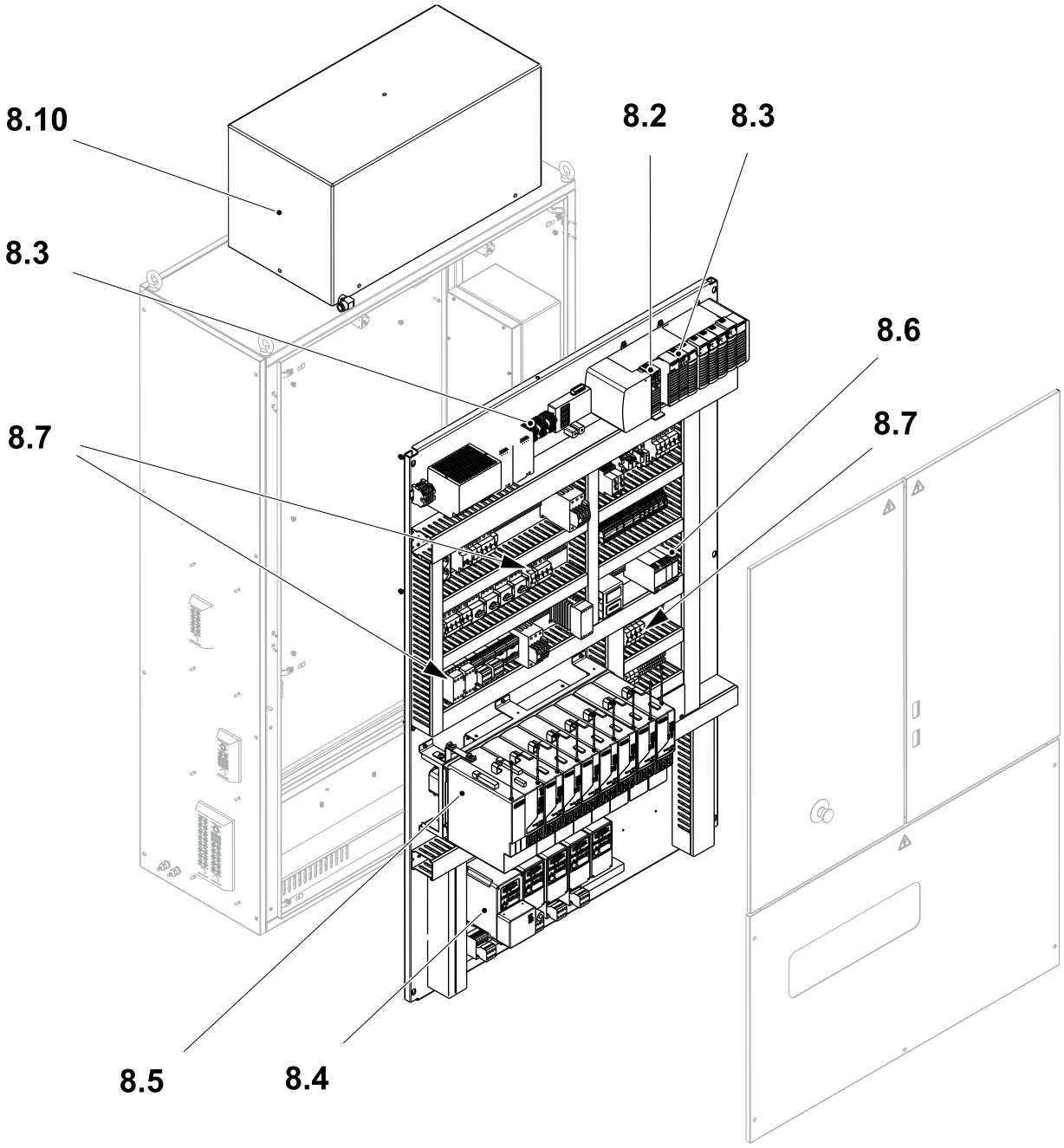

8.2 PLC
8.3 Distributed I/O and Network
8.4 Frequency Converter PowerFlex 4 and 40
8.5 Motor Drive Control
8.6 Safety System
8.7 Circuit Breaker
8.8 Sensors*
8.9 Control Panel*
8.10 Cooling System
8.11 Electrical Conversion*
8.12 PLMS Config*
8.13 CAP30 Development Step*

* Not Illustrated

Electrical System - Description 8-2

8.1 Functional Description 8-9

8.2 PLC 8-16

8.2.1 Preparation for PLC Communication 8-16

8.2.1-1 Preparation for PLC Communication - Configure PC Network Communications 8-16

8.2.1-2 Preparations for PLC Communication - Configure RSLinx 8-24

8.2.1-3 Preparations for PLC Communication - Set EtherNet Module IP Address 8-28

8.2.2 CPU Controller 8-34

8.2.2-1 CPU Module - Change Energy Storage Module (ESM) 8-34

8.2.2-2 CPU Controller - Change. 8-35

8.2.2-3 CPU Module - Load Firmware 8-41

8.2.2-4 CPU Module - Download Program 8-51

8.2.2-5 CPU Module - Troubleshoot 8-61

8.2.2-6 CPU - Upload Program 8-68

8.2.2-7 Install the ControlFlash Application Firmware Library. 8-72

8.2.2-8 PLC - Load FirmWare in PLC, Ethernet, DeviceNet and SERCOS Modules 8-78

8.2.2-9 Install the Driver for the First Kinetix Servo Driver 8-81

8.3 Distributed I/O and Network 8-90

8.3-1 Distributed I/O and Network - Overview 8-90

8.3.1 Distributed I/O and DeviceNet - I/O Modules 8-94

8.3.1-1 DeviceNet Scanner (A01K3004) Node 0. 8-94

8.3.1-2 DeviceNet Adaptor (22-COMM-D) Node 1 8-95

8.3.1-3 DeviceNet Adaptor (1734-ADN) Node 2 8-96

8.3.1-4 DeviceNet Armor Block 8-97

8.3.2 Distributed I/O and DeviceNet - DeviceNet Scanner 8-99

8.3.2-1 DeviceNet Scanner - Change. 8-99

8.3.2-2 DeviceNet Scanner - Set DeviceNet Scanner (A01K3004) Node Address and Baudrate 8-102

8.3.2-3 DeviceNet - DeviceNet on the Machine..... 8-103

8.3.2-4 DeviceNet - Saving DeviceNet Files in a Computer..... 8-110

8.3.2-5 DeviceNet - Loading a Program in a New DeviceNet Scanner..... 8-111

8.3.2-6 DeviceNet - Loading a DeviceNet Program in a New Point I/O Module Adaptor..... 8-114

8.3.3 Distributed I/O and DeviceNet - Troubleshooting..... 8-117

8.3.3-1 Troubleshooting - General DeviceNet Error 8-117

8.3.3-2 Troubleshooting - DeviceNet Error Indications and Messages on DeviceNet Scanner (Node 0) 8-118

8.3.3-3 Troubleshooting - DeviceNet Error Indications on the PowerFlex40 Module 22-COMM-D Adaptor (Node 1)..... 8-124

8.3.3-4 Troubleshooting - DeviceNet Error Indications on the 1734-ADN Adaptor for the Point I/O Modules (Node 2)..... 8-128

8.3.3-5 Troubleshooting - DeviceNet Error Indications on the Armor Block I/O Module (Node 3) 8-132

8.3.3-6 Troubleshooting - DeviceNet Error Indications on the Armor Block I/O Module (Node 4) 8-134

8.3.3-7 Troubleshooting - DeviceNet Error Indications on the Armor Block I/O Module (Node 5) (ReCap Only)..... 8-134

8.3.3-8 Troubleshooting - DeviceNet Error Indications on the Armor Block I/O Module (Node 6) (ReCap Only)..... 8-135

8.3.4 Ethernet..... 8-135

8.3.4-1 EtherNet Module - Change..... 8-136

8.4 Frequency Converter PowerFlex 4 and 40 8-139

8.4.1 PowerFlex40 and PowerFlex 4 Frequency Converters..... 8-139

8.4.1-1 PowerFlex40 DeviceNet Adaptor - Change..... 8-140

8.4.1-2 Frequency Converter - Change..... 8-151

8.4.1-3 Frequency Converter - LED Description 8-156
8.4.1-4 Frequency Converters - Change Parameters 8-159
8.4.1-5 Frequency Converters - Fault Types 8-164
8.4.1-6 Frequency Converters - Identifying the Fault 8-165
8.4.1-7 Frequency Converters - Clearing a Fault Indication Manually 8-166
8.4.1-8 Frequency Converters - Clearing a Fault Indication Automatically 8-167

8.5 Motor Drive Control 8-171
8.5.1 Servo System - Overview 8-171
8.5.2 Servo System - Sercos Module 8-174
8.5.2-1 Sercos Module - Description 8-174
8.5.2-2 Sercos Module - Change 8-176
8.5.3 Servo Drive 8-179
8.5.3-1 Servo Drive - Description 8-179
8.5.3-2 Servo Drive - Change Drive 8-182
8.5.3-3 Servo Drive - Set Baud Rate 8-187
8.5.4 Servo System Troubleshooting 8-188
8.5.4-1 Troubleshooting - General 8-188
8.5.4-2 Troubleshooting - SERCOS Net Error Indication and Error Codes on the Integrated Axis Module and Axis Modules 8-189
8.5.4-3 SERCOS Module - Troubleshooting 8-199

8.6 Safety System 8-202
8.6.1 Safety System - Description 8-202
8.6.2 Pluto Maintenance 8-203
8.6.2-1 Pluto Maintenance - Connecting a PC to Pluto Module 8-203
8.6.2-2 Pluto Maintenance - Set the ID-FIX Address after Replacing an ID-FIX 8-210
8.6.2-3 Pluto Maintenance - Change Baud Rate, Error Code E26 8-216
8.6.2-4 Pluto Maintenance - Installing a Pluto Module in an Existing Application 8-218

8.6.2-5 Pluto Maintenance - Program Download from a PC to a Pluto Unit 8-219

8.6.3 Pluto Troubleshooting 8-225

8.6.3-1 Pluto Troubleshooting - Safety System Alarm on the Control Panel 8-225

8.6.3-2 Pluto Troubleshooting - Explanations of Inputs, Outputs and LEDs 8-226

8.7 Circuit Breaker 8-230

8.7.1 Automatic Fuses 8-230

8.7.1-1 Automatic Fuses - Set 8-230

8.7.2 Residual Current Device 8-231

8.7.2-1 Residual Current Device - Check Function 8-231

8.7.3 Power Supply - Current Control Relay 8-233

8.7.3-1 Check - Current Control Relay Function 8-233

8.8 Sensors 8-234

8.8.1 Belt Brake Package Sensor 8-234

8.8.1-1 Sensor (W20B0003) - Set Sensitivity 8-234

8.8.2 General Purpose Sensor 8-236

8.8.2-1 Sensor (W21B4002,W 21B4004,W 21B4006, W21B4008, W21B4024, W21B6002, W21B6004, C50B0013, G50B5000, G50B5004) - Set 8-236

8.8.3 Elevator Sensors 8-239

8.8.3-1 Sensor (C60B4008, C60B4009) - Set 8-239

8.8.4 Cap Present Sensor 8-241

8.8.4-1 Sensor (W21B3012, W21B3014) - Set 8-241

8.9 Control Panel 8-244

8.9-1 Control Panel - Overview 8-244

8.9.1 Control Panel - Touch Screen 8-245

8.9.1-1 Touch Screen - TPOP SHUTDOWN 8-246

8.9.1-2 Touch Screen - Firmware Installation 8-247

8.9.1-3 Touch Screen Machine Setup - Calibrate Touch Screen 8-264

8.9.1-4 Touch Screen - New Application Software Installation 8-268
8.9.1-5 Touch Screen - Remove Existing Application Program 8-275
8.9.1-6 Touch Screen - Load New Application 8-279
8.9.1-7 Touch Screen - Check/Set Network Configuration 8-283
8.9.1-8 Touch Screen - Startup Options Setup 8-300
8.9.1-9 Touch Screen - Display Setup 8-306
8.9.1-10 Touch Screen - Time/Date/Regional Settings Setup 8-310
8.9.1-11 Touch Screen - Start-Up Language Setup 8-314
8.9.1-12 Touch Screen - Language Setup 8-320
8.9.1-13 Touch Screen - Create New Recipes 8-326
8.9.1-14 Touch Screen - Saving Recipe Settings 8-332
8.9.1-15 Recipe - Set Correct Values 8-333
8.9.1-16 Touch Screen - Delete Recipes 8-334
8.9.1-17 Touch Screen - Change Recipes 8-336

8.10 Cooling System 8-338

8.10.1 Cooling Unit 8-338

8.10.1-1 Cooling Unit - Clean Filter 8-338
8.10.1-2 Cooling Unit - Change Filter 8-340
8.10.1-3 Cooling Unit - Check 8-341
8.10.1-4 Cooling Unit - Overhaul 8-343
8.10.1-5 Cooling Unit - Troubleshooting 8-349

8.10.2 Thermostat 8-350

8.10.2-1 Thermostat - Set-Up 8-350

8.11 Electrical Conversion 8-351

8.11.1 Variable Frequency Drive 8-351

8.11.1-1 Maintenance Instructions 8-351

8.11.2 Axis Module 8-351

8.11.2-1 Maintenance Instructions 8-351

8.11.3 Communication Unit 8-351

8.11.3-1 Maintenance Instructions 8-351

8.12 PLMS Config 8-352

8.12.1 PLMS - Install DE Config Files 8-352

8.13 CAP30 Development Step 8-353

8.13-1 Development Step - Setup 8-353

8.13-2 Development Step - Check 8-354

8.13-3 Development Step - Set 8-355

8.1 Functional Description

The Networks

The system uses networks for almost all communications.

There are three networks in the machine:

- The Ethernet: This is used for data exchange on the input side.
- The Sercos net: This is a fibre optic high speed link for the communication of motion data between the SERCOS module, in the Control Logic Rack and the Servo drivers of the Motor Drive Control
- The Device net: this is used for the transmission of data to and from the sensors and actuators via the I/O Modules and Armor Block Devices. The Device net is also used for the control of the Frequency Converters and the AC Motors connected to them.

The Control Panel (HMI)

The Control Panel is used to start, stop and supervise the machine from one common point. The control panel display (touch screen) is touch sensitive.

The operating panel is described in detail in the Operating Manual for this machine.

(Cont'd)

(Cont'd)

The Safety System

The Pluto PLC safety system provides a method of putting the machine in a mode that is safe to work with when an action is taken that could put the operator in danger or create a situation where the machinery could be damaged. The Pluto PLC communicates via the I/O bus with the system PLC.

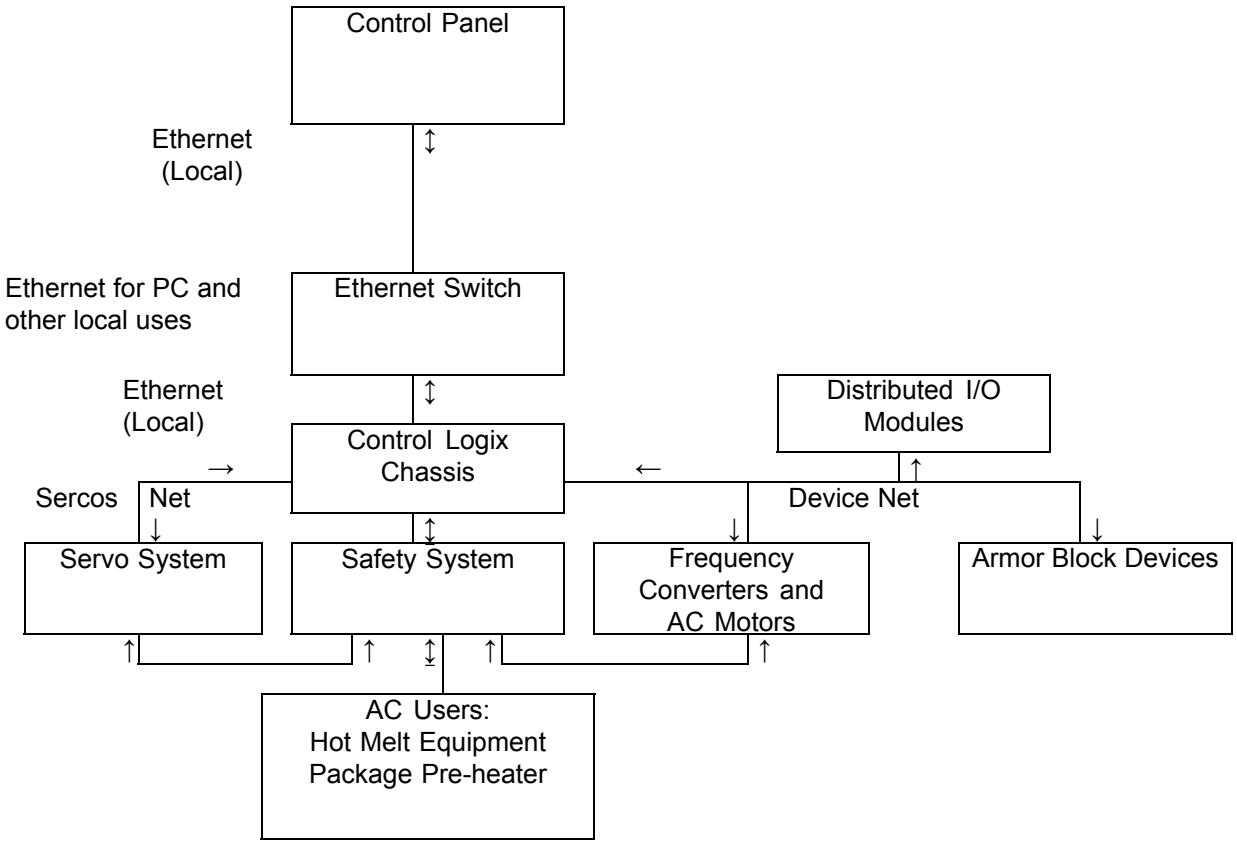

(Cont'd)

(Cont'd)

Control Logic Chassis - CPU Processor

The PLC Processor (A01K3001) uses upgradeable firmware to perform the tasks contained in PLC program. The PLC program can be loaded into the unit from a PC and, if necessary, the program in the PLC can be copied to a PC. System variables, entered via the Control Panel or the PC are also stored in the PLC.

A CompactFlash card is provided in the PLC module to allow a back-up of the system data and the PLC program to be made.

See 8.2 PLC for further information.

Control Logic Chassis - Ethernet Bridge Modules

There are two ethernet bridge modules. The bridge module (A01K3002) provides a link to external devices such as a line controller.

The other ethernet bridge module (A01K3003) is connected to the ethernet switch (A01X2000) to provide a connection to the Control Panel, the Vision System, if it is installed, and the host PC.

See 8.2 PLC for further information.

Control Logic Chassis - DeviceNet Bridge Scanner Modules

The devicenet scanner (A01X3004) provides a link between the PLC Processor, the Frequency Converters, the I/O modules. and the Armor Block modules.

See 8.3.1 Distributed I/O and DeviceNet - I/O Modules for further information.

Control Logix Chassis

PLC Processor (A01K3001)	Ethernet Bridge Module (A01K3002) Ethernet Bridge Module (A01K3003)	DeviceNet Bridge Scanner Module (A01X3004)	Digital Input Module (A01K3005) Digital Input Module (A01K3006)	Digital Output Module (A01K3007) Digital Output Module (A01K3008)	ReCap Machines Only Digital Output Module (A01K3009)	Sercos Module (A01K3010)

(Cont'd)

(Cont'd)

Control Logic Chassis - Digital Input Module

The digital input modules (A01K3005) and (A01K3006) receive digital signals from devices such as sensors and relays and distributes them in the electrical cabinet and the machine board.

These are "plug and play" devices and require no maintenance.

Control Logic Chassis - Digital Output Module

The two digital output modules (A01K3007) and (A01K3008) send signals to devices such as sensors, relays and valves and also distribute signals to components in the electrical cabinet and the machine board.

These are "plug and play" devices and require no maintenance.

Control Logic Chassis - Digital Output Module (ReCap Only)

The digital output module (A01K3009) sends signals to pneumatic panel to operate the additional valves used in Recap machines.

This is a "plug and play" device and requires no maintenance.

Control Logic Chassis - SERCOS Module

The SERCOS module (A01K3010), in the Control Logix Chassis, converts motion data from the PLC Processor into data that can be transmitted via the SErial Real time COmmunication System SERCOS digital interface to the Kinetix 6000 drivers.

See 8.5.1 Servo System - Overview for further information.

Power Supplies

The low voltage power supply unit (A01T2000) produces the stabilised 24V DC for Control Logix Power Supply (A01T3000) and other components in the machine.

The low voltage power supply unit (A81T4000) produces 24V DC for the DeviceNet.

(Cont'd)

(Cont'd)

Kinetix 6000 Servo Control (ScrewCap Only)

The kinetix servo control modules, convert the position or motion data arriving on the SERCOS net into servo motor power.

There is one module for each servo motor.

Servo motors are used where precise positioning or exact speeds are required.

See 8.5.1 Servo System - Overview for more information.

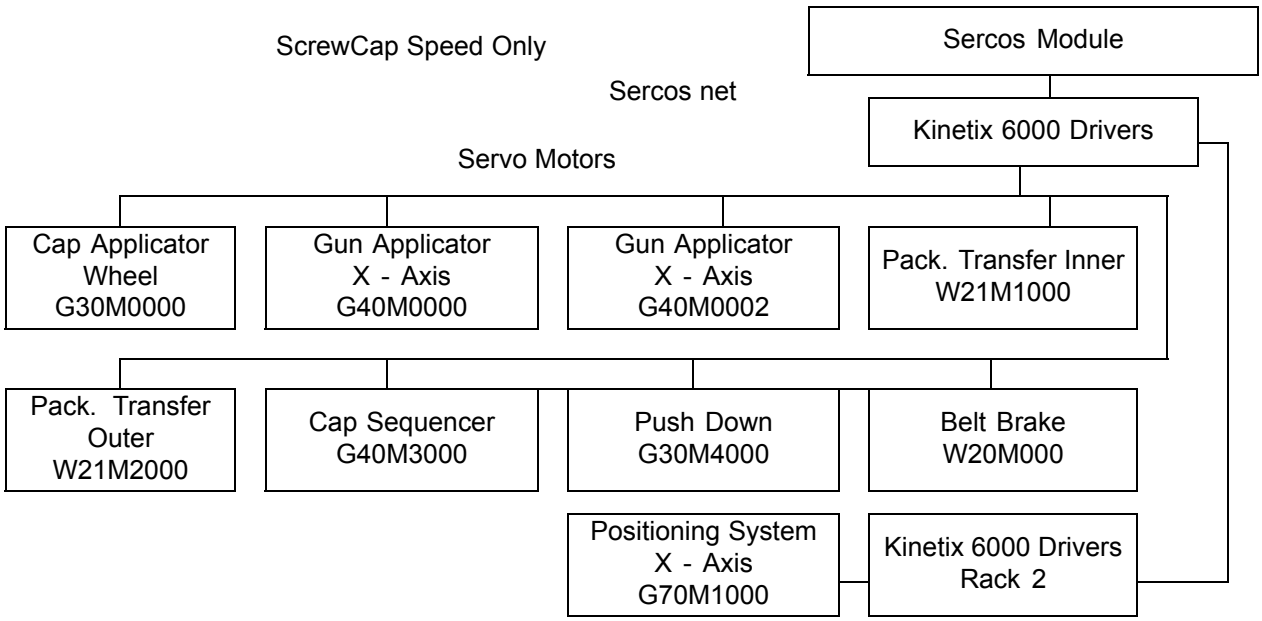

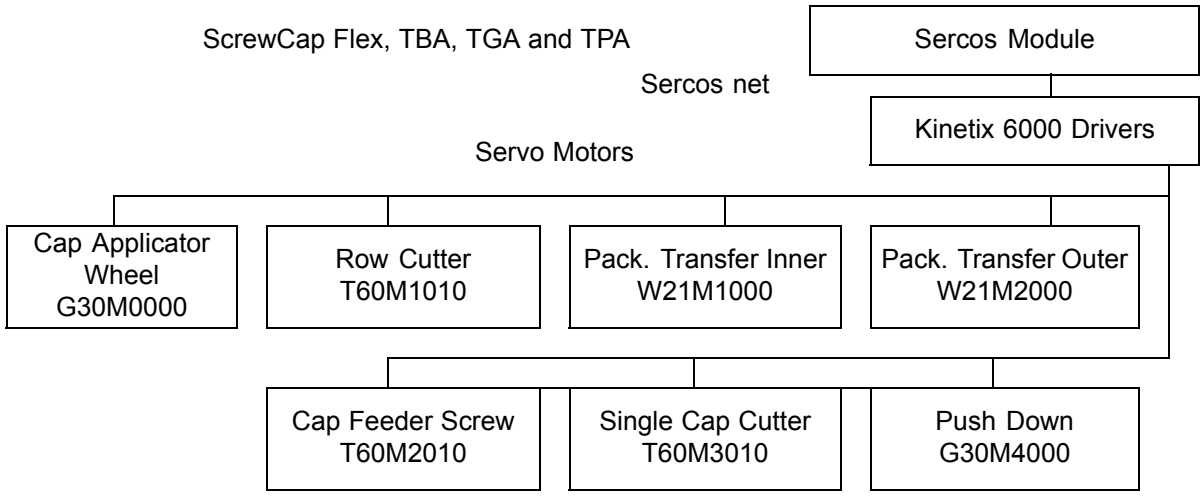

(Cont'd)

(Cont'd)

Kinetix 6000 Servo Control (ReCap Only)

The kinetix servo control modules, convert the position or motion data arriving on the SERCOS net into servo motor power.

There is one module for each servo motor.

Servo motors are used where precise positioning or exact speeds are required.

See 8.5.1 Servo System - Overview on page 8-171 for more information.

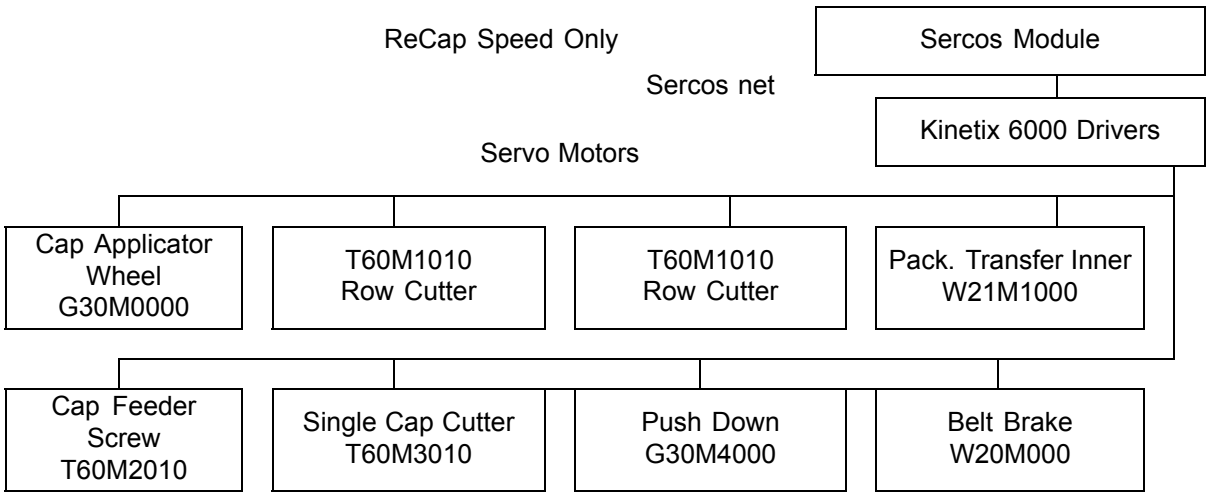

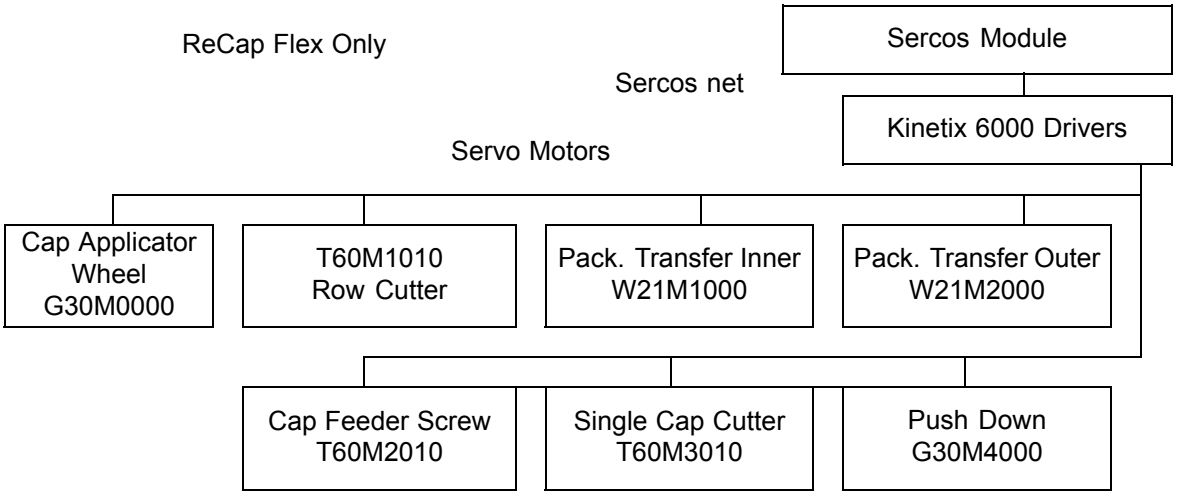

(Cont'd)

(Cont'd)

The Frequency Converters

Frequency converters are used to provide the drive power for the AC motors.

AC motors are used where a constant speed is required irrespective of their load.

There is one frequency converter for each AC motor.

The Distribution I/O Modules

The Distributed I/O Modules communicate with sensors and actuators in the system on one side and with the DeviceNet Bridge Module on the other.

See 8.3-1 Distributed I/O and Network - Overview for more information.

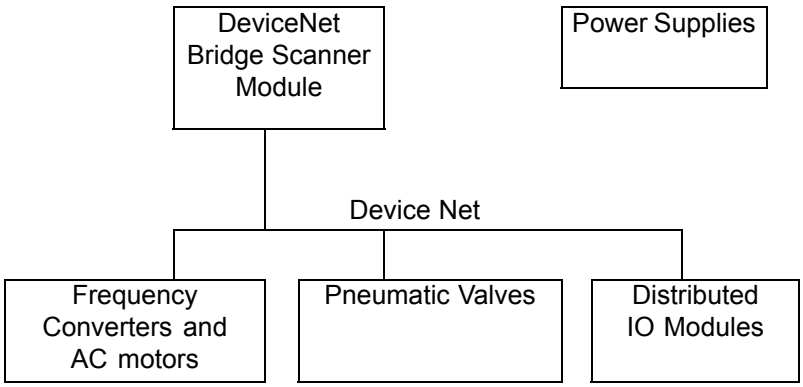

8.2 PLC

8.2.1 Preparation for PLC Communication

8.2.1-1 Preparation for PLC Communication - Configure PC Network Communications

Machine Status	Electrical supply disconnecting device in position I (ON)
Special Equipment	PC with CD drive
SPC Reference	2833407-0300

Before data can be sent to the PLC from the PC via an ethernet cable, the PC network settings must first be configured. The following procedure describes how to configure the PC network communications.

Note! If after configuring the PC network communications it is not possible to connect to the PLC, it is recommended to disable the PC firewall protection. Contact the local IT administrator for assistance in disabling the PC fire wall protection.

(Cont'd)

(Cont'd)

Disable Wireless Network Connection

a) Open the START MENU (1) on the PC and select SETTINGS (2) and then NETWORK CONNECTIONS (3) to open the NETWORK CONNECTIONS window (4).

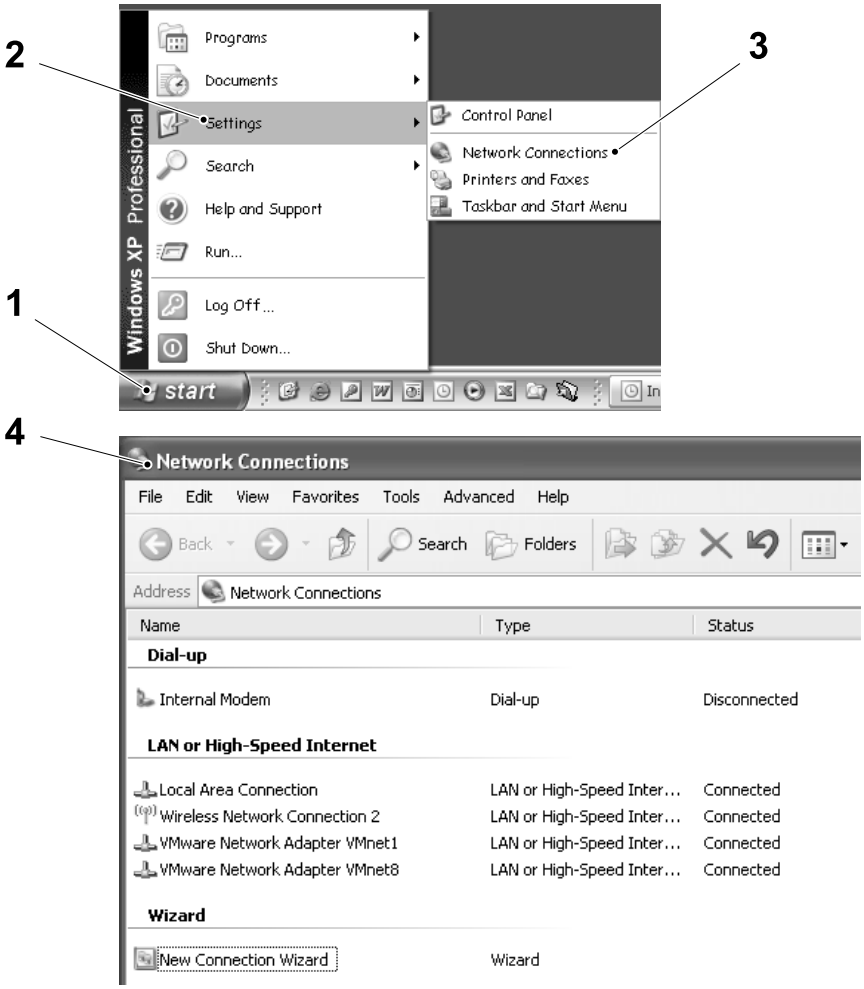

1 Start menu
2 Settings
3 Network Connections
4 Network Connections window

(Cont'd)

(Cont'd)

b) In the NETWORK CONNECTIONS window (4) select the WIRELESS NETWORK CONNECTION (5).

c) Right click the PC mouse and select DISABLE (6).

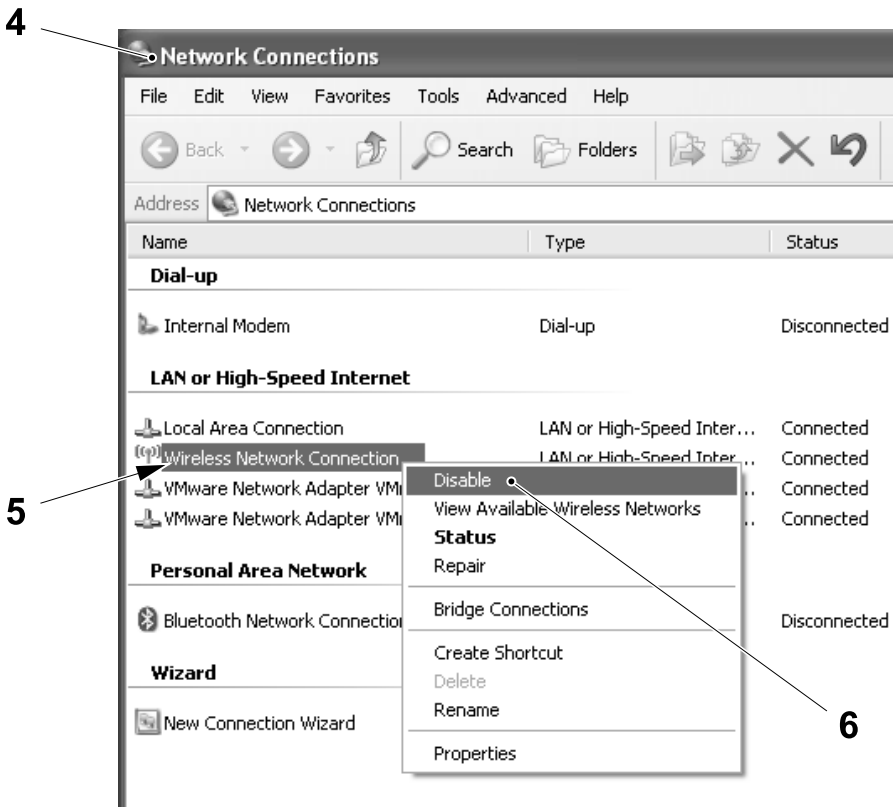

4 Network Connections window

5 Wireless network connection

6 Disable

(Cont'd)

(Cont'd)

Configure PC IP Address

a) Open the START MENU (1) on the PC and select SETTINGS (2) and then NETWORK CONNECTIONS (3) to open the NETWORK CONNECTIONS window (4).

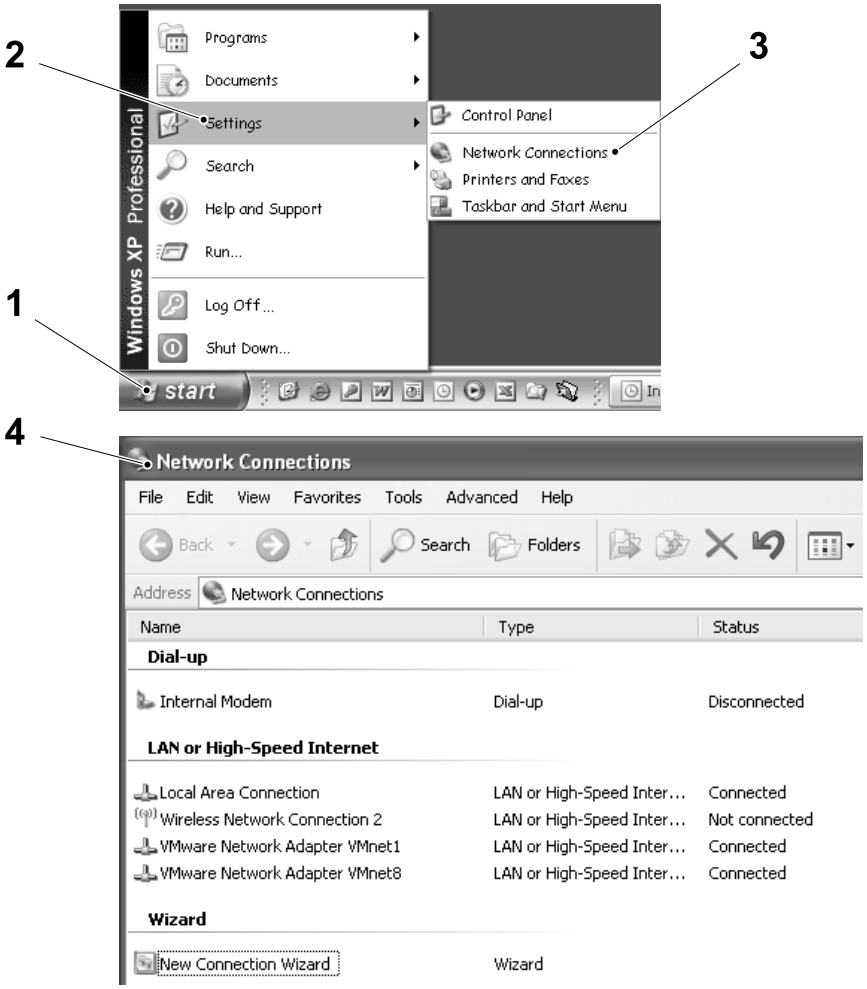

1 Start menu
2 Settings
3 Network connections
4 Network connections window

(Cont'd)

(Cont'd)

Note! The LOCAL AREA CONNECTION (5) is given only as an example, if multiple area connections are listed in the NETWORK CONNECTIONS window (4), select the required network connection.

b) In the NETWORK CONNECTIONS window (4) select the LOCAL AREA CONNECTION (5) and right click the PC mouse to select PROPERTIES window (6).

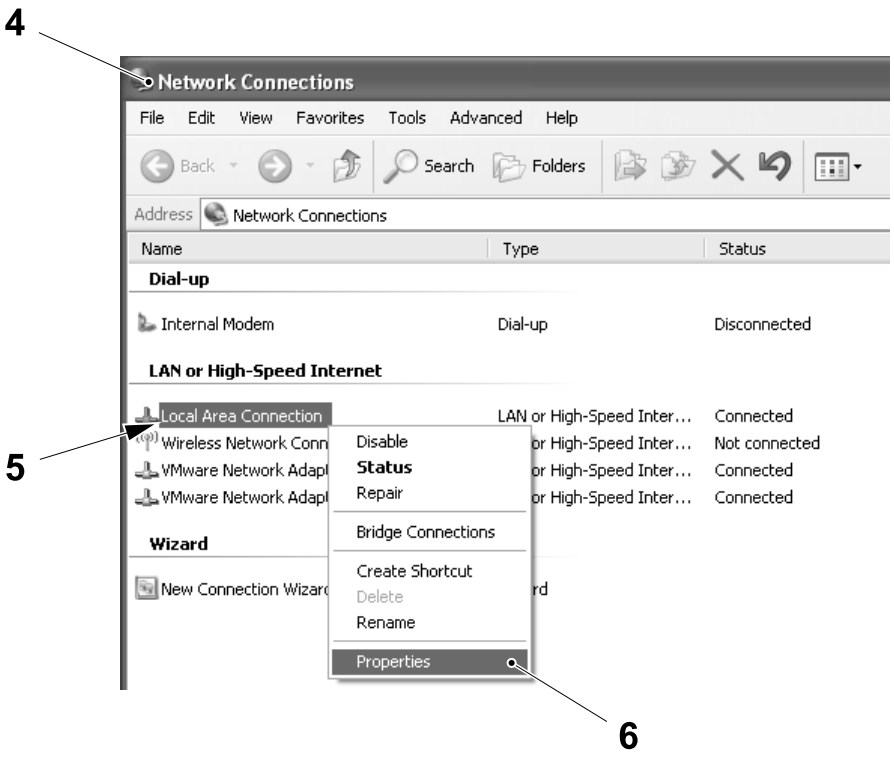

4 Network connections window
5 Local area connection
6 Properties window

(Cont'd)

(Cont'd)

c) In the LOCAL AREA CONNECTION PROPERTIES window (7) select INTERNET PROTOCOL (TCP/IP) (8) and then select PROPERTIES (9).

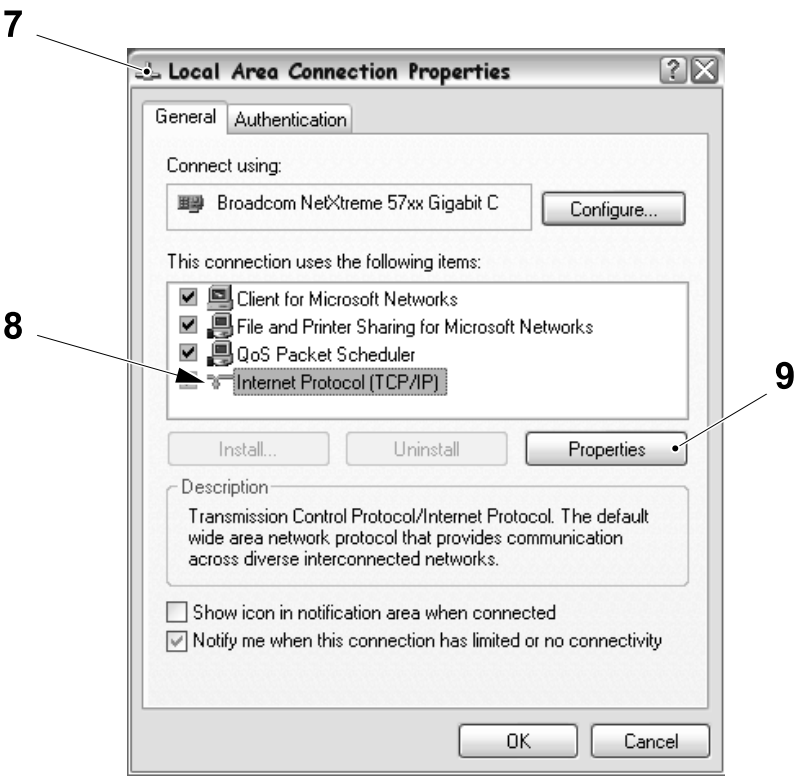

7 Local area connection properties window
8 Internet protocol (TCP/IP)
9 Properties

(Cont'd)

(Cont'd)

Note! The unique number "XXX" must be within the range of the permitted IP addresses if the firewall protection is configured to allow a range of IP addresses and higher than the number 100 to avoid possible conflicts with machine device IP addresses.

d) Check the `USE THE FOLLOWING IP ADDRESS` button (10) and the `USE THE FOLLOWING DNS SERVER ADDRESSES` button (11).

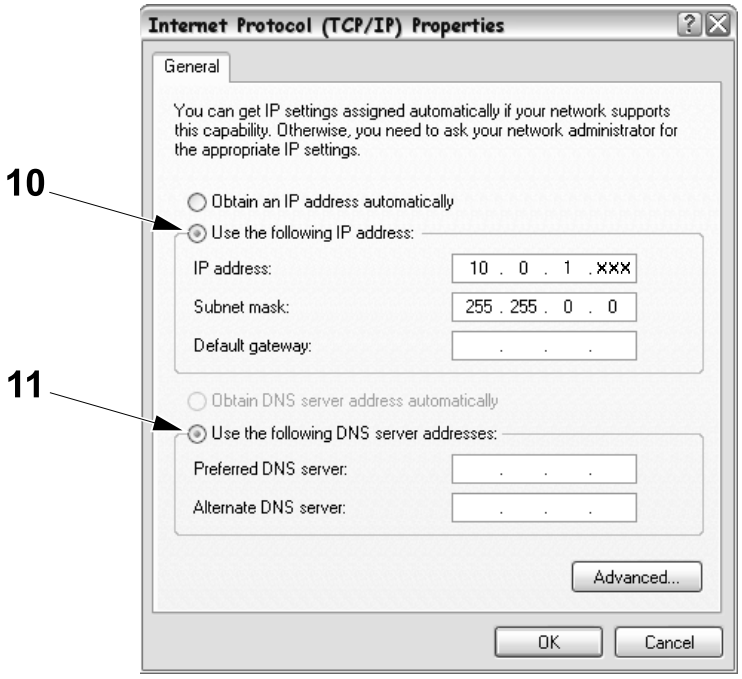

10 Use the following IP address button

11 Use the following DNS server addresses button

(Cont'd)

(Cont'd)

e) In the IP ADDRESS BOX (12) enter the IP address chosen for the PC. The IP address chosen must conform to the format 10.0.1.XXX. This must be a unique number that is not assigned previously to any PC or PLC connected to the same network.

f) In the SUBNET MASK BOX (13) enter the same subnet mask shown in the illustration below.

g) Select the OK button (14) to confirm the setting and close the window.

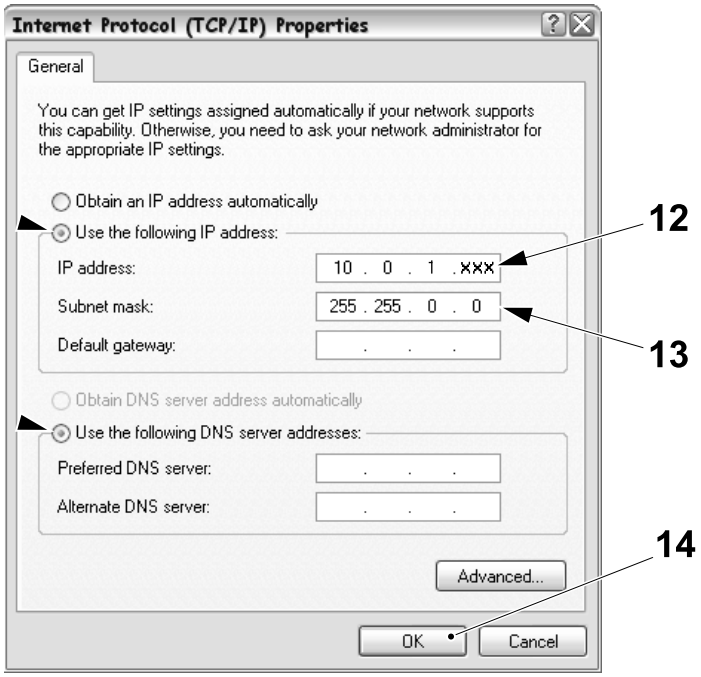

12 IP address box
13 SUBNET MASK box
14 OK button

8.2.1-2 Preparations for PLC Communication - Configure RSLinx

Machine Status	Electrical supply disconnecting device in position I (ON)
Special Equipment	PC with CD drive Ethernet communication cable
SPC Reference	2833407-0300

The RSLinx software enables seamless communication between the PC and the PLC and its components over different networks such as ethernet and DeviceNet. Before communication is possible, the network and IP addresses for the PC and PLC must be set in RSLinx as follows:

a) Open the START menu on the PC and select `PROGRAMS` (1), `ROCKWELL SOFTWARE` (2), `RSLINX` (3) and then `RSLINX CLASSIC` (4).

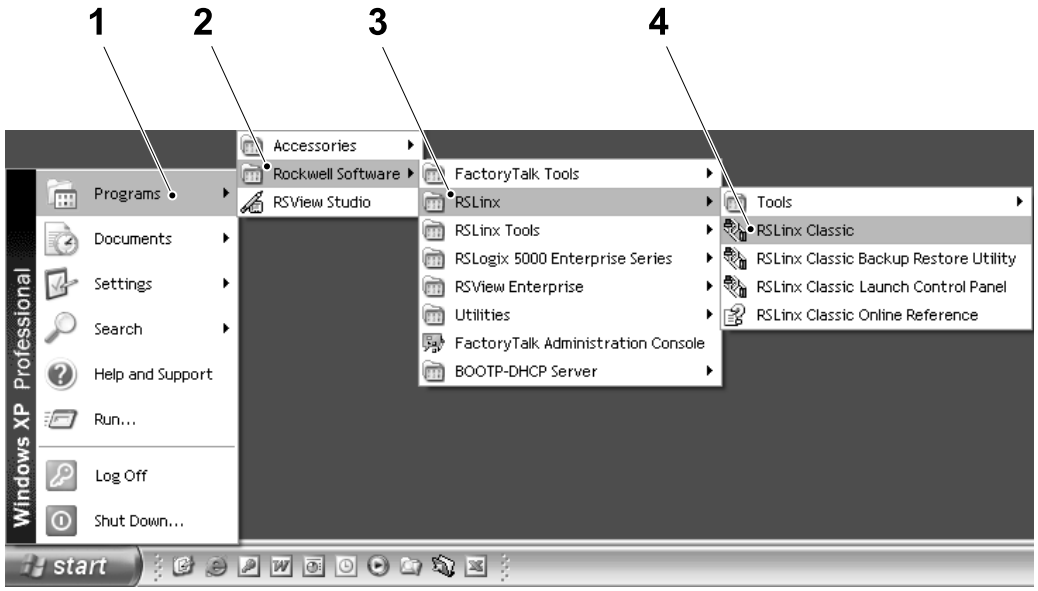

1 Programs
2 Rockwell software
3 RSLinx
4 RSLinx Classic

(Cont'd)

(Cont'd)

b) The RSLINX CLASSIC PROFESSIONAL window (5) appears, select the CONFIGURE DRIVERS button (6) .

c) In the CONFIGURE DRIVERS window (7) , select ETHERNET DEVICES (8) from the drop down menu.

d) Select the ADD NEW button (9).

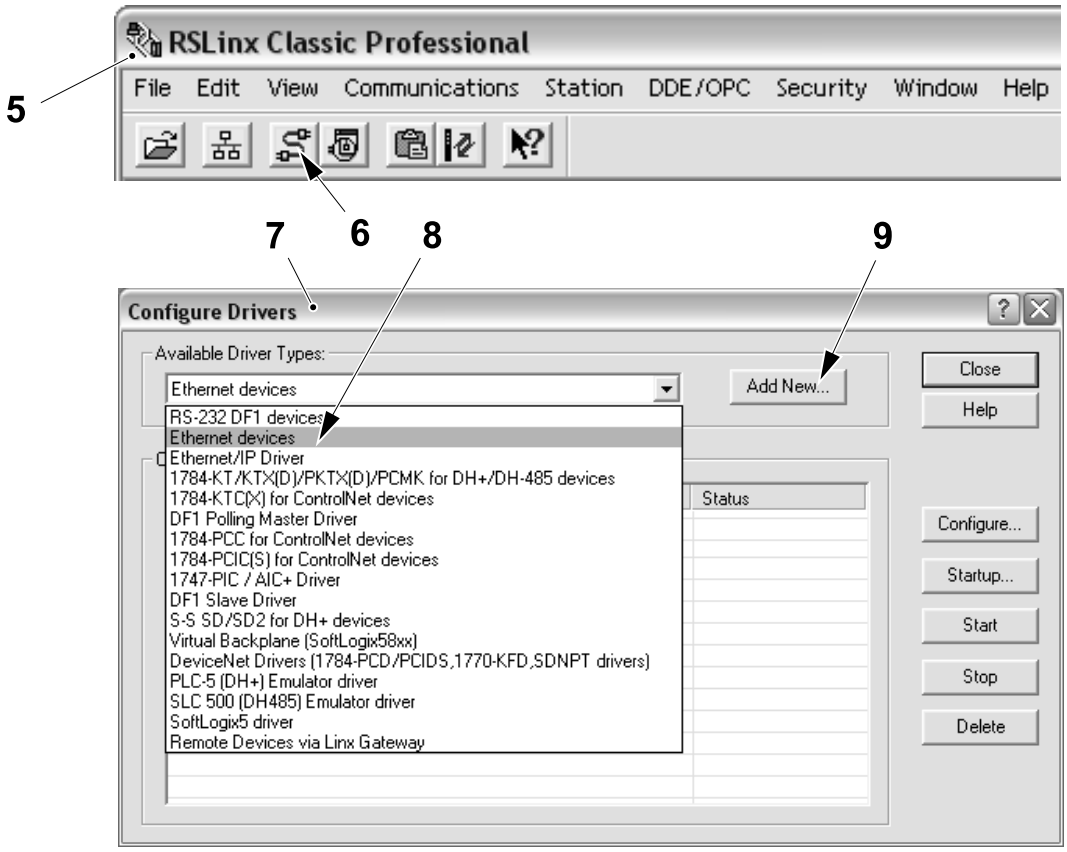

5 RSlinx classic professional window
6 Configure drivers button
7 Configure drivers window
8 Ethernet devices
9 ADD NEW button

(Cont'd)

(Cont'd)

e) Accept the default driver name that appears by selecting the OK button (10).

f) Enter the PC's IP address (set in 8.2.1-1 Preparation for PLC Communication - Configure PC Network Communications) in the HOST NAME field (11) and then select the ADD NEW button (12).

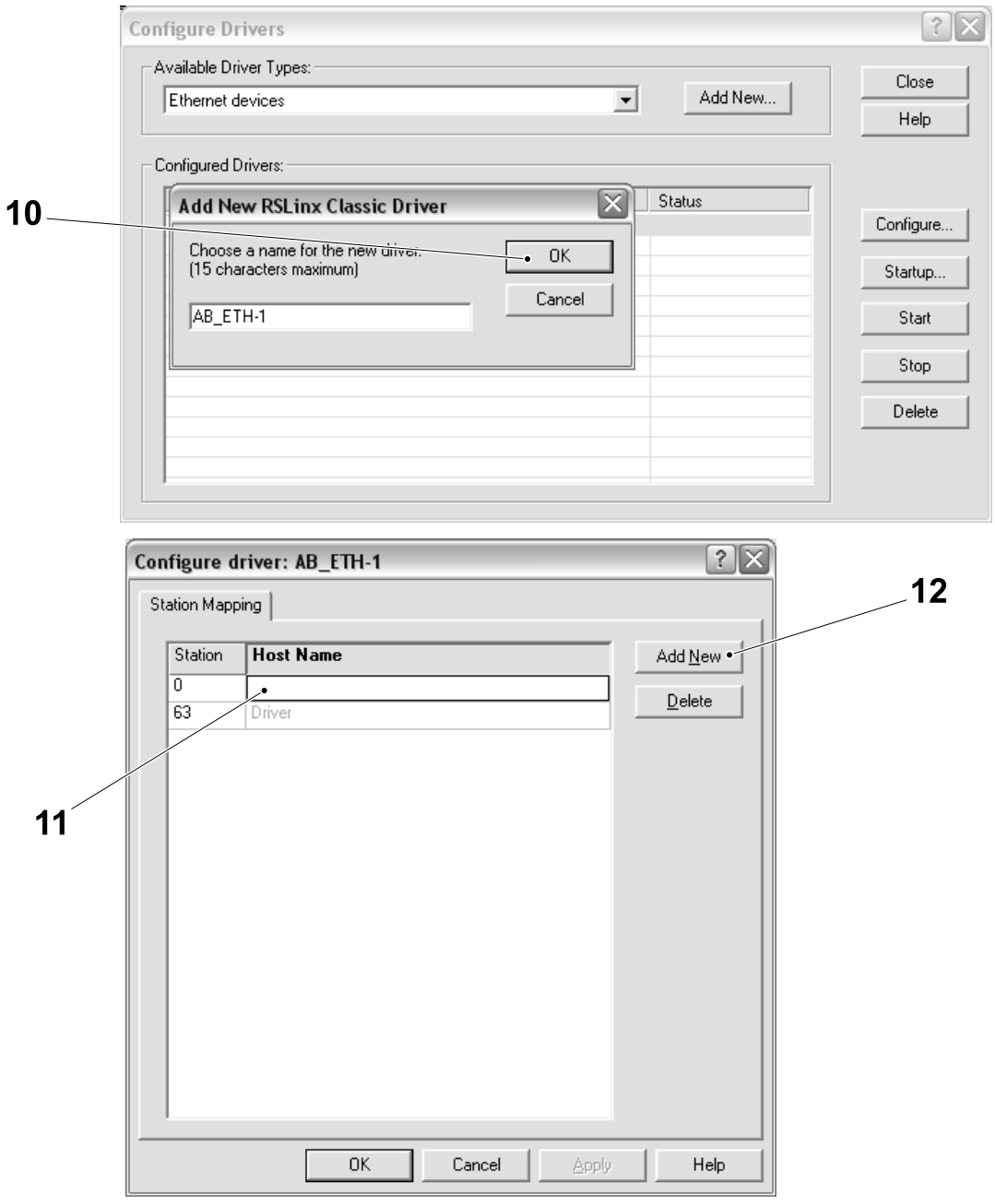

10 OK button
11 Host name field
12 ADD NEW button

(Cont'd)

(Cont'd)

g) Enter the IP address 10.0.1.80 for the PLC in the HOST NAME field (13).

h) Select the OK button (14) to save the configuration.



13 Host name field
14 OK button

8.2.1-3 Preparations for PLC Communication - Set EtherNet Module IP Address

Machine Status	Electrical supply disconnecting device in position I (ON)
Special Equipment	PC with CD Drive Latest Software CD see SPC Ethernet communication cable
SPC Reference	2833407-0300

Note! This procedure is for a new EtherNet module. If the module has been previously configured, skip this procedure.

Note! New EtherNet modules have a MAC address programmed as a factory setting. The MAC address must be changed to an IP address.

a) Using the ETHERNET COMMUNICATION cable (1), connect the PC (2) to any vacant ETHERNET CONNECTION port (3) on the ETHERNET switch (4).

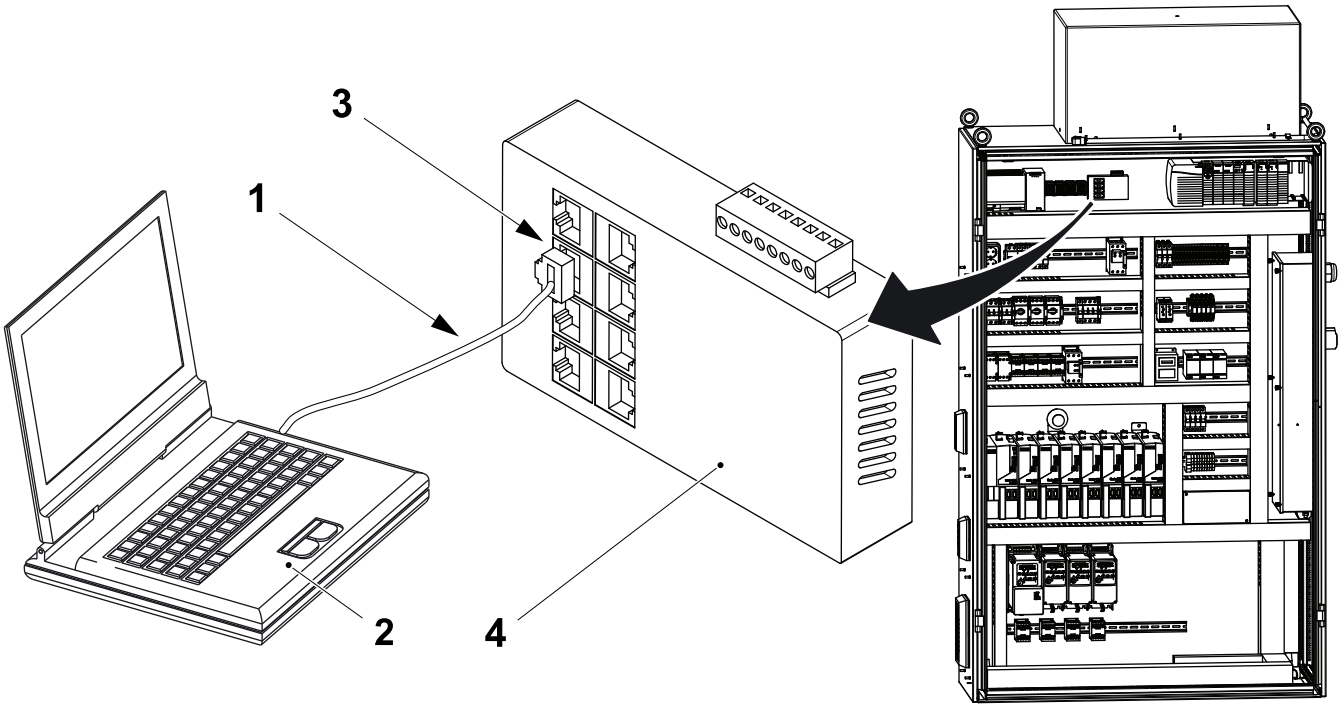

1 Ethernet communication cable
2 PC
3 Ethernet connection port
4 Ethernet switch

(Cont'd)

(Cont'd)

b) Make sure that the network cables between the Ethernet switch and the EtherNet module are connected.

c) Close the RSLINX PROGRAM as follows:

- Open the RSLINX GATEWAY window, see step a) in 8.2.1-2 Preparations for PLC Communication - Configure RSLinx.
- In the File menu, select `EXIT AND SHUTDOWN` (5).

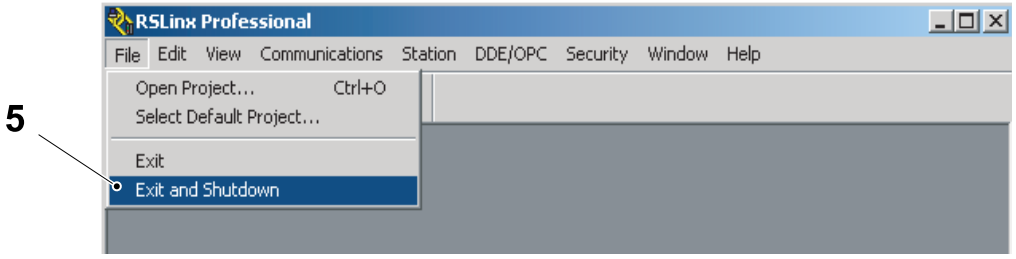

5 Exit and shutdown

d) Open the start menu on the PC and select `PROGRAM` (6), `ROCKWELL` software (7), `BOOTP DHCP` server (8) and `BOOTP DHCP` server (9).

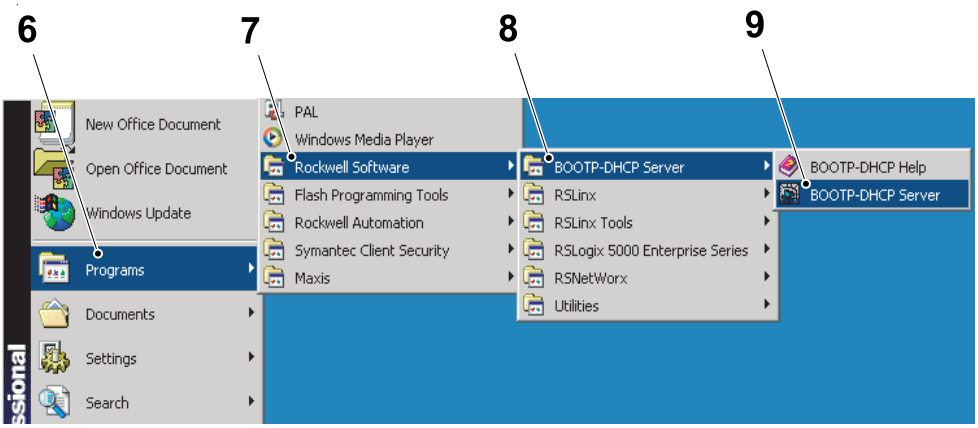

6 Program
7 Rockwell software
8 BOOTP DHCP server
9 BOOTP DHCP server

(Cont'd)

(Cont'd)

Note! If it is the first time the BOOT program is used, a network setting will be requested. If it is not, continue with step g).

e) Enter 255.255.0.0 as the SUBNET MASK (10) . All other settings should be set to 0.

f) Press the OK button (11) to confirm the setting.

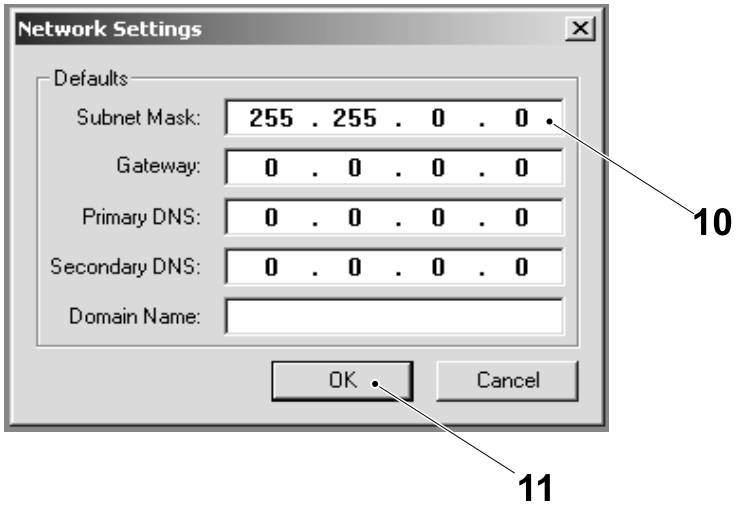

10 Subnet Mask
11 OK button

(Cont'd)

(Cont'd)

g) When the MAC address appears in the `REQUEST HISTORY` window (12) of the `BOOT DHCP SERVER` window (13), check that the same address is displayed on the EtherNet module and press the `NEW` button (14) to begin the conversion from the MAC address to an IP address.

h) When the MAC address appears in the `RELATION LIST` window (15), select the MAC address.

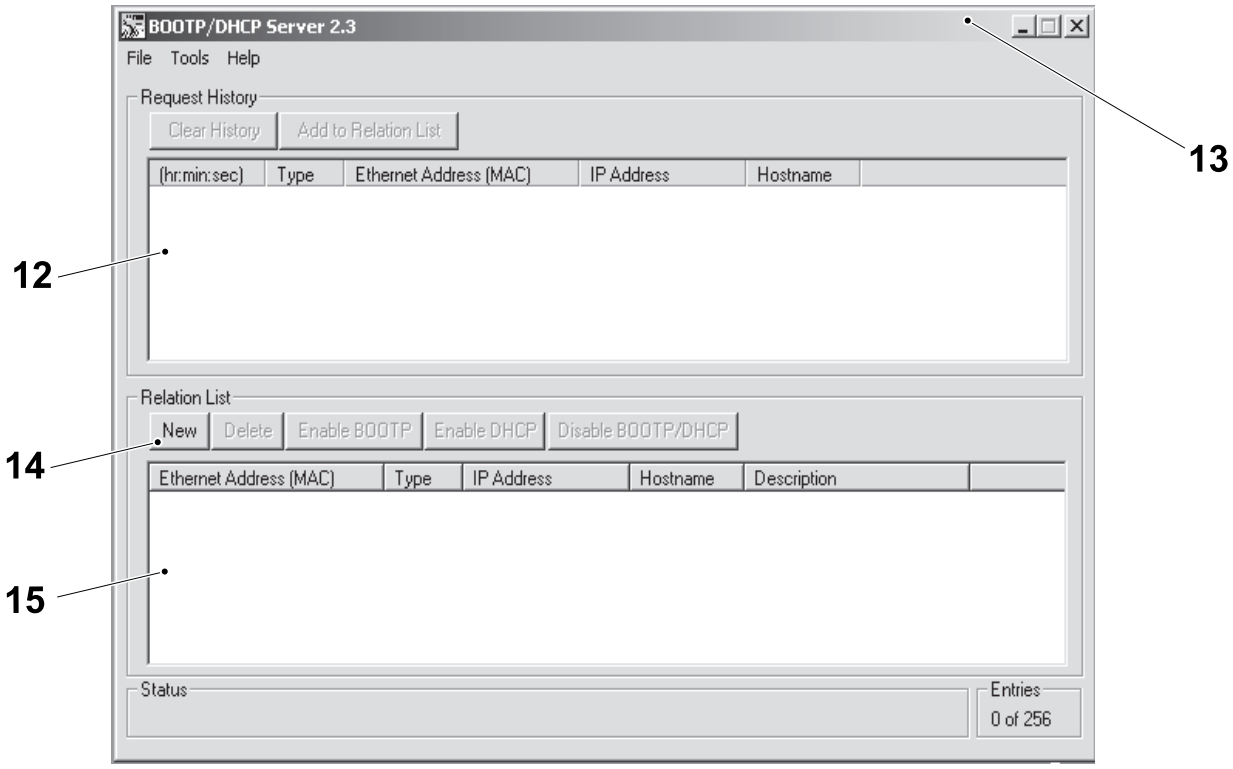

12 Reqest history window
13 Boot dhcp server window
14 `NEW` button
15 Relation list window

(Cont'd)

(Cont'd)

i) For the EtherNet module to be addressed, enter the MAC address in the ETHERNET ADDRESS (MAC) field (16) and the new IP address in the IP ADDRESS field (17) of the NEW ENTRY window (18) that appears.

j) Select the OK button (19). The new IP address will appear in the REQUEST HISTORY window (12) and on the EtherNet module.

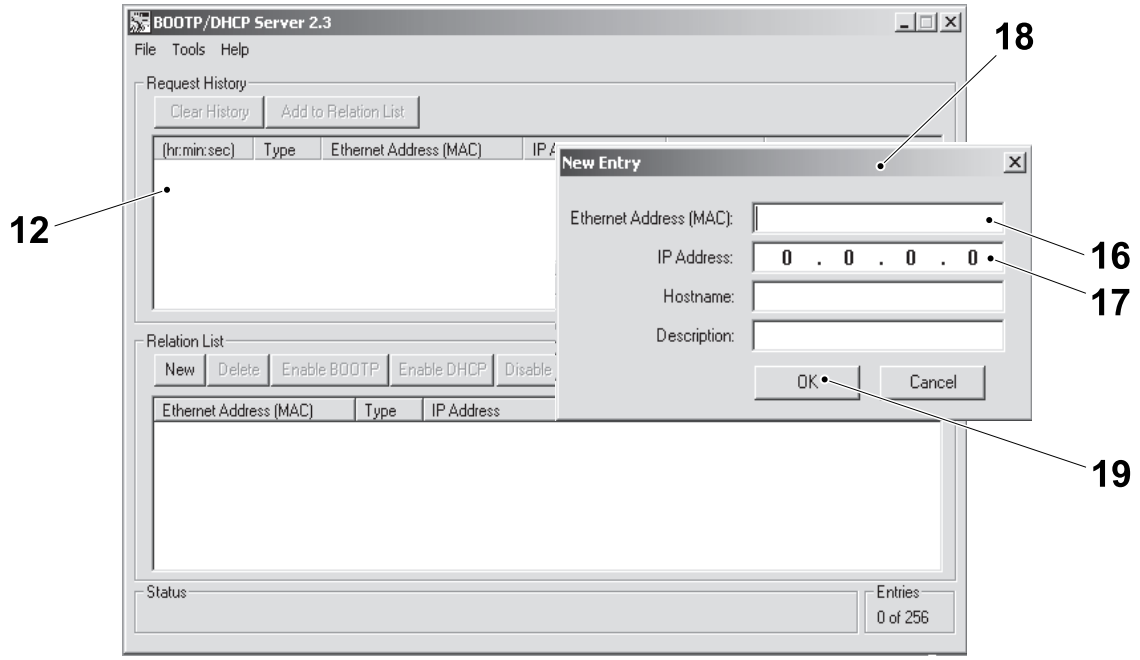

12 Reqest history window
16 ethernet address (MAC) field
17 IP address field
18 New entry window
19 OK button

(Cont'd)

(Cont'd)

k) Select the EtherNet module relation in the RELATION LIST window (15) and then select the DISABLE BOOTP/DHCP button (20).

l) To configure the other EtherNet module, select the NEW button (14) and repeat step i) on previous page to k).

m) After configuring an EtherNet module, check that the correct IP address appears on the display on the EtherNet module. If the display cycles data continuously, the configuration has not been completed successfully. Repeat the complete procedure for the module in question.

n) Disconnect the PC from the Ethernet switch.

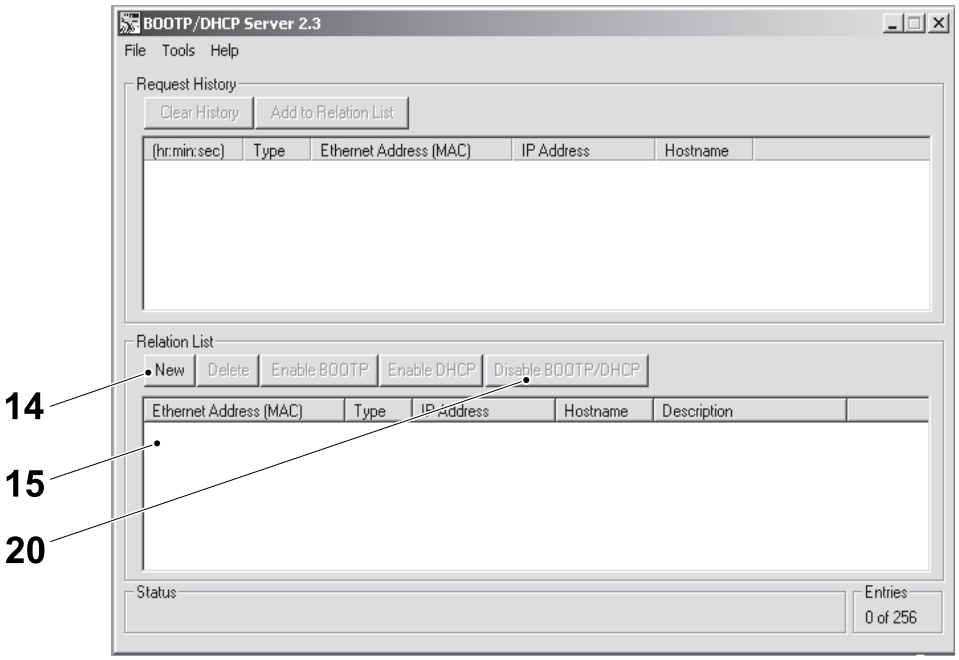

14 NEW button
15 Relation list window
20 DISABLE BOOTP/DHCP button

8.2.2 CPU Controller

8.2.2-1 CPU Module - Change Energy Storage Module (ESM)

Machine Status	Electrical supply disconnecting device in position I (ON)
SPC Reference	90603-5366

CAUTION
Loss of data.
Make sure that the electrical supply disconnecting device is turned to the ON position. Failure to do this may result in the data stored in the PLC being lost.

Note! Even if the power is turned off or the CPU module has been removed from the chassis, do not remove the Energy Storage Module (ESM) immediately. Wait until the OK status indicator changes from green to solid red to OFF before removing the ESM.

a) Remove the key (1).

b) Press down the lock (2) and pull out the Energy Storage Module (3) from the CPU module.

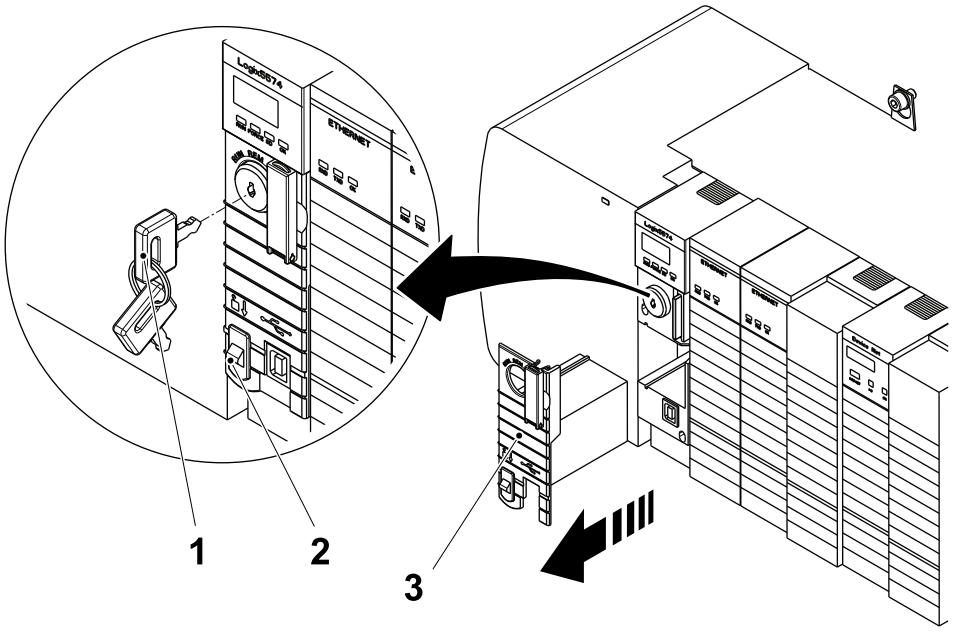

1 Key
2 Lock
3 Energy Storage Module

(Cont'd)

(Cont'd)

c) Align the guide (4) of the Energy Storage Module (3) with the groove (5) on the CPU module.

d) Slide the Energy Storage Module (3) back until it snaps into place.

e) The Energy Storage Module (3) begins charging after installation. The status is indicated by the message `ESM CHARGING` or `CHRG`.

Note! The messages `ESM CHARGING` or `CHRG` may take up to 15 seconds to be displayed.

Note! Allow the `ESM` to finish charging. To check that the `ESM` is fully charged, check that the messages `ESM CHARGING` or `CHRG` are no longer indicated.

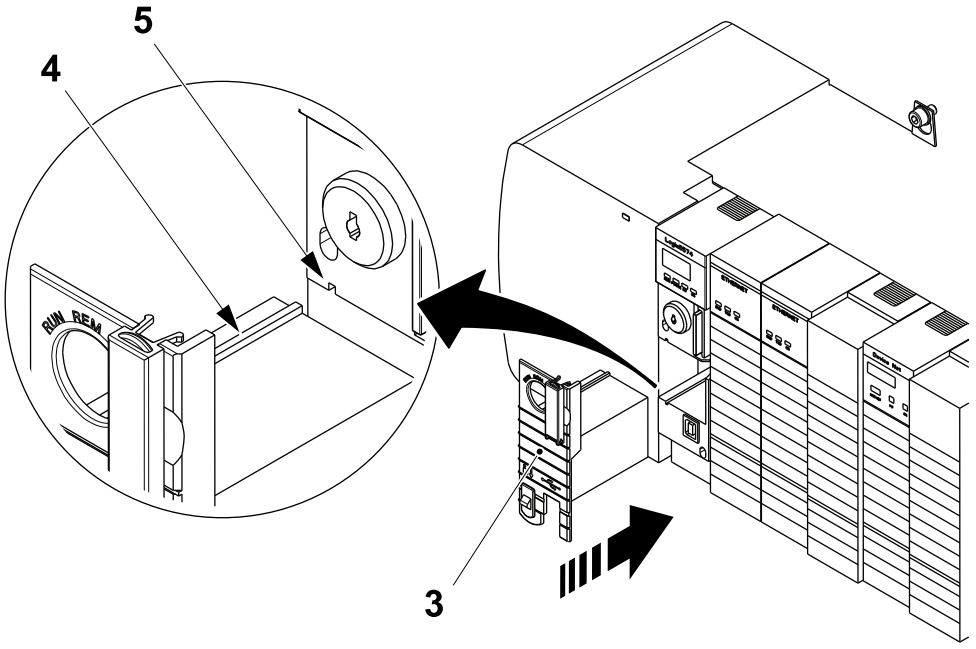

3 Energy Storage Module
4 Guide
5 Groove

8.2.2-2 CPU Controller - Change

Machine Status	Electrical supply disconnecting device in position O (OFF)
SPC Reference	90603-5366

Preparation

Note! New CPU modules are supplied with basic firmware. The correct firmware revision must be installed before the CPU program can be down-loaded to the CPU module.

(Cont'd)

(Cont'd)

Before changing the CPU controller:

- Use the RSLinx Classic program to verify and record the firmware version of the CPU program.
- Use the Flow Chart of Procedures for Changing the CPU controller on the next page to determine which procedures must be performed and their correct sequence.

  Note! It is recommended that the electrical supply disconnecting device is turned to the position "O" (OFF) before the PLC is removed or installed. The PLC may be removed or installed with the chassis power ON and the system operating, but doing this repeatedly may cause excessive wear to the contacts on the module and its mating connector. Worn contacts can create electrical resistance that may effect the operation of the module.

  Note! If the CPU module is removed with the power turned ON, all the devices connected to the CPU module will go to their configured default state.

  Note! A SD card fitted inside the CPU module is used to store a back-up of the CPU program. When the CPU module is changed, the SD card must be transferred from the old CPU module to the new CPU module.

(Cont'd)

(Cont'd)

Flow Chart of Procedures for Changing the CPU controller

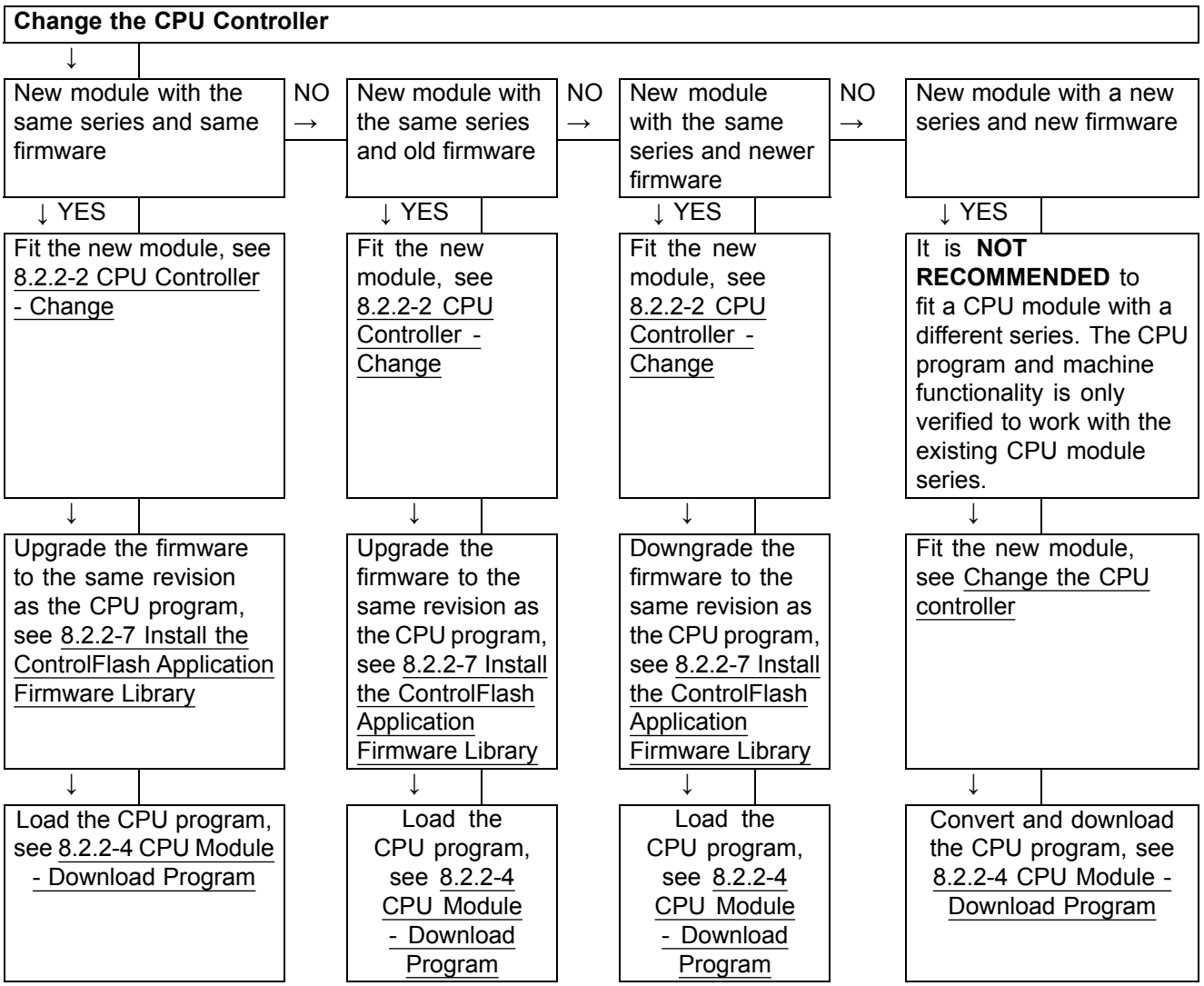

(Cont'd)

(Cont'd)

Change the CPU controller

a) Verify that the SD card is not in use by checking that the indicator is off.

b) Open the door (1) to access the SD card (2).

c) Press and release the SD card (2) to eject it.

d) Store the SD card (2) in a safe and clean place.

e) Press the locking tabs on the top and the bottom of the CPU.

f) Slide the CPU module out of the chassis.

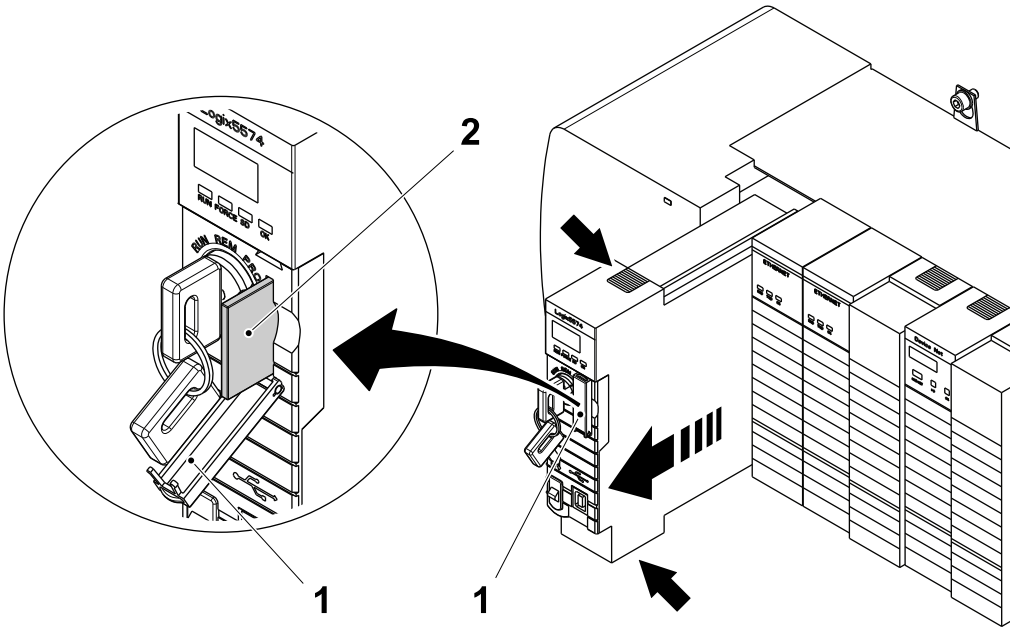

1 Door
2 SD card

(Cont'd)

(Cont'd)

g) Align the new CPU module with the top and the bottom guides in the chassis.

h) Slide the CPU module into the chassis. Make sure it is flush with the power supply or the other modules and the top and bottom latches are engaged.

i) Insert the key (3) into the new CPU module.

j) Turn the key (3) to the REM position.

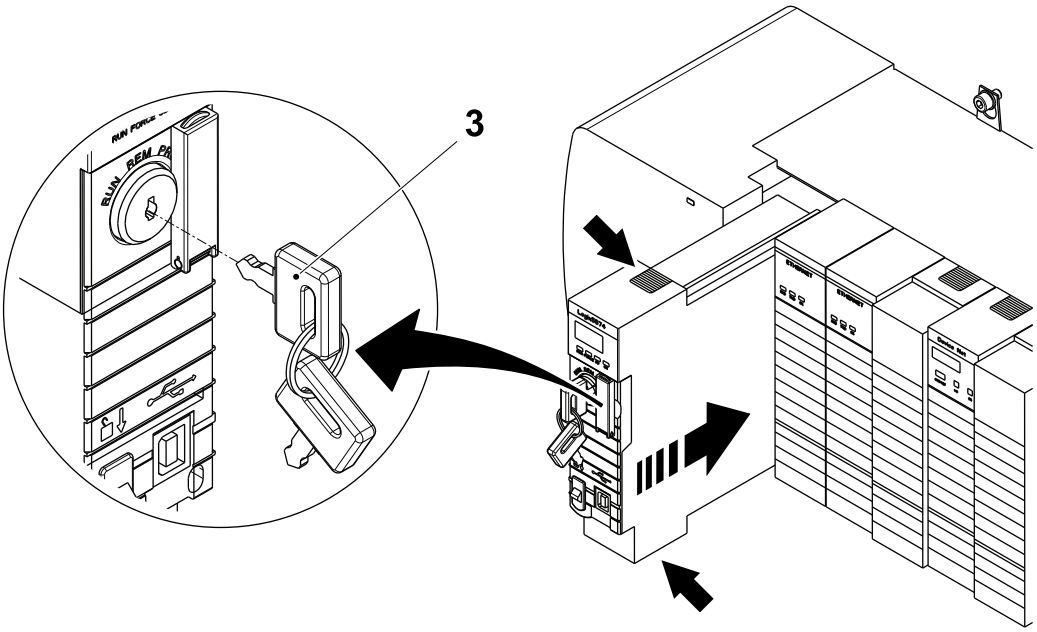

3 Key

(Cont'd)

(Cont'd)

k) Open the door (1) for the SD card.

l) Insert the SD card (2) into the slot.

m) Press gently the SD card (2) until it clicks into place.

n) Close the door (1).

o) Turn the electrical supply disconnecting device to the position I (ON).

p) Check the status of the CPU module according to the LED table in section 8.2.2-5 CPU Module - Troubleshoot.

q) If necessary, install the correct version of the firmware into the CPU module, see 8.2.2-8 PLC - Load FirmWare in PLC, Ethernet, DeviceNet and SERCOS Modules

r) Load the program into the CPU module, see 8.2.2-4 CPU Module - Download Program.

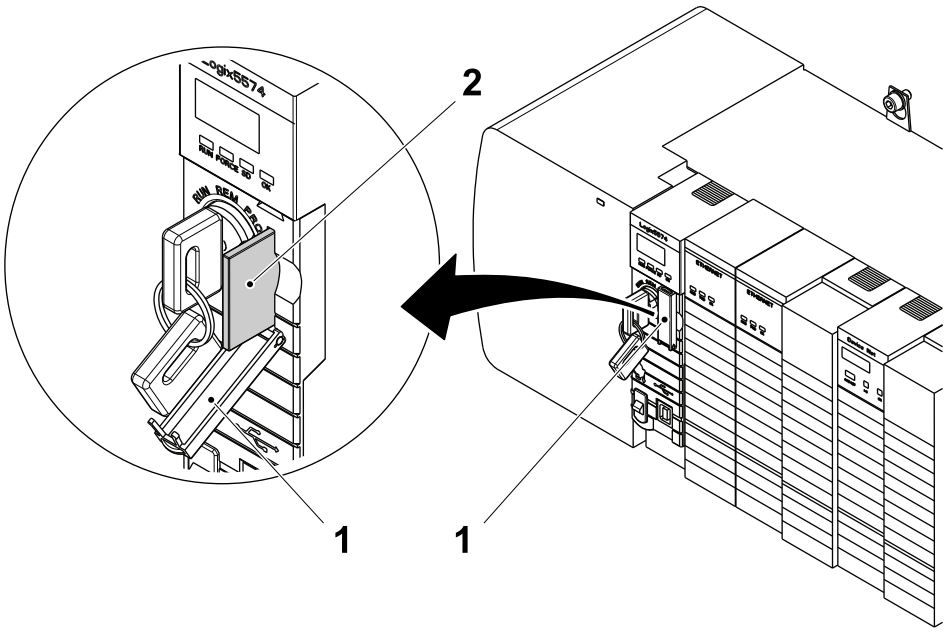

1 Door
2 SD card

8.2.2-3 CPU Module - Load Firmware

Machine Status	Electrical supply disconnecting device in position O (OFF)
Special Equipment	PC with CD Drive Ethernet communication cable
SPC Reference	90603-5366

CAUTION
Risk of damage to the equipment.
If a firmware download is interrupted, for example by a loss of power or if the communication fails between the module and the PC, the module will be corrupted.

Use the firmware setup table on the software CD to identify the correct firmware revision for the module to be flashed.

Note! The table lists the required firmware versions for all rack mounted or distributed devices. Do not upgrade or downgrade the device firmware unnecessarily.

a) Make sure that the PC is configured as described in 8.2.1-1 Preparation for PLC Communication - Configure PC Network Communications and in 8.2.1-2 Preparations for PLC Communication - Configure RSLinx.

b) Open the `START` menu on the PC and select `PROGRAMS` (1), `FLASH PROGRAMMING TOOLS` (2), and `CONTROL FLASH` (3).

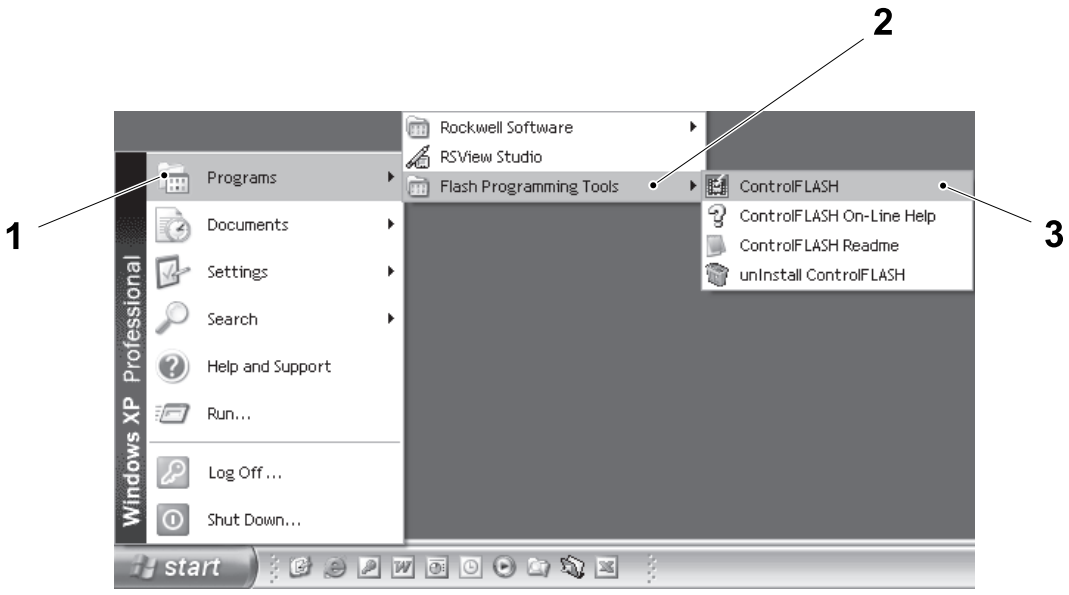

1 Programs
2 Flash programming tools
3 Control flash

(Cont'd)

(Cont'd)

c) Follow the instructions in the CONTROL FLASH PROGRAM window (4) to load the firmware.

Note! If the control FLASH program is not updated with the required firmware catalogue then continue with Update Control FLASH Catalogue and repeat 8.2.2-3 CPU Module - Load Firmware one more time.

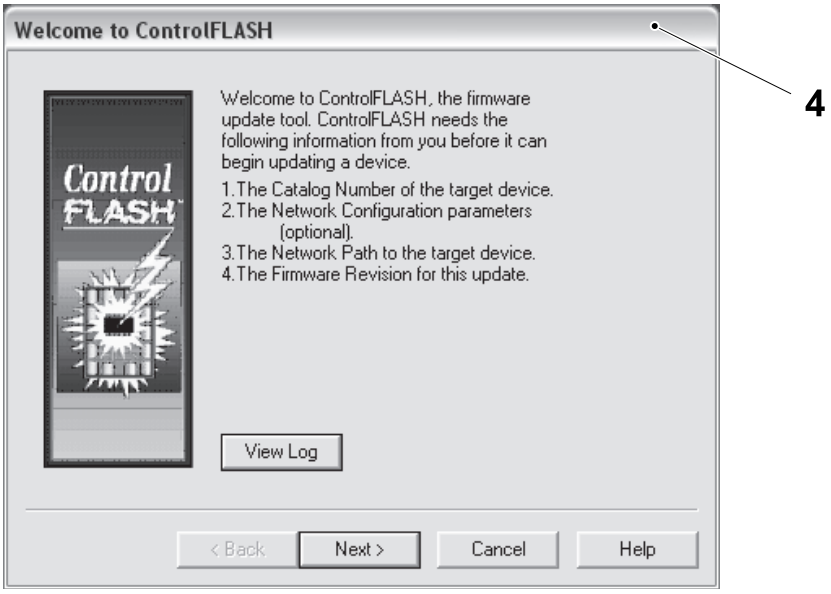

4 CONTROL FLASH PROGRAM window

(Cont'd)

(Cont'd)

Note! The firmware must be verified and if necessary upgraded for all Rockwell devices. Use the firmware setup table on the software CD to determine the catalogue number of the first device to be upgraded.

d) In the CATALOGUE NUMBER dialogue window, select and highlight the first device to be upgraded in the CATALOGUE LIST (5) as indicated in the illustration.

e) Select the NEXT button (6).

An ethernet device is shown as example

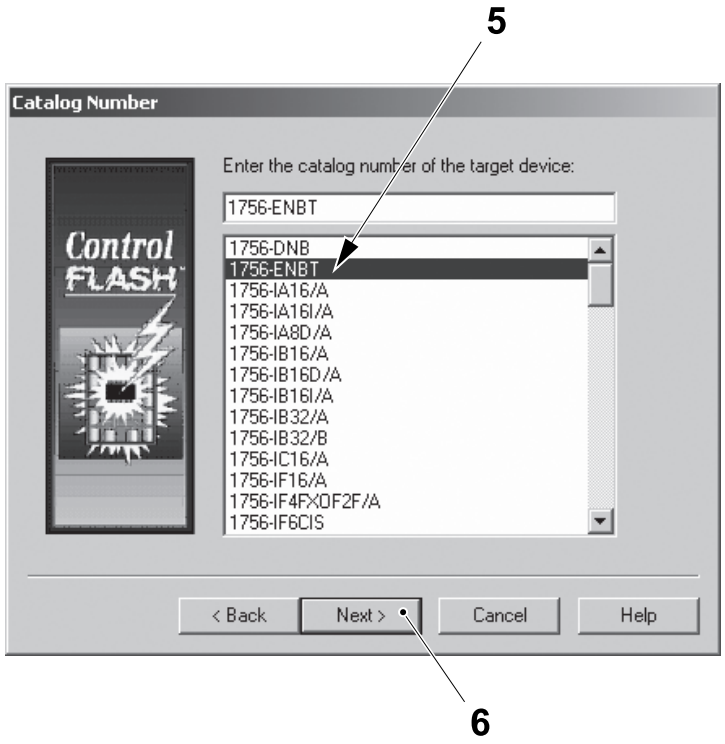

5 Catalogue list
6 Next button

(Cont'd)

(Cont'd)

Note! For the device 1756-ENBT/A only, select and highlight the backplane 1756-A7/A to verify the firmware. For all other devices select the appropriate icon as indicated in the illustration.

Note! To locate and verify the motion firmware(s), of the Kinetix servo drives click on the plus icon next to the 1756-M08SE, 8 Axis SERCOS interface to display the Sercos network and then click on the plus icon next to the Sercos network to fully expand and display all the devices.

f) In the dialogue window, browse the device tree and select and highlight the first device (7) to be upgraded as indicated in the illustration.

g) Select the OK button (8).

A = Ethernet Device
B = Other Device

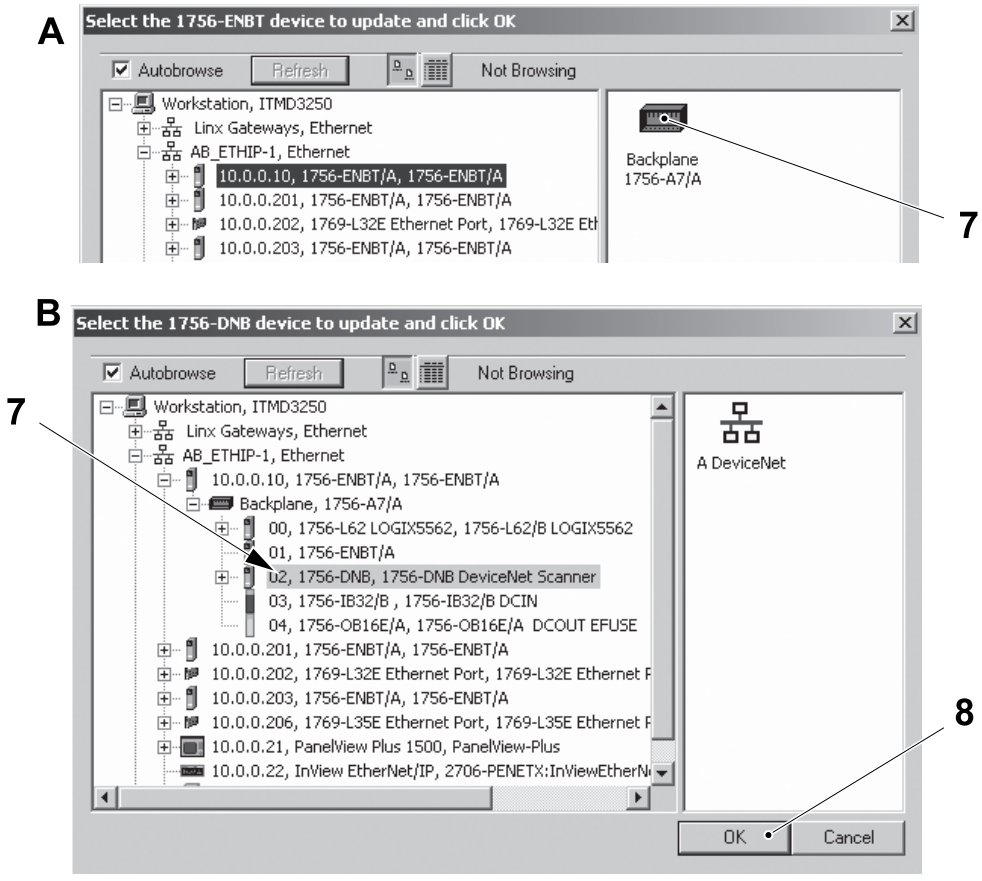

7 Device
8 Ok button

(Cont'd)

(Cont'd)

h) In the FIRMWARE REVISION dialogue window, check the current firmware revision number (9) with the firmware revision number indicated in the firmware setup table on the software CD.

i) If the firmware revision number (9) is:

- equal to or greater than the number indicated in the firmware setup table, select the BACK button (10) and select the next device from the catalogue dialogue window as indicated in item d)
- a lower revision number than the number indicated in the firmware setup table, select the NEXT button (11) to continue with the firmware upgrade.

Ethernet device dialog is shown as example

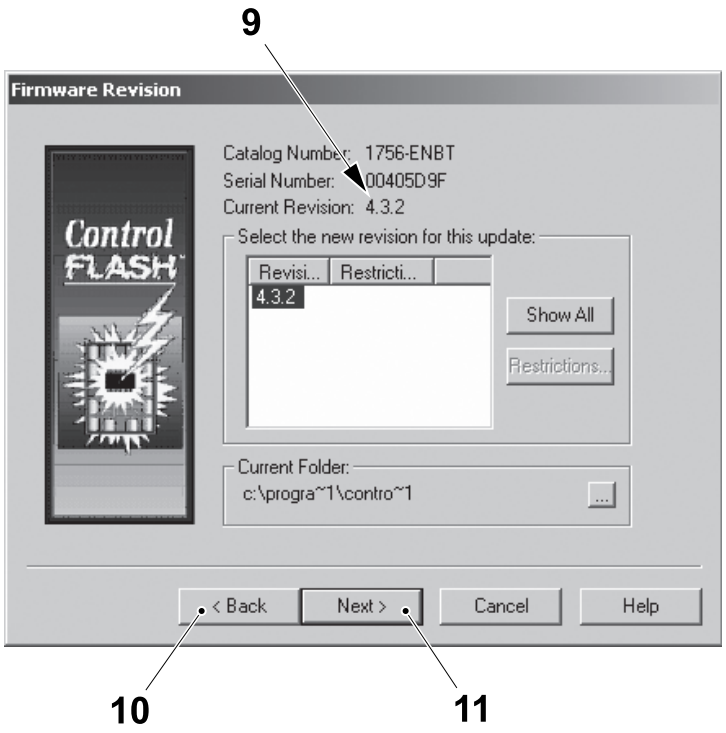

9 Firmware revision number
10 Back button
11 Next button

(Cont'd)

(Cont'd)

j) In the SUMMARY dialogue window, select the FINISH button (12) to upgrade the device firmware.

Ethernet device dialog is shown as example

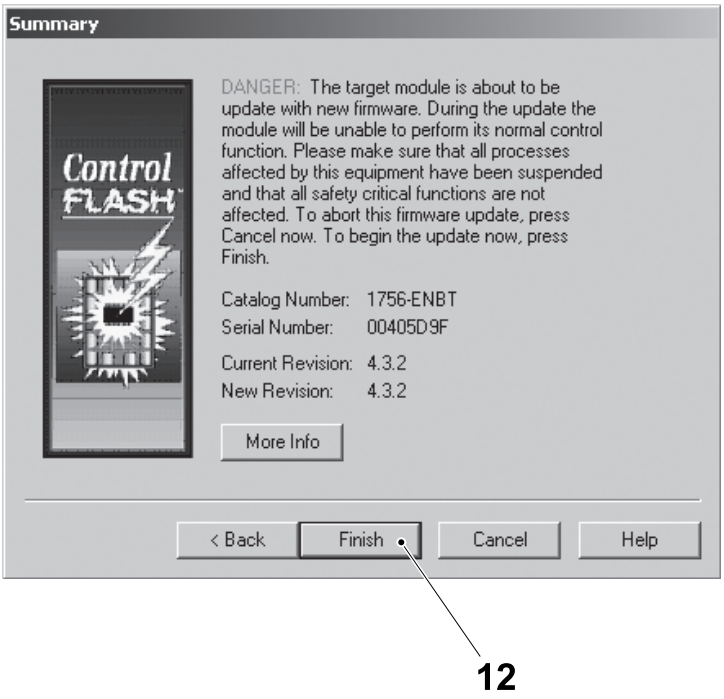

12 Finish button

(Cont'd)

(Cont'd)

CAUTION
Risk of damage to the equipment.
If a firmware download is interrupted, for example by a loss of power or if the communication fails between the device and the PC, the PLC card will be corrupted.

k) In the confirmation window, select the YES button (13).

l) At the end of the download, the UPDATE STATUS window opens, and shows the current revision number is equal to the new revision number.

m) Click the OK button (14).

n) Repeat the procedure for all the other Rockwell devices listed in the firmware setup table on the software CD.

Ethernet device dialog is shown as example

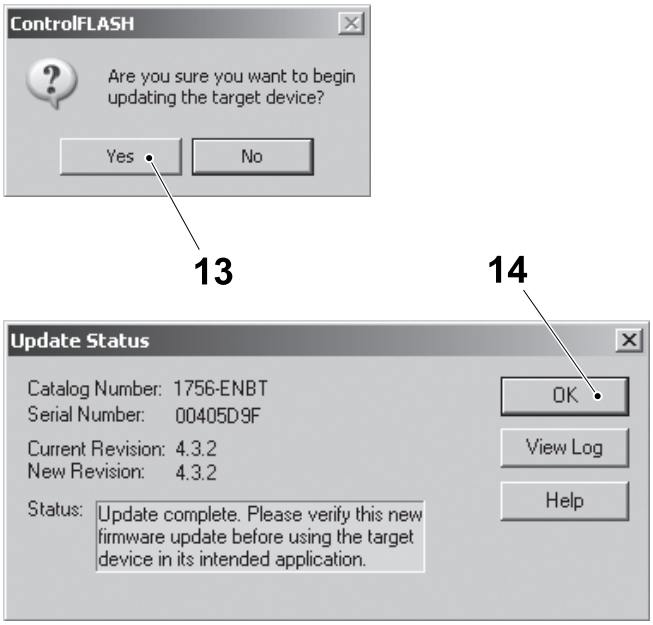

13 YES button
14 OK button

(Cont'd)

(Cont'd)

Update Control FLASH Catalogue

Note! Only use the following procedure if the required firmware catalogue was not loaded.

a) Insert the software CD into the PC CD drive.

b) Browse the CD to find the `FIRMWARE` folder (1) in the directory; `E:\FIRMWARE\`.

c) Copy the entire `FIRMWARE` folder (1) to the PC desktop.

Note! The `FIRMWARE` folder (1) contains all the ControlFLASH firmware upgrade kits for the CAP30 Applicator CPU cards.

d) Open the `FIRMWARE` folder (1), or the `CONTROLFLASH.MSI` to start the ControlFLASH program.

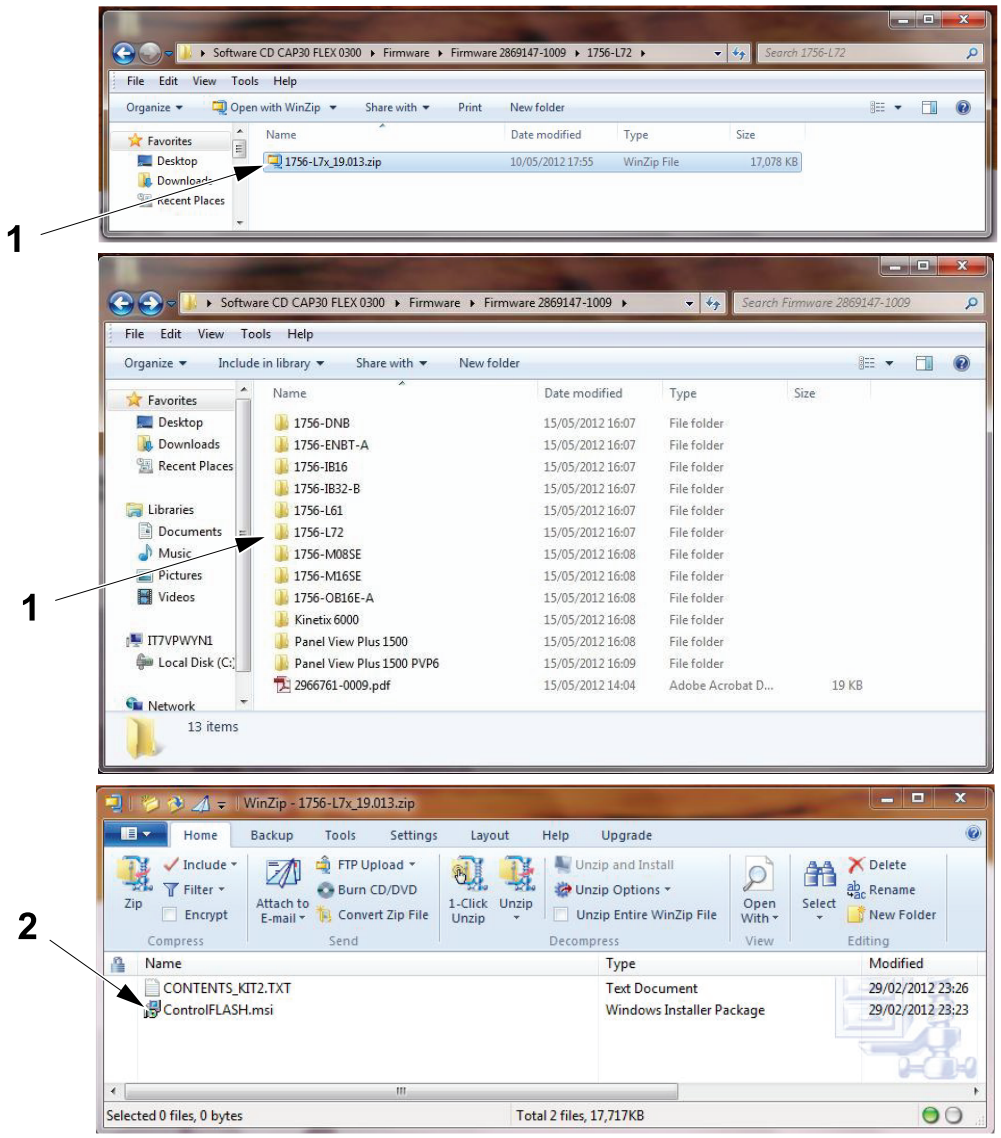

1 Firmware folder
2 Setup.exe file

(Cont'd)

(Cont'd)

Note! The following procedure describes the use of the ControlFLASH program version 4.00. Different versions of the ControlFLASH program may be included in the software CD, always follow the on-screen instructions provided by the ControlFLASH program.

e) In the `WELCOME` dialogue window, select the `NEXT` button (3).

f) In the `SOFTWARE LICENSE AGREEMENT` dialogue window, select the `YES` button (4).

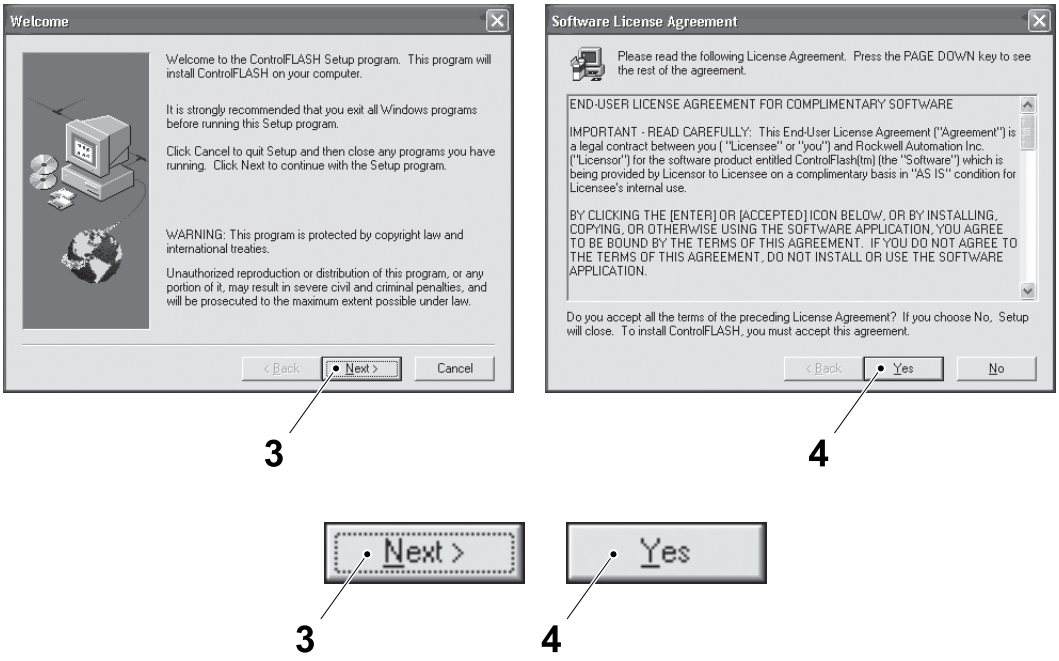

3 Next button
4 Yes button

(Cont'd)

(Cont'd)

g) In the CHOOSE DESTINATION LOCATION dialogue window, select the NEXT button (5) to start the installation.

h) In the SETUP COMPLETE dialogue window, deselect the two preselected check boxes (6).

i) Select the FINISH button (7).

j) Repeat the procedure to install the firmware catalogue updates in each of the other sub folders in the FIRMWARE SETUP folder.

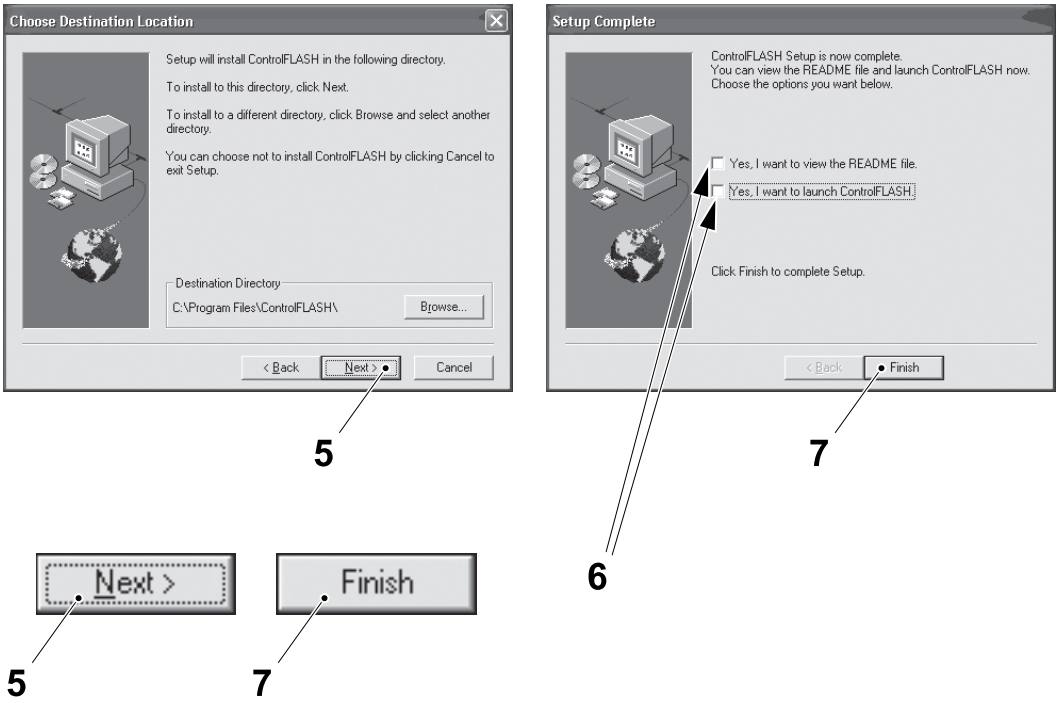

5 Next button
6 Check box
7 Finish button

8.2.2-4 CPU Module - Download Program

Machine Status	Electrical supply disconnecting device in position I (ON)
Special Equipment	Ethernet communication cable PC with CD drive
SPC Reference	2833407-0300

CAUTION
The downloading of a new software into the PLC will erase all the recipes.
Before the downloading it's recommended to write down all the setting values to restore the old recipes afterwards.

Note! To connect to the CPU module using an ethernet communication cable, the PC must first be configured for this type of communication. See 8.2.1-1 Preparation for PLC Communication - Configure PC Network Communications and 8.2.1-2 Preparations for PLC Communication - Configure RSLinx for more details.

a) Connect the ethernet communication cable between a vacant connection port on the ethernet switch (1) and the PC (2).

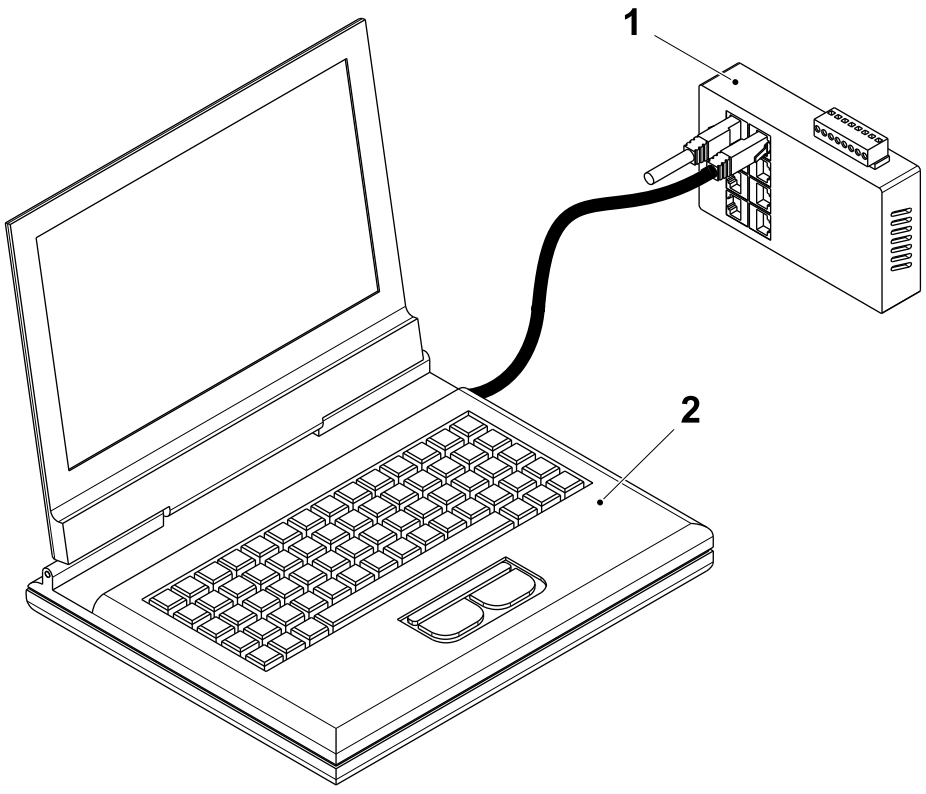

1 Ethernet switch
2 PC

(Cont'd)

(Cont'd)

Procedure

a) Make sure that the mains power switch is ON and the machine is at STEP 0.

b) Insert the CPU program CD into the PC CD drive.

c) Browse to the CD drive and copy the compressed program folder to the PC desktop and extract the program file with the format *.ADC.

d) Double click on the program file to automatically start the RSLogix program and open the program file.

e) Use the COMMUNICATION menu (1) in RSLogix and select GO ONLINE (2).

f) If the program:

- matches the program in the CPU Processor, an online connection will be established without any further messages. A download is not necessary.
- does not match the program in the CPU Processor, the CONNECTED TO GO ONLINE window (3) will appear.

g) Select the DOWNLOAD button (4).

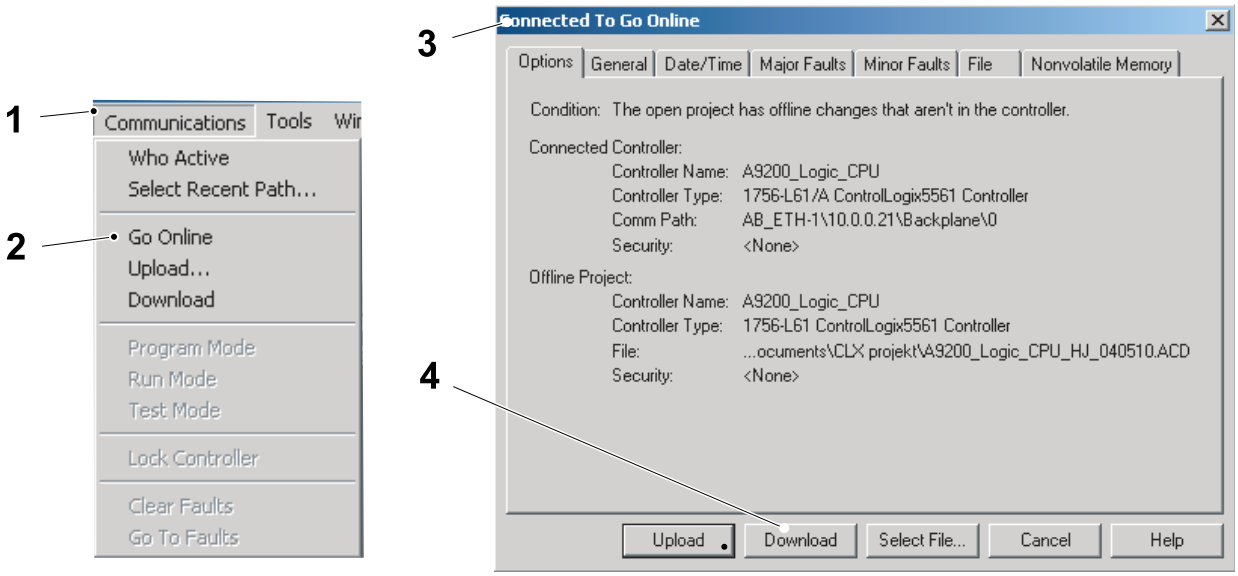

1 COMMUNICATION menu
2 GO ONLINE
3 CONNECTED TO GO ONLINE window
4 DOWNLOAD button

(Cont'd)

(Cont'd)

h) In the DOWNLOAD window (5), select the DOWNLOAD button (6).

Note! All the values and settings in the CPU Processor will be replaced with those from the down loaded program.

i) When the download is complete the Dialogue box (7) appears, select the YES button (8) to put the CPU in the RUN mode.

j) If the download is to:

- an existing CPU, cycle the CPU power supply to force the CPU to store the CPU program to the controller's memory. The download procedure is complete.
- a replacement CPU controller continue with the procedure that follows to set the nonvolatile memory .

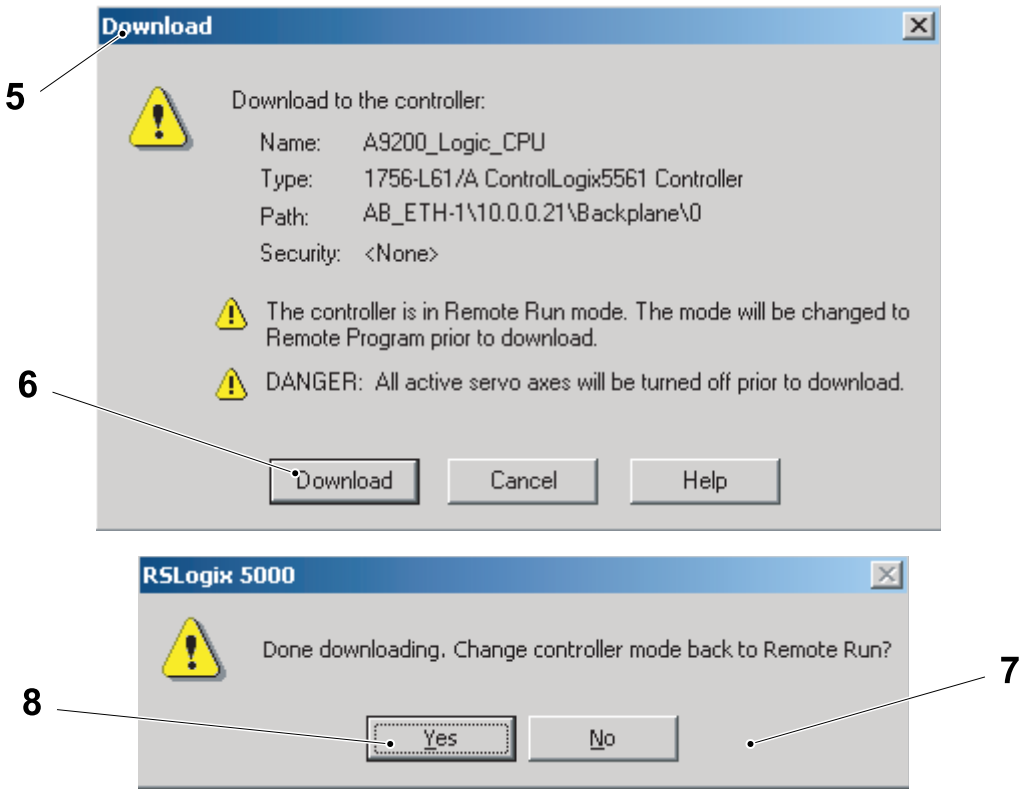

5 DOWNLOAD window
6 DOWNLOAD button
7 Dialogue box
8 YES button

(Cont'd)

(Cont'd)

Set Nonvolatile Memory

a) Select the COMMUNICATION menu (1) and then select GO ONLINE (2).

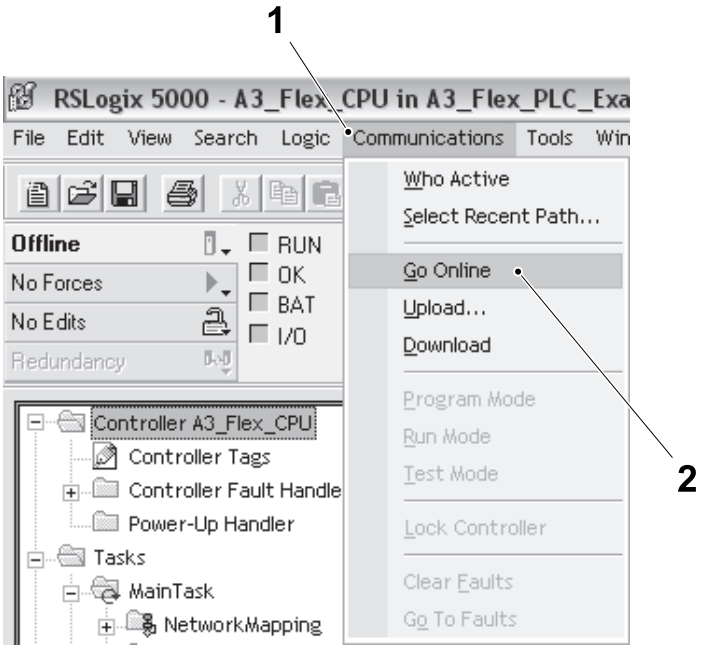

1 Communication menu
2 Go online

(Cont'd)

(Cont'd)

b) Select the COMMUNICATION menu (1), then select PROGRAM MODE (3).

c) When the RSLOGIX 5000 dialogue box (4) appears, select the YES button (5) to put the PLC in PROGRAM MODE.

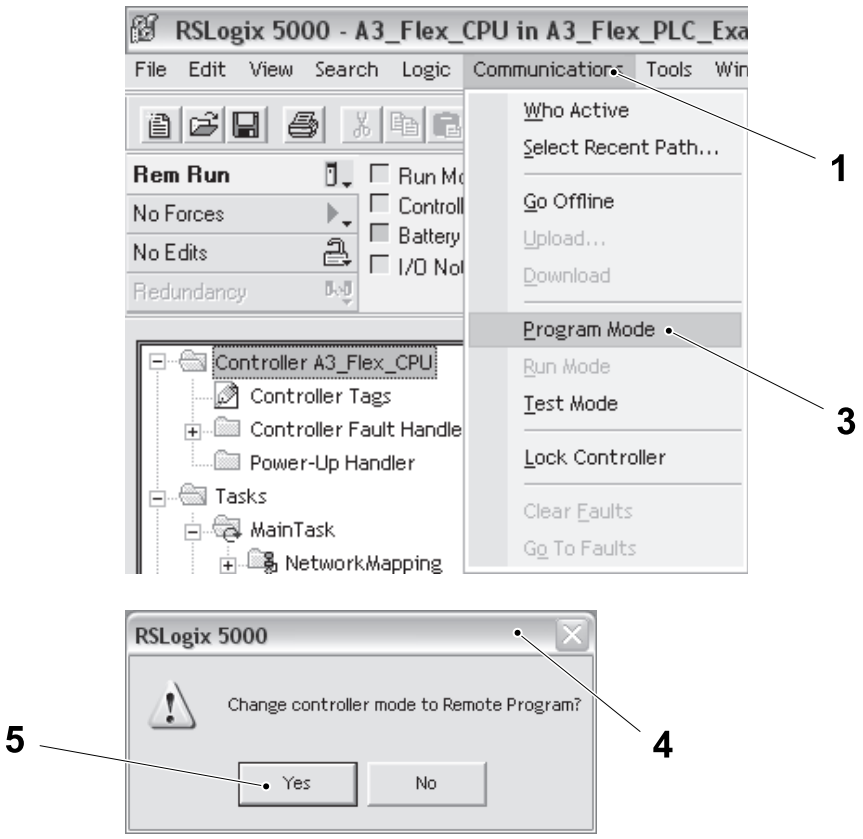

1 Communication menu
3 Program mode
4 Dialogue box
5 Yes button

(Cont'd)

(Cont'd)

d) In the RSLOGIX 5000 window (6) , select the CONTROLLER PROPERTIES button (7) .

e) The CONTROLLER PROPERTIES window (8).

f) Select the NONVOLATILE MEMORY tab (9).

g) Select the LOAD/STORE button (10).

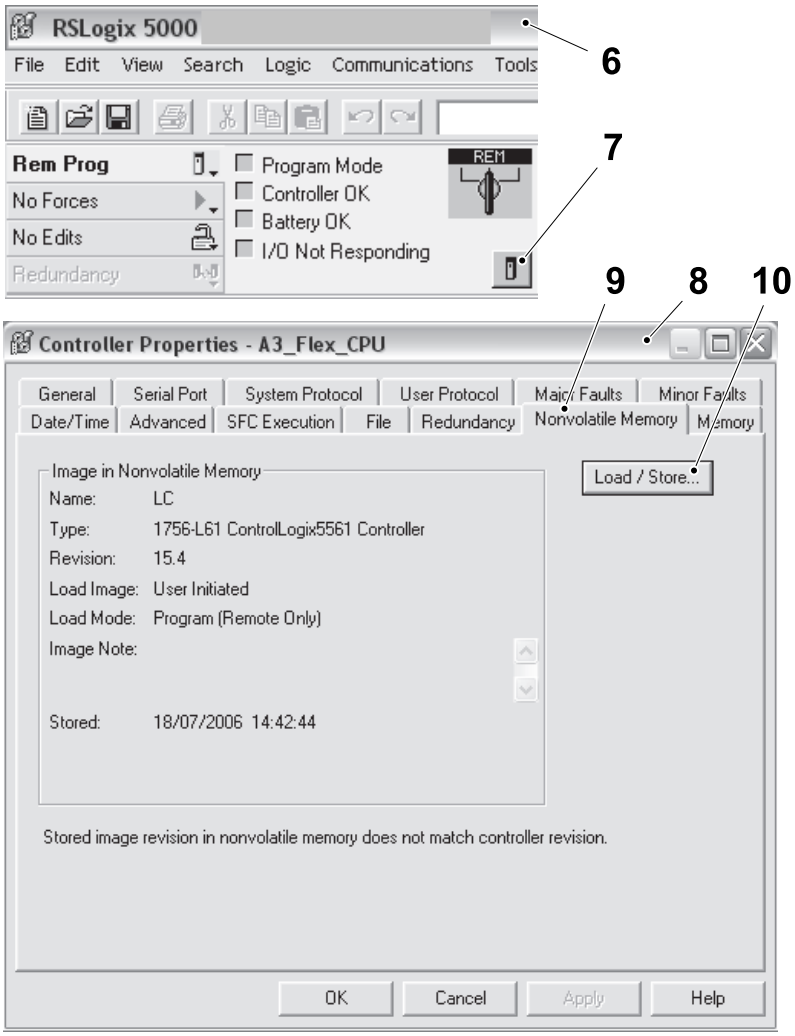

6 RSLOGIX 5000 window
7 CONTROLLER PROPERTIES button
8 CONTROLLER PROPERTIES window
9 NONVOLATILE MEMORY tab
10 LOAD/STORE button

(Cont'd)

(Cont'd)

h) In the NONVOLATILE MEMORY LOAD/STORE window (11), select ON CORRUPT memory (12) from the drop down list of the LOAD IMAGE option (13).

i) In the NONVOLATILE MEMORY LOAD/STORE window (11) , select PROGRAM (REMOTE ONLY) (14) from the drop down list of the LOAD MODE option (15) .

j) Select the STORE button (16) .

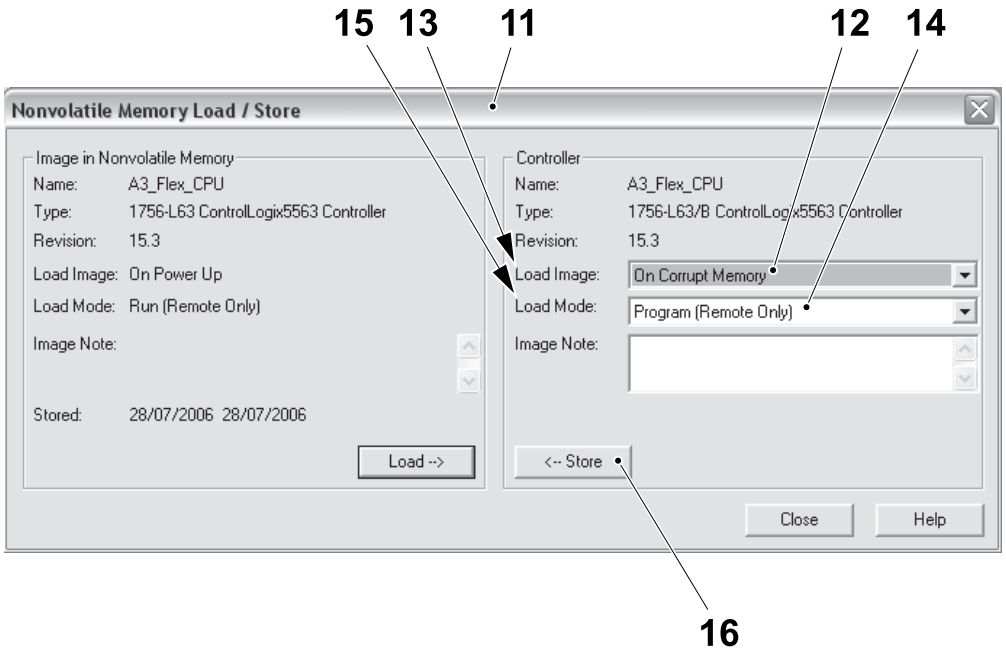

11 NONVOLATILE MEMORY LOAD/STORE window
12 ON CORRUPT memory
13 LOAD IMAGE option
14 PROGRAM (REMOTE ONLY)
15 LOAD MODE option
16 STORE button

(Cont'd)

(Cont'd)

k) Select the YES button (17) to confirm the store.

l) During the process a dialogue box indicates that the store is in progress, select the OK button (18).

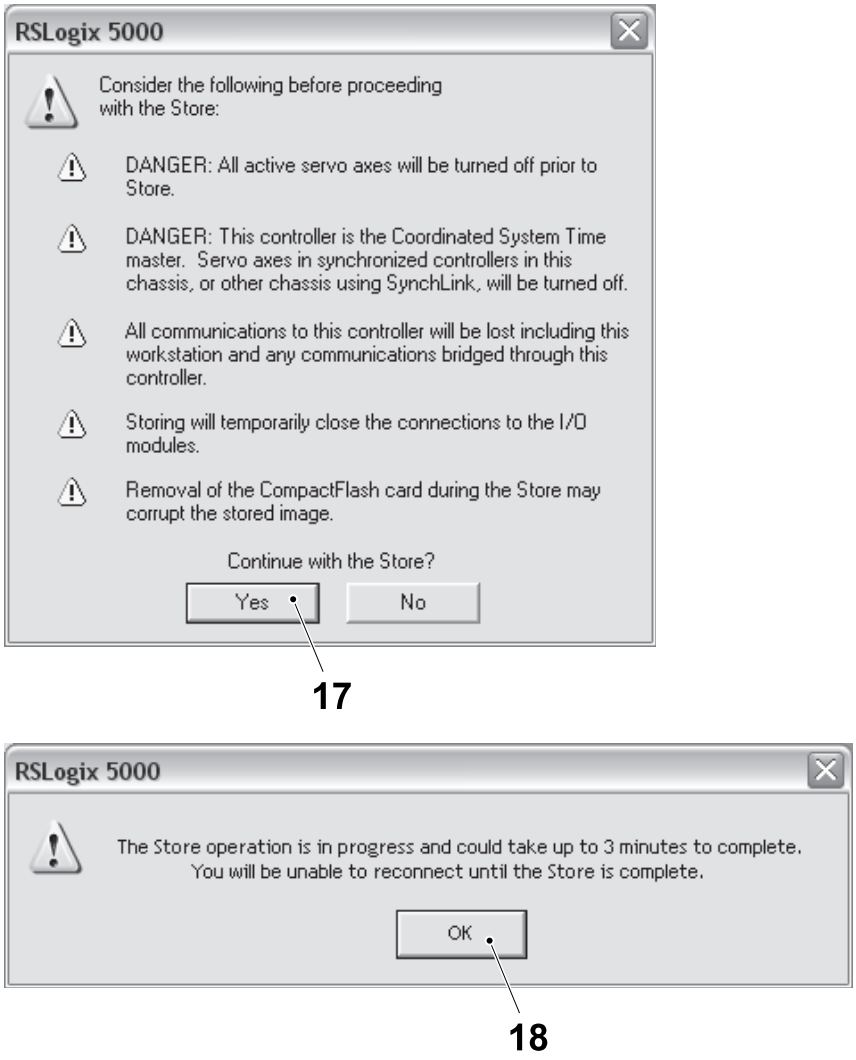

17 Yes button
18 OK button

(Cont'd)

(Cont'd)

m) Select the OK button (19) to close the CONTROLLER PROPERTIES window (8) window.

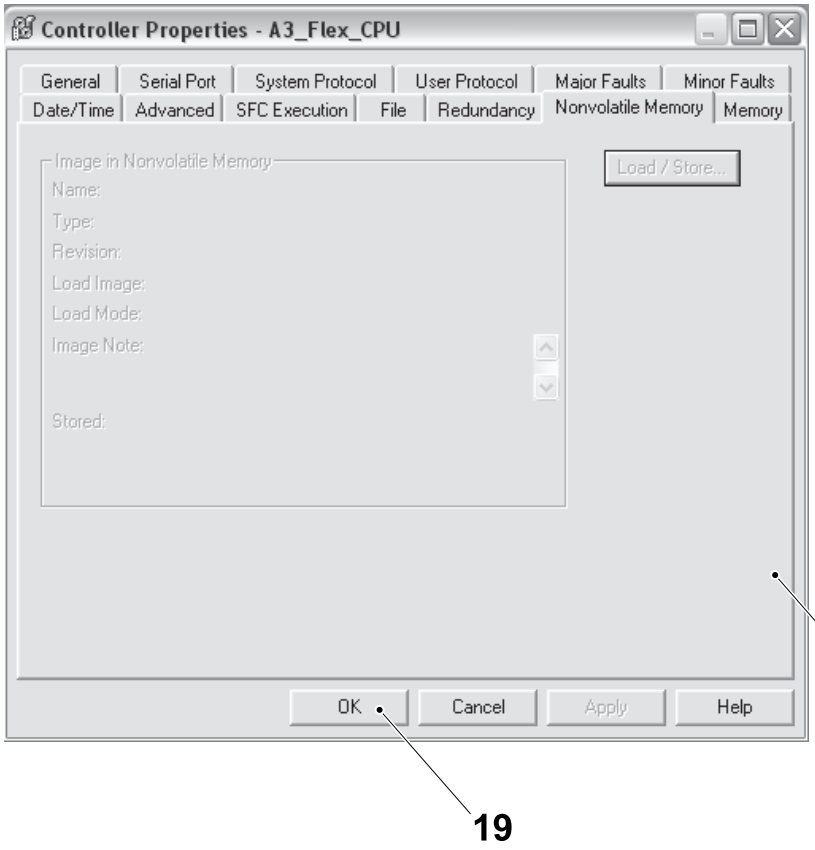

8 CONTROLLER PROPERTIES window

19 OK button

(Cont'd)

(Cont'd)

n) Select the COMMUNICATION menu (1) and then select GO ONLINE (2).

o) Select the COMMUNICATION menu (1) and then select RUN MODE (20) to put the PLC in RUN MODE.

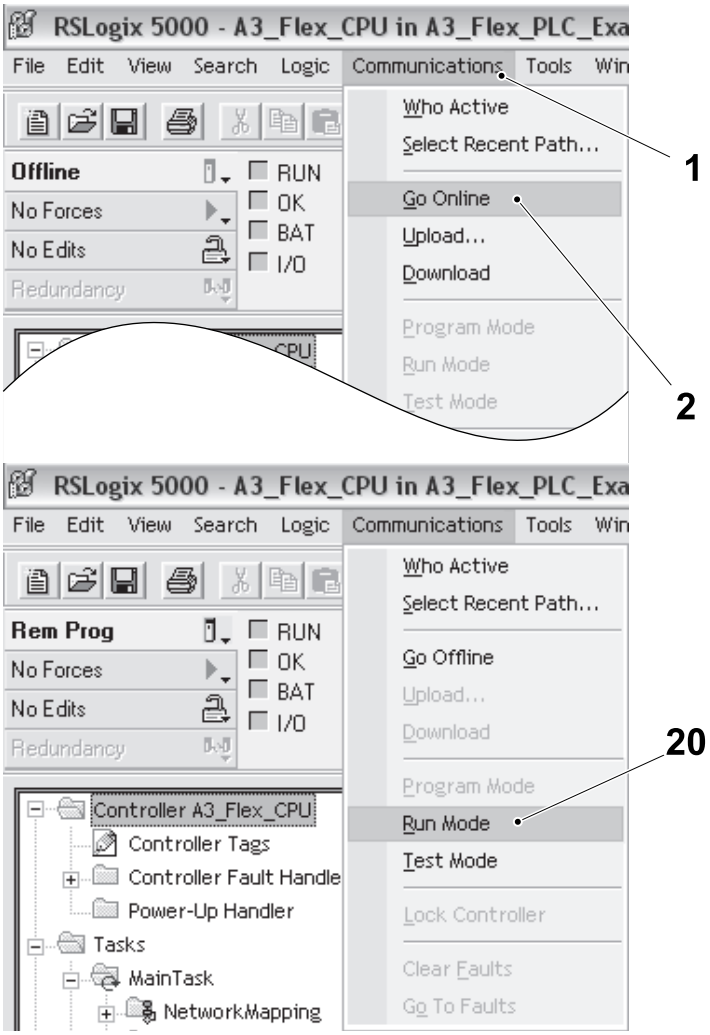

1 Communication menu
2 Go online
20 Run mode

8.2.2-5 CPU Module - Troubleshoot

Machine Status	Electrical supply disconnecting device in position I (ON)
SPC Reference	90603-5366

The CPU Module has a four-character scrolling status display (1) and four status indicators (2).

- the status display (1) scrolls messages that provide information about the firmware revision, Energy Storage Module (ESM) status, project status, and major faults.
- the status indicators (2) indicate the status of the controller.

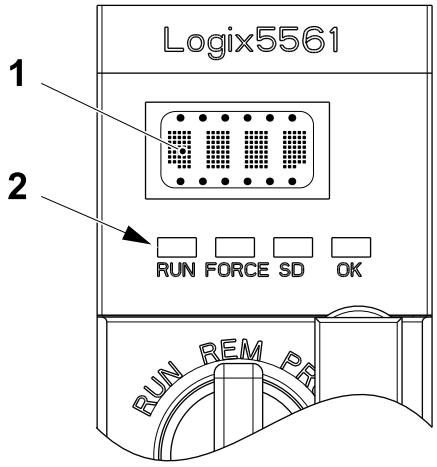

1 Status display
2 Status indicators

General Status Messages

Message	Description	Action
No message is indicated	The controller is off. A major non recoverable fault (MNRF) has occurred.	Check the OK indicator to determine if the controller is powered and determine the state of the controller
test	Power-up tests are being conducted by the controller	
pass	PASS Power-up tests have been successfully completed.	
SAVE	A project is being saved to the SD card at power down.	Allow the save to complete before removing the SD card or disconnecting the power.
load	A project is being loaded from the SD card at controller power up.	Allow the load to complete before removing the SD card or disconnecting power or removing the ESM module.

(Cont'd)

(Cont'd)

Message	Description	Action
updt	A firmware upgrade is being conducted from the SD card upon power up.	If the firmware to update upon power up is not desired, change the controller's Load Image property.
CHRG	The capacitor-based ESM is being charged.	
1756-L7x/X	The controller catalogue number and series.	
Rev XX.xxx	The major and minor revision of the controller's firmware.	
no project	No project is loaded on the controller.	Download the project to the controller or use a SD card to load a project to the controller
Project name	The name of the project that is currently loaded on the controller. The name indicated is based on the project name specified in RSLogix 5000 software.	
busy	The I/O modules associated with the controller are not yet fully-powered.	Allow time for power up and I/O module self-testing.
Corrupt Certificate Received	The security certificate associated with the firmware is corrupted.	Replace the firmware revision.
Corrupt Image Received	The firmware file is corrupted.	Replace the firmware revision.
ESM Not Present	An ESM is not present and the controller cannot save the application at power down.	Insert a compatible ESM, and, if using a capacitor-based ESM, do not remove power until the ESM is charged.
ESM Incompatible	The ESM is incompatible with the memory size of the controller.	Replace the incompatible ESM with a compatible ESM.
ESM Hardware Failure	A failure with the ESM has occurred and the controller is incapable of saving of the program in the event of a power down.	Replace the ESM before removing power to the controller so the controller program is saved.
ESM Energy Low	The capacitor-based ESM does not have sufficient energy to enable the controller to save the program in the event of a power down.	Replace the ESM.
ESM Charging	The capacitor-based ESM is charging.	Do not remove power until charging is complete.
Flash in Progress	A firmware upgrade initiated via ControlFLASH or AutoFlash utilities is in progress.	Allow the firmware upgrade to complete without interruption.

(Cont'd)

(Cont'd)

Message	Description	Action
Firmware Installation Required	The controller is using boot firmware and requires a firmware upgrade.	Upgrade controller firmware.
SD Card Locked	An SD card that is locked is installed.	

Major Recoverable Fault Messages

Major recoverable faults are indicated by the message `MAJOR FAULT TXX:CXX` on the controller status display. This table lists specific fault types, codes, and the associated messages as they are shown on the status display.

Note! For detailed descriptions and suggested recovery methods for major recoverable faults, see the Logix5000 Major, Minor, and I/O Fault Codes Programming Manual supplied by Rockwell Automation.

Type	Code	Message
1	1	Run Mode Powerup
1	60	Non-recoverable
1	61	Non-recoverable - Diagnostics Saved
1	62	Non-recoverable - Program Saved
3	16	I/O Connection Failure
3	20	Chassis Failure
3	23	Connection Failure
4	16	Unknown Instruction
4	20	Invalid Array Subscript
4	21	Control Structure LEN or POS < 0
4	31	Invalid JSR Parameter
4	34	Timer Failure
4	42	Invalid JMP Target
4	82	SFC Jump Back Failure
4	83	Value Out of Range
4	84	Stack Overflow
4	89	Invalid Target Step
4	90	Invalid Instruction
4	91	Invalid Context
4	92	Invalid Action
6	1	Task Watchdog Expired
7	40	Save Failure
7	41	Bad Restore Type
7	42	Bad Restore Revision
7	43	Bad Restore Checksum
8	1	Keyswitch Change Ignored

(Cont'd)

(Cont'd)

I/O Fault Codes

I/O faults indicated by the controller are shown in the status display in one of these formats; `I/O FAULT LOCAL:X #XXXX MESSAGE` or `I/O FAULT MODULENAME #XXXX MESSAGE` or `I/O FAULT MODULEPARENT:X #XXXX MESSAGE`.

The first part of the format is used to indicate the location of the faulted module. How the location is indicated depends on the I/O configuration and the module properties specified in RSLogix 5000 software.

The latter part of the format, #XXXX message, can be used to diagnose the type of I/O fault and potential corrective actions.

Take corrective action specific to the type of fault indicated.

Note! The status display shows `X I/O FAULTS` if multiple I/O faults are present: X is the number of I/O faults present. As each I/O fault is resolved, the number of faults indicated decreases and the next fault reported is indicated by the I/O Fault message.

Note! For details about each I/O fault code, see the Logix5000 Major, Minor, and I/O Fault Codes Programming Manual supplied by Rockwell Automation.

Code	Message	Code	Message
#0001	Connection Failure	#0110	Module Not Configured
#0002	Insufficient Resource	#0111	RPI Out of Range
#0003	Invalid Value	#0113	Out of Connections
#0004	IOI Syntax	#0114	Wrong Module
#0005	Destination Unknown	#0115	Wrong Device Type
#0006	Partial Data Transferred	#0116	Wrong Revision
#0007	Connection Lost	#0117	Invalid Connection Point
#0008	Service Unsupported	#0118	Invalid Configuration Format
#0009	Invalid Attribute Value	#0119	Module Not Owned
#000A	Attribute List Error	#011A	Out of Connection Resources
#000B	State Already Exists	#0203	Connection Timeout
#000C	Object Mode Conflict	#0204	Unconnected Message Timeout
#000D	Object Already Exists	#0205	Invalid Parameter
#000E	Attribute Not Settable	#0206	Message Too Large
#000F	Permission Denied	#0301	No Buffer Memory
#0010	Device State Conflict	#0302	Bandwidth Not Available
#0011	Reply Too Large	#0303	No Bridge Available
#0012	Fragment Primitive	#0304	ControlNet Schedule Error
#0013	Insufficient Command Data	#0305	Signature Mismatch
#0014	Attribute Not Supported	#0306	CCM Not Available
#0015	Data Too Large	#0311	Invalid Port
#0100	Connection In Use	#0312	Invalid Link Address

(Cont'd)

(Cont'd)

Code	Message	Code	Message
#0103	Transport Not Supported	#0315	Invalid Segment Type
#0106	Ownership Conflict	#0317	Connection Not Scheduled
#0107	Connection Not Found	#0318	Invalid Link Address
#0108	Invalid Connection Type	#0319	No Secondary Resources Available
#0109	Invalid Connection Size	#031E	No Available Resources
#031F	No Available Resources	#FE07	Invalid Output Connection
#0800	Network Link Offline	#FE08	Invalid Output Data Pointer
#0801	Incompatible Multicast RPI	#FE09	Invalid Output Data Size
#0814	Data Type Mismatch	#FE0A	Invalid Output Force Pointer
#FD01	Bad Backplane EEPROM	#FE0B	Invalid Symbol String
#FD02	No Error Code	#FE0C	Invalid Scheduled P/C Instance
#FD03	Missing Required Connection	#FE0D	Invalid Symbol Instance
#FD04	No CST Master	#FE0E	Module Firmware Updating
#FD05	Axis or GRP Not Assigned	#FE0F	Invalid Firmware File Revision
#FD06	SERCOS Transition Fault	#FE10	Firmware File Not Found
#FD07	SERCOS Init Ring Fault	#FE11	Firmware File Invalid
#FD08	SERCOS Comm Fault	#FE12	Automatic Firmware Update Failed
#FD09	SERCOS Init Node Fault	#FE13	Update Failed - Active Connection
#FD0A	Axis Attribute Reject	#FE14	Searching Firmware File
#FD1F	Safety I/O	#FE22	Invalid Connection Type
#FD20	No Safety Task	#FE23	Invalid Unicast Allowed
#FE01	Invalid Connection Type	#FF00	No Connection Instance
#FE02	Invalid Update Rate	#FF01	Path Too Long
#FE03	Invalid Input Connection	#FF04	Invalid State
#FE04	Invalid Input Data Pointer	#FF08	Invalid Path
#FE05	Invalid Input Data Size	#FF0B	Invalid Config
#FE06	Invalid Input Force Pointer	#FF0E	No Connection Allowed

(Cont'd)

(Cont'd)

Status Indicators

LED	Colour	Description
RUN (1)	Off	The controller is in Program or Test mode.
	Steady green	The controller is in Run mode.
FORCE (2)	Off	No tags contain I/O force values. I/O forces are inactive (disabled).
	Solid amber	I/O forces are active (enabled) though I/O force values may or may not be configured.
	Flashing amber	One or more input or output addresses have been forced to an On or Off state, but the forces have not been enabled.
SD (3)	Off	There is no activity.
	Flashing green	The controller is reading from or writing to the SD card. Do not remove the SD card while the controller is reading or writing.
	Solid green	
	Flashing red	The SD card does not have a valid file system.
	Solid red	The SD card is not recognized by the controller.

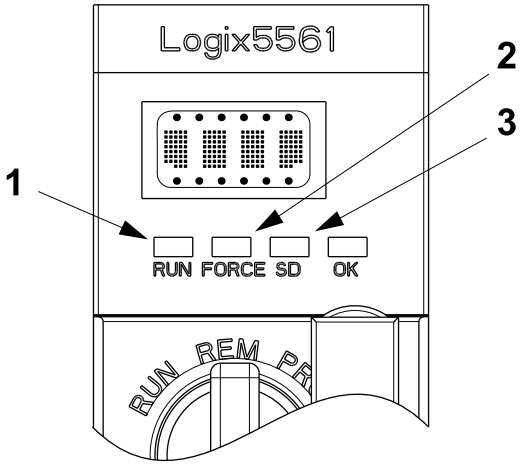

1 Run LED
2 Force LED
3 SD LED

(Cont'd)

(Cont'd)

LED	Colour	Description
OK (4)	Off	No power is applied.
	Flashing red	If the controller is new, then the controller requires a firmware update. Thestatus display (5) indicates `FIRMWARE INSTALLATION REQUIRED`. If the controller is **not** new, then a board major fault has occurred. For details about major recoverable faults, see the Logix5000 Major, Minor, and I/O Fault Codes Programming Manual, distributed by Rockwell Automation.
	Solid red	The controller is completing power-up diagnostics or The controller detected a non-recoverable fault, so it cleared the project from memory. or The charge of the capacitor in the ESM is being discharged upon power down. or The controller is powered, but is inoperable. or The controller is loading a project to nonvolatile memory.
	Solid green	The controller is ok.

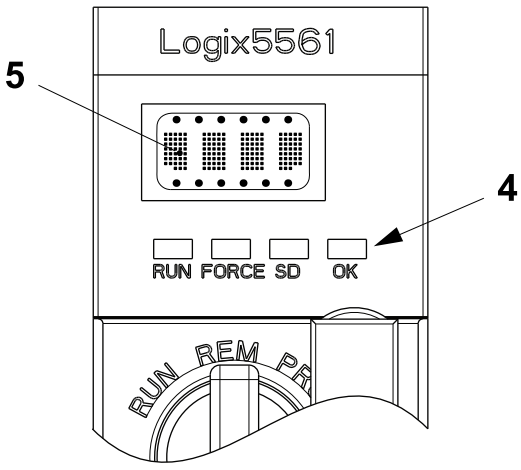

4 OK LED
5 Status display

8.2.2-6 CPU - Upload Program

Machine Status	Electrical supply disconnecting device in position I (ON)
Special Equipment	PC with CD Drive Ethernet communication cable
SPC Reference	2833407-0300

Note! To connect to the PLC using an ethernet communication cable, the PC must first be configured for this type of communication. See 8.2.1-1 Preparation for PLC Communication - Configure PC Network Communications and 8.2.1-2 Preparations for PLC Communication - Configure RSLinx for more details.

Note! It is possible to upload the current PLC program from the PLC to the PC. This might be necessary to compare the contents of the current and new PLC programs.

a) Connect the ethernet communication cable between a vacant connection port on the ethernet switch (1) and the PC (2).

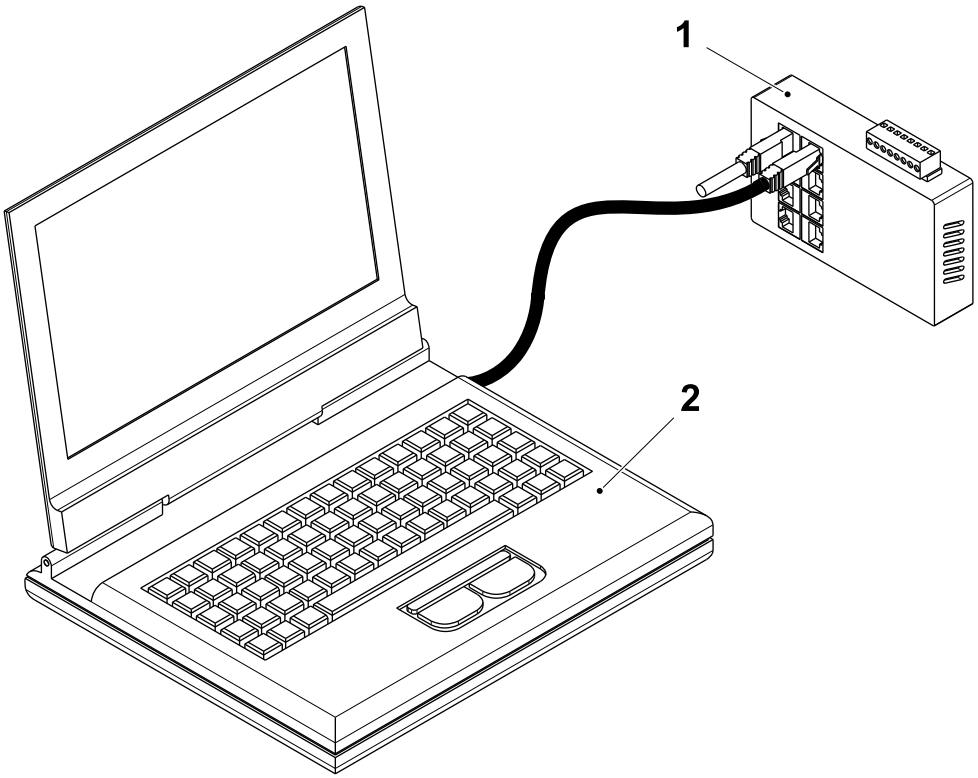

1 Ethernet switch
2 PC

(Cont'd)

(Cont'd)

b) Start the RSLogix program, select the COMMUNICATION menu (3) and then select GO ONLINE (4).

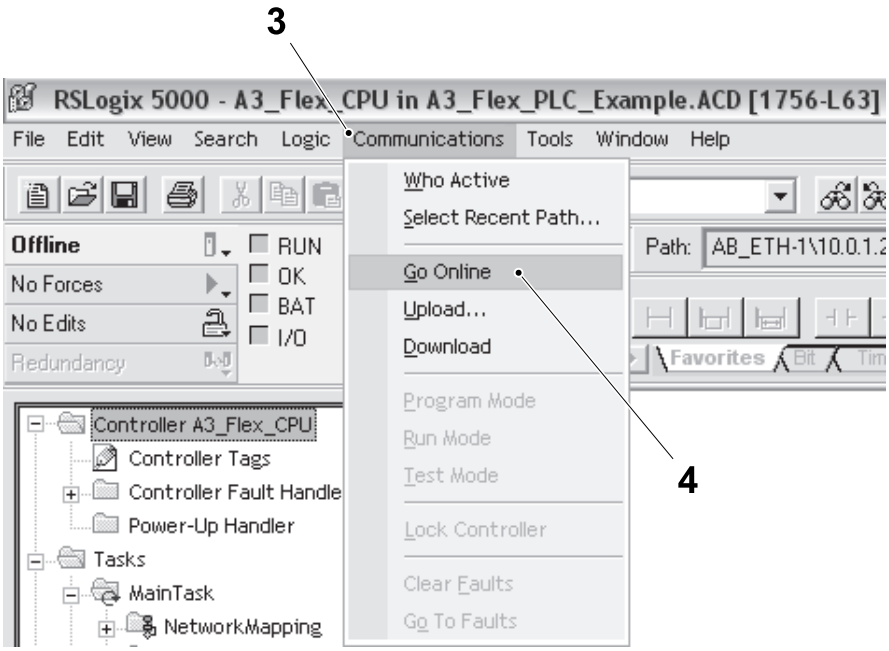

3 COMMUNICATION menu
4 GO ONLINE

(Cont'd)

(Cont'd)

c) In the CONNECTED TO GO ONLINE window (5), select the SELECT FILE button (6) .

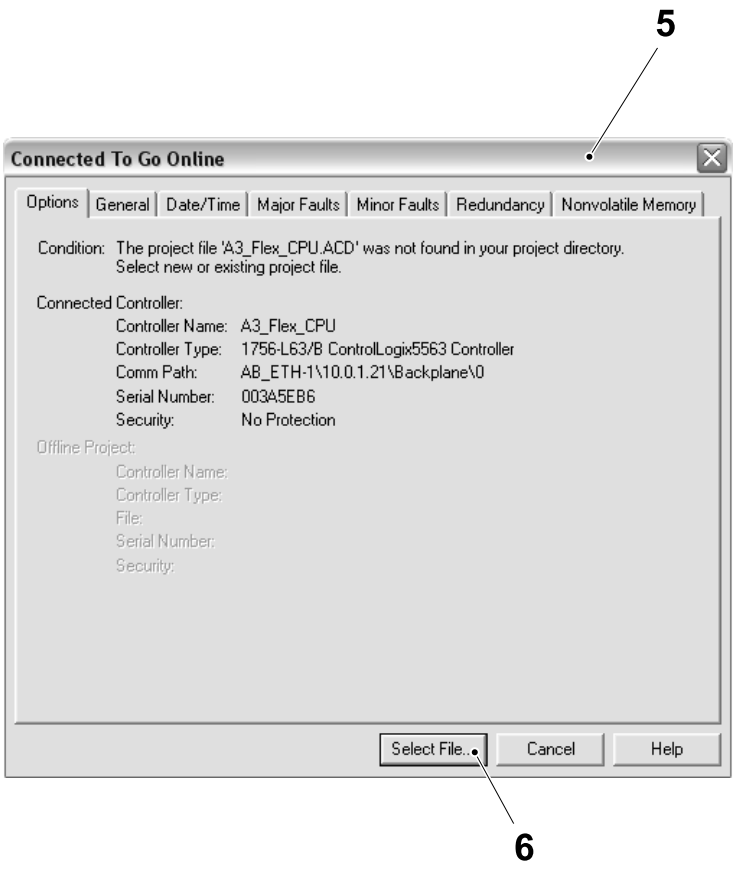

5 CONNECTED TO GO ONLINE window
6 SELECT FILE button

(Cont'd)

(Cont'd)

Note! Choose a unique name and file location for the program upload to avoid over writing other program files on the PC.

d) The enter new or select existing file window (7) is displayed, enter a name for the program upload in the `FILE NAME BOX` (8).

e) Select the `SELECT` button (9).

f) When the `RSLOGIX 5000 DIALOGUE BOX` (10) appears, select the `YES` button (11) to upload the PLC program to the PC.

Note! The upload process takes several minutes to complete.

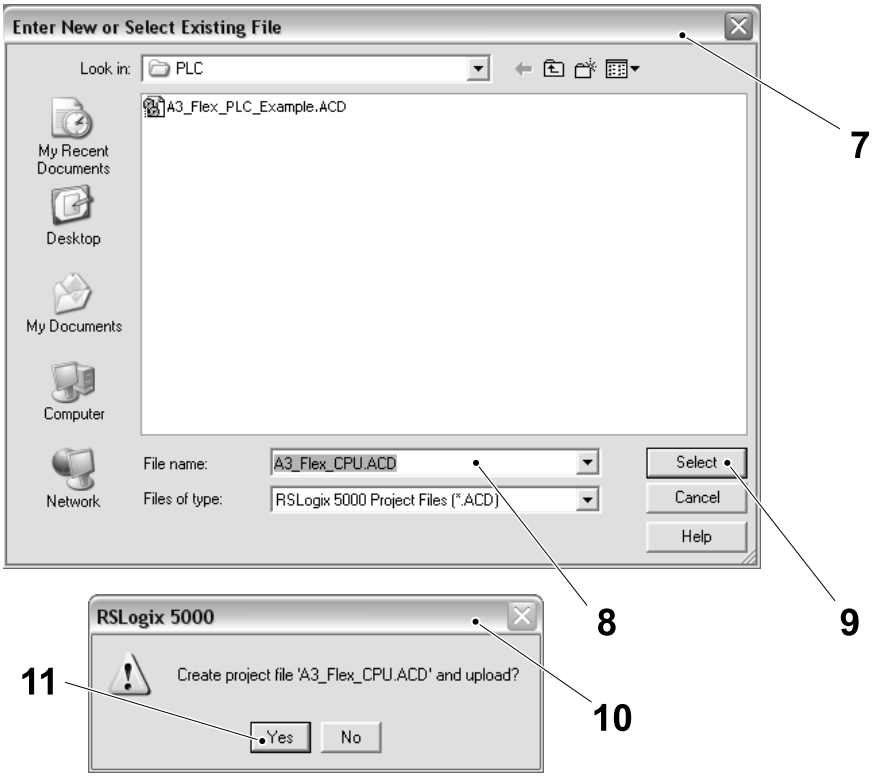

7 enter new or select existing file window
8 `FILE NAME BOX`
9 `SELECT` button
10 `RSLOGIX 5000 DIALOGUE BOX`
11 `YES` button

8.2.2-7 Install the ControlFlash Application Firmware Library

Machine Status	Electrical supply disconnecting device in position I (ON)
Special Equipment	Ethernet communication cable PC with CD drive RSLogix 5000 installed Latest Program CD see SPC

Note! Always use the latest version of the program CD.

Note! The firmware of the drivers of the servomotors has to be updated in all the machines. CAP 30/Speed is shown in the illustration as reference only.

a) Open the required (not the example shown) compressed folder (1).

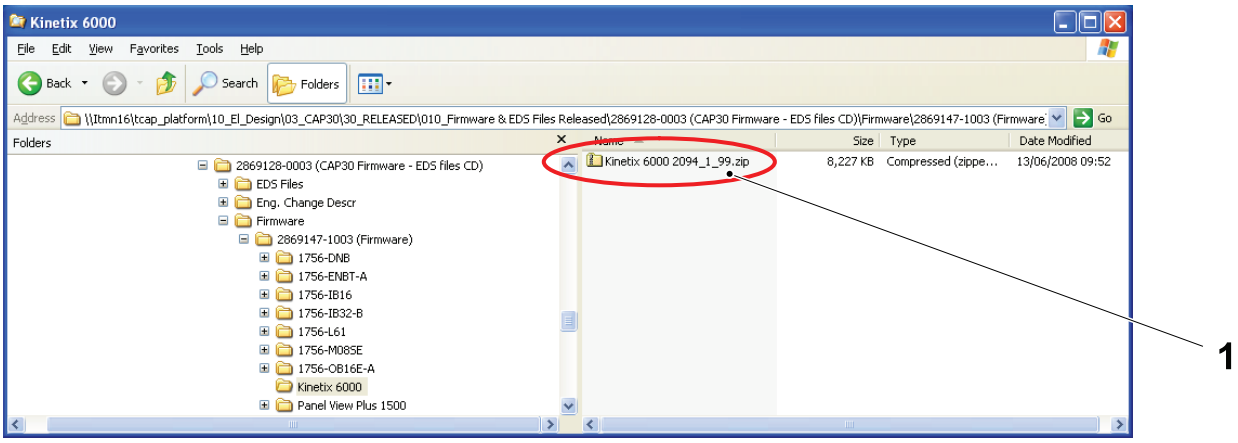

1 Compressed folder

b) Move the installation file (2) in the desktop of the PC and

c) Execute the installation file (2).

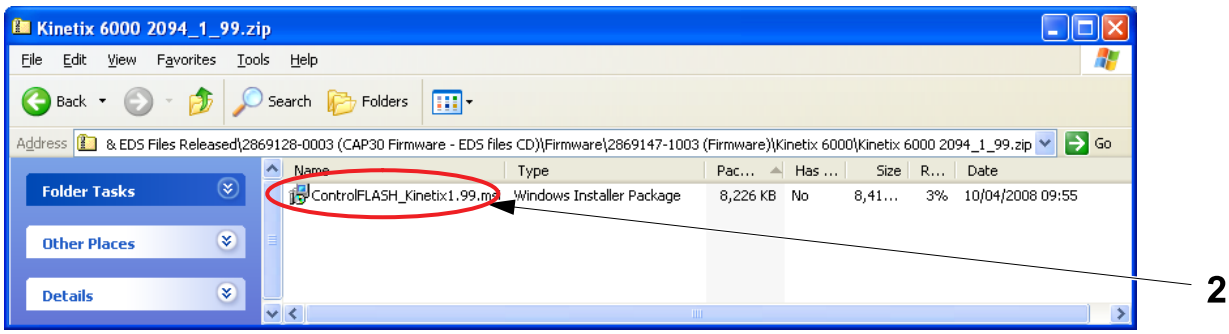

2 Installation file

(Cont'd)

(Cont'd)

d) Click on the NEXT button (3).

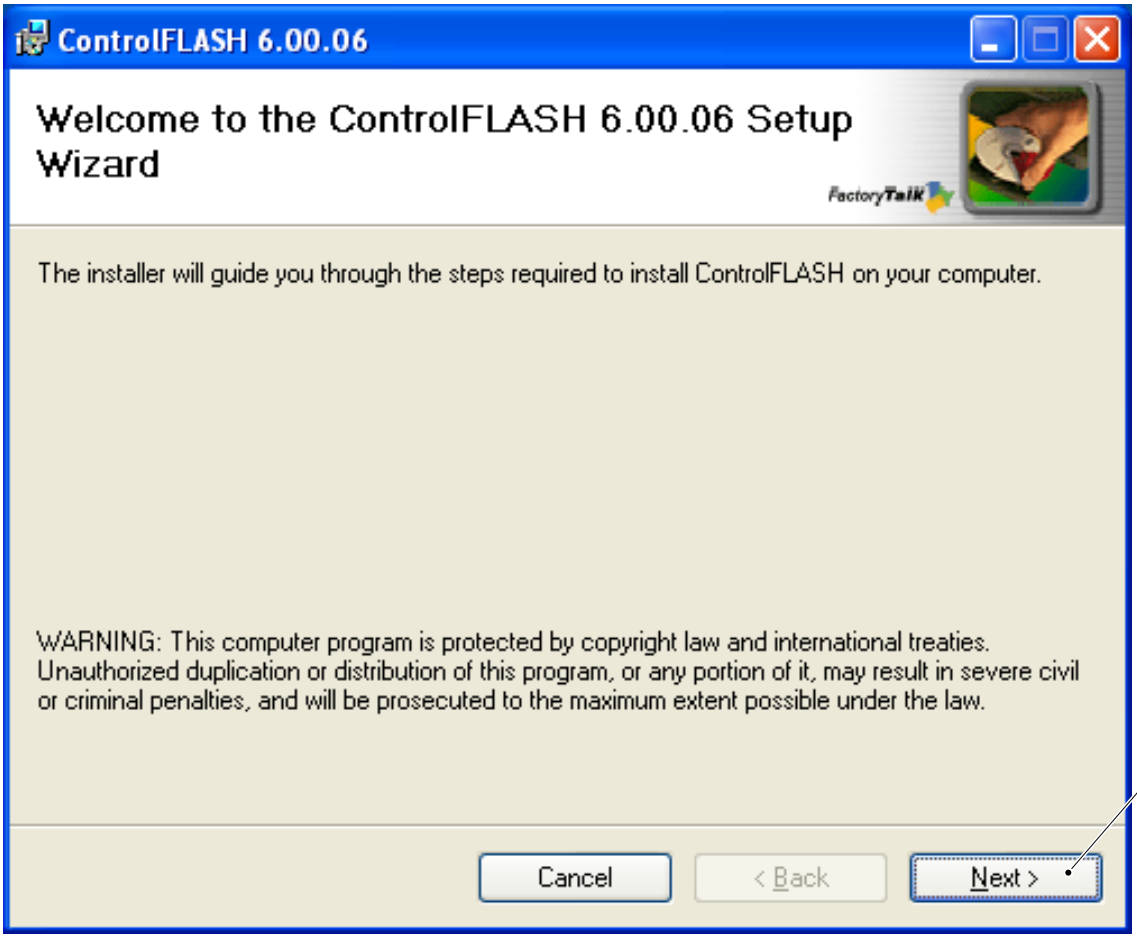

3 NEXT button

(Cont'd)

(Cont'd)

e) Select "I Agree"and then click on the NEXT button (4).

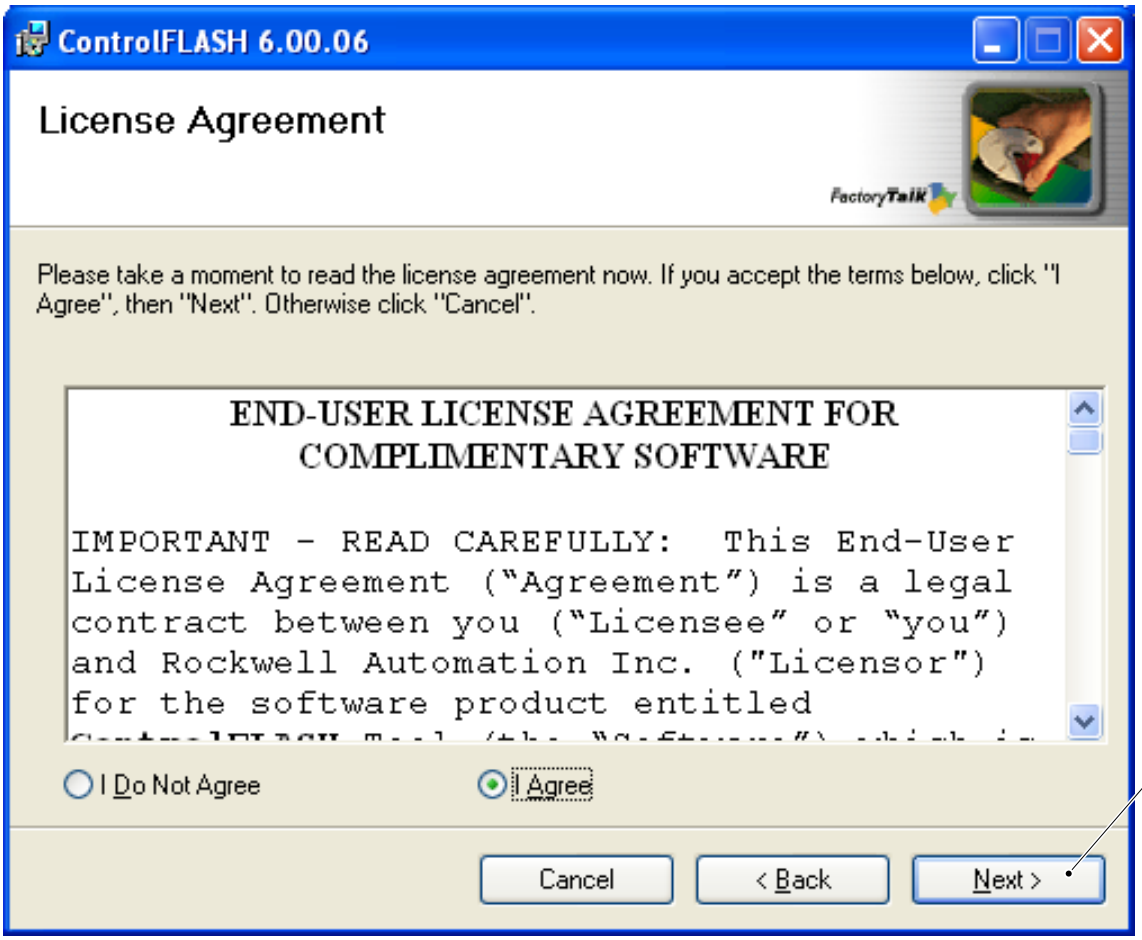

4 NEXT button

(Cont'd)

(Cont'd)

f) Select the folder for the installation and then click on the NEXT button (5).

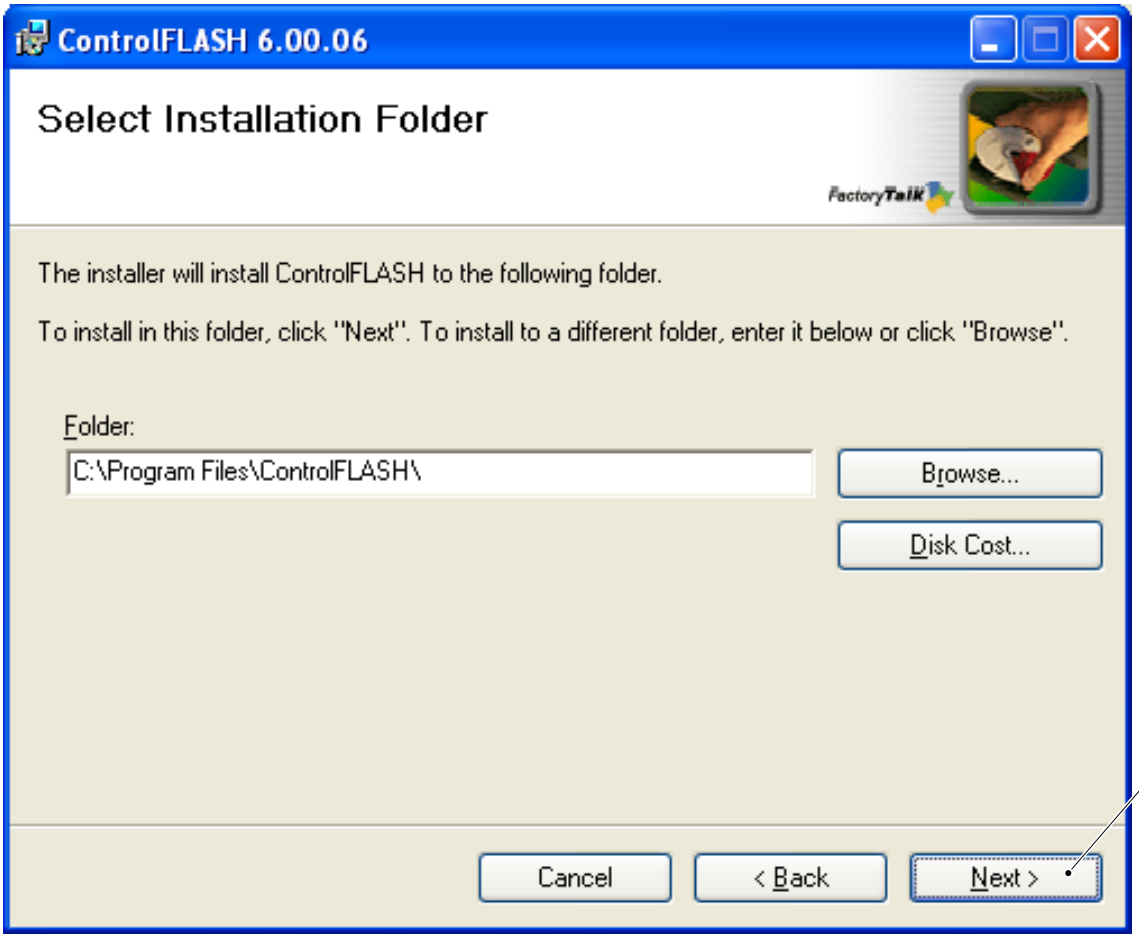

5 NEXT button

(Cont'd)

(Cont'd)

g) Click on the NEXT button (6) to start the installation.

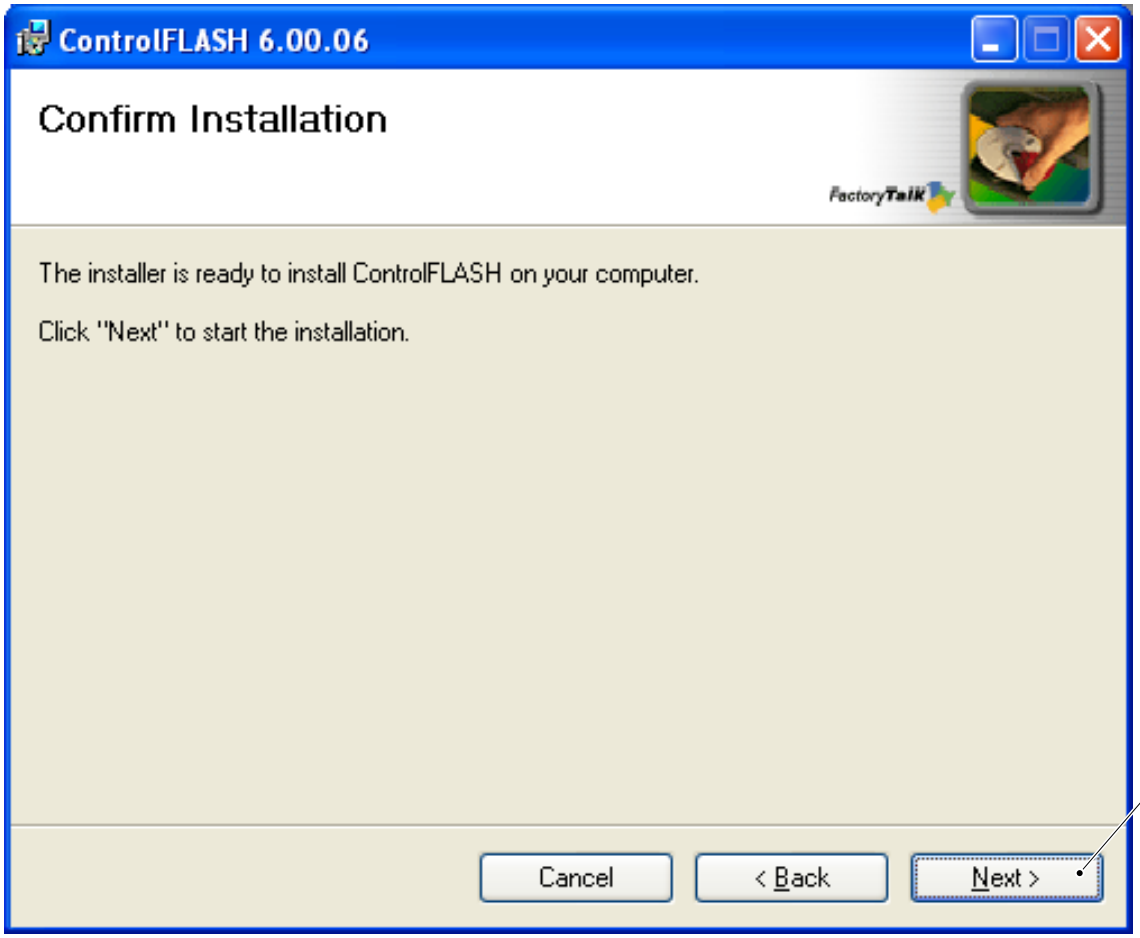

6 NEXT button

(Cont'd)

(Cont'd)

h) Click on the CLOSE button (7) to exit.

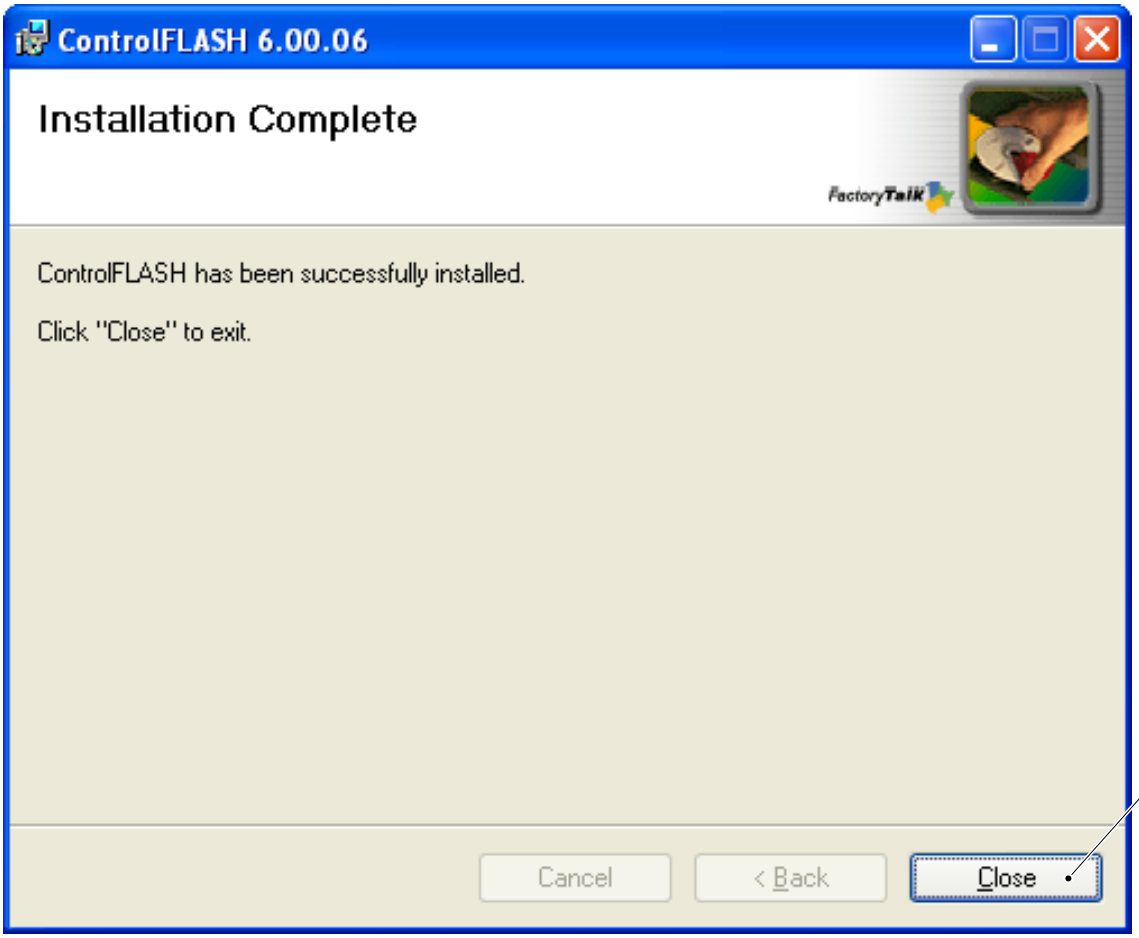

7 CLOSE button

8.2.2-8 PLC - Load FirmWare in PLC, Ethernet, DeviceNet and SERCOS Modules

Machine Status	Electrical supply disconnecting device in position I (ON)
Special Equipment	PC with CD Drive Latest Software CD see SPC Ethernet communication cable
SPC Reference	2833407-0300

CAUTION
Risk of damage to the equipment.
If a FirmWare update is interrupted, e.g. by a power loss on the machine, or if the communication fails between the device and the PC, the PLC Processor will be corrupted and must be sent for repair.

Note! The following procedure is valid for all PLC rack mounted or distributed modules requiring firmware.

Use the table below to identify the correct firmware revision for the module to be flashed.

PLC				
Slot No.	**Pos. No.**	**Module type**	**TP No.**	**Firmware revision**
1	01K301	1756-L61	90459-3142	13.36.1
2	01K302	1756-ENBT	90459-2477	3.2.6
3	01K303	1756-ENBT	90459-2477	3.2.6
4	01K304	1756-DNB	90600-4543	10.005
10	01K310	1756-M08SE	90459-2480	13.7

(Cont'd)

(Cont'd)

a) Make sure that the PC is configured as described in see 8.2.1-1 Preparation for PLC Communication - Configure PC Network Communications and 8.2.1-2 Preparations for PLC Communication - Configure RSLinx.

b) Open the start menu on the PC and select programs (1) , flash programming tools (2) and control flash (3).

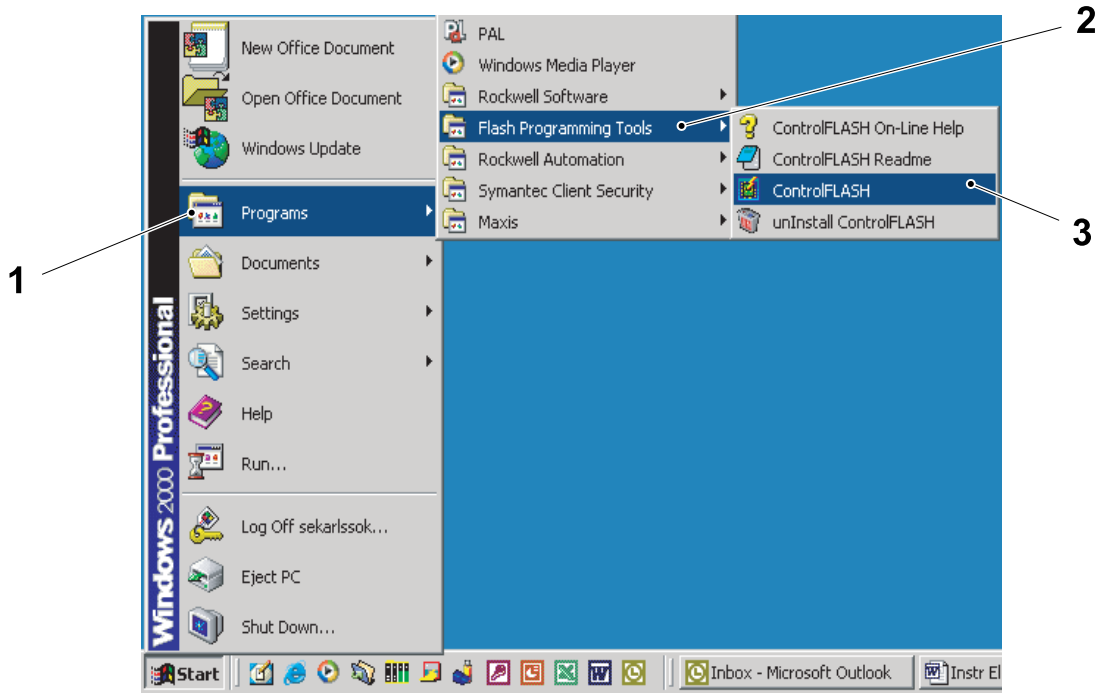

1 Programs
2 Flash programming tools
3 Control flash

(Cont'd)

(Cont'd)

c) Follow the instructions in the CONTROL FLASH PROGRAM window (4) to load the firmware.

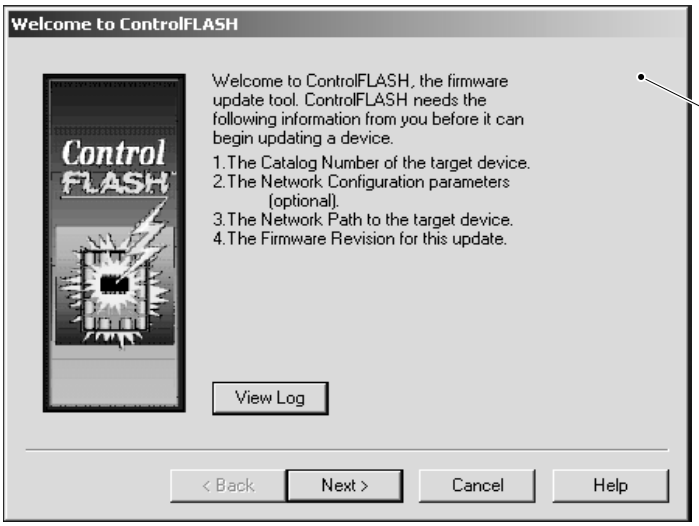

4 CONTROL FLASH PROGRAM window

8.2.2-9 Install the Driver for the First Kinetix Servo Driver

Machine Status	Electrical supply disconnecting device in position I (ON)
Special Equipment	PC with CD Drive Latest Software CD see SPC Ethernet communication cable
SPC Reference	2833407-0100

a) Launch RSLogix and enable the on-line connection with the PLC.

b) In the menu select tools (1) and then ControlFLASH (2).

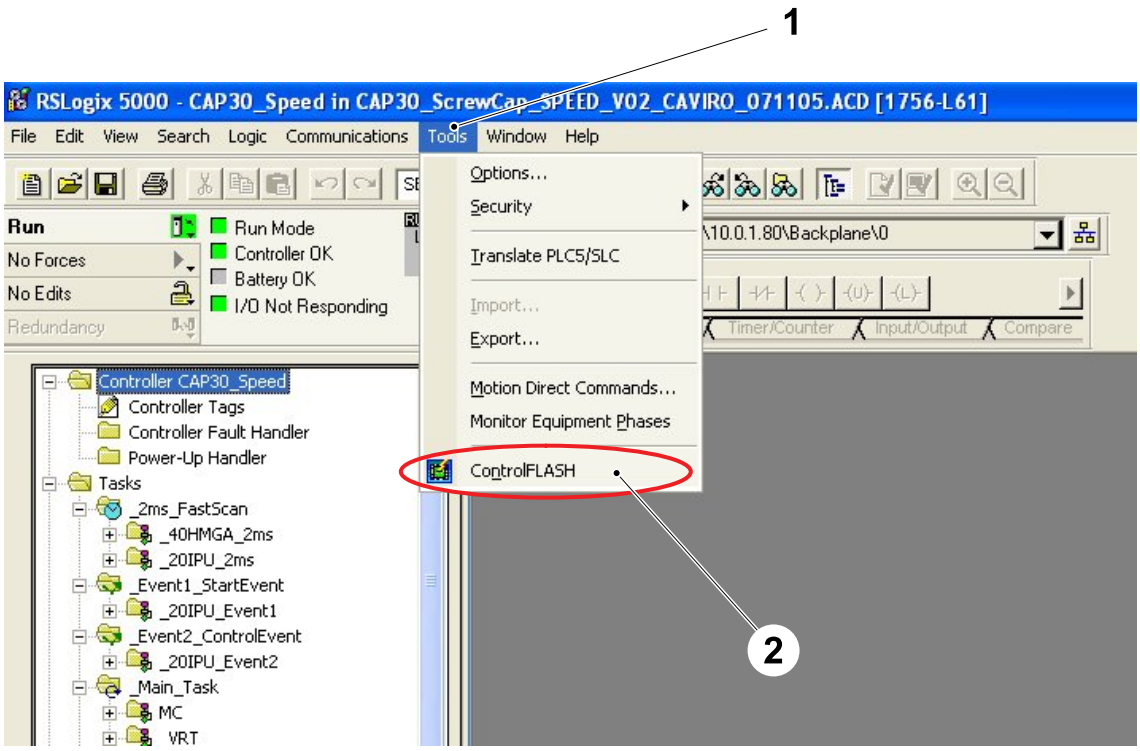

1 Tools
2 ControlFLASH

(Cont'd)

(Cont'd)

c) The ControlFLASH window (3) window appears as shown in picture.

d) Click on the NEXT button (4).

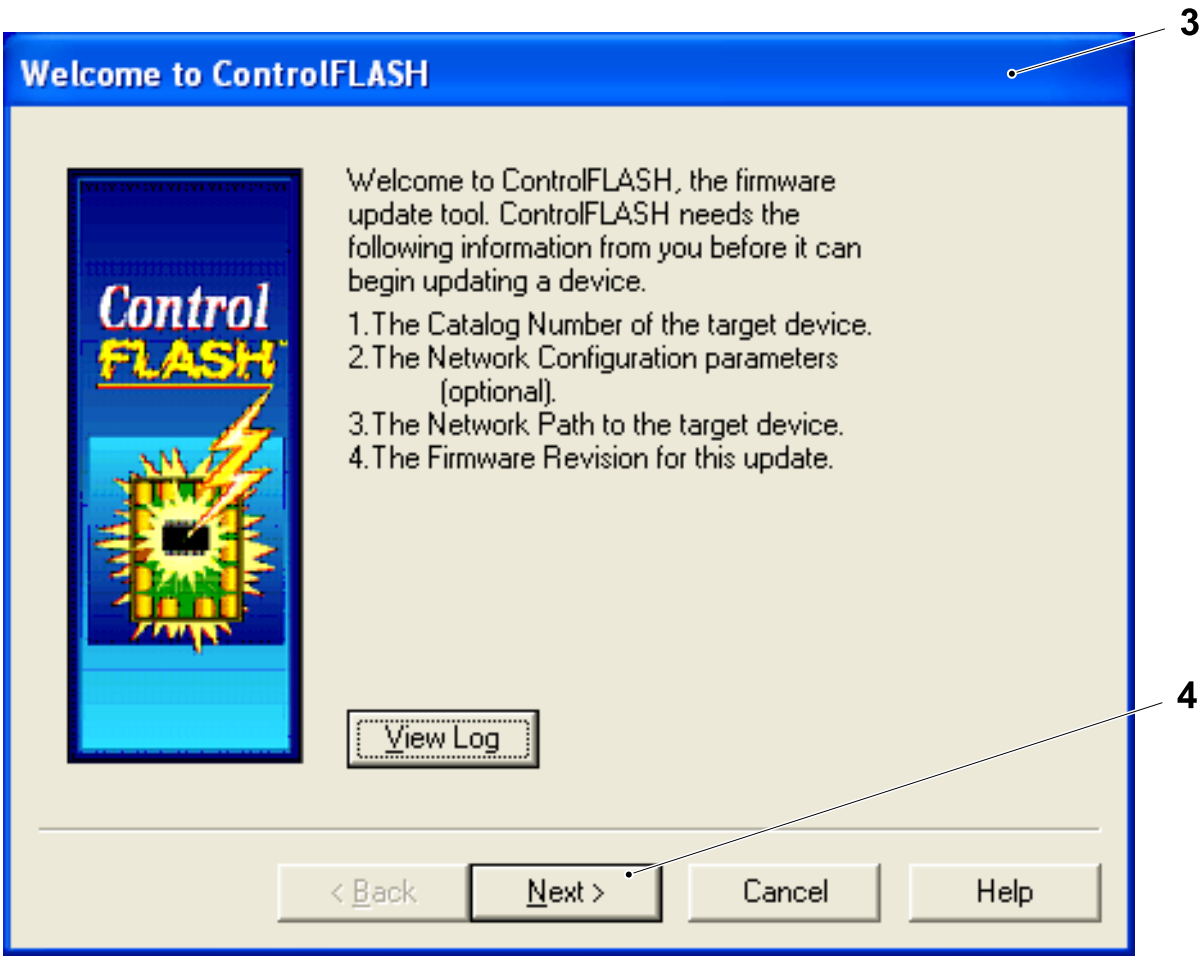

3 ControlFLASH window
4 NEXT button

(Cont'd)

(Cont'd)

e) Read the Code number (5) of the first Driver (6) starting from the left side of the Kinetix Rack, in the electrical cabinet.

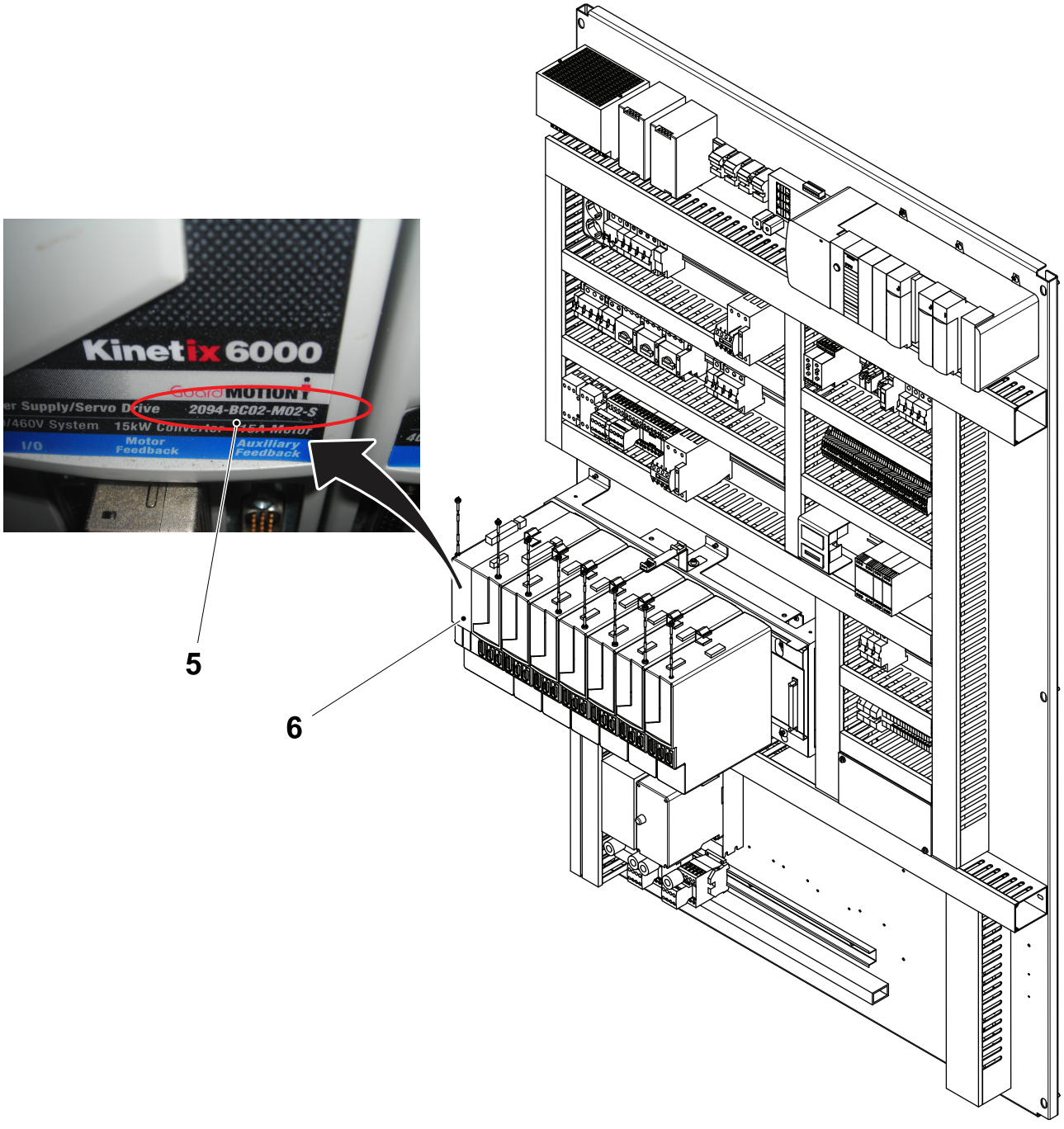

5 Code number
6 Driver

(Cont'd)

(Cont'd)

f) In the catalogue number window (7), scroll the search bar (8) and select the Code number (5) of the first driver.

g) Click on the NEXT button (9).

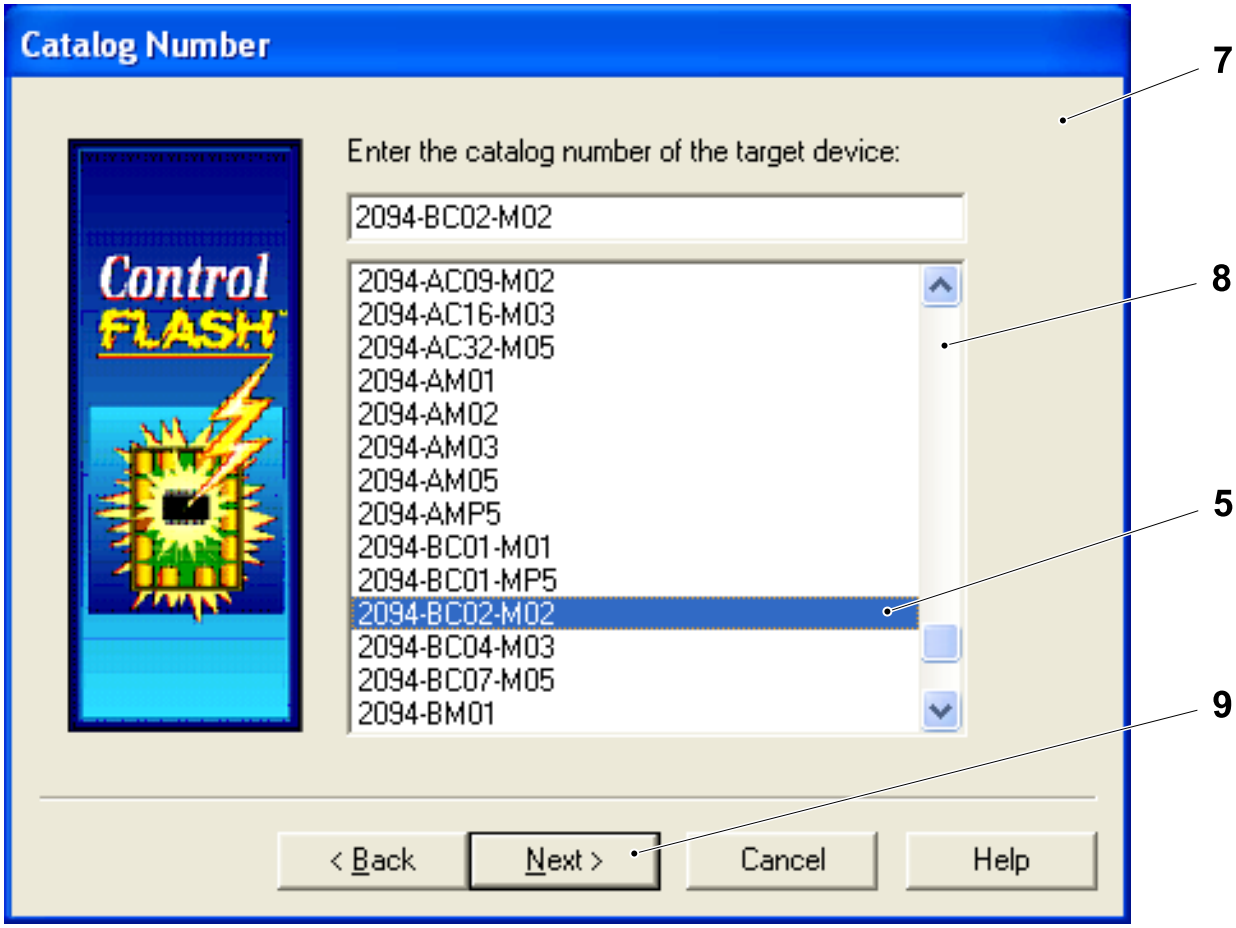

5 Code number
7 Catalogue number window
8 Search bar
9 NEXT button

(Cont'd)

(Cont'd)

h) Select the communication path (10) where the first driver is allocated.

i) Select the driver (11) that will be updated with the new firmware.

j) Click on the OK button (12).

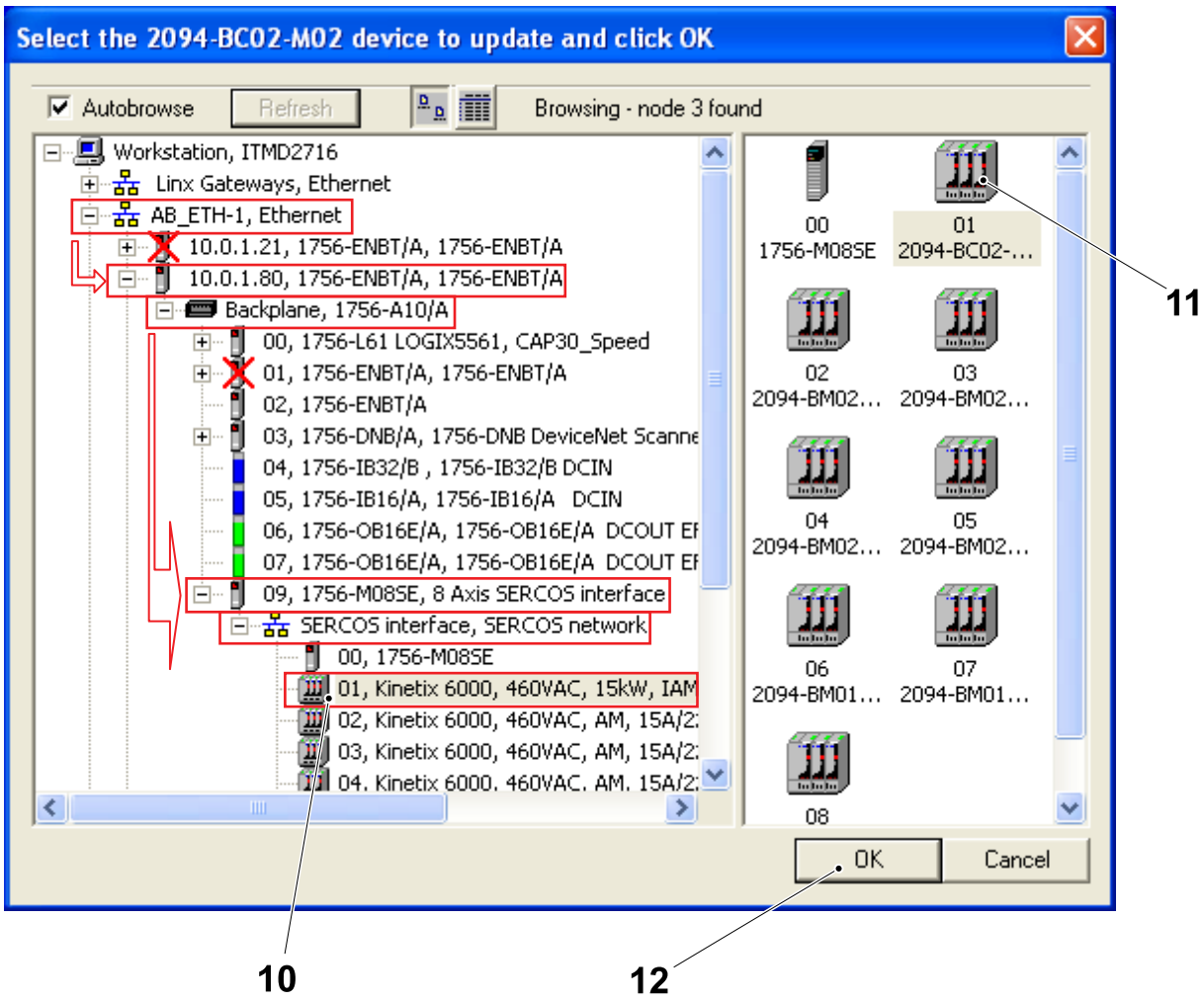

10 Communication path
11 Driver
12 OK button

(Cont'd)

(Cont'd)

k) Select the new revision 1.111 (13) in the firmware revision window by clicking on it.

l) Click on the NEXT button (14).

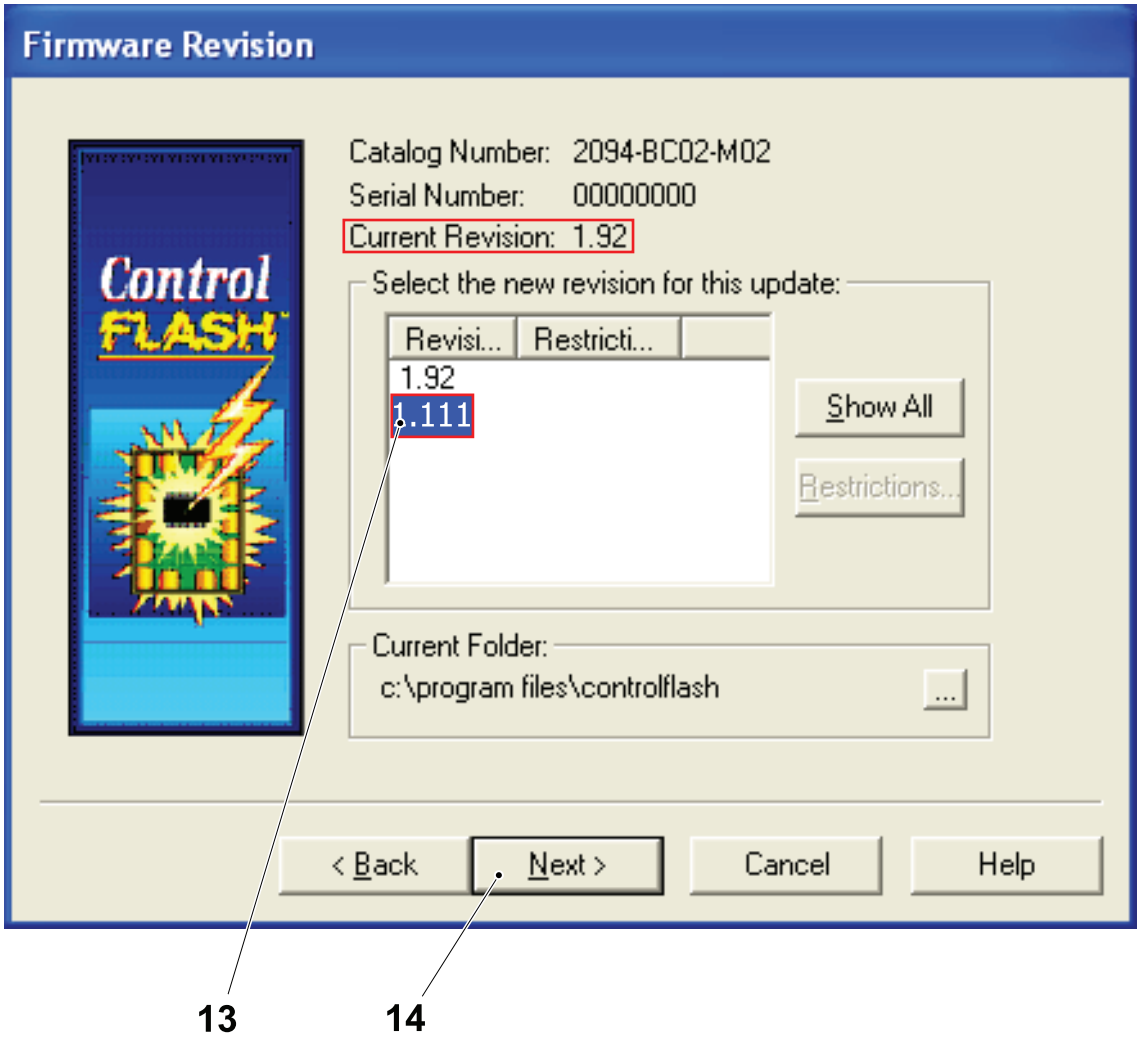

13 New Revision 1.111
14 NEXT button

(Cont'd)

(Cont'd)

m) Click on the FINISH button (15) in the summary window.

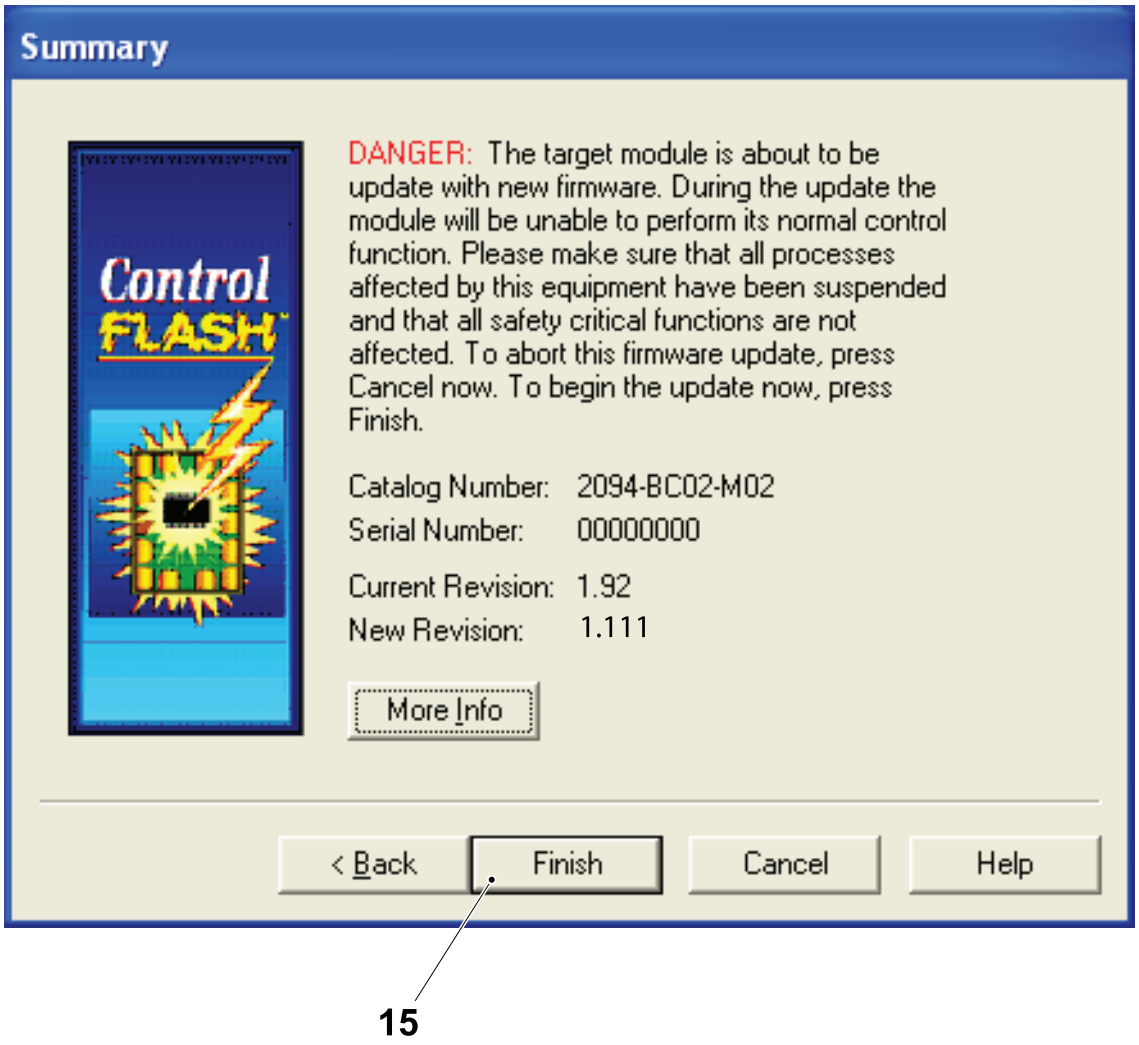

15 FINISH button

(Cont'd)

(Cont'd)

n) Click on the YES button (16).



16 YES button

o) Click on the OK button (17).

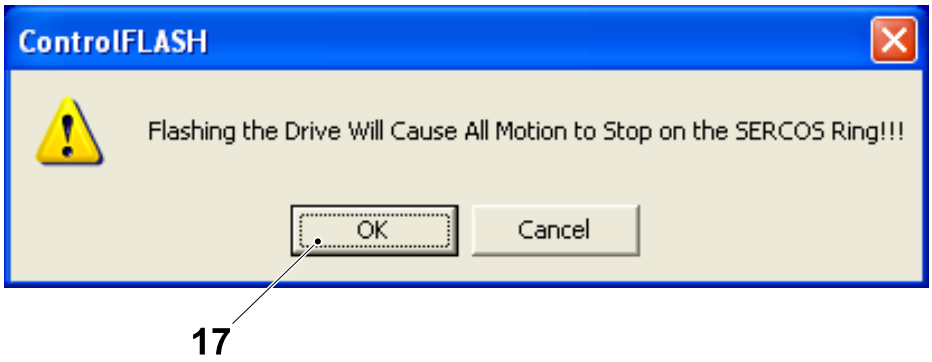

17 OK button

(Cont'd)

(Cont'd)

p) When the downloading of the firmware is finished, click on the OK button (18) in the update status window.

Note! After the installation of the first driver, the ControlFLASH tool returns to the first screen f).

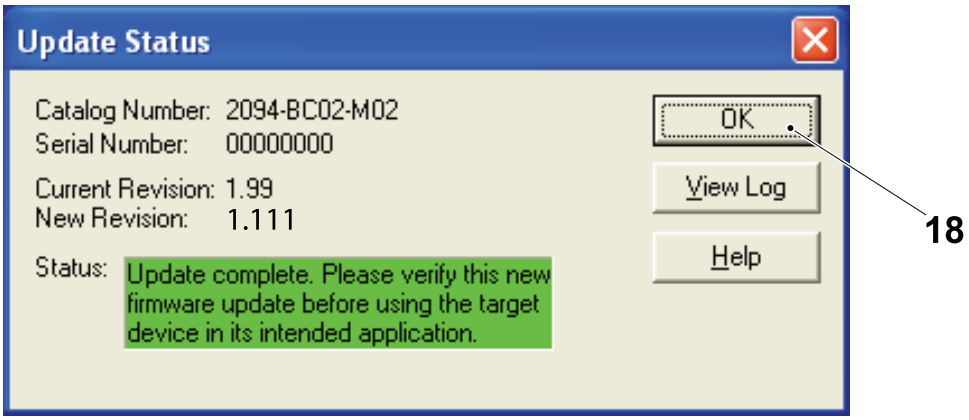

18 OK button

Install the Driver for the Next Kinetix Servo Driver

CAUTION
Always make sure to select the correct servo driver.
Carefully read the code number of the Kinetix servo driver.

a) Install the firmware in the next servo driver, see step f).

b) Repeat this procedure for all the servo drivers.

8.3 Distributed I/O and Network

8.3-1 Distributed I/O and Network - Overview

Machine Status	Electrical supply disconnecting device in position O (OFF)
SPC Reference	662911-0300

General

Distributed I/O is a generic term for I/O devices in the systems that communicate, via a network, to a component or components in the Control Logix Rack.

(Cont'd)

(Cont'd)

In This machine there are four such devices that communicate with the DNB DeviceNet Scanner (1) in the Control Logix Rack.

- The PowerFlex40 Module (2) (PF40) via a 22-COMM-D DeviceNet adaptor. The adaptor is integrated in the PowerFlex40 module. This adaptor has been assigned with Node address 1.
- The 10 Point I/O modules via a 1734-ADN DeviceNet adapter (3) . The adaptor has been assigned with Node address 2.

4 - Armor Block DeviceNet I/O Module
5 - Drop Lines
6 - Trunk Lines
7 - Electrical Cabinet
8 - Distribution Terminal
9 - Power Supply 24V DC
10 - DSI Communications
11 - Cap sorter sensors Node 3
12 - Cap sorter sensors Node 4
13 - Point I/O 20 in /20 out Node 2
14 - Cap sorter sensors Node54
15 - Cap sorter sensors Node 6

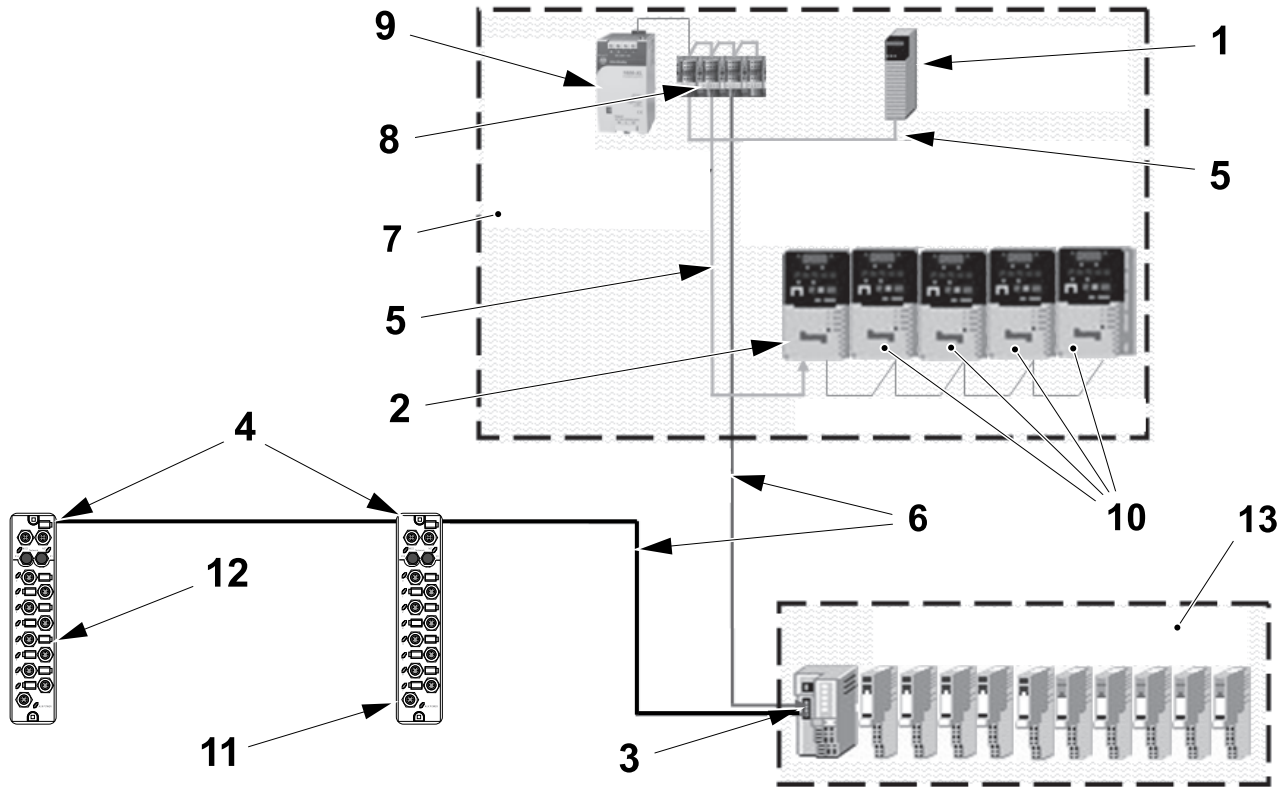

1 DeviceNet Scanner
2 PowerFlex40 Module
3 1734-ADN DeviceNet adapter

(Cont'd)

(Cont'd)

- Two Armor block DeviceNet I/O Module (4). These modules have been assigned with the Node addresses 3 and 4.

  Drop Line (5) is used to connect to modules in the Electrical Cabinet and Trunk Line (6) for connections to components in the machine.

4 - Armor Block DeviceNet I/O Module
5 - Drop Lines
6 - Trunk Lines
7 - Electrical Cabinet
8 - Distribution Terminal
9 - Power Supply 24V DC
10 - DSI Communications
11 - Cap sorter sensors Node 3
12 - Cap sorter sensors Node 4
13 - Point I/O 20 in /20 out Node 2
14 - Cap sorter sensors Node54
15 - Cap sorter sensors Node 6

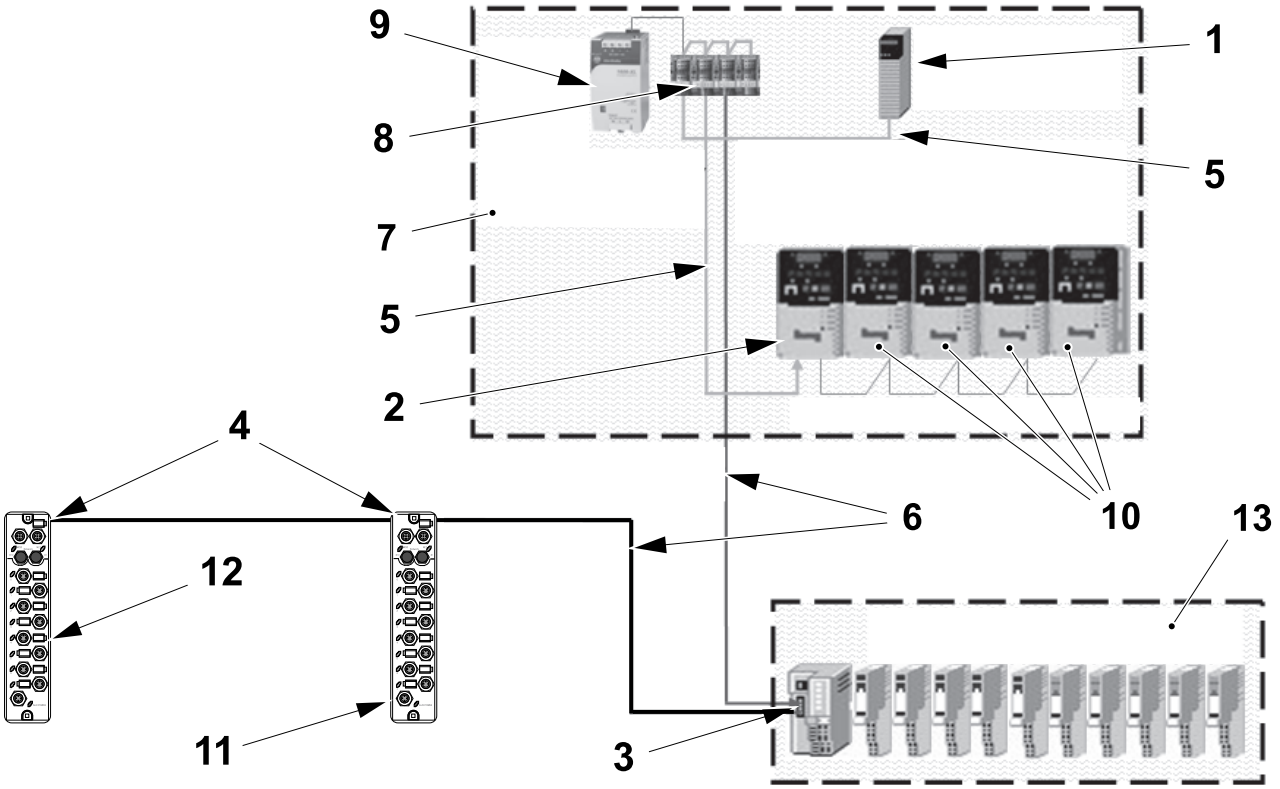

4 Armor block DeviceNet I/O Module
5 Drop Line
6 Trunk Line

Configuration Tools

The DeviceNet can be configured from a PC by using the RSLogix5000 and RSNetwork software.

(Cont'd)

(Cont'd)

Power Supplies and Cabling

The network is connected to a separate 24VDC power supply and has a terminating resistor (*TR*) (121 ohm), attached to the ends of the trunk line.

The network cable is colour coded to avoid wiring faults:

- +24 VDC (V+) Red
- CAN -H White
- Drain Shield or Bare
- CAN-L Blue
- +0 VDC (V-) Black

8.3.1 Distributed I/O and DeviceNet - I/O Modules

8.3.1-1 DeviceNet Scanner (A01K3004) Node 0

Machine Status	Electrical supply disconnecting device in position O (OFF)
SPC Reference	662911-0300 662905-0300

The DeviceNet Scanner (1) is located in the Control Logix Chassis. On the input side, the DeviceNet Scanner (1), communicates with the PLC via the back plane of the Control Logix Chassis. On the output side it communicates, via the DeviceNet, with the other DeviceNet modules.

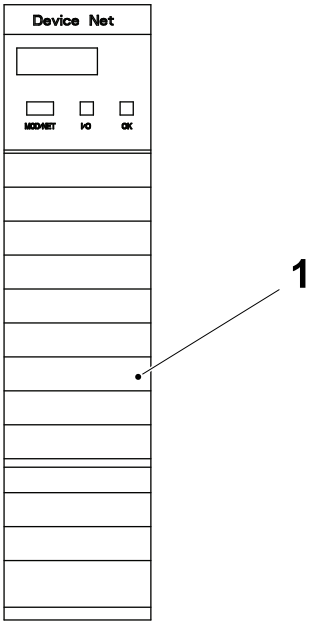

1 DeviceNet Scanner

Status indicators and an alphanumeric display are provided to report the status of the module and the DeviceNet.

If this module is changed, do the following:

- download the firmware to the module, see 8.2.2-7 Install the ControlFlash Application Firmware Library.
- set the Node address number and the baudrate, see 8.3.2-3 DeviceNet - DeviceNet on the Machine.
- load the DeviceNet program, 8.3.2-5 DeviceNet - Loading a Program in a New DeviceNet Scanner.

For DeviceNet troubleshooting information regarding this module, see 8.3.3-2 Troubleshooting - DeviceNet Error Indications and Messages on DeviceNet Scanner (Node 0).

8.3.1-2 DeviceNet Adaptor (22-COMM-D) Node 1

Machine Status	Electrical supply disconnecting device in position O (OFF)
SPC Reference	662911-0300 662905-0300

DeviceNet Adaptor (22-COMM-D) Node 1

The (22-COMM-D) DeviceNet adaptor (1) is mounted behind the cover (2) of the PowerFlex 40 drive (3) .

The DeviceNet adaptor (1) is used to set the Node address number and the baudrate.

Status indicators are provided to report the status of the module and the DeviceNet.

If this module is changed, do the following:

- set the Node address number and the baudrate, see 8.3.2-3 DeviceNet - DeviceNet on the Machine.
- load the DeviceNet program, 8.3.2-5 DeviceNet - Loading a Program in a New DeviceNet Scanner.

For DeviceNet troubleshooting information regarding this module, see 8.3.3-3 Troubleshooting - DeviceNet Error Indications on the PowerFlex40 Module 22-COMM-D Adaptor (Node 1).

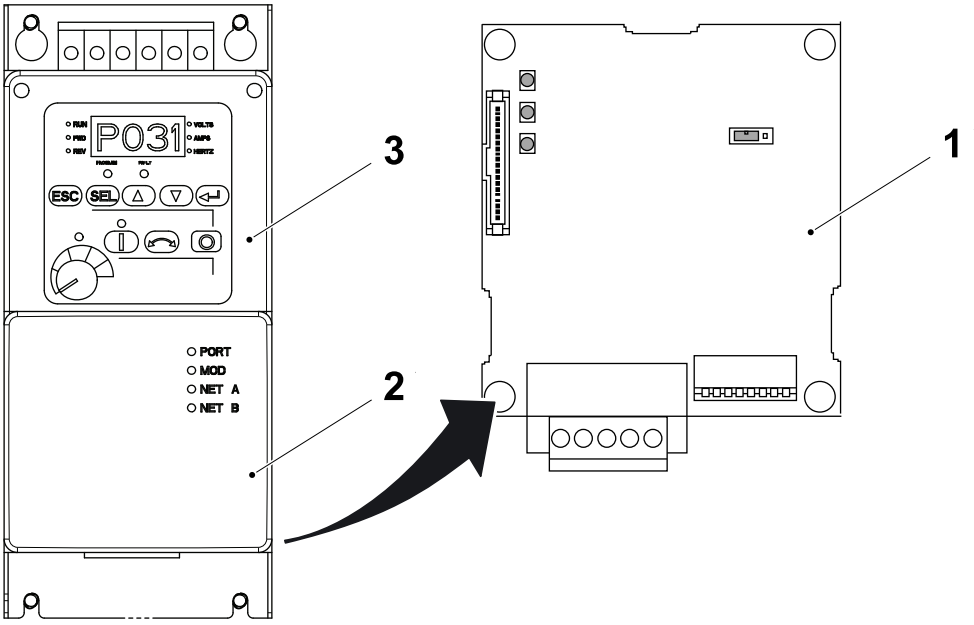

1 DeviceNet adaptor 2 Cover 3 PowerFlex 40 drive

8.3.1-3 DeviceNet Adaptor (1734-ADN) Node 2

Machine Status	Electrical supply disconnecting device in position I (ON)
SPC Reference	662911-0300 662905-0300

DeviceNet Adaptor (1734-ADN) Node 2

The DeviceNet Adaptor (1) is mounted in the Control Panel box and physically connected to the point I/O modules. On one side, the DeviceNet Adaptor (1) sends and receives I/O data, via the DeviceNet, to and from the DeviceNet Scanner. On the other side, the DeviceNet Adaptor (1) transfers outputs to the Point I/O output modules and receives data from the Point I/O input modules.

The DeviceNet Adaptor (1) is used to set the Node address number and the baudrate.

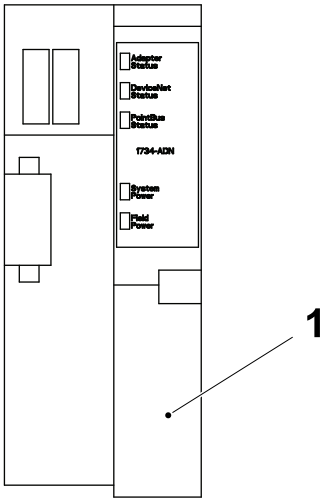

1 DeviceNet Adaptor

Status indicators are provided to report the status of the module and the DeviceNet.

If this module is changed, do the following:

- set the Node address number, see 8.3.2-3 DeviceNet - DeviceNet on the Machine
- load the DeviceNet program, see 8.3.2-6 DeviceNet - Loading a DeviceNet Program in a New Point I/O Module Adaptor.

For DeviceNet troubleshooting information regarding this module, see 8.3.3-2 Troubleshooting - DeviceNet Error Indications and Messages on DeviceNet Scanner (Node 0)

8.3.1-4 DeviceNet Armor Block

Machine Status	Electrical supply disconnecting device in position I (ON)
SPC Reference	662911-0300 662905-0300

For all Machines (Node 3 and 4)

These DeviceNet Armor Block Module (1) are used to monitor components in the machine and transmit the information via the DeviceNet to the PLC.

The Node address number is set by rotary switches on the module.

Status indicators are provided to report the status of the module and the DeviceNet.

If a module is changed, do the following:

- set the Node address number, see 8.3.2-2 DeviceNet Scanner - Set DeviceNet Scanner (A01K3004) Node Address and Baudrate on page 8-102, 8.3.2-3 DeviceNet - DeviceNet on the Machine on page 8-103.

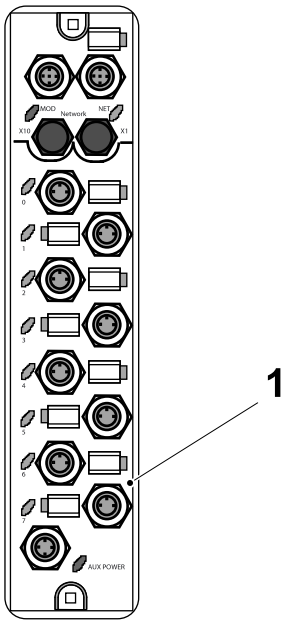

1 DeviceNet Armor Block Module

For DeviceNet troubleshooting information regarding this module, see 8.3.3-5 Troubleshooting - DeviceNet Error Indications on the Armor Block I/O Module (Node 3) and 8.3.3-6 Troubleshooting - DeviceNet Error Indications on the Armor Block I/O Module (Node 4).

(Cont'd)

(Cont'd)

For ReCap Machines Only (Node 5 and 6)

These DeviceNet Armor Block Module (1) are used to monitor components in the machine and transmit the information via the DeviceNet to the PLC.

The Node address number is set by rotary switches on the module.

Status indicators are provided to report the status of the module and the DeviceNet.

If a module is changed, do the following:

- set the Node address number, see 8.3.2-3 DeviceNet - DeviceNet on the Machine and Armor Block I/O Modules - Set Node Address.

For DeviceNet troubleshooting information regarding this module, see 8.3.3-7 Troubleshooting - DeviceNet Error Indications on the Armor Block I/O Module (Node 5) (ReCap Only) and 8.3.3-8 Troubleshooting - DeviceNet Error Indications on the Armor Block I/O Module (Node 6) (ReCap Only).

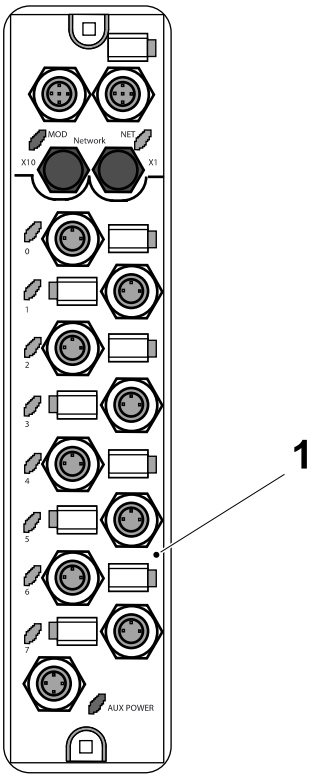

1 DeviceNet Armor Block Module

8.3.2 Distributed I/O and DeviceNet - DeviceNet Scanner

8.3.2-1 DeviceNet Scanner - Change

Machine Status	Electrical supply disconnecting device in position I (ON)
SPC Reference	2833407-0300

Preparation

Note! The firmware revision of the PLC controller maybe equal to, or newer than the firmware revision of the old PLC controller. If an attempt to go online is made with a newer firmware revision installed, this may create errors such as an unrecognised device or a device mismatch if the PC does not contain the very latest EDS files.

Before changing the PLC controller:

- Use the RSLinx Classic program to verify and record the firmware version of the PLC program.
- Use the Flow Chart of Procedures for Changing the DeviceNet Scanner to determine which procedures must be performed and their correct sequence.

(Cont'd)

(Cont'd)

Flow Chart of Procedures for Changing the DeviceNet Scanner

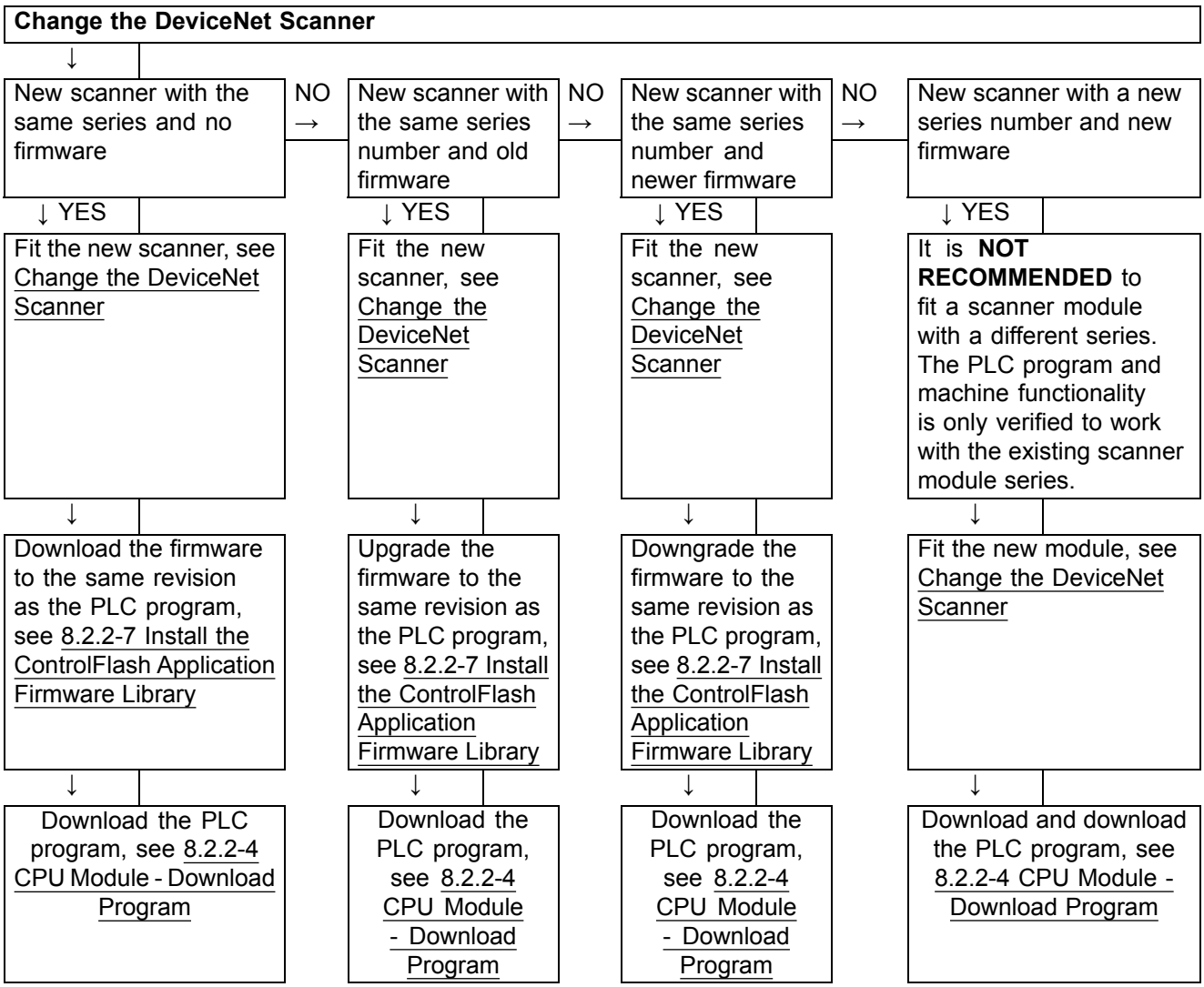

(Cont'd)

(Cont'd)

Change the DeviceNet Scanner

a) Press the locking tab (1) on the top and the bottom of the DeviceNet Scanner (2).

b) Slide the DeviceNet scanner (2) out of the chassis.

c) Align the new DeviceNet scanner (2) with the top and the bottom guides in the chassis.

d) Slide the DeviceNet scanner (2) into the chassis. Make sure it is flush with the power supply or the other modules and the top and bottom latches are engaged.

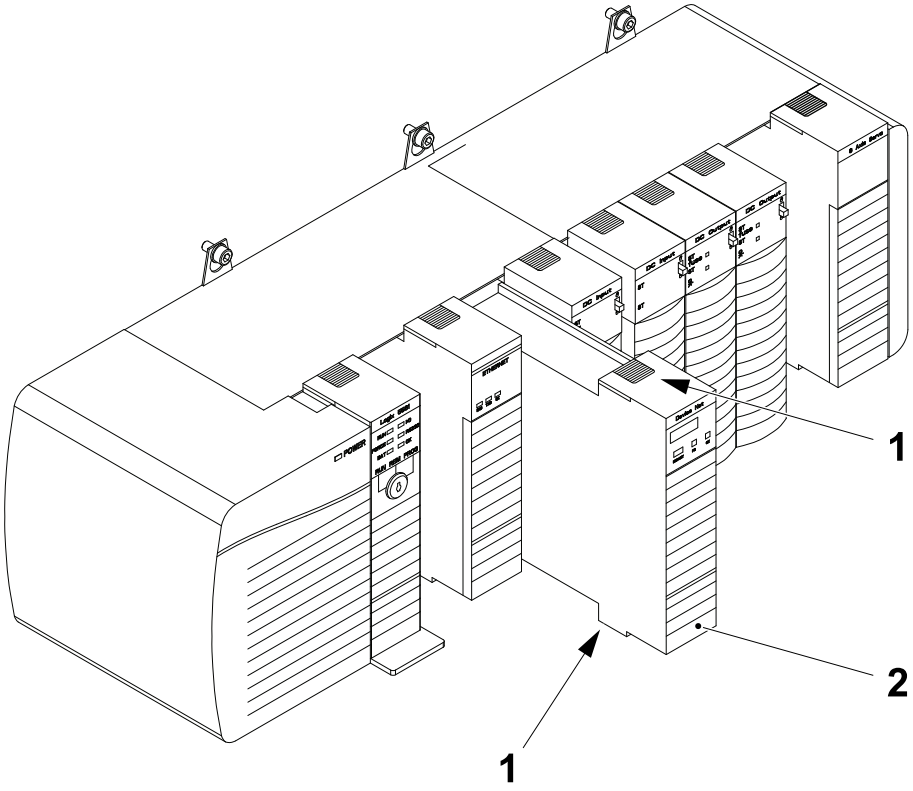

1 Locking tab
2 DeviceNet scanner

8.3.2-2 DeviceNet Scanner - Set DeviceNet Scanner (A01K3004) Node Address and Baudrate

Machine Status	Electrical supply disconnecting device in position I (ON)
SPC Reference	2833407-0300

DeviceNet Scanner Module Series C/D

Set the Switch for baud rate (1), the Switch for first node digit (2) and the Switch for second node digit (3) according to the table below.

Switch Number	Setting Position	Note
1	2	Sets the baud rate to 500 Kbps
2	0	Sets the first digit of the node address
3	0	Sets the second digit of the node address

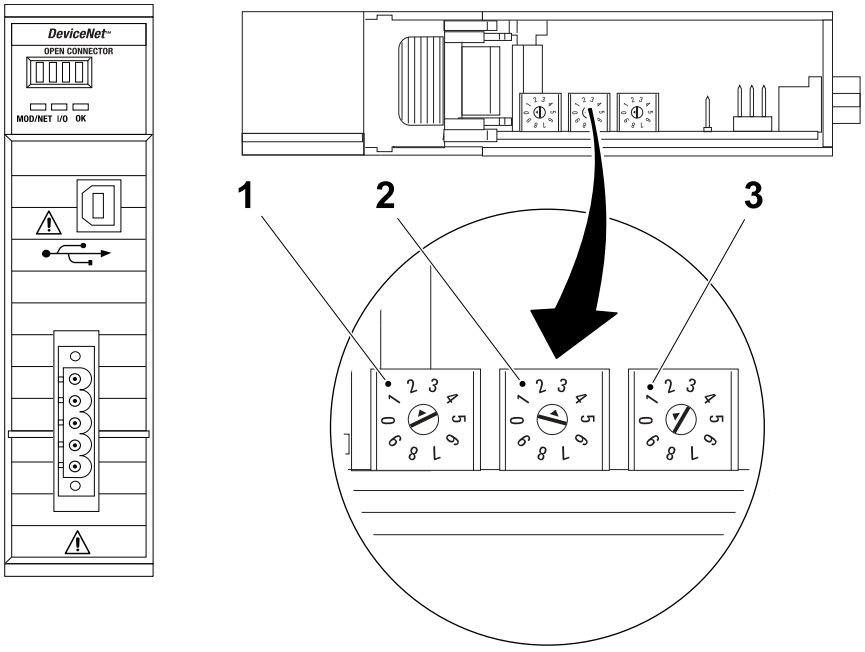

1 Switch for baud rate
2 Switch for first node digit
3 Switch for second node digit

8.3.2-3 DeviceNet - DeviceNet on the Machine

Machine Status	Electrical supply disconnecting device in position O (OFF)
Special Equipment	Latest Software CD see SPC Ethernet communication cable
SPC Reference	2779070-0100 662911-0200

Note! The firmware revision of the PLC controller maybe equal to, or newer than the firmware revision of the old PLC controller. If an attempt to go online is made with a newer firmware revision installed, this may create errors such as an unrecognised device or a device mismatch if the PC does not contain the very latest EDS files.

1734 DeviceNet Adaptor for Point I/O Module (A01K0320) - Change

Preparation

Before changing the DeviceNet adaptor:

- Use the Flow Chart of Procedure for Changing a 1734-Point I/O Adaptor to determine which procedures must be performed and their correct sequence.

Flow Chart of Procedure for Changing a 1734-Point I/O Adaptor

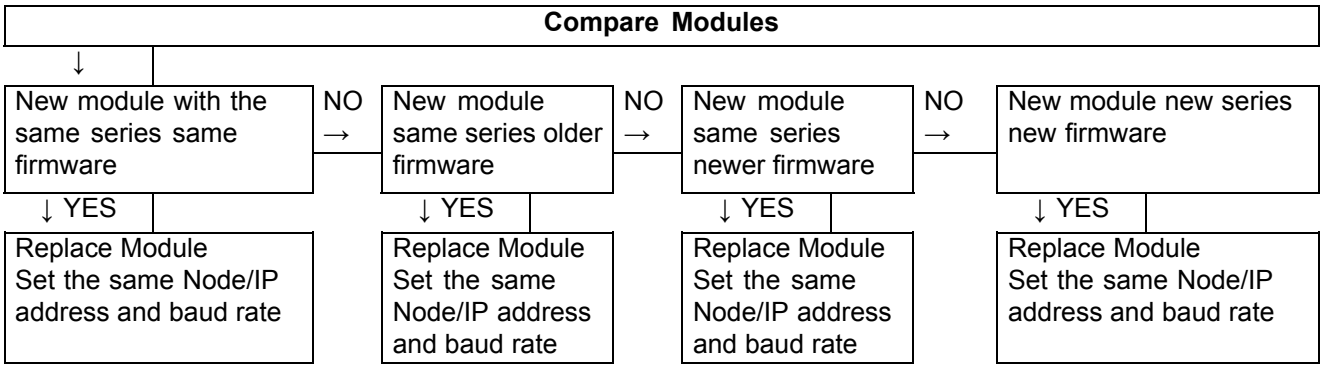

(Cont'd)

(Cont'd)

Remove

a) Disconnect the power connector (1) from the DeviceNet adaptor (2).

b) Disconnect the DeviceNet connector (3) from the DeviceNet adaptor (2).

c) Remove the first I/O slice (4).

d) Turn the screw (5) to the release position and pull out the adaptor (2).

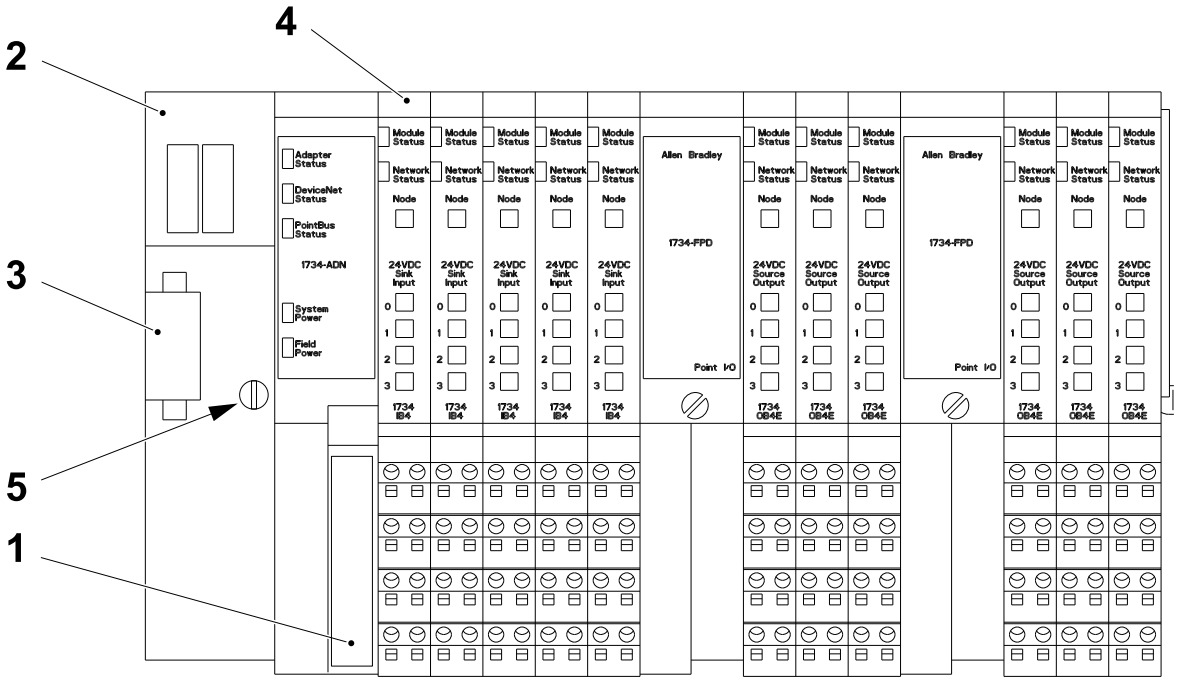

1 Power connector
2 DeviceNet adaptor
3 DeviceNet connector
4 first I/O slice
5 Screw

(Cont'd)

(Cont'd)

Install

a) Remove the blank connectors and the cover plate from the new adaptor.

b) Insert the new DeviceNet adaptor (1)and turn the screw (2).

c) Set the node address, see 1734 DeviceNet Adaptor for Point I/O Module (A01K3020) - Set Node Address.

d) Insert the first first I/O slice (3).

e) Connect the DeviceNet connector (4).

f) Connect the power connector (5).

g) The pointbus status led (6) will flash red to indicate that the local bus must be configured. Configure the bus as described in 8.3.2-5 DeviceNet - Loading a Program in a New DeviceNet Scanner.

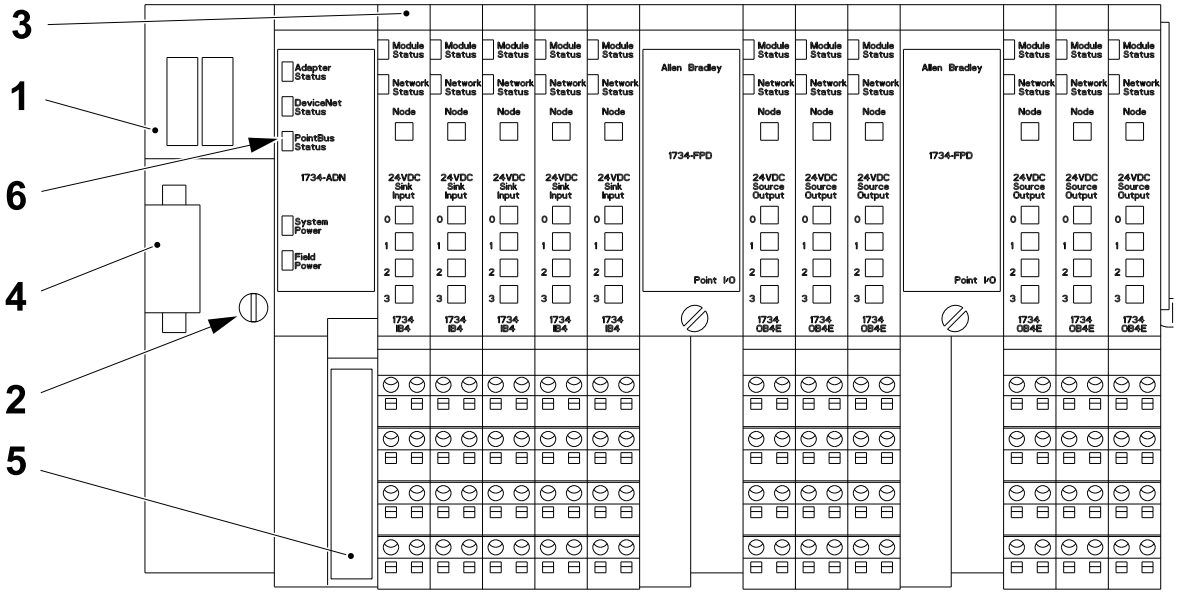

1 DeviceNet adaptor
2 Screw
3 First I/O slice
4 DeviceNet connector
5 Power connector
6 Pointbus status led

(Cont'd)

(Cont'd)

1734 DeviceNet Adaptor for Point I/O Module (A01K3020) - Set Node Address

Note! On this adaptor, the baudrate is set automatically.

Note! Thumb wheels (1) at the top of 1734 DeviceNet adaptor (2) are used to set the node address.

On the 1734 DeviceNet adaptor (2), use the Thumb wheels (1) to set the node address to 02.

Note! If the DeviceNet Scanner has been in the RUN position with an incorrect Baudrate setting, the ADN modules 24V supply power (not the network power) must be disconnected and reconnected again to make a new automatic Baudrate setting.

Disconnect the 24V connection cable on the ADN modules and reconnect it again.

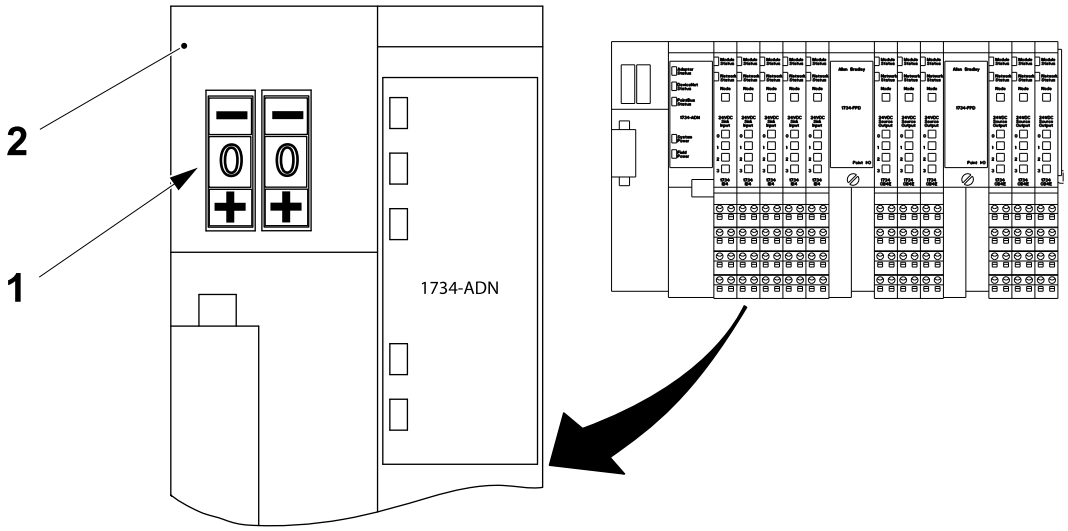

1 Thumb wheel
2 1734 DeviceNet adaptor

(Cont'd)

(Cont'd)

PowerFlex 40 Module (20T000) - Set Node address, Baudrate and Operating Mode

The position of the F/C switches (1) on the 22-COMM adaptor (2), under the front cover of the PowerFlex 40 frequency converter, determines the node address and the communication baud rate.

The position of the F/C switches 1 to 6 (3) determines the node address and the F/C switches 7 and 8 (4) determines the baudrate.

Set the F/C switches 1 to 6 (3) as shown in the following table to set the Node address to 1.

Set the F/C switches 7 and 8 (4) as shown in the following table to select the Auto Baud mode.

The position of the jumper (5) on the connector (6) determines the operating mode of the adaptor.

Set the jumper (5) to the left, as shown, to select the Multi Drive mode.

Switch No.	1	2	3	4	5	6	7	8
Switch Pos.	UP	DOWN	DOWN	DOWN	DOWN	DOWN	UP	UP

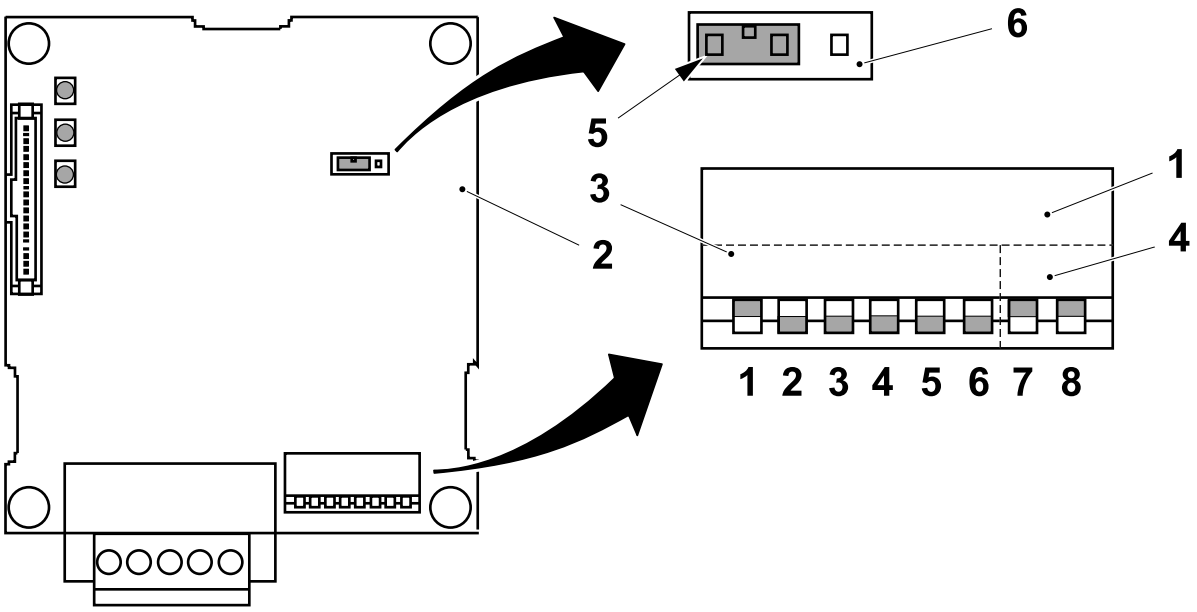

1 F/C switches
2 22-COMM adaptor
3 F/C switches 1 to 6
4 F/C switches 7 and 8
5 Jumper
6 Connector

(Cont'd)

(Cont'd)

Note! Behind the front cover of the PowerFlex 40 frequency converter there is another circuit card. On this circuit card there is a switch annotated SNK - SRC Switch (7). This switch must be set to the SRC Position (8).

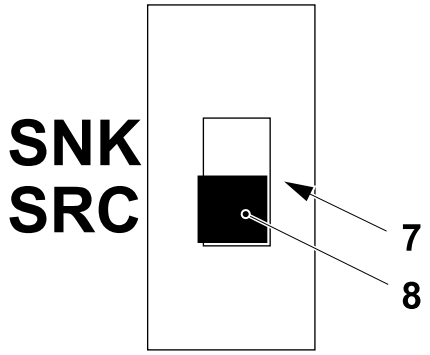

7 SNK - SRC Switch
8 SRC Position

(Cont'd)

(Cont'd)

Armor Block I/O Modules - Set Node Address

a) At the armor block module (1) referred to in the following table, remove the protective cap (2) from the X1 switch access hole (3).

b) Use a small screw driver to set the node address for that module.

c) Fit the protective cap (2).

d) Remove the protective cap (4) and check that the X10 switch (5) is set to 0, if not turn the X10 switch (5) to that position.

Machine Type	Module Number	Switch X1 Position	Switch X10 Position	Node address
All machines	W81K4120	3	0	3
ScrewCap Only	C81K4130	4	0	4
ReCap only	C81K4140	4	0	4
	C81K4150	5	0	5
	C81K4160	6	0	6

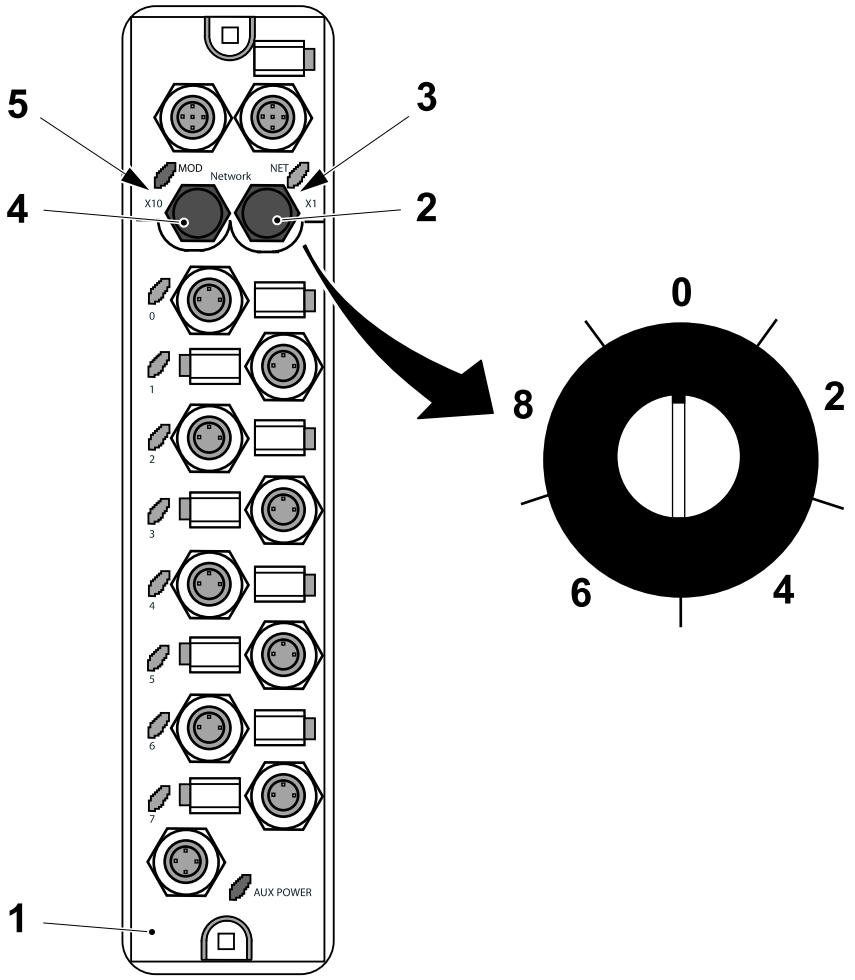

1 Armor block module
2 Protective cap
3 X1 switch access hole
4 Protective cap
5 X10 switch

8.3.2-4 DeviceNet - Saving DeviceNet Files in a Computer

Machine Status	Electrical supply disconnecting device in position I (ON)
SPC Reference	2833407-0300

Put the DeviceNet files in a folder with the following path way:

C:\180v program\Projects\Networks

Note! It is important that the files have this path way so that the Device Bridging function will work.

This function makes it possible to jump between the DeviceNet Scanner program and the Point I/O files program that are linked to this, and vice versa. If the files are placed in another folder the Device Bridging must be done again on all files in both directions.

8.3.2-5 DeviceNet - Loading a Program in a New DeviceNet Scanner

Machine Status	Electrical supply disconnecting device in position I (ON)
Special Equipment	Latest Software CD see SPC Ethernet communication cable
SPC Reference	2833407-0300

Note! To connect to the PLC using an ethernet communication cable, the PC must first be configured for this type of communication. See 8.2.1-1 Preparation for PLC Communication - Configure PC Network Communications on page 8-16 and 8.2.1-2 Preparations for PLC Communication - Configure RSLinx on page 8-24 for more details.

a) Set the address and baud rate for the DeviceNet scanner, see 8.3.2-2 DeviceNet Scanner - Set DeviceNet Scanner (A01K3004) Node Address and Baudrate on page 8-102.

b) Connect the ethernet communication cable between a vacant connection port on the Ethernet switch (1) and the PC (2).

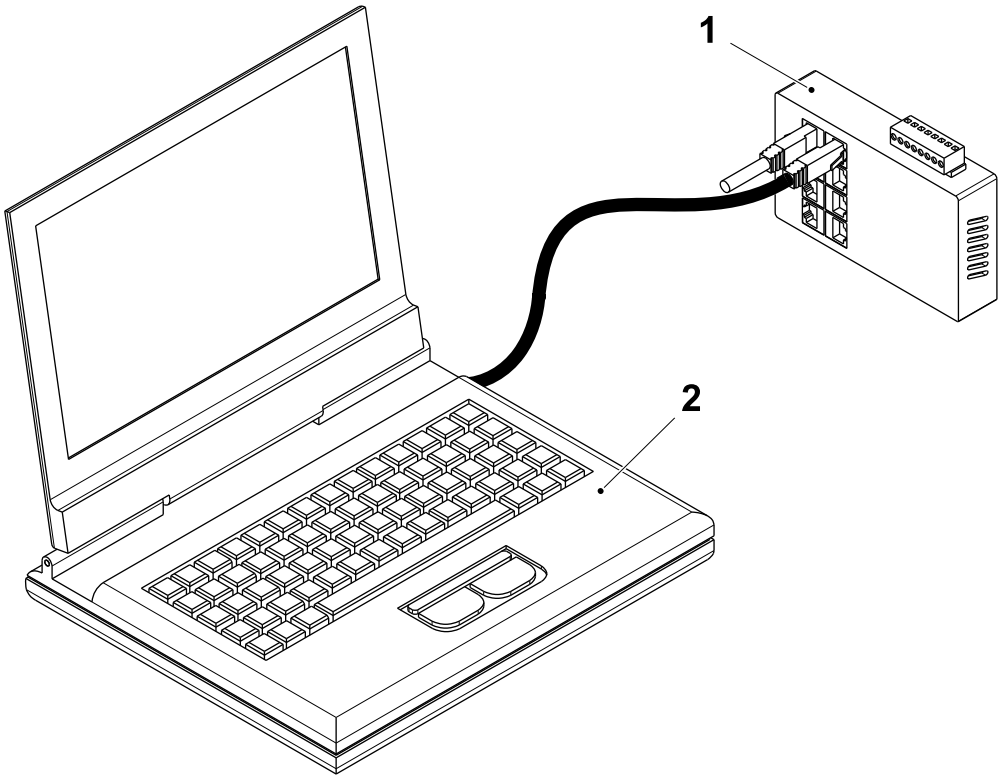

1 Ethernet switch
2 PC

(Cont'd)

(Cont'd)

Note! The DeviceNet Scanner that is being loaded must not be in the RUN position when loading the program.

c) Turn the key, on the Logic CPU, to the PROG mode position. The scanner will show IDLE in the display.

d) Insert the DeviceNet program CD into the PC CD drive.

e) Browse to the CD drive and copy the compressed program folder to the PC desktop and extract the program file.

f) Double click on the program file to automatically start the RSNetWorx program and open the program file.

g) Select theNetwork menu (3) and then select Online (4).

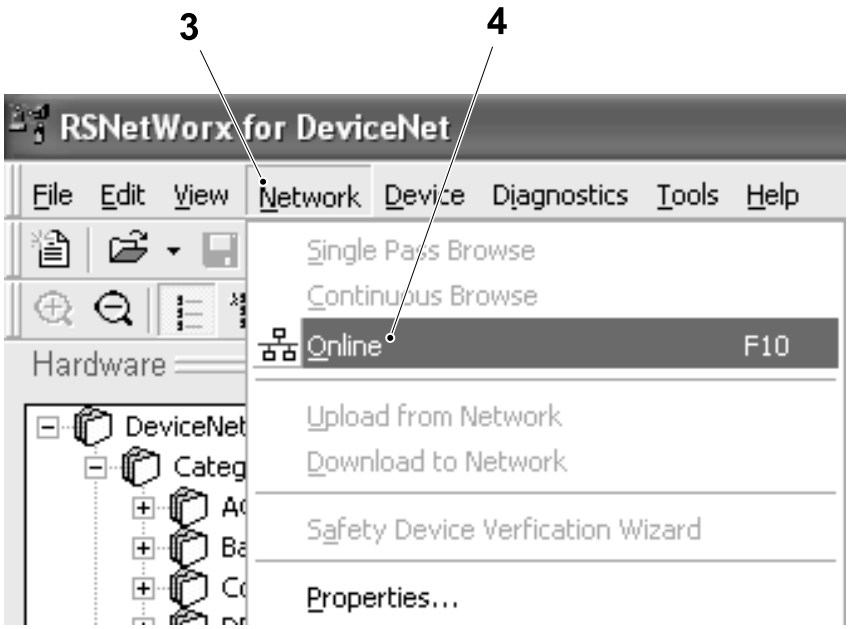

3 Network menu
4 Online

(Cont'd)

(Cont'd)

h) Highlight the Devicenet scanner (5) and right click the PC mouse, select Download to device (6) to start the download.

i) When the Dialogue box (7) appears, select the Yes button (8) to continue.

j) When the download is complete, close the RSNetWorx program and turn the key on the Rockwell PLC module to the REM mode position.

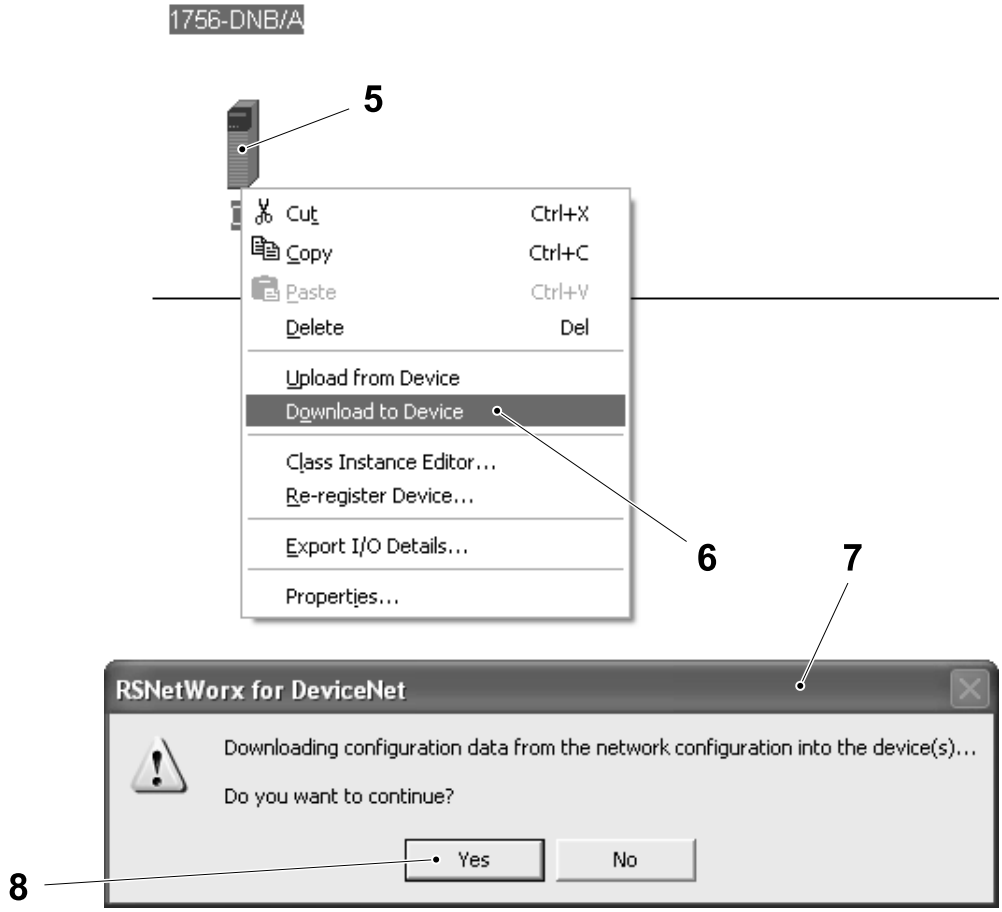

5 Devicenet scanner
6 Download to device
7 Dialogue box
8 Yes button

8.3.2-6 DeviceNet - Loading a DeviceNet Program in a New Point I/O Module Adaptor

Machine Status	Electrical supply disconnecting device in position I (ON)
Special Equipment	Latest Software CD see SPC Ethernet communication cable
SPC Reference	2833407-0100

Note! To connect to the PLC using an ethernet communication cable, the PC must first be configured for this type of communication. See 8.2.1-1 Preparation for PLC Communication - Configure PC Network Communications and 8.2.1-2 Preparations for PLC Communication - Configure RSLinx for more details.

a) Set the Node address for the DeviceNet adaptor, see 8.3.2-2 DeviceNet Scanner - Set DeviceNet Scanner (A01K3004) Node Address and Baudrate.

b) Connect the ethernet communication cable between a vacant connection port on the Ethernet switch (1) and the PC (2).

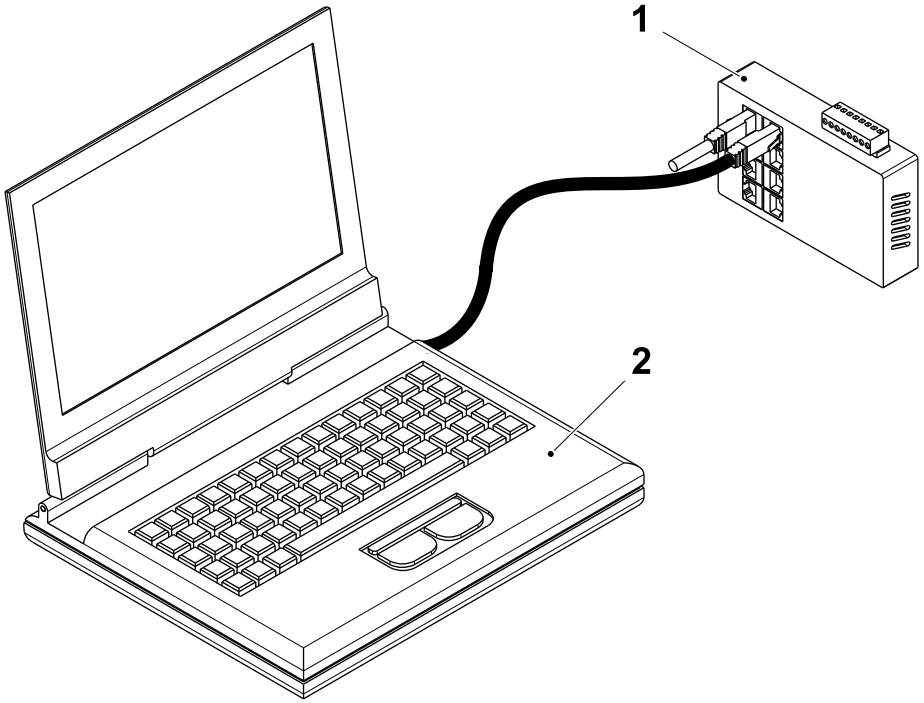

1 Ethernet switch
2 PC

(Cont'd)

(Cont'd)

c) Insert the DeviceNet program CD into the PC CD drive.

d) Browse to the CD drive and copy the compressed program folder to the PC desktop and extract the program file.

e) Double click on the program file to automatically start the RSNetWorx program and open the program file.

f) Select theNetwork menu (3) and then select Online (4).

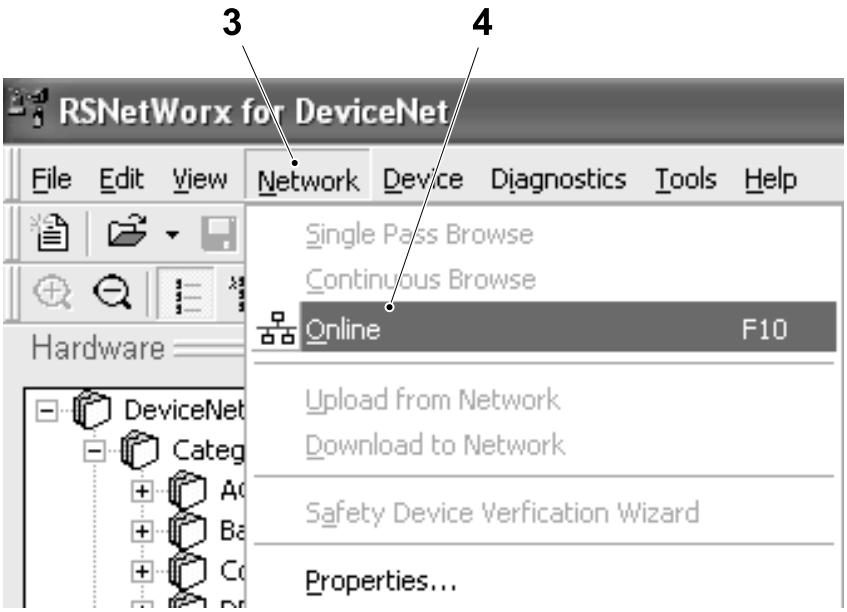

3 Network menu
4 Online

(Cont'd)

(Cont'd)

g) Highlight the 1734 DeviceNet Adaptor (5) and right click the PC mouse, select Download to device (6) to start the download.

h) When the DIALOGUE box (7) appears, select the YES button (8) to continue.

i) When the download is complete, close the RSNetWorx program.

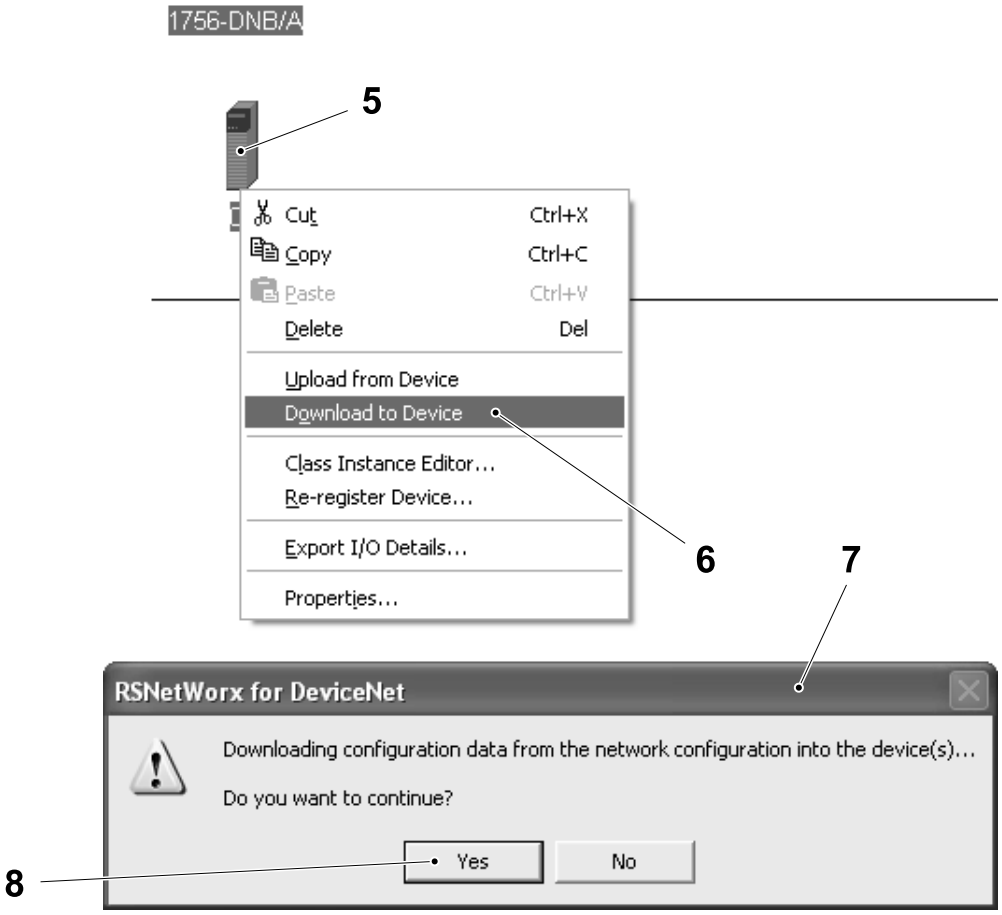

5 1734 DeviceNet Adaptor
6 Download to device
7 DIALOGUE box
8 YES button

8.3.3 Distributed I/O and DeviceNet - Troubleshooting

8.3.3-1 Troubleshooting - General DeviceNet Error

Machine Status	Electrical supply disconnecting device in position I (ON)
SPC Reference	2779070-0300

If an error occurs on the DeviceNet, this will be indicated by the appearance of the following `DEVICENET ERROR` icon (1) and the `DEVICENET ERROR` message (2) on the TPOP.

To continue with troubleshooting, see 8.3.3-2 Troubleshooting - DeviceNet Error Indications and Messages on DeviceNet Scanner (Node 0).

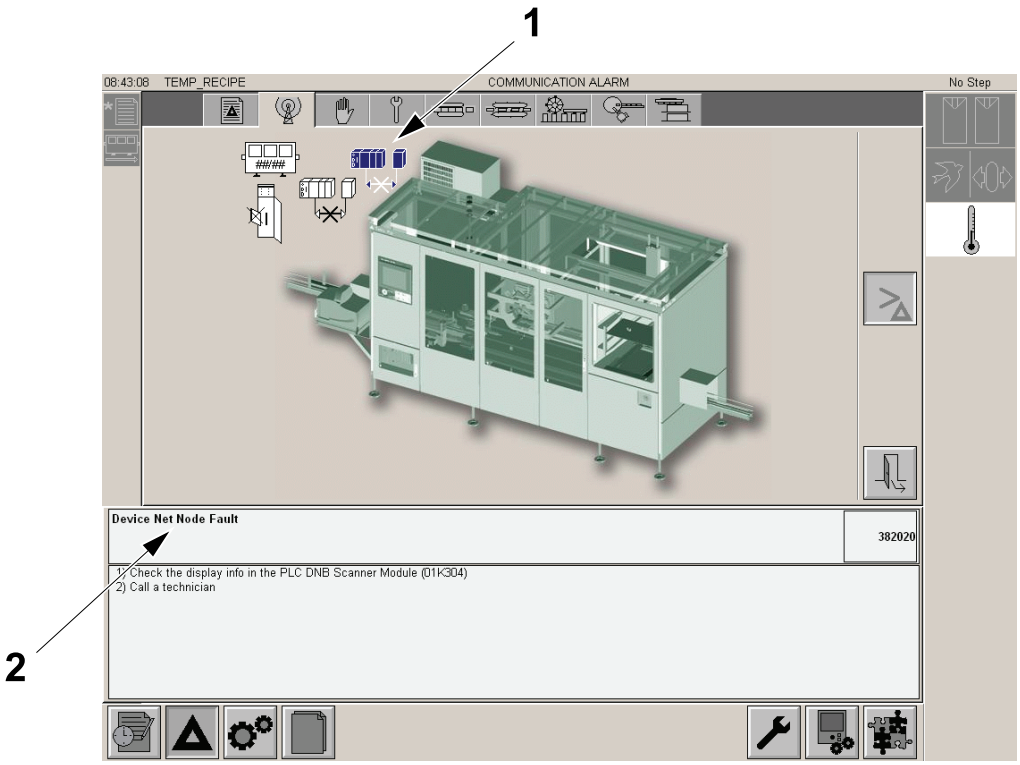

1 DeviceNet error icon
2 DeviceNet error message

8.3.3-2 Troubleshooting - DeviceNet Error Indications and Messages on DeviceNet Scanner (Node 0)

Machine Status	Electrical supply disconnecting device in position I (ON)
SPC Reference	2833407-0300

To locate the source of the error and then find the cause, proceed as follows:

a) At the Control Logix Chassis in the electrical cabinet, note the status indicated by the Alphanumeric display (1), the MOD/NET LED (2), the I/O LED (3) and the on the DeviceNet scanner (A01K3004) (5).

b) Use the following tables to determine the cause of the error.

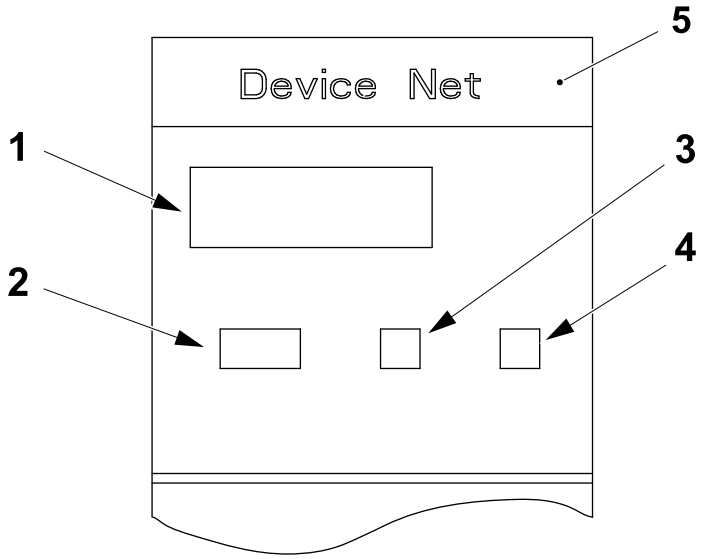

1 Alphanumeric display
2 MOD/NET LED
3 I/O LED
4 OK LED
5 DeviceNet scanner (A01K3004)

(Cont'd)

(Cont'd)

MOD/NET LED

Condition	Status	Indicates
off	No power or not on line	Device is not on-line. - The device has not completed the Dup_MAC_ID test - The device is not powered
green	Device operational AND on-line and connected	Device is operating normally and is on-line with connections established.
flashing green	Device operational AND on-line but not connected or device on-line and device needs commissioning	Device is operating normally and is on-line but with NO connections established. - The device has passed the Dup_MAC_ID test but has NO established connections to other Nodes
flashing red	Minor fault and/or connection time out	Recoverable fault and/or one or more I/O connection in timed out state
red	Critical fault or critical link failure	Device has an unrecoverable fault and may need to be replaced. Failed communication device. The device has detected an error (duplicate MAC ID or bus-off) that has rendered it incapable of communicating on the network.

I/O LED

Condition	Indicates
off	Scanner is not on-line
green	Scanner is in RUN mode, outputs are under control and inputs are being consumed
flashing green	Scanner is in IDLE mode, outputs are not under control and inputs are being consumed

(Cont'd)

(Cont'd)

OK LED

Condition	Status	Indicates
off	No power	No power applied to device. Apply chassis power. Verify module is completely inserted into chassis and backplane.
green	Device operational	Device is operating normally. The DNB has at least one connection to it from a controller.
flashing green	Device in stand-by	Device is operating correctly, however no controller is controlling it. Verify the DNB is correctly configured in the controllers I/O configuration
red	Unrecoverable fault or Device self testing	Device has an unrecoverable fault; change the device or Device is in self test during power up; wait until self test has finished

Alphanumeric Display

When there are no problems the alphanumeric display will toggle between the node address of the scanner module and the operating mode i.e.

A#00

run

When there is a problem, the alphanumeric display will display first the node address of the scanner followed by the node address of the device from where the error originated and finally the error code i.e.

A#00

N#01

E#72

The error messages are in the table that follows.

(Cont'd)

(Cont'd)

Condition	Status	Indicates
70	Scanner failed Duplicate Node Address check	Change the scanner address to the correct node address A#00
71	Illegal data in scan list table (node number alternately flashes)	Reconfigure the scan list table and remove any illegal data
72	Slave device stopped communicating (node number alternately flashes)	Inspect the slave devices and verify the connections
73	Device's identity information does not match electronic key in scan list table entry (node number alternately flashes)	Verify that the correct device is at this node number. Make sure that the device at the scrolling node address matches the desired electronic key (vendor, product code, product type, etc.)
74	Data overrun on port detected	Modify your configuration and check for invalid data. Check network communication traffic.
75	No traffic detected on network	Check the network configuration
76	No direct network traffic for scanner detected	None. The scanner hears other network communication but none for itself
77	Data size expected by the device does not match scan list entry (node number alternately flashes)	Reconfigure the module for the correct transmit and receive data sizes
78	Slave device is scan list table does not exist (node number alternately flashes)	Add the device to the network or delete the scan list entry for that device
79	Scanner has failed to transmit a message	Make sure the module is connected to the network. Check for disconnected cables
80	Scanner is in IDLE mode	Put controller in run mode. Enable RUN bit in Module Command Register
81	Scanner is in FAULT mode	Check Module Command Register for FAULT bit set

(Cont'd)

(Cont'd)

Condition	Status	Indicates
82	Error detected in sequence of fragmented I/O messages from device (node number alternately flashes)	Check scan list table entry for slave device
83	Slave device is returning error responses when scanner attempts to communicate with it (node number alternately flashes)	Check accuracy of scan list table entry. Check slave device configuration. Slave device may be in another master's scan list. Reboot slave device.
84	Scanner is initialising the DeviceNet network.	None. This code clears itself once scanner attempts to initialize all devices on the network.
85	Data size was incorrect for this device at runtime.	Slave device is transmitting incorrect length data. Try replacing slave device.
86	Device is producing zero length data (idle state) while scanner is in RUN mode.	Check device configuration and slave node status.
90	User has disabled communication port.	Check Module Command Register for DISABLE bit set.
91	Bus-off condition detected con comm. port. Scanner is detecting communication errors.	Check DeviceNet connections and physical media integrity. Check system for failed slave devices or other possible sources of network interference.
92	No network power detected on communication port.	Provide network power. Make sure that module drop cable is providing network power to scanner communication port.
95	Application FLASH update in progress.	None. Do not disconnect the module while application flash is in progress. If this is done existing data in the scanner's memory will be lost.
97	Scanner halted by user command.	Check Module Command Register for HALT bit set.
98	General firmware error.	Replace module.

(Cont'd)

(Cont'd)

Condition	Status	Indicates
A#00 to A#63	Normal operation. The numeric display matches the scanners node address on the DeviceNet network.	Do nothing.
IDLE	Scanner is in IDLE mode.	Put controller in RUN mode. Enable RUN bit in Module Command Register.
Network Disabled	User has disabled communication port.	Reconfigure the module. Check Module Command Register.
No Network Power	No network power detected on communication port.	Provide network power. Make sure that module drop cable is providing network power to scanner communication port.
NoRX	No scan list is active in the module or no messages have been received by the scanner.	Enter a scan list. Check DeviceNet connection on front of module.
NoTX	No direct network traffic for scanner device.	None. The scanner hears other network communication.

8.3.3-3 Troubleshooting - DeviceNet Error Indications on the PowerFlex40 Module 22-COMM-D Adaptor (Node 1)

Machine Status	Electrical supply disconnecting device in position I (ON)
SPC Reference	662911-0300

The PowerFlex40 module is connected to the DeviceNet via an adaptor.

The adaptor has four LED's that are visible through the front panel of the PowerFlex40 module (1).

To locate the source of the error and then find the cause, proceed as follows:

Note! The NET B LED (5) is not used for DeviceNet communications.

a) At the PowerFlex40 module (1) (W20T0000) in the Electrical Cabinet, check the status of the port led (2), mod led (3) and net a led (4).

b) Use the following tables to determine the cause of the error.

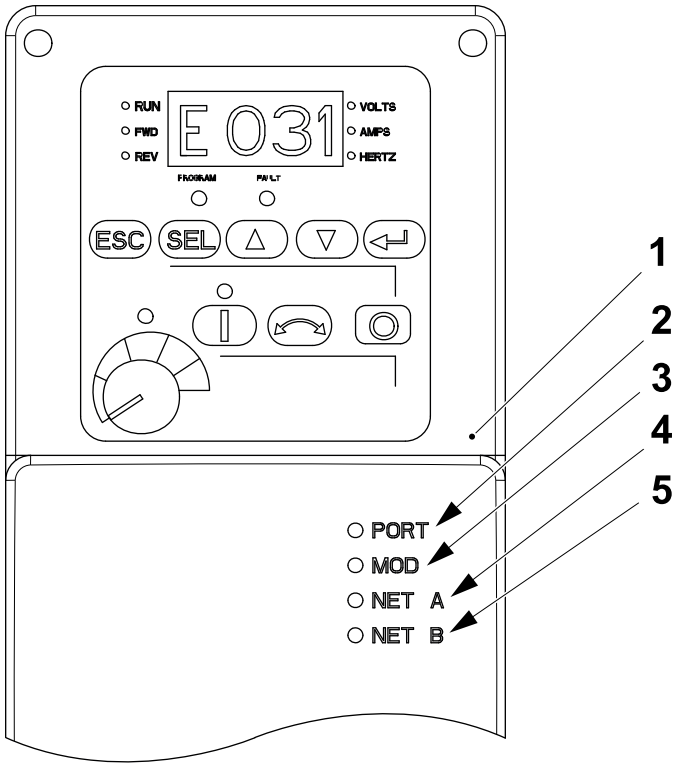

1 PowerFlex40 module
2 port led
3 mod led
4 net a led
5 net b led

(Cont'd)

(Cont'd)

Port Status LED

State	Status	Recommendation
off	The adaptor is not powered or connected correctly to the drive.	Use the ribbon cable to connect the adaptor securely to the drive. Apply power to the adaptor.
flashing red	The adaptor is not receiving communications from a drive, a connected drive has failed or a drive is missing.	Clear any drive faults. Check that all cables are securely connected. Cycle power to the drive.
red	The drive has refused an I/O connection from the adaptor. Another DSI peripheral is using the same DSI port as the adaptor.	Important: Cycle power to the adaptor after making the following correction. Check that all DSI cables are securely connected and undamaged. If necessary, replace any damaged cable.
flashing green	The adaptor is establishing an I/O connection to the drive or (DSI I/O Config) is configured for all I/O disabled.	None: This indication will turn GREEN or RED. Check the setting of parameter 15 (DSI I/O Config). The adaptor is operating normally if no DSI I/O is enabled.
green	The adaptor is properly connected and is communicating with the drive.	None.
orange	Daisy-chained devices in the Multi-Drive mode are not all Allen-Bradley devices.	Use correct devices

(Cont'd)

(Cont'd)

Mod Status LED

State	Status	Recommendation
off	The adaptor is not powered.	Use the ribbon cable to connect the adaptor securely to the drive. Apply power to the adaptor.
flashing red	The adaptor has failed the firmware test, a connected drive has failed or a drive is missing.	Clear any drive faults. Cycle power to the drive. If cycling power does not correct the problem, the parameter settings may have been corrupted. Restore default values reconfigure the adaptor. If restoring default values does not correct the problem, flash the adaptor with the latest firmware release. Determine which drive is missing or has failed. Check cabling and configuration settings.
red	The adaptor has failed the hardware test	Cycle power to the drive Replace the adaptor.
flashing green	The adaptor is operational but is not transferring I/O data.	Put the scanner in the RUN mode. Program the controller to recognise and transmit I/O data to the adaptor. Configure the adaptor for the program in the controller. The adaptor is operating normally if no DSI I/O is enabled.
green	The adaptor is operational and transferring I/O data.	None.

(Cont'd)

(Cont'd)

Net A Status LED

State	Status	Recommendation
off	The adaptor and/or the network is not powered or the adaptor is not connected correctly to the network.	Use the ribbon cable to connect the adaptor securely to the drive and the DeviceNet cable to connect it to the network. Connect the DeviceNet cable correctly to the DeviceNet plug. Apply power to the adaptor and the network.
flashing red	A DeviceNet I/O connection has timed out.	Put the scanner in the RUN mode, or apply power to the peer device that will send I/O data. Check the amount of traffic on the network.
red	Failed duplicate node detection test or bus off condition exists.	Configure the adaptor to use a unique node address on the DeviceNet. Configure the adaptor to use the correct baudrate. Ensure the network has the correct media installed.
flashing green	The adaptor is properly connected but is not communicating with any devices on the network.	Put the scanner in the RUN mode, or apply power to the peer device that will send I/O data. Configure a controller or peer device to recognise and transmit I/O to the adaptor. Configure the adaptor for the program in the controller or the I/O from the peer device.
green	The adaptor is properly connected and is communicating with devices on the network.	None.

8.3.3-4 Troubleshooting - DeviceNet Error Indications on the 1734-ADN Adaptor for the Point I/O Modules (Node 2)

Machine Status	Electrical supply disconnecting device in position I (ON)
SPC Reference	2779070-0300

To locate the source of the error and then find the cause, proceed as follows:

a) At the Point I/O Module (A01K3020) in the Operator Panel Box, check the `SYSTEM POWER` led (1), the `FIELD POWER` led (2), the `ADAPTOR STATUS` led (3), the `NETWORK STATUS` led (4) and the `POINTBUS STATUS` led (5).

b) Use the following tables to determine the cause of the error.

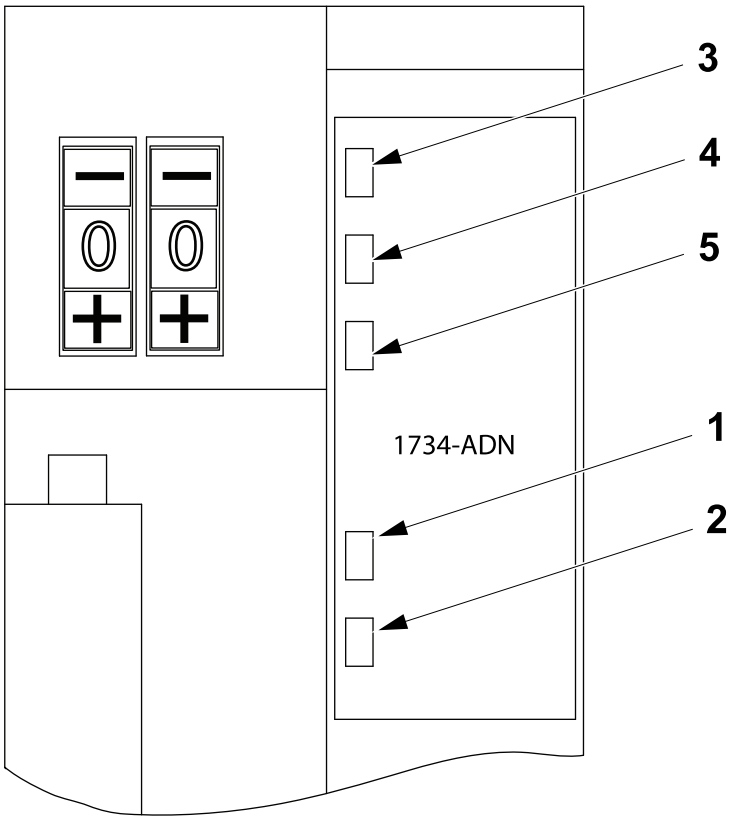

1 System power led
2 Field power led
3 Adaptor status led
4 Network status led
5 Pointbus status led

(Cont'd)

(Cont'd)

System Power LED

State	Status	Recommendation
off	Not active. Field power is OFF. DC-DC converter problem.	Check adaptor configuration. Turn Field power ON. Contact Tetra Pak Services.
green	System power is ON. DC-DC converter is active (5V)	None

Field Power LED

State	Status	Recommendation
off	Not active.	Check adaptor configuration. Turn Field power ON.
green	Power is ON with 24V present.	None

Adaptor Status LED

State	Status	Recommendation
off	No power is applied to the device.	Provide power to the adaptor.
green	Device is operating normally.	None
flashing green	Device needs to be commissioned because configuration is missing, incomplete or incorrect.	Check the configuration and re-commission the adaptor.
flashing red	Recoverable fault is present.	Make sure that it does not need a FLASH update.
red	Unrecoverable fault may require the adaptor to be changed.	Replace the adaptor.
flashing red/GREEN	Device is in self-test.	Wait for the self-test to finish.

(Cont'd)

(Cont'd)

Network Status LED

State	Status	Recommendation
off	Device is not online. Device is autobauding. Device has not completed the dup_MAC_id test.	Check the adaptor status indicator to determine if more time is required to complete the dup_MAC_id test or if power is required at the module.
flashing green	Device is online but has no connections in the established state	None
green	Device is online and has connections in the established state	None
flashing red	1 or more I/O connections are in a timed-out state.	Determine the cause of the time-out. An increase in packet rate may be required.
red	Critical link failure - communication device failed. Device detected error that prevents it from communicating on the network.	Make sure the device is using the correct MAC ID and baudrate.

(Cont'd)

(Cont'd)

Subnet and Pointbus Status LED

State	Status	Recommendation
off	Device is not online. Device has not completed the dup_MAC_id test. Device is not powered. Check module status indicator	Check the adaptor status indicator to determine if more time is required to complete the dup_MAC_id test or if power is required at the module.
flashing green	Device is online but has no connections in the established state	None
green	Device is online and has connections in the established state	None
flashing red	No scan list is available. I/O module is missing.	Make sure all I/O modules are connecting and using the correct MAC ID's. Check the "Cycling Node Status" parameter in RSnetWorx for DeviceNet.
red	Critical link failure - communication device failed. Device detected error that prevents it from communicating on the network.	Make sure an I/O module is not using MAC ID = 0. Make sure all backplane modules are correcting at the correct baudrate.

8.3.3-5 Troubleshooting - DeviceNet Error Indications on the Armor Block I/O Module (Node 3)

Machine Status	Electrical supply disconnecting device in position I (ON)
SPC Reference	662905-0300

a) At the Armor Block module (node 3), note the status indicated by the MOD LED (1), the Net LED (2), the Aux power LED (3) and the I/O LED (4).

b) Use the following tables to determine the cause of the error.

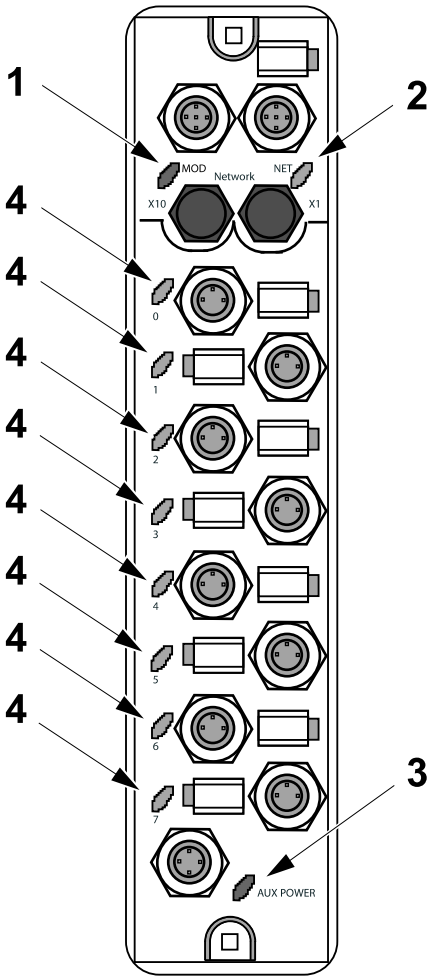

1 MOD LED
2 Net LED
3 Aux power LED
4 I/O LED

(Cont'd)

(Cont'd)

Net LED

State	Status	Description	Recommendation
off	No power or not on line	The module is not online.	Wait until module has completed the dup_MAC_id test or power the module.
green	Online Connected	Device is operating normally and is online with connections established.	None
flashing green	Online but not connected	The module is online with connections established.	Establish connections to other nodes.
red	Critical link failure	Failed communication module.	Check the communication and cycle power.
flashing red	Connection time out	An I/O connection has timed out	Cycle power to the module.

MOD LED

State	Status	Description	Recommendation
off	No power	There is no power applied to the module.	Apply power to the module.
green	Module operational	The module is operating normally.	None
flashing green	Module needs commissioning	The module needs commissioning due to missing, incomplete or an incorrect configuration.	Check the configuration and cycle power
flashing red	Minor fault	The module has a recoverable fault.	Check the configuration and cycle power
red	Critical fault	Watchdog timeout or the module has an unrecoverable fault.	Cycle power to the module. If this does not solve the problem contact the Tetra Pak service desk. The module may need to be changed.

(Cont'd)

(Cont'd)

Aux power LED

State	Status	Description	Recommendation
off	No auxiliary power	There is no auxiliary power applied to the module.	Apply auxiliary power to the module.
green	Auxiliary power present	There is auxiliary power applied to the module.	None

I/O LED

State	Status	Description	Recommendation
off	Output not energised or no valid input	Output is not energised or input not valid	None
yellow	Output energised or valid input	Output is energised or input is valid	None

8.3.3-6 Troubleshooting - DeviceNet Error Indications on the Armor Block I/O Module (Node 4)

Machine Status	Electrical supply disconnecting device in position I (ON)
SPC Reference	662905-0300

See, 8.3.3-5 Troubleshooting - DeviceNet Error Indications on the Armor Block I/O Module (Node 3) on page 8-132.

8.3.3-7 Troubleshooting - DeviceNet Error Indications on the Armor Block I/O Module (Node 5) (ReCap Only)

Machine Status	Electrical supply disconnecting device in position I (ON)
SPC Reference	662905-0300

See, 8.3.3-5 Troubleshooting - DeviceNet Error Indications on the Armor Block I/O Module (Node 3) on page 8-132.

8.3.3-8 Troubleshooting - DeviceNet Error Indications on the Armor Block I/O Module (Node 6) (ReCap Only)

Machine Status	Electrical supply disconnecting device in position I (ON)
SPC Reference	662905-0300

See, 8.3.3-5 Troubleshooting - DeviceNet Error Indications on the Armor Block I/O Module (Node 3) on page 8-132.

8.3.4 Ethernet

The Ethernet is used for data exchange on the input side of the PLC.

For more information about the Ethernet, see the following sections:

- 8.2.1-1 Preparation for PLC Communication - Configure PC Network Communications
- 8.2.1-2 Preparations for PLC Communication - Configure RSLinx
- 8.2.1-3 Preparations for PLC Communication - Set EtherNet Module IP Address.

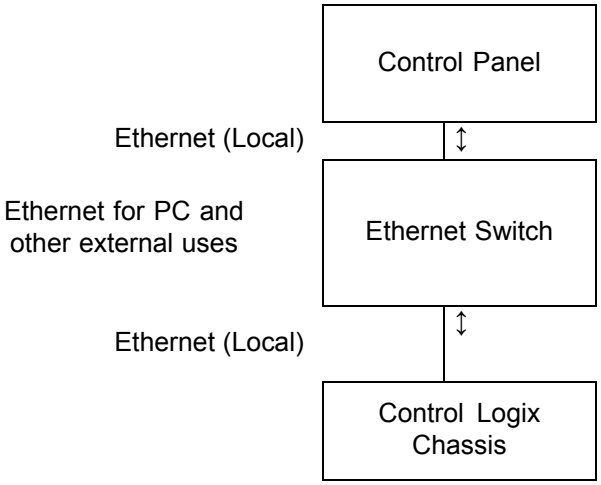

8.3.4-1 EtherNet Module - Change

Machine Status	Electrical supply disconnecting device in position I (ON)
SPC Reference	2833407-0300

Preparation

Note! The firmware revision of the PLC controller maybe equal to, or newer than the firmware revision of the old PLC controller. If an attempt to go online is made with a newer firmware revision installed, this may create errors such as an unrecognised device or a device mismatch if the PC does not contain the very latest EDS files.

(Cont'd)

(Cont'd)

Before changing the EtherNet Module:

- Use the RSLinx Classic program to verify and record the firmware version of the EtherNet Module. Use the flow chart below to determine which procedures must be performed and their correct sequence.

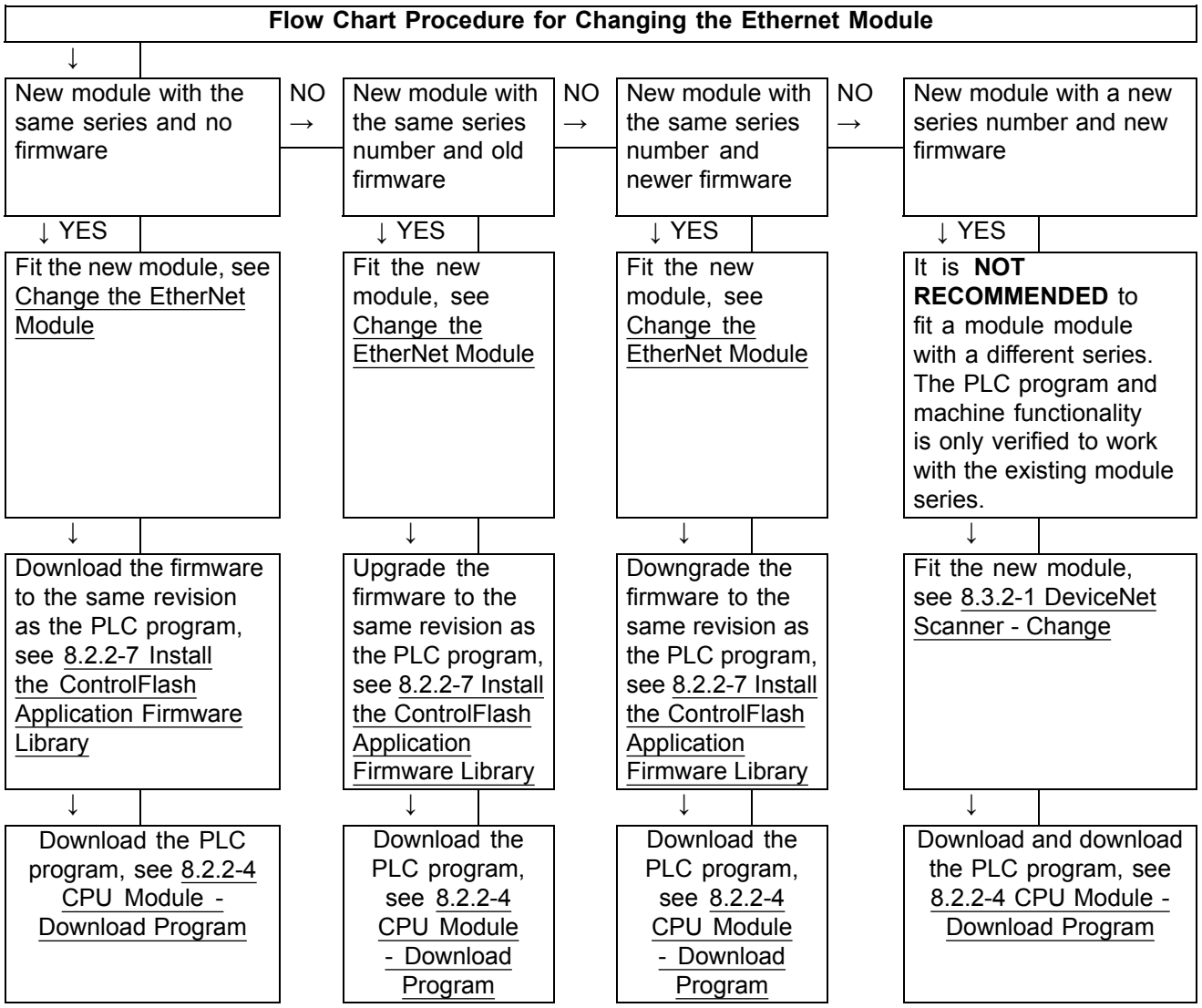

(Cont'd)

(Cont'd)

Change the EtherNet Module

a) Press the locking tab (1) on the top and the bottom of the EtherNet module (2).

b) Slide the EtherNet module (2) out of the chassis.

c) Align the new EtherNet module (2) with the top and the bottom guides in the chassis.

d) Slide the EtherNet module (2) into the chassis. Make sure it is flush with the power supply or the other modules and the top and bottom latches are engaged.

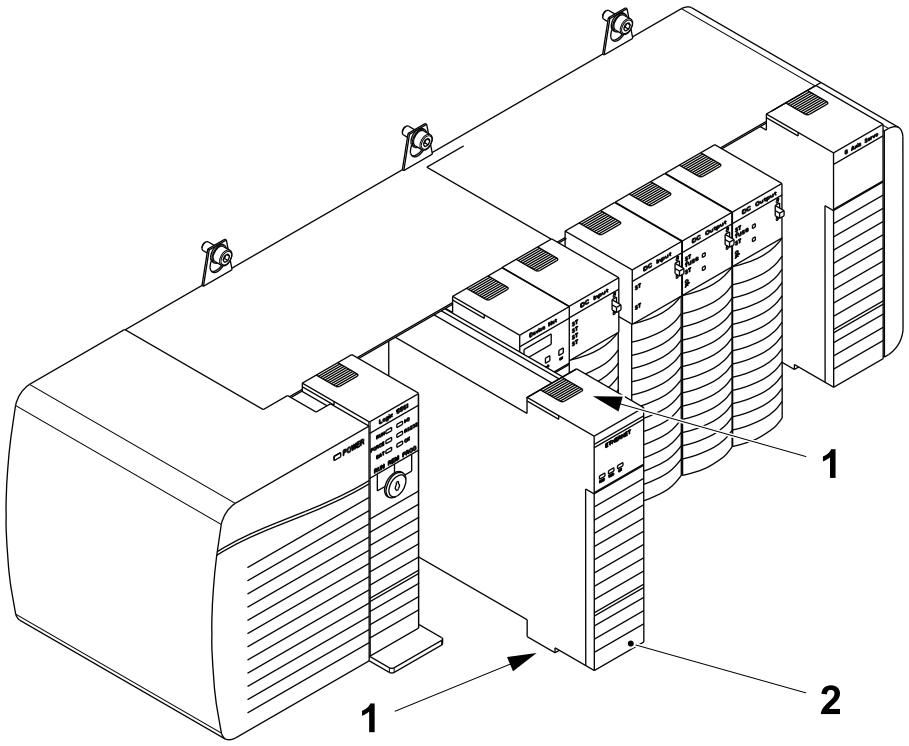

1 Locking tab
2 EtherNet module

8.4 Frequency Converter PowerFlex 4 and 40

8.4.1 PowerFlex40 and PowerFlex 4 Frequency Converters

General

The PowerFlex 40 (PF 40) (1) and the PowerFlex 4 (PF 4) (2) frequency converters are connected by links (3) to form a DSI network as shown.

The 22-COMM DeviceNet adaptor, mounted on the PF 40 module, provides the communications link between DNB scanner module in the PLC and the frequency converters.

The adaptor stores the parameters required to operate the frequency converters as a DSI system. A new adaptor must be configured to set these parameters.

The individual converters (PF 40 and PF 4) store there own motor control parameters. These parameters are set manually at each of the converters.

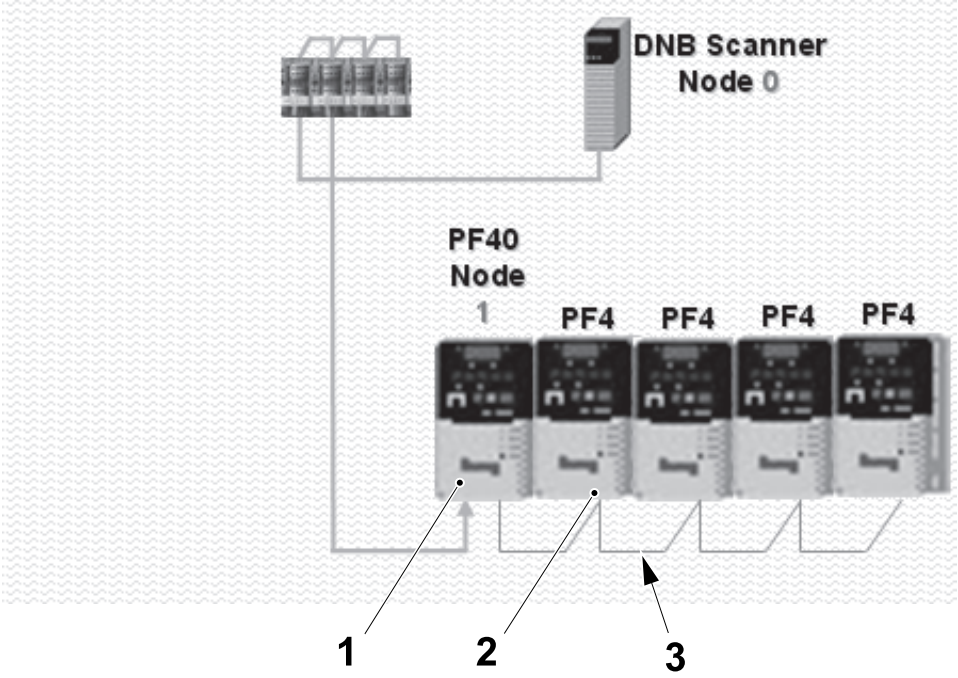

1 PowerFlex 40 (PF 40)
2 PowerFlex 4 (PF 4)
3 Links

8.4.1-1 PowerFlex40 DeviceNet Adaptor - Change

Machine Status	Electrical supply disconnecting device in position I (ON)
SPC Reference	90459-2614

Preparation

Note! The firmware revision of the PLC controller maybe equal to, or newer than the firmware revision of the old PLC controller. If an attempt to go online is made with a newer firmware revision installed, this may create errors such as an unrecognised device or a device mismatch if the PC does not contain the very latest EDS files.

Before changing the 22-COMM DeviceNet adaptor:

- Use the to determine which procedures must be performed and their correct sequence.

Flow Chart of Procedures for Changing a 22-COMM Adaptor

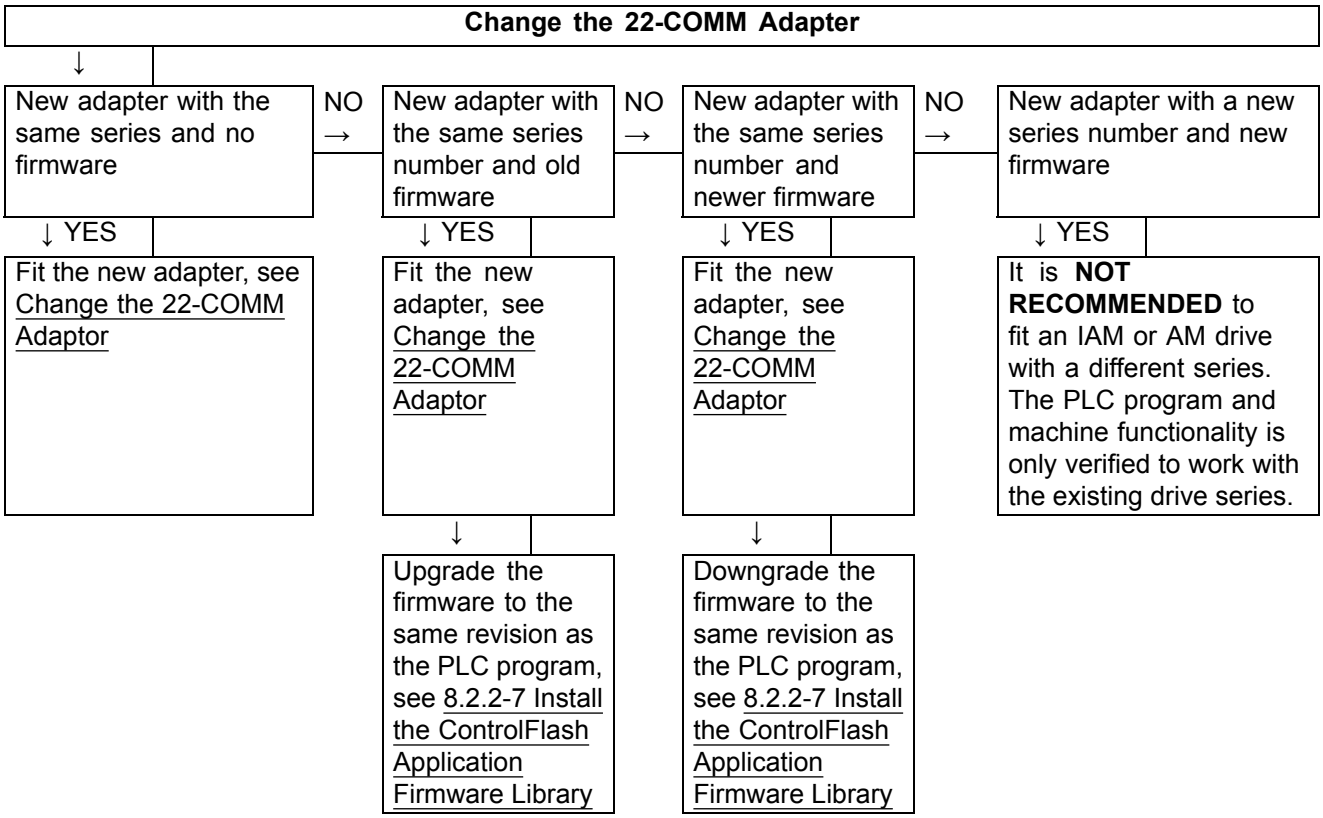

Note! If the PowerFlex4 or 40 DeviceNet Adaptor is new, make sure to set the parameters: A103=4 and A104=100, see Tables for Customising Inverter Values on page 8-163.

(Cont'd)

(Cont'd)

Set the Node Address and Baud Rate

The position of the F/C switches (1) on the 22-COMM adaptor (2), under the front cover of the PowerFlex 40 frequency converter, determines the node address and the communication baud rate.

The position of the F/C switches 1-6 determine the node address and the switches 7 and 8 determine the baud rate.

Set the F/C switches 1-6 as shown in the following table to set the Node address to 1.

Set the F/C switches 7 and 8 as shown in the following table to select the Auto Baud mode.

Switch No.	1	2	3	4	5	6	7	8
Switch Pos.	UP	DOWN	DOWN	DOWN	DOWN	DOWN	UP	UP

Note! When configuring the adaptor, the jumper (3) should be set to the right, see Configure the PowerFlex40 DeviceNet Adaptor.

The position of the jumper (3) on the connector (4) determines the operating mode of the adaptor.

Set the jumper (3) to the left as shown to select the MULTI DRIVE mode.

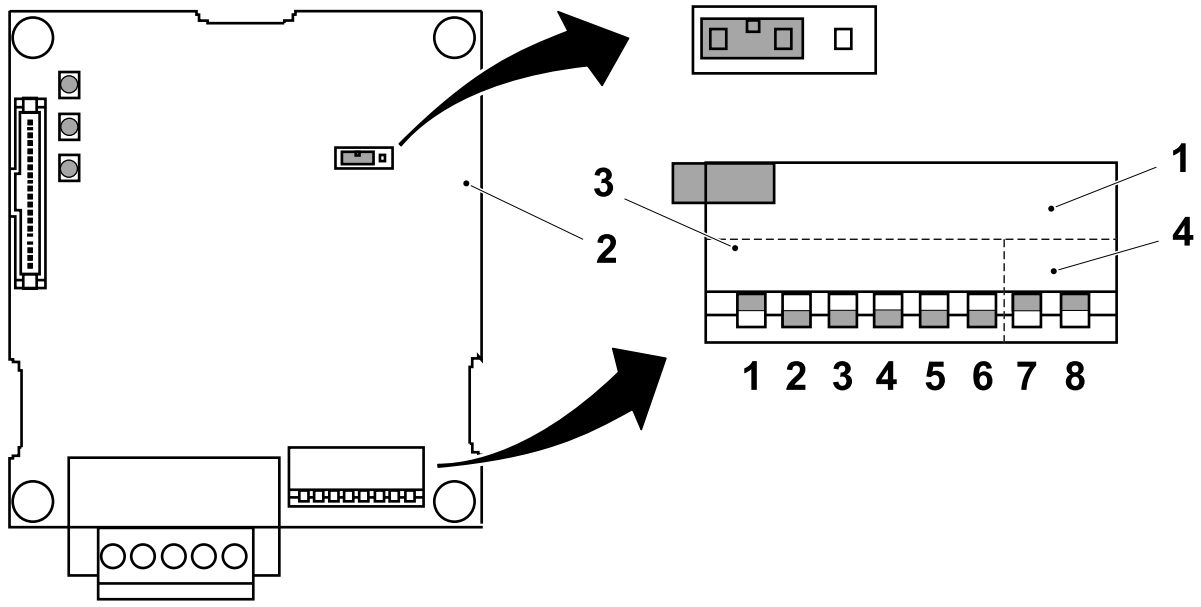

1 F/C switches
2 22-COMM adaptor
3 Jumper
4 Connector

(Cont'd)

(Cont'd)

Change the 22-COMM Adaptor

a) Remove the cover (1) from the front of the PowerFlex 40 drive (2) .

b) Disconnect the DeviceNet cable (3) and the Internal interface cable (4) from the 22-COMM adaptor (5).

c) Remove the screw (6) and change the 22-COMM adaptor (5) .

d) Install the new 22-COMM adaptor in the reverse order.

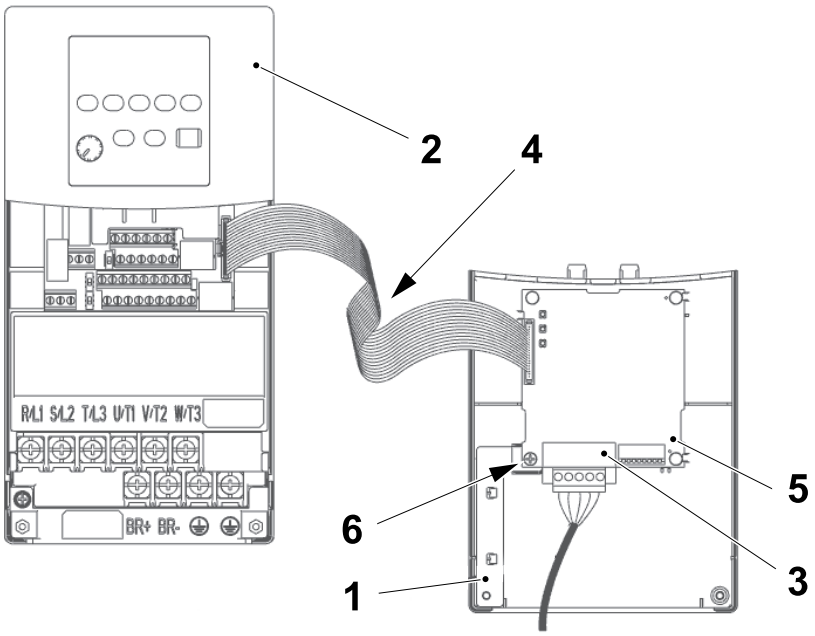

1 Cover
2 PowerFlex 40 drive
3 DeviceNet cable
4 internal interface cable
5 22-COMM adaptor
6 Screw

(Cont'd)

(Cont'd)

Configure the PowerFlex40 DeviceNet Adaptor

a) Step down the machine to `STEP0`.

b) Interrupt the DSI network (1) at the output (2) of the PF 40 module (3).

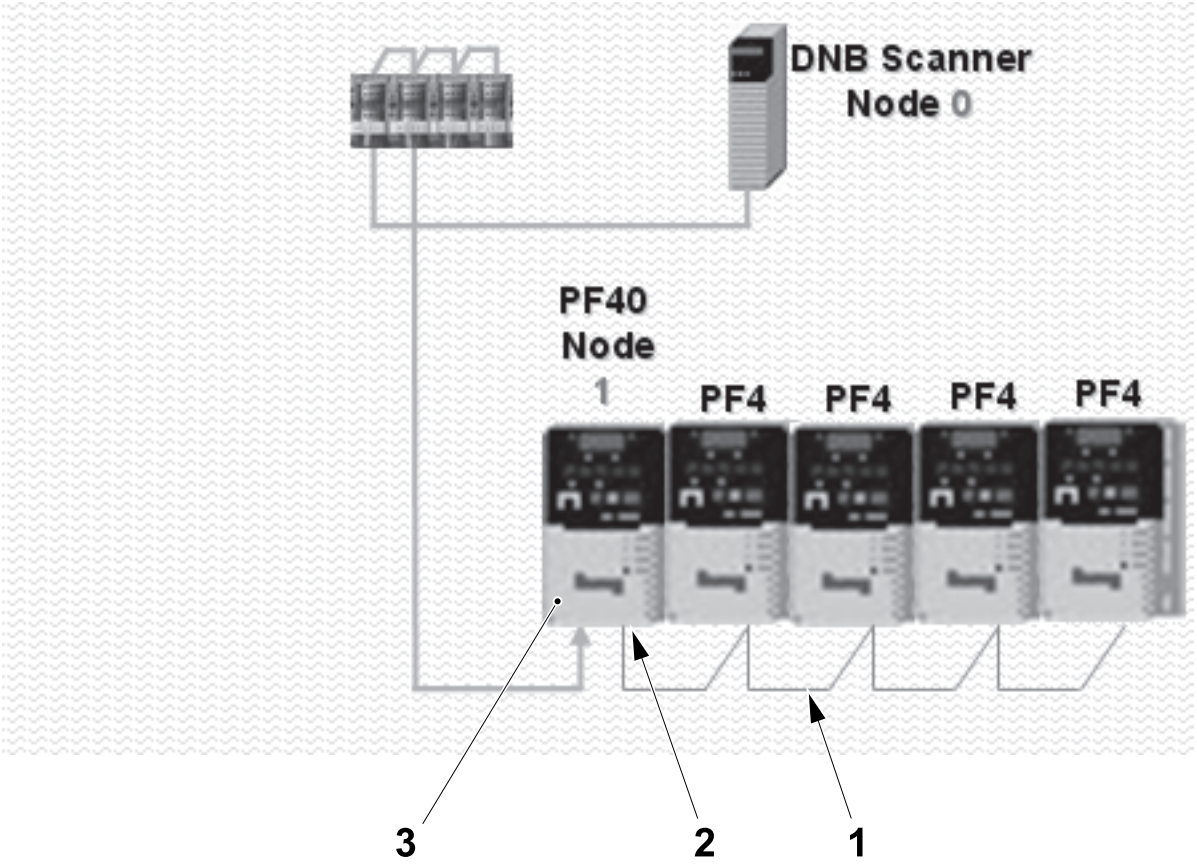

1 DSI network
2 Output
3 PF 40 module

(Cont'd)

(Cont'd)

c) With the machine in STEP0, on the 22-COMM adaptor (4)), move the jumper (5) on the connector (6) to the right as shown to select the SINGLE DRIVE operating mode.

d) Be sure that the address and the baud rate are correct according to Set the Node Address and Baud Rate on page 8-141, if the 22-COMM adaptor (4) is new.

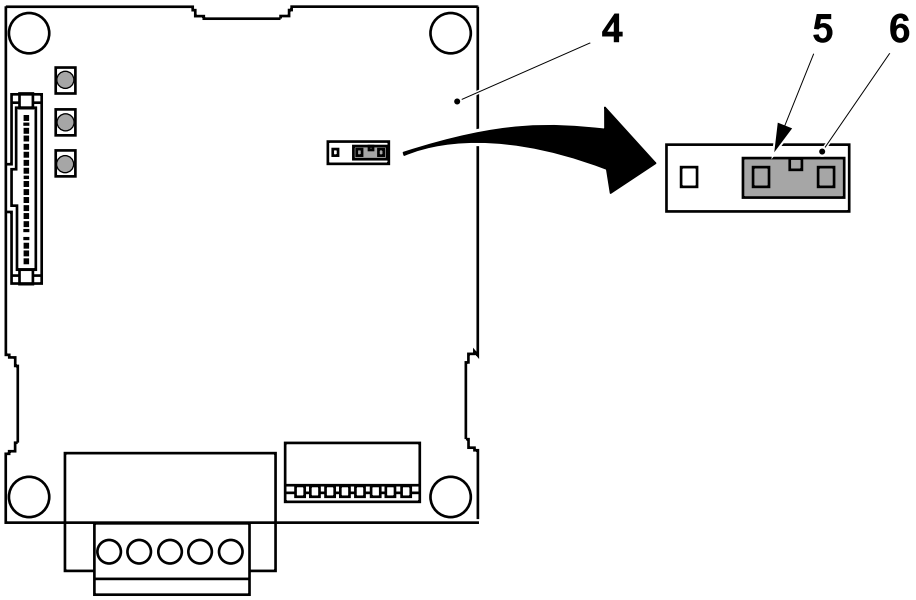

4 22-COMM adaptor
5 Jumper
6 Connector

(Cont'd)

(Cont'd)

e) Step up the machine to `STEP1`.

f) Open RSNetWorx.

g) Open a new file in RSNetWorx.

h) Select theNetwork menu (7) and then select Online (8).

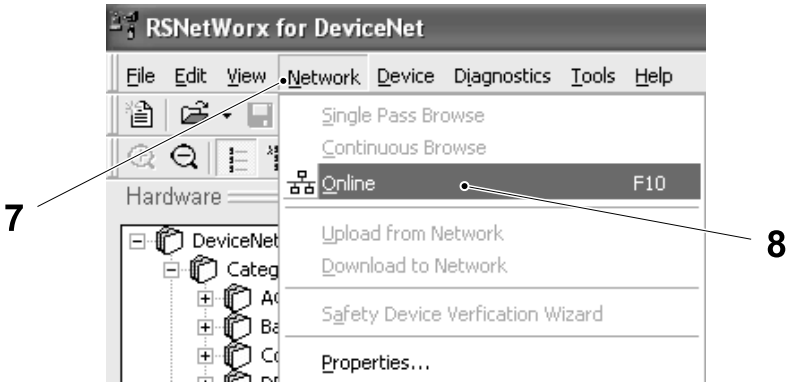

7 Network menu
8 Online

i) Browse to find and access the Main Net (9).

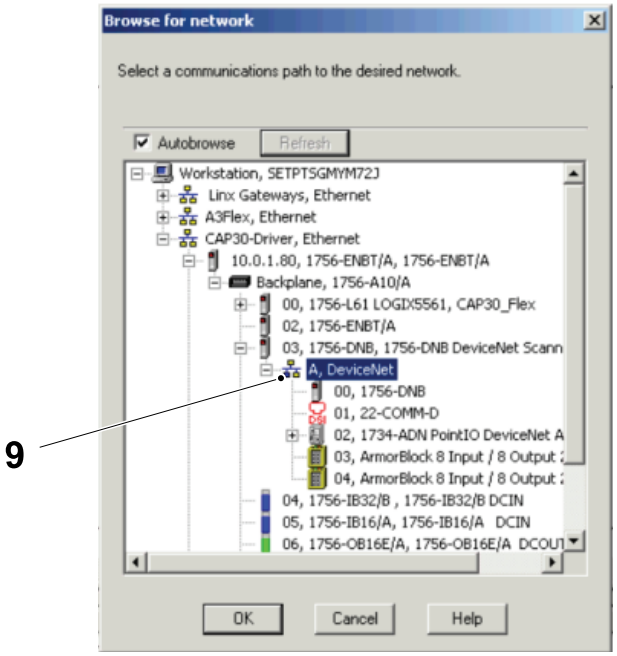

9 Main Net

(Cont'd)

(Cont'd)

j) Wait for the automatic scan of the network.



k) Double click on the Powerflex 40 icon (10) icon and select `PARAMETERS`.

l) Select `UPLOAD` in the `PARAMETERS` window.

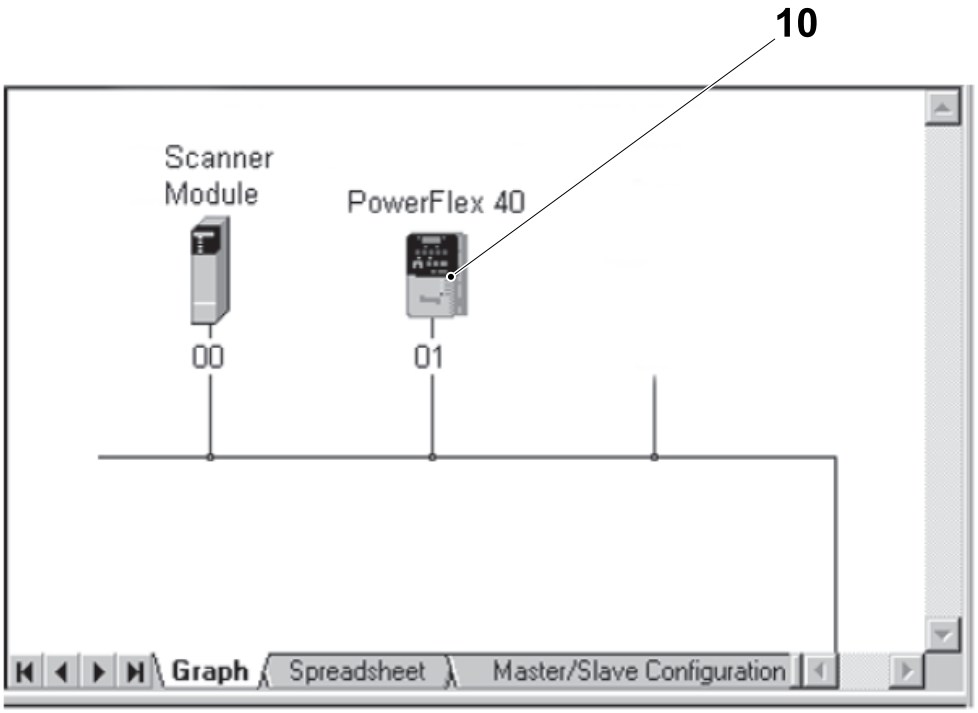

10 powerflex 40 icon

(Cont'd)

(Cont'd)

m) Scroll to end of the parameter list (11) and change the parameters shown in the following table.

n) Select OK when done.

Note! In the table Drv 0 - 2 means 3 drives are used Drv 0 - 4 means all.

Parameter	Value
DSI I/O Config	Drv 0 - 2 up to 0 - 4
Drive 0 Address	100
Drive 1 Address	101
Drive 2 Address	102
Drive 3 Address	103
Drive 4 Address	104

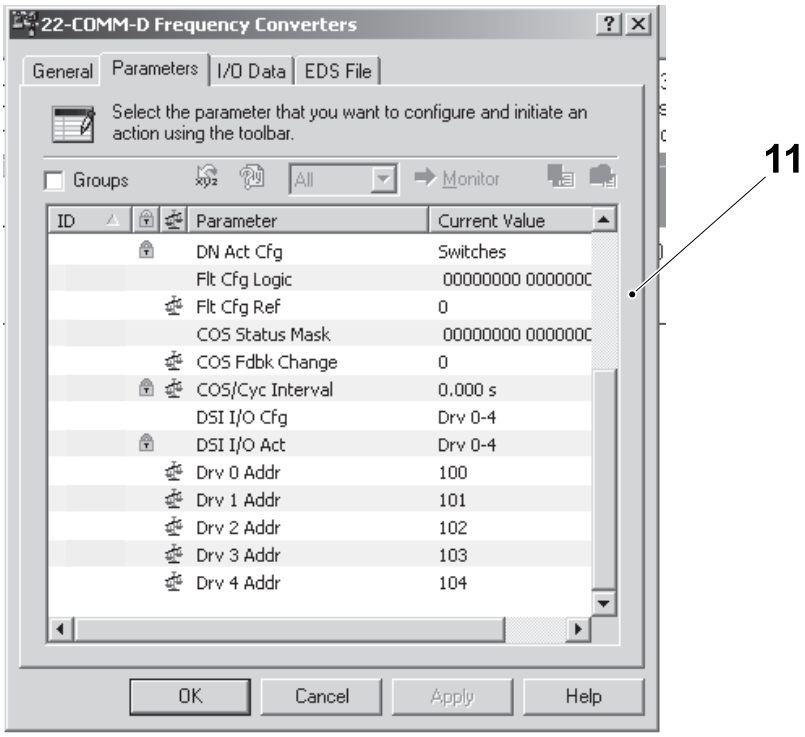

11 Parameter list

(Cont'd)

(Cont'd)

o) Step down the machine to `STEP0`.

p) Connect the DSI network (1) at the output (2) of the PF 40 module (3).

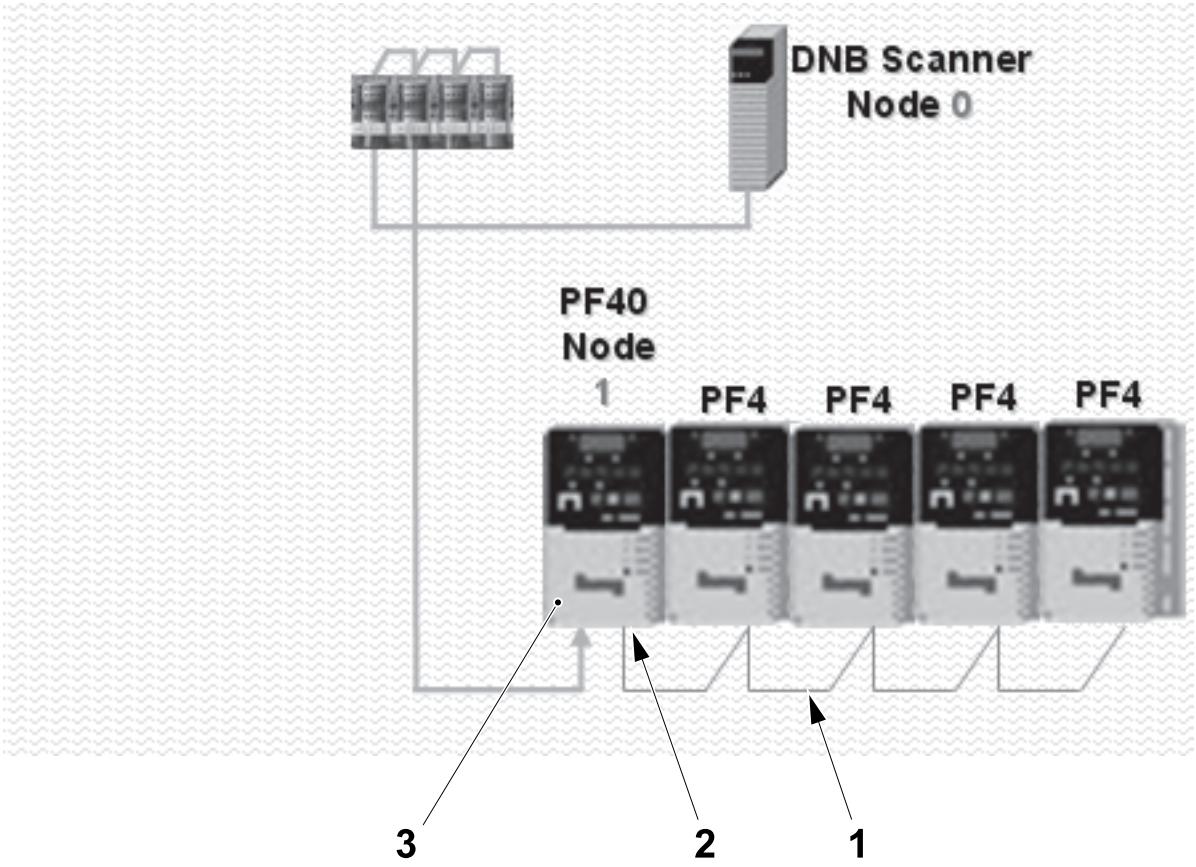

1 DSI network
2 Output
3 PF 40 module

(Cont'd)

(Cont'd)

q) On the 22-COMM adaptor (4), move the jumper (5) on the connector (6) to the left as shown to select the MULTI DRIVE operating mode.

Note! Reboot the drive before continuing.

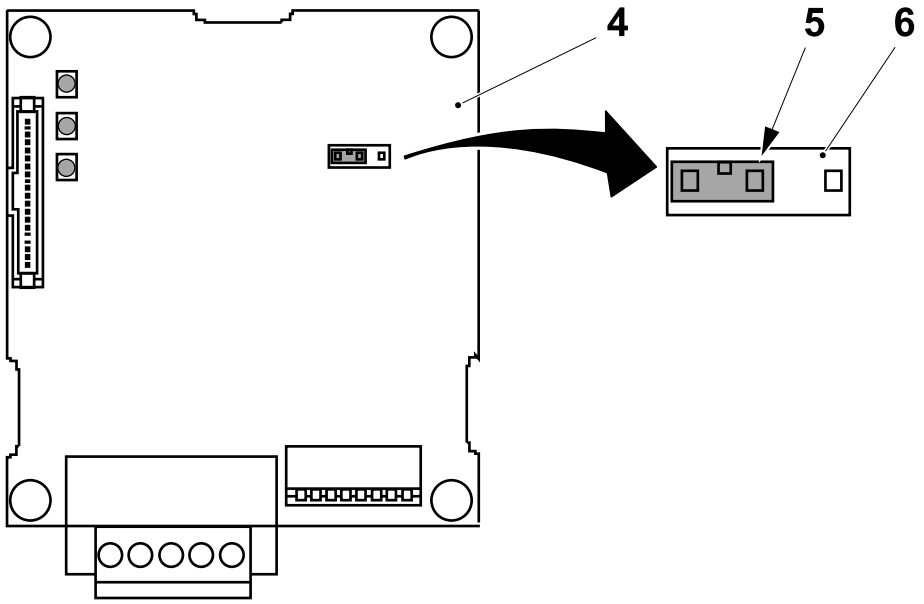

4 22-COMM adaptor
5 Jumper
6 Connector

r) Step up the machine to `STEP1`.

s) Only if the RSNetWorx was closed, open RSNetWorx.

t) Open a new file in RSNetWorx.

(Cont'd)

(Cont'd)

u) Select View –> Refresh (12) (or type F5) to update the view.

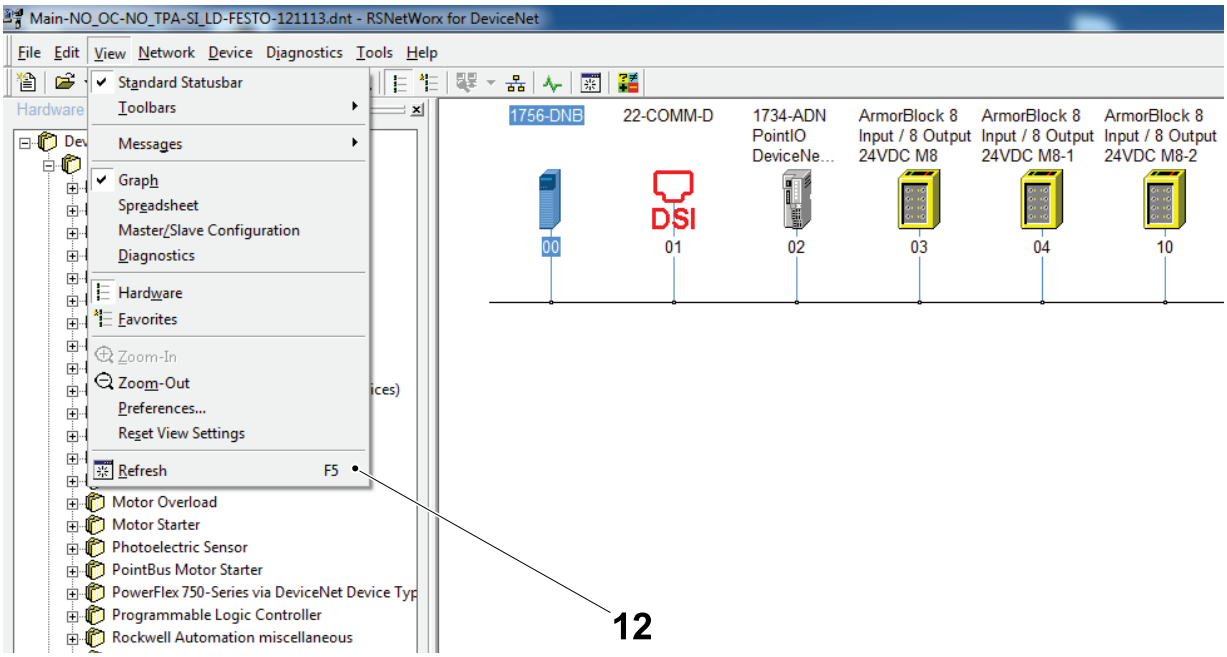

12 View –> Refresh

v) Check that the DSI icon (13) appears confirming that the adaptor has been configured correctly and the frequency converters are now recognised as part of the network as Node 1.

w) Exit RSNetWorx.

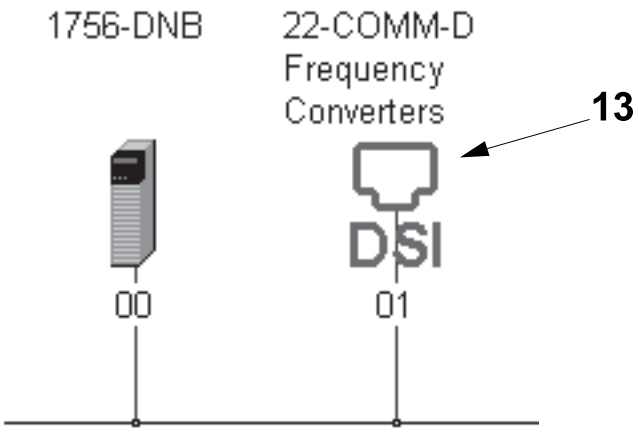

13 DSI icon

8.4.1-2 Frequency Converter - Change

Machine Status	Electrical supply disconnecting device in position O (OFF)
SPC Reference	90459-3441 90459-3450

For the PowerFlex 40 Module

a) Remove the cover (1) from the front of the PowerFlex 40 module (2).

b) Disconnect the DeviceNet cable (3) and the Internal interface cable (4) from the 22-COMM adaptor (5) and the PowerFlex 40 module (2).

c) Remove the screw (6) and the 22-COMM adaptor (5).

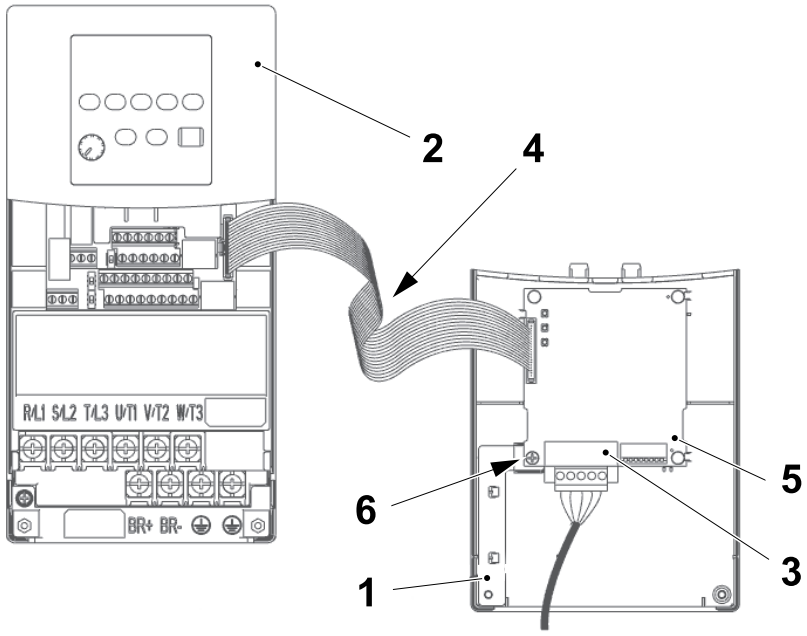

1 Cover
2 PowerFlex 40 module
3 DeviceNet cable
4 internal interface cable
5 22-COMM adaptor
6 Screw

(Cont'd)

(Cont'd)

d) Make a note of the electrical connections (7) at the base of the PowerFlex 40 module (2) and then disconnect all of the cables and wires.

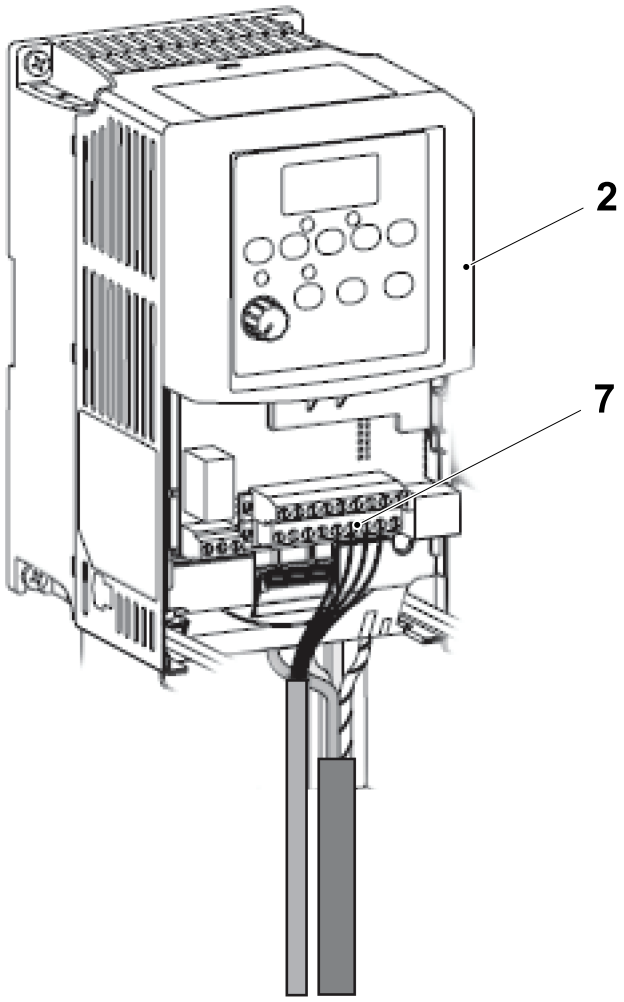

2 PowerFlex 40 module
7 Electrical connections

(Cont'd)

(Cont'd)

e) Remove the Screw (8) and the PowerFlex 40 module (2) .

f) Assemble in the reverse order.

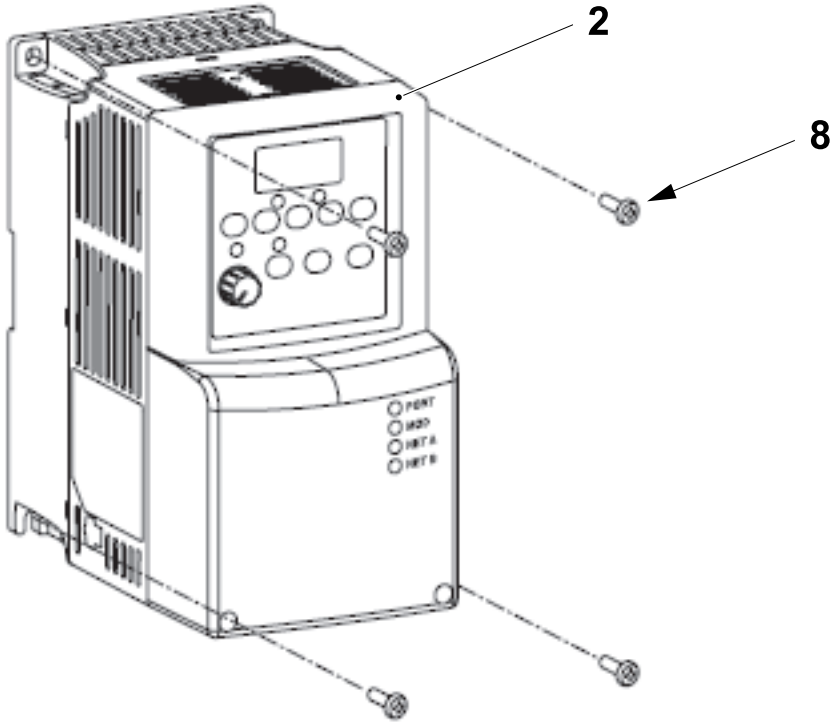

2 PowerFlex 40 module
8 Screw

(Cont'd)

(Cont'd)

For the PowerFlex 4 Modules

a) Make a note of the Electrical connections (1) at the base of the PowerFlex 4 module (2) and then disconnect all of the cables and wires.

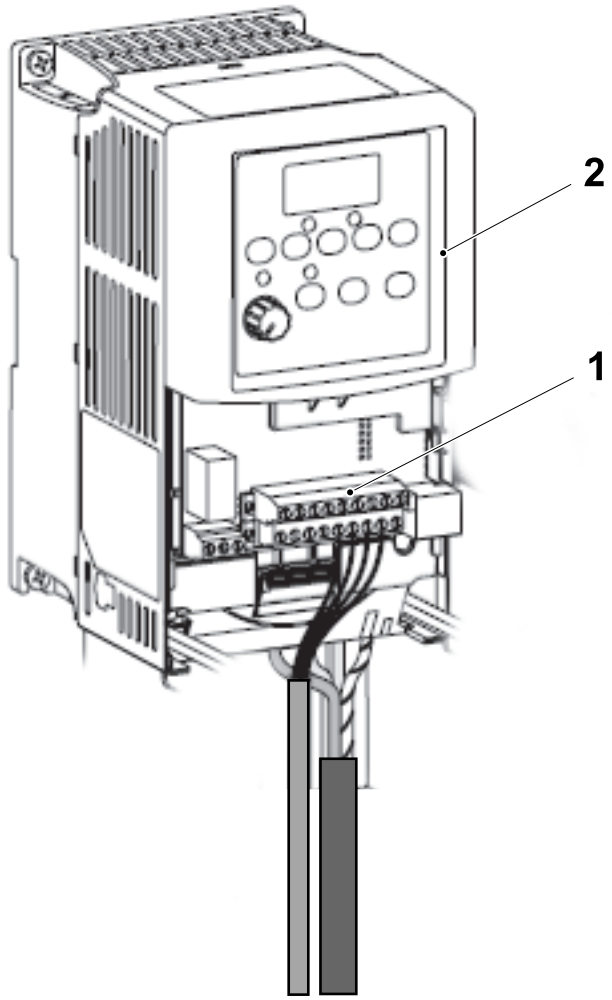

1 Electrical connections
2 PowerFlex 4 module

(Cont'd)

(Cont'd)

b) Make a note of thescrews (3) at the base of thePowerFlex 4 module (2) and then disconnect all of the cables and wires.

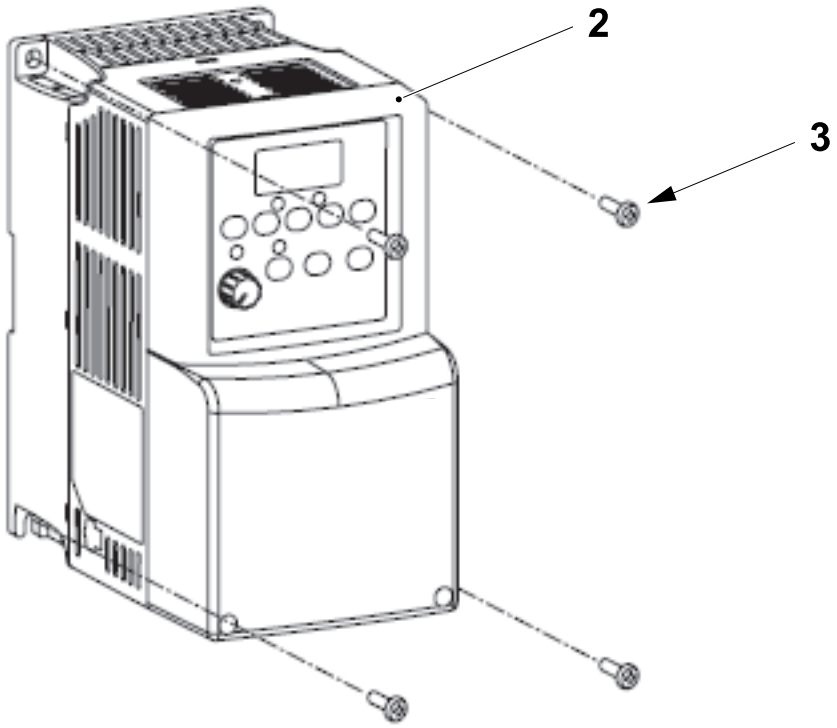

2 PowerFlex 4 module
3 Screw

8.4.1-3 Frequency Converter - LED Description

Machine Status	Electrical supply disconnecting device in position I (ON)
SPC Reference	90459-3441

The PowerFlex40 module is connected to the DeviceNet via an adaptor.

The adaptor has four LED's that are visible through the front panel of the PowerFlex40 module.

To locate the source of the error and then find the cause, proceed as follows:

a) At the PowerFlex40 module (1) (W20T0000) in the Electrical Cabinet, check the status of the Port LED (2), the Mod LED (3) and Net A LED (4).

b) Use the following tables to determine the cause of the error.

Note! The Net B LED (5) is not used for DeviceNet communications.

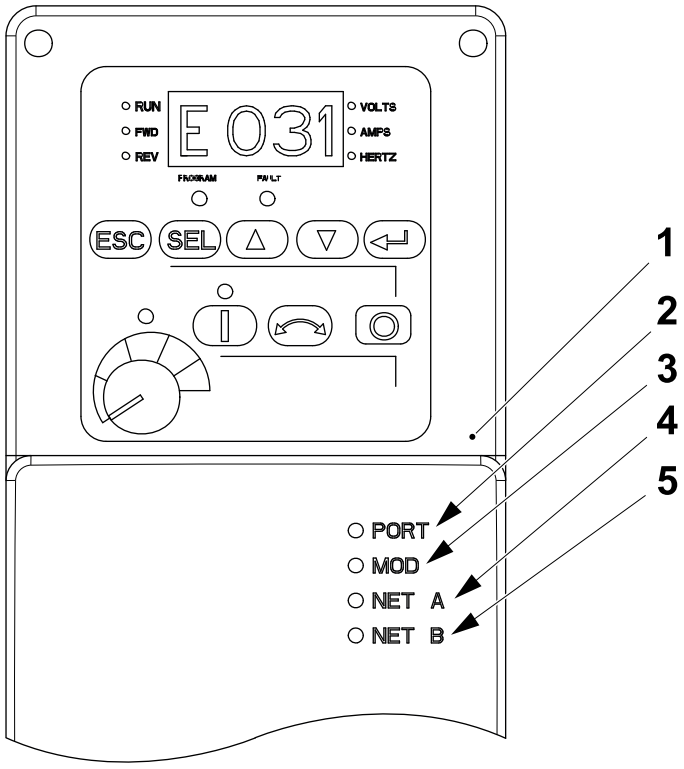

1 PowerFlex40 module
2 Port LED
3 Mod LED
4 Net A LED
5 Net B LED

(Cont'd)

(Cont'd)

Error Sorting

LED	Colour	Status	Action
Port Status (2)	Off	The adaptor is not powered or connected correctly to the drive.	Use the ribbon cable to connect the adaptor securely to the drive. Apply power to the adaptor.
Port Status (2)	Flashing red	The adaptor is not receiving communications from a drive, a connected drive has failed or a drive is missing.	Clear any drive faults. Check that all cables are securely connected. Cycle power to the drive.
Port Status (2)	Solid red	The drive has refused an I/O connection from the adaptor. Another DSI peripheral is using the same DSI port as the adaptor.	Important: Cycle power to the adaptor after making the following correction. Check that all DSI cables are securely connected and undamaged. If necessary, replace any damaged cable.
Port Status (2)	Flashing green	The adaptor is establishing an I/O connection to the drive or (DSI I/O Config) is configured for all I/O disabled.	None: This indication will turn GREEN or RED. Check the setting of parameter 15 (DSI I/O Config). The adaptor is operating normally if no DSI I/O is enabled.
Port Status (2)	Solid green	The adaptor is properly connected and is communicating with the drive.	None.
Port Status (2)	Orange	Daisy-chained devices in the Multi-Drive mode are not of the correct type.	Install the correct modules.

(Cont'd)

(Cont'd)

LED	Colour	Status	Action
Mod Status (3)	Off	The adaptor is not powered.	Use the ribbon cable to connect the adaptor securely to the drive. Apply power to the adaptor.
Mod Status (3)	Flashing red	The adaptor has failed the firmware test, a connected drive has failed or a drive is missing.	Clear any drive faults. Cycle power to the drive. If cycling power does not correct the problem, the parameter settings may have been corrupted. Restore default values reconfigure the adaptor. If restoring default values does not correct the problem, flash the adaptor with the latest firmware release. Determine which drive is missing or has failed. Check cabling and configuration settings.
Mod Status (3)	Solid red	The adaptor has failed the hardware test	Cycle power to the drive Replace the adaptor.
Mod Status (3)	Flashing green	The adaptor is operational but is not transferring I/O data.	Put the scanner in the RUN mode. Program the controller to recognise and transmit I/O data to the adaptor. Configure the adaptor for the program in the controller. The adaptor is operating normally if no DSI I/O is enabled.
Mod Status (3)	Solid green	The adaptor is operational and transferring I/O data.	None.

LED	Colour	Status	Action
Net A Status (3)	Off	The adaptor and/or the network is not powered or the adaptor is not connected correctly to the network.	Use the ribbon cable to connect the adaptor securely to the drive and the DeviceNet cable to connect it to the network. Connect the DeviceNet cable correctly to the DeviceNet plug. Apply power to the adaptor and the network.
Net A Status (3)	Flashing red	A DeviceNet I/O connection has timed out.	Put the scanner in the RUN mode, or apply power to the peer device that will send I/O data. Check the amount of traffic on the network.
Net A Status (3)	Solid red	red	Failed duplicate node detection test or bus off condition exists.
Net A Status (3)	Flashing green	The adaptor is properly connected but is not communicating with any devices on the network.	Put the scanner in the RUN mode, or apply power to the peer device that will send I/O data. Configure a controller or peer device to recognise and transmit I/O to the adaptor. Configure the adaptor for the program in the controller or the I/O from the peer device.
Net A Status (3)	Solid green	The adaptor is properly connected and is communicating with devices on the network.	None.

8.4.1-4 Frequency Converters - Change Parameters

Machine Status	Electrical supply disconnecting device in position I (ON)
SPC Reference	90459-3441 90459-3450

Note! The procedure for setting the parameters is the same for all frequency converters.

Note! Before setting the converter, make sure that the sink/source switch, located behind the removable cover, is set to the SRC position.

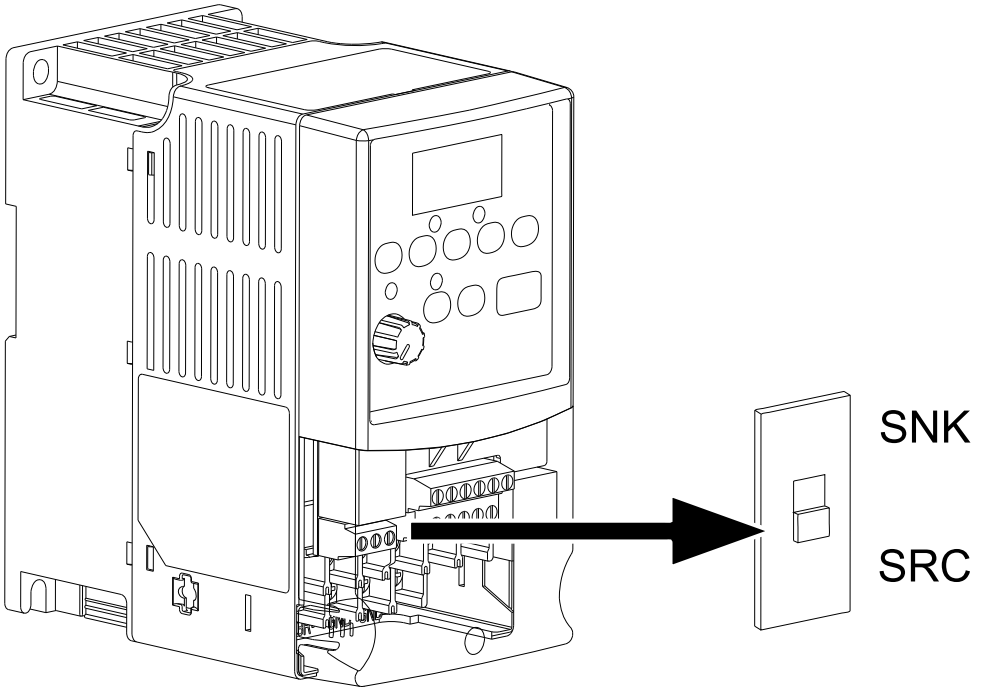

(Cont'd)

(Cont'd)

a) Press the ESC button (1) twice. The letter d, P, or A flashes.

b) Press theUP button (2) or the DOWN button (3) to scroll through the group menu (d, P or A).

c) Press the ⏎ ENTER button (4) or the SEL button (5) to enter a group. The digit on the right of the 3 digit parameter 031, in the example below flashes.

d) Press the UP button (2) or the DOWN button (3) to scroll through the parameters that are in the group.

e) Press the ⏎ ENTER button (4) or the SEL button (5) to view the value of a parameter. To return to the parameter number without editing, press the ESC button (1).

f) To edit a parameter value, press the ⏎ ENTER button (4) or the SEL button (5) to enter the program mode. The digit on the right flashes and the Program LED (6) turns red when the value can be edited.

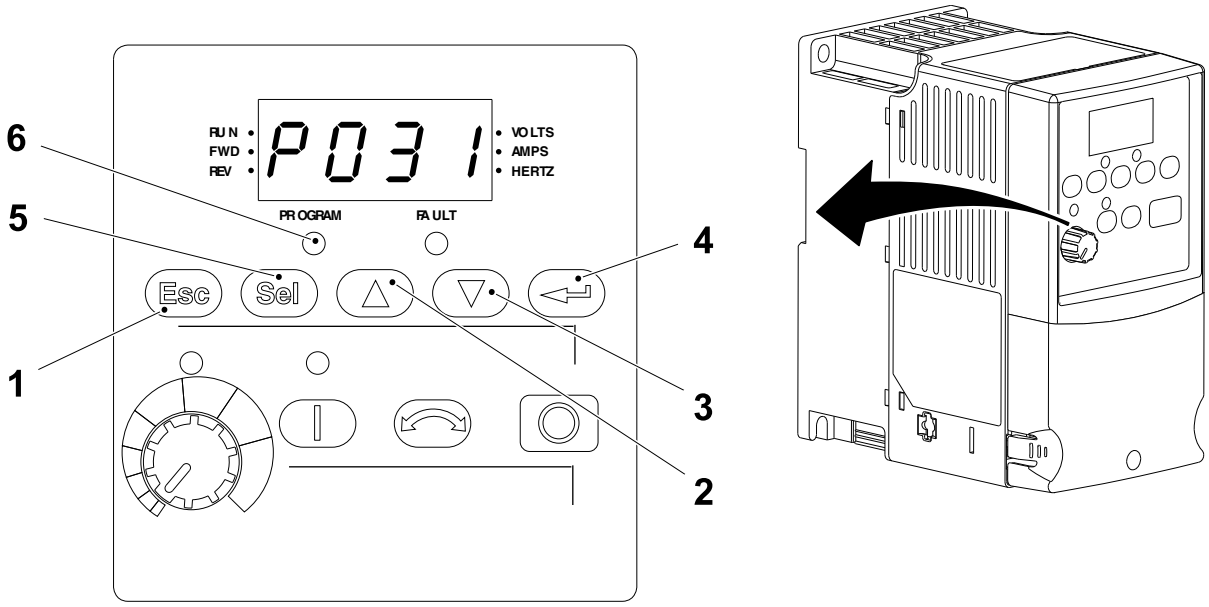

1 ESC button
2 UP button
3 DOWN button
4 ENTER button
5 SEL button
6 Program LED

(Cont'd)

(Cont'd)

g) Press the UP button (2) or the DOWN button (3) to change the parameter value. Press the SEL button (5) to move from digit to digit or from bit to bit. When a digit or bit flashes, it can be changed.

h) Press the ESC button (1) to cancel a change. The digit or bit stops flashing, the previous is restored and the Program LED (6) turns OFF or press the ⏎ ENTER button (4) to save a change. The digit or bit stops flashing and the Program LED (6) turns OFF.

i) Press the ESC button (1) to return to the parameter list.

j) Continue to press the ESC button (1) to leave the programming menu. When pressing the ESC button (1) does not change the display, d001 (output frequency) is displayed. Press the ⏎ ENTER button (4) or the SEL button (5) to enter the group menu.

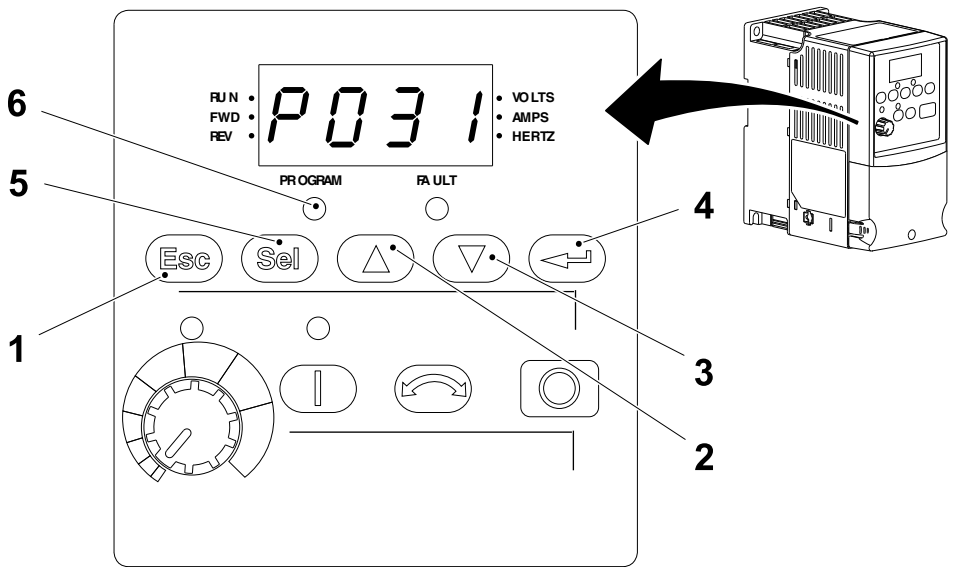

1 ESC button
2 UP button
3 DOWN button
4 ENTER button
5 SEL button
6 Program LED

(Cont'd)

(Cont'd)

Table showing Read Only Display Groups

Parameter	Function
d001	Output Frequency
d002	Commanded Frequency
d003	Output Current
d004	Output Voltage
d005	DC Bus Voltage
d006	Drive Status
d007	Fault Code 1
d008	Fault Code 2
d009	Fault Code 3
d010	Process Display
d012	Control Source
d013	Control In Status
d014	Dig In Status
d015	Comm In Status
d016	Control SW Version
d017	Drive Type
d018	Elapsed Run Time
d019	Testpoint Data
d020	0-10V Analog Input
d021	4-20 mA Analog Input

(Cont'd)

(Cont'd)

Tables for Customising Inverter Values

See the enclosed "Rockwell" manual for more details.

Basic Program Group							
Parameter	**Description**	**Unit**	**Belt Brake W20T0000**	**Package Line Conveyor W21T4000**	**Cap Sorter Disk C50T1000**	**Outfeed Package Conveyor W21T6000 ****	**Package Aligner W21T4010**
P031	Motor NP Volts	V	230	230	230	230	230
P032	Motor NP Hertz	Hz	50	50	50	50	50
P033	Motor OL Current	A	1.2	2.6	1.2	2.6	0.9
P034	Minimum Freq	Hz	0.0	0.0	0.0	0.0	0.0
P035	Maximum Freq	Hz	100	100	100	100	100
P036	Start Source		4	5	5	5	5
P037	Stop Mode		0	Default	Default	Default	Default
P038	Speed Reference		5	5	5	5	5
P039	Accel Time 1	Sec	0	3	1	3	3
P040	Decel Time 1	Sec	0.1	3	1	3	3
A080	*		0.5				
A081	*		2				
A103	*		4	4	4	4	4
A104	*		100	101	102	103 (104***)	103
A105	*		0	0	0	0	0
A107	*		0	0	0	0	0
***** The default values for these parameters are shown in the **Advanced Program Group** table ** This item is optional equipment. *** When Package Aligner is Installed.							

8.4.1-5 Frequency Converters - Fault Types

Machine Status	Electrical supply disconnecting device in position I (ON)
SPC Reference	90459-3441 90459-3450

Note! The fault codes in the format Fxxx are the same for PowerFlex40 and PowerFlex4 frequency converters.

There are two types of fault, this is explained in the following table:

Note! The Auto Restart (Reset/Run) feature allows the drive to perform a fault reset followed by a start attempt without user or application intervention. This provides for either remote or “unattended operation”. Only certain faults can be reset. Certain type 2 faults that indicate possible drive component malfunction can not be reset. Caution should be used when enabling this feature as the drive will attempt to issue its own START command based on user selected programming.

Fault Type	Fault Description	
1	Auto-Reset/Run	When this type of fault occurs and parameter A092 (Auto Rstrt Tries) is set to a value greater than “0”, a user configurable timer A093 (Auto Rstrt Delay), begins. When the timer reaches zero, the drive attempts to automatically reset the fault. If the condition that caused the fault is no longer present, the fault will be reset and the drive will be restarted.
2	Non-Resetable	This type of fault may require drive or motor repair, or is caused by wiring or programming error. The cause of the fault must be corrected before the fault can be cleared.

8.4.1-6 Frequency Converters - Identifying the Fault

Machine Status	Electrical supply disconnecting device in position I (ON)
SPC Reference	90459-3441 90459-3450

If a fault occurs the fault LED (1) on the front panel of the converter will flash to indicate the presence of a fault and the relevant fault code, F013 in the example below, will flash on the alphanumeric display (2).

a) Use the table on 8-168 to determine the type of fault that has occurred.

- If the fault is a type 1, follow the instructions 8.4.1-7 Frequency Converters - Clearing a Fault Indication Manually.
- If the fault is a type 2, follow the instructions 8.4.1-8 Frequency Converters - Clearing a Fault Indication Automatically.

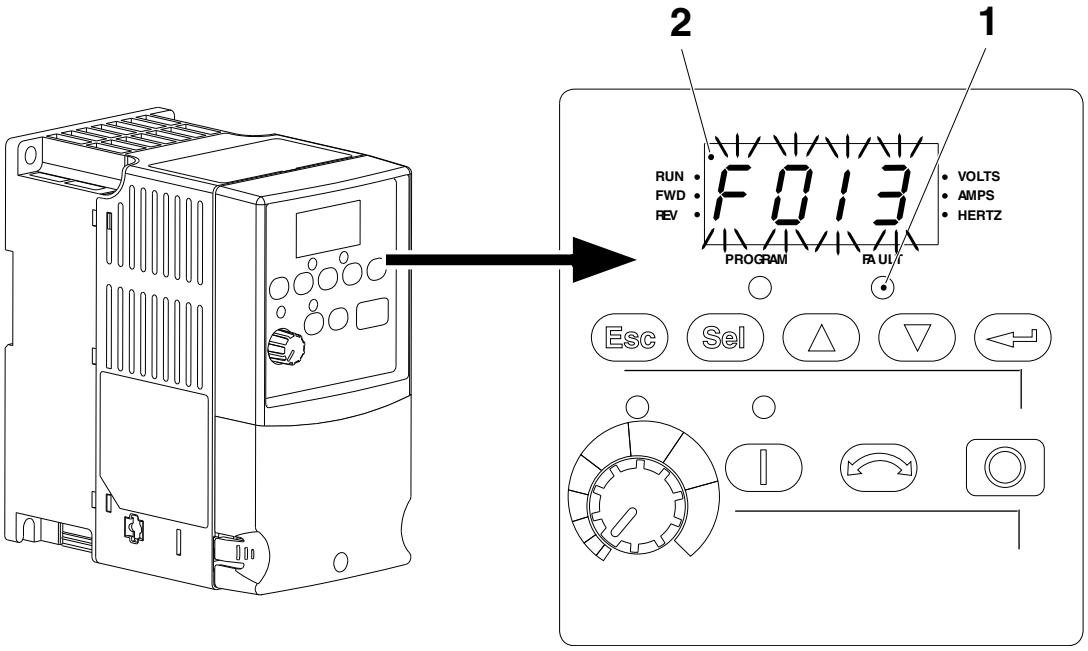

1 Fault LED
2 Alphanumeric display

8.4.1-7 Frequency Converters - Clearing a Fault Indication Manually

Machine Status	Electrical supply disconnecting device in position I (ON)
SPC Reference	90459-3441 90459-3450

a) When a fault occurs, press the Esc button (1) to acknowledge the alarm and to gain control of the control panel. The controls will be locked until the alarm is acknowledged. When the Esc button (1) is pressed the fault indication will be removed.

b) Use the control panel to access the parameter d007 (FAULT CODE 1), if necessary see 8.4.1-1 PowerFlex40 DeviceNet Adaptor - Change.

c) Locate and clear the cause of the fault, see 8-168.

d) After corrective action has been taken, clear the fault indication using one of the following methods:

- Press the Stop button (2) if the parameter P037 (STOP MODE) is set to a value between “0” and “3”
- Cycle drive power
- Set parameter A100 (FAULT CLEAR) to “1” or “2”.
- Cycle digital input if the parameters A051 - A052 (DIGITAL INX SEL) are set to option 7.

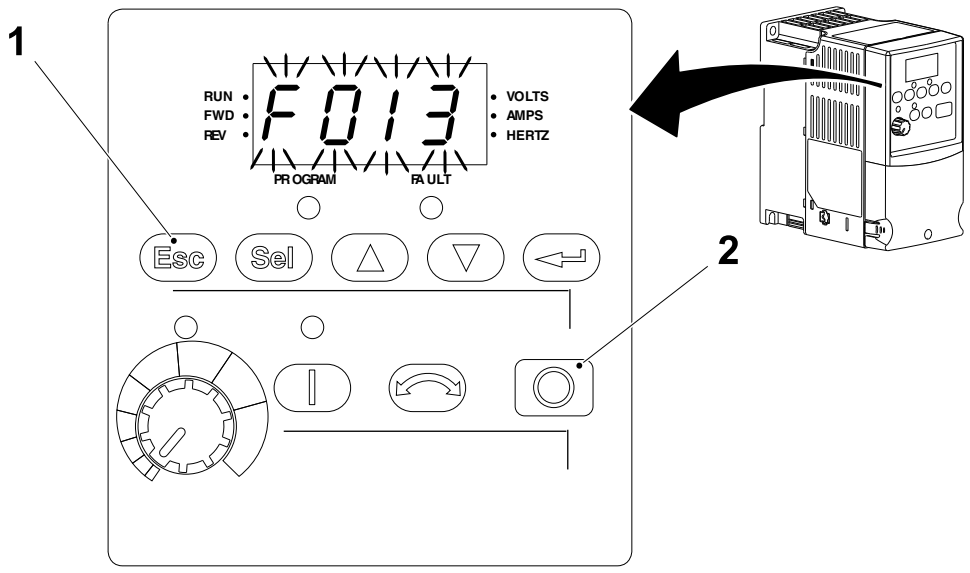

1 Esc button
2 Stop button

8.4.1-8 Frequency Converters - Clearing a Fault Indication Automatically

Machine Status	Electrical supply disconnecting device in position I (ON)
SPC Reference	90459-3441 90459-3450

Option 1: Clear a type 1 fault and restart the drive

a) When a fault occurs, press the Esc button (1) to acknowledge the alarm and to gain control of the control panel. The controls will be locked until the alarm is acknowledged. When the Esc button (1) is pressed the fault indication will be removed.

b) Use the control panel to set the parameter A092 (Auto Rstrt Tries) to any value other than “0”. If necessary see 8.4.1-1 PowerFlex40 DeviceNet Adaptor - Change.

c) Set parameter A093 (Auto Rstrt Delay) to any value other than “0”.

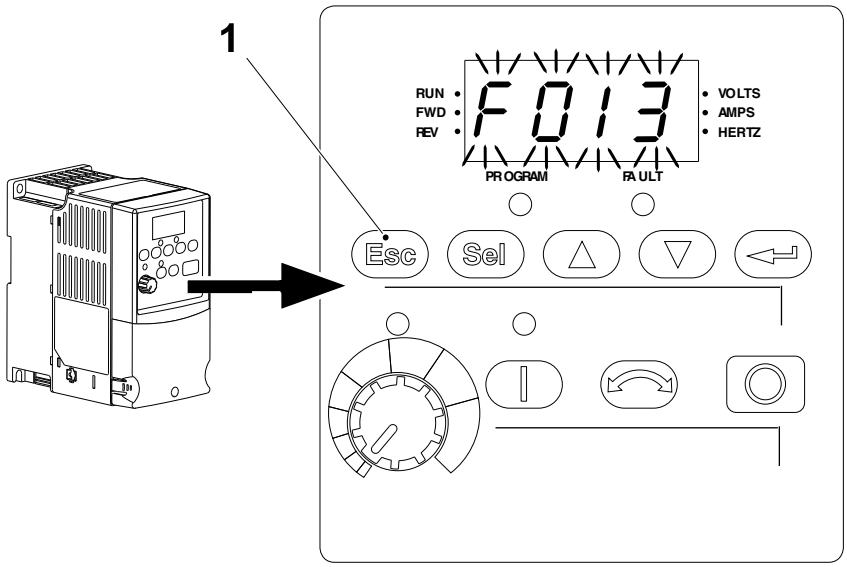

1 Esc button

(Cont’d)

(Cont'd)

Option 2: Clear an OverVoltage, UnderVoltage or Heatsink OverTemp fault without restarting the drive

a) When a fault occurs, press the Esc button (1) to acknowledge the alarm and to gain control of the control panel. The controls will be locked until the alarm is acknowledged. When the Esc button (1) is pressed the fault indication will be removed.

b) Use the control panel to set the parameter A092 (Auto Rstrt Tries) to any value other than "0". If necessary see 8.4.1-1 PowerFlex40 DeviceNet Adaptor - Change on page 8-140.

c) Set parameter A093 (Auto Rstrt Delay) to "0".

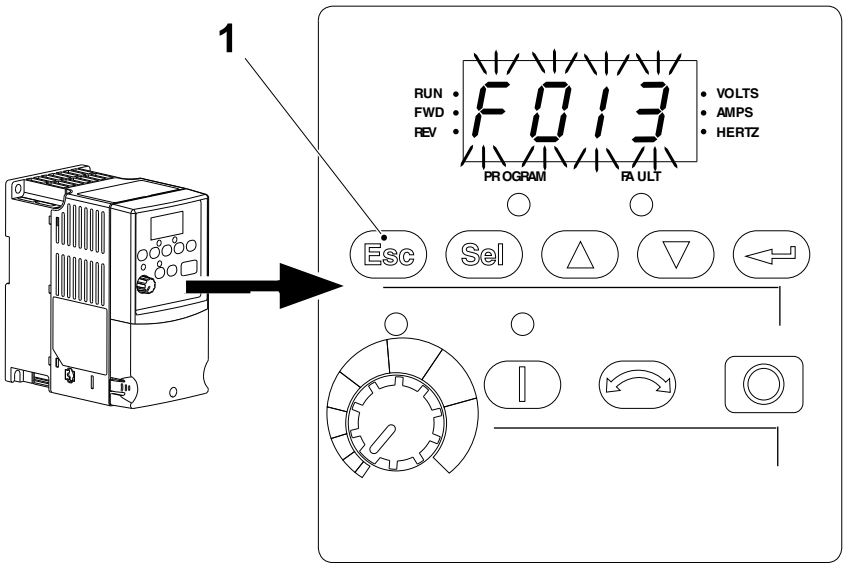

1 Esc button

Fault Code Descriptions

No.	Fault	Type	Description	Recommendation
F002	Auxiliary Input	1	Auxiliary input interlock is open	Check remote wiring. Verify communications programming for intentional fault
F003	Power Loss	2	DC bus voltage remained below 85% of normal	Monitor the incoming AC line for low voltage or line power interruption. Check input fuses.
F004	UnderVoltage	1	DC bus voltage fell below the minimum value	Monitor the incoming AC line for low voltage or line power interruption.
F005	OverVoltage	1	DC bus voltage exceeded the maximum value	Monitor the AC line for high line voltage or transient conditions. Bus overvoltage can also be caused by motor regeneration. Extend the decel. time or install the dynamic brake option.

(Cont'd)

(Cont'd)

No.	Fault	Type	Description	Recommendation
F006	Motor Stalled	1	Drive is unable to accelerate the motor	Increase parameters P039 and A067 (Accel Time x) or reduce the load so that the drive output current does not exceed the value set by parameter A089 (Current Limit1)
F007	Motor Overload	1	Internal electronic overload trip	An excessive motor load exists. Reduce the load so that the drive output current does not exceed the value set by parameter P033 (Motor OL Current).
f008	Heatsink OvrTmp	1	Heatsink temperature exceeds a predefined value	Check for blocked or dirty heatsink fins. Verify that the ambient temperature has not exceeded 40°C (104°F). Check fan.
f012	HW OverCurrent	2	The drive output current has exceeded the hardware current limit	Check programming. Check for excessive load, an incorrect value for parameter A084 (Boost Select), DC brake volts set too high or other causes of excess current.
f013	Ground Fault	2	A current path to earth has been detected at one or more of the drive output terminals	Check the motor and external wiring to the drive output terminals from a grounded condition.
f029	Analog Input Loss	1	An analog input is configured to fault on signal loss. A signal loss has occurred. Configure with parameter A122.	Check the parameters. Check for loose or broken connections at the inputs.
f033	Auto Rstrt Tries	2	Drive unsuccessfully attempted to reset a fault and resume running for the programmed number of parameter A092 (Auto Rstrt Tries)	Correct the cause of the fault and manually clear.
f038	Phase U to Gnd	2	A phase to ground has been detected between the drive and motor in this phase.	Check the wiring between the drive and the motor. Check the motor for a grounded phase. Replace the drive if the fault cannot be cleared.
f039	Phase V to Gnd	2	A phase to ground has been detected between the drive and motor in this phase.	Check the wiring between the drive and the motor. Check the motor for a grounded phase. Replace the drive if the fault cannot be cleared.
f040	Phase W to Gnd	2	A phase to ground has been detected between the drive and motor in this phase.	Check the wiring between the drive and the motor. Check the motor for a grounded phase. Replace the drive if the fault cannot be cleared.
f041	Phase UV Short	2	Excessive current has been detected between these two output terminals	Check the motor and drive output terminal wiring for a short circuit condition. Replace the drive if the fault cannot be cleared.

(Cont'd)

(Cont'd)

No.	Fault	Type	Description	Recommendation
f042	Phase UW Short	2	Excessive current has been detected between these two output terminals	Check the motor and drive output terminal wiring for a short circuit condition. Replace the drive if the fault cannot be cleared.
f043	Phase VW Short	2	Excessive current has been detected between these two output terminals	Check the motor and drive output terminal wiring for a short circuit condition. Replace the drive if the fault cannot be cleared.
f048	Parameters Defaulted		The drive was commanded to write default values to EEPROM.	Clear the fault or cycle power to the drive. Program the drive parameters as necessary.
f063	SW OverCurrent	1	Programmed value of parameter A098 (SW Current Trip) has been exceeded	Check load requirements and parameter A098 (SW Current Trip) setting.
f064	Drive Overload	2	Drive rating of 150% for 1 minute or 200% for 3 seconds has been exceeded.	Reduce load or extend Accel Time.
f070	Power Unit	2	Failure has been detected in the drive power section	Cycle power. Replace the drive if fault cannot be cleared.
f071	Net Loss		The communication network has failed	Cycle power Check communications cabling Check network adaptor setting Check external network status.
f080	SVC Autotune		The autotune function was either cancelled by the user or has failed.	Restart procedure.
f081	Comm Loss	2	RS485 (DSI) port stopped communicating.	If the adaptor was not intentionally disconnected, check the wiring to the port. If necessary, replace the wiring, port expander, adaptors or complete drive.
f100	Parameter Checksum	2	The checksum read from the board does not match the checksum calculated.	Set parameter P041 (Reset to Defaults) to option 1 "Reset Defaults"
f122	I/O Board Failure	2	Failure has been detected in the drive control and I/O section	Cycle power Replace the drive if the fault cannot be cleared.

8.5 Motor Drive Control

8.5.1 Servo System - Overview

The program in the CPU Processor (1) determines the actions to be taken by the servo motors in the machine. The CPU Processor (1) communicates with the servo control module, called the Sercos module (2) through the backplane of the Logic Control Chassis (3). The Sercos module (2) communicates with the Servo rack (4) via the SERCOS optical fibre SERCOS network (5) and the SERCOS network (6).

The Servo rack (4) contains one Integrated Axis Modules (7) and a number of Axis Modules (8).

Each of the Integrated Axis Modules (7) and Axis Modules (8) controls one servo motor.

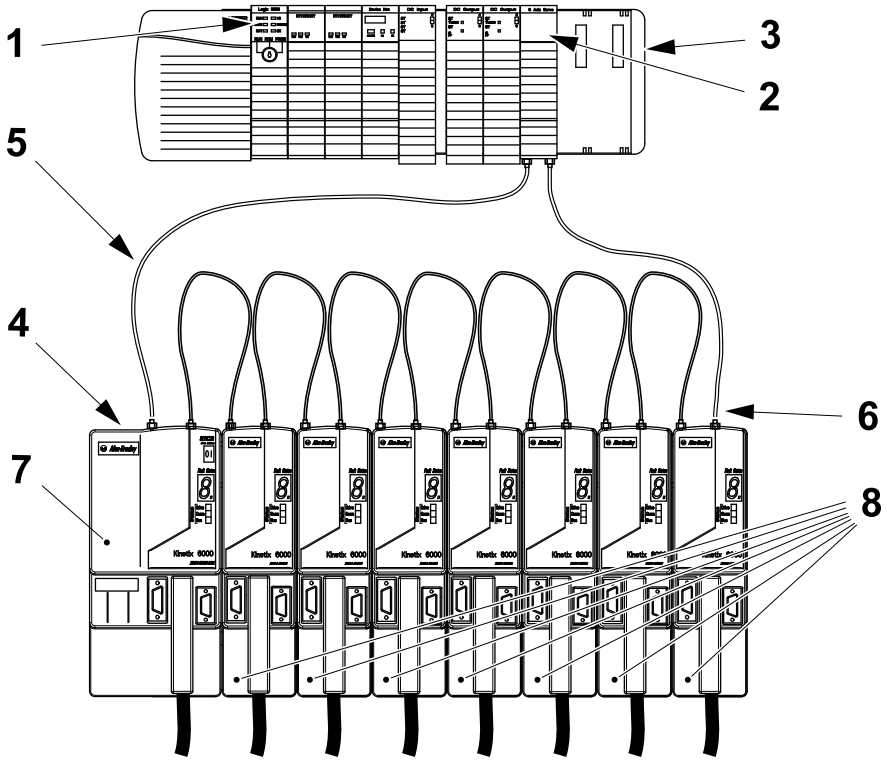

1 CPU Processor
2 Sercos module
3 Logic Control Chassis
4 Servo rack
5 SERCOS network
6 SERCOS network
7 Integrated Axis Module
8 Axis Module

(Cont'd)

(Cont'd)

The SERCOS module (2) and the servo drives (IAM and AM) Integrated Axis Modules (7) and Axis Modules (8) are connected to form a ring with the Tx port (9) of one module being connected to the Rx port (10) of the next.

The SERCOS module (2), the IAM (7) and the AM (8) transmit data from the Tx port (9) and receive data on the Rx port (10). The ports are located on top of the servo drives (IAM and AM) Integrated Axis Modules (7) and Axis Modules (8) , and on the bottom of the Sercos module (2) . The ports are clearly marked on the modules.

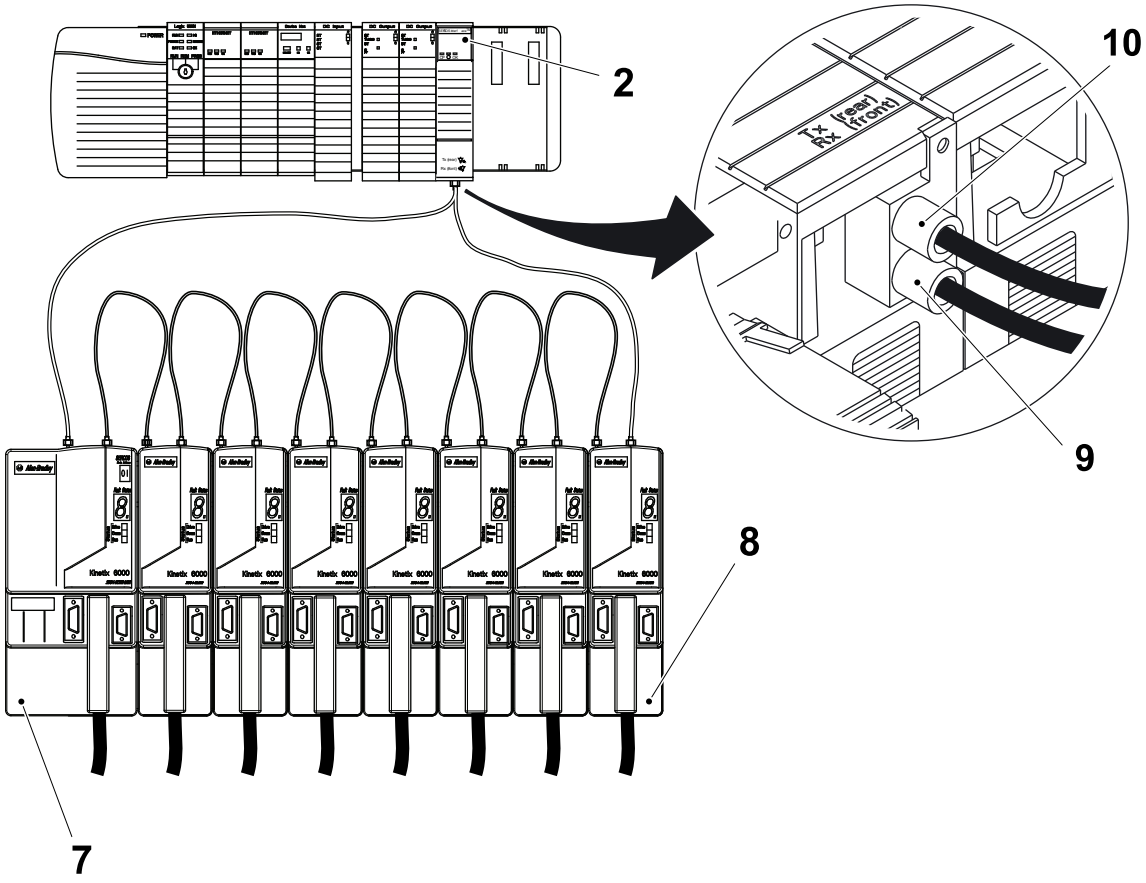

2 Sercos module
7 Integrated Axis Module
8 Axis Module
9 Tx port
10 Rx port

(Cont'd)

(Cont'd)

Note! Normally the AC voltages supplied to this machine are at 50Hz.

The Integrated Axis Modules (7) receives a 440V, 3 Phase, AC supply and a single phase 220 V .

The two supplies are distributed via the backplane of the servo rack to the Axis Modules (8) .

The drive power for a Servo drive motor (12) is provided through a power cable (13) and the motor position feedback is sent to its driver through the motor position feedback cable (14) .

The power connector (15) and the feedback connector (16) are not interchangeable so there is no possibility of an incorrect connection.

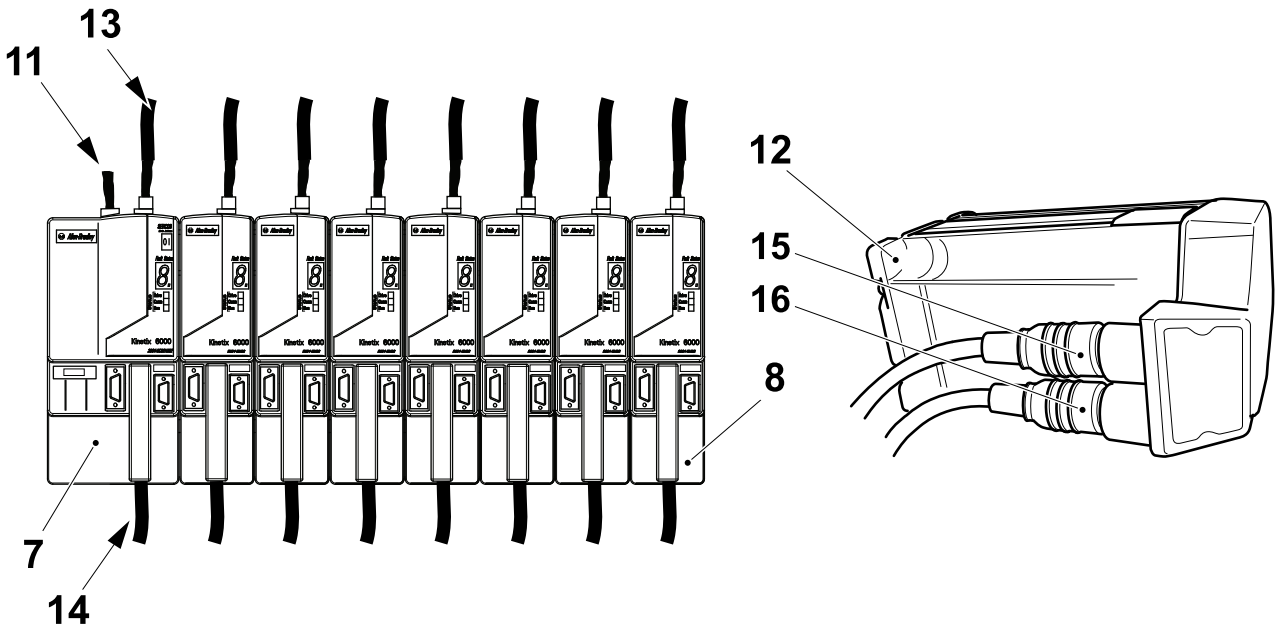

7 Integrated Axis Module
8 Axis Module
11 AC Supply
12 Servo drive motor
13 Power cable
14 Motor position feedback cable
15 Power connector
16 Feedback connector

8.5.2 Servo System - Sercos Module

8.5.2-1 Sercos Module - Description

Machine Status	Electrical supply disconnecting device in position I (ON)
SPC Reference	662911-0300

The SERCOS Module (1) is located in the Control Logix Chassis. On the input side, the SERCOS Module (1), communicates with the PLC via the backplane of the Control Logix Chassis. On the output side it communicates, via the SERCOS Net, with the Servo Drivers.

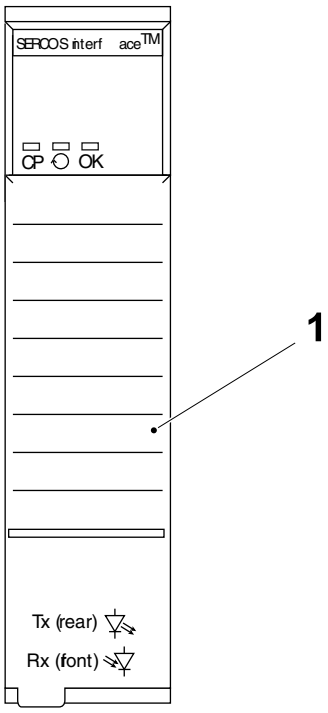

1 SERCOS Module

(Cont'd)

(Cont'd)

Status indicators are provided to report the status of the module and the SERCOS Net.

After a SERCOS Module (1) has been changed, the firmware in the module should be checked to see if it has the correct version and revision state. See 8.2.2-7 Install the ControlFlash Application Firmware Library.

For SERCOS module troubleshooting information, see 8.3.3 Distributed I/O and DeviceNet - Troubleshooting and 8.3.3-2 Troubleshooting - DeviceNet Error Indications and Messages on DeviceNet Scanner (Node 0).

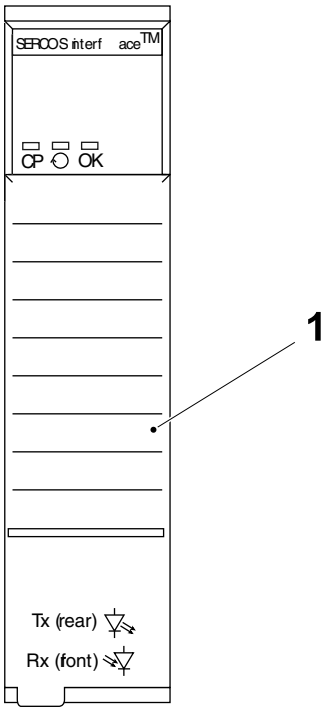

1 SERCOS Module

8.5.2-2 Sercos Module - Change

Machine Status	Electrical supply disconnecting device in position O (OFF)
SPC Reference	2833407-0300

Preparation

Before changing the Sercos module:

- Use the RSLinx Classic program to verify and record the firmware version of the existing Sercos module.
- Use the Flow Chart of Procedures for Changing the Sercos Module below to determine which procedures must be performed and their correct sequence.

Flow Chart of Procedures for Changing the Sercos Module

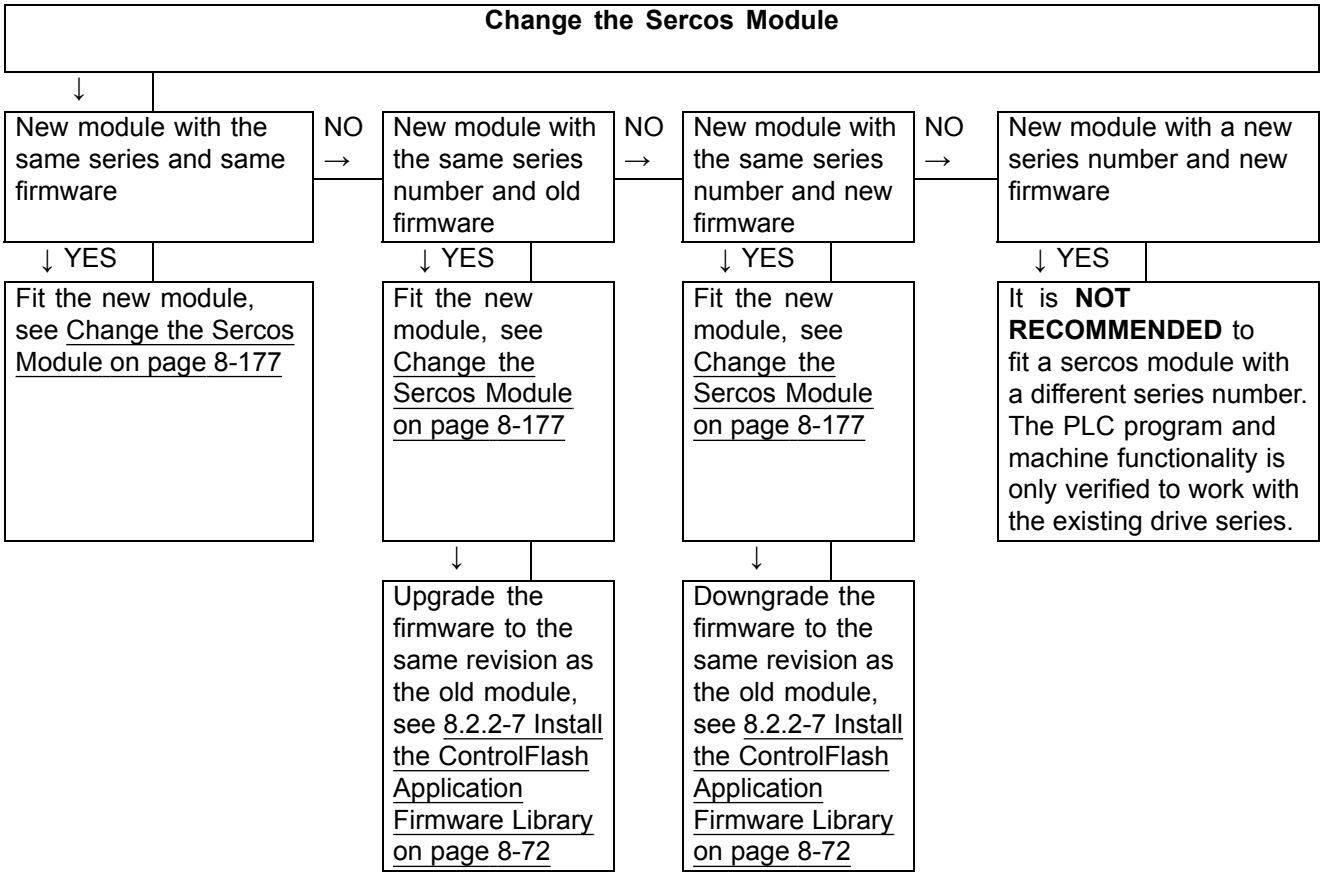

(Cont'd)

(Cont'd)

Change the Sercos Module

a) Mark the Receive connector, Rx (1) and the Transmit connector, Tx (2) and disconnect the connectors from the Sercos module (3).

b) Push in and hold the top and bottom Locking tab (4) on the Sercos module (3).

c) Pull out the Sercos module (3).

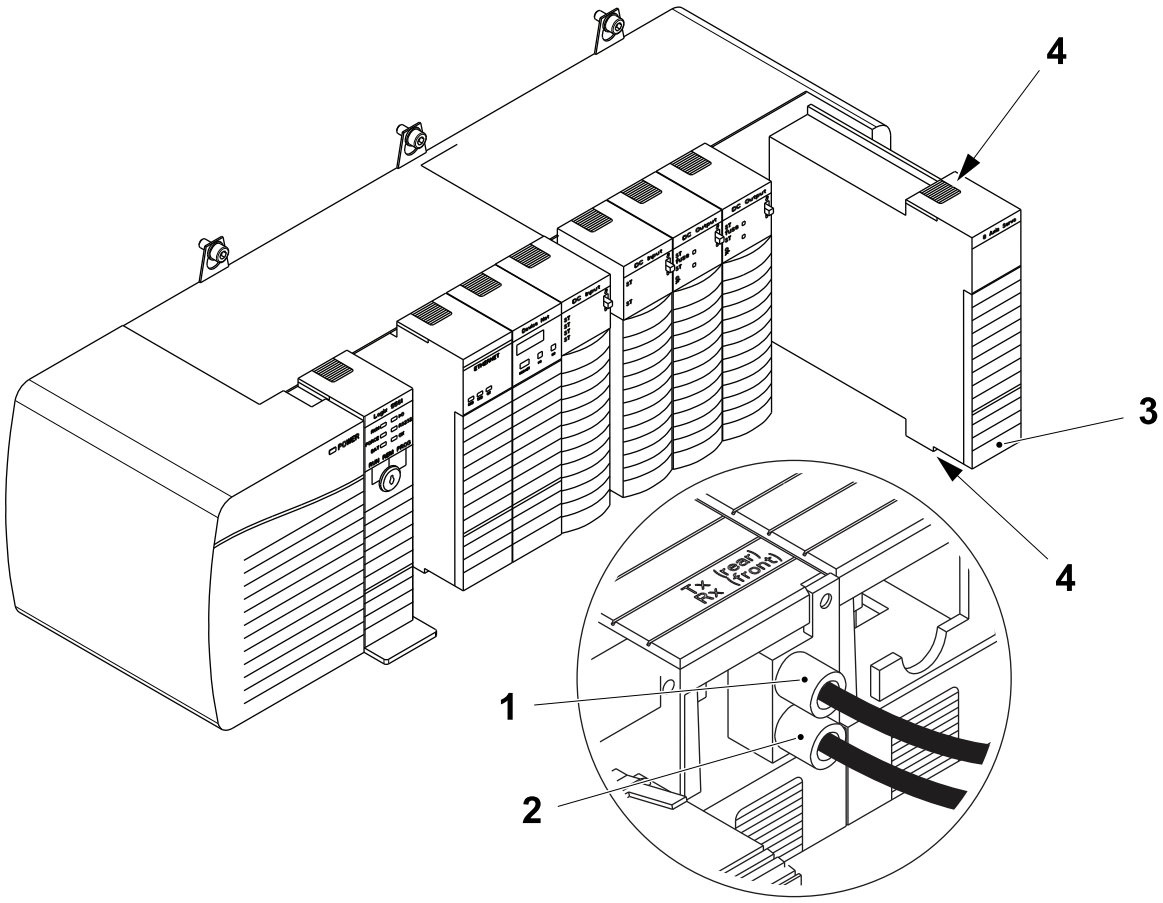

1 Receive connector, Rx
2 Transmit connector, Tx
3 Sercos module
4 Locking tab

(Cont'd)

(Cont'd)

d) Align the new Sercos module (3) with the top and the bottom guides in the chassis.

e) Slide the Sercos module (3) into the chassis. Make sure it is flush with the other modules and the top and bottom latches are engaged.

f) Connect the Receive connector, Rx (1) and the Transmit connector, Tx (2) to the Sercos module (3) .

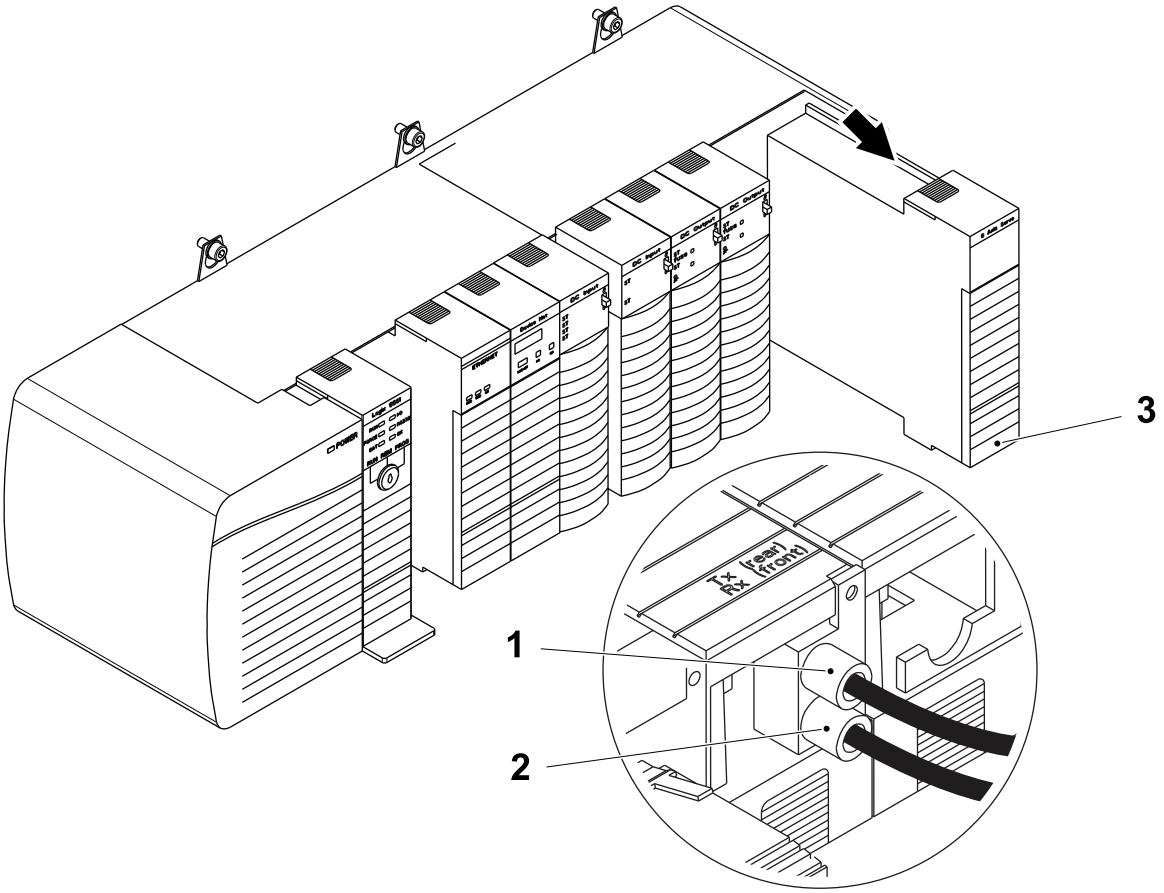

1 Receive connector, Rx
2 Transmit connector, Tx
3 Sercos module

8.5.3 Servo Drive

8.5.3-1 Servo Drive - Description

Machine Status	Electrical supply disconnecting device in position I (ON)
SPC Reference	662911-0300

Integrated Axis Module (IAM)

The Integrated Axis Module (1) receives drive data from the SERCOS module via the SERCOS net. It also receives feedback data from the servo drive motor it controls.

Status indicators and an alphanumeric display are provided to report the status of the module and the SERCOS Net.

The Integrated Axis Module (1) is assigned the Node number 1.

After the Integrated Axis Module (1) has been changed, do the following:

- set the Node address, see 8.5.3-2 Servo Drive - Change Drive
- set the baudrate and the optical power, see 8.5.3-3 Servo Drive - Set Baud Rate
- download the firmware, see 8.2.2-7 Install the ControlFlash Application Firmware Library.

For troubleshooting information, see 8.3.3 Distributed I/O and DeviceNet - Troubleshooting and 8.3.3-2 Troubleshooting - DeviceNet Error Indications and Messages on DeviceNet Scanner (Node 0).

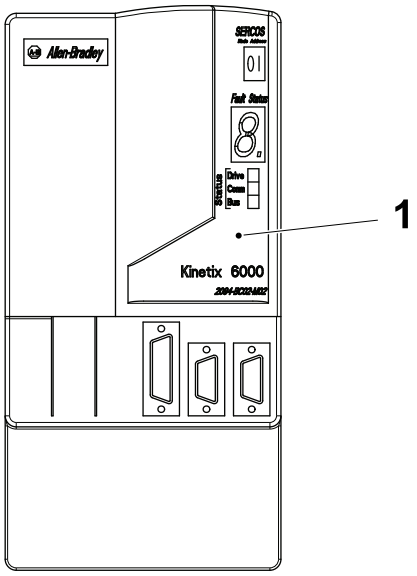

1 Integrated Axis Module

(Cont'd)

(Cont'd)

Axis Module (AM) Description

The Axis Module (1) receives drive data from the SERCOS module via the SERCOS net. It also receives feedback data from the servo drive motor it controls.

Status indicators and an alphanumeric display are provided to report the status of the module and the SERCOS Net.

Each servo drive has a node number which is determined by the base node number set on the IAM and a second digit which is determined by the rack-slot the drive is located in.

The Axis Module (1) receives AC and DC supplies from the backplane of the servo rack.

After the Axis Module (1) has been changed, no settings are required.

For troubleshooting information, see 8.3.3 Distributed I/O and DeviceNet - Troubleshooting and 8.3.3-2 Troubleshooting - DeviceNet Error Indications and Messages on DeviceNet Scanner (Node 0).

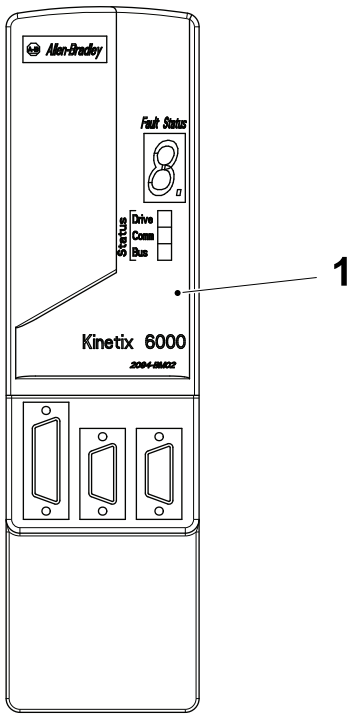

1 Axis Module

(Cont'd)

(Cont'd)

Servo Motor

A Servo motor (1) receives power from an Axis Module. This can be an Axis Module or the Integrated Axis Module. It provides position feedback data to the same Axis Module.

The Power connector (2) and the Feedback connector (3) are not interchangeable so there is no possibility of an incorrect connection.

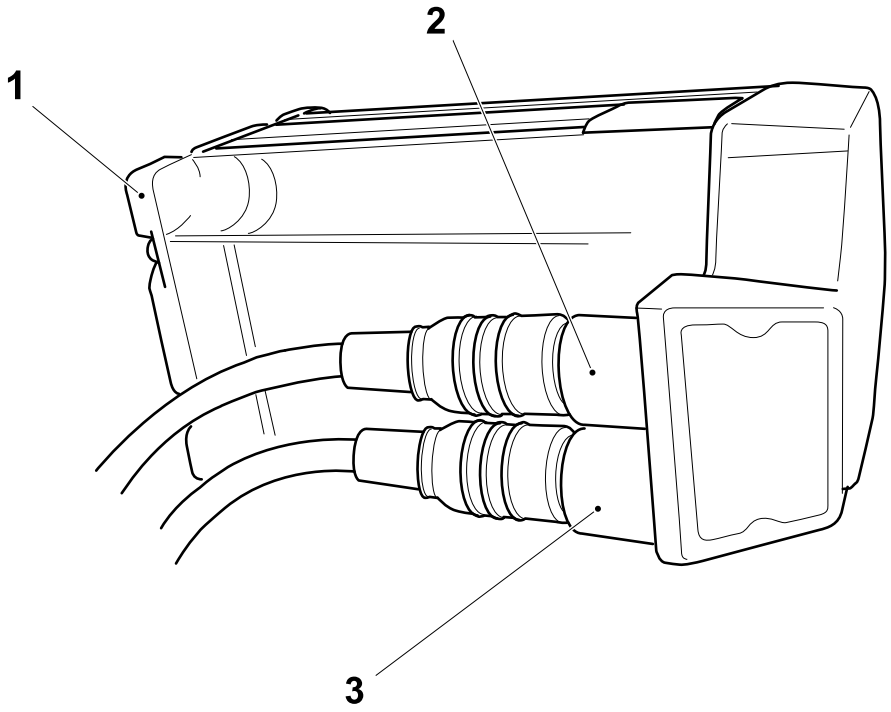

1 Servo motor
2 Power connector
3 Feedback connector

8.5.3-2 Servo Drive - Change Drive

Machine Status	Electrical supply disconnecting device in position O (OFF)
SPC Reference	662950-0300

Remove Drive

CAUTION

Risk of electric shock

Allow 5 minutes for the unit to discharge.

a) Make sure that all control and input power has been removed from the servo system. Wait five minutes for the DC bus to completely discharge before proceeding.

b) Mark and record the position of all connectors from the servo drive and then remove the connectors.

c) Use a screwdriver to remove the motor cable (1) from the cable shield clamp (2).

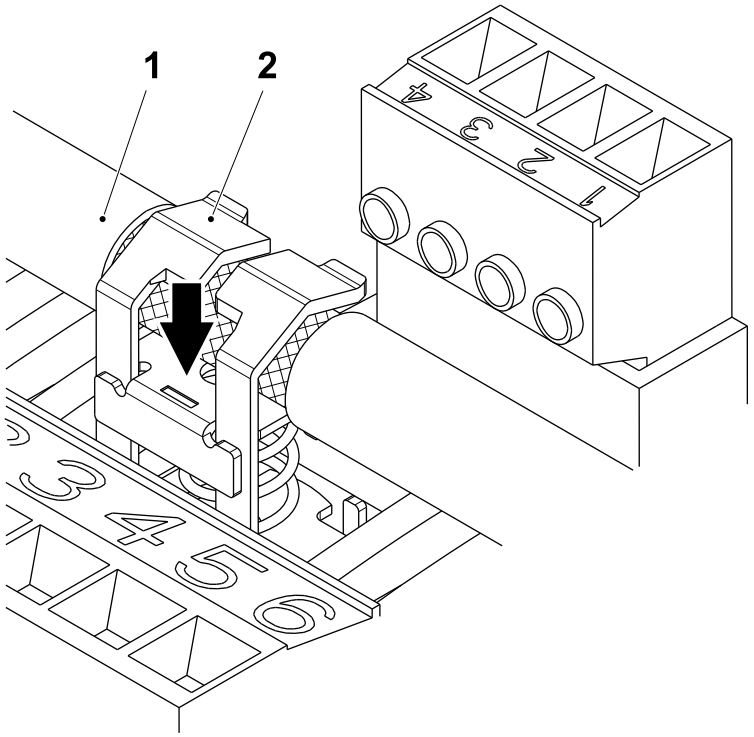

1 Motor cable
2 Clamp

(Cont'd)

(Cont'd)

d) Loosen the screw (3).

e) Grip the top and bottom of the servo drive (4) and gently pull it away from the connectors enough to clear the guide pin (5) (the servo drive will pivot on the top bracket). Lift the bracket out of the power rail slot (6) and remove the servo drive from the power rail.

f) If the servo drive to be changed is an IAM module, record the Node address (7) and Baude rate (8) settings.

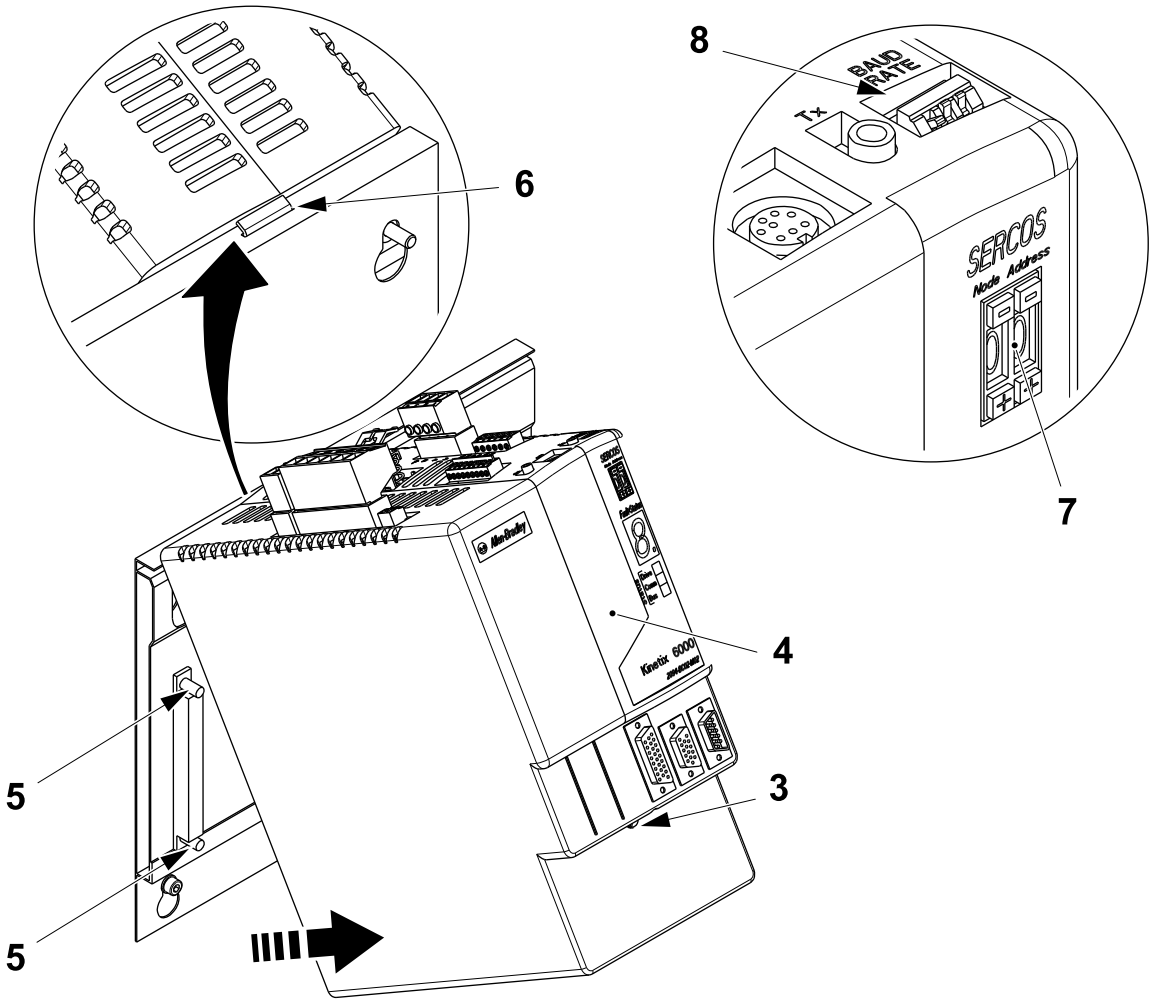

3 Screw
4 Servo drive
5 Guide pin
6 Power rail slot
7 Node address
8 Baude rate

(Cont'd)

(Cont'd)

Change Power Rail

CAUTION
Equipment damage.
To avoid damage to the power rail (1) during installation, do not remove the protective boots until the servo drive for each slot is ready for mounting.

a) Disconnect all power from the power rail (1) servo drives and remove all servo drives from the power rail (1).

b) Disconnect the braided ground strap (2) from the grounding stud (3).

c) Loosen the mounting bolts.

d) Lift the power rail (1) up and off the mounting bolts.

e) Align the replacement power rail (1) over the existing mounting bolts.

f) Tighten the mounting bolts.

g) Connect the braided ground strap (2) to the power rail grounding stud (3).

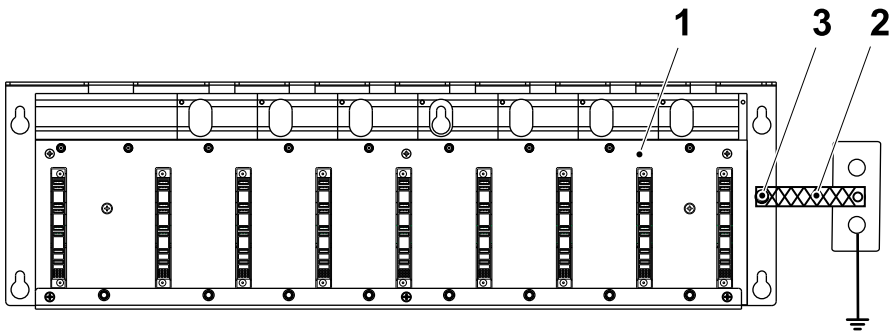

1 Power rail
2 Braided ground strap
3 Grounding stud

(Cont'd)

(Cont'd)

Fit New Servo Drive

CAUTION
Risk of damage to the equipment.
Make sure the guide pins (1) are correctly seated.

a) Attach the new servo drive mounting bracket (2) to the slot (3) in the power rail (4).

Note! The IAM has two power rail connectors and guide pins (1), all other servo drives have only one connector and one guide pins (1).

b) Align the guide pins (1) on the power rail (4) with the guide pin holes in the back of the servo drive (5).

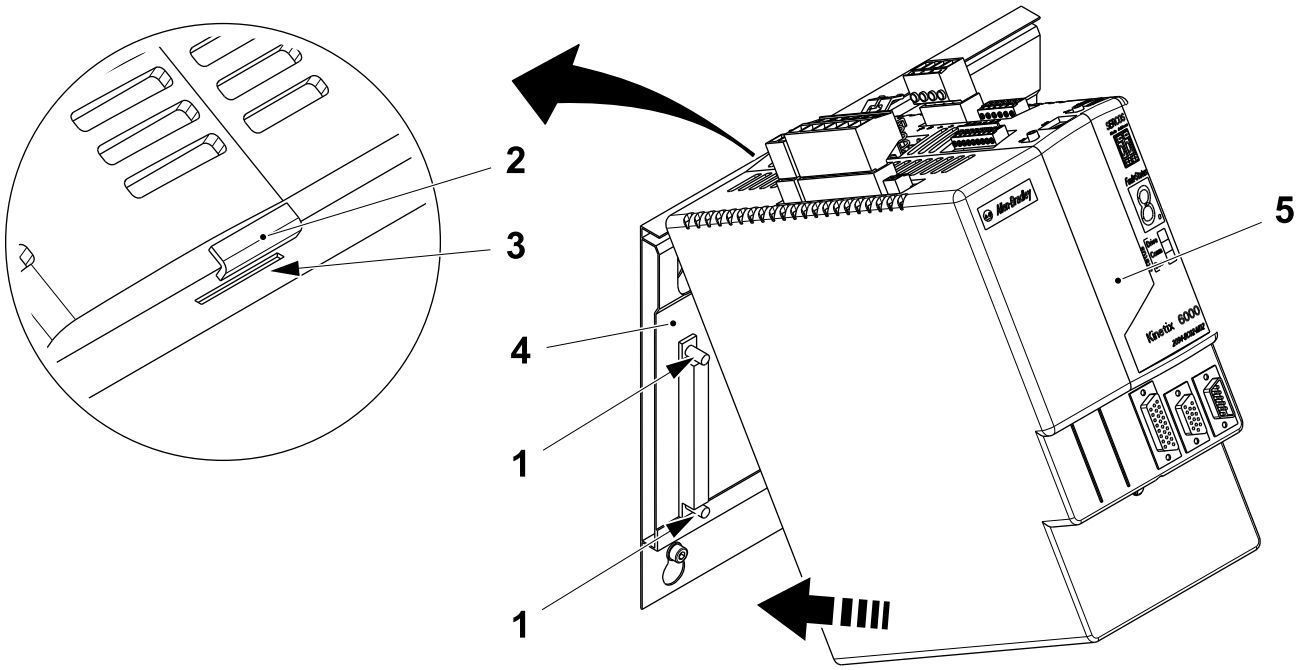

1 Guide pin
2 Mounting bracket
3 Slot
4 Power rail
5 Servo drive

(Cont'd)

(Cont'd)

c) Tighten the screw (6) to a torque of 2.26 Nm.

d) If the servo drive is an IAM, set the node address (7) and the baud rate (8) according to the setting recorded previously.

e) Connect the servo drive connectors and apply power to the system.

f) Check that the system is operating properly, see 8.5.4 Servo System Troubleshooting.

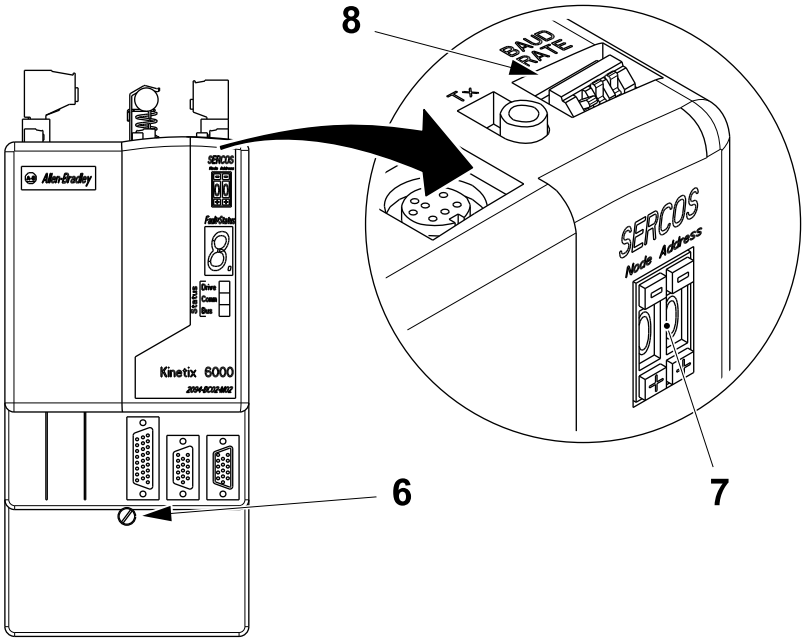

6 Screw
7 Node address
8 Baud rate

8.5.3-3 Servo Drive - Set Baud Rate

Machine Status	Electrical supply disconnecting device in position O (OFF)
SPC Reference	662911-0300

Use the DIP switches (1) , 1 to 3, to set the baudrate and the optical power level according to the table below.

Setting	Dip switch 1	Dip switch 2	Dip switch 3	Value
Optical Power Level	on			high
Baudrate		on	off	8M

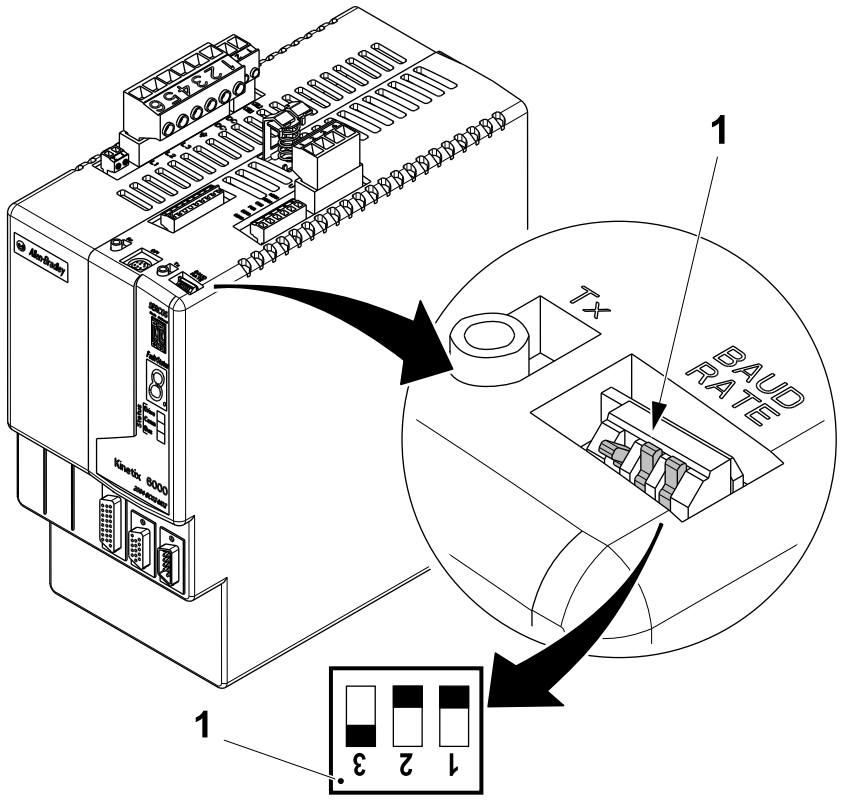

1 DIP switch

8.5.4 Servo System Troubleshooting

8.5.4-1 Troubleshooting - General

Machine Status	Electrical supply disconnecting device in position I (ON)
SPC Reference	662911-0300

If an error occurs on the SERCOSNet, this will be indicated by the appearance of the following sercosNet error icon (1) and the sercosNet error message (2) on the TPOP.

To continue with troubleshooting, see 8.5.4-2 Troubleshooting - SERCOS Net Error Indication and Error Codes on the Integrated Axis Module and Axis Modules.

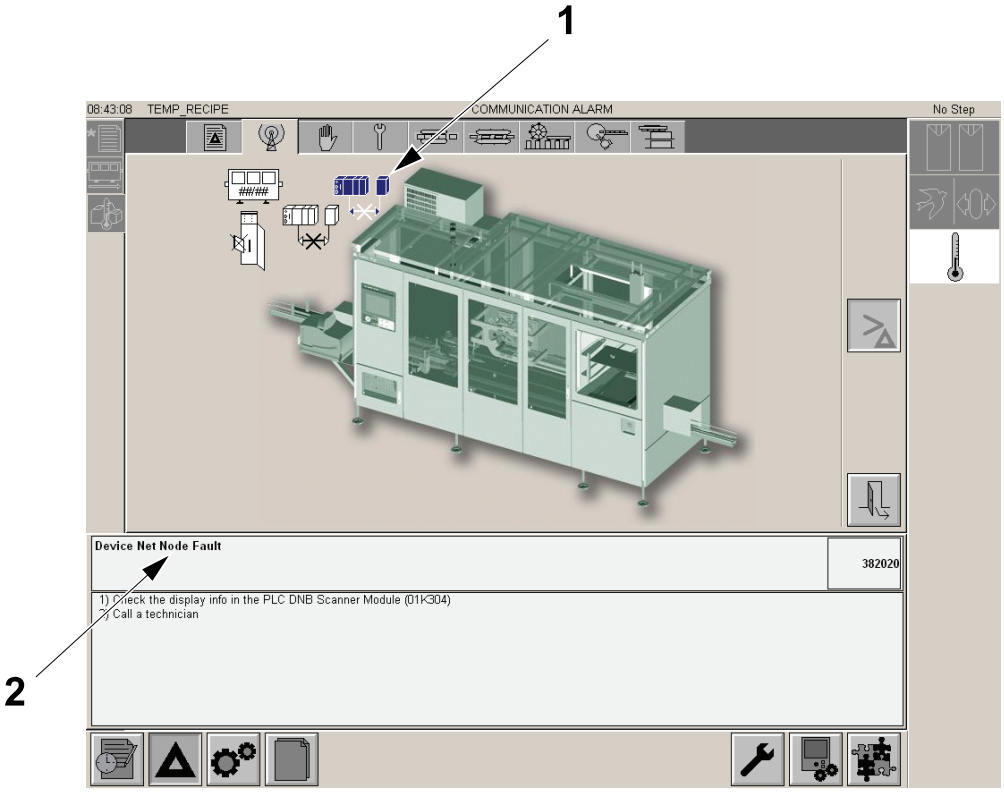

1 SercosNet error icon
2 SercosNet error message

8.5.4-2 Troubleshooting - SERCOS Net Error Indication and Error Codes on the Integrated Axis Module and Axis Modules

Machine Status	Electrical supply disconnecting device in position I (ON)
SPC Reference	662911-0300

To locate the source of the error and then find the cause, proceed as follows:

Note! The small control power LED (1) on the alphanumeric display (2) of the integrated Axis module (3) and the axis module (4), is the CONTROL POWER LED.

a) Note the status of the control power LED (1) if the control power LED (1) is OFF, check the power supplies at the servo rack. If the control power LED (1) is ON, continue with next step.

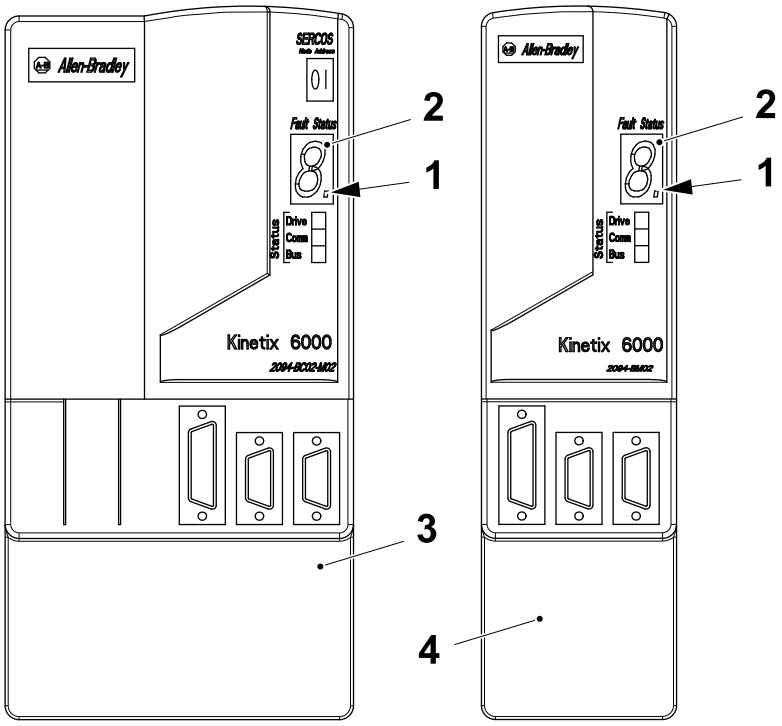

1 Control power LED
2 Alphanumeric display
3 Integrated Axis module
4 Axis module

(Cont'd)

(Cont'd)

b) Look at the status indicated by the alphanumeric display (2) and the Drive LED (5), Com LED (6) and Bus LED (7) on the integrated Axis module (3) and the axis module (4) .

c) Use the following tables to determine the cause of the error.

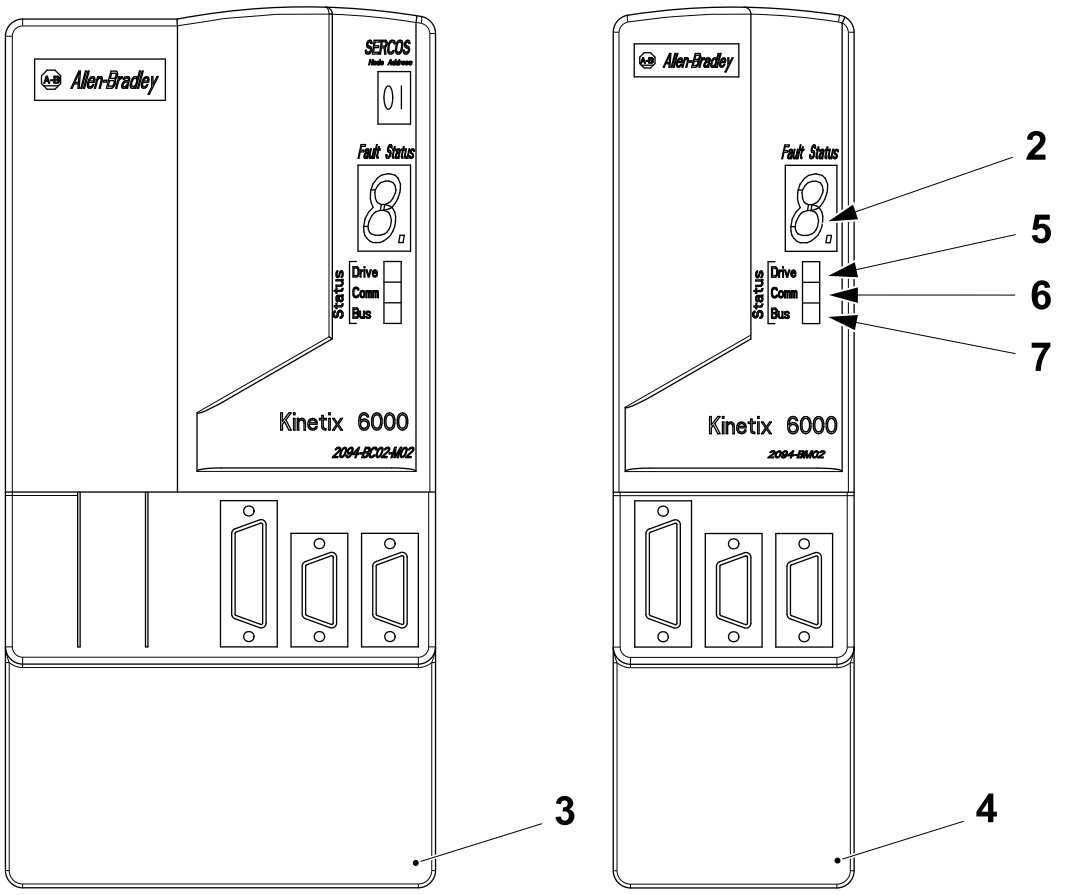

2 Alphanumeric display
3 Integrated Axis module
4 Axis module
5 Drive LED
6 Com LED
7 Bus LED

(Cont'd)

(Cont'd)

Troubleshooting Alphanumeric Display at Start-Up

At start-up, the alphanumeric display will toggle between the node address of each module and then display the operating mode i.e.

If	Is	Status	Do this
Integrated Axis Module or an axis module	Actively Cycling (Phase 0)	The drive is looking for a closed SERCOS ring. Wait for phase 1 or take corrective action to reach phase 1.	Check fibre optic connections
	Displaying a fixed 1 (Phase 1)	The drive is looking for active nodes. Wait for phase 2 or take corrective action to reach phase 2.	Check node addressing
	Displaying a fixed 2 (Phase2)	The drive is configuring nodes for communication. Wait for Phase 3 or take corrective action to reach phase 3.	Check program and drive configuration
	Displaying a fixed 3 (Phase 3)	The drive is configuring drive specific parameters. Wait for Phase 4 or take corrective action to reach phase 4.	Check motor catalogue against the selection (1)
	Displaying a fixed 4 (Phase 4)	The drive is configured and active.	Continue below
	Displaying an E followed by two numbers	Drive has an error.	Go to Troubleshooting IAM/AM LED's on page 8-191

Diagnostic information can be obtained from the module by highlighting the module name in PSLogix 5000. A pseudo key failure often indicates that the motor selection does not match the motor installed.

Troubleshooting IAM/AM LED's

After start-up, observe the status of the **LED's** on the **IAM** and the **AM** modules:

(Cont'd)

(Cont'd)

Drive LED

Condition	Status	Action
off	Normal condition	Go to COMM LED table.
permanent red	Drive is faulted	Go to Troubleshooting IAM/AM LED's on page 8-191

COMM LED

Condition	Status	Action
flashing green	Establishing communication with network	Wait for a permanent green.
permanent green	Communication is ready.	Go to BUS STATUS LED table.
off	No ring present	Verify correct fibre optical cable connections. Replace any damaged or broken fibre optical connections.

BUS STATUS LED

Condition	Status	Action
permanent green	DC bus is present. Axis is enabled. No faults or failures.	Verify Hardware Enable Input (IOD-2) is open. Verify MSO instruction is not commanded in RSLogix 5000. Recycle power to module.
flashing green	Bus is running, axis is disabled (normal condition)	Go to SERCOS STATUS LED table. See SERCOS Module - Troubleshooting (8.5.4-3)
8.5.4-3 SERCOS Module - Troubleshooting on page 8-199off	DC Bus not present	Go to 8.5.4-2 Troubleshooting - SERCOS Net Error Indication and Error Codes on the Integrated Axis Module and Axis Modules on page 8-189

(Cont'd)

(Cont'd)

Troubleshooting IAM/AM Problems with no Error Codes

The following list of problematic symptoms with no error codes is designed to help resolve problems.

Power (PWR) indicator not ON	No AC power or auxiliary logic power.	Verify AC control power is applied to the Kinetix 6000.
	Internal power supply malfunction.	Call your Allen-Bradley representative to return module for repair.
Motor jumps when first enabled.	Motor wiring error.	Check motor wiring. Run Hookup test in RSLogix 5000.
	Incorrect motor chosen.	Verify the proper motor is selected.
Digital I/O not working correctly	I/O power supply disconnected.	Verify connections and I/O power source.

Troubleshooting IAM/AM Problems with Error Codes

When a fault is detected, the 7-segment LED will display an E followed by the flashing of the two-digit error code, one digit at a time. This is repeated until the problem is cleared.

Error code	Fault message RSLogix (HIM)	Problem or symptom	Possible cause(s)	Action/solution
E00	BusUndervoltage Fault (Blown fuse)	A blown fuse was detected on the inverter PCB.	Blown fuse.	Call your Allen-Bradley representative to return module for repair.
E04	Motor Overtemp Fault (Motor Overtemp)	Motor thermal switch tripped	High motor ambient temperature and/or excessive current.	Operate within (not above) the continuous torque rating for the ambient temperature (40°C maximum). Lower ambient temperature, increase motor cooling.
			Motor wiring error.	Check motor wiring at MF connector on the IAM/AM.
			Incorrect motor selection.	Verify the proper motor has been selected.
E05	Drive Overcurrent Fault (Power Fault)	Self-protection of the Intelligent Power Module (IPM) is indicating a major power related fault condition.	Motor cables shorted.	Verify continuity of motor power cable and connector.
			Motor winding shorted internally.	Disconnect motor power cables from the motor. If the motor is difficult to turn by hand, it may need to be replaced.
			Kinetix 6000 temperature too high.	Check for clogged vents or defective fan. Ensure cooling is not restricted by insufficient space around the unit.

(Cont'd)

(Cont'd)

Error code	Fault message RSLogix (HIM)	Problem or symptom	Possible cause(s)	Action/solution
E05	Drive Overcurrent Fault (Power Fault)	Self-protection of the Intelligent Power Module (IPM) is indicating a major power related fault condition.	Operation above continuous power rating and/or product environmental ratings.	Verify ambient temperature is not too high. Operate within the continuous power rating. Reduce acceleration rates.
			Kinetix 6000 has a short circuit, overcurrent, or failed component.	Remove all power and motor connections, and preform a continuity check from the DC bus to the U, V, and W motor outputs. If a continuity exists, check for wire fibres between terminals, or send drive in for repair.
E06	HardOvertravel Fault (+/- Hard Overtravel)	Axis moved beyond the physical travel limits in the positive/negative direction.	Dedicated overtravel input is inactive.	Check wiring. Verify motion profile. Verify axis configuration in software.
E07	MotFeedback Fault (Motor Feedback Loss)	The feedback wiring is open, shorted, or missing.		Check motor encoder wiring. Run Hookup test in RSLogix 5000.
E09	BusUndervoltage Fault (Bus Under Voltage)	With three-phase power present, the DC bus voltage is below limits.	DC bus voltage for 460V system is below 275V DC bus voltage for 230V system is below 137V	Verify voltage level of the incoming AC power. Check AC power source for glitches or line drop. Install an uninterruptible power supply (UPS) on your AC input.
E10	DriveOvervoltage Fault (Bus Overvoltage)	The DC bus voltage is above limits.	Excessive regeneration of power. When the motor is driven by an external mechanical power source, it may regenerate too much peak energy through the Kinetix 6000's power supply. The system faults to save itself from an overload.	Change the deceleration or motion profile. Use a larger system (motor and Kinetix 6000). Install shunt module.
			DC bus voltage for 460V system is over 820V DC bus voltage for 230V system is over 410V	Verify input is within specifications.

(Cont'd)

(Cont'd)

Error code	Fault message RSLogix (HIM)	Problem or symptom	Possible cause(s)	Action/solution
E11	MotFeedback Fault (Illegal Hall State)	State of Hall feedback inputs is incorrect.	Bad connections.	Verify the Hall wiring at the MF connector on the IAM/AM. Verify 5V power supply to the encoder.
E16	Softovertravel Fault (+/- Software Overtravel)	Axis position exceeded maximum software setting.		Verify motion profile. Verify overtravel settings are appropriate.
E18	OverSpeed Fault (Overspeed Fault)	Motor speed has exceeded 150% of maximum rated speed. The 100% trip point is dedicated by the lesser of the the user velocity limits or the motor rated base speed.		Check cables for noise. Check tuning.
E19	PositionError Fault (Follow Error)	Position error limit was exceeded.		Increase the feed forward gain. Increase following error limit or time. Check position loop tuning. Verify sizing of system. Verify mechanical integrity of system within specification limits.
E20	MotFeedback Fault (Mtr Fdbk AQB)	Motor Encoder State Error	The motor encoder encountered an illegal transition.	Use shielded cables with twisted pair wires. Route the feedback away from potential noise sources. Check the system grounds. Replace the motor/encoder.
E21	AuxFeedback Fault (Aux Feedback Comm)	Communication was not established with an intelligent encoder.		Verify auxiliary encoder wiring.
E30	MotFeedback Fault (Motor Feedback Comm)	Communication was not established with an intelligent encoder.		Verify motor selection. Verify the motor supports automatic identification. Verify motor encoder wiring.
E34	GroundShort Fault (Ground Fault)	Excessive ground current in the converter was detected.	Wiring error.	Check motor power wiring. Check input power wiring (refer to Kinetix 6000 Installation Manual, publication 2094-IN001x-EN-P, regarding use of isolation transformer).
			Motor internal ground short.	Replace motor.
			Internal malfunction.	Disconnect motor power cable from drive and enable drive with current limit set to 0. If fault clears, then a wiring error or motor internal problem exists. If fault remains, call your A-B representative.
E35	DriveUndervoltage Fault (Precharge Fault)	Converter pre-charge cycle failed.	Low AC input voltage.	Check input AC voltage on all phases.
			Internal malfunction.	Call your A-B representative.

(Cont'd)

(Cont'd)

Error code	Fault message RSLogix (HIM)	Problem or symptom	Possible cause(s)	Action/solution
E36	DriveOvertemp Fault (System Overtemperature)	Converter thermal switch tripped.	Excessive heat exists in the power circuitry.	Reduce acceleration rates. Reduce duty cycle (ON/OFF) of commanded motion. Increase time permitted for motion. Use larger Kinetix 6000 converter. Check for clogged vents or defective fan. Ensure cooling is not restricted by insufficient space around the unit.
E37	PowerPhaseLoss Fault	One or more phases of the input AC power is missing. Axis was enabled when main (3-phase) power was removed. Expect the following symptoms with: Firmware v11: Shutdown, CED relay opens, motor coasts Firmware v12: Shutdown, motor stops		Check input AC voltage on all phases. Disable axis before removing power. Clear fault.
E38	SERCOSFault (SERCOS Ring Flt)	The SERCOS ring is not active after being active and operational.	Cable disconnected.	Check that the fibre cable is present and connected properly.
E39	DriveHardFault (Self Sense Flt)	Control hardware fault detected.	Motion required for self-sensing strartup commutation was obstructed.	Verify that there are no impediments to motion at startup, such as hard limits. Increase self-sensing current if high friction or load conditions exist. Check motor or encoder wiring using wiring diagnostics.
E43	DriveEnableInput (Drive Enable Flt)	Missing Drive Enable Input Signal	An attempt was made to enable the axis through software while the Drive Enable hardware input was inactive. The Drive Enable input transitioned from active to inactive while the axis was enabled.	Disable the Drive Enable Input fault. Verify that Drive Enable hardware input is active whenever the drive is enabled through software.
E50	SERCOSFault (Sercos Same ADDR)	Duplicate node address detected on SERCOS ring.		Verify that each SERCOS drive is assigned an unique node address.
E60	DriveHardFault (Unknown Axis)	Illegal ID bits detected.		Replace the module.
E61	AuxFeedback Fault (Aux Fdbk AQB)	Auxiliary Encoder State Error.	The auxiliary encoder encountered an illegal transition.	Use shielded cables with twisted pair wires. Route the feedback away from potential noise sources. Check the system grounds. Replace the motor/encoder..

(Cont'd)

(Cont'd)

Error code	Fault message RSLogix (HIM)	Problem or symptom	Possible cause(s)	Action/solution
E62	AuxFeedback Fault (Aux Fdbk Loss)	The feedback wiring is open, shorted, or missing.		Check the motor feedback cable connectors/wiring to the IAM/AM and motor.
E65	No Fault Message (condition indicated by on-screen message) (Hookup Fault)	Hookup procedure failed.	Motor or feedback device malfunction.	Check motor power/feedback wiring. Refer to on-screen message for resolution.
E66	No Fault Message (condition indicated by on-screen message) (Atune Flt)	Autotune procedure failed.	Motor or feedback device malfunction.	Check motor power/feedback wiring. Refer to on-screen message solution. Perform Hookup in RSLogix 5000. Consult RSLogix 5000 for help screen.
E67	DriveHard Fault (Task init)	Operation system failed.	Software initalisation fault detected due to hardware failure.	Cycle power. If fault persists, replace module.
E68	DriveHard Fault (SCANport (TM) Comm)	DPI communication failed.	The DPI device or cable is faulty.	Check DPI connections.
E69	HardDrive Fault (Objects init)	Non-volatile memory is corrupt due to control board hardware failure.		Load default parameters, save to non-volatile memory, and recycle power or reset the drive.
E70	DriveHard Fault (NV Mem Init)	Non-volatile memory is corrupt due to control board software error.		Load default parameters, save to non-volatile memory, and recycle power or reset the drive.
E71	DriveHard Fault (Memory Init)	RAM or flash memory validation failure.		Cycle power. If fault persists, replace module.
E72	DriveOvertemp Fault (Drive Overtemp)	Inverter thermal switch tripped.	The fan on the IAM or an AM failed.	Replace the failed module.
			The cabinet ambient temperature is above rating.	Check the cabinet temperature.
			The machine duty cycle requires an RMS current exceeding the continuous rating of the controller.	Change the command profile to reduce speed or increase time.
			The airflow access to the Kinetix 6000 is limited or blocked.	Check airflow and re-route cables away from the Kinetix 6000.
E73	GroundShort Fault (Backplane Comm)	Power rail CAN communications failed.		Check module for proper mount.
		Power rail connection shorted or open.		Check power rail and module for foreign objects.

(Cont'd)

(Cont'd)

		If the Sercos CP LED is:		Then the module status is:
E74	DriveOvercurrent Fault (BusOverCurrent)	DC link current exceeds rating.	Motor or transmission malfunction.	Check for proper motor sizing. Check/replace transmission device. Check/replace motor.
			IAM not properly sized.	Check for proper IAM sizing. Install larger kW rated IAM.
E75	DriveOvervoltage Fault (Shunt Time Out)	The IAM or AM has exceeded its shunt resistor continuous rating.		Use properly sized shunt or modify duty cycle of the application. System uses internal shunt for additional capacity.
E76	DriveHard Fault (Can Init)	DPI hardware initialisation fault detected.	Control board hardware failure.	Reset system. If fault persists, replace the module.
E77	DriveHard Fault (Module Mismatch)	Either 230V AM is installed on power rail with 460V IAM, or 460V AM is installed on power rail with 230V IAM.		Replace mismatched module.
E78	DriveHard Fault (SERCOS Init)	Control hardware fault detected.		Cycle power. If fault persists, replace module.
E79	Not applicable			
E80	Hardware Fault (CPLD FLT)	Control hardware fault detected.		Replace module.
All others	RESERVED			Call your local Allen-Bradley representative.

8.5.4-3 SERCOS Module - Troubleshooting

Machine Status	Electrical supply disconnecting device in position I (ON)
SPC Reference	2833407-0300

During power up, the module completes a self test that includes an indicator test. All LEDs go red for one second, green for one second, and off for one second.

To locate the source of an error and then find the cause, proceed as follows:

a) At the Control Logix Chassis in the electrical cabinet, note the status indicated by the SERCOS CP LED (1), the SERCOS ring LED (2) and the OK LED's (3) on the SERCOS Module (A01K3004).

b) Use the following tables to determine the cause of the error.

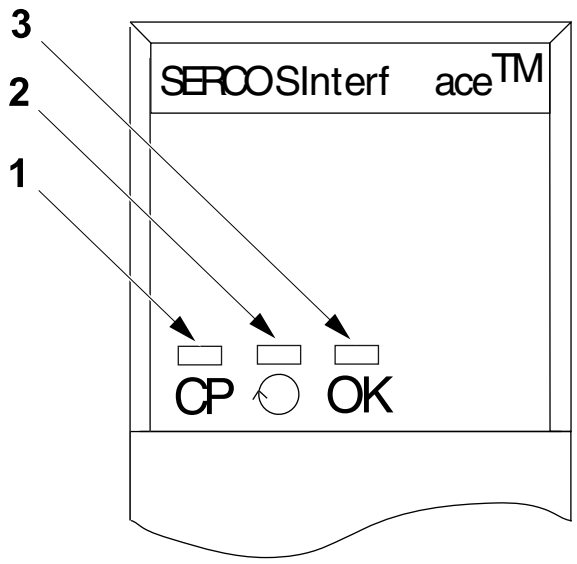

1 SERCOS CP LED
2 SERCOS ring LED
3 OK LED

(Cont'd)

(Cont'd)

Sercos CP (Communication Port) LED

If the Sercos CP LED is:	Then the module status is:
Solid Orange	In Phase -1: autobaud detection in progress.
Off	In Phase 0: looking for a closed ring.
Flashing Red	In Phase 1: looking for active nodes.
Alternating Red/Green	In Phase 2: configuring nodes for communication.
Flashing Green	In Phase 3: configuring device specific parameters
Solid Green	In Phase 4: configured and active.

Sercos Ring LED

If the Sercos Ring LED is:	Then the ring status is:	Take this action:
Solid Green	The ring, drive, and axes are configured and are actively communicating through to the nodes on the ring.	None
Flashing Red	The module has detected a setup or configuration fault with the ring.	Check your system setup and configuration as follows: - Ensure drive and axes addresses are correct. - Remove excess axes from ring. - Make sure application program has selected the proper Ring Cycle Period and Baud Rate.
Solid Red	The module has detected a hardware or installation fault with the ring.	Check your system hardware and installation as follows: - Make sure all cables are properly installed. - Make sure cable is of the correct type and length. - Make sure application program has configured the ring transmit level of the module to High when using specified cables. - Make sure the transmit levels of the drive are set appropriately. - Inspect cables for degradation. - Inspect drives for any faults and correct them.

(Cont'd)

(Cont'd)

If the Sercos Ring LED is:	Then the ring status is:	Take this action:
Off	The module has detected no ring data on its receiver or has not successfully completed phase 2.	Check your system and installation as follows: - Make sure all cables are properly installed - Inspect cable for degradation and breakage. - Inspect drives for faults.
Flashing Green	The ring, drive, or axes are not configured but, at least one has been identified.	Not a problem if the system has not been configured.If you are having trouble configuring the ring, drive, and axes: - Make sure that the application program is setup properly for the equipment in use.

OK LED

If the ok Ring LED is :	Then the ring status is:	Take this action:
Off	The module is not operating.	Apply chassis power. Verify the module is completely inserted into the chassis and backplane.
Flashing Green	The module has passed internal diagnostics, but has not established active communications.	None, if the module is not configured.
Steady Green	Data is being exchanged. The module is in the normal operating state.	None. The module is ready for action.
Flashing Red	A major recoverable failure has occurred. An NVS update is in progress.	If an NVS update is in progress, complete the NVS update. If an NVS update is not in progress: Reboot
Solid Red	A potential nonrecoverable fault has occurred.	Reboot the module. If the solid red persists, replace the module.

8.6 Safety System

8.6.1 Safety System - Description

The main component of the safety system is the Pluto Safety PLC (F09K0000). To increase the number of input and output possibilities, the main unit is assisted by two expansion relays (F09K0001 and F09K0003).

The pluto system monitors the:

- emergency stop buttons
- doors fitted with a safety switch
- covers fitted with a safety switch
- contactors for the ac motor driven units
- modules for the servo controlled units
- contactor for units using ac power.

When an emergency stop button is pushed, a door is opened or a cover is removed, an EMERGENCY STOP signal is sent to the system PLC Processor which takes the necessary actions to stop the motors in the machine.

When the emergency stop button is released, the door is closed or the cover is replaced, a reset is produced by the PLC Processor when it is triggered from the touch screen.

8.6.2 Pluto Maintenance

8.6.2-1 Pluto Maintenance - Connecting a PC to Pluto Module

Machine Status	Electrical supply disconnecting device in position I (ON)
Special Equipment	PC with Pluto Manager RS 232-C Communication Cable USB Communication Cable 90602-3870
SPC Reference	2839221-0200

Note! It is possible to connect the PC to the Pluto Module via RS-232 or via USB. Choose one of the two connections.

Connection via RS-232

To communicate with the main Pluto module, use the RS-232 communication cable (1) to connect the RS-232 connector (2) at the rear of a PC to the Pluto connector (3) at the front of the Pluto module.

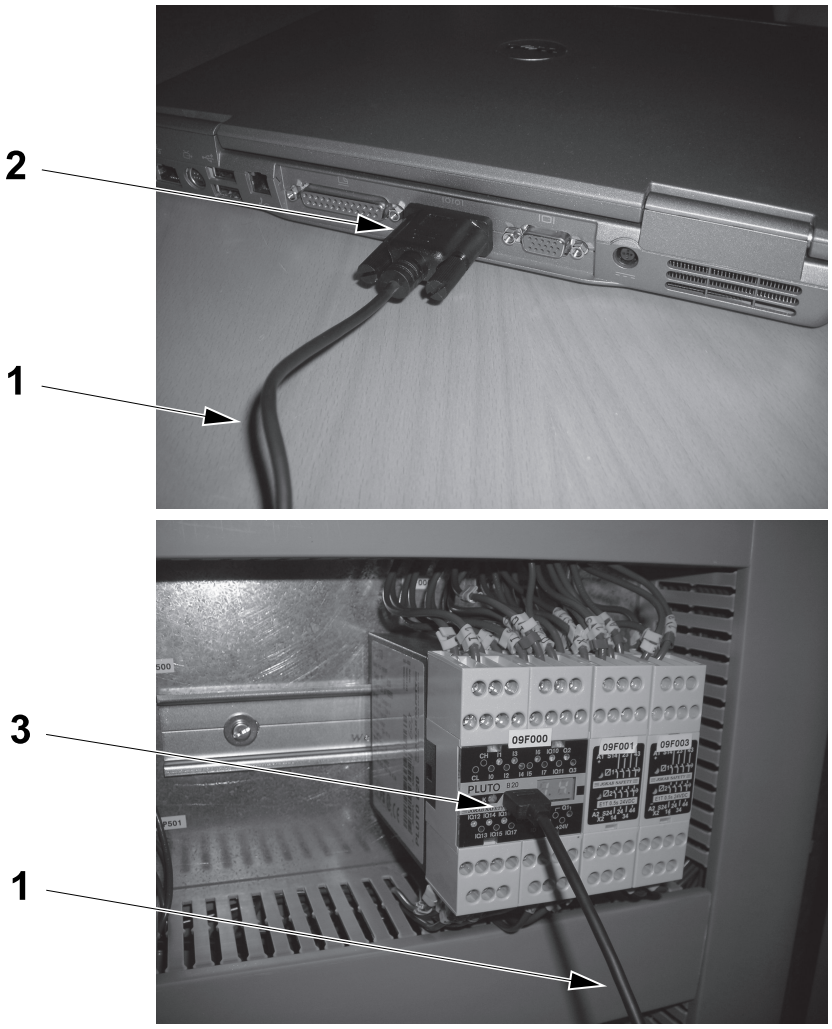

1 RS-232 communication cable
2 RS-232 connector
3 Pluto connector

(Cont'd)

(Cont'd)

Connection via USB

To communicate with the main Pluto module, use the USB communication cable (1) to connect the USB connector (2) at the rear of a PC to the Pluto connector (3) at the front of the Pluto module.

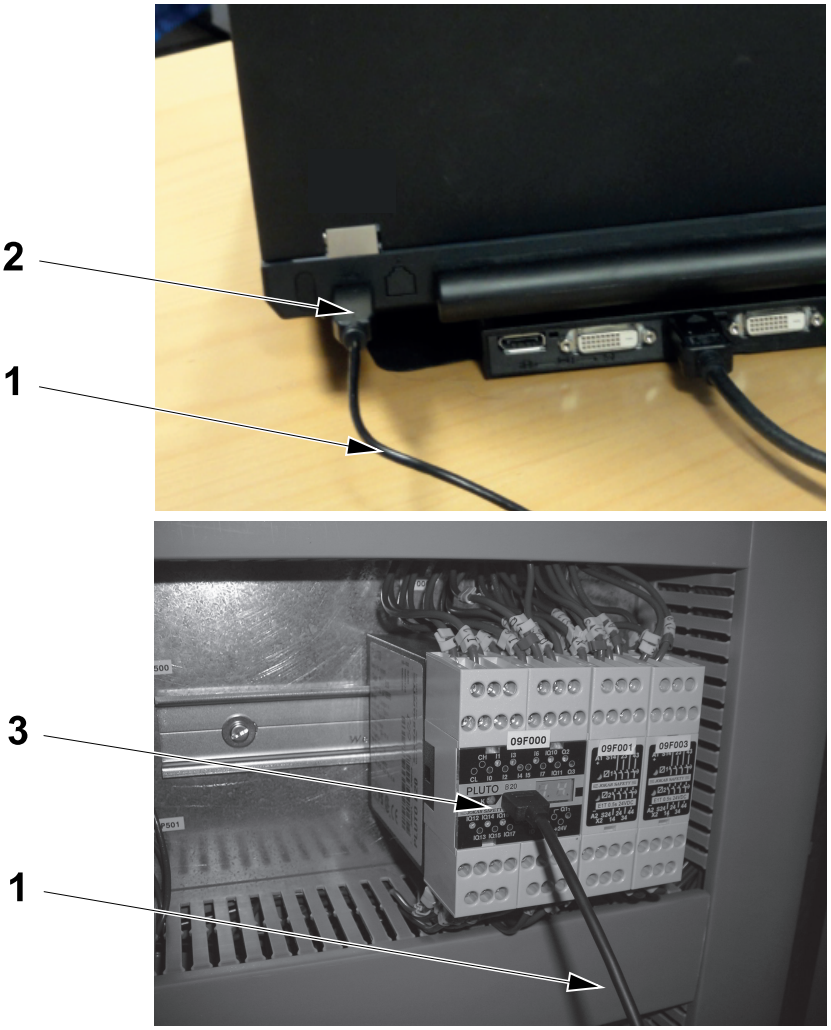

1 USB communication cable
2 USB connector
3 Pluto connector

(Cont'd)

(Cont'd)

USB Installation

Note! The following instruction is referred to a PC working with Window7 operating system.

a) Connect the pluto connector (1) to the Pluto device (2).

b) Connect the USB connector (3) to the PC (4).

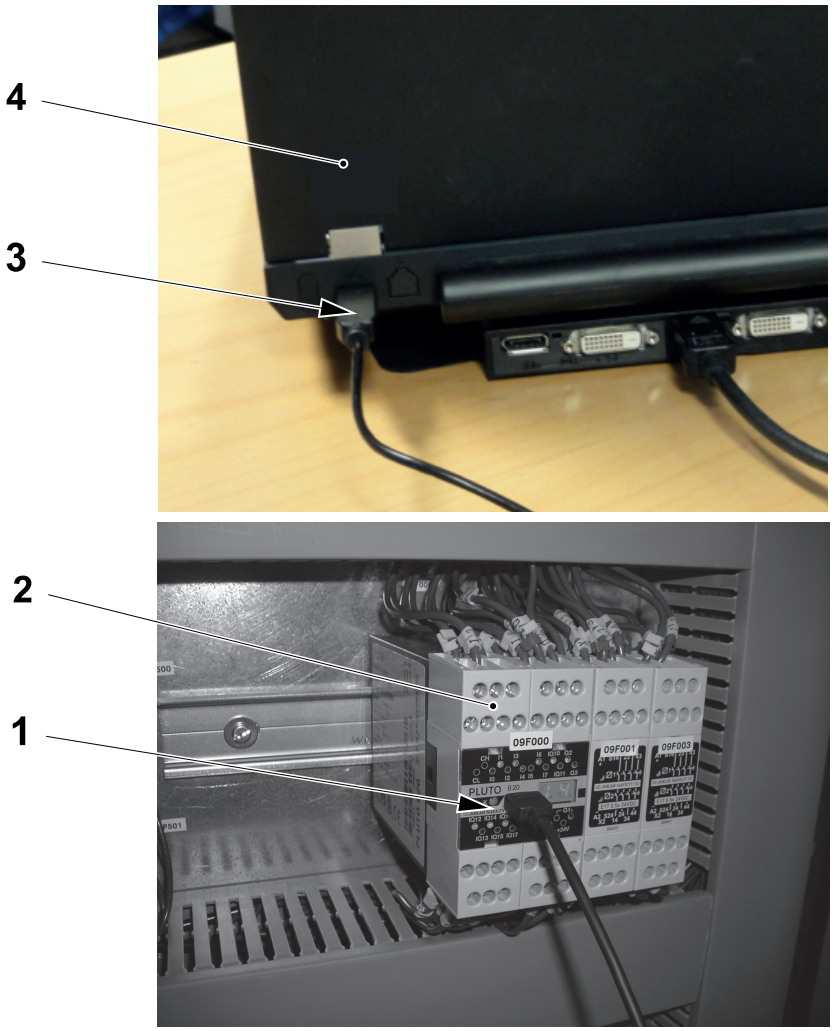

1 Pluto connector
2 Pluto device
3 USB connector
4 PC

(Cont'd)

(Cont'd)

c) Make sure that the PC is connected to internet and wait for the connection to the PC.

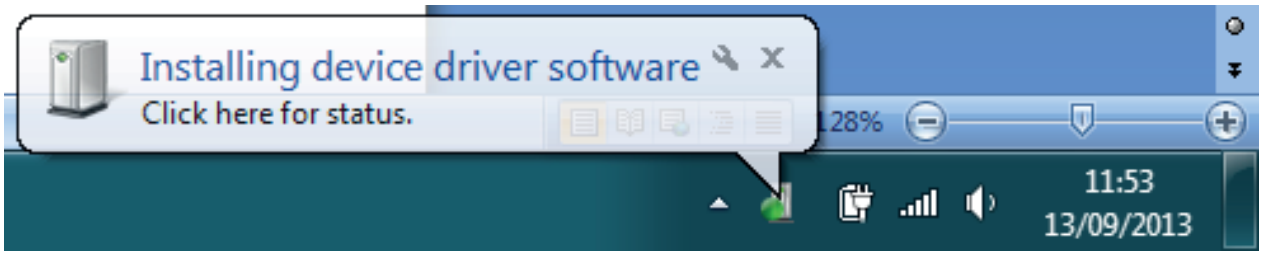

d) Wait for the PC to be updated.

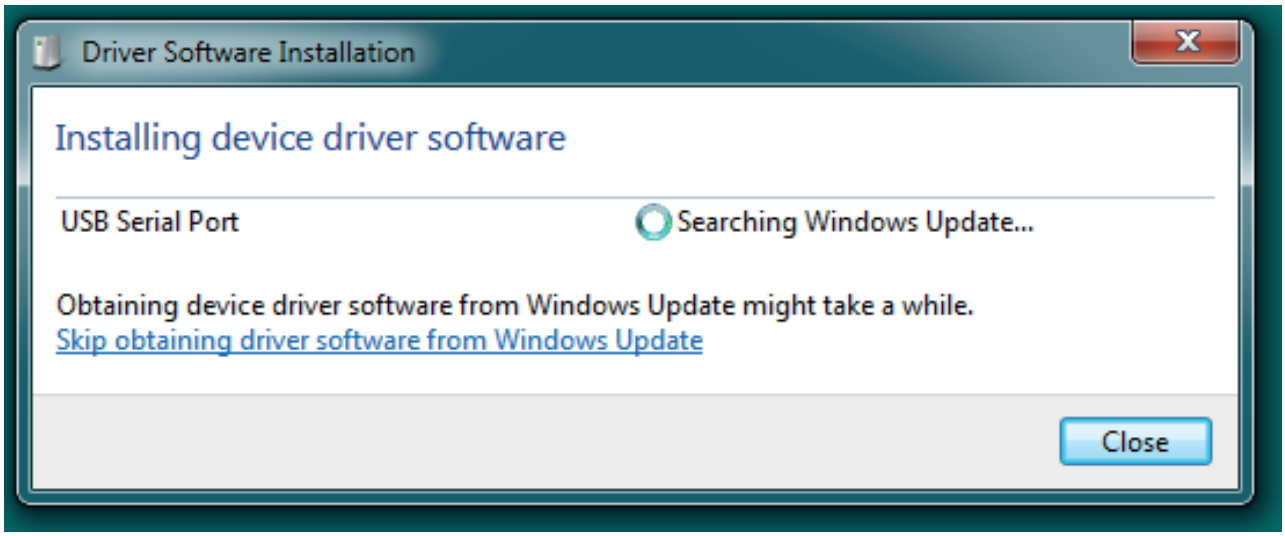

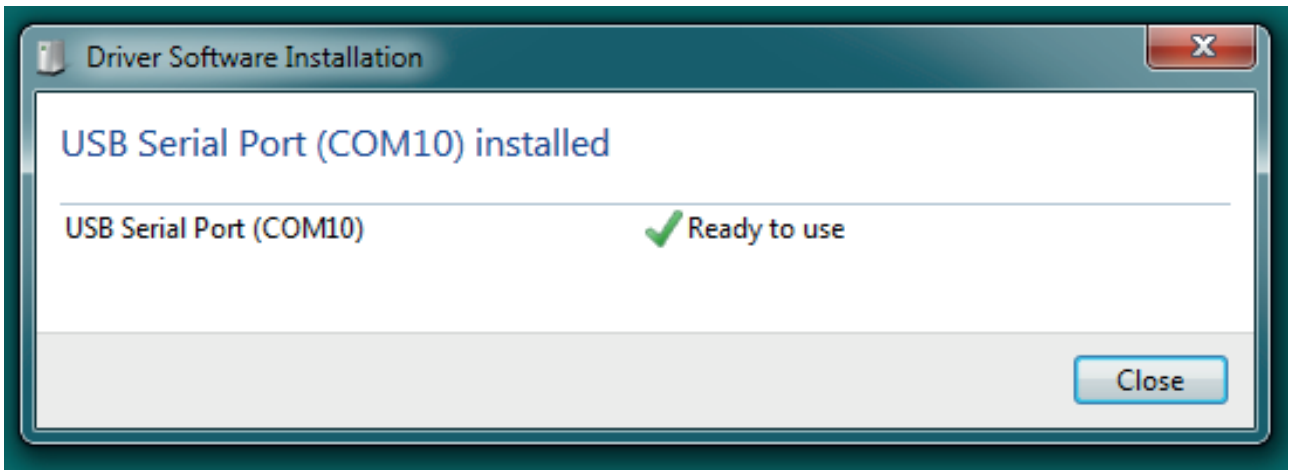

(Cont'd)

(Cont'd)

e) Click on START (5) and on CONTROL PANEL (6).

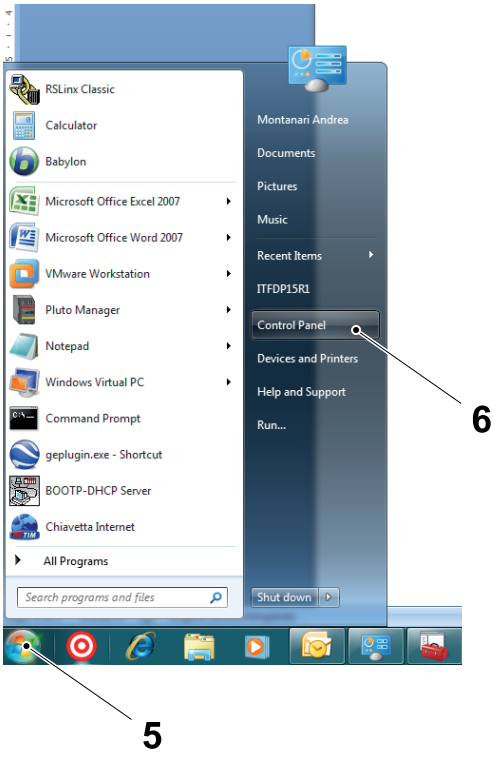

5 START
6 CONTROL PANEL

(Cont'd)

(Cont'd)

Note! The number of the USB Serial Port (8) is useful for later setup. In this example the number of the USB Serial Port (8) is "COM10".

f) Click on DEVICE MANAGER (7).

g) Read the USB Serial Port (8) that has been automatically selected.

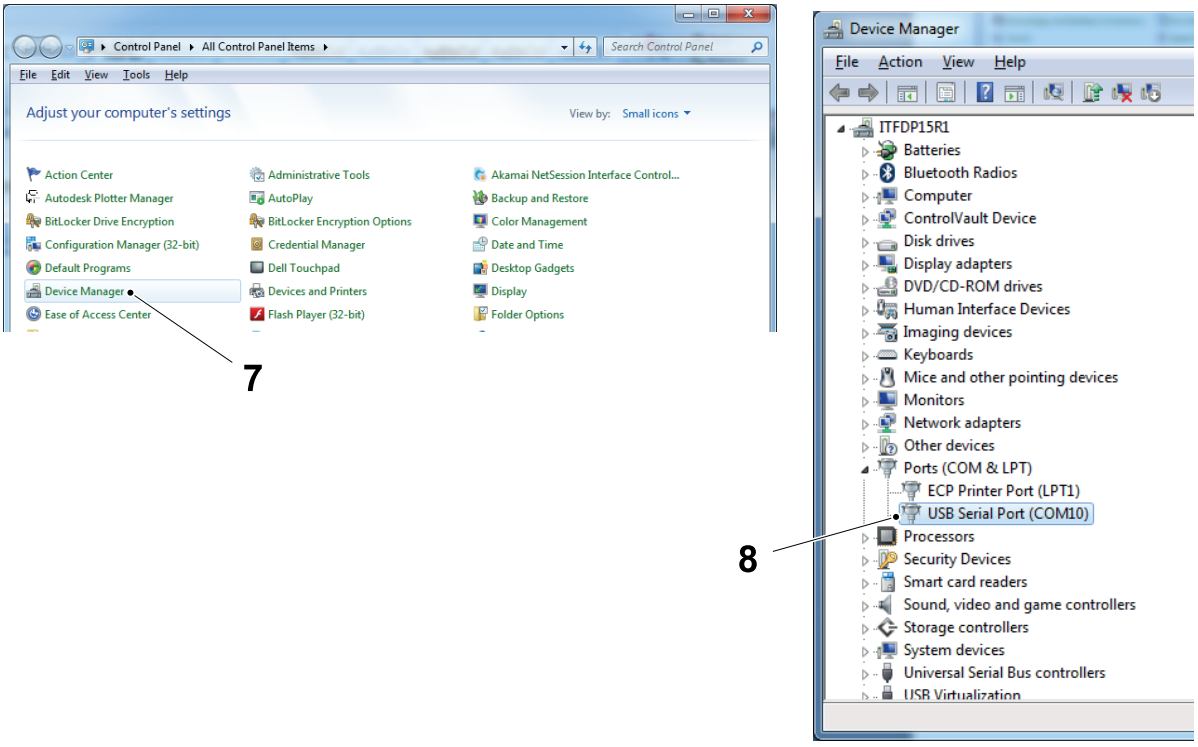

7 DEVICE MANAGER
8 USB Serial Port

h) Double click on the PLUTO MANAGER icon (9).

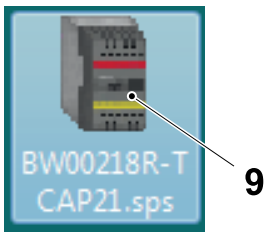

9 PLUTO MANAGER icon

(Cont'd)

(Cont'd)

Note! In this example the number of the USB Serial Port (8) is "COM10".

i) In the PLUTO MANAGER window (10), make sure that the communication port (11) is the same as the number of the USB Serial Port (8), see g).

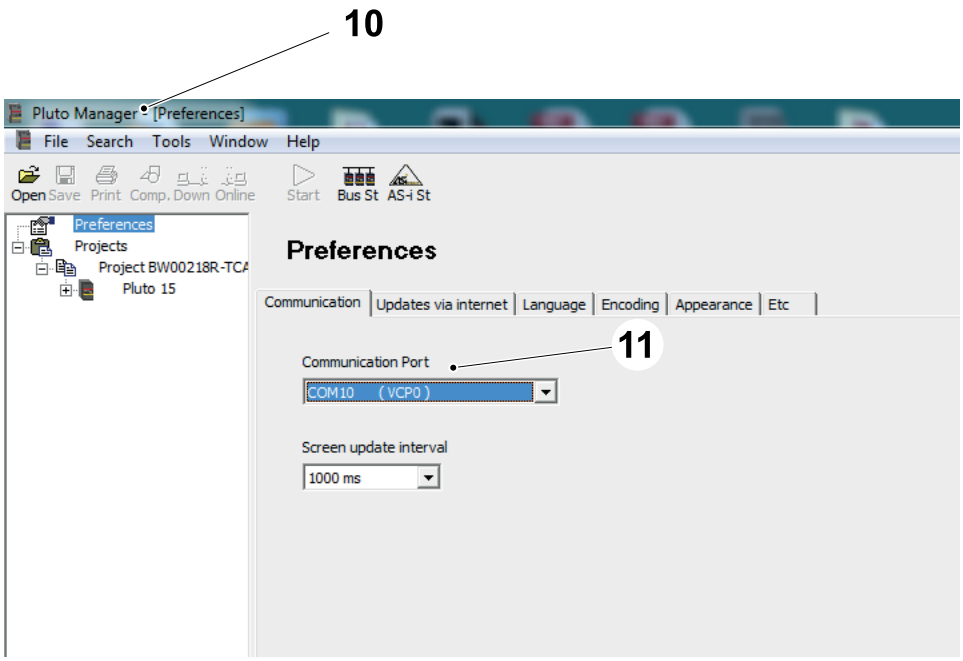

10 PLUTO MANAGER window
11 Communication port

8.6.2-2 Pluto Maintenance - Set the ID-FIX Address after Replacing an ID-FIX

Machine Status	Electrical supply disconnecting device in position I (ON)
Special Equipment	PC with Pluto Manager RS 232-C Communication Cable
SPC Reference	2839221-0200

Introduction

To enable the system PLC program to recognise a Pluto module, an ID code must be given to the module. This is done by connecting an external component, called ID-FIX (1), between the ID terminal (2) and the 0V terminal (3) at the front of the Pluto module (4). The unique code associated with the ID-FIX (1) must then be entered in the PLC program.

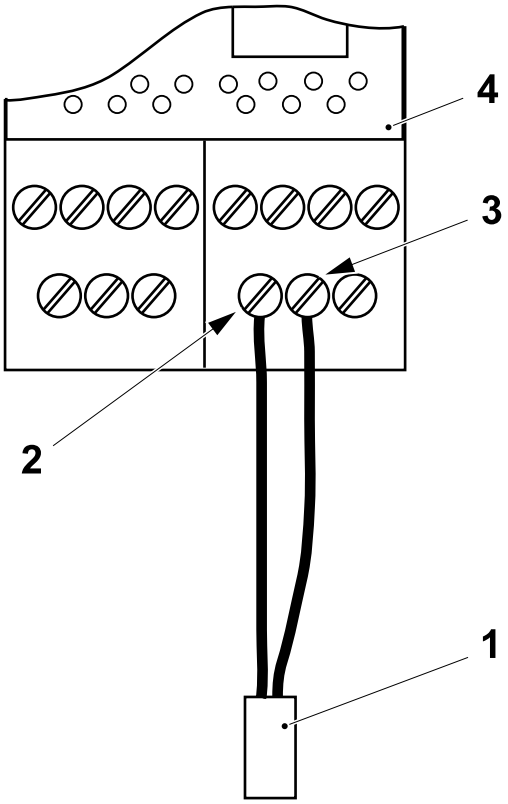

1 ID-FIX
2 ID terminal
3 0V terminal
4 Pluto module

(Cont'd)

(Cont'd)

Entering the ID-FIX Address

If an ID-FIX is replaced, the code for the ID-FIX must be entered in the PLC program as follows:

a) Connect the PC to the Pluto module, see 8.6.2-1 Pluto Maintenance - Connecting a PC to Pluto Module.

b) Open the Pluto Manager by clicking the PLUTO MANAGER icon (1).

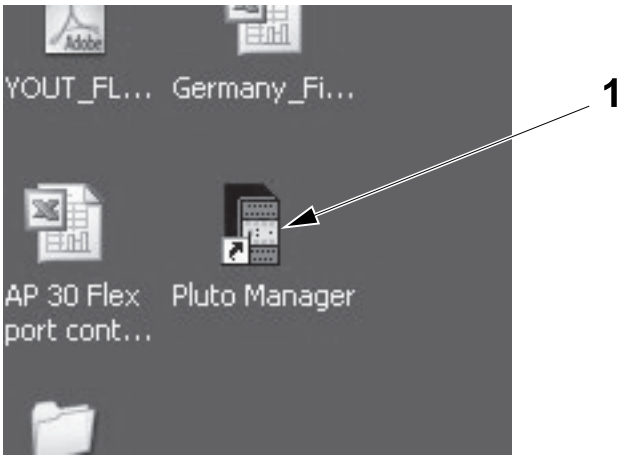

1 PLUTO MANAGER icon

c) In the Pluto Manager - [projects] (2), select Projects (3) and click Open (4).

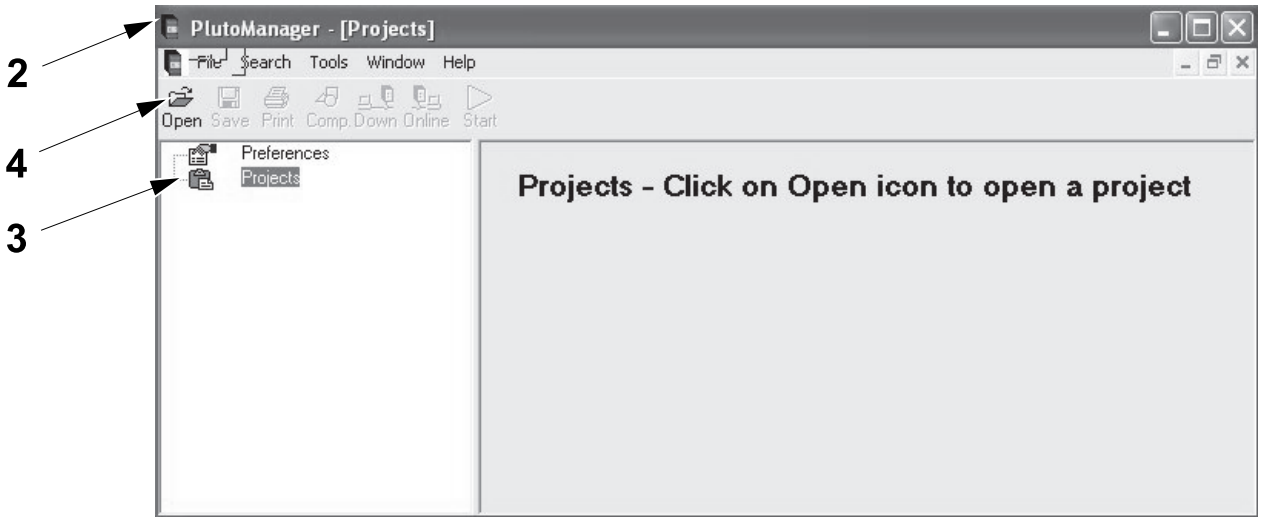

2 Pluto Manager - [projects]
3 Projects
4 Open

(Cont'd)

(Cont'd)

Note! The project number BW00159_2.SPS (5) shown below is an example.

d) Select a Project (5) and click Open (6).

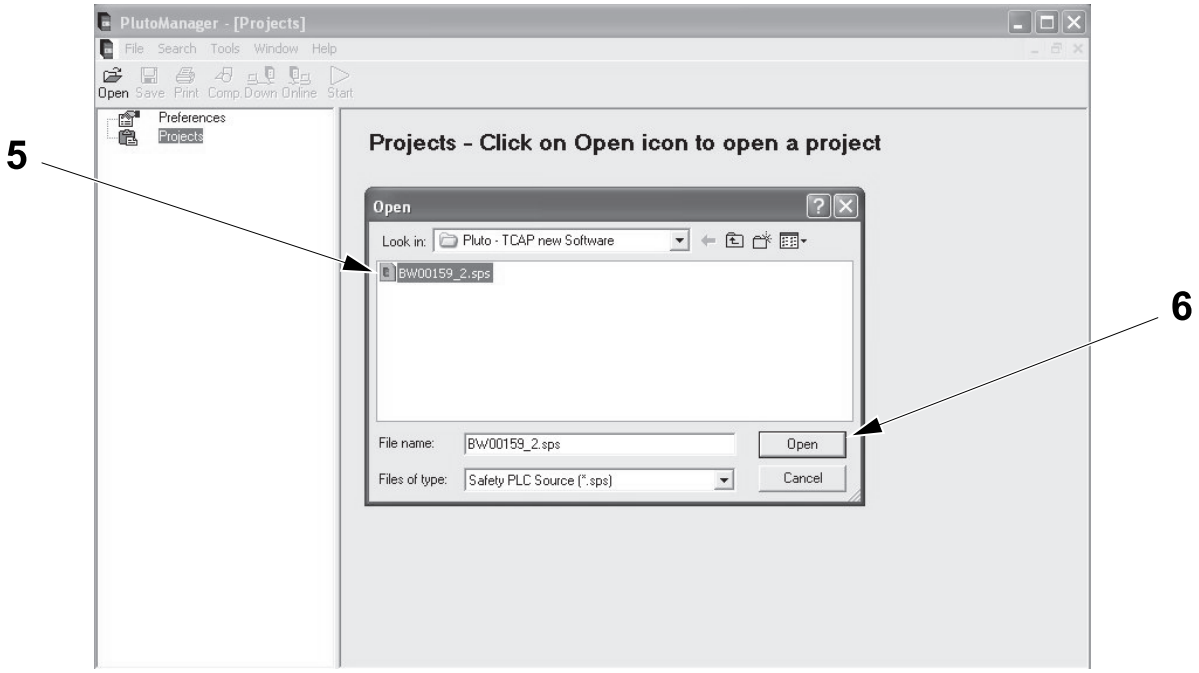

5 Project
6 Open

e) In the Project window (7) that opens, click on the icon Pluto 14 (8) .

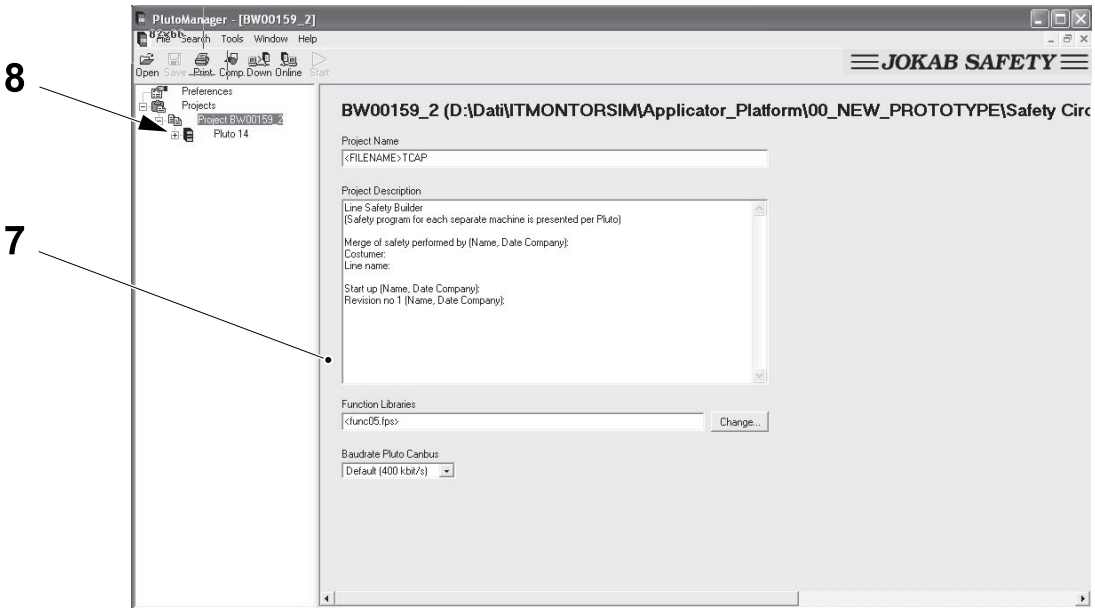

7 Project window
8 Pluto 14

(Cont'd)

(Cont'd)

f) The IDFIX number (14000009F000) appears in the IDFIX number window (9).

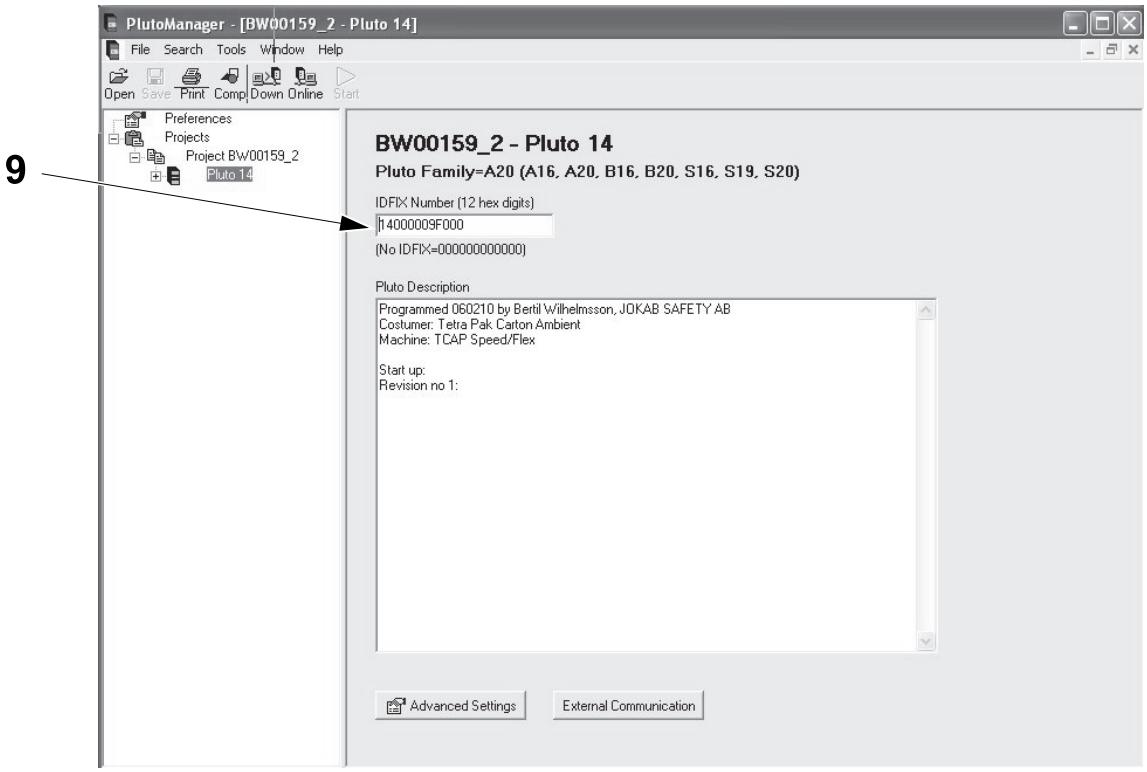

9 IDFIX number window

(Cont'd)

(Cont'd)

g) From the tools (10) pull down menu, select Write IDfix (11).

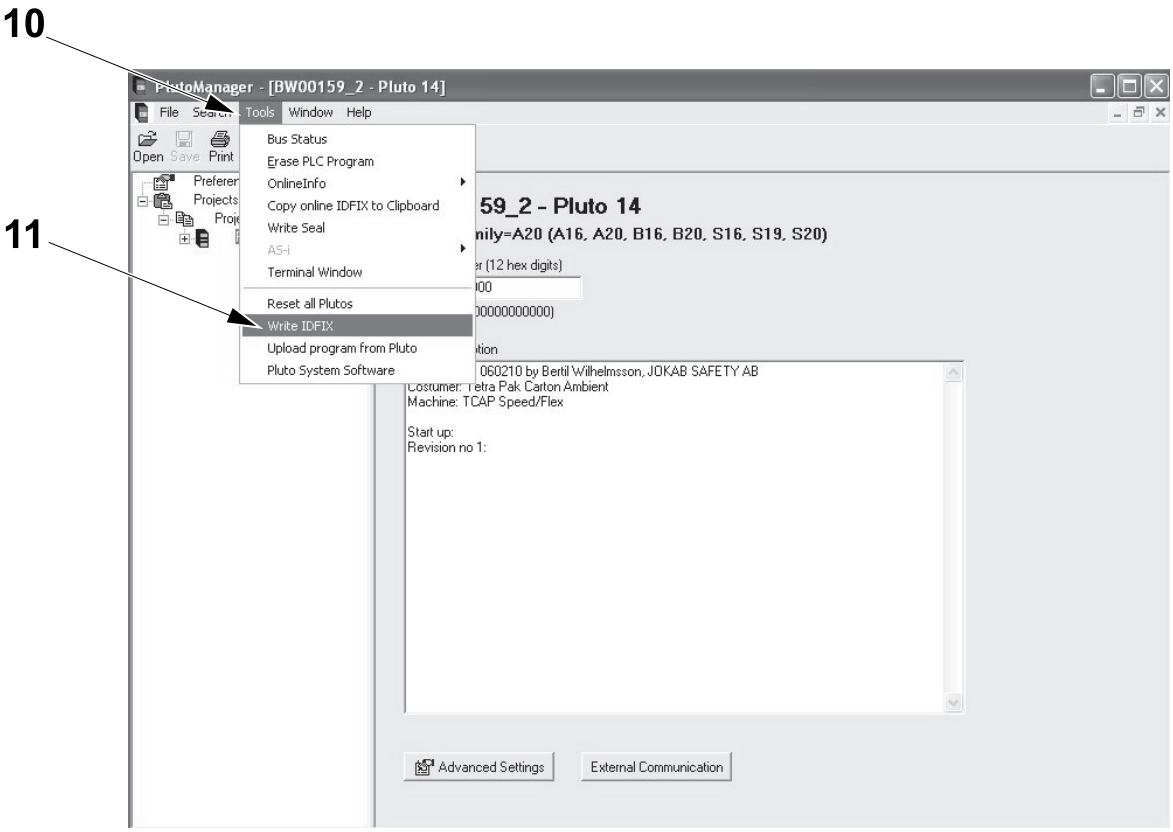

10 Tools
11 Write IDfix

(Cont'd)

(Cont'd)

CAUTION
Do not select the ERASE PROTECT ID (12). Doing so will prevent any further IDFIX changes being made.
Do not press the SUGGEST UNIQUE ID (13).

h) Write the IDFIX code, displayed in the IDFIX number window (9), in the ID number field (14) and select write id circuit (15).

i) Select close (16).

Note! The ID-FIX code for the Pluto module is shown below.

Unit	ID number
F09K0000	14000009F000

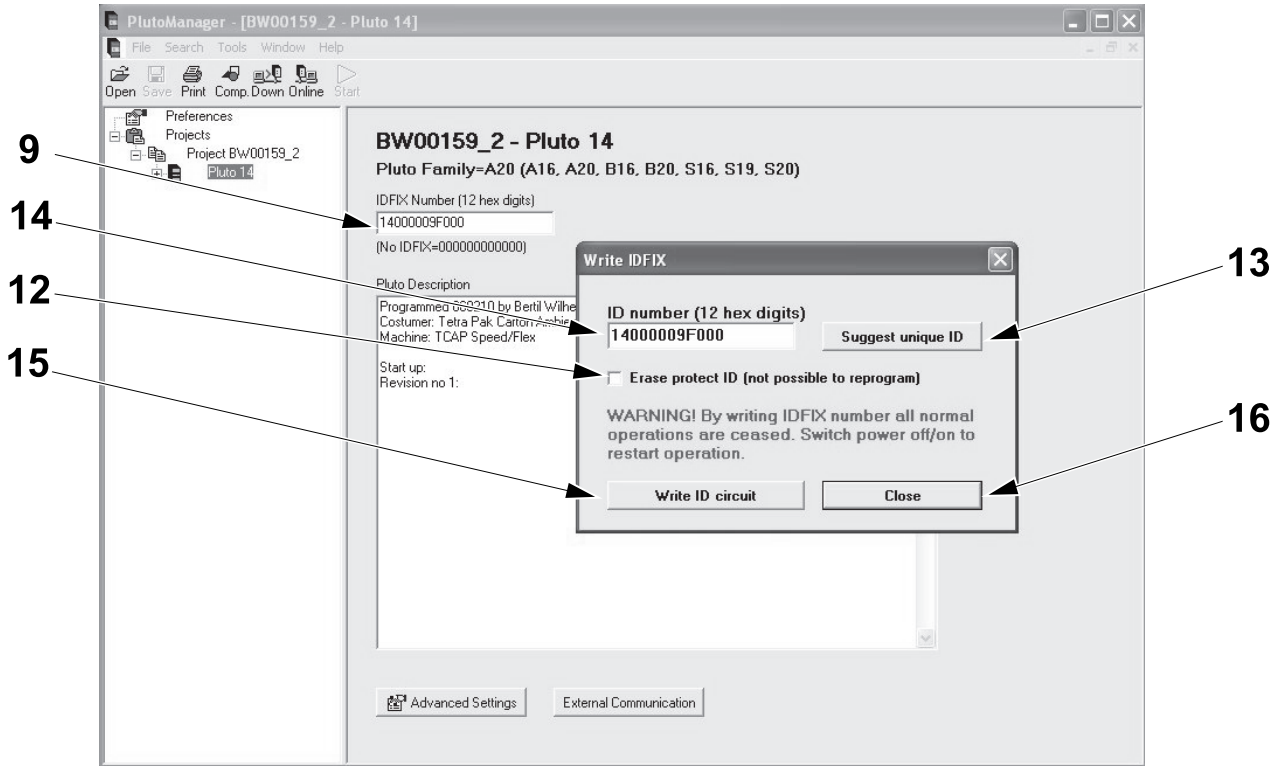

9 IDFIX number window
12 ERASE PROTECT ID
13 SUGGEST UNIQUE ID
14 ID number field
15 write id circuit
16 close

8.6.2-3 Pluto Maintenance - Change Baud Rate, Error Code E26

Machine Status	Electrical supply disconnecting device in position I (ON)
Special Equipment	PC with Pluto Manager RS 232-C Communication Cable
SPC Reference	2839221-0200

Note! It is not possible to change the baud rate of a Pluto module when it is in operation. If a unit is loaded with a program with a new baud rate, it will continue to function with the old baud rate and indicate the error code E26.

Note! If a Pluto module does not contain a program it will display the error code E20. If a program is loaded into the Pluto it will also display error code E26 to indicate that the module must be rebooted to start with the programmed baud rate.

The baud rate can be changed by turning the power OFF and ON to reboot the system

or

by using the Pluto Manager as follows:

a) Connect the PC to the Pluto module, see 8.6.2-1 Pluto Maintenance - Connecting a PC to Pluto Module.

b) Open the Pluto Manager by clicking the PLUTO MANAGER icon (1).

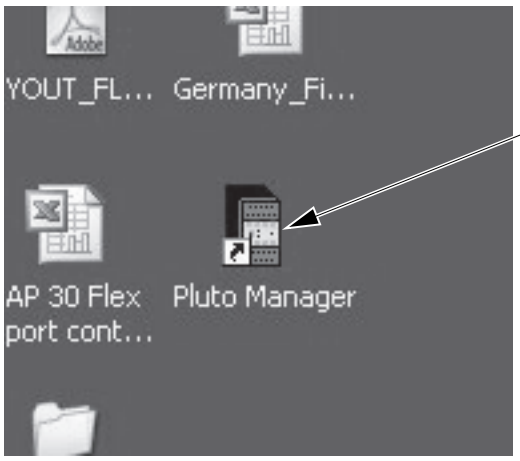

1 PLUTO MANAGER icon

(Cont'd)

(Cont'd)

c) Click on Tools (2) and select Reset all Plutos (3).

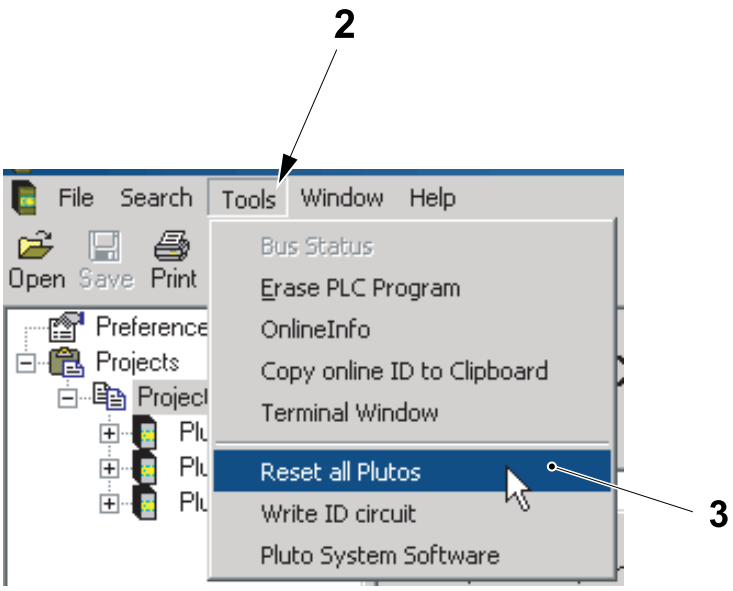

2 Tools
3 Reset all Plutos

8.6.2-4 Pluto Maintenance - Installing a Pluto Module in an Existing Application

Machine Status	Electrical supply disconnecting device in position I (ON)
Special Equipment	PC with Pluto Manager RS 232-C Communication Cable
SPC Reference	2839221-0200

No PLC Program in Pluto

When a system comprises of more than one Pluto module they are loaded with a common program. The modules check each other to confirm that they contain exactly the same version of the program. With a program mismatch the modules do not accept each others I/O data.

If a new Pluto module belonging to a program project is connected to the bus that is already connected to one or more Pluto modules, two possible situations may arise depending upon the status of the new Pluto module.

The new Pluto does not contain a PLC program (message code E20) but it is fitted with the correct IDFIX circuit. When this is the case the new Pluto can be programmed using its self programming function. To do this proceed as follows:

a) Press the 'K'-button (1) on the Pluto front panel for two seconds. The display flashes 'L' indicating that the system is ready for self programming.

b) Press the 'K'-button (1) on the Pluto front panel for two seconds. The display flashes 'L' indicating that the system is ready for self programming.

c) The program load is started. This is indicated by a steady 'L' on the display.

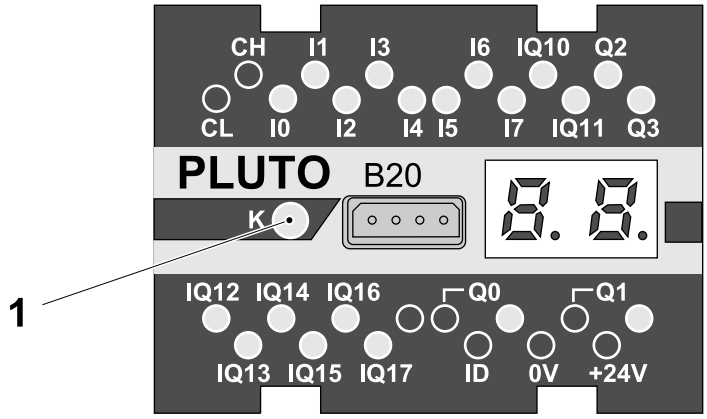

1 K button

Pluto has correct ID-Fix but wrong program version

In this situation, all Pluto modules of the project will display the error code E27 indicating that the new Pluto module with the incorrect software has been detected. The units will run the PLC program, but will not accept I/O data from the new Pluto module.

(Cont'd)

(Cont'd)

To correct this situation, download the correct version of the program to all of the units in the project, all of them will be updated with the same version. To download the program, see 8.6.2-5 Pluto Maintenance - Program Download from a PC to a Pluto Unit.

8.6.2-5 Pluto Maintenance - Program Download from a PC to a Pluto Unit

Machine Status	Electrical supply disconnecting device in position I (ON)
Special Equipment	PC with Pluto Manager RS 232-C Communication Cable
SPC Reference	2839221-0200

Note! The program must be compiled before it can be downloaded. A fault message is shown if the program is not compiled.

a) Connect the PC to the Pluto module.

b) Open the Pluto Manager by clicking the PLUTO MANAGER icon (1) .

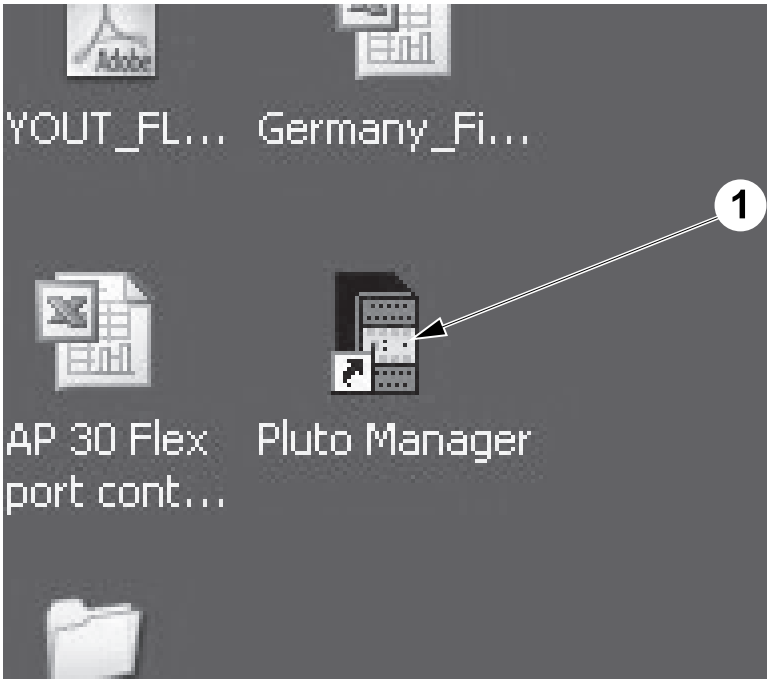

1 PLUTO MANAGER icon

(Cont'd)

(Cont'd)

c) In the pluto manager - [projects] (2), select Projects (3) and click Open (4).

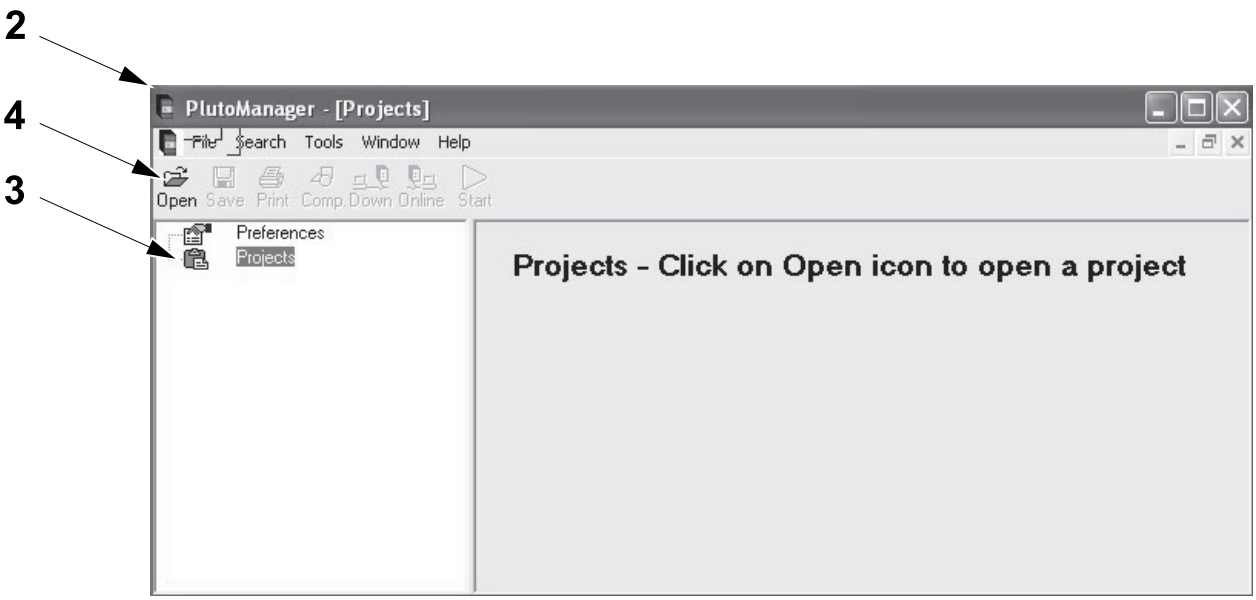

2 PLUTO MANAGER-[PROJECTS]
3 Projects
4 Open

(Cont'd)

(Cont'd)

Note! The project number BW00159_2.SPS is shown below as an example.

d) Select a Project (5) and click Open (6).

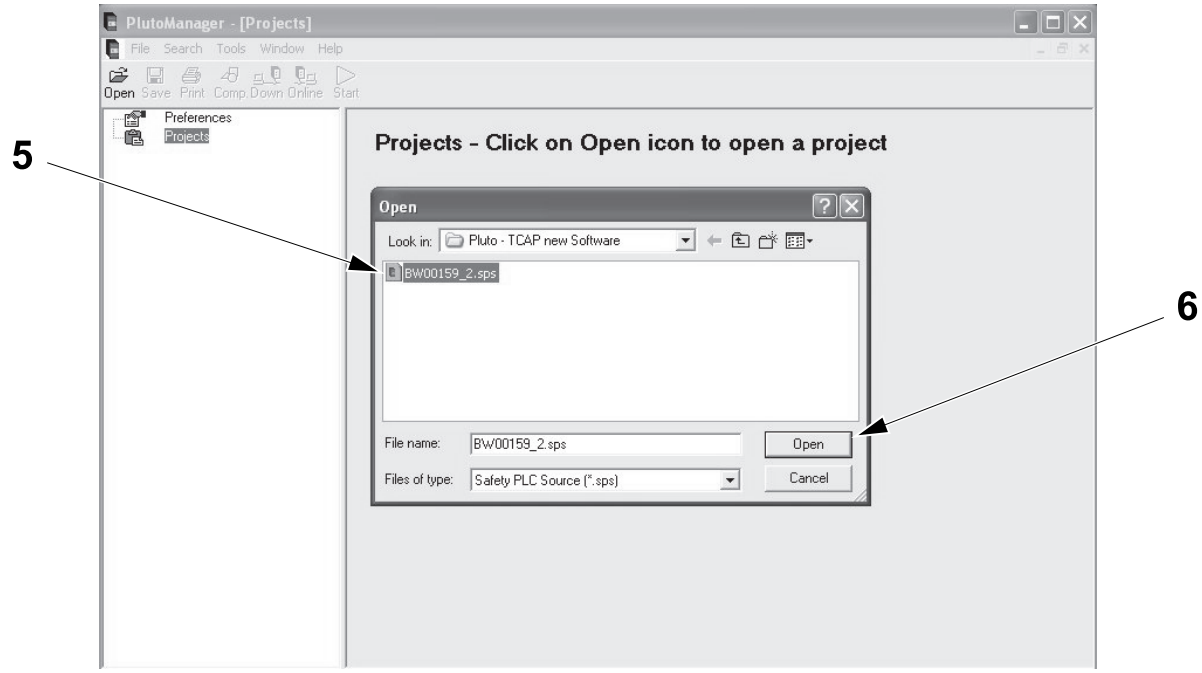

5 Project
6 Open

e) Press the down button (7) in the tool bar.

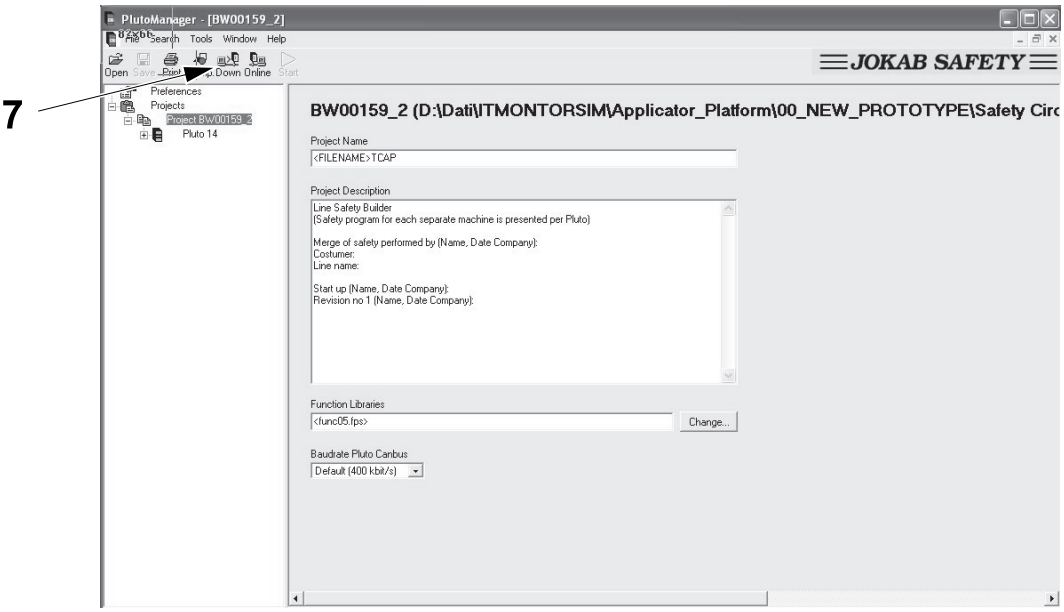

7 Down button

(Cont'd)

(Cont'd)

f) If the unit is not loaded with a password, a dialogue box appears asking for a new password.

g) Type the password "abc80" in the Password field (8) .

h) Type the same password in the Confirm Password field (9) and click the OK button (10).

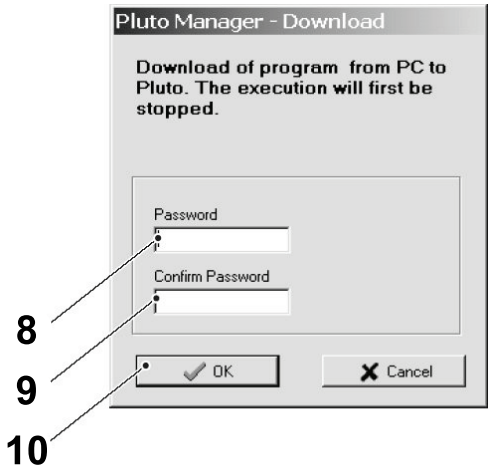

8 Password field
9 Confirm Password field
10 OK button

i) If the unit is loaded with a password, a dialogue box appears asking for the password.

j) Type the password "abc80" in the Password field (11).

k) Click the OK button (12).



11 Password field
12 OK button

(Cont'd)

(Cont'd)

l) If the fault message COULDN'T ESTABLISH CONNECTION appears there is no connection at all.

If the fault message CONNECTION TIME OUT appears the communication is interrupted.

- If any of these two fault messages appears check that the communication cable is correctly connected.

m) If everything is OK a dialogue box appears telling that the file is downloaded together with the question START PROGRAM EXECUTION (13) .

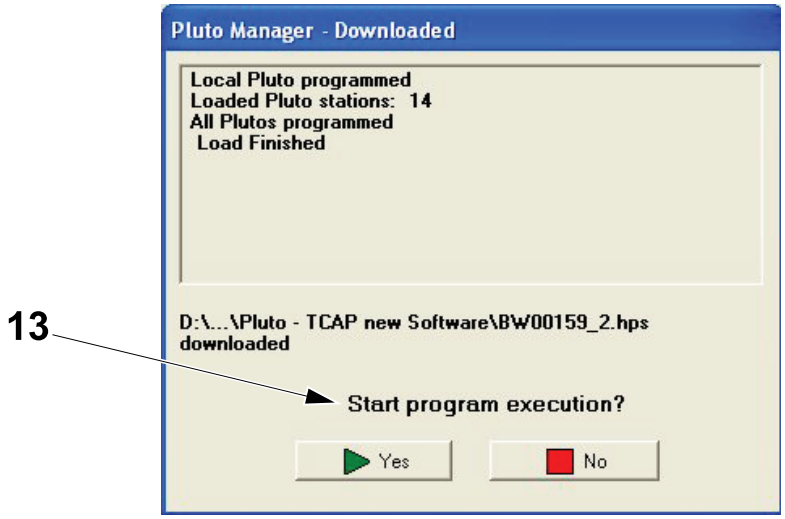

13 START PROGRAM EXECUTION

(Cont'd)

(Cont'd)

Note! A warning is given if the program project is for several Pluto stations and all stations are not connected to the bus.

n) Click the Yes button (14).

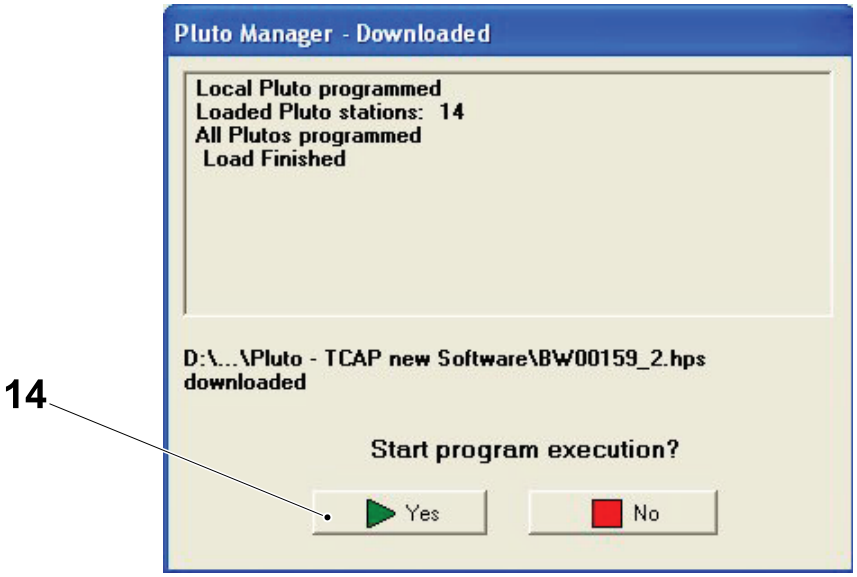

14 Yes button

8.6.3 Pluto Troubleshooting

8.6.3-1 Pluto Troubleshooting - Safety System Alarm on the Control Panel

Machine Status	Electrical supply disconnecting device in position I (ON)
Special Equipment	PC with Pluto Manager RS 232-C Communication Cable
SPC Reference	2839221-0200

The symbol (1) indicates that the PLC monitors all safety doors and EMERGENCY STOP buttons are OK but the system has not been reset.

Note! The PLC can only monitor the channel which has a constant +24V DC.

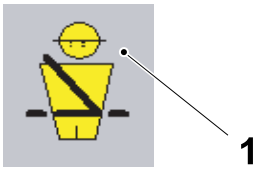

1 Safety System Alarm symbol

Two channel fault

a) **Reason 1:** One of the channels (inputs) may have been temporarily interrupted but is now OK.

- **Symptom 1:** The system has tripped but will not automatically reset when the input is OK again.
- **Indication 1**: The LED associated with the faulty input flashes as does the information output to the PLC.
- **Reset 1:** Open and close both channels (for example by opening and closing a door in the affected circuit) and reset the alarm.

b) **Reason 2:** One or both channels are permanently OFF.

- **Symptom 2**: The system has tripped and cannot be reset.
- **Indication 2:** The LED associated with the faulty input is OFF.
- **Reset 2:** Repair the faulty circuit, open and close both channels (for example by opening and closing a door in the affected circuit) and reset the alarm.

(Cont'd)

(Cont'd)

Feedback fault

a) **Reason:** One of the feedback circuits has not been closed when the output has tripped.

- **Symptom:** It is not possible to reset the system.
- **Indication:** The LED associated with the faulty input (feedback circuit) is OFF and the information output to the PLC is ON.
- **Reset:** Repair the faulty circuit or contactor and reset the alarm.

8.6.3-2 Pluto Troubleshooting - Explanations of Inputs, Outputs and LEDs

Machine Status	Electrical supply disconnecting device in position I (ON)
Special Equipment	PC with Pluto Manager RS 232-C Communication Cable
SPC Reference	2839221-0200

For more detailed information on connections, refer to the circuit diagram.

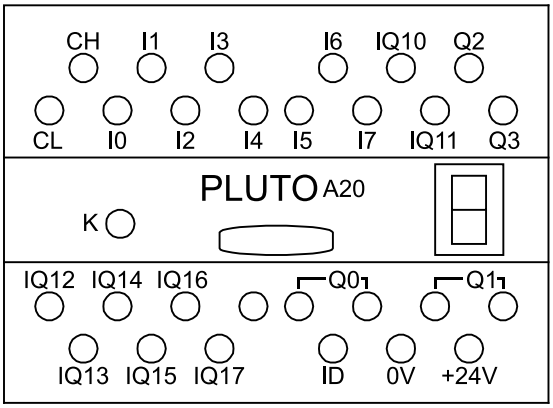

(Cont'd)

(Cont'd)

Pluto 09F00

CL	CAN bus
CH	CAN bus
I0	Input emergency stops on the machine (+24V)
I1	Input emergency stops on the machine (Pulse)
I2	Not used
I3	Not used
I4	Input power ON, cap conveyor and belt brake and Servos
I5	Input power ON, package line conveyor, outfeed conveyor, cap elevator and mains power
I6	Input power ON
I7	Input power ON
Q0	Doors Closed (L32)
Q1	No Emergency Stop (L22)
Q2	Mains power ON, AC users
Q3	Output to expansion units 09F003
IQ10	Output pulse to safety circuits
IQ11	Input from applicator doors
IQ12	Input doors
IQ13	Input cap sorter
IQ14	Safety Relay reset from PLC
IQ15	Power On step from PLC
IQ16	Emergency stop to PLC
IQ17	Safety relay error message to PLC
ID	Identifier on the CAN bus
0V	0V
+24V	+24V DC (L12)

Message and fault code list

General Status messages

No:	Description
-	Power up
n	Run mode for station number 0-9. (n = station number)
P nn	Run mode for station number 10-31. (nn = station number)
L	Program load mode state. Flashing 'L', ready for self programming (program found in other unit).
H	Program execution stopped from PC computer.

(Cont'd)

(Cont'd)

User faults

No:	Fault and possible reason	Reset action
E10	Dynamic output short circuited to foreign voltage	Remedy of fault
E11	IQ_for illuminated push button function. Missing diode	Remedy of fault
E12	Short circuit between two dynamic inputs	Remedy of fault
E13	Static output Q10...Q17 short circuited to 0V or Q2-Q3 overloaded	Reset button, power off/on
E14	Static output Q10...Q17 short circuited to 24V	Remedy of fault
E15	Power supply below 18V	Reset button, power off/on
E16	Power supply above 30V	Reset button, power off/on
E17		
E18	CAN-bus fault. (Short circuit, termination resistor, etc.)	Remedy of fault+ reset button
E19	Other unit same station ID on CAN-bus.	
E20	PLC-program not loaded	Load of program
E21	PLC-program CRC-error	Re-load with valid PLC-program
E22	Identifier problem. External identifier can not be read.	Power off/on
E23	Unmatched ID. Identifier does not match declaration in program.	Exchange of identifiers or re-declaration of identifier in program
E24	Erroneous PLC-code. Invalid PLC-instructions.	Reload with valid code
E25	For version A16. Non existing output used in program.	
E26	Baud rate conflict. Unit programmed for other baud rate than current bus baud rate.	Reprogramming
E27	Wrong checksum for unit member in common program.	Reprogramming or reboot

I/O faults

No:	Fault and possible reason	Reset action
E40	Error output Q0-Q3	Remedy of fault + reset button
E41	Error output Q2 or Q3. Overload or foreign voltage.	Remedy of fault + reset button
E42	Error output Q0 or Q1. (No answer from relay monitoring)	Remedy of fault + reset button
E43	Error output Q0 or Q1. (Self test of transistors)	Power off/on
E45	Analogue functions not calibrated.	System must be calibrated
E49	Error calibration values, analogue functions	Recalibration

(Cont'd)

(Cont'd)

CPU faults

No:	Fault and possible reason	Reset action
E50	a/b twin input data diff	Power off/on
E51	a/b twin output data diff	Power off/on
E59	Calibration analogue functions CRC fault	Power off/on
E60	Twin self test monitoring	Power off/on
E61	Timer IRQ monitoring	Power off/on
E62	Internal serial communication	Power off/on
E63	Boot-flash CRC	Power off/on
E64	OS-flash CRC	Power off/on
E65	PLC-flash CRC	Power off/on
E66	5 volt under/over voltage monitoring	Power off/on
E67	CPU-test error	Power off/on
E68	Ram-test error	Power off/on
E69	Scan cycle time over run	Power off/on
E70	System, sum of system and stack monitoring	Power off/on
E71	Pluto used for IDFIX writing. Normal operation ceased	Power off/on
E80	Undefined self-test error	Power off/on

User Errors

No:	Fault and possible reason	Reset action
UE00	Emergency stop inputs, one channel missing, one remaining	Power off/on
UE10	Emergency stop inputs, both channels missing	Power off/on
UE24	Missing feedback - L42 Applicator Frequency Converter	
UE25	Missing feedback - L22 Emergency stop circuit	Power off/on
UE26	Missing feedback - L32 - L42 - L43 - L44	Power off/on
UE27	Missing feedback - L72	Power off/on
UE29	Feedback not cycling - L42	Power off/on
UE34	Constant reset	Power off/on

8.7 Circuit Breaker

8.7.1 Automatic Fuses

8.7.1-1 Automatic Fuses - Set

Machine Status	Electrical supply disconnecting device in position O (OFF)
SPC Reference	2833407-0300

Set the current rating of each overload protection according to the fuse panel label located in the door of the electrical cabinet or according to the EM.

8.7.2 Residual Current Device

8.7.2-1 Residual Current Device - Check Function

Machine Status	Electrical supply disconnecting device in position I (ON) Main air valve OFF
SPC Reference	2833407–030

DANGER

Hazardous voltage.
Electric shock will cause death or serious injury. Change the A01F7001 Residual current device (1) if it does not trip immediately.

Note! The residual current device is not fitted and not valid for machines in compliance with the UL or CSA requirements.

The A01F7001 Residual current device (1) must always be tested before using the Socket outlet (2).

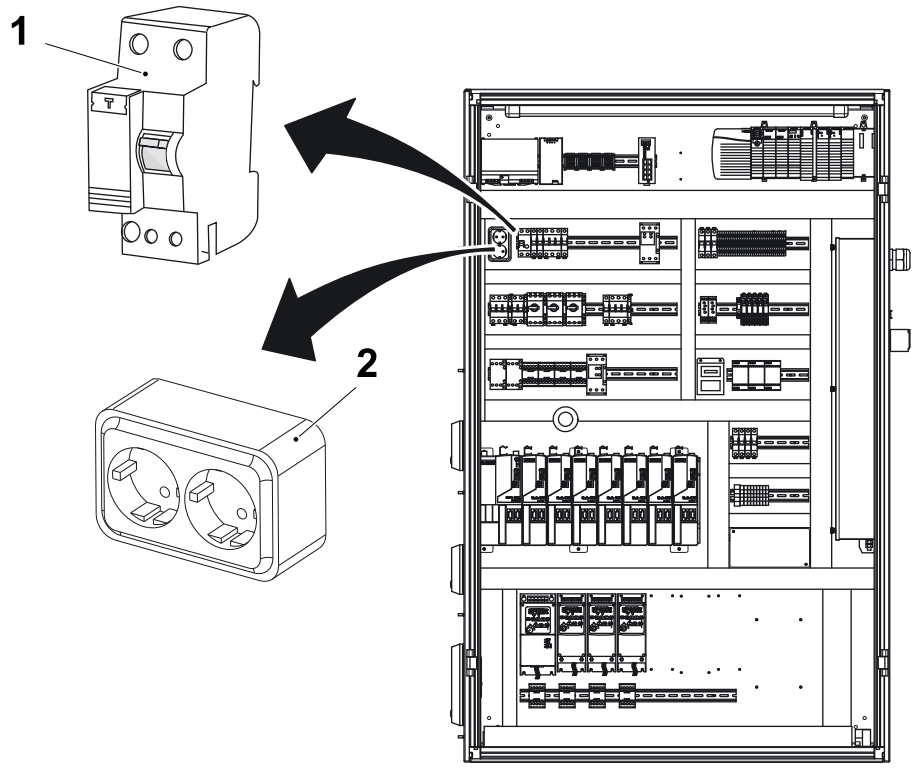

1 A01F7001 Residual current device
2 Socket outlet

(Cont'd)

(Cont'd)

a) Make sure that the switch (3) is in its up position (position "1").

b) Press the Test button (4) .

c) The earth fault breaker must trip immediately (the switch (3) will jump to the lower position"0").

d) If the earth fault breaker does not trip immediately, change the earth fault breaker.

e) Move the switch (3) to its upper position.

f) Turn OFF the power supply disconnecter.

Note! The residual current device should be checked once a month.

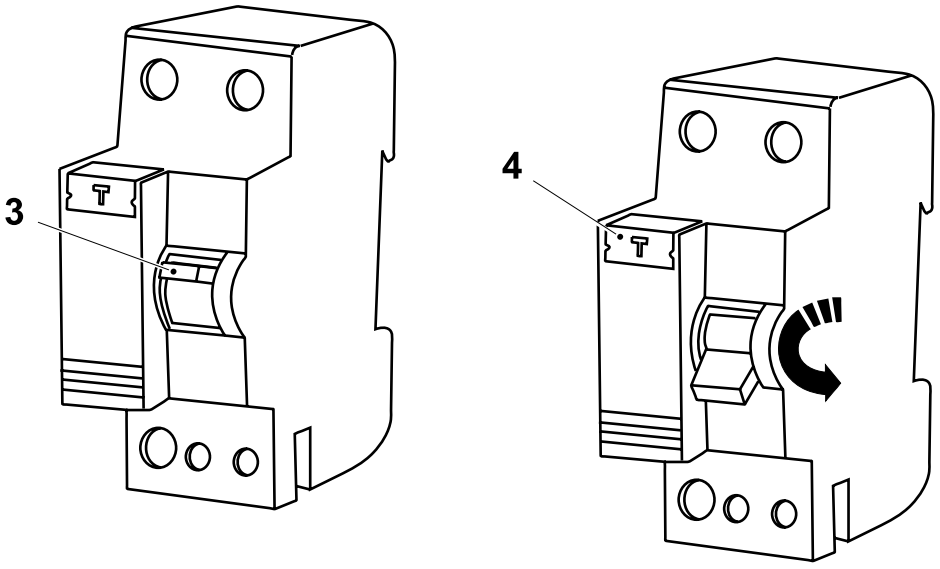

3 Switch
4 Test button

8.7.3 Power Supply - Current Control Relay

8.7.3-1 Check - Current Control Relay Function

Machine Status	Electrical supply disconnecting device in position I (ON) Main air valve OFF
SPC Reference	90600-4731

Use a screwdriver to set the element function as follows:

a) Switch SV value (1) to 30.

b) Switch Hystereris (2) to 0 (fully counter clockwise).

c) Potentiometer T (3) to 0 (fully counter clockwise).

d) Potentiometer lock (4) to 0 (fully counter clockwise).

Note! The LED PWR (5) switches OFF if a malfunction occurs during PRODUCTION.

e) LED relay output (6) and LED alarm (7) alarm.

f) Set the selectors on the bottom of the relay to Selector (OFF) (8) and Selector (ON) (9) as shown below.

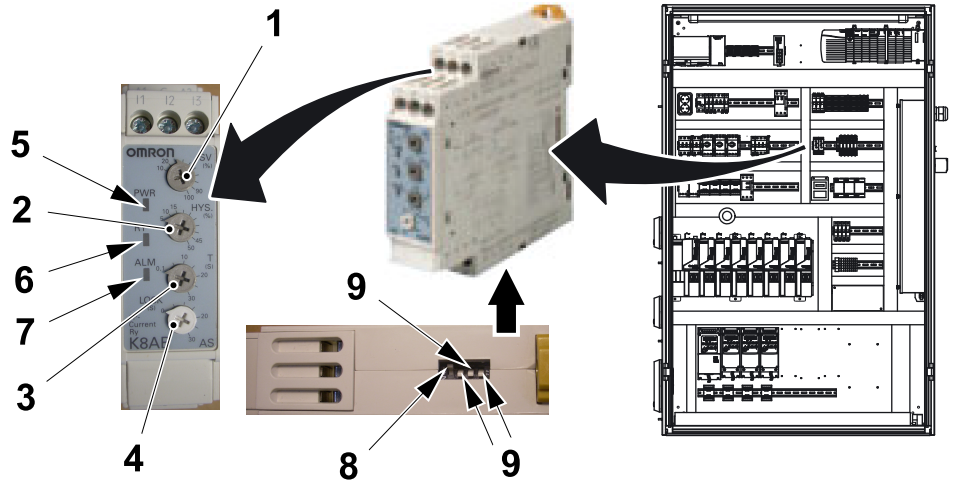

1 Switch SV value
2 Switch Hystereris
3 Potentiometer T
4 Potentiometer Lock
5 LED PWR
6 LED relay output
7 LED alarm
8 Selector (OFF)
9 Selector (ON)

8.8 Sensors

8.8.1 Belt Brake Package Sensor

8.8.1-1 Sensor (W20B0003) - Set Sensitivity

Machine Status	Electrical supply disconnecting device in position I (ON)
SPC Reference	90600-4732

Standard Setting

a) Check that there are no objects between the sensor (1) and the receiver (2).

b) Line up the sensor (1) with the receiver (2) .

- The green led (3) and yellow led (4) should be ON.

c) Press the button (5) for 3 seconds or more so that the yellow led (4) goes out.

d) The teach-in is initiated when both LED's blink. Press the teach-in button to store the sensitivity.

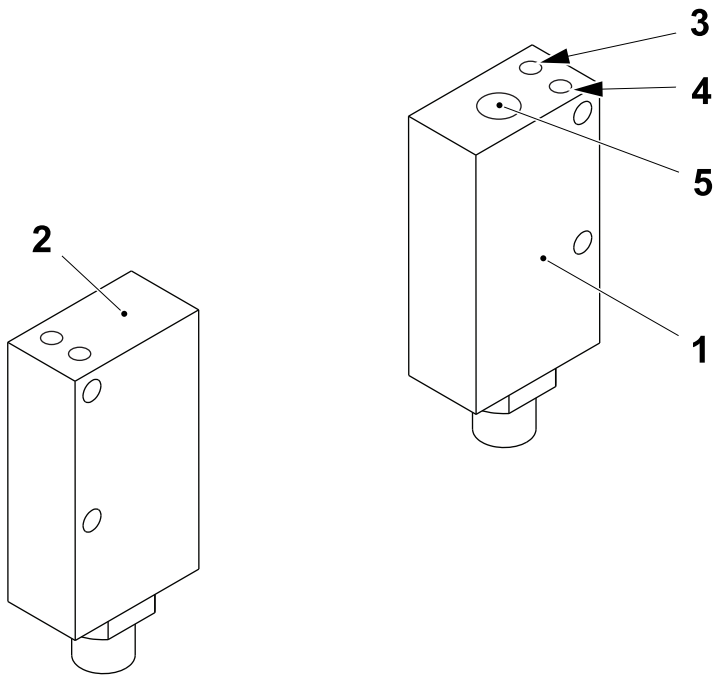

1 Sensor
2 Receiver
3 Green led
4 Yellow led
5 Button

(Cont'd)

(Cont'd)

Precise Setting

a) Press the button (5) for 5 seconds or more.

b) The teach-in is initiated when both the green led (3) and the yellow led (4) blink. Press the teach-in button (5) to store the sensitivity.

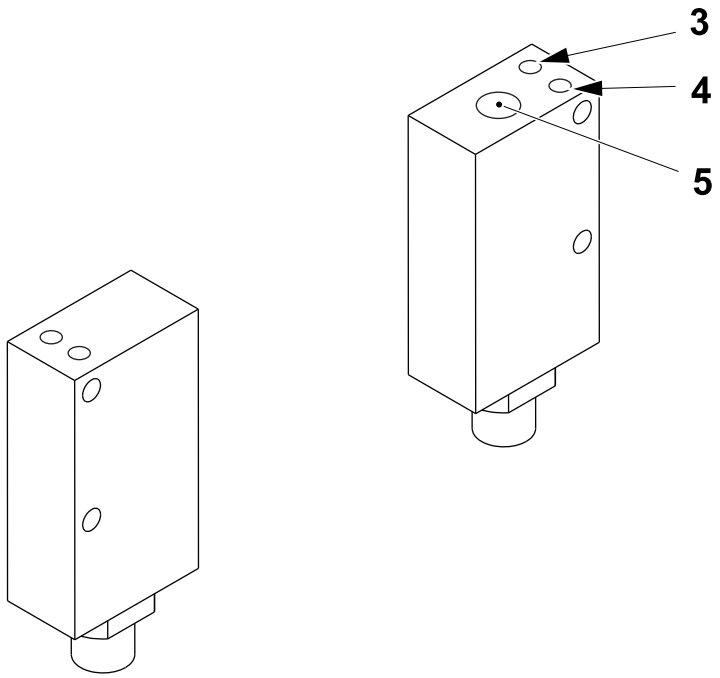

3 Green led
4 Yellow led
5 Button

8.8.2 General Purpose Sensor

8.8.2-1 Sensor (W21B4002,W 21B4004,W 21B4006, W21B4008, W21B4024, W21B6002, W21B6004, C50B0013, G50B5000, G50B5004) - Set

Machine Status	Electrical supply disconnecting device in position I (ON)
SPC Reference	90459-5529

a) Line up the sensor (1) with the reflector (2) .

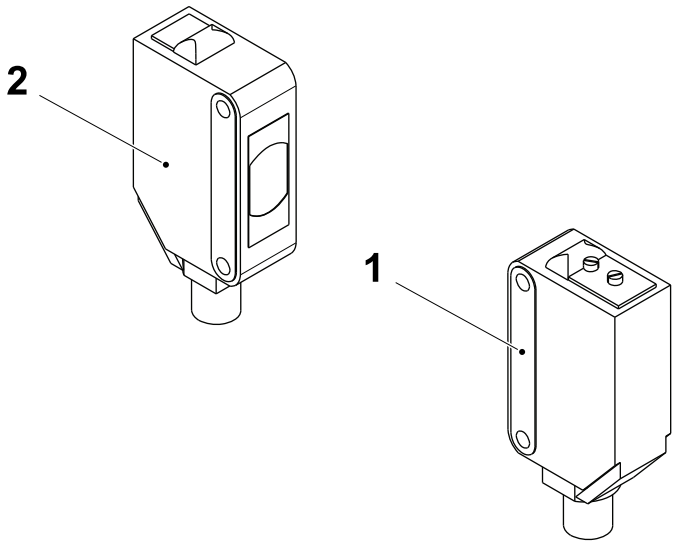

1 Sensor
2 Reflector

(Cont'd)

(Cont'd)

Note! The min/max knob (3) sets the sensitivity and the D/L knob (4) sets the dark background/light background function.

b) Turn the min/max knob (3) to the middle of its range.

c) Turn the D/L knob (4) to the D position.

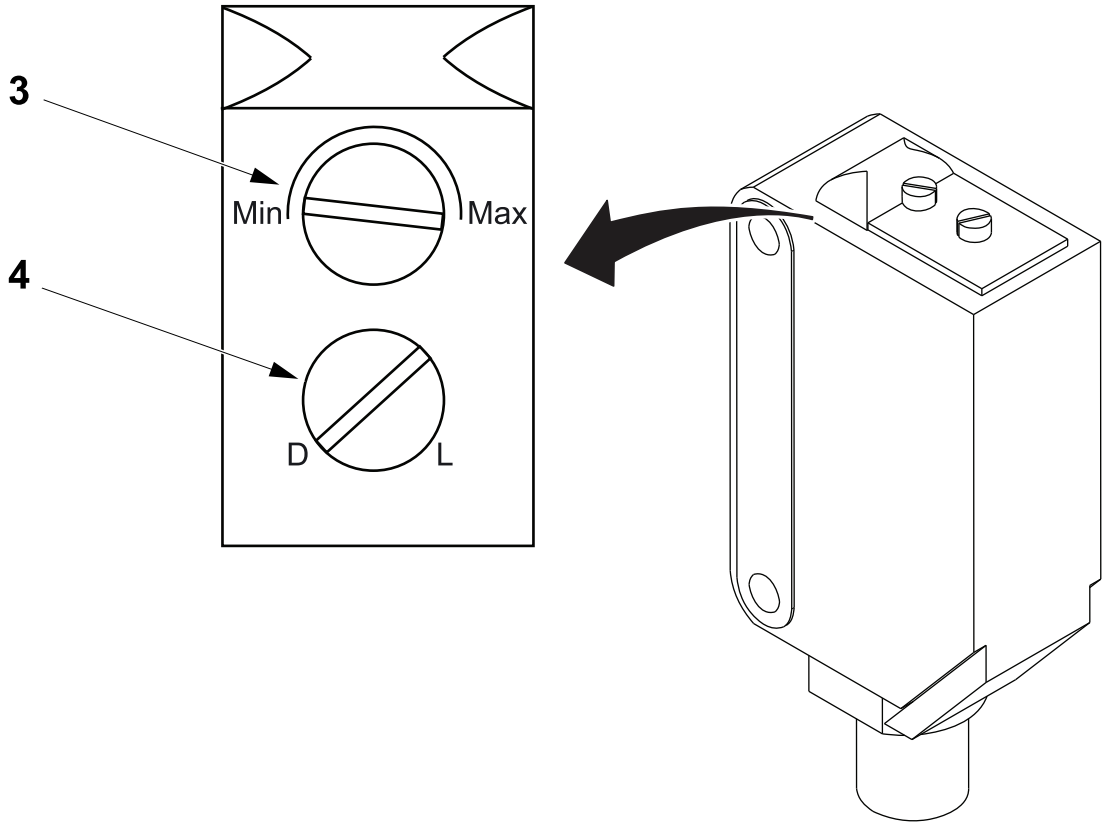

3 min/max knob
4 D/L knob

(Cont'd)

(Cont'd)

Note! The stability LED (6) is on whenever power is supplied to the sensor.

d) Put a package between the sensor and the reflector and check that the operation LED (5) comes on.

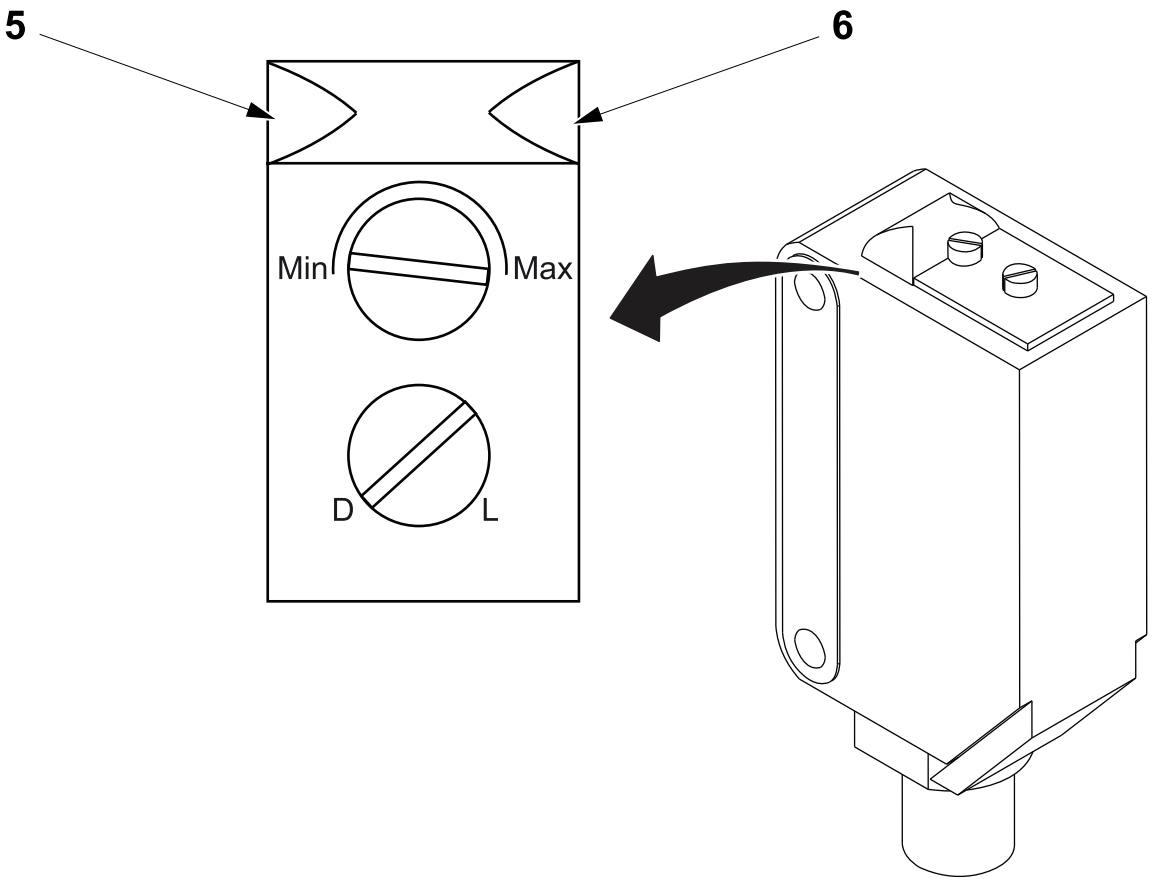

5 Operation LED
6 Stability LED

8.8.3 Elevator Sensors

8.8.3-1 Sensor (C60B4008, C60B4009) - Set

Machine Status	Electrical supply disconnecting device in position I (ON)
SPC Reference	90459-7272

Note! The MIN/MAX knob (1) sets the sensitivity and the D/L knob (2) sets the dark background/light background function.

a) Turn the MIN/MAX knob (1) to the middle of its range.

b) Turn the D/L knob (2) to the D position.

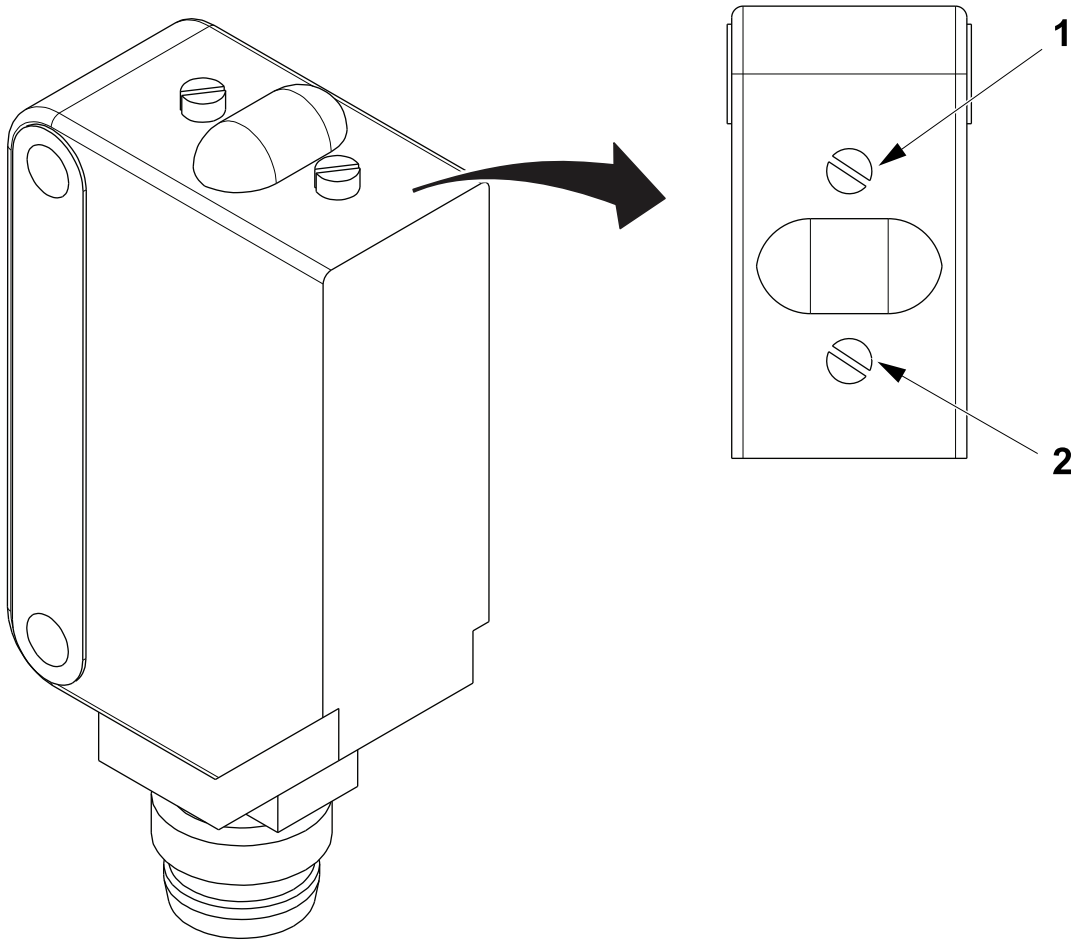

1 MIN/MAX knob
2 D/L knob

(Cont'd)

(Cont'd)

Note! The Operation LED (Orange)is on whenever power is supplied to the sensor.

c) Put a package between the sensor and the reflector and check that the operation LED (Orange) (4) comes on.

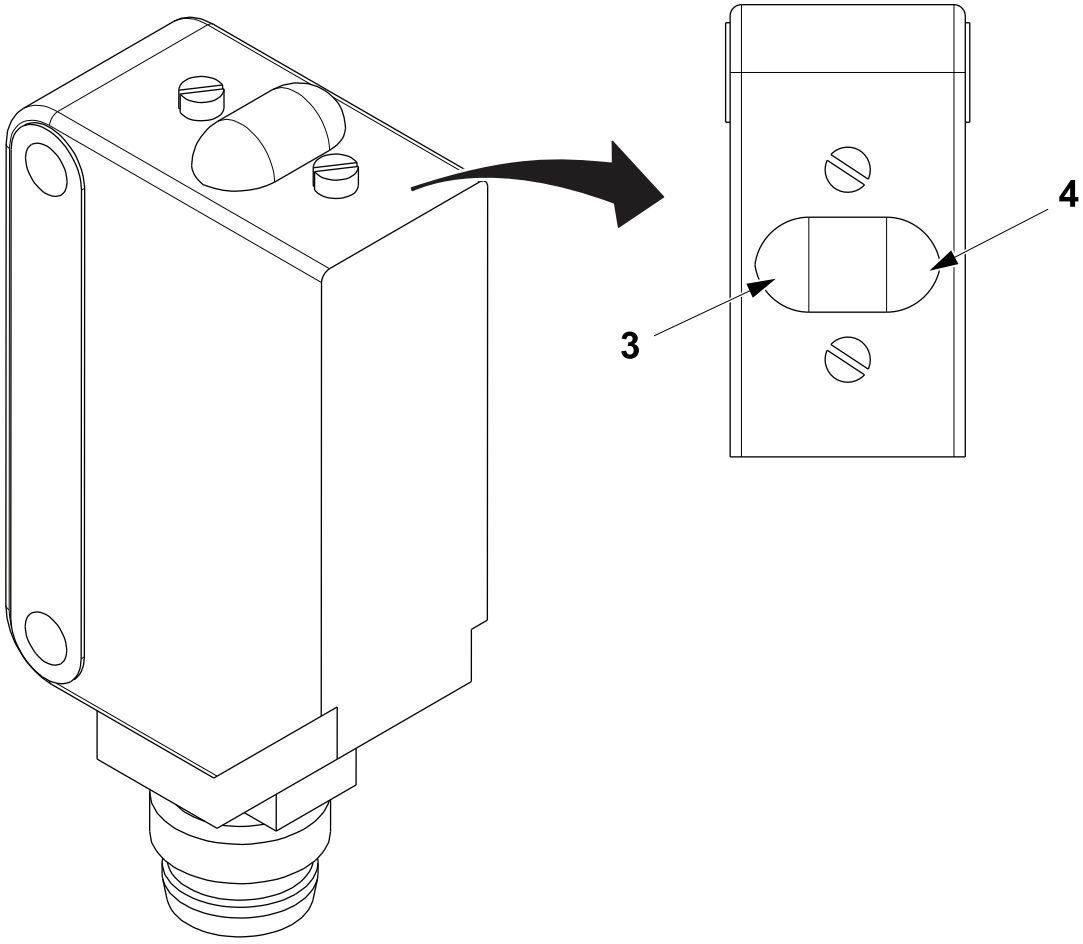

3 Stability LED (Green)
4 Operation LED (Orange)

8.8.4 Cap Present Sensor

8.8.4-1 Sensor (W21B3012, W21B3014) - Set

Machine Status	Electrical supply disconnecting device in position I (ON)
SPC Reference	90459-6607

a) Set the scanning distance to the maximum by turning the control knob (1) fully counter clockwise to the MAX position.

b) Place a cap in front of the sensor (2).

c) Make sure that the red light spot is visible on the cap and the signal strength indicator (3) is ON. If not, change the sensor (2).

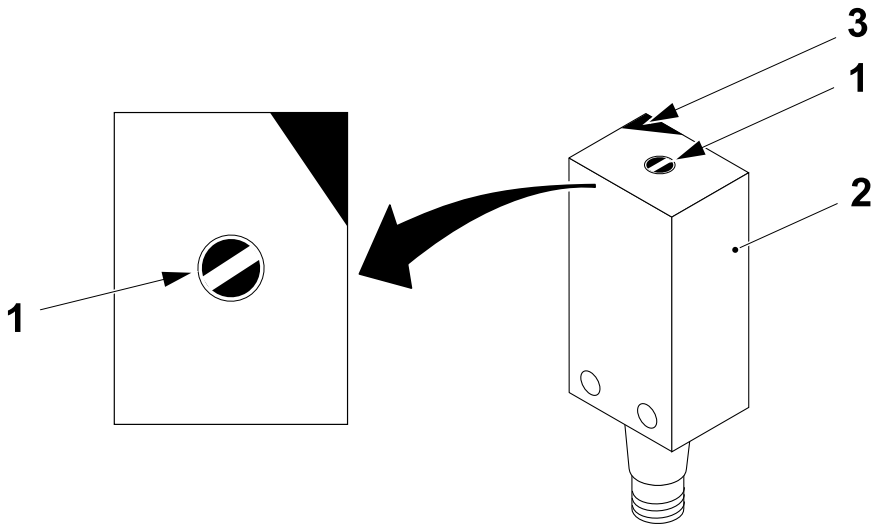

1 Knob
2 Sensor
3 Strength indicator

(Cont'd)

(Cont'd)

d) Remove the cap from in front of the sensor (2).

e) Check the condition of the signal strength indicator (3).

f) If the signal strength indicator (3) is OFF, position **A** is defined and only positions **B** and **C** need to be found. See Situation 1 below.

g) If the signal strength indicator (3) is still ON, turn the control knob (1) slowly clockwise until the signal strength indicator (3) goes OFF. The control knob (1) is now at the new position **A** as shown in Situation 2 below. Note this position.

Y = Situation 1
Z = Situation 2

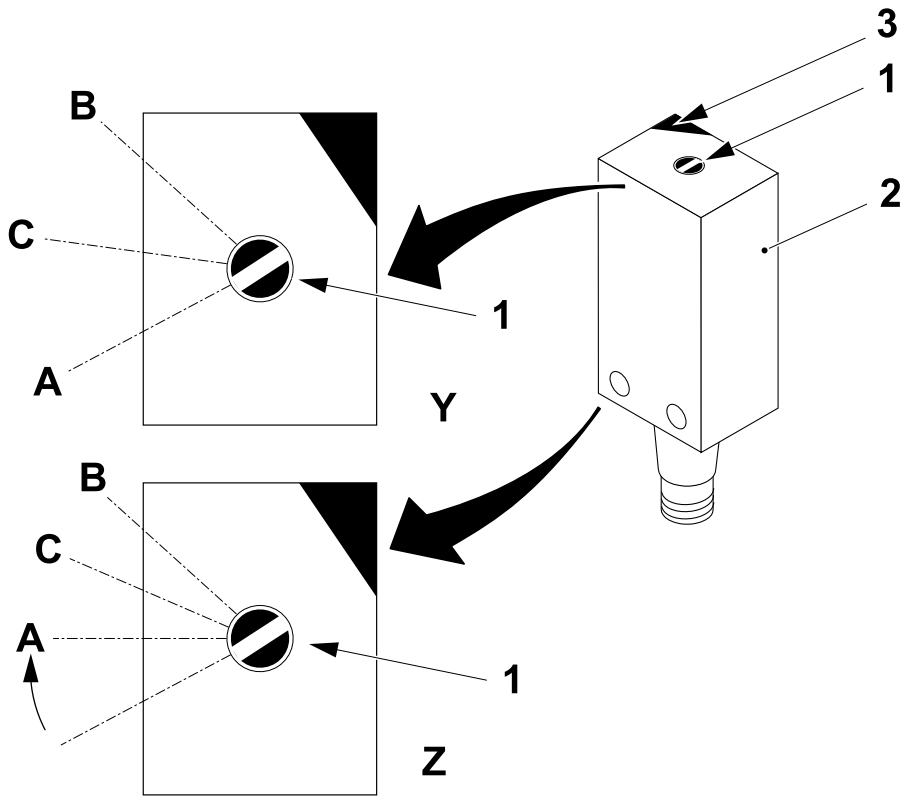

1 Knob
2 Sensor
3 Strength indicator

(Cont'd)

(Cont'd)

h) Turn the switch fully clockwise to the MIN position.

i) Place a cap in front of the sensor (2).

j) Turn the control knob (1) slowly counter clockwise until the signal strength indicator (3) comes ON. The control knob (1) is now at the position **B**. Note this position.

k) If the position **B** is further clockwise than the relevant position **A**, set the control knob (1) to a position half way between **A** and **B**. This is position **C** and the correct setting for the scanning distance.

l) If the position **B** is further counter clockwise than the position **A**, the affect of the background is too great and the sensor mechanical setting must be checked again.

Y = Situation 1
Z = Situation 2

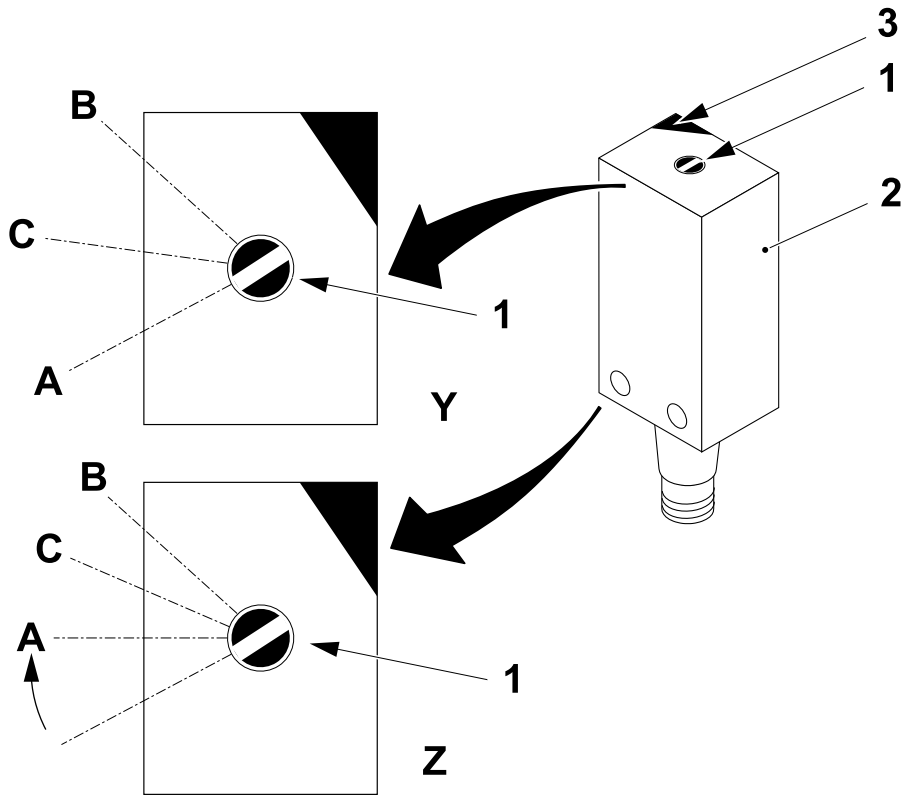

1 Knob
2 Sensor
3 Strength indicator

8.9 Control Panel

8.9-1 Control Panel - Overview

SPC Reference	90600-0980

The Control Panel is used to start, stop and supervise the machine from one common point. It has two main parts:

- The Touch screen display (1)
- The Operator pushbutton panel (2) .

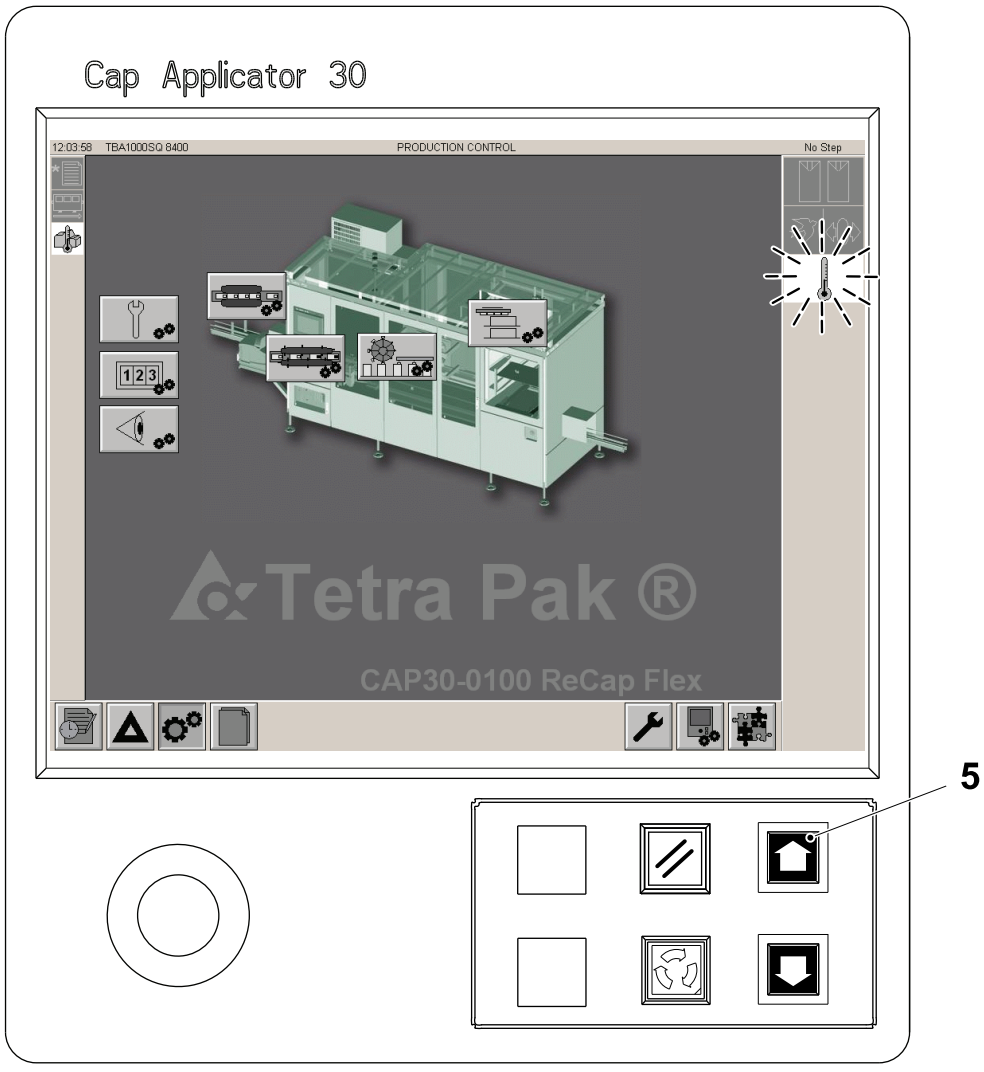

1 Touch screen display
2 Operator pushbutton panel

8.9.1 Control Panel - Touch Screen

This section describes the maintenance procedures associated with the touch screen display. The procedures must be performed in a specific order according to the situation. Proceed as follows:

- 8.9.1-1 Touch Screen - TPOP SHUTDOWN
- 8.9.1-2 Touch Screen - Firmware Installation
- 8.9.1-3 Touch Screen Machine Setup - Calibrate Touch Screen
- 8.9.1-4 Touch Screen - New Application Software Installation
- 8.9.1-5 Touch Screen - Remove Existing Application Program
- 8.9.1-6 Touch Screen - Load New Application
- 8.9.1-7 Touch Screen - Check/Set Network Configuration
- 8.9.1-8 Touch Screen - Startup Options Setup
- 8.9.1-9 Touch Screen - Display Setup
- 8.9.1-10 Touch Screen - Time/Date/Regional Settings Setup
- 8.9.1-11 Touch Screen - Start-Up Language Setup
- 8.9.1-12 Touch Screen - Language Setup
- 8.9.1-13 Touch Screen - Create New Recipes
- 8.9.1-14 Touch Screen - Saving Recipe Settings

8.9.1-1 Touch Screen - TPOP SHUTDOWN

Machine Status	Electrical supply disconnecting device in position I (ON)
Special Equipment	PC with CD drive Secure Digital Reader Secure Digital Card TP No. 90604-3590 for Firmware see SPC
SPC Reference	2779070-0300

Note! Always use the latest version of Firmware and Software.

a) Login as Service technician in the TPOP, see 1.1.1-1 HMI User Management - Log On as a User.

b) In the SERVICE window, touch the SHUTDOWN button (1) to shutdown the TPOP.

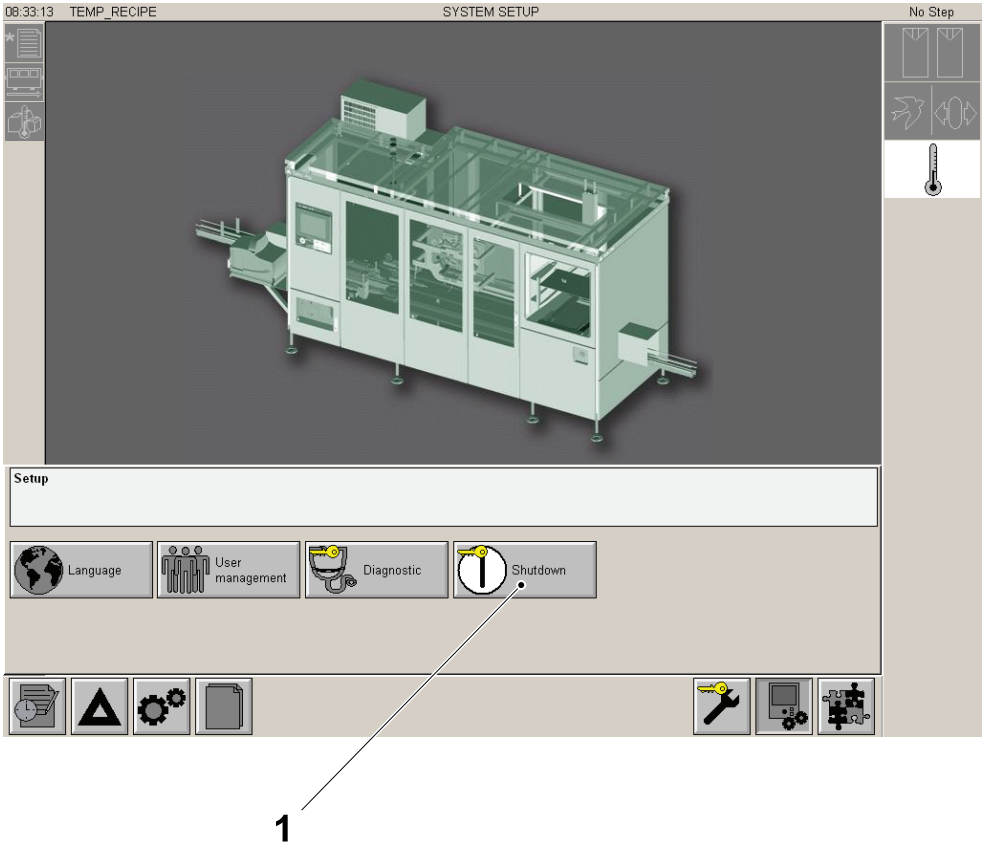

1 SHUTDOWN button

8.9.1-2 Touch Screen - Firmware Installation

Machine Status	Electrical supply disconnecting device in position I (ON)
Special Equipment	PC with CD Drive and Secure Digital card reader and Secure Digital card Software CD TP No. XXXXXXX-0XXX TetraPak Installer Version 1.2
SPC Reference	2779070-0300

a) In the CONFIGURATION WINDOW (1) touch the TERMINAL SETTING BUTTON (2).

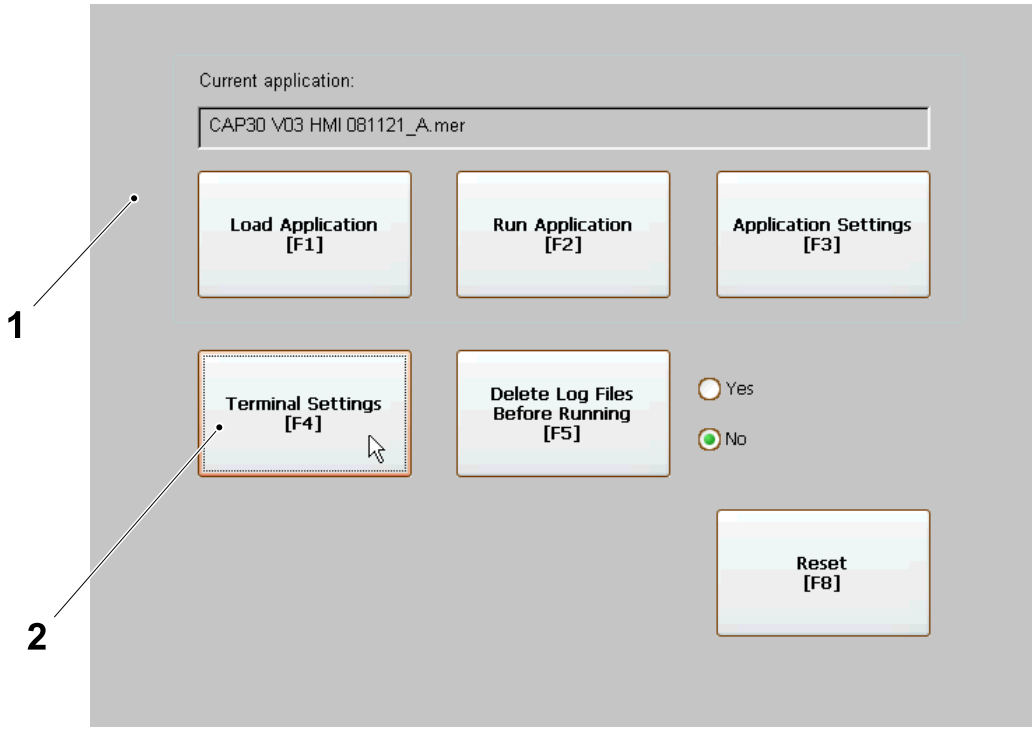

1 Configuration window
2 Terminal setting button

(Cont'd)

(Cont'd)

b) Select File management (3) and touch ENTER button (4).

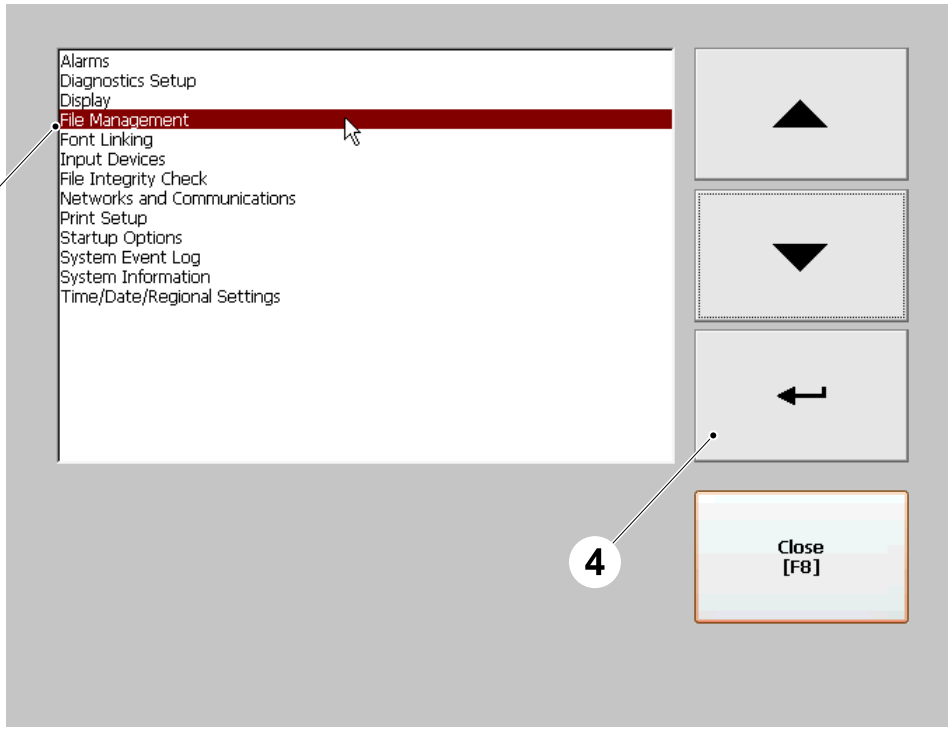

3 File management
4 ENTER button

(Cont'd)

(Cont'd)

c) Touch the ARROW button (5) to select "Delete Files".

d) Touch ENTER button (4) .

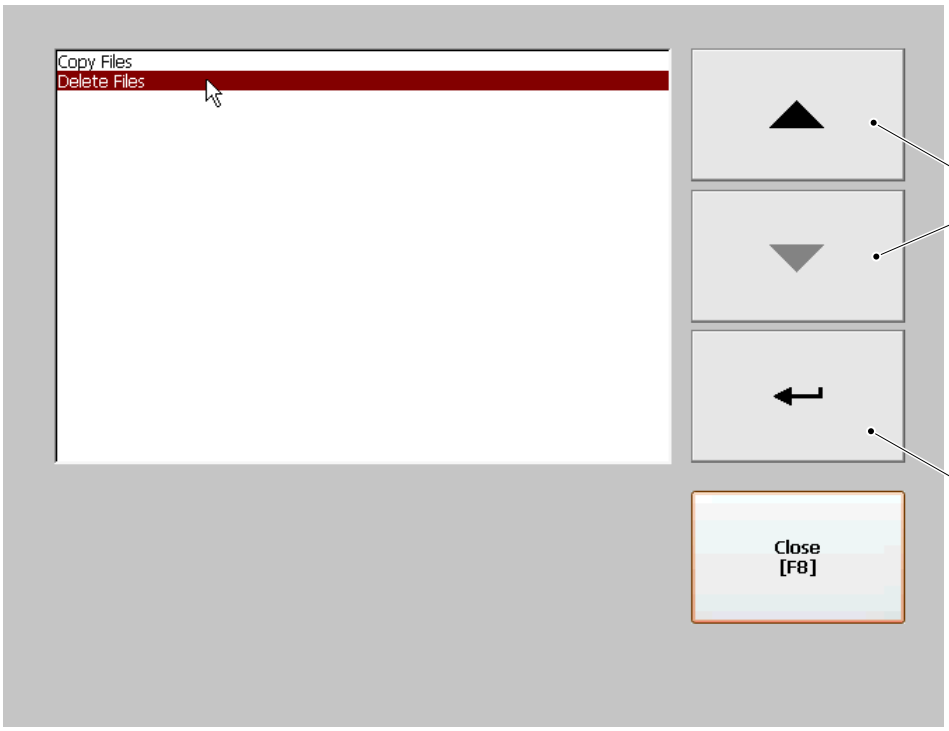

4 ENTER button
5 ARROW button

(Cont'd)

(Cont'd)

e) Select "Delete Applications" and touch ENTER button (4) .

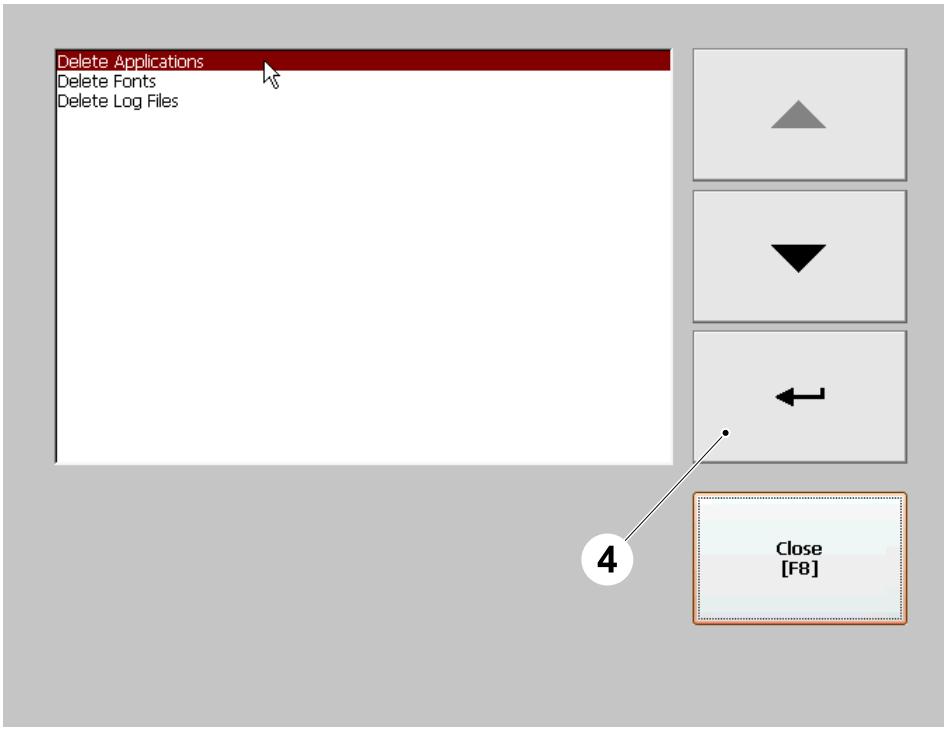

4 ENTER button

(Cont'd)

(Cont'd)

f) Touch Delete button (6) to remove all the Firmware applications (7) if any are present, if not and the field appears empty go to step Install New Firmware.

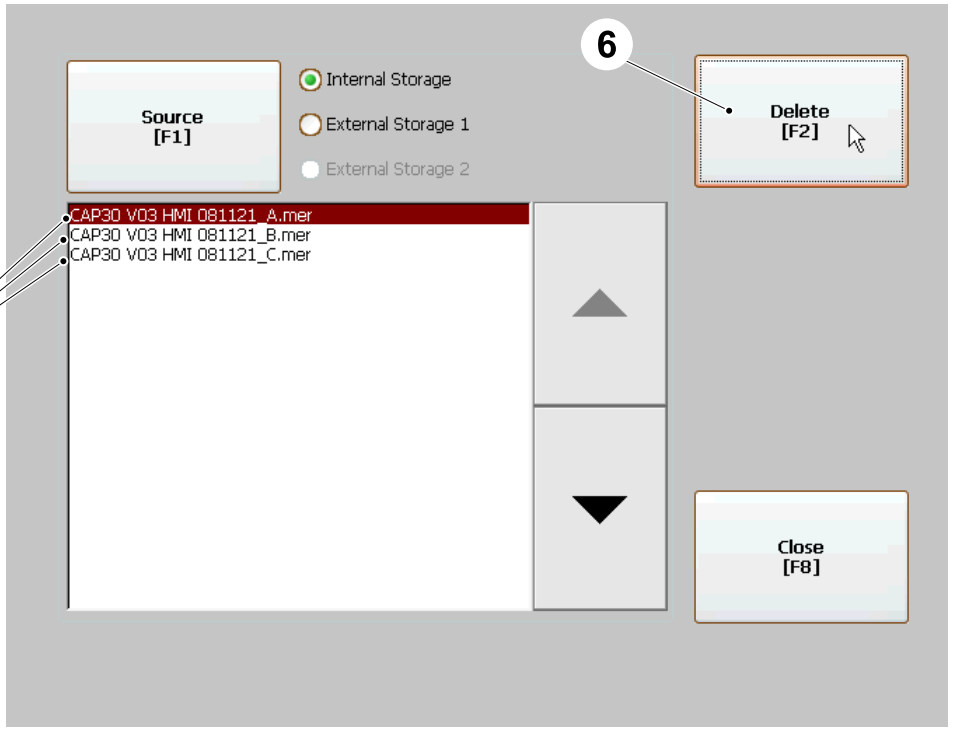

6 Delete button
7 Firmware applications

(Cont'd)

(Cont'd)

g) Touch YES button (8) to confirm.

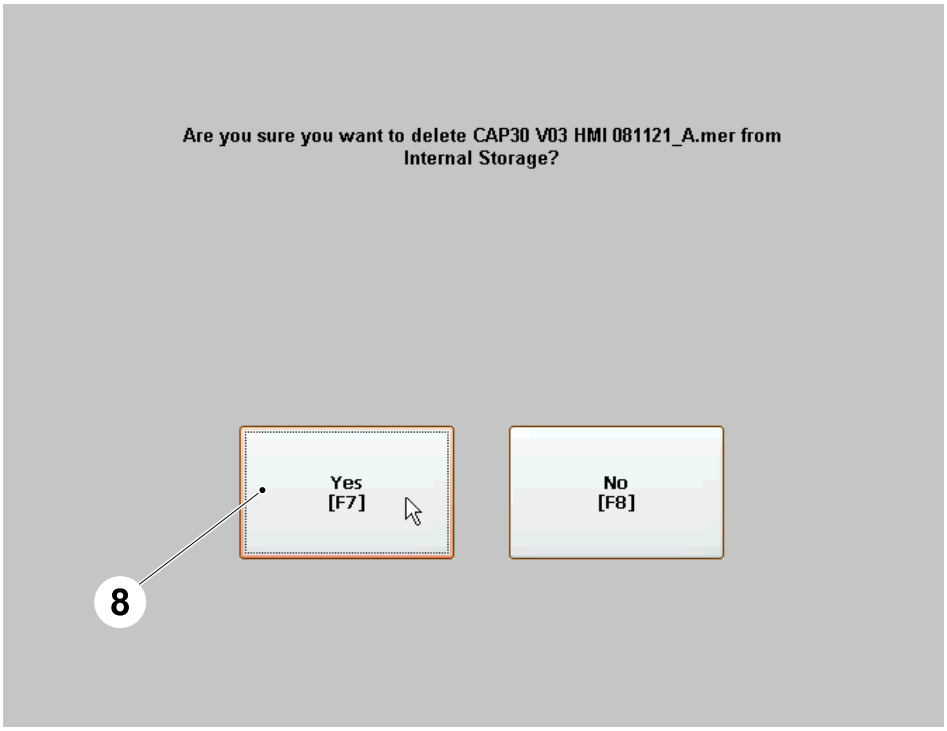

8 YES button

(Cont'd)

(Cont'd)

h) Delete all the applications by repeating the instructions from f) on page 8-251.

i) When all the applications are deleted, touch Close button (9) until the configuration window is displayed.

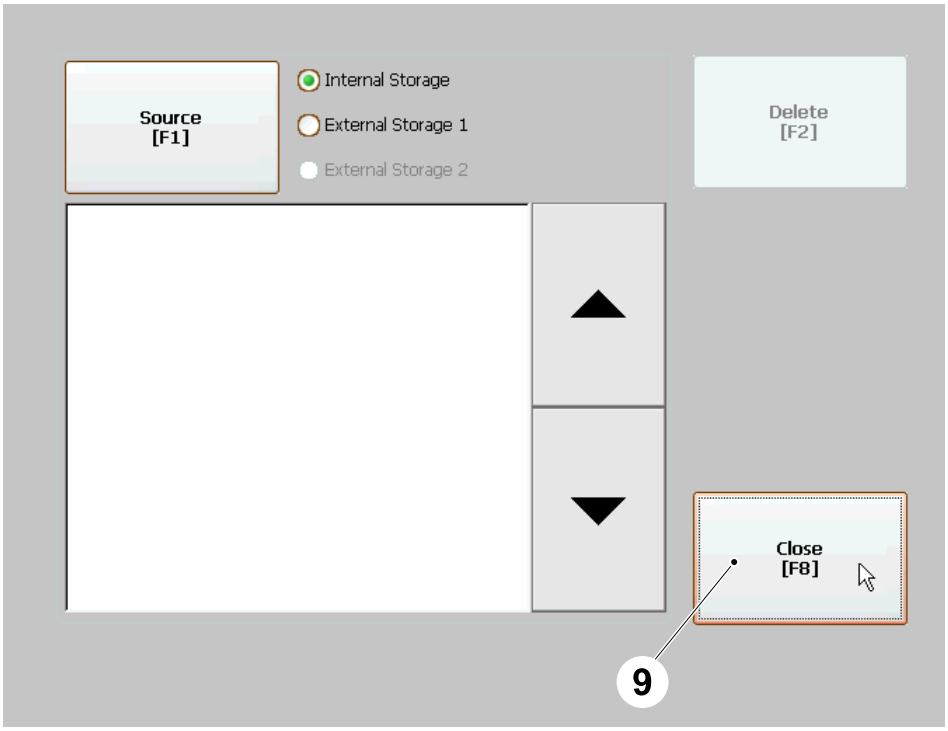

9 Close button

(Cont'd)

(Cont'd)

j) In the CONFIGURATION WINDOW (1) touch the Reset button (10).

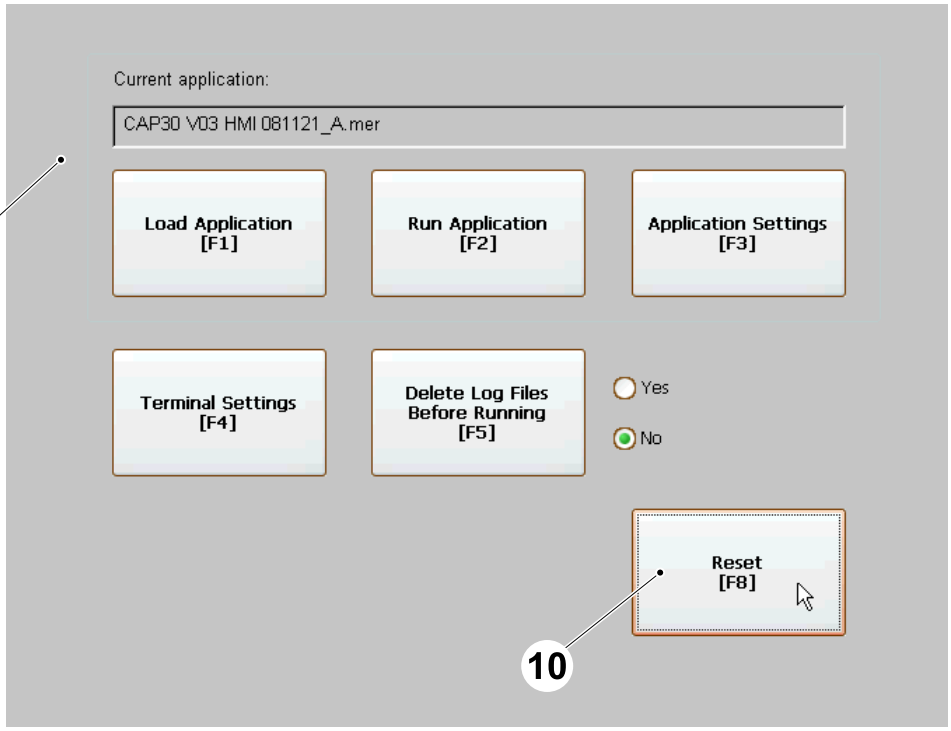

1 Configuration window
10 Reset button

(Cont'd)

(Cont'd)

k) Touch YES button (8) to confirm.

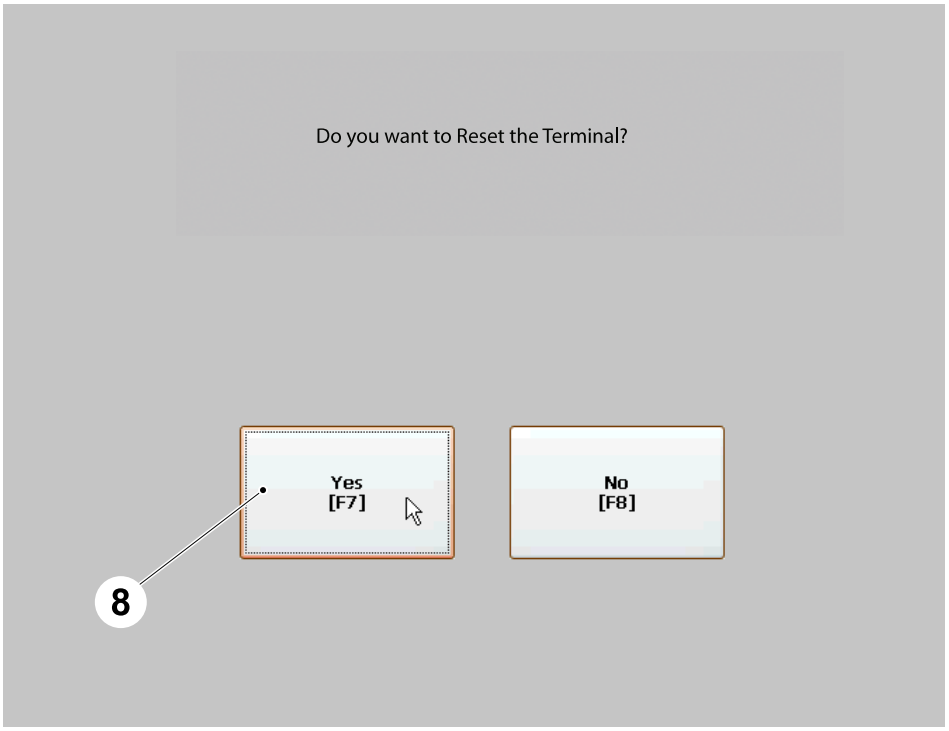

8 YES button

(Cont'd)

(Cont'd)

l) When the TPOP reboots, touch OK button (11) in the ERROR window (12) .

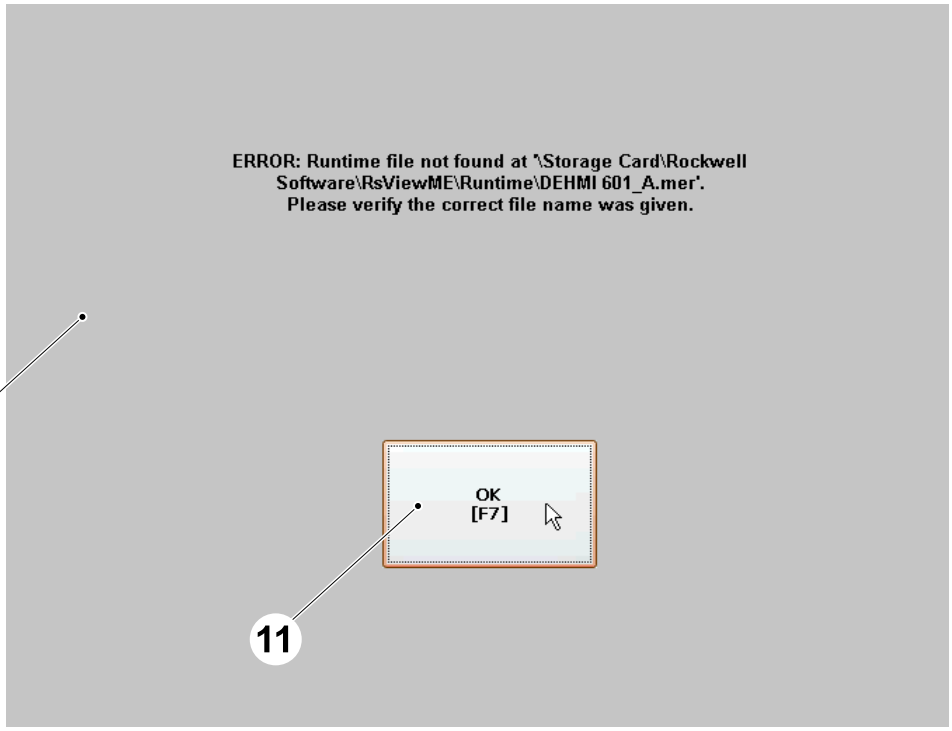

11 OK button
12 ERROR window

(Cont'd)

(Cont'd)

Copy Firmware to Secure Digital Card

Note! Use a formatted secure digital card.

a) Connect the Secure Digital Reader (1) to the PC (2) .

b) Insert the software CD into the PC CD drive and the Secure Digital Card (3) in the Secure Digital Reader (1) .

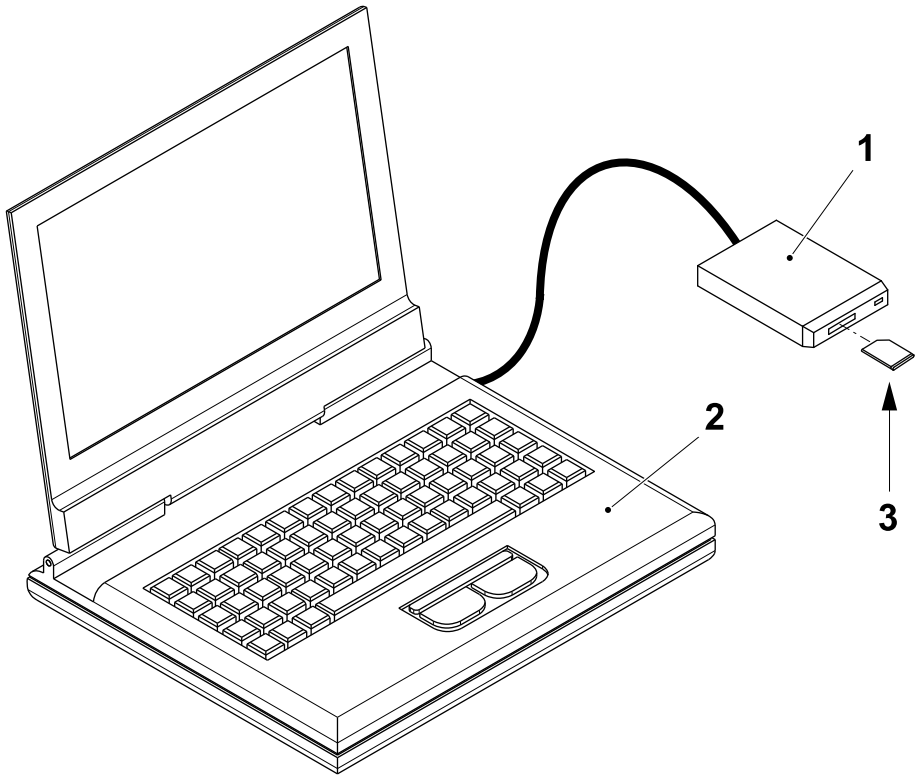

1 Secure Digital Reader
2 PC
3 Secure Digital Card

(Cont'd)

(Cont'd)

c) Browse the software CD and locate the subfolder shown in picture below.

d) Make sure that the Secure Digital Card is inside the Secure Digital Reader, then copy the file **Autorun.exe** and the folder **Upgrade** from the software CD to the Secure Digital Card.

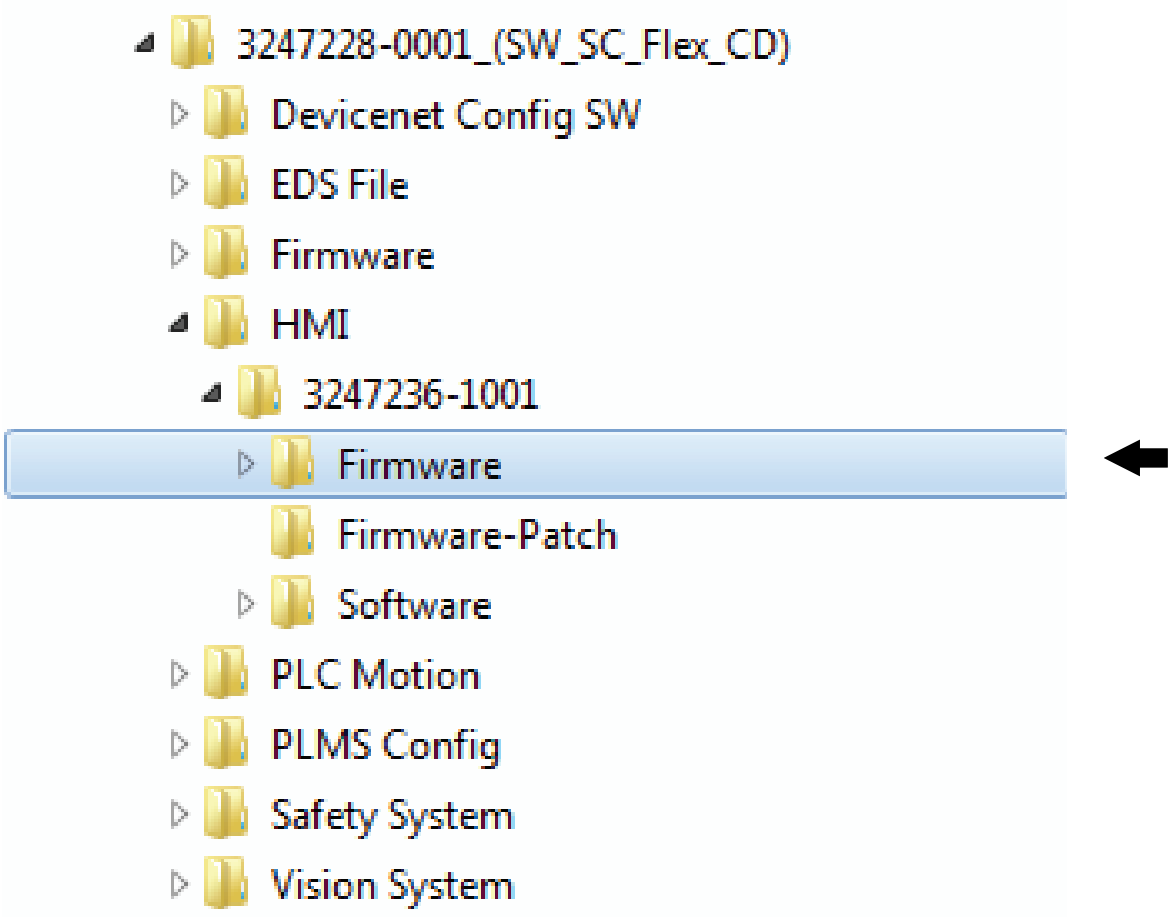

(Cont'd)

(Cont'd)

e) Remove the Secure Digital Card (3).

f) Disconnect the Secure Digital Reader (1) from the PC (2).

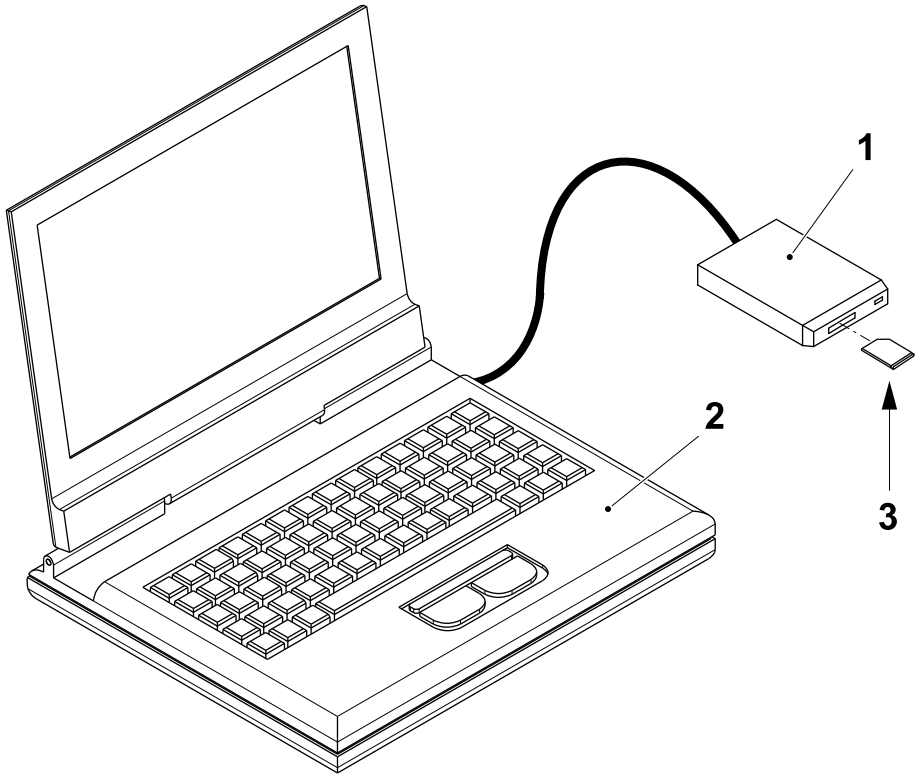

1 Secure Digital Reader
2 PC
3 Secure Digital Card

(Cont'd)

(Cont'd)

Install New Firmware

a) Remove the screw (1) and open the panel (2) to access the rear of the TPOP.

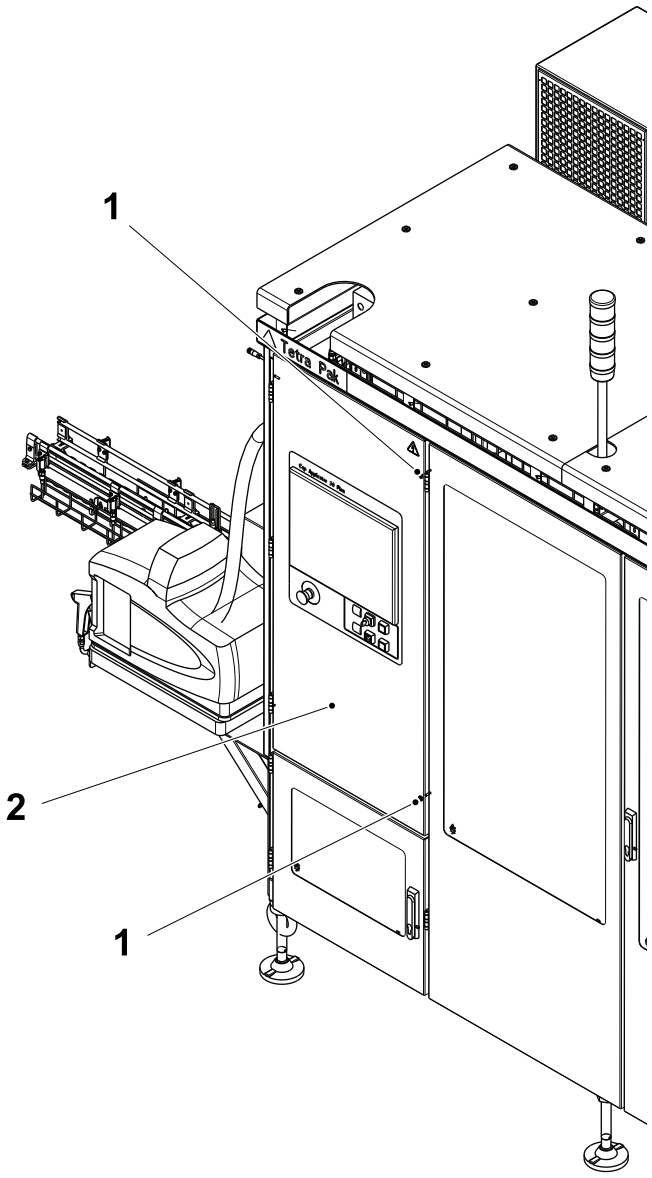

1 Screw
2 Panel

(Cont'd)

(Cont'd)

b) Insert the Secure digital card (3) with the new Firmware inside the slot (4), making sure that the cut edge (5) is placed on the outer side.

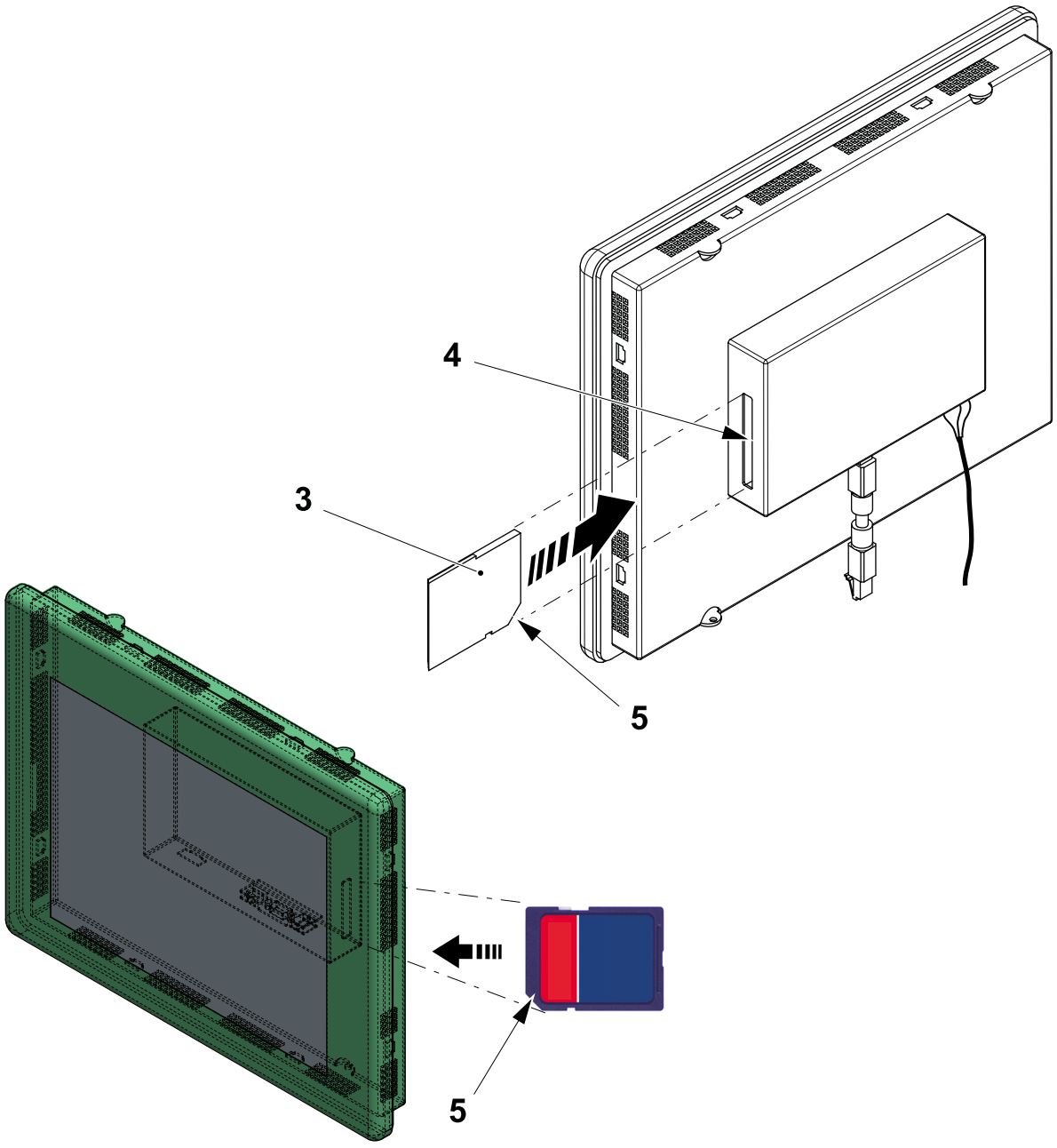

3 Secure digital card
4 Slot
5 Edge

(Cont'd)

(Cont'd)

c) When the Firmware upgrade card window (6) appears, check the versions of the Firmware and touch the Upgrade button (7) to upgrade to the latest version.

d) In case the Firmware is already updated, touch the Exit button (8) and proceed from 8.9.1-4 Touch Screen - New Application Software Installation.

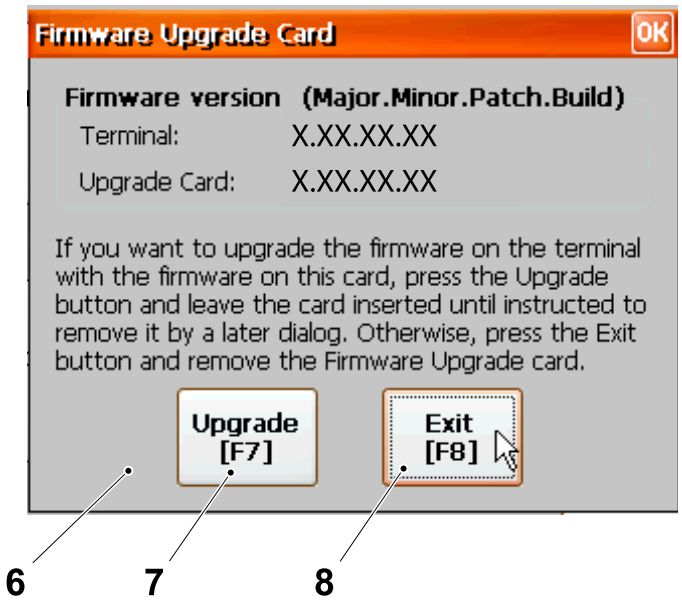

6 Firmware upgrade card window
7 Upgrade button
8 Exit button

(Cont'd)

(Cont'd)

e) Wait for the TPOP to finish the uploading of Firmware.

f) Calibrate the touch sensor area of the TPOP according to the instructions described in the paragraph 8.9.1-3 Touch Screen Machine Setup - Calibrate Touch Screen on page 8-264.

g) Remove the Secure Digital card.

h) Touch RESET button (9).

i) The panel reboots.

j) Set the IP address of the panel, see 8.9.1-7 Touch Screen - Check/Set Network Configuration.

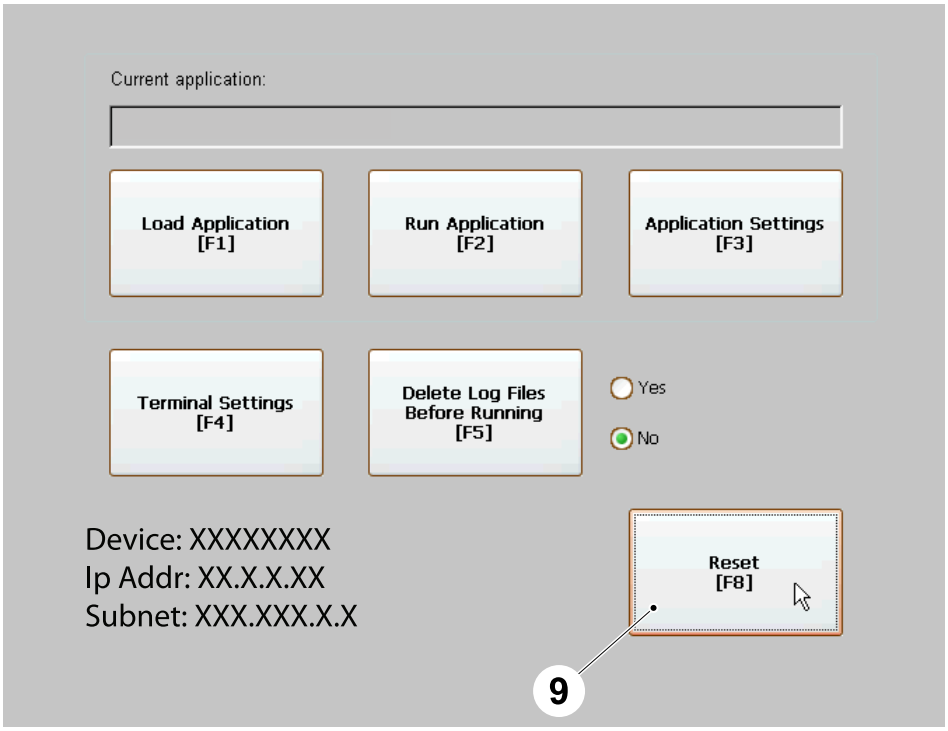

9 RESET button

8.9.1-3 Touch Screen Machine Setup - Calibrate Touch Screen

Machine Status	Electrical supply disconnecting device in position I (ON)
Special Equipment	PC with CD Drive Secure Digital Reader Secure Digital Card TP No. 90604-3590 for Firmware see SPC
SPC Reference	2779070-0300

a) Shut down the TPOP, see 8.9.1-1 Touch Screen - TPOP SHUTDOWN.

b) In the MAIN window, touch the `TERMINAL SETTING BUTTON` (1).

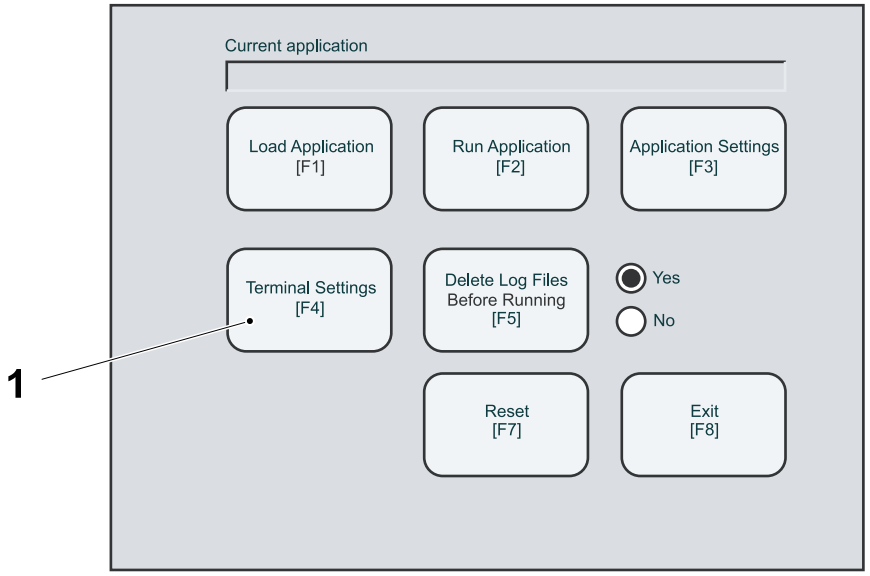

1 Terminal setting button

(Cont'd)

(Cont'd)

c) Select Input Devices (2) and touch ENTER button (3).

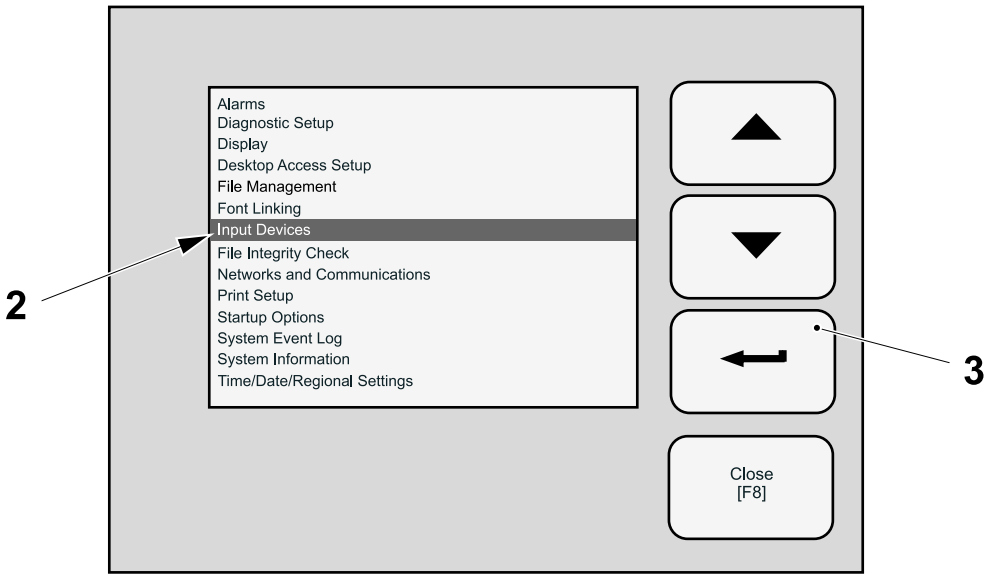

2 Input Devices
3 ENTER button

d) Touch the Touch Screen (4) and touch the ENTER button (3)

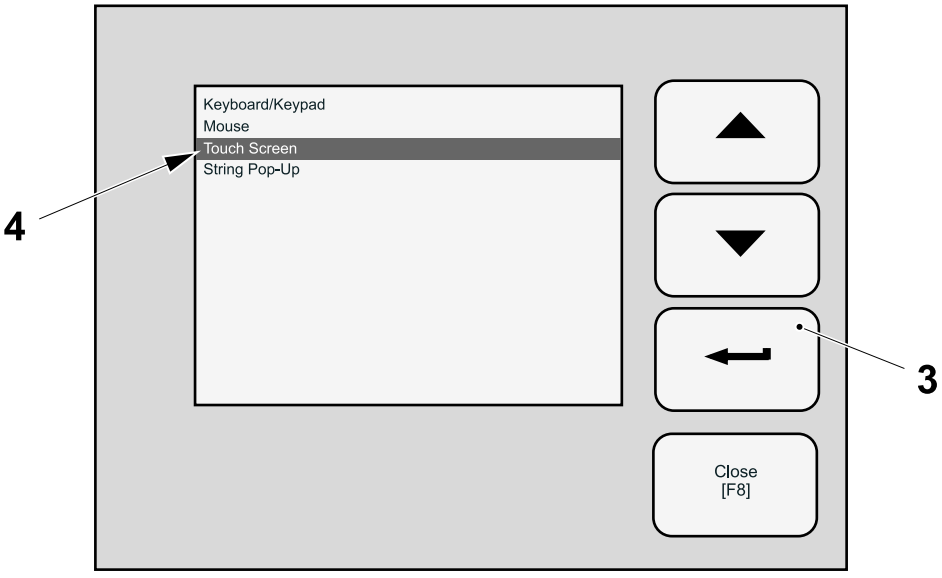

3 ENTER button
4 Touch Screen

(Cont'd)

(Cont'd)

e) Select the CALIBRATION (5) and touch ENTER button (3) .

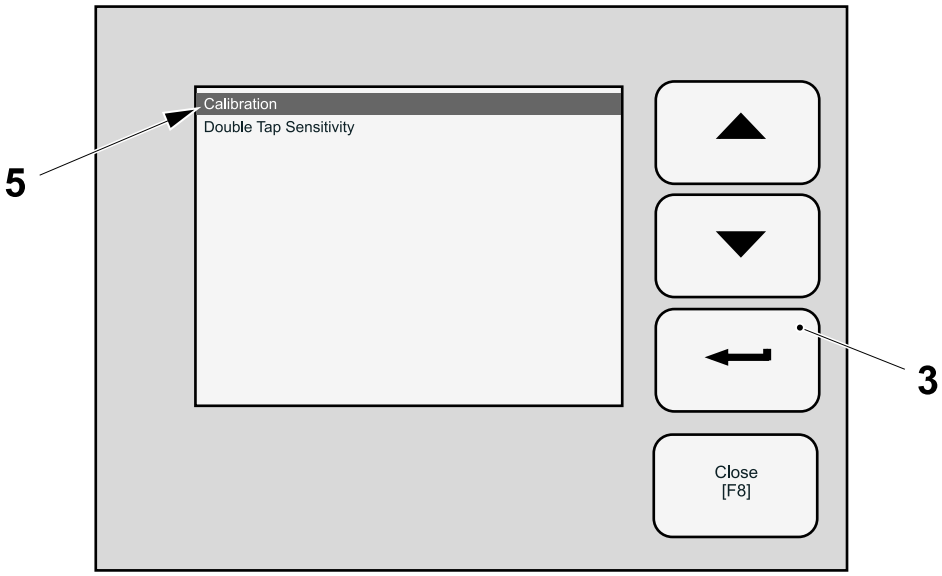

3 ENTER button

5 CALIBRATION

(Cont'd)

(Cont'd)

f) Follow the instructions on the touch screen to calibrate it. Using a pointed object (not too pointed) touch in the middle of the cross that will appear at the screen centre and on each corner of the screen, as shown in the pictures from 1 to 5.

g) Touch the screen again within 30 seconds to confirm the new calibration, or wait 30 seconds to reset the previous calibration.

h) Repeatedly press the CLOSE button until the MAIN window appears.

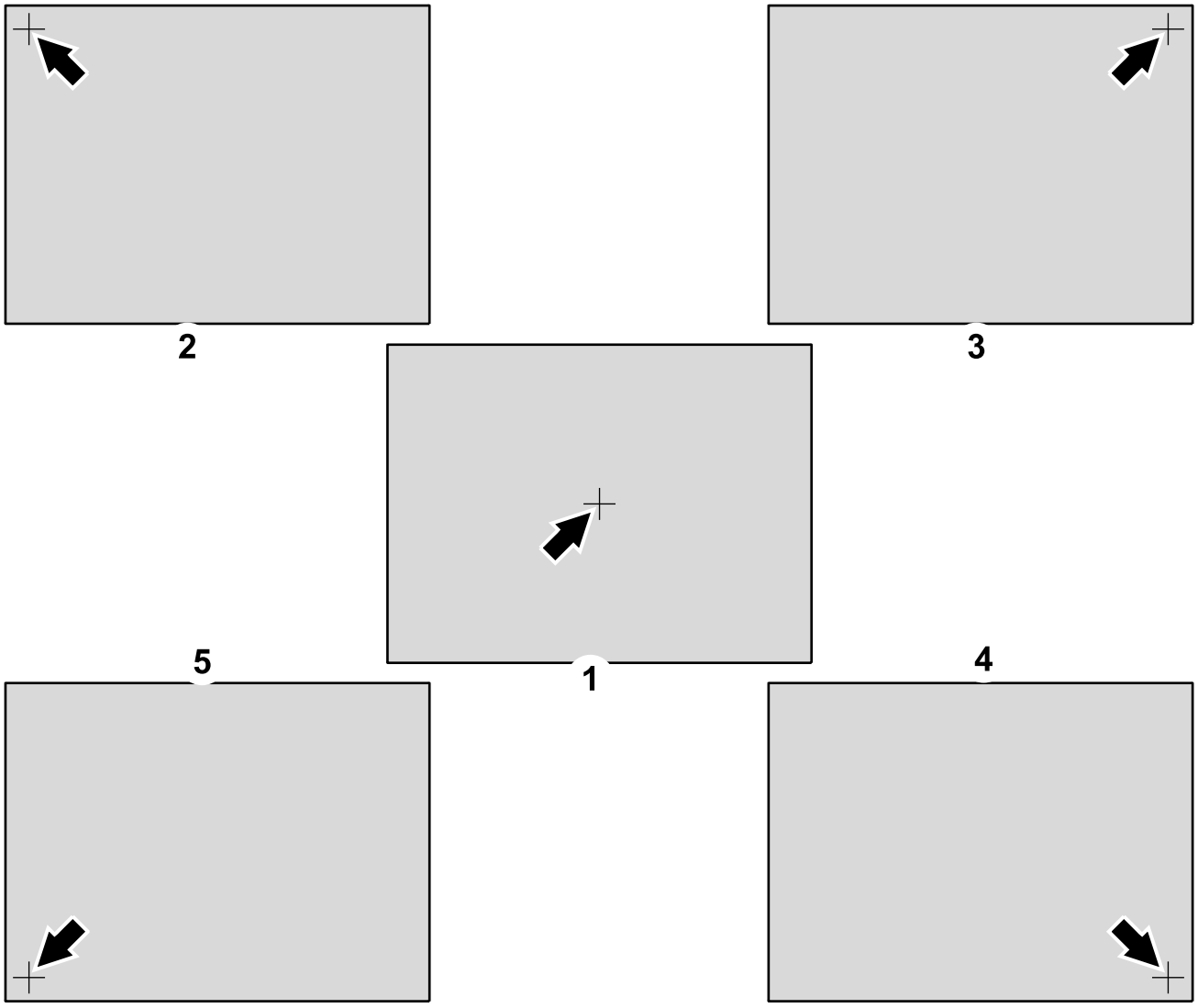

8.9.1-4 Touch Screen - New Application Software Installation

Machine Status	Electrical supply disconnecting device in position I (ON)
Special Equipment	PC with CD Drive and Secure Digital card reader Secure Digital card Software CD TP No. XXXXXXX-XXXX TetraPak Installer Version 1.2
SPC Reference	2779070-0300

Note! Use a formatted Secure Digital card.

a) Browse the software CD drive to the folder **../HMI/3247236-100X/PVP6 1500-SD Card/**, then copy all the folders and files from the CD to the root of the Secure Digital card.

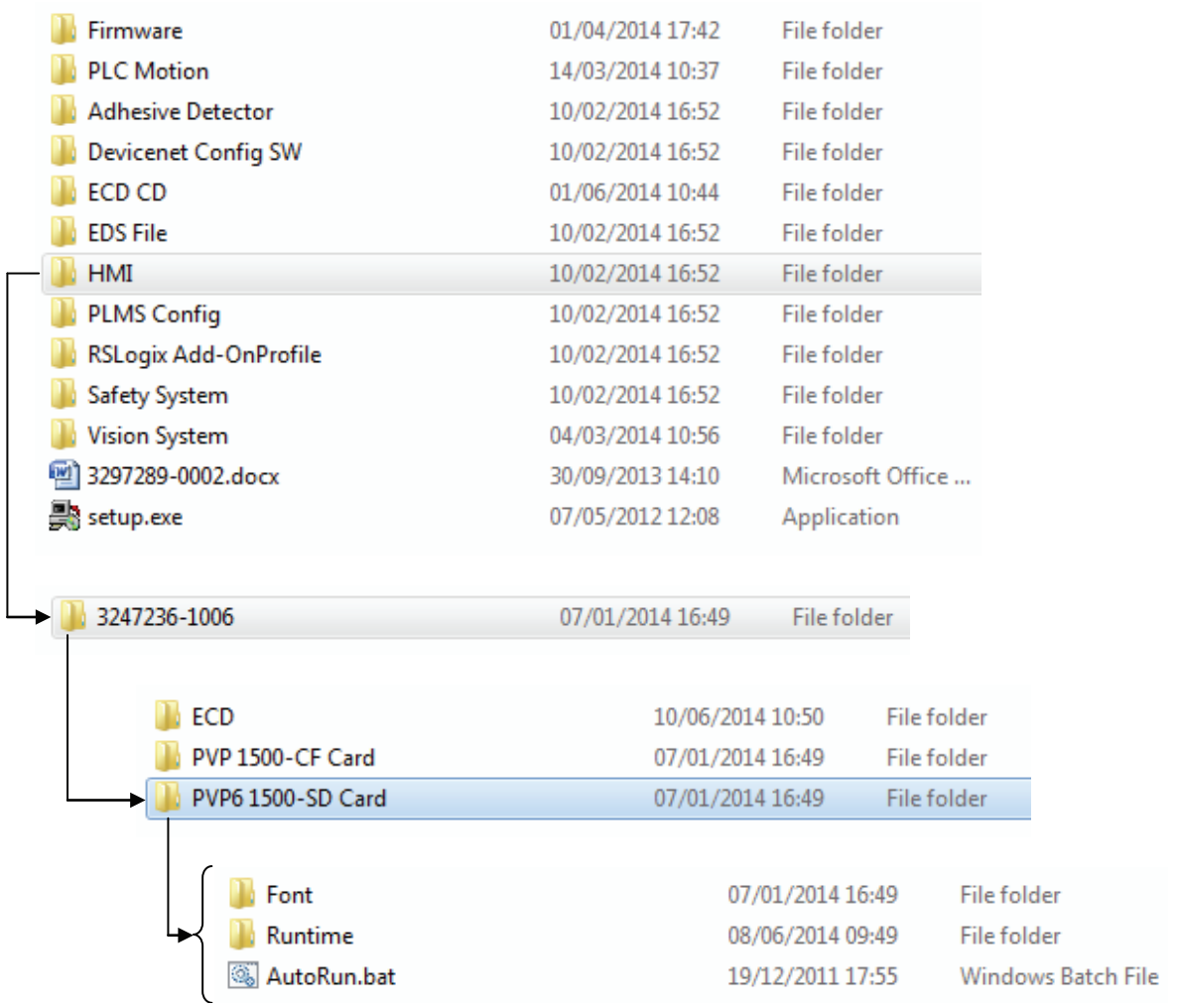

(Cont'd)

(Cont'd)

b) Delete all projects (*.mer-files) from TPOP panel if not empty, see 8.9.1-5 Touch Screen - Remove Existing Application Program.

c) When the TPOP reboots, wait for the Configuration window (1) to appear.

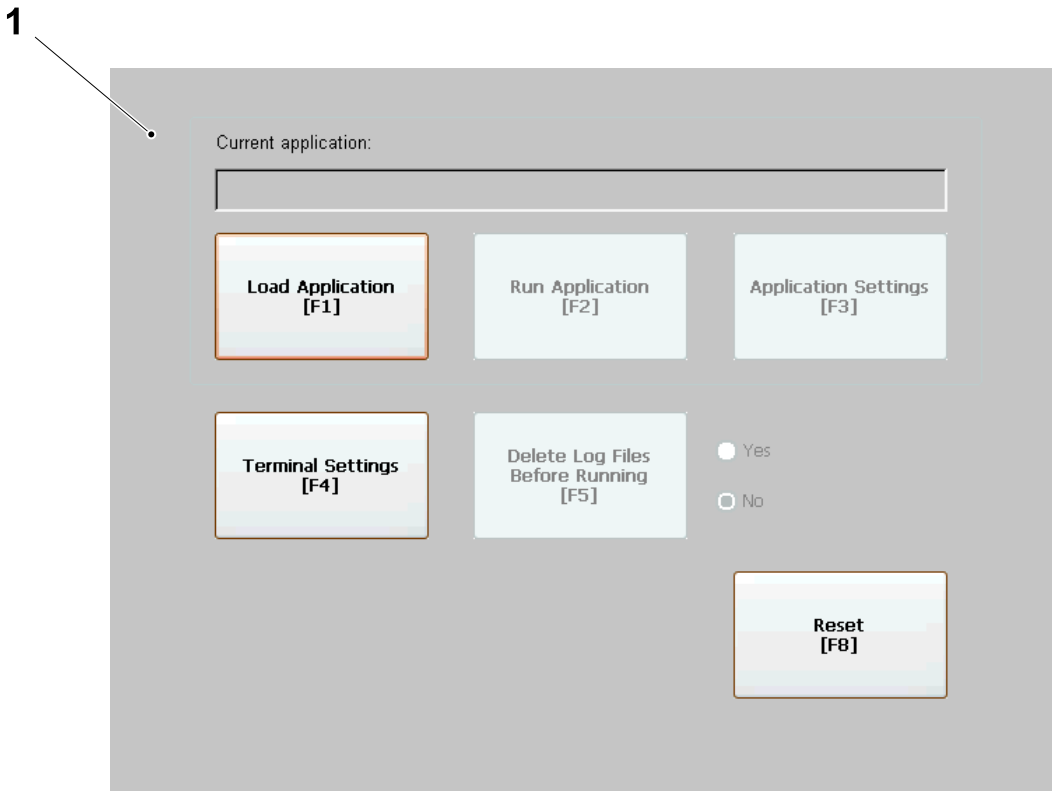

1 Configuration window

(Cont'd)

(Cont'd)

d) Insert the Secure Digital Card (2), with the new Software, inside the slot (3) , making sure that the cut edge (4) is placed on the lower side.

Note! The new software application will be installed automatically.

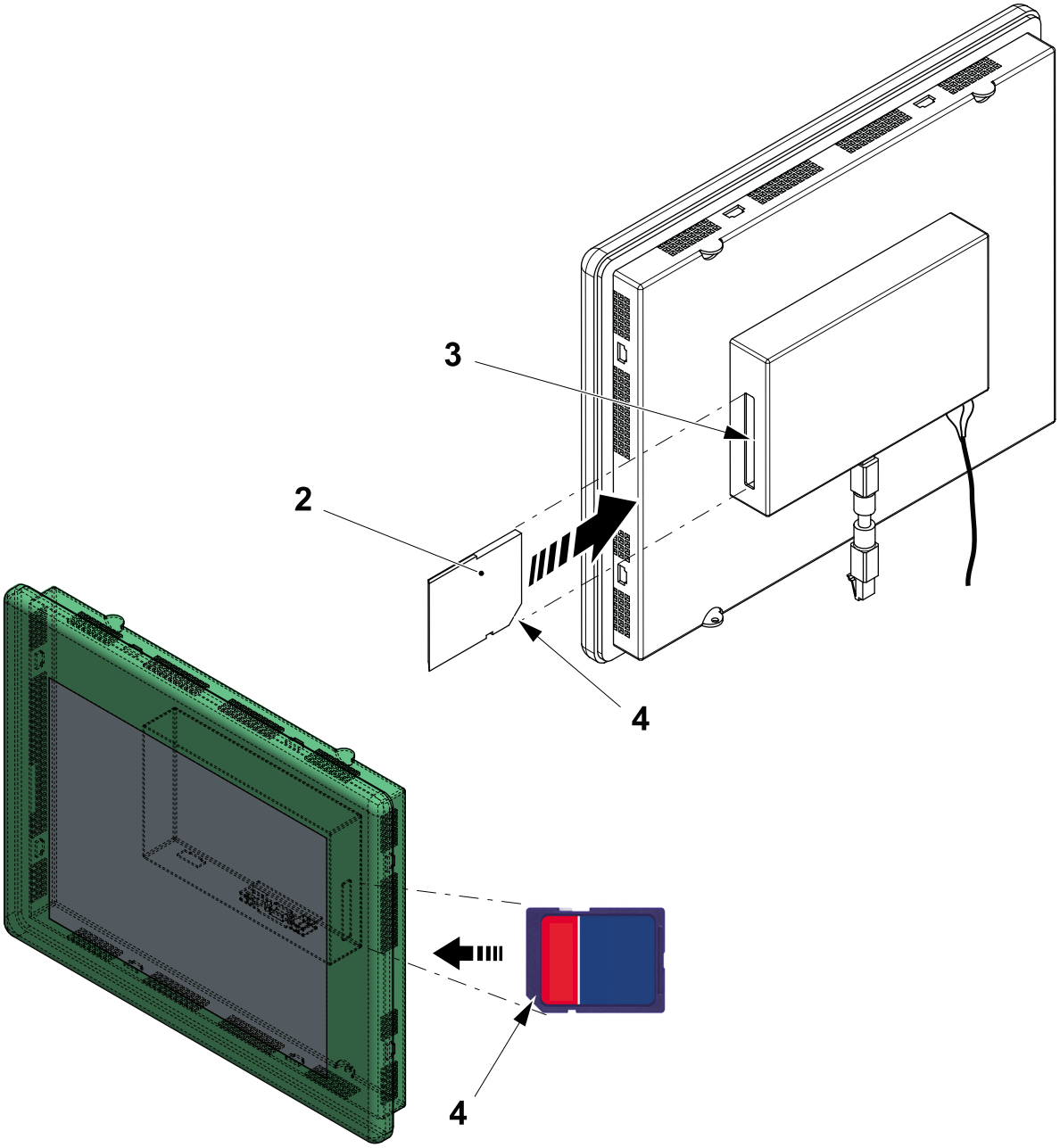

2 Secure Digital Card
3 Slot
4 Edge

(Cont'd)

(Cont'd)

e) When the installation is completed, the window below appears.

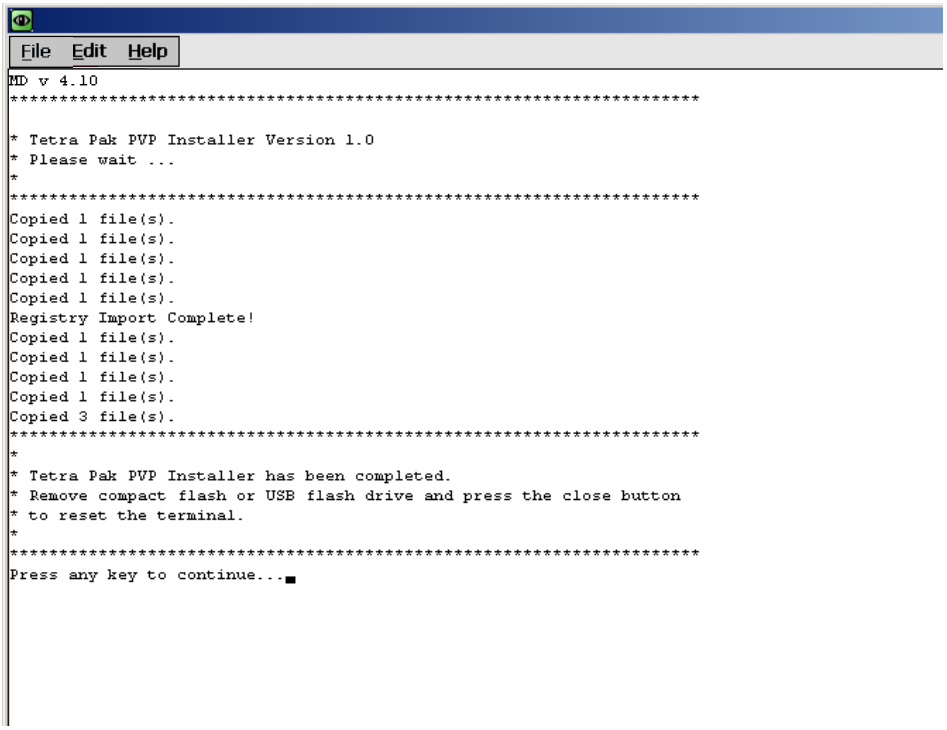

(Cont'd)

(Cont'd)

f) Remove the Secure Digital Card (2) with the new Application.

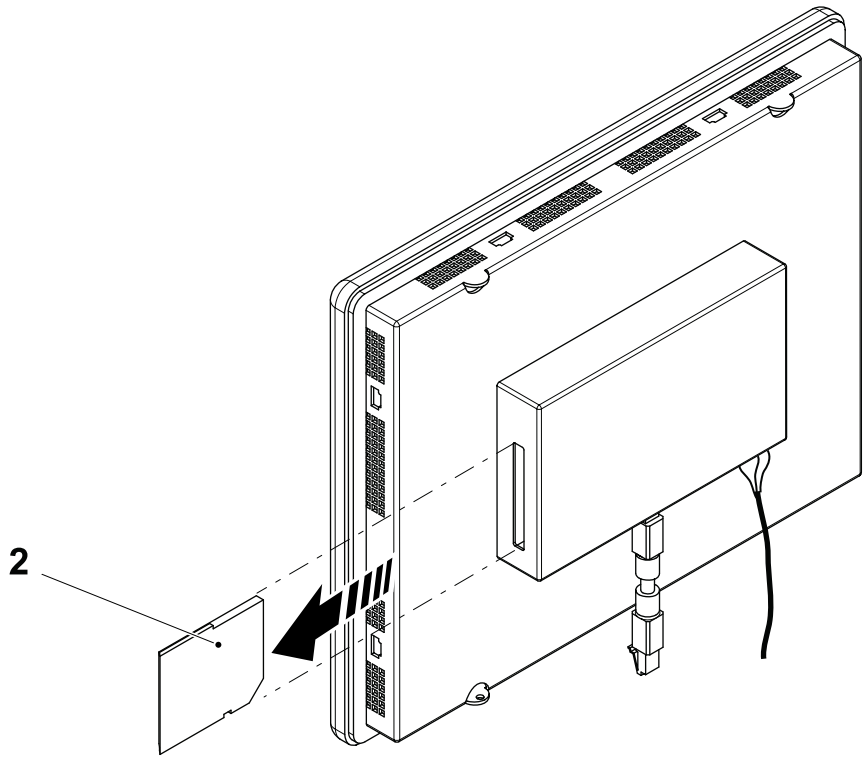

2 Secure Digital Card

(Cont'd)

(Cont'd)

g) Touch File and then Close.

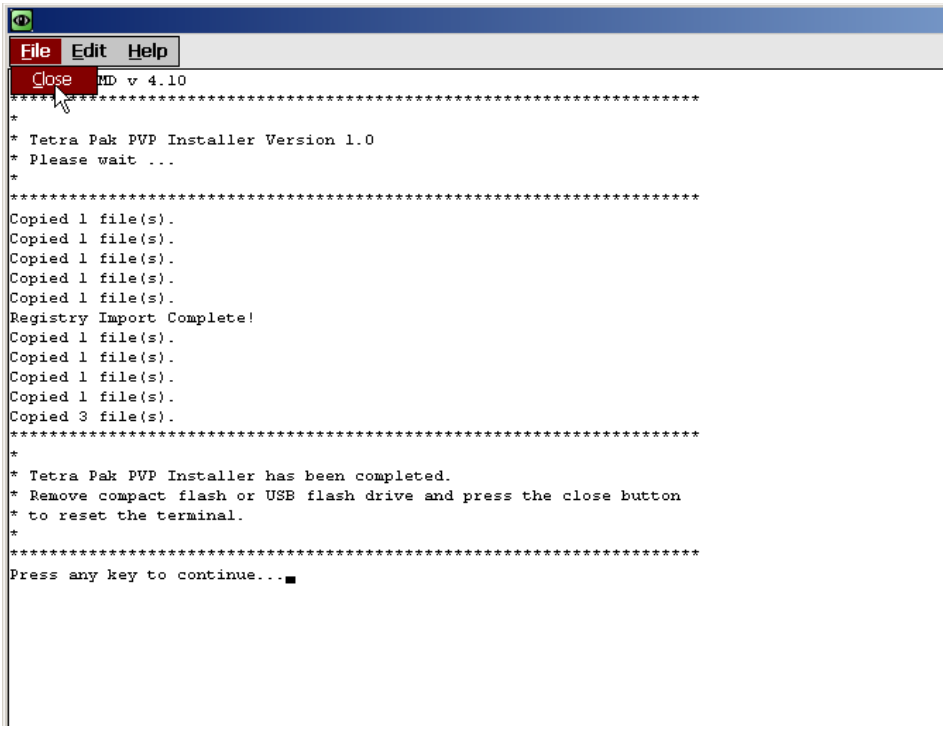

(Cont'd)

(Cont'd)

h) In the configuration window (5) touch the LOAD APPLICATION button (6) .

i) Load the new application, see 8.9.1-6 Touch Screen - Load New Application.

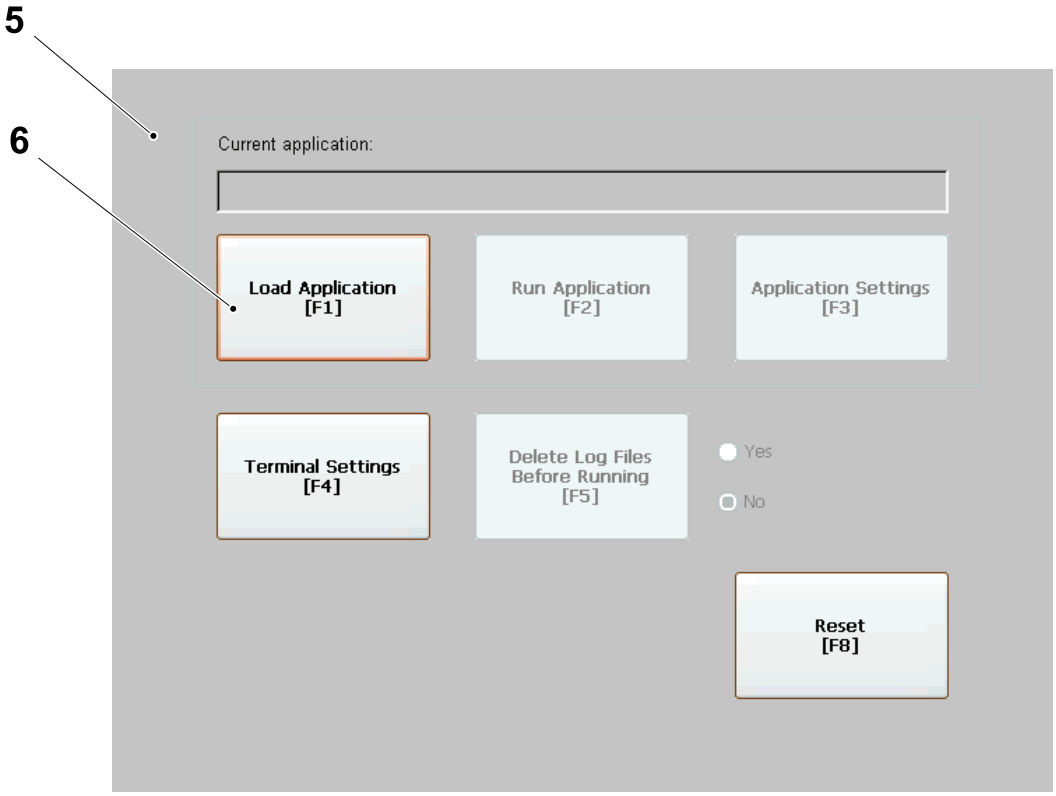

5 Configuration window
6 LOAD APPLICATION button

8.9.1-5 Touch Screen - Remove Existing Application Program

Machine Status	Electrical supply disconnecting device in position I (ON)
SPC Reference	90604-3805

Before a new application program can be installed, all files associated with the old program must be deleted to make space in the memory for the new program.

a) Shut down the TPOP, see 8.9.1-1 Touch Screen - TPOP SHUTDOWN.

b) In the MAIN window, press the TERMINAL SETTING button (1) .

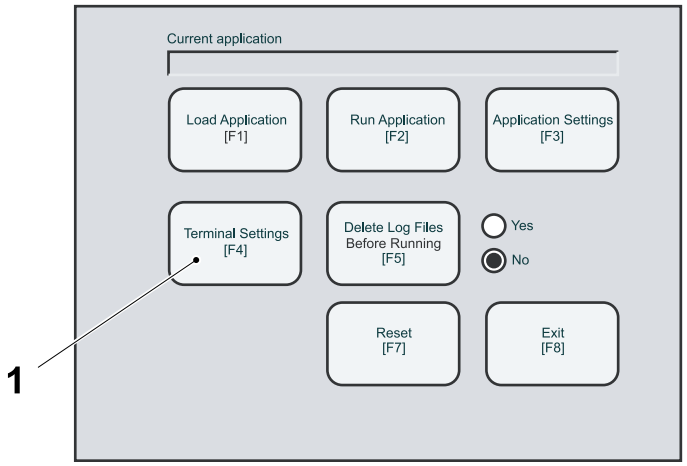

1 TERMINAL SETTING button

c) Select the FILE MANAGMNET (2) and press the ENTER button (3) .

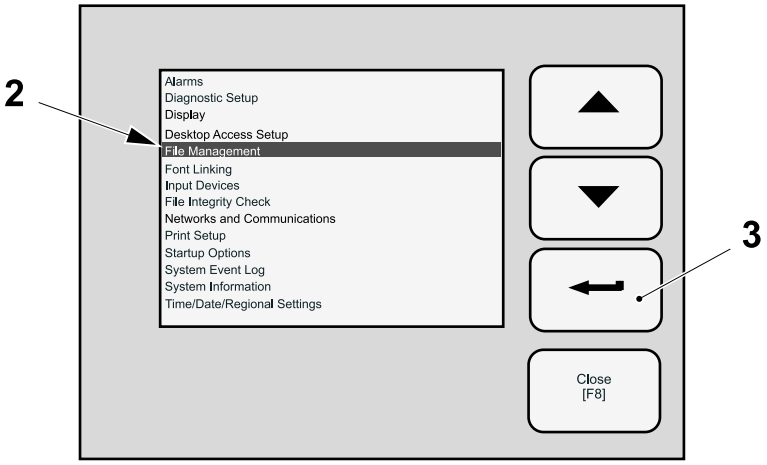

2 FILE MANAGMNET
3 ENTER button

(Cont'd)

(Cont'd)

d) Select DELETE FILES (4) and press the ENTER button (3) .

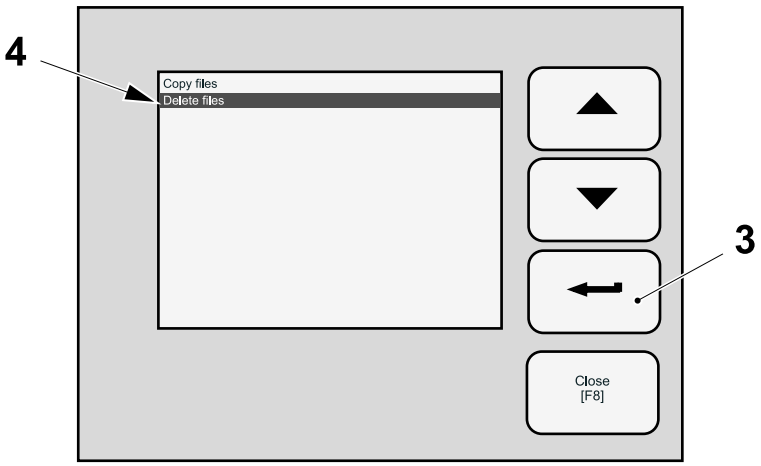

3 ENTER button
4 DELETE FILES

e) Select DELETE APPLICATIONS (5) and press the ENTER button (3).

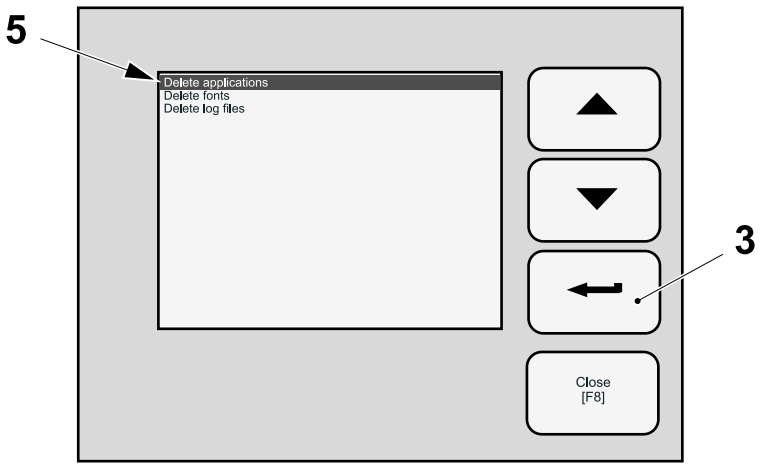

3 ENTER button
5 DELETE APPLICATIONS

(Cont'd)

(Cont'd)

f) Select one of the APPLICATION PROGRAMS (6) to be deleted and press the DELETE button (7) .

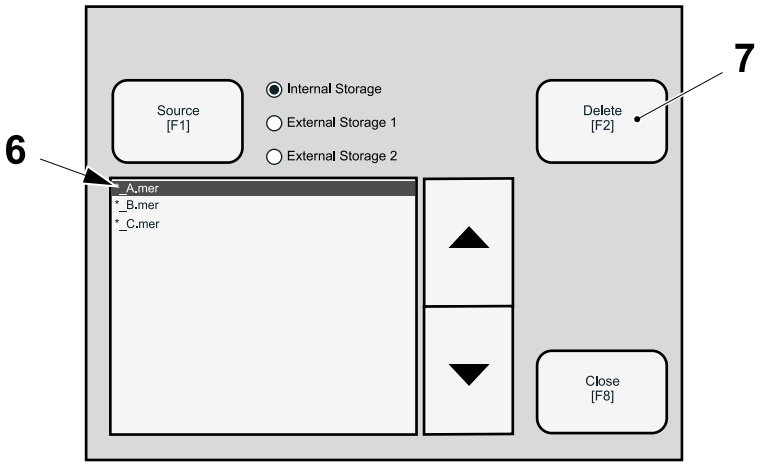

6 APPLICATION PROGRAMS
7 DELETE button

g) Press the YES button (8) to confirm.

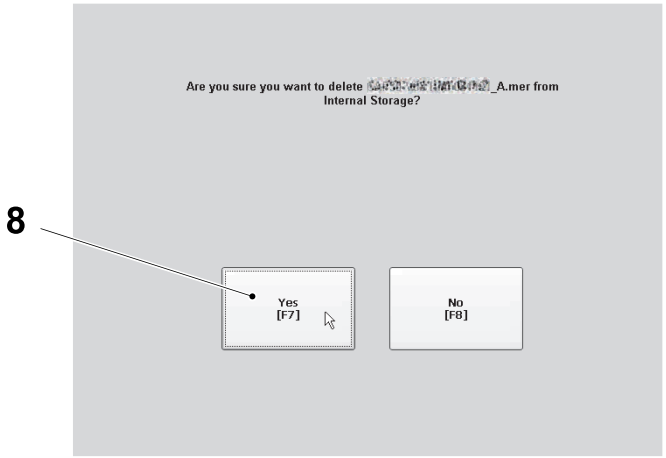

8 YES button

(Cont'd)

(Cont'd)

h) Delete any other application program, applying the items and on the previous page, then press the CLOSE button (9) .

i) Repeatedly press the CLOSE button (9) until the MAIN window appears.



9 CLOSE button

8.9.1-6 Touch Screen - Load New Application

Machine Status	Electrical supply disconnecting device in position I (ON)
SPC Reference	2779070-0300

a) When the TPOP reboots, in the Configuration window (1) touch the Load application button (2) .

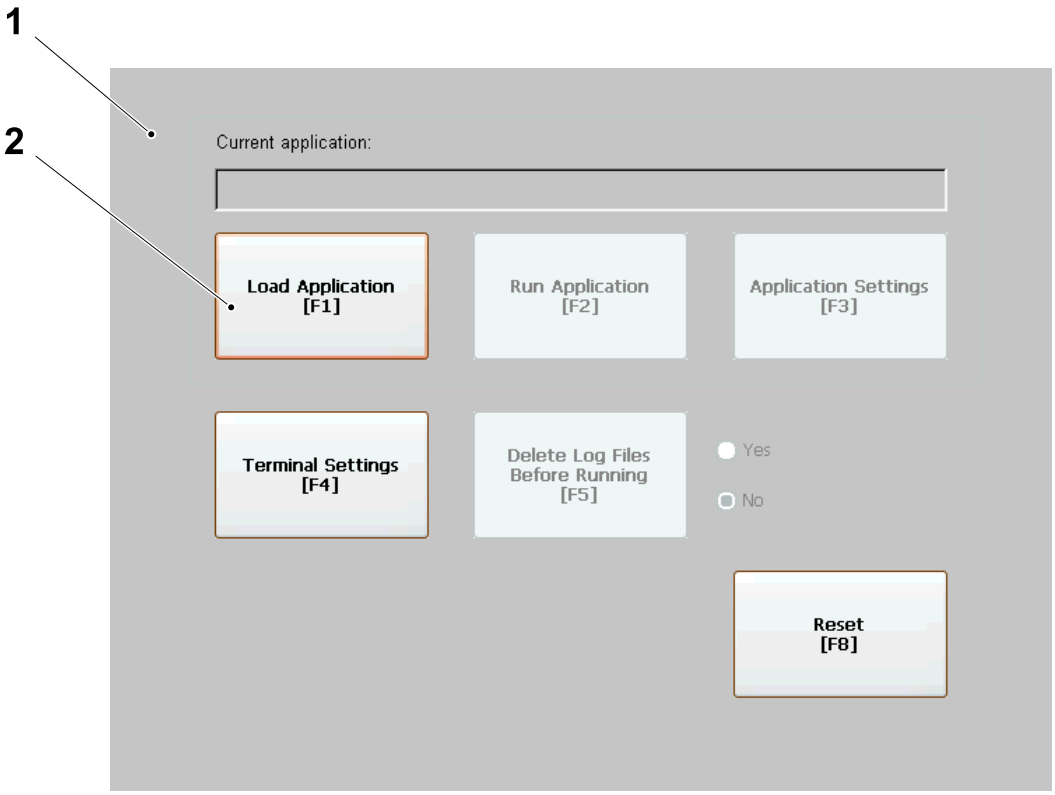

1 Configuration window
2 Load application button

(Cont'd)

(Cont'd)

b) Touch the ARROW button (3) and select the proper application of the TPOP that matches the desired language, see the table on 8-282.

c) Touch the LOAD button (4).

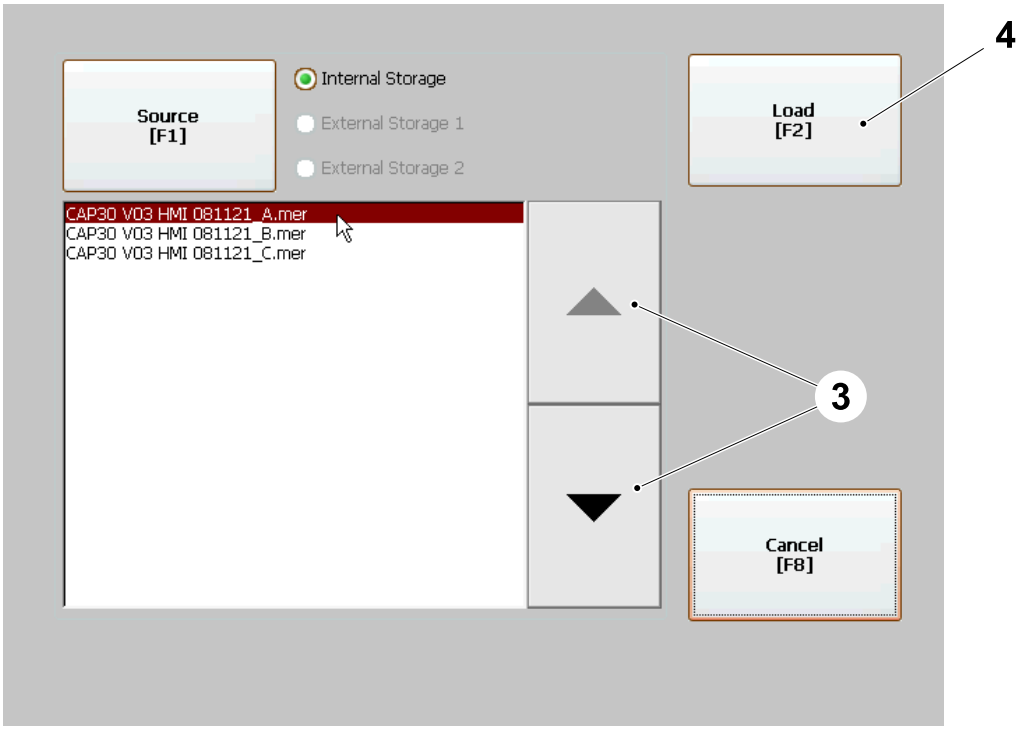

3 ARROW button
4 LOAD button

(Cont'd)

(Cont'd)

d) Touch YES button (5) to confirm.

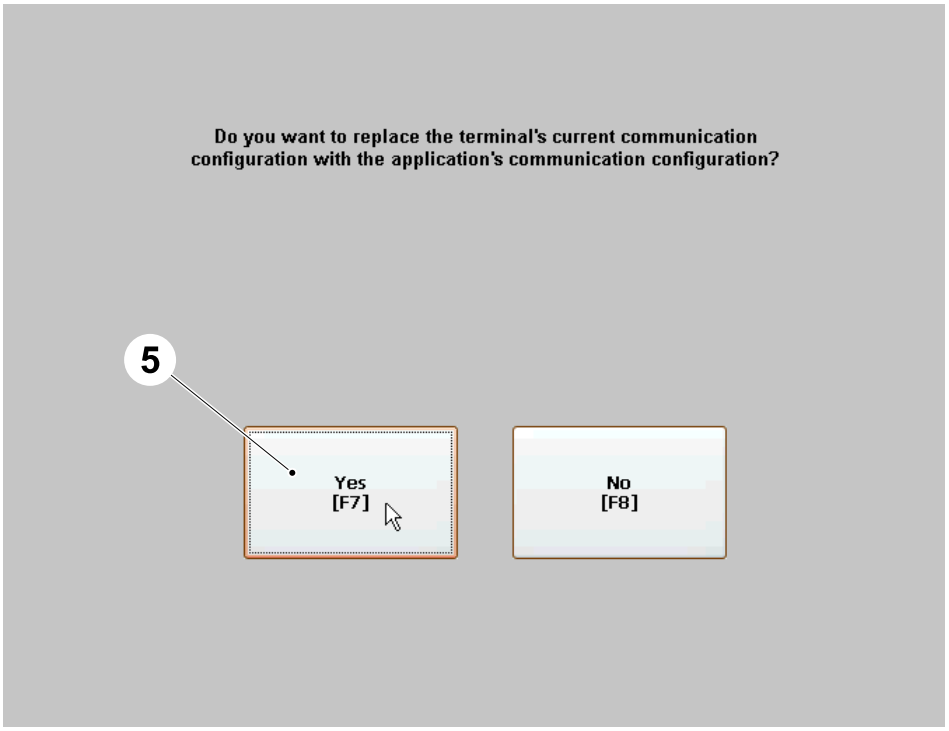

5 YES button

e) Wait for the TPOP to upload the selected application.

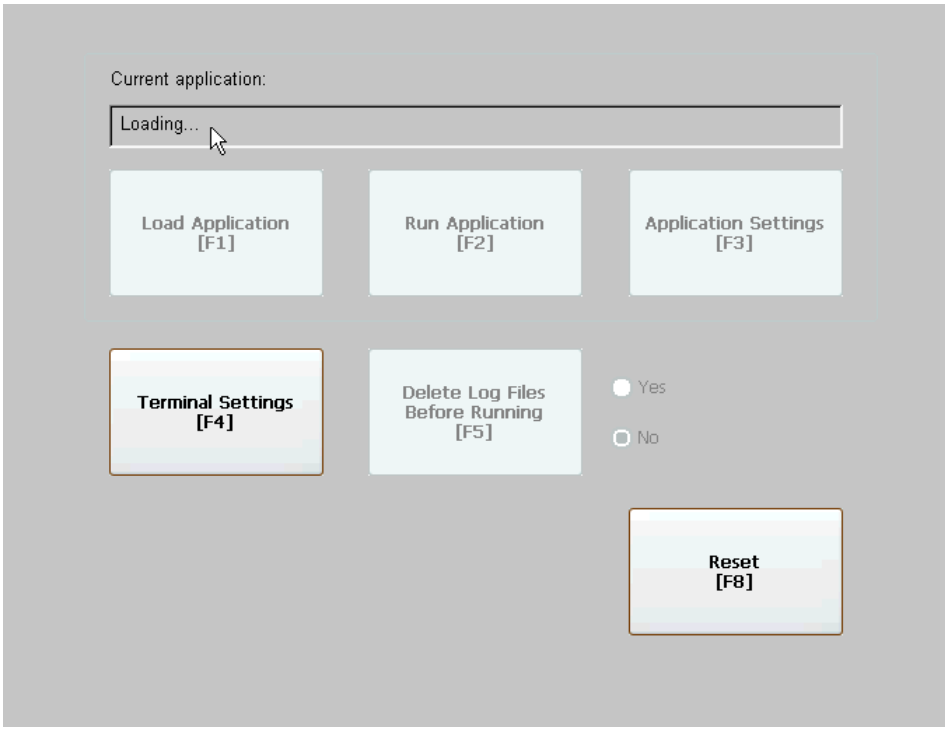

(Cont'd)

(Cont'd)

Language Table

Note! In the table below there are all the languages available for the TPOP. The languages of the group **A** are available in the application program named XXXXXX_A.mer and consequently for the group **B** and **C.**

Note! English is available in all the three groups.

LANGUAGE GROUP A	LANGUAGE GROUP B	LANGUAGE GROUP C
English	English	English
Swedish	Czech	Arabic
German	Croatian	Persian
French	Slovenian	Malay
Spanish	Slovak	Japanese
Italian	Romanian	Simplified Chinese
Portuguese	Bulgarian	Thai
Danish	Hungarian	Korean
Greek	Russian	Traditional Chinese
Finnish	Latvian	Vietnamese
Polish	Estonian	
Dutch	Lithuanian	
Norwegian	Serbian	
Turkish		

Note! If your language is not shown above you should contact TetraPak for more information.

8.9.1-7 Touch Screen - Check/Set Network Configuration

Machine Status	Electrical supply disconnecting device in position I (ON)
SPC Reference	2779070-0300

Note! Check the application program (1) on the configuration window (2).

a) Touch `TERMINAL SETTINGS` button (3).

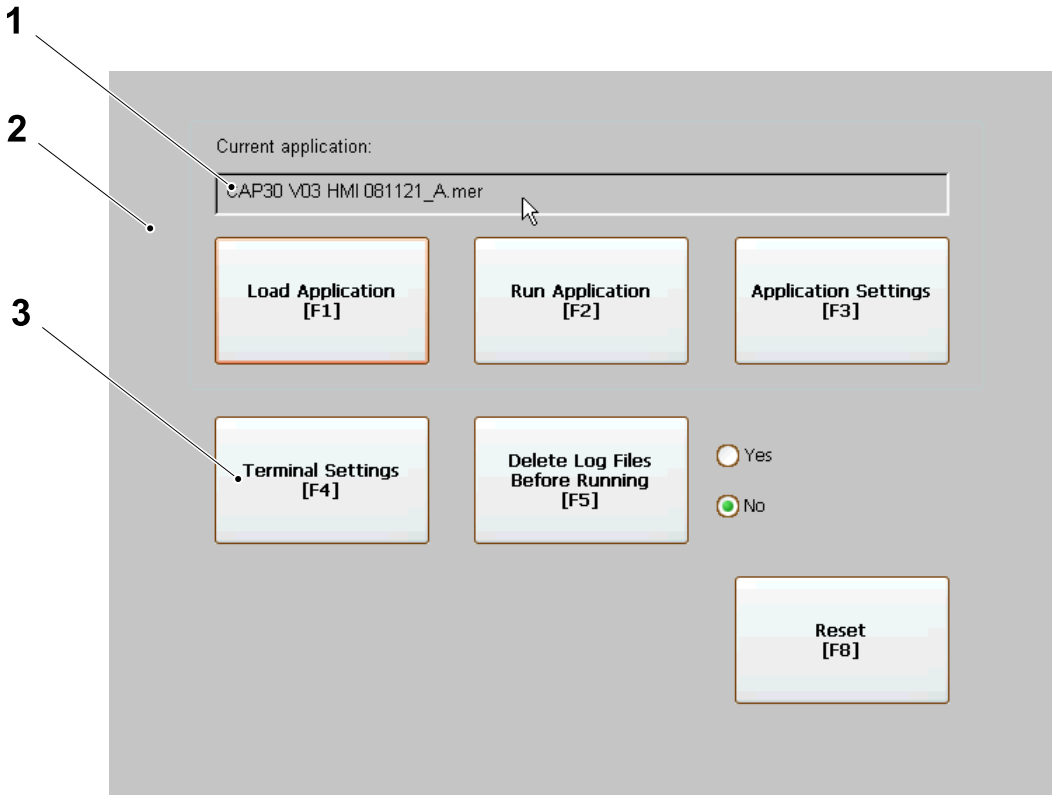

1 Application program
2 Configuration window
3 Terminal settings button

(Cont'd)

(Cont'd)

b) Touch the ARROW button (4) and select "Network and Communications".

c) Touch ENTER button (5) to confirm.

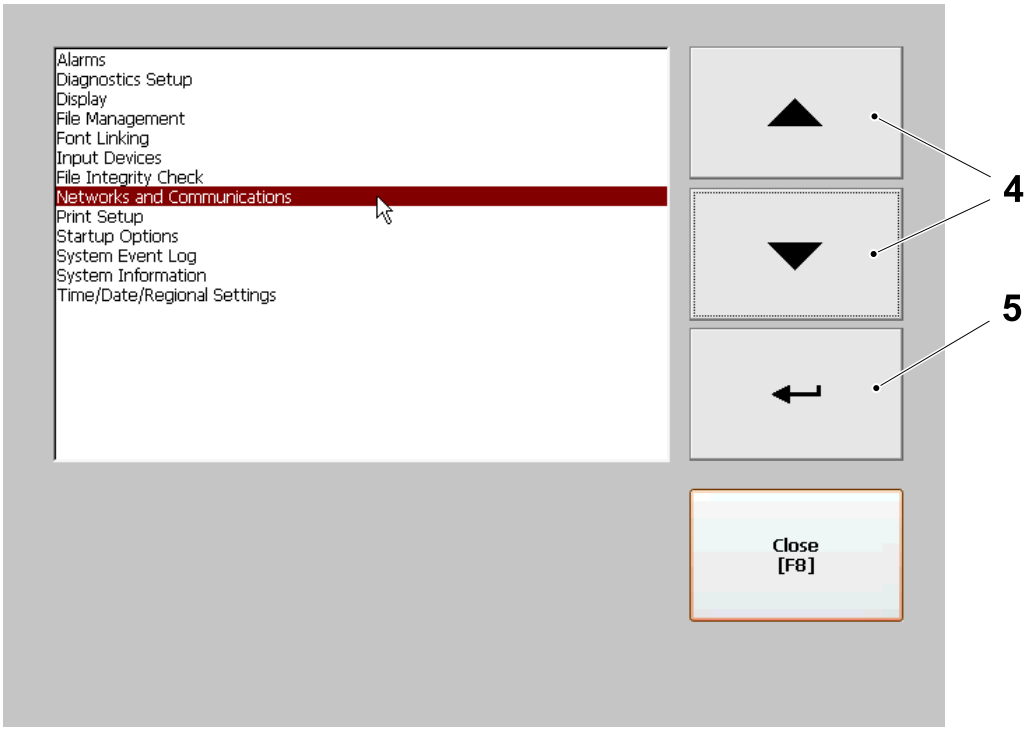

4 ARROW button
5 ENTER button

(Cont'd)

(Cont'd)

d) Touch the ARROW button (4) and select "Network Connections".

e) Touch ENTER button (5) to confirm.

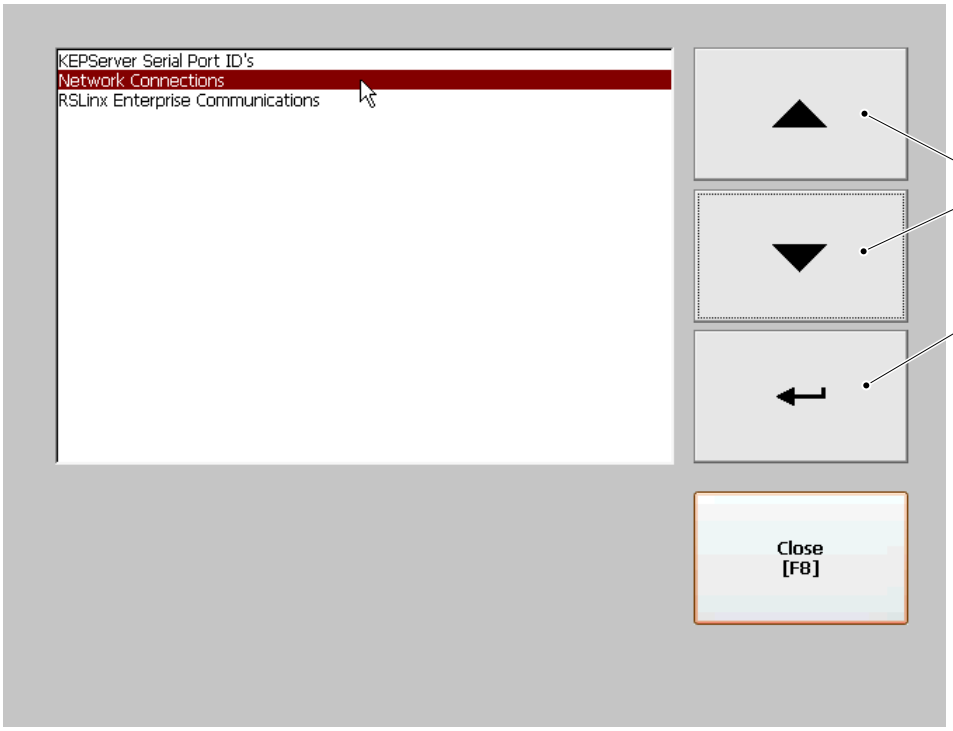

4 ARROW button
5 ENTER button

(Cont'd)

(Cont'd)

f) Touch the ARROW button (4) and select "Network Adaptors".

g) Touch ENTER button (5) to confirm.

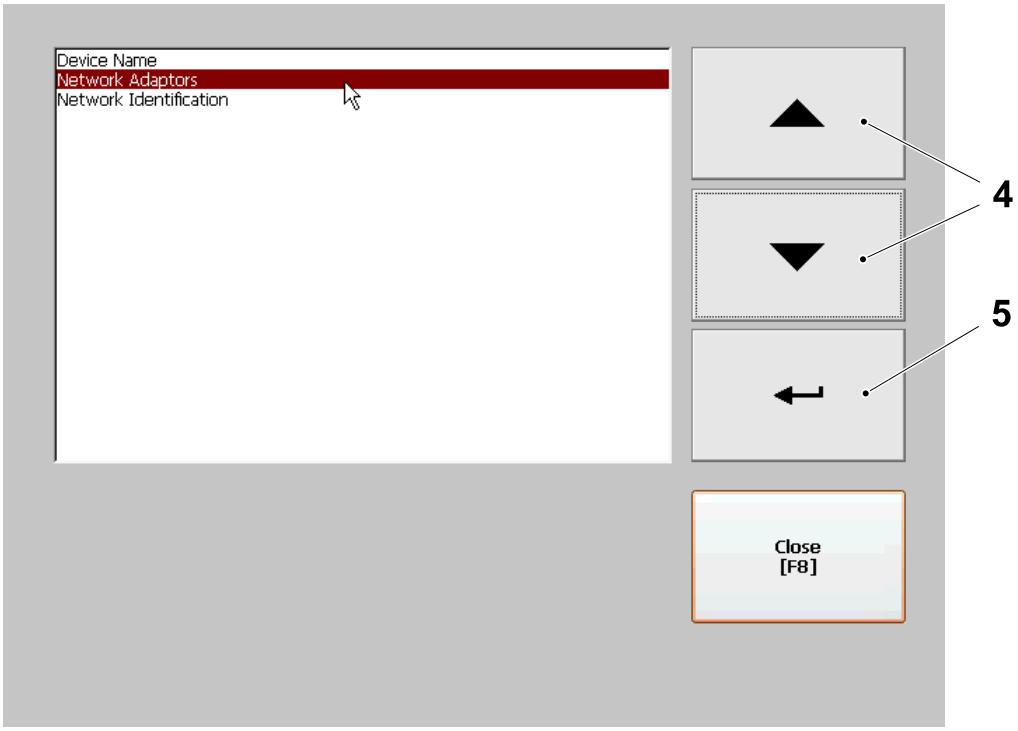

4 ARROW button

5 ENTER button

(Cont'd)

(Cont'd)

h) Check it's selected "Built-in Ethernet Controller" and touch `IP ADDRESS` button (6).

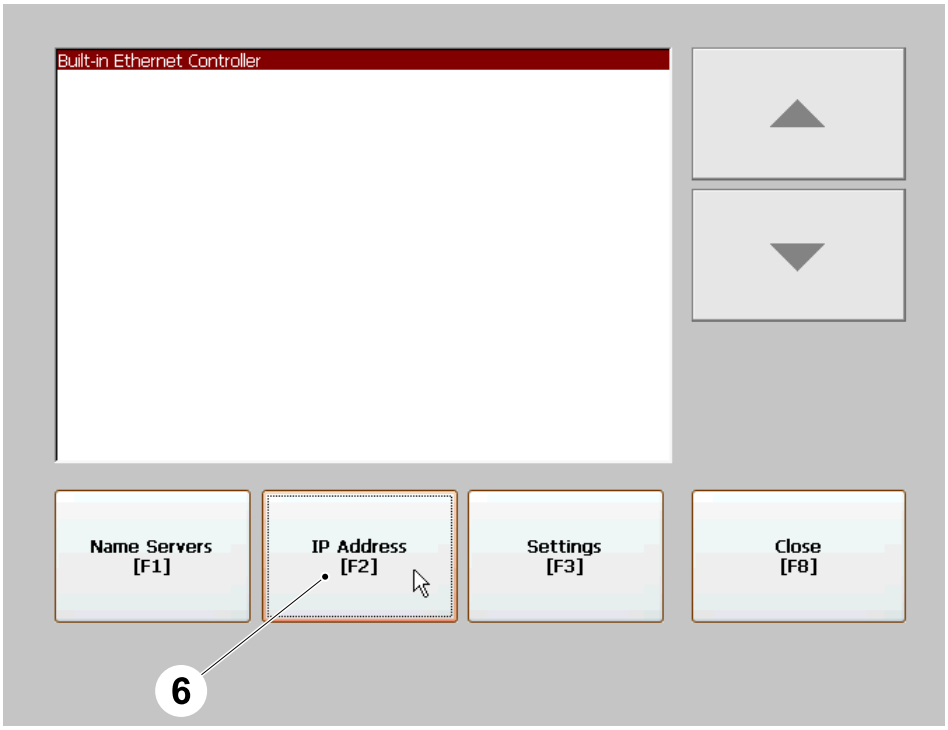

6 IP Address button

(Cont'd)

(Cont'd)

Note! Check that checkbox (7) is selected. If not, touch checkbox (7).

i) Touch `IP ADDRESS` button (6) .

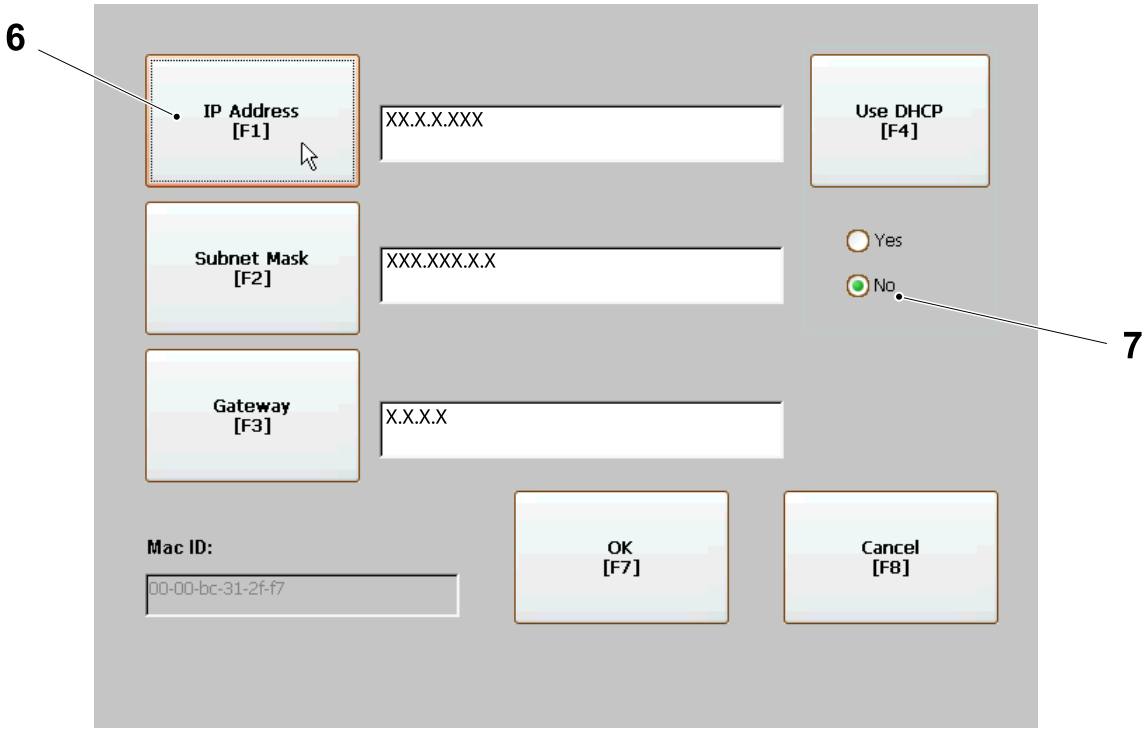

6 IP Address button

7 Checkbox

(Cont'd)

(Cont'd)

j) Enter the correct IP Address (8).

k) Touch ENTER button (5) to confirm.

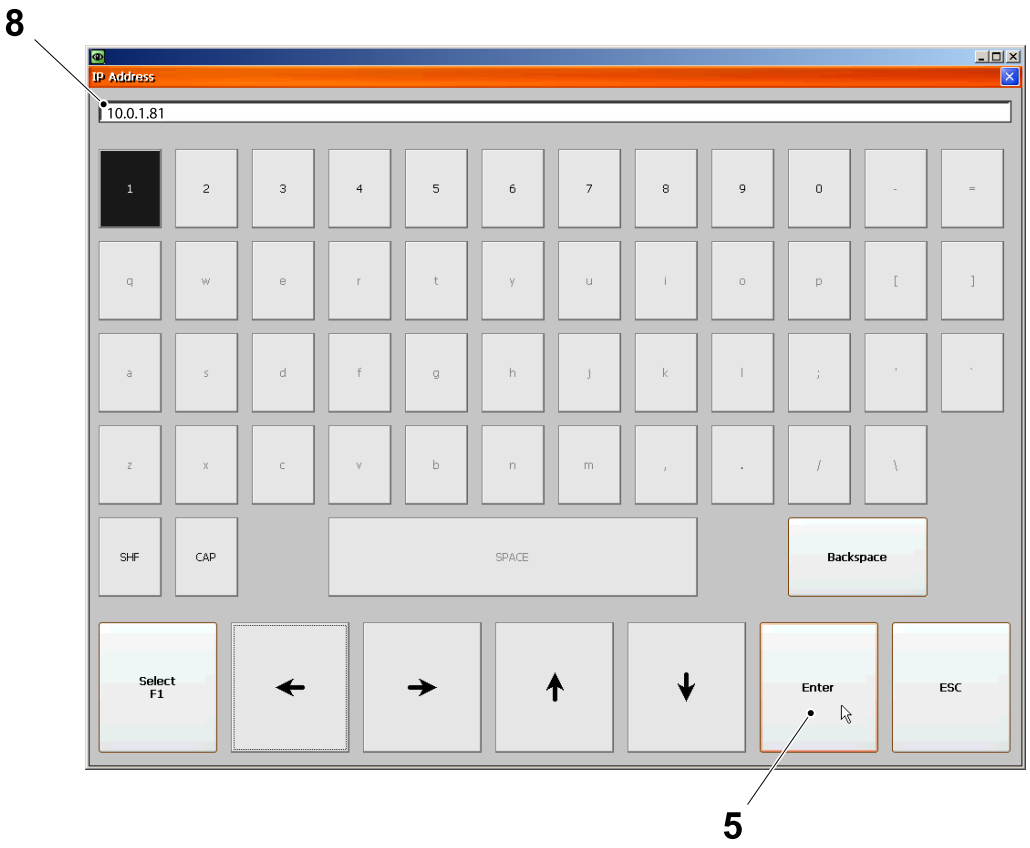

5 ENTER button

8 IP Address

(Cont'd)

(Cont'd)

l) Touch SUBNET MASK button (9).

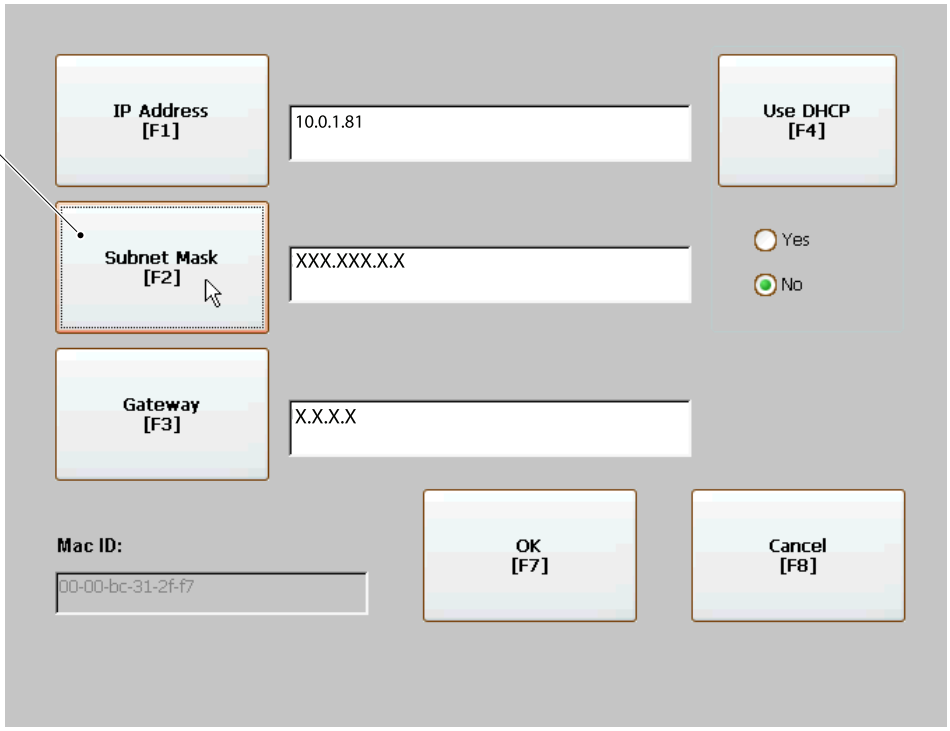

9 Subnet Mask button

(Cont'd)

(Cont'd)

m) Enter the correct Subnet Mask Code (10).

n) Touch ENTER button (5) to confirm.

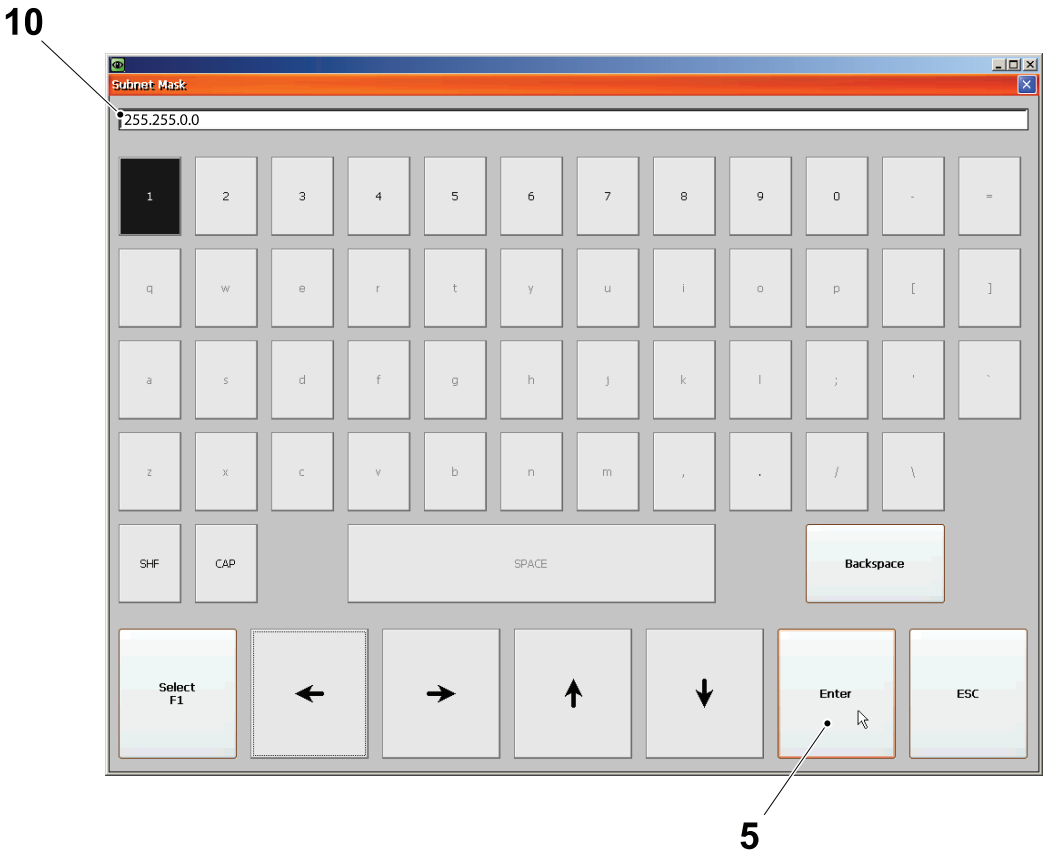

5 ENTER button
10 Subnet Mask Code

(Cont'd)

(Cont'd)

o) Touch the GATEWAY button (11).

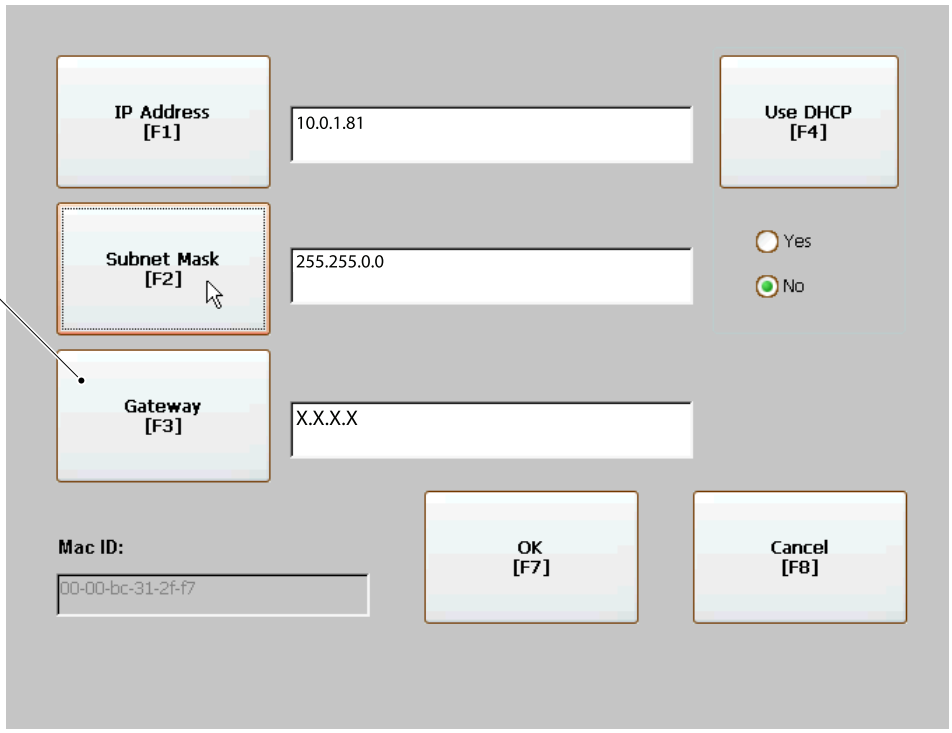

11 Gateway button

(Cont'd)

(Cont'd)

p) Enter the correct Gateway Code (12).

q) Touch ENTER button (5) to confirm.



5 ENTER button
12 Gateway Code

(Cont'd)

(Cont'd)

r) Touch the OK button (13) .

Note! In the window below there's the complete right address.

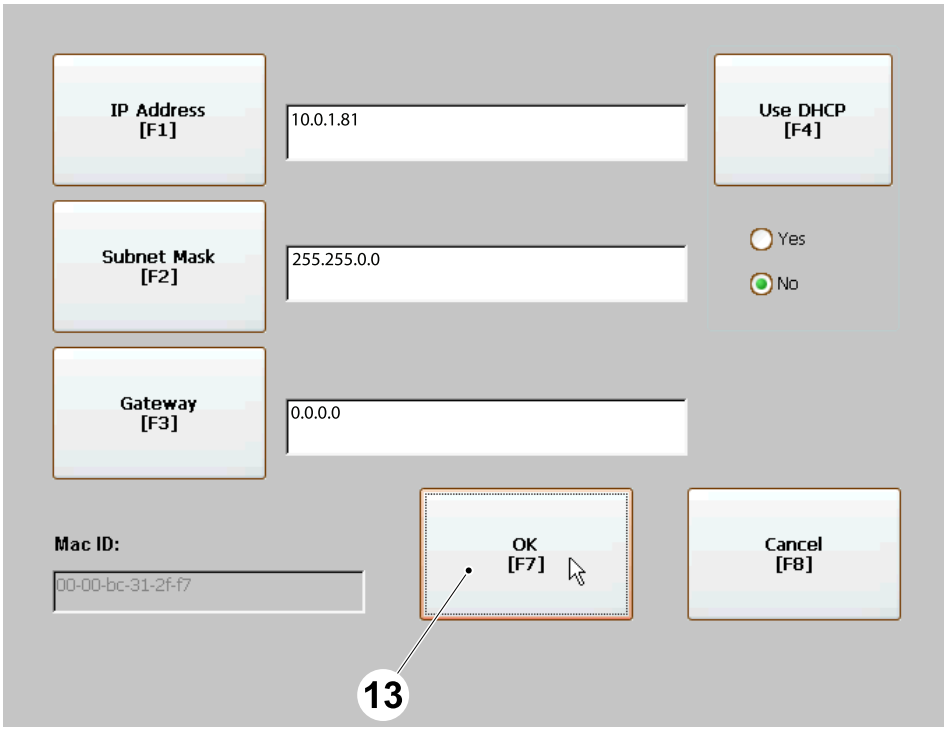

13 OK button

(Cont'd)

(Cont'd)

s) Touch the OK button (13) .

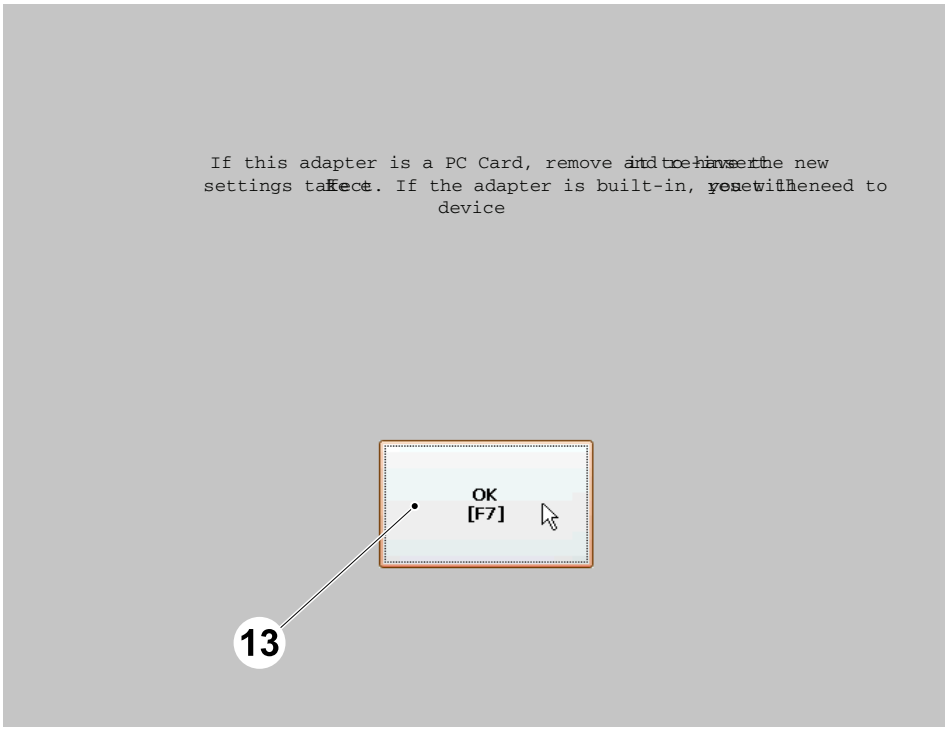

13 OK button

(Cont'd)

(Cont'd)

t) Touch CLOSE button (14).

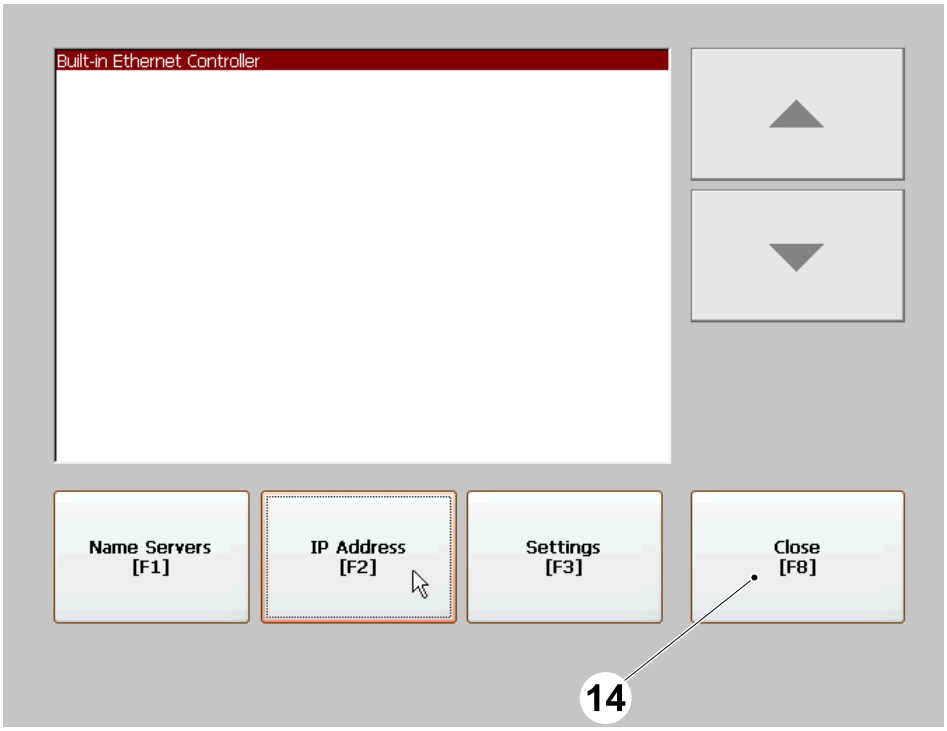

14 CLOSE button

(Cont'd)

(Cont'd)

u) Touch the CLOSE button (14) .

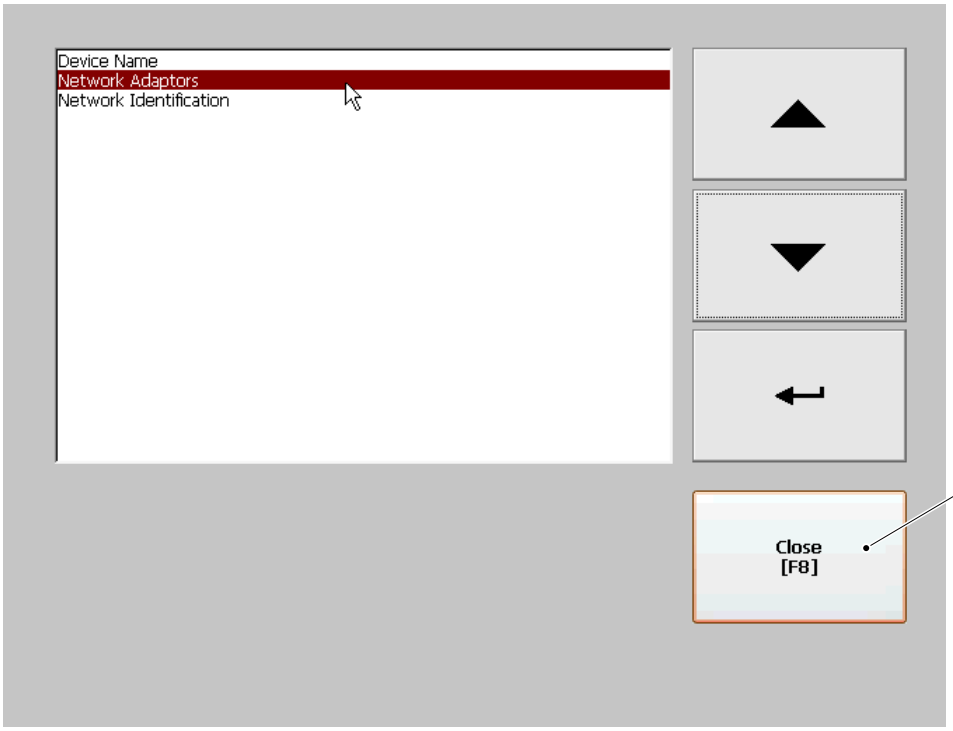

14 CLOSE button

(Cont'd)

(Cont'd)

v) Touch the CLOSE button (14) .

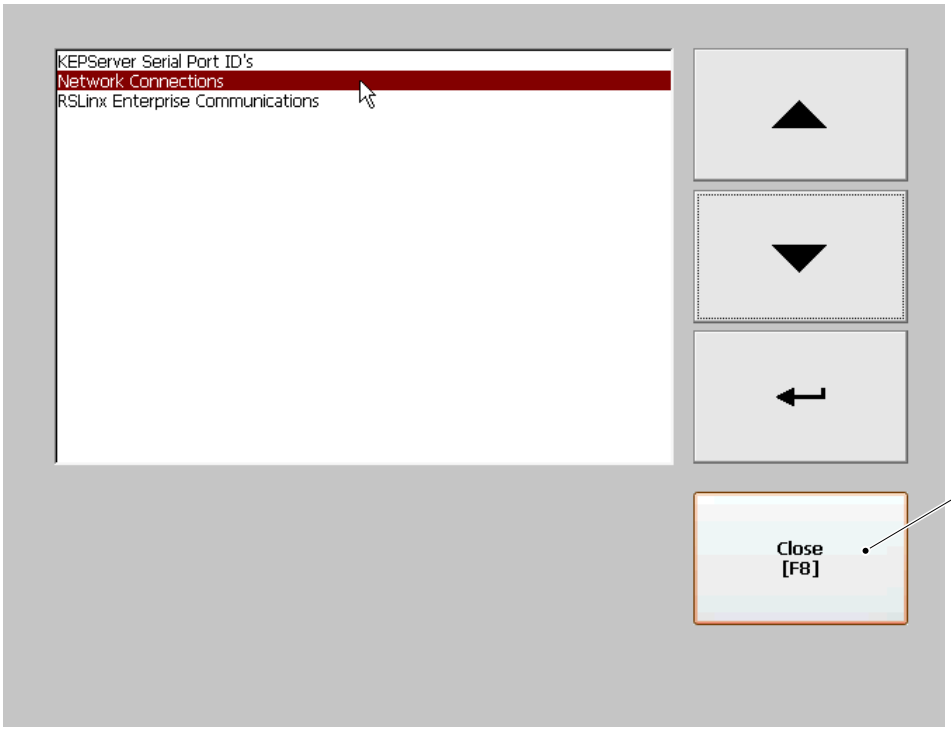

14 CLOSE button

(Cont'd)

(Cont'd)

w) Touch the RESET button (15).

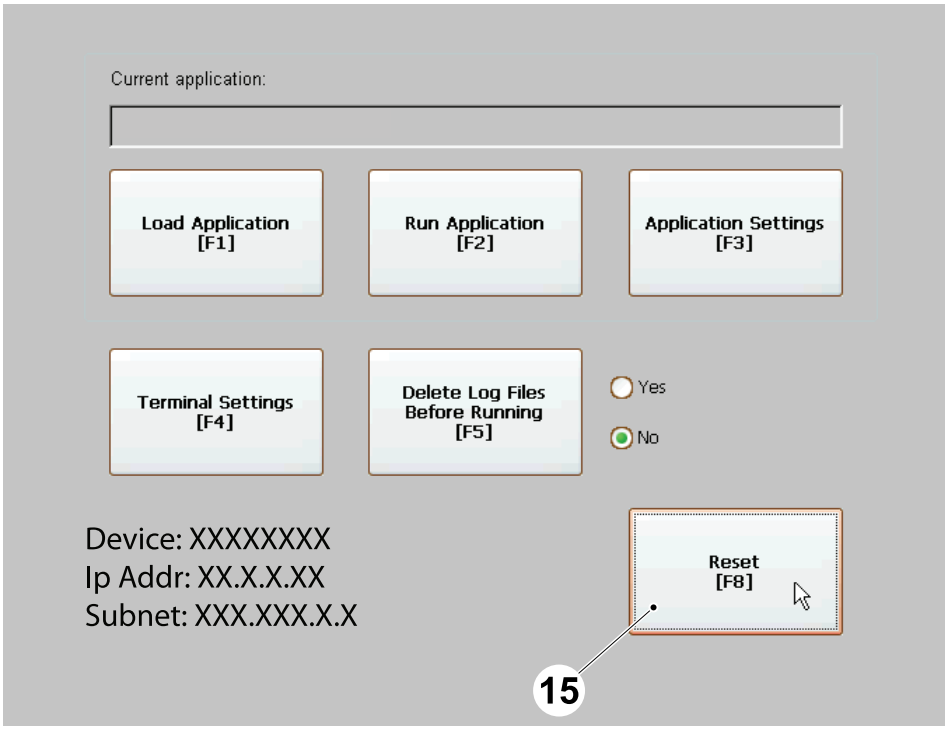

15 RESET button

8.9.1-8 Touch Screen - Startup Options Setup

Machine Status	Electrical supply disconnecting device in position I (ON)
SPC Reference	2779070-0300

a) Touch the ARROW button (1) and select “Startup Options“.

b) Touch ENTER button (2) to confirm.

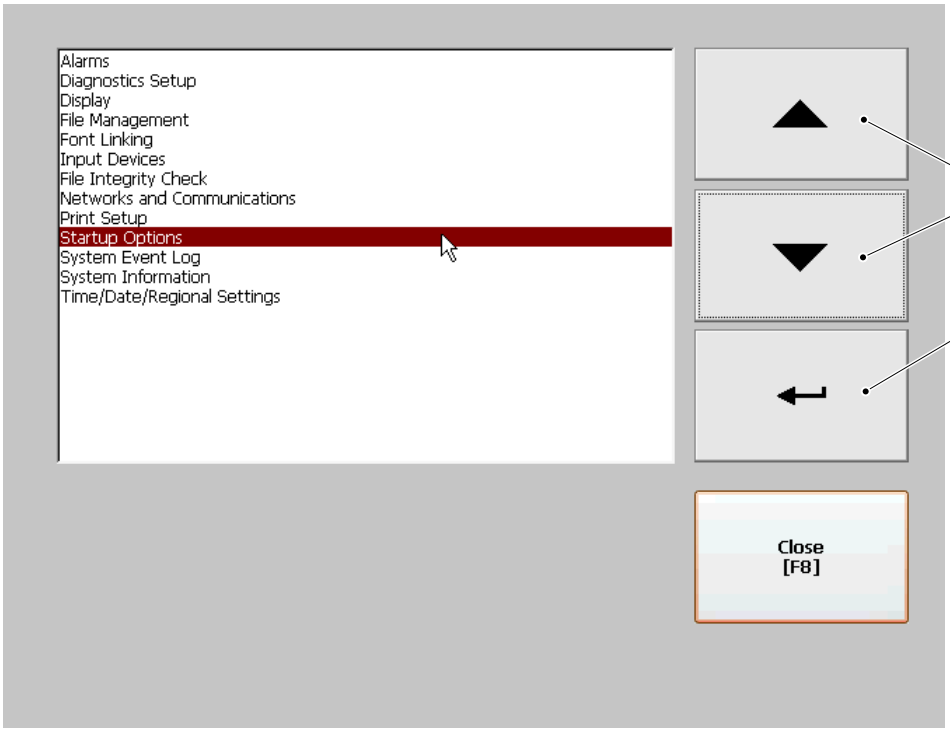

1 ARROW button
2 ENTER button

(Cont’d)

(Cont'd)

c) Touch the ARROW button (1) and select "FactoryTalk View ME Station Startup".

d) Touch ENTER button (2) to confirm.

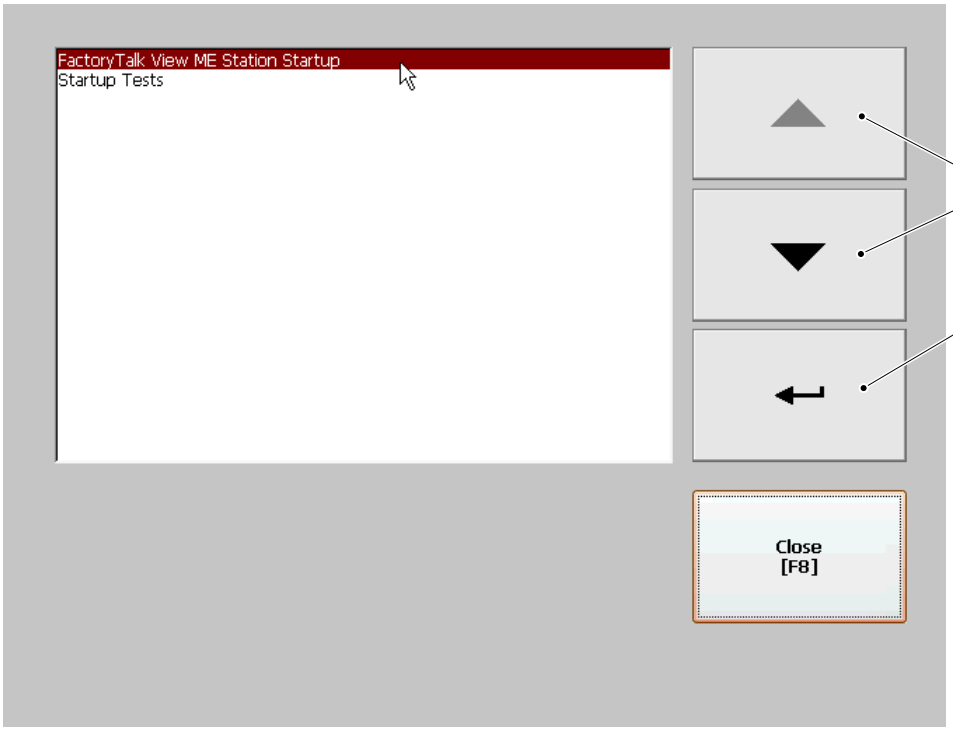

1 ARROW button
2 ENTER button

(Cont'd)

(Cont'd)

e) Touch Run Current Application (3).

f) Touch the RUN OPTIONS button (4).

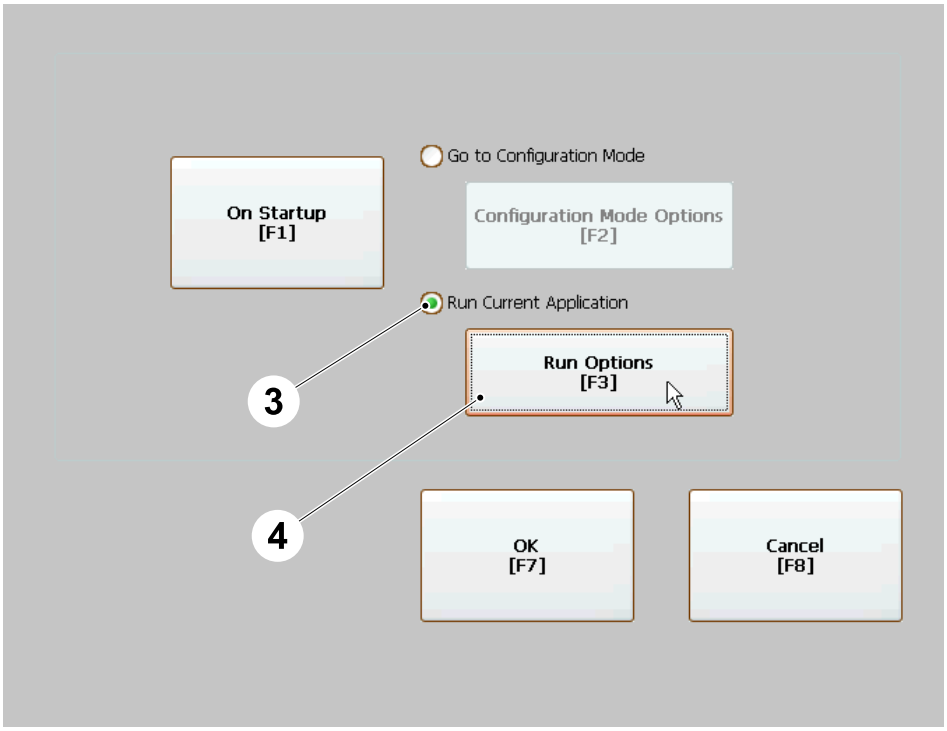

3 Run Current Application
4 Run Options button

(Cont'd)

(Cont'd)

g) Touch the YES button (5) to activate "Replace RSLinx Enterprise Communications".

h) Touch the YES button (6) to activate "Delete Log Files On Every Power Cycle".

i) Touch the OK button (7) to confirm.

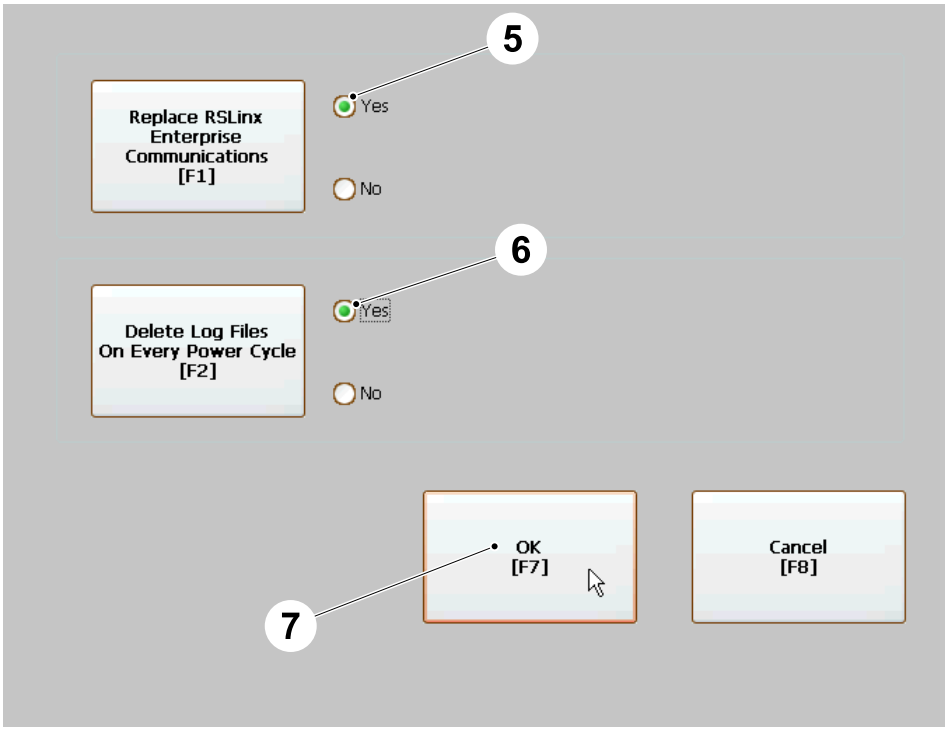

5 Yes button
6 Yes button
7 OK button

(Cont'd)

(Cont'd)

j) Touch the OK button (7) .

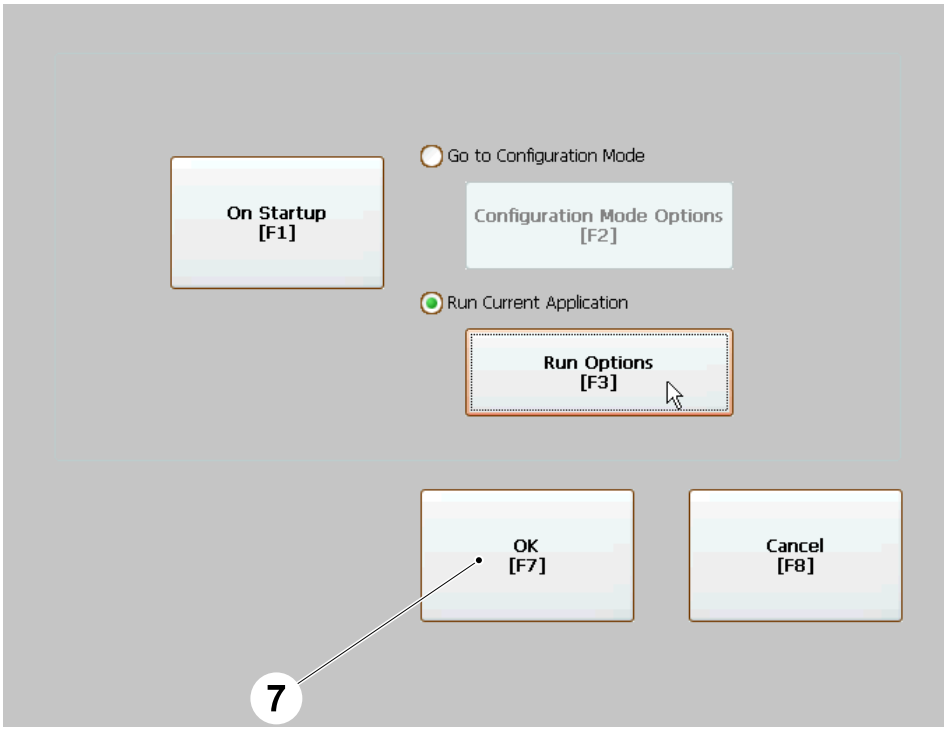

7 OK button

(Cont'd)

(Cont'd)

k) Touch the CLOSE button (8).

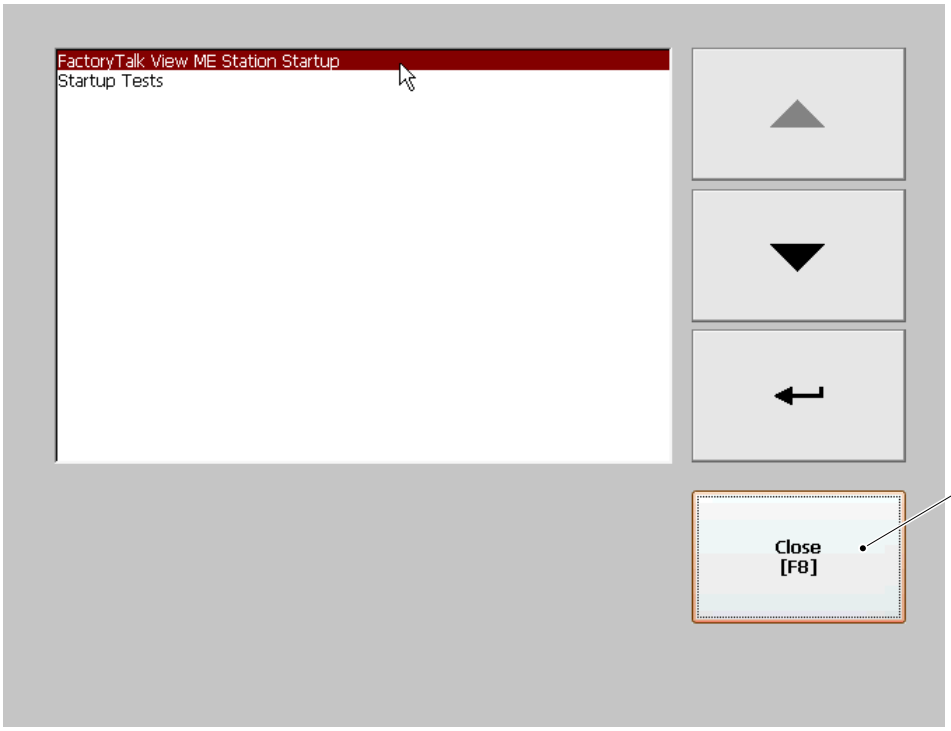

8 CLOSE button

8.9.1-9 Touch Screen - Display Setup

Machine Status	Electrical supply disconnecting device in position I (ON)
SPC Reference	2779070-0300

a) Touch the ARROW button (1) to select “Display“.

b) Touch the ENTER button (2) to confirm.

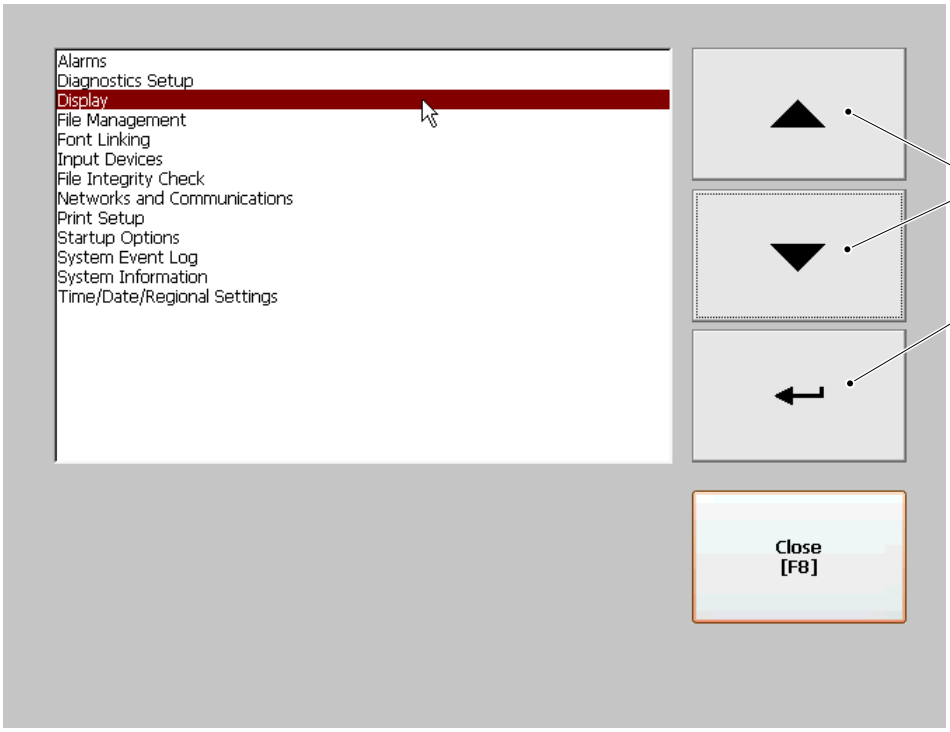

1 ARROW button
2 ENTER button

(Cont’d)

(Cont'd)

c) Touch the ARROW button (1) to select "Screen Saver".

d) Touch the ENTER button (2) to confirm.

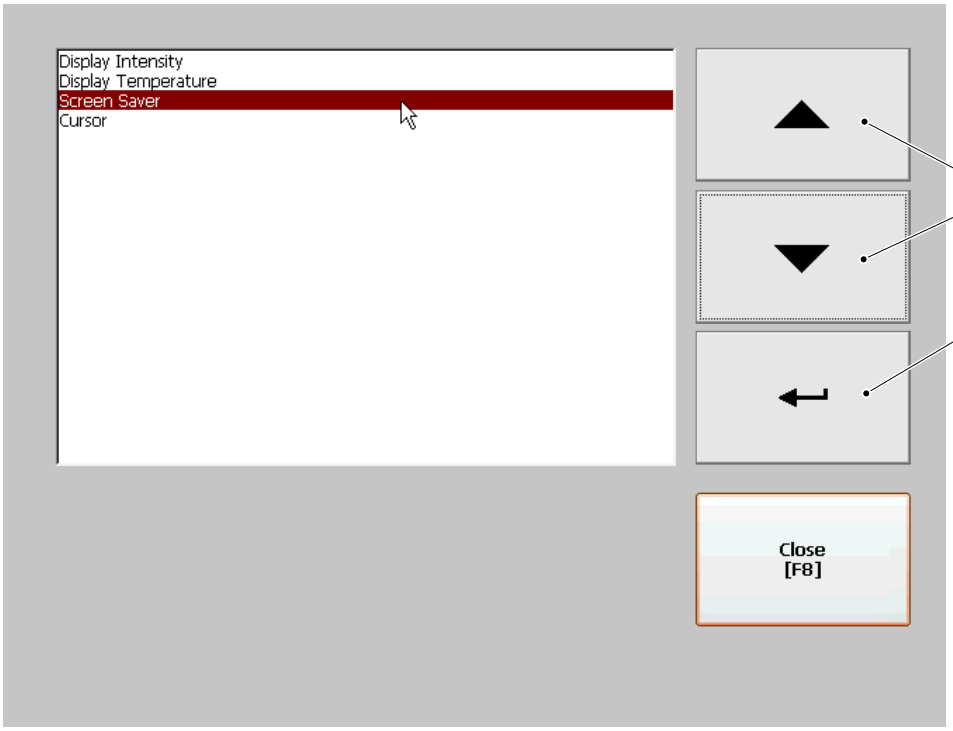

1 ARROW button
2 ENTER button

(Cont'd)

(Cont'd)

e) Touch the DISABLED button (3) to select no active screen saver.

f) Touch the OK button (4) to confirm.

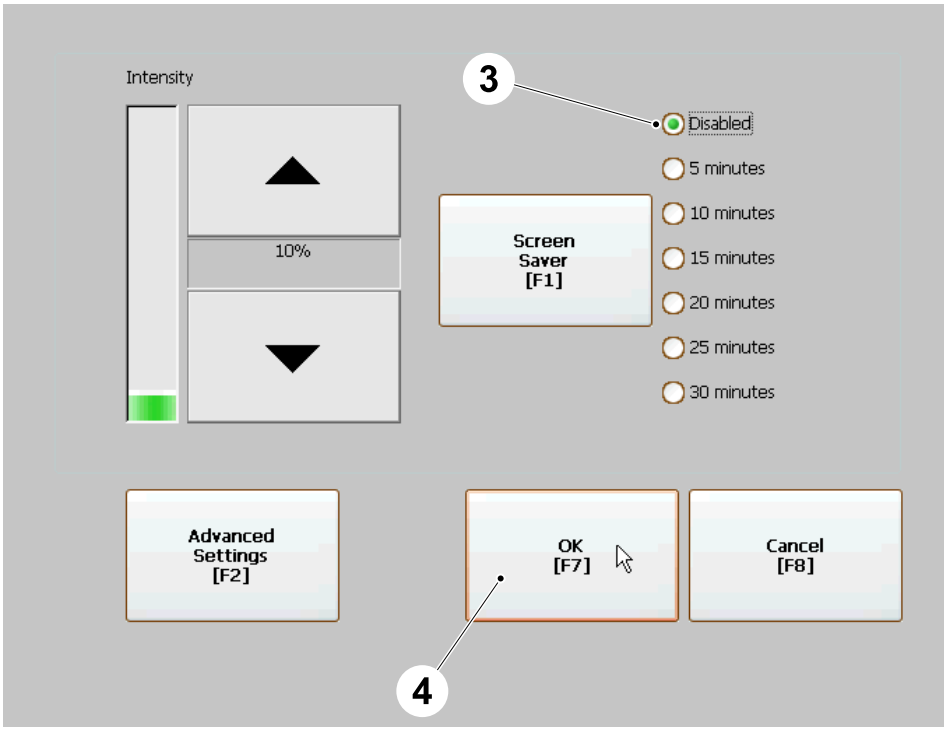

3 Disabled button
4 OK button

(Cont'd)

(Cont'd)

g) Touch the CLOSE button (5) to exit.

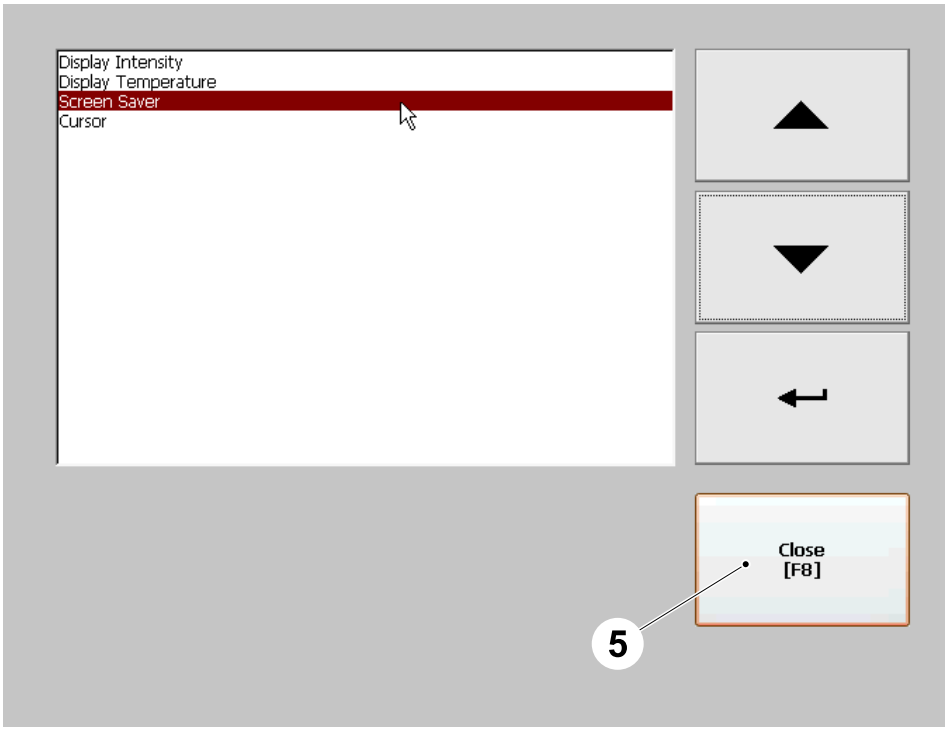

5 CLOSE button

8.9.1-10 Touch Screen - Time/Date/Regional Settings Setup

Machine Status	Electrical supply disconnecting device in position I (ON)
SPC Reference	2779070-0300

a) Touch the ARROW button (1) to select “Time/Date/Regional Settings“.

b) Touch ENTER button (2) to confirm.

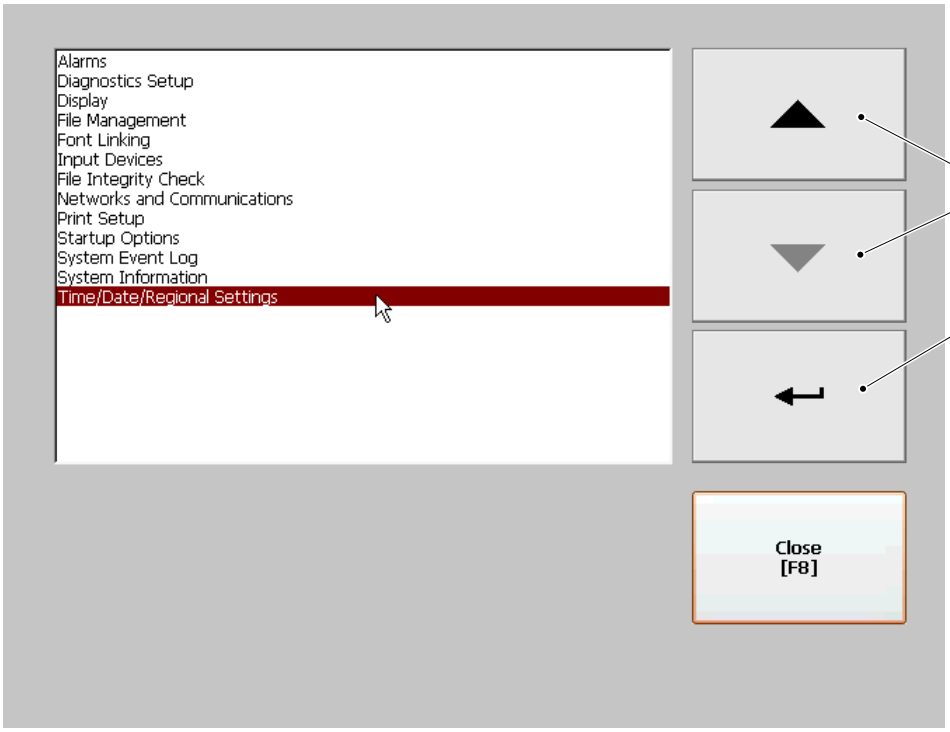

1 ARROW button
2 ENTER button

(Cont’d)

(Cont'd)

c) Touch the ARROW button (1) to select "Time Zone".

d) Touch the ENTER button (2) to confirm.

e) Set the proper Time Zone.

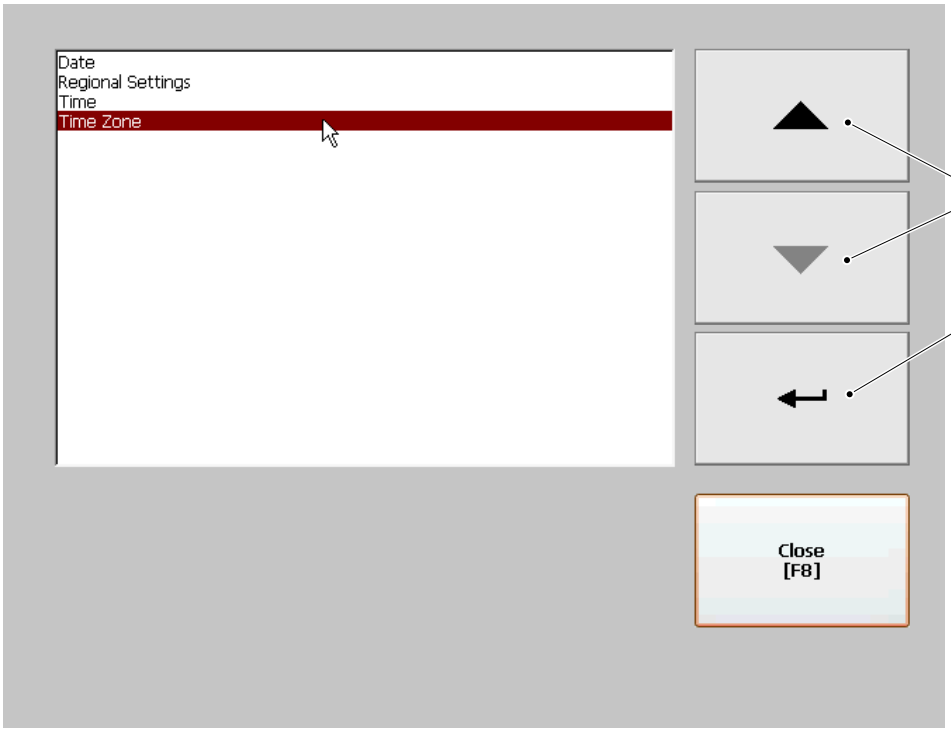

1 ARROW button

2 ENTER button

(Cont'd)

(Cont'd)

f) Touch the ARROW button (1) to select "Date".

g) Touch the ENTER button (2) to confirm.

h) Set the current Date.

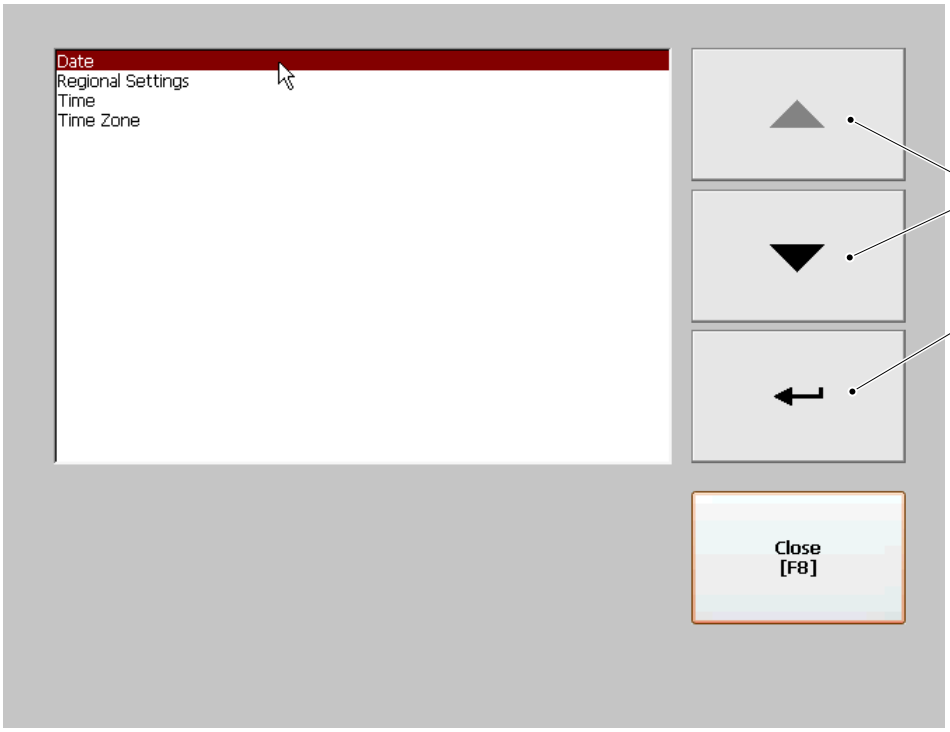

1 ARROW button

2 ENTER button

(Cont'd)

(Cont'd)

i) Touch the ARROW button (1) to select "Time".

j) Touch the ENTER button (2) to confirm.

k) Set the current Time.

l) Touch the CLOSE button (3) to display the configuration window.

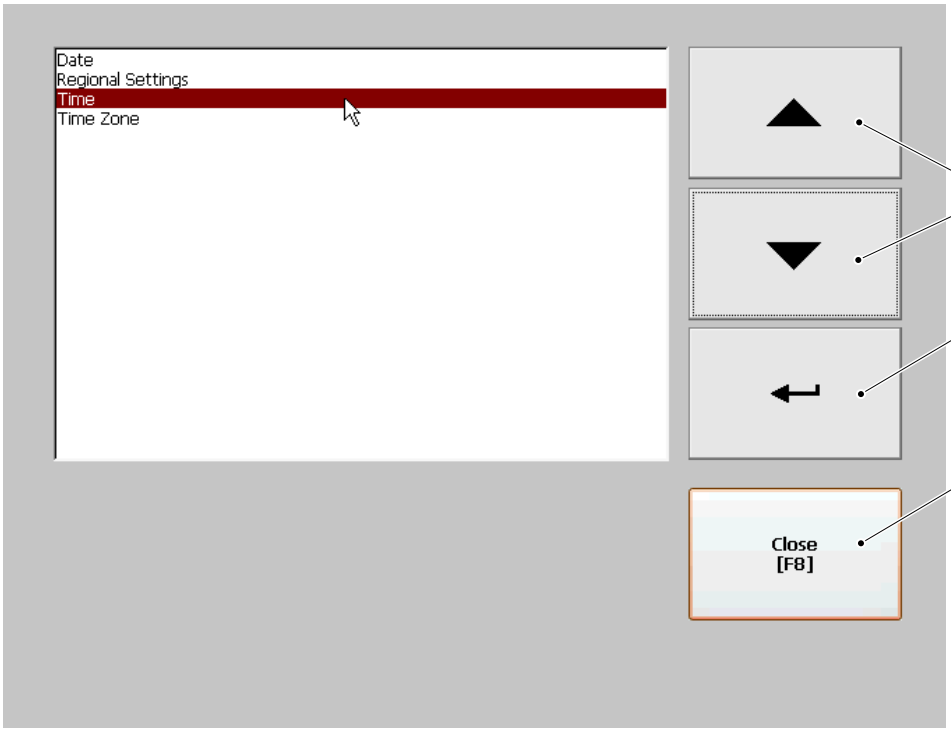

1 ARROW button
2 ENTER button
3 Close button

8.9.1-11 Touch Screen - Start-Up Language Setup

Machine Status	Electrical supply disconnecting device in position I (ON)
SPC Reference	2779070-0300

a) In the Configuration window (1) touch the APPLICATION SETTINGS button (2).

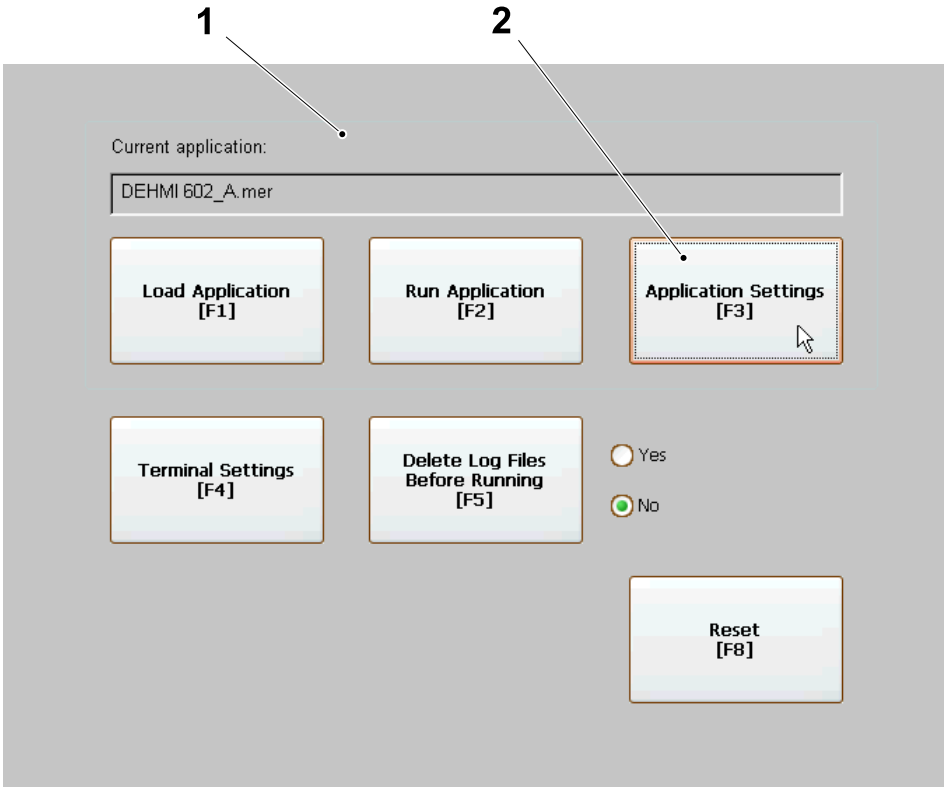

1 Configuration window
2 Application settings button

(Cont'd)

(Cont'd)

b) Touch the ARROW button (3) to select "Startup Language".

c) Touch the ENTER button (4) to confirm.

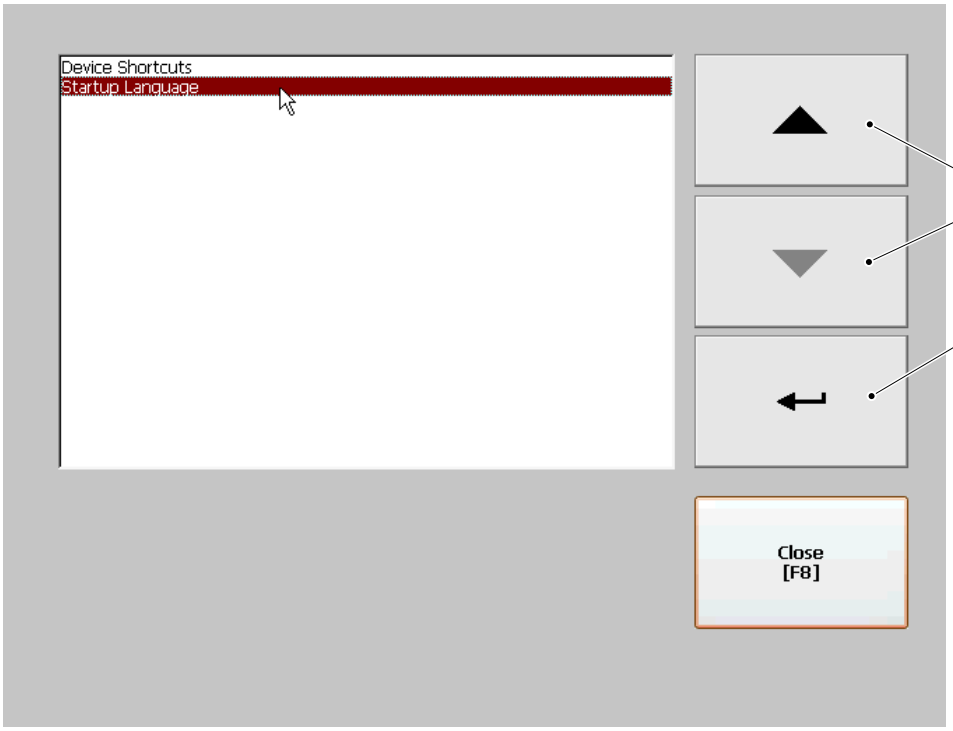

3 ARROW button
4 ENTER button

(Cont'd)

(Cont'd)

d) Touch the Start in Last Runtime Language (5) to make the TPOP select the active language after every reboot.

e) Touch the ENTER button (6) to confirm.

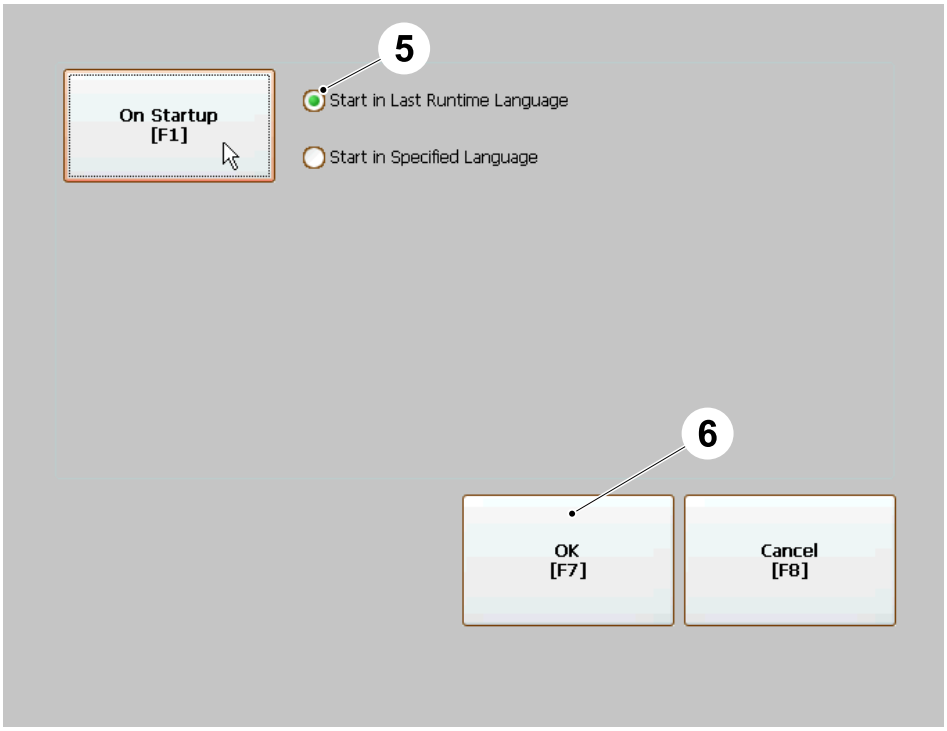

5 Start in Last Runtime Language
6 ENTER button

(Cont'd)

(Cont'd)

f) Touch the CLOSE button (7) to exit.

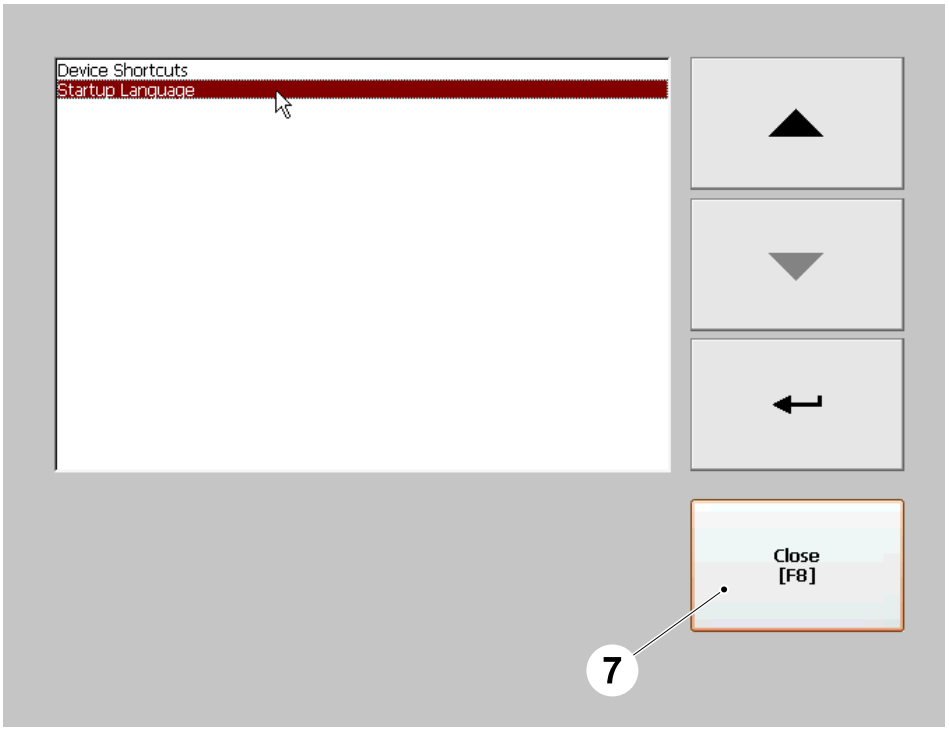

7 CLOSE button

(Cont'd)

(Cont'd)

Reboot the TPOP

a) In the Configuration window (1) touch the `RESET` button (2).

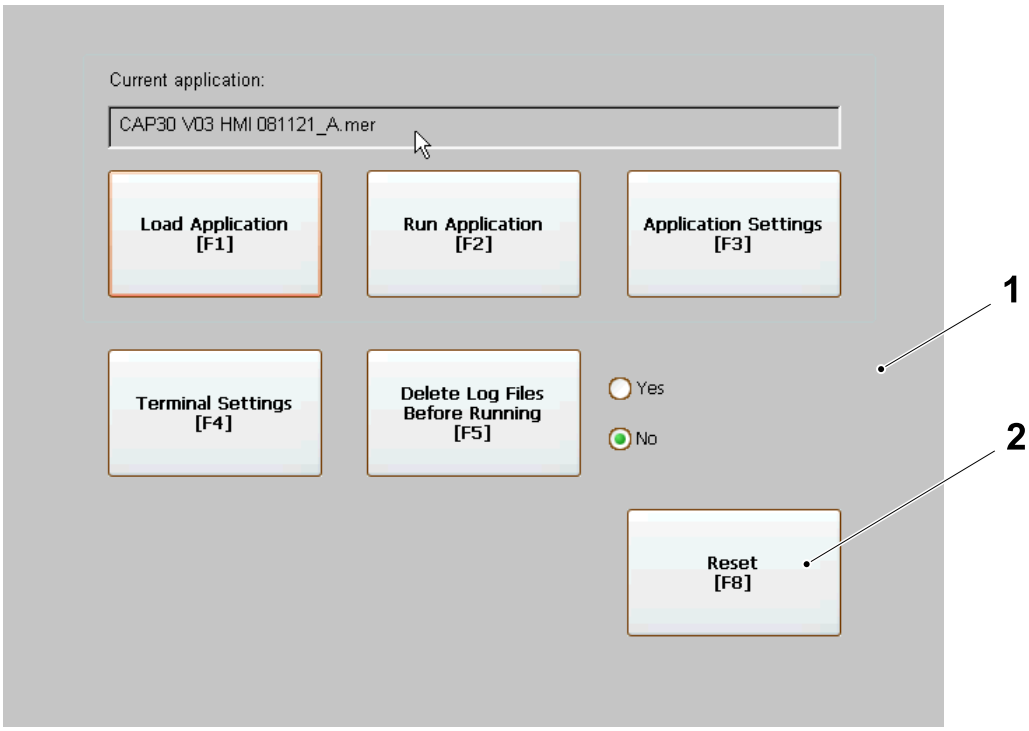

1 Configuration window
2 Reset button

(Cont'd)

(Cont'd)

b) Touch the YES button (3) to confirm.

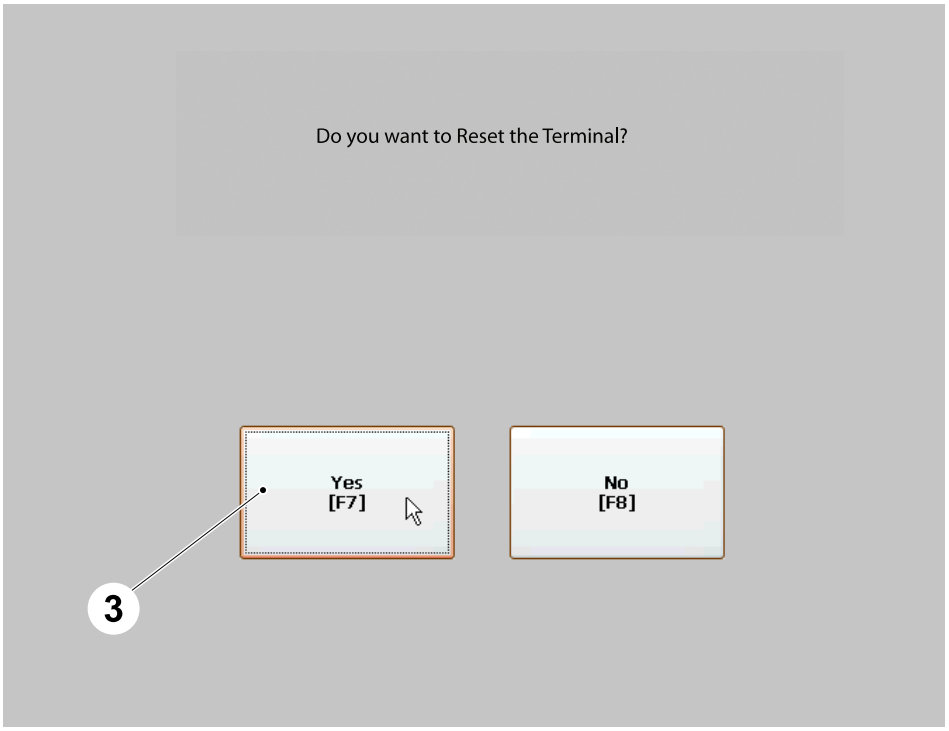

3 YES button

8.9.1-12 Touch Screen - Language Setup

Machine Status	Electrical supply disconnecting device in position I (ON)
SPC Reference	2779070-0300

Language Installation

Note! After the installation of the new application of the TPOP it's necessary to install and then activate the desired languages.

a) Access the TPOP as a Service Technician, see 1.1.1-1 HMI User Management - Log On as a User.

b) Touch the `SYSTEM SETUP` button (1) to display the Setup window.

c) Touch the `LANGUAGE ENTER` button (2) .

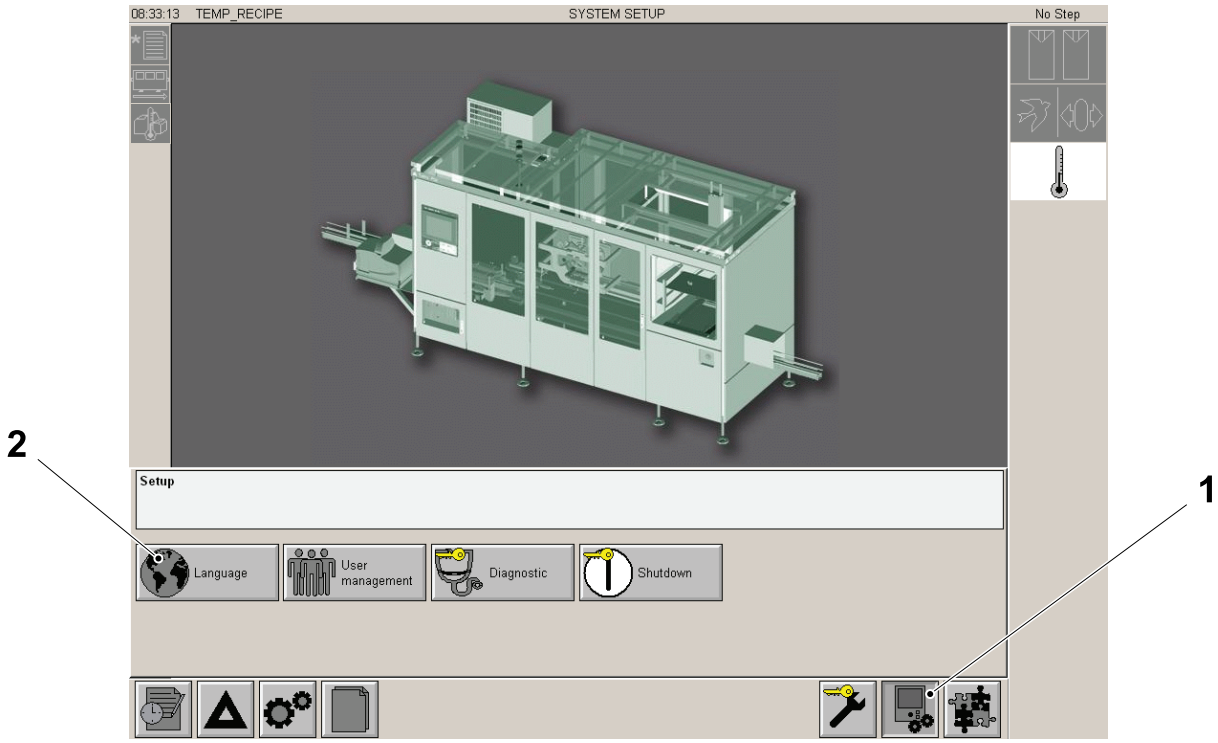

1 SYSTEM SETUP button
2 LANGUAGE ENTER button

(Cont'd)

(Cont'd)

d) Touch the LANGUAGE SETUP button (3) to display all the LANGUAGE button (4).

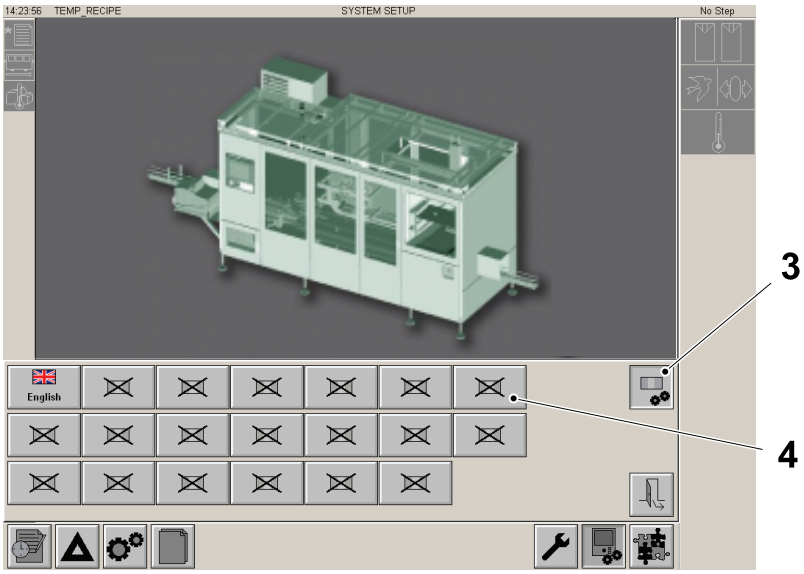

3 LANGUAGE SETUP button
4 LANGUAGE button

e) Touch several times the LANGUAGE button (4) until the Icon (5) of the desired language is shown.

f) Touch the LANGUAGE SETUP button (3) to end the language installation.

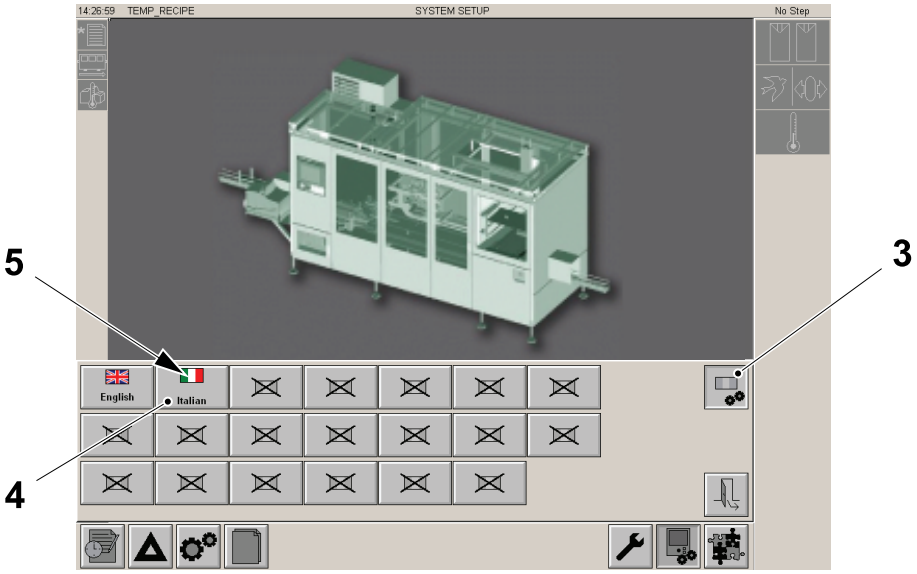

3 LANGUAGE SETUP button
4 LANGUAGE button
5 Icon

(Cont'd)

(Cont'd)

Logout from Service technician in the TPOP

a) Touch the SYSTEM SETUP button (1) to display the Setup window.

b) Touch the USER MANAGEMENT button (2).

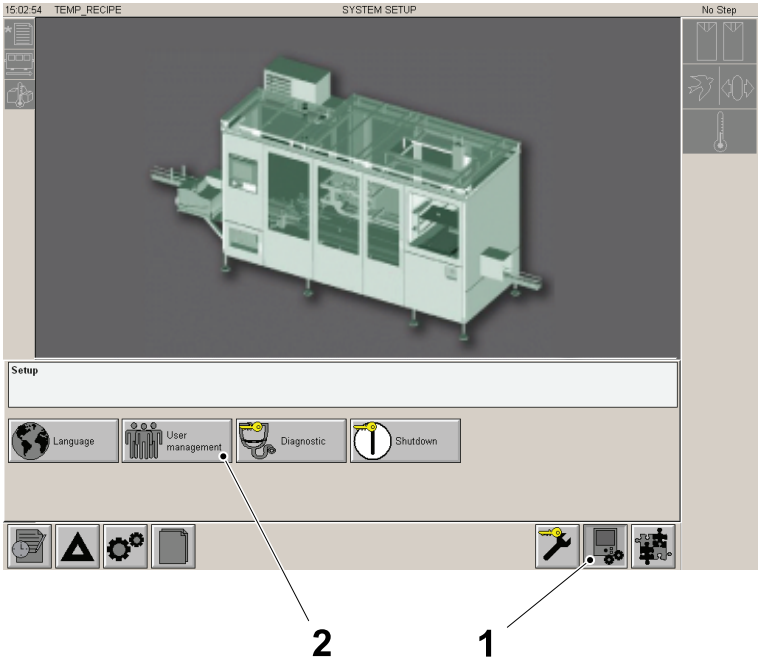

1 SYSTEM SETUP button
2 USER MANAGEMENT button

(Cont'd)

(Cont'd)

c) Touch the LOGOUT button (3) .

d) Touch the EXIT button (4).

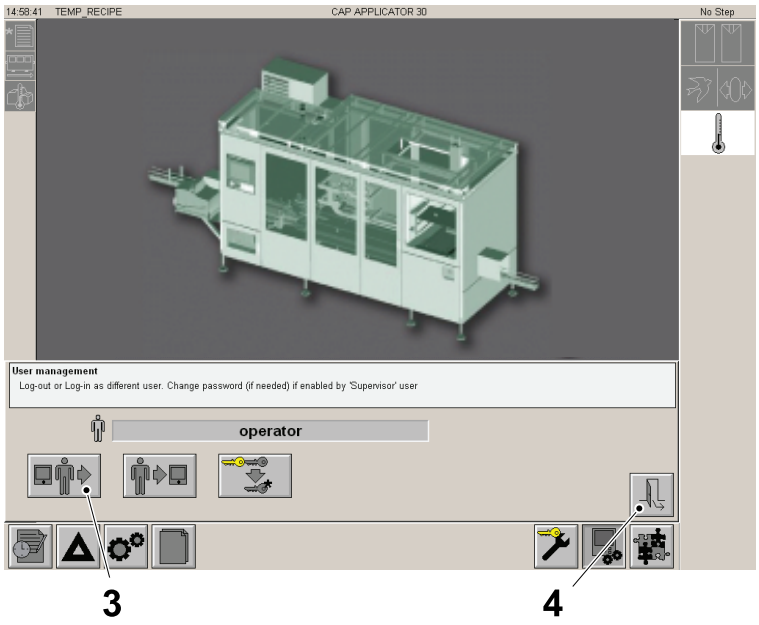

3 LOGOUT button
4 EXIT button

(Cont'd)

(Cont'd)

Language Activation

Note! After the installation of the new application of the TPOP it's necessary to install and then activate the desired languages.

a) Touch the SYSTEM SETUP button (1) to display the Setup window.

b) Touch the LANGUAGE ENTER button (2) .

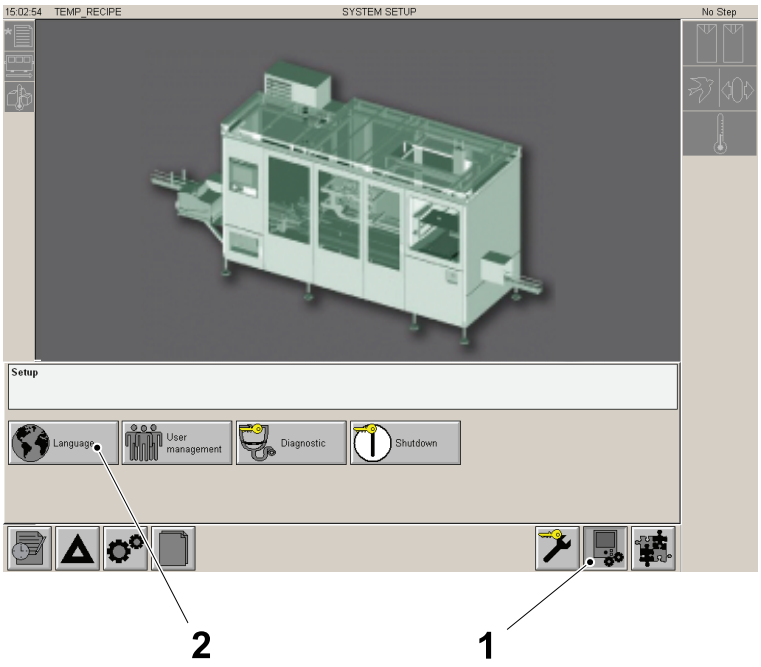

1 SYSTEM SETUP button
2 LANGUAGE ENTER button

(Cont'd)

(Cont'd)

c) Touch the required LANGUAGE button (3) to change the language.

d) Touch the EXIT button (4) .

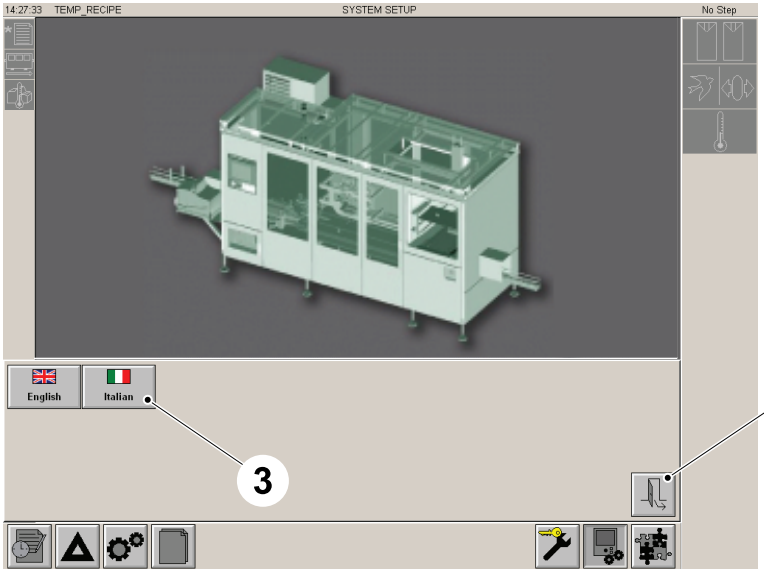

3 LANGUAGE button
4 EXIT button

8.9.1-13 Touch Screen - Create New Recipes

General Description

Create a new recipe in case the recipes have been deleted or in case of a package conversion.

The machine can produce only if a recipe has been selected. Each recipe includes the machine settings necessary for a specific type of production.

To create a new recipe for example package TPA 1000 Sq, proceed as follows:

a) Set the machine to STEP 0.

b) Access the TPOP as a Service Technician, see 1.1.1-1 HMI User Management - Log On as a User.

c) Touch the `RECIPE` button (1) to open the recipe window.

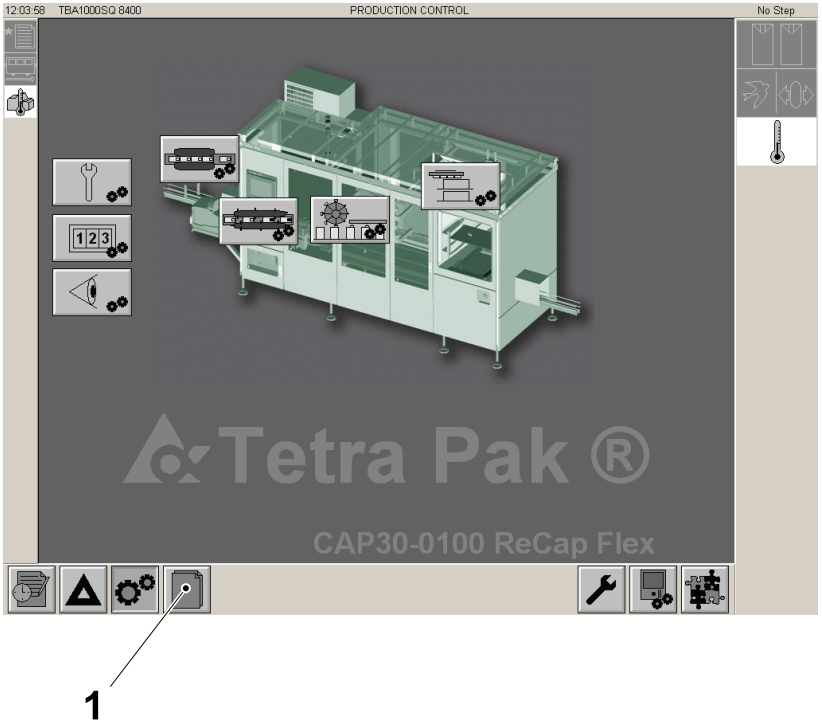

1 Recipe button

(Cont'd)

(Cont'd)

d) Touch the NEW RECIPE button (2).

Note! The Recipe name (3) stays the same at this time.

e) Touch the configuration of the package button (4).

f) Touch the ARROW button (5) to see the available packages and stop on the desired one.

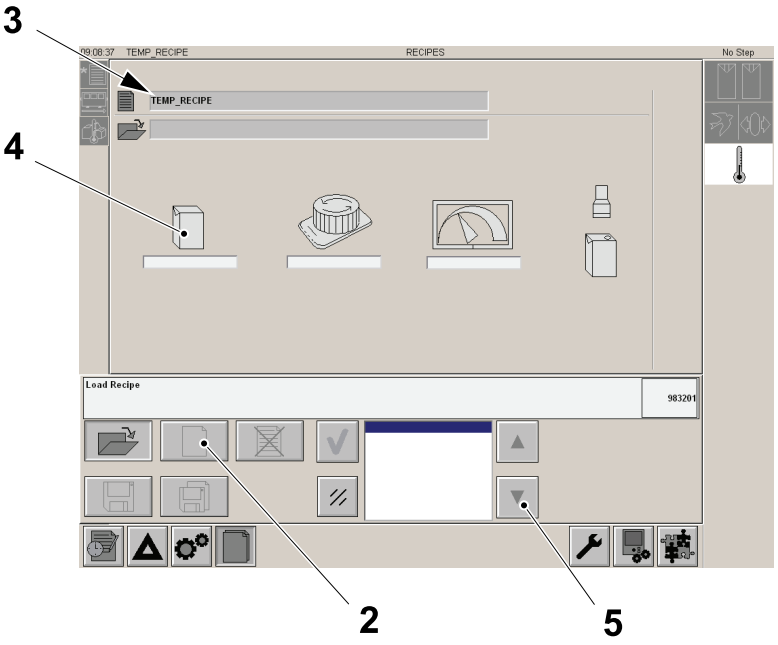

2 NEW recipe button
3 Recipe name
4 Configuration of the package button
5 ARROW button

(Cont'd)

(Cont'd)

g) Touch the cap button (6) to select the cap.

h) Touch the ARROW button (5) to see the available caps for the selected package and stop on the desired one.

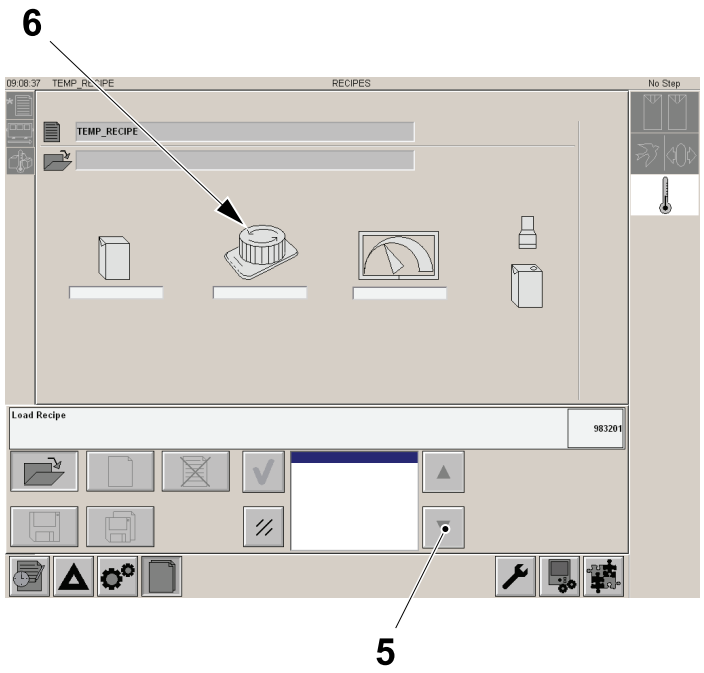

5 ARROW button
6 Cap button

(Cont'd)

(Cont'd)

i) Touch the machine SPEED button (7) to select the speed of the machine for this cap/package configuration.

j) Touch the ARROW button (5) to see the available speeds and stop on the desired one.

Note! The speed of the machine must be set 20% higher than the speed of the filling machine. For example, if the speed of the filling machine is 6000 p/h, a good setting for the speed is 7200 p/h.

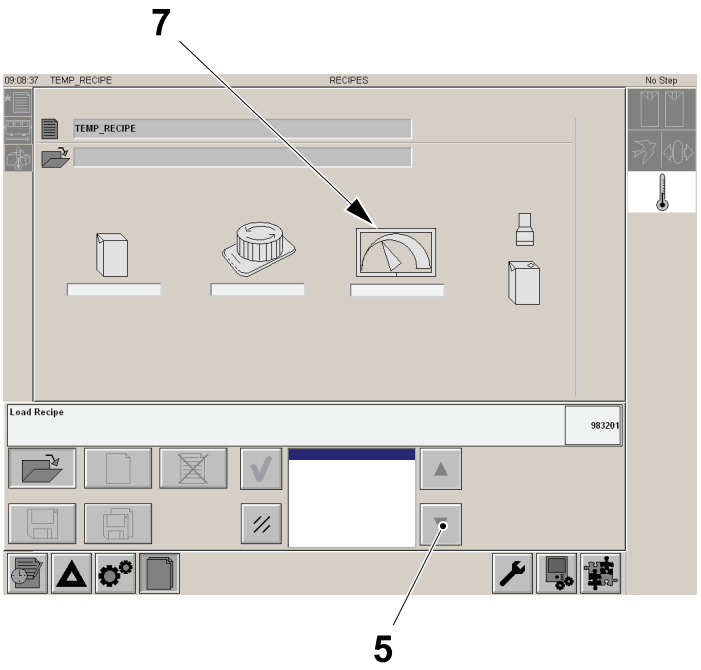

5 ARROW button
7 Speed button

(Cont'd)

(Cont'd)

Note! The steps k) and l) only if Positioning Device is used.

k) Touch the PACKAGING MATERIAL SELECTION button (8).

l) Touch the ARROW button (5) to select the metalised non-metalised package configuration.

m) Touch the OK button (9).

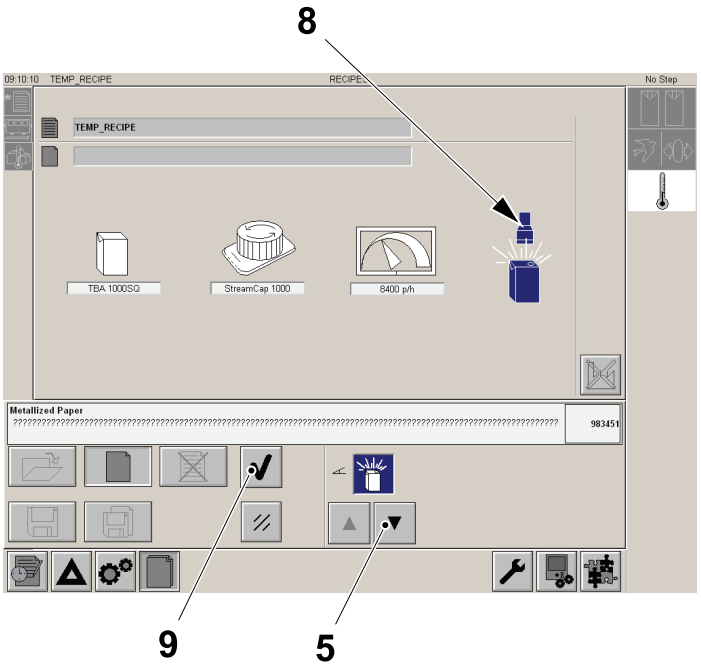

5 ARROW button
8 Packaging material selection button
9 Ok button

(Cont'd)

(Cont'd)

n) When the Keyboard window (10) appears, type the name of the recipe. A good example can be:
   - TPA1000Sq7200M if metalised
   - TPA1000Sq7200 if non metalised

o) Touch the `ENTER` button (11) to confirm.

p) Touch the `EXIT` button (12) to quit.

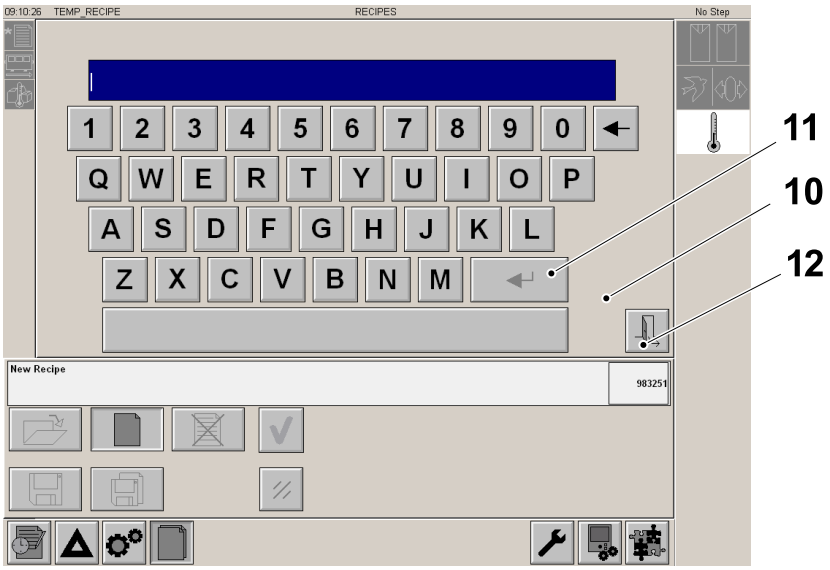

10 Keyboard window
11 ENTER button
12 EXIT button

8.9.1-14 Touch Screen - Saving Recipe Settings

Machine Status	Electrical supply disconnecting device in position I (ON)
SPC Reference	2779070-0300

To save any change made to a machine setting in a recipe, proceed as follows:

a) Touch the RECIPE button (1) and the activeRECIPE name (2) will appear.

b) Touch the SAVE button (3) .

c) Touch the OK button (4) to confirm. The changes will be saved as default values in the recipe.

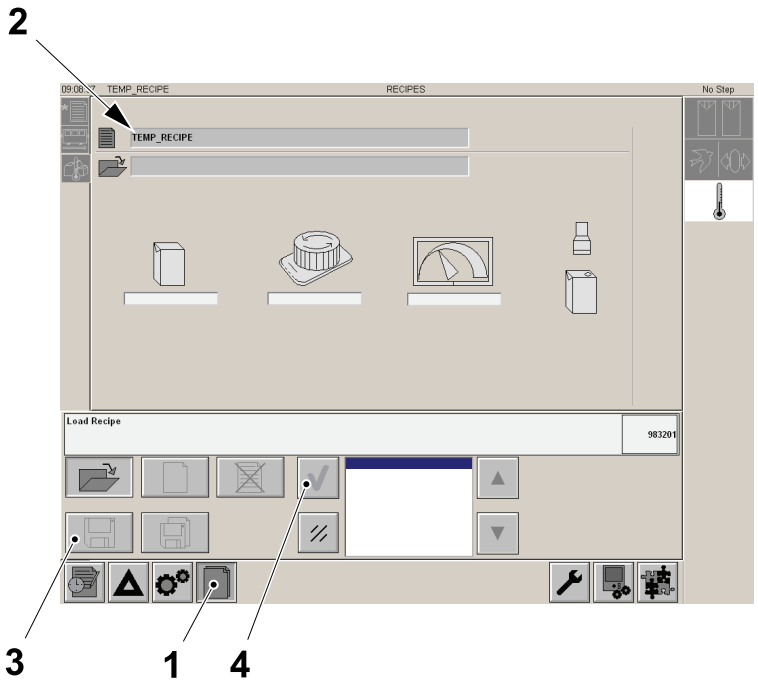

1 Recipe button
2 Recipe name
3 Save button
4 OK button

8.9.1-15 Recipe - Set Correct Values

Machine Status	Electrical supply disconnecting device in position I (ON)
SPC Reference	2779070-0300

Set the correct values of the recipe

To set the correct values of the recipe insert the new settings according to the Final Inspection Report and the MM. The settings are as follows:

a) Package infeed start angle, see 1.1.2.5-7 Set Package Infeed Start Angle.

b) Package infeed running angle, see 1.1.2.5-8 Set Package Infeed Running Angle.

c) Belt brake speed, see 1.1.2.5-5 Set Belt Brake Speed.

d) Package conveyor speed, see 1.1.2.5-4 Set Package Conveyor Speed.

e) Set Package length, see 2.3.3.1-9 Set - Package Length Y.

f) The settings of the hotmelt wheel, see 2.3.3.1-10 Set - Wheel Pushdown Offset.

g) Cap position Y setting, see 2.3.3.1-7 Set - Cap Position Y Direction.

Note! Save the recipe after all the new values are set, see 8.9.1-14 Touch Screen - Saving Recipe Settings on page 8-332.

Note! As soon as the new recipe is saved the machine will automatically load it.

8.9.1-16 Touch Screen - Delete Recipes

Machine Status	Electrical supply disconnecting device in position I (ON)
SPC Reference	2779070-0300

To delete a recipe, proceed as follows:

a) Set the machine to STEP 0.

b) Touch the RECIPE button (1) to open the recipe window.

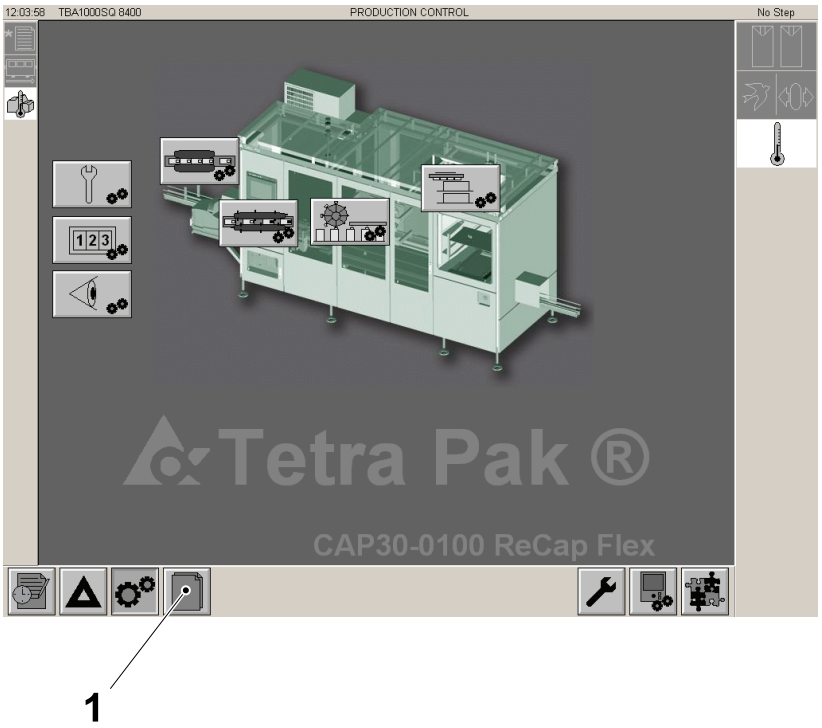

1 Recipe button

(Cont'd)

(Cont'd)

c) Touch the ARROW button (2) to scroll the recipes and stop in the recipe to be deleted.

d) Touch the DELETE button (3) to delete the recipe.

e) Touch the CONFIRM button (4) .

Note! It is not possible to delete the active recipe.

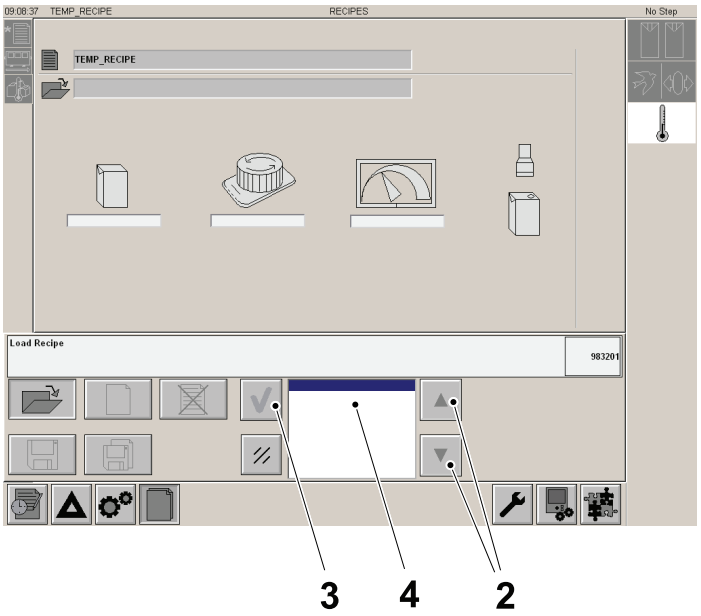

2 ARROW button
3 DELETE button
4 Confirm button

8.9.1-17 Touch Screen - Change Recipes

Machine Status	Electrical supply disconnecting device in position I (ON)
SPC Reference	2779070-0300

To change the recipe in the machine, proceed as follows:

a) Set the machine to STEP 0.

b) Touch the RECIPE button (1) to open the recipe window.

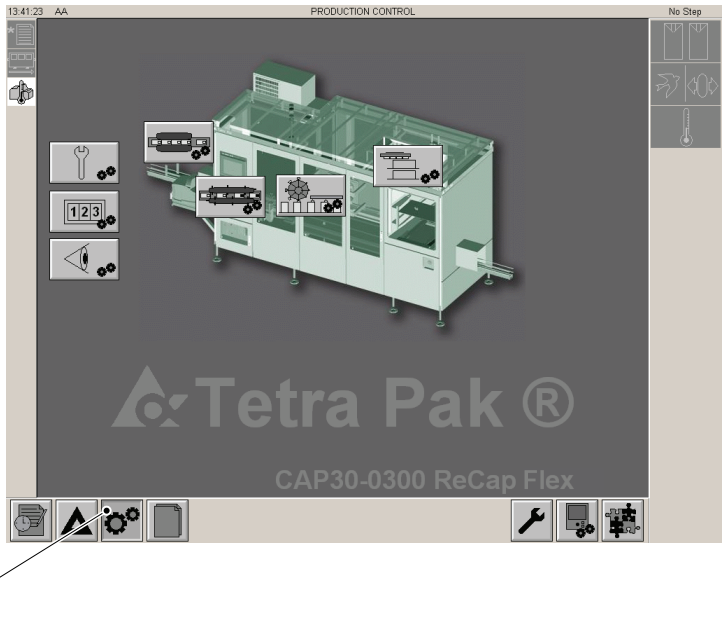

1 Recipe button

(Cont'd)

(Cont'd)

c) Touch the RECIPE button (2) .

d) Touch the ARROW button (3) to scroll the recipes and stop on the recipe to be selected.

e) Touch the OK button (4) to select the recipe.

f) Check the configuration name in the Field (5) is correct.

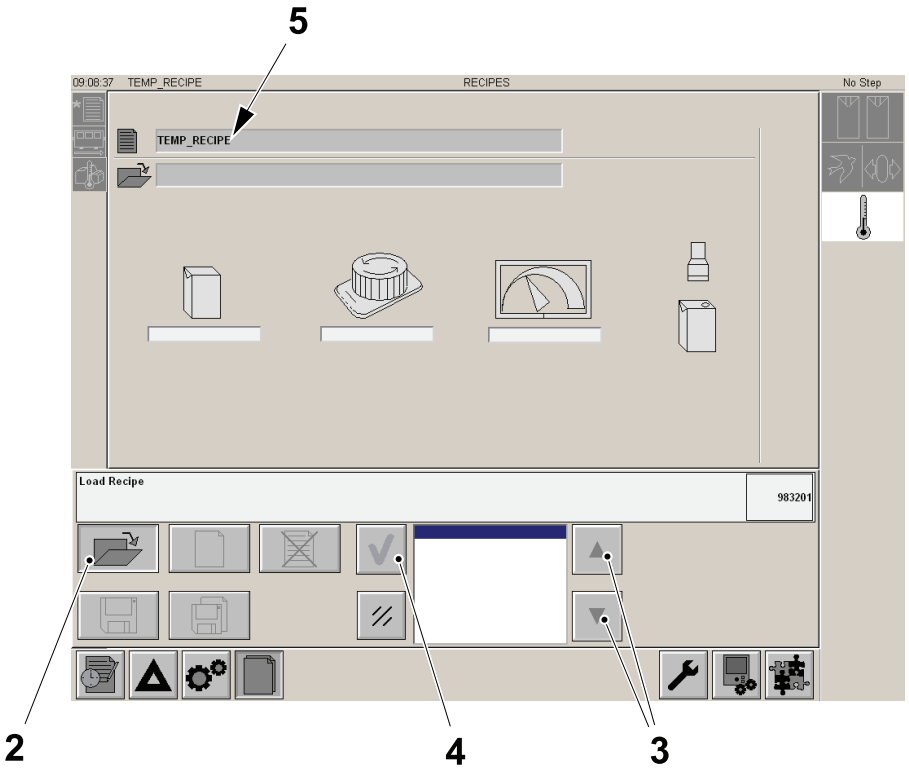

2 Recipe button
3 ARROW button
4 OK button
5 Field

8.10 Cooling System

8.10.1 Cooling Unit

8.10.1-1 Cooling Unit - Clean Filter

Machine Status	Electrical supply disconnecting device in position I (ON) Main air valve ON
SPC Reference	2833406-0300

WARNING

Refrigerant gas.

Cooling media R134A. Always follow the Manufacturers Data Sheet as specified in the Safety Precautions.

CAUTION

Risk of damage to the equipment.

Only the procedures described may be performed by Tetra Pak or Tetra Pak trained customer technicians. In all other cases contact Tetra Pak.

(Cont'd)

(Cont'd)

a) Remove the screw (1) .

b) Remove the cover (2) and the filter (3) .

c) Clean the filter (3) with compressed air.

d) Assemble in the reverse order.

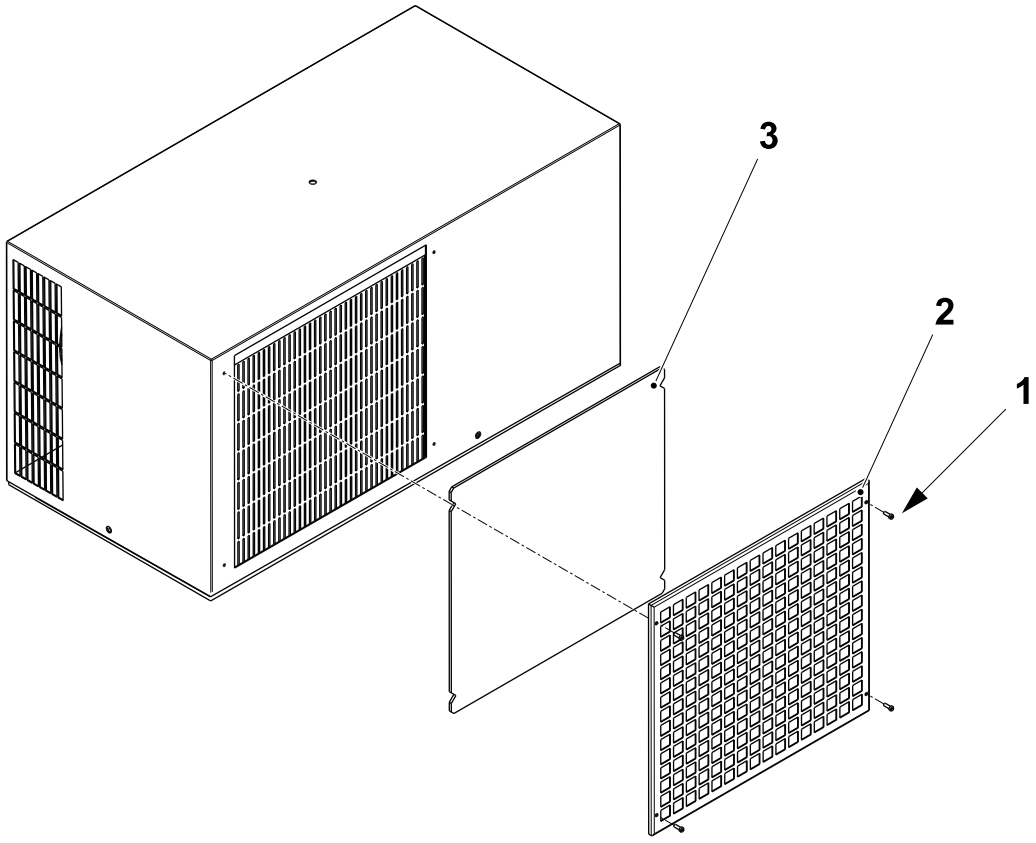

1 Screw
2 Cover
3 Filter

8.10.1-2 Cooling Unit - Change Filter

Machine Status	Electrical supply disconnecting device in position I (ON) Main air valve ON
SPC Reference	2833406-0300

WARNING

Refrigerant gas.

Cooling media R134A. See the Safety Precautions.

CAUTION

Risk of damage to the equipment.

Only the procedures described may be performed by Tetra Pak or Tetra Pak trained customer technicians. In all other cases contact Tetra Pak.

a) Remove the screw (1) .

b) Remove the cover (2) and the filter (3).

c) Change the filter (3).

d) Assemble in the reverse order.

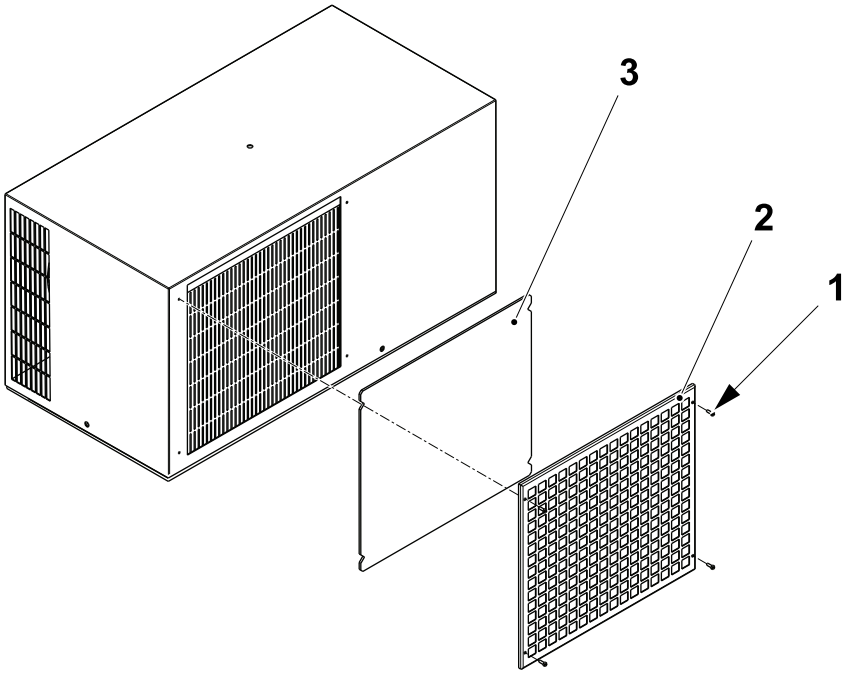

1 Screw
2 Cover
3 Filter

8.10.1-3 Cooling Unit - Check

Machine Status	Electrical supply disconnecting device in position I (ON) Main air valve ON
SPC Reference	2833406-0300

DANGER

Hazardous voltage.
Will shock, burn or cause death. Follow the lockout procedure before performing this procedure.

CAUTION
Risk of damage to the equipment.
Only the procedures described may be performed by Tetra Pak or Tetra Pak trained customer technicians. In all other cases contact Tetra Pak.

a) Remove the screw (1) and the cover (2) .

b) Clean heat exchanger unit (3) with compressed air, blow the compressed air through from the inner side of the heat exchanger unit (3) to the outside of the cooling unit.

c) Clean any build up of dirt from the fan blades (4) .

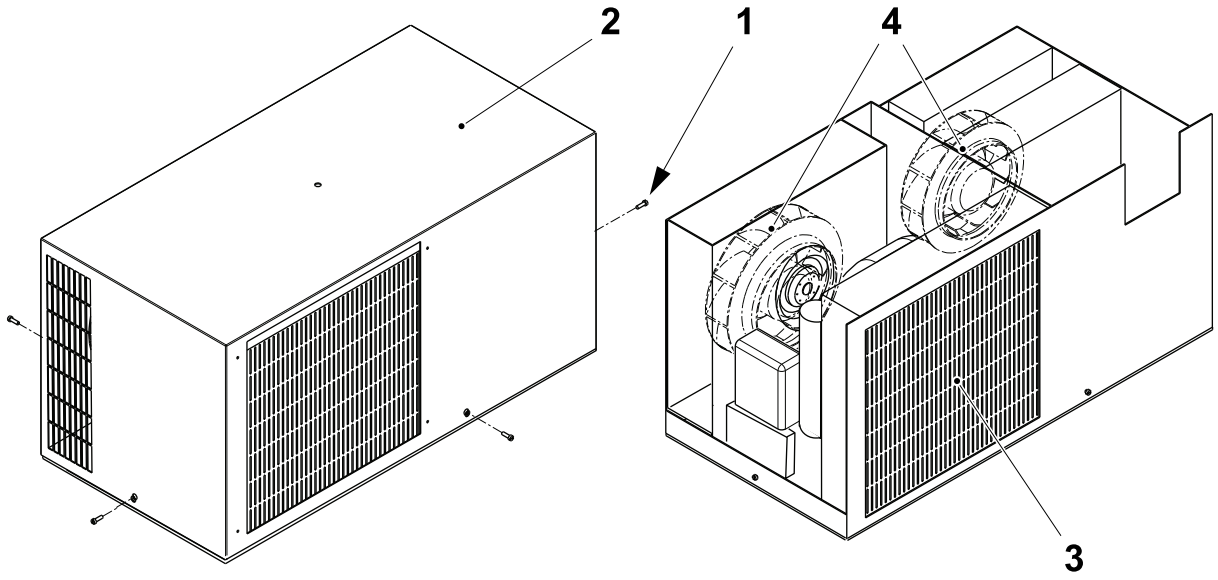

1 Screw
2 Cover
3 Heat exchanger unit
4 Fan blade

(Cont'd)

(Cont'd)

d) Check for oil leakages on the copper pipe connections, if oil is leaking from the pipe connections, contact Tetra Pak

e) Check that the compressor (5) is securely fastened to the cooling unit base

f) Check that the fans (6) are securely fixed and there is not excessive radial play. To change the fans, see 8.10.1-4 Cooling Unit - Overhaul.

g) Assemble in the reverse order.

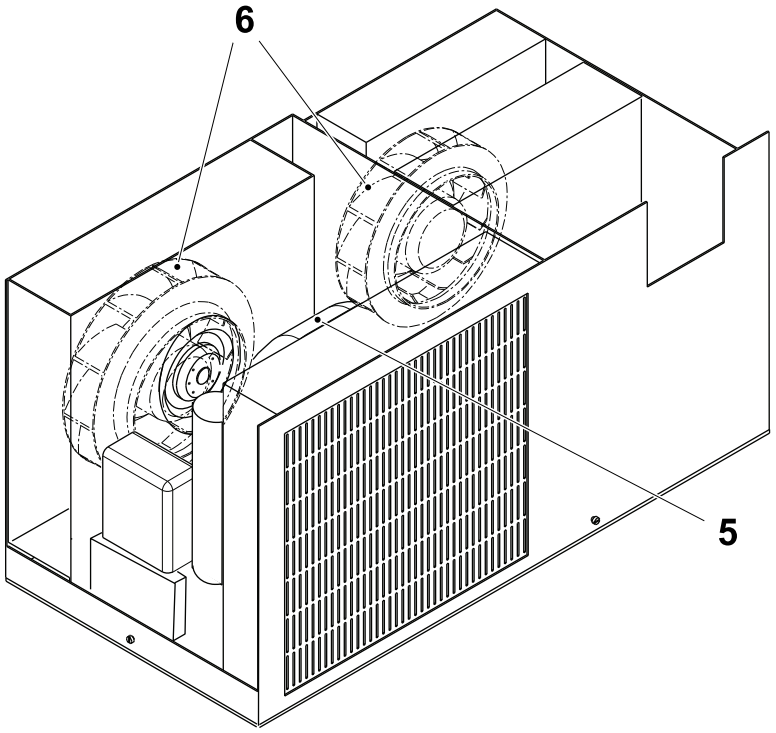

5 Compressor
6 Fan

8.10.1-4 Cooling Unit - Overhaul

Machine Status	Electrical supply disconnecting device in position I (ON) Main air valve ON
SPC Reference	2833406-0300

DANGER

Hazardous voltage.
Will shock, burn or cause death. Follow the lockout procedure before performing this procedure.

WARNING

Refrigerant gas.
Cooling media R134A. See the Safety Precautions.

CAUTION

Risk of damage to the equipment.
Only the procedures described may be performed by Tetra Pak or Tetra Pak trained customer technicians. In all other cases contact Tetra Pak.

Note! If the cooling unit is removed from the electrical cabinet it is advisable to fit a new gasket to ensure a sufficient seal between the electrical cabinet and the cooling unit. Apply the self adhesive side of the new gasket to the cooling unit base.

(Cont'd)

(Cont'd)

a) Remove the screw (1) and the cover (2).

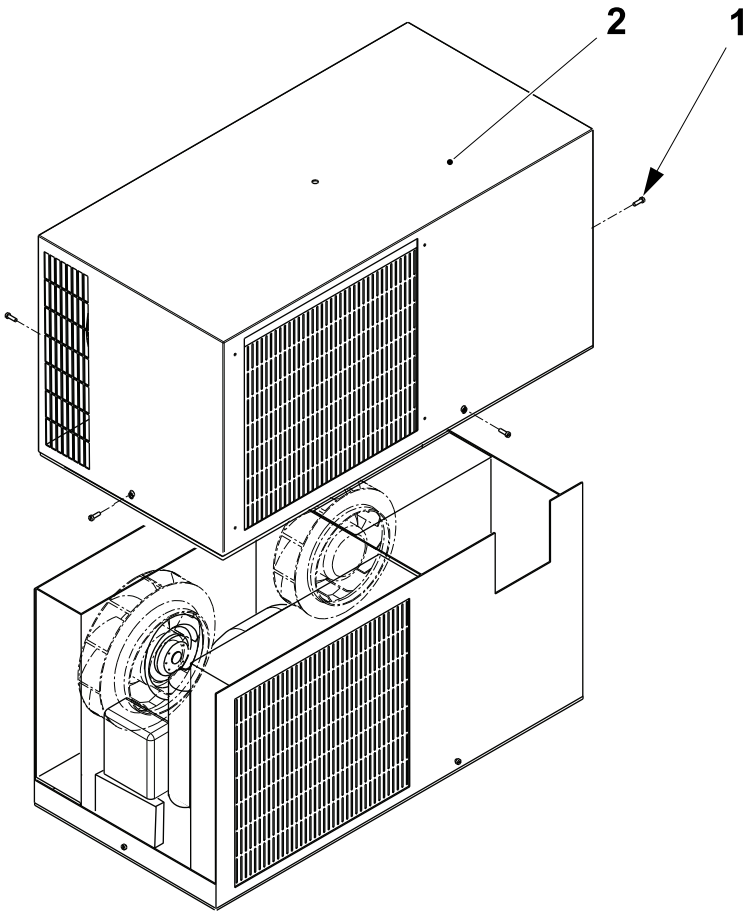

1 Screw
2 Cover

(Cont'd)

(Cont'd)

Change the Condenser Fan

a) Disconnect the electrical cable (1) from the connection block (2) making a note of which wire is connected where.

b) Remove the screw (3) and the fan (4).

c) Assemble in the reverse order.

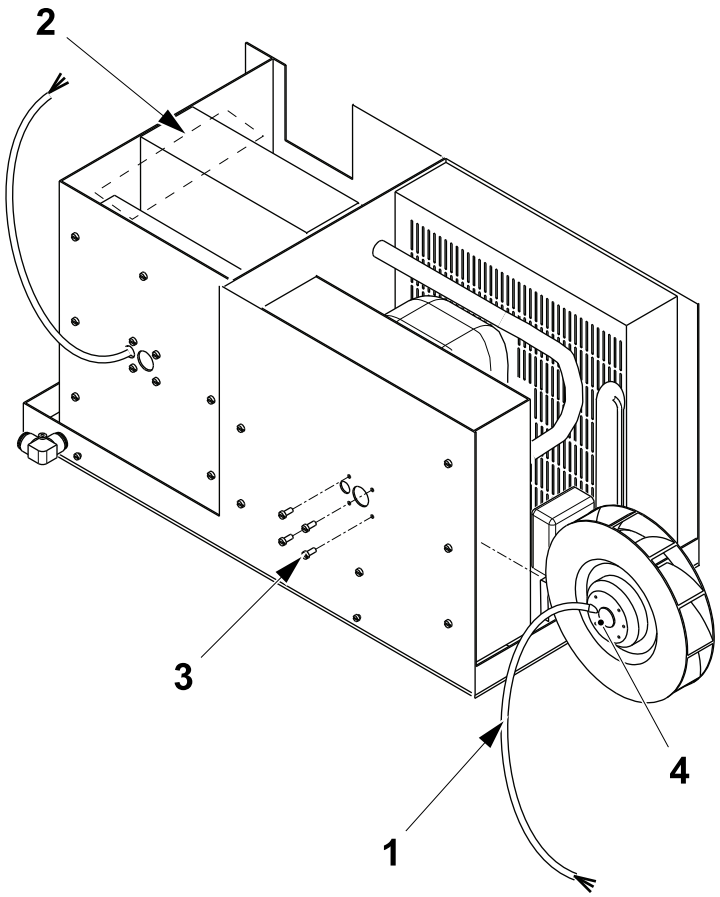

1 Cable
2 Connection block
3 Screw
4 Fan

(Cont'd)

(Cont'd)

Change the Expansion Chamber Fan

CAUTION
Risk of damage to the equipment.
Take care to fit the fan (6) with the correct screw (5), the screw (3) may damage the fan.

a) Disconnect the electrical cable (1) from the electrical connection box (2).

b) Remove the screw (3) and the Cover (4).

c) Remove the screw (5) and the fan (6).

d) Assemble in the reverse order.

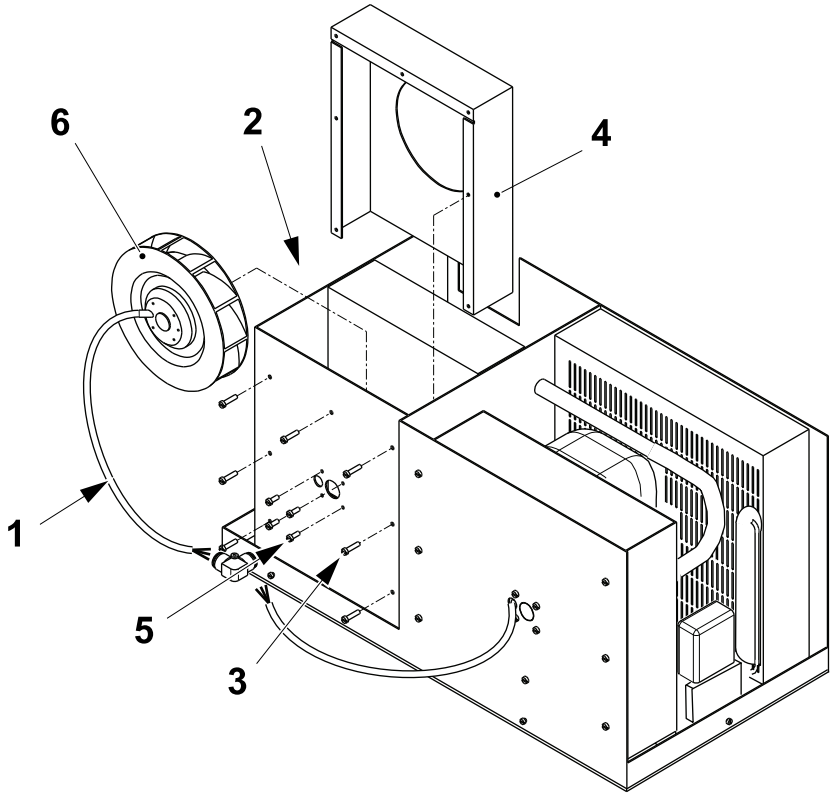

1 Electrical cable
2 Connection box
3 Screw
4 Cover
5 Screw
6 Fan

(Cont'd)

(Cont'd)

Change the Anti-freeze Thermostat

a) Remove the thermostat (1) from the expansion chamber unit (2).

b) Remove the screw (3) and the thermostat unit (4).

c) Assemble in the reverse order.

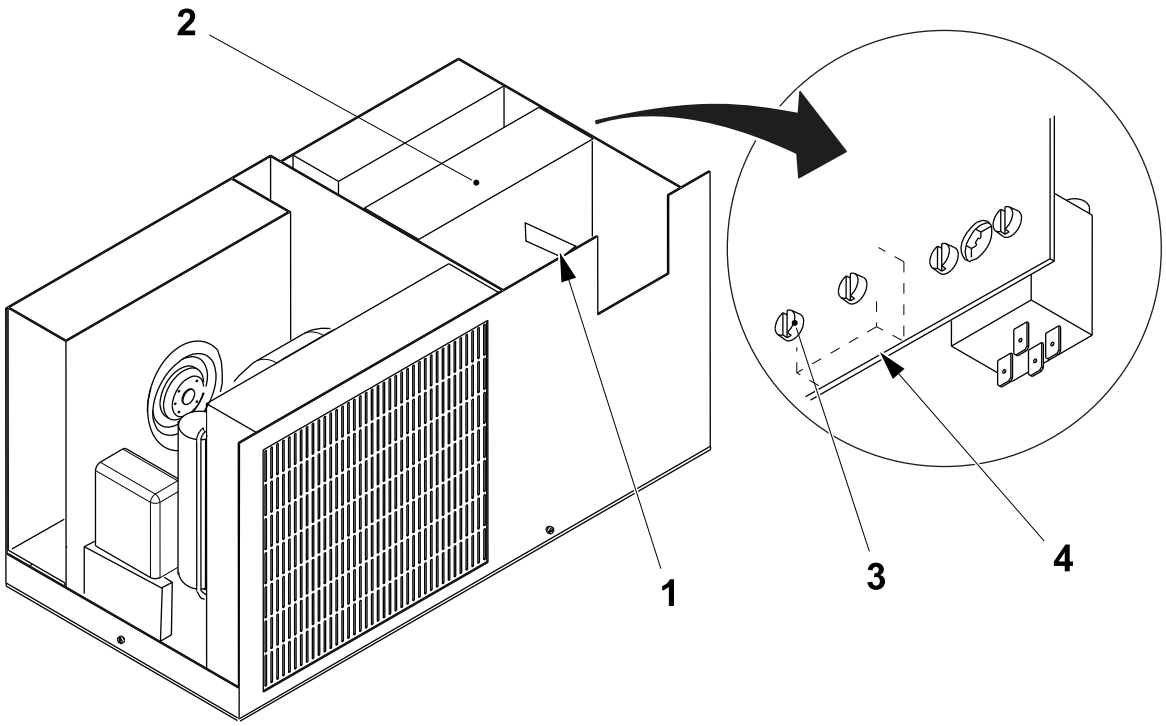

1 Thermostat
2 Expansion chamber unit
3 Screw
4 Thermostat unit

(Cont'd)

(Cont'd)

Change the Cabinet Temperature Thermostat

a) Remove the electrical connections from the thermostat (1).

b) Remove the screw (2) and the cabinet temperature thermostat (1).

c) Assemble the new thermostat unit (1) placing the thermostat sensor (3) into the airflow.

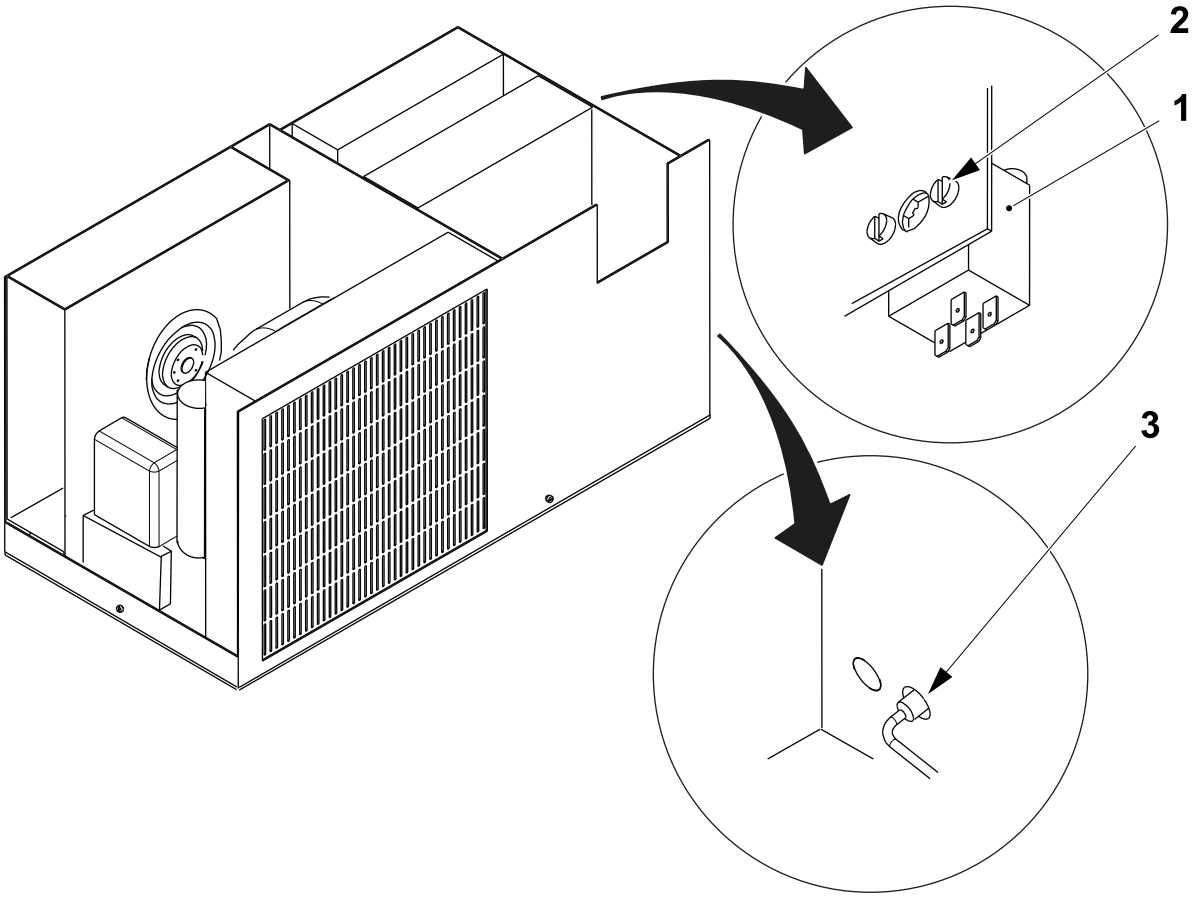

1 Thermostat
2 Screw
3 Thermostat sensor

8.10.1-5 Cooling Unit - Troubleshooting

Machine Status	Electrical supply disconnecting device in position I (ON) Main air valve ON
SPC Reference	2833406-0300

CAUTION
Risk of damage to the equipment.
Only the procedures described may be performed by Tetra Pak or Tetra Pak trained customer technicians. In all other cases contact Tetra Pak.

If the cooling unit fails to operate or is operating insufficiently use the table below to determine the possible cause and actions to be taken.

Description	Possible Cause	Action
The cooling unit will not start.	No mains power supply to the cooling unit.	Check the circuit breaker and connections to the mains power supply.
Only the inside fan runs. Practically no electric consumption	The electrical cabinet internal thermostat has tripped or is wrongly set. The freeze thermostat has tripped.	Check the electrical cabinet internal thermostat and if necessary set to 35°C.
Normal operation. Insufficient cooling. High electric consumption	Condenser coil or filter dirty. Faulty condenser fan. Electric panel not properly sealed.	Check coil and air filter. Check the fans. Remove any obstacles. Close the cabinet doors.
The fan runs but the compressor does not run. Low electric consumption	Compressor internal protection has tripped probably due to too many frequent start ups or insufficient refrigerant gas	Contact Tetra Pak.
Normal operation. Low electric consumption and compressor very hot.	Insufficient or complete lack of refrigerant gas.	Contact Tetra Pak.
Compressor never stops.	Check that the thermostat contacts or any switch contacts are not stuck.	Replace the necessary faulty part.
During operation a lot of condensation forms and is drained off.	Cabinet not sealed sufficiently. Cabinet doors open. Holes in cabinet walls.	Improve the cabinet sealing. Close the cabinet doors. Fill any holes in the cabinet.

8.10.2 Thermostat

8.10.2-1 Thermostat - Set-Up

Machine Status	Electrical supply disconnecting device in position I (ON) Main air valve ON
SPC Reference	2835457-0200

Note! The thermostat (1) is used to monitor the temperature inside the electrical cabinet. When the temperature exceeds the one set in the thermostat (1), a blue alarm appears.

a) Turn the regulator (2) and set the temperature limit to 38°C.

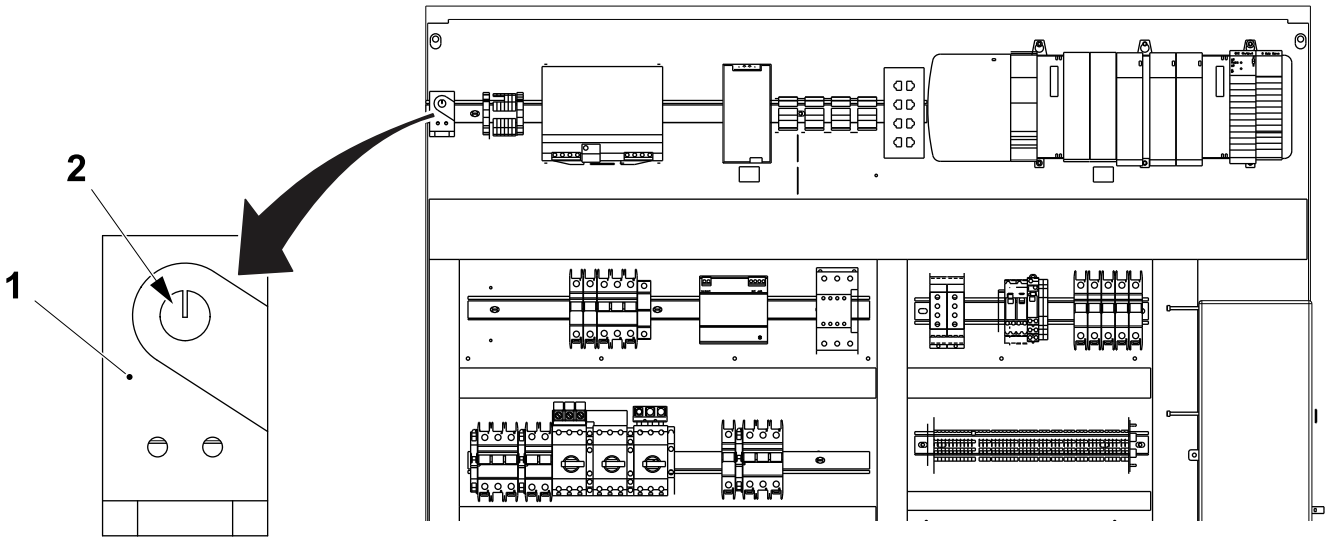

1 Thermostat
2 Regulator

8.11 Electrical Conversion

8.11.1 Variable Frequency Drive

8.11.1-1 Maintenance Instructions

Machine Status	Electrical supply disconnecting device in position I (ON)
SPC Reference	662911-0300

For maintenance instructions, see 8.4.1 PowerFlex40 and PowerFlex 4 Frequency Converters on 8-139.

8.11.2 Axis Module

8.11.2-1 Maintenance Instructions

Machine Status	Electrical supply disconnecting device in position I (ON)
SPC Reference	662911-0300

For maintenance instructions, see 8.5.3 Servo Drive on 8-179.

8.11.3 Communication Unit

8.11.3-1 Maintenance Instructions

Machine Status	Electrical supply disconnecting device in position I (ON)
SPC Reference	662911-0300

For maintenance instructions, see 10.4 Communication Unit on 10-9.

8.12 PLMS Config

8.12.1 PLMS - Install DE Config Files

The CONFIG file of each DE (and Tetra Pak LC30) must be installed on the filling machine IPC.

The instructions for this can be found in the filling machines MM under HMI and PLMS - Install DE Config Files.

8.13 CAP30 Development Step

8.13-1 Development Step - Setup

Machine Status	Electrical supply disconnecting device in position I (ON) Main air valve ON
SPC Reference	662950-0300

CAUTION
Risk of Damge to Equipment
The wrong setting of the development step may cause wrong behaviour of CAP30 machine and may bring to property damage.

Note! The new software for CAP30 machines introduces the setting for the development step of the machine. This setting configures the software for the proper development step of the CAP30.

a) Login the TPOP as service technician, see 1.1.1-1 HMI User Management - Log On as a User.

b) Touch the `CONFIGURATION` button (1).

c) In the CONFIGURATION window, the `CAP30 DEVELOPMENT STEP` button (2) is shown in picture below.

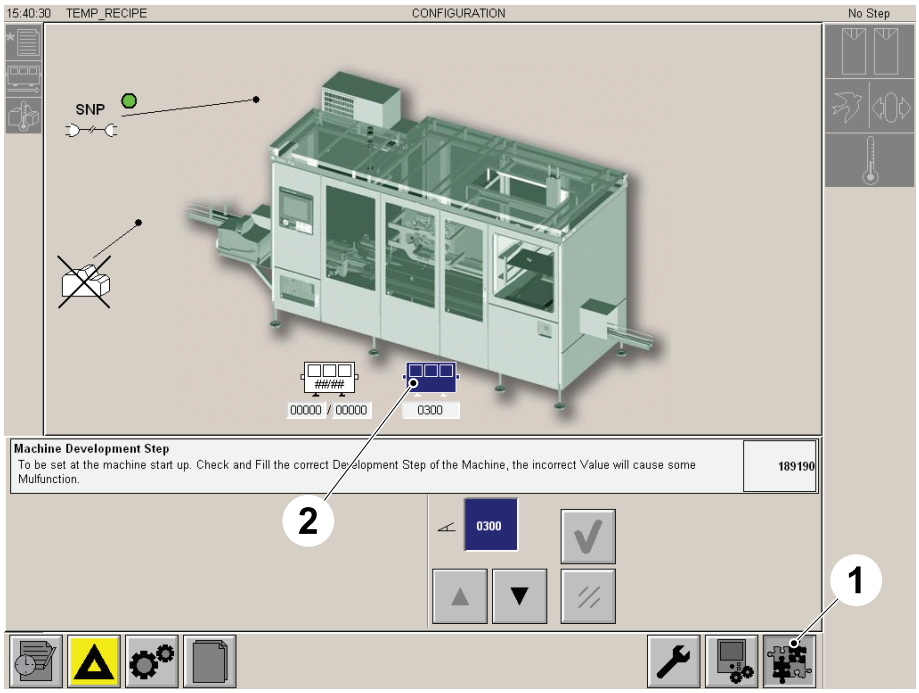

1 `CONFIGURATION` button
2 `CAP30 DEVELOPMENT STEP` button

8.13-2 Development Step - Check

Machine Status	Electrical supply disconnecting device in position O (OFF)
SPC Reference	662950-0300

a) Check the CAP30 machine plate (1) .

b) Check the CAP30 development step in the machine number (2) of the CAP30 machine plate (1).

Note! For CAP30 Flex the machine number is 662950-0100, 662950-0200 or 662950-0300 and the development steps are -0100, -0200 and -0300.

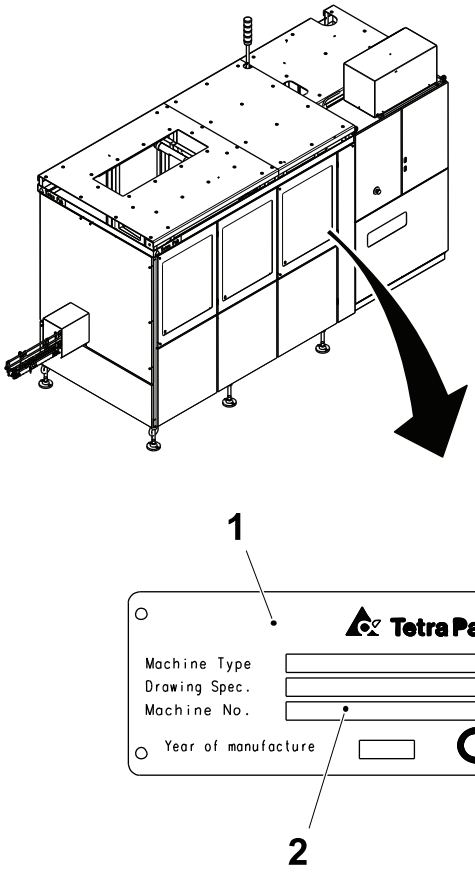

1 CAP30 machine plate
2 Machine number

8.13-3 Development Step - Set

Machine Status	Electrical supply disconnecting device in position I (ON) Main air valve ON
SPC Reference	662950-0300

a) In the CONFIGURATION window (1), touch the CAP30 DEVELOPMENT STEP button (2).

b) Touch the ARROW keys (3) to setup the correct development step.

c) Touch the OK button (4) to confirm.

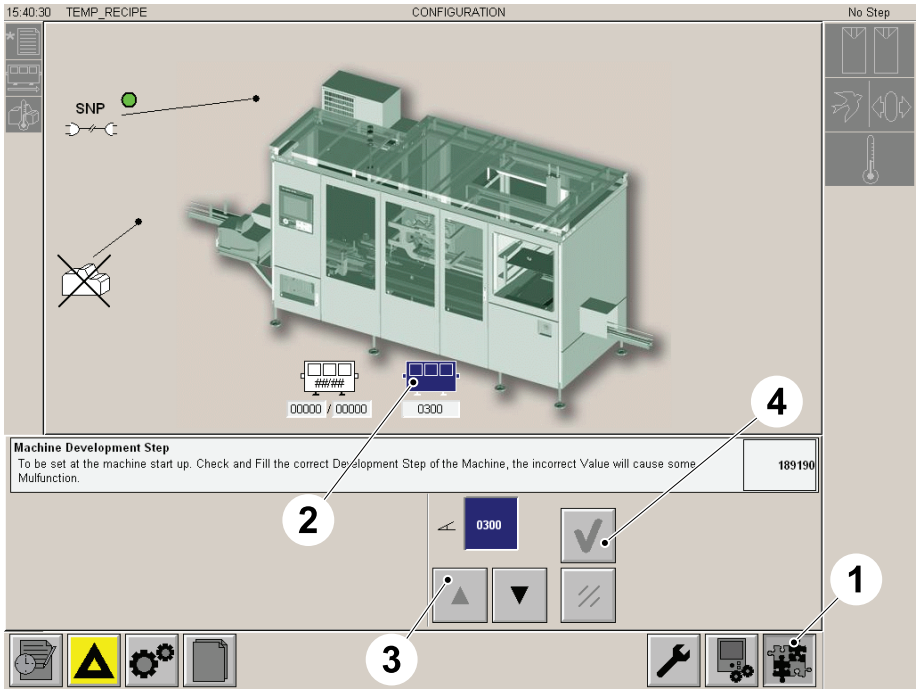

1 CONFIGURATION window
2 CAP30 DEVELOPMENT STEP button
3 ARROW keys
4 OK button

(Cont'd)

(Cont'd)

d) Once the DEVELOPMENT STEP (5) is setup it is visible in the main window of the TPOP, as shown in the illustration.

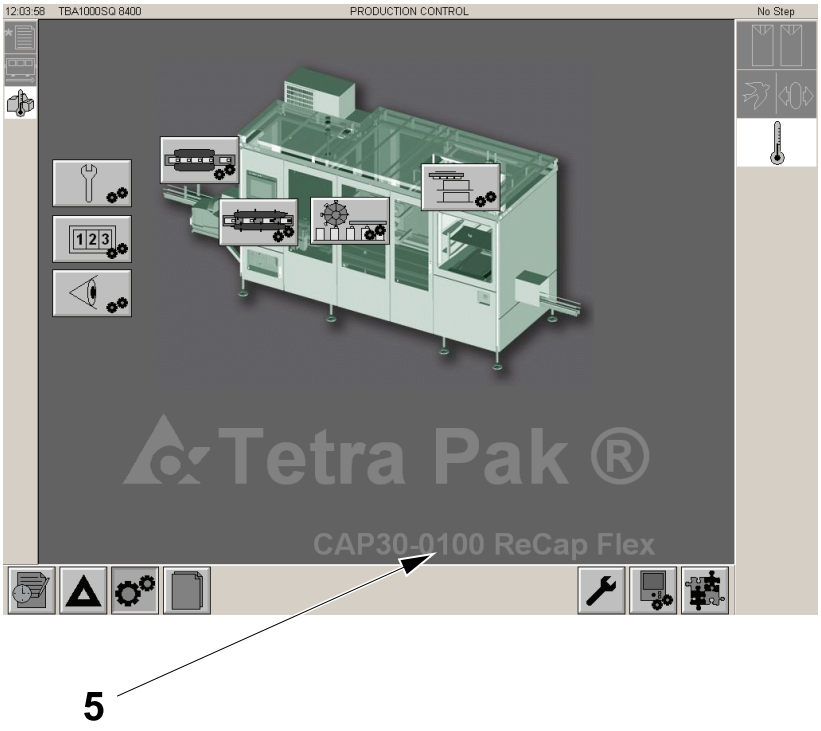

5 DEVELOPMENT STEP

9 Regular Accessories

Regular Accessories

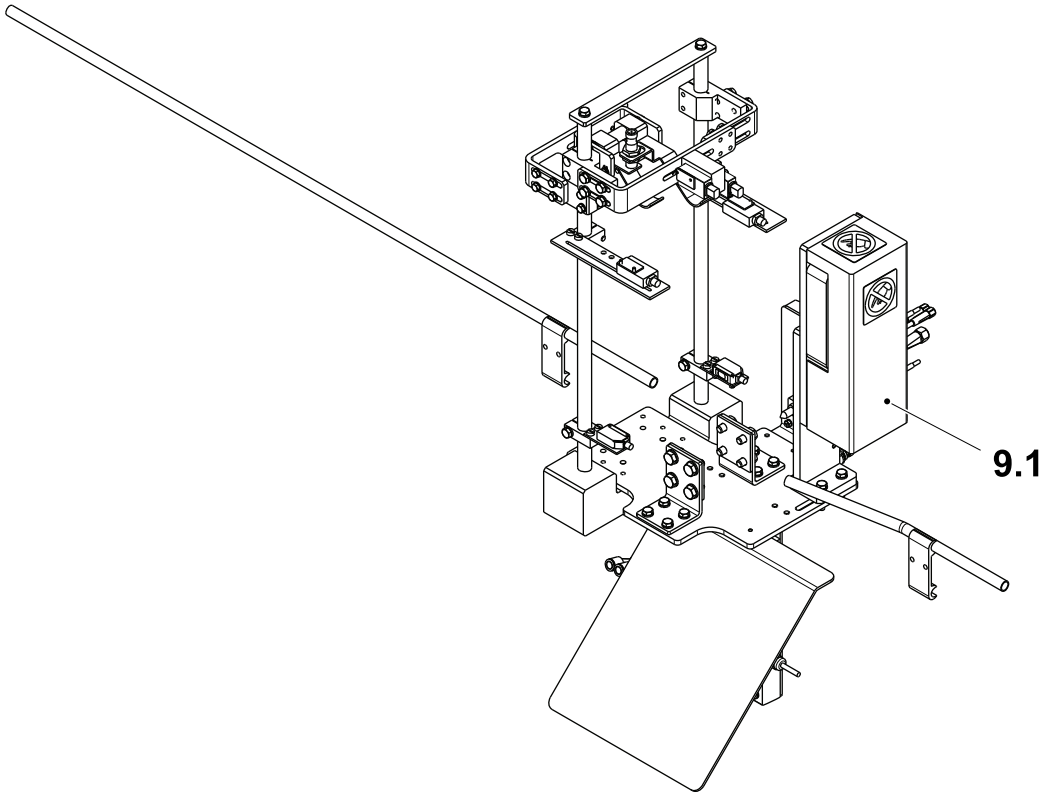

9.1 Cap Detector (ReCap)

Regular Accessories 9-2

9.1 Cap Detector (ReCap) 9-5

9.1.1 Functional Descripton 9-5

9.1-1 Cap Detector (ReCap) - Check 9-7

9.1-2 Cap Detector (ReCap) - Set 9-8

9.2 Cap Detector - Package Ejector Timing 9-13

9.2-1 Cap Detector - Package Ejector Timing Setting 9-13

9.2-2 Cap Detector - Fine Setting 9-17

9.2-3 Different Waste Package Counters 9-19

9.2-4 Cap Ejector - Set Pressure 9-22

9.2-5 Cap Ejector - Set Height 9-23

This page intentionally left blank

9.1 Cap Detector (ReCap)

9.1.1 Functional Descripton

Cap Position Y- Packages without caps

The trigger (1) is lifted by the trigger (2) to the package height.The photocells (3) sense the presence of the package and tells the system to check if the cap sensor (4) is activated by the trigger (1), if not the package is ejected.

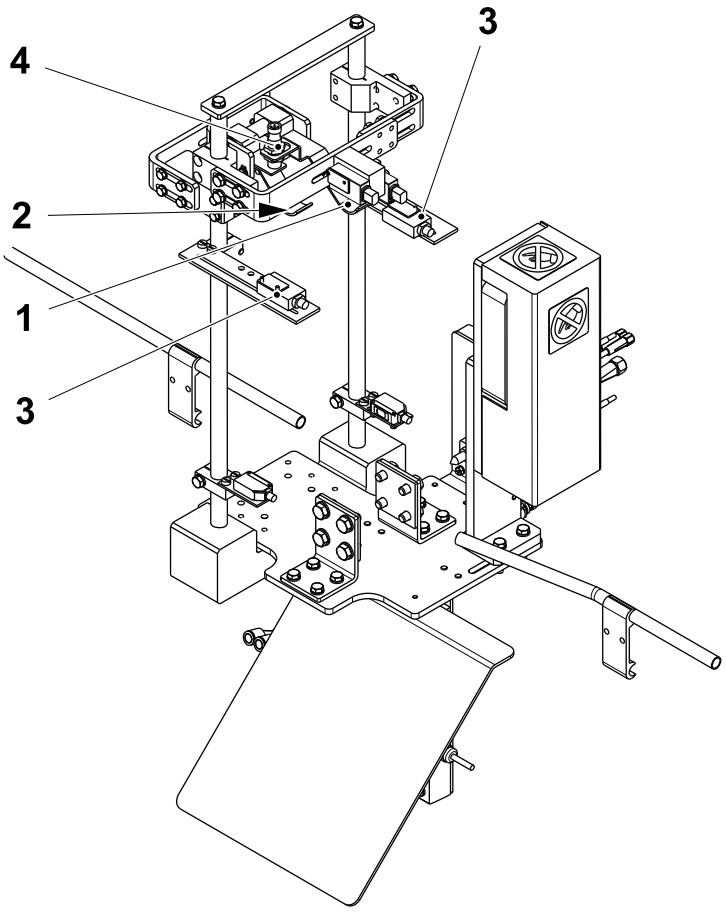

1 Trigger
2 Trigger
3 Photocell
4 Sensor

(Cont'd)

(Cont'd)

Cap Position Y+

When the photocell (5) is triggered the software checks that the photocell (6) is reading the package, if not the cap is out of position in the Y+ direction and the package is ejected.

If a cap leaves the package but stays on the conveyor this will be detected by the photocell (7) and be removed by a jet of air from the nozzle (8).

Packages to be ejected are removed by the pusher (9).

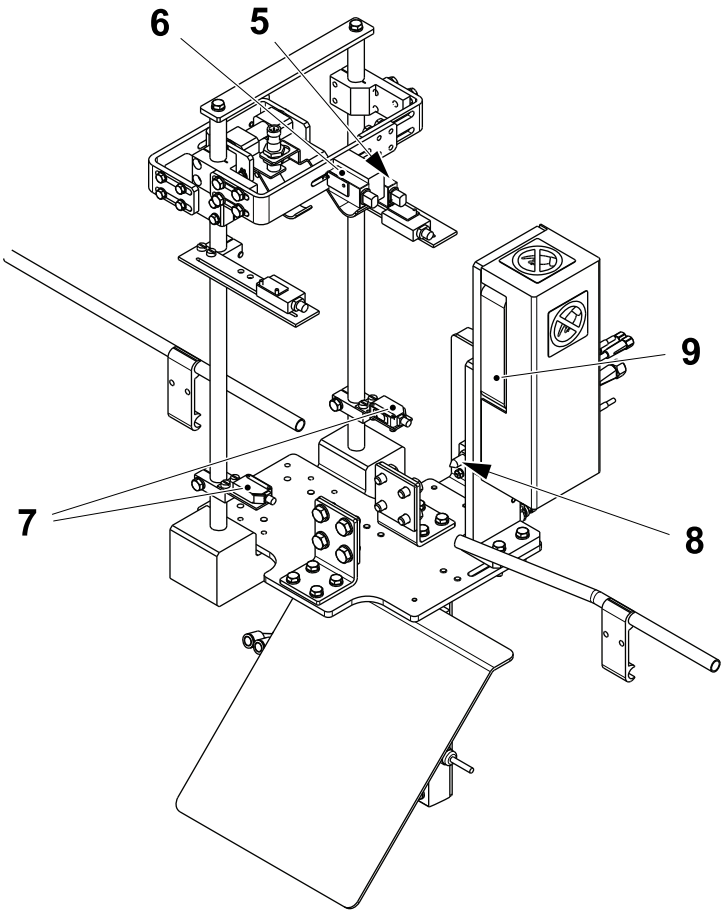

5 Photocell
6 Photocell
7 Photocell
8 Nozzle
9 Pusher

9.1-1 Cap Detector (ReCap) - Check

Machine Status	Electrical supply disconnecting device in position O (OFF)
SPC Reference	2986247-0200

Check each of the following parts for wear:

- Link head (1)
- Cylinder (2)
- Pusher (3).

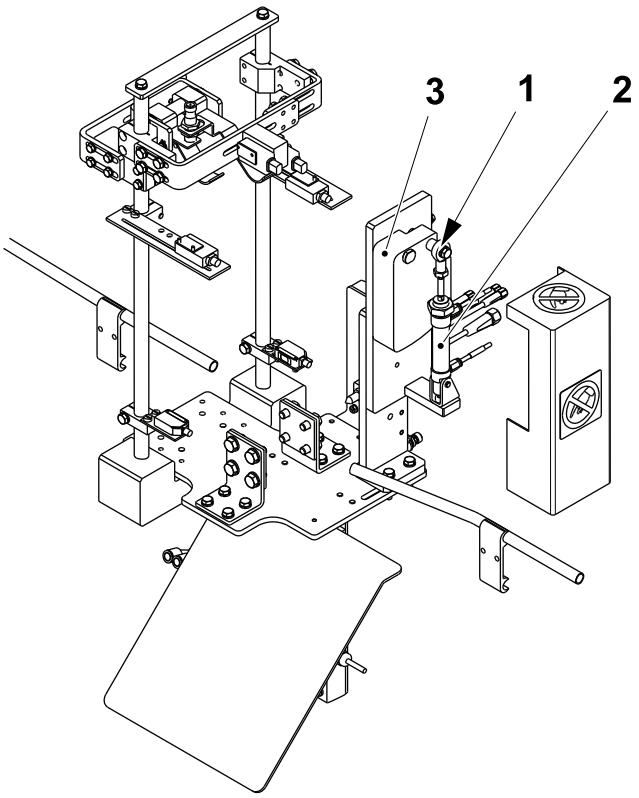

1 Link head
2 Cylinder
3 Pusher

9.1-2 Cap Detector (ReCap) - Set

Machine Status	Electrical supply disconnecting device in position O (OFF)
SPC Reference	2986247-0200

Note! Install the cap detector according to the Installation Manual (IM).

a) Set the distance **A** between the plate (1) and the photocell (2) by releasing and tightening the screw (3).

b) Set the distance **B** between the plate (1) and the photocell (4) by releasing and tightening the screw (5).

Package	A (mm)	B (mm)
TBA 1000 B, TBA 1000 Sq, TBA 1000 S	100	170

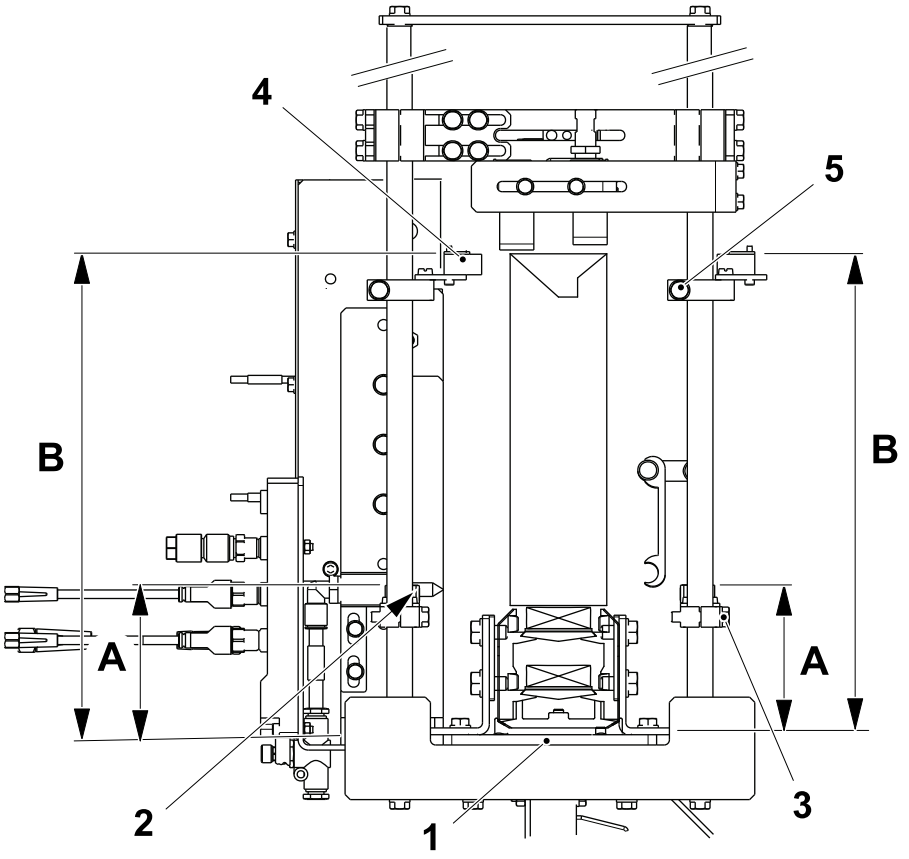

1 Plate
2 Photocell
3 Screw
4 Photocell
5 Screw

(Cont'd)

(Cont'd)

c) Place a package with a correctly positioned cap on the conveyor, then release the screws (6) and centre the triggers (7) on the package (8).

d) Release the screws (9) and move the bracket (10) so that the triggers (7) is the same height as the top of the bracket (10).

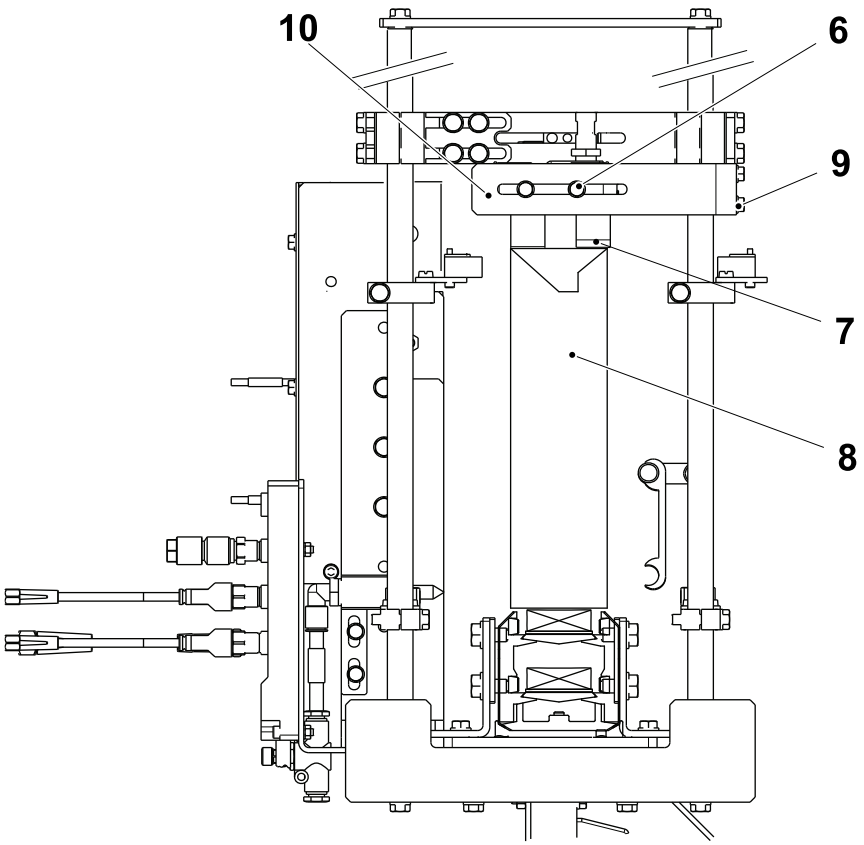

6 Screw
7 Trigger
8 Package
9 Screw
10 Bracket

(Cont'd)

(Cont'd)

e) Set the distance A by loosening the screws (11) and moving the sensor (12) until the beam (13) is distance A from the plate (14).

f) Set the position of the trigger (15) by placing a package with cap under the trigger, releasing the screws (16) and moving the bracket (10).

g) When the proximity sensor (12) starts to reading the flat part of the trigger must be on the cap.

Note! A good package with cap must be used for this.

Note! Moving the trigger towards the sensor decreases the cap out of position acceptability. Away from the sensor increases acceptability.

A = 114 mm

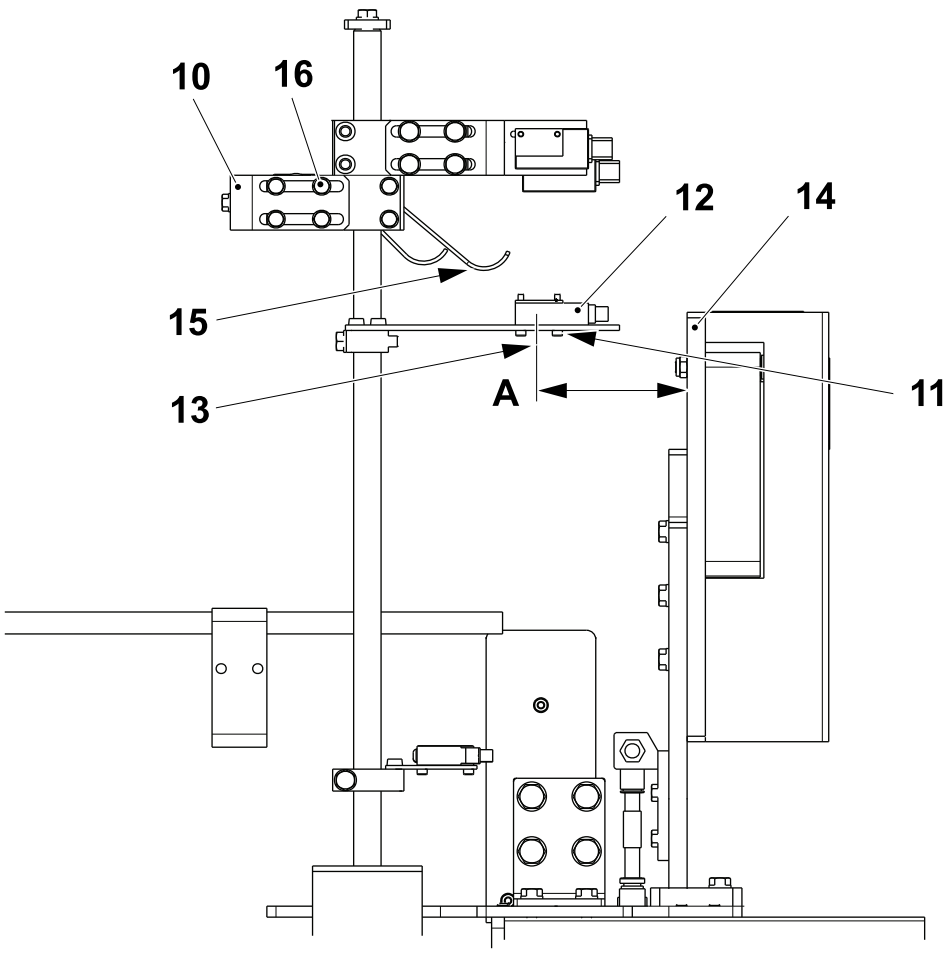

10 Bracket
11 Screw
12 Sensor
13 Beam
14 Plate
15 Trigger
16 Screw

(Cont'd)

(Cont'd)

h) Set the distance between the bottom of the sensor (17) and the top of the trigger (15) by adjusting the nut (18).

Note! Do not loose the plates that are attached to the triggers (7) and the trigger (15).

i) Release the screw (19) and set the nozzle (20) to blow the over the conveyor belt and under the bar.

Note! See 8.8.4-1 Sensor (W21B3012, W21B3014) - Set.

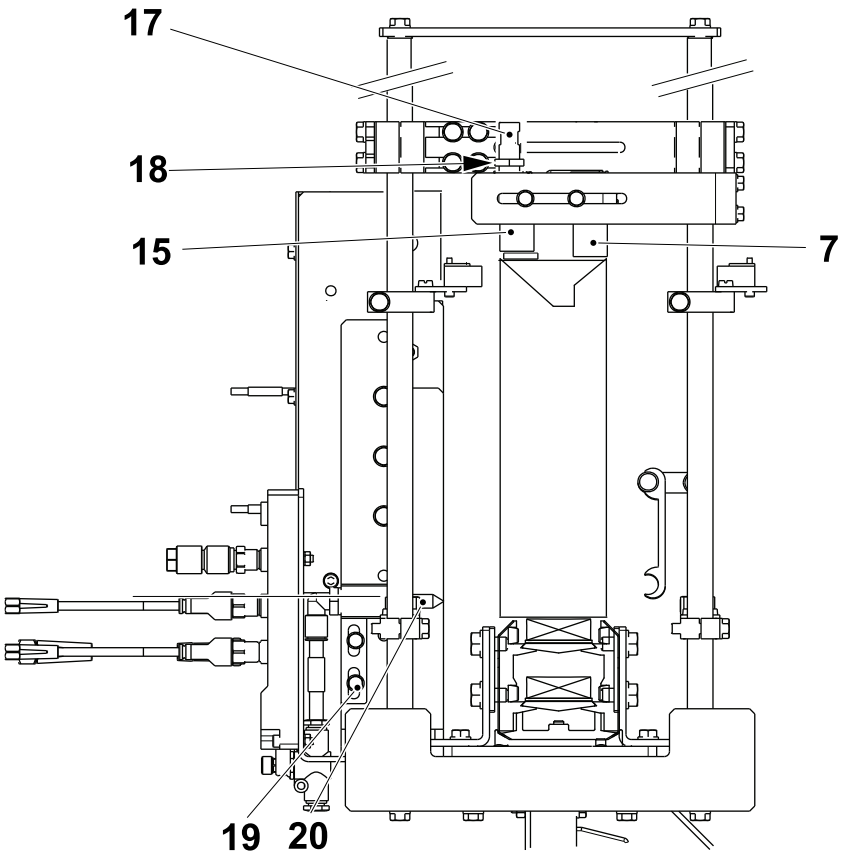

7 Trigger
15 Trigger
17 Sensor
18 Nut
19 Screw
20 Nozzle

(Cont'd)

(Cont'd)

j) Release the screws (21) to move the bracket (22).

k) Release the screws (23) and move the sensor to obtain the dimension B and C to the centre of each beam (24).

Note! The difference between B and C equals accuracy. The smaller the distance the higher the waste, the greater the distance the fewer waste packages.

B = 81 mm
C = 85 mm

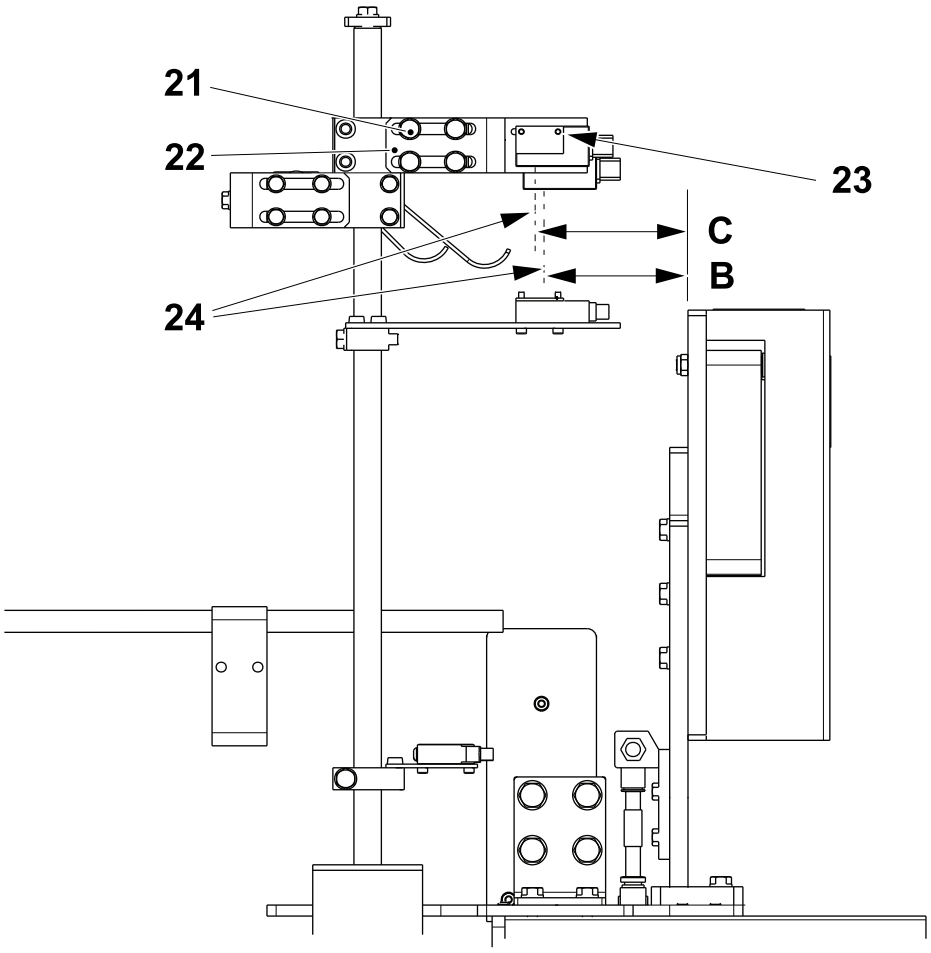

21 Screw
22 Bracket
23 Screw
24 Beam

9.2 Cap Detector - Package Ejector Timing

9.2-1 Cap Detector - Package Ejector Timing Setting

Machine Status	Electrical supply disconnecting device in position I (ON)
SPC Reference	2986247-0200

Description

Note! This setting should only be done when the machine is functioning correctly.

The reason for this setting is to eject those package that will receive caps with glue not at the correct temperature and packages likely to be miss fed at the restart. This occurs when the machine goes into a fast stop, for example the queue congestion sensor is covered. When the machine restarts the caps held in the cap holders between the hotmelt guns and the pushdown fingers will have glue not at temperature, but the packages already with caps held on by the pushdown will be good and must pass by the ejector.

(Cont'd)

(Cont'd)

Procedure

a) Make a fast stop by preventing the packages from leaving the machine.

b) Open the door and mark the second package (1) under a pushdown finger.

c) Remove any loose package (2) after the belt brake and before the package transfer, also the last package in the belt brake that is in front of the photocells.

d) Remove any packages in front of the outfeed sensor.

e) Close the doors and reset the alarms.

f) Restart the machine making sure that either you or someone else can see the cap detector.

g) Start counting the packages when they start being ejected, this may be before or after the marked package.

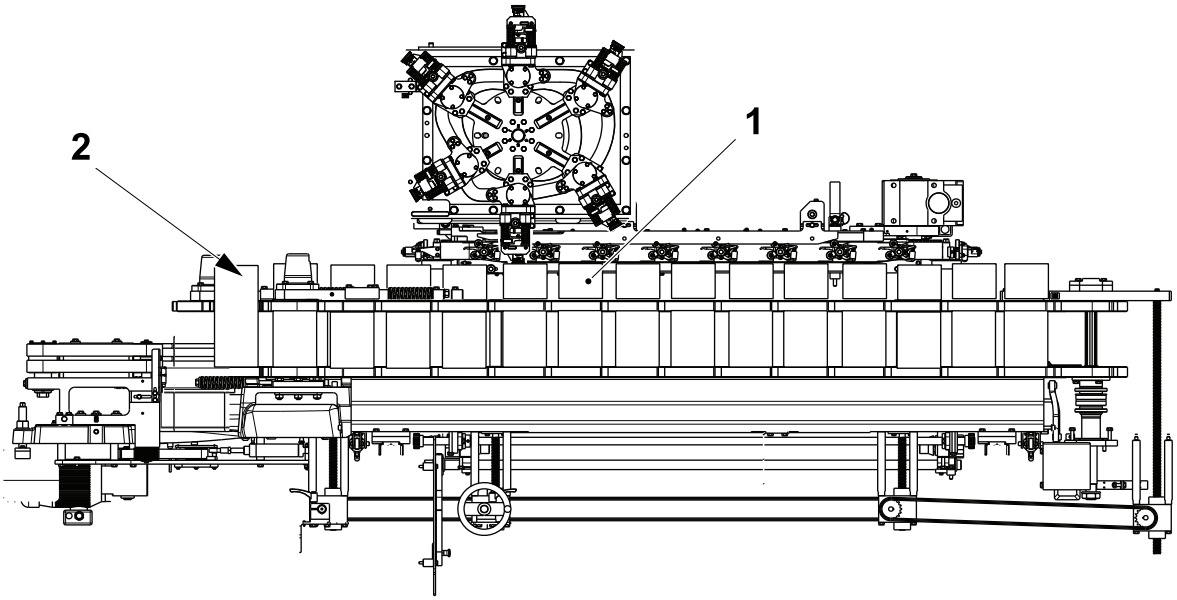

1 Second package
2 Loose package

(Cont'd)

(Cont'd)

h) Login and enter password, see 1.1.1-1 HMI User Management - Log On as a User.

i) Touch the SETTING button (3) and then the PACKAGE TRANSFER button (4).

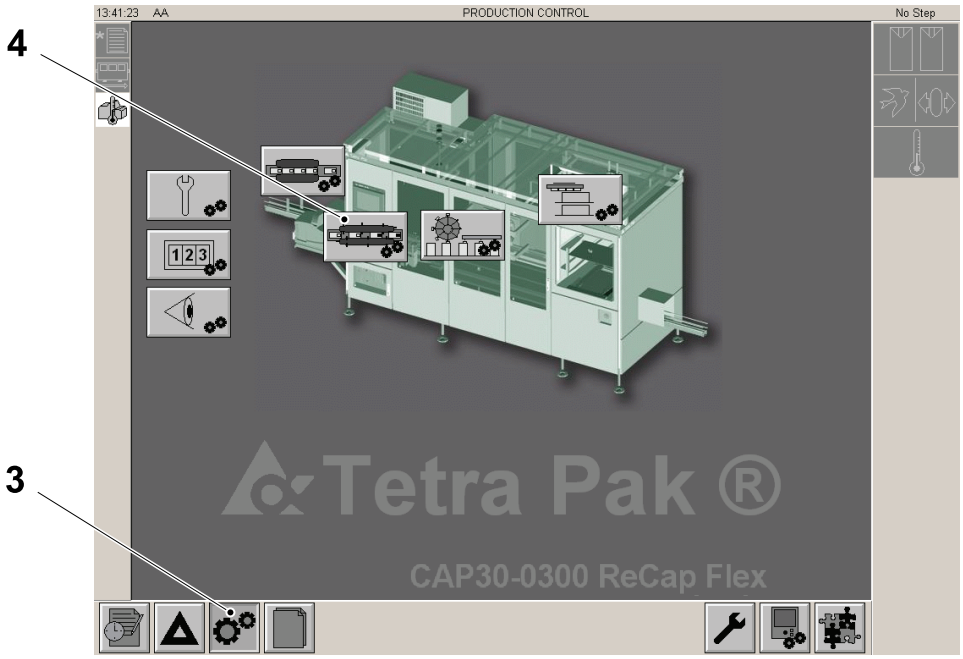

3 SETTING button
4 PACKAGE TRANSFER button

(Cont'd)

(Cont'd)

j) Touch the WASTE DEVICE ICON (5) and then the DEFAULT SETTING ICON (6).

k) Using theUP-DOWN button (7) set the number in the VALUE WINDOW (8) and then touch the OK button (9).

l) Confirm that the number has been changed in the DEFAULT WINDOW (10).

m) Touch the EXIT button (11) to leave.

n) If the marked package is the first package to be discarded all is correct. If for example three packages before the marked package are discarded, increase the default number by three. If three packages after the marked package are discarded then decrease the default number by three.

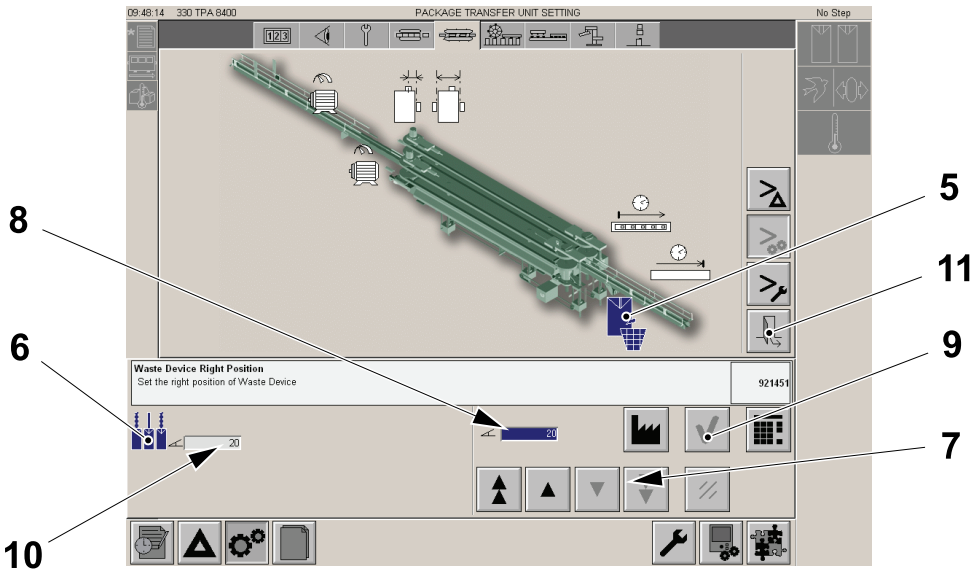

5 WASTE DEVICE ICON
6 DEFAULT SETTING ICON
7 UP-DOWN button
8 VALUE WINDOW
9 OK button
10 DEFAULT WINDOW
11 EXIT button

9.2-2 Cap Detector - Fine Setting

Machine Status	Electrical supply disconnecting device in position I (ON)
SPC Reference	2986247-0200

Note! See 9.2-1 Cap Detector - Package Ejector Timing Setting.

Note! The fine tuning permits a better centring of the waste device ejector.

a) In the PACKAGE TRANSFER SETTING window (1), touch the WASTE DEVICE icon (2).

b) Touch the PACKAGE WASTE RANGE button (3).

c) Use the ARROW keys (4) or the NUMERIC button (5) to set the number in the VALUE window (6) to zero, as a starting value.

d) Touch the OK button (7).

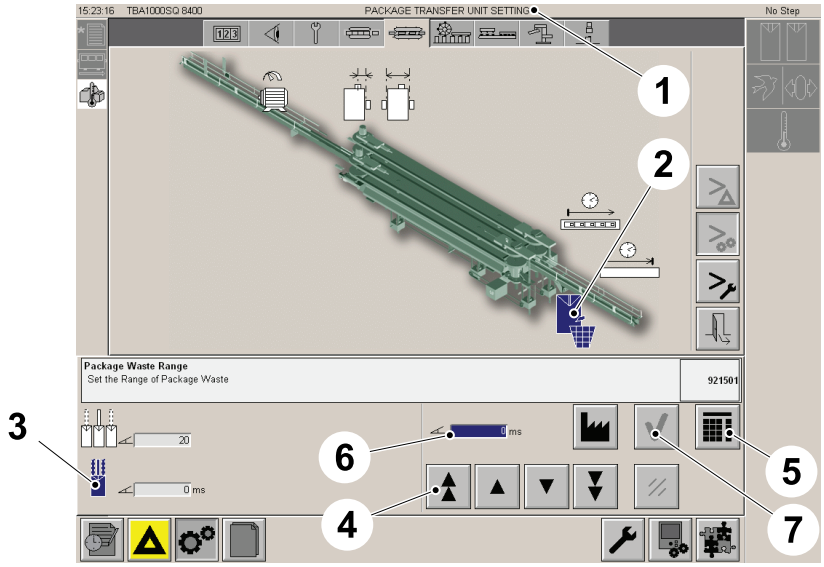

1 PACKAGE TRANSFER SETTING window
2 WASTE DEVICE icon
3 PACKAGE WASTE RANGE button
4 ARROW keys
5 NUMERIC button
6 VALUE window
7 OK button

(Cont'd)

(Cont'd)

e) Modify the fine setting when the package ejector (8) is not working in the centre of the package (9).

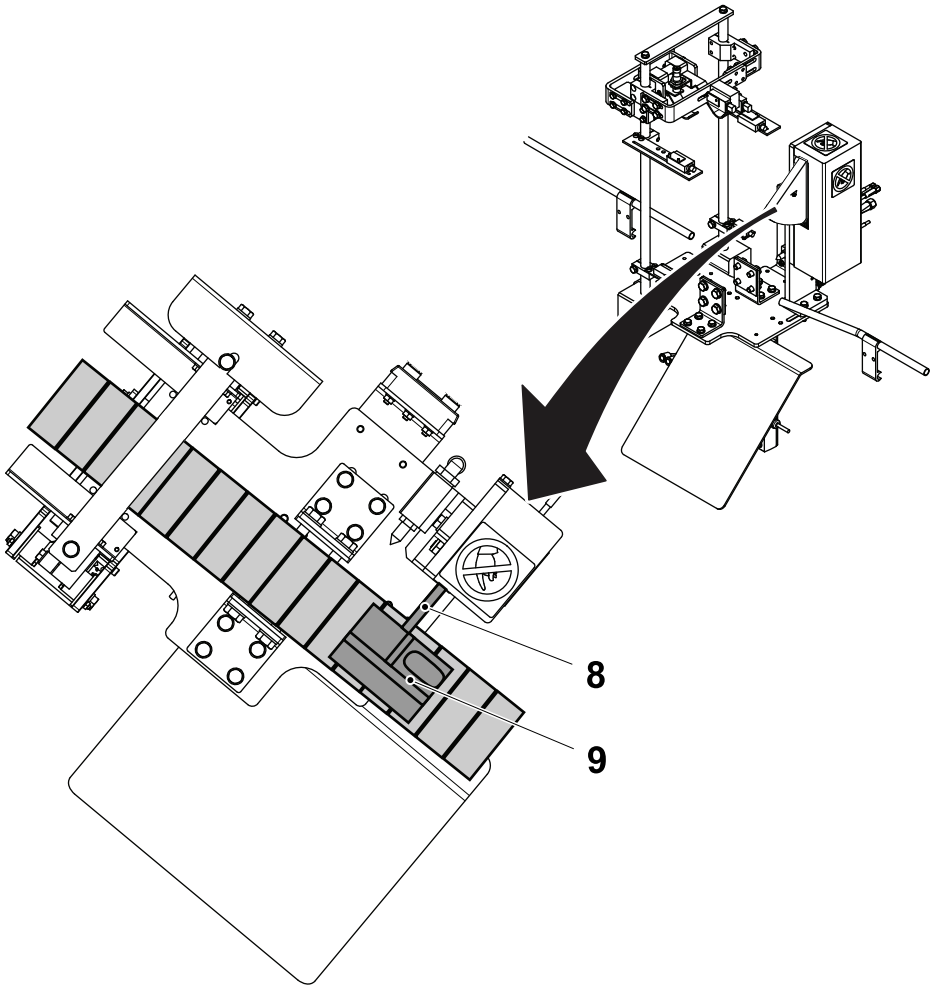

8 Package ejector
9 Package

9.2-3 Different Waste Package Counters

Check

a) Touch the PRODUCTION CONTROL button (1) .

b) In the PRODUCTION CONTROL window, touch the PACKAGE COUNTER button (2).

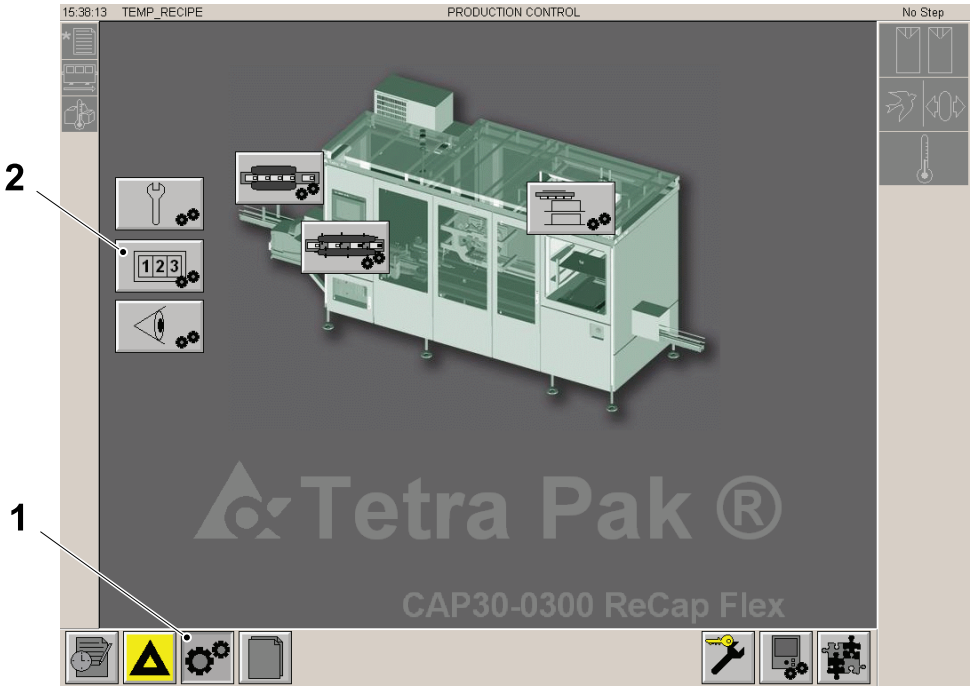

1 PRODUCTION CONTROL button

2 PACKAGE COUNTER button

(Cont'd)

(Cont'd)

c) In the Package counter window (3) there are the following information:
- Packages that entered into the machine (4)
- Packages that went out of the machine (5)
- Packages discarded by the machine (6).

d) It is possible to reset the counters by touching the ZERO buttons (7).

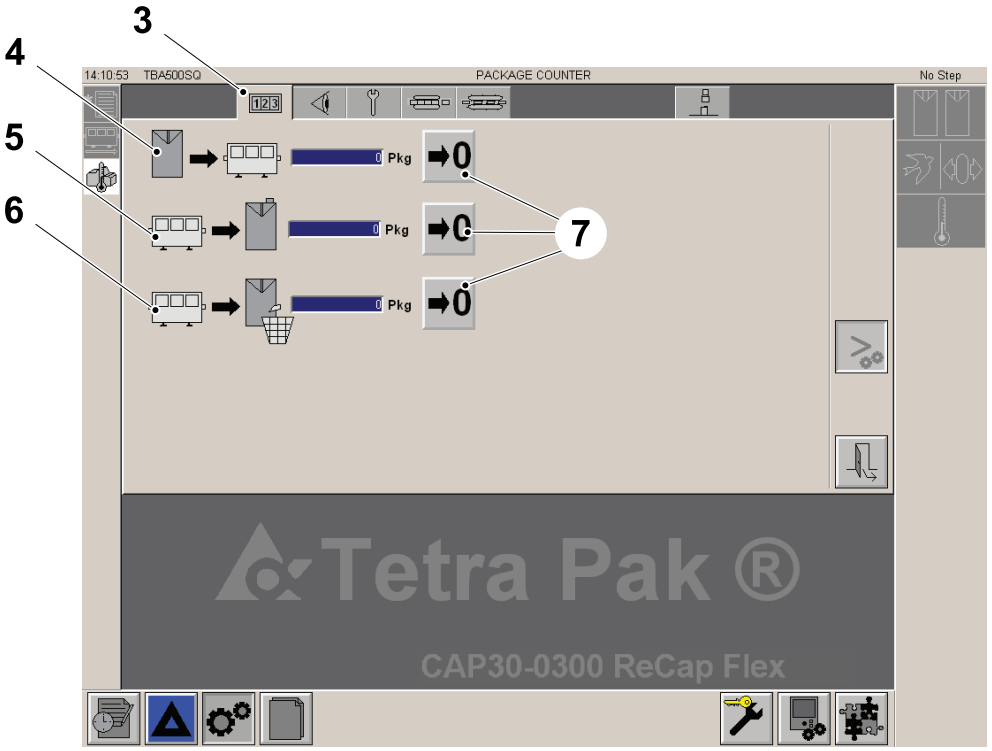

3 Package counter window
4 Packages that entered into the machine
5 Packages that went out of the machine
6 Packages discarded by the machine
7 ZERO buttons

(Cont'd)

(Cont'd)

Overview Waste Reason

a) Touch the PACKAGES DISCARDED BY THE MACHINE button (1) to display informations about the wasted packages:

- Packages discarded by the cap detector (2)
- Packages discarded after a fast stop (3) .

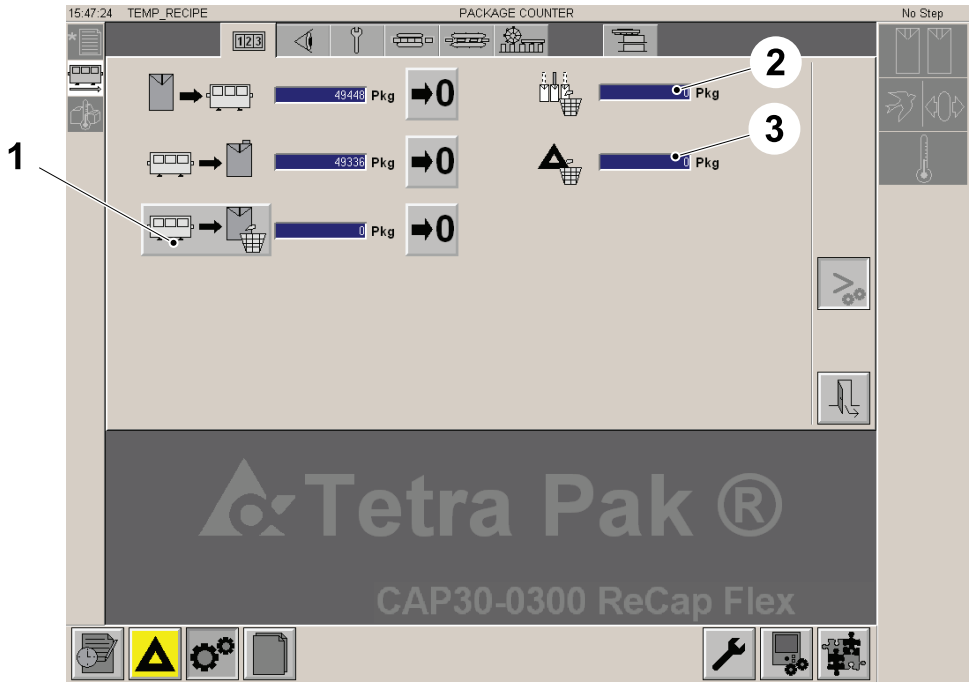

1 PACKAGES DISCARDED BY THE MACHINE button
2 Packages discarded by the cap detector
3 Packages discarded after a fast stop

9.2-4 Cap Ejector - Set Pressure

Machine Status	Electrical supply disconnecting device in position I (ON) Main air valve ON
SPC Reference	2986247-0200

To set the correct operation of the cap ejector do as follows:

a) Turn the knob (1) until only the caps are ejected.

Note! When the pressure is to high the package is also ejected.

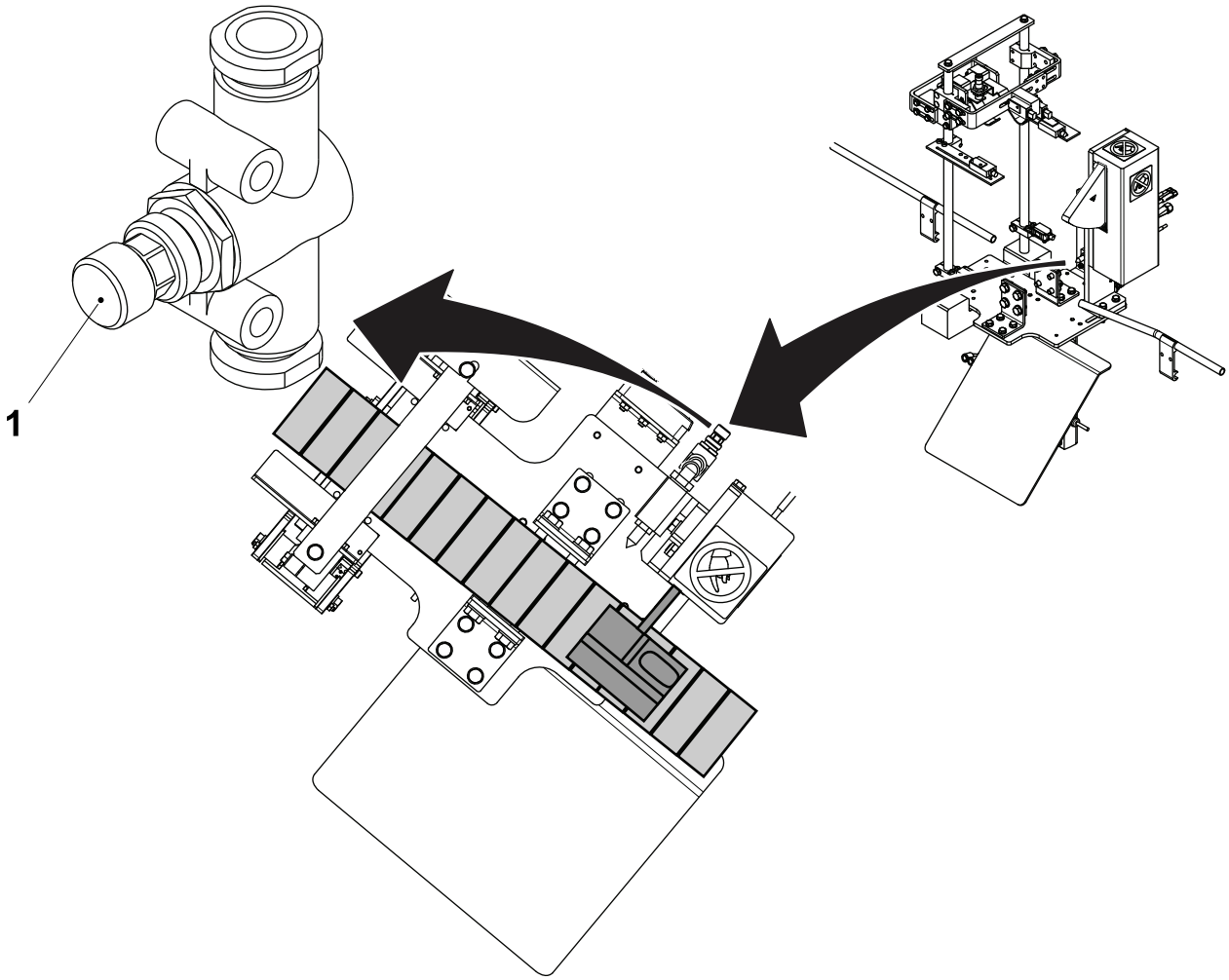

1 Knob

9.2-5 Cap Ejector - Set Height

Machine Status	Electrical supply disconnecting device in position I (ON) Main air valve ON
SPC Reference	2986247-0200

Move the ejector (1) by removing and installing the screws (2) from the bottom hole (3).

The ejector (1) must be mounted in the lower position for portion packages, as shown for all other.

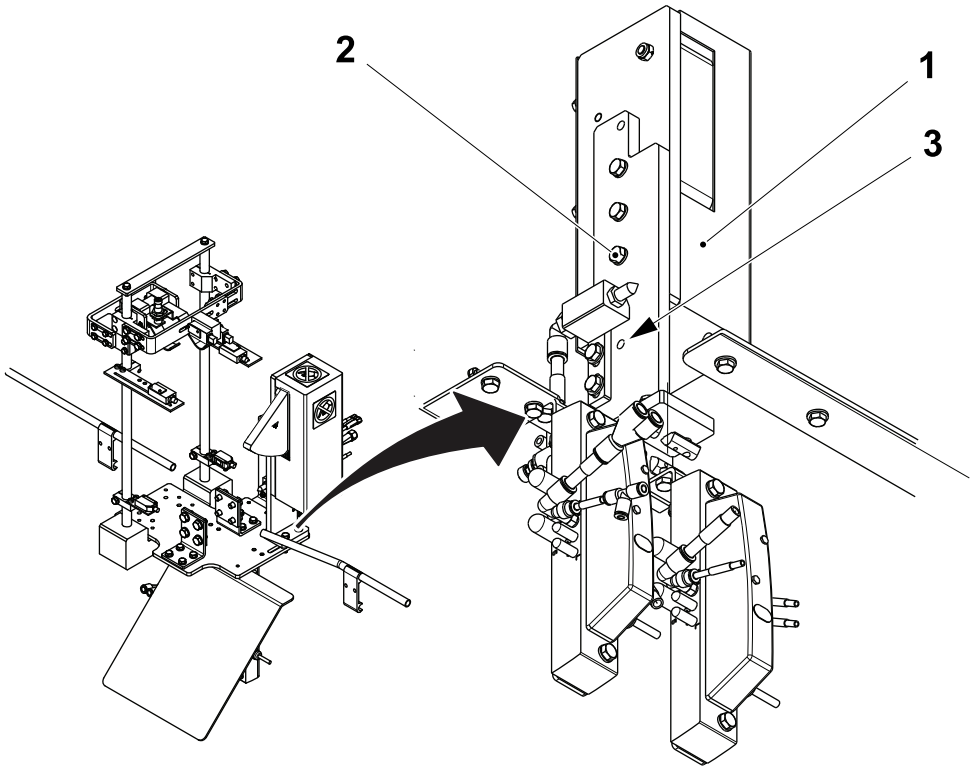

1 Ejector
2 Screw
3 Bottom hole

This page intentionally left blank

10 Optional Equipment

Optional Equipment

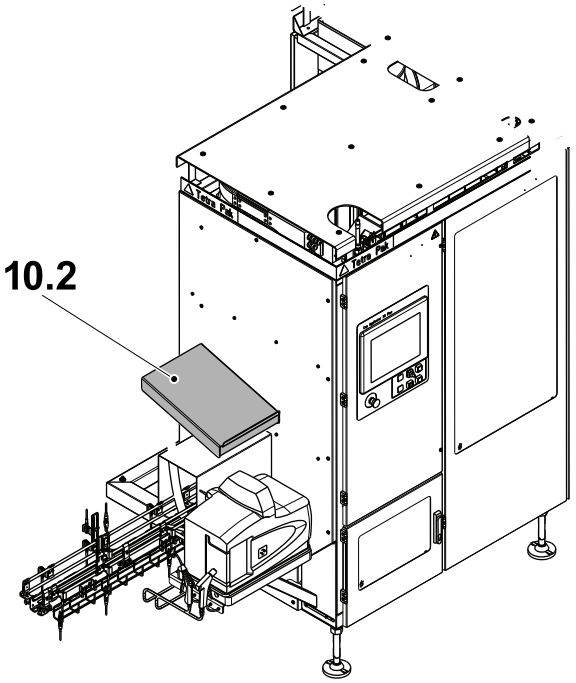

10.2 Glue Shelf

10.3 Sensor Group - Line Switching*

10.4 Communication Unit*

* Not Illustrated

Optional Equipment 10-2

10.1 Optional Equipment 10-5

10.2 Glue Shelf 10-6

10.2.1 Glue Shelf Description 10-6

10.2.1-1 Glue Shelf Change 10-6

10.2.1-2 Glue Shelf Installation 10-7

10.3 Sensor Group - Line Switching 10-8

10.3.1 Sensor Group - Description 10-8

10.3.1-1 Sensor Group - Setting 10-8

10.4 Communication Unit 10-9

10.4.1 Communication Unit Description 10-9

10.4.1-1 Ethernet Connections 10-9

10.4.1-2 QuickServer Connections 10-10

10.5 Line Communication 10-13

10.5-1 TPOP Line Communication - Install 10-13

This page intentionally left blank

10.1 Optional Equipment

This chapter covers the equipment considered as optional;

- Glue Shelf
- Sensor Group - Line Switching
- Communication Unit

10.2 Glue Shelf

10.2.1 Glue Shelf Description

The glue shelf is a convenient storage place for the glue packages.

10.2.1-1 Glue Shelf Change

SPC Reference	2842806-0100

a) Remove the screw (1), the shelf (2) and the spacer (3).

b) Only if damaged remove the screw (4) and the cross bar (5).

c) Only if damaged remove the screw (6) and the angle bracket (7).

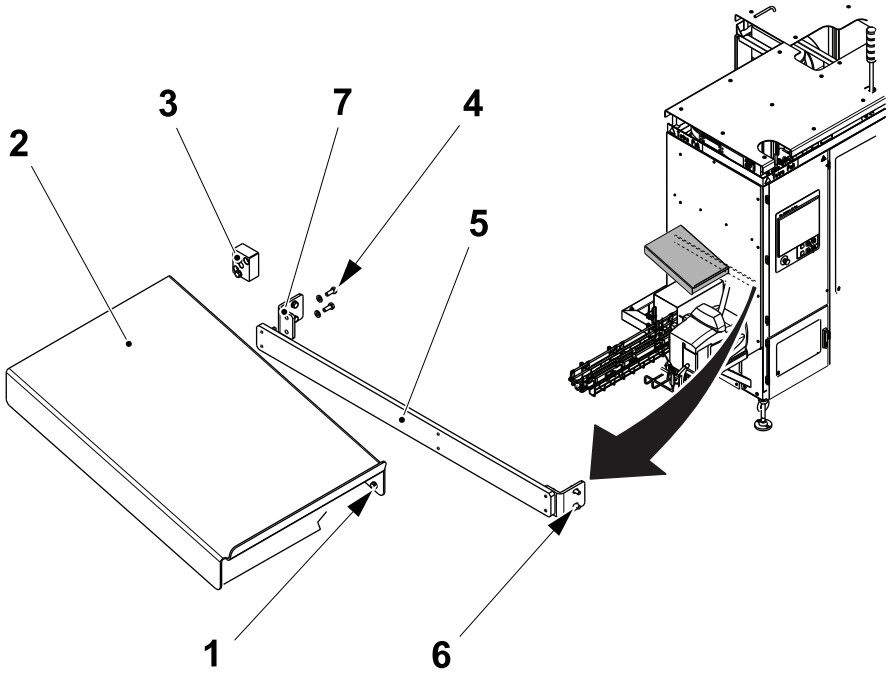

1 Screw
2 Shelf
3 Spacer
4 Screw
5 Cross bar
6 Screw
7 Angle bracket

10.2.1-2 Glue Shelf Installation

SPC Reference	2842806-0100

a) Fasten the cross bar (1) to the angle brackets (2) using the screw (3).

b) Fasten the angle brackets (2) to the frame using the screw (4).

c) Fasten the shelf (5) by passing the screw (6) through the machine cover (7) and into the cross bar (1) at one end and the frame at the other end using the spacer (8).

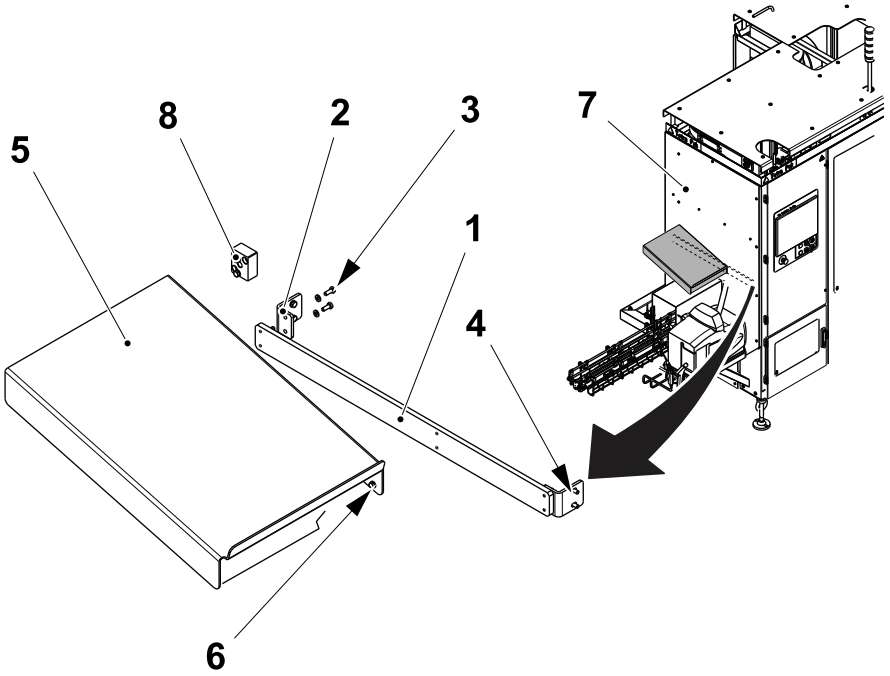

1 Cross bar
2 Angle bracket
3 Screw
4 Screw
5 Shelf
6 Screw
7 Cover
8 Spacer

10.3 Sensor Group - Line Switching

10.3.1 Sensor Group - Description

This sensor indicates to the Cap30 which downstream equipment is being used.

10.3.1-1 Sensor Group - Setting

SPC Reference	2930179-0200

a) Adjust the nut (1) until the sensor (2) is distance **A** from the switch arm (3).

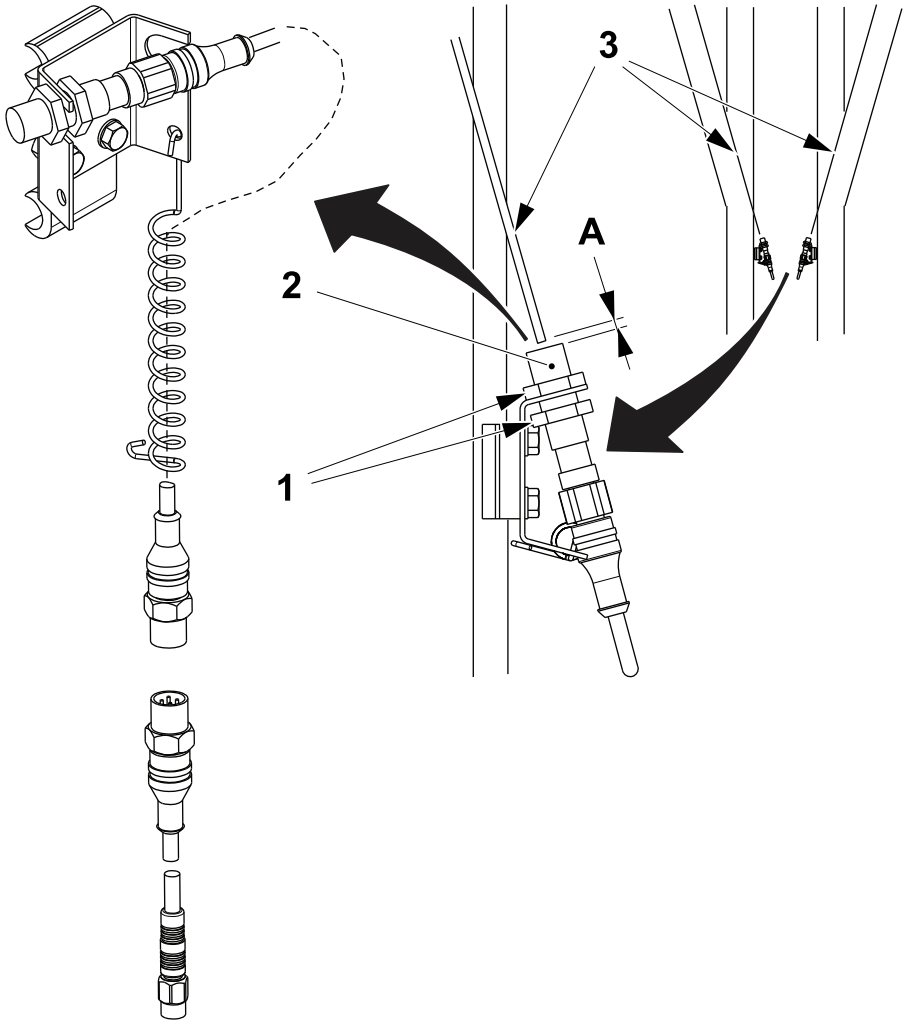

1 Nut
2 Sensor
3 Switch Arm

10.4 Communication Unit

10.4.1 Communication Unit Description

This is a switching unit.

10.4.1-1 Ethernet Connections

Machine Status	Electrical supply disconnecting device in position O (OFF)
SPC Reference	90604-5464

This is a Ethernet\IP system 10/100mb (1) and a SNP protocol system line (2) data exchange unit called Quick Server Gateway (3).

This equipment is delivered preloaded with the configuration for Tetrapak.

4 -120ohm
5 - PLMS Logger - GESNO I/O server
6 - RS485 connection
7 - SNP ID;7200
8 - ControlLogix\CompacLogix

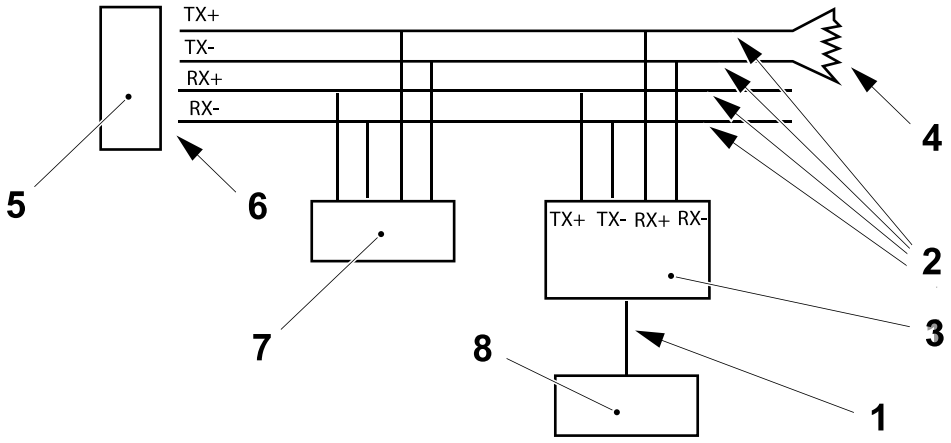

1 Ethernet\IP system 10/100mb
2 SNP protocol system line
3 Quick Server Gateway
4 120 ohm
5 PLMS Logger - GESNO I/O server
6 RS485 connection RS485 connection
7 SNP ID;7200
8 ControlLogix\CompacLogix

10.4.1-2 QuickServer Connections

Machine Status	Electrical supply disconnecting device in position O (OFF)
SPC Reference	90604-5464

RS485 Connections

The RS485 port connections are as follows;

- terminal 1 = TX+ (1)
- terminal 2 = TX- (2)
- terminal 3 = RX+ (3)
- terminal 4 = RX- (4)
- terminal 5 = shield (5).

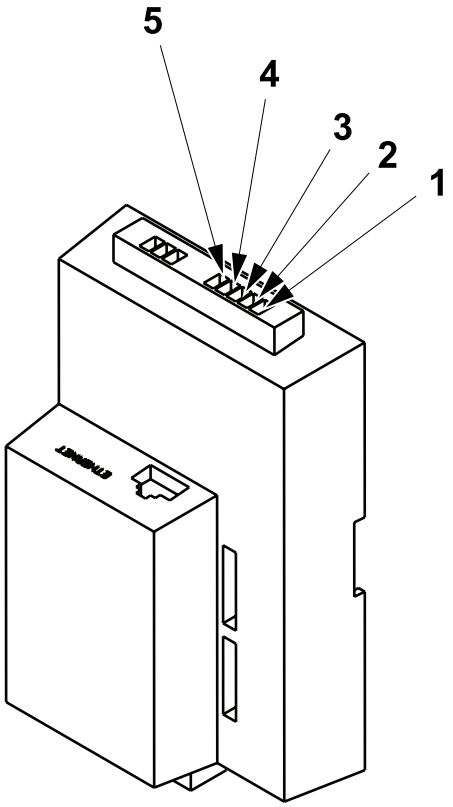

1 Terminal 1 = TX+
2 Terminal 2 = TX-
3 Terminal 3 = RX+
4 Terminal 4 = RX-
5 Terminal 5 = shield

(Cont'd)

(Cont'd)

Power Connections

The power connections are as follows;

- terminal 1 = 24V (1)
- terminal 2 = 0V (2)
- terminal 3 = Ground (3) .

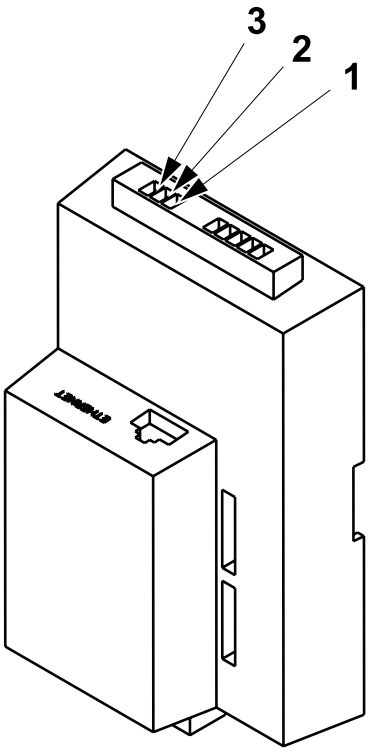

1 Terminal 1 = 24V
2 Terminal 2 = 0V
3 Terminal 3 = Ground

(Cont'd)

(Cont'd)

Ethernet Connections

The Ethernet port pins are as follows, Pin 1;Transmit+ (1), Pin 2;Transmit- (2), Pin 3;Receive+ (3), Pin 4;Reserved (4), Pin 5;Reserved (5), Pin 6;Receive- (6), Pin 7;ReservedPin 7;Reserved (7) and Pin 8;Reserved Pin 8;Reserved (8).

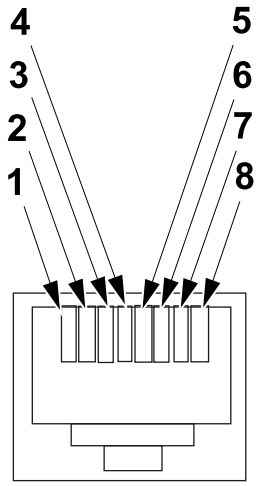

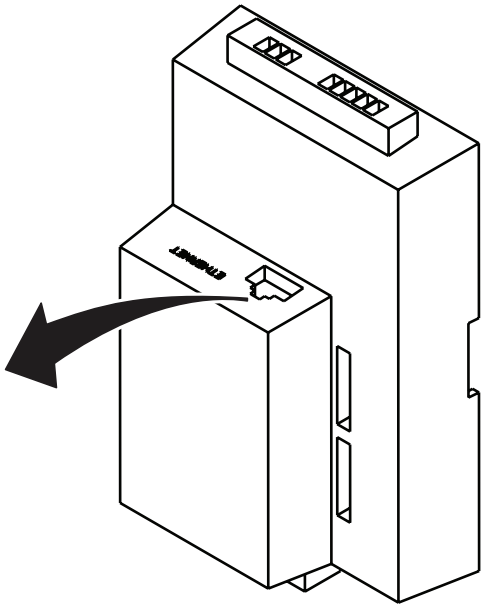

1 Pin 1;Transmit+
2 Pin 2;Transmit-
3 Pin 3;Receive+
4 Pin 4;Reserved
5 Pin 5;Reserved
6 Pin 6;Receive-
7 Pin 7;Reserved
8 Pin 8;Reserved

10.5 Line Communication

10.5-1 TPOP Line Communication - Install

Machine Status	Electrical supply disconnecting device in position I (ON) Main air valve ON
SPC Reference	2779070-0300

Machine Line Communication - Set

a) Login the TPOP as service technician, see 1.1.1-1 HMI User Management - Log On as a User.

b) Step down the machine to STEP0.

c) Touch the CONFIGURATION button (1).

Note! A cross over the LINE COMMUNICATION icon (2), means that the option has not been installed.

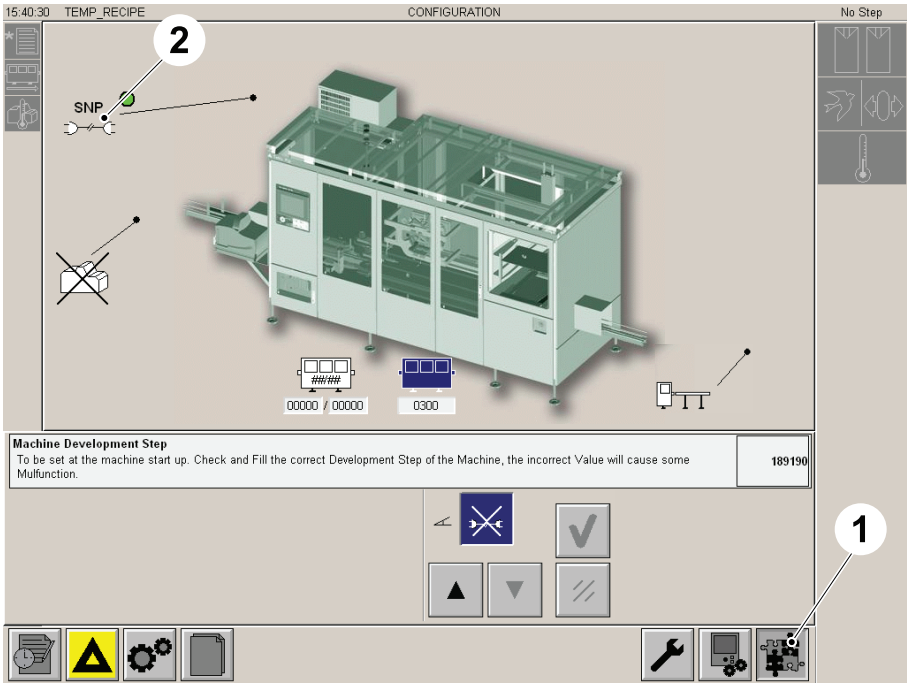

1 Configuration button
2 Line communication icon

(Cont'd)

(Cont'd)

d) Touch the LINE COMMUNICATION SELECTION icon (3).

e) Touch the ARROW key (4) to select the correct line communication of the machine.

f) Touch the OK button (5) to confirm.

Note! The LINE CONTROLLER SELECTION (6) must be set according to the actual line configuration or the machine will not work. The available selections for LINE COMMUNICATION are shown in the illustration below.

Note! A GREEN dot (7) close to the LINE COMMUNICATION SELECTION icon (3), means that the line communication has been activated.

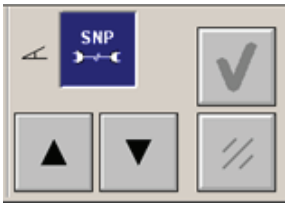

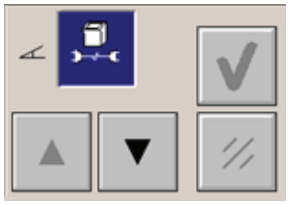

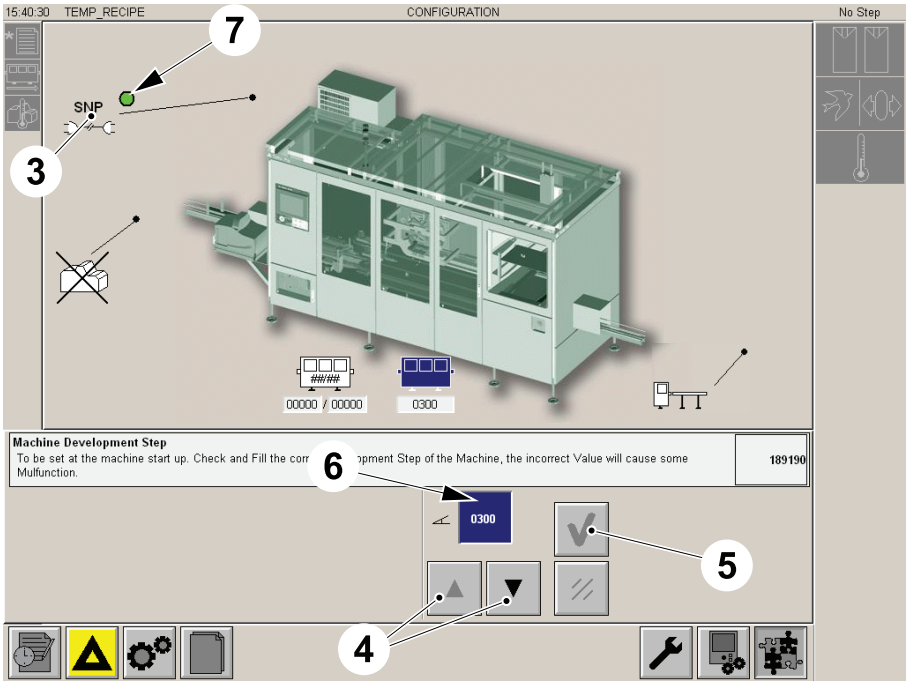

3 Line communication selection icon
4 Arrow key
5 Ok button
6 Line controller selection
7 Green dot

11 General

General - How to use this Chapter

This chapter provides the standard values for setting the Tetra Cap Applicator and information on the lubricants and cleaning compounds used with Tetra Pak machines.

General - How to use this Chapter 11-2

11.1 Technical Data CAP30 11-5

11.1.1 Pressure/Adhesive/Temperature 11-5

11.1-1 Equipment Pressure 11-5

11.1-2 Hotmelt Specification 11-6

11.2 Templates and Tools (ReCap) 11-7

11.3 Consumables 11-9

11.3.1 CAP30 Lubricants 11-9

11.3.2 Cleaning Compounds 11-10

11.3.2.1 Cleaning Compound Table 11-10

11.4 Safety Functions 11-13

11.4-1 Safety Functions - Check 11-13

This page intentionally left blank

11.1 Technical Data CAP30

11.1.1 Pressure/Adhesive/Temperature

Jowatherm				
Cap	**Pump Ratio**	**Approximate Pressure**	**Glue Amount**	**Temperature ºC (ºF)**
ReCap3	14:1	1.8 (26.1)	0.09g	
ReCap2 A3	14:1	1.8 (26.1)	0.04g	
Tank				195 (383)
Hose				200 (392)
Wheel				205 (401)
Package Storage Temperature Range				Min. 10 (50) Max. 50 (122)

Tetra Pak® CapFix 300				
Cap	**Pump Ratio**	**Approximate Pressure**	**Glue Amount**	**Temperature ºC (ºF)**
ReCap3	14:1	1.8 (26.1)	0.09g	
ReCap2 A3	14:1	1.8 (26.1)	0.04g	
Tank				195 (383)
Hose				200 (392)
Wheel				205 (401)
Package Storage Temperature Range				Min. 4 (39.2) Max. 50 (122)

11.1-1 Equipment Pressure

This table gives the pressure settings for the applicator.

(Cont'd)

(Cont'd)

Function	Unit	Value
Main air supply	Bar (MPa)	6.0 (0.6)
Hotmelt Unit (14-1) pump	Bar (psi)	1.8 (26.1)

11.1-2 Hotmelt Specification

Type	TP Number	Use
Jowatherm Hotmelt 250.00	344481-5000	ReCap 3 / ReCap 2 A3
Tetra Pak® CapFix 300	1606001-0000	ReCap 3 / ReCap 2 A3

11.2 Templates and Tools (ReCap)

Illustration	Description
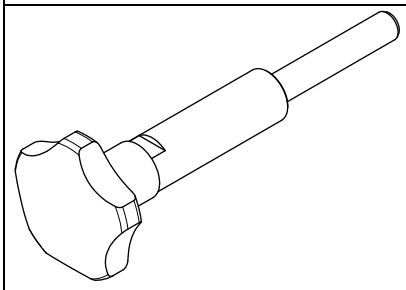	Zero Setting Template TP No. 2715750-0100 5 Applicator Unit
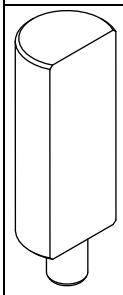	Zero Alignment:- TP No. 3044285-0000 2 Package Line
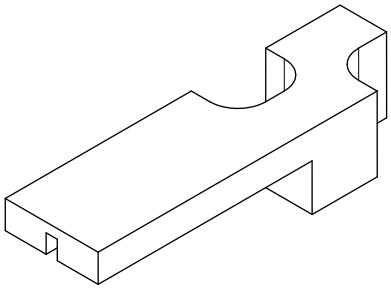	Zero Alignment: - TBA 1000 Slim, Base, Square TBA 500 Slim, TBA 1500 Slim TP No. 2788137-0000 2 Package Line
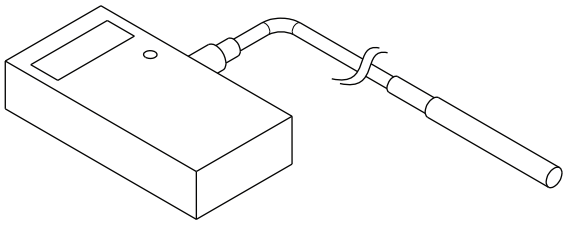	Belt Tension TP No. 90459-2181 2 Package Line

(Cont'd)

(Cont'd)

Illustration	Description
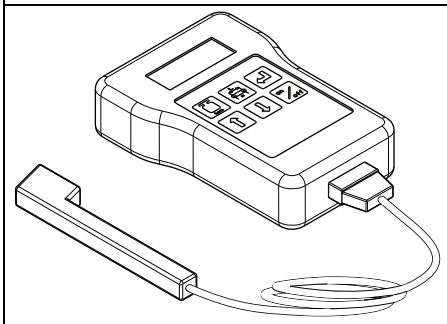	Belt Tension TP No. 90600-3415 2 Package Line
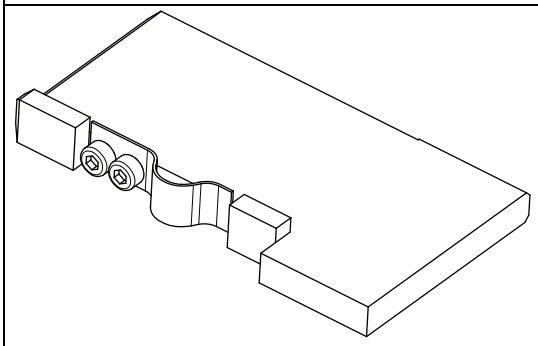	Zero Alignment TP No. 3141449-0100 6 ReCap Cutting and Feeding

11.3 Consumables

11.3.1 CAP30 Lubricants

WARNING

Risk of personal injury!

Certain lubricants can cause injury if they come into contact with the eyes, skin, mucous membranes, or clothing. Always follow the manufacturer's instructions for handling chemical products.

The table below lists only a selection of lubricants with their respective designations.

Lubricant specifications may be ordered from:

Tetra Pak Technical Service - Parts Supply Chain, Ruben Rausings gata, SE-221 86 LUND, Sweden

Lubricants Used In CAP30 Machines

Lubricant Description	**TP Part No. (used when ordering from Tetra Pak)**	**Supplier**	**Product Designation**	**Lube Type**
Grease	344407-0000 Reference for purchasing: 344407-0285 (45g) 344407-0591 (400g) 344407-0037 (1kg) 344407-0177 (25kg)	Klüber	Klübersynth UH1 14-151	H1
Lubrication oil (To be used with the oil gun)	344414-0000 Reference for purchasing: 344414-0764 (5 l) 344414-0766 (20 l) 344414-0335 (200 l)	Klüber	Klüberoil 4 UH1 320-N	H1 PAO base
Central lubrication oil (To be used in the central lubrication unit)	90606-3683 Reference for purchasing: RM 2000T (5 l)	Specialist Lubrications Ltd	Food Grade Lubricant with PTFE	H1

11.3.2 Cleaning Compounds

WARNING

Risk of explosion.

Cleaning with not recommended cleaning agents, for example agents including alcohol, could cause explosion. Use only Tetra Pak recommended cleaning agents when cleaning or disinfecting parts that can come into contact with hydrogen peroxide.

It is strongly recommended, in order to optimize the cleaning efficiency, to use water characterised by the following physicochemical parameters:

- water quality; chlorine free, drinkable water
- pH; between 7 and 8 pH units
- water hardness; between 5 and 10 °f French degrees of hardness (between 3 and 6 German degrees of hardness)
- chlorides; lower than 50 ppm
- silicates; lower than 10 ppm (in order to reduce the formation of solid deposits difficult to be removed)

11.3.2.1 Cleaning Compound Table

Comparable qualities from other suppliers may be selected in compliance with the technical requirements listed in the table. All cleaning compounds must comply with local legal requirements.

The supplier recommendations for concentration and temperature should be followed. When dosing the products automatically, the concentration should be checked.

Note! The concentration of formulated products indicated in the table is the manufacturers expected concentration of use and is reported as an example of the optimal concentration of use.

Do not manually dilute a concentrated or formulated product for use with an integrated cleaning system.

Furthermore, for CIP cleaning the use concentration of a formulated product may not match the filling machine preset value for concentration monitoring and may require specialist adjustment.

(Cont'd)

(Cont'd)

Cleaning Type	TP Code		Detergent Type	Examples 20141103									
				Raw Material				Formulated Products					
				Name	Max Conc. w/w	Use Conc. w/w	Use Temp. °C (*)	Ecolab	Use Conc. w/w	Use Temp. °C (*)	Sealed Air	Use Conc. w/w.	Use Temp. °C (*)
CIP	A	1	Alkali	NaOH	30%	1.50%	80	Mip CA	1.5%	80	VC 11	2.0%	80
	B	1	Acid	HNO_3	50%	1.00%	60	P3-horolith FL	1.0%	60	VA 5	1.0%	60
External Cleaning (automatic)	C	1	Alkali foam (**)					P3-Topactive LA	2.0%	20 - 40	VF 9	3.0%	20 - 40
		2	Alkali solution (***)					P3-mip FPC	2.0%	55	VK 12	1.0%	55
		3	Acid foam (****)					P3-Topax 56	2.0%	25	VF 11	2.0%	25
		4	Disinfection foam (****)					P3-Topax 990	2.0%	25	VS 1	1.0%	25
Manual Cleaning (wiping)	D	1	Alkali					P3-mip FPC	2.0%	25	VK 12	1.0%	25
Manual Disinfection (immersion)	F	3	Acid solution	Peracetic acid solution	15%	200ppm	25	Oxonia Active	0.50%	25	VT 6	0.15%	25
Manual Disinfection (spraying)	G	1	Alcoholic solution	Isopropanol			25	Spitaderm	Pure	25	VT 29	pure	25
		2	Alcoholic solution	Ethanol			25	Alcodes	Pure	25	VT 29	pure	25
		3	Acid solution	Peracetic acid solution	15%	200ppm	25	Oxonia Active	0.50%	25	VT 6	0.15%	25
Hand Disinfection	H	1						P3-Manodes gel	pure	25	H34	pure	25
PullTab Patch Sealing Plate Manual Cleaning	J	1	Solvent	Acetone CAS No 67-64-1 Technical Grade (*****)	Pure	25							

(Cont'd)

(Cont'd)

* 25 °C to the optimal ambient temperature.

** To be used on TBA/21, TBA/22, TP A3/Flex, TP A3/CompactFlex, TP A3/Speed, TB/21, TP C3/Flex.

*** To be used on TBA/8, TBA/9, TBA/19, TB/8, TB/9, TB/19.

**** To be used on TP C3/Flex

***** Acetone is a flammable solvent and the grade has to fulfil requirements for pharmaceutical use or food processing operations according to USO or NF or FCC.

11.4 Safety Functions

11.4-1 Safety Functions - Check

Machine Status	preparation

Make sure that the machine can not be inched if:

a) any of the doors or covers are open

b) any EMERGENCY STOP is pushed

c) any crank is in the cranking position.

For the location of safety components, see the sections and in the chapter.

Make sure that when any EMERGENCY STOP is pushed the machine resets to step ZERO.

Check that the warning sign labels are present and readable. Replace any missing and /or illegible signs, see in the chapter.

Also see the Optional Equipment documentation.

This page intentionally left blank

A

Adhesive Preservation Activation 4-65
Adhesive Preservation Hooter Activation 4-74
Adhesive Preservation Hooter Deactivation 4-75
Adhesive Preservation Settings 4-67
Align - Transmitter and Receiver 7-61
Automatic Fuses - Set 8-230

B

Belt Brake - Lubricate the Grease Nipples 4-40
Belt Stretcher - Change Bearings 2-58, 3-28
Belt Stretcher - Set Belt Tension 3-30
Blowing System - Check 4-19
Blowing System - Set Blowing Device 4-20
Box Alignment Cylinder 7-21
Box Conveyor - Change Bearings 7-38
Box Conveyor - Change Conveyor Belts 7-33
Box Conveyor - Change Drive Belt 7-31
Box Conveyor - Change for Box Size 7-43
Box Conveyor - Set Conveyor Belt Tension 7-37
Box Conveyor - Set Drive Belt Tension 7-36
Box Eject Cylinder 7-26
Box Pusher Cylinder Sensors 7-12
Brake Sensors - Method for Setting a Brake Sensor 7-17
Brake Unit - Change Belt 2-10
Brake Unit - Check 2-15
Brake Unit - Check Ball Bearing 2-17
Brake Unit - Check Belt Tension 2-8
Brake Unit - Check Belts 2-9
Brake Unit - Set Belt Tension 2-11
Brake Unit - Set Position 2-13
Brake Unit - Set Sensor 2-16
BYPASS Mode - Switch On the Hotmelt Unit 4-60

C

Cam (ReCap) Application - Set 5-11
Cam (ReCap) Gripper - Set 5-8
Cam (ReCap) Picking - Set 5-6
Cam (ReCap) Release - Set 5-12
Cam Module - Removal 5-13
Cap Detector - Fine Setting 9-17
Cap Detector - Package Ejector Timing Setting 9-13
Cap Detector (ReCap) - Check 9-7
Cap Detector (ReCap) - Set 9-8
Cap Ejector - Set Height 9-23
Cap Ejector - Set Pressure 9-22
Cap Handling Device Horizontal Cylinder Sensors 7-11
Cap Holder - Change Roller and Bushings 5-16
Cap Holder - Check 5-15
Cap Holder - Set Y Position 5-17
Carrier Cylinder 6-96
Central Lubrication - Check Level Switch 4-34
Central Lubrication - Check Pressure Switch 4-35
Change Cam Holder Bushings 6-19
Change Cap Carrier Bushings and Rollers 6-18
Change Drive End Bearings 6-15
Change Guide Roller Bearings 6-16
Check - Current Control Relay Function 8-233
Check - Transmitter and Receiver 7-64
Clamping Element - Removal and Installation 6-80
Coarse Setting Inner Package Positioner Zero 2-73
Coarse Setting Outer Package Positioner Zero 2-84
Control Panel - Overview 8-244
Conveyor - Change 6-45
Conveyor - Change Belt 6-47
Conveyor - Check 6-46
Conveyor - Drive Overhaul 6-49
Conveyor - Framework Change 6-51
Conveyor - Rollers Overhaul 6-50
Conveyor - Set Belt Alignment and Tension 6-54
Conveyor - Set X Position 6-52
Conveyor - Set Z Position 6-53
Conveyor Support - Set Height 4-8
Cooling Unit - Change Filter 8-340
Cooling Unit - Check 8-341
Cooling Unit - Clean Filter 8-338
Cooling Unit - Overhaul 8-343
Cooling Unit - Troubleshooting 8-349
CPU - Upload Program 8-68
CPU Controller - Change 8-35
CPU Module - Change Energy Storage Module (ESM) 8-34
CPU Module - Download Program 8-51
CPU Module - Load Firmware 8-41
CPU Module - Troubleshoot 8-61
Cutting Mechanism Body - Change 6-65
Cutting Mechanism Body - Set Belt Tension 6-69
Cutting Mechanism Body - Set Sensors 6-67
Cutting Mechanism Body - Set X 6-68
Cutting Mechanism Body - Set Zero 6-70
Cutting Unit - Change 6-73
Cutting Unit - Set Shim 6-77
Cutting Unit - Set Sprung Retainer 6-76

Cylinder Speed - Set Regulator Valve 2-64

D

Delay On Stand-By Description 4-69
Delay On Stand-By Setting..... 4-70
Delay On To Step Zero..... 4-72
Development Step - Check.....8-354
Development Step - Set 8-355
Development Step - Setup 8-353
DeviceNet - DeviceNet on the Machine 8-103
DeviceNet - Loading a DeviceNet Program in a New Point I/O Module Adaptor.....8-114
DeviceNet - Loading a Program in a New DeviceNet Scanner 8-111
DeviceNet - Saving DeviceNet Files in a Computer 8-110
DeviceNet Adaptor (1734-ADN) Node 2 8-96
DeviceNet Adaptor (22-COMM-D) Node 1..... 8-95
DeviceNet Armor Block 8-97
DeviceNet Scanner - Change 8-99
DeviceNet Scanner - Set DeviceNet Scanner (A01K3004) Node Address and Baudrate 8-102
DeviceNet Scanner (A01K3004) Node 0 8-94
Different Waste Package Counters 9-19
Display Trend Curve 1-36
Distributed I/O and Network - Overview..... 8-90
Drive - Change Bearings 2-30
Drive - Change Belt 2-28
Drive - Check Belt..... 2-27
Drive - Motor and Gearbox 2-55
Drive Unit - Align Comb with Shim 6-98
Drive Unit - Change 6-36, 6-78, 6-93
Drive Unit - Change Horizontal Cylinder 7-44
Drive Unit - Change Motor..... 3-25
Drive Unit - Change Vertical Cylinder 7-47
Drive Unit - Set Carrier Sensor 6-95
Drive Unit - Set X Position Stop and Sensor 6-94

E

Elevator - Change Cylinder 7-28
Elevator - Set Box Stopper..... 7-30
Elevator Cylinder 7-19
Elevator Cylinder Sensors..... 7-13
Equipment Pressure 11-5
Ethernet Connections 10-9
EtherNet Module - Change.....8-136

F

Fan System - Check 4-13
Fan System - Clean Fan Filter 4-14
Fine Setting Inner Package Positioner Zero..... 2-77
Fine Setting Outer Package Positioner Zero 2-87
Frequency Converter - Change.....8-151
Frequency Converter - LED Description 8-156
Frequency Converters - Change Parameters.....8-159
Frequency Converters - Clearing a Fault Indication Automatically 8-167
Frequency Converters - Clearing a Fault Indication Manually 8-166
Frequency Converters - Fault Types 8-164
Frequency Converters - Identifying the Fault 8-165

G

General..... 7-18
Glue Shelf Change 10-6
Glue Shelf Installation 10-7
Guide Bracket (ReCap) - Change Roller and Bushings 5-26
Guide Bracket (ReCap) - Check 5-25
Guide Bracket (ReCap) - Set X Position 5-27

H

Heating Element - Change 4-15
Heating Element - Set..... 4-17
Height Adjustment - Check..... 4-78
Height Adjustment - Set 4-79
HMI User Management - Change User Password 1-10
HMI User Management - Log On as a User..... 1-6
Hotmellt Wheel - Change Cylinder 5-37
Hotmelt Equipment - Change Filter 4-54
Hotmelt Equipment - Check..... 4-46
Hotmelt Equipment - Empty Tank..... 4-47
Hotmelt Equipment - F2 Alarm..... 4-56
Hotmelt Equipment - Set Pressure..... 4-59
Hotmelt Panel Overview..... 4-44
Hotmelt Specification 11-6
Hotmelt Wheel - Calibration..... 5-43
Hotmelt Wheel - Change Hotmelt..... 5-46
Hotmelt Wheel - Set Cam Position..... 5-38

I

Indexing Unit - Change 6-82
Indexing Unit - Check X Direction 6-92
Indexing Unit - Proximity Switch Check / Set..... 6-87
Infeed Package Setting Screen..... 1-28
Infeed Rail Change 4-80
Infeed Speeds and Angles (Flex-ReCap) 1-30
Install the ControlFlash Application Firmware Library..... 8-72
Install the Driver for the First Kinetix Servo Driver 8-81
Installation of Spring 2-35, 2-41

L

LED Information 7-65
Lubrication Unit (Pushdown)..... 4-30

M

Maintenance Instructions 8-351
Memorizing Inner Package Positioner Zero Position 2-82
Memorizing the Outer Package Positioner Zero Position 2-92

O

Outfeed Conveyor - Setting Speed..... 1-48
Outfeed Package Guides - Set 2-98

P

Package Line - Lubricate the Grease Nipples..... 4-38
Package Transfer Unit Setting Screen..... 1-27
Pick Up Cylinder..... 7-22
Place Cylinder..... 7-24
PLC - Load FirmWare in PLC, Ethernet, DeviceNet and SERCOS Modules..... 8-78
Pluto Maintenance - Change Baud Rate, Error Code E26 8-216
Pluto Maintenance - Connecting a PC to Pluto Module 8-203
Pluto Maintenance - Installing a Pluto Module in an Existing Application 8-218
Pluto Maintenance - Program Download from a PC to a Pluto Unit 8-219
Pluto Maintenance - Set the ID-FIX Address after Replacing an ID-FIX.....8-210
Pluto Troubleshooting - Explanations of Inputs, Outputs and LEDs.....8-226
Pluto Troubleshooting - Safety System Alarm on the Control Panel 8-225
Pneumatic Panel - Check..... 4-23
Pneumatic Panel - Clean Filter Regulator..... 4-27
Pneumatic Panel - Set Filter Regulator..... 4-29
Pneumatic Panel - Set Pressure Switch 4-25
Pneumatic Unit - Panel Back 6-100
Pneumatic Unit - Panel Front..... 6-99
Positioning Unit - Set Sensor Positions 7-14
Positioning Unit - Setting 7-55
PowerFlex40 DeviceNet Adaptor - Change.....8-140
Preparation 2-44
Preparation for PLC Communication - Configure PC Network Communications 8-16
Preparations for PLC Communication - Configure RSLinx 8-24
Preparations for PLC Communication - Set EtherNet Module IP Address..... 8-28
Pressure Finger - Change Bushings and Rollers 3-15
Pressure Finger - Check Bushings and Rollers 3-14
Procedure 2-47
Pushdown - Lubricate the Grease Nipples..... 4-41
Pushdown Lubrication - Clean Conveyor Lubricant Tank..... 4-36
Pushdown Lubrication - Fault Finding 4-37
Pusher - Change Cylinder 7-56

Q

QuickServer Connections.....10-10

R

Receiver - Change..... 7-58
Recipe - Set Correct Values 8-333
Release the Lower Belt 2-33, 2-39
Release the Upper Belt 2-38
Release the Upper Belt 2-32
Removal 6-62
Removal and Installation of the Belts 2-34, 2-40
Remove Single Cut Roller 6-17
Residual Current Device - Check Function 8-231
Row Cutter - Jam Clearance 6-8

S

Safety Functions - Check 11-13
Sensor (C60B4008, C60B4009) - Set 8-239
Sensor (W20B0003) - Set Sensitivity 8-234
Sensor (W21B3012, W21B3014) - Set 8-241
Sensor (W21B4002,W 21B4004,W 21B4006, W21B4008, W21B4024, W21B6002, W21B6004, C50B0013, G50B5000, G50B5004) - Set 8-236
Sensor Group - Setting 10-8
Sensors - Cap Holder No.1 Position 5-28
Sensors - Method for Setting a Sensor Position 7-7
Sensors - Set Box Detection Sensors 7-10
Sercos Module - Change 8-176
Sercos Module - Description 8-174
SERCOS Module - Troubleshooting 8-199
Servo Drive - Change Drive 8-182
Servo Drive - Description 8-179
Servo Drive - Set Baud Rate 8-187
Set - Cap Position X Direction 2-65
Set - Cap Position Y Direction 2-66
Set - Package Length Y 2-69
Set - Package Width X 2-68
Set - Wheel Pushdown Offset 2-71
Set Belt Brake Speed 1-34, 2-17
Set Belt Tension - Right 2-36
Set Belts Alignment - Left 2-43
Set Belts Alignment - Right 2-37
Set Belts Tension - Left 2-42
Set Package Conveyor Speed 1-31
Set Package Infeed Running Angle 1-44
Set Package Infeed Running Angle Range 1-46
Set Package Infeed Start Angle 1-41
Set Tank, Hose and Gun Temperatures 4-57
Set X Cam 3-9
Set X Position 6-88
Set Y Cam (Recap Machines) 3-6
Set Z Cam (ReCap Machines) 3-8
Set Zero 3-11, 6-89
Sheet Blower - Set 6-59
Sheet Carrier - Change Rubber Mat 7-53
Sheet Carrier - Overhaul 7-52
Sheet Detector - Change 6-57
Sheet Detector - Set 6-58
Sheet Guides - Set 6-60
Sheet Guides - Set Height 6-61
Sheet Holder - Overhaul 6-39
Sheet Holder - Removal 6-38
Sheet Holder - Set 6-41
Sheet Holder - Set the Sensors 6-43
Single Cut - Change Belt 6-12
Single Cut - Check Belt 6-11
Single Cut - Removal and Assembly 6-14
Single Cut - Set Belt Tension 6-13
Single Cut - Set Cap Present Sensor 6-33
Single Cut - Set Cap Stop 6-32
Single Cut - Set Sensor Position 6-31
Single Cut - Set X and Z Direction 6-20
Single Cut - Set Zero Position 6-23
Star Wheel - Change 5-33
Star Wheel - Change Inner Cam Follower Bearings 5-34
Star Wheel - Change Outer Cam Follower Bearings 5-32
Star Wheel - Set Zero Position 5-29

T

Thermostat - Set-Up 8-350
Timing Belt - Change 3-18
Timing Belt - Change Guides 3-23
Timing Belt - Check 3-17
Touch Screen - Change Recipes 8-336
Touch Screen - Check/Set Network Configuration 8-283
Touch Screen - Create New Recipes 8-326
Touch Screen - Delete Recipes 8-334
Touch Screen - Display Setup 8-306
Touch Screen - Firmware Installation 8-247
Touch Screen - Language Setup 8-320
Touch Screen - Load New Application 8-279
Touch Screen - New Application Software Installation 8-268
Touch Screen - Remove Existing Application Program 8-275
Touch Screen - Saving Recipe Settings 8-332
Touch Screen - Start-Up Language Setup 8-314
Touch Screen - Startup Options Setup 8-300
Touch Screen - Time/Date/Regional Settings Setup 8-310
Touch Screen - TPOP SHUTDOWN 8-246
Touch Screen Machine Setup - Calibrate Touch Screen 8-264
TPOP - Change 4-76
TPOP Line Communication - Install 10-13
Transmitter - Change 7-60
Troubleshooting - DeviceNet Error Indications and Messages on DeviceNet Scanner (Node 0) 8-118
Troubleshooting - DeviceNet Error Indications on the 1734-ADN Adaptor for the Point I/O Modules (Node 2) 8-128

Troubleshooting - DeviceNet Error Indications on the Armor Block I/O Module (Node 3).....8-132
Troubleshooting - DeviceNet Error Indications on the Armor Block I/O Module (Node 4).....8-134
Troubleshooting - DeviceNet Error Indications on the Armor Block I/O Module (Node 5) (ReCap Only).....8-134
Troubleshooting - DeviceNet Error Indications on the Armor Block I/O Module (Node 6) (ReCap Only).....8-135
Troubleshooting - DeviceNet Error Indications on the PowerFlex40 Module 22-COMM-D Adaptor (Node 1).....8-124
Troubleshooting - General.....8-188
Troubleshooting - General DeviceNet Error 8-117
Troubleshooting - SERCOS Net Error Indication and Error Codes on the Integrated Axis Module and Axis Modules.....8-189

U

Upper Inner Package Positioner - Set X Direction..... 2-96
Upper Left Package Positioner - Set Height..... 2-94
Upper Right Package Positioner - Set Height..... 2-95

This page intentionally left blank

Tetra Pak®

Label for 40 mm binder ***Note!*** *This page is generated* ***automatically.***

CAP30/Flex ReCap
662950-0300 Issue 2014-11
Doc. No. MM-3202360-0109

CAP30/Flex ReCap 1(2)
662950-0300 Issue 2014-11
Doc. No. MM-3202360-0109

CAP30/Flex ReCap
662950-0300 Issue 2014-11
Doc. No. MM-3202360-0109

CAP30/Flex ReCap 2(2)
662950-0300 Issue 2014-11
Doc. No. MM-3202360-0109

CAP30/Flex ReCap
662950-0300 Issue 2014-11
Doc. No. MM-3202360-0109

CAP30/Flex ReCap 1(2)
662950-0300 Issue 2014-11
Doc. No. MM-3202360-0109

CAP30/Flex ReCap
662950-0300 Issue 2014-11
Doc. No. MM-3202360-0109

CAP30/Flex ReCap 2(2)
662950-0300 Issue 2014-11
Doc. No. MM-3202360-0109

CAP30/Flex ReCap
662950-0300 Issue 2014-11
Doc. No. MM-3202360-0109

CAP30/Flex ReCap1(3)
662950-0300 Issue 2014-11
Doc. No. MM-3202360-0109

CAP30/Flex ReCap
662950-0300 Issue 2014-11
Doc. No. MM-3202360-0109

CAP30/Flex ReCap 2(3)
662950-0300 Issue 2014-11
Doc. No. MM-3202360-0109

CAP30/Flex ReCap
662950-0300 Issue 2014-11
Doc. No. MM-3202360-0109

CAP30/Flex ReCap 3(3)
662950-0300 Issue 2014-11
Doc. No. MM-3202360-0109

CAP30/Flex ReCap
662950-0300 Issue 2014-11
Doc. No. MM-3202360-0109

CAP30/Flex ReCap3(3)
662950-0300 Issue 2014-11
Doc. No. MM-3202360-0109

Label for 55 mm binder ***Note!*** *This page is generated* ***automatically.***

CAP30/Flex ReCap
662950-0300 Issue 2014-11
Doc. No. MM-3202360-0109

CAP30/Flex ReCap 1(2)
662950-0300 Issue 2014-11
Doc. No. MM-3202360-0109

CAP30/Flex ReCap
662950-0300 Issue 2014-11
Doc. No. MM-3202360-0109

CAP30/Flex ReCap 2(2)
662950-0300 Issue 2014-11
Doc. No. MM-3202360-0109

CAP30/Flex ReCap
662950-0300 Issue 2014-11
Doc. No. MM-3202360-0109

CAP30/Flex ReCap 1(3)
662950-0300 Issue 2014-11
Doc. No. MM-3202360-0109

CAP30/Flex ReCap
662950-0300 Issue 2014-11
Doc. No. MM-3202360-0109

CAP30/Flex ReCap 2(3)
662950-0300 Issue 2014-11
Doc. No. MM-3202360-0109

CAP30/Flex ReCap
662950-0300 Issue 2014-11
Doc. No. MM-3202360-0109

CAP30/Flex ReCap 3(3)
662950-0300 Issue 2014-11
Doc. No. MM-3202360-0109

CAP30/Flex ReCap
662950-0300 Issue 2014-11
Doc. No. MM-3202360-0109

CAP30/Flex ReCap 3(3)
662950-0300 Issue 2014-11
Doc. No. MM-3202360-0109

CAP30/Flex ReCap
662950-0300 Issue 2014-11
Doc. No. MM-3202360-0109

CAP30/Flex ReCap
662950-0300 Issue 2014-11
Doc. No. MM-3202360-0109

CAP30/Flex ReCap
662950-0300 Issue 2014-11
Doc. No. MM-3202360-0109

CAP30/Flex ReCap 1(3)
662950-0300 Issue 2014-11
Doc. No. MM-3202360-0109

CAP30/Flex ReCap 1(2)
662950-0300 Issue 2014-11
Doc. No. MM-3202360-0109

CAP30/Flex ReCap 2(3)
662950-0300 Issue 2014-11
Doc. No. MM-3202360-0109

CAP30/Flex ReCap 2(2)

662950-0300 Issue 2014-11

Doc. No. MM-3202360-0109

CAP30/Flex ReCap 3(3)

662950-0300 Issue 2014-11

Doc. No. MM-3202360-0109