EM

Electrical Manual

Cap 30/Flex

662950-0400

ScrewCap

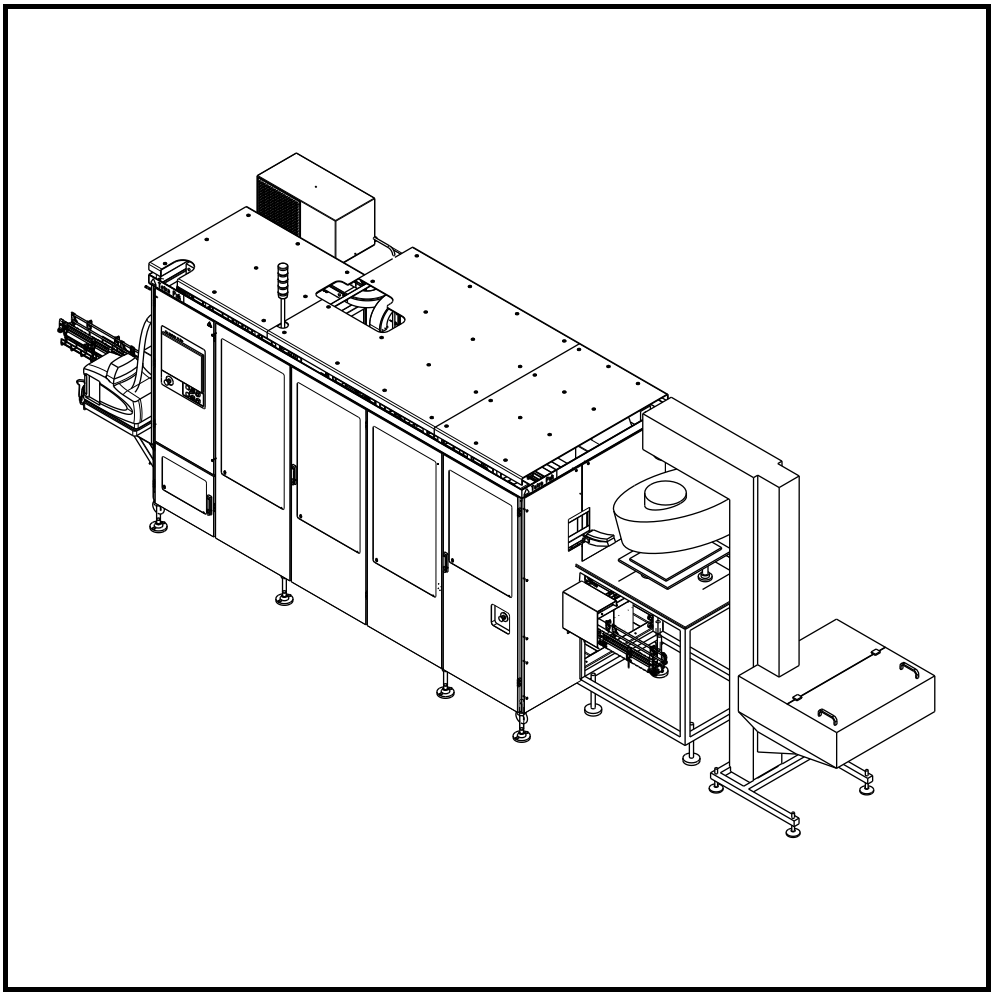

WARNING

Read and follow all safety precaution instructions throughout this document and on safety signs attached to this equipment.

Failure to follow all safety precaution instructions could result in death or serious injury.

Tetra Pak®

Doc. No. EM-3413355-0102

Copyright © 2016 Tetra Pak International S.A.

All rights reserved. No part of this document may be reproduced or copied in any form or by any means without written permission from Tetra Pak Packaging Solutions.

, Tetra Pak, and all other trademarks displayed in this document are the property of the Tetra Pak International SA. Tetra Pak Packaging Solutions together with Tetra Pak International SA form part of ‘the Tetra Pak Group’. The content of this document is in accordance with the design and construction of the machine or equipment at the time of publishing. The Tetra Pak Group reserves the right to introduce design modifications without prior notice.

The English language version of this document contains the original instructions. All other language versions are translations of the original instructions.

This document was produced and printed by:

Tetra Pak Packaging Solutions
Via Delfini 1
41123 Modena
Italy

Doc. No. EM-3413355-0102

Issue 2016-10

This document is valid for:

Serial No. / Machine No.
Year of Manufacture Sign.

EM
Electrical Manual

Cap 30/Flex
662950-0400

i Introduction
ii Safety Precautions
1 Electrical System Description
2 Document List
3 Position Summary
4 Circuit Diagrams
5 Line Summary
6 Cabinet Terminal Summary
7 Terminal Strip Overview
8 Cable Connection List
9 Mains Connection
10 Drawing Remarks
11 Component Location
12 Other Information
13 Program Documents

Machine or equipment configurations that this document is valid for are described on the next page.

Doc. No. EM-3413355-0102
Issue 2016-10

Tetra Pak®
Tetra Pak Packaging Solutions

Valid for:

Name	Drawing Specification and Development Step	Additional Information
Cap 30/Flex	662950-0400	

i Introduction

About the Introduction Chapter

This chapter contains basic information about this manual and the related Tetra Pak equipment.

About the Introduction Chapter i-2

Abbreviations and Terminology i-5

Manual Information i-7

Delivered Manuals i-7

CM i-7

EM i-7

IM i-7

MM i-7

OM i-7

SPC i-7

TeM i-8

Page Layout i-9

Page Numbering i-10

Typographical Conventions i-10

Symbols i-11

Machine Introduction i-12

Intended Use of the Equipment i-12

Manufacturer i-12

Declaration of Conformity i-12

Identification i-13

CE Classification i-13

EAC Compliance i-13

Machine Plate i-13

Electrical Equipment Marking i-14

Food Grade Lubricated Machine Plate i-15

Delivered Design Label i-16

Orientation i-17

Hygiene i-18

Packaging Material i-18

How to Use This EM i-19

Reference Designation i-20

List of Function Codes i-21

Explanation of the American Wire Gauge (AWG) Table on the First Page of the Circuit Diagrams i-21

Example i-23

Optional Equipment i-24

How to Trace an Electrical Component i-24

Example 1: How to Trace a Line i-25

Line Connection Order i-25

How to Trace a Line i-26

Example 2: How to Trace a Contactor i-27

Example 3: How to Trace a Terminal in the Electrical Cabinet i-28

Example 4: How to Trace a Terminal Outside the Electrical Cabinet i-29

Example 5: How to Trace a Network i-30

Example 6: How to Find Electrical Components Using the SPC i-32

Assistance and Inquiries i-34

Abbreviations and Terminology

Abbreviation/Terminology	Meaning	Translation
ANSI	American National Standards Institute	American National Standards Institute
APU	Applicator Unit	Applicator Unit
AWG	American Wire Gauge	American Wire Gauge
CAP	Cap Applicator	Cap Applicator
CE	Conformité Européenne/European Conformity	Conformité Européenne/European Conformity
COMMs	Communications	Communications
Cont'd	Continued	Continued
CSA	Canadian Standard Association	Canadian Standard Association
CSU	Cap Sorter Unit	Cap Sorter Unit
Doc.	Document	Document
EEA	European Economic Area	European Economic Area
EM	Electrical Manual	Electrical Manual
EN	European Norm	European Norm
HMGU	Hotmelt Gun Unit	Hotmelt Gun Unit
IM	Installation Manual	Installation Manual
IPU	Infeed Package Unit	Infeed Package Unit
LED	Light Emitted Diode	Light Emitted Diode
LH	Left Hand	Left Hand
ISO	International Standards Organization	International Standards Organization
MM	Maintenance Manual	Maintenance Manual
No.	Number	Number
OE	Optional Equipment	Optional Equipment
OM	Operation Manual	Operation Manual
PE	Polyethylene	Polyethylene
Pos	Position	Position
psi	Pound per square inch	Pound per square inch
PTU	Package Transfer Unit	Package Transfer Unit
PVC	Polyvinyl chloride	Polyvinyl chloride
QuTI-P	Quality and Technical Issues Platform	Quality and Technical Issues Platform
RFID	Radio-Frequency Identification	Radio-Frequency Identification
RH	Right Hand	Right Hand
S	Slim (package shape)	Slim (package shape)
SPC	Spare Parts Catalogue	Spare Parts Catalogue
TP	Tetra Pak	Tetra Pak

Abbreviation/Terminology	Meaning	Translation
UL	Underwriters Laboratories	Underwriters Laboratories
V	Volt	Volt

Manual Information

The Tetra Pak Group recommends reading all delivered manuals carefully. Make sure that the delivered manuals are available to personnel who operate or maintain the equipment.

It is important to keep this manual for the lifetime of the equipment and to pass the manual on to any subsequent holder or user.

Any item that is named specifically in this manual is to be considered a designated item for the equipment. Designated items are verified by the Tetra Pak Group for use with the equipment.

The Tetra Pak Group will not be held responsible for any damage, loss, injury, or death caused by not following the instructions in the manuals that accompany this equipment, or by a failure to use designated items specified in the manuals that accompany this equipment.

Delivered Manuals

Manuals delivered with this equipment:

CM

The Conversion Manual provides technicians with information on converting the equipment between different production modes.

EM

The Electrical Manual provides technicians with information about the equipment's electrical system.

IM

The Installation Manual provides technicians with information required to safely install the equipment.

MM

The Maintenance Manual provides technicians with information on maintaining the equipment.

OM

The Operation Manual provides the operator with information on handling and operating the equipment before, during, and after production.

SPC

The Spare Parts Catalogue provides the information necessary to order spare parts from the Tetra Pak Group.

TeM

The Technical Manual provides technicians with information which can be:

- information required to safely install the equipment
- information required to maintaining the equipment
- information about the machine's/equipment's electrical system
- information necessary to order spare parts from the Tetra Pak Group
- other technical information

Page Layout

Every main page in a manual contains a header and a footer. The page header contains the chapter name (1) and the section name (2). The page footer contains the page number (3), and the document number (4). See also the Page Numbering section.

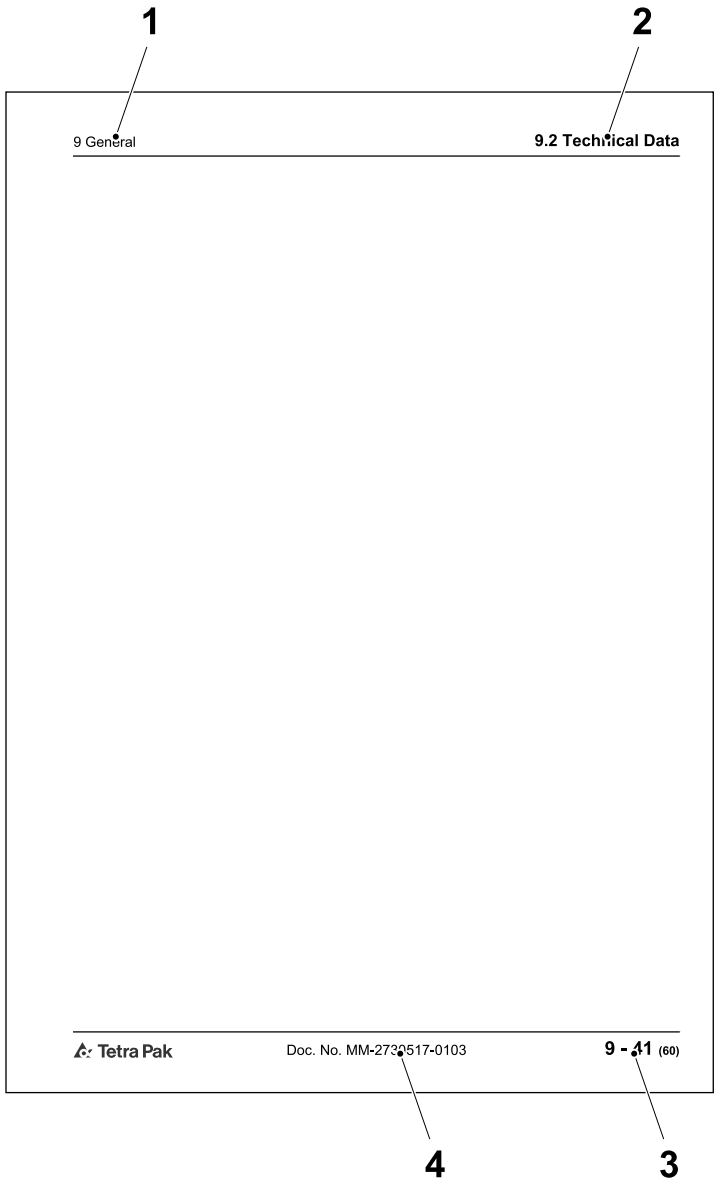

1 Chapter name
2 Section name
3 Page number
4 Document number

Page Numbering

A page number has three parts:

- chapter number (1)
- consecutive page number (2) within the chapter
- total number of pages (3) in the chapter

Note! The letters UP may replace the chapter number (1) if the manual includes update pages. The consecutive page number (2) and the total number of pages (3) of update pages do not follow the existing sequential page numbering of the chapter.

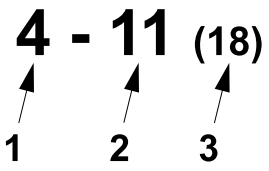

1 Chapter number
2 Consecutive page number
3 Total number of pages

Typographical Conventions

Physical buttons on the operator panel, emergency stop devices, program steps, and program tasks are printed in CAPITAL LETTERS.

Names of buttons, entry fields, menu items, or other objects that allow the user to control the user interface are printed in `Courier`.

Information that is displayed on the user interface, is to be repeated in the user manual, but is not used to control the user interface, is printed in `COURIER CAPITAL LETTERS`.

Cross-references are underlined.

Symbols

Symbols used in illustrations.

	A pointer arrow indicates the position of an object.
	A zoom arrow indicates that an object view is enlarged. The arrow points towards the enlarged view of the object.
	A rotation movement arrow indicates rotational movement of an object. The arrow points in the direction of rotation.
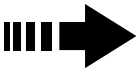	A straight movement arrow indicates movement of an object. The arrow points in the direction of movement.

Machine Introduction

Intended Use of the Equipment

The intended use of this Tetra Pak equipment is to apply a closure onto a package.

Tetra Brik Aseptic Slim packages with SlimCaps or ReCaps must have opening tabs. The opening tabs are applied by a PullTab unit which is incorporated in to the filling machine. Packages with StreamCaps must have pre-laminated holes.

All other use is prohibited. Tetra Pak will not be held responsible for injury or damage if the equipment is used for any other purpose than the intended use described above.

Manufacturer

This Tetra Pak equipment has been manufactured by

Tetra Pak Packaging Solutions
Via Delfini 1
41123 Modena
Italy

Declaration of Conformity

A copy of the Declaration of Conformity can be found in the Installation Manual. The signed Declaration of Conformity is delivered separately with the equipment.

Identification

CE Classification

This equipment complies with the basic health and safety regulations of the European Economic Area (EEA).

EAC Compliance

This equipment complies with the regulations of the Eurasian Customs Union.

Machine Plate

The illustration below shows an example of the machine plate and its location on the equipment. The machine plate carries data needed when contacting Tetra Pak concerning this specific equipment.

Make sure that the equipment data in the front pages of this manual corresponds to the machine plate data and the machine specification.

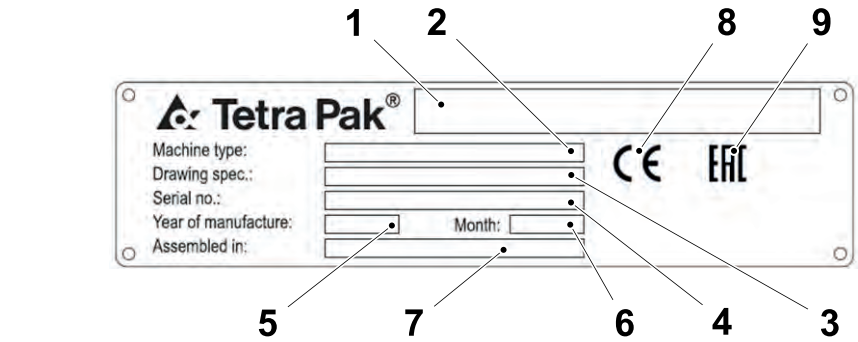

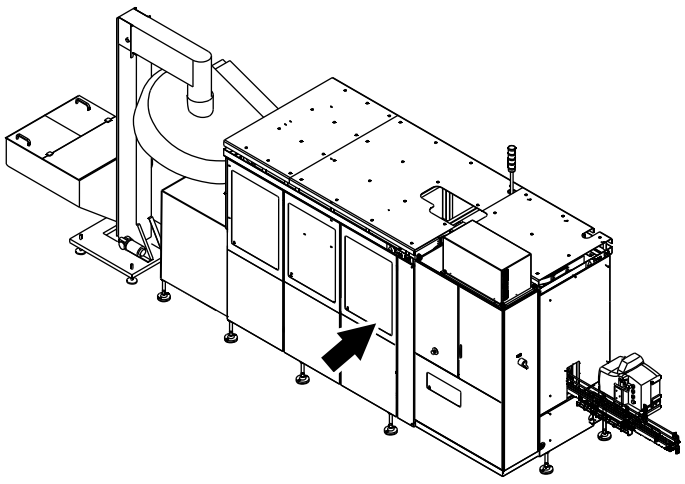

1 Manufacturer (full name and address)
2 Machine type
3 Drawing specifications
4 Machine serial number
5 Year of manufacture
6 Month of manufacture
7 Country
8 CE mark
9 EAC mark

Electrical Equipment Marking

The illustration below shows an example of the electrical equipment marking and its location on the equipment. The electrical equipment marking specifies the electrical characteristics for the equipment at the connection point.

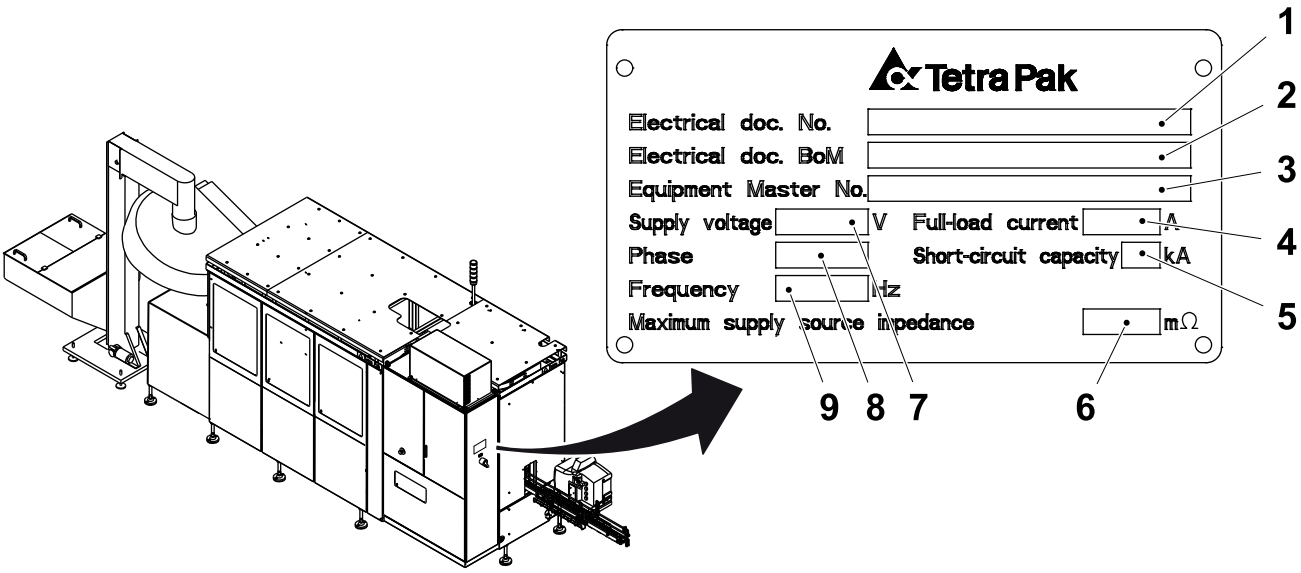

1 Electrical doc. No.
2 Electrical doc. BoM
3 Equipment Master No.
4 Full-load current
5 Short-circuit capacity
6 Maximum supply source impedance
7 Supply voltage
8 Phase
9 Frequency

Food Grade Lubricated Machine Plate

The illustration below shows an example of the Food Grade Lubricated Machine plate and its location on the equipment. The Food Grade Lubricated Machine plate indicates that lubricants used in this equipment are of food grade quality.

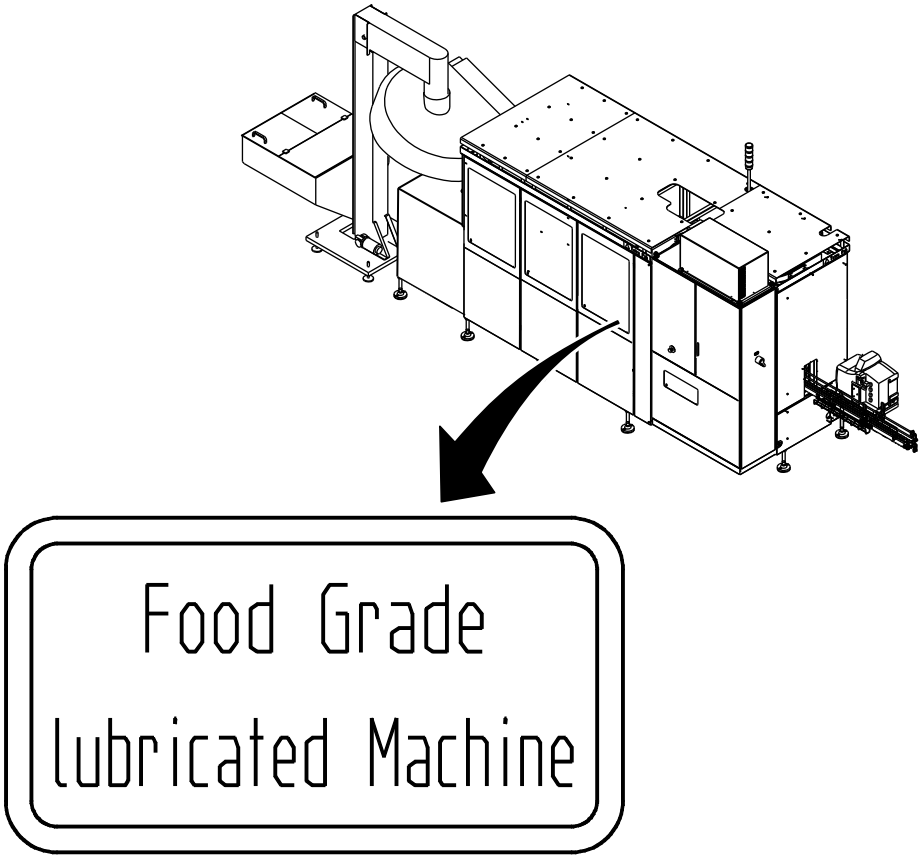

Delivered Design Label

The illustration below shows an example of the delivered design label and its location on the equipment. The delivered design label lists information tracking any rebuilding done to the electrical design, and any alterations done in the electrical cabinet and to related electrical components.

The delivered design label is filled in by the person performing the rebuilding or alteration.

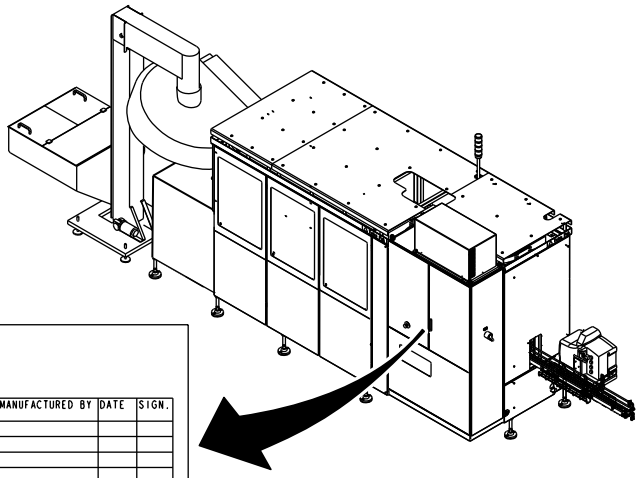

DELIVERED DESIGN

REGISTERED ALTERATIONS

ECM	REBUILDING KIT OR VARIANT	MACHINE DEV.	TECHNICAL BULLETIN	REMARK	MANUFACTURED BY	DATE	SIGN.

Orientation

The illustration below shows the orientation of the equipment. This orientation information will be used throughout this manual. The arrows indicate the flow of material.

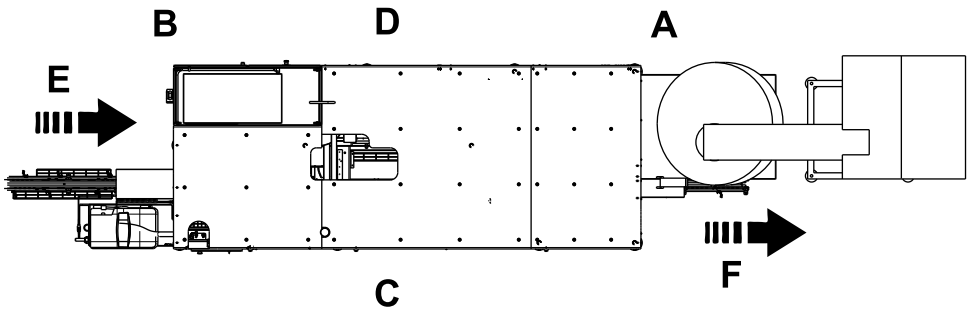

A Front
B Back
C Left
D Right
E Infeed
F Outfeed

Hygiene

Packaging Material

Avoid microbiological contamination of the packaging material:

- Always protect your packaging material against contamination. Do not let the caps come into contact with contaminated areas. Only use caps direct from their packaging material.
- Except when filling the cap sorter with caps, always keep the cap-sorter magazine door closed. Keep the transparent door panels clean.
- Always keep the doors to the filling room (area) closed. To prevent contamination via air streams, never open a window when the machine is in production.
- Never clean the floors or the machine in the filling room (area) when the machine is in production.
- Compressed air used for cleaning purposes is to be used only for cleaning filters and should only be used outside of the applicator room (area).
- Disinfect your hands before touching anything that may come into contact with the product. Use code H disinfectant. See the Technical Data chapter of the Maintenance Manual.
- Keep your hands clean.
- Always wear some type of hair protection (cap or hairnet) and clean clothes (preferably white).
- Do not wear a watch, ring, necklace, earrings, or any other exposed jewellery.

How to Use This EM

Chapters in this EM.

Chapter	Name	Drawing No.
i	Introduction	
ii	Safety Precautions	
1	Electrical Systems Description	
2	Document List	xxxxxxx-0001
3	Position Summary	xxxxxxx-0002
4	Circuit Diagrams	xxxxxxx-0003
5	Line Summary	xxxxxxx-0004
6	Cabinet Terminal Summary	xxxxxxx-0005
7	Terminal Strip Overview	xxxxxxx-0006
8	Cable Connection List	xxxxxxx-0007
9	Mains Connection	xxxxxxx-0008
10	Drawing Remarks	xxxxxxx-0098
11	Component Location	
12	Other Information, for example • Bill of Materials • Fuse Panel	
13	Program Documents	

The Document List chapter is a table of contents for the chapters 3 to 9, listing all drawings included.

In the Circuit Diagrams, the first pages are reserved for distribution terminals and the last pages can be used for pre-connected cables. Pre-connected cables are connected to spare terminals and are reserved for future use.

The diagrams in the Mains Connection chapter show how the machine should be connected to the local supply, the dimensions of the connection cable, and the connection of the matching transformer, when used.

The Drawing Remarks chapter lists the drawing remarks indicated with a number in the drawing.

The Program Documents chapter contains the PLC programs for this equipment.

(Cont'd)

(Cont'd)

The documents and drawings are identified by drawing number (1), version code (2), and page number (3). The page number is the consecutive numbering of the pages that belong to the main number and is used as a reference in the diagrams.

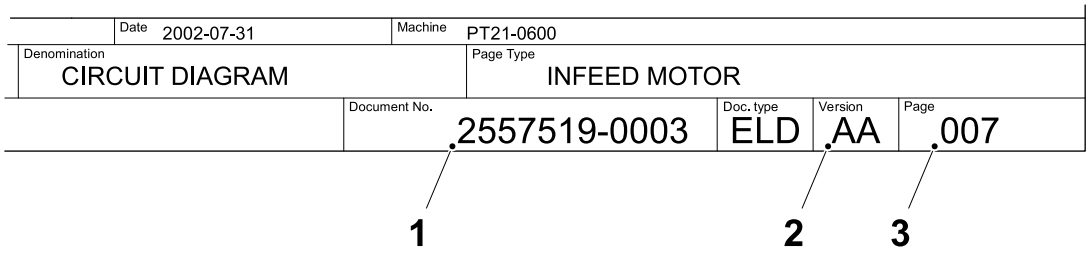

1 Drawing number
2 Version code
3 Page number

Reference Designation

Components are identified by the reference designation, defined by a function code (1), and a component code (2).

The object code for the group level (3) refers to the purpose or task of the group level that the component serves or supplies. See the List of Function Codes section.

The object code for the component level (4) refers to the purpose or task of the current object. The letter is in accordance with international standards.

Examples: Code P for components that present information, such as an alarm lamp, a clock, or a volt meter. Code M for components that provide mechanical energy such as an actuator, or an electric motor.

Tetra Pak has chosen to always use the function oriented structure for reference designation. The prefix indicating function oriented structure (=) is not shown in the reference designation.

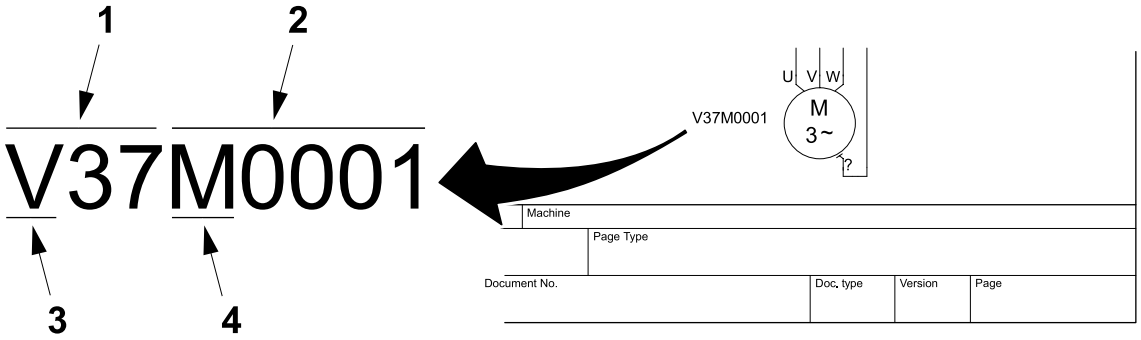

1 Function code
2 Component code
3 Object code, group level
4 Object code, component level

List of Function Codes

Function codes for this equipment.

Function Code	Identification
1	SERVICE AND SUPPLY
9	SAFETY
20	INFEED PACKAGE
21	PACKAGE TRANSFER
30	APPLICATOR UNIT
40	HOT MELT GUNS APPLICATOR
50	CAP SORTER
60	RECAP CUT AND FEEDING
70	CAP POSITIONING SYSTEM
81	COMMUNICATION

Explanation of the American Wire Gauge (AWG) Table on the First Page of the Circuit Diagrams

The cables and conductors used in Tetra Pak® equipment and documentation are, in most cases, given in measurements of metric area, such as 1.5 mm². Metric areas and AWG sizes are not fully interchangeable, and CSA/UL standards have a different current density for conductors than EN/ISO standards.

(Cont'd)

(Cont'd)

The AWG table on the first page of the circuit diagrams illustrates how metric areas correspond to AWG sizes, and how the current carrying capacity is recalculated based on the current density for the corresponding AWG conductor.

	1	2	3	4	5	6	7
	Current carrying capacity, A Ambient temperature 40ºC			Conductor size		Current density	
				mm^2	AWG	A / mm^2	
	B1	Based on CSA/UL density	CSA/UL	EN	CSA/UL	B1	CSA/UL
A			**2,64**	0,32	**22**		**8,25**
	N/A	4,13		0,50			
B			**4,4**	0,52	**20**		**8,48**
	8,6	5,61		0,75		11,47	
			6,16	0,82	**18**		**7,48**
C	10,3	7,48		1,00		10,30	
D			**8,8**	1,31	**16**		**6,72**
	13,5	10,08		1,50		9,00	
E			**13,2**	2,08	**14**		**6,35**
	18,3	15,87		2,50		7,32	
F			**17,6**	3,31	**12**		**5,32**
	24	21,27		4,00		6,00	
G			**26,4**	5,26	**10**		**5,02**
	31	30,11		6,00		5,17	
H			**44**	8,37	**8**		**5,26**
	44	52,59		10,00		4,40	
I			**57,2**	13,30	**6**		**4,30**
	59	68,81		16,00		3,69	
J			**74,8**	21,15	**4**		**3,54**
	77	88,42		25,00		3,08	
K			**88**	26,67	**3**		**3,30**
			101,2	33,62	**2**		**3,01**
	96	105,35		35,00		2,74	
L			**114,4**	42,41	**1**		**2,70**
	117	134,87		50,00		2,34	
M			**132**	53,49	**1/0**		**2,47**
			154	67,43	**2/0**		**2,28**
	149	159,87		70,00		2,13	
N			**176**	85,01	**3/0**		**2,07**
	180	196,68		95,00		1,89	
O			**202,4**	107,20	**4/0**		**1,89**
	208	226,57		120,00		1,73	

(Cont'd)

(Cont'd)

In the AWG table on the previous page, column 1 gives the current carrying capacity according to EN 60204-1:2006 Table 6, installation method B1. The values are given for 40 °C ambient temperature.

Column 2 gives the current carrying capacity, limited by the AWG current density in column 7 within the same row(s) letter.

Column 3 gives the CSA/UL current carrying capacity according to NFPA 79:2007 Table 12.5.1 (75 °C insulation). The values have been converted to 40 °C ambient temperature according to NFPA 79:2007 Table 12.5.5(a).

For conductors smaller than 10 mm^2, the current carrying capacity is limited by the AWG density in column 7, that is, values in column 2 with grey background colour are valid for the current carrying capacity.

For conductors equal to or larger than 10 mm^2, the current carrying capacity is limited by the calculated value from EN 60204-1:2006 Table 6 (column 6), that is, values in column 1 with grey background colour are valid for the current carrying capacity.

Example

In the row with the letter D

- 1.5 mm^2 conductor (column 4) has, according to EN 60204-1:2006 Table 6, a current carrying capacity of 13.5 A (column 1).
- 13.5 A in a 1.5 mm^2 conductor gives a current density of 9.00 A/mm2 (column 6).
- The corresponding AWG conductor, AWG 16 (column 5), has a current carrying capacity of 8.8 A (column 3), which gives a current density of 6.72 A/mm^2 (column 7)
- A 1.5 mm^2 conductor with a density of 6.72 A/mm^2 gives a current carrying capacity of 10.08 A (column 2).

Optional Equipment

An optional equipment designation indicates that the component belongs to specific optional equipment. The designation numbers for this equipment are explained in the Drawing Remarks chapter.

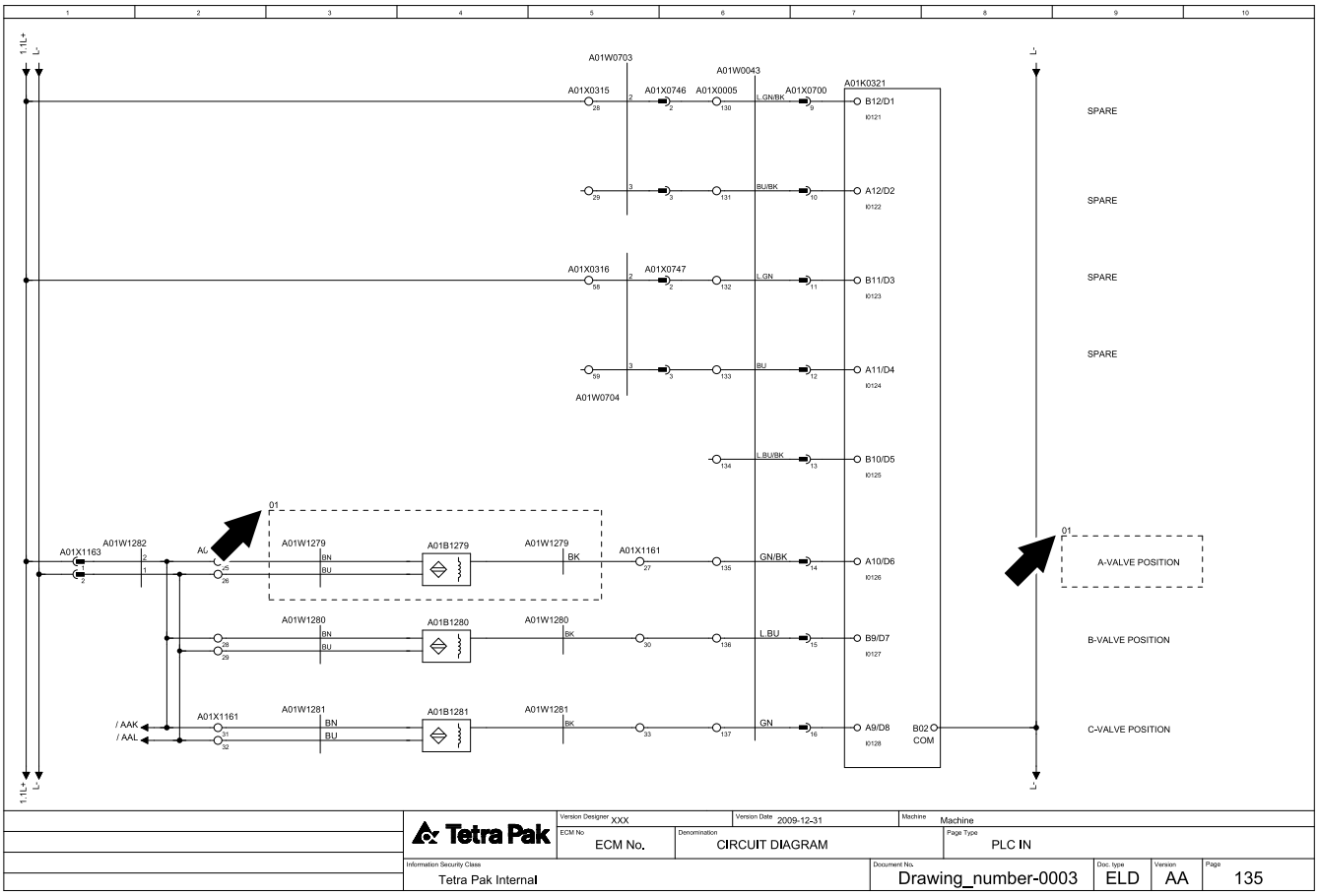

How to Trace an Electrical Component

Start tracing an electrical component by finding the correct list with page and column references to the Circuit Diagram.

Example 1: How to Trace a Line on page i-25 illustrates how to trace a Line. Use the Line Summary.

Example 2: How to Trace a Contactor on page i-27 illustrates how to trace a contactor. Find page references in the Position Summary. The procedure is identical when tracing sensors or other components. For cables, the page references are in the Cable Connection List. The number of spare cores is shown in the cable connection list.

Example 3: How to Trace a Terminal in the Electrical Cabinet on page i-28 and Example 4: How to Trace a Terminal Outside the Electrical Cabinet on page i-29 illustrate how to trace a terminal. Find page references for terminals *in* the electrical cabinet in the Cabinet Terminal Summary, and page references for terminals *outside* the electrical cabinet in the Terminal Strip Overview.

(Cont'd)

(Cont'd)

Example 5: How to Trace a Network on page i-30 illustrates how to trace a network (DeviceNet, Ethernet etc.). The last pages of the Circuit Diagrams are reserved for the network layout; these provide an overview of the network with cross references to locate the components in the circuit diagrams.

Example 6: How to Find Electrical Components Using the SPC on page i-32 illustrates how to locate a component in the Spare Parts Catalogue, SPC.

Example 1: How to Trace a Line

Line Connection Order

The line connection order is shown in the Line Summary.

How to Trace a Line

The illustration below shows how to trace line connection L- from the component terminal A01X1163:2 to A01K0321:B02.

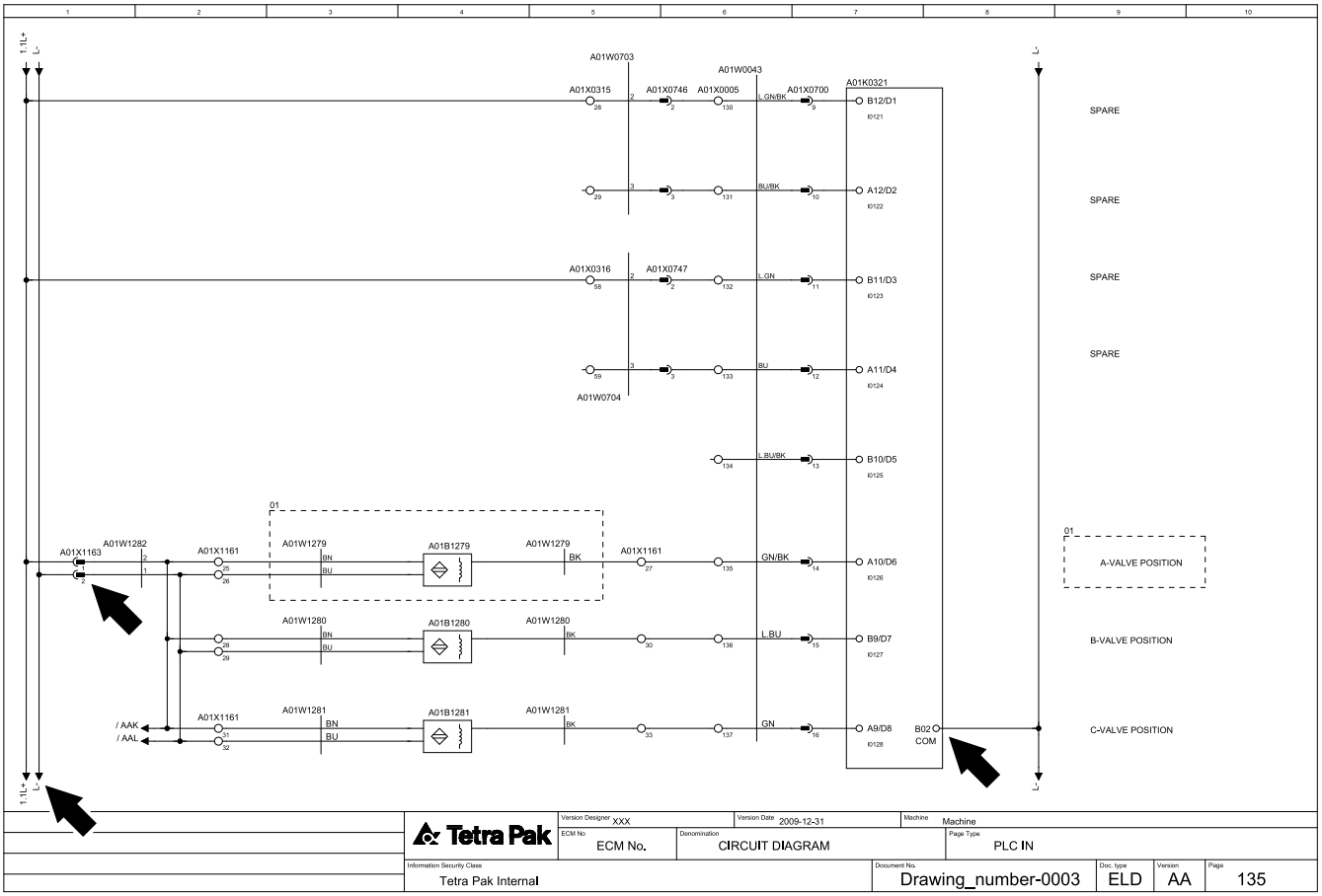

Line summary : Drawing_number-0003

Net	Page.Col.	Option	Area/Color	Net
L-				
A01X0010:1	001.2		0,75 BU	
A01X1163:2	135.1		0,75 BU	
A01K0321:B02	135.8			

Example 2: How to Trace a Contactor

The illustration below shows how to trace contactor G34K0110 to page 114, column 6 in the Circuit diagram.

Related contacts are traced with a cross reference to page 014, column 5.

Note! For master and slave components, such as coils and contacts, only the master is reported in the Position Summary. The slave shows the page and column references of the master.

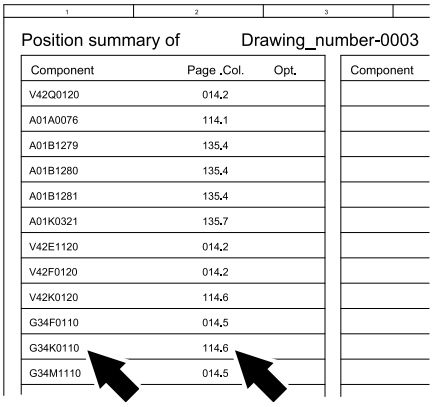

Position summary of Drawing_number-0003

Component	Page .Col.	Opt.	Component
V42Q0120	014,2		
A01A0076	114,1		
A01B1279	135,4		
A01B1280	135,4		
A01B1281	135,4		
A01K0321	135,7		
V42E1120	014,2		
V42F0120	014,2		
V42K0120	114,6		
G34F0110	014,5		
G34K0110	114,6		
G34M1110	014,5		

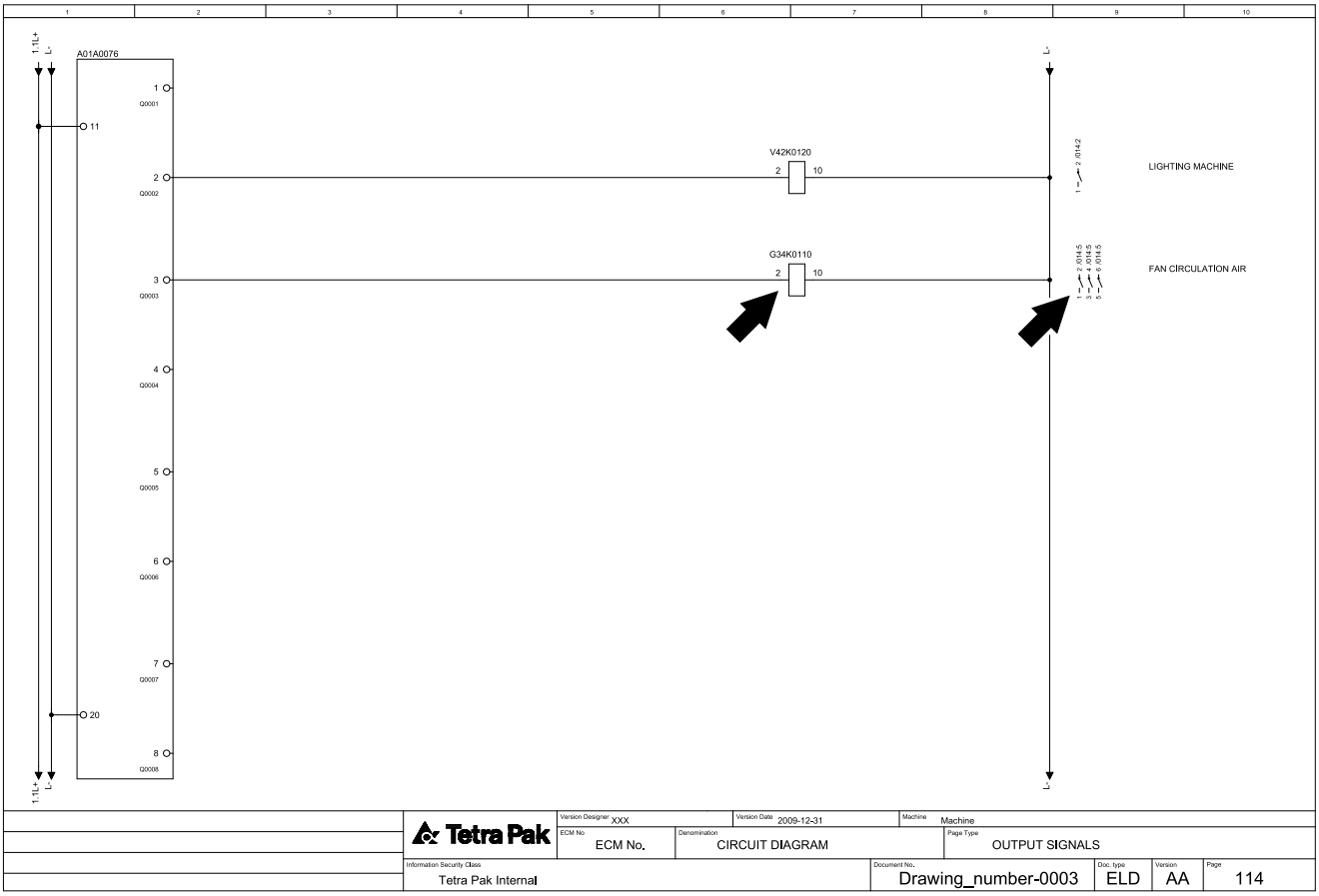

Example 3: How to Trace a Terminal in the Electrical Cabinet

The Cabinet Terminal Summary refers to the page and column where the relevant terminal is to be found.

The illustration below shows how to trace terminal A01X0005:130 to page 135, column 6 in the Circuit diagram.

Cabinet terminal summary of Drawing_number-0003

A01X0005	Page .Col.	Opt.
A01X0005:130	135.6	
A01X0005:131	135.6	
A01X0005:132	135.6	
A01X0005:133	135.6	
A01X0005:134	135.6	
A01X0005:135	135.6	
A01X0005:136	135.6	
A01X0005:137	135.6	

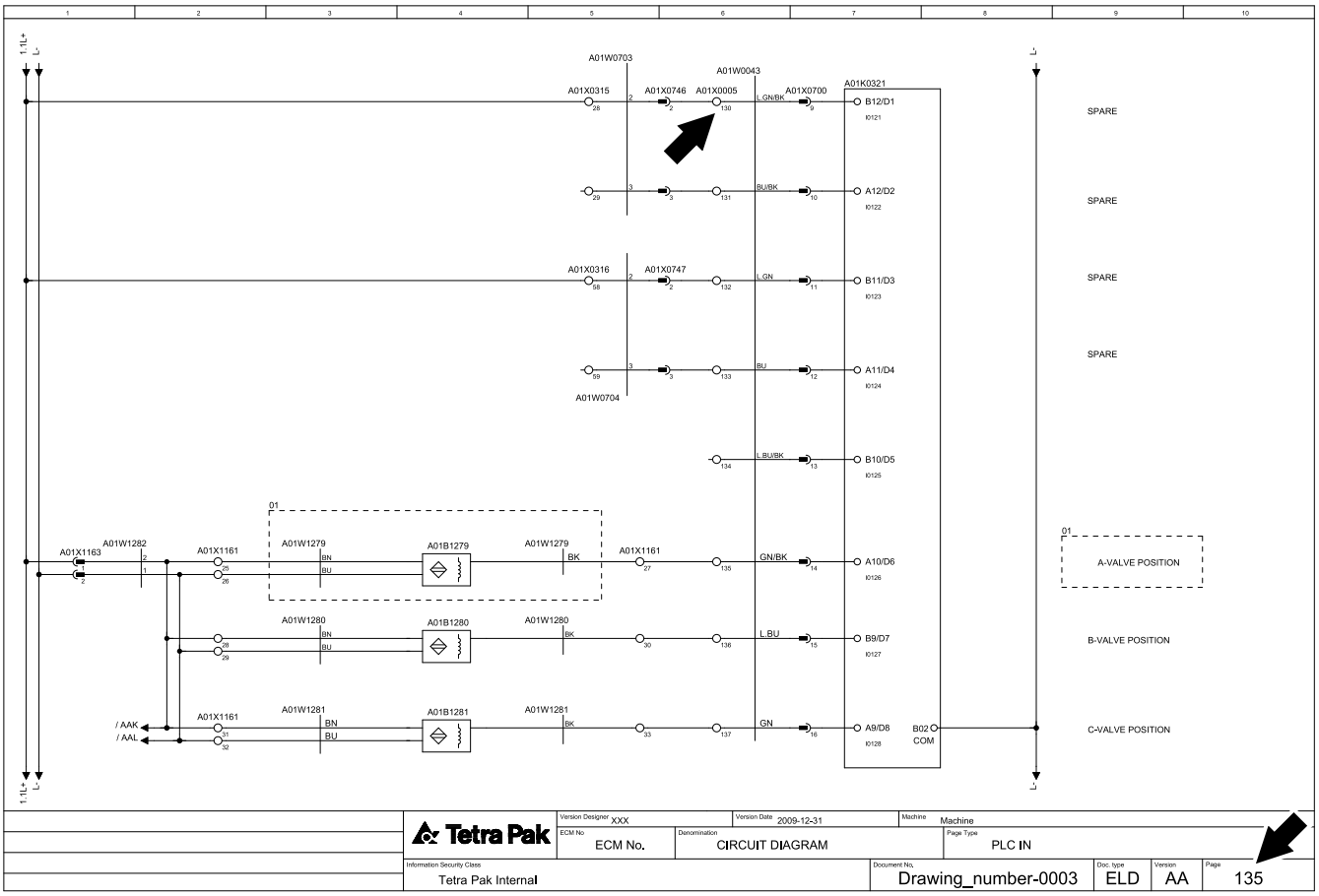

Example 4: How to Trace a Terminal Outside the Electrical Cabinet

The Terminal Strip Overview refer to the page and column where the relevant terminal is to be found.

The illustration below shows how to trace terminal A01X1161:26 to page 135, column 2 in the Circuit diagram. Note the connected component, A01B1279.

Terminal strip of Drawing_number-0003

A01X1161

From	Cable	Internal Jumper	Terminal	External Jumper	Cable	To	Page.Col.	Option	Function text
A01X1163:1	A01W1282-2		25		A01W1279-BN	A01B1279	135.2		A-VALVE POSITION
A01X1163:2	A01W1282-1		26		A01W1279-BU	A01B1279	135.2		A-VALVE POSITION
A01B1279	A01W1279-BK		27			A01X0005:135	135.5		
			28		A01W1280-BN	A01B1280	135.2		B-VALVE POSITION
			29		A01W1280-BU	A01B1280	135.2		B-VALVE POSITION
A01B1280	A01W1280-BK		30			A01X0005:136	135.5		
			31		A01W1281-BN	A01B1281	135.2		C-VALVE POSITION
			32		A01W1281-BU	A01B1281	135.2		C-VALVE POSITION
A01B1281	A01W1281-BK		33			A01X0005:137	135.5		

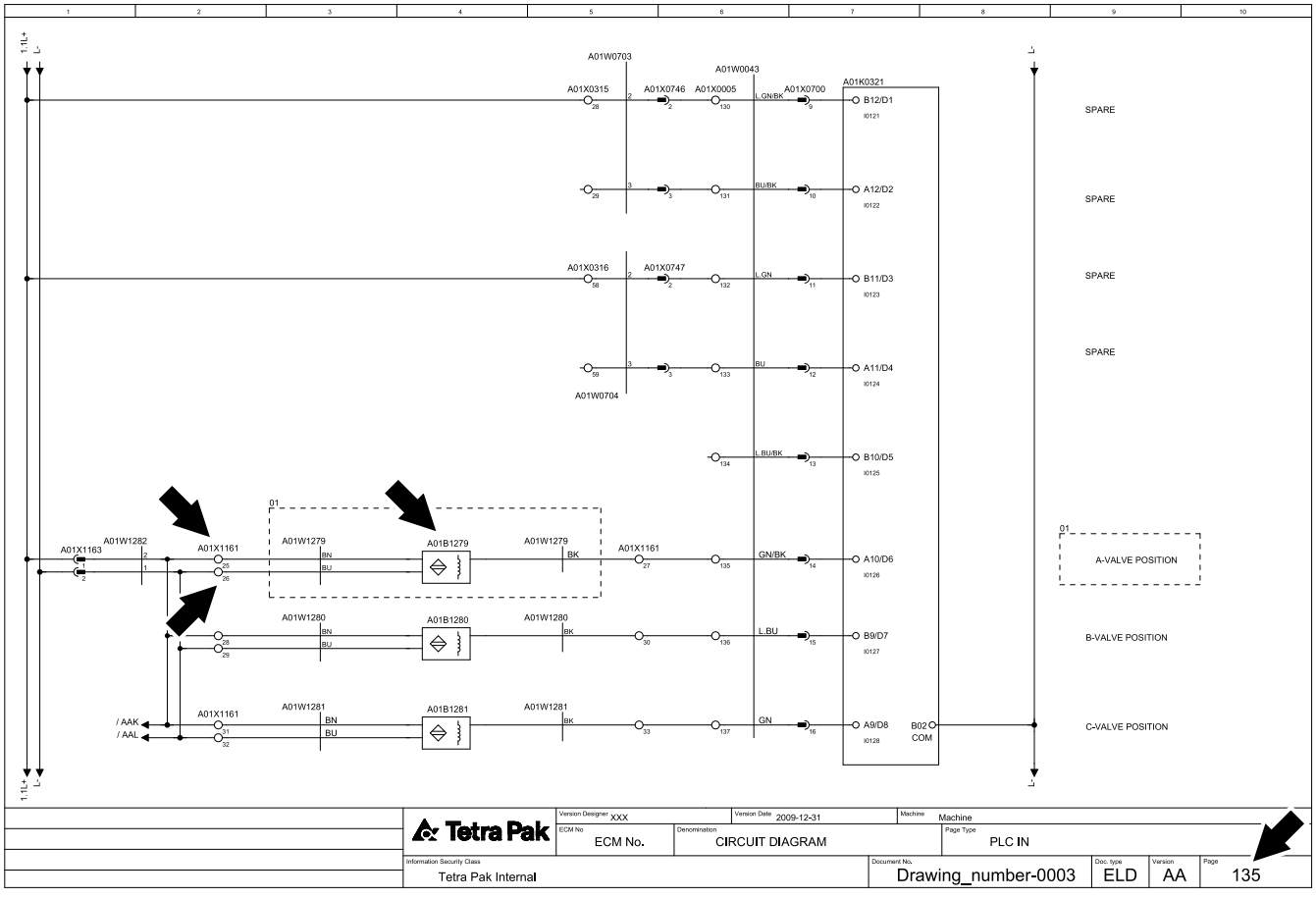

Example 5: How to Trace a Network

The illustration below shows how to find the terminal strip A01X9300 and the network cable A01W9300 in the network overview page(s).

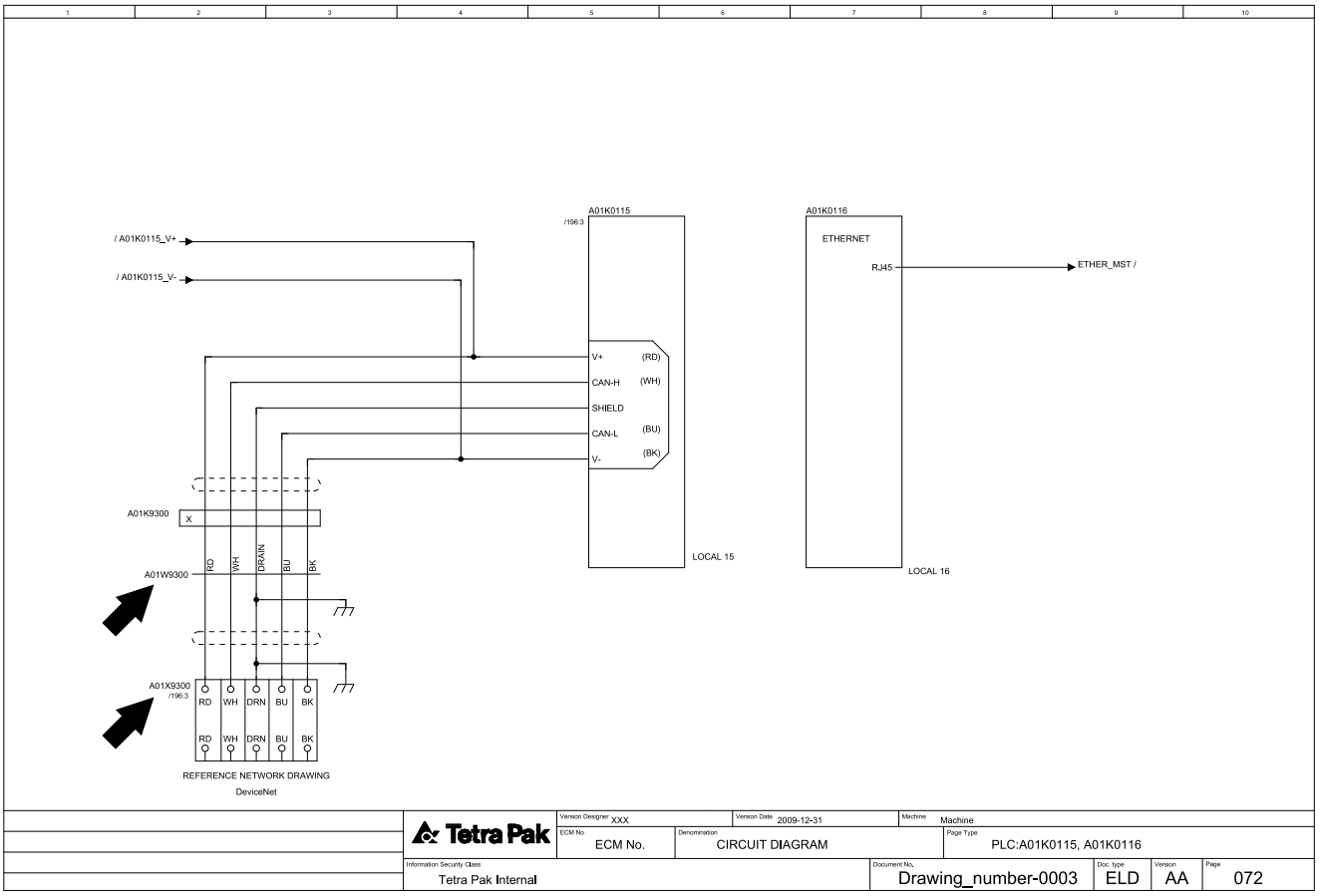

(Cont'd)

(Cont'd)

The figure reference, for example; "fig F" in the Network Overview page, refers to the Network Figure Drawing which provides a description of the component wiring. See the illustration.

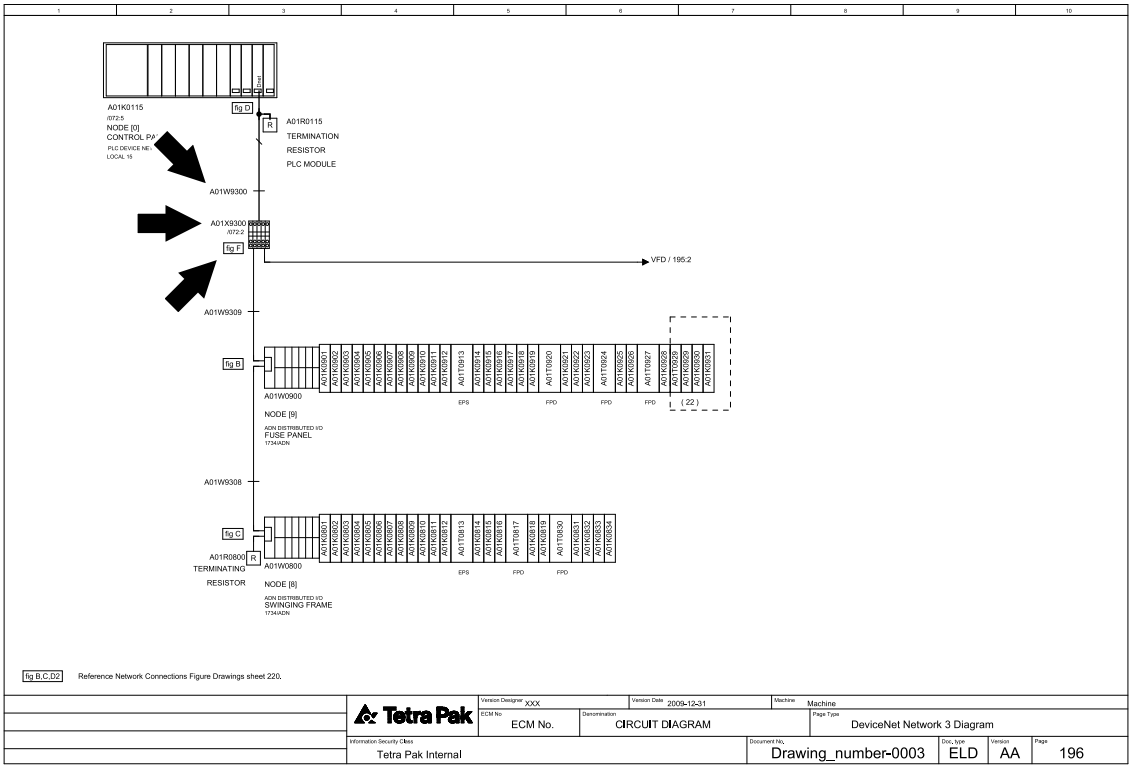

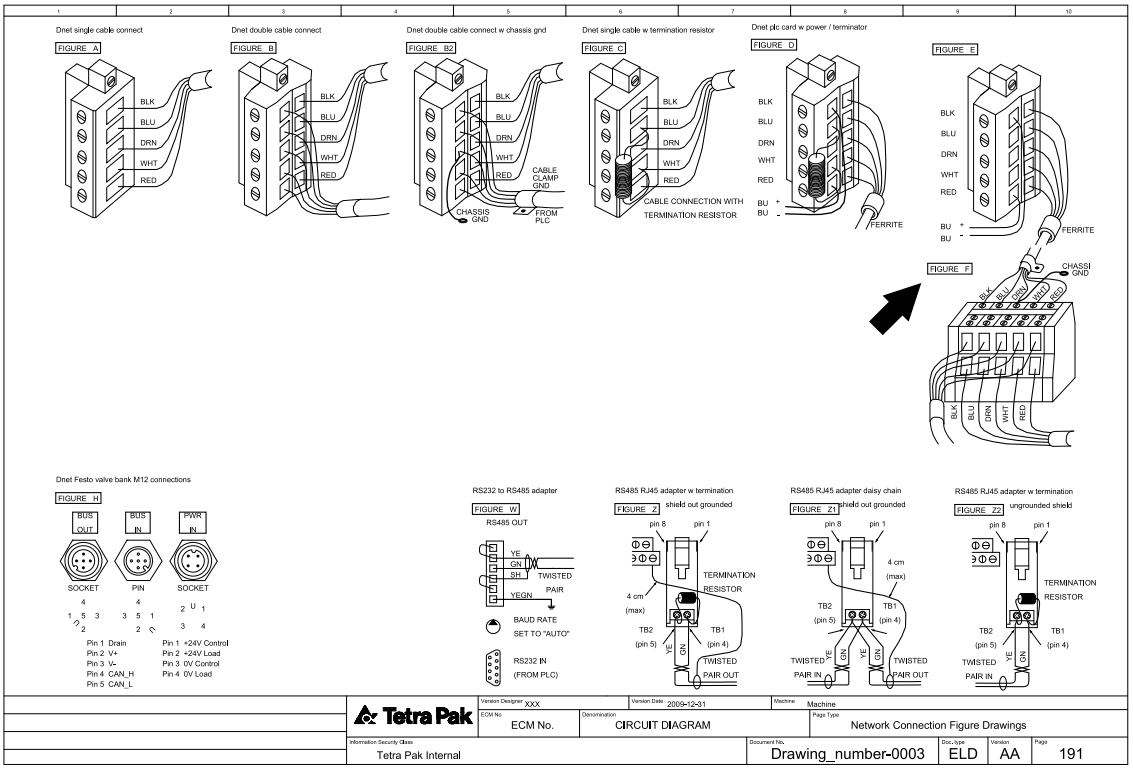

Example 6: How to Find Electrical Components Using the SPC

The Reference Designation Parts Index in the Spare Parts Catalogue, SPC, is used to locate electrical parts. For SPCs without a Reference Designation Parts Index, see the Component Location chapter in this manual.

(Cont'd)

(Cont'd)

The illustration below shows how to find component A04B0041 in the SPC. The Reference Designation Parts Index refers to page 2-5. In the drawing on page 2-4, the position number is the same as the reference designation for the component.

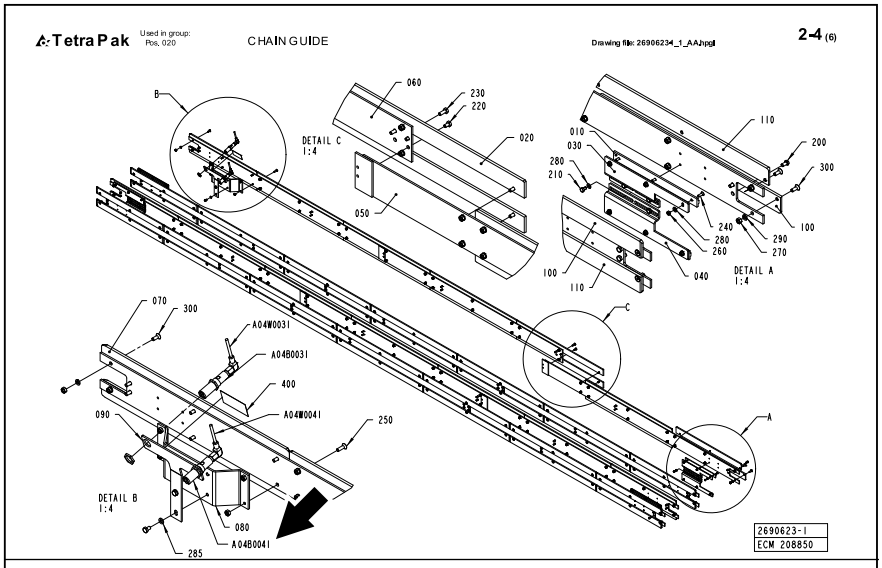

ECM: 209071 - 50001231
Group number: 2690623-0100
Assembly Drawing: 2690623-1_1_AA
This list covers pages from 2-2 to 2-5

Pos	Part No	UN	Qty	Description	Page No
-					
010	2597877-0000		8	CHAIN GUIDE	
020	2653358-0000		40	CHAIN GUIDE	
030	2653365-0000		4	SUPPORT	
040	2653366-0000		4	SUPPORT	
050	2653367-0000		8	PLATE	
060	2653368-0000		4	PLATE	
070	2653369-0000		8	CHAIN GUIDE	
080	2690632-0000		1	HOLDER	
090	2690633-0000		1	HOLDER	
100	2730969-0000		4	CHAIN GUIDE	
110	2730970-0000		4	CHAIN GUIDE	
200	90458-0072		8	SCREW ISO 7380 S M6X12 A2	
210	312105-0287		16	SCREW M6S ISO4017 M4X8 A470	
220	312105-0364		18	SCREW M6S ISO 4017 M6X10 A480	
230	312105-0368		40	SCREW M6S ISO 4017 M6X16 A480	
240	312155-0291		24	SCREW DIN 7991 MF6S M4X12 A4 70	
250	312155-0370		4	SCREW DIN 7991 MF6S M6X20 A4 70	
260	312605-0312		24	HEXAGON NUT, M6M M4 A280	
270	312605-0316		168	HEXAGON NUT, M6M M6 A280	
280	315105-0146		40	WASHER BRB5,3X10RFR	
285	315105-0153		2	WASHER BRB6,4X12RFR	
290	315[illegible]0156		164	LOCK WASHER FBB 6,5	
300	[illegible]28		164	SCREW DIN 7991 MF6S M6X16 A4 70	
400	[illegible]98		1	WARNING SIGN ISO, LASER RADIATION	
A04W0041	[illegible]-0050		1	ACTUATOR/SENSOR CABLE RKWTN 4-225/5M	
A04W0031	[illegible]2-0050		1	ACTUATOR/SENSOR CABLE RKWTN 4-225/5M	
A04B0041	90459-5012		1	LASER SENSOR, YD24PA3	
C05C0041	2690632-0000		1	HOLDER	
C05C0031	2653367-0000		8	PLATE	
T04B0031	90459-5012		1	LASER SENSOR, YD24PA3	
T05C0041	2653369-0000		8	CHAIN GUIDE	
T05C0031	2653368-0000		4	PLATE	

Tetra Pak
iv-2 (4)
Doc No: SPC-654654-0101

Pos	Part No	Description	Page No
A			
F09A0332	[illegible]9	THERMOCOUPLE CABLE K/PVC/20AWG 2X0,5MM2	1-3, 1-5
T03A0321	[illegible]9	THERMOCOUPLE CABLE K/PVC/20AWG 2X0,5MM2	1-3, 1-5
T03A0322	[illegible]30	HEATING ELEMENT, 3000W, 220V	1-3, 1-5
B			
A04B0041	90459-5012	LASER SENSOR, YD24PA3	2-3, 2-5
C01B0001	351120-0145	CABLE SILFLEX SIHF 3X2,5 0046020	1-3, 1-5
C32B0001	90220-2259	THERMOCOUPLE CABLE K/PVC/20AWG 2X0,5MM2	1-3, 1-5
T04B0031	90459-5012	LASER SENSOR, YD24PA3	2-3, 2-5
C			
C05C0031	2653367-0000	PLATE	2-3, 2-5
C05C0041	2690632-0000	HOLDER	2-3, 2-5
T05C0031	2653368-0000	PLATE	2-3, 2-5

Page No

2-5 (6)
c No: SPC-654654-0101

Assistance and Inquiries

For assistance when operating this equipment, or other inquiries, comments, or suggestions, submit the questions or give feedback by using the QuTI-P tool. Type QuTI-P in the address field of your browser. If access to QuTI-P is not available, request access by contacting the Global Service Desk.

If access to the Tetra Pak® intranet is not available, contact the nearest Tetra Pak representative.

ii Safety Precautions

Description

Safety Precaution Instructions

WARNING

Read and understand this manual before using the machine.
Failure to follow safety precautions and instructions can result in death or serious injury.

Description ii-2

Safety Messages Description..... ii-5

Personnel Requirements ii-6

Skilled Person ii-6

Instructed Person ii-6

Safety Signs..... ii-7

Location of Safety Signs ii-9

Protective Devices ii-12

Emergency Stop..... ii-12

Emergency Stop Push-Buttons ii-13

Safeguards..... ii-14

Indicating Tower..... ii-16

Audible Alarm ii-17

Safe Manual Handling ii-18

Personal Protection ii-19

Noise ii-19

Entanglement..... ii-19

Hazardous Substances..... ii-20

Disposal of Chemical Substances..... ii-20

Personal Protective Equipment ii-20

Supply Systems..... ii-21

Definition of Lockout Procedure..... ii-21

Power Supply..... ii-21

Residual Voltage..... ii-22

Electrical Cabinet ii-22

Socket Outlet..... ii-24

Air Supply..... ii-25

Hotmelt Equipment ii-26

General ii-26

Hotmelt Unit ii-27

Hotmelt Guns ii-28

Additional Information ii-29

Package Heater ii-29

Cap Detector ii-30

Safety Messages Description

A safety message is always accompanied by a safety alert symbol and a signal word.

The safety alert symbol is used to alert about potential personal injury hazards. To avoid hazards, obey all safety messages that follow this symbol.

The following safety alert symbols and signal words are used in this manual to inform the user of hazards.

DANGER	Danger indicates an imminently hazardous situation which, if not avoided, **will** result in **death or serious injury**.
WARNING	Warning indicates a potentially hazardous situation which, if not avoided, **could** result in **death or serious injury**.
CAUTION	Caution indicates a potentially hazardous situation which, if not avoided, **may** result in **minor or moderate injury.** It may also be used to alert against unsafe practices.
CAUTION	Caution without the safety alert symbol indicates a potentially hazardous situation which, if not avoided, **may** result in **property damage**.

Personnel Requirements

Note! Personnel includes all persons working on or near this equipment.

Only skilled or instructed persons are allowed to work with this equipment.

Skilled Person

A skilled person must have relevant education and experience to enable him or her to identify hazards, analyse risks, and avoid hazards which electricity, machinery, chemicals, other energies, and supply systems on this equipment can create.

Skilled persons must meet local regulations, such as certifications and qualifications for working with these energies and systems.

Instructed Person

An instructed person must be adequately advised or supervised by a skilled person. The skilled person enables the instructed person to identify hazards, analyse risks, and avoid hazards which electricity, machinery, chemicals, other energies, and supply systems on this equipment can create.

Safety Signs

WARNING

Damaged or missing safety signs.
Safety signs are used to indicate safety hazards. If the signs are missing or damaged, they can not fulfil this function. Replace all missing or damaged safety signs immediately.

Safety signs are attached to the equipment. The table below lists all the signs that are used, and illustrations show their locations on the equipment. Each position number refers to two standards of a safety sign in the table, but only one is used on the equipment.

- Make sure that each safety sign is legible and in its correct position after installation and maintenance.
- Replace all missing or damaged safety signs immediately.

Pos	ISO Standard	ANSI Standard
1	 	**Hazardous voltage.** Will shock, burn, or cause death. Follow lockout procedure before maintenance.
2	 	**Hot surface.** Do not touch. Follow lockout procedure before maintenance.
3	 	**Risk of equipment damage.** Do not let water into this area.

(Cont'd)

(Cont'd)

Pos	ISO Standard	ANSI Standard
4		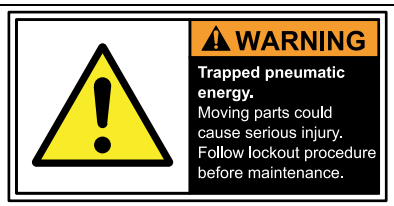
	Trapped pneumatic energy. Moving parts could cause serious injury. Follow lockout procedure before maintenance.	
5		
	Do not reach in. Moving parts may cause injury. Follow instructions for safe work practice.	
6		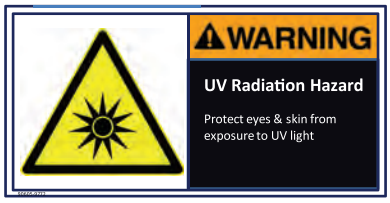
	Risk of UV Radiation. Do not see and touch when the UV lamp is in function. Follow lockout procedure before maintenance.	
7	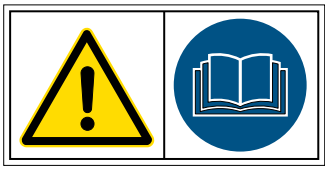	Not applicable
	Risk of electric shock. This equipment can cause currents greater than 10 mA in the electrical power supply protective conductor (PE). Connect the equipment to the electric power supply source in accordance with applicable local or national regulations.	

Location of Safety Signs

The illustration shows where the safety signs are located. The position numbers refer to the table in the Safety Signs section.

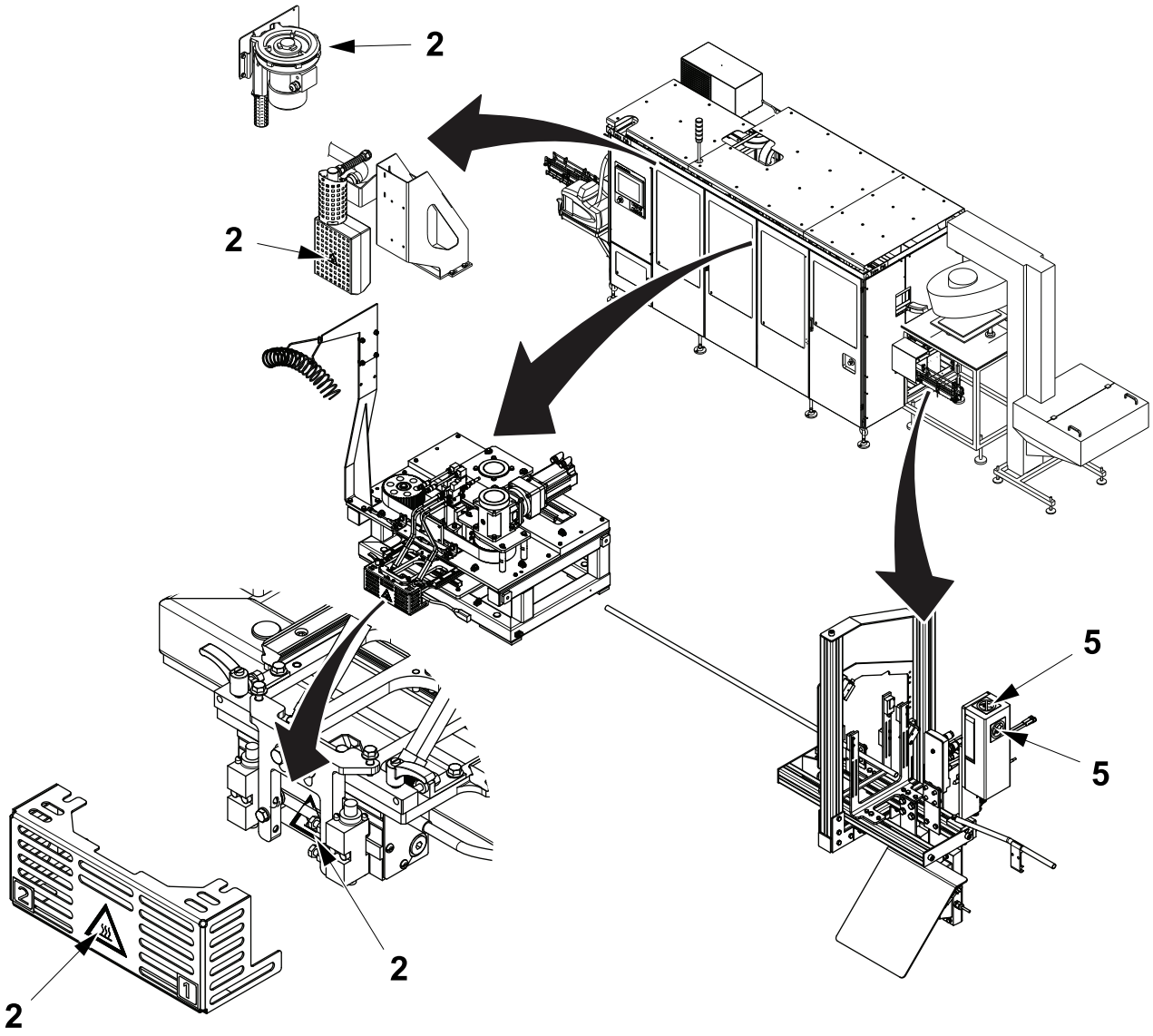

(Cont'd)

(Cont'd)

The illustration shows where the safety signs are located. The position numbers refer to the table in the Safety Signs section.

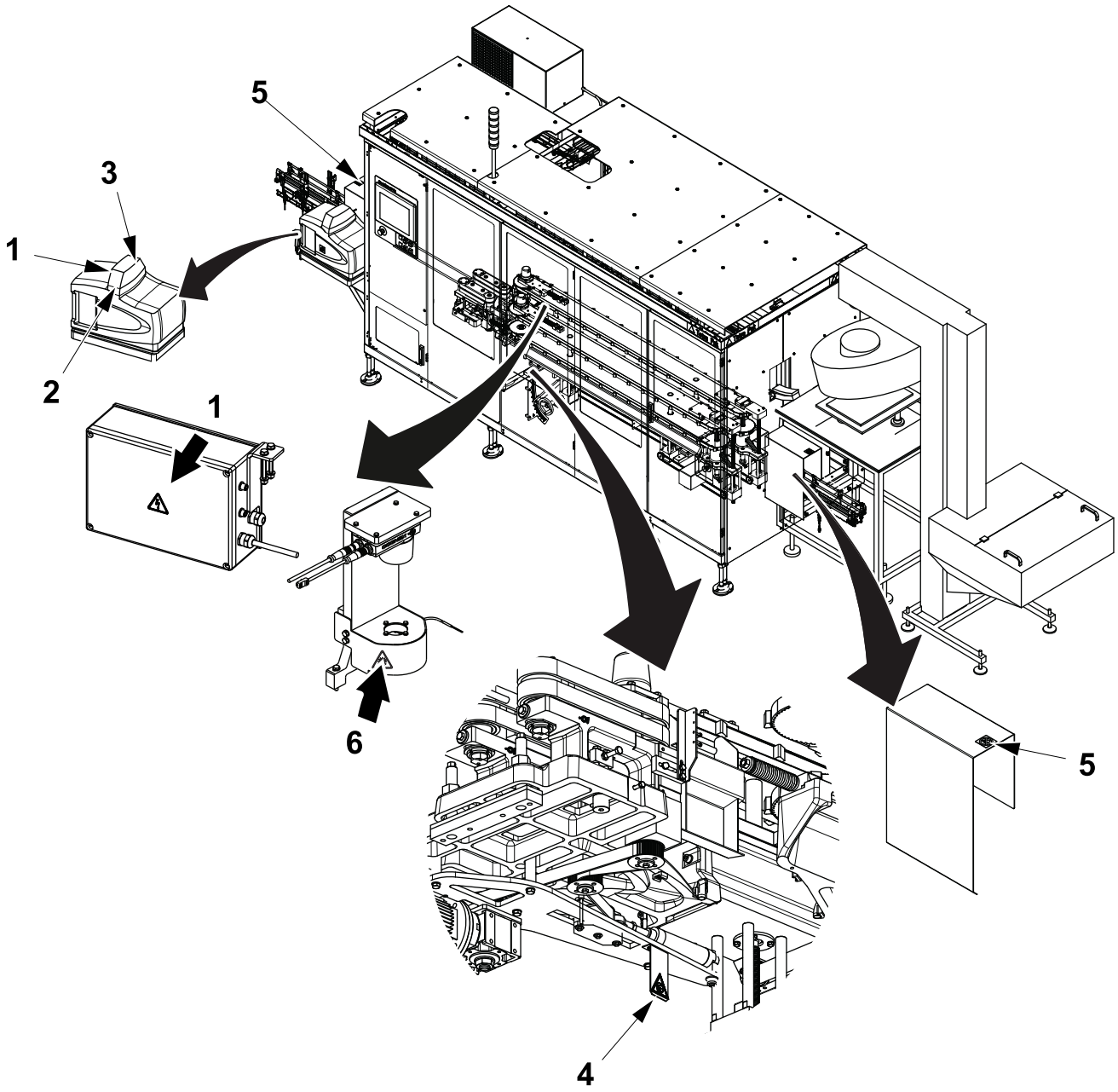

(Cont'd)

(Cont'd)

The illustration shows where the safety signs are located. The position numbers refer to the table in the Safety Signs section.

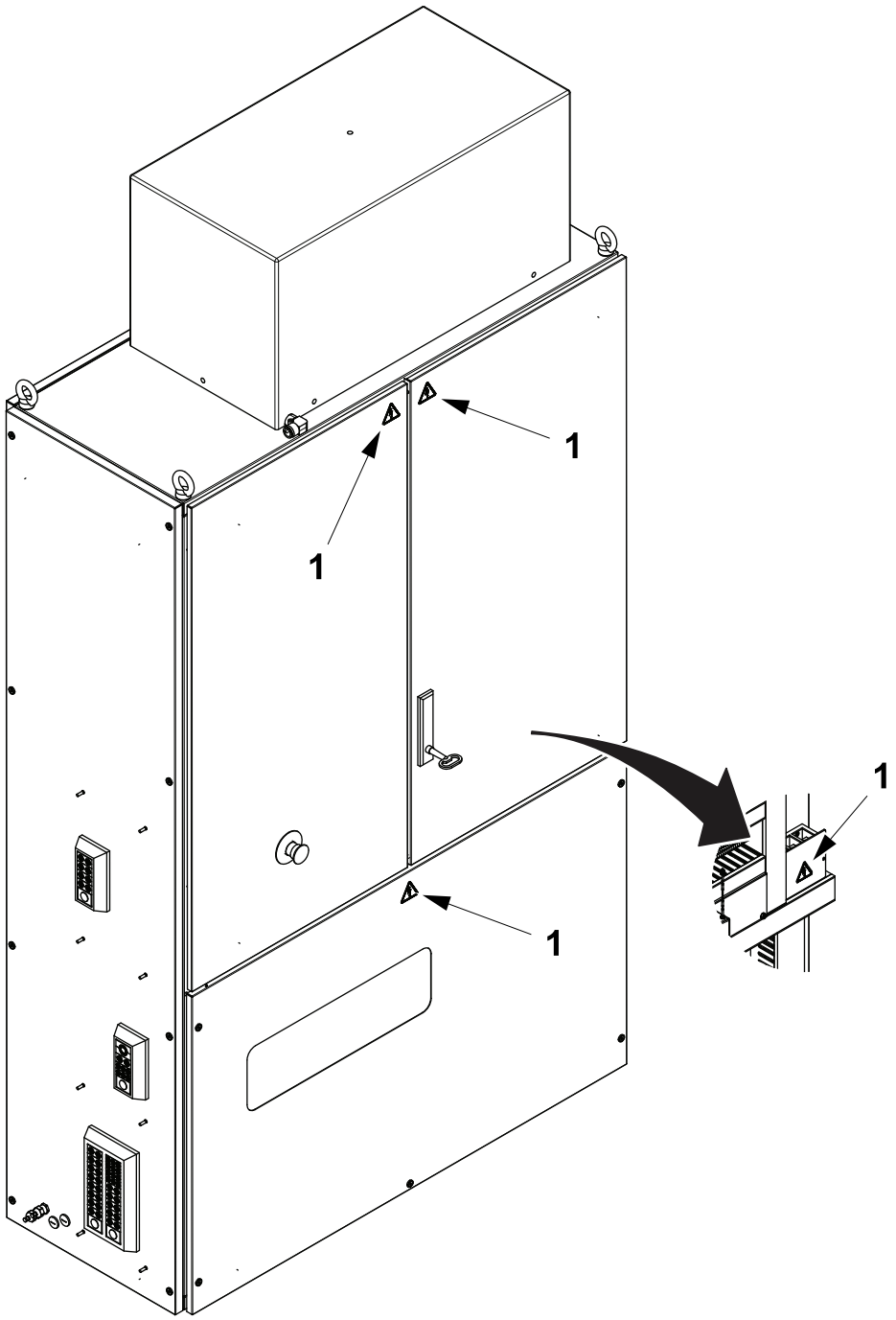

Protective Devices

There are different kinds of protective device designed to ensure safe use of the equipment. See the sections below.

WARNING

Hazardous zones.
Hazardous zones are safeguarded and provided with protective devices. Do not inch or run this equipment if any protective device is inoperative.

Change inoperative components of the safety system immediately.

For the locations of safeguards and/or other protective devices not mentioned in this section, see the Maintenance Manual.

Emergency Stop

DANGER

Hazardous voltage.
Will shock, burn, or cause death.
Hazardous voltage remains ON after activating an EMERGENCY STOP.

Emergency stop devices are used to stop this equipment immediately in a hazardous situation. Learn the positions of all emergency stop devices and how to use them.

Instructions for a normal production stop are included in the Stop chapter of the Operation Manual.

Emergency Stop Push-Buttons

Push one of the EMERGENCY STOP push-buttons to stop this equipment immediately.

The location of each EMERGENCY STOP push-button is shown by an arrow.

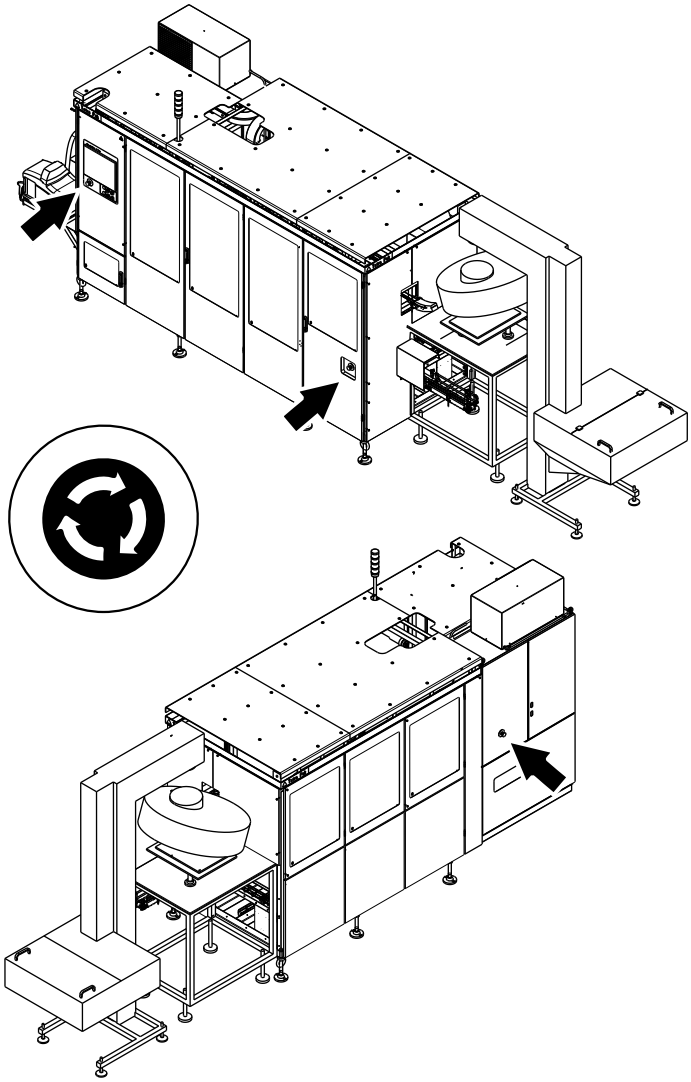

Safeguards

WARNING
Moving machinery parts.
Never defeat or bypass the interlocking devices.

Movable guards, for example, doors and covers leading to hazardous zones, are fitted with interlocking devices where required. These devices are usually electric safety switches that are parts of the safety system and must never be defeated, bypassed, or otherwise made inoperative.

Where movable guards (doors) are equipped with means to be locked in a nonclosed position, any person with the intention to preside, for any reason, behind such a guard must lock the guard in the nonclosed position by use of a padlock.

Note! For work on the electrical equipment, the electrical power must also be disconnected.

CAUTION
Corners and edges.
Close the doors, guards, or parts of the equipment unless they must be open during work.

CAUTION
Burn hazard.
Parts of the equipment protected by guards may be hot after operation. Allow components to cool down or use personal protective equipment.

After installation and maintenance, and before this equipment is inched or run, check that all safeguards are in place and that they operate correctly.

(Cont'd)

(Cont'd)

CAUTION
Equipment damage.
The equipment can be damaged if it is not stopped in the correct way. Never stop this equipment by opening a movable guard, for example, a door or cover, equipped with an interlocking device.

Movable guards with safety switches installed are shown by an arrow.

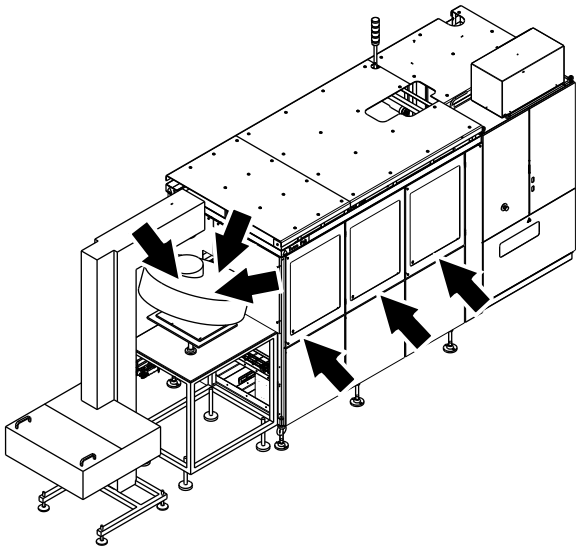

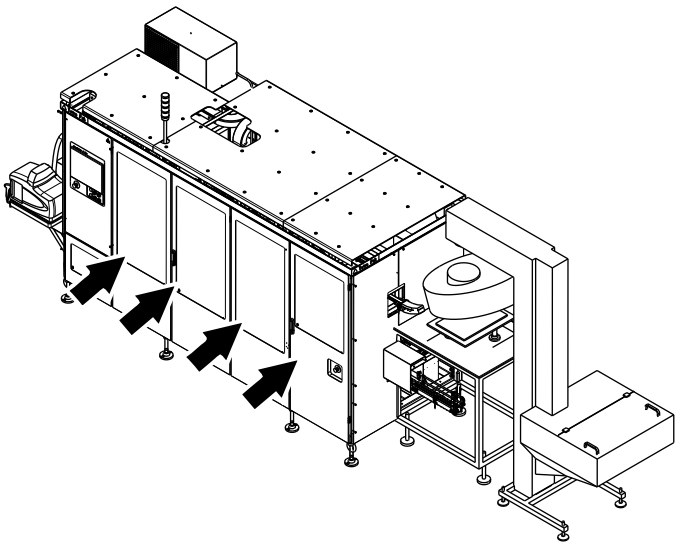

Movable guards with an electromagnetic door lock installed are shown by an arrow.

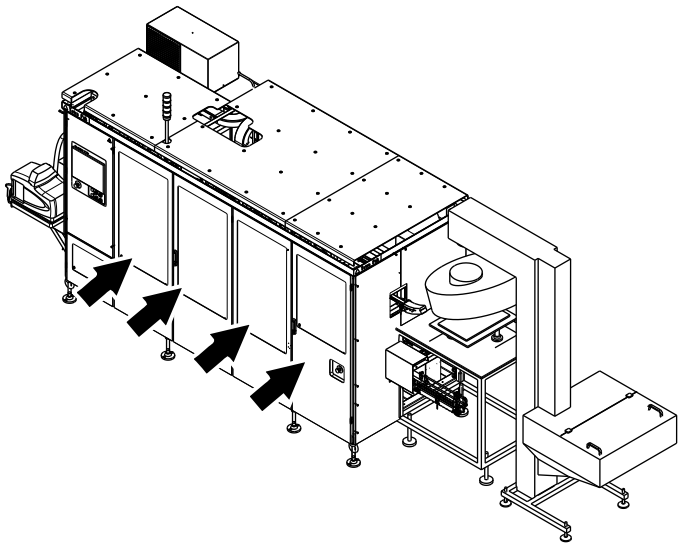

Indicating Tower

An indicating tower is a column of warning lights:

- A red light (1) indicates a hazardous condition. This is a situation that requires immediate action.
- A yellow light (2) indicates an abnormal or impending critical condition. This is a condition calling for action by the operator.
- A blue light (3) indicates that operator action is required.
- A green light (4) indicates a normal condition.

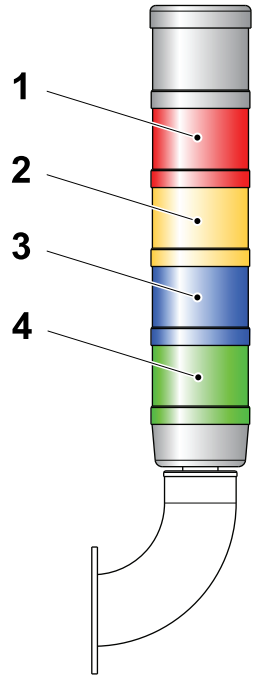

1 Red light
2 Yellow light
3 Blue light
4 Green light

Audible Alarm

The audible alarm (1) produces a warning signal every time this equipment is about to start. The warning signal sounds for approximately three seconds prior to starting to alert personnel.

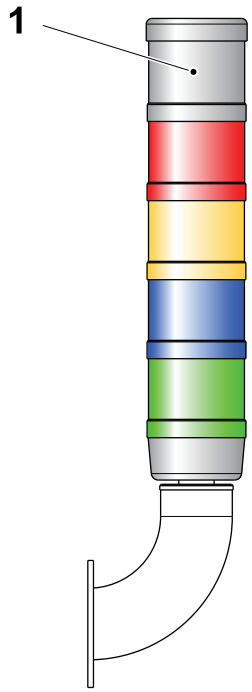

1 Audible alarm

Safe Manual Handling

Use mechanical lifting aids whenever possible. If mechanical lifting aids are not available, do not attempt to lift loads over 23 kg without the assistance of a colleague. Avoid lifting below knee height and above shoulder height. If it is necessary to lift from the floor, follow the instructions below to reduce the risk of back and disc injuries.

- Use safety shoes and be sure that the surface of the floor is not slippery.
- Get close to the load.
- Take a wide stance and find the best positions for your feet.
- Bend your hips and knees, and use your leg muscles.
- Keep the load close to your body.
- Do not twist your body while moving the load.
- Take small steps when turning.

In order to reduce the risk of injury to discs and back muscles, be careful to not bend or twist your back when lifting. Keep the load close to your body to reduce the strain on your back.

To reduce the ergonomic risks to each individual operator, job rotation is recommended, so that recovery and variety are provided.

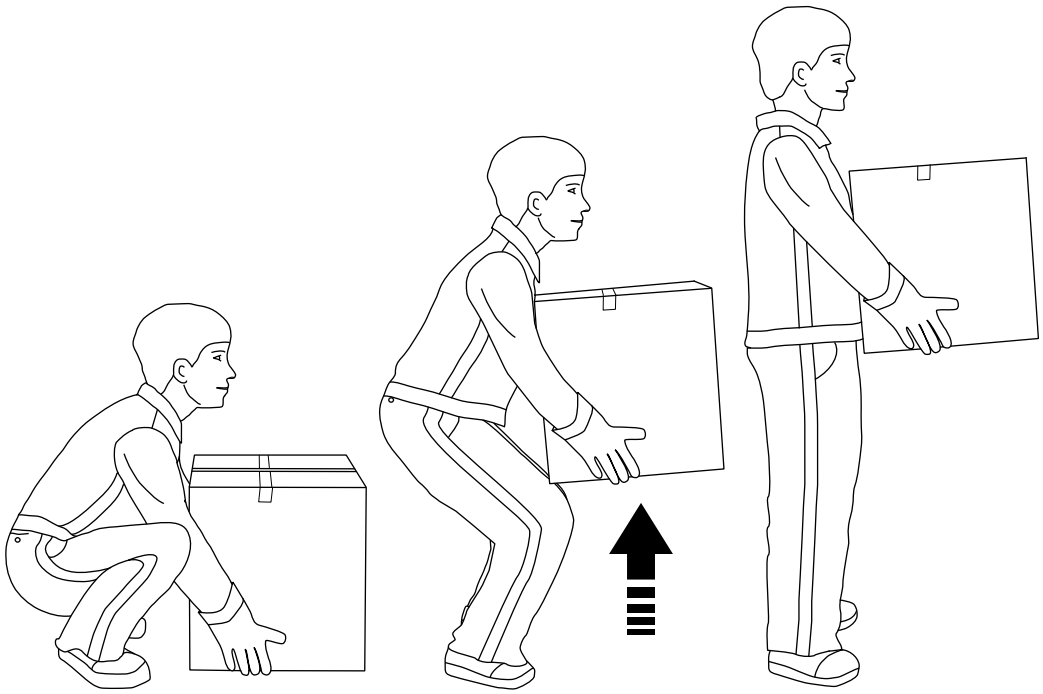

Personal Protection

This section applies to all personnel at all times when this equipment is in operation. For special personal protective equipment required when handling hazardous substances, see the Hazardous Substances section.

Noise

WARNING

Hazardous noise.
Can cause impaired hearing.
Wear hearing protection whenever this equipment is in operation.

CAUTION

Hazardous noise.
May cause impaired hearing.
Hearing protection is recommended whenever this equipment is in operation.

Entanglement

WARNING

Risk of entanglement.
Do not wear jewellery or loose clothing when working on or near this equipment.
Restrain long hair with, for example, clips or rubber bands.

Hazardous Substances

WARNING

Contact with chemicals can cause death, serious injury, or illness.
Always read and follow the instructions in the safety data sheet supplied by the manufacturer or local supplier, when handling chemicals.

Make sure that

- the safety data sheet is available
- preparations have been done to ensure that the stated safety measures in the safety data sheet can be followed
- the locations of the first aid equipment are learned in order to act immediately in case of an accident

Disposal of Chemical Substances

Always read and follow the disposal instructions in the safety data sheet supplied by the manufacturer or local supplier.

It is strongly recommended that used chemical containers are

- disposed of according to the instructions immediately after use
- not used as disposal containers for other chemicals in order to avoid uncontrolled chemical reactions within the container

Personal Protective Equipment

Wear personal protective equipment when working with hotmelt equipment.

- protective goggles (for instance, TP No. 90303-11), tight fitting
  If there is a risk of splashes, a visor is a suitable complement
- protective gloves made of neoprene (for instance, TP No. 90303-12), nitrile, or butyl rubber
- protective apron (for instance, TP No. 90303-13), or protective suit when handling larger amounts
- protective shoes or boots made of PVC, PE plastic, or rubber
- proper respiratory equipment, if ventilation is insufficient

Supply Systems

Definition of Lockout Procedure

A lockout procedure is a procedure to put each necessary energy isolating device in its safe position to prevent the energisation of the equipment, such as when a maintenance procedure should be carried out.

A lockout is the use of a device, for example, a padlock, to make sure that an energy isolating device cannot be operated.

An energy isolating device is a mechanical device that physically prevents transmission or release of energy, such as an electrical supply disconnecting device.

A detailed instruction for the specific lockout procedure(s) for this equipment is found in the Maintenance Manual.

Power Supply

DANGER

Hazardous voltage and moving machinery.
The electrical supply disconnecting device must be in position O (OFF) and secured with a lock before any maintenance that requires the electrical supply to be disconnected. See the Machine Status section of the MM Procedure Start Table.

Note! The key to the lock must be removed by the technician and retained in his/her possession until all work is completed.

DANGER

Hazardous voltage can be present with the power supply switched off.
Circuits identified by orange-coloured conductors are not disconnected by the main electrical supply disconnecting device. The location of the electrical supply disconnecting device of these circuits is described in the Maintenance Manual procedures that include work on these types of circuit.

Certain maintenance procedures may require power supply systems to be on. These exceptions are clearly stated in the Maintenance Manual.

(Cont'd)

(Cont'd)

The illustrations show the electrical supply disconnecting device and its location.

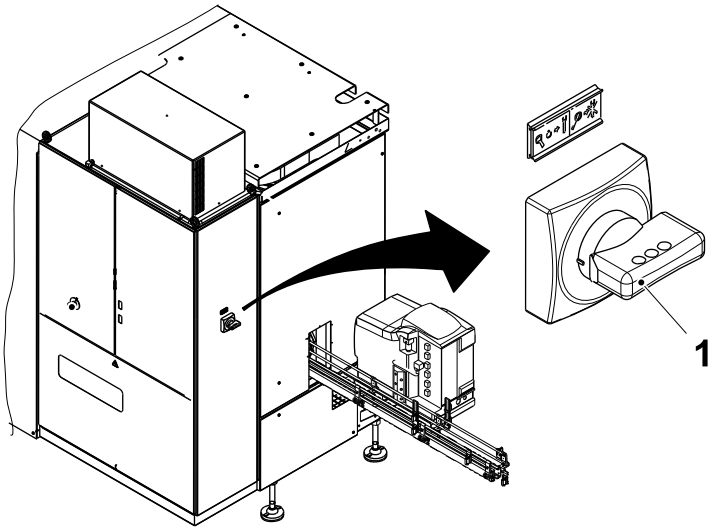

1 Electrical supply disconnecting device

Residual Voltage

DANGER

Hazardous voltage.
Will shock, burn, or cause death.
After the electrical supply disconnecting device is turned to position O (OFF), residual voltage remains in the capacitor circuits. Wait five minutes before opening the enclosure containing these circuits. Ensure that no residual voltage remains on the capacitors before touching them.

Electrical Cabinet

DANGER

Hazardous voltage.
Will shock, burn, or cause death.
Parts behind doors to the electrical cabinet may be live. The electrical supply disconnecting device must be turned to position O (OFF) and secured with a lock before maintenance inside the electrical cabinet.

Note! The key to the lock must be removed by the technician and retained in his/her possession until all work is completed.

(Cont'd)

(Cont'd)

Make sure that the electrical cabinet doors are closed after working inside the electrical cabinet. Doors with locks must be locked.

The location of each electrical cabinet is shown by an arrow.

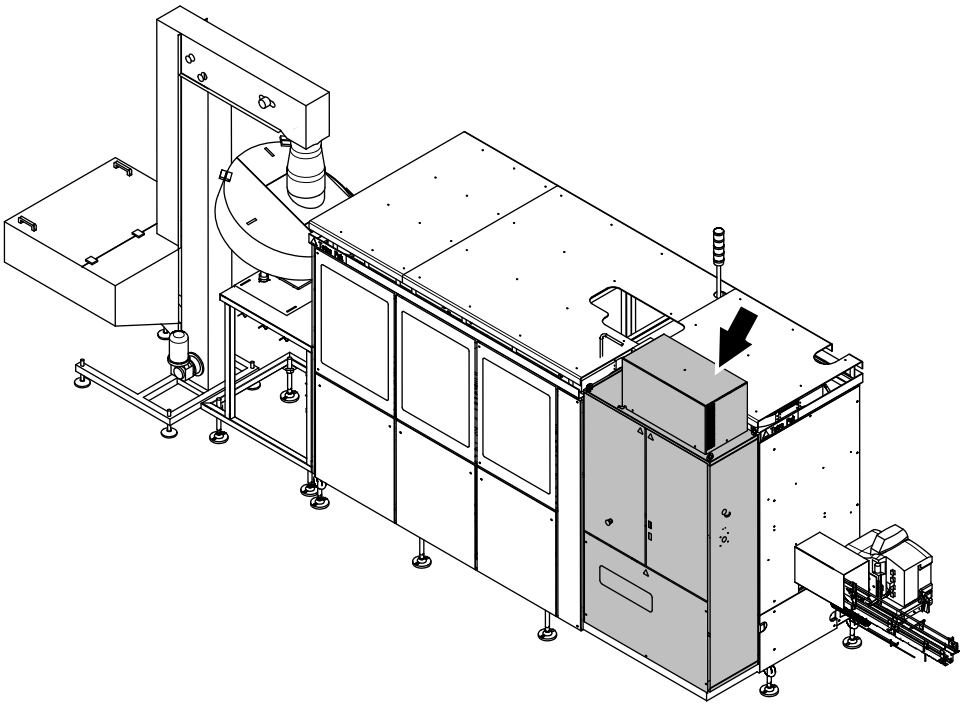

Socket Outlet

WARNING

Hazardous voltage.
Can shock, burn, or cause death.
Read the Maintenance Manual before using this socket outlet.

The socket outlet (1) is connected to a residual current device (2) to protect users against electrical shock if there is an earth fault in the connected equipment. The residual current device must be tested each time before the socket outlet is being used. See the MM for test procedure.

The illustrations show the socket outlet, the residual current device, and their locations.

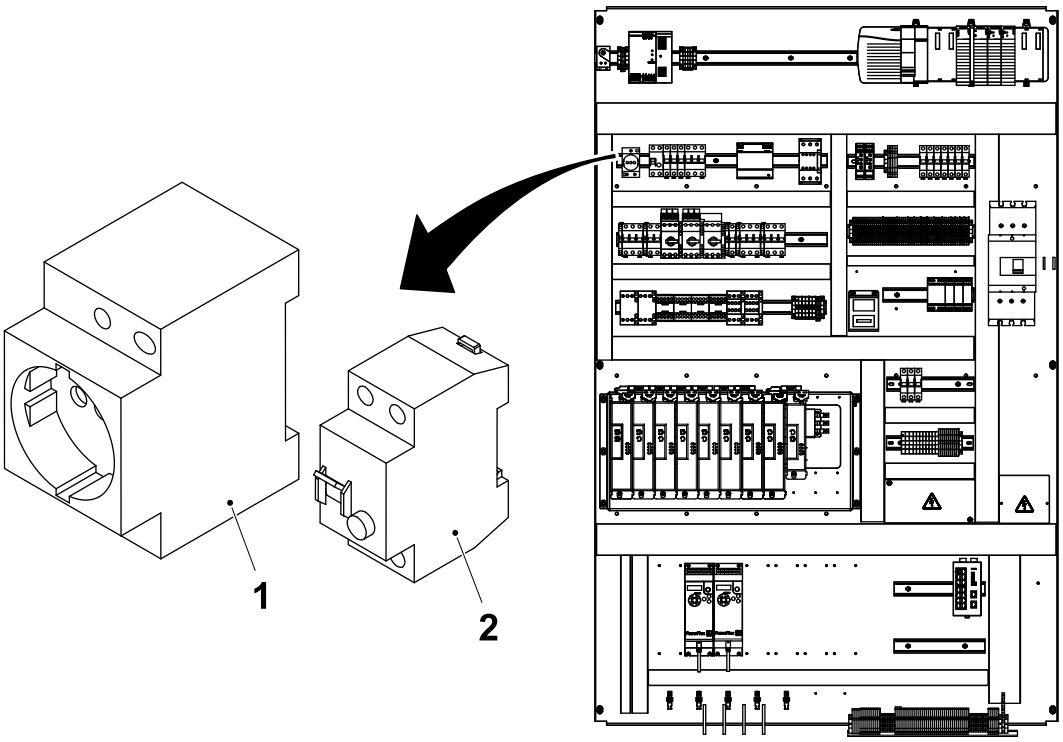

1 Socket outlet
2 Residual current device

Air Supply

WARNING

Compressed air and moving machinery.
Close the main air valve and lock it, and safely release compressed air from the air system before any maintenance that requires the air supply to be closed. See the Machine Status section of the MM Procedure Start Table.

Note! The key to the lock must be removed by the technician and retained in his/her possession until all work is completed.

Certain maintenance procedures may require air supply systems to be on. These exceptions are clearly stated in the Maintenance Manual.

The illustration shows the shut-off valve (1). The shut-off handle (2), is used to close the air supply.

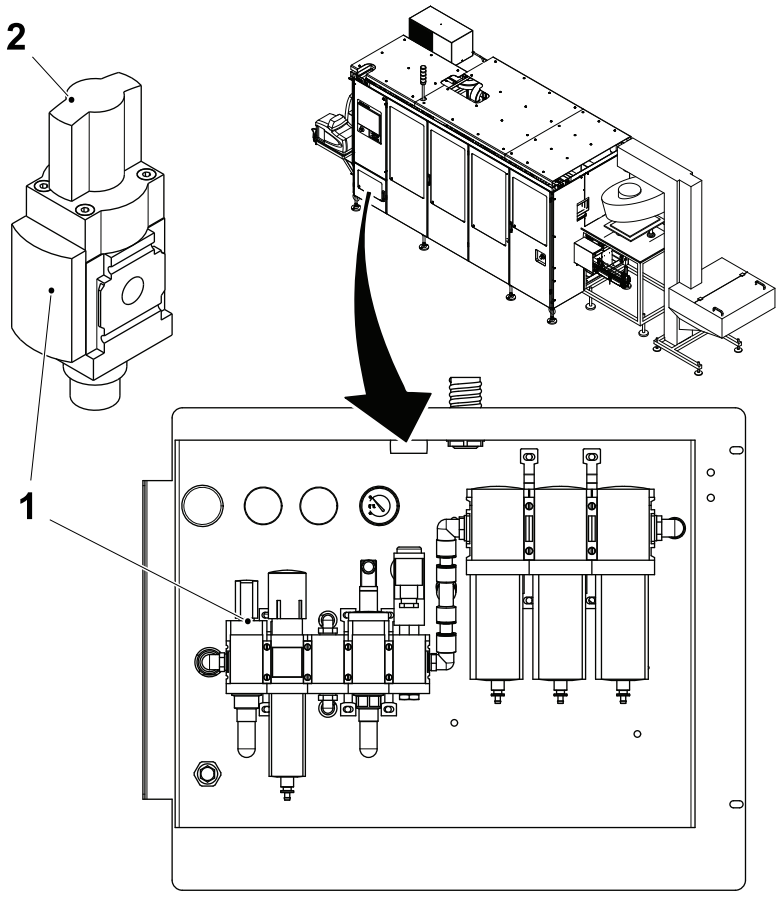

1 Shut-off valve
2 Shut-off handle

Hotmelt Equipment

General

DANGER

Risk of electrical shock.
The voltage is 400V inside the hotmelt unit. Risk of immediate danger to life from electrical shock.

WARNING

Risk of personal injury.
All service work on the hotmelt unit must be carried out by authorized personnel. Always wear safety glasses, protective gloves, and other protective clothing to avoid injuries caused by splashing hotmelt material. Failure to relieve any air or adhesive pressure could cause serious injuries from burning when the hotmelt filter is detached or flushed. Never remove any part or component until the air and the electrical supply to the machine have been disconnected and the pressure of the hotmelt in the system has been relieved.

WARNING

Risk of hotmelt vapours.
When the tank lid is open, hotmelt vapours could be released. Vent the application area or wear a respirator.

Note! Always refer to the documentation provided from Nordson Corporation before doing any kind of work on the hotmelt equipment. The Nordson hotmelt manual is included with the delivery from Tetra Pak. The information in this manual only deals with what is specific for this machine.

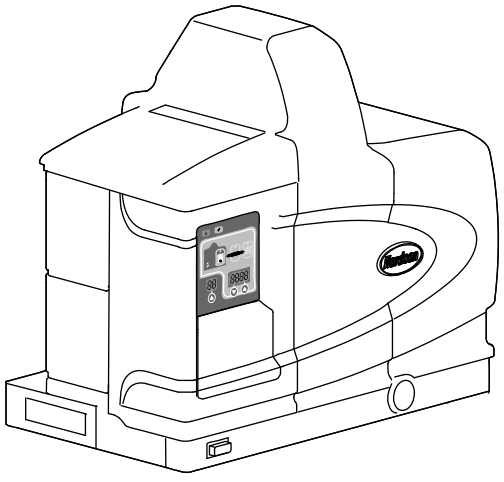

Hotmelt Unit

CAUTION

Risk of damage to the equipment

Never flush water or any other liquid towards the hotmelt unit when cleaning the machine. Failure to obey could result in damage to equipment.

WARNING

Risk of burns.

During PREHEATING and PREPARATION the hotmelt unit becomes hot. Do not touch the hotmelt unit and beware of the entrapped heat inside the unit when service is performed.

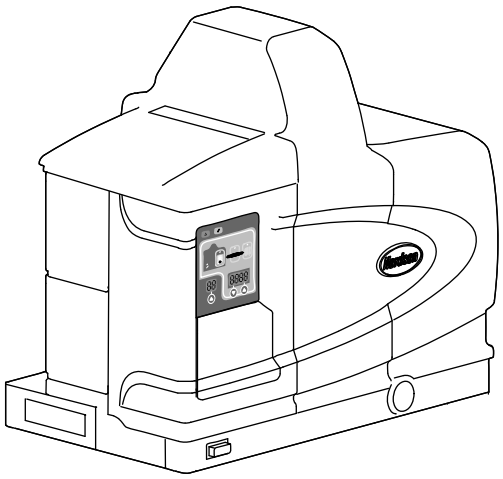

Hotmelt Guns

WARNING

Risk of burns.

During PREHEATING, PREPARATION and PRODUCTION the hotmelt guns are hot. There is risk of severe burns. Do not touch the hotmelt guns and beware of the entrapped heat when service is performed.

CAUTION

Risk of damage to the equipment

Never flush water or any other liquid towards the hotmelt guns when cleaning the machine. Failure to obey could result in damage to equipment.

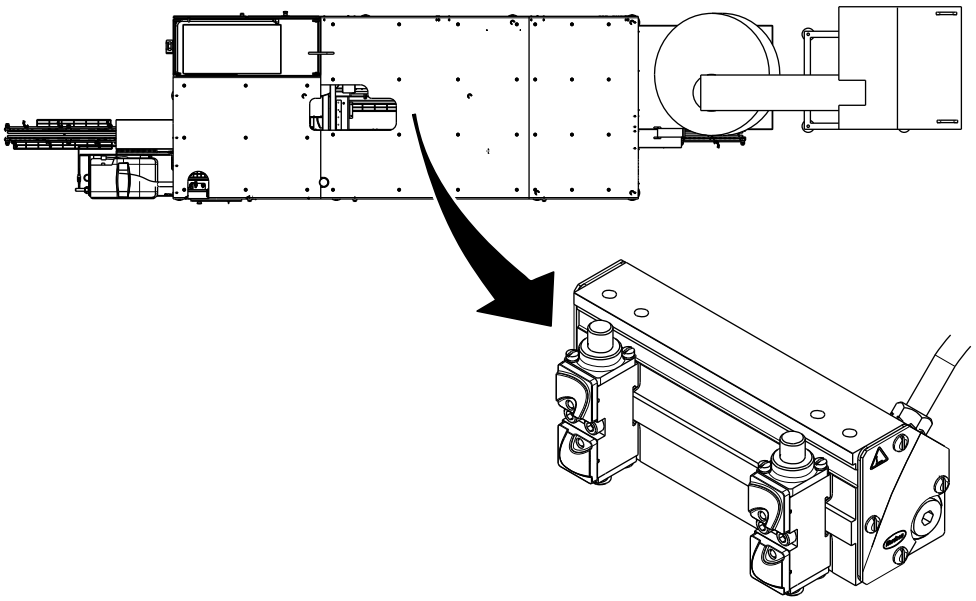

Additional Information

Package Heater

WARNING

Risk of burns.

The package heater is very hot and there is risk of severe burns. Never touch the package heater.

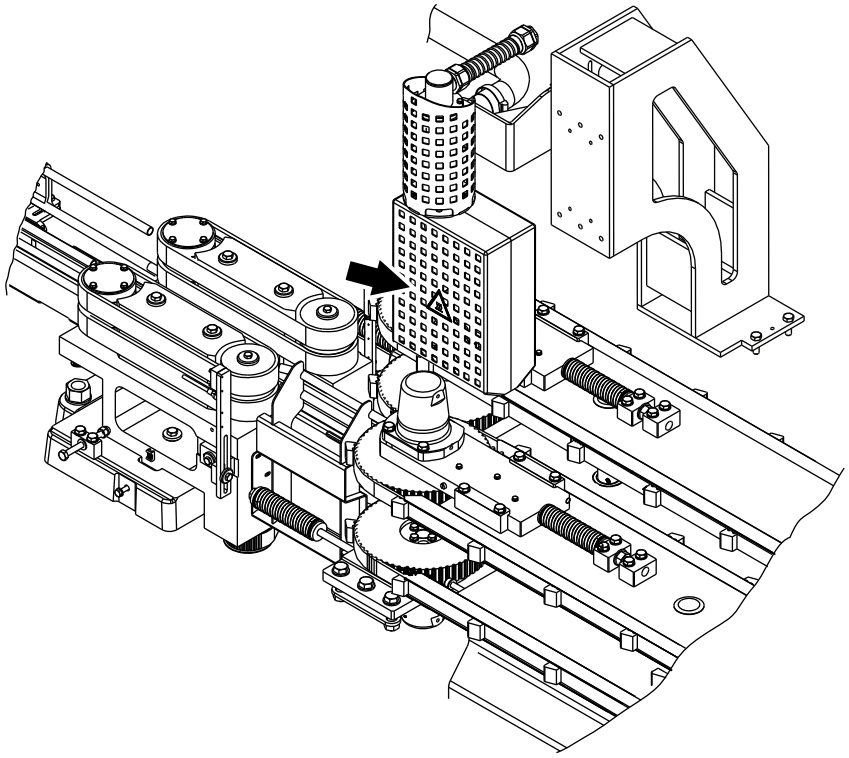

Cap Detector

WARNING

Risk of personal injury.

Never put any part of the body, such as a hand, near the cap detector when the machine is working. There is a risk of injury caused by the movable pusher.

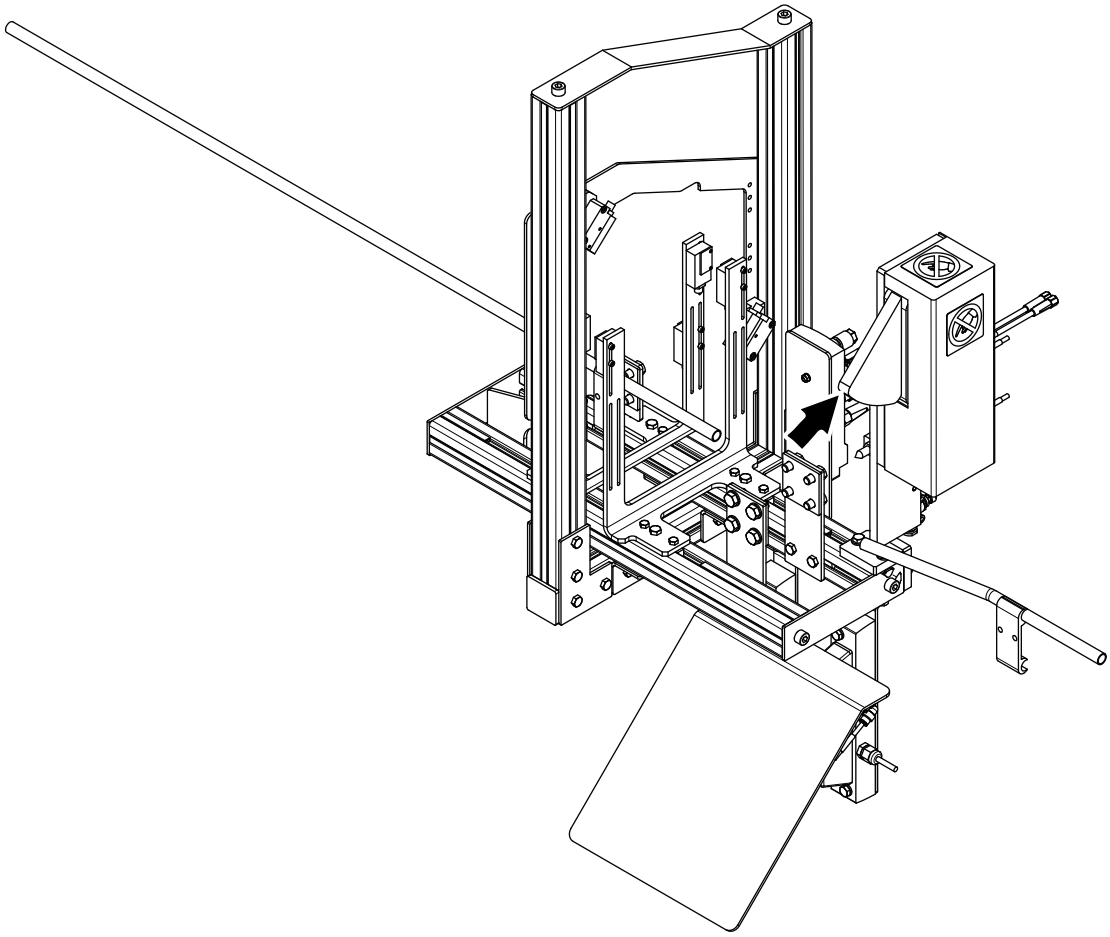

1 Electrical System Description

Description

This chapter contains a description of the electrical safety system.

Description 1-2

1.1 Safety System 1-5

1.1-1 Safety System - Description 1-5
1.1-2 Safety Relay (Pluto) - Applicator Doors 1-6
1.1-3 Emergency Stop Buttons 1-8
1.1-4 Door Monitor (Operator Side) 1-9
1.1-5 Door Monitor and Covers 1-10

This page intentionally left blank

1.1 Safety System

1.1-1 Safety System - Description

All the safety lines are managed from the PLUTO B20 device which is a safety PLC with customized I/O and programmable software inside.

The main relays are as follows:

a) Safety relay: PLUTO B20 Jokab

b) Expansion relay: E1T0,5s Jokab

The safety lines are summarized in the following illustration:

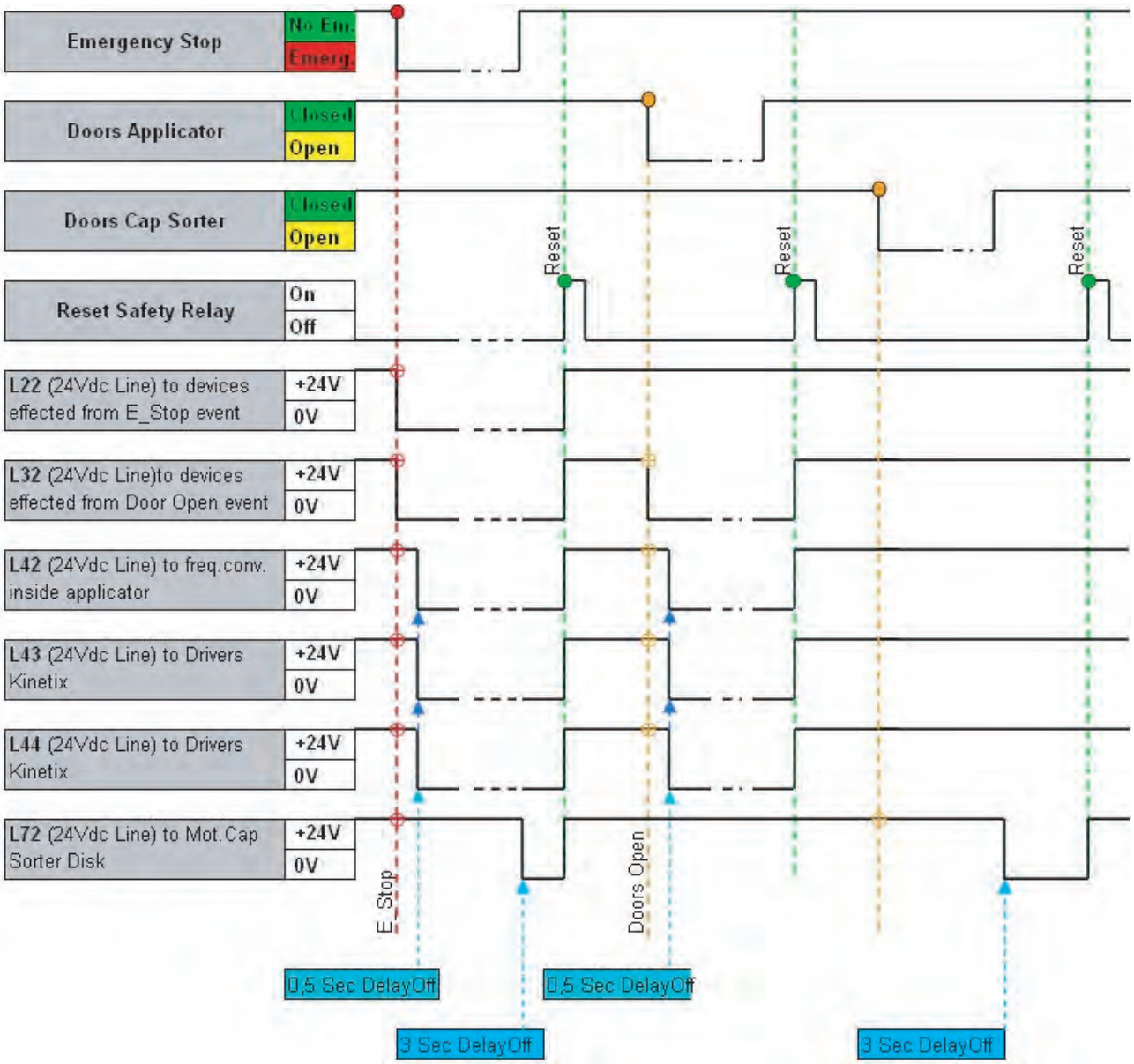

1.1-2 Safety Relay (Pluto) - Applicator Doors

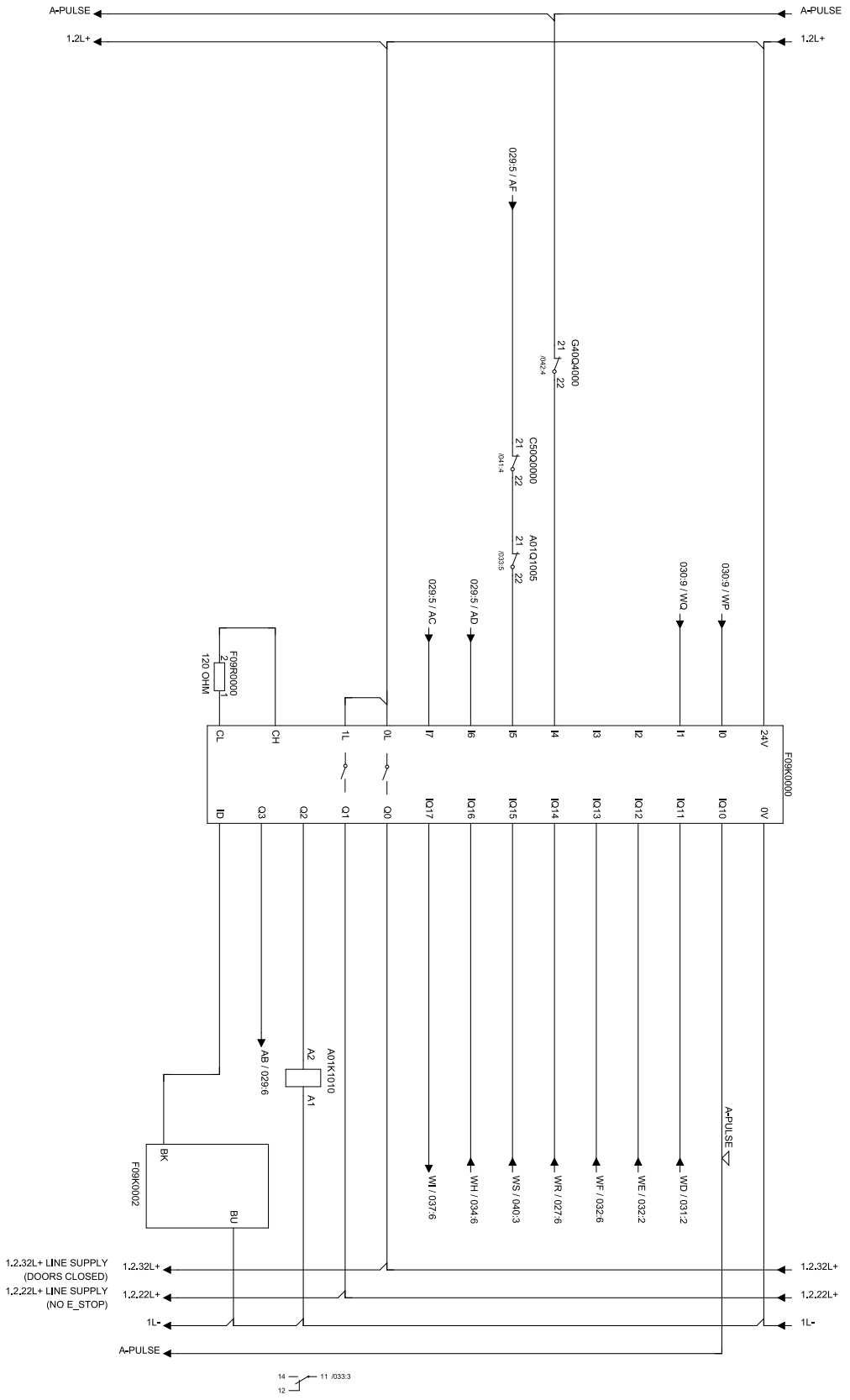

(Cont'd)

(Cont'd)

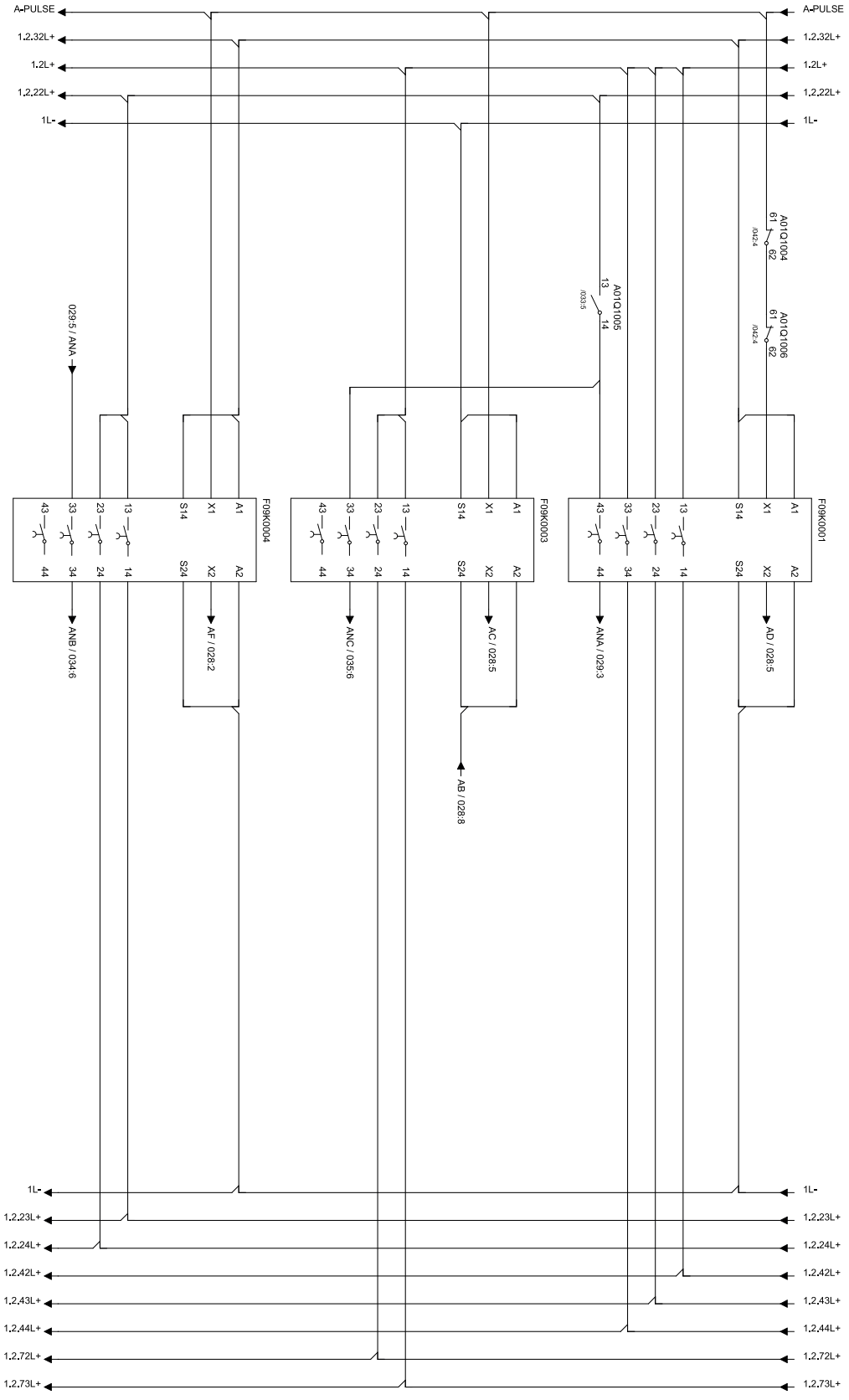
A-PULSE
1.2.32L+
1.2L+
1.2.22L+
1L-
A01Q1004
61
62
/042:4
A01Q1005
13
14
/033:5
A01Q1006
61
62
/042:4
029:5 / ANA
F09K0004
F09K0003
F09K0001
43
33
23
13
S14
X1
A1
44
34
24
14
S24
X2
A2
ANB / 034:6
AF / 028:2
ANC / 035:6
AC / 028:5
AB / 028:8
ANA / 029:3
AD / 028:5
1L-
1.2.23L+
1.2.24L+
1.2.42L+
1.2.43L+
1.2.44L+
1.2.72L+
1.2.73L+

1.1-3 Emergency Stop Buttons

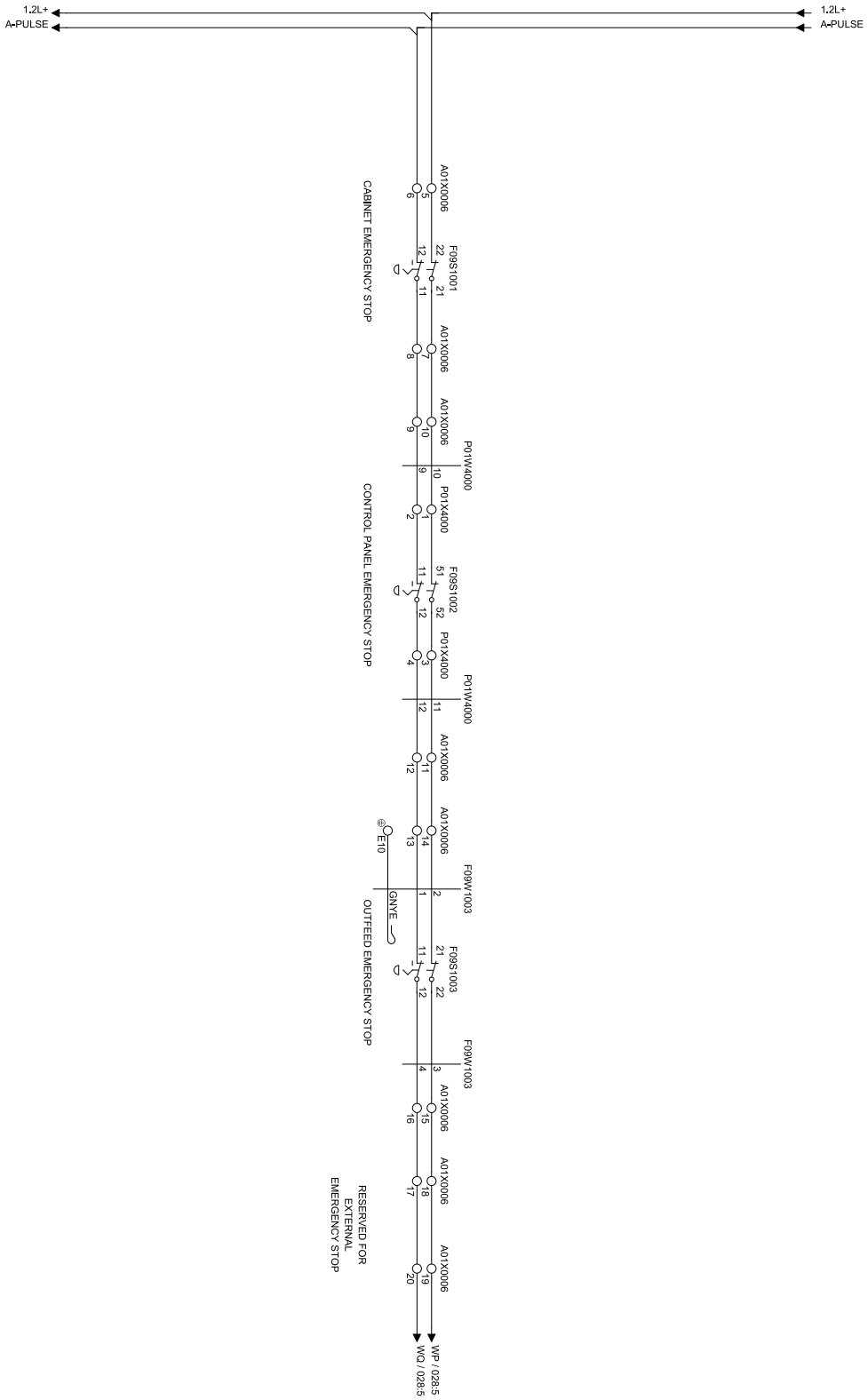

1.1-4 Door Monitor (Operator Side)

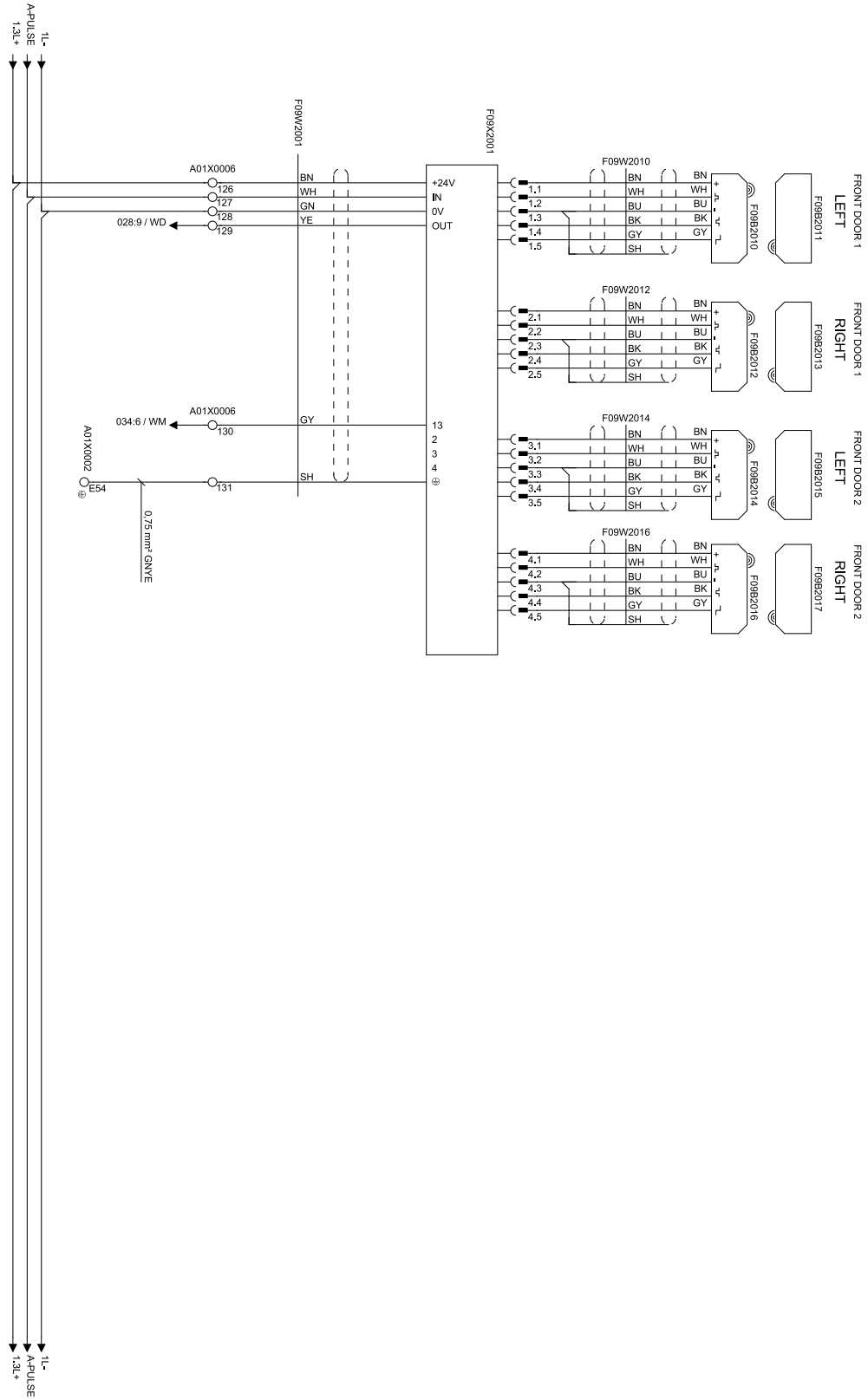

1.1-5 Door Monitor and Covers

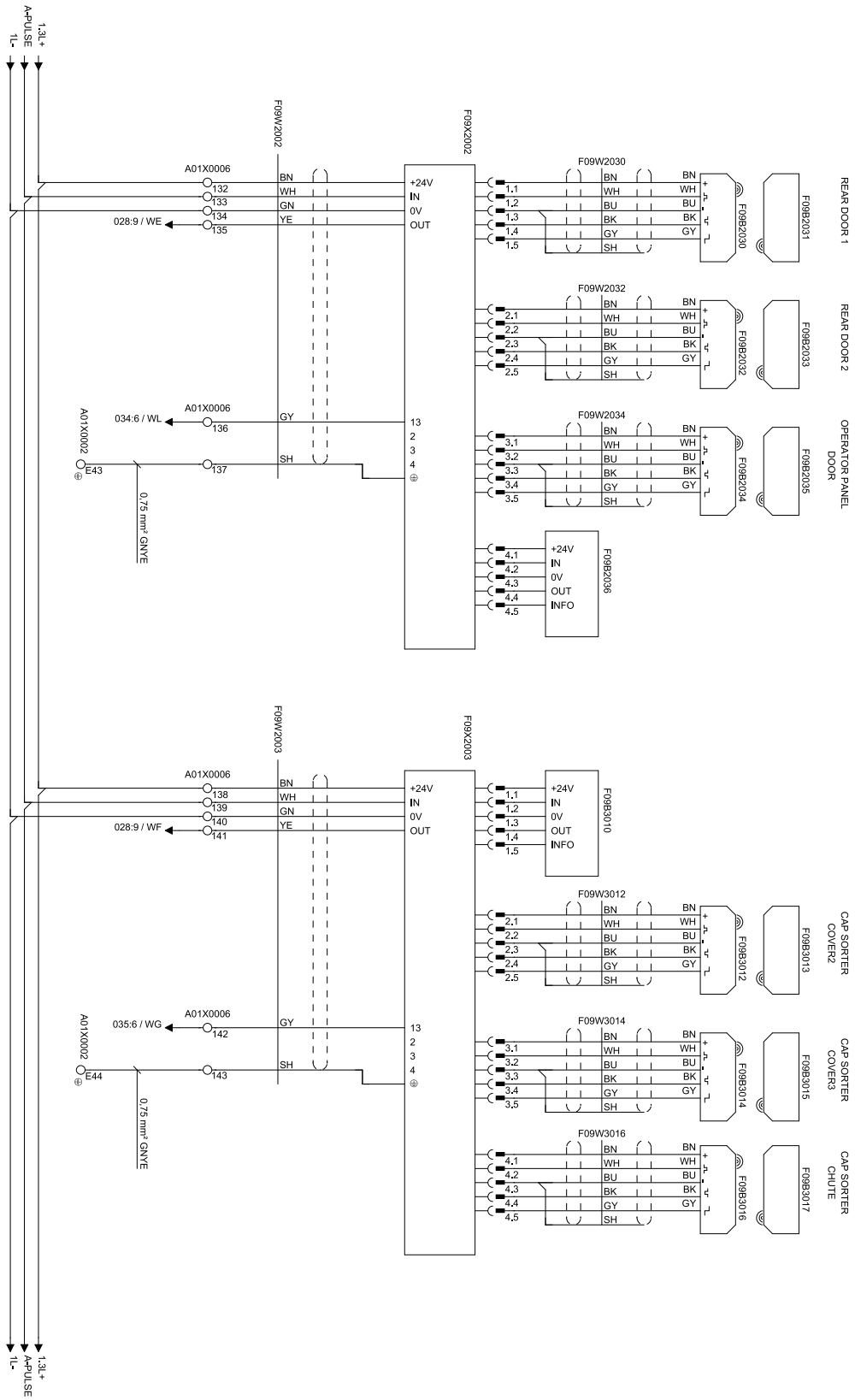

2 Document List

Description

This chapter is a table of contents that includes the drawing specification for each electrical document valid for the equipment.

2.1 Document List

This page intentionally left blank

This drawing must not without the consent of Tetra Pak be copied, transmitted or disclosed to any third party.

RELEASED

DOCUMENTS LIST

Drawing number	Page	Denomination	Page type	Version
3404507-0001	001	DOCUMENTS LIST	DOCUMENTS LIST	AC
3404507-0001	002	DOCUMENTS LIST	DOCUMENTS LIST	AC
3404507-0001	003	DOCUMENTS LIST	DOCUMENTS LIST	AC
3404507-0001	004	DOCUMENTS LIST	DOCUMENTS LIST	AC
3404507-0002	001	POSITION SUMMARY	POSITION SUMMARY	AC
3404507-0002	002	POSITION SUMMARY	POSITION SUMMARY	AC
3404507-0002	003	POSITION SUMMARY	POSITION SUMMARY	AC
3404507-0003	001	CIRCUIT DIAGRAM	0V_24V TERMINAL	AC
3404507-0003	002	CIRCUIT DIAGRAM	TERMINAL	AC
3404507-0003	003	CIRCUIT DIAGRAM	MAINS	AC
3404507-0003	004	CIRCUIT DIAGRAM	CONTROL VOLTAGE	AC
3404507-0003	005	CIRCUIT DIAGRAM	CONTROL VOLTAGE (LIFTING DEVICE)	AC
3404507-0003	006	CIRCUIT DIAGRAM	LIGHT FIXTURES	AC
3404507-0003	007	CIRCUIT DIAGRAM	COOLING UNIT	AC
3404507-0003	008	CIRCUIT DIAGRAM	SERVO SUPPLY	AC
3404507-0003	009	CIRCUIT DIAGRAM	SERVO MOTOR 1 (APPLICATOR WHELL)	AC
3404507-0003	010	CIRCUIT DIAGRAM	SERVO MOTOR 2 (X AXIS HOT MELT APPL.)	AC
3404507-0003	011	CIRCUIT DIAGRAM	SERVO MOTOR 3 (Y AXIS HOT MELT APPL.)	AC
3404507-0003	012	CIRCUIT DIAGRAM	SERVO MOTOR 4 (PACK. TRANSFER INNER)	AC
3404507-0003	013	CIRCUIT DIAGRAM	SERVO MOTOR 5 (PACK. TRANSFER OUTER)	AC
3404507-0003	014	CIRCUIT DIAGRAM	SERVO MOTOR 6 (CAP SEQUENCER)	AC
3404507-0003	015	CIRCUIT DIAGRAM	SERVO MOTOR 7 (PUSH DOWN)	AC
3404507-0003	016	CIRCUIT DIAGRAM	SERVO MOTOR 8 (BELT BRAKE)	AC
3404507-0003	017	CIRCUIT DIAGRAM	SERVO MOTOR 9 (AXIS X POSITIONING SYS.)	AC
3404507-0003	018	CIRCUIT DIAGRAM	SERVO DRIVE CONFIGUTRATION	AC
3404507-0003	019	CIRCUIT DIAGRAM	MOTORS	AC
3404507-0003	020	CIRCUIT DIAGRAM	MOTORS CAP SORTER	AC
3404507-0003	021	CIRCUIT DIAGRAM	MOTORS	AC
3404507-0003	022	CIRCUIT DIAGRAM	MOTORS	AC
3404507-0003	023	CIRCUIT DIAGRAM	PLC RACK	AC
3404507-0003	024	CIRCUIT DIAGRAM	CURRENT CONTROL RELAY	AC
3404507-0003	025	CIRCUIT DIAGRAM	ETHERNET SWITCH	AC
3404507-0003	026	CIRCUIT DIAGRAM	ROUTER	AC
3404507-0003	027	CIRCUIT DIAGRAM	CONTROL PANEL	AC
3404507-0003	028	CIRCUIT DIAGRAM	SAFETY RELAY	AC
3404507-0003	029	CIRCUIT DIAGRAM	SAFETY RELAY	AC
3404507-0003	030	CIRCUIT DIAGRAM	EMERGENCY STOP	AC
3404507-0003	031	CIRCUIT DIAGRAM	DOORS MONITORING (OPERATOR SIDE)	AC
3404507-0003	032	CIRCUIT DIAGRAM	DOORS AND COVERS MONITOR	AC
3404507-0003	033	CIRCUIT DIAGRAM	POWER ON TO THE MOTORS	AC
3404507-0003	034	CIRCUIT DIAGRAM	PLC IN	AC
3404507-0003	035	CIRCUIT DIAGRAM	PLC IN	AC
3404507-0003	036	CIRCUIT DIAGRAM	PLC IN	AC
3404507-0003	037	CIRCUIT DIAGRAM	PLC IN	AC
3404507-0003	038	CIRCUIT DIAGRAM	PLC IN	AC
3404507-0003	039	CIRCUIT DIAGRAM	PLC IN	AC

Tetra Pak®

Version Designer ROG
ECM No 825145
Denomination DOCUMENTS LIST
Version Date 2016-09-30
Machine CAP30 Flex ScrewCap 0400
Page Type DOCUMENTS LIST
Document No. 3404507-0001
Doc. type ELD
Version AC
Page 001
Information Security Class PUBLIC

This drawing must not without the consent of Tetra Pak be copied, transmitted or disclosed to any third party.

RELEASED

DOCUMENTS LIST

Drawing number	Page	Denomination	Page type	Version
3404507-0003	040	CIRCUIT DIAGRAM	PLC OUT	AC
3404507-0003	041	CIRCUIT DIAGRAM	PLC OUT	AC
3404507-0003	042	CIRCUIT DIAGRAM	PLC OUT	AC
3404507-0003	043	CIRCUIT DIAGRAM	PLC OUT	AC
3404507-0003	044	CIRCUIT DIAGRAM	REMOTE I/O ADAPTER O.P. BOX	AC
3404507-0003	045	CIRCUIT DIAGRAM	REMOTE I/O ADAPTER O.P. BOX	AC
3404507-0003	046	CIRCUIT DIAGRAM	REMOTE I/O ADAPTER O.P. BOX	AC
3404507-0003	047	CIRCUIT DIAGRAM	REMOTE I/O ADAPTER O.P. BOX	AC
3404507-0003	048	CIRCUIT DIAGRAM	FIELD POWER DISTR. O.P. BOX	AC
3404507-0003	049	CIRCUIT DIAGRAM	REMOTE OUTPUT O.P. BOX	AC
3404507-0003	050	CIRCUIT DIAGRAM	REMOTE OUTPUT O.P. BOX	AC
3404507-0003	051	CIRCUIT DIAGRAM	FIELD POWER DISTR. O.P. BOX	AC
3404507-0003	052	CIRCUIT DIAGRAM	REMOTE OUTPUT O.P. BOX	AC
3404507-0003	053	CIRCUIT DIAGRAM	REMOTE OUTPUT O.P. BOX	AC
3404507-0003	054	CIRCUIT DIAGRAM	PLC REMOTE A.O.V HOT MELT	AC
3404507-0003	055	CIRCUIT DIAGRAM	ARMOR BLOCK (MACHINE BODY)	AC
3404507-0003	056	CIRCUIT DIAGRAM	ARMOR BLOCK (CAP SORTER)	AC
3404507-0003	057	CIRCUIT DIAGRAM	VISION SYSTEM DEVICE	AC
3404507-0003	058	CIRCUIT DIAGRAM	ADHESIVE DETECTOR	AC
3404507-0003	059	CIRCUIT DIAGRAM	VALVES	AC
3404507-0003	060	CIRCUIT DIAGRAM	VALVES	AC
3404507-0003	061	CIRCUIT DIAGRAM	ETHERNET SWITCH LIFTING DEVICE	AC
3404507-0003	062	CIRCUIT DIAGRAM	ARMOR BLOCK (COLLISION SENSORS)	AC
3404507-0003	063	CIRCUIT DIAGRAM	LIFTING DEVICE APPLICATIOR WHEEL	AC
3404507-0003	064	CIRCUIT DIAGRAM	LIFTING DEVICE PACKAGE LINE	AC
3404507-0003	065	CIRCUIT DIAGRAM	LIFTING DEVICE CAP SORTER	AC
3404507-0003	066	CIRCUIT DIAGRAM	ETHERNET COMMUNICATION	AC
3404507-0004	001	LINE SUMMARY	LINE SUMMARY	AC
3404507-0004	002	LINE SUMMARY	LINE SUMMARY	AC
3404507-0004	003	LINE SUMMARY	LINE SUMMARY	AC
3404507-0004	004	LINE SUMMARY	LINE SUMMARY	AC
3404507-0004	005	LINE SUMMARY	LINE SUMMARY	AC
3404507-0004	006	LINE SUMMARY	LINE SUMMARY	AC
3404507-0005	001	CABINET TERMINAL SUMMARY	CABINET TERMINAL SUMMARY	AC
3404507-0005	002	CABINET TERMINAL SUMMARY	CABINET TERMINAL SUMMARY	AC
3404507-0005	003	CABINET TERMINAL SUMMARY	CABINET TERMINAL SUMMARY	AC
3404507-0005	004	CABINET TERMINAL SUMMARY	CABINET TERMINAL SUMMARY	AC
3404507-0005	005	CABINET TERMINAL SUMMARY	CABINET TERMINAL SUMMARY	AC
3404507-0005	006	CABINET TERMINAL SUMMARY	CABINET TERMINAL SUMMARY	AC
3404507-0006	001	TERMINAL STRIP OVERVIEW	TERMINAL STRIP OVERVIEW	AC
3404507-0006	002	TERMINAL STRIP OVERVIEW	TERMINAL STRIP OVERVIEW	AC
3404507-0006	003	TERMINAL STRIP OVERVIEW	TERMINAL STRIP OVERVIEW	AC
3404507-0006	004	TERMINAL STRIP OVERVIEW	TERMINAL STRIP OVERVIEW	AC
3404507-0006	005	TERMINAL STRIP OVERVIEW	TERMINAL STRIP OVERVIEW	AC
3404507-0006	006	TERMINAL STRIP OVERVIEW	TERMINAL STRIP OVERVIEW	AC
3404507-0006	007	TERMINAL STRIP OVERVIEW	TERMINAL STRIP OVERVIEW	AC

Tetra Pak®

Version Designer: ROG
ECM No: 825145
Denomination: DOCUMENTS LIST
Version Date: 2016-09-30
Machine: CAP30 Flex ScrewCap 0400
Page Type: DOCUMENTS LIST
Document No.: 3404507-0001
Doc. type: ELD
Version: AC
Page: 002
Information Security Class: PUBLIC

This drawing must not without the consent of Tetra Pak be copied, transmitted or disclosed to any third party.

RELEASED

DOCUMENTS LIST

Drawing number	Page	Denomination	Page type	Version
3404507-0006	008	TERMINAL STRIP OVERVIEW	TERMINAL STRIP OVERVIEW	AC
3404507-0006	009	TERMINAL STRIP OVERVIEW	TERMINAL STRIP OVERVIEW	AC
3404507-0006	010	TERMINAL STRIP OVERVIEW	TERMINAL STRIP OVERVIEW	AC
3404507-0006	011	TERMINAL STRIP OVERVIEW	TERMINAL STRIP OVERVIEW	AC
3404507-0006	012	TERMINAL STRIP OVERVIEW	TERMINAL STRIP OVERVIEW	AC
3404507-0006	013	TERMINAL STRIP OVERVIEW	TERMINAL STRIP OVERVIEW	AC
3404507-0006	014	TERMINAL STRIP OVERVIEW	TERMINAL STRIP OVERVIEW	AC
3404507-0006	015	TERMINAL STRIP OVERVIEW	TERMINAL STRIP OVERVIEW	AC
3404507-0006	016	TERMINAL STRIP OVERVIEW	TERMINAL STRIP OVERVIEW	AC
3404507-0006	017	TERMINAL STRIP OVERVIEW	TERMINAL STRIP OVERVIEW	AC
3404507-0006	018	TERMINAL STRIP OVERVIEW	TERMINAL STRIP OVERVIEW	AC
3404507-0006	019	TERMINAL STRIP OVERVIEW	TERMINAL STRIP OVERVIEW	AC
3404507-0006	020	TERMINAL STRIP OVERVIEW	TERMINAL STRIP OVERVIEW	AC
3404507-0006	021	TERMINAL STRIP OVERVIEW	TERMINAL STRIP OVERVIEW	AC
3404507-0006	022	TERMINAL STRIP OVERVIEW	TERMINAL STRIP OVERVIEW	AC
3404507-0006	023	TERMINAL STRIP OVERVIEW	TERMINAL STRIP OVERVIEW	AC
3404507-0006	024	TERMINAL STRIP OVERVIEW	TERMINAL STRIP OVERVIEW	AC
3404507-0006	025	TERMINAL STRIP OVERVIEW	TERMINAL STRIP OVERVIEW	AC
3404507-0006	026	TERMINAL STRIP OVERVIEW	TERMINAL STRIP OVERVIEW	AC
3404507-0006	027	TERMINAL STRIP OVERVIEW	TERMINAL STRIP OVERVIEW	AC
3404507-0006	028	TERMINAL STRIP OVERVIEW	TERMINAL STRIP OVERVIEW	AC
3404507-0006	029	TERMINAL STRIP OVERVIEW	TERMINAL STRIP OVERVIEW	AC
3404507-0006	030	TERMINAL STRIP OVERVIEW	TERMINAL STRIP OVERVIEW	AC
3404507-0006	031	TERMINAL STRIP OVERVIEW	TERMINAL STRIP OVERVIEW	AC
3404507-0006	032	TERMINAL STRIP OVERVIEW	TERMINAL STRIP OVERVIEW	AC
3404507-0006	033	TERMINAL STRIP OVERVIEW	TERMINAL STRIP OVERVIEW	AC
3404507-0006	034	TERMINAL STRIP OVERVIEW	TERMINAL STRIP OVERVIEW	AC
3404507-0006	035	TERMINAL STRIP OVERVIEW	TERMINAL STRIP OVERVIEW	AC
3404507-0006	036	TERMINAL STRIP OVERVIEW	TERMINAL STRIP OVERVIEW	AC
3404507-0006	037	TERMINAL STRIP OVERVIEW	TERMINAL STRIP OVERVIEW	AC
3404507-0006	038	TERMINAL STRIP OVERVIEW	TERMINAL STRIP OVERVIEW	AC
3404507-0006	039	TERMINAL STRIP OVERVIEW	TERMINAL STRIP OVERVIEW	AC
3404507-0006	040	TERMINAL STRIP OVERVIEW	TERMINAL STRIP OVERVIEW	AC
3404507-0006	041	TERMINAL STRIP OVERVIEW	TERMINAL STRIP OVERVIEW	AC
3404507-0006	042	TERMINAL STRIP OVERVIEW	TERMINAL STRIP OVERVIEW	AC
3404507-0006	043	TERMINAL STRIP OVERVIEW	TERMINAL STRIP OVERVIEW	AC
3404507-0006	044	TERMINAL STRIP OVERVIEW	TERMINAL STRIP OVERVIEW	AC
3404507-0006	045	TERMINAL STRIP OVERVIEW	TERMINAL STRIP OVERVIEW	AC
3404507-0006	046	TERMINAL STRIP OVERVIEW	TERMINAL STRIP OVERVIEW	AC
3404507-0006	047	TERMINAL STRIP OVERVIEW	TERMINAL STRIP OVERVIEW	AC
3404507-0007	001	CABLE CONNECTION LIST	CABLE CONNECTION LIST	AC
3404507-0007	002	CABLE CONNECTION LIST	CABLE CONNECTION LIST	AC
3404507-0007	003	CABLE CONNECTION LIST	CABLE CONNECTION LIST	AC
3404507-0007	004	CABLE CONNECTION LIST	CABLE CONNECTION LIST	AC
3404507-0007	005	CABLE CONNECTION LIST	CABLE CONNECTION LIST	AC
3404507-0007	006	CABLE CONNECTION LIST	CABLE CONNECTION LIST	AC

Tetra Pak®

Version Designer: ROG
ECM No: 825145
Denomination: DOCUMENTS LIST
Version Date: 2016-09-30
Machine: CAP30 Flex ScrewCap 0400
Page Type: DOCUMENTS LIST
Document No.: 3404507-0001
Doc. type: ELD
Version: AC
Page: 003
Information Security Class: PUBLIC

This drawing must not without the consent of Tetra Pak be copied, transmitted or disclosed to any third party.

RELEASED

DOCUMENTS LIST

Drawing number	Page	Denomination	Page type	Version
3404507-0007	007	CABLE CONNECTION LIST	CABLE CONNECTION LIST	AC
3404507-0007	008	CABLE CONNECTION LIST	CABLE CONNECTION LIST	AC
3404507-0007	009	CABLE CONNECTION LIST	CABLE CONNECTION LIST	AC
3404507-0007	010	CABLE CONNECTION LIST	CABLE CONNECTION LIST	AC
3404507-0007	011	CABLE CONNECTION LIST	CABLE CONNECTION LIST	AC
3404507-0007	012	CABLE CONNECTION LIST	CABLE CONNECTION LIST	AC
3404507-0007	013	CABLE CONNECTION LIST	CABLE CONNECTION LIST	AC
3404507-0007	014	CABLE CONNECTION LIST	CABLE CONNECTION LIST	AC
3404507-0008	001	MAINS CONNECTION	MAINS CONNECTION	AC
3404507-0008	002	MAINS CONNECTION	MAINS CONNECTION	AC
3404507-0008	003	MAINS CONNECTION	MAINS CONNECTION	AC
3404507-0098	001	DRAWING REMARKS	DRAWING REMARKS	AC
3404507-0099	001	ENGINEERING CHANGE DESCRIPTION	ENGINEERING CHANGE DESCRIPTION	AC

Tetra Pak®

Version Designer ROG
ECM No 825145
Denomination DOCUMENTS LIST
Version Date 2016-09-30
Machine CAP30 Flex ScrewCap 0400
Page Type DOCUMENTS LIST
Document No. 3404507-0001
Doc. type ELD
Version AC
Page 004
Information Security Class PUBLIC

3 Position Summary

Description

This chapter is a list of all electrical components that are shown in the electrical drawings, with page references to the drawings where they are located.

3.1 Position Summary

This page intentionally left blank

This drawing must not without the consent of Tetra Pak be copied, transmitted or disclosed to any third party.

POSITION SUMMARY 3404507-0003

Component	Page / Col.	Option
A01A4000	027.2	
A01B6000	034.3	
A01B6001	034.4	
A01B6010	034.4	
A01B8001	046.5	
A01C3001	023.3	
A01C4000	027.7	
A01E6000	007.1	
A01E7000	006.3	
A01E7001	006.4	
A01E7002	006.5	
A01E7003	006.7	
A01F1001	003.5	
A01F1004	008.2	
A01F1005	008.6	
A01F1006	008.4	
A01F1007	008.9	
A01F2000	004.1	
A01F2001	004.6	
A01F2002	004.7	
A01F2003	004.8	
A01F2004	006.4	
A01F2005	004.9	
A01F3000	004.8	
A01F6000	007.2	
A01F7000	006.4	
A01F7001	006.9	
A01F7002	006.9	

Component	Page / Col.	Option
A01K1000	003.6	
A01K1001	003.7	
A01K1002	003.7	
A01K1004	008.2	
A01K1005	008.6	
A01K1006	008.4	
A01K1007	008.9	
A01K1010	028.8	
A01K3001	023.3	
A01K3002	023.3	
A01K3005	034.7	
A01K3006	038.7	
A01K3007	040.2	
A01K3008	042.2	
A01K3020	066.5	
A01K3021	045.7	
A01K3022	046.7	
A01K3023	047.7	
A01K3024	048.7	
A01K3025	049.2	
A01K3026	050.2	
A01K3027	051.7	
A01K3028	052.2	
A01K3029	053.2	
A01K3030	054.1	
A01K3034	053.3	
A01K3035	053.3	
A01K3036	053.3	

Component	Page / Col.	Option
A01K7000	040.3	
A01K8000	052.5	
A01P5000	040.6	
A01P5001	040.6	
A01P5010	049.4	
A01Q106	.	
A01Q1000	003.2	
A01Q1001	003.2	UL/CSA
A01Q1004	042.4	
A01Q1005	033.5	
A01Q1006	042.4	
A01Q6000	040.3	
A01T2000	004.1	
A01T2001	004.5	
A01T3000	023.3	
A01T7000	006.4	
A01X7000	006.9	
A81K5000	023.9	COM.UNIT
A81R5020	023.9	COM.UNIT
A81S2010	027.9	BCS
A81X2000	025.3	
A81X6000	026.7	ROUTER
C50B0013	056.4	
C50B0014	056.5	
C50B1001	056.4	
C50B1002	056.2	
C50B1005	056.2	
C50F0000	020.6	

Component	Page / Col.	Option
C50F1000	021.7	
C50K1000	021.7	
C50K1001	021.8	
C50K1003	021.7	
C50K1004	043.5	
C50M0000	020.6	
C50M1000	021.9	
C50Q0000	041.4	
C50T1000	021.7	
C81K4130	056.6	
F09B2010	031.2	
F09B2011	031.2	
F09B2012	031.3	
F09B2013	031.3	
F09B2014	031.4	
F09B2015	031.4	
F09B2016	031.5	
F09B2017	031.5	
F09B2030	032.2	
F09B2031	032.2	
F09B2032	032.3	
F09B2033	032.3	
F09B2034	032.4	
F09B2035	032.4	
F09B2036	032.4	
F09B2041	050.7	
F09B2042	050.7	
F09B3010	032.6	

Tetra Pak®

Version Designer	Version Date	Machine
ROG	2016-09-30	CAP30 Flex ScrewCap 0400

ECM No	Denomination	Page Type
825145	POSITION SUMMARY	POSITION SUMMARY

Information Security Class	Document No.	Doc. type	Version	Page
PUBLIC	3404507-0002	ELD	AC	001

This drawing must not without the consent of Tetra Pak be copied, transmitted or disclosed to any third party.

POSITION SUMMARY 3404507-0003

Component	Page / Col.	Option
F09B3012	032.7	
F09B3013	032.8	
F09B3014	032.8	
F09B3015	032.8	
F09B3016	032.9	
F09B3017	032.9	
F09K0000	028.6	
F09K0001	029.4	
F09K0002	028.9	
F09K0003	029.4	
F09K0004	029.4	
F09K2040	050.3	
F09R0000	028.5	
F09S1001	030.2	
F09S1002	027.4	
F09S1003	030.7	
F09X2001	031.2	
F09X2002	032.2	
F09X2003	032.6	
G30B1001	036.4	PAC.CRAS.
G30B1002	036.4	
G30M0000	009.3	
G30M4000	015.3	
G30T0000	009.2	
G30T4000	015.2	
G40B2000	037.4	
G40B2002	036.5	
G40B5000	056.4	

Component	Page / Col.	Option
G40B5001	056.4	
G40B5004	056.2	
G40B5005	056.3	
G40F4000	020.4	
G40K1000	043.5	
G40K1001	043.5	
G40K2003	059.4	
G40K2010	059.4	
G40K2011	059.4	
G40M0000	010.3	
G40M0002	011.3	
G40M3000	014.3	
G40M4000	020.4	
G40Q4000	042.4	
G40T0000	010.2	
G40T0002	011.2	
G40T3000	014.2	
G41B0000	058.8	ADH. DET.
G41E0002	058.8	ADH. DET.
G41K0011	058.5	ADH. DET.
G41T0002	058.3	ADH. DET.
G70B0000	057.8	VIS.SYS.D.
G70E0002	057.5	
G70K0000	041.4	
G70K0001	057.2	
G70M1000	017.3	POS.SYS.
G70T1000	017.2	POS. SYS.
V01B9001	055.3	

Component	Page / Col.	Option
V01B9002	055.3	
V01F5000	019.6	
V01K5000	019.5	
V01K5010	054.5	
V01K9000	059.4	
V01Q5000	040.3	
V01V5000	019.5	
W20B0002	036.4	
W20B0003	036.5	
W20K3000	059.4	
W20M0000	016.3	
W20T0000	016.2	
W21B0000	055.4	
W21B3000	038.5	
W21B3001	038.5	
W21B3002	038.4	
W21B3003	038.4	
W21B3004	038.5	
W21B3005	038.5	
W21B3006	038.4	
W21B3007	038.4	
W21B3008	038.5	
W21B3009	038.5	
W21B3018	038.4	
W21B3019	038.4	
W21B4001	045.4	
W21B4002	045.5	
W21B4003	045.4	

Component	Page / Col.	Option
W21B4004	045.5	
W21B4005	045.4	
W21B4006	045.5	
W21B4007	045.4	
W21B4008	045.5	
W21B4023	055.4	
W21B4024	055.4	
W21B6001	055.4	
W21B6002	055.5	
W21B6003	055.2	
W21B6004	055.3	
W21B6005	055.2	
W21E8001	019.8	
W21F4000	021.2	
W21F4010	022.7	P.ALIGNER
W21F6000	022.2	
W21F8000	019.1	
W21F8001	019.8	
W21K0000	059.4	
W21K2002	039.1	
W21K3010	060.4	
W21K3011	060.4	
W21K4000	021.2	
W21K4001	021.3	
W21K4003	021.2	
W21K4010	022.7	P.ALIGNER
W21K4011	022.8	P.ALIGNER
W21K4013	022.7	P.ALIGNER

This drawing must not without the consent of Tetra Pak
be copied, transmitted or disclosed to any third party.

POSITION SUMMARY 3404507-0003

Component	Page / Col.	Option
W21K5000	060.4	
W21K6000	022.2	OUT. P.CONV.
W21K6001	022.3	OUT. P.CONV.
W21K6003	022.2	OUT. P.CONV.
W21K8000	024.4	
W21K8001	024.7	
W21M1000	012.3	
W21M2000	013.3	
W21M4000	021.4	
W21M4010	022.9	P.ALIGNER
W21M6000	022.4	OUT. P.CONV.
W21M8000	019.1	
W21Q8000	040.3	
W21Q8001	040.3	
W21T1000	012.2	
W21T2000	013.2	
W21T4000	021.2	
W21T4010	022.7	P.ALIGNER
W21T6000	022.1	OUT. P.CONV.
W81K4120	055.7	

Component	Page / Col.	Option

Component	Page / Col.	Option

Component	Page / Col.	Option

Tetra Pak®

Version Designer: ROG	Version Date: 2016-09-30	Machine: CAP30 Flex ScrewCap 0400	
ECM No: 825145	Denomination: POSITION SUMMARY	Page Type: POSITION SUMMARY	
Information Security Class: PUBLIC	Document No.: 3404507-0002	Doc. type: ELD	Version: AC	Page: 003

This page intentionally left blank

4 Circuit Diagrams

Description

This chapter contains all component drawings, such as programmable logic controller (PLC) modules, terminals, and cables.

4.1 Circuit Diagrams

This page intentionally left blank

RELEASED

This drawing must not without the consent of Tetra Pak be copied, transmitted or disclosed to any third party.

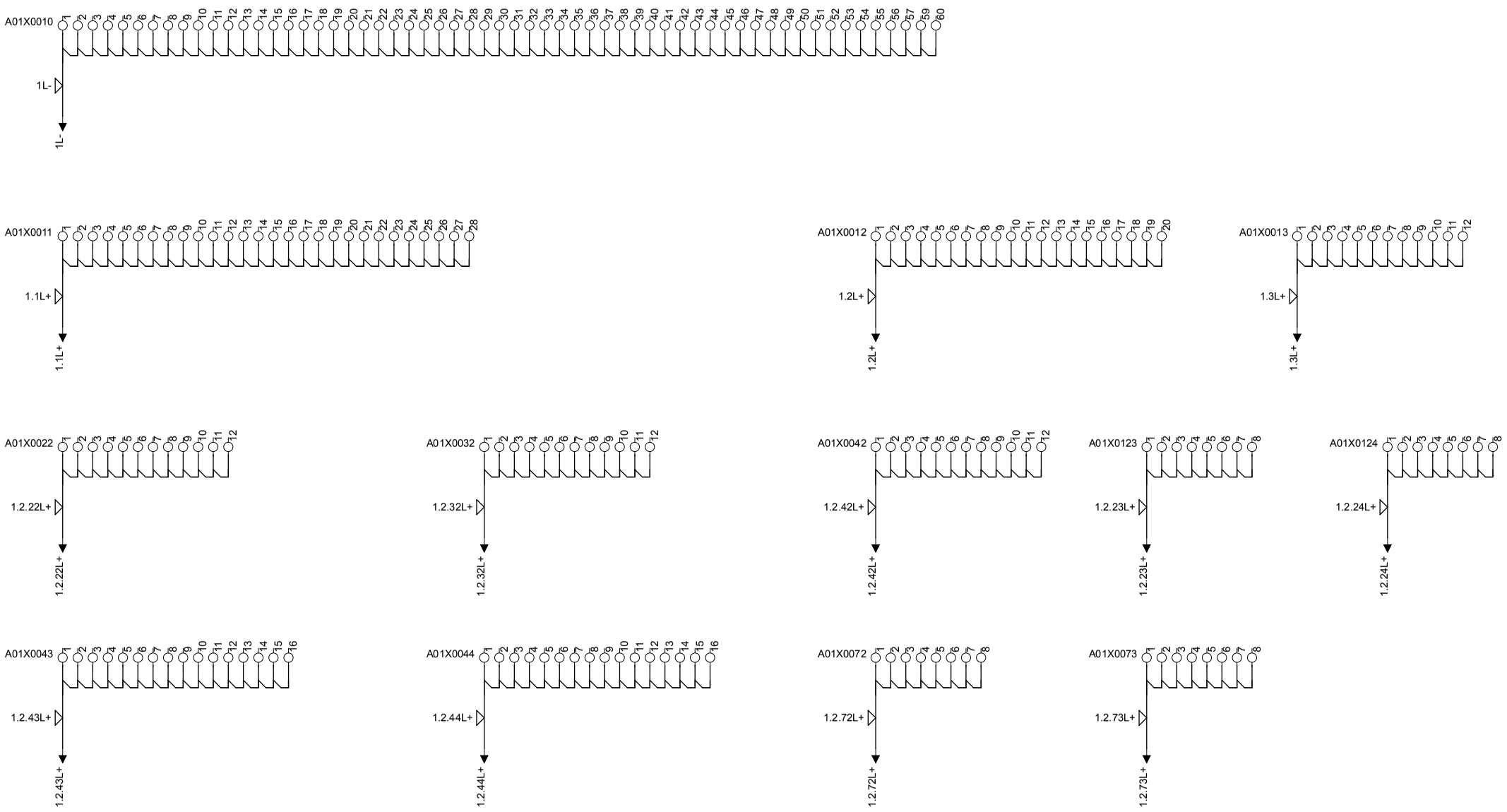

Tetra Pak®	Version Designer: ROG	Version Date: 2016-09-30	Machine: CAP30 Flex ScrewCap 0400	
	ECM No: 825145	Denomination: CIRCUIT DIAGRAM	Page Type: 0V_24V TERMINAL	
	Information Security Class: PUBLIC	Document No.: 3404507-0003	Doc. type: ELD	Version: AC / Page: 001

This drawing must not without the consent of Tetra Pak
be copied, transmitted or disclosed to any third party.

1	2	3	4	5	6	7	8	9	10

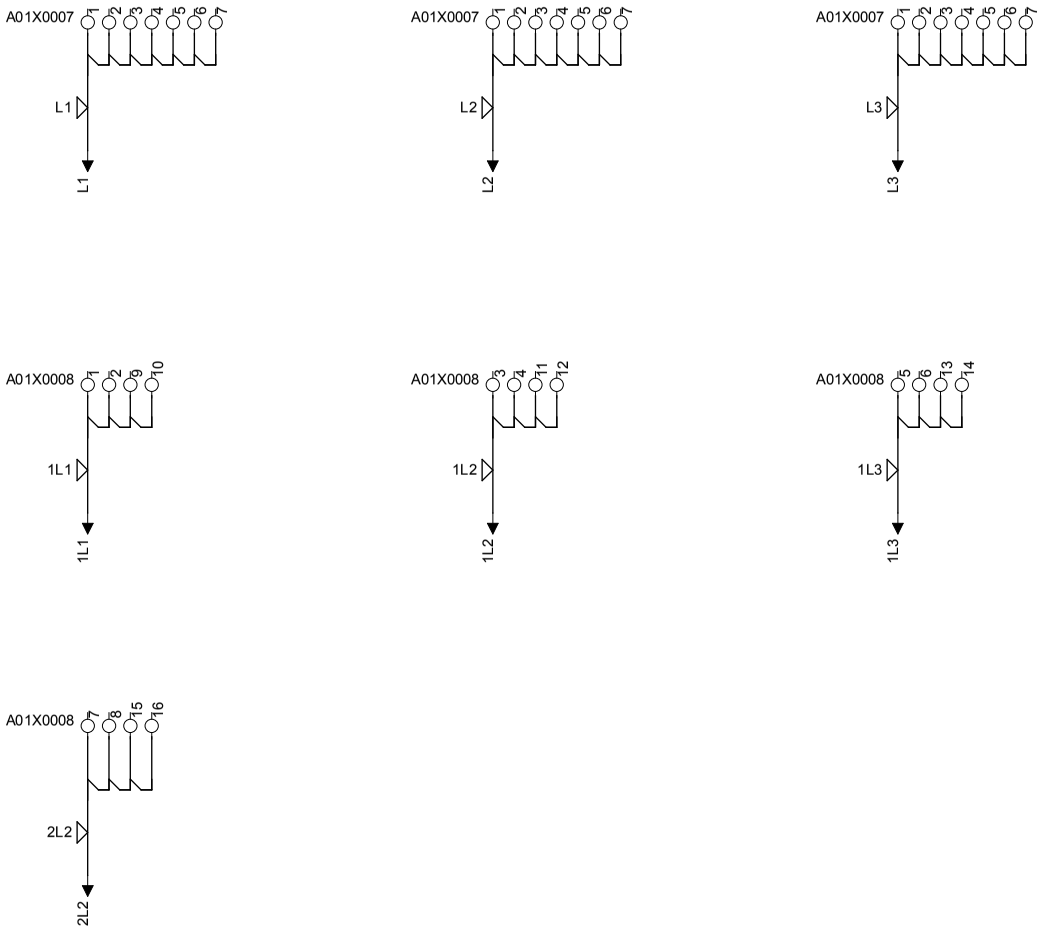

Tetra Pak®	Version Designer: ROG	Version Date: 2016-09-30	Machine: CAP30 Flex ScrewCap 0400			
	ECM No: 825145	Denomination: CIRCUIT DIAGRAM	Page Type: TERMINAL			
	Information Security Class: PUBLIC	Document No.: 3404507-0003	Doc. type: ELD	Version: AC	Page: 002	

RELEASED

This drawing must not without the consent of Tetra Pak be copied, transmitted or disclosed to any third party.

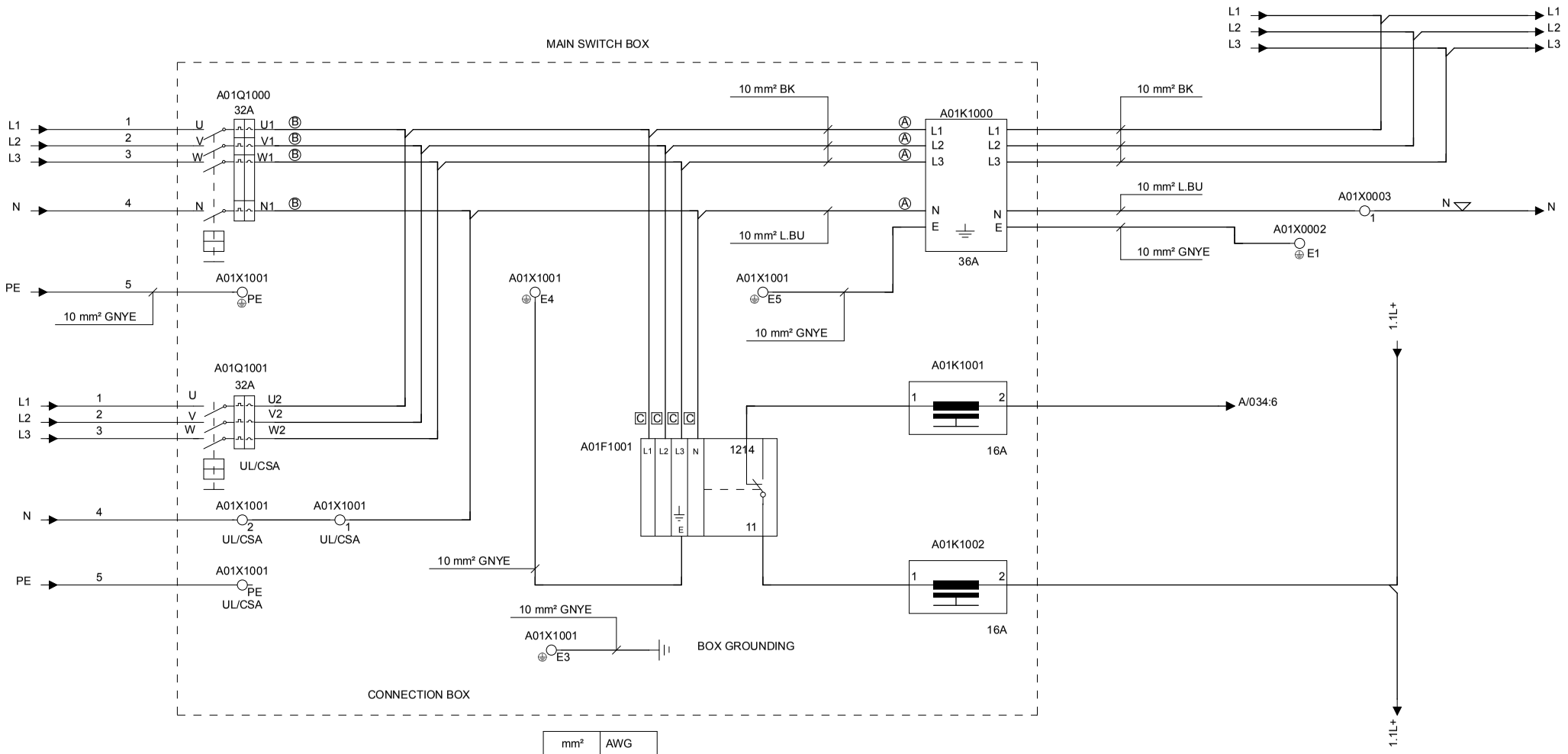

mm²	AWG
10.00	8
6.00	10
4.00	12
2.50	14
1.50	16
1.00	18
0.75	20

FOR TYPE OF WIRING, INSTRUCTION ETC.
SEE SPECIFICATION FOR SUBSUPPLIERS TPUS 3502.22

WHERE NOTHING ELSE IS SAID
OR LINE SUMMARY IS VALID : 0,75 mm2 BU

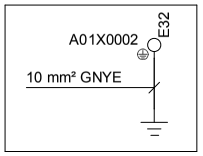

STIRRUP KINETIX

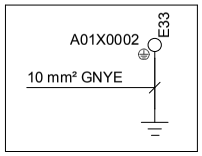

EARTH PLATE

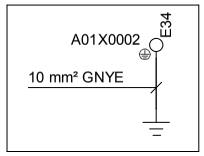

EARTH CUPBOARD

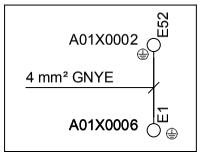

EARTH TERMINAL STRIP

Tetra Pak®	Version Designer: ROG	Version Date: 2016-09-30	Machine: CAP30 Flex ScrewCap 0400	
	ECM No: 825145	Denomination: CIRCUIT DIAGRAM	Page Type: MAINS	
	Information Security Class: PUBLIC	Document No.: 3404507-0003	Doc. type: ELD	Version: AC / Page: 003

RELEASED

This drawing must not without the consent of Tetra Pak be copied, transmitted or disclosed to any third party.

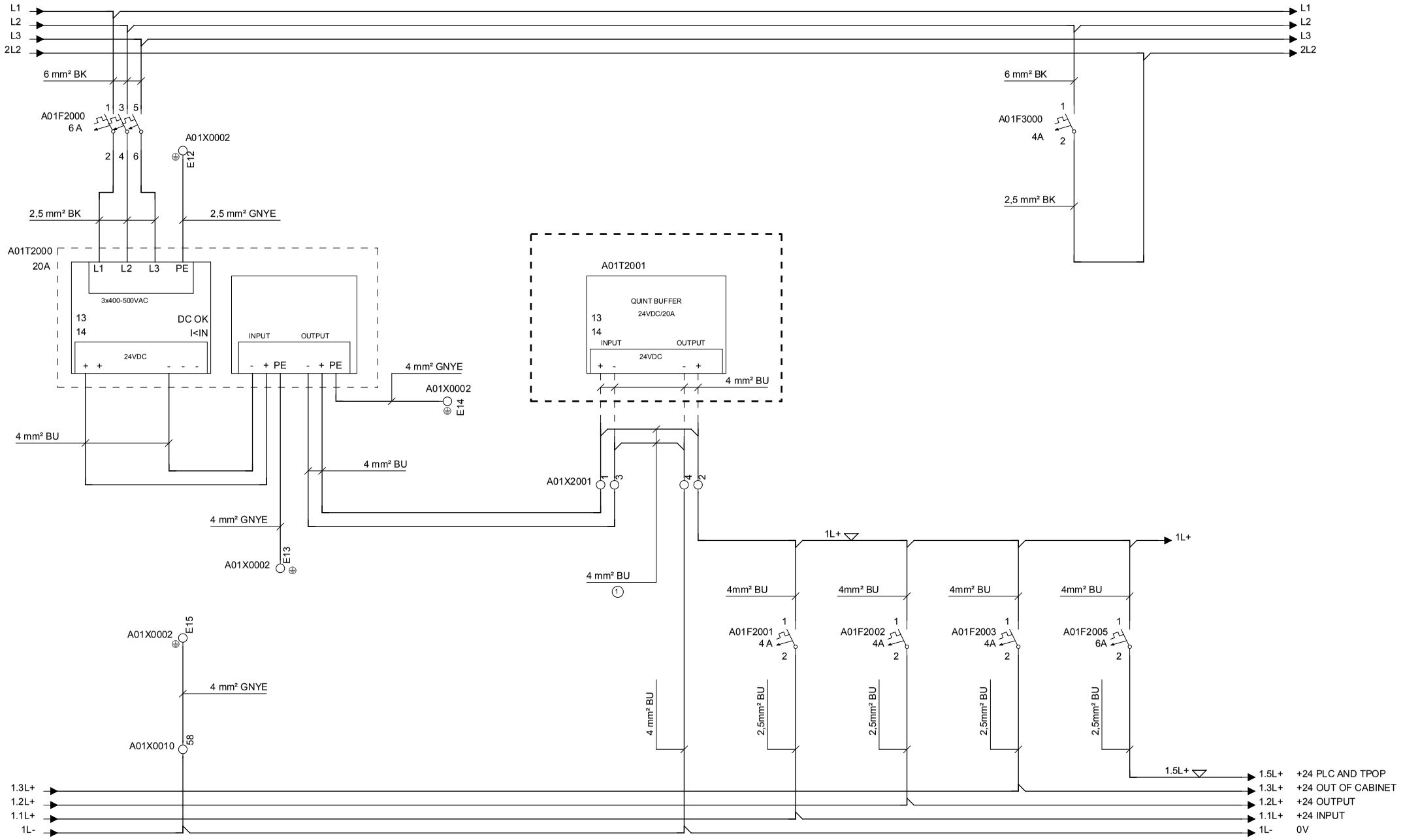

Tetra Pak®	Version Designer: ROG	Version Date: 2016-09-30	Machine: CAP30 Flex ScrewCap 0400		
	ECM No: 825145	Denomination: CIRCUIT DIAGRAM	Page Type: CONTROL VOLTAGE		
	Information Security Class: PUBLIC	Document No.: 3404507-0003	Doc. type: ELD	Version: AC	Page: 004

RELEASED

This drawing must not without the consent of Tetra Pak
be copied, transmitted or disclosed to any third party.

1	2	3	4	5	6	7	8	9	10

Tetra Pak®

Version Designer: ROG	Version Date: 2016-09-30	Machine: CAP30 Flex ScrewCap 0400	
ECM No: 825145	Denomination: CIRCUIT DIAGRAM	Page Type: CONTROL VOLTAGE (LIFTING DEVICE)	
Information Security Class: PUBLIC	Document No.: 3404507-0003	Doc. type: ELD	Version: AC / Page: 005

RELEASED

This drawing must not without the consent of Tetra Pak be copied, transmitted or disclosed to any third party.

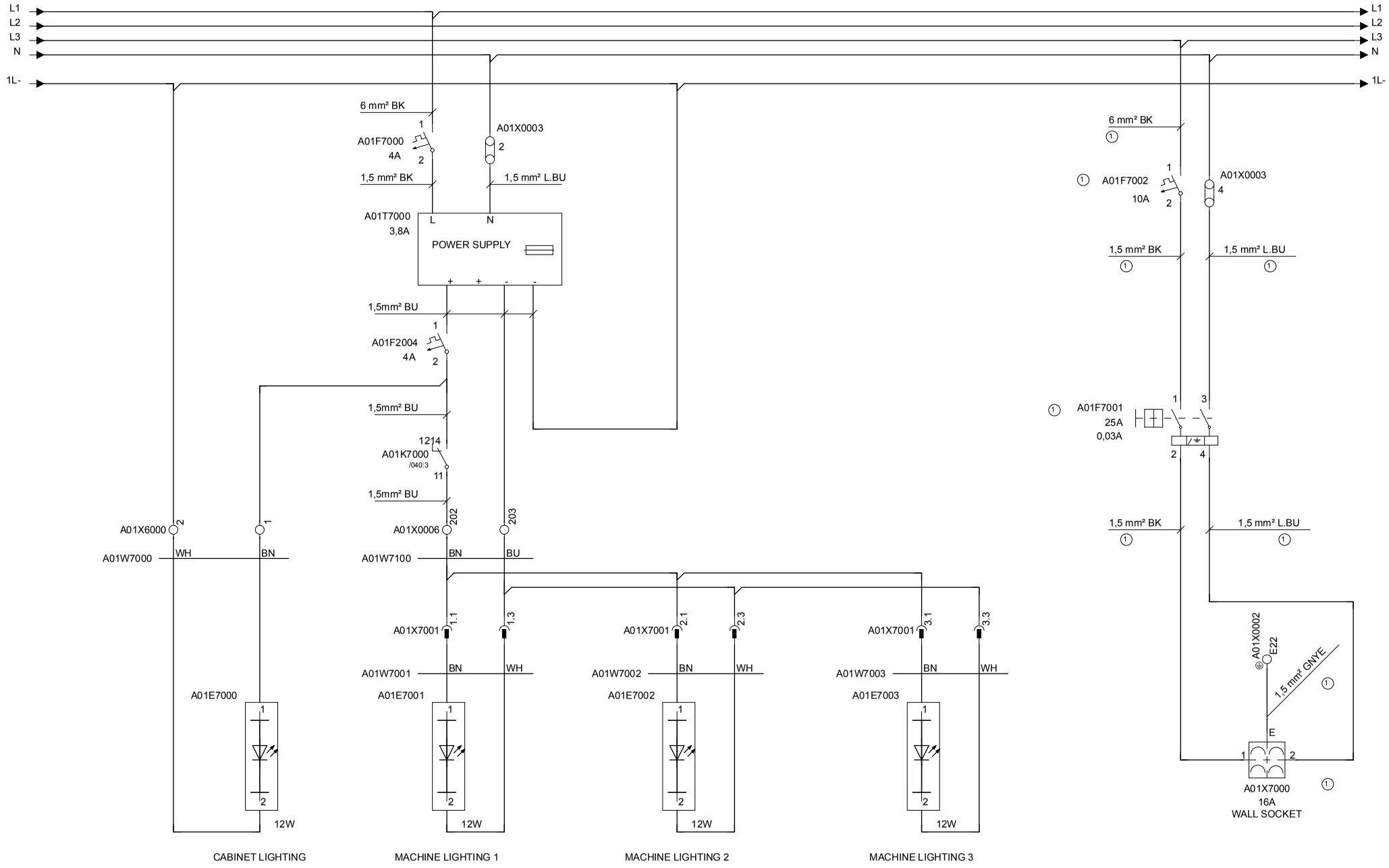

Tetra Pak®	Version Designer: ROG	Version Date: 2016-09-30	Machine: CAP30 Flex ScrewCap 0400		
	ECM No: 825145	Denomination: CIRCUIT DIAGRAM	Page Type: LIGHT FIXTURES		
	Information Security Class: PUBLIC	Document No.: 3404507-0003	Doc. type: ELD	Version: AC	Page: 006

RELEASED

This drawing must not without the consent of Tetra Pak be copied, transmitted or disclosed to any third party.

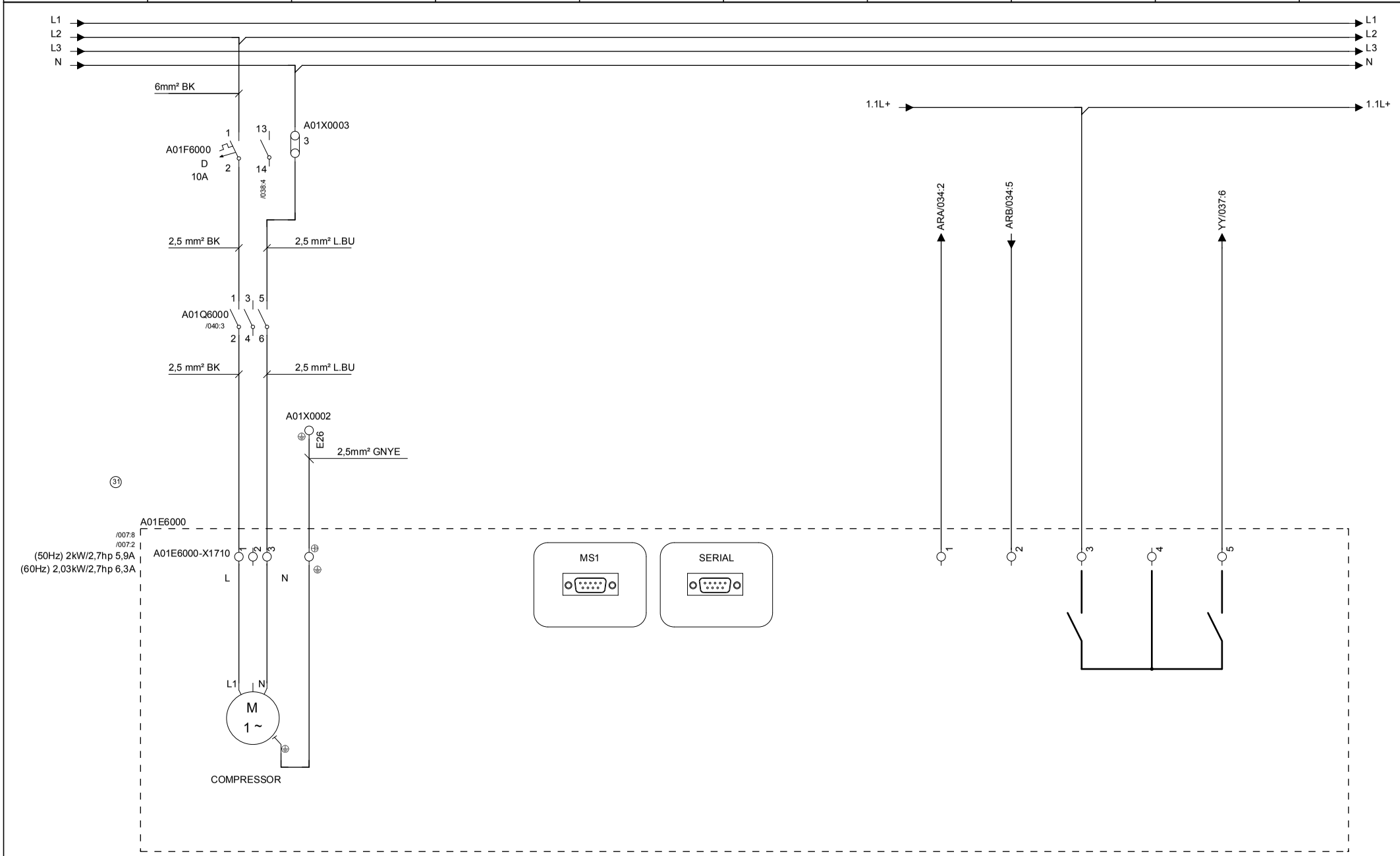

Tetra Pak®	Version Designer: ROG	Version Date: 2016-09-30	Machine: CAP30 Flex ScrewCap 0400		
	ECM No: 825145	Denomination: CIRCUIT DIAGRAM	Page Type: COOLING UNIT		
	Information Security Class: PUBLIC	Document No.: 3404507-0003	Doc. type: ELD	Version: AC	Page: 007

RELEASED

This drawing must not without the consent of Tetra Pak be copied, transmitted or disclosed to any third party.

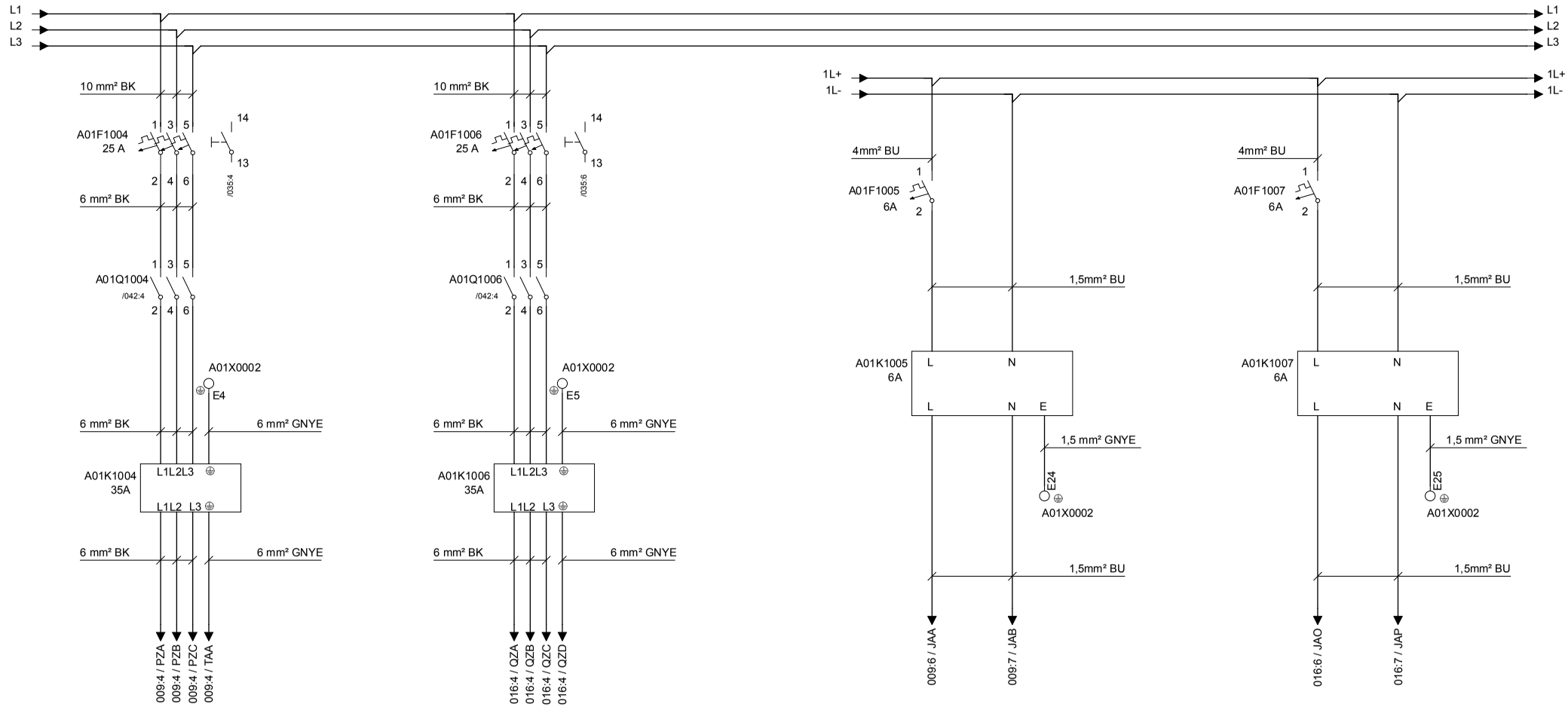

Tetra Pak®	Version Designer: ROG	Version Date: 2016-09-30	Machine: CAP30 Flex ScrewCap 0400	
	ECM No: 825145	Denomination: CIRCUIT DIAGRAM	Page Type: SERVO SUPPLY	
	Information Security Class: PUBLIC	Document No.: 3404507-0003	Doc. type: ELD	Version: AC / Page: 008

RELEASED

This drawing must not without the consent of Tetra Pak be copied, transmitted or disclosed to any third party.

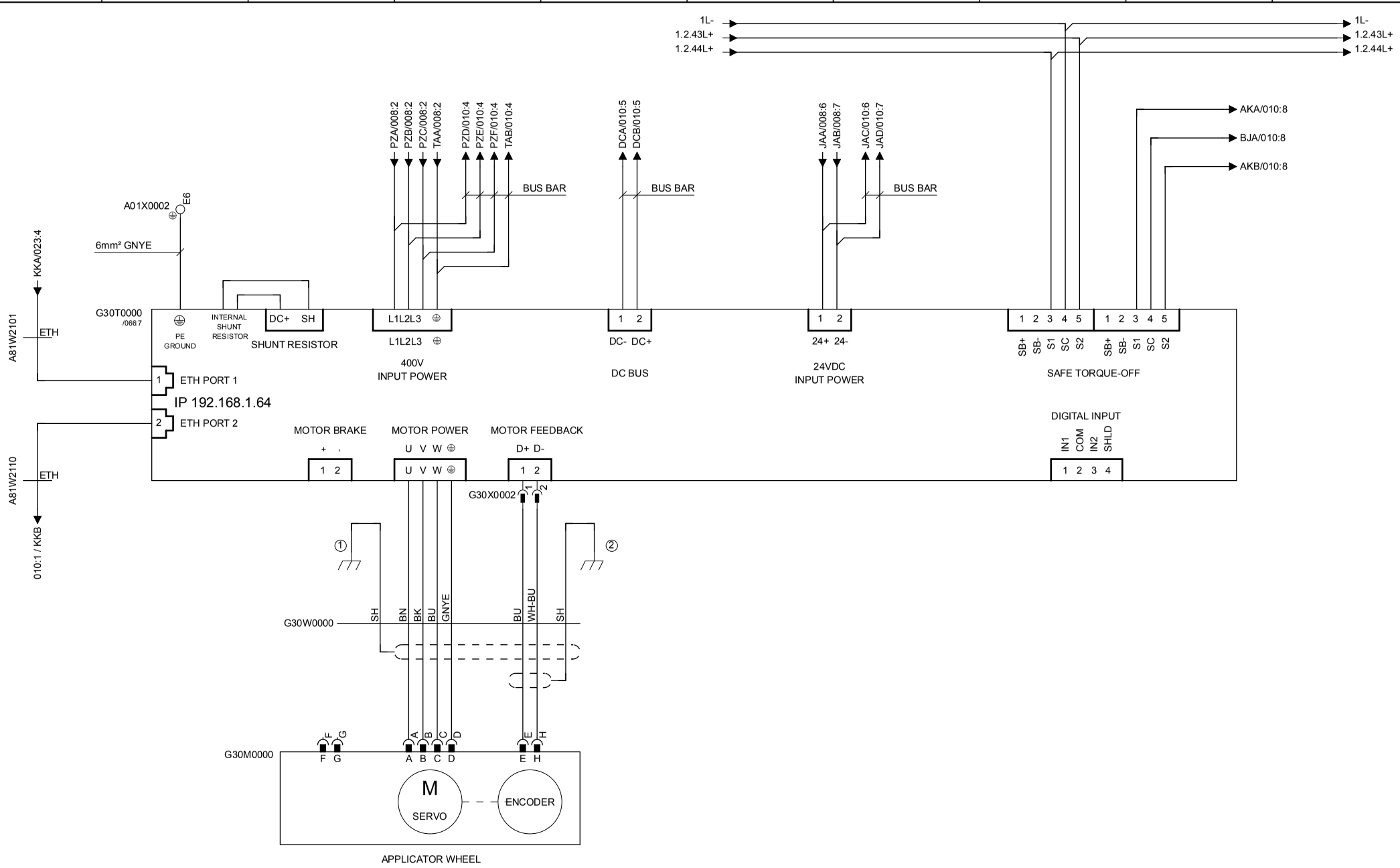

Tetra Pak®	Version Designer: ROG	Version Date: 2016-09-30	Machine: CAP30 Flex ScrewCap 0400	
	ECM No: 825145	Denomination: CIRCUIT DIAGRAM	Page Type: SERVO MOTOR 1 (APPLICATOR WHELL)	
	Information Security Class: PUBLIC	Document No.: 3404507-0003	Doc. type: ELD	Version: AC / Page: 009

RELEASED

This drawing must not without the consent of Tetra Pak be copied, transmitted or disclosed to any third party.

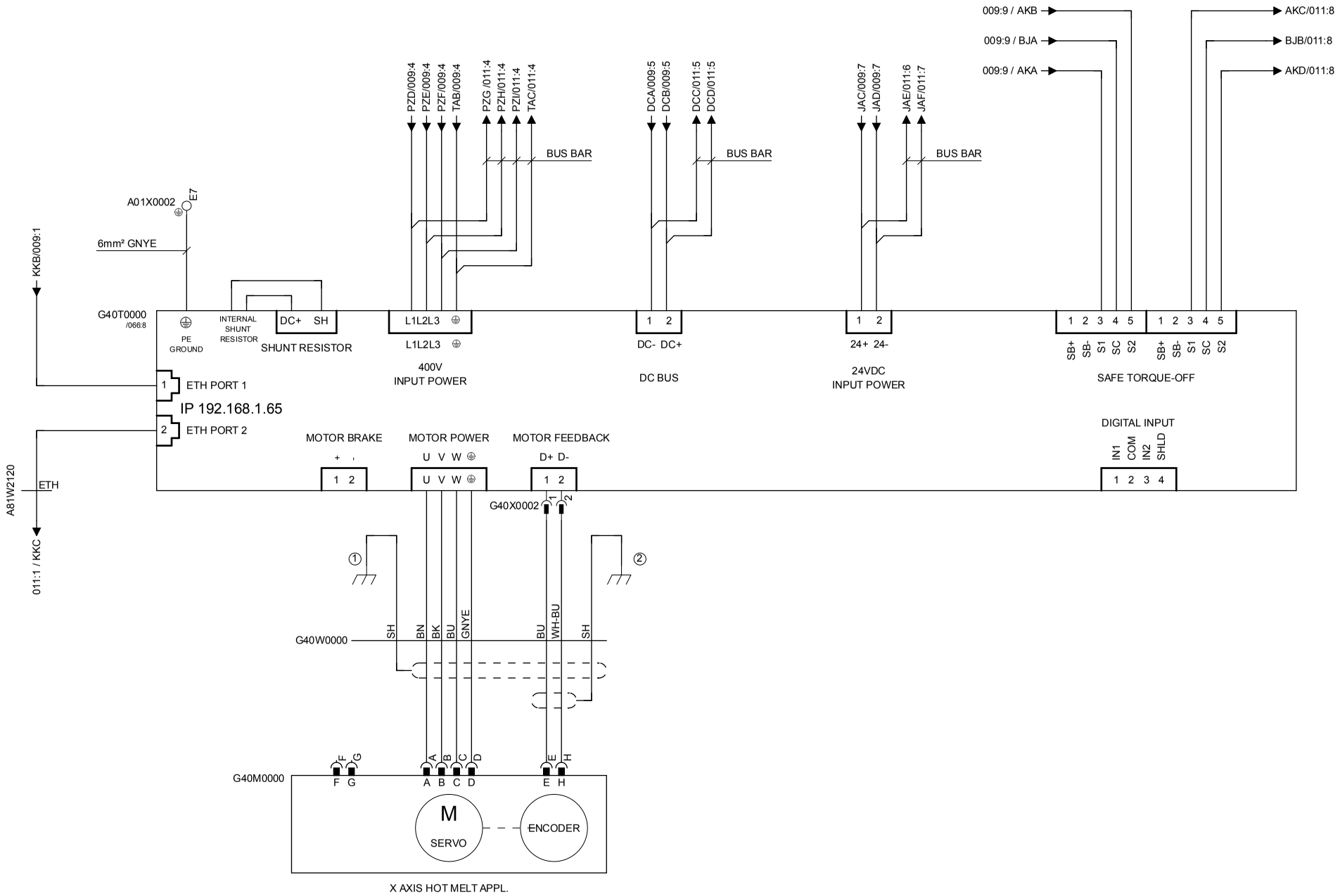

Tetra Pak®	Version Designer: ROG	Version Date: 2016-09-30	Machine: CAP30 Flex ScrewCap 0400	
	ECM No: 825145	Denomination: CIRCUIT DIAGRAM	Page Type: SERVO MOTOR 2 (X AXIS HOT MELT APPL.)	
	Information Security Class: PUBLIC	Document No.: 3404507-0003	Doc. type: ELD	Version: AC / Page: 010

RELEASED

This drawing must not without the consent of Tetra Pak be copied, transmitted or disclosed to any third party.

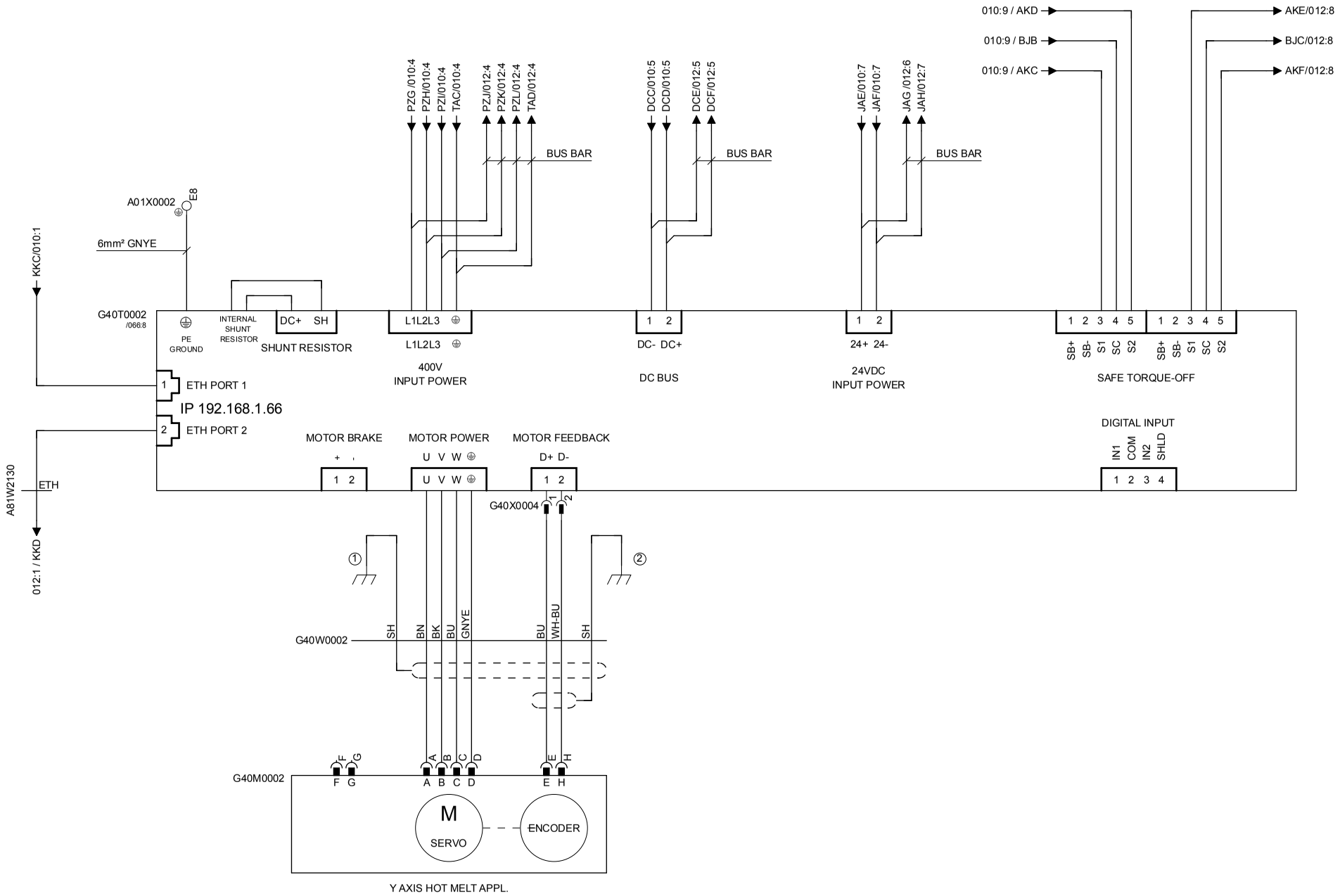

Tetra Pak®	Version Designer: ROG	Version Date: 2016-09-30	Machine: CAP30 Flex ScrewCap 0400	
	ECM No: 825145	Denomination: CIRCUIT DIAGRAM	Page Type: SERVO MOTOR 3 (Y AXIS HOT MELT APPL.)	
	Information Security Class: PUBLIC	Document No.: 3404507-0003	Doc. type: ELD	Version: AC / Page: 011

RELEASED

This drawing must not without the consent of Tetra Pak be copied, transmitted or disclosed to any third party.

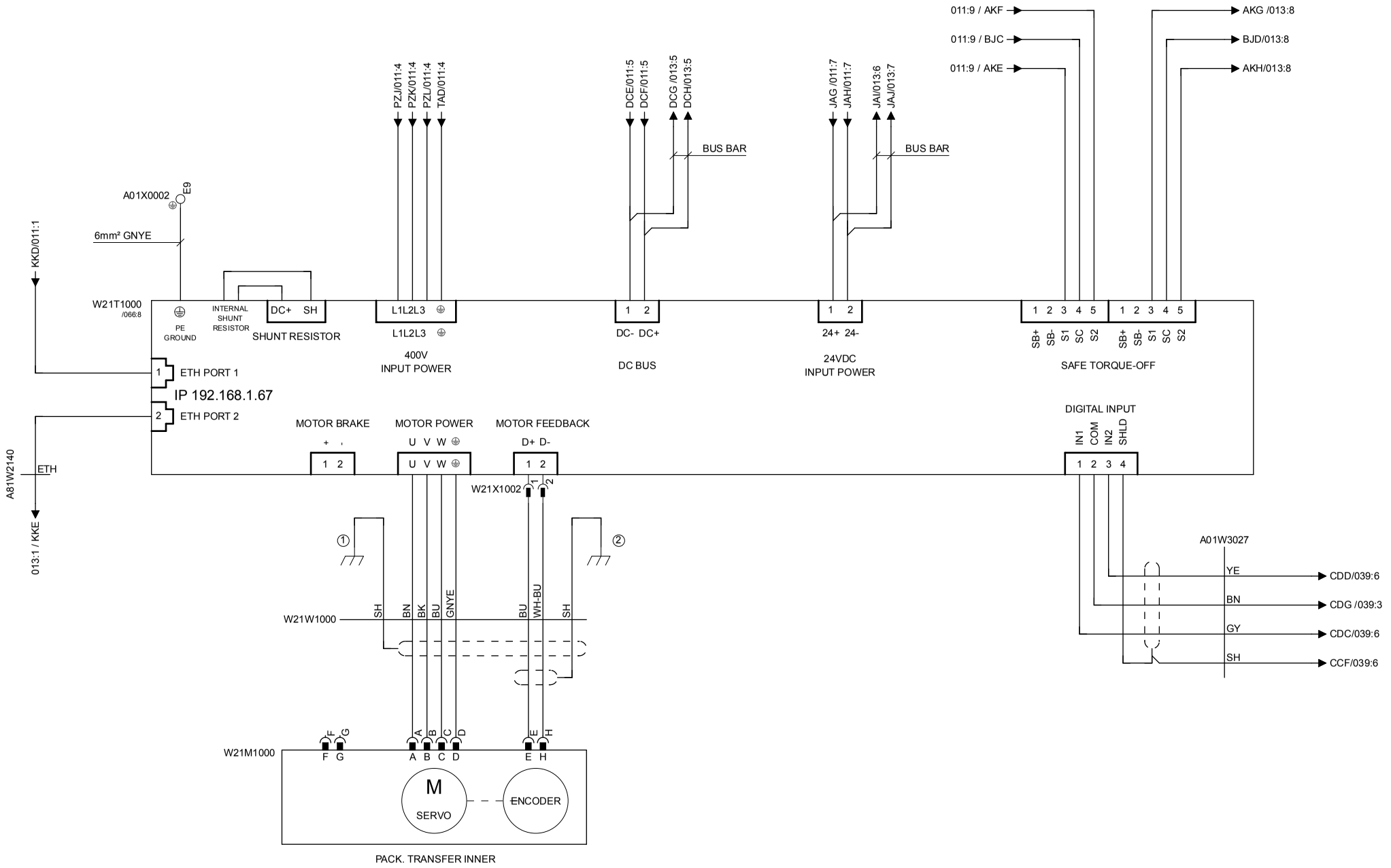

Tetra Pak®	Version Designer: ROG	Version Date: 2016-09-30	Machine: CAP30 Flex ScrewCap 0400	
	ECM No: 825145	Denomination: CIRCUIT DIAGRAM	Page Type: SERVO MOTOR 4 (PACK. TRANSFER INNER)	
	Information Security Class: PUBLIC	Document No.: 3404507-0003	Doc. type: ELD	Version: AC / Page: 012

RELEASED

This drawing must not without the consent of Tetra Pak be copied, transmitted or disclosed to any third party.

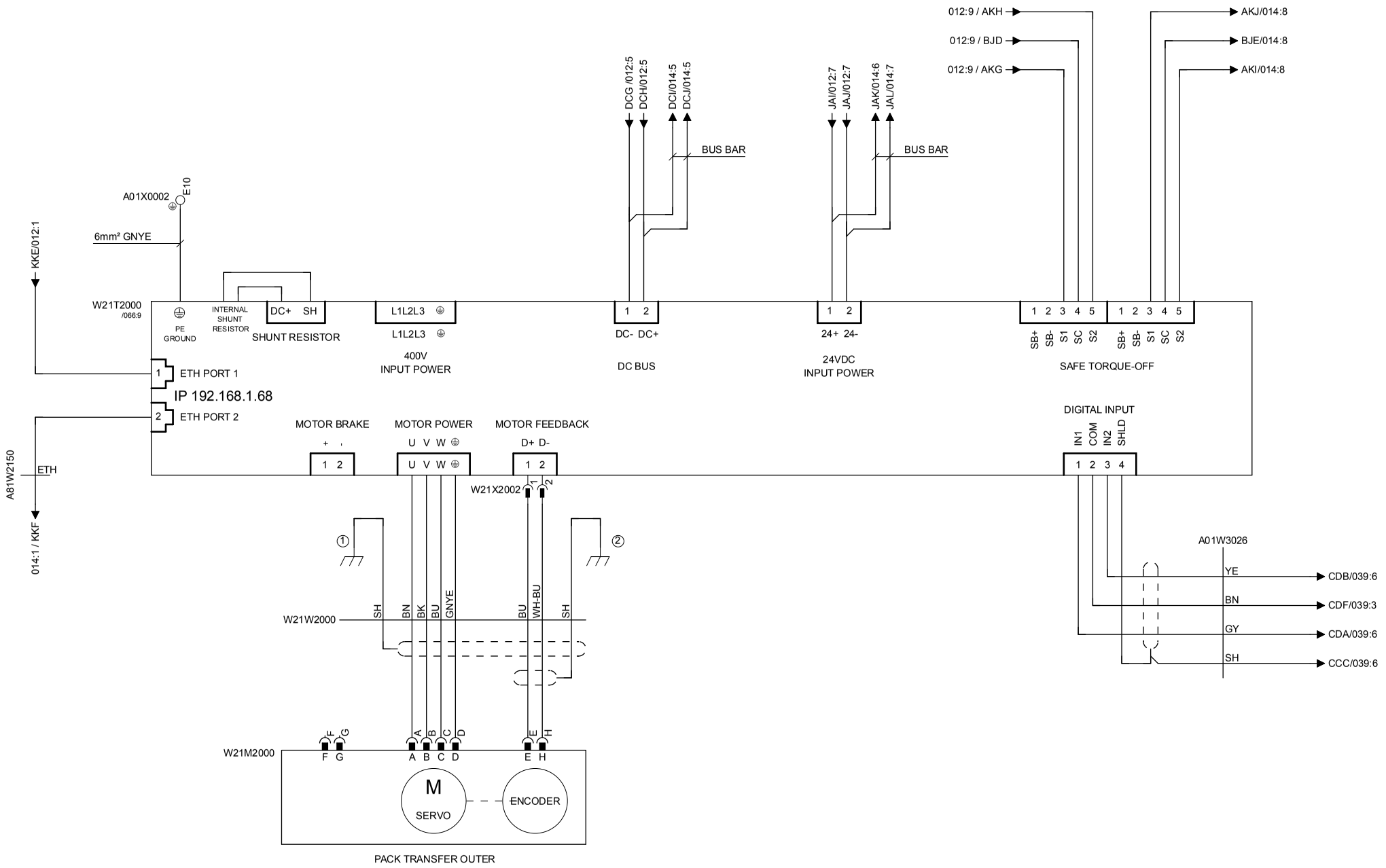

Tetra Pak®	Version Designer: ROG	Version Date: 2016-09-30	Machine: CAP30 Flex ScrewCap 0400	
	ECM No: 825145	Denomination: CIRCUIT DIAGRAM	Page Type: SERVO MOTOR 5 (PACK. TRANSFER OUTER)	
	Information Security Class: PUBLIC	Document No.: 3404507-0003	Doc. type: ELD	Version: AC / Page: 013

RELEASED

This drawing must not without the consent of Tetra Pak
be copied, transmitted or disclosed to any third party.

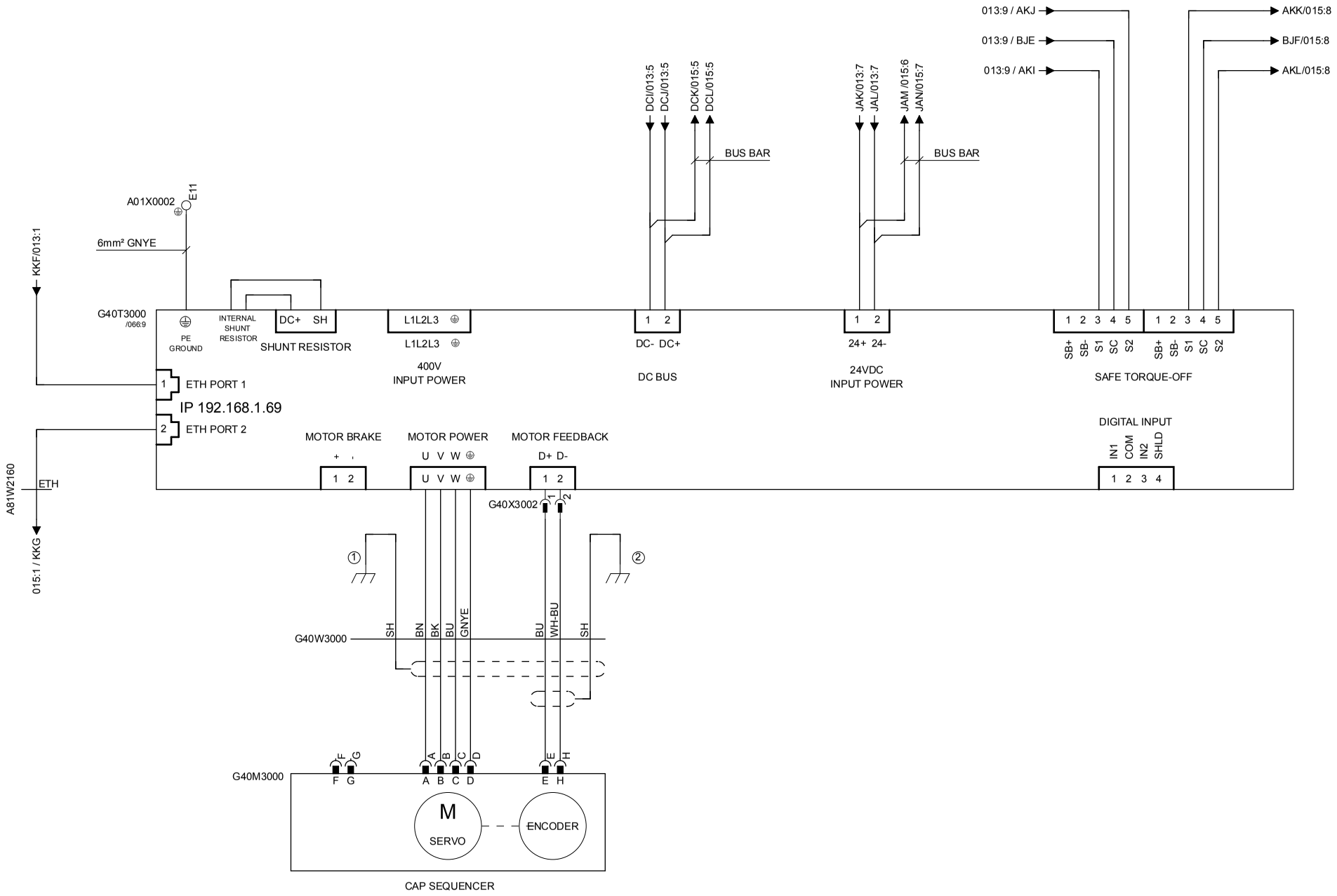

Tetra Pak®	Version Designer: ROG	Version Date: 2016-09-30	Machine: CAP30 Flex ScrewCap 0400	
	ECM No: 825145	Denomination: CIRCUIT DIAGRAM	Page Type: SERVO MOTOR 6 (CAP SEQUENCER)	
	Information Security Class: PUBLIC	Document No.: 3404507-0003	Doc. type: ELD	Version: AC / Page: 014

RELEASED

This drawing must not without the consent of Tetra Pak be copied, transmitted or disclosed to any third party.

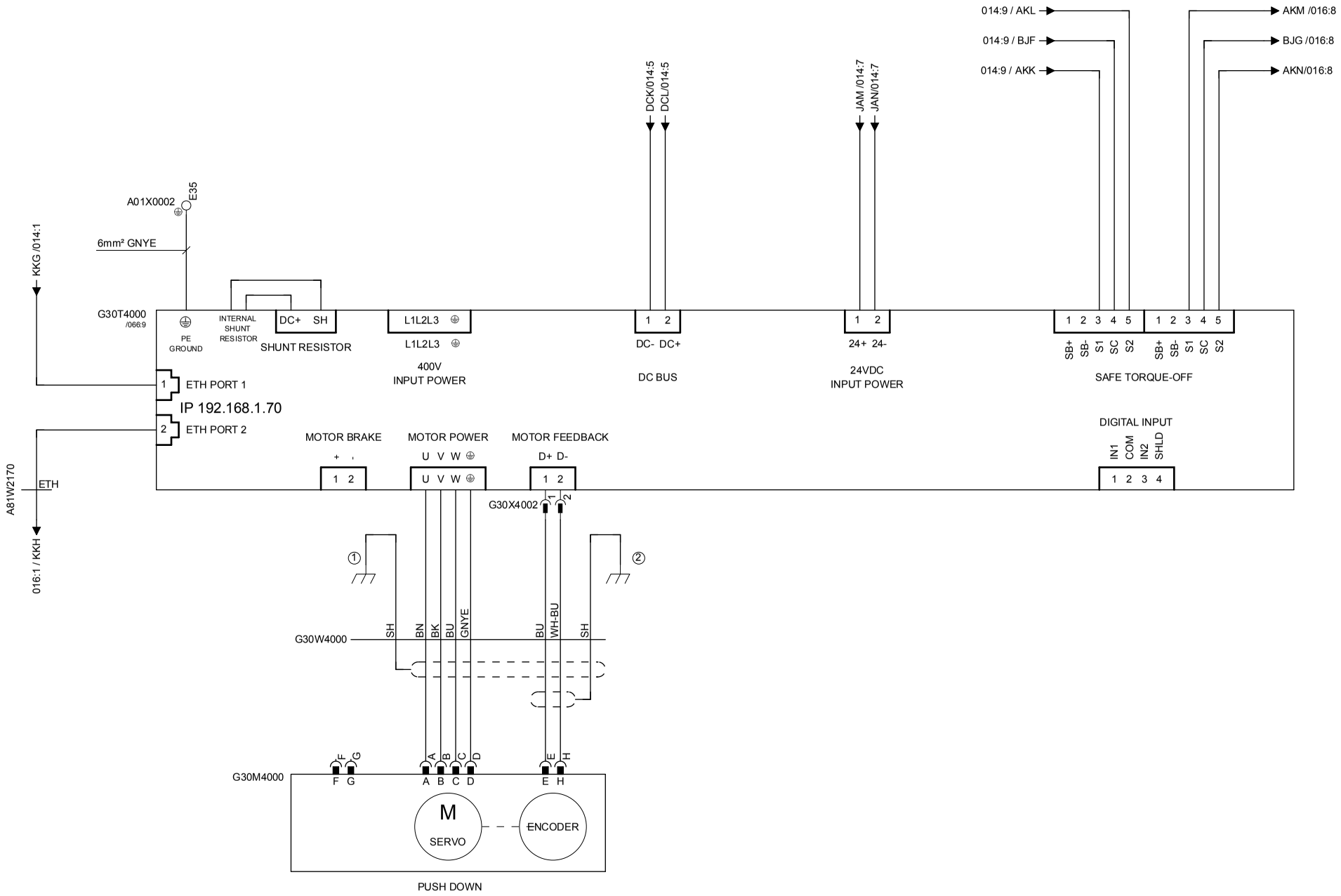

Tetra Pak®	Version Designer: ROG	Version Date: 2016-09-30	Machine: CAP30 Flex ScrewCap 0400	
	ECM No: 825145	Denomination: CIRCUIT DIAGRAM	Page Type: SERVO MOTOR 7 (PUSH DOWN)	
	Information Security Class: PUBLIC	Document No.: 3404507-0003	Doc. type: ELD	Version: AC / Page: 015

RELEASED

This drawing must not without the consent of Tetra Pak be copied, transmitted or disclosed to any third party.

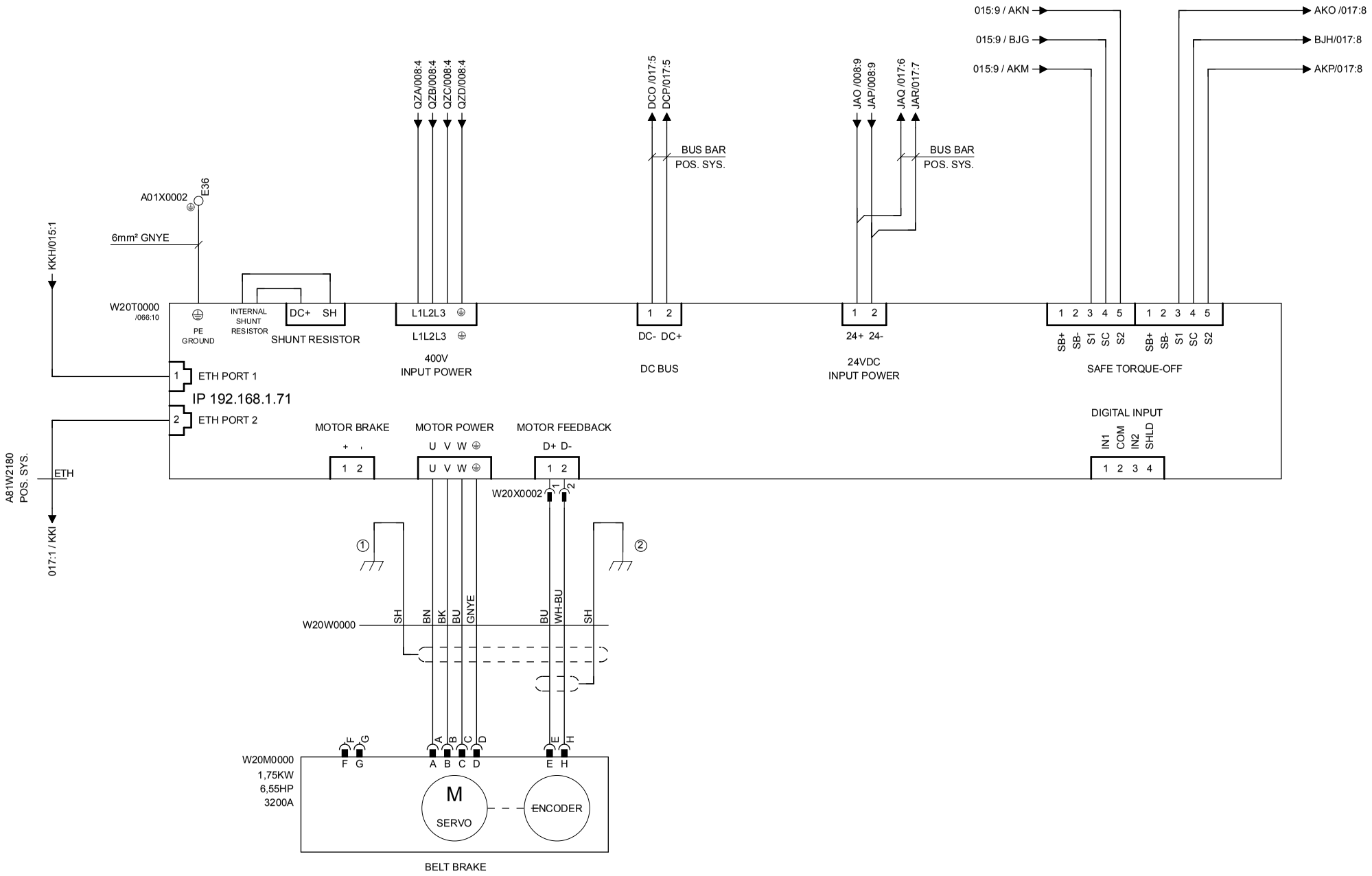

Tetra Pak®	Version Designer: ROG	Version Date: 2016-09-30	Machine: CAP30 Flex ScrewCap 0400				
	ECM No: 825145	Denomination: CIRCUIT DIAGRAM	Page Type: SERVO MOTOR 8 (BELT BRAKE)				
	Information Security Class: PUBLIC	Document No.: 3404507-0003	Doc. type: ELD	Version: AC	Page: 016		

RELEASED

This drawing must not without the consent of Tetra Pak be copied, transmitted or disclosed to any third party.

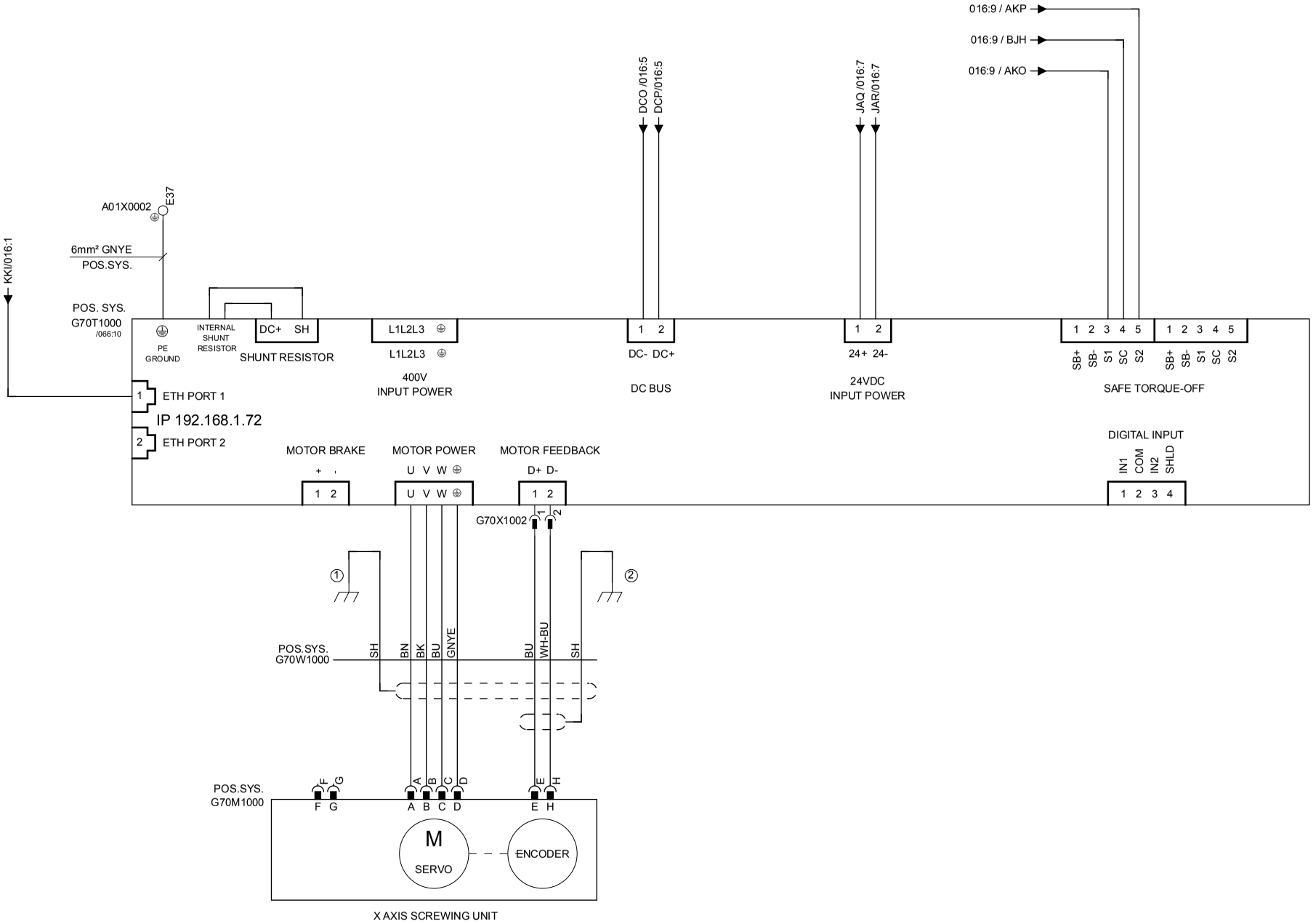

Tetra Pak®	Version Designer: ROG	Version Date: 2016-09-30	Machine: CAP30 Flex ScrewCap 0400	
	ECM No: 825145	Denomination: CIRCUIT DIAGRAM	Page Type: SERVO MOTOR 9 (AXIS X POSITIONING SYS.)	
	Information Security Class: PUBLIC	Document No.: 3404507-0003	Doc. type: ELD	Version: AC / Page: 017

This drawing must not without the consent of Tetra Pak
be copied, transmitted or disclosed to any third party.

SERVO DRIVE CONFIGURATION

G30T0000	G40T0000	G40T0002	W21T1000	W21T2000	G40T3000	G30T4000	W20T0000	G70T1000
AC SHARING							AC SHARING	
DC BUS SHARING							DC BUS SHARING	
CONTROL POWER SHARING							CONTROL POWER SHARING	
APPLICATOR WHEEL	AXIS X HOT MELT APPLICATOR	AXIS Y HOT MELT APPLICATOR	PACKAGE TRANSFER INNER	PACKAGE TRANSFER OUTER	CAPS SEQUENCER	PUSH DOWN	BELT BRAKE	AXIS X POSITIONING SYSTEM
H025 FRAME 2	H025 FRAME 2	H025 FRAME 2	H025 FRAME 2	H025 FRAME 2	H015 FRAME 2	H025 FRAME 2	H025 FRAME 1	H008 FRAME 1

RELEASED

This drawing must not without the consent of Tetra Pak be copied, transmitted or disclosed to any third party.

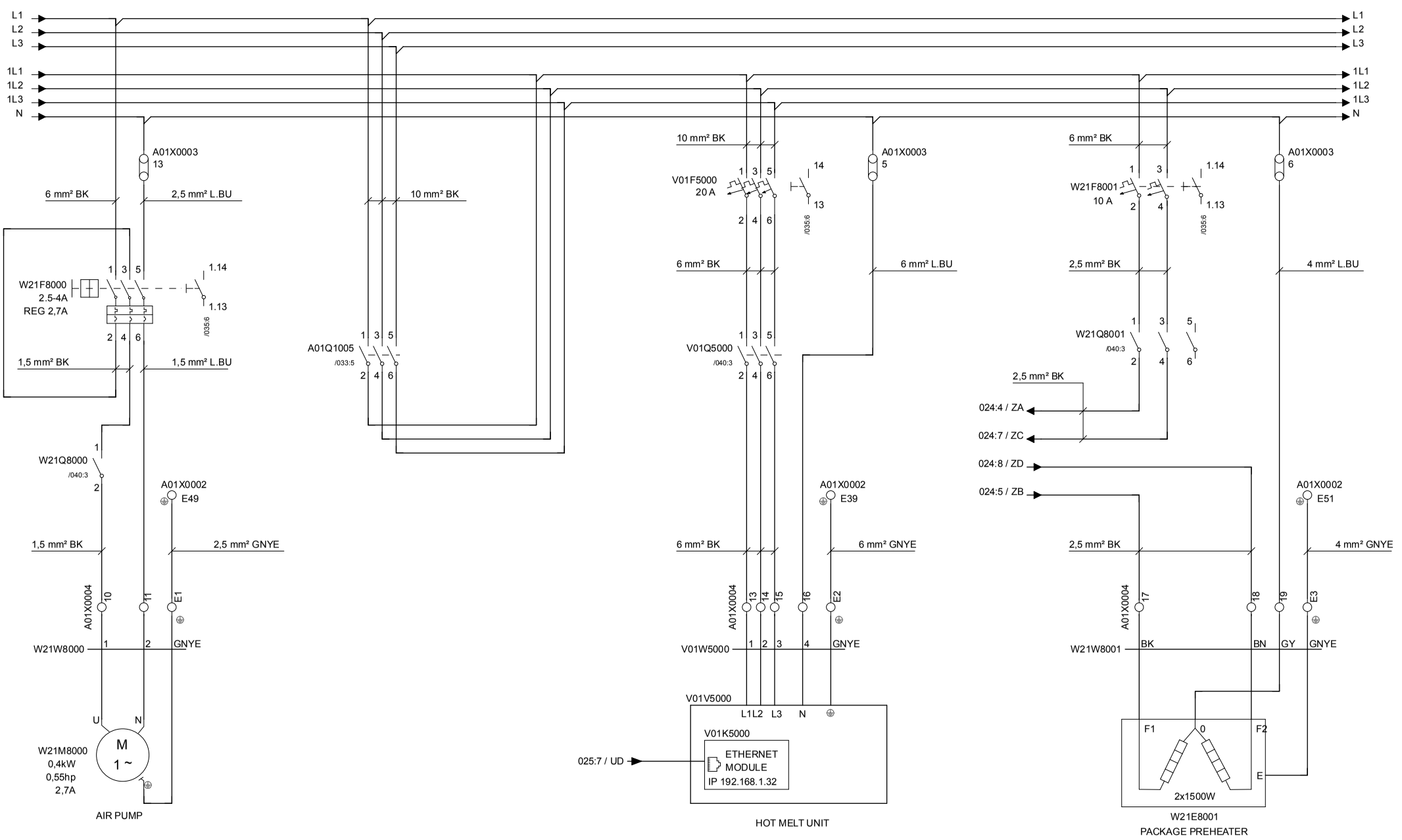

Tetra Pak®	Version Designer: ROG	Version Date: 2016-09-30	Machine: CAP30 Flex ScrewCap 0400				
	ECM No: 825145	Denomination: CIRCUIT DIAGRAM	Page Type: MOTORS				
	Information Security Class: PUBLIC	Document No.: 3404507-0003	Doc. type: ELD	Version: AC	Page: 019		

RELEASED

This drawing must not without the consent of Tetra Pak
be copied, transmitted or disclosed to any third party.

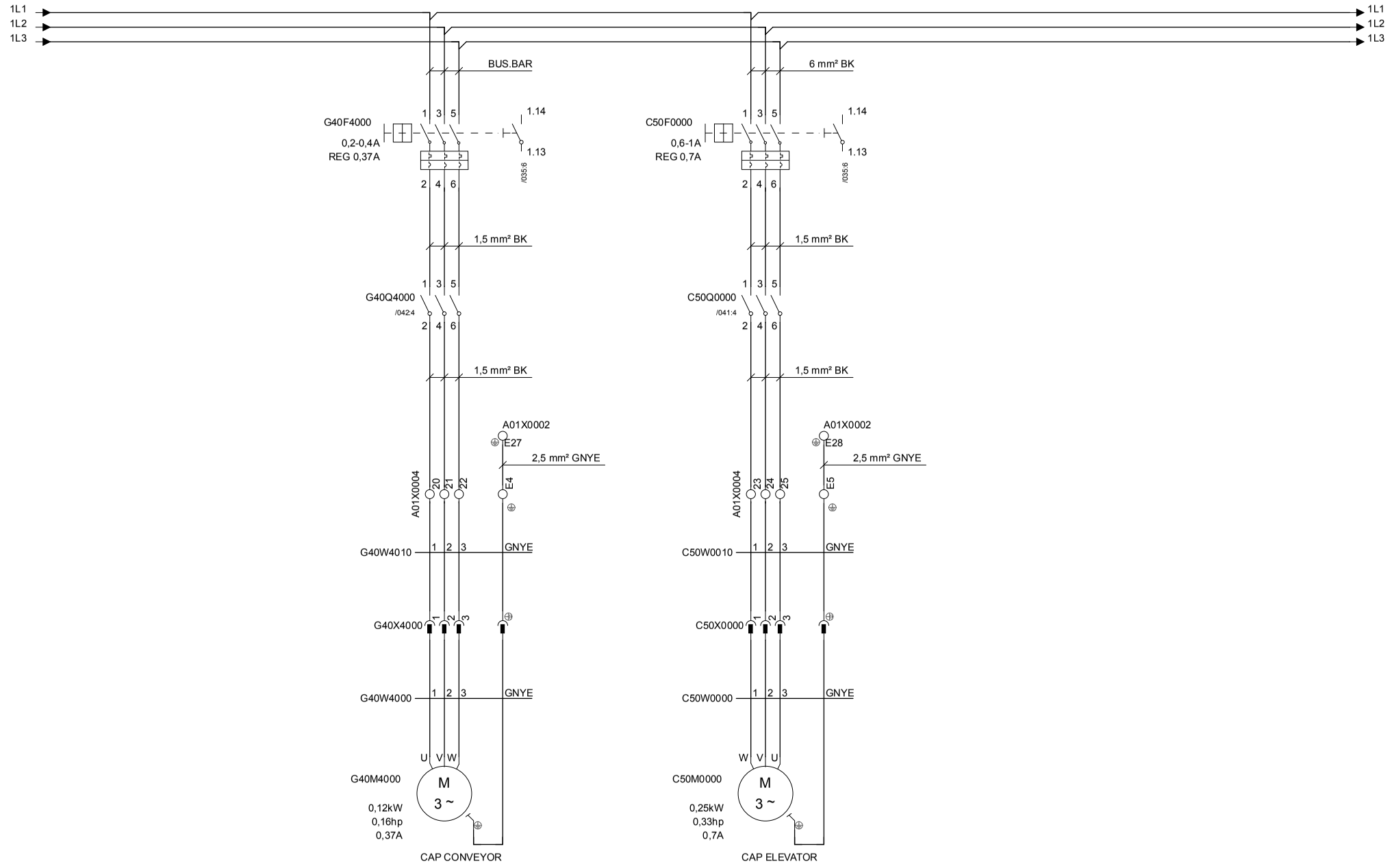

Tetra Pak®	Version Designer: ROG	Version Date: 2016-09-30	Machine: CAP30 Flex ScrewCap 0400	
	ECM No: 825145	Denomination: CIRCUIT DIAGRAM	Page Type: MOTORS CAP SORTER	
	Information Security Class: PUBLIC	Document No.: 3404507-0003	Doc. type: ELD	Version: AC / Page: 020

RELEASED

This drawing must not without the consent of Tetra Pak be copied, transmitted or disclosed to any third party.

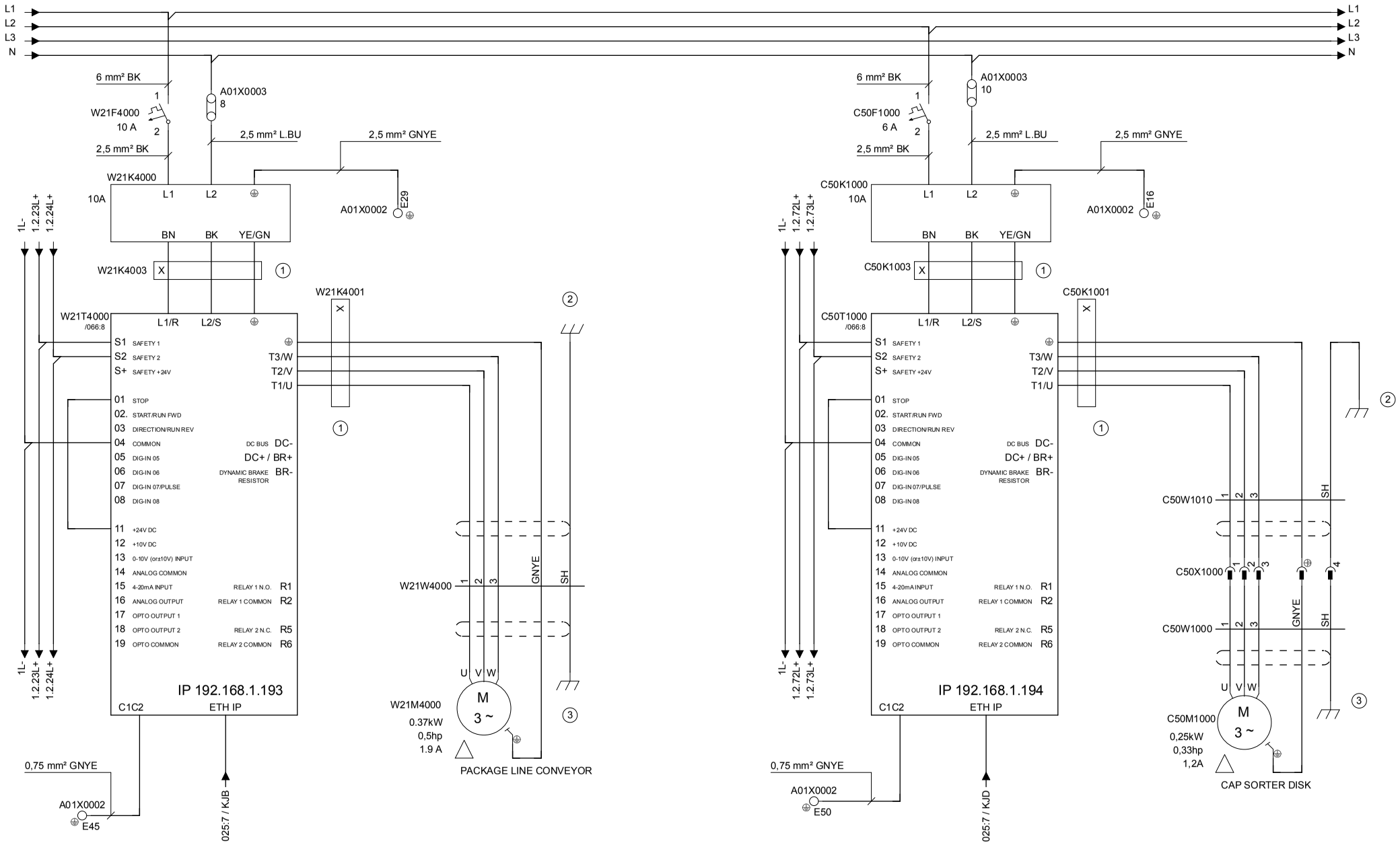

Tetra Pak®	Version Designer: ROG	Version Date: 2016-09-30	Machine: CAP30 Flex ScrewCap 0400				
	ECM No: 825145	Denomination: CIRCUIT DIAGRAM	Page Type: MOTORS				
	Information Security Class: PUBLIC	Document No.: 3404507-0003	Doc. type: ELD	Version: AC	Page: 021		

RELEASED

This drawing must not without the consent of Tetra Pak
be copied, transmitted or disclosed to any third party.

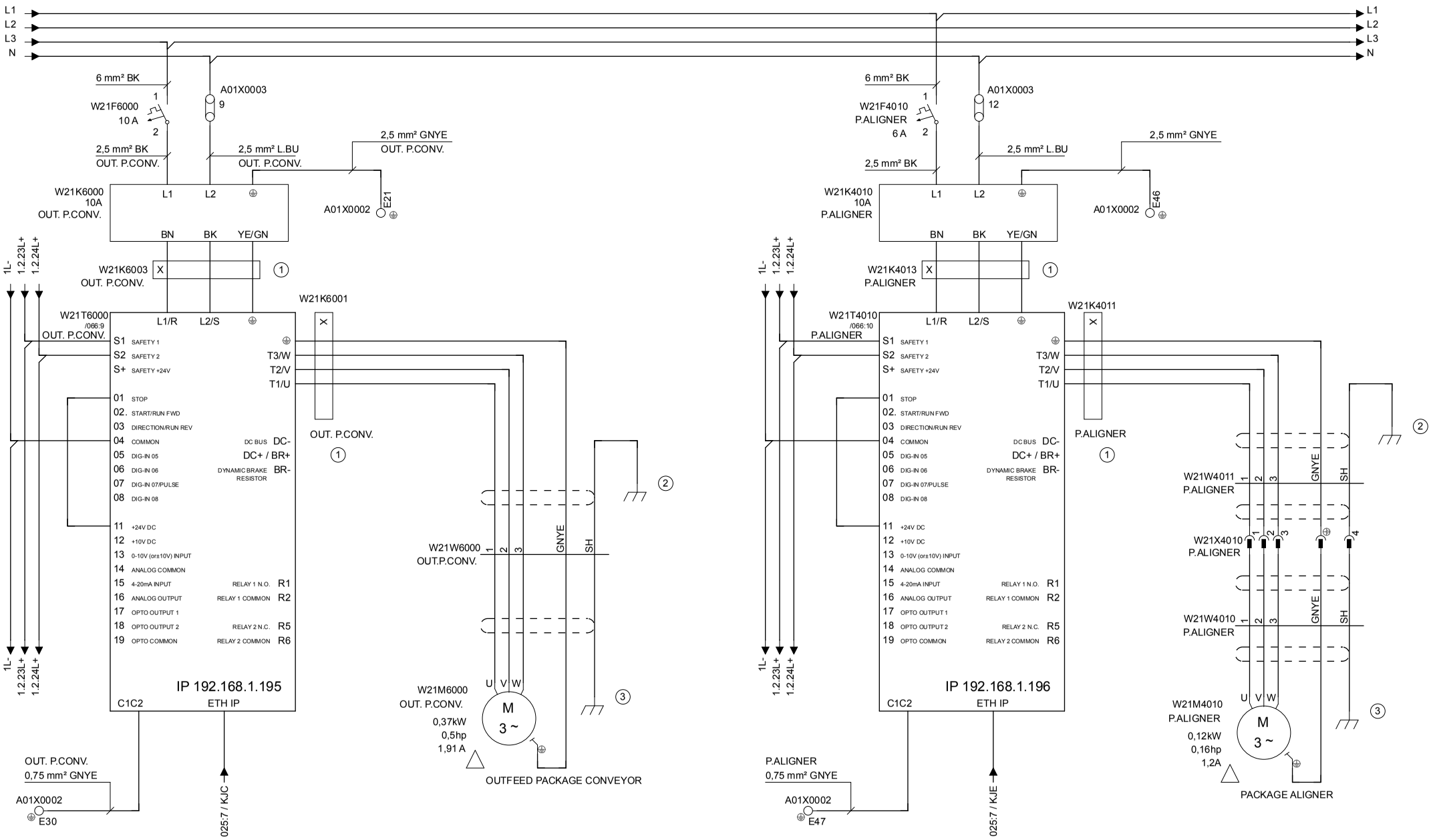

Tetra Pak®	Version Designer: ROG	Version Date: 2016-09-30	Machine: CAP30 Flex ScrewCap 0400		
	ECM No: 825145	Denomination: CIRCUIT DIAGRAM	Page Type: MOTORS		
	Information Security Class: PUBLIC	Document No.: 3404507-0003	Doc. type: ELD	Version: AC	Page: 022

RELEASED

This drawing must not without the consent of Tetra Pak be copied, transmitted or disclosed to any third party.

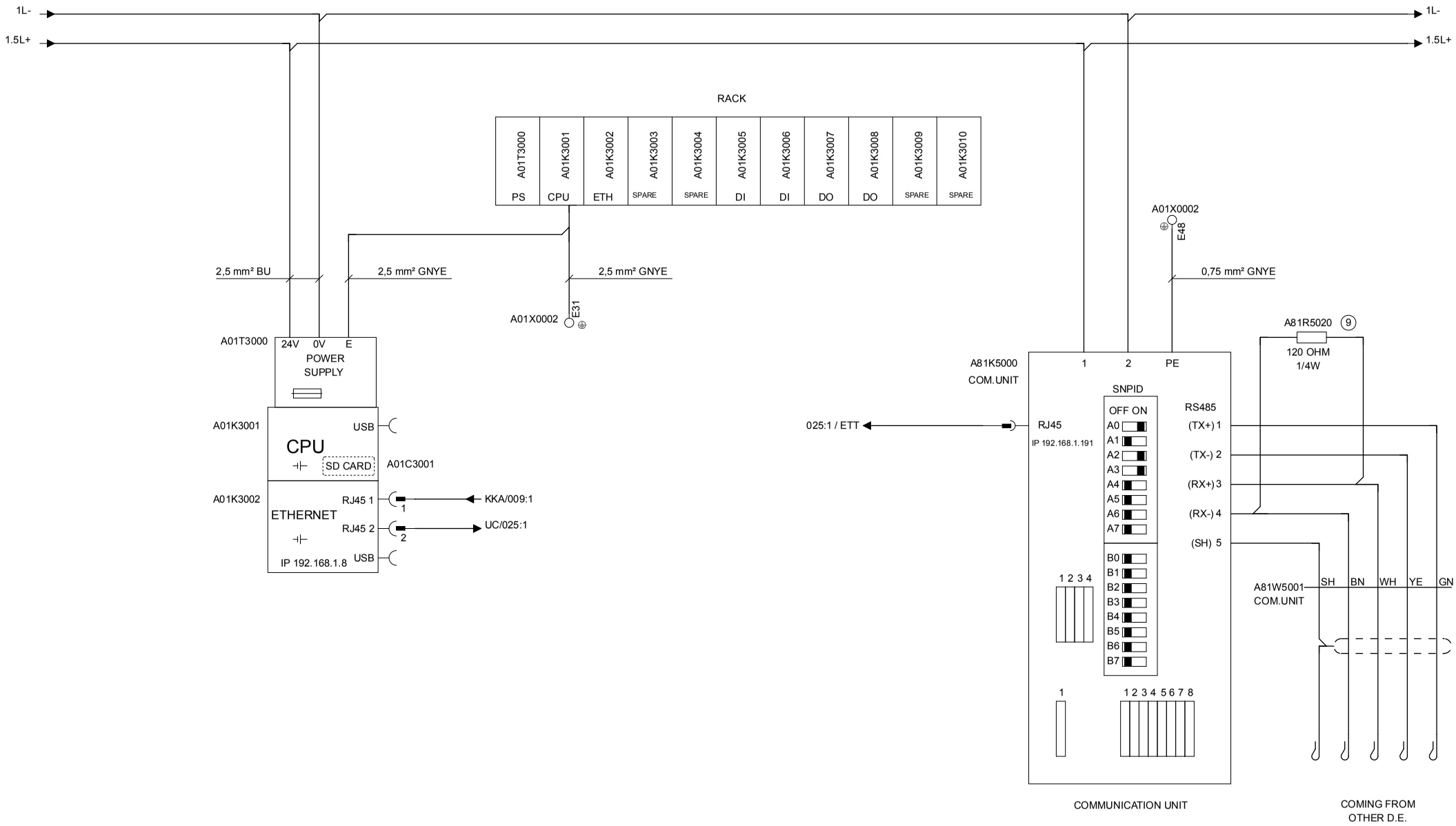

Tetra Pak®	Version Designer: ROG	Version Date: 2016-09-30	Machine: CAP30 Flex ScrewCap 0400	
	ECM No: 825145	Denomination: CIRCUIT DIAGRAM	Page Type: PLC RACK	
	Information Security Class: PUBLIC	Document No.: 3404507-0003	Doc. type: ELD	Version: AC / Page: 023

RELEASED

This drawing must not without the consent of Tetra Pak
be copied, transmitted or disclosed to any third party.

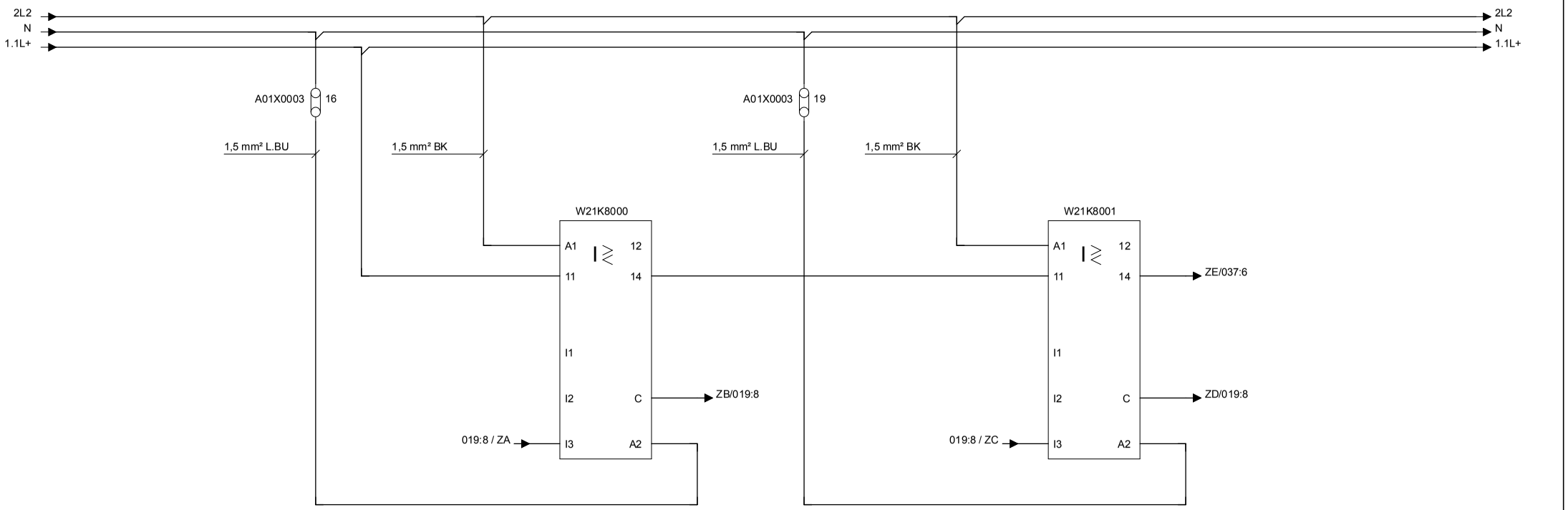

Tetra Pak®	Version Designer ROG	Version Date 2016-09-30	Machine CAP30 Flex ScrewCap 0400					
	ECM No 825145	Denomination CIRCUIT DIAGRAM	Page Type CURRENT CONTROL RELAY					
	Information Security Class PUBLIC	Document No. 3404507-0003	Doc. type ELD	Version AC	Page 024			

RELEASED

This drawing must not without the consent of Tetra Pak be copied, transmitted or disclosed to any third party.

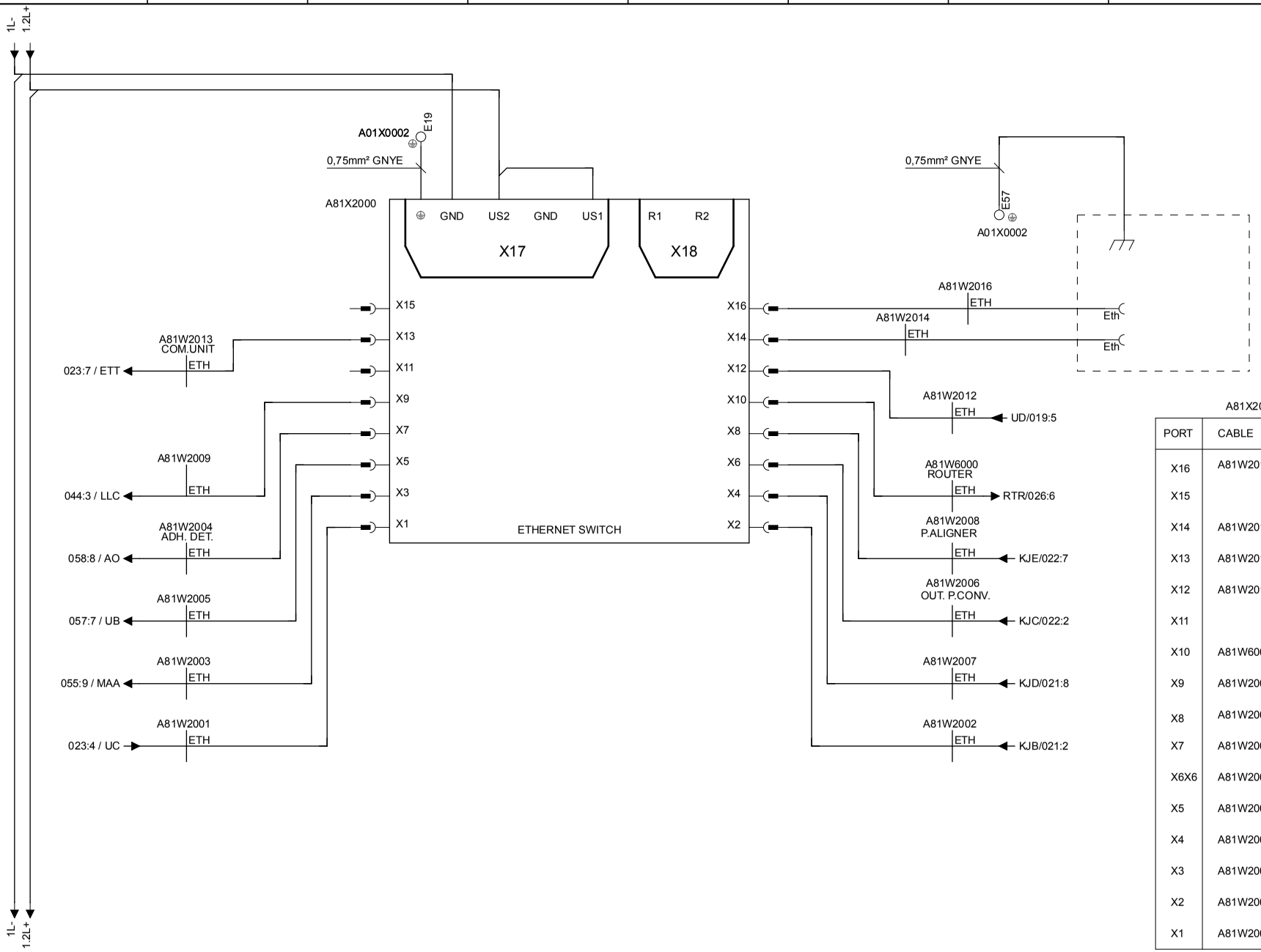

A81X2000 PORT RESERVATION

PORT	CABLE	DESCRIPTION
X16	A81W2016	A81X2016 - SERVICE PLUG
X15		RESERVED FOR LIFTING DEVICE
X14	A81W2014	A81X2014 - SERVICE PLUG
X13	A81W2013	COMMUNICATION UNIT (OPTIONAL)
X12	A81W2012	HOT MELT UNIT
X11		SPARE
X10	A81W6000	A81X6000 - ROUTER (OPTIONAL)
X9	A81W2009	A01K3020 - REMOTE I/O ADAPTER O.P.
X8	A81W2008	W21T4010 - PACKAGE ALIGNER
X7	A81W2004	G41B0000 - ADHESIVE DETECTOR
X6X6	A81W2006	W21T6000 - OUTFEED PACKAGE CONVEYOR
X5	A81W2005	G70B0000 - VISION SYSTEM DEVICE
X4	A81W2007	C50T1000 - CAP SORTER DISK
X3	A81W2003	A81K4120 - ARMOR BLOCK
X2	A81W2002	W21T4000 - PACKAGE LINE CONVEYOR
X1	A81W2001	A01K3002 - PLC

Tetra Pak®	Version Designer: ROG	Version Date: 2016-09-30	Machine: CAP30 Flex ScrewCap 0400	
	ECM No: 825145	Denomination: CIRCUIT DIAGRAM	Page Type: ETHERNET SWITCH	
	Information Security Class: PUBLIC	Document No.: 3404507-0003	Doc. type: ELD	Version: AC / Page: 025

RELEASED

This drawing must not without the consent of Tetra Pak be copied, transmitted or disclosed to any third party.

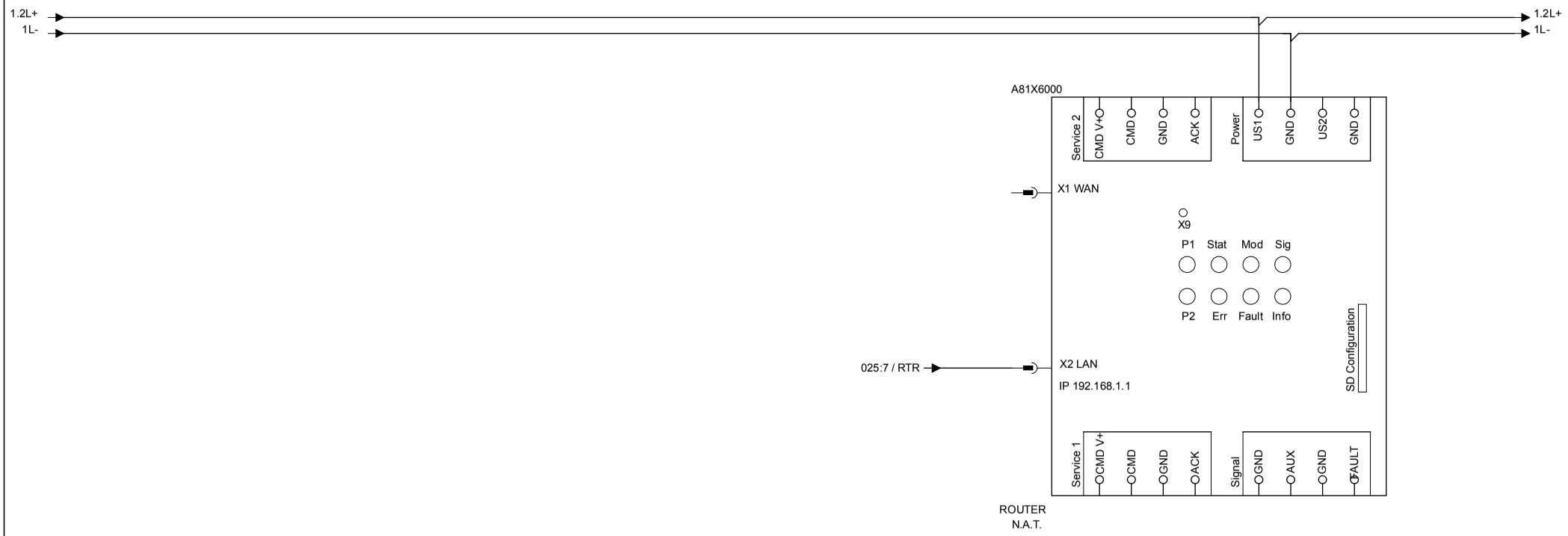

Tetra Pak®	Version Designer: ROG	Version Date: 2016-09-30	Machine: CAP30 Flex ScrewCap 0400				
	ECM No: 825145	Denomination: CIRCUIT DIAGRAM	Page Type: ROUTER				
	Information Security Class: PUBLIC	Document No.: 3404507-0003	Doc. type: ELD	Version: AC	Page: 026		

RELEASED

This drawing must not without the consent of Tetra Pak be copied, transmitted or disclosed to any third party.

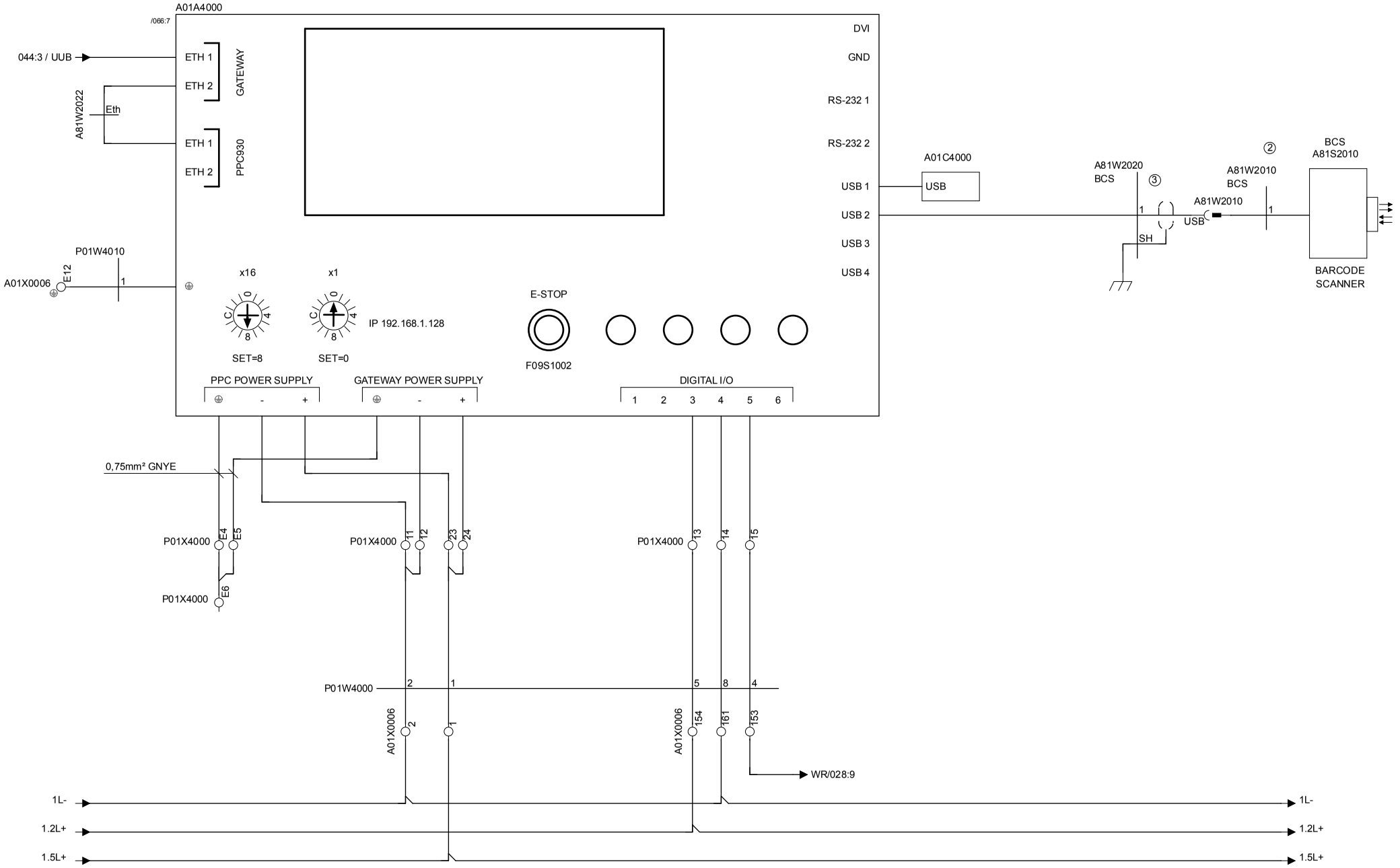

Tetra Pak®	Version Designer: ROG	Version Date: 2016-09-30	Machine: CAP30 Flex ScrewCap 0400	
	ECM No: 825145	Denomination: CIRCUIT DIAGRAM	Page Type: CONTROL PANEL	
	Information Security Class: PUBLIC	Document No.: 3404507-0003	Doc. type: ELD	Version: AC / Page: 027

RELEASED

This drawing must not without the consent of Tetra Pak
be copied, transmitted or disclosed to any third party.

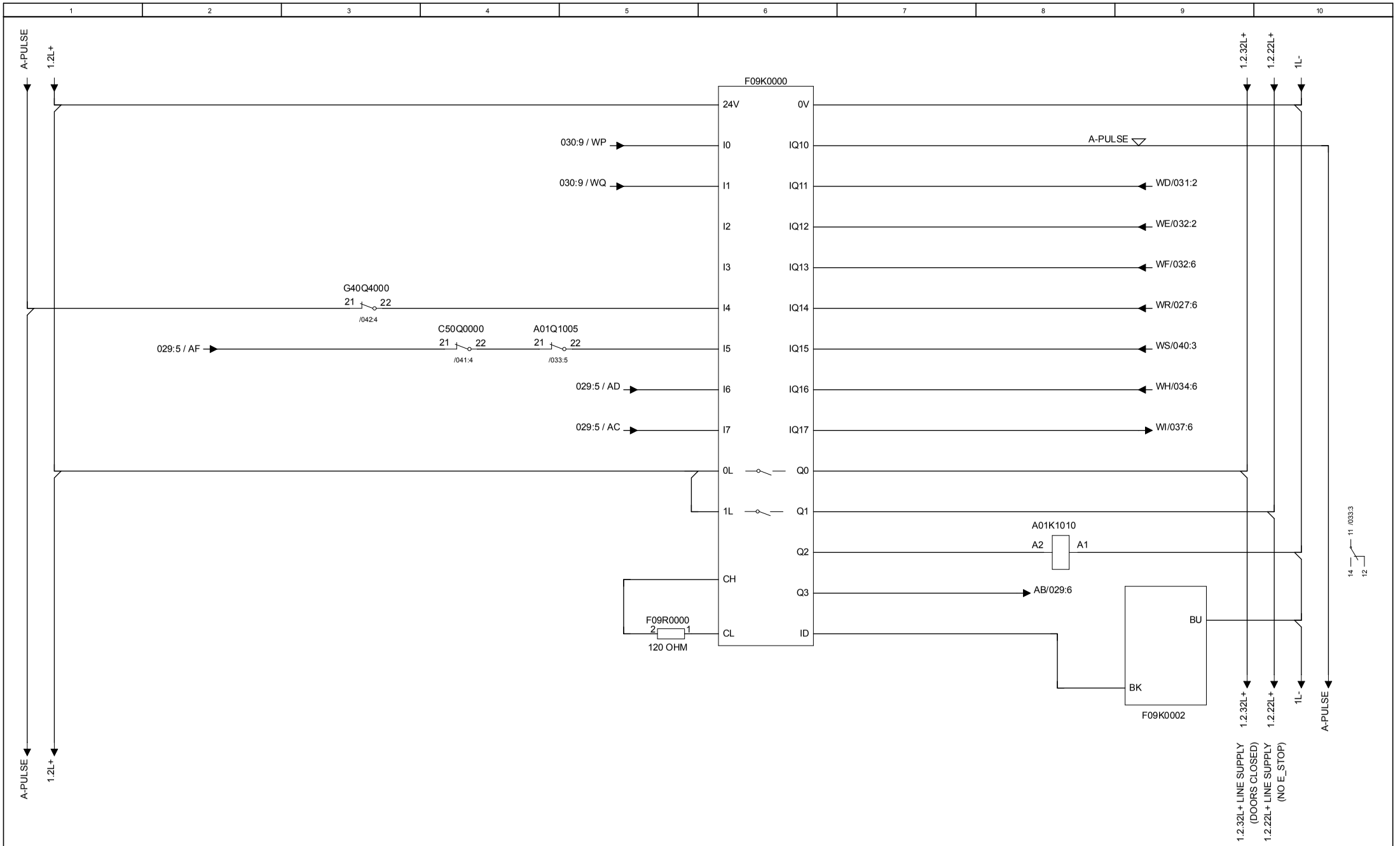

Tetra Pak®	Version Designer: ROG	Version Date: 2016-09-30	Machine: CAP30 Flex ScrewCap 0400		
	ECM No: 825145	Denomination: CIRCUIT DIAGRAM	Page Type: SAFETY RELAY		
	Information Security Class: PUBLIC	Document No.: 3404507-0003	Doc. type: ELD	Version: AC	Page: 028

RELEASED

This drawing must not without the consent of Tetra Pak
be copied, transmitted or disclosed to any third party.

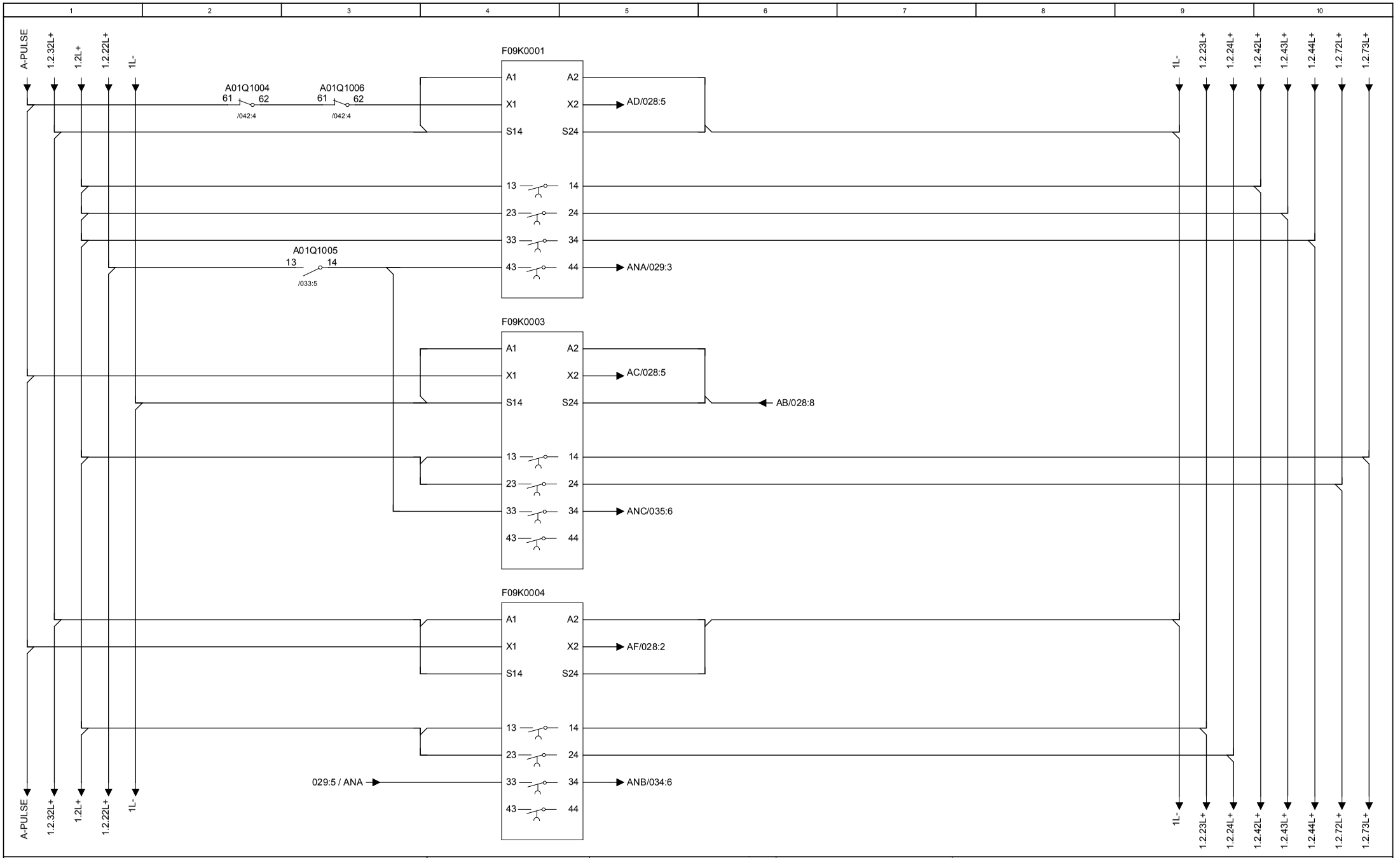

Tetra Pak®	Version Designer: ROG	Version Date: 2016-09-30	Machine: CAP30 Flex ScrewCap 0400	
	ECM No: 825145	Denomination: CIRCUIT DIAGRAM	Page Type: SAFETY RELAY	
	Information Security Class: PUBLIC	Document No.: 3404507-0003	Doc. type: ELD	Version: AC / Page: 029

RELEASED

This drawing must not without the consent of Tetra Pak
be copied, transmitted or disclosed to any third party.

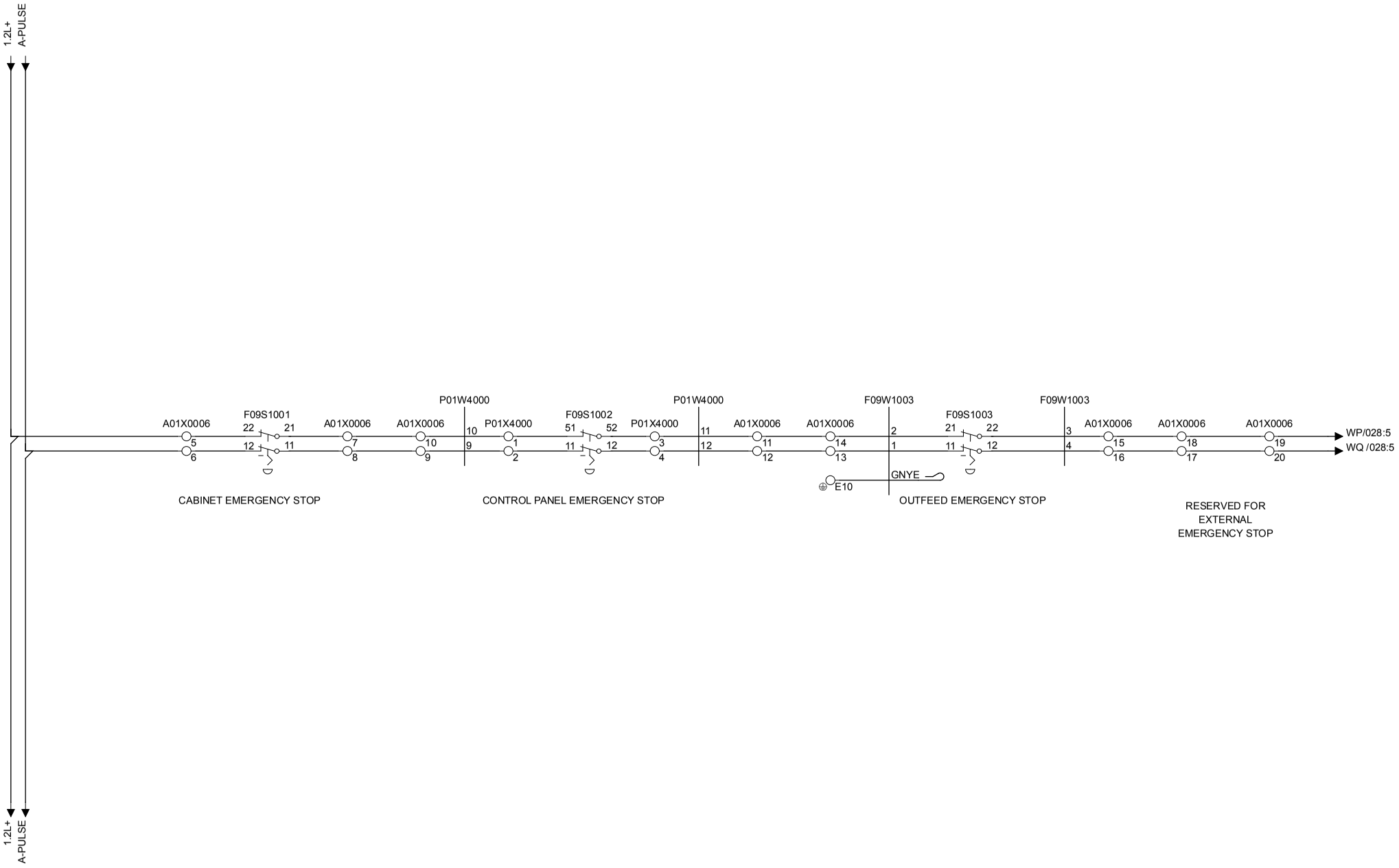

Tetra Pak®	Version Designer: ROG	Version Date: 2016-09-30	Machine: CAP30 Flex ScrewCap 0400	
	ECM No: 825145	Denomination: CIRCUIT DIAGRAM	Page Type: EMERGENCY STOP	
	Information Security Class: PUBLIC	Document No.: 3404507-0003	Doc. type: ELD	Version: AC / Page: 030

RELEASED

This drawing must not without the consent of Tetra Pak
be copied, transmitted or disclosed to any third party.

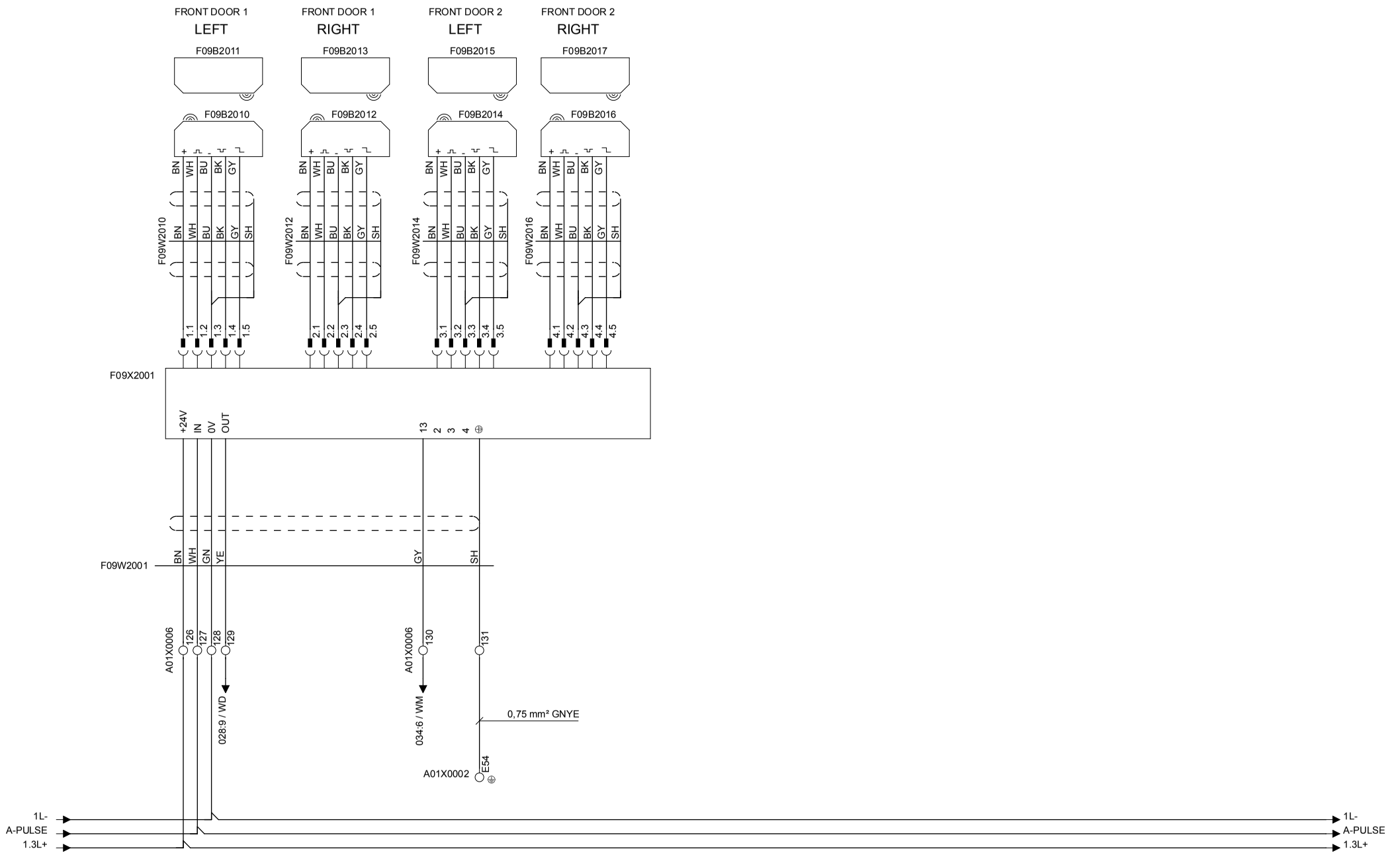

Tetra Pak®	Version Designer: ROG	Version Date: 2016-09-30	Machine: CAP30 Flex ScrewCap 0400	
	ECM No: 825145	Denomination: CIRCUIT DIAGRAM	Page Type: DOORS MONITORING (OPERATOR SIDE)	
	Information Security Class: PUBLIC	Document No.: 3404507-0003	Doc. type: ELD	Version: AC / Page: 031

RELEASED

This drawing must not without the consent of Tetra Pak be copied, transmitted or disclosed to any third party.

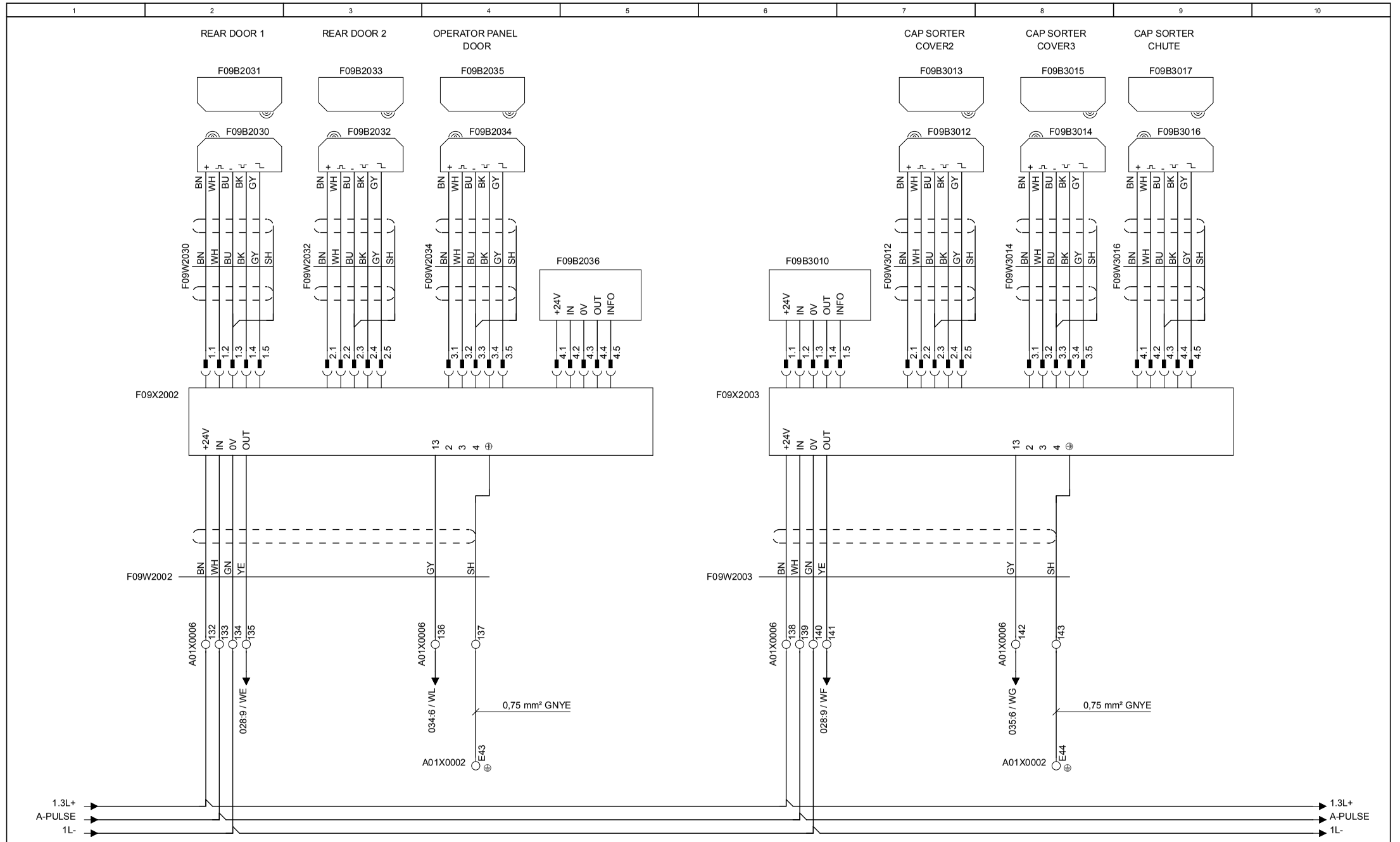

Tetra Pak®	Version Designer: ROG	Version Date: 2016-09-30	Machine: CAP30 Flex ScrewCap 0400		
	ECM No: 825145	Denomination: CIRCUIT DIAGRAM	Page Type: DOORS AND COVERS MONITOR		
	Information Security Class: PUBLIC	Document No.: 3404507-0003	Doc. type: ELD	Version: AC	Page: 032

RELEASED

This drawing must not without the consent of Tetra Pak
be copied, transmitted or disclosed to any third party.

1	2	3	4	5	6	7	8	9	10

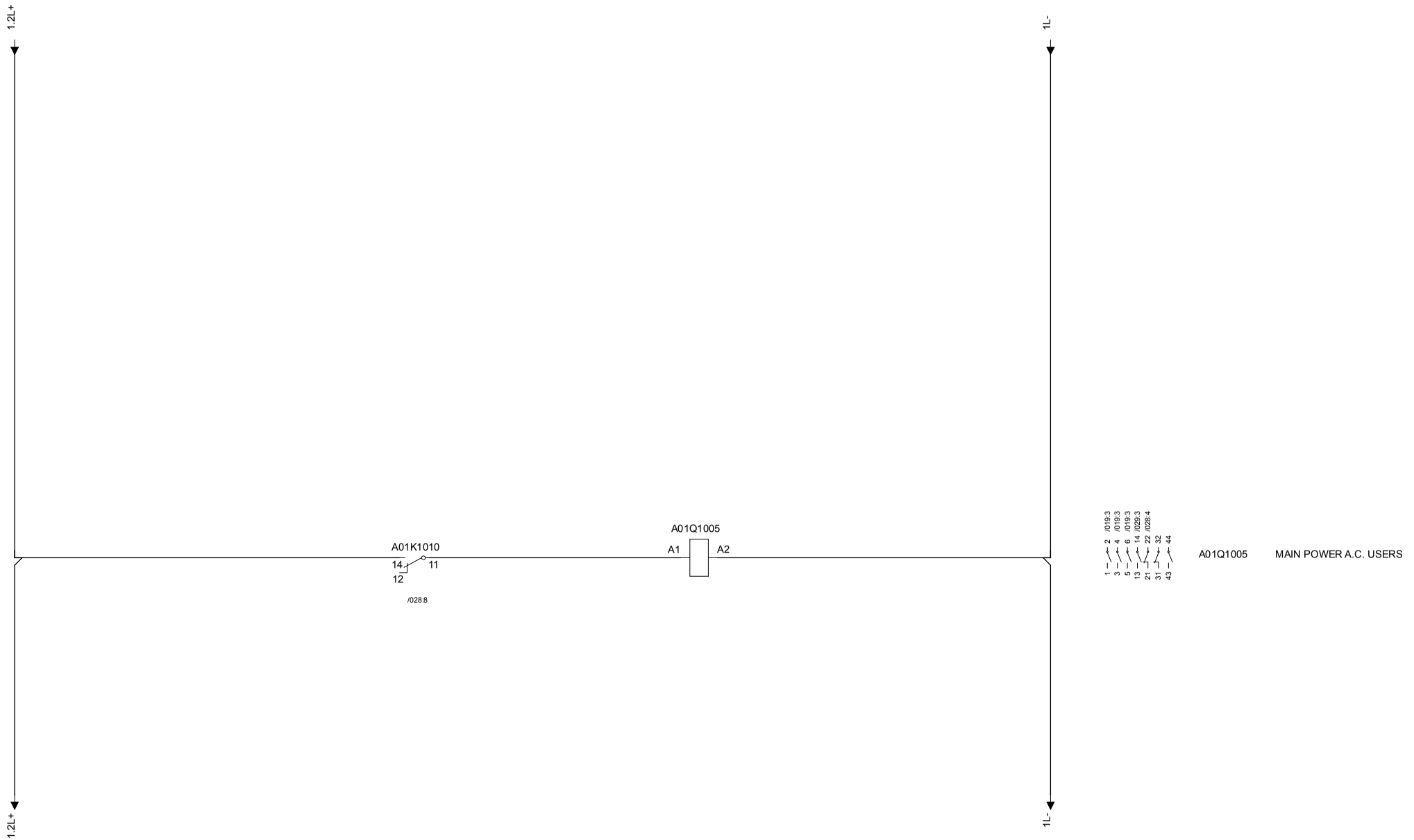

Tetra Pak®	Version Designer: ROG	Version Date: 2016-09-30	Machine: CAP30 Flex ScrewCap 0400	
	ECM No: 825145	Denomination: CIRCUIT DIAGRAM	Page Type: POWER ON TO THE MOTORS	
	Information Security Class: PUBLIC	Document No.: 3404507-0003	Doc. type: ELD	Version: AC / Page: 033

RELEASED

This drawing must not without the consent of Tetra Pak
be copied, transmitted or disclosed to any third party.

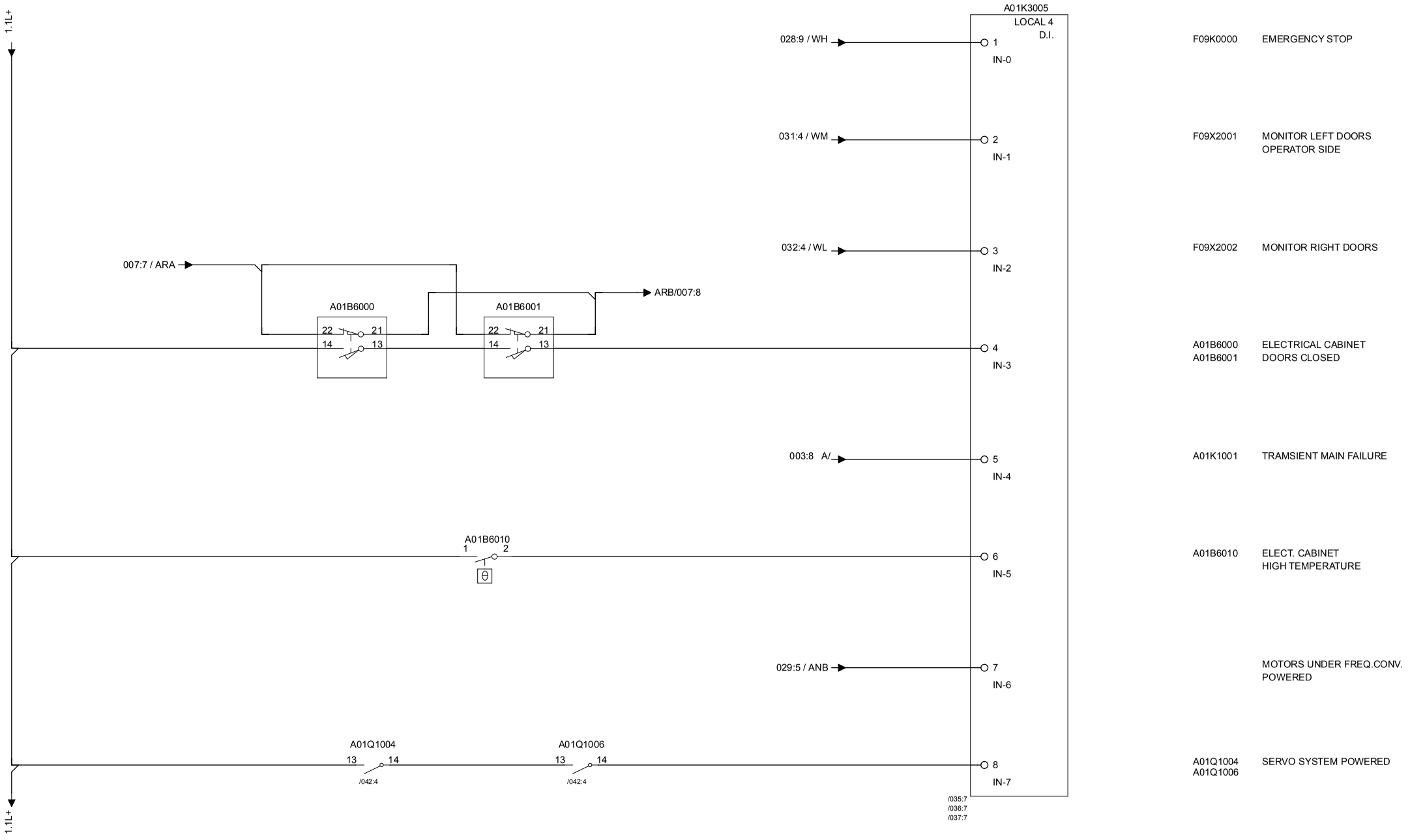

Tetra Pak®	Version Designer: ROG	Version Date: 2016-09-30	Machine: CAP30 Flex ScrewCap 0400	
	ECM No: 825145	Denomination: CIRCUIT DIAGRAM	Page Type: PLC IN	
	Information Security Class: PUBLIC	Document No.: 3404507-0003	Doc. type: ELD	Version: AC / Page: 034

RELEASED

This drawing must not without the consent of Tetra Pak
be copied, transmitted or disclosed to any third party.

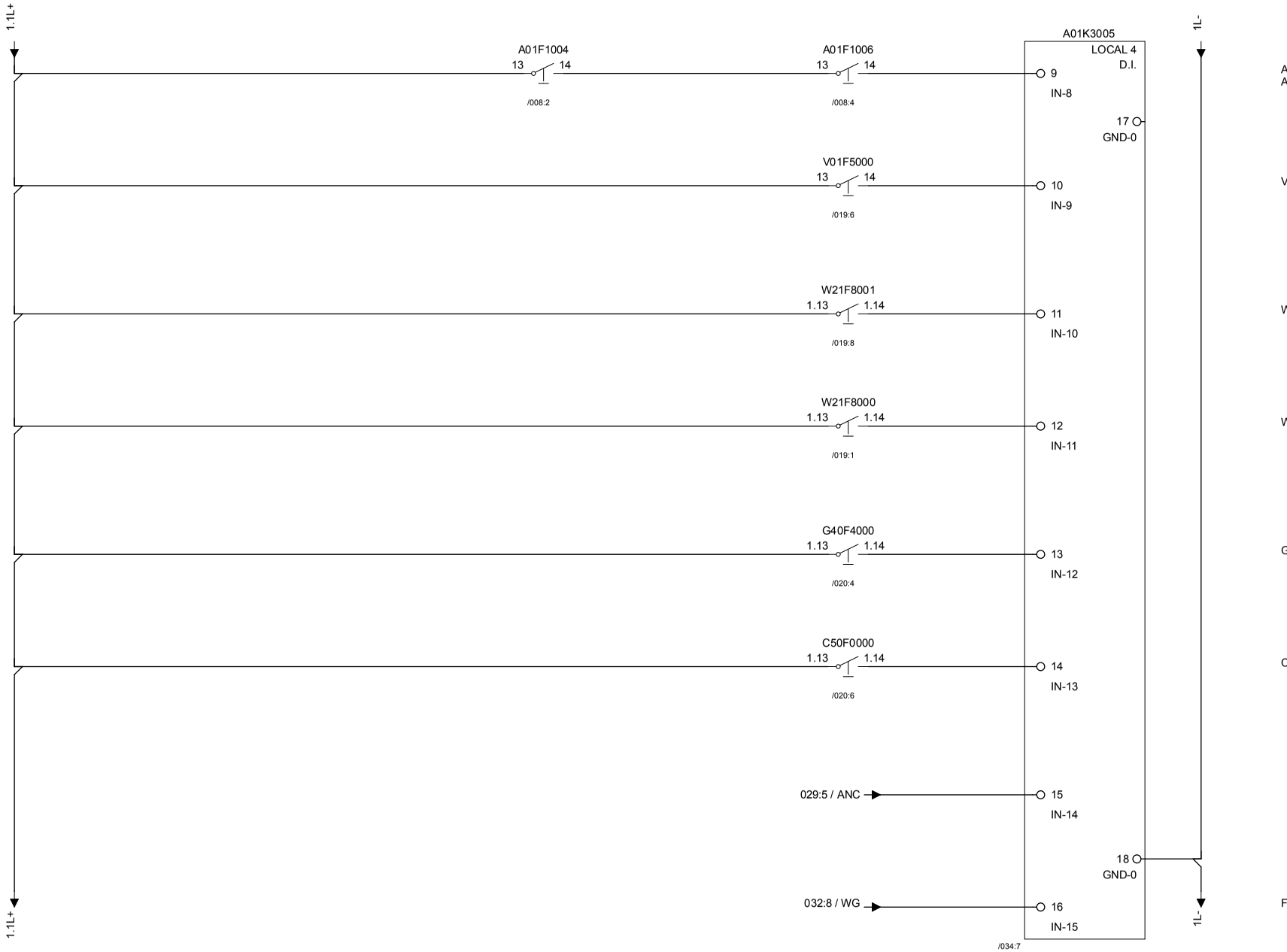

A01F1004 A01F1006	NO OVERLOAD PROTECTION SERVO SYSTEM
V01F5000	NO OVERLOAD PROTECTION HOT MELT UNIT
W21F8001	NO OVERLOAD PROTECTION PACKAGE PREHEATER
W21F8000	NO OVERLOAD PROTECTION AIR PUMP
G40F4000	NO OVERLOAD PROTECTION CAP CONVEYOR
C50F0000	NO OVERLOAD PROTECTION CAP ELEVATOR
	CAP SORTER DISK POWERED
F09X2003	MONITOR CAP SORTER DOOR

Tetra Pak®	Version Designer: ROG	Version Date: 2016-09-30	Machine: CAP30 Flex ScrewCap 0400	
	ECM No: 825145	Denomination: CIRCUIT DIAGRAM	Page Type: PLC IN	
	Information Security Class: PUBLIC	Document No.: 3404507-0003	Doc. type: ELD	Version: AC	Page: 035

This drawing must not without the consent of Tetra Pak
be copied, transmitted or disclosed to any third party.

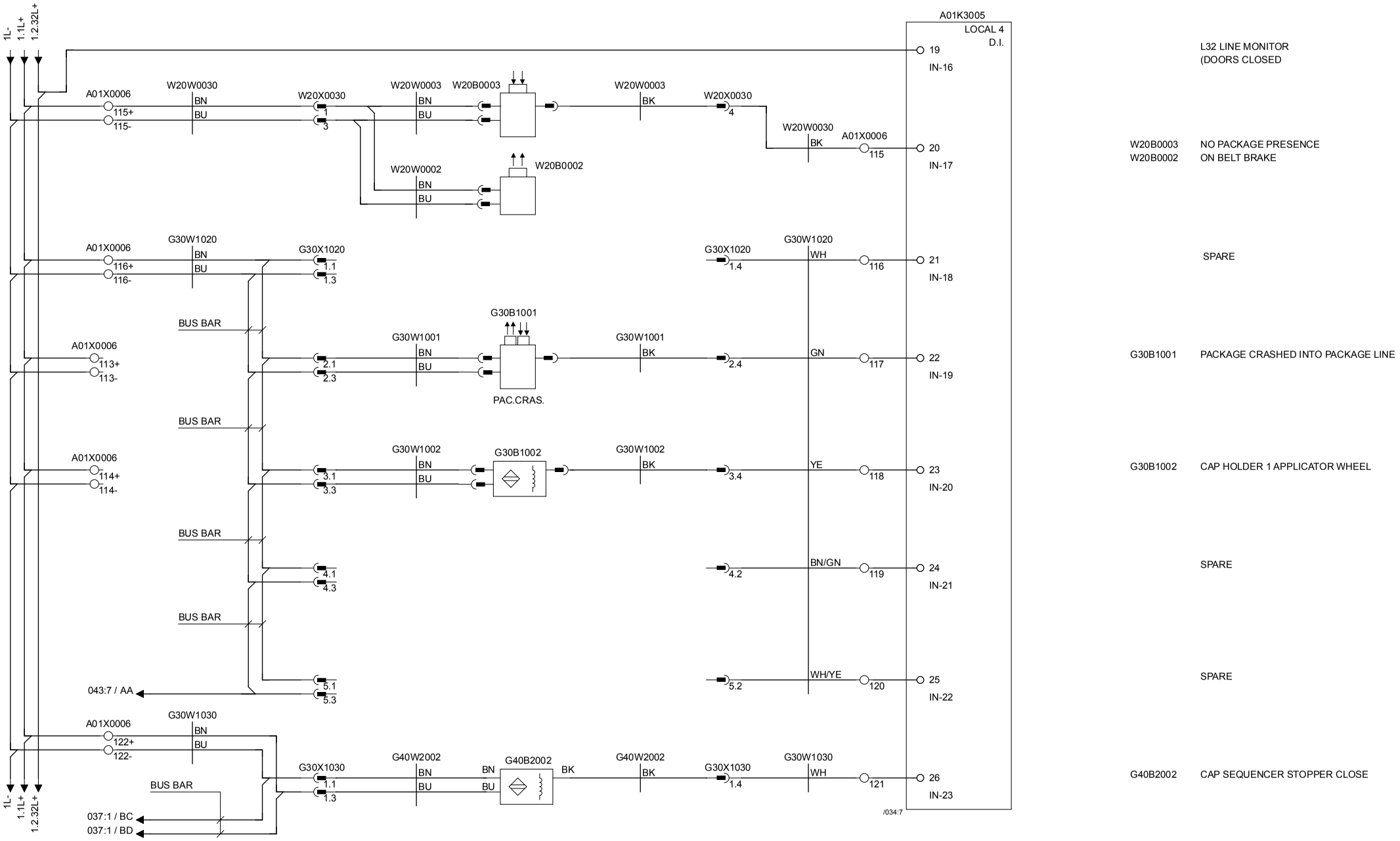

Tetra Pak®	Version Designer: ROG	Version Date: 2016-09-30	Machine: CAP30 Flex ScrewCap 0400	
	ECM No: 825145	Denomination: CIRCUIT DIAGRAM	Page Type: PLC IN	
	Information Security Class: PUBLIC	Document No.: 3404507-0003	Doc. type: ELD	Version: AC	Page: 036

RELEASED

This drawing must not without the consent of Tetra Pak be copied, transmitted or disclosed to any third party.

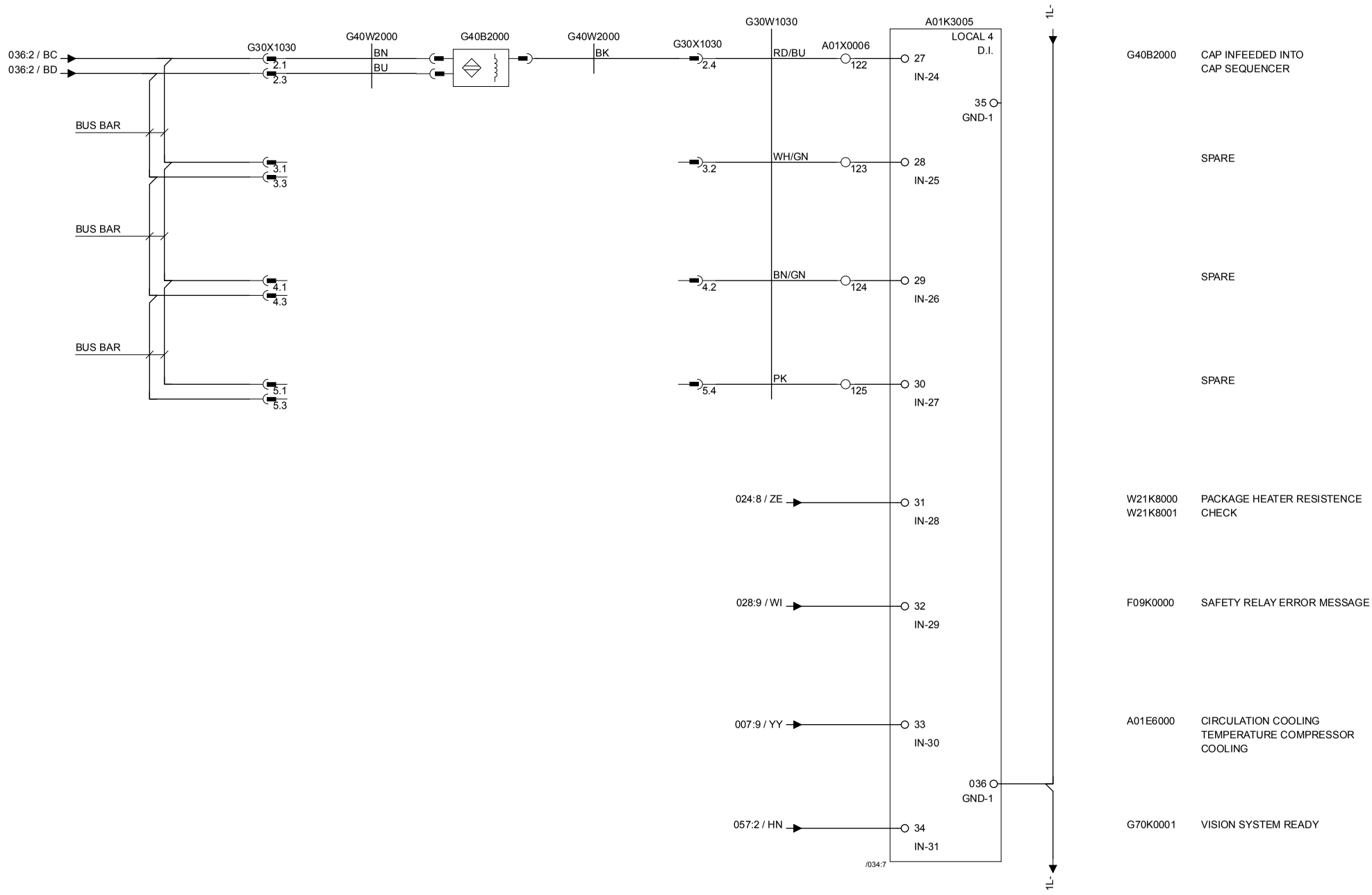

Tetra Pak®	Version Designer: ROG	Version Date: 2016-09-30	Machine: CAP30 Flex ScrewCap 0400				
	ECM No: 825145	Denomination: CIRCUIT DIAGRAM	Page Type: PLC IN				
	Information Security Class: PUBLIC	Document No.: 3404507-0003	Doc. type: ELD	Version: AC	Page: 037		

RELEASED

This drawing must not without the consent of Tetra Pak be copied, transmitted or disclosed to any third party.

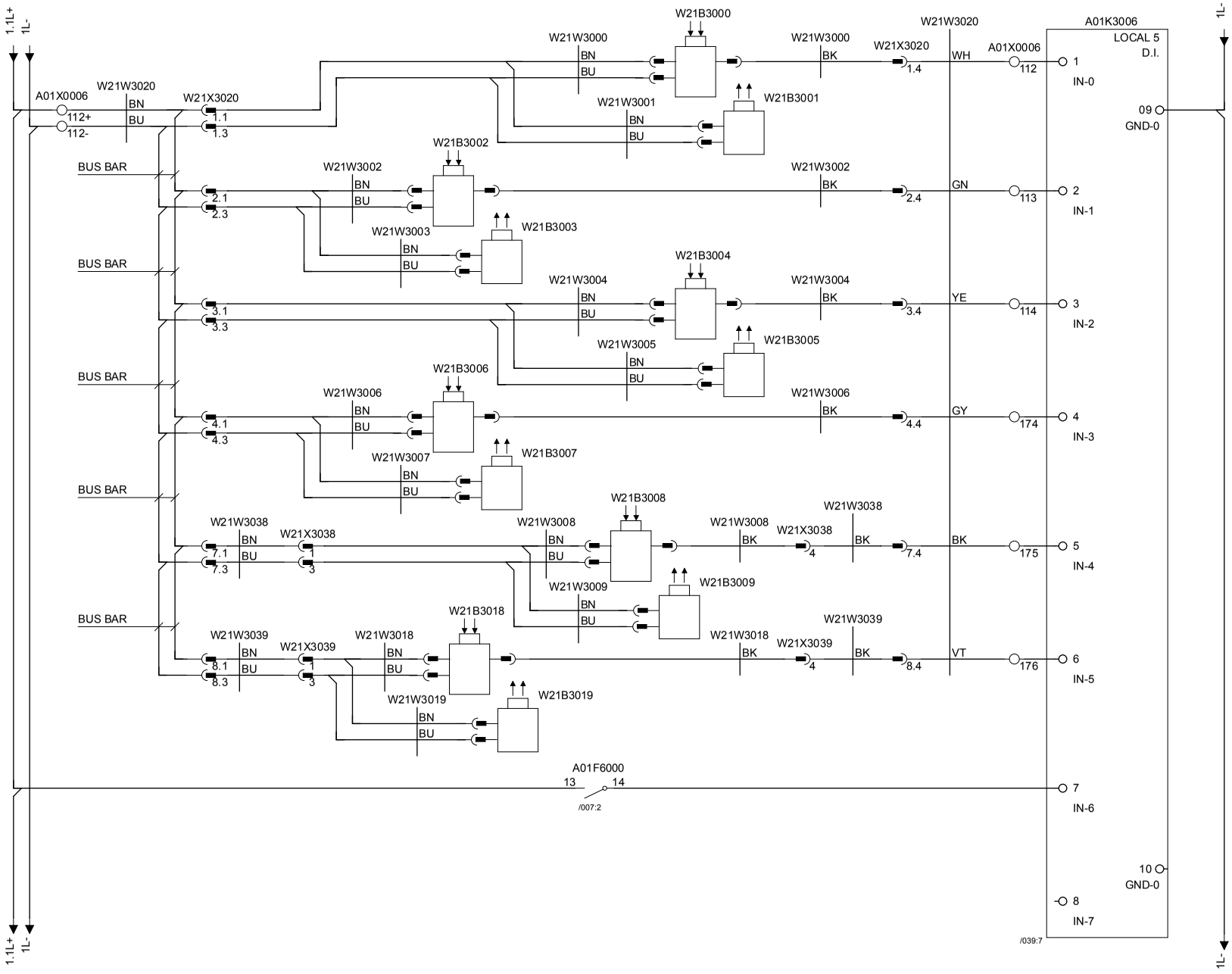

W21B3000 W21B3001	CAP DETECTION ON PACKAGE
W21B3002 W21B3003	PACKAGE DETECTION
W21B3004 W21B3005	OBJECT DETECTION ON PACKAGE CONVEYOR
W21B3006 W21B3007	PACKAGE DETECTION 2
W21B3008 W21B3009	CAP DETECTION POSITION 2
W21B3018 W21B3019	PACKAGE DETECTION POSITION 3 ONLY FOR TGA
A01F6000	AIR CONDITION OVERLOAD PROTECTION
	RESERVED

Tetra Pak®	Version Designer: ROG	Version Date: 2016-09-30	Machine: CAP30 Flex ScrewCap 0400	
	ECM No: 825145	Denomination: CIRCUIT DIAGRAM	Page Type: PLC IN	
	Information Security Class: PUBLIC	Document No.: 3404507-0003	Doc. type: ELD	Version: AC	Page: 038

RELEASED

This drawing must not without the consent of Tetra Pak be copied, transmitted or disclosed to any third party.

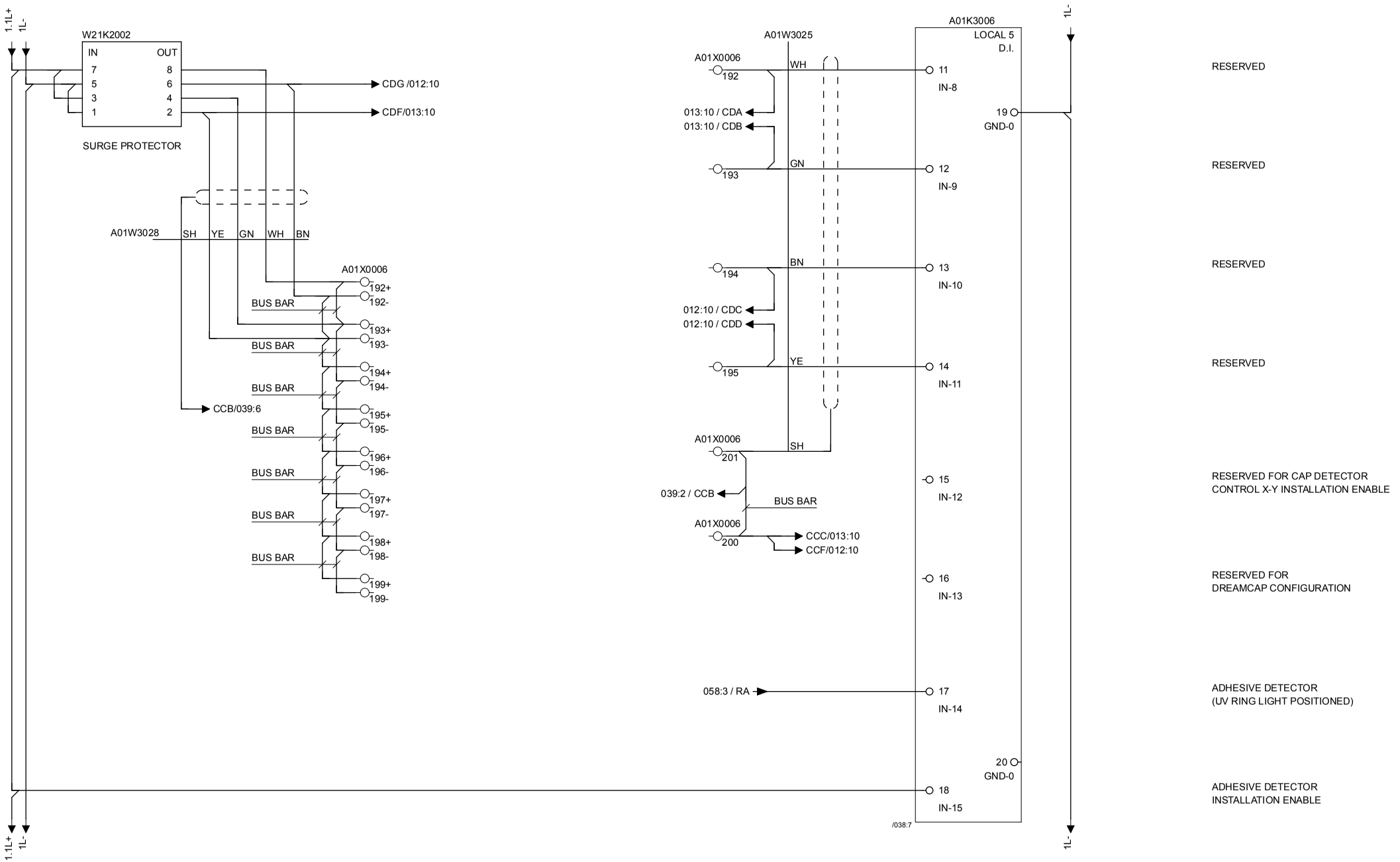

Tetra Pak®	Version Designer: ROG	Version Date: 2016-09-30	Machine: CAP30 Flex ScrewCap 0400	
	ECM No: 825145	Denomination: CIRCUIT DIAGRAM	Page Type: PLC IN	
	Information Security Class: PUBLIC	Document No.: 3404507-0003	Doc. type: ELD	Version: AC / Page: 039

RELEASED

This drawing must not without the consent of Tetra Pak be copied, transmitted or disclosed to any third party.

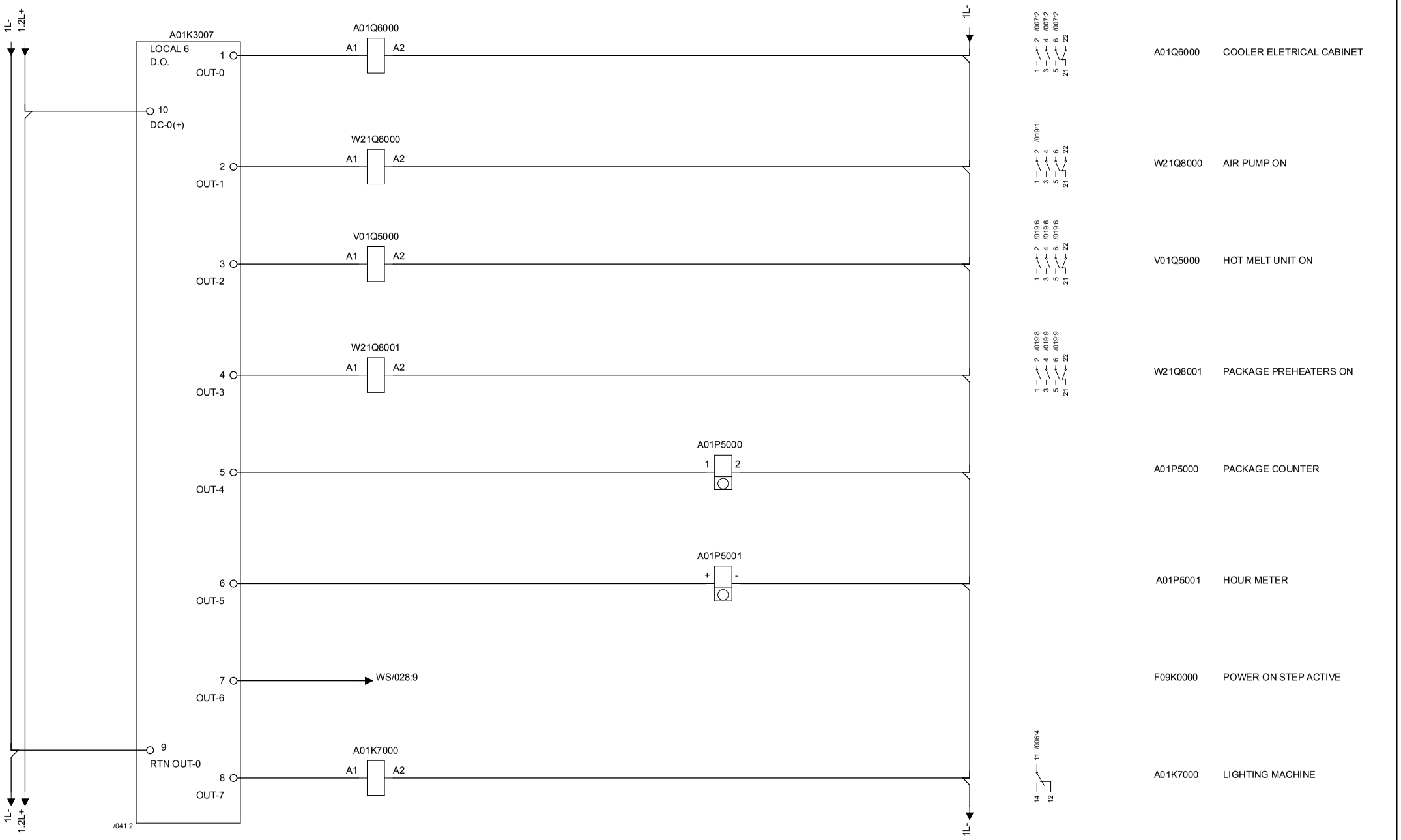

Tetra Pak®	Version Designer: ROG	Version Date: 2016-09-30	Machine: CAP30 Flex ScrewCap 0400	
	ECM No: 825145	Denomination: CIRCUIT DIAGRAM	Page Type: PLC OUT	
	Information Security Class: PUBLIC	Document No.: 3404507-0003	Doc. type: ELD	Version: AC / Page: 040

RELEASED

This drawing must not without the consent of Tetra Pak
be copied, transmitted or disclosed to any third party.

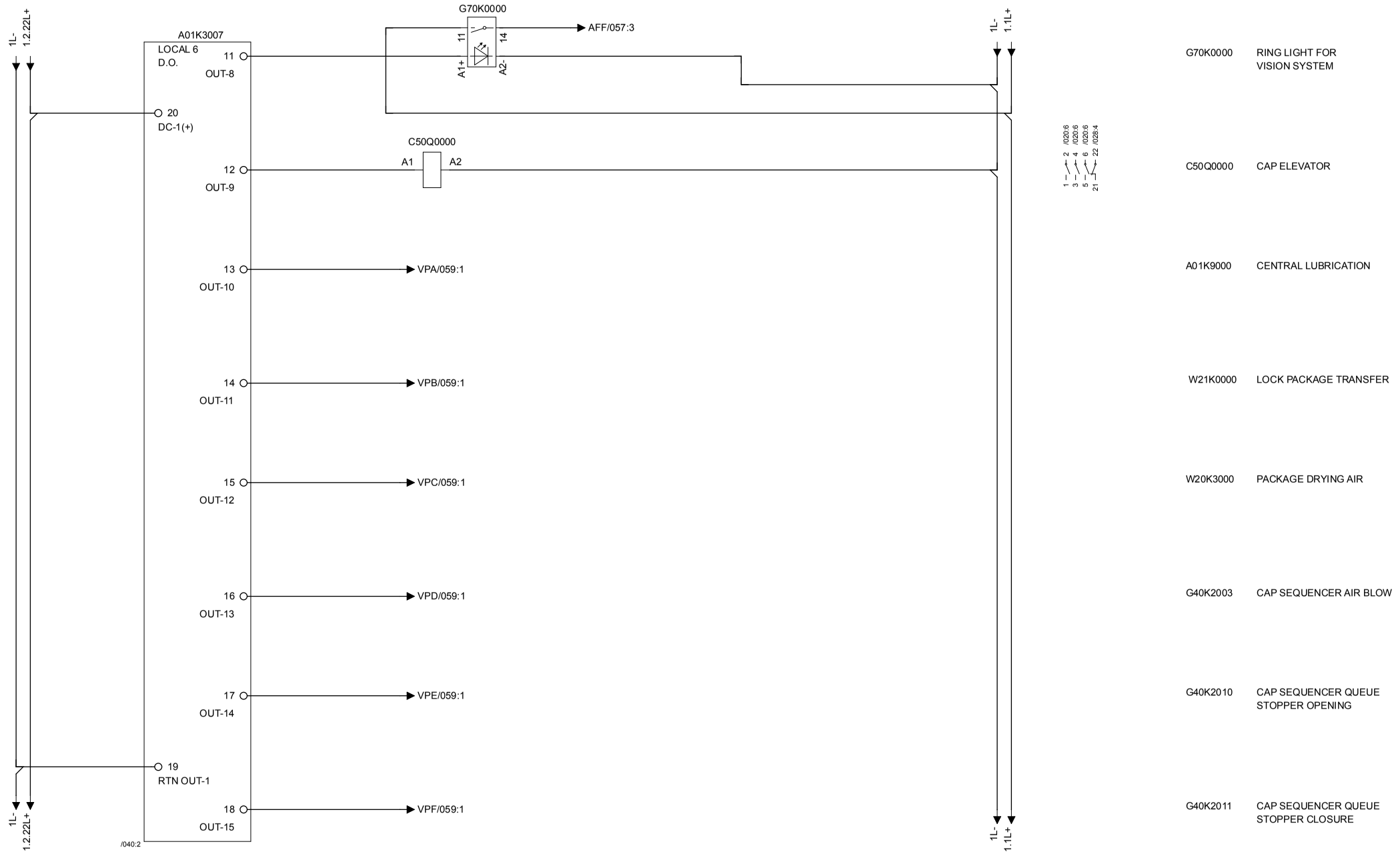

Tetra Pak®	Version Designer: ROG	Version Date: 2016-09-30	Machine: CAP30 Flex ScrewCap 0400				
	ECM No: 825145	Denomination: CIRCUIT DIAGRAM	Page Type: PLC OUT				
	Information Security Class: PUBLIC	Document No.: 3404507-0003	Doc. type: ELD	Version: AC	Page: 041		

RELEASED

This drawing must not without the consent of Tetra Pak
be copied, transmitted or disclosed to any third party.

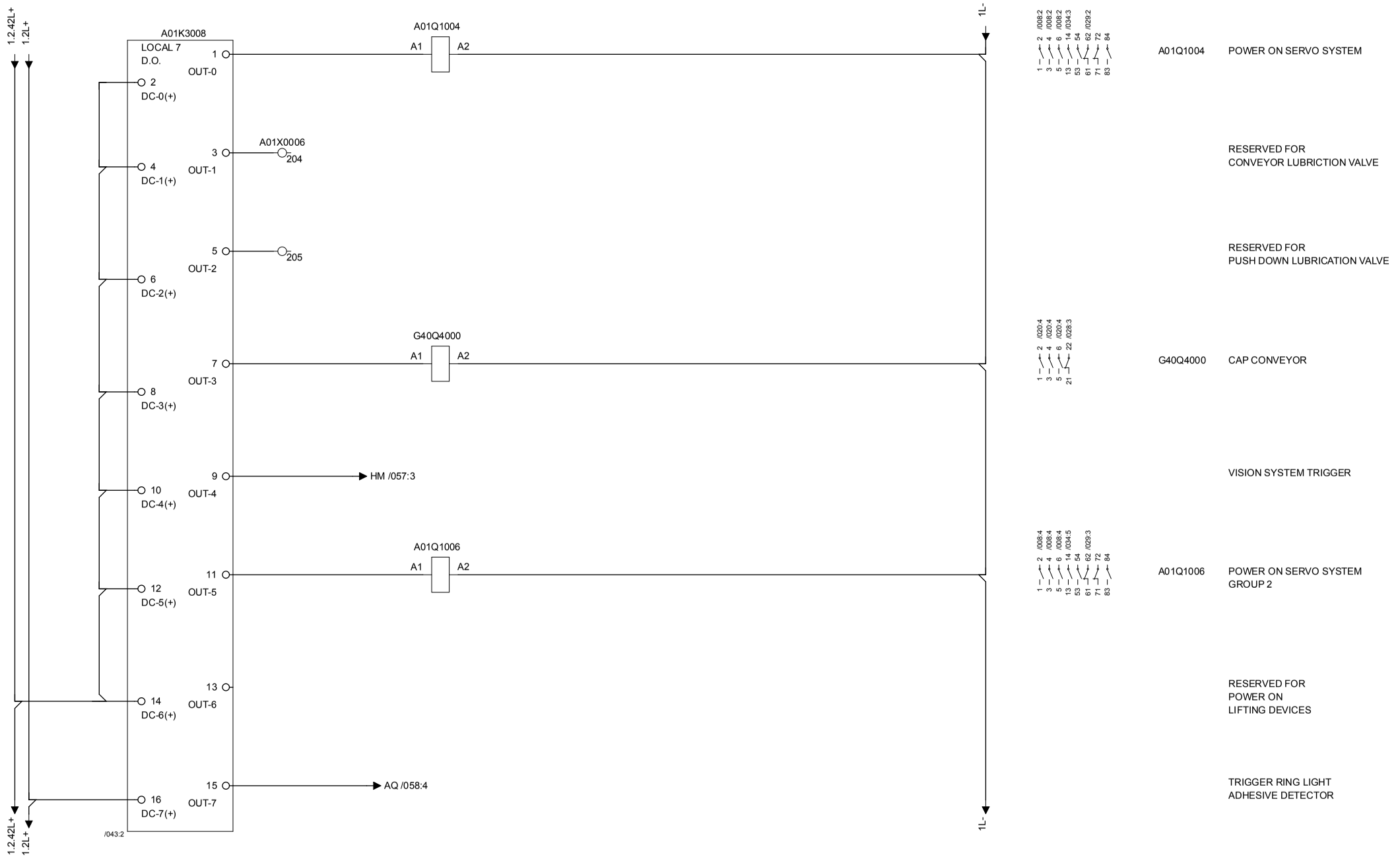

A01Q1004	POWER ON SERVO SYSTEM
	RESERVED FOR CONVEYOR LUBRICTION VALVE
	RESERVED FOR PUSH DOWN LUBRICATION VALVE
G40Q4000	CAP CONVEYOR
	VISION SYSTEM TRIGGER
A01Q1006	POWER ON SERVO SYSTEM GROUP 2
	RESERVED FOR POWER ON LIFTING DEVICES
	TRIGGER RING LIGHT ADHESIVE DETECTOR

Tetra Pak®	Version Designer: ROG	Version Date: 2016-09-30	Machine: CAP30 Flex ScrewCap 0400			
	ECM No: 825145	Denomination: CIRCUIT DIAGRAM	Page Type: PLC OUT			
	Information Security Class: PUBLIC	Document No.: 3404507-0003	Doc. type: ELD	Version: AC	Page: 042	

RELEASED

This drawing must not without the consent of Tetra Pak
be copied, transmitted or disclosed to any third party.

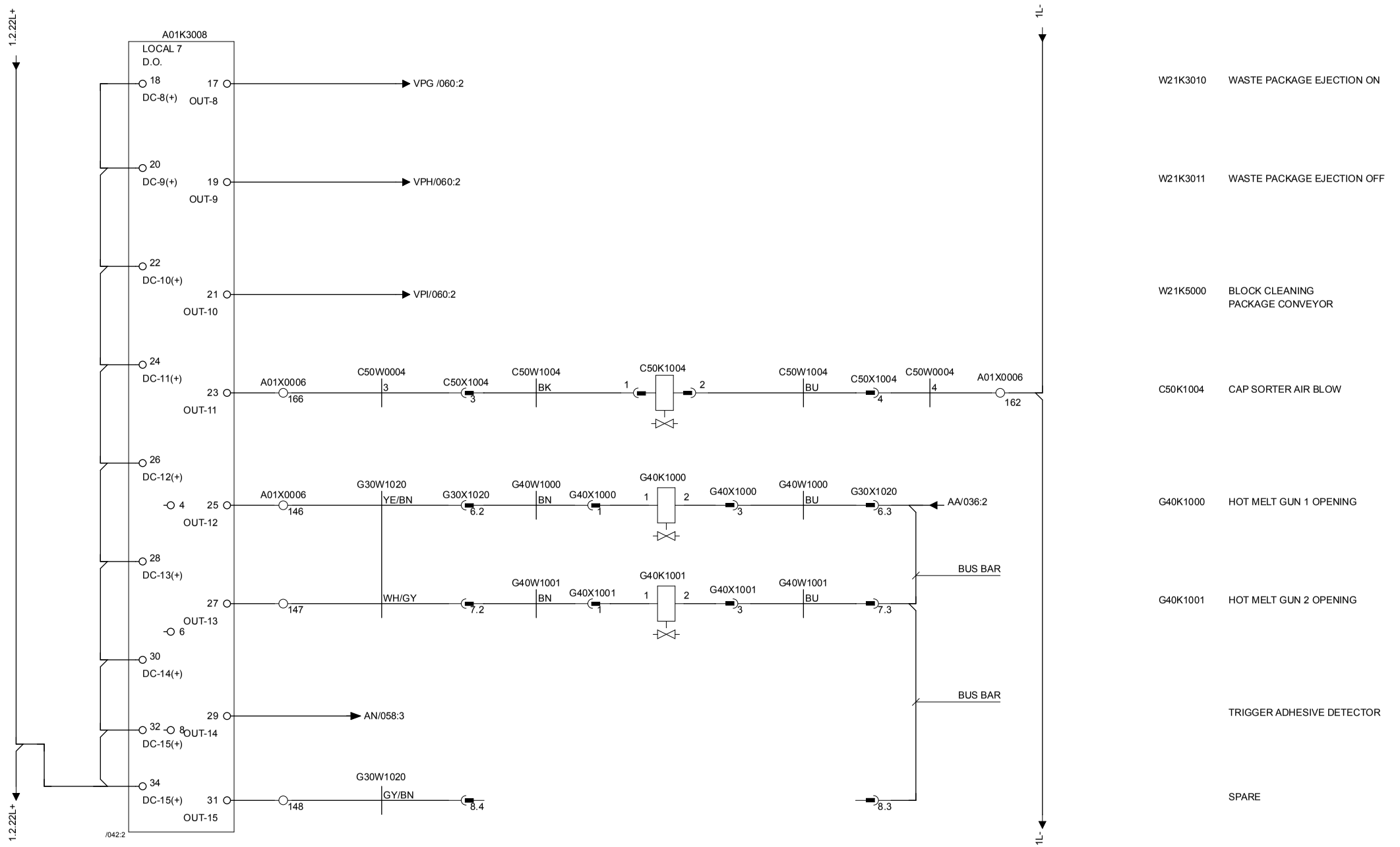

Tetra Pak®	Version Designer: ROG	Version Date: 2016-09-30	Machine: CAP30 Flex ScrewCap 0400	
	ECM No: 825145	Denomination: CIRCUIT DIAGRAM	Page Type: PLC OUT	
	Information Security Class: PUBLIC	Document No.: 3404507-0003	Doc. type: ELD	Version: AC / Page: 043

This drawing must not without the consent of Tetra Pak
be copied, transmitted or disclosed to any third party.

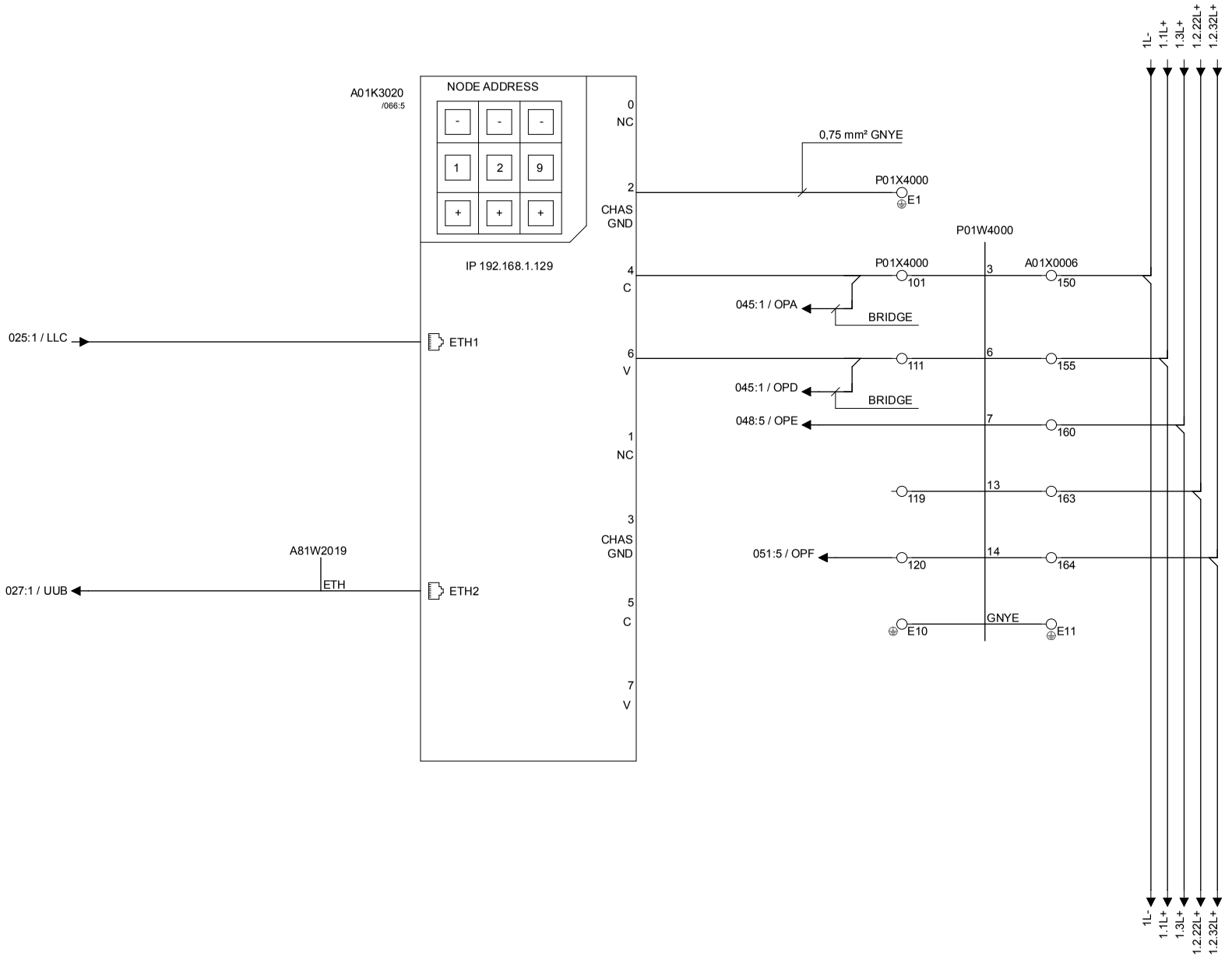

Tetra Pak®	Version Designer: ROG	Version Date: 2016-09-30	Machine: CAP30 Flex ScrewCap 0400	
	ECM No: 825145	Denomination: CIRCUIT DIAGRAM	Page Type: REMOTE I/O ADAPTER O.P. BOX	
	Information Security Class: PUBLIC	Document No.: 3404507-0003	Doc. type: ELD	Version: AC / Page: 044

RELEASED

This drawing must not without the consent of Tetra Pak
be copied, transmitted or disclosed to any third party.

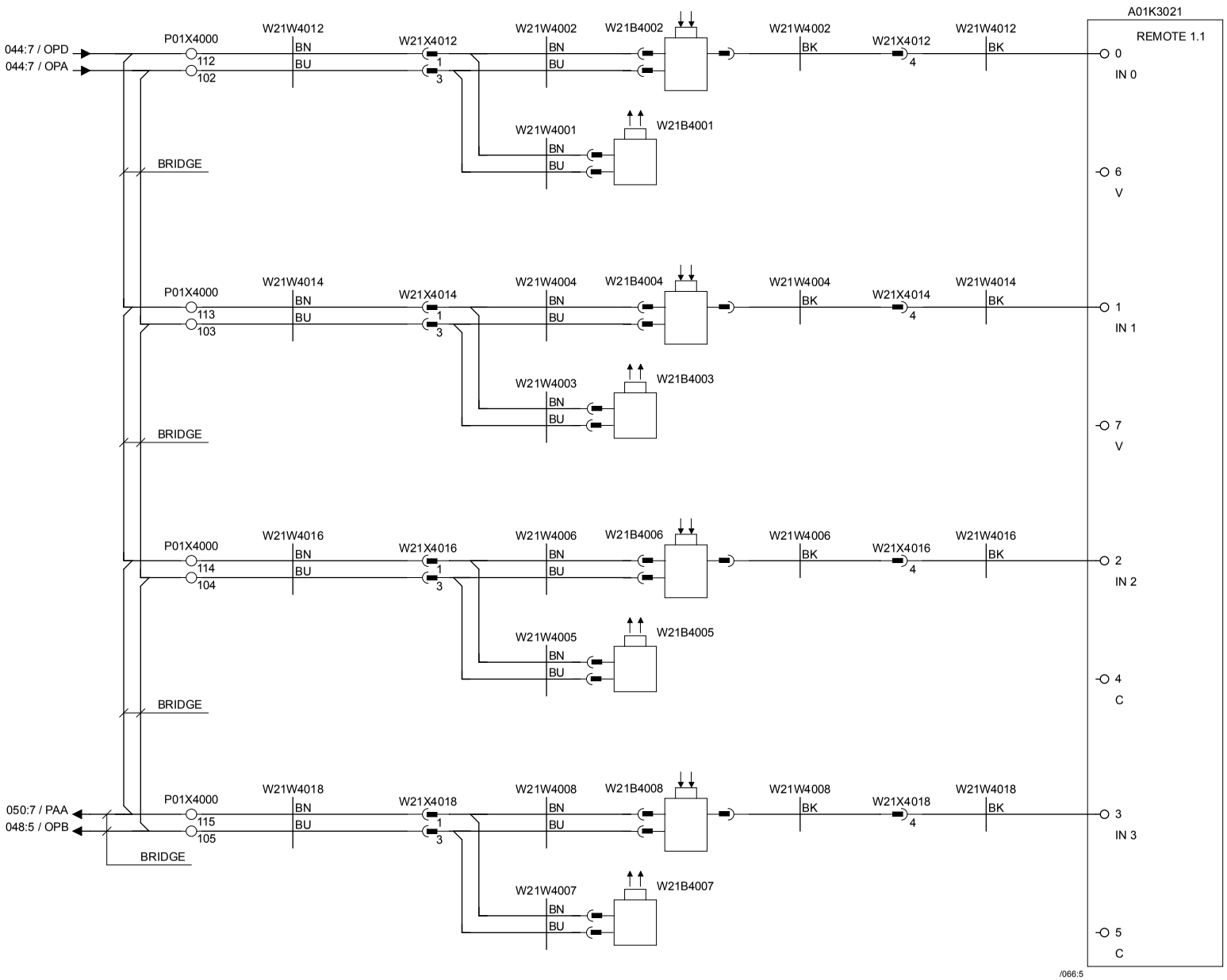

W21B4002 LONG PACKAGE QUEUE
W21B4001

W21B4004 SHORT PACKAGE QUEUE
W21B4003

W21B4006 VERIFIES PACKAGE STANDING
W21B4005

W21B4008 TOO LONG PACKAGE QUEUE
W21B4007

Tetra Pak®	Version Designer: ROG	Version Date: 2016-09-30	Machine: CAP30 Flex ScrewCap 0400			
	ECM No: 825145	Denomination: CIRCUIT DIAGRAM	Page Type: REMOTE I/O ADAPTER O.P. BOX			
	Information Security Class: PUBLIC	Document No.: 3404507-0003	Doc. type: ELD	Version: AC	Page: 045	

This drawing must not without the consent of Tetra Pak
be copied, transmitted or disclosed to any third party.

1	2	3	4	5	6	7	8	9	10

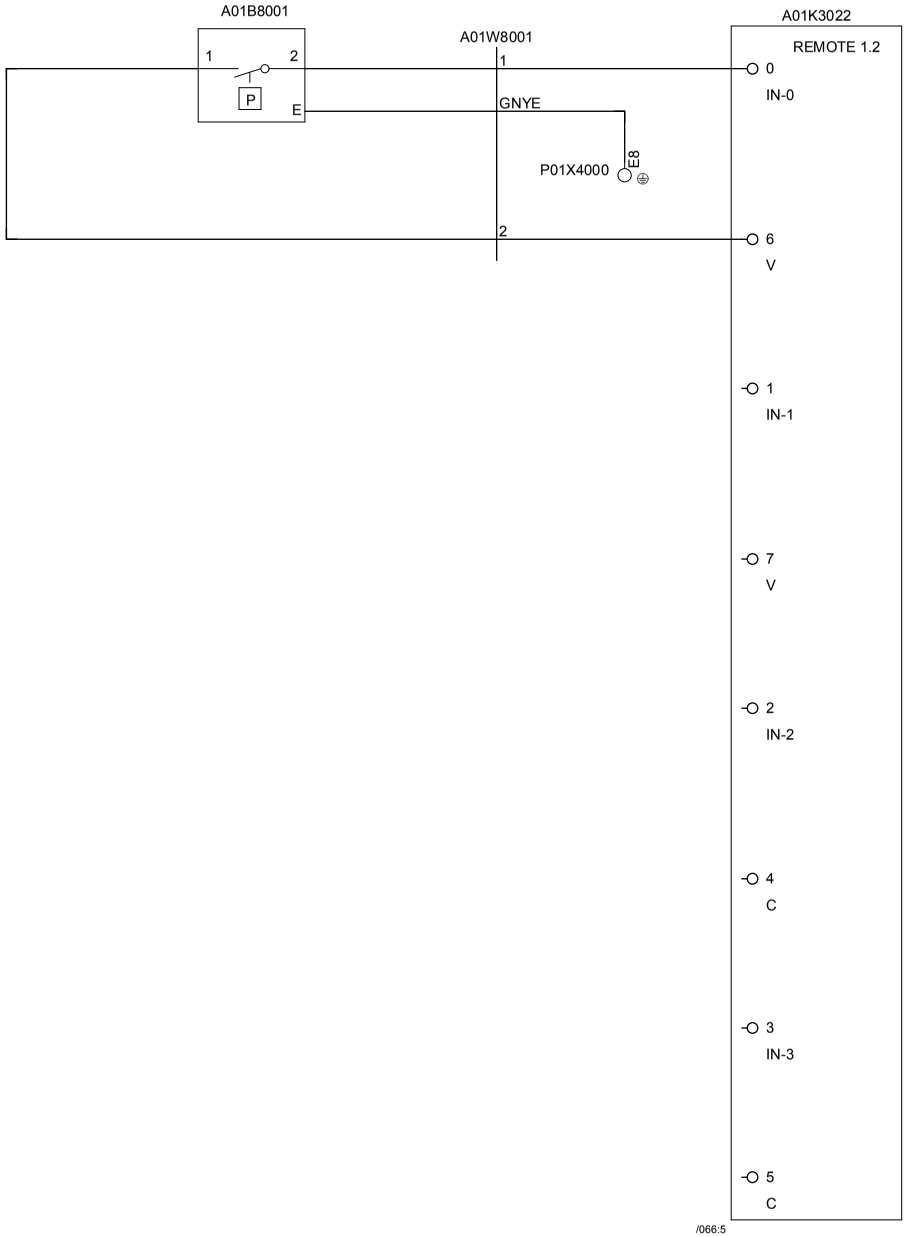

A01B8001	AIR PRESSURE GUARD
	SPARE
	SPARE
	SPARE
	SPARE

Tetra Pak®	Version Designer: ROG	Version Date: 2016-09-30	Machine: CAP30 Flex ScrewCap 0400	
	ECM No: 825145	Denomination: CIRCUIT DIAGRAM	Page Type: REMOTE I/O ADAPTER O.P. BOX	
	Information Security Class: PUBLIC	Document No.: 3404507-0003	Doc. type: ELD	Version: AC / Page: 046

RELEASED

This drawing must not without the consent of Tetra Pak be copied, transmitted or disclosed to any third party.

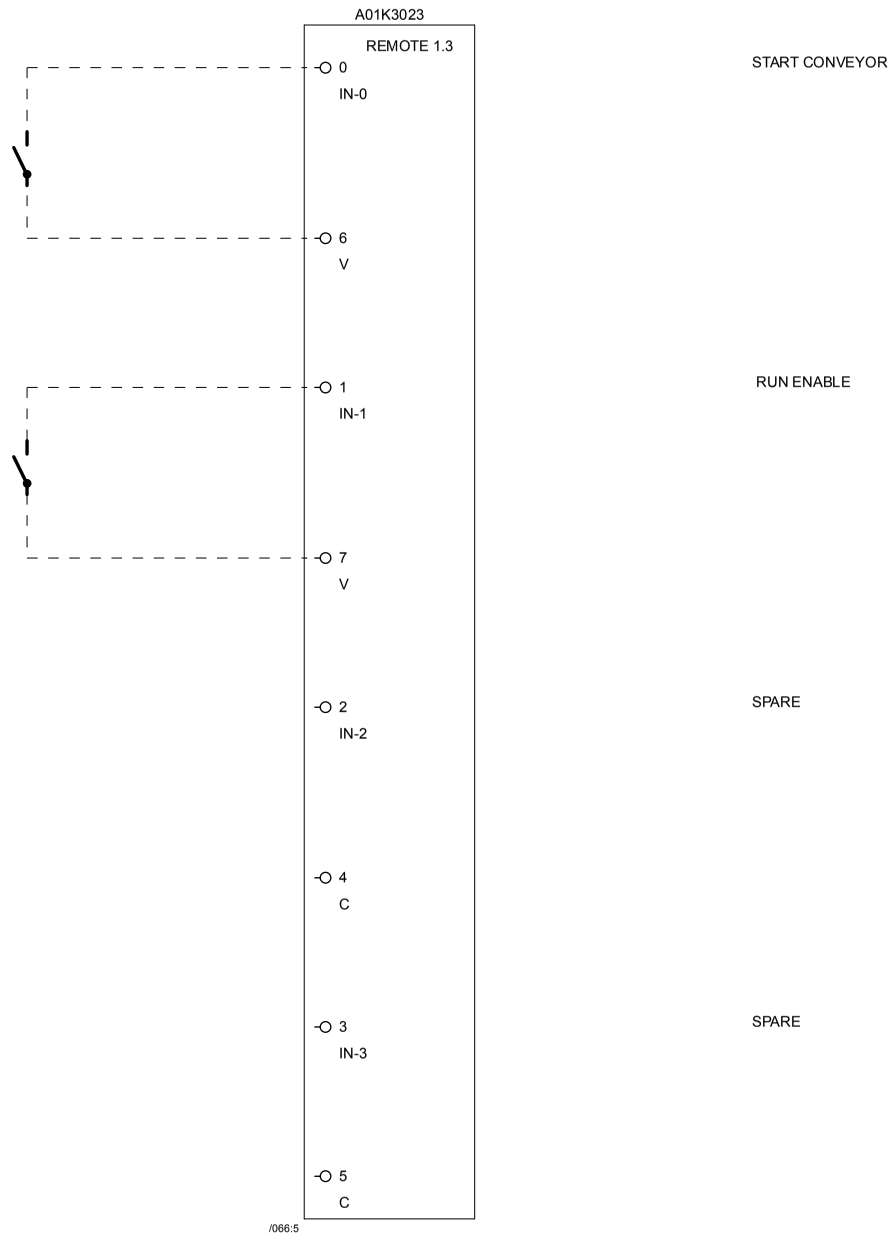

Tetra Pak®	Version Designer: ROG	Version Date: 2016-09-30	Machine: CAP30 Flex ScrewCap 0400	
	ECM No: 825145	Denomination: CIRCUIT DIAGRAM	Page Type: REMOTE I/O ADAPTER O.P. BOX	
	Information Security Class: PUBLIC	Document No.: 3404507-0003	Doc. type: ELD	Version: AC / Page: 047

RELEASED

This drawing must not without the consent of Tetra Pak
be copied, transmitted or disclosed to any third party.

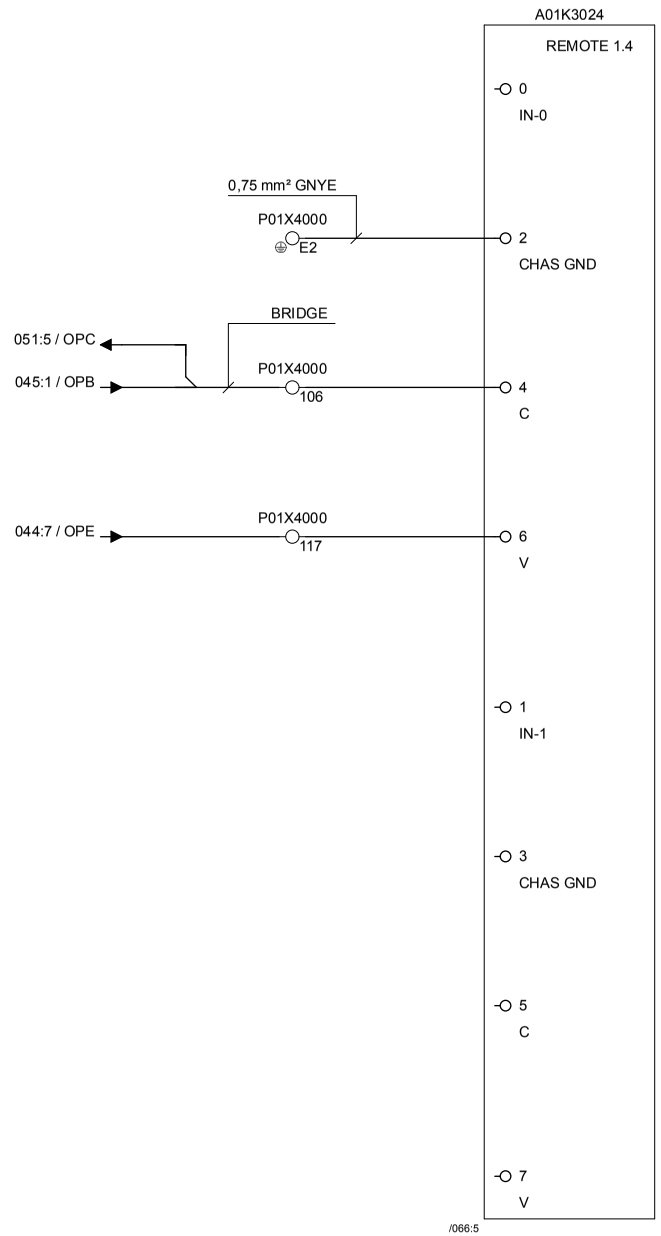

Tetra Pak®	Version Designer: ROG	Version Date: 2016-09-30	Machine: CAP30 Flex ScrewCap 0400					
	ECM No: 825145	Denomination: CIRCUIT DIAGRAM	Page Type: FIELD POWER DISTR. O.P. BOX					
	Information Security Class: PUBLIC	Document No.: 3404507-0003	Doc. type: ELD	Version: AC	Page: 048			

RELEASED

This drawing must not without the consent of Tetra Pak
be copied, transmitted or disclosed to any third party.

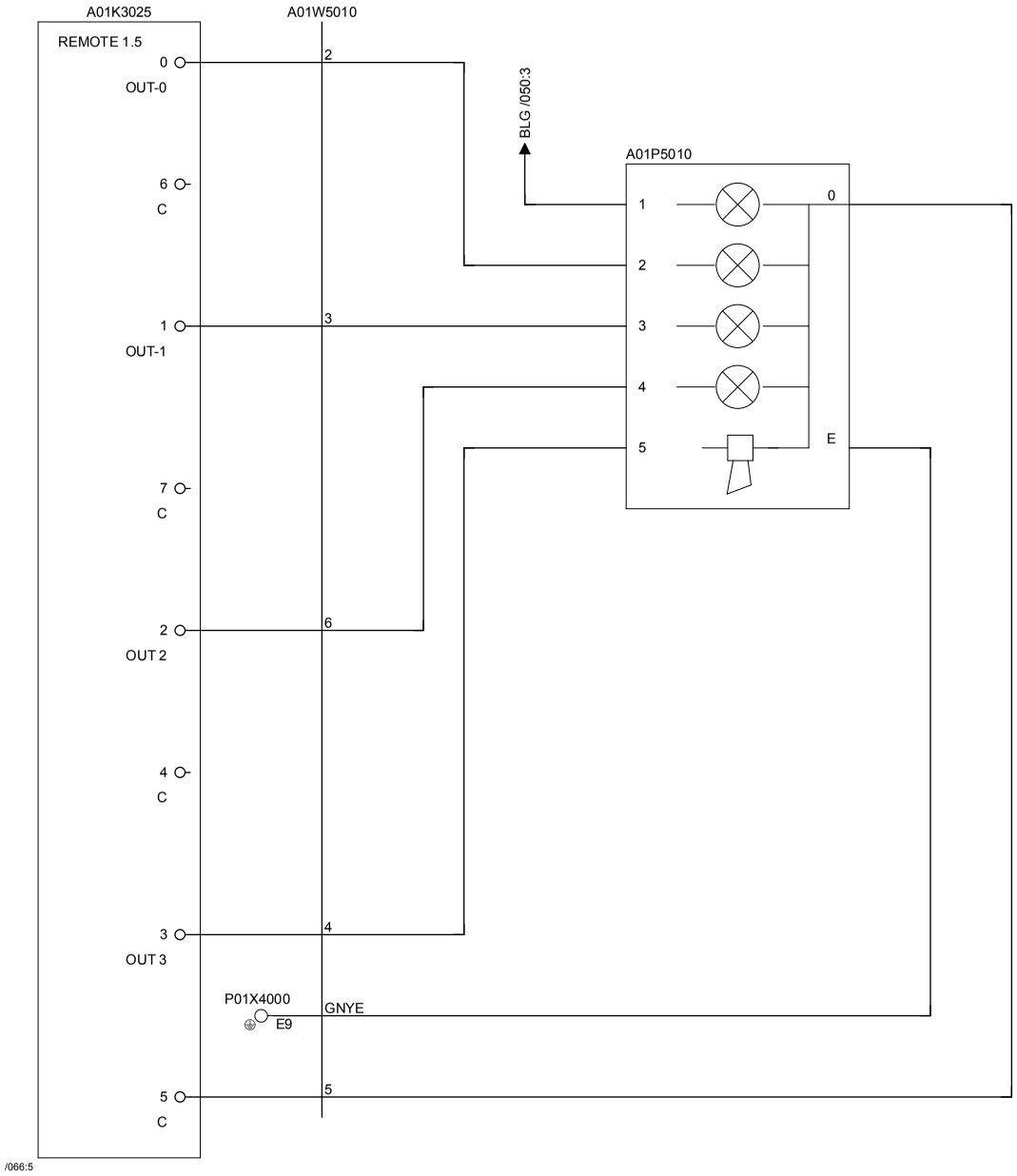

A01P5014	ALARM BEACON BLUE
A01P5012	ALARM BEACON YELLOW
A01P5011	ALARM BEACON RED
A01P5013	HOOTER

Tetra Pak®	Version Designer: ROG	Version Date: 2016-09-30	Machine: CAP30 Flex ScrewCap 0400	
	ECM No: 825145	Denomination: CIRCUIT DIAGRAM	Page Type: REMOTE OUTPUT O.P. BOX	
	Information Security Class: PUBLIC	Document No.: 3404507-0003	Doc. type: ELD	Version: AC / Page: 049

This drawing must not without the consent of Tetra Pak
be copied, transmitted or disclosed to any third party.

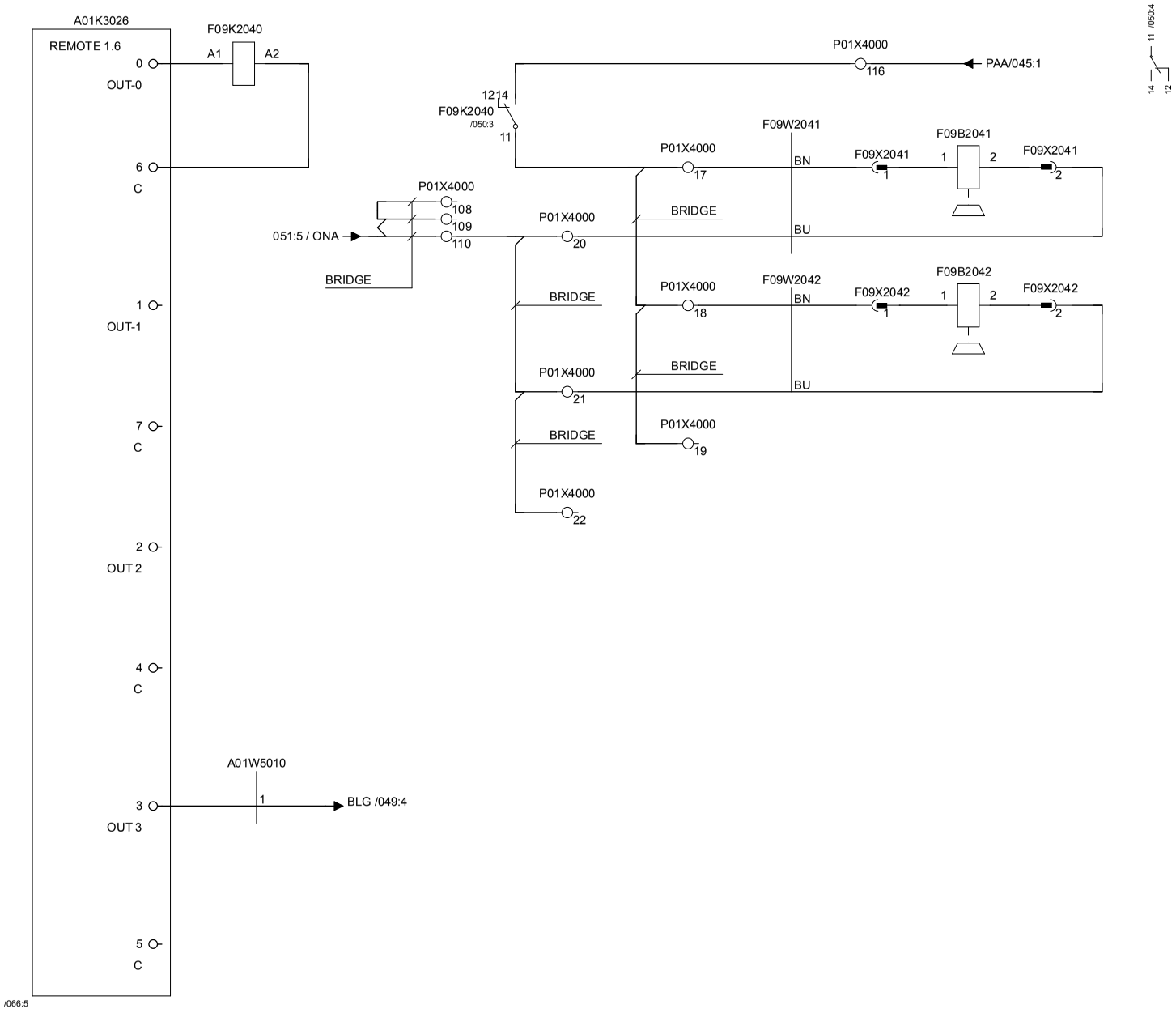

F09K2040	LOCKER DOOR RELAY
F09B2041	LOCKER DOOR FRONT 1
F09B2042	LOCKER DOOR FRONT 2
	SPARE
A01P5015	BEACON LAMP GREEN

Tetra Pak®	Version Designer: ROG	Version Date: 2016-09-30	Machine: CAP30 Flex ScrewCap 0400	
	ECM No: 825145	Denomination: CIRCUIT DIAGRAM	Page Type: REMOTE OUTPUT O.P. BOX	
	Information Security Class: PUBLIC	Document No.: 3404507-0003	Doc. type: ELD	Version: AC / Page: 050

This drawing must not without the consent of Tetra Pak
be copied, transmitted or disclosed to any third party.

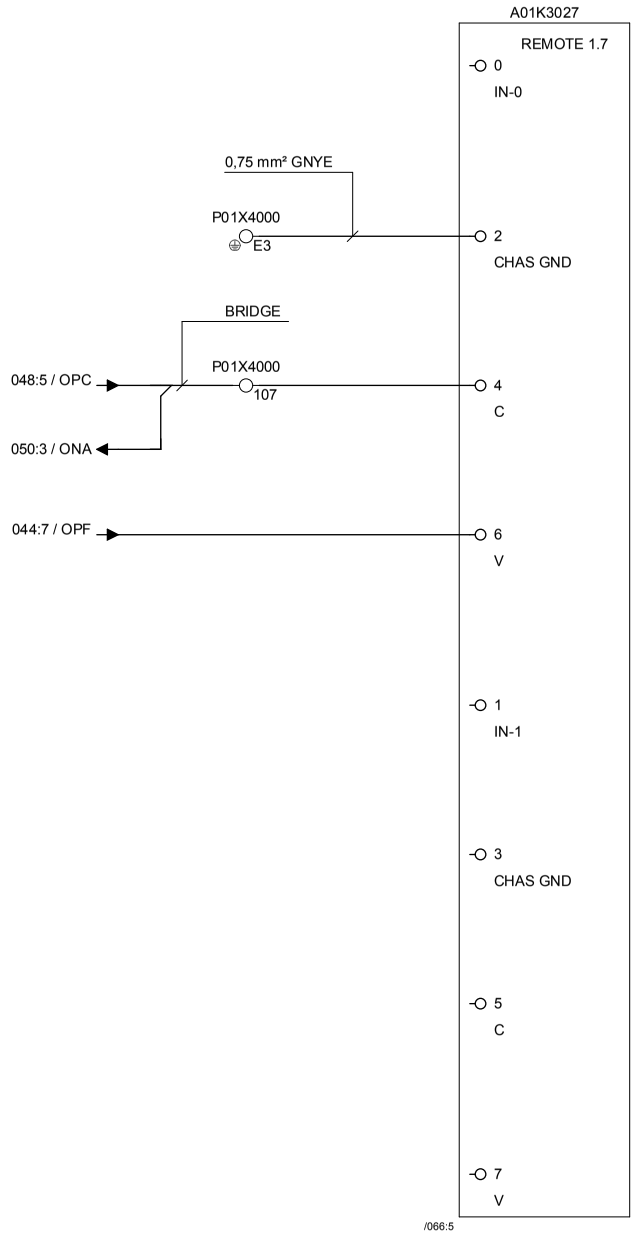

Tetra Pak®	Version Designer: ROG	Version Date: 2016-09-30	Machine: CAP30 Flex ScrewCap 0400	
	ECM No: 825145	Denomination: CIRCUIT DIAGRAM	Page Type: FIELD POWER DISTR. O.P. BOX	
	Information Security Class: PUBLIC	Document No.: 3404507-0003	Doc. type: ELD	Version: AC	Page: 051

This drawing must not without the consent of Tetra Pak
be copied, transmitted or disclosed to any third party.

1	2	3	4	5	6	7	8	9	10

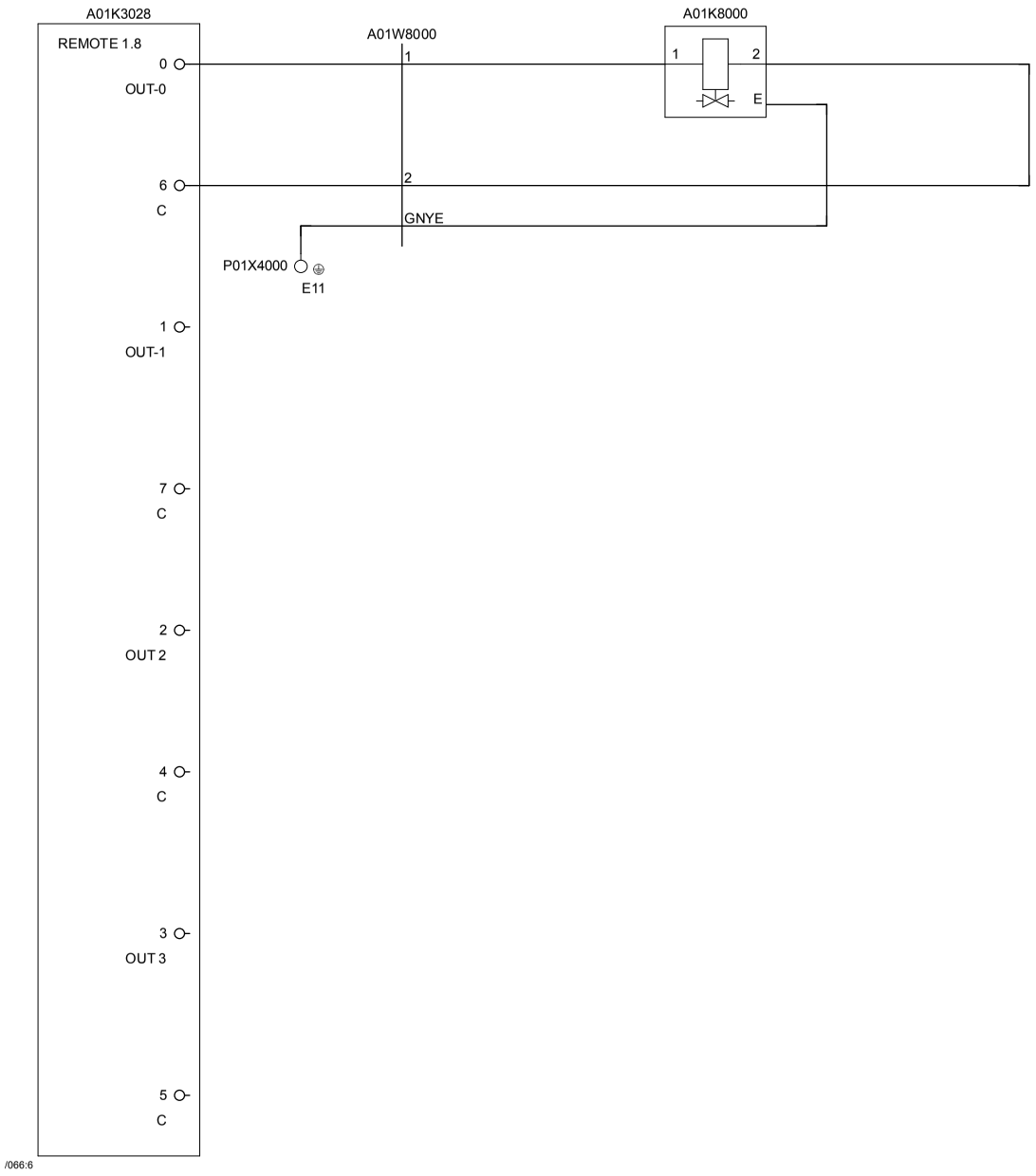

Tetra Pak®	Version Designer: ROG	Version Date: 2016-09-30	Machine: CAP30 Flex ScrewCap 0400		
	ECM No: 825145	Denomination: CIRCUIT DIAGRAM	Page Type: REMOTE OUTPUT O.P. BOX		
	Information Security Class: PUBLIC	Document No.: 3404507-0003	Doc. type: ELD	Version: AC	Page: 052

RELEASED

This drawing must not without the consent of Tetra Pak be copied, transmitted or disclosed to any third party.

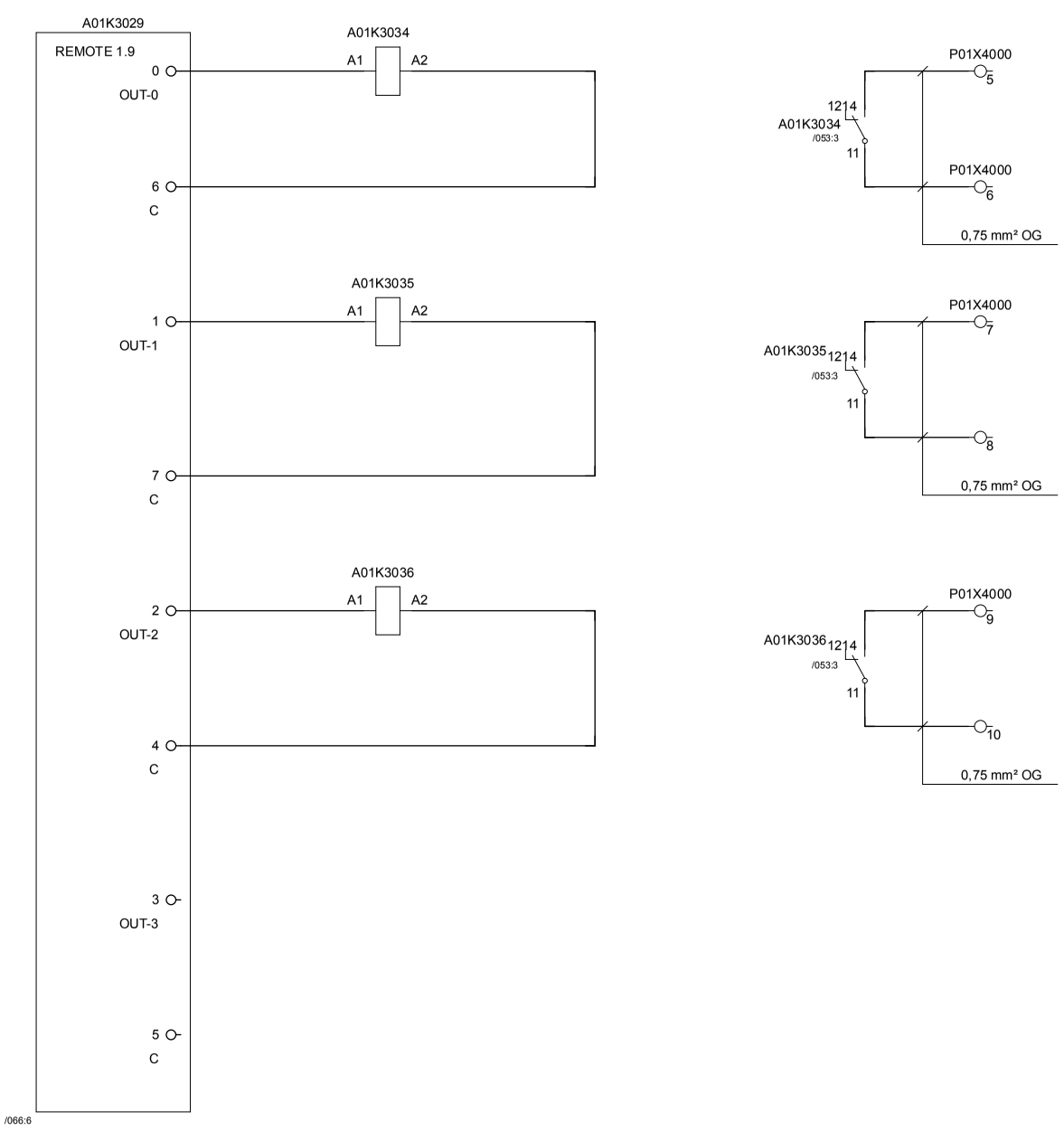

A01K3034	READY SIGNAL FOR EXT. LUBRICATION
A01K3035	READY SIGNAL (RS) FOR LINE
A01K3036	PACKAGE COMING (PC) FOR LINE
	SPARE

Tetra Pak®	Version Designer: ROG	Version Date: 2016-09-30	Machine: CAP30 Flex ScrewCap 0400				
	ECM No: 825145	Denomination: CIRCUIT DIAGRAM	Page Type: REMOTE OUTPUT O.P. BOX				
	Information Security Class: PUBLIC	Document No.: 3404507-0003	Doc. type: ELD	Version: AC	Page: 053		

This drawing must not without the consent of Tetra Pak
be copied, transmitted or disclosed to any third party.

1	2	3	4	5	6	7	8	9	10

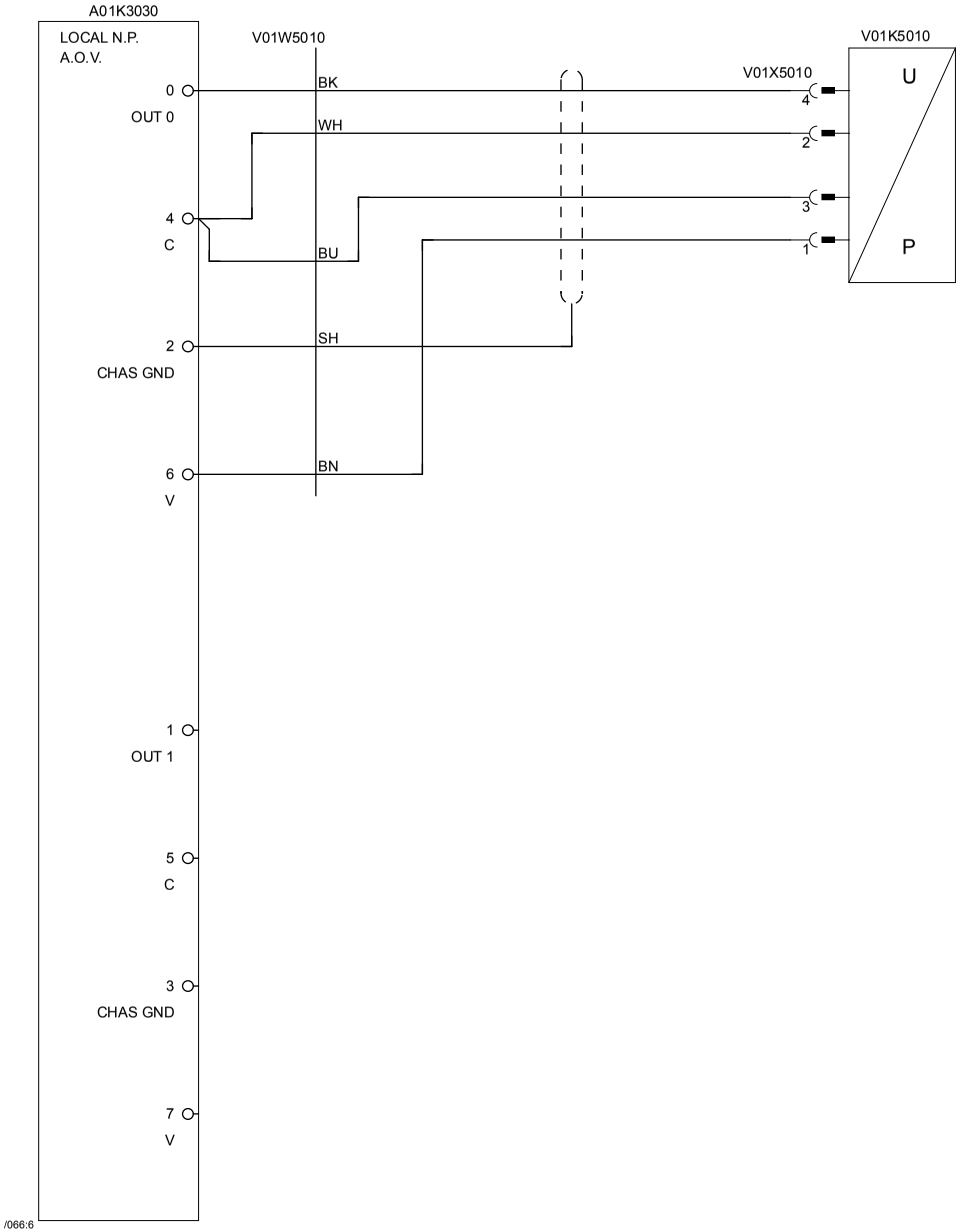

V01K5010 GLUE PRESSURE REGULATOR

Tetra Pak®	Version Designer: ROG	Version Date: 2016-09-30	Machine: CAP30 Flex ScrewCap 0400			
	ECM No: 825145	Denomination: CIRCUIT DIAGRAM	Page Type: PLC REMOTE A.O.V HOT MELT			
	Information Security Class: PUBLIC	Document No.: 3404507-0003	Doc. type: ELD	Version: AC	Page: 054	

RELEASED

This drawing must not without the consent of Tetra Pak be copied, transmitted or disclosed to any third party.

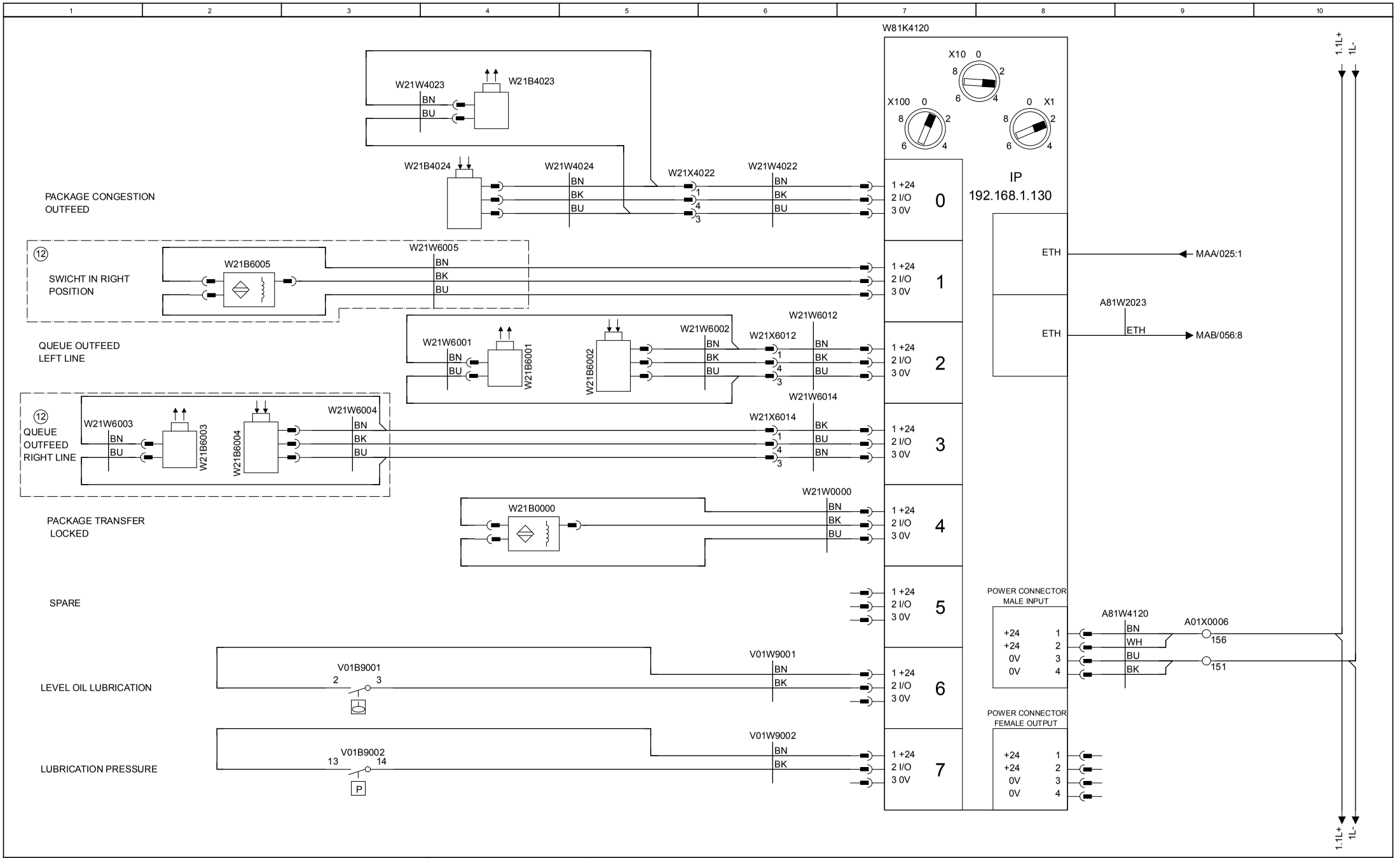

Tetra Pak®	Version Designer: ROG	Version Date: 2016-09-30	Machine: CAP30 Flex ScrewCap 0400		
	ECM No: 825145	Denomination: CIRCUIT DIAGRAM	Page Type: ARMOR BLOCK (MACHINE BODY)		
	Information Security Class: PUBLIC	Document No.: 3404507-0003	Doc. type: ELD	Version: AC	Page: 055

RELEASED

This drawing must not without the consent of Tetra Pak be copied, transmitted or disclosed to any third party.

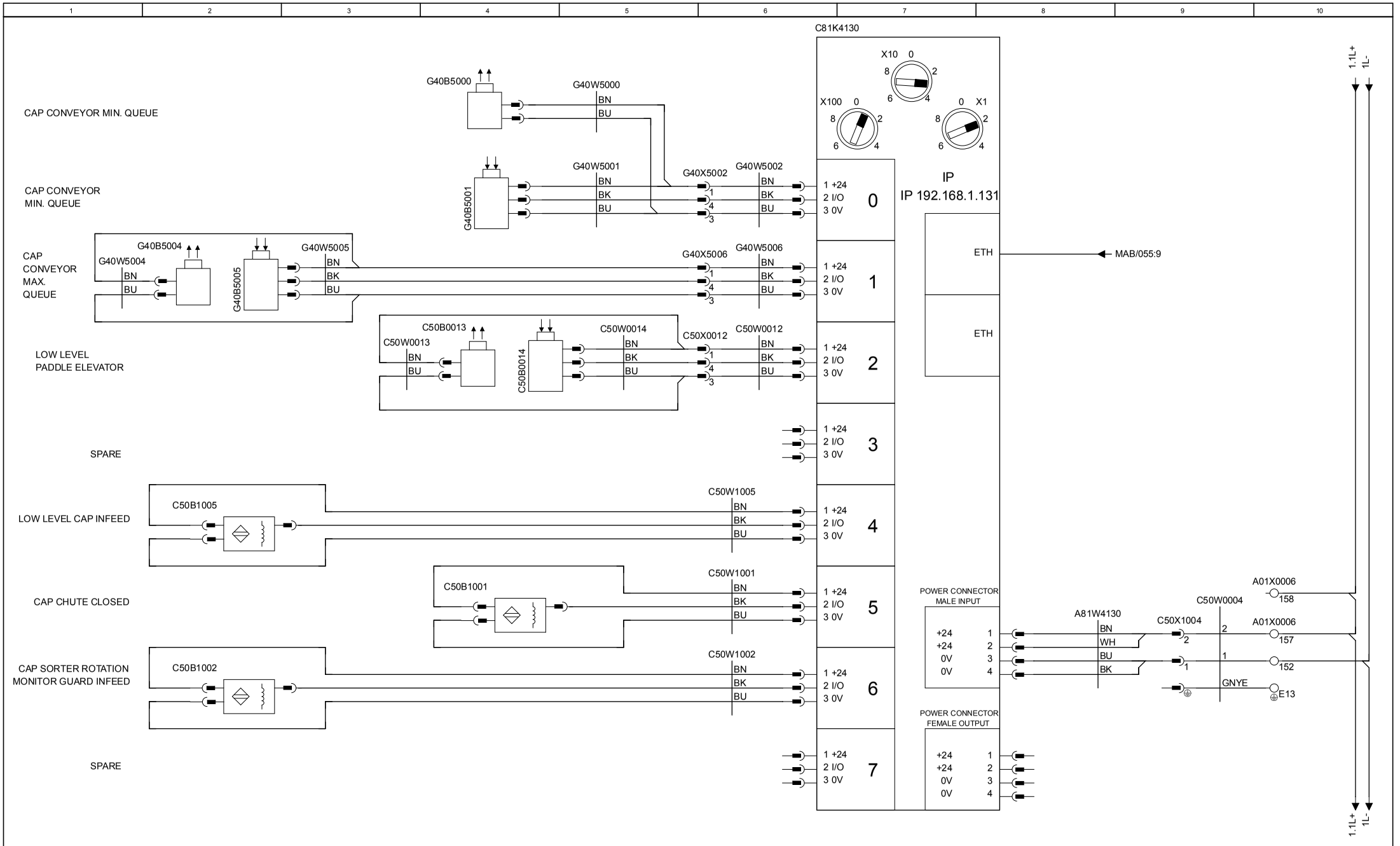

Tetra Pak®	Version Designer: ROG	Version Date: 2016-09-30	Machine: CAP30 Flex ScrewCap 0400		
	ECM No: 825145	Denomination: CIRCUIT DIAGRAM	Page Type: ARMOR BLOCK (CAP SORTER)		
	Information Security Class: PUBLIC	Document No.: 3404507-0003	Doc. type: ELD	Version: AC	Page: 056

RELEASED

This drawing must not without the consent of Tetra Pak be copied, transmitted or disclosed to any third party.

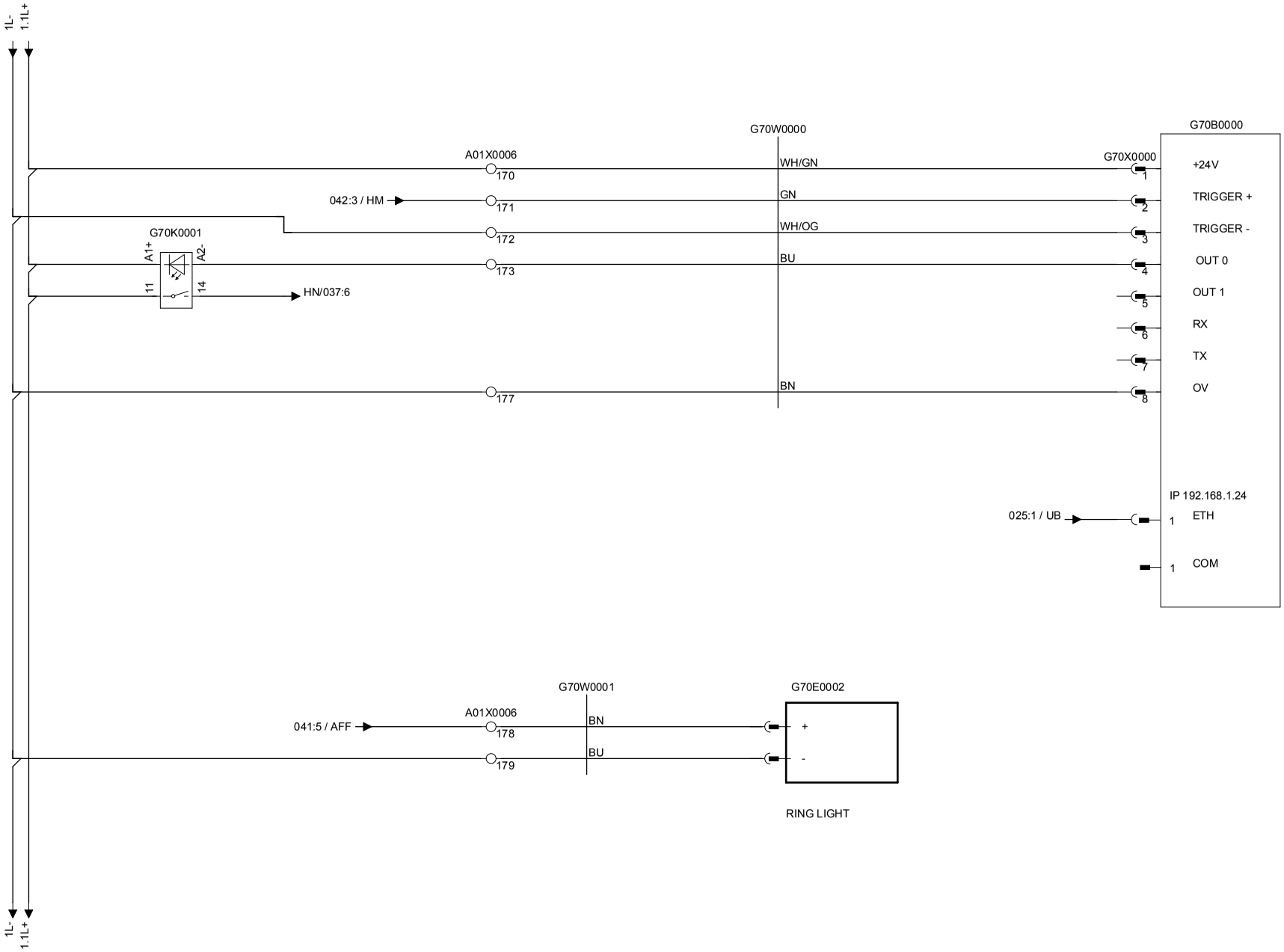

Tetra Pak®	Version Designer: ROG	Version Date: 2016-09-30	Machine: CAP30 Flex ScrewCap 0400	
	ECM No: 825145	Denomination: CIRCUIT DIAGRAM	Page Type: VISION SYSTEM DEVICE	
	Information Security Class: PUBLIC	Document No.: 3404507-0003	Doc. type: ELD	Version: AC / Page: 057

RELEASED

This drawing must not without the consent of Tetra Pak
be copied, transmitted or disclosed to any third party.

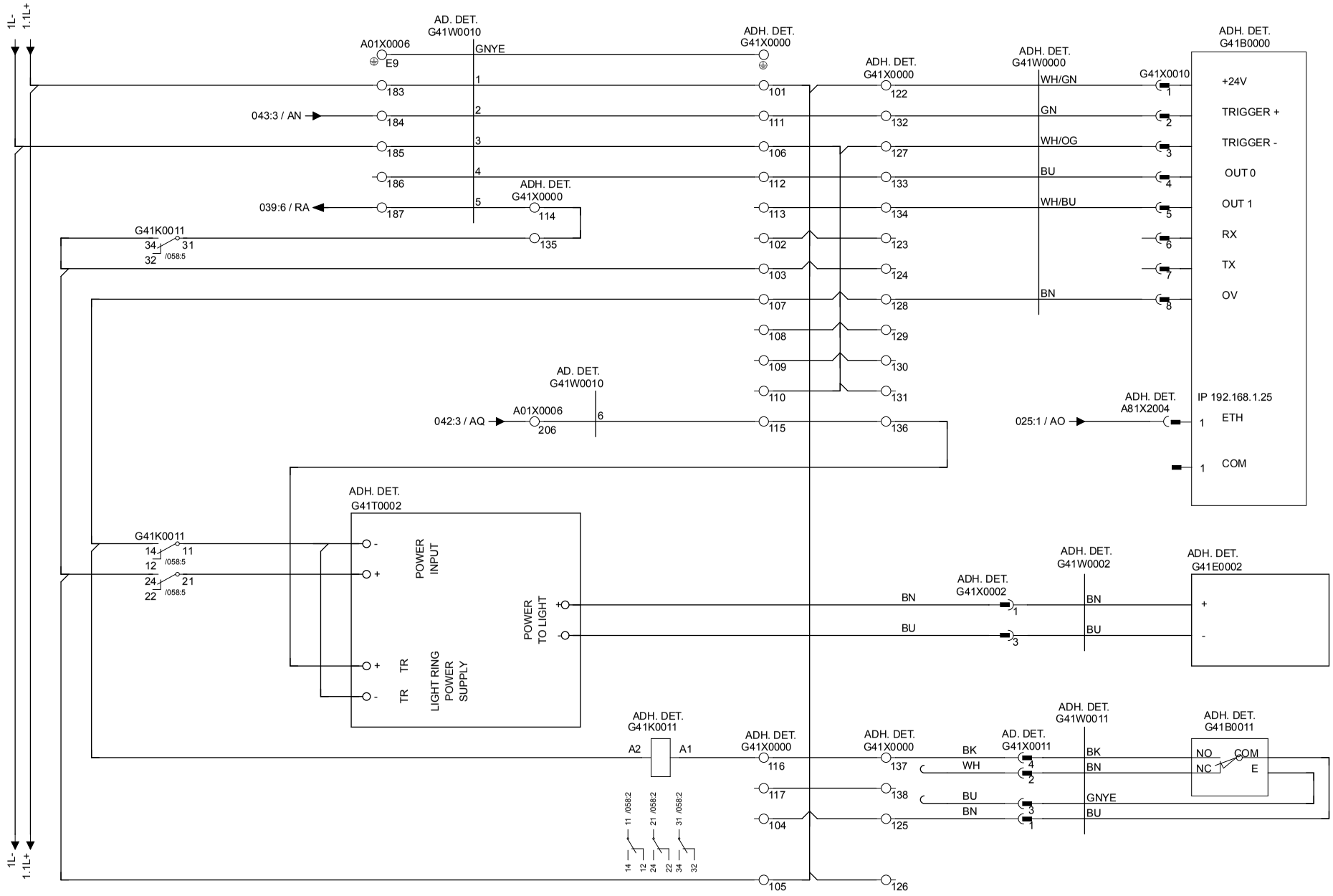

Tetra Pak®	Version Designer: ROG	Version Date: 2016-09-30	Machine: CAP30 Flex ScrewCap 0400		
	ECM No: 825145	Denomination: CIRCUIT DIAGRAM	Page Type: ADHESIVE DETECTOR		
	Information Security Class: PUBLIC	Document No.: 3404507-0003	Doc. type: ELD	Version: AC	Page: 058

This drawing must not without the consent of Tetra Pak
be copied, transmitted or disclosed to any third party.

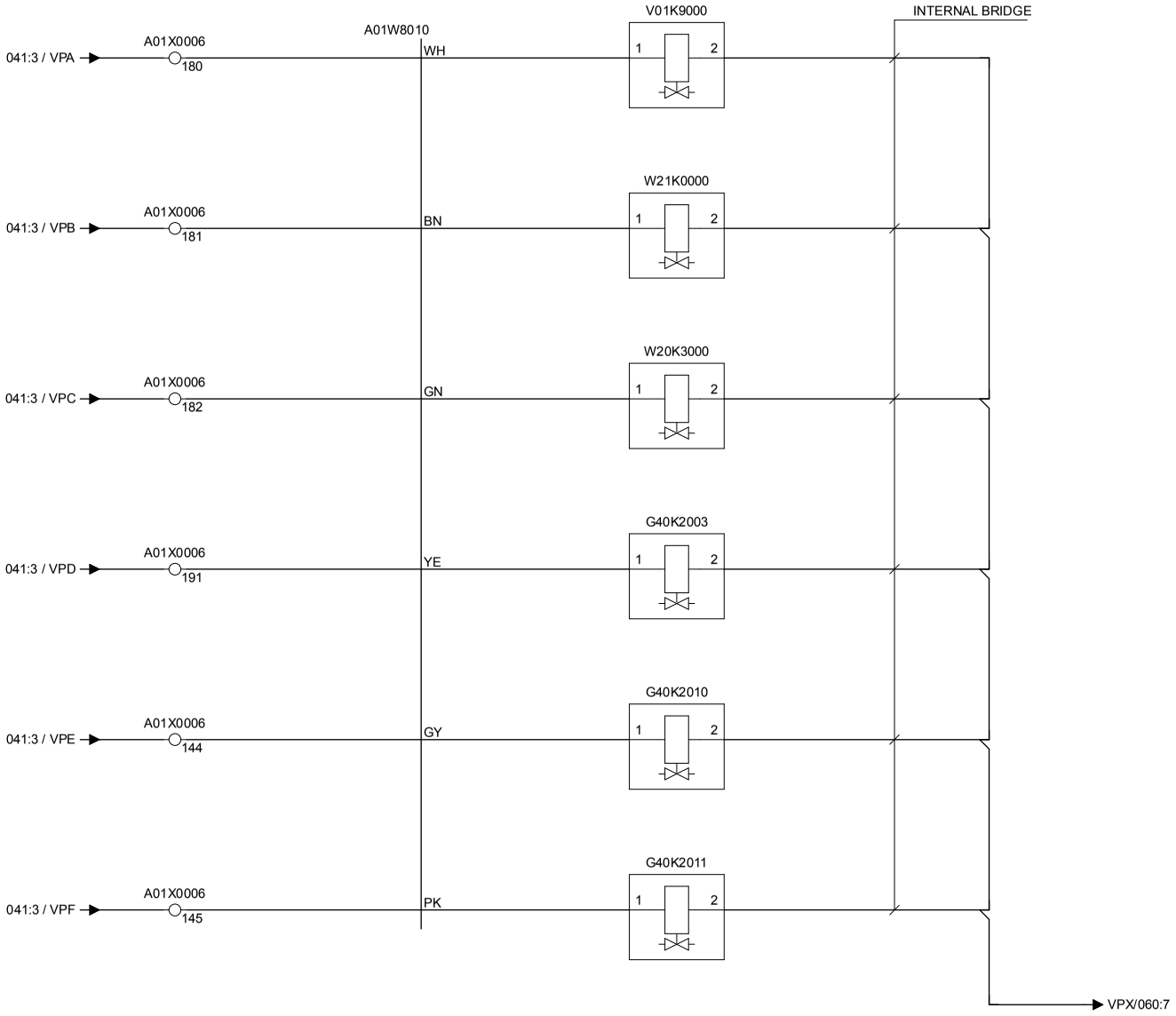

V01K9000	LUBRICATION UNIT
W21K0000	LOCK PACKAGE TRANSFER
W20K3000	PACKAGE DRYING AIR
G40K2003	CAP SEQUENCER AIR BLOW
G40K2010	CAP SEQUENCER QUEUE STOPPER OPENING
G40K2011	CAP SEQUENCER QUEUE STOPPER CLOSURE

Tetra Pak®	Version Designer: ROG	Version Date: 2016-09-30	Machine: CAP30 Flex ScrewCap 0400	
	ECM No: 825145	Denomination: CIRCUIT DIAGRAM	Page Type: VALVES	
Information Security Class: PUBLIC	Document No.: 3404507-0003	Doc. type: ELD	Version: AC	Page: 059

RELEASED

This drawing must not without the consent of Tetra Pak be copied, transmitted or disclosed to any third party.

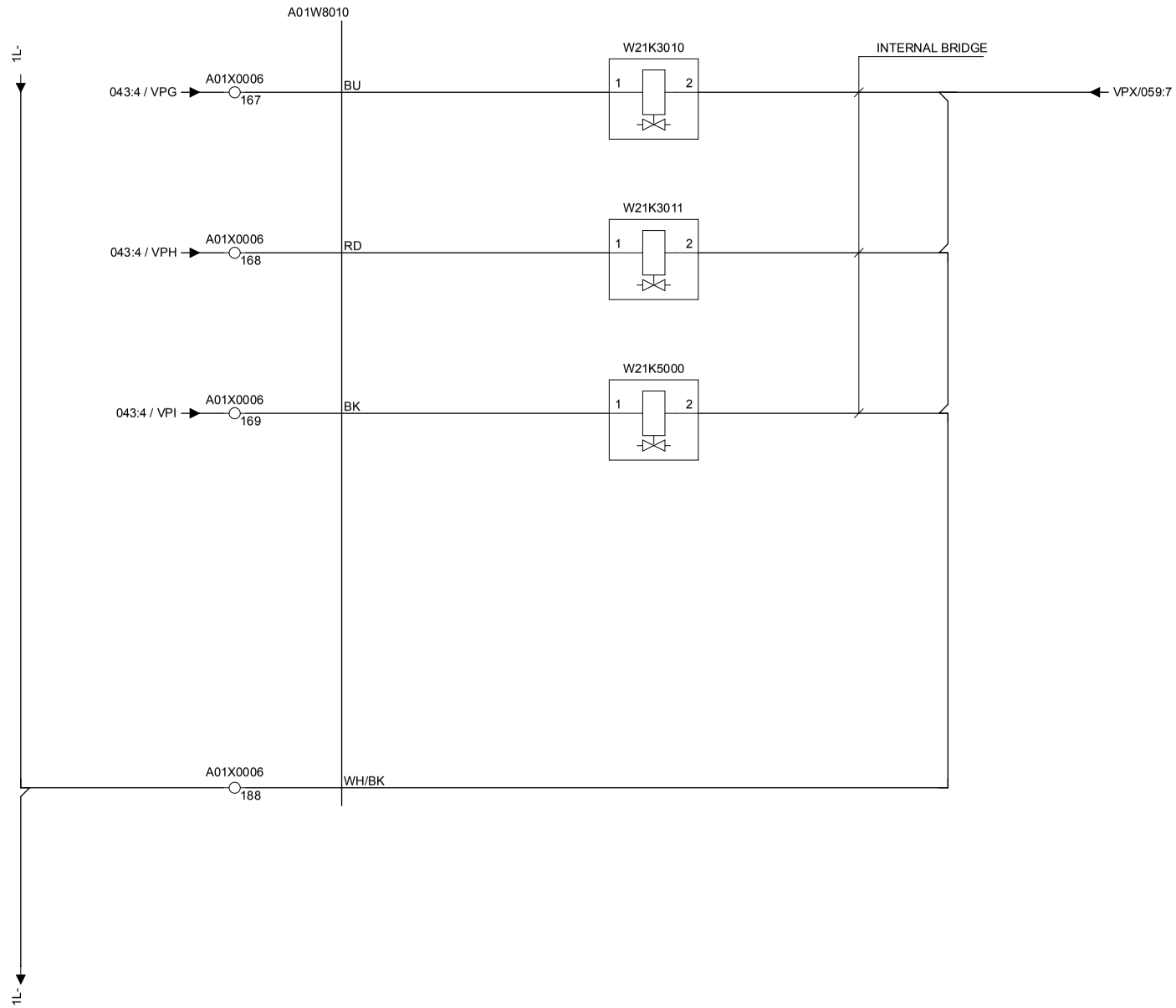

W21K3010	WASTE PACKAGE EJECTION ON
W21K3011	WASTE PACKAGE EJECTION OFF
W21K5000	BLOW CLEANING PACKAGE CONVEYOR

Tetra Pak®	Version Designer: ROG	Version Date: 2016-09-30	Machine: CAP30 Flex ScrewCap 0400				
	ECM No: 825145	Denomination: CIRCUIT DIAGRAM	Page Type: VALVES				
	Information Security Class: PUBLIC	Document No.: 3404507-0003	Doc. type: ELD	Version: AC	Page: 060		

RELEASED

This drawing must not without the consent of Tetra Pak
be copied, transmitted or disclosed to any third party.

1	2	3	4	5	6	7	8	9	10

Tetra Pak®

Version Designer: ROG	Version Date: 2016-09-30	Machine: CAP30 Flex ScrewCap 0400	
ECM No: 825145	Denomination: CIRCUIT DIAGRAM	Page Type: ETHERNET SWITCH LIFTING DEVICE	
Information Security Class: PUBLIC	Document No.: 3404507-0003	Doc. type: ELD	Version: AC / Page: 061

RELEASED

This drawing must not without the consent of Tetra Pak
be copied, transmitted or disclosed to any third party.

1	2	3	4	5	6	7	8	9	10

Tetra Pak®

Version Designer: ROG	Version Date: 2016-09-30	Machine: CAP30 Flex ScrewCap 0400	
ECM No: 825145	Denomination: CIRCUIT DIAGRAM	Page Type: ARMOR BLOCK (COLLISION SENSORS)	
Information Security Class: PUBLIC	Document No.: 3404507-0003	Doc. type: ELD	Version: AC / Page: 062

RELEASED

This drawing must not without the consent of Tetra Pak
be copied, transmitted or disclosed to any third party.

1	2	3	4	5	6	7	8	9	10

Tetra Pak®

Version Designer: ROG	Version Date: 2016-09-30	Machine: CAP30 Flex ScrewCap 0400	
ECM No: 825145	Denomination: CIRCUIT DIAGRAM	Page Type: LIFTING DEVICE APPLICATIOR WHEEL	
Information Security Class: PUBLIC	Document No.: 3404507-0003	Doc. type: ELD	Version: AC / Page: 063

RELEASED

This drawing must not without the consent of Tetra Pak
be copied, transmitted or disclosed to any third party.

1	2	3	4	5	6	7	8	9	10

Tetra Pak®

Version Designer: ROG	Version Date: 2016-09-30	Machine: CAP30 Flex ScrewCap 0400	
ECM No: 825145	Denomination: CIRCUIT DIAGRAM	Page Type: LIFTING DEVICE PACKAGE LINE	
Information Security Class: PUBLIC	Document No.: 3404507-0003	Doc. type: ELD	Version: AC / Page: 064

RELEASED

This drawing must not without the consent of Tetra Pak
be copied, transmitted or disclosed to any third party.

1	2	3	4	5	6	7	8	9	10

Tetra Pak®

Version Designer: ROG	Version Date: 2016-09-30	Machine: CAP30 Flex ScrewCap 0400	
ECM No: 825145	Denomination: CIRCUIT DIAGRAM	Page Type: LIFTING DEVICE CAP SORTER	
Information Security Class: PUBLIC	Document No.: 3404507-0003	Doc. type: ELD	Version: AC	Page: 065

RELEASED

This drawing must not without the consent of Tetra Pak
be copied, transmitted or disclosed to any third party.

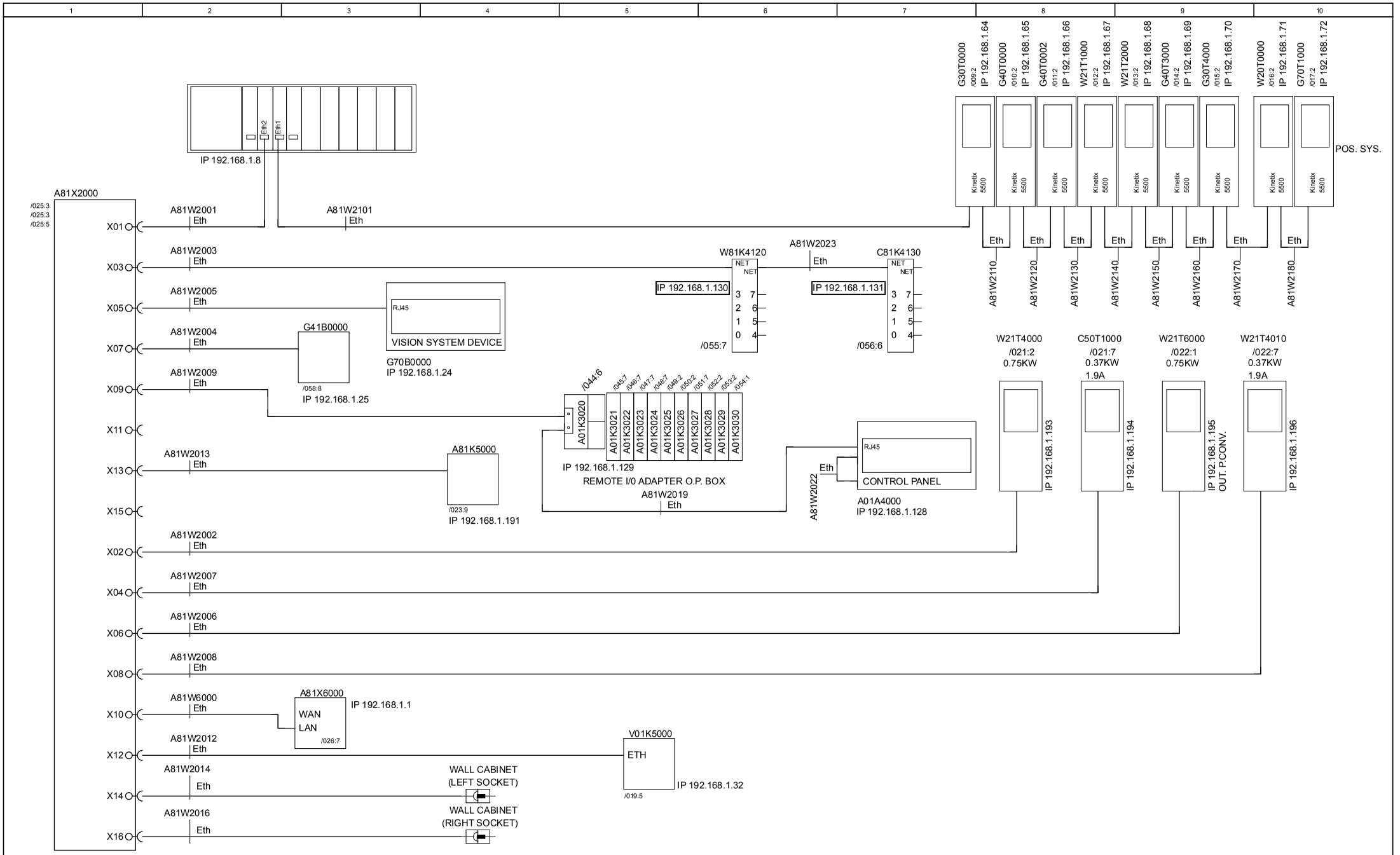

Tetra Pak®	Version Designer: ROG	Version Date: 2016-09-30	Machine: CAP30 Flex ScrewCap 0400	
	ECM No: 825145	Denomination: CIRCUIT DIAGRAM	Page Type: ETHERNET COMMUNICATION	
	Information Security Class: PUBLIC	Document No.: 3404507-0003	Doc. type: ELD	Version: AC	Page: 066

5 Line Summary

Description

All connections inside the electrical cabinet are listed in this chapter.

5.1 Line Summary

This page intentionally left blank

This drawing must not without the consent of Tetra Pak be copied, transmitted or disclosed to any third party.

Line summary of 3404507-0003

Net	Page / Col.	Option	Area/Color
1.1L+			
A01X0011:1	001.1		2,5 mm² BU
A01F2001:2	004.6		
1.1L+			
A01X0011:2	001.1		0,75 mm² BU
A01F6000:13	038.4		
1.1L+			
A01X0011:3	001.1		0,75 mm² BU
W21K8000:11	024.4		
1.1L+			
A01X0011:4	001.1		0,75 mm² BU
A01B6000:14	034.3		
1.1L+			
A01X0011:5	001.1		0,75 mm² BU
W21K2002:3	039.1		
W21K2002:7	039.1		
1.1L+			
A01X0011:6	001.1		0,75 mm² BU
V01F5000:13	035.6		
W21F8001:1.13	035.6		
W21F8000:1.13	035.6		
G40F4000:1.13	035.6		
C50F0000:1.13	035.6		
A01F1004:13	035.4		
A01Q1004:13	034.3		

Net	Page / Col.	Option	Area/Color
1.1L+			
A01X0011:7	001.2		0,75 mm² BU
A01K1002:2	003.7		
1.1L+			
A01X0011:8	001.2		0,75 mm² BU
G70K0001:A1+	057.2		
1.1L+			
A01X0011:9	001.2		0,75 mm² BU
X1710:3	007.8		
1.1L+			
A01X0011:10	001.2		0,75 mm² BU
G70K0001:11	057.2		
G70K0000:11	041.4		
1.1L+			
A01X0011:11	001.2		0,75 mm² BU
A01X0006:122+	036.1		BRIDGE
A01X0006:116+	036.1		
A01X0006:115+	036.1		
A01X0006:114+	036.1		
A01X0006:113+	036.1		
A01X0006:112+	038.1		
1.1L+			
A01X0006:115+	036.1		0,75 mm² BU
A01X0006:170	057.4		
1.1L+			
A01X0011:12	001.2		0,75 mm² BU

Net	Page / Col.	Option	Area/Color
A01X0006:157	056.10		BRIDGE
A01X0006:156	055.9		
A01X0006:155	044.8		
1.1L+			
A01X0011:15	001.2		0,75 mm² BU
A01X0006:158	056.10		
1.1L+			
A01X0011:16	001.2		0,75 mm² BU
A01B6010:1	034.4		
1.1L+			
A01X0011:23	001.3		0,75 mm² BU
A01X0006:183	058.3		
1.1L+			
A01X0011:24	001.3		0,75 mm² BU
A01K3006:18	039.7		
1.2.22L+			
A01X0022:1	001.1		0,75 mm² BU
F09K0000:Q1	028.6		
1.2.22L+			
A01X0022:2	001.1		0,75 mm² BU
A01K3007:20	041.2		
1.2.22L+			
A01X0022:3	001.1		0,75 mm² BU
A01X0006:163	044.8		
1.2.22L+			
A01X0022:5	001.1		0,75 mm² BU

Net	Page / Col.	Option	Area/Color
A01K3008:34	043.2		BRIDGE
A01K3008:32	043.2		
A01K3008:30	043.2		
A01K3008:28	043.2		
A01K3008:26	043.2		
A01K3008:24	043.2		
A01K3008:22	043.2		
A01K3008:20	043.2		
A01K3008:18	043.2		
1.2.22L+			
A01X0022:6	001.1		0,75 mm² BU
A01Q1005:13	029.3		
1.2.23L+			
A01X0123:1	001.8		0,75 mm² BU
F09K0004:14	029.4		
1.2.23L+			
A01X0123:2	001.8		0,75 mm² BU
W21T4000:S1	021.2		
1.2.23L+			
A01X0123:3	001.8		0,75 mm² BU
W21T6000:S1	022.1	OUT. P.CONV.	
1.2.23L+			
A01X0123:4	001.8		0,75 mm² BU
W21T4010:S1	022.7	P.ALIGNER	
1.2.24L+			
A01X0124:1	001.10		0,75 mm² BU
F09K0004:24	029.4		

Tetra Pak®

Version Designer	Version Date	Machine
ROG	2016-09-30	CAP30 Flex ScrewCap 0400

ECM No	Denomination	Page Type
825145	LINE SUMMARY	LINE SUMMARY

Information Security Class	Document No.	Doc. type	Version	Page
PUBLIC	3404507-0004	ELD	AC	001

This drawing must not without the consent of Tetra Pak be copied, transmitted or disclosed to any third party.

Line summary of 3404507-0003

Net	Page / Col.	Option	Area/Color
1.2.24L+			
A01X0124:2	001.10		0,75 mm² BU
W21T4000:S2	021.2		
1.2.24L+			
A01X0124:3	001.10		0,75 mm² BU
W21T6000:S2	022.1	OUT. P.CONV.	
1.2.24L+			
A01X0124:4	001.10		0,75 mm² BU
W21T4010:S2	022.7	P.ALIGNER	
1.2.32L+			
A01X0032:1	001.4		0,75 mm² BU
F09K0000:Q0	028.6		
1.2.32L+			
A01X0032:2	001.4		0,75 mm² BU
F09K0001:S14	029.4		
1.2.32L+			
A01X0032:3	001.4		0,75 mm² BU
F09K0001:A1	029.4		
1.2.32L+			
A01X0032:4	001.4		0,75 mm² BU
A01K3005:19	036.7		
1.2.32L+			
A01X0032:5	001.4		0,75 mm² BU
A01X0006:164	044.8		
1.2.32L+			
A01X0032:6	001.4		0,75 mm² BU

Net	Page / Col.	Option	Area/Color
F09K0004:A1	029.4		
F09K0004:S14	029.4		
1.2.42L+			
A01X0042:1	001.6		0,75 mm² BU
F09K0001:14	029.4		
1.2.42L+			
A01X0042:3	001.6		0,75 mm² BU
A01K3008:14	042.2		BRIDGE
A01K3008:12	042.2		
A01K3008:10	042.2		
A01K3008:8	042.2		
A01K3008:6	042.2		
A01K3008:4	042.2		
A01K3008:2	042.2		
1.2.43L+			
A01X0043:1	001.1		0,75 mm² BU
F09K0001:24	029.4		
1.2.43L+			
A01X0043:4	001.1		0,75 mm² BU
G30T0000:5	009.8		
1.2.44L+			
A01X0044:1	001.4		0,75 mm² BU
F09K0001:34	029.4		
1.2.44L+			
A01X0044:2	001.4		0,75 mm² BU
G30T0000:3	009.8		

Net	Page / Col.	Option	Area/Color
1.2.72L+			
A01X0072:1	001.6		0,75 mm² BU
F09K0003:24	029.4		
1.2.72L+			
A01X0072:2	001.6		0,75 mm² BU
C50T1000:S1	021.7		
1.2.73L+			
A01X0073:1	001.8		0,75 mm² BU
F09K0003:14	029.4		
1.2.73L+			
A01X0073:2	001.8		0,75 mm² BU
C50T1000:S2	021.7		
1.2L+			
A01X0012:1	001.6		2,5 mm² BU
A01F2002:2	004.7		
1.2L+			
A01X0012:2	001.6		0,75 mm² BU
F09K0000:24V	028.6		
1.2L+			
A01X0012:3	001.6		0,75 mm² BU
F09K0000:0L	028.6		
1.2L+			
A01X0012:4	001.7		0,75 mm² BU
F09K0000:1L	028.6		
1.2L+			
A01X0012:5	001.7		0,75 mm² BU
A81X6000:US1	026.8		

Net	Page / Col.	Option	Area/Color
1.2L+			
A01X0012:6	001.7		0,75 mm² BU
A81X2000:US1	025.4		
1.2L+			
A01X0012:7	001.7		0,75 mm² BU
A81X2000:US2	025.4		
1.2L+			
A01X0012:8	001.7		0,75 mm² BU
A01K3007:10	040.2		
1.2L+			
A01X0012:9	001.7		0,75 mm² BU
F09K0001:13	029.4		
1.2L+			
A01X0012:10	001.7		0,75 mm² BU
F09K0001:23	029.4		
1.2L+			
A01X0012:11	001.7		0,75 mm² BU
F09K0001:33	029.4		
1.2L+			
A01X0012:12	001.7		0,75 mm² BU
A01X0006:154	027.5		
1.2L+			
A01X0012:14	001.8		0,75 mm² BU
F09K0003:13	029.4		
1.2L+			
A01X0012:15	001.8		0,75 mm² BU
F09K0003:23	029.4		

This drawing must not without the consent of Tetra Pak
be copied, transmitted or disclosed to any third party.

Line summary of 3404507-0003

Net	Page / Col.	Option	Area/Color
1.2L+			
A01X0012:16	001.8		0,75 mm² BU
A01X0006:5	030.2		
1.2L+			
A01X0012:17	001.8		0,75 mm² BU
F09K0004:13	029.4		
F09K0004:23	029.4		
1.2L+			
A01X0012:18	001.8		0,75 mm² BU
A01K1010:14	033.3		
1.2L+			
A01X0012:19	001.8		0,75 mm² BU
A01K3008:16	042.2		
1.3L+			
A01X0013:1	001.9		2,5 mm² BU
A01F2003:2	004.8		
1.3L+			
A01X0013:2	001.9		0,75 mm² BU
A01X0006:126	031.2		
1.3L+			
A01X0013:3	001.9		0,75 mm² BU
A01X0006:132	032.2		
1.3L+			
A01X0013:4	001.9		0,75 mm² BU
A01X0006:138	032.6		

Net	Page / Col.	Option	Area/Color
1.3L+			
A01X0013:5	001.9		0,75 mm² BU
A01X0006:160	044.8		
1.5L+			
A01T3000:24V	023.3		2,5 mm² BU
A01F2005:2	004.9		0,75 mm² BU
A01X0006:1	027.4		
A81K5000:1	023.9	COM.UNIT	
1L1			
A01X0008:1	002.1		6 mm² BK
A01Q1005:2	019.3		10 mm² BK
V01F5000:1	019.6		
1L1			
A01X0008:2	002.1		6 mm² BK
W21F8001:1	019.8		
1L1			
A01X0008:9	002.1		6 mm² BK
C50F0000:1	020.6		BUS.BAR
G40F4000:1	020.4		
1L2			
A01X0008:3	002.3		6 mm² BK
A01Q1005:4	019.3		10 mm² BK
V01F5000:3	019.6		
1L2			
A01X0008:4	002.3		6 mm² BK
W21F8001:3	019.8		

Net	Page / Col.	Option	Area/Color
1L2			
A01X0008:11	002.3		6 mm² BK
C50F0000:3	020.6		BUS.BAR
G40F4000:3	020.4		
1L3			
A01X0008:5	002.5		6 mm² BK
A01Q1005:6	019.3		10 mm² BK
V01F5000:5	019.6		
1L3			
A01X0008:6	002.5		6 mm² BK
C50F0000:5	020.6		BUS.BAR
G40F4000:5	020.4		
1L+			
A01X2001:2	004.6		4 mm² BU
A01F2001:1	004.6		BUS BAR
A01F2002:1	004.7		
A01F2003:1	004.8		
A01F2005:1	004.9		
A01F1005:1	008.6		
A01F1007:1	008.9		
1L-			
A01X0010:1	001.1		4 mm² BU
A01X2001:4	004.5		
1L-			
A01X0010:2	001.1		0,75 mm² BU
A81K5000:2	023.9	COM.UNIT	

Net	Page / Col.	Option	Area/Color
1L-			
A01X0010:3	001.1		0,75 mm² BU
F09K0001:A2	029.4		
1L-			
A01X0010:4	001.1		0,75 mm² BU
F09K0000:0V	028.6		
F09K0002:BU	028.9		
1L-			
A01X0010:5	001.1		0,75 mm² BU
A81X2000:GND	025.3		
1L-			
A01X0010:6	001.1		0,75 mm² BU
A81X6000:GND	026.8		
1L-			
A01X0010:7	001.2		0,75 mm² BU
F09K0003:A1	029.4		
F09K0003:S14	029.4		
1L-			
A01X0010:8	001.2		0,75 mm² BU
A01X0006:162	043.8		
1L-			
A01X0010:9	001.2		1,5 mm² BU
A01T7000:-	006.4		
1L-			
A01X0010:10	001.2		0,75 mm² BU
A01Q1005:A2	033.5		

This drawing must not without the consent of Tetra Pak be copied, transmitted or disclosed to any third party.

Line summary of 3404507-0003

Net	Page / Col.	Option	Area/Color
1L-			
A01X0010:11	001.2		0,75 mm² BU
V01Q5000:A2	040.3		
1L-			
A01X0010:12	001.2		0,75 mm² BU
A01K1010:A1	028.8		
1L-			
A01X0010:13	001.2		0,75 mm² BU
F09K0001:S24	029.4		
1L-			
A01X0010:14	001.2		0,75 mm² BU
A01K3005:18	035.8		
1L-			
A01X0010:15	001.2		0,75 mm² BU
A01K3005:036	037.8		
1L-			
A01X0010:16	001.2		0,75 mm² BU
A01K3007:9	040.2		
1L-			
A01X0010:17	001.3		0,75 mm² BU
A01K3007:19	041.2		
1L-			
A01X0010:19	001.3		0,75 mm² BU
W21T4000:04	021.2		
1L-			
A01X0010:20	001.3		0,75 mm² BU

Net	Page / Col.	Option	Area/Color
A01Q1004:A2	042.4		
A01Q1006:A2	042.4		
1L-			
A01X0010:21	001.3		2,5 mm² BU
A01T3000:0V	023.3		
1L-			
A01X0010:22	001.3		0,75 mm² BU
A01X6000:2	006.2		
1L-			
A01X0010:24	001.3		0,75 mm² BU
A01X0006:122-	036.1		BRIDGE
A01X0006:116-	036.1		
A01X0006:115-	036.1		
A01X0006:114-	036.1		
A01X0006:113-	036.1		
A01X0006:112-	038.1		
1L-			
A01X0006:112-	038.1		0,75 mm² BU
A01X0006:2	027.3		
1L-			
A01X0006:113-	036.1		0,75 mm² BU
A01X0006:128	031.2		
1L-			
A01X0006:114-	036.1		0,75 mm² BU
A01X0006:134	032.2		

Net	Page / Col.	Option	Area/Color
1L-			
A01X0006:115-	036.1		0,75 mm² BU
A01X0006:140	032.6		
1L-			
A01X0006:116-	036.1		0,75 mm² BU
A01X0006:177	057.4		
1L-			
A01X0010:25	001.3		0,75 mm² BU
A01X0006:152	056.10		BRIDGE
A01X0006:151	055.9		
A01X0006:150	044.8		0,75 mm² BU
A01X0006:172	057.4		
1L-			
A01X0006:151	055.9		0,75 mm² BU
A01X0006:179	057.4		
1L-			
A01X0010:26	001.3		0,75 mm² BU
A01K3006:09	038.8		
1L-			
A01X0010:27	001.4		0,75 mm² BU
A01K3006:19	039.8		
1L-			
A01X0010:28	001.4		0,75 mm² BU
C50T1000:04	021.7		
1L-			
A01X0010:29	001.4		0,75 mm² BU
W21T6000:04	022.1	OUT. P.CONV.	

Net	Page / Col.	Option	Area/Color
1L-			
A01X0010:30	001.4		0,75 mm² BU
W21T4010:04	022.7	P.ALIGNER	
1L-			
A01X0010:31	001.4		0,75 mm² BU
A01K7000:A2	040.3		
G70K0000:A2-	041.4		
1L-			
A01X0010:32	001.4		0,75 mm² BU
A01P5000:2	040.6		
1L-			
A01X0010:33	001.4		0,75 mm² BU
A01P5001:-	040.6		
1L-			
A01X0010:34	001.4		0,75 mm² BU
F09K0004:A2	029.4		
F09K0004:S24	029.4		
1L-			
A01X0010:35	001.4		0,75 mm² BU
W21K2002:1	039.1		
W21K2002:5	039.1		
1L-			
A01X0010:36	001.4		0,75 mm² BU
G30T0000:4	009.8		
1L-			
A01X0010:37	001.4		0,75 mm² BU
A01X0006:161	027.5		

This drawing must not without the consent of Tetra Pak be copied, transmitted or disclosed to any third party.

Line summary of 3404507-0003

Net	Page / Col.	Option	Area/Color
1L-			
A01X0010:40	001.5		4 mm² BU
A01X0010:41	001.5		
1L-			
A01X0010:48	001.6		0,75 mm² BU
A01Q6000:A2	040.3		
1L-			
A01X0010:49	001.6		0,75 mm² BU
W21Q8000:A2	040.3		
W21Q8001:A2	040.3		
1L-			
A01X0010:50	001.6		0,75 mm² BU
C50Q0000:A2	041.4		
1L-			
A01X0010:51	001.6		0,75 mm² BU
G40Q4000:A2	042.4		
1L-			
A01X0010:53	001.6		0,75 mm² BU
A01X0006:185	058.3		
A01X0006:188	060.2		
1L-			
A01X0010:56	001.6		1,5 mm² BU
A01K1005:N	008.6		
1L-			
A01X0010:57	001.6		1,5 mm² BU
A01K1007:N	008.9		

Net	Page / Col.	Option	Area/Color
2L2			
A01X0008:7	002.1		2,5 mm² BK
A01F3000:2	004.8		
2L2			
A01X0008:15	002.1		1,5 mm² BK
W21K8000:A1	024.4		
2L2			
A01X0008:16	002.2		1,5 mm² BK
W21K8001:A1	024.7		
A-PULSE			
F09K0004:X1	029.4		0,75 mm² BU
F09K0003:X1	029.4		
A01X0006:139	032.6		
A01X0006:133	032.2		
A01X0006:127	031.2		
A01Q1004:61	029.2		
F09K0000:IQ10	028.6		
G40Q4000:21	028.3		
A01X0006:139	032.6		
L1			
A01X0007:1	002.1		10 mm² BK
A01K1000:L1	003.6		
L1			
A01X0007:2	002.1		6 mm² BK
A01F2000:1	004.1		

Net	Page / Col.	Option	Area/Color
L1			
A01X0007:3	002.1		10 mm² BK
A01F1004:1	008.2		
A01F1006:1	008.4		
L1			
A01X0007:4	002.2		10 mm² BK
A01Q1005:1	019.3		
L1			
A01X0007:5	002.2		6 mm² BK
W21F4000:1	021.2		
W21F4010:1	022.7	P.ALIGNER	
L1			
A01X0007:6	002.2		6 mm² BK
W21F8000:1	019.1		
L1			
A01X0007:7	002.2		6 mm² BK
A01F7000:1	006.4		
L2			
A01X0007:1	002.3		10 mm² BK
A01K1000:L2	003.6		
L2			
A01X0007:2	002.3		6 mm² BK
A01F2000:3	004.1		
L2			
A01X0007:3	002.3		10 mm² BK

Net	Page / Col.	Option	Area/Color
A01F1004:3	008.2		
A01F1006:3	008.4		
L2			
A01X0007:4	002.3		10 mm² BK
A01Q1005:3	019.3		
L2			
A01X0007:5	002.4		6 mm² BK
A01F6000:1	007.2		
L2			
A01X0007:6	002.4		6 mm² BK
A01F3000:1	004.8		
L2			
A01X0007:7	002.4		6 mm² BK
C50F1000:1	021.7		
L3			
A01X0007:1	002.5		10 mm² BK
A01K1000:L3	003.6		
L3			
A01X0007:2	002.5		6 mm² BK
A01F2000:5	004.1		
L3			
A01X0007:3	002.5		10 mm² BK
A01F1004:5	008.2		
A01F1006:5	008.4		
L3			
A01X0007:4	002.5		10 mm² BK
A01Q1005:5	019.3		

This drawing must not without the consent of Tetra Pak
be copied, transmitted or disclosed to any third party.

Line summary of 3404507-0003

Net	Page / Col.	Option	Area/Color

Net	Page / Col.	Option	Area/Color

Net	Page / Col.	Option	Area/Color

Net	Page / Col.	Option	Area/Color

L3

A01X0007:5	002.5		6 mm² BK
A01F7002:1	006.9		

L3

A01X0007:6	002.5		6 mm² BK
W21F6000:1	022.2		

6 Cabinet Terminal Summary

Description

All terminals inside the electrical cabinet are listed in this chapter. The field *Opt.* specifies if the terminal is reserved for an option.

6.1 Cabinet Terminal Summary

This page intentionally left blank

This drawing must not without the consent of Tetra Pak be copied, transmitted or disclosed to any third party.

Cabinet terminal summary of 3404507-0003

A01X0002	Page / Col.	Option
A01X0002:E1	003.8	
A01X0002:E2		
A01X0002:E3		
A01X0002:E4	008.2	
A01X0002:E5	008.4	
A01X0002:E6	009.2	
A01X0002:E7	010.2	
A01X0002:E8	011.2	
A01X0002:E9	012.2	
A01X0002:E10	013.2	
A01X0002:E11	014.2	
A01X0002:E12	004.2	
A01X0002:E13	004.3	
A01X0002:E14	004.4	
A01X0002:E15	004.2	
A01X0002:E16	021.9	
A01X0002:E17		
A01X0002:E18		
A01X0002:E19	025.3	
A01X0002:E20		
A01X0002:E21	022.3	OPT.P.CONV.
A01X0002:E22	006.9	
A01X0002:E23		
A01X0002:E24	008.7	
A01X0002:E25	008.9	
A01X0002:E26	007.3	
A01X0002:E27	020.4	
A01X0002:E28	020.6	
A01X0002:E29	021.4	
A01X0002:E30	022.1	OPT.P.CONV.
A01X0002:E31	023.4	
A01X0002:E32	003.7	
A01X0002:E33	003.8	
A01X0002:E34	003.9	
A01X0002:E35	015.2	
A01X0002:E36	016.2	
A01X0002:E37	017.2	
A01X0002:E38		
A01X0002:E39	019.6	
A01X0002:E40		
A01X0002:E41		
A01X0002:E42		
A01X0002:E43	032.4	
A01X0002:E44	032.8	
A01X0002:E45	021.1	
A01X0002:E46	022.8	P.ALIGNER
A01X0002:E47	022.6	P.ALIGNER
A01X0002:E48	023.8	
A01X0002:E49	019.2	
A01X0002:E50	021.6	
A01X0002:E51	019.10	
A01X0002:E52	003.10	
A01X0002:E53		
A01X0002:E54	031.4	
A01X0002:E55		
A01X0002:E56		
A01X0002:E57	025.7	
A01X0002:E58		
A01X0002:E59		
A01X0002:E60		
A01X0002:E61		
A01X0002:E62		

A01X0003	Page / Col.	Option
A01X0003:1	003.9	
A01X0003:2	006.4	
A01X0003:3	007.3	
A01X0003:4	006.9	
A01X0003:5	019.7	
A01X0003:6	019.9	
A01X0003:7		
A01X0003:8	021.2	
A01X0003:9	022.2	OUT. P.CONV.
A01X0003:10	021.7	
A01X0003:11		
A01X0003:12	022.7	P.ALIGNER
A01X0003:13	019.2	
A01X0003:14		
A01X0003:15		
A01X0003:16	024.3	
A01X0003:17		
A01X0003:18		
A01X0003:19	024.6	
A01X0003:20		
A01X0003:21		

A01X0004	Page / Col.	Option
A01X0004:10	019.1	
A01X0004:11	019.2	
A01X0004:12		
A01X0004:13	019.6	
A01X0004:14	019.6	
A01X0004:15	019.6	
A01X0004:16	019.6	
A01X0004:17	019.8	
A01X0004:18	019.9	
A01X0004:19	019.9	
A01X0004:20	020.4	
A01X0004:21	020.4	
A01X0004:22	020.4	
A01X0004:23	020.6	

This drawing must not without the consent of Tetra Pak be copied, transmitted or disclosed to any third party.

Cabinet terminal summary of 3404507-0003

A01X0004	Page / Col.	Option
A01X0004:24	020.6	
A01X0004:25	020.6	
A01X0004:26		
A01X0004:27		
A01X0004:28		
A01X0004:E1	019.2	
A01X0004:E2	019.6	
A01X0004:E3	019.10	
A01X0004:E4	020.4	
A01X0004:E5	020.6	
A01X0004:E6		

A01X0006	Page / Col.	Option
A01X0006:1	027.4	
A01X0006:2	027.3	
A01X0006:3		
A01X0006:4		
A01X0006:5	030.2	
A01X0006:6	030.2	
A01X0006:7	030.3	
A01X0006:8	030.3	
A01X0006:9	030.3	
A01X0006:10	030.3	
A01X0006:11	030.6	
A01X0006:12	030.6	
A01X0006:13	030.6	
A01X0006:14	030.6	
A01X0006:15	030.8	
A01X0006:16	030.8	
A01X0006:17	030.8	
A01X0006:18	030.8	
A01X0006:19	030.9	
A01X0006:20	030.9	
A01X0006:112	038.7	
A01X0006:112+	038.1	
A01X0006:112-	038.1	
A01X0006:113	038.7	
A01X0006:113+	036.1	
A01X0006:113-	036.1	
A01X0006:114	038.7	
A01X0006:114+	036.1	
A01X0006:114-	036.1	
A01X0006:115	036.7	
A01X0006:115+	036.1	
A01X0006:115-	036.1	
A01X0006:116	036.7	
A01X0006:116+	036.1	
A01X0006:116-	036.1	
A01X0006:117	036.7	
A01X0006:118	036.7	
A01X0006:119	036.7	
A01X0006:120	036.7	
A01X0006:121	036.7	
A01X0006:122	037.7	
A01X0006:122+	036.1	
A01X0006:122-	036.1	
A01X0006:123	037.7	
A01X0006:124	037.7	
A01X0006:125	037.7	
A01X0006:126	031.2	
A01X0006:127	031.2	
A01X0006:128	031.2	
A01X0006:129	031.2	
A01X0006:130	031.4	
A01X0006:131	031.4	
A01X0006:132	032.2	
A01X0006:133	032.2	
A01X0006:134	032.2	
A01X0006:135	032.2	
A01X0006:136	032.4	
A01X0006:137	032.4	
A01X0006:138	032.6	
A01X0006:139	032.6	
A01X0006:140	032.6	
A01X0006:141	032.6	
A01X0006:142	032.8	
A01X0006:143	032.8	
A01X0006:144	059.2	
A01X0006:145	059.2	
A01X0006:146	043.3	
A01X0006:147	043.3	
A01X0006:148	043.3	
A01X0006:150	044.8	
A01X0006:151	055.9	
A01X0006:152	056.10	
A01X0006:153	027.6	
A01X0006:154	027.5	
A01X0006:155	044.8	
A01X0006:156	055.9	
A01X0006:157	056.10	
A01X0006:158	056.10	
A01X0006:159		
A01X0006:160	044.8	
A01X0006:161	027.5	
A01X0006:162	043.8	
A01X0006:163	044.8	
A01X0006:164	044.8	
A01X0006:165		
A01X0006:166	043.3	
A01X0006:167	060.2	

This drawing must not without the consent of Tetra Pak be copied, transmitted or disclosed to any third party.

Cabinet terminal summary of 3404507-0003

A01X0006	Page / Col.	Option
A01X0006:168	060.2	
A01X0006:169	060.2	
A01X0006:170	057.4	
A01X0006:171	057.4	
A01X0006:172	057.4	
A01X0006:173	057.4	
A01X0006:174	038.7	
A01X0006:175	038.7	
A01X0006:176	038.7	
A01X0006:177	057.4	
A01X0006:178	057.4	
A01X0006:179	057.4	
A01X0006:180	059.2	
A01X0006:181	059.2	
A01X0006:182	059.2	
A01X0006:183	058.3	
A01X0006:184	058.3	
A01X0006:185	058.3	
A01X0006:186	058.3	
A01X0006:187	058.3	
A01X0006:188	060.2	
A01X0006:189		
A01X0006:190		
A01X0006:191	059.2	

A01X0006:192	039.6	
A01X0006:192+	039.3	
A01X0006:192-	039.3	
A01X0006:193	039.6	
A01X0006:193+	039.3	
A01X0006:193-	039.3	
A01X0006:194	039.6	
A01X0006:194+	039.3	
A01X0006:194-	039.3	
A01X0006:195	039.6	
A01X0006:195+	039.3	
A01X0006:195-	039.3	
A01X0006:196		
A01X0006:196+	039.3	
A01X0006:196-	039.3	
A01X0006:197		
A01X0006:197+	039.3	
A01X0006:197-	039.3	
A01X0006:198		
A01X0006:198+	039.3	
A01X0006:198-	039.3	
A01X0006:199		
A01X0006:199+	039.3	
A01X0006:199-	039.3	
A01X0006:200	039.6	

A01X0006:201	039.6	
A01X0006:202	006.4	
A01X0006:203	006.4	
A01X0006:204	042.3	
A01X0006:205	042.3	
A01X0006:206	058.4	
A01X0006:207		
A01X0006:208		
A01X0006:209		
A01X0006:E1	003.10	
A01X0006:E2		
A01X0006:E3		
A01X0006:E4		
A01X0006:E5		
A01X0006:E6		
A01X0006:E7		
A01X0006:E8		
A01X0006:E9	058.3	
A01X0006:E10	030.6	
A01X0006:E11	044.8	
A01X0006:E12	027.1	
A01X0006:E13	056.10	
A01X0006:E14		
A01X0006:E15		
A01X0006:E16		

A01X0008	Page / Col.	Option
A01X0008:1	002.1	
A01X0008:2	002.1	
A01X0008:3	002.3	
A01X0008:4	002.3	
A01X0008:5	002.5	
A01X0008:6	002.5	
A01X0008:7	002.1	
A01X0008:8	002.1	
A01X0008:9	002.1	
A01X0008:10	002.2	
A01X0008:11	002.3	
A01X0008:12	002.3	
A01X0008:13	002.5	
A01X0008:14	002.5	
A01X0008:15	002.1	
A01X0008:16	002.2	

A01X0010	Page / Col.	Option
A01X0010:1	001.1	
A01X0010:2	001.1	
A01X0010:3	001.1	
A01X0010:4	001.1	
A01X0010:5	001.1	
A01X0010:6	001.1	
A01X0010:7	001.2	

This drawing must not without the consent of Tetra Pak be copied, transmitted or disclosed to any third party.

Cabinet terminal summary of 3404507-0003

A01X0010	Page / Col.	Option
A01X0010:8	001.2	
A01X0010:9	001.2	
A01X0010:10	001.2	
A01X0010:11	001.2	
A01X0010:12	001.2	
A01X0010:13	001.2	
A01X0010:14	001.2	
A01X0010:15	001.2	
A01X0010:16	001.2	
A01X0010:17	001.3	
A01X0010:18	001.3	
A01X0010:19	001.3	
A01X0010:20	001.3	
A01X0010:21	001.3	
A01X0010:22	001.3	
A01X0010:23	001.3	
A01X0010:24	001.3	
A01X0010:25	001.3	
A01X0010:26	001.3	
A01X0010:27	001.4	
A01X0010:28	001.4	
A01X0010:29	001.4	
A01X0010:30	001.4	
A01X0010:31	001.4	
A01X0010:32	001.4	
A01X0010:33	001.4	
A01X0010:34	001.4	
A01X0010:35	001.4	
A01X0010:36	001.4	
A01X0010:37	001.4	
A01X0010:38	001.5	
A01X0010:39	001.5	
A01X0010:40	001.5	
A01X0010:41	001.5	
A01X0010:42	001.5	
A01X0010:43	001.5	
A01X0010:44	001.5	
A01X0010:45	001.5	
A01X0010:46	001.5	
A01X0010:47	001.5	
A01X0010:48	001.6	
A01X0010:49	001.6	
A01X0010:50	001.6	
A01X0010:51	001.6	
A01X0010:52	001.6	
A01X0010:53	001.6	
A01X0010:54	001.6	
A01X0010:55	001.6	
A01X0010:56	001.6	
A01X0010:57	001.6	
A01X0010:58	004.2	
A01X0010:59	001.7	
A01X0010:60	001.7	

A01X0011	Page / Col.	Option
A01X0011:1	001.1	
A01X0011:2	001.1	
A01X0011:3	001.1	
A01X0011:4	001.1	
A01X0011:5	001.1	
A01X0011:6	001.1	
A01X0011:7	001.2	
A01X0011:8	001.2	
A01X0011:9	001.2	
A01X0011:10	001.2	
A01X0011:11	001.2	
A01X0011:12	001.2	
A01X0011:13	001.2	
A01X0011:14	001.2	
A01X0011:15	001.2	
A01X0011:16	001.2	
A01X0011:17	001.3	
A01X0011:18	001.3	
A01X0011:19	001.3	
A01X0011:20	001.3	
A01X0011:21	001.3	
A01X0011:22	001.3	
A01X0011:23	001.3	
A01X0011:24	001.3	
A01X0011:25	001.3	
A01X0011:26	001.3	
A01X0011:27	001.4	
A01X0011:28	001.4	

A01X0012	Page / Col.	Option
A01X0012:1	001.6	
A01X0012:2	001.6	
A01X0012:3	001.6	
A01X0012:4	001.7	
A01X0012:5	001.7	
A01X0012:6	001.7	
A01X0012:7	001.7	
A01X0012:8	001.7	
A01X0012:9	001.7	
A01X0012:10	001.7	
A01X0012:11	001.7	
A01X0012:12	001.7	
A01X0012:13	001.7	
A01X0012:14	001.8	
A01X0012:15	001.8	
A01X0012:16	001.8	

This drawing must not without the consent of Tetra Pak be copied, transmitted or disclosed to any third party.

Cabinet terminal summary of 3404507-0003

A01X0012	Page / Col.	Option
A01X0012:17	001.8	
A01X0012:18	001.8	
A01X0012:19	001.8	
A01X0012:20	001.8	

A01X0013	Page / Col.	Option
A01X0013:1	001.9	
A01X0013:2	001.9	
A01X0013:3	001.9	
A01X0013:4	001.9	
A01X0013:5	001.9	
A01X0013:6	001.9	
A01X0013:7	001.10	
A01X0013:8	001.10	
A01X0013:9	001.10	
A01X0013:10	001.10	
A01X0013:11	001.10	
A01X0013:12	001.10	

A01X0022	Page / Col.	Option
A01X0022:1	001.1	
A01X0022:2	001.1	
A01X0022:3	001.1	
A01X0022:4	001.1	
A01X0022:5	001.1	
A01X0022:6	001.1	
A01X0022:7	001.2	
A01X0022:8	001.2	
A01X0022:9	001.2	
A01X0022:10	001.2	
A01X0022:11	001.2	
A01X0022:12	001.2	

A01X0032	Page / Col.	Option
A01X0032:1	001.4	
A01X0032:2	001.4	
A01X0032:3	001.4	
A01X0032:4	001.4	
A01X0032:5	001.4	
A01X0032:6	001.4	
A01X0032:7	001.4	
A01X0032:8	001.4	
A01X0032:9	001.4	
A01X0032:10	001.5	
A01X0032:11	001.5	
A01X0032:12	001.5	

A01X0042	Page / Col.	Option
A01X0042:1	001.6	
A01X0042:2	001.6	
A01X0042:3	001.6	
A01X0042:4	001.7	
A01X0042:5	001.7	
A01X0042:6	001.7	
A01X0042:7	001.7	
A01X0042:8	001.7	
A01X0042:9	001.7	
A01X0042:10	001.7	
A01X0042:11	001.7	
A01X0042:12	001.7	

A01X0043	Page / Col.	Option
A01X0043:1	001.1	
A01X0043:2	001.1	
A01X0043:3	001.1	
A01X0043:4	001.1	
A01X0043:5	001.1	
A01X0043:6	001.1	
A01X0043:7	001.2	
A01X0043:8	001.2	
A01X0043:9	001.2	
A01X0043:10	001.2	
A01X0043:11	001.2	
A01X0043:12	001.2	
A01X0043:13	001.2	
A01X0043:14	001.2	
A01X0043:15	001.2	
A01X0043:16	001.2	

A01X0044	Page / Col.	Option
A01X0044:1	001.4	
A01X0044:2	001.4	
A01X0044:3	001.4	
A01X0044:4	001.4	
A01X0044:5	001.4	
A01X0044:6	001.4	
A01X0044:7	001.4	
A01X0044:8	001.4	
A01X0044:9	001.4	
A01X0044:10	001.5	
A01X0044:11	001.5	
A01X0044:12	001.5	
A01X0044:13	001.5	
A01X0044:14	001.5	
A01X0044:15	001.5	
A01X0044:16	001.5	

A01X0072	Page / Col.	Option
A01X0072:1	001.6	
A01X0072:2	001.6	
A01X0072:3	001.6	
A01X0072:4	001.7	
A01X0072:5	001.7	
A01X0072:6	001.7	
A01X0072:7	001.7	

This drawing must not without the consent of Tetra Pak be copied, transmitted or disclosed to any third party.

Cabinet terminal summary of 3404507-0003

A01X0072	Page / Col.	Option
A01X0072:8	001.7	

A01X0073	Page / Col.	Option
A01X0073:1	001.8	
A01X0073:2	001.8	
A01X0073:3	001.8	
A01X0073:4	001.8	
A01X0073:5	001.8	
A01X0073:6	001.8	
A01X0073:7	001.9	
A01X0073:8	001.9	

A01X0123	Page / Col.	Option
A01X0123:1	001.8	
A01X0123:2	001.8	
A01X0123:3	001.8	
A01X0123:4	001.8	
A01X0123:5	001.8	
A01X0123:6	001.8	
A01X0123:7	001.9	
A01X0123:8	001.9	

A01X0124	Page / Col.	Option
A01X0124:1	001.10	
A01X0124:2	001.10	
A01X0124:3	001.10	
A01X0124:4	001.10	
A01X0124:5	001.10	
A01X0124:6	001.10	
A01X0124:7	001.10	
A01X0124:8	001.10	

A01X1001	Page / Col.	Option
A01X1001:1	003.3	UL/CSA
A01X1001:2	003.2	UL/CSA
A01X1001:3		UL/CSA
A01X1001:4		UL/CSA
A01X1001:PE	003.2	UL/CSA
A01X1001:E1		
A01X1001:E2		
A01X1001:E3	003.4	
A01X1001:E4	003.4	
A01X1001:E5	003.5	
A01X1001:PE	003.2	

A01X2001	Page / Col.	Option
A01X2001:1	004.5	
A01X2001:2	004.6	
A01X2001:3	004.5	
A01X2001:4	004.5	

A01X6000	Page / Col.	Option
A01X6000:1	006.3	
A01X6000:2	006.2	

G30X0002	Page / Col.	Option
G30X0002:1	009.4	
G30X0002:2	009.4	

G30X4002	Page / Col.	Option
G30X4002:1	015.4	
G30X4002:2	015.4	

G40X0002	Page / Col.	Option
G40X0002:1	010.4	
G40X0002:2	010.4	

G40X0004	Page / Col.	Option
G40X0004:1	011.4	
G40X0004:2	011.4	

G40X3002	Page / Col.	Option
G40X3002:1	014.4	
G40X3002:2	014.4	

G70X1002	Page / Col.	Option
G70X1002:1	017.4	POS.SYS.
G70X1002:2	017.4	POS.SYS.

W20X0002	Page / Col.	Option
W20X0002:1	016.4	
W20X0002:2	016.4	

W21X1002	Page / Col.	Option
W21X1002:1	012.4	
W21X1002:2	012.4	

W21X2002	Page / Col.	Option
W21X2002:1	013.4	
W21X2002:2	013.4	

7 Terminal Strip Overview

Description

All terminals used in the equipment except for those in the electrical cabinet are listed in this chapter.

7.1 Terminal Strip Overview

This page intentionally left blank

RELEASED

This drawing must not without the consent of Tetra Pak
be copied, transmitted or disclosed to any third party.

1 2 3 4 5 6 7 8 9 10

Terminal-strip overview 3404507-0003

A01X7001

From	Cable	Internal Jumper	Terminal	External Jumper	Cable	To	Page / Col.	Option	Function text
A01X0006:202	A01W7100-BN		1.1		A01W7001-BN	A01E7001:1	006.4		MACHINE LIGHTING 1
A01X0006:203	A01W7100-BU		1.3		A01W7001-WH	A01E7001:2	006.4		MACHINE LIGHTING 1
			2.1		A01W7002-BN	A01E7002:1	006.5		MACHINE LIGHTING 2
			2.3		A01W7002-WH	A01E7002:2	006.6		MACHINE LIGHTING 2
			3.1		A01W7003-BN	A01E7003:1	006.7		MACHINE LIGHTING 3
			3.3		A01W7003-WH	A01E7003:2	006.7		MACHINE LIGHTING 3

Tetra Pak®

Version Designer: ROG	Version Date: 2016-09-30	Machine: CAP30 Flex ScrewCap 0400	
ECM No: 825145	Denomination: TERMINAL STRIP OVERVIEW	Page Type: TERMINAL STRIP OVERVIEW	
Information Security Class: PUBLIC	Document No.: 3404507-0006	Doc. type: ELD	Version: AC	Page: 001

RELEASED

This drawing must not without the consent of Tetra Pak
be copied, transmitted or disclosed to any third party.

1 2 3 4 5 6 7 8 9 10

Terminal-strip overview 3404507-0003

C50X0000

From	Cable	Internal Jumper	Terminal	External Jumper	Cable	To	Page / Col.	Option	Function text
A01X0004:23	C50W0010-1		1		C50W0000-1	C50M0000:W	020.6		CAP ELEVATOR
A01X0004:24	C50W0010-2		2		C50W0000-2	C50M0000:V	020.6		CAP ELEVATOR
A01X0004:25	C50W0010-3		3		C50W0000-3	C50M0000:U	020.6		CAP ELEVATOR
			4						
			5						
			6						
A01X0004:E5	C50W0010-GNYE		⏚		C50W0000-GNYE	C50M0000:⏚	020.6		CAP ELEVATOR

Tetra Pak®	Version Designer: ROG	Version Date: 2016-09-30	Machine: CAP30 Flex ScrewCap 0400	
	ECM No: 825145	Denomination: TERMINAL STRIP OVERVIEW	Page Type: TERMINAL STRIP OVERVIEW	
Information Security Class: PUBLIC	Document No.: 3404507-0006	Doc. type: ELD	Version: AC	Page: 002

RELEASED

This drawing must not without the consent of Tetra Pak
be copied, transmitted or disclosed to any third party.

1 2 3 4 5 6 7 8 9 10

Terminal-strip overview 3404507-0003

C50X0012

From	Cable	Internal Jumper	Terminal	External Jumper	Cable	To	Page / Col.	Option	Function text
C81K4130:2.1	C50W0012-BN		1		C50W0014-BN	C50B0014	056.6		LOW LEVEL PADDLE ELEVATOR
					C50W0013-BN	C50B0013			LOW LEVEL PADDLE ELEVATOR
C81K4130:2.3	C50W0012-BU		3		C50W0014-BU	C50B0014	056.6		LOW LEVEL PADDLE ELEVATOR
					C50W0013-BU	C50B0013			LOW LEVEL PADDLE ELEVATOR
C81K4130:2.4	C50W0012-BK		4		C50W0014-BK	C50B0014	056.6		LOW LEVEL PADDLE ELEVATOR

Tetra Pak®

Version Designer	Version Date	Machine
ROG	2016-09-30	CAP30 Flex ScrewCap 0400

ECM No	Denomination	Page Type
825145	TERMINAL STRIP OVERVIEW	TERMINAL STRIP OVERVIEW

Information Security Class	Document No.	Doc. type	Version	Page
PUBLIC	3404507-0006	ELD	AC	003

This drawing must not without the consent of Tetra Pak
be copied, transmitted or disclosed to any third party.

Terminal-strip overview 3404507-0003

C50X1000

From	Cable	Internal Jumper	Terminal	External Jumper	Cable	To	Page / Col.	Option	Function text
C50T1000:T1/U	C50W1010-1		1		C50W1000-1	C50M1000:U	021.9		CAP SORTER DISK
C50T1000:T2/V	C50W1010-2		2		C50W1000-2	C50M1000:V	021.9		CAP SORTER DISK
C50T1000:T3/W	C50W1010-3		3		C50W1000-3	C50M1000:W	021.9		CAP SORTER DISK
GND	C50W1010-SH		4		C50W1000-SH	GND	021.10		
			5						
			6						
C50T1000:⏚			⏚		C50W1000-GNYE	C50M1000:⏚	021.10		CAP SORTER DISK

Version Designer: ROG	Version Date: 2016-09-30	Machine: CAP30 Flex ScrewCap 0400			
ECM No: 825145	Denomination: TERMINAL STRIP OVERVIEW	Page Type: TERMINAL STRIP OVERVIEW			
Information Security Class: PUBLIC	Document No.: 3404507-0006	Doc. type: ELD	Version: AC	Page: 004	

This drawing must not without the consent of Tetra Pak
be copied, transmitted or disclosed to any third party.

1 2 3 4 5 6 7 8 9 10

Terminal-strip overview 3404507-0003

C50X1004

From	Cable	Internal Jumper	Terminal	External Jumper	Cable	To	Page / Col.	Option	Function text
A01X0006:152	C50W0004-1		1		A81W4130-BU	C81K4130:POWER I:3	056.9		
					A81W4130-BK	C81K4130:POWER I:4			
A01X0006:157	C50W0004-2		2		A81W4130-BN	C81K4130:POWER I:1	056.9		
					A81W4130-WH	C81K4130:POWER I:2			
A01X0006:166	C50W0004-3		3		C50W1004-BK	C50K1004:1	043.4		
			3						
A01X0006:162	C50W0004-4		4		C50W1004-BU	C50K1004:2	043.7		
			4						
A01X0006:E13	C50W0004-GNYE		⏚				056.9		

Tetra Pak®

Version Designer	Version Date	Machine
ROG	2016-09-30	CAP30 Flex ScrewCap 0400

ECM No	Denomination	Page Type
825145	TERMINAL STRIP OVERVIEW	TERMINAL STRIP OVERVIEW

Information Security Class	Document No.	Doc. type	Version	Page
PUBLIC	3404507-0006	ELD	AC	005

RELEASED

This drawing must not without the consent of Tetra Pak
be copied, transmitted or disclosed to any third party.

1 2 3 4 5 6 7 8 9 10

Terminal-strip overview 3404507-0003

F09X2010

From	Cable	Internal Jumper	Terminal	External Jumper	Cable	To	Page / Col.	Option	Function text
F09B2010:BN	F09W2010-BN		1.1				031.2		
F09B2010:WH	F09W2010-WH		1.2				031.2		
F09B2010:BU	F09W2010-BU		1.3				031.2		
F09W2010:SH	F09W2010-SH								
F09B2010:BK	F09W2010-BK		1.4				031.2		
F09B2010:GY	F09W2010-GY		1.5				031.2		

Tetra Pak®

Version Designer: ROG	Version Date: 2016-09-30	Machine: CAP30 Flex ScrewCap 0400	
ECM No: 825145	Denomination: TERMINAL STRIP OVERVIEW	Page Type: TERMINAL STRIP OVERVIEW	
Information Security Class: PUBLIC	Document No.: 3404507-0006	Doc. type: ELD	Version: AC	Page: 006

RELEASED

This drawing must not without the consent of Tetra Pak
be copied, transmitted or disclosed to any third party.

1 2 3 4 5 6 7 8 9 10

Terminal-strip overview 3404507-0003

F09X2012

From	Cable	Internal Jumper	Terminal	External Jumper	Cable	To	Page / Col.	Option	Function text
F09B2012:BN	F09W2012-BN		2.1				031.3		
F09B2012:WH	F09W2012-WH		2.2				031.3		
F09B2012:BU	F09W2012-BU		2.3				031.3		
F09W2012:SH	F09W2012-SH								
F09B2012:BK	F09W2012-BK		2.4				031.3		
F09B2012:GY	F09W2012-GY		2.5				031.3		

Tetra Pak®

Version Designer	Version Date	Machine
ROG	2016-09-30	CAP30 Flex ScrewCap 0400

ECM No	Denomination	Page Type
825145	TERMINAL STRIP OVERVIEW	TERMINAL STRIP OVERVIEW

Information Security Class	Document No.	Doc. type	Version	Page
PUBLIC	3404507-0006	ELD	AC	007

This drawing must not without the consent of Tetra Pak
be copied, transmitted or disclosed to any third party.

1 2 3 4 5 6 7 8 9 10

Terminal-strip overview 3404507-0003

F09X2014

From	Cable	Internal Jumper	Terminal	External Jumper	Cable	To	Page / Col.	Option	Function text
F09B2014:BN	F09W2014-BN		3.1				031.4		
F09B2014:WH	F09W2014-WH		3.2				031.4		
F09B2014:BU	F09W2014-BU		3.3				031.4		
F09W2014:SH	F09W2014-SH								
F09B2014:BK	F09W2014-BK		3.4				031.4		
F09B2014:GY	F09W2014-GY		3.5				031.4		

Tetra Pak®

Version Designer: ROG	Version Date: 2016-09-30	Machine: CAP30 Flex ScrewCap 0400	
ECM No: 825145	Denomination: TERMINAL STRIP OVERVIEW	Page Type: TERMINAL STRIP OVERVIEW	
Information Security Class: PUBLIC	Document No.: 3404507-0006	Doc. type: ELD	Version: AC / Page: 008

This drawing must not without the consent of Tetra Pak
be copied, transmitted or disclosed to any third party.

1 2 3 4 5 6 7 8 9 10

Terminal-strip overview 3404507-0003

F09X2016

From	Cable	Internal Jumper	Terminal	External Jumper	Cable	To	Page / Col.	Option	Function text
F09B2016:BN	F09W2016-BN		4.1				031.4		
F09B2016:WH	F09W2016-WH		4.2				031.5		
F09B2016:BU	F09W2016-BU		4.3				031.5		
F09W2016:SH	F09W2016-SH								
F09B2016:BK	F09W2016-BK		4.4				031.5		
F09B2016:GY	F09W2016-GY		4.5				031.5		

Tetra Pak®

Version Designer	Version Date	Machine
ROG	2016-09-30	CAP30 Flex ScrewCap 0400

ECM No	Denomination	Page Type
825145	TERMINAL STRIP OVERVIEW	TERMINAL STRIP OVERVIEW

Information Security Class	Document No.	Doc. type	Version	Page
PUBLIC	3404507-0006	ELD	AC	009

RELEASED

This drawing must not without the consent of Tetra Pak
be copied, transmitted or disclosed to any third party.

1 2 3 4 5 6 7 8 9 10

Terminal-strip overview 3404507-0003

F09X2030

From	Cable	Internal Jumper	Terminal	External Jumper	Cable	To	Page / Col.	Option	Function text
F09B2030:BN	F09W2030-BN		1.1				032.2		
F09B2030:WH	F09W2030-WH		1.2				032.2		
F09B2030:BU	F09W2030-BU		1.3				032.2		
F09W2030:SH	F09W2030-SH								
F09B2030:BK	F09W2030-BK		1.4				032.2		
F09B2030:GY	F09W2030-GY		1.5				032.2		

Tetra Pak®

Version Designer: ROG	Version Date: 2016-09-30	Machine: CAP30 Flex ScrewCap 0400	
ECM No: 825145	Denomination: TERMINAL STRIP OVERVIEW	Page Type: TERMINAL STRIP OVERVIEW	
Information Security Class: PUBLIC	Document No.: 3404507-0006	Doc. type: ELD	Version: AC / Page: 010

RELEASED

This drawing must not without the consent of Tetra Pak
be copied, transmitted or disclosed to any third party.

1 2 3 4 5 6 7 8 9 10

Terminal-strip overview 3404507-0003

F09X2032

From	Cable	Internal Jumper	Terminal	External Jumper	Cable	To	Page / Col.	Option	Function text
F09B2032:BN	F09W2032-BN		2.1				032.3		
F09B2032:WH	F09W2032-WH		2.2				032.3		
F09B2032:BU	F09W2032-BU		2.3				032.3		
F09W2032:SH	F09W2032-SH								
F09B2032:BK	F09W2032-BK		2.4				032.3		
F09B2032:GY	F09W2032-GY		2.5				032.3		

Tetra Pak®

Version Designer	Version Date	Machine
ROG	2016-09-30	CAP30 Flex ScrewCap 0400

ECM No	Denomination	Page Type
825145	TERMINAL STRIP OVERVIEW	TERMINAL STRIP OVERVIEW

Information Security Class	Document No.	Doc. type	Version	Page
PUBLIC	3404507-0006	ELD	AC	011

RELEASED

This drawing must not without the consent of Tetra Pak
be copied, transmitted or disclosed to any third party.

1 2 3 4 5 6 7 8 9 10

Terminal-strip overview 3404507-0003

F09X2034

From	Cable	Internal Jumper	Terminal	External Jumper	Cable	To	Page / Col.	Option	Function text
F09B2034:BN	F09W2034-BN		3.1				032.4		
F09B2034:WH	F09W2034-WH		3.2				032.4		
F09B2034:BU	F09W2034-BU		3.3				032.4		
F09W2034:SH	F09W2034-SH								
F09B2034:BK	F09W2034-BK		3.4				032.4		
F09B2034:GY	F09W2034-GY		3.5				032.4		

Tetra Pak®

Version Designer	Version Date	Machine
ROG	2016-09-30	CAP30 Flex ScrewCap 0400

ECM No	Denomination	Page Type
825145	TERMINAL STRIP OVERVIEW	TERMINAL STRIP OVERVIEW

Information Security Class	Document No.	Doc. type	Version	Page
PUBLIC	3404507-0006	ELD	AC	012

This drawing must not without the consent of Tetra Pak
be copied, transmitted or disclosed to any third party.

1 2 3 4 5 6 7 8 9 10

Terminal-strip overview 3404507-0003

F09X2036

From	Cable	Internal Jumper	Terminal	External Jumper	Cable	To	Page / Col.	Option	Function text
F09B2036:+24V			4.1				032.4		
F09B2036:IN			4.2				032.5		
F09B2036:0V			4.3				032.5		
F09B2036:OUT			4.4				032.5		
F09B2036:INFO			4.5				032.5		

Tetra Pak®

Version Designer: ROG	Version Date: 2016-09-30	Machine: CAP30 Flex ScrewCap 0400	
ECM No: 825145	Denomination: TERMINAL STRIP OVERVIEW	Page Type: TERMINAL STRIP OVERVIEW	
Information Security Class: PUBLIC	Document No.: 3404507-0006	Doc. type: ELD	Version: AC / Page: 013

This drawing must not without the consent of Tetra Pak
be copied, transmitted or disclosed to any third party.

1 2 3 4 5 6 7 8 9 10

Terminal-strip overview 3404507-0003

F09X2041

From	Cable	Internal Jumper	Terminal	External Jumper	Cable	To	Page / Col.	Option	Function text
P01X4000:17	F09W2041-BN		1			F09B2041:1	050.6		LOCKER DOOR FRONT 1
P01X4000:20	F09W2041-BU		2			F09B2041:2	050.7		LOCKER DOOR FRONT 1
			3						
			4						

Tetra Pak®

Version Designer	Version Date	Machine
ROG	2016-09-30	CAP30 Flex ScrewCap 0400

ECM No	Denomination	Page Type
825145	TERMINAL STRIP OVERVIEW	TERMINAL STRIP OVERVIEW

Information Security Class	Document No.	Doc. type	Version	Page
PUBLIC	3404507-0006	ELD	AC	014

RELEASED

This drawing must not without the consent of Tetra Pak
be copied, transmitted or disclosed to any third party.

1 2 3 4 5 6 7 8 9 10

Terminal-strip overview 3404507-0003

F09X2042

From	Cable	Internal Jumper	Terminal	External Jumper	Cable	To	Page / Col.	Option	Function text
P01X4000:18	F09W2042-BN		1			F09B2042:1	050.6		LOCKER DOOR FRONT 2
P01X4000:21	F09W2042-BU		2			F09B2042:2	050.7		LOCKER DOOR FRONT 2
			3						
			4						

Tetra Pak®

Version Designer: ROG	Version Date: 2016-09-30	Machine: CAP30 Flex ScrewCap 0400	
ECM No: 825145	Denomination: TERMINAL STRIP OVERVIEW	Page Type: TERMINAL STRIP OVERVIEW	
Information Security Class: PUBLIC	Document No.: 3404507-0006	Doc. type: ELD	Version: AC	Page: 015

RELEASED

This drawing must not without the consent of Tetra Pak
be copied, transmitted or disclosed to any third party.

1 2 3 4 5 6 7 8 9 10

Terminal-strip overview 3404507-0003

F09X3010

From	Cable	Internal Jumper	Terminal	External Jumper	Cable	To	Page / Col.	Option	Function text
F09B3010:+24V			1.1				032.6		
F09B3010:IN			1.2				032.6		
F09B3010:0V			1.3				032.6		
F09B3010:OUT			1.4				032.6		
F09B3010:INFO			1.5				032.7		

Version Designer: ROG	Version Date: 2016-09-30	Machine: CAP30 Flex ScrewCap 0400		
ECM No: 825145	Denomination: TERMINAL STRIP OVERVIEW	Page Type: TERMINAL STRIP OVERVIEW		
Information Security Class: PUBLIC	Document No.: 3404507-0006	Doc. type: ELD	Version: AC	Page: 016

This drawing must not without the consent of Tetra Pak
be copied, transmitted or disclosed to any third party.

1 2 3 4 5 6 7 8 9 10

Terminal-strip overview 3404507-0003

F09X3012

From	Cable	Internal Jumper	Terminal	External Jumper	Cable	To	Page / Col.	Option	Function text
F09B3012:BN	F09W3012-BN		2.1				032.7		
F09B3012:WH	F09W3012-WH		2.2				032.7		
F09B3012:BU	F09W3012-BU		2.3				032.7		
F09W3012:SH	F09W3012-SH								
F09B3012:BK	F09W3012-BK		2.4				032.7		
F09B3012:GY	F09W3012-GY		2.5				032.7		

Tetra Pak®

Version Designer	Version Date	Machine
ROG	2016-09-30	CAP30 Flex ScrewCap 0400

ECM No	Denomination	Page Type
825145	TERMINAL STRIP OVERVIEW	TERMINAL STRIP OVERVIEW

Information Security Class	Document No.	Doc. type	Version	Page
PUBLIC	3404507-0006	ELD	AC	017

This drawing must not without the consent of Tetra Pak
be copied, transmitted or disclosed to any third party.

1 2 3 4 5 6 7 8 9 10

Terminal-strip overview 3404507-0003

F09X3014

From	Cable	Internal Jumper	Terminal	External Jumper	Cable	To	Page / Col.	Option	Function text
F09B3014:BN	F09W3014-BN		3.1				032.8		
F09B3014:WH	F09W3014-WH		3.2				032.8		
F09B3014:BU	F09W3014-BU		3.3				032.8		
F09W3014:SH	F09W3014-SH								
F09B3014:BK	F09W3014-BK		3.4				032.8		
F09B3014:GY	F09W3014-GY		3.5				032.8		

Tetra Pak®

Version Designer	Version Date	Machine
ROG	2016-09-30	CAP30 Flex ScrewCap 0400

ECM No	Denomination	Page Type
825145	TERMINAL STRIP OVERVIEW	TERMINAL STRIP OVERVIEW

Information Security Class	Document No.	Doc. type	Version	Page
PUBLIC	3404507-0006	ELD	AC	018

RELEASED

This drawing must not without the consent of Tetra Pak
be copied, transmitted or disclosed to any third party.

1 2 3 4 5 6 7 8 9 10

Terminal-strip overview 3404507-0003

F09X3016

From	Cable	Internal Jumper	Terminal	External Jumper	Cable	To	Page / Col.	Option	Function text
F09B3016:BN	F09W3016-BN		4.1				032.9		
F09B3016:WH	F09W3016-WH		4.2				032.9		
F09B3016:BU	F09W3016-BU		4.3				032.9		
F09W3016:SH	F09W3016-SH								
F09B3016:BK	F09W3016-BK		4.4				032.9		
F09B3016:GY	F09W3016-GY		4.5				032.9		

Tetra Pak®

Version Designer	Version Date	Machine
ROG	2016-09-30	CAP30 Flex ScrewCap 0400

ECM No	Denomination	Page Type
825145	TERMINAL STRIP OVERVIEW	TERMINAL STRIP OVERVIEW

Information Security Class	Document No.	Doc. type	Version	Page
PUBLIC	3404507-0006	ELD	AC	019

This drawing must not without the consent of Tetra Pak
be copied, transmitted or disclosed to any third party.

Terminal-strip overview 3404507-0003

G30X1020

From	Cable	Internal Jumper	Terminal	External Jumper	Cable	To	Page / Col.	Option	Function text
A01X0006:116+	G30W1020-BN		1.1				036.3		
A01X0006:116-	G30W1020-BU		1.3				036.3		
A01X0006:116	G30W1020-WH		1.4				036.6		
			2.1		G30W1001-BN	G30B1001	036.3		
			2.3		G30W1001-BU	G30B1001	036.3		
A01X0006:117	G30W1020-GN		2.4		G30W1001-BK	G30B1001	036.6		
			3.1		G30W1002-BN	G30B1002	036.3		CAP HOLDER 1 APPLICATOR WHEEL
			3.3		G30W1002-BU	G30B1002	036.3		CAP HOLDER 1 APPLICATOR WHEEL
A01X0006:118	G30W1020-YE		3.4		G30W1002-BK	G30B1002	036.6		CAP HOLDER 1 APPLICATOR WHEEL
			4.1				036.3		
A01X0006:119	G30W1020-BN/GN		4.2				036.6		
			4.3				036.3		
			5.1				036.3		
A01X0006:120	G30W1020-WH/YE		5.2				036.6		
			5.3				036.3		
A01X0006:146	G30W1020-YE/BN		6.2		G40W1000-BN	G40X1000:1	043.4		HOT MELT GUN 1OPENING
			6.3		G40W1000-BU	G40X1000:3	043.7		HOT MELT GUN 1OPENING
A01X0006:147	G30W1020-WH/GY		7.2		G40W1001-BN	G40X1001:1	043.4		HOT MELT GUN 2 OPENING
			7.3		G40W1001-BU	G40X1001:3	043.7		HOT MELT GUN 2 OPENING
			8.3				043.7		
A01X0006:148	G30W1020-GY/BN		8.4				043.4		

Tetra Pak®

Version Designer: ROG	Version Date: 2016-09-30	Machine: CAP30 Flex ScrewCap 0400	
ECM No: 825145	Denomination: TERMINAL STRIP OVERVIEW	Page Type: TERMINAL STRIP OVERVIEW	
Information Security Class: PUBLIC	Document No.: 3404507-0006	Doc. type: ELD	Version: AC / Page: 020

This drawing must not without the consent of Tetra Pak
be copied, transmitted or disclosed to any third party.

1 2 3 4 5 6 7 8 9 10

Terminal-strip overview 3404507-0003

G30X1030

From	Cable	Internal Jumper	Terminal	External Jumper	Cable	To	Page / Col.	Option	Function text
A01X0006:122-	G30W1030-BU		1.1		G40W2002-BN	G40B2002:BN	036.3		CAP SEQUENCER STOPPER CLOSE
A01X0006:122+	G30W1030-BN		1.3		G40W2002-BU	G40B2002:BU	036.3		CAP SEQUENCER STOPPER CLOSE
A01X0006:121	G30W1030-WH		1.4		G40W2002-BK	G40B2002:BK	036.6		CAP SEQUENCER STOPPER CLOSE
			2.1		G40W2000-BN	G40B2000	037.3		CAP INFEEDED INTO CAP SEQUENCER
			2.3		G40W2000-BU	G40B2000	037.3		CAP INFEEDED INTO CAP SEQUENCER
A01X0006:122	G30W1030-RD/BU		2.4		G40W2000-BK	G40B2000	037.6		CAP INFEEDED INTO CAP SEQUENCER
			3.1				037.3		
A01X0006:123	G30W1030-WH/GN		3.2				037.6		
			3.3				037.3		
			4.1				037.3		
A01X0006:124	G30W1030-BN/GN		4.2				037.6		
			4.3				037.3		
			5.1				037.3		
			5.3				037.3		
A01X0006:125	G30W1030-PK		5.4				037.6		

Tetra Pak®

Version Designer: ROG	Version Date: 2016-09-30	Machine: CAP30 Flex ScrewCap 0400	
ECM No: 825145	Denomination: TERMINAL STRIP OVERVIEW	Page Type: TERMINAL STRIP OVERVIEW	
Information Security Class: PUBLIC	Document No.: 3404507-0006	Doc. type: ELD	Version: AC	Page: 021

This drawing must not without the consent of Tetra Pak
be copied, transmitted or disclosed to any third party.

1 2 3 4 5 6 7 8 9 10

Terminal-strip overview 3404507-0003

G40X1000

From	Cable	Internal Jumper	Terminal	External Jumper	Cable	To	Page / Col.	Option	Function text
G30X1020:6.2	G40W1000-BN		1			G40K1000:1	043.5		HOT MELT GUN 1OPENING
			2						
G30X1020:6.3	G40W1000-BU		3			G40K1000:2	043.6		HOT MELT GUN 1OPENING

Tetra Pak®

Version Designer	Version Date	Machine
ROG	2016-09-30	CAP30 Flex ScrewCap 0400

ECM No	Denomination	Page Type
825145	TERMINAL STRIP OVERVIEW	TERMINAL STRIP OVERVIEW

Information Security Class	Document No.	Doc. type	Version	Page
PUBLIC	3404507-0006	ELD	AC	022

This drawing must not without the consent of Tetra Pak
be copied, transmitted or disclosed to any third party.

1 2 3 4 5 6 7 8 9 10

Terminal-strip overview 3404507-0003

G40X1001

From	Cable	Internal Jumper	Terminal	External Jumper	Cable	To	Page / Col.	Option	Function text
G30X1020:7.2	G40W1001-BN		1			G40K1001:1	043.5		HOT MELT GUN 2 OPENING
			2						
G30X1020:7.3	G40W1001-BU		3			G40K1001:2	043.6		HOT MELT GUN 2 OPENING

Tetra Pak®

Version Designer	Version Date	Machine
ROG	2016-09-30	CAP30 Flex ScrewCap 0400

ECM No	Denomination	Page Type
825145	TERMINAL STRIP OVERVIEW	TERMINAL STRIP OVERVIEW

Information Security Class	Document No.	Doc. type	Version	Page
PUBLIC	3404507-0006	ELD	AC	023

This drawing must not without the consent of Tetra Pak
be copied, transmitted or disclosed to any third party.

1 2 3 4 5 6 7 8 9 10

Terminal-strip overview 3404507-0003

G40X4000

From	Cable	Internal Jumper	Terminal	External Jumper	Cable	To	Page / Col.	Option	Function text
A01X0004:20	G40W4010-1		1		G40W4000-1	G40M4000:U	020.4		CAP CONVEYOR
A01X0004:21	G40W4010-2		2		G40W4000-2	G40M4000:V	020.4		CAP CONVEYOR
A01X0004:22	G40W4010-3		3		G40W4000-3	G40M4000:W	020.4		CAP CONVEYOR
			4						
			5						
			6						
A01X0004:E4	G40W4010-GNYE		⏚		G40W4000-GNYE	G40M4000:⏚	020.4		CAP CONVEYOR

Tetra Pak®

Version Designer	Version Date	Machine
ROG	2016-09-30	CAP30 Flex ScrewCap 0400

ECM No	Denomination	Page Type
825145	TERMINAL STRIP OVERVIEW	TERMINAL STRIP OVERVIEW

Information Security Class	Document No.	Doc. type	Version	Page
PUBLIC	3404507-0006	ELD	AC	024

This drawing must not without the consent of Tetra Pak
be copied, transmitted or disclosed to any third party.

1 2 3 4 5 6 7 8 9 10

Terminal-strip overview 3404507-0003

G40X5002

From	Cable	Internal Jumper	Terminal	External Jumper	Cable	To	Page / Col.	Option	Function text
C81K4130:0.1	G40W5002-BN		1		G40W5001-BN	G40B5001	056.6		CAP CONVEYOR MIN. QUEUE
					G40W5000-BN	G40B5000			CAP CONVEYOR MIN. QUEUE
C81K4130:0.3	G40W5002-BU		3		G40W5001-BU	G40B5001	056.6		CAP CONVEYOR MIN. QUEUE
					G40W5000-BU	G40B5000			CAP CONVEYOR MIN. QUEUE
C81K4130:0.4	G40W5002-BK		4		G40W5001-BK	G40B5001	056.6		CAP CONVEYOR MIN. QUEUE

Tetra Pak®

Version Designer: ROG	Version Date: 2016-09-30	Machine: CAP30 Flex ScrewCap 0400	
ECM No: 825145	Denomination: TERMINAL STRIP OVERVIEW	Page Type: TERMINAL STRIP OVERVIEW	
Information Security Class: PUBLIC	Document No.: 3404507-0006	Doc. type: ELD	Version: AC	Page: 025

This drawing must not without the consent of Tetra Pak
be copied, transmitted or disclosed to any third party.

1 2 3 4 5 6 7 8 9 10

Terminal-strip overview 3404507-0003

G40X5006

From	Cable	Internal Jumper	Terminal	External Jumper	Cable	To	Page / Col.	Option	Function text
C81K4130:1.1	G40W5006-BN		1		G40W5005-BN	G40B5005	056.6		CAP CONVEYOR MAX. QUEUE
					G40W5004-BN	G40B5004			CAP CONVEYOR MAX. QUEUE
C81K4130:1.3	G40W5006-BU		3		G40W5005-BU	G40B5005	056.6		CAP CONVEYOR MAX. QUEUE
					G40W5004-BU	G40B5004			CAP CONVEYOR MAX. QUEUE
C81K4130:1.4	G40W5006-BK		4		G40W5005-BK	G40B5005	056.6		CAP CONVEYOR MAX. QUEUE

Tetra Pak®

Version Designer: ROG	Version Date: 2016-09-30	Machine: CAP30 Flex ScrewCap 0400	
ECM No: 825145	Denomination: TERMINAL STRIP OVERVIEW	Page Type: TERMINAL STRIP OVERVIEW	
Information Security Class: PUBLIC	Document No.: 3404507-0006	Doc. type: ELD	Version: AC / Page: 026

This drawing must not without the consent of Tetra Pak
be copied, transmitted or disclosed to any third party.

1 2 3 4 5 6 7 8 9 10

Terminal-strip overview 3404507-0003

G41X0000

From	Cable	Internal Jumper	Terminal	External Jumper	Cable	To	Page / Col.	Option	Function text
			101		G41W0010-1	A01X0006:183	058.6	ADH. DET.	
			102				058.6	ADH. DET.	
			103			G41K0011:34	058.6	ADH. DET.	
						G41K0011:24			
			104				058.6	ADH. DET.	
			105			G41K0011:24	058.6	ADH. DET.	
			106		G41W0010-3	A01X0006:185	058.6	ADH. DET.	
			107			G41K0011:14	058.6	ADH. DET.	
			108				058.6	ADH. DET.	
			109				058.6	ADH. DET.	
			110				058.6	ADH. DET.	
			111		G41W0010-2	A01X0006:184	058.6	ADH. DET.	
			112		G41W0010-4	A01X0006:186	058.6	ADH. DET.	
			113				058.6	ADH. DET.	
			114		G41W0010-5	A01X0006:187	058.4	ADH. DET.	
A01X0006:206	G41W0010-6		115				058.6	ADH. DET.	
			115					ADH. DET.	
G41K0011:A1			116				058.6	ADH. DET.	
			117				058.6	ADH. DET.	
			118					ADH. DET.	
			119					ADH. DET.	
			120					ADH. DET.	
			121					ADH. DET.	
G41X0010:1	G41W0000-WH/GN		122				058.6	ADH. DET.	
			123				058.6	ADH. DET.	
			124				058.6	ADH. DET.	
G41X0011:1			125				058.6	ADH. DET.	
			126				058.6	ADH. DET.	
G41X0010:3	G41W0000-WH/OG		127				058.6	ADH. DET.	
G41X0010:8	G41W0000-BN		128				058.6	ADH. DET.	

Tetra Pak®

Version Designer	Version Date	Machine
ROG	2016-09-30	CAP30 Flex ScrewCap 0400

ECM No	Denomination	Page Type
825145	TERMINAL STRIP OVERVIEW	TERMINAL STRIP OVERVIEW

Information Security Class	Document No.	Doc. type	Version	Page
PUBLIC	3404507-0006	ELD	AC	027

This drawing must not without the consent of Tetra Pak
be copied, transmitted or disclosed to any third party.

Terminal-strip overview 3404507-0003

G41X0000

From	Cable	Internal Jumper	Terminal	External Jumper	Cable	To	Page / Col.	Option	Function text
			129				058.6	ADH. DET.	
			130				058.6	ADH. DET.	
			131				058.6	ADH. DET.	
G41X0010:2	G41W0000-GN		132				058.6	ADH. DET.	
G41X0010:4	G41W0000-BU		133				058.6	ADH. DET.	
G41X0010:5	G41W0000-WH/BU		134				058.6	ADH. DET.	
G41K0011:31			135				058.4	ADH. DET.	
			136			G41T0002:+	058.6	ADH. DET.	
			136					ADH. DET.	
G41X0011:4			137				058.6	ADH. DET.	
			138				058.6	ADH. DET.	
			139					ADH. DET.	
			140					ADH. DET.	
			141					ADH. DET.	
			142					ADH. DET.	
A01X0006:E9	G41W0010-GNYE		GND				058.6	ADH. DET.	
			GND					ADH. DET.	
			GND					ADH. DET.	
			GND					ADH. DET.	

Tetra Pak®

Version Designer: ROG	Version Date: 2016-09-30	Machine: CAP30 Flex ScrewCap 0400	
ECM No: 825145	Denomination: TERMINAL STRIP OVERVIEW	Page Type: TERMINAL STRIP OVERVIEW	
Information Security Class: PUBLIC	Document No.: 3404507-0006	Doc. type: ELD	Version: AC / Page: 028

This drawing must not without the consent of Tetra Pak
be copied, transmitted or disclosed to any third party.

1 2 3 4 5 6 7 8 9 10

Terminal-strip overview 3404507-0003

G41X0002

From	Cable	Internal Jumper	Terminal	External Jumper	Cable	To	Page / Col.	Option	Function text
G41E0002:+	G41W0002-BN		1			G41T0002:+	058.7	ADH. DET.	
			2					ADH. DET.	
G41E0002:-	G41W0002-BU		3			G41T0002:-	058.7	ADH. DET.	
			4					ADH. DET.	
			5					ADH. DET.	

This drawing must not without the consent of Tetra Pak
be copied, transmitted or disclosed to any third party.

1 2 3 4 5 6 7 8 9 10

Terminal-strip overview 3404507-0003

G41X0010

From	Cable	Internal Jumper	Terminal	External Jumper	Cable	To	Page / Col.	Option	Function text
G41X0000:122	G41W0000-WH/GN		1			G41B0000	058.8	RK	ADH. DET.
G41X0000:132	G41W0000-GN		2			G41B0000	058.8	RK	ADH. DET.
G41X0000:127	G41W0000-WH/OG		3			G41B0000	058.8	RK	ADH. DET.
G41X0000:133	G41W0000-BU		4			G41B0000	058.8	RK	ADH. DET.
G41X0000:134	G41W0000-WH/BU		5			G41B0000	058.8	RK	ADH. DET.
			6			G41B0000	058.8	RK	ADH. DET.
			7			G41B0000	058.8	RK	ADH. DET.
G41X0000:128	G41W0000-BN		8			G41B0000	058.8	RK	ADH. DET.

Tetra Pak®

Version Designer: ROG	Version Date: 2016-09-30	Machine: CAP30 Flex ScrewCap 0400	
ECM No: 825145	Denomination: TERMINAL STRIP OVERVIEW	Page Type: TERMINAL STRIP OVERVIEW	
Information Security Class: PUBLIC	Document No.: 3404507-0006	Doc. type: ELD	Version: AC / Page: 030

This drawing must not without the consent of Tetra Pak
be copied, transmitted or disclosed to any third party.

1 2 3 4 5 6 7 8 9 10

Terminal-strip overview 3404507-0003

G41X0011

From	Cable	Internal Jumper	Terminal	External Jumper	Cable	To	Page / Col.	Option	Function text
G41X0000:125			1		G41W0011-BU	G41B0011:COM	058.7	ADH. DET.	
			2		G41W0011-BN	G41B0011:NC	058.7	ADH. DET.	
			3		G41W0011-GNYE	G41B0011:E	058.7	ADH. DET.	
G41X0000:137			4		G41W0011-BK	G41B0011:NO	058.7	ADH. DET.	

Tetra Pak®

Version Designer	Version Date	Machine
ROG	2016-09-30	CAP30 Flex ScrewCap 0400

ECM No	Denomination	Page Type
825145	TERMINAL STRIP OVERVIEW	TERMINAL STRIP OVERVIEW

Information Security Class	Document No.	Doc. type	Version	Page
PUBLIC	3404507-0006	ELD	AC	031

This drawing must not without the consent of Tetra Pak
be copied, transmitted or disclosed to any third party.

1 2 3 4 5 6 7 8 9 10

Terminal-strip overview 3404507-0003

G70X0000

From	Cable	Internal Jumper	Terminal	External Jumper	Cable	To	Page / Col.	Option	Function text
A01X0006:170	G70W0000-WH/GN		1			G70B0000	057.8		VISION SYSTEM DEVICE
A01X0006:171	G70W0000-GN		2			G70B0000	057.8		VISION SYSTEM DEVICE
A01X0006:172	G70W0000-WH/OG		3			G70B0000	057.8		VISION SYSTEM DEVICE
A01X0006:173	G70W0000-BU		4			G70B0000	057.8		VISION SYSTEM DEVICE
			5			G70B0000	057.8		VISION SYSTEM DEVICE
			6			G70B0000	057.8		VISION SYSTEM DEVICE
			7			G70B0000	057.8		VISION SYSTEM DEVICE
A01X0006:177	G70W0000-BN		8			G70B0000	057.8		VISION SYSTEM DEVICE

Tetra Pak®

Version Designer: ROG	Version Date: 2016-09-30	Machine: CAP30 Flex ScrewCap 0400	
ECM No: 825145	Denomination: TERMINAL STRIP OVERVIEW	Page Type: TERMINAL STRIP OVERVIEW	
Information Security Class: PUBLIC	Document No.: 3404507-0006	Doc. type: ELD	Version: AC	Page: 032

This drawing must not without the consent of Tetra Pak
be copied, transmitted or disclosed to any third party.

Terminal-strip overview 3404507-0003

P01X4000

From	Cable	Internal Jumper	Terminal	External Jumper	Cable	To	Page / Col.	Option	Function text
F09S1002:51			1		P01W4000-10	A01X0006:10	030.4		CONTROL PANEL EMERGENCY STOP
F09S1002:11			2		P01W4000-9	A01X0006:9	030.4		CONTROL PANEL EMERGENCY STOP
			3			F09S1002:52	030.5		CONTROL PANEL EMERGENCY STOP
					P01W400011	A01X0006:11			
A01X0006:12	P01W4000-12		4			F09S1002:12	030.5		CONTROL PANEL EMERGENCY STOP
A01K3034:14			5				053.6		
A01K3034:11			6				053.6		
			7			A01K3035:14	053.6		READY SIGNAL (RS) FOR LINE
			8			A01K3035:11	053.6		READY SIGNAL (RS) FOR LINE
A01K3036:14			9				053.6		
A01K3036:11			10				053.6		
A01A4000:-			11		P01W4000-2	A01X0006:2	027.3		
A01A4000:-			12				027.3		
A01A4000:3			13		P01W4000-5	A01X0006:154	027.5		
A01A4000:4			14		P01W4000-8	A01X0006:161	027.5		
A01A4000:5			15		P01W4000-4	A01X0006:153	027.6		
			16						
F09K2040:11			17		F09W2041-BN	F09X2041:1	050.5		
			18		F09W2042-BN	F09X2042:1	050.5		
			19				050.5		
			20		F09W2041-BU	F09X2041:2	050.5		
			21		F09W2042-BU	F09X2042:2	050.5		
			22				050.5		
A01A4000:+			23		P01W4000-1	A01X0006:1	027.4		
A01A4000:+			24				027.4		
A01K3020:4			101		P01W4000-3	A01X0006:150	044.8		
			102		W21W4012-BU	W21X4012:3	045.2		LONG PACKAGE QUEUE
			103		W21W4014-BU	W21X4014:3	045.2		SHORT PACKAGE QUEUE
			104		W21W4016-BU	W21X4016:3	045.2		VERIFIES PACKAGE STANDING
			105		W21W4018-BU	W21X4018:3	045.2		TOO LONG PACKAGE QUEUE

This drawing must not without the consent of Tetra Pak
be copied, transmitted or disclosed to any third party.

Terminal-strip overview 3404507-0003

P01X4000

From	Cable	Internal Jumper	Terminal	External Jumper	Cable	To	Page / Col.	Option	Function text
			106			A01K3024:4	048.6		
			107			A01K3027:4	051.6		
			108				050.4		
			109				050.4		
			110				050.4		
A01K3020:6			111		P01W4000-6	A01X0006:155	044.8		REMOTE I/O ADAPTER O.P. BOX
			112		W21W4012-BN	W21X4012:1	045.2		LONG PACKAGE QUEUE
			113		W21W4014-BN	W21X4014:1	045.2		SHORT PACKAGE QUEUE
			114		W21W4016-BN	W21X4016:1	045.2		VERIFIES PACKAGE STANDING
			115		W21W4018-BN	W21X4018:1	045.2		TOO LONG PACKAGE QUEUE
F09K2040:14			116				050.6		
A01X0006:160	P01W4000-7		117			A01K3024:6	048.6		
			118						
			119		P01W4000-13	A01X0006:163	044.8		
A01K3027:6			120		P01W4000-14	A01X0006:164	044.8		
A01K3020:2			E1				044.8		
A01K3024:2			E2				048.6		
A01K3027:2			E3				051.6		
A01A4000:⏚			E4				027.2		
A01A4000:⏚			E5				027.2		
			E6				027.2		
			E6						
			E7						
A01B8001:E	A01W8001-GNYE		E8				046.6		
A01P5010:E	A01W5010-GNYE		E9				049.3		
A01X0006:E11	P01W4000-GNYE		E10				044.8		
A01K8000:E	A01W8000-GNYE		E11				052.3		
			E12						

RELEASED

This drawing must not without the consent of Tetra Pak
be copied, transmitted or disclosed to any third party.

1 2 3 4 5 6 7 8 9 10

Terminal-strip overview 3404507-0003

V01X5010

From	Cable	Internal Jumper	Terminal	External Jumper	Cable	To	Page / Col.	Option	Function text
A01K3030:6	V01W5010-BN		1				054.5		
A01K3030:4	V01W5010-WH		2				054.5		
A01K3030:4	V01W5010-BU		3				054.5		
A01K3030:0	V01W5010-BK		4				054.5		

Tetra Pak®

Version Designer	Version Date	Machine
ROG	2016-09-30	CAP30 Flex ScrewCap 0400

ECM No	Denomination	Page Type
825145	TERMINAL STRIP OVERVIEW	TERMINAL STRIP OVERVIEW

Information Security Class	Document No.	Doc. type	Version	Page
PUBLIC	3404507-0006	ELD	AC	035

This drawing must not without the consent of Tetra Pak
be copied, transmitted or disclosed to any third party.

1 2 3 4 5 6 7 8 9 10

Terminal-strip overview 3404507-0003

W20X0030

From	Cable	Internal Jumper	Terminal	External Jumper	Cable	To	Page / Col.	Option	Function text
A01X0006:115+	W20W0030-BN		1		W20W0003-BN	W20B0003	036.3		PACKAGE PRESENCE ON BELT BRAKE
					W20W0002-BN	W20B0002			PACKAGE PRESENCE ON BELT BRAKE
			2						
A01X0006:115-	W20W0030-BU		3		W20W0003-BU	W20B0003	036.3		PACKAGE PRESENCE ON BELT BRAKE
					W20W0002-BU	W20B0002			PACKAGE PRESENCE ON BELT BRAKE
A01X0006:115	W20W0030-BK		4		W20W0003-BK	W20B0003	036.6		PACKAGE PRESENCE ON BELT BRAKE

Tetra Pak®

Version Designer: ROG	Version Date: 2016-09-30	Machine: CAP30 Flex ScrewCap 0400	
ECM No: 825145	Denomination: TERMINAL STRIP OVERVIEW	Page Type: TERMINAL STRIP OVERVIEW	
Information Security Class: PUBLIC	Document No.: 3404507-0006	Doc. type: ELD	Version: AC / Page: 036

This drawing must not without the consent of Tetra Pak be copied, transmitted or disclosed to any third party.

Terminal-strip overview 3404507-0003

W21X3020

From	Cable	Internal Jumper	Terminal	External Jumper	Cable	To	Page / Col.	Option	Function text
A01X0006:112+	W21W3020-BN		1.1		W21W3000-BN	W21B3000	038.2		CAP DETECTION ON PACKAGE
					W21W3001-BN	W21B3001			CAP DETECTION ON PACKAGE
A01X0006:112-	W21W3020-BU		1.3		W21W3000-BU	W21B3000	038.2		CAP DETECTION ON PACKAGE
					W21W3001-BU	W21B3001			CAP DETECTION ON PACKAGE
A01X0006:112	W21W3020-WH		1.4		W21W3000-BK	W21B3000	038.6		CAP DETECTION ON PACKAGE
			2.1		W21W3002-BN	W21B3002	038.2		PACKAGE DETECTION
					W21W3003-BN	W21B3003			PACKAGE DETECTION
			2.3		W21W3002-BU	W21B3002	038.2		PACKAGE DETECTION
					W21W3003-BU	W21B3003			PACKAGE DETECTION
A01X0006:113	W21W3020-GN		2.4		W21W3002-BK	W21B3002	038.6		PACKAGE DETECTION
			3.1		W21W3004-BN	W21B3004	038.2		OBJECT DETECTION ON PACKAGE CONVEYOR
					W21W3005-BN	W21B3005			OBJECT DETECTION ON PACKAGE CONVEYOR
			3.3		W21W3004-BU	W21B3004	038.2		OBJECT DETECTION ON PACKAGE CONVEYOR
					W21W3005-BU	W21B3005			OBJECT DETECTION ON PACKAGE CONVEYOR
A01X0006:114	W21W3020-YE		3.4		W21W3004-BK	W21B3004	038.6		OBJECT DETECTION ON PACKAGE CONVEYOR
			4.1		W21W3006-BN	W21B3006	038.2		PACKAGE DETECTION 2
					W21W3007-BN	W21B3007			PACKAGE DETECTION 2
			4.3		W21W3006-BU	W21B3006	038.2		PACKAGE DETECTION 2
					W21W3007-BU	W21B3007			PACKAGE DETECTION 2
A01X0006:174	W21W3020-GY		4.4		W21W3006-BK	W21B3006	038.6		PACKAGE DETECTION 2
			7.1		W21W3038-BN	W21X3038:1	038.2		
			7.3		W21W3038-BU	W21X3038:3	038.2		
A01X0006:175	W21W3020-BK		7.4		W21W3038-BK	W21X3038:4	038.6		
			8.1		W21W3039-BN	W21X3039:1	038.2		
			8.3		W21W3039-BU	W21X3039:3	038.2		
A01X0006:176	W21W3020-VT		8.4		W21W3039-BK	W21X3039:4	038.6		

Tetra Pak®

Version Designer	Version Date	Machine
ROG	2016-09-30	CAP30 Flex ScrewCap 0400

ECM No	Denomination	Page Type
825145	TERMINAL STRIP OVERVIEW	TERMINAL STRIP OVERVIEW

Information Security Class	Document No.	Doc. type	Version	Page
PUBLIC	3404507-0006	ELD	AC	037

This drawing must not without the consent of Tetra Pak
be copied, transmitted or disclosed to any third party.

1 2 3 4 5 6 7 8 9 10

Terminal-strip overview 3404507-0003

W21X3038

From	Cable	Internal Jumper	Terminal	External Jumper	Cable	To	Page / Col.	Option	Function text
W21X3020:7.1	W21W3038-BN		1		W21W3008-BN	W21B3008	038.2		CAP DETECTION POSITION 2
					W21W3009-BN	W21B3009			CAP DETECTION POSITION 2
W21X3020:7.3	W21W3038-BU		3		W21W3008-BU	W21B3008	038.2		CAP DETECTION POSITION 2
					W21W3009-BU	W21B3009			CAP DETECTION POSITION 2
W21X3020:7.4	W21W3038-BK		4		W21W3008-BK	W21B3008	038.5		CAP DETECTION POSITION 2

Tetra Pak®

Version Designer: ROG	Version Date: 2016-09-30	Machine: CAP30 Flex ScrewCap 0400	
ECM No: 825145	Denomination: TERMINAL STRIP OVERVIEW	Page Type: TERMINAL STRIP OVERVIEW	
Information Security Class: PUBLIC	Document No.: 3404507-0006	Doc. type: ELD	Version: AC	Page: 038

This drawing must not without the consent of Tetra Pak
be copied, transmitted or disclosed to any third party.

1 2 3 4 5 6 7 8 9 10

Terminal-strip overview 3404507-0003

W21X3039

From	Cable	Internal Jumper	Terminal	External Jumper	Cable	To	Page / Col.	Option	Function text
W21X3020:8.1	W21W3039-BN		1		W21W3018-BN	W21B3018	038.2		PACKAGE DETECTION POSITION 3 ONLY FOR TGA
					W21W3019-BN	W21B3019			PACKAGE DETECTION POSITION 3 ONLY FOR TGA
W21X3020:8.3	W21W3039-BU		3		W21W3018-BU	W21B3018	038.2		PACKAGE DETECTION POSITION 3 ONLY FOR TGA
					W21W3019-BU	W21B3019			PACKAGE DETECTION POSITION 3 ONLY FOR TGA
W21X3020:8.4	W21W3039-BK		4		W21W3018-BK	W21B3018	038.5		PACKAGE DETECTION POSITION 3 ONLY FOR TGA

Tetra Pak®

Version Designer	Version Date	Machine
ROG	2016-09-30	CAP30 Flex ScrewCap 0400

ECM No	Denomination	Page Type
825145	TERMINAL STRIP OVERVIEW	TERMINAL STRIP OVERVIEW

Information Security Class	Document No.	Doc. type	Version	Page
PUBLIC	3404507-0006	ELD	AC	039

RELEASED

This drawing must not without the consent of Tetra Pak
be copied, transmitted or disclosed to any third party.

1 2 3 4 5 6 7 8 9 10

Terminal-strip overview 3404507-0003

W21X4010

From	Cable	Internal Jumper	Terminal	External Jumper	Cable	To	Page / Col.	Option	Function text
W21T4010:T1/U	W21W4011-1		1		W21W4010-1	W21M4010:U	022.9	P.ALIGNER	PACKAGE ALIGNER
W21T4010:T2/V	W21W4011-2		2		W21W4010-2	W21M4010:V	022.9	P.ALIGNER	PACKAGE ALIGNER
W21T4010:T3/W	W21W4011-3		3		W21W4010-3	W21M4010:W	022.9	P.ALIGNER	PACKAGE ALIGNER
GND	W21W4011-SH		4		W21W4010-SH	GND	022.10	P.ALIGNER	
			5						
			6						
W21T4010:⏚	W21W4011-GNYE		⏚		W21W4010-GNYE	W21M4010:⏚	022.10	P.ALIGNER	PACKAGE ALIGNER

Tetra Pak®

Version Designer: ROG	Version Date: 2016-09-30	Machine: CAP30 Flex ScrewCap 0400	
ECM No: 825145	Denomination: TERMINAL STRIP OVERVIEW	Page Type: TERMINAL STRIP OVERVIEW	
Information Security Class: PUBLIC	Document No.: 3404507-0006	Doc. type: ELD	Version: AC	Page: 040

This drawing must not without the consent of Tetra Pak
be copied, transmitted or disclosed to any third party.

1 2 3 4 5 6 7 8 9 10

Terminal-strip overview 3404507-0003

W21X4012

From	Cable	Internal Jumper	Terminal	External Jumper	Cable	To	Page / Col.	Option	Function text
P01X4000:112	W21W4012-BN		1		W21W4002-BN	W21B4002	045.3		LONG PACKAGE QUEUE
					W21W4001-BN	W21B4001			LONG PACKAGE QUEUE
			2						
P01X4000:102	W21W4012-BU		3		W21W4002-BU	W21B4002	045.3		LONG PACKAGE QUEUE
					W21W4001-BU	W21B4001			LONG PACKAGE QUEUE
A01K3021:0	W21W4012-BK		4		W21W4002-BK	W21B4002	045.6		LONG PACKAGE QUEUE

Tetra Pak®

Version Designer: ROG	Version Date: 2016-09-30	Machine: CAP30 Flex ScrewCap 0400	
ECM No: 825145	Denomination: TERMINAL STRIP OVERVIEW	Page Type: TERMINAL STRIP OVERVIEW	
Information Security Class: PUBLIC	Document No.: 3404507-0006	Doc. type: ELD	Version: AC	Page: 041

This drawing must not without the consent of Tetra Pak
be copied, transmitted or disclosed to any third party.

1 2 3 4 5 6 7 8 9 10

Terminal-strip overview 3404507-0003

W21X4014

From	Cable	Internal Jumper	Terminal	External Jumper	Cable	To	Page / Col.	Option	Function text
P01X4000:113	W21W4014-BN		1		W21W4004-BN	W21B4004	045.3		SHORT PACKAGE QUEUE
					W21W4003-BN	W21B4003			SHORT PACKAGE QUEUE
			2						
P01X4000:103	W21W4014-BU		3		W21W4004-BU	W21B4004	045.3		SHORT PACKAGE QUEUE
					W21W4003-BU	W21B4003			SHORT PACKAGE QUEUE
A01K3021:1	W21W4014-BK		4		W21W4004-BK	W21B4004	045.6		SHORT PACKAGE QUEUE

Tetra Pak®

Version Designer: ROG	Version Date: 2016-09-30	Machine: CAP30 Flex ScrewCap 0400	
ECM No: 825145	Denomination: TERMINAL STRIP OVERVIEW	Page Type: TERMINAL STRIP OVERVIEW	
Information Security Class: PUBLIC	Document No.: 3404507-0006	Doc. type: ELD	Version: AC	Page: 042

This drawing must not without the consent of Tetra Pak
be copied, transmitted or disclosed to any third party.

1 2 3 4 5 6 7 8 9 10

Terminal-strip overview 3404507-0003

W21X4016

From	Cable	Internal Jumper	Terminal	External Jumper	Cable	To	Page / Col.	Option	Function text
P01X4000:114	W21W4016-BN		1		W21W4006-BN	W21B4006	045.3		VERIFIES PACKAGE STANDING
					W21W4005-BN	W21B4005			VERIFIES PACKAGE STANDING
			2						
P01X4000:104	W21W4016-BU		3		W21W4006-BU	W21B4006	045.3		VERIFIES PACKAGE STANDING
					W21W4005-BU	W21B4005			VERIFIES PACKAGE STANDING
A01K3021:2	W21W4016-BK		4		W21W4006-BK	W21B4006	045.6		VERIFIES PACKAGE STANDING

Tetra Pak®

Version Designer: ROG	Version Date: 2016-09-30	Machine: CAP30 Flex ScrewCap 0400	
ECM No: 825145	Denomination: TERMINAL STRIP OVERVIEW	Page Type: TERMINAL STRIP OVERVIEW	
Information Security Class: PUBLIC	Document No.: 3404507-0006	Doc. type: ELD	Version: AC	Page: 043

This drawing must not without the consent of Tetra Pak
be copied, transmitted or disclosed to any third party.

1 2 3 4 5 6 7 8 9 10

Terminal-strip overview 3404507-0003

W21X4018

From	Cable	Internal Jumper	Terminal	External Jumper	Cable	To	Page / Col.	Option	Function text
P01X4000:115	W21W4018-BN		1		W21W4008-BN	W21B4008	045.3		TOO LONG PACKAGE QUEUE
					W21W4007-BN	W21B4007			TOO LONG PACKAGE QUEUE
			2						
P01X4000:105	W21W4018-BU		3		W21W4008-BU	W21B4008	045.3		TOO LONG PACKAGE QUEUE
					W21W4007-BU	W21B4007			TOO LONG PACKAGE QUEUE
A01K3021:3	W21W4018-BK		4		W21W4008-BK	W21B4008	045.6		TOO LONG PACKAGE QUEUE

Tetra Pak®

Version Designer: ROG	Version Date: 2016-09-30	Machine: CAP30 Flex ScrewCap 0400	
ECM No: 825145	Denomination: TERMINAL STRIP OVERVIEW	Page Type: TERMINAL STRIP OVERVIEW	
Information Security Class: PUBLIC	Document No.: 3404507-0006	Doc. type: ELD	Version: AC / Page: 044

This drawing must not without the consent of Tetra Pak
be copied, transmitted or disclosed to any third party.

1 2 3 4 5 6 7 8 9 10

Terminal-strip overview 3404507-0003

W21X4022

From	Cable	Internal Jumper	Terminal	External Jumper	Cable	To	Page / Col.	Option	Function text
W81K4120:0.1	W21W4022-BN		1		W21W4024-BN	W21B4024	055.5		PACKAGE CONGESTION OUTFEED
					W21W4023-BN	W21B4023			PACKAGE CONGESTION OUTFEED
			2						
W81K4120:0.3	W21W4022-BU		3		W21W4024-BU	W21B4024	055.5		PACKAGE CONGESTION OUTFEED
					W21W4023-BU	W21B4023			PACKAGE CONGESTION OUTFEED
W81K4120:0.4	W21W4022-BK		4		W21W4024-BK	W21B4024	055.5		PACKAGE CONGESTION OUTFEED

Tetra Pak®

Version Designer: ROG	Version Date: 2016-09-30	Machine: CAP30 Flex ScrewCap 0400		
ECM No: 825145	Denomination: TERMINAL STRIP OVERVIEW	Page Type: TERMINAL STRIP OVERVIEW		
Information Security Class: PUBLIC	Document No.: 3404507-0006	Doc. type: ELD	Version: AC	Page: 045

This drawing must not without the consent of Tetra Pak
be copied, transmitted or disclosed to any third party.

1 2 3 4 5 6 7 8 9 10

Terminal-strip overview 3404507-0003

W21X6012

From	Cable	Internal Jumper	Terminal	External Jumper	Cable	To	Page / Col.	Option	Function text
W81K4120:2.1	W21W6012-BN		1		W21W6002-BN	W21B6002	055.6		QUEUE OUTFEED LEFT LINE
					W21W6001-BN	W21B6001			QUEUE OUTFEED LEFT LINE
W81K4120:2.3	W21W6012-BU		3		W21W6002-BU	W21B6002	055.6		QUEUE OUTFEED LEFT LINE
					W21W6001-BU	W21B6001			QUEUE OUTFEED LEFT LINE
W81K4120:2.4	W21W6012-BK		4		W21W6002-BK	W21B6002	055.6		QUEUE OUTFEED LEFT LINE

Tetra Pak®

Version Designer: ROG	Version Date: 2016-09-30	Machine: CAP30 Flex ScrewCap 0400	
ECM No: 825145	Denomination: TERMINAL STRIP OVERVIEW	Page Type: TERMINAL STRIP OVERVIEW	
Information Security Class: PUBLIC	Document No.: 3404507-0006	Doc. type: ELD	Version: AC / Page: 046

This drawing must not without the consent of Tetra Pak
be copied, transmitted or disclosed to any third party.

1 2 3 4 5 6 7 8 9 10

Terminal-strip overview 3404507-0003

W21X6014

From	Cable	Internal Jumper	Terminal	External Jumper	Cable	To	Page / Col.	Option	Function text
W81K4120:3.1	W21W6014-BK		1		W21W6004-BN	W21B6004	055.6		QUEUE OUTFEED RIGHT LINE
					W21W6003-BN	W21B6003			QUEUE OUTFEED RIGHT LINE
W81K4120:3.3	W21W6014-BN		3		W21W6004-BU	W21B6004	055.6		QUEUE OUTFEED RIGHT LINE
					W21W6003-BU	W21B6003			QUEUE OUTFEED RIGHT LINE
W81K4120:3.4	W21W6014-BU		4		W21W6004-BK	W21B6004	055.6		QUEUE OUTFEED RIGHT LINE

Tetra Pak®

Version Designer: ROG	Version Date: 2016-09-30	Machine: CAP30 Flex ScrewCap 0400		
ECM No: 825145	Denomination: TERMINAL STRIP OVERVIEW	Page Type: TERMINAL STRIP OVERVIEW		
Information Security Class: PUBLIC	Document No.: 3404507-0006	Doc. type: ELD	Version: AC	Page: 047

This page intentionally left blank

8 Cable Connection List

Description

All cable connections used in the equipment are listed in this chapter.

8.1 Cable Connection List

This page intentionally left blank

This drawing must not without the consent of Tetra Pak be copied, transmitted or disclosed to any third party.

Cable Connection List of 3404507-0003

From	Cable	To	Page / Col.	Option
A01W3025				
A01X0006:192	WH	A01K3006:11	039.7	
A01X0006:194	BN	A01K3006:13	039.7	
A01X0006:193	GN	A01K3006:12	039.7	
A01X0006:195	YE	A01K3006:14	039.7	
A01X0006:201	SH	A01W3025:SH	039.6	
A01W3026				
A01X0006:192	GY	W21T2000:1	013.8	
	WH			
A01X0006:193	YE	W21T2000:3	013.8	
	GN			
W21K2002:2	BN	W21T2000:2	013.8	
A01X0006:200	SH	W21T2000:4	013.8	
A01W3027				
A01X0006:194	GY	W21T1000:1	012.8	
	WH			
A01X0006:195	YE	W21T1000:3	012.8	
	GN			
W21K2002:6	BN	W21T1000:2	012.8	
A01X0006:200	SH	W21T1000:4	012.8	
A01W3028				
A01X0006:192+	WH	W21K2002:8	039.2	
A01X0006:192-	BN	W21K2002:6	039.2	
A01X0006:193+	GN	W21K2002:4	039.2	
A01X0006:193-	YE	W21K2002:2	039.2	
A01X0006:201	SH	A01W3028:SH	039.2	
A01W5010				
A01K3025:3	1	A01P5010:1	049.4	
A01K3025:0	2	A01P5010:2	049.4	
A01K3025:1	3	A01P5010:3	049.4	

From	Cable	To	Page / Col.	Option
A01K3025:3	4	A01P5010:5	049.4	
A01K3025:5	5	A01P5010:0	049.6	
A01K3025:2	6	A01P5010:4	049.4	
P01X4000:E9	GNYE	A01P5010:E	049.6	
A01W7000				
A01X6000:2	WH	A01E7000:2	006.3	
A01X6000:1	BN	A01E7000:1	006.3	
A01W7001				
A01X7001:1.3	WH	A01E7001:2	006.4	
A01X7001:1.1	BN	A01E7001:1	006.4	
A01W7002				
A01X7001:2.3	WH	A01E7002:2	006.5	
A01X7001:2.1	BN	A01E7002:1	006.5	
A01W7003				
A01X7001:3.3	WH	A01E7003:2	006.7	
A01X7001:3.1	BN	A01E7003:1	006.7	
A01W7100				
A01X0006:202	BN	A01X7001:1.1	006.4	
	WH			
A01X0006:203	BU	A01X7001:1.3	006.4	
	BK			
A01W8000				
A01K3028:0	1	A01K8000:1	052.5	
A01K3028:6	2	A01K8000:2	052.5	
P01X4000:E11	GNYE	A01K8000:E	052.5	

Tetra Pak®

Version Designer	Version Date	Machine
ROG	2016-09-30	CAP30 Flex ScrewCap 0400

ECM No	Denomination	Page Type
825145	CABLE CONNECTION LIST	CABLE CONNECTION LIST

Information Security Class	Document No.	Doc. type	Version	Page
PUBLIC	3404507-0007	ELD	AC	001

RELEASED

This drawing must not without the consent of Tetra Pak be copied, transmitted or disclosed to any third party.

Cable Connection List of 3404507-0003

From	Cable	To	Page / Col.	Option
	A01W8001			
A01B8001:2	1	A01K3022:0	046.7	
A01B8001:1	2	A01K3022:6	046.7	
A01B8001:E	GNYE	P01X4000:E8	046.6	
	A01W8010			
A01X0006:169	BK	W21K5000:1	060.4	
A01X0006:181	BN	W21K0000:1	059.4	
A01X0006:167	BU	W21K3010:1	060.4	
A01X0006:182	GN	W20K3000:1	059.4	
A01X0006:144	GY	G40K2010:1	059.4	
A01X0006:145	PK	G40K2011:1	059.4	
A01X0006:168	RD	W21K3011:1	060.4	
A01X0006:180	WH	V01K9000:1	059.4	
A01X0006:188	WH/BK	W21K5000:2	060.4	
A01X0006:191	YE	G40K2003:1	059.4	
	A81W2001			
A01K3002:2	ETH	A81X2000:X1	025.3	
	A81W2002			
A81X2000:X2	ETH	W21T4000:ETH IP	021.2	
	A81W2003			
A81X2000:X3	ETH	W81K4120:ETH	055.8	
	A81W2004			
A81X2004:1	ETH	A81X2000:X7	025.3	ADH. DET.
	A81W2005			
G70B0000:1	ETH	A81X2000:X5	025.3	

From	Cable	To	Page / Col.	Option
	A81W2006			
A81X2000:X6	ETH	W21T6000:ETH IP	022.2	
	A81W2007			
A81X2000:X4	ETH	C50T1000:ETH IP	021.8	
	A81W2008			
A81X2000:X8	ETH	W21T4010:ETH IP	022.7	
	A81W2009			
A01K3020:ETH1	ETH	A81X2000:X9	025.3	
	A81W2010			
A81W2010:USB	1	A81S2010	027.9	
	A81W2012			
A81X2000:X12	ETH	V01K5000:ETH	019.5	
	A81W2013			
A81K5000:RJ45	ETH	A81X2000:X13	025.3	COM.UNIT
	A81W2014			
A81X2014:Eth	ETH	A81X2000:X14	025.5	
	A81W2016			
A81X2016:Eth	ETH	A81X2000:X16	025.5	
	A81W2019			
A01A4000:ETH 1	ETH	A01K3020:ETH2	044.6	
	A81W2020			
A81W2020:USB	1	A01A4000:USB 2	027.7	BCS

Tetra Pak®	Version Designer: ROG	Version Date: 2016-09-30	Machine: CAP30 Flex ScrewCap 0400		
	ECM No: 825145	Denomination: CABLE CONNECTION LIST	Page Type: CABLE CONNECTION LIST		
	Information Security Class: PUBLIC	Document No.: 3404507-0007	Doc. type: ELD	Version: AC	Page: 002

This drawing must not without the consent of Tetra Pak be copied, transmitted or disclosed to any third party.

Cable Connection List of 3404507-0003

From	Cable	To	Page / Col.	Option
	A81W2020			
A81W2020:SH	SH	GND	027.8	BCS
	A81W2022			
A01A4000:ETH 1	Eth	A01A4000:ETH 2	027.2	
	A81W2023			
C81K4130:ETH	ETH	W81K4120:ETH	055.8	
	A81W2101			
A01K3002:1	ETH	G30T0000:1	009.2	
	A81W2110			
G30T0000:2	ETH	G40T0000:1	010.2	
	A81W2120			
G40T0000:2	ETH	G40T0002:1	011.2	
	A81W2130			
G40T0002:2	ETH	W21T1000:1	012.2	
	A81W2140			
W21T1000:2	ETH	W21T2000:1	013.2	
	A81W2150			
G40T3000:1	ETH	W21T2000:2	013.2	
	A81W2160			
G30T4000:1	ETH	G40T3000:2	014.2	
	A81W2170			
G30T4000:2	ETH	W20T0000:1	016.2	

From	Cable	To	Page / Col.	Option
	A81W2180			
G70T1000:1	ETH	W20T0000:2	016.2	POS.SYS.
	A81W4120			
A01X0006:156	WH	W81K4120:POWER I:2	055.8	
A01X0006:151	BU	W81K4120:POWER I:3	055.8	
A01X0006:151	BK	W81K4120:POWER I:4	055.8	
A01X0006:156	BN	W81K4120:POWER I:1	055.8	
	A81W4130			
C50X1004:2	BN	C81K4130:POWER I:1	056.8	
C50X1004:2	WH	C81K4130:POWER I:2	056.8	
C50X1004:1	BU	C81K4130:POWER I:3	056.8	
C50X1004:1	BK	C81K4130:POWER I:4	056.8	
	A81W5001			
	GN	A81K5000:1	023.9	
	BN	A81K5000:4	023.9	
	YE	A81K5000:2	023.9	
	WH	A81K5000:3	023.9	
	SH	A81K5000:5	023.9	
	A81W6000			
A81X6000:X2	ETH	A81X2000:X10	025.5	ADH. DET.
	C50W0000			
C50X0000:1	1	C50M0000:W	020.6	
C50X0000:2	2	C50M0000:V	020.6	
C50X0000:3	3	C50M0000:U	020.6	
C50X0000:⏚	GNYE	C50M0000:⏚	020.6	
	C50W0004			
A01X0006:152	1	C50X1004:1	056.9	

Tetra Pak®

Version Designer	Version Date	Machine
ROG	2016-09-30	CAP30 Flex ScrewCap 0400

ECM No	Denomination	Page Type
825145	CABLE CONNECTION LIST	CABLE CONNECTION LIST

Information Security Class	Document No.	Doc. type	Version	Page
PUBLIC	3404507-0007	ELD	AC	003

This drawing must not without the consent of Tetra Pak be copied, transmitted or disclosed to any third party.

Cable Connection List of 3404507-0003

From	Cable	To	Page / Col.	Option
C50W0004				
A01X0006:157	2	C50X1004:2	056.9	
A01X0006:166	3	C50X1004:3	043.4	
A01X0006:162	4	C50X1004:4	043.7	
A01X0006:E13	GNYE	C50X1004:⏚	056.9	
A01X0006:166	3			
A01X0006:162	4			
C50W0010				
A01X0004:23	1	C50X0000:1	020.6	
A01X0004:24	2	C50X0000:2	020.6	
A01X0004:25	3	C50X0000:3	020.6	
A01X0004:E5	GNYE	C50X0000:⏚	020.6	
C50W0012				
C50X0012:1	BN	C81K4130:2.1	056.6	
C50X0012:3	BU	C81K4130:2.3	056.6	
C50X0012:4	BK	C81K4130:2.4	056.6	
C50W0013				
C50X0012:1	BN	C50B0013	056.4	
C50X0012:3	BU	C50B0013	056.4	
C50W0014				
C50X0012:1	BN	C50B0014	056.5	
C50X0012:3	BU	C50B0014	056.5	
C50X0012:4	BK	C50B0014	056.5	
C50W1000				
C50X1000:1	1	C50M1000:U	021.9	
C50X1000:2	2	C50M1000:V	021.9	
C50X1000:3	3	C50M1000:W	021.9	
C50X1000:⏚	GNYE	C50M1000:⏚	021.9	

From	Cable	To	Page / Col.	Option
C50X1000:4	SH	GND	021.10	
C50W1001				
C81K4130:5.1	BN	C50B1001	056.4	
C81K4130:5.3	BU	C50B1001	056.4	
C81K4130:5.4	BK	C50B1001	056.4	
C50W1002				
C81K4130:6.1	BN	C50B1002	056.2	
C81K4130:6.3	BU	C50B1002	056.2	
C81K4130:6.4	BK	C50B1002	056.2	
C50W1004				
C50X1004:3	BK	C50K1004:1	043.5	
C50X1004:4	BU	C50K1004:2	043.5	
C50W1005				
C81K4130:4.1	BN	C50B1005	056.2	
C81K4130:4.3	BU	C50B1005	056.2	
C81K4130:4.4	BK	C50B1005	056.2	
C50W1010				
C50X1000:1	1	C50T1000:T1/U	021.8	
C50X1000:2	2	C50T1000:T2/V	021.8	
C50X1000:3	3	C50T1000:T3/W	021.8	
	GNYE			
C50X1000:4	SH	GND	021.10	
F09W1003				
A01X0006:13	1	F09S1003:11	030.7	
A01X0006:14	2	F09S1003:21	030.7	
A01X0006:15	3	F09S1003:22	030.7	
A01X0006:16	4	F09S1003:12	030.7	

This drawing must not without the consent of Tetra Pak be copied, transmitted or disclosed to any third party.

Cable Connection List of 3404507-0003

From	Cable	To	Page / Col.	Option
	F09W1003			
A01X0006:E10	GNYE		030.7	
	F09W2001			
A01X0006:130	GY	F09X2001:13	031.2	
A01X0006:127	WH	F09X2001:IN	031.2	
A01X0006:129	YE	F09X2001:OUT	031.2	
A01X0006:128	GN	F09X2001:0V	031.2	
A01X0006:126	BN	F09X2001:+24V	031.2	
A01X0006:131	SH	F09X2001:⏚	031.2	
	F09W2002			
A01X0006:136	GY	F09X2002:13	032.2	
A01X0006:133	WH	F09X2002:IN	032.2	
A01X0006:135	YE	F09X2002:OUT	032.2	
A01X0006:134	GN	F09X2002:0V	032.2	
A01X0006:132	BN	F09X2002:+24V	032.2	
A01X0006:137	SH	F09X2002:⏚	032.2	
	F09W2003			
A01X0006:142	GY	F09X2003:13	032.6	
A01X0006:139	WH	F09X2003:IN	032.6	
A01X0006:141	YE	F09X2003:OUT	032.6	
A01X0006:140	GN	F09X2003:0V	032.6	
A01X0006:138	BN	F09X2003:+24V	032.6	
A01X0006:143	SH	F09X2003:⏚	032.6	
	F09W2010			
F09X2010:1.1	BN	F09B2010:BN	031.2	
F09X2010:1.2	WH	F09B2010:WH	031.2	
F09X2010:1.3	BU	F09B2010:BU	031.2	
F09X2010:1.4	BK	F09B2010:BK	031.2	
F09X2010:1.5	GY	F09B2010:GY	031.2	

From	Cable	To	Page / Col.	Option
F09X2010:1.3	SH	F09W2010:SH	031.2	
	F09W2012			
F09X2012:2.1	BN	F09B2012:BN	031.3	
F09X2012:2.2	WH	F09B2012:WH	031.3	
F09X2012:2.3	BU	F09B2012:BU	031.3	
F09X2012:2.4	BK	F09B2012:BK	031.3	
F09X2012:2.5	GY	F09B2012:GY	031.3	
F09X2012:2.3	SH	F09W2012:SH	031.3	
	F09W2014			
F09X2014:3.1	BN	F09B2014:BN	031.4	
F09X2014:3.2	WH	F09B2014:WH	031.4	
F09X2014:3.3	BU	F09B2014:BU	031.4	
F09X2014:3.4	BK	F09B2014:BK	031.4	
F09X2014:3.5	GY	F09B2014:GY	031.4	
F09X2014:3.3	SH	F09W2014:SH	031.4	
	F09W2016			
F09X2016:4.1	BN	F09B2016:BN	031.5	
F09X2016:4.2	WH	F09B2016:WH	031.5	
F09X2016:4.3	BU	F09B2016:BU	031.5	
F09X2016:4.4	BK	F09B2016:BK	031.5	
F09X2016:4.5	GY	F09B2016:GY	031.5	
F09X2016:4.3	SH	F09W2016:SH	031.4	
	F09W2030			
F09X2030:1.1	BN	F09B2030:BN	032.2	
F09X2030:1.2	WH	F09B2030:WH	032.2	
F09X2030:1.3	BU	F09B2030:BU	032.2	
F09X2030:1.4	BK	F09B2030:BK	032.2	
F09X2030:1.5	GY	F09B2030:GY	032.2	
F09X2030:1.3	SH	F09W2030:SH	032.2	

This drawing must not without the consent of Tetra Pak be copied, transmitted or disclosed to any third party.

Cable Connection List of 3404507-0003

From	Cable	To	Page / Col.	Option
F09W2032				
F09X2032:2.1	BN	F09B2032:BN	032.3	
F09X2032:2.2	WH	F09B2032:WH	032.3	
F09X2032:2.3	BU	F09B2032:BU	032.3	
F09X2032:2.4	BK	F09B2032:BK	032.3	
F09X2032:2.5	GY	F09B2032:GY	032.3	
F09X2032:2.3	SH	F09W2032:SH	032.3	
F09W2034				
F09X2034:3.1	BN	F09B2034:BN	032.4	
F09X2034:3.2	WH	F09B2034:WH	032.4	
F09X2034:3.3	BU	F09B2034:BU	032.4	
F09X2034:3.4	BK	F09B2034:BK	032.4	
F09X2034:3.5	GY	F09B2034:GY	032.4	
F09X2034:3.3	SH	F09W2034:SH	032.4	
F09W2041				
F09X2041:1	BN	P01X4000:17	050.5	
	WH			
F09X2041:2	BU	P01X4000:20	050.5	
	BK			
F09W2042				
F09X2042:1	BN	P01X4000:18	050.5	
	WH			
F09X2042:2	BU	P01X4000:21	050.5	
	BK			
F09W3012				
F09X3012:2.1	BN	F09B3012:BN	032.7	
F09X3012:2.2	WH	F09B3012:WH	032.7	
F09X3012:2.3	BU	F09B3012:BU	032.7	
F09X3012:2.4	BK	F09B3012:BK	032.7	
F09X3012:2.5	GY	F09B3012:GY	032.7	

From	Cable	To	Page / Col.	Option
F09X3012:2.3	SH	F09W3012:SH	032.7	
F09W3014				
F09X3014:3.1	BN	F09B3014:BN	032.8	
F09X3014:3.2	WH	F09B3014:WH	032.8	
F09X3014:3.3	BU	F09B3014:BU	032.8	
F09X3014:3.4	BK	F09B3014:BK	032.8	
F09X3014:3.5	GY	F09B3014:GY	032.8	
F09X3014:3.3	SH	F09W3014:SH	032.8	
F09W3016				
F09X3016:4.1	BN	F09B3016:BN	032.9	
F09X3016:4.2	WH	F09B3016:WH	032.9	
F09X3016:4.3	BU	F09B3016:BU	032.9	
F09X3016:4.4	BK	F09B3016:BK	032.9	
F09X3016:4.5	GY	F09B3016:GY	032.9	
F09X3016:4.3	SH	F09W3016:SH	032.9	
G30W0000				
G30M0000:B	BK	G30T0000:V	009.4	
G30M0000:A	BN	G30T0000:U	009.4	
G30M0000:C	BU	G30T0000:W	009.4	
G30M0000:E	BU	G30X0002:1	009.4	
G30M0000:D	GNYE	G30T0000:⏚	009.4	
G30W0000	SH	GND	009.3	
G30W0000	SH	GND	009.5	
G30M0000:H	WH-BU	G30X0002:2	009.4	
G30W1001				
G30X1020:2.1	BN	G30B1001	036.4	PAC.CRAS.
G30X1020:2.3	BU	G30B1001	036.4	PAC.CRAS.
G30X1020:2.4	BK	G30B1001	036.4	PAC.CRAS.

This drawing must not without the consent of Tetra Pak be copied, transmitted or disclosed to any third party.

Cable Connection List of 3404507-0003

From	Cable	To	Page / Col.	Option
	G30W1002			
G30X1020:3.1	BN	G30B1002	036.4	
G30X1020:3.3	BU	G30B1002	036.4	
G30X1020:3.4	BK	G30B1002	036.4	
	G30W1020			
A01X0006:116+	BN	G30X1020:1.1	036.3	
A01X0006:116-	BU	G30X1020:1.3	036.3	
	GY/PK			
	RD/BU			
	WH/GN			
A01X0006:119	BN/GN	G30X1020:4.2	036.6	
A01X0006:120	WH/YE	G30X1020:5.2	036.6	
A01X0006:146	YE/BN	G30X1020:6.2	043.4	
A01X0006:147	WH/GY	G30X1020:7.2	043.4	
A01X0006:148	GY/BN	G30X1020:8.4	043.4	
A01X0006:116	WH	G30X1020:1.4	036.6	
A01X0006:117	GN	G30X1020:2.4	036.6	
A01X0006:118	YE	G30X1020:3.4	036.6	
	GY			
	PK			
	RD			
	BK			
	VT			
	GNYE			
	G30W1030			
A01X0006:122+	BN	G30X1030:1.3	036.3	
A01X0006:122-	BU	G30X1030:1.1	036.3	
	GY/PK			
A01X0006:122	RD/BU	G30X1030:2.4	037.6	
A01X0006:123	WH/GN	G30X1030:3.2	037.6	
A01X0006:124	BN/GN	G30X1030:4.2	037.6	
	WH/YE			

From	Cable	To	Page / Col.	Option
	YE/BN			
	WH/GY			
	GY/BN			
A01X0006:121	WH	G30X1030:1.4	036.6	
	GN			
	YE			
	GY			
A01X0006:125	PK	G30X1030:5.4	037.6	
	RD			
	BK			
	VT			
	GNYE			
	G30W4000			
G30M4000:B	BK	G30T4000:V	015.4	
G30M4000:A	BN	G30T4000:U	015.4	
G30M4000:C	BU	G30T4000:W	015.4	
G30M4000:E	BU	G30X4002:1	015.4	
G30M4000:D	GNYE	G30T4000:⏚	015.4	
G30W4000	SH	GND	015.3	
G30W4000	SH	GND	015.5	
G30M4000:H	WH-BU	G30X4002:2	015.4	
	G40W0000			
G40M0000:B	BK	G40T0000:V	010.4	
G40M0000:A	BN	G40T0000:U	010.4	
G40M0000:C	BU	G40T0000:W	010.4	
G40M0000:E	BU	G40X0002:1	010.4	
G40M0000:D	GNYE	G40T0000:⏚	010.4	
G40W0000	SH	GND	010.3	
G40W0000	SH	GND	010.5	
G40M0000:H	WH-BU	G40X0002:2	010.4	

This drawing must not without the consent of Tetra Pak be copied, transmitted or disclosed to any third party.

Cable Connection List of 3404507-0003

From	Cable	To	Page / Col.	Option
G40W0002				
G40M0002:B	BK	G40T0002:V	011.4	
G40M0002:A	BN	G40T0002:U	011.4	
G40M0002:C	BU	G40T0002:W	011.4	
G40M0002:E	BU	G40X0004:1	011.4	
G40M0002:D	GNYE	G40T0002:⏚	011.4	
G40W0002	SH	GND	011.3	
G40W0002	SH	GND	011.5	
G40M0002:H	WH-BU	G40X0004:2	011.4	
G40W1000				
G30X1020:6.2	BN	G40X1000:1	043.5	
G30X1020:6.3	BU	G40X1000:3	043.6	
G40W1001				
G30X1020:7.2	BN	G40X1001:1	043.5	
G30X1020:7.3	BU	G40X1001:3	043.6	
G40W2000				
G30X1030:2.1	BN	G40B2000	037.4	
G30X1030:2.3	BU	G40B2000	037.4	
G30X1030:2.4	BK	G40B2000	037.4	
G40W2002				
G30X1030:1.1	BN	G40B2002:BN	036.5	
G30X1030:1.3	BU	G40B2002:BU	036.5	
G30X1030:1.4	BK	G40B2002:BK	036.5	
G40W3000				
G40M3000:B	BK	G40T3000:V	014.4	
G40M3000:A	BN	G40T3000:U	014.4	
G40M3000:C	BU	G40T3000:W	014.4	
G40M3000:E	BU	G40X3002:1	014.4	

From	Cable	To	Page / Col.	Option
G40M3000:D	GNYE	G40T3000:⏚	014.4	
G40W3000	SH	GND	014.3	
G40W3000	SH	GND	014.5	
G40M3000:H	WH-BU	G40X3002:2	014.4	
G40W4000				
G40X4000:1	1	G40M4000:U	020.4	
G40X4000:2	2	G40M4000:V	020.4	
G40X4000:3	3	G40M4000:W	020.4	
G40X4000:⏚	GNYE	G40M4000:⏚	020.4	
G40W4010				
A01X0004:20	1	G40X4000:1	020.4	
A01X0004:21	2	G40X4000:2	020.4	
A01X0004:22	3	G40X4000:3	020.4	
A01X0004:E4	GNYE	G40X4000:⏚	020.4	
G40W5000				
G40X5002:1	BN	G40B5000	056.4	
G40X5002:3	BU	G40B5000	056.4	
G40W5001				
G40X5002:1	BN	G40B5001	056.4	
G40X5002:3	BU	G40B5001	056.4	
G40X5002:4	BK	G40B5001	056.4	
G40W5002				
C81K4130:0.1	BN	G40X5002:1	056.6	
C81K4130:0.3	BU	G40X5002:3	056.6	
C81K4130:0.4	BK	G40X5002:4	056.6	
G40W5004				
G40X5006:1	BN	G40B5004	056.2	

This drawing must not without the consent of Tetra Pak be copied, transmitted or disclosed to any third party.

Cable Connection List of 3404507-0003

From	Cable	To	Page / Col.	Option
	G40W5004			
G40X5006:3	BU	G40B5004	056.2	
	G40W5005			
G40X5006:1	BN	G40B5005	056.3	
G40X5006:3	BU	G40B5005	056.3	
G40X5006:4	BK	G40B5005	056.3	
	G40W5006			
C81K4130:1.1	BN	G40X5006:1	056.6	
C81K4130:1.3	BU	G40X5006:3	056.6	
C81K4130:1.4	BK	G40X5006:4	056.6	
	G41W0000			
	OG			
G41X0000:133	BU	G41X0010:4	058.8	ADH. DET.
G41X0000:132	GN	G41X0010:2	058.8	ADH. DET.
G41X0000:128	BN	G41X0010:8	058.8	ADH. DET.
G41X0000:127	WH/OG	G41X0010:3	058.8	ADH. DET.
G41X0000:122	WH/GN	G41X0010:1	058.8	ADH. DET.
G41X0000:134	WH/BU	G41X0010:5	058.8	ADH. DET.
	WH/BN			
	G41W0002			
G41X0002:1	BN	G41E0002:+	058.8	ADH. DET.
G41X0002:3	BU	G41E0002:-	058.8	ADH. DET.
	G41W0010			
A01X0006:183	1	G41X0000:101	058.6	
A01X0006:184	2	G41X0000:111	058.6	
A01X0006:185	3	G41X0000:106	058.6	
A01X0006:186	4	G41X0000:112	058.6	
A01X0006:187	5	G41X0000:114	058.4	

From	Cable	To	Page / Col.	Option
A01X0006:206	6	G41X0000:115	058.6	
A01X0006:E9	GNYE	G41X0000:GND	058.6	
	G41W0011			
G41X0011:4	BK	G41B0011:NO	058.9	ADH. DET.
G41X0011:2	BN	G41B0011:NC	058.9	ADH. DET.
G41X0011:1	BU	G41B0011:COM	058.9	ADH. DET.
G41X0011:3	GNYE	G41B0011:E	058.9	ADH. DET.
	G70W0000			
	OG			
A01X0006:173	BU	G70X0000:4	057.8	V.S.D.
A01X0006:171	GN	G70X0000:2	057.8	V.S.D.
A01X0006:177	BN	G70X0000:8	057.8	V.S.D.
A01X0006:172	WH/OG	G70X0000:3	057.8	V.S.D.
A01X0006:170	WH/GN	G70X0000:1	057.8	V.S.D.
	WH/BU			
	WH/BN			
	G70W0001			
A01X0006:178	BN	G70E0002:+	057.5	V.S.D.
	WH			
A01X0006:179	BU	G70E0002:-	057.5	V.S.D.
	BK			
	G70W1000			
G70M1000:B	BK	G70T1000:V	017.4	POS.SYS.
G70M1000:A	BN	G70T1000:U	017.4	POS.SYS.
G70M1000:C	BU	G70T1000:W	017.4	POS.SYS.
G70M1000:E	BU	G70X1002:1	017.4	POS.SYS.
G70M1000:D	GNYE	G70T1000:⏚	017.4	POS.SYS.
G70W1000	SH	GND	017.3	POS.SYS.
G70W1000	SH	GND	017.5	POS.SYS.

This drawing must not without the consent of Tetra Pak
be copied, transmitted or disclosed to any third party.

Cable Connection List of 3404507-0003

From	Cable	To	Page / Col.	Option
G70W1000				
G70M1000:H	WH-BU	G70X1002:2	017.4	POS.SYS.
P01W4000				
A01X0006:1	1	P01X4000:23	027.4	
A01X0006:2	2	P01X4000:11	027.3	
A01X0006:150	3	P01X4000:101	044.8	
A01X0006:153	4	P01X4000:15	027.6	
A01X0006:154	5	P01X4000:13	027.5	
A01X0006:155	6	P01X4000:111	044.8	
A01X0006:160	7	P01X4000:117	048.6	
A01X0006:161	8	P01X4000:14	027.5	
A01X0006:9	9	P01X4000:2	030.4	
A01X0006:10	10	P01X4000:1	030.4	
A01X0006:11	11	P01X4000:3	030.5	
A01X0006:12	12	P01X4000:4	030.5	
A01X0006:163	13	P01X4000:119	044.8	
A01X0006:164	14	P01X4000:120	044.8	
	15			
	16			
	17			
A01X0006:E11	GNYE	P01X4000:E10	044.8	
P01W4010				
	1			
A01X0006:E12	1	A01A4000:⏚	027.2	
V01W5000				
A01X0004:13	1	V01V5000:L1	019.6	
A01X0004:14	2	V01V5000:L2	019.6	
A01X0004:15	3	V01V5000:L3	019.6	
A01X0004:16	4	V01V5000:N	019.6	
A01X0004:E2	GNYE	V01V5000:⏚	019.6	

From	Cable	To	Page / Col.	Option
V01W5010				
V01X5010:1	BN	A01K3030:6	054.2	
V01X5010:2	WH	A01K3030:4	054.2	
V01X5010:3	BU	A01K3030:4	054.2	
V01X5010:4	BK	A01K3030:0	054.2	
V01W5010:SH	SH	A01K3030:2	054.2	
V01W9001				
W81K4120:6.1	BN	V01B9001:2	055.3	
	BU			
W81K4120:6.4	BK	V01B9001:3	055.3	
V01W9002				
W81K4120:7.1	BN	V01B9002:13	055.3	
	BU			
W81K4120:7.4	BK	V01B9002:14	055.3	
W20W0000				
W20M0000:B	BK	W20T0000:V	016.4	
W20M0000:A	BN	W20T0000:U	016.4	
W20M0000:C	BU	W20T0000:W	016.4	
W20M0000:E	BU	W20X0002:1	016.4	
W20M0000:D	GNYE	W20T0000:⏚	016.4	
GND	SH	W20W0000	016.3	
GND	SH	W20W0000	016.3	
W20M0000:H	WH-BU	W20X0002:2	016.4	
W20W0002				
W20X0030:1	BN	W20B0002	036.4	
W20X0030:3	BU	W20B0002	036.4	
W20W0003				
W20X0030:1	BN	W20B0003	036.5	

This drawing must not without the consent of Tetra Pak be copied, transmitted or disclosed to any third party.

Cable Connection List of 3404507-0003

From	Cable	To	Page / Col.	Option
W20W0003				
W20X0030:3	BU	W20B0003	036.5	
W20X0030:4	BK	W20B0003	036.5	
W20W0030				
A01X0006:115+	BN	W20X0030:1	036.3	
A01X0006:115-	BU	W20X0030:3	036.3	
A01X0006:115	BK	W20X0030:4	036.6	
W21W0000				
W81K4120:4.1	BN	W21B0000	055.4	
W81K4120:4.3	BU	W21B0000	055.4	
W81K4120:4.4	BK	W21B0000	055.4	
W21W1000				
W21M1000:B	BK	W21T1000:V	012.4	
W21M1000:A	BN	W21T1000:U	012.4	
W21M1000:C	BU	W21T1000:W	012.4	
W21M1000:E	BU	W21X1002:1	012.4	
W21M1000:D	GNYE	W21T1000:⏚	012.4	
GND	SH	W21W1000	012.3	
GND	SH	W21W1000	012.3	
W21M1000:H	WH-BU	W21X1002:2	012.4	
W21W2000				
W21M2000:B	BK	W21T2000:V	013.4	
W21M2000:A	BN	W21T2000:U	013.4	
W21M2000:C	BU	W21T2000:W	013.4	
W21M2000:E	BU	W21X2002:1	013.4	
W21M2000:D	GNYE	W21T2000:⏚	013.4	
GND	SH	W21W2000	013.3	
GND	SH	W21W2000	013.3	
W21M2000:H	WH-BU	W21X2002:2	013.4	

From	Cable	To	Page / Col.	Option
W21W3000				
W21X3020:1.1	BN	W21B3000	038.5	
W21X3020:1.3	BU	W21B3000	038.5	
W21X3020:1.4	BK	W21B3000	038.5	
W21W3001				
W21X3020:1.1	BN	W21B3001	038.5	
W21X3020:1.3	BU	W21B3001	038.5	
W21W3002				
W21X3020:2.1	BN	W21B3002	038.4	
W21X3020:2.3	BU	W21B3002	038.4	
W21X3020:2.4	BK	W21B3002	038.4	
W21W3003				
W21X3020:2.1	BN	W21B3003	038.4	
W21X3020:2.3	BU	W21B3003	038.4	
W21W3004				
W21X3020:3.1	BN	W21B3004	038.5	
W21X3020:3.3	BU	W21B3004	038.5	
W21X3020:3.4	BK	W21B3004	038.5	
W21W3005				
W21X3020:3.1	BN	W21B3005	038.5	
W21X3020:3.3	BU	W21B3005	038.5	
W21W3006				
W21X3020:4.1	BN	W21B3006	038.4	
W21X3020:4.3	BU	W21B3006	038.4	
W21X3020:4.4	BK	W21B3006	038.4	

This drawing must not without the consent of Tetra Pak be copied, transmitted or disclosed to any third party.

Cable Connection List of 3404507-0003

From	Cable	To	Page / Col.	Option
W21W3007				
W21X3020:4.1	BN	W21B3007	038.4	
W21X3020:4.3	BU	W21B3007	038.4	
W21W3008				
W21X3038:1	BN	W21B3008	038.5	
W21X3038:3	BU	W21B3008	038.5	
W21X3038:4	BK	W21B3008	038.5	
W21W3009				
W21X3038:1	BN	W21B3009	038.5	
W21X3038:3	BU	W21B3009	038.5	
W21W3018				
W21X3039:1	BN	W21B3018	038.4	
W21X3039:3	BU	W21B3018	038.4	
W21X3039:4	BK	W21B3018	038.4	
W21W3019				
W21X3039:1	BN	W21B3019	038.4	
W21X3039:3	BU	W21B3019	038.4	
W21W3020				
A01X0006:112+	BN	W21X3020:1.1	038.2	
A01X0006:112-	BU	W21X3020:1.3	038.2	
	GY/PK			
	RD/BU			
	WH/GN			
	BN/GN			
	WH/YE			
	YE/BN			
	WH/GY			
	GY/BN			

From	Cable	To	Page / Col.	Option
A01X0006:112	WH	W21X3020:1.4	038.6	
A01X0006:113	GN	W21X3020:2.4	038.6	
A01X0006:114	YE	W21X3020:3.4	038.6	
A01X0006:174	GY	W21X3020:4.4	038.6	
	PK			
	RD			
A01X0006:175	BK	W21X3020:7.4	038.6	
A01X0006:176	VT	W21X3020:8.4	038.6	
	GNYE			
W21W3038				
W21X3020:7.1	BN	W21X3038:1	038.2	
W21X3020:7.3	BU	W21X3038:3	038.2	
W21X3020:7.4	BK	W21X3038:4	038.5	
W21W3039				
W21X3020:8.1	BN	W21X3039:1	038.2	
W21X3020:8.3	BU	W21X3039:3	038.2	
W21X3020:8.4	BK	W21X3039:4	038.5	
W21W4000				
W21M4000:U	1	W21T4000:T1/U	021.3	
W21M4000:V	2	W21T4000:T2/V	021.3	
W21M4000:W	3	W21T4000:T3/W	021.3	
W21M4000:⏚	GNYE	W21T4000:⏚	021.3	
GND	SH	GND	021.5	
W21W4001				
W21X4012:1	BN	W21B4001	045.4	
W21X4012:3	BU	W21B4001	045.4	
W21W4002				
W21X4012:1	BN	W21B4002	045.5	

Tetra Pak®

Version Designer: ROG	Version Date: 2016-09-30	Machine: CAP30 Flex ScrewCap 0400	
ECM No: 825145	Denomination: CABLE CONNECTION LIST	Page Type: CABLE CONNECTION LIST	
Information Security Class: PUBLIC	Document No.: 3404507-0007	Doc. type: ELD	Version: AC / Page: 012

This drawing must not without the consent of Tetra Pak be copied, transmitted or disclosed to any third party.

Cable Connection List of 3404507-0003

From	Cable	To	Page / Col.	Option
	W21W4002			
W21X4012:3	BU	W21B4002	045.5	
W21X4012:4	BK	W21B4002	045.5	
	W21W4003			
W21X4014:1	BN	W21B4003	045.4	
W21X4014:3	BU	W21B4003	045.4	
	W21W4004			
W21X4014:1	BN	W21B4004	045.5	
W21X4014:3	BU	W21B4004	045.5	
W21X4014:4	BK	W21B4004	045.5	
	W21W4005			
W21X4016:1	BN	W21B4005	045.4	
W21X4016:3	BU	W21B4005	045.4	
	W21W4006			
W21X4016:1	BN	W21B4006	045.5	
W21X4016:3	BU	W21B4006	045.5	
W21X4016:4	BK	W21B4006	045.5	
	W21W4007			
W21X4018:1	BN	W21B4007	045.4	
W21X4018:3	BU	W21B4007	045.4	
	W21W4008			
W21X4018:1	BN	W21B4008	045.5	
W21X4018:3	BU	W21B4008	045.5	
W21X4018:4	BK	W21B4008	045.5	
	W21W4010			
W21X4010:1	1	W21M4010:U	022.9	P.ALIGNER
W21X4010:2	2	W21M4010:V	022.9	P.ALIGNER
W21X4010:3	3	W21M4010:W	022.9	P.ALIGNER
W21X4010:⏚	GNYE	W21M4010:⏚	022.9	P.ALIGNER
W21X4010:4	SH	GND	022.10	P.ALIGNER
	W21W4011			
W21X4010:1	1	W21T4010:T1/U	022.8	P.ALIGNER
W21X4010:2	2	W21T4010:T2/V	022.8	P.ALIGNER
W21X4010:3	3	W21T4010:T3/W	022.8	P.ALIGNER
W21X4010:⏚	GNYE	W21T4010:⏚	022.8	P.ALIGNER
W21X4010:4	SH	GND	022.10	P.ALIGNER
	W21W4012			
P01X4000:112	BN	W21X4012:1	045.3	
P01X4000:102	BU	W21X4012:3	045.3	
A01K3021:0	BK	W21X4012:4	045.6	
	W21W4014			
P01X4000:113	BN	W21X4014:1	045.3	
P01X4000:103	BU	W21X4014:3	045.3	
A01K3021:1	BK	W21X4014:4	045.6	
	W21W4016			
P01X4000:114	BN	W21X4016:1	045.3	
P01X4000:104	BU	W21X4016:3	045.3	
A01K3021:2	BK	W21X4016:4	045.6	
	W21W4018			
P01X4000:115	BN	W21X4018:1	045.3	
P01X4000:105	BU	W21X4018:3	045.3	
A01K3021:3	BK	W21X4018:4	045.6	

This drawing must not without the consent of Tetra Pak be copied, transmitted or disclosed to any third party.

Cable Connection List of 3404507-0003

From	Cable	To	Page / Col.	Option
W21W4022				
W21X4022:1	BN	W81K4120:0.1	055.7	
W21X4022:3	BU	W81K4120:0.3	055.7	
W21X4022:4	BK	W81K4120:0.4	055.7	
W21W4023				
W21X4022:1	BN	W21B4023	055.4	
W21X4022:3	BU	W21B4023	055.4	
W21W4024				
W21X4022:1	BN	W21B4024	055.4	
W21X4022:3	BU	W21B4024	055.4	
W21X4022:4	BK	W21B4024	055.4	
W21W6000				
W21M6000:U	1	W21T6000:T1/U	022.3	OUT.P.CONV.
W21M6000:V	2	W21T6000:T2/V	022.3	OUT.P.CONV.
W21M6000:W	3	W21T6000:T3/W	022.3	OUT.P.CONV.
W21M6000:⏚	GNYE	W21T6000:⏚	022.3	OUT.P.CONV.
GND	SH	W21W6000	022.5	OUT.P.CONV.
W21W6001				
W21X6012:1	BN	W21B6001	055.4	
W21X6012:3	BU	W21B6001	055.4	
W21W6002				
W21X6012:1	BN	W21B6002	055.5	
W21X6012:3	BU	W21B6002	055.5	
W21X6012:4	BK	W21B6002	055.5	
W21W6003				
W21X6014:1	BN	W21B6003	055.2	

From	Cable	To	Page / Col.	Option
W21X6014:3	BU	W21B6003	055.2	
W21W6004				
W21X6014:1	BN	W21B6004	055.3	
W21X6014:3	BU	W21B6004	055.3	
W21X6014:4	BK	W21B6004	055.3	
W21W6005				
W81K4120:1.1	BN	W21B6005	055.2	
W81K4120:1.3	BU	W21B6005	055.2	
W81K4120:1.4	BK	W21B6005	055.2	
W21W6012				
W21X6012:1	BN	W81K4120:2.1	055.7	
W21X6012:3	BU	W81K4120:2.3	055.7	
W21X6012:4	BK	W81K4120:2.4	055.7	
W21W6014				
W21X6014:3	BN	W81K4120:3.3	055.7	
W21X6014:4	BU	W81K4120:3.4	055.7	
W21X6014:1	BK	W81K4120:3.1	055.7	
W21W8000				
A01X0004:10	1	W21M8000:U	019.1	
A01X0004:11	2	W21M8000:N	019.1	
A01X0004:E1	GNYE	W21M8000:⏚	019.1	
W21W8001				
A01X0004:18	BN	W21E8001:F2	019.8	
A01X0004:17	BK	W21E8001:F1	019.8	
A01X0004:19	GY	W21E8001:0	019.8	
A01X0004:E3	GNYE	W21E8001:E	019.8	

9 Mains Connection

Description

The drawings that show the connection from the mains power to the electrical cabinet are included in this chapter.

9.1 Mains Connection

This page intentionally left blank

This drawing must not without the consent of Tetra Pak
be copied, transmitted or disclosed to any third party.

Main voltage 200-600V except 400/230V

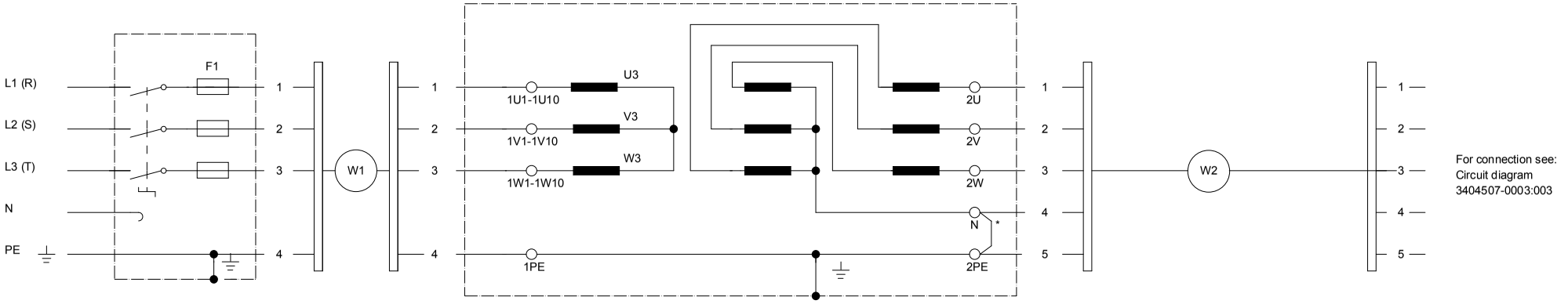

Mains supply Low voltage switchgear

Supply disconnecting device

Matching transformer connection according
to diagram Mains Conncetion page 003

* NOTE: Make sure that the bridge is connected.

Main voltage 400/230V

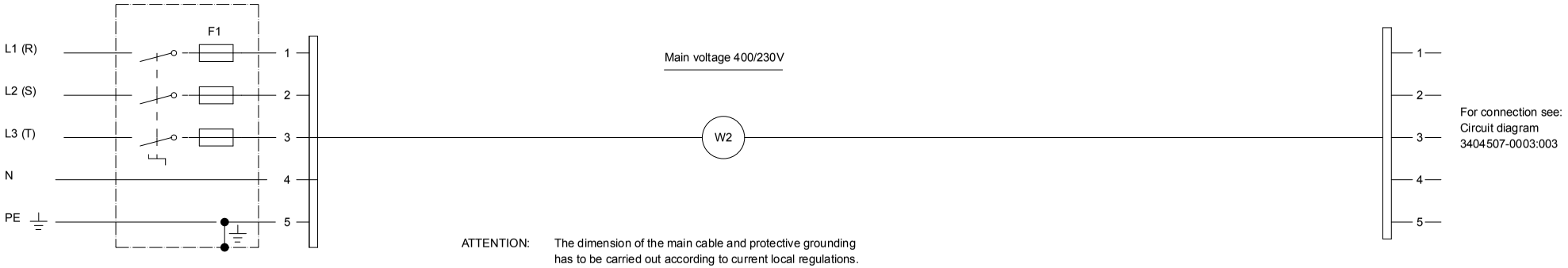

ATTENTION: The dimension of the main cable and protective grounding has to be carried out according to current local regulations.

Mains supply Low voltage switchgear

Supply disconnecting device

Tetra Pak®	Version Designer: ROG	Version Date: 2016-09-30	Machine: CAP30 Flex ScrewCap 0400	
	ECM No: 825145	Denomination: MAINS CONNECTION	Page Type: MAINS CONNECTION	
	Information Security Class: PUBLIC	Document No.: 3404507-0008	Doc. type: ELD	Version: AC / Page: 001

This drawing must not without the consent of Tetra Pak be copied, transmitted or disclosed to any third party.

MAIN VOLTAGE	FUSES (SLOW) F1	AREA TO COPPER (CU) CABLE, MAXIMUM LENGTH, AND VOLTAGE DROP (%) WITH CABLE W1 AND W2 ACCORDING TO MAINS CONNECTION PAGE 003						SETTING VALUE SUPPLY DISCONNECTING DEVICE (+ ref. des.)	CONNECTIONS ON MATCHING TRANSFORMER		
		W1			W2						
V	A	AREA (mm²)	Lmax (m)	DROP (%)	AREA (mm²)	Lmax (m)	DROP (%)	A	MAINS	TAP	CONNECT
600/347 3x600	50	6	30	0,72	10	65	2,06	32A (A01Q1000)	L1 L2 L3 PE	1U9 1V9 1W9	1U3 - U4 1V3 - V4 1W3 - W4
550/318 3x550	50	6	30	0,85	10	65	2,06	32A (A01Q1000)	L1 L2 L3 PE	1U8 1V8 1W8	1U3 - U4 1V3 - V4 1W3 - W4
500/289 3x500	63	6	25	0,86	10	65	2,06	32A (A01Q1000)	L1 L2 L3 PE	1U7 1V7 1W7	1U3 - U4 1V3 - V4 1W3 - W4
480/277 3x480	63	6	20	0,75	10	65	2,06	32A (A01Q1000)	L1 L2 L3 PE	1U6 1V6 1W6	1U3 - U4 1V3 - V4 1W3 - W4
440/254 3x440	63	6	20	0,89	10	65	2,06	32A (A01Q1000)	L1 L2 L3 PE	1U5 1V5 1W5	1U2 - U4 1V2 - V4 1W2 - W4
415/240 3x415	80	10	40	1,18	16	65	1,30	32A (A01Q1000)	L1 L2 L3 PE	1U5 1V5 1W5	1U1 - U4 1V1 - V4 1W1 - W4
400/230 3x400	80	10	40	1,27	16	65	1,30	32A (A01Q1000)	L1 L2 L3 PE	1U4 1V4 1W4	1U1 - U4 1V1 - V4 1W1 - W4
3x400	50	N/A	N/A	N/A	10	90	2,86	32A (A01Q1000)	N/A		N/A
380/220 3x380	80	10	40	1,41	16	65	1,30	32A (A01Q1000)	L1 L2 L3 PE	1U10 1V10 1W10	1U1 - U4 1V1 - V4 1W1 - W4
240/140 3x240	125	16	30	1,67	16	65	1,30	32A (A01Q1000)	L1 L2 L3 PE	1U3 1V3 1W3	U3 - U4 1U3-1U6 V3 - V4 1V3-1V6 W3 - W4 1W3-1W6
220/127 3x220	125	25	20	0,84	10	65	2,06	32A (A01Q1000)	L1 L2 L3 PE	1U2 1V2 1W2	U3 - U4 1U2-1U5 V3 - V4 1V2-1V5 W3 - W4 1W2-1W5
200/115 3x200	160	25	20	1,01	16	65	1,30	32A (A01Q1000)	L1 L2 L3 PE	1U1 1V1 1W1	U3 - U4 1U1-1U4 V3 - V4 1V1-1V4 W3 - W4 1W1-1W4

MATCHING TRANSFORMER

37kVA (90606-1310)

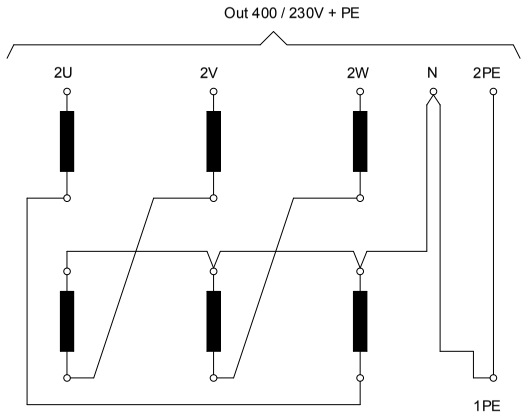

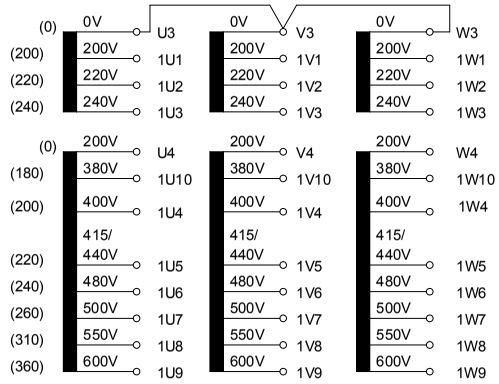

ATTENTION:

Preconditions for the calculation is described in the Installation Manual chapter "Preconditions for the mains connection calculation".
National regulations have to be followed in each country.
Tetra Pak is not responsible for the dimensioning at installation.
Tetra Pak only provides recomendations.

Version Designer: ROG	Version Date: 2016-09-30	Machine: CAP30 Flex ScrewCap 0400		
ECM No: 825145	Denomination: MAINS CONNECTION	Page Type: MAINS CONNECTION		
Information Security Class: PUBLIC	Document No.: 3404507-0008	Doc. type: ELD	Version: AC	Page: 002

This drawing must not without the consent of Tetra Pak be copied, transmitted or disclosed to any third party.

MAIN VOLTAGE	MCCB F1	AREA TO COPPER (CU) CABLE, MAXIMUM LENGTH, AND VOLTAGE DROP (%) WITH CABLE W1 AND W2 ACCORDING TO MAINS CONNECTION PAGE 003						SETTING VALUE SUPPLY DISCONNECTING DEVICE (+ ref. des.)	CONNECTIONS ON MATCHING TRANSFORMER		MATCHING TRANSFORMER 37kVA (90606-1310)
		W1			W2						
V	A	AREA (mm²)	Lmax (m)	DROP (%)	AREA (mm²)	Lmax (m)	DROP (%)	A	MAINS	TAP	CONNECT
600/347 3x600	45	6	30	0,72	10	65	2,06	32A (A01Q1000)	L1 L2 L3 PE	1U9 1V9 1W9	1U3 - U4 1V3 - V4 1W3 - W4
550/318 3x550	49	6	30	0,85	10	65	2,06	32A (A01Q1000)	L1 L2 L3 PE	1U8 1V8 1W8	1U3 - U4 1V3 - V4 1W3 - W4
500/289 3x500	54	6	25	0,86	10	65	2,06	32A (A01Q1000)	L1 L2 L3 PE	1U7 1V7 1W7	1U3 - U4 1V3 - V4 1W3 - W4
480/277 3x480	56	6	20	0,75	10	65	2,06	32A (A01Q1000)	L1 L2 L3 PE	1U6 1V6 1W6	1U3 - U4 1V3 - V4 1W3 - W4
440/254 3x440	61	6	20	0,89	10	65	2,06	32A (A01Q1000)	L1 L2 L3 PE	1U5 1V5 1W5	1U2 - U4 1V2 - V4 1W2 - W4
415/240 3x415	65	10	25	0,74	10	65	2,06	32A (A01Q1000)	L1 L2 L3 PE	1U5 1V5 1W5	1U1 - U4 1V1 - V4 1W1 - W4
400/230 3x400	67	10	25	0,79	10	65	2,06	32A (A01Q1000)	L1 L2 L3 PE	1U4 1V4 1W4	1U1 - U4 1V1 - V4 1W1 - W4
3x400	40	N/A	N/A	N/A	10	90	2,86	32A (A01Q1000)	N/A		N/A
380/220 3x380	71	10	25	0,88	10	65	2,06	32A (A01Q1000)	L1 L2 L3 PE	1U10 1V10 1W10	1U1 - U4 1V1 - V4 1W1 - W4
240/140 3x240	112	16	15	0,83	10	65	2,06	32A (A01Q1000)	L1 L2 L3 PE	1U3 1V3 1W3	U3 - U4 V3 - V4 W3 - W4 — 1U3-1U6 1V3-1V6 1W3-1W6
220/127 3x220	122	25	20	0,84	10	65	2,06	32A (A01Q1000)	L1 L2 L3 PE	1U2 1V2 1W2	U3 - U4 V3 - V4 W3 - W4 — 1U2-1U5 1V2-1V5 1W2-1W5
200/115 3x200	134	25	15	0,76	10	65	2,06	32A (A01Q1000)	L1 L2 L3 PE	1U1 1V1 1W1	U3 - U4 V3 - V4 W3 - W4 — 1U1-1U4 1V1-1V4 1W1-1W4

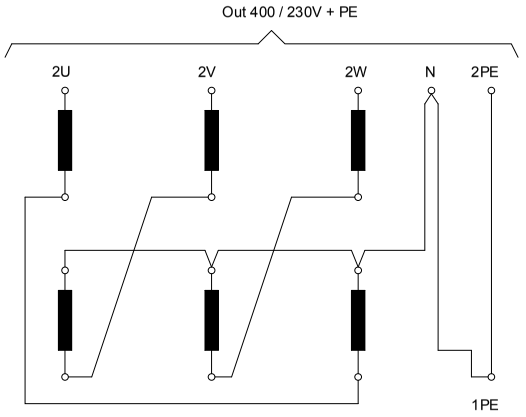

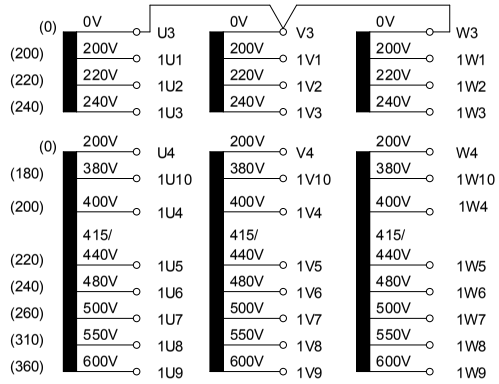

ATTENTION:

Preconditions for the calculation is described in the Installation Manual chapter "Preconditions for the mains connection calculation".
National regulations have to be followed in each country.
Tetra Pak is not responsible for the dimensioning at installation.
Tetra Pak only provides recomendations.

Tetra Pak®	Version Designer: ROG	Version Date: 2016-09-30	Machine: CAP30 Flex ScrewCap 0400	
	ECM No: 825145	Denomination: MAINS CONNECTION	Page Type: MAINS CONNECTION	
	Information Security Class: PUBLIC	Document No.: 3404507-0008	Doc. type: ELD	Version: AC / Page: 003

This page intentionally left blank

10 Drawing Remarks

Description

The following pages contain the drawing remarks that are referenced in chapter 4 Circuit Diagrams.

10.1 Drawing Remarks

Identity	Document type	Version	ECM 825145
3404507-0098	**ELD**	**AC**	**Issued by/Date: ROG/2016-09-30**
			Approved/Date: AZU/2016-09-30

Drawing No.	Page	Note	Remark
3404507-0003	004	1	REMOVE THE BRIDGE IN CASE OF BUFFER MODULE A01T2001 IS INSTALLED.
	006	1	NOT PRESENT WITH UL/CSA VARIANT.
	007	31	INTERNAL CIRCUIT OF EL.CABINET COOLING UNIT.
	009	1	CONNECT TO SHIELD CLIP ON FRAME BELOW DRIVER.
		2	CONNECT INSIDE EMC CABLE GLAND.
	010	1	CONNECT TO SHIELD CLIP ON FRAME BELOW DRIVER.
		2	CONNECT INSIDE EMC CABLE GLAND.
	011	1	CONNECT TO SHIELD CLIP ON FRAME BELOW DRIVER.
		2	CONNECT INSIDE EMC CABLE GLAND.
	012	1	CONNECT TO SHIELD CLIP ON FRAME BELOW DRIVER.
		2	CONNECT INSIDE EMC CABLE GLAND.
	013	1	CONNECT TO SHIELD CLIP ON FRAME BELOW DRIVER.
		2	CONNECT INSIDE EMC CABLE GLAND.
	014	1	CONNECT TO SHIELD CLIP ON FRAME BELOW DRIVER.
		2	CONNECT INSIDE EMC CABLE GLAND.
	015	1	CONNECT TO SHIELD CLIP ON FRAME BELOW DRIVER.
		2	CONNECT INSIDE EMC CABLE GLAND.
	016	1	CONNECT TO SHIELD CLIP ON FRAME BELOW DRIVER.
		2	CONNECT INSIDE EMC CABLE GLAND.
	017	1	CONNECT TO SHIELD CLIP ON FRAME BELOW DRIVER.
		2	CONNECT INSIDE EMC CABLE GLAND.
	021	1	TWO TURNS.
		2	CONNECT TO SHIELD CLIP ON FRAME BELOW DRIVER.
		3	CONNECT INSIDE EMC CABLE GLAND.
	022	1	TWO TURNS.
		2	CONNECT TO SHIELD CLIP ON FRAME BELOW DRIVER.
		3	CONNECT INSIDE EMC CABLE GLAND.
	023	9	CONNECT THE RESISTOR IF A81K5000 IS PRESENT AND IF A81K5000 IS THE LAST DEVICE OF THIS COMMUNICATION CHAIN.
	027	2	INSTALLED IN CASE OF BARCODE SCANNER OPTIONAL EQUIPMENT.

(Cont'd)

(Cont'd)

Identity	Document type	Version	ECM 825145
3404507-0098	ELD	AC	Issued by/Date: ROG/2016-09-30
			Approved/Date: AZU/2016-09-30

Drawing No.	Page	Note	Remark
		3	CONNECT TO SHIELD CLIP INSIDE THE PANEL FRAME, CLOSE TO THE USB CONNECTOR.
	055	12	OPTIONAL FOR CONVEYOR SWITCH.

11 Component Location

Description

For component location, refer to the Electrical Parts Index in the SPC.

12 Other Information

Description

This chapter gives other information, when applicable; such as, a Bill of Materials, fuse panel label etc.

Description 12-2

12.1 Bills of Material 12-5

12.1.1 Bills of Material 12-5

12.2 Fuse Panel Label 12-9

12.2.1 Fuse Panel Label (CE) 12-9

12.2.2 Fuse Panel Label (UL-CSA) 12-13

This page intentionally left blank

12.1 Bills of Material

This chapter includes the lists of the documents and programs.

12.1.1 Bills of Material

This page intentionally left blank

ECM	P735519(L735515)	P803620(L802409)	P826869(L825146)
Release date	2016.04.01	2016.08.05	2016.10.01

Chg	Position	Sp	SH	Description	As	Cr	Identity	DTp	Prt	Vs	Unit	Column quantity All	ECM
I	0010			DOCUMENTS LIST			3404507-0001	ELD	000	AC		x	826869
I	0020			POSITION SUMMARY			3404507-0002	ELD	000	AC		x	826869
I	0030			CIRCUIT DIAGRAM			3404507-0003	ELD	000	AC		x	826869
I	0040			LINE SUMMARY			3404507-0004	ELD	000	AC		x	826869
I	0050			CABINET TERMINAL SUMMARY			3404507-0005	ELD	000	AC		x	826869
I	0060			TERMINAL STRIP OVERVIEW			3404507-0006	ELD	000	AC		x	826869
I	0070			CABLE CONNECTION LIST			3404507-0007	ELD	000	AC		x	826869
I	0080			MAINS CONNECTION			3404507-0008	ELD	000	AC		x	826869
I	0098			DRAWING REMARKS			3404507-0098	ELD	000	AC		x	826869
I	0099			ENGINEERING CHANGE DESCRIPTION			3404507-0099	ELD	000	AC		x	826869

Information 'valid to' 2016.10.01

Chg	Position	Sp	SH	Description	Acs	Identity	DTp	Prt	Vs	Unit	Column quantity All	ECM
D	0010			DOCUMENTS LIST		3404507-0001	ELD	000	AB		x	803620
D	0020			POSITION SUMMARY		3404507-0002	ELD	000	AB		x	803620
D	0030			CIRCUIT DIAGRAM		3404507-0003	ELD	000	AB		x	803620
D	0040			LINE SUMMARY		3404507-0004	ELD	000	AB		x	803620
D	0050			CABINET TERMINAL SUMMARY		3404507-0005	ELD	000	AB		x	803620
D	0060			TERMINAL STRIP OVERVIEW		3404507-0006	ELD	000	AB		x	803620
D	0070			CABLE CONNECTION LIST		3404507-0007	ELD	000	AB		x	803620
D	0080			MAINS CONNECTION		3404507-0008	ELD	000	AB		x	803620
D	0098			DRAWING REMARKS		3404507-0098	ELD	000	AB		x	803620
D	0099			ENGINEERING CHANGE DESCRIPTION		3404507-0099	ELD	000	AB		x	803620

12.2 Fuse Panel Label

This chapter shows the location and the setting of the fuses.

12.2.1 Fuse Panel Label (CE)

This page intentionally left blank

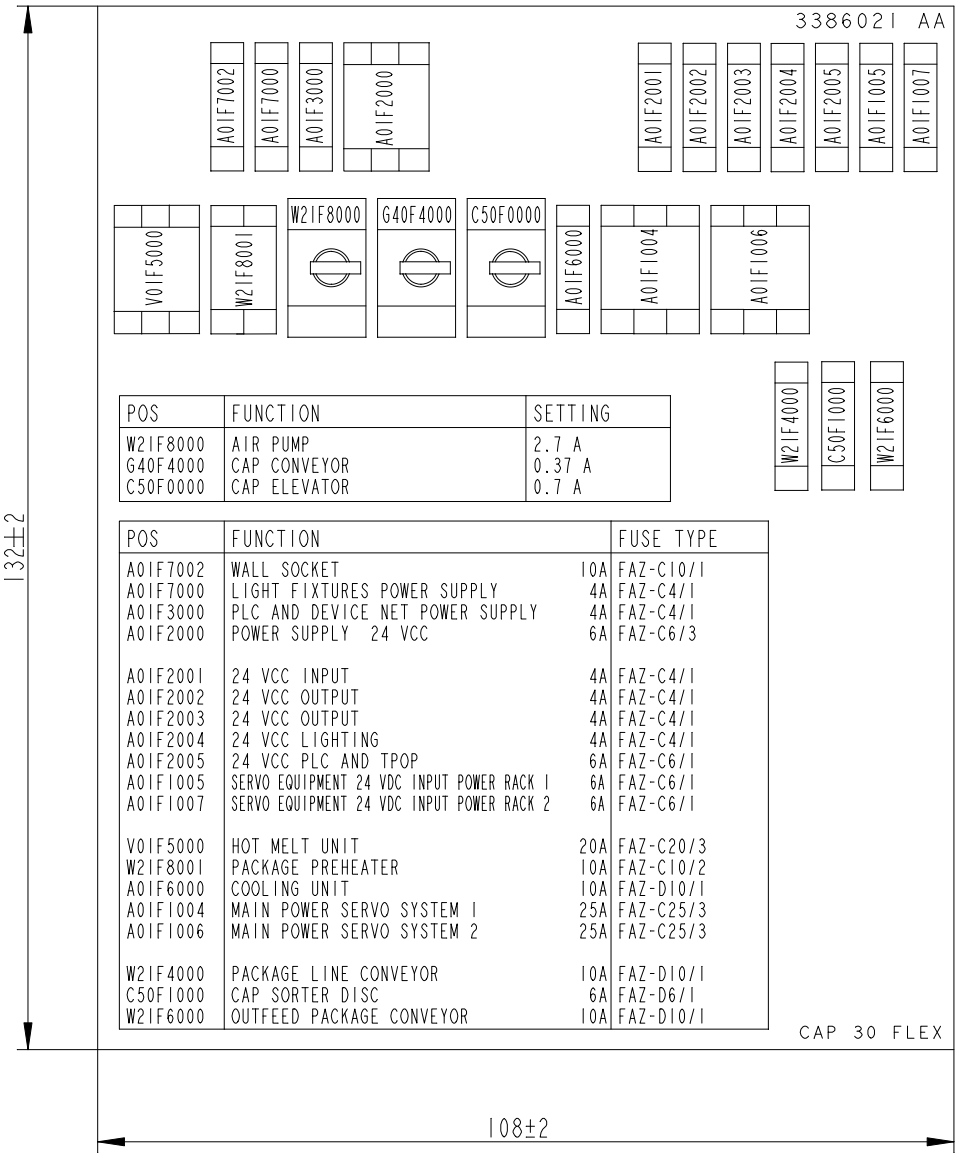

POS	FUNCTION	SETTING
W21F8000	AIR PUMP	2.7 A
G40F4000	CAP CONVEYOR	0.37 A
C50F0000	CAP ELEVATOR	0.7 A

POS	FUNCTION		FUSE TYPE
A01F7002	WALL SOCKET	10A	FAZ-C10/1
A01F7000	LIGHT FIXTURES POWER SUPPLY	4A	FAZ-C4/1
A01F3000	PLC AND DEVICE NET POWER SUPPLY	4A	FAZ-C4/1
A01F2000	POWER SUPPLY 24 VCC	6A	FAZ-C6/3
A01F2001	24 VCC INPUT	4A	FAZ-C4/1
A01F2002	24 VCC OUTPUT	4A	FAZ-C4/1
A01F2003	24 VCC OUTPUT	4A	FAZ-C4/1
A01F2004	24 VCC LIGHTING	4A	FAZ-C4/1
A01F2005	24 VCC PLC AND TPOP	6A	FAZ-C6/1
A01F1005	SERVO EQUIPMENT 24 VDC INPUT POWER RACK 1	6A	FAZ-C6/1
A01F1007	SERVO EQUIPMENT 24 VDC INPUT POWER RACK 2	6A	FAZ-C6/1
V01F5000	HOT MELT UNIT	20A	FAZ-C20/3
W21F8001	PACKAGE PREHEATER	10A	FAZ-C10/2
A01F6000	COOLING UNIT	10A	FAZ-D10/1
A01F1004	MAIN POWER SERVO SYSTEM 1	25A	FAZ-C25/3
A01F1006	MAIN POWER SERVO SYSTEM 2	25A	FAZ-C25/3
W21F4000	PACKAGE LINE CONVEYOR	10A	FAZ-D10/1
C50F1000	CAP SORTER DISC	6A	FAZ-D6/1
W21F6000	OUTFEED PACKAGE CONVEYOR	10A	FAZ-D10/1

BLACK PRINTING ON WHITE PAPER
PLASTIC EMBEDDED
SHINY SURFACE

Release Level: Released		ECM No: 711474	PDM Version Drawing 1.5 Model 1.2
Method/Size: Marked according to standard B 2103.10 NO /-		Unless otherwise stated: SHARP EDGES BROKEN; Scale: 7:10	Surface Roughness
Material: SEE ABOVE			Surface Treatment: Untreated
Version Designer: MVI	Version Date: 2015-02-26		Denomination: FUSE PANEL LABEL –
Information Security Class: Tetra Pak Restricted			
Hygienic Demands: No	Critical Part: No		
Tetra Pak®	Drawing No: 3386021	Document Type: DRA	R3 Version: AA / Page: 1(1)

©Tetra Pak. All rights reserved; any copying, transmittal or disclosure subject to Tetra Pak's written approval.

Pro/ENGINEER - A3

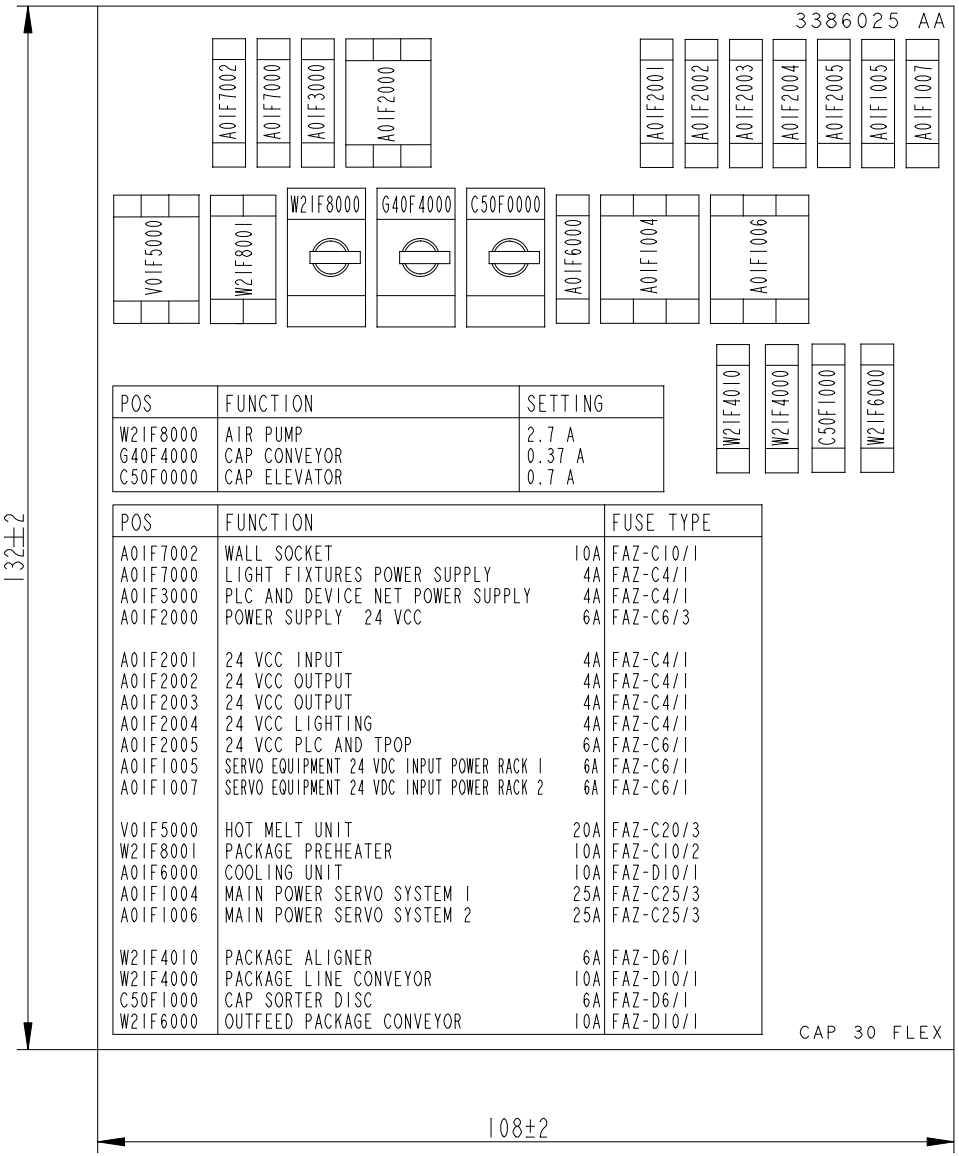

POS	FUNCTION	SETTING
W21F8000	AIR PUMP	2.7 A
G40F4000	CAP CONVEYOR	0.37 A
C50F0000	CAP ELEVATOR	0.7 A

POS	FUNCTION		FUSE TYPE
A01F7002	WALL SOCKET	10A	FAZ-C10/1
A01F7000	LIGHT FIXTURES POWER SUPPLY	4A	FAZ-C4/1
A01F3000	PLC AND DEVICE NET POWER SUPPLY	4A	FAZ-C4/1
A01F2000	POWER SUPPLY 24 VCC	6A	FAZ-C6/3
A01F2001	24 VCC INPUT	4A	FAZ-C4/1
A01F2002	24 VCC OUTPUT	4A	FAZ-C4/1
A01F2003	24 VCC OUTPUT	4A	FAZ-C4/1
A01F2004	24 VCC LIGHTING	4A	FAZ-C4/1
A01F2005	24 VCC PLC AND TPOP	6A	FAZ-C6/1
A01F1005	SERVO EQUIPMENT 24 VDC INPUT POWER RACK 1	6A	FAZ-C6/1
A01F1007	SERVO EQUIPMENT 24 VDC INPUT POWER RACK 2	6A	FAZ-C6/1
V01F5000	HOT MELT UNIT	20A	FAZ-C20/3
W21F8001	PACKAGE PREHEATER	10A	FAZ-C10/2
A01F6000	COOLING UNIT	10A	FAZ-D10/1
A01F1004	MAIN POWER SERVO SYSTEM 1	25A	FAZ-C25/3
A01F1006	MAIN POWER SERVO SYSTEM 2	25A	FAZ-C25/3
W21F4010	PACKAGE ALIGNER	6A	FAZ-D6/1
W21F4000	PACKAGE LINE CONVEYOR	10A	FAZ-D10/1
C50F1000	CAP SORTER DISC	6A	FAZ-D6/1
W21F6000	OUTFEED PACKAGE CONVEYOR	10A	FAZ-D10/1

BLACK PRINTING ON WHITE PAPER
PLASTIC EMBEDDED
SHINY SURFACE

Release Level: Released		ECM No: 711474	PDM Version Drawing 1.6 Model 1.3
Method/Size: Marked according to standard B 2103.10 NO /-		Unless otherwise stated: SHARP EDGES BROKEN; Scale: 7:10	Surface Roughness
Material: SEE ABOVE		Surface Treatment: Untreated	
Version Designer: MVI	Version Date: 2015-10-21	Denomination: FUSE PANEL LABEL –	
Information Security Class: Tetra Pak Restricted			
Hygienic Demands: No	Critical Part: No		
Tetra Pak®	Drawing No: 3386025	Document Type: DRA	R3 Version: AA / Page: 1(1)

©Tetra Pak. All rights reserved; any copying, transmittal or disclosure subject to Tetra Pak's written approval.

Pro/ENGINEER - A3

12.2.2 Fuse Panel Label (UL-CSA)

This page intentionally left blank

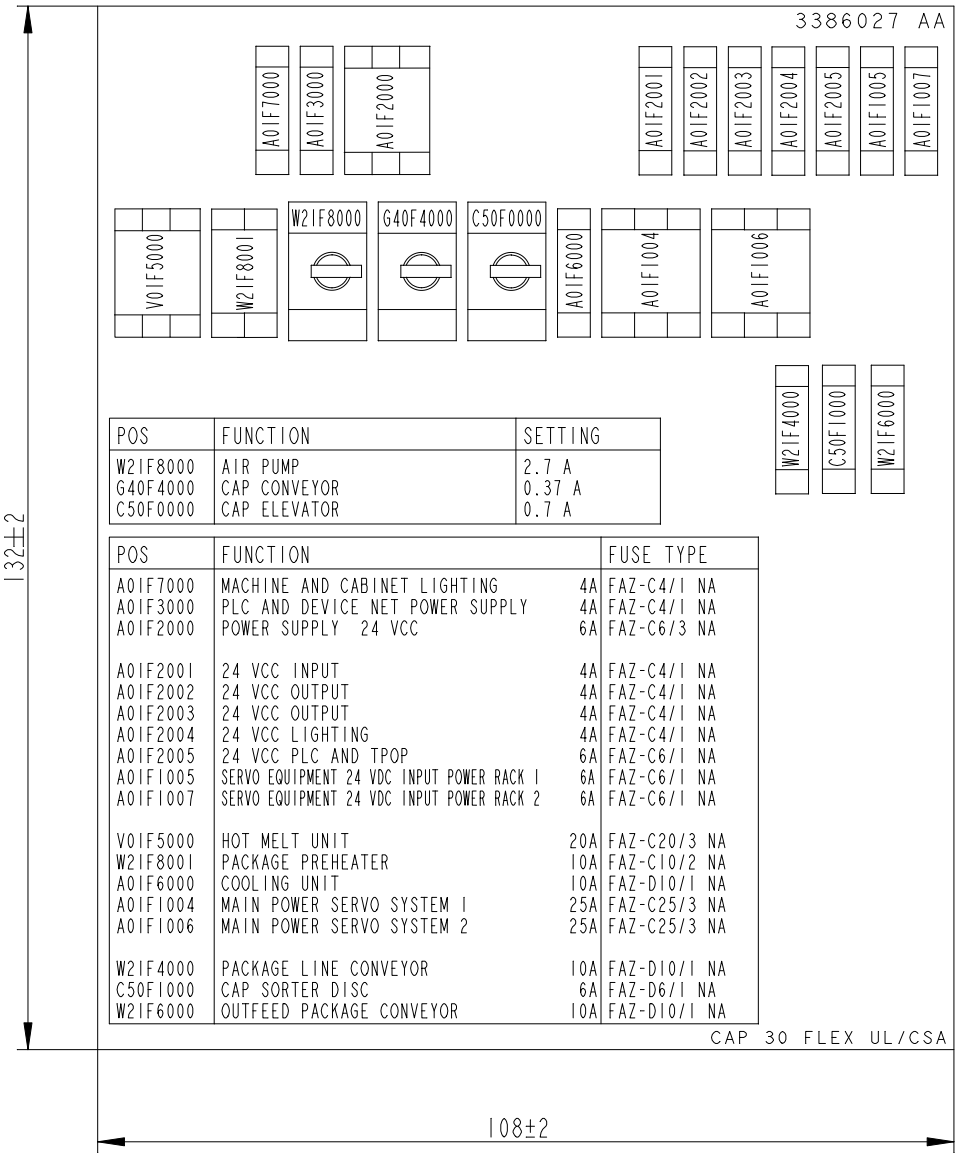

POS	FUNCTION	SETTING
W21F8000	AIR PUMP	2.7 A
G40F4000	CAP CONVEYOR	0.37 A
C50F0000	CAP ELEVATOR	0.7 A

POS	FUNCTION		FUSE TYPE
A01F7000	MACHINE AND CABINET LIGHTING	4A	FAZ-C4/1 NA
A01F3000	PLC AND DEVICE NET POWER SUPPLY	4A	FAZ-C4/1 NA
A01F2000	POWER SUPPLY 24 VCC	6A	FAZ-C6/3 NA
A01F2001	24 VCC INPUT	4A	FAZ-C4/1 NA
A01F2002	24 VCC OUTPUT	4A	FAZ-C4/1 NA
A01F2003	24 VCC OUTPUT	4A	FAZ-C4/1 NA
A01F2004	24 VCC LIGHTING	4A	FAZ-C4/1 NA
A01F2005	24 VCC PLC AND TPOP	6A	FAZ-C6/1 NA
A01F1005	SERVO EQUIPMENT 24 VDC INPUT POWER RACK 1	6A	FAZ-C6/1 NA
A01F1007	SERVO EQUIPMENT 24 VDC INPUT POWER RACK 2	6A	FAZ-C6/1 NA
V01F5000	HOT MELT UNIT	20A	FAZ-C20/3 NA
W21F8001	PACKAGE PREHEATER	10A	FAZ-C10/2 NA
A01F6000	COOLING UNIT	10A	FAZ-D10/1 NA
A01F1004	MAIN POWER SERVO SYSTEM 1	25A	FAZ-C25/3 NA
A01F1006	MAIN POWER SERVO SYSTEM 2	25A	FAZ-C25/3 NA
W21F4000	PACKAGE LINE CONVEYOR	10A	FAZ-D10/1 NA
C50F1000	CAP SORTER DISC	6A	FAZ-D6/1 NA
W21F6000	OUTFEED PACKAGE CONVEYOR	10A	FAZ-D10/1 NA

BLACK PRINTING ON WHITE PAPER
PLASTIC EMBEDDED
SHINY SURFACE

Release Level: Released		ECM No: 711474	PDM Version Drawing 1.6 Model 1.2
Marked according to standard B 2103.10		Unless otherwise stated: SHARP EDGES BROKEN	Surface Roughness
Method/Size: NO /-		Scale: 7:10	
Material: SEE ABOVE		Surface Treatment: Untreated	
Version Designer: MVI	Version Date: 2015-03-03	Denomination: FUSE PANEL LABEL	
Information Security Class: Tetra Pak Restricted		-	
Hygienic Demands: No	Critical Part: No		

Tetra Pak®	Drawing No	Document Type	R3 Version	Page
	3386027	DRA	AA	1(1)

©Tetra Pak. All rights reserved; any copying, transmittal or disclosure subject to Tetra Pak's written approval.

Pro/ENGINEER - A3

©Tetra Pak. All rights reserved; any copying, transmittal or disclosure subject to Tetra Pak's written approval.

3386031 AA

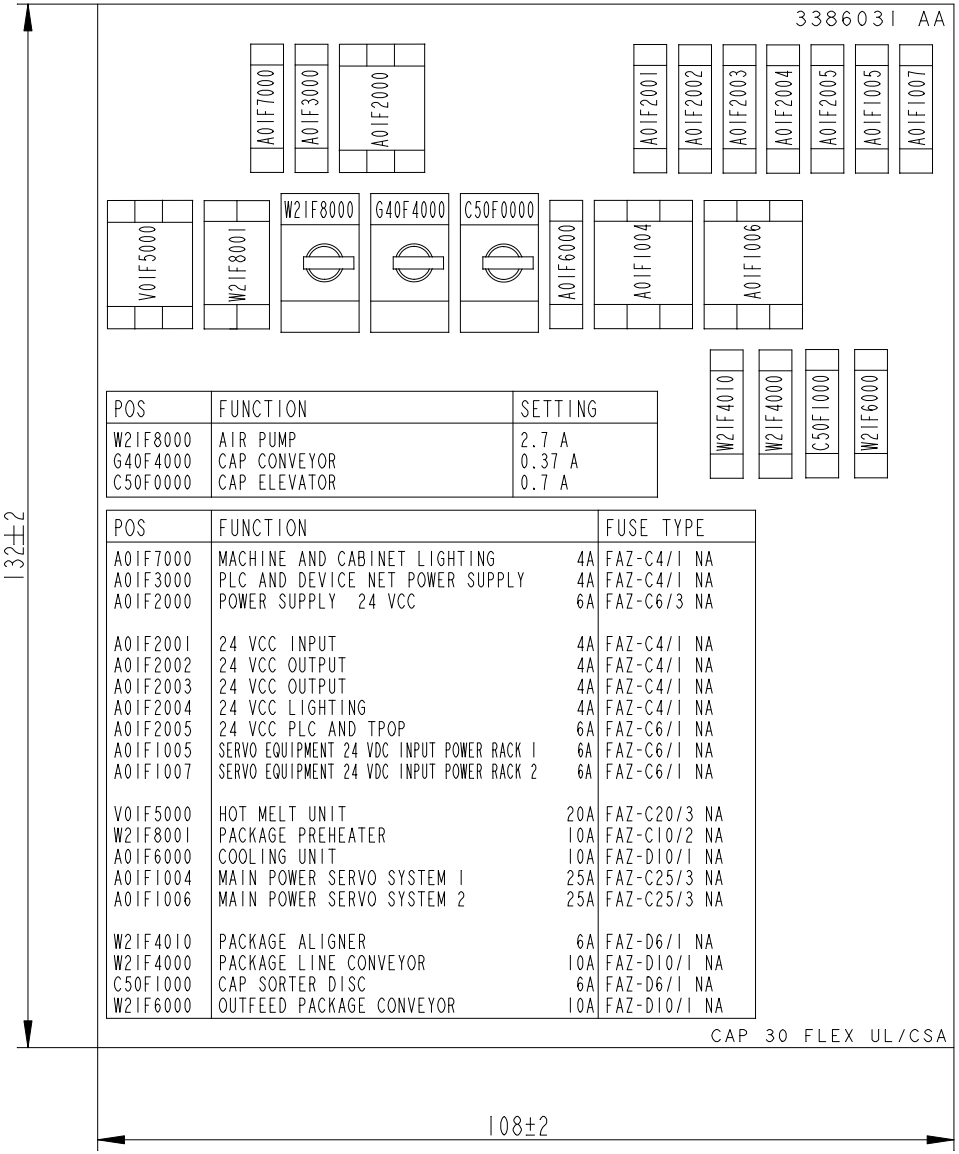

POS	FUNCTION	SETTING
W21F8000	AIR PUMP	2.7 A
G40F4000	CAP CONVEYOR	0.37 A
C50F0000	CAP ELEVATOR	0.7 A

POS	FUNCTION		FUSE TYPE
A01F7000	MACHINE AND CABINET LIGHTING	4A	FAZ-C4/1 NA
A01F3000	PLC AND DEVICE NET POWER SUPPLY	4A	FAZ-C4/1 NA
A01F2000	POWER SUPPLY 24 VCC	6A	FAZ-C6/3 NA
A01F2001	24 VCC INPUT	4A	FAZ-C4/1 NA
A01F2002	24 VCC OUTPUT	4A	FAZ-C4/1 NA
A01F2003	24 VCC OUTPUT	4A	FAZ-C4/1 NA
A01F2004	24 VCC LIGHTING	4A	FAZ-C4/1 NA
A01F2005	24 VCC PLC AND TPOP	6A	FAZ-C6/1 NA
A01F1005	SERVO EQUIPMENT 24 VDC INPUT POWER RACK 1	6A	FAZ-C6/1 NA
A01F1007	SERVO EQUIPMENT 24 VDC INPUT POWER RACK 2	6A	FAZ-C6/1 NA
V01F5000	HOT MELT UNIT	20A	FAZ-C20/3 NA
W21F8001	PACKAGE PREHEATER	10A	FAZ-C10/2 NA
A01F6000	COOLING UNIT	10A	FAZ-D10/1 NA
A01F1004	MAIN POWER SERVO SYSTEM 1	25A	FAZ-C25/3 NA
A01F1006	MAIN POWER SERVO SYSTEM 2	25A	FAZ-C25/3 NA
W21F4010	PACKAGE ALIGNER	6A	FAZ-D6/1 NA
W21F4000	PACKAGE LINE CONVEYOR	10A	FAZ-D10/1 NA
C50F1000	CAP SORTER DISC	6A	FAZ-D6/1 NA
W21F6000	OUTFEED PACKAGE CONVEYOR	10A	FAZ-D10/1 NA

CAP 30 FLEX UL/CSA

BLACK PRINTING ON WHITE PAPER
PLASTIC EMBEDDED
SHINY SURFACE

Release Level: Released		ECM No: 711474	PDM Version Drawing: 1.7 Model: 1.3
Marked according to standard B 2103.10		Unless otherwise stated: SHARP EDGES BROKEN	Surface Roughness:
Method/Size: NO /-		Scale: 7:10	
Material: SEE ABOVE		Surface Treatment: Untreated	
Version Designer: MVI	Version Date: 2015-10-21	Denomination: FUSE PANEL LABEL	
Information Security Class: Tetra Pak Restricted		-	
Hygienic Demands: No	Critical Part: No		

Tetra Pak®	Drawing No	Document Type	R3 Version	Page
	3386031	DRA	AA	1(1)

Pro/ENGINEER - A3

13 Program Documents

Description

The program document used for this machine is contained on an USB key. For installation instructions, see the MM.

Description 13-2

13.1 USB PEN DRIVE Contents 13-5

This page intentionally left blank

13.1 USB PEN DRIVE Contents

The USB Pen Drive contains the machine programs.

The application programs are as follows:

- PLC program (Rockwell)
- Safety PLC program (Jokab)
- Operator Panel program (Rockwell)
- Vision system
- Adhesive Detector
- PLMS Config.
- Insight (Cognex)
- Firmware
- Router Config.
- SNP Config.

This page intentionally left blank

Tetra Pak®

Label for 40 mm binder ***Note!*** *This page is generated* ***automatically.***

Cap 30/Flex
662950-0400 Issue 2016-10
Doc. No. EM-3413355-0102

Cap 30/Flex 1(2)
662950-0400 Issue 2016-10
Doc. No. EM-3413355-0102

Cap 30/Flex
662950-0400 Issue 2016-10
Doc. No. EM-3413355-0102

Cap 30/Flex 2(2)
662950-0400 Issue 2016-10
Doc. No. EM-3413355-0102

Cap 30/Flex
662950-0400 Issue 2016-10
Doc. No. EM-3413355-0102

Cap 30/Flex 1(2)
662950-0400 Issue 2016-10
Doc. No. EM-3413355-0102

Cap 30/Flex
662950-0400 Issue 2016-10
Doc. No. EM-3413355-0102

Cap 30/Flex 2(2)
662950-0400 Issue 2016-10
Doc. No. EM-3413355-0102

Cap 30/Flex
662950-0400 Issue 2016-10
Doc. No. EM-3413355-0102

Cap 30/Flex1(3)
662950-0400 Issue 2016-10
Doc. No. EM-3413355-0102

Cap 30/Flex
662950-0400 Issue 2016-10
Doc. No. EM-3413355-0102

Cap 30/Flex 2(3)
662950-0400 Issue 2016-10
Doc. No. EM-3413355-0102

Cap 30/Flex
662950-0400 Issue 2016-10
Doc. No. EM-3413355-0102

Cap 30/Flex 3(3)
662950-0400 Issue 2016-10
Doc. No. EM-3413355-0102

Cap 30/Flex
662950-0400 Issue 2016-10
Doc. No. EM-3413355-0102

Cap 30/Flex3(3)
662950-0400 Issue 2016-10
Doc. No. EM-3413355-0102

Label for 55 mm binder ***Note!*** *This page is generated* ***automatically.***

Cap 30/Flex
662950-0400 Issue 2016-10
Doc. No. EM-3413355-0102

Cap 30/Flex 1(2)
662950-0400 Issue 2016-10
Doc. No. EM-3413355-0102

Cap 30/Flex
662950-0400 Issue 2016-10
Doc. No. EM-3413355-0102

Cap 30/Flex 2(2)
662950-0400 Issue 2016-10
Doc. No. EM-3413355-0102

Cap 30/Flex
662950-0400 Issue 2016-10
Doc. No. EM-3413355-0102

Cap 30/Flex 1(3)
662950-0400 Issue 2016-10
Doc. No. EM-3413355-0102

Cap 30/Flex
662950-0400 Issue 2016-10
Doc. No. EM-3413355-0102

Cap 30/Flex 2(3)
662950-0400 Issue 2016-10
Doc. No. EM-3413355-0102

Cap 30/Flex
662950-0400 Issue 2016-10
Doc. No. EM-3413355-0102

Cap 30/Flex 3(3)
662950-0400 Issue 2016-10
Doc. No. EM-3413355-0102

Cap 30/Flex
662950-0400 Issue 2016-10
Doc. No. EM-3413355-0102

Cap 30/Flex 3(3)
662950-0400 Issue 2016-10
Doc. No. EM-3413355-0102

Cap 30/Flex
662950-0400 Issue 2016-10
Doc. No. EM-3413355-0102

Cap 30/Flex
662950-0400 Issue 2016-10
Doc. No. EM-3413355-0102

Cap 30/Flex
662950-0400 Issue 2016-10
Doc. No. EM-3413355-0102

Cap 30/Flex 1(3)
662950-0400 Issue 2016-10
Doc. No. EM-3413355-0102

Cap 30/Flex 1(2)
662950-0400 Issue 2016-10
Doc. No. EM-3413355-0102

Cap 30/Flex 2(3)
662950-0400 Issue 2016-10
Doc. No. EM-3413355-0102

Cap 30/Flex 2(2)
662950-0400 Issue 2016-10
Doc. No. EM-3413355-0102

Cap 30/Flex 3(3)
662950-0400 Issue 2016-10
Doc. No. EM-3413355-0102