IM

Installation Manual

Cap 30/Flex

662950-0400

ScrewCap

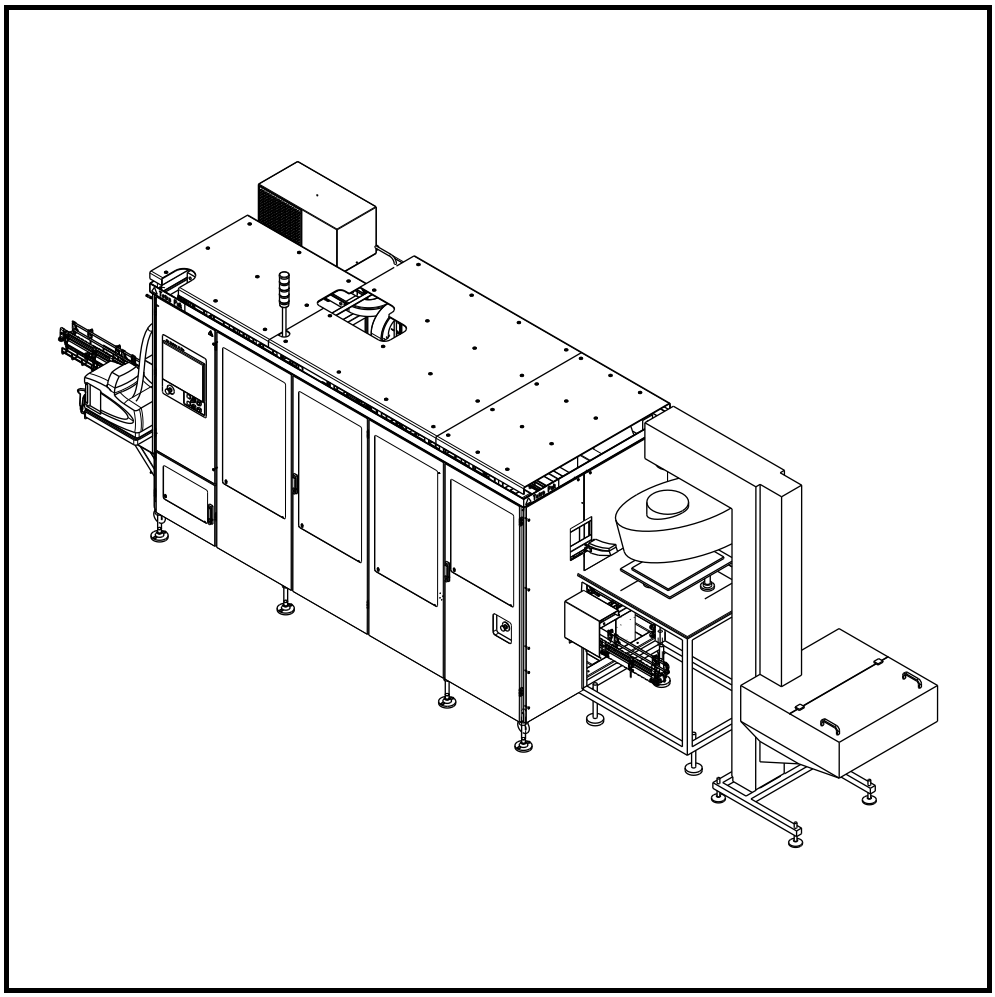

WARNING
Read and follow all safety precaution instructions throughout this document and on safety signs attached to this equipment.
Failure to follow all safety precaution instructions could result in death or serious injury.

Tetra Pak®

Doc. No. IM-3413352-0106

Copyright © 2018 Tetra Pak International S.A.

All rights reserved. No part of this document may be reproduced or copied in any form or by any means without written permission from Tetra Pak Packaging Solutions.

, Tetra Pak, and all other trademarks displayed in this document are the property of the Tetra Pak International SA. Tetra Pak Packaging Solutions together with Tetra Pak International SA form part of ‘the Tetra Pak Group’. The content of this document is in accordance with the design and construction of the machine or equipment at the time of publishing. The Tetra Pak Group reserves the right to introduce design modifications without prior notice.

The English language version of this document contains the original instructions. All other language versions are translations of the original instructions.

This document was produced and printed by:

Tetra Pak Packaging Solutions
Via Delfini 1
41123 Modena
Italy

Doc. No. IM-3413352-0106

Issue 2018-02

This document is valid for:

Serial No. / Machine No.
Year of Manufacture Sign.

Introduction
Safety Precautions
1 Technical Specification
2 Preparatory Requirements
3 Mechanical Completion
4 Commissioning
5 Performance Validation
6 Disassembly and Removal

IM
Installation Manual

Cap 30/Flex
662950-0400

Machine or equipment configurations that this document is valid for are described on the next page.

Doc. No. IM-3413352-0106
Issue 2018-02

Tetra Pak®
Tetra Pak Packaging Solutions

Valid for:

Name	Drawing Specification and Development Step	Additional Information
Cap 30/Flex ScrewCap	662950-0400	

Introduction

About the Introduction Chapter

This chapter contains basic information about this manual and the related Tetra Pak equipment.

About the Introduction Chapter 6

Abbreviations and Terminology 9

Manual Information 11

Delivered Manuals 11

CM 11

EM 11

IM 11

MM 11

OM 11

SPC 11

TeM 11

Page Layout 12

Page Numbering 13

Typographical Conventions 13

Symbols 14

Machine Introduction 15

Intended Use of the Equipment 15

Manufacturer 15

EU Declaration of Conformity 15

EU Declaration of Conformity 15

Identification 42

EAC Compliance 42

China RoHS2 Compliance 42

Machine Plate 42

Electrical Equipment Marking 43

Food Grade Lubricated Machine Plate 44

Delivered Design Label 45

Orientation 46

Hygiene 47

Packaging Material 47

How to Use This IM 48

Purpose of the IM 48

Installation Workflow 48

Assistance and Inquiries 49

Abbreviations and Terminology

Abbreviation/Terminology	Meaning	Translation
A	Ampere	Ampere
ANSI	American National Standards Institute	American National Standards Institute
B	Base (package shape)	Base (package shape)
CAP	Cap Applicator	Cap Applicator
CE	Conformité Européenne/European Conformity	Conformité Européenne/European Conformity
Cont'd	Continued	Continued
dB	Decibel	Decibel
DE	Distribution Equipment	Distribution Equipment
Deg.	Degree	Degree
Doc.	Document	Document
EAC	EurAsian Conformity	EurAsian Conformity
EEA	European Economic Area	European Economic Area
EM	Electrical Manual	Electrical Manual
EU	European Unit	
ft	Foot / feet	Foot / feet
Hz	Hertz	Hertz
kg	kilogram	kilogram
kPa	kilopascal	kilopascal
lbs	Pounds	Pounds
IM	Installation Manual	Installation Manual
in.	Inch	Inch
ISO	International Standards Organization	International Standards Organization
LED	Light-Emitting Diode	Light-Emitting Diode
LH	Left Hand	Left Hand
Max	Maximum	Maximum
m	Metre	Metre
mm	Millimetre	Millimetre
MM	Maintenance Manual	Maintenance Manual
min	Minimum	Minimum
N	Neutral	Neutral
Ni/min	The flow in litres per minute	The flow in litres per minute
No.	Number	Number
OE	Optional Equipment	Optional Equipment
OM	Operation Manual	Operation Manual
PE	Polyethylene	Polyethylene
PLC	Programmable Logic Controller	Programmable Logic Controller
PLMS	Packaging Line Monitoring System	Packaging Line Monitoring System
Pos	Position	Position

Abbreviation/Terminology	Meaning	Translation
psi	Pound per square inch	Pound per square inch
PVC	Polyvinyl chloride	Polyvinyl chloride
QuTI-P	Quality and Technical Issues Platform	Quality and Technical Issues Platform
RFID	Radio-Frequency Identification	Radio-Frequency Identification
RH	Right Hand	Right Hand
RoHS2	Restriction of Hazardous Substances	
S	Slim (package shape)	Slim (package shape)
sec.	Second	Second
SPC	Spare Parts Catalogue	Spare Parts Catalogue
Sq	Square (package shape)	Square (package shape)
TBA	Tetra Brik® Aseptic	Tetra Brik® Aseptic
TeM	Technical Manual	Technical Manual
TP	Tetra Pak	Tetra Pak
TPA	Tetra Prisma Aseptic	Tetra Prisma Aseptic
V	Volt	Volt

Manual Information

The Tetra Pak Group recommends reading all delivered manuals carefully. Make sure that the delivered manuals are available to personnel who operate or maintain the equipment.

It is important to keep this manual for the lifetime of the equipment and to pass the manual on to any subsequent holder or user.

Any item that is named specifically in this manual is to be considered a designated item for the equipment. Designated items are verified by the Tetra Pak Group for use with the equipment.

The Tetra Pak Group will not be held responsible for any damage, loss, injury, or death caused by not following the instructions in the manuals that accompany this equipment, or by a failure to use designated items specified in the manuals that accompany this equipment.

Delivered Manuals

Manuals delivered with this equipment:

CM

The Conversion Manual provides technicians with information on converting the equipment between different production modes.

EM

The Electrical Manual provides technicians with information about the equipment's electrical system.

IM

The Installation Manual provides technicians with information required to safely install the equipment.

MM

The Maintenance Manual provides technicians with information on maintaining the equipment.

OM

The Operation Manual provides the operator with information on handling and operating the equipment before, during, and after production.

SPC

The Spare Parts Catalogue provides the information necessary to order spare parts from the Tetra Pak Group.

TeM

The Technical Manual provides technicians with information which can be:

- information required to safely install the equipment
- information required to maintaining the equipment
- information about the machine's/equipment's electrical system
- information necessary to order spare parts from the Tetra Pak Group
- other technical information

Page Layout

Every main page in a manual contains a header and a footer. The page header contains the chapter name (1) and the section name (2). The page footer contains the page number (3), and the document number (4). See also the Page Numbering section.

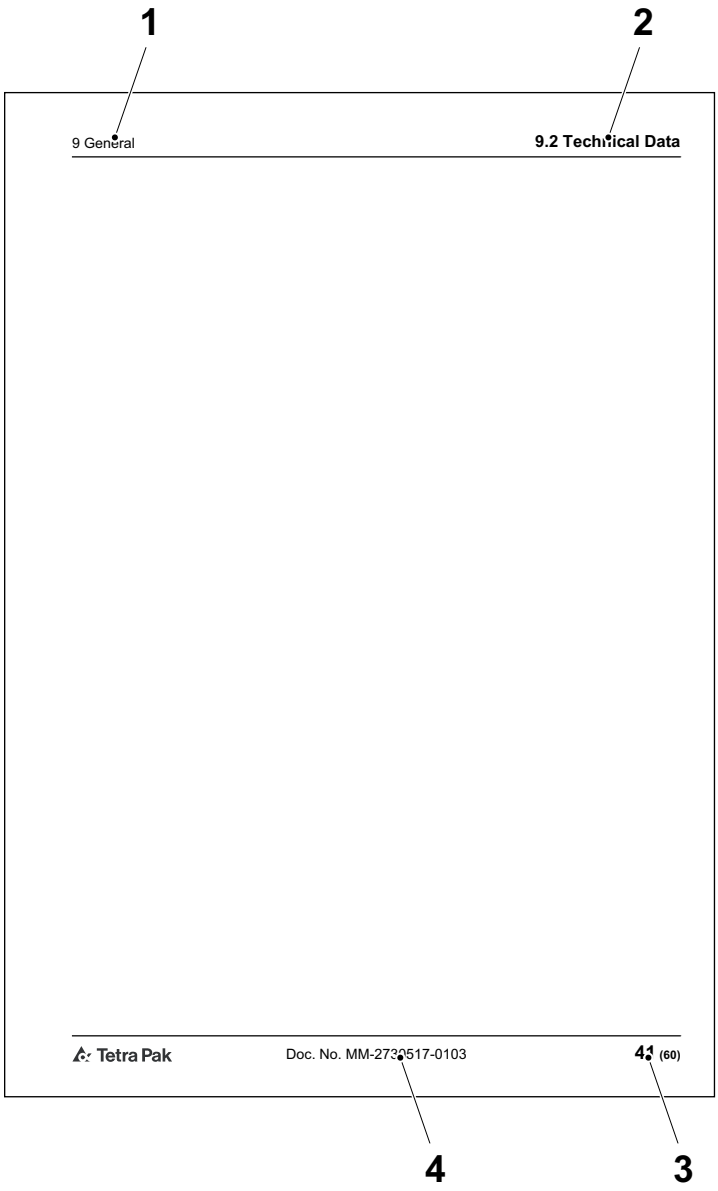

1 Chapter name
2 Section name
3 Page number
4 Document number

Page Numbering

A page number has two parts:

- consecutive page number (1)
- total number of pages (2) in user manual

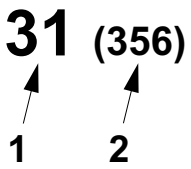

1 Consecutive page number
2 Total number of pages

Note! The letters UP (3) may appear before the consecutive page number (4) if the user manual includes update pages. The consecutive page number (4) and the total number of pages (5) of update pages do not follow the existing sequential page numbering of the user manual.

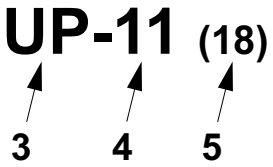

3 UP
4 Consecutive page number
5 Total number of pages

Typographical Conventions

Physical buttons on the operator panel, emergency stop devices, program steps, and program tasks are printed in CAPITAL LETTERS.

Names of buttons, entry fields, menu items, or other objects that allow the user to control the user interface are printed in `Courier`.

Information that is displayed on the user interface, is to be repeated in the user manual, but is not used to control the user interface, is printed in `COURIER CAPITAL LETTERS`.

Cross-references are underlined.

Symbols

Symbols used in illustrations.

	A pointer arrow indicates the position of an object.
	A zoom arrow indicates that an object view is enlarged. The arrow points towards the enlarged view of the object.
	A rotation movement arrow indicates rotational movement of an object. The arrow points in the direction of rotation.
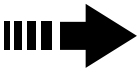	A straight movement arrow indicates movement of an object. The arrow points in the direction of movement.

Machine Introduction

Intended Use of the Equipment

The intended use of this Tetra Pak equipment is to apply a closure onto a package.

Tetra Brik Aseptic Slim packages with SlimCaps or ReCaps must have opening tabs. The opening tabs are applied by a PullTab unit which is incorporated in to the filling machine. Packages with StreamCaps must have pre-laminated holes.

All other use is prohibited. Tetra Pak will not be held responsible for injury or damage if the equipment is used for any other purpose than the intended use described above.

Manufacturer

This Tetra Pak equipment has been manufactured by

Tetra Pak Packaging Solutions
Via Delfini 1
41123 Modena
Italy

EU Declaration of Conformity

A copy of the EU Declaration of Conformity can be found below. The signed EU Declaration of Conformity is delivered separately with the equipment.

EU Declaration of Conformity

This page intentionally left blank

EU Declaration of Conformity

Declaration for the following machine/ equipment/ complex installation:

CAP 30/Flex (662950-0400)
75971/xxxxx

Manufactured by
Tetra Pak Packaging Solutions S.p.A.
Via Delfini 1
41123 Modena
Italy

This declaration of conformity is issued under the sole responsibility of the manufacturer.

The object of the declaration is in conformity with the relevant Union harmonisation legislation:

X	2006/42/EC Machinery
X	2014/30/EU Electromagnetic compatibility (EMC)
	2014/35/EU Low Voltage

and is in conformity with the following harmonized standards:

EN ISO 12100:2010
EN 61000-6-2:2005+AC:2005
EN 61000-6-4:2007+A1:2011
EN 60204-1:2006+A1:2009

The following person is authorised to compile the technical file:

Tetra Pak Packaging Solutions S.p.A.
Via Delfini 1
41123 Modena
Italy

Modena 24/11/2017

Mikael Wahlgren
Director Operations DSO CE

The English language version of this document is the original version. All other language versions are translations of the original version.

English

EU-Konformitätserklärung

Erklärung für die folgende Maschine/ Ausrüstung/ komplexe Anlage:

CAP 30/Flex (662950-0400)
75971/xxxxx

Hergestellt von:
Tetra Pak Packaging Solutions S.p.A.
Via Delfini 1
41123 Modena
Italy

Die alleinige Verantwortung für die Ausstellung dieser Konformitätserklärung trägt der Hersteller.

Der Gegenstand der Erklärung erfüllt die einschlägigen Harmonisierungsrechtsvorschriften der Gemeinschaft:

[X] 2006/42/EC Maschine

[X] 2014/30/EU Elektromagnetische Verträglichkeit (EMV)

[ ] 2014/35/EU Niederspannung

und steht in Einklang mit den folgenden harmonisierten Normen:

EN ISO 12100:2010
EN 61000-6-2:2005+AC:2005
EN 61000-6-4:2007+A1:2011
EN 60204-1:2006+A1:2009

Folgender Person ist es gestattet, die technischen Unterlagen zusammenzustellen:

Tetra Pak Packaging Solutions S.p.A.
Via Delfini 1
41123 Modena
Italy

Modena 24/11/2017

Mikael Wahlgren
Director Operations DSO CE

Die englische Version dieses Dokuments ist die Originalversion. Alle anderssprachigen Versionen sind Übersetzungen der Originalversion.

Deutsch/German

Template: 160113 EU Declaration of Conformity, KA 2157.20

Internal

EU-overensstemmelseserklæring

Erklæring for følgende maskine / udstyr / komplekse anlæg:

CAP 30/Flex (662950-0400)
75971/xxxxx

Fremstillet af
Tetra Pak Packaging Solutions S.p.A.
Via Delfini 1
41123 Modena
Italy

Denne overensstemmelseserklæring er udstedt under producentens eneansvar.

Erklæringens genstand er i overensstemmelse med den relevante EU-harmoniseringslovgivning:

X	2006/42/EC Maskineri
X	2014/30/EU Elektromagnetisk kompatibilitet (EMK)
	2014/35/EU Lavspænding

og i overensstemmelse med følgende harmoniserede standarder:

EN ISO 12100:2010
EN 61000-6-2:2005+AC:2005
EN 61000-6-4:2007+A1:2011
EN 60204-1:2006+A1:2009

Følgende person er authoriseret til at udarbejde den tekniske fil:

Tetra Pak Packaging Solutions S.p.A.
Via Delfini 1
41123 Modena
Italy

Modena 24/11/2017

Mikael Wahlgren
Director Operations DSO CE

Den engelske version af dette dokument er den oprindelige version. Alle versioner på andre sprog er oversættelser af den oprindelige version.

Dansk/Danish

Declaración de conformidad con la UE

Declaración para la siguiente instalación de máquina / equipo / complejo:

CAP 30/Flex (662950-0400)
75971/xxxxx

Fabricado por
Tetra Pak Packaging Solutions S.p.A.
Via Delfini 1
41123 Modena
Italy

Esta declaración de conformidad se expide bajo la responsabilidad exclusiva del fabricante.

El objeto de la declaración está en conformidad con la legislación armonizada relevante de la Unión:

[X] 2006/42/EC máquinas

[X] Directiva 2014/30/UE sobre compatibilidad electromagnética

[ ] Directiva 2014/35/UE sobre límites de tensión

y está en conformidad con los siguientes estándares armonizados:

EN ISO 12100:2010
EN 61000-6-2:2005+AC:2005
EN 61000-6-4:2007+A1:2011
EN 60204-1:2006+A1:2009

La persona indicada a continuación está autorizada para compilar el archivo técnico:

Tetra Pak Packaging Solutions S.p.A.
Via Delfini 1
41123 Modena
Italy

Modena 24/11/2017

Mikael Wahlgren
Director Operations DSO CE

La versión en inglés de este documento es la versión original. Todas las demás versiones de otros idiomas son traducciones de la versión original.

EU-yhdenmukaisuusvakuutus

Ilmoitus koskien seuraavan konetta/ laitetta/ laitteistokokonaisuutta:

CAP 30/Flex (662950-0400)
75971/xxxxx

Valmistaja
Tetra Pak Packaging Solutions S.p.A.
Via Delfini 1
41123 Modena
Italy

Tämä yhdenmukaisuusvakuutus on myönnetty ainoastaan valmistajan vastuulla.

Vakuutuksen kohde on yhdenmukaisuus vastaavan harmonisointia koskevan lainsäädännön kanssa:

X	2006/42/EY Kone
X	2014/30/EU Sähkömagneettinen yhteensopivuus (EMC)
	2014/35/EU pienjännite

ja se vastaa seuraavia harmonisoituja standardeja:

EN ISO 12100:2010
EN 61000-6-2:2005+AC:2005
EN 61000-6-4:2007+A1:2011
EN 60204-1:2006+A1:2009

Seuraava henkilö on valtuutettu täyttämään teknisen tiedoston:

Tetra Pak Packaging Solutions S.p.A.
Via Delfini 1
41123 Modena
Italy

Modena 24/11/2017

Mikael Wahlgren
Director Operations DSO CE

Englanninkielinen versio tästä asiakirjasta on alkuperäinen versio. Kaikki muut kieliversiot ovat käännöksiä alkuperäistestä versiosta.

Suomi/Finnish

Template: 160113 EU Declaration of Conformity, KA 2157.20

Internal

Déclaration de Conformité UE

Déclaration relative à la machine/ équipement/ installation complexe suivant(e) :

CAP 30/Flex (662950-0400)
75971/xxxxx

Fabriqué par
Tetra Pak Packaging Solutions S.p.A.
Via Delfini 1
41123 Modena
Italy

La présente déclaration de conformité est délivrée sous la seule responsabilité du fabricant.

L'objet de la déclaration est en conformité avec la législation d'harmonisation de l'Union prévue par les directives :

[X] 2006/42/EC Machine

[X] 2014/30/UE Compatibilité Électromagnétique (CEM)

[ ] 2014/35/UE Basse Tension

et est en conformité avec les normes harmonisées suivantes :

EN ISO 12100:2010
EN 61000-6-2:2005+AC:2005
EN 61000-6-4:2007+A1:2011
EN 60204-1:2006+A1:2009

La personne suivante est autorisée à élaborer le dossier technique :

Tetra Pak Packaging Solutions S.p.A.
Via Delfini 1
41123 Modena
Italy

Modena 24/11/2017

Mikael Wahlgren
Director Operations DSO CE

La version en langue anglaise du présent document est la version originale. Tous les exemplaires en d'autres langues sont des traductions de la version originale.

Français / French

Template: 160113 EU Declaration of Conformity, KA 2157.20

Internal

Δήλωση συμμόρφωσης ΕΕ

Δήλωση για την εγκατάσταση της ακόλουθης μηχανής/ εξοπλισμού/ συγκροτήματος:

CAP 30/Flex (662950-0400)
75971/xxxxx

Κατασκευάστηκε από
Tetra Pak Packaging Solutions S.p.A.
Via Delfini 1
41123 Modena
Italy

Η παρούσα δήλωση συμμόρφωσης εκδίδεται με αποκλειστική ευθύνη του κατασκευαστή.

Ο στόχος της δήλωσης είναι σύμφωνος προς τη σχετική ενωσιακή νομοθεσία εναρμόνισης:

[X] 2006/42/ΕΚ Μηχανημάτων

[X] 2014/30/ΕΕ Ηλεκτρομαγνητική συμβατότητα (ΗΜΣ)

[ ] 2014/35/ΕΕ Χαμηλή τάση

και είναι σύμφωνη με τα ακόλουθα εναρμονισμένα πρότυπα:

EN ISO 12100:2010
EN 61000-6-2:2005+AC:2005
EN 61000-6-4:2007+A1:2011
EN 60204-1:2006+A1:2009

Το παρακάτω άτομο είναι εξουσιοδοτημένο να συντάξει τον τεχνικό φάκελο:

Tetra Pak Packaging Solutions S.p.A.
Via Delfini 1
41123 Modena
Italy

Modena 24/11/2017

Mikael Wahlgren
Director Operations DSO CE

Η έκδοση αυτού του εγγράφου στην αγγλική γλώσσα είναι η πρωτότυπη έκδοση. Όλες οι εκδόσεις των άλλων γλωσσών είναι μεταφράσεις της πρωτότυπης έκδοσης.

Ελληνικά/Greek

EU izjava o sukladnosti

Izjava za sljedeći stroj / opremu / ugradnju složenog stroja

CAP 30/Flex (662950-0400)

75971/xxxxx

Proizvođač
Tetra Pak Packaging Solutions S.p.A.
Via Delfini 1
41123 Modena
Italy

Za izdavanje EU izjave o sukladnosti odgovoran je isključivo proizvođač.

Predmet izjave u skladu je s mjerodavnim zakonodavstvom Unije o usklađivanju:

[X] 2006/42/EC Strojevi

[X] 2014/30/EU o elektromagnetskoj kompatibilnosti (EMC)

[ ] 2014/35/EU o niskom naponu

te je u skladu sa sljedećim usklađenim normama:

EN ISO 12100:2010
EN 61000-6-2:2005+AC:2005
EN 61000-6-4:2007+A1:2011
EN 60204-1:2006+A1:2009

Sljedeća osoba ovlaštena je za izradu tehničke mape:

Tetra Pak Packaging Solutions S.p.A.
Via Delfini 1
41123 Modena
Italy

Modena 24/11/2017

Mikael Wahlgren
Director Operations DSO CE

Verzija dokumenta na engleskom jeziku izvorna je verzija. Sve ostale verzije prijevodi su izvorne verzije.

Hrvatski/Croatian

Template: 160113 EU Declaration of Conformity, KA 2157.20

Internal

Conformiteitsverklaring EU

Verklaring voor de volgende machine/ uitrusting/ complete installatie:

CAP 30/Flex (662950-0400)
75971/xxxxx

Vervaardigd door
Tetra Pak Packaging Solutions S.p.A.
Via Delfini 1
41123 Modena
Italy

Deze verklaring van overeenstemming wordt verstrekt onder volledige verantwoordelijkheid van de fabrikant.

Het doel van de verklaring is in overeenstemming met de relevante harmonisatiewetgeving van de Unie:

[X] 2006/42/EG Machine(s)

[X] 2014/30/EU Elektromagnetische compatibiliteit (EMC)

[ ] 2014/35/EU Laagspanning

en is in overeenstemming met de volgende geharmoniseerde normen:

EN ISO 12100:2010
EN 61000-6-2:2005+AC:2005
EN 61000-6-4:2007+A1:2011
EN 60204-1:2006+A1:2009

De volgende persoon heeft toestemming om het technische dossier samen te stellen:

Tetra Pak Packaging Solutions S.p.A.
Via Delfini 1
41123 Modena
Italy

Modena 24/11/2017

Mikael Wahlgren
Director Operations DSO CE

De Engels versie van dit document is de originele versie. Alle andere versies zijn vertalingen van de originele versie.

EU-samsvarserklæring

Erklæring for følgende maskin/ utstyr/ komplekst anlegg:

CAP 30/Flex (662950-0400)
75971/xxxxx

Produsert av
Tetra Pak Packaging Solutions S.p.A.
Via Delfini 1
41123 Modena
Italy

Denne samsvarserklæringen er utstedt under produsentens eneansvar.

Formålet med erklæringen er i samsvar med den aktuelle harmoniserte lovgivning for fagforening:

[X] 2006/42/EF Maskiner

[X] 2014/30/EF elektromagnetisk kompatibilitet (EMC)

[ ] 2014/35/EF lavspenning

og er i samsvar med følgende harmoniserte standarder:

EN ISO 12100:2010
EN 61000-6-2:2005+AC:2005
EN 61000-6-4:2007+A1:2011
EN 60204-1:2006+A1:2009

Følgende person er autorisert til å kompilere den tekniske filen:

Tetra Pak Packaging Solutions S.p.A.
Via Delfini 1
41123 Modena
Italy

Modena 24/11/2017

Mikael Wahlgren
Director Operations DSO CE

Den engelskspråklige versjonen av dette dokumentet er den originale versjonen.
Alle andre språkversjoner er oversettelser av den originale versjonen.

Norsk/Norwegian

Template: 160113 EU Declaration of Conformity, KA 2157.20

Declaração de Conformidade CE

Declaração para a seguinte máquina/ equipamento/ instalação complexa:

CAP 30/Flex (662950-0400)
75971/xxxxx

Produzida por
Tetra Pak Packaging Solutions S.p.A.
Via Delfini 1
41123 Modena
Italy

Esta declaração de conformidade é emitida sob a exclusiva responsabilidade do fabricante.

O objeto da declaração está em conformidade com a respetiva harmonização da legislação da União:

X	2006/42/CE Máquinas
X	2014/30/UE Compatibilidade eletromagnética (CEM)
	2014/35/UE Baixa Tensão

e está em conformidade com as seguintes normas harmonizadas:

EN ISO 12100:2010
EN 61000-6-2:2005+AC:2005
EN 61000-6-4:2007+A1:2011
EN 60204-1:2006+A1:2009

A pessoa abaixo está autorizada a compilar o ficheiro técnico:

Tetra Pak Packaging Solutions S.p.A.
Via Delfini 1
41123 Modena
Italy

Modena 24/11/2017

Mikael Wahlgren
Director Operations DSO CE

A versão em língua inglesa deste documento é a versão original. Todas as outras versões de línguas são traduções da versão original.

Português/Portuguese
Template: 160113 EU Declaration of Conformity, KA 2157.20

Samræmisyfirlýsing ESB

Yfirlýsing fyrir uppsetningu á eftirfarandi vél/ búnaði/ samstæðu:

CAP 30/Flex (662950-0400)
75971/xxxxx

Framleidd af
Tetra Pak Packaging Solutions S.p.A.
Via Delfini 1
41123 Modena
Italy

Þessi samræmisyfirlýsing er gefin út á eigin ábyrgð framleiðanda.

Viðfang yfirlýsingarinnar uppfyllir viðeigandi samhæfingarlöggjöf ESB:

[X] 2006/42/EB Vélbúnaður

[X] 2014/30/ESB rafsegulsviðssamhæfi (EMC)

[ ] 2014/35/ESB lágspenna

og uppfyllir eftirfarandi samhæfða staðla:

EN ISO 12100:2010
EN 61000-6-2:2005+AC:2005
EN 61000-6-4:2007+A1:2011
EN 60204-1:2006+A1:2009

Eftirfarandi einstaklingur hefur heimild til að taka saman tækniskjalið:

Tetra Pak Packaging Solutions S.p.A.
Via Delfini 1
41123 Modena
Italy

Modena 24/11/2017

Mikael Wahlgren
Director Operations DSO CE

Enska útgáfa skjalsins er frumútgáfan. Öll önnur tungumál eru þýðingar á frumútgáfunni.

Íslenska/Icelandic

Template: 160113 EU Declaration of Conformity, KA 2157.20

Dichiarazione UE di conformità

Dichiarazione relativa alla seguente macchina/ apparecchiatura/ impianto complesso:

CAP 30/Flex (662950-0400)
75971/xxxxx

Fabbricante:
Tetra Pak Packaging Solutions S.p.A.
Via Delfini 1
41123 Modena
Italy

La presente dichiarazione di conformità è rilasciata sotto l'esclusiva responsabilità del fabbricante.

L'oggetto della dichiarazione è conforme alla pertinente legislazione UE di armonizzazione:

[X] 2006/42/EC Macchinari

[X] 2014/30/UE Compatibilità elettromagnetica (EMC)

[ ] 2014/35/UE Bassa Tensione

ed è conforme alle seguenti norme armonizzate:

EN ISO 12100:2010
EN 61000-6-2:2005+AC:2005
EN 61000-6-4:2007+A1:2011
EN 60204-1:2006+A1:2009

La seguente persona è autorizzata a redigere il file tecnico:

Tetra Pak Packaging Solutions S.p.A.
Via Delfini 1
41123 Modena
Italy

Modena 24/11/2017

Mikael Wahlgren
Director Operations DSO CE

La versione in lingua inglese del presente documento costituisce la versione originale.
Tutte le versioni nelle altre lingue sono traduzioni dell'originale.

EU-försäkran om överensstämmelse

Försäkran gällande följande maskin/ utrustning/ komplexa anläggning:

CAP 30/Flex (662950-0400)
75971/xxxxx

Tillverkare
Tetra Pak Packaging Solutions S.p.A.
Via Delfini 1
41123 Modena
Italy

Denna försäkran om överensstämmelse har utfärdats endast på tillverkarens ansvar.

Föremålet för försäkran ovan överensstämmer med den relevanta harmoniserade unionslagstiftningen:

[X] 2006/42/EG, maskiner

[X] 2014/30/EU Elektromagnetisk kompatibilitet (EMC)

[ ] 2014/35/EU lågspänning

och är i överensstämmelse med följande harmoniserade standarder:

EN ISO 12100:2010
EN 61000-6-2:2005+AC:2005
EN 61000-6-4:2007+A1:2011
EN 60204-1:2006+A1:2009

Följande person är behörig att ställa samman den tekniska dokumentationen:

Tetra Pak Packaging Solutions S.p.A.
Via Delfini 1
41123 Modena
Italy

Modena 24/11/2017

Mikael Wahlgren

Director Operations DSO CE

Den engelska språkversionen av detta dokument är originalversionen. Alla andra språkversioner är översättningar av den ursprungliga versonen.

Svenska/Swedish

Prohlášení EU o shodě

Prohlášení pro následující stroj / zařízení / komplexní instalaci:

CAP 30/Flex (662950-0400)
75971/xxxxx

Vyrobil
Tetra Pak Packaging Solutions S.p.A.
Via Delfini 1
41123 Modena
Italy

Toto prohlášení o shodě se vydává s plnou zodpovědností výrobce.

Předmět prohlášení je v souladu s harmonizovanou legislativou EU:

X	2006/42/EC Strojní zařízení
X	Směrnice 2014/30/EU o elektromagnetické kompatibilitě (EMC)
	Směrnice 2014/35/EU o elektrických zařízeních určených pro používání v určitých mezích napětí

a je v souladu s následujícími harmonizovanými normami:

EN ISO 12100:2010
EN 61000-6-2:2005+AC:2005
EN 61000-6-4:2007+A1:2011
EN 60204-1:2006+A1:2009

Ke zpracování technických souborů je oprávněna následující osoba:

Tetra Pak Packaging Solutions S.p.A.
Via Delfini 1
41123 Modena
Italy

Modena 24/11/2017

Mikael Wahlgren
Director Operations DSO CE

Původní verze tohoto dokumentu je v anglickém jazyce. Všechny další jazykové verze jsou překlady původní verze.

EL-i vastavusdeklaratsioon

Deklaratsioon järgmise masina/ seadme/ kompleksi paigaldamiseks:

CAP 30/Flex (662950-0400)
75971/xxxxx

Tootja
Tetra Pak Packaging Solutions S.p.A.
Via Delfini 1
41123 Modena
Italy

Tootja vastutab ainuisikuliselt selle vastavusdeklaratsiooni väljastamise eest.

Deklaratsiooni objekt vastab asjakohastele ühtlustamist puudutavatele Euroopa Liidu õigusaktidele

[X] 2006/42/EC Masinad

[X] Direktiiv 2014/30/EL elektromagnetilise ühilduvuse (EMC) kohta

[ ] Direktiiv 2014/35/EL madalpinge kohta

ja vastab järgmistele ühtlustatud standarditele:

EN ISO 12100:2010
EN 61000-6-2:2005+AC:2005
EN 61000-6-4:2007+A1:2011
EN 60204-1:2006+A1:2009

Tehnilise faili koostamiseks on luba järgmisel isikul:

Tetra Pak Packaging Solutions S.p.A.
Via Delfini 1
41123 Modena
Italy

Modena 24/11/2017

Mikael Wahlgren
Director Operations DSO CE

Originaaldokument on inglise keeles. Kõik muukeelsed versioonid on originaalversiooni tõlked.

EU megfelelőségi nyilatkozat

A következő gépre/ felszerelésre/ komplex berendezésre vonatkozó nyilatkozat:

CAP 30/Flex (662950-0400)
75971/xxxxx

Gyártó:
Tetra Pak Packaging Solutions S.p.A.
Via Delfini 1
41123 Modena
Italy

Jelen nyilatkozat kiadása a gyártó kizárólagos felelősségén alapul.

A nyilatkozat tárgya a releváns uniós harmonizációs szabályozásoknak való megfelelés:

X	2006/42/EC Gépek
X	2014/30/EU Elektromágneses összeférhetőségre (EMC) vonatkozó irányelv
	2014/35/EU Alacsony feszültség direktíva

és megfelel az alábbi harmonizált szabványoknak:

EN ISO 12100:2010
EN 61000-6-2:2005+AC:2005
EN 61000-6-4:2007+A1:2011
EN 60204-1:2006+A1:2009

A műszaki dokumentum összeállítására jogosult személy:

Tetra Pak Packaging Solutions S.p.A.
Via Delfini 1
41123 Modena
Italy

Modena 24/11/2017

Mikael Wahlgren
Director Operations DSO CE

Jelen dokumentum angol változata tekintendő eredeti változatnak. Az összes egyéb nyelvű változat az eredeti fordításának tekintendő.

ES atbilstības deklarācija

Deklarācija ir izsniegta par šo mašīnu/ aprīkojumu/ sarežģīto instalāciju:

CAP 30/Flex (662950-0400)
75971/xxxxx

Ražotājs:
Tetra Pak Packaging Solutions S.p.A.
Via Delfini 1
41123 Modena
Italy

Šī ES atbilstības deklarācija ir izdota vienīgi uz šāda ražotāja atbildību.

Šajā deklarācijā aprakstītais priekšmets atbilst attiecīgajiem Savienības saskaņotajiem tiesību aktiem:

[X] 2006/42/EK Mašīnas

[X] Elektromagnētiskās savietojamības (EMS) direktīva 2014/30/ES

[ ] Zemsprieguma direktīva 2014/35/ES

un atbilst šiem saskaņotajiem standartiem:

EN ISO 12100:2010
EN 61000-6-2:2005+AC:2005
EN 61000-6-4:2007+A1:2011
EN 60204-1:2006+A1:2009

Sastādīt tehnisko lietu ir pilnvarota šāda persona:

Tetra Pak Packaging Solutions S.p.A.
Via Delfini 1
41123 Modena
Italy

Modena 24/11/2017

Mikael Wahlgren
Director Operations DSO CE

Šī dokumenta versija angļu valodā ir oriģinālā versija. Visu pārējo valodu versijas ir oriģinālās versijas tulkojumi.

Deklaracja zgodności UE

Deklaracja dla następującej maszyny/ wyposażenia/ instalacji złożonej:

CAP 30/Flex (662950-0400)
75971/xxxxx

Wyprodukowane przez
Tetra Pak Packaging Solutions S.p.A.
Via Delfini 1
41123 Modena
Italy

Wyłączną odpowiedzialność za niniejszą deklarację zgodności ponosi producent.

Przedmiotem deklaracji jest zgodność z wymienionymi poniżej przepisami harmonizacyjnymi UE:

[X] 2006/42/WE Maszyny

[X] Dyrektywa dotycząca zgodności elektromagnetycznej (EMC) 2014/30/UE

[ ] Dyrektywa niskonapięciowa 2014/35/UE

oraz jest zgodne z następującymi zharmonizowanymi normami:

EN ISO 12100:2010
EN 61000-6-2:2005+AC:2005
EN 61000-6-4:2007+A1:2011
EN 60204-1:2006+A1:2009

Następująca osoba jest upoważniona do opracowania pliku technicznego:

Tetra Pak Packaging Solutions S.p.A.
Via Delfini 1
41123 Modena
Italy

Modena 24/11/2017

Mikael Wahlgren
Director Operations DSO CE

Angielska wersja niniejszego dokumentu jest oryginalną wersją językową. Wszystkie pozostałe wersje językowe są tłumaczeniami wersji oryginalnej.

EB atitikties deklaracija

Toliau nurodytų mašinų / įrangos / kompleksų montavimo deklaracija:

CAP 30/Flex (662950-0400)

75971/xxxxx

Gamintojas
Tetra Pak Packaging Solutions S.p.A.
Via Delfini 1
41123 Modena
Italy

Ši atitikties deklaracija išduota tik gamintojo atsakomybe.

Deklaracijos objektas atitinka susijusius derinamuosius Sąjungos teisės aktus:

[X] 2006/42/EB mašinų direktyva

[X] 2014/30/ES dėl elektromagnetinio suderinamumo (EMS)

[ ] 2014/35/ES dėl žemos įtampo

ir atitinka šiuos darniuosius standartus:

EN ISO 12100:2010
EN 61000-6-2:2005+AC:2005
EN 61000-6-4:2007+A1:2011
EN 60204-1:2006+A1:2009

Techninį failą sudaryti įgaliotas šis asmuo:

Tetra Pak Packaging Solutions S.p.A.
Via Delfini 1
41123 Modena
Italy

Modena 24/11/2017

Mikael Wahlgren

Director Operations DSO CE

Šio dokumento versija anglų kalba yra originali versija. Versijos visomis kitomis kalbomis yra originalios versijos vertimai.

ЕС Декларация за съответствие

Декларация за следната машина/ оборудване/ комплексна инсталация:
CAP 30/Flex (662950-0400)
75971/xxxxx

Произведена от
Tetra Pak Packaging Solutions S.p.A.
Via Delfini 1
41123 Modena
Italy

Настоящата декларация за съответствие е издадена на пълната отговорност на производителя.

Предметът на декларацията е в съответствие с приложимото законодателство относно хармонизация на Съюза:

X	2006/42/EC Машини
X	2014/30/EC Електромагнитна съвместимост (EMC)
	2014/35/EC относно ниското напрежение

и е в съответствие със следните хармонизирани стандарти:

EN ISO 12100:2010
EN 61000-6-2:2005+AC:2005
EN 61000-6-4:2007+A1:2011
EN 60204-1:2006+A1:2009

Следното лице е оторизирано да попълни техническия файл:

Tetra Pak Packaging Solutions S.p.A.
Via Delfini 1
41123 Modena
Italy

Modena 24/11/2017

Mikael Wahlgren
Director Operations DSO CE

Версията на английски език е оригиналната версия на този документ. Всички останали версии на други езици са преводи на оригинала.

Declarație de Conformitate UE

Declarație pentru următoarea mașină/ echipament/ instalație complexă:

CAP 30/Flex (662950-0400)
75971/xxxxx

Produs de
Tetra Pak Packaging Solutions S.p.A.
Via Delfini 1
41123 Modena
Italy

Prezenta Declarație de Conformitate este emisă pe propria răspundere a producătorului.

Obiectul Declarației este în conformitate cu legislația armonizată corespunzătoare a Uniunii:

X	2006/42/EC Utilaje
X	2014/30/UE Compatibilitate electromagnetică (CEM)
	2014/35/UE Tensiune joasă

și este în conformitate cu următoarele standarde armonizate:

EN ISO 12100:2010
EN 61000-6-2:2005+AC:2005
EN 61000-6-4:2007+A1:2011
EN 60204-1:2006+A1:2009

Următoarea persoană este autorizată să redacteze dosarul tehnic:

Tetra Pak Packaging Solutions S.p.A.
Via Delfini 1
41123 Modena
Italy

Modena 24/11/2017

Mikael Wahlgren
Director Operations DSO CE

Versiunea în limba engleză a acestui document este versiunea originală. Toate versiunile în alte limbi sunt traduceri ale versiunii originale.

Vyhlásenie o zhode EÚ

Vyhlásenie pre nasledujúci stroj/ zariadenie/ komplexnú inštaláciu:

CAP 30/Flex (662950-0400)
75971/xxxxx

Výrobca
Tetra Pak Packaging Solutions S.p.A.
Via Delfini 1
41123 Modena
Italy

Toto vyhlásenie o zhode sa vydáva na výhradnú zodpovednosť výrobcu.

Predmet tohto vyhlásenia je v súlade s príslušnými harmonizačnými právnymi predpismi únie:

[X] 2006/42/ES Strojárska

[X] Smernica 2014/30/ EÚ o elektromagnetickej kompatibilite (EMC)

[ ] 2014/35/EÚ o nízkom napätí

a je v súlade s nasledujúcimi harmonizovanými normami:

EN ISO 12100:2010
EN 61000-6-2:2005+AC:2005
EN 61000-6-4:2007+A1:2011
EN 60204-1:2006+A1:2009

Nasledujúca osoba je oprávnená zostavovať súbor technickej dokumentácie:

Tetra Pak Packaging Solutions S.p.A.
Via Delfini 1
41123 Modena
Italy

Modena 24/11/2017

Mikael Wahlgren
Director Operations DSO CE

Anglická verzia tohto dokumentu je originálna verzia. Všetky ostatné jazykové verzie sú prekladmi pôvodnej verzie.

Izjava EU o skladnosti

Izjava za naslednji stroj/ opremo/ kompleksno napravo:

CAP 30/Flex (662950-0400)
75971/xxxxx

Proizvajalec
Tetra Pak Packaging Solutions S.p.A.
Via Delfini 1
41123 Modena
Italy

Za izdajo te izjave o skladnosti je odgovoren izključno proizvajalec.

Predmet navedene izjave je v skladu z ustrezno zakonodajo Unije o harmonizaciji:

[X] 2006/42/EC Varnost strojev

[X] 2014/30/EU o elektromagnetni združljivosti (EMC)

[ ] 2014/35/EU o nizki napetosti

in v skladu z naslednjimi harmoniziranimi standardi:

EN ISO 12100:2010
EN 61000-6-2:2005+AC:2005
EN 61000-6-4:2007+A1:2011
EN 60204-1:2006+A1:2009

Oseba, ki je pooblaščena za sestavljanje tehnične datoteke:

Tetra Pak Packaging Solutions S.p.A.
Via Delfini 1
41123 Modena
Italy

Modena 24/11/2017

Mikael Wahlgren
Director Operations DSO CE

Izvirnik tega dokumenta je napisan v angleškem jeziku. Vse druge jezikovne različice so prevod izvirnika.

AB Uygunluk Beyanı

Aşağıdaki makine/ ekipman/ kompleks kurulumu için beyan:

CAP 30/Flex (662950-0400)
75971/xxxxx

Üretici :
Tetra Pak Packaging Solutions S.p.A.
Via Delfini 1
41123 Modena
Italy

Bu uygunluk beyanı üreticinin yegane sorumluluğu altında düzenlenmiştir.

Beyana konu eşya ilgili Birlik uyumlaştırma düzenlemelerine uygunduı

X	2006/42/EC Makine
X	2014/30/EU Elektromanyetik uyumluluk (EMC)
	2014/35/EU Alçak Gerilim

ve takip eden uyumlaştırılmış standartlara uygundur :

EN ISO 12100:2010
EN 61000-6-2:2005+AC:2005
EN 61000-6-4:2007+A1:2011
EN 60204-1:2006+A1:2009

Aşağıdaki kişi teknik dosyayı hazırlamaya yetkilidir.

Tetra Pak Packaging Solutions S.p.A.
Via Delfini 1
41123 Modena
Italy

Modena 24/11/2017

Mikael Wahlgren
Director Operations DSO CE

Bu belgenin İngilizce nüshası asıl nüshadır. Tüm diğer dil nüshaları asıl nüshanın tercümeleridir.

Identification

EAC Compliance

This equipment complies with the regulations of the Eurasian Customs Union.

China RoHS2 Compliance

This equipment may contain one or more of the following substances: Pb, Hg, Cd, Cr6+, PBB, and PBDE.

The Environmental Protection Use Period is 25 years.

The Hazardous Substances Disclosure Table can be found in the Disassembly and Removal chapter in the IM.

Machine Plate

The illustration below shows an example of the machine plate and its location on the equipment. The machine plate carries data needed when contacting Tetra Pak concerning this specific equipment.

Make sure that the equipment data in the front pages of this manual corresponds to the machine plate data and the machine specification.

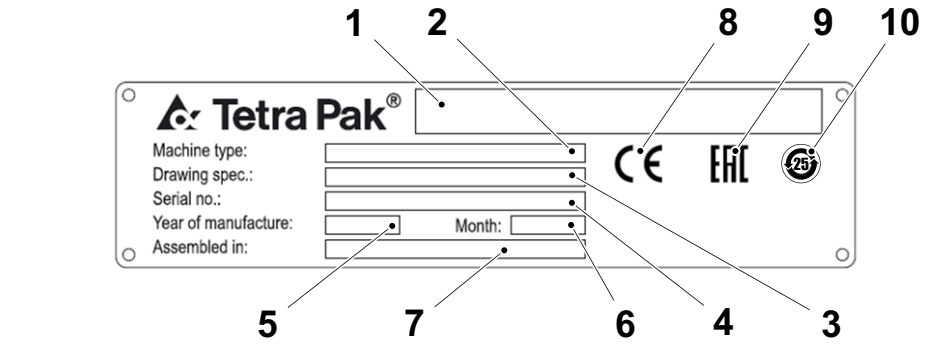

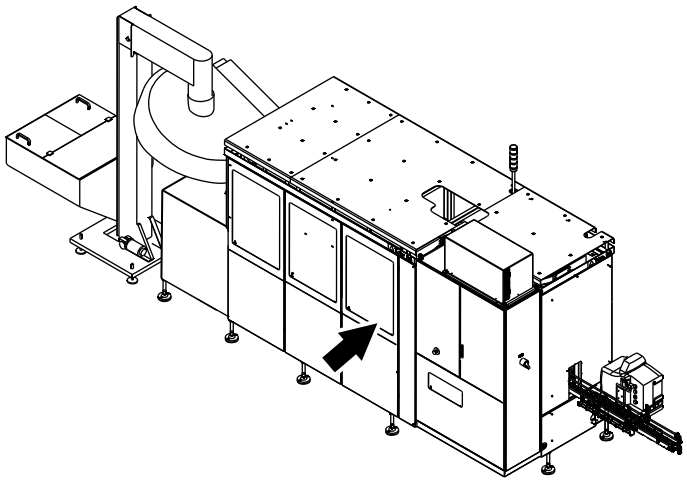

1 Manufacturer (full name and address)
2 Machine type
3 Drawing specifications
4 Machine serial number
5 Year of manufacture
6 Month of manufacture
7 Country
8 CE mark
9 EAC mark
10 China RoHS2 mark

Electrical Equipment Marking

The illustration below shows an example of the electrical equipment marking and its location on the equipment. The electrical equipment marking specifies the electrical characteristics for the equipment at the connection point.

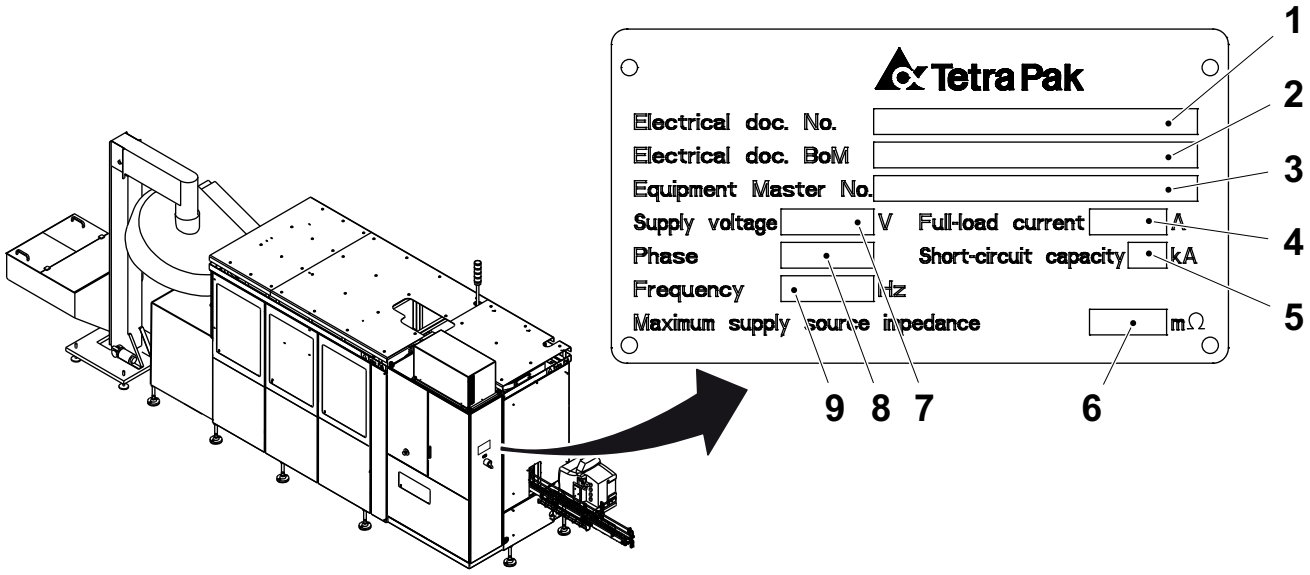

1 Electrical doc. No.
2 Electrical doc. BoM
3 Equipment Master No.
4 Full-load current
5 Short-circuit capacity
6 Maximum supply source impedance
7 Supply voltage
8 Phase
9 Frequency

Food Grade Lubricated Machine Plate

The illustration below shows an example of the Food Grade Lubricated Machine plate and its location on the equipment. The Food Grade Lubricated Machine plate indicates that lubricants used in this equipment are of food grade quality.

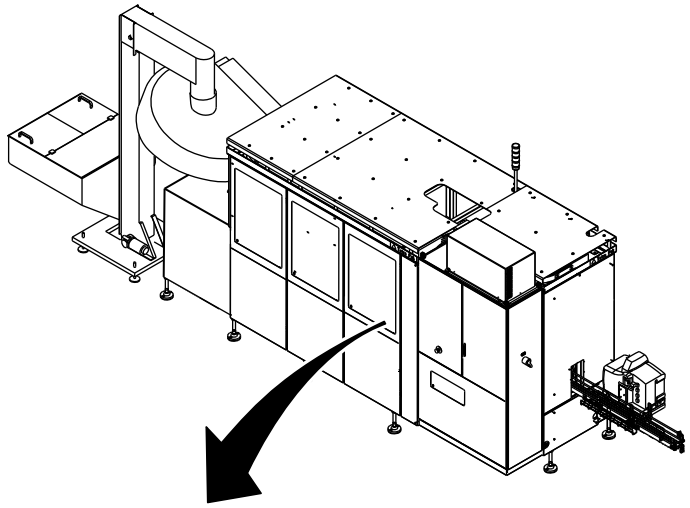

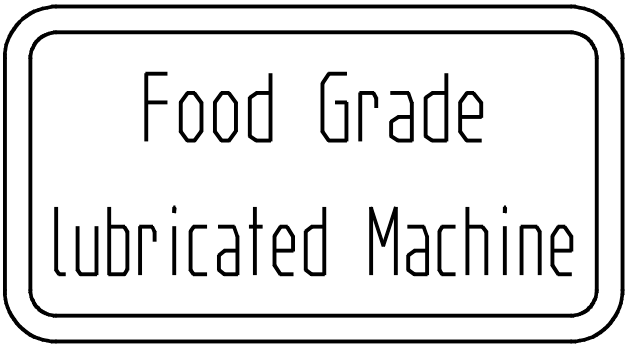

Delivered Design Label

The illustration below shows an example of the delivered design label and its location on the equipment. The delivered design label lists information tracking any rebuilding done to the electrical design, and any alterations done in the electrical cabinet and to related electrical components.

The delivered design label is filled in by the person performing the rebuilding or alteration.

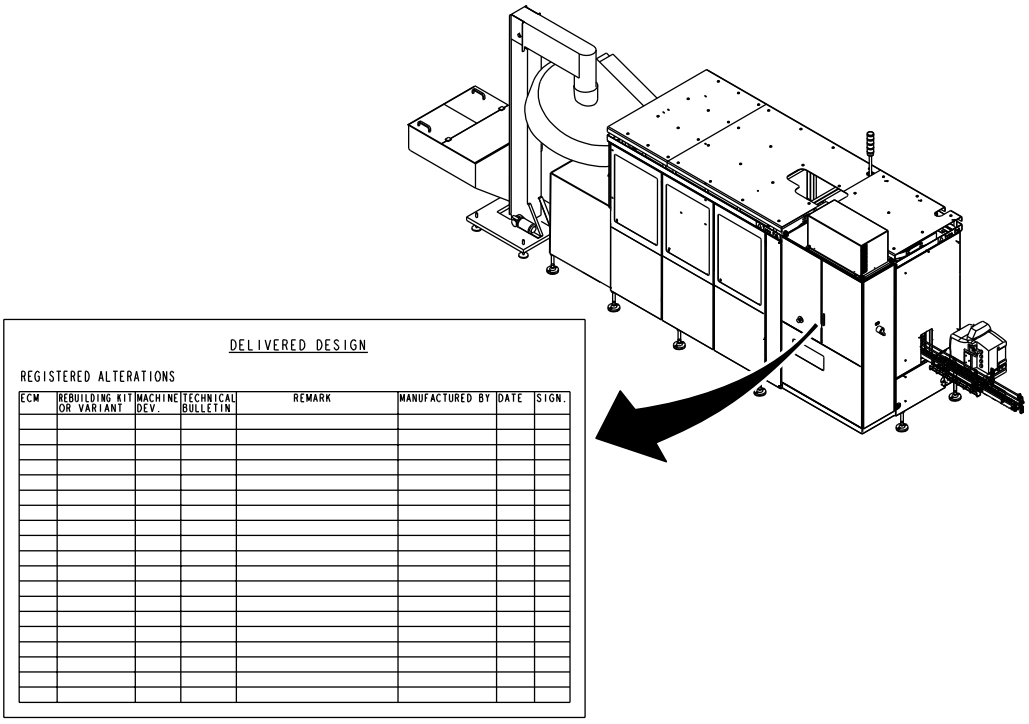

DELIVERED DESIGN

REGISTERED ALTERATIONS

ECM	REBUILDING KIT OR VARIANT	MACHINE DEV.	TECHNICAL BULLETIN	REMARK	MANUFACTURED BY	DATE	SIGN.

Orientation

The illustration below shows the orientation of the equipment. This orientation information will be used throughout this manual. The arrows indicate the flow of material.

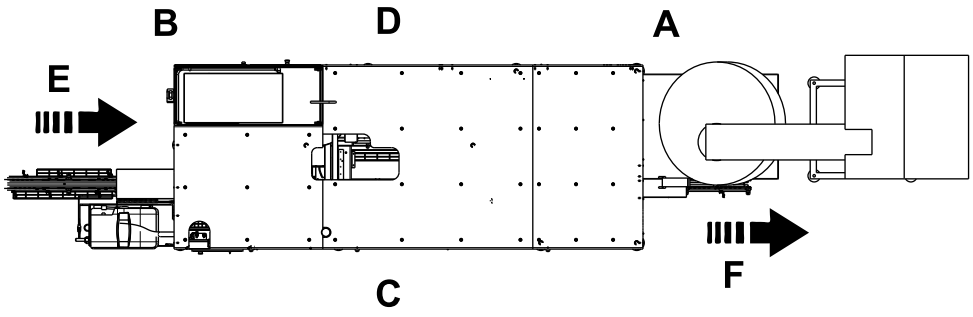

A Front
B Back
C Left
D Right
E Infeed
F Outfeed

Hygiene

Packaging Material

Avoid microbiological contamination of the packaging material:

- Always protect your packaging material against contamination. Do not let the caps come into contact with contaminated areas. Only use caps direct from their packaging material.
- Except when filling the cap sorter with caps, always keep the cap-sorter magazine door closed. Keep the transparent door panels clean.
- Always keep the doors to the applicator room (area) closed. To prevent contamination via air streams, never open a window when the machine is in production.
- Never clean the floors or the machine in the applicator room (area) when the machine is in production.
- Compressed air used for cleaning purposes is to be used only for cleaning filters and should only be used outside of the applicator room (area).
- Disinfect your hands before touching anything that may come into contact with the product. Use code H disinfectant. See the Technical Data chapter of the Maintenance Manual.
- Keep your hands clean.
- Always wear some type of hair protection (cap or hairnet) and clean clothes (preferably white).
- Do not wear a watch, ring, necklace, earrings, or any other exposed jewellery.

How to Use This IM

Purpose of the IM

The IM provides technical specifications and preparatory information needed during the quotation of the equipment and during the entire installation process. The IM describes the equipment requirements in the packaging line. It also provides instructions on how to mechanically install, commission, and validate the performance of the equipment, and how to disassemble and remove the equipment.

The intended users of the IM are project engineers, installation site supervisor, installation technicians, and other technicians involved in the equipment installation project.

Installation Workflow

An installation of any Tetra Pak® equipment follows the Installation to Performance process. The process consists of five main activities and the IM is structured to support the process. See the illustration and the table below.

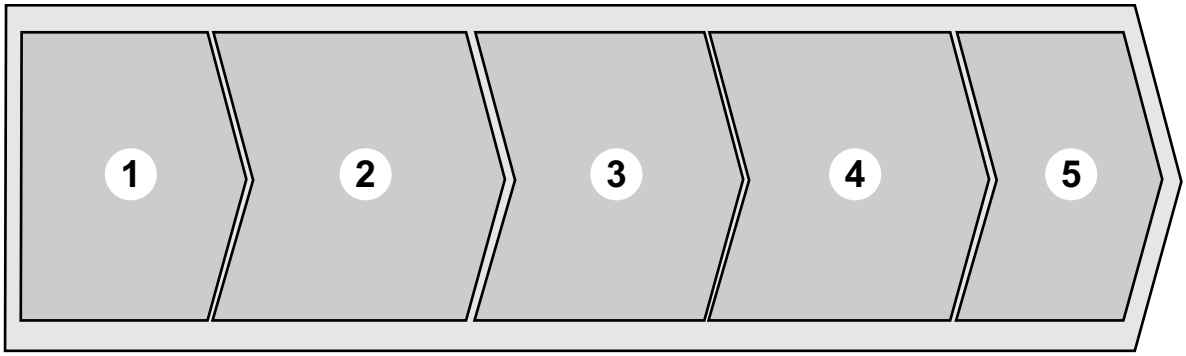

Pos.	Process Activity	End State	Related IM Chapters	Intended User
1	Preparation	Equipment at prepared site	Chapter 1 and 2	Project engineer/Installation site supervisor
2	Mechanical Completion	Equipment mechanically installed	Chapter 3	Installation technician/Installation site supervisor
3	Commissioning	Equipment commissioned and functionally validated	Chapter 4	Installation technician/Installation site supervisor
4	Performance Validation	Equipment performance validated	Chapter 5	Project engineer/Installation site supervisor
5	Hand Over	Contract fulfilled	-	-

Assistance and Inquiries

For assistance when operating this equipment, submit your questions using the QuTI-P tool. The QuTI-P tool shall also be used for all other inquiries, comments, or suggestions that you may have, as well as giving feedback concerning the user manuals delivered with this equipment.

If access to the Tetra Pak® intranet is available, access the QuTI-P tool by typing “QuTI-P” in the address field of your browser. If access to QuTI-P is not available, request access by contacting the Global Service Desk.

If access to the Tetra Pak intranet is not available, contact the nearest Tetra Pak representative.

This page intentionally left blank

Safety Precautions

Description

Safety Precaution Instructions

WARNING

Read and understand this manual before using the machine.
Failure to follow safety precautions and instructions can result in death or serious injury.

Description 52

Safety Messages Description 55

Personnel Requirements 56

Skilled Person 56

Instructed Person 56

Safety Signs 57

Location of Safety Signs 59

Protective Devices 62

Emergency Stop 62

Emergency Stop Push-Buttons 63

Safeguards 64

Indicating Tower 66

Audible Alarm 67

Safe Manual Handling 68

Personal Protection 69

Noise 69

Entanglement 69

Personal Protective Equipment 69

Working at Height 70

Hazardous Substances 71

Disposal of Chemical Substances 71

Personal Protective Equipment 71

Supply Systems 72

Definition of Lockout Procedure 72

Power Supply 72

Residual Voltage 73

Electrical Cabinet 73

Socket Outlet 75

Air Supply 76
Hotmelt Equipment 76
General 76
Hotmelt Unit 77
Hotmelt Guns 78
Additional Information 79
Package Heater 79
Cap Detector 80

Safety Messages Description

A safety message is always accompanied by a safety alert symbol and a signal word.

The safety alert symbol is used to alert about potential personal injury hazards. To avoid hazards, obey all safety messages that follow this symbol.

The following safety alert symbols and signal words are used in this manual to inform the user of hazards.

DANGER	Danger indicates an imminently hazardous situation which, if not avoided, **will** result in **death or serious injury**.
WARNING	Warning indicates a potentially hazardous situation which, if not avoided, **could** result in **death or serious injury**.
CAUTION	Caution indicates a potentially hazardous situation which, if not avoided, **may** result in **minor or moderate injury.** It may also be used to alert against unsafe practices.
CAUTION	Caution without the safety alert symbol indicates a potentially hazardous situation which, if not avoided, **may** result in **property damage**.

Personnel Requirements

Note! Personnel includes all persons working on or near this equipment.

Only skilled or instructed persons are allowed to work with this equipment.

Skilled Person

A skilled person must have relevant education and experience to enable him or her to identify hazards, analyse risks, and avoid hazards which electricity, machinery, chemicals, other energies, and supply systems on this equipment can create.

Skilled persons must meet local regulations, such as certifications and qualifications for working with these energies and systems.

Instructed Person

An instructed person must be adequately advised or supervised by a skilled person. The skilled person enables the instructed person to identify hazards, analyse risks, and avoid hazards which electricity, machinery, chemicals, other energies, and supply systems on this equipment can create.

Safety Signs

WARNING

Damaged or missing safety signs.
Safety signs are used to indicate safety hazards. If the signs are missing or damaged, they can not fulfil this function. Replace all missing or damaged safety signs immediately.

Safety signs are attached to the equipment. The table below lists all the signs that are used, and illustrations show their locations on the equipment. Each position number refers to two standards of a safety sign in the table, but only one is used on the equipment.

- Make sure that each safety sign is legible and in its correct position after installation and maintenance.
- Replace all missing or damaged safety signs immediately.

Pos	ISO Standard	ANSI Standard
1	 **Hazardous voltage.** Will shock, burn, or cause death. Follow lockout procedure before maintenance.	
2	 **Hot surface.** Do not touch. Follow lockout procedure before maintenance.	
3	 **Risk of equipment damage.** Do not let water into this area.	
4		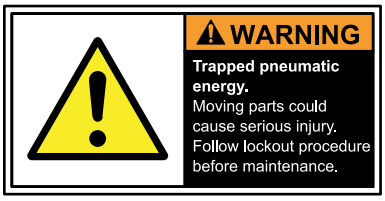

(Cont'd)

(Cont'd)

Pos	ISO Standard	ANSI Standard
	Trapped pneumatic energy. Moving parts could cause serious injury. Follow lockout procedure before maintenance.	
5		
	Do not reach in. Moving parts may cause injury. Follow instructions for safe work practice.	
6		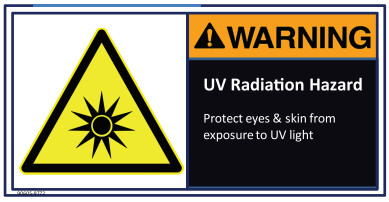
	Risk of UV Radiation. Do not see and touch when the UV lamp is in function. Follow lockout procedure before maintenance.	
7	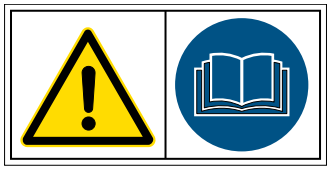	Not applicable
	Risk of electric shock. This equipment can cause currents greater than 10 mA in the electrical power supply protective conductor (PE). Connect the equipment to the electric power supply source in accordance with applicable local or national regulations.	

Location of Safety Signs

The illustration shows where the safety signs are located. The position numbers refer to the table in the Safety Signs section.

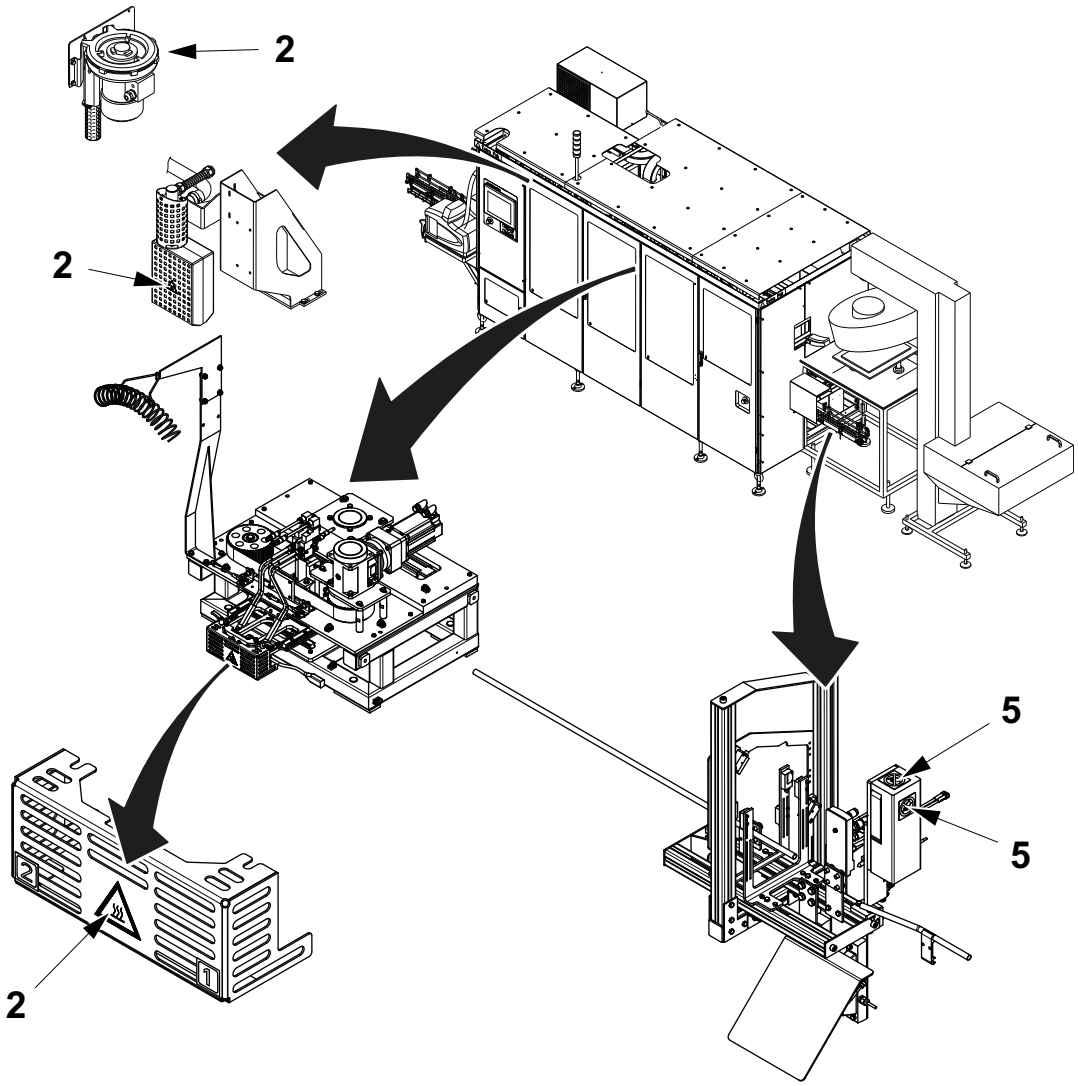

(Cont'd)

(Cont'd)

The illustration shows where the safety signs are located. The position numbers refer to the table in the Safety Signs section.

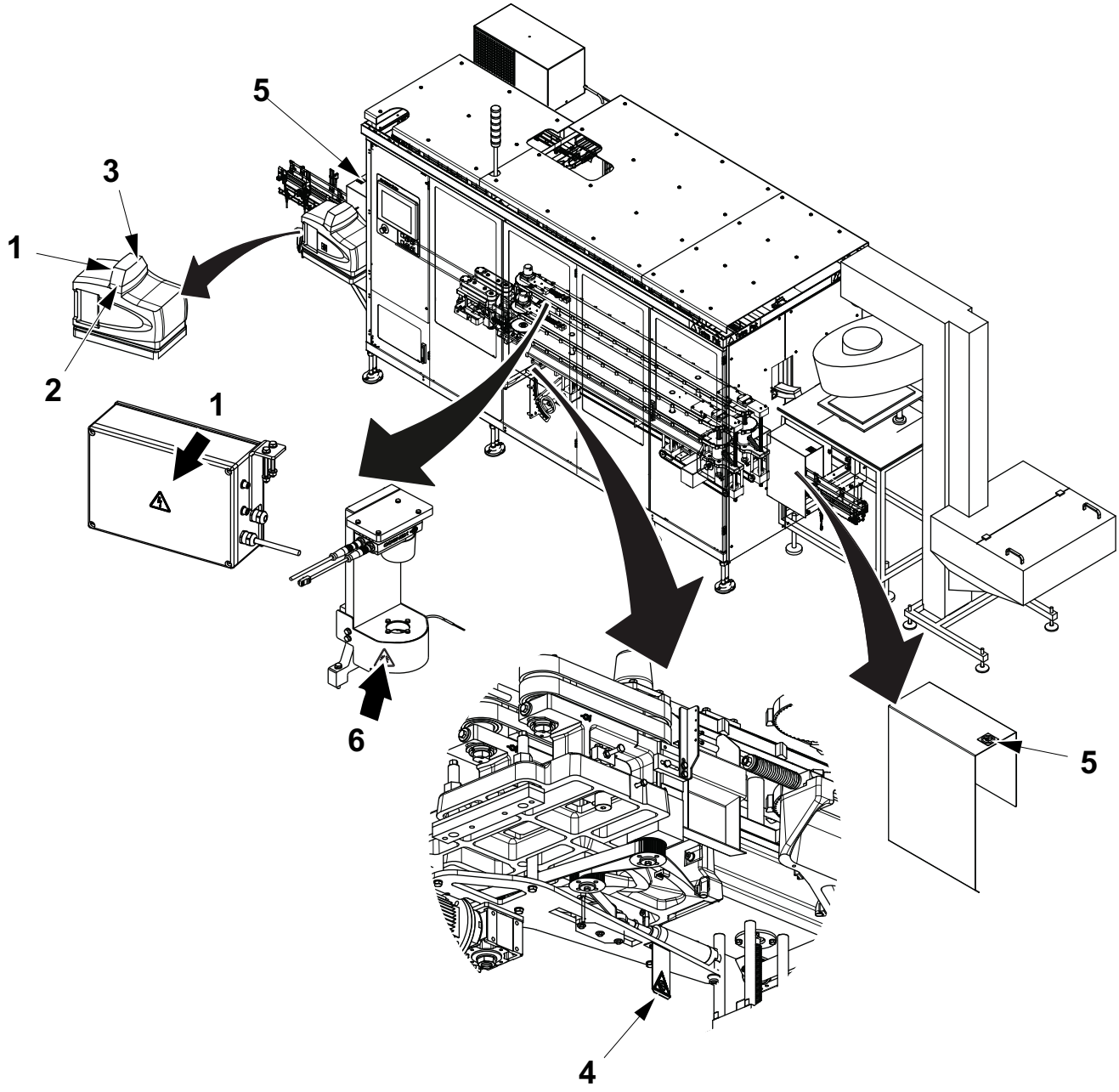

(Cont'd)

(Cont'd)

The illustration shows where the safety signs are located. The position numbers refer to the table in the Safety Signs section.

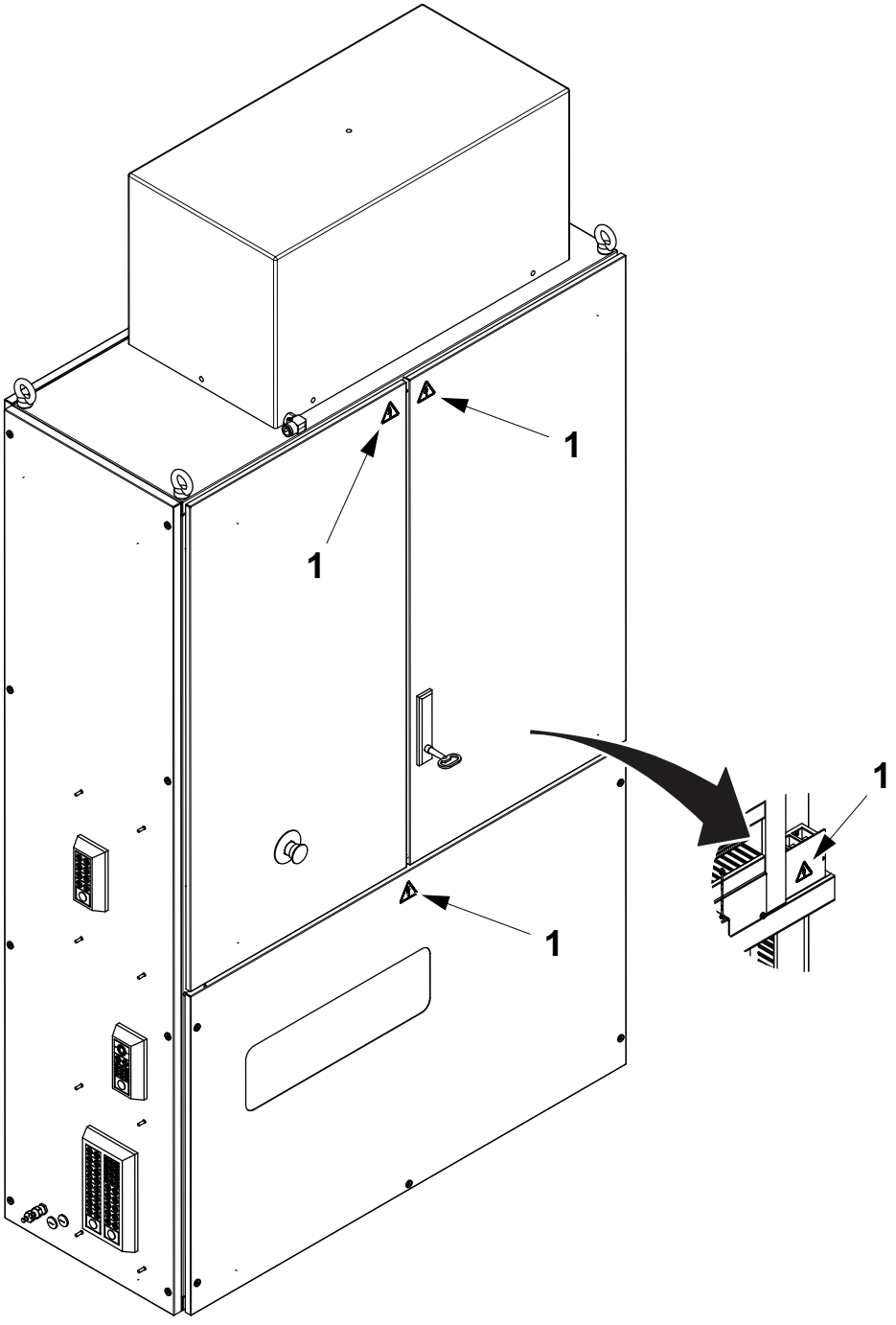

Protective Devices

There are different kinds of protective device designed to ensure safe use of the equipment. See the sections below.

WARNING

Hazardous zones.
Hazardous zones are safeguarded and provided with protective devices. Do not inch or run this equipment if any protective device is inoperative.

Change inoperative components of the safety system immediately.

For the locations of safeguards and/or other protective devices not mentioned in this section, see the Maintenance Manual.

Emergency Stop

DANGER

Hazardous voltage.
Will shock, burn, or cause death.
Hazardous voltage remains ON after activating an EMERGENCY STOP.

Emergency stop devices are used to stop this equipment immediately in a hazardous situation. Learn the positions of all emergency stop devices and how to use them.

Instructions for a normal production stop are included in the Stop chapter of the Operation Manual.

Emergency Stop Push-Buttons

Push one of the EMERGENCY STOP push-buttons to stop this equipment immediately.

The location of each EMERGENCY STOP push-button is shown by an arrow.

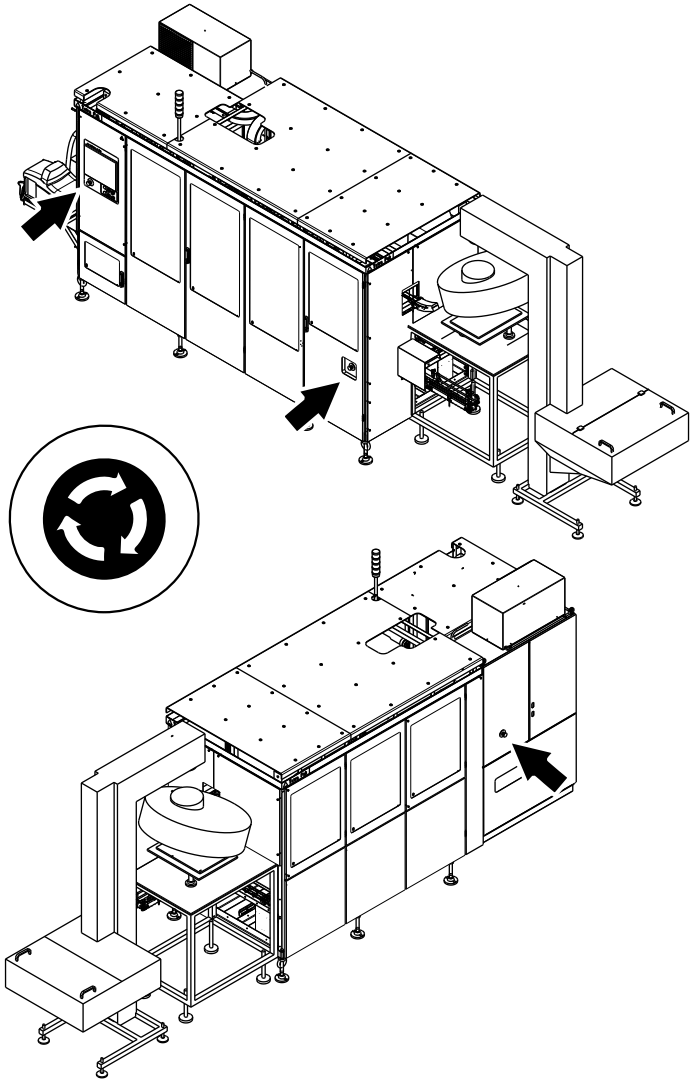

Safeguards

WARNING

Moving machinery parts.
Never defeat or bypass the interlocking devices.

Movable guards, for example, doors and covers leading to hazardous zones, are fitted with interlocking devices where required. These devices are usually electric safety switches that are parts of the safety system and must never be defeated, bypassed, or otherwise made inoperative.

Where movable guards (doors) are equipped with means to be locked in a nonclosed position, any person with the intention to preside, for any reason, behind such a guard must lock the guard in the nonclosed position by use of a padlock.

Note! For work on the electrical equipment, the electrical power must also be disconnected.

CAUTION

Corners and edges.
Close the doors, guards, or parts of the equipment unless they must be open during work.

CAUTION

Burn hazard.
Parts of the equipment protected by guards may be hot after operation. Allow components to cool down or use personal protective equipment.

After installation and maintenance, and before this equipment is inched or run, check that all safeguards are in place and that they operate correctly.

(Cont'd)

(Cont'd)

CAUTION

Equipment damage.

The equipment can be damaged if it is not stopped in the correct way. Never stop this equipment by opening a movable guard, for example, a door or cover, equipped with an interlocking device.

Movable guards with safety switches installed are shown by an arrow.

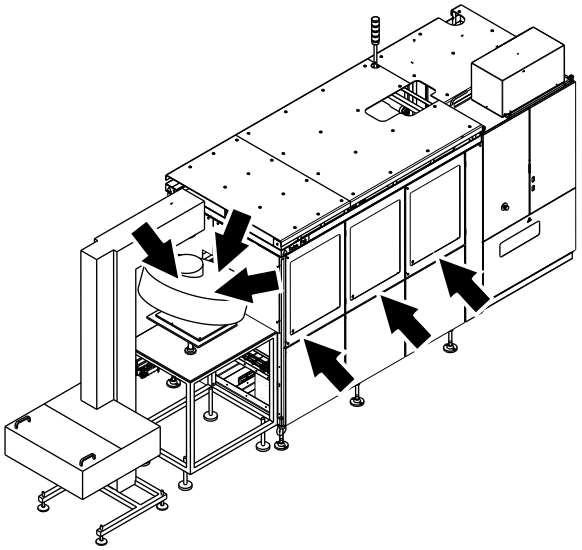

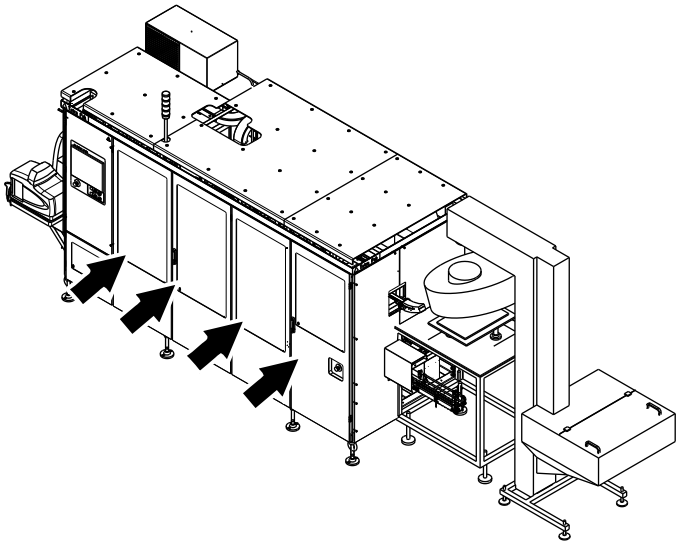

Movable guards with an electromagnetic door lock installed are shown by an arrow.

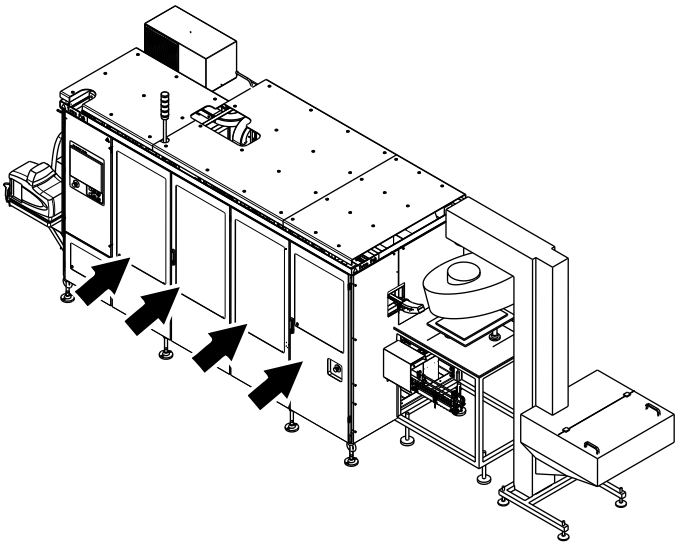

Indicating Tower

An indicating tower is a column of warning lights:

- A red light (1) indicates a hazardous condition. This is a situation that requires immediate action.
- A yellow light (2) indicates an abnormal or impending critical condition. This is a condition calling for action by the operator.
- A blue light (3) indicates that operator action is required.
- A green light (4) indicates a normal condition.

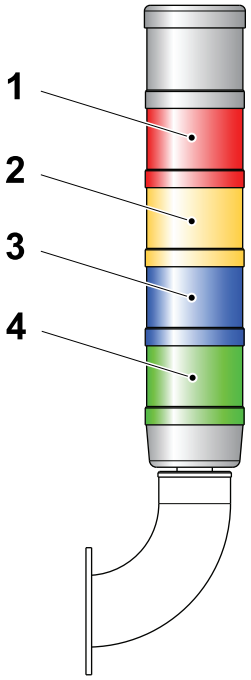

1 Red light
2 Yellow light
3 Blue light
4 Green light

Audible Alarm

The audible alarm (1) produces a warning signal every time this equipment is about to start. The warning signal sounds for approximately three seconds prior to starting to alert personnel.

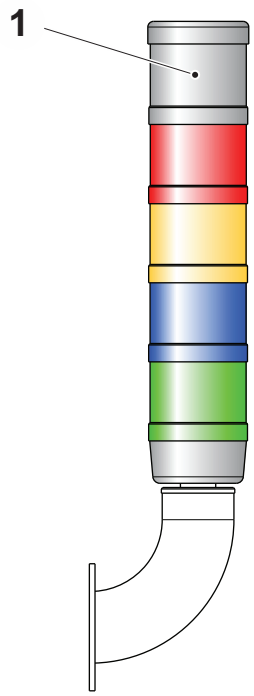

1 Audible alarm

Safe Manual Handling

Use mechanical lifting aids whenever possible. If mechanical lifting aids are not available, do not attempt to lift loads over 23 kg without the assistance of a colleague. Avoid lifting below knee height and above shoulder height. If it is necessary to lift from the floor, follow the instructions below to reduce the risk of back and disc injuries.

- Use safety shoes and be sure that the surface of the floor is not slippery.
- Get close to the load.
- Take a wide stance and find the best positions for your feet.
- Bend your hips and knees, and use your leg muscles.
- Keep the load close to your body.
- Do not twist your body while moving the load.
- Take small steps when turning.

In order to reduce the risk of injury to discs and back muscles, be careful to not bend or twist your back when lifting. Keep the load close to your body to reduce the strain on your back.

To reduce the ergonomic risks to each individual operator, job rotation is recommended, so that recovery and variety are provided.

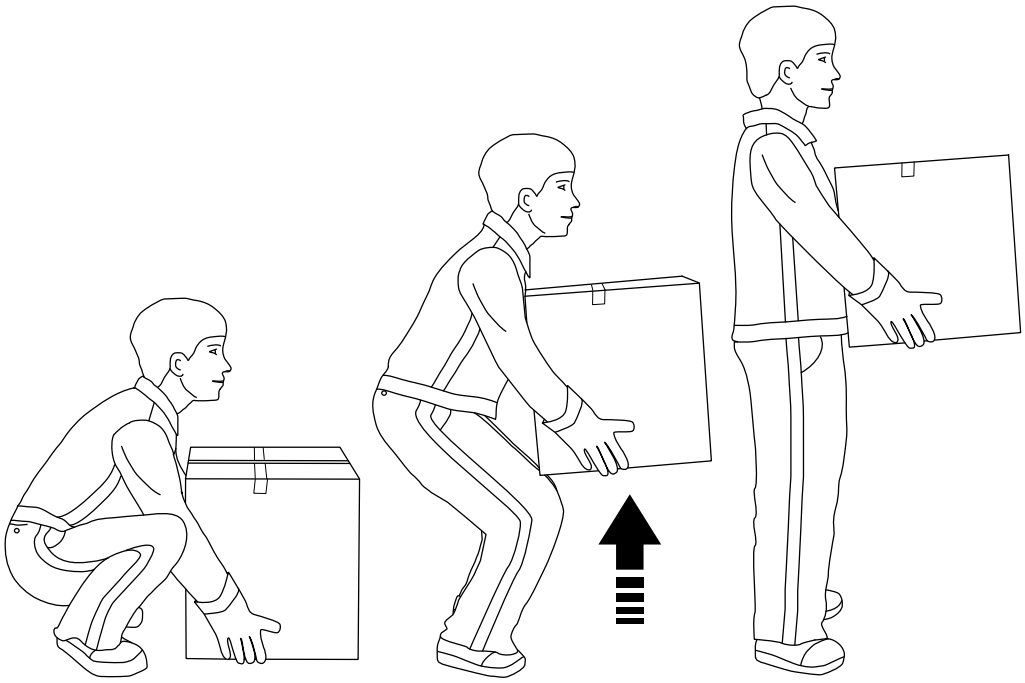

Personal Protection

This section applies to all personnel at all times when this equipment is in operation. For special personal protective equipment required when handling hazardous substances, see the Hazardous Substances section.

Noise

WARNING

Hazardous noise.
Can cause impaired hearing.
Wear hearing protection whenever this equipment is in operation.

CAUTION

Hazardous noise.
May cause impaired hearing.
Hearing protection is recommended whenever this equipment is in operation.

Entanglement

WARNING

Risk of entanglement.
Do not wear jewellery or loose clothing when working on or near this equipment.
Restrain long hair with, for example, clips or rubber bands.

Personal Protective Equipment

The personal protective equipment for hot surfaces is

- protective gloves TP No. 90600-5981, (or other protective gloves with similar characteristics).

Working at Height

This equipment is provided with a means of access to all locations where routine tasks for operation and maintenance need to be carried out.

WARNING

Risk of falling.

For any kind of work at height always ensure that safe means of access is available and used. Where additional safe means of access other than provided with the equipment is required, follow local work at height regulations and guidelines. Use scaffolds or a mobile work platform and a safety harness. Create a safety perimeter around the working area and secure tools or other objects from falling.

Hazardous Substances

WARNING

Contact with chemicals can cause death, serious injury, or illness.
Always read and follow the instructions in the safety data sheet supplied by the manufacturer or local supplier, when handling chemicals.

Make sure that

- the safety data sheet is available
- preparations have been done to ensure that the stated safety measures in the safety data sheet can be followed
- the locations of the first aid equipment are learned in order to act immediately in case of an accident

Disposal of Chemical Substances

Always read and follow the disposal instructions in the safety data sheet supplied by the manufacturer or local supplier.

It is strongly recommended that used chemical containers are

- disposed of according to the instructions immediately after use
- not used as disposal containers for other chemicals in order to avoid uncontrolled chemical reactions within the container

Personal Protective Equipment

Wear personal protective equipment when working with hotmelt equipment.

- protective goggles (for instance, TP No. 90303-11), tight fitting
  If there is a risk of splashes, a visor is a suitable complement
- protective gloves made of neoprene (for instance, TP No. 90303-12), nitrile, or butyl rubber
- protective apron (for instance, TP No. 90303-13), or protective suit when handling larger amounts
- protective shoes or boots made of PVC, PE plastic, or rubber
- proper respiratory equipment, if ventilation is insufficient

Supply Systems

Definition of Lockout Procedure

A lockout procedure is a procedure to put each necessary energy isolating device in its safe position to prevent the energisation of the equipment, such as when a maintenance procedure should be carried out.

A lockout is the use of a device, for example, a padlock, to make sure that an energy isolating device cannot be operated.

An energy isolating device is a mechanical device that physically prevents transmission or release of energy, such as an electrical supply disconnecting device.

A detailed instruction for the specific lockout procedure(s) for this equipment is found in the Maintenance Manual.

Power Supply

DANGER

Hazardous voltage and moving machinery.
The electrical supply disconnecting device must be in position O (OFF) and secured with a lock before any maintenance that requires the electrical supply to be disconnected. See the Machine Status section of the MM Procedure Start Table.

Note! The key to the lock must be removed by the technician and retained in his/her possession until all work is completed.

DANGER

Hazardous voltage can be present with the power supply switched off.
Circuits identified by orange-coloured conductors are not disconnected by the main electrical supply disconnecting device. The location of the electrical supply disconnecting device of these circuits is described in the Maintenance Manual procedures that include work on these types of circuit.

Certain maintenance procedures may require power supply systems to be on. These exceptions are clearly stated in the Maintenance Manual.

(Cont'd)

(Cont'd)

The illustrations show the electrical supply disconnecting device and its location.

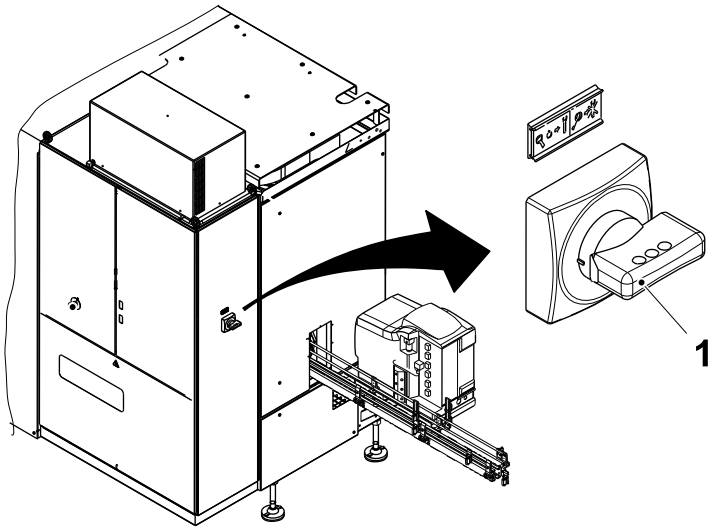

1 Electrical supply disconnecting device

Residual Voltage

DANGER

Hazardous voltage.
Will shock, burn, or cause death.
After the electrical supply disconnecting device is turned to position O (OFF), residual voltage remains in the capacitor circuits. Wait five minutes before opening the enclosure containing these circuits. Ensure that no residual voltage remains on the capacitors before touching them.

Electrical Cabinet

DANGER

Hazardous voltage.
Will shock, burn, or cause death.
Parts behind doors to the electrical cabinet may be live. The electrical supply disconnecting device must be turned to position O (OFF) and secured with a lock before maintenance inside the electrical cabinet.

Note! The key to the lock must be removed by the technician and retained in his/her possession until all work is completed.

(Cont'd)

(Cont'd)

Make sure that the electrical cabinet doors are closed after working inside the electrical cabinet. Doors with locks must be locked.

The location of each electrical cabinet is shown by an arrow.

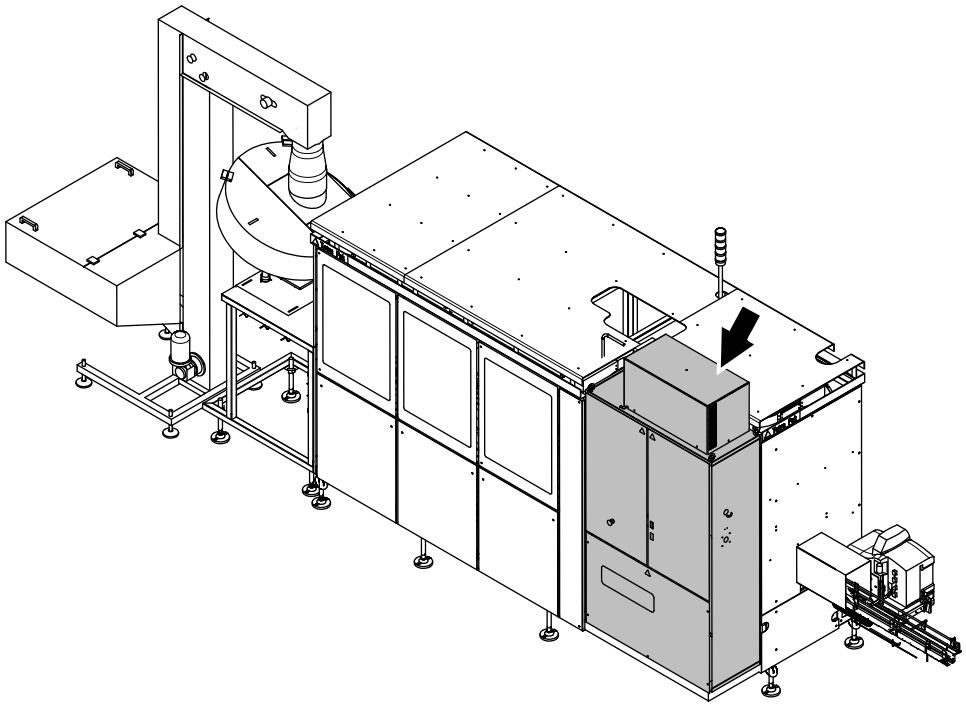

Socket Outlet

WARNING
Hazardous voltage.
Can shock, burn, or cause death.
Read the Maintenance Manual before using this socket outlet.

The socket outlet (1) is connected to a residual current device (2) to protect users against electrical shock if there is an earth fault in the connected equipment. The residual current device must be tested each time before the socket outlet is being used. See the MM for test procedure.

The illustrations show the socket outlet, the residual current device, and their locations.

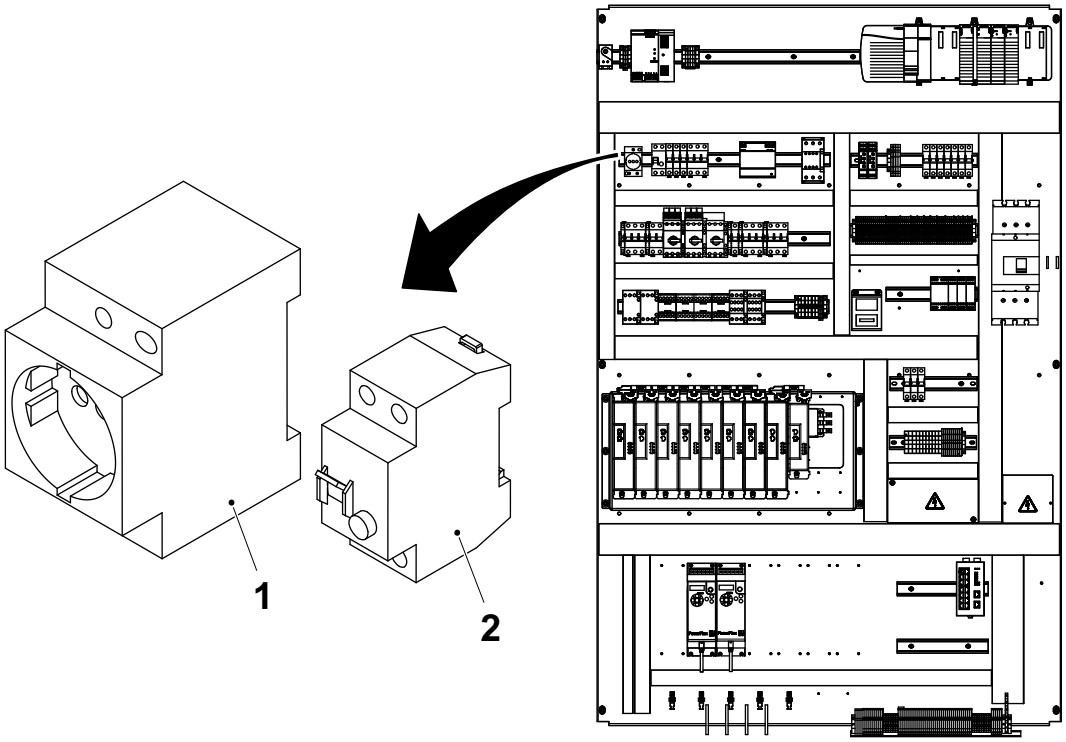

1 Socket outlet
2 Residual current device

Air Supply

WARNING

Compressed air and moving machinery.
Close the main air valve and lock it, and safely release compressed air from the air system before any maintenance that requires the air supply to be closed. See the Machine Status section of the MM Procedure Start Table.

Note! The key to the lock must be removed by the technician and retained in his/her possession until all work is completed.

Certain maintenance procedures may require air supply systems to be on. These exceptions are clearly stated in the Maintenance Manual.

The illustration shows the shut-off valve (1). The shut-off handle (2), is used to close the air supply.

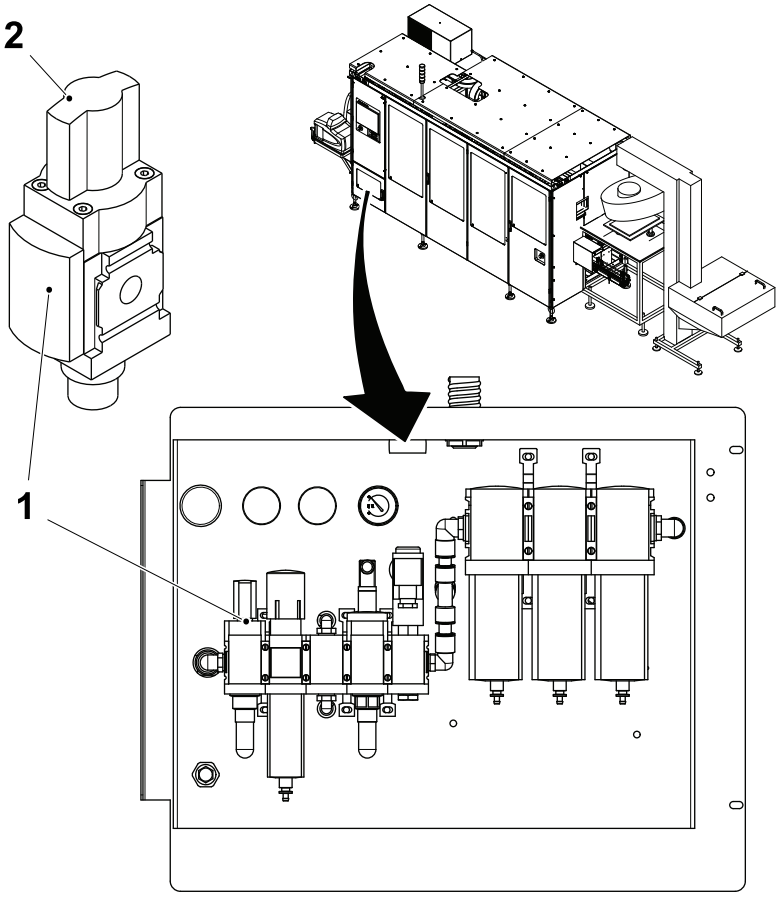

1 Shut-off valve
2 Shut-off handle

Hotmelt Equipment

General

DANGER

Risk of electrical shock.
The voltage is 400V inside the hotmelt unit. Risk of immediate danger to life from electrical shock.

(Cont'd)

(Cont'd)

WARNING
Risk of personal injury.
All service work on the hotmelt unit must be carried out by authorized personnel. Always wear safety glasses, protective gloves, and other protective clothing to avoid injuries caused by splashing hotmelt material. Failure to relieve any air or adhesive pressure could cause serious injuries from burning when the hotmelt filter is detached or flushed. Never remove any part or component until the air and the electrical supply to the machine have been disconnected and the pressure of the hotmelt in the system has been relieved.

WARNING
Risk of hotmelt vapours.
When the tank lid is open, hotmelt vapours could be released. Vent the application area or wear a respirator.

Note! Always refer to the documentation provided from Nordson Corporation before doing any kind of work on the hotmelt equipment. The Nordson hotmelt manual is included with the delivery from Tetra Pak. The information in this manual only deals with what is specific for this machine.

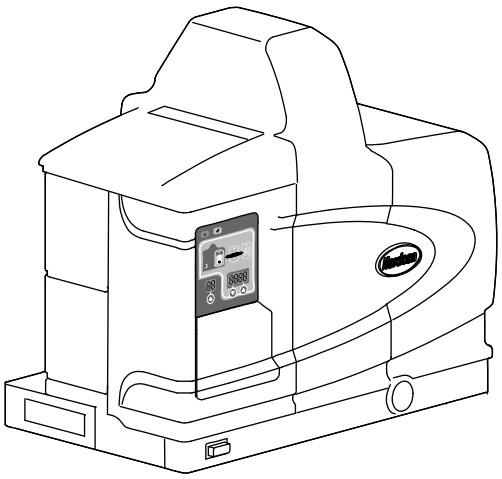

Hotmelt Unit

CAUTION
Risk of damage to the equipment
Never flush water or any other liquid towards the hotmelt unit when cleaning the machine. Failure to obey could result in damage to equipment.

WARNING
Risk of burns.
During PREHEATING and PREPARATION the hotmelt unit becomes hot. Do not touch the hotmelt unit and beware of the entrapped heat inside the unit when service is performed.

(Cont'd)

(Cont'd)

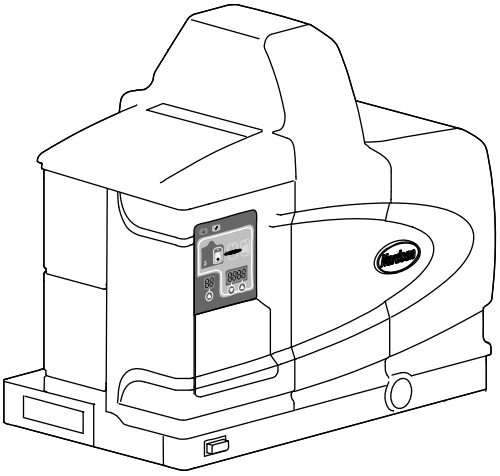

Hotmelt Guns

WARNING

Risk of burns.

During PREHEATING, PREPARATION and PRODUCTION the hotmelt guns are hot. There is risk of severe burns. Do not touch the hotmelt guns and beware of the entrapped heat when service is performed.

CAUTION

Risk of damage to the equipment

Never flush water or any other liquid towards the hotmelt guns when cleaning the machine. Failure to obey could result in damage to equipment.

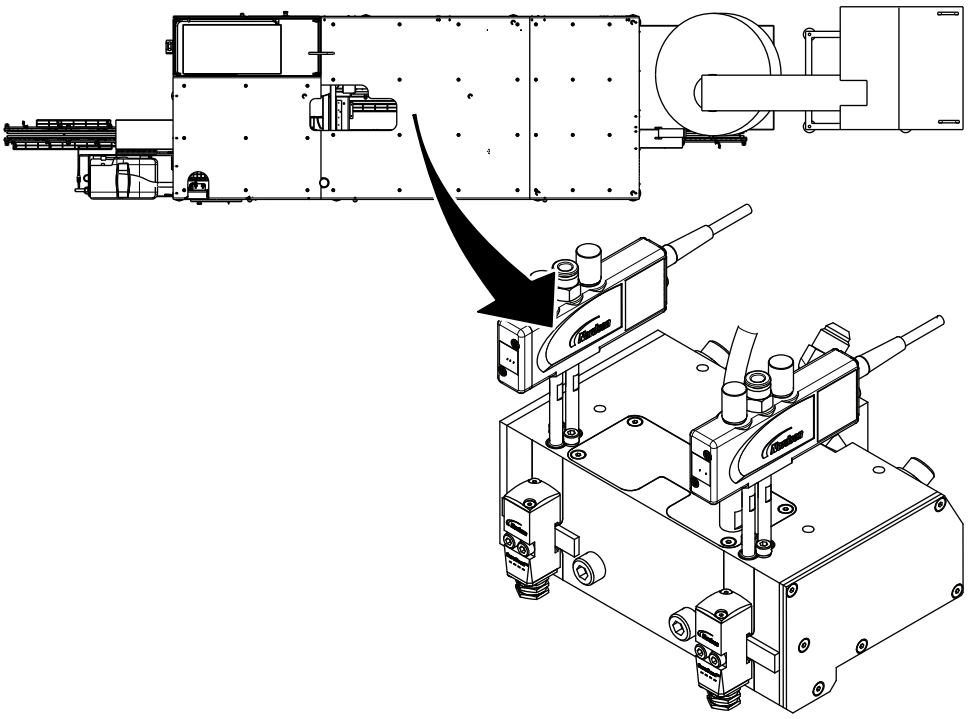

Additional Information

Package Heater

WARNING

Risk of burns.

The package heater is very hot and there is risk of severe burns. Never touch the package heater.

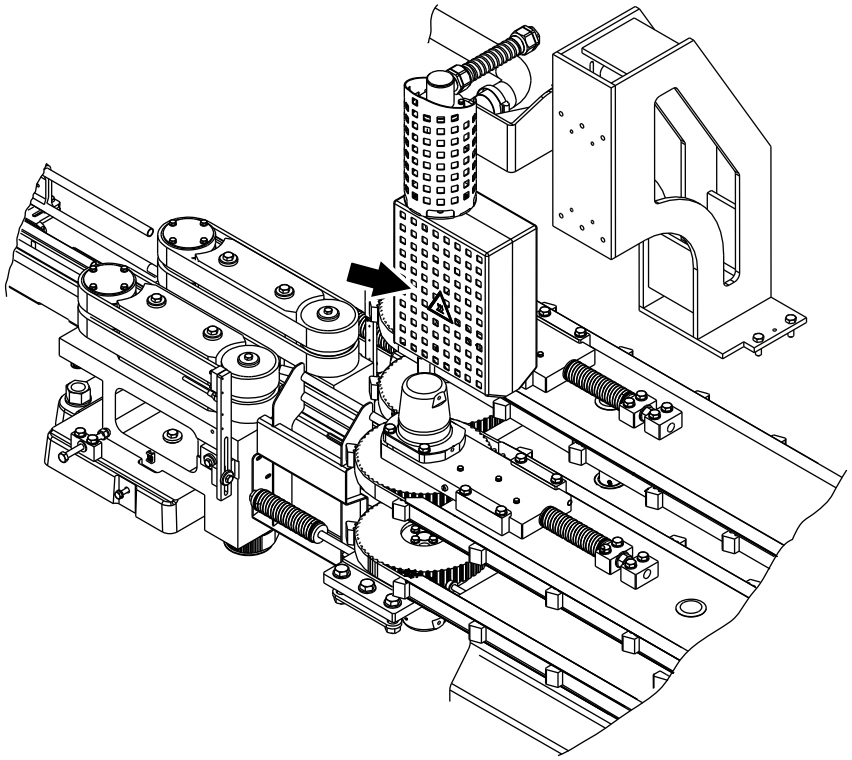

Cap Detector

WARNING

Risk of personal injury.

Never put any part of the body, such as a hand, near the cap detector when the machine is working. There is a risk of injury caused by the movable pusher.

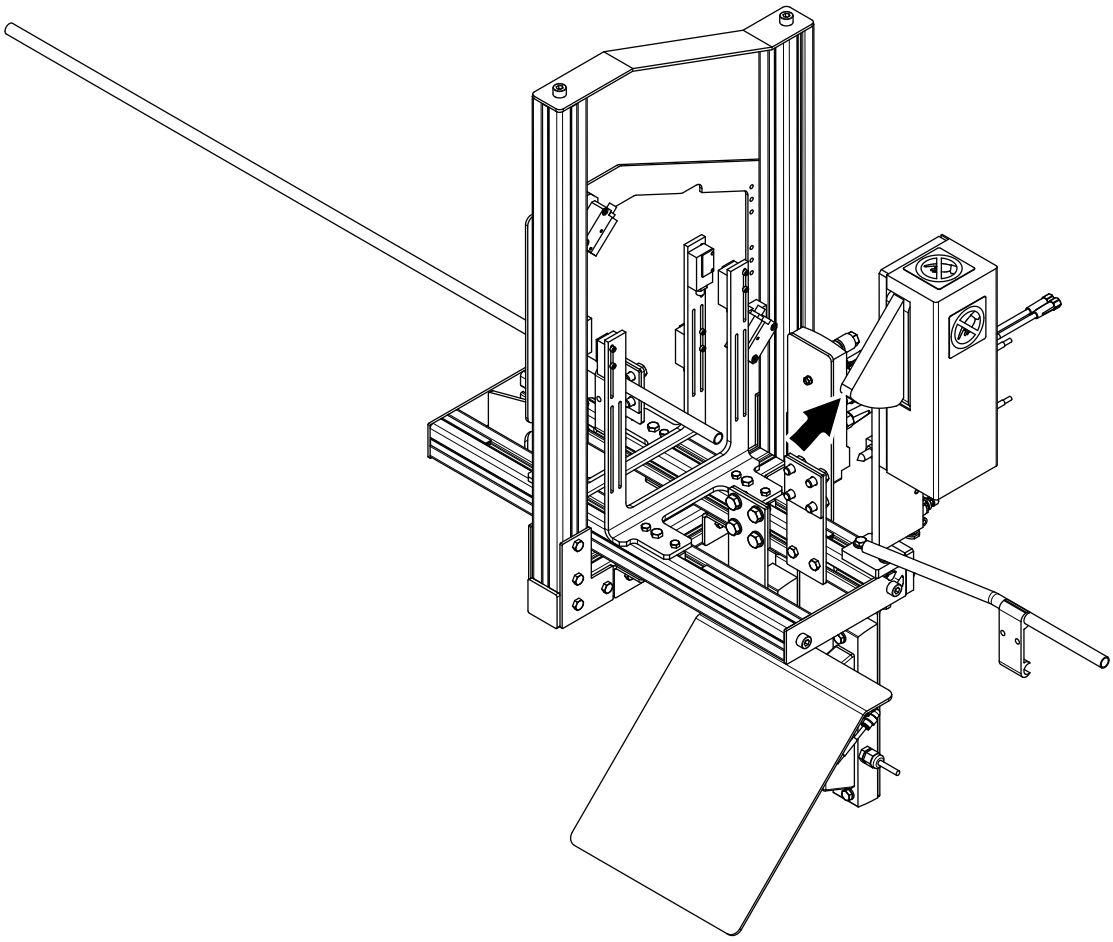

1 Technical Specification

Description

This chapter describes the equipment's technical specification and data. The information is used during the planning and installation of the equipment.

Description 82

1.1 Installation Drawings 87

1.1.1 System Drawings 87

1.1.2 Cap Applicator - Left View 88

1.1.3 Top View 89

1.1.4 Cap Applicator Feet Locations 90

1.1.5 Working Area 91

1.1.6 Drive and End Unit 92

1.1.6.1 General 93

1.1.6.2 Installation Requirements 93

1.1.6.2.1 Safety 93

1.1.6.2.2 Distances 94

1.1.7 Cap Detector 95

1.1.8 Sensors Position 96

1.1.9 Service Connection 97

1.2 Installation Space 99

1.2.1 Unpacking Area 99

1.3 Site Environment 100

1.3.1 Ambient Temperature 100

1.4 Crates 101

1.4.1 Main Crate 101

1.4.1.1 Weight and Dimensions 101

1.4.1.2 Contents 101

1.5 Equipment Data 102

1.5.1 Equipment Limitations 102

1.5.2 Additional Equipment 102

1.5.3 Mass 102

1.5.4 Capacity 102

1.5.4.1 Production Capacity 102

1.5.5 Consumption 102
1.5.5.1 Electrical Power 102
1.5.5.2 Compressed Air 103
1.5.6 Noise 103
1.5.6.1 Sound Pressure Level 103
1.5.7 Emissions and Thermal Load 103
1.5.7.1 Emissions 103
1.5.7.2 Thermal Load 103
1.5.8 Hygiene Function Connection Data 104
1.5.8.1 Manual Cleaning 104
1.6 Equipment Specification 105
1.6.1 Conveyor Requirements 105
1.6.1.1 Infeed/Discharge 105
1.6.1.2 Outfeed Conveyor Speed 105
1.6.1.3 Machine Conveyor Speed 105
1.6.1.4 Conveyor Speed For CAP30 With TBA 200E and TBA 250E 106
1.6.2 Conveyor Length 106
1.6.3 Installation Requirements 106
1.7 Additional Information 107
1.7.1 Conveyor Lubrication 107
1.7.1.1 General settings 107
1.8 Additional Material Storage and Handling 108
1.9 Utilities Specifications 109
1.9.1 Cold Water Supply 109
1.9.1.1 Water Quality 109
1.9.1.2 Technical Water Parameters 110
1.9.2 Compressed Air 110
1.9.2.1 Compressed Air Requirements 110
1.9.3 Electrical Power 111

1.10 Tools, Materials, and Consumables Specifications 112

1.10.1 Special Tools and Equipment 112

1.10.2 Consumables 112

1.10.2.1 Lubricants 112

1.10.2.2 Cleaning Compounds 112

1.10.3 Start Up Material 112

1.10.4 Additional Material 112

1.10.5 Lifting and Transportation Equipment 113

1.10.5.1 Lifting Equipment Specifications 113

1.10.5.2 Lifting Equipment Specifications for Uncrated Equipment 114

1.11 Mechanical Line Integration and Connection 115

1.11.1 Discharge Requirements 115

1.11.1.1 Package Conveyor 115

1.11.2 Machine Connections - General Layout 115

1.11.3 Installation in TP A3 iLines 116

1.11.3.1 General 116

1.11.3-1 Installation Guidelines 117

1.12 Communication 119

1.12.1 Line Communication (Gateway Communication) 119

1.12.2 Line Communication (Ethernet Communication With The Line Controller) 120

This page intentionally left blank

1.1 Installation Drawings

This section includes drawings showing:

- overall dimensions,
- connection positions and dimensions,
- access dimensions.

Values are in millimetres unless otherwise stated. All dimensions must be observed.

The following drawings are provided:

- 1.1.2 Cap Applicator - Left View
- 1.1.3 Top View
- 1.1.4 Cap Applicator Feet Locations
- 1.1.5 Working Area
- 1.1.6 Drive and End Unit

1.1.1 System Drawings

System drawings are located in the electrical cabinet. System drawings are as follows:

- Installation drawings
- Pneumatic diagram
- Lubrication diagram
- Extra equipment (if relevant).

1.1.2 Cap Applicator - Left View

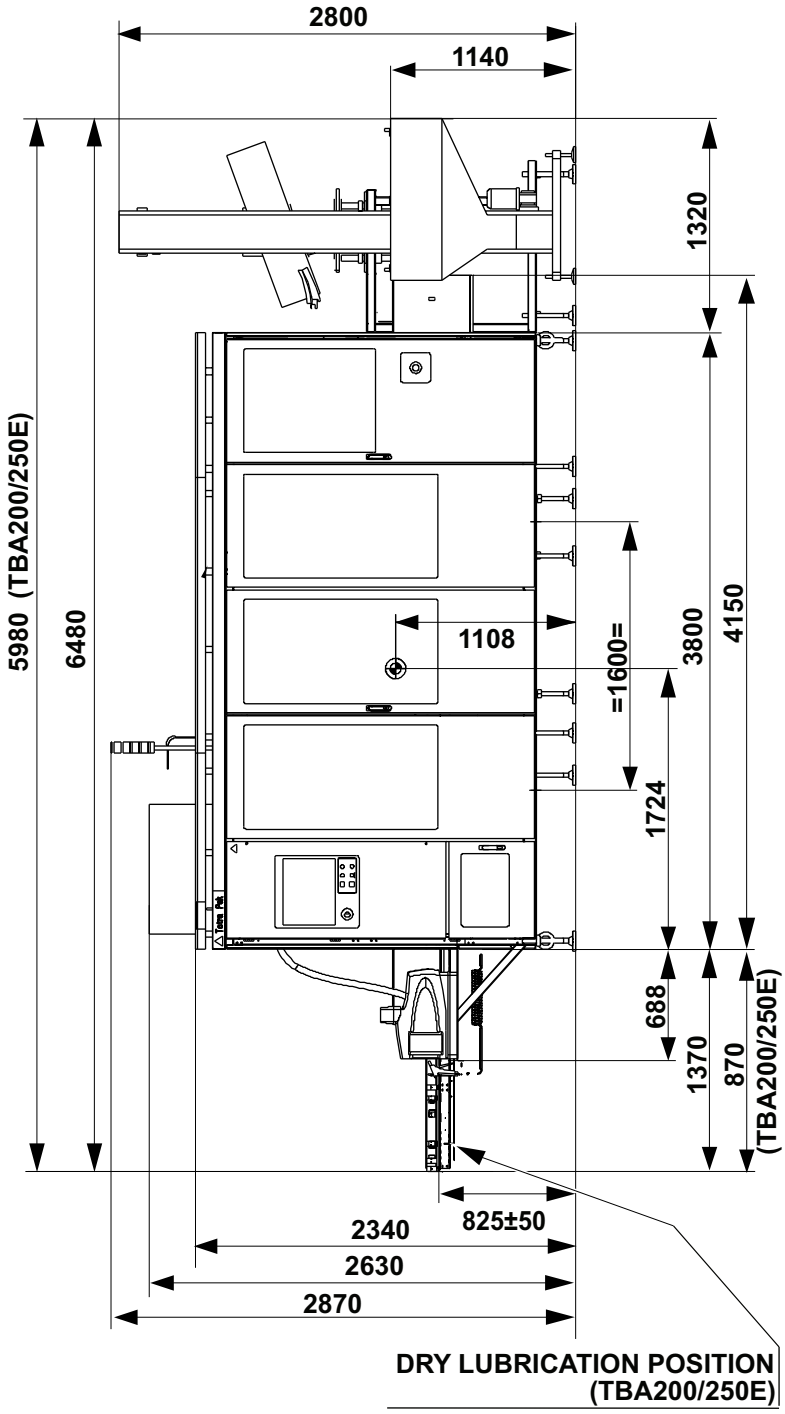

1.1.3 Top View

Note! For conveyor lengths and conveyor details, see 1.6.1 Conveyor Requirements.

The cap sorter positions are shown in the illustration below.

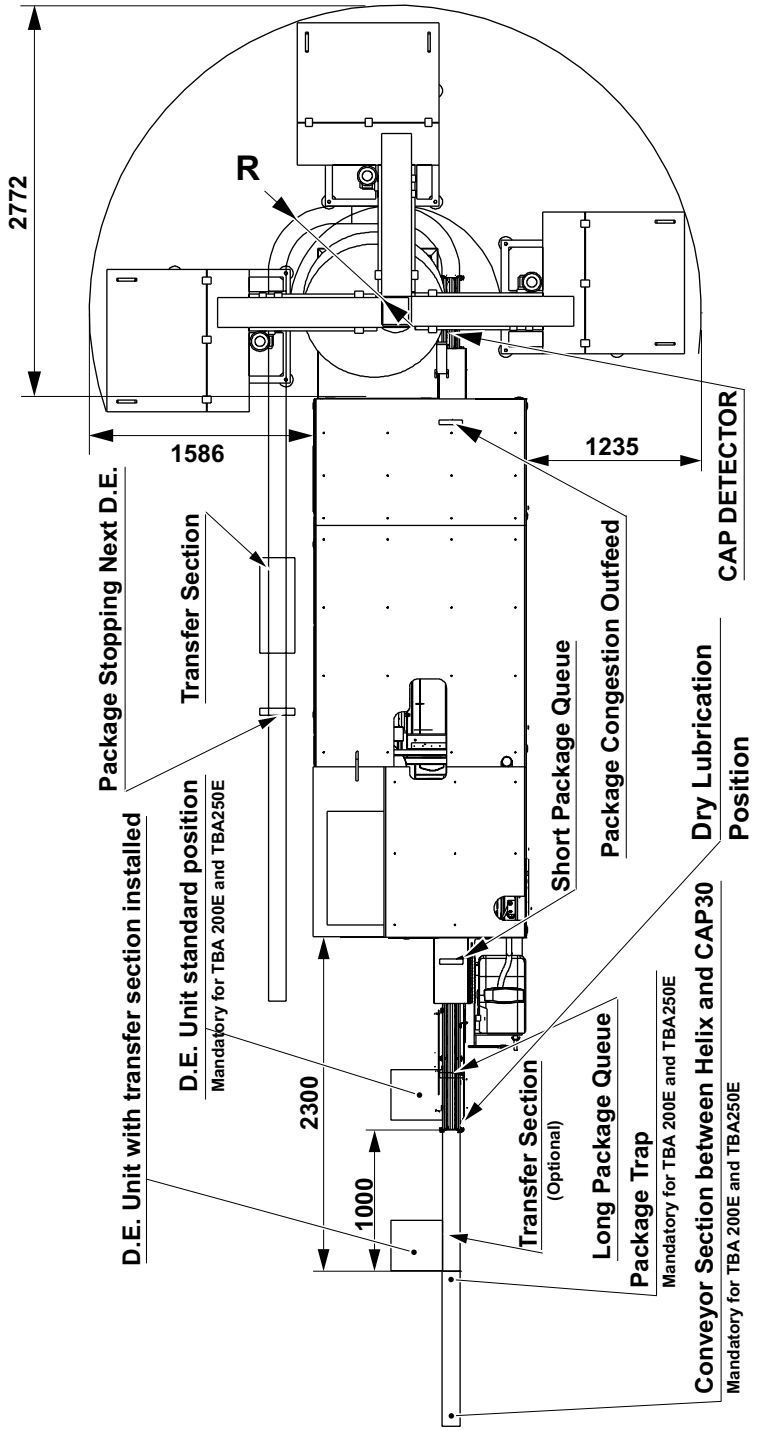

R = Radius of curvature = 500 mm minimum

Note! Install the package trap as close as possible to the CAP30 infeed. The package trap avoids the falling of TBA 200E and TBA 250E packages.

1.1.4 Cap Applicator Feet Locations

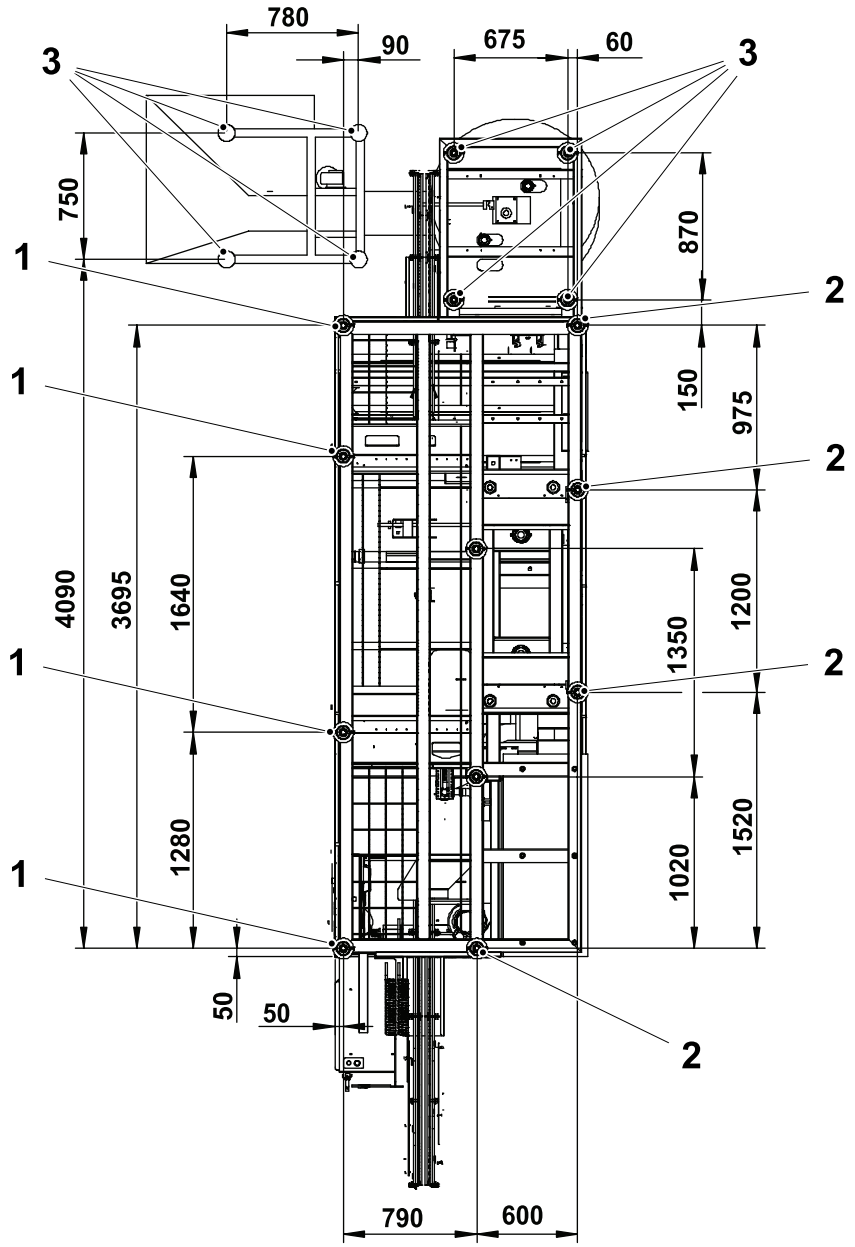

1 CAP30 left side feet
2 CAP30 right side feet
3 Cap sorter feet

1.1.5 Working Area

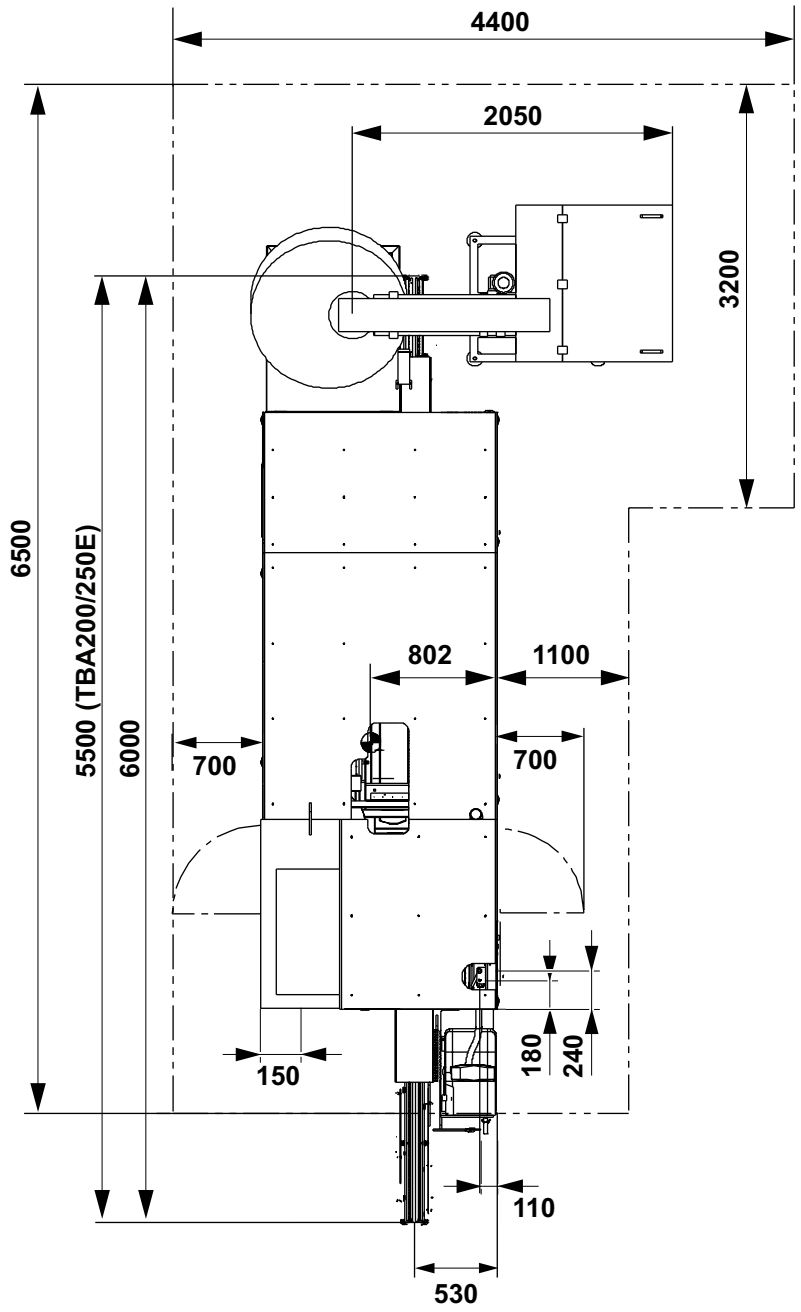

1.1.6 Drive and End Unit

The illustration below shows the location of DE units, the distances to be respected and the installation requirements for these units. For more detailed informations, see on page 93.

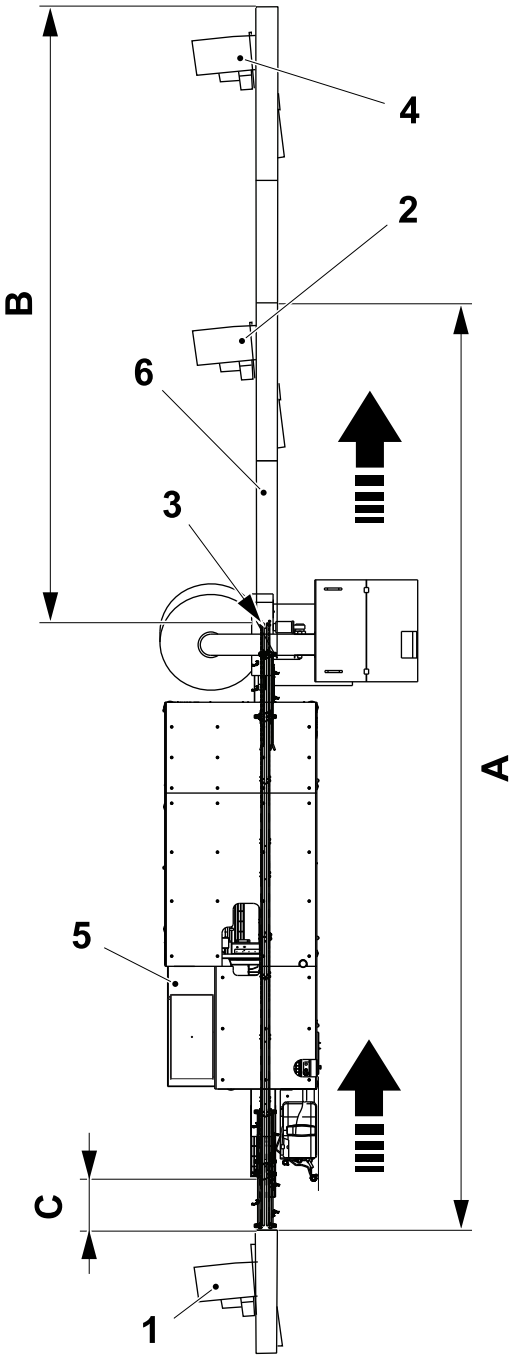

1 DE unit
2 DE unit
3 Package conveyor
4 DE unit
5 Electrical cabinet
6 Package conveyor

1.1.6.1 General

A DE unit (1) is installed at a distance **C** (**1 m** maximum for all except TBA 200 E and TBA 250 E and **0 m** for TBA 200 E and TBA 250 E) from the infeed of the cap applicator (see picture in the previous page). The DE unit (1) is not controlled by the cap applicator.

To pull the chain (package conveyor) through the cap applicator, a DE unit (2) is installed at the discharge end (front) of the cap applicator. Install the DE unit at the end of the Package conveyor (6) maximum **10 m** from the infeed DE unit (1).

Note! Don't put more than two curves in the package conveyor to avoid problems in the CAP30 infeed. Many curves in the conveyor may create a non costant movement of the conveyor chain.

For the speed applicator, a second DE unit (4) is installed. For the flex applicator the second DE unit (4) is a buyable optional; it is mandatory only in TP A3 iLines installations.

The minimum length of the outfeed conveyor, distance **B**, is calculated so that the conveyor is long enough to empty the machine of packages. The packages must leave the cap detector area.

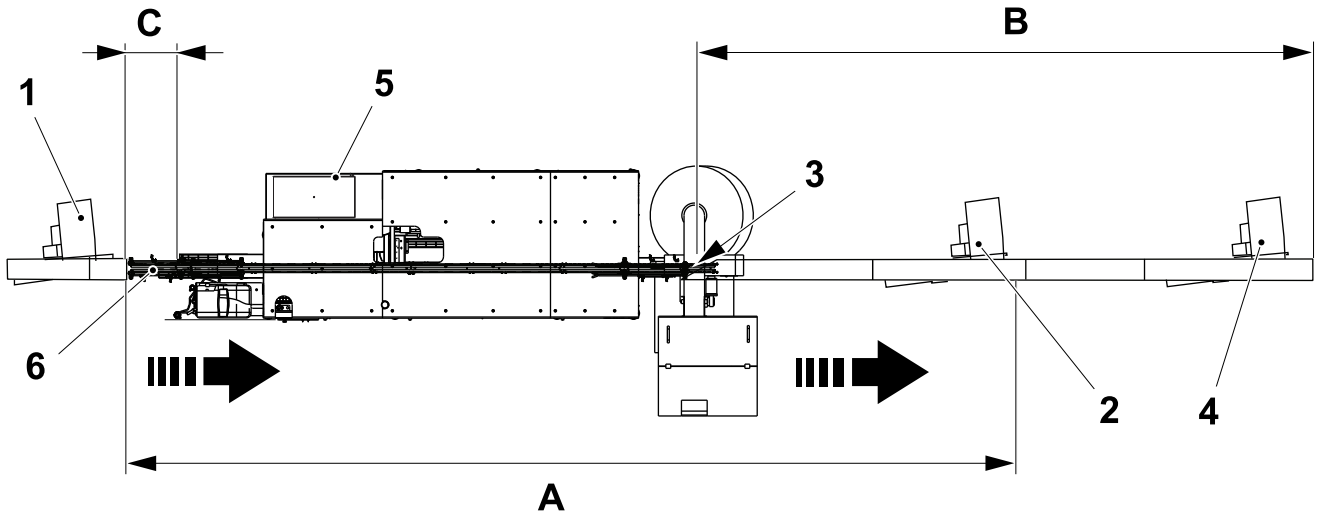

1 DE unit
2 DE unit
3 Package conveyor
4 DE unit
5 Electrical cabinet
6 Package conveyor

1.1.6.2 Installation Requirements

1.1.6.2.1 Safety

WARNING

Risk of personal injury.

To obey the safety regulations, a DE unit must drive the package conveyor through the Cap Applicator. **The electrical power for the DE unit must be supplied and controlled** from the cap applicator. See the EM for connecting the electrical cable to the DE units.

1.1.6.2.2 Distances

The distance **A**, between the DE unit (1) and DE unit (2), must not exceed **10 m**.

Note! Don't put more than two curves in the package conveyor to avoid problems in the CAP30 infeed. Many curves in the conveyor may create a non costant movement of the conveyor chain.

Distance **B**. This is the distance required to empty the cap applicator. The distance is package dependent, see the table below.

The distance **C**, between the DE unit (1) and the infeed of the machine, must not exceed **1 m**.

For TBA 200 E and TBA 250 E the distance **C** must be **0 m**.

Package type	Distance B (mm)
TBA 200 Sq; TBA 250 Sq TBA 200 E; TBA 250 E	3000
TBA 500 Sq	5000 - 5500
TGA 500 Sq; TGA 750 Sq; TGA 1000 Sq; TGA 1000 Crystal/Leaf	4500
TGA 1500 Sq	5000
TBA 750 S	7500
TPA 1000 Sq	5500
TBA 1000 Sq	5000
TBA 1000 S	5000 if the machine speed is 4800 p/h 7000 for all the other machine speeds
TBA 1500 S	7000
TBA 1890 S	12000
TBA 2000 S	12000 - 12500

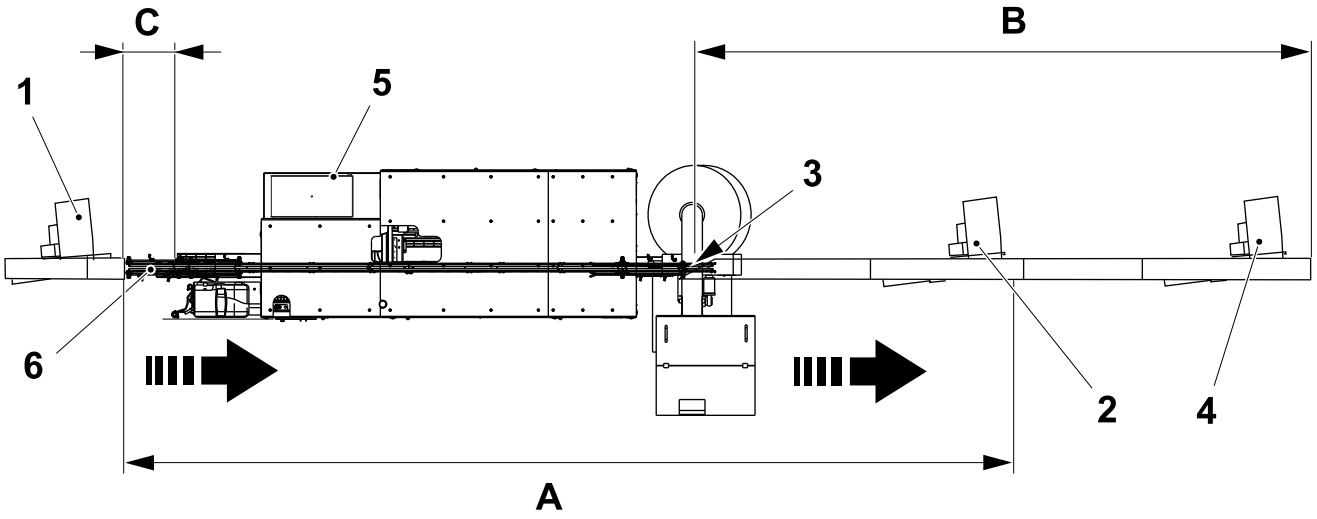

1 DE unit
2 DE unit
3 Package conveyor
4 DE unit
5 Electrical cabinet
6 Package conveyor

1.1.7 Cap Detector

The cap detector (1) is installed at the exit of the cap applicator (2). The cap detector discards any packages without caps or with caps that are misplaced.

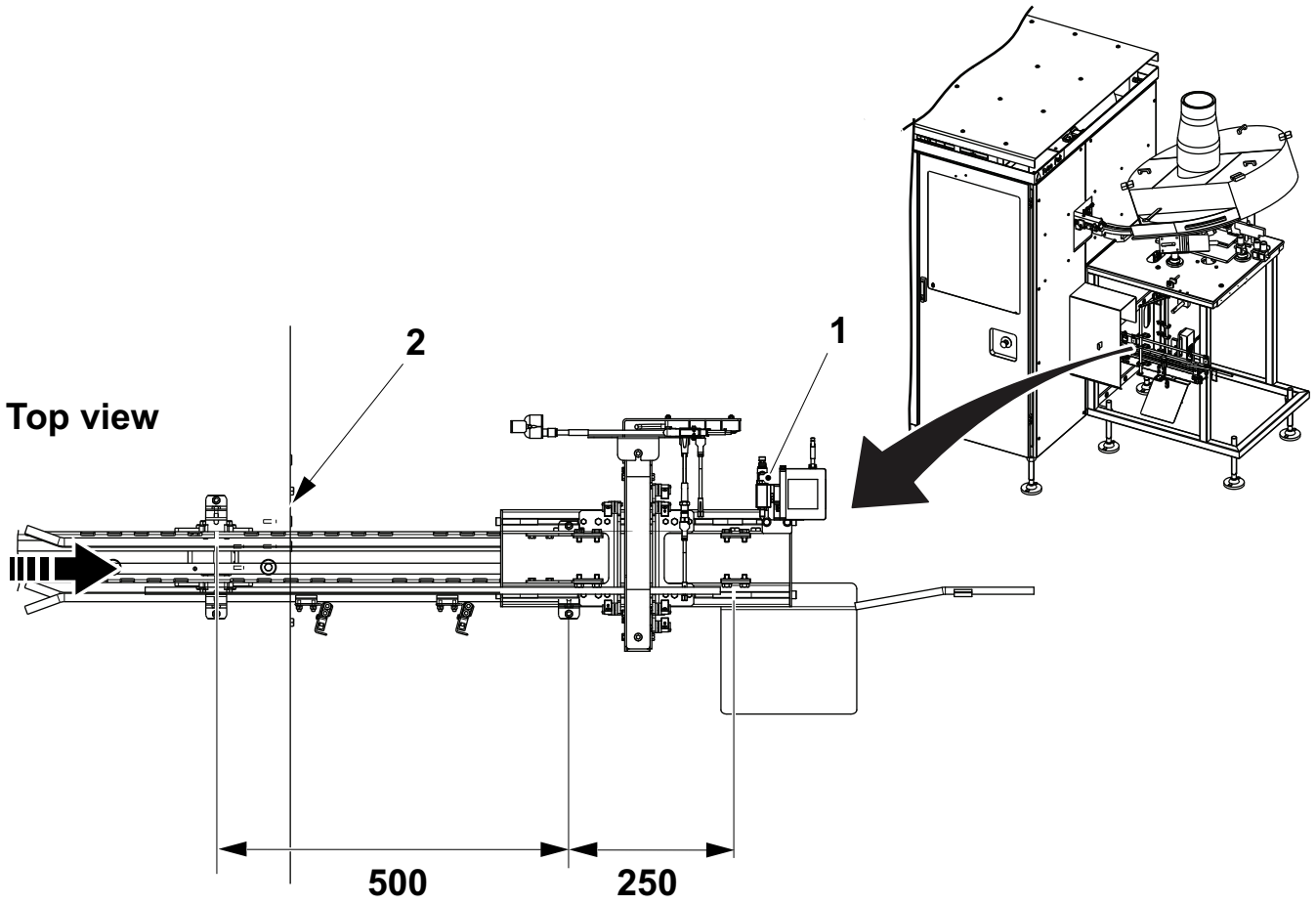

1 Cap detector
2 Cap applicator (front panel)

1.1.8 Sensors Position

The too long package queue sensor (1) is installed **1 m** before the DE unit (2) (distance **A**). This sensor is used to start the machine when it is in production and it is in stand by waiting for packages. The illustration below shows the location of long package queue sensor (3), verify package standing sensor (4), short package queue sensor (5) referring to the rear of belt brake (6), see the MM.

As well as the end of bearing housing (7) also shown is the location of the outfeed congestion package sensor (8) and the cap detector photo-electric sensor (9), see the MM.

Note! The maximum distance of the queue outfeed left line (10) is 5 m. The extension cable part number is: 351411-0050 (not included in machine delivery).

The queue outfeed left line (10) is installed at the discharge end of the cap applicator and after the DE unit (11). Where there is only one DE unit installed the queue outfeed left line (10) is installed after the DE unit (12) (distance **B**). See the MM. to set the distances.

A = 1000 mm

B = 500 mm

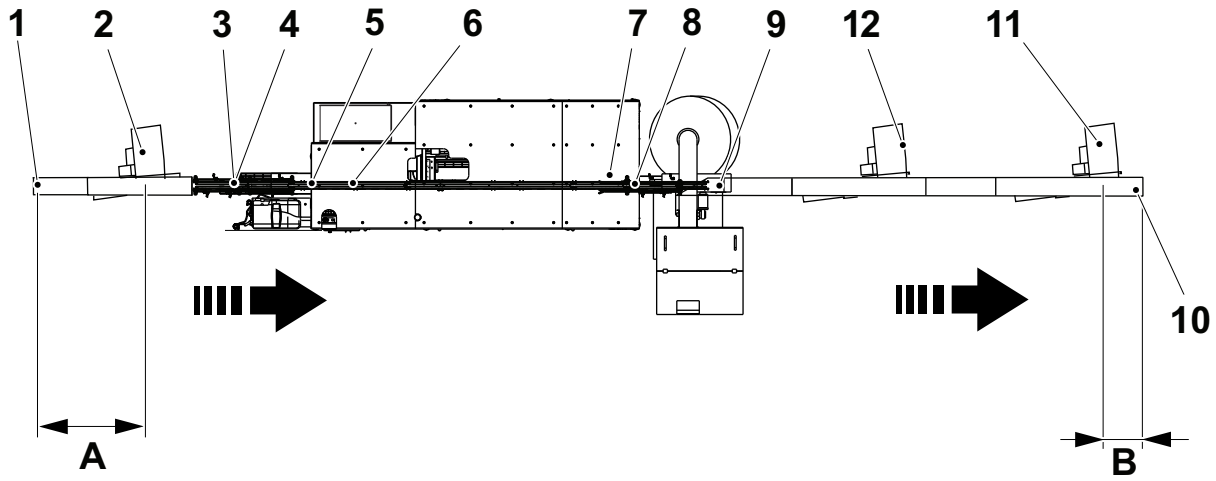

1 Too long package queue sensor
2 DE unit
3 long package queue sensor
4 Package standing sensor
5 Short package queue sensor
6 Rear of belt brake
7 End of bearing housing
8 Outfeed congestion package sensor
9 Cap detector photo-electric sensor
10 Queue Outfeed Left Line
11 DE unit
12 DE unit

1.1.9 Service Connection

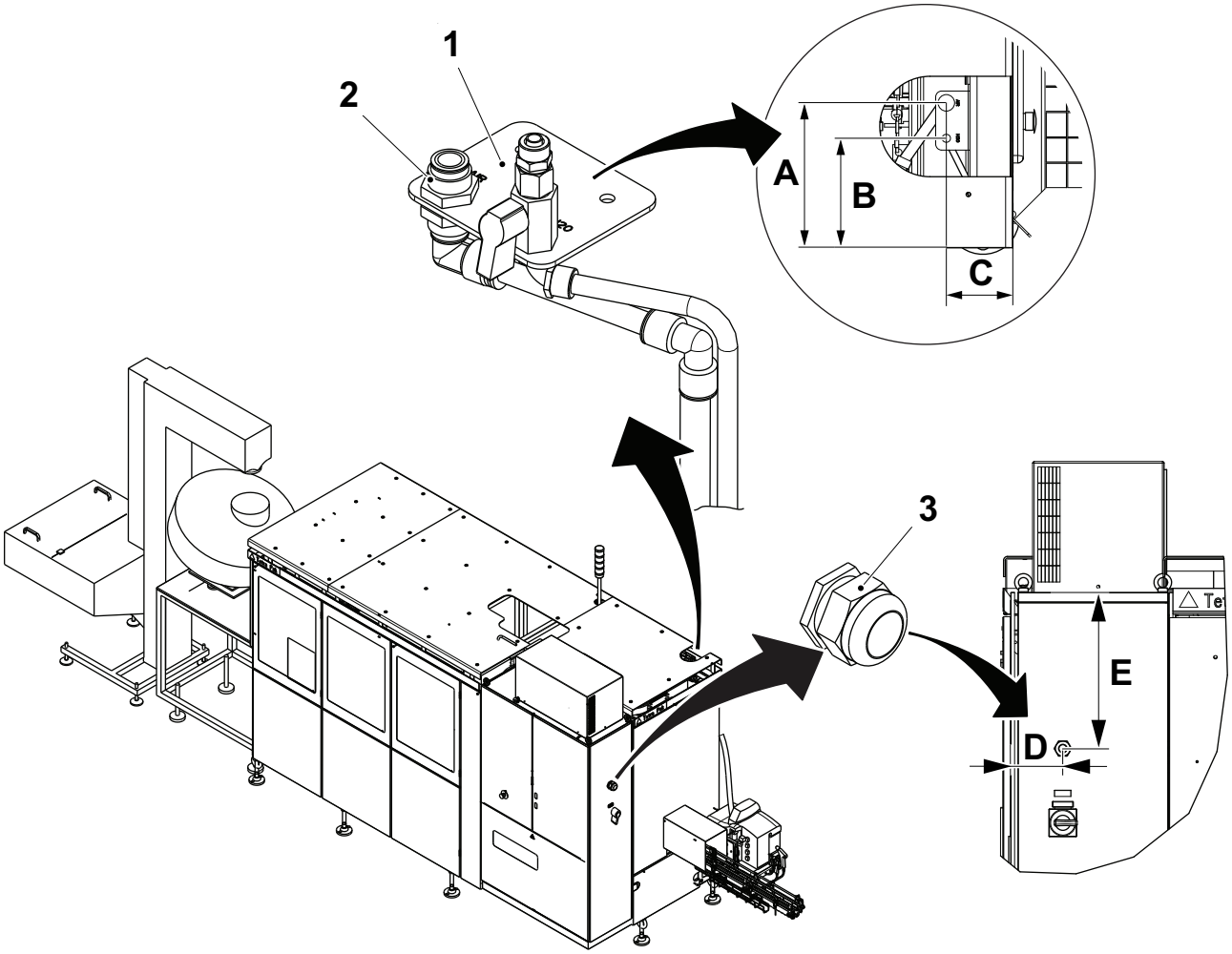

A = 240 mm
B = 180 mm
C = 110 mm
D = 150 mm
E = 480 mm

1 Water connection
2 Air connection
3 Electrical connection

(Cont'd)

(Cont'd)

Note! The water hose (4) must not be installed too much straight. A more curved installation is suggested to prevent any damages to the connection (5) of the water hose (4). Any water leakages from the connection (5) may damage the electric devices and the TPOP underneath.

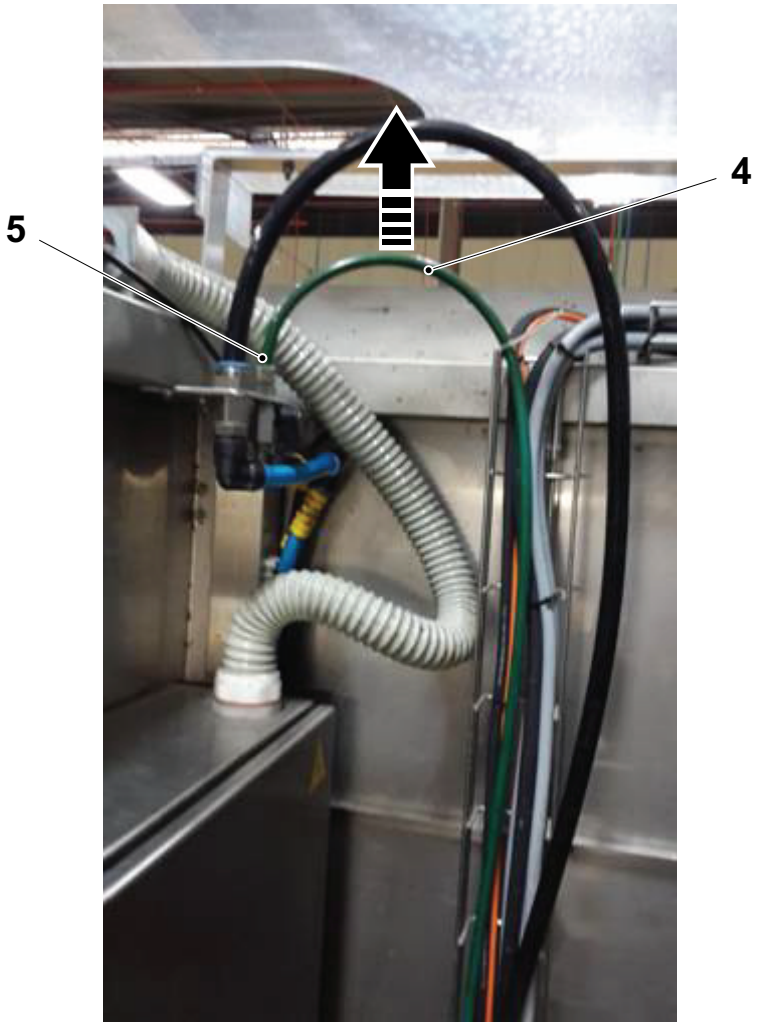

Wrong installation of the water hose (4)

4 Water hose 5 Connection

1.2 Installation Space

1.2.1 Unpacking Area

The minimum unpacking area must be at least twice the size of the main crate (number 1). This only allows an area large enough for one crate to be unpacked at a time.

Minimum area: XXXXX

The ideal unpacking area allows all crates to be unpacked together.

WARNING

Risk of personal injury.

Make sure there is sufficient room to move safely around the installation site. If machines around the site cannot be stopped, place guards around them to prevent accidental contact.

1.3 Site Environment

For detailed data, see Procedures & Guidelines QAM-588013-010X, a Guideline for the Hygienic Production of Liquid Food, Site and Building Recommendations.

1.3.1 Ambient Temperature

Characteristic	**Value**	
Ambient temperature	+15°C to +40°C (59°F to 104°F)	
Dew point	25°C (77°F)	
Ambient humidity	Temperature (°C)	Relative Humidity (%)
	15	95
	20	95
	25	95
	30	74
	35	56
	40	43

1.4 Crates

1.4.1 Main Crate

1.4.1.1 Weight and Dimensions

Note! The weight of the crates can increase significantly if the crates become wet.

Machine type	**Gross weight kg (lbs)**	**Net weight* kg (lbs)**	**Length mm (ft in.)**	**Width mm (ft in.)**	**Height mm (ft in.)**
CAP 30/Flex ScrewCap	3965 (8741)	2809 (6193)	5500 (18 ft 1 in.)	2260 (7 ft 5 in.)	2260 (7 ft 5 in.)

*The net weight is equal to the contents of the crate.

1.4.1.2 Contents

Machine type	**Contents**
CAP 30/Flex ScrewCap	Applicator Applicator roof with supports Cap detector Conveyor (250 mm) Machine manuals Machine documentation Outfeed tunnel Package conveyor and railings (infeed) Start up kits Setting tools Software CD Templates Warning lamp

1.5 Equipment Data

1.5.1 Equipment Limitations

See section 1.11.1.1 Package Conveyor.

1.5.2 Additional Equipment

See section 1.10.5 Lifting and Transportation Equipment.

1.5.3 Mass

All weights are estimates.

Characteristic	Value	Note
Machine mass Cap Applicator 30/Flex Cap sorter Flex Elevator	~ 2507 ±35 kg (5527 lbs) ~ 260 ±35 kg (573 lbs) ~ 170 ±35 kg (375 lbs)	
Static load	XXXX kgf	Maximum per leg
Dynamic load	XXXX kg	Maximum per leg
Static area mass	XXXX kg/cm^2	Maximum per leg
Dynamic area mass	XXXX kg/cm^2	Maximum per leg

1.5.4 Capacity

1.5.4.1 Production Capacity

Note! Machine capacity refers to the package conveyor speed (pack/hour).

Note! Machine capacity is cap and package dependent.

Note! To setup the package conveyor speed see the MM.

Machine configuration	Production Capacity (pack/hour)	Notes
CAP30		The applicator capacity is 20% more than the filling machine. The applicator capacity must not exceed the downstream equipment capacity.

1.5.5 Consumption

1.5.5.1 Electrical Power

Machine phase:	Consumption	Notes
Cap Applicator 30/Flex	6.7 kWh	

1.5.5.2 Compressed Air

Machine configuration	Average consumption during production	Peak consumption (duration < 2 sec.)
Cap Applicator 30/Flex	510 ±18 Nl/min	920 ± 20 Nl/min
TBA HeliCap2 23 7000 p/h	530 ±17 Nl/min	635 ± 20 Nl/min
TBA HeliCap2 23 10800 p/h	680 ±17 Nl/min	760 ± 19 Nl/min

1.5.6 Noise

The tables below gives the noise level measurements for the machine under the following conditions:

- machine on a concrete floor supported by standard feet
- production under normal operating conditions.

Note! Emission sound pressure/power values in accordance with ISO 4871.

1.5.6.1 Sound Pressure Level

Characteristic	Symbol	Value dB(A)	Notes
Declared maximum emitted sound pressure level, operator position	L_{pA}	76.5 dB(A)	Determined according to ISO 11204 (engineering method)
Uncertainty factor	K_{pA}	2.5 dB(A)	

1.5.7 Emissions and Thermal Load

1.5.7.1 Emissions

Characteristic	Value	Notes
Oil fumes in the operator´s environment	None	
Oil spillage	None	
Detergent spillage	None	
Water spillage	None	Except during external cleaning
Product spillage	None	

1.5.7.2 Thermal Load

Machine configuration	Value	Notes
CAP30 Flex	None	during PRODUCTION

1.5.8 Hygiene Function Connection Data

1.5.8.1 Manual Cleaning

For information regarding manual cleaning, see the chapter Care and Cleaning section in the Operation Manual for the equipment.

1.6 Equipment Specification

1.6.1 Conveyor Requirements

1.6.1.1 Infeed/Discharge

Note! In the table below are listed the caracteristics for the package conveyor.

Characteristic	Value
Type	Package Conveyor PC23
Width	40 to 78 mm (adjustable)
Height	825 ±50 mm
Standard Speed	25 m/min

1.6.1.2 Outfeed Conveyor Speed

Note! The outfeed conveyor speed is managed by the PLC program as a software recipe parameter depending on the production capacity. A different conveyor speed is stored for each production capacity. See also the MM.

Reference Speed Package-s/Hour	Outfeed Conveyor Speed (m/min) for Package Types			
	TBA 200Sq TBA 250Sq	TBA 500Sq; TBA 750Sq TBA 1000Sq; TPA 500Sq TPA 750Sq; TPA 1000Sq TGA 500Sq; TGA 750Sq TGA 1000Sq; TGA 1500Sq TGA 1000 Crystal/Leaf	TBA 1000S; TBA 1500S TBA 1890S; TBA 2000S TBA 1000B	Notes
4800		22.1		For TBA 1000 S only
6600	20.9	24.7	30.4	
7200	22.8	26.9	33.1	
8400	26.6	31.4	38.6	
9600	30.4	35.9	44.2	
10800	34.2	40.4	49.7	

1.6.1.3 Machine Conveyor Speed

If it's necessary to change the speed of the conveyor, go to the System Setting window in the operator interface and select the PACKAGE POSITIONER (PP) button, see the MM. Conveyor speed is shown in Hz.

For the speed values, see the following table:

(Cont'd)

(Cont'd)

Reference Speed Packages/Hour	Machine Conveyor Speed (m/min)	Notes
6600	19.0	
7200	20.7	
8400	24.2	
9600	27.6	
10800	31.1	

1.6.1.4 Conveyor Speed For CAP30 With TBA 200E and TBA 250E

CAUTION
TBA 200E and TBA 250E packages fall with a wrong conveyor speed.
When the conveyor runs with TBA 200 E and TBA 250 E packages, you refer to the speeds in chapter 1 of the MM.

1.6.2 Conveyor Length

The total length of the package conveyor varies according to the components used in the conveyor system. Each component gives a force load which is equal to a length of conveyor. General installation recommendations and guidelines for line layouts can be found in the various Standard Line catalogues. For additional information about the Package Conveyor PC23, see the TeM.

1.6.3 Installation Requirements

a) To obey the safety regulations, a DE unit must drive the conveyor. The electrical power for the DE unit must be supplied and controlled from the Cap Applicator. See the EM for connecting the electrical cable to the DE unit.

b) Conveyor lubrication must be used, see 1.7.1 Conveyor Lubrication.

1.7 Additional Information

1.7.1 Conveyor Lubrication

1.7.1.1 General settings

CAUTION
The package conveyor must be lubricated.
Special care in lubrication must be done when the conveyor runs with TPA packages and with higher speeds. Dry lubrication is suggested.

Note! These are the general settings recommended for TP production lines.

- the optimum value for friction is 0.14 to 0.18 depending on which package type and the conveyor speed. Friction calculation = push force on one package/weight on the package (in unit kilogram).
- to measure push force, place one package on a straight piece of conveyor, start the conveyor and measure the push force with a dynamometer or equivalent tool (in unit kilogram).

Note! Conveyor lubricants can be ordered from Tetra Pak Parts AB.

1.8 Additional Material Storage and Handling

See information in the Customer Specification, delivered on request. Contact Tetra Pak® for more information.

To ensure that the properties of the material are not changed, it is vital to follow the storage and handling recommendation of materials. Secure compliance to the G 026 Customer Storage & Handling Guide. The guide should be provided by your Tetra Pak® contact before, or at the point of material delivery.

1.9 Utilities Specifications

1.9.1 Cold Water Supply

Characteristic	Value	Notes
Water Quality	Drinking water	see the section 1.9.1.1 Water Quality
Supply pressure	300 to 450 kPa (3 to 4.5 bar) [43.5 to 65 psi]	
Max inlet temperature range	14 - 20°C (57 - 68°F)	For the Filling Machine with DIMC configuration the maximum inlet temperature must not exceed 16°C (61°F).

1.9.1.1 Water Quality

CAUTION
Risk of damage to the equipment.
Deposits due to water of inferior quality circulating in the plant can cause malfunction of vital parts.

- The water supply pipe must be equipped with a master shut-off valve.
- The supply pressure must be constant.
- The hardness of the water should conform to the recommended value.

In order to ensure good equipment operation and cleanliness, as a minimum, it is highly recommended to use a supply of water to the equipment with drinking water quality. This applies to water used for cooling, product flushing, rinsing and cleaning. A definition and description of drinking water may be found in the documents listed in the table below.

Term	Definition according to geographic area and document(s)
Drinking water	**EEA/EU:** COUNCIL DIRECTIVE 98/83/EC
	USA: FDA Title 40 Code of Federal Regulations - CFR Part 141, 142 and 143.
	All Countries except USA and EU/EEA WHO Guidelines for Drinking Water Quality

1.9.1.2 Technical Water Parameters

CAUTION

Risk of damage to the equipment.

The drinking water physical-chemicals parameters below have been identified to be critical in cleaning efficiency and to avoid/prevent corrosion and the formation/build-up of deposits. It is therefore strongly recommended to use water with these parameters falling within the ranges listed below.

Parameter	Recommended Values	Additional Info
pH	between 7 and 8 pH units	In order to minimise corrosion the water should be slightly alkaline (the pH value is easily determined by litmus paper or a pH meter).
Water hardness	between 5 and 10°f, French degrees of hardness (i.e. between 3 and 6 German degrees of hardness)	If the water is hard (high concentration of calcium carbonate, $CaCO_3$), deposits will accumulate in devices such as valves. This process is accelerated at high temperatures. Cleaning results and detergent consumption will also be affected due to hard water. These effects become more severe the harder the water.
Chlorides	lower than 50 ppm	In order to minimise corrosion the water must have low concentrations of chloride ions (Cl^-).
Silicates	lower than 10 ppm	In order to reduce the formation of solid deposits difficult to be removed.

1.9.2 Compressed Air

Characteristic	Value	Notes
Air quality	Class ISO 2.4.1	According to ISO 8573-1
Min. supply pressure	600 to 700 kPa (6 to 7 bar) [87 to 102 psi]	

1.9.2.1 Compressed Air Requirements

- Oil is invariably introduced into compressed air from oil-lubricated compressors and must be removed as completely as possible. Oil is a serious pollutant which is difficult to remove from instruments.
- Water will condense within the pneumatic system in quantities varying with the humidity of the input air, the temperature before and after the compressor, or after a temperature drop in a section of the air line routed through a cold zone.
- To avoid condensation, the air must be dried to an extent determined by the lowest temperature after the drier.
- Air expands and cools down in orifices and nozzles inside instruments with condensation as a result.

(Cont'd)

(Cont'd)

- For this reason, the dew point of the air at the instrument inlet must be at least 3° C.
- Dirt in the form of solid particles down to a size of 15 microns (0.015 mm) must be removed, for instance by filters or filter-equipped reducing valves.
- Position the filters so they can be seen and easily checked. The filters must be checked daily and their cartridges or inserts renewed whenever necessary.
- The air supply line must include a master shut-off valve.

1.9.3 Electrical Power

Note! For more information, see the Mains Connection Diagrams in the EM.

Characteristic	**Value**	**Notes**
Supply voltage	400 VAC, 3 phase + N + PE	
Supply cable cross section	**6 or 10 mm**^{2}	
Max. voltage fluctuation	**±10%**	
Frequency	**50/60 Hz** ±2%	
Fuse dimension	50 A	
Control system	Rockwell Automation	
Control voltage	24 VDC	
Earth Switch calibration current	300 mA	
PLMS software is installed in the machine.		

1.10 Tools, Materials, and Consumables Specifications

1.10.1 Special Tools and Equipment

The following tools and materials are needed to move and install the equipment:

- two hydraulic jacks, min. capacity 3 tons
- pallet trolley, capacity 800 kg (1765 lbs)
- spirit level, TP No. 90243-163
- 2 m (7') step ladder
- pneumatic or electric powered wrench
- crowbar or strong lever
- large rubber coated mallet
- cable ties
- insulating tape.

The following special tools may also be available from the local service organisation:

- machine carriage, TP No. 2514392-0100

1.10.2 Consumables

1.10.2.1 Lubricants

Refer to the Safety Precautions for the handling procedure for consumables

See chapter Technical Data in the MM delivered with the machine.

1.10.2.2 Cleaning Compounds

Refer to the Safety Precautions for the handling procedures for consumables

See chapter Technical Data in the MM and OM delivered with the machine.

1.10.3 Start Up Material

The following material is needed during the start up of the equipment:

Material	Quantity	Notes
Adhesive for Hotmelt Tank	12 Kg	
Hotmelt Nozzles	6	
Tension Spring	1	
Brush	1	
Fuse ATDR6	3	

Some of the start-up material is volume, package and cap-dependant. For more details, contact Tetra Pak.

1.10.4 Additional Material

The following additional material is needed during the installation:

(Cont'd)

(Cont'd)

Equipment	TP No.	Notes

See also the section Regular Accessories in the SPC delivered with the machine.

1.10.5 Lifting and Transportation Equipment

1.10.5.1 Lifting Equipment Specifications

The following types of equipment can be used to lift and move the crates:

- overhead gantry
- mobile crane
- fork lift.

Make sure that the lifting equipment complies with the specifications given in the following table.

Equipment or lifting tackle	Lifting capacity kg (lbs)	Notes
Fork lift	5000 (11025)	A higher capacity fork lift truck allows the centre of gravity of the crate to be raised safely to a height of 1500 mm (4 ft 11 in.).
Lifting forks	5000 (11025)	Min. length: – Main crate: 2000 mm ((6 ft 6 in.) Recommended setting width: – Main crate: 2000 mm (6 ft 6 in.))
Lifting chains, cables, ropes or hoist slings	5000 (11025)	Main crate Two pieces: Min. length: 8900 mm (30 ft) hook to hook.

1.10.5.2 Lifting Equipment Specifications for Uncrated Equipment

Make sure that the lifting equipment used to move the uncrated equipment complies with the specifications given in the following table.

Note! Do not use chains, ropes or hoist slings to lift or move the equipment.

Equipment or lifting tackle	**Min. lifting capacity kg (lbs)**	**Notes**
Lifting forks	5000 (11025)	Cap Applicator Min. length 1500 mm (4 ft 11in.) Recommended setting width = 1500 to 1600 mm (4 ft 11 in. to 5 ft 3 in.)
Lifting forks	1500 (3307)	Cap sorter Recommended setting width = 500 mm (1 ft 7 in.) Elevator Recommended setting width = 600 mm (2 ft)

1.11 Mechanical Line Integration and Connection

1.11.1 Discharge Requirements

1.11.1.1 Package Conveyor

Characteristic	Value	Notes
Recommended conveyor make/model	PC 23, see Package Conveyor manual.	Width varies according to package volume. Contact service organisation if necessary.

Note! The outfeed conveyor speed is managed by the PLC program as software recipe parameter depending on the production capacity. A different conveyor speed is stored for each production capacity.

1.11.2 Machine Connections - General Layout

Make sure that the CAP 30 machine is correctly connected to the filling machine and to any downstream equipment, according to the EM.

Note! If the downstream equipment is not a Tetra Pak machine connect the CAP 30 machine to it by wiring according to the EM.

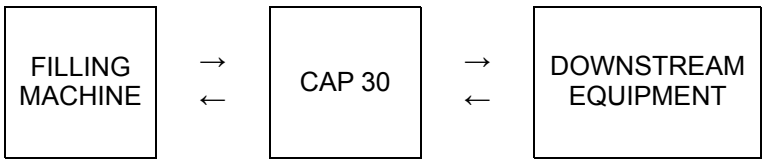

1.11.3 Installation in TP A3 iLines

1.11.3.1 General

An example of the composition of a TP A3 iLine is shown in the picture below. The line controller LC30 (1) is the device that controls all the machines. In this example there's the filling machine (2), the accumulator helix (3), the CAP30 (4) and other downstream equipment (5) and (6).

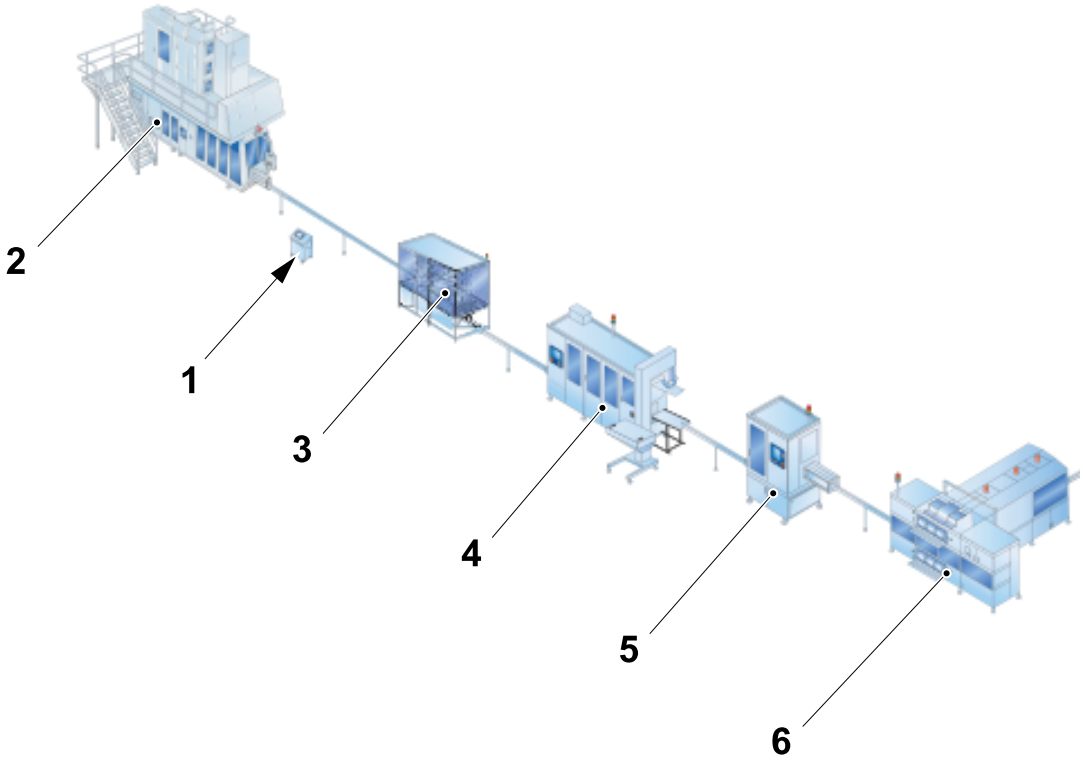

1 LC30 Line controller
2 Filling machine
3 Accumulator Helix
4 CAP30
5 Downstream equipment
6 Downstream equipment

1.11.3-1 Installation Guidelines

a) The package conveyor (1) managed by LC30 before the CAP30 Infeed is mandatory (minimum length suggested is 3 meters, possibly without any 90/180 degrees curve).

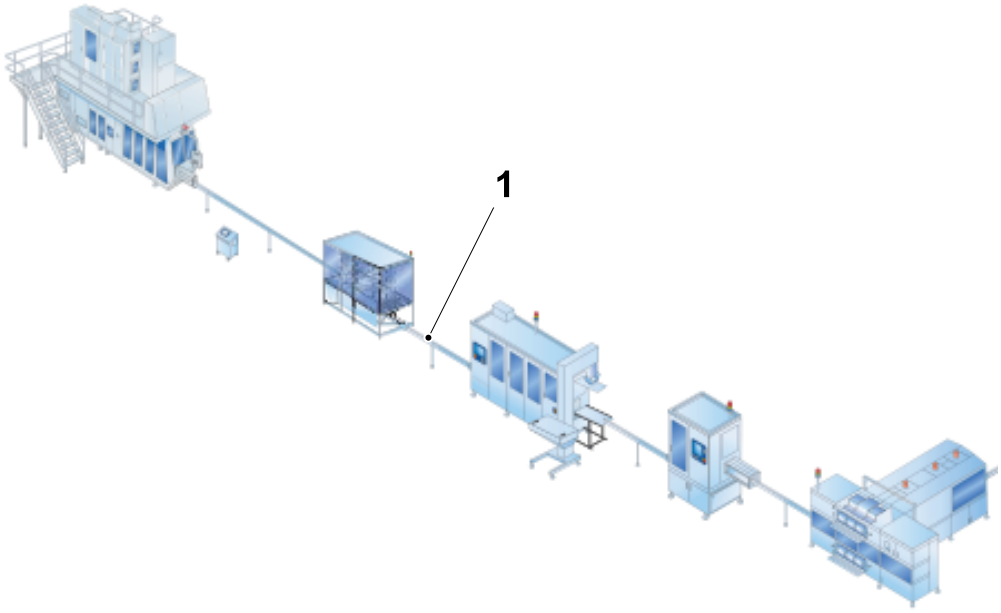

1 Package Conveyor

(Cont'd)

(Cont'd)

b) The installation of the DE unit (12) is mandatory (minimum length suggested is 3 meters, possibly without any 90/180 degrees curve).

c) The extension cable (part number 351411-0050) has always to be ordered.

d) Sensor (11) is named "outfeed queue photocell".

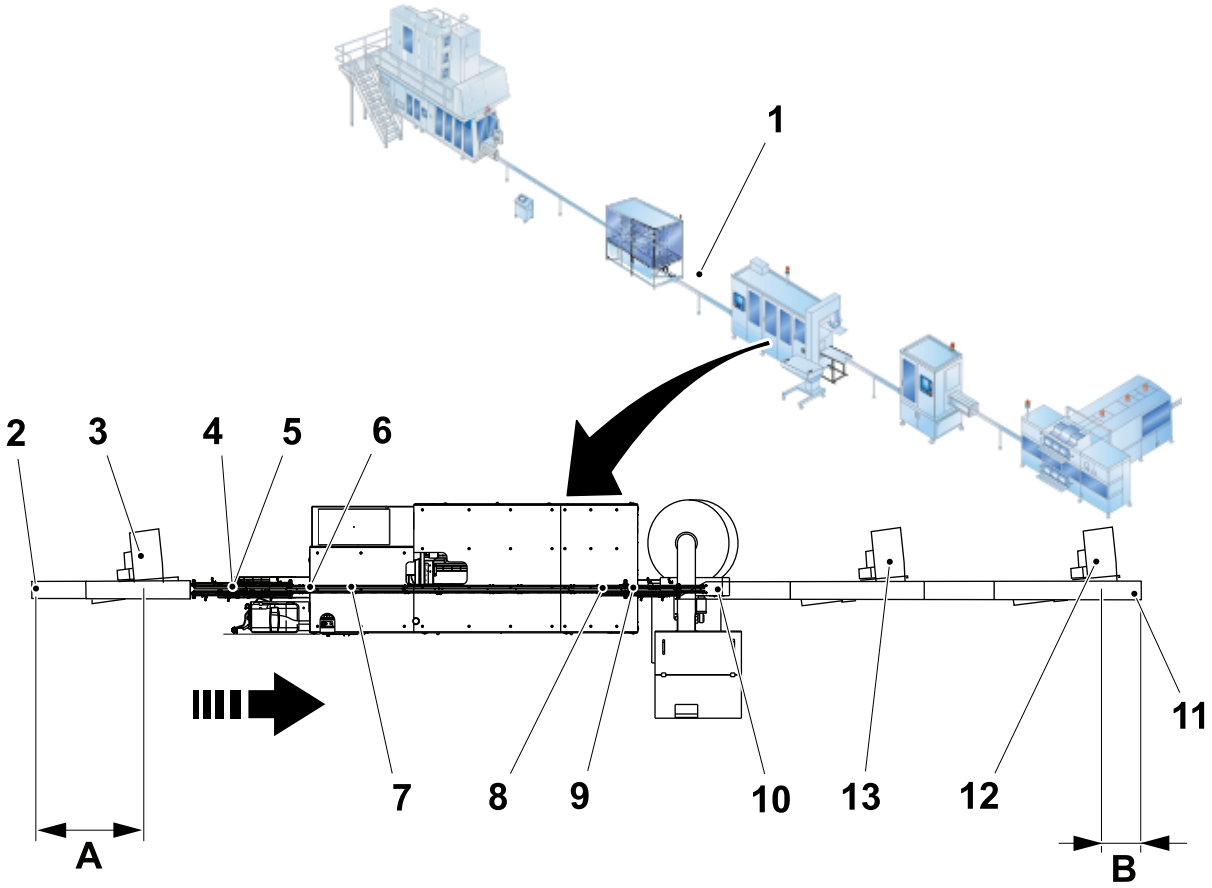

A = 1000 mm

B = 500 mm

1 Package conveyor
2 Too long package queue sensor
3 DE unit
4 Long package queue sensor
5 Fallen package sensor
6 Short package queue sensor
7 Rear of belt brake
8 End of bearing housing
9 Outfeed congestion package sensor
10 Cap detector photo-electric sensor
11 Outfeed queue photocell
12 DE unit
13 DE unit

1.12 Communication

1.12.1 Line Communication (Gateway Communication)

Refer to the circuit diagram in the EM. The communication cable enters the electrical cabinet through a hole for communication cable (1) on the left side of the electrical cabinet. The cable connects to the gateway communication unit (2). If required, a cable is connected from the module to the next inline machine.

Note! If the hole for cable to downstream equipment (3) in the electrical cabinet is not used, make sure the hole is sealed to stop the entry of liquids.

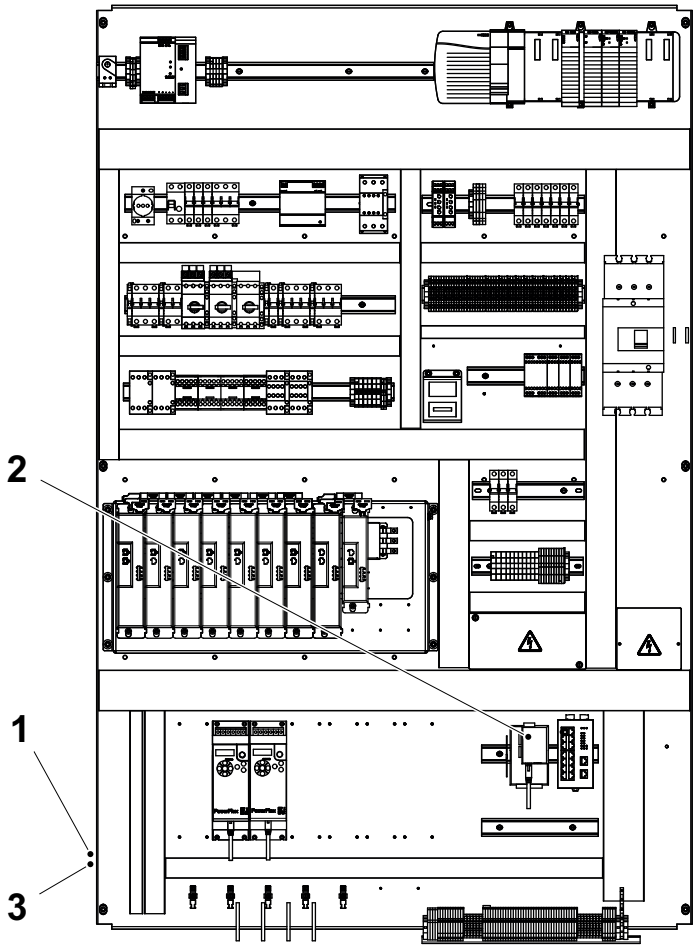

1 Hole for communication cable
2 Gateway communication unit
3 Hole for cable to downstream equipment

1.12.2 Line Communication (Ethernet Communication With The Line Controller)

Refer to the circuit diagram in the EM. The communication cable enters the electrical cabinet through a hole for communication cable (1) on the left side of the electrical cabinet. The cable connects to the ethernet router (2).

Note! If the hole for cable to downstream equipment (3) in the electrical cabinet is not used, make sure the hole is sealed to stop the entry of liquids.

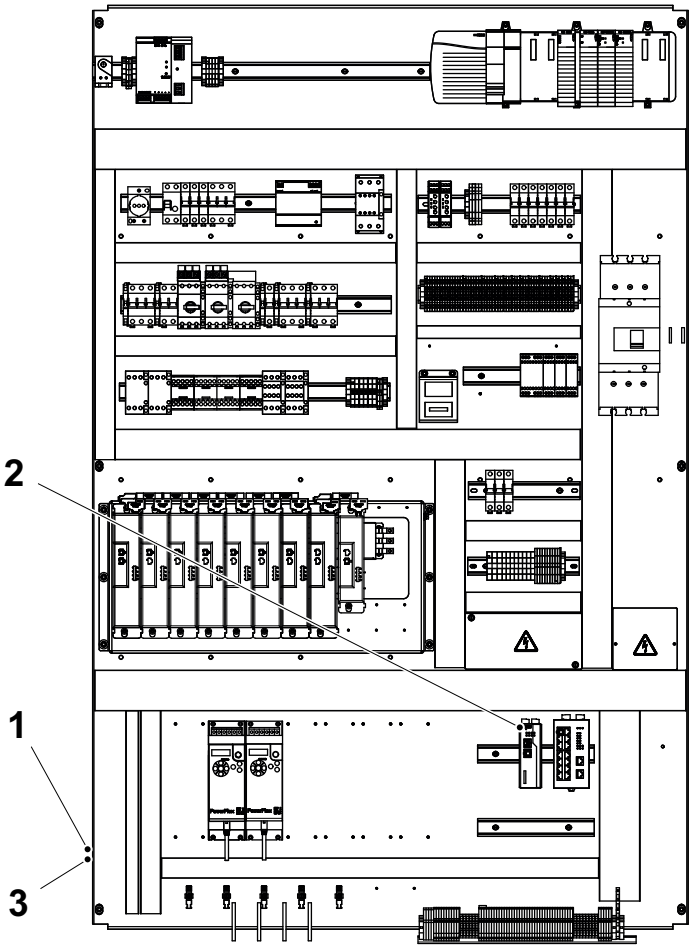

1 Hole for communication cable

2 Ethernet Router

3 Hole for cable to downstream equipment

2 Preparatory Requirements

Description

This chapter describes preparatory requirements and recommendations to ensure a good installation. Its purpose is to help the installation technicians and other involved in the installation project to quickly locate information about the site preparation, including requirements for utility, space, tools, and other required installation equipment, and specific construction details.

This chapter also contains a preparation checklist that is to be used both during the planning of the installation and during the preparation review meeting.

Description 122

2.1 Planning Preparation 125

2.2 Ensure Site Preparation 126

2.3 Prepare Customer 127

2.3.1 Resources 127

2.3.2 Special Skills 127

2.3.3 Special Practices 127

2.3.4 Training 127

2.4 Tetra Pak Maintenance System (TPMS) 128

2.4.1 Process 128

2.4.2 Methodology 128

2.4.3 Competence 128

2.4.4 Tools 129

2.5 Tools, Materials and Consumables 130

2.6 Spare Parts Supply 131

2.6.1 Start-Up Parts 131

2.6.2 Parts Inventory Management System 131

2.6.3 Parts Recommendation Tool 131

2.7 Special Practices and Procedures 132

2.7.1 Good Manufacturing Practices 132

2.8 Procedures and Guidelines from Tetra Pak 133

2.8.1 Food Safety Chart 133

2.8.2 Microbiological Validation Document 133

2.9 Prepare Site 134

2.9.1 Site Location 134

2.9.2 Installation Area 134

2.10 Check and Store Goods 135

2.10.1 Goods Reception 135
2.10.1.1 Lifting and Unloading the Crated Equipment..... 135
2.10.1.1.1 Labels, Symbols and Warning Placards 136
2.10.1.1.2 Impact Indicator 137
2.10.1.1.3 Centre of Gravity 137
2.10.1.1.4 Crate - Lift using a Fork Lift 138
2.10.1.2 Moving the Crated Equipment..... 140
2.10.1.2.1 Pulling Out System 141
2.10.1.2.2 Storing the Crated Equipment..... 142
2.10.1.3 Delivery Checks 142
2.10.1.3-1 Delivery Checks - How to Document Damage..... 143
2.10.1.4 Capital Equipment Logistic Checklist 143
2.11 Preparation Review..... 146
2.11.1 Preparation Checklist 146

2.1 Planning Preparation

The preparation checklist is to be used both during the planning of the installation and during the preparation review meeting, see 2.11.1 Preparation Checklist.

During the planning phase the preparation checklist is used to ensure that no important information is overlooked and that required activities are planned. In the column **Planned** of the checklist, the Tetra Pak® responsible applies the signature using a pen with indelible ink when required actions have been planned.

The preparation checklist covers system specific preparation requirements not covered in other generic installation preparation checklists. The generic checklist, available in Tetra Pak® Process Centre, is to be used to secure customer site readiness.

Ensure that the Installation Preparation form (PD-ID 2-1366) available in Tetra Pak® Process Centre is fulfilled.

2.2 Ensure Site Preparation

Ensure that Tetra Pak® personnel and customer personnel are familiar with the structure and content in this IM.

2.3 Prepare Customer

2.3.1 Resources

During Installation		
Personnel	No.	Note
Technicians	2-3	
Electrician	1	
During Production		
Personnel	No.	Note
Operators	2	
Technician	1	For troubleshooting purposes.
During Maintenance		
Personnel	No.	Note
Technicians	2	
Electrician	1	

2.3.2 Special Skills

Only skilled or instructed Tetra Pak installation personnel are allowed to assemble the Flex machine.

See section Personnel Requirements in chapter Safety Precautions.

Personnel must know how to use the portable PC computer programs for modifying PLC program parameters and downloading the PLC program.

2.3.3 Special Practices

Tetra Pak recommends that Tetra Pak staff and the final users cooperate during installation, commissioning, and validation of the equipment. The cooperation is a part of the training in how to operate and maintain the equipment.

2.3.4 Training

All operators of the equipment must have participated at a Tetra Pak operator training.

Contact the TP Technical Training Centre for more information about Customer Adapted Training (CAT).

2.4 Tetra Pak Maintenance System (TPMS)

To ensure uninterrupted production, it is strongly recommended to use the TPMS (Tetra Pak Maintenance System) provided by Tetra Pak. TPMS is the maintenance system for Tetra Pak Packaging Solutions to support system performance.

The overall scope includes:

2.4.1 Process

The Maintenance Process describes in six steps how Maintenance should be handled by the Tetra Pak Group and our Customers.

1. Create Maintenance Recommendations - Documenting the individual tasks that must be performed

2. Configure Line Maintenance - Consolidating the tasks needs for a particular packaging line configuration

3. Generate Maintenance Event - Generating the exact tasks for a particular packaging line at a particular time

4. Plan/Schedule Maintenance Event - Agreeing on the start date and the duration for a particular maintenance occasion

5. Perform Maintenance Event & Feedback - Carrying out the physical maintenance and feeding back the results to the TPMS

6. Analyse Feedback - Tetra Pak uses the feedback to correct and update global maintenance tasks

Steps 1 - 3 are carried out by the Tetra Pak Group based on Tetra Pak Group and Customer inputs. Steps 4 - 6 are carried out by both the Tetra Pak Group and the Customer, together or separate.

Customers using the Tetra Pak planned maintenance system receive checklists from their local Tetra Pak office whenever planned maintenance is due. These checklists are individualised for each of Tetra Pak's customer, according to the type of machine, equipment usage, and maintenance occasion. In addition, the system recommends spare parts, maintenance units, tools, and templates according to the statistics collected.

2.4.2 Methodology

A Reliability Centred Maintenance approach built on Failure Mode Effect & Criticality Analysis (FMECA) resulting in a mix of condition based, predetermined and corrective maintenance tactics.

2.4.3 Competence

These are the skills and competencies required to set the overall strategy, establish the maintenance recommendations, administer the process and to perform the physical work. If needed, depending on the sales agreement, make sure that the customers personnel take part in TPMS training.

2.4.4 Tools

TPMS On-Line - The global web based maintenance application providing seamless end to end flow of information to facilitate improvements:

- Capturing of all maintenance data performed by Tetra Pak and Customer
- Analysis of facts consolidated in a global database for continuous improvement
- Maintenance recommendations - When and which activities to be performed
- Maintenance & Operation Manual - How to perform the activities

2.5 Tools, Materials and Consumables

For special tools and equipment, consumables, materials, packaging and additional material, lifting and transportation equipment and accessories needed during all phases of the installation process refer to:

- for special tools and equipment, see 1.10.1 Special Tools and Equipment.
- for consumables, see 1.10.2 Consumables
- for materials, see 1.10.3 Start Up Material and 1.10.4 Additional Material.
- for lifting and transportation equipment, see 1.10.5 Lifting and Transportation Equipment.

2.6 Spare Parts Supply

The spare parts supply must be managed to ensure the availability of needed spare parts. Tetra Pak provides services to support the spare parts supply.

2.6.1 Start-Up Parts

Start-Up Parts is a service that supports the final user of the equipment in optimizing the on-site parts inventory for selected equipment. The service is available during the first 12 months of production or 3000 hours of production. Tetra Pak and the final user regularly analyse parts consumption and optimize the inventory accordingly.

The service gives good parts management, optimized total parts cost, easy access to the right parts at the right time, improved cash flow, and reduced working capital, all of which leads to increased production availability.

2.6.2 Parts Inventory Management System

Parts Inventory Management System (PIMS) has been developed to provide an appropriate level of administration and control of the stock held on the final user's site. The main purpose of the system is to optimize the quantity of stock held, in order to ensure that the correct spare parts are available when needed.

2.6.3 Parts Recommendation Tool

The Parts Recommendation Tool identifies the type and quantity of parts the final user of the equipment should have on hand when installing new equipment. This recommendation focuses on the first 3000 production hours and is based on the final user's operation, equipment, and level of security and risk.

2.7 Special Practices and Procedures

2.7.1 Good Manufacturing Practices

Good Manufacturing Practices (GMPs) are guidelines used by food processing and packaging facilities.

Important General GMPs are listed below:

- Keep facilities clean and in good repair.
- Use well constructed trash receptacles and keep them clean and in good repair.
- Provide adequate ventilation to minimize odours and vapours.
- Identify toxic cleaning compounds and sanitation agents and store them carefully, so that they cannot contaminate product, product-contact surfaces, or packaging materials.
- Clean and decontaminate all product-contact surfaces regularly. See the Operation Manual for information about cleaning procedures.
- Also the non-product contact surfaces should be clean. Clean as needed to protect against contamination of product. See the Operation Manual for information about cleaning procedures.
- Make sure that sewage and liquid waste are drained from the product processing and packaging areas.
- Provide adequate floor drainage for water, cleaning solutions, and product that is released onto the floor.
- Sewers and drains must be accessible for cleaning. Drains should never be located directly underneath the equipment.
- Provide convenient hand washing facilities with warm running water.
- Provide properly designed heating, venting, and air conditioning (HVAC) systems to reduce the risk of airborne contamination.
- Provide proper personal hygiene apparel as described in your facility's GMPs and operating and safety procedures.

2.8 Procedures and Guidelines from Tetra Pak

2.8.1 Food Safety Chart

Make sure that the Customer Quality Department receives the TeM Food Safety Chart (FSC).

The Food Safety Chart provides an overview of food safety relevant information related to:

- Equipment requirements
- Operational requirements
- Preventive Maintenance requirements

The FSC is an important document for the customer in order to prepare the HACCP (Hazard Analysis Critical Control Points) analysis/plan for the entire production line.

2.8.2 Microbiological Validation Document

The microbiological validation is recommended to be performed according to Quality Assurance Management guideline, QAM-588002-010X Guideline for Microbiological Evaluations of Commercially Sterile Products, the section for High Acid products should be used.

See Section 4.5.2 Microbiological Validation on page 4-73 for specific information about how to perform the microbiological validation test.

Sampling during commercial production is also recommended to be performed according to QAM-588002-010X Guideline for Microbiological Evaluations of Commercially Sterile Products.

2.9 Prepare Site

2.9.1 Site Location

The choice of site location should be determined with regard to the utilities and supplies required by the machine and access limitations.

Access is required for a fork lift or lifting equipment should be available to site the machine.

The installation site must be prepared in advance by the customer.

No special foundation work is required for the machine. The floor should be strong enough to support the full weight of the machine when packaging material is present.

See also the following Tetra Pak Guidelines:

Document Name	Document No.	Note
Guideline for the Hygienic Production of Liquid Food, Site & Building Recommendations	QAM-588013-010X	Available in English and Spanish

2.9.2 Installation Area

a) Make sure that all customer preparation work has been completed to prepare the site for the machine.

b) Make sure that all the necessary utility supplies are available, see section 1 Technical Specification.

c) Clear all obstacles away from the installation site and, if necessary, clean the floor of the site before starting to install the machine.

d) Leave the protective packing on parts until they are required during the machine assembly procedure.

e) Make sure that the lighting is adequate. Arrange additional portable lights if required, making sure that the cables are routed safely.

2.10 Check and Store Goods

The following sections contain information specific to the correct handling of the crated equipment.

The information given below is given for planning purposes only.

The equipment will be delivered in crates. Please note that the purpose of packing the equipment is solely to protect it during transportation. The crates are not designed for storage. The Machine Documents box contains the equipment manuals and is placed inside the crate. If the equipment is delivered in more than one crate, the Machine Documents box is placed inside the crate marked with the text "No.1".

A metal folder located on the outside of one of the crates, and marked with the text "to be opened first", contains the instructions for crate handling and crate opening at the installation site.

2.10.1 Goods Reception

The crates are designed to protect the equipment during transportation only. When the crates are delivered to the site, unpack the crates as soon as possible.

Always take delivery of the goods.

It is important to check goods immediately upon delivery whether they appear damaged or not. The purpose of this is to minimise the extent of any possible damage, prevent further aggravation of the damage, secure the rights of recovery against the carrier and enable a swift and correct handling of the claim.

Take the following steps immediately upon receipt of the goods.

Note! Never sign for damaged goods without making a written remark about the damage on the freight document, for example, the way bill, or the delivery receipt. Make a written remark on both the customer’s and the carrier’s copies. Get the signature from the driver on both documents.

Take at least one detailed picture and a broad picture, to show the arrival condition of the goods.

a) Investigate the external condition of the wooden crates. Follow the Procedure 2.10.1.3-1 Delivery Checks - How to Document Damage and use the 2.10.1.4 Capital Equipment Logistic Checklist. Any evident irregularities must also be noted on the freight document.

b) Check the contents of the consignment and verify that they conform to the way bill, invoice and packing list. The packing list can be found in the Machine Documents box inside the crate.
If any evident irregularities the content of consignment must be checked. Open the wooden crates immediately upon delivery or as early as possible thereafter. Follow the Procedure 2.10.1.3-1 Delivery Checks - How to Document Damage and use the 2.10.1.4 Capital Equipment Logistic Checklist. Any evident irregularities must also be noted on the freight document.

2.10.1.1 Lifting and Unloading the Crated Equipment

DANGER

Immediate danger to life.
To ensure safe and efficient handling of the crate, carefully study the following instructions.

2.10.1.1.1 Labels, Symbols and Warning Placards

Labels, symbols and warning placards are located on the external surfaces of the transit crates and outline the handling principles which must be observed.

- The crates should not be subjected to sudden shocks or movement
- The crates are not load bearing and must not be stacked or have other items placed on them
- The transit crates should be kept in the indicated upright position.

Labels may be installed to indicate that the crates have been tipped over or exposed to extremes of humidity.

Symbol	Meaning
	Centre of gravity
	Lifting points for chains, cables, ropes, or slings
	This way up
	Fragile
	Keep dry
↑TOP↑	Top of crate
FRAGILE	‘Fragile’ warning
HANDLE WITH CARE	‘Handle with care’ warning
NOT TO BE DROPPED	‘Not to be dropped’ warning
GROSS KG.	‘Gross weight’ value
NET KG.	‘Net weight’ value
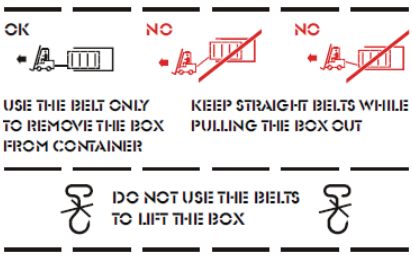	'Pulling Out System'

2.10.1.1.2 Impact Indicator

Some crates or boxes may have an impact indicator. Check the impact indicator has not turned red, if the impact indicator is red this shows that the crate or box has been exposed to an impact that could potentially have damaged the contents inside. If necessary fill out the damage report see the section 2.10.1.3-1 Delivery Checks - How to Document Damage.

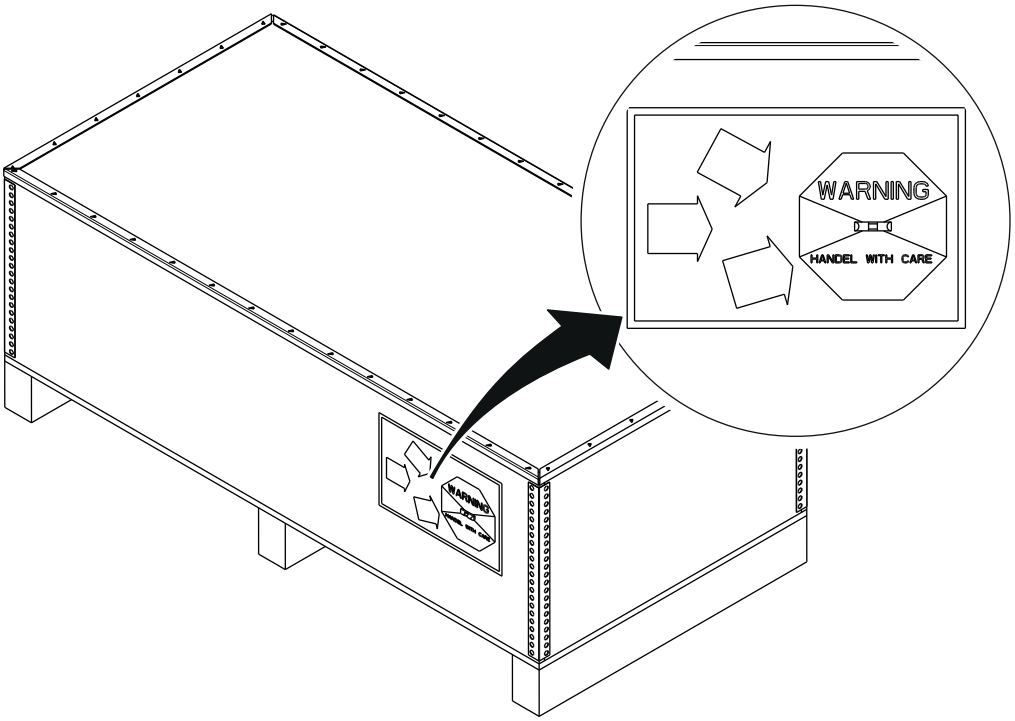

2.10.1.1.3 Centre of Gravity

WARNING

Risk of serious personal injury.

The purpose of the illustration below is to give an example of how the centre of gravity is indicated on a crate. For information on the location of the centre of gravity for a specific crate, see the actual marks on the crate.

The illustration below shows an example of how the centre of gravity is indicated on a Tetra Pak crate.

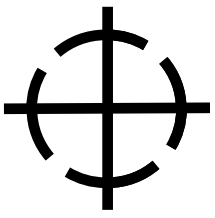

Centre of gravity

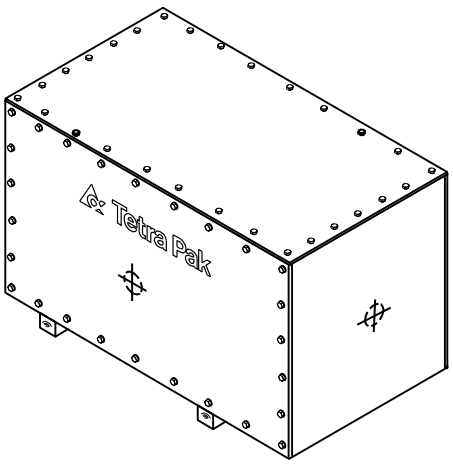

2.10.1.1.4 Crate - Lift using a Fork Lift

WARNING

Example only.

The purpose of the illustration below is to give an example of how the centre of gravity is indicated on a crate! For information on the location of the centre of gravity for a specific crate, see the actual marks on each crate.

DANGER

Immediate danger to life.

The crate will tilt if not observing the centre of gravity or the fork-lift points. Failure to obey may result in immediate danger to life and/or major damage to machine.

WARNING

Risk of death or serious injury.

The crate will tilt if not observing the centre of gravity or the forklift points. Failure to obey may result in immediate danger to life and/or major damage to equipment.

WARNING

Risk of death or serious injury.

Never stand or pass under the elevated portion of any truck, whether loaded or empty.

WARNING

Risk of death or serious injury.

Never ride on a suspended load.

WARNING

Risk of death or serious injury.

Do not stack crates on top of each other.

WARNING

Risk of death or serious injury.

Do not tilt the load too much or use pathways that slope too much. The maximum permitted slope in longitudinal and lateral direction is 18% (10.3 degrees).

CAUTION

Risk of equipment damage.

Handle the load with care.

(Cont'd)

(Cont'd)

a) Check that the complete lifting area is clear from obstructions in the path of travel.

b) The crates are marked with the centre of gravity symbol (2).
The lifting forks (3) must be positioned at equal distances from the centre of gravity symbol (2) on the crate (1) before lifting the crate. The forks should be set as wide as possible.

c) For the capacity, length and setting width of the lifting forks, see 1.10.5 Lifting and Transportation Equipment.

d) Keep the load close to the front wheels of the forklift truck in order to gain stability.

e) Smoothly lift the crate, just a few inches, and check the stability. Make sure that it does not tilt more than 6 degrees.

f) If the load is stable, keep hoisting velocity low at all times. Lower and raise the load gently to avoid jerks.

g) Avoid running over loose objects on the roadway surface.

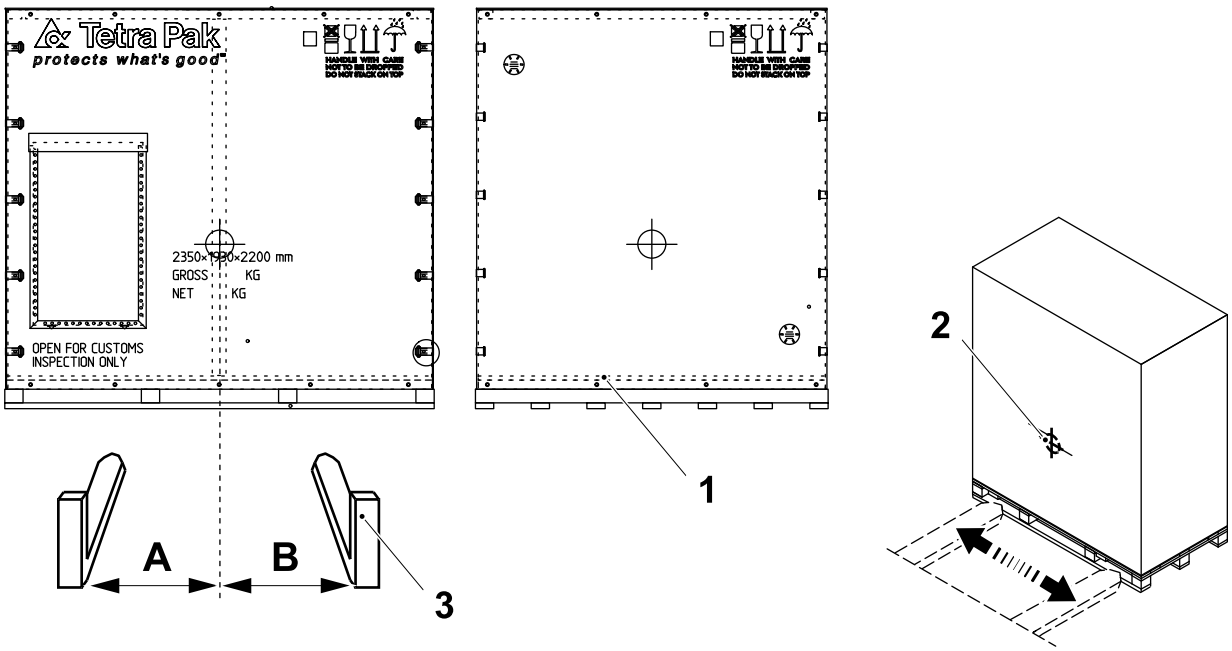

The illustration shows an example of a crate.

A=B

1 Crate
2 Centre of gravity symbol
3 Fork

2.10.1.2 Moving the Crated Equipment

DANGER

Immediate danger to life.
The machine may tilt if not observing the centre of gravity or the forklift points. Failure to observe may result in immediate danger to life and major damage to the equipment.
See Section 2.10.1.1.3 Centre of Gravity.

WARNING

Risk of death or serious injury.
Never raise or lower the load when travelling.

WARNING

Risk of death or serious injury.
Do not tilt the load too much or use pathways that slope too much. The maximum permitted slope in longitudinal and lateral direction is 18% (10.3 degrees).

CAUTION

Risk of pinching or crushing.
Move the crate slowly and gently.

Check that the crate can be transported to the storage or installation site without any problems regarding ceiling height, doors, passages, etcetera.

Uncrating and installation can then be performed together.

If installation has to start immediately, check whether it is possible to move the crates to the installation site.

When moving the crates to the installation site, deposit them so that the equipment can be lifted out and positioned without being turned around. Open the customs inspection panels to see inside the crates.

Wait until installation can start before unpacking the crates.

a) Lift the crate, see 2.10.1.1 Lifting and Unloading the Crated Equipment. **Lift only** enough to clear the floor.
b) Make sure that the crate remains stable on the lifting equipment.
c) Keep the fork arms about 300 mm (11.8 inches) above the ground when moving the crate. Tilt the fork arms backwards to the maximum.
d) Move the crate to its destination.
e) Look through the customs inspection panel to see in what way the contents are facing. Position the crate to face the most convenient direction.
f) Lower the crate gently to the floor, leaving enough room around it for easy access to all sides.
g) Make sure that the crate is firmly supported. Place blocks or plates under it if required.
h) Remove the lifting equipment.

2.10.1.2.1 Pulling Out System

When the “Pulling Out System” symbol is present, the crate has the pulling out system installed. The “Pulling Out System” is a tool to ease the extraction of the crate from the container.

WARNING

Warning! A wrong use of the Pulling Out System may damage the equipment.
The crate (1) must be horizontally extracted (Picture a). The belts (2) and (3) must be pulled in straight direction (Picture b).

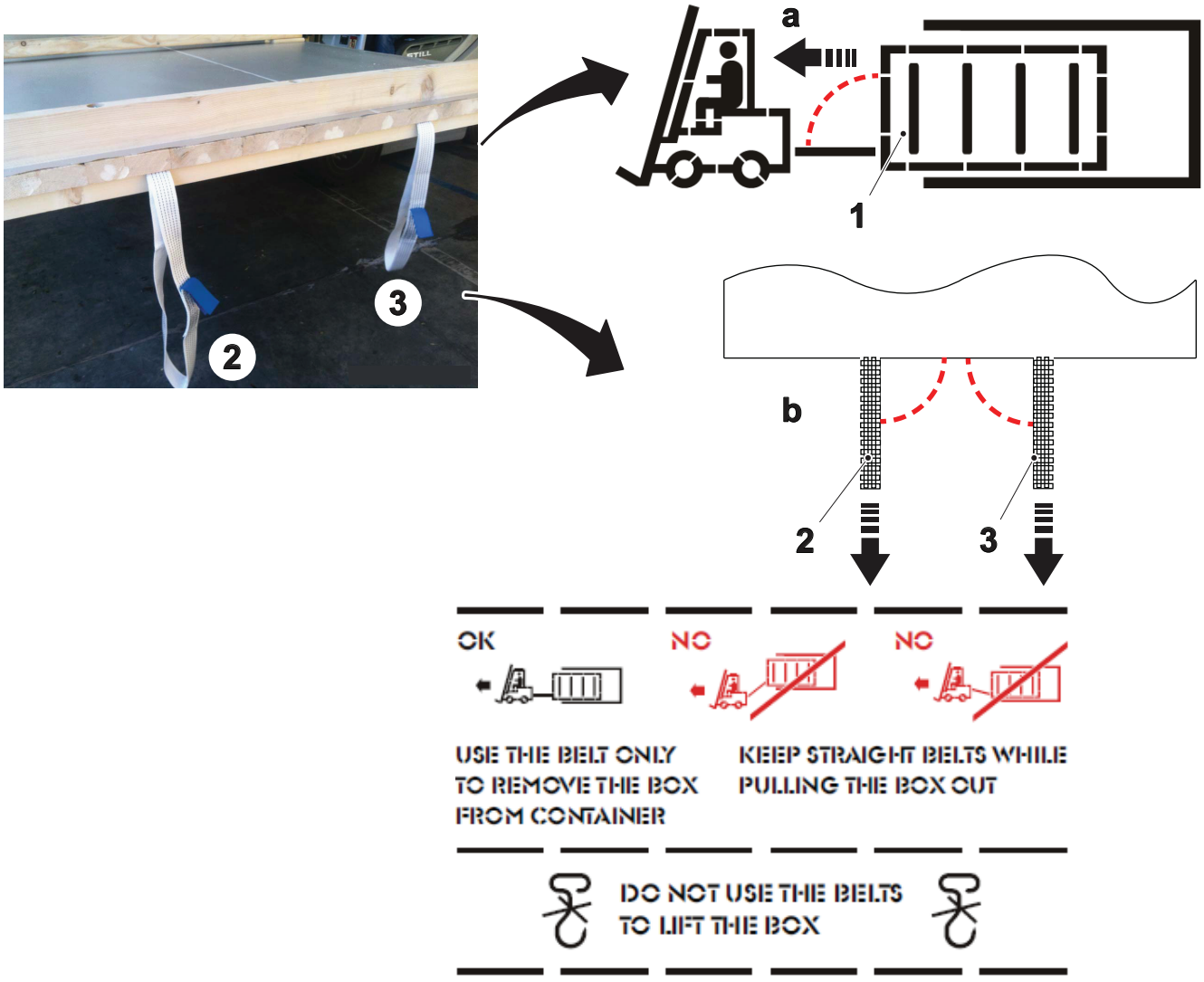

2.10.1.2.2 Storing the Crated Equipment

CAUTION
Risk of damage to the equipment.
Do not stack the crates on top of each other. Store the crates indoors. Exposure to damp or to high or low temperatures may damage the equipment.

a) Make sure that the storage environment respects the conditions specified in the table below.

b) Store the crates with about 1000 mm (3 ft) of free access space around and above for access and ventilation.

c) If the floor under the crates is uneven, place blocks or plates under them to provide a steady support.

Contents	Recommended Storage Temperature	Recommended Storage Humidity	Notes
Main Crate	10 to 30°C (50 to 86°F)	< 80%	
Caps	10 to 30°C (50 to 86°F)	< 80%	
Hotmelt adhesive	10 to 30°C (50 to 86°F)		Avoid dust and damp in the storage facility.

2.10.1.3 Delivery Checks

This section contains instructions on how to document damage, procedures for filling out damage reports, and how to report damage to Tetra Pak®, including inspection forms.

The forms can be found in both the IM and the Crate Handling Manual. Fill in the Capital Equipment Logistic Checklist located in the metal folder.

2.10.1.3-1 Delivery Checks - How to Document Damage

a) Take pictures of the damaged goods. If damage is apparent, take pictures to show the arrival condition of the goods, preferably before the goods have been unloaded.

b) Make a note on the freight document, for example, on the way bill or the delivery receipt, if you observe or suspect any of the following:

- apparent damage
- evident irregularities
- any delay encountered with the deliver
- the wooden crates are damaged
- seals are missing, broken or differ from those advised in the freight documents. Save the seals until a survey has taken place.

c) Do not sign for damaged goods without making a written remark about the damage on the freight document, for example, on the way bill or the delivery receipt.

d) Make an estimate of any possible damage by investigating the wooden crates, packaging and goods.

Use the 2.10.1.4 Capital Equipment Logistic Checklist to identify the Defect Mode code.

Note! Using the Defect Mode code when reporting the issue to Tetra Pak will help to systematically collect data.

e) Try to mitigate the damage as much as possible. For instance, place wet, damaged goods in a dry and heated area and protect damaged goods.

f) Report the issues to Tetra Pak:

- The sites using QuTI-P tool should report the issues in QuTI-P, describing the issue, enclosing pictures, and classifying the issue with a proper Defect Mode code part of the **Supply** defect area.
- The sites not using the QuTI-P should report the issues in the R/3 tool, describing the issue in claim notification, enclosing pictures, and classifying the claim with a proper Defect Mode code, part of the **Supply** defect area in **Damage** field of claim notification.

2.10.1.4 Capital Equipment Logistic Checklist

The Defect Mode codes are used by the Claim Administrator for reporting the damage.

Fill in and submit the form to the Claim Administrator together with relevant pictures.

(Cont'd)

(Cont'd)

Outside the box - the primary package

Check		No/Not applica-ble	Yes	Defect Mode
1.1	Is the shock warning tag activated?			Cracked (411)
1.2	Is one or more of the crate corners visibly damaged?			Cracked (411)
1.3	Is one or more of the crate sides visibly damaged?			Cracked (411)
1.4	Is the crate lid visibly damaged?			Cracked (411)
1.5	Are any documents missing?			Missing part (401)
1.6	Is the centre of gravity marking missing from one or more crate sides?			Wrong marking (407)
1.7	Is the crate marking incorrect?			Wrong marking (407)
1.8	Are there any crates missing?			Missing part (401)

(Cont'd)

(Cont'd)

Inside the box - the goods

Check		No/Not applica-ble	Yes	Defect Mode
2.1	Is there any broken glass panel?			Cracked (411)
2.2	Is there any part broken off the machine?			Cracked (411)
2.3	Is there any material not blocked?			Displaced (404)
2.4	Is there any crushed or visibly damaged carton?			Crushed (410)
2.5	Is there any visible rust on any part of the machine (including inside)?			Oxidised/corro-ded (406)
2.6	Is there any detached or loose part?			Loose (405)
2.7	Is the machine wet?			Water inside (413)
2.8	Is there any water inside the machine?			Water inside (413)
2.9	Is there any water inside the crate?			Water inside (413)
2.10	Is the machine dirty (not tidy and clean)?			Dirty (409)
2.11	Is there any part of the machine bent?			Bent (408)
2.12	Is there any part of the machine scratched?			Scratched (412)
2.13	Is there any truncated cable?			Truncated (414)
2.14	Is there any worn cable?			Worn (415)
2.15	Check the content of the packing list: is there any part not listed?			Wrong part (402)
2.16	Check the content of the packing list: is there any part missing?			Missing part (401)

2.11 Preparation Review

The purpose of the preparation review is to align with the customer that all steps in this phase have been completed. Any remaining issues should be addressed in regards to ownership and completion time.

The preparation checklist lists specific preparation requirements as personnel required, materials, tools and consumable to be used, recommendations to know, guidelines and documents to have at hand. Defects or faults together with necessary actions and time to correct the deviations must be recorded in the checklist. See Section 2.11.1 Preparation Checklist. Reference to the specific instructions and documents are given in the checklist.

The checklist must be filled by the project manager. During the preparation review, the completion of the planned activities are confirmed using a pen with indelible ink.

Use the checklist as follows:

- Make a copy of the checklist before it is filled in (there may be a need to reuse the checklist if the equipment is to be moved to another site)
- Use a pen with indelible ink.
- Under Note, document any deviations, incorrect values, or comments.
- Under Planned, sign that the check is planned.
- Under Done, sign that the check is performed.
- Store the checklist in the project files maintained by the market company.

2.11.1 Preparation Checklist

Machine No.	Name	Drawing Specification	Electrical Equipment SPC Reference
Site		**Project Manager**	**Checklist completion date**

No.	Check	Reference Document (IM unless other document specified)	Note	Planned (signature)	Done (signature)
1	The resources (personnel, licences, software) required for the installation, production and maintenance are in place.	2.3.1 Resources			
2	The personnel for the installation is adequately skilled or instructed.	2.3.2 Special Skills			
3	All operators of the equipment must have participated at a Tetra Pak operator training.	2.3.4 Training			
4	The Tetra Pak recommendations for organising good and efficient equipment maintenance through the use of the TPMS have been read and understood.	2.4 Tetra Pak Maintenance System (TPMS)			
5	The informations about how to manage the spare parts supply to ensure the availability of needed spare parts have been read and understood.	2.6 Spare Parts Supply			
6	The guidelines for Good Manufacturing Practices have been read and understood.	2.7.1 Good Manufacturing Practices			
7	The guidelines for Food Safety Chart and Microbiological Validation have been received.	2.8.1 Food Safety Chart 2.8.2 Microbiological Validation Document TeM Food Safety Chart			
8	The lifting and transportation equipment is in place.	1.10.5 Lifting and Transportation Equipment			
9	The required start up material in place.	1.10.3 Start Up Material			
10	The required additional material is in place.	1.10.4 Additional Material			
11	The required consumables are in place.	1.10.2 Consumables			
12	The site location and the installation area have been identified and they are compliant with the requirements for space, product connections, utilities, temperature.	2.9 Prepare Site Guideline for the Hygienic Production of Liquid Food, Site & Building Recommendations QAM-588013-010X.			
13	Review the status of the site preparation.	Generic checklists PDID-2-1366 available in Tetra Pak® Process Centre.			
14	The instructions for crate handling and crate opening are located in the metal folder outside the crates.	2.10 Check and Store Goods			

3 Mechanical Completion

Description

This chapter describes the mechanical completion of the equipment. The mechanical completion covers all activities from receipt of the equipment until the equipment is mechanically installed.

The chapter includes procedures to receive, assemble, and install the equipment. It also includes a checklist used to verify that the equipment is mechanical correctly installed.

Description 150

3.1 Crate Handling 153

3.1.1 Opening the Crates 153

3.1.1-1 Crate Opening Sequence 153

3.1.2 Unpacking the Crates 154

3.1.2-1 Inspection 155

3.1.3 Disposing of Reusable Materials and Waste 156

3.2 Positioning and Assembly 157

3.2.1 Moving 157

3.2.1.1 Centre of Gravity and Lifting Points 158

3.2.1.1.1 Cap Applicator 158

3.2.1.1.2 Cap Sorter 159

3.2.1.1.3 Infeeder 159

3.2.1.2 Fork-lift Position 160

3.2.1.2-1 Main Crate (1) - Remove the Machine Body with a Fork Lift 160

3.2.1.3 Moving the Machine 160

3.2.1.3-1 Machine - Move using Carriages 161

3.2.1.4 Moving the Machine Parts 162

3.2.2 Positioning 162

3.2.2.1 Positioning the Machine 162

3.2.3 Levelling the Equipment 163

3.2.4 Install the Machine Feet 163

3.2.5 Set the Machine Body Height 164

3.2.6 Level the Machine Body 164

3.3 Assembly 165

3.3.1 Cooling Unit 165

3.3.2 Warning Lamp 167

3.3.3 Roof Sections 168

3.3.4 Hotmelt Unit 169

3.3-1 Hotmelt Hose 171

3.3.5 Package Conveyor 175
3.3-2 Package Conveyor - TBA Edge 176
3.3.6 Cap Conveyor 180
3.3-3 Cap Sorter 181
3.3.7 Conveyor and Cap Detector 186
3.3.7-1 Cap Detector 186
3.4 Equipment Interfaces and Connections 187
3.4.1 Electrical Connection 187
3.4.1.1 Power Supply 187
3.4.1.2 Cap Detector 187
3.4.1.3 Cap Sorter 188
3.4.2 Compressed Air 189
3.4.3 Water 190
3.5 Auxiliary Equipment 191
3.5.1 General 191
3.5.2 PLMS 191
3.5.2-1 Install PLMS Config File 191
3.6 Final Procedures 192
3.7 Restore Tools and Site 193
3.8 Mechanical Completion Review 194
3.8.1 Mechanical Completion Review Checklist 194

3.1 Crate Handling

- For crate handling instructions, see 2.10 Check and Store Goods.
- For goods reception instructions, see 2.10.1 Goods Reception.
- For instructions regarding lifting and unloading the crated equipment, see 2.10.1.1 Lifting and Unloading the Crated Equipment.
- For instructions regarding moving the crated equipment, see 2.10.1.2 Moving the Crated Equipment.
- For instructions regarding delivery checks, see 2.10.1.3 Delivery Checks.

3.1.1 Opening the Crates

3.1.1-1 Crate Opening Sequence

The following sections contain the correct procedures for opening the crates and unpacking this equipment.

WARNING
Risk of personal injury.
Take care when disassembling the crates. Some machine parts may have been loosened during transport.

(Cont'd)

(Cont'd)

Note! The following instructions apply to all crates. Open the crates in the order in which the equipment components are required.

a) Remove the top of the crate and the reinforcement cross-beams, see figure 1.

b) Unscrew any screws fixing the contents to the front of the crate and remove the front of the crate, see figure 2.

c) Unscrew any screws fixing the contents to the back of the crate and remove the back of the crate, see figure 3.

d) Unscrew any screws fixing the contents to the sides of the crate and remove the sides of the crate, see figure 4.

e) Remove all loose boxes and packages.

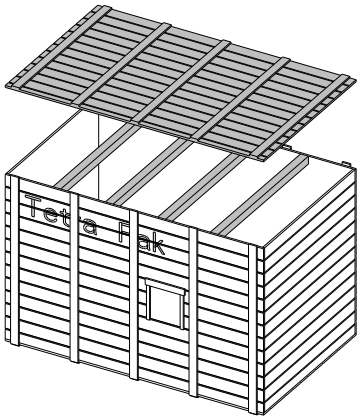

Fig.1

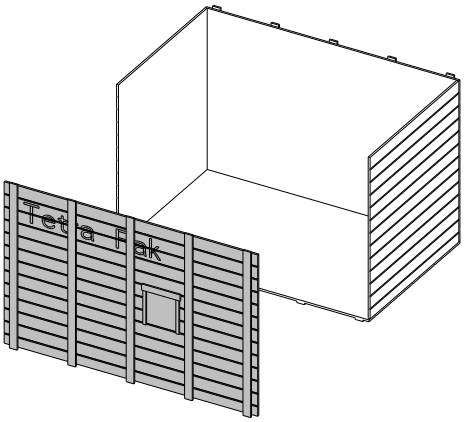

Fig 2

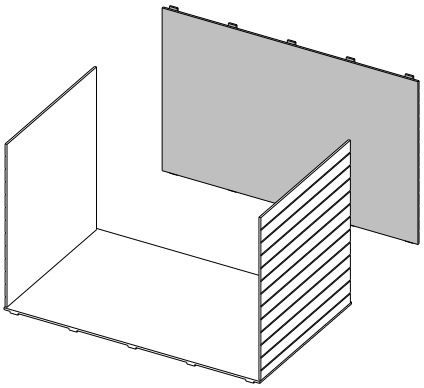

Fig.3

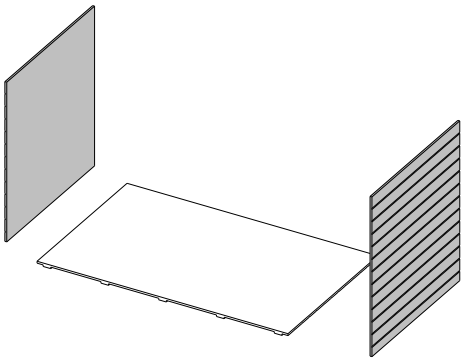

Fig 4

3.1.2 Unpacking the Crates

If not already done, investigate the condition of the equipment during unpacking. Follow applicable parts of the procedure 2.10.1.3-1 Delivery Checks - How to Document Damage and use the 2.10.1.4 Capital Equipment Logistic Checklist.

The packing list can be found in the Machine Documents box inside the crate.

3.1.2-1 Inspection

a) Use the packing list to check that nothing is missing.

b) Inspect the machine and the accessories for damage.

c) Open the machine document box and check that the documentation corresponds with the machine and the machine number.

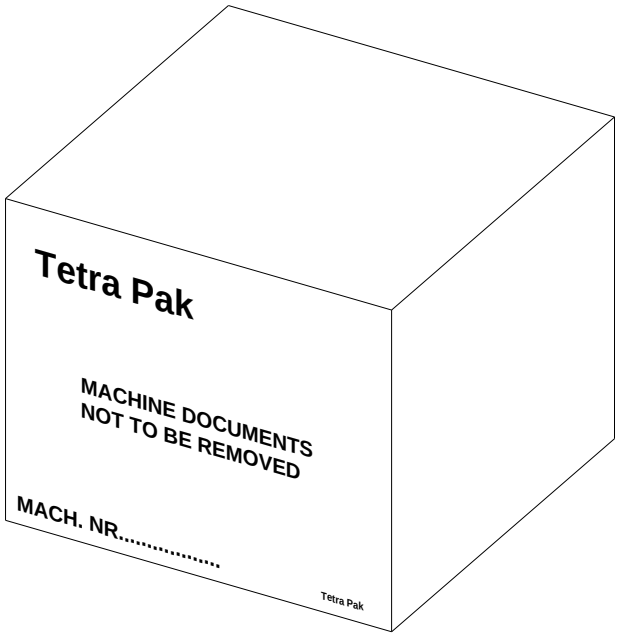

Machine Document Box

Check that the IMD (Individual Machine Documentation) binder is included in the delivery and contains the following:

- Machine Specifications
- Machine Deviation (if relevant)
- Declaration of Conformity
- Final Inspection Report
- System drawings
- Technical Publications (Manuals)

The Technical Publications below are available in the correct EU language, quantity, and correspond to the specific machine:

English version:

- SPC (one piece)
- IM (one piece)
- MM (one piece)
- EM (two pieces)
- OM (two pieces)

(Cont'd)

(Cont'd)

Translated version:

- IM (one piece)
- MM (one piece)
- EM (one piece)
- OM (two pieces)

Separate Components

Place all separate components in a location where they will not disturb the installation work and the normal plant activities. If possible do not remove any transportation protections until the components are required.

3.1.3 Disposing of Reusable Materials and Waste

Note! Packing materials (including crates, wrapping and boxes) are not normally returned to the manufacturer.

a) Check with the customer if there is a special agreement for the return of the packing to the manufacturer.

b) If the packing must be returned to the manufacturer, prepare an area to store the crates and other returnable packing.

c) Check with the customer if there is a special agreement for recycling packing.

d) If packing has not to be recycled, check with the customer how to separate and dispose of packing (wood, plastic, paper, etc.).

e) Dispose of pollutant waste (bubble wrapping, plastic bags, expanded polystyrene, etc.) in accordance with local regulations.

f) Separate, recycle or dispose of all material and components in a safely and environmentally responsible way, or according to local regulations. If there is any uncertainty regarding what material a component is made of, contact the Tetra Pak Group. Use a certified (ISO 14001 or similar) scrapping/waste handling company.

3.2 Positioning and Assembly

The following section contains the correct procedures for transporting the uncrated equipment to the installation area.

3.2.1 Moving

DANGER

Immediate danger to life.
The machine may tilt if the centre of gravity and the fork lift points are not observed. Failure to obey may result in immediate danger to life and/or major damage to the equipment.

Use the correct lifting equipment, see 1.10.5.2 Lifting Equipment Specifications for Uncrated Equipment.

a) Check that the machine can be transported to the assembly site without any problems regarding ceiling height, doors, passages, etcetera.

b) Make sure that the machine can be lifted and moved in accordance with the sub-section 2.10.1.1.3 Centre of Gravity.

c) Remove the machine from the crate. Lift only enough to clear the crate. When lifting the machine using a fork lift truck, use the fork lift positions as shown in Section 3.2.1.2 Fork-lift Position.

d) Make sure that the machine remains stable on the lifting equipment, then move the machine out of the crate.

e) Move the machine to its destination.

f) Lower the machine feet at the measure indicated see 3.2.6 Level the Machine Body, in order to facilitate the levelling later on.

g) Lower the machine gently on the floor, then remove the lifting equipment.

3.2.1.1 Centre of Gravity and Lifting Points

3.2.1.1.1 Cap Applicator

WARNING

Risk of serious personal injury

The machine can tilt if not observing the centre of gravity points (1). Always use the recommended fork lift points (2) to avoid personnel injury and/or major damage to the equipment. Be careful not to hit the inner feet with the lifting forks.

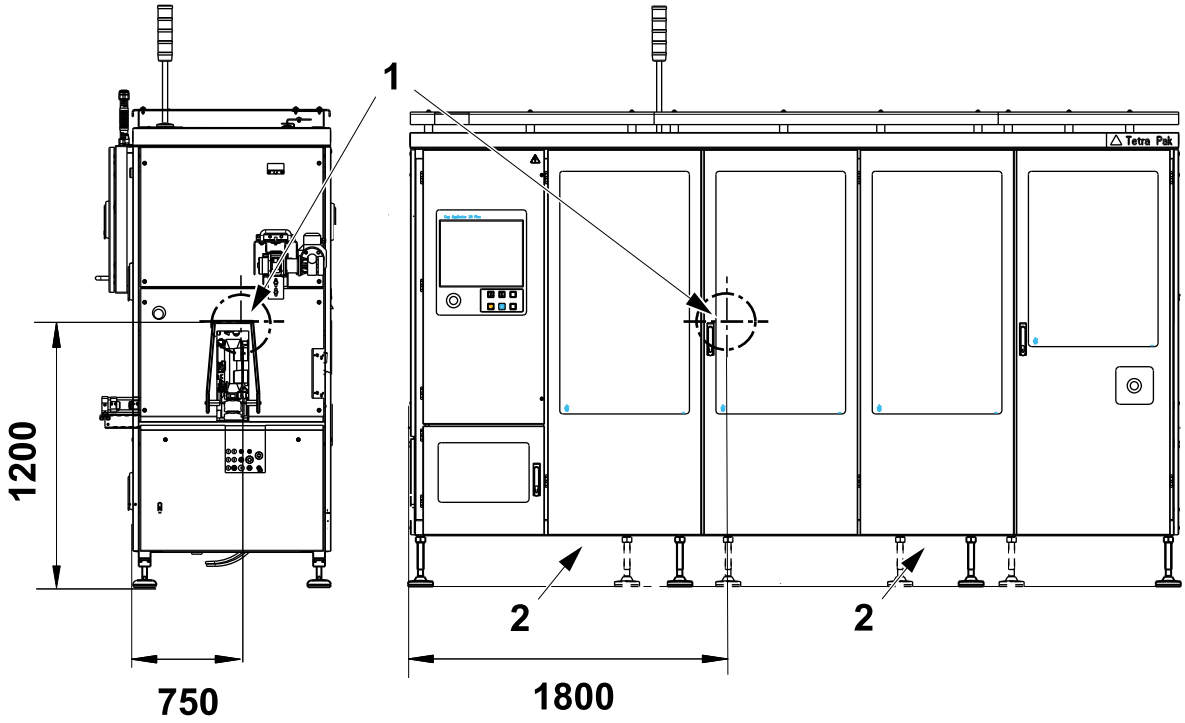

1 Centre of gravity
2 Recommended fork lift points

3.2.1.1.2 Cap Sorter

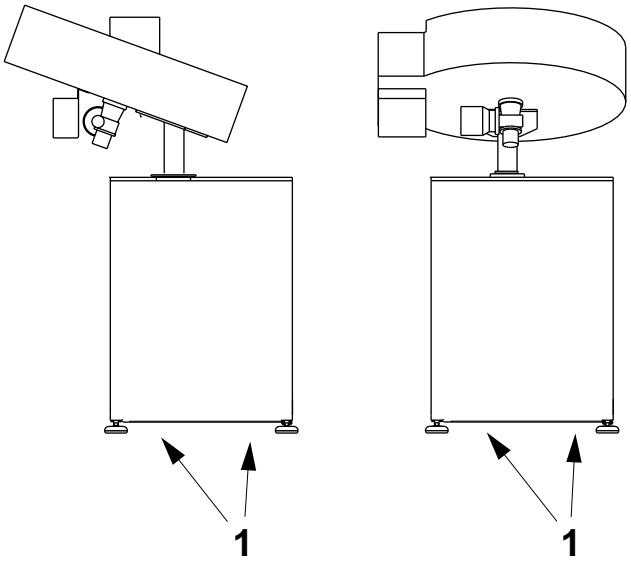

1 Recommended fork lift points

3.2.1.1.3 Infeeder

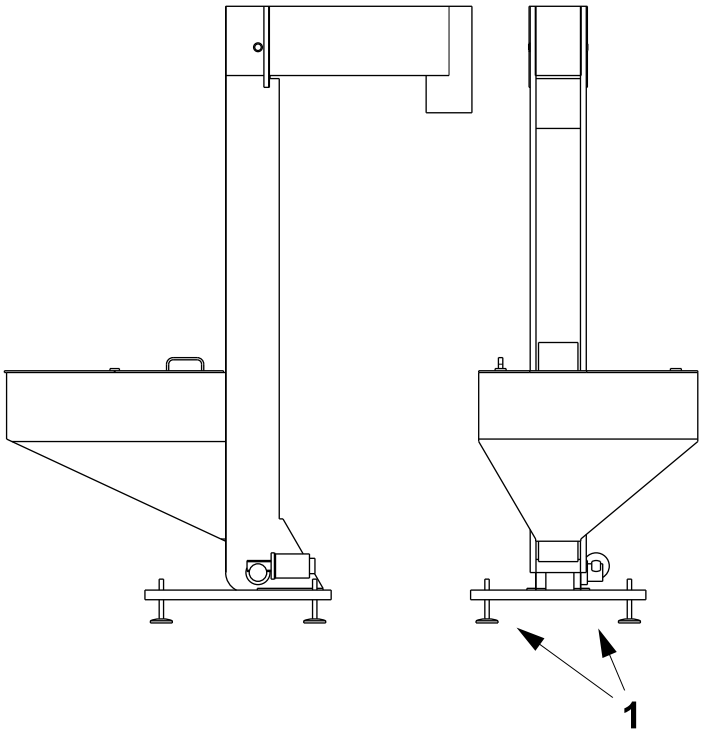

1 Recommended fork lift points

3.2.1.2 Fork-lift Position

CAUTION
Damage to the equipment.
Beware not to hit the machine feet with the fork-lift. It could result in serious frame damage to the machine.

Put the forks according to the drawings below.

Note! After any movement of the machine, it should be put down gently.

3.2.1.2-1 Main Crate (1) - Remove the Machine Body with a Fork Lift

CAUTION
Risk of damage to the equipment.
Using lifting positions other than shown and careless handling when lifting the machine body can severely damage the machine frame.

Note! For the correct lifting equipment, see section 1.10.5 Lifting and Transportation Equipment.

a) Place the forks as indicated in the illustration.

b) Lift only enough to clear the crate.

c) Manoeuvre the machine body out of the crate.

d) Adjust the machine feet to 150 mm to facilitate the levelling later on.

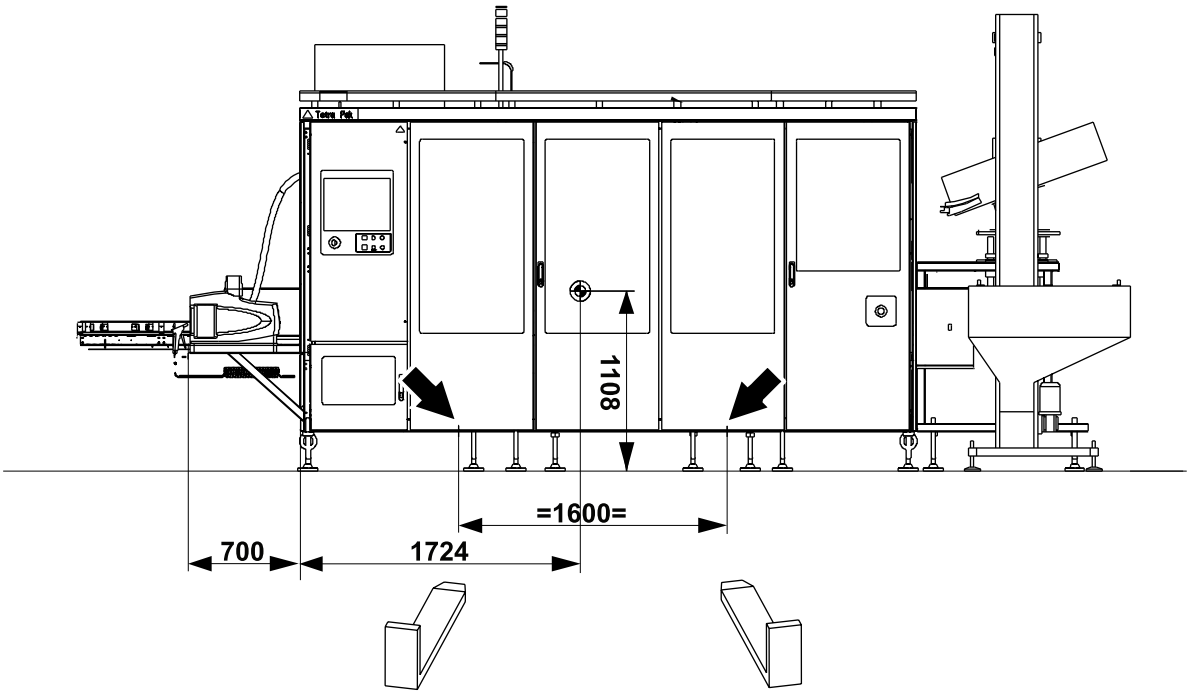

3.2.1.3 Moving the Machine

After uncrating, transfer the machine body directly to the installation area. When it is not possible to use the uncrating equipment to transport the machine body, a set of wheeled carriages TP No. 2514392-0100 can be used, see 3.2.1.3-1 Machine - Move using Carriages below.

3.2.1.3-1 Machine - Move using Carriages

When it is not possible to use the uncrating equipment to transport the machine body, a set of wheeled carriages can be used as follows:

a) Remove the wheel assembly from one side of each carriage.

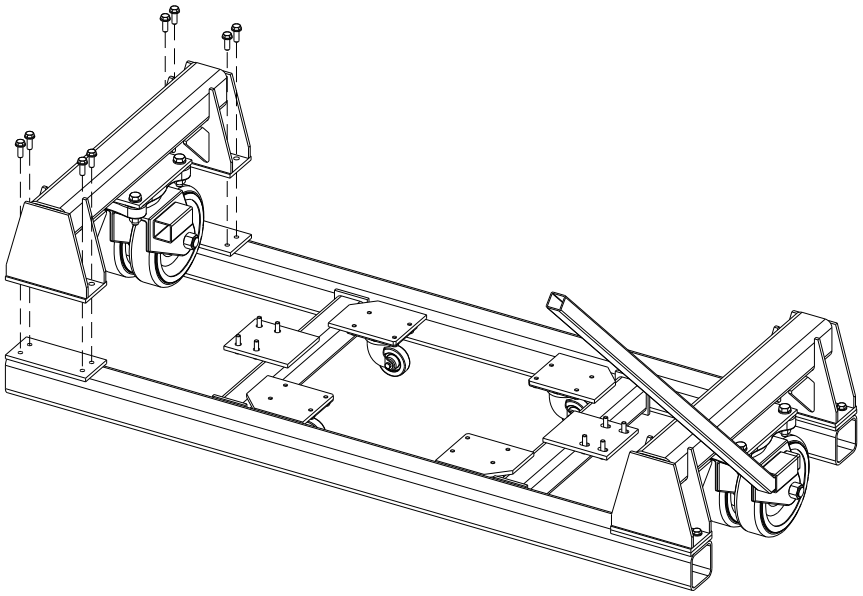

(Cont'd)

(Cont'd)

CAUTION
Risk of damage to the equipment.
The carriages must be secured to the machine frame with screws to avoid transport damage. Only lift one side of the machine body at a time.

CAUTION
Risk of damage to the equipment.
Block the wheels if the machine must be left on the carriages.

Note! Hydraulic jacks can be used to lift the machine body.

b) Roll the carriages under the machine frame where shown in the illustration and install each wheel assembly.

c) Remove the machine feet if necessary and raise the remaining machine feet enough to clear any variations in the floor level.

d) Move the machine, by manual pushing or towing with a truck, very carefully to the installation area. Steer with the steering handles.

e) Place the machine in the exact position according to the site installation drawing, see 3.2.2 Positioning.

f) Fit the machine feet if any have been removed.

g) Remove the carriages in the reverse order of fitting.

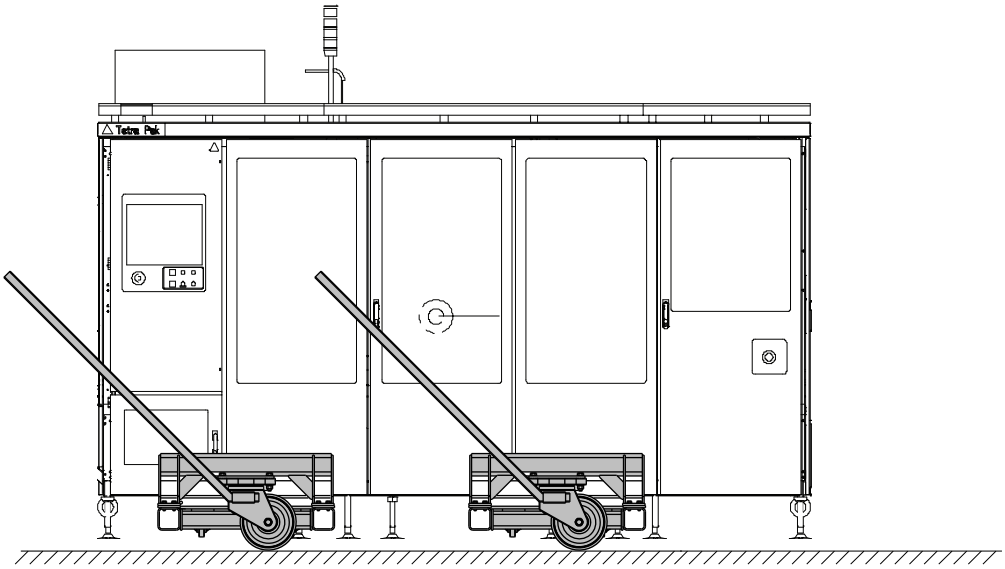

3.2.1.4 Moving the Machine Parts

Move the machine parts as they are needed to the installation area with the lifting equipment.

3.2.2 Positioning

The following section contains the correct procedures for positioning this equipment in the installation area.

3.2.2.1 Positioning the Machine

Set the machine in its exact position if not already done. Place a damper underneath each machine foot. Respect minimum distances around the machine.

(Cont'd)

(Cont'd)

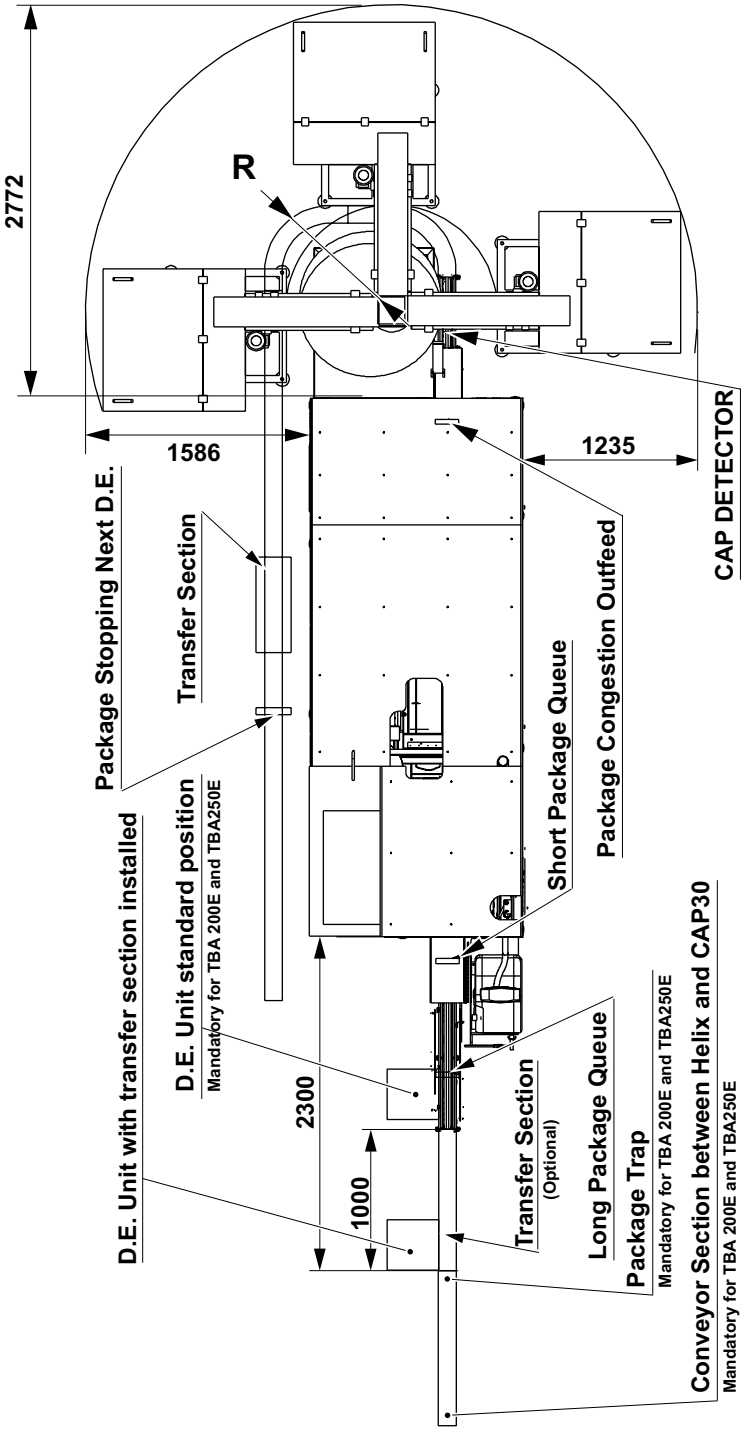

R = Radius of curvature = 500 mm minimum

3.2.3 Levelling the Equipment

The following sections contain the correct procedures for setting the height and level of this equipment.

3.2.4 Install the Machine Feet

Note! Lubricate feet if necessary.

Install the machine feet to the machine body. Set the feet to the initial distance of **250 mm**.

3.2.5 Set the Machine Body Height

Adjust the four feet to set the machine body to the correct height. For installations with existing conveyor equipment, the machine's outfeed conveyor should be adjusted to the same height as the conveyor equipment.

3.2.6 Level the Machine Body

To obtain correct position it is important that the machine is level. Put a spirit level on the cross beam and on the longitudinal beam in the machine. If necessary, turn the machine feet (1) to make the machine level.

When the machine is level, turn the remaining feet so that the feet touch the floor and support the weight of the machine.

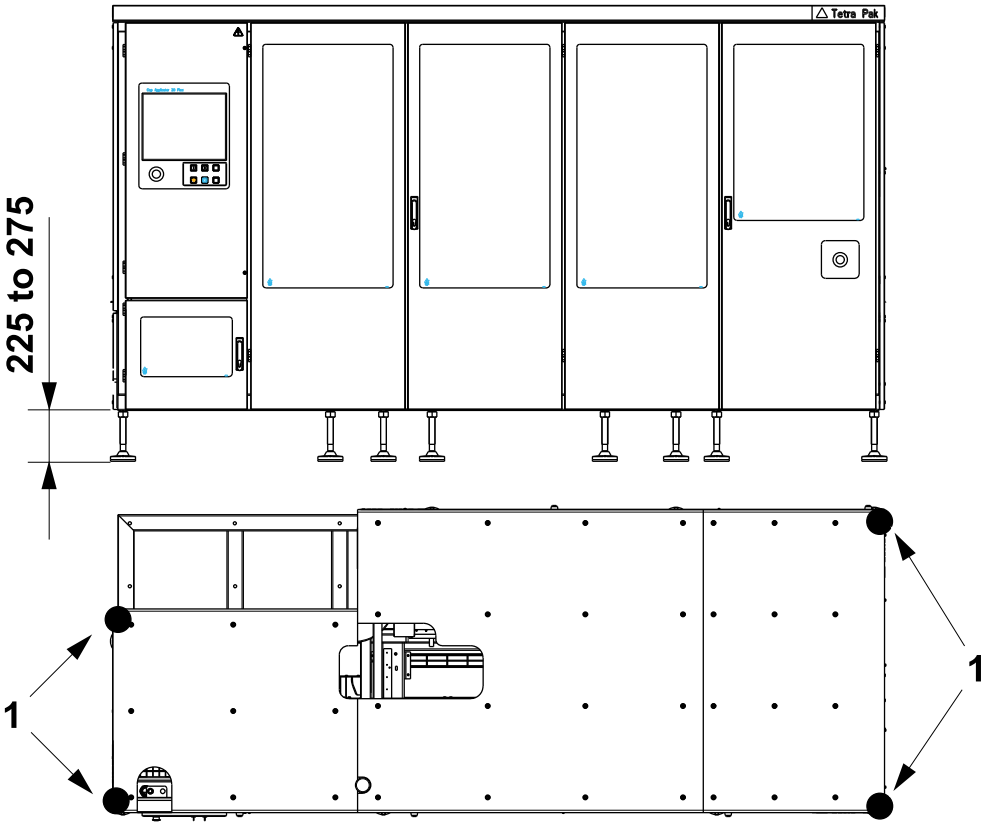

1 Machine feet

3.3 Assembly

This section gives the correct procedure for assembling the machine components.

3.3.1 Cooling Unit

WARNING

Risk of personal injury.

Carefully follow the supplier's instructions for handling the cooling unit. The cooling unit contains the refrigerant R134e (Freon). If a compressor leakage occurs in the cooling system this may cause serious freezing injuries if it comes in contact with bare skin.

In the case of compressor leakages, only trained personnel are allowed to handle the unit. Ensure good ventilation. Keep the container well closed and in a cool and dry place away from any sources of heat. Avoid direct contact with the product. Wear suitable protective clothing, gloves, goggles, face and eye protection.

In case of contact with eyes, rinse immediately with plenty of water for 15 minutes and call for medical attention. Inhalation of a high concentration can cause shortage of breath and unconsciousness. In case of inhalation move into fresh air. If needed, use oxygen or artificial respiration.

WARNING

Risk of personal injury.

The cooling unit is heavy. Use lifting equipment to move the unit into position.

CAUTION

Damage to the equipment.

Be careful when lowering the cooling unit on to the electrical cabinet. Make sure the gasket is installed and the electrical cable goes through the prepared hole in the top of the electrical cabinet.

(Cont'd)

(Cont'd)

a) Connect the drain pipe (1) to the cooling unit (2) and run the pipe along the rear panel (3) of the electrical cabinet.

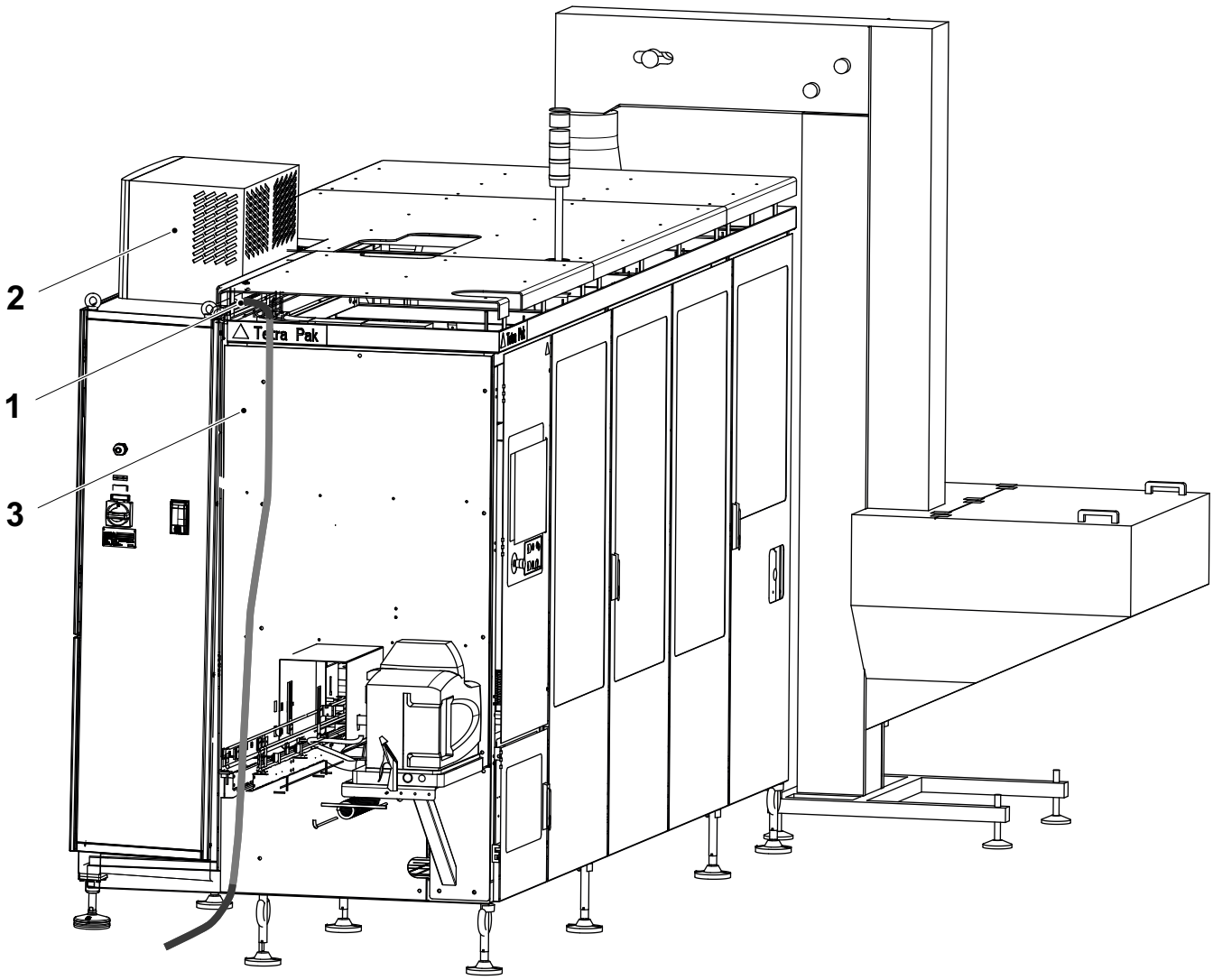

1 Drain pipe
2 Cooling unit
3 Rear panel

3.3.2 Warning Lamp

Install the warning lamp (1), see the EM for the electrical connections.

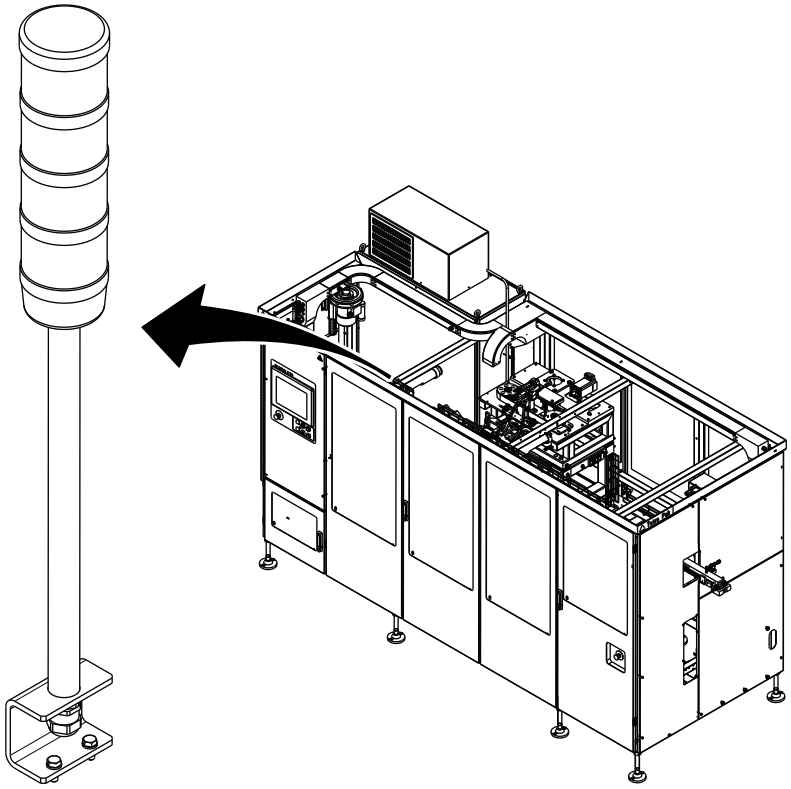

1 Warning Lamp

3.3.3 Roof Sections

WARNING

Risk of personal injury.

The weight of each roof sections (1), (2) and (3) is heavy. Two people are required to lift the roof sections into position.

CAUTION

Damage to the equipment.

Be careful when lowering the roof sections on to the applicator. Make sure the roof support brackets (4) do not trap any electrical cables.

Note! Make sure the roof sections have the correct orientation.

Note! Remove any protective material from the roof sections before installation.

Install the roof sections (1), (2) and (3).

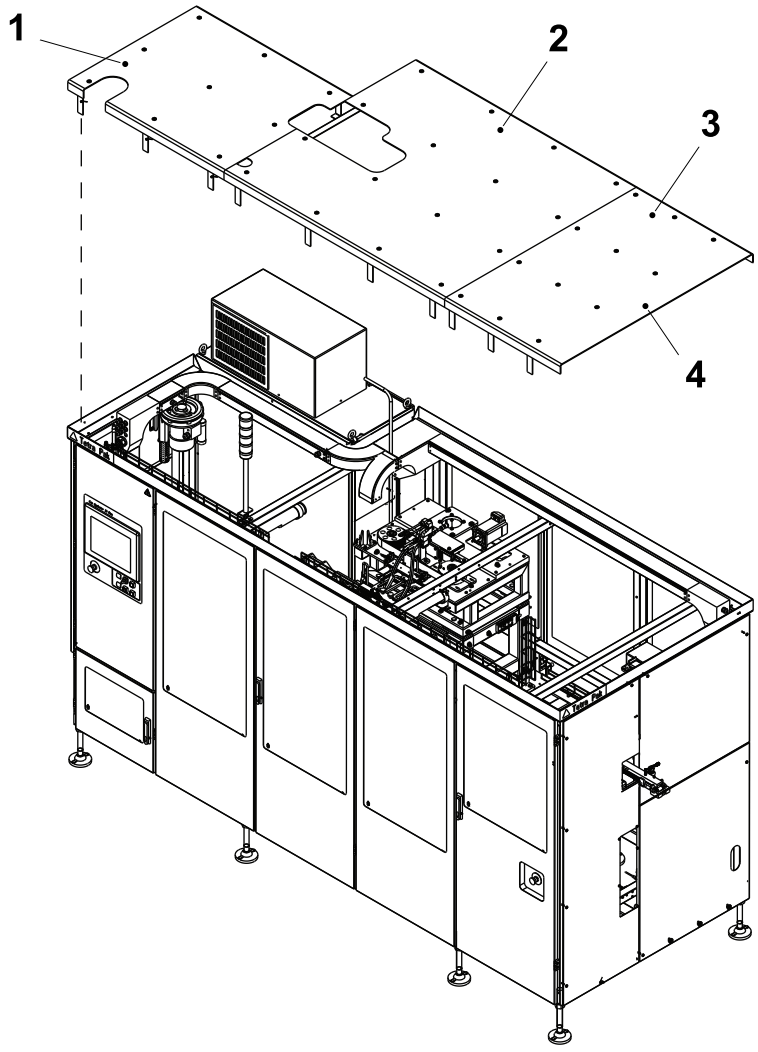

1 Roof section
2 Roof section
3 Roof section
4 Support bracket

3.3.4 Hotmelt Unit

a) Put the support (1) in position and install the four screws (2) and washers (3).

b) Put the hotmelt unit (4) on the support (1) and install the screws (5).

c) Connect the hotmelt hose (6) to the hotmelt unit (4).

d) Connect the electrical plug (7) to the hotmelt unit (4).

e) Connect the air pipe (8) to the filter.

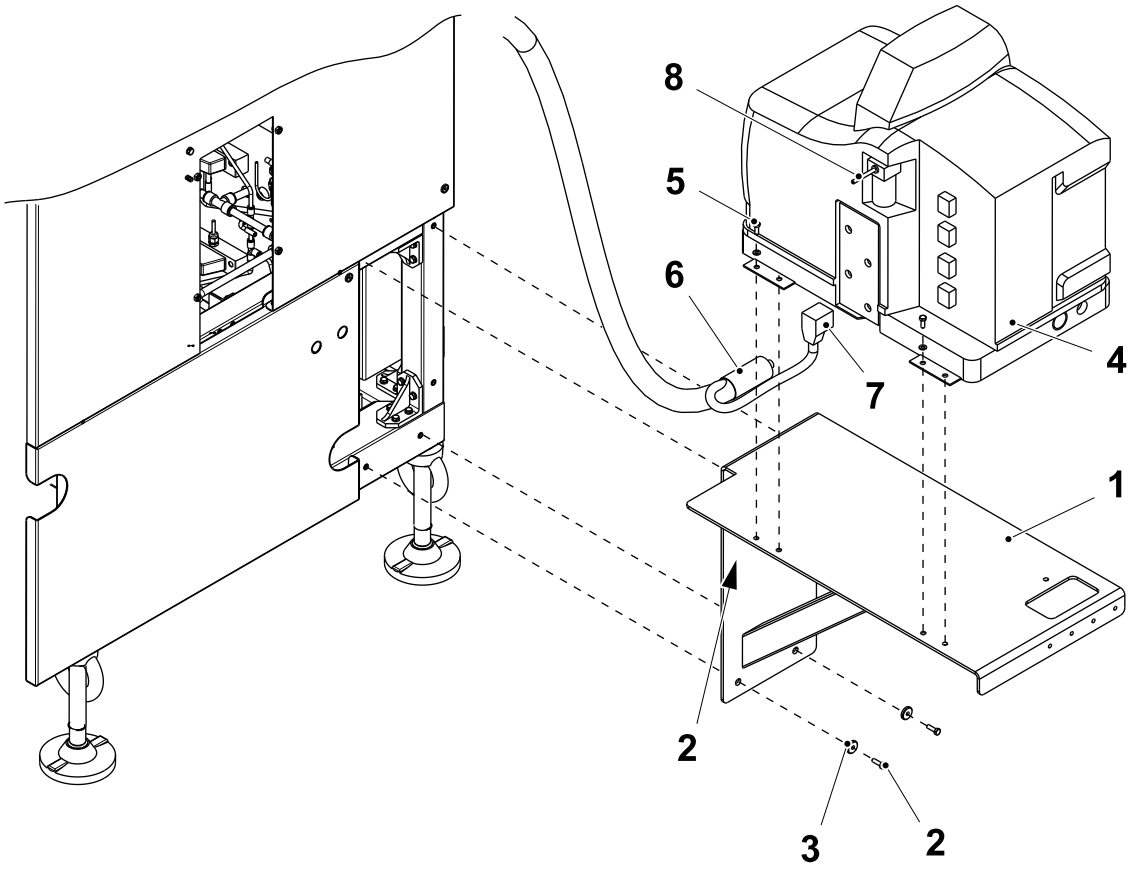

1 Support
2 Screw
3 Washer
4 Hotmelt unit
5 Screw
6 Hose
7 Electrical plug
8 Air pipe

(Cont'd)

(Cont'd)

Electrically Connect the Hotmelt Unit

a) Open the electrical enclosure door (1).

b) Loosen the plug (2) and install the cables (3).

c) Connect the cables (3) to the electrical supply cable connection (4) and tighten the screws (5).

d) Connect the ground lead (6) to the ground lug (7) on the sub-base.

e) Connect the ground jumper (8) to the ground post (9) on the sub-base.

f) Loosen the plug (10) and install the cables (11).

g) Connect the cables (11) and tighten the screws (13).

h) Connect the electrical supply cable connection (4) to the receptacle (12) on the main board.

i) Connect the electrical signal cable connection (14) to the receptacle (15) on the main board.

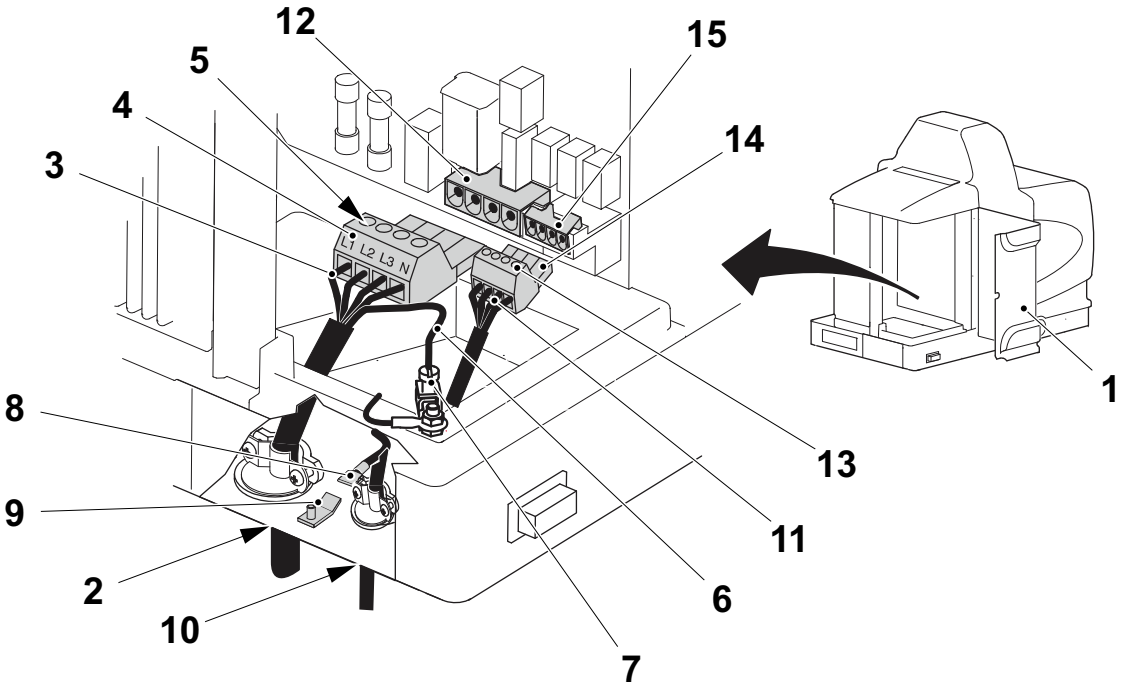

1 Door
2 Plug
3 Cable
4 Electrical supply cable connection
5 Screw
6 Ground lead
7 Ground lug
8 Ground jumper
9 Ground post
10 Plug
11 Cable
12 Receptacle
13 Screw
14 Electrical signal cable connection
15 Receptacle

3.3-1 Hotmelt Hose

a) Install the bracket (1) to the hotmelt applicator (2).

b) Install the spring (3).

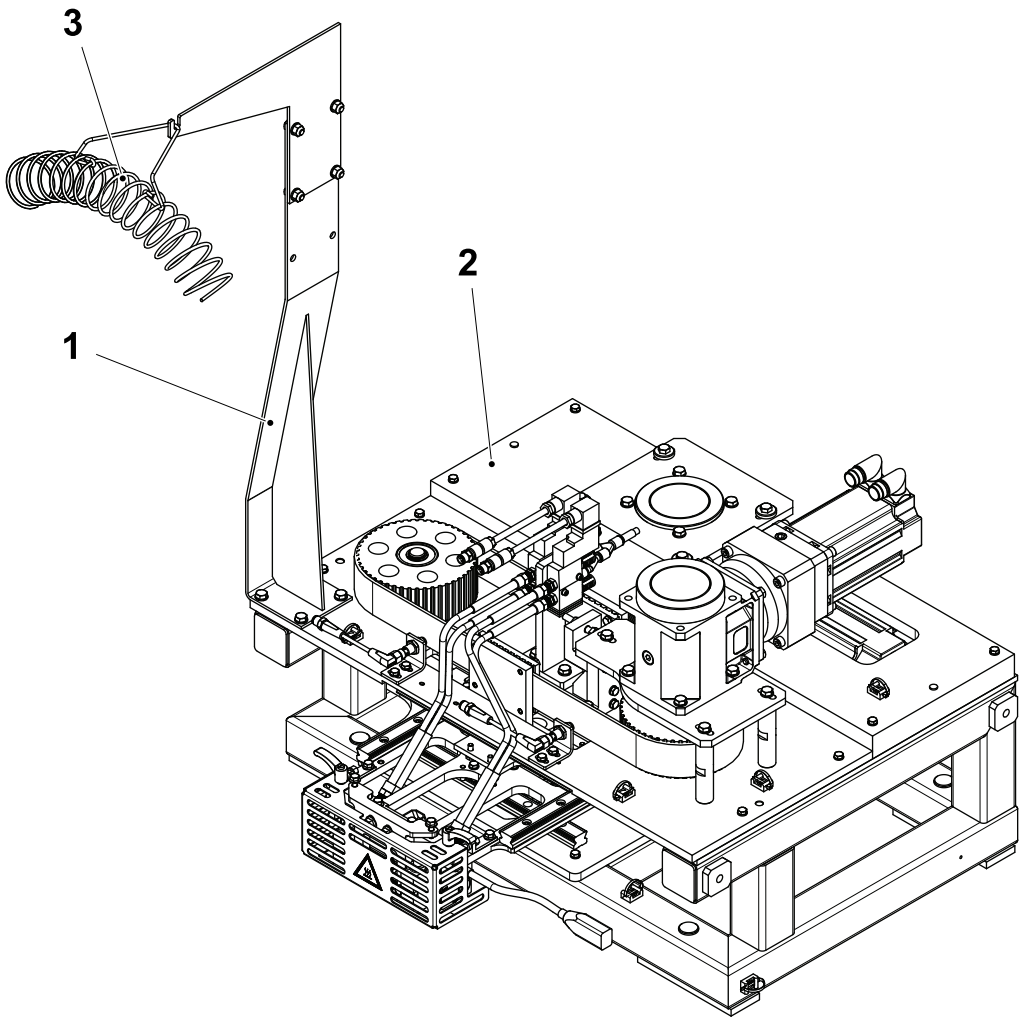

1 Bracket
2 Hotmelt applicator
3 Spring

(Cont'd)

(Cont'd)

c) Fit the hotmelt hose (4) into the supports (5) and (6) and into the spring (3), see picture.

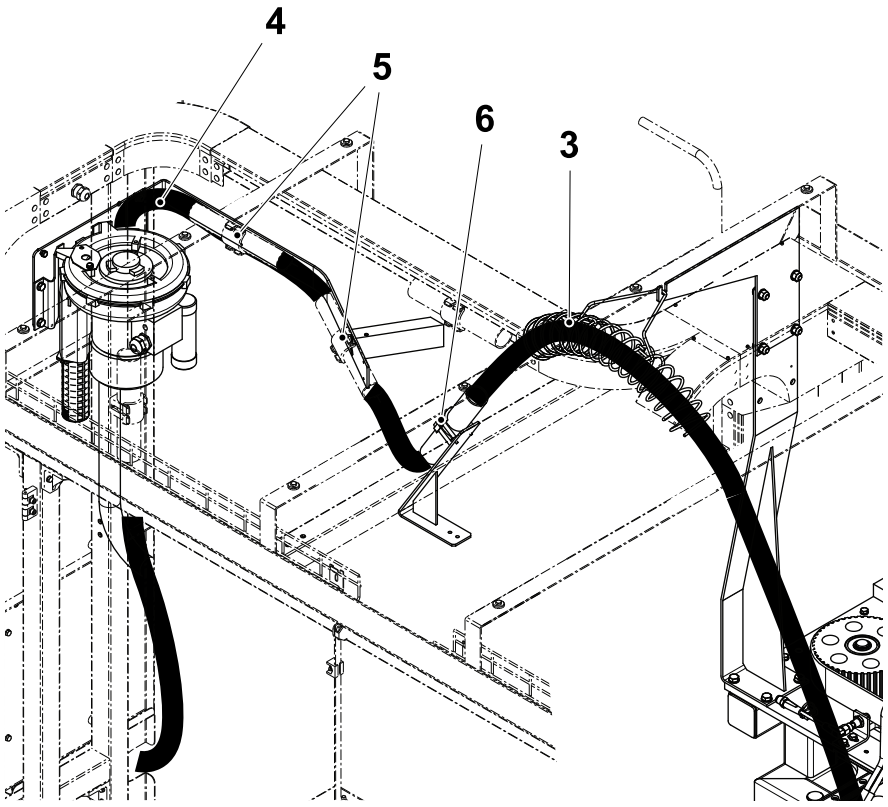

3 Spring
4 Hotmelt hose
5 Support
6 Support

(Cont'd)

(Cont'd)

d) Electrically connect the hotmelt hose (4).

Note! The machine has to be electrically connected and switched on.

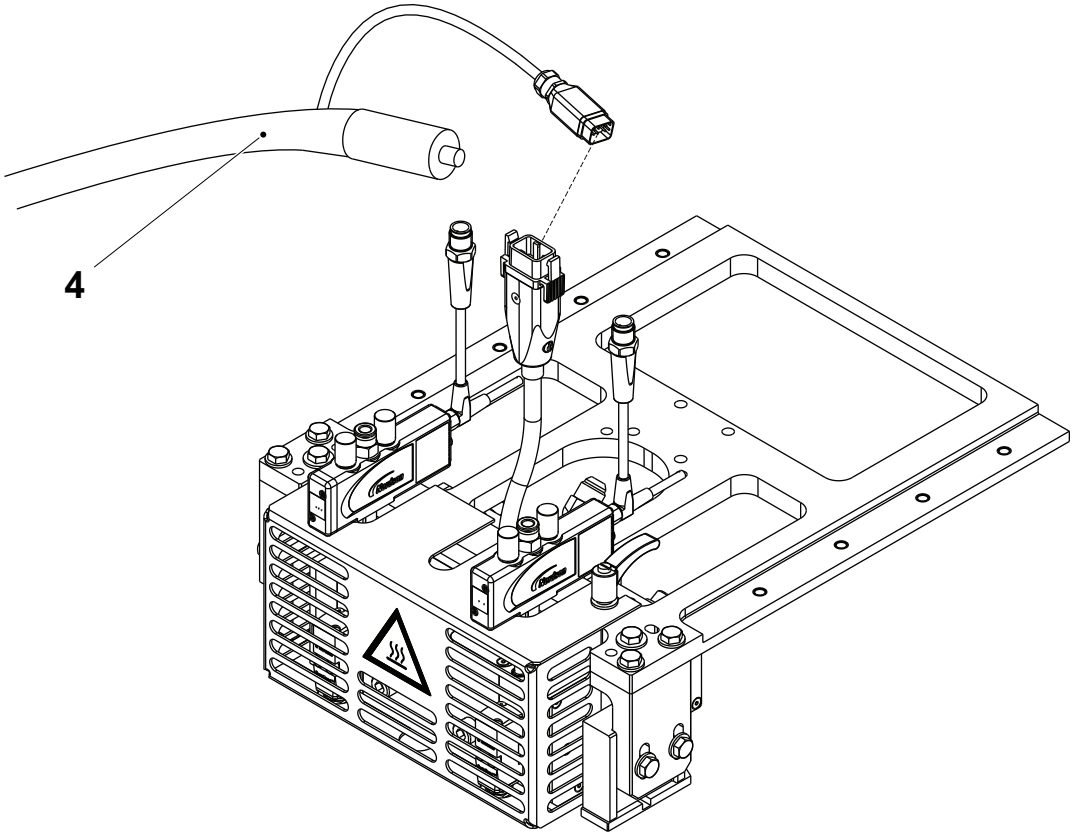

4 Hotmelt hose

e) Set up the machine to STEP 1

WARNING

Do not step up the machine to STEP2.
The machine must not be put in STEP2 to avoid that the Hotmelt comes off from the hotmelt hose.

f) Wait until the hotmelt is 150 ºC.

(Cont'd)

(Cont'd)

WARNING

Risk of burns

Hot adhesive. Wear safety glasses, protective gloves and other protective clothing to avoid injuries from hot adhesive.

g) Connect the hotmelt hose (4) to the hotmelt gun (7).

h) Step down the machine to STEP0

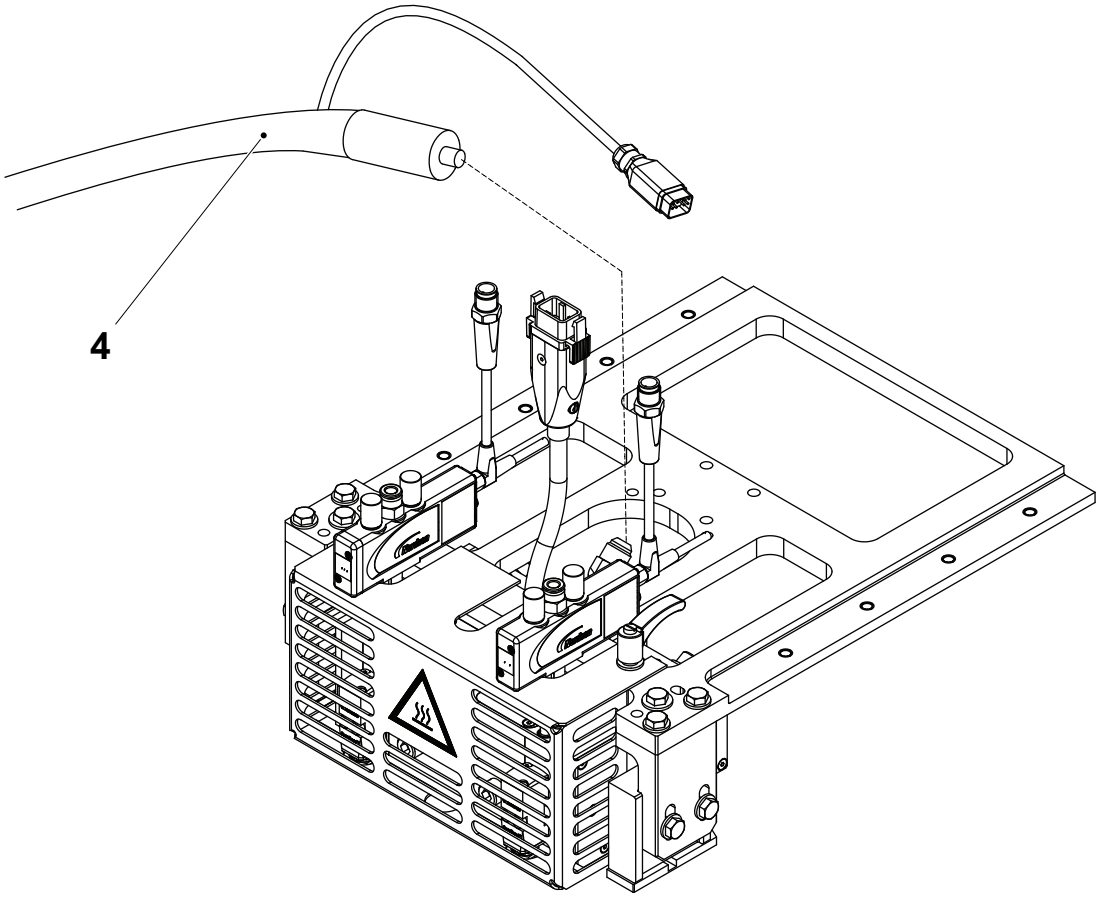

4 Hotmelt hose
7 Hotmelt gun

3.3.5 Package Conveyor

Note! Valid for all the packages except for TBA Edge

a) Install the infeed package conveyor (1).

b) Install the conveyor tunnel (2).

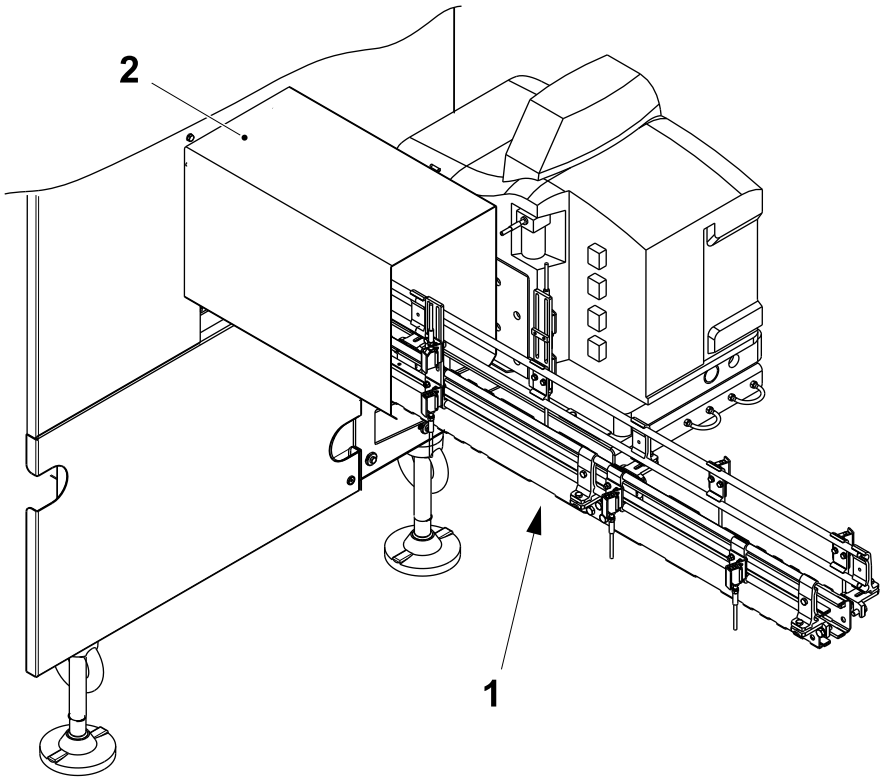

1 Infeed package conveyor
2 Conveyor tunnel

3.3-2 Package Conveyor - TBA Edge

Note! Valid only for TBA Edge

a) Install the 500 mm long infeed package conveyor (1).

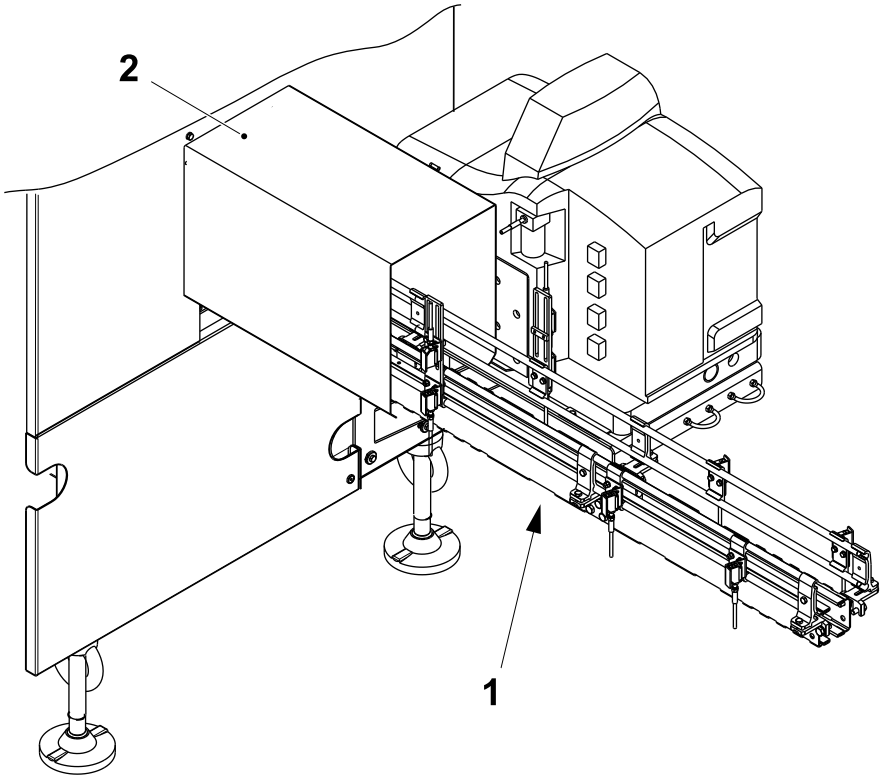

1 Infeed package conveyor
2 Conveyor tunnel

Check Rails

a) Make sure that the distance **A** between the guide rails (1) of the infeed package conveyor is 55 mm.

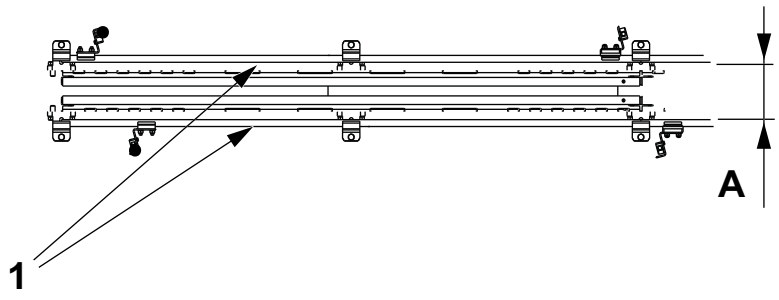

A = 55 mm
1 Guide rail

(Cont'd)

(Cont'd)

Install Dry Lubrication

a) Install the dry lubrication unit (1) close the machine infeed (2) according to the TeM for conveyor accessories

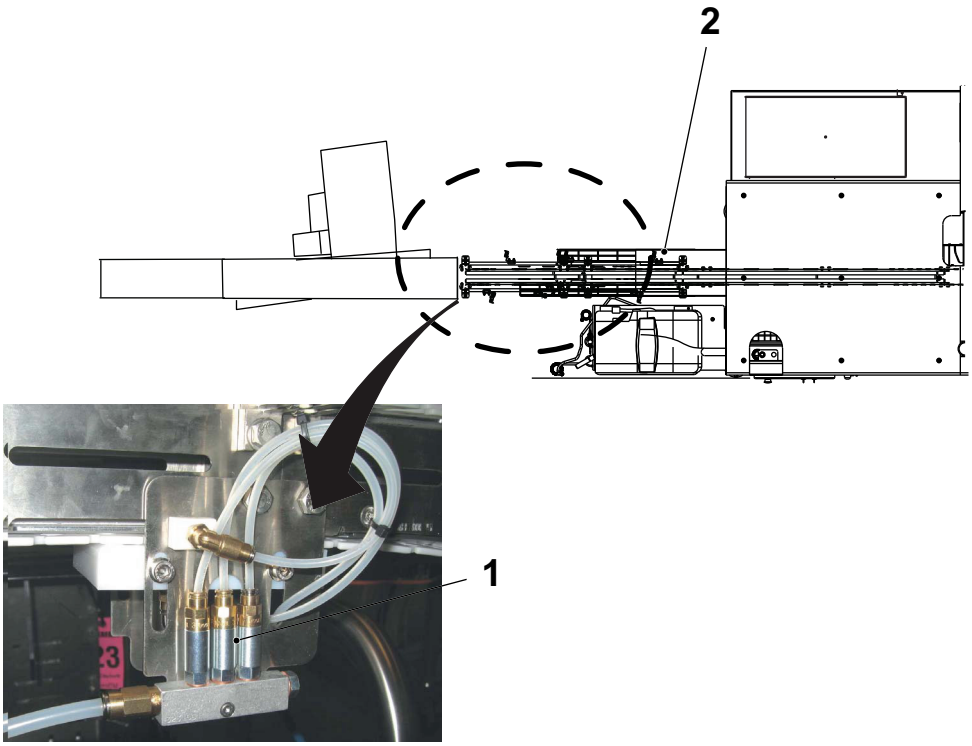

1 Dry lubrication unit
2 Infeed

Install Infeed Sensors

See in the MM.

(Cont'd)

(Cont'd)

Install Conveyor Tunnel

a) Install the conveyor tunnel (1).

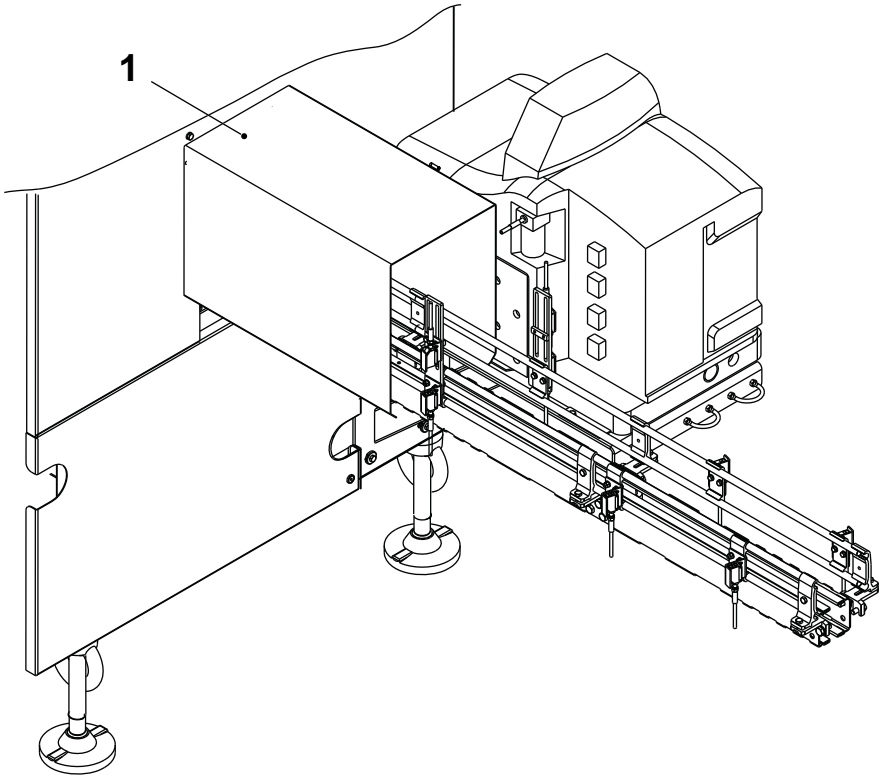

1 Conveyor tunnel

(Cont'd)

(Cont'd)

Check Package Conveyor Switch

a) Make sure that the gap **A** between belts (1) and (2) of the package conveyor switch (3) is 2 mm maximum.

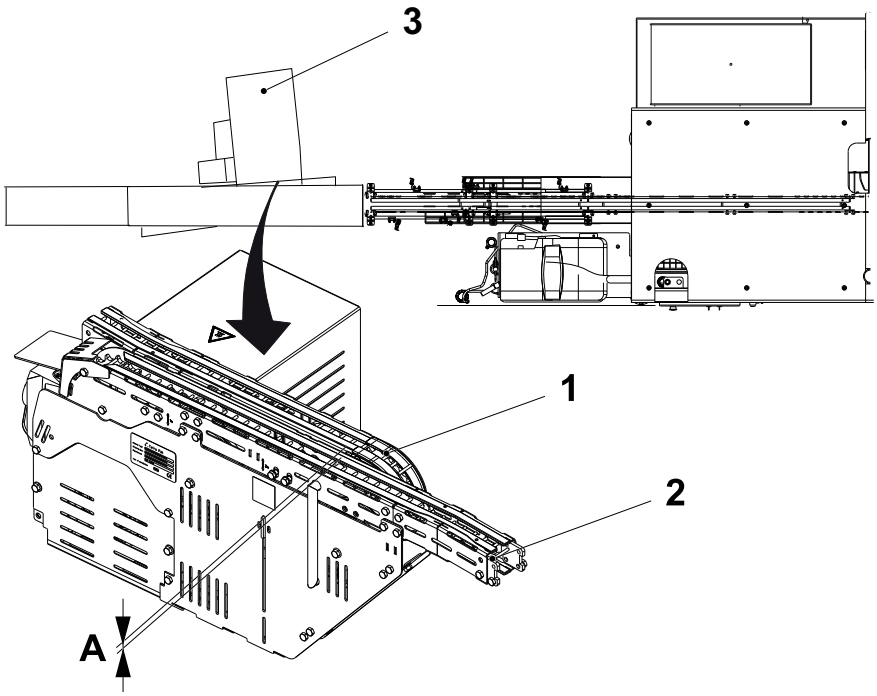

1 Belt
2 Belt
3 Package conveyor switch

3.3.6 Cap Conveyor

a) Losen the screw (1) and remove the support (2).

b) Install the cap conveyor (3).

c) Install the support (2) to fix the position of the cap conveyor (3).

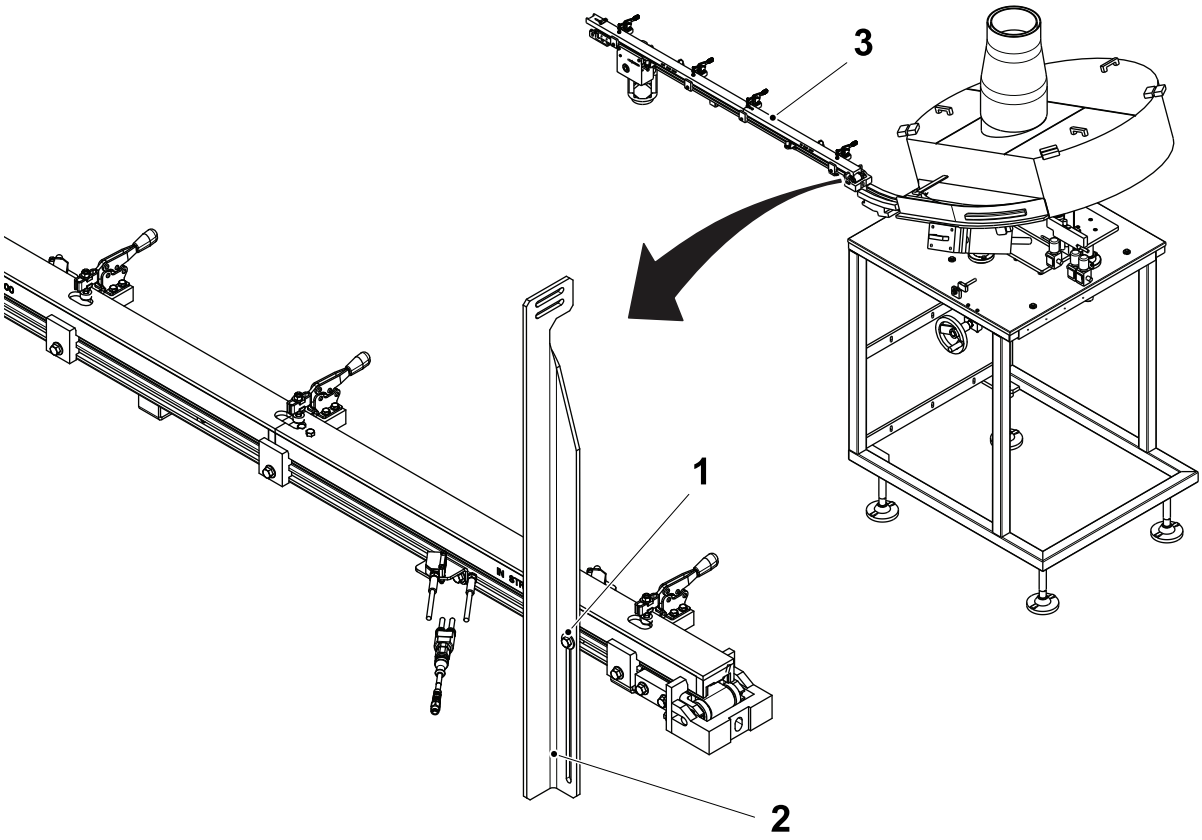

1 Screw
2 Support
3 Cap conveyor

3.3-3 Cap Sorter

a) Install the cap sorter feet (1) to the cap sorter frame. Set the feet to the initial distance of 250 mm.

b) Put the cap sorter in position. Adjust the four feet (1) to give the same height as the machine body.

c) Put a spirit level on the cross beam and on the longitudinal beam. If necessary, turn the cap sorter feet (1) to make the cap sorter level. Install the four screws (2) to connect the cap sorter frame to the machine body.

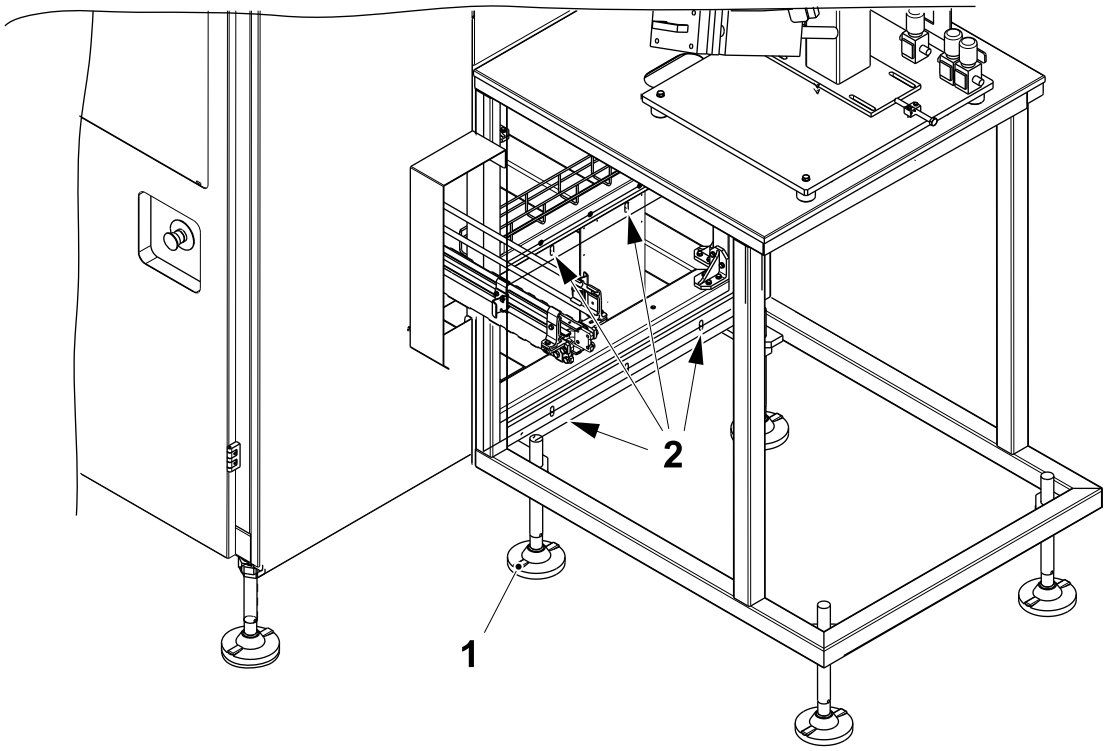

1 Feet
2 Screw

(Cont'd)

(Cont'd)

d) Measure the quote **A** between the beam (3) and the cap conveyor (4).

e) Make the quote **B** between the beam (5) and the cap conveyor (4) the same as the quote **A**, by means of the screw (6).

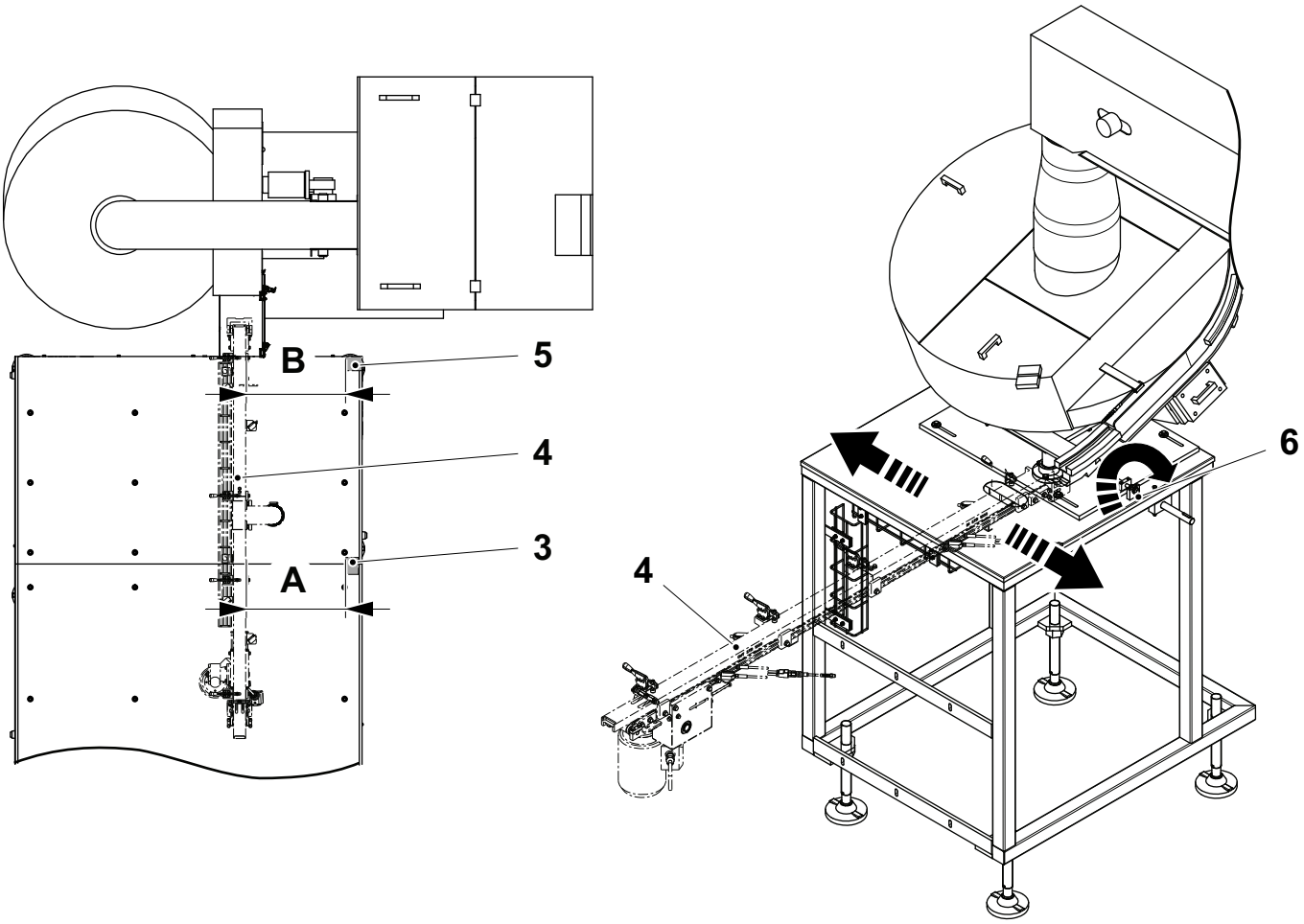

3 Beam
4 Cap conveyor
5 Beam
6 Screw

(Cont'd)

(Cont'd)

f) Loosen the four screws (7) to free the plate (8).

g) Move the feeder (9) close to the cap conveyor (4).

h) Check that the cap conveyor (4) is level and not stressed after adjustment.

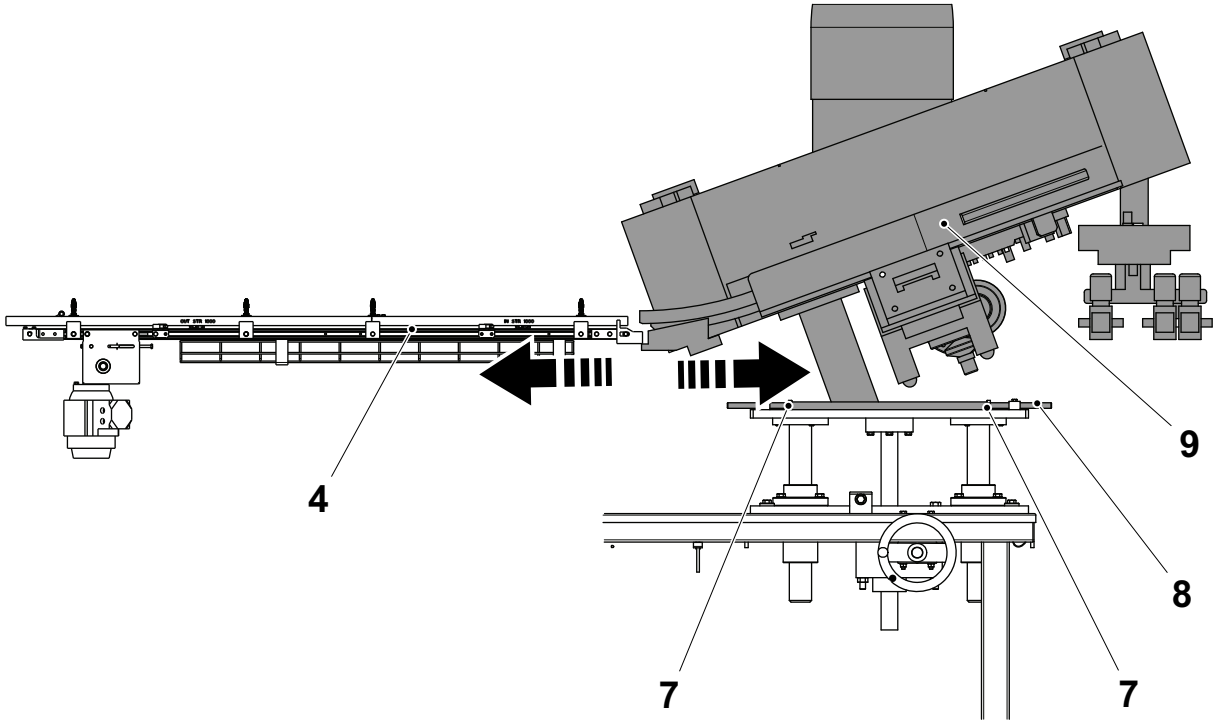

4 Cap conveyor
7 Screw
8 Plate
9 Feeder

(Cont'd)

(Cont'd)

i) Turn the handle (10) to move the to give the correct height to the cap conveyor (4). For additional information, see the MM.

j) Level the cap conveyor (4) and the chute (11) with the screw (12).

Note! Check with a cap that the cap conveyor (4) and the chute (11) are level.

k) Tighten the screw (13) to fix the cap conveyor (4) in position.

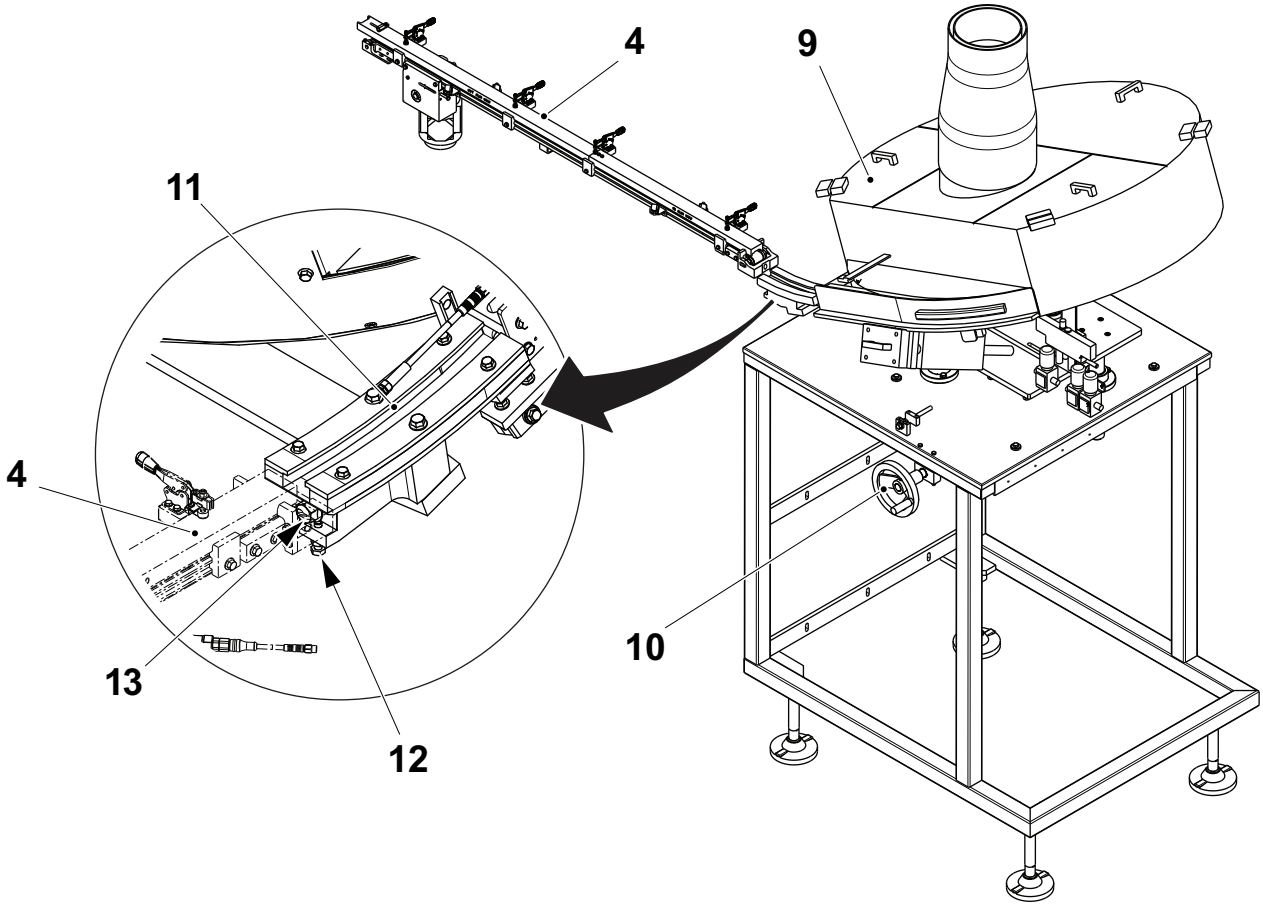

4	Cap conveyor	11	Chute
9	Feeder	12	Screw
10	Handle	13	Screw

(Cont'd)

(Cont'd)

Note! Lubricate feet (14) if necessary.

l) Install the feet (14) to the elevator frame.

m) Put the hopper (15) and the elevator (16) in position.

n) Put a spirit level on frame. If necessary, turn the feet (14) to make the elevator level.

o) Use the fabric sleeve (17) to connect the elevator (16) to the feeder (9).

p) To connect the electrical cables to the cap sorter, see 3.4.1 Electrical Connection

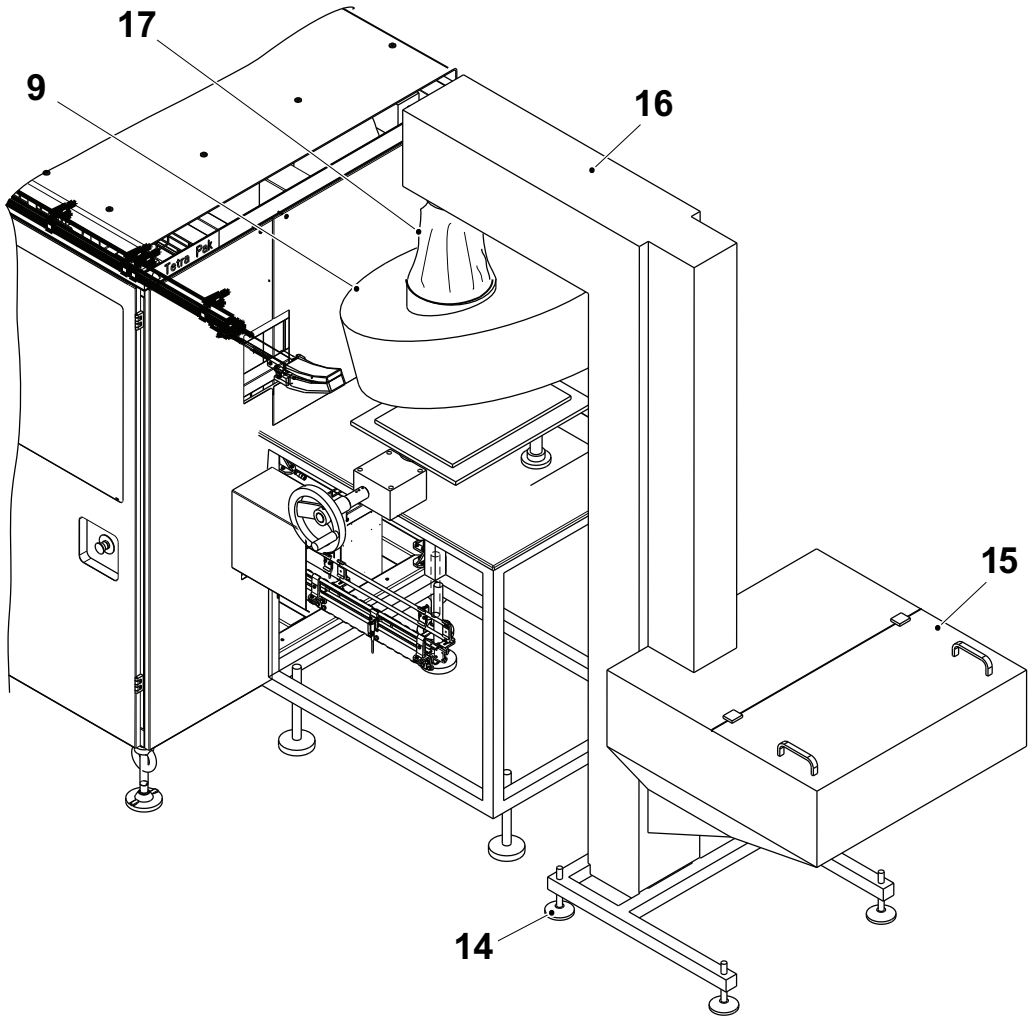

9 Feeder
14 Feet
15 Hopper
16 Elevator
17 Fabric sleeve

3.3.7 Conveyor and Cap Detector

WARNING

Moving parts could cause serious injuries.

The conveyor must be driven by a DE unit with the electrical power supplied and controlled from the machine. Connected in any other way the conveyor could cause serious injuries to personnel.

Note! The DE units for the conveyor are not part of the machine.

Note! Conveyor lubrication has to be used.

3.3.7-1 Cap Detector

WARNING

Risk of personal injury.

Never put any part of the body, such as a hand, near the cap detector when the machine is working. There is a risk of injury caused by the movable pusher. Make sure the protection cover is installed

The cap detector removes from the conveyor fallen packages, loose caps that fall onto the conveyor or packages without caps. The cap detector also removes the three last packages at a restart after an emergency stop. The cap detector is installed at the end of the discharge (front) machine conveyor. See the MM for the set-up.

3.4 Equipment Interfaces and Connections

The following sections contain the correct procedures for making connections to utility sources.

3.4.1 Electrical Connection

3.4.1.1 Power Supply

DANGER

Hazardous voltage.
The voltage is 400V inside the electrical cabinet. This can cause electrical shock or serious injury. In case of an accident, immediately call for medical attention.

a) The figure below shows the electrical cable lead-in (1). The main electrical connection must be done according to the Main Connection Diagrams contained in the EM.

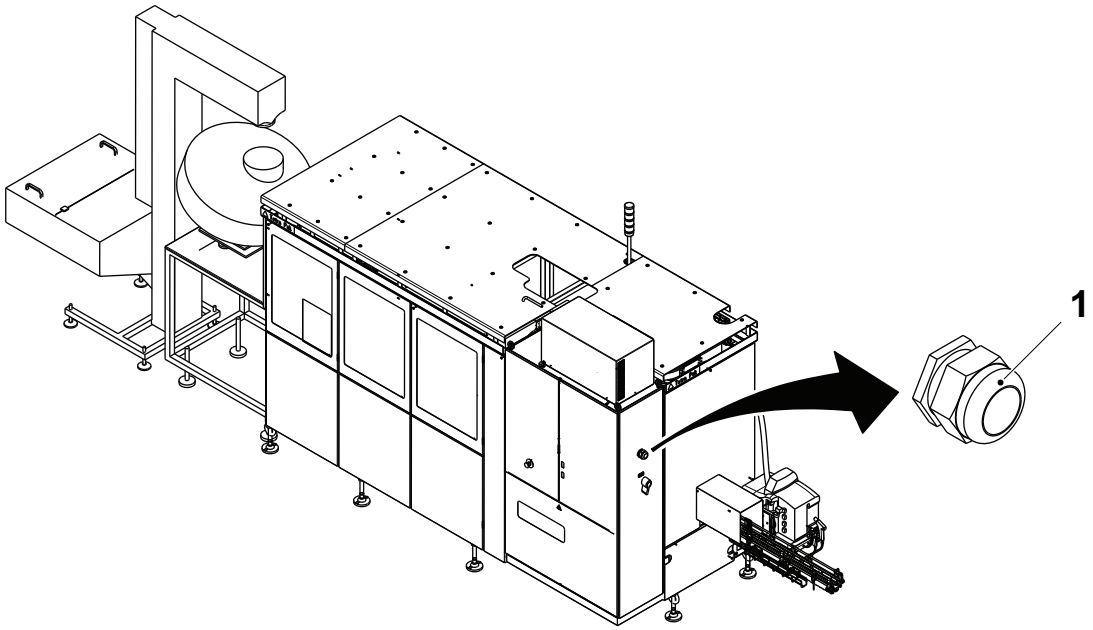

1 Electrical cable lead-in

3.4.1.2 Cap Detector

Connect the electrical cables from the sensors to the connectors on the distributor. See the EM for sensor and connector identification. See the pneumatic diagrams for the air connections.

3.4.1.3 Cap Sorter

a) Connect the electrical cable from the motor (1) to the connector (2). The route of this cable is under the cap sorter and in the cable ducting.

b) Connect the electrical cable from the motor (3) to the connector (4). The route of this cable is under the cap sorter and in the cable ducting.

c) Connect the single cable (5) from the sensor (6) to the connector No 2 on the armor block (7). The armor block is on the underside of the drum.

d) Connect the Device Net cable to the armor armor block (8).

e) Connect the cable from the safety switch to the cable.

f) Attach the earth cable to a suitable metal point.

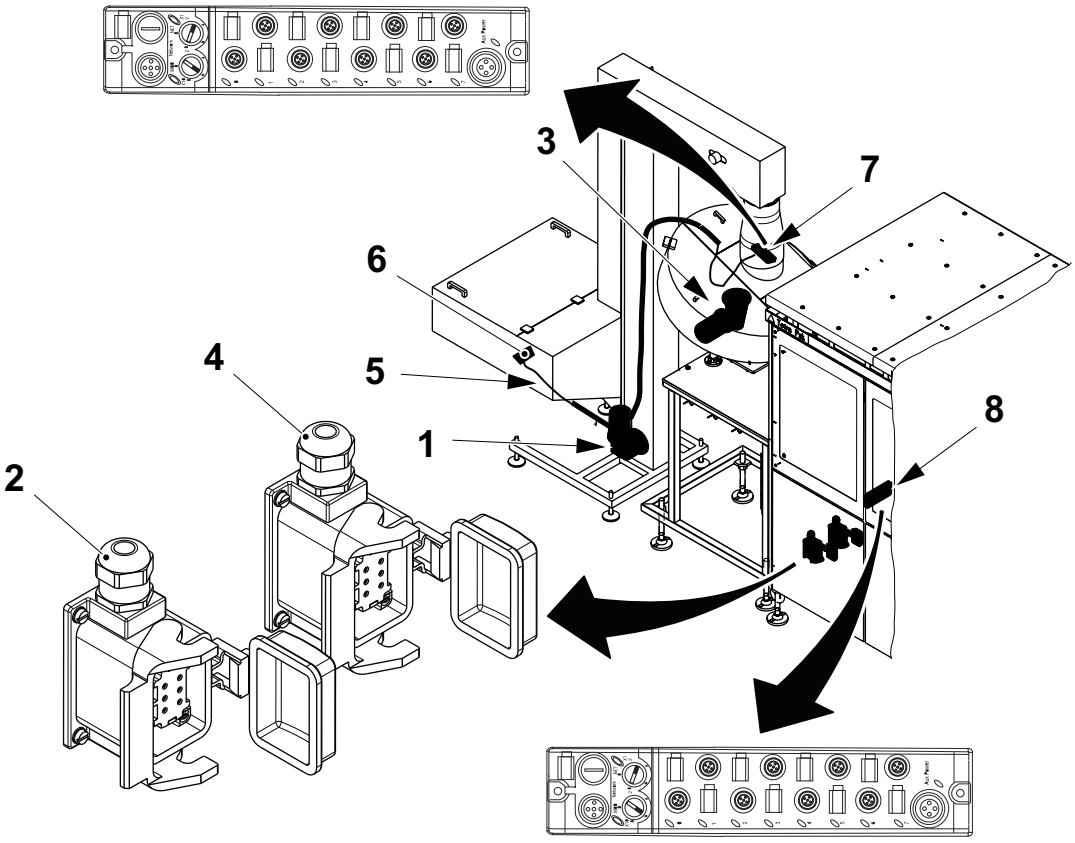

1 Motor
2 Connector
3 Motor
4 Connector
5 Cable
6 Sensor
7 Armor block
8 Armor block

3.4.2 Compressed Air

WARNING

Risk of personal injury.

Make sure that the air supply is OFF before performing any connection work.

a) Connect the compressed air connection (1) as illustrated.

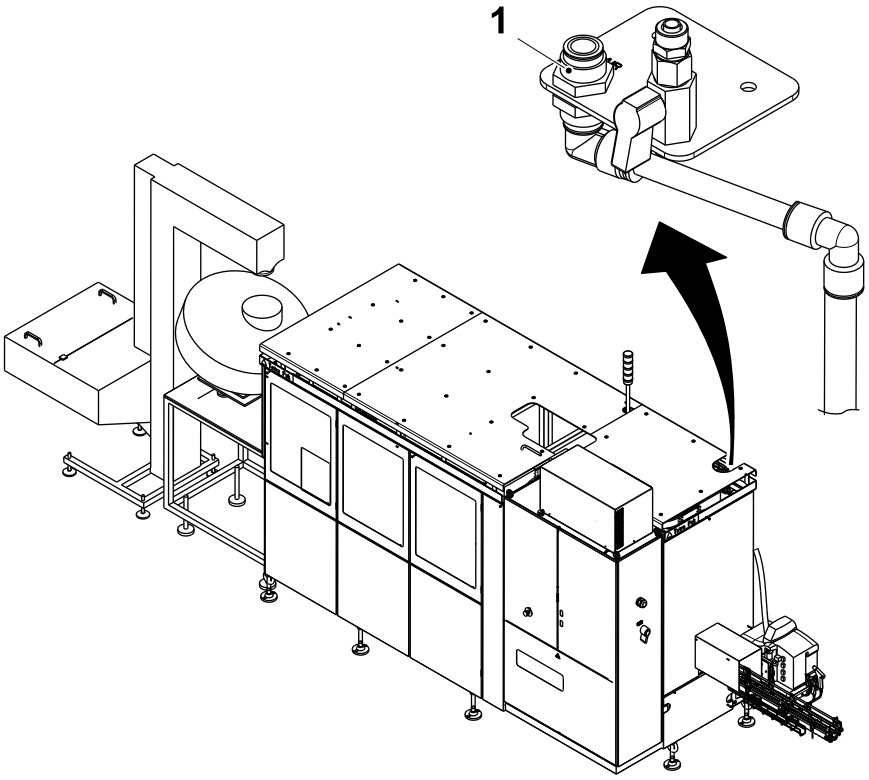

1 Compressed air connection

3.4.3 Water

Connect the water connection (1) as illustrated.

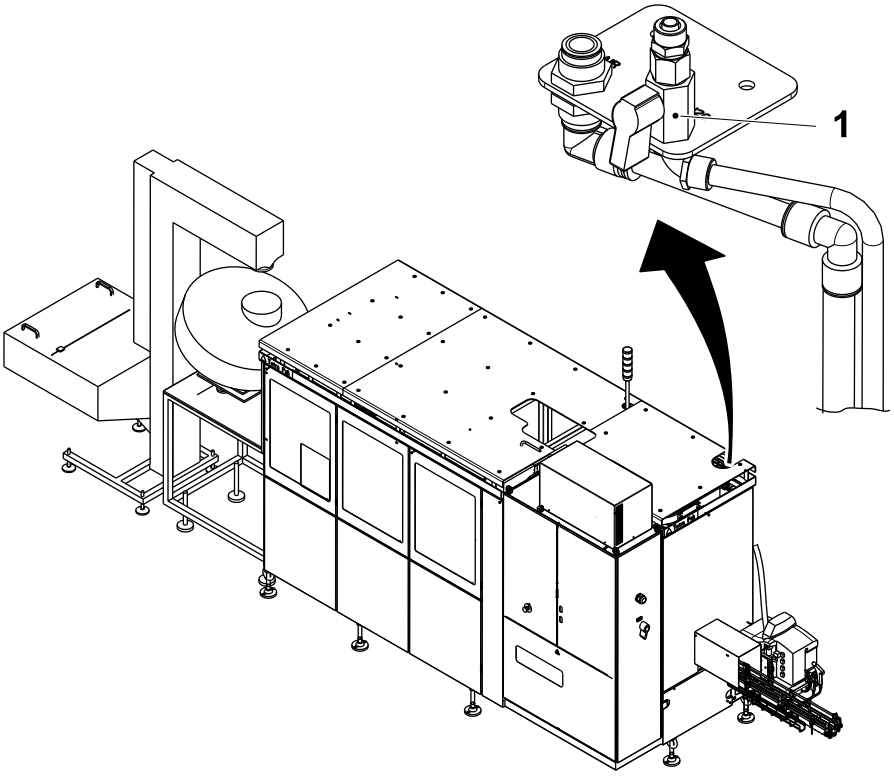

1 Water connection

3.5 Auxiliary Equipment

3.5.1 General

For the machine to work at its optimal efficiency, photocells, package traps and curves must be installed according to Tetra Pak recommendations, see 1.1 Installation Drawings.

3.5.2 PLMS

PLMS software is installed in the machine. If PLMS data is required, it is necessary to connect a cable from the Helix machine to the applicator Genius bus in the electrical cabinet. This cable requires the cable screen to be clamped to the chassis of the electrical cabinet, see the EM and the filling machine IM.

3.5.2-1 Install PLMS Config File

a) In the CD of the CAP30, enter the folder with the PLMS config folder (1).

b) Install the PLMS config file (2) XXXX_CFG in the Filling Machine, according to the instruction HMI and PLMS - install DE Config Files, see the MM of the Filling Machine.

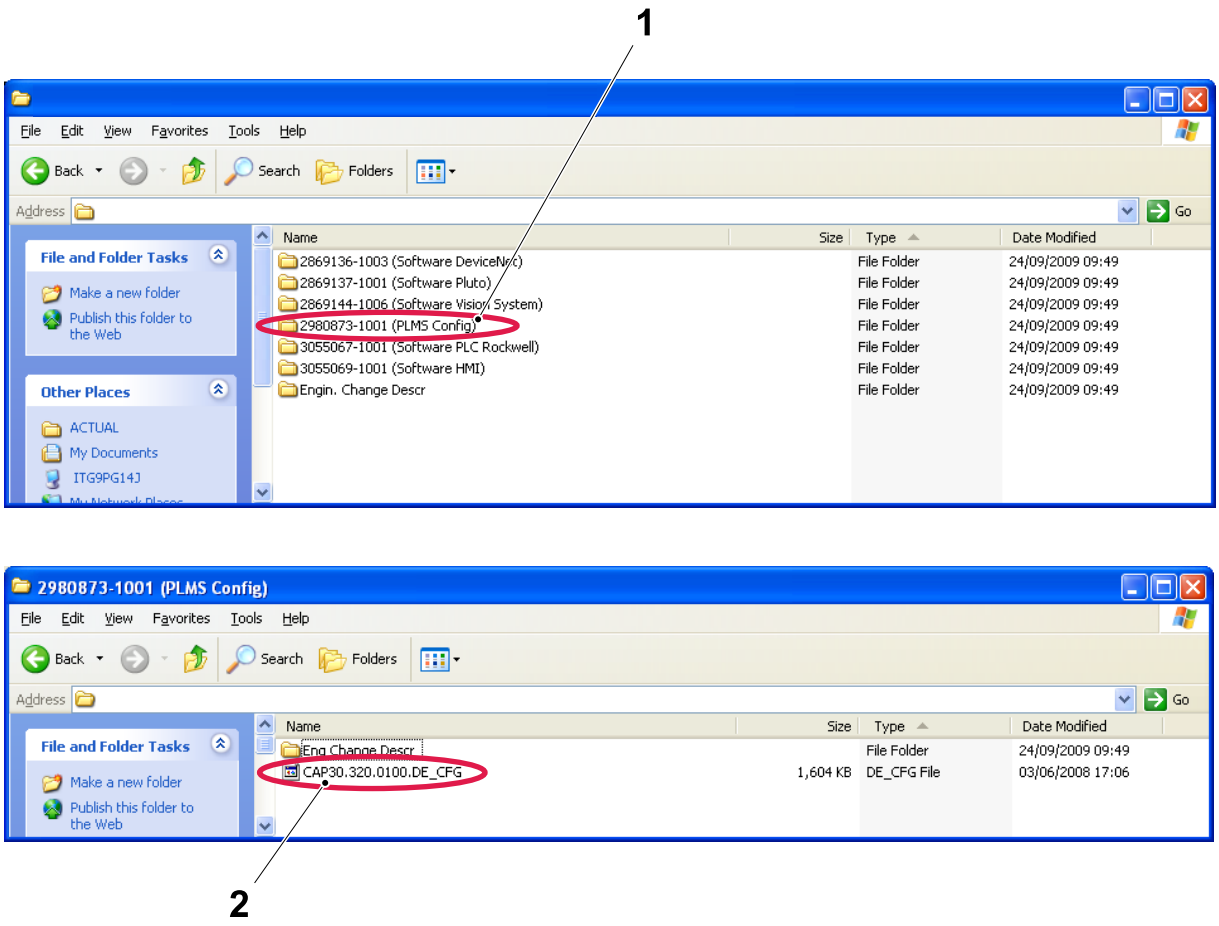

1 PLMS config folder
2 PLMS config file

3.6 Final Procedures

3.7 Restore Tools and Site

Make sure that:

- all protective plastic is removed from the equipment;
- all lifting tools and other installation tools are removed from the area around the equipment;
- the area around the equipment is properly cleaned;
- the equipment is properly cleaned;
- the site is restored to production status.

3.8 Mechanical Completion Review

The purpose of the mechanical completion review is to align with the customer that all steps in this phase have been completed. Any remaining issues should be addressed in regards to ownership and completion time.

Verify that the equipment in question has been delivered and is installed in accordance with the relevant documentation. This inspection must be carried out in conjunction with all involved parties, and prior to commissioning. All relevant installation documents are to be used for this task.

Defects or faults together with necessary actions and timing to correct the deviations must be recorded in the checklist. See section 3.8.1 Mechanical Completion Review Checklist. Commissioning must not be started until the mechanical completion inspection has been completed.

Use the checklist as follows:

- Make a copy of the checklist before it is filled in (there may be a need to reuse the checklist if the equipment is to be moved to another site)
- Use a pen with indelible ink.
- Under Note, document any deviations, incorrect values, or comments.
- Under Value, document the actual value.
- Under Signature, sign that the check is performed.
- Store the checklist in the project files maintained by the market company.

3.8.1 Mechanical Completion Review Checklist

Machine No.		**Country**		**Final User**	**Site**
				Checklist completed by	**Checklist completion date**

No.	Checks	Reference document IM unless other document specified	Note	Value	Signature
1	The machine is positioned according to approved layout and without interference with service area	Layout drawing			
2	The machine is level transversely and longitudinally				
3	The utility connections work is completed.				
4	Inspect the compressed air connection.				
5	Package conveyor equipment is connected and level.				
6	According to the MM, set the sensors of the Package Conveyor: Infeed Sensors min. queue, Infeed Sensors max. queue, Fallen Package Sensor, Outfeed Congestion Sensor, Package Stopping next DE.				
7	Make sure that the screws (1) are tightened. If the screws (1) are loosened set up the package positioner (2). see procedure 2.2.5-3 Upper Inner Package Positioner - Set X Direction in the MM. 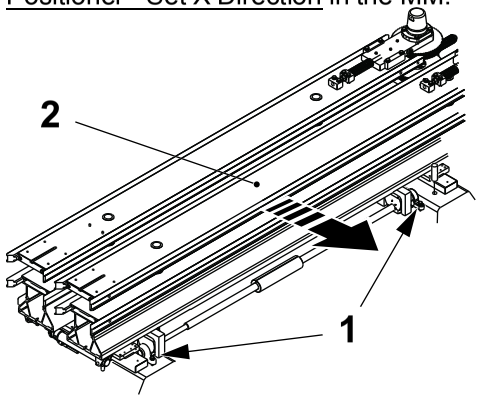				
8	Cap sorter connection work is complete.				
9	Electrical power cables are correctly connected. Make sure the PLMS cable, if installed, is clamped to the chassis of the electrical cabinet.				
10	All machine covers are fitted.				

(Cont'd)

(Cont'd)

No.	Checks	Reference document IM unless other document specified	Note	Value	Signature
11	Infeed and discharge tunnels are fitted.				
12	Cap sorter magazine is filled with caps.				
13	Turn On the electrical power upstream. Turn the main switch to the On position.		**DANGER** **Risk of electrocution.** To be performed by authorized electricians only. Check the rotation direction of the conveyor band used for packages to see if the polarity of the mains cable connection must be changed. See the EM for further details.		
14	Upstream valves/switches are open and ON: • electrical power • cold water • compressed air.		**Note!** Switch compressed air ON only after checking all drive belts are correctly mounted.		
15	There are no leaks from the utility connections.				
16	The TPOP has been set.				
17	All crates and other packing martial are removed from the area and disposed of as agreed with the customer.				
18	All tools are removed from the machine.				
19	Before stepping up the machine check all the belts are in the correct position.				
20	All doors open and close correctly.				
21	All hatches and safety covers are secured.				

(Cont'd)

(Cont'd)

No.	Checks	Reference document IM unless other document specified	Note	Value	Signature
22	All the EMERGENCY STOP buttons. See the Safety Precautions for further details. Press each EMERGENCY STOP button and make sure that the machine steps down to OFF.				
23	All the doors, covers and guards. See the Safety Precautions for further details. Open each door, cover or guard and make sure that the TPOP shows the correct one.				
24	The machine and the area around the machine are free from any remaining installation packing and wrapping				
25	Safety signs are undamaged, are in the correct position and visible. Replace any missing or damaged safety signs. See Safety Precautions for details.				

4 Commissioning

Description

This chapter describes the commissioning of the equipment. The commissioning covers all activities from the first start up of the equipment until the equipment is validated and ready for commercial production. The commissioning activity is finalized when a commissioning certificate is signed.

The chapter includes procedures to start up and validate the function of the equipment. It also describes the commissioning validation of the equipment, and how to verify the packages with package integrity tests and microbiological validation.

Make sure any local validation requirements are observed.

Note! Commissioning covers only the functioning of the individual machine. A line performance test is required to check the functioning of the machine as part of a complete line. Check with the local service organisation as to what arrangements have been made for a line performance test.

Description 200

4.1 Functional Validation 203

4.1-1 Presence and Correctness Checks 203

4.1-2 Product and Utility Value Checks 204

4.1.1 Function Checks Before Start 205

4.1.2 Electrical Power Supply and Electrical Functions 205

4.1.2-1 Machine Site - Prepare 205

4.1.2-2 Fault Loop - Verify 206

4.1.2-3 Continuity of the Protective Bonding Circuit - Check 206

4.1.2-4 Test Equipment Preparation 207

4.1.2-5 Emergency Stop Devices - Check 208

4.1.2-6 Safeguard - Check 210

4.1.2-7 Residual Current Devices - Check 213

4.1.2-8 TPOP - Set 213

4.1.3 Test Run 214

4.1.3-1 Operation - Check 214

4.1.3-2 Package - Check 214

4.1.3.1 Result Table for Verification of the Continuity of the Protective Bonding Circuit 214

4.1.3.2 Result Table for Testing the Safety Functions 218

4.1.3.3 Result Table for Testing the Safeguarding 218

4.1.4 TPOP 220

4.1.4-1 TPOP - Configure 220

4.1.4-2 TPOP - Create Production Recipe 220

4.1.5 Machine Functions 220

4.1.5.1 After Start Checks 220

4.1.5.1.1 PLC Program Parameters change 221

4.1.5.1.2 Health and Safety Checks 221

4.2 Commissioning Review 222

4.2.1 Commissioning Checklist 222

4.2.2 Functional Validation 224

4.2.2.1 Presence and Correctness Checks 224

4.2.2.2 Product and Utility Value Checks 226
4.2.2.3 Function Checks Before Start 228
4.2.2.4 After Start Checks 230
4.2.2.5 Health and Safety Checks 232
4.2.3 Commissioning Validation 234
4.2.3.1 Training 234
4.2.3.2 TPMS 236
4.2.4 Commissioning Inspection 238

4.1 Functional Validation

Note! During Commissioning, make sure to have the OM and the MM delivered with the equipment as support for setting values and equipment start instructions.

4.1-1 Presence and Correctness Checks

Spare Parts

Put the spare parts in the spare parts stores.

Operator Equipment

The accessories are available to the operator:

- apron
- gloves
- goggles.

Documents

Check that the documents correspond to the specific machine:

- EM
- IM
- OM
- MM
- SPC
- System drawings
- Machine Specification Document
- Final Inspection Report
- Machine Deviation Report (if relevant)

OM

Check that the OM is available to the operator.

Supply and Quality of Product

Make sure that the supply and quality of product is sufficient for the purpose of the commissioning.

Equipment Supplies

Make sure that the supplies are of the correct type and are available in sufficient quantities for the purpose of the commissioning:

- Caps
- Hotmelt supplies.

Tools and Templates

Make sure that the tools and templates are on site and stored in an appropriate way.

Electrical Cabinet Keys

Check that:

(Cont'd)

(Cont'd)

- the keys in the electrical cabinet are present.

Consumables

Make sure that the consumables are of the correct type and are available in sufficient quantities for the purpose of the commissioning:

- Grease.

4.1-2 Product and Utility Value Checks

Make sure that the product and utility values are correct. Ask for the assistance of the customer technical personnel if required. If values are incorrect, inform the customer technical personnel, see section 1 Technical Specification.

Electrical voltage supply

- voltage
- max voltage fluctuation
- frequency
- fuse rating

Cold water supply

- pressure
- max inlet temperature
- pH

Compressed air supply

- pressure

Detergent supply

- correct type (specifications)
- pH

4.1.1 Function Checks Before Start

a) Make sure that the PLC program on the CD/USB corresponds with that in the machine PLC. See the SPC for further details.

b) Switch ON the mains power switch. Make absolutely sure that all electrical motors have the correct direction rotation. See the EM for further details.

c) Make sure that all the EMERGENCY STOP buttons activate the correct alarm on the TPOP.

d) Make sure that all the doors, covers, and guard safety switches activate the correct alarm on the TPOP.

e) Make sure that the TPOP is set for machine configuration

f) Make sure that the speed of the first DE conveyor after the machine is set.

g) Check the Servo Zero Position. See the MM.

h) Check the X-setting of the Belt Brake, see the MM.

i) Check the X- and Y-settings of the Package Positioner, see the MM.

j) Check the height adjustment of the Package Positioner, see the MM.

k) Check the Cap position in the Package, see the MM.

l) Check the Cap conveyor height, X and Y level. See the MM.

m) Check the Package Conveyors Motors are correctly connected (start to work under frequency). Check the Package Conveyor speed, according to the MM. The Conveyor speed is shown in Hertz.

n) Prepare the machine for production. See the OM for further details.

o) Start up the Package Outfeed Conveyor.

p) Step up the machine to PRODUCTION (STEP3) according to the OM.

4.1.2 Electrical Power Supply and Electrical Functions

This section contains procedures for checks of the electrical supply and checks of electrical safety functions.

4.1.2-1 Machine Site - Prepare

Identification of Test Personnel

The different tests may be carried out by different test persons. The name of the person carrying out the verification shall be entered in each table.

(Cont'd)

(Cont'd)

Machine Preparation

Where tests are performed in a wet area with an obvious risk for splashing water from nearby machines or from pressurized water hoses the following requirements apply:

- doors and covers of electrical enclosures must be closed.
- parts of machine in contact with the floor, such as feet and ladders, must be included in the continuity of the protective bonding circuit test to ensure proper earthing, see Procedure 4.1.2-3 Continuity of the Protective Bonding Circuit - Check.

Note! The following safety requirements must be complied with:

- unauthorized persons must be prevented from access to the test area by means of chains, ropes, walls, bars or similar barriers
- the barrier must be provided with the appropriate number of warning signs "No access for unauthorized persons"
- test installations must be provided with means for emergency switching off
- assembly work, preparation for test, and actual test must not be performed simultaneously
- test instructions must be available during test



Warning sign

4.1.2-2 Fault Loop - Verify

Machine Status	Electrical supply disconnecting device in position O (LOCKED in OFF position)

Check if the power supply source impedance at the site (Z_{ss}), including the site's power transformer internal impedance and the site's power supply cable(s) to the machine, is lower than the maximum allowed, see Section 1.9.3 Electrical Power.

4.1.2-3 Continuity of the Protective Bonding Circuit - Check

Machine Status	Electrical supply disconnecting device in position O (LOCKED in OFF position)

Results from this procedure must be reported in the commissioning review checklists and result tables, see Section 4.2 Commissioning Review. All tests and verifications must be completed with the result *pass* before the check lists and result tables documents are signed.

(Cont'd)

(Cont'd)

- All dismantled or site assembled protective conductor terminations must be visually inspected.
- Any screw terminations connected at the site for protective conductors must be tested. Where applicable, test by pulling on the newly connected cables.

Any replaced cable that carries a protective conductor, requires the connected parts to be tested for the continuity of the protective bonding circuit. If needed, use the procedure below.

Note! For the correct article numbering during cable replacement, see the SPC.

a) Prepare the test equipment according to 4.1.2-4 Test Equipment Preparation.

b) Enter the name of the test object (reference designation) that the replaced cable is connected to in the column "Test Object".

c) Enter the test point of the Test Object in the "Test Point" column.

d) Enter the cable area of the replaced cable in the column "Area".

e) Depending on the cable area enter the test limit value in the "Test limit column" according to the table below.

Note! Tetra Pak machinery normally have very low resistance in the protective circuit. Therefore, to simplify testing, use the 6 mm² limit for lower conductor areas where possible.

Conductor area (mm²)	Max R_{PE} (mΩ)
1.5	256
2.5	196
4	145
6	111
10	83
16	62
25	48

f) Set, if applicable, the PE conductor tester in accordance with the conditions depending on the conductor area.

g) For each replaced cable, press the probe to the test point. Keep the probe pressed against the test point until a stable reading is obtained. Read and enter the resistance value in the Test Result table.

h) Check that the measured value is lower than the test limit value.

4.1.2-4 Test Equipment Preparation

a) Check visually on the test equipment that the connections of the PE probe, the probe, and the cable are intact.

b) Turn ON the power switch on the PE Conductor Tester.

c) To verify the test equipment, press both probes to the metallic structure of the machine and check that the resistance is sufficiently low. Direct contact between the two probes should give < 1 mΩ.

4.1.2-5 Emergency Stop Devices - Check

Machine Status	PREPARATION

Note! All safety functions to be tested (identified by their safety function designations) and the safety devices and power control devices (identified by their reference designations) are pre-entered into the result table.

(Cont'd)

(Cont'd)

Make sure to fill in the test result table, see 4.1.3.2 Result Table for Testing the Safety Functions.

a) The machine must be stopped and in machine step PREPARATION.

b) Identify the safety PLC F09K0000 in the electrical cabinet.

c) Make sure that all the EMERGENCY STOP buttons are deactivated and any alarms are reset by touching the alarm reset button on the TPOP panel, and pushing the safety reset button. Check in the electrical cabinet that the safety PLC output F09K0000:Q0/Q1/Q2/Q3 and Safety Relay Expansions F09K0001 - F09K0003 - F09K0004 are ON.

d) Press the first selected EMERGENCY STOP button and make sure that all the expansion safety modules are tripped, the LED switches should be off.

e) With the EMERGENCY STOP button still activated, attempt to start the machine by pressing the STEP UP button. Check that the machine does not start and that the safety relay remains tripped.

f) Deactivate, by pulling out, the EMERGENCY STOP button, attempt to start the machine by pressing the STEP UP button. Check that the machine does not start and that all the expansion safety modules remains tripped.

g) Repeat items b) to e) for the other selected emergency stop devices. See Section 4.1.3.2 Result Table for Testing the Safety Functions.

h) Release the EMERGENCY STOP button and reset any alarms by touching the RESET button on the TPOP panel. Check in the electrical cabinet that the safety PLC output F09K0000:Q0/Q1/Q2/Q3 and Safety Relay Expansions F09K0001 - F09K0003 - F09K0004 are ON.

Fill in the result in the Result Table for Testing the Safety Functions, see Section 4.1.3.2 Result Table for Testing the Safety Functions.

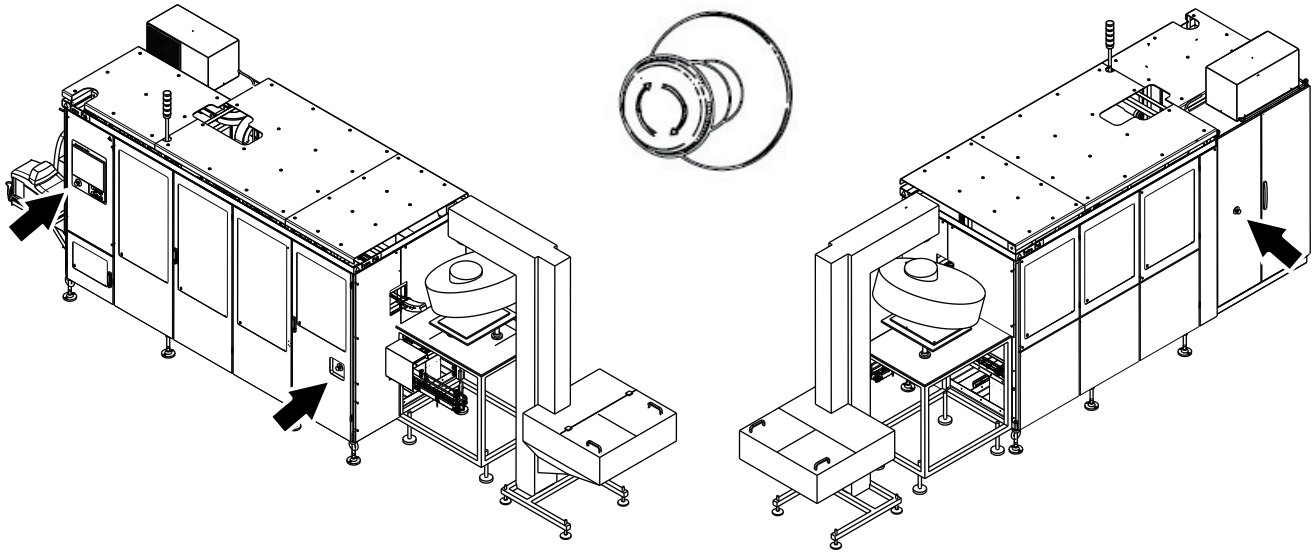

The emergency stop button (01F490) is placed close to the manual hand packing station (optional equipment).

4.1.2-6 Safeguard - Check

Machine Status	PREPARATION

Machine Body Doors

Note! All safety functions to be tested (identified by their safety function designations) and the safety devices and power control devices (identified by their reference designations) are pre-entered into the result table, see Section 4.1.3.2 Result Table for Testing the Safety Functions. Make sure to fill in the test result table.

a) Identify the safety PLC F09K0000 (4) in the electrical cabinet.

b) Make sure that all the doors at the machine body are closed and any alarms are reset.

c) Check in the electrical cabinet that the safety input IQ11 (1), the safety output Q0 (2) and the safety output Q2 (3) are ON. Check also that the safety relay expansion F09K0001 (5) and safety relay expansion F09K0004 (6) are ON.

d) Open the door (arrow) and make sure that an alarm is displayed on the TPOP.

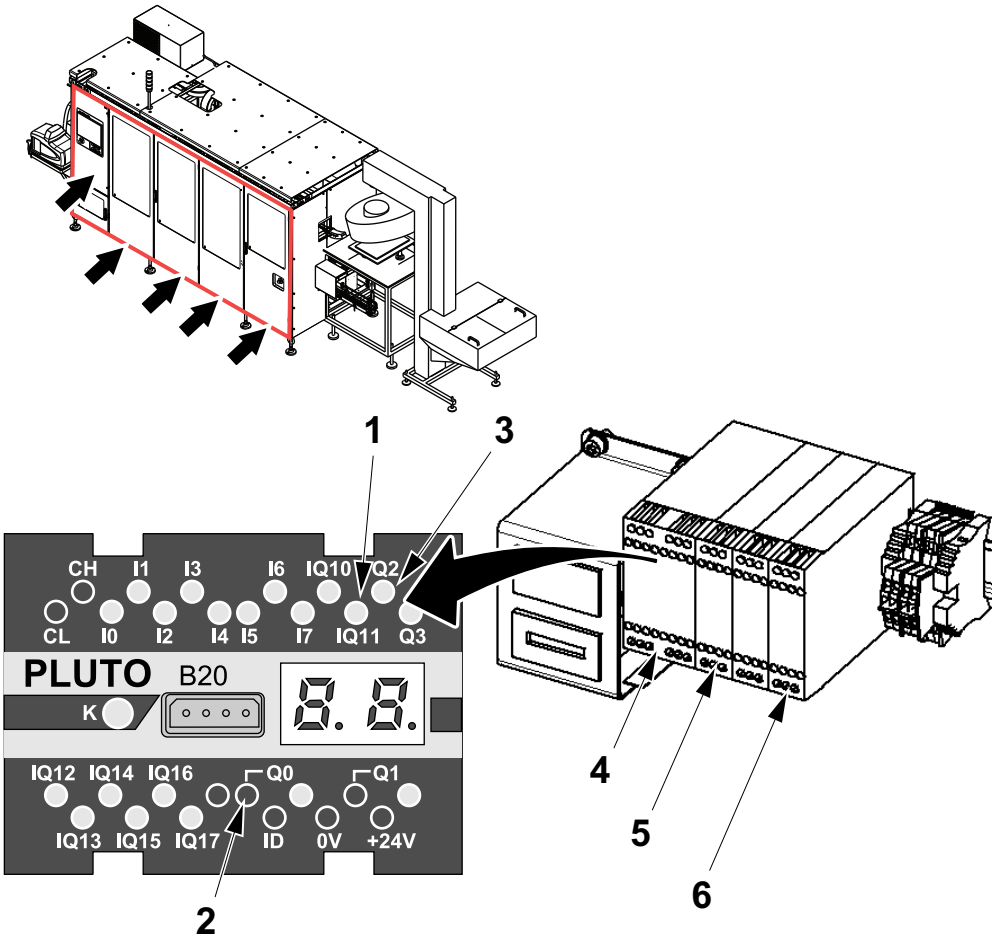

1 Safety input IQ11
2 Safety output Q0
3 Safety output Q2
4 Safety PLC F09K0000
5 Safety relay expansion F09K0001
6 Safety relay expansion F09K0004

(Cont'd)

(Cont'd)

e) Check that the safety input IQ11 (1), the safety output Q0 (2), the safety output Q2 (3), the safety relay expansion F09K0001 (5) and safety relay expansion F09K0004 (6) switch OFF.

f) With the door still open, attempt to start the machine by pressing the STEP UP button.

g) Close the door and touch the RESET button on the TPOP panel to reset the safety system.

h) Repeat items b) to g) for the other doors in the machine body.

i) Make sure that all the doors at the machine body are closed any alarms have been cleared by touching the alarm reset button.

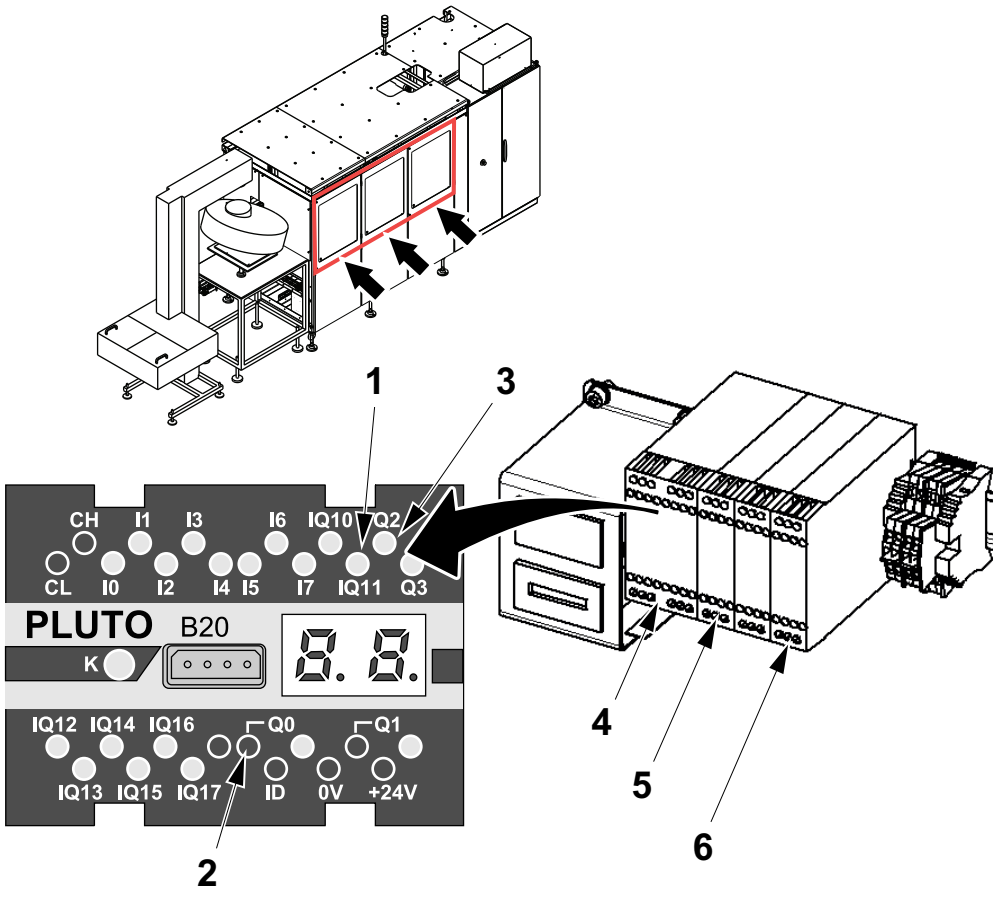

1 Safety input IQ11
2 Safety output Q0
3 Safety output Q2
4 Safety PLC F09K0000
5 Safety relay expansion F09K0001
6 Safety relay expansion F09K0004

(Cont'd)

(Cont'd)

Cap Sorter Doors

a) Identify the safety PLC F09K0000 (3) in the electrical cabinet.

b) Make sure that all the side doors of the Cap Sorter are closed and any alarms are reset.

c) Check in the electrical cabinet that the safety input IQ12 (1) and the safety output Q1 (2) are ON. Check also that the safety relay expansion F09K0003 (4) is ON.

d) Open the door (arrow) and make sure that an alarm is displayed on the TPOP.

e) Check that the safety input IQ12 (1), the safety output Q1 (2) and the safety relay expansion F09K0003 (4) switch OFF.

f) Close the door and check that the alarm is automatically reset after the test.

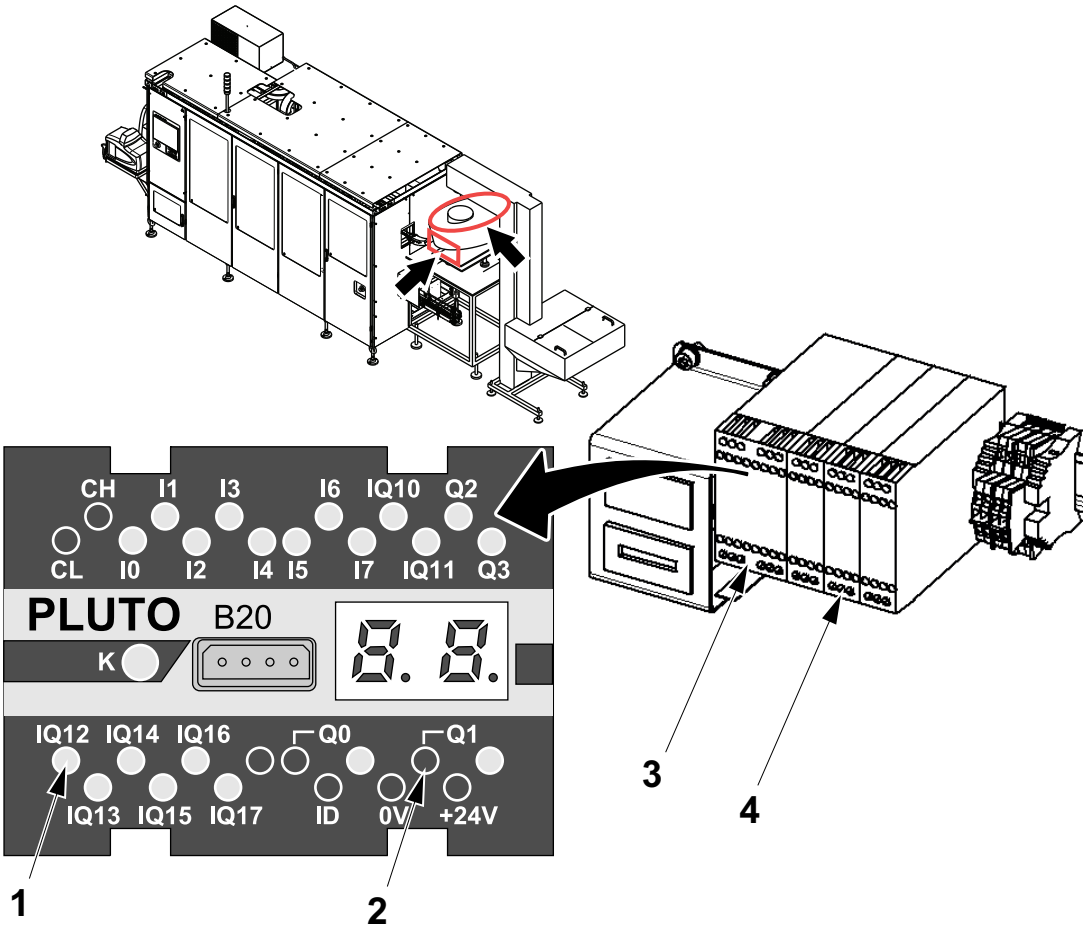

1 Safety input IQ12
2 Safety output Q1
3 Safety PLC F09K0000
4 Safety relay expansion F09K0003

4.1.2-7 Residual Current Devices - Check

Machine Status	Electrical supply disconnecting device in position I (ON)

DANGER

Hazardous voltage.
Electric shock will cause death or serious injury. Change the residual current device if it does not trip immediately.

Note! All test objects (identified by their reference designations) are pre-entered into the result table, see 4.1.3.2 Result Table for Testing the Safety Functions.

a) For **A01F7001** make sure that the switch (3) is in ON position (4).

b) Press the TEST button (2).

c) The residual current device must trip immediately. Check that the switch (3) changes to OFF position (5).

d) Put the switch (3) back to ON position (4).

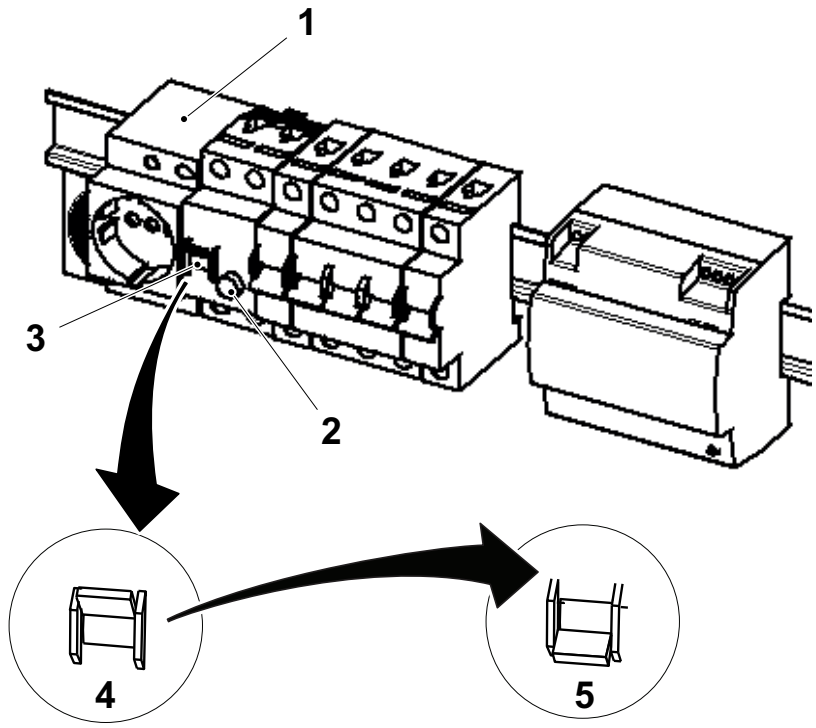

1 Socket outlet 01X031
2 Test button residual current device A01F7001
3 Switch residual current device 01F031
4 Switch (ON)
5 Switch (OFF)

4.1.2-8 TPOP - Set

Machine Status	Electrical supply disconnecting device in position I (ON)
SPC Reference	3438627-0101

Note! See the Operation Manual for descriptions and detailed explanations of the HMI.

(Cont'd)

(Cont'd)

Configure the HMI on the machine by entering the following information:

- Check and set if necessary the date and time.
- Check and set if necessary the language.
- Check and set if necessary the machine type.
- Check and set if necessary the machine serial number.
- Set a recipe for the machine.

4.1.3 Test Run

4.1.3-1 Operation - Check

Machine Status	Electrical supply disconnecting device in position I (ON) Main air valve ON

a) Supply the machine with packaging material and step the machine up to PRODUCTION according the Operation Manual.

b) Make sure that there are no visible leaks in the machine:
   - compressed air

4.1.3-2 Package - Check

Machine Status	Electrical supply disconnecting device in position I (ON) Main air valve ON

a) Supply the machine with packaging material and step the machine up to PRODUCTION according the Operation Manual.

b) Perform a package check according the Operation Manual.
   - At even the slightest doubt concerning the quality, several more packages should be taken for further checks. Correct any fault and, if required, stop the machine. Whenever a fault, according to the check points, can not be eliminated, set the machine according to the Maintenance Manual.

4.1.3.1 Result Table for Verification of the Continuity of the Protective Bonding Circuit

- **Test Object:** Enter the test object reference designation and denomination
- **Test Point:** Enter significantly touchable equipment part

(Cont'd)

(Cont'd)

	Test Object	Test Point	Check	Note	Signature
1	Incoming supply cable	A01X1001:E3			
2	Machine body ground	A01X0002:E1			
3	Cap Sorter ground	C50X1001:E1			

(Cont'd)

(Cont'd)

If a cable needs to be replaced, the continuity of the protective bonding circuit has to be verified. Enter the test results in the table below.

- **Test Object:** Enter the test object reference designation and denomination
- **Test Point:** Enter significantly touchable equipment part
- **Area (mm^2):** Enter the cross-sectional area of the associated protective conductor
- **Test Limit (mΩ):** Enter the maximum resistance
- **Test Value (mΩ):** Leave empty

(Cont'd)

		R_{PE}						
	Test Object (Reference designation)	**Test Point**	**Area (mm^2)**	**Test Limit (mΩ)**	**Test Value (mΩ)**	**Note**	**Signature**

4.1.3.2 Result Table for Testing the Safety Functions

- **Safety Function:** Enter the designation of the safety function, that is, the designation for an emergency stop or safeguard
- **Safety Input:** Enter the reference designation: terminal designation of the safety input
- **Safety Output:** Enter the reference designation: terminal designation of the safety output
- **Power Contactor:** Enter the reference designation for the first level of power contactors, and if applicable, the second level of power contactors
- **Power Valve:** Enter the reference designation for the first level of power valves, and if applicable, the second level of power valves

Designation	Ref. Des.: Terminal Des.			
Safety Function	Safety Input	Safety Output	Reference Designation	Signature
Emergency stop on Electrical Cabinet	F09S1001			
Comment:	Check input:	Check activation:		
		Check deactivation:		
Emergency stop on Operator Panel	F09S1002			
Comment:	Check input:	Check activation:		
		Check deactivation:		
Emergency stop on Machine Body	F09S1003			
Comment:	Check input:	Check activation:		
		Check deactivation:		

4.1.3.3 Result Table for Testing the Safeguarding

Check the safeguardings and enter the results in the table below

(Cont'd)

(Cont'd)

Designation	Reference designation	Safety I/O activated	Safety I/O deactivated	Carried out / Checked by:	Notes
Front Door 1 Left	F09B2010	IQ11 ☐	IQ11 ☐		
Front Door 1 Right	F09B2012	IQ11 ☐	IQ11 ☐		
Front Door 2 Left	F09B2014	IQ11 ☐	IQ11 ☐		
Front Door 2 Right	F09B2016	IQ11 ☐	IQ11 ☐		
Rear Door 1	F09B2030	IQ11 ☐	IQ12 ☐		
Rear Door 2	F09B2032	IQ11 ☐	IQ12 ☐		
Door Operator Panel	F09B2034	IQ11 ☐	IQ12 ☐		
Cap Sorter Cover 1	F09B3010	IQ12 ☐	IQ13 ☐		
Cap Sorter Cover 2	F09B3012	IQ12 ☐	IQ13 ☐		
Cap Sorter Cover 3	F09B3014	IQ12 ☐	IQ13 ☐		
Cap Sorter Chute	F09B3016	IQ12 ☐	IQ13 ☐		

4.1.4 TPOP

4.1.4-1 TPOP - Configure

Configure the:

- Date, time, language and shift settings, see the OM chapter 2 Control Panels, System Setup.
- PLMS components in the PLMS Live window, see the MM section PLMS NRG Configurator.

4.1.4-2 TPOP - Create Production Recipe

Log on to the HMI as TP Service Technician, see the MM section HMI - User Management Log On.

4.1.5 Machine Functions

4.1.5.1 After Start Checks

a) Check Conveyor speed, see 1.6.2 Conveyor Length.

b) During the start sequence, check that the hotmelt unit reaches working temperature within 40 minutes.

c) During the start sequence, packages must enter the belt brake correctly.

d) Make sure that caps travel along the infeed conveyor smoothly and without causing any stops.

e) Make sure that caps enter the cap sequencer and the cap holders without problems.

f) Make sure that all pressures values are correct, see the MM for further details.

g) Make sure that there are no leakages from the hotmelt hose (when the machine is stepped up).

h) Make sure that there are no unusual noises which could indicate loose or misaligned parts.

i) Make sure that there are no unusual smells which could indicate internal leaks or burning of electrical components.

j) Make sure that finished packages (final user packaging material) are correct in terms of the cap application.

k) Make sure that defective packages are ejected. Check that packages without caps are also ejected.

l) Perform the package check procedure, see the OM for further details.

m) Perform the cap infeed empty function, see the OM for further details.

n) Make sure of the Stop methods. Stop the machine according to the OM to verify the different stop functions.

o) Perform external cleaning.

p) Make sure that there are no unusual smells which could indicate internal leaks or burning of electrical circuits.

4.1.5.1.1 PLC Program Parameters change

CAUTION
Risk of damage to the equipment.
Do not change the PLC parameters unless absolutely necessary. Make a copy of the existing parameters before modifying them. Also keep a copy of the new parameters for future reference.

Only skilled or instructed persons are allowed to make changes to the PLC parameters.

Note! To connect to the CPU module using an ethernet communication cable, the PC must first be configured for this type of communication. See the MM for more details.

4.1.5.1.2 Health and Safety Checks

a) All the EMERGENCY STOP buttons. See the Safety Precautions for further details. Press each EMERGENCY STOP button and make sure that the machine steps down to OFF.

Note! Doors with electromagnetic switches cannot be opened when the machine is in production.

b) All doors, covers and guards. For each door, cover or guard which has a safety switch installed, open the door, cover and guard and make sure that the operator interface shows an alarm.

c) Make sure that each of the safety signs on the equipment is undamaged, in the correct position and visible after the installation. Replace any missing or damaged safety signs. See the Safety Precautions for further details..

4.2 Commissioning Review

The purpose of the commissioning review is to align with the customer that all steps in this phase have been completed. Any remaining issues should be addressed in regards to ownership and completion time.

Verify that the equipment in question is ready for commercial production. This inspection must be carried out in conjunction with all involved parties, and prior to the performance validation.

Defects or faults together with necessary actions and timing to correct the deviations must be recorded in the checklist. See Section 4.2.1 Commissioning Checklist. Performance validation must not be started until the commissioning inspection has been completed.

Use the checklist as follows:

- Make a copy of the checklist before it is filled in (there may be a need to reuse the checklist if the equipment is to be moved to another site).
- Use a pen with indelible ink.
- Under Note, document any deviations, incorrect values, or comments.
- Under Value, document the actual value.
- Under Signature, sign that the check is performed.
- Store the checklist in the project files maintained by the market company.

4.2.1 Commissioning Checklist

Machine No.		**Country**		**Final User**	**Site**
				Checklist completed by	**Checklist completion date**

4.2.2 Functional Validation

4.2.2.1 Presence and Correctness Checks

No.	Check	Reference Document (IM unless other document specified)	Note	Value	Signature
1	The TP No. on the program corresponds to the TP No. in the SPC.				
2	The spare parts have been deposited in the spare parts stores.				
3	The accessories are available to the operator: • safety goggles. • heat protective gloves • protective apron • shoes	OM			
4	All the documents correspond to the specific machine. • EM • IM • OM • MM • SPC • System drawings • Machine Specification Document • Final Inspection Report • Machine Deviation Report (if relevant).	OM			
5	The OM is available to the operator.				
6	Caps supplies are of the correct type and are available in sufficient quantities for the purpose of commissioning and production.				
7	The tools and templates are on site and stored in an appropriate way.				
8	The keys in the electrical cabinet are present				
9	Consumables according to specification are available on site.				

4.2.2.2 Product and Utility Value Checks

Make sure that the product and utility values are correct and include actual value in the value column. Ask for assistance by the final user's technical personnel if necessary. If a value can't be measured, make a note of value stated by final user in the note column. If values aren't according to specification in IM, inform the final user's technical personnel. If the value can't be rectified a comment about incorrect value should be added in the “Note” column.

(Cont’d)

(Cont'd)

No.	Check	Reference Document (IM unless other document specified)	Note	Value	Signature
1	Electrical voltage supply • voltage • max voltage fluctuation • frequency • fuse rating				
2	Cold water supply • pressure • max inlet temperature • pH				
3	Compressed air supply • pressure				
4	Detergent • correct type (specifications) • pH				

4.2.2.3 Function Checks Before Start

No.	Check	Reference Document (IM unless other document specified)	Note	Value	Signature
1	Make sure that the PLC program on the USB memory stick corresponds with that in the machine PLC.				
2	Switch On the mains power switch. Make absolutely sure that all electrical motors have the correct direction rotation. See the EM for further details.				
3	All the EMERGENCY STOP buttons and cords activate the correct alarm on the TPOP.				
4	All the door, cover, and guard safety switches activate the correct alarm on the TPOP.				
5	TPOP set for machine configuration				
6	The speed of the first DE conveyor after the machine is set.				
7	Check the Servo Zero Position. See the MM				
8	Check the X-setting of the Belt Brake, see the MM.				
9	Check the X- and Y-settings of the Package Positioner, see the MM.				
10	Check the height adjustment of the Package Positioner, see the MM.				
11	Check the Cap position in the Package, see the MM.				
12	Check the Cap conveyor height, X and Y level. See the MM.				
13	Check the Package Conveyors Motors are correctly connected (start to work under frequency). Check the Package Conveyor speed, according to the MM. **Note!** The Conveyor speed is shown in Hertz				
14	Prepare the machine for production. See the OM for further details.				
15	Start up the Package Outfeed Conveyor.				
16	Step up the machine to PRODUCTION (STEP3) according to the OM.				

4.2.2.4 After Start Checks

No.	Check	Reference Document (IM unless other document specified)	Note	Value	Signature
1	Check Conveyor speed, see 1.6.1.2 Outfeed Conveyor Speed and 1.6.1.3 Machine Conveyor Speed.				
2	During the start sequence, check that the hotmelt unit reaches working temperature within 40 minutes.				
3	During the start sequence, packages must enter the belt brake correctly.				
4	Caps must travel along the infeed conveyor smoothly and without causing any stops.				
5	Caps must enter the cap sequencer and the cap holders without problems.				
6	All pressures values are correct, see the MM for further details.				
7	There are no leakages from the hotmelt hose (when the machine is stepped up).				
8	There are no unusual noises which could indicate loose or misaligned parts.				
9	There are no unusual smells which could indicate internal leaks or burning of electrical components.				
10	Finished packages (final user packaging material) are correct in terms of: • cap application.				
11	Defective packages are ejected. Check that packages without caps are also ejected.				
12	Perform the package check procedure, see the OM for further details.				
13	Perform the cap infeed empty function, see the OM for further details.				
14	Stop methods. Stop the machine according to the OM to verify the different stop functions.				
15	Perform external cleaning.				
16	There are no unusual smells which could indicate internal leaks or burning of electrical circuits.				

4.2.2.5 Health and Safety Checks

No.	Check	Reference Document (IM unless other document specified	Note	Value	Signature
1	All the EMERGENCY STOP buttons. See the Safety Precautions for further details. Press each EMERGENCY STOP button and make sure that the machine steps down to OFF.				
2	All doors, covers and guards. **Note!** Note: Doors with electromagnetic switches cannot be opened when the machine is in production. For each door, cover or guard which has a safety switch installed, open the door, cover and guard and make sure that the operator interface shows an alarm.				
3	Make sure that each of the safety signs on the equipment is undamaged, in the correct position and visible after the installation. Replace any missing or damaged safety signs. See the Safety Precautions for further details.				

4.2.3 Commissioning Validation

4.2.3.1 Training

No.	Check	Reference Document (IM unless other document specified)	Note	Value	Signature
1	Training level of final user technicians • Participation during installation work • Service work				
2	Training level of final user operators • Operator training completed • Number of operators trained • Names of operators trained	OM			

4.2.3.2 TPMS

No.	Check	Reference Document (IM unless other document specified)	Note	Value	Signature
1	Procedures for maintenance (TPMS) have been established (not later than in time for the completion of the Commissioning): • Daily check list • Weekly check list • 250 h check list "training"	CLO			

4.2.4 Commissioning Inspection

No.	Check	Reference Document (IM unless other document specified)	Note	Value	Signature
1	Functional validation performed.				
2	Commissioning validation performed.				
3	Commissioning certificate issued.				

This page intentionally left blank

5 Performance Validation

Description

This chapter describes the performance validation of the equipment. The performance validation covers the activities from when the equipment is ready for commercial production until the equipment is handed over to the final user.

The chapter includes information on how to verify that the equipment achieves the performance targets during commercial production.

Description 242

5.1 Performance Preconditions 245

5.2 Commercial Production 246

5.3 Monitor and Improve the Performance 247

5.4 Performance Test 248

5.5 Performance Validation Review 249

5.5.1 Performance Validation Checklist 249

5.5.2 Performance Validation Criteria 251

5.5.3 Performance Validation Completed 253

This page intentionally left blank

5.1 Performance Preconditions

To ensure an effective and successful performance validation, the following has to be in place prior to the execution of the performance validation:

- Commercial production: commercial production must have started.
- Attendance: both Tetra Pak and the final user must have appointed representatives to participate in the performance validation.
- Operation: the equipment must be operated according to the Operation Manual for each component in the line.
- Qualified personnel from the final user should operate the equipment during the performance validation procedures.
- Production plan: a production plan covering the duration of the performance validation must be available and agreed between Tetra Pak and the final user of the equipment before the start of performance validation.
- The production plan should reflect the normal constant running conditions, including the range of products and packaging material that the final user intends to use with the equipment, as well as any expected product changes.
- The Machine Mechanical Efficiency (MME) and Line Machine Mechanical Efficiency (LMME) has been monitored and optimized.
- Performance Test has been carried out (if applicable).
- PLMS data (bin files) has been downloaded for Performance Monitoring Period and Line Performance Test.

5.2 Commercial Production

The performance validation is performed when the equipment runs in commercial production.

See the sales agreement for more information.

5.3 Monitor and Improve the Performance

During the performance monitoring period the actual performance of the equipment is measured and any non-performance issues are solved.

See the sales agreement for more information.

5.4 Performance Test

During the performance test the actual performance of the equipment during a pre-defined period is measured. The result of the performance test is recorded as the certified performance in the performance certificate.

See the sales agreement for more information.

5.5 Performance Validation Review

The purpose of the performance validation review is to align with the customer that all steps in this phase have been completed. Any remaining issues should be addressed in regards to ownership and completion time.

Verify that the equipment in question fulfils the performance agreed upon. This review must be carried out in conjunction with all involved parties, prior to final hand over of the equipment.

Defects or faults together with necessary actions and time to correct the deviations must be recorded in the checklist. See Section 5.5.1 Performance Validation Checklist.

Use the checklist as follows:

- Make a copy of the checklist before it is filled in (there may be a need to reuse the checklist if the equipment is to be moved to another site).
- Use a pen with indelible ink.
- Under Note, document any deviations, incorrect values, or comments.
- Under Value, document the actual value.
- Under Signature, sign that the check is performed.
- Store the checklist in the project files maintained by the market company.

5.5.1 Performance Validation Checklist

Machine No.			
Country			
Final User		Checklist completed by	
Site		Checklist completion date	

5.5.2 Performance Validation Criteria

No.	Checks	Reference document (IM unless other document specified)	Note	Value	Signature
1	Commercial production started.				
2	The General Performance Preconditions are fulfilled.	Sales agreement with schedules			
3	The Special Performance Preconditions are fulfilled (if applicable).	Sales agreement with schedules			
4	A production plan for the performance validation period is established and communicated.	Sales agreement with schedules			
5	The Machine Mechanical Efficiency (MME) and Line Machine Mechanical Efficiency (LMME) has been monitored and optimized.				
6	Performance Test has been carried out (if applicable).	PLMS, Performance specification			
7	PLMS data (bin files) has been downloaded for Performance Monitoring Period and Line Performance Test.	PLMS			

5.5.3 Performance Validation Completed

No.	Check	Reference document (IM unless other document specified)	Note	Value	Signature
	Performance certificate issued.				

6 Disassembly and Removal

Description

This chapter contains information about how to safely disassemble and remove the machine for reuse in another location or for final disposal.

Description 256

6.1 General 259

6.2 Moving and Transporting the Equipment 260

6.2.1 Compressed Air 260

6.2.2 Electrical Connection 260

6.2.3 Water Connection 260

6.3 Disassemble Machine 261

6.4 Storage Preparation 262

6.5 Lifting and Moving 263

6.6 Return to the Manufacturer 264

6.7 Disposal 265

This page intentionally left blank

6.1 General

Only skilled or instructed installation technicians are allowed to disassemble the equipment for moving to other installation positions.

WARNING

Risk of personal injury.

The cap applicator and the cap sorter must never be lifted as one unit. The assembled groups are unstable when lifted together and could cause personal injury. Disconnect the two units and lift separately.

WARNING

Risk of personal injury.

The machine can tilt if not observing the centre of gravity or the fork lift points, see 3.2.1.1 Centre of Gravity and Lifting Points. Failure to observe may result in personal injury and/or major damage to equipment.

6.2 Moving and Transporting the Equipment

6.2.1 Compressed Air

WARNING

Risk of personal injury.

Make sure that air supply to the machine is switched OFF before performing any disconnection work.

a) Shut off the compressed air supplies.

b) Disconnect the compressed air. For location see 3.4.2 Compressed Air.

6.2.2 Electrical Connection

DANGER

Hazardous voltage.

Make sure that the electrical power is switched OFF upstream before performing any work on cables and electrical components.

a) Shut off the electrical power supplies.

b) Disconnect the electrical cables in accordance with the EM.

6.2.3 Water Connection

a) Shut off the cold water supply.

b) Operate the water gun to release the residual pressure.

c) Disconnect the cold water inlet supply. For location, see 3.4.3 Water.

6.3 Disassemble Machine

WARNING

Risk of personal injury.
Before disassembling the machine, read the Safety precautions. If the safety precautions are not followed, there is risk of personal injury.

To disassemble the machine, follow the assembly instructions in the reverse order, see 3.3 Assembly.

6.4 Storage Preparation

Note! If the machine is to be stored, make sure the storage conditions are followed, see 2.10.1.2.2 Storing the Crated Equipment.

a) Follow the safety instructions in 3.2 Positioning and Assembly.

b) Move the equipment to its new position.

c) Level the equipment even if it is not going to be used.

6.5 Lifting and Moving

WARNING

Risk of personal injury.

The machine may tilt if not observing the centre of gravity or the fork lift points. Failure to observe will result in personal injury.

a) Before lifting and moving the machine from its production site, do the following:
   - check that the machine can be transported without any problems with the ceiling height, doors, passages, etc.
   - make sure that the machine is lifted and moved in accordance with 3.2 Positioning and Assembly.

b) Move the equipment to its new position.

c) Level the equipment even if it is not going to be used.

6.6 Return to the Manufacturer

a) Drain the equipment, see section 6.1 General.

b) Prepare the equipment for transport, see section 6.2 Moving and Transporting the Equipment.

c) Contact the local service organisation for further instructions and to arrange shipment.

6.7 Disposal

If the equipment has to be permanently disposed of, perform the following operations.

a) Drain the central lubrication tank. Follow the manufacturer´s instructions for disposal of the liquid.

b) Disassemble the machine as far as possible and separate the following materials:
   - stainless steel (panels and doors)
   - cast iron
   - aluminium
   - glass (windows, etc.)
   - rubber (seals, O-rings, etc.)
   - nylon and other plastics
   - electrical cables
   - lubrication and pneumatic hoses
   - electrical components (batteries, etc.).

c) Recycle or dispose of all materials, groups and machine components according to the local regulations.

This page intentionally left blank

Tetra Pak®

Cap 30/Flex
662950-0400 Issue 2018-02
Doc. No. IM-3413352-0106

Cap 30/Flex 1(2)
662950-0400 Issue 2018-02
Doc. No. IM-3413352-0106

Cap 30/Flex
662950-0400 Issue 2018-02
Doc. No. IM-3413352-0106

Cap 30/Flex 2(2)
662950-0400 Issue 2018-02
Doc. No. IM-3413352-0106

Cap 30/Flex
662950-0400 Issue 2018-02
Doc. No. IM-3413352-0106

Cap 30/Flex 1(2)
662950-0400 Issue 2018-02
Doc. No. IM-3413352-0106

Cap 30/Flex
662950-0400 Issue 2018-02
Doc. No. IM-3413352-0106

Cap 30/Flex 2(2)
662950-0400 Issue 2018-02
Doc. No. IM-3413352-0106

Cap 30/Flex
662950-0400 Issue 2018-02
Doc. No. IM-3413352-0106

Cap 30/Flex1(3)
662950-0400 Issue 2018-02
Doc. No. IM-3413352-0106

Cap 30/Flex
662950-0400 Issue 2018-02
Doc. No. IM-3413352-0106

Cap 30/Flex 2(3)
662950-0400 Issue 2018-02
Doc. No. IM-3413352-0106

Cap 30/Flex
662950-0400 Issue 2018-02
Doc. No. IM-3413352-0106

Cap 30/Flex 3(3)
662950-0400 Issue 2018-02
Doc. No. IM-3413352-0106

Cap 30/Flex
662950-0400 Issue 2018-02
Doc. No. IM-3413352-0106

Cap 30/Flex3(3)
662950-0400 Issue 2018-02
Doc. No. IM-3413352-0106

Cap 30/Flex
662950-0400 Issue 2018-02
Doc. No. IM-3413352-0106

Cap 30/Flex 1(2)
662950-0400 Issue 2018-02
Doc. No. IM-3413352-0106

Cap 30/Flex
662950-0400 Issue 2018-02
Doc. No. IM-3413352-0106

Cap 30/Flex 2(2)
662950-0400 Issue 2018-02
Doc. No. IM-3413352-0106

Cap 30/Flex
662950-0400 Issue 2018-02
Doc. No. IM-3413352-0106

Cap 30/Flex 1(3)
662950-0400 Issue 2018-02
Doc. No. IM-3413352-0106

Cap 30/Flex
662950-0400 Issue 2018-02
Doc. No. IM-3413352-0106

Cap 30/Flex 2(3)
662950-0400 Issue 2018-02
Doc. No. IM-3413352-0106

Cap 30/Flex
662950-0400 Issue 2018-02
Doc. No. IM-3413352-0106

Cap 30/Flex 3(3)
662950-0400 Issue 2018-02
Doc. No. IM-3413352-0106

Cap 30/Flex
662950-0400 Issue 2018-02
Doc. No. IM-3413352-0106

Cap 30/Flex 3(3)
662950-0400 Issue 2018-02
Doc. No. IM-3413352-0106

Cap 30/Flex
662950-0400 Issue 2018-02
Doc. No. IM-3413352-0106

Cap 30/Flex
662950-0400 Issue 2018-02
Doc. No. IM-3413352-0106

Cap 30/Flex
662950-0400 Issue 2018-02
Doc. No. IM-3413352-0106

Cap 30/Flex 1(3)
662950-0400 Issue 2018-02
Doc. No. IM-3413352-0106

Cap 30/Flex 1(2)
662950-0400 Issue 2018-02
Doc. No. IM-3413352-0106

Cap 30/Flex 2(3)
662950-0400 Issue 2018-02
Doc. No. IM-3413352-0106

Cap 30/Flex 2(2)
662950-0400 Issue 2018-02
Doc. No. IM-3413352-0106

Cap 30/Flex 3(3)
662950-0400 Issue 2018-02
Doc. No. IM-3413352-0106