SPC

Spare Parts Catalogue

CAP30/Flex ScrewCap

662950-0400

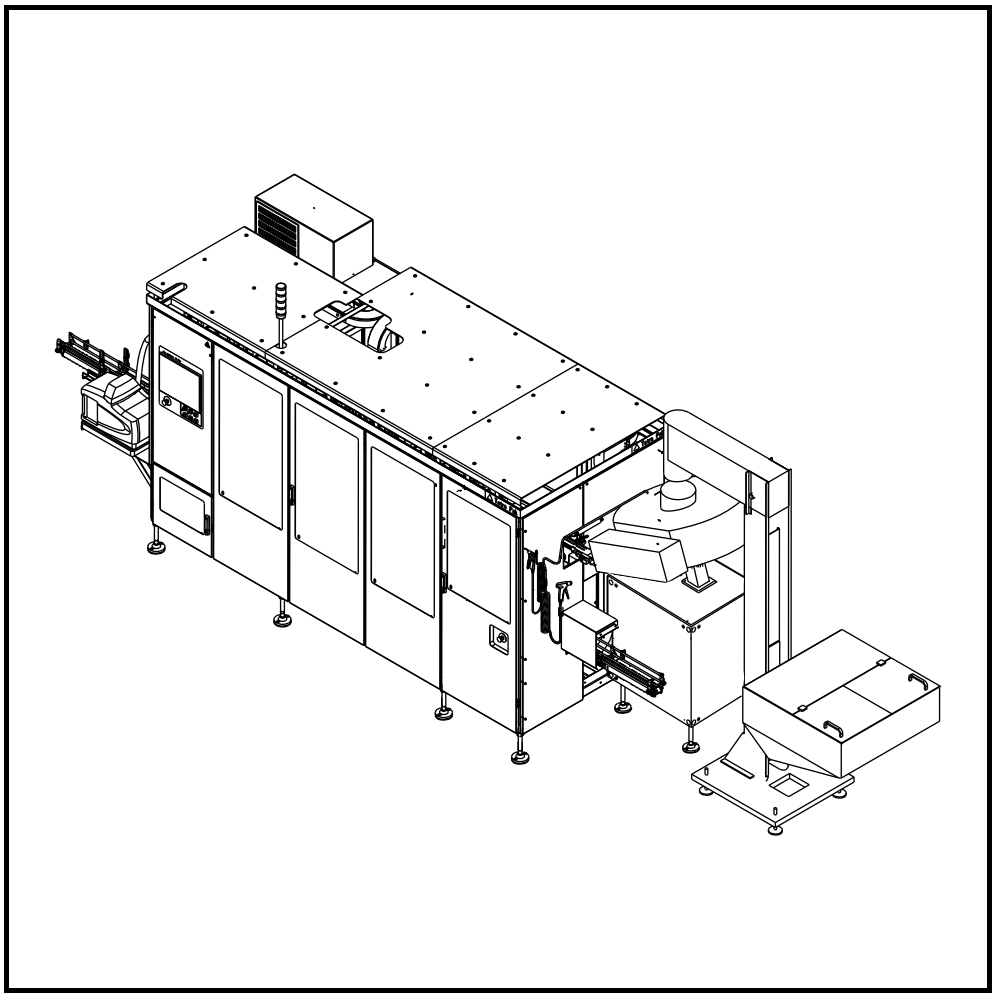

Tetra Pak®

Doc. No. SPC-3413383-0101

Copyright © 2018 Tetra Pak International S.A.

All rights reserved. No part of this document may be reproduced or copied in any form or by any means without written permission from Tetra Pak Packaging Solutions.

, Tetra Pak, and all other trademarks displayed in this document are the property of the Tetra Pak International SA. Tetra Pak Packaging Solutions together with Tetra Pak International SA form part of ‘the Tetra Pak Group’. The content of this document is in accordance with the design and construction of the machine or equipment at the time of publishing. The Tetra Pak Group reserves the right to introduce design modifications without prior notice.

The English language version of this document contains the original instructions. All other language versions are translations of the original instructions.

This document was produced and printed by:

Tetra Pak Packaging Solutions
Via Delfini 1
41123 MODENA
Italy

Doc. No. SPC-3413383-0101

Issue 2018-02

This document is valid for:

Serial No. / Machine No.
Year of Manufacture Sign.

SPC
Spare Parts Catalogue

CAP30/Flex ScrewCap
662950-0400

Introduction
1 Package Line
2 Push Down
3 Screw Cap Hot Melt Applicator
4 Cap Sorter
5 Machine Body
6 Applicator Unit
7 Cap Sequencer
8 Cap Conveyor
9 Electrical Cabinet
10 Regular Accessories
11 Electric Equipment
12 Optional Accessories
13 Optional Kit
Part Number Index
Alphabetical Index
Reference Designation Parts Index

Equipment configurations that this catalogue is valid for are described on the next page.

Doc. No. SPC-3413383-0101
Issue 2018-02

Tetra Pak®
Tetra Pak Packaging Solutions

Valid for:

Name	Drawing Specification and Development Step	Additional Information
CAP30/Flex ScrewCap	662950-0400	-

Introduction

Description

This chapter contains basic information about this manual and the related Tetra Pak® equipment.

Description 6

Document Information 9

Delivered Manuals 9

CM 9

EM 9

IM 9

MaSP 9

MM 9

OM 9

RM 9

SPC 10

TeM 10

UP 10

Page Layout and Numbering 11

Machine Introduction 12

Intended Use of the Equipment 12

Manufacturer 12

Service 12

Identification 13

EAC Compliance 13

China RoHS2 Compliance 13

Machine Plate 13

Electrical Equipment Marking 14

Food Grade Lubricated Machine Plate 15

Delivered Design Label 16

How to Use This SPC 17

Locate a Spare Part Number 17

Information Listed in a Spare Parts Catalogue 24

Assistance and Inquiries 27

This page intentionally left blank

Document Information

Prior to interacting with the equipment, carefully read the instructions in the applicable documentation pertinent to the activity. Make sure that the delivered documents are available to personnel who operate or maintain the equipment.

It is important to keep this document for the lifetime of the equipment and to pass the document on to any subsequent holder or user.

Any item that is named specifically in this document is to be considered a designated item for the equipment. Designated items are verified by the Tetra Pak Group for use with the equipment.

The Tetra Pak Group will not be held responsible for any damage, loss, injury, or death caused by not following the instructions in the documents delivered with this equipment, or by a failure to use designated items specified in the documents delivered with this equipment.

Delivered Manuals

Manuals delivered with this equipment:

CM

The Conversion Manual provides technicians with information on converting the equipment between different production modes.

EM

The Electrical Manual provides technicians with information about the equipment's electrical system.

IM

The Installation Manual provides technicians with information required to safely install the equipment.

MaSP

The Maintenance & Spare Parts Manual provides information on how to maintain the component. It also provides the information necessary to order spare parts from the Tetra Pak Group for the component.

MM

The Maintenance Manual provides technicians with information on maintaining the equipment.

OM

The Operation Manual provides the operator with information on handling and operating the equipment before, during, and after production.

RM

The Rebuilding Manual provides technicians with information required to safely install a kit to an installed machine or equipment.

SPC

The Spare Parts Catalogue provides the information necessary to order spare parts from the Tetra Pak Group.

TeM

The Technical Manual provides technicians with information concerning:

- requirements to safely install the equipment
- requirements to maintain the equipment
- the machine's/equipment's electrical system
- necessary information to order spare parts from the Tetra Pak Group

UP

The Update Pages provides new pages to update existing machine manuals.

Page Layout and Numbering

The main pages in a Spare Parts Catalogue consist of an illustration page (5) and a corresponding list page (1). The page number is shown in the header of an illustration page and in the footer of a list page. The page number consists of the consecutive page number (2), and the total number of pages (3) in the document.

The document number (4) is shown in the footer of a list page.

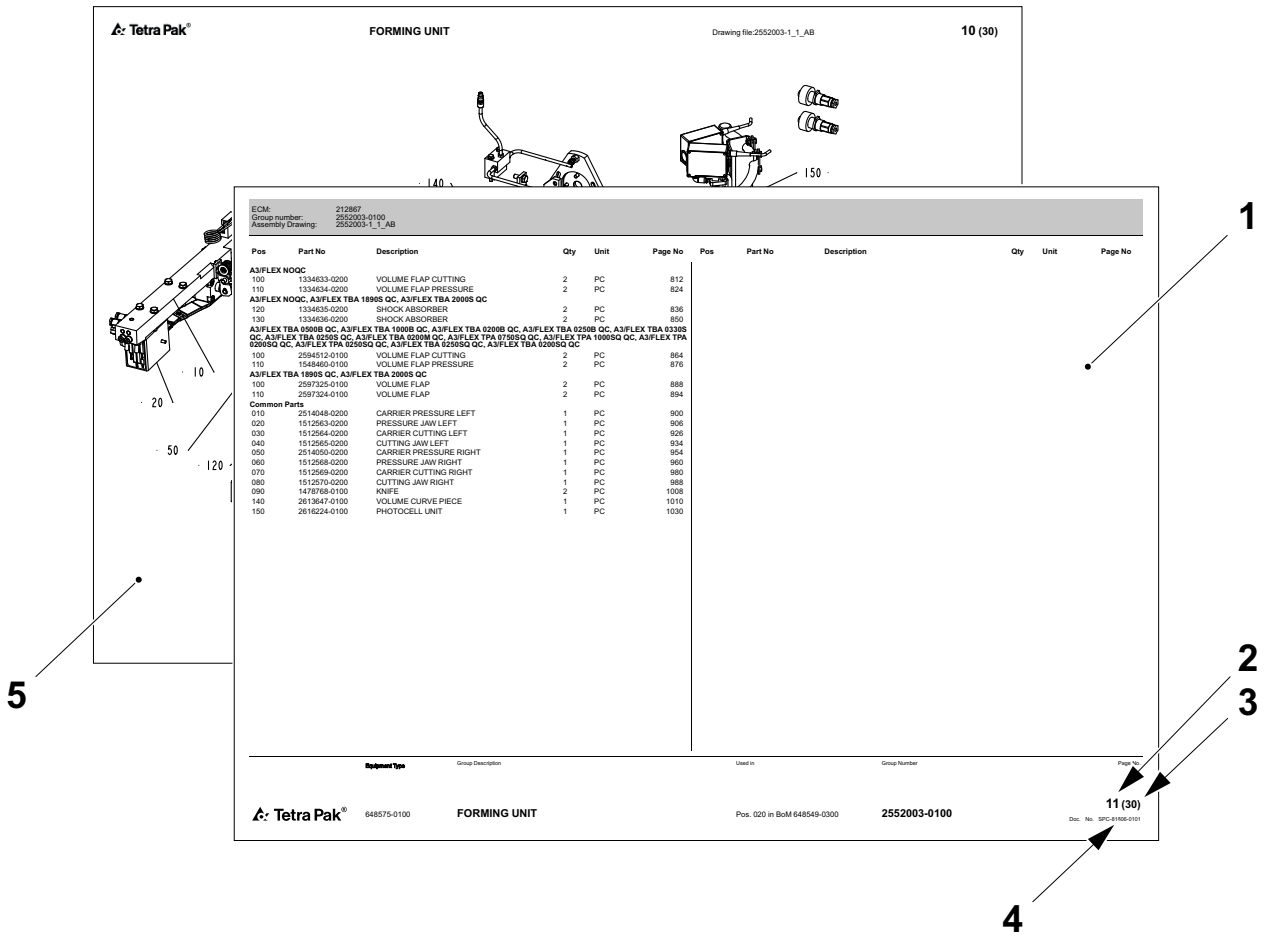

1 List page
2 Consecutive page number
3 Total number of pages
4 Document number
5 Illustration page

Machine Introduction

Intended Use of the Equipment

The intended use of this Tetra Pak equipment is to apply a closure onto a package.

Tetra Brik Aseptic Slim packages must have opening tabs. The opening tabs are applied by a PullTab unit which is incorporated in to the filling machine. All other packages must have pre-laminated holes.

All other use is prohibited. Tetra Pak will not be held responsible for injury or damage if the equipment is used for any other purpose than the intended use described above.

Manufacturer

This Tetra Pak® equipment is manufactured by

Tetra Pak Packaging Solutions
Via Delfini 1
41123 MODENA
Italy

Service

The Tetra Pak Group does not accept responsibility for any damages or any injuries to equipment, staff or consumers that is caused by spare parts that are not genuine Tetra Pak® spare parts.

To order genuine Tetra Pak spare parts for this machine contact the nearest Tetra Pak office.

Identification

EAC Compliance

This equipment complies with the regulations of the Eurasian Customs Union.

China RoHS2 Compliance

This equipment may contain one or more of the following substances: Pb, Hg, Cd, Cr6+, PBB, and PBDE.

The Environmental Protection Use Period is 25 years.

The Hazardous Substances Disclosure Table can be found in the Disassembly and Removal chapter in the IM.

Machine Plate

The illustration below shows an example of the machine plate and its location on the equipment. The machine plate carries data needed when contacting Tetra Pak concerning this specific equipment.

Make sure that the equipment data in the front pages of this manual corresponds to the machine plate data and the machine specification.

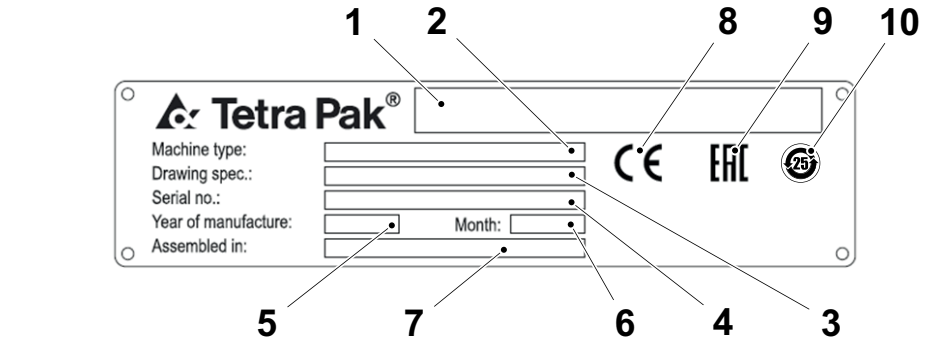

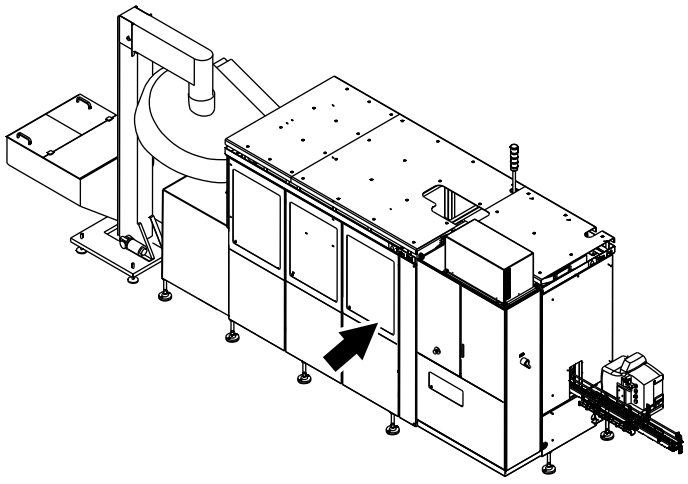

1 Manufacturer (full name and address)
2 Machine type
3 Drawing specifications
4 Machine serial number
5 Year of manufacture
6 Month of manufacture
7 Country
8 CE mark
9 EAC mark
10 China RoHS2 mark

Electrical Equipment Marking

The illustration below shows an example of the electrical equipment marking and its location on the equipment. The electrical equipment marking specifies the electrical characteristics for the equipment at the connection point.

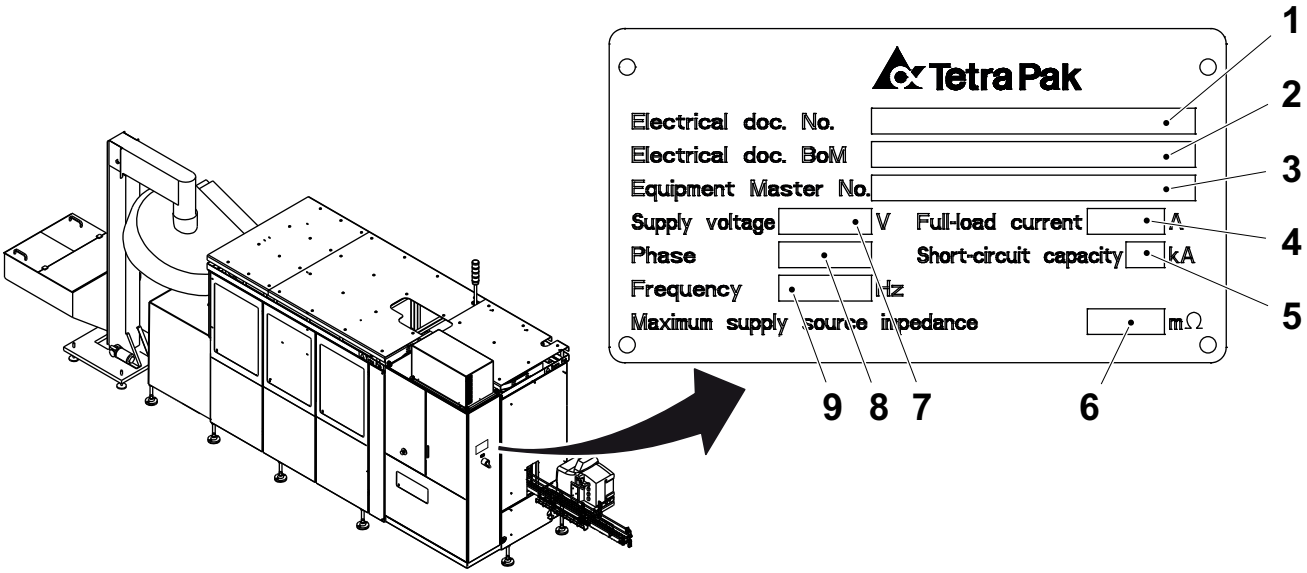

1 Electrical doc. No.
2 Electrical doc. BoM
3 Equipment Master No.
4 Full-load current
5 Short-circuit capacity
6 Maximum supply source impedance
7 Supply voltage
8 Phase
9 Frequency

Food Grade Lubricated Machine Plate

The illustration below shows an example of the Food Grade Lubricated Machine plate and its location on the equipment. The Food Grade Lubricated Machine plate indicates that lubricants used in this equipment are of food grade quality.

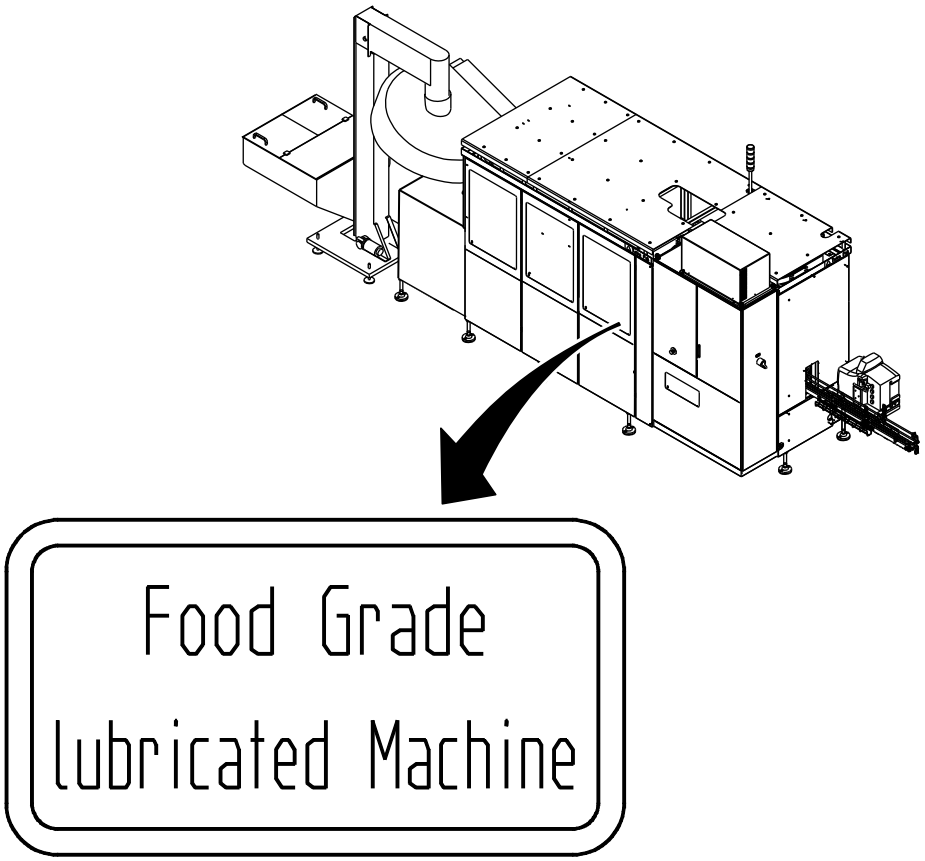

Delivered Design Label

The illustration below shows an example of the delivered design label and its location on the equipment. The delivered design label lists information tracking any rebuilding done to the electrical design, and any alterations done in the electrical cabinet and to related electrical components.

The delivered design label is filled in by the person performing the rebuilding or alteration.

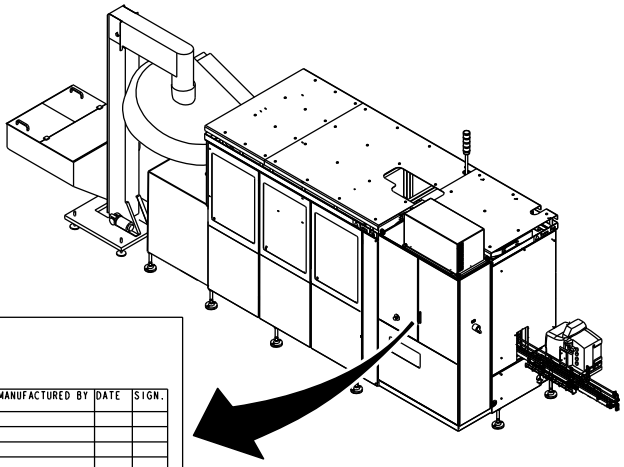

DELIVERED DESIGN

REGISTERED ALTERATIONS

ECM	REBUILDING KIT OR VARIANT	MACHINE DEV.	TECHNICAL BULLETIN	REMARK	MANUFACTURED BY	DATE	SIGN.

How to Use This SPC

Locate a Spare Part Number

a) Go to the chapter that contains the part you want to locate.

b) On the main group illustration, look for the machine subgroup (1) that contains the part you are looking for. Note the position number (2) and go to the list page that follows the illustration.

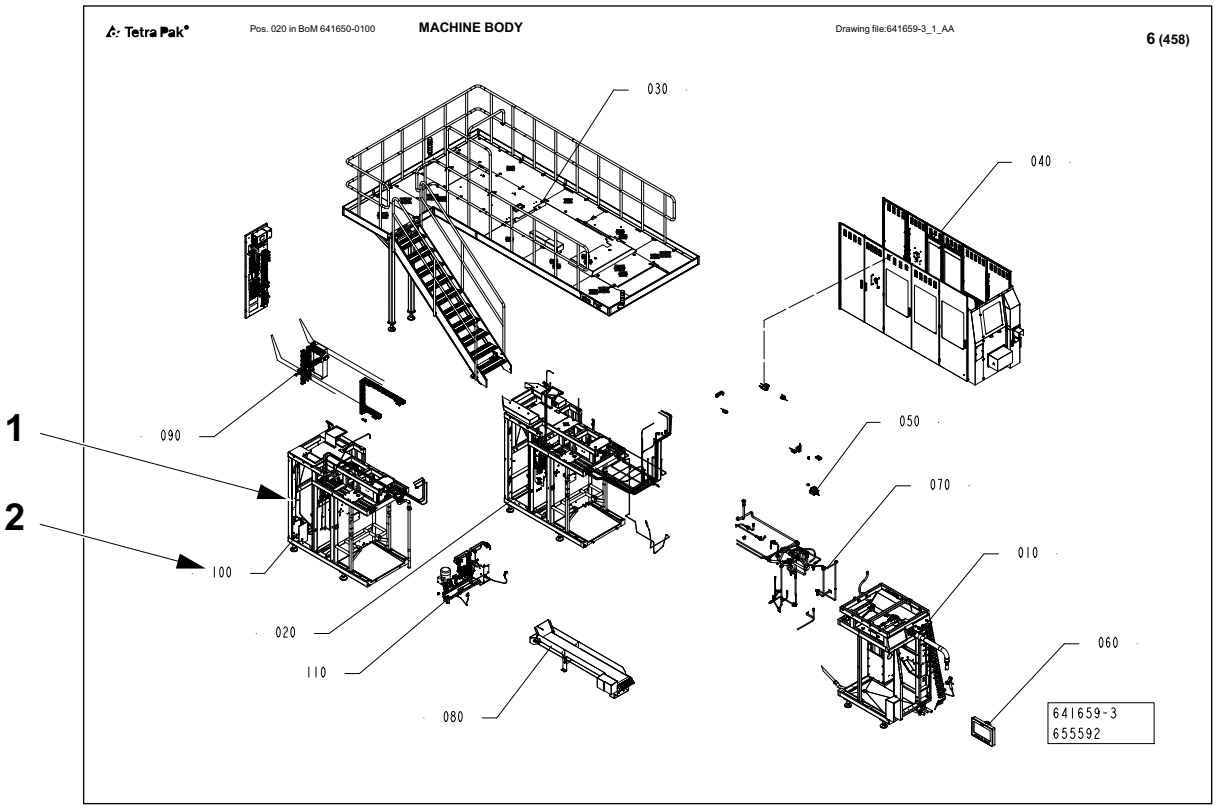

1 Machine subgroup
2 Position number

c) Locate the position number (3) in the **Pos** column. Click on the link to the corresponding page number (4) in the **Page No** column.

Note! If there is more than one page number listed, click on the link of the first page number.

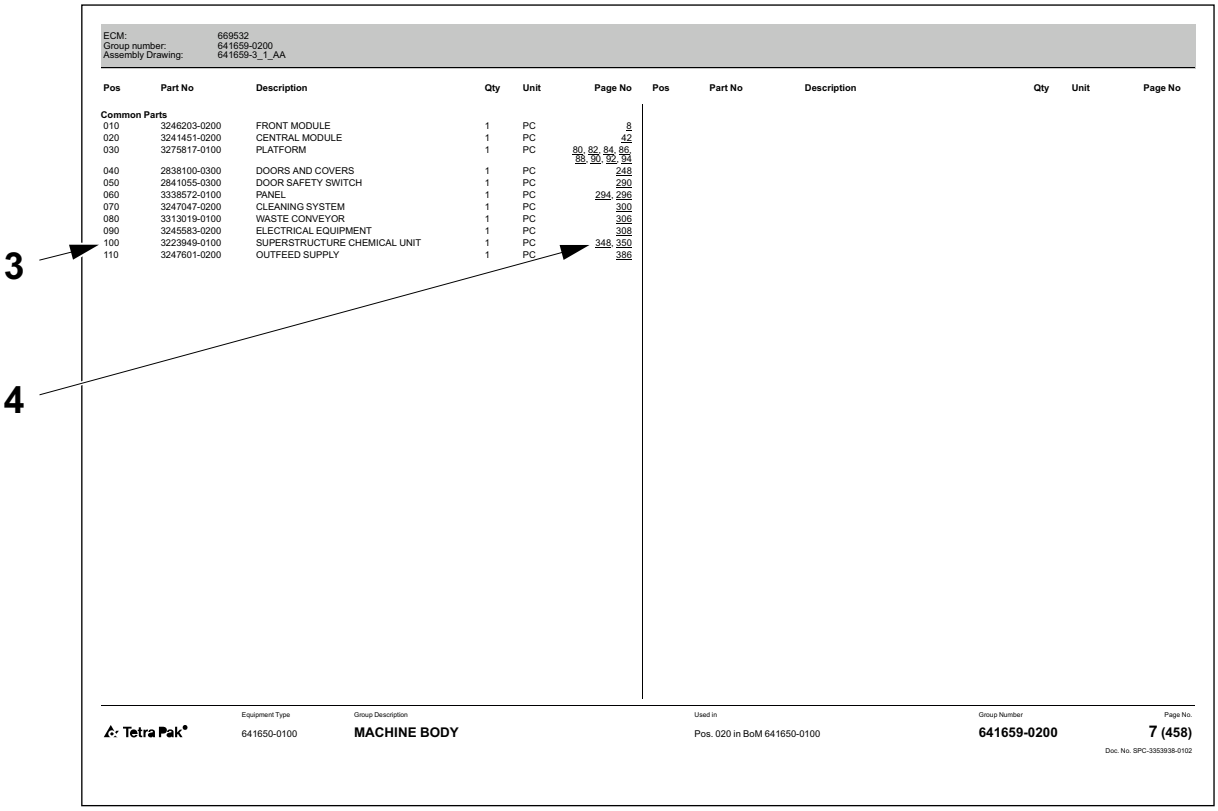

ECM: 669532
Group number: 641659-0200
Assembly Drawing: 641659-3_1_AA

Pos	Part No	Description	Qty	Unit	Page No
Common Parts					
010	3246203-0200	FRONT MODULE	1	PC	8
020	3241451-0200	CENTRAL MODULE	1	PC	42
030	3275817-0100	PLATFORM	1	PC	80, 82, 84, 86, 88, 90, 92, 94
040	2838100-0300	DOORS AND COVERS	1	PC	248
050	2841055-0300	DOOR SAFETY SWITCH	1	PC	290
060	3338572-0100	PANEL	1	PC	294, 296
070	3247047-0200	CLEANING SYSTEM	1	PC	300
080	3313019-0100	WASTE CONVEYOR	1	PC	306
090	3245583-0200	ELECTRICAL EQUIPMENT	1	PC	308
100	3223949-0100	SUPERSTRUCTURE CHEMICAL UNIT	1	PC	348, 350
110	3247601-0200	OUTFEED SUPPLY	1	PC	386

Pos	Part No	Description	Qty	Unit	Page No

Equipment Type: 641650-0100
Group Description: MACHINE BODY
Used in: Pos. 020 in BoM 641650-0100
Group Number: 641659-0200
Page No.: 7 (458)
Doc. No. SPC-3353938-0102

3 Position number
4 Page number

d) Go to the list page that follows the illustration.

e) If there are one or more variant groupings (5) in the list page, they will appear first. Check which variant applies to the part that you looking for, and click on the page number (6) of the corresponding illustration.

f) If there are no variant grouping in the list page, go to item j).

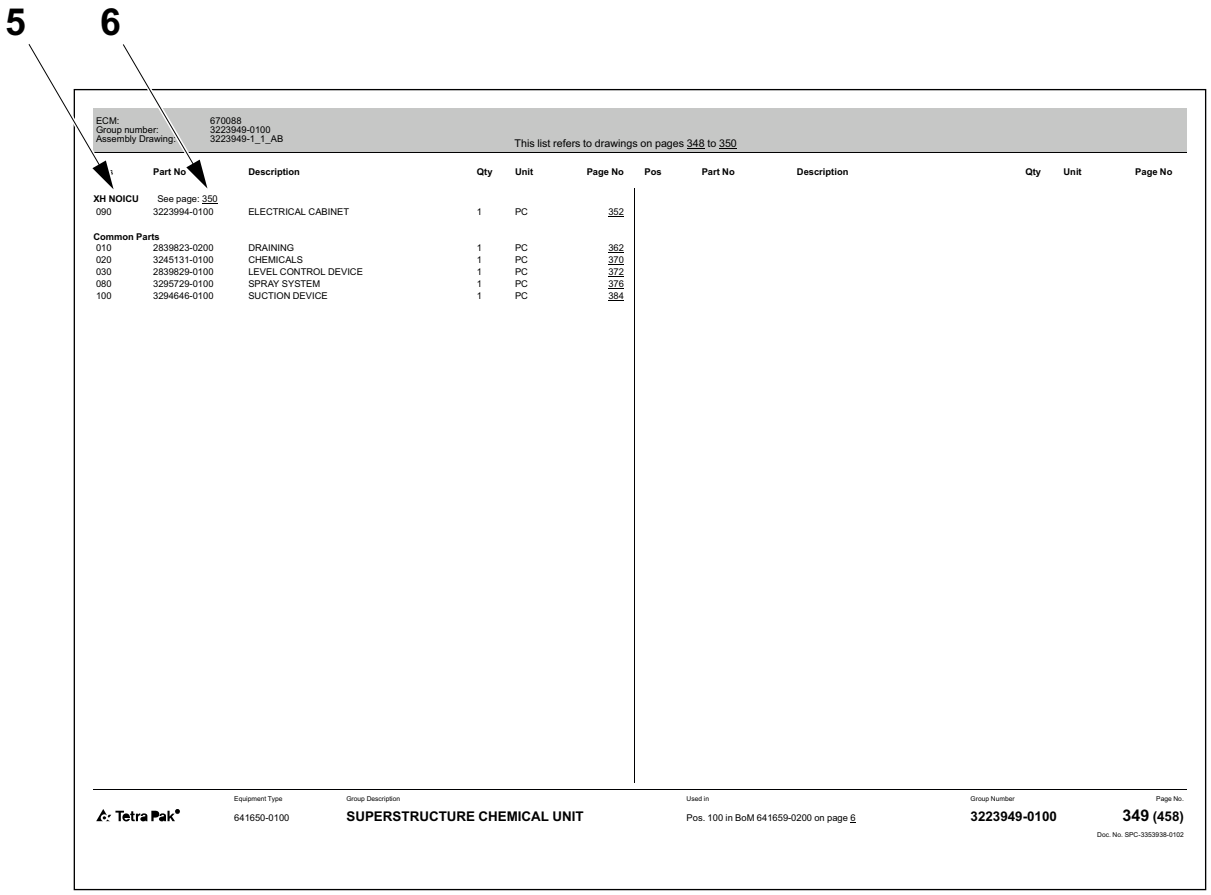

5 Variant grouping
6 Page number

g) On the subgroup illustration, look for the part or subgroup (7) that contains the part you are looking for. Note the position number (8) and go to the list page that follows the illustration.

Note! If there are multiple drawings, the list page after all drawings, with the exception of the first one, will contain a cross-reference back to the list page that appears after the first drawing.

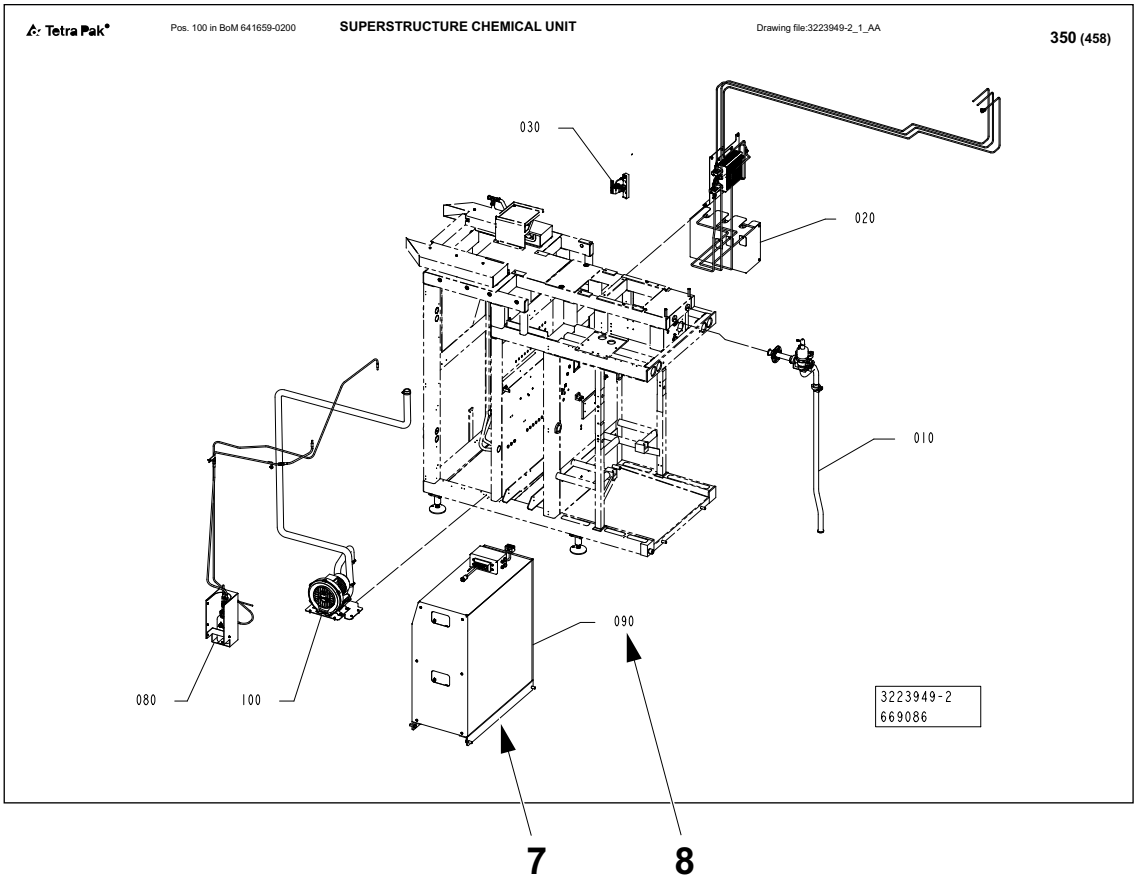

7 Part or subgroup
8 Position number

h) Locate the position number (9) in the **Pos** column. Click on the link to the corresponding page number (10) in the **Page No** column.

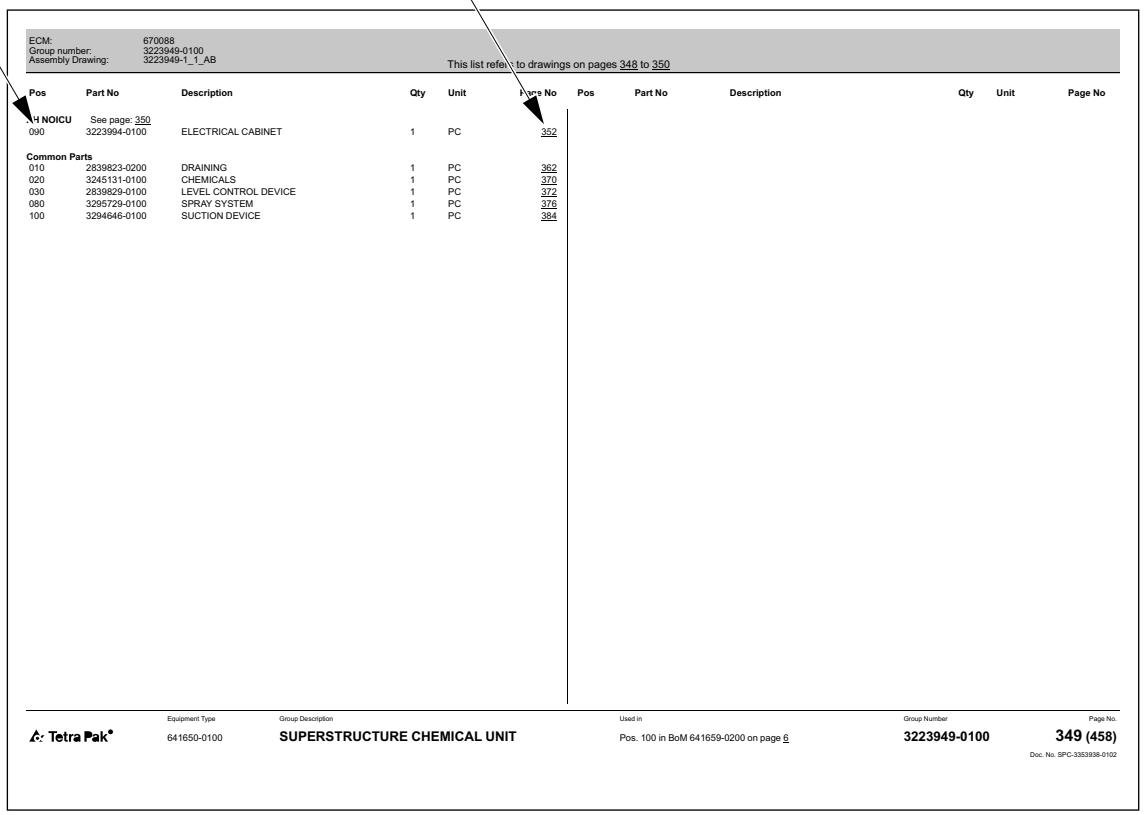

9 Position number
10 Page number

i) On the subgroup illustration, look for the part or subgroup (12) that contains the part you are looking for. Note the position number or reference designation (11) (in this case, reference designation), and go to the list page that follows the illustration.

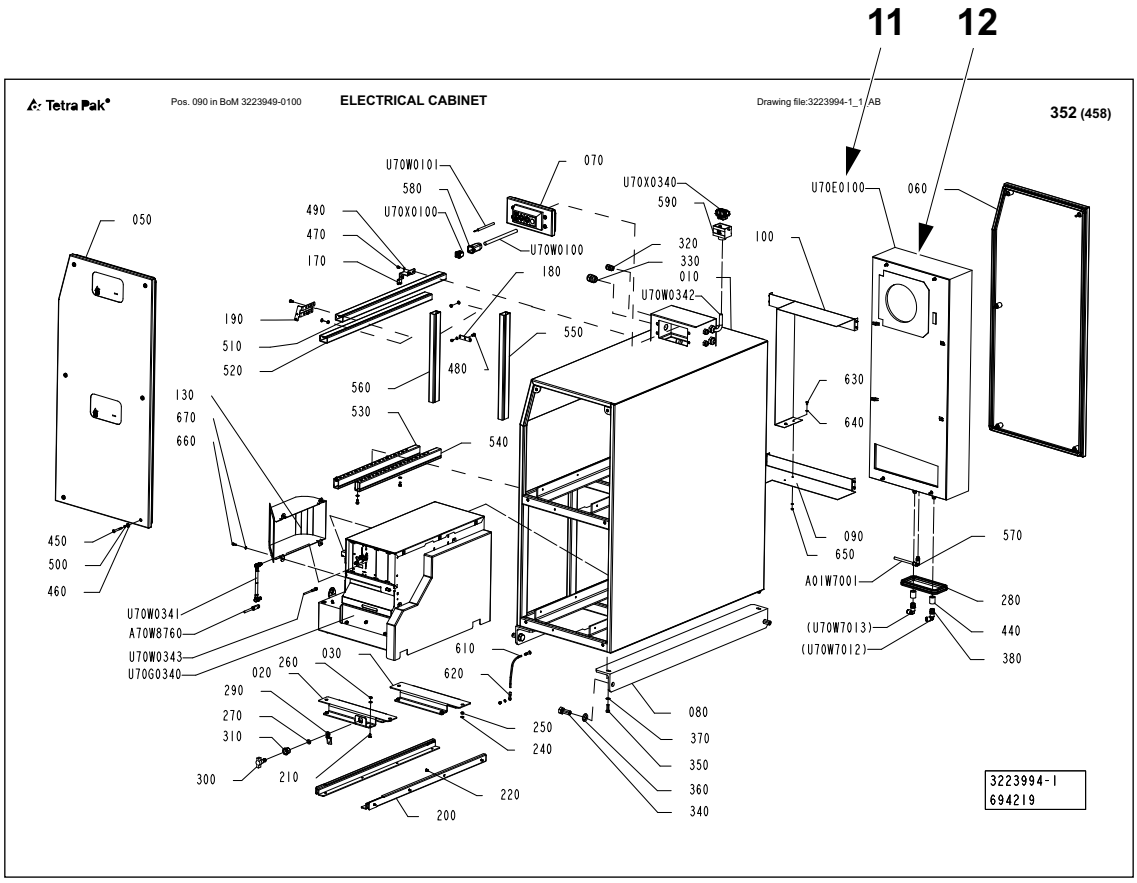

11 Position number or reference designation

12 Part or subgroup

j) Locate the position number or reference designation (13) (in this case, reference designation) in the **Pos** column.

k) Annotate the corresponding part number (14) in the **Part No** column, and the corresponding part description (15) in the **Description** column.

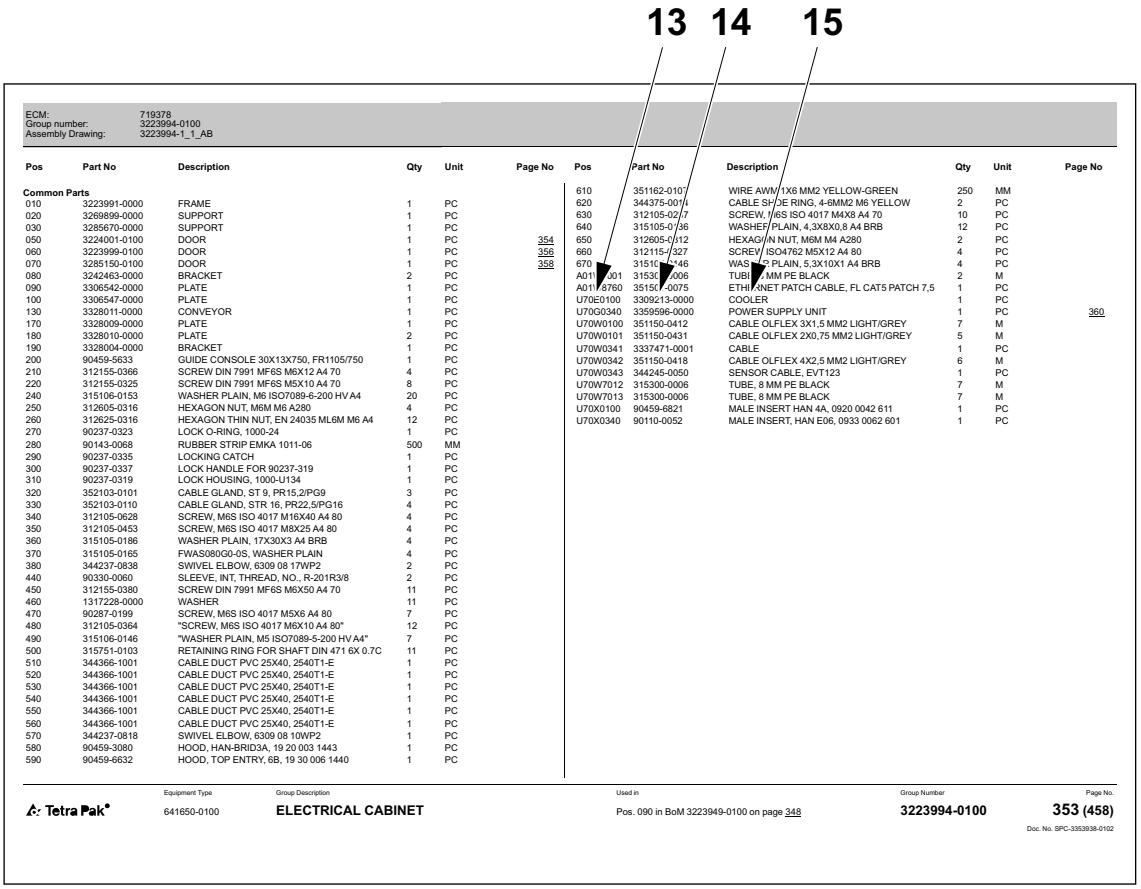

ECM: 719378
Group number: 3223994-0100
Assembly Drawing: 3223994-1_1_AB

Pos	Part No	Description	Qty	Unit	Page No
Common Parts					
010	3223991-0000	FRAME	1	PC	
020	3269899-0000	SUPPORT	1	PC	
030	3285670-0000	SUPPORT	1	PC	
050	3224001-0100	DOOR	1	PC	354
060	3223999-0100	DOOR	1	PC	356
070	3285150-0100	DOOR	1	PC	358
080	3242463-0000	BRACKET	2	PC	
090	3306542-0000	PLATE	1	PC	
100	3306547-0000	PLATE	1	PC	
130	3328011-0000	CONVEYOR	1	PC	
170	3328009-0000	PLATE	1	PC	
180	3328010-0000	PLATE	2	PC	
190	3328004-0000	BRACKET	1	PC	
200	90459-5633	GUIDE CONSOLE 30X13X750, FR1105/750	1	PC	
210	312155-0366	SCREW DIN 7991 MF6S M6X12 A4 70	4	PC	
220	312155-0325	SCREW DIN 7991 MF6S M5X10 A4 70	8	PC	
240	315106-0153	WASHER PLAIN, M6 ISO7089-6-200 HV A4	20	PC	
250	312605-0316	HEXAGON NUT, M6M M6 A280	4	PC	
260	312625-0316	HEXAGON THIN NUT, EN 24035 ML6M M6 A4	12	PC	
270	90237-0323	LOCK O-RING, 1000-24	1	PC	
280	90143-0068	RUBBER STRIP EMKA 1011-06	500	MM	
290	90237-0335	LOCKING CATCH	1	PC	
300	90237-0337	LOCK HANDLE FOR 90237-319	1	PC	
310	90237-0319	LOCK HOUSING, 1000-U134	1	PC	
320	352103-0101	CABLE GLAND, ST 9, PR15,2/PG9	3	PC	
330	352103-0110	CABLE GLAND, STR 16, PR22,5/PG16	4	PC	
340	312105-0628	SCREW, M6S ISO 4017 M16X40 A4 80	4	PC	
350	312105-0453	SCREW, M6S ISO 4017 M8X25 A4 80	4	PC	
360	315105-0186	WASHER PLAIN, 17X30X3 A4 BRB	4	PC	
370	315105-0165	FWAS080G0-0S, WASHER PLAIN	4	PC	
380	344237-0838	SWIVEL ELBOW, 6309 08 17WP2	2	PC	
440	90330-0060	SLEEVE, INT, THREAD, NO., R-201R3/8	2	PC	
450	312155-0380	SCREW DIN 7991 MF6S M6X50 A4 70	11	PC	
460	1317228-0000	WASHER	11	PC	
470	90287-0199	SCREW, M6S ISO 4017 M5X6 A4 80	7	PC	
480	312105-0364	"SCREW, M6S ISO 4017 M6X10 A4 80"	12	PC	
490	315106-0146	"WASHER PLAIN, M5 ISO7089-5-200 HV A4"	7	PC	
500	315751-0103	RETAINING RING FOR SHAFT DIN 471 6X 0.7C	11	PC	
510	344366-1001	CABLE DUCT PVC 25X40, 2540T1-E	1	PC	
520	344366-1001	CABLE DUCT PVC 25X40, 2540T1-E	1	PC	
530	344366-1001	CABLE DUCT PVC 25X40, 2540T1-E	1	PC	
540	344366-1001	CABLE DUCT PVC 25X40, 2540T1-E	1	PC	
550	344366-1001	CABLE DUCT PVC 25X40, 2540T1-E	1	PC	
560	344366-1001	CABLE DUCT PVC 25X40, 2540T1-E	1	PC	
570	344237-0818	SWIVEL ELBOW, 6309 08 10WP2	1	PC	
580	90459-3080	HOOD, HAN-BRID3A, 19 20 003 1443	1	PC	
590	90459-6632	HOOD, TOP ENTRY, 6B, 19 30 006 1440	1	PC	

Pos	Part No	Description	Qty	Unit	Page No
610	351162-0107	WIRE AWM 1X6 MM2 YELLOW-GREEN	250	MM	
620	344375-0014	CABLE SHOE RING, 4-6MM2 M6 YELLOW	2	PC	
630	312105-0277	SCREW, M6S ISO 4017 M4X8 A4 70	10	PC	
640	315105-0136	WASHER PLAIN, 4,3X8X0,8 A4 BRB	12	PC	
650	312605-0112	HEXAGON NUT, M6M M4 A280	2	PC	
660	312115-0327	SCREW, ISO4762 M5X12 A4 80	4	PC	
670	3151C[illegible]746	WASHER PLAIN, 5,3X10X1 A4 BRB	4	PC	
A01[illegible]001	3153C[illegible]006	TUBE, [illegible] MM PE BLACK	2	M	
A01[illegible]8760	3515C[illegible]0075	ETHERNET PATCH CABLE, FL CAT5 PATCH 7,5	1	PC	
U70E0100	3309213-0000	COOLER	1	PC	
U70G0340	3359596-0000	POWER SUPPLY UNIT	1	PC	360
U70W0100	351150-0412	CABLE OLFLEX 3X1,5 MM2 LIGHT/GREY	7	M	
U70W0101	351150-0431	CABLE OLFLEX 2X0,75 MM2 LIGHT/GREY	5	M	
U70W0341	3337471-0001	CABLE	1	PC	
U70W0342	351150-0418	CABLE OLFLEX 4X2,5 MM2 LIGHT/GREY	6	M	
U70W0343	344245-0050	SENSOR CABLE, EVT123	1	PC	
U70W7012	315300-0006	TUBE, 8 MM PE BLACK	7	M	
U70W7013	315300-0006	TUBE, 8 MM PE BLACK	7	M	
U70X0100	90459-6821	MALE INSERT HAN 4A, 0920 0042 611	1	PC	
U70X0340	90110-0052	MALE INSERT, HAN E06, 0933 0062 601	1	PC	

Tetra Pak®	Equipment Type	Group Description	Used in	Group Number	Page No.
	641650-0100	**ELECTRICAL CABINET**	Pos. 090 in BoM 3223949-0100 on page 348	**3223994-0100**	**353 (458)**

Doc. No. SPC-3353938-0102

13 Position number or reference designation
14 Part number
15 Part description

Information Listed in a Spare Parts Catalogue

A Spare Parts Catalogue contains the following information:

- group structure reference (3). Indicates the next higher group in the equipment list structure
- group name (5)
- food contact indication (2). (alternative information) An X after the part number in the FC column indicates that the part from the Tetra Pak Group is in accordance with the applicable food contact material regulations and directives identified within the Declaration of Compliance
- unit of measure (1).
  The most commonly used units of measure are PC (Piece), M (Meter), MM (Millimetre), ML (Millilitre), and G (Gramme)
- quantity (4)

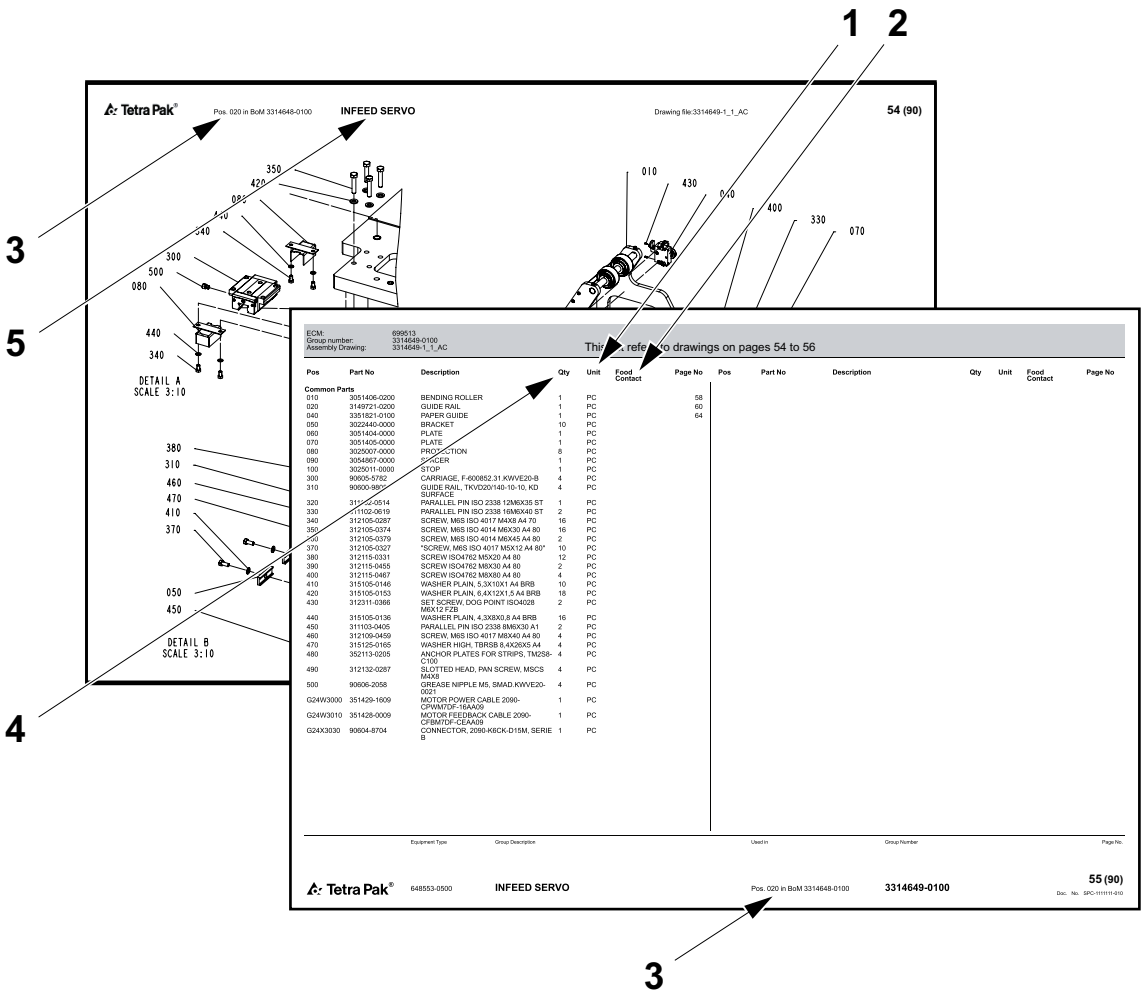

1 Unit of measure
2 Food contact indication
3 Group structure reference
4 Quantity
5 Group name

- assembly drawing number (6)
- list page range (7). Included if there are multiple pages in the group illustration or list
- group number (8)
- subgroup name or part description (9)
- part or subgroup number (10)

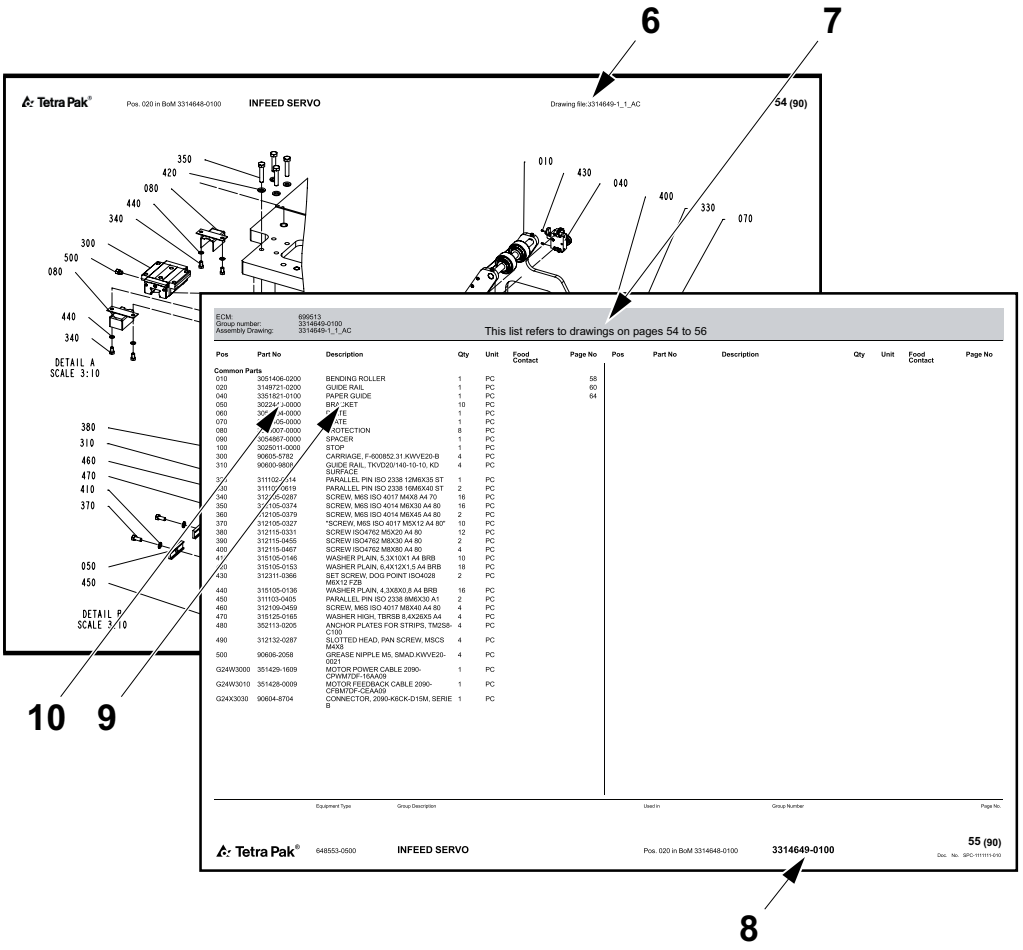

6 Assembly drawing number
7 List page range
8 Group number
9 Subgroup name or part description
10 Part or subgroup number

- equipment number (13)
- group information heading (12). Indicates if the section below the heading is for a specific machine variant or if it is a list of common parts. If a list has more than one variant and each variant has its own assembly drawing, a page reference to the assembly drawing of the variant is shown
- internal information (11)

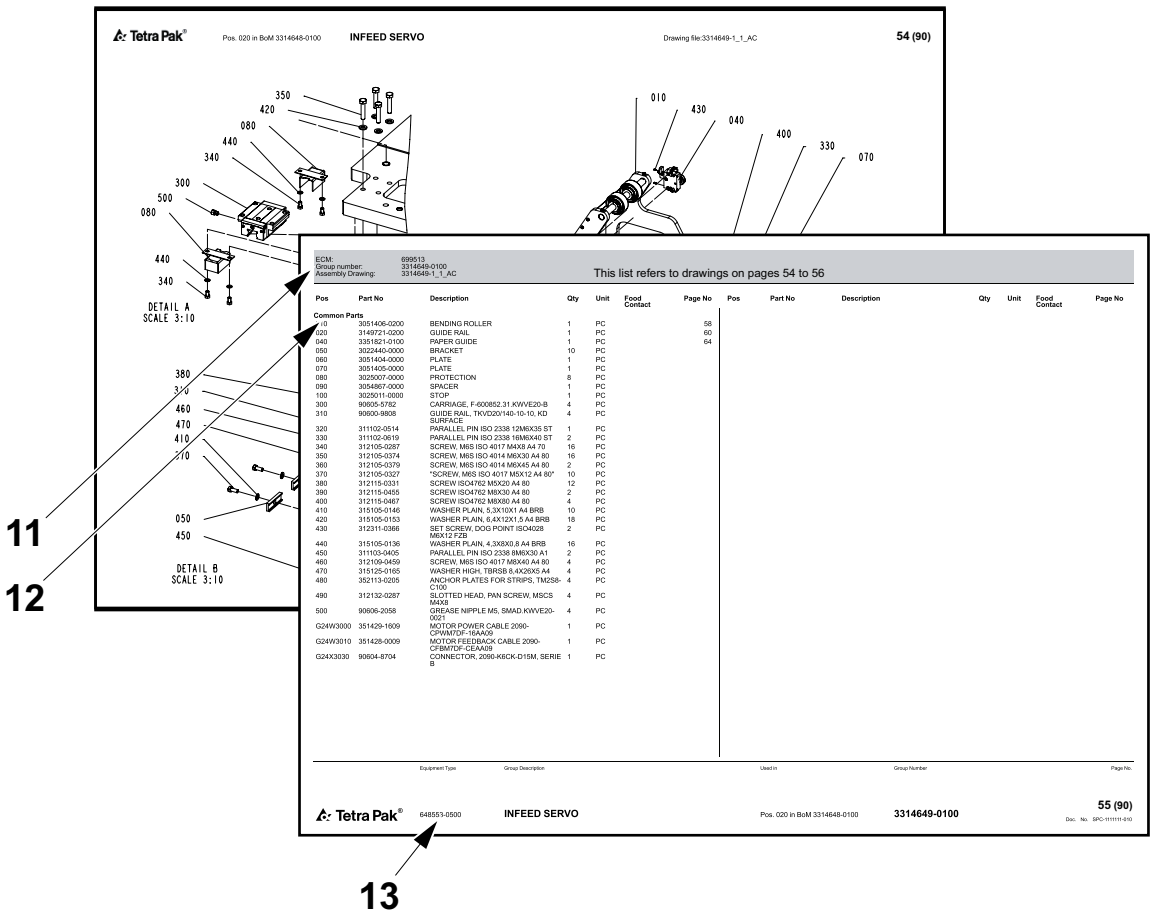

11 Internal information
12 Group information heading
13 Equipment number

Assistance and Inquiries

For assistance when operating this equipment, submit your questions using the QuTI-P tool. The QuTI-P tool shall also be used for all other inquiries, comments, or suggestions that you may have, as well as giving feedback concerning the user manuals delivered with this equipment.

If access to the Tetra Pak® intranet is available, access the QuTI-P tool by typing “QuTI-P” in the address field of your browser. If access to QuTI-P is not available, request access by contacting the Global Service Desk.

If access to the Tetra Pak intranet is not available, contact the nearest Tetra Pak representative.

This page intentionally left blank

SPC

Spare Parts Catalogue

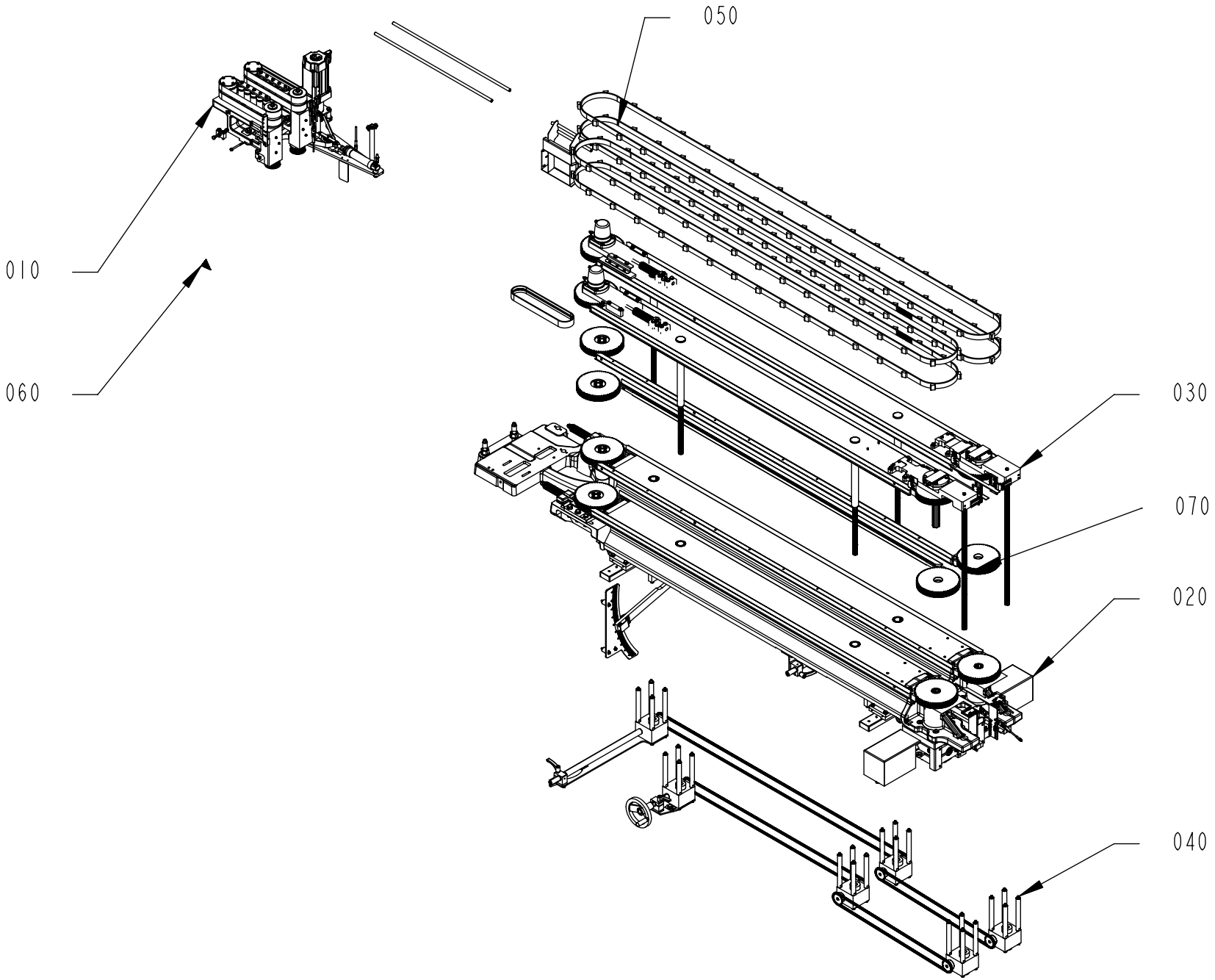
050
010
060
030
070
020
040

This list refers to drawings on pages 30 to 32

Pos	Part No	Description	Qty	Unit	Page No
TBA 0500SQ, TBA 1000SQ, TBA 1000S, TBA 1500S, TPA 1000SQ, TPA 0500SQ, TBA 2000S, TPA 0750SQ, TGA, TBA 0200E, TBA 0250E See page: 30					
TBA 0200SQ, TBA 0250SQ See page: 32					
070	3495612-0100	PACKAGE LINE	1	PC	34
TBA 0500SQ, TBA 1000SQ, TBA 1000S, TBA 1500S, TPA 1000SQ, TPA 0500SQ, TBA 2000S, TPA 0750SQ, TGA, TBA 0200E, TBA 0250E See page: 30					
030	3199893-0100	PACKAGE POSITIONER	1	PC	36
TGA, TBA 0200E, TBA 0250E, TBA 0500SQ, TBA 1000SQ, TBA 1000S, TBA 1500S, TPA 1000SQ, TPA 0500SQ, TBA 2000S, TPA 0750SQ See page: 30					
040	2838647-0200	SLIDING RACK	1	PC	68
Common Parts					
010	2838654-0500	BELT BRAKE	1	PC	72
020	3199892-0300	PACKAGE POSITIONER	1	PC	92
050	3199895-0300	PACKAGE HANDLING	1	PC	138, 140, 142, 144
060	3217278-0100	WARNING SIGN	1	PC	162

Pos	Part No	Description	Qty	Unit	Page No

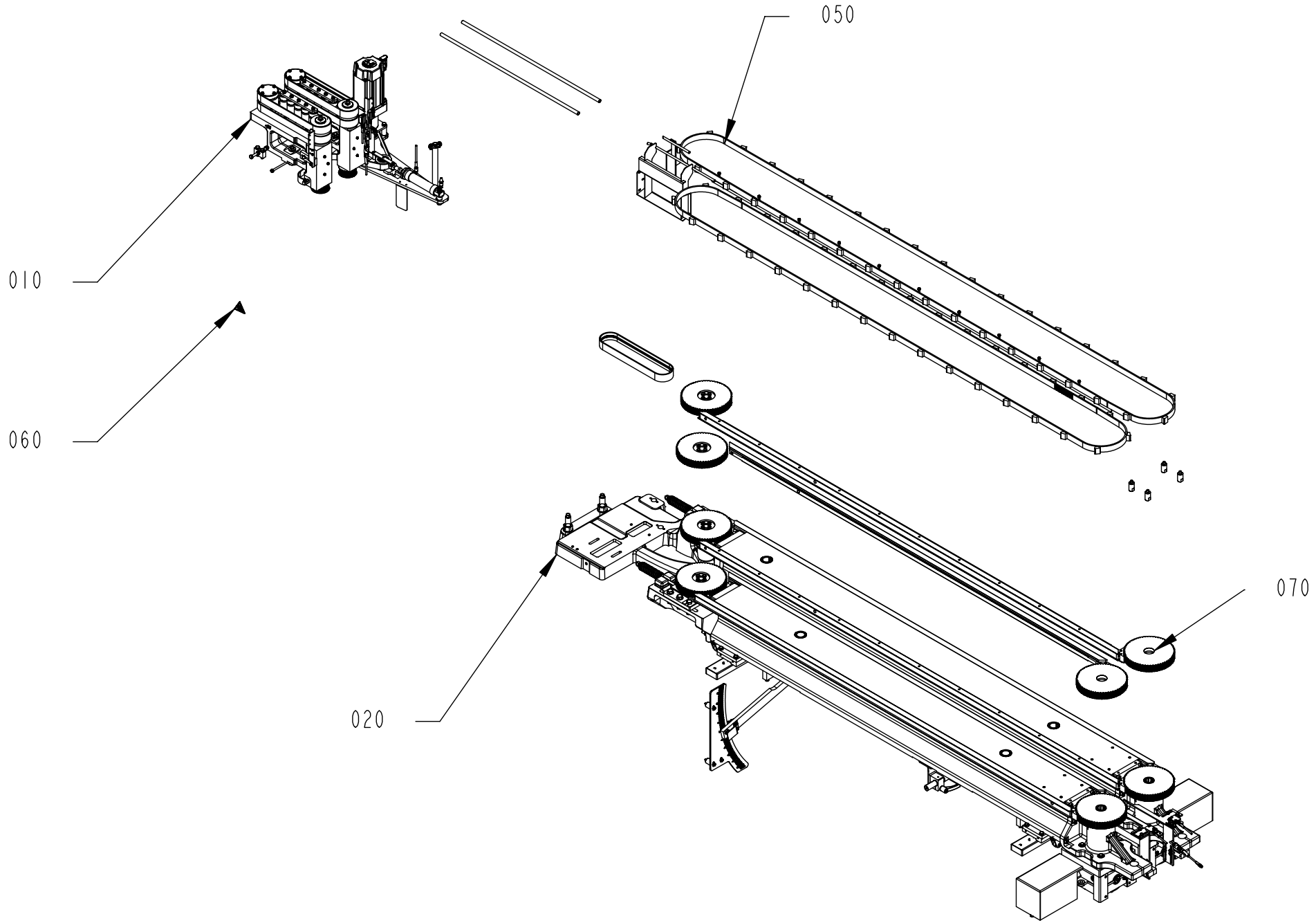
050
010
060
070
020

This list refers to drawings on pages 30 to 32

Pos	Part No	Description	Qty	Unit	Page No

SEE LIST FOLLOWING DRAWING ON PAGE: 30

Pos	Part No	Description	Qty	Unit	Page No

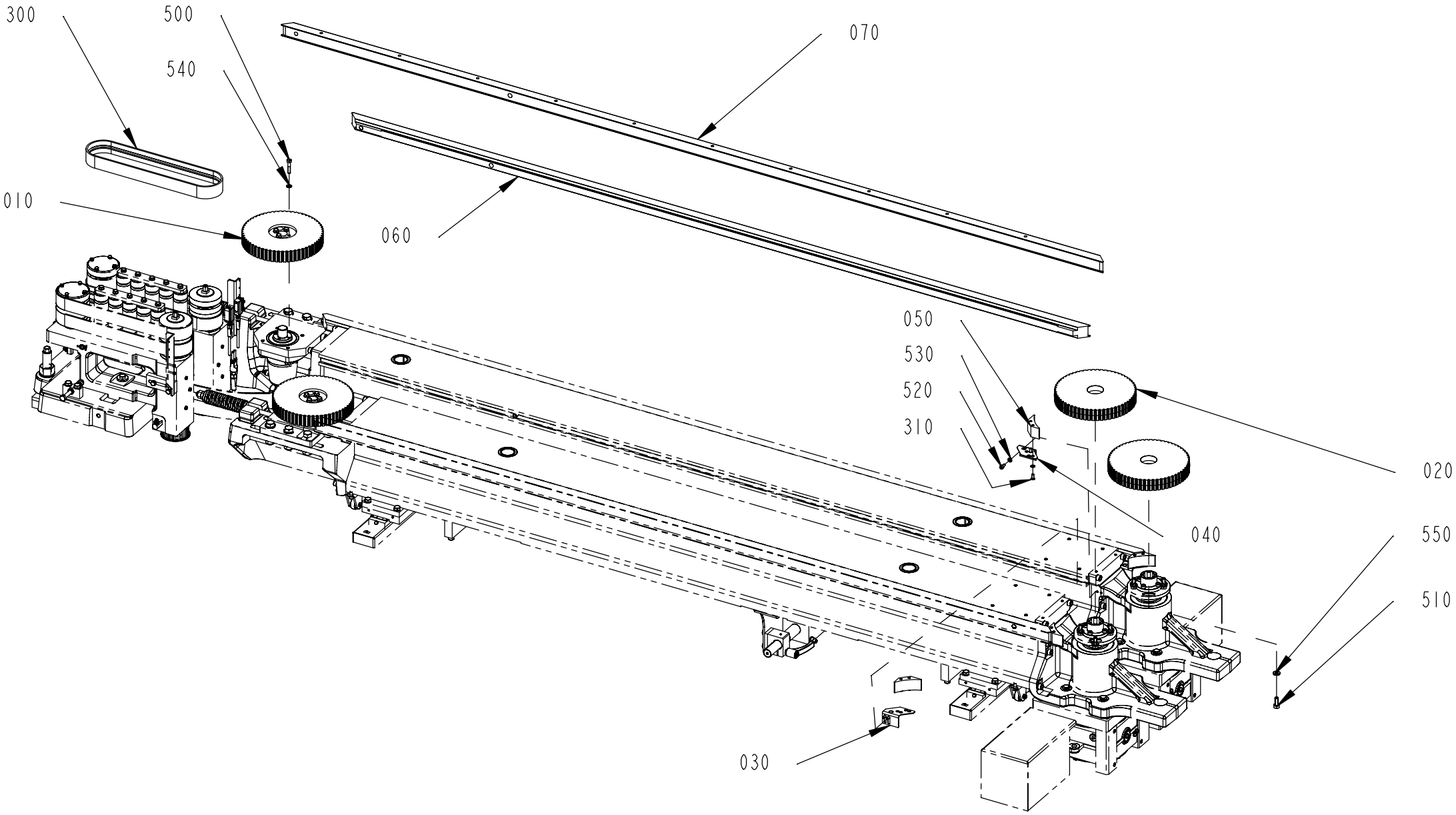
300
500
540
070
010
060
050
530
520
310
020
040
550
510
030

ECM: 847418
Group number: 3495612-0100
Assembly Drawing: 3495612-1_1_AA

Pos	Part No	Description	Qty	Unit	Page No
Common Parts					
010	2766981-0000	TOOTHED PULLEY	2	PC	
020	2775437-0000	TOOTHED PULLEY	2	PC	
030	3161464-0000	BRACKET	1	PC	
040	3161465-0000	BRACKET	1	PC	
050	3186487-0000	PROTECTION PLUG	2	PC	
060	3217908-0000	GUIDE	1	PC	
070	3217909-0000	GUIDE	1	PC	
300	90602-4686	TIMING BELT 32TK5K6/780 PU + MINIGRIP	1	PC	
310	90606-4924	SCREW, CBSTSR5-12	4	PC	
500	312105-0374	SCREW, M6S ISO 4014 M6X30 A4 80	8	PC	
510	312105-0451	SCREW, M6S ISO 4017 M8X20 A4 80	6	PC	
520	312115-0325	SCREW ISO4762 M5X10 A4 80	4	PC	
530	315105-0146	WASHER PLAIN, 5,3X10X1 A4 BRB	8	PC	
540	315105-0153	WASHER PLAIN, 6,4X12X1,5 A4 BRB	8	PC	
550	315115-0165	WASHER PLAIN, TBRB 8,4/16 H=3	6	PC	

Pos	Part No	Description	Qty	Unit	Page No

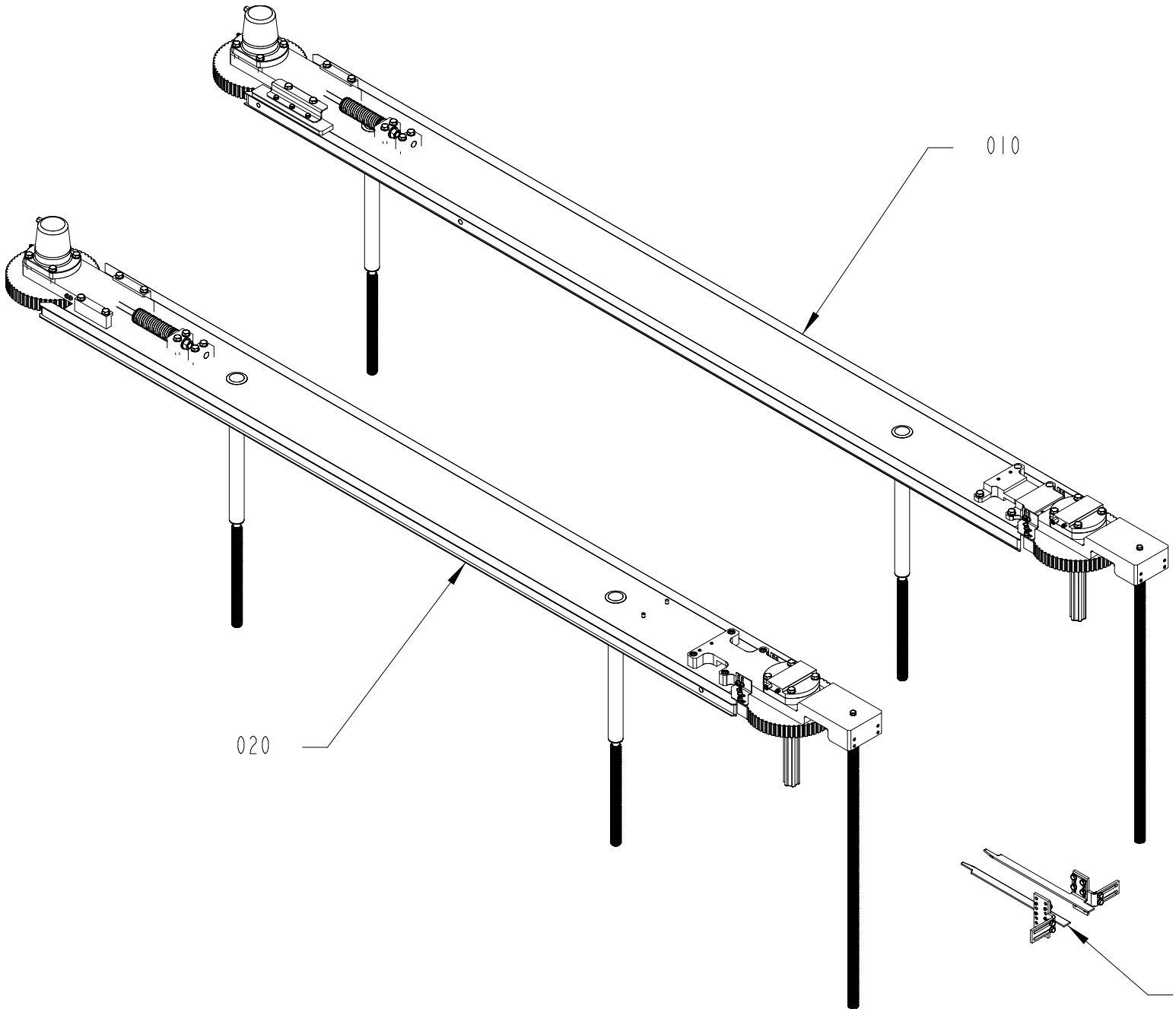

3199893-1
529087

ECM: 529609
Group number: 3199893-0100
Assembly Drawing: 3199893-1_1_AA

Pos	Part No	Description	Qty	Unit	Page No
Common Parts					
010	3199889-0100	SIDE ADJUSTER	1	PC	38
020	3199890-0100	SIDE ADJUSTER	1	PC	52
030	3208157-0100	ADJUSTABLE GUIDE	1	PC	66

Pos	Part No	Description	Qty	Unit	Page No

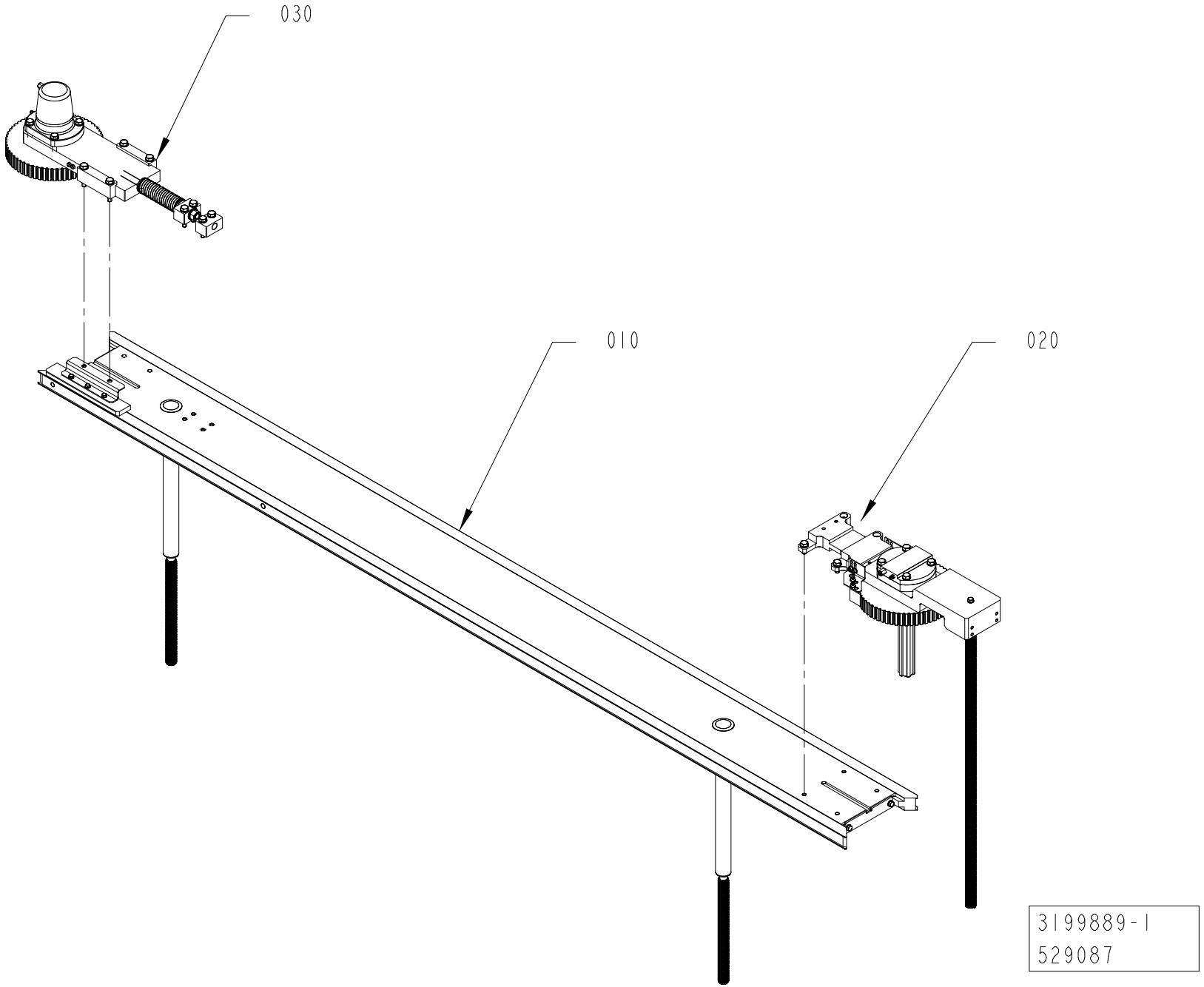
030
010
020
3199889-1
529087

ECM: 529605
Group number: 3199889-0100
Assembly Drawing: 3199889-1_1_AA

Pos	Part No	Description	Qty	Unit	Page No
Common Parts					
010	3209480-0100	FRAME UPPER	1	PC	40
020	3199891-0100	DRIVE	1	PC	42
030	2766954-0200	BELT TENSIONER	1	PC	48

Pos	Part No	Description	Qty	Unit	Page No

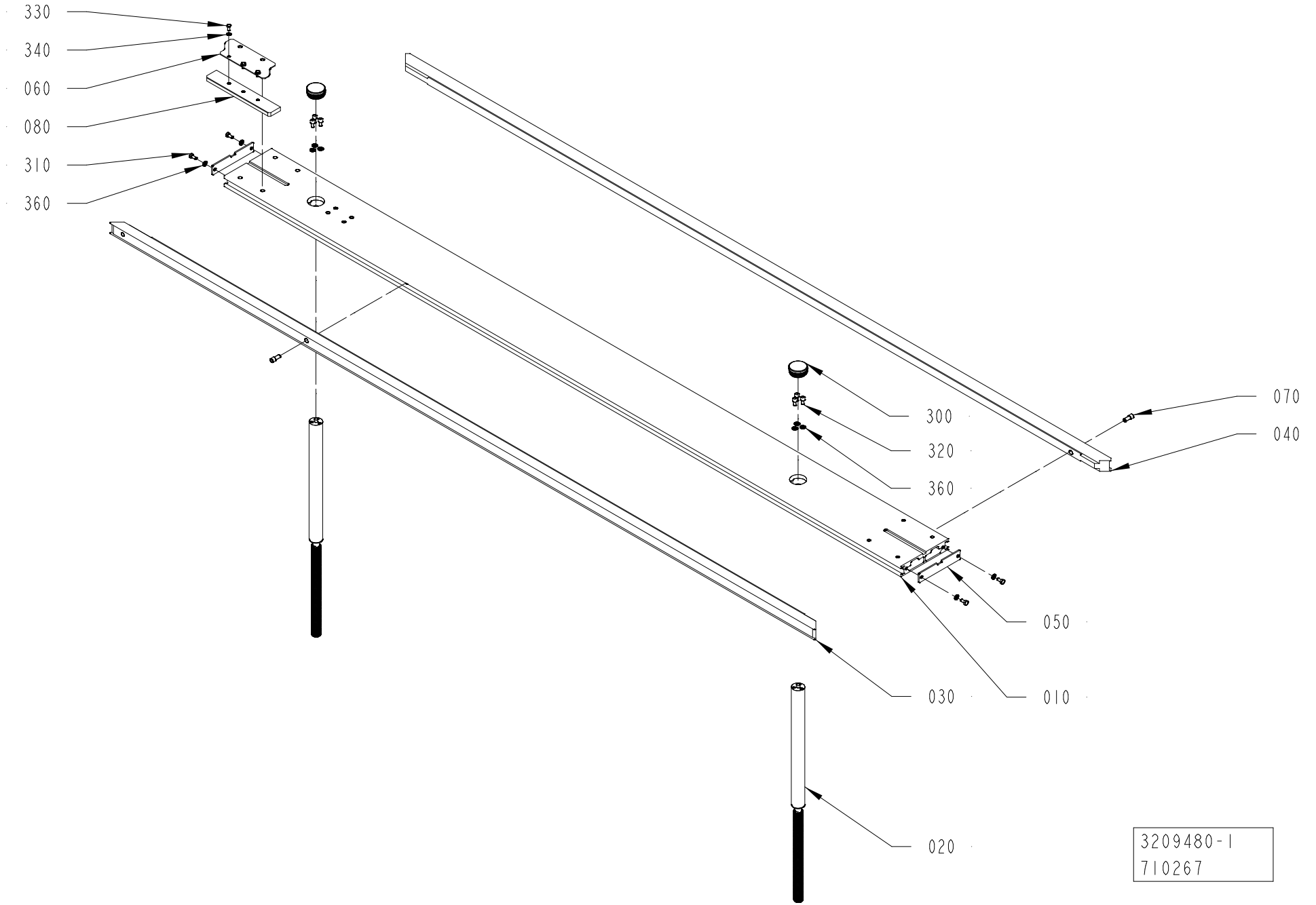
330
340
060
080
310
360
300
320
360
070
040
050
030
010
020
3209480-1
710267

ECM: 714098
Group number: 3209480-0100
Assembly Drawing: 3209480-1_1_AB

Pos	Part No	Description	Qty	Unit	Page No
Common Parts					
010	3217911-0000	FRAME	1	PC	
020	2766927-0000	PILLAR	2	PC	
030	3217906-0000	GUIDE	1	PC	
040	3203258-0000	GUIDE	1	PC	
050	2788134-0000	COVER	2	PC	
060	3199900-0000	BRACKET	1	PC	
070	3202908-0000	SCREW	2	PC	
080	3217277-0000	PLATE	1	PC	
300	344353-0421	FINNED PLUG PE, GPN 320 GL42 1-2	2	PC	
310	312105-0366	SCREW, M6S ISO 4017 M6X12 A4 80	4	PC	
320	312115-0366	SCREW ISO4762 M6X12 A4 80	6	PC	
330	312105-0325	SCREW, M6S ISO 4017 M5X10 A4 80	3	PC	
340	315105-0146	WASHER PLAIN, 5,3X10X1 A4 BRB	3	PC	
360	315105-0153	WASHER PLAIN, 6,4X12X1,5 A4 BRB	10	PC	

Pos	Part No	Description	Qty	Unit	Page No

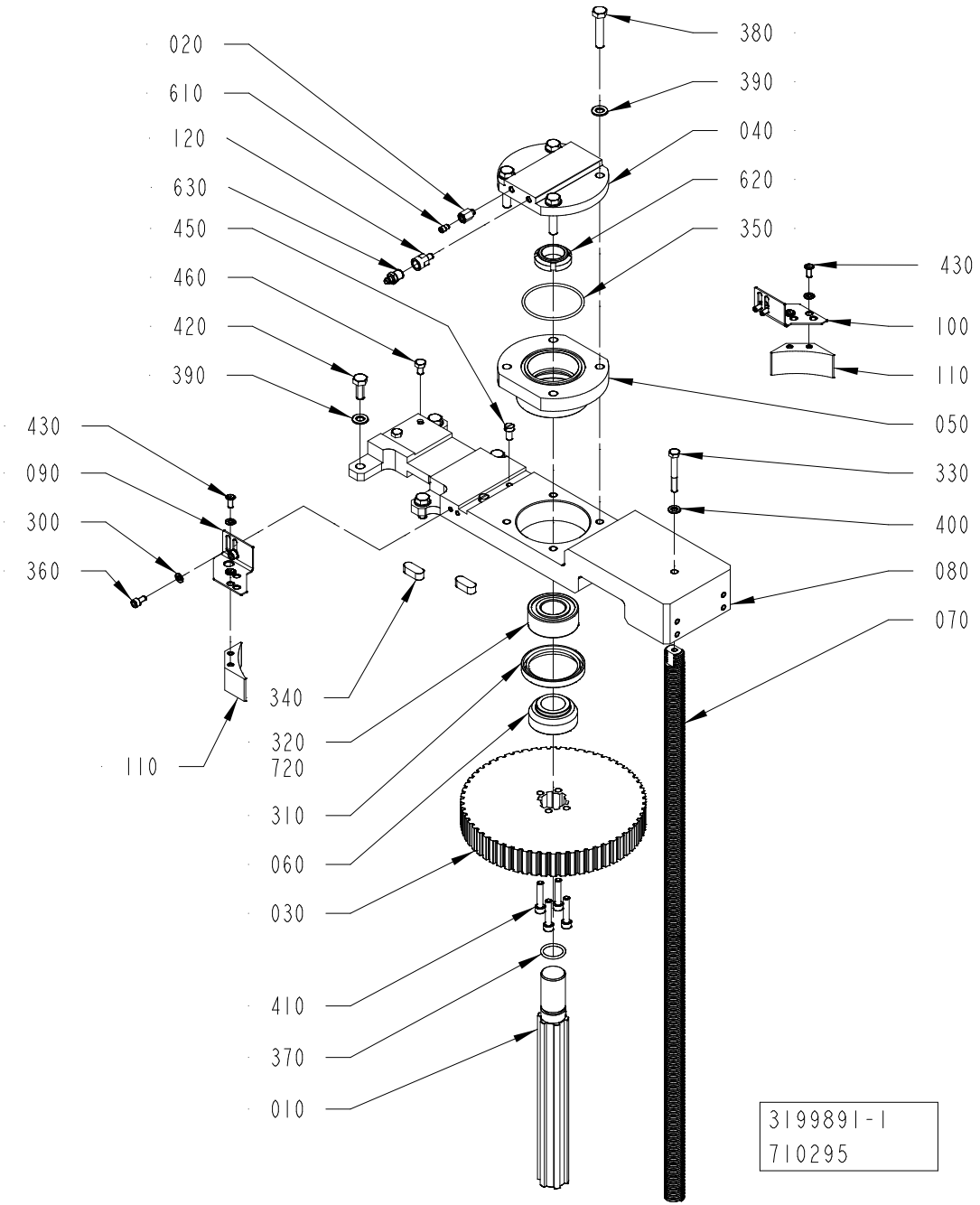
020
610
120
630
450
460
420
390
430
090
300
360
110
340
320
720
310
060
030
410
370
010
380
390
040
620
350
430
100
110
050
330
400
080
070
3199891-1
710295

ECM: 713769
Group number: 3199891-0100
Assembly Drawing: 3199891-1_1_AE

Pos	Part No	Description	Qty	Unit	Page No
Common Parts					
010	2775446-0000	SHAFT	1	PC	
020	3147226-0000	ADAPTER	1	PC	
030	2775442-0000	TOOTHED PULLEY	1	PC	
040	2778566-0000	BELLOWS	1	PC	
050	2775445-0000	SPACER	1	PC	
060	2775443-0000	SPACER	1	PC	
070	2802392-0000	PILLAR	1	PC	
080	3203747-0000	PLATE	1	PC	
090	3161464-0000	BRACKET	1	PC	
100	3161465-0000	BRACKET	1	PC	
110	3186487-0000	PROTECTION PLUG	2	PC	
120	3326956-0000	JUNCTION NIPPLE	1	PC	
300	315105-0146	WASHER PLAIN, 5,3X10X1 A4 BRB	8	PC	
310	315221-0198	RADIAL SEAL 50X65X8 MM	1	PC	
320	321330-0105	ANG. BALL BEAR 25/52X20,6	1	PC	
330	312105-0379	SCREW, M6S ISO 4014 M6X45 A4 80	1	PC	
340	315705-0296	PARALLEL KEY W. ROUND ENDS, 10X8X25 MM	2	PC	
350	315202-0741	O-RING 58,42X2,62 MM	1	PC	
360	312115-0325	SCREW ISO4762 M5X10 A4 80	4	PC	
370	315202-0717	O-RING 20,29X2,62 MM	1	PC	
380	312105-0459	SCREW, M6S ISO 4014 M8X40 A4 80	4	PC	
390	315105-0165	FWAS080G0-0S, WASHER PLAIN	8	PC	
400	315105-0153	WASHER PLAIN, 6,4X12X1,5 A4 BRB	1	PC	
410	312115-0374	SCREW ISO4762 M6X30 A4 80	4	PC	
420	312105-0451	SCREW, M6S ISO 4017 M8X20 A4 80	4	PC	
430	90606-4924	SCREW, CBSTSR5-12	4	PC	
450	312125-0366	SLOTTED HEAD SCREW, ISO1207 M6X12 A4	2	PC	
460	312105-0364	"SCREW, M6S ISO 4017 M6X10 A4 80"	2	PC	
600	344447-0000	THREAD SEALANT LOCTITE 542, ONLY IN BOM	1	PC	44
610	90604-3329	NON-RETURN VALVE, RVA-M6	1	PC	
620	90459-6280	NUT GUK 5 M25 X 1.5 FZB	1	PC	
630	90606-2351	GREASE NIPPLE STR. M10X1, 996-001-890-S3	1	PC	
720	344414-0000	KLÜBEROIL 4 UH1-320N, ONLY IN BOM	1	L	46

Pos	Part No	Description	Qty	Unit	Page No

This page intentionally left blank

ECM: 659574
Group number: 344447-0000
Assembly Drawing: -

Pos	Part No	Description	Qty	Unit	Page No
Common Parts					
	344447-0050	THREAD SEALANT LOCTITE 542, 50ML	1	PC	

Pos	Part No	Description	Qty	Unit	Page No

This page intentionally left blank

ECM: 653856
Group number: 344414-0000
Assembly Drawing: -

Pos	Part No	Description	Qty	Unit	Page No
Common Parts					
	344414-0335	KLÜBEROIL 4 UH1-320N, 200 L DRUM	1	PC	
	344414-0764	KLÜBEROIL 4 UH1-320N, 5 L CAN	1	PC	
	344414-0766	KLÜBEROIL 4 UH1-320N, 20 L CAN	1	PC	

Pos	Part No	Description	Qty	Unit	Page No

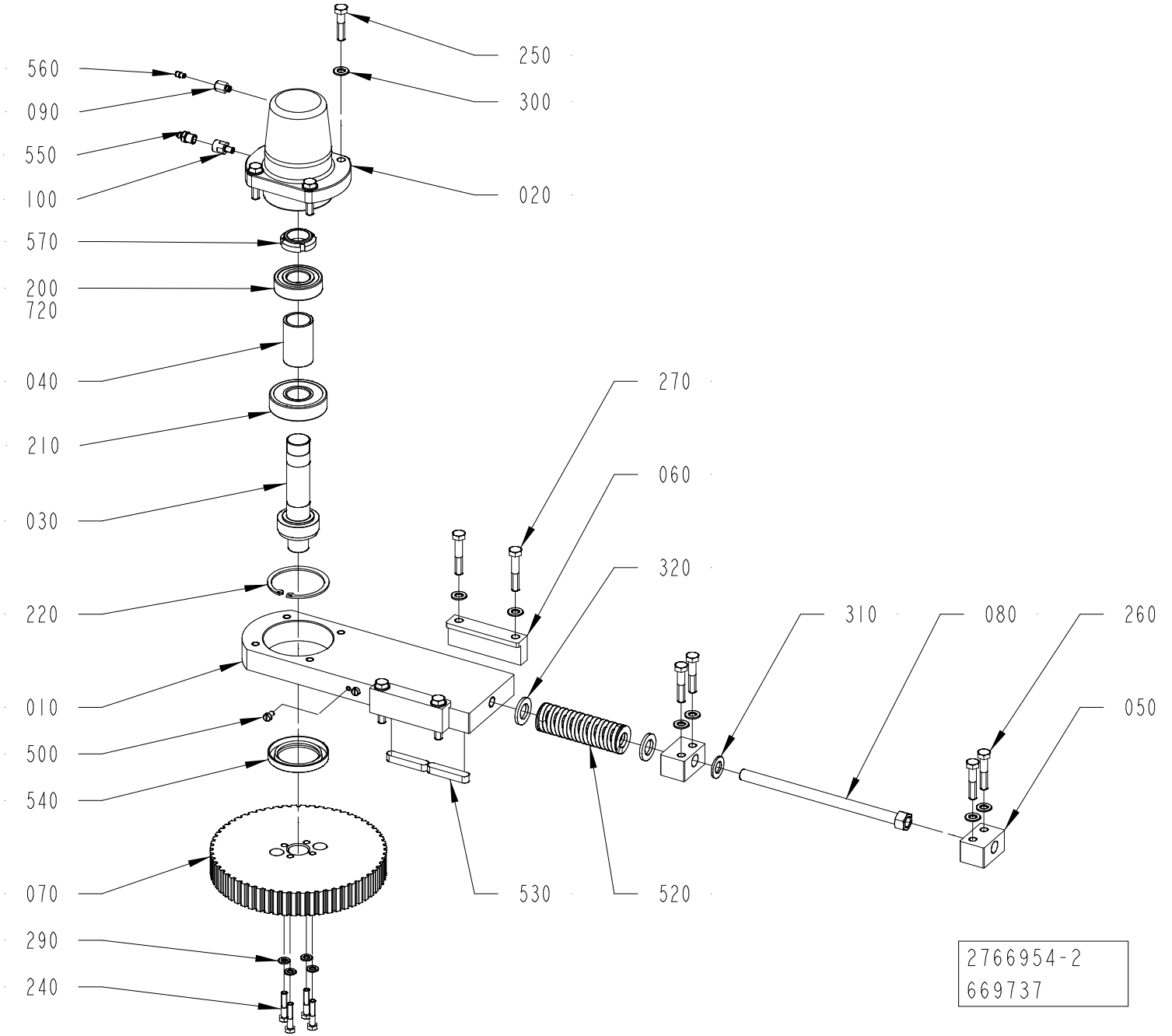
560
090
550
100
570
200
720
040
210
030
220
010
500
540
070
290
240
250
300
020
270
060
320
310
080
260
050
530
520
2766954-2
669737

ECM: 679474
Group number: 2766954-0200
Assembly Drawing: 2766954-2_1_AC

Pos	Part No	Description	Qty	Unit	Page No
Common Parts					
010	2766953-0000	PLATE	1	PC	
020	3022796-0000	BELLOWS	1	PC	
030	2766958-0000	SHAFT	1	PC	
040	2766959-0000	SPACER	1	PC	
050	2766962-0000	BLOCK	2	PC	
060	2766963-0000	BRACKET	2	PC	
070	2766981-0000	TOOTHED PULLEY	1	PC	
080	2817784-0000	SCREW	1	PC	
090	3147226-0000	ADAPTER	1	PC	
100	3326956-0000	JUNCTION NIPPLE	1	PC	
200	321309-0105	BALL BEARING 25/52X15	1	PC	
210	321314-0105	BALL BEARING 25/62X17	1	PC	
220	315752-0136	RETAINING RING FOR BORE DIN 472 62	1	PC	
240	312105-0374	SCREW, M6S ISO 4014 M6X30 A4 80	4	PC	
250	312105-0457	SCREW, M6S ISO 4014 M8X35 A4 80	4	PC	
260	312105-0459	SCREW, M6S ISO 4014 M8X40 A4 80	4	PC	
270	312105-0460	SCREW, M6S ISO 4014 M8X45 A4 80	4	PC	
290	315105-0153	WASHER PLAIN, 6,4X12X1,5 A4 BRB	4	PC	
300	315105-0165	FWAS080G0-0S, WASHER PLAIN	12	PC	
310	315105-0178	WASHER PLAIN, 13X24X2,5 A4 BRB	1	PC	
320	315105-0186	WASHER PLAIN, 17X30X3 A4 BRB	2	PC	
500	312125-0323	SLOTTED HEAD SCREW, ISO1207 M5X8 A4	4	PC	
520	90604-3324	COMP. SPRING, 5443, ?X31,2X115	1	PC	
530	315705-0303	PARALLEL KEY W. ROUND ENDS, 10X8X50 MM	2	PC	
540	90091-0304	RADIAL SEAL 45X65X8 MM DUST LIP	1	PC	
550	90606-2351	GREASE NIPPLE STR. M10X1, 996-001-890-S3	1	PC	
560	90604-3329	NON-RETURN VALVE, RVA-M6	1	PC	
570	90459-6280	NUT GUK 5 M25 X 1.5 FZB	1	PC	
720	344414-0000	KLÜBEROIL 4 UH1-320N, ONLY IN BOM	1	PC	50

Pos	Part No	Description	Qty	Unit	Page No

This page intentionally left blank

ECM: 653856
Group number: 344414-0000
Assembly Drawing: -

Pos	Part No	Description	Qty	Unit	Page No
Common Parts					
	344414-0335	KLÜBEROIL 4 UH1-320N, 200 L DRUM	1	PC	
	344414-0764	KLÜBEROIL 4 UH1-320N, 5 L CAN	1	PC	
	344414-0766	KLÜBEROIL 4 UH1-320N, 20 L CAN	1	PC	

Pos. 020 in BoM 3199893-0100

SIDE ADJUSTER

Drawing file:3199890-1_1_AA

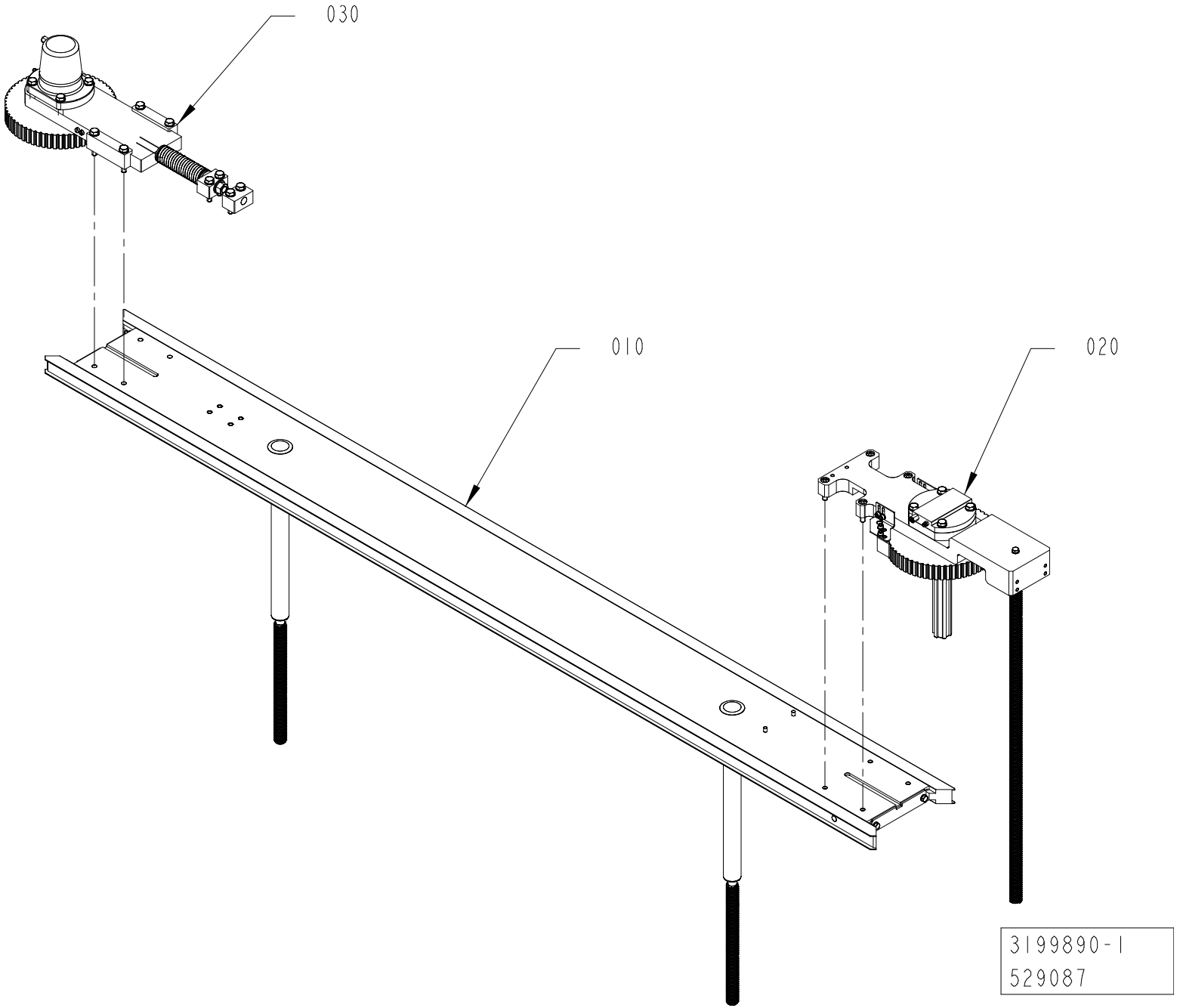

ECM: 529606
Group number: 3199890-0100
Assembly Drawing: 3199890-1_1_AA

Pos	Part No	Description	Qty	Unit	Page No
Common Parts					
010	3209481-0100	FRAME UPPER	1	PC	54
020	3217276-0100	DRIVE	1	PC	56
030	2766954-0200	BELT TENSIONER	1	PC	62

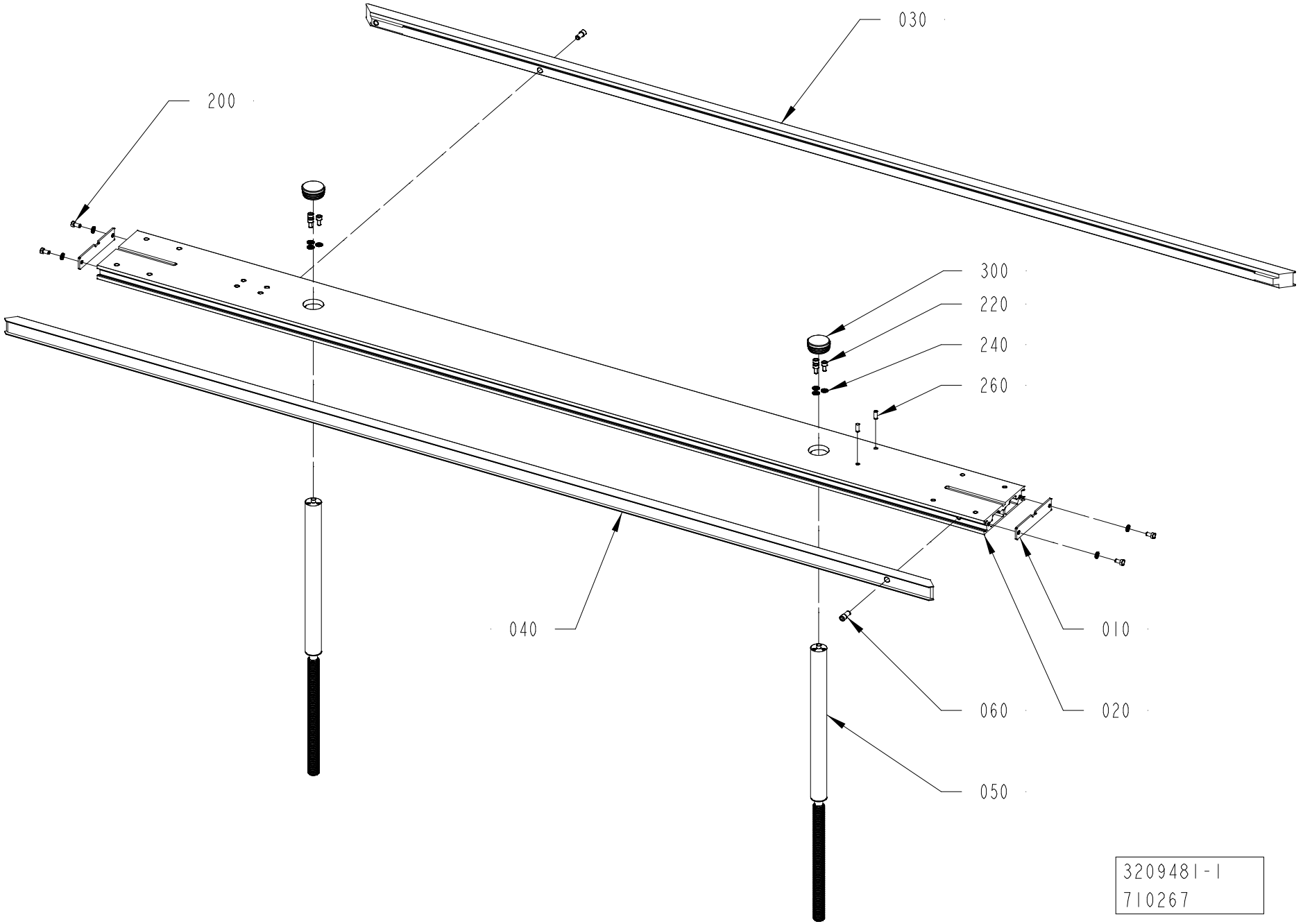
030
200
300
220
240
260
040
010
060
020
050
3209481-1
710267

ECM: 714109
Group number: 3209481-0100
Assembly Drawing: 3209481-1_1_AB

Pos	Part No	Description	Qty	Unit	Page No
Common Parts					
010	2788134-0000	COVER	2	PC	
020	3217913-0000	FRAME	1	PC	
030	3217907-0000	GUIDE	1	PC	
040	3203260-0000	GUIDE	1	PC	
050	2766927-0000	PILLAR	2	PC	
060	3202908-0000	SCREW	2	PC	
200	312105-0366	SCREW, M6S ISO 4017 M6X12 A4 80	4	PC	
220	312115-0366	SCREW ISO4762 M6X12 A4 80	6	PC	
240	315105-0153	WASHER PLAIN, 6,4X12X1,5 A4 BRB	10	PC	
260	311103-0351	PARALLEL PIN ISO 2338 6M6X16 A1	2	PC	
300	344353-0421	FINNED PLUG PE, GPN 320 GL42 1-2	2	PC	

Pos	Part No	Description	Qty	Unit	Page No

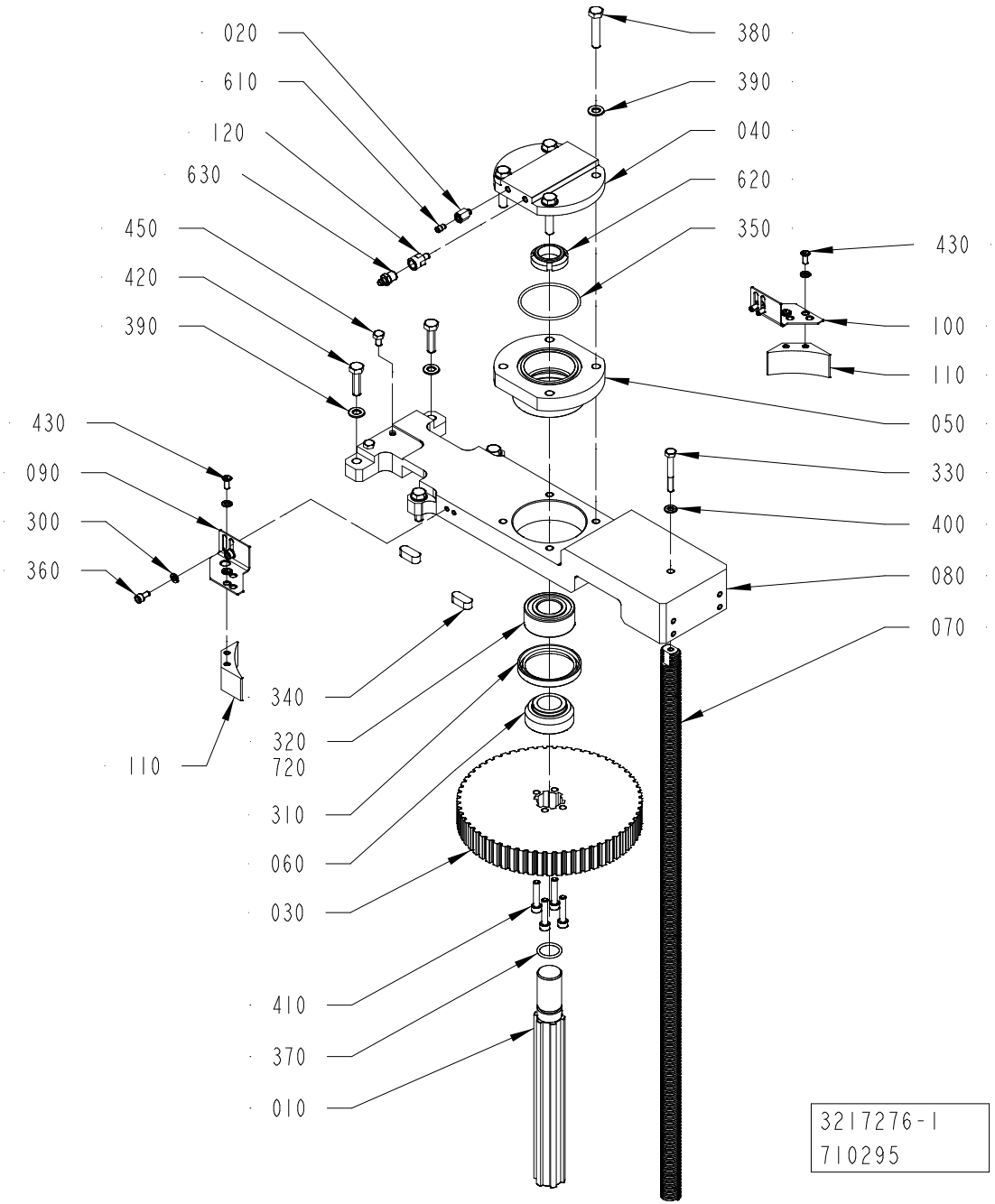
020
610
120
630
450
420
390
430
090
300
360
110
340
320
720
310
060
030
410
370
010
380
390
040
620
350
430
100
110
050
330
400
080
070
3217276-1
710295

ECM: 713770
Group number: 3217276-0100
Assembly Drawing: 3217276-1_1_AE

Pos	Part No	Description	Qty	Unit	Page No
Common Parts					
010	2775446-0000	SHAFT	1	PC	
020	3147226-0000	ADAPTER	1	PC	
030	2775442-0000	TOOTHED PULLEY	1	PC	
040	2778566-0000	BELLOWS	1	PC	
050	2775445-0000	SPACER	1	PC	
060	2775443-0000	SPACER	1	PC	
070	2802392-0000	PILLAR	1	PC	
080	3217924-0000	PLATE	1	PC	
090	3161464-0000	BRACKET	1	PC	
100	3161465-0000	BRACKET	1	PC	
110	3186487-0000	PROTECTION PLUG	2	PC	
120	3326956-0000	JUNCTION NIPPLE	1	PC	
300	315105-0146	WASHER PLAIN, 5,3X10X1 A4 BRB	8	PC	
310	315221-0198	RADIAL SEAL 50X65X8 MM	1	PC	
320	321330-0105	ANG. BALL BEAR 25/52X20,6	1	PC	
330	312105-0379	SCREW, M6S ISO 4014 M6X45 A4 80	1	PC	
340	315705-0296	PARALLEL KEY W. ROUND ENDS, 10X8X25 MM	2	PC	
350	315202-0741	O-RING 58,42X2,62 MM	1	PC	
360	312115-0325	SCREW ISO4762 M5X10 A4 80	4	PC	
370	315202-0717	O-RING 20,29X2,62 MM	1	PC	
380	312105-0459	SCREW, M6S ISO 4014 M8X40 A4 80	4	PC	
390	315105-0165	FWAS080G0-0S, WASHER PLAIN	8	PC	
400	315105-0153	WASHER PLAIN, 6,4X12X1,5 A4 BRB	1	PC	
410	312115-0374	SCREW ISO4762 M6X30 A4 80	4	PC	
420	312105-0455	SCREW, M6S ISO 4017 M8X30 A4 80	4	PC	
430	90606-4924	SCREW, CBSTSR5-12	4	PC	
450	312105-0364	"SCREW, M6S ISO 4017 M6X10 A4 80"	2	PC	
600	344447-0000	THREAD SEALANT LOCTITE 542, ONLY IN BOM	1	PC	58
610	90604-3329	NON-RETURN VALVE, RVA-M6	1	PC	
620	90459-6280	NUT GUK 5 M25 X 1.5 FZB	1	PC	
630	90606-2351	GREASE NIPPLE STR. M10X1, 996-001-890-S3	1	PC	
720	344414-0000	KLÜBEROIL 4 UH1-320N, ONLY IN BOM	1	L	60

Pos	Part No	Description	Qty	Unit	Page No

This page intentionally left blank

ECM: 659574
Group number: 344447-0000
Assembly Drawing: -

Pos	Part No	Description	Qty	Unit	Page No
Common Parts					
	344447-0050	THREAD SEALANT LOCTITE 542, 50ML	1	PC	

Pos	Part No	Description	Qty	Unit	Page No

This page intentionally left blank

ECM: 653856
Group number: 344414-0000
Assembly Drawing: -

Pos	Part No	Description	Qty	Unit	Page No
Common Parts					
	344414-0335	KLÜBEROIL 4 UH1-320N, 200 L DRUM	1	PC	
	344414-0764	KLÜBEROIL 4 UH1-320N, 5 L CAN	1	PC	
	344414-0766	KLÜBEROIL 4 UH1-320N, 20 L CAN	1	PC	

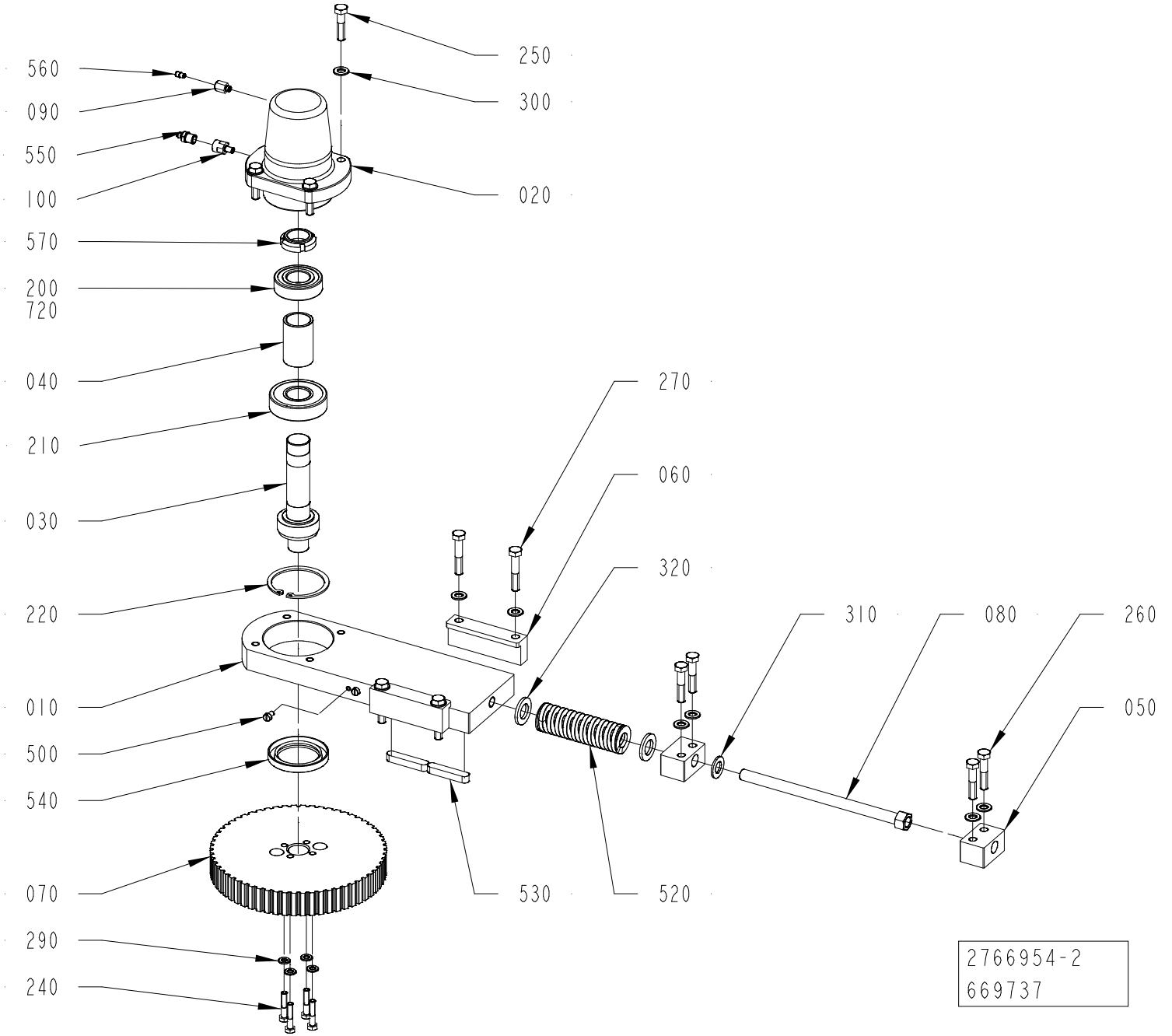
560
090
550
100
570
200
720
040
210
030
220
010
500
540
070
290
240
250
300
020
270
060
320
310
080
260
050
530
520
2766954-2
669737

ECM: 679474
Group number: 2766954-0200
Assembly Drawing: 2766954-2_1_AC

Pos	Part No	Description	Qty	Unit	Page No
Common Parts					
010	2766953-0000	PLATE	1	PC	
020	3022796-0000	BELLOWS	1	PC	
030	2766958-0000	SHAFT	1	PC	
040	2766959-0000	SPACER	1	PC	
050	2766962-0000	BLOCK	2	PC	
060	2766963-0000	BRACKET	2	PC	
070	2766981-0000	TOOTHED PULLEY	1	PC	
080	2817784-0000	SCREW	1	PC	
090	3147226-0000	ADAPTER	1	PC	
100	3326956-0000	JUNCTION NIPPLE	1	PC	
200	321309-0105	BALL BEARING 25/52X15	1	PC	
210	321314-0105	BALL BEARING 25/62X17	1	PC	
220	315752-0136	RETAINING RING FOR BORE DIN 472 62	1	PC	
240	312105-0374	SCREW, M6S ISO 4014 M6X30 A4 80	4	PC	
250	312105-0457	SCREW, M6S ISO 4014 M8X35 A4 80	4	PC	
260	312105-0459	SCREW, M6S ISO 4014 M8X40 A4 80	4	PC	
270	312105-0460	SCREW, M6S ISO 4014 M8X45 A4 80	4	PC	
290	315105-0153	WASHER PLAIN, 6,4X12X1,5 A4 BRB	4	PC	
300	315105-0165	FWAS080G0-0S, WASHER PLAIN	12	PC	
310	315105-0178	WASHER PLAIN, 13X24X2,5 A4 BRB	1	PC	
320	315105-0186	WASHER PLAIN, 17X30X3 A4 BRB	2	PC	
500	312125-0323	SLOTTED HEAD SCREW, ISO1207 M5X8 A4	4	PC	
520	90604-3324	COMP. SPRING, 5443, ?X31,2X115	1	PC	
530	315705-0303	PARALLEL KEY W. ROUND ENDS, 10X8X50 MM	2	PC	
540	90091-0304	RADIAL SEAL 45X65X8 MM DUST LIP	1	PC	
550	90606-2351	GREASE NIPPLE STR. M10X1, 996-001-890-S3	1	PC	
560	90604-3329	NON-RETURN VALVE, RVA-M6	1	PC	
570	90459-6280	NUT GUK 5 M25 X 1.5 FZB	1	PC	
720	344414-0000	KLÜBEROIL 4 UH1-320N, ONLY IN BOM	1	PC	64

Pos	Part No	Description	Qty	Unit	Page No

This page intentionally left blank

ECM: 653856
Group number: 344414-0000
Assembly Drawing: -

Pos	Part No	Description	Qty	Unit	Page No
Common Parts					
	344414-0335	KLÜBEROIL 4 UH1-320N, 200 L DRUM	1	PC	
	344414-0764	KLÜBEROIL 4 UH1-320N, 5 L CAN	1	PC	
	344414-0766	KLÜBEROIL 4 UH1-320N, 20 L CAN	1	PC	

Pos	Part No	Description	Qty	Unit	Page No

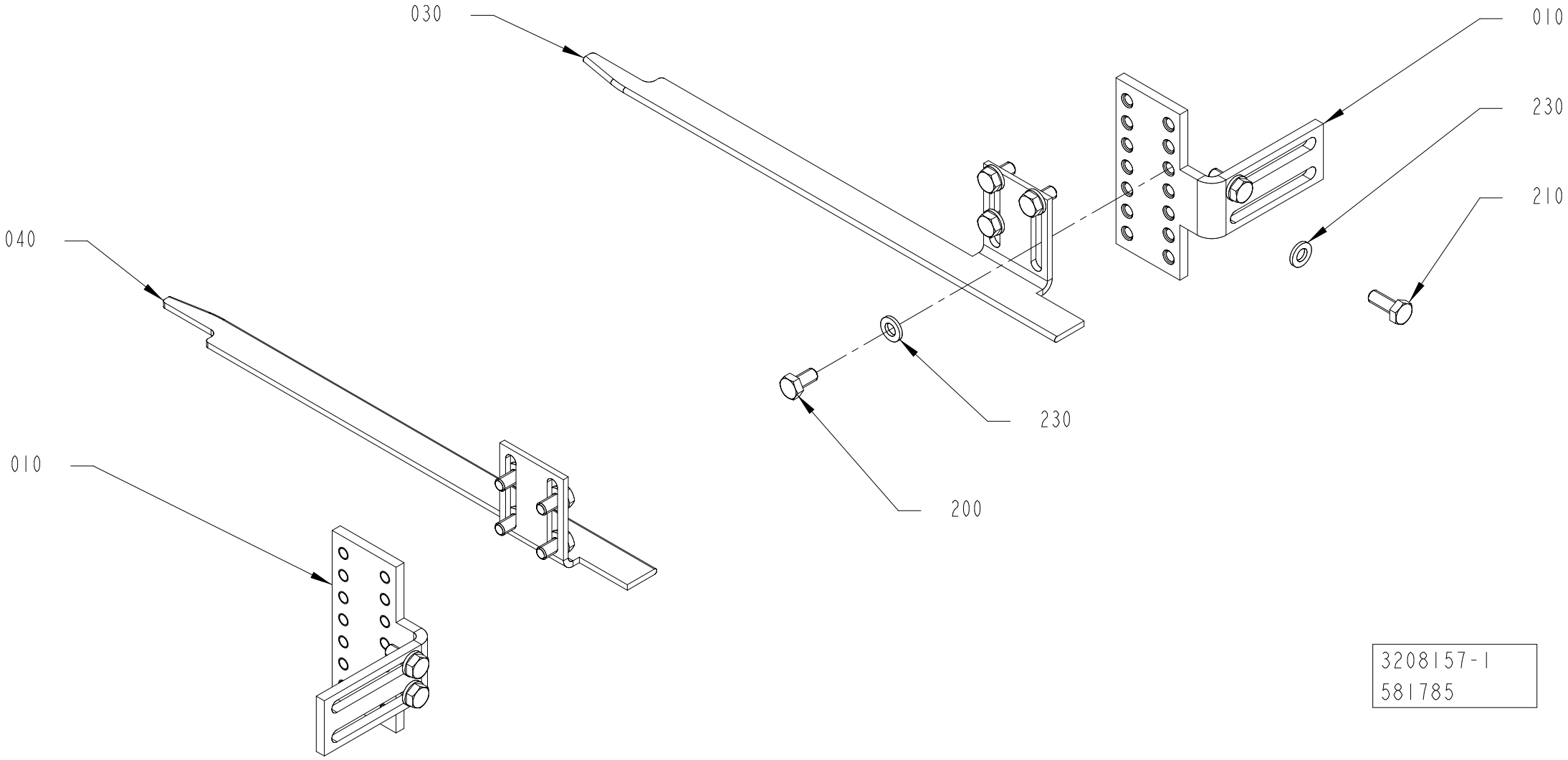
030
010
230
210
040
230
010
200
3208157-1
581785

ECM: 581786
Group number: 3208157-0100
Assembly Drawing: 3208157-1_1_AB

Pos	Part No	Description	Qty	Unit	Page No
Common Parts					
010	3117145-0000	ANGLE	2	PC	
030	3117146-0000	GUIDE	1	PC	
040	3120838-0000	GUIDE	1	PC	
200	312105-0366	SCREW, M6S ISO 4017 M6X12 A4 80	8	PC	
210	312105-0368	SCREW, M6S ISO 4017 M6X16 A4 80	4	PC	
230	315106-0153	WASHER PLAIN, M6 ISO7089-6-200 HV A4	12	PC	

Pos	Part No	Description	Qty	Unit	Page No

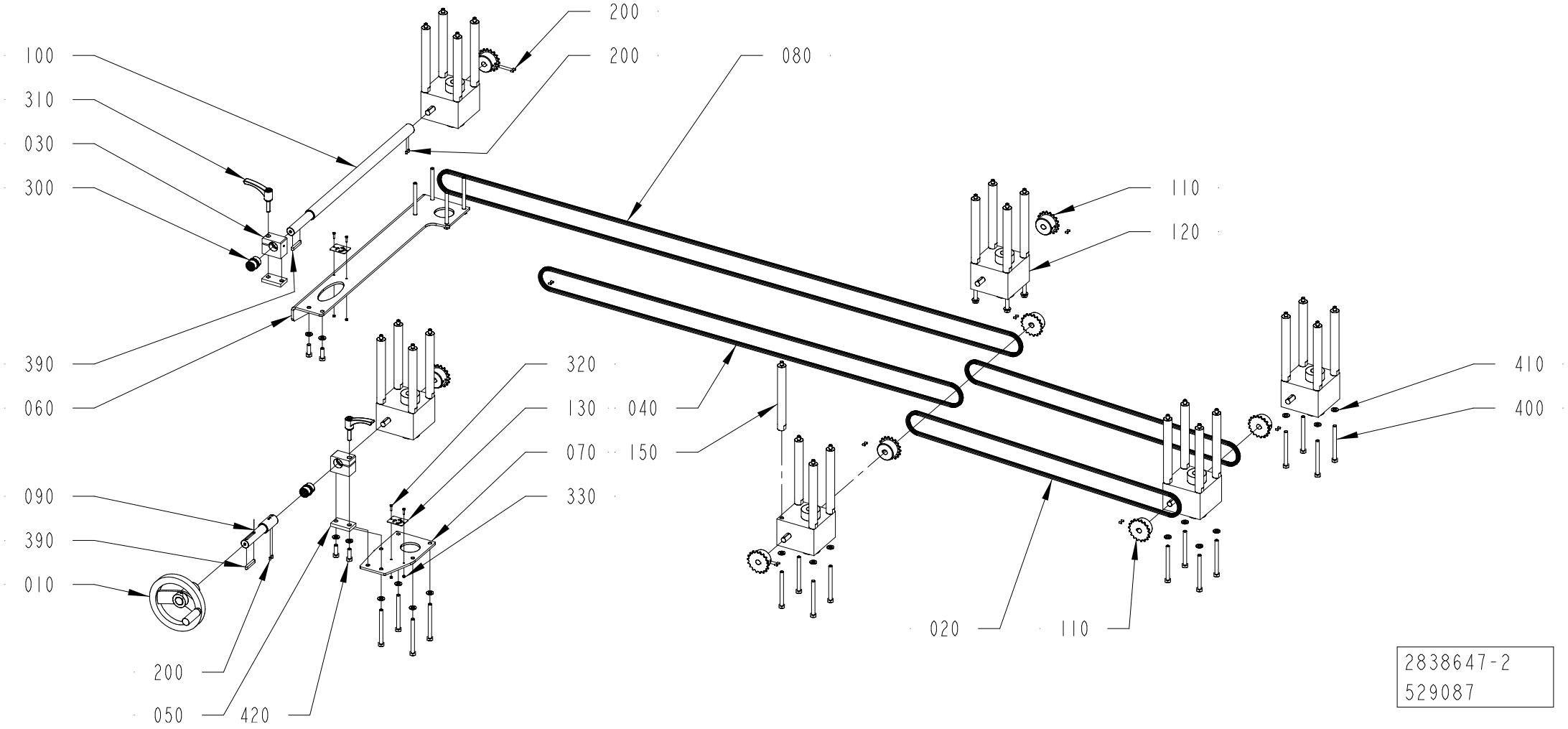
100
310
030
300
200
200
080
110
120
390
060
320
130
070
040
150
330
410
400
090
390
010
200
050
420
020
110
2838647-2
529087

ECM: 529593
Group number: 2838647-0200
Assembly Drawing: 2838647-2_1_AA

Pos	Part No	Description	Qty	Unit	Page No
Common Parts					
010	2802404-0100	HANDLE	1	PC	70
020	90600-0961	ROLLER CHAIN, SIMPLEX 3/8 -159, SS	2	PC	
030	2769726-0000	BRACKET	2	PC	
040	90600-0962	ROLLER CHAIN, SIMPLEX 3/8 -243, SS	1	PC	
050	2778594-0000	PLATE	2	PC	
060	2779063-0000	PLATE	1	PC	
070	2779759-0000	PLATE	1	PC	
080	90600-0964	ROLLER CHAIN, SIMPLEX 3/8 -333, SS	1	PC	
090	2769729-0000	SHAFT	1	PC	
100	2779756-0000	SHAFT	1	PC	
110	2779062-0000	SPROCKET	8	PC	
120	90600-0812	GEAR BOX, TP00042000110	6	PC	
130	2873941-0000	SIGN	2	PC	
150	2778585-0000	PILLAR	24	PC	
200	312318-0285	SET SCREW, CUP END ISO4029 M4X6 A4	20	PC	
300	90458-2932	PLAIN BEARING, JUM-02-20	2	PC	
310	90017-0029	LOCKING LEVER, NO. KR8X30-SUS	2	PC	
320	90287-0175	SCREW M6S M3X12 A480	4	PC	
330	312605-0310	HEXAGON NUT, M6M M3 A280	4	PC	
390	315705-0239	PARALLEL KEY W. ROUND ENDS, 6X6X40 MM	2	PC	
400	312105-0469	SCREW, M6S ISO 4014 M8X90 A4 80	24	PC	
410	315105-0165	FWAS080G0-0S, WASHER PLAIN	28	PC	
420	312105-0453	SCREW, M6S ISO 4017 M8X25 A4 80	4	PC	

Pos	Part No	Description	Qty	Unit	Page No

Pos. 010 in BoM 2838647-0200

HANDLE

Drawing file:2802404-1_1_AA

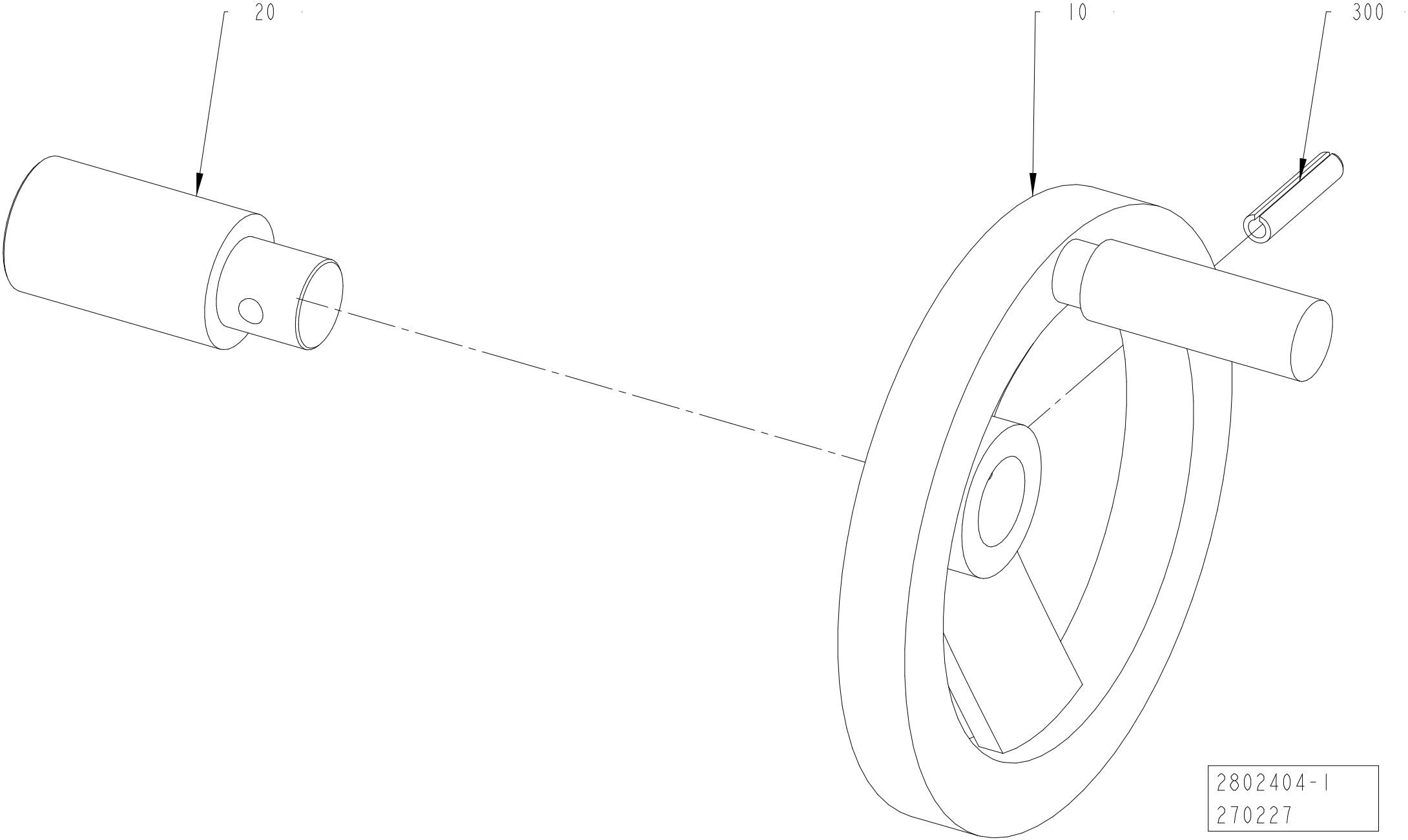

ECM: 273295
Group number: 2802404-0100
Assembly Drawing: 2802404-1_1_AA

Pos	Part No	Description	Qty	Unit	Page No
Common Parts					
010	2781286-0000	HAND WHEEL	1	PC	
020	2788144-0000	SHAFT	1	PC	
300	311112-0345	SPRING PIN, ISO 8752 6X32 A2	1	PC	

Pos	Part No	Description	Qty	Unit	Page No

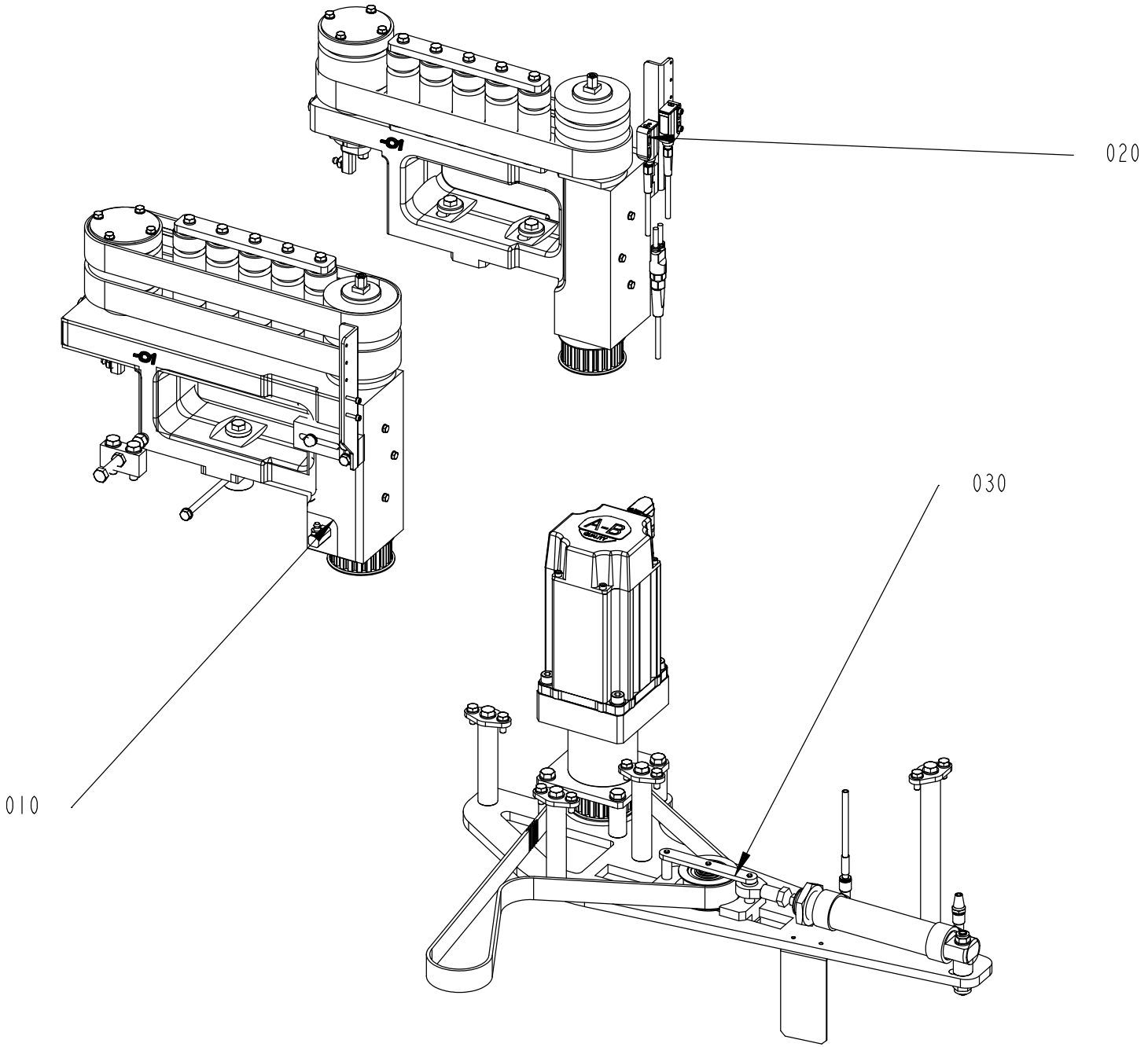
020
030
010

ECM: 847419
Group number: 2838654-0500
Assembly Drawing: 2838654-5_1_AA

Pos	Part No	Description	Qty	Unit	Page No
Common Parts					
010	2766990-0200	BRAKE UNIT	1	PC	74
020	3495611-0100	BRAKE UNIT	1	PC	80
030	2766994-0500	ACCELERATION PUSHER	1	PC	84

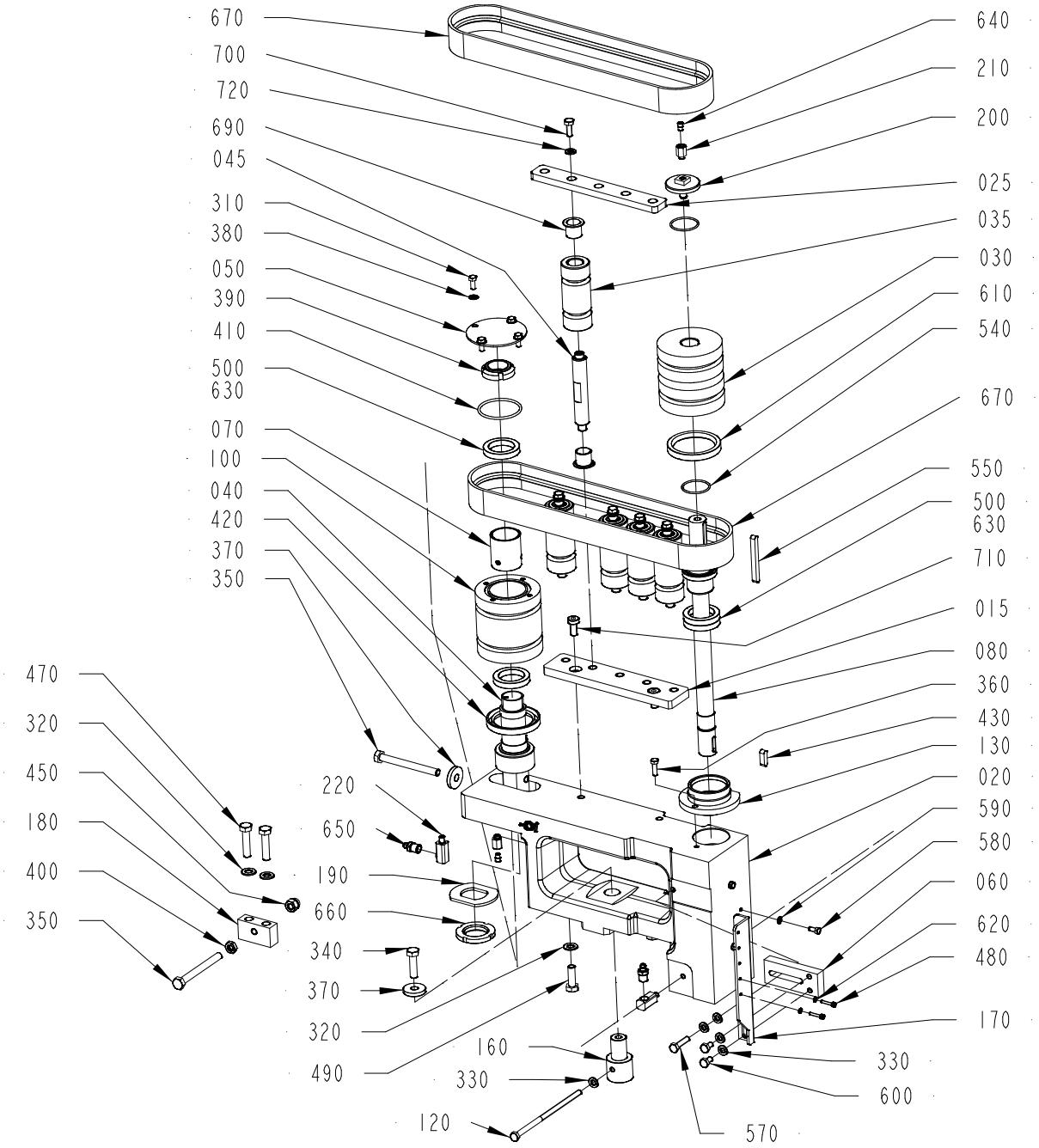

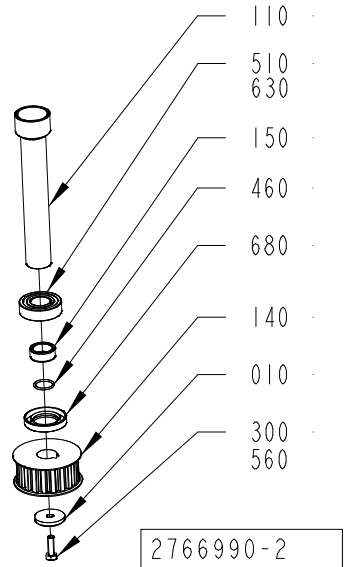

2766990-2
669737

ECM: 679476
Group number: 2766990-0200
Assembly Drawing: 2766990-2_1_AC

Pos	Part No	Description	Qty	Unit	Page No
Common Parts					
010	290027-0000	WASHER	1	PC	
015	3257421-0000	PLATE	1	PC	
020	3010622-0000	CANTILEVER	1	PC	
025	3257422-0000	PLATE	1	PC	
030	3115079-0000	DRIVE PULLEY	1	PC	
035	3225865-0000	PULLEY	5	PC	
040	3217280-0000	SHAFT	1	PC	
045	3227371-0000	SHAFT	5	PC	
050	2769686-0000	COVER	1	PC	
060	2936120-0000	BRACKET	1	PC	
070	2769741-0000	SPACER	1	PC	
080	3108987-0000	DRIVE SHAFT	1	PC	
100	2826729-0000	PULLEY	1	PC	
110	3115081-0000	SPACER	1	PC	
120	2805468-0000	SCREW	1	PC	
130	3115080-0000	FLANGE	1	PC	
140	3039030-0000	TOOTHED PULLEY	1	PC	
150	2773600-0000	SPACER	1	PC	
160	2775418-0000	SHAFT	1	PC	
170	2936740-0000	BRACKET	1	PC	
180	2775427-0000	BRACKET	1	PC	
190	2778564-0000	WASHER	1	PC	
200	3199899-0000	SCREW	1	PC	
210	3147226-0000	ADAPTER	2	PC	
220	3326954-0000	JUNCTION NIPPLE	2	PC	
300	312105-0370	SCREW, M6S ISO 4017 M6X20 A4 80	1	PC	
310	312105-0327	SCREW, M6S ISO 4017 M5X12 A4 80	4	PC	
320	315105-0165	FWAS080G0-0S, WASHER PLAIN	4	PC	
330	315105-0153	WASHER PLAIN, 6,4X12X1,5 A4 BRB	5	PC	
340	312105-0455	SCREW, M6S ISO 4017 M8X30 A4 80	1	PC	
350	312109-0467	SCREW, M6S ISO 4017 M8X80 A4 80	2	PC	
360	312105-0329	SCREW, M6S ISO 4017 M5X16 A4 80	1	PC	
370	315125-0165	WASHER HIGH, TBRSB 8,4X26X5 A4	2	PC	
380	315105-0146	WASHER PLAIN, 5,3X10X1 A4 BRB	4	PC	
390	90459-6280	NUT GUK 5 M25 X 1.5 FZB	1	PC	
400	312625-0318	HEXAGON THIN NUT, EN 24035 ML6M M8 A4	1	PC	
410	315202-0733	O-RING 45,69X2,62 MM	1	PC	
420	315221-0192	RADIAL SEAL 45X62X8 MM	1	PC	
430	315705-0232	PARALLEL KEY W. ROUND ENDS, 6X6X20 MM	1	PC	
450	312705-0318	NUT HEX. DOMED CAP MHM-6 M8 A280	1	PC	
460	315202-0705	O-RING 17,17X1,78 MM	1	PC	
470	312105-0457	SCREW, M6S ISO 4014 M8X35 A4 80	2	PC	
480	312115-0228	SCREW ISO4762 M3X16 A4 80	2	PC	
490	312105-0453	SCREW, M6S ISO 4017 M8X25 A4 80	2	PC	
500	90214-0186	BALL BEARING 30/42X7	4	PC	
510	321306-0104	BALL BEARING 20/42X12	1	PC	
540	315202-0713	O-RING 29,87X1,78 MM	2	PC	
550	90458-0507	PARALLEL KEY W. ROUND ENDS 6X6X60 MM	1	PC	
560	344447-0000	THREAD SEALANT LOCTITE 542, ONLY IN BOM	1	PC	76
570	312105-0372	SCREW, M6S ISO 4017 M6X25 A4 80	1	PC	
580	312105-0289	SCREW, M6S ISO 4017 M4X10 A4 70	3	PC	
590	315105-0136	WASHER PLAIN, 4,3X8X0,8 A4 BRB	3	PC	
600	312105-0364	"SCREW, M6S ISO 4017 M6X10 A4 80"	2	PC	
610	315221-0196	RADIAL SEAL 48X62X8 MM	1	PC	
620	315105-0124	WASHER PLAIN, 3,2X6X0,5 A4 BRB	2	PC	
630	344414-0000	KLÜBEROIL 4 UH1-320N, ONLY IN BOM	1	PC	78
640	90604-3329	NON-RETURN VALVE, RVA-M6	2	PC	
650	90606-2351	GREASE NIPPLE STR. M10X1, 996-001-890-S3	2	PC	
660	90459-2644	NUT ROUND WITH SLOTS M30X1,5 SS	1	PC	
670	90602-4686	TIMING BELT 32TK5K6/780 PU + MINIGRIP	2	PC	
680	90091-0322	RADIAL SEAL 25X42X7 MM DUST LIP	1	PC	
690	321158-0221	FLANGE BUSHING, IGLIDUR J 16X18X17	10	PC	
700	312105-0368	SCREW, M6S ISO 4017 M6X16 A4 80	5	PC	
710	90600-2026	SCREW DIN7984 M8X16 AISI 304	2	PC	
720	315106-0153	WASHER PLAIN, M6 ISO7089-6-200 HV A4	5	PC	

This page intentionally left blank

ECM: 659574
Group number: 344447-0000
Assembly Drawing: -

Pos	Part No	Description	Qty	Unit	Page No
Common Parts					
	344447-0050	THREAD SEALANT LOCTITE 542, 50ML	1	PC	

Pos	Part No	Description	Qty	Unit	Page No

This page intentionally left blank

ECM: 653856
Group number: 344414-0000
Assembly Drawing: -

Pos	Part No	Description	Qty	Unit	Page No
Common Parts					
	344414-0335	KLÜBEROIL 4 UH1-320N, 200 L DRUM	1	PC	
	344414-0764	KLÜBEROIL 4 UH1-320N, 5 L CAN	1	PC	
	344414-0766	KLÜBEROIL 4 UH1-320N, 20 L CAN	1	PC	

Pos	Part No	Description	Qty	Unit	Page No

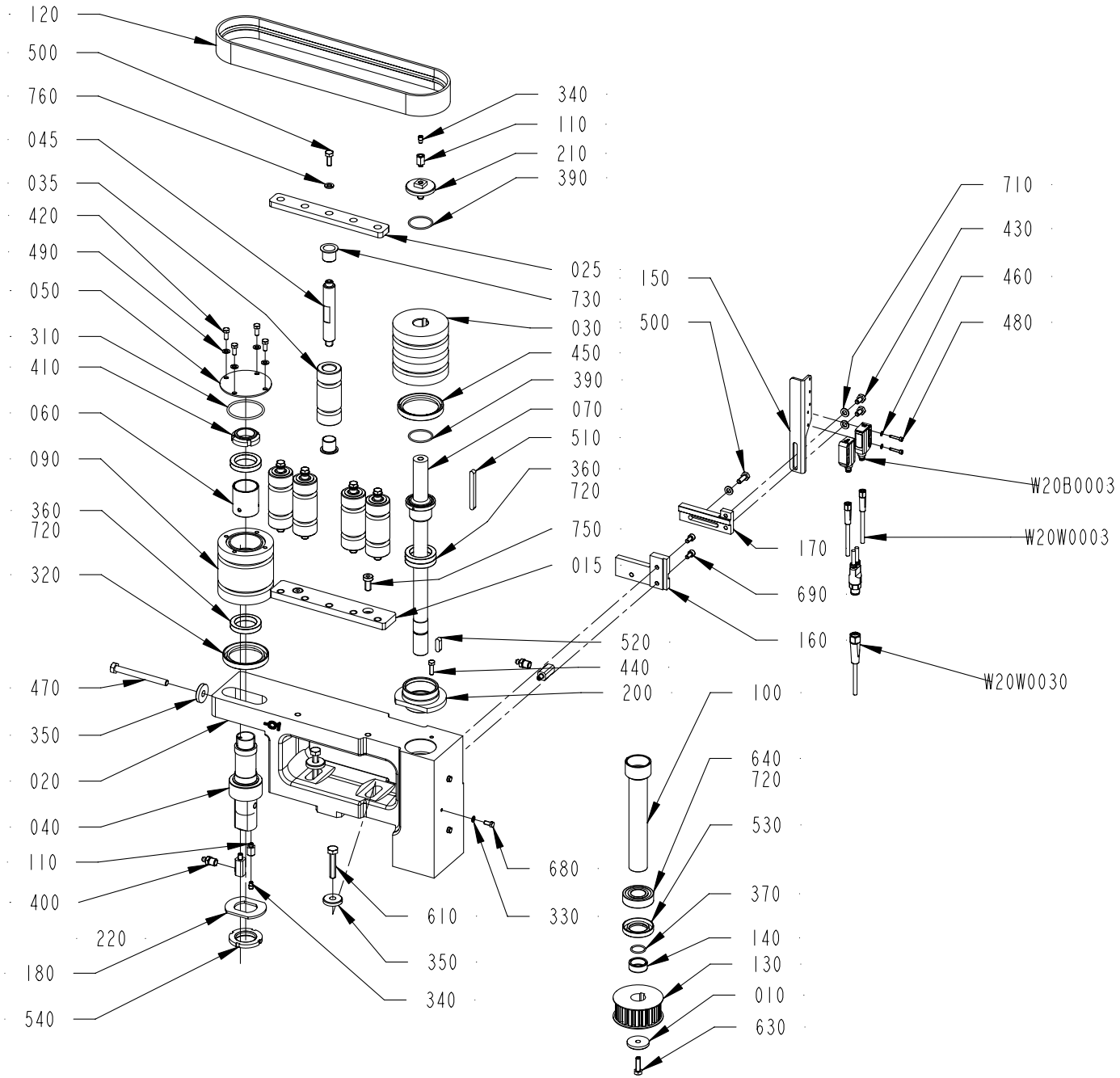
120
500
760
045
035
420
490
050
310
410
060
090
360
720
320
470
350
020
040
110
400
220
180
540
340
110
210
390
025
730
030
450
390
070
510
360
720
750
015
520
440
200
610
350
340
680
330
150
500
710
430
460
480
W20B0003
W20W0003
170
690
160
W20W0030
100
640
720
530
370
140
130
010
630

ECM: 847415
Group number: 3495611-0100
Assembly Drawing: 3495611-1_1_AA

Pos	Part No	Description	Qty	Unit	Page No
Common Parts					
010	290027-0000	WASHER	1	PC	
015	3257421-0000	PLATE	1	PC	
020	3010624-0000	CANTILEVER	1	PC	
025	3257422-0000	PLATE	1	PC	
030	3115079-0000	DRIVE PULLEY	1	PC	
035	3225865-0000	PULLEY	5	PC	
040	3217280-0000	SHAFT	1	PC	
045	3227371-0000	SHAFT	5	PC	
050	2769686-0000	COVER	1	PC	
060	2769741-0000	SPACER	1	PC	
070	3108987-0000	DRIVE SHAFT	1	PC	
090	2826729-0000	PULLEY	1	PC	
100	3115081-0000	SPACER	1	PC	
110	3147226-0000	ADAPTER	2	PC	
120	90602-4686	TIMING BELT 32TK5K6/780 PU + MINIGRIP	1	PC	
130	3039030-0000	TOOTHED PULLEY	1	PC	
140	2773600-0000	SPACER	1	PC	
150	2936506-0000	BRACKET	1	PC	
160	2943597-0000	PLATE	1	PC	
170	2944164-0000	PLATE	1	PC	
180	2778564-0000	WASHER	1	PC	
200	3115080-0000	FLANGE	1	PC	
210	3199899-0000	SCREW	1	PC	
220	3326954-0000	JUNCTION NIPPLE	2	PC	
310	315202-0733	O-RING 45,69X2,62 MM	1	PC	
320	315221-0192	RADIAL SEAL 45X62X8 MM	1	PC	
330	315105-0136	WASHER PLAIN, 4,3X8X0,8 A4 BRB	3	PC	
340	90604-3329	NON-RETURN VALVE, RVA-M6	2	PC	
350	315125-0165	WASHER HIGH, TBRSB 8,4X26X5 A4	3	PC	
360	90214-0186	BALL BEARING 30/42X7	4	PC	
370	315202-0705	O-RING 17,17X1,78 MM	1	PC	
390	315202-0713	O-RING 29,87X1,78 MM	2	PC	
400	90606-2351	GREASE NIPPLE STR. M10X1, 996-001-890-S3	2	PC	
410	90459-6280	NUT GUK 5 M25 X 1.5 FZB	1	PC	
420	312105-0327	SCREW, M6S ISO 4017 M5X12 A4 80	4	PC	
430	312105-0364	"SCREW, M6S ISO 4017 M6X10 A4 80"	2	PC	
440	312105-0329	SCREW, M6S ISO 4017 M5X16 A4 80	1	PC	
450	315221-0196	RADIAL SEAL 48X62X8 MM	1	PC	
460	315105-0124	WASHER PLAIN, 3,2X6X0,5 A4 BRB	2	PC	
470	312109-0467	SCREW, M6S ISO 4017 M8X80 A4 80	1	PC	
480	312115-0228	SCREW ISO4762 M3X16 A4 80	2	PC	
490	315105-0146	WASHER PLAIN, 5,3X10X1 A4 BRB	4	PC	
500	312105-0368	SCREW, M6S ISO 4017 M6X16 A4 80	6	PC	
510	90458-0507	PARALLEL KEY W. ROUND ENDS 6X6X60 MM	1	PC	
520	315705-0232	PARALLEL KEY W. ROUND ENDS, 6X6X20 MM	1	PC	
530	90091-0322	RADIAL SEAL 25X42X7 MM DUST LIP	1	PC	
540	90459-2644	NUT ROUND WITH SLOTS M30X1,5 SS	1	PC	
610	312109-0459	SCREW, M6S ISO 4017 M8X40 A4 80	2	PC	
630	312105-0370	SCREW, M6S ISO 4017 M6X20 A4 80	1	PC	
640	321306-0104	BALL BEARING 20/42X12	1	PC	
650	344447-0050	THREAD SEALANT LOCTITE 542, 50ML	1	L	
680	312105-0289	SCREW, M6S ISO 4017 M4X10 A4 70	3	PC	
690	312115-0325	SCREW ISO4762 M5X10 A4 80	2	PC	
710	315105-0153	WASHER PLAIN, 6,4X12X1,5 A4 BRB	3	PC	
720	1607010-0000	LUBRICANT H1-0500, PAO V320, ONLY IN BOM	1	L	82
730	321158-0221	FLANGE BUSHING, IGLIDUR J 16X18X17	10	PC	
750	90600-2026	SCREW DIN7984 M8X16 AISI 304	2	PC	
760	315106-0153	WASHER PLAIN, M6 ISO7089-6-200 HV A4	5	PC	
W20B0003	90606-4464	LASER SENSOR, WSE9L-3P2237	1	PC	
W20W0003	90603-3979	SENSOR Y-CABLE, EVT339	1	PC	
W20W0030	344253-0100	SENSOR CABLE, EVT002	1	PC	

This page intentionally left blank

ECM: 716391
Group number: 1607010-0000
Assembly Drawing: -

Pos	Part No	Description	Qty	Unit	Page No
Common Parts					
	1607010-0005	LUBRICANT H1-0500, PAO V320, 5 L CAN	1	PC	
	1607010-0020	LUBRICANT H1-0500, PAO V320, 20 L CAN	1	PC	

Pos	Part No	Description	Qty	Unit	Page No

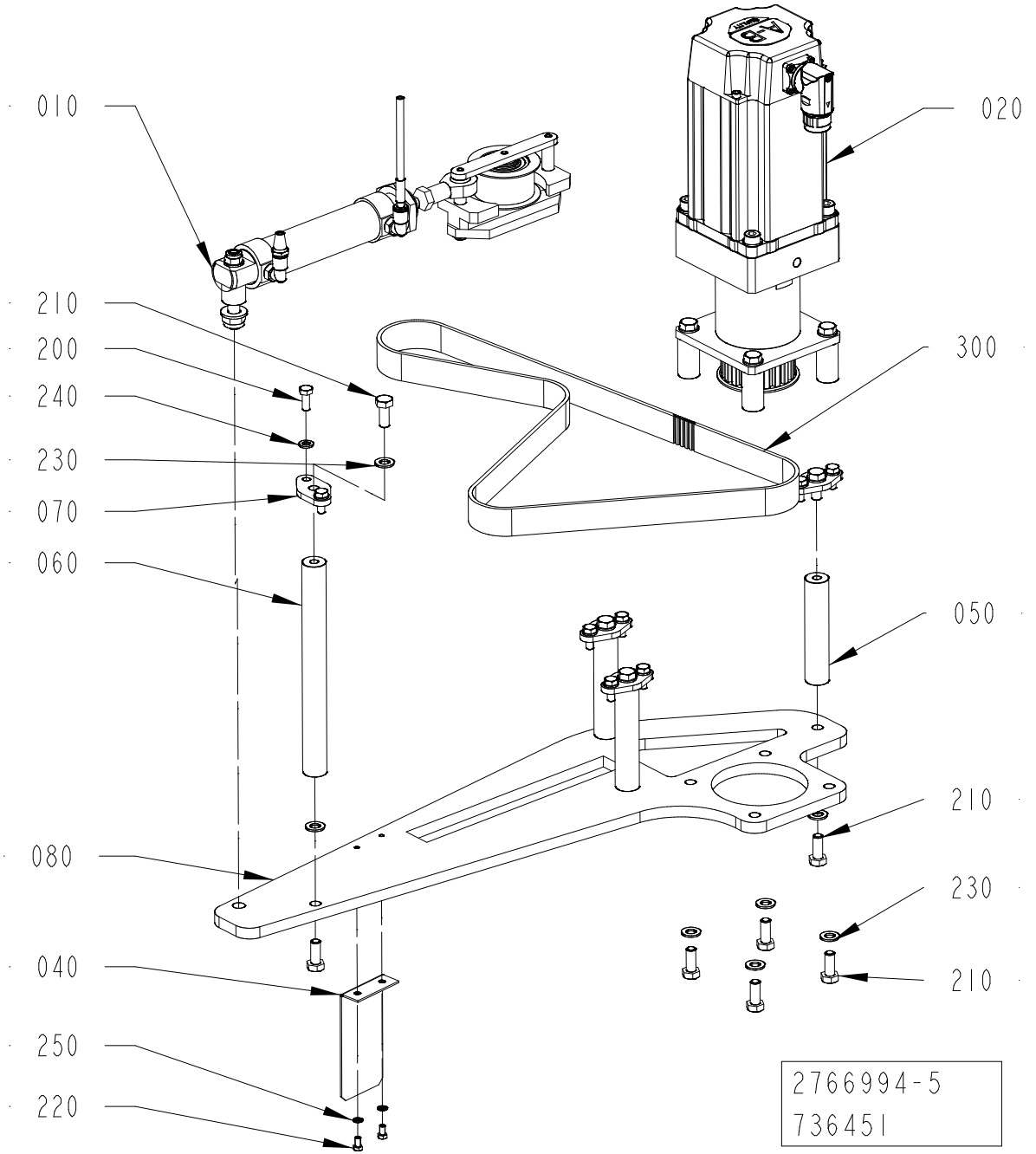
010
020
210
200
240
230
070
060
300
050
210
080
230
040
210
250
220
2766994-5
736451

ECM: 785929
Group number: 2766994-0500
Assembly Drawing: 2766994-5_1_AA

Pos	Part No	Description	Qty	Unit	Page No
Common Parts					
010	2773636-0200	BELT TENSIONER	1	PC	86
020	2838710-0500	WORM GEAR MOTOR	1	PC	90
040	2985847-0000	PLATE	1	PC	
050	2769773-0000	SPACER	3	PC	
060	2773601-0000	SPACER	1	PC	
070	2775412-0000	PLATE	4	PC	
080	3331455-0000	PLATE	1	PC	
200	312105-0368	SCREW, M6S ISO 4017 M6X16 A4 80	8	PC	
210	312105-0451	SCREW, M6S ISO 4017 M8X20 A4 80	12	PC	
220	312105-0287	SCREW, M6S ISO 4017 M4X8 A4 70	2	PC	
230	315105-0165	FWAS080G0-0S, WASHER PLAIN	12	PC	
240	315105-0153	WASHER PLAIN, 6,4X12X1,5 A4 BRB	8	PC	
250	315105-0136	WASHER PLAIN, 4,3X8X0,8 A4 BRB	2	PC	
300	90602-4674	TIMING BELT 25T10/1150-DL PU	1	PC	

Pos	Part No	Description	Qty	Unit	Page No

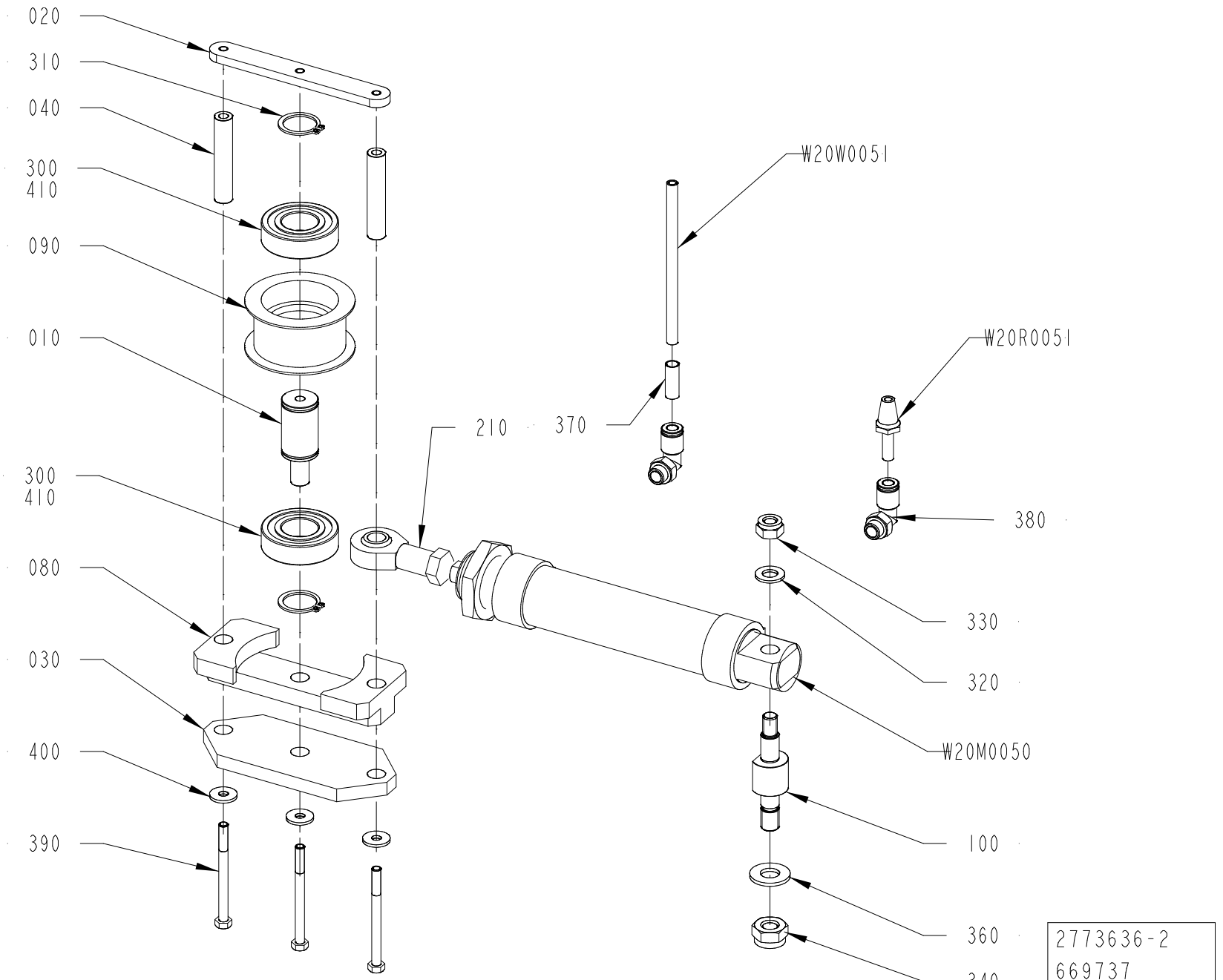
020
310
040
300
410
090
010
300
410
080
030
400
390
W20W0051
370
210
W20R0051
380
330
320
W20M0050
100
360
340
2773636-2
669737

ECM: 679490
Group number: 2773636-0200
Assembly Drawing: 2773636-2_1_AB

Pos	Part No	Description	Qty	Unit	Page No
Common Parts					
010	2775398-0000	PIN	1	PC	
020	2773604-0000	PLATE	1	PC	
030	2773638-0000	PLATE	1	PC	
040	2773639-0000	SHAFT	2	PC	
080	2773637-0000	BRACKET	1	PC	
090	2773615-0000	ROLLER	1	PC	
100	2781292-0000	SHAFT	1	PC	
210	90115-0134	ROD END, ID=10 MM, M10X1,25	1	PC	
300	344224-0204	B40160040S, BALL BEARING 20/42X12	2	PC	
310	315751-0116	RETAINING RING FOR SHAFT DIN 471 20 SS	2	PC	
320	315105-0165	FWAS080G0-0S, WASHER PLAIN	1	PC	
330	312812-0318	HEXAGON NUT, NY-LOCK M8 A4 80	1	PC	
340	312812-0320	HEXAGON NUT, NY-LOCK M10 A4 80	1	PC	
360	315105-0173	WASHER PLAIN, 10,5X22X2 A4 BRB	1	PC	
370	90459-7369	MARKING FOR PNEUM. TUBING, PRZ06	1	PC	
380	351456-3002	PUSH-IN L-FITTING NPQH-L-G18-Q6-P10	2	PC	
390	312105-0343	SCREW, M6S ISO 4014 M5X60 A4 80	3	PC	
400	90005-0139	WASHER PLAIN ROUND 5,2(M5)/15, H=1,6	3	PC	
410	344414-0000	KLÜBEROIL 4 UH1-320N, ONLY IN BOM	1	PC	88
W20M0050	90604-3137	DOUBLE ACTING, MINI-ISO, CYL. 32-80	1	PC	
W20R0051	90328-0017	SILENCER, D=6 MM74122000	1	PC	
W20W0051	315400-0001	TUBE PUN-H-6X1-BL	3	M	

This page intentionally left blank

ECM: 653856
Group number: 344414-0000
Assembly Drawing: -

Pos	Part No	Description	Qty	Unit	Page No
Common Parts					
	344414-0335	KLÜBEROIL 4 UH1-320N, 200 L DRUM	1	PC	
	344414-0764	KLÜBEROIL 4 UH1-320N, 5 L CAN	1	PC	
	344414-0766	KLÜBEROIL 4 UH1-320N, 20 L CAN	1	PC	

Pos	Part No	Description	Qty	Unit	Page No

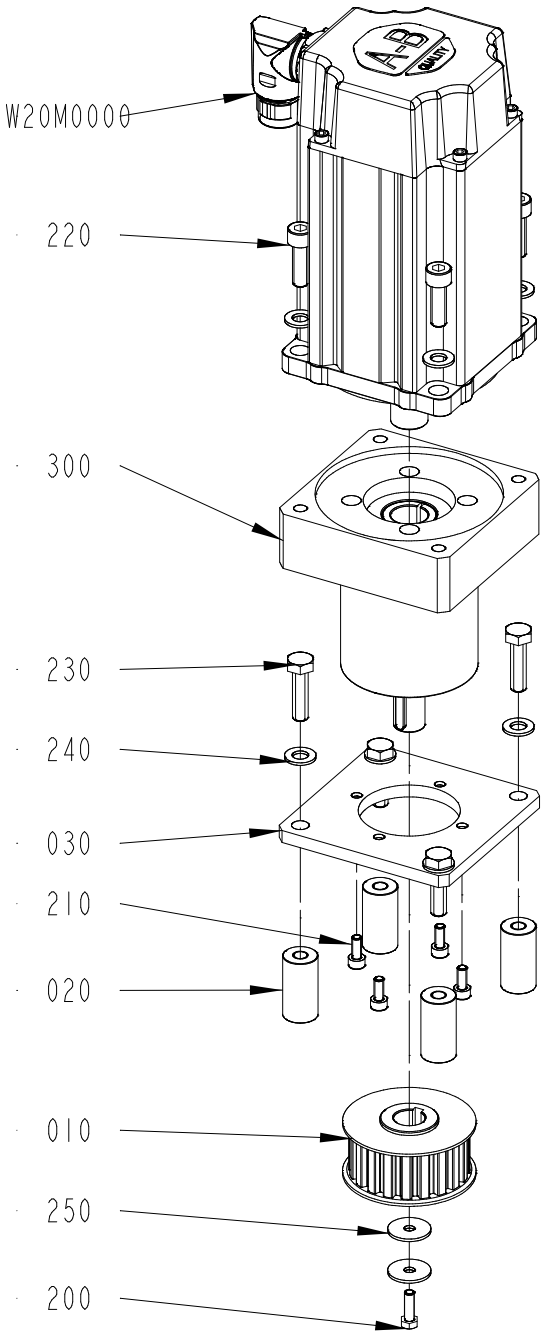

2838710-5
736451

ECM: 742848
Group number: 2838710-0500
Assembly Drawing: 2838710-5_1_AA

Pos	Part No	Description	Qty	Unit	Page No
Common Parts					
010	3412971-0000	TOOTHED PULLEY	1	PC	
020	3412975-0000	SPACER	4	PC	
030	3412973-0000	SUPPORT	1	PC	
200	312105-0329	SCREW, M6S ISO 4017 M5X16 A4 80	1	PC	
210	312115-0327	SCREW ISO4762 M5X12 A4 80	4	PC	
220	312115-0453	SCREW ISO4762 M8X25 A4 80	4	PC	
230	312105-0455	SCREW, M6S ISO 4017 M8X30 A4 80	4	PC	
240	315105-0165	FWAS080G0-0S, WASHER PLAIN	8	PC	
250	90005-0125	WASHER PLAIN ROUND 5,5/22, H=1,5 FZB	2	PC	
300	90606-8923	PLANETARY GEAR, LP070F-MF1-3-1E1	1	PC	
W20M0000	90606-2779	SERVO MOTOR, VPL-B1153F-PK12AA, SERIES A	1	PC	

Pos	Part No	Description	Qty	Unit	Page No

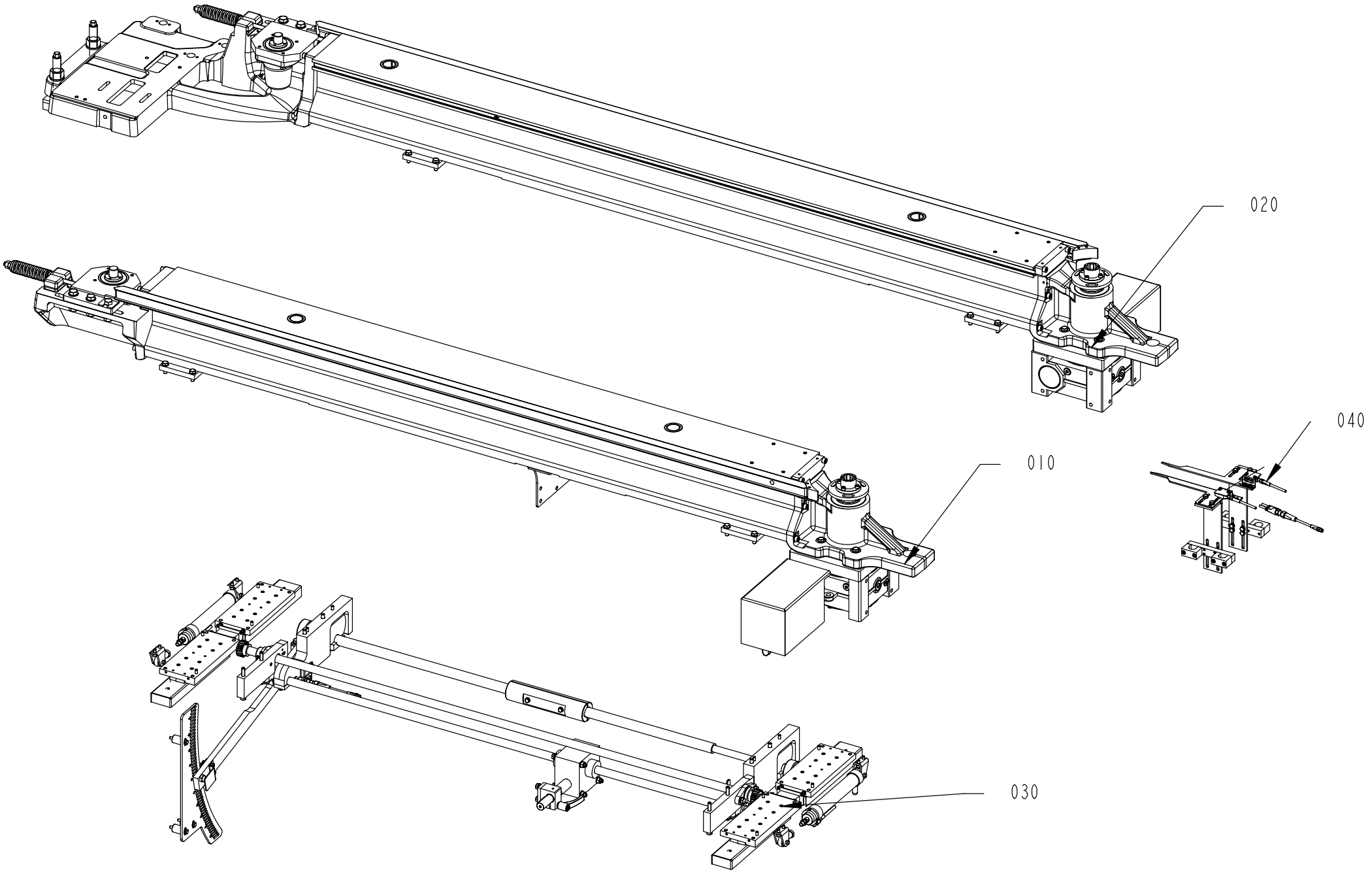
020
040
010
030

ECM: 847420
Group number: 3199892-0300
Assembly Drawing: 3199892-3_1_AA

Pos	Part No	Description	Qty	Unit	Page No
Common Parts					
010	3493274-0100	SIDE FRAME	1	PC	94
020	3493275-0100	SIDE FRAME	1	PC	108
030	2838650-0200	SLIDING RACK	1	PC	122
040	3199894-0100	ADJUSTABLE GUIDE	1	PC	136

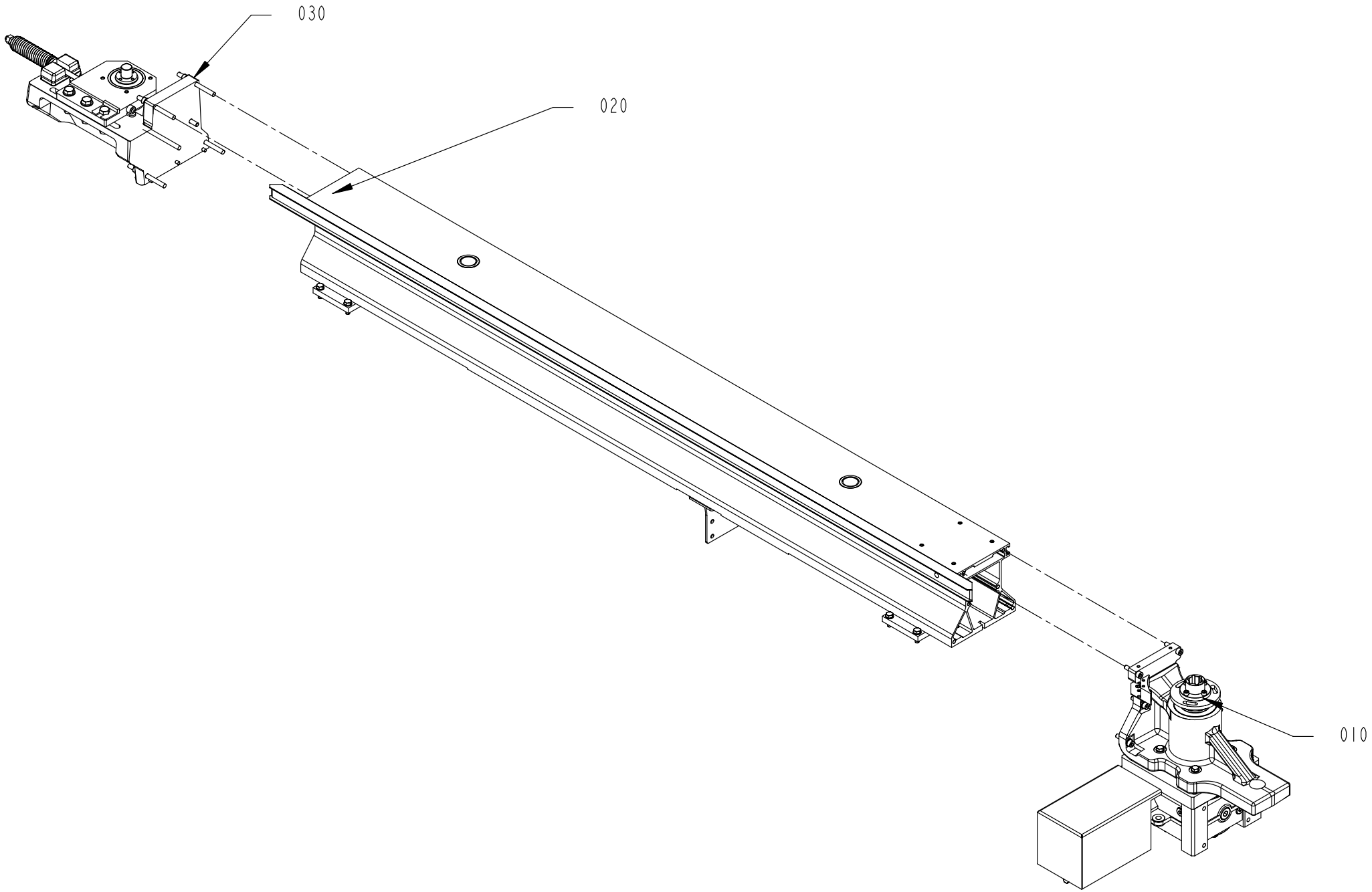
030
020
010

ECM: 847417
Group number: 3493274-0100
Assembly Drawing: 3493274-1_1_AA

Pos	Part No	Description	Qty	Unit	Page No
Common Parts					
010	3493268-0100	DRIVE	1	PC	96
020	3493269-0100	FRAME BOTTOM	1	PC	102
030	3493270-0100	BELT TENSIONER	1	PC	104

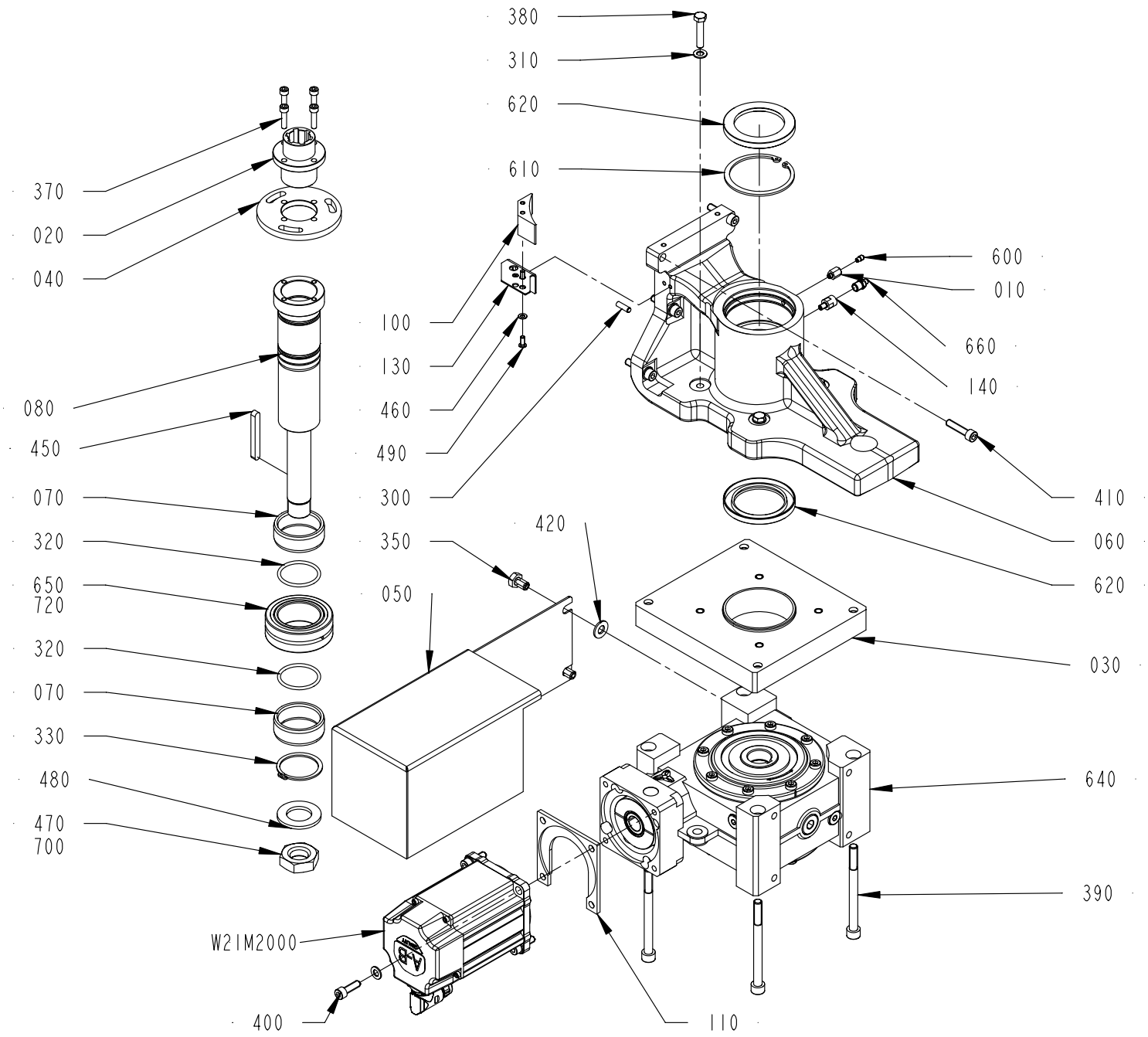
380
310
620
610
370
020
040
100
130
460
490
300
600
010
660
140
410
060
620
080
450
070
320
650
720
320
070
330
480
470
700
420
350
050
030
640
390
W21M2000
400
110

ECM: 847414
Group number: 3493268-0100
Assembly Drawing: 3493268-1_1_AA

Pos	Part No	Description	Qty	Unit	Page No
Common Parts					
010	3147226-0000	ADAPTER	1	PC	
020	2775439-0000	BUSHING	1	PC	
030	3295035-0000	FLANGE	1	PC	
040	2775438-0000	PLATE	1	PC	
050	3296679-0000	COVER	1	PC	
060	2837623-0000	BRACKET	1	PC	
070	2837628-0000	SPACER	2	PC	
080	3356451-0000	SHAFT	1	PC	
100	3186487-0000	PROTECTION PLUG	1	PC	
110	2985781-0000	PLATE	1	PC	
130	3161465-0000	BRACKET	1	PC	
140	3326956-0000	JUNCTION NIPPLE	1	PC	
300	311103-0353	PARALLEL PIN ISO 2338 6M6X20 A1	3	PC	
310	315105-0165	FWAS080G0-0S, WASHER PLAIN	12	PC	
320	315202-0602	O-RING 44,04X3,53 MM	2	PC	
330	315751-0130	RETAINING RING FOR SHAFT DIN 471 50 SS	1	PC	
350	312105-0489	SCREW, M6S ISO 4017 M10X16 A4 80	3	PC	
360	312115-0325	SCREW ISO4762 M5X10 A4 80	2	PC	
370	312115-0372	SCREW ISO4762 M6X25 A4 80	4	PC	
380	312105-0459	SCREW, M6S ISO 4014 M8X40 A4 80	4	PC	
390	312111-0515	SCREW HEX.SOCK.HD.MC6S 10X120 88 FZB	4	PC	
400	312115-0453	SCREW ISO4762 M8X25 A4 80	4	PC	
410	312115-0457	SCREW ISO4762 M8X35 A4 80	6	PC	
420	315105-0173	WASHER PLAIN, 10,5X22X2 A4 BRB	3	PC	
450	3478353-0000	KEY	1	PC	
460	315105-0146	WASHER PLAIN, 5,3X10X1 A4 BRB	4	PC	
470	312625-0330	HEXAGON THIN NUT, EN 24035 ML6M M27 A4	1	PC	
480	315105-0203	WASHER PLAIN, 30X52X4 A4 BRB	1	PC	
490	90606-4924	SCREW, CBSTSR5-12	2	PC	
600	90604-3329	NON-RETURN VALVE, RVA-M6	1	PC	
610	90458-0181	RETAINING RING FOR BORE DIN 472 80 SS	1	PC	
620	90459-4588	RADIAL SEAL 60X85X8 MM DUST LIP	2	PC	
640	90606-5283	WORM GEAR VDHE063-ML1-40-141-0E0 / MPL-B	1	PC	
650	90600-0892	NEEDLE ROLLER BEARING, 50X80X28 MM	1	PC	
660	90606-2351	GREASE NIPPLE STR. M10X1, 996-001-890-S3	1	PC	
700	344447-0000	THREAD SEALANT LOCTITE 542, ONLY IN BOM	1	L	98
720	1607010-0000	LUBRICANT H1-0500, PAO V320, ONLY IN BOM	1	L	100
W21M2000	90606-2776	SERVO MOTOR, VPL-B1152T-PK12AA, SERIES A	1	PC	

This page intentionally left blank

ECM: 659574
Group number: 344447-0000
Assembly Drawing: -

Pos	Part No	Description	Qty	Unit	Page No
Common Parts					
	344447-0050	THREAD SEALANT LOCTITE 542, 50ML	1	PC	

Pos	Part No	Description	Qty	Unit	Page No

This page intentionally left blank

ECM: 716391
Group number: 1607010-0000
Assembly Drawing: -

Pos	Part No	Description	Qty	Unit	Page No
Common Parts					
	1607010-0005	LUBRICANT H1-0500, PAO V320, 5 L CAN	1	PC	
	1607010-0020	LUBRICANT H1-0500, PAO V320, 20 L CAN	1	PC	

Pos	Part No	Description	Qty	Unit	Page No

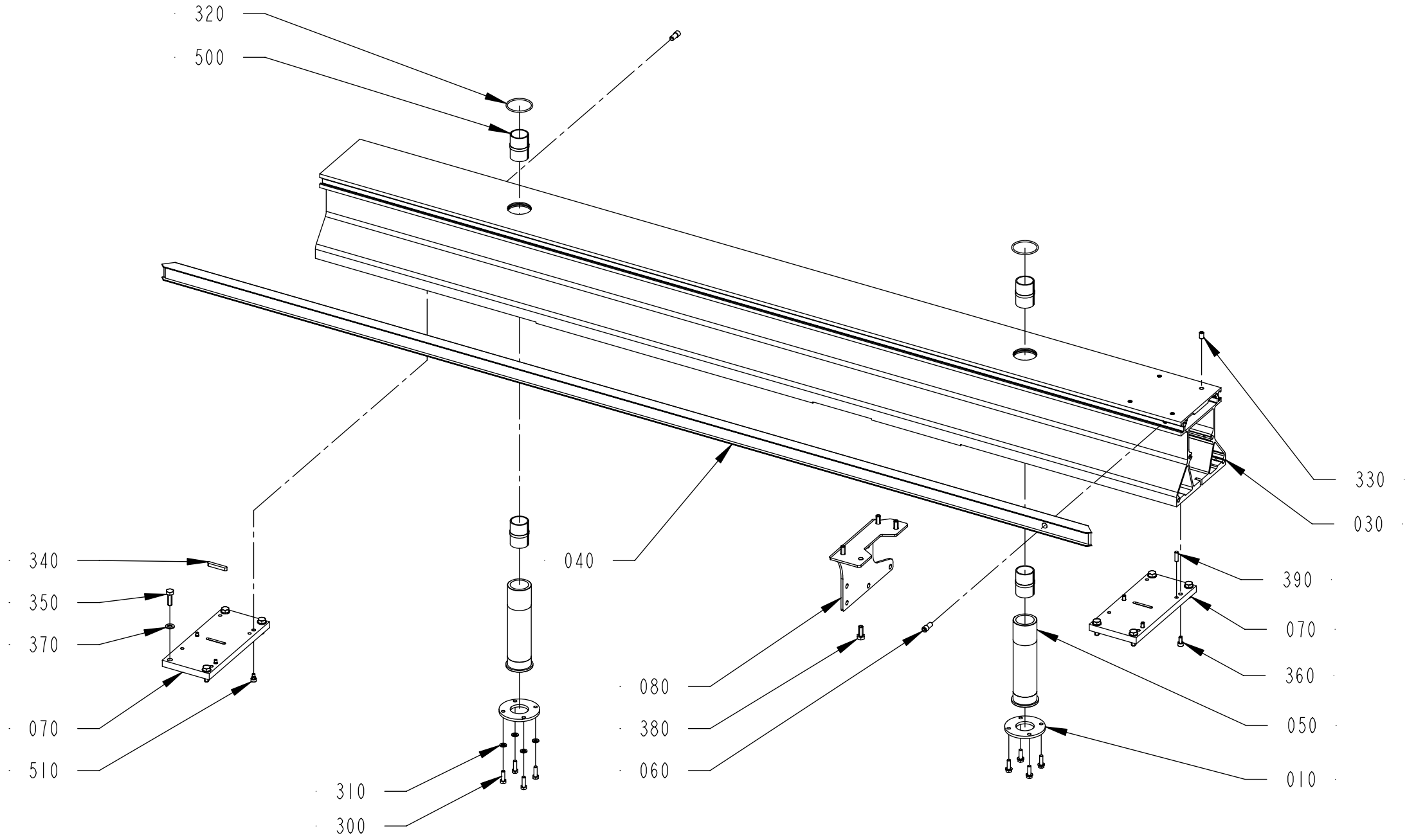
320
500
330
030
340
350
370
070
510
040
310
300
080
380
060
390
070
360
050
010

ECM: 847412
Group number: 3493269-0100
Assembly Drawing: 3493269-1_1_AA

Pos	Part No	Description	Qty	Unit	Page No
Common Parts					
010	2766976-0000	FLANGE	2	PC	
030	3217912-0000	FRAME	1	PC	
040	3203260-0000	GUIDE	1	PC	
050	2766974-0000	SLEEVE	2	PC	
060	3202908-0000	SCREW	2	PC	
070	2788169-0000	PLATE	2	PC	
080	2778592-0000	PLATE	1	PC	
300	312105-0370	SCREW, M6S ISO 4017 M6X20 A4 80	8	PC	
310	315105-0153	WASHER PLAIN, 6,4X12X1,5 A4 BRB	8	PC	
320	315202-0732	O-RING 44,12X2,62 MM	2	PC	
330	312318-0447	SET SCREW, CUP END ISO4029 M8X12 A4	4	PC	
340	315705-0239	PARALLEL KEY W. ROUND ENDS, 6X6X40 MM	1	PC	
350	312105-0453	SCREW, M6S ISO 4017 M8X25 A4 80	8	PC	
360	312115-0366	SCREW ISO4762 M6X12 A4 80	3	PC	
370	315106-0165	WASHER PLAIN, M8 ISO7089-8-200 HV A4	8	PC	
380	312105-0451	SCREW, M6S ISO 4017 M8X20 A4 80	4	PC	
390	311103-0353	PARALLEL PIN ISO 2338 6M6X20 A1	1	PC	
500	90600-0798	BUSHING INSERT, JUM-02-30	4	PC	
510	90287-0230	SHOULDER SCREW, 6X4/M5 SS	1	PC	

Pos	Part No	Description	Qty	Unit	Page No

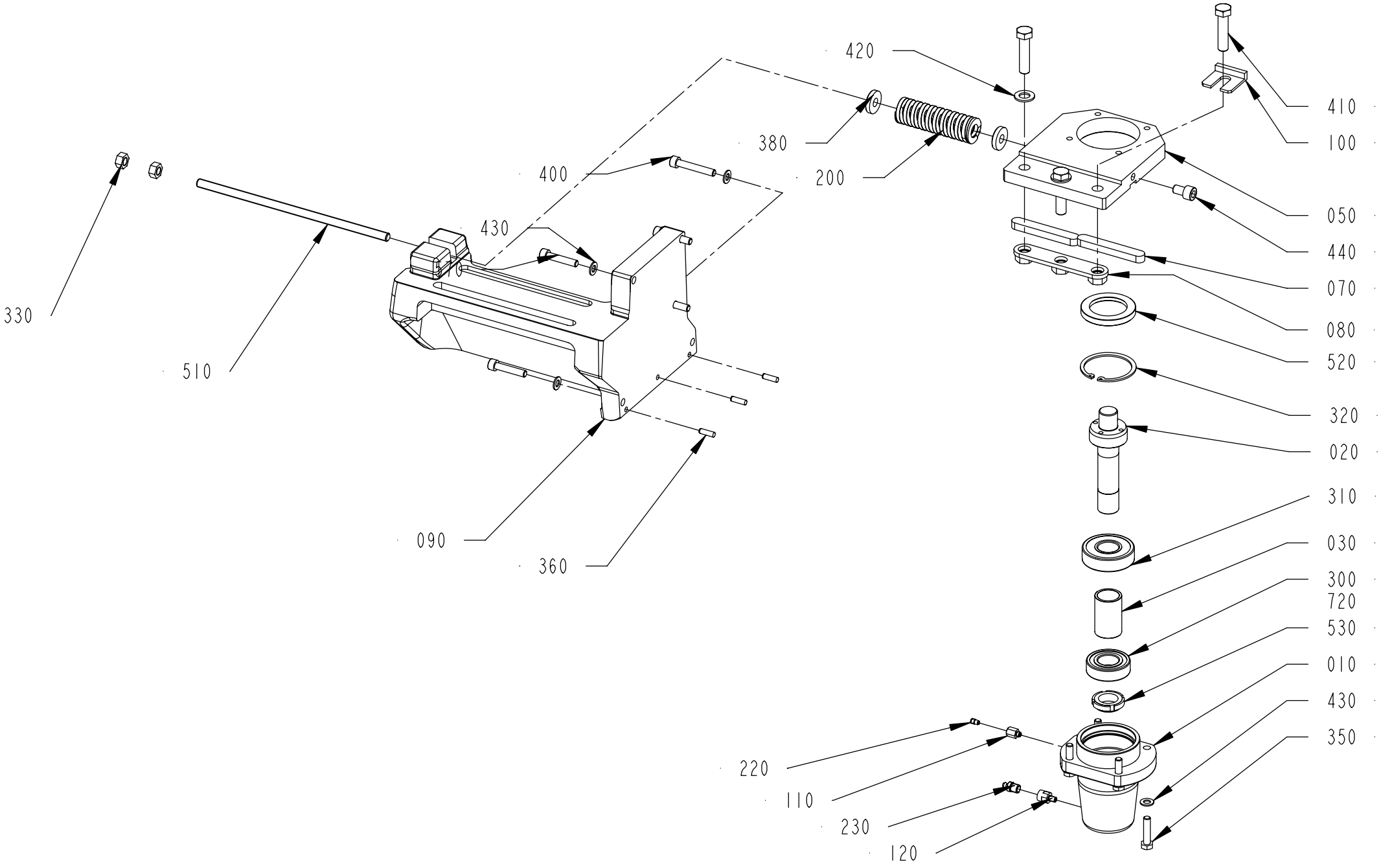
420
380
200
400
430
330
510
090
360
410
100
050
440
070
080
520
320
020
310
030
300
720
530
010
430
350
220
110
230
120

ECM: 847411
Group number: 3493270-0100
Assembly Drawing: 3493270-1_1_AA

Pos	Part No	Description	Qty	Unit	Page No
Common Parts					
010	3022796-0000	BELLOWS	1	PC	
020	2766958-0000	SHAFT	1	PC	
030	2766959-0000	SPACER	1	PC	
050	2766989-0000	BRACKET	1	PC	
070	315701-0371	PARALLEL KEY W. ROUND ENDS, 14X9X90 MM	2	PC	
080	2775417-0000	BRACKET	1	PC	
090	2778571-0000	FRAME	1	PC	
100	2937337-0000	SPACER	1	PC	
110	3147226-0000	ADAPTER	1	PC	
120	3326956-0000	JUNCTION NIPPLE	1	PC	
200	90604-3324	COMP. SPRING, 5443, ?X31,2X115	1	PC	
220	90604-3329	NON-RETURN VALVE, RVA-M6	1	PC	
230	90606-2351	GREASE NIPPLE STR. M10X1, 996-001-890-S3	1	PC	
300	321309-0105	BALL BEARING 25/52X15	1	PC	
310	321314-0105	BALL BEARING 25/62X17	1	PC	
320	315752-0136	RETAINING RING FOR BORE DIN 472 62	1	PC	
330	312607-0320	HEXAGON NUT, EN 24032 M6M M10 A480	2	PC	
350	312105-0457	SCREW, M6S ISO 4014 M8X35 A4 80	4	PC	
360	311103-0353	PARALLEL PIN ISO 2338 6M6X20 A1	3	PC	
380	315125-0173	WASHER HIGH, TBRSB 10,5X28X6 A4	2	PC	
400	312115-0461	SCREW ISO4762 M8X50 A4 80	2	PC	
410	312109-0542	SCREW M6S ISO 4017 M12X50 A280	3	PC	
420	315105-0178	WASHER PLAIN, 13X24X2,5 A4 BRB	2	PC	
430	315105-0165	FWAS080G0-0S, WASHER PLAIN	9	PC	
440	312115-0489	SCREW ISO4762 M10X16 A4 80	1	PC	
510	3381527-0000	THREADED ROD	1	PC	
520	90091-0304	RADIAL SEAL 45X65X8 MM DUST LIP	1	PC	
530	90459-6280	NUT GUK 5 M25 X 1.5 FZB	1	PC	
570	312115-0459	SCREW ISO4762 M8X40 A4 80	3	PC	
720	1607010-0000	LUBRICANT H1-0500, PAO V320, ONLY IN BOM	1	L	106

This page intentionally left blank

ECM: 716391
Group number: 1607010-0000
Assembly Drawing: -

Pos	Part No	Description	Qty	Unit	Page No
Common Parts					
	1607010-0005	LUBRICANT H1-0500, PAO V320, 5 L CAN	1	PC	
	1607010-0020	LUBRICANT H1-0500, PAO V320, 20 L CAN	1	PC	

Pos	Part No	Description	Qty	Unit	Page No

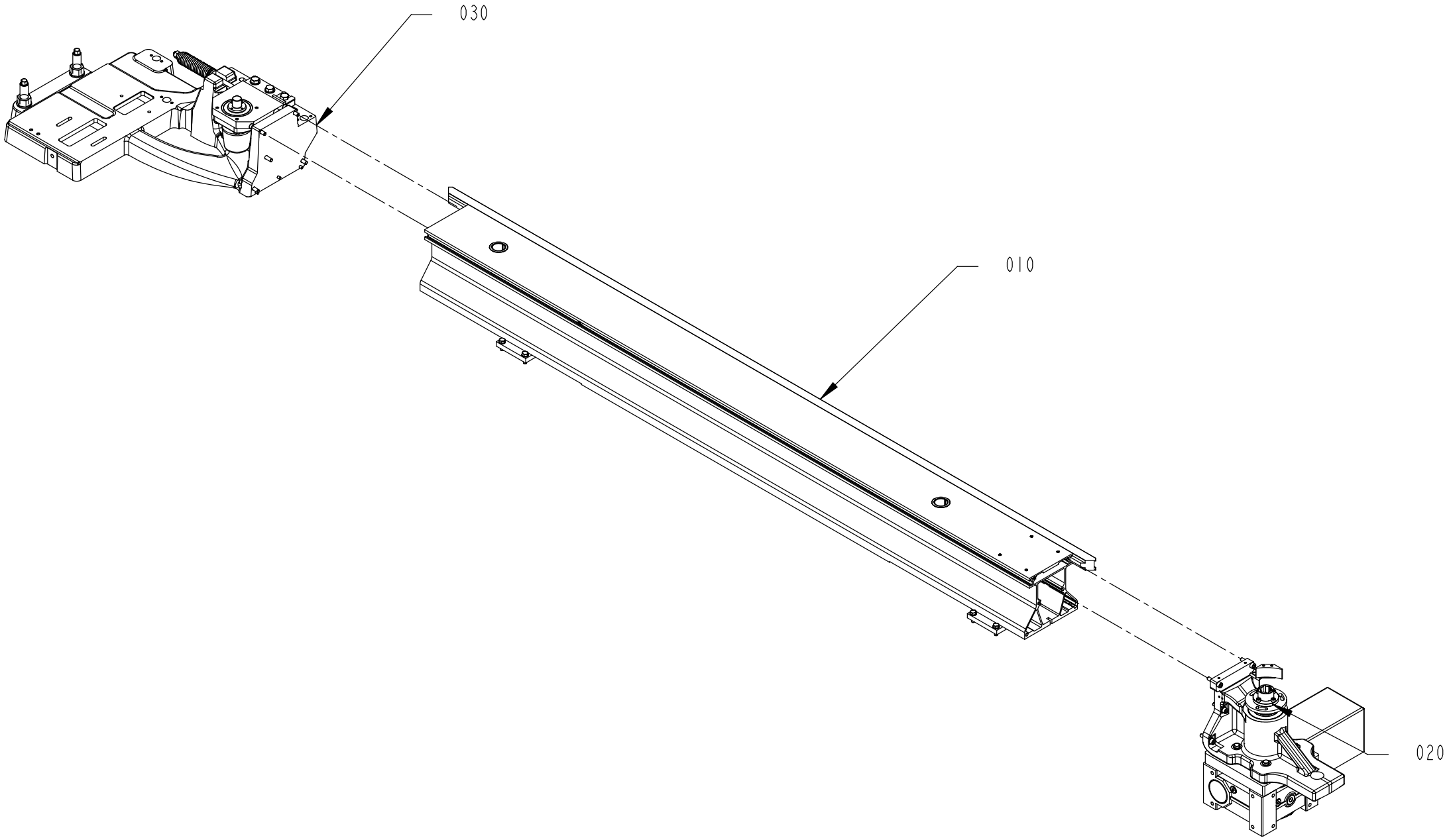
030
010
020

ECM: 847416
Group number: 3493275-0100
Assembly Drawing: 3493275-1_1_AA

Pos	Part No	Description	Qty	Unit	Page No
Common Parts					
010	3493271-0100	FRAME BOTTOM	1	PC	110
020	3493272-0100	DRIVE	1	PC	112
030	3493273-0100	BELT TENSIONER	1	PC	118

Pos	Part No	Description	Qty	Unit	Page No

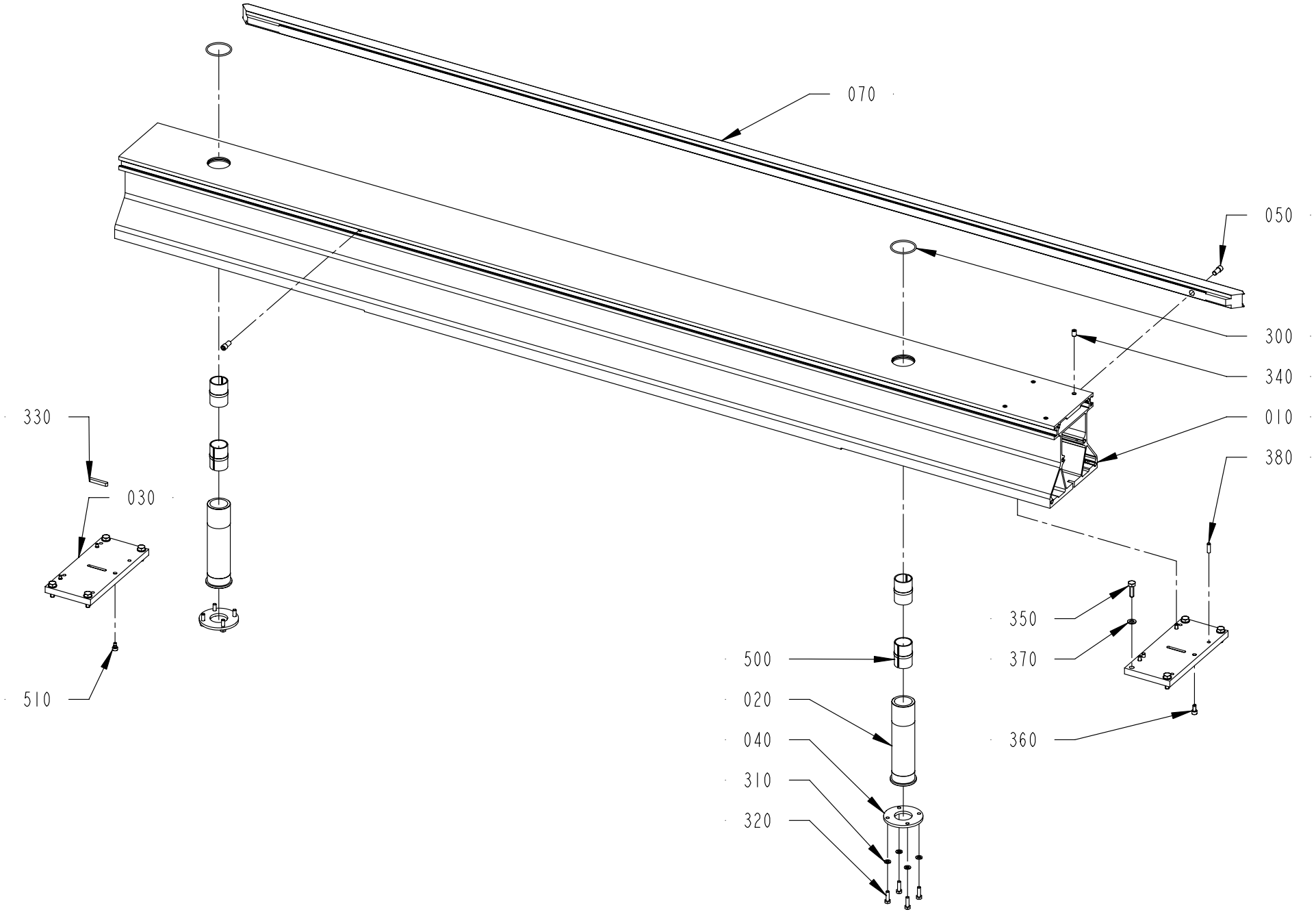
070
050
300
340
010
380
330
030
510
500
020
040
310
320
350
370
360

ECM: 847413
Group number: 3493271-0100
Assembly Drawing: 3493271-1_1_AA

Pos	Part No	Description	Qty	Unit	Page No
Common Parts					
010	3217910-0000	FRAME	1	PC	
020	2766974-0000	SLEEVE	2	PC	
030	2788169-0000	PLATE	2	PC	
040	2766976-0000	FLANGE	2	PC	
050	3202908-0000	SCREW	2	PC	
070	3203258-0000	GUIDE	1	PC	
300	315202-0732	O-RING 44,12X2,62 MM	2	PC	
310	315105-0153	WASHER PLAIN, 6,4X12X1,5 A4 BRB	8	PC	
320	312105-0370	SCREW, M6S ISO 4017 M6X20 A4 80	8	PC	
330	315705-0239	PARALLEL KEY W. ROUND ENDS, 6X6X40 MM	1	PC	
340	312318-0447	SET SCREW, CUP END ISO4029 M8X12 A4	4	PC	
350	312105-0453	SCREW, M6S ISO 4017 M8X25 A4 80	8	PC	
360	312115-0366	SCREW ISO4762 M6X12 A4 80	3	PC	
370	315106-0165	WASHER PLAIN, M8 ISO7089-8-200 HV A4	8	PC	
380	311103-0353	PARALLEL PIN ISO 2338 6M6X20 A1	2	PC	
500	90600-0798	BUSHING INSERT, JUM-02-30	4	PC	
510	90287-0230	SHOULDER SCREW, 6X4/M5 SS	1	PC	

Pos	Part No	Description	Qty	Unit	Page No

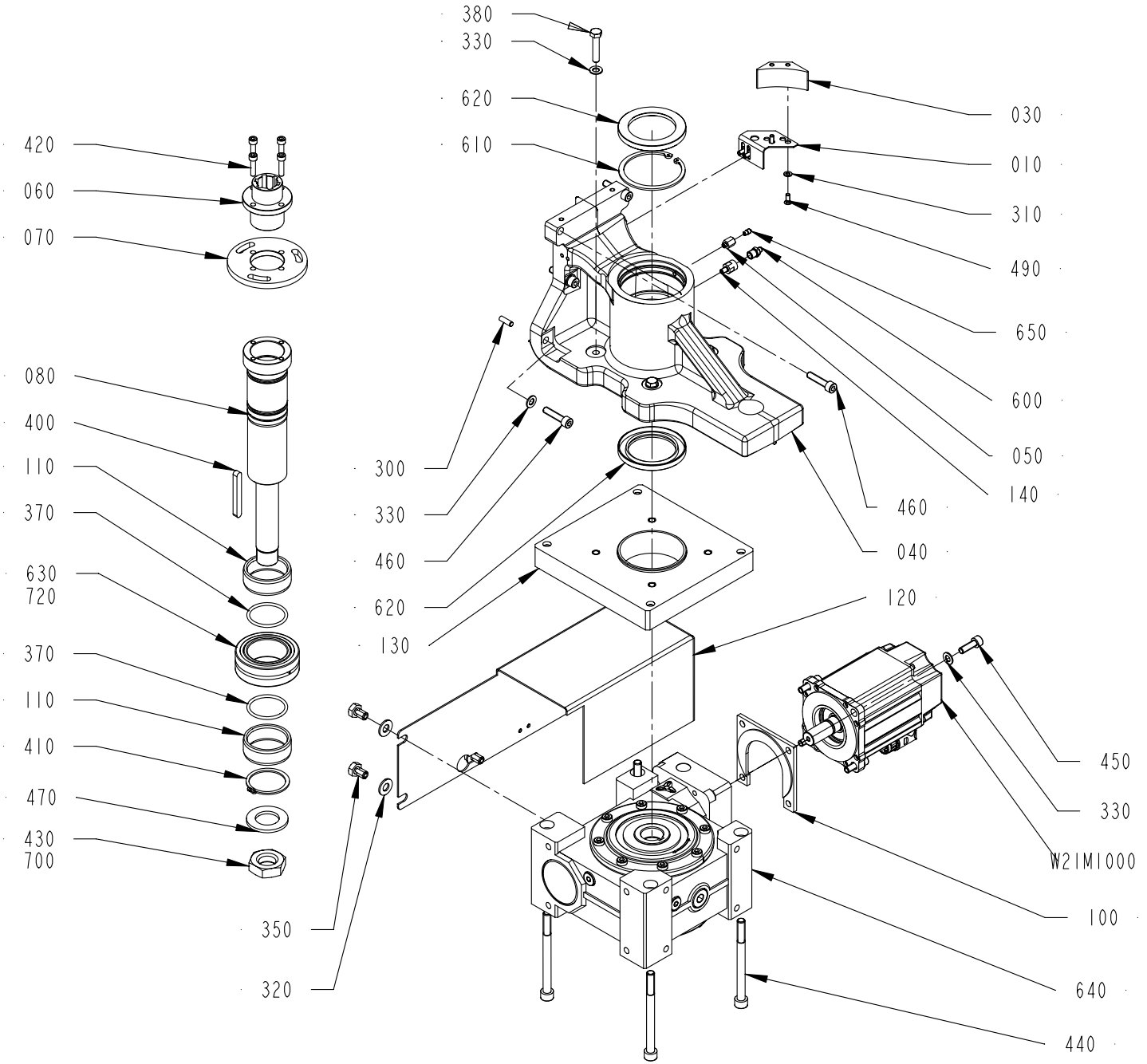
380
330
620
610
420
060
070
080
400
110
370
630
720
370
110
410
470
430
700
300
330
460
620
130
030
010
310
490
650
600
050
140
460
040
120
450
330
W2IM1000
100
640
440
350
320

ECM: 847409
Group number: 3493272-0100
Assembly Drawing: 3493272-1_1_AA

Pos	Part No	Description	Qty	Unit	Page No
Common Parts					
010	3161464-0000	BRACKET	1	PC	
030	3186487-0000	PROTECTION PLUG	1	PC	
040	2837623-0000	BRACKET	1	PC	
050	3147226-0000	ADAPTER	1	PC	
060	2775439-0000	BUSHING	1	PC	
070	2775438-0000	PLATE	1	PC	
080	3356451-0000	SHAFT	1	PC	
100	2985781-0000	PLATE	1	PC	
110	2837628-0000	SPACER	2	PC	
120	3319569-0000	COVER	1	PC	
130	3295035-0000	FLANGE	1	PC	
140	3326956-0000	JUNCTION NIPPLE	1	PC	
300	311103-0353	PARALLEL PIN ISO 2338 6M6X20 A1	3	PC	
310	315105-0146	WASHER PLAIN, 5,3X10X1 A4 BRB	4	PC	
320	315105-0173	WASHER PLAIN, 10,5X22X2 A4 BRB	3	PC	
330	315105-0165	FWAS080G0-0S, WASHER PLAIN	12	PC	
350	312105-0489	SCREW, M6S ISO 4017 M10X16 A4 80	3	PC	
360	312115-0325	SCREW ISO4762 M5X10 A4 80	2	PC	
370	315202-0602	O-RING 44,04X3,53 MM	2	PC	
380	312105-0459	SCREW, M6S ISO 4014 M8X40 A4 80	4	PC	
400	3478353-0000	KEY	1	PC	
410	315751-0130	RETAINING RING FOR SHAFT DIN 471 50 SS	1	PC	
420	312115-0372	SCREW ISO4762 M6X25 A4 80	4	PC	
430	312625-0330	HEXAGON THIN NUT, EN 24035 ML6M M27 A4	1	PC	
440	312111-0515	SCREW HEX.SOCK.HD.MC6S 10X120 88 FZB	4	PC	
450	312115-0453	SCREW ISO4762 M8X25 A4 80	4	PC	
460	312115-0457	SCREW ISO4762 M8X35 A4 80	6	PC	
470	315105-0203	WASHER PLAIN, 30X52X4 A4 BRB	1	PC	
490	90606-4924	SCREW, CBSTSR5-12	2	PC	
600	90606-2351	GREASE NIPPLE STR. M10X1, 996-001-890-S3	1	PC	
610	90458-0181	RETAINING RING FOR BORE DIN 472 80 SS	1	PC	
620	90459-4588	RADIAL SEAL 60X85X8 MM DUST LIP	2	PC	
630	90600-0892	NEEDLE ROLLER BEARING, 50X80X28 MM	1	PC	
640	90606-5283	WORM GEAR VDHE063-ML1-40-141-0E0 / MPL-B	1	PC	
650	90604-3329	NON-RETURN VALVE, RVA-M6	1	PC	
700	344447-0000	THREAD SEALANT LOCTITE 542, ONLY IN BOM	1	L	114
720	1607010-0000	LUBRICANT H1-0500, PAO V320, ONLY IN BOM	1	L	116
W21M1000	90606-2776	SERVO MOTOR, VPL-B1152T-PK12AA, SERIES A	1	PC	

This page intentionally left blank

ECM: 659574
Group number: 344447-0000
Assembly Drawing: -

Pos	Part No	Description	Qty	Unit	Page No
Common Parts					
	344447-0050	THREAD SEALANT LOCTITE 542, 50ML	1	PC	

Pos	Part No	Description	Qty	Unit	Page No

This page intentionally left blank

ECM: 716391
Group number: 1607010-0000
Assembly Drawing: -

Pos	Part No	Description	Qty	Unit	Page No
Common Parts					
	1607010-0005	LUBRICANT H1-0500, PAO V320, 5 L CAN	1	PC	
	1607010-0020	LUBRICANT H1-0500, PAO V320, 20 L CAN	1	PC	

Pos	Part No	Description	Qty	Unit	Page No

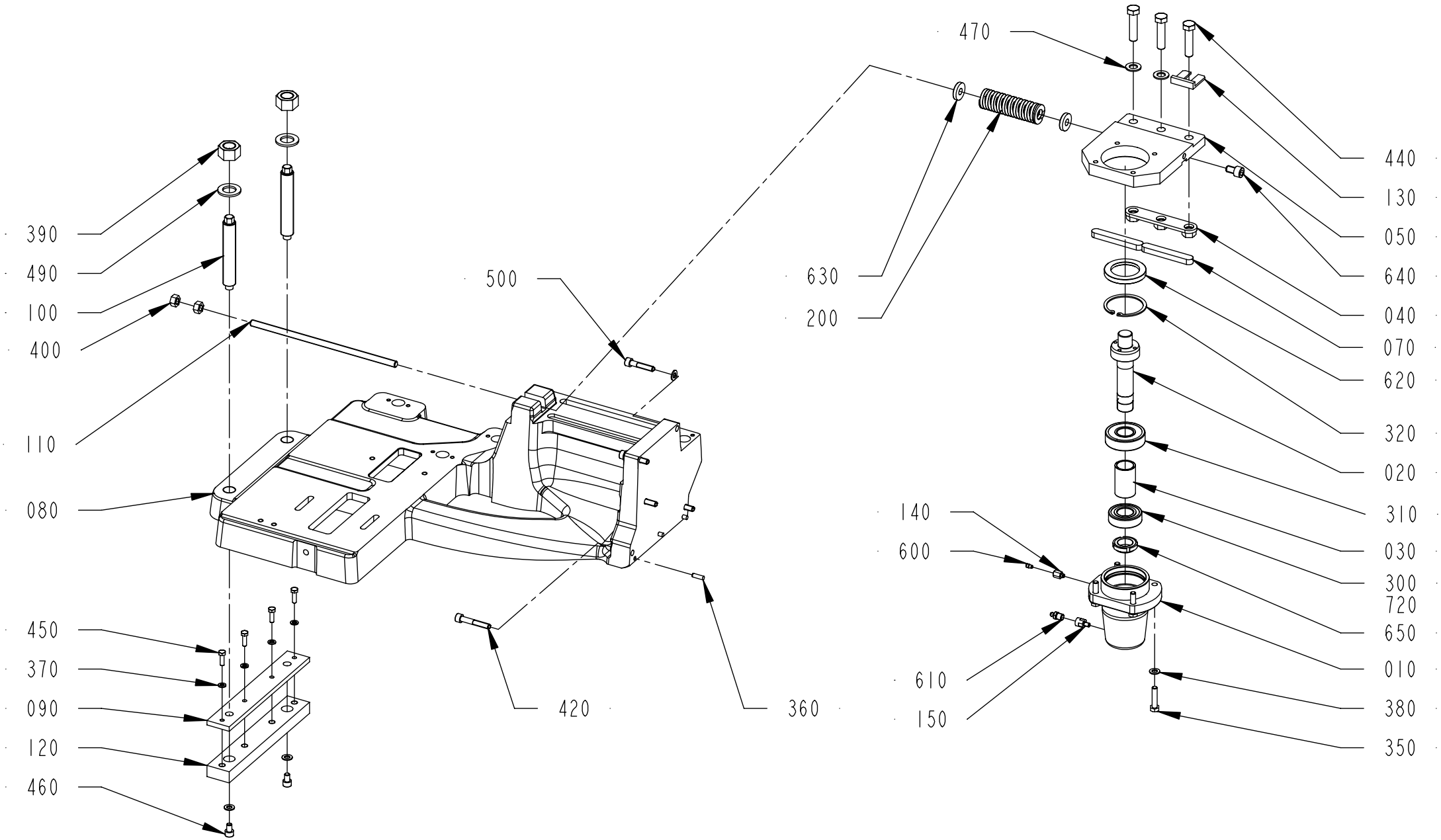
470
440
130
050
640
040
070
620
320
020
310
030
300
720
650
010
380
350
630
200
500
390
490
100
400
110
080
450
370
090
120
460
420
360
140
600
610
150

ECM: 847410
Group number: 3493273-0100
Assembly Drawing: 3493273-1_1_AA

Pos	Part No	Description	Qty	Unit	Page No
Common Parts					
010	3022796-0000	BELLOWS	1	PC	
020	2766958-0000	SHAFT	1	PC	
030	2766959-0000	SPACER	1	PC	
040	2775417-0000	BRACKET	1	PC	
050	2766989-0000	BRACKET	1	PC	
070	315701-0371	PARALLEL KEY W. ROUND ENDS, 14X9X90 MM	2	PC	
080	2769746-0000	FRAME	1	PC	
090	2775423-0000	PLATE	1	PC	
100	2775421-0000	SCREW	2	PC	
110	3381527-0000	THREADED ROD	1	PC	
120	2775420-0000	SLIDE	1	PC	
130	2937337-0000	SPACER	1	PC	
140	3147226-0000	ADAPTER	1	PC	
150	3326956-0000	JUNCTION NIPPLE	1	PC	
200	90604-3324	COMP. SPRING, 5443, ?X31,2X115	1	PC	
300	321309-0105	BALL BEARING 25/52X15	1	PC	
310	321314-0105	BALL BEARING 25/62X17	1	PC	
320	315752-0136	RETAINING RING FOR BORE DIN 472 62	1	PC	
350	312105-0457	SCREW, M6S ISO 4014 M8X35 A4 80	4	PC	
360	311103-0353	PARALLEL PIN ISO 2338 6M6X20 A1	3	PC	
370	315105-0153	WASHER PLAIN, 6,4X12X1,5 A4 BRB	4	PC	
380	315105-0165	FWAS080G0-0S, WASHER PLAIN	11	PC	
390	312607-0326	HEXAGON NUT, EN 24032 M6M M20 A480	2	PC	
400	312607-0320	HEXAGON NUT, EN 24032 M6M M10 A480	2	PC	
420	312115-0461	SCREW ISO4762 M8X50 A4 80	2	PC	
440	312109-0542	SCREW M6S ISO 4017 M12X50 A280	3	PC	
450	312105-0370	SCREW, M6S ISO 4017 M6X20 A4 80	4	PC	
460	312115-0447	SCREW ISO4762 M8X12 A4 80	2	PC	
470	315105-0178	WASHER PLAIN, 13X24X2,5 A4 BRB	2	PC	
490	315105-0192	WASHER PLAIN, 21X36X3 A4 BRB	2	PC	
500	312115-0459	SCREW ISO4762 M8X40 A4 80	3	PC	
600	90604-3329	NON-RETURN VALVE, RVA-M6	1	PC	
610	90606-2351	GREASE NIPPLE STR. M10X1, 996-001-890-S3	1	PC	
620	90091-0304	RADIAL SEAL 45X65X8 MM DUST LIP	1	PC	
630	315125-0173	WASHER HIGH, TBRSB 10,5X28X6 A4	2	PC	
640	312115-0489	SCREW ISO4762 M10X16 A4 80	1	PC	
650	90459-6280	NUT GUK 5 M25 X 1.5 FZB	1	PC	
720	1607010-0000	LUBRICANT H1-0500, PAO V320, ONLY IN BOM	1	L	120

This page intentionally left blank

ECM: 716391
Group number: 1607010-0000
Assembly Drawing: -

Pos	Part No	Description	Qty	Unit	Page No
Common Parts					
	1607010-0005	LUBRICANT H1-0500, PAO V320, 5 L CAN	1	PC	
	1607010-0020	LUBRICANT H1-0500, PAO V320, 20 L CAN	1	PC	

Pos	Part No	Description	Qty	Unit	Page No

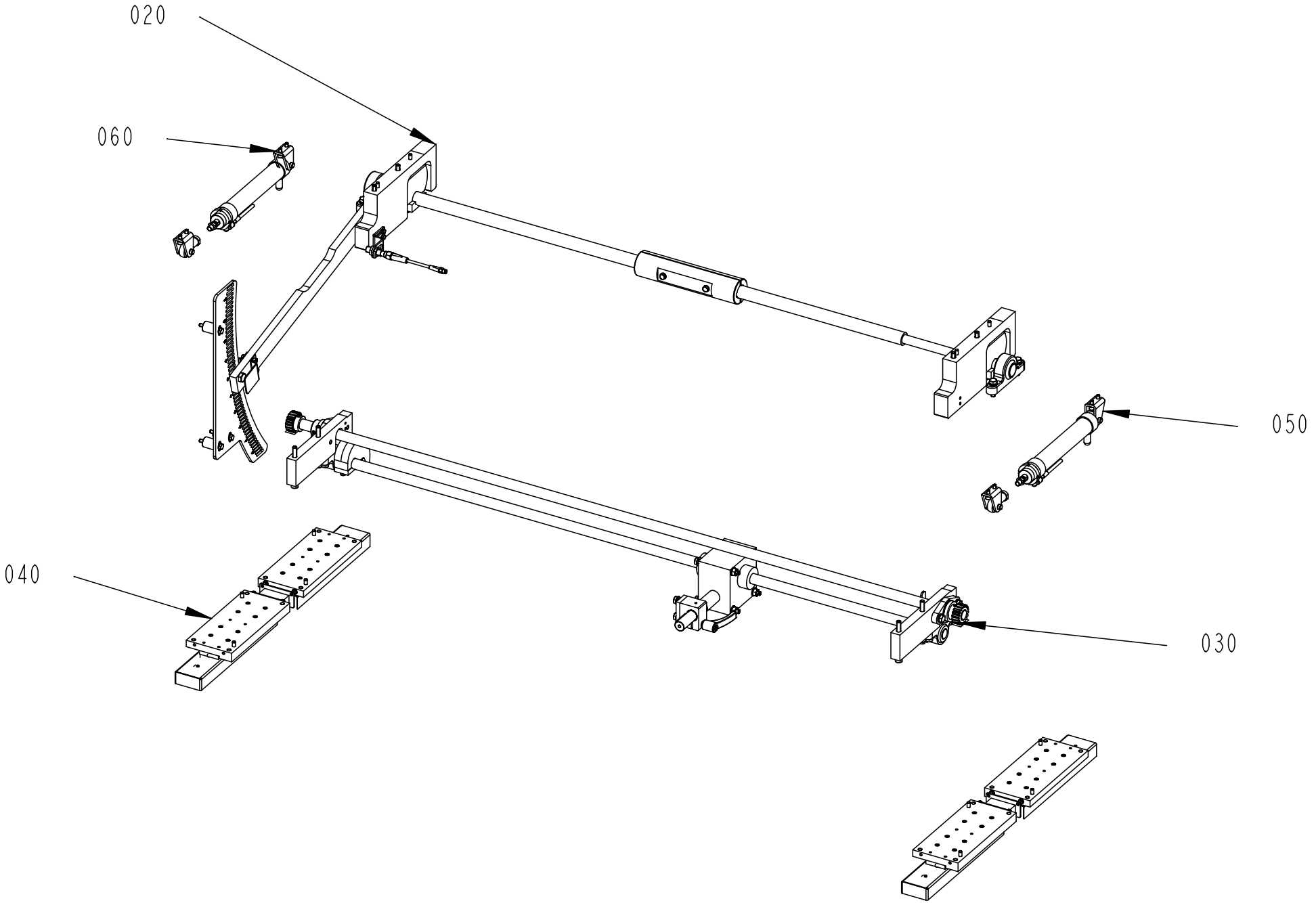
020
060
050
040
030

ECM: 847434
Group number: 2838650-0200
Assembly Drawing: 2838650-2_1_AC

Pos	Part No	Description	Qty	Unit	Page No
Common Parts					
020	2838669-0200	SETTING ARM	1	PC	124
030	2845127-0200	SETTING ARM	1	PC	126
040	2838653-0200	GUIDE RAIL	1	PC	128
050	2769718-0300	PNEUMATIC CYLINDER	1	PC	132
060	3199896-0200	PNEUMATIC CYLINDER	1	PC	134

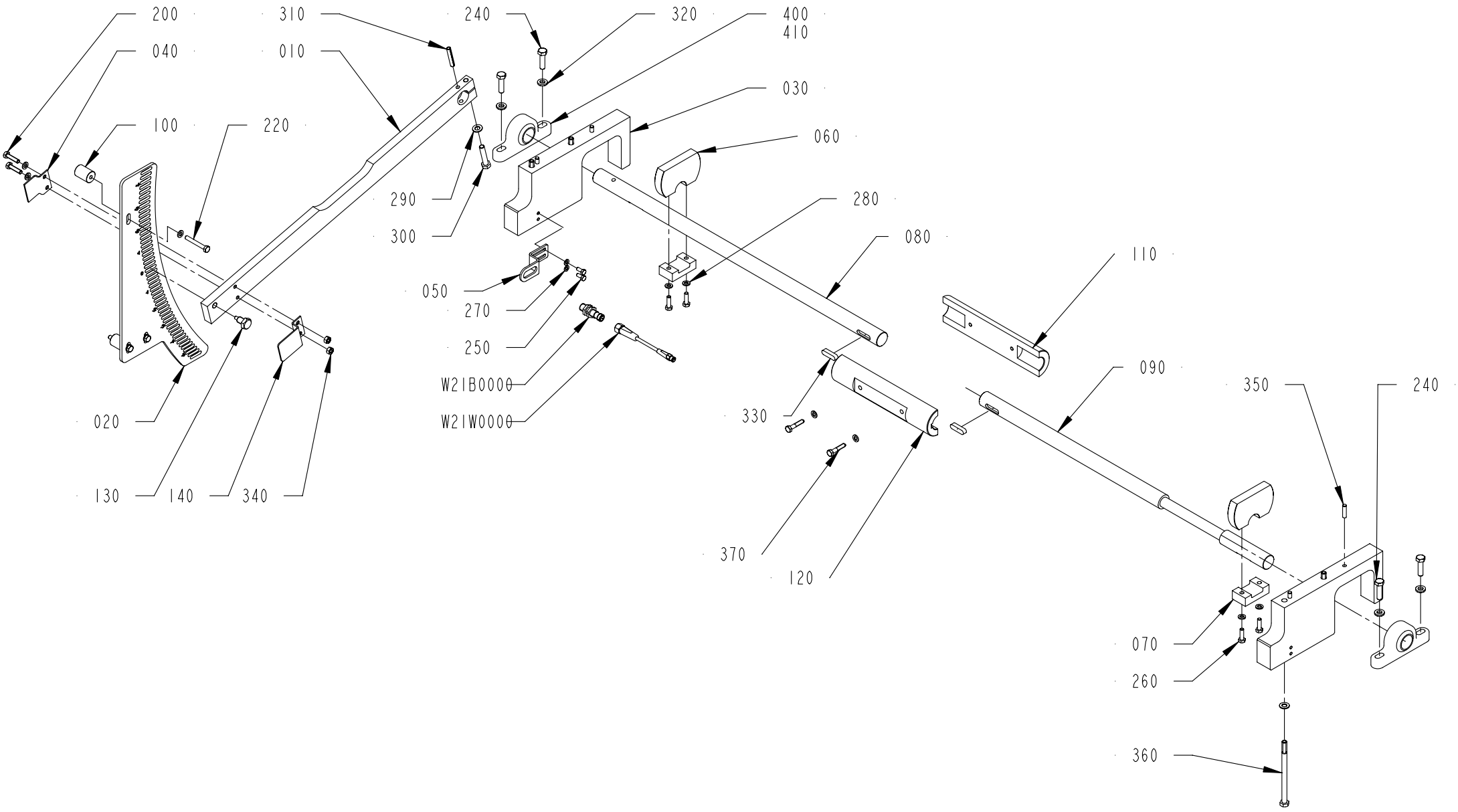
200
040
100
220
310
010
240
320
400
410
030
060
290
300
280
080
050
270
250
W21B0000
W21W0000
330
370
120
110
090
350
240
070
260
360
020
130
140
340

ECM: 823444
Group number: 2838669-0200
Assembly Drawing: 2838669-2_1_AC

Pos	Part No	Description	Qty	Unit	Page No
Common Parts					
010	2788174-0000	LEVER	1	PC	
020	3021525-0000	PLATE	1	PC	
030	2766944-0000	BRACKET	2	PC	
040	2769695-0000	BRACKET	1	PC	
050	2779057-0000	PLATE	1	PC	
060	3022488-0000	CAM	2	PC	
070	2838683-0000	PLATE	2	PC	
080	3022022-0000	SHAFT	1	PC	
090	3022023-0000	SHAFT	1	PC	
100	2773632-0000	SPACER	3	PC	
110	2985809-0000	HOUSING	1	PC	
120	3022021-0000	HOUSING	1	PC	
130	3086231-0000	SCREW	1	PC	
140	3086233-0000	BRACKET	1	PC	
200	312105-0372	SCREW, M6S ISO 4017 M6X25 A4 80	2	PC	
220	312105-0379	SCREW, M6S ISO 4014 M6X45 A4 80	3	PC	
240	312105-0455	SCREW, M6S ISO 4017 M8X30 A4 80	4	PC	
250	312105-0327	SCREW, M6S ISO 4017 M5X12 A4 80	2	PC	
260	312105-0370	SCREW, M6S ISO 4017 M6X20 A4 80	4	PC	
270	315105-0146	WASHER PLAIN, 5,3X10X1 A4 BRB	2	PC	
280	315105-0153	WASHER PLAIN, 6,4X12X1,5 A4 BRB	11	PC	
290	315105-0165	FWAS080G0-0S, WASHER PLAIN	5	PC	
300	312105-0459	SCREW, M6S ISO 4014 M8X40 A4 80	1	PC	
310	311112-0347	SPRING PIN, ISO 8752 6X40 A2	1	PC	
320	315115-0165	WASHER PLAIN, TBRB 8,4/16 H=3	4	PC	
330	315705-0267	PARALLEL KEY W. ROUND ENDS, 8X7X30 MM	2	PC	
340	312605-0316	HEXAGON NUT, M6M M6 A280	2	PC	
350	311103-1355	PARALLEL PIN ISO 2338 6M6X24 A1	4	PC	
360	312105-0475	SCREW, M6S ISO 4014 M8X120 A4 80	4	PC	
370	312105-0374	SCREW, M6S ISO 4014 M6X30 A4 80	2	PC	
400	90600-0799	STANDING BEARING, KSTM-25	2	PC	
W21B0000	90458-2907	PROX.SWITCH IFS204	1	PC	
W21W0000	344261-0050	SENSOR CABLE, EVT216	1	PC	

Pos	Part No	Description	Qty	Unit	Page No

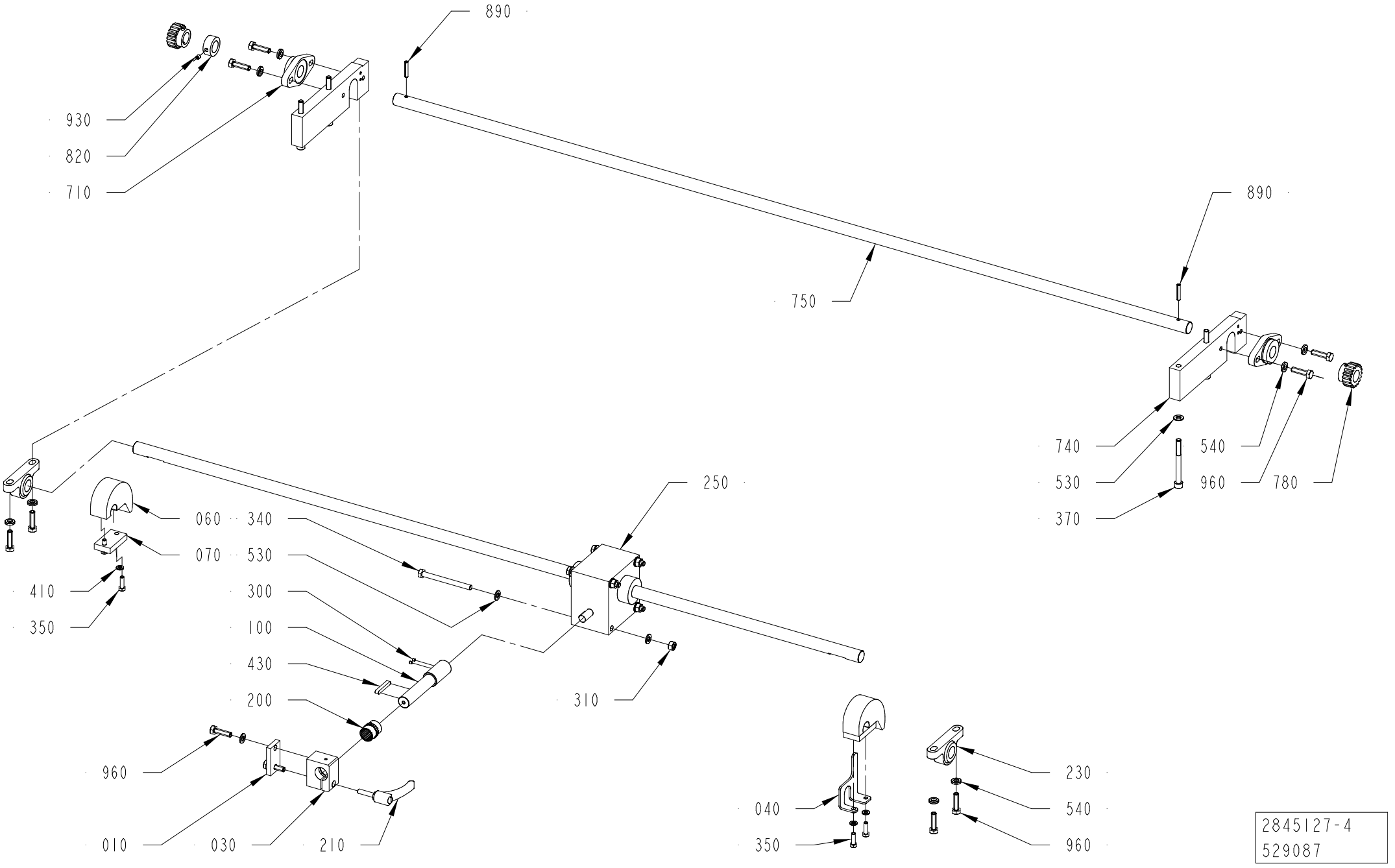
890
930
820
710
750
890
740
530
370
540
960
780
250
060
070
410
350
340
530
300
100
430
200
960
010
030
210
310
040
350
230
540
960
2845127-4
529087

ECM: 529599
Group number: 2845127-0200
Assembly Drawing: 2845127-4_1_AA

Pos	Part No	Description	Qty	Unit	Page No
CAP 30/FLEX					
010	2778594-0000	PLATE	1	PC	
030	2769726-0000	BRACKET	1	PC	
040	2802405-0000	STOP ARM	1	PC	
060	2779013-0000	CAM	2	PC	
070	2712603-0000	PLATE	2	PC	
100	2769729-0000	SHAFT	1	PC	
200	90458-2932	PLAIN BEARING, JUM-02-20	1	PC	
210	90017-0029	LOCKING LEVER, NO. KR8X30-SUS	1	PC	
230	90459-4727	STANDING BEARING, KSTM-20	2	PC	
250	90600-1005	WORM GEAR SCREW JACK, TR00042000130	1	PC	
300	312318-0283	SET SCREW, CUP END ISO4029 M4X4 A4	2	PC	
310	312605-0318	HEXAGON NUT, M6M M8 A280	4	PC	
340	312105-0469	SCREW, M6S ISO 4014 M8X90 A4 80	4	PC	
350	312105-0370	SCREW, M6S ISO 4017 M6X20 A4 80	4	PC	
410	315105-0153	WASHER PLAIN, 6,4X12X1,5 A4 BRB	4	PC	
430	315705-0239	PARALLEL KEY W. ROUND ENDS, 6X6X40 MM	1	PC	
530	315105-0165	FWAS080G0-0S, WASHER PLAIN	14	PC	
540	315115-0165	WASHER PLAIN, TBRB 8,4/16 H=3	8	PC	
750	2766950-0000	SHAFT	1	PC	
820	315741-0216	RETAINING RING, DIN 705 A4 20	1	PC	
960	312105-0455	SCREW, M6S ISO 4017 M8X30 A4 80	10	PC	
Common Parts					
370	312115-0467	SCREW ISO4762 M8X80 A4 80	4	PC	
710	90600-0800	FLANGE BEARING 20X89X20 MM	2	PC	
740	2779014-0000	PLATE	2	PC	
780	2838690-0000	WHEEL	2	PC	
890	311112-0312	SPRING PIN, ISO 8752 5X28 A2	2	PC	
930	312318-0360	SET SCREW, CUP END ISO4029 M6X6 A4	2	PC	

Pos	Part No	Description	Qty	Unit	Page No

Pos. 040 in BoM 2838650-0200

GUIDE RAIL

Drawing file:2838653-2_1_AD

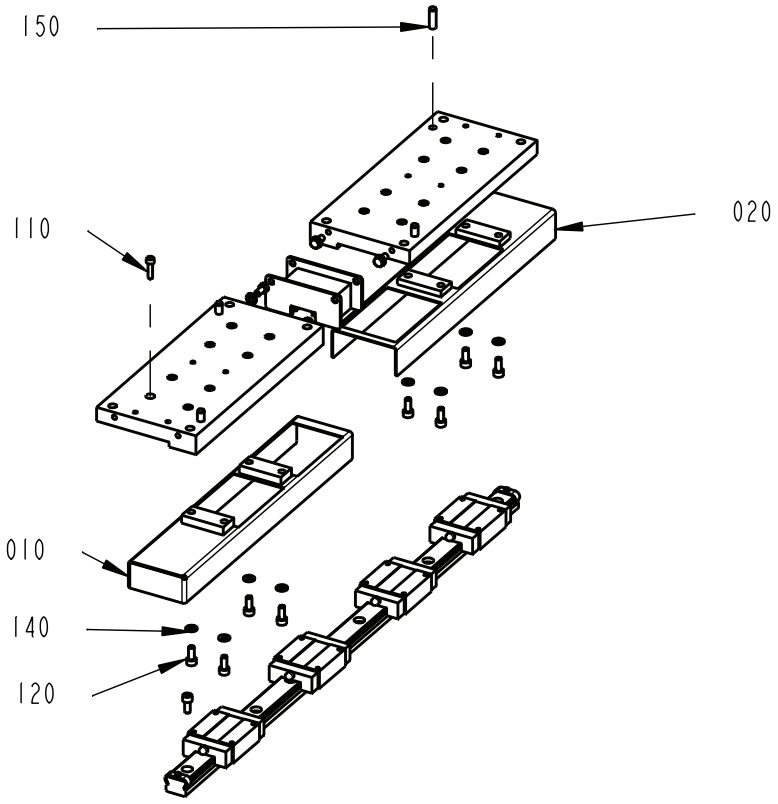

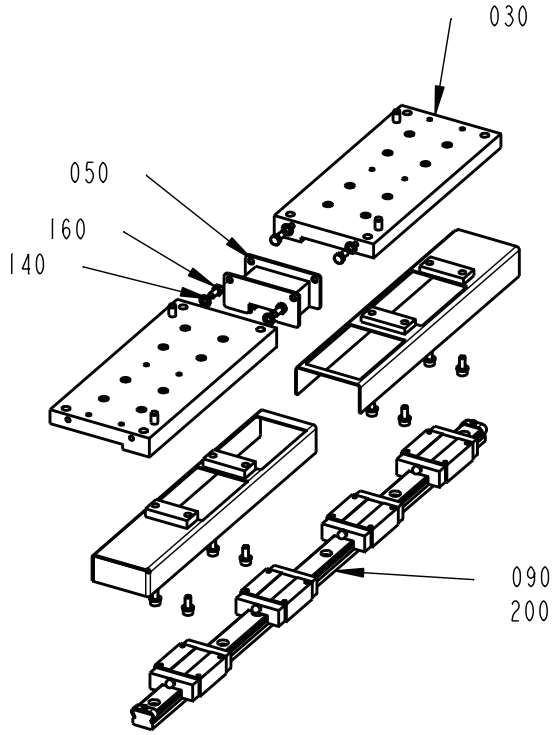

ECM: 847435
Group number: 2838653-0200
Assembly Drawing: 2838653-2_1_AD

Pos	Part No	Description	Qty	Unit	Page No
Common Parts					
010	3209476-0000	COVER	2	PC	
020	3209475-0000	COVER	2	PC	
030	2788168-0000	PLATE	4	PC	
050	3448587-0000	BELLOWS	2	PC	
090	90604-3333	GUIDE RAIL, 15X20X580	2	PC	
110	312115-0293	SCREW ISO4762 M4X16 A4 80	32	PC	
120	312115-0327	SCREW ISO4762 M5X12 A4 80	36	PC	
140	315105-0146	WASHER PLAIN, 5,3X10X1 A4 BRB	16	PC	
150	311103-0353	PARALLEL PIN ISO 2338 6M6X20 A1	8	PC	
160	312105-0325	SCREW, M6S ISO 4017 M5X10 A4 80	8	PC	
200	344407-0000	KLÜBERSYNTH UH1 14-151, ONLY IN BOM	1	PC	130

Pos	Part No	Description	Qty	Unit	Page No

This page intentionally left blank

ECM: 653851
Group number: 344407-0000
Assembly Drawing: -

Pos	Part No	Description	Qty	Unit	Page No
Common Parts					
	344407-0037	KLÜBERSYNTH UH1 14-151, 1KG CAN	1	PC	
	344407-0177	KLÜBERSYNTH UH1 14-151, 25KG BUCKET	1	PC	
	344407-0285	KLÜBERSYNTH UH1 14-151, 45G TUBE	1	PC	
	344407-0591	KLÜBERSYNTH UH1 14-151, 400G CARTRIDGE	1	PC	

Pos	Part No	Description	Qty	Unit	Page No

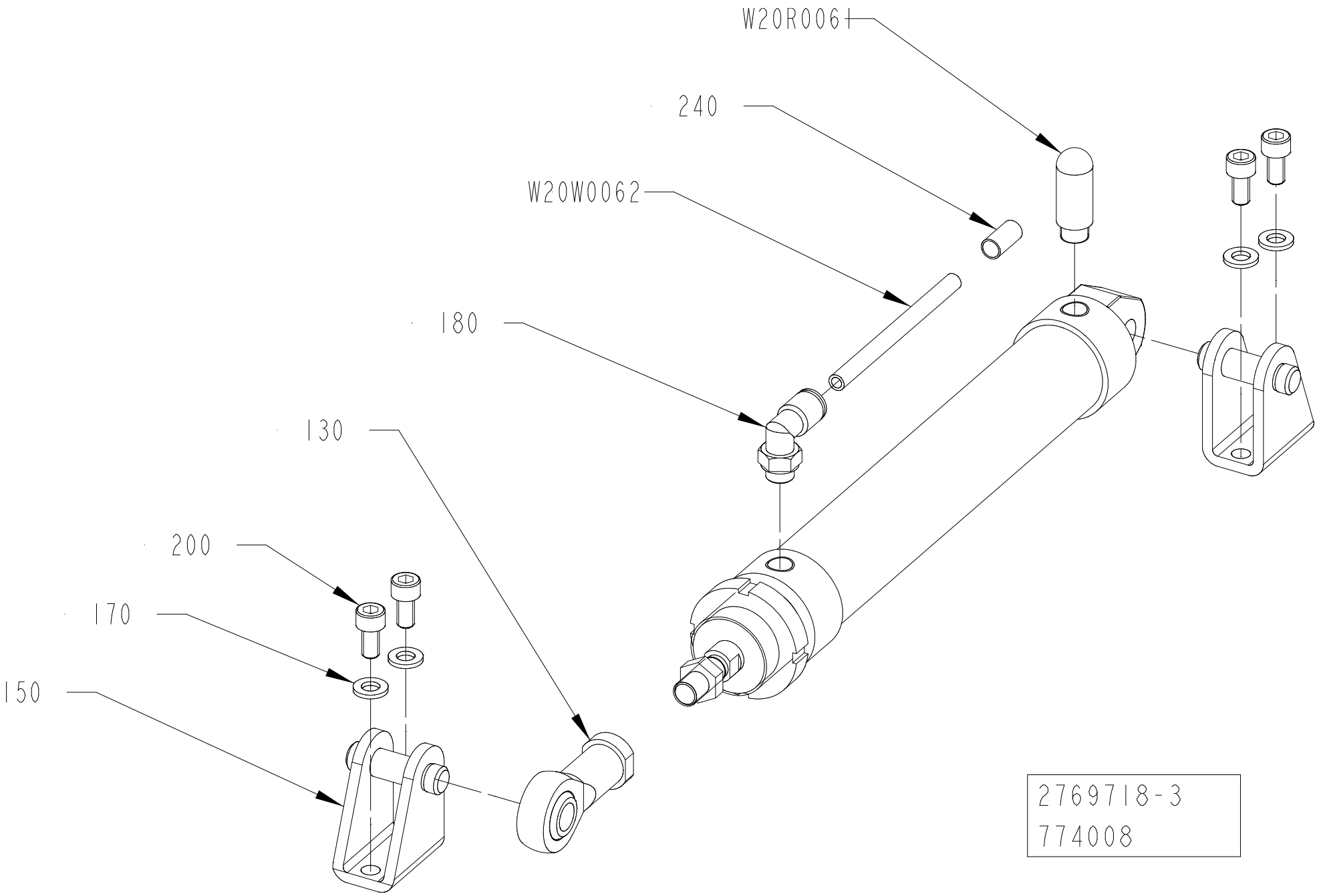
W20R0061
240
W20W0062
180
130
200
170
150
2769718-3
774008

ECM: 779402
Group number: 2769718-0300
Assembly Drawing: 2769718-3_1_AA

Pos	Part No	Description	Qty	Unit	Page No
Common Parts					
130	90459-1018	ROD END, BALL JOINT EYE M10X1,25	1	PC	
150	90459-5949	REAR CLEVIS FOOT MOUNTING, CRLBN-32	2	PC	
170	315105-0153	WASHER PLAIN, 6,4X12X1,5 A4 BRB	4	PC	
180	351456-3002	PUSH-IN L-FITTING NPQH-L-G18-Q6-P10	1	PC	
200	312115-0366	SCREW ISO4762 M6X12 A4 80	4	PC	
240	90459-7369	MARKING FOR PNEUM. TUBING, PRZ06	1	PC	
W20M0060	351476-3150	DOUBLE ACTING, ROUND, CYL. 32-150	1	PC	
W20R0061	90328-0047	SILENCER, G1/8"	1	PC	
W20W0062	315400-0001	TUBE PUN-H-6X1-BL	200	MM	

Pos	Part No	Description	Qty	Unit	Page No

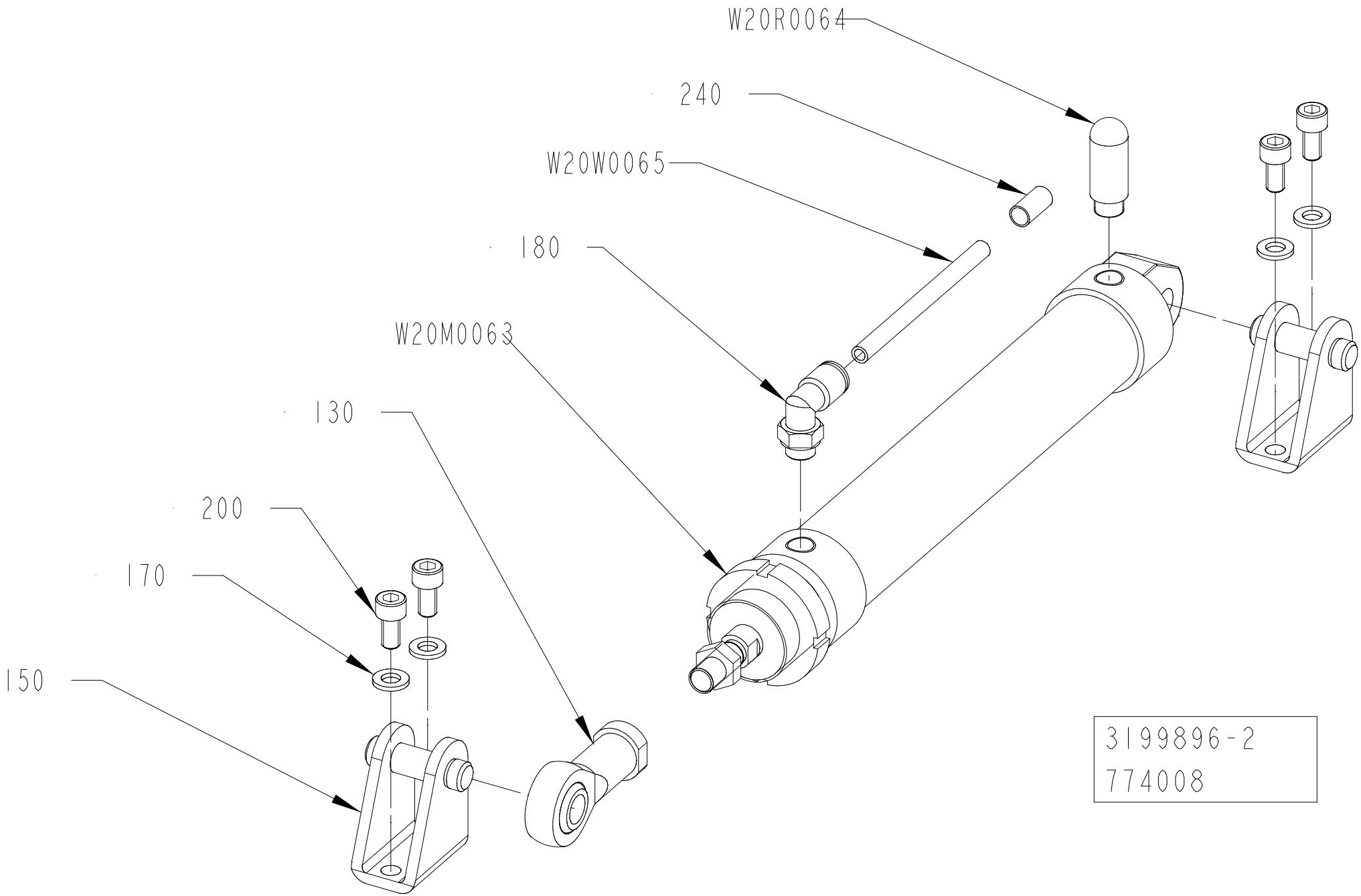
W20R0064
240
W20W0065
180
W20M0063
130
200
170
150
3199896-2
774008

ECM: 779405
Group number: 3199896-0200
Assembly Drawing: 3199896-2_1_AA

Pos	Part No	Description	Qty	Unit	Page No
Common Parts					
130	90459-1018	ROD END, BALL JOINT EYE M10X1,25	1	PC	
150	90459-5949	REAR CLEVIS FOOT MOUNTING, CRLBN-32	2	PC	
170	315105-0153	WASHER PLAIN, 6,4X12X1,5 A4 BRB	4	PC	
180	351456-3002	PUSH-IN L-FITTING NPQH-L-G18-Q6-P10	1	PC	
200	312115-0366	SCREW ISO4762 M6X12 A4 80	4	PC	
240	90459-7369	MARKING FOR PNEUM. TUBING, PRZ06	1	PC	
W20M0063	351476-3150	DOUBLE ACTING, ROUND, CYL. 32-150	1	PC	
W20R0064	90328-0047	SILENCER, G1/8"	1	PC	
W20W0065	315400-0001	TUBE PUN-H-6X1-BL	200	MM	

Pos	Part No	Description	Qty	Unit	Page No

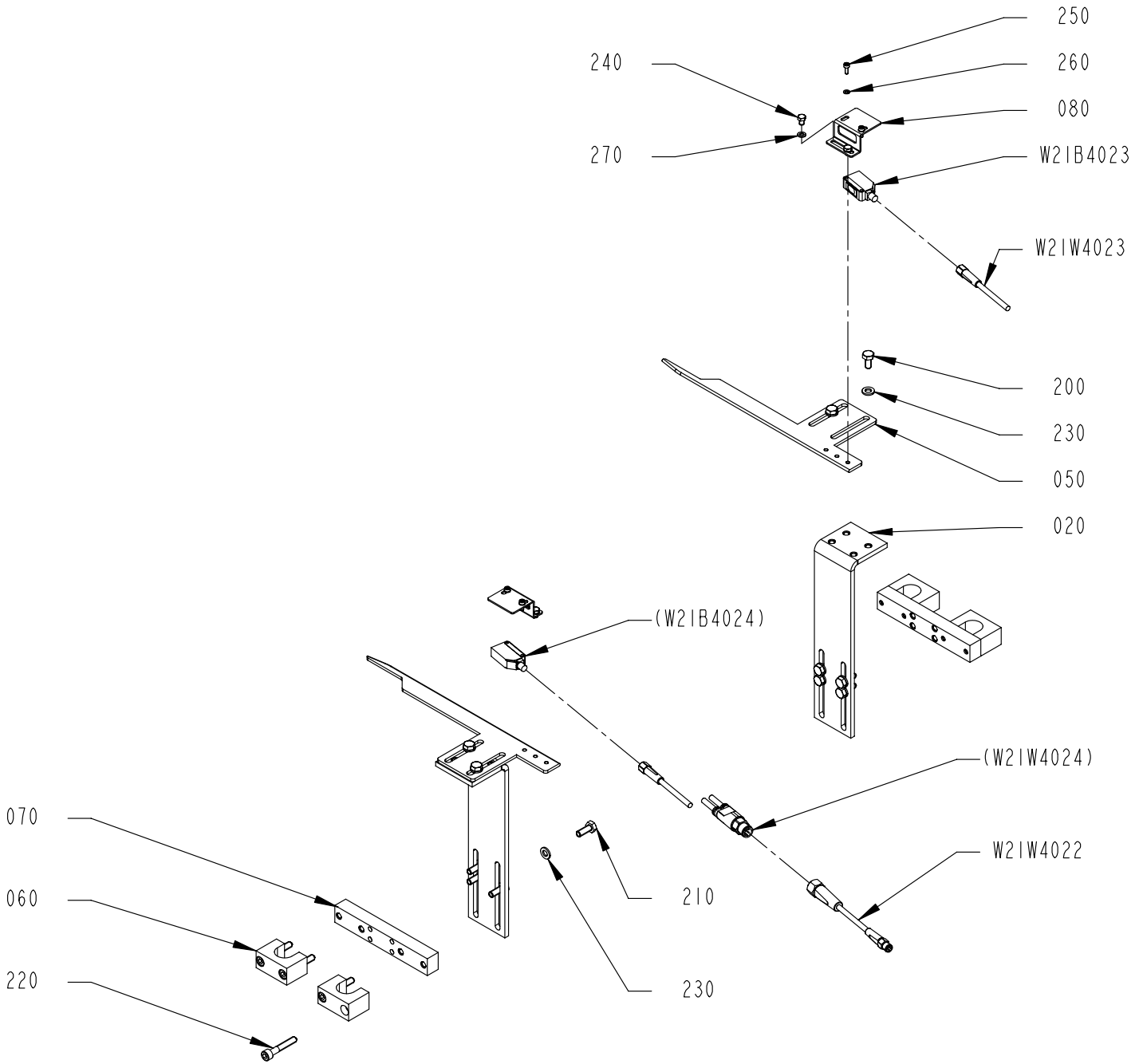
250
240
260
080
270
W2IB4023
W2IW4023
200
230
050
020
(W2IB4024)
(W2IW4024)
070
W2IW4022
060
210
220
230

ECM: 847436
Group number: 3199894-0100
Assembly Drawing: 3199894-1_1_AB

Pos	Part No	Description	Qty	Unit	Page No
Common Parts					
020	3464963-0000	ANGLE	2	PC	
050	3120842-0000	GUIDE	2	PC	
060	3120839-0000	PLATE	4	PC	
070	3120840-0000	PLATE	2	PC	
080	3193666-0000	SUPPORT	2	PC	
200	312105-0366	SCREW, M6S ISO 4017 M6X12 A4 80	4	PC	
210	312105-0368	SCREW, M6S ISO 4017 M6X16 A4 80	8	PC	
220	312115-0376	SCREW ISO4762 M6X35 A4 80	8	PC	
230	315105-0153	WASHER PLAIN, 6,4X12X1,5 A4 BRB	12	PC	
240	312105-0285	SCREW, M6S ISO 4017 M4X6 A4 70	4	PC	
250	312115-0222	SCREW ISO4762 M3X8 A4 80	4	PC	
260	315105-0124	WASHER PLAIN, 3,2X6X0,5 A4 BRB	4	PC	
270	315105-0136	WASHER PLAIN, 4,3X8X0,8 A4 BRB	4	PC	
W21B4023	90459-5529	PHOTOCELL E3Z-T86A, SENDER+RECIEVER	1	PC	
W21W4022	344261-0006	SENSOR CABLE, EVT261	1	PC	
W21W4023	90603-3979	SENSOR Y-CABLE, EVT339	1	PC	

Pos	Part No	Description	Qty	Unit	Page No

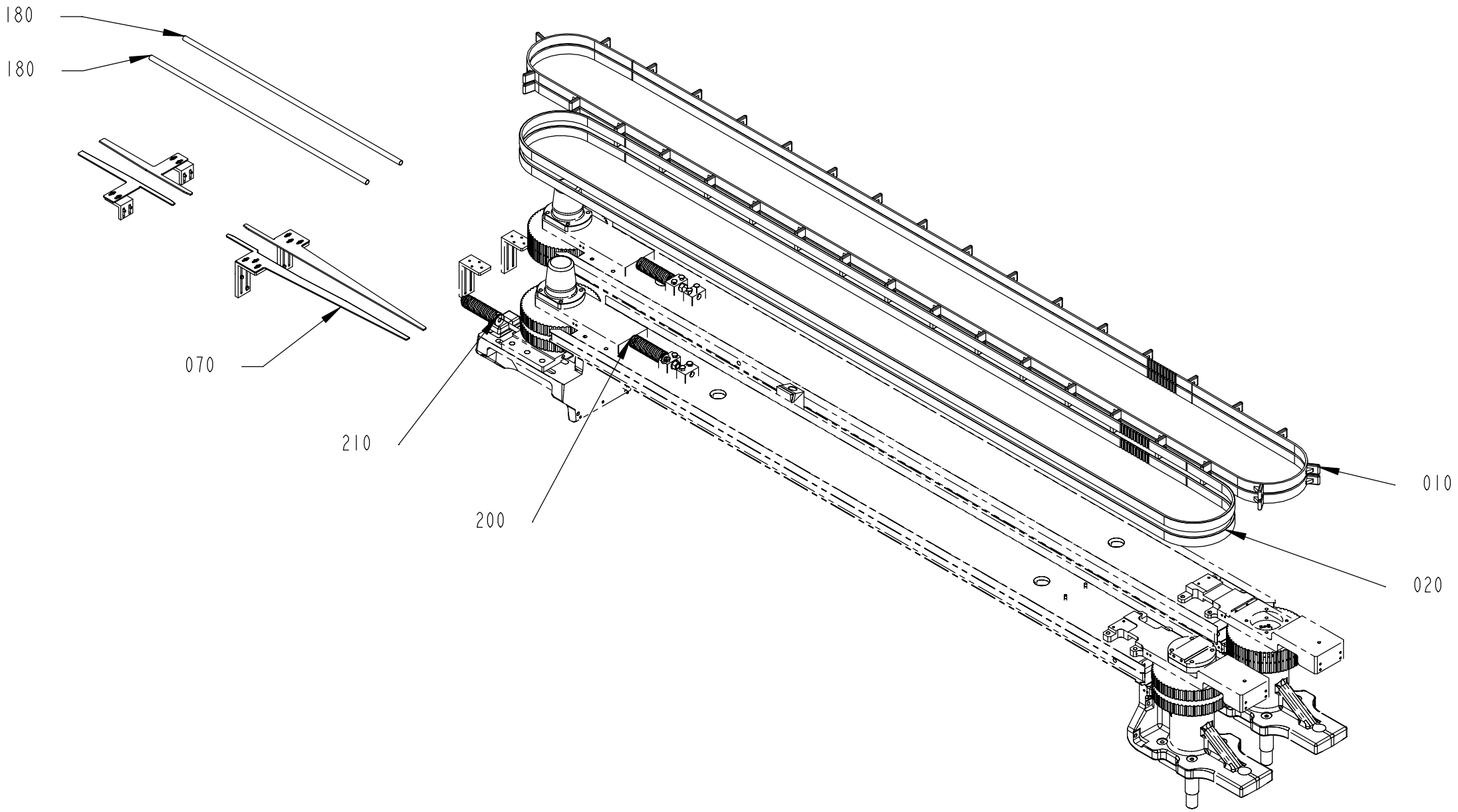
180
180
070
210
200
010
020

Pos	Part No	Description	Qty	Unit	Page No
TBA 0200E, TBA 0250E See page: 138					
010	90606-5094	TIMING BELT, 25AT10/5250-BFX-VA 1.2 +35	2	PC	
020	90606-4926	TIMING BELT 25AT10/4810 PU	2	PC	
070	3139123-0100	INFEED GUIDE	1	PC	146
200	315106-0178	"WASHER PLAIN, M12 ISO7089-12-200 HV A4"	2	PC	
210	90606-5192	WASHER ISO 7093 10,5X30X2,5 A2	2	PC	
TBA 0200E, TBA 0250E See page: 138					
TBA 0500SQ, TBA 1000SQ, TBA 1000S, TBA 1500S, TBA 2000S, TGA 1000SQ, TGA 0750SQ, TGA 0500SQ, TGA 1500SQ See page: 140					
TBA 0200SQ, TBA 0250SQ See page: 144					
180	2779831-0000	PIPE	2	PC	
TBA 0200SQ, TBA 0250SQ See page: 144					
010	90600-0814	TIMING BELT 25AT10/5250 PU+35.2.3.6.050	1	PC	
020	90600-0815	TIMING BELT 25AT10/4800 PU +32 2.3.6.050	1	PC	
030	2940677-0000	GUIDE	1	PC	
040	2940569-0000	GUIDE	1	PC	
090	2907981-0000	NUT	2	PC	
190	3314429-0000	PILLAR	4	PC	
TPA 1000SQ, TPA 0500SQ, TPA 0750SQ, TGA 1000CR, TGA 1000LF See page: 142					
TBA 0200SQ, TBA 0250SQ See page: 144					
120	2873952-0100	COVER	1	PC	148, 150
TBA 0500SQ, TBA 1000SQ, TBA 1000S, TBA 1500S, TBA 2000S, TGA 1000SQ, TGA 0750SQ, TGA 0500SQ, TGA 1500SQ See page: 140					
010	90600-0814	TIMING BELT 25AT10/5250 PU+35.2.3.6.050	2	PC	
020	90600-0815	TIMING BELT 25AT10/4800 PU +32 2.3.6.050	2	PC	
030	2805461-0000	GUIDE	1	PC	
TGA 1000CR See page: 142					
010	90605-1982	TIMING BELT 25AT10/5250 PU	2	PC	
020	90605-1983	TIMING BELT 25AT10/4800 PU+32 2.3.7.579	2	PC	
TGA 1000CR, TGA 1000LF, TPA 1000SQ, TPA 0500SQ, TPA 0750SQ See page: 142					
180	3162977-0000	GUIDE	2	PC	
TGA 1000LF See page: 142					
010	90605-4807	TIMING BELT 25AT10/5250 PU+35 2.3.7.580	2	PC	
020	90605-4806	TIMING BELT 25AT10/4800 PU+32 2.3.7.580	2	PC	
TPA 1000SQ, TPA 0500SQ, TPA 0750SQ See page: 142					
010	90600-3011	TIMING BELT, 25AT10/5250 PU+35 2.3.7.339	2	PC	
020	90600-3012	TIMING BELT 25AT10/4800 PU+32 2.3.7.339	2	PC	
TPA 1000SQ, TPA 0500SQ, TPA 0750SQ, TGA 1000CR, TGA 1000LF See page: 142					
080	3208122-0100	PHOTOCELL BRACKET	1	PC	154
100	3115099-0300	PACKAGE ALIGNER	1	PC	156
130	3199898-0100	ROLLER	1	PC	160

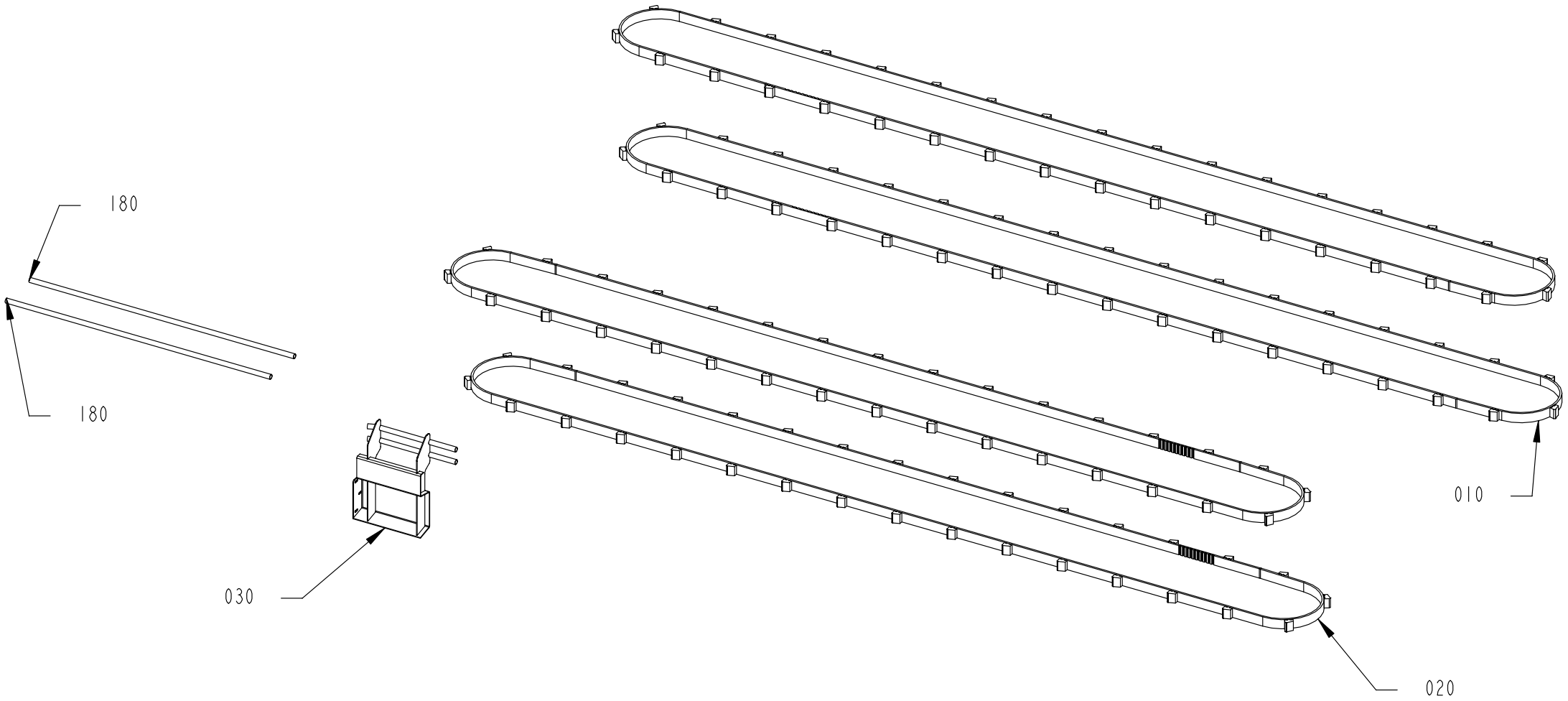
180
180
030
010
020

This list refers to drawings on pages 138 to 144

Pos	Part No	Description	Qty	Unit	Page No

SEE LIST FOLLOWING DRAWING ON PAGE: 138

Pos	Part No	Description	Qty	Unit	Page No

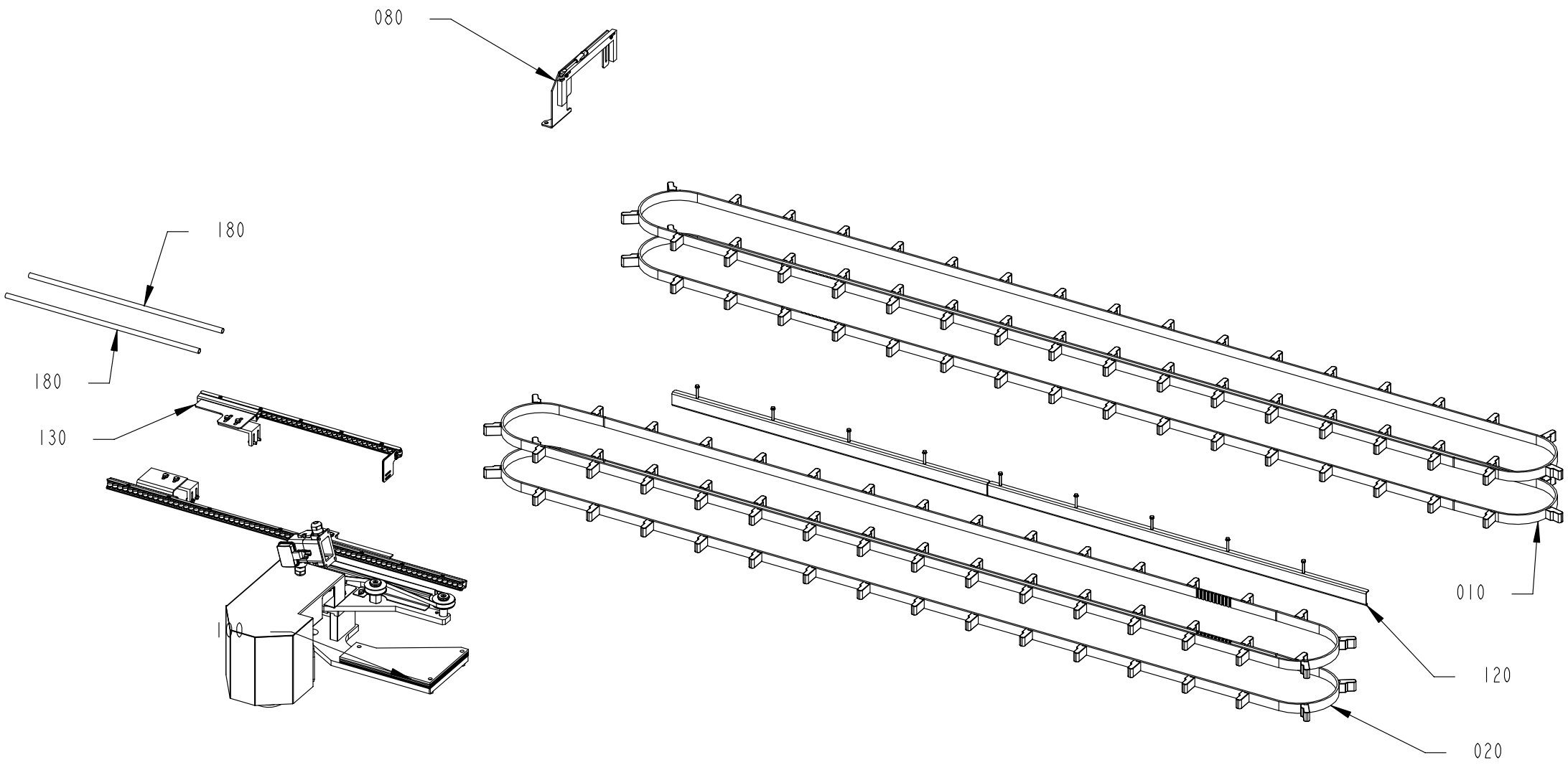
080
180
180
130
100
010
120
020

This list refers to drawings on pages 138 to 144

Pos	Part No	Description	Qty	Unit	Page No

SEE LIST FOLLOWING DRAWING ON PAGE: 138

Pos	Part No	Description	Qty	Unit	Page No

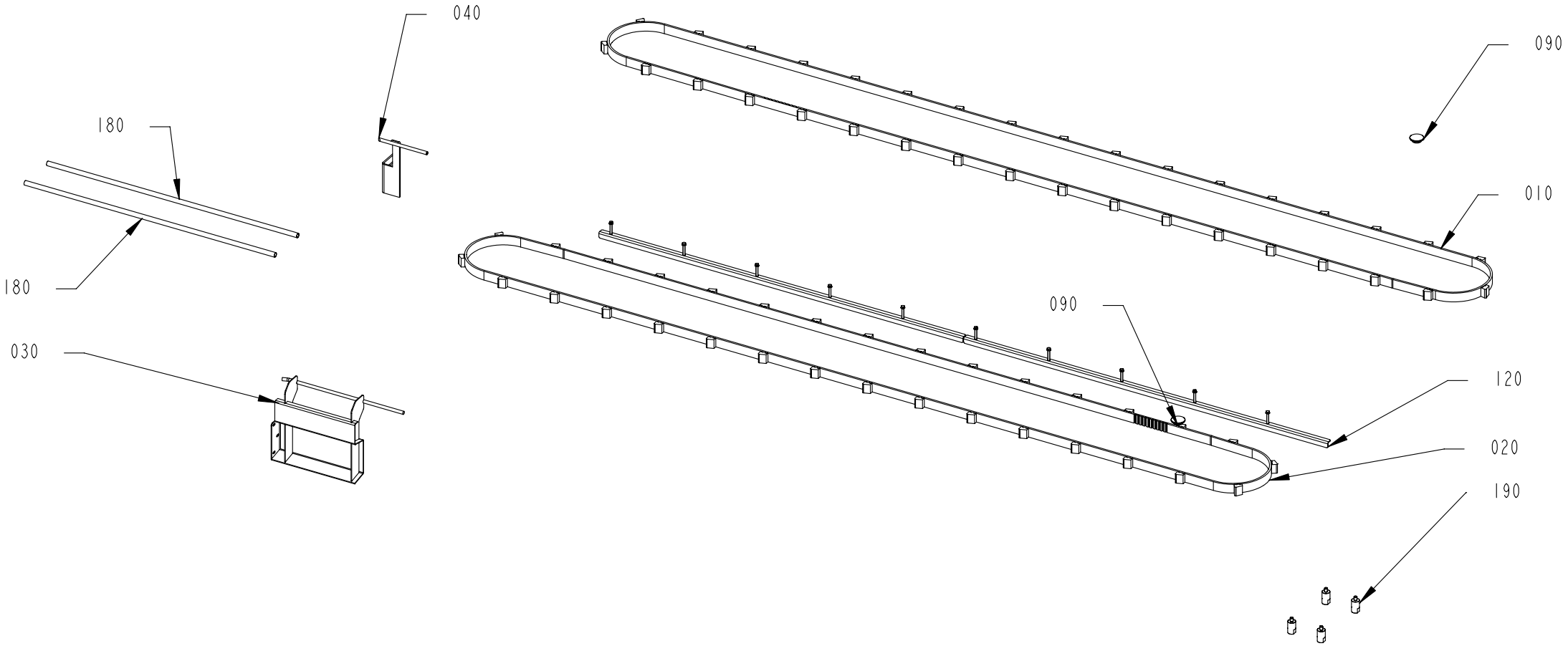
040
090
180
010
180
090
030
120
020
190

This list refers to drawings on pages 138 to 144

Pos	Part No	Description	Qty	Unit	Page No

SEE LIST FOLLOWING DRAWING ON PAGE: 138

Pos	Part No	Description	Qty	Unit	Page No

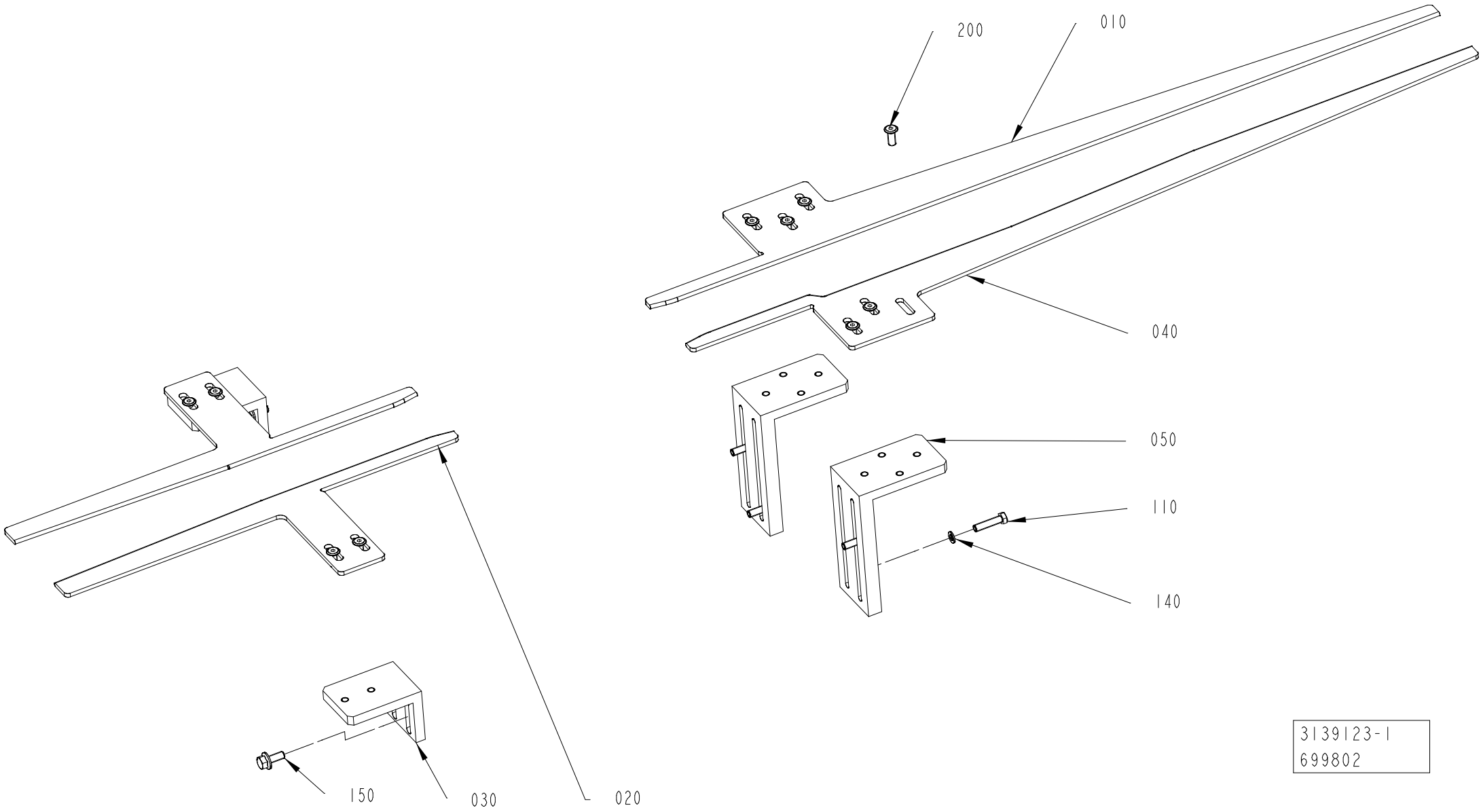

3139123-1
699802

ECM: 692590
Group number: 3139123-0100
Assembly Drawing: 3139123-1_1_AB

Pos	Part No	Description	Qty	Unit	Page No
Common Parts					
010	3139124-0000	BRACKET	1	PC	
020	3103326-0000	GUIDE	2	PC	
030	3103328-0000	BRACKET	2	PC	
040	3341018-0000	SLIDE RAIL	1	PC	
050	3139125-0000	BRACKET	2	PC	
110	312105-0295	SCREW, M6S ISO 4017 M4X20 A4 70	4	PC	
140	315105-0136	WASHER PLAIN, 4,3X8X0,8 A4 BRB	4	PC	
150	312108-0327	SCREW EN 1665 TYPE F M5X12 A270	4	PC	
200	90606-4924	SCREW, CBSTSR5-12	10	PC	

Pos	Part No	Description	Qty	Unit	Page No

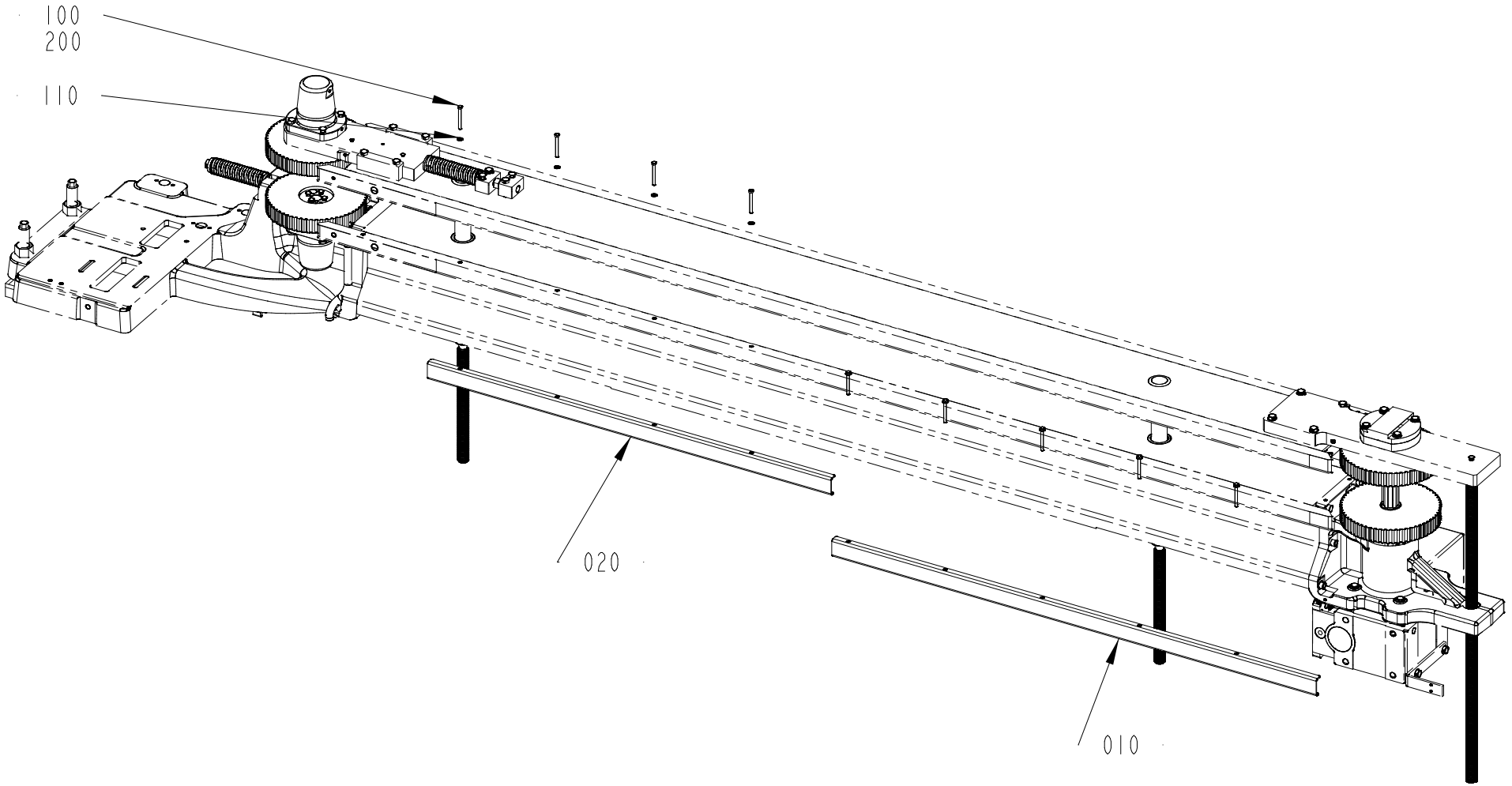

2873952-1
721588

This list refers to drawings on pages 148 to 150

Pos	Part No	Description	Qty	Unit	Page No
TBA 0200SQ, TBA 0250SQ	See page: 150				
010	2991257-0000	COVER	2	PC	
100	312109-0340	SCREW, M6S ISO 4017 M5X45 A4 80	10	PC	
110	315106-0146	"WASHER PLAIN, M5 ISO7089-5-200 HV A4"	10	PC	
TPA 1000SQ, TPA 0500SQ, TPA 0750SQ, TGA 1000CR, TGA 1000LF	See page: 148				
010	2873951-0000	COVER	1	PC	
020	3200713-0000	COVER	1	PC	
100	312109-0340	SCREW, M6S ISO 4017 M5X45 A4 80	9	PC	
110	315106-0146	"WASHER PLAIN, M5 ISO7089-5-200 HV A4"	9	PC	
Common Parts					
200	351532-0000	THREADLOCKER LOCTITE 2400, BOM ONLY	1	PC	152

Pos	Part No	Description	Qty	Unit	Page No

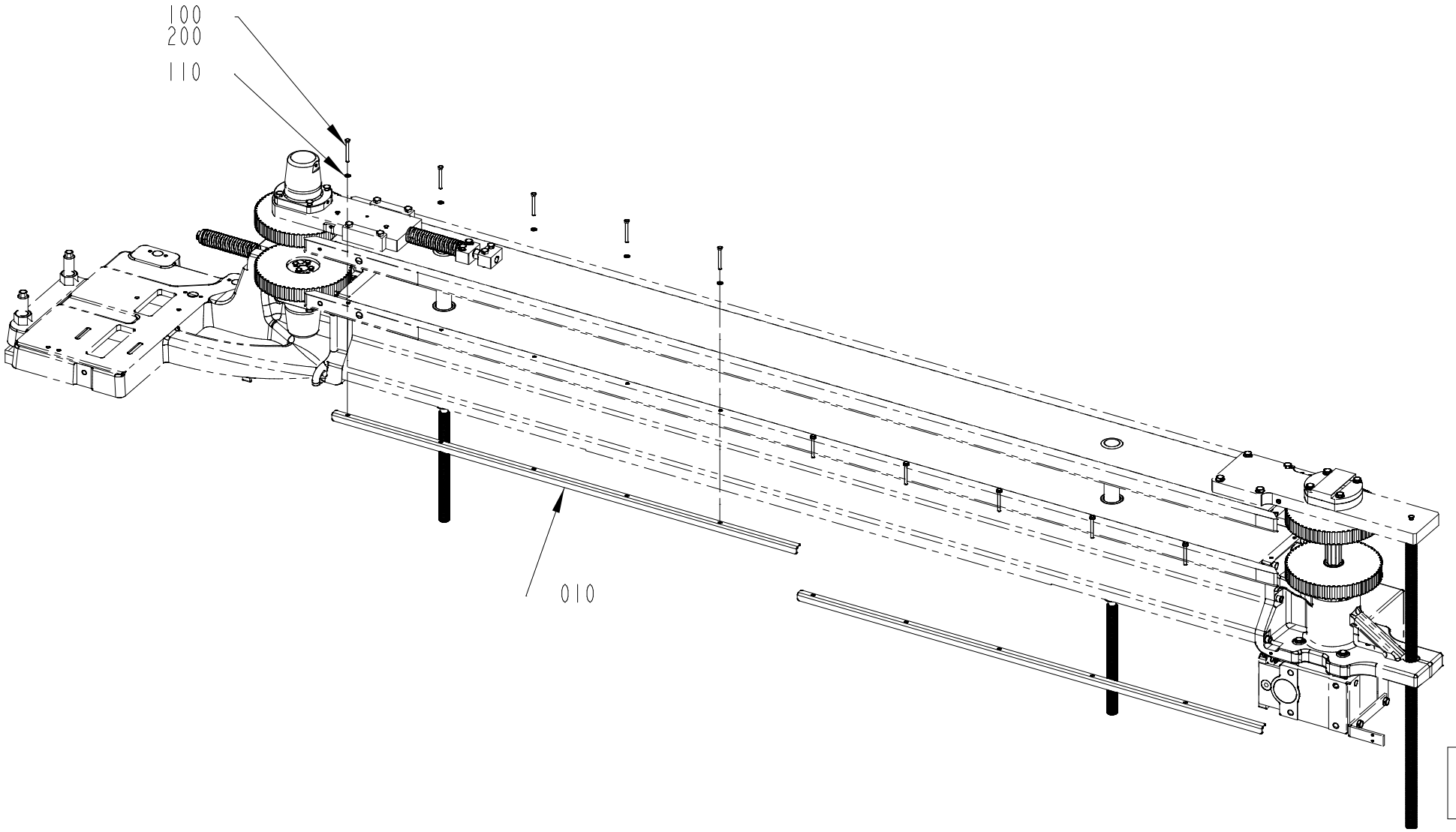
100
200
110
010
2873952-3
721588

This list refers to drawings on pages 148 to 150

Pos	Part No	Description	Qty	Unit	Page No

SEE LIST FOLLOWING DRAWING ON PAGE: 148

Pos	Part No	Description	Qty	Unit	Page No

This page intentionally left blank

ECM: 791790
Group number: 351532-0000
Assembly Drawing: -

Pos	Part No	Description	Qty	Unit	Page No
Common Parts					
	351532-0050	THREADLOCKER LOCTITE 2400 50 ML	1	PC	

Pos	Part No	Description	Qty	Unit	Page No

Pos. 080 in BoM 3199895-0300

PHOTOCELL BRACKET

Drawing file:3208122-1_1_AA

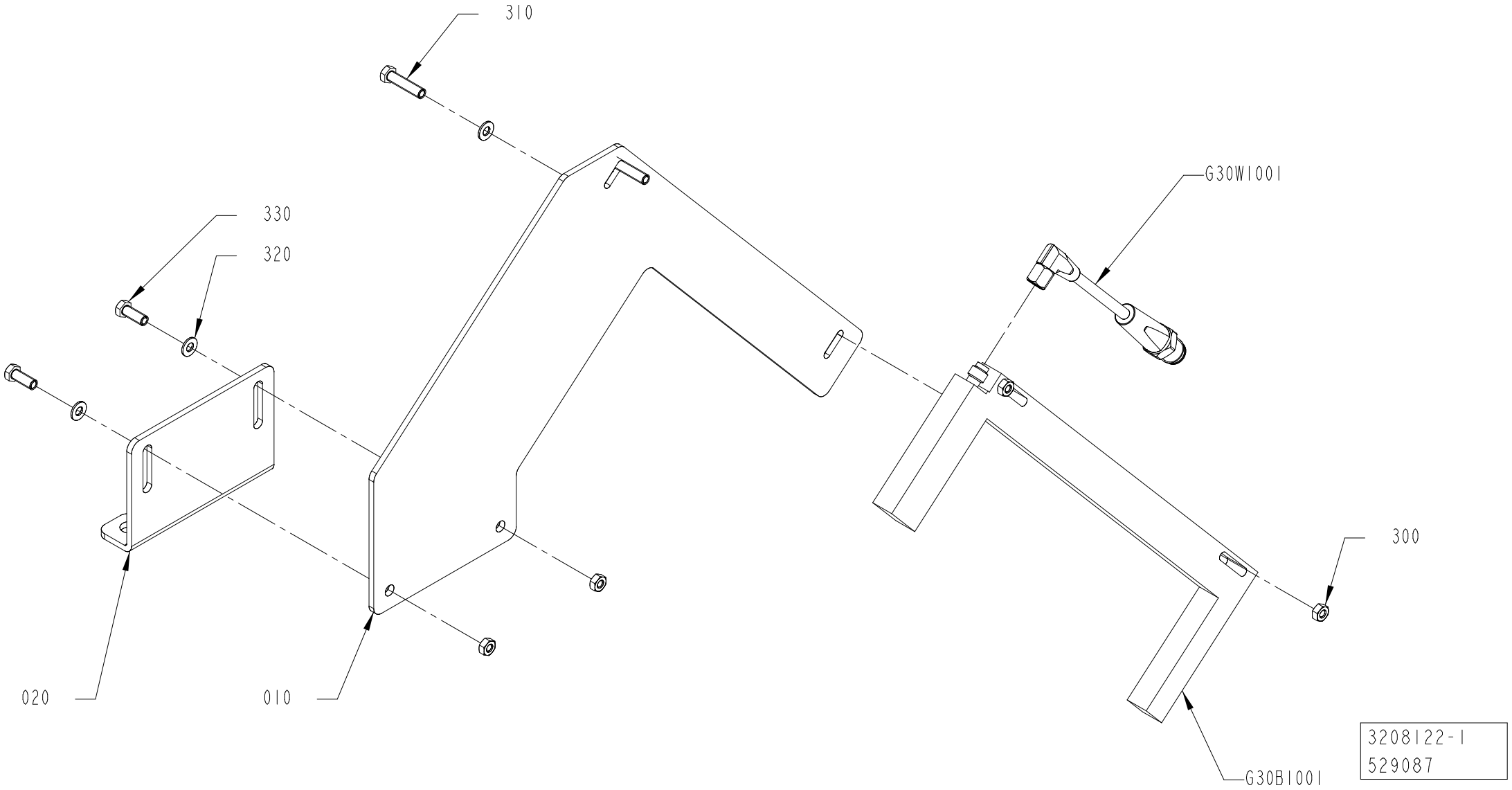

ECM: 560252
Group number: 3208122-0100
Assembly Drawing: 3208122-1_1_AA

Pos	Part No	Description	Qty	Unit	Page No
TGA 1000CR, TGA 1000LF					
010	3193670-0000	SUPPORT	1	PC	
020	3193669-0000	SUPPORT	1	PC	
TPA					
010	3166547-0000	BRACKET	1	PC	
Common Parts					
300	312605-0312	HEXAGON NUT, M6M M4 A280	4	PC	
310	312105-0295	SCREW, M6S ISO 4017 M4X20 A4 70	2	PC	
320	315106-0136	WASHER PLAIN, M4 ISO7089-4-200 HV A4	4	PC	
330	312105-0291	SCREW, M6S ISO 4017 M4X12 A4 70	2	PC	
G30B1001	90459-6947	PHOTOCELL, WF 225-B4150	1	PC	
G30W1001	344266-0020	SENSOR CABLE, EVT256	1	PC	

Pos	Part No	Description	Qty	Unit	Page No

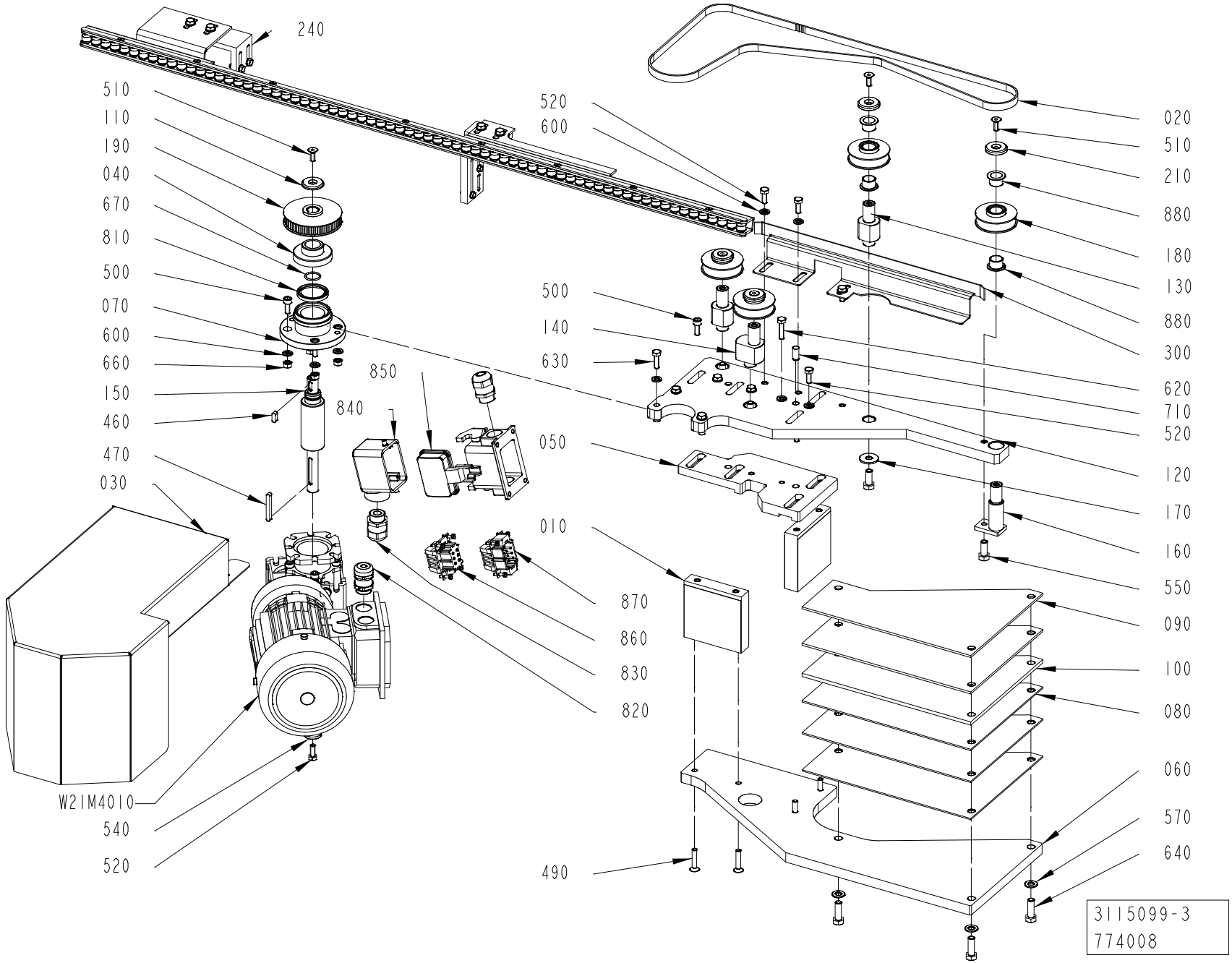
240
510
110
190
040
670
810
500
070
600
660
150
460
470
030
W21M4010
540
520
850
840
520
600
500
140
630
050
010
870
860
830
820
490
020
510
210
880
180
130
880
300
620
710
520
120
170
160
550
090
100
080
060
570
640
3115099-3
774008

ECM: 774709
Group number: 3115099-0300
Assembly Drawing: 3115099-3_1_AB

Pos	Part No	Description	Qty	Unit	Page No
Common Parts					
010	3149907-0000	SPACER	2	PC	
020	90606-4344	TIMING BELT 10T5/1215 PU	1	PC	
030	3317859-0000	COVER	1	PC	
040	3149911-0000	SPACER	1	PC	
050	3149906-0000	PLATE	1	PC	
060	3149901-0000	PLATE	1	PC	
070	3368748-0000	FLANGE	1	PC	
080	3117151-0000	PLATE	3	PC	
090	3117152-0000	PLATE	2	PC	
100	3117153-0000	PLATE	1	PC	
110	3117136-0000	WASHER	1	PC	
120	3177603-0000	PLATE	1	PC	
130	3115098-0000	SHAFT	2	PC	
140	3115103-0000	SHAFT	1	PC	
150	3317858-0000	SHAFT	1	PC	
160	3149912-0000	SHAFT	1	PC	
170	90005-0116	WASHER PLAIN ROUND 8,4(M8)/24, H=2	3	PC	
180	3300287-0000	WHEEL	4	PC	
190	3152724-0000	WHEEL	1	PC	
210	3115101-0000	WASHER	4	PC	
240	3114810-0100	ROLLER	1	PC	158
300	3149908-0000	GUIDE	1	PC	
460	315701-0198	PARALLEL KEY W. ROUND ENDS, 5X5X14 MM	1	PC	
470	315701-0208	PARALLEL KEY W. ROUND ENDS, 5X5X40 MM	1	PC	
490	312155-0374	SCREW DIN 7991 MF6S M6X30 A4 70	4	PC	
500	312115-0368	SCREW ISO4762 M6X16 A4 80	8	PC	
510	312155-0368	SCREW DIN 7991 MF6S M6X16 A4 70	5	PC	
520	312105-0368	SCREW, M6S ISO 4017 M6X16 A4 80	7	PC	
540	315125-0153	WASHER HIGH, TBRSB 6,4X22X4 A4	1	PC	
550	312105-0451	SCREW, M6S ISO 4017 M8X20 A4 80	4	PC	
570	315105-0165	FWAS080G0-0S, WASHER PLAIN	3	PC	
600	315105-0153	WASHER PLAIN, 6,4X12X1,5 A4 BRB	14	PC	
620	312105-0372	SCREW, M6S ISO 4017 M6X25 A4 80	2	PC	
630	312105-0370	SCREW, M6S ISO 4017 M6X20 A4 80	2	PC	
640	312105-0453	SCREW, M6S ISO 4017 M8X25 A4 80	3	PC	
660	312605-0316	HEXAGON NUT, M6M M6 A280	4	PC	
670	315202-0705	O-RING 17,17X1,78 MM	1	PC	
710	311103-0400	PARALLEL PIN ISO 2338 8M6X18 A	2	PC	
810	315230-0353	BEARING SEAL G30X40X4 MM	1	PC	
820	344202-0003	CABLE GLAND; MS-SC-M, 7-12,5MM, M20X1,5	1	PC	
830	90458-0307	CABLE GLAND, M20X1,5, 5311 1020	2	PC	
840	90459-1458	HOOD, SIDE ENTRY, HAN6E, 19 30 006 1540	1	PC	
850	90459-1461	HOUSING, 19 30 006 1255	1	PC	
860	90110-0053	FEMALE INSERT, HAN 6 E 09 33 006 2701	1	PC	
870	90110-0052	MALE INSERT, HAN E06, 0933 0062 601	1	PC	
880	90605-3869	FLANGE BUSHING, IGLIDUR J 15X17X12	8	PC	
W21M4010	90606-5280	GEARS, WORM MOTOR SK1SIS31F-IEC63-63S/2	1	PC	

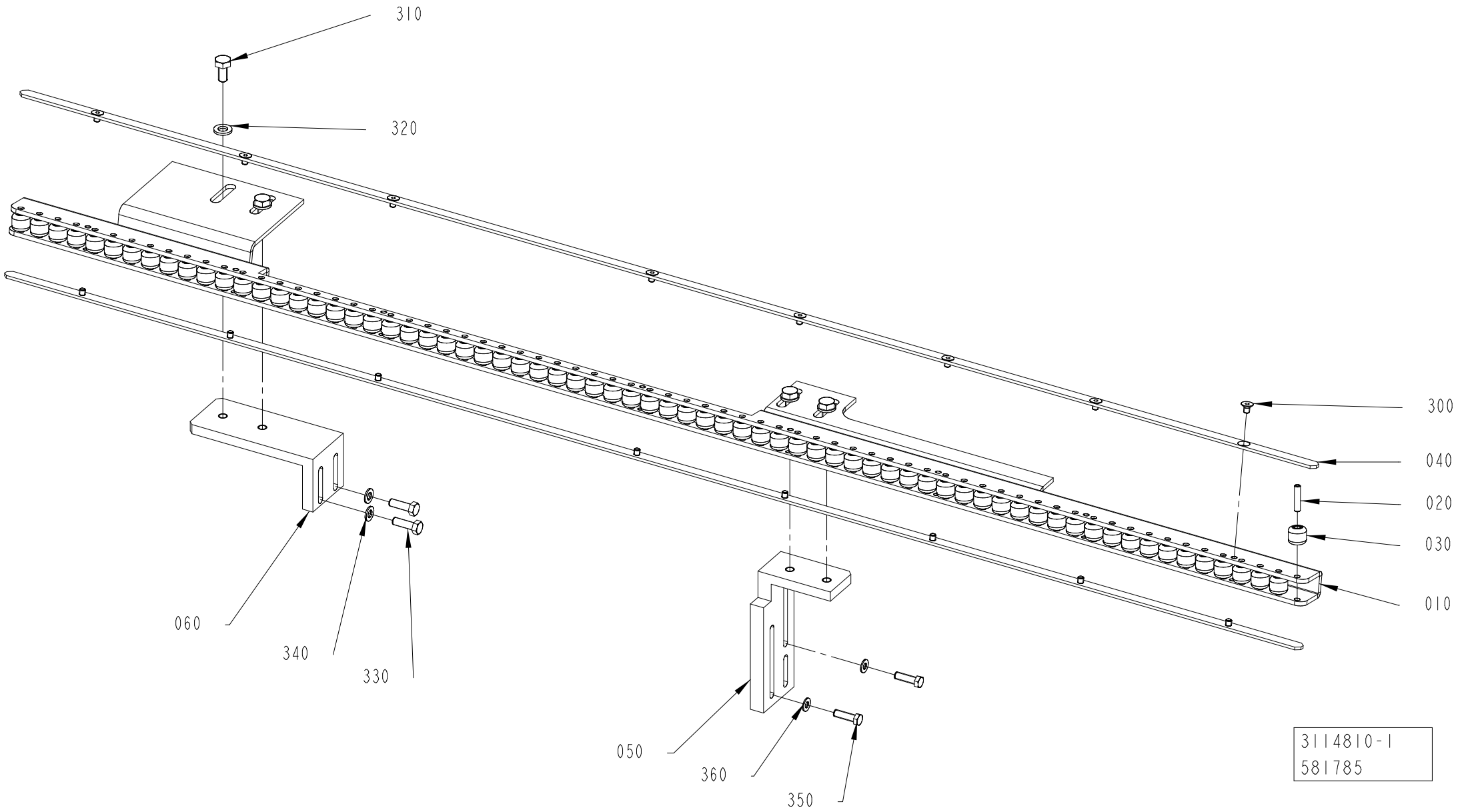
310
320
300
040
020
030
010
060
340
330
050
360
350
3114810-1
581785

ECM: 582103
Group number: 3114810-0100
Assembly Drawing: 3114810-1_1_AC

Pos	Part No	Description	Qty	Unit	Page No
Common Parts					
010	3114082-0000	BRACKET	1	PC	
020	3114083-0000	AXLE PIN	70	PC	
030	3114084-0000	ROLL	70	PC	
040	3114692-0000	PLATE	2	PC	
050	3123928-0000	BRACKET	1	PC	
060	3123929-0000	BRACKET	1	PC	
300	312155-0285	SCREW DIN 7991 MF6S M4X6 A4 70	16	PC	
310	312105-0366	SCREW, M6S ISO 4017 M6X12 A4 80	4	PC	
320	315105-0153	WASHER PLAIN, 6,4X12X1,5 A4 BRB	4	PC	
330	312105-0329	SCREW, M6S ISO 4017 M5X16 A4 80	2	PC	
340	315106-0146	"WASHER PLAIN, M5 ISO7089-5-200 HV A4"	2	PC	
350	312105-0293	SCREW, M6S ISO 4017 M4X16 A4 70	2	PC	
360	315106-0136	WASHER PLAIN, M4 ISO7089-4-200 HV A4	2	PC	

Pos	Part No	Description	Qty	Unit	Page No

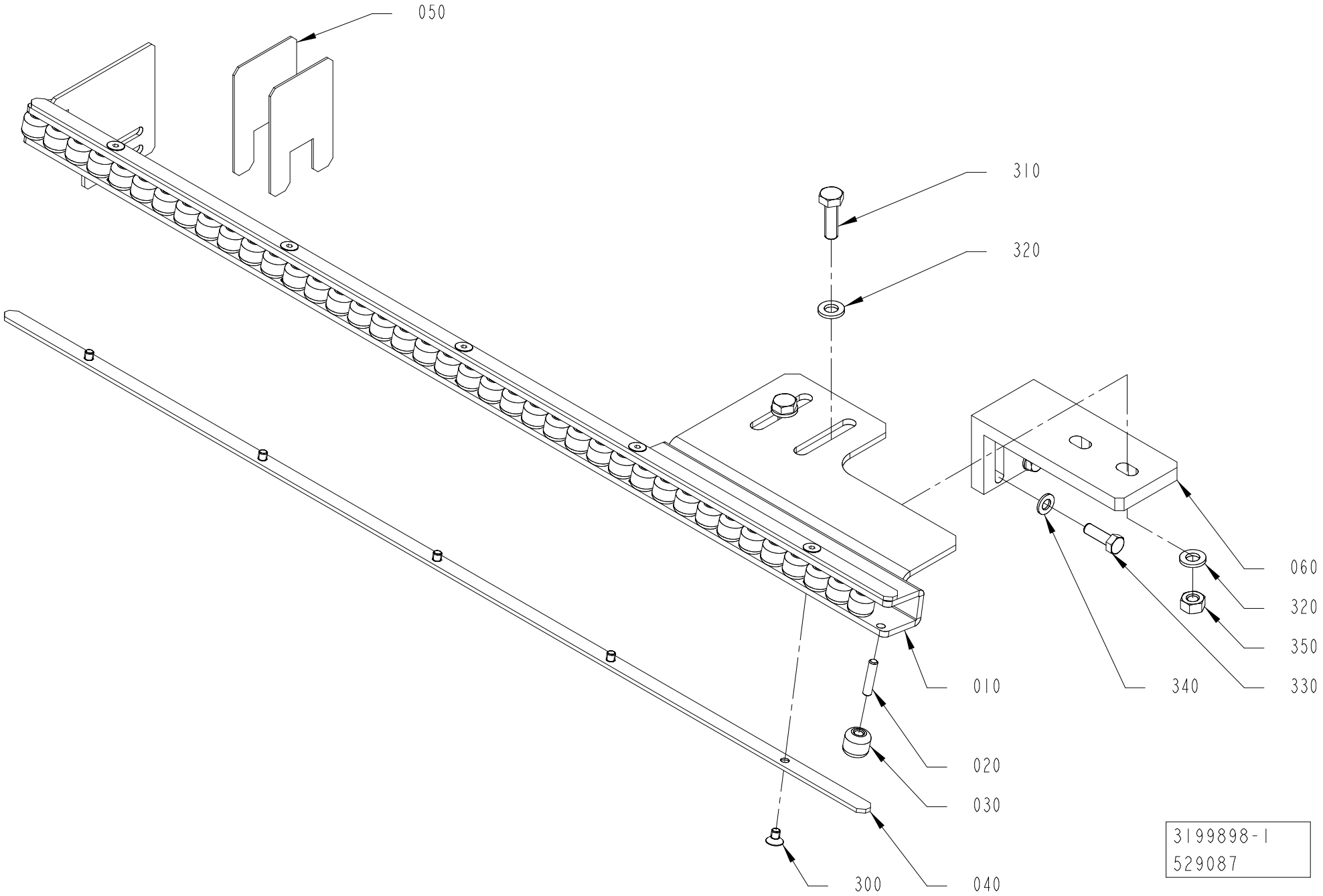
050
310
320
060
320
350
330
340
010
020
030
040
300
3199898-1
529087

ECM: 531667
Group number: 3199898-0100
Assembly Drawing: 3199898-1_1_AA

Pos	Part No	Description	Qty	Unit	Page No
Common Parts					
010	3209478-0000	BRACKET	1	PC	
020	3114083-0000	AXLE PIN	40	PC	
030	3114084-0000	ROLL	40	PC	
040	3209477-0000	PLATE	2	PC	
050	3209473-0000	SHIM	2	PC	
060	3209474-0000	BRACKET	1	PC	
300	312155-0285	SCREW DIN 7991 MF6S M4X6 A4 70	10	PC	
310	312105-0370	SCREW, M6S ISO 4017 M6X20 A4 80	2	PC	
320	315105-0153	WASHER PLAIN, 6,4X12X1,5 A4 BRB	4	PC	
330	312105-0329	SCREW, M6S ISO 4017 M5X16 A4 80	2	PC	
340	315106-0146	"WASHER PLAIN, M5 ISO7089-5-200 HV A4"	2	PC	
350	312605-0316	HEXAGON NUT, M6M M6 A280	2	PC	

Pos	Part No	Description	Qty	Unit	Page No

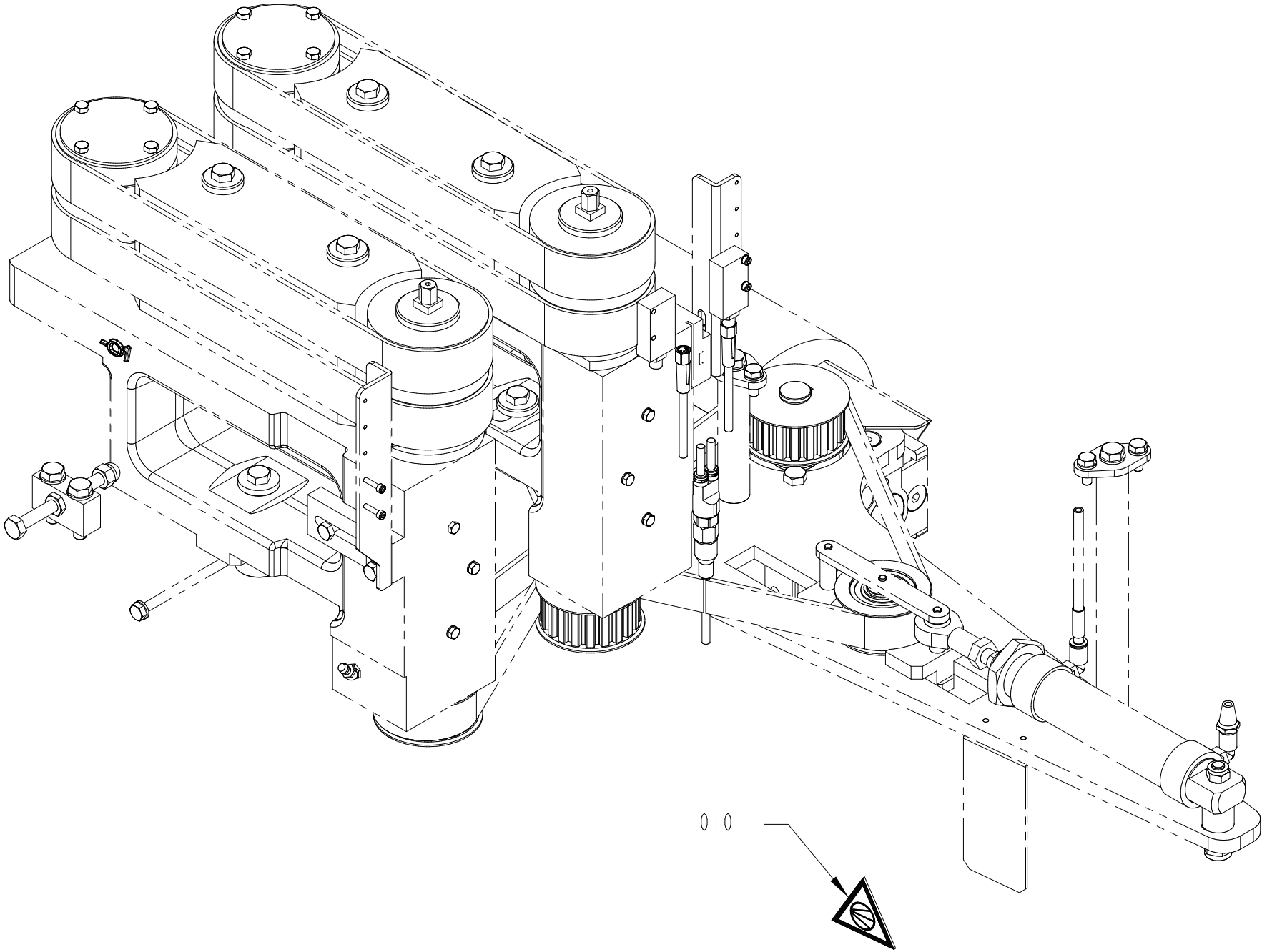

3217278-1
529087

ECM: 534705
Group number: 3217278-0100
Assembly Drawing: 3217278-1_1_AA

Pos	Part No	Description	Qty	Unit	Page No
ANSI					
010	359725-0125	WARNING SIGN ANSI (V), PNEUMATIC ENERGY	1	PC	
ISO					
010	359705-0021	WARNING SIGN ISO, PNEUMATIC ENERGY	1	PC	

This page intentionally left blank

SPC

Spare Parts Catalogue

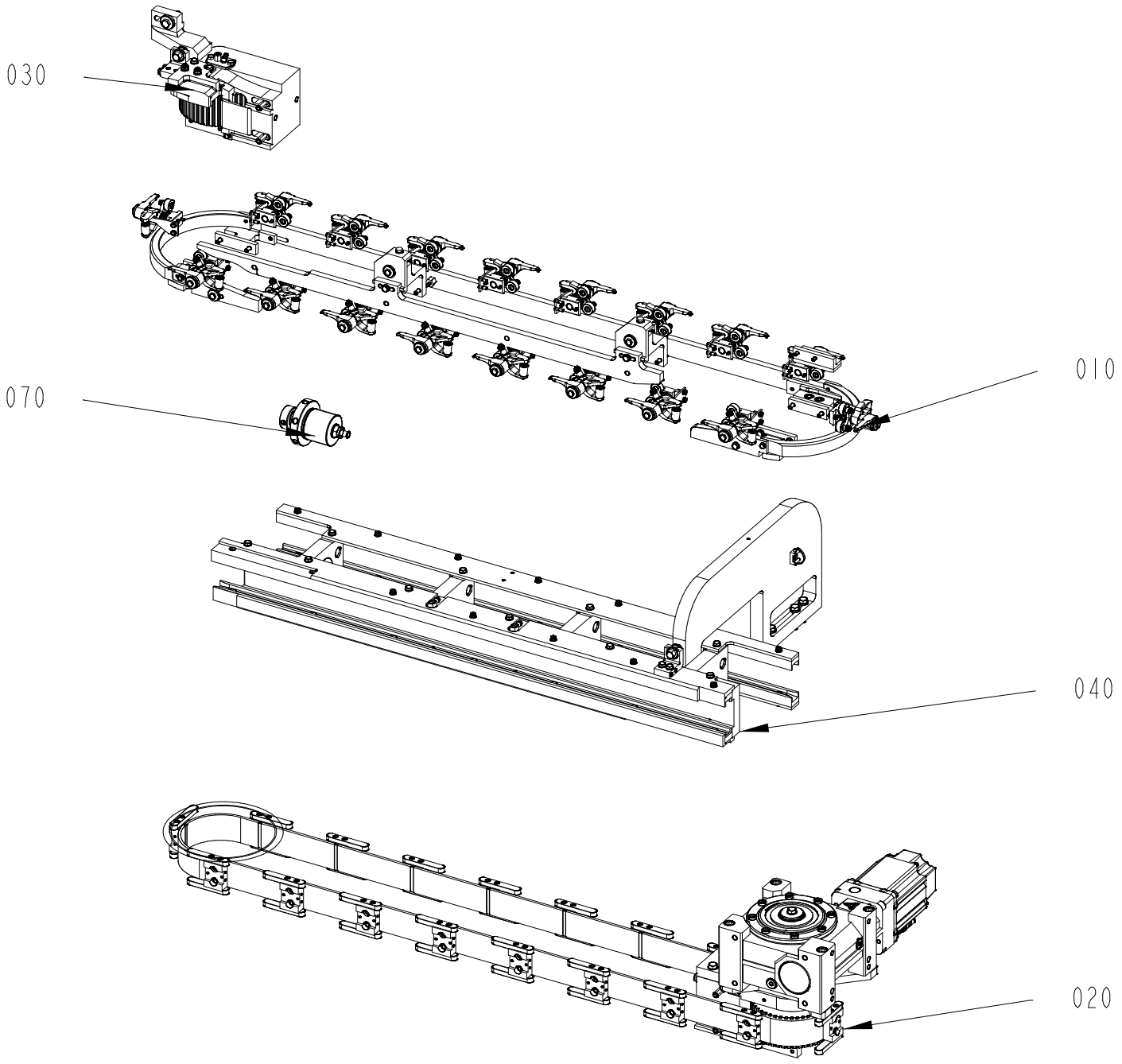

662902-4
736425

ECM: 742673
Group number: 662902-0300
Assembly Drawing: 662902-4_1_AA

Pos	Part No	Description	Qty	Unit	Page No
Common Parts					
010	2802648-0200	CAP HOLDERS GROUP	1	PC	168, 170, 172
020	2802647-0300	DRIVE UNIT	1	PC	176
030	2802645-0200	BELT STRETCHER	1	PC	180
040	2802646-0200	FRAME SECTION	1	PC	184
070	2843157-0100	CLAMPING ELEMENT	1	PC	186

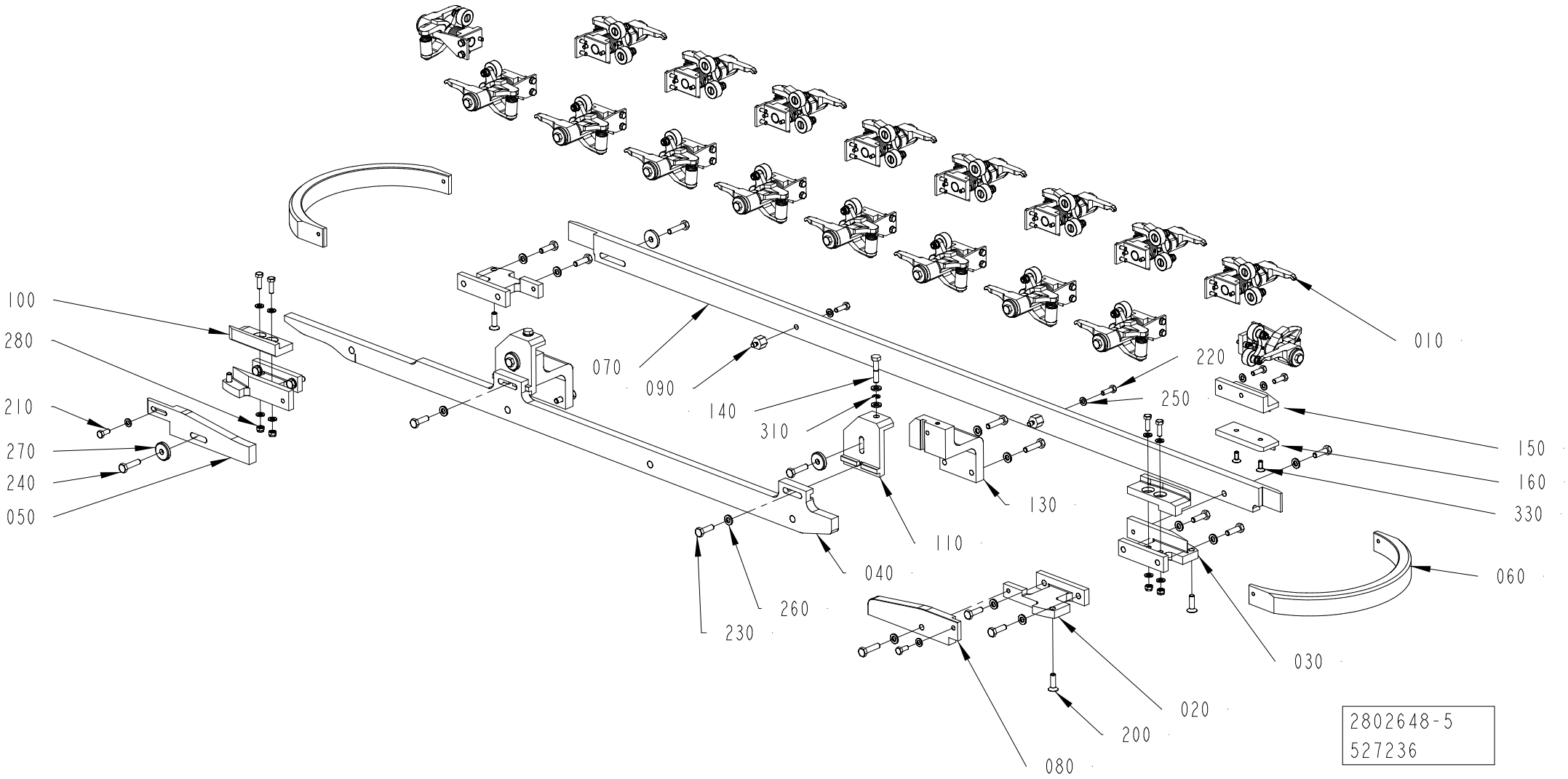
100
280
210
270
240
050
070
090
140
310
110
040
260
230
130
220
250
010
150
160
330
060
030
020
200
080
2802648-5
527236

Pos	Part No	Description	Qty	Unit	Page No
TBA 0200E HELICAP 23, TBA 0250E HELICAP 23 See page: 172					
040	3073407-0000	CURVE	1	PC	
050	3073402-0000	CURVE	1	PC	
060	3073401-0000	CURVE	2	PC	
070	3073404-0000	CURVE	1	PC	
080	3073403-0000	CURVE	1	PC	
130	3073405-0000	BRACKET	2	PC	
340	312105-0378	SCREW, M6S ISO 4014 M6X40 A4 80	1	PC	
350	312105-0339	SCREW, M6S ISO 4014 M5X40 A4 80	2	PC	
TBA 1000S HELICAP2 23, TBA 1500S HELICAP2 23, TBA 2000S HELICAP 27, TBA SLIMCAP1000, TBA STREAMCAP1000, TBA SLIMCAP 2000, TBA STREAMCAP200, TBA 0500SQ HELICAP 27, TBA 1000SQ HELICAP 27, TPA STREAMCAP 1000, TPA STREAMCAP 500, TPA HELICAP 27 See page: 168					
TBA 0200E HELICAP 23, TBA 0250E HELICAP 23 See page: 172					
110	2838728-0000	ADJUSTMENT BRACKET	2	PC	
200	312155-0370	SCREW DIN 7991 MF6S M6X20 A4 70	4	PC	
210	312105-0327	SCREW, M6S ISO 4017 M5X12 A4 80	2	PC	
240	312105-0372	SCREW, M6S ISO 4017 M6X25 A4 80	9	PC	
250	315105-0146	WASHER PLAIN, 5,3X10X1 A4 BRB	14	PC	
260	315105-0153	WASHER PLAIN, 6,4X12X1,5 A4 BRB	20	PC	
270	315125-0153	WASHER HIGH, TBRSB 6,4X22X4 A4	4	PC	
TPA STREAMCAP 1000, TPA STREAMCAP 500, TPA HELICAP 27 See page: 168					
TGA See page: 170					
TBA 0200E HELICAP 23, TBA 0250E HELICAP 23 See page: 172					
220	312105-0329	SCREW, M6S ISO 4017 M5X16 A4 80	6	PC	
TPA STREAMCAP 1000, TPA STREAMCAP 500, TPA HELICAP 27 See page: 168					
TBA 0200E HELICAP 23, TBA 0250E HELICAP 23 See page: 172					
020	2780339-0000	BRACKET	2	PC	
030	2780338-0000	BRACKET	2	PC	
090	2715807-0000	SPACER	2	PC	
TGA See page: 170					
TBA 0250E HELICAP 23, TBA 0200E HELICAP 23 See page: 172					
230	312105-0370	SCREW, M6S ISO 4017 M6X20 A4 80	10	PC	
TBA 1000S HELICAP2 23, TBA 1500S HELICAP2 23, TBA 2000S HELICAP 27, TBA SLIMCAP1000, TBA STREAMCAP1000, TBA SLIMCAP 2000, TBA STREAMCAP200, TBA 0500SQ HELICAP 27, TBA 1000SQ HELICAP 27 See page: 168					
020	2715666-0000	BRACKET	2	PC	
030	2715671-0000	BRACKET	2	PC	
040	2873895-0000	CURVE	1	PC	
050	2838737-0000	CURVE	1	PC	
060	2751708-0000	CURVE	2	PC	
070	2751722-0000	CURVE	1	PC	
080	2751733-0000	CURVE	1	PC	
090	2751721-0000	SPACER	2	PC	
130	2751742-0000	BRACKET	2	PC	
220	312105-0329	SCREW, M6S ISO 4017 M5X16 A4 80	8	PC	
TBA 1000S HELICAP2 23, TBA 1500S HELICAP2 23, TBA 2000S HELICAP 27, TBA SLIMCAP1000, TBA STREAMCAP1000, TBA SLIMCAP 2000, TBA STREAMCAP200, TBA 0500SQ HELICAP 27, TBA 1000SQ HELICAP 27, TPA STREAMCAP 1000, TPA STREAMCAP 500, TPA HELICAP 27 See page: 168					
230	312105-0370	SCREW, M6S ISO 4017 M6X20 A4 80	11	PC	
TGA See page: 170					
020	2873859-0000	BRACKET	2	PC	
030	2873868-0000	BRACKET	1	PC	
040	2873857-0000	CAM	1	PC	
050	2873860-0000	CURVE	1	PC	
060	2873864-0000	CAM	2	PC	
080	2873869-0000	CURVE	1	PC	
110	2873870-0000	ADJUSTMENT BRACKET	2	PC	
130	2780469-0000	BRACKET	2	PC	
200	312155-0370	SCREW DIN 7991 MF6S M6X20 A4 70	1	PC	
240	312105-0372	SCREW, M6S ISO 4017 M6X25 A4 80	7	PC	
250	315105-0146	WASHER PLAIN, 5,3X10X1 A4 BRB	10	PC	
260	315105-0153	WASHER PLAIN, 6,4X12X1,5 A4 BRB	21	PC	
270	315125-0153	WASHER HIGH, TBRSB 6,4X22X4 A4	2	PC	
290	312812-0316	HEXAGON NUT, NY-LOCK M6 A4 80	1	PC	
300	312109-0376	SCREW, M6S ISO 4017 M6X35 A4 80	2	PC	
TPA STREAMCAP 1000, TPA STREAMCAP 500, TPA HELICAP 27 See page: 168					
040	2838727-0000	CURVE	1	PC	
050	2780341-0000	CURVE	1	PC	
060	2780337-0000	CURVE	2	PC	
070	2780343-0000	CURVE	1	PC	
080	2780342-0000	CURVE	1	PC	
130	2780344-0000	BRACKET	2	PC	
320	312105-0331	SCREW, M6S ISO 4017 M5X20 A4 80	2	PC	
Common Parts					
010	2751667-0200	PRESSURE FINGER	18	PC	174
100	2751695-0000	STEERING	2	PC	
140	2715804-0000	SCREW	2	PC	
150	2873871-0000	BRACKET	1	PC	
160	2838781-0000	STEERING	1	PC	
280	312812-0314	HEXAGON NUT, NY-LOCK M5 A4 80	4	PC	
310	315755-0106	RETAINING RING SHAFT DIN 6799 4 SS	2	PC	
330	312155-0327	SCREW DIN 7991 MF6S M5X12 A4 70	2	PC	

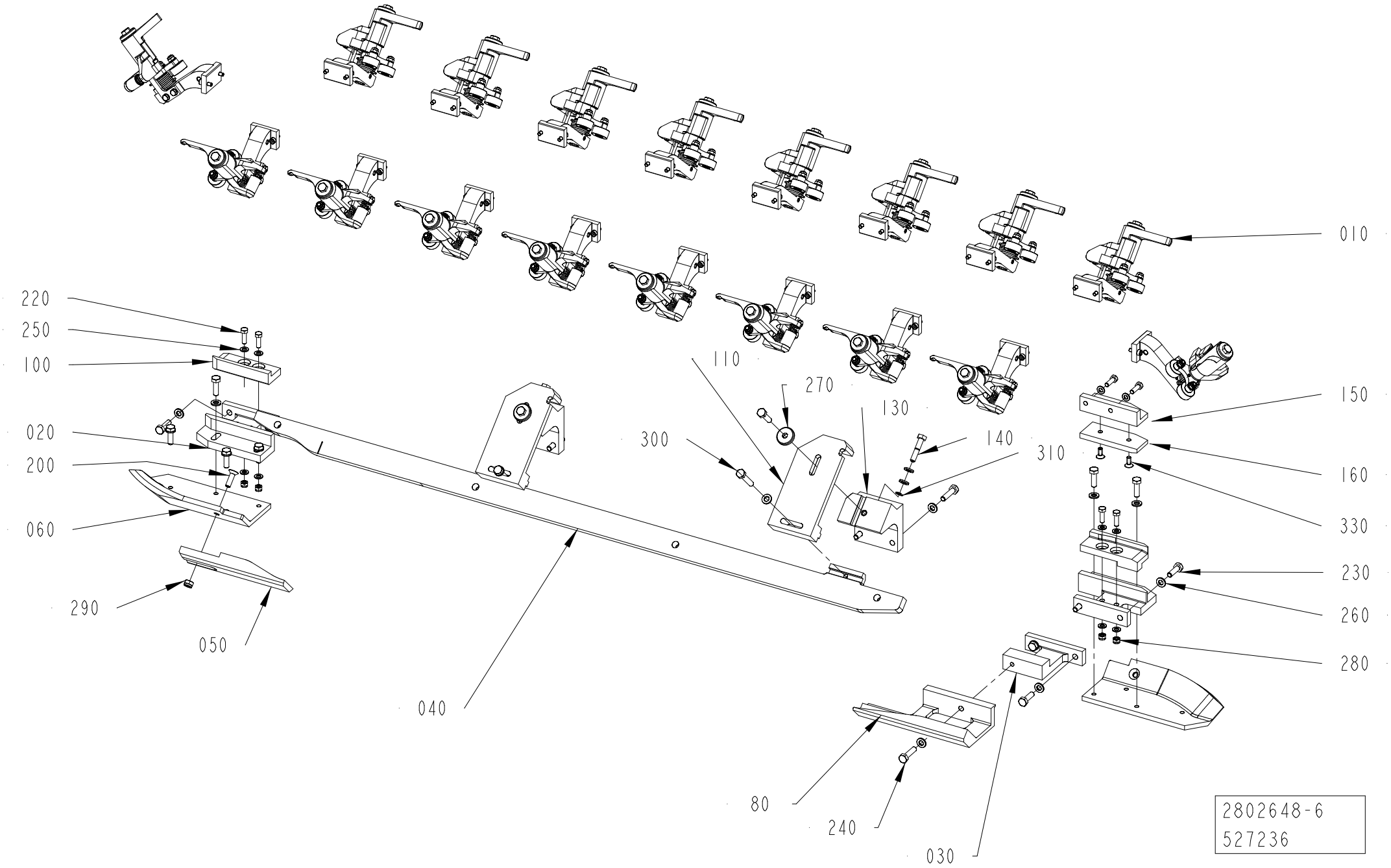
010
220
250
100
020
200
060
290
050
040
110
270
130
300
140
310
150
160
330
230
260
280
80
240
030
2802648-6
527236

This list refers to drawings on pages 168 to 172

Pos	Part No	Description	Qty	Unit	Page No

SEE LIST FOLLOWING DRAWING ON PAGE: 168

Pos	Part No	Description	Qty	Unit	Page No

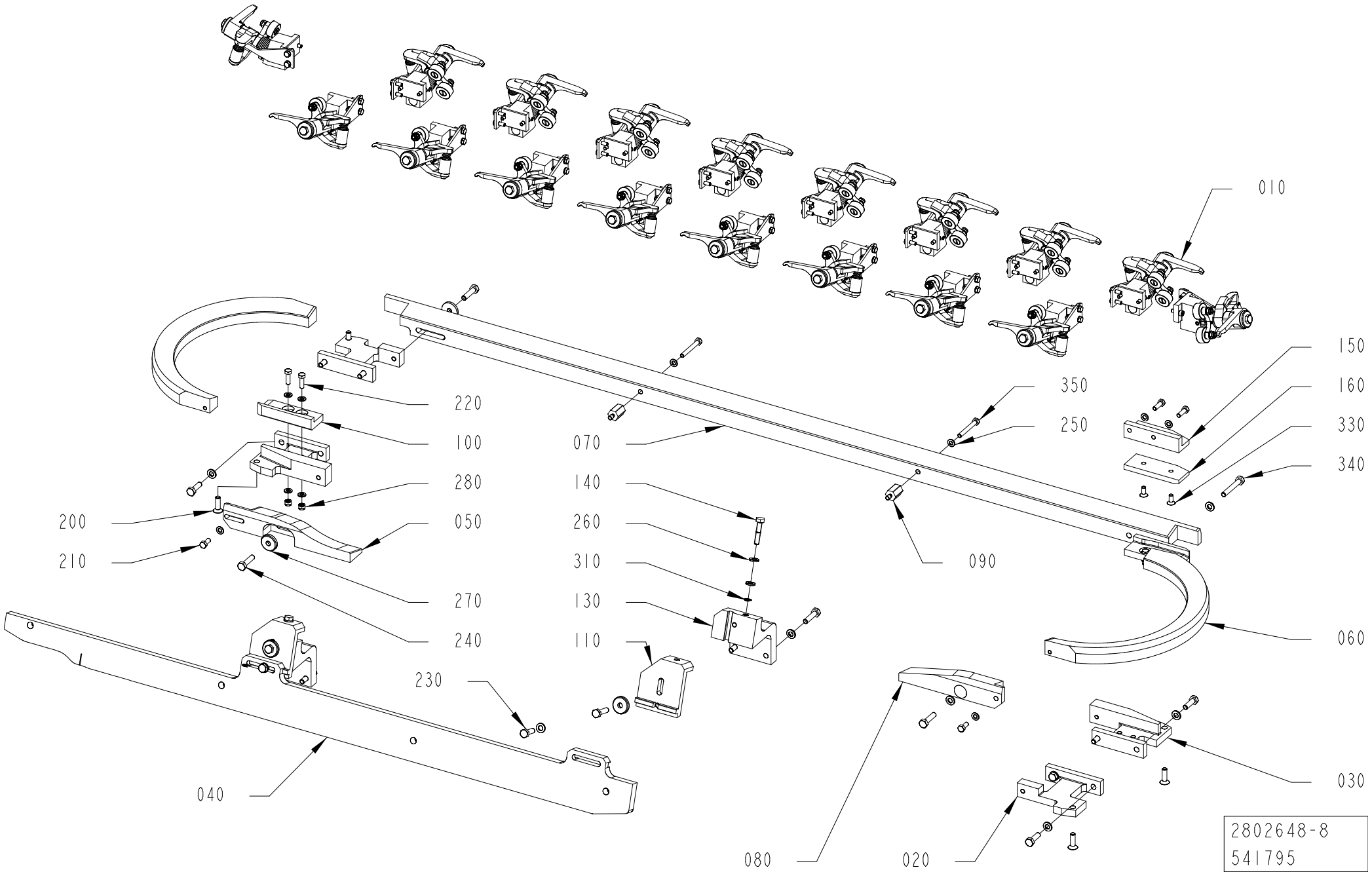
010
150
160
330
340
350
250
220
100
280
050
070
140
260
310
130
110
090
060
200
210
270
240
230
040
080
020
030
2802648-8
541795

Pos	Part No	Description	Qty	Unit	Page No

SEE LIST FOLLOWING DRAWING ON PAGE: 168

Pos	Part No	Description	Qty	Unit	Page No

Pos. 010 in BoM 2802648-0200

PRESSURE FINGER

Drawing file:2751667-3_1_AA

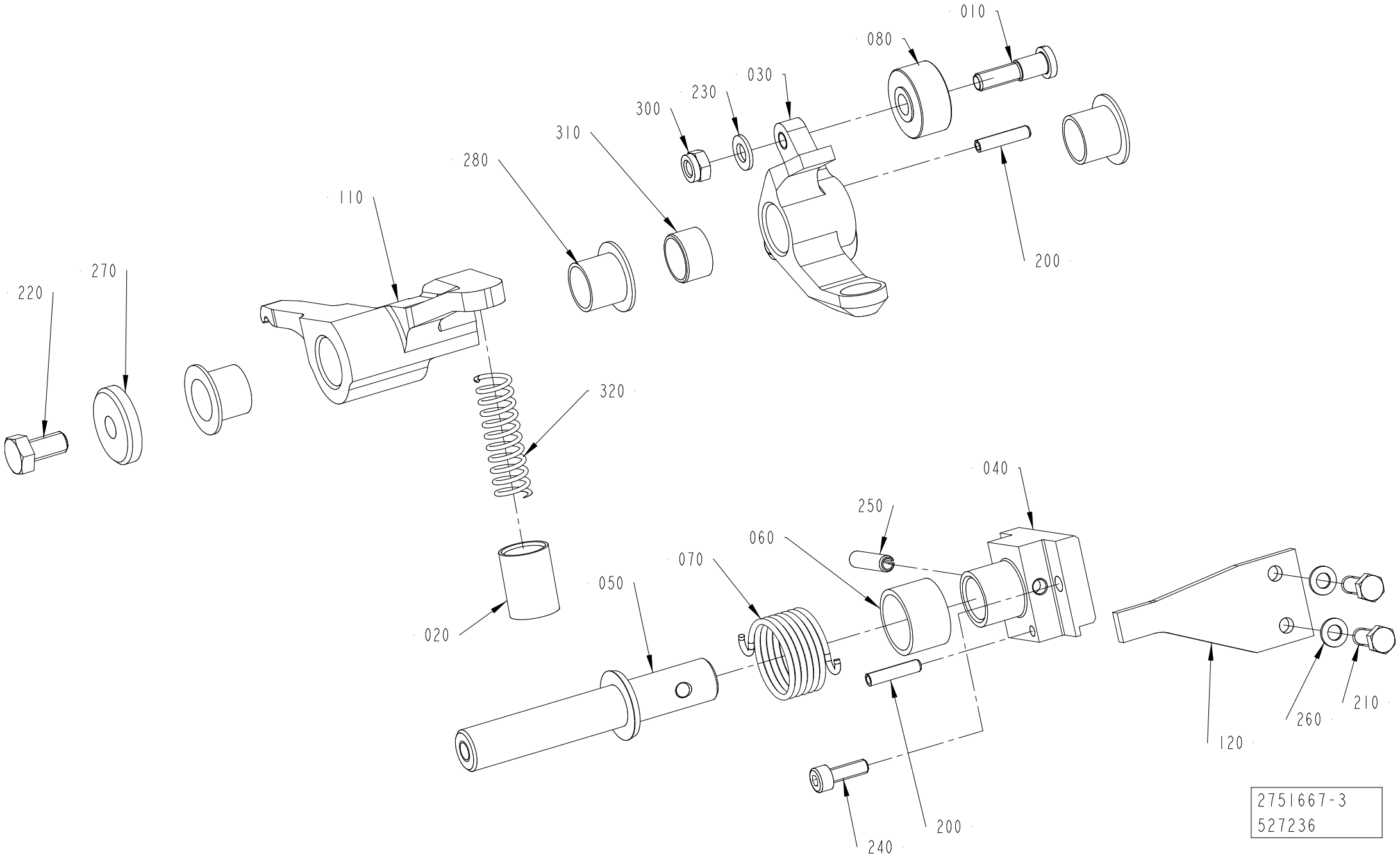

ECM: 850867
Group number: 2751667-0200
Assembly Drawing: 2751667-3_1_AA

Pos	Part No	Description	Qty	Unit	Page No
CAP 30/FLEX TBA 0200E HELICAP 23, CAP 30/FLEX TBA 0250E HELICAP 23					
040	3073406-0000	HOLDER	1	PC	
120	3073408-0000	BRACKET	1	PC	
CAP 30/FLEX TBA 0200E HELICAP 23, CAP 30/FLEX TBA 0250E HELICAP 23, CAP 30/FLEX TBA 1000S HELICAP 23, CAP 30/FLEX TBA 1500S HELICAP2 23, TBA 2000S HELICAP 27					
320	90605-3904	COMP. SPRING, 2529, 1,5X?X45	1	PC	
CAP 30/FLEX TBA 0200E HELICAP 23, CAP 30/FLEX TBA 0250E HELICAP 23, CAP 30/FLEX TBA 1000S HELICAP 23, CAP 30/FLEX TBA 1500S HELICAP2 23, TBA 2000S HELICAP 27, TBA SLIMCAP1000, TBA STREAMCAP1000, TBA SLIMCAP 2000, TBA STREAMCAP200, TBA 0500SQ HELICAP 27, TBA 1000SQ HELICAP 27, TGA, TPA STREAMCAP 1000, TPA STREAMCAP 500, TPA HELICAP 27					
010	2684864-0000	SHAFT	2	PC	
080	2703725-0000	ROLLER	2	PC	
200	311112-0208	SPRING PIN, ISO 8752 3X16 A2	2	PC	
230	315105-0146	WASHER PLAIN, 5,3X10X1 A4 BRB	2	PC	
250	311112-0256	SPRING PIN, ISO 8752 4X20 A2	1	PC	
270	315125-0153	WASHER HIGH, TBRSB 6,4X22X4 A4	1	PC	
280	90240-0262	FLANGE BUSHING, IGLIDUR X 12X14X12	3	PC	
300	312812-0314	HEXAGON NUT, NY-LOCK M5 A4 80	2	PC	
310	90600-5135	BUSHING, 12X14X8 MM	1	PC	
CAP 30/FLEX TBA 0200E HELICAP 23, CAP 30/FLEX TBA 0250E HELICAP 23, CAP 30/FLEX TBA 1000S HELICAP 23, CAP 30/FLEX TBA 1500S HELICAP2 23, TBA 2000S HELICAP 27, TBA SLIMCAP1000, TBA STREAMCAP1000, TBA SLIMCAP 2000, TBA STREAMCAP200, TBA 0500SQ HELICAP 27, TBA 1000SQ HELICAP 27, TPA STREAMCAP 1000, TPA STREAMCAP 500, TPA HELICAP 27					
050	2703715-0000	SHAFT	1	PC	
CAP 30/FLEX TBA 0200E HELICAP 23, CAP 30/FLEX TBA 0250E HELICAP 23, TPA STREAMCAP 1000, TPA STREAMCAP 500, TPA HELICAP 27					
110	2780346-0000	ARM	1	PC	
CAP 30/FLEX TBA 1000S HELICAP 23, CAP 30/FLEX TBA 1500S HELICAP2 23, TBA 2000S HELICAP 27, TBA SLIMCAP1000, TBA STREAMCAP1000, TBA SLIMCAP 2000, TBA STREAMCAP200, TBA 0500SQ HELICAP 27, TBA 1000SQ HELICAP 27					
040	2703714-0000	HOLDER	1	PC	
110	2716056-0000	ARM	1	PC	
120	2751732-0000	BRACKET	1	PC	
TBA SLIMCAP1000, TBA STREAMCAP1000, TBA SLIMCAP 2000, TBA STREAMCAP200, TBA 0500SQ HELICAP 27, TBA 1000SQ HELICAP 27, TGA, TPA STREAMCAP 1000, TPA STREAMCAP 500, TPA HELICAP 27					
320	90600-0683	COMP. SPRING, 2496, 1,2X10,4X45	1	PC	
TGA					
040	2780391-0000	HOLDER	1	PC	
050	2780393-0000	SHAFT	1	PC	
110	2780394-0000	ARM	1	PC	
120	2715813-0000	BRACKET	1	PC	
TPA STREAMCAP 1000, TPA STREAMCAP 500, TPA HELICAP 27					
040	2780352-0000	HOLDER	1	PC	
120	2780353-0000	BRACKET	1	PC	
Common Parts					
020	2715695-0000	SLEEVE	1	PC	
030	2715794-0000	ARM	1	PC	
060	2715797-0000	BUSHING	1	PC	
070	2715798-0000	TURN SPRING	1	PC	
210	312105-0291	SCREW, M6S ISO 4017 M4X12 A4 70	2	PC	
220	312105-0366	SCREW, M6S ISO 4017 M6X12 A4 80	1	PC	
240	312115-0291	SCREW ISO4762 M4X12 A4 80	2	PC	
260	315105-0136	WASHER PLAIN, 4,3X8X0,8 A4 BRB	2	PC	

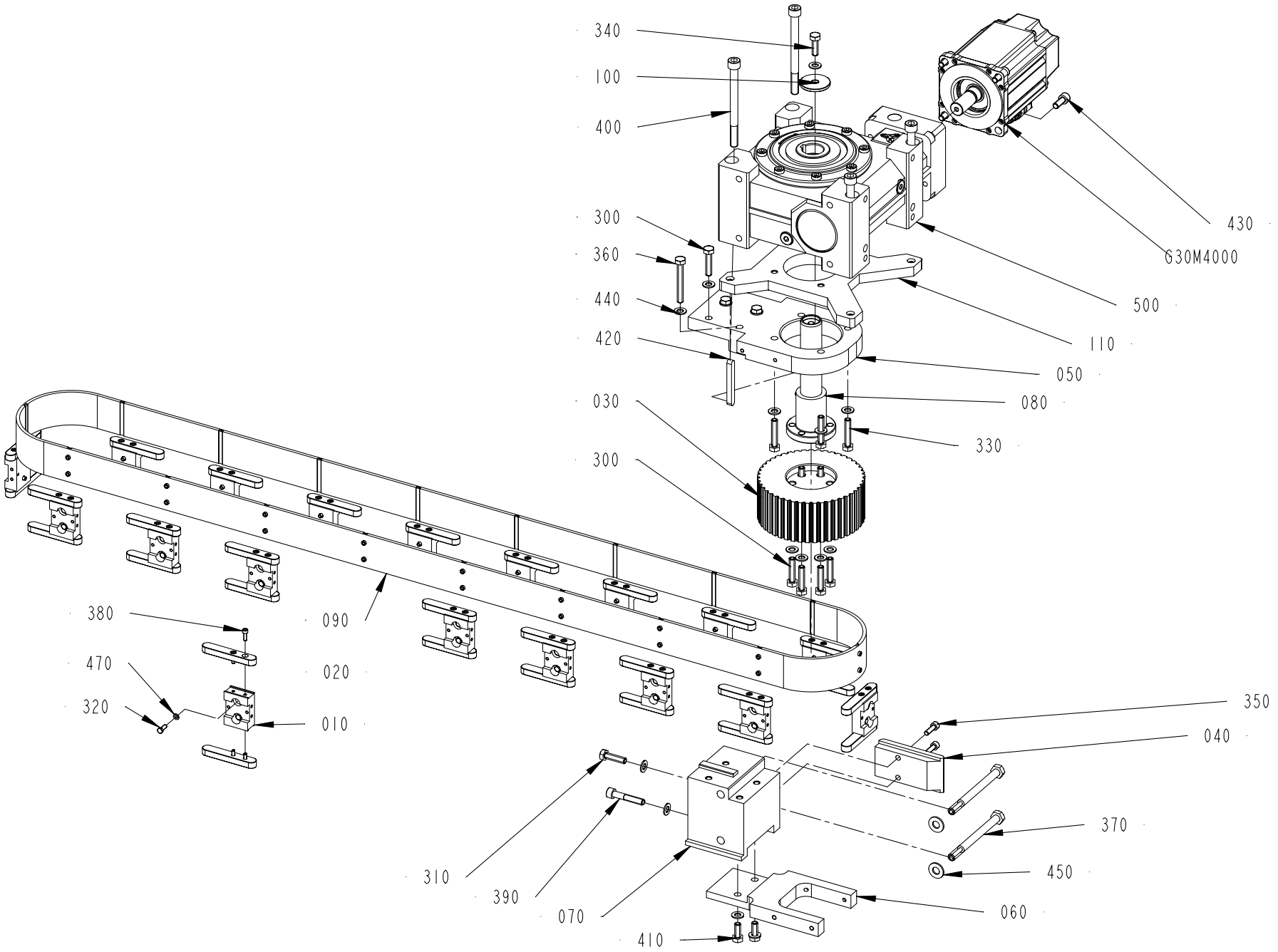
340
100
400
300
360
440
420
030
300
380
470
320
090
020
010
310
390
070
410
430
G30M4000
500
110
050
080
330
350
040
370
450
060

ECM: 833773
Group number: 2802647-0300
Assembly Drawing: 2802647-4_1_AC

Pos	Part No	Description	Qty	Unit	Page No
Common Parts					
010	2703711-0000	HOLDER	18	PC	
020	2715837-0000	KEY	36	PC	
030	2837191-0000	TOOTHED PULLEY	1	PC	
040	2751710-0000	SUPPORT PLATE	1	PC	
050	2837175-0000	BEARING HALF	1	PC	
060	2716041-0000	BRACKET	1	PC	
070	2751700-0000	BOW CLAMP	1	PC	
080	3356449-0000	SHAFT	1	PC	
090	3117862-0000	TIMING BELT	1	PC	178
100	2837255-0000	WASHER	1	PC	
110	3319430-0000	SPACER	1	PC	
300	312109-0457	SCREW, M6S ISO 4017 M8X35 A4 80	8	PC	
310	312105-0455	SCREW, M6S ISO 4017 M8X30 A4 80	1	PC	
320	312105-0291	SCREW, M6S ISO 4017 M4X12 A4 70	36	PC	
330	312109-0459	SCREW, M6S ISO 4017 M8X40 A4 80	4	PC	
340	312105-0453	SCREW, M6S ISO 4017 M8X25 A4 80	1	PC	
350	312115-0370	SCREW ISO4762 M6X20 A4 80	2	PC	
360	312109-0463	SCREW, M6S ISO 4017 M8X60 A4 80	2	PC	
370	312105-0515	SCREW, M6S ISO 4014 M10X120 A4 80	2	PC	
380	312115-0291	SCREW ISO4762 M4X12 A4 80	72	PC	
390	312115-0460	SCREW ISO4762 M8X45 A4 80	1	PC	
400	312111-0515	SCREW HEX.SOCK.HD.MC6S 10X120 88 FZB	4	PC	
410	312105-0451	SCREW, M6S ISO 4017 M8X20 A4 80	2	PC	
420	3478353-0000	KEY	1	PC	
430	312115-0451	SCREW ISO4762 M8X20 A4 80	4	PC	
440	315105-0165	FWAS080G0-0S, WASHER PLAIN	19	PC	
450	315105-0173	WASHER PLAIN, 10,5X22X2 A4 BRB	2	PC	
470	315105-0136	WASHER PLAIN, 4,3X8X0,8 A4 BRB	36	PC	
500	90606-5282	WORM GEAR VDHE063-ML1-10-141-0E0 / MPL-B	1	PC	
G30M4000	90606-2776	SERVO MOTOR, VPL-B1152T-PK12AA, SERIES A	1	PC	

Pos	Part No	Description	Qty	Unit	Page No

This page intentionally left blank

ECM: 507626
Group number: 3117862-0000
Assembly Drawing: -

Pos	Part No	Description	Qty	Unit	Page No
Common Parts					
010	90603-1153	TIMING BELT 50AT10/2700-V PU	1	PC	
020	90603-1154	INSERT NUT, 50 M4 X 50AT10-00	18	PC	

Pos	Part No	Description	Qty	Unit	Page No

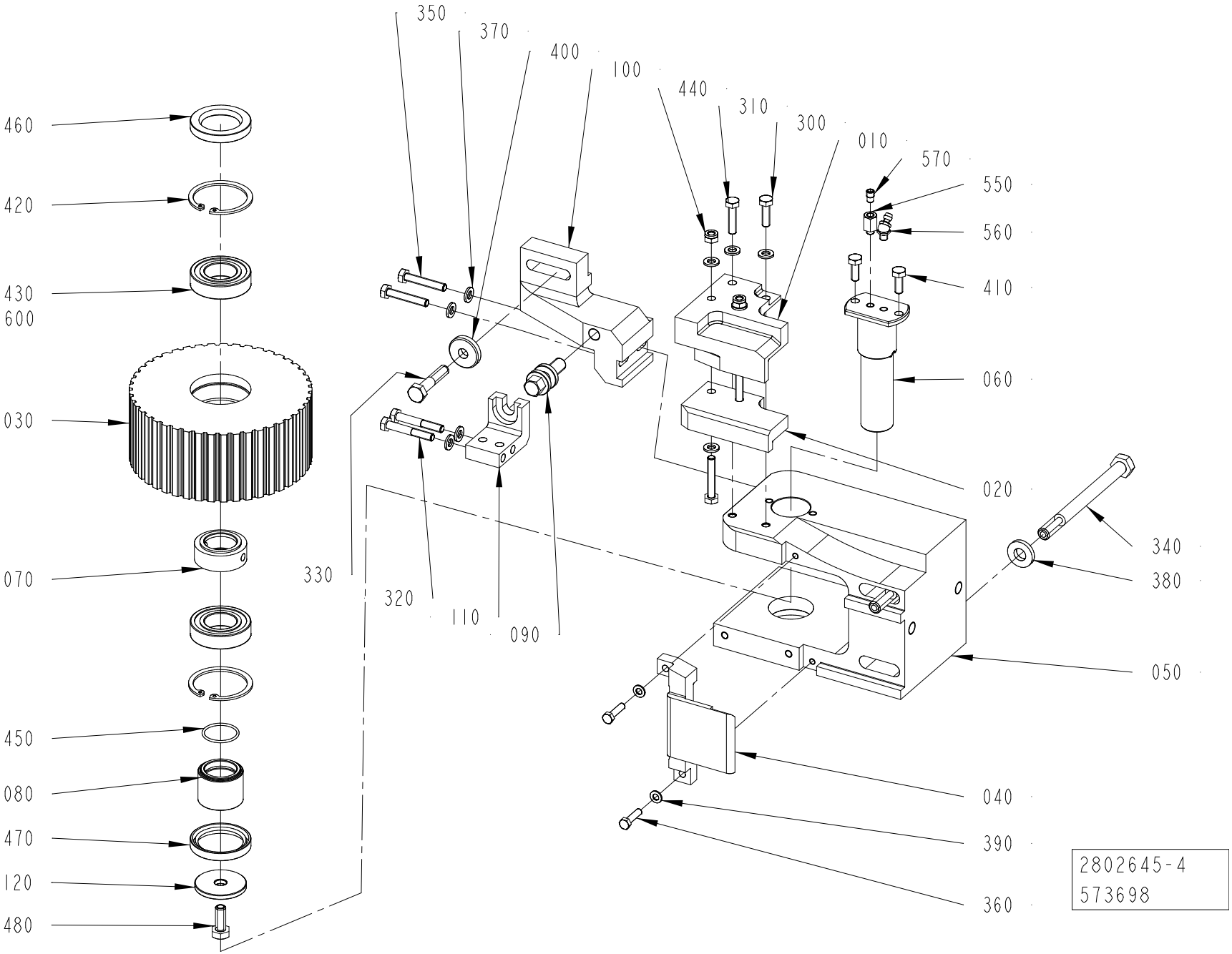
350
370
400
100
440
310
300
010
570
550
560
410
060
020
340
380
050
040
390
360
460
420
430
600
030
070
450
080
470
120
480
330
320
110
090
2802645-4
573698

ECM: 685961
Group number: 2802645-0200
Assembly Drawing: 2802645-4_1_AC

Pos	Part No	Description	Qty	Unit	Page No
STREAMCAP500, STREAMCAP1000, SLIMCAP 2000, SLIMCAP 1000, STREAMCAP200, HELICAP2 23, HELICAP 27					
010	2751692-0000	BRACKET	1	PC	
100	2802629-0000	BRACKET	1	PC	
310	312105-0372	SCREW, M6S ISO 4017 M6X25 A4 80	1	PC	
350	312109-0376	SCREW, M6S ISO 4017 M6X35 A4 80	4	PC	
370	315105-0153	WASHER PLAIN, 6,4X12X1,5 A4 BRB	10	PC	
Common Parts					
020	2751693-0000	STEERING	1	PC	
030	2751712-0000	TOOTHED PULLEY	1	PC	
040	2751714-0000	SUPPORT PLATE	1	PC	
050	2751725-0000	BOW CLAMP	1	PC	
060	3208104-0000	SHAFT	1	PC	
070	2751747-0000	SPACER	1	PC	
080	2751748-0000	SLEEVE	1	PC	
090	2703842-0000	ADJUSTING SCREW	1	PC	
110	2802635-0000	SUPPORT	1	PC	
120	2837255-0000	WASHER	1	PC	
300	312105-0370	SCREW, M6S ISO 4017 M6X20 A4 80	1	PC	
320	312105-0378	SCREW, M6S ISO 4014 M6X40 A4 80	2	PC	
330	312105-0459	SCREW, M6S ISO 4014 M8X40 A4 80	1	PC	
340	312105-0515	SCREW, M6S ISO 4014 M10X120 A4 80	2	PC	
360	312105-0331	SCREW, M6S ISO 4017 M5X20 A4 80	2	PC	
380	315115-0173	WASHER PLAIN, TBRB 10,5/22 H=4	2	PC	
390	315105-0146	WASHER PLAIN, 5,3X10X1 A4 BRB	2	PC	
400	315125-0165	WASHER HIGH, TBRSB 8,4X26X5 A4	1	PC	
410	312105-0368	SCREW, M6S ISO 4017 M6X16 A4 80	2	PC	
420	315753-0130	RETAINING RING FOR BORE DIN 472 47 SS	2	PC	
430	321306-0105	BALL BEARING 25/47X12	2	PC	
440	312812-0316	HEXAGON NUT, NY-LOCK M6 A4 80	2	PC	
450	315202-0710	O-RING 25,12X1,78 MM	1	PC	
460	315221-0169	RADIAL SEAL 30X47X7 MM	1	PC	
470	315221-0175	RADIAL SEAL 35X47X7 MM	1	PC	
480	312105-0451	SCREW, M6S ISO 4017 M8X20 A4 80	1	PC	
550	3147226-0000	ADAPTER	1	PC	
560	90605-1284	GREASE NIPPLE 45 DEG. M6X1, 10606145RF	1	PC	
570	90604-3329	NON-RETURN VALVE, RVA-M6	1	PC	
600	344414-0000	KLÜBEROIL 4 UH1-320N, ONLY IN BOM	1	PC	182

Pos	Part No	Description	Qty	Unit	Page No

This page intentionally left blank

ECM: 653856
Group number: 344414-0000
Assembly Drawing: -

Pos	Part No	Description	Qty	Unit	Page No
Common Parts					
	344414-0335	KLÜBEROIL 4 UH1-320N, 200 L DRUM	1	PC	
	344414-0764	KLÜBEROIL 4 UH1-320N, 5 L CAN	1	PC	
	344414-0766	KLÜBEROIL 4 UH1-320N, 20 L CAN	1	PC	

Pos	Part No	Description	Qty	Unit	Page No

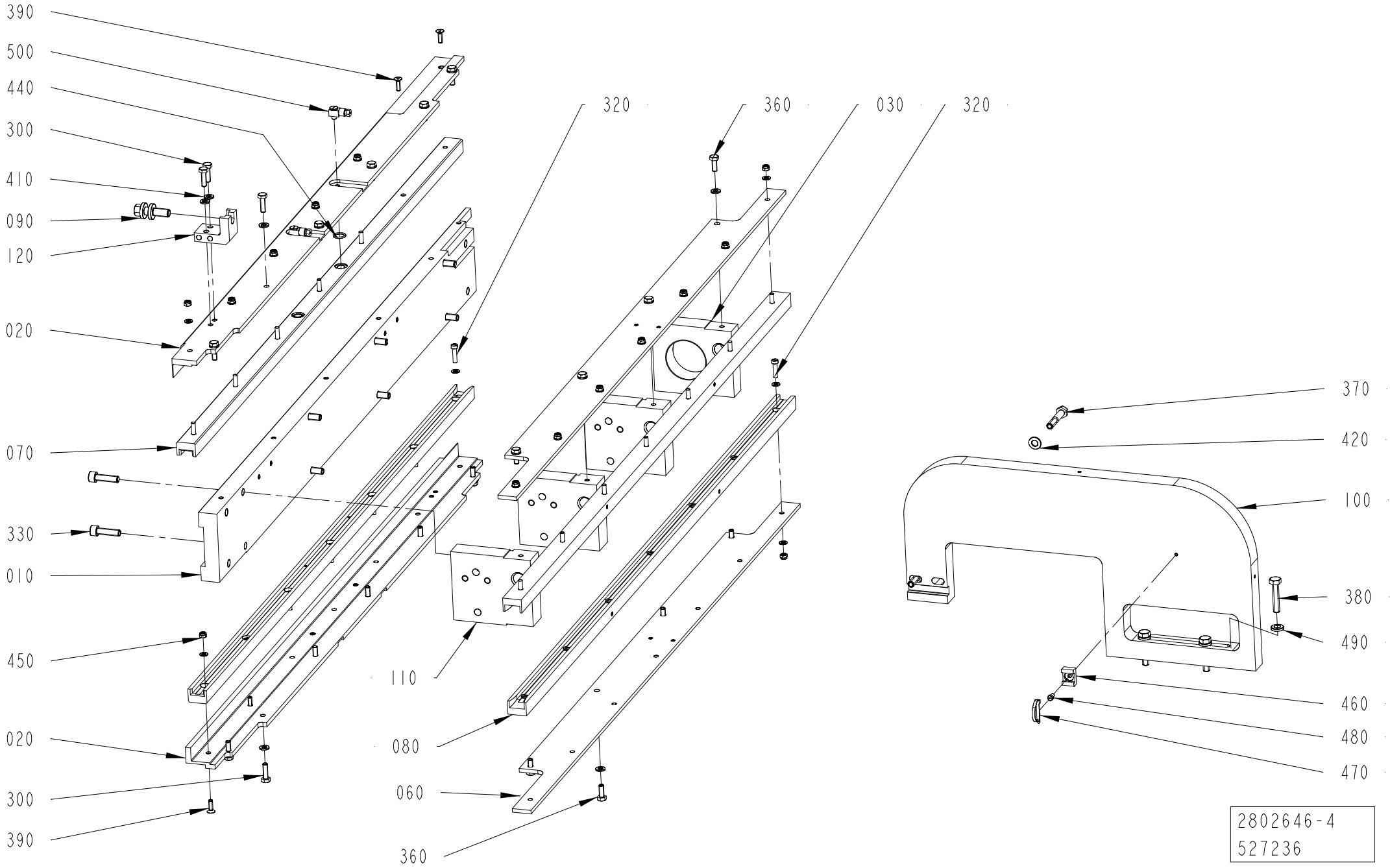
390
500
440
300
410
090
120
020
070
330
010
450
020
300
390
320
360
030
320
110
080
060
360
370
420
100
380
490
460
480
470
2802646-4
527236

ECM: 850870
Group number: 2802646-0200
Assembly Drawing: 2802646-4_1_AA

Pos	Part No	Description	Qty	Unit	Page No
STREAMCAP500, STREAMCAP1000, SLIMCAP 2000, SLIMCAP 1000, STREAMCAP200, HELICAP2 23, HELICAP 27					
010	3095793-0000	PLATE	1	PC	
020	3095794-0000	ANGLE BRACKET	2	PC	
070	3095795-0000	SLIDING STRIP	2	PC	
100	2802637-0000	MOUNTING SHEET	1	PC	
320	312125-0331	SLOTTED HEAD SCREW, ISO1207 M5X20 A4	24	PC	
390	312155-0329	SCREW DIN 7991 MF6S M5X16 A4 70	4	PC	
400	315105-0146	WASHER PLAIN, 5,3X10X1 A4 BRB	52	PC	
410	315105-0153	WASHER PLAIN, 6,4X12X1,5 A4 BRB	23	PC	
Common Parts					
030	2837631-0000	SPACER	1	PC	
060	2838783-0000	PLATE	2	PC	
080	2838784-0000	SLIDING STRIP	2	PC	
090	2703842-0000	ADJUSTING SCREW	1	PC	
110	2802644-0000	SPACER	3	PC	
120	2802635-0000	SUPPORT	1	PC	
300	312105-0370	SCREW, M6S ISO 4017 M6X20 A4 80	15	PC	
330	312115-0455	SCREW ISO4762 M8X30 A4 80	8	PC	
360	312105-0368	SCREW, M6S ISO 4017 M6X16 A4 80	8	PC	
370	312105-0460	SCREW, M6S ISO 4014 M8X45 A4 80	2	PC	
380	312109-0459	SCREW, M6S ISO 4017 M8X40 A4 80	3	PC	
420	315105-0165	FWAS080G0-0S, WASHER PLAIN	2	PC	
440	315202-0702	O-RING 12,42X1,78 MM	4	PC	
450	312812-0314	HEXAGON NUT, NY-LOCK M5 A4 80	28	PC	
460	352113-0203	ANCHOR PLATES FOR STRIPS, TM3S8-M0	1	PC	
470	352113-0104	CABLE TIE, BLACK 300X4,8 MM	1	PC	
480	312125-0287	SLOTTED HEAD SCREW, ISO1207 M4X8 A4	1	PC	
490	315115-0165	WASHER PLAIN, TBRB 8,4/16 H=3	3	PC	
500	90134-0058	CONNECTION	3	PC	

Pos	Part No	Description	Qty	Unit	Page No

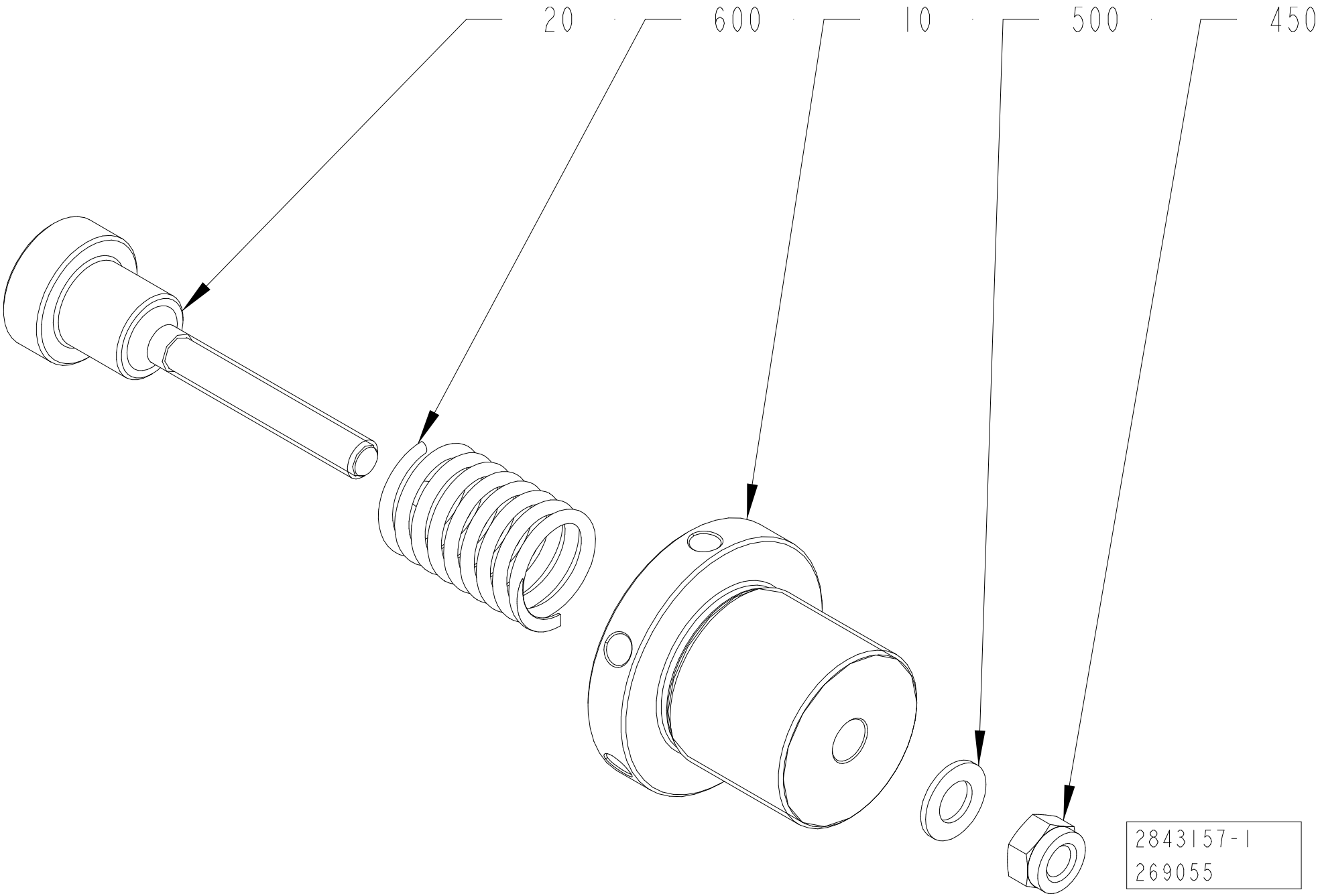
20
600
10
500
450
2843157-1
269055

ECM: 350651
Group number: 2843157-0100
Assembly Drawing: 2843157-1_1_AA

Pos	Part No	Description	Qty	Unit	Page No
Common Parts					
010	2843158-0000	FLANGE	1	PC	
020	2843159-0000	SHAFT	1	PC	
450	312812-0322	HEXAGON NUT, NY-LOCK M12 A4 80	1	PC	
500	315105-0178	WASHER PLAIN, 13X24X2,5 A4 BRB	1	PC	
600	90600-0656	COMP. SPRING, 6777, 4X36X120 DIN2098	1	PC	

Pos	Part No	Description	Qty	Unit	Page No

This page intentionally left blank

SPC

Spare Parts Catalogue

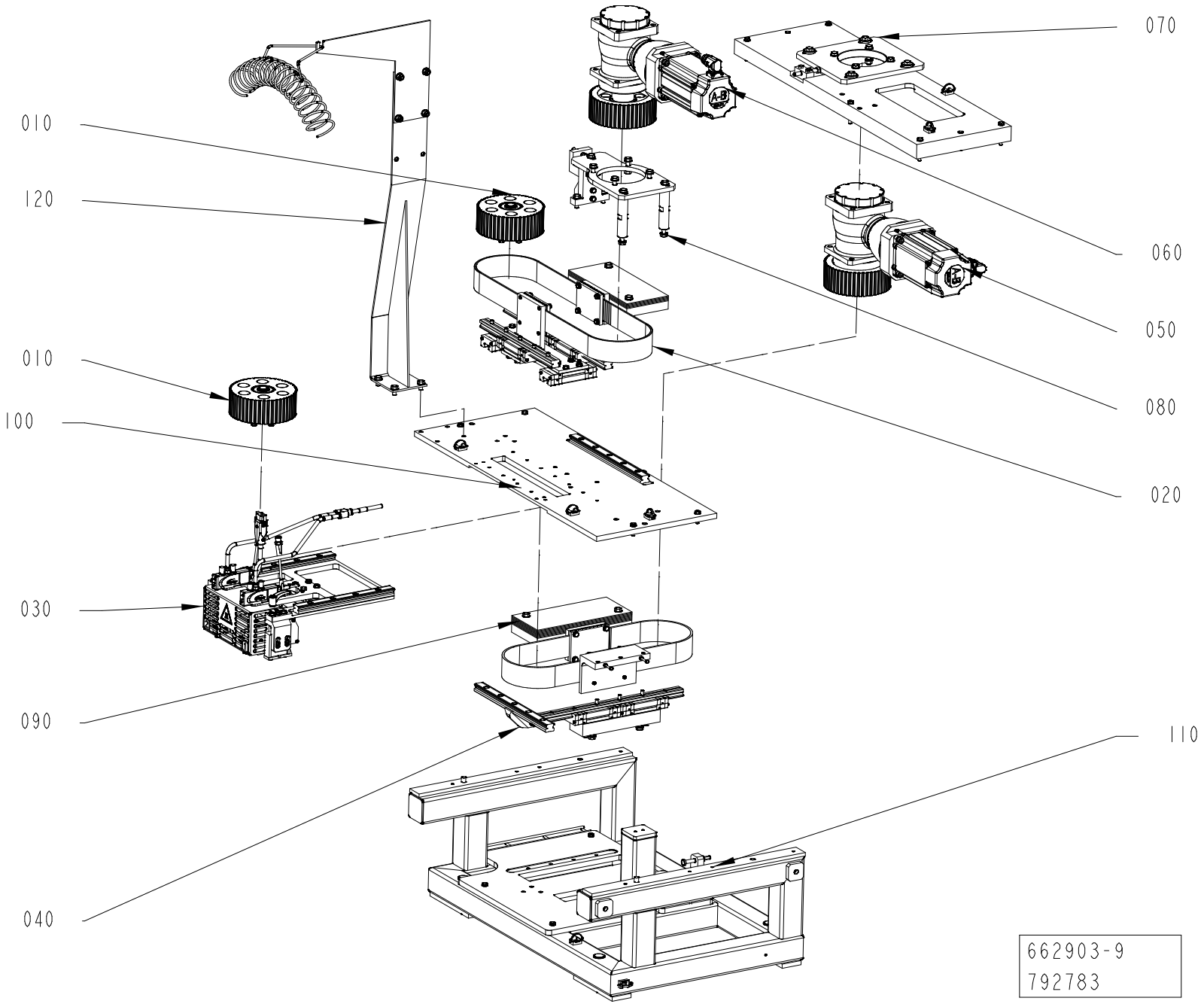
010
120
010
100
030
090
040
070
060
050
080
020
110
662903-9
792783

ECM: 793992
Group number: 662903-0400
Assembly Drawing: 662903-9_1_AC

Pos	Part No	Description	Qty	Unit	Page No
CAP 30/FLEX SLIMCAP1000, CAP 30/FLEX STREAMCAP1000, CAP 30/FLEX SLIMCAP2000, CAP 30/FLEX STREAMCAP500, CAP 30/FLEX STREAMCAP200, CAP 30/FLEX HELICAP2 23, CAP 30/FLEX HELICAP 27					
030	3448635-0100	HOTMELT GUN	1	PC	192
080	2840146-0100	MOTOR BRACKET	1	PC	196
Common Parts					
010	2695135-0200	PULLEY	2	PC	198
020	2716090-0200	MOTION CONTROL	1	PC	200
040	2716092-0200	TRANSMISSION RAIL	1	PC	204
050	2840143-0300	SERVO MOTOR	1	PC	206
060	2840144-0300	SERVO MOTOR	1	PC	208
070	2840145-0100	MOTOR BRACKET	1	PC	210
090	2716097-0200	MOTION CONTROL	1	PC	212
100	2840147-0300	FASTENING BRACKET	1	PC	214
110	2841501-0300	FRAME	1	PC	216
120	2901708-0100	SUPPORT TUBE	1	PC	218

Pos	Part No	Description	Qty	Unit	Page No

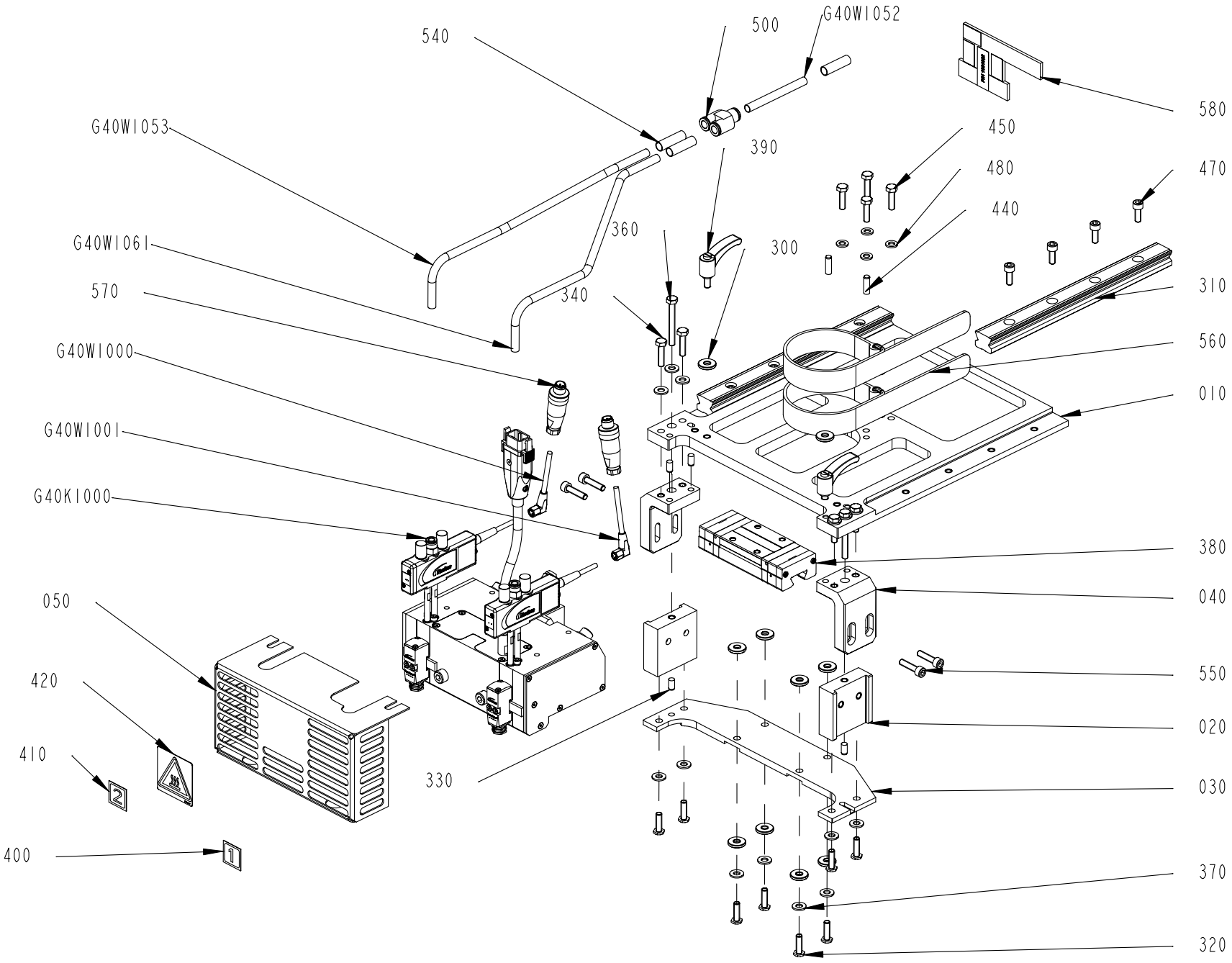
540
500
G40WI052
580
G40WI053
390
450
480
470
440
360
300
G40WI061
570
340
310
560
G40WI000
010
G40WI001
G40KI000
380
040
050
550
420
020
410
330
030
400
370
320

ECM: 852519
Group number: 3448635-0100
Assembly Drawing: 3448635-1_1_AD

Pos	Part No	Description	Qty	Unit	Page No
CAP 30/FLEX					
050	3449628-0000	COVER	1	PC	
500	351456-6005	PUSH-IN Y-CONNECTOR NPQH-Y-Q8-E-P10	1	PC	
540	351582-0008	MARKING STRIP, PRZ08T04/09/17/30	3	PC	
570	90603-5560	CONNECTOR, SACC-M12MS-5CON-PG 7-VA	2	PC	
G40K1000	344319-3001	HOT MELT APPLICATOR, 7333040	1	PC	194
Common Parts					
010	3448874-0000	PLATE	1	PC	
020	3413327-0000	GUIDE	2	PC	
030	3448636-0000	BASE PLATE	1	PC	
040	3448863-0000	BRACKET	2	PC	
300	90600-0684	SPACER 75ODX.328IDX.12THK, 102 8115	10	PC	
310	90600-0484	GUIDE BAR, SSR 25 253L-YM G36.5/36.5	2	PC	
320	90607-0067	LOW HEAD SCREW,RSCBT620	8	PC	
330	311103-0349	PARALLEL PIN ISO 2338 6M6X12 A1	6	PC	
340	312105-0372	SCREW, M6S ISO 4017 M6X25 A4 80	4	PC	
360	312109-0380	SCREW, M6S ISO 4017 M6X50 A4 80	2	PC	
370	315105-0156	WASHER PLAIN, 6,7X14X1,5 A4 BRB	14	PC	
380	90604-8448	CARRIAGE, SSR25XW1QZSSHHM(GK)(B) BLOCK	1	PC	
390	90604-8744	LOCKING HANDLE, M6X12M	2	PC	
400	3272544-0000	SIGN	1	PC	
410	3272545-0000	SIGN	1	PC	
420	351552-0007	WARNING SIGN ISO, BURN HAZARD, 50 MM	1	PC	
440	311103-0353	PARALLEL PIN ISO 2338 6M6X20 A1	2	PC	
450	312105-0371	SCREW, M6S ISO 4017 M6X22 A4 80	4	PC	
470	312115-0368	SCREW ISO4762 M6X16 A4 80	8	PC	
480	315105-0153	WASHER PLAIN, 6,4X12X1,5 A4 BRB	4	PC	
550	312115-0372	SCREW ISO4762 M6X25 A4 80	4	PC	
560	90607-0070	VELCRO STRAP W/BUCKLE, 25X3 CM, 301841	2	PC	
580	3501860-0000	HOSE CLIP	1	PC	
G40W1000	344246-0050	SENSOR CABLE, EVT127	1	PC	
G40W1001	344246-0050	SENSOR CABLE, EVT127	1	PC	
G40W1052	90600-0553	TUBE, 8X1 MM PTFE	1	M	
G40W1053	90600-0553	TUBE, 8X1 MM PTFE	1	M	
G40W1061	90600-0553	TUBE, 8X1 MM PTFE	1	M	

Pos	Part No	Description	Qty	Unit	Page No

This page intentionally left blank

ECM: 906723
Group number: 344319-3001
Assembly Drawing: -

Pos	Part No	Description	Qty	Unit	Page No
Common Parts					
020	344319-3115	HOTMELT EQUIPMENT NORDSON	4	PC	
040	344319-3101	HEATER CARTRIDGE, 3/8X50 MM 230V-50W	2	PC	
050	344319-3102	O-RING, 26,0 X 1.80 MM, VITON, 7333932	2	PC	
060	344319-3103	HEATER CARTRIDGE, 3/8X76 MM 230V-100W	2	PC	
070	344319-3104	HEATED INSERT FOR MANIFOLD, 7333919	2	PC	
080	344319-2101	APPLICATION MODULE MINIBLUE II, 1095703	2	PC	
090	344319-3105	FILTER, GUN, 200 MESH, SATURN, 1045520	1	PAK	
100	344319-3106	HEATER CARTRIDGE 3/8"X6" 230V-200W	1	PC	
110	344319-3113	HOTMELT EQUIPMENT NORDSON	2	PC	
120	90606-8120	CORDSET KIT, 1121501	1	PC	
130	344319-3114	HOTMELT EQUIPMENT NORDSON	1	PC	
140	344319-2103	SOLENOID SATURN SP 4-WAY 24 VDC, 1095800	2	PC	
160	344319-3107	O-RING, 6*1, AFLAS 70, 375291	4	PC	

Pos	Part No	Description	Qty	Unit	Page No

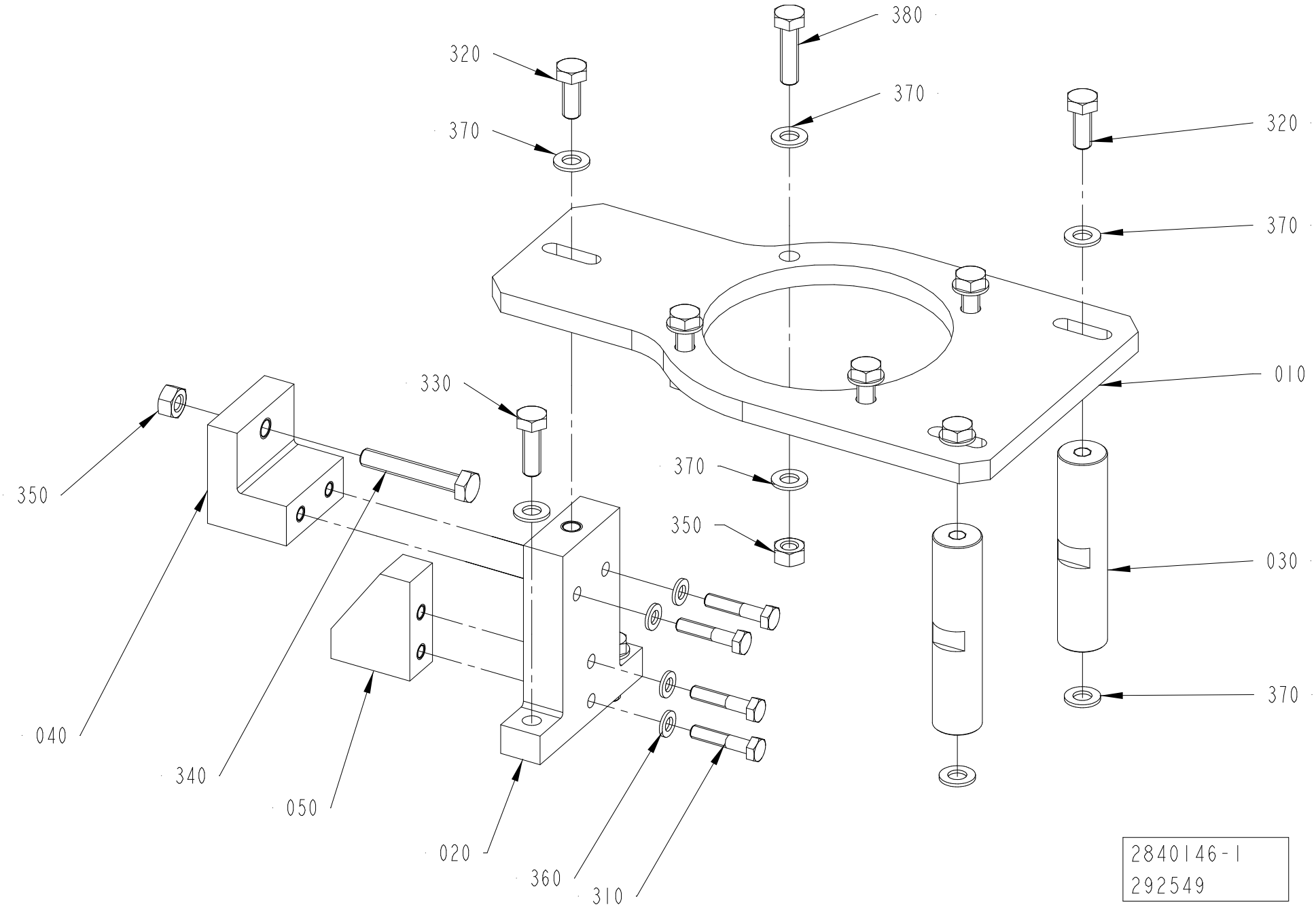
380
320
370
370
320
370
010
330
370
350
350
030
370
040
340
050
020
360
310
2840146-1
292549

ECM: 293232
Group number: 2840146-0100
Assembly Drawing: 2840146-1_1_AB

Pos	Part No	Description	Qty	Unit	Page No
Common Parts					
010	2841344-0000	PLATE	1	PC	
020	2841346-0000	BLOCK	1	PC	
030	2841345-0000	COLUMN	2	PC	
040	2696481-0000	BLOCK	1	PC	
050	2873921-0000	BLOCK	1	PC	
310	312105-0374	SCREW, M6S ISO 4014 M6X30 A4 80	4	PC	
320	312105-0451	SCREW, M6S ISO 4017 M8X20 A4 80	3	PC	
330	312105-0453	SCREW, M6S ISO 4017 M8X25 A4 80	4	PC	
340	312109-0461	SCREW, M6S ISO 4017 M8X50 A4 80	1	PC	
350	312605-0318	HEXAGON NUT, M6M M8 A280	5	PC	
360	315105-0153	WASHER PLAIN, 6,4X12X1,5 A4 BRB	4	PC	
370	315105-0165	FWAS080G0-0S, WASHER PLAIN	15	PC	
380	312105-0455	SCREW, M6S ISO 4017 M8X30 A4 80	4	PC	

Pos	Part No	Description	Qty	Unit	Page No

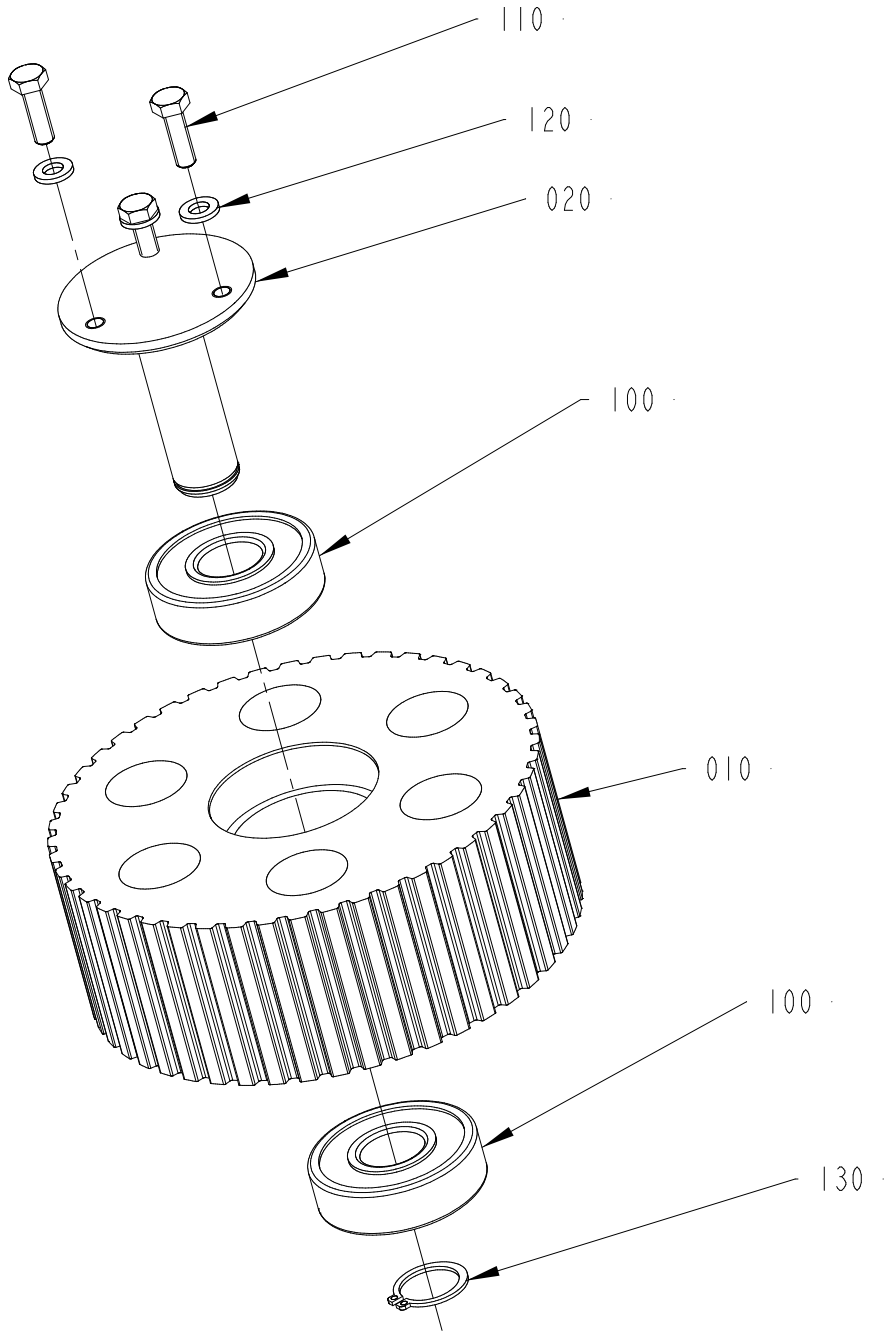

2695135-2
529090

ECM: 529637
Group number: 2695135-0200
Assembly Drawing: 2695135-2_1_AA

Pos	Part No	Description	Qty	Unit	Page No
Common Parts					
010	2695133-0000	TOOTHED PULLEY	1	PC	
020	2695134-0000	SHAFT	1	PC	
100	90603-2323	BALL BEARING	2	PC	
110	312105-0370	SCREW, M6S ISO 4017 M6X20 A4 80	3	PC	
120	315106-0153	WASHER PLAIN, M6 ISO7089-6-200 HV A4	3	PC	
130	315751-0116	RETAINING RING FOR SHAFT DIN 471 20 SS	1	PC	

Pos	Part No	Description	Qty	Unit	Page No

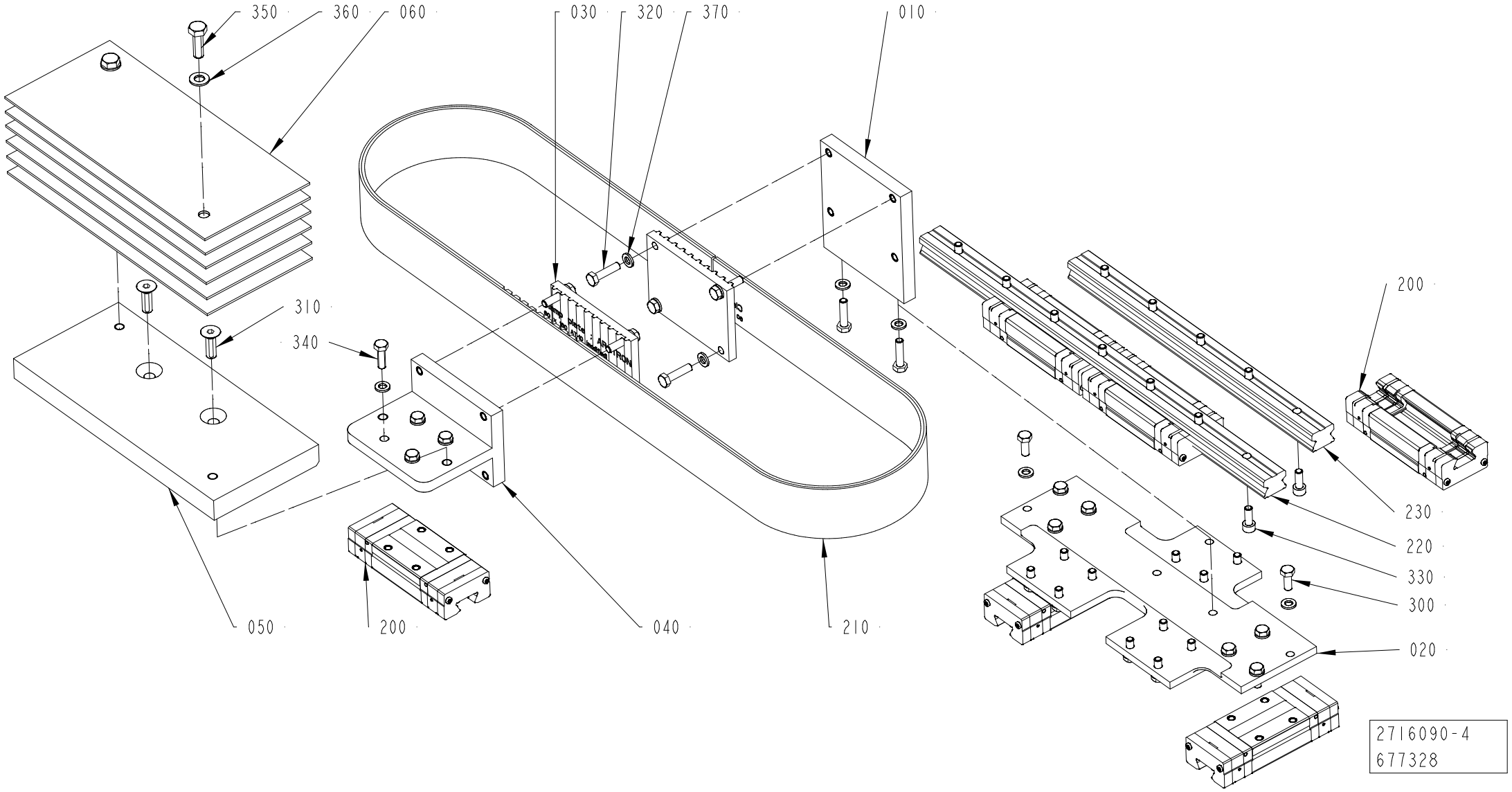
350
360
060
030
320
370
010
310
340
200
230
220
330
300
020
050
200
040
210
2716090-4
677328

ECM: 678267
Group number: 2716090-0200
Assembly Drawing: 2716090-4_1_AC

Pos	Part No	Description	Qty	Unit	Page No
SLIMCAP 2000, SLIMCAP 1000, STREAMCAP200, HELICAP2 23, HELICAP 27, STREAMCAP500, STREAMCAP1000					
020	2716083-0000	BRACKET	1	PC	
STREAMCAP500, STREAMCAP1000, SLIMCAP 2000, SLIMCAP 1000, STREAMCAP200, HELICAP2 23, HELICAP 27					
010	2695610-0000	CLAMP BRACKET	1	PC	
200	90604-8448	CARRIAGE, SSR25XW1QZSSHHM(GK)(B) BLOCK	6	PC	
220	90600-0483	GUIDE BAR, SSR 25-430LYM G35/35	1	PC	
230	90600-0482	GUIDE BAR, SSR 25 305 LYM G32.5/32.5	1	PC	
300	312105-0368	SCREW, M6S ISO 4017 M6X16 A4 80	20	PC	
320	312105-0372	SCREW, M6S ISO 4017 M6X25 A4 80	10	PC	
330	312115-0368	SCREW ISO4762 M6X16 A4 80	9	PC	
370	315106-0153	WASHER PLAIN, M6 ISO7089-6-200 HV A4	34	PC	
Common Parts					
030	2716073-0000	BELT HOLDER	2	PC	
040	2716074-0000	BRACKET	1	PC	
050	2716085-0000	COUNTERWEIGHT	1	PC	
060	2716075-0000	COUNTERWEIGHT	6	PC	
210	90600-0487	TIMING BELT 50AT10/1410 PU	1	PC	
310	312155-0453	SCREW DIN 7991 MF6S M8X25 A4 70	2	PC	
340	312105-0370	SCREW, M6S ISO 4017 M6X20 A4 80	4	PC	
350	312105-0453	SCREW, M6S ISO 4017 M8X25 A4 80	2	PC	
360	315105-0165	FWAS080G0-0S, WASHER PLAIN	2	PC	
500	344407-0000	KLÜBERSYNTH UH1 14-151, ONLY IN BOM	1	PC	202

Pos	Part No	Description	Qty	Unit	Page No

This page intentionally left blank

ECM: 653851
Group number: 344407-0000
Assembly Drawing: -

Pos	Part No	Description	Qty	Unit	Page No
Common Parts					
	344407-0037	KLÜBERSYNTH UH1 14-151, 1KG CAN	1	PC	
	344407-0177	KLÜBERSYNTH UH1 14-151, 25KG BUCKET	1	PC	
	344407-0285	KLÜBERSYNTH UH1 14-151, 45G TUBE	1	PC	
	344407-0591	KLÜBERSYNTH UH1 14-151, 400G CARTRIDGE	1	PC	

Pos	Part No	Description	Qty	Unit	Page No

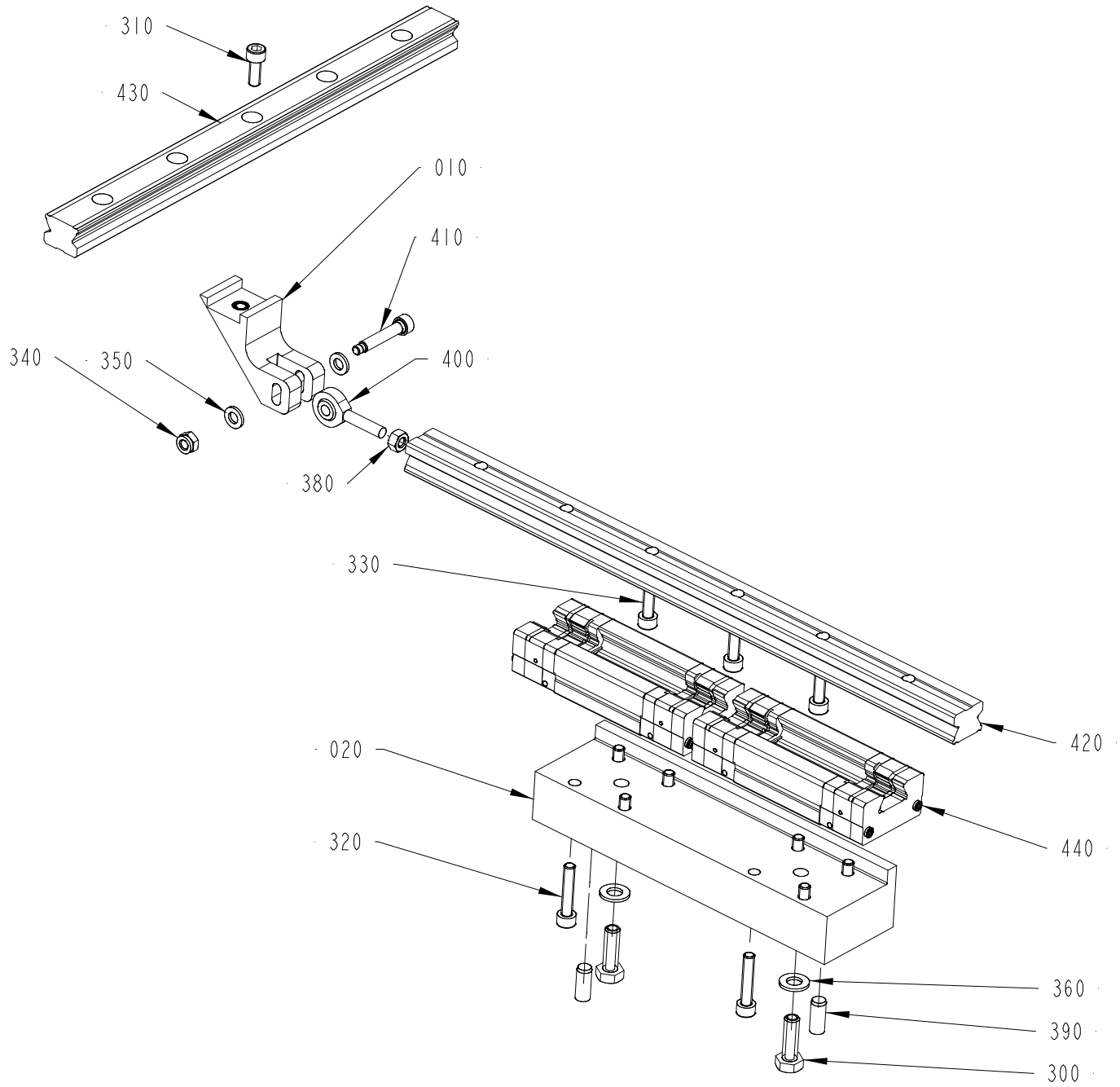
310
430
010
410
340
350
400
380
330
420
020
440
320
360
390
300
2716092-3
677328

ECM: 825847
Group number: 2716092-0200
Assembly Drawing: 2716092-3_1_AC

Pos	Part No	Description	Qty	Unit	Page No
HELICAP2 23, HELICAP 27, STREAMCAP500, STREAMCAP1000, SLIMCAP 2000, SLIMCAP 1000, STREAMCAP200					
330	312115-0370	SCREW ISO4762 M6X20 A4 80	3	PC	
STREAMCAP500, STREAMCAP1000, SLIMCAP 2000, SLIMCAP 1000, STREAMCAP200, HELICAP2 23, HELICAP 27					
020	2716089-0000	FASTENING BRACKET	1	PC	
310	312115-0368	SCREW ISO4762 M6X16 A4 80	1	PC	
320	312115-0374	SCREW ISO4762 M6X30 A4 80	8	PC	
420	90600-0485	GUIDE BAR, SSR25 385L YM G42.5/42.5	1	PC	
Common Parts					
010	3039032-0000	LINK ATTACHMENT	1	PC	
300	312105-0453	SCREW, M6S ISO 4017 M8X25 A4 80	2	PC	
340	312812-0316	HEXAGON NUT, NY-LOCK M6 A4 80	1	PC	
350	315106-0153	WASHER PLAIN, M6 ISO7089-6-200 HV A4	2	PC	
360	315106-0165	WASHER PLAIN, M8 ISO7089-8-200 HV A4	2	PC	
380	312605-0316	HEXAGON NUT, M6M M6 A280	1	PC	
390	311103-0401	PARALLEL PIN ISO 2338 8M6X20 A1	2	PC	
400	90115-0137	ROD END, ID=6 MM, M6X1	1	PC	
410	90287-0239	SHOULDER SCREW, 6X30/M5 SS	1	PC	
430	90600-0482	GUIDE BAR, SSR 25 305 LYM G32.5/32.5	1	PC	
440	90604-8448	CARRIAGE, SSR25XW1QZSSHHM(GK)(B) BLOCK	2	PC	

Pos	Part No	Description	Qty	Unit	Page No

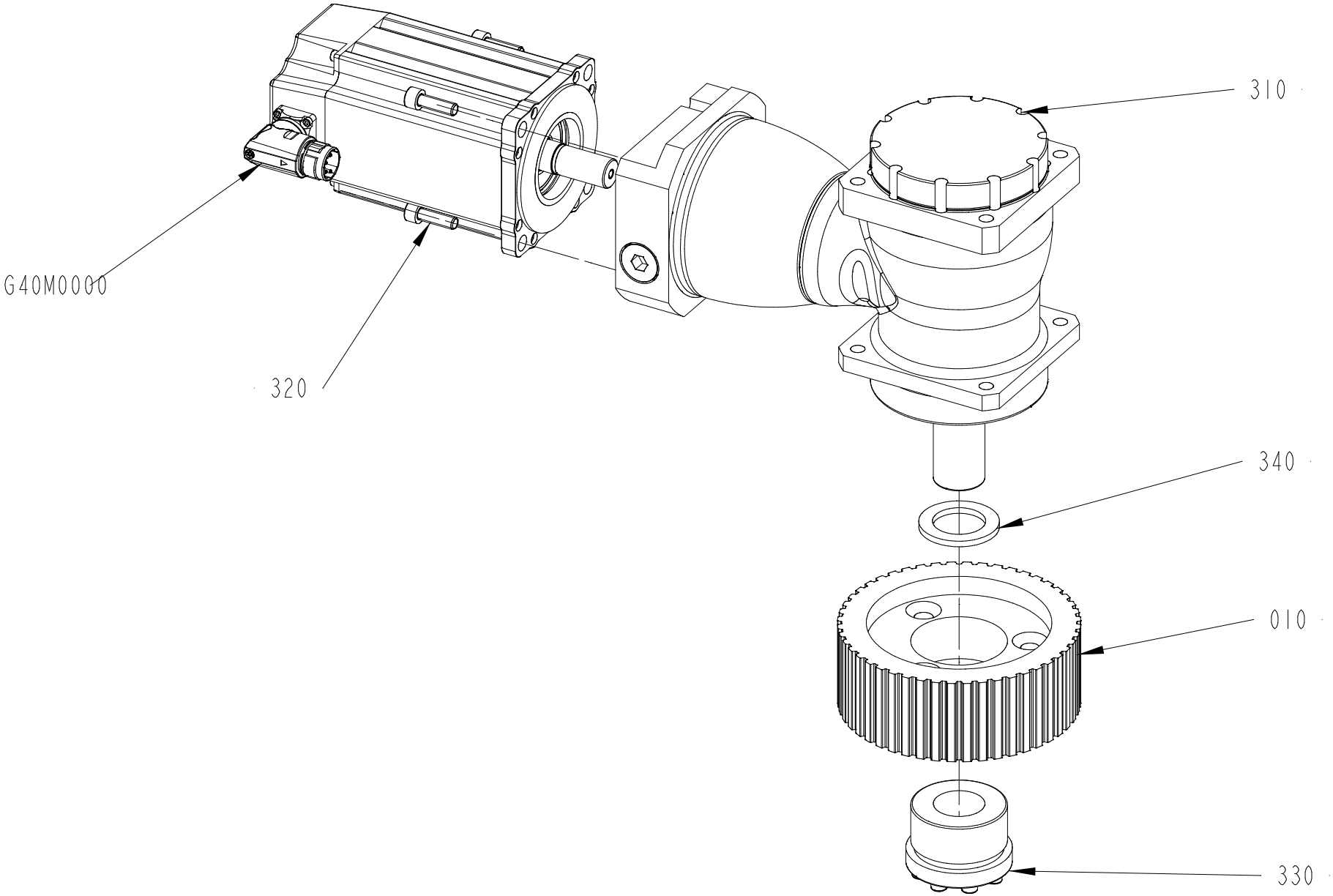

2840143-3
736442

ECM: 742650
Group number: 2840143-0300
Assembly Drawing: 2840143-3_1_AA

Pos	Part No	Description	Qty	Unit	Page No
Common Parts					
010	3319571-0000	TOOTHED PULLEY	1	PC	
310	90606-8922	PLANETARY GEAR, SK+100X-MF1-10-4H1	1	PC	
320	312115-0453	SCREW ISO4762 M8X25 A4 80	4	PC	
330	90603-2066	CLAMP.ELEMENT, WITHOUT SLEEVE, 32X60	1	PC	
340	315105-0205	WASHER PLAIN, 33X50X4 A4 BRB	1	PC	
G40M0000	90606-2779	SERVO MOTOR, VPL-B1153F-PK12AA, SERIES A	1	PC	

Pos	Part No	Description	Qty	Unit	Page No

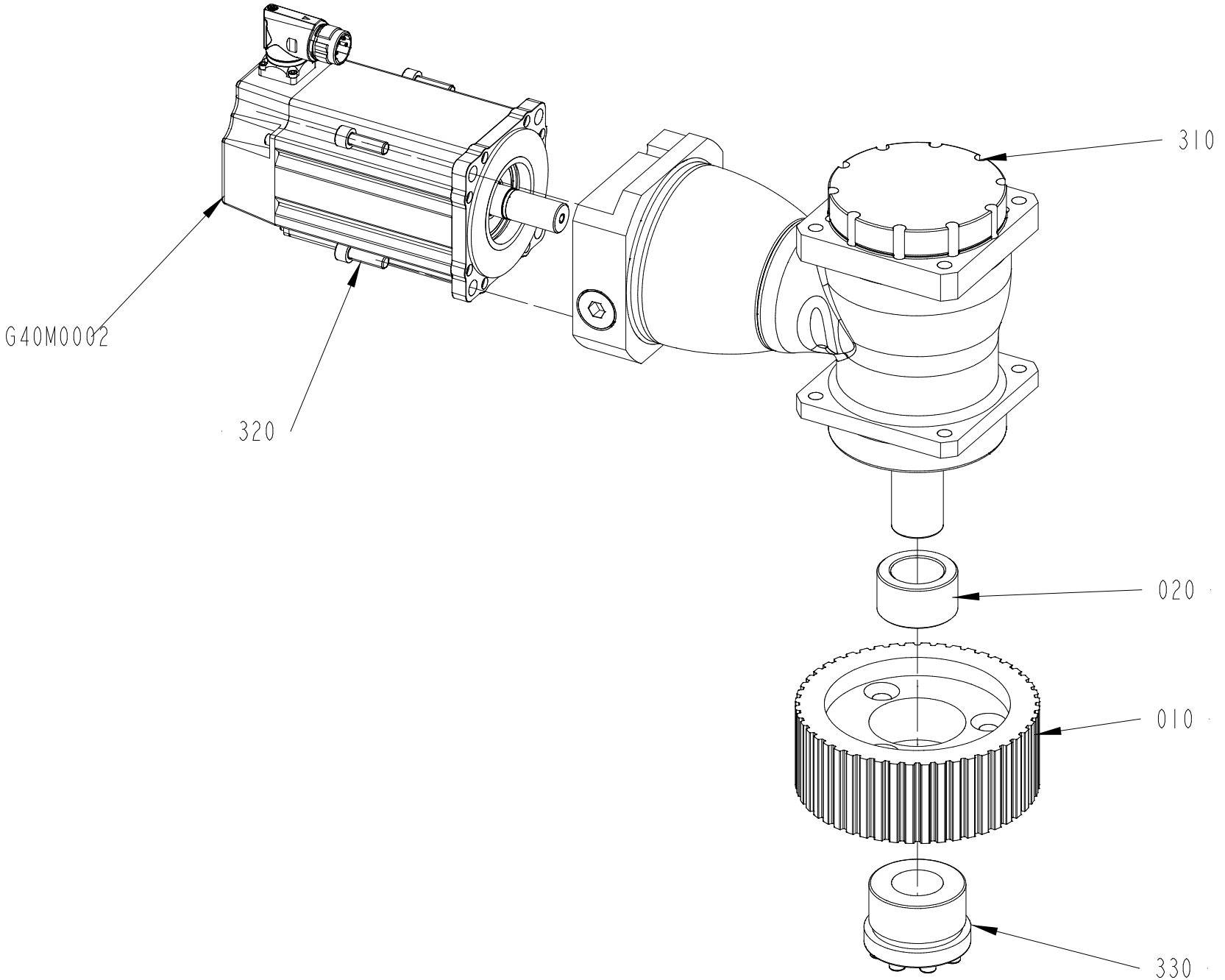

2840144-3
736442

ECM: 742651
Group number: 2840144-0300
Assembly Drawing: 2840144-3_1_AA

Pos	Part No	Description	Qty	Unit	Page No
Common Parts					
010	3319571-0000	TOOTHED PULLEY	1	PC	
020	3426317-0000	SPACER	1	PC	
310	90606-8922	PLANETARY GEAR, SK+100X-MF1-10-4H1	1	PC	
320	312115-0453	SCREW ISO4762 M8X25 A4 80	4	PC	
330	90603-2066	CLAMP.ELEMENT, WITHOUT SLEEVE, 32X60	1	PC	
G40M0002	90606-2779	SERVO MOTOR, VPL-B1153F-PK12AA, SERIES A	1	PC	

Pos	Part No	Description	Qty	Unit	Page No

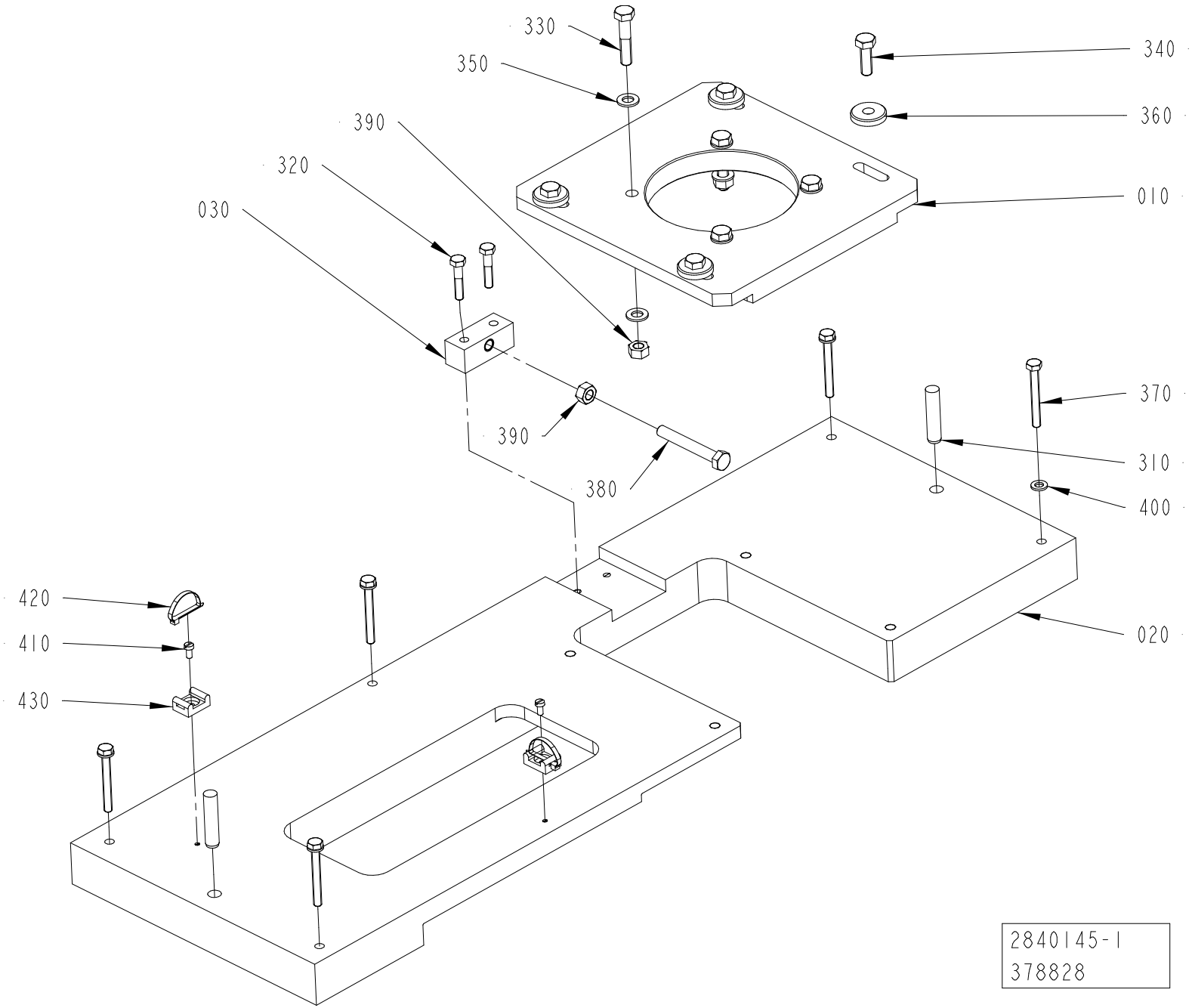
330
350
390
320
030
340
360
010
390
380
370
310
400
420
410
430
020
2840145-1
378828

ECM: 378825
Group number: 2840145-0100
Assembly Drawing: 2840145-1_1_AC

Pos	Part No	Description	Qty	Unit	Page No
Common Parts					
010	2985770-0000	FLANGE	1	PC	
020	2909473-0000	PLATE	1	PC	
030	2840851-0000	BLOCK	1	PC	
310	311103-0464	PARALLEL PIN ISO 2338 10M6X45 A1	2	PC	
320	312105-0374	SCREW, M6S ISO 4014 M6X30 A4 80	2	PC	
330	312105-0459	SCREW, M6S ISO 4014 M8X40 A4 80	4	PC	
340	312105-0453	SCREW, M6S ISO 4017 M8X25 A4 80	4	PC	
350	315105-0165	FWAS080G0-0S, WASHER PLAIN	8	PC	
360	315125-0165	WASHER HIGH, TBRSB 8,4X26X5 A4	4	PC	
370	312109-0380	SCREW, M6S ISO 4017 M6X50 A4 80	5	PC	
380	312109-0463	SCREW, M6S ISO 4017 M8X60 A4 80	1	PC	
390	312607-0318	HEXAGON NUT, EN 24032 M6M M8 A480	5	PC	
400	315105-0178	WASHER PLAIN, 13X24X2,5 A4 BRB	5	PC	
410	312125-0287	SLOTTED HEAD SCREW, ISO1207 M4X8 A4	2	PC	
420	352113-0104	CABLE TIE, BLACK 300X4,8 MM	2	PC	
430	352113-0203	ANCHOR PLATES FOR STRIPS, TM3S8-M0	2	PC	

Pos	Part No	Description	Qty	Unit	Page No

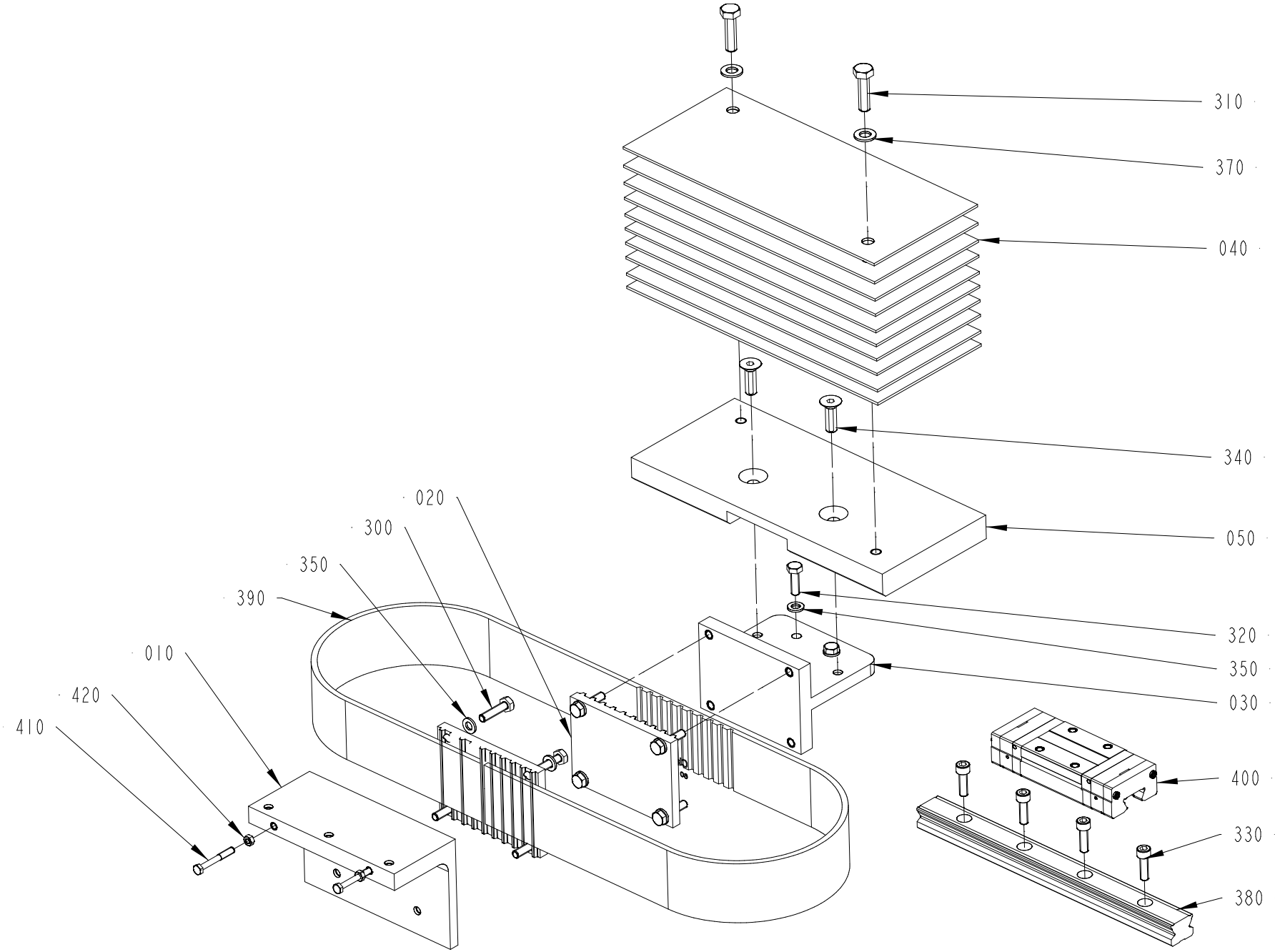

2716097-2
677328

ECM: 678270
Group number: 2716097-0200
Assembly Drawing: 2716097-2_1_AC

Pos	Part No	Description	Qty	Unit	Page No
STREAMCAP500, STREAMCAP1000, SLIMCAP 2000, SLIMCAP 1000, STREAMCAP200, HELICAP2 23, HELICAP 27					
010	2985772-0000	BRACKET	1	PC	
030	2716074-0000	BRACKET	1	PC	
050	2716085-0000	COUNTERWEIGHT	1	PC	
Common Parts					
020	2716073-0000	BELT HOLDER	2	PC	
040	2716075-0000	COUNTERWEIGHT	10	PC	
300	312105-0372	SCREW, M6S ISO 4017 M6X25 A4 80	8	PC	
310	312105-0455	SCREW, M6S ISO 4017 M8X30 A4 80	2	PC	
320	312105-0370	SCREW, M6S ISO 4017 M6X20 A4 80	4	PC	
330	312115-0370	SCREW ISO4762 M6X20 A4 80	4	PC	
340	312155-0453	SCREW DIN 7991 MF6S M8X25 A4 70	2	PC	
350	315105-0153	WASHER PLAIN, 6,4X12X1,5 A4 BRB	12	PC	
370	315105-0165	FWAS080G0-0S, WASHER PLAIN	2	PC	
380	90600-0484	GUIDE BAR, SSR 25 253L-YM G36.5/36.5	1	PC	
390	90600-0486	TIMING BELT 50AT10/1120 PU	1	PC	
400	90604-8448	CARRIAGE, SSR25XW1QZSSHHM(GK)(B) BLOCK	1	PC	
410	312105-0331	SCREW, M6S ISO 4017 M5X20 A4 80	2	PC	
420	312607-0314	HEXAGON NUT, EN 24032 M6M M5 A480	2	PC	

Pos	Part No	Description	Qty	Unit	Page No

Pos. 100 in BoM 662903-0400

FASTENING BRACKET

Drawing file:2840147-6_1_AA

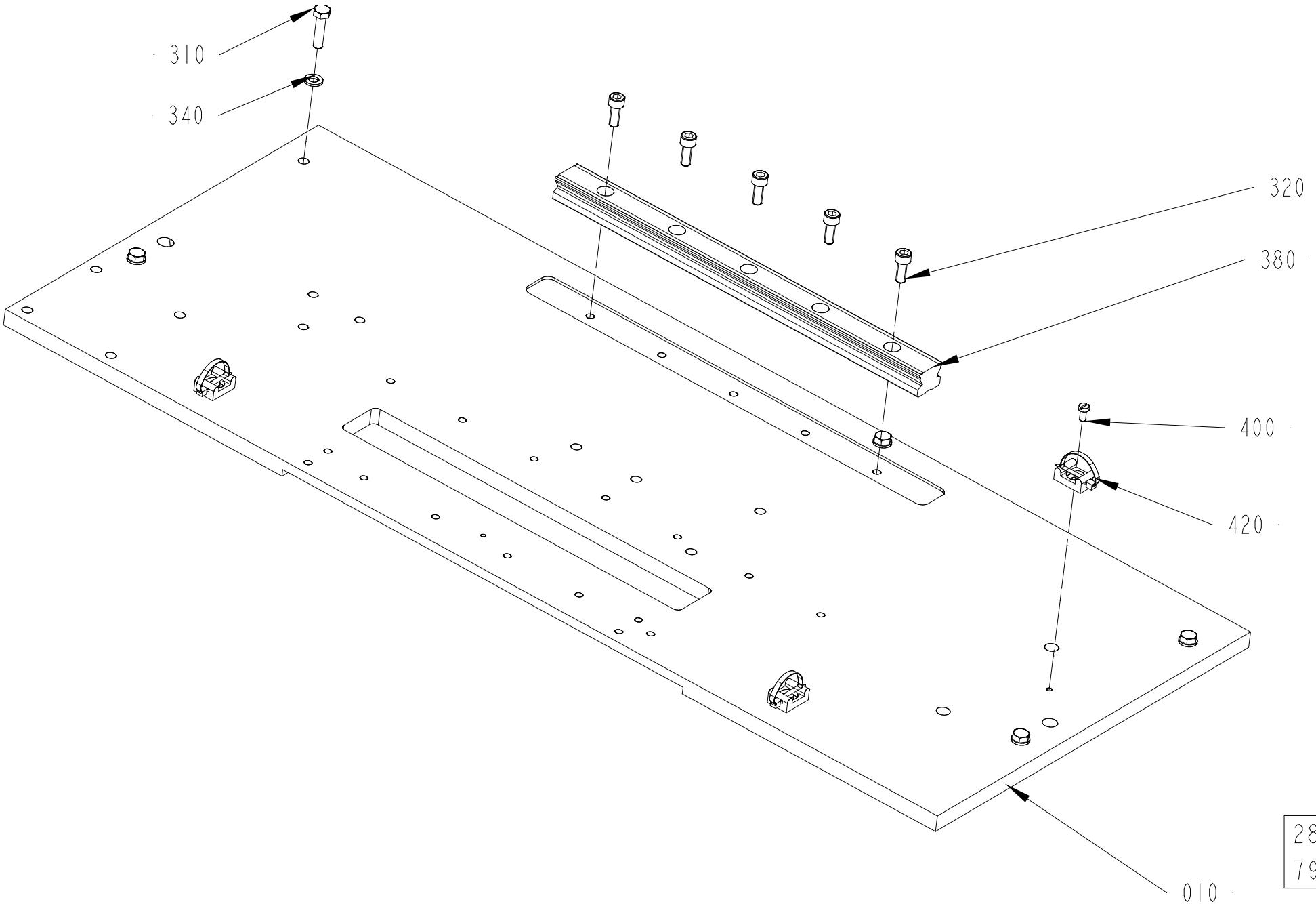

2840147-6
792783

ECM: 793993
Group number: 2840147-0300
Assembly Drawing: 2840147-6_1_AA

Pos	Part No	Description	Qty	Unit	Page No
STREAMCAP500, STREAMCAP1000, SLIMCAP 2000, SLIMCAP 1000, STREAMCAP200, HELICAP2 23, HELICAP 27					
010	2840680-0000	ASSEMBLY PLATE	1	PC	
310	312105-0372	SCREW, M6S ISO 4017 M6X25 A4 80	5	PC	
340	315105-0153	WASHER PLAIN, 6,4X12X1,5 A4 BRB	5	PC	
Common Parts					
320	312115-0368	SCREW ISO4762 M6X16 A4 80	5	PC	
380	90600-0482	GUIDE BAR, SSR 25 305 LYM G32.5/32.5	1	PC	
400	312125-0287	SLOTTED HEAD SCREW, ISO1207 M4X8 A4	3	PC	
410	352113-0104	CABLE TIE, BLACK 300X4,8 MM	3	PC	
420	352113-0203	ANCHOR PLATES FOR STRIPS, TM3S8-M0	3	PC	

Pos	Part No	Description	Qty	Unit	Page No

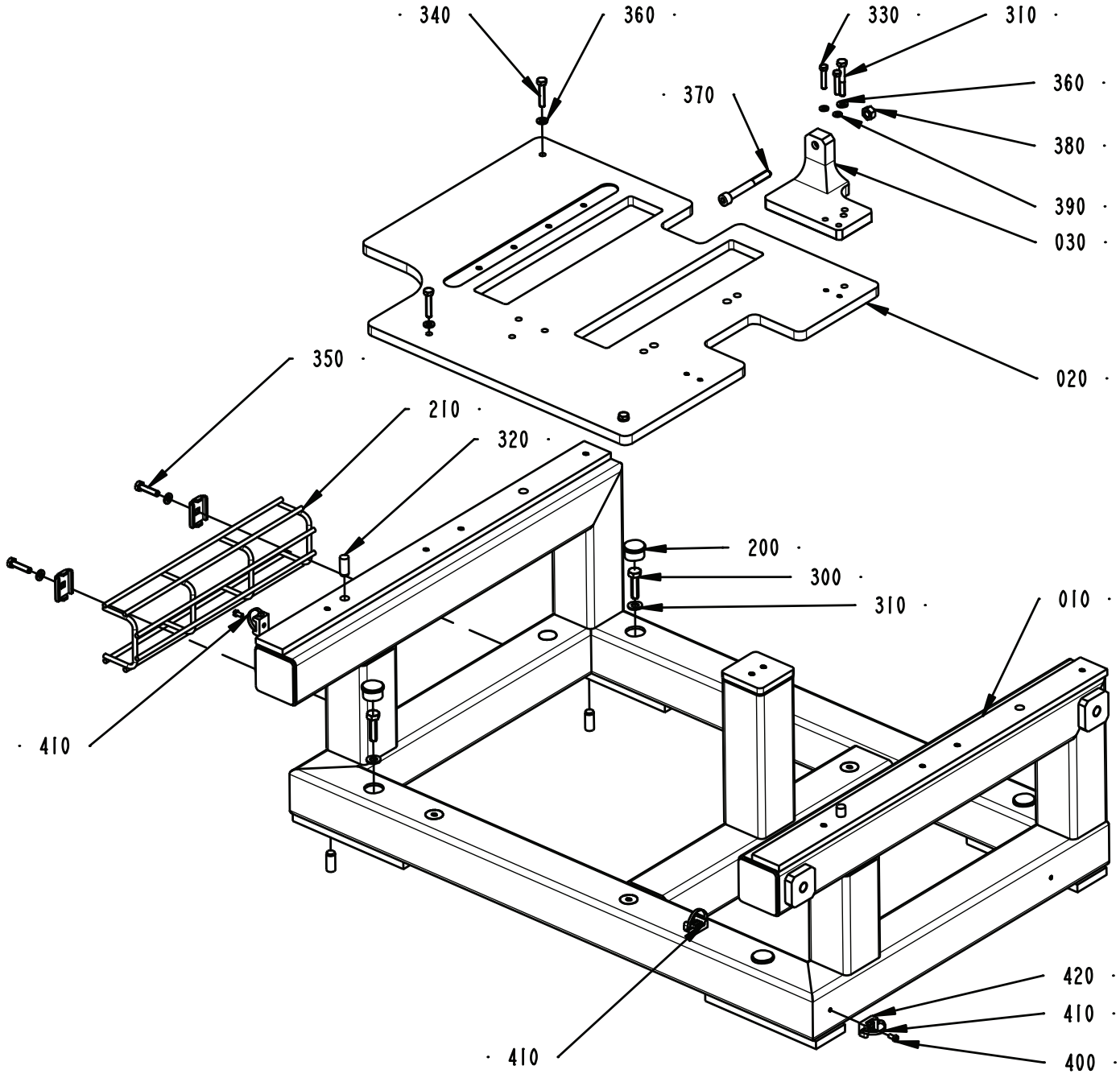
340
360
330
310
370
360
380
390
030
020
350
210
320
200
300
310
010
410
420
410
410
400

ECM: 805830
Group number: 2841501-0300
Assembly Drawing: 2841501-5_1_AB

Pos	Part No	Description	Qty	Unit	Page No
STREAMCAP500, STREAMCAP1000, SLIMCAP 2000, SLIMCAP 1000, STREAMCAP200, HELICAP2 23, HELICAP 27					
010	2838753-0000	FRAME	1	PC	
020	2985771-0000	PLATE	1	PC	
310	315105-0165	FWAS080G0-0S, WASHER PLAIN	4	PC	
400	312125-0287	SLOTTED HEAD SCREW, ISO1207 M4X8 A4	3	PC	
410	352113-0104	CABLE TIE, BLACK 300X4,8 MM	3	PC	
420	352113-0203	ANCHOR PLATES FOR STRIPS, TM3S8-M0	3	PC	
Common Parts					
030	3443928-0000	BLOCK	2	PC	
200	90261-0060	PLUG, BLIND, PLASTIC, NO. IKPK25X1, 5	4	PC	
210	2873896-0000	CABLE TRAY	1	PC	
300	312105-0455	SCREW, M6S ISO 4017 M8X30 A4 80	4	PC	
310	312105-0378	SCREW, M6S ISO 4014 M6X40 A4 80	1	PC	
320	311103-1456	PARALLEL PIN ISO 2338 10M6X24 A1	4	PC	
330	312105-0333	SCREW, M6S ISO 4017 M5X25 A4 80	2	PC	
340	312109-0374	SCREW, M6S ISO 4017 M6X30 A4 80	3	PC	
350	312105-0372	SCREW, M6S ISO 4017 M6X25 A4 80	2	PC	
360	315105-0153	WASHER PLAIN, 6,4X12X1,5 A4 BRB	6	PC	
370	312115-0465	SCREW ISO4762 M8X70 A4 80	1	PC	
380	312607-0318	HEXAGON NUT, EN 24032 M6M M8 A480	1	PC	
390	315105-0146	WASHER PLAIN, 5,3X10X1 A4 BRB	2	PC	

Pos	Part No	Description	Qty	Unit	Page No

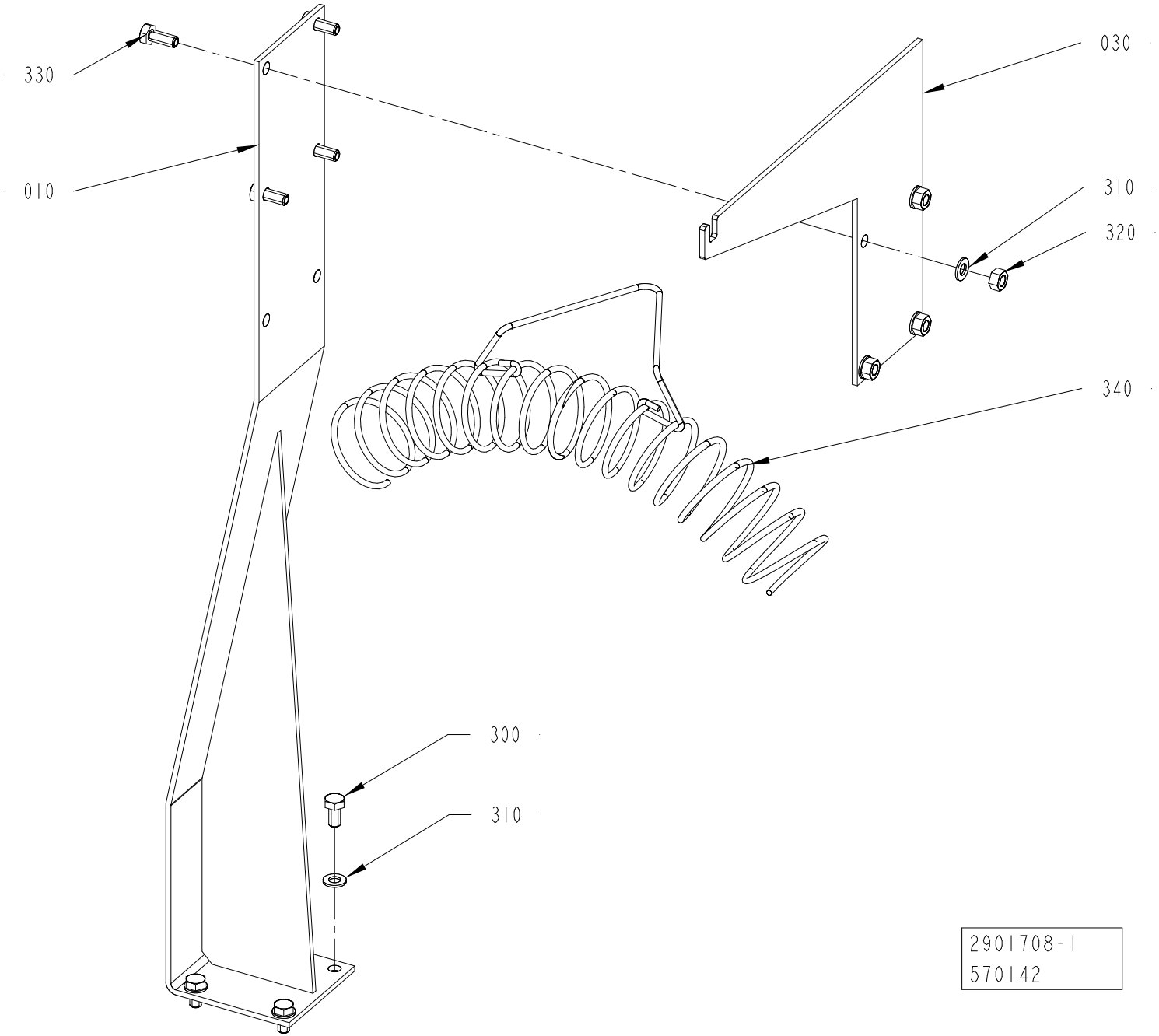
330
010
030
310
320
340
300
310
2901708-1
570142

ECM: 573765
Group number: 2901708-0100
Assembly Drawing: 2901708-1_1_AD

Pos	Part No	Description	Qty	Unit	Page No
Common Parts					
010	3223764-0000	BRACKET	1	PC	
030	3223765-0000	PLATE	1	PC	
300	312105-0449	SCREW, M6S ISO 4017 M8X16 A4 80	4	PC	
310	315105-0165	FWAS080G0-0S, WASHER PLAIN	8	PC	
320	312607-0318	HEXAGON NUT, EN 24032 M6M M8 A480	4	PC	
330	312105-0451	SCREW, M6S ISO 4017 M8X20 A4 80	4	PC	
340	90605-1044	HOSE HOLDER BLUE SERIES, 271486	1	PC	

Pos	Part No	Description	Qty	Unit	Page No

This page intentionally left blank

SPC

Spare Parts Catalogue

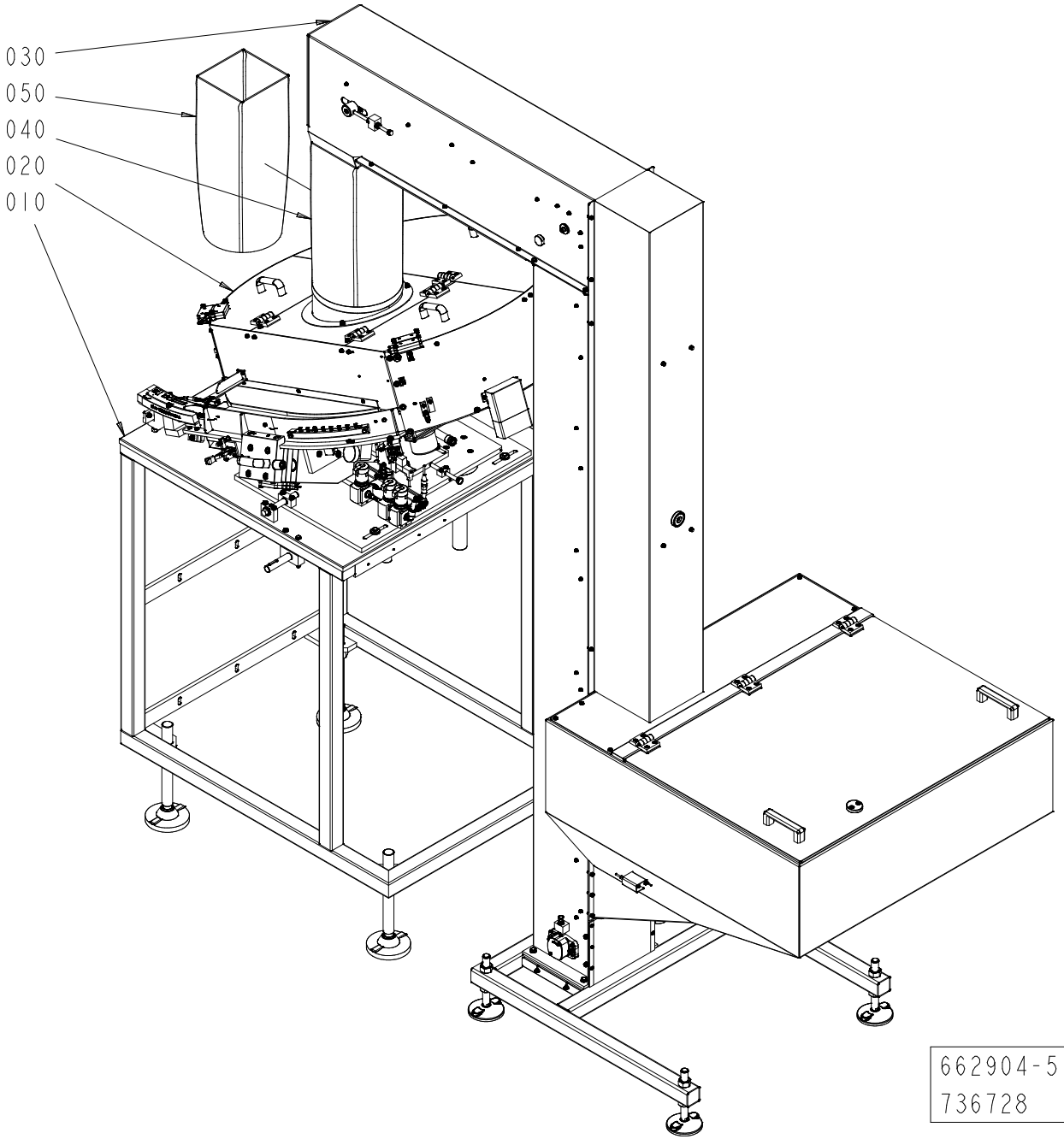
030
050
040
020
010
662904-5
736728

ECM: 812622
Group number: 662904-0400
Assembly Drawing: 662904-5_1_AA

Pos	Part No	Description	Qty	Unit	Page No
Common Parts					
010	2842830-0200	SUPPORT	1	PC	224
020	2846416-0400	FEEDER	1	PC	228
030	2812005-0400	ELEVATOR	1	PC	264, 268
040	2852912-0000	CONNECTION PIPE	1	PC	
050	2852913-0000	CONNECTION PIPE	1	PC	

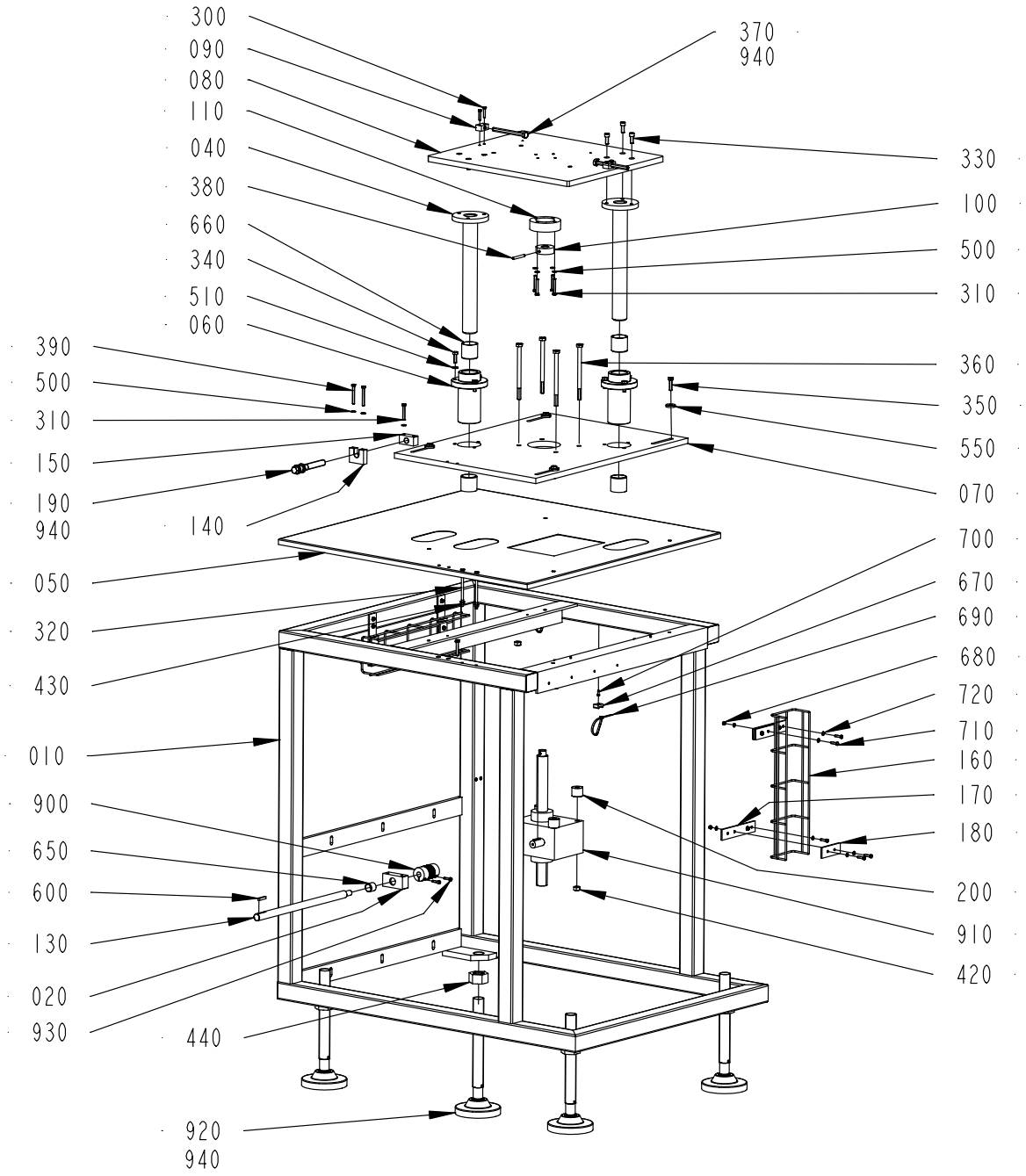
300
090
080
110
040
380
660
340
510
060
390
500
310
150
190
940
140
050
320
430
010
900
650
600
130
020
930
440
920
940
370
940
330
100
500
310
360
350
550
070
700
670
690
680
720
710
160
170
180
200
910
420

ECM: 812623
Group number: 2842830-0200
Assembly Drawing: 2842830-2_1_AA

Pos	Part No	Description	Qty	Unit	Page No
Common Parts					
010	3462207-0000	SUPPORT	1	PC	
020	2842832-0000	BRACKET	1	PC	
040	2842835-0000	COLUMN	2	PC	
050	3068596-0000	COVER	1	PC	
060	2842834-0000	FLANGE	2	PC	
070	3068597-0000	PLATE	1	PC	
080	2842837-0000	PLATE	1	PC	
090	2842838-0000	BLOCK	2	PC	
100	2769739-0000	DISC	1	PC	
110	2766964-0000	FLANGE	1	PC	
130	2842831-0000	ROD	1	PC	
140	3068594-0000	BLOCK	1	PC	
150	3068595-0000	BLOCK	1	PC	
160	2844525-0000	CABLE DUCT	2	PC	
170	2844526-0000	PLATE	4	PC	
180	2844527-0000	PLATE	4	PC	
190	3068593-0000	SCREW	1	PC	
200	2845097-0000	SPACER	4	PC	
300	312105-0333	SCREW, M6S ISO 4017 M5X25 A4 80	4	PC	
310	312109-0378	SCREW, M6S ISO 4017 M6X40 A4 80	6	PC	
320	312105-0390	SCREW, M6S ISO 4014 M6X100 A4 80	2	PC	
330	312115-0451	SCREW ISO4762 M8X20 A4 80	6	PC	
340	312105-0453	SCREW, M6S ISO 4017 M8X25 A4 80	6	PC	
350	312105-0455	SCREW, M6S ISO 4017 M8X30 A4 80	4	PC	
360	312105-0519	SCREW, M6S ISO 4014 M10X150 A4 80	4	PC	
370	6-4000 0006 08	SCREW M6S 10 X 110	2	PC	
380	311103-0365	PARALLEL PIN ISO 2338 6M6X50 A1	1	PC	
390	312109-0380	SCREW, M6S ISO 4017 M6X50 A4 80	2	PC	
420	312605-0320	HEXAGON NUT, M6M M10 A280	4	PC	
430	312607-0316	HEXAGON NUT, EN 24032 M6M M6 A480	2	PC	
440	312607-0332	HEXAGON NUT, EN 24032 M6M M30 A480	4	PC	
500	315105-0153	WASHER PLAIN, 6,4X12X1,5 A4 BRB	10	PC	
510	315105-0165	FWAS080G0-0S, WASHER PLAIN	6	PC	
550	315125-0165	WASHER HIGH, TBRSB 8,4X26X5 A4	4	PC	
600	315705-0237	PARALLEL KEY W. ROUND ENDS, 6X6X32 MM	1	PC	
650	321133-0260	BUSHING IGLIDUR G 20X23X20	1	PC	
660	321133-0420	BUSHING IGLIDUR G 40X44X40	4	PC	
670	352113-0203	ANCHOR PLATES FOR STRIPS, TM3S8-M0	5	PC	
680	312605-0314	HEXAGON NUT, M6M M5 A280	8	PC	
690	352113-0102	CABLE TIE, BLACK 188X4,8 MM	5	PC	
700	312125-0291	SLOTTED HEAD SCREW, ISO1207 M4X12 A4	5	PC	
710	312105-0331	SCREW, M6S ISO 4017 M5X20 A4 80	16	PC	
720	315105-0146	WASHER PLAIN, 5,3X10X1 A4 BRB	24	PC	
900	90600-2560	COUPLING 14X20 MM, 727-38-4838	1	PC	
910	90600-0658	WORM GEAR SCREW JACK, TP00063000130	1	PC	
920	90600-1002	FOOT 50000N, HPA125-30-325	4	PC	
930	312115-0331	SCREW ISO4762 M5X20 A4 80	2	PC	
940	1607010-0000	LUBRICANT H1-0500, PAO V320, ONLY IN BOM	1	L	226

This page intentionally left blank

ECM: 716391
Group number: 1607010-0000
Assembly Drawing: -

Pos	Part No	Description	Qty	Unit	Page No
Common Parts					
	1607010-0005	LUBRICANT H1-0500, PAO V320, 5 L CAN	1	PC	
	1607010-0020	LUBRICANT H1-0500, PAO V320, 20 L CAN	1	PC	

Pos	Part No	Description	Qty	Unit	Page No

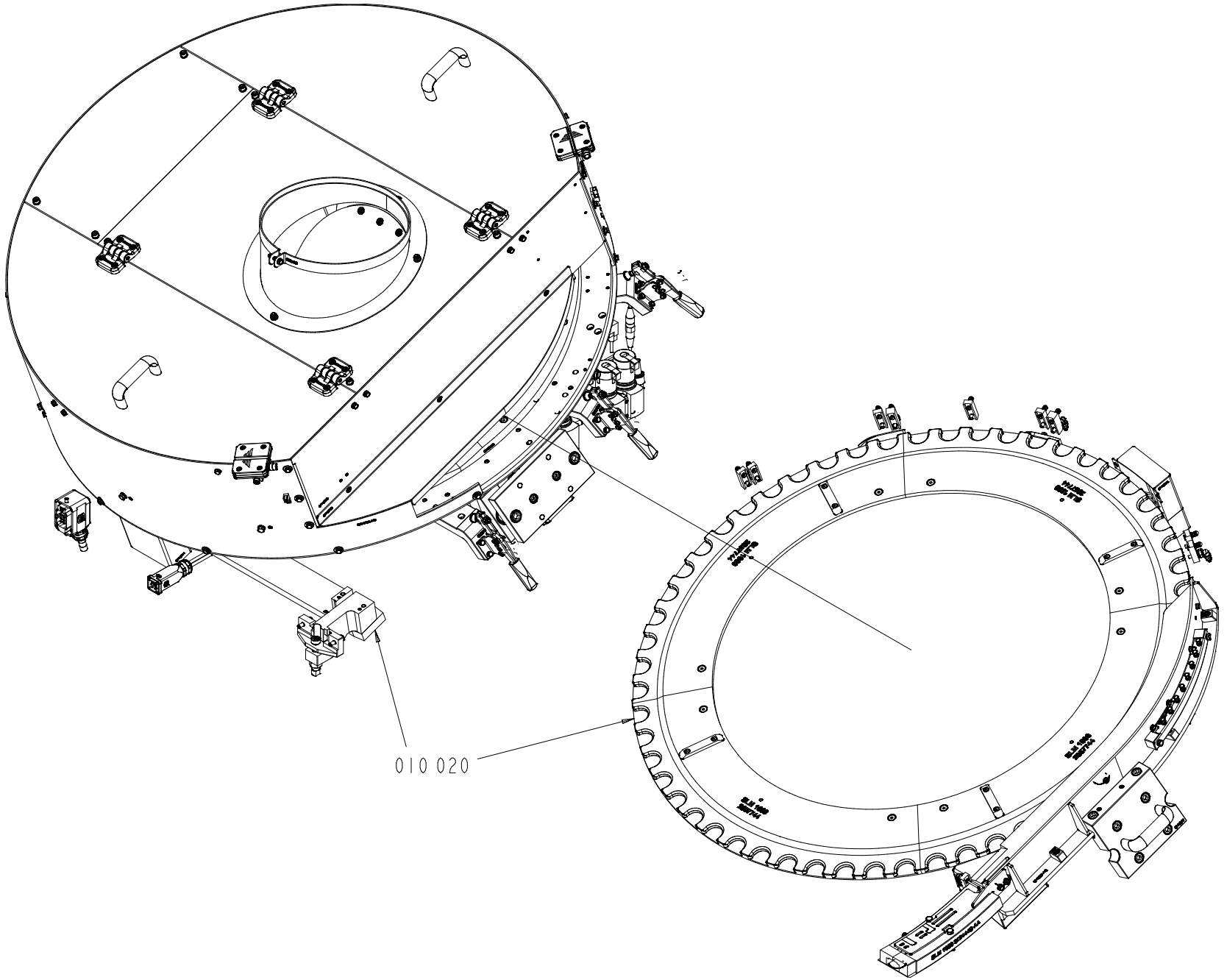
010 020

ECM: 836363
Group number: 2846416-0400
Assembly Drawing: 2846416-5_1_AB

Pos	Part No	Description	Qty	Unit	Page No
HELICAP 27					
020	3102968-0300	VOLUME KIT	1	PC	230
HELICAP2 23					
020	3068635-0400	VOLUME KIT	1	PC	232
SLIMCAP 1000					
020	2846408-0400	VOLUME KIT	1	PC	234
SLIMCAP 2000					
020	2873977-0400	VOLUME KIT	1	PC	236
STREAMCAP1000					
020	2846407-0300	VOLUME KIT	1	PC	238
STREAMCAP200					
020	2874001-0400	VOLUME KIT	1	PC	240
STREAMCAP500					
020	2873978-0300	VOLUME KIT	1	PC	242
STREAMCAP500, STREAMCAP1000, SLIMCAP 2000, SLIMCAP 1000, STREAMCAP200, HELICAP2 23, HELICAP 27					
010	2846406-0500	CAP SORTER	1	PC	244, 248

Pos	Part No	Description	Qty	Unit	Page No

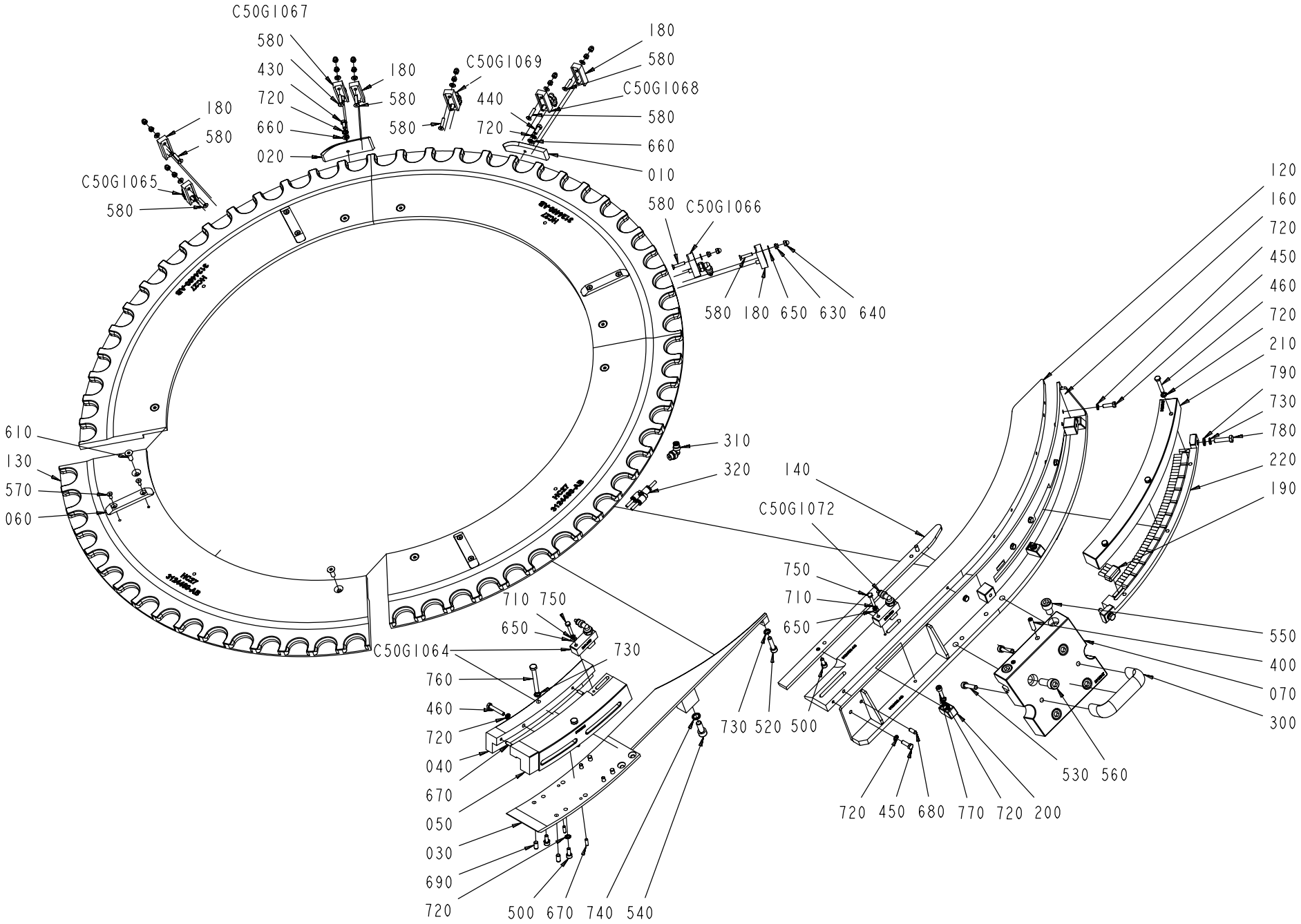
C50G1067
580
430
720
660
020
180
580
C50G1069
580
440
720
010
180
580
C50G1068
580
660
180
580
C50G1065
580
580
C50G1066
580 180 650 630 640
610
130
570
060
310
320
140
C50G1072
120
160
720
450
460
720
210
790
730
780
220
190
750
710
650
550
400
070
300
710 750
650
C50G1064
730
760
460
720
040
670
050
030
690
720
500 670 740 540
730 520 500
530 560
720 450 680 770 720 200

ECM: 836366
Group number: 3102968-0300
Assembly Drawing: 3102968-3_1_AA

Pos	Part No	Description	Qty	Unit	Page No
Common Parts					
010	2981410-0000	CAM	1	PC	
020	2981411-0000	CAM	1	PC	
030	3115368-0000	BASE	1	PC	
040	3124531-0000	GUIDE	1	PC	
050	3124532-0000	GUIDE	1	PC	
060	3115346-0000	CARRIER	4	PC	
070	3115347-0000	PLATE	1	PC	
120	3124459-0000	PULLER	1	PC	
130	3124460-0000	GUIDE	4	PC	
140	3124461-0000	PLATE	1	PC	
160	3124463-0000	PLATE	1	PC	
180	2981406-0000	AIR BLOW REGULATOR	4	PC	
190	2857743-0000	BRUSH	12	PC	
200	3365201-0000	DOWEL	3	PC	
200	3459910-0000	TOP SUPPORT	1	PC	
200	3459911-0000	BOTTOM SUPPORT	1	PC	
300	3115300-0000	HANDLE	1	PC	
310	351456-3001	PUSH-IN L-FITTING NPQH-L-G18-Q4-P10	1	PC	
320	90458-0745	Y-CONNECTION	1	PC	
400	3108463-0000	TAPER PIN	2	PC	
430	312105-0325	SCREW, M6S ISO 4017 M5X10 A4 80	1	PC	
440	312105-0327	SCREW, M6S ISO 4017 M5X12 A4 80	1	PC	
450	312105-0329	SCREW, M6S ISO 4017 M5X16 A4 80	6	PC	
460	312109-0335	SCREW, M6S ISO 4017 M5X30 A4 80	4	PC	
500	312115-0327	SCREW ISO4762 M5X12 A4 80	6	PC	
520	312115-0372	SCREW ISO4762 M6X25 A4 80	1	PC	
530	312115-0374	SCREW ISO4762 M6X30 A4 80	2	PC	
540	312115-0451	SCREW ISO4762 M8X20 A4 80	1	PC	
550	312115-0489	SCREW ISO4762 M10X16 A4 80	2	PC	
560	312115-0495	SCREW ISO4762 M10X30 A4 80	4	PC	
570	312155-0289	SCREW DIN 7991 MF6S M4X10 A4 70	8	PC	
580	312155-0295	SCREW DIN 7991 MF6S M4X20 A4 70	9	PC	
610	312155-0368	SCREW DIN 7991 MF6S M6X16 A4 70	8	PC	
630	312810-0312	HEXAGON NUT, NY-LOCK M4 FZB	9	PC	
640	312705-0312	NUT HEX. DOMED CAP MHM-6 M4 A280	9	PC	
650	315103-0136	WASHER PLAIN, 4,3X8X0,8 BR NI PL	11	PC	
660	315103-0146	WASHER PLAIN, 5,3X10X1 BR NI PL	2	PC	
670	311103-0268	PARALLEL PIN ISO 2338 4M6X12 A1	4	PC	
680	311103-0306	PARALLEL PIN ISO 2338 5M6X12 A1	2	PC	
690	311103-0349	PARALLEL PIN ISO 2338 6M6X12 A1	4	PC	
710	3108451-0000	WASHER	2	PC	
720	3108452-0000	WASHER	19	PC	
730	3108453-0000	WASHER	5	PC	
740	3108454-0000	WASHER	1	PC	
750	312105-0297	SCREW, M6S ISO 4017 M4X25 A4 70	2	PC	
760	312109-0380	SCREW, M6S ISO 4017 M6X50 A4 80	2	PC	
770	312115-0331	SCREW ISO4762 M5X20 A4 80	3	PC	
780	312105-0372	SCREW, M6S ISO 4017 M6X25 A4 80	2	PC	
790	315103-0153	WASHER PLAIN, 6,4X12X1,5 BR NI PL	2	PC	
C50G1064	3124533-0000	AIR NOZZLE	1	PC	
C50G1065	2930228-0000	AIR NOZZLE	1	PC	
C50G1066	3124524-0000	AIR NOZZLE	1	PC	
C50G1067	2930228-0000	AIR NOZZLE	1	PC	
C50G1068	2930228-0000	AIR NOZZLE	1	PC	
C50G1069	3124524-0000	AIR NOZZLE	1	PC	
C50G1072	3124533-0000	AIR NOZZLE	1	PC	

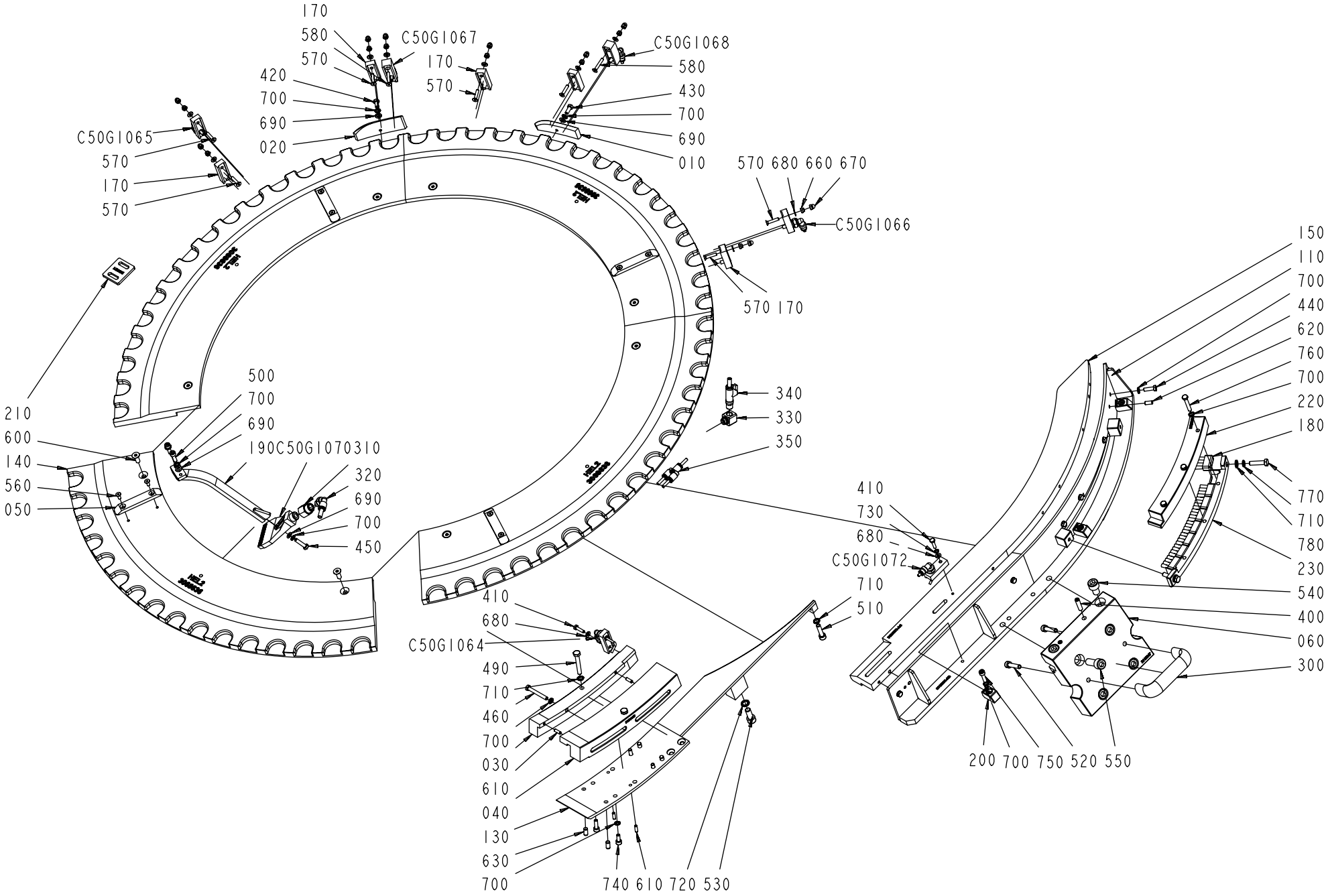
170
580
570
C50G1067
420
700
690
020
C50G1065
570
170
570
170
570
C50G1068
580
430
700
690
010
570 680 660 670
C50G1066
570 170
150
110
700
440
620
760
700
220
180
770
710
780
230
540
400
060
300
200 700 750 520 550
340
330
350
500
700
690
190C50G1070310
320
690
700
450
210
600
140
560
050
410
730
680
C50G1072
710
510
410
680
C50G1064
490
710
460
700
030
610
040
130
630
700
740 610 720 530

ECM: 836365
Group number: 3068635-0400
Assembly Drawing: 3068635-5_1_AA

Pos	Part No	Description	Qty	Unit	Page No
Common Parts					
010	2981410-0000	CAM	1	PC	
020	2981411-0000	CAM	1	PC	
030	3124457-0000	GUIDE	1	PC	
040	3124458-0000	GUIDE	1	PC	
050	3115346-0000	CARRIER	4	PC	
060	3115347-0000	PLATE	1	PC	
110	3115354-0000	PLATE	1	PC	
130	3115368-0000	BASE	1	PC	
140	3068636-0000	GUIDE	4	PC	
150	3124373-0000	PULLER	1	PC	
170	2981406-0000	AIR BLOW REGULATOR	5	PC	
180	2857743-0000	BRUSH	8	PC	
190	2981418-0000	AIR NOZZLE	1	PC	
200	3365201-0000	DOWEL	3	PC	
210	3433171-0000	SPACER	1	PC	
220	3459908-0000	TOP SUPPORT	1	PC	
230	3459909-0000	BOTTOM SUPPORT	1	PC	
300	3115300-0000	HANDLE	1	PC	
310	3124360-0000	REDUCTION SLEEVE	1	PC	
320	351456-3002	PUSH-IN L-FITTING NPQH-L-G18-Q6-P10	1	PC	
330	90224-0031	CONN. ELBOW, ART.NO 3814	1	PC	
340	90187-0191	BALL VALVE, R1/8 - HOSE 6 MM	1	PC	
350	90458-0745	Y-CONNECTION	1	PC	
400	3108463-0000	TAPER PIN	2	PC	
410	312105-0293	SCREW, M6S ISO 4017 M4X16 A4 70	2	PC	
420	312105-0325	SCREW, M6S ISO 4017 M5X10 A4 80	1	PC	
430	312105-0327	SCREW, M6S ISO 4017 M5X12 A4 80	1	PC	
440	312105-0329	SCREW, M6S ISO 4017 M5X16 A4 80	6	PC	
450	312105-0331	SCREW, M6S ISO 4017 M5X20 A4 80	1	PC	
460	312109-0339	SCREW, M6S ISO 4017 M5X40 A4 80	1	PC	
490	312109-0378	SCREW, M6S ISO 4017 M6X40 A4 80	2	PC	
500	312115-0329	SCREW ISO4762 M5X16 A4 80	4	PC	
510	312115-0372	SCREW ISO4762 M6X25 A4 80	1	PC	
520	312115-0374	SCREW ISO4762 M6X30 A4 80	2	PC	
530	312115-0451	SCREW ISO4762 M8X20 A4 80	1	PC	
540	312115-0489	SCREW ISO4762 M10X16 A4 80	2	PC	
550	312115-0495	SCREW ISO4762 M10X30 A4 80	4	PC	
560	312155-0289	SCREW DIN 7991 MF6S M4X10 A4 70	8	PC	
570	312155-0295	SCREW DIN 7991 MF6S M4X20 A4 70	7	PC	
580	312155-0297	SCREW DIN 7991 MF6S M4X25 A4 70	2	PC	
600	312155-0368	SCREW DIN 7991 MF6S M6X16 A4 70	8	PC	
610	311103-0268	PARALLEL PIN ISO 2338 4M6X12 A1	4	PC	
620	311103-0306	PARALLEL PIN ISO 2338 5M6X12 A1	2	PC	
630	311103-0349	PARALLEL PIN ISO 2338 6M6X12 A1	4	PC	
660	312810-0312	HEXAGON NUT, NY-LOCK M4 FZB	9	PC	
670	312705-0312	NUT HEX. DOMED CAP MHM-6 M4 A280	9	PC	
680	315103-0136	WASHER PLAIN, 4,3X8X0,8 BR NI PL	11	PC	
690	315103-0146	WASHER PLAIN, 5,3X10X1 BR NI PL	5	PC	
700	3108452-0000	WASHER	22	PC	
710	3108453-0000	WASHER	5	PC	
720	3108454-0000	WASHER	1	PC	
730	3108451-0000	WASHER	1	PC	
740	312115-0327	SCREW ISO4762 M5X12 A4 80	2	PC	
750	312115-0331	SCREW ISO4762 M5X20 A4 80	3	PC	
760	312109-0335	SCREW, M6S ISO 4017 M5X30 A4 80	3	PC	
770	312105-0372	SCREW, M6S ISO 4017 M6X25 A4 80	2	PC	
780	315103-0153	WASHER PLAIN, 6,4X12X1,5 BR NI PL	2	PC	
C50G1064	3115358-0000	AIR NOZZLE	1	PC	
C50G1065	2930228-0000	AIR NOZZLE	1	PC	
C50G1066	2930229-0000	AIR NOZZLE	1	PC	
C50G1067	3115238-0000	AIR NOZZLE	1	PC	
C50G1068	3115238-0000	AIR NOZZLE	1	PC	
C50G1070	3124541-0000	AIR NOZZLE	1	PC	
C50G1072	3124444-0000	AIR NOZZLE	1	PC	

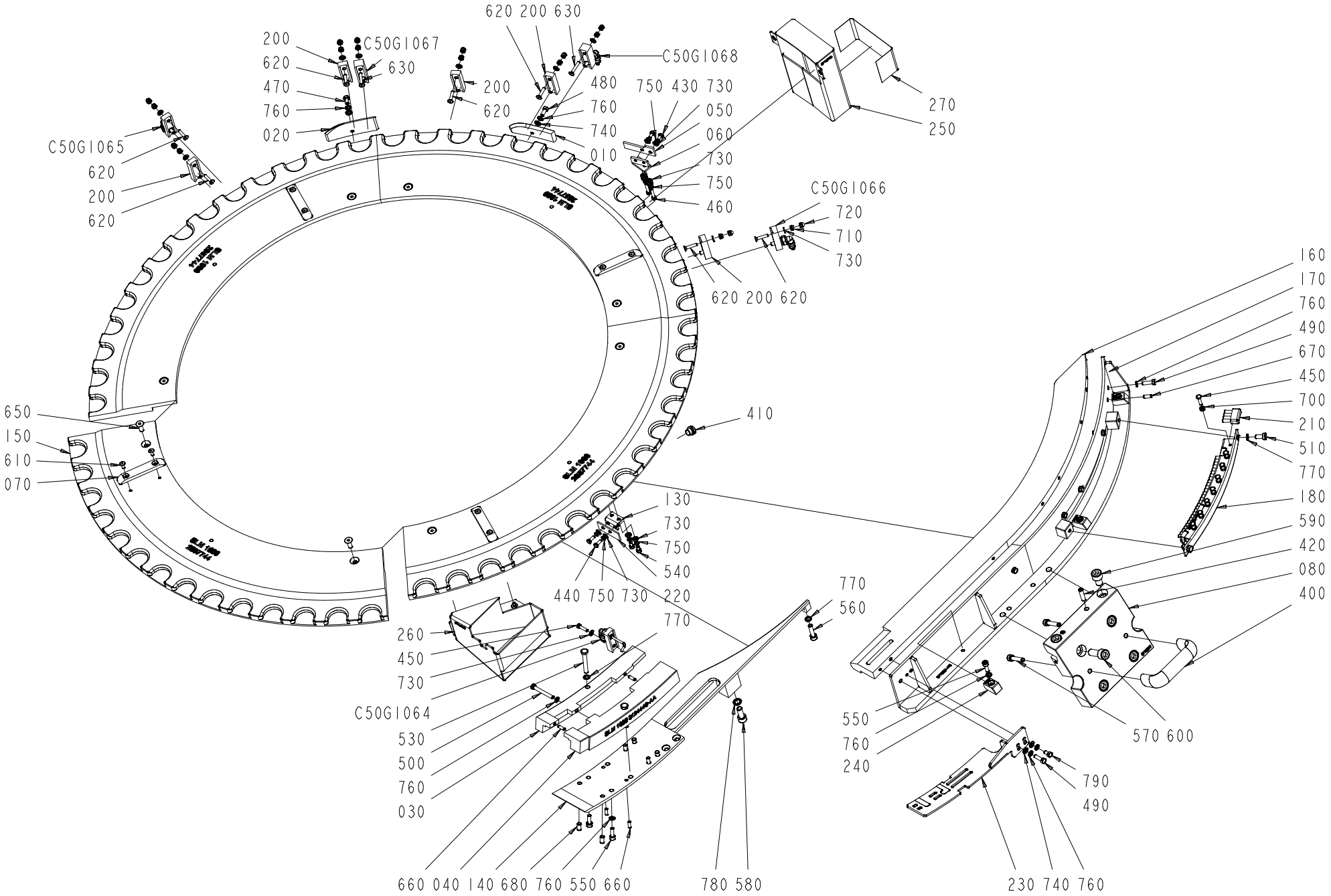
620 200 630
200
620
470
760
020
C50G1067
630
C50G1068
480
760
740
010
750 430 730
050
060
730
750
460
270
250
C50G1065
620
200
620
C50G1066
720
710
730
620 200 620
650
150
610
070
410
160
170
760
490
670
450
700
210
510
770
180
590
420
080
400
130
730
750
540
220
440 750 730
770
560
260
450
730
C50G1064
530
500
760
030
660 040 140 680 760 550 660
780 580
550
760
240
570 600
790
490
230 740 760

ECM: 861135
Group number: 2846408-0400
Assembly Drawing: 2846408-5_1_AA

Pos	Part No	Description	Qty	Unit	Page No
Common Parts					
010	2981410-0000	CAM	1	PC	
020	2981411-0000	CAM	1	PC	
030	3124445-0000	GUIDE	1	PC	
040	3124446-0000	GUIDE	1	PC	
050	3124421-0000	SCRAPER	1	PC	
060	3115345-0000	SUPPORT	1	PC	
070	3115346-0000	CARRIER	4	PC	
080	3115347-0000	PLATE	1	PC	
130	3124422-0000	CLAMP	1	PC	
140	3115352-0000	BASE	1	PC	
150	2857744-0000	GUIDE	4	PC	
160	3115353-0000	PULLER	1	PC	
170	3115354-0000	PLATE	1	PC	
180	3115355-0000	BRUSH	1	PC	
200	2981406-0000	AIR BLOW REGULATOR	5	PC	
210	2857743-0000	BRUSH	8	PC	
220	3115357-0000	SCRAPER	1	PC	
230	3124443-0000	SUPPORT	1	PC	
240	3365201-0000	DOWEL	3	PC	
250	3115275-0000	COVER	1	PC	
260	3115259-0000	COVER	1	PC	
270	3115281-0000	LABEL TAPE	1	PC	
400	3115300-0000	HANDLE	1	PC	
410	344373-0030	BLANKING PLUG G1/8, NPQH-BK-G18-P10	1	PC	
420	3108463-0000	TAPER PIN	2	PC	
430	312105-0287	SCREW, M6S ISO 4017 M4X8 A4 70	2	PC	
440	312105-0289	SCREW, M6S ISO 4017 M4X10 A4 70	2	PC	
450	312105-0293	SCREW, M6S ISO 4017 M4X16 A4 70	9	PC	
460	312105-0287	SCREW, M6S ISO 4017 M4X8 A4 70	2	PC	
470	312105-0325	SCREW, M6S ISO 4017 M5X10 A4 80	1	PC	
480	312105-0327	SCREW, M6S ISO 4017 M5X12 A4 80	1	PC	
490	312105-0329	SCREW, M6S ISO 4017 M5X16 A4 80	4	PC	
500	312109-0339	SCREW, M6S ISO 4017 M5X40 A4 80	1	PC	
510	312105-0366	SCREW, M6S ISO 4017 M6X12 A4 80	2	PC	
530	312109-0378	SCREW, M6S ISO 4017 M6X40 A4 80	2	PC	
540	312115-0287	SCREW ISO4762 M4X8 A4 80	2	PC	
550	312115-0329	SCREW ISO4762 M5X16 A4 80	7	PC	
560	312115-0372	SCREW ISO4762 M6X25 A4 80	1	PC	
570	312115-0374	SCREW ISO4762 M6X30 A4 80	2	PC	
580	312115-0451	SCREW ISO4762 M8X20 A4 80	1	PC	
590	312115-0489	SCREW ISO4762 M10X16 A4 80	2	PC	
600	312115-0495	SCREW ISO4762 M10X30 A4 80	4	PC	
610	312155-0289	SCREW DIN 7991 MF6S M4X10 A4 70	8	PC	
620	312155-0295	SCREW DIN 7991 MF6S M4X20 A4 70	7	PC	
630	312155-0297	SCREW DIN 7991 MF6S M4X25 A4 70	2	PC	
650	312155-0368	SCREW DIN 7991 MF6S M6X16 A4 70	8	PC	
660	311103-0268	PARALLEL PIN ISO 2338 4M6X12 A1	4	PC	
670	311103-0306	PARALLEL PIN ISO 2338 5M6X12 A1	2	PC	
680	311103-0349	PARALLEL PIN ISO 2338 6M6X12 A1	4	PC	
700	312605-0312	HEXAGON NUT, M6M M4 A280	8	PC	
710	312810-0312	HEXAGON NUT, NY-LOCK M4 FZB	9	PC	
720	312705-0312	NUT HEX. DOMED CAP MHM-6 M4 A280	9	PC	
730	315103-0136	WASHER PLAIN, 4,3X8X0,8 BR NI PL	22	PC	
740	315103-0146	WASHER PLAIN, 5,3X10X1 BR NI PL	4	PC	
750	3108451-0000	WASHER	8	PC	
760	3108452-0000	WASHER	17	PC	
770	3108453-0000	WASHER	5	PC	
780	3108454-0000	WASHER	1	PC	
790	312105-0323	"FSCR05080-10, SCREW, M6S"	1	PC	
C50G1064	3115358-0000	AIR NOZZLE	1	PC	
C50G1065	2930228-0000	AIR NOZZLE	1	PC	
C50G1066	2930229-0000	AIR NOZZLE	1	PC	
C50G1067	2981405-0000	AIR NOZZLE	1	PC	
C50G1068	2981405-0000	AIR NOZZLE	1	PC	

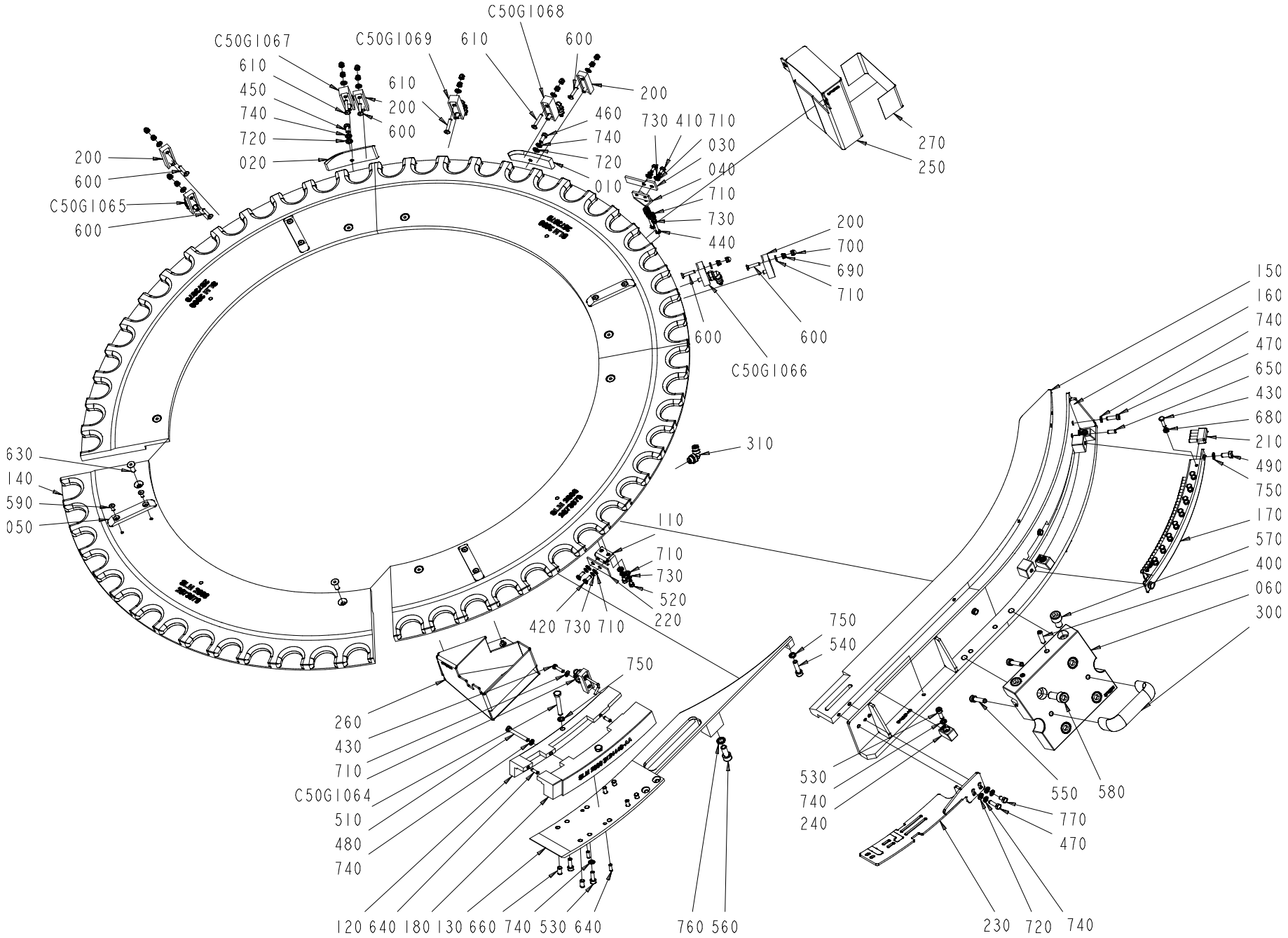
C50G1068
C50G1067
C50G1069
610
600
610
450
740
720
020
610
200
600
200
460
740
720
010
730 410 710
030
040
710
730
440
270
250
200
600
C50G1065
600
200
700
690
710
600
600
C50G1066
310
630
140
590
050
110
710
730
520
220
420 730 710
750
540
750
260
430
710
C50G1064
510
480
740
120 640 180 130 660 740 530 640
760 560
150
160
740
470
650
430
680
210
490
750
170
570
400
060
300
530
740
240
550
580
770
470
230
720
740

ECM: 791177
Group number: 2873977-0400
Assembly Drawing: 2873977-5_1_AA

Pos	Part No	Description	Qty	Unit	Page No
Common Parts					
010	2981410-0000	CAM	1	PC	
020	2981411-0000	CAM	1	PC	
030	3124421-0000	SCRAPER	1	PC	
040	3115345-0000	SUPPORT	1	PC	
050	3115346-0000	CARRIER	4	PC	
060	3115347-0000	PLATE	1	PC	
110	3124422-0000	CLAMP	1	PC	
120	3124447-0000	GUIDE	1	PC	
130	3115360-0000	BASE	1	PC	
140	2873979-0000	GUIDE	4	PC	
150	3115361-0000	PULLER	1	PC	
160	3115362-0000	PLATE	1	PC	
170	3115363-0000	HOLDER	1	PC	
180	3124448-0000	GUIDE	1	PC	
200	2981406-0000	AIR BLOW REGULATOR	4	PC	
210	2857743-0000	BRUSH	9	PC	
220	3115357-0000	SCRAPER	1	PC	
230	3124443-0000	SUPPORT	1	PC	
240	3365201-0000	DOWEL	3	PC	
250	3115275-0000	COVER	1	PC	
260	3115259-0000	COVER	1	PC	
270	3115281-0000	LABEL TAPE	1	PC	
300	3115300-0000	HANDLE	1	PC	
310	351456-3001	PUSH-IN L-FITTING NPQH-L-G18-Q4-P10	1	PC	
400	3108463-0000	TAPER PIN	2	PC	
410	312105-0287	SCREW, M6S ISO 4017 M4X8 A4 70	2	PC	
420	312105-0289	SCREW, M6S ISO 4017 M4X10 A4 70	2	PC	
430	312105-0293	SCREW, M6S ISO 4017 M4X16 A4 70	10	PC	
440	312105-0287	SCREW, M6S ISO 4017 M4X8 A4 70	2	PC	
450	312105-0325	SCREW, M6S ISO 4017 M5X10 A4 80	1	PC	
460	312105-0327	SCREW, M6S ISO 4017 M5X12 A4 80	2	PC	
470	312105-0329	SCREW, M6S ISO 4017 M5X16 A4 80	6	PC	
480	312109-0339	SCREW, M6S ISO 4017 M5X40 A4 80	1	PC	
490	312105-0366	SCREW, M6S ISO 4017 M6X12 A4 80	2	PC	
510	312109-0378	SCREW, M6S ISO 4017 M6X40 A4 80	2	PC	
520	312115-0287	SCREW ISO4762 M4X8 A4 80	2	PC	
530	312115-0329	SCREW ISO4762 M5X16 A4 80	7	PC	
540	312115-0372	SCREW ISO4762 M6X25 A4 80	1	PC	
550	312115-0374	SCREW ISO4762 M6X30 A4 80	2	PC	
560	312115-0451	SCREW ISO4762 M8X20 A4 80	1	PC	
570	312115-0489	SCREW ISO4762 M10X16 A4 80	2	PC	
580	312115-0495	SCREW ISO4762 M10X30 A4 80	4	PC	
590	312155-0289	SCREW DIN 7991 MF6S M4X10 A4 70	8	PC	
600	312155-0295	SCREW DIN 7991 MF6S M4X20 A4 70	6	PC	
610	312155-0297	SCREW DIN 7991 MF6S M4X25 A4 70	3	PC	
630	312155-0368	SCREW DIN 7991 MF6S M6X16 A4 70	8	PC	
640	311103-0268	PARALLEL PIN ISO 2338 4M6X12 A1	4	PC	
650	311103-0306	PARALLEL PIN ISO 2338 5M6X12 A1	2	PC	
660	311103-0349	PARALLEL PIN ISO 2338 6M6X12 A1	4	PC	
680	312605-0312	HEXAGON NUT, M6M M4 A280	9	PC	
690	312810-0312	HEXAGON NUT, NY-LOCK M4 FZB	9	PC	
700	312705-0312	NUT HEX. DOMED CAP MHM-6 M4 A280	9	PC	
710	315103-0136	WASHER PLAIN, 4,3X8X0,8 BR NI PL	22	PC	
720	315103-0146	WASHER PLAIN, 5,3X10X1 BR NI PL	4	PC	
730	3108451-0000	WASHER	8	PC	
740	3108452-0000	WASHER	15	PC	
750	3108453-0000	WASHER	5	PC	
760	3108454-0000	WASHER	1	PC	
770	312105-0323	"FSCR05080-10, SCREW, M6S"	1	PC	
C50G1064	3115358-0000	AIR NOZZLE	1	PC	
C50G1065	2930228-0000	AIR NOZZLE	1	PC	
C50G1066	2930229-0000	AIR NOZZLE	1	PC	
C50G1067	2930230-0000	AIR NOZZLE	1	PC	
C50G1068	2930230-0000	AIR NOZZLE	1	PC	
C50G1069	2981405-0000	AIR NOZZLE	1	PC	

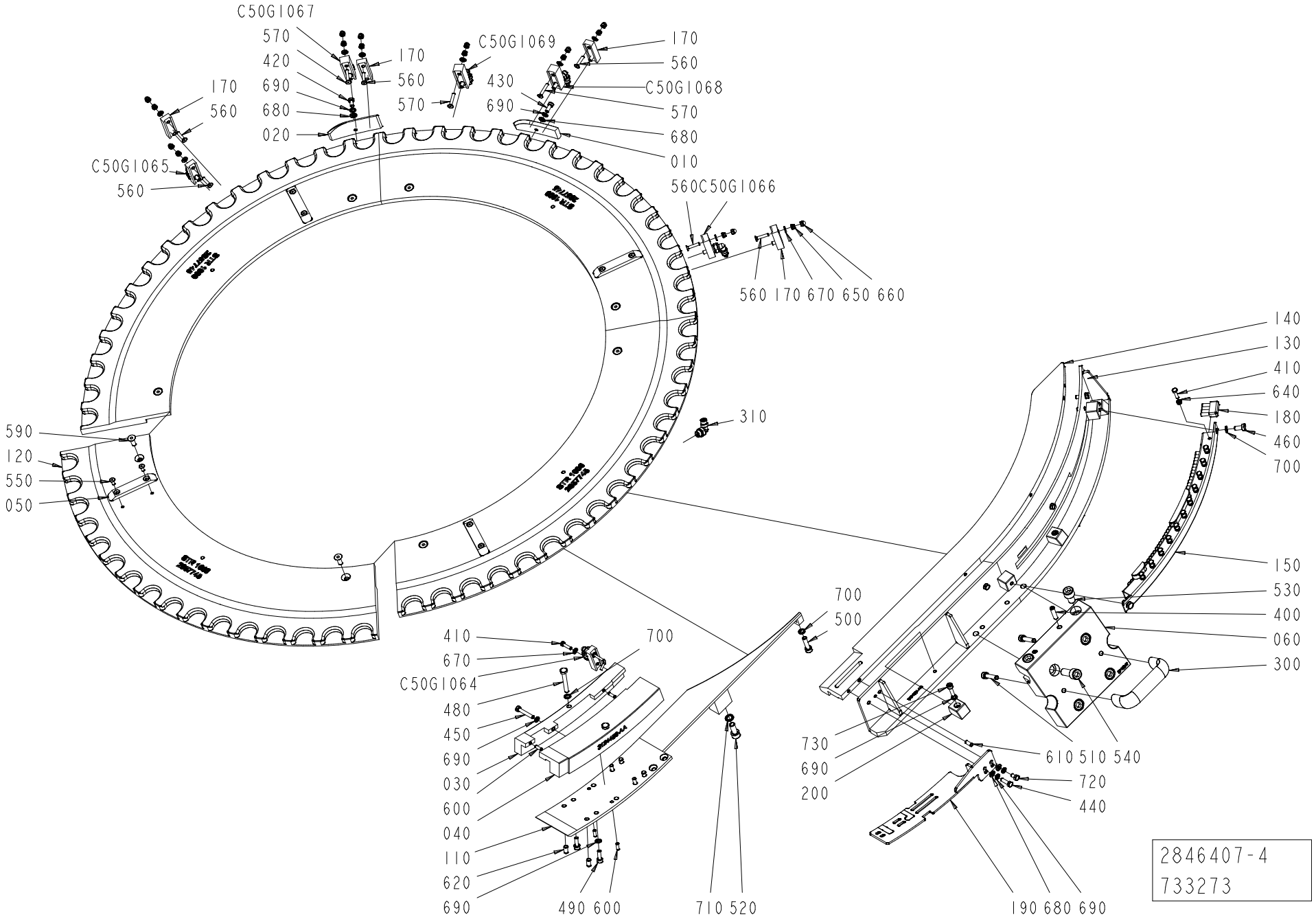
C50G1067
570
420
690
680
020
170
560
C50G1069
570
170
560
430
690
C50G1068
570
680
010
170
560
C50G1065
560
560C50G1066
560 170 670 650 660
590
120
550
050
310
140
130
410
640
180
460
700
150
530
400
060
300
700
500
730
690
200
610 510 540
720
440
410
670
C50G1064
480
450
690
030
600
040
110
620
690
700
490 600
710 520
190 680 690
2846407-4
733273

ECM: 714069
Group number: 2846407-0300
Assembly Drawing: 2846407-4_1_AB

Pos	Part No	Description	Qty	Unit	Page No
Common Parts					
010	2981410-0000	CAM	1	PC	
020	2981411-0000	CAM	1	PC	
030	3124455-0000	GUIDE	1	PC	
040	3124456-0000	GUIDE	1	PC	
050	3115346-0000	CARRIER	4	PC	
060	3115347-0000	PLATE	1	PC	
110	3115368-0000	BASE	1	PC	
120	2857745-0000	GUIDE	4	PC	
130	3124364-0000	PLATE	1	PC	
140	3124368-0000	PULLER	1	PC	
150	3124365-0000	BOX	1	PC	
170	2981406-0000	AIR BLOW REGULATOR	4	PC	
180	2857743-0000	BRUSH	12	PC	
190	3124443-0000	SUPPORT	1	PC	
200	3365201-0000	DOWEL	3	PC	
300	3115300-0000	HANDLE	1	PC	
310	351456-3001	PUSH-IN L-FITTING NPQH-L-G18-Q4-P10	1	PC	
400	3108463-0000	TAPER PIN	2	PC	
410	312105-0293	SCREW, M6S ISO 4017 M4X16 A4 70	13	PC	
420	312105-0325	SCREW, M6S ISO 4017 M5X10 A4 80	1	PC	
430	312105-0327	SCREW, M6S ISO 4017 M5X12 A4 80	1	PC	
440	312105-0329	SCREW, M6S ISO 4017 M5X16 A4 80	4	PC	
450	312109-0335	SCREW, M6S ISO 4017 M5X30 A4 80	1	PC	
460	312105-0366	SCREW, M6S ISO 4017 M6X12 A4 80	2	PC	
480	312109-0378	SCREW, M6S ISO 4017 M6X40 A4 80	2	PC	
490	312115-0329	SCREW ISO4762 M5X16 A4 80	4	PC	
500	312115-0372	SCREW ISO4762 M6X25 A4 80	1	PC	
510	312115-0374	SCREW ISO4762 M6X30 A4 80	2	PC	
520	312115-0451	SCREW ISO4762 M8X20 A4 80	1	PC	
530	312115-0489	SCREW ISO4762 M10X16 A4 80	2	PC	
540	312115-0495	SCREW ISO4762 M10X30 A4 80	4	PC	
550	312155-0289	SCREW DIN 7991 MF6S M4X10 A4 70	8	PC	
560	312155-0295	SCREW DIN 7991 MF6S M4X20 A4 70	6	PC	
570	312155-0297	SCREW DIN 7991 MF6S M4X25 A4 70	3	PC	
590	312155-0368	SCREW DIN 7991 MF6S M6X16 A4 70	8	PC	
600	311103-0268	PARALLEL PIN ISO 2338 4M6X12 A1	4	PC	
610	311103-0306	PARALLEL PIN ISO 2338 5M6X12 A1	2	PC	
620	311103-0349	PARALLEL PIN ISO 2338 6M6X12 A1	4	PC	
640	312605-0312	HEXAGON NUT, M6M M4 A280	12	PC	
650	312810-0312	HEXAGON NUT, NY-LOCK M4 FZB	9	PC	
660	312705-0312	NUT HEX. DOMED CAP MHM-6 M4 A280	9	PC	
670	315103-0136	WASHER PLAIN, 4,3X8X0,8 BR NI PL	10	PC	
680	315103-0146	WASHER PLAIN, 5,3X10X1 BR NI PL	4	PC	
690	3108452-0000	WASHER	15	PC	
700	3108453-0000	WASHER	5	PC	
710	3108454-0000	WASHER	1	PC	
720	312105-0323	"FSCR05080-10, SCREW, M6S"	1	PC	
730	312115-0331	SCREW ISO4762 M5X20 A4 80	3	PC	
C50G1064	3115358-0000	AIR NOZZLE	1	PC	
C50G1065	2930228-0000	AIR NOZZLE	1	PC	
C50G1066	2930229-0000	AIR NOZZLE	1	PC	
C50G1067	2930230-0000	AIR NOZZLE	1	PC	
C50G1068	2930230-0000	AIR NOZZLE	1	PC	
C50G1069	2981405-0000	AIR NOZZLE	1	PC	

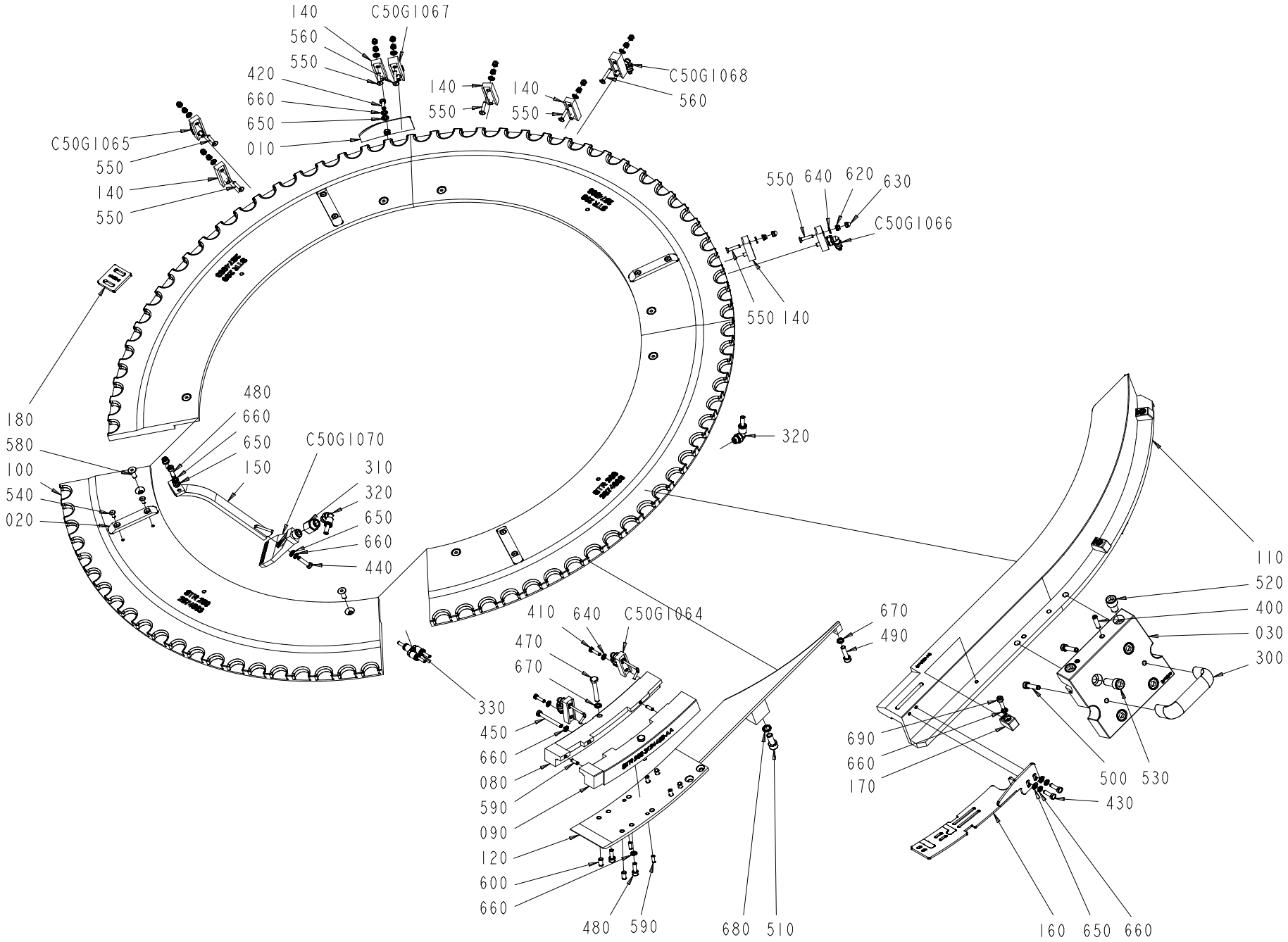
140
C50G1067
560
550
420
660
650
010
140
550
140
550
C50G1068
560
C50G1065
550
140
550
550 640 620 630
C50G1066
550 140
180
580
100
540
020
480
660
650
150
C50G1070
310
320
650
660
440
320
410 640 C50G1064
470
670
330
450
660
080
590
090
120
600
660
480 590
680 510
670
490
690
660
170
110
520
400
030
300
500 530
430
160 650 660

ECM: 791178
Group number: 2874001-0400
Assembly Drawing: 2874001-5_1_AA

Pos	Part No	Description	Qty	Unit	Page No
Common Parts					
010	2981409-0000	CAM	1	PC	
020	3115346-0000	CARRIER	4	PC	
030	3115347-0000	PLATE	1	PC	
080	3124449-0000	GUIDE	1	PC	
090	3124450-0000	GUIDE	1	PC	
100	2874003-0000	GUIDE	4	PC	
110	3115367-0000	PULLER	1	PC	
120	3115368-0000	BASE	1	PC	
140	2981406-0000	AIR BLOW REGULATOR	5	PC	
150	2981418-0000	AIR NOZZLE	1	PC	
160	3124443-0000	SUPPORT	1	PC	
170	3365201-0000	DOWEL	3	PC	
180	3433171-0000	SPACER	1	PC	
300	3115300-0000	HANDLE	1	PC	
310	3124360-0000	REDUCTION SLEEVE	1	PC	
320	351456-3002	PUSH-IN L-FITTING NPQH-L-G18-Q6-P10	2	PC	
330	90458-0745	Y-CONNECTION	1	PC	
400	3108463-0000	TAPER PIN	2	PC	
410	312105-0293	SCREW, M6S ISO 4017 M4X16 A4 70	2	PC	
420	312105-0327	SCREW, M6S ISO 4017 M5X12 A4 80	1	PC	
430	312105-0329	SCREW, M6S ISO 4017 M5X16 A4 80	2	PC	
440	312105-0331	SCREW, M6S ISO 4017 M5X20 A4 80	1	PC	
450	312109-0340	SCREW, M6S ISO 4017 M5X45 A4 80	1	PC	
470	312109-0378	SCREW, M6S ISO 4017 M6X40 A4 80	2	PC	
480	312115-0329	SCREW ISO4762 M5X16 A4 80	6	PC	
490	312115-0372	SCREW ISO4762 M6X25 A4 80	1	PC	
500	312115-0374	SCREW ISO4762 M6X30 A4 80	2	PC	
510	312115-0451	SCREW ISO4762 M8X20 A4 80	1	PC	
520	312115-0489	SCREW ISO4762 M10X16 A4 80	2	PC	
530	312115-0495	SCREW ISO4762 M10X30 A4 80	4	PC	
540	312155-0289	SCREW DIN 7991 MF6S M4X10 A4 70	8	PC	
550	312155-0295	SCREW DIN 7991 MF6S M4X20 A4 70	7	PC	
560	312155-0297	SCREW DIN 7991 MF6S M4X25 A4 70	2	PC	
580	312155-0368	SCREW DIN 7991 MF6S M6X16 A4 70	8	PC	
590	311103-0268	PARALLEL PIN ISO 2338 4M6X12 A1	4	PC	
600	311103-0349	PARALLEL PIN ISO 2338 6M6X12 A1	4	PC	
620	312810-0312	HEXAGON NUT, NY-LOCK M4 FZB	9	PC	
630	312705-0312	NUT HEX. DOMED CAP MHM-6 M4 A280	9	PC	
640	315103-0136	WASHER PLAIN, 4,3X8X0,8 BR NI PL	11	PC	
650	315103-0146	WASHER PLAIN, 5,3X10X1 BR NI PL	6	PC	
660	3108452-0000	WASHER	14	PC	
670	3108453-0000	WASHER	3	PC	
680	3108454-0000	WASHER	1	PC	
800	312115-0331	SCREW ISO4762 M5X20 A4 80	3	PC	
C50G1064	3115358-0000	AIR NOZZLE	2	PC	
C50G1065	2930228-0000	AIR NOZZLE	1	PC	
C50G1066	2930229-0000	AIR NOZZLE	1	PC	
C50G1067	2981405-0000	AIR NOZZLE	1	PC	
C50G1068	2981405-0000	AIR NOZZLE	1	PC	
C50G1070	3124541-0000	AIR NOZZLE	1	PC	

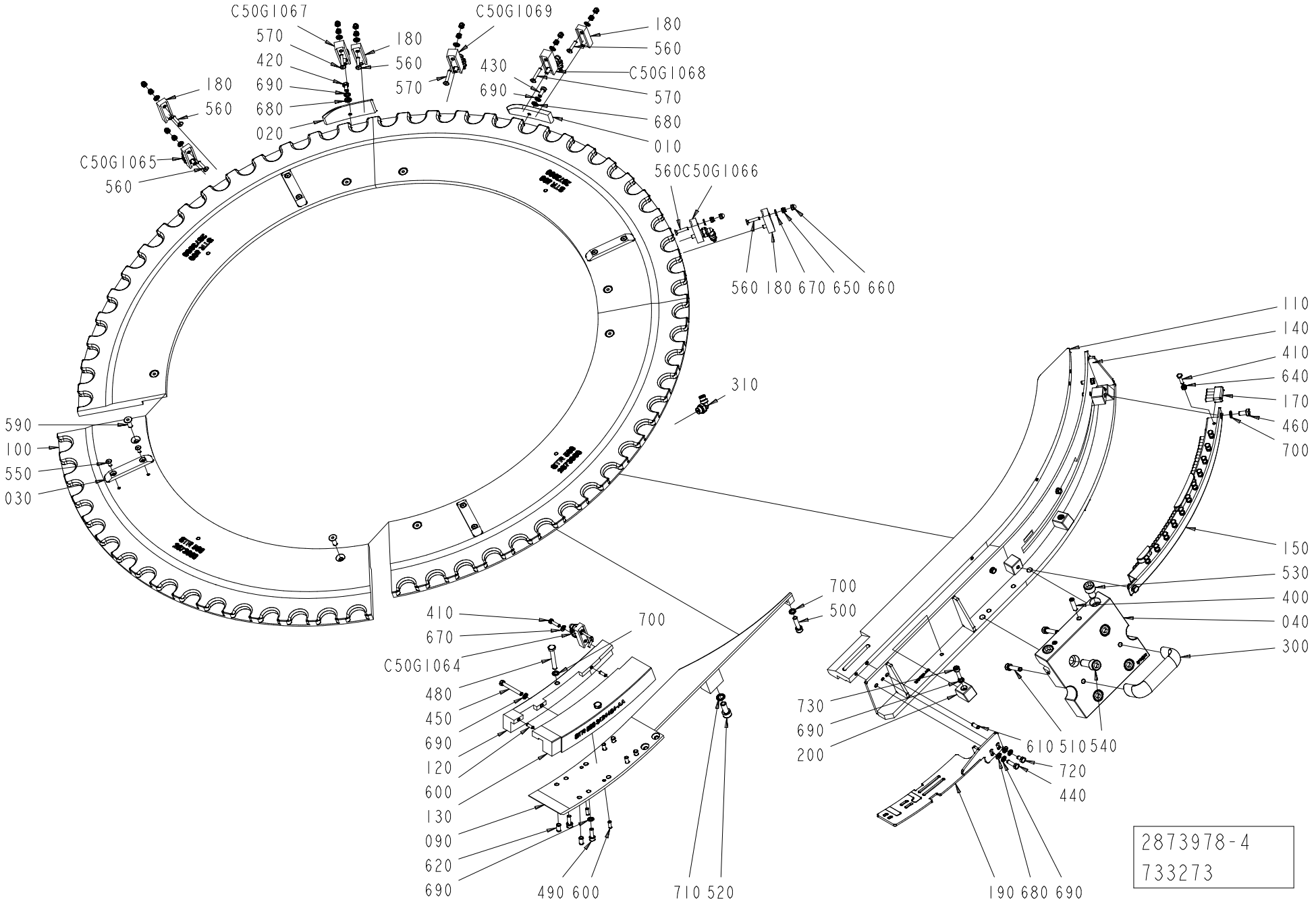
C50G1067
570
420
690
680
020
180
560
570
C50G1069
430
690
180
560
C50G1068
570
680
010
180
560
C50G1065
560
560C50G1066
560 180 670 650 660
310
590
100
550
030
110
140
410
640
170
460
700
150
530
400
040
300
700
500
730
690
200
610 510 540
720
440
190 680 690
410
670
C50G1064
480
450
690
120
600
130
090
620
690
700
490 600
710 520
2873978-4
733273

ECM: 714077
Group number: 2873978-0300
Assembly Drawing: 2873978-4_1_AB

Pos	Part No	Description	Qty	Unit	Page No
Common Parts					
010	2981410-0000	CAM	1	PC	
020	2981411-0000	CAM	1	PC	
030	3115346-0000	CARRIER	4	PC	
040	3115347-0000	PLATE	1	PC	
090	3115368-0000	BASE	1	PC	
100	2873980-0000	GUIDE	4	PC	
110	3124361-0000	PULLER	1	PC	
120	3124453-0000	GUIDE	1	PC	
130	3124454-0000	GUIDE	1	PC	
140	3124364-0000	PLATE	1	PC	
150	3124365-0000	BOX	1	PC	
170	2857743-0000	BRUSH	12	PC	
180	2981406-0000	AIR BLOW REGULATOR	4	PC	
190	3124443-0000	SUPPORT	1	PC	
200	3365201-0000	DOWEL	3	PC	
300	3115300-0000	HANDLE	1	PC	
310	351456-3001	PUSH-IN L-FITTING NPQH-L-G18-Q4-P10	1	PC	
400	3108463-0000	TAPER PIN	2	PC	
410	312105-0293	SCREW, M6S ISO 4017 M4X16 A4 70	13	PC	
420	312105-0325	SCREW, M6S ISO 4017 M5X10 A4 80	1	PC	
430	312105-0327	SCREW, M6S ISO 4017 M5X12 A4 80	2	PC	
440	312105-0329	SCREW, M6S ISO 4017 M5X16 A4 80	6	PC	
450	312109-0339	SCREW, M6S ISO 4017 M5X40 A4 80	1	PC	
460	312105-0366	SCREW, M6S ISO 4017 M6X12 A4 80	2	PC	
480	312109-0378	SCREW, M6S ISO 4017 M6X40 A4 80	2	PC	
490	312115-0329	SCREW ISO4762 M5X16 A4 80	4	PC	
500	312115-0372	SCREW ISO4762 M6X25 A4 80	1	PC	
510	312115-0374	SCREW ISO4762 M6X30 A4 80	2	PC	
520	312115-0451	SCREW ISO4762 M8X20 A4 80	1	PC	
530	312115-0489	SCREW ISO4762 M10X16 A4 80	2	PC	
540	312115-0495	SCREW ISO4762 M10X30 A4 80	4	PC	
550	312155-0289	SCREW DIN 7991 MF6S M4X10 A4 70	8	PC	
560	312155-0295	SCREW DIN 7991 MF6S M4X20 A4 70	6	PC	
570	312155-0297	SCREW DIN 7991 MF6S M4X25 A4 70	3	PC	
590	312155-0368	SCREW DIN 7991 MF6S M6X16 A4 70	8	PC	
600	311103-0268	PARALLEL PIN ISO 2338 4M6X12 A1	4	PC	
610	311103-0306	PARALLEL PIN ISO 2338 5M6X12 A1	2	PC	
620	311103-0349	PARALLEL PIN ISO 2338 6M6X12 A1	4	PC	
640	312605-0312	HEXAGON NUT, M6M M4 A280	12	PC	
650	312810-0312	HEXAGON NUT, NY-LOCK M4 FZB	9	PC	
660	312705-0312	NUT HEX. DOMED CAP MHM-6 M4 A280	9	PC	
670	315103-0136	WASHER PLAIN, 4,3X8X0,8 BR NI PL	10	PC	
680	315103-0146	WASHER PLAIN, 5,3X10X1 BR NI PL	4	PC	
690	3108452-0000	WASHER	15	PC	
700	3108453-0000	WASHER	5	PC	
710	3108454-0000	WASHER	1	PC	
720	312105-0323	"FSCR05080-10, SCREW, M6S"	1	PC	
730	312115-0331	SCREW ISO4762 M5X20 A4 80	3	PC	
C50G1064	3115358-0000	AIR NOZZLE	1	PC	
C50G1065	2930228-0000	AIR NOZZLE	1	PC	
C50G1066	2930229-0000	AIR NOZZLE	1	PC	
C50G1067	2930230-0000	AIR NOZZLE	1	PC	
C50G1068	2930230-0000	AIR NOZZLE	1	PC	
C50G1069	2981405-0000	AIR NOZZLE	1	PC	

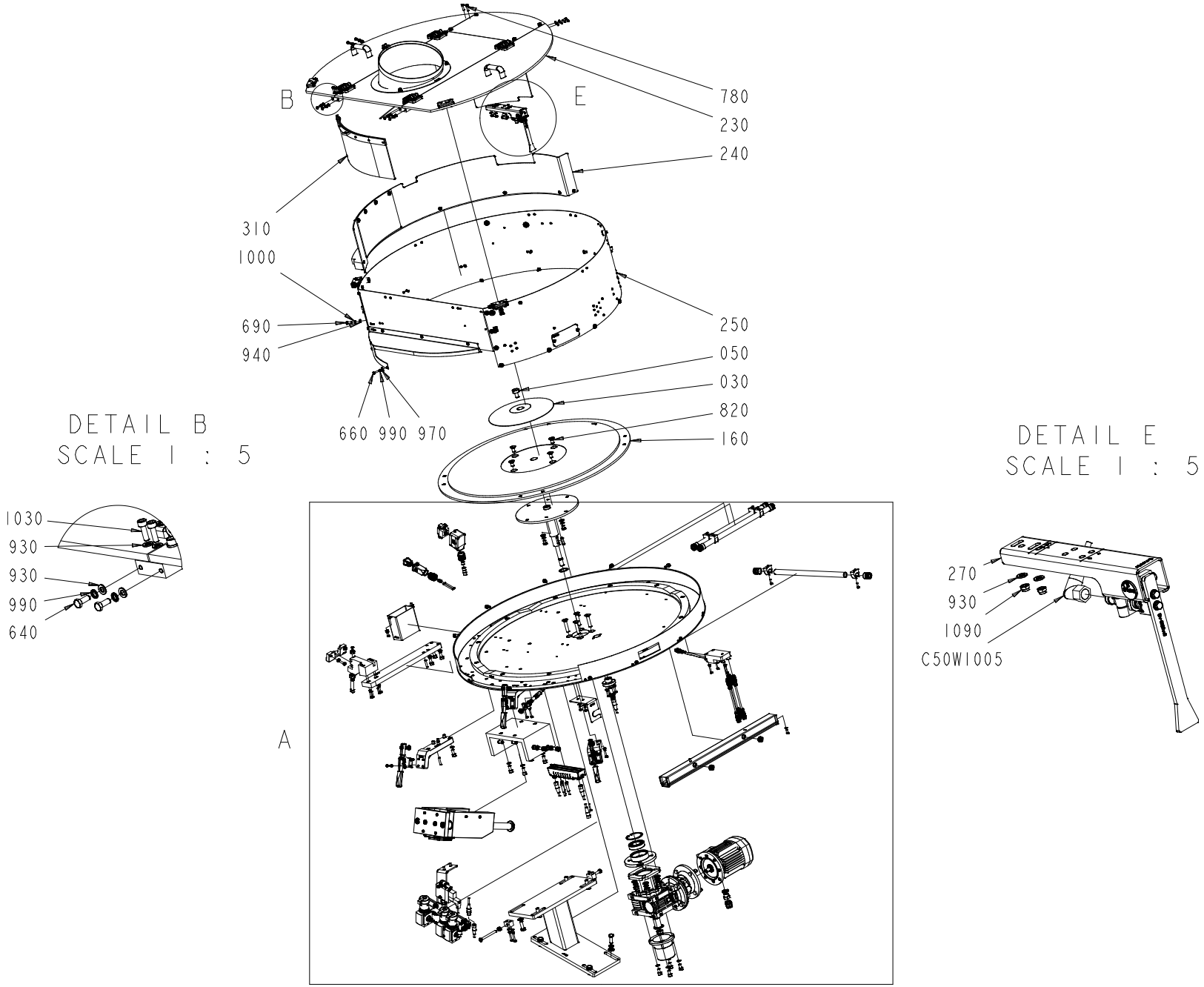
B
E
780
230
240
310
1000
690
940
250
050
030
820
160
660 990 970
DETAIL B
SCALE 1 : 5
1030
930
930
990
640
A
DETAIL E
SCALE 1 : 5
270
930
1090
C50W1005

Pos	Part No	Description	Qty	Unit	Page No
Common Parts					
0010	3115239-0000	SHAFT	1	PC	
0020	3115240-0000	REDUCER	1	PC	
0030	3115241-0000	CAP	1	PC	
0040	3115242-0000	BUSHING	1	PC	
0050	3115243-0000	SCREW	1	PC	
0060	3115244-0000	PROTECTIVE COVER	1	PC	
0070	3115245-0000	SUPPORT	1	PC	
0080	3365199-0000	BASE PLATE	1	PC	
0090	3115247-0000	ARM	1	PC	
0110	3115249-0000	CONNECTION BOX	1	PC	
0120	3115250-0000	BLOCK	2	PC	
0130	3115251-0000	BRACKET	1	PC	
0140	3365197-0000	LID	1	PC	
0150	3115253-0000	SUPPORT	1	PC	
0160	3115254-0000	SUPPORT	1	PC	
0170	3115255-0000	BASE	1	PC	
0180	3365198-0000	BRACKET	1	PC	
0190	3115257-0000	CONNECTION	1	PC	
0200	3115258-0000	CONNECTION	2	PC	
0220	3108413-0300	PULLER	1	PC	250
0230	3448589-0100	COVER	1	PC	252
0240	3108443-0200	RAKE	1	PC	254
0250	3108444-0300	BODY	1	PC	256
0260	3108445-0200	PNEUMATIC COMPONENT	1	PC	258
0270	3433170-0100	SENSOR	1	PC	260
0280	3108447-0100	HARD DISK	1	PC	262
0300	3124472-0000	SHIM	1	PC	
0310	3115291-0000	PLATE	1	PC	
0320	3124528-0000	GUIDE	1	PC	
0330	3124529-0000	PIN	1	PC	
0340	3124530-0000	PLATE	1	PC	
0350	3365191-0000	BUSHING	1	PC	
0400	3365192-0000	WORM GEAR	1	PC	
0410	344224-0207	BALL BEARING 35/62X14	1	PC	
0420	3124534-0000	LOCKING LEVER	3	PC	
0430	3124535-0000	STOP SCREW	3	PC	
0440	3115234-0000	CAP	6	PC	
0450	3115233-0000	CLAMP	6	PC	
0460	3115263-0000	CLAMP	1	PC	
0470	3108471-0000	PROTECTION RING	2	PC	
0480	90459-1458	HOOD, SIDE ENTRY, HAN6E, 19 30 006 1540	1	PC	
0490	90458-0406	CABLE GLAND, VK 22052Y	2	PC	
0500	353249-0004	INSERT, SINGLE HOLE, E152 13	1	PC	
0510	344202-0003	CABLE GLAND; MS-SC-M, 7-12,5MM, M20X1,5	1	PC	
0520	90459-3644	REDUCER, M20X1,5/M16X1,5	1	PC	
0530	90458-0460	GLAND, LOCK NUT, M16X1,5	1	PC	
0540	90459-3670	HOOD, HAN3A, 19 20 003 1440	1	PC	
0550	353249-0041	INSERT, SOLID, E151 G	1	PC	
0600	315701-0267	PARALLEL KEY W. ROUND ENDS, 8X7X30 MM	1	PC	
0610	90458-0048	RETAINING RING FOR BORE DIN 472 62 SS	1	PC	
0630	312115-0297	SCREW ISO4762 M4X25 A4 80	3	PC	
0640	312105-0327	SCREW, M6S ISO 4017 M5X12 A4 80	28	PC	
0660	312105-0331	SCREW, M6S ISO 4017 M5X20 A4 80	14	PC	
0670	312109-0335	SCREW, M6S ISO 4017 M5X30 A4 80	4	PC	
0690	312105-0368	SCREW, M6S ISO 4017 M6X16 A4 80	5	PC	
0710	90459-4735	SCREW, M6S ISO 4017 M8X10 A4 80	2	PC	
0720	312109-0467	SCREW, M6S ISO 4017 M8X80 A4 80	2	PC	
0740	312105-0495	SCREW, M6S ISO 4017 M10X30 A4 80	8	PC	
0750	312115-0232	SCREW ISO4762 M3X25 A4 80	2	PC	
0760	312115-0293	SCREW ISO4762 M4X16 A4 80	6	PC	
0770	312115-0299	SCREW ISO4762 M4X30 A4 80	2	PC	
0780	312115-0331	SCREW ISO4762 M5X20 A4 80	4	PC	
0800	312115-0451	SCREW ISO4762 M8X20 A4 80	13	PC	
0810	312115-0493	SCREW ISO4762 M10X25 A4 80	4	PC	
0820	312155-0491	SCREW DIN 7991 MF6S M10X20 A4 70	4	PC	
0830	312155-0501	SCREW DIN 7991 MF6S M10X50A4 70	4	PC	
0840	311103-1274	PARALLEL PIN ISO 2338 4M6X24 A1	2	PC	
0850	311103-0357	PARALLEL PIN ISO 2338 6M6X30 A1	4	PC	
0870	312605-0318	HEXAGON NUT, M6M M8 A280	2	PC	
0880	312605-0320	HEXAGON NUT, M6M M10 A280	4	PC	
0890	90099-0187	HEXAGON NUT, LOCK, M14, DIN985	1	PC	
0920	315103-0136	WASHER PLAIN, 4,3X8X0,8 BR NI PL	3	PC	
0930	315103-0146	WASHER PLAIN, 5,3X10X1 BR NI PL	22	PC	
0940	315103-0153	WASHER PLAIN, 6,4X12X1,5 BR NI PL	7	PC	
0950	315103-0165	WASHER PLAIN, 8,4X15X1,5 BR NI PL	2	PC	
0960	315103-0173	WASHER PLAIN, 10,5X22X2 BR NI PL	12	PC	
0970	315125-0146	WASHER HIGH, TBRSB 5.3X15X1 A4	12	PC	
0990	3108452-0000	WASHER	50	PC	
1000	3108453-0000	WASHER	5	PC	
1010	3108454-0000	WASHER	19	PC	
1020	3108455-0000	WASHER	12	PC	
1030	312115-0329	SCREW ISO4762 M5X16 A4 80	2	PC	
1040	312105-0372	SCREW, M6S ISO 4017 M6X25 A4 80	2	PC	
1050	312155-0291	SCREW DIN 7991 MF6S M4X12 A4 70	1	PC	
1060	312605-0322	HEXAGON NUT, M6M M12 A280	1	PC	
1070	312115-0333	SCREW ISO4762 M5X25 A4 80	4	PC	
1080	312115-0449	SCREW ISO4762 M8X16 A4 80	4	PC	
1090	312810-0314	HEXAGON NUT, NY-LOCK M5 FZB	2	PC	
360	3365200-0000	BRACKET	1	PC	
A81W2023	351501-2050	ETH. P CAB.SAC-4P-M12MSD/ 5,0-PVC/M12MSD	1	PC	
A81W4130	344253-0050	SENSOR CABLE, EVT001	1	PC	
C50B1001	90458-2907	PROX.SWITCH IFS204	1	PC	
C50B1002	90458-2907	PROX.SWITCH IFS204	1	PC	
C50M1000	90603-9718	MOTOR 3GAA 062 002-BSC	1	PC	
C50W1000	315756-0009	OLFLEX CONTROL TM CY 4G1,5, 281604CY	3	M	

ECM: 850180
Group number: 2846406-0500
Assembly Drawing: 2846406-6_1_AB

This list refers to drawings on pages 244 to 248

Pos	Part No	Description	Qty	Unit	Page No
C50W1001	344261-0006	SENSOR CABLE, EVT261	1	PC	
C50W1002	344261-0006	SENSOR CABLE, EVT261	1	PC	
C50W1004	344253-0050	SENSOR CABLE, EVT001	1	PC	
C50W1005	344261-0015	SENSOR CABLE, EVT264	1	PC	
C50X0001	90459-6821	MALE INSERT HAN 4A, 0920 0042 611	1	PC	
C50X1010	90110-0052	MALE INSERT, HAN E06, 0933 0062 601	1	PC	
C81K4130	90606-4706	ARMORBLOCK MODULE, 1732E-8CFGM8R, SER. A	1	PC	
F09K3016	90604-0093	CONNECTION BLOCK, TINA4A 2TLA020054R0300	1	PC	
F09W2003	90600-0934	CABLE M12-C62, 2TLA020056R0200	1	PC	
F09W3012	90459-7095	CABLE M12-C112, 2TLA020056R2000	1	PC	
F09W3014	90459-7095	CABLE M12-C112, 2TLA020056R2000	1	PC	
F09W3016	90459-7095	CABLE M12-C112, 2TLA020056R2000	1	PC	

Pos	Part No	Description	Qty	Unit	Page No

This page intentionally left blank

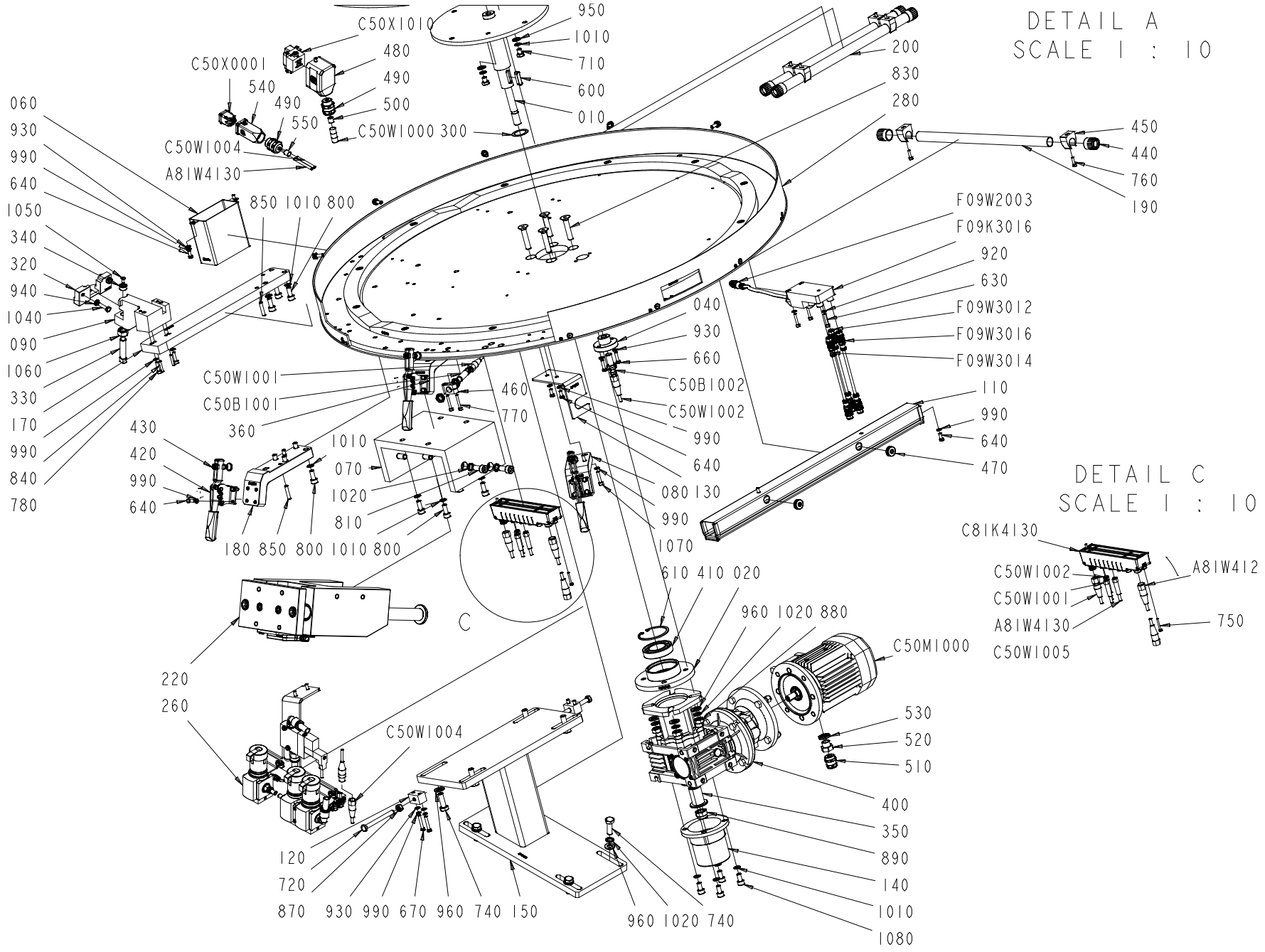
DETAIL A
SCALE 1 : 10
DETAIL C
SCALE 1 : 10
C50X1010
950
1010
710
600
010
C50X0001
480
490
500
C50W1000 300
540
490
550
C50W1004
A81W4130
060
930
990
640
1050
340
320
940
1040
090
1060
330
170
990
840
780
850 1010 800
200
830
280
450
440
760
190
F09W2003
F09K3016
920
630
F09W3012
F09W3016
F09W3014
110
990
640
470
040
930
660
C50B1002
C50W1002
990
640
080 130
990
1070
C50W1001
C50B1001
360
460
770
430
420
990
640
1010
070
1020
810
180 850 800 1010 800
610 410 020
960 1020 880
C50M1000
530
520
510
400
350
890
140
1010
1080
960 1020 740
220
260
C50W1004
120
720
870
930 990 670 960 740 150
C81K4130
C50W1002
C50W1001
A81W4130
C50W1005
A81W412
750

This list refers to drawings on pages 244 to 248

Pos	Part No	Description	Qty	Unit	Page No

SEE LIST FOLLOWING DRAWING ON PAGE: 244

Pos	Part No	Description	Qty	Unit	Page No

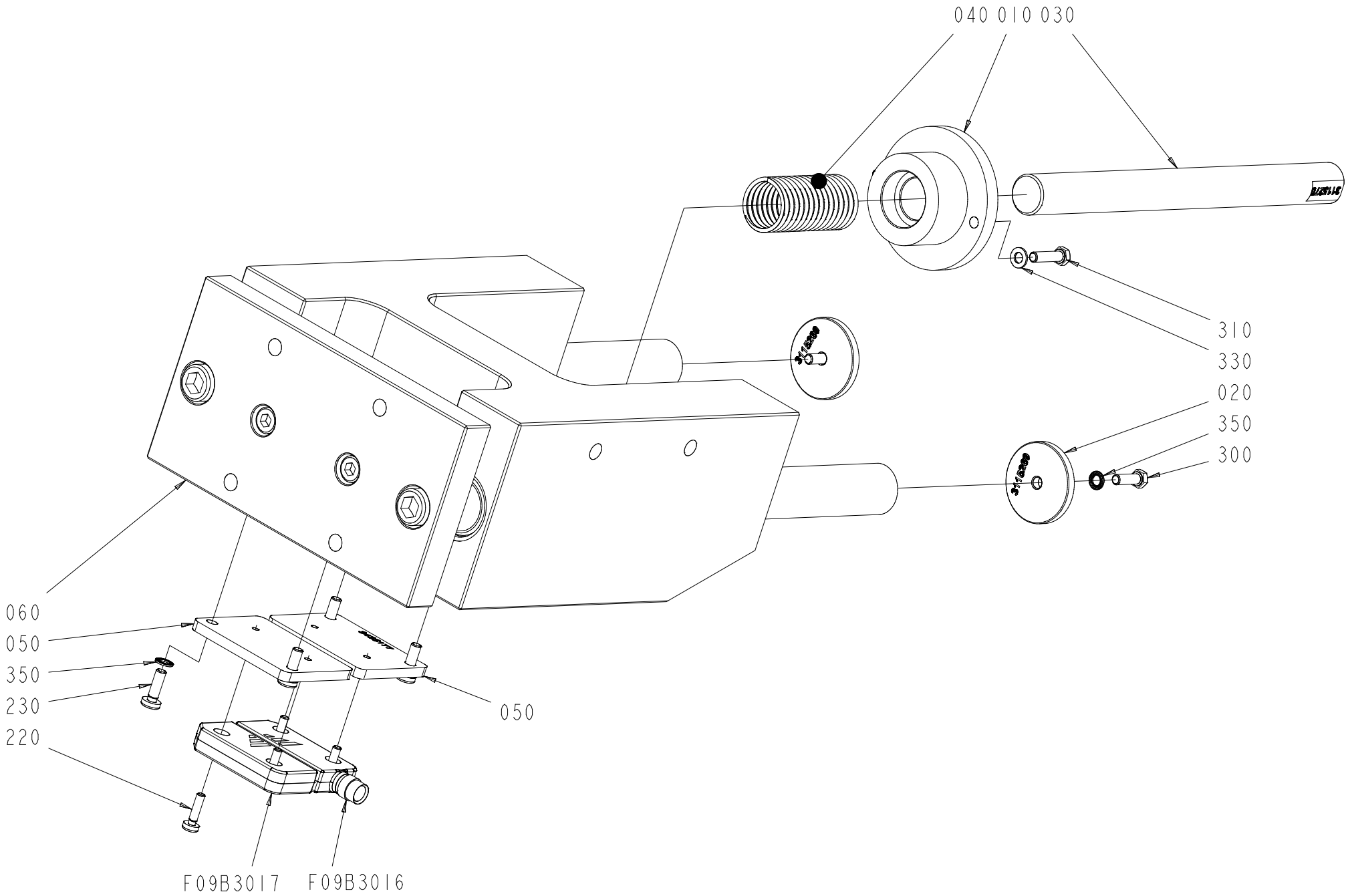
040 010 030
310
330
020
350
300
060
050
350
230
220
050
F09B3017
F09B3016

ECM: 887518
Group number: 3108413-0300
Assembly Drawing: 3108413-3_1_AA

Pos	Part No	Description	Qty	Unit	Page No
Common Parts					
010	3115268-0000	BUSHING	1	PC	
020	3115269-0000	WASHER	2	PC	
030	3115270-0000	PIN	1	PC	
040	3115271-0000	SPRING	1	PC	
050	3433177-0000	PLATE	2	PC	
060	3115273-0000	GUIDE	1	PC	
220	3433168-0000	SCREW	4	PC	
230	3115274-0000	SCREW	4	PC	
300	312105-0329	SCREW, M6S ISO 4017 M5X16 A4 80	2	PC	
310	312105-0331	SCREW, M6S ISO 4017 M5X20 A4 80	2	PC	
330	315103-0146	WASHER PLAIN, 5,3X10X1 BR NI PL	2	PC	
350	3108452-0000	WASHER	6	PC	
F09B3016	90606-4580	SAFETY SENSOR, ADAM M12-5 DYN-INFO	1	PC	
F09B3017	90606-4582	SAFETY SENSOR, EVA GENERAL CODE	1	PC	

Pos	Part No	Description	Qty	Unit	Page No

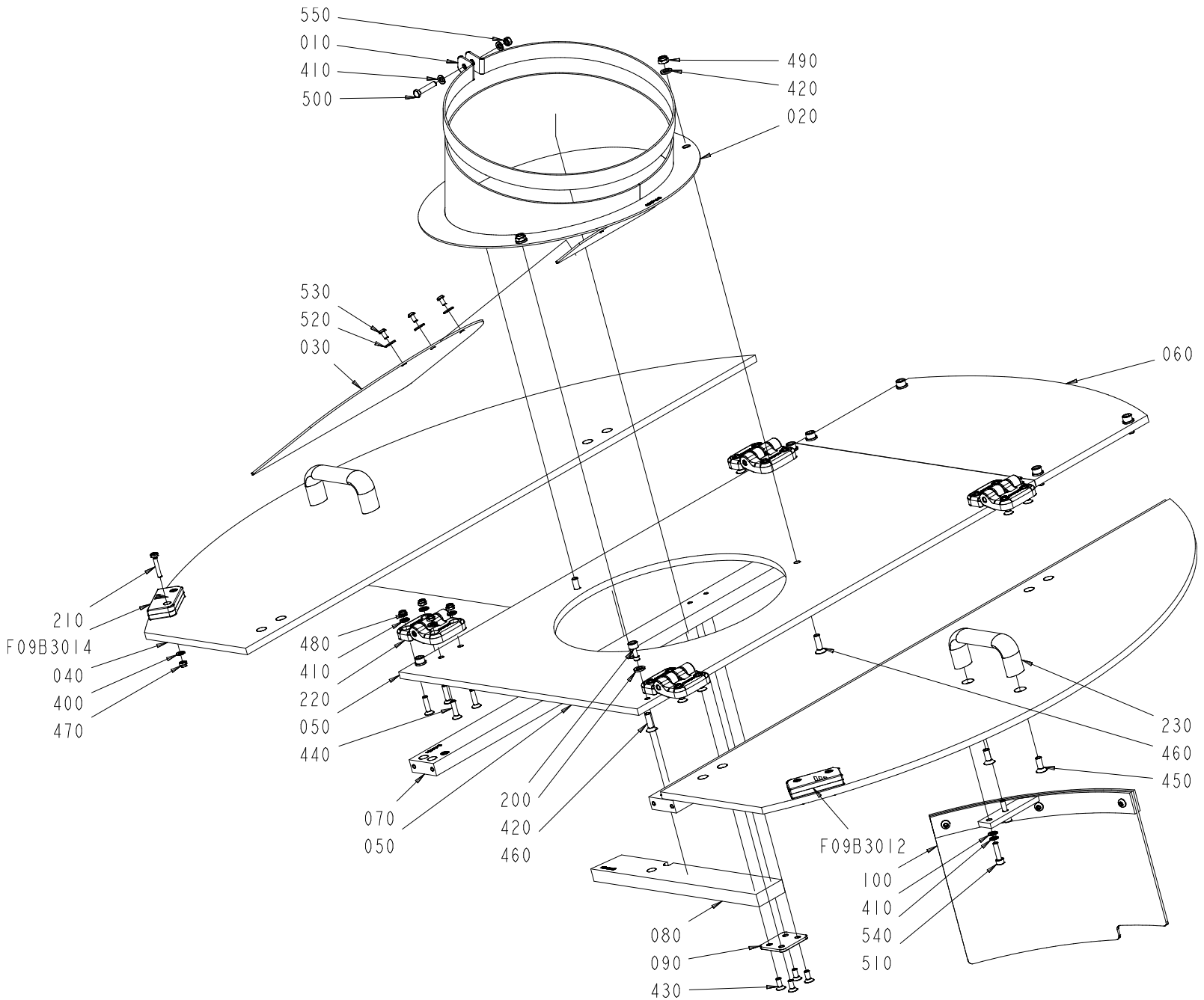
550
010
410
500
490
420
020
530
520
030
060
210
F09B3014
040
400
470
480
410
220
050
440
070
050
200
420
460
230
460
450
F09B3012
100
410
540
510
080
090
430

ECM: 887521
Group number: 3448589-0100
Assembly Drawing: 3448589-1_1_AA

Pos	Part No	Description	Qty	Unit	Page No
Common Parts					
010	3115288-0000	CLAMP	1	PC	
020	3115289-0000	FUNNEL	1	PC	
030	3115290-0000	DAMPING ELEMENT	1	PC	
040	3433159-0000	PANEL	2	PC	
050	3433160-0000	PANEL	1	PC	
060	3433161-0000	PANEL	1	PC	
070	3417764-0000	BEAM	2	PC	
080	3417765-0000	BEAM	1	PC	
090	3417766-0000	PLATE	1	PC	
100	3433173-0000	PLATE	1	PC	
200	3417769-0000	SCREW	8	PC	
210	90459-4165	SAFETY SCREW, SM4X25, 2TLA020053R4300	4	PC	
220	3115232-0000	HINGE	4	PC	
230	3115300-0000	HANDLE	2	PC	
400	315103-0136	WASHER PLAIN, 4,3X8X0,8 BR NI PL	4	PC	
410	315103-0146	WASHER PLAIN, 5,3X10X1 BR NI PL	20	PC	
420	315103-0153	WASHER PLAIN, 6,4X12X1,5 BR NI PL	11	PC	
430	312155-0327	SCREW DIN 7991 MF6S M5X12 A4 70	4	PC	
440	312155-0331	SCREW DIN 7991 MF6S M5X20 A4 70	16	PC	
450	312155-0368	SCREW DIN 7991 MF6S M6X16 A4 70	4	PC	
460	312155-0370	SCREW DIN 7991 MF6S M6X20 A4 70	3	PC	
470	312810-0312	HEXAGON NUT, NY-LOCK M4 FZB	4	PC	
480	312810-0314	HEXAGON NUT, NY-LOCK M5 FZB	16	PC	
490	312810-0316	HEXAGON NUT, NY-LOCK M6 FZB	3	PC	
500	312105-0333	SCREW, M6S ISO 4017 M5X25 A4 80	1	PC	
510	312115-0331	SCREW ISO4762 M5X20 A4 80	2	PC	
520	3108458-0000	WASHER	3	PC	
530	3108456-0000	SCREW	3	PC	
540	3108452-0000	WASHER	2	PC	
550	312605-0314	HEXAGON NUT, M6M M5 A280	1	PC	
F09B3012	90606-4582	SAFETY SENSOR, EVA GENERAL CODE	1	PC	
F09B3014	90606-4582	SAFETY SENSOR, EVA GENERAL CODE	1	PC	

Pos	Part No	Description	Qty	Unit	Page No

Pos. 0240 in BoM 2846406-0500 **RAKE**

Drawing file:3108443-2_1_AA

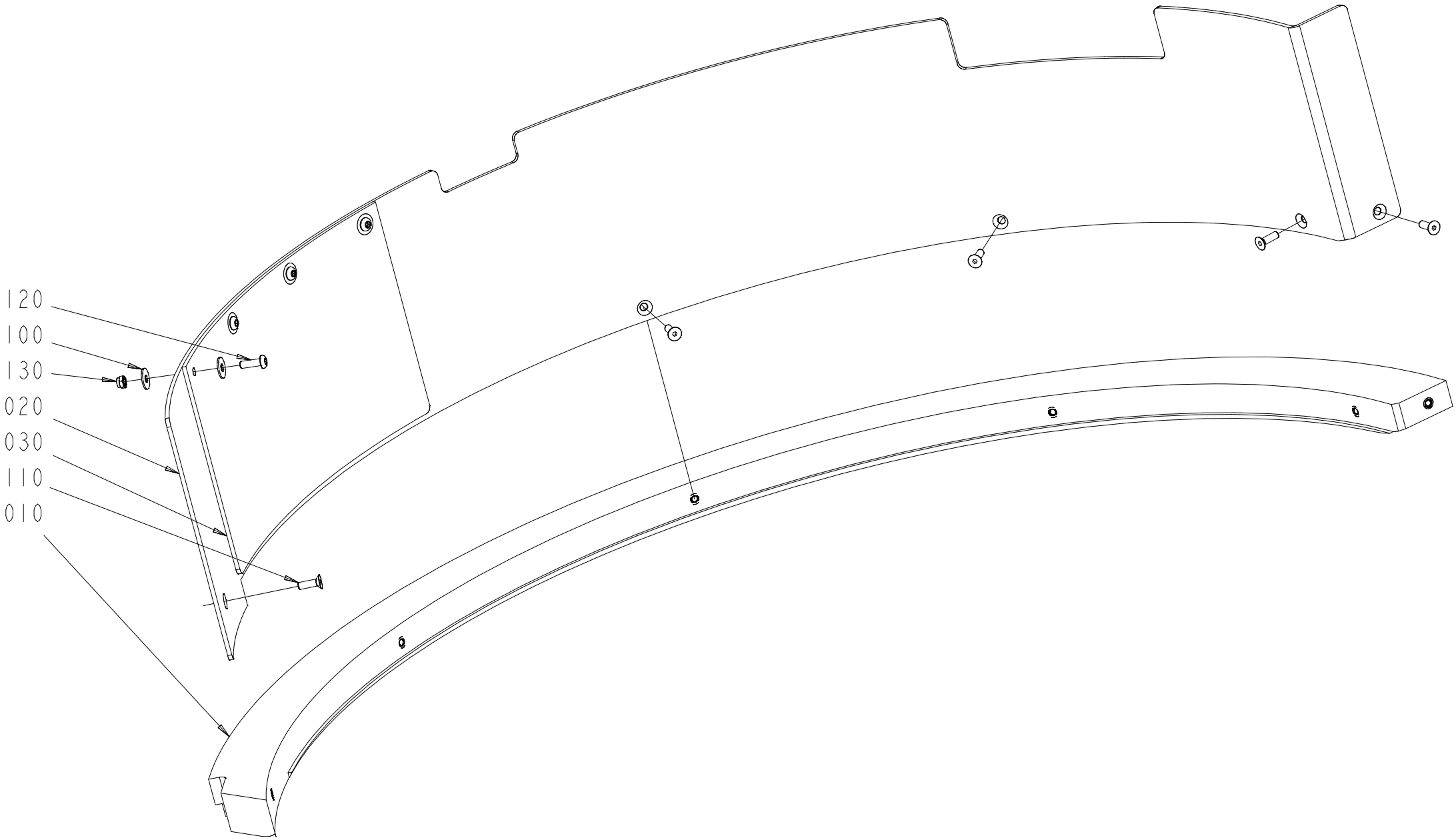

ECM: 791181
Group number: 3108443-0200
Assembly Drawing: 3108443-2_1_AA

Pos	Part No	Description	Qty	Unit	Page No
Common Parts					
010	3115284-0000	RING	1	PC	
020	3433174-0000	PLATE	1	PC	
030	3115286-0000	PLATE	1	PC	
100	315125-0146	WASHER HIGH, TBRSB 5.3X15X1 A4	8	PC	
110	312155-0329	SCREW DIN 7991 MF6S M5X16 A4 70	6	PC	
120	3108457-0000	SCREW	4	PC	
130	312810-0314	HEXAGON NUT, NY-LOCK M5 FZB	4	PC	

Pos	Part No	Description	Qty	Unit	Page No

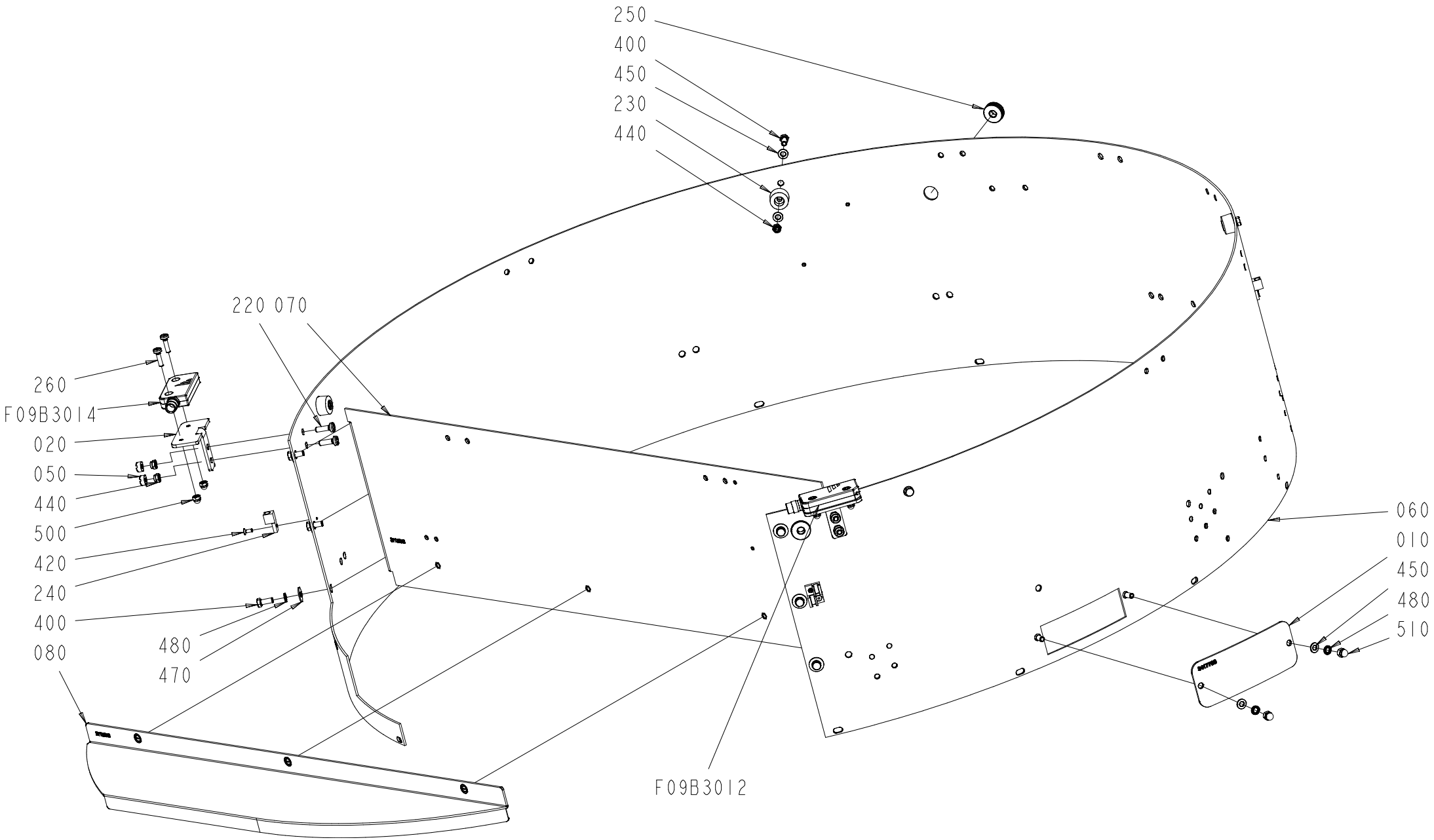
250
400
450
230
440
220 070
260
F09B3014
020
050
440
500
420
240
400
080
480
470
060
010
450
480
510
F09B3012

ECM: 887520
Group number: 3108444-0300
Assembly Drawing: 3108444-3_1_AA

Pos	Part No	Description	Qty	Unit	Page No
STREAMCAP500, STREAMCAP1000, SLIMCAP 2000, SLIMCAP 1000, STREAMCAP200, HELICAP2 23, HELICAP 27					
060	3115280-0000	STRIP	1	PC	
Common Parts					
010	3417768-0000	PLATE	1	PC	
020	3433167-0000	BRACKET	2	PC	
030	3115277-0000	SUPPORT	1	PC	
050	575034-0000	ROUND NUT	4	PC	
070	3115278-0000	PLATE	1	PC	
080	3115279-0000	COVERING	1	PC	
220	3115274-0000	SCREW	4	PC	
230	3115282-0000	FOOT	4	PC	
240	3115283-0000	CLAMP	6	PC	
250	3108471-0000	PROTECTION RING	2	PC	
260	3433168-0000	SCREW	4	PC	
400	312105-0327	SCREW, M6S ISO 4017 M5X12 A4 80	10	PC	
420	3108462-0000	SCREW	5	PC	
430	312705-0314	NUT HEX. DOMED CAP MHM-6 M5 A280	2	PC	
440	312810-0314	HEXAGON NUT, NY-LOCK M5 FZB	8	PC	
450	315103-0146	WASHER PLAIN, 5,3X10X1 BR NI PL	16	PC	
470	315125-0146	WASHER HIGH, TBRSB 5.3X15X1 A4	6	PC	
480	3108452-0000	WASHER	8	PC	
500	312705-0312	NUT HEX. DOMED CAP MHM-6 M4 A280	4	PC	
F09B3012	90606-4580	SAFETY SENSOR, ADAM M12-5 DYN-INFO	1	PC	
F09B3014	90606-4580	SAFETY SENSOR, ADAM M12-5 DYN-INFO	1	PC	

Pos	Part No	Description	Qty	Unit	Page No

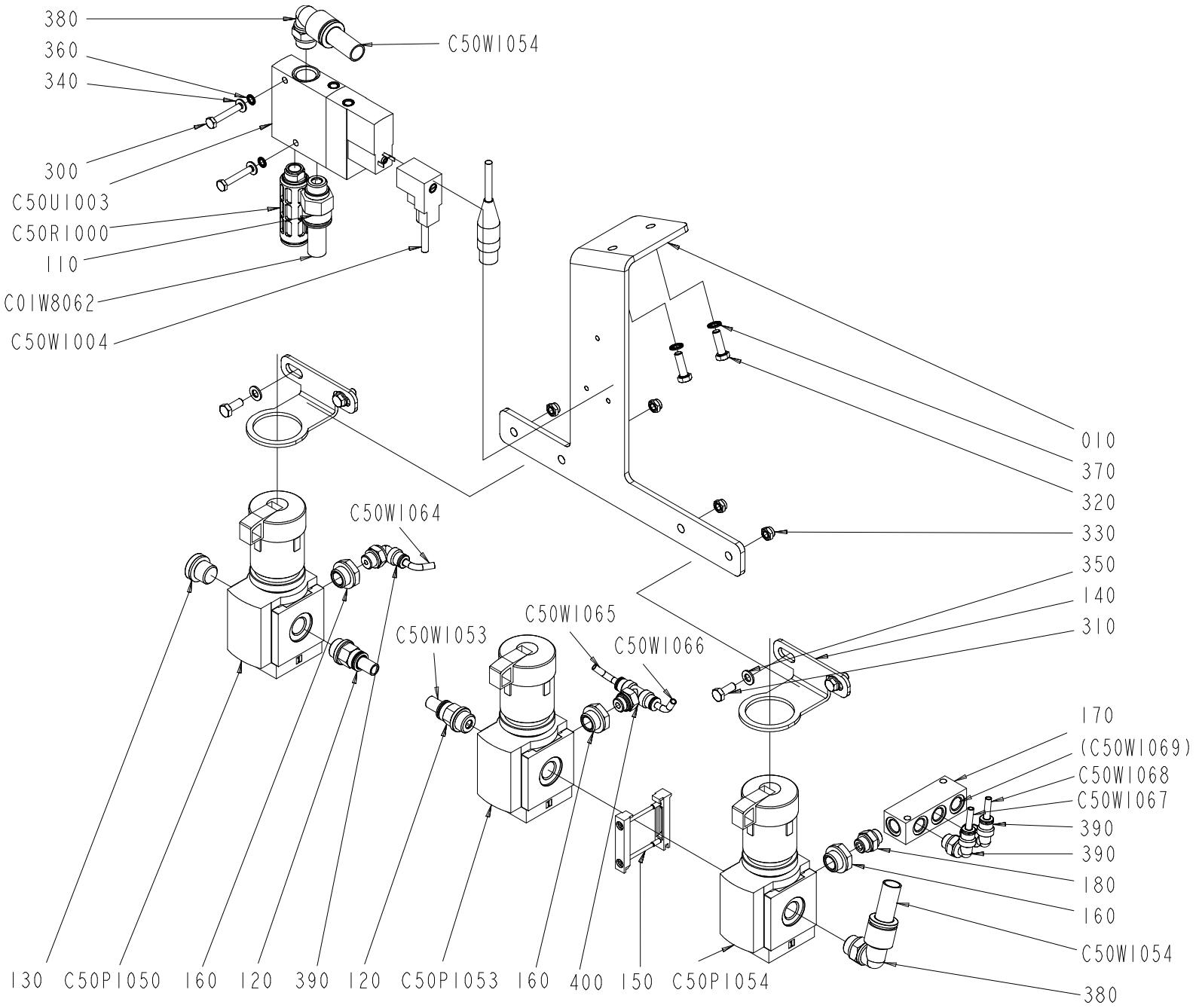

3108445-2
541792

ECM: 714067
Group number: 3108445-0200
Assembly Drawing: 3108445-2_1_AB

Pos	Part No	Description	Qty	Unit	Page No
Common Parts					
010	3124420-0000	BRACKET	1	PC	
110	351456-0105	PUSH-IN FITTING NPQH-D-G14-Q12-P10	1	PC	
120	351456-0107	PUSH-IN FITTING NPQH-D-G14-Q8-P10	2	PC	
130	90600-1167	PLUG, EXT. R-THREAD, R1/4	1	PC	
140	90459-2389	B71800059TM, BRACKET, MS4-LR-WR	2	PC	
150	90459-2248	BRACKET	1	PC	
160	90224-0289	BUSHING, INT.EXT. THR. R1/8-R1/4	3	PC	
170	90224-0314	DISTRIBUTOR BLOCK, FR-4-1/8-B	1	PC	
180	342700-0109	NIPPLE EXT.THREAD HEXAGON, 0901 00 10	1	PC	
300	312105-0297	SCREW, M6S ISO 4017 M4X25 A4 70	2	PC	
310	312105-0327	SCREW, M6S ISO 4017 M5X12 A4 80	4	PC	
320	312105-0329	SCREW, M6S ISO 4017 M5X16 A4 80	2	PC	
330	312810-0314	HEXAGON NUT, NY-LOCK M5 FZB	4	PC	
340	315103-0136	WASHER PLAIN, 4,3X8X0,8 BR NI PL	2	PC	
350	315103-0146	WASHER PLAIN, 5,3X10X1 BR NI PL	4	PC	
360	3108451-0000	WASHER	2	PC	
370	3108452-0000	WASHER	2	PC	
380	351456-3005	PUSH-IN L-FITTING NPQH-L-G14-Q12-P10	2	PC	
390	351456-3001	PUSH-IN L-FITTING NPQH-L-G18-Q4-P10	1	PC	
400	351456-5007	PUSH-IN T-FITTING NPQH-T-G18-Q4-P10	1	PC	
C01W1053	315400-0004	TUBE PUN-H-8X1,25-BL	1	M	
C01W1054	315400-0010	TUBE PUN-H-12X2-BL	1	M	
C01W8062	315400-0010	TUBE PUN-H-12X2-BL	1	M	
C50P1050	90600-1420	REGULATOR, MS4-LRB-1/4-D6-AS	1	PC	
C50P1053	90600-1420	REGULATOR, MS4-LRB-1/4-D6-AS	1	PC	
C50P1054	90600-1420	REGULATOR, MS4-LRB-1/4-D6-AS	1	PC	
C50R1000	90328-0026	SILENCER, G1/4"	1	PC	
C50U1003	90600-5813	SOLENOID VALVE, CPE18-M1H-3GL-1/4	1	PC	
C50W1004	90600-3573	SOCKET CONN. CABLE, KMEB-2-24-M12-0,5-LE	1	PC	
C50W1064	315400-0016	TUBE PUN-H-4X0,75-BL	1	M	
C50W1065	315400-0016	TUBE PUN-H-4X0,75-BL	1	M	
C50W1066	315400-0016	TUBE PUN-H-4X0,75-BL	1	M	
C50W1067	315400-0016	TUBE PUN-H-4X0,75-BL	1	M	
C50W1068	315400-0016	TUBE PUN-H-4X0,75-BL	1	M	
C50W1069	315400-0016	TUBE PUN-H-4X0,75-BL	1	M	

Pos	Part No	Description	Qty	Unit	Page No

Pos. 0270 in BoM 2846406-0500 **SENSOR** Drawing file:3433170-1_1_AA

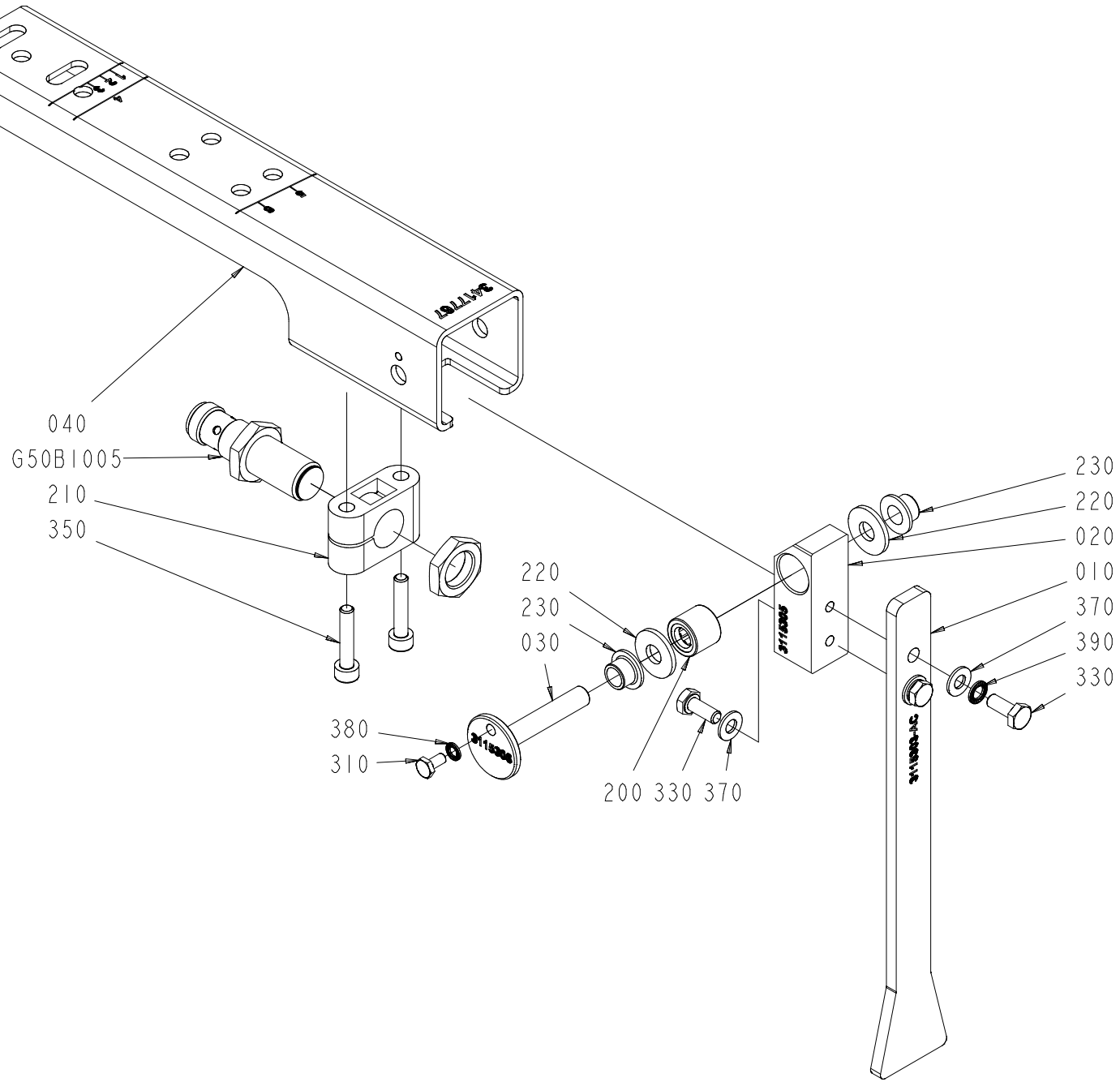

ECM: 791189
Group number: 3433170-0100
Assembly Drawing: 3433170-1_1_AA

Pos	Part No	Description	Qty	Unit	Page No
Common Parts					
010	3115303-0000	DIP STICK	1	PC	
020	3115305-0000	BRACKET	1	PC	
030	3115306-0000	PIN	1	PC	
040	3417767-0000	BRACKET	1	PC	
200	3115309-0000	BEARING	1	PC	
210	3115263-0000	CLAMP	1	PC	
220	3433175-0000	BUSHING	2	PC	
230	3433176-0000	BUSHING	2	PC	
310	90287-0175	SCREW M6S M3X12 A480	1	PC	
330	312105-0289	SCREW, M6S ISO 4017 M4X10 A4 70	3	PC	
350	312115-0295	SCREW ISO4762 M4X20 A4 80	2	PC	
370	315103-0136	WASHER PLAIN, 4,3X8X0,8 BR NI PL	3	PC	
380	3108450-0000	WASHER	1	PC	
390	3108451-0000	WASHER	2	PC	
G50B1005	90458-2907	PROX.SWITCH IFS204	1	PC	

Pos	Part No	Description	Qty	Unit	Page No

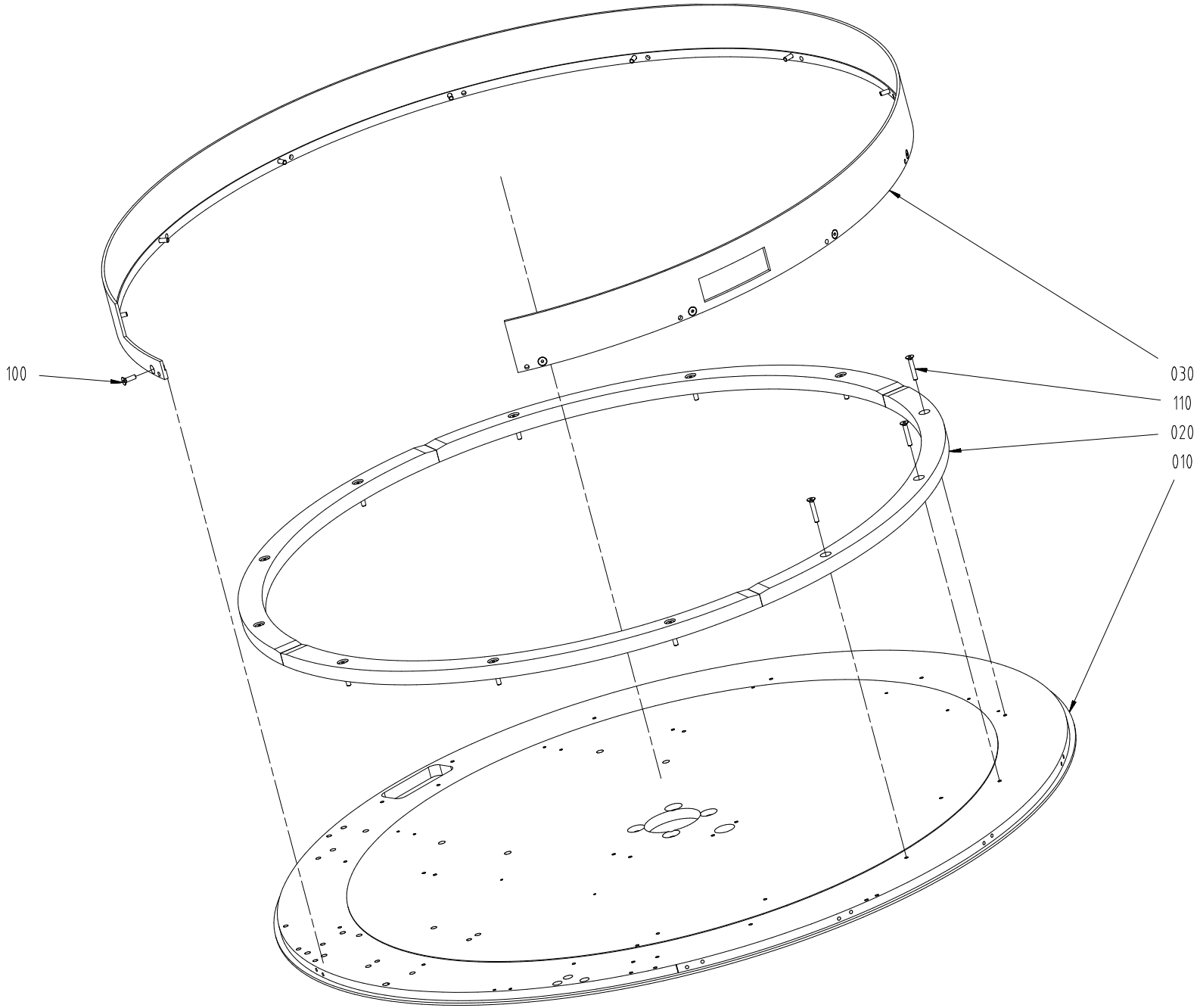
100
030
110
020
010

ECM: 481904
Group number: 3108447-0100
Assembly Drawing: 3108447-1_1_AA

Pos	Part No	Description	Qty	Unit	Page No
Common Parts					
010	3108464-0000	STUD BOLT	1	PC	
020	3108465-0000	SECTOR	4	PC	
030	3108466-0000	RING	1	PC	
100	312155-0329	SCREW DIN 7991 MF6S M5X16 A4 70	12	PC	
110	312155-0335	SCREW DIN 7991 MF6S M5X30 A4 70	12	PC	

Pos	Part No	Description	Qty	Unit	Page No

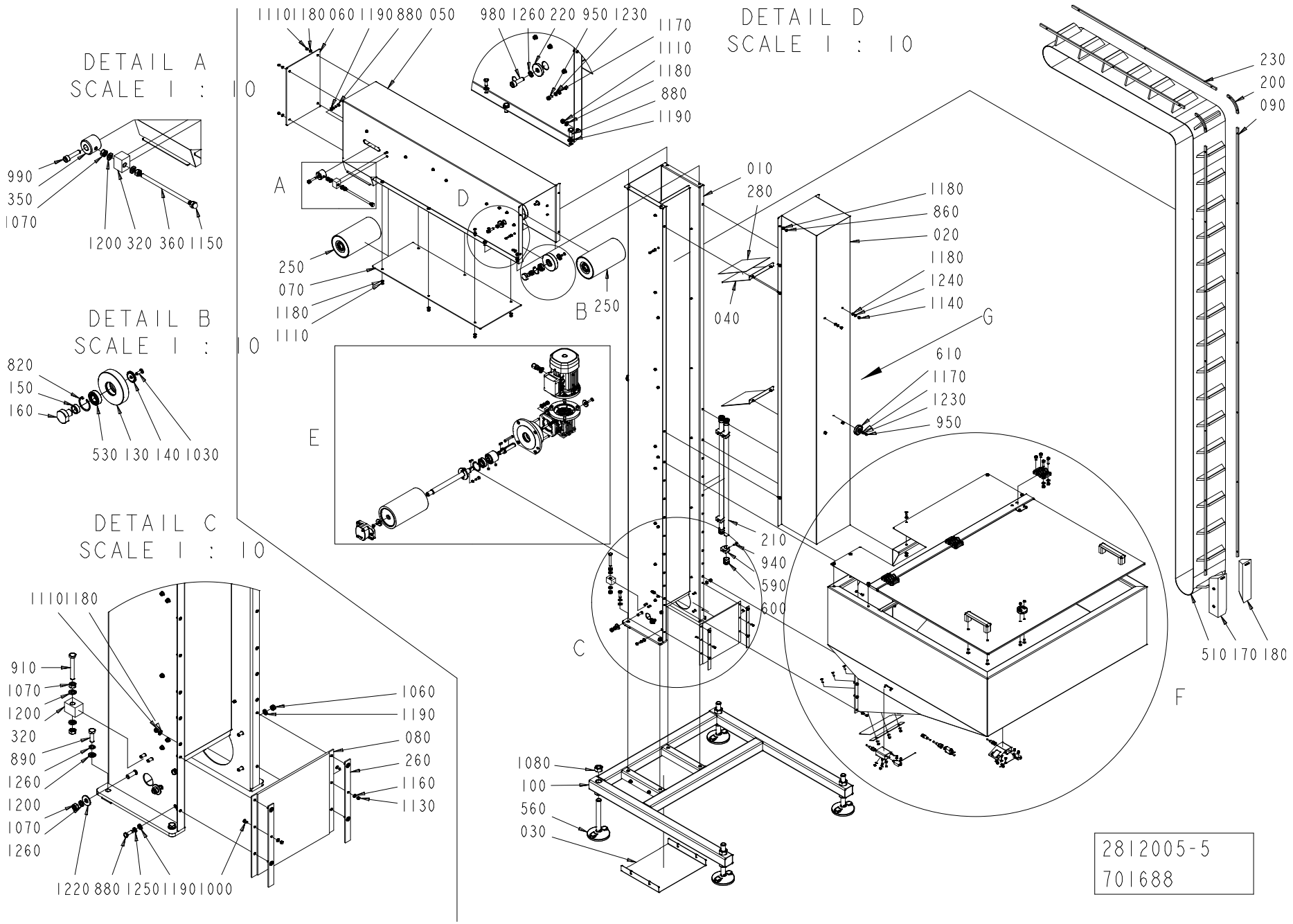
DETAIL A
SCALE 1 : 10
990
350
1070
1200 320 360 1150
DETAIL B
SCALE 1 : 10
820
150
160
530 130 140 1030
DETAIL C
SCALE 1 : 10
1110 1180
910
1070
1200
320
890
1260
1200
1070
1260
1220 880 1250 1190 1000
1060
1190
080
260
1160
1130
1110 1180 060 1190 880 050
980 1260 220 950 1230
1170
1110
1180
880
1190
A
D
250
070
1180
1110
B 250
E
C
010
280
040
DETAIL D
SCALE 1 : 10
230
200
090
1180
860
020
1180
1240
1140
G
610
1170
1230
950
210
940
590
600
F
510 170 180
1080
100
560
030
2812005-5
701688

Pos	Part No	Description	Qty	Unit	Page No
Common Parts					
0010	3108472-0000	SUPPORT	1	PC	
0020	3108473-0000	COVER	1	PC	
0030	3108474-0000	COVER	1	PC	
0040	3108475-0000	PLATE	2	PC	
0050	3108476-0000	CARRIER	1	PC	
0060	3108477-0000	COVER	1	PC	
0070	3108478-0000	COVER	1	PC	
0080	3108479-0000	COVER	1	PC	
0090	3108480-0000	PLATE	2	PC	
0100	3108481-0000	BED	1	PC	
0110	3108482-0000	UNIT CONVERGER	1	PC	
0120	3108483-0000	COVER	1	PC	
0130	3108484-0000	WASHER	2	PC	
0140	3108485-0000	WASHER	2	PC	
0150	3108486-0000	SPACER	2	PC	
0160	3108487-0000	PIN	2	PC	
0170	3108488-0000	GUIDE	1	PC	
0180	3108489-0000	GUIDE	1	PC	
0190	3108490-0000	COVER	1	PC	
0200	3108491-0000	PLATE	2	PC	
0210	3108492-0000	CABLE CONDUIT	2	PC	
0220	3108493-0000	WASHER	2	PC	
0230	3108494-0000	PLATE	2	PC	
0240	3058564-0000	ROLLER	1	PC	
0250	3108495-0000	ROLLER	2	PC	
0260	3108496-0000	PLATE	2	PC	
0270	3108497-0000	GASKET	1	PC	
0280	3108498-0000	GASKET	2	PC	
0290	3108499-0000	ANCHOR	1	PC	
0300	3058565-0000	SHAFT	1	PC	
0310	3108500-0000	SHAFT	1	PC	
0320	3108501-0000	PLUG	3	PC	
0330	3115224-0000	FLANGE	1	PC	
0340	3115225-0000	PLATE	1	PC	
0350	3115226-0000	THREADED ROD	2	PC	
0360	3115227-0000	BAR	2	PC	
0370	3115228-0000	COUPLING	1	PC	
0380	3124525-0000	SUPPORT	1	PC	
0390	3124526-0000	SUPPORT	1	PC	
0400	3124527-0100	SUPPORT	1	PC	270
0500	3115229-0000	WASHER	2	PC	
0510	3124436-0000	BELT	1	PC	
0520	3365194-0000	WORM GEAR	1	PC	
0530	344224-0202	BALL BEARING 15/32X9	2	PC	
0540	344224-0204	B40160040S, BALL BEARING 20/42X12	1	PC	
0560	3115230-0000	FOOT	4	PC	
0570	3115231-0000	HANDLE	2	PC	
0580	3115232-0000	HINGE	3	PC	
0590	3115233-0000	CLAMP	4	PC	
0600	3115234-0000	CAP	4	PC	
0610	3115235-0000	MAGNET	1	PC	
0620	90458-0322	NUT, M16X1,5	1	PC	
0630	90458-0306	CABLE GLAND, M16X1,5, 5311 1010	1	PC	
0640	351162-0106	WIRE AWM 1X4 MM2 YELLOW-GREEN	4	M	
0650	90459-1458	HOOD, SIDE ENTRY, HAN6E, 19 30 006 1540	1	PC	
0660	90458-0430	GLAND FITTING, VK 22054YUL16	4	PC	
0670	90458-0322	NUT, M16X1,5	3	PC	
0680	353249-0012	INSERT, SINGLE HOLE, EK154 11	4	PC	
0690	90152-0051	HOSE, SPIRAL CONDUIT, 25X18, UL 1816	7.500	M	
0800	3108461-0000	KEY	2	PC	
0810	315701-0241	PARALLEL KEY W. ROUND ENDS, 6X6X50 MM	1	PC	
0820	315753-0123	RETAINING RING FOR BORE DIN 472 32 SS	2	PC	
0830	90141-0020	RETAINING RING FOR BORE DIN 472 42 SS	1	PC	
0840	312318-0323	SET SCREW, CUP END ISO4029 M5X8 A4	2	PC	
0850	3108464-0000	STUD BOLT	4	PC	
0860	312105-0327	SCREW, M6S ISO 4017 M5X12 A4 80	20	PC	
0870	312105-0329	SCREW, M6S ISO 4017 M5X16 A4 80	6	PC	
0880	312105-0368	SCREW, M6S ISO 4017 M6X16 A4 80	16	PC	
0890	312105-0453	SCREW, M6S ISO 4017 M8X25 A4 80	4	PC	
0910	312109-0463	SCREW, M6S ISO 4017 M8X60 A4 80	1	PC	
0920	312115-0291	SCREW ISO4762 M4X12 A4 80	1	PC	
0930	312115-0230	SCREW ISO4762 M3X20 A4 80	4	PC	
0940	312115-0293	SCREW ISO4762 M4X16 A4 80	4	PC	
0950	312115-0287	SCREW ISO4762 M4X8 A4 80	24	PC	
0960	312115-0366	SCREW ISO4762 M6X12 A4 80	6	PC	
0970	312115-0372	SCREW ISO4762 M6X25 A4 80	6	PC	
0980	312115-0453	SCREW ISO4762 M8X25 A4 80	2	PC	
0990	312115-0457	SCREW ISO4762 M8X35 A4 80	2	PC	
1000	3108462-0000	SCREW	2	PC	
1010	312155-0289	SCREW DIN 7991 MF6S M4X10 A4 70	12	PC	
1020	312155-0293	SCREW DIN 7991 MF6S M4X16 A4 70	3	PC	
1030	312155-0329	SCREW DIN 7991 MF6S M5X16 A4 70	4	PC	
1040	312155-0370	SCREW DIN 7991 MF6S M6X20 A4 70	5	PC	
1050	312155-0374	SCREW DIN 7991 MF6S M6X30 A4 70	1	PC	
1060	312605-0316	HEXAGON NUT, M6M M6 A280	4	PC	
1070	312605-0318	HEXAGON NUT, M6M M8 A280	12	PC	
1080	312605-0326	HEXAGON NUT, M6M M20 A280	4	PC	
1090	312810-0310	HEXAGON NUT, NY-LOCK M3 FZB	4	PC	
1100	312810-0312	HEXAGON NUT, NY-LOCK M4 FZB	21	PC	
1110	312810-0314	HEXAGON NUT, NY-LOCK M5 FZB	36	PC	
1120	312810-0316	HEXAGON NUT, NY-LOCK M6 FZB	10	PC	
1130	312705-0310	NUT HEX. DOMED CAP MHM-6 M3 A2	2	PC	
1140	312705-0314	NUT HEX. DOMED CAP MHM-6 M5 A280	4	PC	
1150	312705-0318	NUT HEX. DOMED CAP MHM-6 M8 A280	2	PC	
1160	315103-0124	WASHER PLAIN, 3,2X/6X0,5 BR NI PL	10	PC	

Pos	Part No	Description	Qty	Unit	Page No
1170	315103-0136	WASHER PLAIN, 4,3X8X0,8 BR NI PL	43	PC	
1180	315103-0146	WASHER PLAIN, 5,3X10X1 BR NI PL	64	PC	
1190	315103-0153	WASHER PLAIN, 6,4X12X1,5 BR NI PL	28	PC	
1200	315103-0165	WASHER PLAIN, 8,4X15X1,5 BR NI PL	14	PC	
1210	3108458-0000	WASHER	1	PC	
1220	3108460-0000	WASHER	2	PC	
1230	3108451-0000	WASHER	24	PC	
1240	3108452-0000	WASHER	4	PC	
1250	3108453-0000	WASHER	14	PC	
1260	3108454-0000	WASHER	12	PC	
C50B0013	90459-5529	PHOTOCELL E3Z-T86A, SENDER+RECIEVER	1	PC	
C50M0000	90603-9718	MOTOR 3GAA 062 002-BSC	1	PC	
C50W0000	315743-0009	OLFLEX CONTROL TM 4G1,5, 281604	6	M	
C50W0012	344261-0050	SENSOR CABLE, EVT216	1	PC	
C50W0013	90603-3979	SENSOR Y-CABLE, EVT339	1	PC	
C50X0000	90110-0052	MALE INSERT, HAN E06, 0933 0062 601	1	PC	

Pos	Part No	Description	Qty	Unit	Page No

This page intentionally left blank

DETAIL E
SCALE 1 : 10

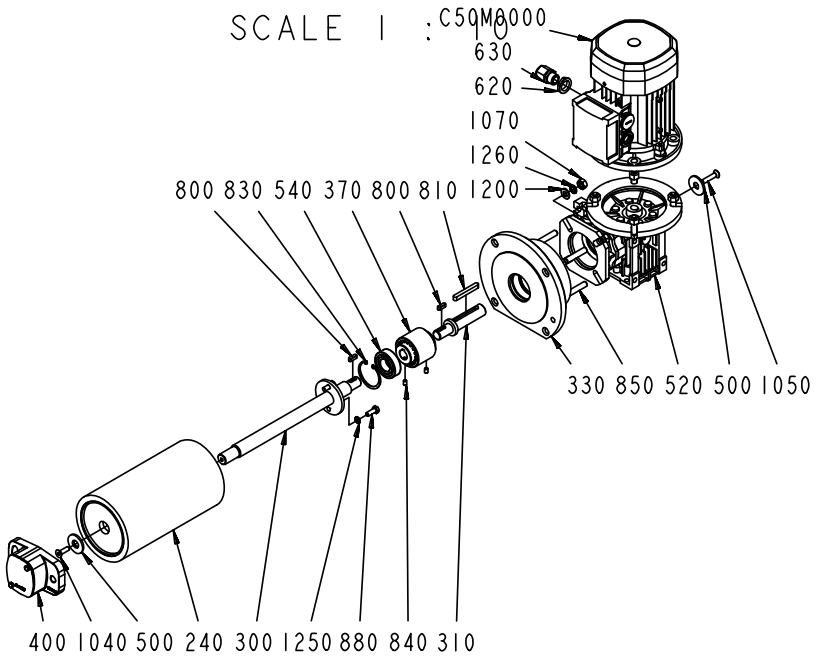

VIEW FROM
G

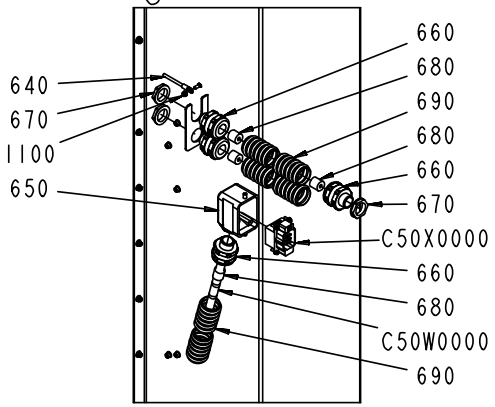

DETAIL F
SCALE 1 : 10

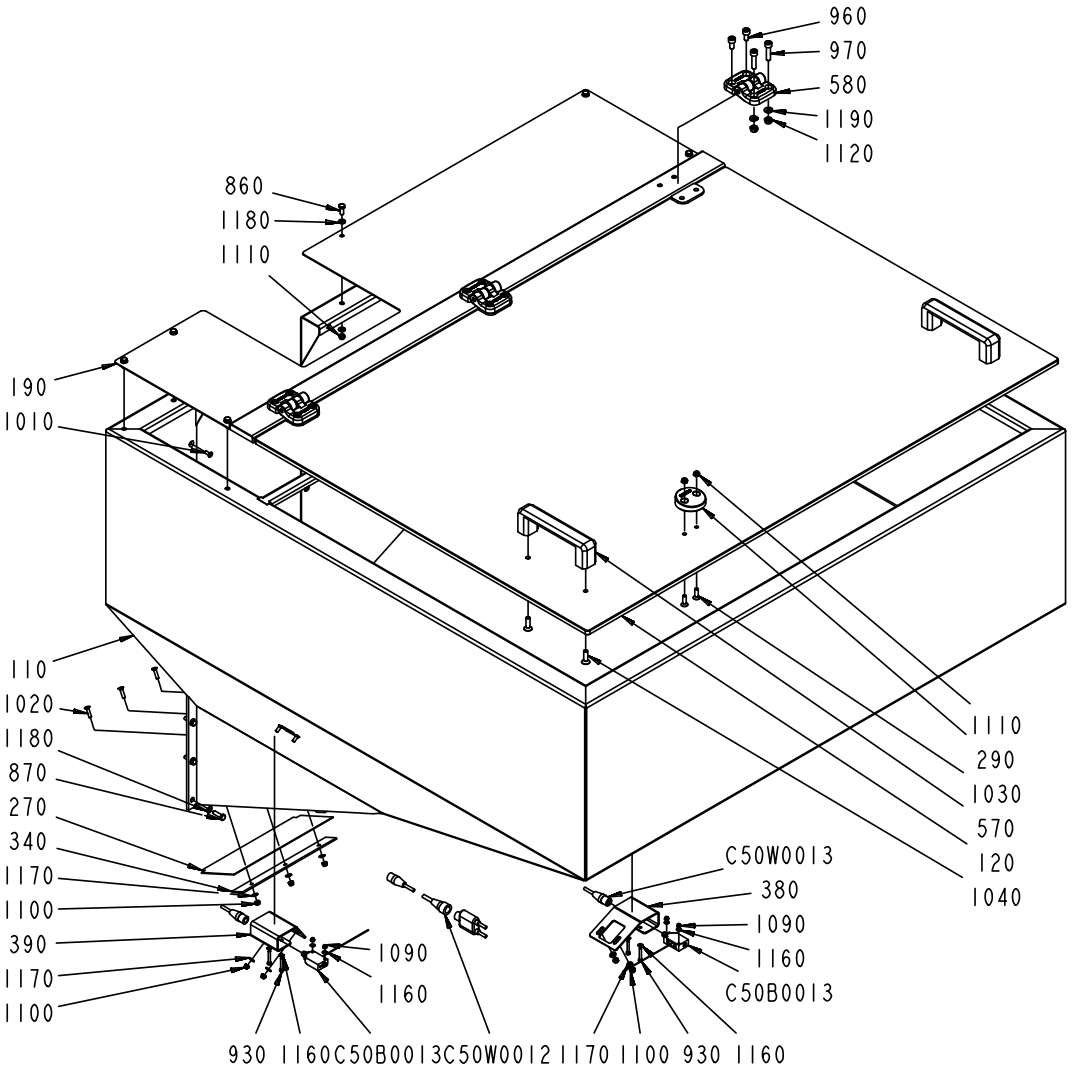

Pos	Part No	Description	Qty	Unit	Page No

SEE LIST FOLLOWING DRAWING ON PAGE: 264

Pos	Part No	Description	Qty	Unit	Page No

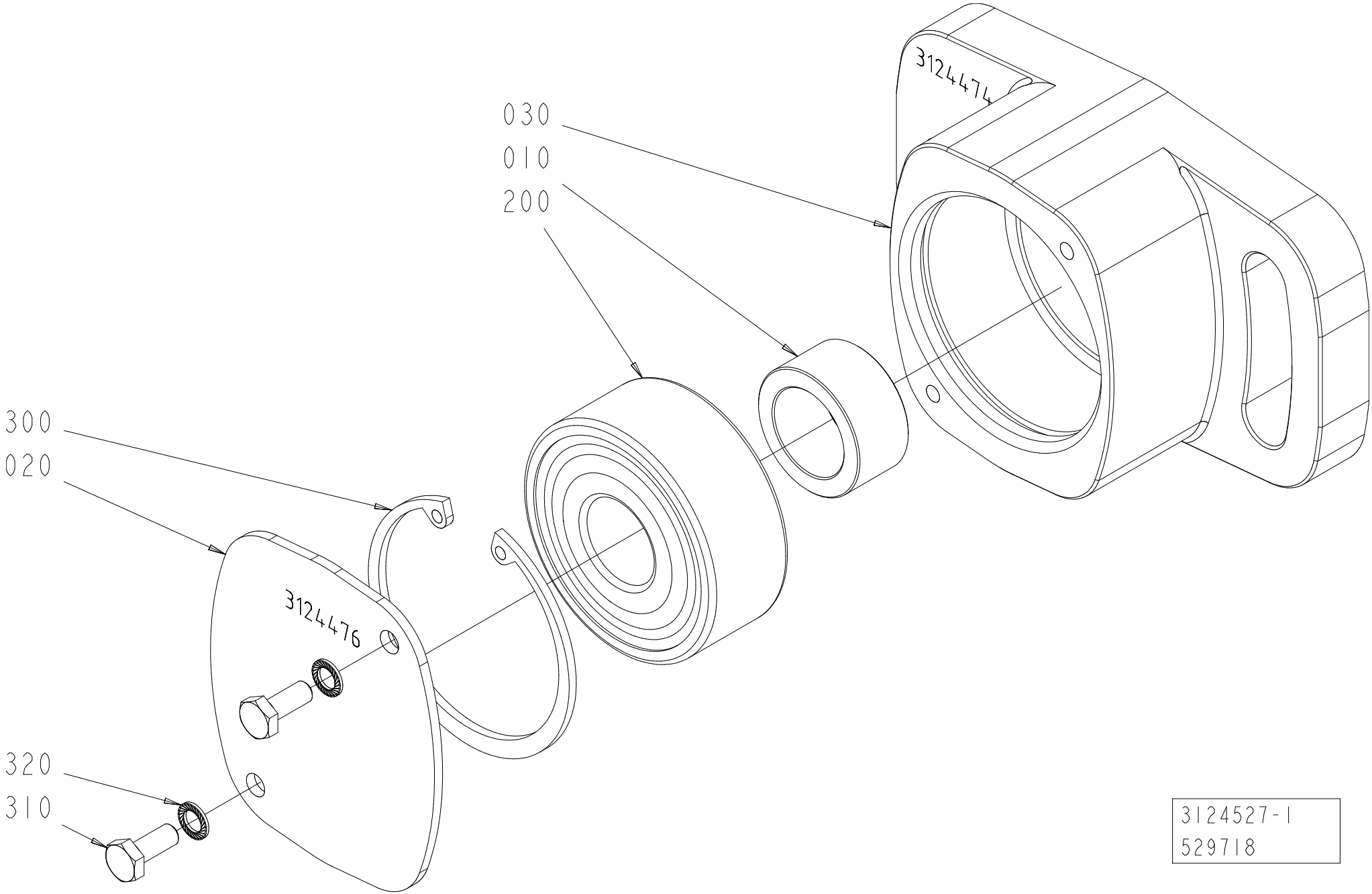

3124527-1
529718

ECM: 532841
Group number: 3124527-0100
Assembly Drawing: 3124527-1_1_AA

Pos	Part No	Description	Qty	Unit	Page No
Common Parts					
010	3124475-0000	SPACER	1	PC	
020	3124476-0000	COVER	1	PC	
030	3124474-0000	FLANGE	1	PC	
200	90603-9715	SPHERICAL BALL BEARING 17/47X19	1	PC	
300	315753-0130	RETAINING RING FOR BORE DIN 472 47 SS	1	PC	
310	312105-0289	SCREW, M6S ISO 4017 M4X10 A4 70	2	PC	
320	3108451-0000	WASHER	2	PC	

Pos	Part No	Description	Qty	Unit	Page No

This page intentionally left blank

SPC

Spare Parts Catalogue

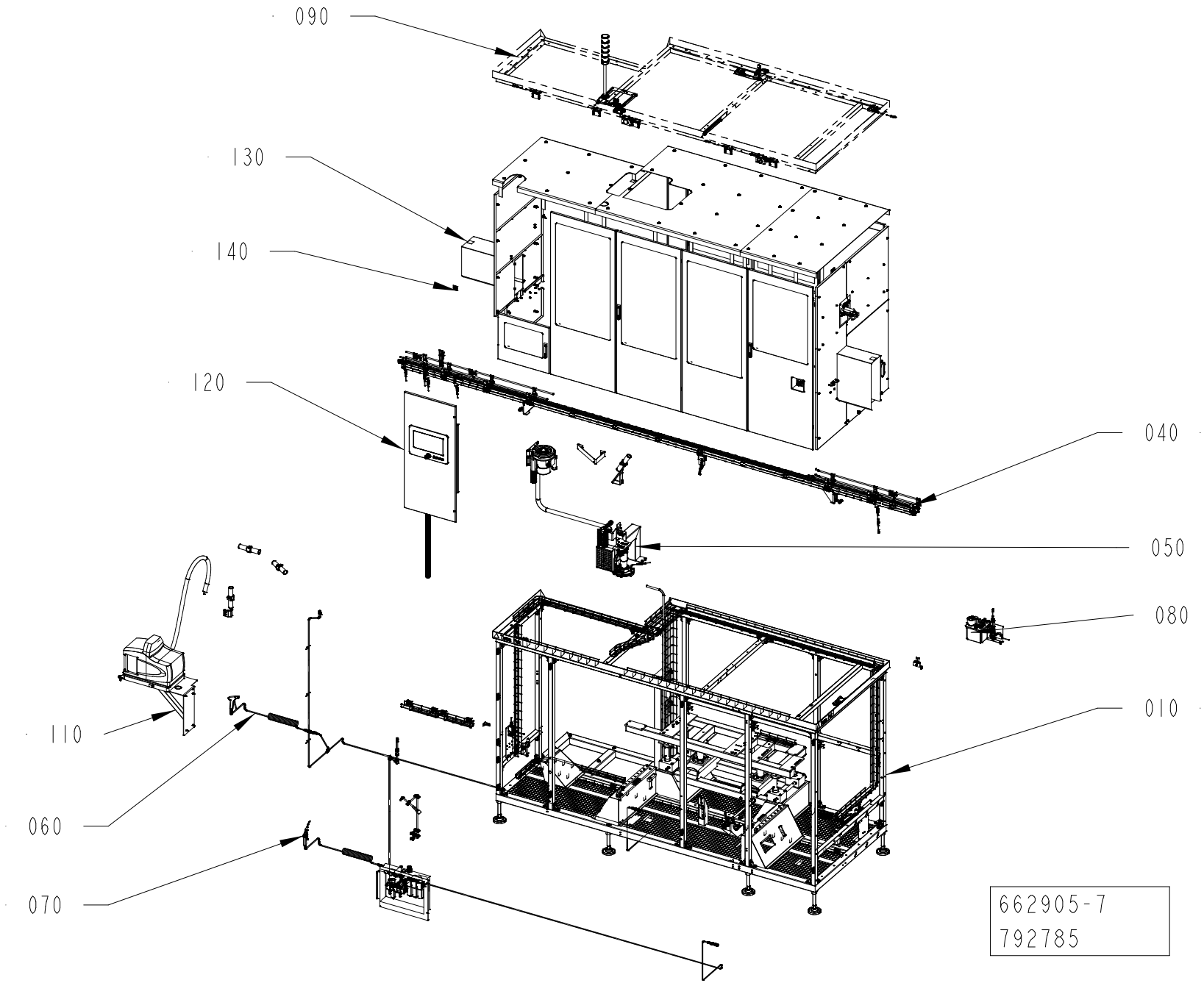
090
130
140
120
040
050
080
010
110
060
070
662905-7
792785

ECM: 794456
Group number: 662905-0400
Assembly Drawing: 662905-7_1_AB

Pos	Part No	Description	Qty	Unit	Page No
Common Parts					
010	2758505-0400	MACHINE BODY	1	PC	276
040	2758507-0300	PACKAGE CONVEYOR	1	PC	298, 300, 302, 304
050	2773622-0300	LINE HEATER	1	PC	324
060	2758514-0200	WATER CONNECTION	1	PC	342
070	2758513-0300	AIR SUPPLY	1	PC	344
080	3208664-0200	CENTRAL LUBRICATION	1	PC	366
090	2769754-0400	ELECTRIC EQUIPMENT	1	PC	374
110	2758511-0400	HOTMELT EQUIPMENT	1	PC	390
120	2779070-0400	OPERATOR INTERFACE	1	PC	396
130	2826741-0400	DOORS AND COVERS	1	PC	412
140	3217567-0100	WARNING SIGN	1	PC	456

Pos	Part No	Description	Qty	Unit	Page No

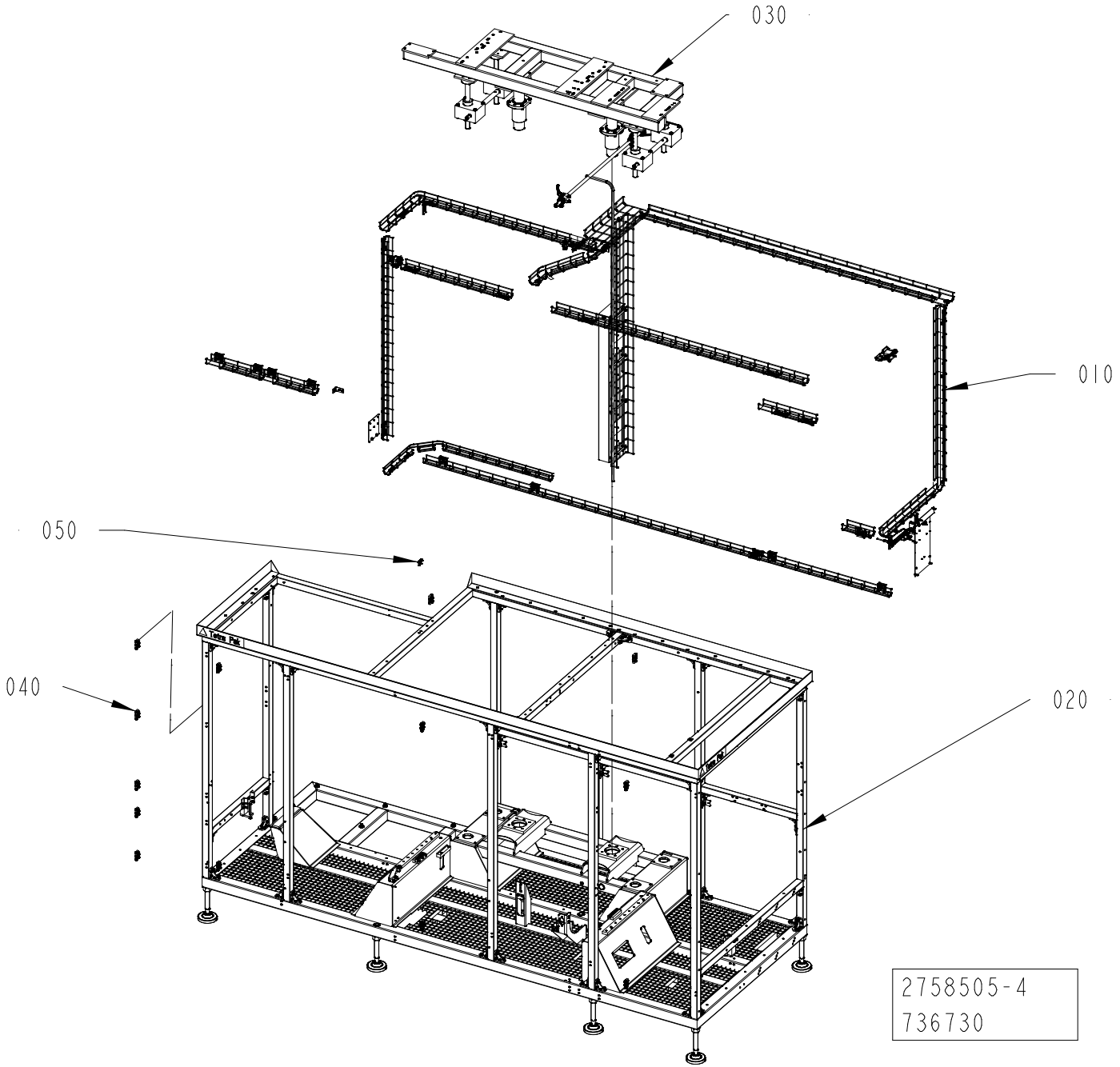
030
010
050
040
020
2758505-4
736730

ECM: 742575
Group number: 2758505-0400
Assembly Drawing: 2758505-4_1_AA

Pos	Part No	Description	Qty	Unit	Page No
STREAMCAP500, STREAMCAP1000, SLIMCAP 2000, SLIMCAP 1000, STREAMCAP200, HELICAP2 23, HELICAP 27					
050	3403463-0100	JUNCTION BOX	1	PC	278, 280
Common Parts					
010	2758515-0400	CABLE DUCT	1	PC	282
020	2769761-0400	MACHINE BODY	1	PC	286, 288
030	2769738-0100	HEIGHT ADJUSTMENT	1	PC	292
040	3217565-0100	DOOR HINGE	1	PC	296

Pos	Part No	Description	Qty	Unit	Page No

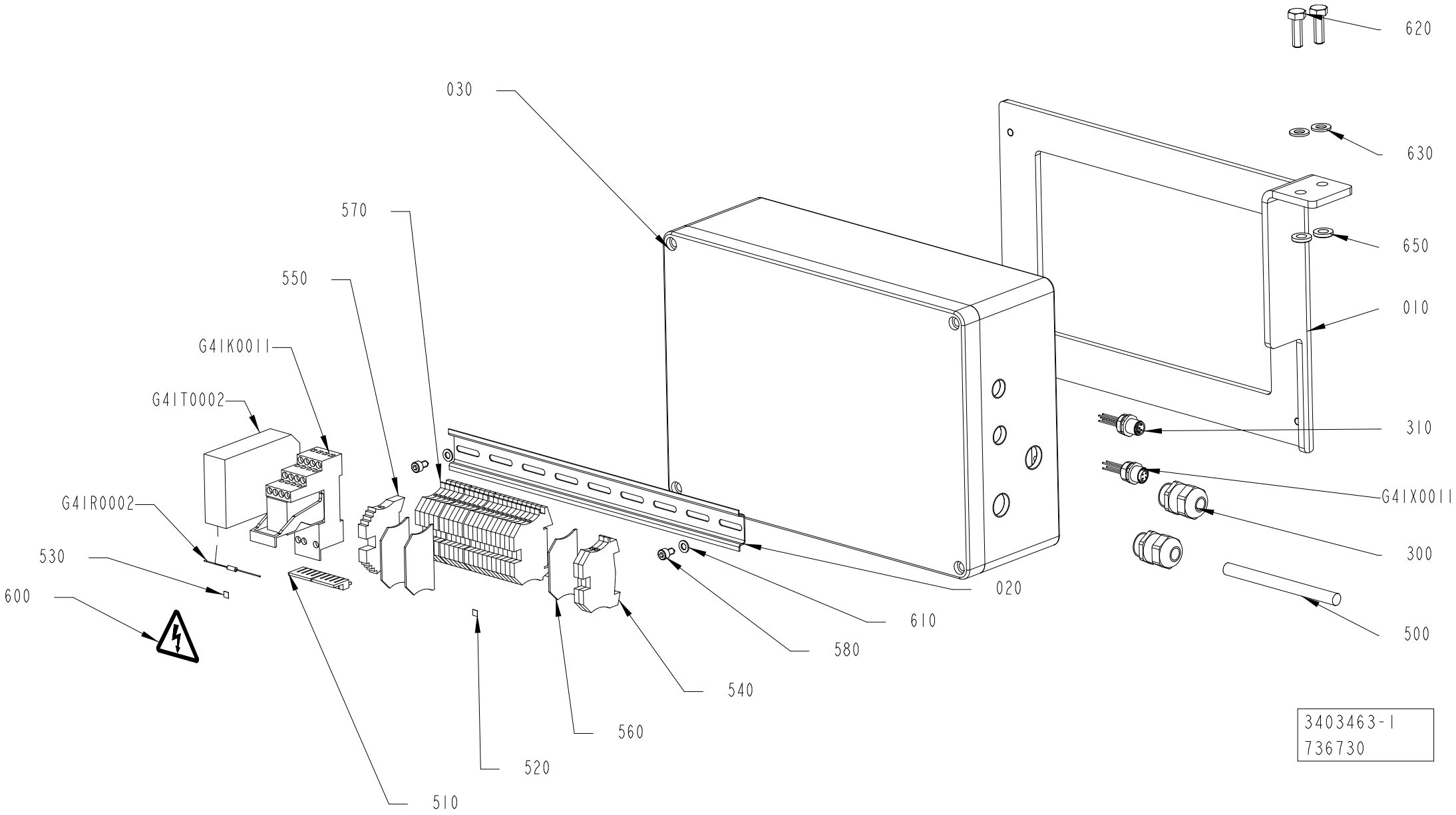
620
030
630
570
650
550
010
G4IK0011
G4IT0002
310
G4IX0011
G4IR0002
300
530
600
020
610
580
500
540
560
520
510
3403463-1
736730

ECM: 742571
Group number: 3403463-0100
Assembly Drawing: 3403463-1_1_AA

This list refers to drawings on pages 278 to 280

Pos	Part No	Description	Qty	Unit	Page No
ADHESIVE DETECTOR	See page: 278				
010	3311368-0000	SUPPORT	1	PC	
020	3267572-0000	RAIL	1	PC	
030	3267762-0000	CONNECTION BOX	1	PC	
300	90458-0307	CABLE GLAND, M20X1,5, 5311 1020	2	PC	
310	90603-4479	RECEPTACLE M12, SACC-E-M12MS-5CON-M16/..	1	PC	
500	351150-0406	CABLE OLFLEX 7X0,75 MM2 LIGHT/GREY	6	M	
510	353034-0030	BRIDGE CONNECTOR WQV 2,5/10	1	PC	
520	359011-0819	MARKING, EARTH, DEK 5 GW ERDE I.KR.	1	PC	
530	359011-0809	MARKING, DEK 5 FW 101-150	1	PC	
540	353024-0204	EARTH TERMINAL WPE 2,5	2	PC	
550	353031-0203	END BRACKET, WEW 35/2	1	PC	
560	353032-0004	END PLATE, WAP 2,5-10, BEIGE	3	PC	
570	353021-0212	FEED THROUGH TERMINAL, WDU 2,5	21	PC	
580	312115-0323	SCREW ISO4762 M5X8 A4 80	2	PC	
600	359705-0015	WARNING SIGN ISO, ELECTRIC HAZARD	1	PC	
610	315106-0146	"WASHER PLAIN, M5 ISO7089-5-200 HV A4"	2	PC	
650	315115-0165	WASHER PLAIN, TBRB 8,4/16 H=3	2	PC	
G41K0011	90601-6656	RELAY, PR2-RSC3-LDP-24DC/4X21AU	1	PC	
G41R0002	90602-3851	RESISTANCE FIXED, 3,6 KOHM, 1/2 W	1	PC	
G41T0002	90605-2645	POWER SUPPLY, IQ00-QLC-400-1-TP	1	PC	
G41X0011	90603-4478	RECEPTACLE M12, SACC-E-M12FS-4CON-M16/..	1	PC	
Common Parts					
620	312105-0453	SCREW, M6S ISO 4017 M8X25 A4 80	2	PC	
630	315106-0165	WASHER PLAIN, M8 ISO7089-8-200 HV A4	2	PC	

Pos	Part No	Description	Qty	Unit	Page No

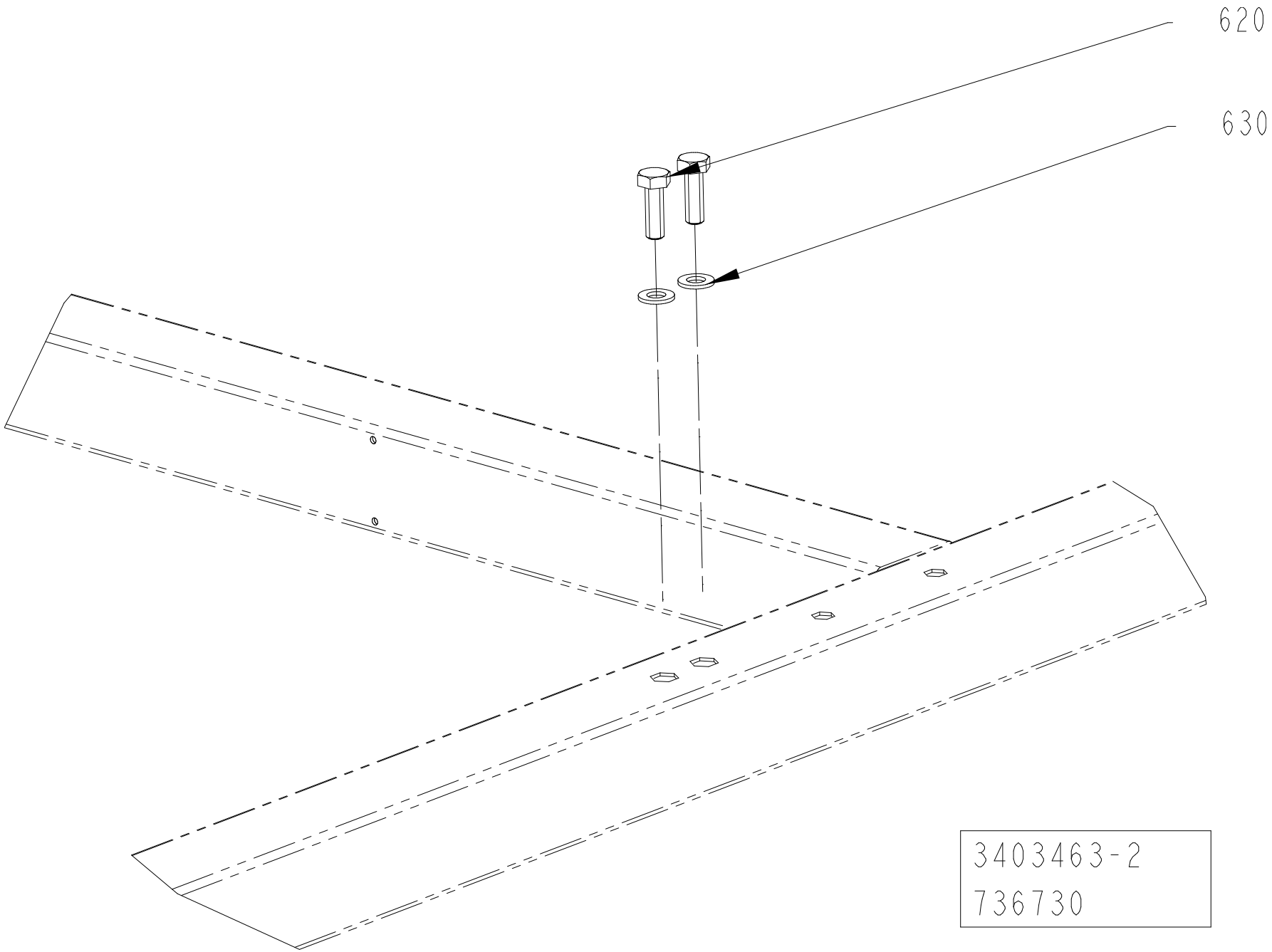
620
630
3403463-2
736730

ECM: 742571
Group number: 3403463-0100
Assembly Drawing: 3403463-2_1_AA

This list refers to drawings on pages 278 to 280

Pos	Part No	Description	Qty	Unit	Page No

SEE LIST FOLLOWING DRAWING ON PAGE: 278

Pos	Part No	Description	Qty	Unit	Page No

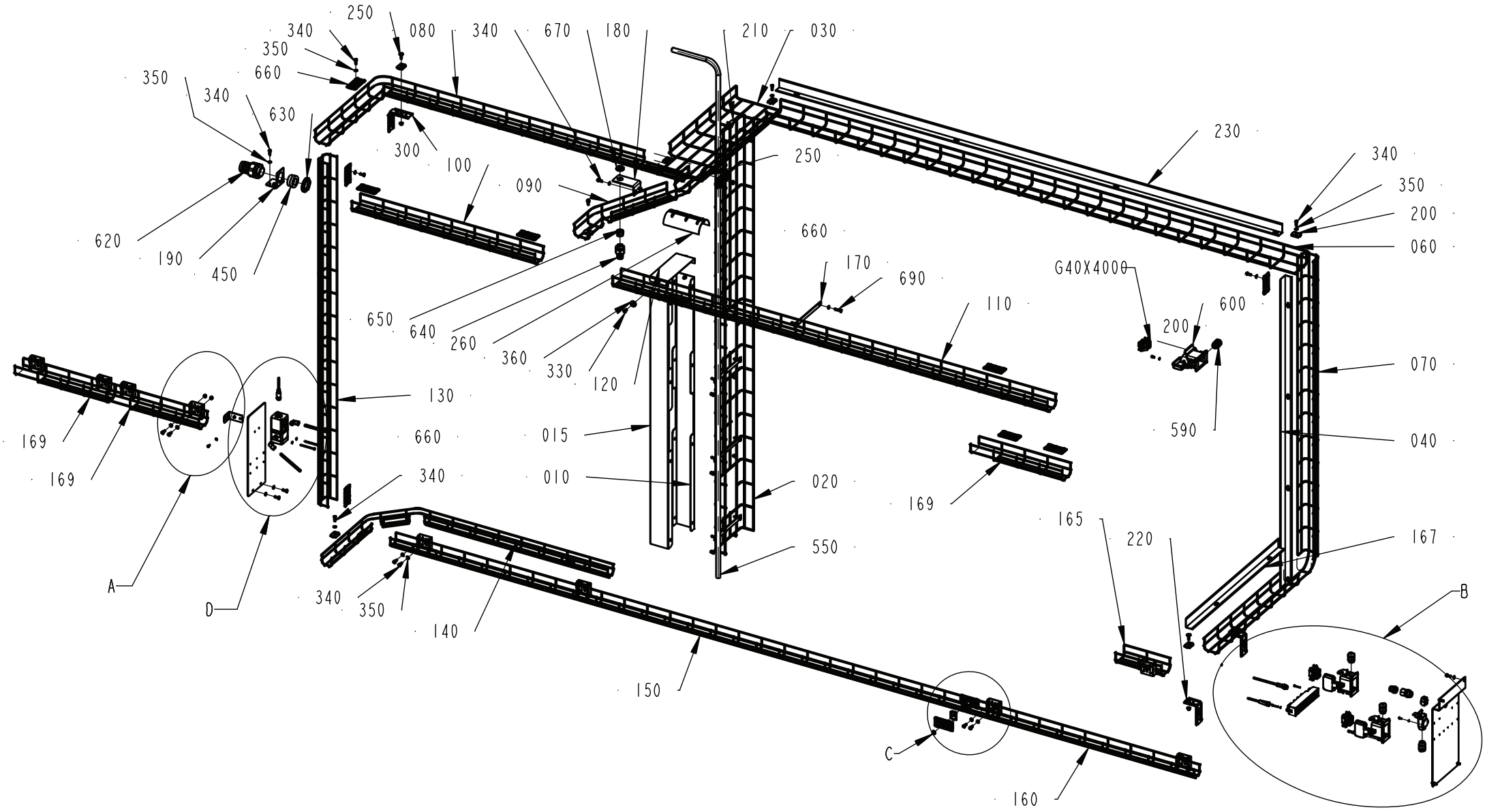
250
340
080
340
670
180
210
030
350
660
350
340
630
300
100
090
230
340
350
200
060
620
190
450
650
640
260
360
330
120
660
170
690
110
G40X4000
200
600
070
130
660
015
590
040
169
169
340
010
020
550
169
165
220
167
A
D
340
350
140
150
C
160
B

ECM: 824289
Group number: 2758515-0400
Assembly Drawing: 2758515-7_1_AC

Pos	Part No	Description	Qty	Unit	Page No
HELICAP 27, STREAMCAP500, SLIMCAP 2000, SLIMCAP 1000, STREAMCAP200, HELICAP2 23, STREAMCAP1000					
590	90458-0307	CABLE GLAND, M20X1,5, 5311 1020	4	PC	
STREAMCAP500, SLIMCAP 2000, SLIMCAP 1000, STREAMCAP200, HELICAP2 23, HELICAP 27, STREAMCAP1000					
100	2931775-0000	CABLE DUCT	1	PC	
169	2931782-0000	CABLE DUCT	3	PC	
240	90181-0190	CABLE DUCT, WALL BRACKET, B4 MINI	9	PC	
320	312125-0232	SLOTTED HEAD SCREW, ISO1207 M3X25 A4	2	PC	
340	312105-0368	SCREW, M6S ISO 4017 M6X16 A4 80	49	PC	
350	315105-0153	WASHER PLAIN, 6,4X12X1,5 A4 BRB	57	PC	
410	312115-0222	SCREW ISO4762 M3X8 A4 80	2	PC	
610	90459-3081	HOUSING, 19 20 003 1250	1	PC	
C50X1004	90459-6820	FEMALE INSERT, HAN 4 A, 09 20 004 2711	1	PC	
STREAMCAP500, STREAMCAP1000, SLIMCAP 2000, SLIMCAP 1000, STREAMCAP200, HELICAP2 23, HELICAP 27					
700	351456-3003	PUSH-IN L-FITTING NPQH-L-G18-Q8-P10	2	PC	
710	312125-0307	SCREW ISO 1207 M4X60 A4	2	PC	
V01K5010	90606-9103	PROPORTIONAL PRESSURE REGULATOR VPPE	1	PC	
V01T5010	315400-0004	TUBE PUN-H-8X1,25-BL	100	MM	
V01T5011	315400-0004	TUBE PUN-H-8X1,25-BL	100	MM	
V01W5010	90603-4384	SENSOR CABLE, SAC-5P- 5,0-PUR/M12FS SH	1	PC	
Common Parts					
010	2746903-0000	CABLE DUCT	1	PC	
015	2873928-0000	CABLE DUCT	1	PC	
020	2931768-0000	CABLE DUCT	1	PC	
030	2931769-0000	CABLE DUCT	1	PC	
040	2931770-0000	DIVIDER	1	PC	
050	3047341-0000	ANGLE BRACKET	1	PC	
060	2931771-0000	CABLE DUCT	1	PC	
070	2931772-0000	CABLE DUCT	1	PC	
080	2931773-0000	CABLE DUCT	1	PC	284
090	2931774-0000	CABLE DUCT	1	PC	
110	2931776-0000	CABLE DUCT	1	PC	
120	2779800-0000	PLATE	1	PC	
130	2931777-0000	CABLE DUCT	1	PC	
140	2931778-0000	CABLE DUCT	1	PC	
150	2931779-0000	CABLE DUCT	1	PC	
160	2931780-0000	CABLE DUCT	1	PC	
165	2931781-0000	CABLE DUCT	1	PC	
167	2931784-0000	DIVIDER	1	PC	
170	2931783-0000	PLATE	4	PC	
180	2931785-0000	ANGLE	1	PC	
190	2931786-0000	ANGLE	1	PC	
200	90181-0183	CABLE DUCT, FITTING, SB-102-S	13	PC	
210	90181-0184	CABLE TRENCH PARTS	1	PC	
220	2931787-0000	ANGLE	2	PC	
230	2931788-0000	DIVIDER	1	PC	
250	90181-0314	BOLT + NUT, SB-106-S	6	PC	
260	2934904-0000	RAIL BRACKET	1	PC	
285	2802417-0000	PLATE	1	PC	
290	3429991-0000	PLATE	1	PC	
300	90181-0186	CABLE DUCT, ELBOW BRACKET, B27	1	PC	
310	312115-0289	SCREW ISO4762 M4X10 A4 80	2	PC	
330	312105-0366	SCREW, M6S ISO 4017 M6X12 A4 80	2	PC	
360	315125-0153	WASHER HIGH, TBRSB 6,4X22X4 A4	2	PC	
390	315105-0124	WASHER PLAIN, 3,2X6X0,5 A4 BRB	4	PC	
400	315105-0136	WASHER PLAIN, 4,3X8X0,8 A4 BRB	14	PC	
420	312115-0287	SCREW ISO4762 M4X8 A4 80	12	PC	
430	312605-0316	HEXAGON NUT, M6M M6 A280	10	PC	
450	353249-0054	INSERT, SINGLE HOLE, EK156 25	1	PC	
550	90166-0113	HOSE	2.500	M	
570	90459-2133	PUSH-IN FITTING QSSF-1/2-12-B	1	PC	
580	351456-0113	PUSH-IN FITTING NPQH-D-G12-Q12	1	PC	
600	90459-1461	HOUSING, 19 30 006 1255	3	PC	
620	90458-0434	GLAND FITTING, VK 24056YUL29	1	PC	
630	90458-0326	NUT M40X1,5	1	PC	
640	90458-0430	GLAND FITTING, VK 22054YUL16	1	PC	
650	353249-0012	INSERT, SINGLE HOLE, EK154 11	1	PC	
660	90181-0182	BRACKET, 1149354	14	PC	
670	90458-0323	NUT, M20X1,5	1	PC	
690	312105-0372	SCREW, M6S ISO 4017 M6X25 A4 80	8	PC	
A81W2003	351501-3100	ETH. P. CAB. VS-M12MSD-IP20-LI-93P/10,0	1	PC	
A81W4120	344253-0100	SENSOR CABLE, EVT002	1	PC	
C50X0000	90110-0053	FEMALE INSERT, HAN 6 E 09 33 006 2701	1	PC	
C50X1000	90110-0053	FEMALE INSERT, HAN 6 E 09 33 006 2701	1	PC	
G40X4000	90110-0053	FEMALE INSERT, HAN 6 E 09 33 006 2701	1	PC	
W81K4120	90606-4706	ARMORBLOCK MODULE, 1732E-8CFGM8R, SER. A	1	PC	

This page intentionally left blank

ECM: 713220
Group number: 2931773-0000
Assembly Drawing: -

Pos	Part No	Description	Qty	Unit	Page No
Common Parts					
	90181-0197	CABLE DUCT, WIRE, 65X48 MM, L=2500 MM	1860	M	

Pos	Part No	Description	Qty	Unit	Page No

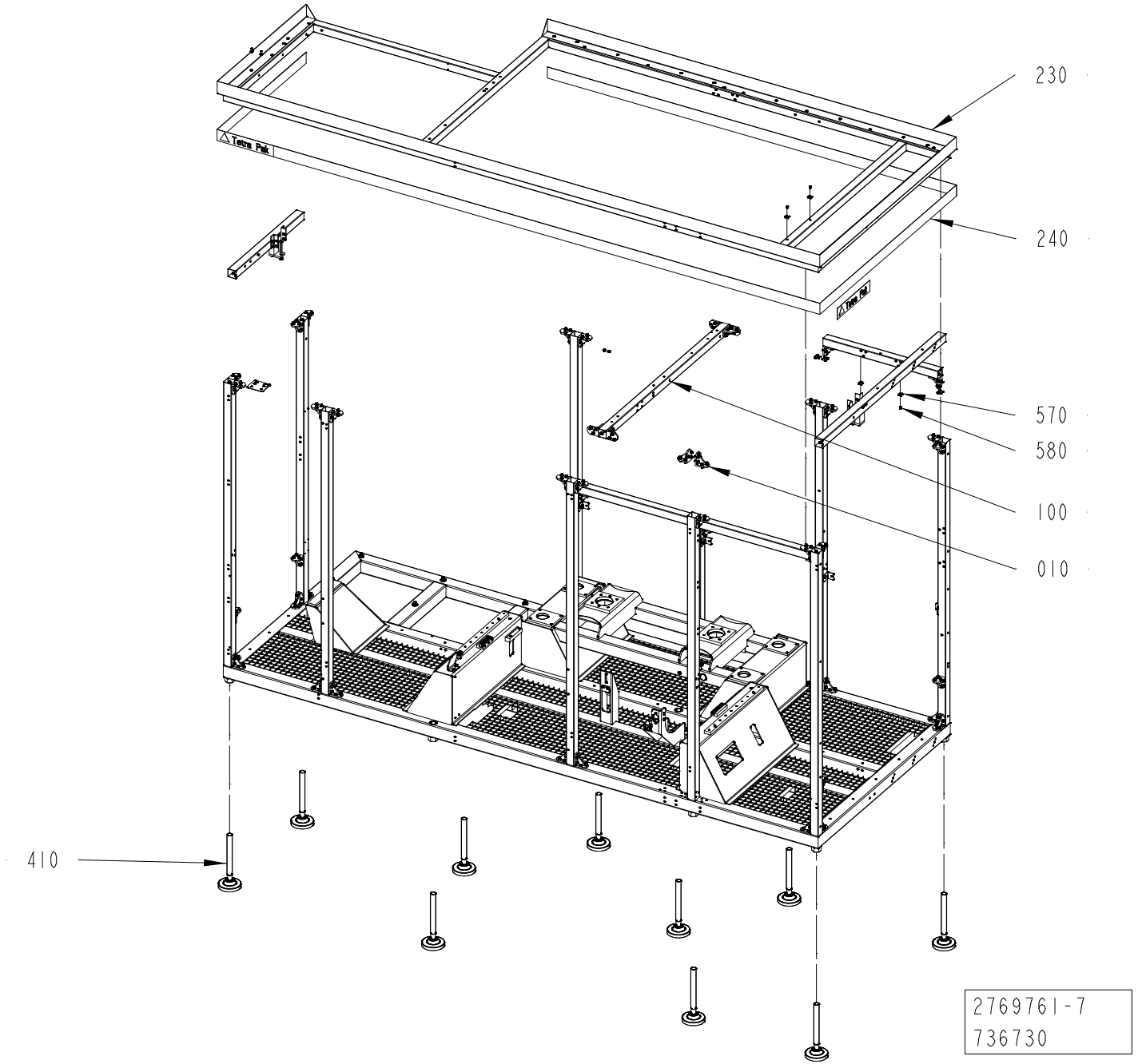
230
240
570
580
100
010
410
2769761-7
736730

ECM: 742570
Group number: 2769761-0400
Assembly Drawing: 2769761-7_1_AA

This list refers to drawings on pages 286 to 288

Pos	Part No	Description	Qty	Unit	Page No
HELICAP 27, STREAMCAP500, STREAMCAP1000, SLIMCAP 2000, SLIMCAP 1000, STREAMCAP200, HELICAP2 23					
See page: 286, 288					
010	2778595-0100	ANGLE	49	PC	290
STREAMCAP500, STREAMCAP1000, SLIMCAP 2000, SLIMCAP 1000, STREAMCAP200, HELICAP2 23, HELICAP 27					
See page: 286, 288					
280	2805697-0000	SUPPORT	6	PC	
450	315105-0156	WASHER PLAIN, 6,7X14X1,5 A4 BRB	12	PC	
530	312105-0368	SCREW, M6S ISO 4017 M6X16 A4 80	14	PC	
540	312105-0370	SCREW, M6S ISO 4017 M6X20 A4 80	26	PC	
560	315105-0153	WASHER PLAIN, 6,4X12X1,5 A4 BRB	36	PC	
570	352113-0204	ANCHOR PLATES FOR STRIPS, TM3S25-M	12	PC	
580	312125-0323	SLOTTED HEAD SCREW, ISO1207 M5X8 A4	12	PC	
Common Parts					
030	3429304-0000	BEAM	1	PC	
040	3423299-0000	BEAM	1	PC	
050	3422241-0000	BEAM	1	PC	
060	3422240-0000	BEAM	1	PC	
070	2779009-0000	BEAM	2	PC	
080	3423300-0000	BEAM	1	PC	
090	3429305-0000	BEAM	1	PC	
100	2830220-0000	BEAM	1	PC	
110	3423301-0000	BEAM	1	PC	
130	3423298-0000	BEAM	1	PC	
150	2766975-0000	FRAME	1	PC	
190	2775447-0000	BRACKET	2	PC	
200	2779776-0000	PLATE	2	PC	
210	2779786-0000	PLATE	1	PC	
220	90511-0145	LOGOTYPE "TETRA PAK" FOR STRIPE 70MM	4	PC	
230	3425942-0000	FRAME UPPER	1	PC	
240	90511-8563	STRIPE HEIGHT 70MM, ROLL LENGTH 25M	1	MM	
250	2805686-0000	BEAM	1	PC	
260	2805698-0000	BEAM	1	PC	
270	3058859-0000	BEAM	1	PC	
290	975887-0000	CATCH	6	PC	
300	2807104-0000	BEAM	1	PC	
320	2788155-0000	ANGLE	4	PC	
330	3177654-0000	BLOCK	1	PC	
340	3039027-0000	PLATE	2	PC	
380	2873941-0000	SIGN	1	PC	
400	90347-0011	VIBRATION DAMPER MEGI 781056	2	PC	
410	90600-1002	FOOT 50000N, HPA125-30-325	10	PC	
420	312812-0318	HEXAGON NUT, NY-LOCK M8 A4 80	6	PC	
430	312115-0455	SCREW ISO4762 M8X30 A4 80	6	PC	
440	315125-0165	WASHER HIGH, TBRSB 8,4X26X5 A4	12	PC	
480	90287-0154	SET SCREW, DOGPOINT M6X10 A4	6	PC	
500	311103-0351	PARALLEL PIN ISO 2338 6M6X16 A1	4	PC	
510	312105-0366	SCREW, M6S ISO 4017 M6X12 A4 80	2	PC	
550	312115-0540	SCREW ISO4762 M12X40 A4 80	1	PC	
600	90600-0971	RACK, ZRR2-100	2	PC	
630	90287-0175	SCREW M6S M3X12 A480	2	PC	
640	312605-0310	HEXAGON NUT, M6M M3 A280	2	PC	
650	312105-0388	SCREW, M6S ISO 4014 M6X90 A4 80	4	PC	
660	312109-0552	SCREW M6S M12X100H A480	2	PC	
680	312605-0316	HEXAGON NUT, M6M M6 A280	2	PC	

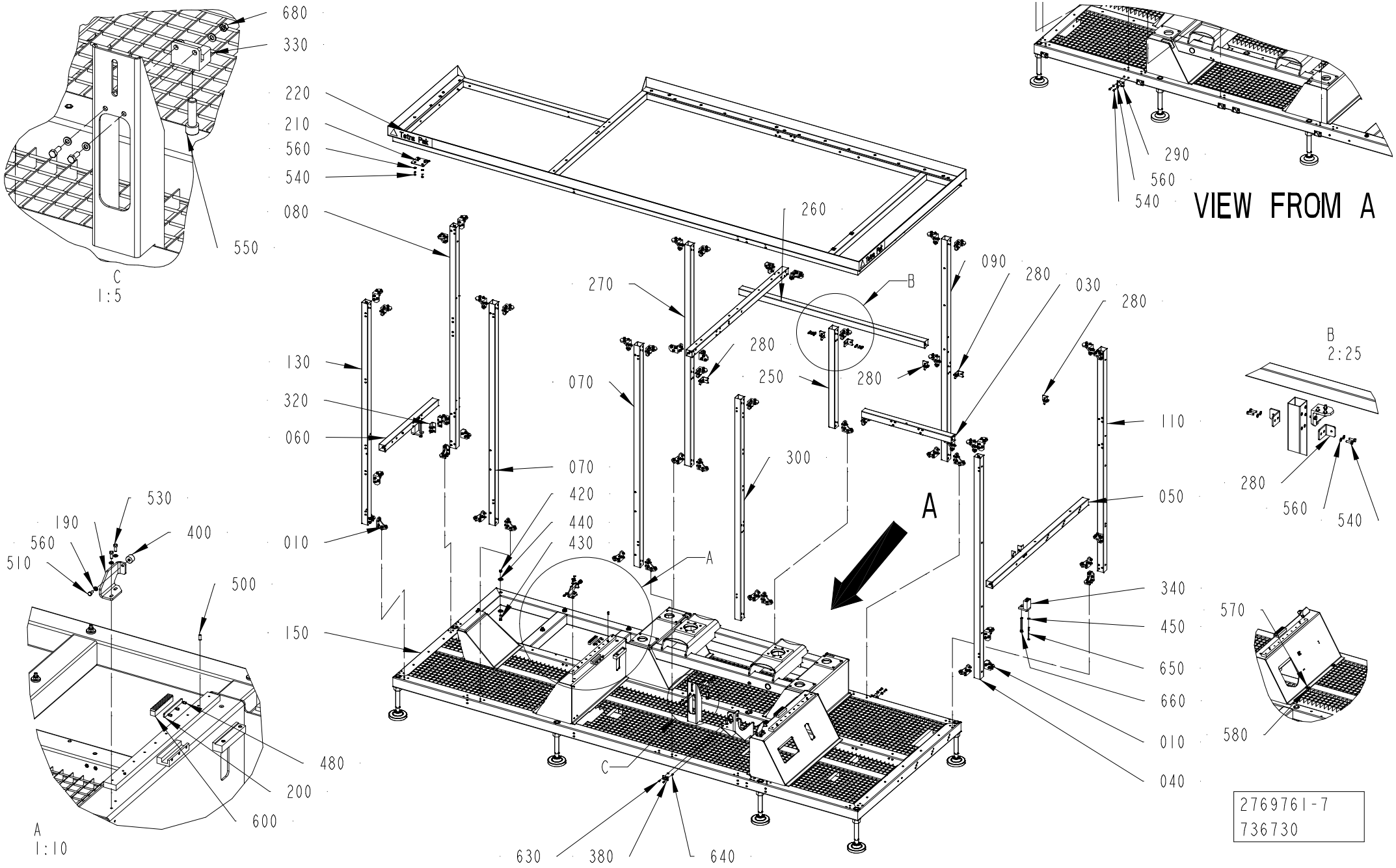
680
330
220
210
560
540
080
550
C
1:5
260
270
090
280
030
280
B
280
250
280
130
320
060
070
070
420
440
430
010
300
A
110
050
340
450
650
660
010
040
150
530
190
560
510
400
500
480
200
600
A
1:10
630
380
640
C
290
560
540
VIEW FROM A
B
2:25
280
560
540
570
580
2769761-7
736730

This list refers to drawings on pages 286 to 288

Pos	Part No	Description	Qty	Unit	Page No

SEE LIST FOLLOWING DRAWING ON PAGE: 286

Pos	Part No	Description	Qty	Unit	Page No

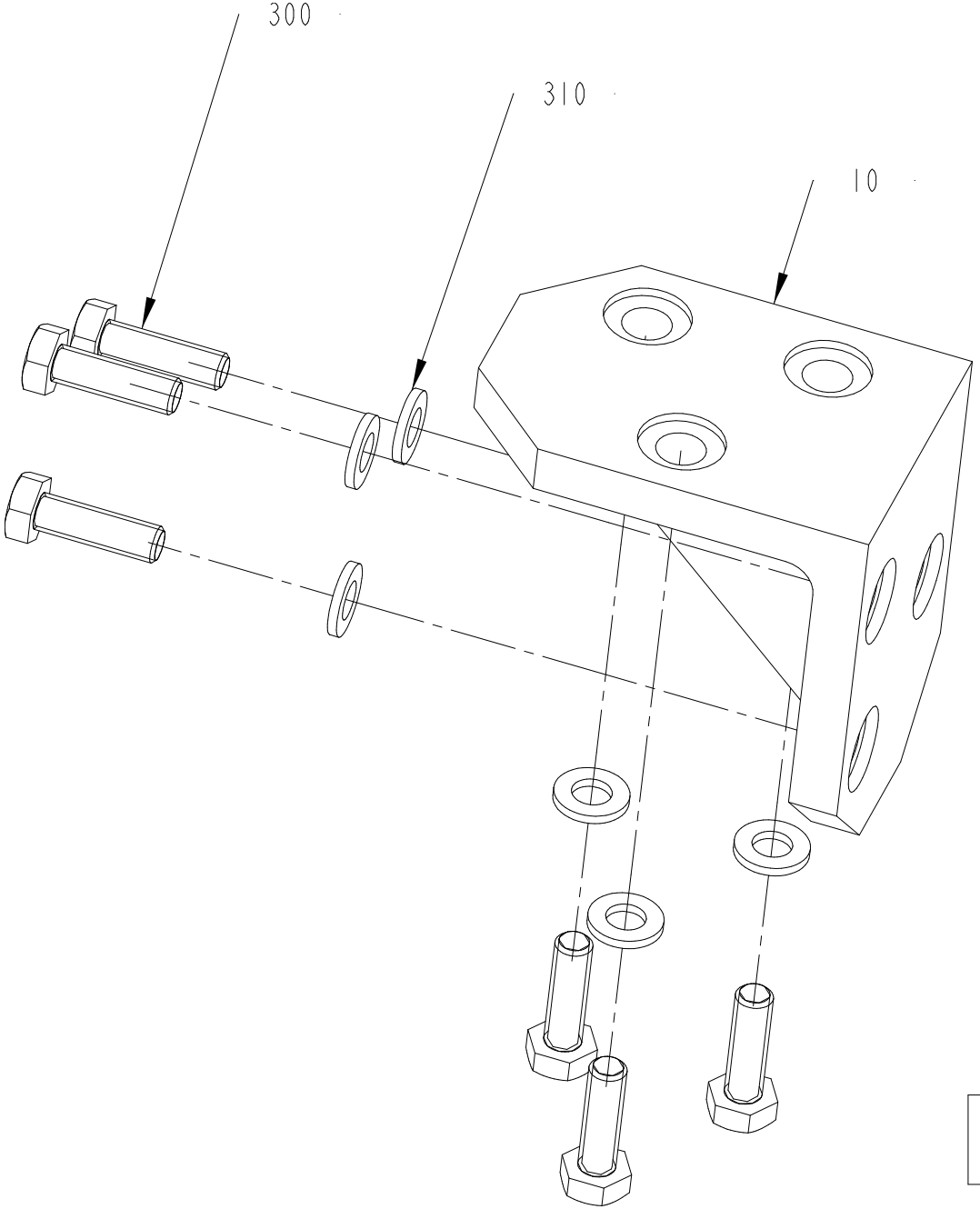

2778595-1
274020

ECM: 274440
Group number: 2778595-0100
Assembly Drawing: 2778595-1_1_AA

Pos	Part No	Description	Qty	Unit	Page No
Common Parts					
010	2779008-0000	BRACKET	1	PC	
300	312105-0370	SCREW, M6S ISO 4017 M6X20 A4 80	6	PC	
310	315105-0153	WASHER PLAIN, 6,4X12X1,5 A4 BRB	6	PC	

Pos	Part No	Description	Qty	Unit	Page No

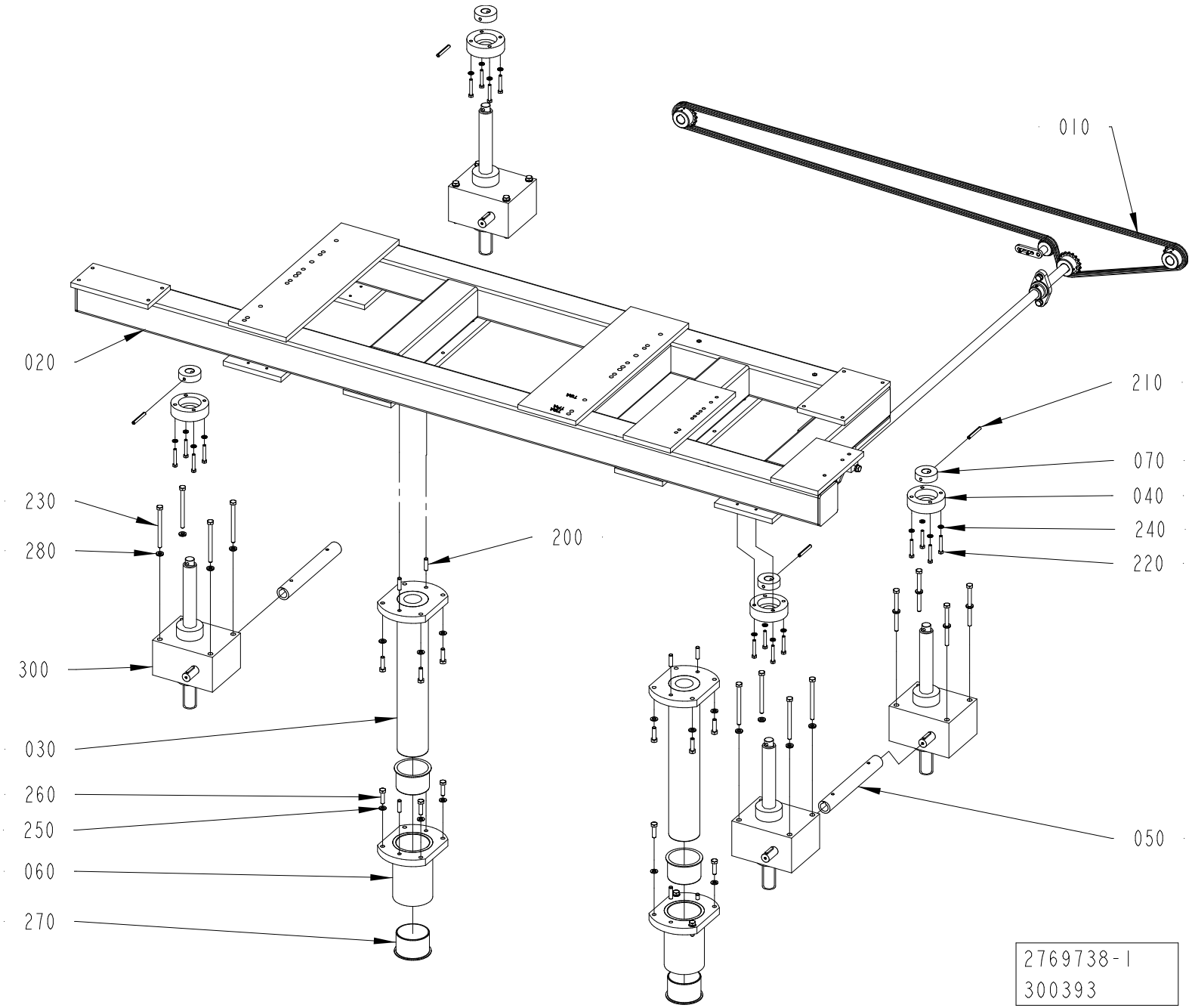
010
020
210
070
040
240
220
230
280
200
300
030
260
250
060
270
050
2769738-1
300393

ECM: 303510
Group number: 2769738-0100
Assembly Drawing: 2769738-1_1_AB

Pos	Part No	Description	Qty	Unit	Page No
Common Parts					
010	2766973-0100	TRANSMISSION	1	PC	294
020	2769709-0000	FRAME	1	PC	
030	2769713-0000	CYLINDRICAL PIN	2	PC	
040	2766964-0000	FLANGE	4	PC	
050	2766968-0000	SHAFT	2	PC	
060	2769717-0000	FLANGE	2	PC	
070	2769739-0000	DISC	4	PC	
200	311103-0405	PARALLEL PIN ISO 2338 8M6X30 A1	8	PC	
210	311112-0349	SPRING PIN, ISO 8752 6X50 A2	4	PC	
220	312105-0378	SCREW, M6S ISO 4014 M6X40 A4 80	16	PC	
230	312105-0471	SCREW, M6S ISO 4014 M8X100 A4 80	16	PC	
240	315105-0153	WASHER PLAIN, 6,4X12X1,5 A4 BRB	16	PC	
250	315105-0165	FWAS080G0-0S, WASHER PLAIN	16	PC	
260	312105-0455	SCREW, M6S ISO 4017 M8X30 A4 80	16	PC	
270	321153-0500	FLANGE BUSHING, IGLIDUR G 70X75X50	4	PC	
280	315115-0165	WASHER PLAIN, TBRB 8,4/16 H=3	16	PC	
300	90600-0658	WORM GEAR SCREW JACK, TP00063000130	4	PC	

Pos	Part No	Description	Qty	Unit	Page No

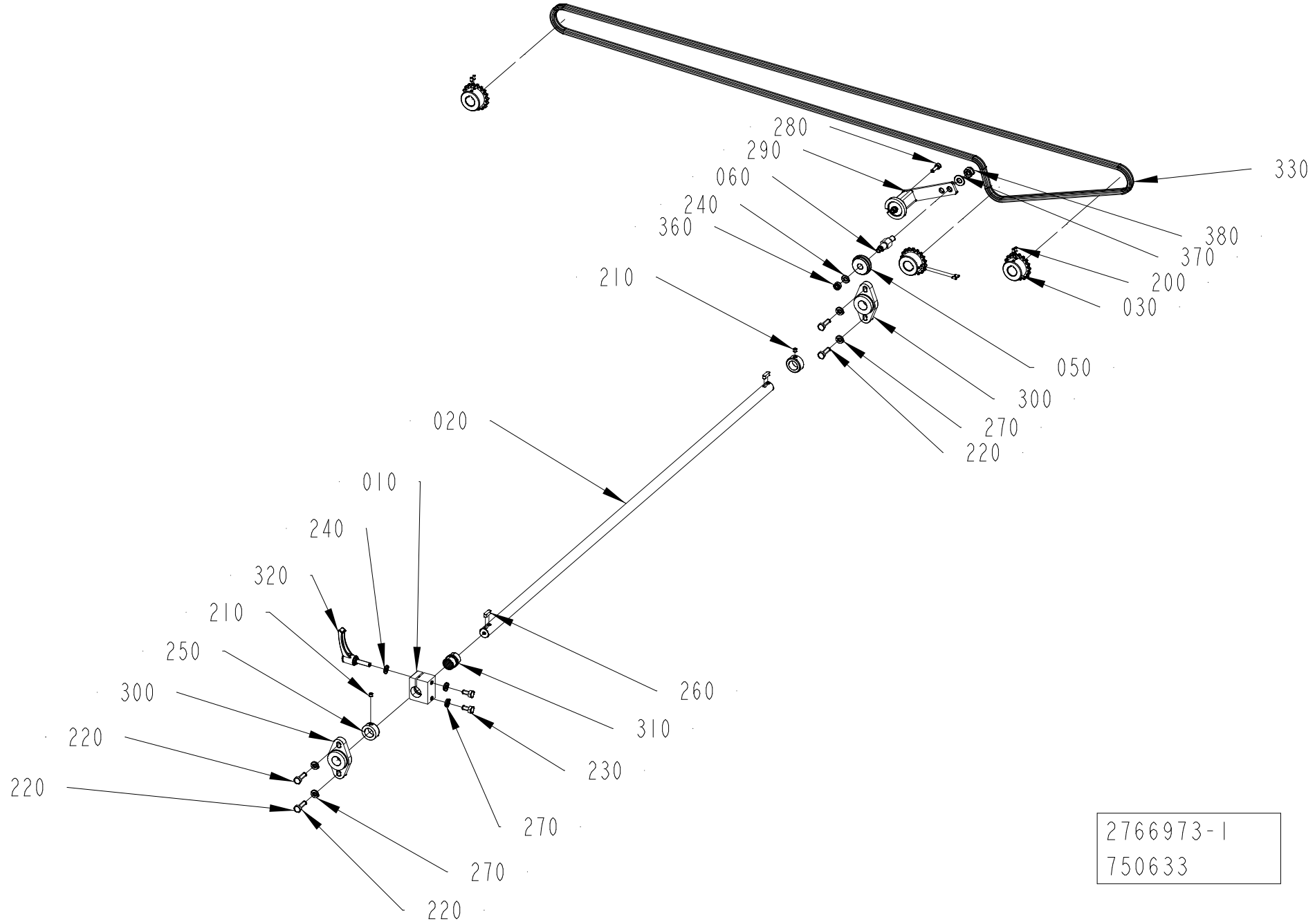
280
290
060
240
360
210
020
010
240
320
210
250
300
220
220
270
270
220
330
380
370
200
030
050
300
270
220
260
310
230
2766973-1
750633

ECM: 759958
Group number: 2766973-0100
Assembly Drawing: 2766973-1_1_AD

Pos	Part No	Description	Qty	Unit	Page No
Common Parts					
010	2769726-0000	BRACKET	1	PC	
020	2766972-0000	SHAFT	1	PC	
030	2779769-0000	SPROCKET	3	PC	
050	2846403-0000	ROLLER	1	PC	
060	3424179-0000	AXLE PIN	1	PC	
200	312318-0287	SET SCREW, CUP END ISO4029 M4X8 A4	6	PC	
210	312318-0360	SET SCREW, CUP END ISO4029 M6X6 A4	2	PC	
220	312105-0453	SCREW, M6S ISO 4017 M8X25 A4 80	4	PC	
230	312105-0449	SCREW, M6S ISO 4017 M8X16 A4 80	2	PC	
240	315105-0165	FWAS080G0-0S, WASHER PLAIN	2	PC	
250	315741-0216	RETAINING RING, DIN 705 A4 20	2	PC	
260	315705-0232	PARALLEL KEY W. ROUND ENDS, 6X6X20 MM	2	PC	
270	315115-0165	WASHER PLAIN, TBRB 8,4/16 H=3	6	PC	
280	312115-0370	SCREW ISO4762 M6X20 A4 80	1	PC	
290	90459-0732	TENSIONER, TYPE SE-I-15	1	PC	
300	90600-0800	FLANGE BEARING 20X89X20 MM	2	PC	
310	90458-2932	PLAIN BEARING, JUM-02-20	1	PC	
320	90017-0029	LOCKING LEVER, NO. KR8X30-SUS	1	PC	
330	90600-1159	ROLLER CHAIN, SIMPLEX 3/8 -290, SS	1	PC	
350	315105-0153	WASHER PLAIN, 6,4X12X1,5 A4 BRB	2	PC	
360	312812-0318	HEXAGON NUT, NY-LOCK M8 A4 80	1	PC	
370	315105-0173	WASHER PLAIN, 10,5X22X2 A4 BRB	1	PC	
380	312810-0320	HEXAGON NUT, NY-LOCK M10 FZB	1	PC	

Pos	Part No	Description	Qty	Unit	Page No

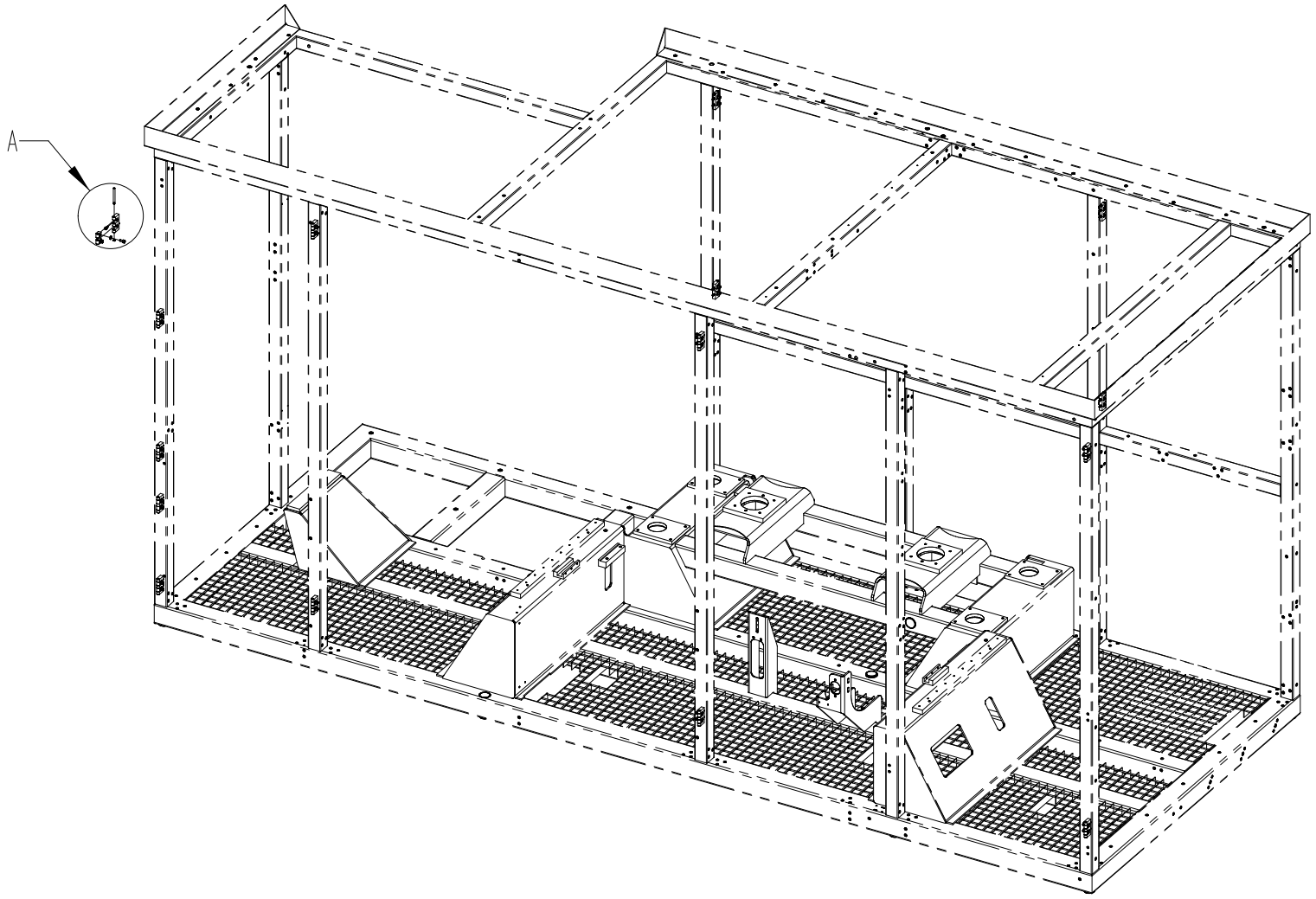

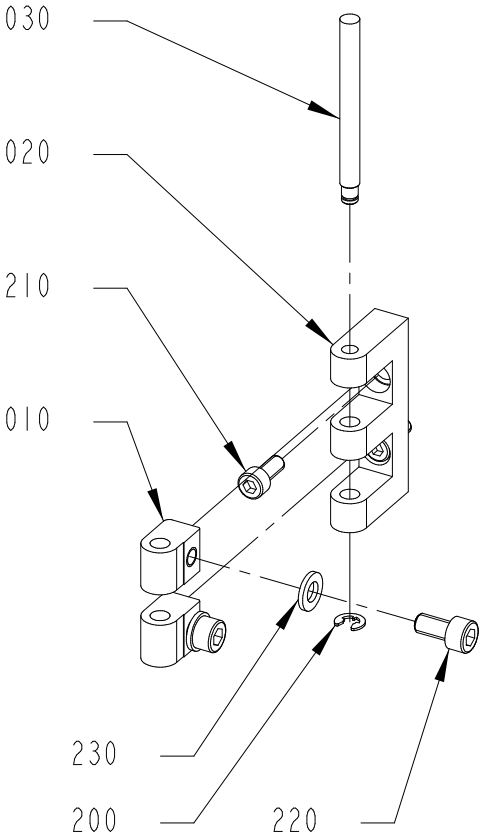

A
1:2

3217565-1
582045

ECM: 589042
Group number: 3217565-0100
Assembly Drawing: 3217565-1_1_AB

Pos	Part No	Description	Qty	Unit	Page No
Common Parts					
010	1129770-0000	BLOCKING PIECE	30	PC	
020	1035792-0000	E-HINGE	15	PC	
030	1036329-0000	PIN	15	PC	
200	315755-0106	RETAINING RING SHAFT DIN 6799 4 SS	15	PC	
210	312115-0327	SCREW ISO4762 M5X12 A4 80	30	PC	
220	312115-0366	SCREW ISO4762 M6X12 A4 80	30	PC	
230	315105-0153	WASHER PLAIN, 6,4X12X1,5 A4 BRB	30	PC	

Pos	Part No	Description	Qty	Unit	Page No

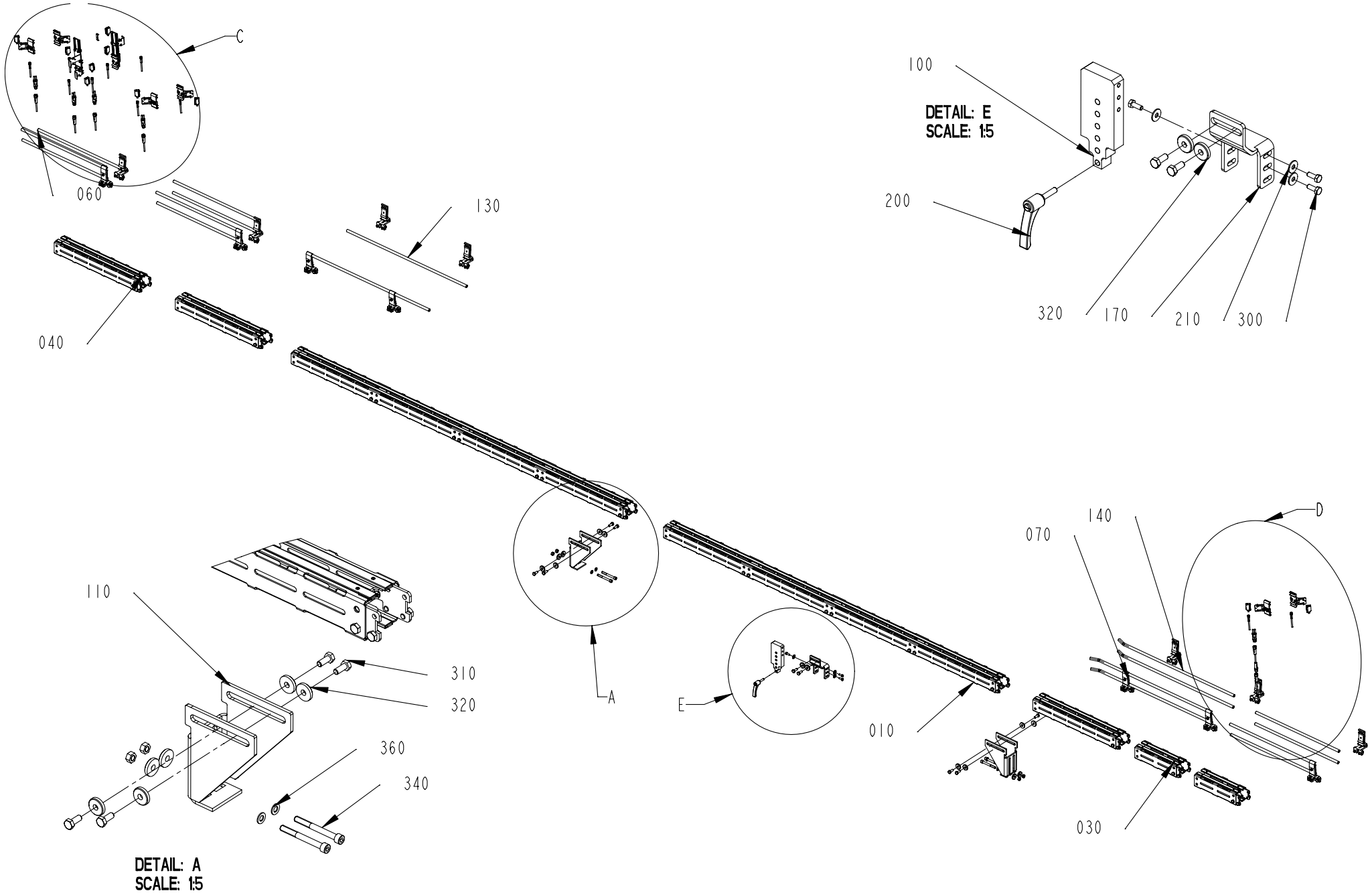
C
060
130
040
100
DETAIL: E
SCALE: 1:5
200
320
170
210
300
110
310
320
360
340
DETAIL: A
SCALE: 1:5
A
E
010
140
070
D
030

ECM: 861132
Group number: 2758507-0300
Assembly Drawing: 2758507-3_1_AD

This list refers to drawings on pages 298 to 304

Pos	Part No	Description	Qty	Unit	Page No
TBA 0200E, TBA 0250E See page: 302, 304					
040	2763616-0102	CONVEYOR BODY	2	PC	306
060	2561274-0102	RAILING	2	PC	308
400	90600-2375	LENS, E39-S65C	4	PC	
TBA 0200SQ, TBA 0500SQ, TBA 1000SQ, TBA 1000S, TBA 1500S, TPA 1000SQ, TPA 0500SQ, TBA 2000S, TPA 0750SQ, TBA 0250SQ, TGA 1000SQ, TGA 0750SQ, TGA 0500SQ, TGA 1500SQ, TGA 1000CR, TGA 1000LF See page: 298, 300					
040	2763616-0102	CONVEYOR BODY	3	PC	306
060	2561274-0102	RAILING	3	PC	308
Common Parts					
010	2763616-0104	CONVEYOR BODY	2	PC	312
030	2763616-0101	CONVEYOR BODY	2	PC	314
070	1550743-0200	RAIL HOLDER	8	PC	316
080	2778586-0100	SENSOR	3	PC	318
090	2778587-0100	SENSOR	1	PC	320, 322
100	2930211-0000	PLATE	1	PC	
110	2965155-0000	SUPPORT	2	PC	
130	2779831-0000	PIPE	2	PC	
140	3216180-0000	PIPE	4	PC	
170	2930210-0000	PLATE	1	PC	
200	90017-0029	LOCKING LEVER, NO. KR8X30-SUS	1	PC	
210	90005-0060	WASHER PLAIN, RBS 6,4/M6)/18,H=1,5	4	PC	
300	312105-0368	SCREW, M6S ISO 4017 M6X16 A4 80	4	PC	
310	312105-0451	SCREW, M6S ISO 4017 M8X20 A4 80	10	PC	
320	315125-0165	WASHER HIGH, TBRSB 8,4X26X5 A4	18	PC	
330	312607-0318	HEXAGON NUT, EN 24032 M6M M8 A480	4	PC	
340	312115-0466	SCREW ISO4762 M8X75 A4 80	4	PC	
350	344267-0050	SENSOR CABLE, EVT044	1	PC	
360	315105-0165	FWAS080G0-0S, WASHER PLAIN	4	PC	
W21B4002	90459-5529	PHOTOCELL E3Z-T86A, SENDER+RECIEVER	1	PC	
W21B4004	90459-5529	PHOTOCELL E3Z-T86A, SENDER+RECIEVER	1	PC	
W21B4006	90459-5529	PHOTOCELL E3Z-T86A, SENDER+RECIEVER	1	PC	
W21B4008	90459-5529	PHOTOCELL E3Z-T86A, SENDER+RECIEVER	1	PC	
W21B6002	90459-5529	PHOTOCELL E3Z-T86A, SENDER+RECIEVER	1	PC	
W21W4002	90603-3979	SENSOR Y-CABLE, EVT339	1	PC	
W21W4004	90603-3979	SENSOR Y-CABLE, EVT339	1	PC	
W21W4006	90603-3979	SENSOR Y-CABLE, EVT339	1	PC	
W21W4008	90603-3979	SENSOR Y-CABLE, EVT339	1	PC	
W21W4012	344253-0050	SENSOR CABLE, EVT001	1	PC	
W21W4014	344253-0050	SENSOR CABLE, EVT001	1	PC	
W21W4016	344253-0050	SENSOR CABLE, EVT001	1	PC	
W21W4018	344253-0100	SENSOR CABLE, EVT002	1	PC	
W21W6002	90603-3979	SENSOR Y-CABLE, EVT339	1	PC	
W21W6012	344261-0050	SENSOR CABLE, EVT216	1	PC	

Pos	Part No	Description	Qty	Unit	Page No

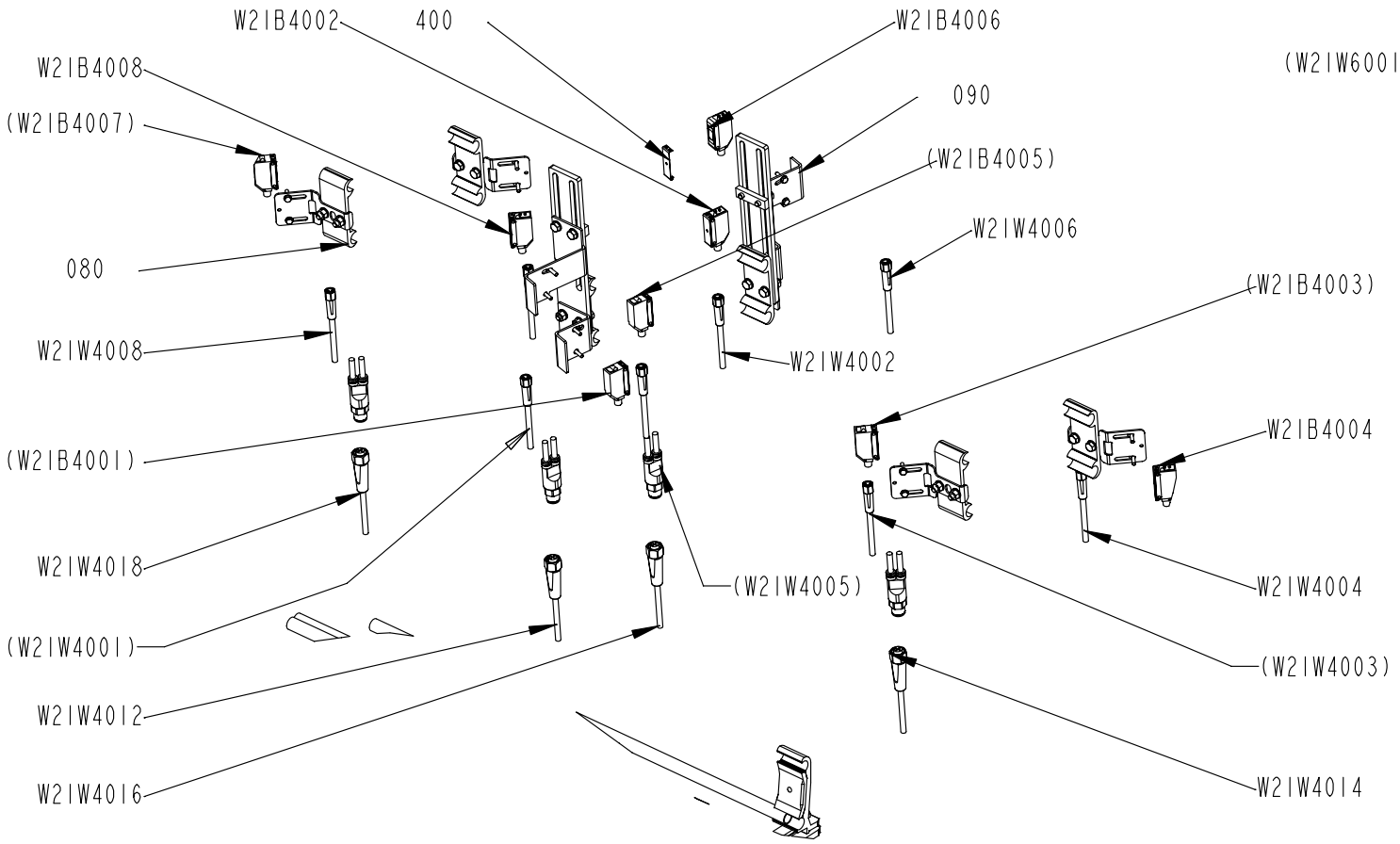

DETAIL: C
SCALE: 1:5

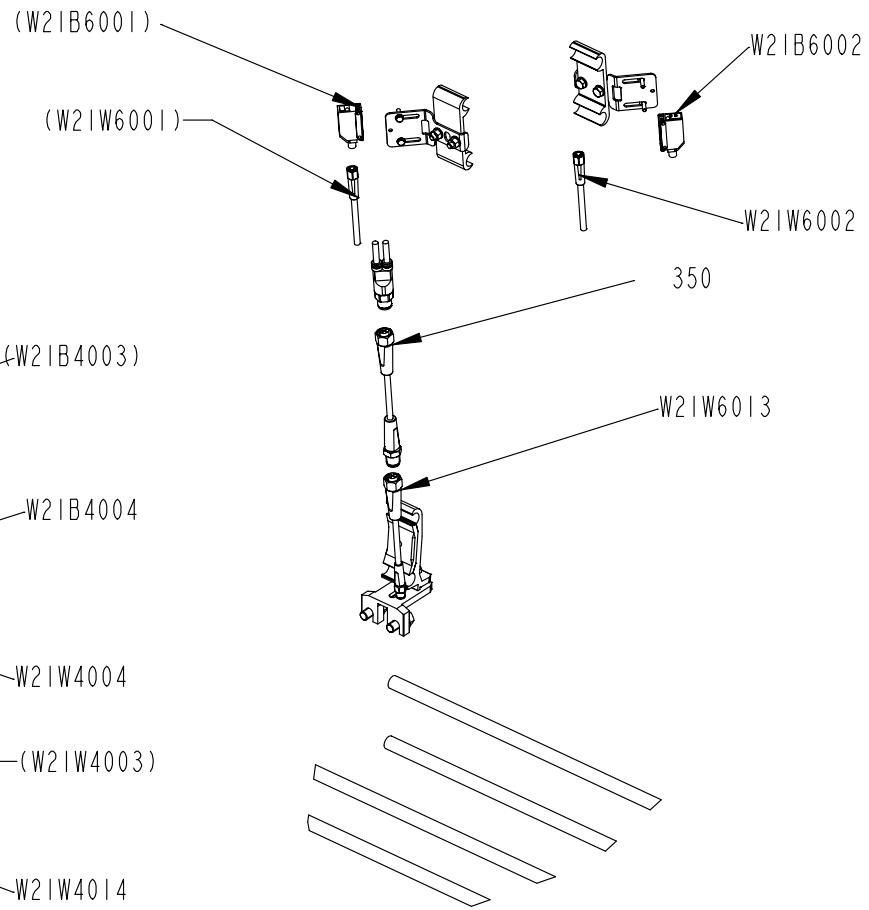

DETAIL: D
SCALE: 1:5

Pos	Part No	Description	Qty	Unit	Page No

SEE LIST FOLLOWING DRAWING ON PAGE: 298

Pos	Part No	Description	Qty	Unit	Page No

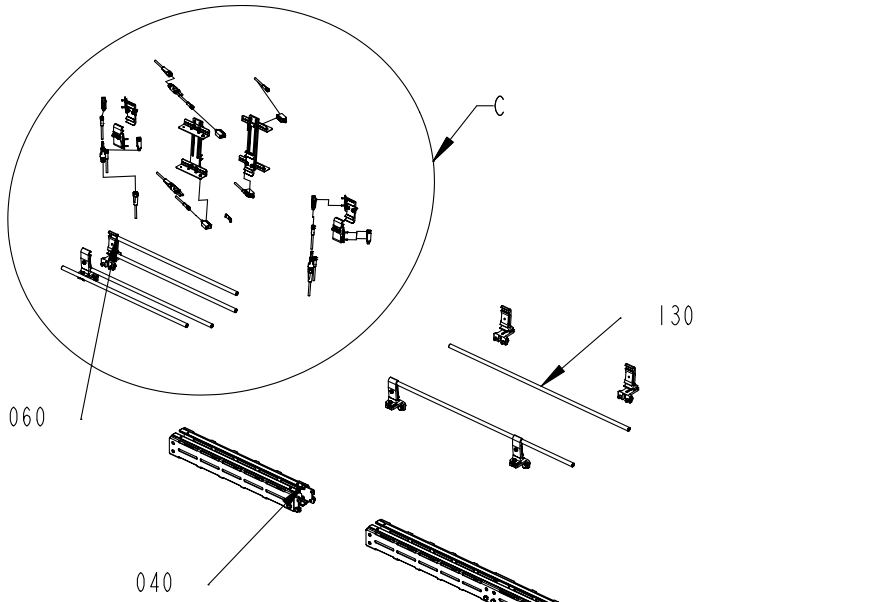
C
060
130
040
A

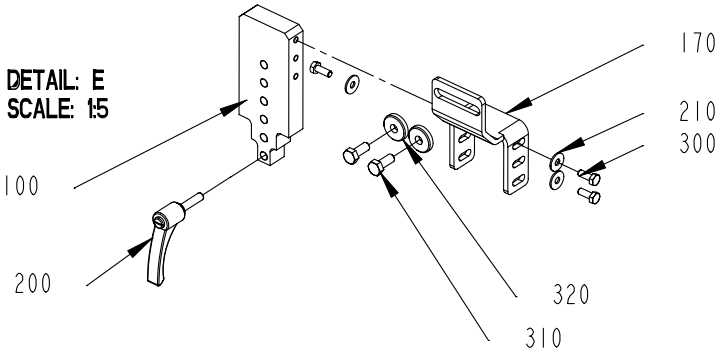
DETAIL: E
SCALE: 1:5
170
210
300
100
200
320
310

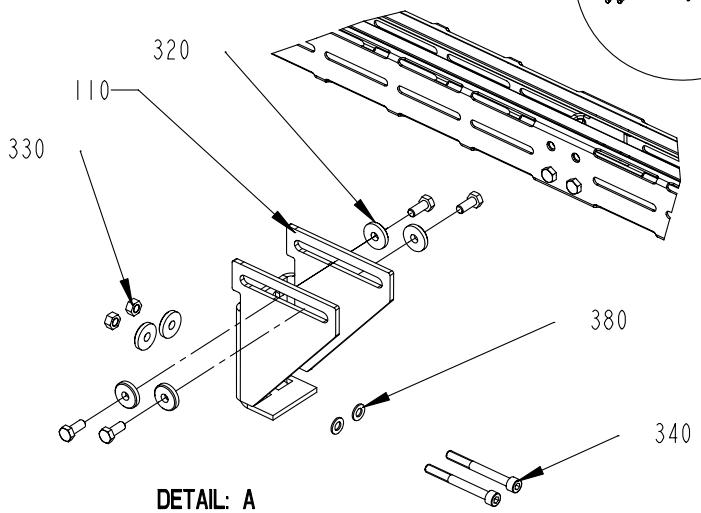
320
110
330
380
340
DETAIL: A
SCALE: 1:5

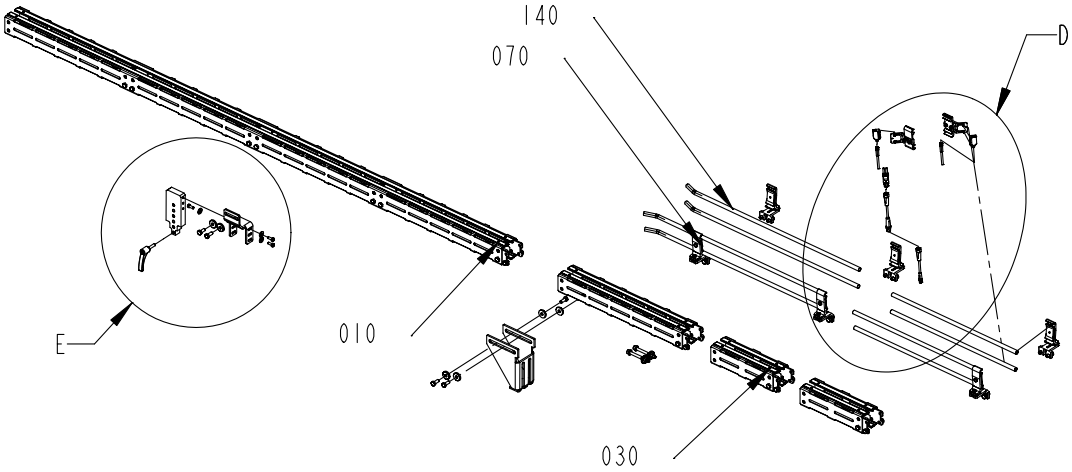
140
070
D
E
010
030

Pos	Part No	Description	Qty	Unit	Page No

SEE LIST FOLLOWING DRAWING ON PAGE: 298

Pos	Part No	Description	Qty	Unit	Page No

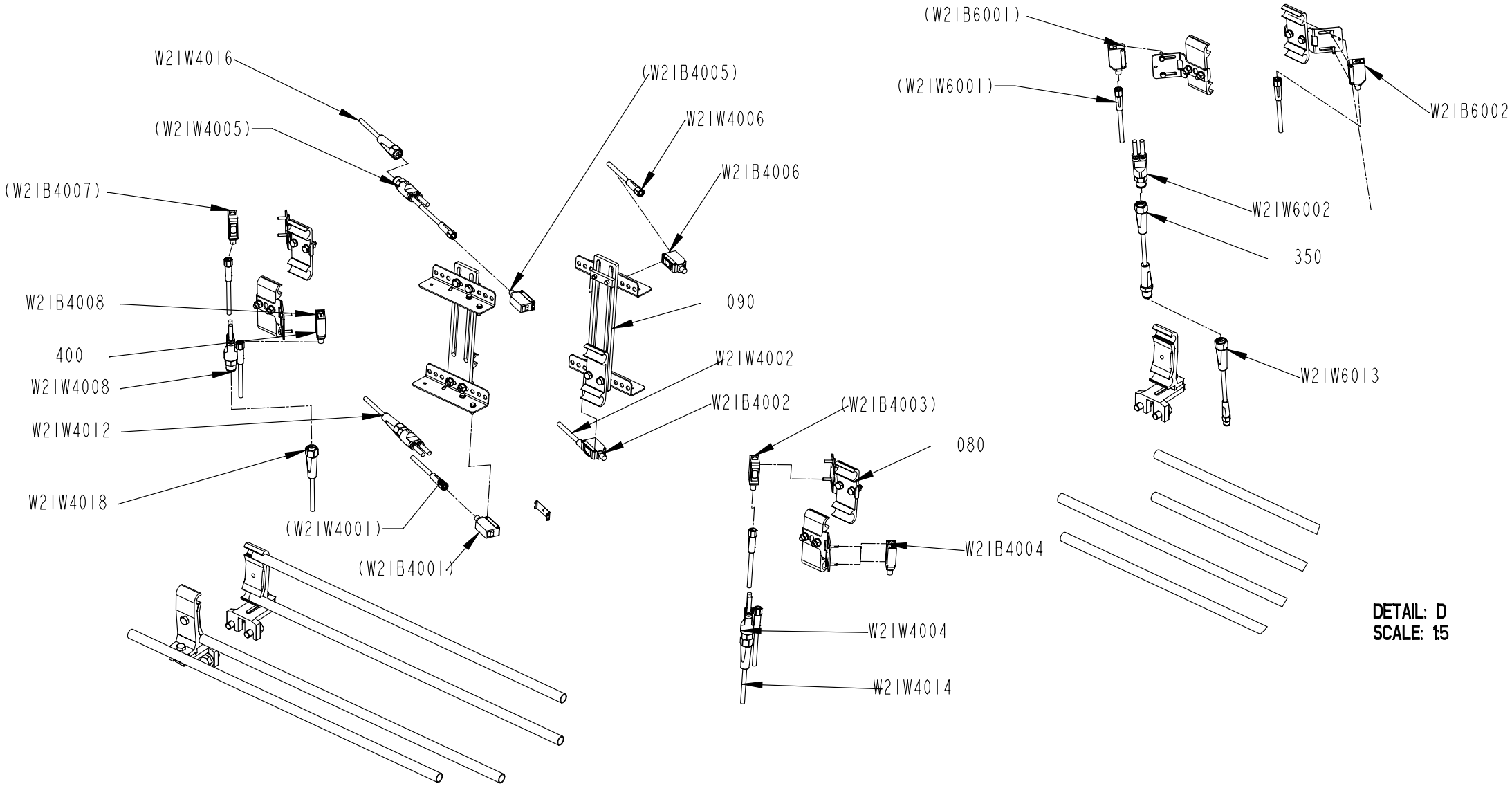

DETAIL: C
SCALE: 1:5

DETAIL: D
SCALE: 1:5

Pos	Part No	Description	Qty	Unit	Page No

SEE LIST FOLLOWING DRAWING ON PAGE: 298

Pos	Part No	Description	Qty	Unit	Page No

Pos. 040 in BoM 2758507-0300

CONVEYOR BODY

Drawing file:2763616-1_1_AB

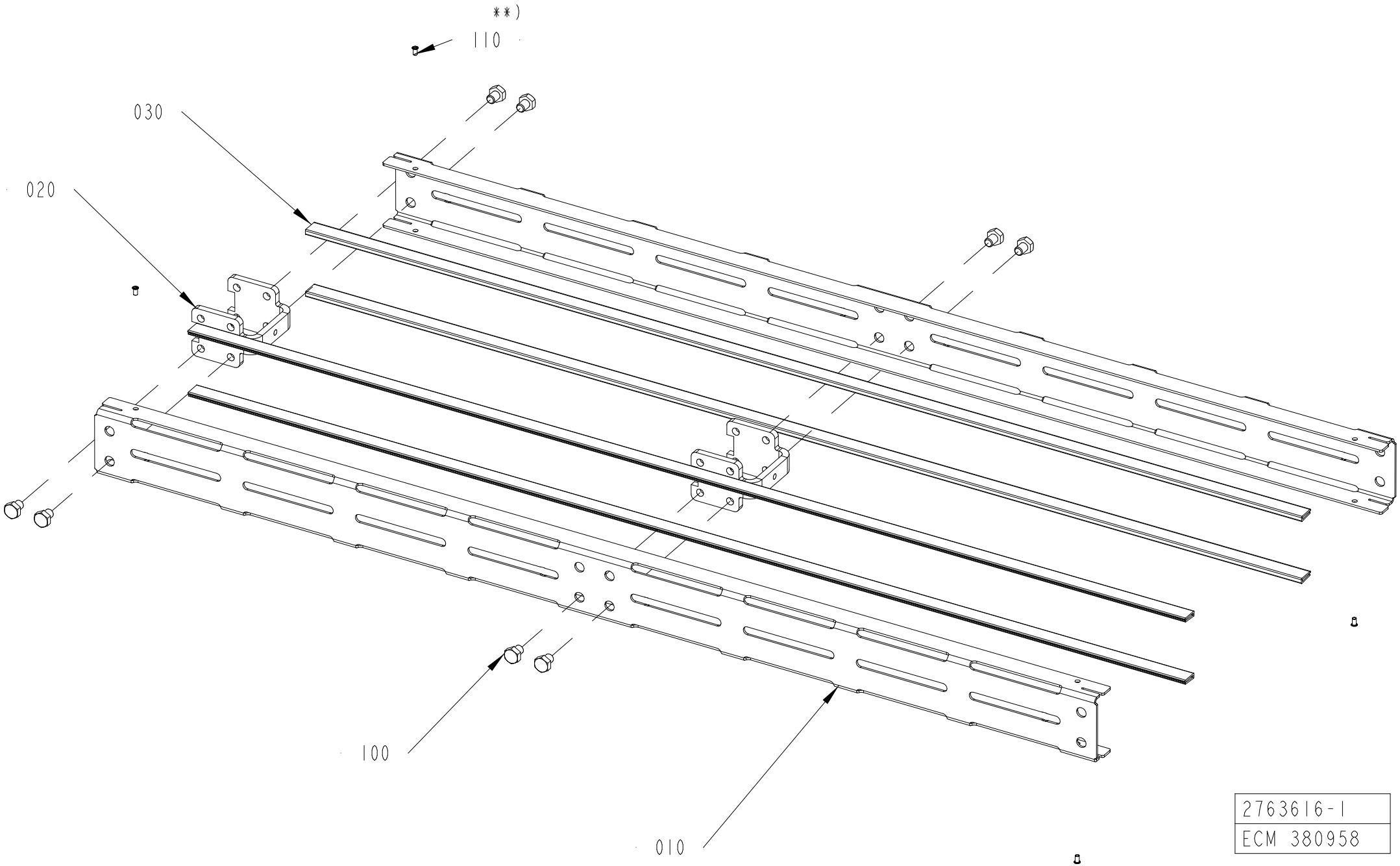

2763616-1
ECM 380958

ECM: -
Group number: 2763616-0102
Assembly Drawing: 2763616-1_1_AB

Pos	Part No	Description	Qty	Unit	Page No
L 0250					
010	2763617-0001	SIDE PLATE	2	PC	
030	1550595-2460	SLIDING STRIP	4	PC	
L 0250, L 0500					
020	2561206-0000	SPACER	1	PC	
100	90459-4735	SCREW, M6S ISO 4017 M8X10 A4 80	4	PC	
L 0500					
010	2763617-0002	SIDE PLATE	2	PC	
030	1550595-4960	SLIDING STRIP	4	PC	
Common Parts					
010	2763617-0004	SIDE PLATE	2	PC	
020	2561206-0000	SPACER	4	PC	
030	2699305-1996	SLIDING STRIP	4	PC	
100	90459-4735	SCREW, M6S ISO 4017 M8X10 A4 80	16	PC	
110	90600-6183	TUBULAR RIVET 3,5X6,2	4	PC	

Pos	Part No	Description	Qty	Unit	Page No

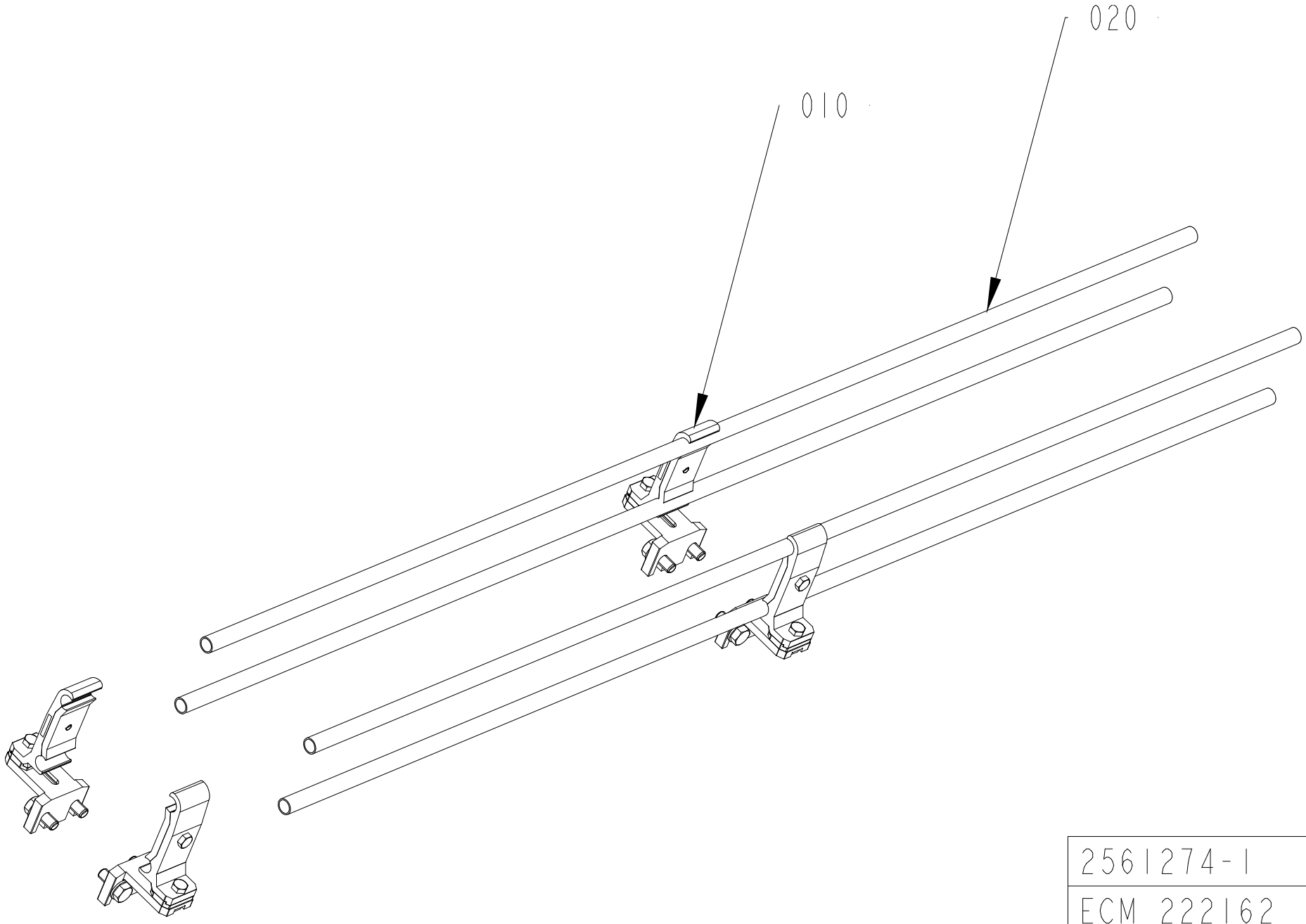

2561274-1
ECM 222162

ECM: -
Group number: 2561274-0102
Assembly Drawing: 2561274-1_1_AB

Pos	Part No	Description	Qty	Unit	Page No
L 0500					
020	476221-0002	PIPE	4	PC	
L 0500, L 0250					
010	1550743-0200	RAIL HOLDER	2	PC	310

Pos. 010 in BoM 2561274-0102

RAIL HOLDER

Drawing file:1550743-2_1_AB

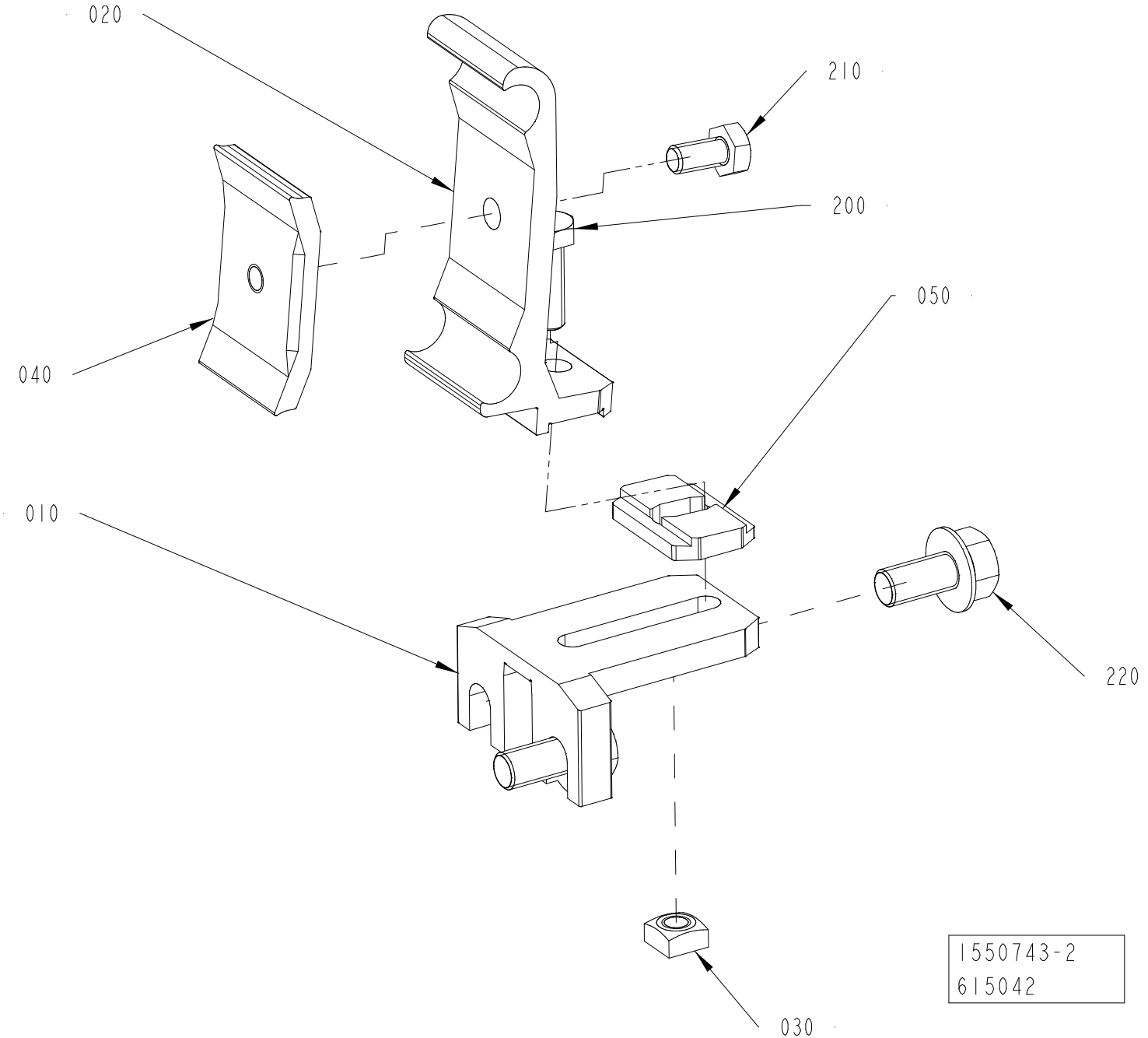

ECM: 742033
Group number: 1550743-0200
Assembly Drawing: 1550743-2_1_AB

Pos	Part No	Description	Qty	Unit	Page No
Common Parts					
010	1550772-0000	HOLDER	1	PC	
020	2699437-0000	RAIL HOLDER	1	PC	
030	1359565-0000	NUT	1	PC	
040	1366727-0000	CLAMP	1	PC	
050	2699436-0000	SPACER	1	PC	
200	312105-0370	SCREW, M6S ISO 4017 M6X20 A4 80	1	PC	
210	312105-0366	SCREW, M6S ISO 4017 M6X12 A4 80	1	PC	
220	312108-0449	SCREW EN 1665 TYPE F M8X16 A270	2	PC	

Pos	Part No	Description	Qty	Unit	Page No

Pos. 010 in BoM 2758507-0300

CONVEYOR BODY

Drawing file:2763616-1_1_AB

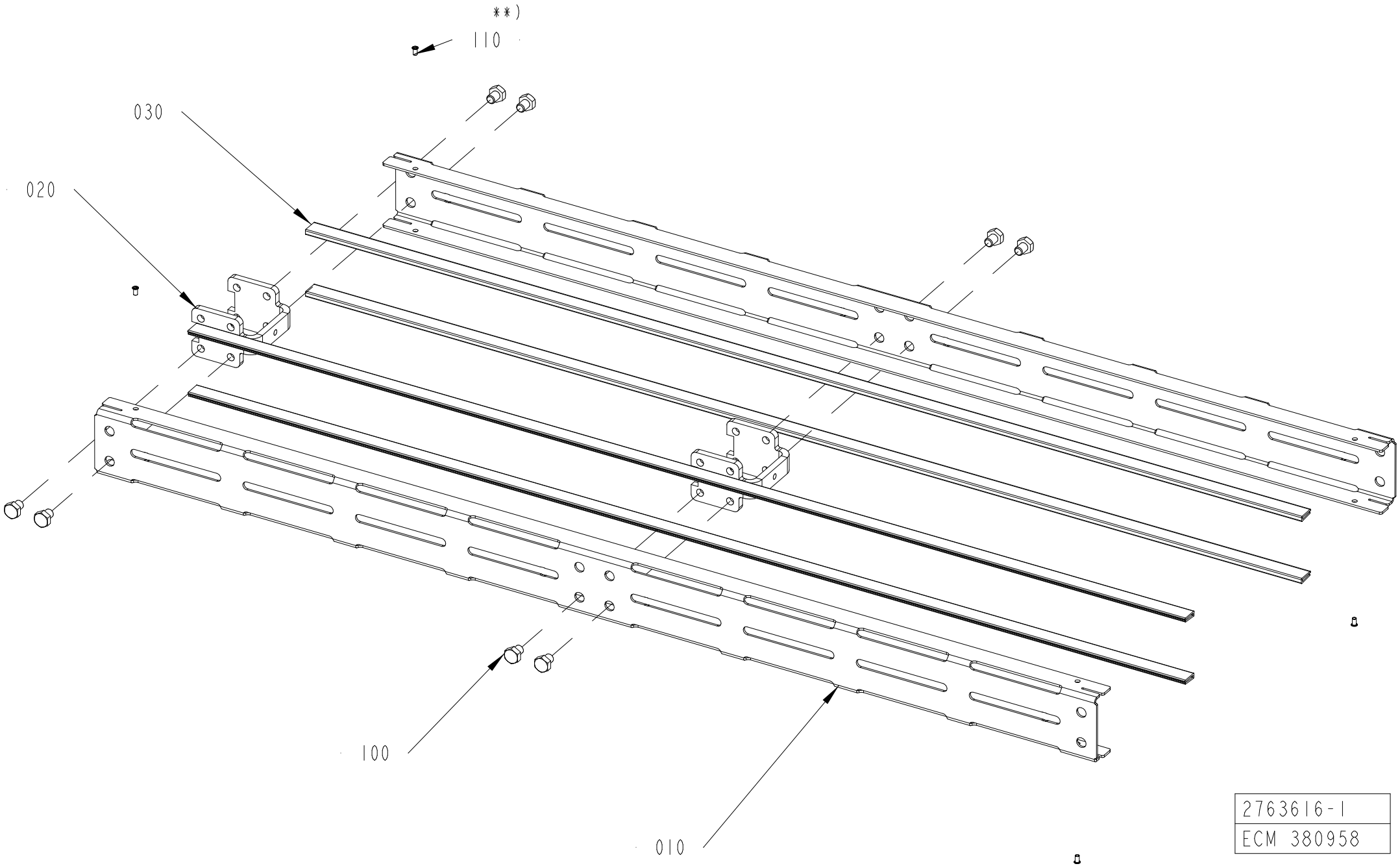

2763616-1
ECM 380958

ECM: -
Group number: 2763616-0104
Assembly Drawing: 2763616-1_1_AB

Pos	Part No	Description	Qty	Unit	Page No
L 2000					
010	2763617-0004	SIDE PLATE	2	PC	
020	2561206-0000	SPACER	4	PC	
030	2699305-1996	SLIDING STRIP	4	PC	
100	90459-4735	SCREW, M6S ISO 4017 M8X10 A4 80	16	PC	
Common Parts					
010	2763617-0002	SIDE PLATE	2	PC	
010	2763617-0001	SIDE PLATE	2	PC	
020	2561206-0000	SPACER	1	PC	
030	1550595-4960	SLIDING STRIP	4	PC	
030	1550595-2460	SLIDING STRIP	4	PC	
100	90459-4735	SCREW, M6S ISO 4017 M8X10 A4 80	4	PC	
110	90600-6183	TUBULAR RIVET 3,5X6,2	4	PC	

Pos	Part No	Description	Qty	Unit	Page No

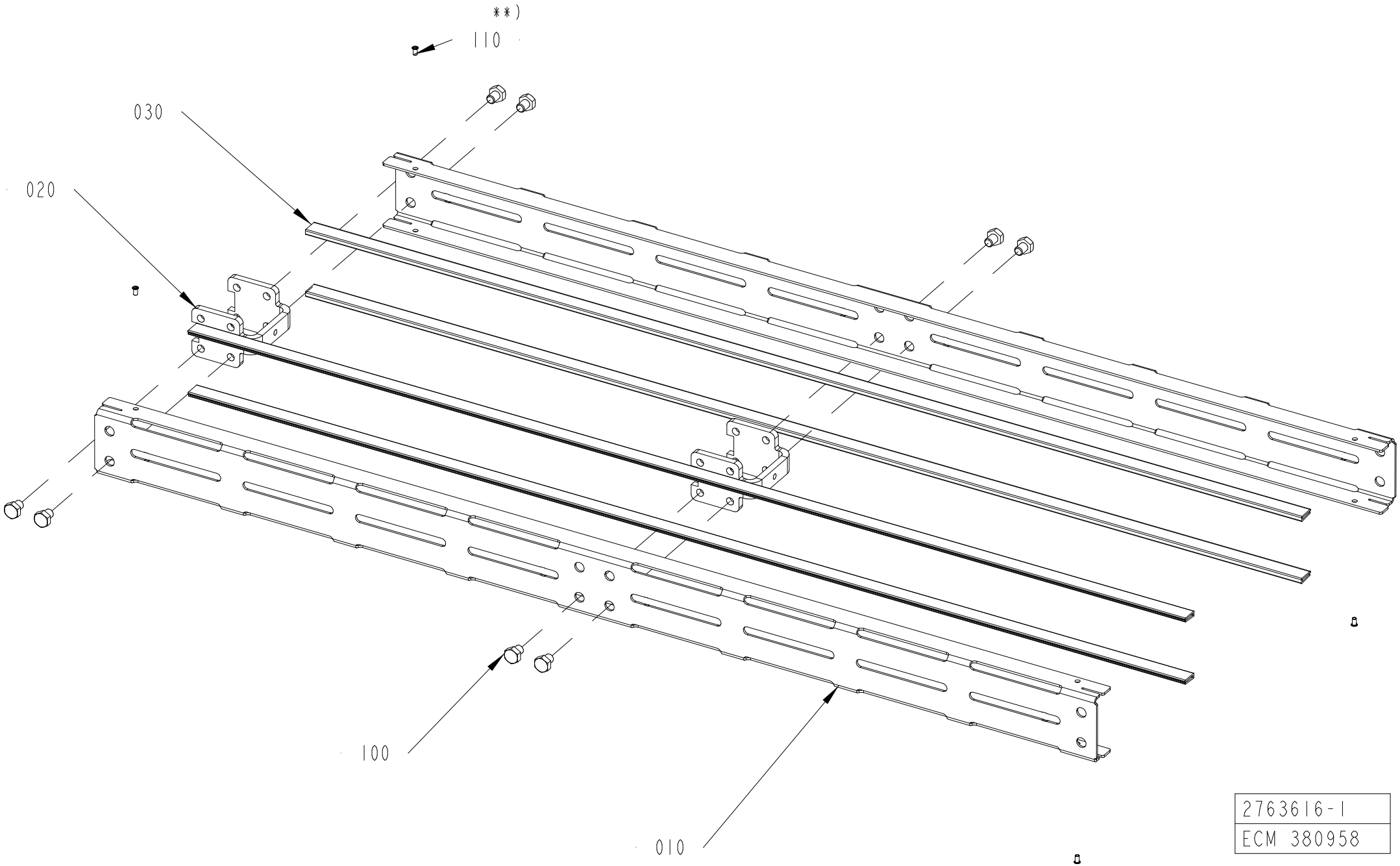

2763616-1
ECM 380958

ECM: -
Group number: 2763616-0101
Assembly Drawing: 2763616-1_1_AB

Pos	Part No	Description	Qty	Unit	Page No
L 0250					
010	2763617-0001	SIDE PLATE	2	PC	
030	1550595-2460	SLIDING STRIP	4	PC	
L 0250, L 0500					
020	2561206-0000	SPACER	1	PC	
100	90459-4735	SCREW, M6S ISO 4017 M8X10 A4 80	4	PC	
L 0500					
010	2763617-0002	SIDE PLATE	2	PC	
030	1550595-4960	SLIDING STRIP	4	PC	
Common Parts					
010	2763617-0004	SIDE PLATE	2	PC	
020	2561206-0000	SPACER	4	PC	
030	2699305-1996	SLIDING STRIP	4	PC	
100	90459-4735	SCREW, M6S ISO 4017 M8X10 A4 80	16	PC	
110	90600-6183	TUBULAR RIVET 3,5X6,2	4	PC	

Pos	Part No	Description	Qty	Unit	Page No

Pos. 070 in BoM 2758507-0300

RAIL HOLDER

Drawing file:1550743-2_1_AB

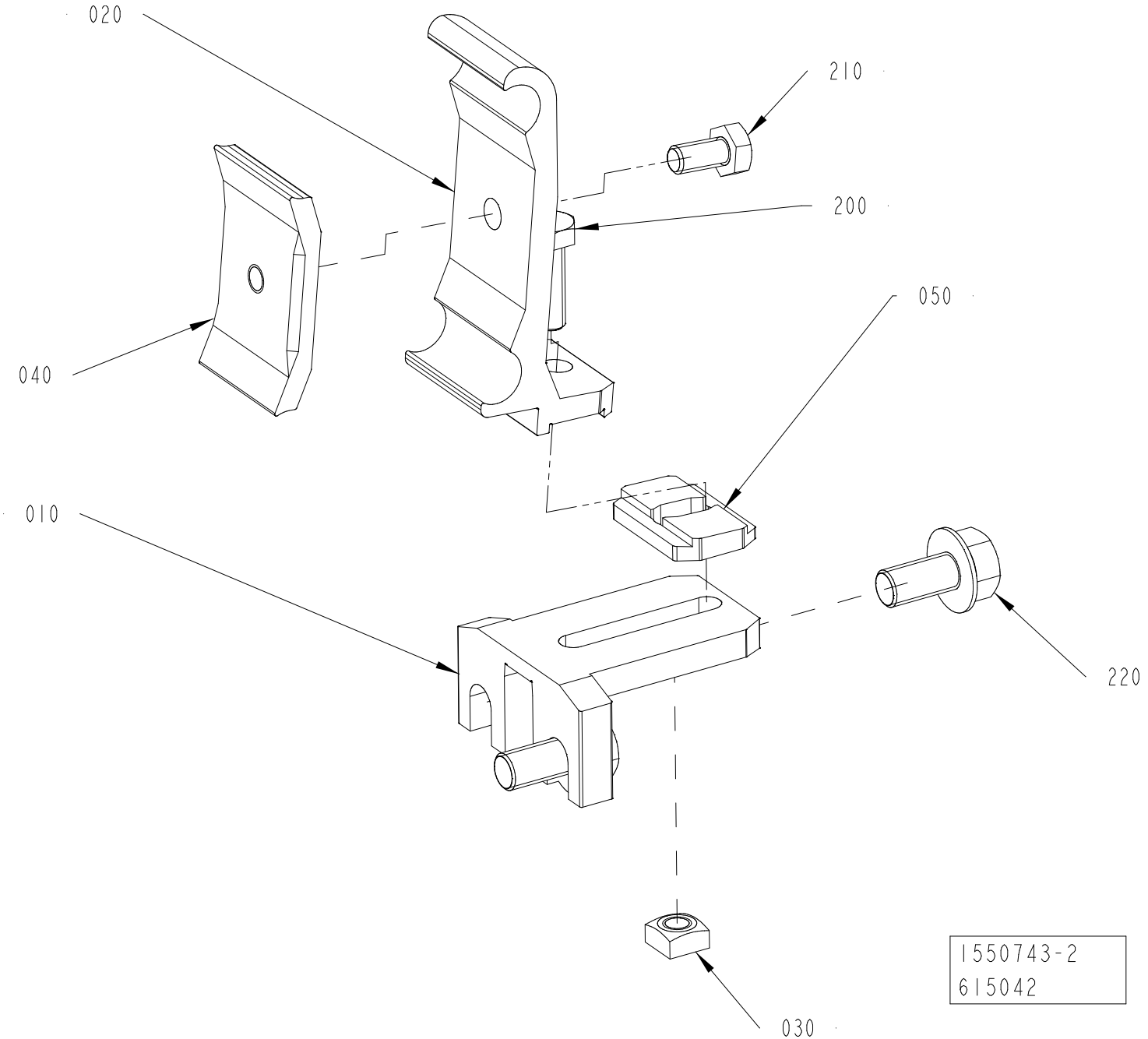

ECM: 742033
Group number: 1550743-0200
Assembly Drawing: 1550743-2_1_AB

Pos	Part No	Description	Qty	Unit	Page No
Common Parts					
010	1550772-0000	HOLDER	1	PC	
020	2699437-0000	RAIL HOLDER	1	PC	
030	1359565-0000	NUT	1	PC	
040	1366727-0000	CLAMP	1	PC	
050	2699436-0000	SPACER	1	PC	
200	312105-0370	SCREW, M6S ISO 4017 M6X20 A4 80	1	PC	
210	312105-0366	SCREW, M6S ISO 4017 M6X12 A4 80	1	PC	
220	312108-0449	SCREW EN 1665 TYPE F M8X16 A270	2	PC	

Pos	Part No	Description	Qty	Unit	Page No

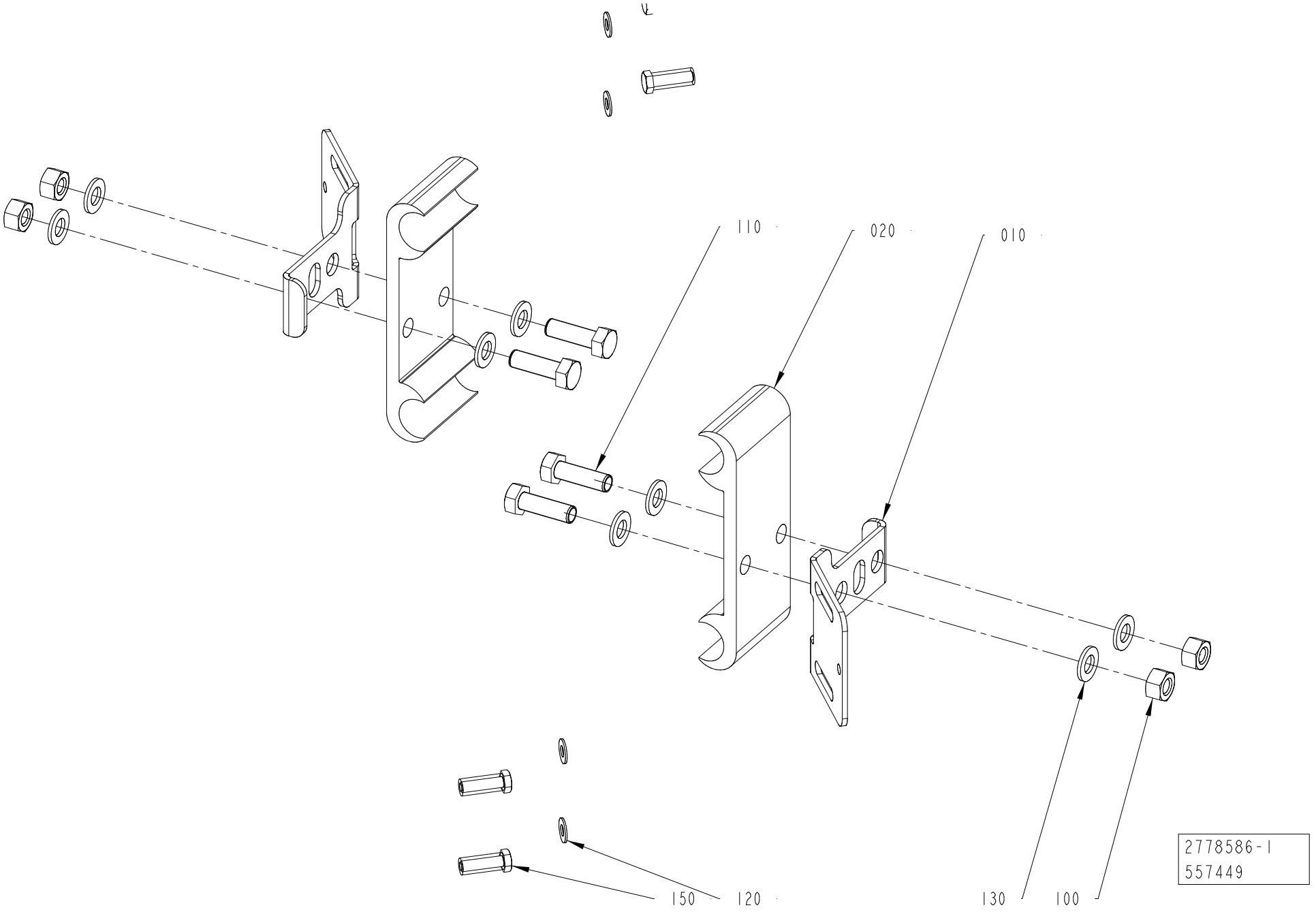
110
020
010
150
120
130
100
2778586-1
557449

ECM: 563430
Group number: 2778586-0100
Assembly Drawing: 2778586-1_1_AC

Pos	Part No	Description	Qty	Unit	Page No
Common Parts					
010	3252696-0000	BRACKET	2	PC	
020	1020637-0000	HOLDER	2	PC	
100	312605-0314	HEXAGON NUT, M6M M5 A280	4	PC	
110	312105-0329	SCREW, M6S ISO 4017 M5X16 A4 80	4	PC	
120	315106-0124	WASHER PLAIN, M3 ISO7089-3-200 HV A4	4	PC	
130	315105-0146	WASHER PLAIN, 5,3X10X1 A4 BRB	8	PC	
150	90287-0175	SCREW M6S M3X12 A480	4	PC	

Pos	Part No	Description	Qty	Unit	Page No

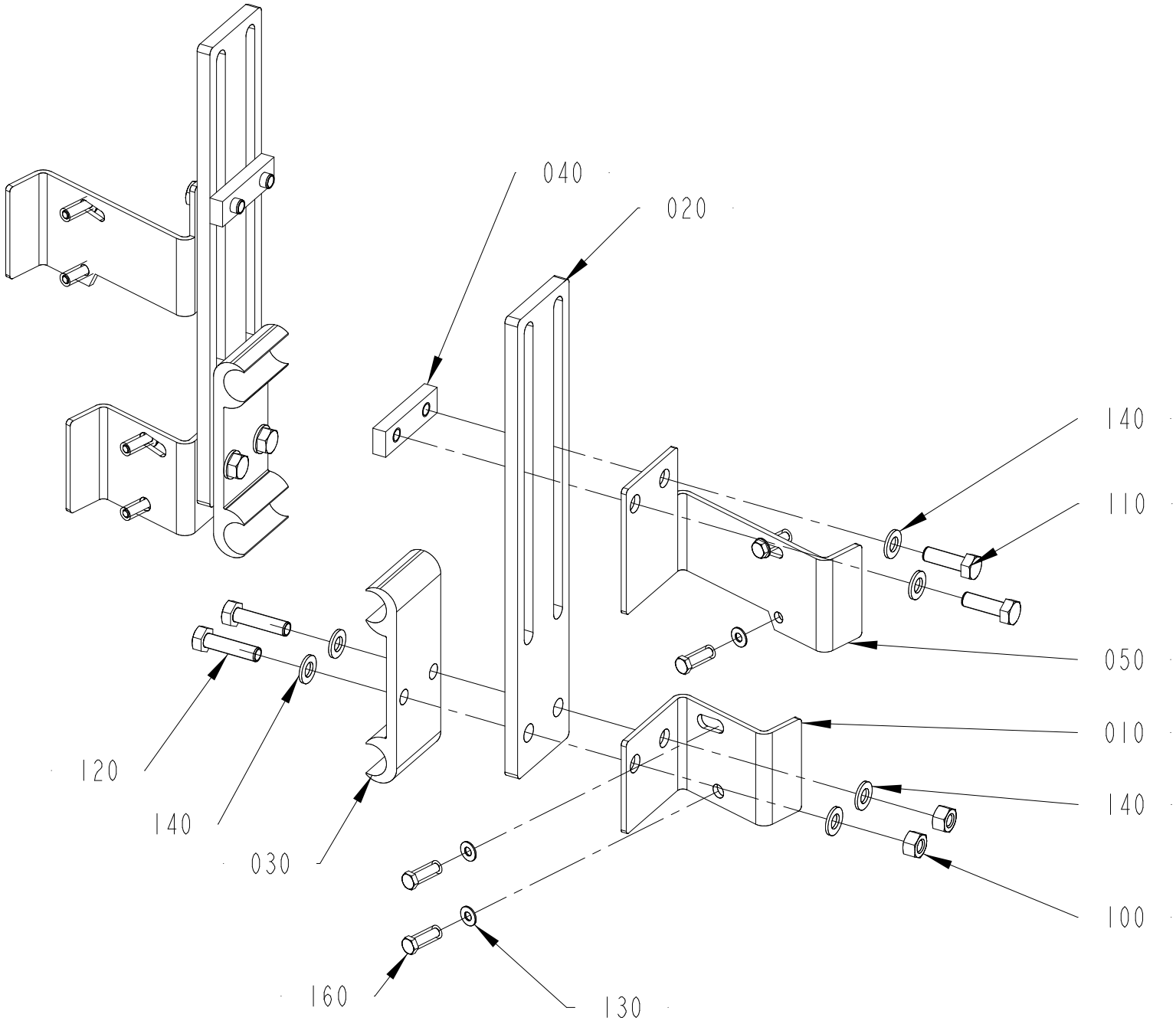

2778587-1
529093

Pos	Part No	Description	Qty	Unit	Page No
TBA 0200E, TBA 0250E	See page: 322				
010	3252597-0000	PHOTOCELL BRACKET	4	PC	
TBA 0200SQ, TBA 0500SQ, TBA 1000SQ, TBA 1000S, TBA 1500S, TPA 1000SQ, TPA 0500SQ, TBA 2000S, TPA 0750SQ, TBA 0250SQ, TGA 1000SQ, TGA 0750SQ, TGA 0500SQ, TGA 1500SQ, TGA 1000CR, TGA 1000LF	See page: 320				
010	2778580-0000	BRACKET	2	PC	
050	2985773-0000	BRACKET	2	PC	
Common Parts					
020	2778584-0000	BRACKET	2	PC	
030	1020637-0000	HOLDER	2	PC	
040	2504290-0000	PLATE	2	PC	
100	312605-0314	HEXAGON NUT, M6M M5 A280	4	PC	
110	312105-0329	SCREW, M6S ISO 4017 M5X16 A4 80	4	PC	
120	312105-0331	SCREW, M6S ISO 4017 M5X20 A4 80	4	PC	
130	315106-0124	WASHER PLAIN, M3 ISO7089-3-200 HV A4	8	PC	
140	315105-0146	WASHER PLAIN, 5,3X10X1 A4 BRB	12	PC	
160	90287-0175	SCREW M6S M3X12 A480	8	PC	

Pos	Part No	Description	Qty	Unit	Page No

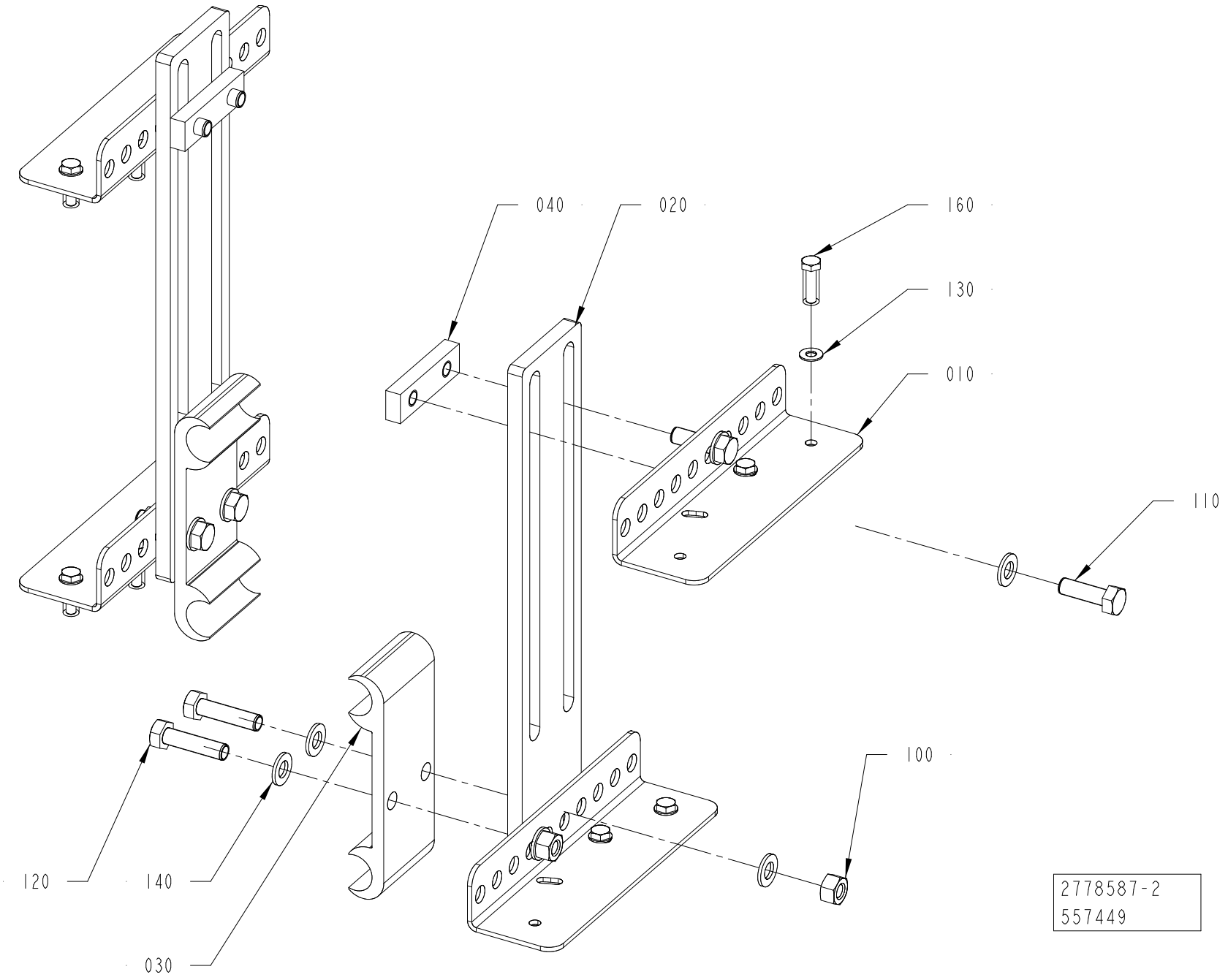
040
020
160
130
010
110
100
120
140
030
2778587-2
557449

Pos	Part No	Description	Qty	Unit	Page No

SEE LIST FOLLOWING DRAWING ON PAGE: 320

Pos	Part No	Description	Qty	Unit	Page No

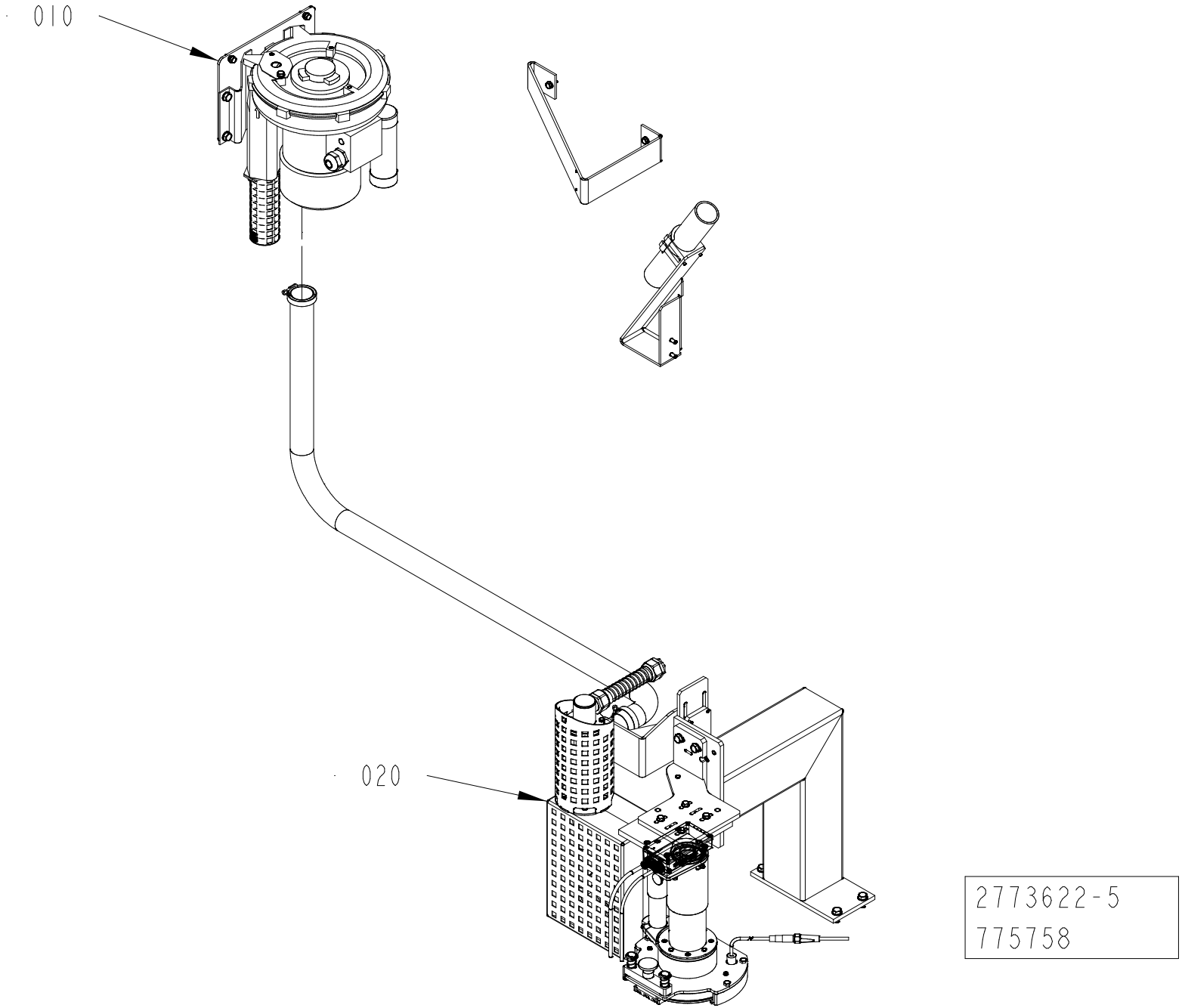

2773622-5
775758

ECM: 777870
Group number: 2773622-0300
Assembly Drawing: 2773622-5_1_AB

Pos	Part No	Description	Qty	Unit	Page No
Common Parts					
010	2773623-0300	FAN SYSTEM	1	PC	326
020	3203761-0200	HEATER	1	PC	328, 330

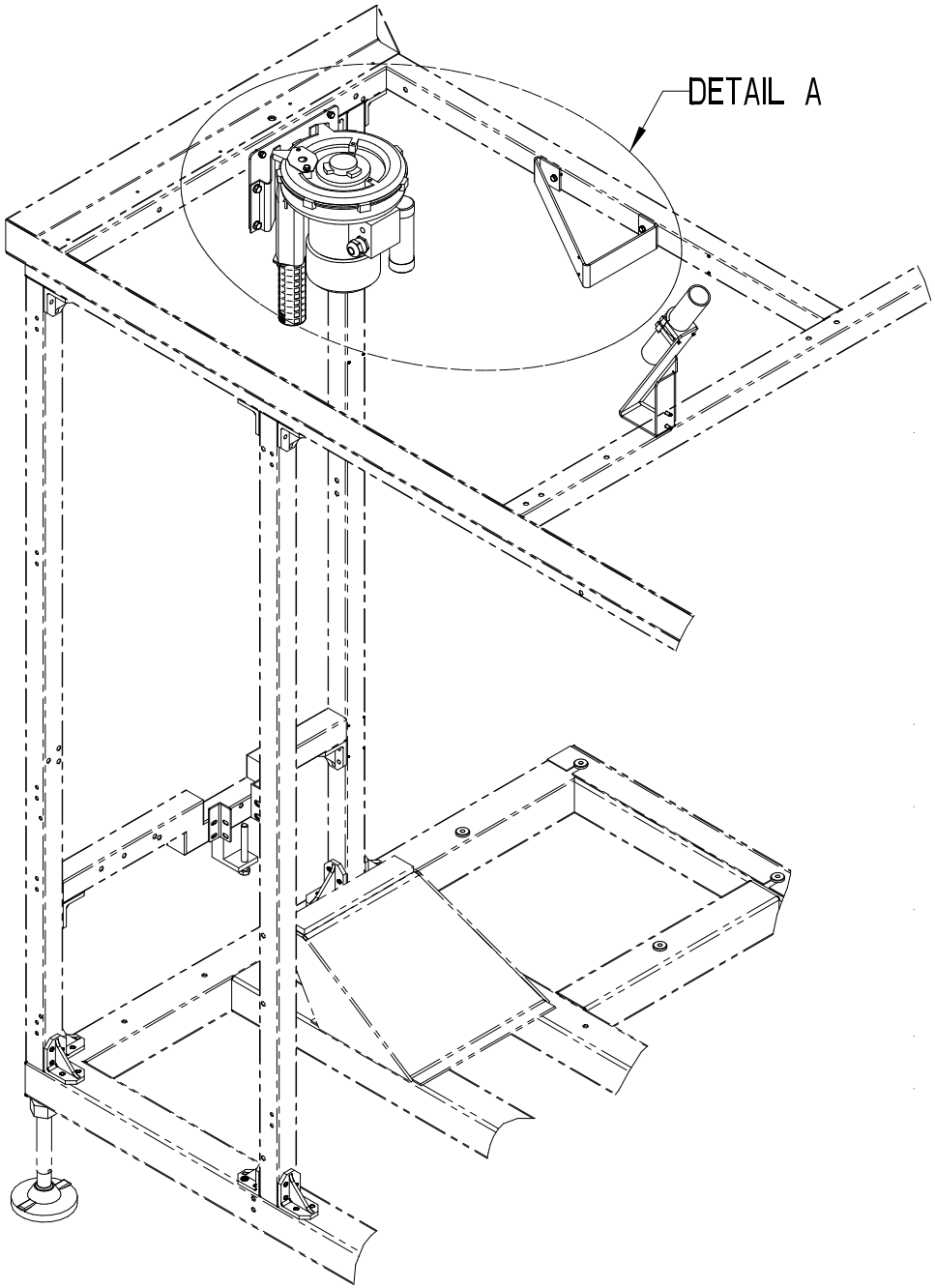

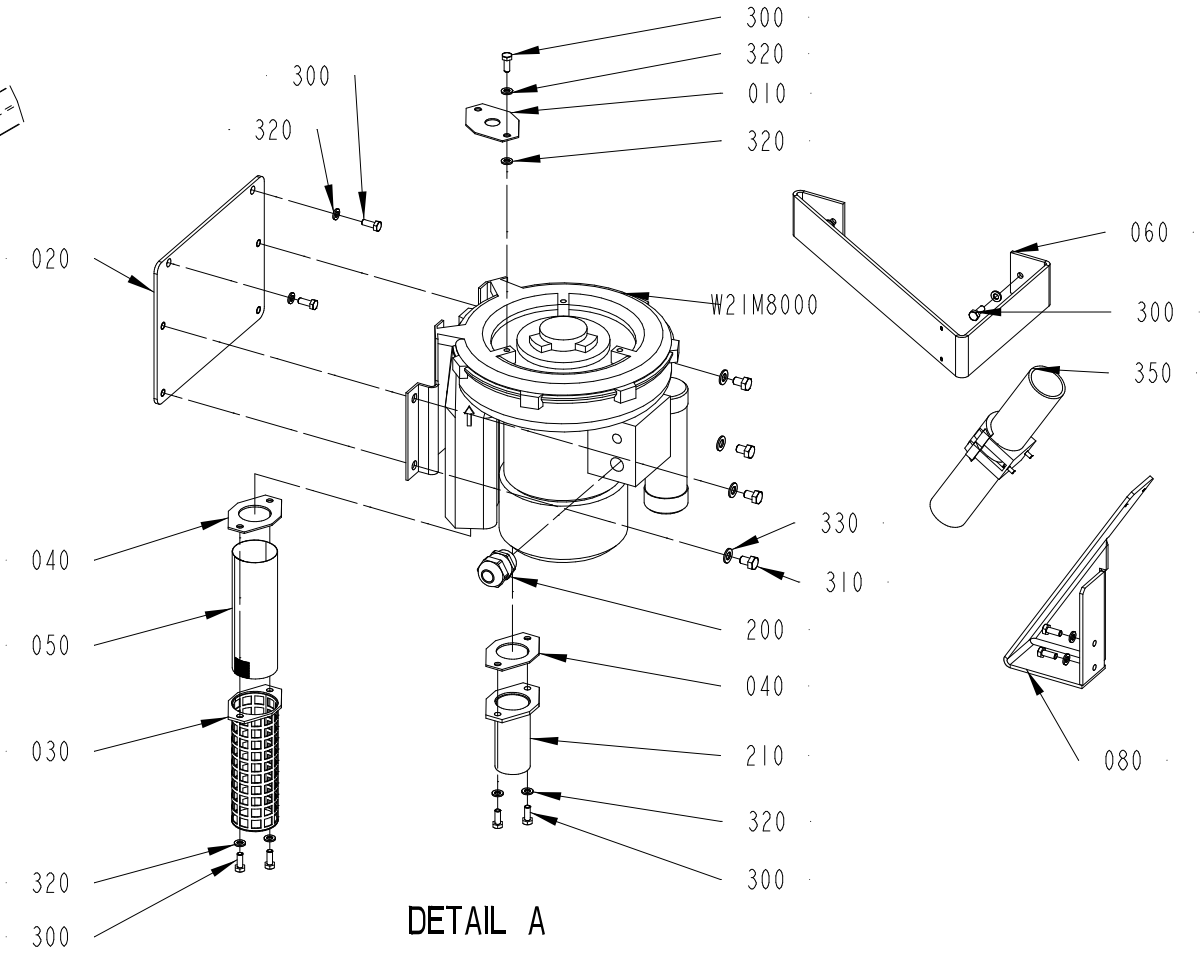

2773623-5
775758

ECM: 777871
Group number: 2773623-0300
Assembly Drawing: 2773623-5_1_AA

Pos	Part No	Description	Qty	Unit	Page No
TPA, TGA, TBA SLIMCAP1000, TBA STREAMCAP1000, TBA SLIMCAP 2000, TBA STREAMCAP200, TBA HELICAP2 23, TBA HELICAP 27					
060	3437640-0000	BRACKET	1	PC	
080	3437723-0000	BRACKET	1	PC	
300	312105-0368	SCREW, M6S ISO 4017 M6X16 A4 80	11	PC	
320	315105-0153	WASHER PLAIN, 6,4X12X1,5 A4 BRB	12	PC	
350	90439-0295	SERVICE KIT, NO. 111940	1	PC	
Common Parts					
010	1030874-0000	THROTTLE WASHER	1	PC	
020	3437768-0000	BRACKET	1	PC	
030	1030335-0000	FILTER HOLDER	1	PC	
040	1030878-0000	GASKET	2	PC	
050	1030338-0000	NET	1	PC	
200	90458-0316	CABLE GLAND, M25X1,5, 5311 1130	1	PC	
210	2663999-0000	NIPPLE	1	PC	
310	312105-0447	SCREW M6S ISO 4017 M8X12 A480	4	PC	
330	315105-0165	FWAS080G0-0S, WASHER PLAIN	4	PC	
W21M8000	90604-3589	FAN, 2BH1300-7AV15-K43	1	PC	

Pos	Part No	Description	Qty	Unit	Page No

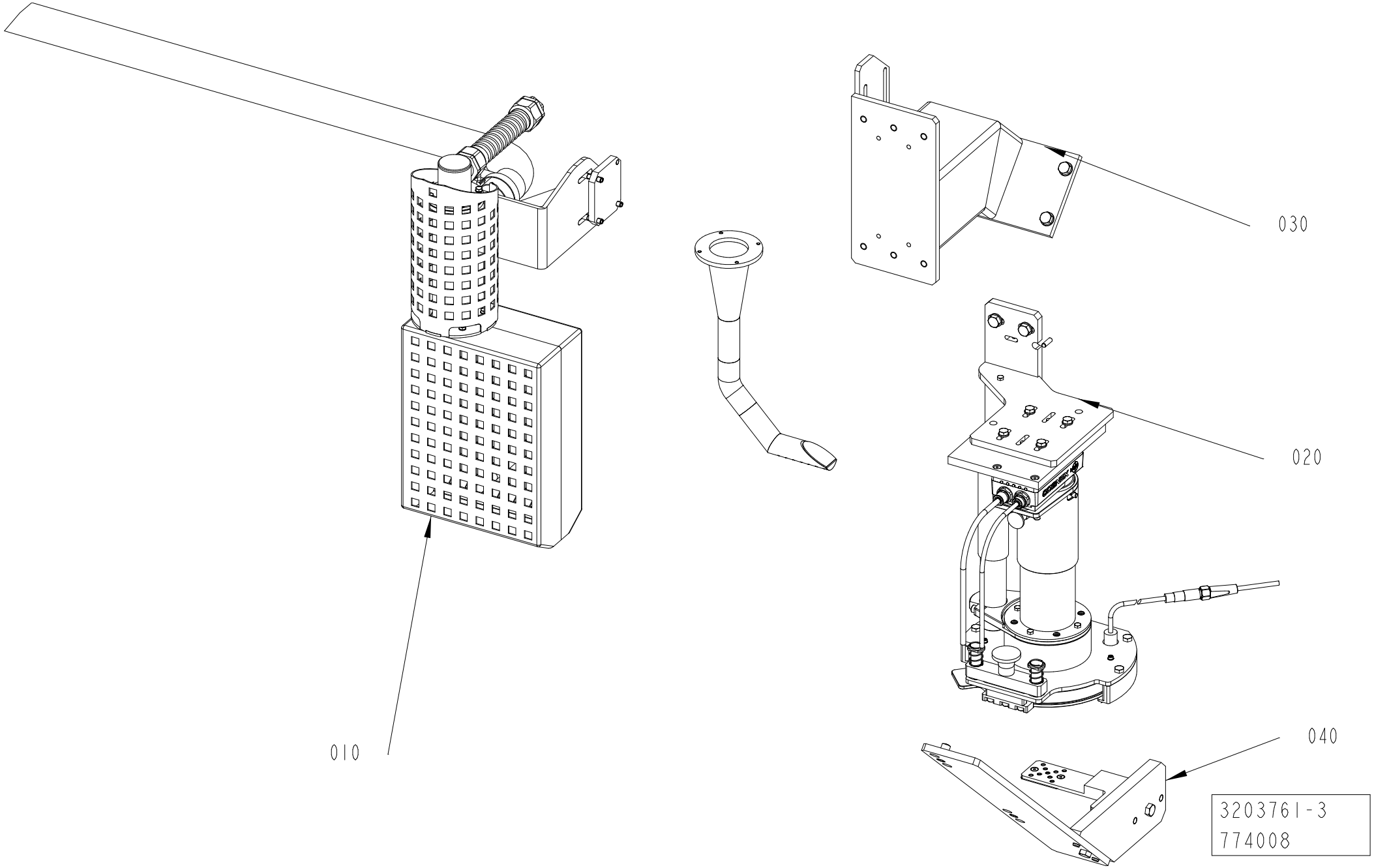
010
030
020
040
3203761-3
774008

ECM: 774707
Group number: 3203761-0200
Assembly Drawing: 3203761-3_1_AB

This list refers to drawings on pages 328 to 330

Pos	Part No	Description	Qty	Unit	Page No
POSITIONING DEVICE	See page: 328				
020	3203763-0100	VISION SYSTEM	1	PC	332
040	3087823-0100	TOOL	1	PC	334
Common Parts					
010	3203764-0100	HEATING ELEMENT	1	PC	336
030	3203766-0100	CONVERSION GROUP	1	PC	340

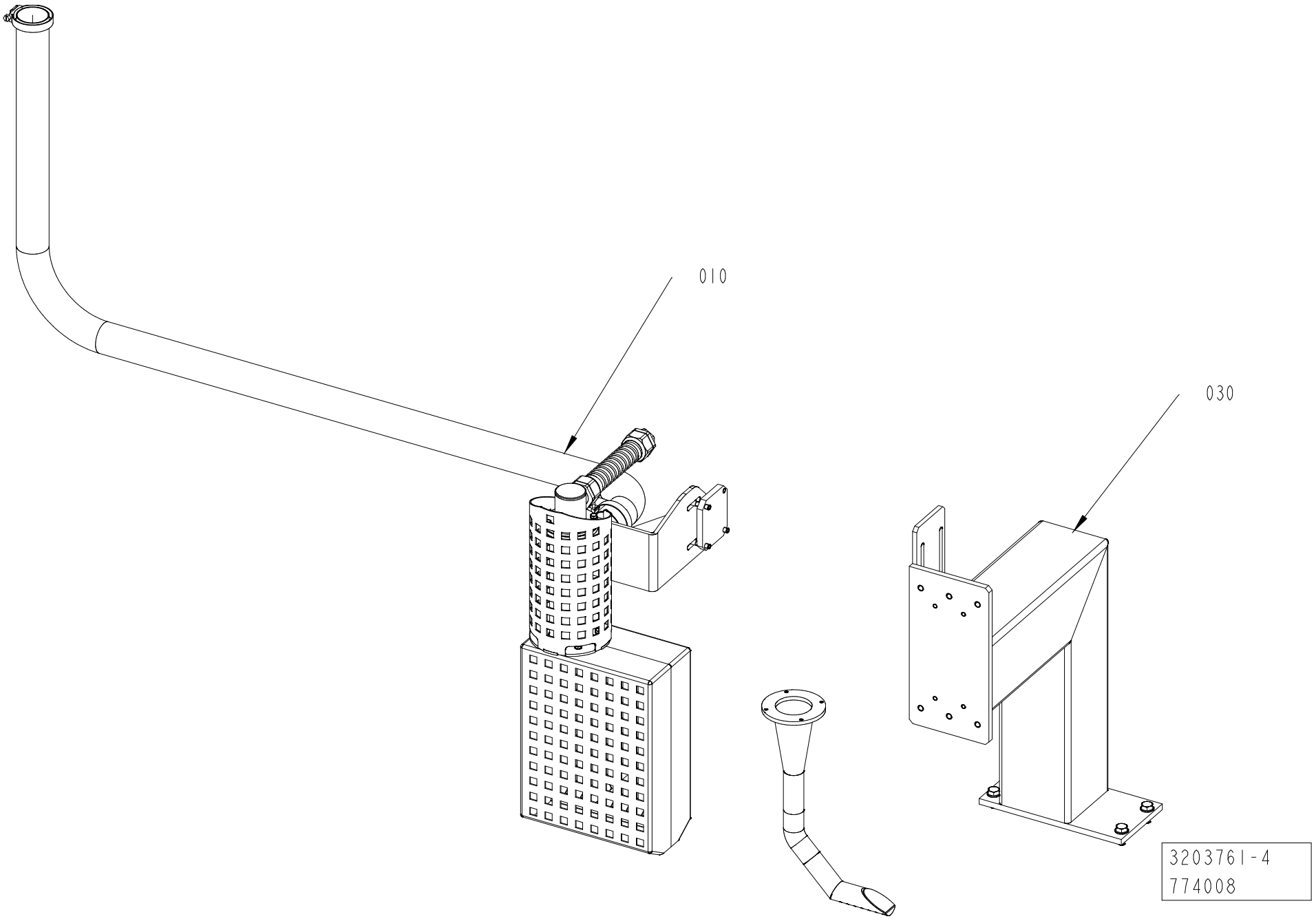
010
030
3203761-4
774008

ECM: 774707
Group number: 3203761-0200
Assembly Drawing: 3203761-4_1_AB

This list refers to drawings on pages 328 to 330

Pos	Part No	Description	Qty	Unit	Page No

SEE LIST FOLLOWING DRAWING ON PAGE: 328

Pos	Part No	Description	Qty	Unit	Page No

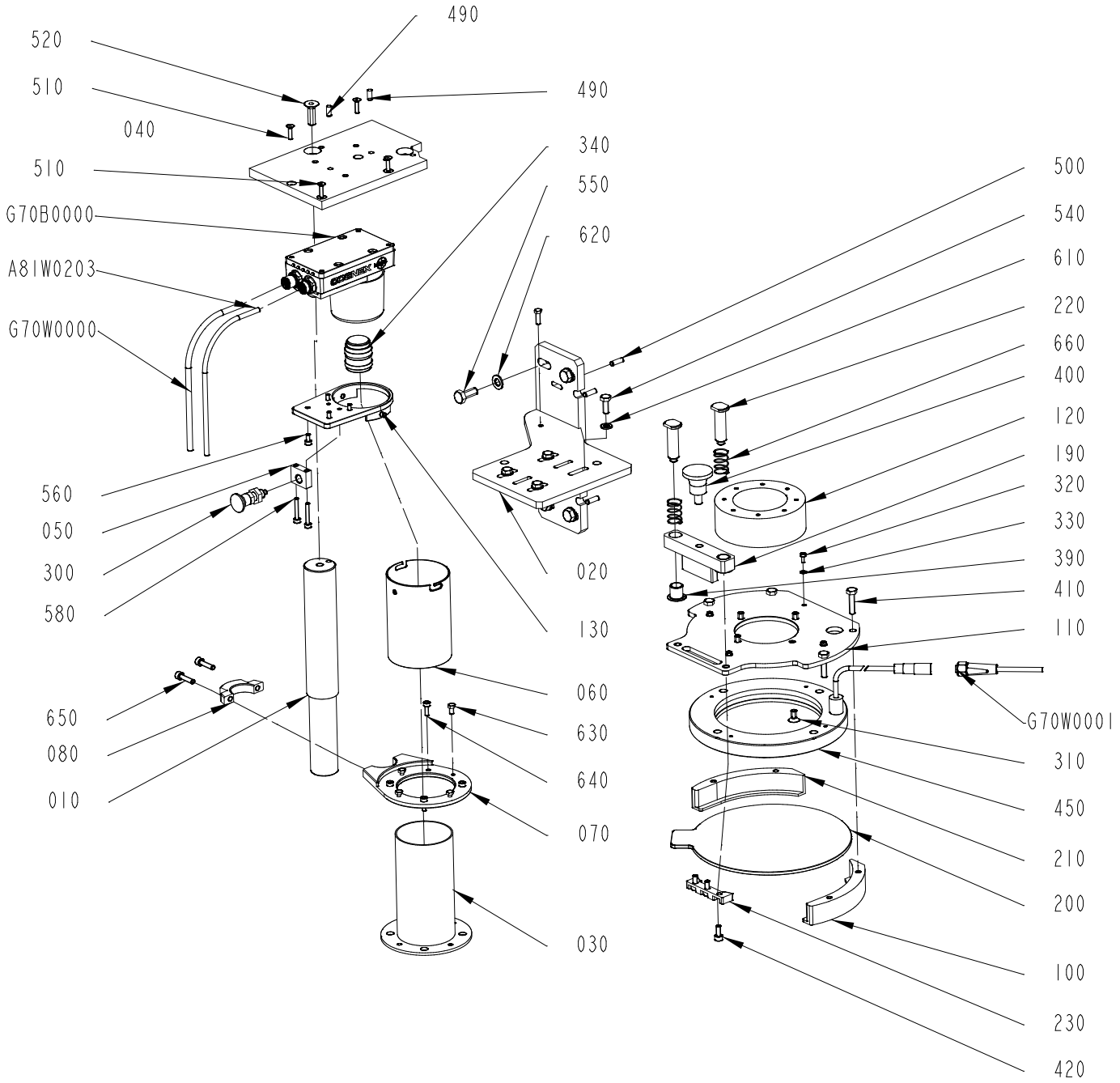

3203763-1
662766

ECM: 662773
Group number: 3203763-0100
Assembly Drawing: 3203763-1_1_AD

Pos	Part No	Description	Qty	Unit	Page No
Common Parts					
010	2985768-0000	COLUMN	1	PC	
020	2792664-0000	BRACKET	1	PC	
030	2557544-0000	PROTECTION	1	PC	
040	3203752-0000	BRACKET	1	PC	
050	2794721-0000	BLOCK	1	PC	
060	2792879-0000	TUBE	1	PC	
070	2794790-0000	CLAMP	1	PC	
080	2873943-0000	CLAMP	1	PC	
100	3095796-0000	HOLDER	1	PC	
110	3095791-0000	PLATE	1	PC	
120	3031442-0000	SPACER	1	PC	
130	2792848-0000	SUPPORT	1	PC	
190	3053477-0000	BRACKET	1	PC	
200	3052393-0000	GLASS COVER	1	PC	
210	3095790-0000	HOLDER	1	PC	
220	3053471-0000	PIN	2	PC	
230	3053478-0000	PUSHER	1	PC	
300	90051-0112	LOCK KNOB, NO. GN 617 NIK5	1	PC	
310	312155-0366	SCREW DIN 7991 MF6S M6X12 A4 70	4	PC	
320	312115-0222	SCREW ISO4762 M3X8 A4 80	4	PC	
330	315106-0124	WASHER PLAIN, M3 ISO7089-3-200 HV A4	4	PC	
340	90459-1180	LENS 16MM IN-SIGHT 4100, HF16HA-1B	1	PC	
390	321156-0188	FLANGE BUSHING, IGLIDUR H370 12X14X15	2	PC	
400	318871-0105	KNOB CIRCULAR, EXT THREAD, NO. 8302-6150	1	PC	
410	312105-0372	SCREW, M6S ISO 4017 M6X25 A4 80	4	PC	
420	312115-0327	SCREW ISO4762 M5X12 A4 80	3	PC	
450	90605-2644	ILLUMINATION, ICRR-LDR2-174LAT	1	PC	
490	311103-0306	PARALLEL PIN ISO 2338 5M6X12 A1	2	PC	
500	311103-0308	PARALLEL PIN ISO 2338 5M6X16 A1	5	PC	
510	312155-0293	SCREW DIN 7991 MF6S M4X16 A4 70	4	PC	
520	312155-0453	SCREW DIN 7991 MF6S M8X25 A4 70	1	PC	
540	312105-0368	SCREW, M6S ISO 4017 M6X16 A4 80	4	PC	
550	312105-0451	SCREW, M6S ISO 4017 M8X20 A4 80	4	PC	
560	312115-0287	SCREW ISO4762 M4X8 A4 80	4	PC	
580	312115-0297	SCREW ISO4762 M4X25 A4 80	2	PC	
610	315105-0153	WASHER PLAIN, 6,4X12X1,5 A4 BRB	4	PC	
620	315105-0165	FWAS080G0-0S, WASHER PLAIN	4	PC	
630	312105-0287	SCREW, M6S ISO 4017 M4X8 A4 70	4	PC	
640	312115-0291	SCREW ISO4762 M4X12 A4 80	4	PC	
650	312115-0331	SCREW ISO4762 M5X20 A4 80	2	PC	
660	90605-3922	COMP. SPRING, 2477, 1X14X25	2	PC	
A81W0203	90600-2103	ETHERNET CABLE, CCB-84901-1004-10	1	PC	
G70B0000	90604-2784	IN-SIGHT 5100 CAMERA, IS5100-01	1	PC	
G70W0000	90600-2102	POWER I/O CABLE, CCB-84901-0103-10	1	PC	
G70W0001	344253-0100	SENSOR CABLE, EVT002	1	PC	

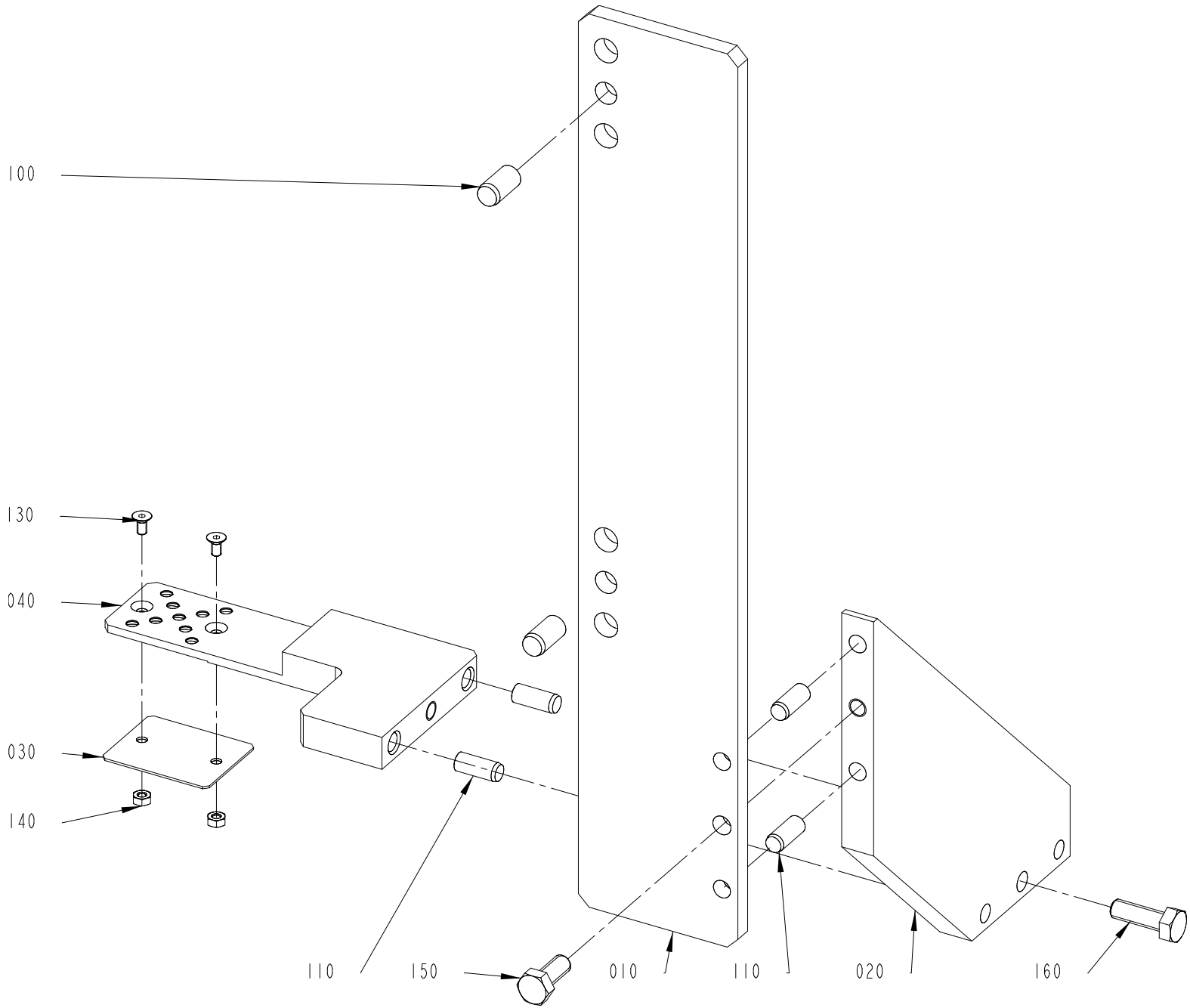

3087823-1
465123

Pos	Part No	Description	Qty	Unit	Page No
TBA 0200E HELICAP 23, TBA 0250E HELICAP 23					
020	3161466-0000	PLATE	1	PC	
TBA SLIMCAP1000, TBA STREAMCAP1000, TBA SLIMCAP 2000, TBA STREAMCAP200, TBA 1000S HELICAP2 23, TBA HELICAP 27, TBA 1500S HELICAP2 23					
020	3123927-0000	PLATE	1	PC	
TGA					
020	3143918-0000	PLATE	1	PC	
TPA STREAMCAP 1000, TPA STREAMCAP 500, TPA HELICAP 27					
020	3089906-0000	PLATE	1	PC	
Common Parts					
010	3087822-0000	PLATE	1	PC	
030	2838782-0000	PLATE	1	PC	
040	3087821-0000	TOOL	1	PC	
100	311103-0454	PARALLEL PIN ISO 2338 10M6X20 A1	2	PC	
110	311103-0401	PARALLEL PIN ISO 2338 8M6X20 A1	4	PC	
130	312155-0287	SCREW DIN 7991 MF6S M4X8 A4 70	2	PC	
140	312605-0312	HEXAGON NUT, M6M M4 A280	2	PC	
150	312105-0451	SCREW, M6S ISO 4017 M8X20 A4 80	1	PC	
160	312105-0453	SCREW, M6S ISO 4017 M8X25 A4 80	1	PC	

Pos	Part No	Description	Qty	Unit	Page No

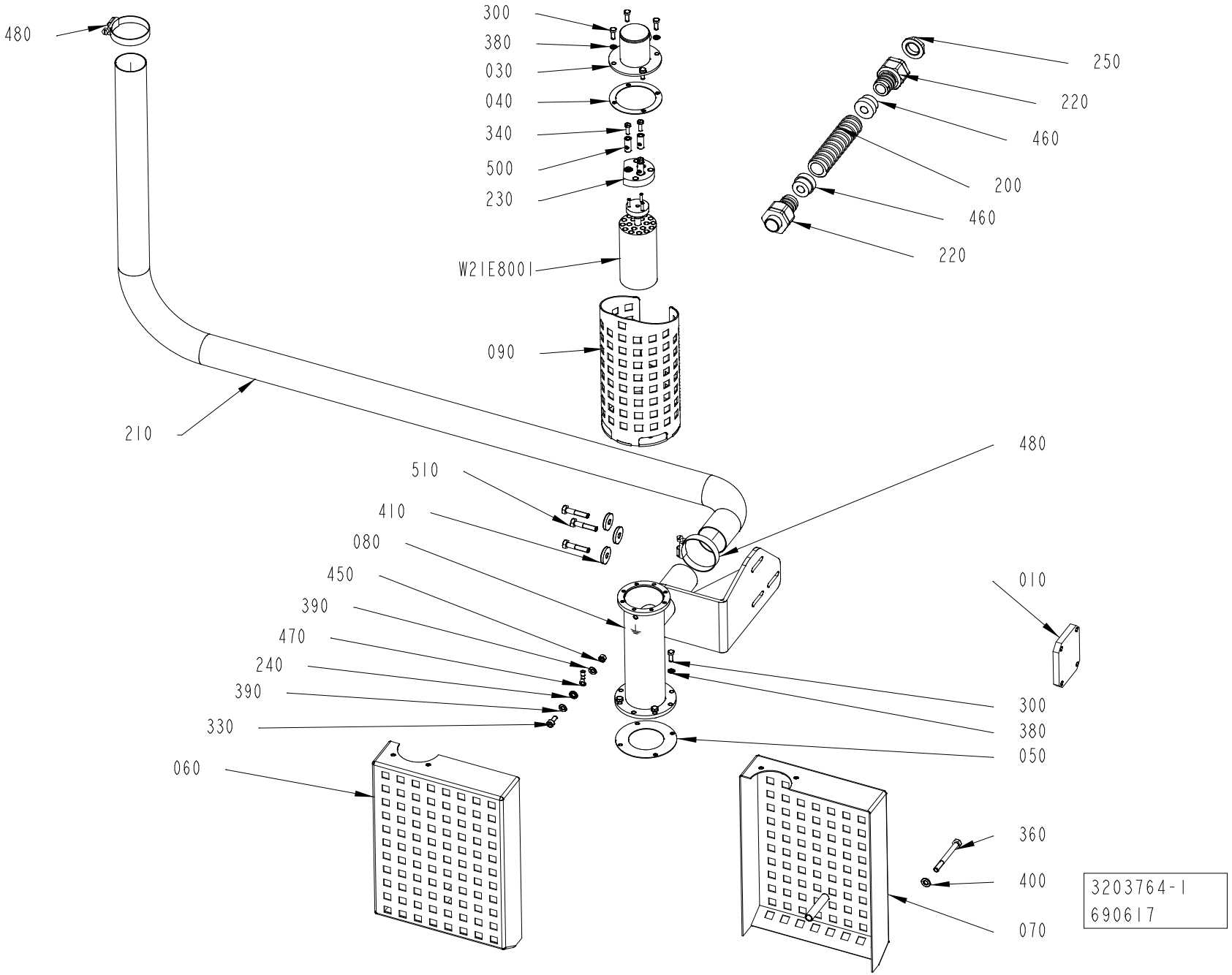
480
300
380
030
040
340
500
230
W21E800I
090
210
250
220
460
200
460
220
510
410
080
450
390
470
240
390
330
060
480
010
300
380
050
360
400
070
3203764-1
690617

ECM: 690312
Group number: 3203764-0100
Assembly Drawing: 3203764-1_1_AC

Pos	Part No	Description	Qty	Unit	Page No
Common Parts					
010	2873867-0000	PLATE	1	PC	
030	2710819-0000	LID	1	PC	
040	1188609-0000	FLANGE SEAL	1	PC	
050	1188610-0000	FLANGE SEAL	1	PC	
060	2773627-0000	HEAT GUARD	1	PC	
070	2773630-0000	HEAT GUARD	1	PC	
080	2873865-0000	PRE-HEATER	1	PC	
090	2836263-0000	HEAT GUARD	1	PC	
200	90152-0051	HOSE, SPIRAL CONDUIT, 25X18, UL 1816	1	M	
210	90152-0075	HOSE	2.350	M	
220	90458-0430	GLAND FITTING, VK 22054YUL16	2	PC	
230	90125-0020	PLATE COMPLETE(BOM)	1	PC	338
240	90062-0060	LOCK WASHER 5,3/10 H=0,6 FZB	1	PC	
250	90458-0323	NUT, M20X1,5	1	PC	
300	312105-0291	SCREW, M6S ISO 4017 M4X12 A4 70	8	PC	
330	312115-0327	SCREW ISO4762 M5X12 A4 80	1	PC	
340	312122-0291	SCREW ISO 1207 M4X12 NI PL BRASS	3	PC	
360	312105-0382	SCREW, M6S ISO 4014 M6X60 A4 80	1	PC	
380	315105-0136	WASHER PLAIN, 4,3X8X0,8 A4 BRB	8	PC	
390	315105-0146	WASHER PLAIN, 5,3X10X1 A4 BRB	2	PC	
400	315105-0153	WASHER PLAIN, 6,4X12X1,5 A4 BRB	1	PC	
410	315125-0153	WASHER HIGH, TBRSB 6,4X22X4 A4	3	PC	
450	312605-0314	HEXAGON NUT, M6M M5 A280	1	PC	
460	353249-0012	INSERT, SINGLE HOLE, EK154 11	2	PC	
470	344375-0004	CABLE SHOE RING, 0,5-1,5MM2 M5 RED	1	PC	
480	342991-0108	"HOSE CLIP,WORM DRIVE TYPE (38)-50"	2	PC	
500	205438-0000	CABLE CONDUIT	3	PC	
510	312105-0374	SCREW, M6S ISO 4014 M6X30 A4 80	3	PC	
W21E8001	90606-1840	CARTRIDGE HEATER, 3KW 230V	1	PC	

Pos	Part No	Description	Qty	Unit	Page No

This page intentionally left blank

ECM: 275534
Group number: 90125-0020
Assembly Drawing: -

Pos	Part No	Description	Qty	Unit	Page No
Common Parts					
	270926-0000	NUT	6	PC	
	270927-0000	SCREW	3	PC	
	294464-0000	BASE PLATE	1	PC	

Pos	Part No	Description	Qty	Unit	Page No

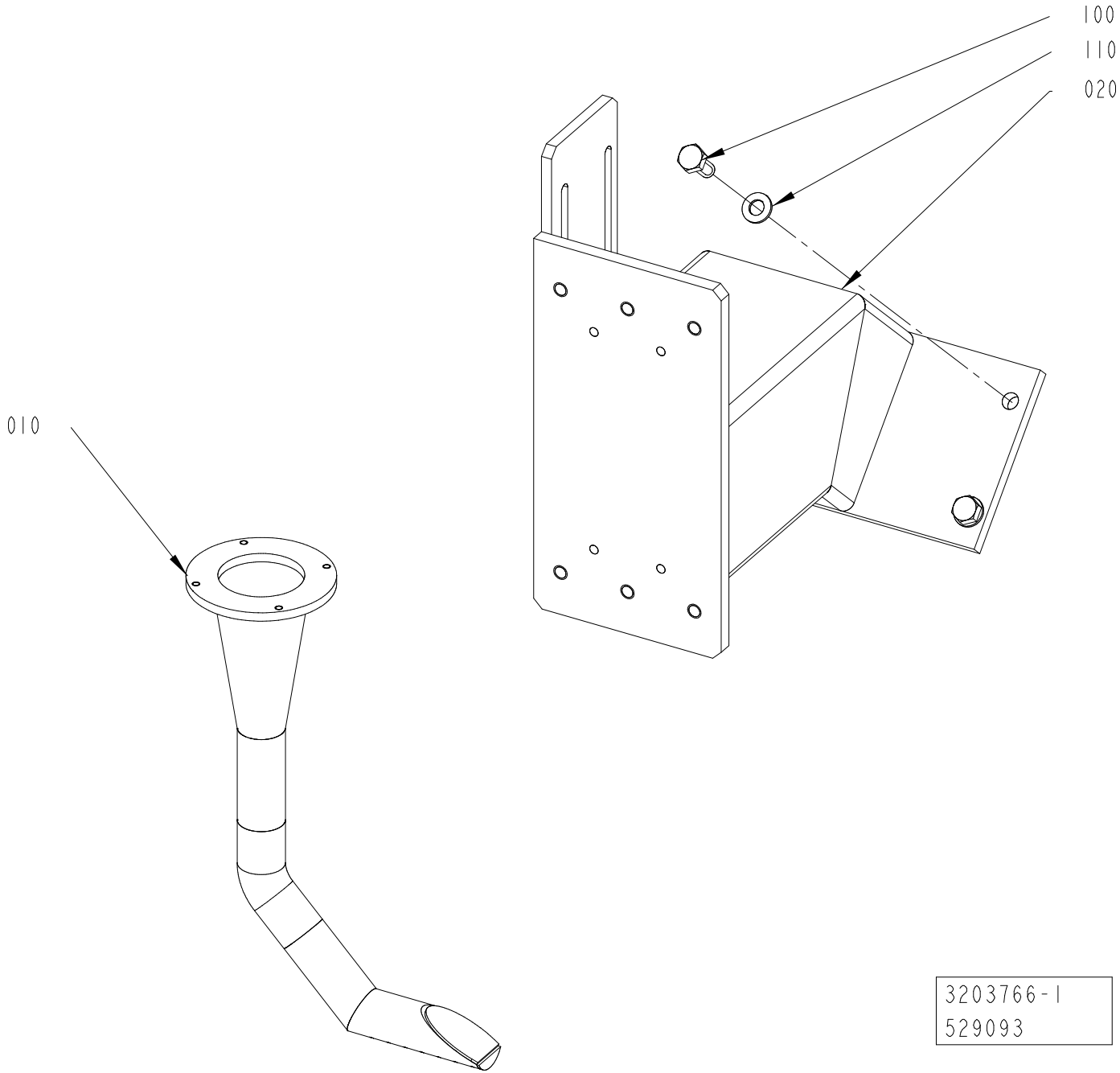
100
110
020
010
3203766-1
529093

Pos	Part No	Description	Qty	Unit	Page No
CAP 30/FLEX SLIMCAP1000, CAP 30/FLEX SLIMCAP2000					
010	2547915-0000	HEATING CHAMBER	1	PC	
CAP 30/FLEX SLIMCAP1000, CAP 30/FLEX SLIMCAP2000, CAP 30/FLEX STREAMCAP500, CAP 30/FLEX TBA STREAMCAP1000, CAP 30/FLEX TPA STREAMCAP1000, CAP 30/FLEX STREAMCAP200, CAP 30/FLEX HELICAP 27, CAP 30/FLEX TBA 1000S HELICAP 23, CAP 30/FLEX TBA 1500S HELICAP2 23					
020	2934905-0000	SUPPORT	1	PC	
CAP 30/FLEX TBA 0200E HELICAP 23, CAP 30/FLEX TBA 0250E HELICAP 23					
020	3073396-0000	SUPPORT	1	PC	
CAP 30/FLEX TBA 0200E HELICAP 23, CAP 30/FLEX TBA 0250E HELICAP 23, CAP 30/FLEX STREAMCAP500, CAP 30/FLEX TBA STREAMCAP1000, CAP 30/FLEX TPA STREAMCAP1000, CAP 30/FLEX STREAMCAP200, CAP 30/FLEX HELICAP 27, CAP 30/FLEX TBA 1000S HELICAP 23, CAP 30/FLEX TBA 1500S HELICAP2 23, CAP 30/FLEX TGA					
010	2662760-0000	HEATING CHAMBER	1	PC	
CAP 30/FLEX TGA					
020	3203753-0000	SUPPORT	1	PC	
Common Parts					
100	312105-0451	SCREW, M6S ISO 4017 M8X20 A4 80	4	PC	
110	315106-0165	WASHER PLAIN, M8 ISO7089-8-200 HV A4	4	PC	

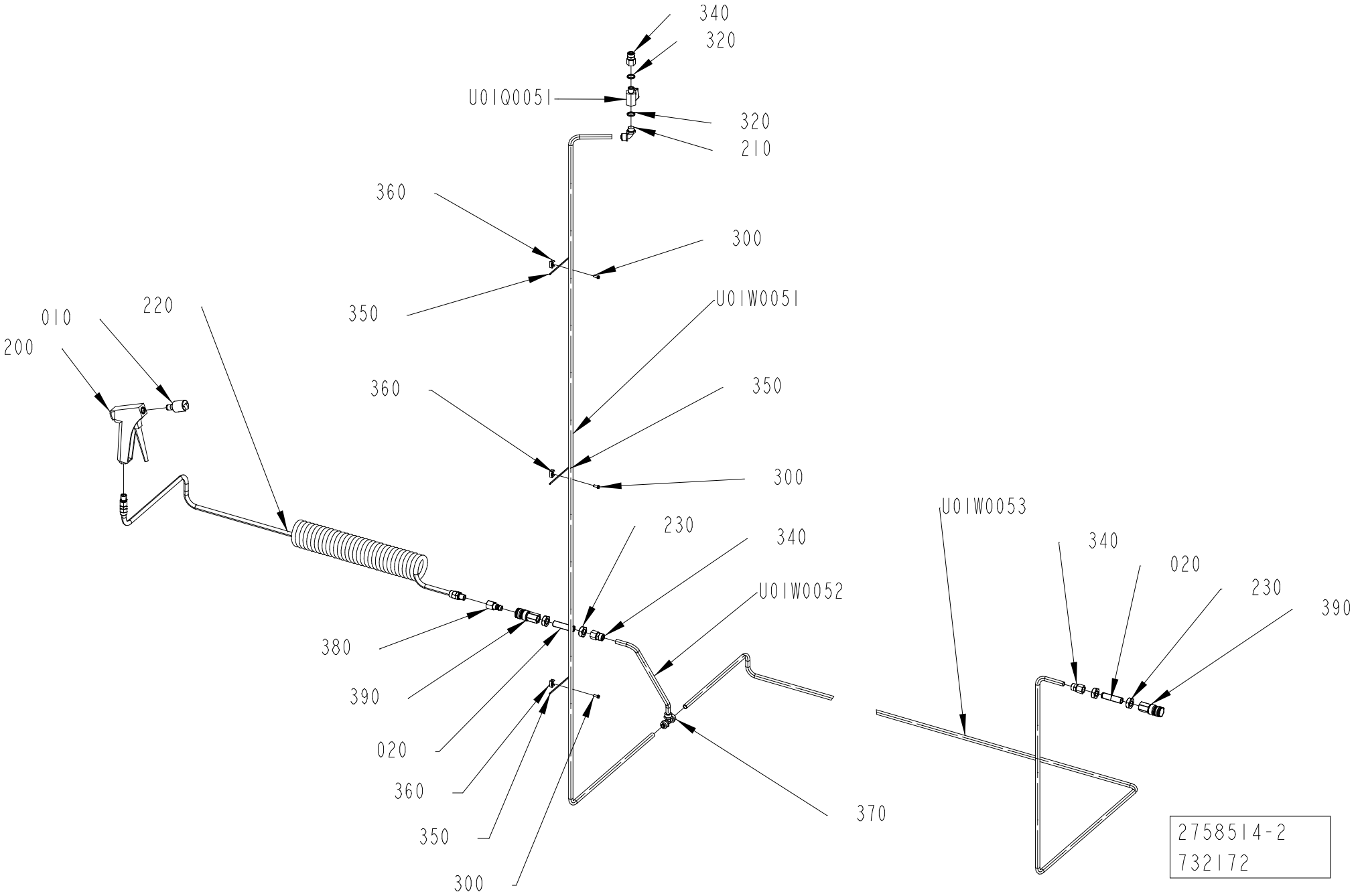
340
320
U01Q0051
320
210
360
300
350
U01W0051
010
220
200
360
350
300
230
340
U01W0052
380
390
020
360
350
300
370
U01W0053
340
020
230
390
2758514-2
732172

ECM: 728427
Group number: 2758514-0200
Assembly Drawing: 2758514-2_1_AD

Pos	Part No	Description	Qty	Unit	Page No
Common Parts					
010	2506940-0000	NOZZLE	1	PC	
020	3293084-0000	THREADED CONNECTION	2	PC	
200	90458-1483	SPRAY GUN, WATER G1/4	1	PC	
210	90224-0325	ELBOW 90 COUPL., EXT. THREAD 10/8-G1/4"	1	PC	
220	90458-1741	HOSE ASSEMBLY, CEJN 19 958 9669	1	PC	
230	6-526343 02	HEXAGON NUT DN8 RP1/4" 1.4404	4	PC	
300	312125-0289	SLOTTED HEAD SCREW, ISO 1207 M4 X 10 A4	3	PC	
320	351477-0110	NYLON WASHER G1/4”, 0602 23 11 20	2	PC	
340	342923-0132	STRAIGHT COUPL.,INT.THREADED 10/8-G1/4"	1	PC	
350	352113-0101	CABLE TIE,BLACK 92X	3	PC	
360	352113-0205	ANCHOR PLATES FOR STRIPS, TM2S8-C100	3	PC	
370	342946-0133	T-COUPLING,UNION 10/8	1	PC	
380	90459-2254	QUICK COUPLING, (M) 10 320 5202	1	PC	
390	90606-5416	QUICK COUPLING, (F) 25KAIW13SPN	2	PC	
U01Q0051	90605-6942	BALL VALVE G1/4, 772117	1	PC	
U01W0051	315400-0009	TUBE PUN-H-10X1,5-SW	2800	MM	
U01W0052	315400-0009	TUBE PUN-H-10X1,5-SW	2800	MM	
U01W0053	315400-0009	TUBE PUN-H-10X1,5-SW	2800	MM	

Pos	Part No	Description	Qty	Unit	Page No

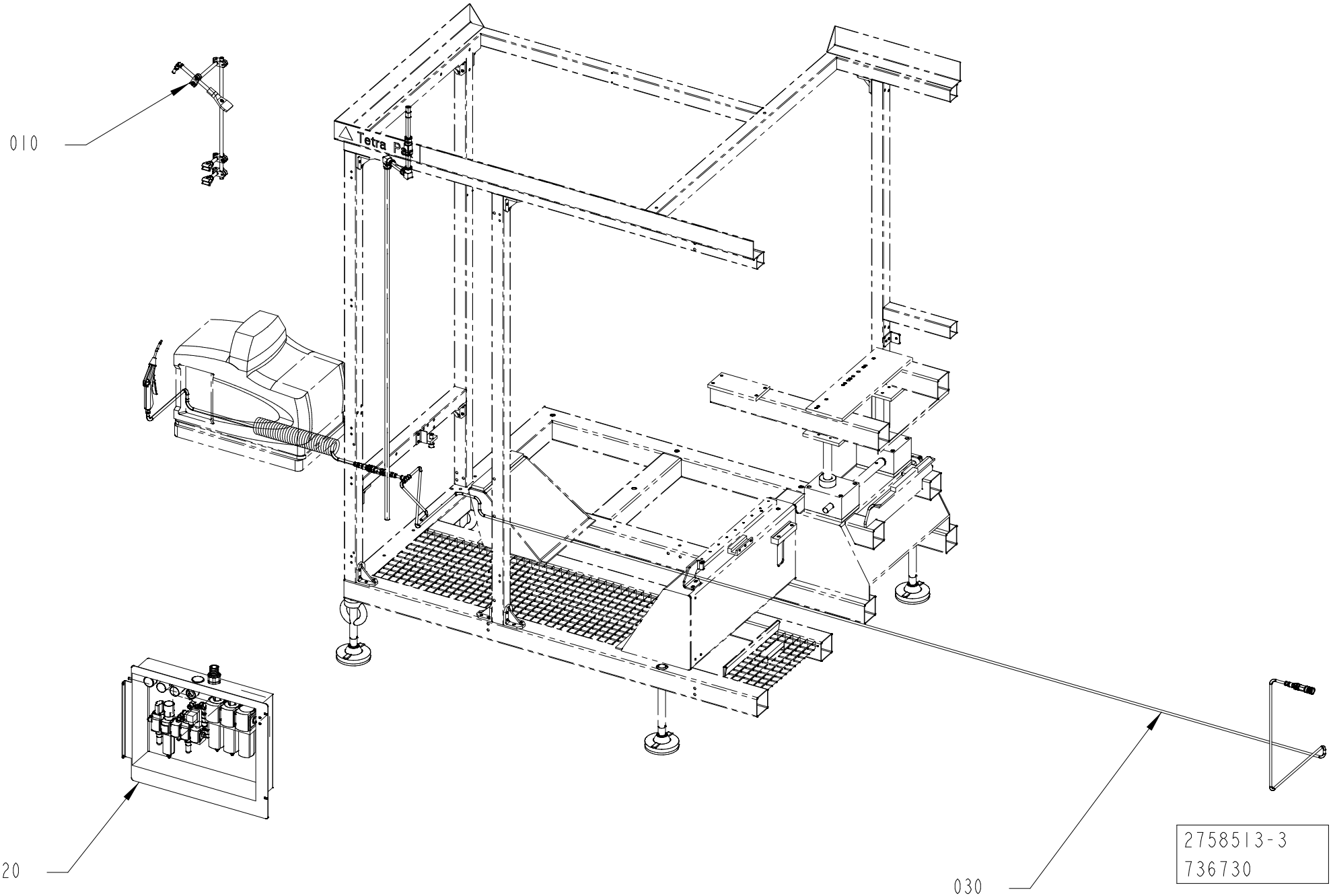
010
020
030
2758513-3
736730

ECM: 742583
Group number: 2758513-0300
Assembly Drawing: 2758513-3_1_AA

Pos	Part No	Description	Qty	Unit	Page No
Common Parts					
010	2758512-0200	BLOWING SYSTEM	1	PC	346
020	2838672-0300	PNEUMATIC PANEL	1	PC	348, 350
030	2838686-0200	AIR JET GUN	1	PC	364

Pos	Part No	Description	Qty	Unit	Page No

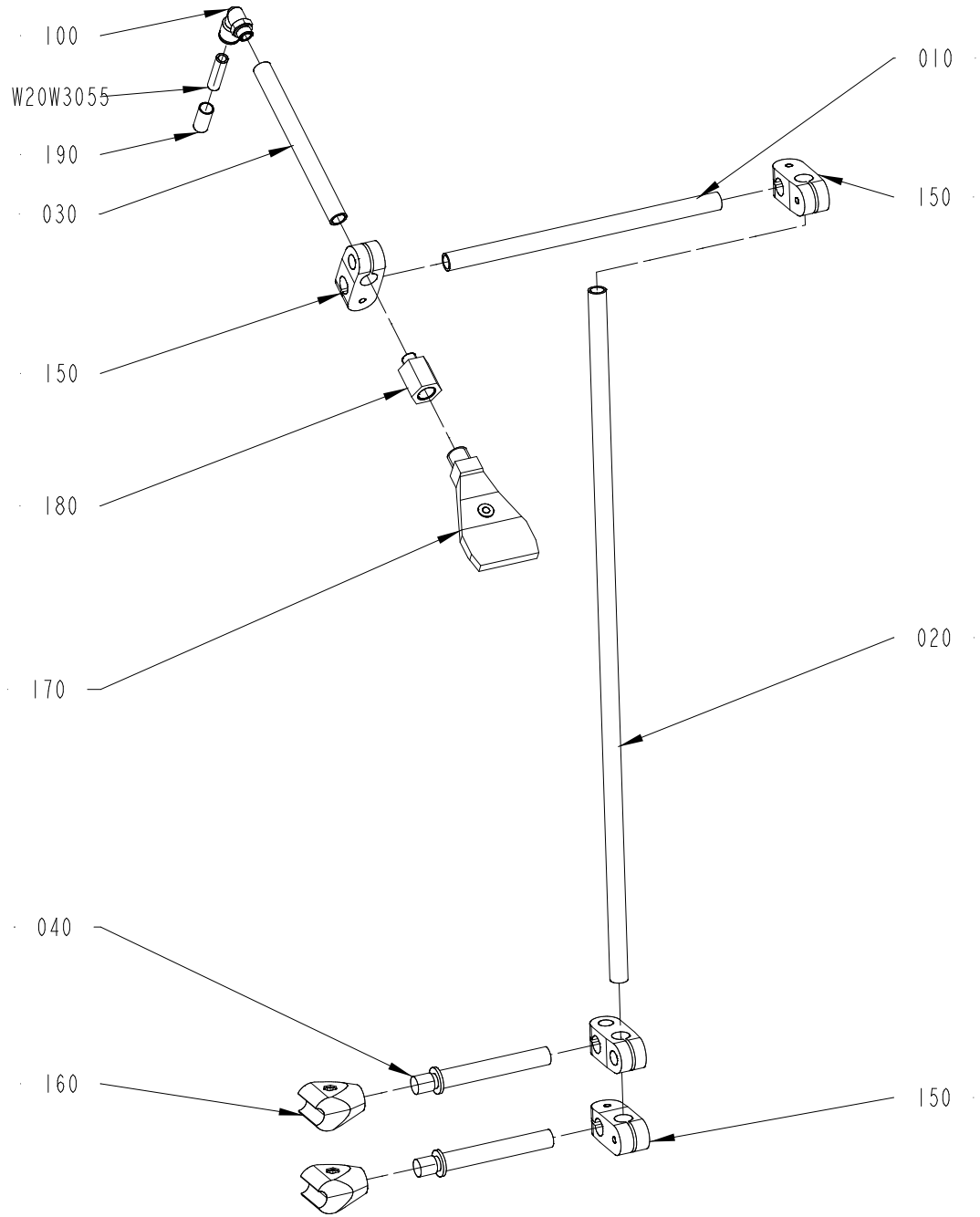
100
W20W3055
190
030
150
180
170
040
160
010
150
020
150
2758512-2
710264

ECM: 713618
Group number: 2758512-0200
Assembly Drawing: 2758512-2_1_AB

Pos	Part No	Description	Qty	Unit	Page No
Common Parts					
010	2775403-0000	PIPE	1	PC	
020	2775404-0000	PIPE	1	PC	
030	2788176-0000	PIPE	1	PC	
040	2838679-0000	SHAFT	2	PC	
100	351456-3003	PUSH-IN L-FITTING NPQH-L-G18-Q8-P10	1	PC	
150	90600-1001	CROSS CLAMP, 340/68385	4	PC	
160	90458-0499	HOLDER 12 MM NO. 82 66861	2	PC	
170	90424-0089	AIR NOZZLE, BSPT1/4, AAB727-1/4-15	1	PC	
180	90330-0134	REDUCING NIPPLE, G1/8EXT-G1/4INT	1	PC	
190	90459-7370	MARKING FOR PNEUM. TUBING, PRZ08	1	PC	
W20W3055	315400-0004	TUBE PUN-H-8X1,25-BL	3000	MM	

Pos	Part No	Description	Qty	Unit	Page No

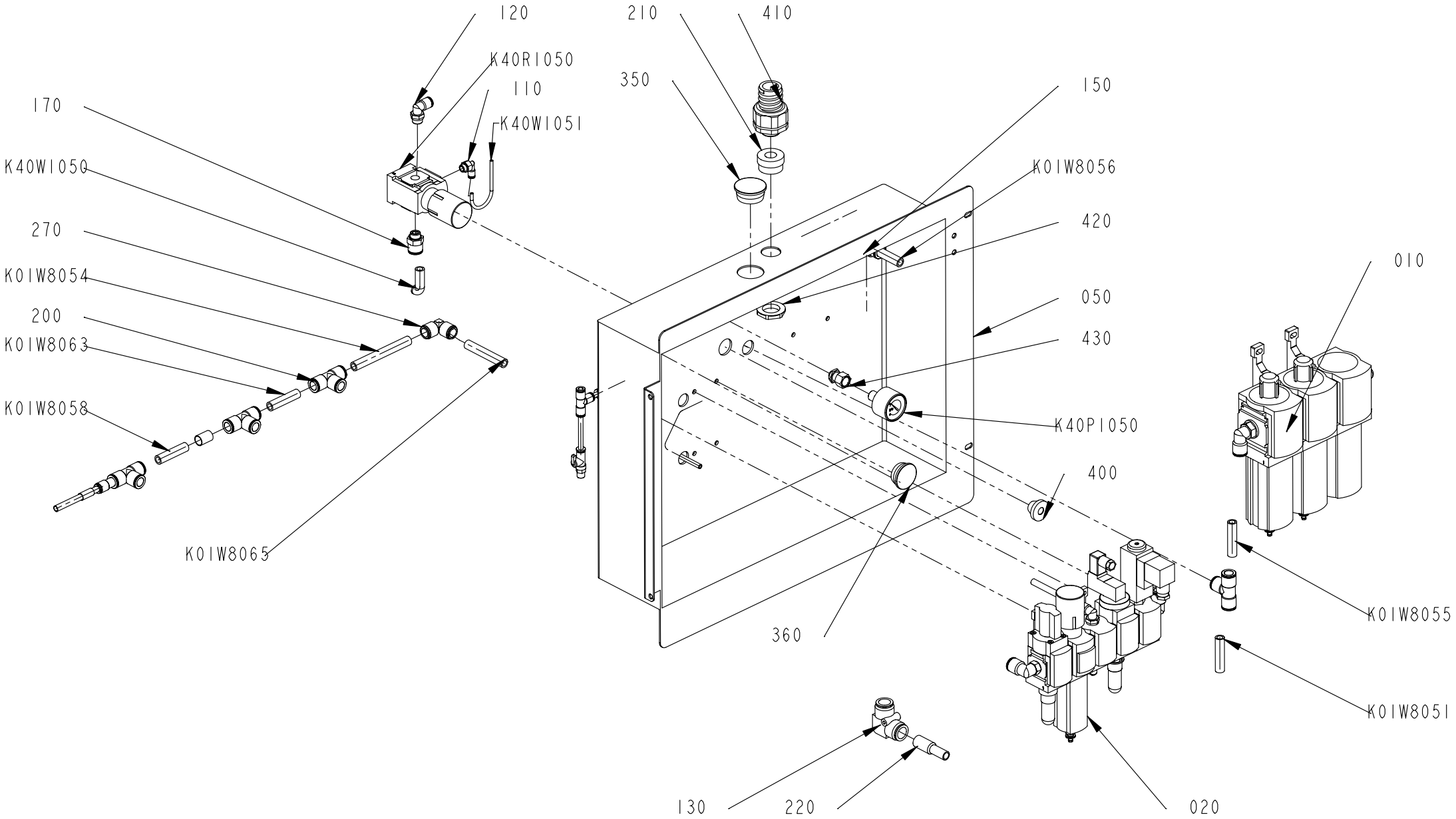
120
210
410
K40R1050
350
110
150
170
K40W1051
K01W8056
K40W1050
420
270
010
050
K01W8054
430
200
K01W8063
K40P1050
400
K01W8058
K01W8055
K01W8065
360
K01W8051
130
220
020

ECM: 823443
Group number: 2838672-0300
Assembly Drawing: 2838672-3_1_AB

This list refers to drawings on pages 348 to 350

Pos	Part No	Description	Qty	Unit	Page No
Common Parts					
010	2838673-0200	SERVICE UNIT	1	PC	352
020	2838674-0200	SERVICE UNIT	1	PC	360
050	3397195-0000	BRACKET	1	PC	
110	351456-3001	PUSH-IN L-FITTING NPQH-L-G18-Q4-P10	1	PC	
120	351456-3007	PUSH-IN L-FITTING NPQH-L-G14-Q8-P10	1	PC	
130	90459-2553	PUSH-IN L-FITTING QSL 16	1	PC	
140	351456-5107	PUSH-IN T-FITTING NPQH-T-Q6-E-P10	1	PC	
150	351456-1109	PUSH-IN FITTING NPQH-D-S12-Q8-P10	2	PC	
170	351456-0105	PUSH-IN FITTING NPQH-D-G14-Q12-P10	1	PC	
200	351456-5103	PUSH-IN T-FITTING NPQH-T-Q12-E-P10	5	PC	
210	353249-0015	INSERT, SINGLE HOLE, EK155 16	1	PC	
220	90459-7107	SLEEVE QSH-16-12	1	PC	
260	351456-5110	PUSH-IN T-FITTING NPQH-T-Q8-Q6-P10	1	PC	
270	351456-3105	PUSH-IN L-FITTING NPQH-L-Q12-E-P10	1	PC	
350	344351-0280	PROTECTIVE PLUG PE, GPN 300/F28	1	PC	
360	344351-0242	PROTECTIVE PLUG PE, GPN 300/F242	1	PC	
400	90015-0021	LEAD-IN, TET 10-14, E1458023	1	PC	
410	90458-0432	GLAND FITTING, VK 22555YUL21	1	PC	
420	90458-0324	NUT, M25X1,5	1	PC	
430	90459-7333	PUSH-IN FITTING QSSF-1/4-4-B	1	PC	
450	90459-7370	MARKING FOR PNEUM. TUBING, PRZ08	1	PC	
460	90459-7372	MARKING FOR PNEUM. TUBING, PRZ12	2	PC	
500	90459-1825	ELBOW WITH TAILPIECE 12/12 MM	1	PC	
520	90600-1175	ELBOW WITH TAILPIECE 8/8 MM	1	PC	
K01W8051	315400-0010	TUBE PUN-H-12X2-BL	300	MM	
K01W8054	315400-0010	TUBE PUN-H-12X2-BL	300	MM	
K01W8055	315400-0010	TUBE PUN-H-12X2-BL	300	MM	
K01W8056	315400-0010	TUBE PUN-H-12X2-BL	300	MM	
K01W8058	315400-0010	TUBE PUN-H-12X2-BL	300	MM	
K01W8059	315400-0001	TUBE PUN-H-6X1-BL	300	MM	
K01W8061	315400-0004	TUBE PUN-H-8X1,25-BL	300	MM	
K01W8062	315400-0010	TUBE PUN-H-12X2-BL	300	MM	
K01W8063	315400-0010	TUBE PUN-H-12X2-BL	300	MM	
K01W8065	315400-0010	TUBE PUN-H-12X2-BL	300	MM	
K01W8071	315400-0004	TUBE PUN-H-8X1,25-BL	300	MM	
K20Q0051	90459-0290	NON-RETURN VALVE, H-QS-6	1	PC	
K20Q0052	90187-0191	BALL VALVE, R1/8 - HOSE 6 MM	1	PC	
K20W0050	315400-0001	TUBE PUN-H-6X1-BL	300	MM	
K20W0052	315400-0001	TUBE PUN-H-6X1-BL	300	MM	
K20W0053	315400-0001	TUBE PUN-H-6X1-BL	300	MM	
K40P1050	90459-7344	PRESSURE GAUGE, MA-40-6-R1/4-EN	1	PC	
K40R1050	90459-5817	REGULATOR, MS4-LR-1/4-D6-A8-AS	1	PC	
K40W1050	315400-0010	TUBE PUN-H-12X2-BL	300	MM	
K40W1051	315400-0016	TUBE PUN-H-4X0,75-BL	300	MM	

Pos	Part No	Description	Qty	Unit	Page No

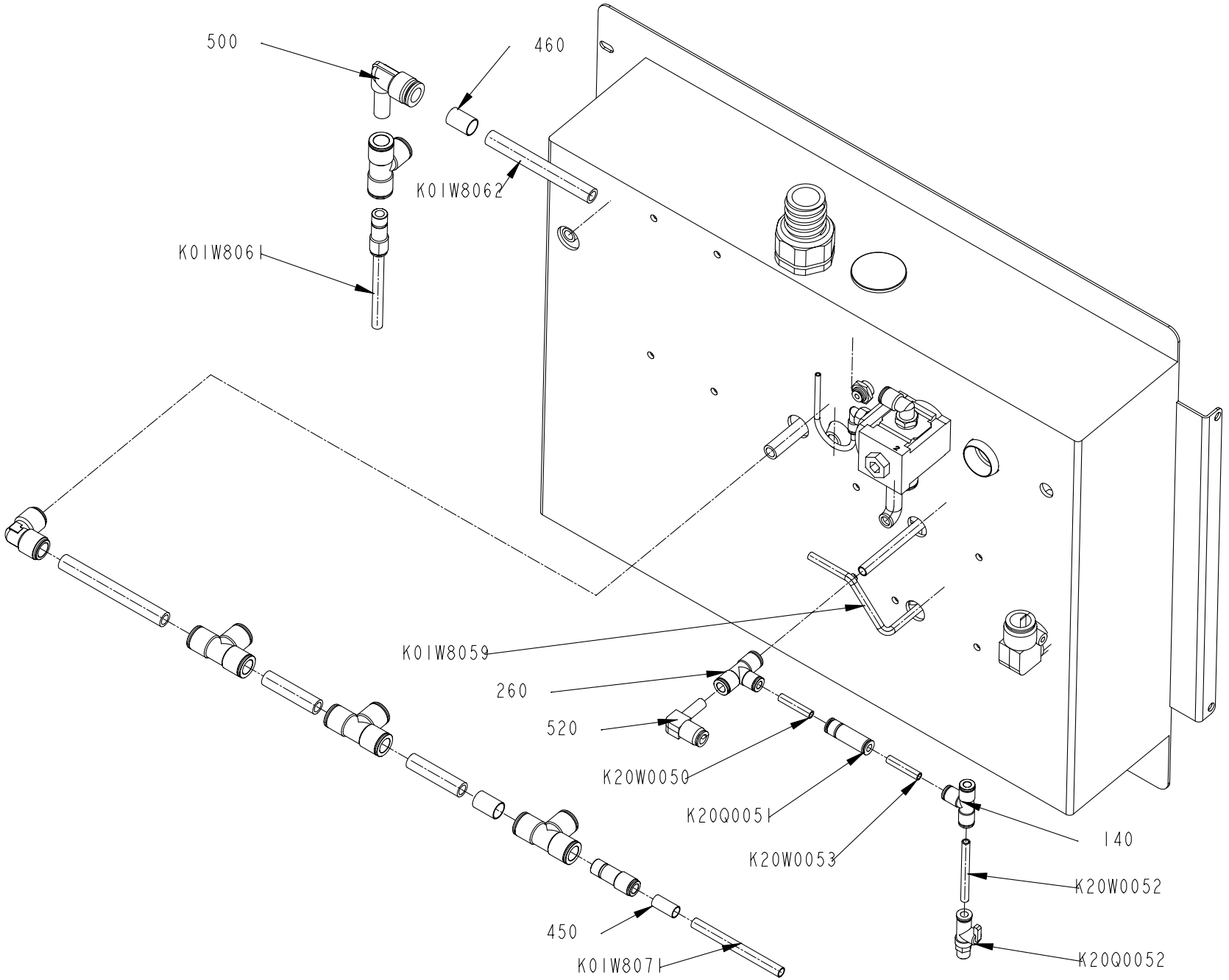
500
460
K01W8062
K01W8061
K01W8059
260
520
K20W0050
K20Q0051
K20W0053
140
K20W0052
K20Q0052
450
K01W8071

This list refers to drawings on pages 348 to 350

Pos	Part No	Description	Qty	Unit	Page No

SEE LIST FOLLOWING DRAWING ON PAGE: 348

Pos	Part No	Description	Qty	Unit	Page No

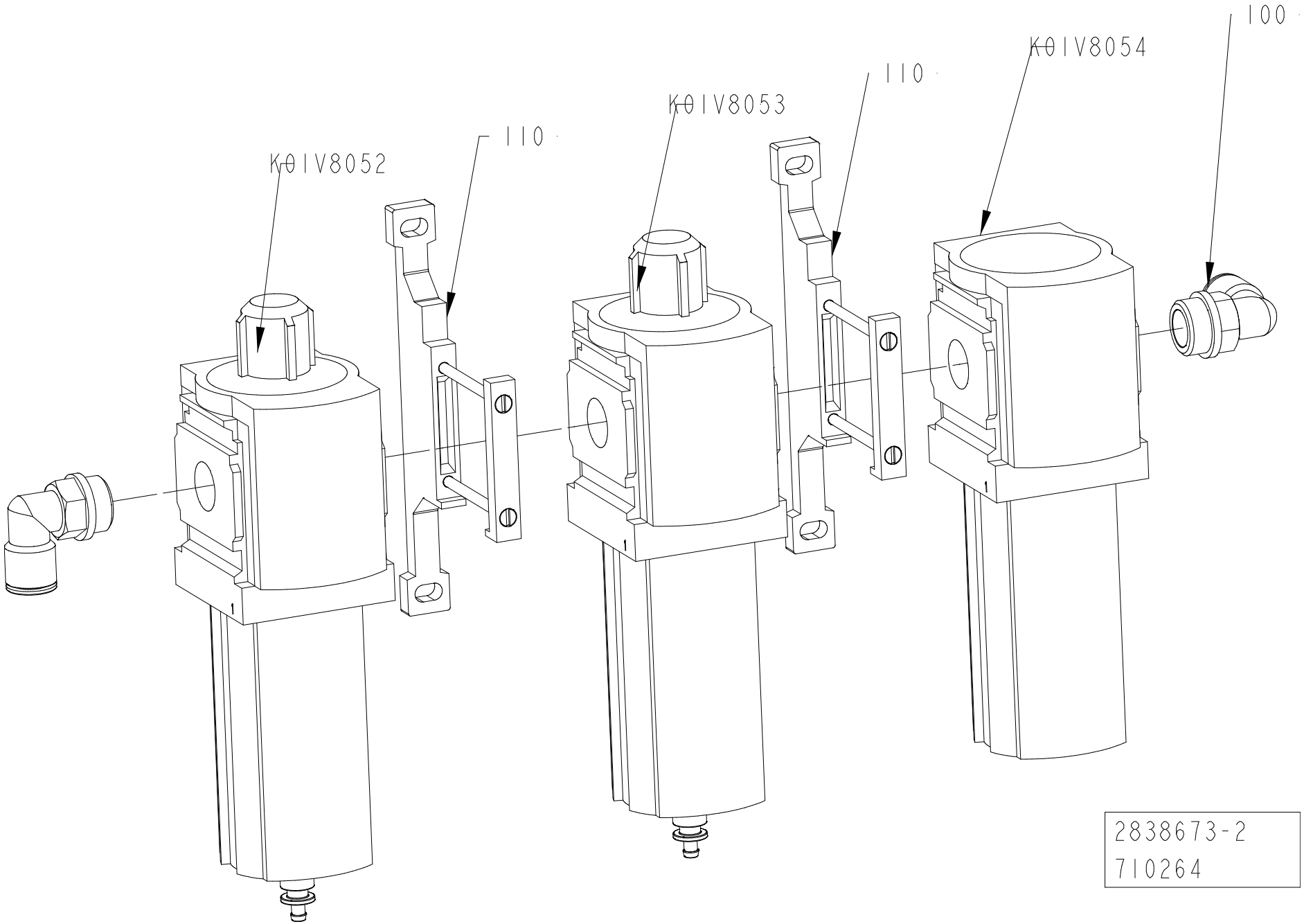
100
K01V8054
110
K01V8053
110
K01V8052
2838673-2
710264

ECM: 713802
Group number: 2838673-0200
Assembly Drawing: 2838673-2_1_AB

Pos	Part No	Description	Qty	Unit	Page No
Common Parts					
100	351456-3013	PUSH-IN L-FITTING NPQH-L-G12-Q12	2	PC	
110	90459-1858	BRACKET, MS6-WP	2	PC	
K01V8052	90603-4699	FILTER, MS6-LFM-1/2-B-R-V-DA	1	PC	354
K01V8053	90603-4698	FILTER, MS6-LFM-1/2-ARV-DA	1	PC	356
K01V8054	90459-2771	FILTER, MS6-LFX-1/2-R	1	PC	358

Pos	Part No	Description	Qty	Unit	Page No

This page intentionally left blank

ECM: 537656
Group number: 90603-4699
Assembly Drawing: -

Pos	Part No	Description	Qty	Unit	Page No
Common Parts					
	90459-3812	FILTER CARTRIDGE, MS6-LFM-B	1	PC	

Pos	Part No	Description	Qty	Unit	Page No

This page intentionally left blank

ECM: 537657
Group number: 90603-4698
Assembly Drawing: -

Pos	Part No	Description	Qty	Unit	Page No
Common Parts					
	90459-3811	FILTER CARTRIDGE MS6-LFM-A	1	PC	

Pos	Part No	Description	Qty	Unit	Page No

This page intentionally left blank

ECM: 264934
Group number: 90459-2771
Assembly Drawing: -

Pos	Part No	Description	Qty	Unit	Page No
Common Parts					
	90459-3810	FILTER CARTRIDGE, MS6-LFX	1	PC	

Pos	Part No	Description	Qty	Unit	Page No

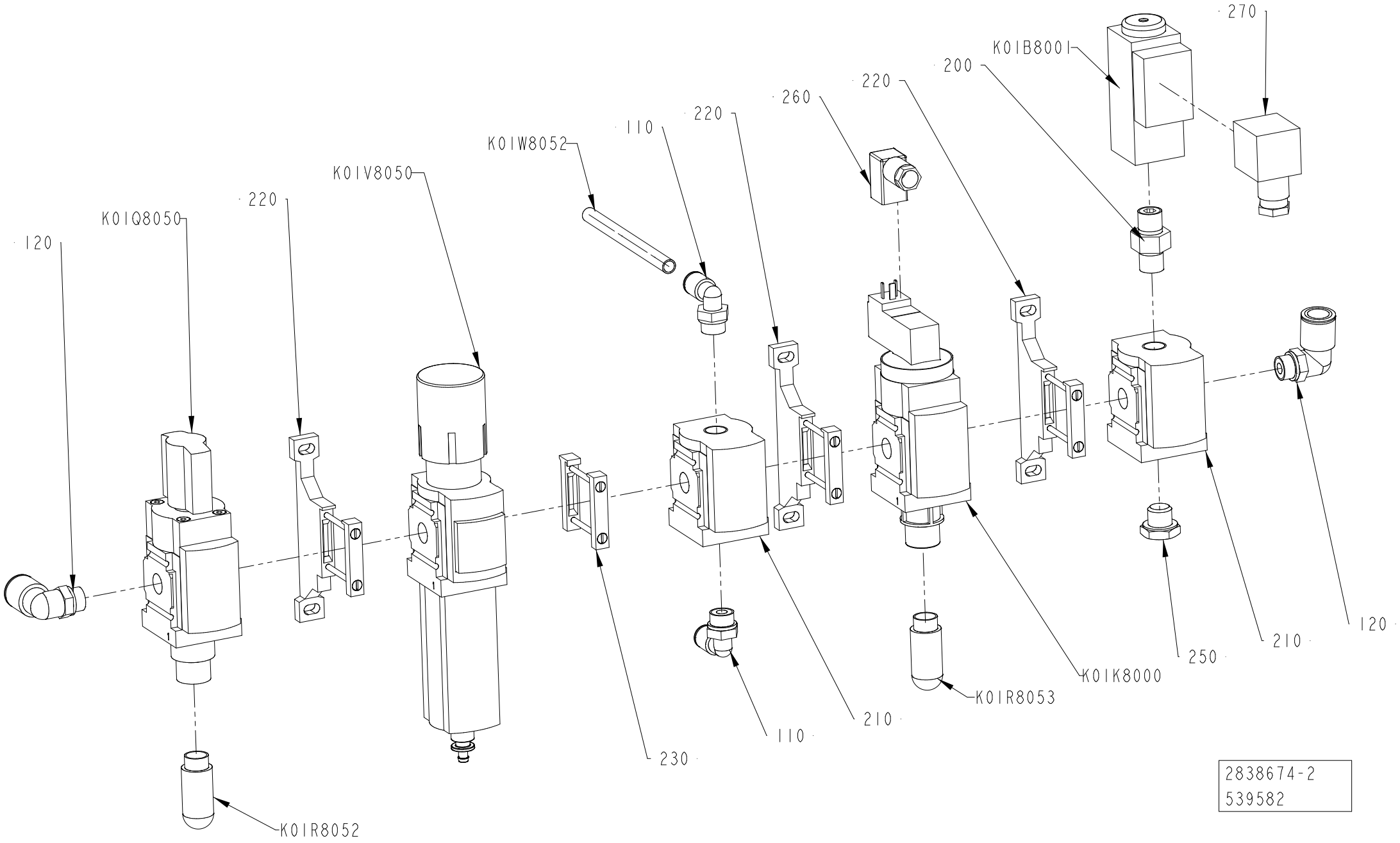
270
K01B8001
200
220
260
220
110
K01W8052
K01V8050
220
K01Q8050
120
K01R8052
230
110
210
K01R8053
K01K8000
250
210
120
2838674-2
539582

ECM: 713807
Group number: 2838674-0200
Assembly Drawing: 2838674-2_1_AB

Pos	Part No	Description	Qty	Unit	Page No
Common Parts					
110	351456-3007	PUSH-IN L-FITTING NPQH-L-G14-Q8-P10	2	PC	
120	351456-3005	PUSH-IN L-FITTING NPQH-L-G14-Q12-P10	2	PC	
200	90224-0372	NIPPLE, EXT.THREAD, HEXAGON, R1/4-R1/4	1	PC	
210	90459-2245	DISTRIBUTOR, MS4-FRM-1/4	2	PC	
220	90459-2247	BRACKET, MS4-WP	3	PC	
230	90459-2248	BRACKET	1	PC	
240	90224-0372	NIPPLE, EXT.THREAD, HEXAGON, R1/4-R1/4	1	PC	
250	90330-0026	PLUG, EXT. G-THREAD, G1/4	1	PC	
260	90458-2837	CONNECTING CABLE KMEB-1-24-5-LED	1	PC	
270	90110-0095	CONNECTOR, PLUG SOCKET, MSSD-C-4P	1	PC	
K01B8001	90459-6426	PRESSURE GUARD PEV-1/4-B-OD	1	PC	
K01K8000	90459-2243	VALVE, MS4-EE-1/4-10V24	1	PC	
K01Q8050	90459-2337	SHUT OFF VALVE, MS4-EM1-1/4	1	PC	
K01R8052	90328-0026	SILENCER, G1/4"	1	PC	
K01R8053	90328-0026	SILENCER, G1/4"	1	PC	
K01V8050	90459-2339	FILTER REGULATOR, MS4-LFR-1/4-D7-ERV-AS	1	PC	362
K01W8052	315400-0004	TUBE PUN-H-8X1,25-BL	1000	MM	

Pos	Part No	Description	Qty	Unit	Page No

This page intentionally left blank

ECM: 290658
Group number: 90459-2339
Assembly Drawing: -

Pos	Part No	Description	Qty	Unit	Page No
Common Parts					
	90459-3814	FILTER CARTRIDGE, MS4-LFP-E	1	PC	

Pos. 030 in BoM 2758513-0300

AIR JET GUN

Drawing file:2838686-2_1_AD

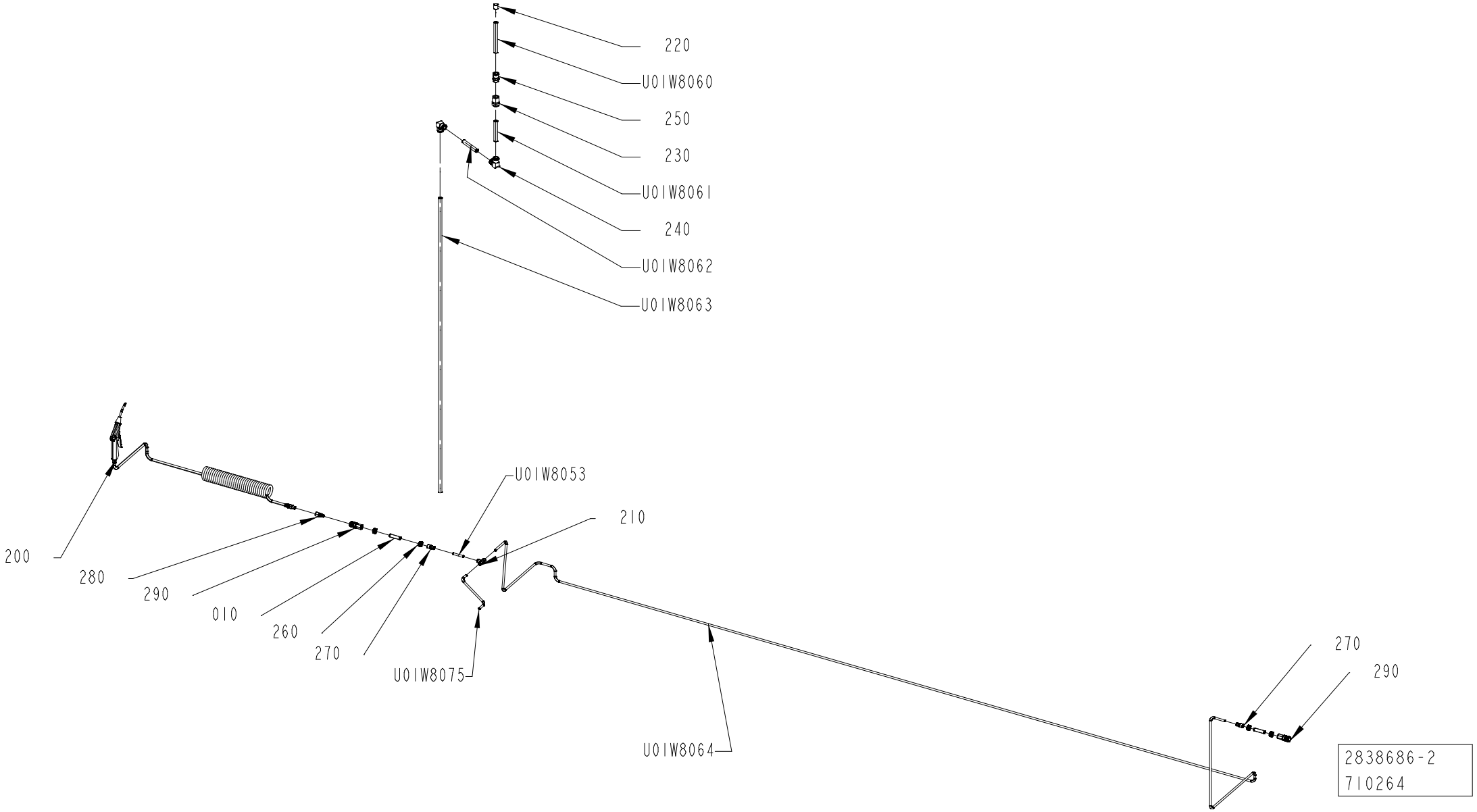

ECM: 713926
Group number: 2838686-0200
Assembly Drawing: 2838686-2_1_AD

Pos	Part No	Description	Qty	Unit	Page No
CAP 30/FLEX					
U01W8060	315400-0013	TUBE PUN-H-16-2,5-BL	650	MM	
U01W8064	315400-0004	TUBE PUN-H-8X1,25-BL	6500	MM	
U01W8075	315400-0004	TUBE PUN-H-8X1,25-BL	2000	MM	
Common Parts					
010	3293084-0000	THREADED CONNECTION	2	PC	
200	90458-1740	AIR GUN ASSEMBLY, CEJN 199589668	1	PC	
210	351456-5109	PUSH-IN T-FITTING NPQH-T-Q8-E-P10	1	PC	
220	90459-7373	MARKING FOR PNEUM. TUBING, PRZ16	1	PC	
230	90459-0864	BULKHEAD CONNECTOR, 12 MM/M27X1,5	1	PC	
240	90459-2553	PUSH-IN L-FITTING QSL 16	2	PC	
250	90459-2215	STRAIGHT COUPLING, D=16 MM - G1/2"	1	PC	
260	6-526343 02	HEXAGON NUT DN8 RP1/4" 1.4404	4	PC	
270	351456-0506	PUSH-IN FITTING NPQH-D-G14F-Q8-P10	2	PC	
280	90459-2254	QUICK COUPLING, (M) 10 320 5202	1	PC	
290	90606-5416	QUICK COUPLING, (F) 25KAIW13SPN	2	PC	
U01W8053	315400-0004	TUBE PUN-H-8X1,25-BL	500	MM	
U01W8061	315400-0013	TUBE PUN-H-16-2,5-BL	500	MM	
U01W8062	315400-0013	TUBE PUN-H-16-2,5-BL	500	MM	
U01W8063	315400-0013	TUBE PUN-H-16-2,5-BL	2000	MM	

Pos	Part No	Description	Qty	Unit	Page No

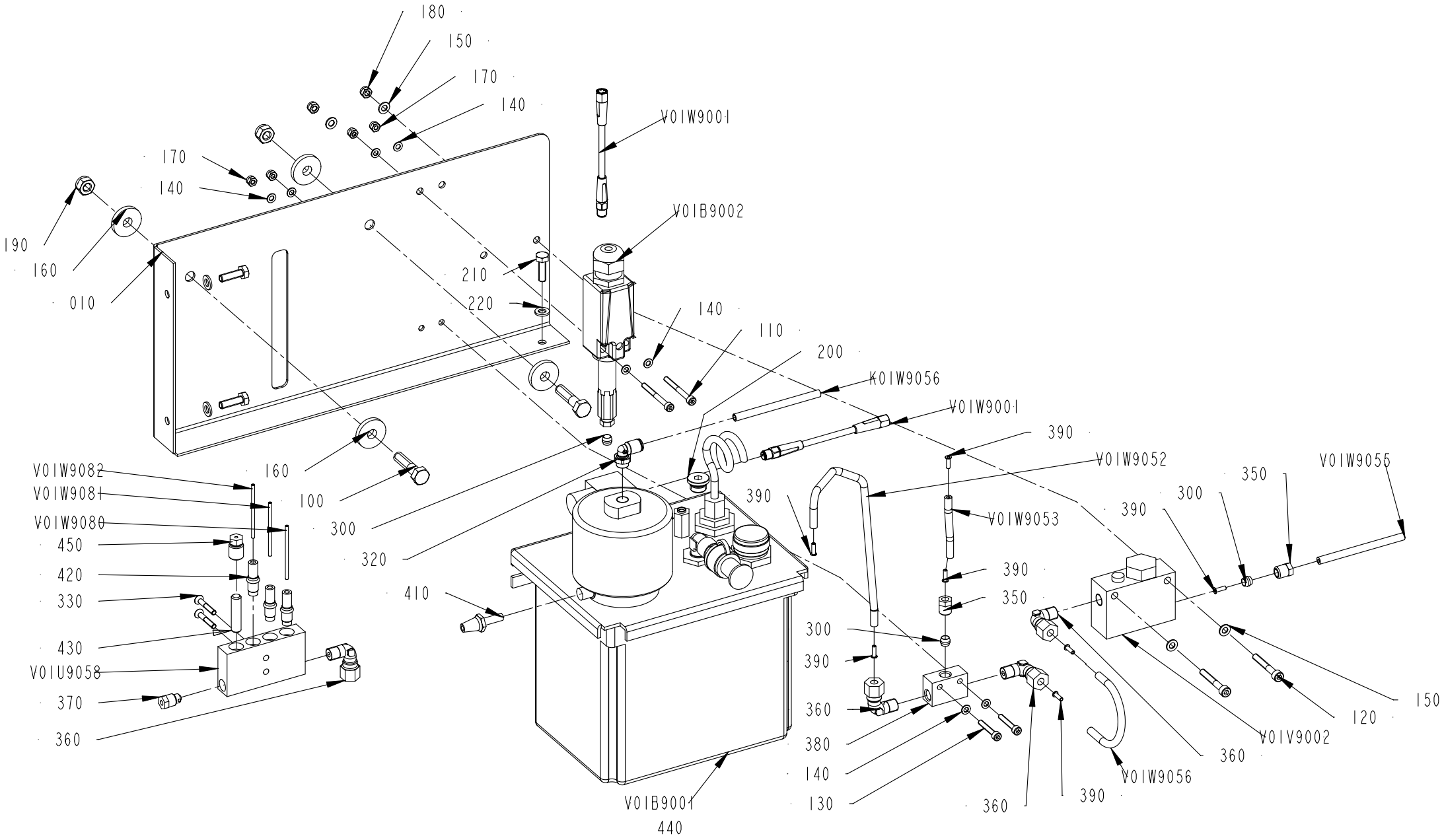
180
150
170
140
V01W9001
170
140
190
160
010
V01B9002
210
220
140
110
200
K01W9056
V01W9001
390
V01W9052
V01W9055
350
300
390
V01W9053
390
350
300
390
360
380
140
130
360
390
V01W9056
V01V9002
360
120
150
V01W9082
V01W9081
V01W9080
450
420
330
430
V01U9058
370
360
160
100
300
320
410
390
V01B9001
440

ECM: 842481
Group number: 3208664-0200
Assembly Drawing: 3208664-2_1_AB

Pos	Part No	Description	Qty	Unit	Page No
Common Parts					
010	3428086-0000	SUPPORT	1	PC	
100	312105-0457	SCREW, M6S ISO 4014 M8X35 A4 80	2	PC	
110	312115-0303	SCREW ISO4762 M4X40 A4 80	2	PC	
120	312115-0337	SCREW ISO4762 M5X35 A4 80	2	PC	
130	312115-0297	SCREW ISO4762 M4X25 A4 80	2	PC	
140	315105-0136	WASHER PLAIN, 4,3X8X0,8 A4 BRB	8	PC	
150	315105-0146	WASHER PLAIN, 5,3X10X1 A4 BRB	4	PC	
160	315125-0165	WASHER HIGH, TBRSB 8,4X26X5 A4	4	PC	
170	312812-0312	HEXAGON NUT, NY-LOCK M4 A4 80	4	PC	
180	312812-0314	HEXAGON NUT, NY-LOCK M5 A4 80	2	PC	
190	312812-0318	HEXAGON NUT, NY-LOCK M8 A4 80	2	PC	
200	90604-6027	PLUG, EXT. THREAD HEX. SOCKET. G1/4	1	PC	
210	312105-0370	SCREW, M6S ISO 4017 M6X20 A4 80	3	PC	
220	315105-0153	WASHER PLAIN, 6,4X12X1,5 A4 BRB	3	PC	
300	90028-0022	CONE TUBE 6 MM	3	PC	
320	90606-5755	ELBOW PIPE JOINT,EXT.THREAD,D=6MM M10X1	1	PC	
330	312155-0297	SCREW DIN 7991 MF6S M4X25 A4 70	2	PC	
350	90134-0055	BUSHING/NUT INLET/OUTLET 6 MM	2	PC	
360	90030-0200	CONN. ELBOW, WE06LM71	4	PC	
370	90087-0019	PLUG M10X1 STAINLESS	1	PC	
380	90032-0043	DISTRIBUTION BLOCK 3 WAYS	1	PC	
390	90134-0030	SLEEVE FOR PLASTIC TUBE	7	PC	
410	90328-0017	SILENCER, D=6 MM74122000	1	PC	
420	90092-0054	METERING VALVE 2.801258.1	3	PC	
430	90134-0052	PLUG DOSING BLOCK	1	PC	
440	1607050-0000	DRY LUBRICANT DLT-333, BOM ONLY	1	KG	368
450	90134-0039	BUSHING VALVE CONNECTION 2,5 MM	1	PC	
K01W9056	315400-0001	TUBE PUN-H-6X1-BL	200	MM	
V01B9001	90603-0408	LUBRICATION UNIT, 10P-P4-H1 LM12	1	PC	370
V01B9002	90603-1938	PRESSURE SWITCH, 1800 KPA, 28545-251-2	1	PC	
V01U9058	90032-0039	BLOCK 4 WAYS	1	PC	
V01V9002	90415-0030	OIL FILTER PN 100 ORD.NO 2.77 10 70.1	1	PC	372
V01W9001	344257-0050	SENSOR CABLE, EVT146	1	PC	
V01W9002	344257-0050	SENSOR CABLE, EVT146	1	PC	
V01W9052	344342-0060	TUBE 6 MM APA TRANSP	200	MM	
V01W9053	344342-0060	TUBE 6 MM APA TRANSP	200	MM	
V01W9055	344342-0060	TUBE 6 MM APA TRANSP	1	M	
V01W9056	344342-0060	TUBE 6 MM APA TRANSP	1	M	
V01W9080	90166-0143	TUBE 2,5 MM PA TRANSP.	3	M	
V01W9081	90166-0143	TUBE 2,5 MM PA TRANSP.	3	M	
V01W9082	90166-0143	TUBE 2,5 MM PA TRANSP.	3	M	

This page intentionally left blank

ECM: 814422
Group number: 1607050-0000
Assembly Drawing: -

Pos	Part No	Description	Qty	Unit	Page No
Common Parts					
	1607050-0005	DRY LUBRICANT DLT-333, 5 L CANISTER	1	PC	

Pos	Part No	Description	Qty	Unit	Page No

This page intentionally left blank

ECM: 746727
Group number: 90603-0408
Assembly Drawing: -

Pos	Part No	Description	Qty	Unit	Page No
Common Parts					
	90606-8122	QUICK COUPLING, (M)52SBAW13SPN	1	PC	
	90604-6568	AIR VENT, 90605-9354 LM12	1	PC	
	90604-6566	CAP, MTC/Z-1/2	1	PC	
	90604-5445	PISTON PUMP, 90048-041 H1	1	PC	
	90274-0052	LEVEL GUARD, 2.855435.1	1	PC	

Pos	Part No	Description	Qty	Unit	Page No

This page intentionally left blank

ECM: 203535
Group number: 90415-0030
Assembly Drawing: -

Pos	Part No	Description	Qty	Unit	Page No
Common Parts					
	90415-0326	FILTER INSERT	1	PC	

Pos	Part No	Description	Qty	Unit	Page No

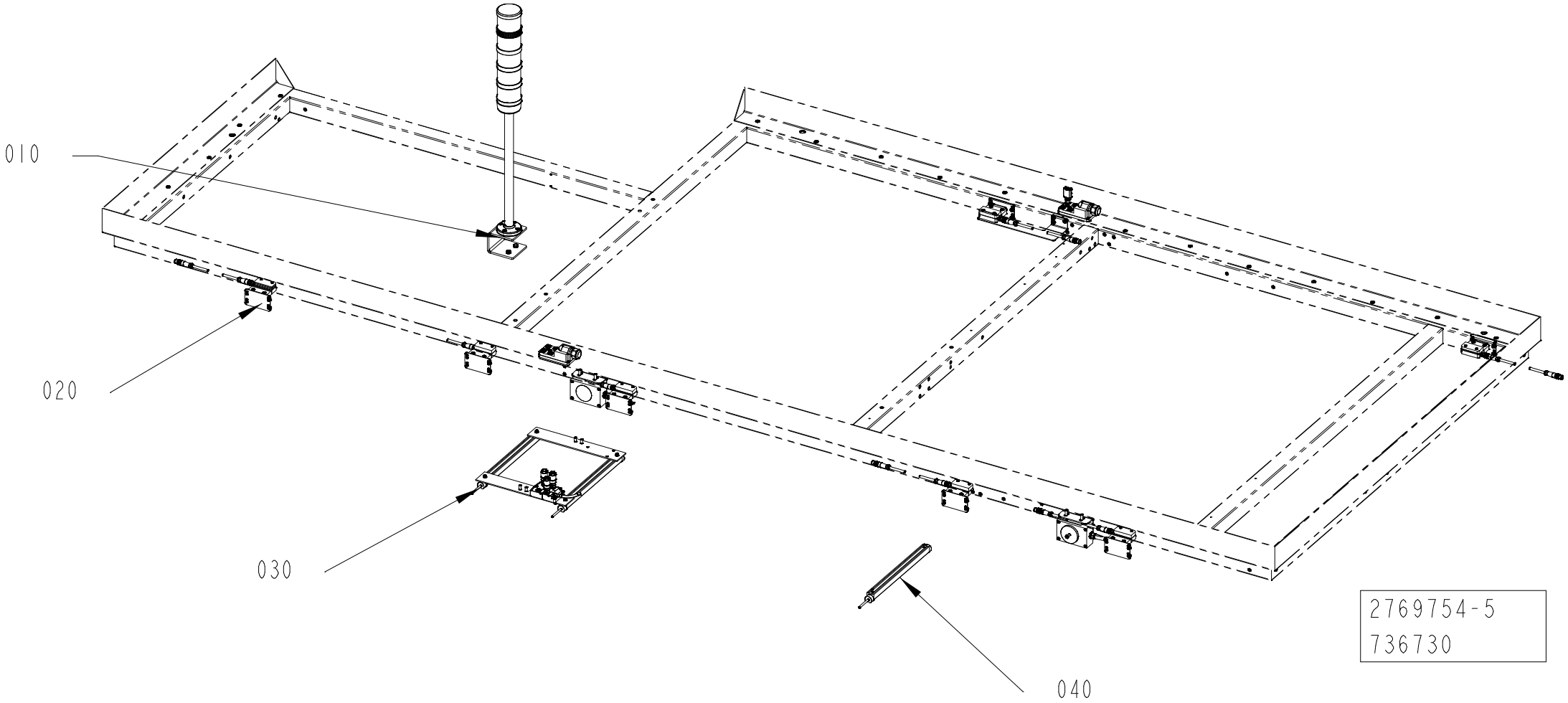
010
020
030
040
2769754-5
736730

ECM: 742579
Group number: 2769754-0400
Assembly Drawing: 2769754-5_1_AA

Pos	Part No	Description	Qty	Unit	Page No
TGA					
060	2873922-0300	CABLE	1	PC	376
Common Parts					
010	3416656-0100	WARNING LAMP	1	PC	378
020	2805700-0400	DOOR SAFETY SWITCH	1	PC	380, 382
030	3210206-0200	LAMP	1	PC	384
040	3210207-0100	LAMP	1	PC	386
050	2873950-0300	CABLE SET	1	PC	388

This page intentionally left blank

ECM: 740005
Group number: 2873922-0300
Assembly Drawing: -

Pos	Part No	Description	Qty	Unit	Page No
Common Parts					
G70W1000	351450-1409	POWER/ENCODER CABLE 2090-CSWM1DF-14AA09	1	PC	
G70X1001	90604-8704	CONNECTOR, 2090-K6CK-D15M, SERIE B	1	PC	

Pos	Part No	Description	Qty	Unit	Page No

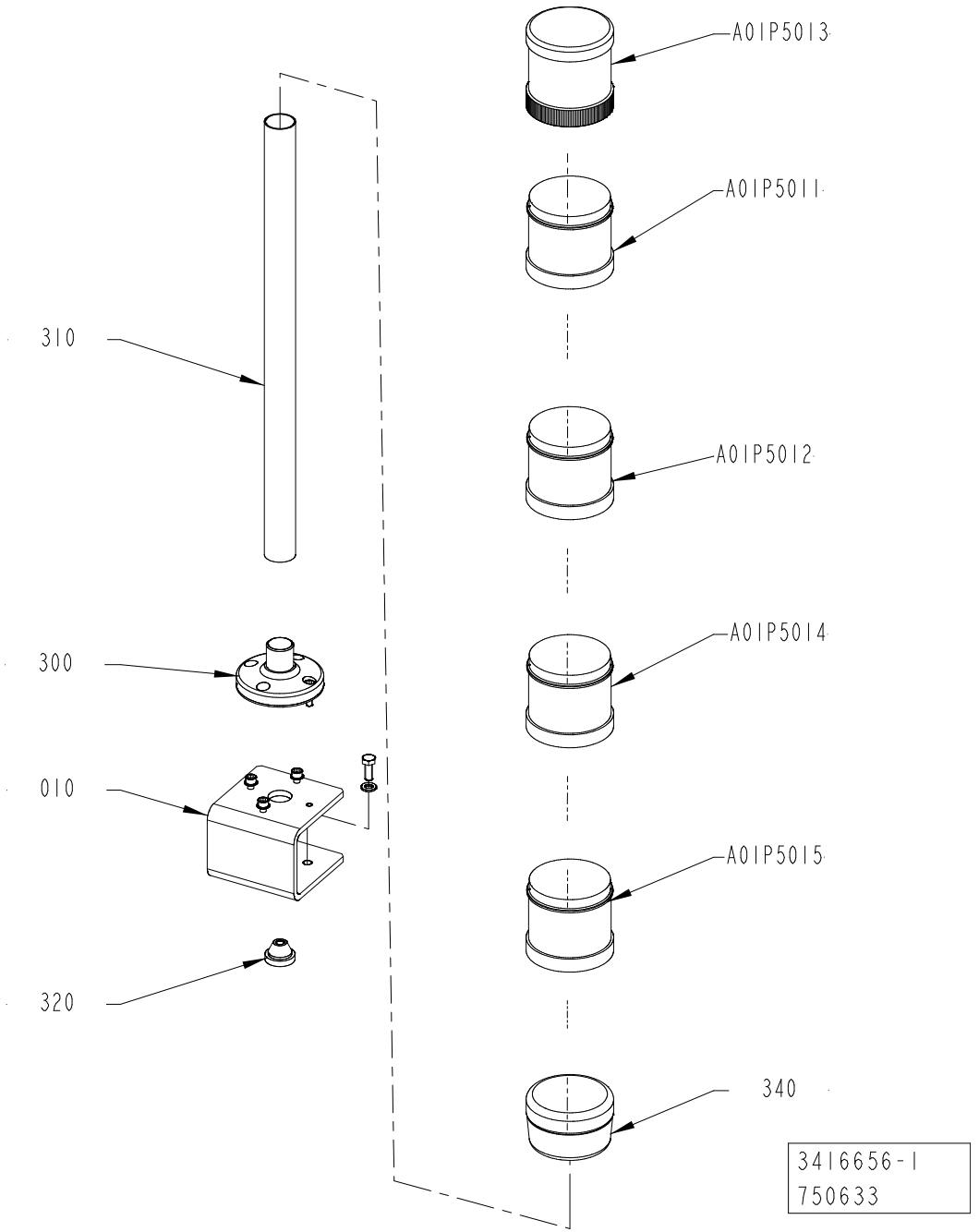
A01P5013
A01P5011
310
A01P5012
300
A01P5014
010
A01P5015
320
340
3416656-1
750633

ECM: 751477
Group number: 3416656-0100
Assembly Drawing: 3416656-1_1_AA

Pos	Part No	Description	Qty	Unit	Page No
Common Parts					
010	3416667-0000	PLATE	1	PC	
300	90458-0298	BASE FOR TUBE, PSD-S ME B-P	1	PC	
310	90458-0725	TUBE 400MM, PSD-S ME T-M 400	1	PC	
320	90015-0023	LEAD-IN, TET 7-10, E1458019	1	PC	
340	90602-4627	TERMINAL ELEMENT, PSD-S CE-TM SPRING	1	PC	
490	312105-0368	SCREW, M6S ISO 4017 M6X16 A4 80	2	PC	
500	312115-0329	SCREW ISO4762 M5X16 A4 80	4	PC	
510	315106-0146	"WASHER PLAIN, M5 ISO7089-5-200 HV A4"	4	PC	
520	315105-0153	WASHER PLAIN, 6,4X12X1,5 A4 BRB	2	PC	
A01P5011	90602-4062	LIGHT ELEMENT, RED, PSD-S OE LED RD	1	PC	
A01P5012	90602-4063	LIGHT ELEMENT, YELLOW, PSD-S OE LED YE	1	PC	
A01P5013	90602-4631	SIREN 100DB, PSD-S AE SM8-5 100DB/1	1	PC	
A01P5014	90602-4060	LIGHT ELEMENT, BLUE, PSD-S OE LED BU	1	PC	
A01P5015	90602-4061	LIGHT ELEMENT, GREEN, PSD-S OE LED GN	1	PC	

Pos	Part No	Description	Qty	Unit	Page No

Pos. 020 in BoM 2769754-0400

DOOR SAFETY SWITCH

Drawing file:2805700-8_1_AB

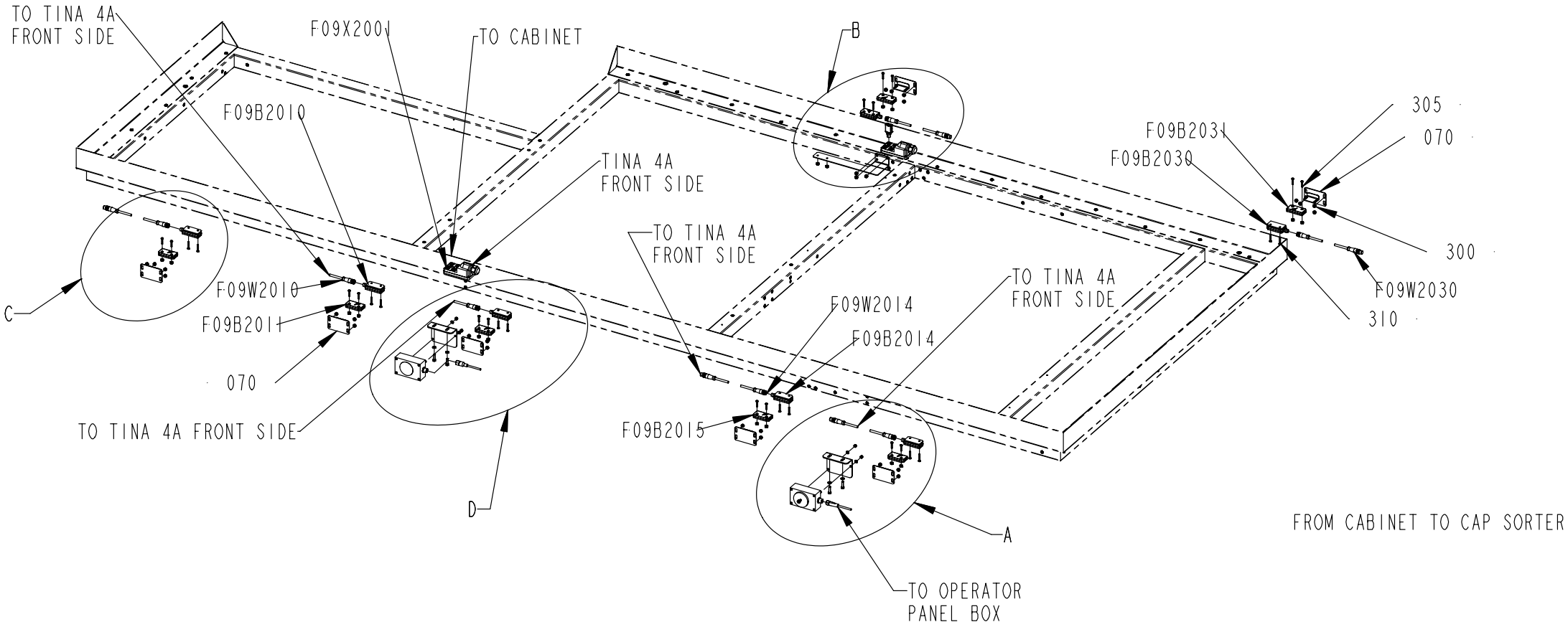

ECM: 882976
Group number: 2805700-0400
Assembly Drawing: 2805700-8_1_AB

This list refers to drawings on pages 380 to 382

Pos	Part No	Description	Qty	Unit	Page No
STREAMCAP500, STREAMCAP1000, SLIMCAP 2000, SLIMCAP 1000, STREAMCAP200, HELICAP2 23, HELICAP 27					
See page: 380, 382					
300	1539391-0000	ROUND NUT	44	PC	
320	312605-0314	HEXAGON NUT, M6M M5 A280	4	PC	
330	312105-0370	SCREW, M6S ISO 4017 M6X20 A4 80	4	PC	
350	315105-0153	WASHER PLAIN, 6,4X12X1,5 A4 BRB	4	PC	
360	315105-0146	WASHER PLAIN, 5,3X10X1 A4 BRB	4	PC	
Common Parts					
010	2781283-0000	BRACKET	2	PC	
030	3425304-0000	SUPPORT	1	PC	
070	3424558-0000	SUPPORT	7	PC	
305	90459-4164	SAFETY SCREW, SM4X20, 2TLA020053R4200	14	PC	
310	90459-4165	SAFETY SCREW, SM4X25, 2TLA020053R4300	14	PC	
390	575034-0000	ROUND NUT	3	PC	
F09B2010	90606-4580	SAFETY SENSOR, ADAM M12-5 DYN-INFO	1	PC	
F09B2011	90606-4582	SAFETY SENSOR, EVA GENERAL CODE	1	PC	
F09B2012	90606-4580	SAFETY SENSOR, ADAM M12-5 DYN-INFO	1	PC	
F09B2013	90606-4582	SAFETY SENSOR, EVA GENERAL CODE	1	PC	
F09B2014	90606-4580	SAFETY SENSOR, ADAM M12-5 DYN-INFO	1	PC	
F09B2015	90606-4582	SAFETY SENSOR, EVA GENERAL CODE	1	PC	
F09B2016	90606-4580	SAFETY SENSOR, ADAM M12-5 DYN-INFO	1	PC	
F09B2017	90606-4582	SAFETY SENSOR, EVA GENERAL CODE	1	PC	
F09B2030	90606-4580	SAFETY SENSOR, ADAM M12-5 DYN-INFO	1	PC	
F09B2031	90606-4582	SAFETY SENSOR, EVA GENERAL CODE	1	PC	
F09B2032	90606-4580	SAFETY SENSOR, ADAM M12-5 DYN-INFO	1	PC	
F09B2033	90606-4582	SAFETY SENSOR, EVA GENERAL CODE	1	PC	
F09B2034	90606-4580	SAFETY SENSOR, ADAM M12-5 DYN-INFO	1	PC	
F09B2035	90606-4582	SAFETY SENSOR, EVA GENERAL CODE	1	PC	
F09B2036	90459-5627	CONNECTION, TINA 1A, 2TLA020054R0000	1	PC	
F09B2041	90459-6913	MAGNETIC LOCK, JSD-ZH-EM1-K	1	PC	
F09B2042	90459-6913	MAGNETIC LOCK, JSD-ZH-EM1-K	1	PC	
F09W2010	90459-7095	CABLE M12-C112, 2TLA020056R2000	1	PC	
F09W2012	90459-7095	CABLE M12-C112, 2TLA020056R2000	1	PC	
F09W2014	90459-4876	CABLE M12-C312 2TLA020056R2100	1	PC	
F09W2016	90459-4876	CABLE M12-C312 2TLA020056R2100	1	PC	
F09W2030	90459-4876	CABLE M12-C312 2TLA020056R2100	1	PC	
F09W2032	90459-4876	CABLE M12-C312 2TLA020056R2100	1	PC	
F09W2034	90459-4876	CABLE M12-C312 2TLA020056R2100	1	PC	
F09W2041	344253-0100	SENSOR CABLE, EVT002	1	PC	
F09W2042	344253-0100	SENSOR CABLE, EVT002	1	PC	
F09X2001	90604-0093	CONNECTION BLOCK, TINA4A 2TLA020054R0300	1	PC	
F09X2002	90604-0093	CONNECTION BLOCK, TINA4A 2TLA020054R0300	1	PC	

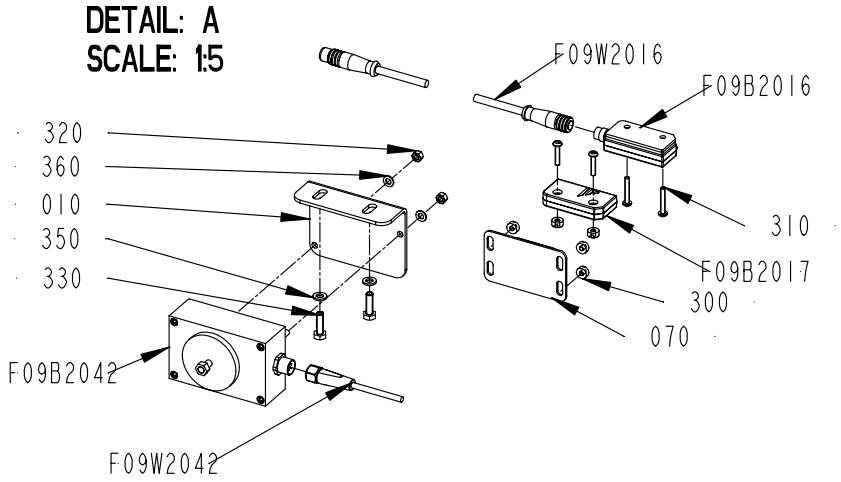
DETAIL: A
SCALE: 1:5
320
360
010
350
330
F09B2042
F09W2042
F09W2016
F09B2016
310
F09B2017
300
070

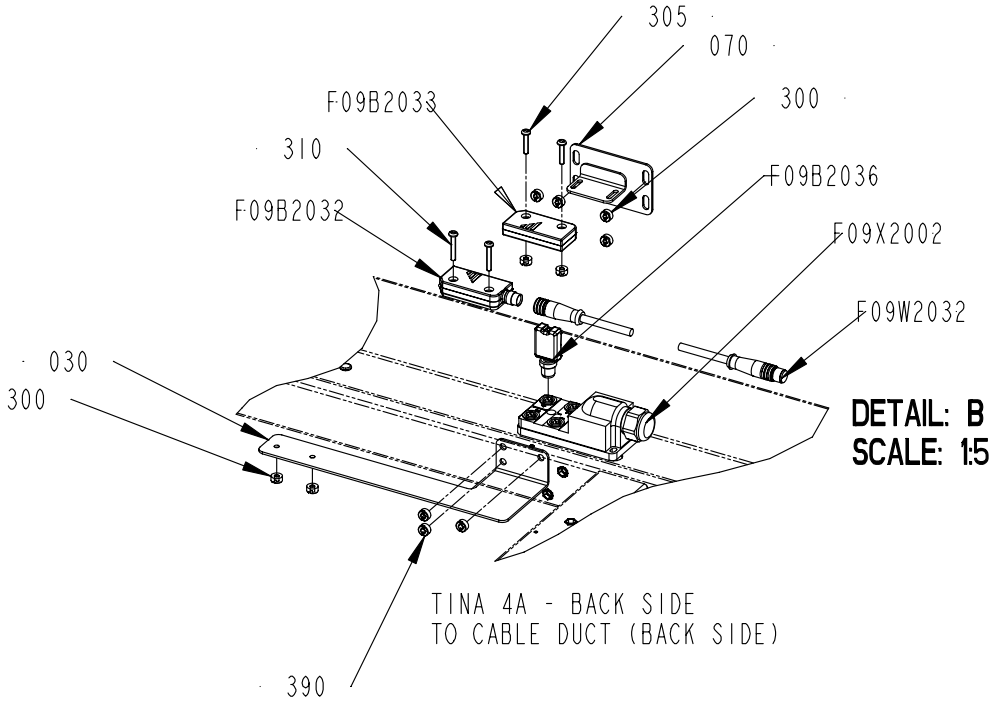
305
070
F09B2033
300
310
F09B2036
F09B2032
F09X2002
F09W2032
030
300
DETAIL: B
SCALE: 1:5
TINA 4A - BACK SIDE
TO CABLE DUCT (BACK SIDE)
390

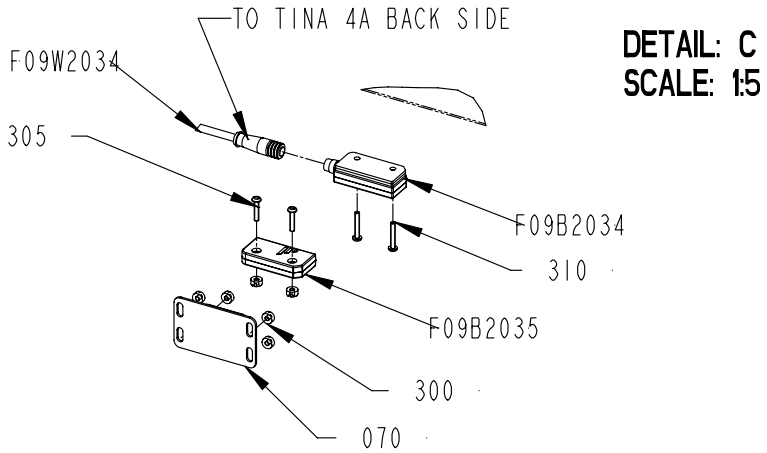
TO TINA 4A BACK SIDE
F09W2034
305
DETAIL: C
SCALE: 1:5
F09B2034
310
F09B2035
300
070

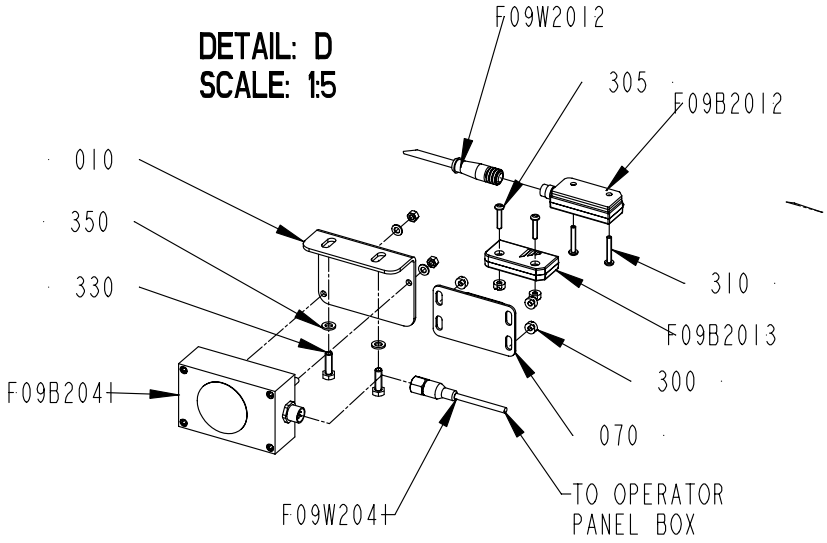
DETAIL: D
SCALE: 1:5
F09W2012
305
F09B2012
010
350
330
310
F09B2013
300
F09B2041
070
F09W2041
TO OPERATOR
PANEL BOX

This list refers to drawings on pages 380 to 382

Pos	Part No	Description	Qty	Unit	Page No

SEE LIST FOLLOWING DRAWING ON PAGE: 380

Pos	Part No	Description	Qty	Unit	Page No

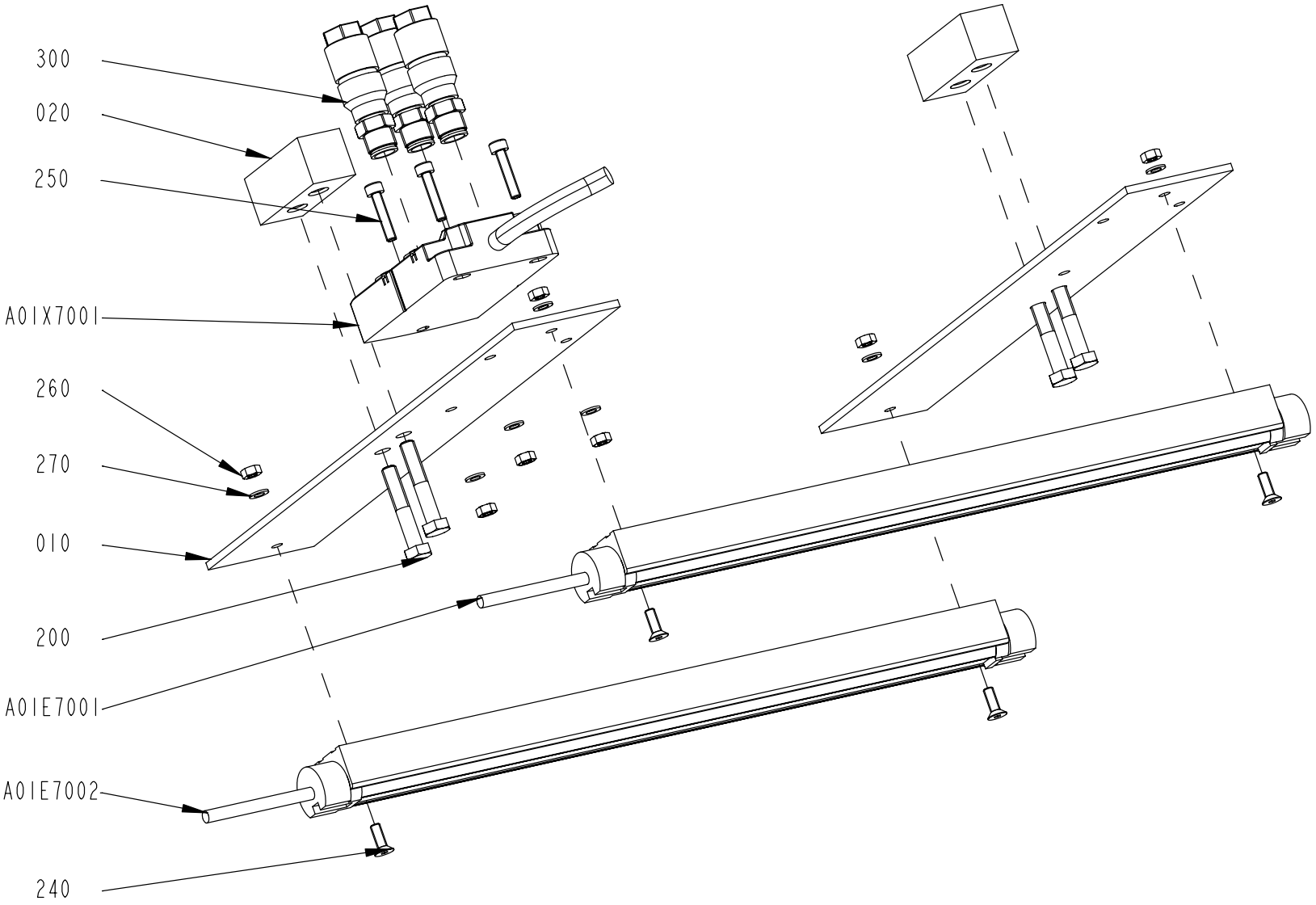

3210206-2
822408

ECM: 826007
Group number: 3210206-0200
Assembly Drawing: 3210206-2_1_AB

Pos	Part No	Description	Qty	Unit	Page No
Common Parts					
010	3426672-0000	PLATE	2	PC	
020	3210208-0000	SPACER	2	PC	
200	312105-0368	SCREW, M6S ISO 4017 M6X16 A4 80	4	PC	
240	312155-0291	SCREW DIN 7991 MF6S M4X12 A4 70	4	PC	
250	312115-0295	SCREW ISO4762 M4X20 A4 80	3	PC	
260	312607-0312	HEXAGON NUT, EN 24032 M6M M4 A480	7	PC	
270	315105-0136	WASHER PLAIN, 4,3X8X0,8 A4 BRB	7	PC	
300	90603-5569	CONNECTOR, SACC-M12MS-4QO-0,75-VA	3	PC	
A01E7001	90606-7666	SLIM LED LIQ 12 LIGHT FIXTURE	1	PC	
A01E7002	90606-7666	SLIM LED LIQ 12 LIGHT FIXTURE	1	PC	
A01X7001	90606-1698	SPLITTER BOX, EBC026	1	PC	

Pos	Part No	Description	Qty	Unit	Page No

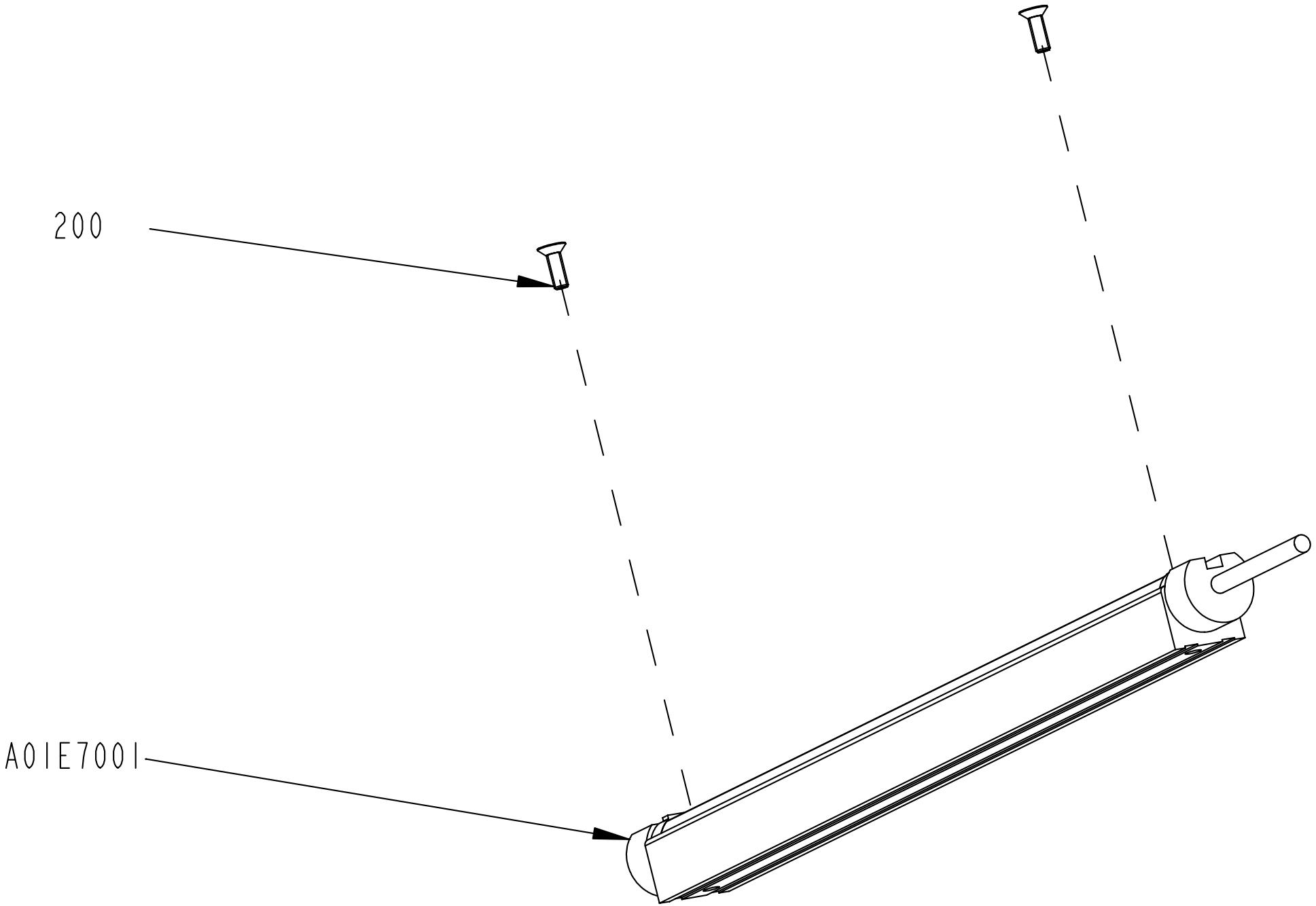
200
A01E7001

ECM: 861256
Group number: 3210207-0100
Assembly Drawing: 3210207-1_1_AC

Pos	Part No	Description	Qty	Unit	Page No
Common Parts					
200	312155-0291	SCREW DIN 7991 MF6S M4X12 A4 70	2	PC	
A01E7001	90606-7666	SLIM LED LIQ 12 LIGHT FIXTURE	1	PC	

Pos	Part No	Description	Qty	Unit	Page No

This page intentionally left blank

ECM: 895243
Group number: 2873950-0300
Assembly Drawing: -

Pos	Part No	Description	Qty	Unit	Page No
TGA, TBA SLIMCAP1000, TBA STREAMCAP1000, TBA SLIMCAP 2000, TBA STREAMCAP200, TBA HELICAP2 23, TBA HELICAP 27, TPA					
20	344375-0012	CABLE SHOE RING, 4-6MM2 M4 YELLOW	1	PC	
C50W0004	351150-0405	CABLE OLFLEX 5X0,75 MM2 LIGHT/GREY	10	M	
C50W0010	315743-0009	OLFLEX CONTROL TM 4G1,5, 281604	9	M	
C50W1010	315756-0009	OLFLEX CONTROL TM CY 4G1,5, 281604CY	9	M	
C50W2000	351162-0107	WIRE AWM 1X6 MM2 YELLOW-GREEN	13	M	
F09W2030	90459-4252	CABLE M12-C101, 2TLA020056R1000	1	PC	
G40W0000	351450-1409	POWER/ENCODER CABLE 2090-CSWM1DF-14AA09	1	PC	
G40W0002	351450-1409	POWER/ENCODER CABLE 2090-CSWM1DF-14AA09	1	PC	
G40W3000	351450-1409	POWER/ENCODER CABLE 2090-CSWM1DF-14AA09	1	PC	
G40W4010	315743-0009	OLFLEX CONTROL TM 4G1,5, 281604	7	M	
G40X0001	90604-8704	CONNECTOR, 2090-K6CK-D15M, SERIE B	1	PC	
G40X0003	90604-8704	CONNECTOR, 2090-K6CK-D15M, SERIE B	1	PC	
G40X3001	90604-8704	CONNECTOR, 2090-K6CK-D15M, SERIE B	1	PC	
TPA					
W21W4010	315756-0009	OLFLEX CONTROL TM CY 4G1,5, 281604CY	11	M	
Common Parts					
A01W5010	351150-0406	CABLE OLFLEX 7X0,75 MM2 LIGHT/GREY	5.500	M	
A01W7001	351150-0403	CABLE OLFLEX 3X0,75 MM2 LIGHT/GREY 35	5	M	
A01W7002	351150-0403	CABLE OLFLEX 3X0,75 MM2 LIGHT/GREY 35	9	M	
F09W1003	351150-0405	CABLE OLFLEX 5X0,75 MM2 LIGHT/GREY	11	M	
F09W2001	351423-0006	CABLE UNITRONIC LIYCY 5X0,34	8	M	
F09W2002	351423-0006	CABLE UNITRONIC LIYCY 5X0,34	5	M	
G30W0000	351450-1409	POWER/ENCODER CABLE 2090-CSWM1DF-14AA09	1	PC	
G30W4000	351450-1409	POWER/ENCODER CABLE 2090-CSWM1DF-14AA09	1	PC	
G30X0001	90604-8704	CONNECTOR, 2090-K6CK-D15M, SERIE B	1	PC	
G30X4001	90604-8704	CONNECTOR, 2090-K6CK-D15M, SERIE B	1	PC	
K01W8000	351150-0403	CABLE OLFLEX 3X0,75 MM2 LIGHT/GREY 35	2	M	
K01W8001	351150-0403	CABLE OLFLEX 3X0,75 MM2 LIGHT/GREY 35	2	M	
P01W4001	351150-0424	CABLE OLFLEX 18X0,75 MM2 LIGHT/GREY	8	M	
V01W5000	315743-0024	OLFLEX CONTROL TM 5G6, 281005	8	M	
W20W0000	351450-1409	POWER/ENCODER CABLE 2090-CSWM1DF-14AA09	1	PC	
W21W1000	351450-1409	POWER/ENCODER CABLE 2090-CSWM1DF-14AA09	1	PC	
W21W2000	351450-1409	POWER/ENCODER CABLE 2090-CSWM1DF-14AA09	1	PC	
W21W4000	315756-0009	OLFLEX CONTROL TM CY 4G1,5, 281604CY	18	M	
W21W8000	315743-0008	OLFLEX CONTROL TM 3G1,5, 281603	6	M	
W21W8001	351424-0017	CABLE OLFLEX HEAT 180 4G4 466343	5	M	
W21X1001	90604-8704	CONNECTOR, 2090-K6CK-D15M, SERIE B	1	PC	
W21X2001	90604-8704	CONNECTOR, 2090-K6CK-D15M, SERIE B	1	PC	

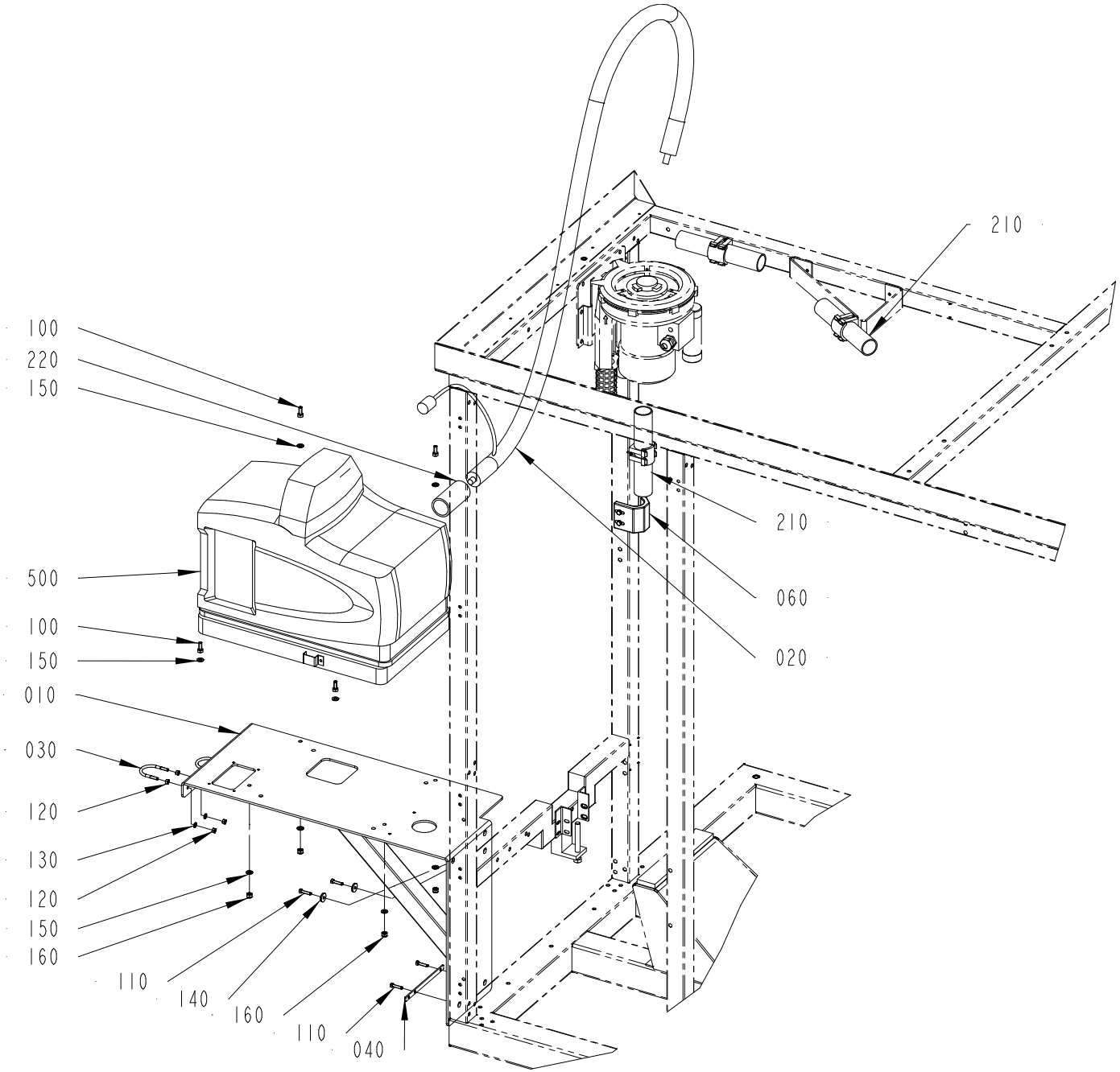
100
220
150
500
100
150
010
030
120
130
120
150
160
110
140
160
110
040
210
210
060
020

ECM: 793998
Group number: 2758511-0400
Assembly Drawing: 2758511-7_1_AA

Pos	Part No	Description	Qty	Unit	Page No
Common Parts					
010	3427691-0000	SUPPORT	1	PC	
020	90606-8121	RTD HOT MELT HOSE, FREEDOM, 1121311	1	PC	
030	531616-0000	HOLDER	2	PC	
040	2874024-0000	BRACKET	1	PC	
060	3216184-0000	TIGHTENING CLAMP	1	PC	
100	312105-0451	SCREW, M6S ISO 4017 M8X20 A4 80	4	PC	
110	312105-0372	SCREW, M6S ISO 4017 M6X25 A4 80	6	PC	
120	312605-0316	HEXAGON NUT, M6M M6 A280	8	PC	
130	315105-0153	WASHER PLAIN, 6,4X12X1,5 A4 BRB	6	PC	
140	315125-0153	WASHER HIGH, TBRSB 6,4X22X4 A4	2	PC	
150	315105-0165	FWAS080G0-0S, WASHER PLAIN	8	PC	
160	312812-0318	HEXAGON NUT, NY-LOCK M8 A4 80	4	PC	
210	90439-0295	SERVICE KIT, NO. 111940	3	PC	
220	90606-2532	INSULATING HOSE CUFF, 1043366	1	PC	
500	3451445-0100	HOTMELT UNIT	1	PC	392

Pos	Part No	Description	Qty	Unit	Page No

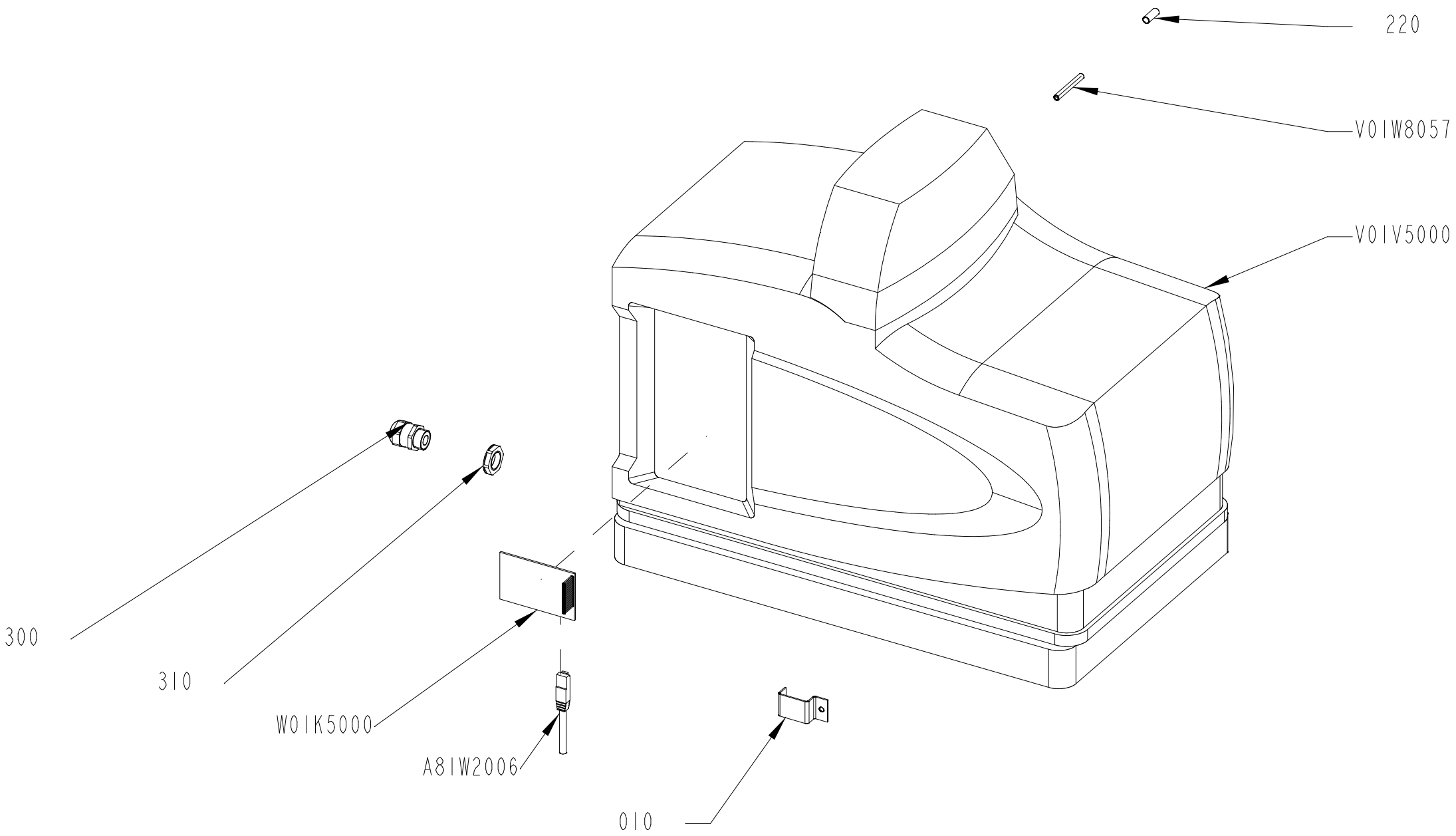
220
V01W8057
V01V5000
300
310
W01K5000
A8IW2006
010

ECM: 794002
Group number: 3451445-0100
Assembly Drawing: 3451445-1_1_AA

Pos	Part No	Description	Qty	Unit	Page No
STREAMCAP500, STREAMCAP1000, SLIMCAP 2000, SLIMCAP 1000, STREAMCAP200, HELICAP2 23, HELICAP 27					
300	90458-0307	CABLE GLAND, M20X1,5, 5311 1020	1	PC	
310	90458-0323	NUT, M20X1,5	1	PC	
A81W2006	351501-0100	ETHERNET PATCH CABLE, FL CAT5 PATCH 10,0	1	PC	
W01K5000	90606-4010	ETHERNET/IP CARD, 1053289	1	PC	
Common Parts					
010	3291724-0000	COVER	1	PC	
220	90459-7369	MARKING FOR PNEUM. TUBING, PRZ06	1	PC	
V01V5000	90604-3320	HOT MELT UNIT PROBLUE 4, 104 9296 H1	1	PC	394
V01W8057	315400-0001	TUBE PUN-H-6X1-BL	1	M	

Pos	Part No	Description	Qty	Unit	Page No

This page intentionally left blank

ECM: 558607
Group number: 90604-3320
Assembly Drawing: -

Pos	Part No	Description	Qty	Unit	Page No
Common Parts					
	90602-5788	REBUILING KIT, PUMP 1:6, 110 0297	1	PC	
	90459-1989	CHASSIS, P4, 1099401	1	PC	
	90459-1988	SUB BASE MOUNTING PLATE, P4 1120194	1	PC	
	90459-1987	SERVICE KIT, PNEUM. PANEL ASSY, 1028307	1	PC	
	90459-1986	FILTER ASSY, 100 MESH, 1028305	1	PC	
	90459-1985	SERVICE KIT, PUMP PISTON, 1028304	1	PC	
	90459-1984	KIT, PUMP PISTON, 1028303	1	PC	
	90459-1983	HEATER BLOCK KIT, 1064649	1	PC	
	90459-1982	SERVICE KIT, PRESS. DISC. VALVE, 1028308	1	PC	
	90459-1981	SERVICE KIT, MANIFOLD ASSY, 1028309	1	PC	
	90459-1980	SERVICE KIT MANIFOLD ASSY, 1064651	1	PC	
	90459-1979	SERV. KIT, THERMOSTAT, 1028321	1	PC	
	90459-1978	KIT, RTD TEMP. SENSOR, 1028320	1	PC	
	90459-1977	SERVICE KIT, TANK P4, 1051033	1	PC	
	90459-1976	KIT, OPERATOR PANEL/ ENCLOSURE, 1028326	1	PC	
	90459-1975	DISPLAY, CPU BOARD SERV. KIT, 1028325	1	PC	
	90459-1974	FUSE KIT, MAIN CIRC.BOARD, 1028329	1	PC	
	90459-1973	MAIN PCA SERV.KIT, 1028322	1	PC	
	90459-1972	FUSE KIT, HOSE/GUN, 1028331	1	PC	
	90459-1971	HOSE/GUN MODULE KIT, 1028328	1	PC	

Pos	Part No	Description	Qty	Unit	Page No

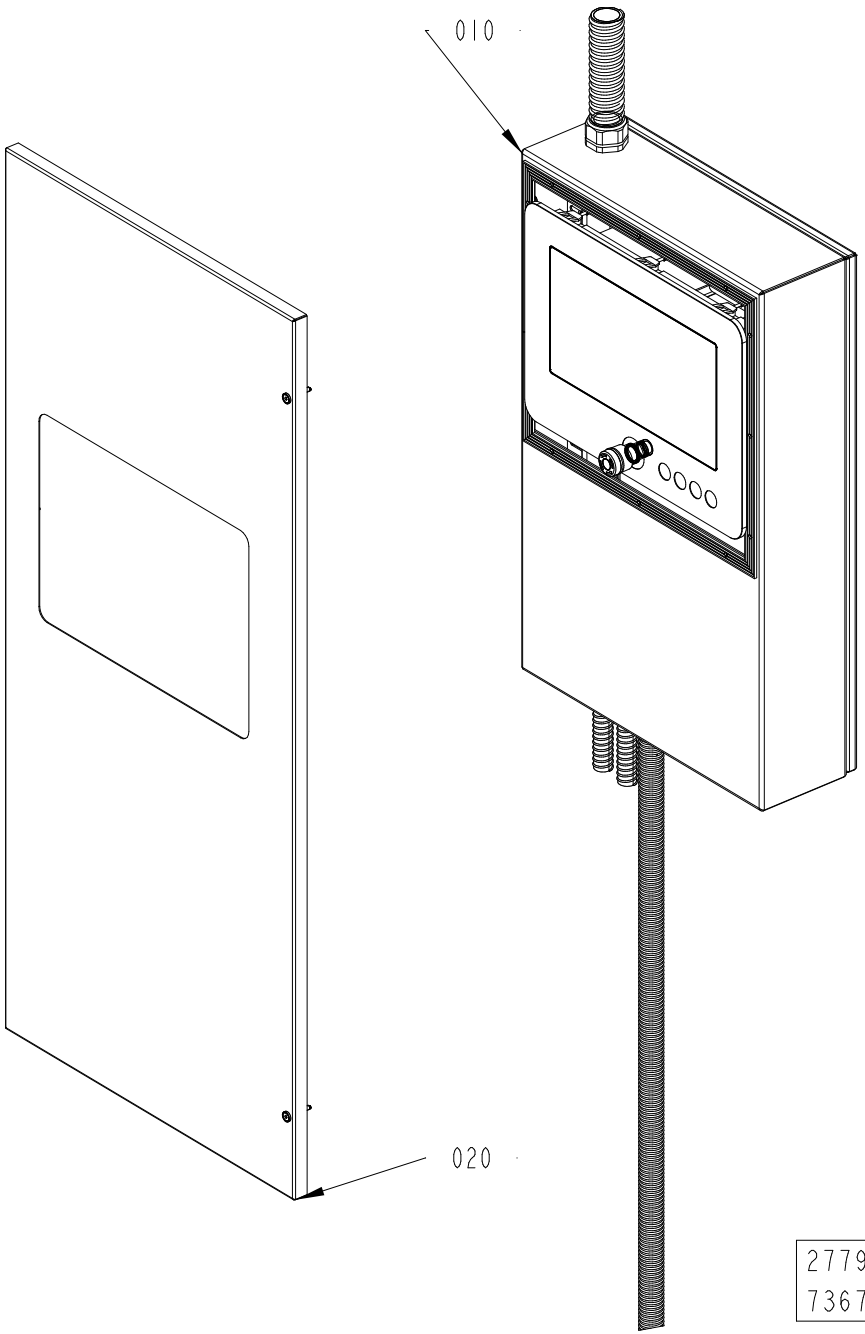
010
020
2779070-4
736730

ECM: 742578
Group number: 2779070-0400
Assembly Drawing: 2779070-4_1_AA

Pos	Part No	Description	Qty	Unit	Page No
Common Parts					
010	2802386-0400	OPERATOR INTERFACE	1	PC	398
020	3397562-0100	DOOR	1	PC	406, 408
250	3218060-0100	WARNING SIGN	1	PC	410

Pos	Part No	Description	Qty	Unit	Page No

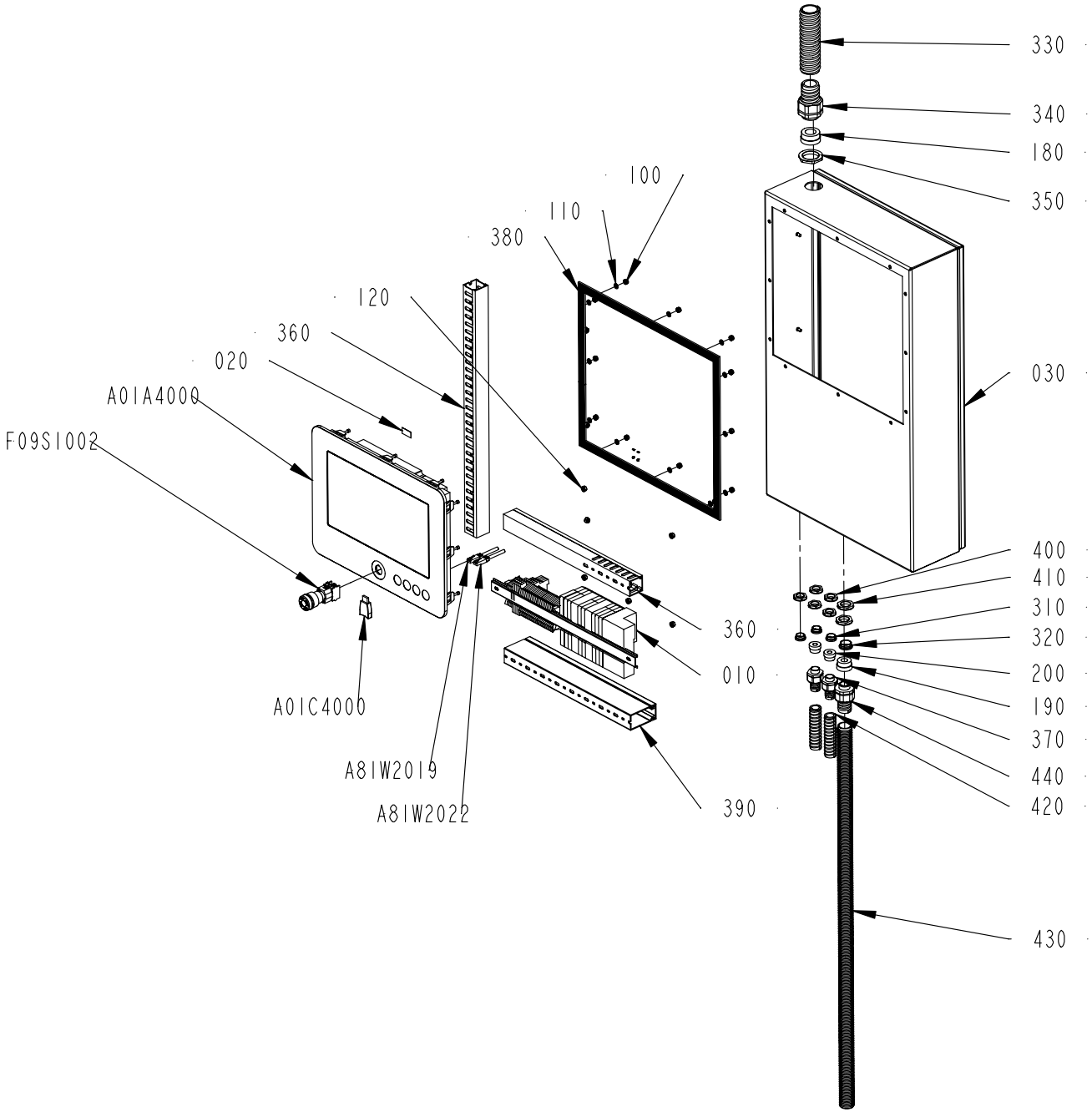
330
340
180
350
100
110
380
120
360
020
A01A4000
F09S1002
030
400
410
310
320
200
190
370
440
420
360
010
A01C4000
A8IW2019
A8IW2022
390
430

ECM: 900110
Group number: 2802386-0400
Assembly Drawing: 2802386-4_1_AC

Pos	Part No	Description	Qty	Unit	Page No
BARCODE SCANNER					
030	3405068-0000	BOX	1	PC	
NO BARCODE SCANNER					
030	3389206-0000	BOX	1	PC	
Common Parts					
010	2817783-0300	PLINTH	1	PC	400, 402
020	351434-0200	GUI SCADA TP-VISU+ RT WIN32/64, 2701191	1	PC	
100	312812-0316	HEXAGON NUT, NY-LOCK M6 A4 80	12	PC	
110	315105-0153	WASHER PLAIN, 6,4X12X1,5 A4 BRB	20	PC	
120	312605-0316	HEXAGON NUT, M6M M6 A280	8	PC	
180	353249-0054	INSERT, SINGLE HOLE, EK156 25	1	PC	
190	353249-0015	INSERT, SINGLE HOLE, EK155 16	1	PC	
200	353249-0012	INSERT, SINGLE HOLE, EK154 11	2	PC	
310	90458-1308	BLIND PLUG CIRCULAR, M20X1,5 514GFK/220	3	PC	
320	90458-1309	BLIND PLUG CIRCULAR, M25X1,5 514GFK/225	1	PC	
330	90152-0060	HOSE, SPIRAL CONDUIT, 42X35, UL3529	1	M	
340	90458-0434	GLAND FITTING, VK 24056YUL29	1	PC	
350	90458-0326	NUT M40X1,5	1	PC	
360	344366-1002	CABLE DUCT PVC 40X40, 4040T1-E	1030	MM	
370	90458-0430	GLAND FITTING, VK 22054YUL16	2	PC	
380	90143-0071	RUBBER STRIP 4X20MM	1	M	
390	344366-1013	CABLE DUCT PVC 40X80, 4080T1-E	552	MM	
400	90458-0323	NUT, M20X1,5	5	PC	
410	90458-0324	NUT, M25X1,5	2	PC	
420	90152-0051	HOSE, SPIRAL CONDUIT, 25X18, UL 1816	4.400	M	
430	90152-0070	FLEXIBLE CONDUIT, UL 2721	1	M	
440	90458-0432	GLAND FITTING, VK 22555YUL21	1	PC	
460	90605-0005	FACTORY TALK GATEWAY, 9355-OPD2400LENE	1	PC	
A01A4000	3328027-0201	IPC CONFIGURATION	1	PC	404
A01C4000	90605-4349	FACTORY TALK ACT. MEMORY DONGLE, 9509-US	1	PC	
A81W2019	351501-0005	ETHERNET PATCH CABLE, FL CAT5 PATCH 0,5	1	PC	
A81W2022	351501-0005	ETHERNET PATCH CABLE, FL CAT5 PATCH 0,5	1	PC	
F09S1002	90605-9819	EMERG. STOP SWITCH, 704.064.2+704.910.4	1	PC	

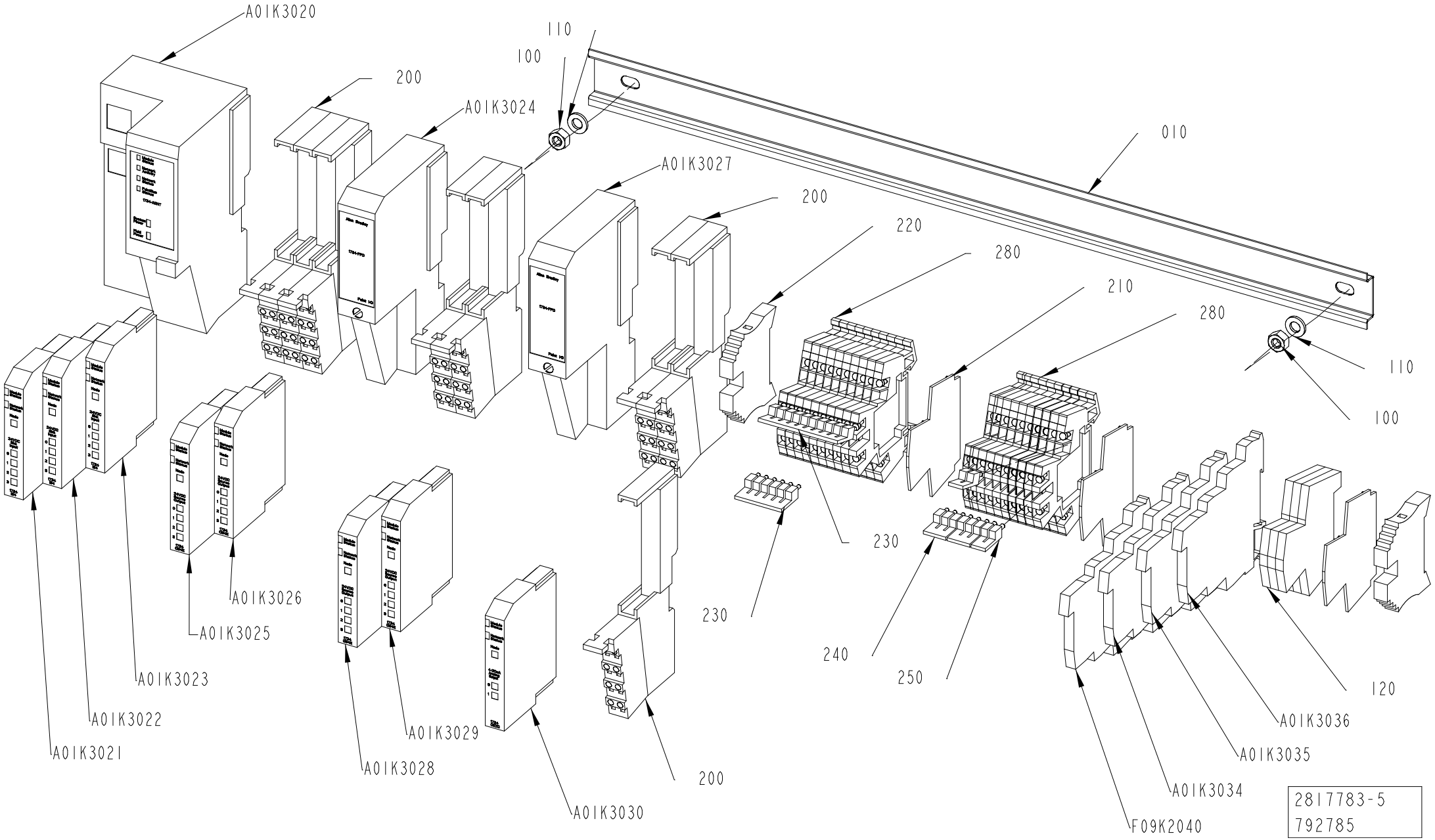
A01K3020
110
100
200
A01K3024
010
A01K3027
200
220
280
210
280
110
100
230
230
240
250
120
A01K3036
A01K3035
A01K3034
F09K2040
A01K3021
A01K3022
A01K3023
A01K3025
A01K3026
A01K3029
A01K3028
A01K3030
200
2817783-5
792785

Pos	Part No	Description	Qty	Unit	Page No
CAP 30/FLEX	See page: 400, 402				
A01K3030	90459-2511	ANALOG OUTPUT CURRENT MODULE 2PTS	1	PC	
A01K3035	90601-6650	RELAY, PLC-RSC-24DC/21	1	PC	
A01K3036	90601-6650	RELAY, PLC-RSC-24DC/21	1	PC	
Common Parts					
010	2746909-0000	RAIL	1	PC	
100	312605-0316	HEXAGON NUT, M6M M6 A280	2	PC	
110	315105-0153	WASHER PLAIN, 6,4X12X1,5 A4 BRB	2	PC	
120	353024-0212	EARTH TERMINAL WDK 2,5 PE	3	PC	
200	90459-2526	REMOTE I/O BASE MODULE 8 POINTS, 1734-TB	8	PC	
210	353032-0009	END PLATE, WAP WDK 2,5	3	PC	
220	353031-0203	END BRACKET, WEW 35/2	2	PC	
230	353034-0030	BRIDGE CONNECTOR WQV 2,5/10	2	PC	
240	353034-0042	BRIDGE CONNECTOR WQV 2,5/3	2	PC	
250	90459-1811	BRIDGE CONNECTOR WQV 2,5/2	2	PC	
280	90077-0113	TERMINAL BLOCK WDK 2.5	22	PC	
290	359011-0807	MARKING, DEK 5 FW 1-50	2	PC	
300	359011-0809	MARKING, DEK 5 FW 101-150	2	PC	
310	90604-9505	MARKING, DEK 5 FWZ E1-E50	1	PC	
A01K3020	90606-0860	POINT I/O ADAPT. MOD.,1734-AENTR SERIEB	1	PC	
A01K3021	90605-0584	DIGITAL INP 4 PTS SINK, 1734-IB4 SERIE D	1	PC	
A01K3022	90605-0584	DIGITAL INP 4 PTS SINK, 1734-IB4 SERIE D	1	PC	
A01K3023	90605-0584	DIGITAL INP 4 PTS SINK, 1734-IB4 SERIE D	1	PC	
A01K3024	90459-2501	5006526, 1734-FPD	1	PC	
A01K3025	90459-2505	DIGITAL OUTPUT 4 PTS, 1734-OB4E SERIES C	1	PC	
A01K3026	90459-2505	DIGITAL OUTPUT 4 PTS, 1734-OB4E SERIES C	1	PC	
A01K3027	90459-2501	5006526, 1734-FPD	1	PC	
A01K3028	90459-2505	DIGITAL OUTPUT 4 PTS, 1734-OB4E SERIES C	1	PC	
A01K3029	90459-2505	DIGITAL OUTPUT 4 PTS, 1734-OB4E SERIES C	1	PC	
A01K3034	90601-6650	RELAY, PLC-RSC-24DC/21	1	PC	
F09K2040	90601-6650	RELAY, PLC-RSC-24DC/21	1	PC	

Pos	Part No	Description	Qty	Unit	Page No

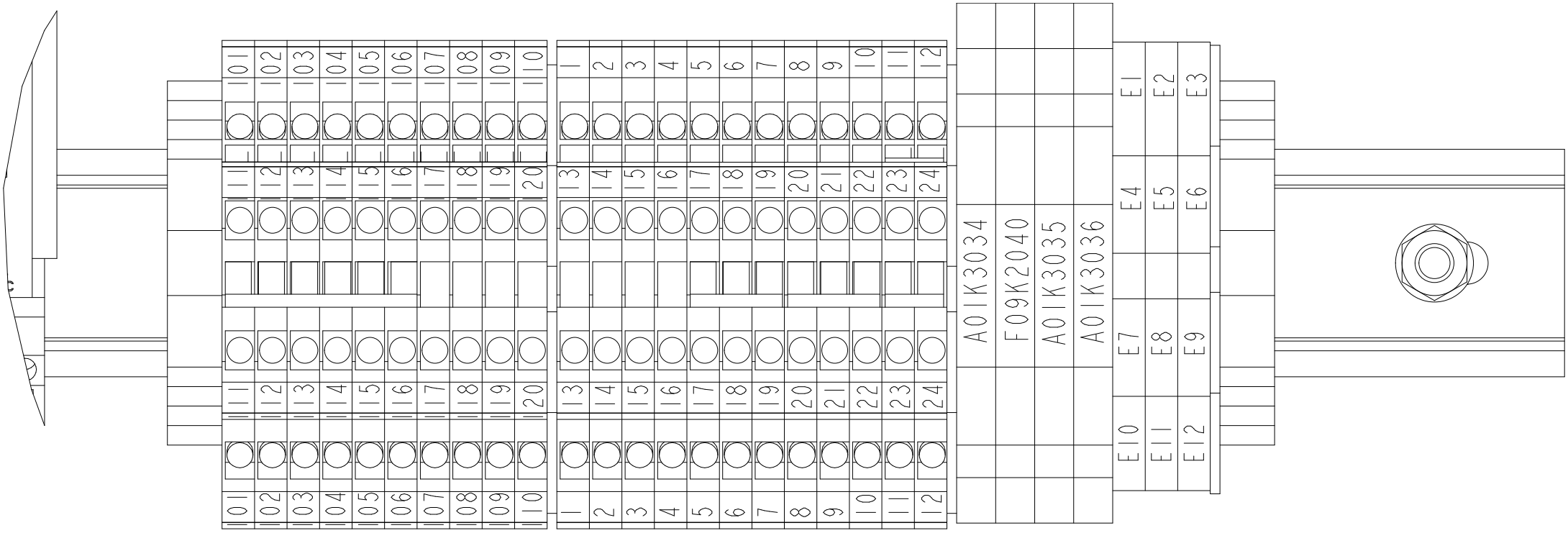

2817783-5
792785

SCALE 1:1

This list refers to drawings on pages 400 to 402

Pos	Part No	Description	Qty	Unit	Page No

SEE LIST FOLLOWING DRAWING ON PAGE: 400

Pos	Part No	Description	Qty	Unit	Page No

This page intentionally left blank

ECM: 823582
Group number: 3328027-0201
Assembly Drawing: -

Pos	Part No	Description	Qty	Unit	Page No
Common Parts					
010	3328018-0002	TPOP BASIC V9.1	1	PC	
020	90607-0745	USB STORAGE MEDIA 16GB, 5MMUSB.016G-C00	1	PC	
030	90606-0355	HARD DISK, 5AC901CSSD03	1	PC	
040	90459-1485	LITHIUM BATTERY, TPOP MAXI 4A0006.00-000	1	PC	
050	90607-0074	SPARE PART KIT, 4B1400.00-K56	1	PC	
060	90606-2203	FAN KIT, 5AC902.FA00-00	1	PC	

Pos	Part No	Description	Qty	Unit	Page No

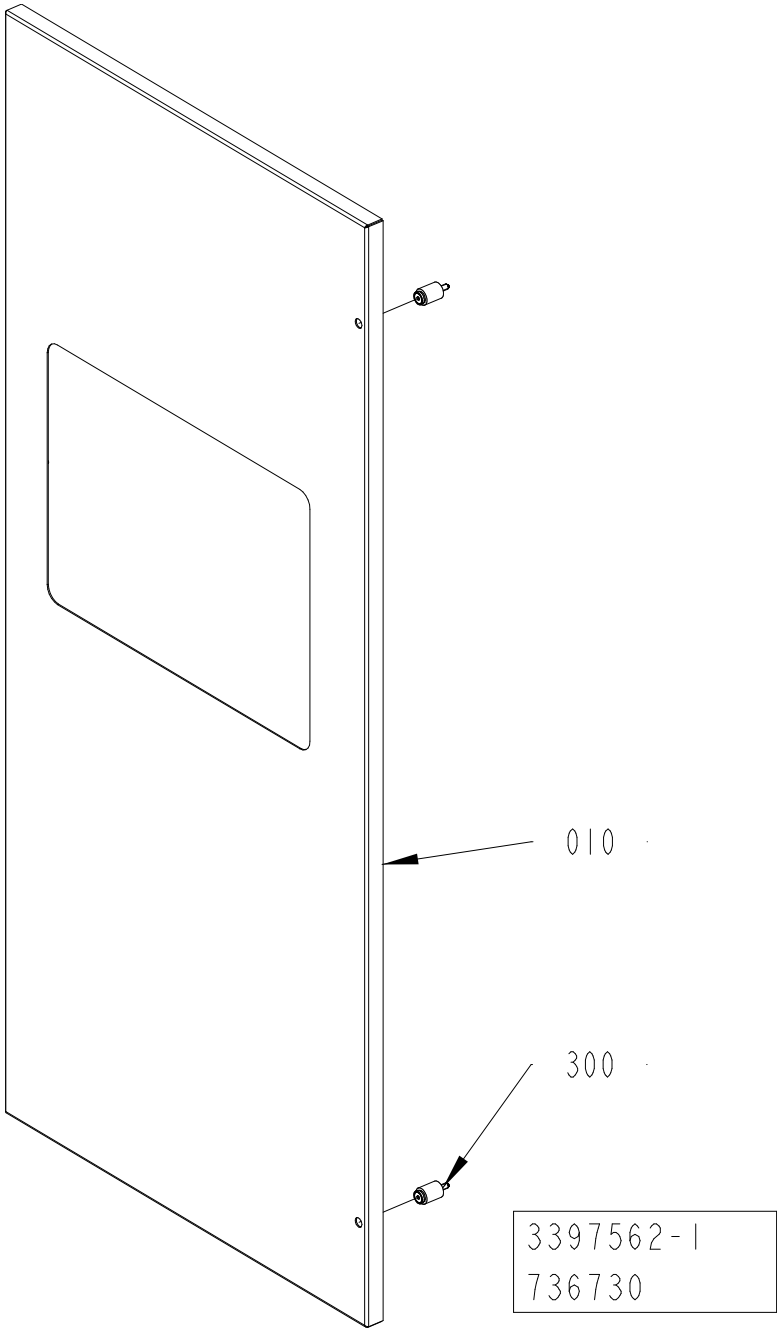
010
300
3397562-1
736730

ECM: 742574
Group number: 3397562-0100
Assembly Drawing: 3397562-1_1_AA

This list refers to drawings on pages 406 to 408

Pos	Part No	Description	Qty	Unit	Page No
BARCODE SCANNER	See page: 408				
010	3403447-0000	DOOR	1	PC	
020	3096014-0000	BRACKET	1	PC	
100	315105-0146	WASHER PLAIN, 5,3X10X1 A4 BRB	2	PC	
110	312812-0314	HEXAGON NUT, NY-LOCK M5 A4 80	2	PC	
310	90143-0097	SELF GRIPPING GASKET, 1011-24	370	MM	
A81S2010	90603-5602	BAR CODE READER, D9330 + CAB-463	1	PC	
A81W2010	90601-6430	USB CABLE, 90601-6430	1	PC	
A81W2020	90600-4778	USB CABLE SET, 5A9000.54	1	PC	
NO BARCODE SCANNER	See page: 406				
010	3389205-0000	DOOR	1	PC	
Common Parts					
300	90226-0458	MOUNTING SCREW	2	PC	

Pos	Part No	Description	Qty	Unit	Page No

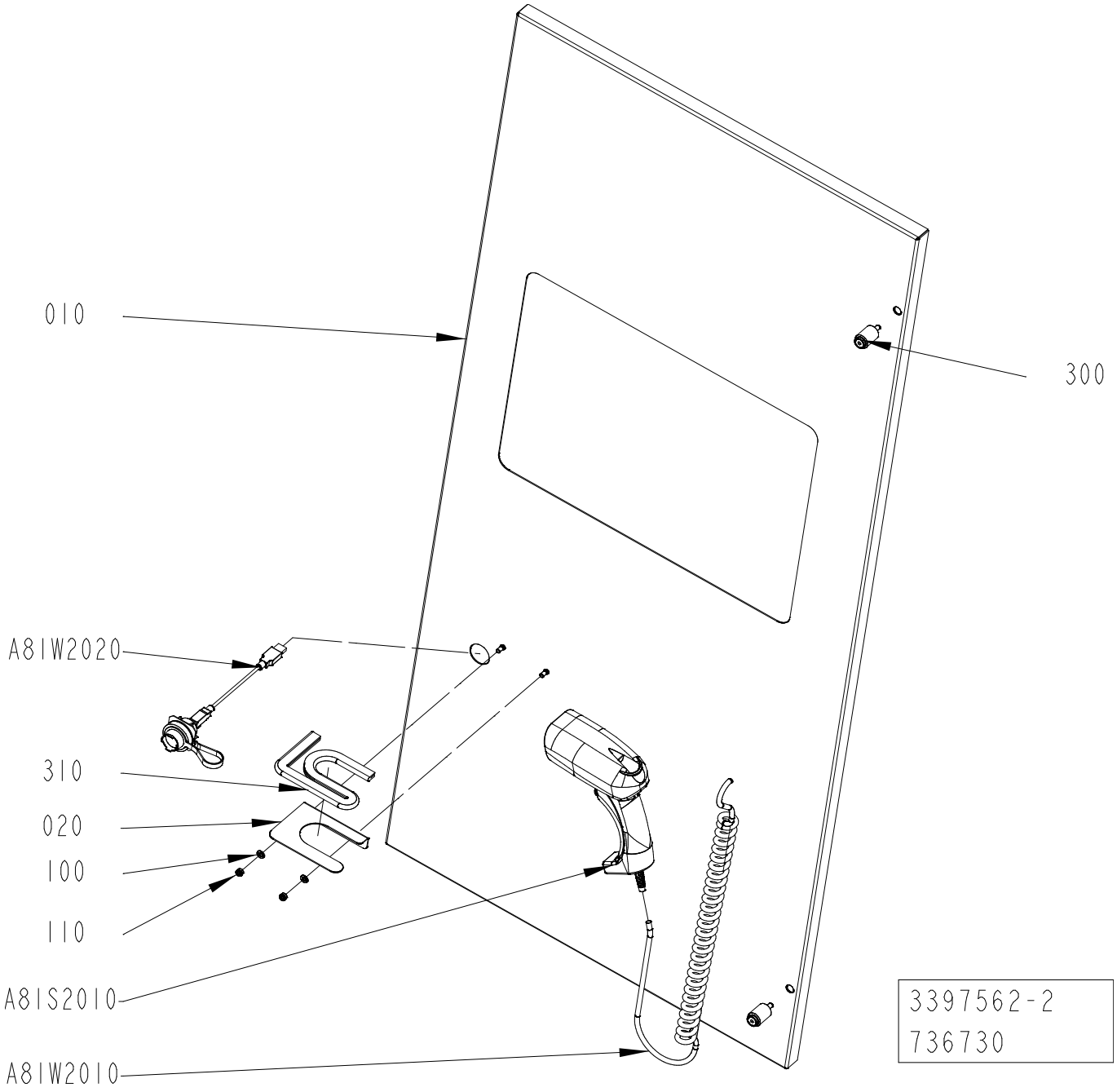
010
300
A81W2020
310
020
100
110
A81S2010
A81W2010
3397562-2
736730

ECM: 742574
Group number: 3397562-0100
Assembly Drawing: 3397562-2_1_AA

This list refers to drawings on pages 406 to 408

Pos	Part No	Description	Qty	Unit	Page No

SEE LIST FOLLOWING DRAWING ON PAGE: 406

Pos	Part No	Description	Qty	Unit	Page No

Pos. 250 in BoM 2779070-0400

WARNING SIGN

Drawing file:3218060-1_1_AB

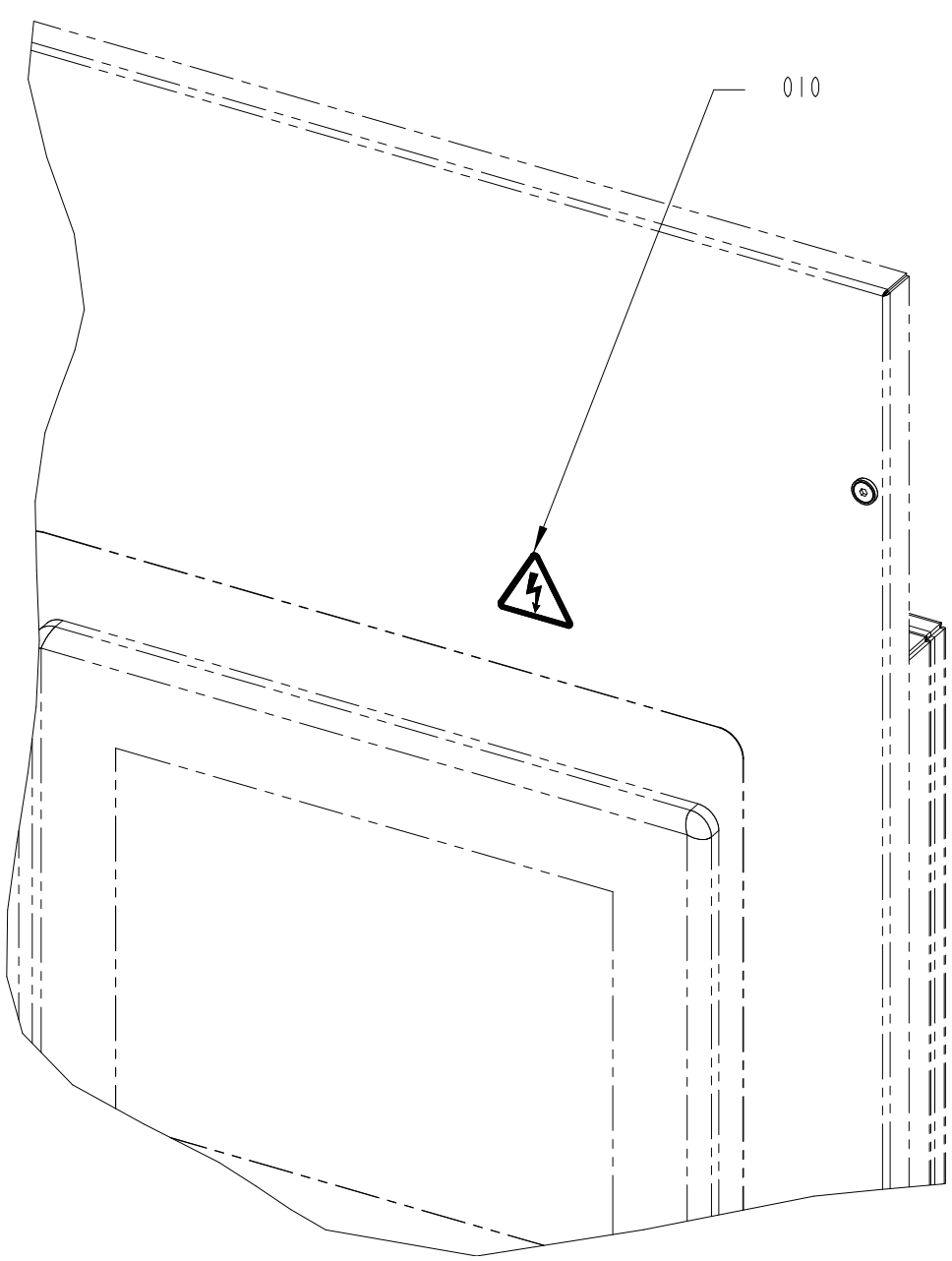

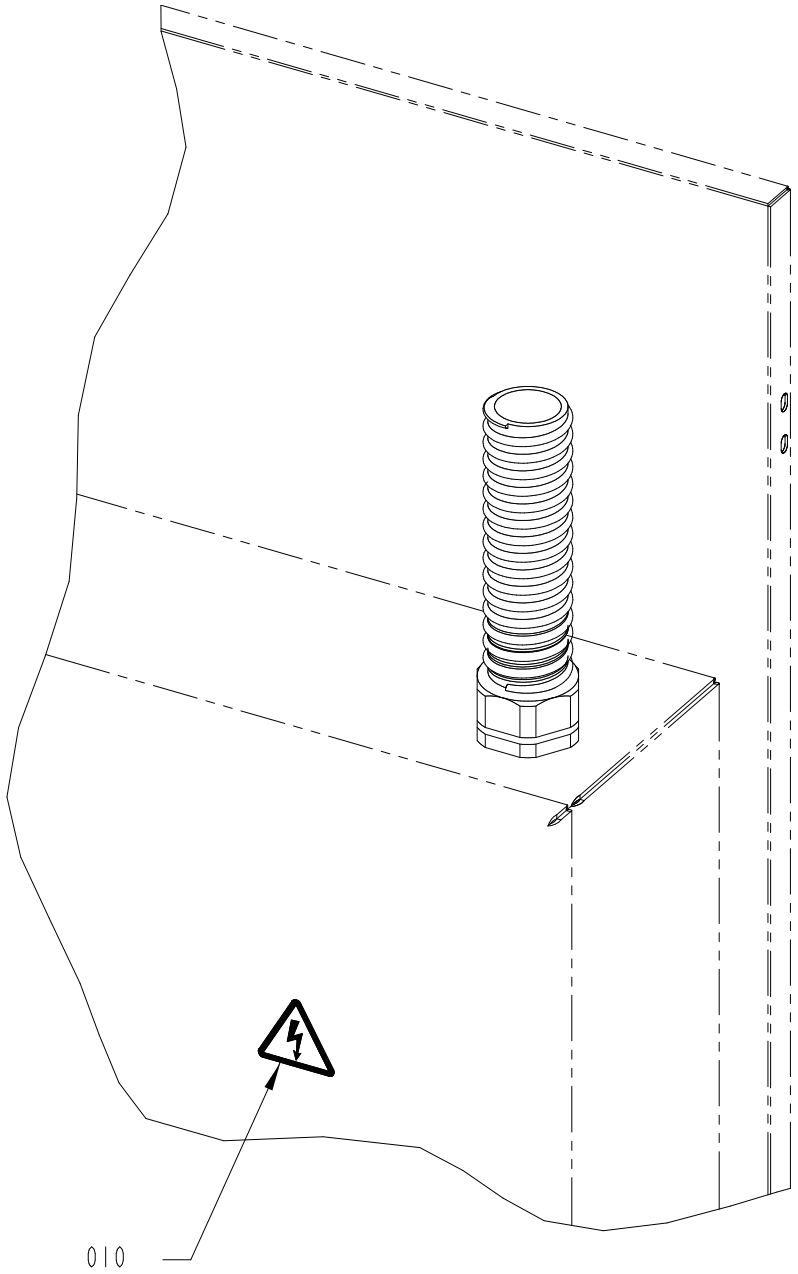

3218060-1
539582

ECM: 543047
Group number: 3218060-0100
Assembly Drawing: 3218060-1_1_AB

Pos	Part No	Description	Qty	Unit	Page No
ANSI					
010	359715-0100	WARNING SIGN ANSI (H), ELECTRIC SHOCK	2	PC	
ISO					
010	359705-0015	WARNING SIGN ISO, ELECTRIC HAZARD	2	PC	

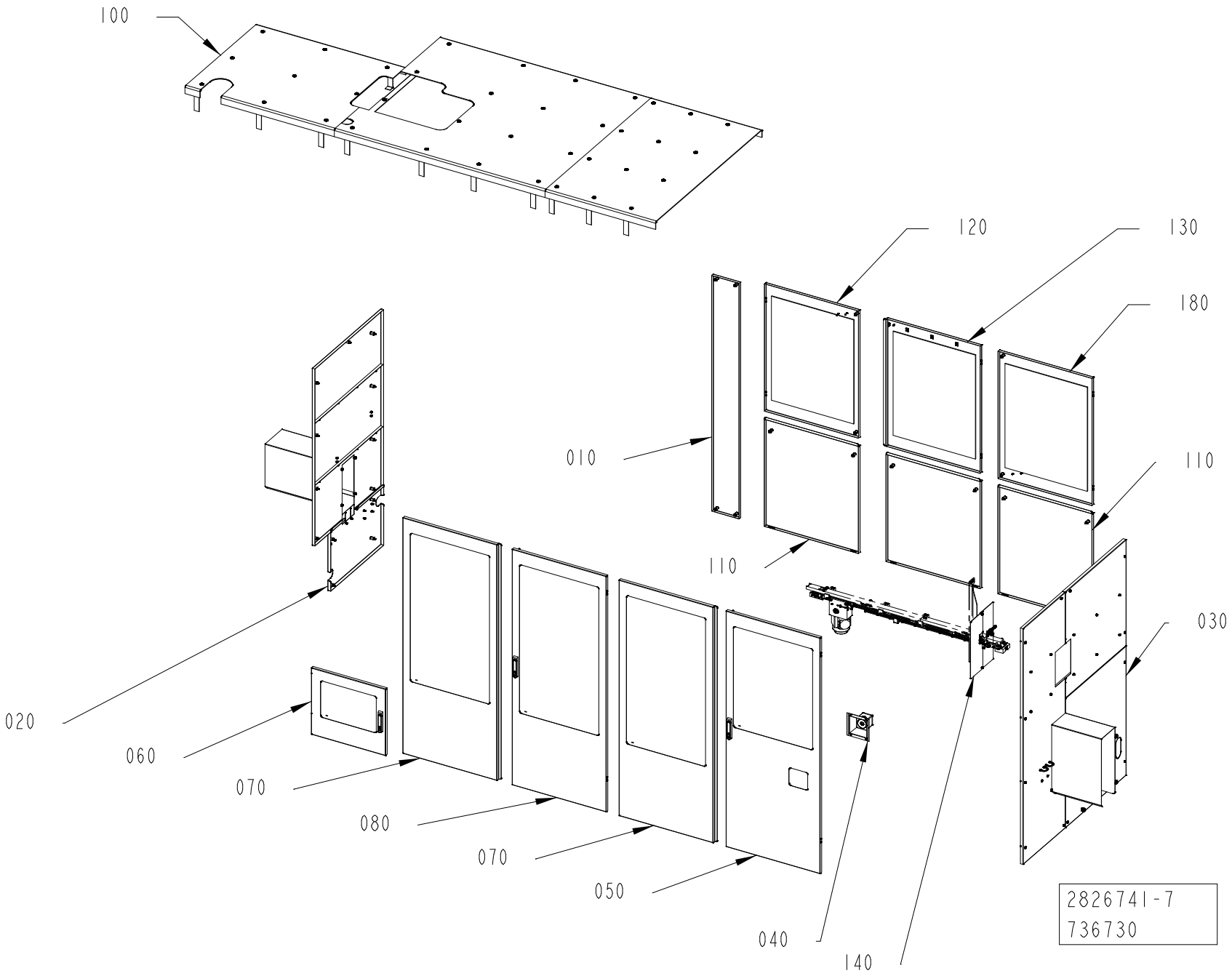
100
120
130
180
010
110
110
030
020
060
070
080
070
050
040
140
2826741-7
736730

ECM: 742577
Group number: 2826741-0400
Assembly Drawing: 2826741-7_1_AA

Pos	Part No	Description	Qty	Unit	Page No
STREAMCAP500, STREAMCAP1000, SLIMCAP 2000, SLIMCAP 1000, STREAMCAP200, HELICAP2 23, HELICAP 27					
030	2826743-0300	COVER	1	PC	414
050	2779748-0200	GLASS DOOR	1	PC	424
070	3329212-0000	GLASS DOOR	2	PC	
140	3360962-0100	COVER	1	PC	426
Common Parts					
010	2779835-0200	DOOR	1	PC	428
020	2826742-0400	COVER	1	PC	430
040	2769760-0300	EMERGENCY STOP	1	PC	440
060	2779832-0100	GLASS DOOR	1	PC	442
080	2779834-0100	GLASS DOOR	1	PC	444
100	2787230-0100	TOP SECTION	1	PC	446
110	2805693-0200	DOOR	3	PC	448
120	2805687-0100	GLASS DOOR	1	PC	450
130	2805694-0100	GLASS DOOR	1	PC	452
180	3047348-0100	GLASS DOOR	1	PC	454

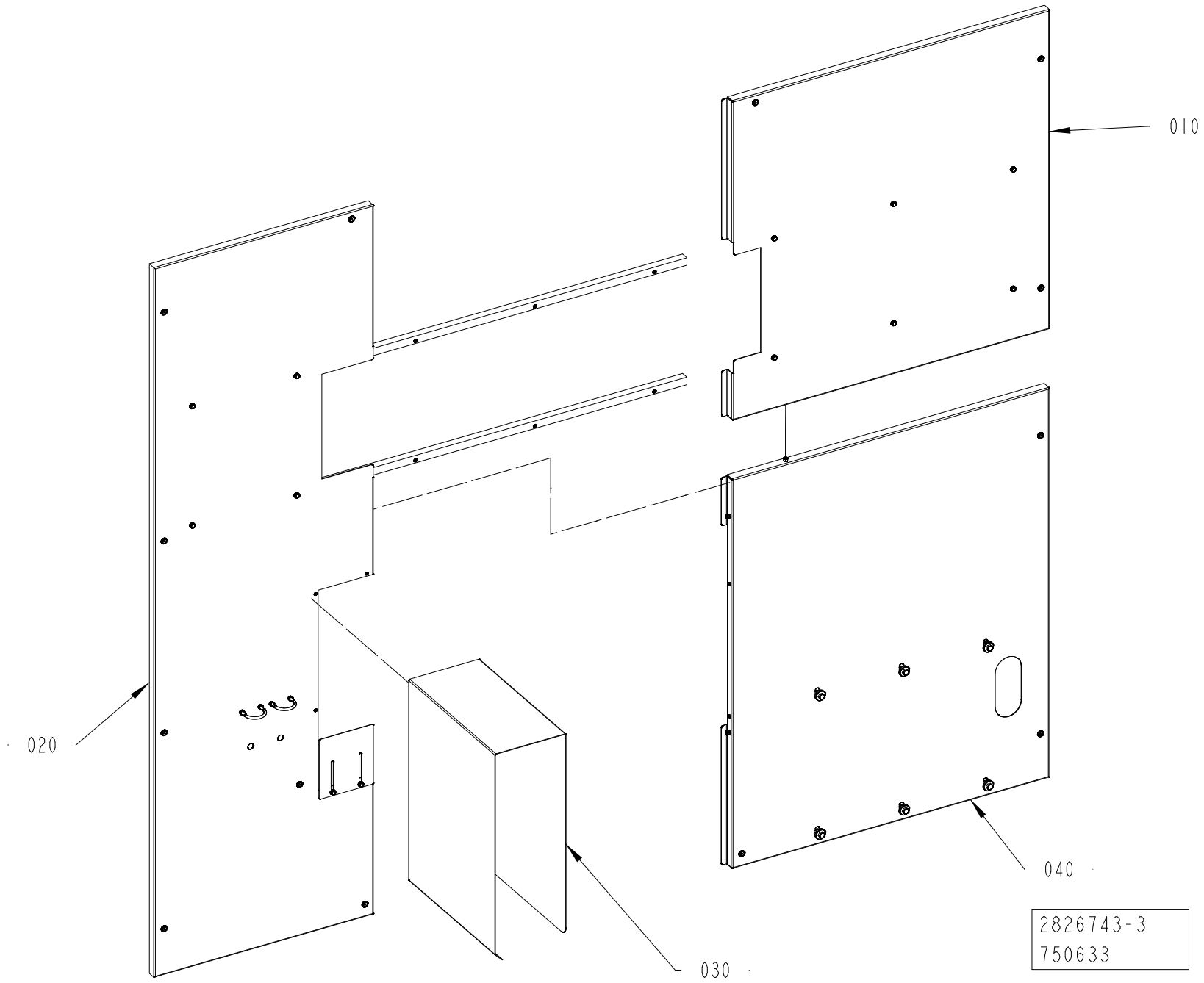
010
020
030
040
2826743-3
750633

ECM: 761631
Group number: 2826743-0300
Assembly Drawing: 2826743-3_1_AB

Pos	Part No	Description	Qty	Unit	Page No
Common Parts					
010	2842795-0100	COVER	1	PC	416
020	2842794-0400	COVER	1	PC	418
030	2846399-0300	TUNNEL	1	PC	420
040	3426348-0100	COVER	1	PC	422

Pos	Part No	Description	Qty	Unit	Page No

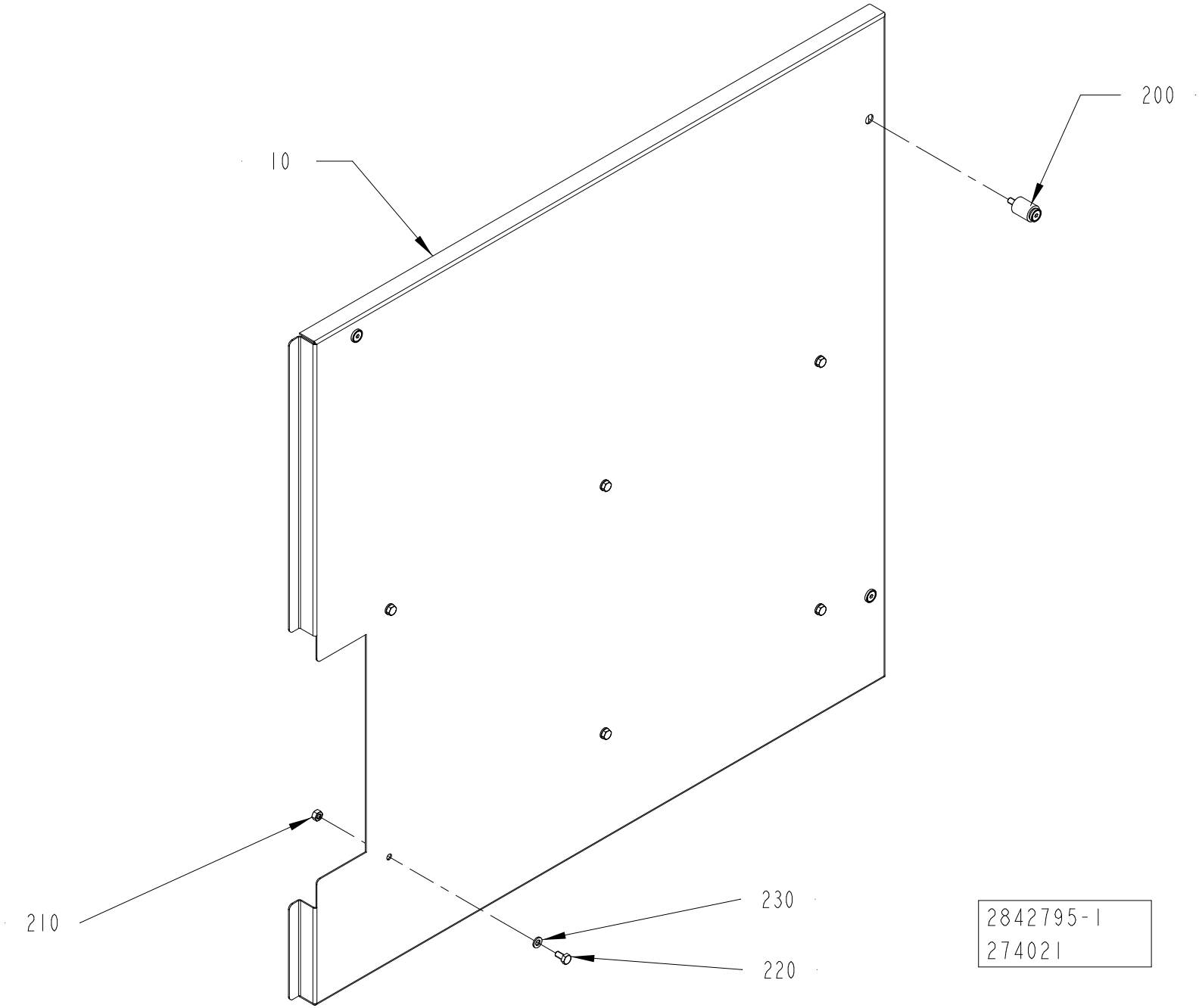
10
200
210
230
220
2842795-1
274021

ECM: 350261
Group number: 2842795-0100
Assembly Drawing: 2842795-1_1_AA

Pos	Part No	Description	Qty	Unit	Page No
Common Parts					
010	2842799-0000	COVER	1	PC	
200	90226-0458	MOUNTING SCREW	3	PC	
210	312605-0316	HEXAGON NUT, M6M M6 A280	6	PC	
220	312105-0366	SCREW, M6S ISO 4017 M6X12 A4 80	6	PC	
230	315105-0153	WASHER PLAIN, 6,4X12X1,5 A4 BRB	6	PC	

Pos	Part No	Description	Qty	Unit	Page No

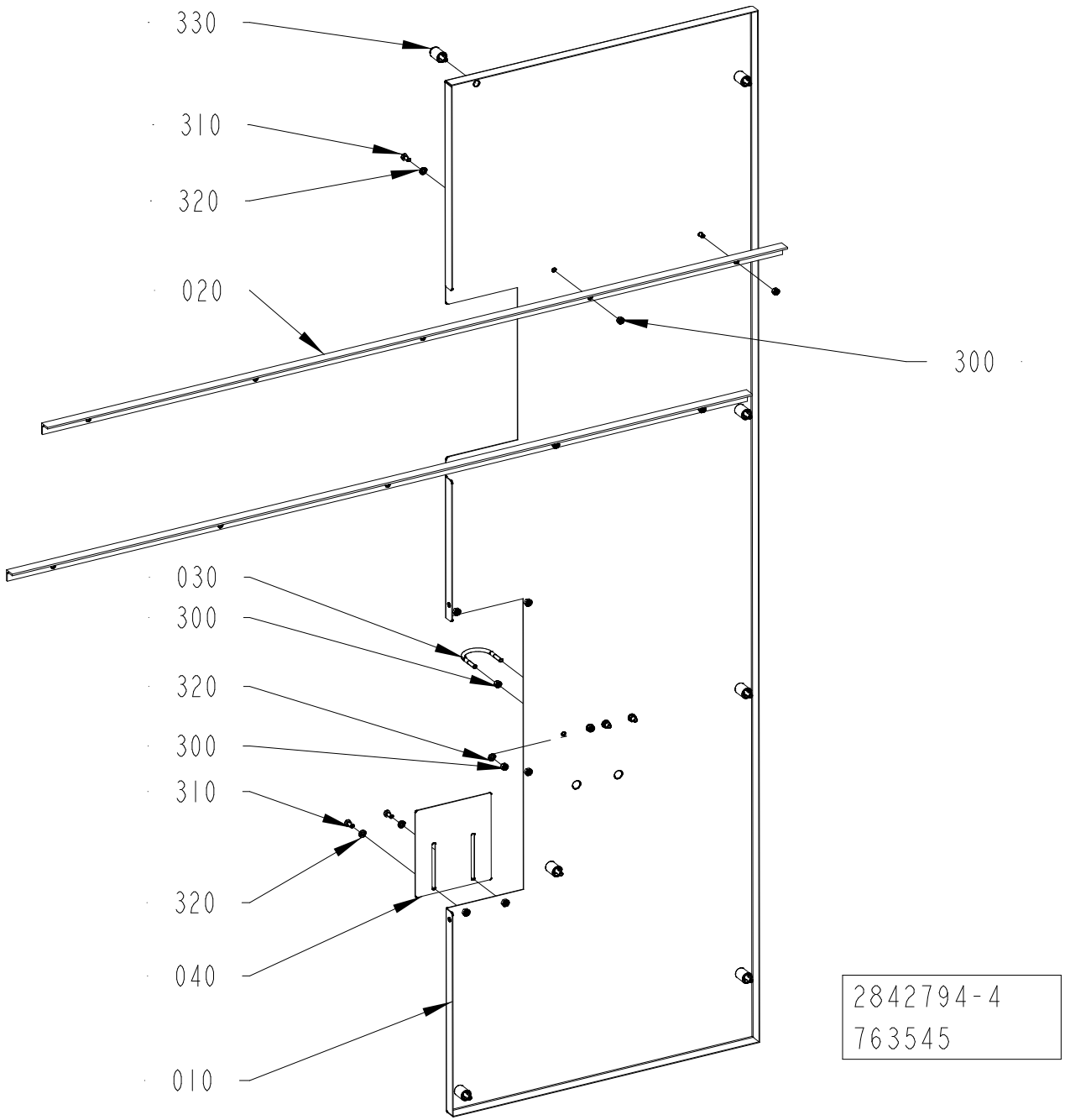
330
310
320
020
300
030
300
320
300
310
320
040
010
2842794-4
763545

ECM: 765529
Group number: 2842794-0400
Assembly Drawing: 2842794-4_1_AA

Pos	Part No	Description	Qty	Unit	Page No
Common Parts					
010	3423309-0000	COVER	1	PC	
020	2844501-0000	PROFILE	2	PC	
030	531616-0000	HOLDER	2	PC	
040	3425967-0000	COVER	1	PC	
300	312605-0316	HEXAGON NUT, M6M M6 A280	12	PC	
310	312105-0366	SCREW, M6S ISO 4017 M6X12 A4 80	6	PC	
320	315105-0153	WASHER PLAIN, 6,4X12X1,5 A4 BRB	10	PC	
330	90226-0458	MOUNTING SCREW	7	PC	

Pos	Part No	Description	Qty	Unit	Page No

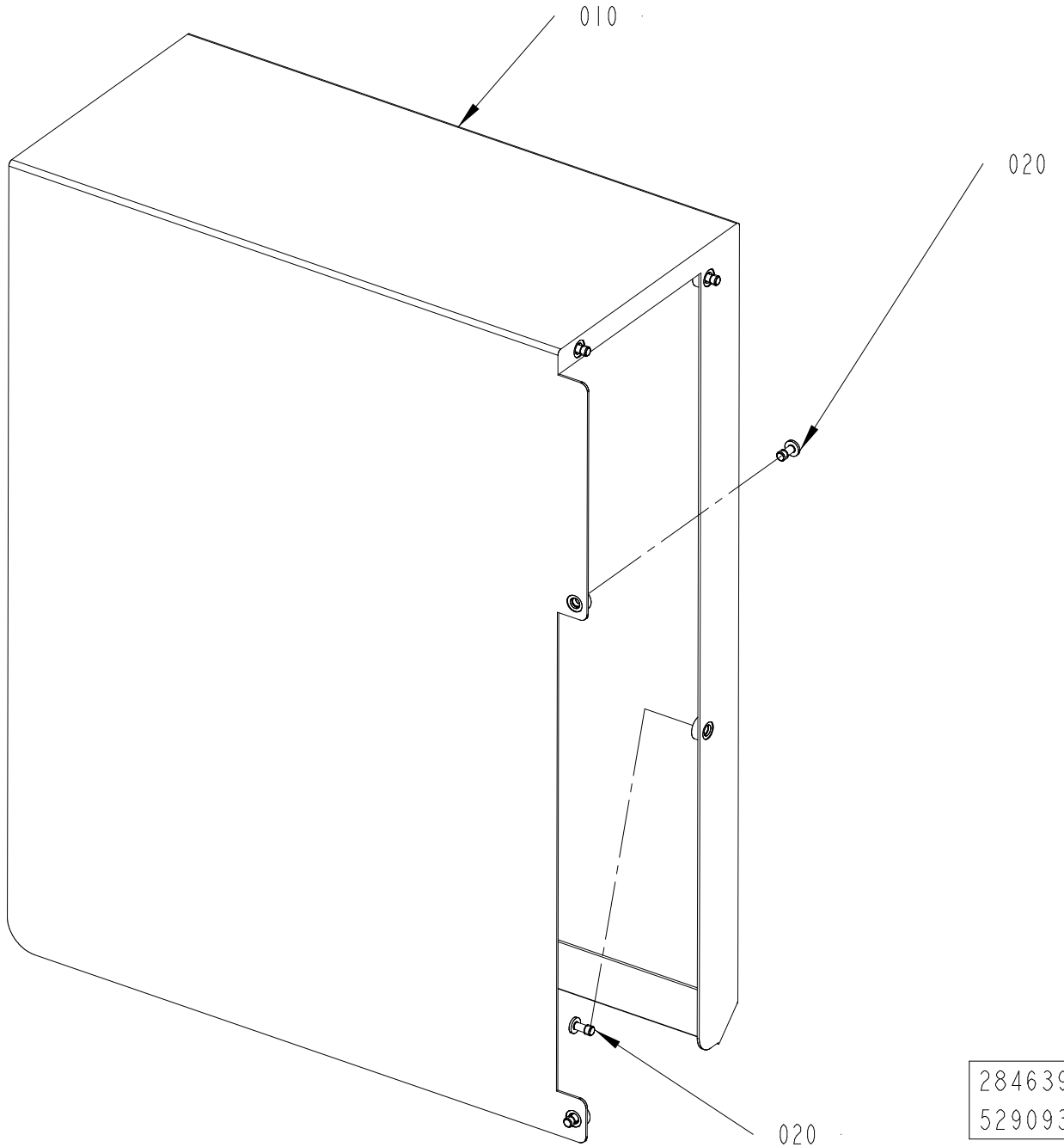
010
020
020
2846399-3
529093

ECM: 537713
Group number: 2846399-0300
Assembly Drawing: 2846399-3_1_AA

Pos	Part No	Description	Qty	Unit	Page No
Common Parts					
010	2985842-0000	TUNNEL	1	PC	
020	90601-2046	CAPTIVE SCREW M6, GUTBG 6-4-12	4	PC	

Pos	Part No	Description	Qty	Unit	Page No

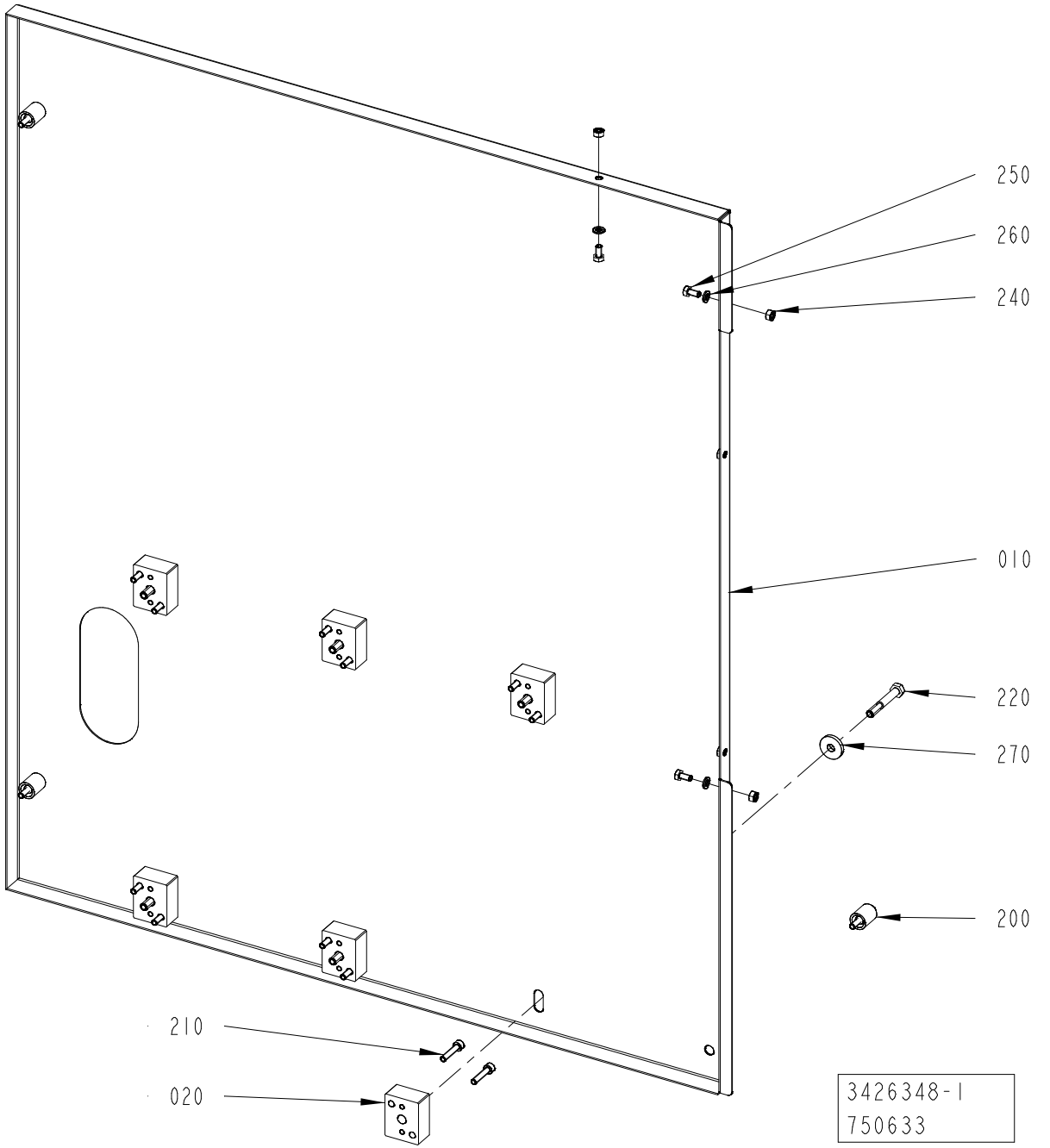
250
260
240
010
220
270
200
210
020
3426348-1
750633

ECM: 760577
Group number: 3426348-0100
Assembly Drawing: 3426348-1_1_AA

Pos	Part No	Description	Qty	Unit	Page No
Common Parts					
010	3423307-0000	COVER	1	PC	
020	2842805-0000	SPACER	6	PC	
200	90226-0458	MOUNTING SCREW	3	PC	
210	312115-0374	SCREW ISO4762 M6X30 A4 80	12	PC	
220	312105-0462	SCREW, M6S ISO 4014 M8X55 A4 8002	6	PC	
240	312605-0316	HEXAGON NUT, M6M M6 A280	3	PC	
250	312105-0366	SCREW, M6S ISO 4017 M6X12 A4 80	3	PC	
260	315105-0153	WASHER PLAIN, 6,4X12X1,5 A4 BRB	3	PC	
270	315125-0165	WASHER HIGH, TBRSB 8,4X26X5 A4	6	PC	

Pos	Part No	Description	Qty	Unit	Page No

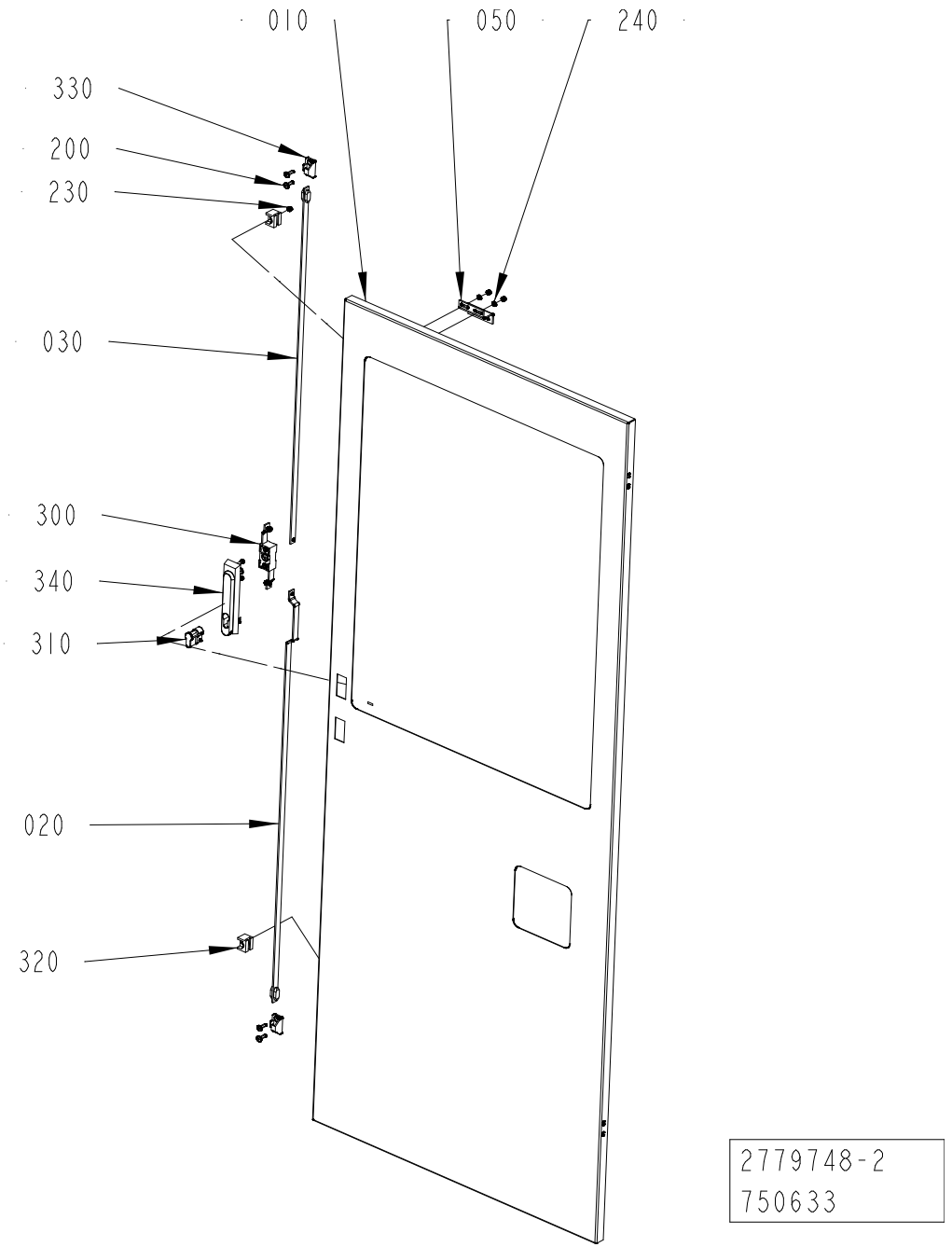

2779748-2
750633

ECM: 759381
Group number: 2779748-0200
Assembly Drawing: 2779748-2_1_AA

Pos	Part No	Description	Qty	Unit	Page No
Common Parts					
010	3423302-0000	GLASS DOOR	1	PC	
020	2551030-0000	STRUT	1	PC	
030	2781285-0000	STRUT	1	PC	
050	2595618-0000	BRACKET	1	PC	
200	312155-0370	SCREW DIN 7991 MF6S M6X20 A4 70	4	PC	
230	312812-0314	HEXAGON NUT, NY-LOCK M5 A4 80	4	PC	
240	315105-0146	WASHER PLAIN, 5,3X10X1 A4 BRB	2	PC	
300	90237-0123	LOCK, 1121-U10C	1	PC	
310	90237-0128	LOCK CYLINDER, 1109-SU125	1	PC	
320	90237-0144	GUIDE, 1121-SU540	2	PC	
330	90237-0147	LOCKING LUG, NO. 1121-53-0P	2	PC	
340	90237-0175	TURNING HANDLE, 1125-U185-0A	1	PC	

Pos	Part No	Description	Qty	Unit	Page No

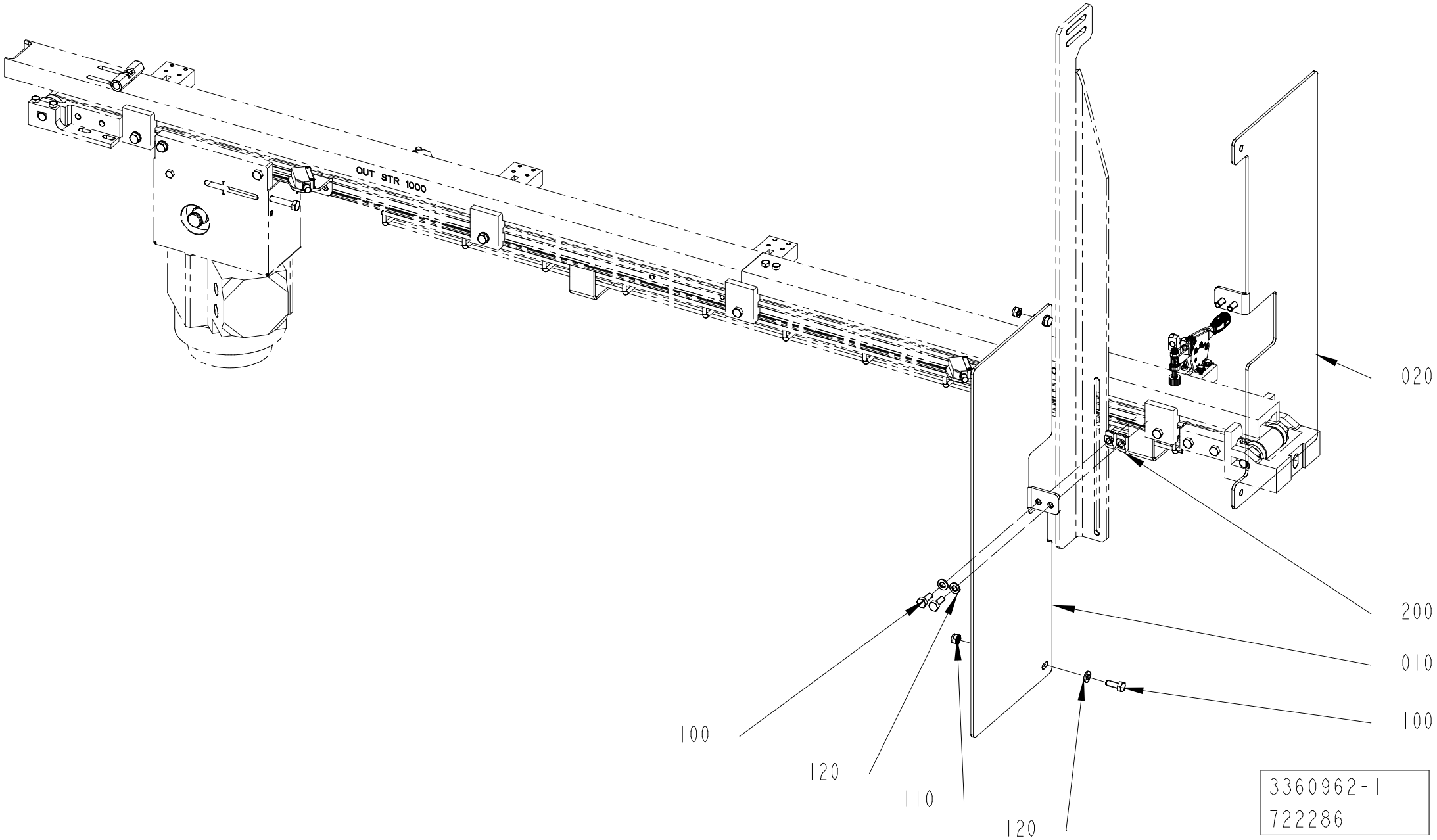
OUT STR 1000
020
200
010
100
100
120
110
120
3360962-1
722286

ECM: 726930
Group number: 3360962-0100
Assembly Drawing: 3360962-1_1_AA

Pos	Part No	Description	Qty	Unit	Page No
Common Parts					
010	3368806-0000	PROTECTION	1	PC	
020	3368990-0000	PROTECTION	1	PC	
100	312105-0368	SCREW, M6S ISO 4017 M6X16 A4 80	6	PC	
110	312812-0316	HEXAGON NUT, NY-LOCK M6 A4 80	2	PC	
120	315105-0153	WASHER PLAIN, 6,4X12X1,5 A4 BRB	6	PC	
200	90013-0035	NUT GROOVE, HAMMER-HEAD M6 FE	4	PC	

Pos	Part No	Description	Qty	Unit	Page No

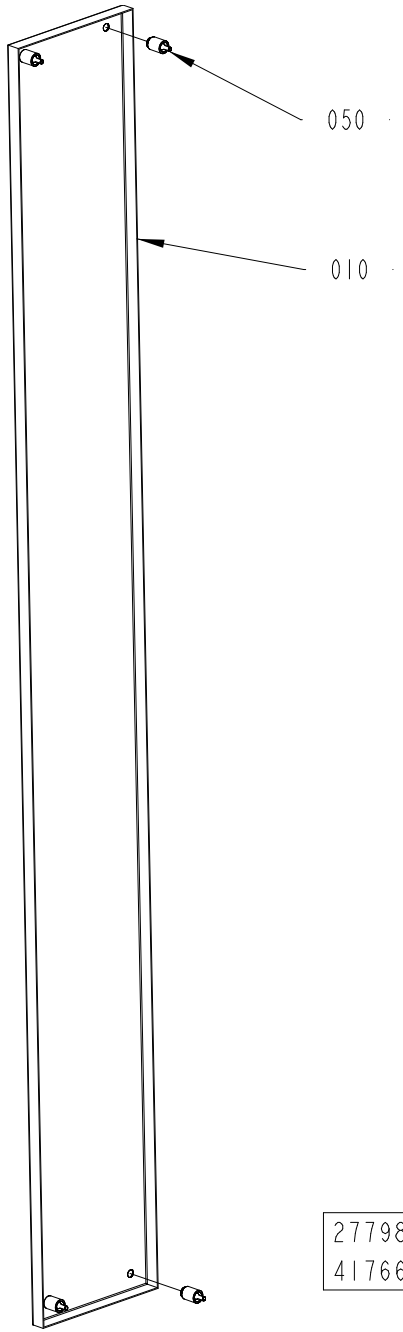
050
010
2779835-2
417662

ECM: 419448
Group number: 2779835-0200
Assembly Drawing: 2779835-2_1_AA

Pos	Part No	Description	Qty	Unit	Page No
Common Parts					
010	3058858-0000	DOOR	1	PC	
050	90226-0458	MOUNTING SCREW	4	PC	

Pos	Part No	Description	Qty	Unit	Page No

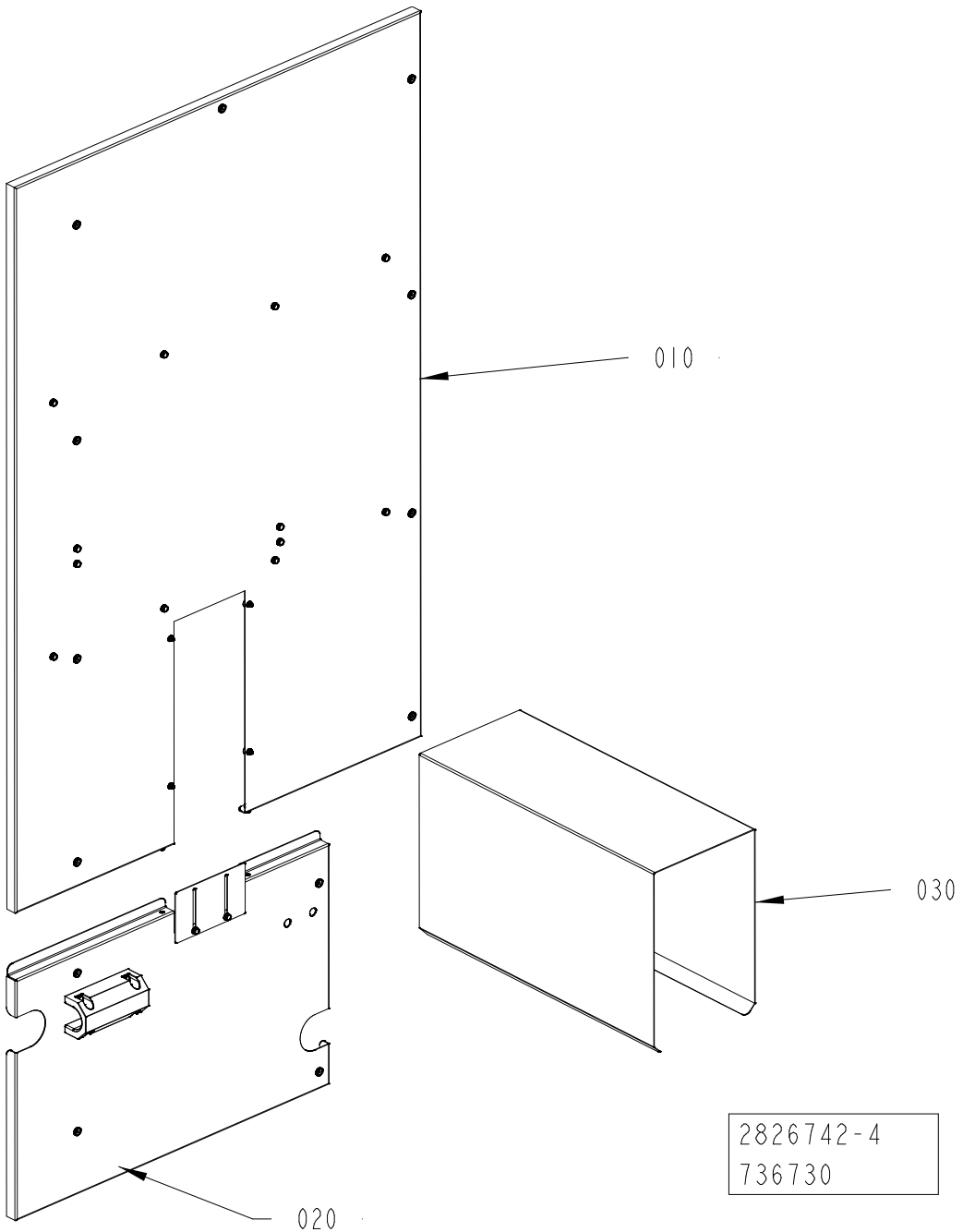
010
030
020
2826742-4
736730

ECM: 742573
Group number: 2826742-0400
Assembly Drawing: 2826742-4_1_AA

Pos	Part No	Description	Qty	Unit	Page No
Common Parts					
010	2826744-0300	COVER	1	PC	432, 434
020	2842793-0400	DOOR	1	PC	438
030	2985804-0000	TUNNEL	1	PC	

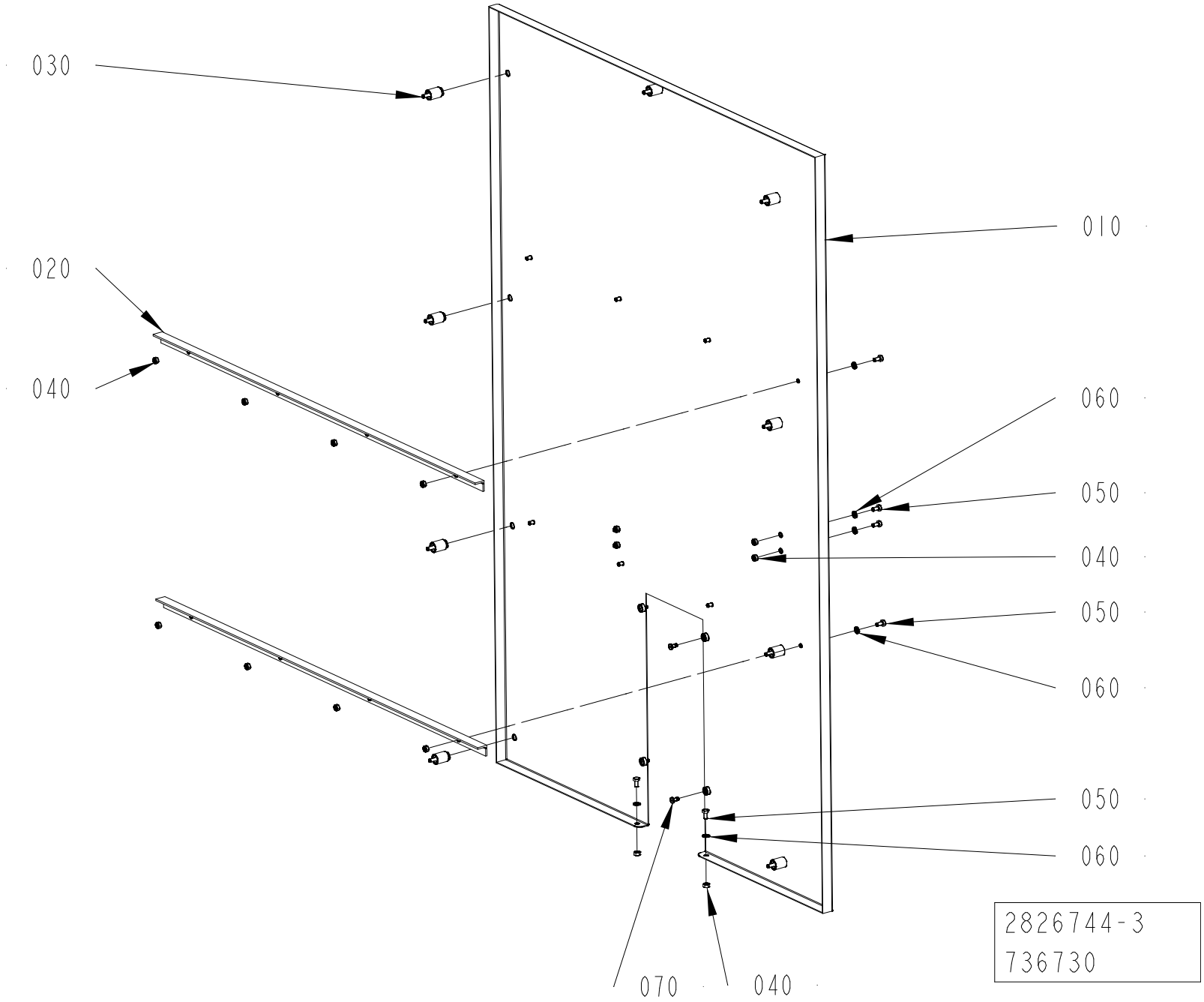
030
020
040
010
060
050
040
050
060
050
060
070
040
2826744-3
736730

ECM: 742591
Group number: 2826744-0300
Assembly Drawing: 2826744-3_1_AA

This list refers to drawings on pages 432 to 434

Pos	Part No	Description	Qty	Unit	Page No
GLUE SHELF	See page: 434				
050	312105-0366	SCREW, M6S ISO 4017 M6X12 A4 80	10	PC	
060	315105-0153	WASHER PLAIN, 6,4X12X1,5 A4 BRB	10	PC	
100	2842806-0100	SHELF	1	PC	436
NO GLUE SHELF	See page: 432				
050	312105-0366	SCREW, M6S ISO 4017 M6X12 A4 80	14	PC	
060	315105-0153	WASHER PLAIN, 6,4X12X1,5 A4 BRB	14	PC	
Common Parts					
010	3056497-0000	DOOR	1	PC	
020	2842801-0000	COVER	2	PC	
030	90226-0458	MOUNTING SCREW	9	PC	
040	312605-0316	HEXAGON NUT, M6M M6 A280	14	PC	
070	90601-2046	CAPTIVE SCREW M6, GUTBG 6-4-12	4	PC	

Pos	Part No	Description	Qty	Unit	Page No

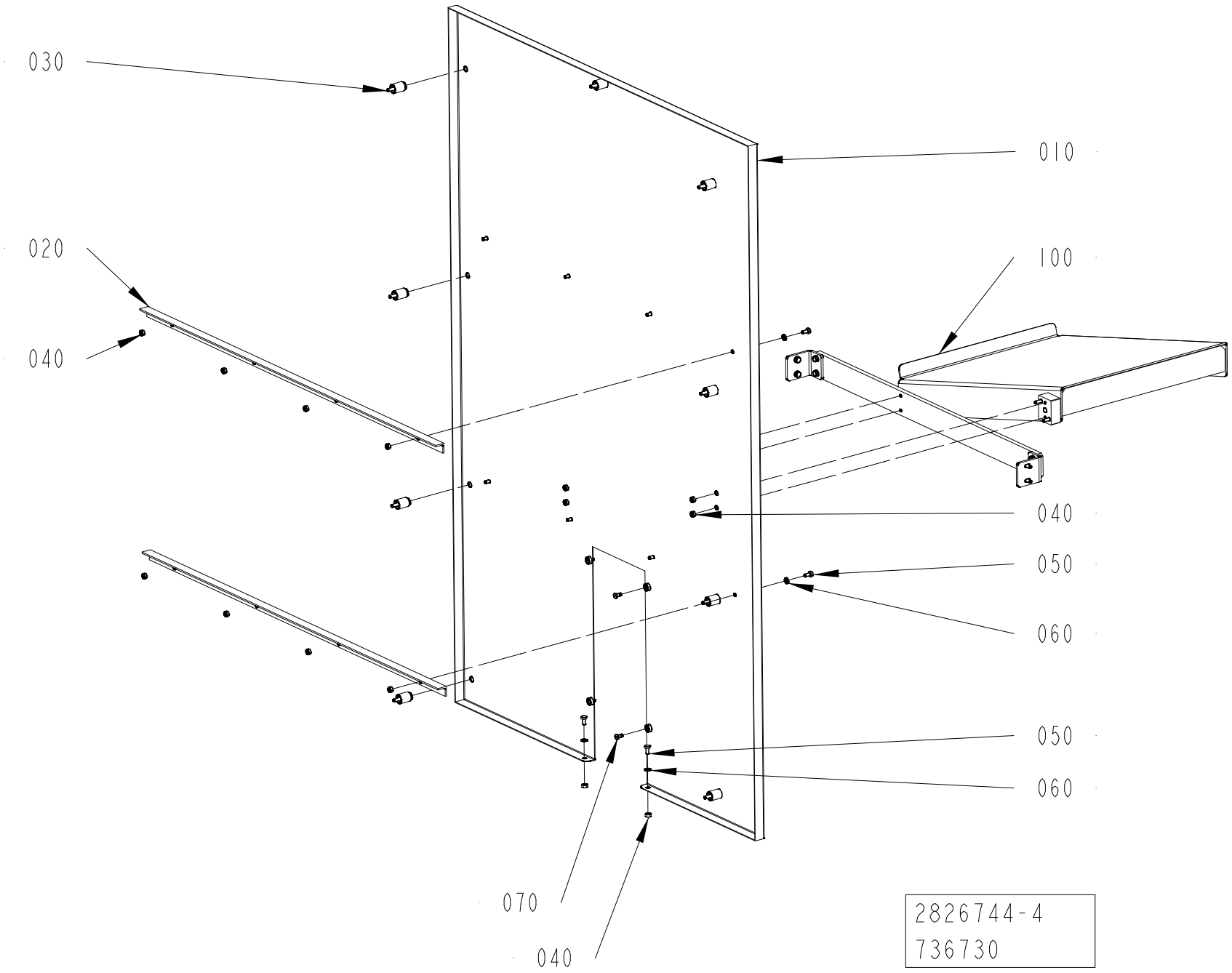
030
020
040
010
100
040
050
060
050
060
070
040
2826744-4
736730

This list refers to drawings on pages 432 to 434

Pos	Part No	Description	Qty	Unit	Page No

SEE LIST FOLLOWING DRAWING ON PAGE: 432

Pos	Part No	Description	Qty	Unit	Page No

Pos. 100 in BoM 2826744-0300

SHELF

Drawing file:2842806-1_1_AB

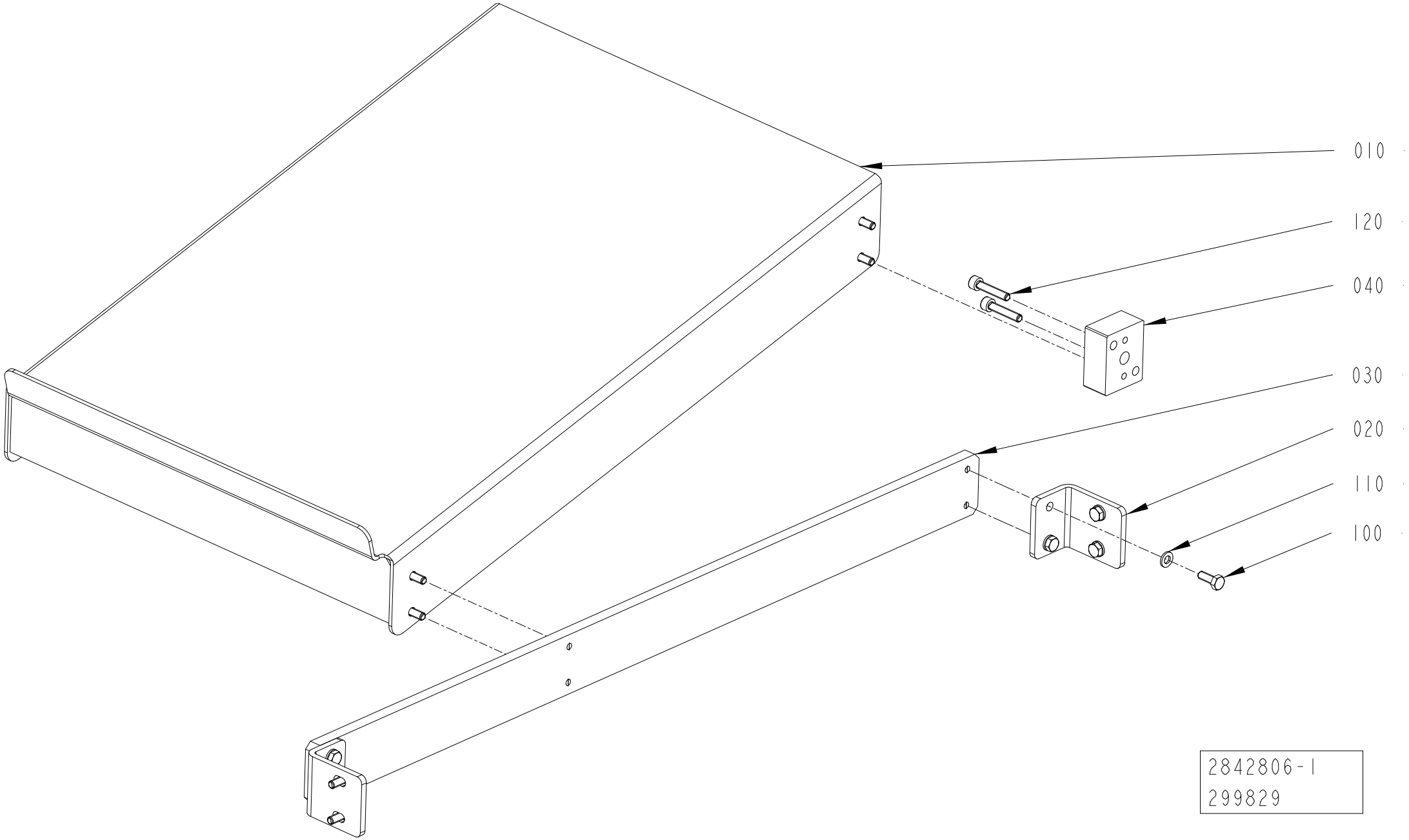

ECM: 310549
Group number: 2842806-0100
Assembly Drawing: 2842806-1_1_AB

Pos	Part No	Description	Qty	Unit	Page No
Common Parts					
010	2842800-0000	SHELF	1	PC	
020	2842804-0000	BRACKET	2	PC	
030	2842803-0000	PLATE	1	PC	
040	2842805-0000	SPACER	1	PC	
100	312105-0368	SCREW, M6S ISO 4017 M6X16 A4 80	12	PC	
110	315105-0153	WASHER PLAIN, 6,4X12X1,5 A4 BRB	12	PC	
120	312115-0374	SCREW ISO4762 M6X30 A4 80	2	PC	

Pos	Part No	Description	Qty	Unit	Page No

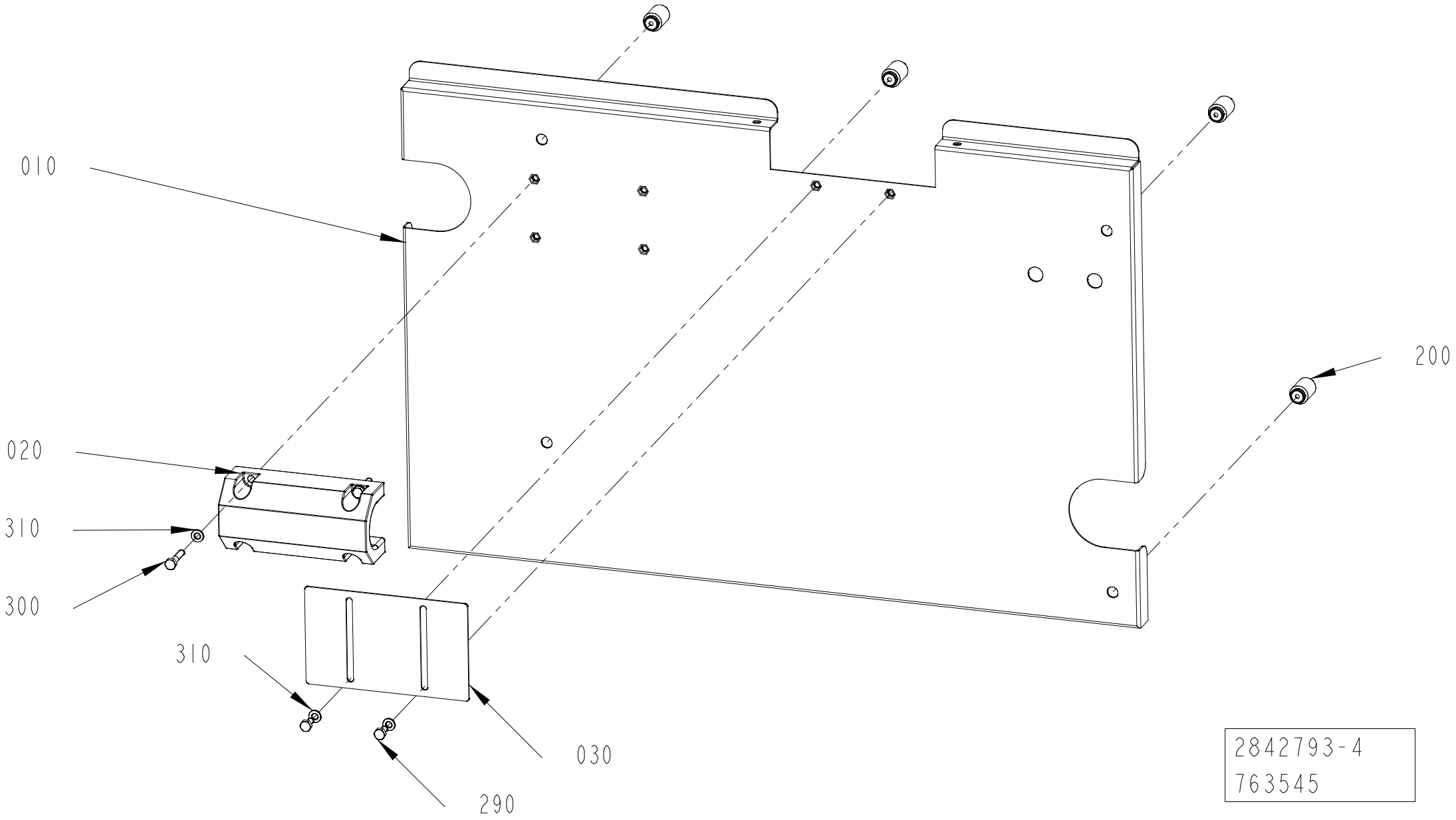
010
020
310
300
310
030
290
200
2842793-4
763545

ECM: 765533
Group number: 2842793-0400
Assembly Drawing: 2842793-4_1_AA

Pos	Part No	Description	Qty	Unit	Page No
Common Parts					
010	3423308-0000	COVER	1	PC	
020	3212201-0000	TUBE HOLDER	1	PC	
030	3425966-0000	COVER	1	PC	
200	90226-0458	MOUNTING SCREW	4	PC	
290	312105-0366	SCREW, M6S ISO 4017 M6X12 A4 80	2	PC	
300	312105-0374	SCREW, M6S ISO 4014 M6X30 A4 80	4	PC	
310	315106-0153	WASHER PLAIN, M6 ISO7089-6-200 HV A4	6	PC	

Pos	Part No	Description	Qty	Unit	Page No

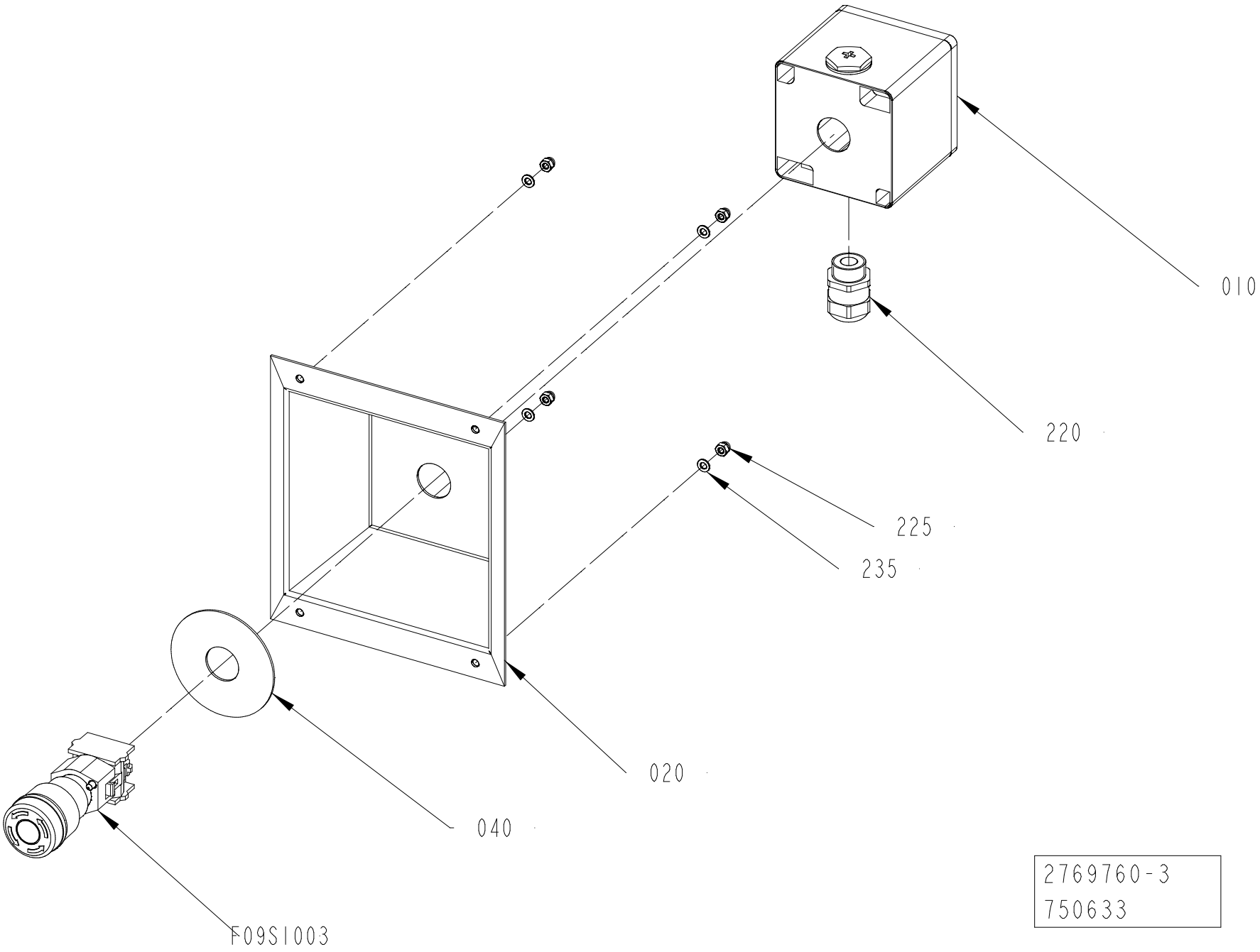
010
220
225
235
020
040
F09S1003
2769760-3
750633

ECM: 751447
Group number: 2769760-0300
Assembly Drawing: 2769760-3_1_AA

Pos	Part No	Description	Qty	Unit	Page No
Common Parts					
010	3257112-0000	PUSH BUTTON BOX	1	PC	
020	2532619-0000	COVER	1	PC	
040	486826-0001	SIGN "EMERGENCY STOP"	1	PC	
220	90458-0315	CABLE GLAND, M20X1,5, 5311 1120	1	PC	
225	312705-0312	NUT HEX. DOMED CAP MHM-6 M4 A280	4	PC	
235	315105-0136	WASHER PLAIN, 4,3X8X0,8 A4 BRB	4	PC	
F09S1003	90605-9819	EMERG. STOP SWITCH, 704.064.2+704.910.4	1	PC	

Pos	Part No	Description	Qty	Unit	Page No

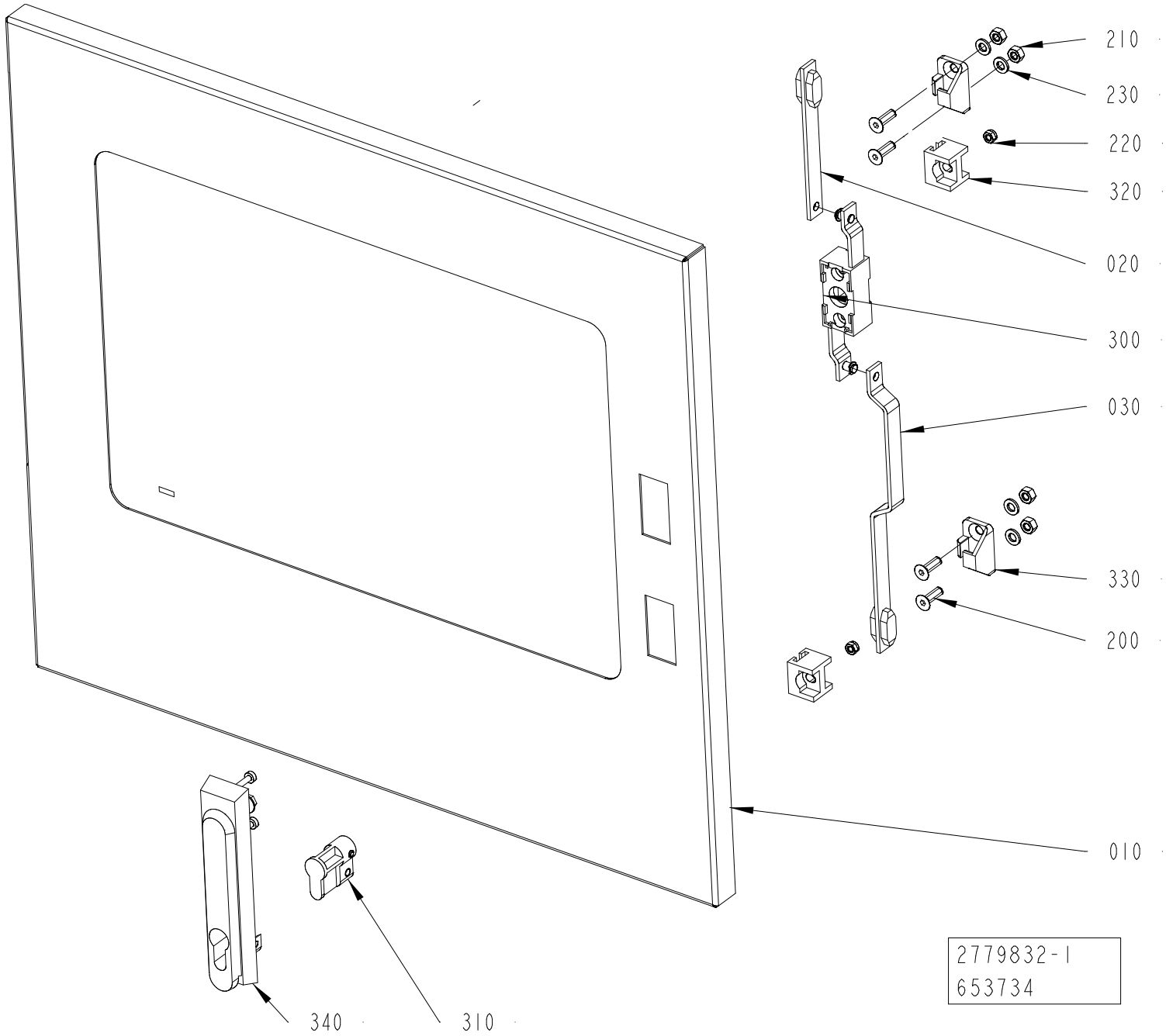
210
230
220
320
020
300
030
330
200
010
340
310
2779832-1
653734

ECM: 656696
Group number: 2779832-0100
Assembly Drawing: 2779832-1_1_AE

Pos	Part No	Description	Qty	Unit	Page No
Common Parts					
010	3329211-0000	GLASS DOOR	1	PC	
020	2563891-0000	STRUT	1	PC	
030	2563892-0000	STRUT	1	PC	
200	312155-0370	SCREW DIN 7991 MF6S M6X20 A4 70	4	PC	
210	312605-0316	HEXAGON NUT, M6M M6 A280	4	PC	
220	312812-0314	HEXAGON NUT, NY-LOCK M5 A4 80	2	PC	
230	315105-0153	WASHER PLAIN, 6,4X12X1,5 A4 BRB	4	PC	
300	90237-0123	LOCK, 1121-U10C	1	PC	
310	90237-0128	LOCK CYLINDER, 1109-SU125	1	PC	
320	90237-0144	GUIDE, 1121-SU540	2	PC	
330	90237-0147	LOCKING LUG, NO. 1121-53-0P	2	PC	
340	90237-0175	TURNING HANDLE, 1125-U185-0A	1	PC	

Pos	Part No	Description	Qty	Unit	Page No

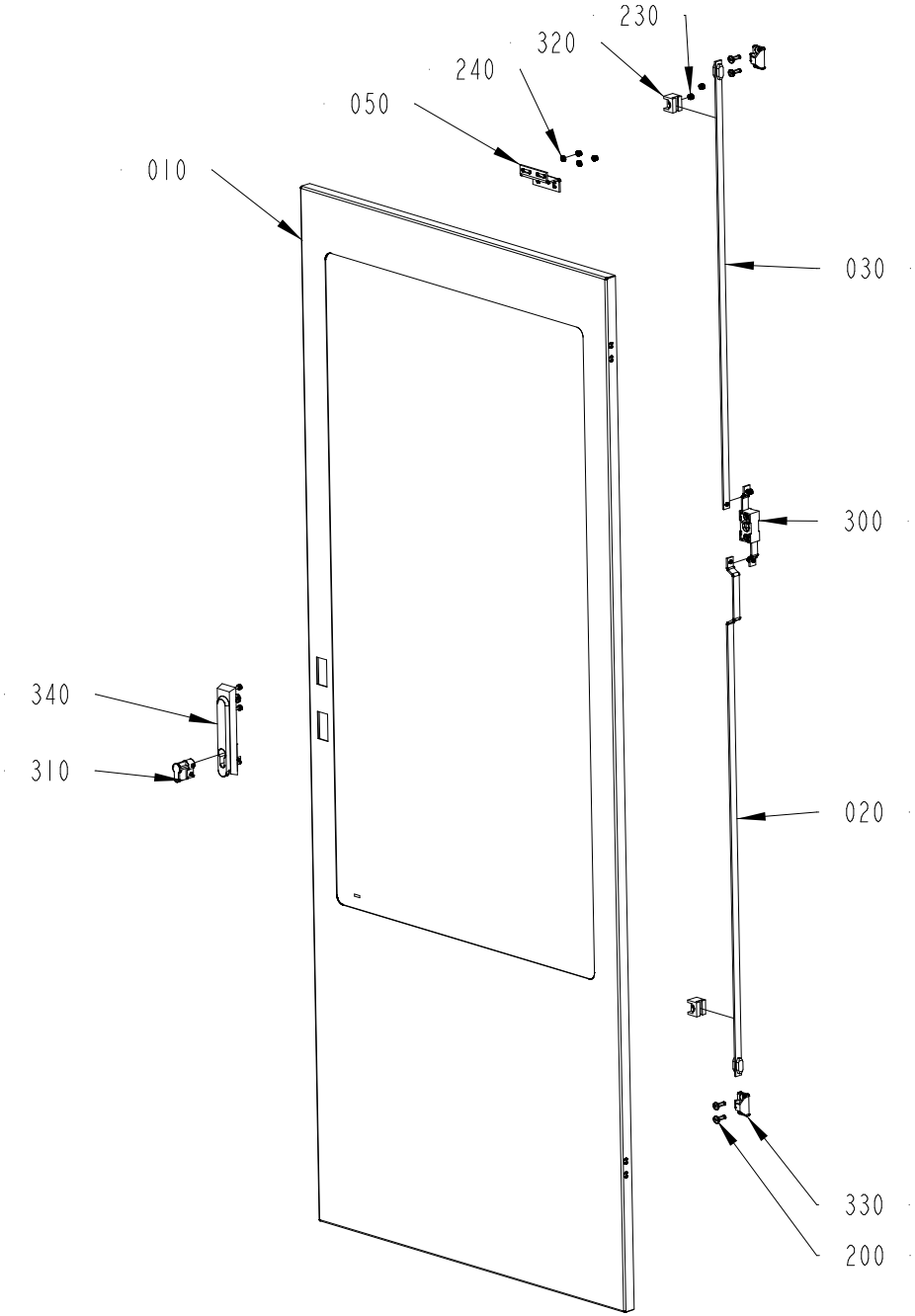

2779834-1
653734

ECM: 656697
Group number: 2779834-0100
Assembly Drawing: 2779834-1_1_AD

Pos	Part No	Description	Qty	Unit	Page No
Common Parts					
010	3329213-0000	GLASS DOOR	1	PC	
020	2551030-0000	STRUT	1	PC	
030	2781285-0000	STRUT	1	PC	
050	2595618-0000	BRACKET	1	PC	
200	312155-0370	SCREW DIN 7991 MF6S M6X20 A4 70	4	PC	
230	312812-0314	HEXAGON NUT, NY-LOCK M5 A4 80	4	PC	
240	315105-0146	WASHER PLAIN, 5,3X10X1 A4 BRB	2	PC	
300	90237-0123	LOCK, 1121-U10C	1	PC	
310	90237-0128	LOCK CYLINDER, 1109-SU125	1	PC	
320	90237-0144	GUIDE, 1121-SU540	2	PC	
330	90237-0147	LOCKING LUG, NO. 1121-53-0P	2	PC	
340	90237-0175	TURNING HANDLE, 1125-U185-0A	1	PC	

Pos	Part No	Description	Qty	Unit	Page No

Pos. 100 in BoM 2826741-0400

TOP SECTION

Drawing file:2787230-1_1_AC

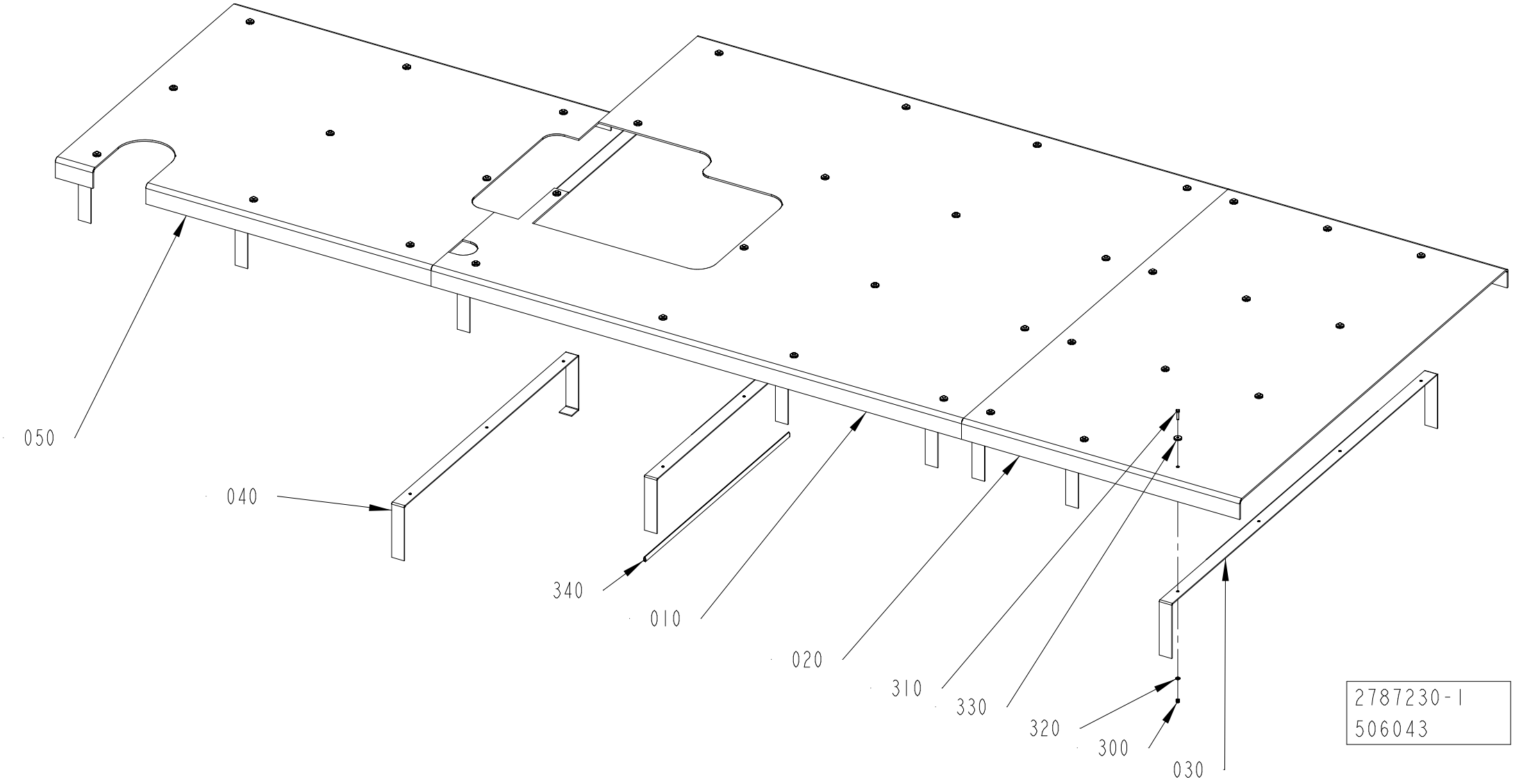

ECM: 507816
Group number: 2787230-0100
Assembly Drawing: 2787230-1_1_AC

Pos	Part No	Description	Qty	Unit	Page No
STREAMCAP500, STREAMCAP1000, SLIMCAP 2000, SLIMCAP 1000, STREAMCAP200, HELICAP2 23, HELICAP 27					
010	3170037-0000	PLATE	1	PC	
020	2787232-0000	PLATE	1	PC	
300	312812-0316	HEXAGON NUT, NY-LOCK M6 A4 80	37	PC	
310	312105-0372	SCREW, M6S ISO 4017 M6X25 A4 80	37	PC	
320	315105-0153	WASHER PLAIN, 6,4X12X1,5 A4 BRB	37	PC	
330	315125-0153	WASHER HIGH, TBRSB 6,4X22X4 A4	37	PC	
340	90143-0098	RUBBER STRIP, CLAMPING, NO. 1038-02	800	MM	
Common Parts					
030	2779823-0000	BRACKET	7	PC	
040	2779824-0000	BRACKET	3	PC	
050	3172144-0000	PLATE	1	PC	

Pos	Part No	Description	Qty	Unit	Page No

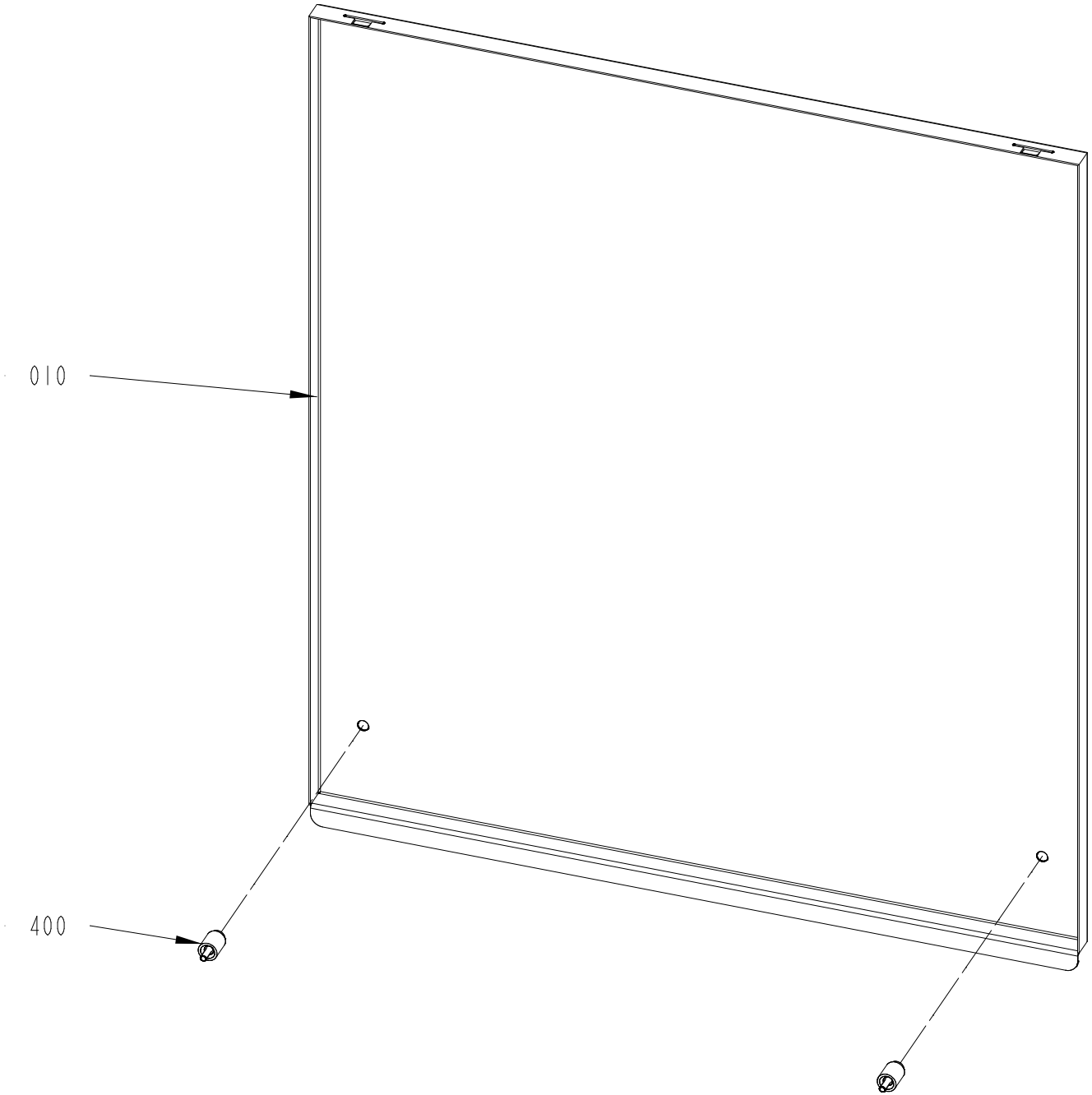

2805693-2
750633

ECM: 759380
Group number: 2805693-0200
Assembly Drawing: 2805693-2_1_AA

Pos	Part No	Description	Qty	Unit	Page No
Common Parts					
010	3426673-0000	COVER	1	PC	
400	90226-0458	MOUNTING SCREW	2	PC	

Pos	Part No	Description	Qty	Unit	Page No

Pos. 120 in BoM 2826741-0400

GLASS DOOR

Drawing file:2805687-1_1_AC

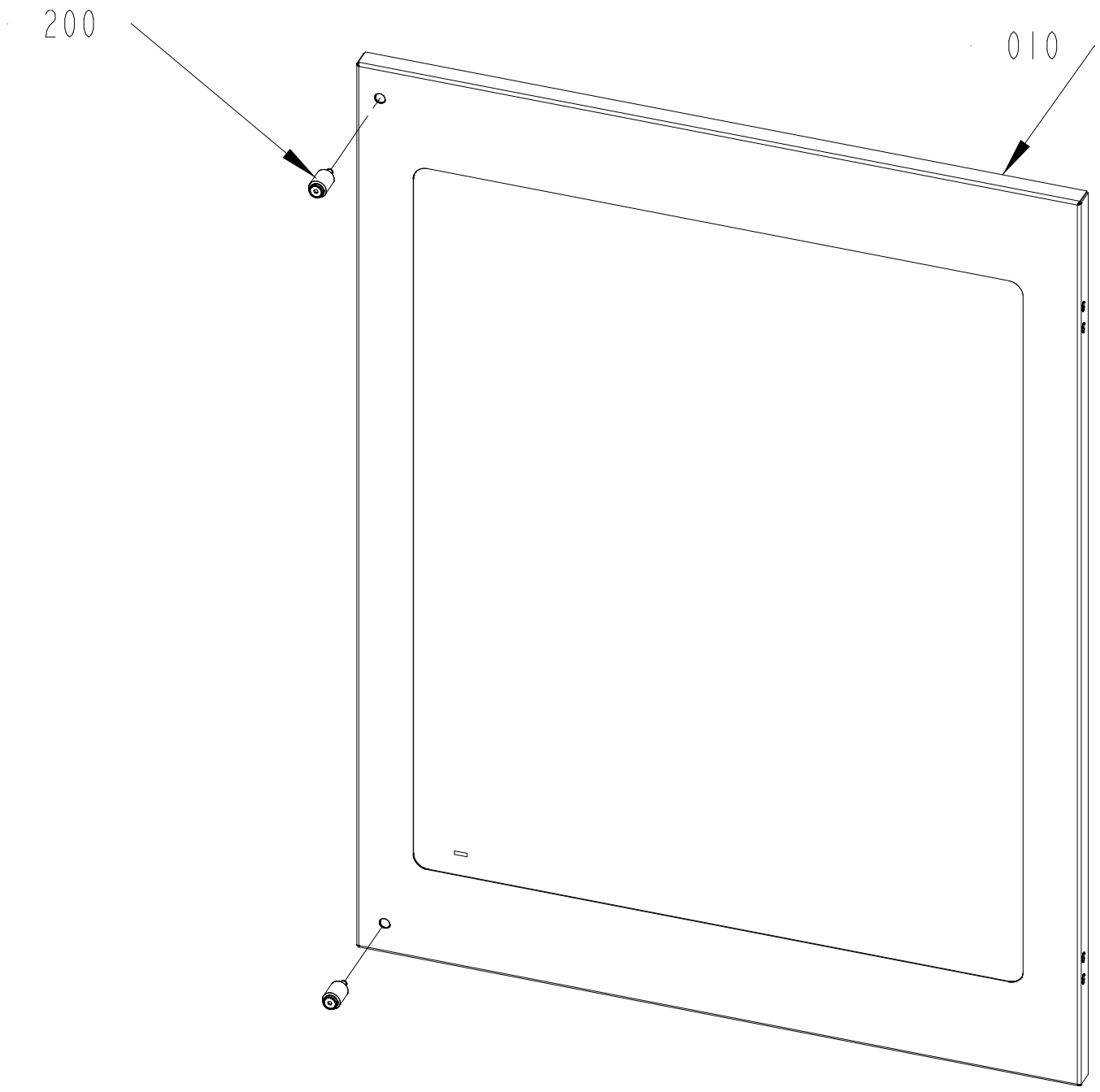

2805687-1

653734

ECM: 656698
Group number: 2805687-0100
Assembly Drawing: 2805687-1_1_AC

Pos	Part No	Description	Qty	Unit	Page No
Common Parts					
010	3329214-0000	GLASS DOOR	1	PC	
200	90226-0458	MOUNTING SCREW	2	PC	

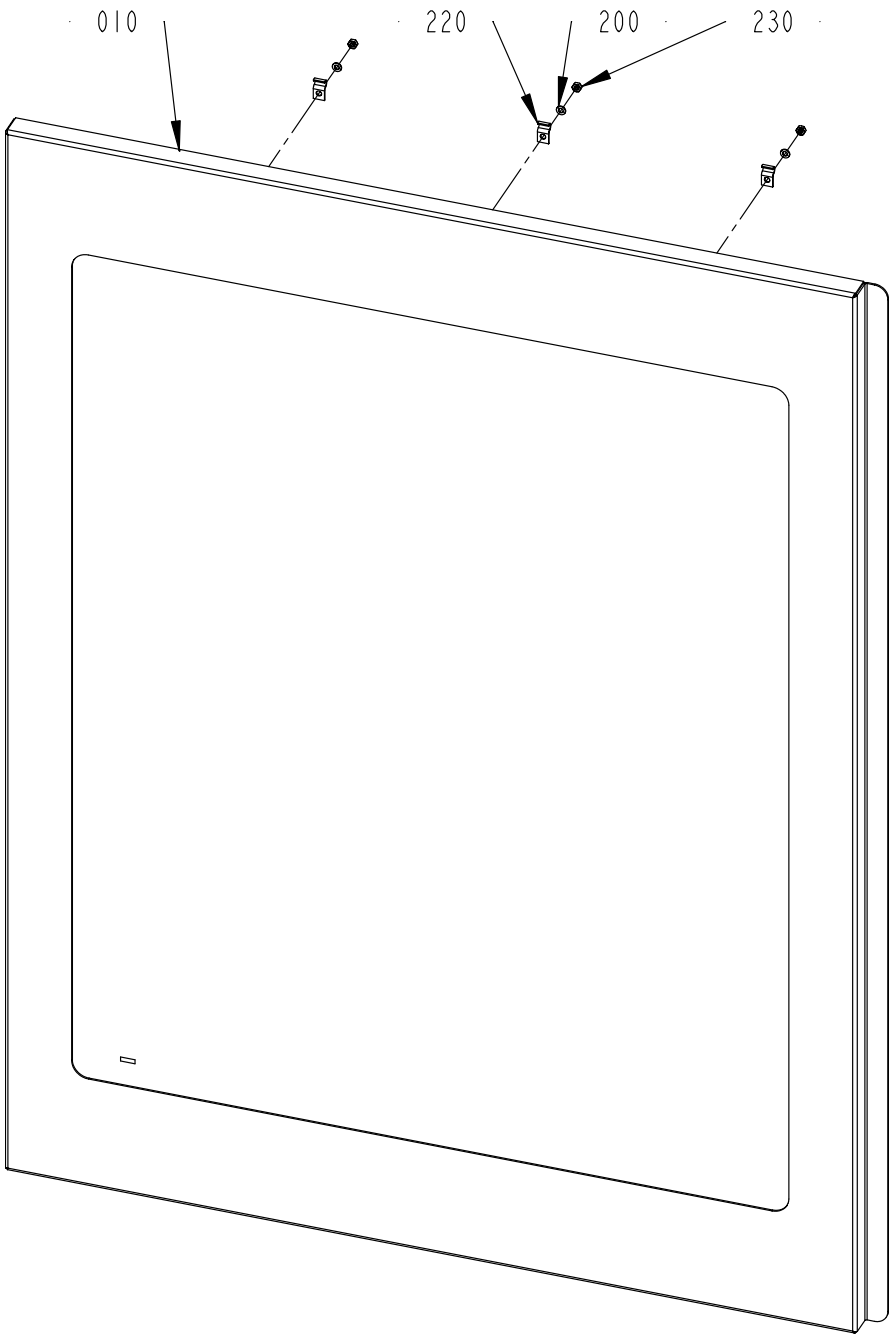
010
220
200
230

ECM: 858237
Group number: 2805694-0100
Assembly Drawing: 2805694-1_1_AE

Pos	Part No	Description	Qty	Unit	Page No
Common Parts					
010	3329215-0000	GLASS DOOR	1	PC	
200	315105-0136	WASHER PLAIN, 4,3X8X0,8 A4 BRB	3	PC	
220	90165-0060	PIPE CLIP FOR TUBE D=5 MM	3	PC	
230	312605-0312	HEXAGON NUT, M6M M4 A280	3	PC	

Pos	Part No	Description	Qty	Unit	Page No

Pos. 180 in BoM 2826741-0400

GLASS DOOR

Drawing file:3047348-1_1_AC

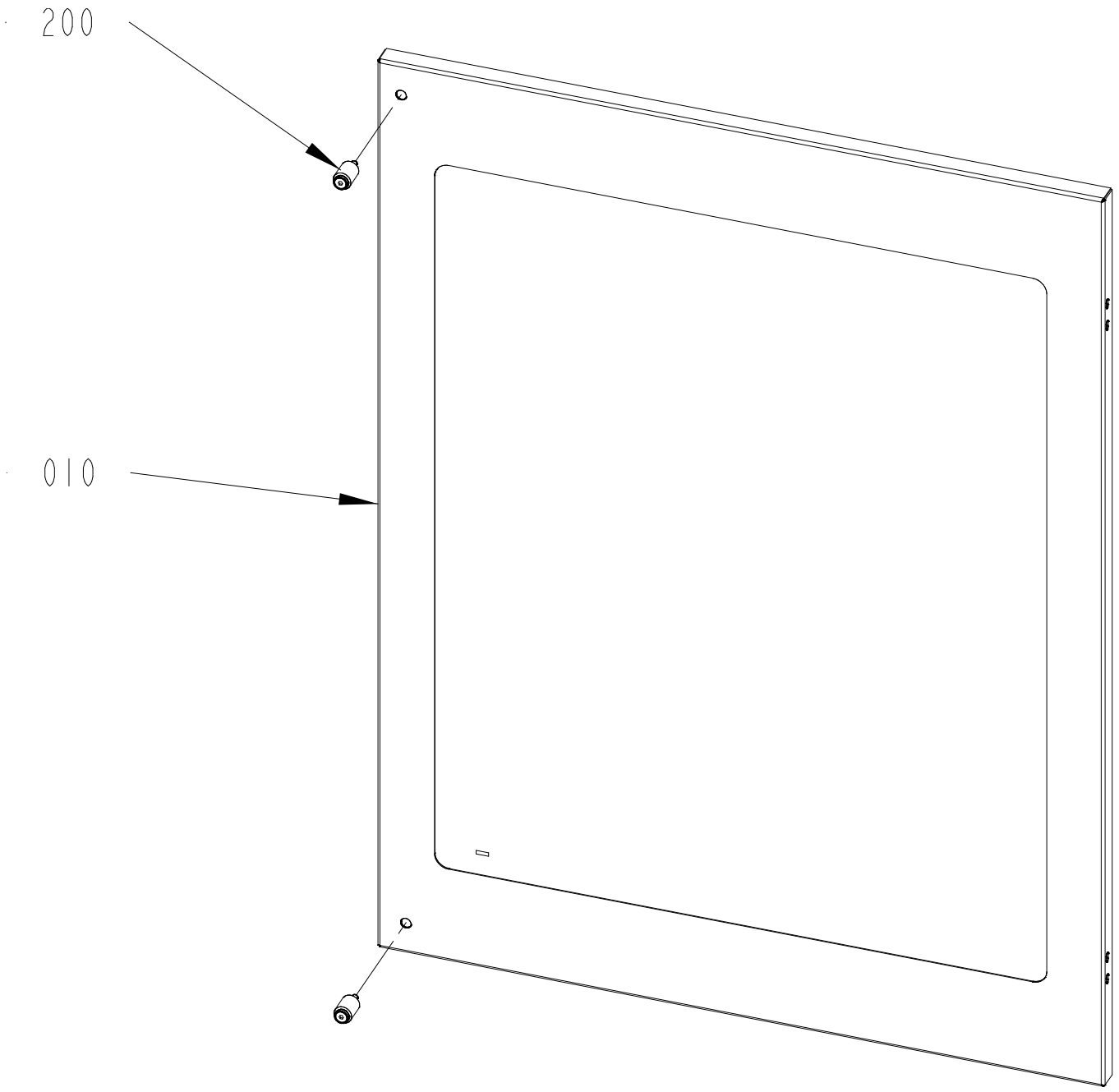

3047348-1
653734

ECM: 656702
Group number: 3047348-0100
Assembly Drawing: 3047348-1_1_AC

Pos	Part No	Description	Qty	Unit	Page No
Common Parts					
010	3329217-0000	GLASS DOOR	1	PC	
200	90226-0458	MOUNTING SCREW	2	PC	

Pos. 140 in BoM 662905-0400

WARNING SIGN

Drawing file:3217567-1_1_AB

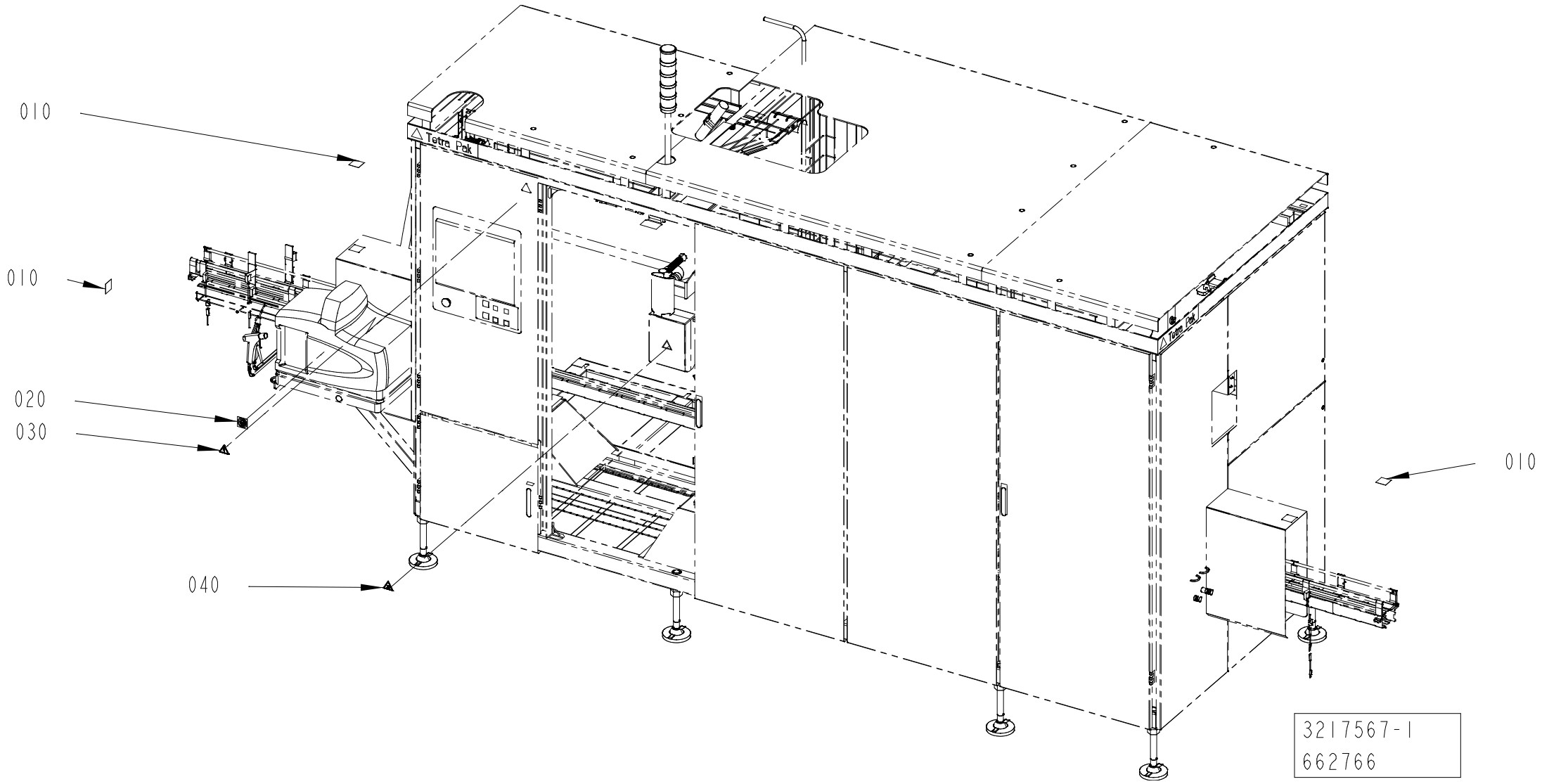

ECM: 861141
Group number: 3217567-0100
Assembly Drawing: 3217567-1_1_AB

Pos	Part No	Description	Qty	Unit	Page No
ANSI					
010	351568-0061	CAUTION SIGN H, MOVING PARTS	3	PC	
020	351569-0001	NOTICE SIGN H, DO NOT SPRAY	1	PC	
030	351566-0001	DANGER SIGN H, HAZ VOLTAGE, LOCKOUT	1	PC	
040	351567-0171	WARNING SIGN H, HOT SURFACE	1	PC	
ISO					
010	351553-0015	PROHIBITION SIGN ISO,DO NOT REACH,50 MM	3	PC	
020	351553-0013	PROHIBITI. SIGN ISO,DONT WASH/SPRAY,50MM	1	PC	
030	351552-0015	WARNING SIGN ISO, ELECTRIC HAZARD, 50MM	1	PC	
040	351552-0007	WARNING SIGN ISO, BURN HAZARD, 50 MM	1	PC	

Pos	Part No	Description	Qty	Unit	Page No

This page intentionally left blank

SPC

Spare Parts Catalogue

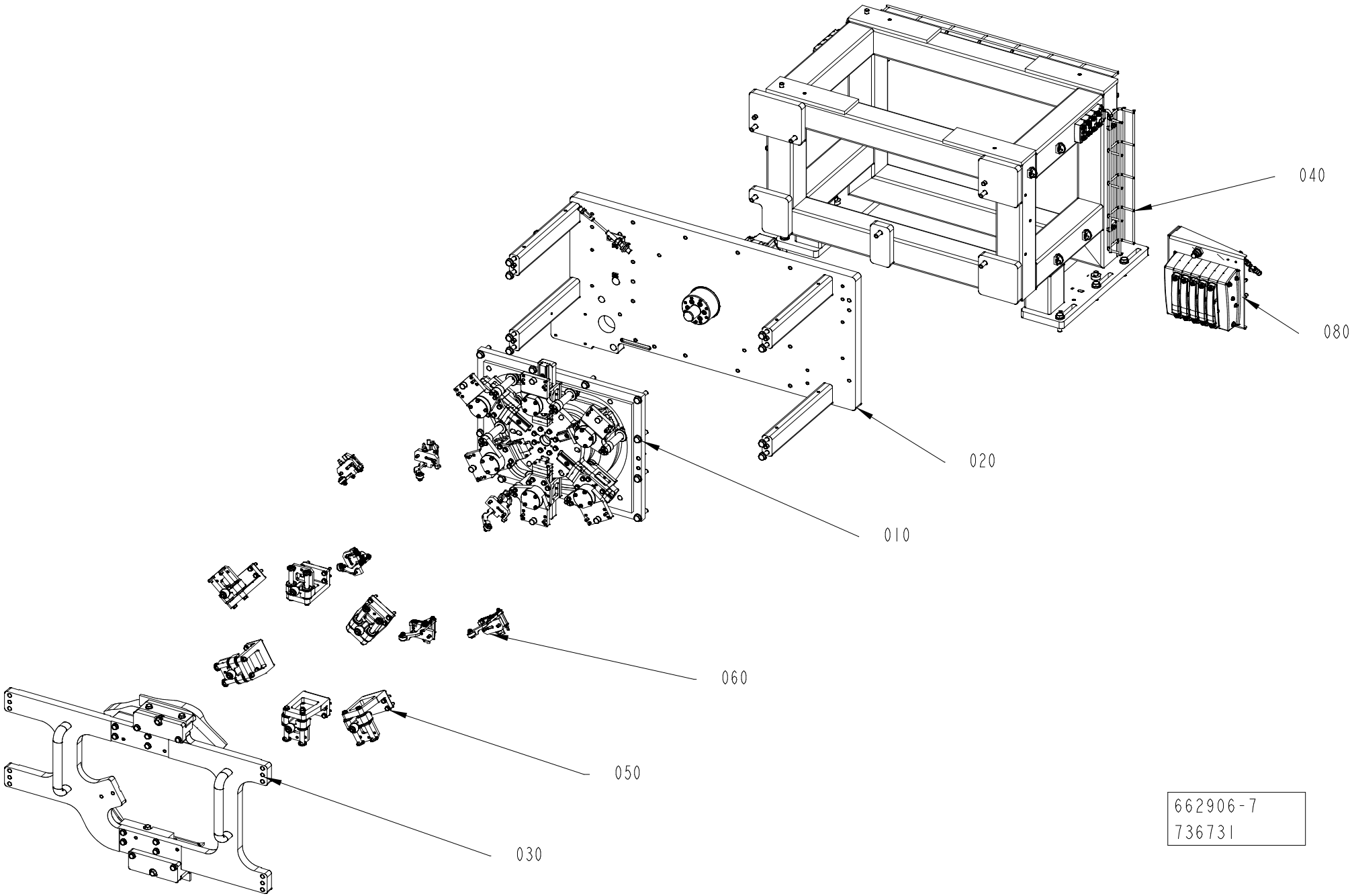
040
080
020
010
060
050
030
662906-7
736731

ECM: 742643
Group number: 662906-0400
Assembly Drawing: 662906-7_1_AA

Pos	Part No	Description	Qty	Unit	Page No
Common Parts					
010	2746938-0200	TRANSFER UNIT	1	PC	462
020	2837072-0300	DRIVE UNIT	1	PC	474
030	2839315-0300	CAMMODULE	1	PC	480, 482, 484, 486
040	2751664-0300	FRAME	1	PC	522
050	2746939-0200	CAP CARRIER GROUP	1	PC	526
060	2746941-0200	CAP HOLDERS GROUP	1	PC	534
080	3398007-0100	PNEUMATIC PANEL	1	PC	540

Pos	Part No	Description	Qty	Unit	Page No

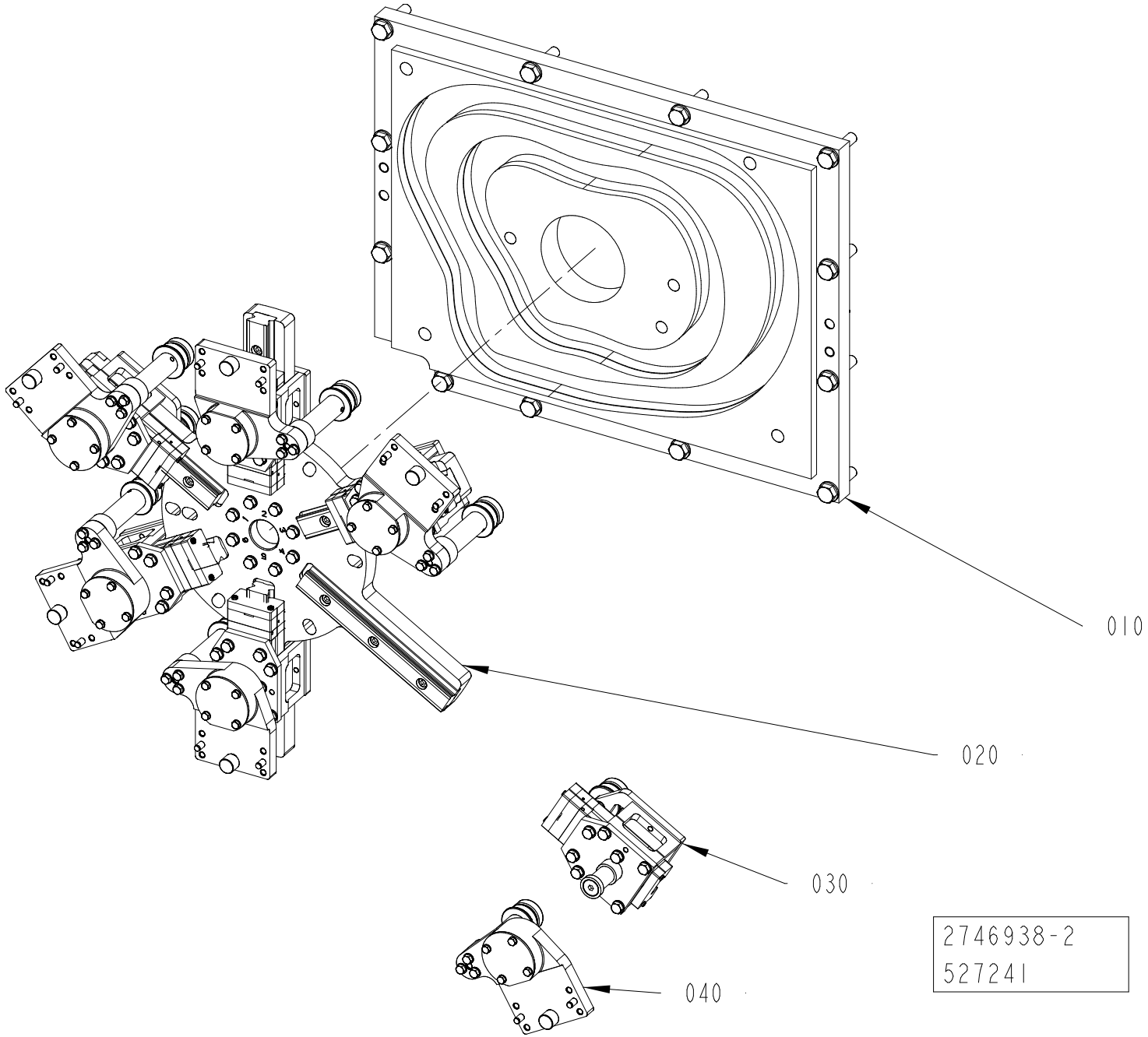
010
020
030
040
2746938-2
527241

ECM: 527260
Group number: 2746938-0200
Assembly Drawing: 2746938-2_1_AA

Pos	Part No	Description	Qty	Unit	Page No
Common Parts					
010	2751655-0100	CAM	1	PC	464
020	2751656-0100	STAR WHEEL	1	PC	466
030	2751657-0200	SLIDER	6	PC	468
040	2751658-0200	FOLLOWER CAM	6	PC	470

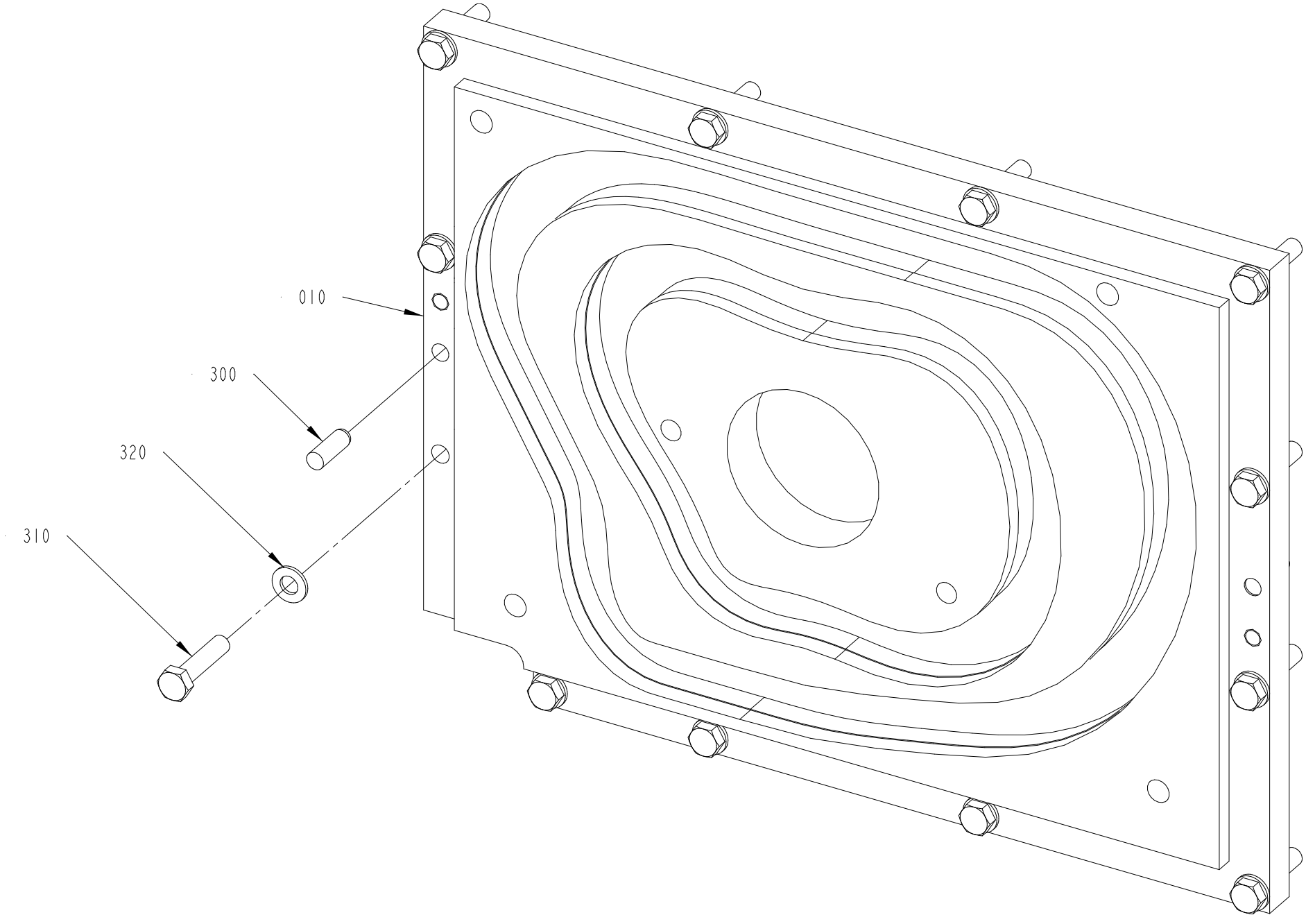

2751655-1
272630

ECM: 272706
Group number: 2751655-0100
Assembly Drawing: 2751655-1_1_AA

Pos	Part No	Description	Qty	Unit	Page No
Common Parts					
010	2716116-0000	CAM	1	PC	
300	311103-0458	PARALLEL PIN ISO 2338 10M6X30 A1	2	PC	
310	312105-0500	SCREW, M6S ISO 4014 M10X45 A4 80	12	PC	
320	315106-0173	"WASHER PLAIN, M10 ISO7089-10-200 HV A4"	12	PC	

Pos	Part No	Description	Qty	Unit	Page No

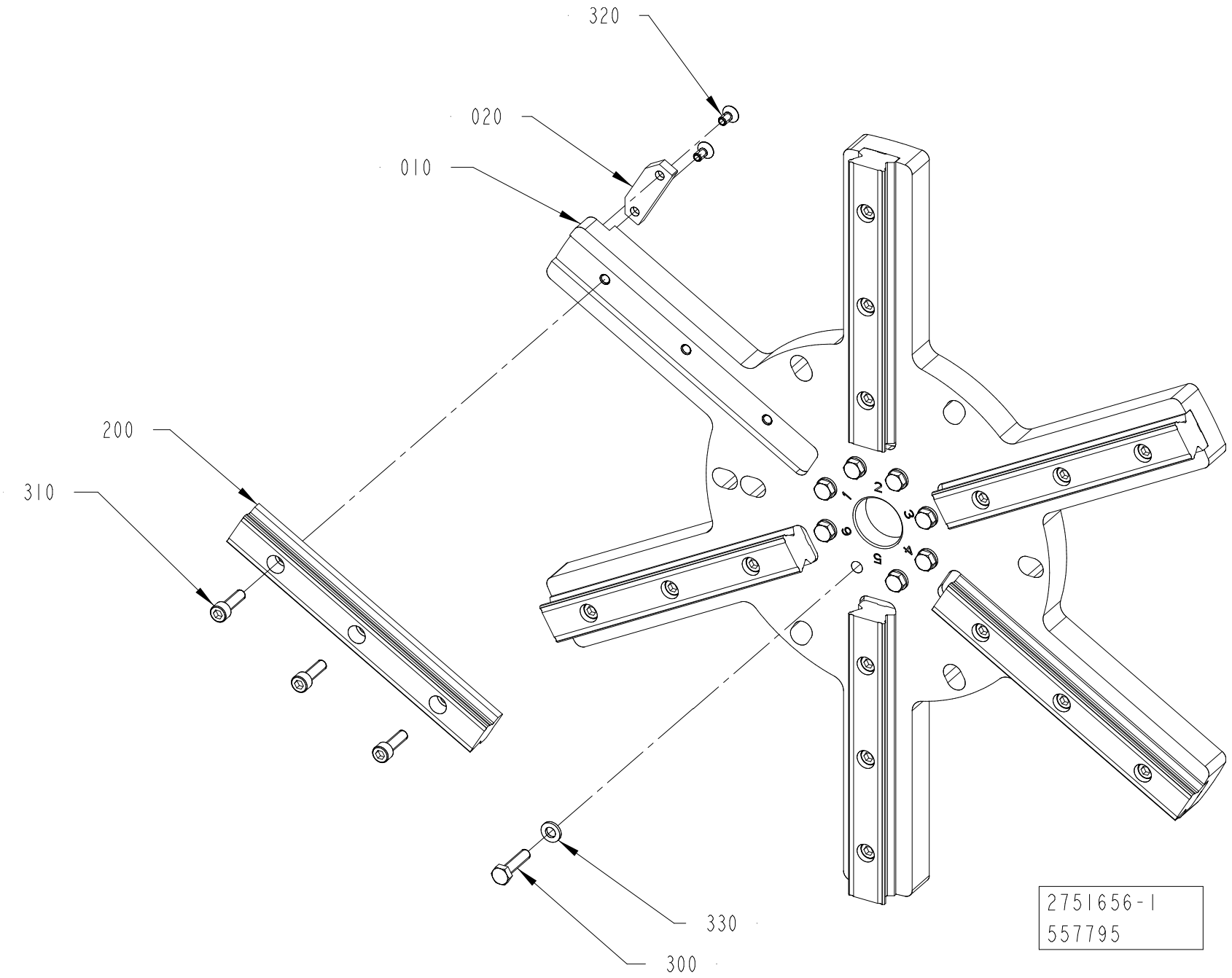
320
020
010
200
310
330
300
1
2
3
4
5
6
2751656-1
557795

ECM: 558785
Group number: 2751656-0100
Assembly Drawing: 2751656-1_1_AB

Pos	Part No	Description	Qty	Unit	Page No
Common Parts					
010	2751702-0000	STAR WHEEL	1	PC	
020	2751706-0000	FLAG	1	PC	
200	90600-0434	GUIDE BAR, SSR25-180L-YM G30/30	6	PC	
300	312105-0372	SCREW, M6S ISO 4017 M6X25 A4 80	8	PC	
310	312115-0370	SCREW ISO4762 M6X20 A4 80	18	PC	
320	312155-0325	SCREW DIN 7991 MF6S M5X10 A4 70	2	PC	
330	315106-0153	WASHER PLAIN, M6 ISO7089-6-200 HV A4	8	PC	

Pos	Part No	Description	Qty	Unit	Page No

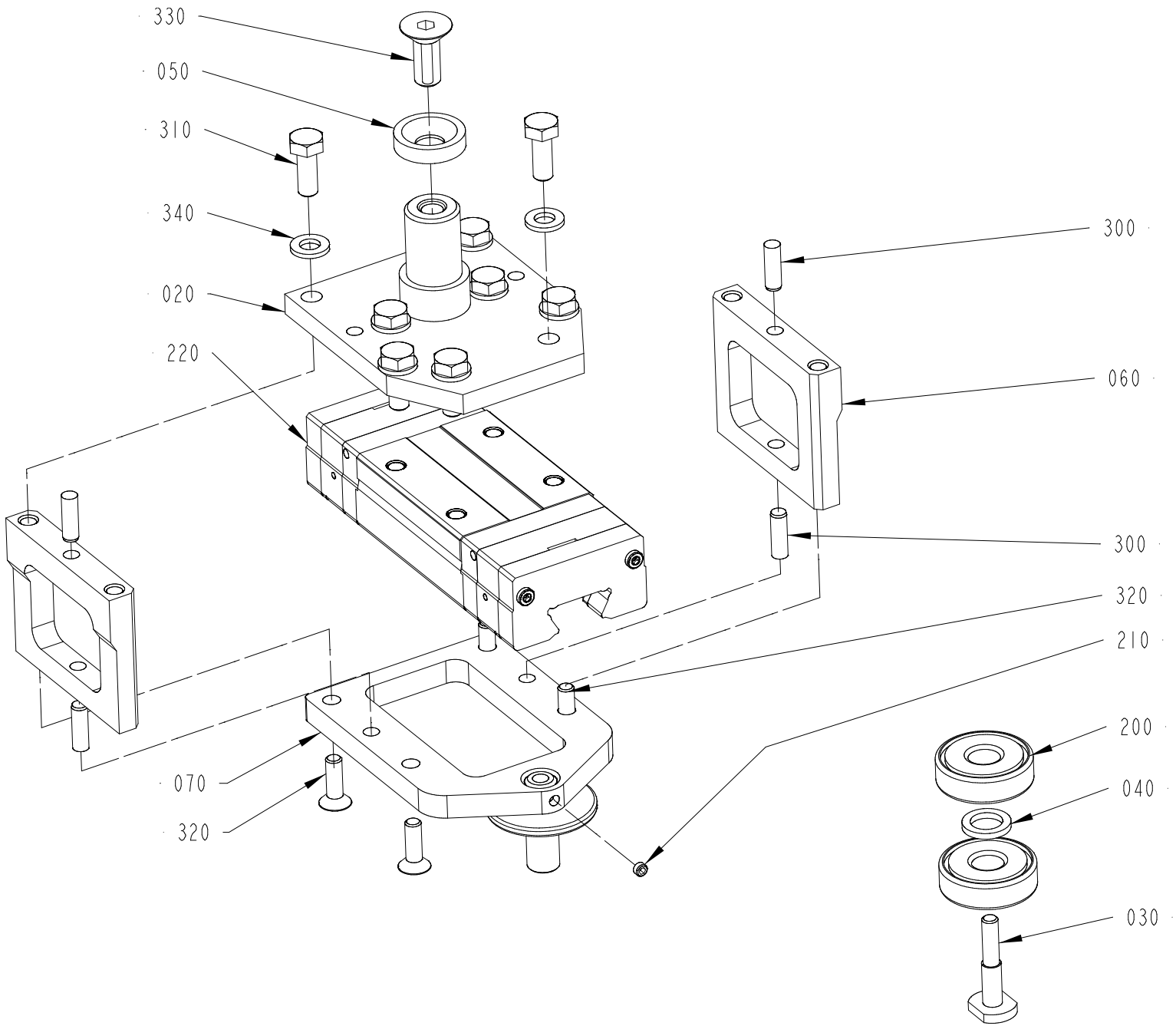
330
050
310
340
020
220
300
060
300
320
210
200
040
030
070
320
2751657-2
676498

ECM: 678265
Group number: 2751657-0200
Assembly Drawing: 2751657-2_1_AC

Pos	Part No	Description	Qty	Unit	Page No
Common Parts					
020	2751739-0000	BRACKET	1	PC	
030	2699680-0000	SCREW	1	PC	
040	2699681-0000	SPACER	1	PC	
050	2699683-0000	WASHER	1	PC	
060	2703697-0000	SIDE	2	PC	
070	2751703-0000	BRACKET	1	PC	
200	90603-2378	BALL BEARING, 10X30X9 MM	2	PC	
210	90459-1395	SCREW HEX.SOCK.SET CONEPT.MS6SS M4X4 A2	1	PC	
220	90604-8448	CARRIAGE, SSR25XW1QZSSHHM(GK)(B) BLOCK	1	PC	
300	311103-0308	PARALLEL PIN ISO 2338 5M6X16 A1	4	PC	
310	312105-0368	SCREW, M6S ISO 4017 M6X16 A4 80	8	PC	
320	312155-0329	SCREW DIN 7991 MF6S M5X16 A4 70	4	PC	
330	312155-0451	SCREW DIN 7991 MF6S M8X20 A4 70	1	PC	
340	315105-0153	WASHER PLAIN, 6,4X12X1,5 A4 BRB	8	PC	

Pos	Part No	Description	Qty	Unit	Page No

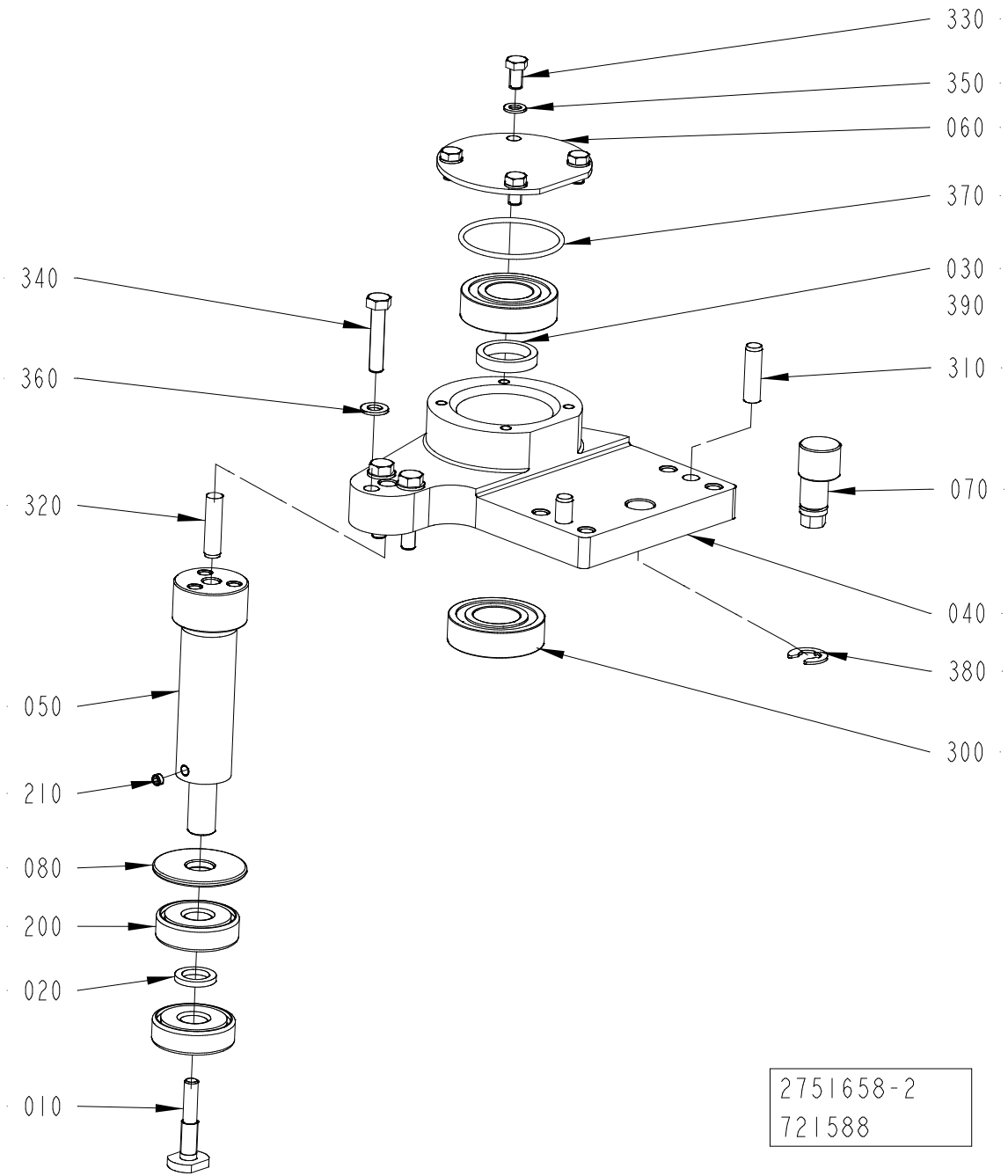
330
350
060
370
030
390
310
070
040
380
300
340
360
320
050
210
080
200
020
010
2751658-2
721588

ECM: 724558
Group number: 2751658-0200
Assembly Drawing: 2751658-2_1_AB

Pos	Part No	Description	Qty	Unit	Page No
Common Parts					
010	2699680-0000	SCREW	1	PC	
020	2699681-0000	SPACER	1	PC	
030	2699682-0000	SPACER	1	PC	
040	2751704-0000	PIVOT BRACKET	1	PC	
050	2751705-0000	SHAFT	1	PC	
060	2703696-0000	PROTECTIVE COVER	1	PC	
070	3103670-0000	ECCENTRIC SHAFT	1	PC	
080	2751699-0000	WASHER	1	PC	
200	90603-2378	BALL BEARING, 10X30X9 MM	2	PC	
210	90459-1395	SCREW HEX.SOCK.SET CONEPT.MS6SS M4X4 A2	1	PC	
300	344224-0203	BALL BEARING 17/35X10	2	PC	
310	311103-0354	PARALLEL PIN ISO 2338 6M6X22 A1	2	PC	
320	311103-1355	PARALLEL PIN ISO 2338 6M6X24 A1	1	PC	
330	312105-0287	SCREW, M6S ISO 4017 M4X8 A4 70	4	PC	
340	312105-0333	SCREW, M6S ISO 4017 M5X25 A4 80	3	PC	
350	315105-0136	WASHER PLAIN, 4,3X8X0,8 A4 BRB	4	PC	
360	315105-0146	WASHER PLAIN, 5,3X10X1 A4 BRB	3	PC	
370	315202-0716	O-RING 34,65X1,78 MM	1	PC	
380	315755-0109	RETAINING RING SHAFT DIN 6799 7 SS	1	PC	
390	344407-0000	KLÜBERSYNTH UH1 14-151, ONLY IN BOM	1	L	472

Pos	Part No	Description	Qty	Unit	Page No

This page intentionally left blank

ECM: 653851
Group number: 344407-0000
Assembly Drawing: -

Pos	Part No	Description	Qty	Unit	Page No
Common Parts					
	344407-0037	KLÜBERSYNTH UH1 14-151, 1KG CAN	1	PC	
	344407-0177	KLÜBERSYNTH UH1 14-151, 25KG BUCKET	1	PC	
	344407-0285	KLÜBERSYNTH UH1 14-151, 45G TUBE	1	PC	
	344407-0591	KLÜBERSYNTH UH1 14-151, 400G CARTRIDGE	1	PC	

Pos	Part No	Description	Qty	Unit	Page No

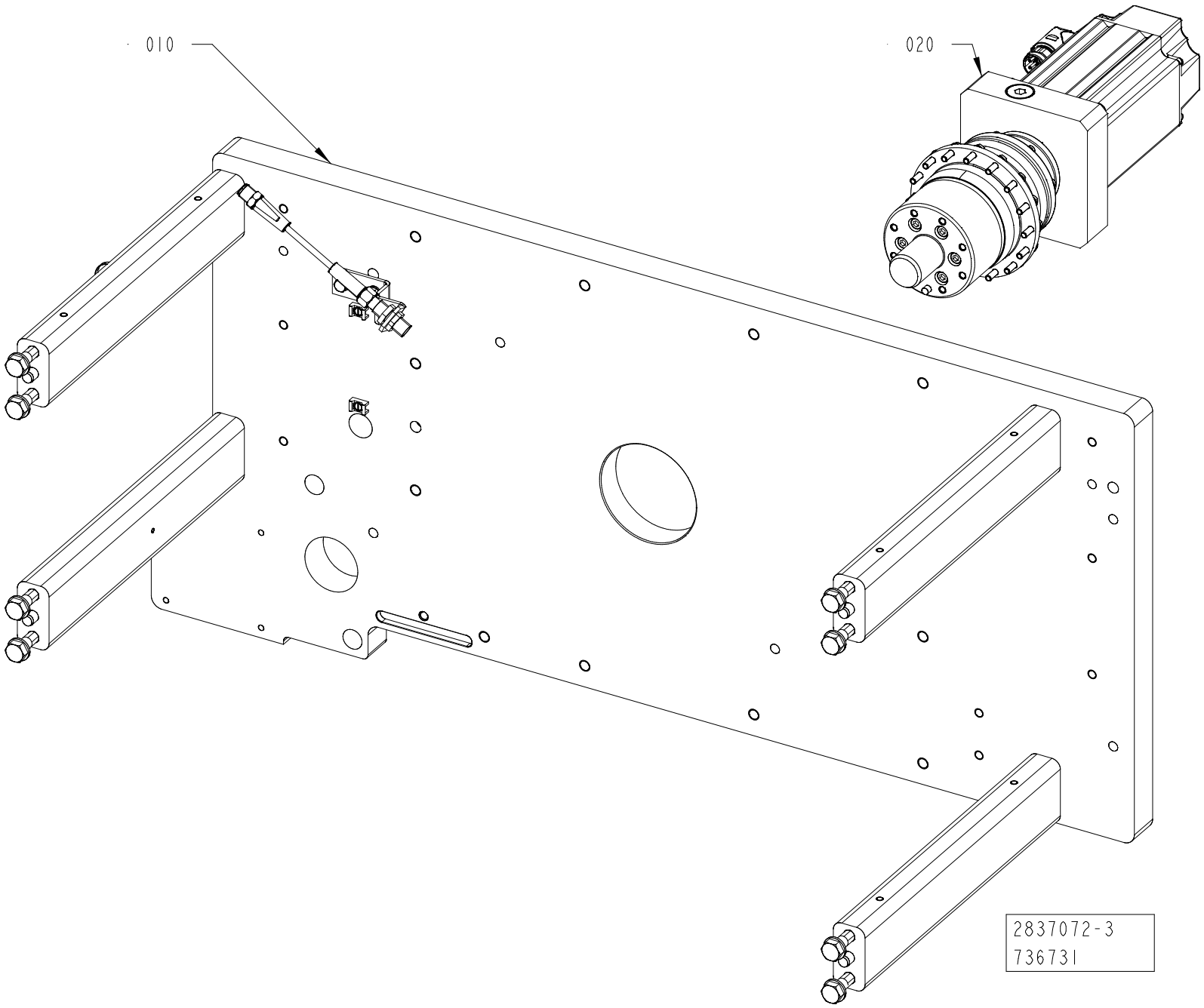
010
020
2837072-3
736731

ECM: 742637
Group number: 2837072-0300
Assembly Drawing: 2837072-3_1_AA

Pos	Part No	Description	Qty	Unit	Page No
Common Parts					
010	2837073-0200	PLATE	1	PC	476
020	2836507-0300	DRIVE MOTOR	1	PC	478

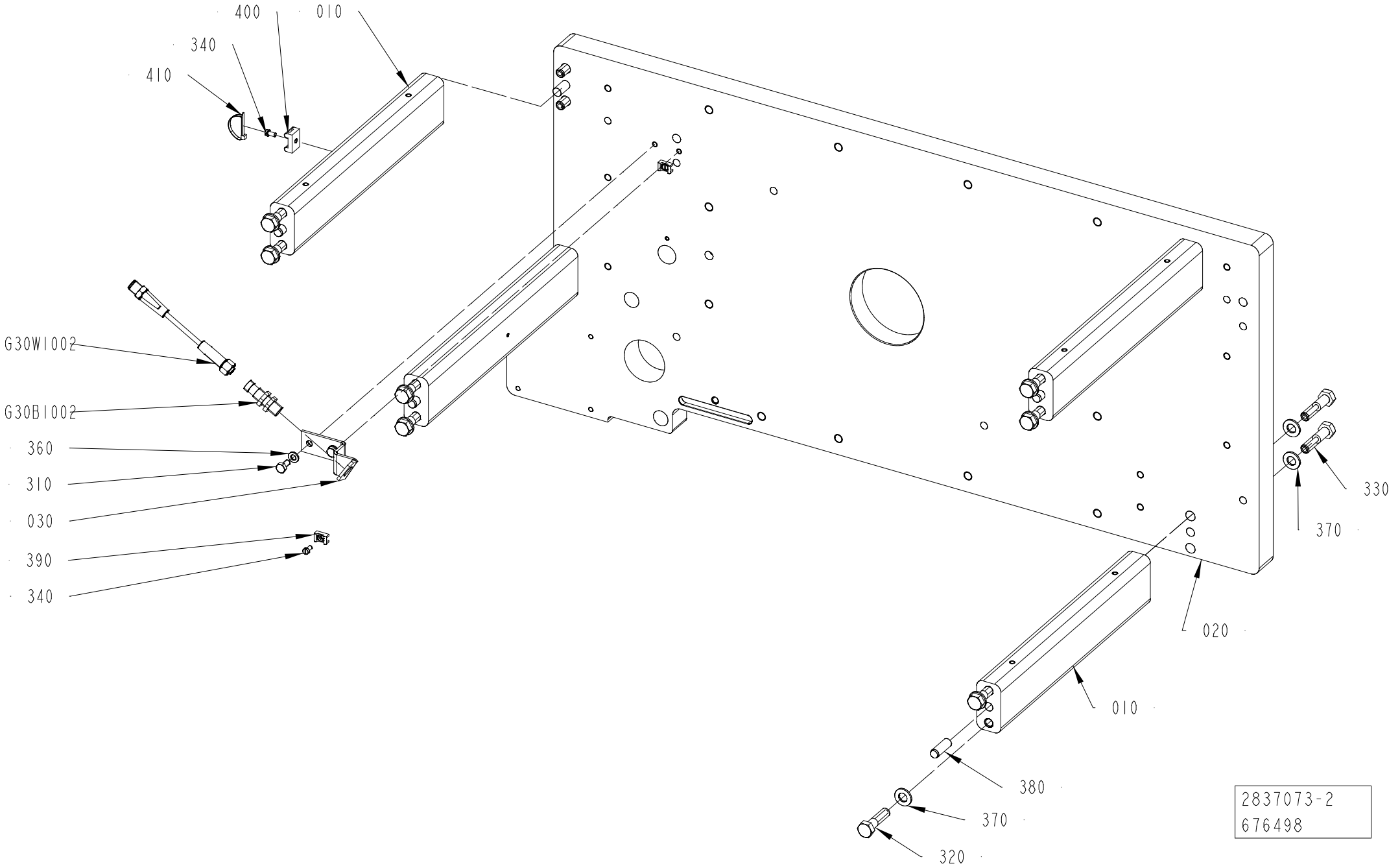
400
010
340
410
G30W1002
G30B1002
360
310
030
390
340
330
370
020
010
380
370
320
2837073-2
676498

ECM: 676774
Group number: 2837073-0200
Assembly Drawing: 2837073-2_1_AB

Pos	Part No	Description	Qty	Unit	Page No
Common Parts					
010	2703704-0000	SPACER STRUT	4	PC	
020	2835939-0000	PLATE	1	PC	
030	2751741-0000	BRACKET	1	PC	
310	312105-0366	SCREW, M6S ISO 4017 M6X12 A4 80	2	PC	
320	312105-0499	SCREW, M6S ISO 4014 M10X40 A4 80	8	PC	
330	312105-0500	SCREW, M6S ISO 4014 M10X45 A4 80	8	PC	
340	312125-0287	SLOTTED HEAD SCREW, ISO1207 M4X8 A4	3	PC	
360	315105-0153	WASHER PLAIN, 6,4X12X1,5 A4 BRB	2	PC	
370	315106-0173	"WASHER PLAIN, M10 ISO7089-10-200 HV A4"	16	PC	
380	311103-0458	PARALLEL PIN ISO 2338 10M6X30 A1	8	PC	
390	352113-0205	ANCHOR PLATES FOR STRIPS, TM2S8-C100	2	PC	
400	352113-0203	ANCHOR PLATES FOR STRIPS, TM3S8-M0	1	PC	
410	352113-0104	CABLE TIE, BLACK 300X4,8 MM	1	PC	
G30B1002	90458-2907	PROX.SWITCH IFS204	1	PC	
G30W1002	344267-0010	SENSOR CABLE, EVT042	1	PC	

Pos	Part No	Description	Qty	Unit	Page No

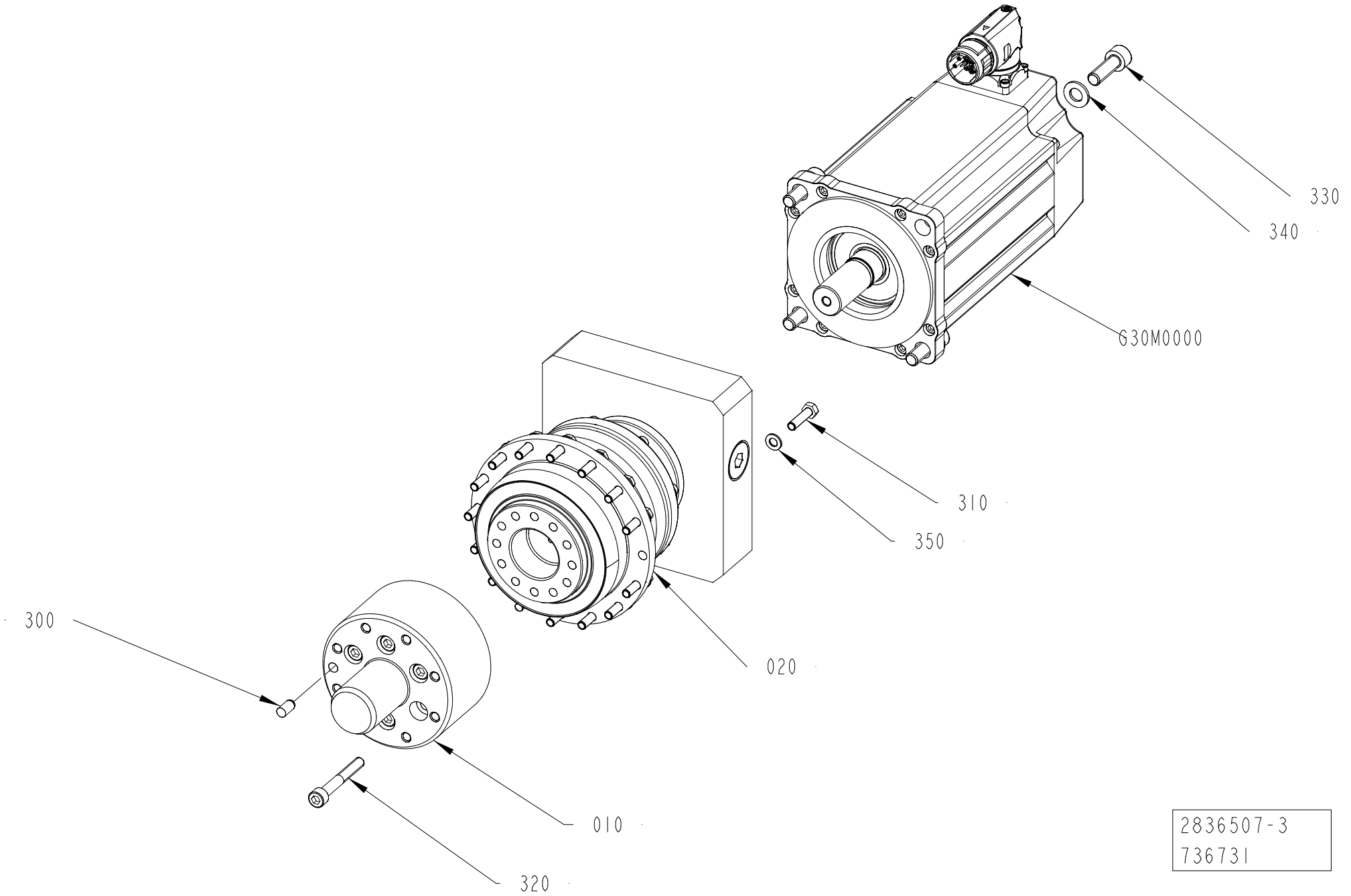
330
340
G30M0000
310
350
020
300
010
320
2836507-3
736731

ECM: 742633
Group number: 2836507-0300
Assembly Drawing: 2836507-3_1_AA

Pos	Part No	Description	Qty	Unit	Page No
Common Parts					
010	2834311-0000	HUB	1	PC	
020	90603-2476	GEARS,PLANETARY TP010F-MA3-66-OE1/MPL B4	1	PC	
300	311103-0349	PARALLEL PIN ISO 2338 6M6X12 A1	1	PC	
310	312105-0331	SCREW, M6S ISO 4017 M5X20 A4 80	16	PC	
320	312115-0379	SCREW ISO4762 M6X45 A4 80	6	PC	
330	312115-0453	SCREW ISO4762 M8X25 A4 80	4	PC	
340	315106-0165	WASHER PLAIN, M8 ISO7089-8-200 HV A4	4	PC	
350	315105-0146	WASHER PLAIN, 5,3X10X1 A4 BRB	16	PC	
G30M0000	90606-2779	SERVO MOTOR, VPL-B1153F-PK12AA, SERIES A	1	PC	

Pos	Part No	Description	Qty	Unit	Page No

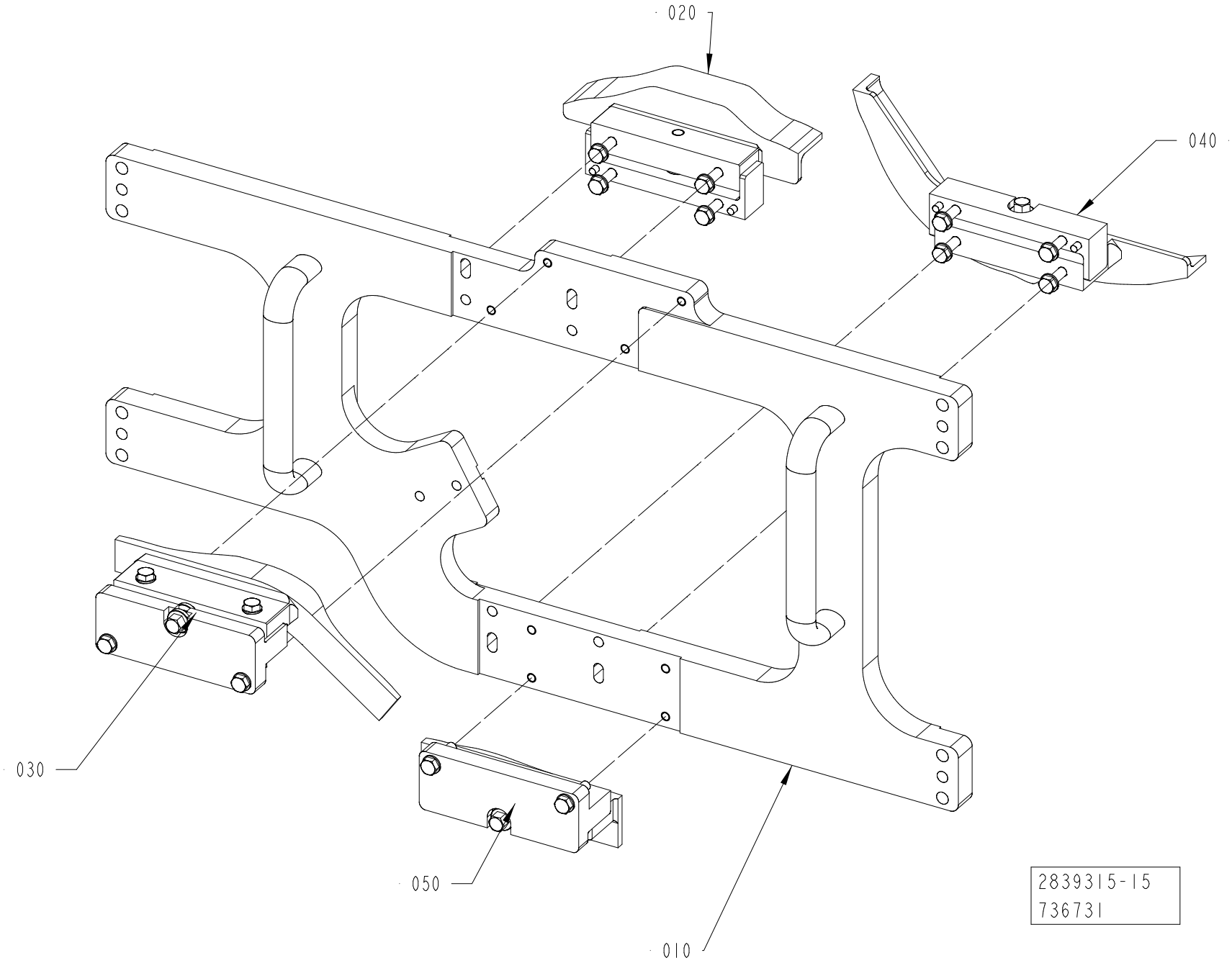
020
040
030
050
010
2839315-15
736731

This list refers to drawings on pages 480 to 486

Pos	Part No	Description	Qty	Unit	Page No
TBA STREAMCAP 1000 NO POSITIONING DEVICE, TBA SLIMCAP 1000 NO POSITIONING DEVICE, TBA SLIMCAP 2000 NO POSITIONING DEVICE, TBA STREAMCAP 200 NO POSDEVICE See page: 480					
040	2839385-0100	CAM	1	PC	488
050	2839386-0100	CAM	1	PC	490
TGA See page: 482					
TBA 0200E HELICAP 23 POSDEVICE, TBA 0250E HELICAP 23 POSDEVICE, TPA STREAMCAP 1000 POSITIONING DEVICE, TPA STREAMCAP 500 POSITIONING DEVICE, TPA HELICAP 27 POSITIONING DEVICE See page: 484					
070	2873914-0100	CAMMODULE	1	PC	492, 494
080	2873915-0100	CAMMODULE	1	PC	496, 498
090	2873916-0100	CAMMODULE	1	PC	500, 502
100	2873917-0100	CAMMODULE	1	PC	504
TGA See page: 482					
TBA 0200E HELICAP 23 POSDEVICE, TBA 0250E HELICAP 23 POSDEVICE, TPA STREAMCAP 1000 POSITIONING DEVICE, TPA STREAMCAP 500 POSITIONING DEVICE, TPA HELICAP 27 POSITIONING DEVICE See page: 484					
TBA STREAMCAP 1000 POSITIONING DEVICE, TBA STREAMCAP 200 POSDEVICE, TBA 1000S HELICAP 23 POSDEVICE, TBA HELICAP 27 POSITIONING DEVICE, TBA 1500S HELICAP2 23 POSDEVICE See page: 486					
110	2780425-0100	CAM	1	PC	506
120	2780560-0300	DRIVE	1	PC	508, 510, 512
Common Parts					
010	2839382-0100	MOUNTING PLATE	1	PC	514, 516
020	2839383-0100	CAM	1	PC	518
030	2839384-0100	CAM	1	PC	520

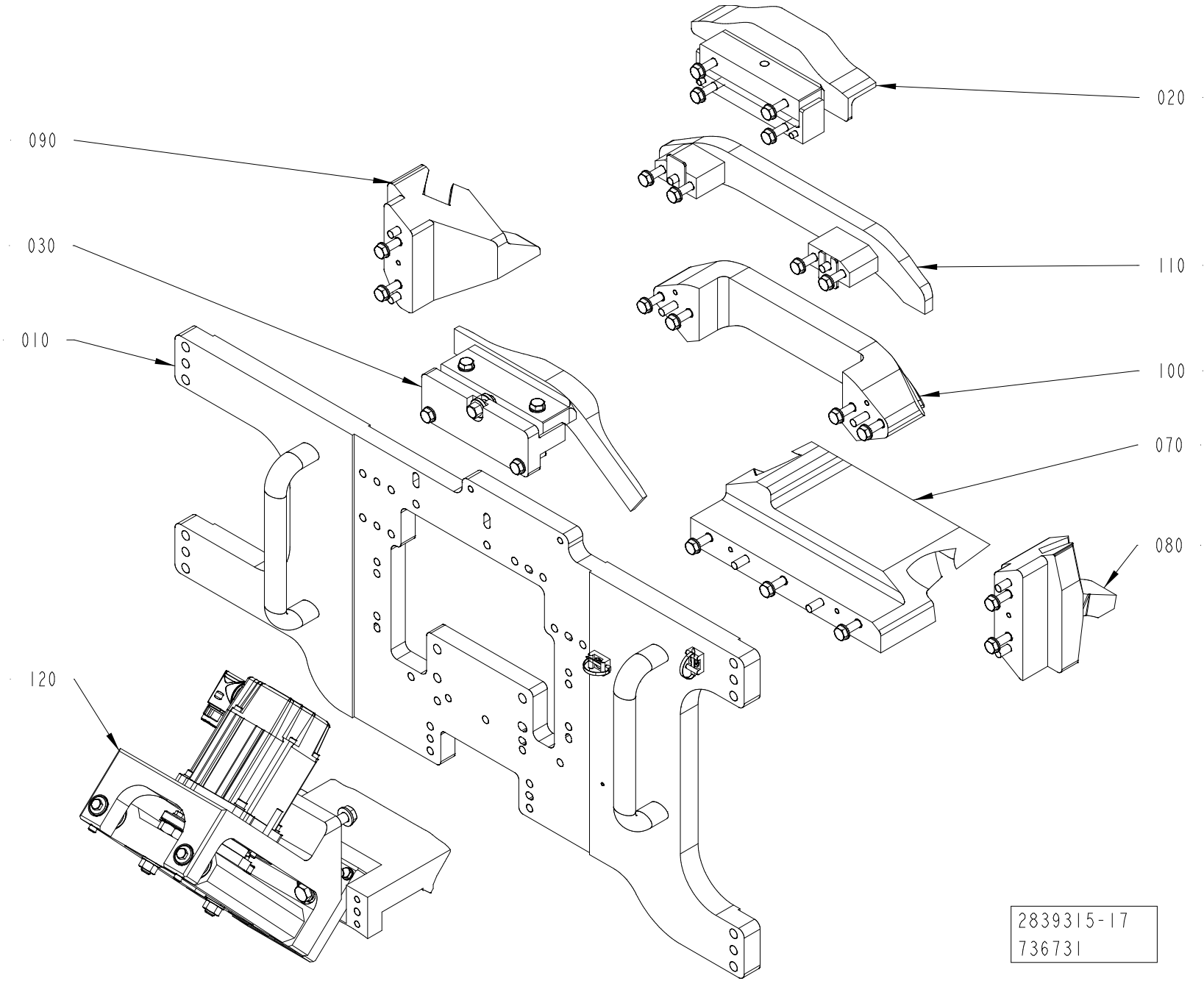
020
090
110
030
100
010
070
080
120
2839315-17
736731

Pos	Part No	Description	Qty	Unit	Page No

SEE LIST FOLLOWING DRAWING ON PAGE: 480

Pos	Part No	Description	Qty	Unit	Page No

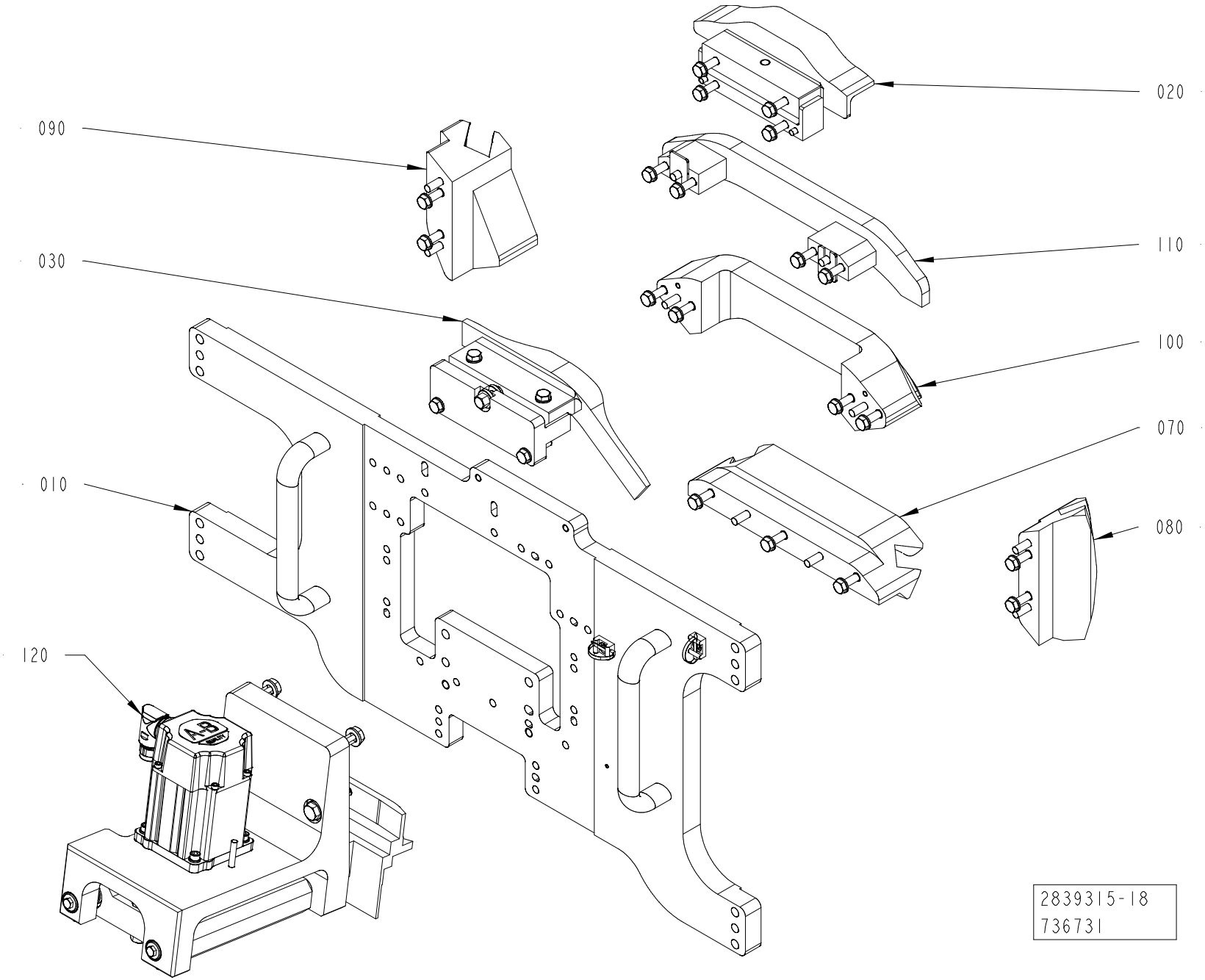
020
090
110
030
100
070
010
080
120
2839315-18
736731

This list refers to drawings on pages 480 to 486

Pos	Part No	Description	Qty	Unit	Page No

SEE LIST FOLLOWING DRAWING ON PAGE: 480

Pos	Part No	Description	Qty	Unit	Page No

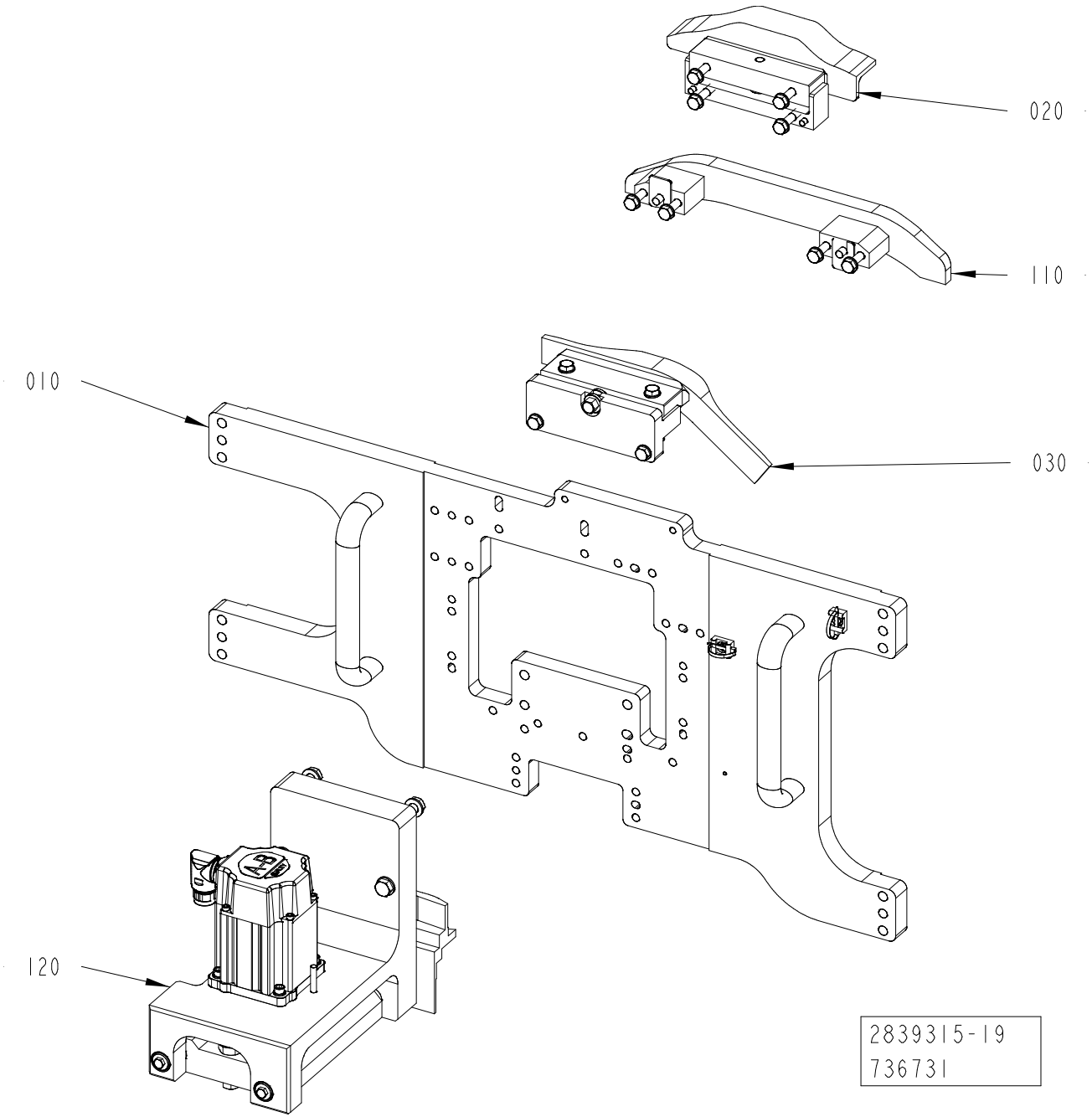
020
110
010
030
120
2839315-19
736731

This list refers to drawings on pages 480 to 486

Pos	Part No	Description	Qty	Unit	Page No

SEE LIST FOLLOWING DRAWING ON PAGE: 480

Pos	Part No	Description	Qty	Unit	Page No

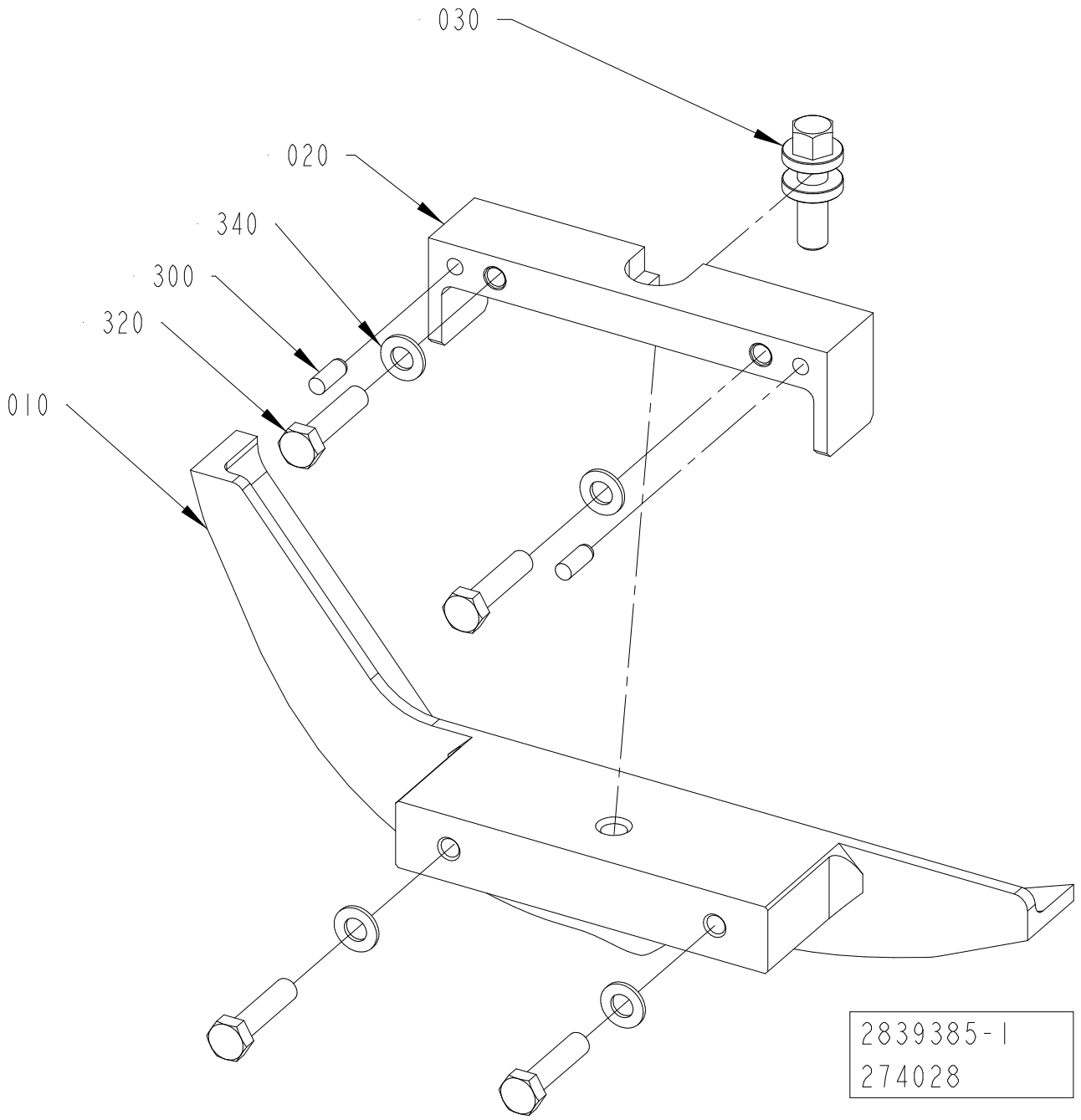
030
020
340
300
320
010
2839385-1
274028

ECM: 494343
Group number: 2839385-0100
Assembly Drawing: 2839385-1_1_AA

Pos	Part No	Description	Qty	Unit	Page No
STREAMCAP1000, SLIMCAP 2000, SLIMCAP 1000, STREAMCAP200					
010	2839393-0000	CAM	1	PC	
Common Parts					
020	2838277-0000	BRACKET	1	PC	
030	2703842-0000	ADJUSTING SCREW	1	PC	
300	311103-0351	PARALLEL PIN ISO 2338 6M6X16 A1	2	PC	
320	312105-0457	SCREW, M6S ISO 4014 M8X35 A4 80	4	PC	
340	315105-0165	FWAS080G0-0S, WASHER PLAIN	4	PC	

Pos	Part No	Description	Qty	Unit	Page No

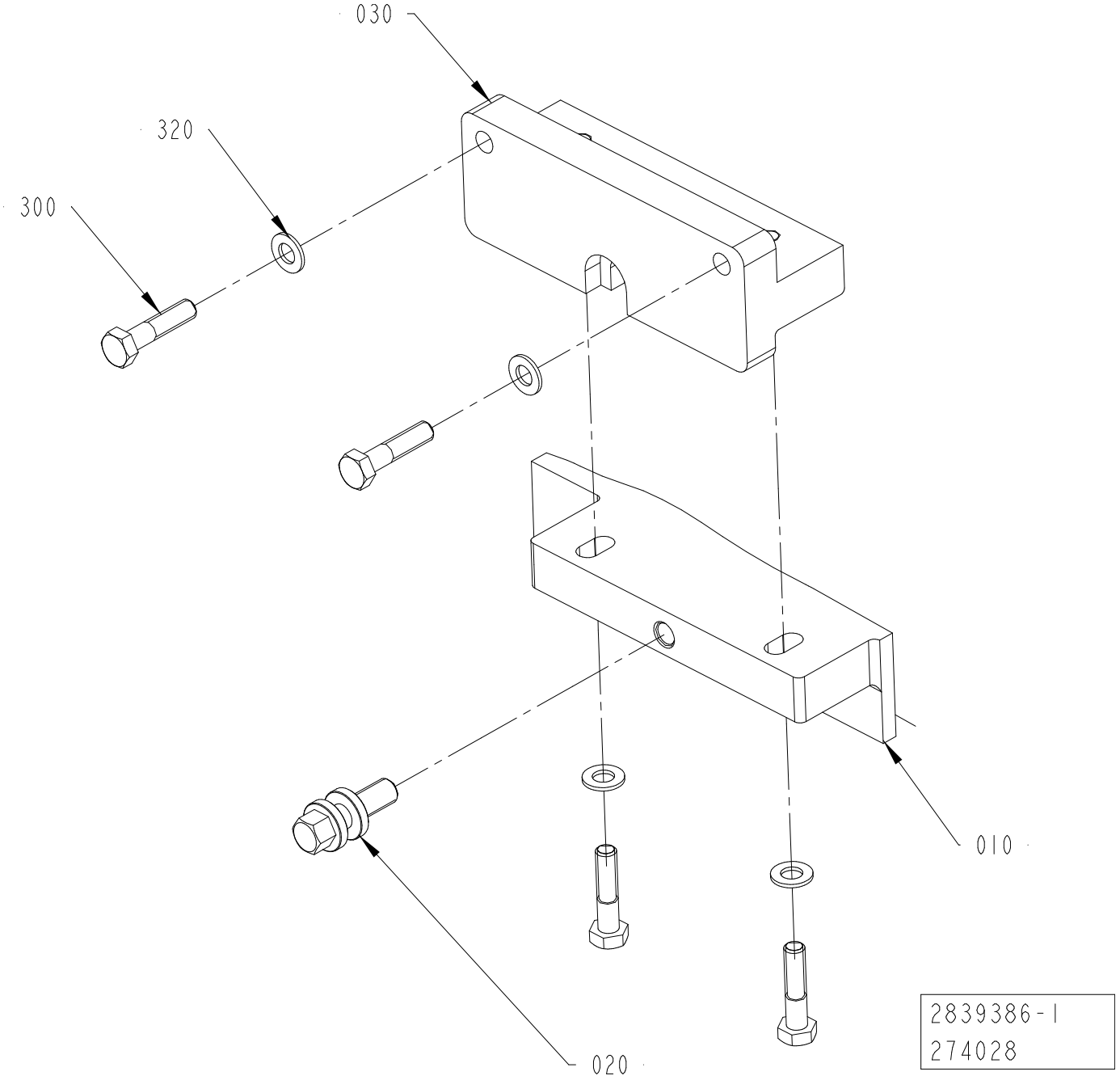
030
320
300
010
020
2839386-1
274028

ECM: 494344
Group number: 2839386-0100
Assembly Drawing: 2839386-1_1_AA

Pos	Part No	Description	Qty	Unit	Page No
STREAMCAP1000, SLIMCAP 2000, SLIMCAP 1000, STREAMCAP200					
010	2839409-0000	CAM	1	PC	
030	2838156-0000	BRACKET	1	PC	
Common Parts					
020	2703842-0000	ADJUSTING SCREW	1	PC	
300	312105-0457	SCREW, M6S ISO 4014 M8X35 A4 80	4	PC	
320	315105-0165	FWAS080G0-0S, WASHER PLAIN	4	PC	

Pos	Part No	Description	Qty	Unit	Page No

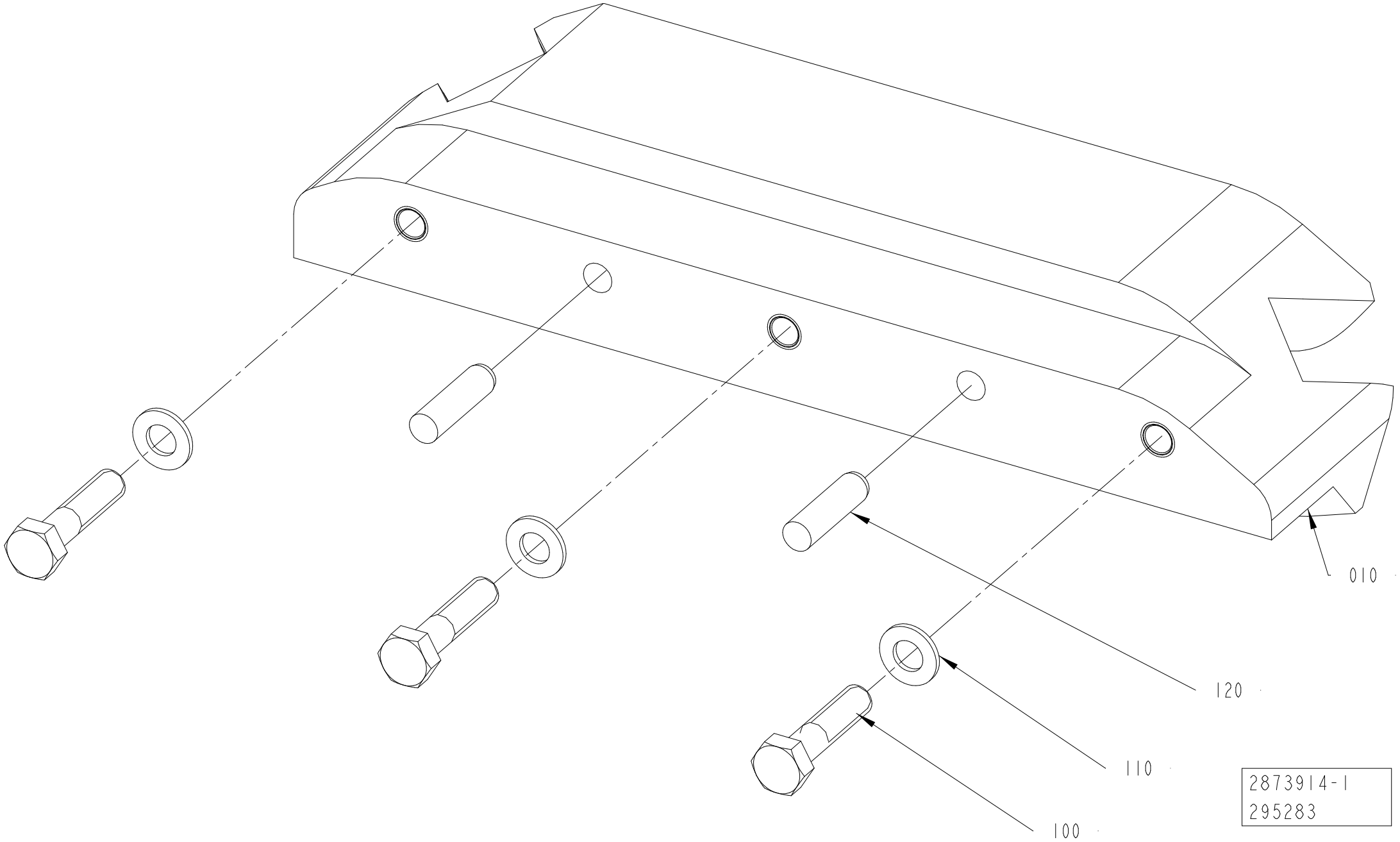
010
120
110
100
2873914-1
295283

ECM: 850873
Group number: 2873914-0100
Assembly Drawing: 2873914-1_1_AA

This list refers to drawings on pages 492 to 494

Pos	Part No	Description	Qty	Unit	Page No
TBA 0200E HELICAP 23, TBA 0250E HELICAP 23	See page: 492				
010	3077715-0000	CAM	1	PC	
TGA	See page: 494				
010	2746982-0000	CAM	1	PC	
TPA STREAMCAP 1000, TPA STREAMCAP 500, TPA HELICAP 27	See page: 492				
010	2746950-0000	CAM	1	PC	
Common Parts					
100	312105-0457	SCREW, M6S ISO 4014 M8X35 A4 80	3	PC	
110	315106-0165	WASHER PLAIN, M8 ISO7089-8-200 HV A4	3	PC	
120	311103-0405	PARALLEL PIN ISO 2338 8M6X30 A1	2	PC	

Pos	Part No	Description	Qty	Unit	Page No

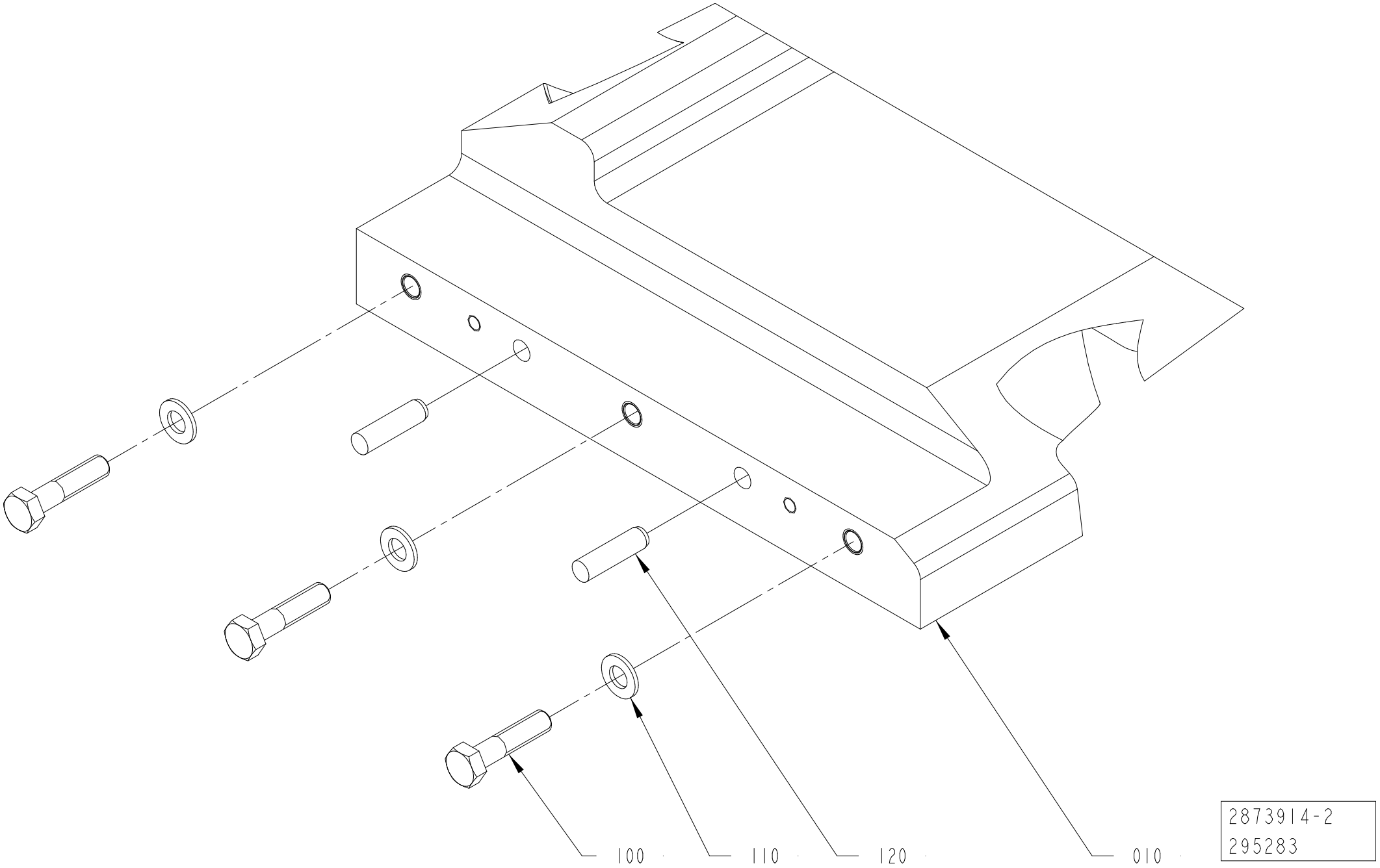
100
110
120
010
2873914-2
295283

ECM: 850873
Group number: 2873914-0100
Assembly Drawing: 2873914-2_1_AA

This list refers to drawings on pages 492 to 494

Pos	Part No	Description	Qty	Unit	Page No

SEE LIST FOLLOWING DRAWING ON PAGE: 492

Pos	Part No	Description	Qty	Unit	Page No

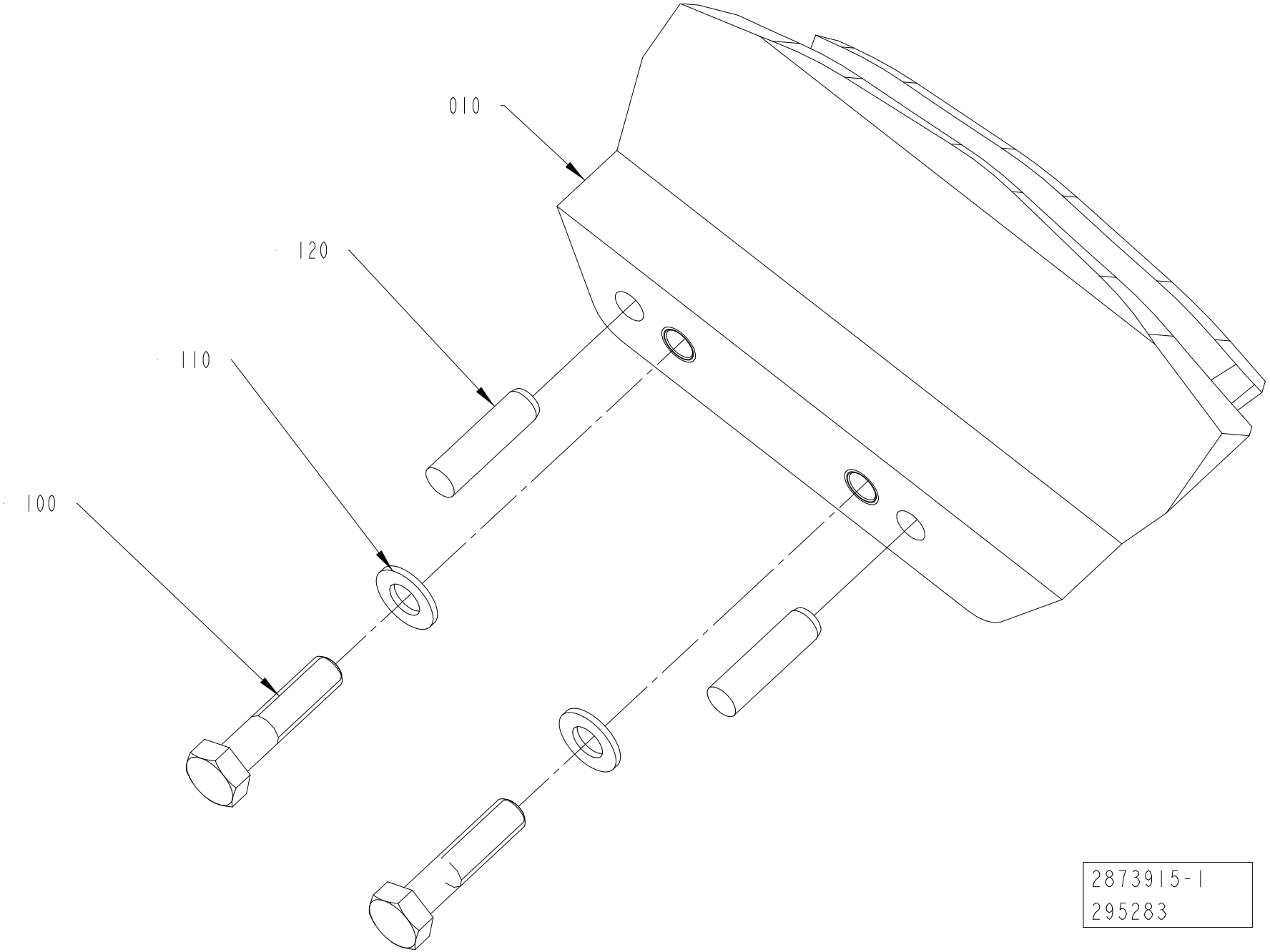
010
120
110
100
2873915-1
295283

Pos	Part No	Description	Qty	Unit	Page No
TGA	See page: 498				
010	2746985-0000	CAM	1	PC	
TPA STREAMCAP 1000, TPA STREAMCAP 500, TPA HELICAP 27, TBA 0200E HELICAP 23, TBA 0250E HELICAP 23	See page: 496				
010	2746951-0000	CAM	1	PC	
Common Parts					
100	312105-0457	SCREW, M6S ISO 4014 M8X35 A4 80	2	PC	
110	315106-0165	WASHER PLAIN, M8 ISO7089-8-200 HV A4	2	PC	
120	311103-0405	PARALLEL PIN ISO 2338 8M6X30 A1	2	PC	

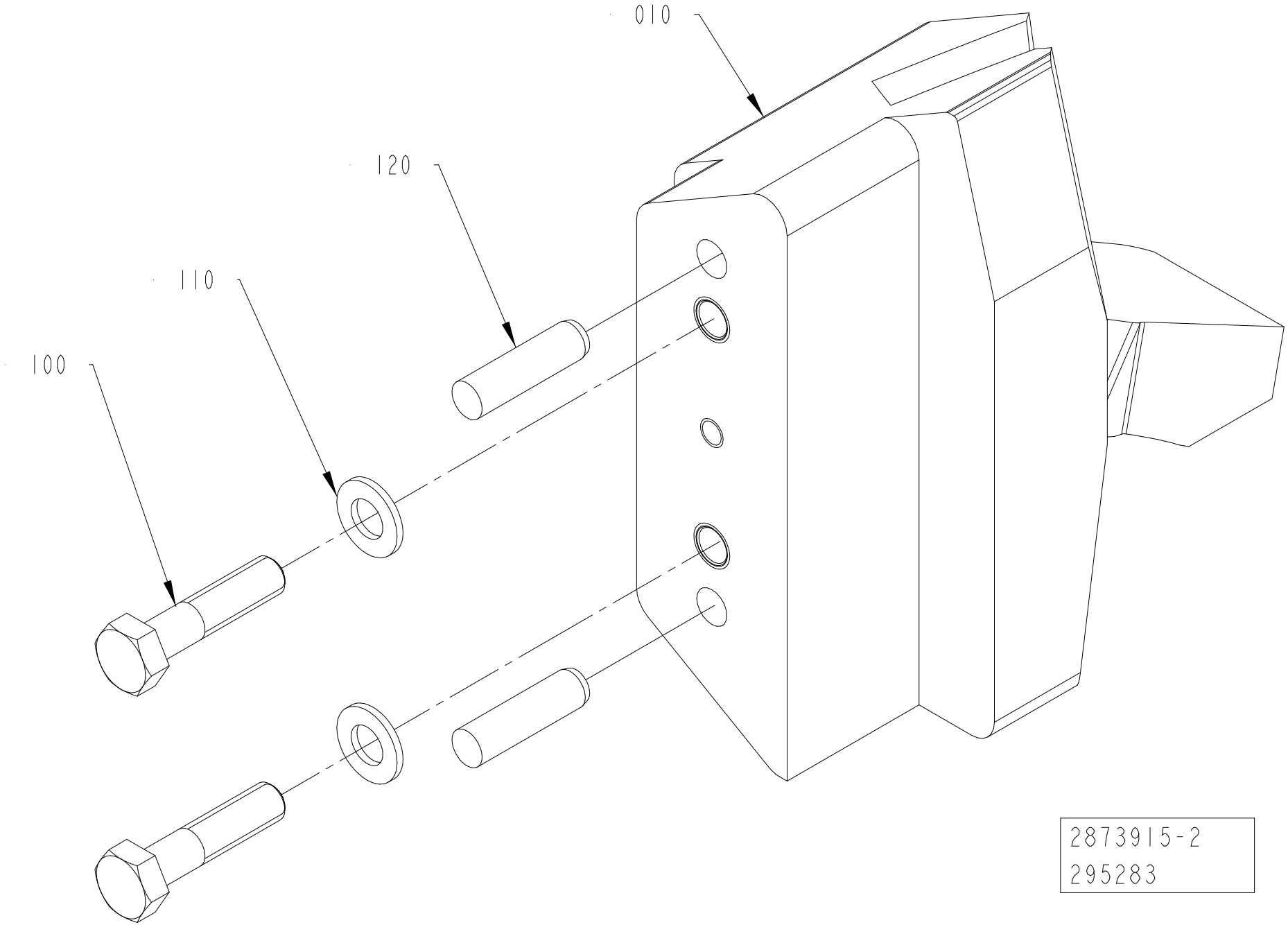
010
120
110
100
2873915-2
295283

This list refers to drawings on pages 496 to 498

Pos	Part No	Description	Qty	Unit	Page No

SEE LIST FOLLOWING DRAWING ON PAGE: 496

Pos	Part No	Description	Qty	Unit	Page No

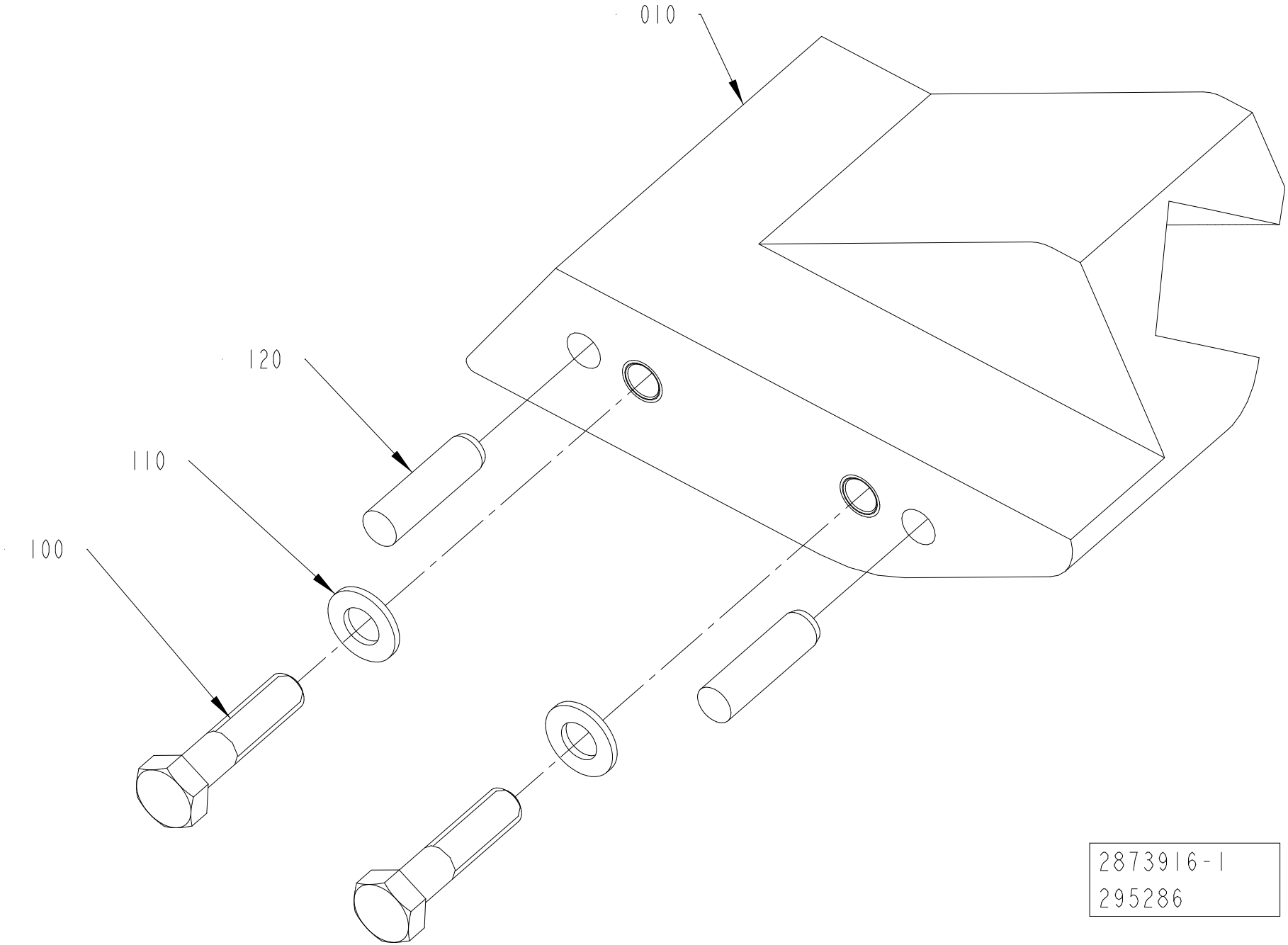
010
120
110
100
2873916-1
295286

Pos	Part No	Description	Qty	Unit	Page No
TGA	See page: 502				
010	2746987-0000	CAM	1	PC	
TPA STREAMCAP 1000, TPA STREAMCAP 500, TPA HELICAP 27, TBA 0200E HELICAP 23, TBA 0250E HELICAP 23	See page: 500				
010	2746953-0000	CAM	1	PC	
Common Parts					
100	312105-0457	SCREW, M6S ISO 4014 M8X35 A4 80	2	PC	
110	315106-0165	WASHER PLAIN, M8 ISO7089-8-200 HV A4	2	PC	
120	311103-0405	PARALLEL PIN ISO 2338 8M6X30 A1	2	PC	

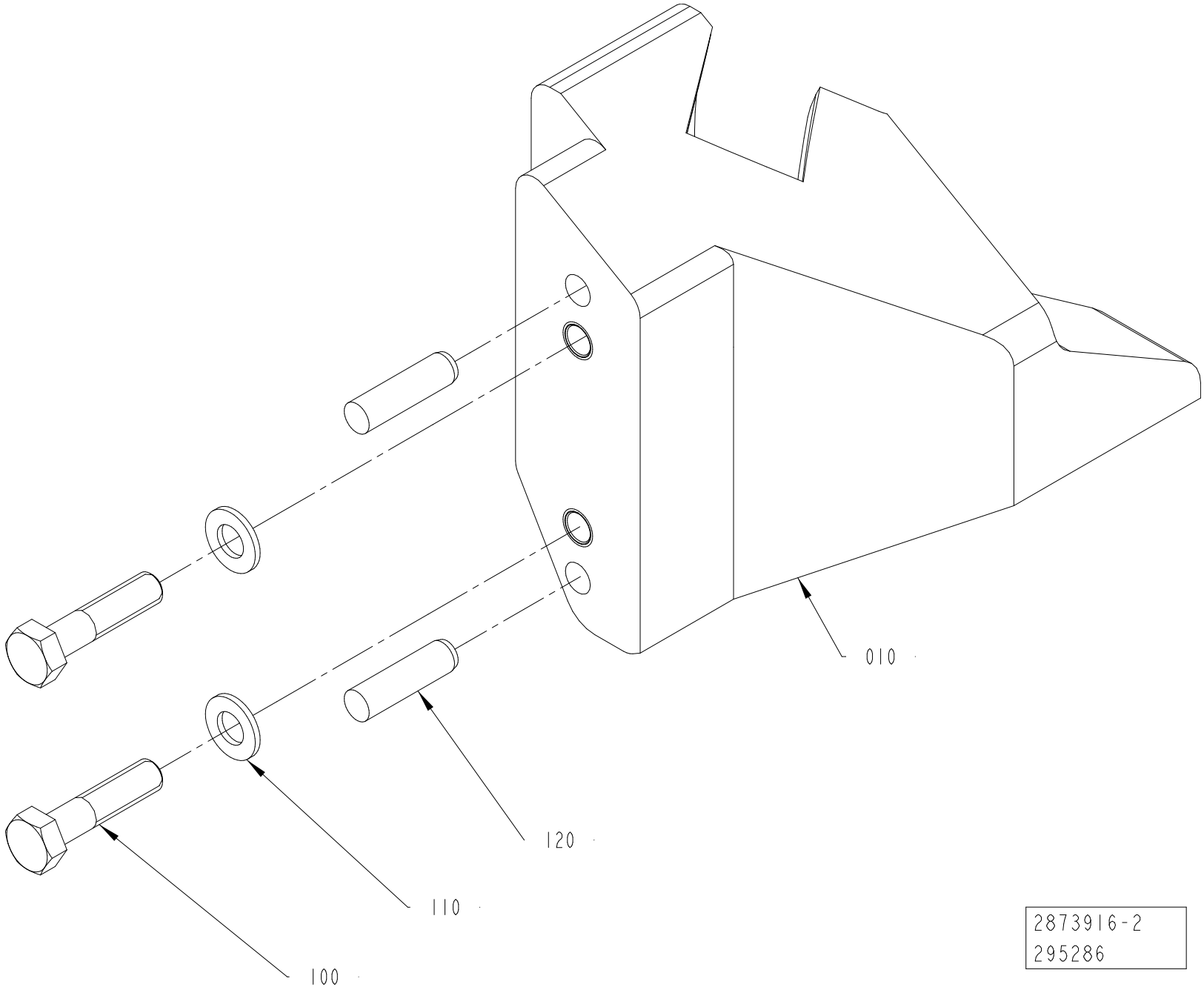
010
120
110
100
2873916-2
295286

Pos	Part No	Description	Qty	Unit	Page No

SEE LIST FOLLOWING DRAWING ON PAGE: 500

Pos	Part No	Description	Qty	Unit	Page No

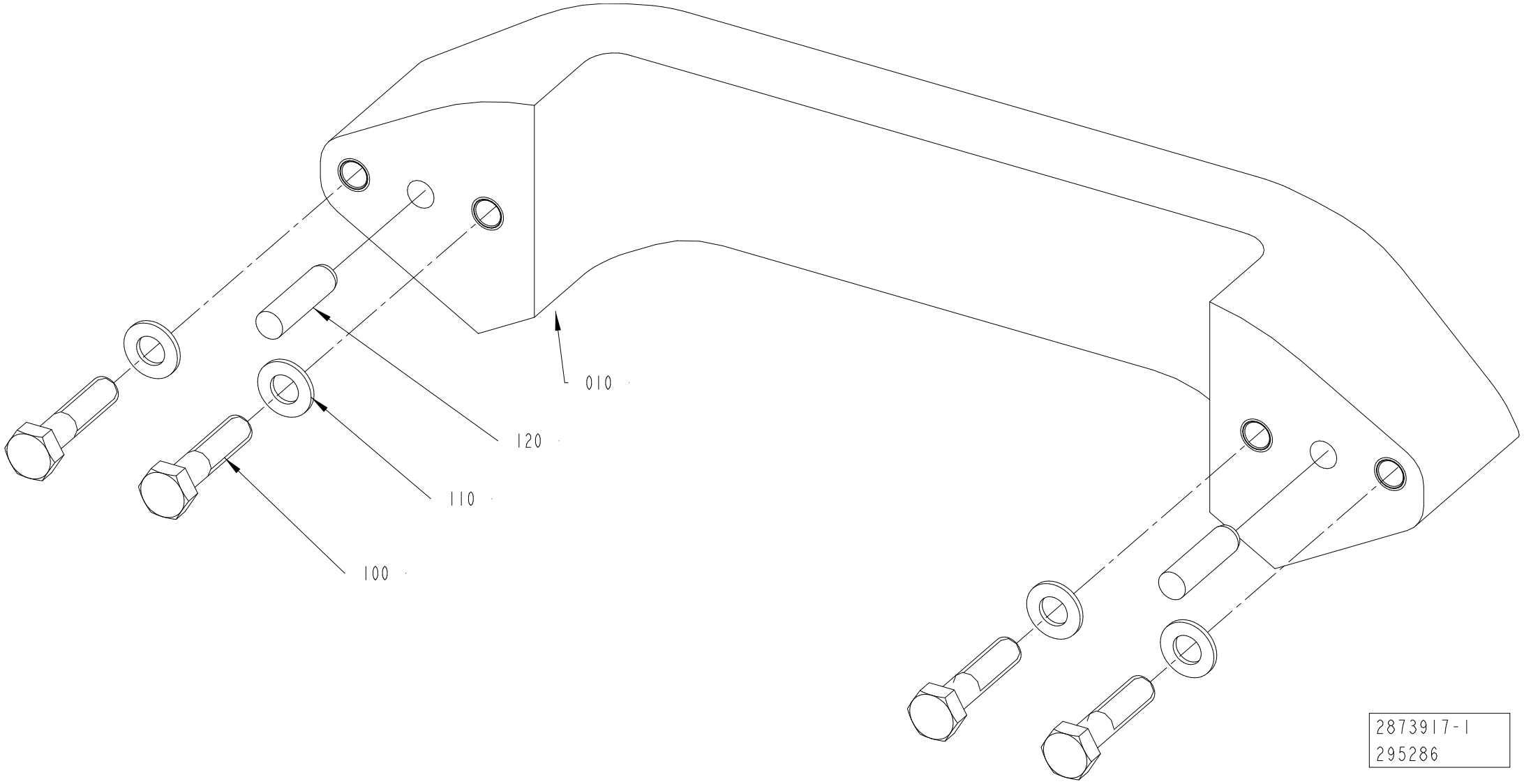
010
120
110
100
2873917-1
295286

ECM: 298771
Group number: 2873917-0100
Assembly Drawing: 2873917-1_1_AA

Pos	Part No	Description	Qty	Unit	Page No
Common Parts					
010	2746952-0000	CAM	1	PC	
100	312105-0457	SCREW, M6S ISO 4014 M8X35 A4 80	4	PC	
110	315106-0165	WASHER PLAIN, M8 ISO7089-8-200 HV A4	4	PC	
120	311103-0405	PARALLEL PIN ISO 2338 8M6X30 A1	2	PC	

Pos	Part No	Description	Qty	Unit	Page No

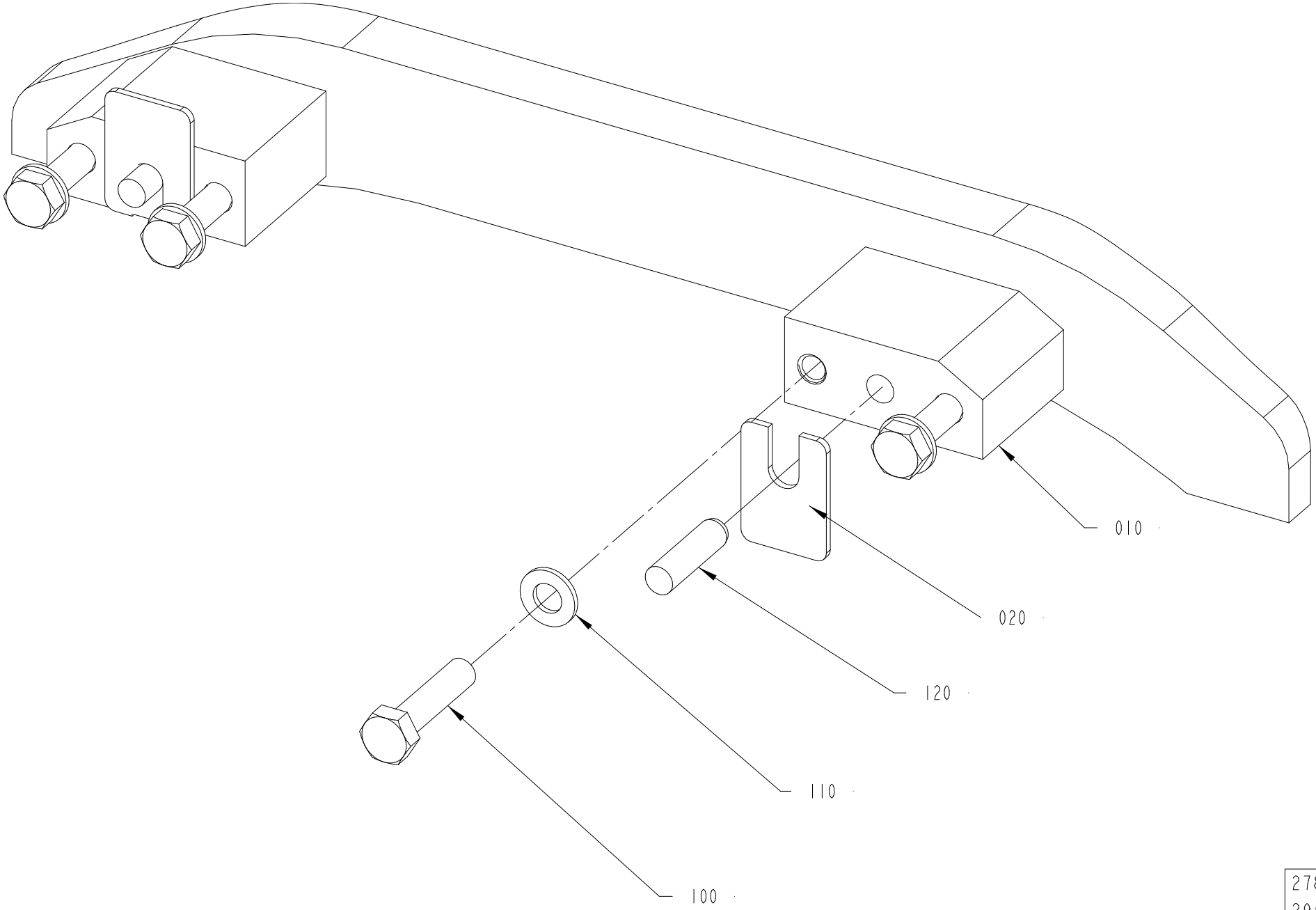

2780425-1
295286

ECM: 349995
Group number: 2780425-0100
Assembly Drawing: 2780425-1_1_AA

Pos	Part No	Description	Qty	Unit	Page No
Common Parts					
010	2801048-0000	CAM	1	PC	
020	2873892-0000	SHIM	2	PC	
100	312105-0457	SCREW, M6S ISO 4014 M8X35 A4 80	4	PC	
110	315106-0165	WASHER PLAIN, M8 ISO7089-8-200 HV A4	4	PC	
120	311103-0405	PARALLEL PIN ISO 2338 8M6X30 A1	2	PC	

Pos	Part No	Description	Qty	Unit	Page No

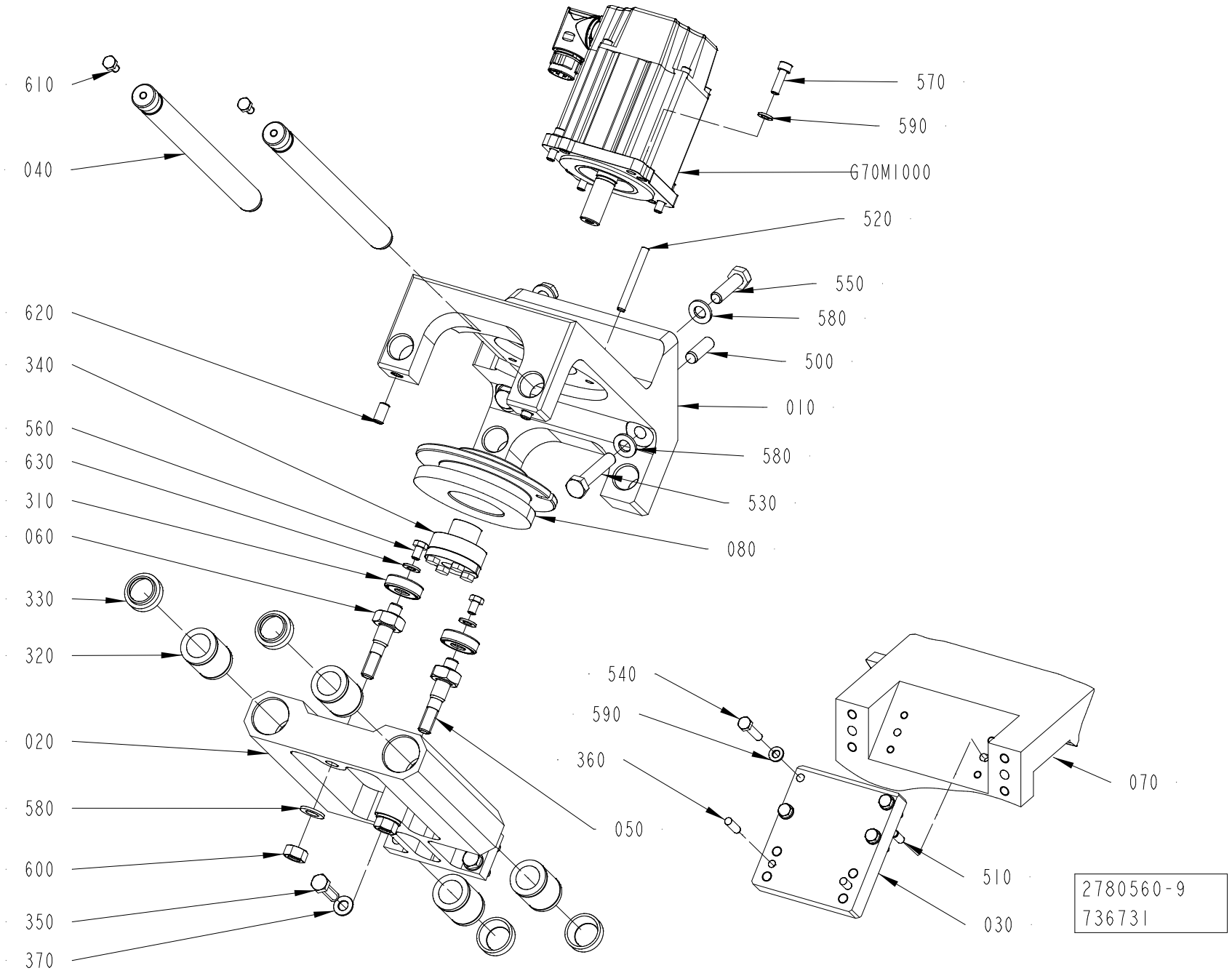
610
040
620
340
560
630
310
060
330
320
020
580
600
350
370
570
590
G70M1000
520
550
580
500
010
580
530
080
540
590
360
070
050
510
030
2780560-9
736731

Pos	Part No	Description	Qty	Unit	Page No
TBA 0200E HELICAP 23, TBA 0250E HELICAP 23 See page: 510					
010	3073397-0000	BRACKET	1	PC	
070	3073409-0000	CAM	1	PC	
TBA 0200E HELICAP 23, TBA 0250E HELICAP 23, TPA STREAMCAP 1000, TPA STREAMCAP 500, TPA HELICAP 27 See page: 510					
TBA STREAMCAP1000, TBA STREAMCAP200, TBA 1000S HELICAP2 23, TBA HELICAP 27, TBA 1500S HELICAP2 23 See page: 512					
590	315106-0153	WASHER PLAIN, M6 ISO7089-6-200 HV A4	4	PC	
TBA STREAMCAP1000, TBA STREAMCAP200, TBA 1000S HELICAP2 23, TBA HELICAP 27, TBA 1500S HELICAP2 23 See page: 512					
010	2838722-0000	BRACKET	1	PC	
TPA STREAMCAP 1000, TPA STREAMCAP 500, TPA HELICAP 27 See page: 510					
TBA STREAMCAP1000, TBA STREAMCAP200, TBA 1000S HELICAP2 23, TBA HELICAP 27, TBA 1500S HELICAP2 23 See page: 512					
070	2783479-0000	CAM	1	PC	
TGA See page: 508					
010	2780526-0000	BRACKET	1	PC	
030	2780529-0000	BRACKET	1	PC	
070	2780521-0000	CAM	1	PC	
510	311103-0351	PARALLEL PIN ISO 2338 6M6X16 A1	2	PC	
540	312105-0374	SCREW, M6S ISO 4014 M6X30 A4 80	4	PC	
590	315106-0153	WASHER PLAIN, M6 ISO7089-6-200 HV A4	8	PC	
TPA STREAMCAP 1000, TPA STREAMCAP 500, TPA HELICAP 27 See page: 510					
010	2859960-0000	BRACKET	1	PC	
Common Parts					
020	2780527-0000	CARRIAGE	1	PC	
040	2783477-0000	GUIDE SHAFT	2	PC	
050	2780531-0000	AXLE PIN	1	PC	
060	2780532-0000	AXLE PIN	1	PC	
080	2780533-0000	CAM	1	PC	
310	90603-2378	BALL BEARING, 10X30X9 MM	2	PC	
320	90189-0019	BALL BUSHING, 20X30X30 MM	4	PC	
330	90091-0038	SCRAPER 20X30X10 MM	4	PC	
340	90600-0454	CLAMPING ELEMENT, 16X24 L=16	1	PC	
350	312105-0455	SCREW, M6S ISO 4017 M8X30 A4 80	4	PC	
360	311103-0354	PARALLEL PIN ISO 2338 6M6X22 A1	2	PC	
370	315105-0165	FWAS080G0-0S, WASHER PLAIN	4	PC	
500	311103-0458	PARALLEL PIN ISO 2338 10M6X30 A1	2	PC	
520	311103-0367	PARALLEL PIN ISO 2338 6M6X55 A1	1	PC	
530	312105-0501	SCREW, M6S ISO 4014 M10X50 A4 80	2	PC	
550	312105-0497	SCREW, M6S ISO 4017 M10X35 A4 80	2	PC	
560	312105-0364	"SCREW, M6S ISO 4017 M6X10 A4 80"	2	PC	
570	312115-0370	SCREW ISO4762 M6X20 A4 80	4	PC	
580	315106-0173	"WASHER PLAIN, M10 ISO7089-10-200 HV A4"	6	PC	
600	312605-0320	HEXAGON NUT, M6M M10 A280	2	PC	
610	312105-0366	SCREW, M6S ISO 4017 M6X12 A4 80	2	PC	
620	312318-0449	SET SCREW, CUP END ISO4029 M8X16 A4	2	PC	
630	315105-0156	WASHER PLAIN, 6,7X14X1,5 A4 BRB	2	PC	
G70M1000	90606-2772	SERVO MOTOR, VPL-B1001M-PK12AA, SERIES A	1	PC	

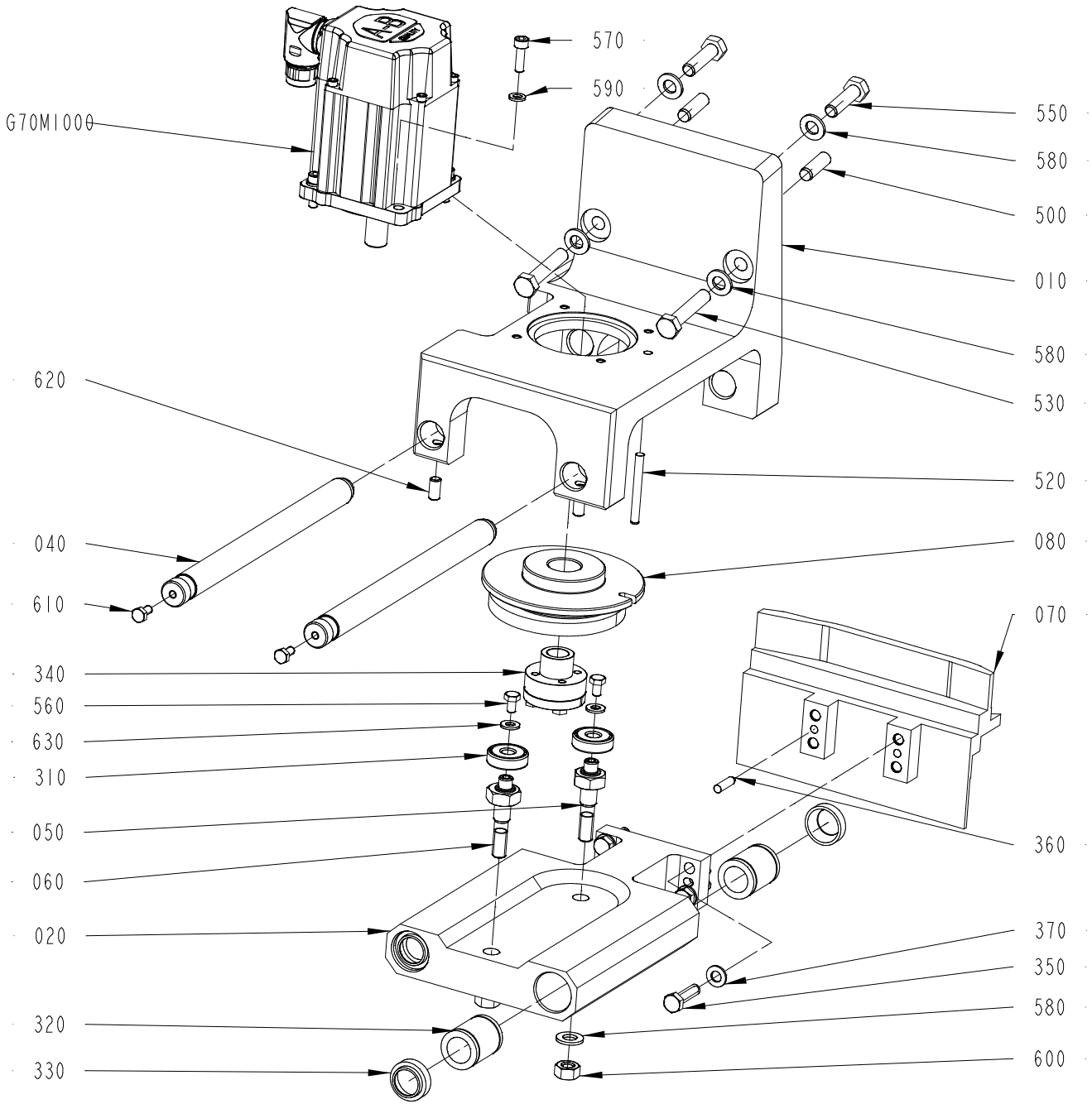
G70M1000
570
590
550
580
500
010
580
530
620
520
040
080
610
070
340
560
630
310
050
360
060
020
370
350
580
320
600
330
2780560-10
736731

ECM: 742634
Group number: 2780560-0300
Assembly Drawing: 2780560-10_1_AA

This list refers to drawings on pages 508 to 512

Pos	Part No	Description	Qty	Unit	Page No

SEE LIST FOLLOWING DRAWING ON PAGE: 508

Pos	Part No	Description	Qty	Unit	Page No

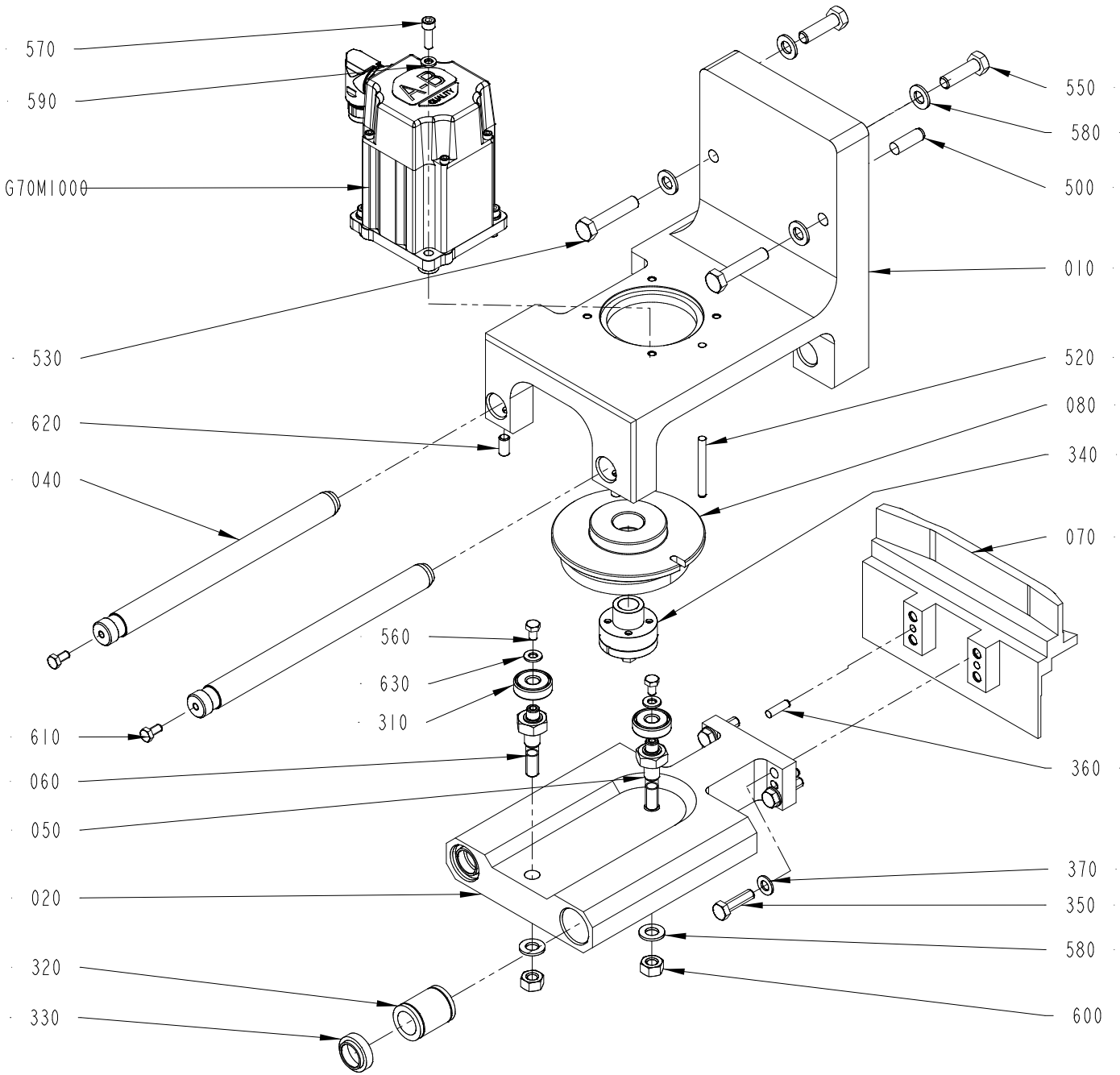
570
590
G70M1000
530
620
040
610
060
050
020
320
330
550
580
500
010
520
080
340
070
560
630
310
360
370
350
580
600
2780560-11
736731

This list refers to drawings on pages 508 to 512

Pos	Part No	Description	Qty	Unit	Page No

SEE LIST FOLLOWING DRAWING ON PAGE: 508

Pos	Part No	Description	Qty	Unit	Page No

Pos. 010 in BoM 2839315-0300

MOUNTING PLATE

Drawing file:2839382-1_1_AA

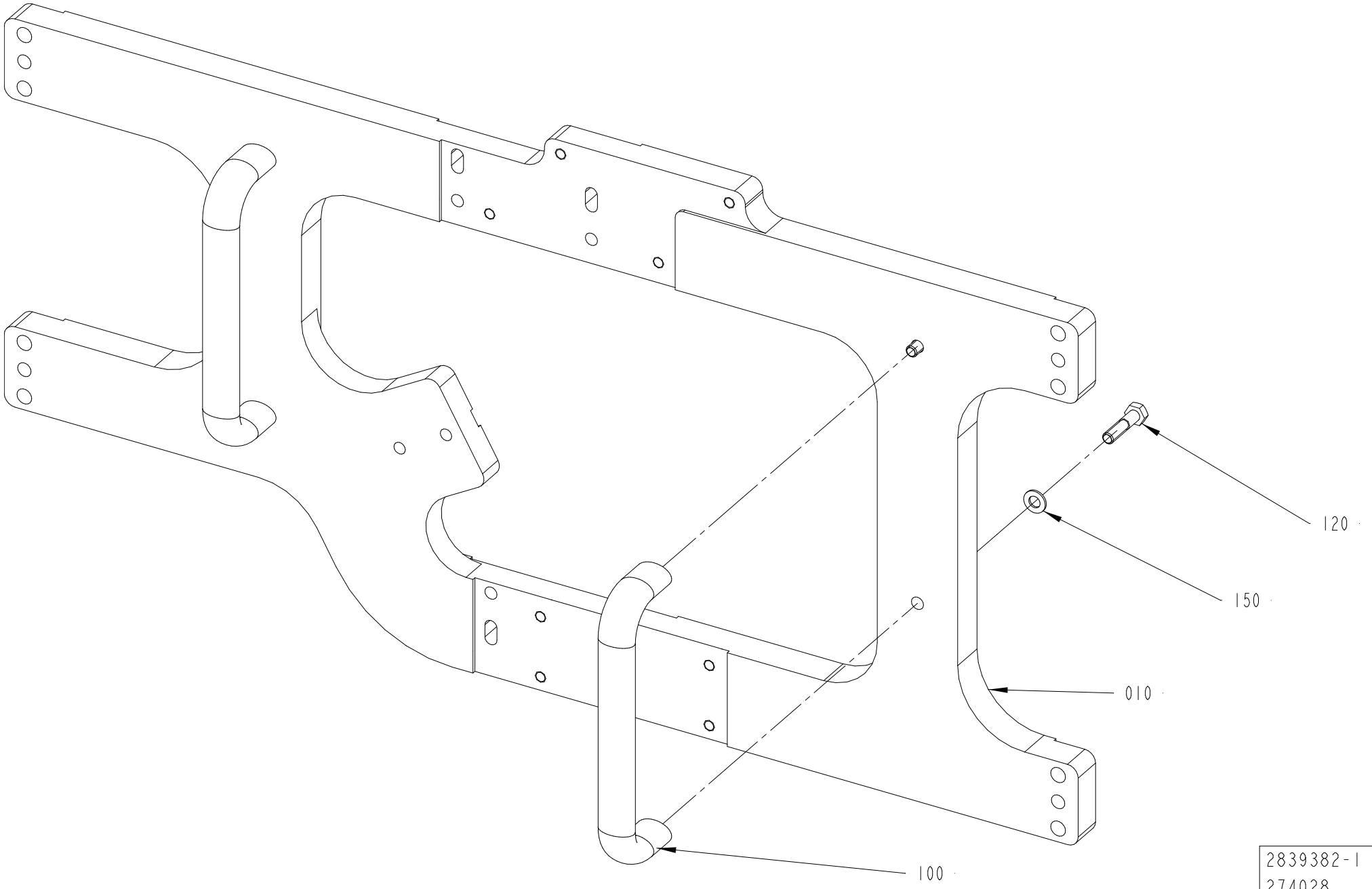

2839382-1
274028

Pos	Part No	Description	Qty	Unit	Page No
TBA STREAMCAP 1000 NO POSITIONING DEVICE, TBA SLIMCAP 1000 NO POSITIONING DEVICE, TBA SLIMCAP 2000 NO POSITIONING DEVICE, TBA STREAMCAP 200 NO POSDEVICE See page: 514					
010	2780379-0000	PLATE	1	PC	
TPA, TGA, TBA STREAMCAP 1000 POSITIONING DEVICE, TBA STREAMCAP 200 POSDEVICE, TBA HELICAP 27 POSITIONING DEVICE, TBA HELICAP2 23 POSITIONING DEVICE See page: 516					
010	2780523-0000	PLATE	1	PC	
130	312125-0287	SLOTTED HEAD SCREW, ISO1207 M4X8 A4	2	PC	
160	352113-0203	ANCHOR PLATES FOR STRIPS, TM3S8-M0	2	PC	
170	352113-0104	CABLE TIE, BLACK 300X4,8 MM	2	PC	
Common Parts					
100	90459-3779	HANDLE, GN565 SW 192-M8	2	PC	
120	312105-0457	SCREW, M6S ISO 4014 M8X35 A4 80	4	PC	
150	315105-0165	FWAS080G0-0S, WASHER PLAIN	4	PC	

Pos	Part No	Description	Qty	Unit	Page No

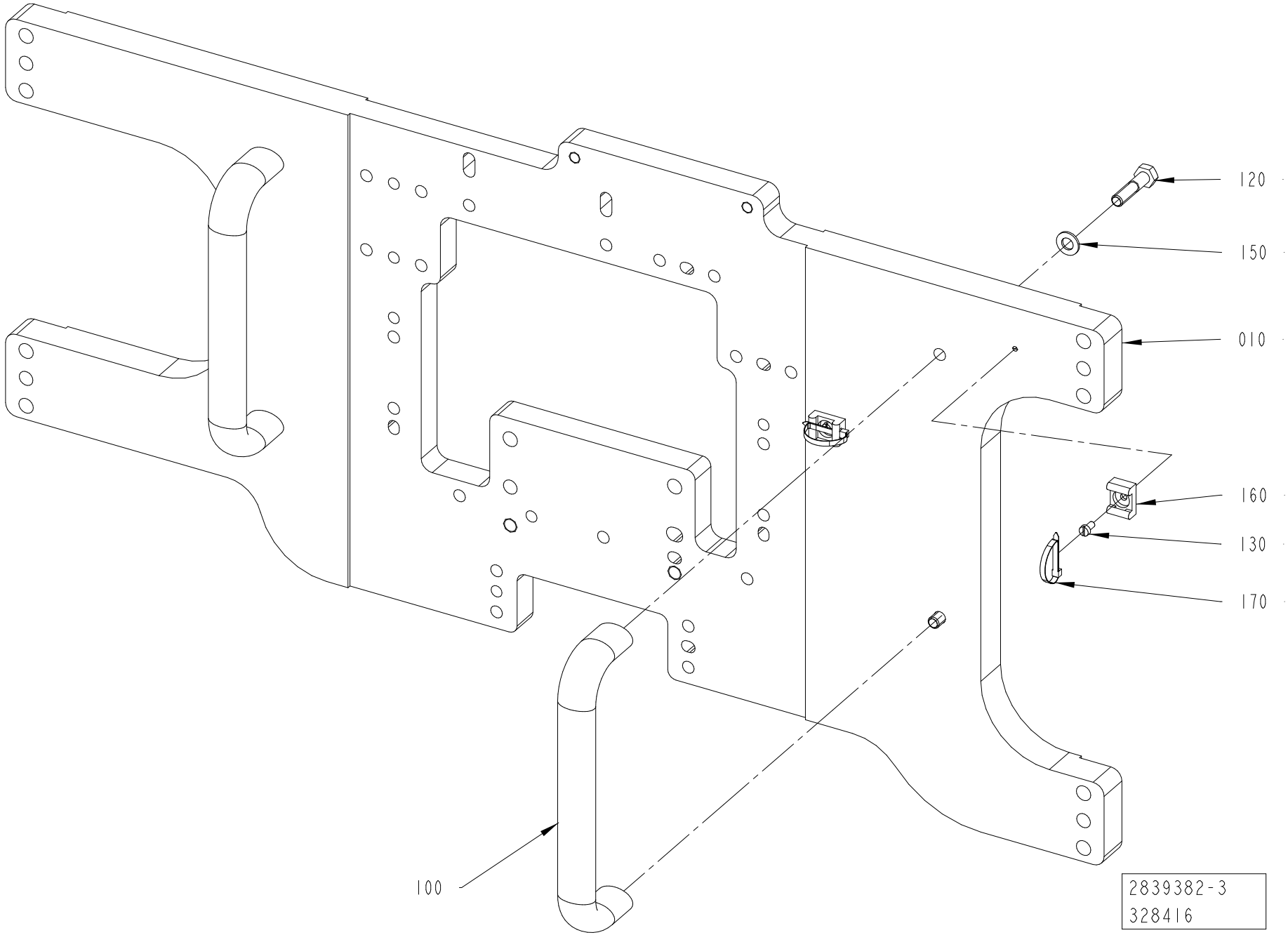
120
150
010
160
130
170
100
2839382-3
328416

This list refers to drawings on pages 514 to 516

Pos	Part No	Description	Qty	Unit	Page No

SEE LIST FOLLOWING DRAWING ON PAGE: 514

Pos	Part No	Description	Qty	Unit	Page No

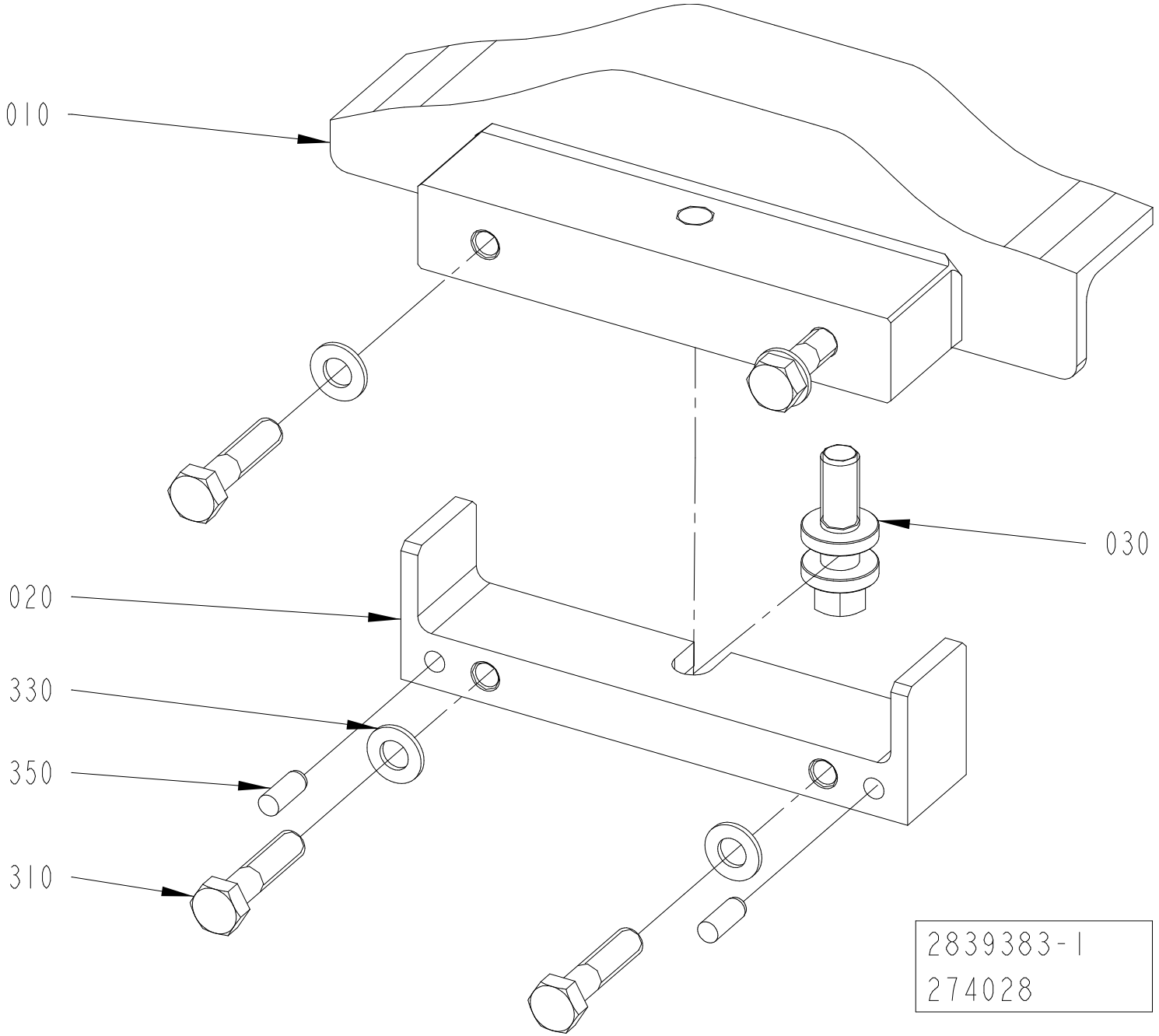
010
030
020
330
350
310
2839383-1
274028

ECM: 272696
Group number: 2839383-0100
Assembly Drawing: 2839383-1_1_AA

Pos	Part No	Description	Qty	Unit	Page No
Common Parts					
010	2839392-0000	CAM	1	PC	
020	2838277-0000	BRACKET	1	PC	
030	2703842-0000	ADJUSTING SCREW	1	PC	
310	312105-0457	SCREW, M6S ISO 4014 M8X35 A4 80	4	PC	
330	315105-0165	FWAS080G0-0S, WASHER PLAIN	4	PC	
350	311103-0351	PARALLEL PIN ISO 2338 6M6X16 A1	2	PC	

Pos	Part No	Description	Qty	Unit	Page No

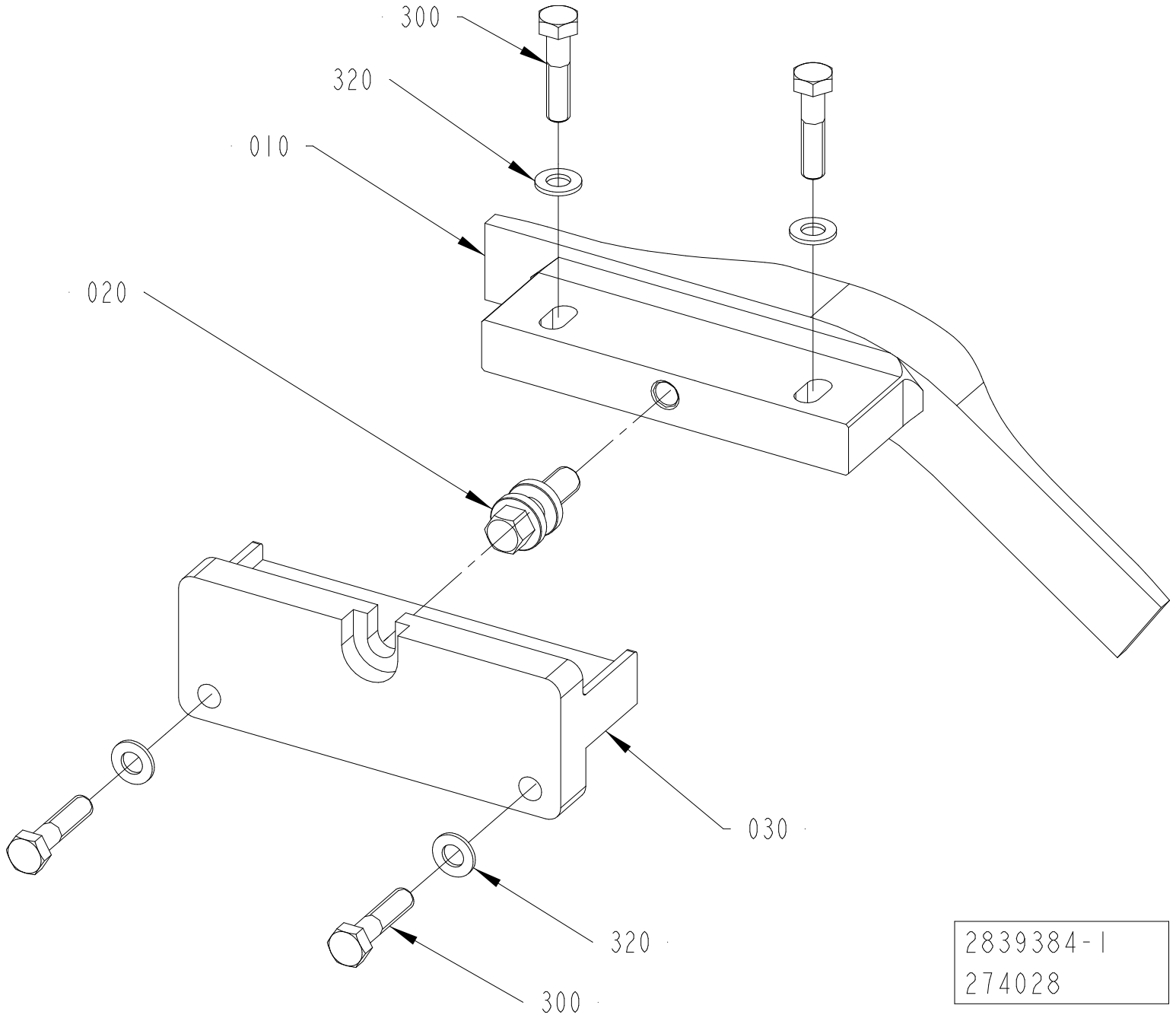
300
320
010
020
030
320
300
2839384-1
274028

ECM: 492980
Group number: 2839384-0100
Assembly Drawing: 2839384-1_1_AA

Pos	Part No	Description	Qty	Unit	Page No
STREAMCAP500, STREAMCAP1000, SLIMCAP 2000, SLIMCAP 1000, STREAMCAP200, HELICAP2 23, HELICAP 27					
010	2839412-0000	CAM	1	PC	
030	2838156-0000	BRACKET	1	PC	
Common Parts					
020	2703842-0000	ADJUSTING SCREW	1	PC	
300	312105-0457	SCREW, M6S ISO 4014 M8X35 A4 80	4	PC	
320	315105-0165	FWAS080G0-0S, WASHER PLAIN	4	PC	

Pos	Part No	Description	Qty	Unit	Page No

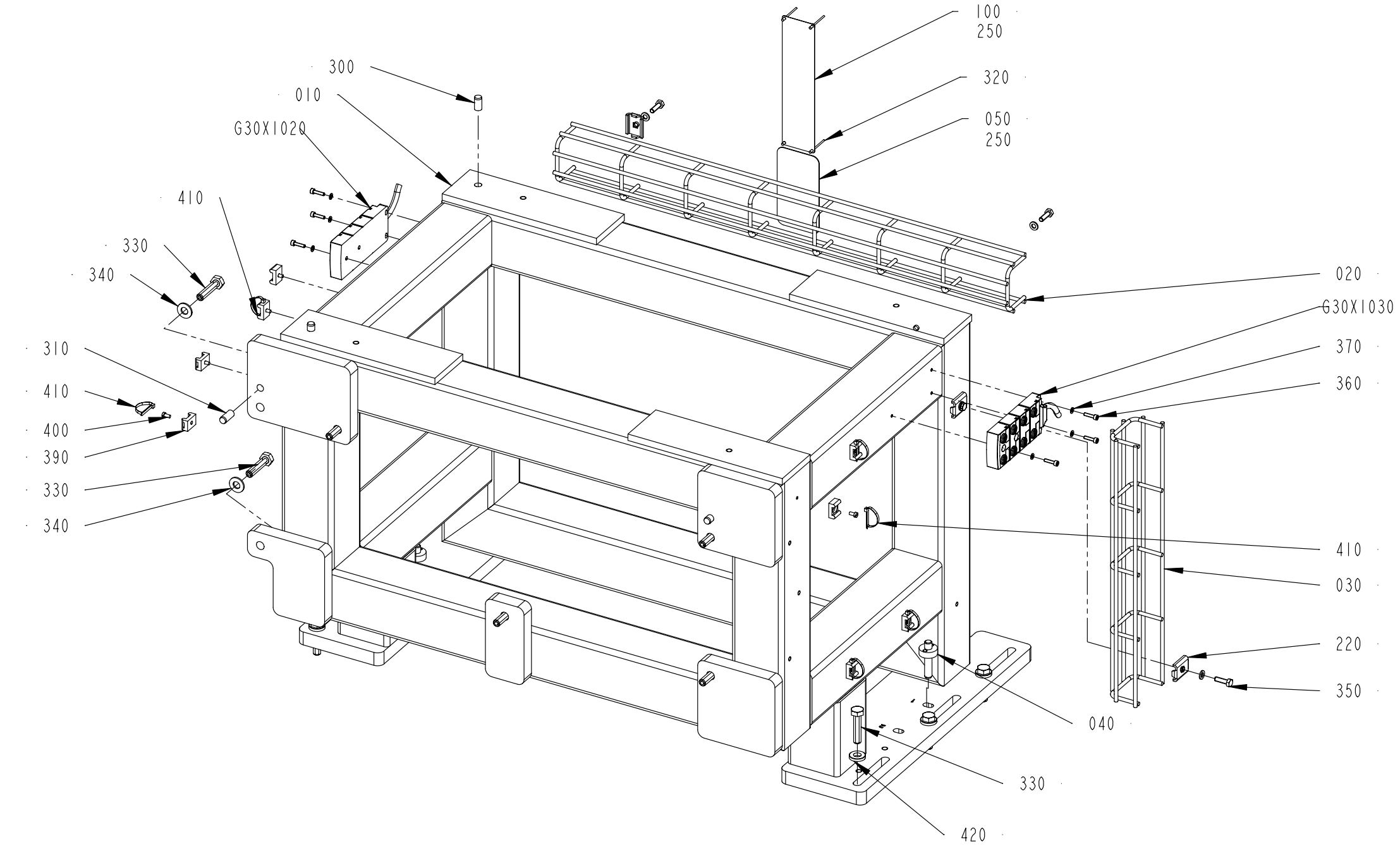
100
250
320
050
250
300
010
G30X1020
410
330
340
020
G30X1030
370
360
310
410
400
390
330
340
410
030
220
350
040
330
420

ECM: 861035
Group number: 2751664-0300
Assembly Drawing: 2751664-3_1_AE

Pos	Part No	Description	Qty	Unit	Page No
Common Parts					
010	3039024-0000	FRAME	1	PC	
020	2838731-0000	CABLE	1	PC	
030	2838732-0000	CABLE	1	PC	
040	2944175-0000	PIN	2	PC	
050	3361872-0000	LABEL	1	PC	
100	351485-0009	MACHINE SIGN, 200X50 CE EAC	1	PC	
220	90181-0183	CABLE DUCT, FITTING, SB-102-S	4	PC	
250	344448-0000	ADHESIVE LOCTITE 5615 A+B, ONLY IN BOM	1	PC	524
300	311103-0454	PARALLEL PIN ISO 2338 10M6X20 A1	2	PC	
310	311103-1456	PARALLEL PIN ISO 2338 10M6X24 A1	2	PC	
320	311523-0142	BLIND RIVET ISO 15983 -3.2X6 A2/A2	4	PC	
330	312109-0500	SCREW, M6S ISO 4017 M10X45 A4 80	12	PC	
340	315105-0173	WASHER PLAIN, 10,5X22X2 A4 BRB	6	PC	
350	312105-0370	SCREW, M6S ISO 4017 M6X20 A4 80	4	PC	
360	312115-0293	SCREW ISO4762 M4X16 A4 80	6	PC	
370	315105-0136	WASHER PLAIN, 4,3X8X0,8 A4 BRB	6	PC	
380	315105-0153	WASHER PLAIN, 6,4X12X1,5 A4 BRB	4	PC	
390	352113-0203	ANCHOR PLATES FOR STRIPS, TM3S8-M0	8	PC	
400	312125-0287	SLOTTED HEAD SCREW, ISO1207 M4X8 A4	8	PC	
410	352113-0104	CABLE TIE, BLACK 300X4,8 MM	8	PC	
420	315115-0173	WASHER PLAIN, TBRB 10,5/22 H=4	6	PC	
G30X1020	90606-1697	SPLITTER BOX, EBC034	1	PC	
G30X1030	90606-1697	SPLITTER BOX, EBC034	1	PC	

Pos	Part No	Description	Qty	Unit	Page No

This page intentionally left blank

ECM: 659575
Group number: 344448-0000
Assembly Drawing: -

Pos	Part No	Description	Qty	Unit	Page No
Common Parts					
	344448-0400	ADHESIVE LOCTITE 5615 A+B, 400ML	1	PC	

Pos	Part No	Description	Qty	Unit	Page No

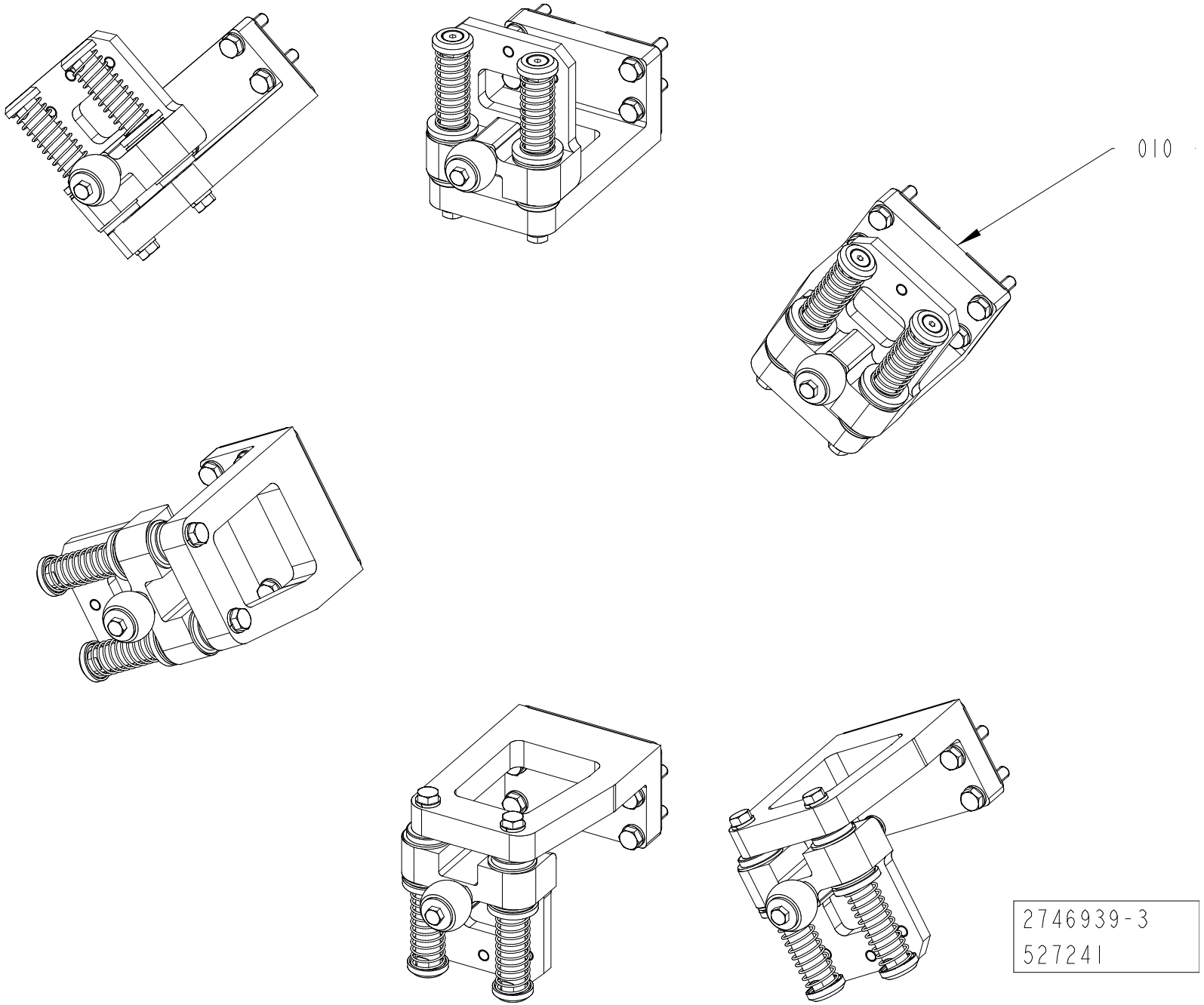
010
2746939-3
527241

ECM: 528925
Group number: 2746939-0200
Assembly Drawing: 2746939-3_1_AA

Pos	Part No	Description	Qty	Unit	Page No
Common Parts					
010	2703700-0200	GUIDE BRACKET	6	PC	528, 530, 532

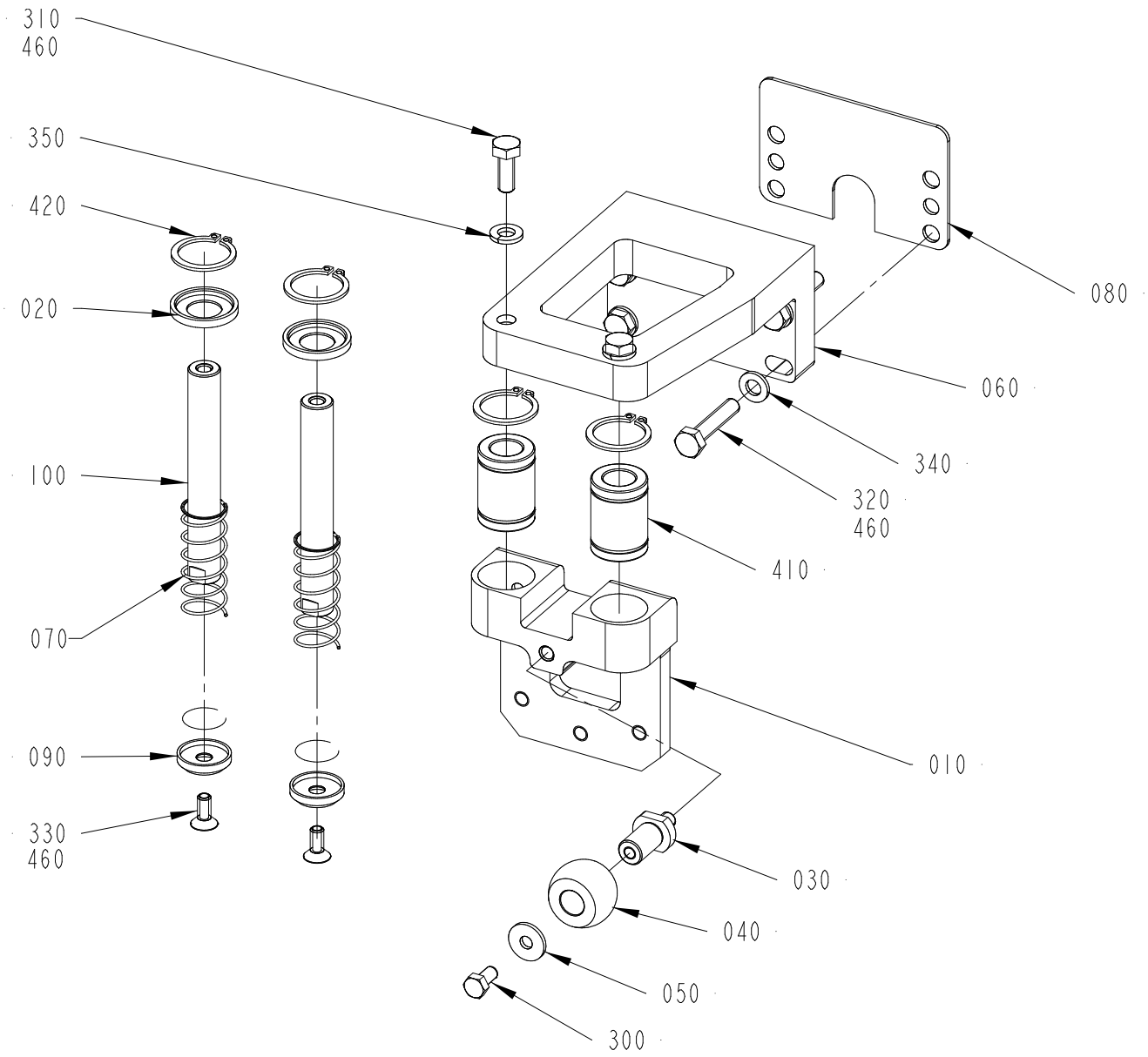

2703700-7
569216

ECM: 861053
Group number: 2703700-0200
Assembly Drawing: 2703700-7_1_AB

This list refers to drawings on pages 528 to 532

Pos	Part No	Description	Qty	Unit	Page No
TBA 0200E HELICAP 23 POSDEVICE, TPA HELICAP 27 POSITIONING DEVICE, TBA 0250E HELICAP 23 POSDEVICE, TGA, TPA STREAMCAP 1000 POSITIONING DEVICE, TPA STREAMCAP 500 POSITIONING DEVICE See page: 530					
060	3143919-0000	HOLDER	1	PC	
TBA 0200E HELICAP 23 POSDEVICE, TPA HELICAP 27 POSITIONING DEVICE, TBA 0250E HELICAP 23 POSDEVICE, TGA, TPA STREAMCAP 1000 POSITIONING DEVICE, TPA STREAMCAP 500 POSITIONING DEVICE See page: 530					
TBA 1000S HELICAP 23 POSDEVICE, TBA HELICAP 27 POSITIONING DEVICE, TBA 1500S HELICAP2 23 POSDEVICE, TBA STREAMCAP 1000 POSITIONING DEVICE, TBA STREAMCAP 200 POSDEVICE See page: 532					
280	3150922-0000	BRACKET	1	PC	
TBA HELICAP 27 POSITIONING DEVICE, TBA 1500S HELICAP2 23 POSDEVICE, TBA STREAMCAP 1000 POSITIONING DEVICE, TBA STREAMCAP 200 POSDEVICE, TBA 1000S HELICAP 23 POSDEVICE See page: 532					
060	3144497-0000	HOLDER	1	PC	
TBA STREAMCAP 1000 NO POSITIONING DEVICE, TBA SLIMCAP 1000 NO POSITIONING DEVICE, TBA SLIMCAP 2000 NO POSITIONING DEVICE, TBA STREAMCAP 200 NO POSDEVICE See page: 528					
020	2751686-0000	WASHER	2	PC	
040	1556630-0000	WHEEL	1	PC	
060	2703692-0000	HOLDER	1	PC	
080	2703702-0000	SHIM	1	PC	
310	312105-0368	SCREW, M6S ISO 4017 M6X16 A4 80	2	PC	
320	312109-0374	SCREW, M6S ISO 4017 M6X30 A4 80	4	PC	
350	315402-0156	LOCK WASHER, DIN127B 6,5 A4, 1/4	2	PC	
410	90600-0375	BALL BUSHING, 12X21X30 MM	2	PC	
420	90600-0373	RETAINING RING FOR SHAFT DIN 471 21 SS	4	PC	
TBA STREAMCAP 1000 NO POSITIONING DEVICE, TBA SLIMCAP 1000 NO POSITIONING DEVICE, TBA SLIMCAP 2000 NO POSITIONING DEVICE, TBA STREAMCAP 200 NO POSDEVICE See page: 528					
TBA STREAMCAP 1000 POSITIONING DEVICE, TBA STREAMCAP 200 POSDEVICE, TBA 1000S HELICAP 23 POSDEVICE, TBA HELICAP 27 POSITIONING DEVICE, TBA 1500S HELICAP2 23 POSDEVICE See page: 532					
050	90005-0139	WASHER PLAIN ROUND 5,2(M5)/15, H=1,6	1	PC	
300	312105-0325	SCREW, M6S ISO 4017 M5X10 A4 80	1	PC	
TBA STREAMCAP 1000 NO POSITIONING DEVICE, TBA SLIMCAP 1000 NO POSITIONING DEVICE, TBA SLIMCAP 2000 NO POSITIONING DEVICE, TBA STREAMCAP 200 NO POSDEVICE See page: 528					
TGA, TPA STREAMCAP 1000 POSITIONING DEVICE, TPA STREAMCAP 500 POSITIONING DEVICE, TBA 0200E HELICAP 23 POSDEVICE, TPA HELICAP 27 POSITIONING DEVICE, TBA 0250E HELICAP 23 POSDEVICE See page: 530					
030	2703683-0000	SHAFT	1	PC	
TBA STREAMCAP 1000 POSITIONING DEVICE, TBA STREAMCAP 200 POSDEVICE, TBA 1000S HELICAP 23 POSDEVICE, TBA HELICAP 27 POSITIONING DEVICE, TBA 1500S HELICAP2 23 POSDEVICE See page: 532					
040	1556630-0000	WHEEL	2	PC	
370	312115-0366	SCREW ISO4762 M6X12 A4 80	4	PC	
TGA, TPA STREAMCAP 1000 POSITIONING DEVICE, TPA STREAMCAP 500 POSITIONING DEVICE, TBA 0200E HELICAP 23 POSDEVICE, TPA HELICAP 27 POSITIONING DEVICE, TBA 0250E HELICAP 23 POSDEVICE See page: 530					
TBA STREAMCAP 1000 POSITIONING DEVICE, TBA STREAMCAP 200 POSDEVICE, TBA 1000S HELICAP 23 POSDEVICE, TBA HELICAP 27 POSITIONING DEVICE, TBA 1500S HELICAP2 23 POSDEVICE See page: 532					
020	2751686-0000	WASHER	4	PC	
080	2780431-0000	SHIM	1	PC	
120	3150919-0000	BRACKET	1	PC	
170	2783465-0000	SHAFT	2	PC	
180	3014020-0000	COMPRESSION SPRING	2	PC	
200	2613995-0000	SPACER	1	PC	
220	2746978-0000	SHAFT	1	PC	
230	2811453-0000	SCREW	2	PC	
260	3151006-0000	SCREW	1	PC	
270	3150924-0000	BLOCK	1	PC	
320	312105-0372	SCREW, M6S ISO 4017 M6X25 A4 80	4	PC	
360	312105-0335	SCREW, M6S ISO 4014 M5X30 A4 80	1	PC	
400	315105-0146	WASHER PLAIN, 5,3X10X1 A4 BRB	1	PC	
410	90600-0375	BALL BUSHING, 12X21X30 MM	4	PC	
420	90600-0373	RETAINING RING FOR SHAFT DIN 471 21 SS	8	PC	
470	312105-0323	"FSCR05080-10, SCREW, M6S"	1	PC	
480	312105-0285	SCREW, M6S ISO 4017 M4X6 A4 70	1	PC	
TGA, TPA STREAMCAP 1000 POSITIONING DEVICE, TPA STREAMCAP 500 POSITIONING DEVICE, TBA 0200E HELICAP 23 POSDEVICE, TPA HELICAP 27 POSITIONING DEVICE, TBA 0250E HELICAP 23 POSDEVICE See page: 530					
040	1556630-0000	WHEEL	3	PC	
050	90005-0139	WASHER PLAIN ROUND 5,2(M5)/15, H=1,6	2	PC	
110	2783460-0000	GUIDE BRACKET	1	PC	
130	2783462-0000	AXLE PIN	1	PC	
140	2715701-0000	AXLE PIN	1	PC	
150	2715704-0000	SLEEVE	1	PC	
160	2715885-0000	TORSION SPRING	1	PC	
190	2715826-0000	DAMPER	1	PC	
210	3158206-0000	ROLLER BRACKET	1	PC	
300	312105-0325	SCREW, M6S ISO 4017 M5X10 A4 80	2	PC	
370	312115-0366	SCREW ISO4762 M6X12 A4 80	6	PC	
380	312318-0285	SET SCREW, CUP END ISO4029 M4X6 A4	2	PC	
390	311103-0268	PARALLEL PIN ISO 2338 4M6X12 A1	2	PC	
430	321154-0180	FLANGE BUSHING, IGLIDUR W300 12X14X12	2	PC	
440	311112-0255	SPRING PIN, ISO 8752 4X18 A2	1	PC	
450	90606-4008	SEALING COMPOUND, ELASTOSIL E41 TRANSP.	1	L	
Common Parts					
010	2716127-0000	SLIDER	1	PC	
070	2703708-0000	SPRING	2	PC	
090	2751687-0000	WASHER	2	PC	
100	90600-0376	SHAFT, LM SHAFT 12 G6 89L M	2	PC	
330	312155-0327	SCREW DIN 7991 MF6S M5X12 A4 70	2	PC	
340	315105-0153	WASHER PLAIN, 6,4X12X1,5 A4 BRB	4	PC	

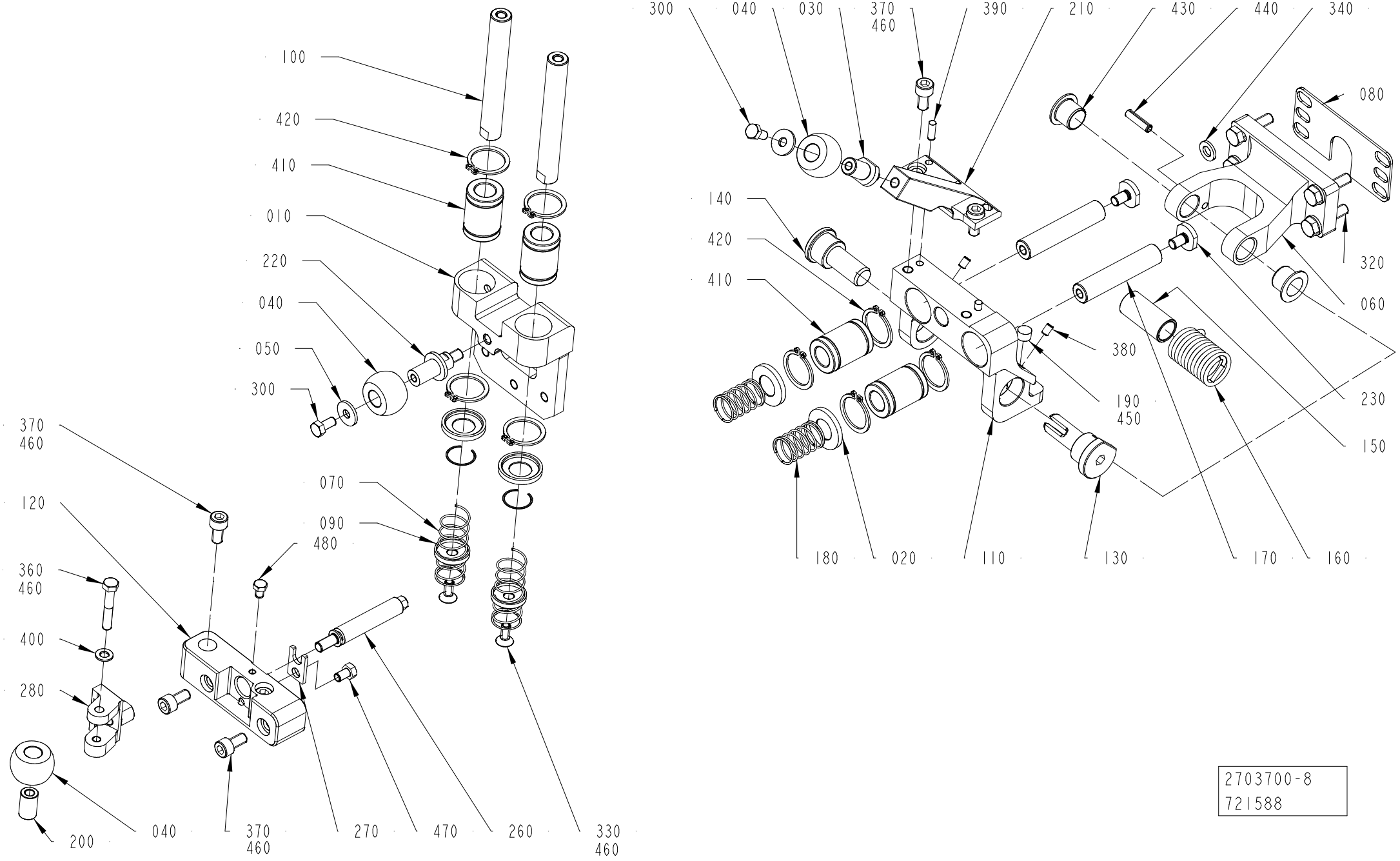

2703700-8
721588

ECM: 861053
Group number: 2703700-0200
Assembly Drawing: 2703700-8_1_AC

This list refers to drawings on pages 528 to 532

Pos	Part No	Description	Qty	Unit	Page No

SEE LIST FOLLOWING DRAWING ON PAGE: 528

Pos	Part No	Description	Qty	Unit	Page No

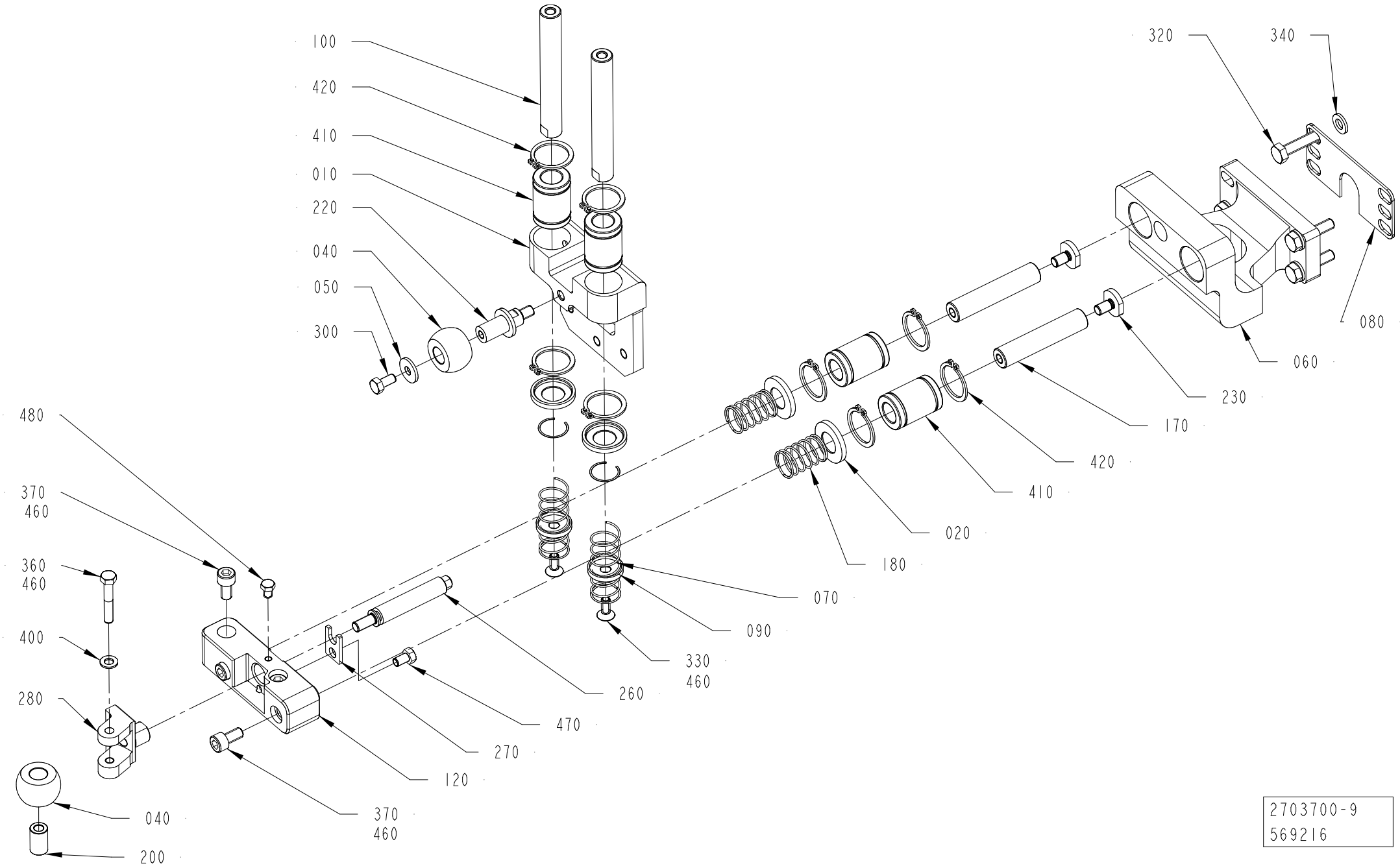

2703700-9
569216

This list refers to drawings on pages 528 to 532

Pos	Part No	Description	Qty	Unit	Page No

SEE LIST FOLLOWING DRAWING ON PAGE: 528

Pos	Part No	Description	Qty	Unit	Page No

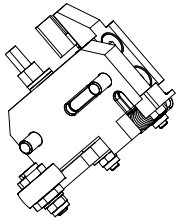

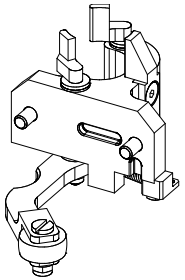

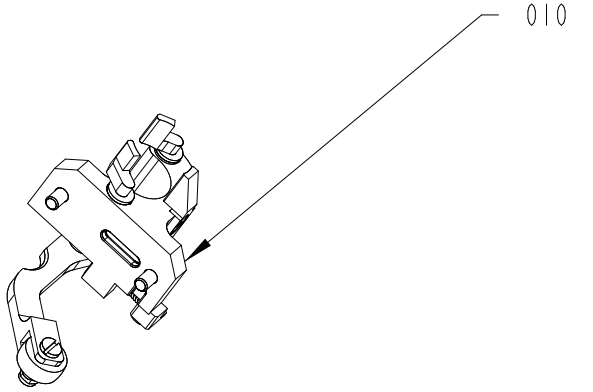

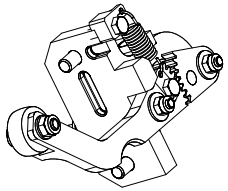

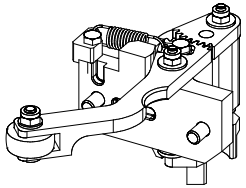

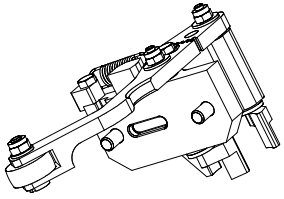

2746941-4
403439

ECM: 492976
Group number: 2746941-0200
Assembly Drawing: 2746941-4_1_AA

Pos	Part No	Description	Qty	Unit	Page No
STREAMCAP500, STREAMCAP1000, SLIMCAP 2000, SLIMCAP 1000, STREAMCAP200, HELICAP2 23, HELICAP 27					
010	2703670-0100	CAP HOLDERS GROUP	6	PC	536

Pos	Part No	Description	Qty	Unit	Page No

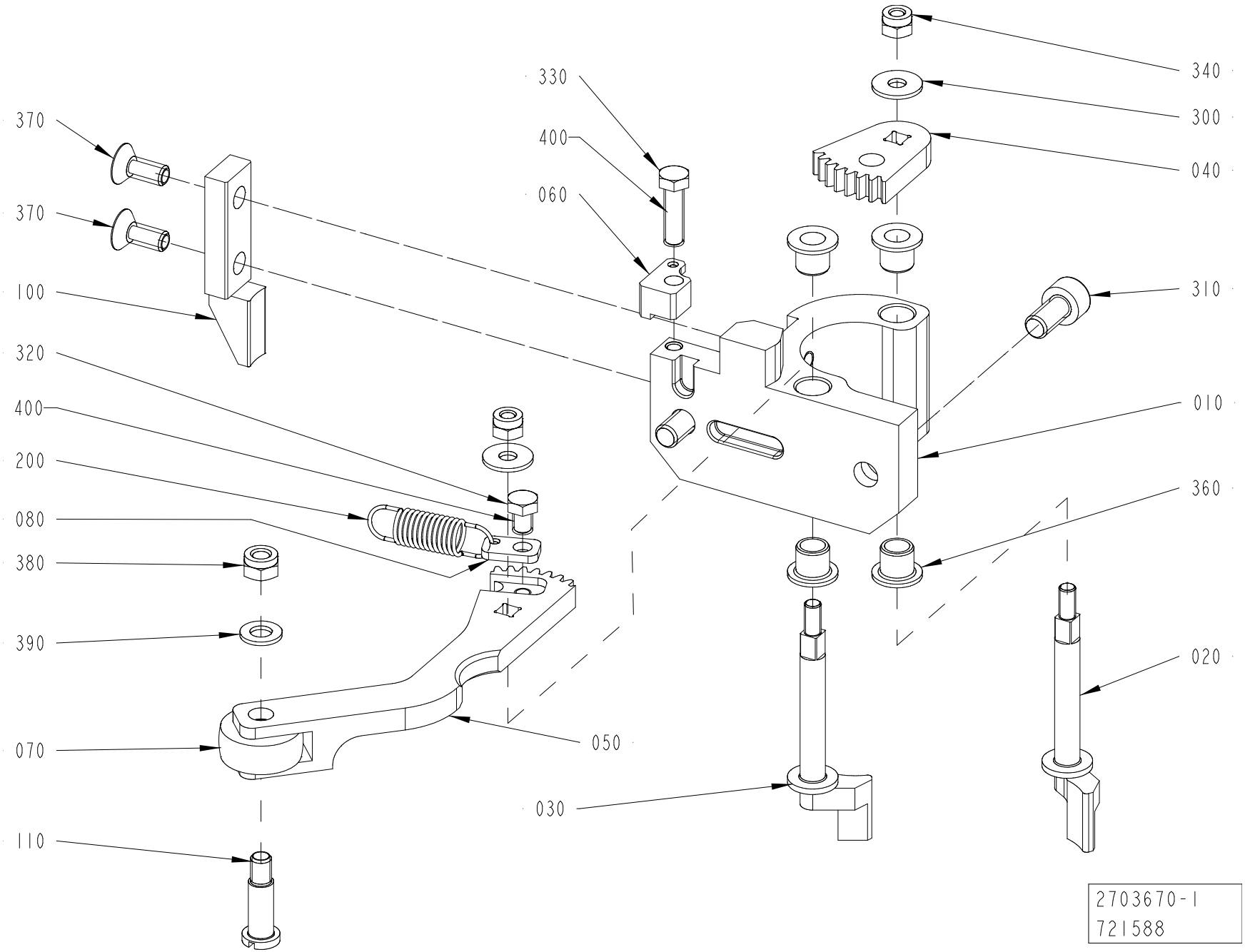
330
400
060
340
300
040
370
370
100
320
400
200
080
380
390
070
110
310
010
360
020
050
030
2703670-1
721588

ECM: 861117
Group number: 2703670-0100
Assembly Drawing: 2703670-1_1_AC

Pos	Part No	Description	Qty	Unit	Page No
HELICAP 27					
020	3077750-0000	CLAW	1	PC	
030	3077749-0000	CLAW	1	PC	
100	3077728-0000	PULLER	1	PC	
HELICAP2 23					
020	2930214-0000	CLAW	1	PC	
030	2930215-0000	CLAW	1	PC	
100	2930216-0000	PULLER	1	PC	
SLIMCAP 1000					
020	2703671-0000	CLAW	1	PC	
030	2703672-0000	CLAW	1	PC	
100	2715887-0000	PULLER	1	PC	
SLIMCAP 2000					
020	2838711-0000	CLAW	1	PC	
030	2838712-0000	CLAW	1	PC	
100	2838713-0000	PULLER	1	PC	
STREAMCAP1000					
020	2715828-0000	CLAW	1	PC	
030	2715829-0000	CLAW	1	PC	
100	2768157-0000	PULLER	1	PC	
STREAMCAP200					
020	2873973-0000	CLAW	1	PC	
030	2873974-0000	CLAW	1	PC	
100	2873975-0000	PULLER	1	PC	
STREAMCAP500					
020	2838715-0000	CLAW	1	PC	
030	2838714-0000	LAW	1	PC	
100	2838716-0000	PULLER	1	PC	
Common Parts					
010	2715827-0000	HOLDER	1	PC	
040	2703673-0000	TOOTHED DISC	1	PC	
050	2983297-0000	FOLLOWER ARM	1	PC	
060	2987971-0000	SPRING HOLDER	1	PC	
070	1556626-0000	WHEEL	1	PC	
080	2987967-0000	SPRING HOLDER	1	PC	
110	2746922-0000	SHAFT	1	PC	
200	3034434-0000	TENSION SPRING	1	PC	
300	90005-0082	WASHER PLAIN ROUND 4,3(M4)/12,H=1	2	PC	
310	312115-0366	SCREW ISO4762 M6X12 A4 80	2	PC	
320	312105-0285	SCREW, M6S ISO 4017 M4X6 A4 70	1	PC	
330	312105-0293	SCREW, M6S ISO 4017 M4X16 A4 70	1	PC	
340	312812-0312	HEXAGON NUT, NY-LOCK M4 A4 80	2	PC	
360	321155-0062	FLANGE BUSHING, IGLIDUR X 6X8X8	4	PC	
370	312155-0327	SCREW DIN 7991 MF6S M5X12 A4 70	2	PC	
380	312812-0314	HEXAGON NUT, NY-LOCK M5 A4 80	1	PC	
390	315105-0146	WASHER PLAIN, 5,3X10X1 A4 BRB	1	PC	
400	351533-0000	THREADLOCKER LOCTITE 2700, BOM ONLY	1	PC	538

This page intentionally left blank

ECM: 791791
Group number: 351533-0000
Assembly Drawing: -

Pos	Part No	Description	Qty	Unit	Page No
Common Parts					
	351533-0050	THREADLOCKER LOCTITE 2700 50 ML	1	PC	

Pos	Part No	Description	Qty	Unit	Page No

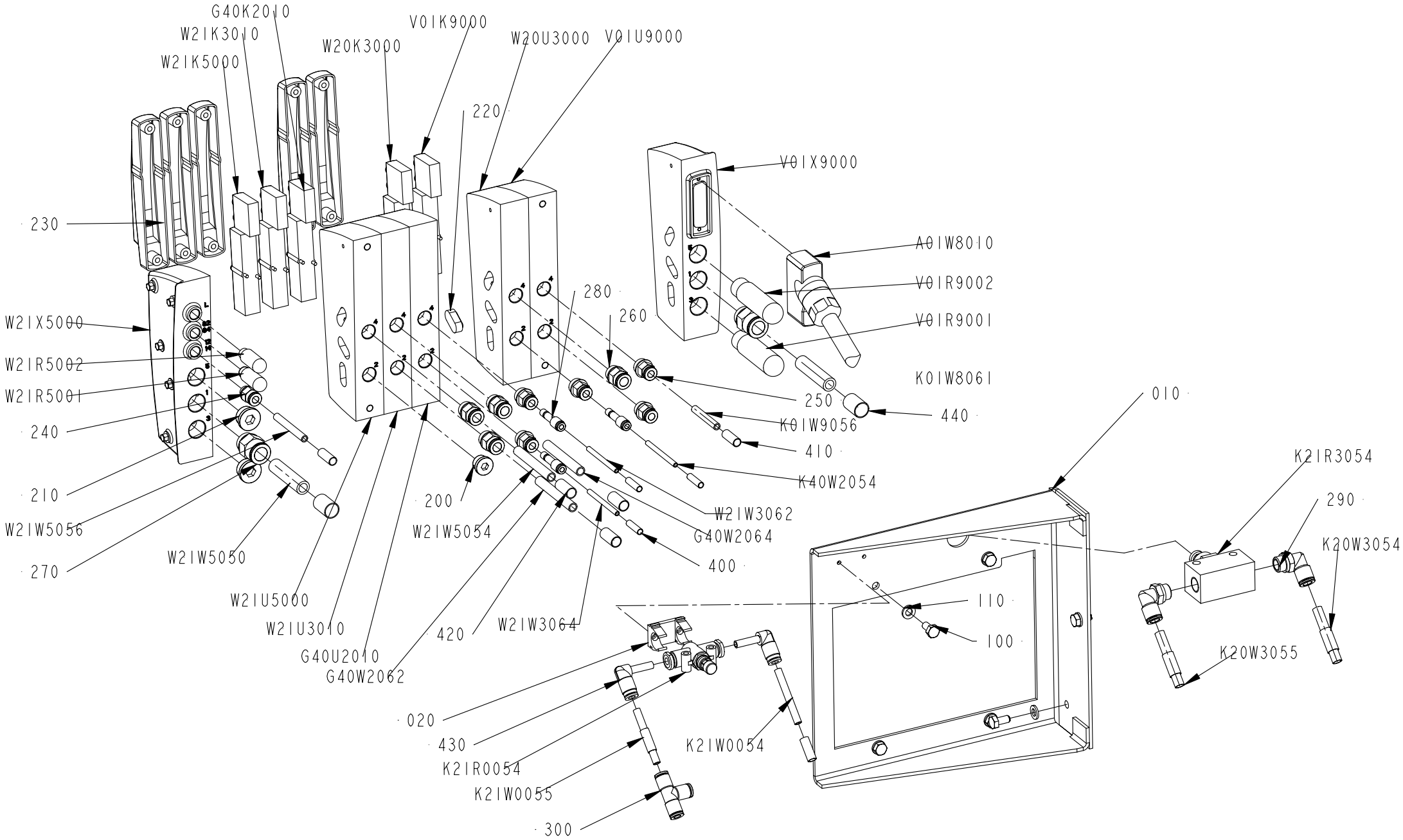
G40K2010
W2IK3010
W2IK5000
W20K3000
V0IK9000
W20U3000
V0IU9000
220
V0IX9000
230
A0IW8010
V0IR9002
V0IR9001
280
260
W2IX5000
W2IR5002
W2IR5001
K0IW8061
250
440
240
K0IW9056
410
K40W2054
010
K2IR3054
290
K20W3054
210
W2IW5056
270
W2IW5050
200
W2IW5054
W2IW3062
G40W2064
400
W2IU5000
W2IU3010
G40U2010
G40W2062
420
W2IW3064
110
100
K20W3055
020
430
K2IR0054
K2IW0055
300
K2IW0054

ECM: 823536
Group number: 3398007-0100
Assembly Drawing: 3398007-1_1_AC

Pos	Part No	Description	Qty	Unit	Page No
HELICAP 27, STREAMCAP500, STREAMCAP1000, SLIMCAP 2000, SLIMCAP 1000, STREAMCAP200, HELICAP2 23					
K01W8061	315400-0010	TUBE PUN-H-12X2-BL	300	MM	
STREAMCAP200, HELICAP2 23, HELICAP 27, STREAMCAP1000, SLIMCAP 2000, SLIMCAP 1000, STREAMCAP500					
G40W2064	315400-0004	TUBE PUN-H-8X1,25-BL	300	MM	
STREAMCAP500, STREAMCAP1000, SLIMCAP 2000, SLIMCAP 1000, STREAMCAP200, HELICAP2 23, HELICAP 27					
200	344373-0040	BLANKING PLUG G1/4, NPQH-BK-G14-P10	1	PC	
250	351456-0106	PUSH-IN FITTING NPQH-D-G14-Q6-P10	5	PC	
260	351456-0107	PUSH-IN FITTING NPQH-D-G14-Q8-P10	4	PC	
270	351456-0109	PUSH-IN FITTING NPQH-D-G38-Q12-P10	2	PC	
280	351456-1101	PUSH-IN FITTING NPQH-D-S6-Q4-P10	3	PC	
400	90459-7368	MARKING FOR PNEUM. TUBING, PRZ04	3	PC	
420	90459-7370	MARKING FOR PNEUM. TUBING, PRZ08	5	PC	
440	90459-7372	MARKING FOR PNEUM. TUBING, PRZ12	2	PC	
G40K2010	344383-0102	VALVE, VMPA14-M1HF-J-PI	1	PC	
G40W2062	315400-0004	TUBE PUN-H-8X1,25-BL	300	MM	
K40W2054	315400-0016	TUBE PUN-H-4X0,75-BL	500	MM	
W21W3062	315400-0016	TUBE PUN-H-4X0,75-BL	500	MM	
W21W3064	315400-0016	TUBE PUN-H-4X0,75-BL	500	MM	
W21W5050	315400-0010	TUBE PUN-H-12X2-BL	300	MM	
Common Parts					
010	3397189-0000	SUPPORT	1	PC	
020	2838701-0000	HOLDER	1	PC	
100	312105-0366	SCREW, M6S ISO 4017 M6X12 A4 80	7	PC	
110	315105-0153	WASHER PLAIN, 6,4X12X1,5 A4 BRB	7	PC	
210	344373-0050	BLANKING PLUG G3/8, NPQH-BK-G38-P10	2	PC	
220	344383-0501	PRESSURE ZONE PLUG, VMPAC-TE	1	PC	
230	344383-0601	VALVE COVER, VMPAC-VC-14	5	PC	
240	351456-0102	PUSH-IN FITTING NPQH-D-G18-Q6-P10	1	PC	
290	351456-3007	PUSH-IN L-FITTING NPQH-L-G14-Q8-P10	2	PC	
300	351456-5107	PUSH-IN T-FITTING NPQH-T-Q6-E-P10	1	PC	
410	90459-7369	MARKING FOR PNEUM. TUBING, PRZ06	4	PC	
430	90055-0222	ELBOW WITH TAILPIECE 6/6 MM	2	PC	
A01W8010	344383-0703	CABLE 10M, NEBV-C-S1WA25-F-10-LE25-S5	1	PC	
G40U2010	344383-0402	VALVE SUB-BASE, VMPAC-AP-14-2	1	PC	
K01W9056	315400-0001	TUBE PUN-H-6X1-BL	300	MM	
K20W3054	315400-0004	TUBE PUN-H-8X1,25-BL	300	MM	
K20W3055	315400-0004	TUBE PUN-H-8X1,25-BL	300	MM	
K21R0054	90459-3604	FLOW CONTROL VALVE, GR-QS-6	1	PC	
K21R3054	90235-0748	THROTTLE CHECK VALVE, GRA-1/4-B	1	PC	
K21W0054	315400-0001	TUBE PUN-H-6X1-BL	500	MM	
K21W0055	315400-0001	TUBE PUN-H-6X1-BL	500	MM	
V01K9000	344383-0121	VALVE, VMPA14-M1HF-K-PI	1	PC	
V01R9001	90328-0024	SILENCER, G3/8"	1	PC	
V01R9002	90328-0024	SILENCER, G3/8"	1	PC	
V01U9000	344383-0404	VALVE SUB-BASE, VMPAC-AP-14-B-2	1	PC	
V01X9000	344383-0301	ENDPLATE LEFT, VMPAC-EPL-MP-SD25	1	PC	
W20K3000	344383-0121	VALVE, VMPA14-M1HF-K-PI	1	PC	
W20U3000	344383-0402	VALVE SUB-BASE, VMPAC-AP-14-2	1	PC	
W21K3010	344383-0102	VALVE, VMPA14-M1HF-J-PI	1	PC	
W21K5000	344383-0123	VALVE, VMPA14-M1HF-H-PI	1	PC	
W21R5001	90328-0047	SILENCER, G1/8"	1	PC	
W21R5002	90328-0047	SILENCER, G1/8"	1	PC	
W21U3010	344383-0402	VALVE SUB-BASE, VMPAC-AP-14-2	1	PC	
W21U5000	344383-0404	VALVE SUB-BASE, VMPAC-AP-14-B-2	1	PC	
W21W5054	315400-0004	TUBE PUN-H-8X1,25-BL	300	MM	
W21W5056	315400-0001	TUBE PUN-H-6X1-BL	500	MM	
W21X5000	344383-0351	ENDPLATE RIGHT, VMPAC-EPR-EX	1	PC	

This page intentionally left blank

SPC

Spare Parts Catalogue

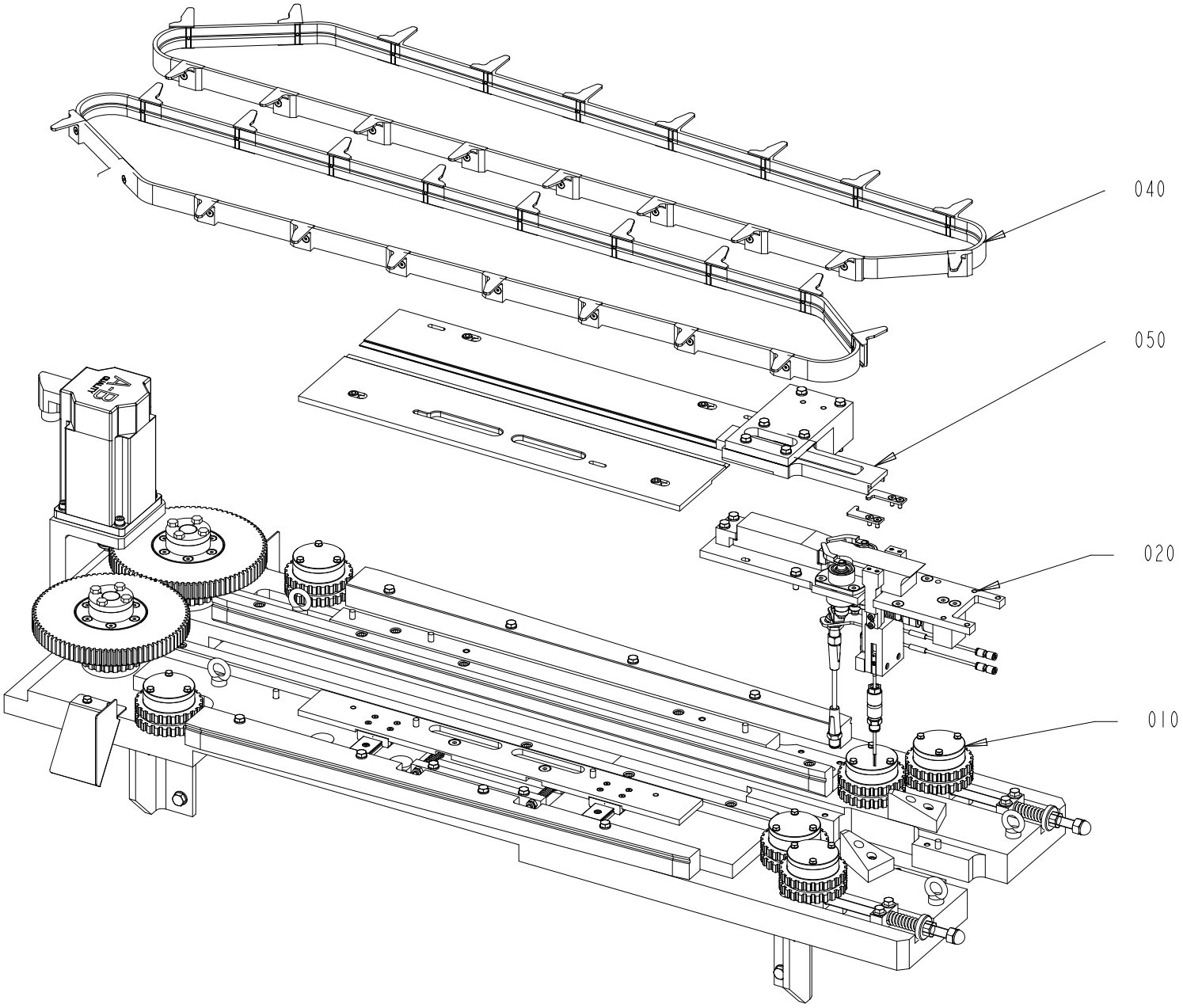

662907-3
775758

ECM: 777872
Group number: 662907-0300
Assembly Drawing: 662907-3_1_AB

Pos	Part No	Description	Qty	Unit	Page No
Common Parts					
010	2746933-0300	BASE UNIT	1	PC	546, 548
020	2746934-0200	FEED UNIT	1	PC	578
040	2746929-0100	CARRIER BELT	1	PC	592
050	2746928-0300	CAP LINE	1	PC	606, 608, 610

Pos	Part No	Description	Qty	Unit	Page No

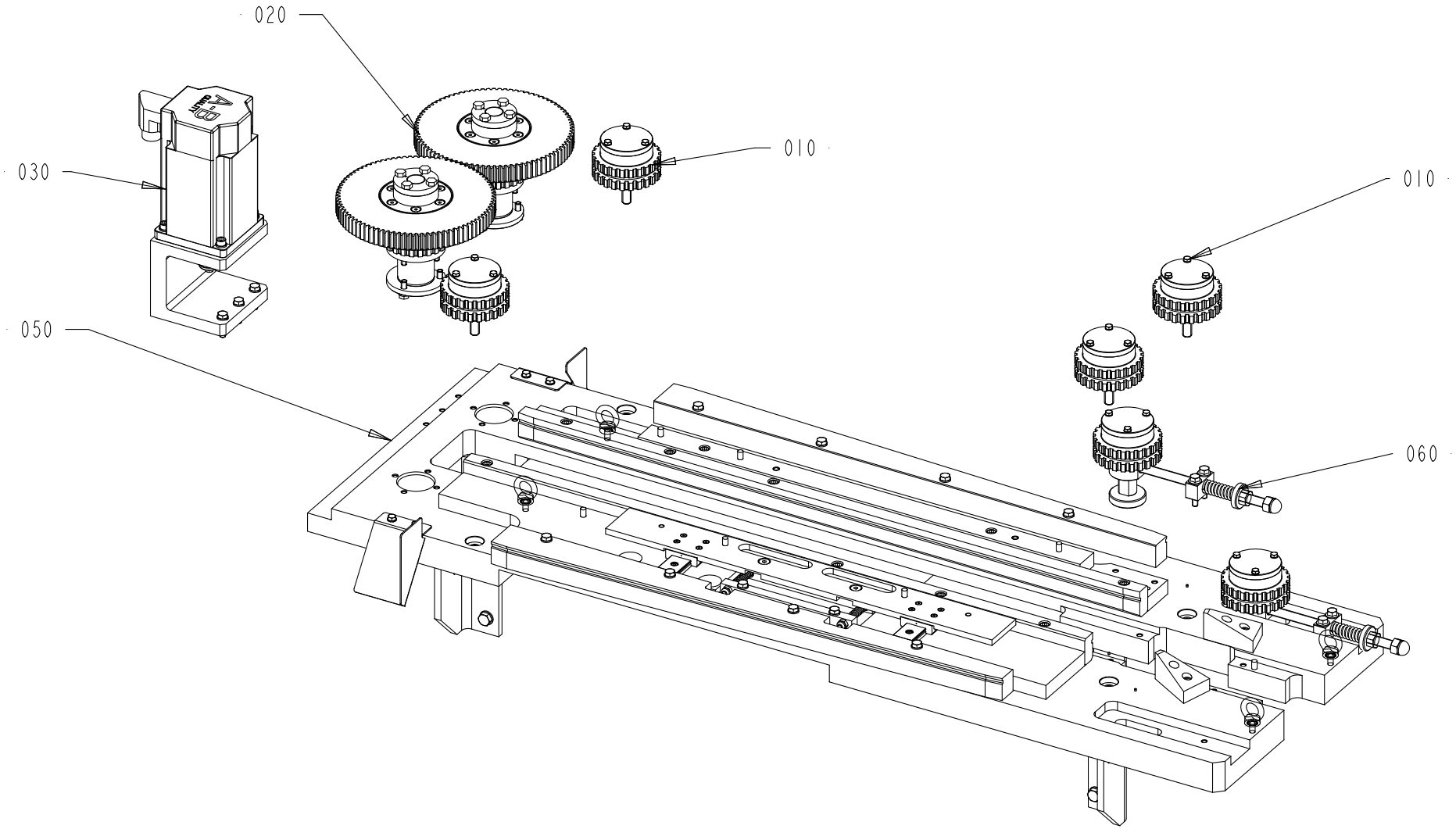

2746933-3
775758

This list refers to drawings on pages 546 to 548

Pos	Part No	Description	Qty	Unit	Page No
ADHESIVE DETECTOR	See page: 548				
070	3402978-0100	ADHESIVE DETECTOR	1	PC	550
Common Parts					
010	2715669-0200	TOOTHED PULLEY	4	PC	552
020	2715976-0300	TOOTHED PULLEY	2	PC	558
030	2727407-0300	DRIVE PULLEY	1	PC	564
050	2716049-0300	CAP LINE	1	PC	566
060	3034438-0200	TOOTHED PULLEY	2	PC	572

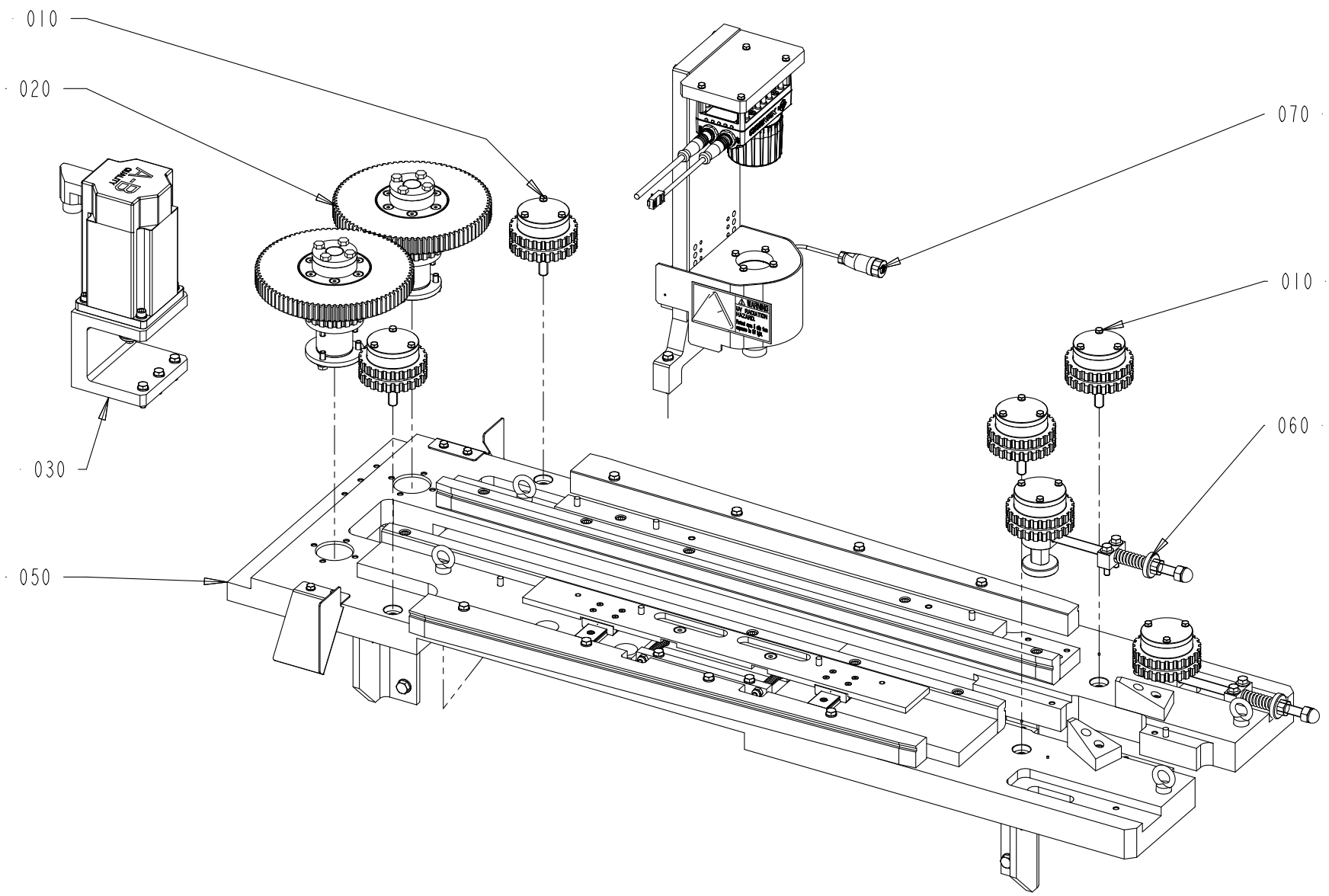

2746933-4
775758

Pos	Part No	Description	Qty	Unit	Page No

SEE LIST FOLLOWING DRAWING ON PAGE: 546

Pos	Part No	Description	Qty	Unit	Page No

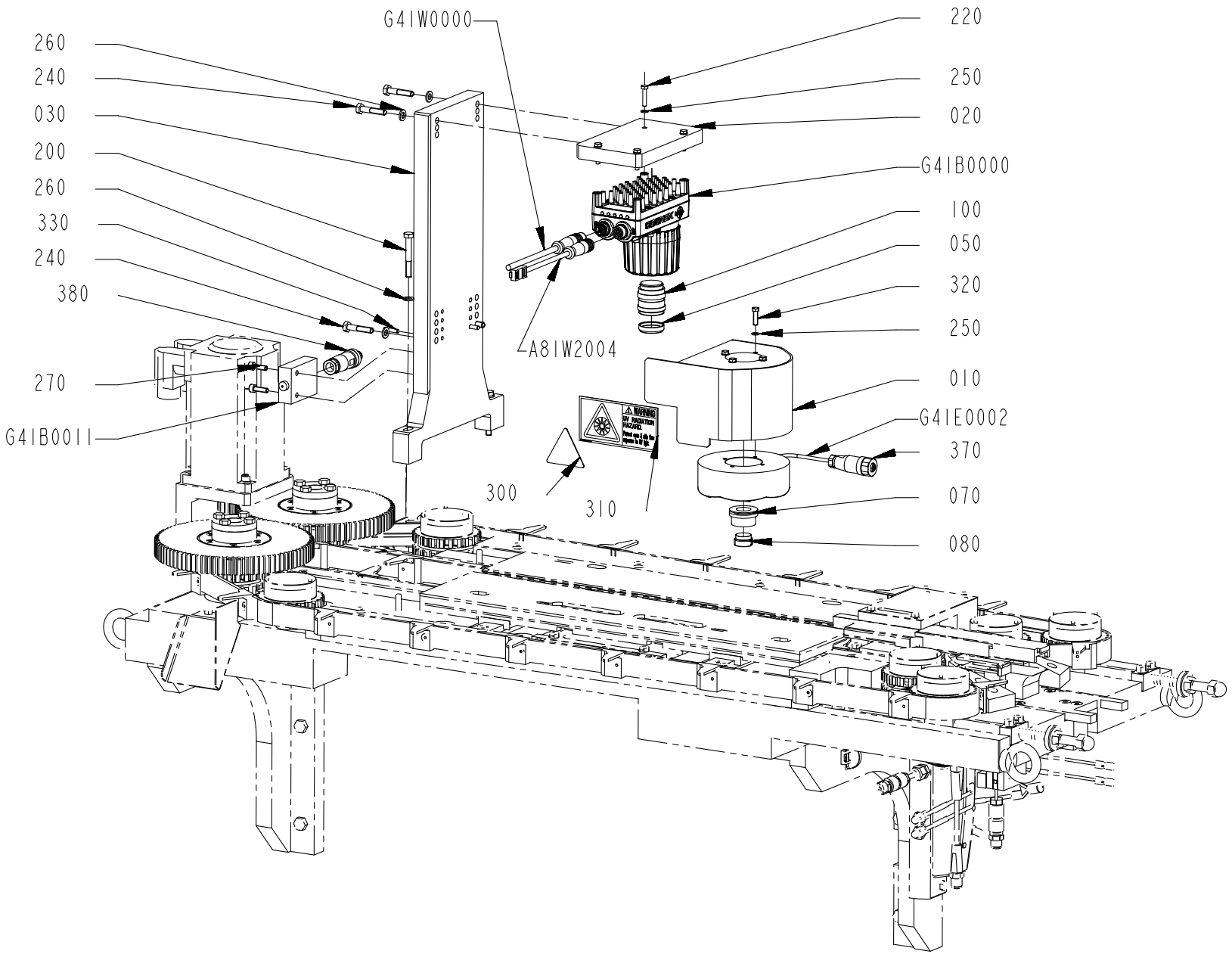

3402978-1
736732

ECM: 742606
Group number: 3402978-0100
Assembly Drawing: 3402978-1_1_AA

Pos	Part No	Description	Qty	Unit	Page No
HELICAP 27					
070	3224303-0000	CAP	1	PC	
HELICAP 27, HELICAP2 23, STREAMCAP1000					
010	3256152-0000	BRACKET	1	PC	
020	2909157-0000	BRACKET	1	PC	
030	2909158-0000	BRACKET	1	PC	
220	312105-0295	SCREW, M6S ISO 4017 M4X20 A4 70	4	PC	
240	312105-0374	SCREW, M6S ISO 4014 M6X30 A4 80	4	PC	
260	315105-0153	WASHER PLAIN, 6,4X12X1,5 A4 BRB	6	PC	
270	312115-0329	SCREW ISO4762 M5X16 A4 80	2	PC	
320	312105-0293	SCREW, M6S ISO 4017 M4X16 A4 70	4	PC	
330	311103-0271	PARALLEL PIN ISO 2338 4M6X18 A1	2	PC	
HELICAP2 23					
070	3224301-0000	CAP	1	PC	
STREAMCAP1000					
070	3203756-0000	CAP	1	PC	
Common Parts					
050	90606-5311	FILTER, IMBF-BP470-25.5	1	PC	
080	3203757-0000	SCREW PLUG	1	PC	
100	90605-2647	LENS, LFC25F1	1	PC	
200	312105-0379	SCREW, M6S ISO 4014 M6X45 A4 80	2	PC	
250	315105-0136	WASHER PLAIN, 4,3X8X0,8 A4 BRB	8	PC	
300	359705-0033	WARNING SIGN ISO, OPTICAL RADIATION	1	PC	
310	90605-9772	WARNING SIGN ANSI (H), UV RADIATION HAZA	1	PC	
370	90603-5562	CONNECTOR, SACC-M12FS-5CON-PG 7-VA	1	PC	
380	90603-5561	CONNECTOR M12 MALE 5-PIN	1	PC	
A81W2004	90600-2103	ETHERNET CABLE, CCB-84901-1004-10	1	PC	
G41B0000	90605-2649	IN-SIGHT 5600 CAMERA, IS5600-01	1	PC	
G41B0011	90601-1027	LIMIT SWITCH, D4C-1G01 5M	1	PC	
G41E0002	90605-9651	UV ILLUMINATION, LDR2-100UV365-IP	1	PC	
G41W0000	90600-2102	POWER I/O CABLE, CCB-84901-0103-10	1	PC	

Pos	Part No	Description	Qty	Unit	Page No

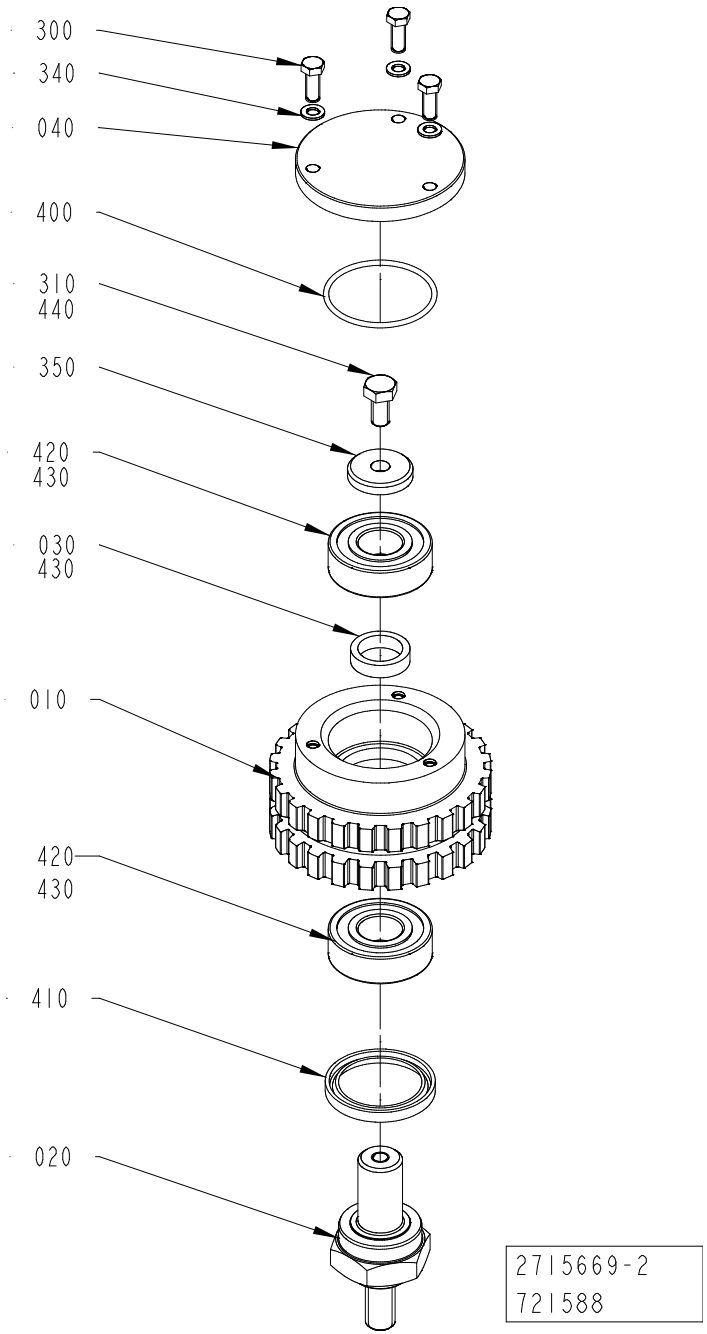
300
340
040
400
310
440
350
420
430
030
430
010
420
430
410
020
2715669-2
721588

ECM: 861118
Group number: 2715669-0200
Assembly Drawing: 2715669-2_1_AC

Pos	Part No	Description	Qty	Unit	Page No
Common Parts					
010	2780452-0000	TOOTHED PULLEY	1	PC	
020	2715978-0000	SHAFT	1	PC	
030	2736447-0000	SPACER	1	PC	
040	2736449-0000	COVER	1	PC	
300	312105-0291	SCREW, M6S ISO 4017 M4X12 A4 70	3	PC	
310	312105-0366	SCREW, M6S ISO 4017 M6X12 A4 80	1	PC	
340	315105-0136	WASHER PLAIN, 4,3X8X0,8 A4 BRB	3	PC	
350	315125-0153	WASHER HIGH, TBRSB 6,4X22X4 A4	1	PC	
400	315202-0716	O-RING 34,65X1,78 MM	1	PC	
410	315230-0330	SEAL RING G 28X37X4	1	PC	
420	321309-0102	BALL BEARING 15/35X11	2	PC	
430	344407-0000	KLÜBERSYNTH UH1 14-151, ONLY IN BOM	1	L	554
440	351533-0000	THREADLOCKER LOCTITE 2700, BOM ONLY	1	PC	556

Pos	Part No	Description	Qty	Unit	Page No

This page intentionally left blank

ECM: 653851
Group number: 344407-0000
Assembly Drawing: -

Pos	Part No	Description	Qty	Unit	Page No
Common Parts					
	344407-0037	KLÜBERSYNTH UH1 14-151, 1KG CAN	1	PC	
	344407-0177	KLÜBERSYNTH UH1 14-151, 25KG BUCKET	1	PC	
	344407-0285	KLÜBERSYNTH UH1 14-151, 45G TUBE	1	PC	
	344407-0591	KLÜBERSYNTH UH1 14-151, 400G CARTRIDGE	1	PC	

Pos	Part No	Description	Qty	Unit	Page No

This page intentionally left blank

ECM: 791791
Group number: 351533-0000
Assembly Drawing: -

Pos	Part No	Description	Qty	Unit	Page No
Common Parts					
	351533-0050	THREADLOCKER LOCTITE 2700 50 ML	1	PC	

Pos	Part No	Description	Qty	Unit	Page No

Pos. 020 in BoM 2746933-0300

TOOTHED PULLEY

Drawing file:2715976-3_1_AA

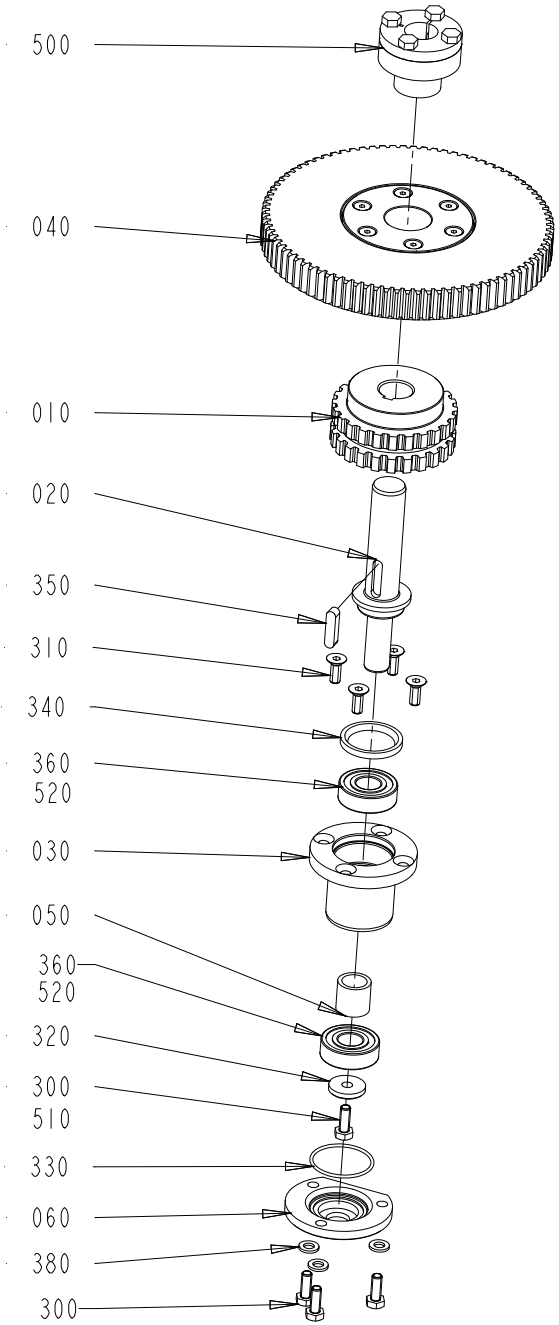

2715976-3
775758

ECM: 861274
Group number: 2715976-0300
Assembly Drawing: 2715976-3_1_AA

Pos	Part No	Description	Qty	Unit	Page No
Common Parts					
010	2780453-0000	TOOTHED PULLEY	1	PC	
020	2930158-0000	SHAFT	1	PC	
030	2930159-0000	LOCKING HUB	1	PC	
040	3311662-0000	TOOTHED PULLEY	1	PC	
050	2930160-0000	SPACER	1	PC	
060	2736448-0000	COVER	1	PC	
300	312105-0368	SCREW, M6S ISO 4017 M6X16 A4 80	4	PC	
310	312155-0368	SCREW DIN 7991 MF6S M6X16 A4 70	4	PC	
320	315125-0153	WASHER HIGH, TBRSB 6,4X22X4 A4	1	PC	
330	315202-0716	O-RING 34,65X1,78 MM	1	PC	
340	315230-0330	SEAL RING G 28X37X4	1	PC	
350	315705-0234	PARALLEL KEY W. ROUND ENDS, 6X6X25 MM	1	PC	
360	321309-0102	BALL BEARING 15/35X11	2	PC	
380	315105-0153	WASHER PLAIN, 6,4X12X1,5 A4 BRB	3	PC	
500	90208-0078	CLAMPING ELEMENT, 20X28 L=18	1	PC	
510	351533-0000	THREADLOCKER LOCTITE 2700, BOM ONLY	1	PC	560
520	344407-0000	KLÜBERSYNTH UH1 14-151, ONLY IN BOM	1	L	562

Pos	Part No	Description	Qty	Unit	Page No

This page intentionally left blank

ECM: 791791
Group number: 351533-0000
Assembly Drawing: -

Pos	Part No	Description	Qty	Unit	Page No
Common Parts					
	351533-0050	THREADLOCKER LOCTITE 2700 50 ML	1	PC	

Pos	Part No	Description	Qty	Unit	Page No

This page intentionally left blank

ECM: 653851
Group number: 344407-0000
Assembly Drawing: -

Pos	Part No	Description	Qty	Unit	Page No
Common Parts					
	344407-0037	KLÜBERSYNTH UH1 14-151, 1KG CAN	1	PC	
	344407-0177	KLÜBERSYNTH UH1 14-151, 25KG BUCKET	1	PC	
	344407-0285	KLÜBERSYNTH UH1 14-151, 45G TUBE	1	PC	
	344407-0591	KLÜBERSYNTH UH1 14-151, 400G CARTRIDGE	1	PC	

Pos	Part No	Description	Qty	Unit	Page No

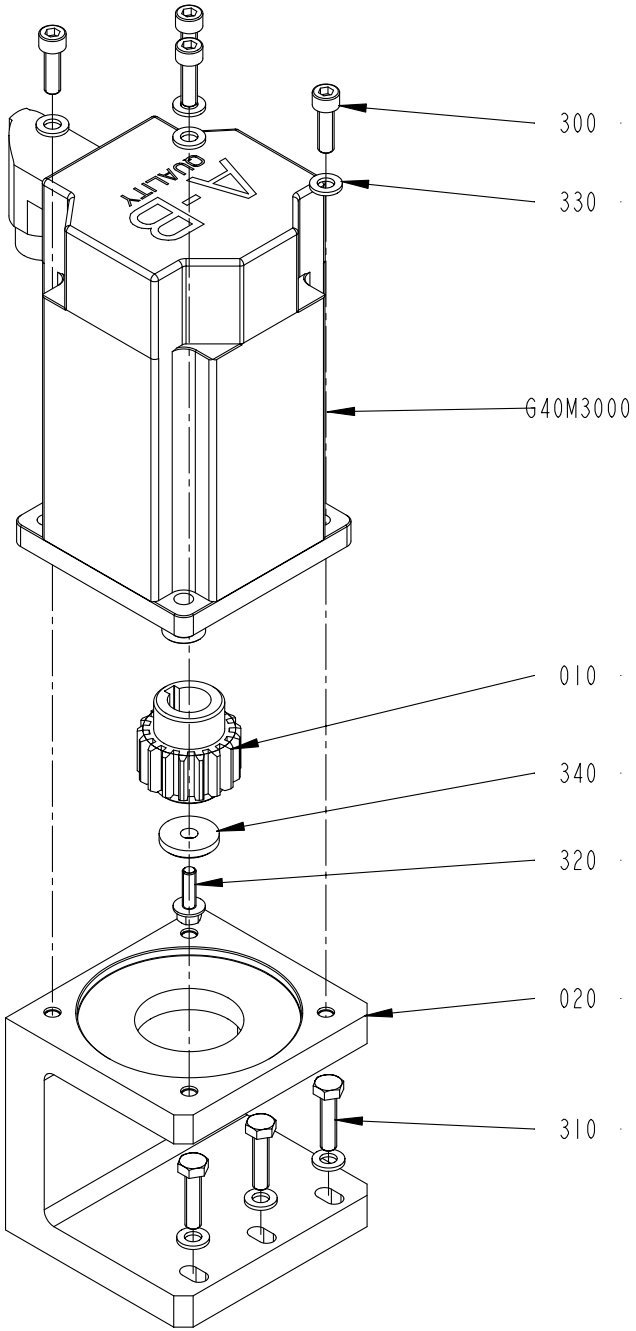

2727407-3
822826

ECM: 825461
Group number: 2727407-0300
Assembly Drawing: 2727407-3_1_AB

Pos	Part No	Description	Qty	Unit	Page No
Common Parts					
010	2727427-0000	GEAR WHEEL	1	PC	
020	2727408-0000	MOTOR BRACKET	1	PC	
300	312115-0370	SCREW ISO4762 M6X20 A4 80	4	PC	
310	312105-0372	SCREW, M6S ISO 4017 M6X25 A4 80	3	PC	
320	312108-0329	SCREW EN 1665 TYPE F M5X16 A270	1	PC	
330	315105-0153	WASHER PLAIN, 6,4X12X1,5 A4 BRB	7	PC	
340	315125-0153	WASHER HIGH, TBRSB 6,4X22X4 A4	1	PC	
G40M3000	90606-0575	SERVO MOTOR, VPL-B1002M-PJ12AA, SERIE A	1	PC	

Pos	Part No	Description	Qty	Unit	Page No

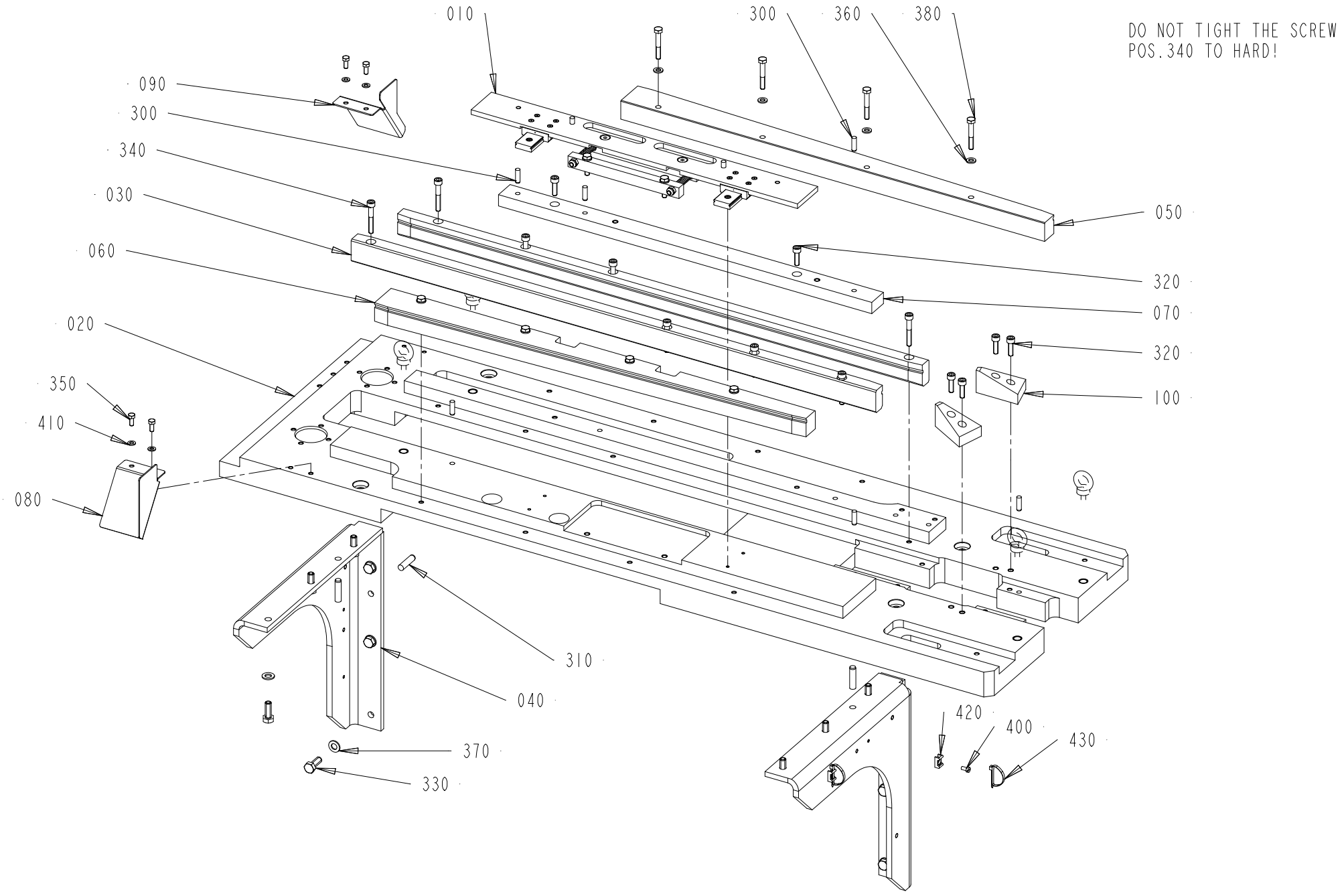
010
300
360
380
DO NOT TIGHT THE SCREW
POS.340 TO HARD!
090
300
340
030
060
020
350
410
080
050
320
070
320
100
310
040
370
330
420
400
430

ECM: 777865
Group number: 2716049-0300
Assembly Drawing: 2716049-3_1_AA

Pos	Part No	Description	Qty	Unit	Page No
Common Parts					
010	2716149-0200	STEERING DEVICE	1	PC	568
020	2838741-0000	BRACKET	1	PC	
030	2780454-0000	SLIDE RAIL	2	PC	
040	3438478-0000	BRACKET	2	PC	
050	2780455-0000	SLIDE RAIL	1	PC	
060	2780456-0000	SLIDE RAIL	1	PC	
070	2930163-0000	SPACER	1	PC	
080	2918904-0000	PLATE	1	PC	
090	2918905-0000	PLATE	1	PC	
100	3095787-0000	SLIDE	2	PC	
300	311103-0353	PARALLEL PIN ISO 2338 6M6X20 A1	6	PC	
310	311103-0406	PARALLEL PIN ISO 2338 8M6X32 A1	4	PC	
320	312115-0370	SCREW ISO4762 M6X20 A4 80	6	PC	
330	312105-0452	SCREW, M6S ISO 4017 M8X22 A4 80	12	PC	
340	312115-0378	SCREW ISO4762 M6X40 A4 80	8	PC	
350	312105-0327	SCREW, M6S ISO 4017 M5X12 A4 80	4	PC	
360	315105-0153	WASHER PLAIN, 6,4X12X1,5 A4 BRB	8	PC	
370	315105-0165	FWAS080G0-0S, WASHER PLAIN	12	PC	
380	312105-0378	SCREW, M6S ISO 4014 M6X40 A4 80	8	PC	
400	312125-0287	SLOTTED HEAD SCREW, ISO1207 M4X8 A4	2	PC	
410	315105-0146	WASHER PLAIN, 5,3X10X1 A4 BRB	4	PC	
420	352113-0205	ANCHOR PLATES FOR STRIPS, TM2S8-C100	2	PC	
430	352113-0104	CABLE TIE, BLACK 300X4,8 MM	2	PC	

Pos	Part No	Description	Qty	Unit	Page No

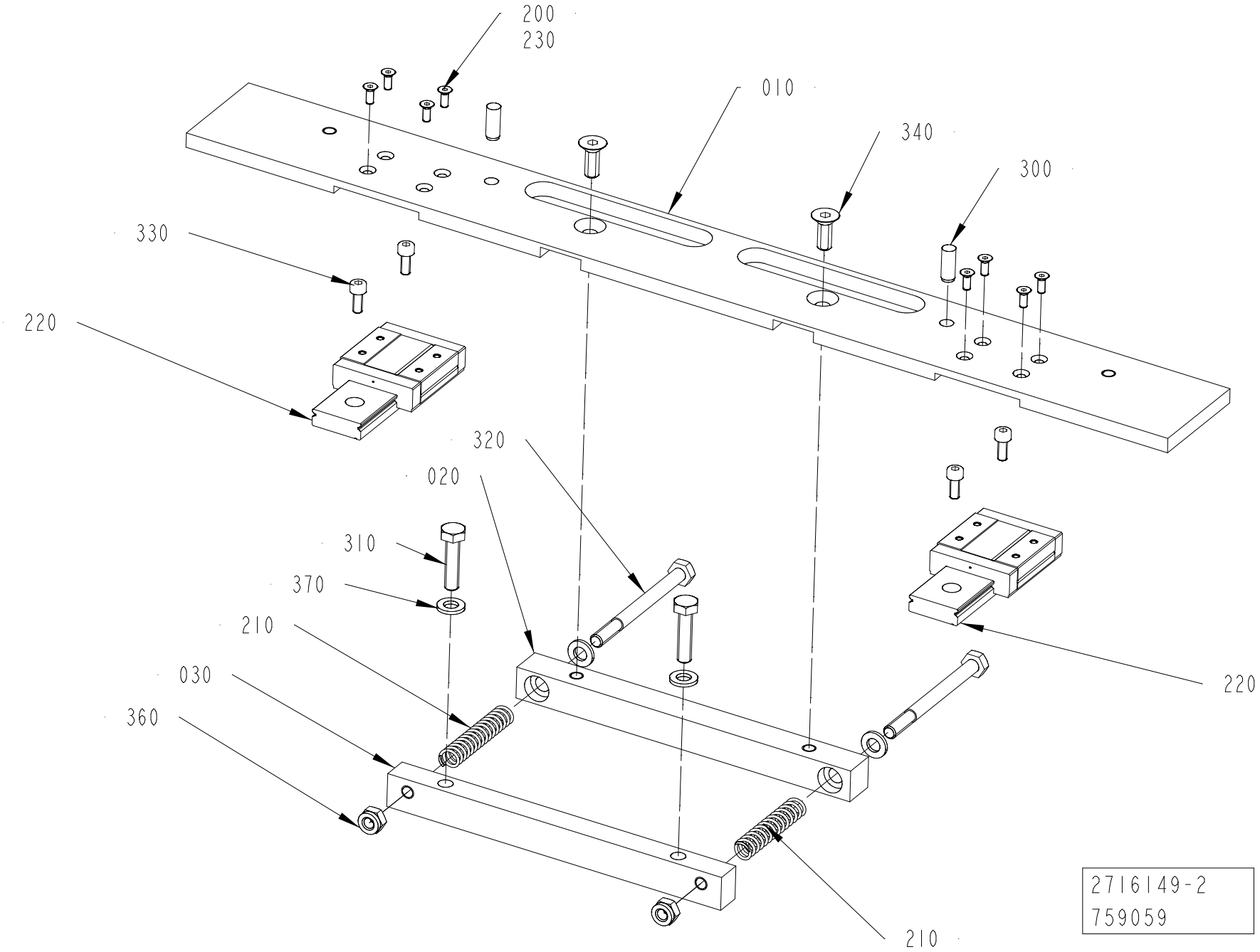
200
230
010
340
300
330
220
320
020
310
370
210
030
360
220
210
2716149-2
759059

ECM: 861121
Group number: 2716149-0200
Assembly Drawing: 2716149-2_1_AE

Pos	Part No	Description	Qty	Unit	Page No
Common Parts					
010	2716152-0000	PLATE	1	PC	
020	2716156-0000	BRACKET	1	PC	
030	2716157-0000	BRACKET	1	PC	
200	90287-0295	SCREW HEX.SOCK.COUNT.MF6S M3X8 A280	8	PC	
210	90335-0082	COMP. SPRING, 22180, 1,25X9,25X47,5	2	PC	
220	90606-9250	GUIDE RAIL, F-618179.KUEM12-W	2	PC	
230	351533-0000	THREADLOCKER LOCTITE 2700, BOM ONLY	1	PC	570
300	311103-0351	PARALLEL PIN ISO 2338 6M6X16 A1	2	PC	
310	312105-0372	SCREW, M6S ISO 4017 M6X25 A4 80	2	PC	
320	312105-0384	SCREW, M6S ISO 4014 M6X70 A4 80	2	PC	
330	312115-0289	SCREW ISO4762 M4X10 A4 80	4	PC	
340	312155-0368	SCREW DIN 7991 MF6S M6X16 A4 70	2	PC	
360	312812-0316	HEXAGON NUT, NY-LOCK M6 A4 80	2	PC	
370	315105-0153	WASHER PLAIN, 6,4X12X1,5 A4 BRB	4	PC	

Pos	Part No	Description	Qty	Unit	Page No

This page intentionally left blank

ECM: 791791
Group number: 351533-0000
Assembly Drawing: -

Pos	Part No	Description	Qty	Unit	Page No
Common Parts					
	351533-0050	THREADLOCKER LOCTITE 2700 50 ML	1	PC	

Pos	Part No	Description	Qty	Unit	Page No

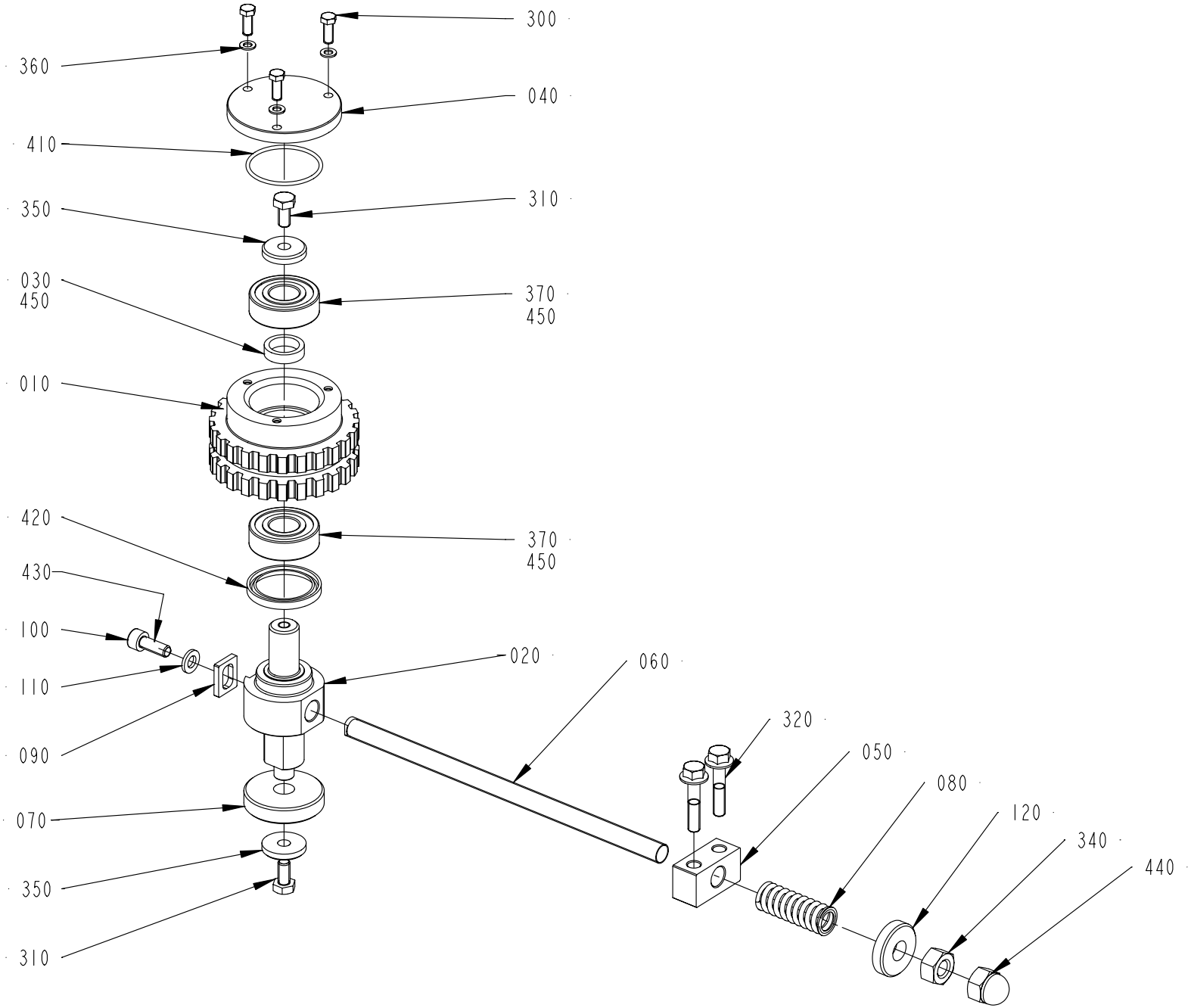
300
360
040
410
310
350
030
450
370
450
010
420
370
450
430
100
020
060
110
320
050
090
080
120
070
340
350
440
310

ECM: 861048
Group number: 3034438-0200
Assembly Drawing: 3034438-2_1_AD

Pos	Part No	Description	Qty	Unit	Page No
Common Parts					
010	2780452-0000	TOOTHED PULLEY	1	PC	
020	2716019-0000	SHAFT	1	PC	
030	2736447-0000	SPACER	1	PC	
040	2736449-0000	COVER	1	PC	
050	3024866-0000	SUPPORT	1	PC	
060	2974857-0000	SCREW	1	PC	
070	2716024-0000	WASHER	1	PC	
080	2716021-0000	SPRING	1	PC	
090	2974858-0000	NUT	1	PC	
100	312115-0368	SCREW ISO4762 M6X16 A4 80	1	PC	
110	315106-0153	WASHER PLAIN, M6 ISO7089-6-200 HV A4	1	PC	
120	315125-0173	WASHER HIGH, TBRSB 10,5X28X6 A4	1	PC	
300	312105-0291	SCREW, M6S ISO 4017 M4X12 A4 70	3	PC	
310	312105-0366	SCREW, M6S ISO 4017 M6X12 A4 80	2	PC	
320	312108-0374	SCREW EN 1665 TYPE F M6X30 A270	2	PC	
340	312605-0320	HEXAGON NUT, M6M M10 A280	1	PC	
350	315125-0153	WASHER HIGH, TBRSB 6,4X22X4 A4	2	PC	
360	315105-0136	WASHER PLAIN, 4,3X8X0,8 A4 BRB	3	PC	
370	321309-0102	BALL BEARING 15/35X11	2	PC	
410	315202-0716	O-RING 34,65X1,78 MM	1	PC	
420	315230-0330	SEAL RING G 28X37X4	1	PC	
430	351532-0000	THREADLOCKER LOCTITE 2400, BOM ONLY	1	PC	574
440	312705-0320	NUT HEX. DOMED CAP MHM-6 M10 A280	1	PC	
450	344407-0000	KLÜBERSYNTH UH1 14-151, ONLY IN BOM	1	L	576

Pos	Part No	Description	Qty	Unit	Page No

This page intentionally left blank

ECM: 791790
Group number: 351532-0000
Assembly Drawing: -

Pos	Part No	Description	Qty	Unit	Page No
Common Parts					
	351532-0050	THREADLOCKER LOCTITE 2400 50 ML	1	PC	

Pos	Part No	Description	Qty	Unit	Page No

This page intentionally left blank

ECM: 653851
Group number: 344407-0000
Assembly Drawing: -

Pos	Part No	Description	Qty	Unit	Page No
Common Parts					
	344407-0037	KLÜBERSYNTH UH1 14-151, 1KG CAN	1	PC	
	344407-0177	KLÜBERSYNTH UH1 14-151, 25KG BUCKET	1	PC	
	344407-0285	KLÜBERSYNTH UH1 14-151, 45G TUBE	1	PC	
	344407-0591	KLÜBERSYNTH UH1 14-151, 400G CARTRIDGE	1	PC	

Pos	Part No	Description	Qty	Unit	Page No

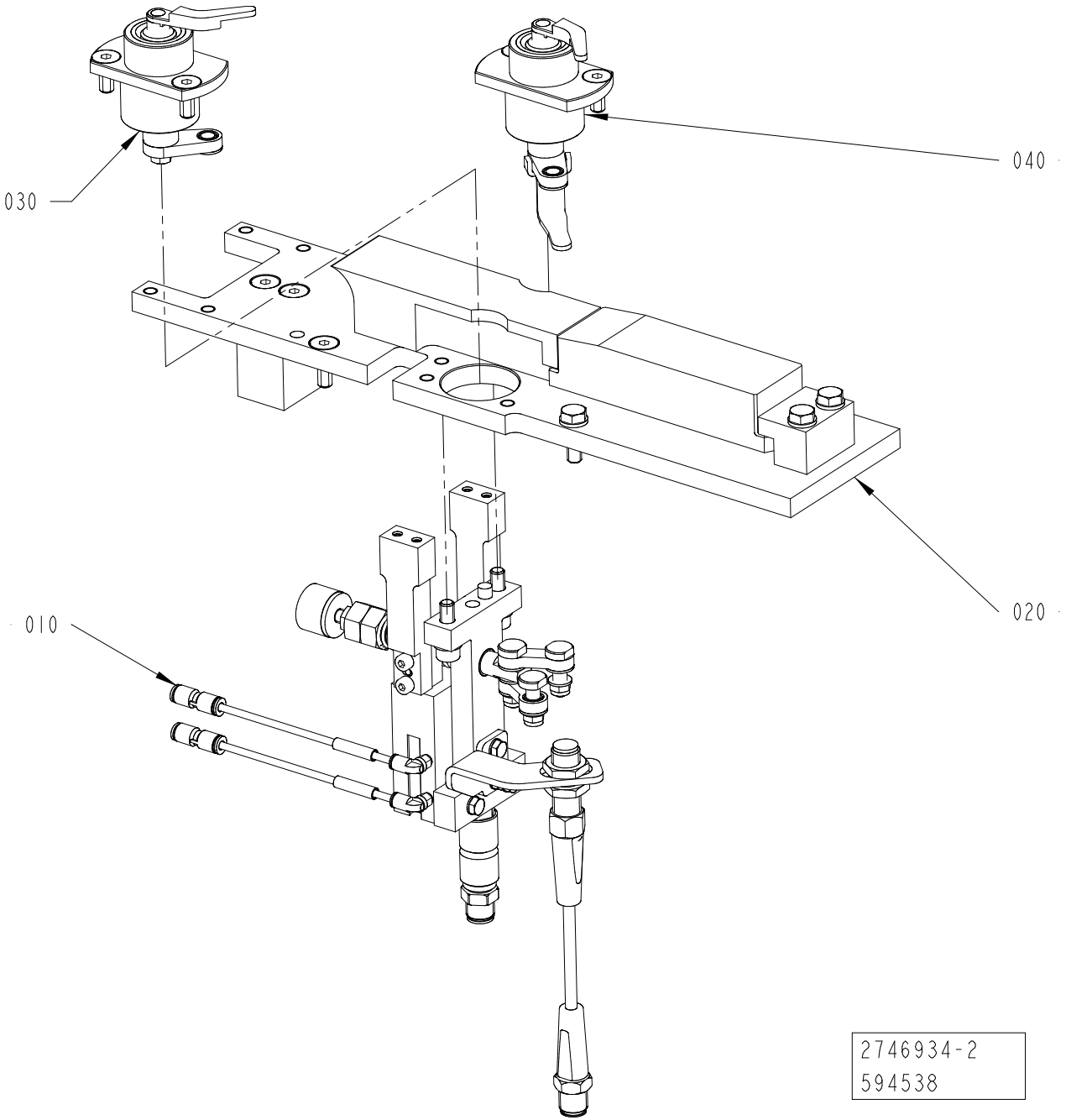
030
040
020
010
2746934-2
594538

ECM: 594644
Group number: 2746934-0200
Assembly Drawing: 2746934-2_1_AB

Pos	Part No	Description	Qty	Unit	Page No
Common Parts					
010	2716046-0200	CLAMP UNIT	1	PC	580
020	2716047-0100	HEIGHT ADJUSTMENT	1	PC	582
030	2740299-0200	FINGER	1	PC	584
040	2740371-0200	FINGER	1	PC	588

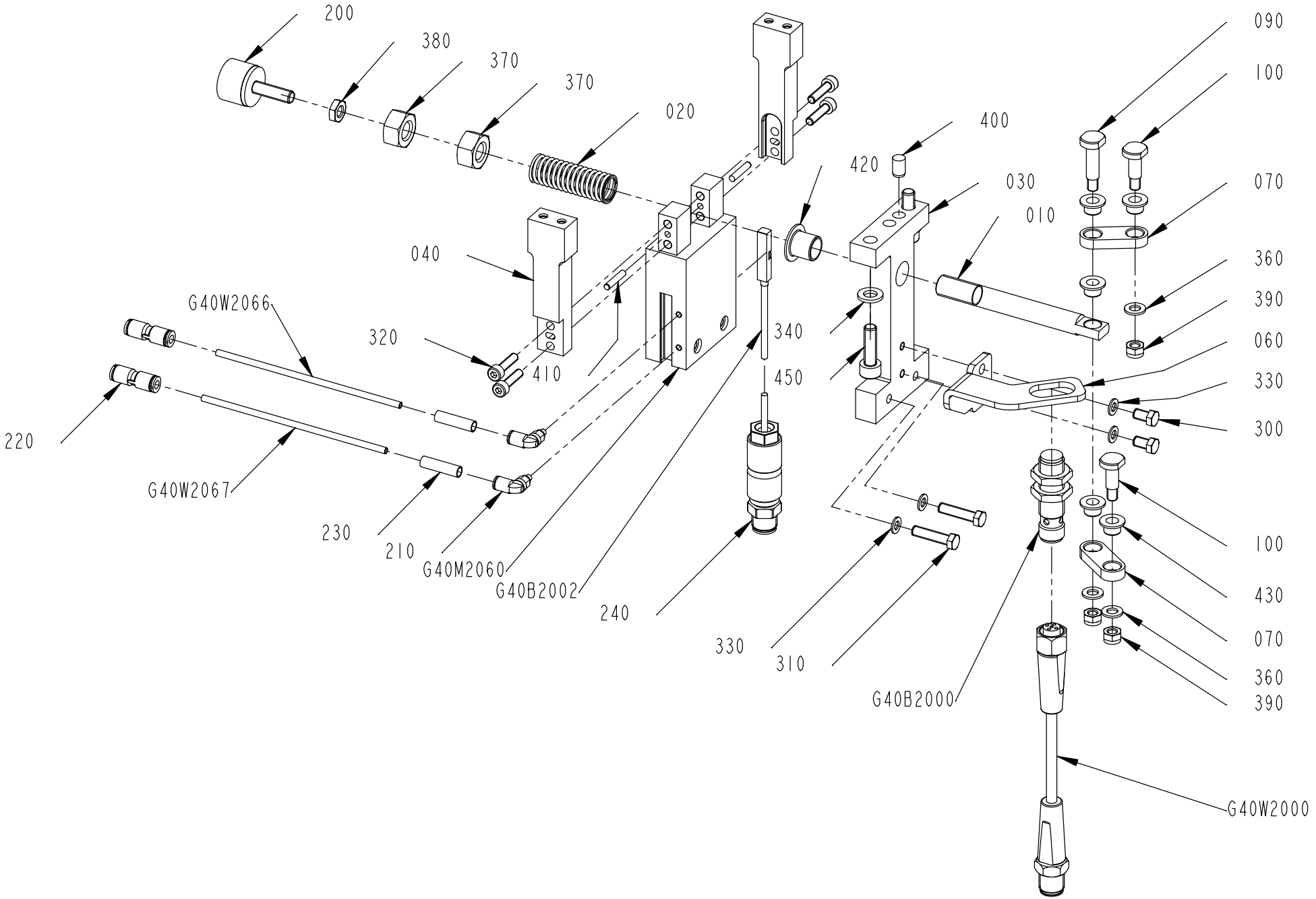
200
380
370
370
020
040
320
410
G40W2066
220
G40W2067
230
210
G40M2060
G40B2002
240
340
450
330
310
G40B2000
400
420
030
010
090
100
070
360
390
060
330
300
100
430
070
360
390
G40W2000

ECM: 864429
Group number: 2716046-0200
Assembly Drawing: 2716046-3_1_AE

Pos	Part No	Description	Qty	Unit	Page No
Common Parts					
010	2838763-0000	SHAFT	1	PC	
020	3020132-0000	SPRING	1	PC	
030	2740373-0000	BRACKET	1	PC	
040	2740375-0000	BRACKET	2	PC	
060	2973942-0000	BRACKET	1	PC	
070	2730989-0000	LEVER	2	PC	
090	2780361-0000	PIN	1	PC	
100	2780362-0000	PIN	2	PC	
200	90459-2726	RUBBER BUFFER, S20-01338-01	1	PC	
210	90459-7426	PUSH-IN L-FITTING QSML-M3-3	2	PC	
220	90459-7427	PUSH-IN FITTING QSM-4-3	2	PC	
230	90459-7368	MARKING FOR PNEUM. TUBING, PRZ04	2	PC	
240	90603-5568	CONNECTOR, SACC-M12MS-4QO-0,34-VA	1	PC	
300	312105-0287	SCREW, M6S ISO 4017 M4X8 A4 70	2	PC	
310	312105-0295	SCREW, M6S ISO 4017 M4X20 A4 70	2	PC	
320	312115-0293	SCREW ISO4762 M4X16 A4 80	4	PC	
330	315105-0136	WASHER PLAIN, 4,3X8X0,8 A4 BRB	4	PC	
340	315105-0153	WASHER PLAIN, 6,4X12X1,5 A4 BRB	2	PC	
360	315106-0146	"WASHER PLAIN, M5 ISO7089-5-200 HV A4"	3	PC	
370	312635-0320	NUT M6M 10X1 STAINLESS A2 80	2	PC	
380	312625-0316	HEXAGON THIN NUT, EN 24035 ML6M M6 A4	1	PC	
390	312812-0314	HEXAGON NUT, NY-LOCK M5 A4 80	3	PC	
400	311103-0348	PARALLEL PIN ISO 2338 6M6X10 A1	1	PC	
410	311103-0236	PARALLEL PIN ISO 2338 3M6X16 A1	2	PC	
420	321158-0142	FLANGE BUSHING, IGLIDUR J 10X12X12	1	PC	
430	321154-0060	FLANGE BUSHING, IGLIDUR W300 6X8X6	5	PC	
450	312115-0370	SCREW ISO4762 M6X20 A4 80	2	PC	
G40B2000	90459-6948	INDUCTIVE SENSOR, IFS 206	1	PC	
G40B2002	351481-5010	PROXIMITY SWITCH FOR T-SLOT, SMT-8M-A	1	PC	
G40M2060	90604-3142	CYLINDER, GRIPPER DHPS-16-A-H1-SA	1	PC	
G40W2000	344267-0010	SENSOR CABLE, EVT042	1	PC	
G40W2066	90459-7428	TUBE PUN-H-3X0,5-BL	1	M	
G40W2067	90459-7428	TUBE PUN-H-3X0,5-BL	1	M	

Pos	Part No	Description	Qty	Unit	Page No

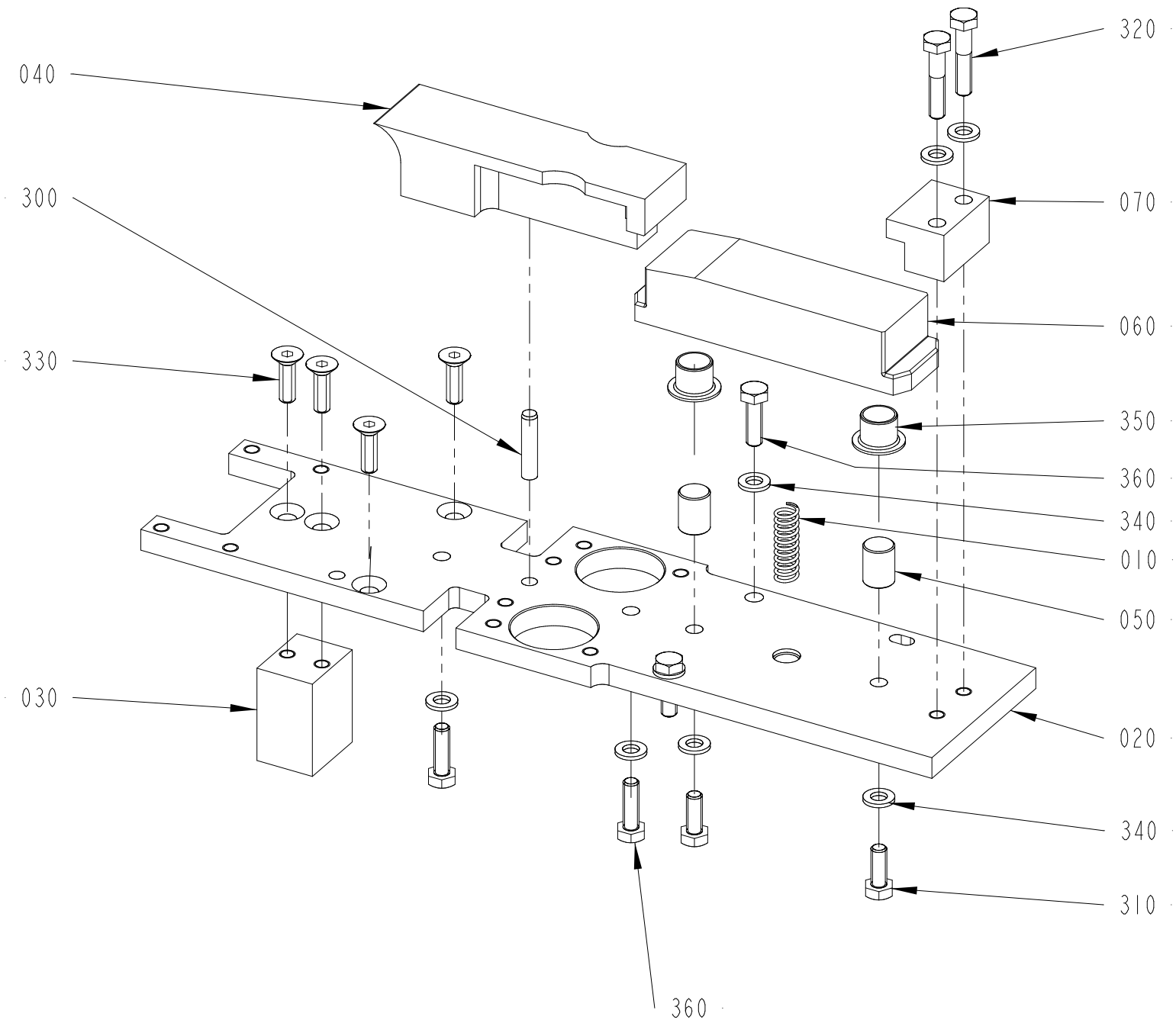

2716047-1
558537

ECM: 558751
Group number: 2716047-0100
Assembly Drawing: 2716047-1_1_AD

Pos	Part No	Description	Qty	Unit	Page No
Common Parts					
010	90600-0351	COMP. SPRING, 2489, 1,2X9,4X30	1	PC	
020	2838765-0000	PLATE	1	PC	
030	2838764-0000	BLOCK	1	PC	
040	2727431-0000	SLIDE PLATE	1	PC	
050	2727432-0000	SHAFT	2	PC	
060	2727434-0000	SLIDE PLATE	1	PC	
070	2727440-0000	END SUPPORT	1	PC	
300	311103-0356	PARALLEL PIN ISO 2338 6M6X28 A1	1	PC	
310	312105-0368	SCREW, M6S ISO 4017 M6X16 A4 80	2	PC	
320	312105-0374	SCREW, M6S ISO 4014 M6X30 A4 80	2	PC	
330	312155-0370	SCREW DIN 7991 MF6S M6X20 A4 70	4	PC	
340	315105-0153	WASHER PLAIN, 6,4X12X1,5 A4 BRB	8	PC	
350	321158-0180	FLANGE BUSHING, IGLIDUR J 12X14X12	2	PC	
360	312105-0370	SCREW, M6S ISO 4017 M6X20 A4 80	4	PC	

Pos	Part No	Description	Qty	Unit	Page No

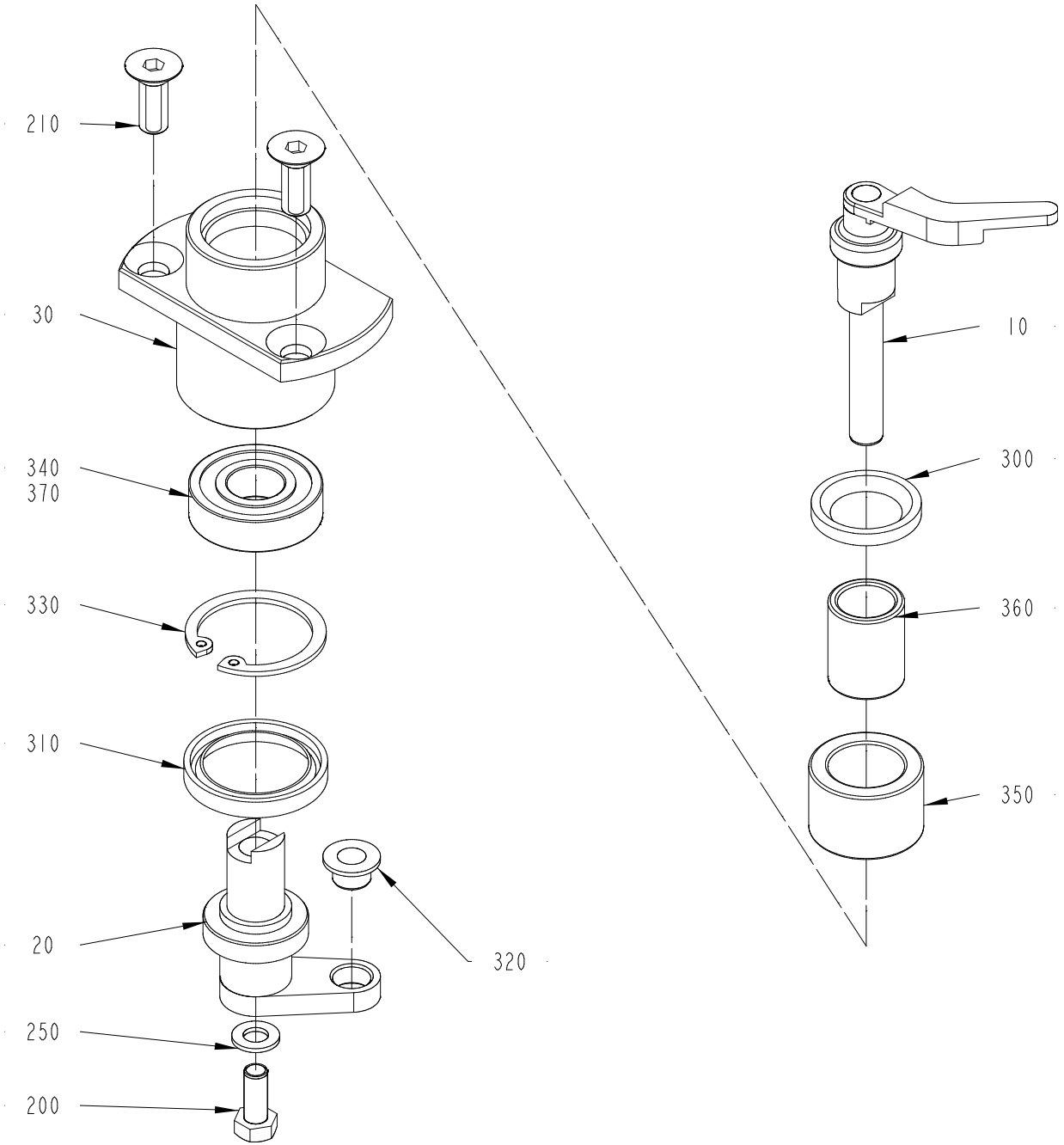
210
30
340
370
330
310
20
320
250
200
10
300
360
350

ECM: 775026
Group number: 2740299-0200
Assembly Drawing: 2740299-2_1_AC

Pos	Part No	Description	Qty	Unit	Page No
Common Parts					
010	2740300-0000	FINGER	1	PC	
020	2470301-0000	LEVER	1	PC	
030	2470302-0000	HUB	1	PC	
200	312105-0327	SCREW, M6S ISO 4017 M5X12 A4 80	1	PC	
210	312155-0368	SCREW DIN 7991 MF6S M6X16 A4 70	2	PC	
250	315105-0146	WASHER PLAIN, 5,3X10X1 A4 BRB	1	PC	
300	315230-0193	BEARING SEAL G15X23X3 MM	1	PC	
310	315230-0274	BEARING SEAL G22X30X4 MM	1	PC	
320	321158-0060	FLANGE BUSHING, IGLIDUR J 6X8X6	1	PC	
330	315753-0121	RETAINING RING FOR BORE DIN 472 28 SS	1	PC	
340	321308-0101	BALL BEARING 12/28X8	1	PC	
350	90600-0347	NEEDLE BEARING W/O CONE, 16X24X16MM	1	PC	
360	90600-0349	INNER RING, IR12X16X20	1	PC	
370	344407-0000	KLÜBERSYNTH UH1 14-151, ONLY IN BOM	1	L	586

Pos	Part No	Description	Qty	Unit	Page No

This page intentionally left blank

ECM: 653851
Group number: 344407-0000
Assembly Drawing: -

Pos	Part No	Description	Qty	Unit	Page No
Common Parts					
	344407-0037	KLÜBERSYNTH UH1 14-151, 1KG CAN	1	PC	
	344407-0177	KLÜBERSYNTH UH1 14-151, 25KG BUCKET	1	PC	
	344407-0285	KLÜBERSYNTH UH1 14-151, 45G TUBE	1	PC	
	344407-0591	KLÜBERSYNTH UH1 14-151, 400G CARTRIDGE	1	PC	

Pos	Part No	Description	Qty	Unit	Page No

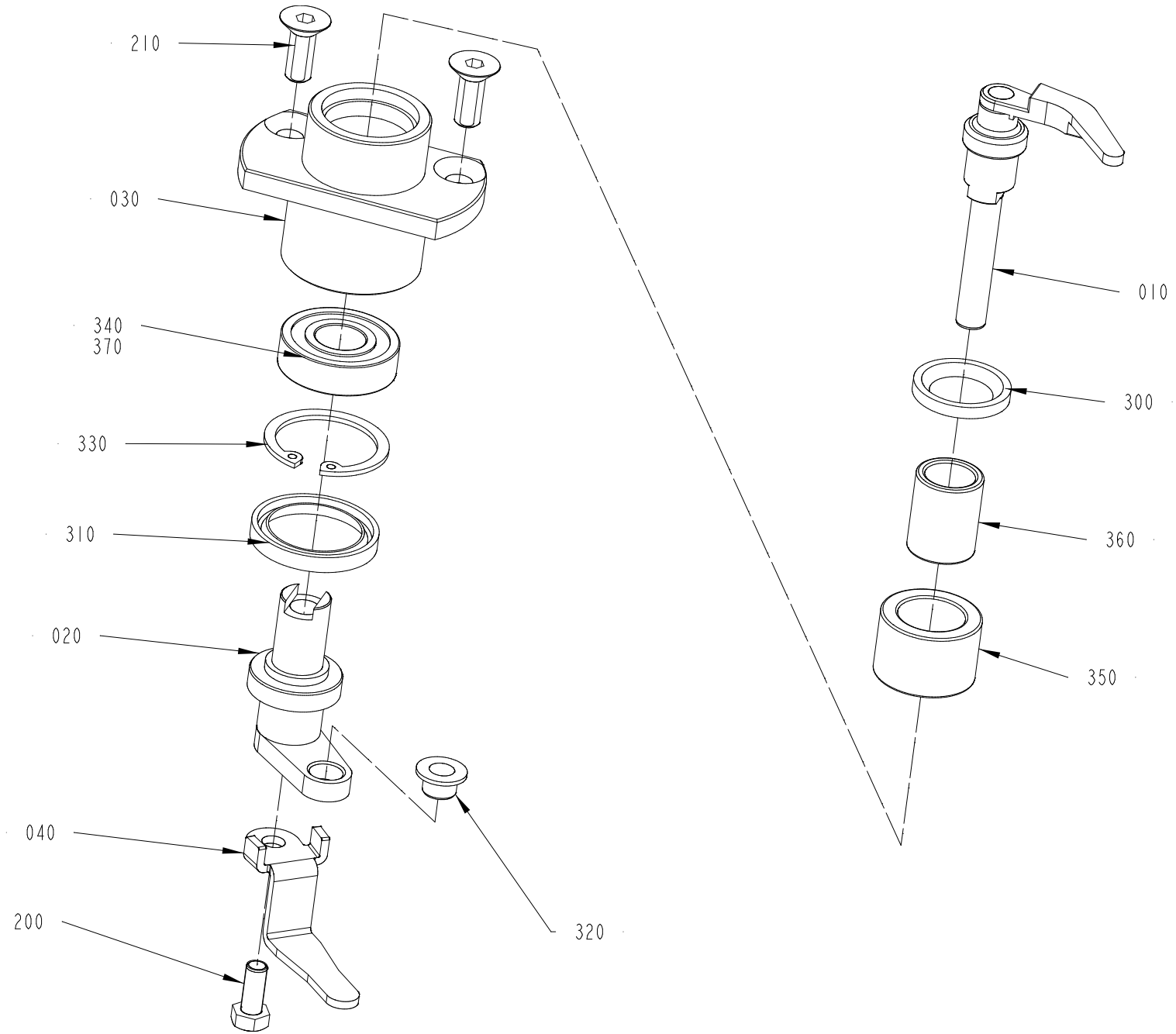
210
030
340
370
330
310
020
040
200
320
010
300
360
350

ECM: 775027
Group number: 2740371-0200
Assembly Drawing: 2740371-2_1_AC

Pos	Part No	Description	Qty	Unit	Page No
Common Parts					
010	2740372-0000	FINGER	1	PC	
020	2470373-0000	LEVER	1	PC	
030	2470302-0000	HUB	1	PC	
040	2973943-0000	PLATE	1	PC	
200	312105-0327	SCREW, M6S ISO 4017 M5X12 A4 80	1	PC	
210	312155-0368	SCREW DIN 7991 MF6S M6X16 A4 70	2	PC	
300	315230-0193	BEARING SEAL G15X23X3 MM	1	PC	
310	315230-0274	BEARING SEAL G22X30X4 MM	1	PC	
320	321158-0060	FLANGE BUSHING, IGLIDUR J 6X8X6	1	PC	
330	315753-0121	RETAINING RING FOR BORE DIN 472 28 SS	1	PC	
340	321308-0101	BALL BEARING 12/28X8	1	PC	
350	90600-0347	NEEDLE BEARING W/O CONE, 16X24X16MM	1	PC	
360	90600-0349	INNER RING, IR12X16X20	1	PC	
370	344407-0000	KLÜBERSYNTH UH1 14-151, ONLY IN BOM	1	L	590

Pos	Part No	Description	Qty	Unit	Page No

This page intentionally left blank

ECM: 653851
Group number: 344407-0000
Assembly Drawing: -

Pos	Part No	Description	Qty	Unit	Page No
Common Parts					
	344407-0037	KLÜBERSYNTH UH1 14-151, 1KG CAN	1	PC	
	344407-0177	KLÜBERSYNTH UH1 14-151, 25KG BUCKET	1	PC	
	344407-0285	KLÜBERSYNTH UH1 14-151, 45G TUBE	1	PC	
	344407-0591	KLÜBERSYNTH UH1 14-151, 400G CARTRIDGE	1	PC	

Pos	Part No	Description	Qty	Unit	Page No

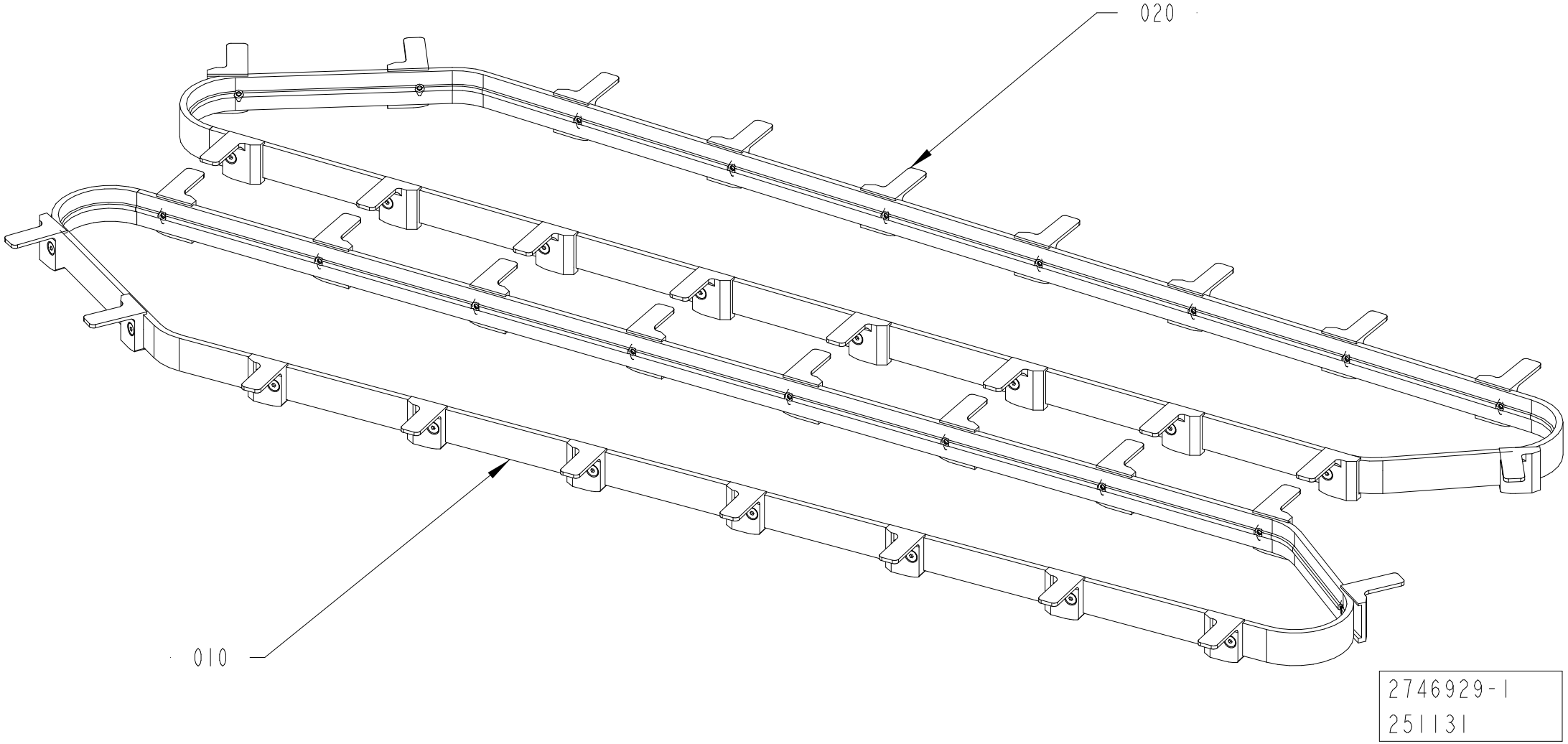
020
010
2746929-1
251131

ECM: 297333
Group number: 2746929-0100
Assembly Drawing: 2746929-1_1_AA

Pos	Part No	Description	Qty	Unit	Page No
Common Parts					
010	2780509-0100	TIMING BELT	1	PC	594
020	2780497-0100	TIMING BELT	1	PC	600

Pos. 010 in BoM 2746929-0100

TIMING BELT

Drawing file:2780509-2_1_AE

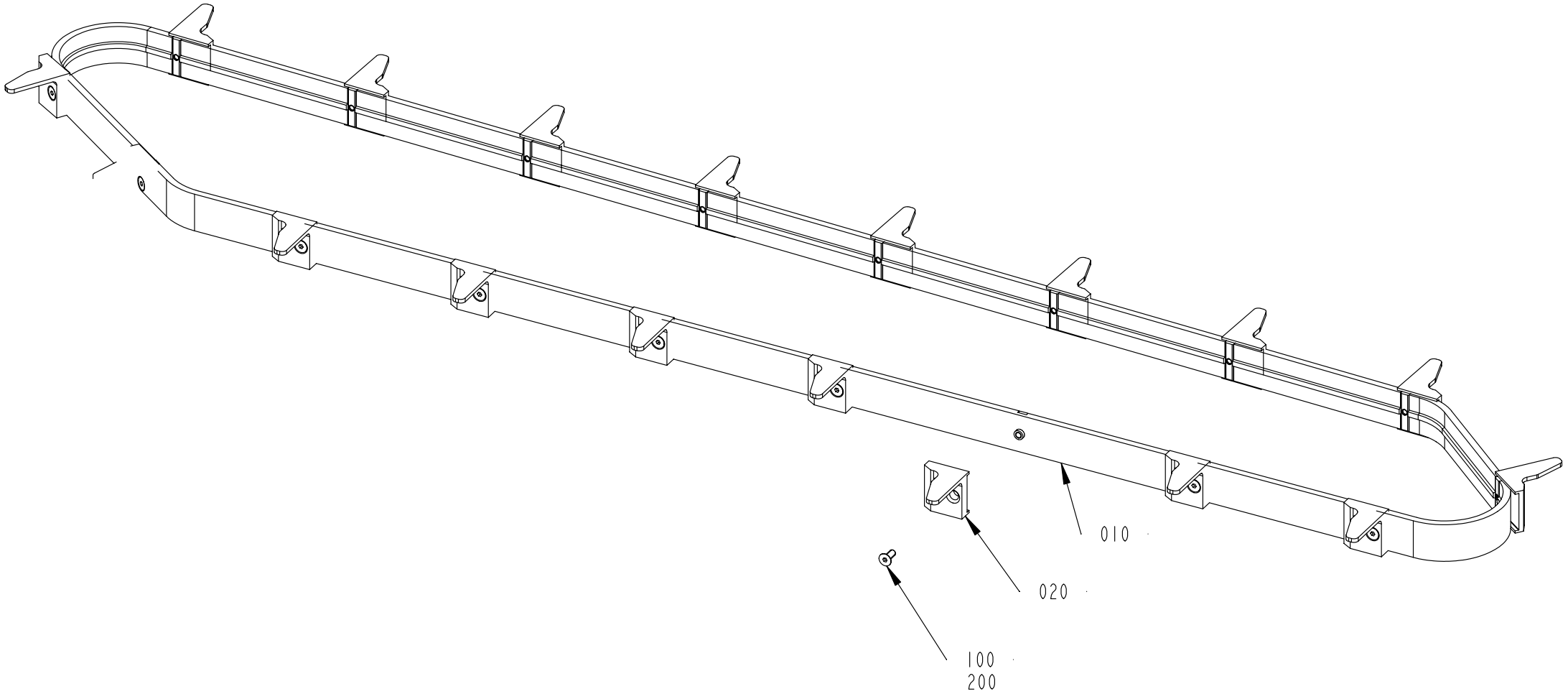

ECM: 861102
Group number: 2780509-0100
Assembly Drawing: 2780509-2_1_AE

Pos	Part No	Description	Qty	Unit	Page No
CAP 30/FLEX					
010	3117845-0000	TIMING BELT	1	PC	596
020	2715975-0000	FINGER	18	PC	
100	312155-0289	SCREW DIN 7991 MF6S M4X10 A4 70	18	PC	
Common Parts					
200	351532-0000	THREADLOCKER LOCTITE 2400, BOM ONLY	1	PC	598

This page intentionally left blank

ECM: 492991
Group number: 3117845-0000
Assembly Drawing: -

Pos	Part No	Description	Qty	Unit	Page No
Common Parts					
	90602-9237	INSERT NUT, 101/04.04.3	18	PC	
	90603-0831	TIMING BELT 25ATK10/2160 PU	1	PC	

Pos	Part No	Description	Qty	Unit	Page No

This page intentionally left blank

ECM: 791790
Group number: 351532-0000
Assembly Drawing: -

Pos	Part No	Description	Qty	Unit	Page No
Common Parts					
	351532-0050	THREADLOCKER LOCTITE 2400 50 ML	1	PC	

Pos	Part No	Description	Qty	Unit	Page No

Pos. 020 in BoM 2746929-0100

TIMING BELT

Drawing file:2780497-2_1_AE

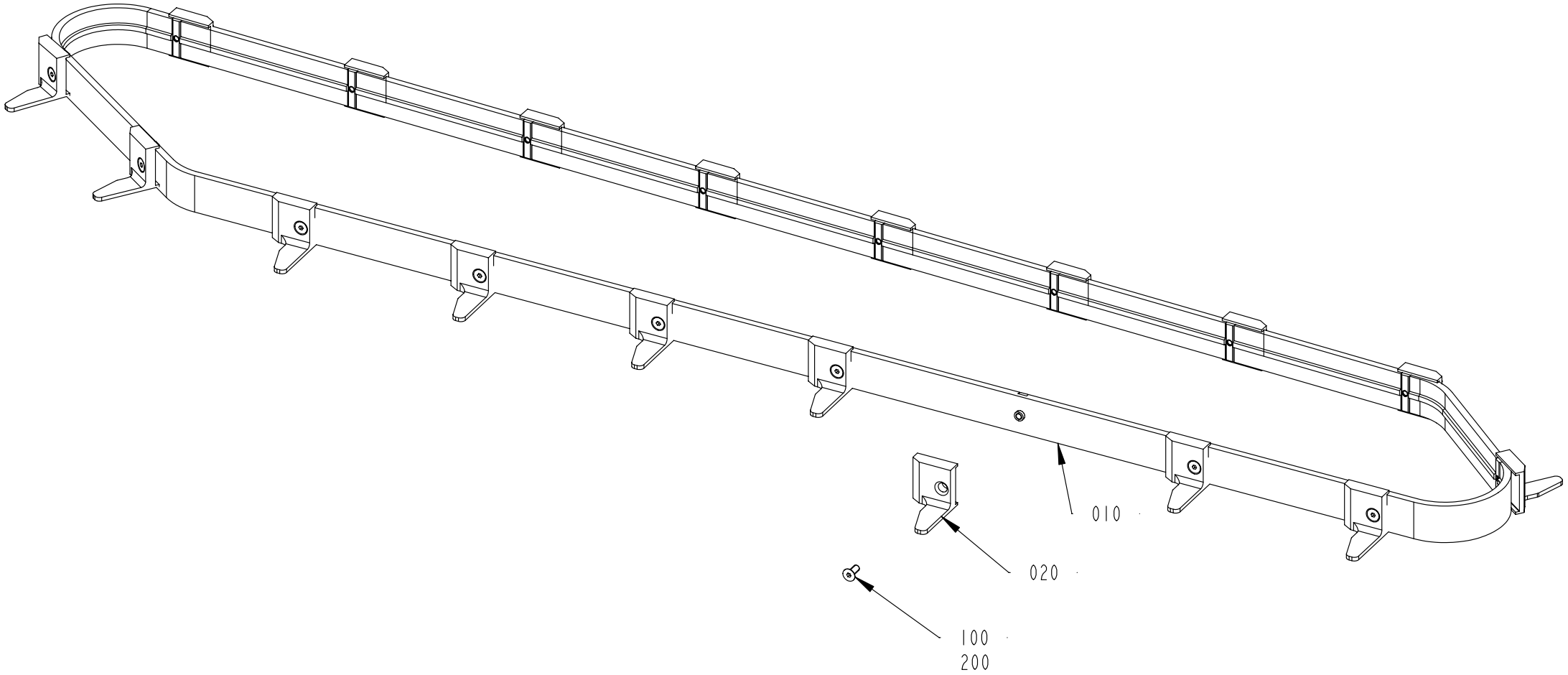

ECM: 861099
Group number: 2780497-0100
Assembly Drawing: 2780497-2_1_AE

Pos	Part No	Description	Qty	Unit	Page No
CAP 30/FLEX					
010	3117845-0000	TIMING BELT	1	PC	602
020	2715889-0000	FINGER	18	PC	
100	312155-0289	SCREW DIN 7991 MF6S M4X10 A4 70	18	PC	
Common Parts					
200	351532-0000	THREADLOCKER LOCTITE 2400, BOM ONLY	1	PC	604

This page intentionally left blank

ECM: 492991
Group number: 3117845-0000
Assembly Drawing: -

Pos	Part No	Description	Qty	Unit	Page No
Common Parts					
	90602-9237	INSERT NUT, 101/04.04.3	18	PC	
	90603-0831	TIMING BELT 25ATK10/2160 PU	1	PC	

Pos	Part No	Description	Qty	Unit	Page No

This page intentionally left blank

ECM: 791790
Group number: 351532-0000
Assembly Drawing: -

Pos	Part No	Description	Qty	Unit	Page No
Common Parts					
	351532-0050	THREADLOCKER LOCTITE 2400 50 ML	1	PC	

Pos	Part No	Description	Qty	Unit	Page No

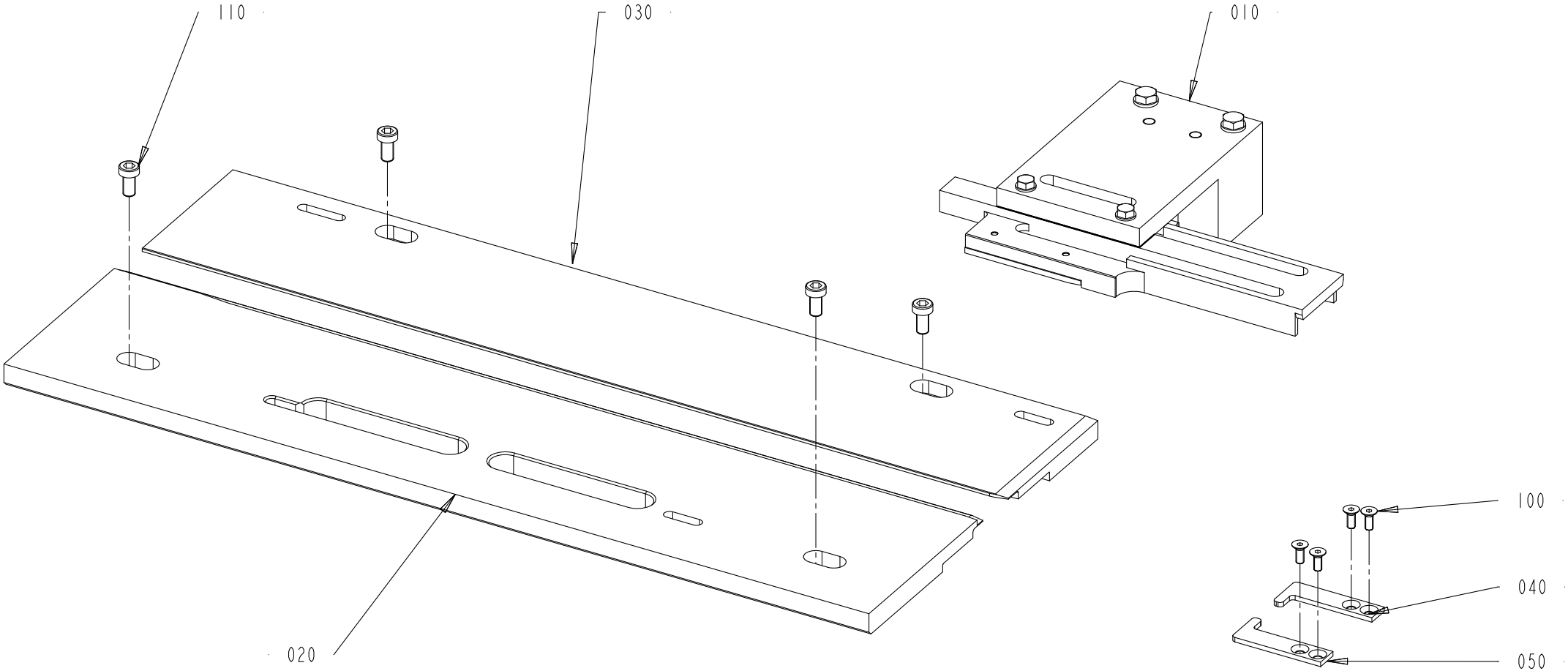

2746928-11
775758

ECM: 777867
Group number: 2746928-0300
Assembly Drawing: 2746928-11_1_AA

This list refers to drawings on pages 606 to 610

Pos	Part No	Description	Qty	Unit	Page No
HELICAP 27 See page: 606					
020	3137424-0000	GUIDE	1	PC	
030	3137425-0000	GUIDE	1	PC	
040	3077722-0000	CLAMPING PART	1	PC	
050	3077721-0000	CLAMPING PART	1	PC	
HELICAP2 23 See page: 610					
020	3077731-0000	GUIDE	1	PC	
030	3077732-0000	GUIDE	1	PC	
040	2970138-0000	CLAMPING PART	1	PC	
050	2970139-0000	CLAMPING PART	1	PC	
070	3141446-0000	GUIDE	2	PC	
120	312105-0285	SCREW, M6S ISO 4017 M4X6 A4 70	4	PC	
130	315105-0136	WASHER PLAIN, 4,3X8X0,8 A4 BRB	4	PC	
SLIMCAP 1000 See page: 608					
020	2716139-0000	GUIDE	1	PC	
030	2716138-0000	GUIDE	1	PC	
040	2727447-0000	CLAMPING PART	1	PC	
050	2727446-0000	CLAMPING PART	1	PC	
SLIMCAP 2000 See page: 608					
020	2867644-0000	GUIDE	1	PC	
030	2867645-0000	GUIDE	1	PC	
040	2893414-0000	CLAMPING PART	1	PC	
050	2893415-0000	CLAMPING PART	1	PC	
STREAMCAP1000 See page: 606					
020	2716067-0000	GUIDE	1	PC	
030	2716068-0000	GUIDE	1	PC	
STREAMCAP1000, STREAMCAP500 See page: 606					
040	2752107-0000	CLAMPING PART	1	PC	
050	2752108-0000	CLAMPING PART	1	PC	
STREAMCAP200 See page: 606					
020	2893416-0000	GUIDE	1	PC	
030	2893417-0000	GUIDE	1	PC	
040	2893420-0000	CLAMPING PART	1	PC	
050	2893421-0000	CLAMPING PART	1	PC	
STREAMCAP500 See page: 606					
020	2875596-0000	GUIDE	1	PC	
030	2875597-0000	GUIDE	1	PC	
Common Parts					
010	2716069-0300	GUIDE RAIL	1	PC	612, 614
100	312155-0289	SCREW DIN 7991 MF6S M4X10 A4 70	4	PC	
110	90600-1772	SCREW DIN7984 M6X12 AISI 304	4	PC	

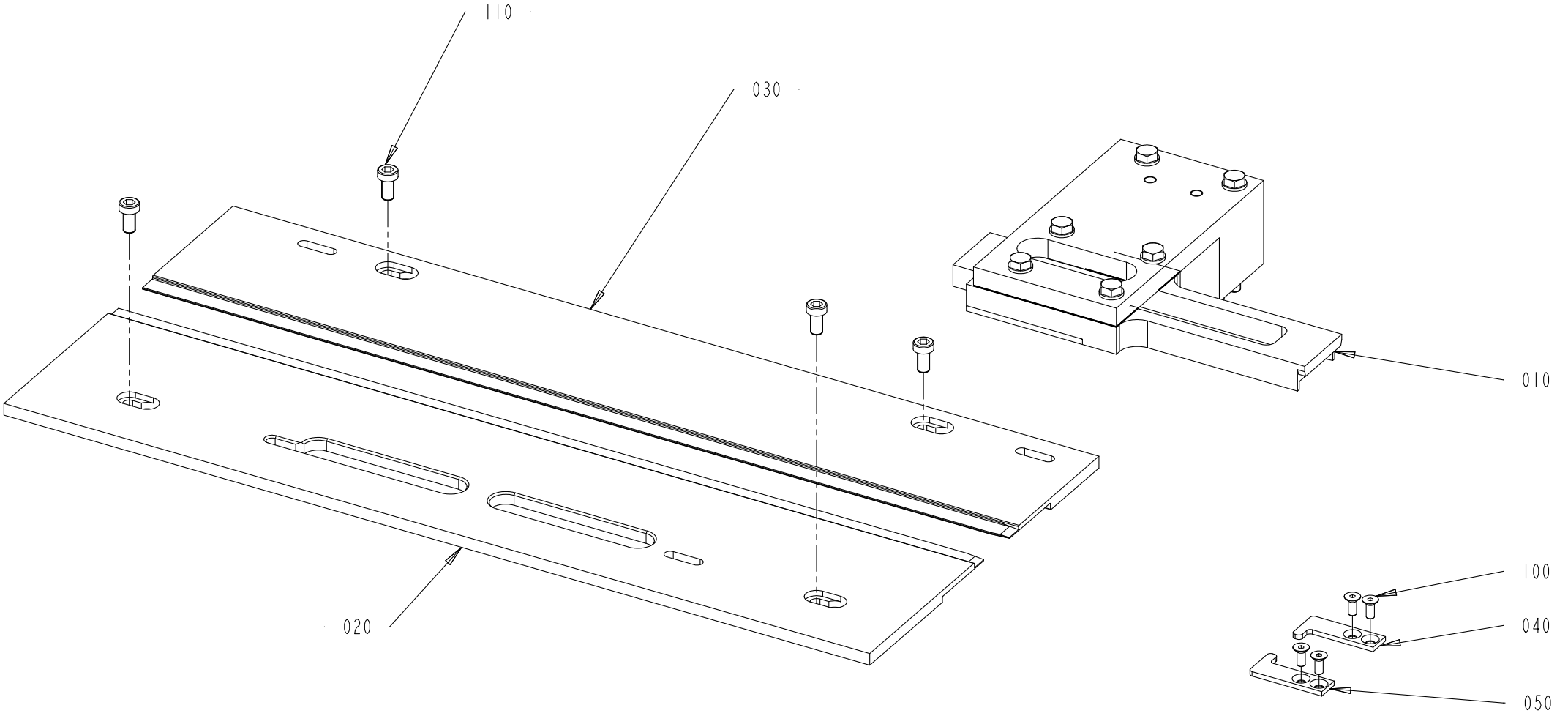

2746928-12
775758

Pos	Part No	Description	Qty	Unit	Page No

SEE LIST FOLLOWING DRAWING ON PAGE: 606

Pos	Part No	Description	Qty	Unit	Page No

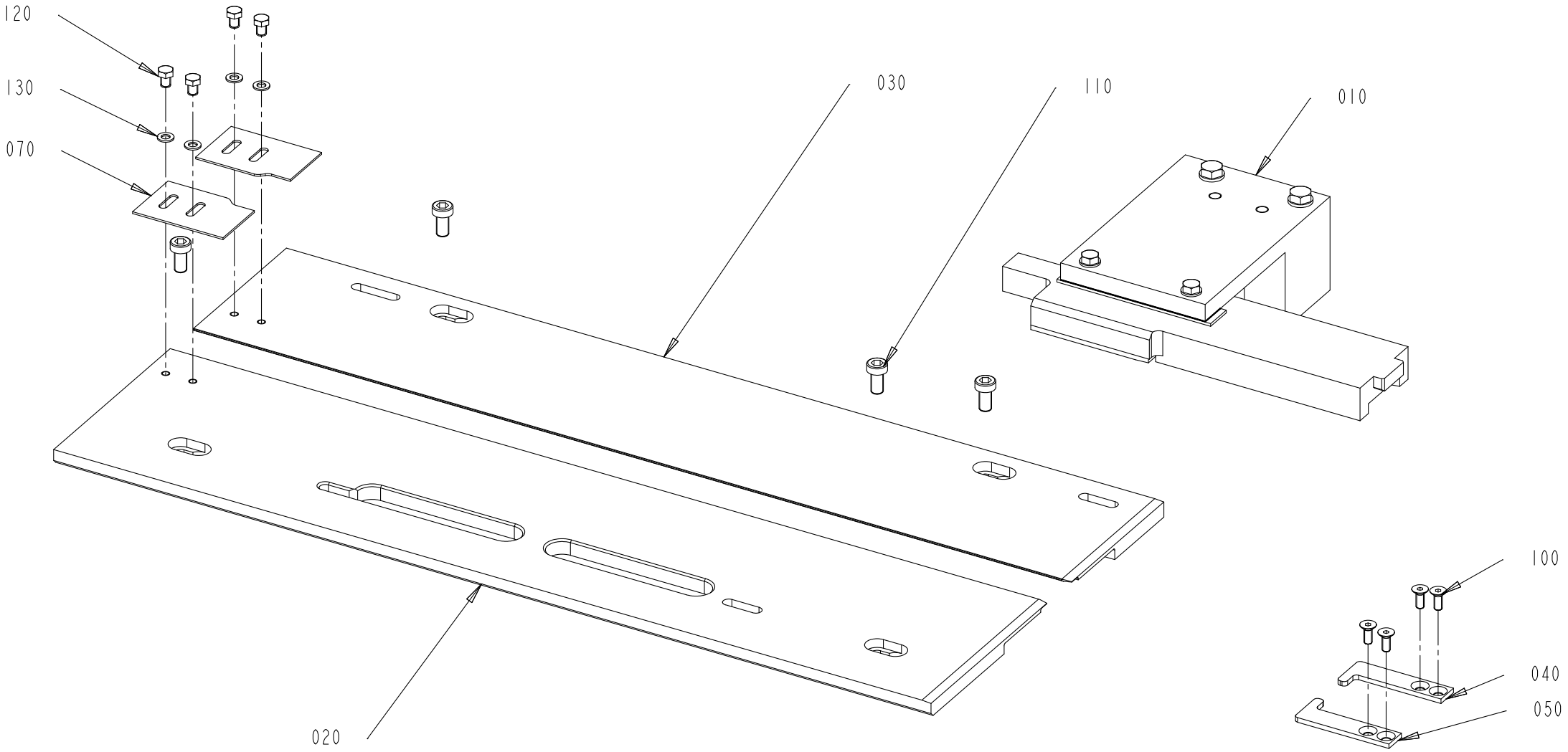

2746928-13
775758

This list refers to drawings on pages 606 to 610

Pos	Part No	Description	Qty	Unit	Page No

SEE LIST FOLLOWING DRAWING ON PAGE: 606

Pos	Part No	Description	Qty	Unit	Page No

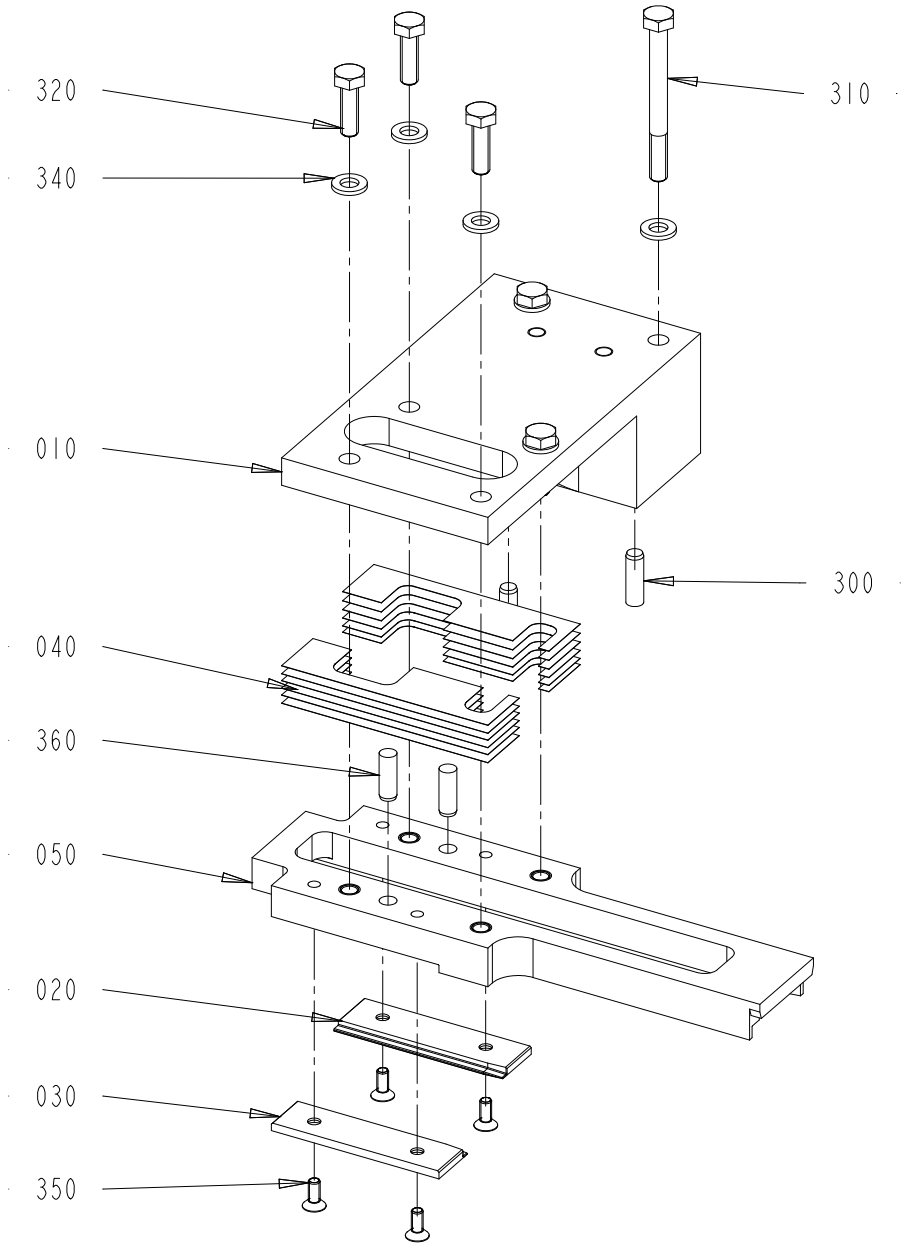

2716069-8
775758

ECM: 777866
Group number: 2716069-0300
Assembly Drawing: 2716069-8_1_AA

This list refers to drawings on pages 612 to 614

Pos	Part No	Description	Qty	Unit	Page No
HELICAP 27 See page: 614					
020	3077724-0000	GUIDE	1	PC	
030	3077723-0000	GUIDE	1	PC	
050	3024869-0000	STEERING RAIL	1	PC	
SLIMCAP 1000, SLIMCAP 2000 See page: 612					
HELICAP 27, HELICAP2 23, STREAMCAP1000, STREAMCAP200, STREAMCAP500 See page: 614					
310	312105-0382	SCREW, M6S ISO 4014 M6X60 A4 80	2	PC	
HELICAP 27, HELICAP2 23, STREAMCAP1000, STREAMCAP200, STREAMCAP500 See page: 614					
040	2751690-0000	SHIM	6	PC	
320	312105-0331	SCREW, M6S ISO 4017 M5X20 A4 80	2	PC	
330	315105-0146	WASHER PLAIN, 5,3X10X1 A4 BRB	2	PC	
340	315105-0153	WASHER PLAIN, 6,4X12X1,5 A4 BRB	2	PC	
360	311103-0349	PARALLEL PIN ISO 2338 6M6X12 A1	2	PC	
HELICAP 27, STREAMCAP1000, STREAMCAP500 See page: 614					
010	3438472-0000	BRACKET	1	PC	
HELICAP2 23 See page: 614					
010	3438476-0000	BRACKET	1	PC	
020	2970130-0000	GUIDE	1	PC	
030	2970129-0000	GUIDE	1	PC	
050	2970131-0000	STEERING RAIL	1	PC	
SLIMCAP 1000 See page: 612					
010	3438477-0000	BRACKET	1	PC	
020	2727448-0000	GUIDE	1	PC	
030	2727442-0000	GUIDE	1	PC	
040	2780459-0000	SHIM	12	PC	
050	2727438-0000	STEERING RAIL	1	PC	
SLIMCAP 1000, SLIMCAP 2000 See page: 612					
320	312105-0370	SCREW, M6S ISO 4017 M6X20 A4 80	4	PC	
340	315105-0153	WASHER PLAIN, 6,4X12X1,5 A4 BRB	6	PC	
360	311103-0352	PARALLEL PIN ISO 2338 6M6X18 A1	2	PC	
SLIMCAP 2000 See page: 612					
010	3438473-0000	BRACKET	1	PC	
020	2867647-0000	GUIDE	1	PC	
030	2867649-0000	GUIDE	1	PC	
040	2864281-0000	SHIM	12	PC	
050	2867646-0000	STEERING RAIL	1	PC	
STREAMCAP1000 See page: 614					
020	2752105-0000	GUIDE	1	PC	
030	2752106-0000	GUIDE	1	PC	
050	2797440-0000	STEERING RAIL	1	PC	
STREAMCAP200 See page: 614					
010	3438474-0000	BRACKET	1	PC	
020	2893423-0000	GUIDE	1	PC	
030	2893422-0000	GUIDE	1	PC	
050	2893419-0000	STEERING RAIL	1	PC	
STREAMCAP500 See page: 614					
020	2875598-0000	GUIDE	1	PC	
030	2875599-0000	GUIDE	1	PC	
050	2875600-0000	STEERING RAIL	1	PC	
Common Parts					
300	311103-0353	PARALLEL PIN ISO 2338 6M6X20 A1	2	PC	
350	312155-0289	SCREW DIN 7991 MF6S M4X10 A4 70	4	PC	

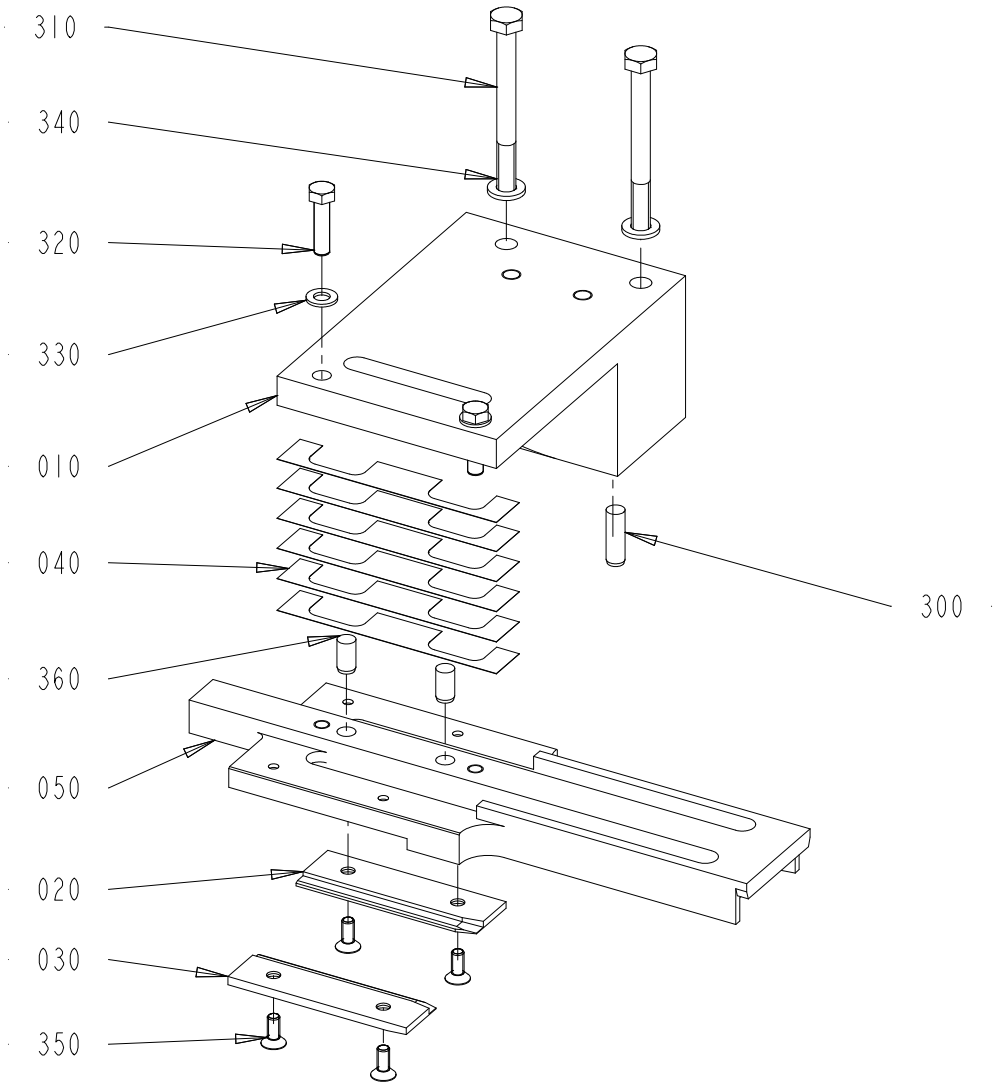

2716069-9
775758

This list refers to drawings on pages 612 to 614

Pos	Part No	Description	Qty	Unit	Page No

SEE LIST FOLLOWING DRAWING ON PAGE: 612

Pos	Part No	Description	Qty	Unit	Page No

This page intentionally left blank

SPC

Spare Parts Catalogue

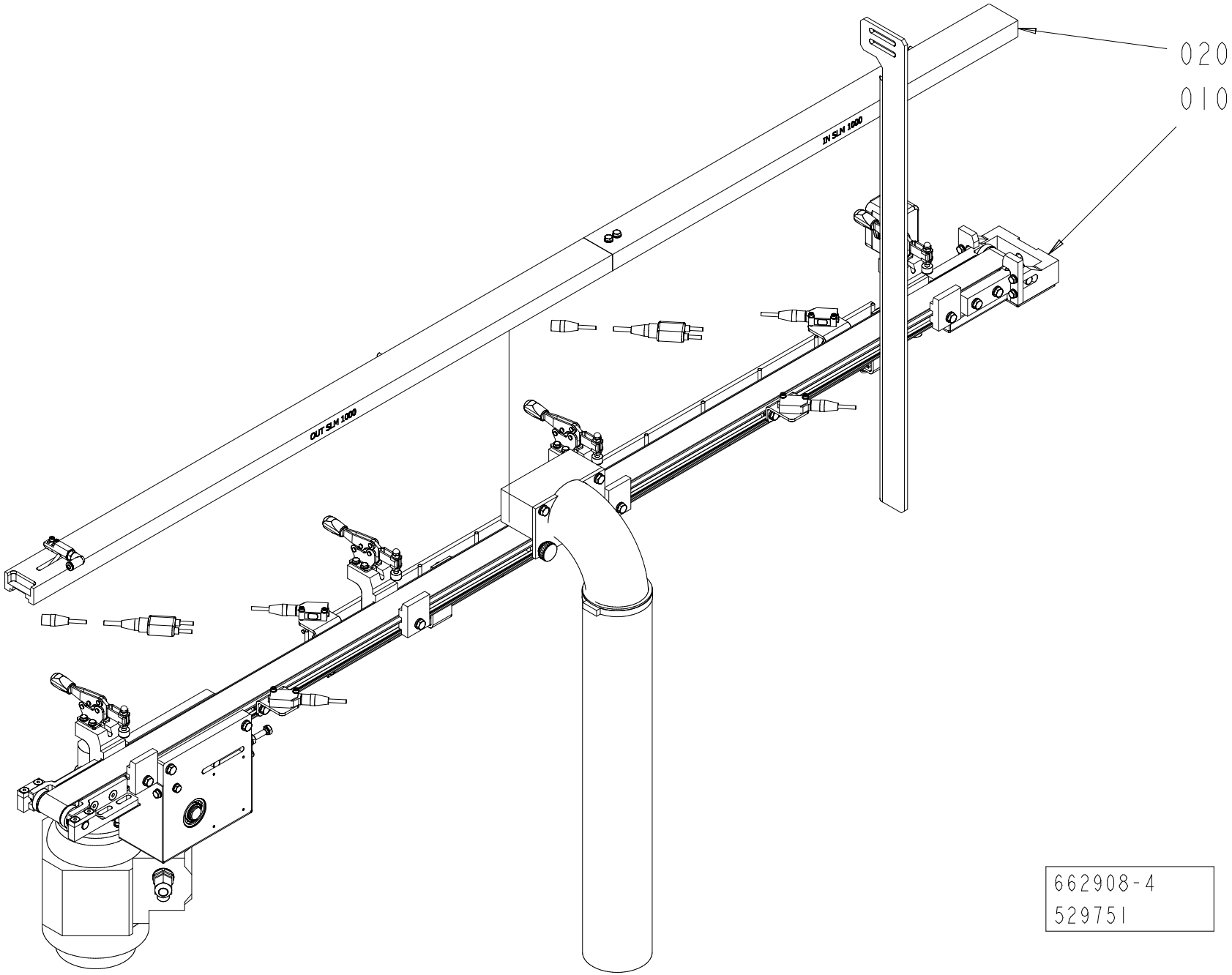
020
010
IN SLH 1000
CUT SLH 1000
662908-4
529751

ECM: 733111
Group number: 662908-0300
Assembly Drawing: 662908-4_1_AA

Pos	Part No	Description	Qty	Unit	Page No
HELICAP 27					
020	3102969-0100	GUIDE RAIL	1	PC	620
HELICAP2 23					
020	3147222-0100	GUIDE RAIL	1	PC	622
SLIMCAP 1000					
020	3147216-0100	GUIDE RAIL	1	PC	624
SLIMCAP 2000					
020	3147217-0100	GUIDE RAIL	1	PC	626
STREAMCAP1000					
020	3147221-0100	GUIDE RAIL	1	PC	628
STREAMCAP200					
010	3034439-0300	CONVEYOR BELT	1	PC	630, 632
020	3147218-0100	GUIDE RAIL	1	PC	636
STREAMCAP500					
020	3147220-0100	GUIDE RAIL	1	PC	638
STREAMCAP500, STREAMCAP1000, SLIMCAP 2000, SLIMCAP 1000, HELICAP2 23, HELICAP 27					
010	2846413-0400	CONVEYOR BELT	1	PC	640, 642

Pos	Part No	Description	Qty	Unit	Page No

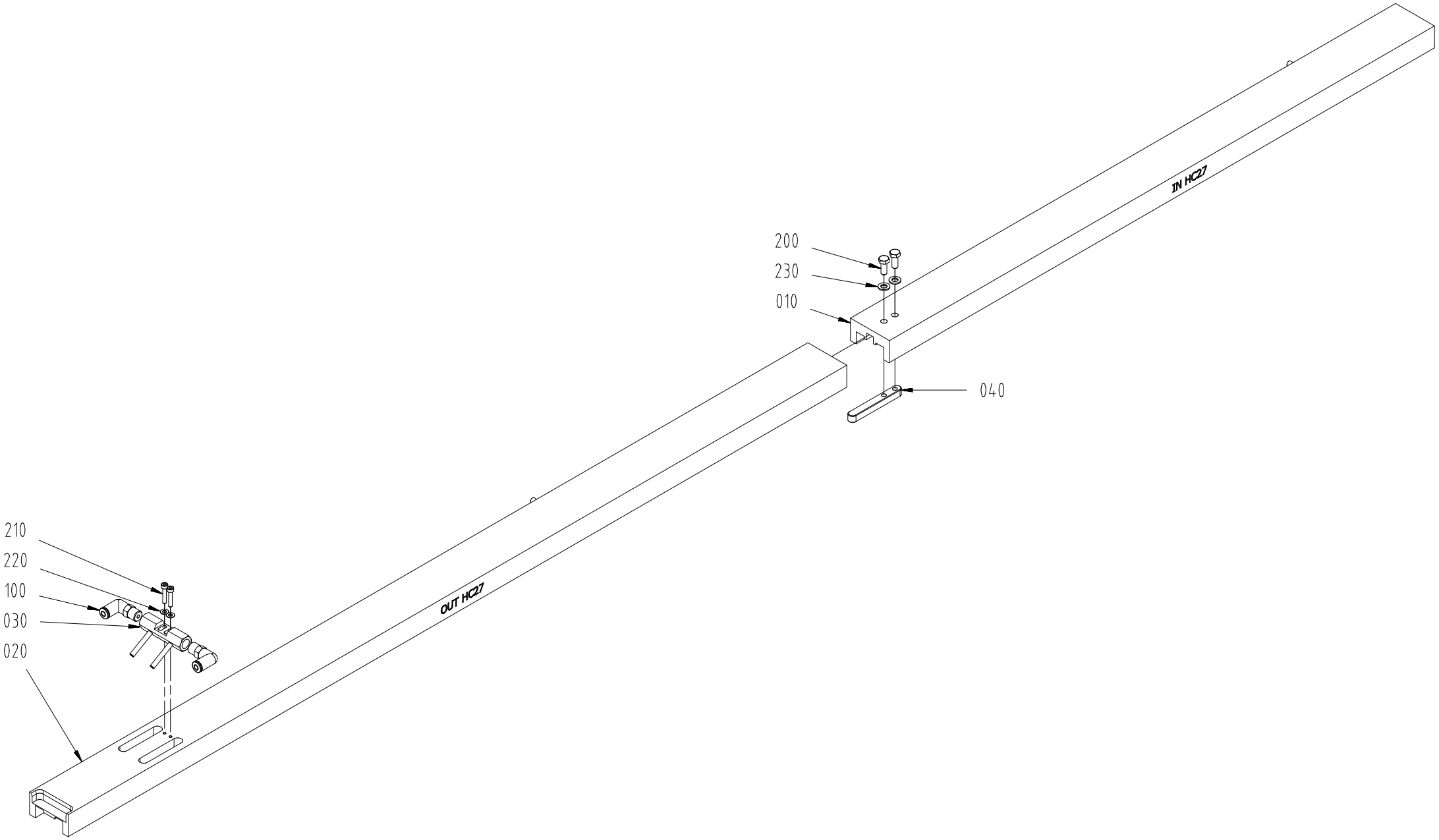
200
230
010
040
IN HC27
210
220
100
030
020
OUT HC27

ECM: 493490
Group number: 3102969-0100
Assembly Drawing: 3102969-1_1_AA

Pos	Part No	Description	Qty	Unit	Page No
Common Parts					
010	3124468-0000	COVER	1	PC	
020	3124469-0000	COVER	1	PC	
030	3124470-0000	AIR NOZZLE	1	PC	
040	3124377-0000	FLAP	1	PC	
100	3124379-0000	FITTING	2	PC	
200	312105-0327	SCREW, M6S ISO 4017 M5X12 A4 80	2	PC	
210	312115-0228	SCREW ISO4762 M3X16 A4 80	2	PC	
220	315103-0124	WASHER PLAIN, 3,2X/6X0,5 BR NI PL	2	PC	
230	315103-0146	WASHER PLAIN, 5,3X10X1 BR NI PL	2	PC	

Pos	Part No	Description	Qty	Unit	Page No

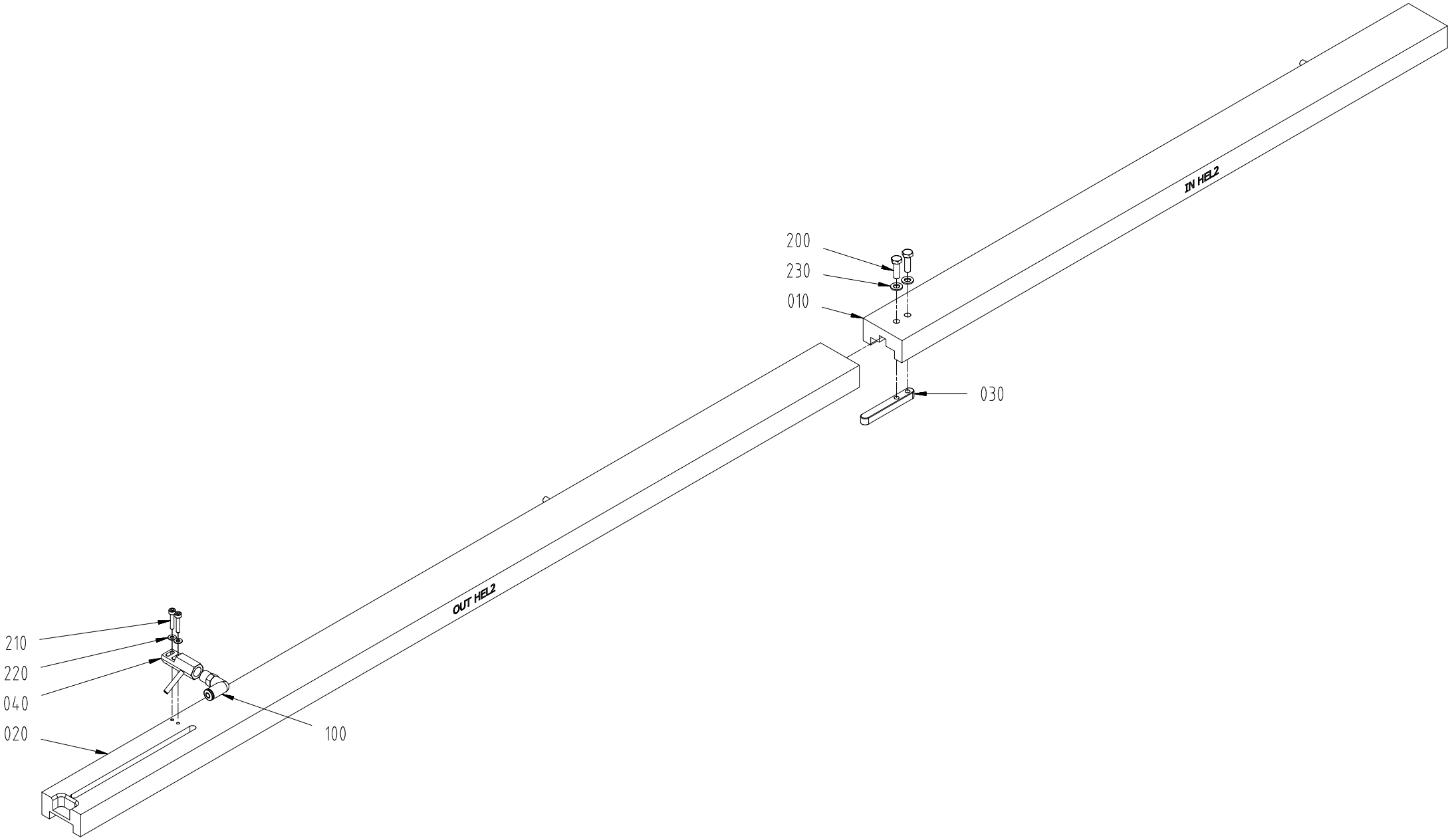
IN HEL2
200
230
010
030
OUT HEL2
210
220
040
020
100

ECM: 482329
Group number: 3147222-0100
Assembly Drawing: 3147222-1_1_AA

Pos	Part No	Description	Qty	Unit	Page No
Common Parts					
010	3124375-0000	COVER	1	PC	
020	3124376-0000	COVER	1	PC	
030	3124377-0000	FLAP	1	PC	
040	3124378-0000	AIR NOZZLE	1	PC	
100	3124379-0000	FITTING	1	PC	
200	312105-0329	SCREW, M6S ISO 4017 M5X16 A4 80	2	PC	
210	312115-0228	SCREW ISO4762 M3X16 A4 80	2	PC	
220	315103-0124	WASHER PLAIN, 3,2X/6X0,5 BR NI PL	2	PC	
230	315103-0146	WASHER PLAIN, 5,3X10X1 BR NI PL	2	PC	

Pos	Part No	Description	Qty	Unit	Page No

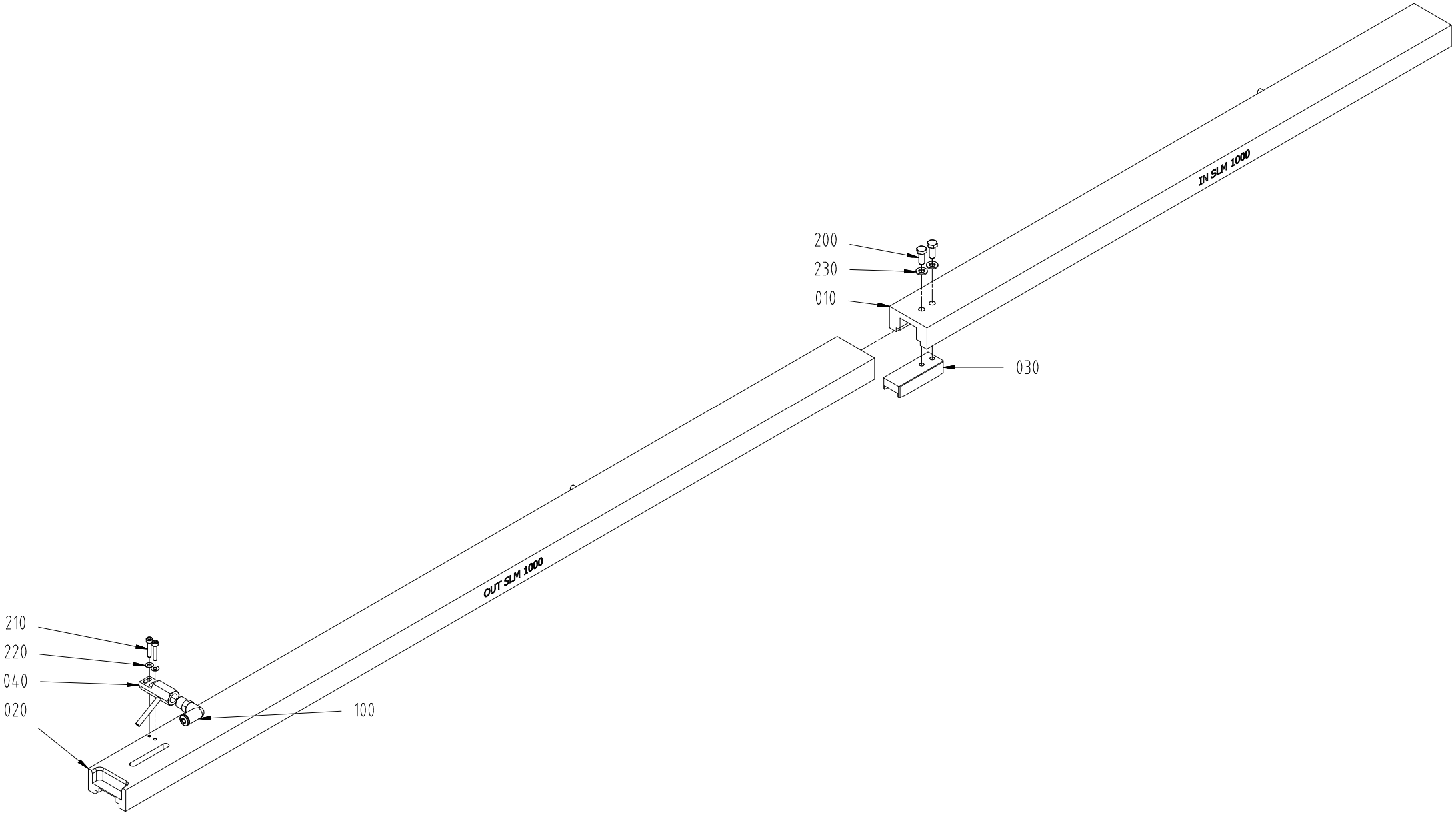
IN SLM 1000
200
230
010
030
OUT SLM 1000
210
220
040
020
100

ECM: 482323
Group number: 3147216-0100
Assembly Drawing: 3147216-1_1_AA

Pos	Part No	Description	Qty	Unit	Page No
Common Parts					
010	3124380-0000	COVER	1	PC	
020	3124381-0000	COVER	1	PC	
030	3124382-0000	FLAP	1	PC	
040	3124383-0000	AIR NOZZLE	1	PC	
100	3124379-0000	FITTING	1	PC	
200	312105-0327	SCREW, M6S ISO 4017 M5X12 A4 80	2	PC	
210	312115-0228	SCREW ISO4762 M3X16 A4 80	2	PC	
220	315103-0124	WASHER PLAIN, 3,2X/6X0,5 BR NI PL	2	PC	
230	315103-0146	WASHER PLAIN, 5,3X10X1 BR NI PL	2	PC	

Pos	Part No	Description	Qty	Unit	Page No

Pos. 020 in BoM 662908-0300

GUIDE RAIL

Drawing file:3147217-1_1_AA

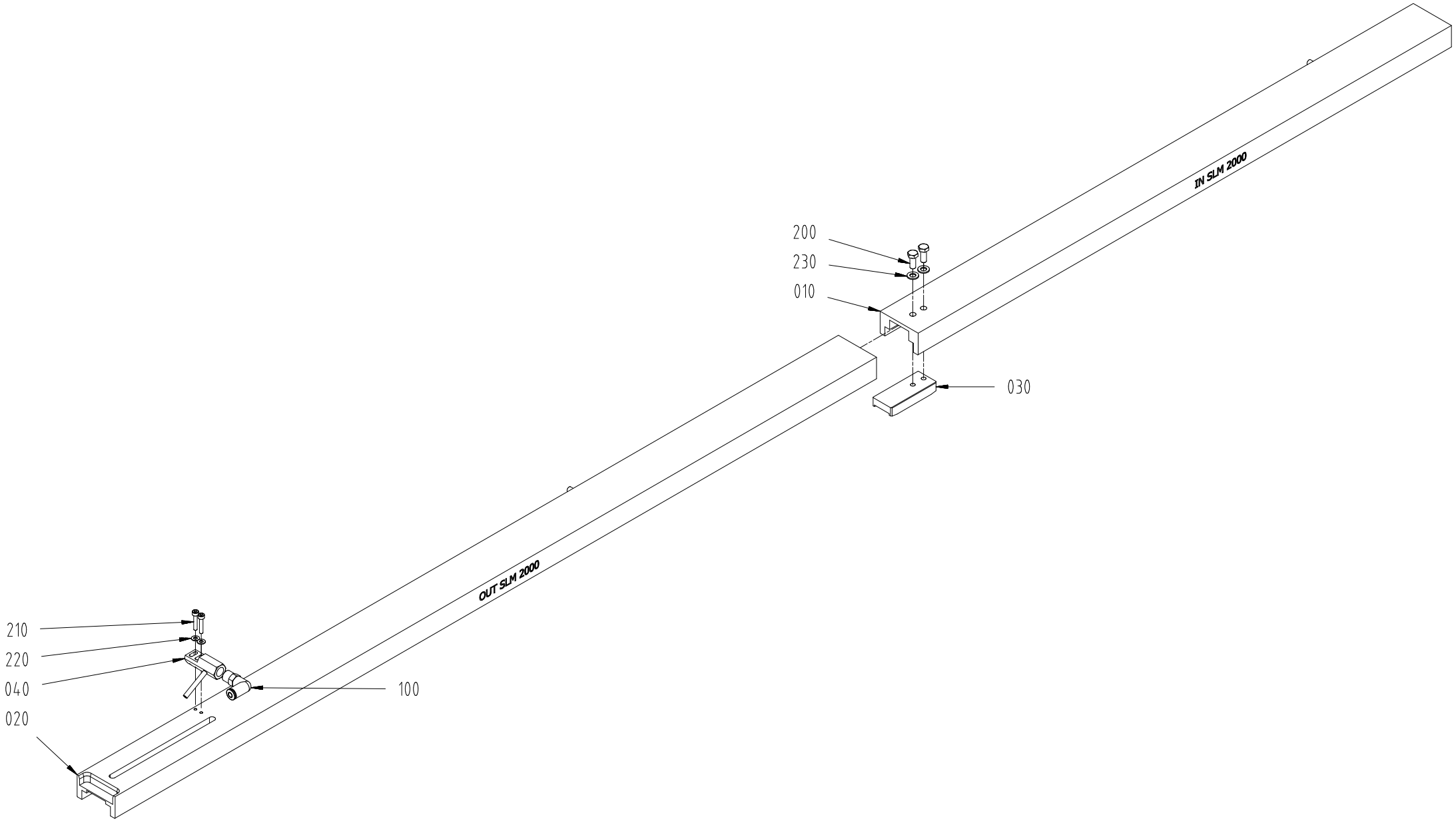

ECM: 482324
Group number: 3147217-0100
Assembly Drawing: 3147217-1_1_AA

Pos	Part No	Description	Qty	Unit	Page No
Common Parts					
010	3124384-0000	COVER	1	PC	
020	3124385-0000	COVER	1	PC	
030	3124386-0000	FLAP	1	PC	
040	3124387-0000	AIR NOZZLE	1	PC	
100	3124379-0000	FITTING	1	PC	
200	312105-0327	SCREW, M6S ISO 4017 M5X12 A4 80	2	PC	
210	312115-0228	SCREW ISO4762 M3X16 A4 80	2	PC	
220	315103-0124	WASHER PLAIN, 3,2X/6X0,5 BR NI PL	2	PC	
230	315103-0146	WASHER PLAIN, 5,3X10X1 BR NI PL	2	PC	

Pos	Part No	Description	Qty	Unit	Page No

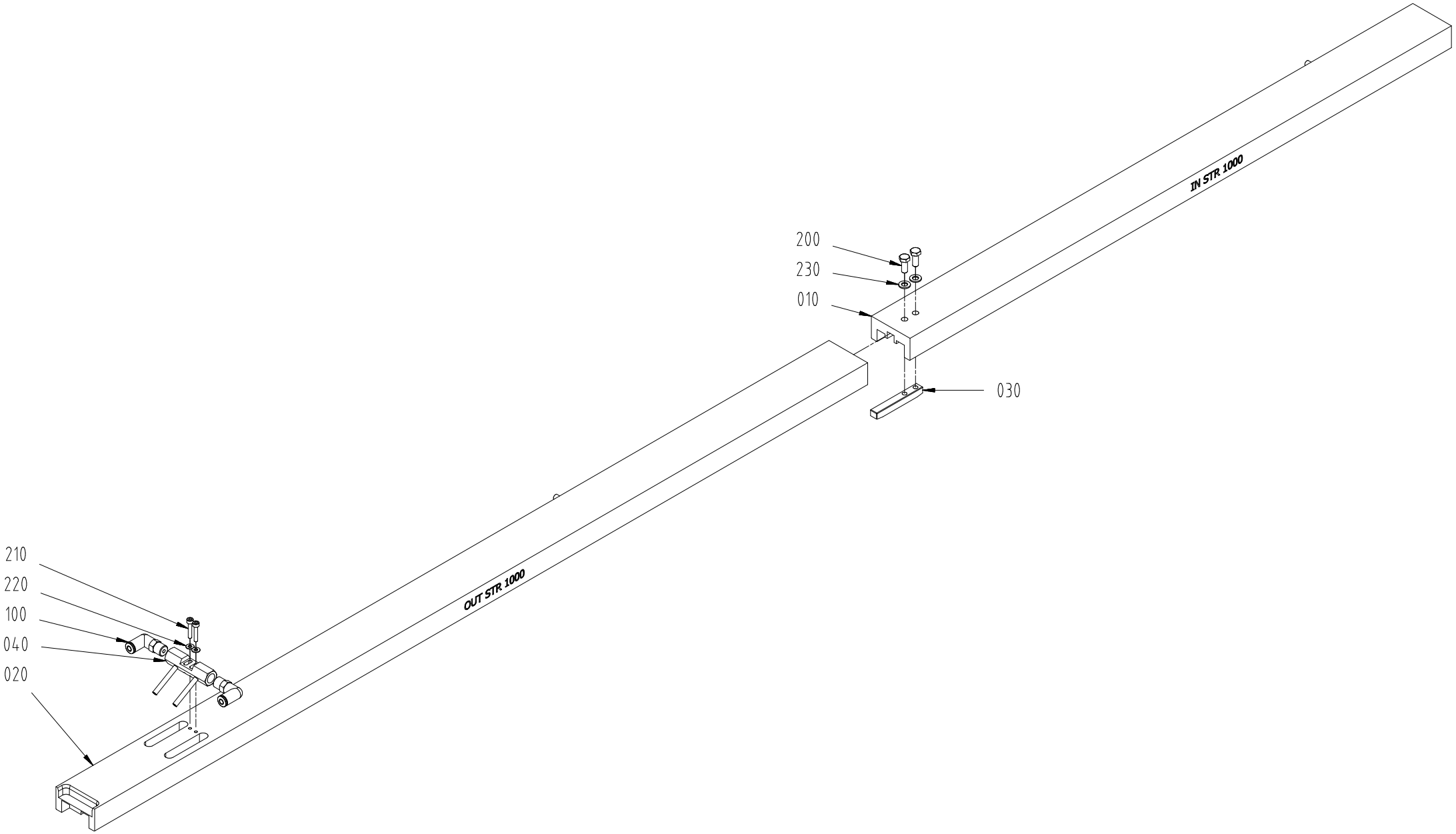
200
230
010
030
IN STR 1000
210
220
100
040
020
OUT STR 1000

ECM: 482328
Group number: 3147221-0100
Assembly Drawing: 3147221-1_1_AA

Pos	Part No	Description	Qty	Unit	Page No
Common Parts					
010	3124398-0000	COVER	1	PC	
020	3124399-0000	COVER	1	PC	
030	3124400-0000	FLAP	1	PC	
040	3124401-0000	AIR NOZZLE	1	PC	
100	3124379-0000	FITTING	2	PC	
200	312105-0327	SCREW, M6S ISO 4017 M5X12 A4 80	2	PC	
210	312115-0228	SCREW ISO4762 M3X16 A4 80	2	PC	
220	315103-0124	WASHER PLAIN, 3,2X/6X0,5 BR NI PL	2	PC	
230	315103-0146	WASHER PLAIN, 5,3X10X1 BR NI PL	2	PC	

Pos	Part No	Description	Qty	Unit	Page No

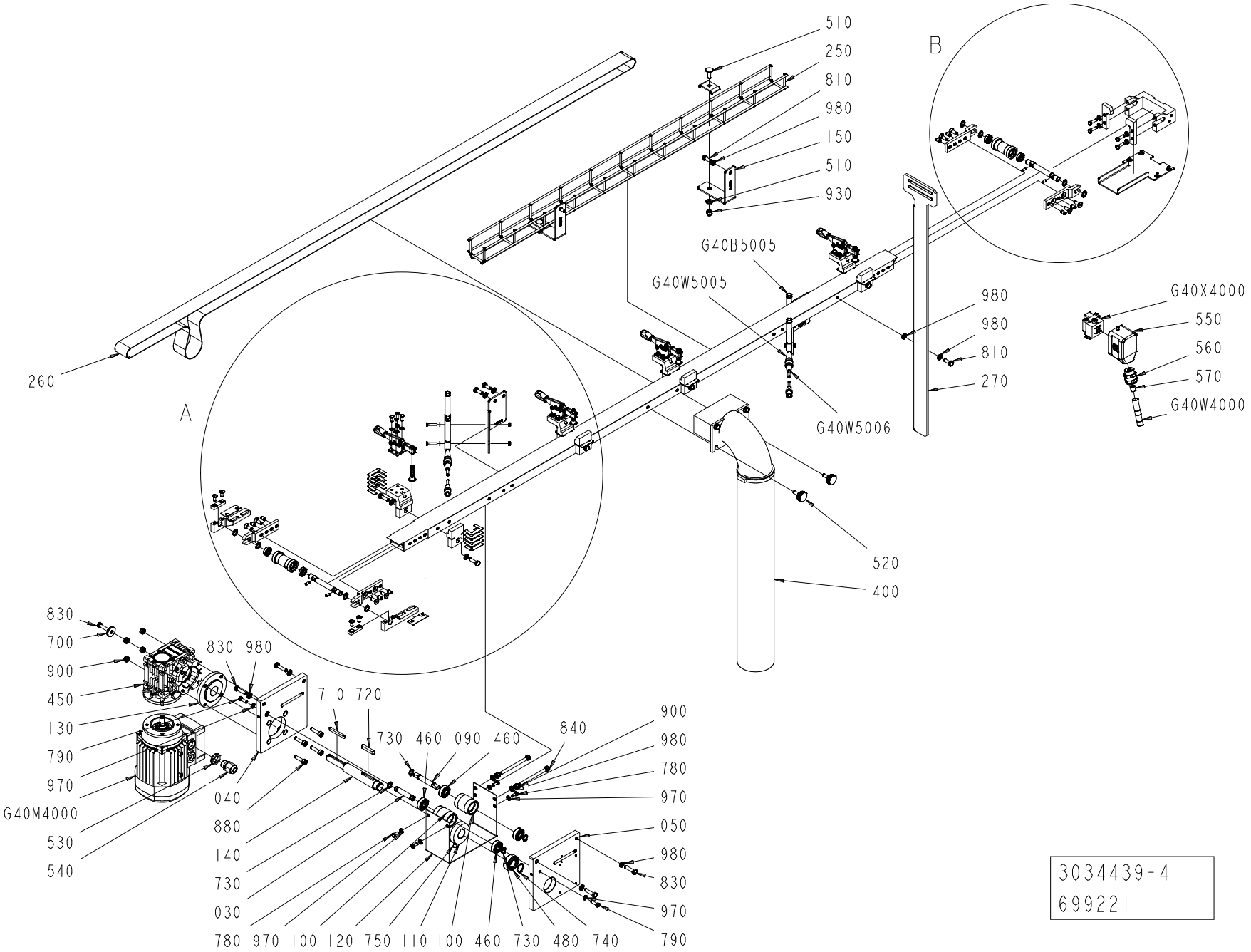
510
250
810
980
150
510
930
B
G40B5005
G40W5005
980
980
810
270
G40X4000
550
560
570
G40W4000
260
A
G40W5006
520
400
830
700
900
450
130
790
970
G40M4000
530
540
830 980
710 720
730 460 090 460
840
040
880
140
730
030
780 970 100 120 750 110 100 460 730 480 740
900
980
780
970
050
980
830
970
790
3034439-4
699221

ECM: 779406
Group number: 3034439-0300
Assembly Drawing: 3034439-4_1_AA

This list refers to drawings on pages 630 to 632

Pos	Part No	Description	Qty	Unit	Page No
Common Parts					
0010	3108404-0000	SHAFT	2	PC	
0020	3108405-0000	ROLLER	2	PC	
0030	3108408-0000	SHAFT	1	PC	
0040	3108409-0000	PLATE	1	PC	
0050	3108410-0000	PLATE	1	PC	
0060	3108411-0000	PLATE	1	PC	
0070	3108412-0000	PLATE	1	PC	
0080	2885916-0000	PLATE	2	PC	
0090	3108414-0000	SHAFT	1	PC	
0100	3108415-0000	IDLER ROLLER	2	PC	
0110	3108417-0000	ROLLER	1	PC	
0120	3108418-0000	COVER	1	PC	
0130	3108419-0000	FLANGE	1	PC	
0140	3108420-0000	SHAFT	1	PC	
0150	3353745-0000	CANTILEVER	2	PC	
0160	3108422-0000	PLATE	2	PC	
0170	3108424-0000	BRACKET	1	PC	
0180	3108427-0000	PLATE	2	PC	
0190	3108428-0000	COVER	1	PC	
0200	2940040-0000	SUPPORT	4	PC	
0210	2940041-0000	LOCK HOLDER	4	PC	
0220	2940042-0000	SHIM	80	PC	
0230	3353746-0000	BRACKET	2	PC	
0240	2985759-0000	HOLDER	4	PC	
0250	3108429-0000	CABLE CONDUIT	1	PC	
0260	3365207-0000	BELT	1	PC	
0270	3108431-0000	BRACKET	1	PC	
0280	2987983-0000	PLATE	1	PC	
0400	3108433-0100	DISCHARGE DEVICE	1	PC	634
0450	3365195-0000	WORM GEAR	1	PC	
0460	344224-0200	BALL BEARING 10/26X8	4	PC	
0470	90603-2322	BALL BEARING 10/19X5	4	PC	
0480	344224-0203	BALL BEARING 17/35X10	1	PC	
0490	3108434-0000	LOCKING LEVER	4	PC	
0500	3124539-0000	STOP SCREW	4	PC	
0510	3108436-0000	CLAMP	2	PC	
0520	3108437-0000	HANDLE	2	PC	
0530	90458-0322	NUT, M16X1,5	1	PC	
0540	90458-0306	CABLE GLAND, M16X1,5, 5311 1010	1	PC	
0550	90459-1458	HOOD, SIDE ENTRY, HAN6E, 19 30 006 1540	1	PC	
0560	90458-0406	CABLE GLAND, VK 22052Y	1	PC	
0570	353249-0004	INSERT, SINGLE HOLE, E152 13	1	PC	
0580	90600-2375	LENS, E39-S65C	1	PC	
0700	315125-0153	WASHER HIGH, TBRSB 6,4X22X4 A4	1	PC	
0710	315701-0209	PARALLEL KEY W. ROUND ENDS, 5X5X45 MM	1	PC	
0720	315701-0238	PARALLEL KEY W. ROUND ENDS, 6X6X36 MM	1	PC	
0730	90141-0016	RETAINING RING FOR SHAFT DIN 471 10 SS	12	PC	
0740	90141-0017	RETAINING RING FOR SHAFT DIN 471 17 SS	1	PC	
0750	90459-5152	SCREW HEX.SOCK.SET CONEPT. MS6SS M6X10 A	1	PC	
0760	312318-0289	SET SCREW, CUP END ISO4029 M4X10 A4	4	PC	
0770	312105-0289	SCREW, M6S ISO 4017 M4X10 A4 70	16	PC	
0780	312105-0325	SCREW, M6S ISO 4017 M5X10 A4 80	4	PC	
0790	312105-0329	SCREW, M6S ISO 4017 M5X16 A4 80	6	PC	
0810	312105-0368	SCREW, M6S ISO 4017 M6X16 A4 80	7	PC	
0820	312105-0370	SCREW, M6S ISO 4017 M6X20 A4 80	8	PC	
0830	312105-0372	SCREW, M6S ISO 4017 M6X25 A4 80	4	PC	
0840	312109-0386	SCREW, M6S ISO 4017 M6X80 A4 80	2	PC	
0850	312155-0327	SCREW DIN 7991 MF6S M5X12 A4 70	4	PC	
0860	312155-0368	SCREW DIN 7991 MF6S M6X16 A4 70	8	PC	
0880	312115-0372	SCREW ISO4762 M6X25 A4 80	4	PC	
0900	312605-0316	HEXAGON NUT, M6M M6 A280	6	PC	
0910	312810-0310	HEXAGON NUT, NY-LOCK M3 FZB	8	PC	
0920	312705-0314	NUT HEX. DOMED CAP MHM-6 M5 A280	4	PC	
0930	312705-0316	HEX. DOMED CAP MHM-6 M6 A280	2	PC	
0940	311103-0348	PARALLEL PIN ISO 2338 6M6X10 A1	8	PC	
0960	315103-0136	WASHER PLAIN, 4,3X8X0,8 BR NI PL	20	PC	
0970	315103-0146	WASHER PLAIN, 5,3X10X1 BR NI PL	10	PC	
0980	315103-0153	WASHER PLAIN, 6,4X12X1,5 BR NI PL	22	PC	
0990	312105-0287	SCREW, M6S ISO 4017 M4X8 A4 70	4	PC	
1000	312810-0312	HEXAGON NUT, NY-LOCK M4 FZB	4	PC	
G40B5001	90606-2469	FORK SENSOR, WFM80-60P321	1	PC	
G40B5005	90606-2469	FORK SENSOR, WFM80-60P321	1	PC	
G40M4000	90603-2676	MOTOR 3GAA052002-CSA	1	PC	
G40W4000	315743-0009	OLFLEX CONTROL TM 4G1,5, 281604	2.500	M	
G40W5001	344264-0006	SENSOR CABLE, EVT243	1	PC	
G40W5002	344261-0020	SENSOR CABLE, EVT263	1	PC	
G40W5005	344264-0006	SENSOR CABLE, EVT243	1	PC	
G40W5006	344261-0010	SENSOR CABLE, EVT262	1	PC	
G40X4000	90110-0052	MALE INSERT, HAN E06, 0933 0062 601	1	PC	

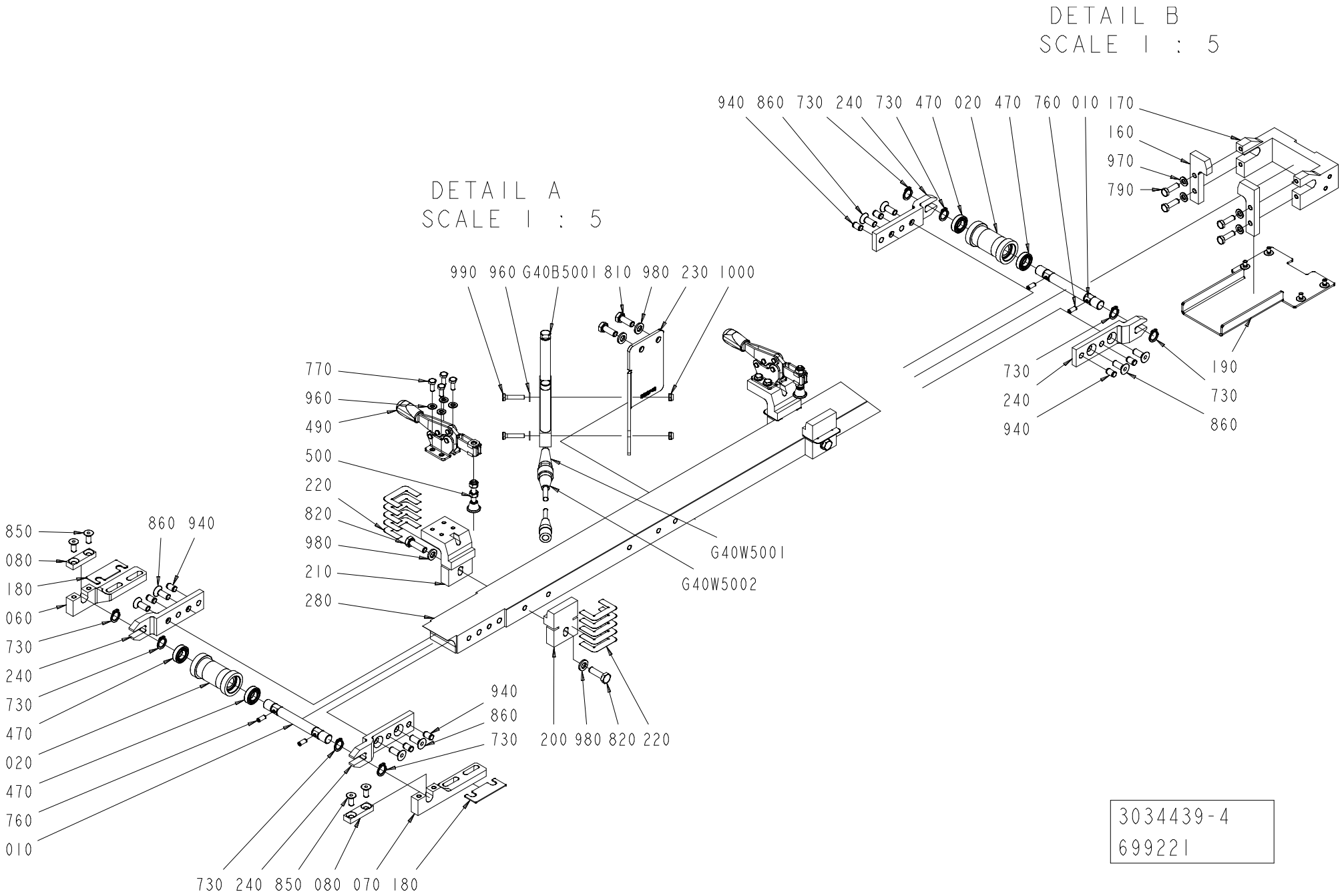
DETAIL B
SCALE 1 : 5
940 860 730 240 730 470 020 470 760 010 170
160
970
790
730
240
940
190
730
860
DETAIL A
SCALE 1 : 5
990 960 G40B5001 810 980 230 1000
770
960
490
500
220
820
980
210
280
G40W5001
G40W5002
850
080
180
060
730
240
730
470
020
470
760
010
860 940
940
860
730
200 980 820 220
730 240 850 080 070 180
3034439-4
699221

ECM: 779406
Group number: 3034439-0300
Assembly Drawing: 3034439-4_2_AA

This list refers to drawings on pages 630 to 632

Pos	Part No	Description	Qty	Unit	Page No

SEE LIST FOLLOWING DRAWING ON PAGE: 630

Pos	Part No	Description	Qty	Unit	Page No

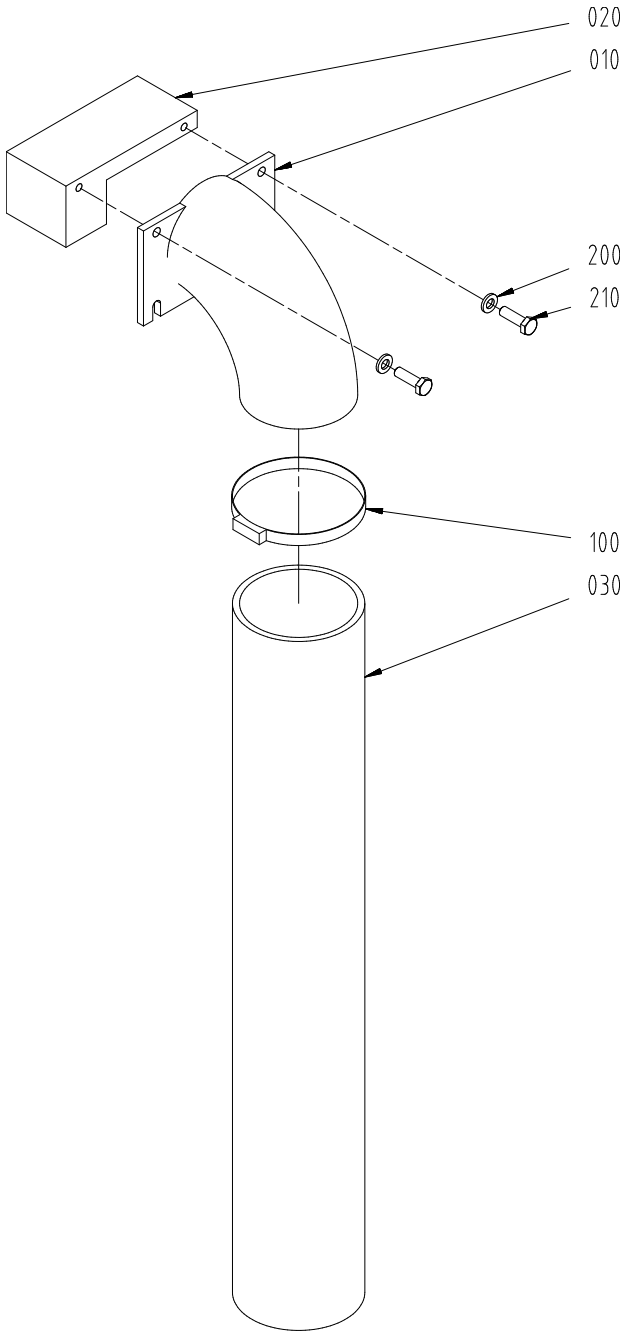
020
010
200
210
100
030

ECM: 482216
Group number: 3108433-0100
Assembly Drawing: 3108433-1_1_AA

Pos	Part No	Description	Qty	Unit	Page No
Common Parts					
010	3108438-0000	CURVE	1	PC	
020	3108439-0000	SUPPORT	1	PC	
030	3108440-0000	TUBE	1	PC	
100	3108441-0000	TIE	1	PC	
200	315103-0153	WASHER PLAIN, 6,4X12X1,5 BR NI PL	2	PC	
210	312105-0370	SCREW, M6S ISO 4017 M6X20 A4 80	2	PC	

Pos	Part No	Description	Qty	Unit	Page No

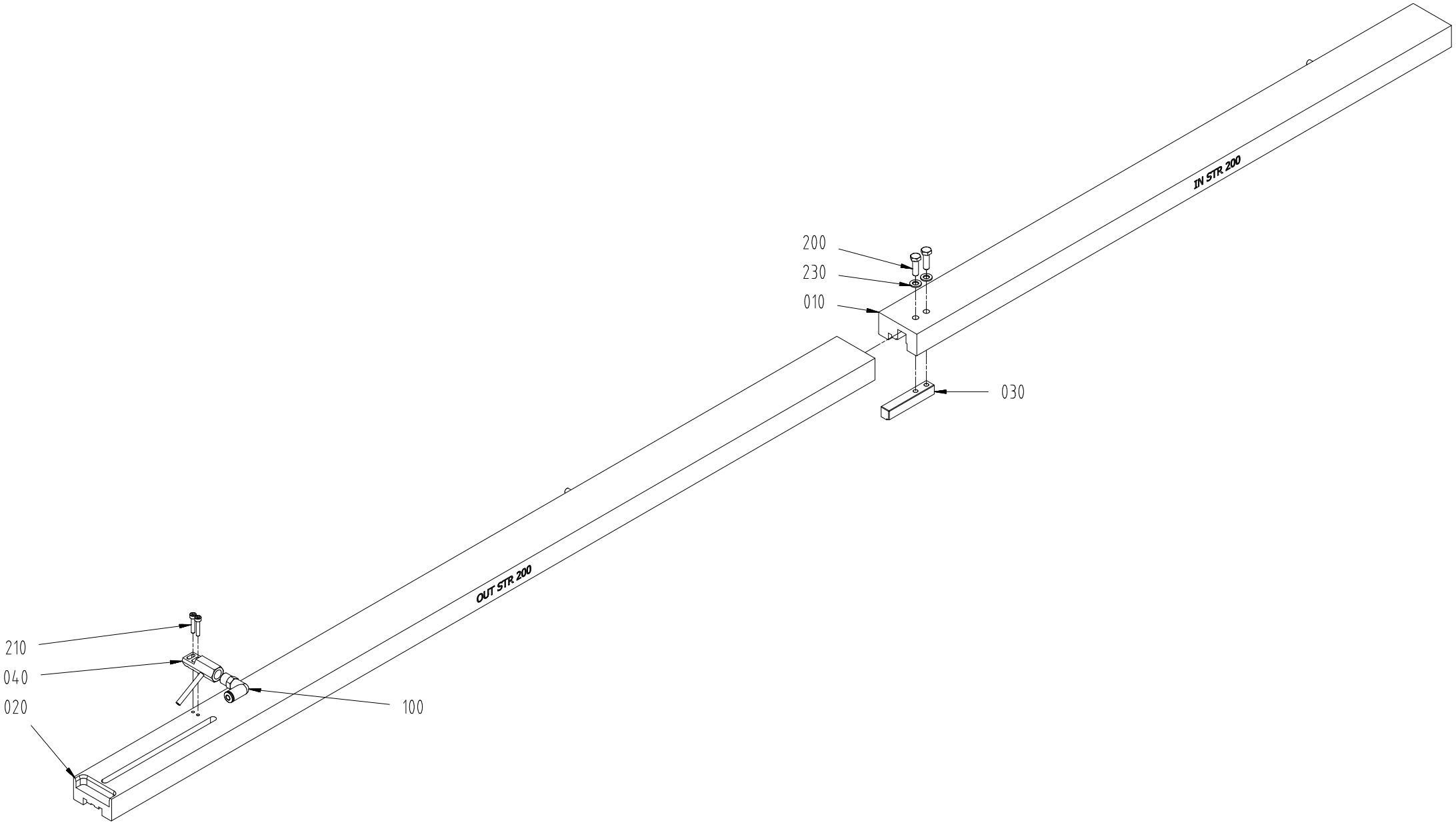
IN STR 200
200
230
010
030
OUT STR 200
210
040
020
100

ECM: 482325
Group number: 3147218-0100
Assembly Drawing: 3147218-1_1_AA

Pos	Part No	Description	Qty	Unit	Page No
Common Parts					
010	3124388-0000	COVER	1	PC	
020	3124389-0000	COVER	1	PC	
030	3124390-0000	FLAP	1	PC	
040	3124391-0000	AIR NOZZLE	1	PC	
100	3124379-0000	FITTING	1	PC	
200	312105-0329	SCREW, M6S ISO 4017 M5X16 A4 80	2	PC	
210	312115-0228	SCREW ISO4762 M3X16 A4 80	2	PC	
230	315103-0146	WASHER PLAIN, 5,3X10X1 BR NI PL	2	PC	

Pos	Part No	Description	Qty	Unit	Page No

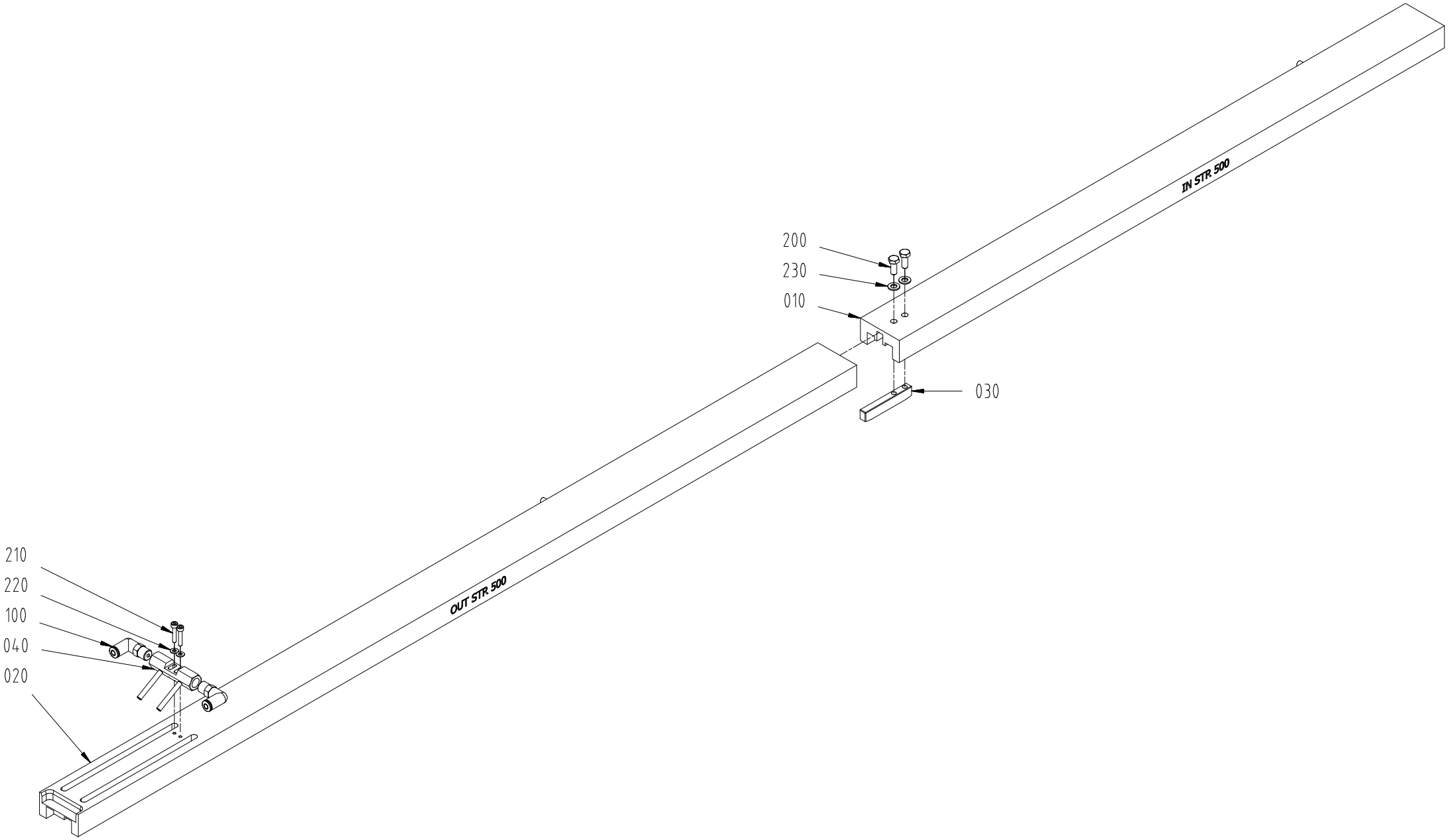
200
230
010
030
IN STR 500
210
220
100
040
020
OUT STR 500

ECM: 482327
Group number: 3147220-0100
Assembly Drawing: 3147220-1_1_AA

Pos	Part No	Description	Qty	Unit	Page No
Common Parts					
010	3124394-0000	COVER	1	PC	
020	3124395-0000	COVER	1	PC	
030	3124396-0000	FLAP	1	PC	
040	3124397-0000	AIR NOZZLE	1	PC	
100	3124379-0000	FITTING	2	PC	
200	312105-0327	SCREW, M6S ISO 4017 M5X12 A4 80	2	PC	
210	312115-0228	SCREW ISO4762 M3X16 A4 80	2	PC	
220	315103-0124	WASHER PLAIN, 3,2X/6X0,5 BR NI PL	2	PC	
230	315103-0146	WASHER PLAIN, 5,3X10X1 BR NI PL	2	PC	

Pos	Part No	Description	Qty	Unit	Page No

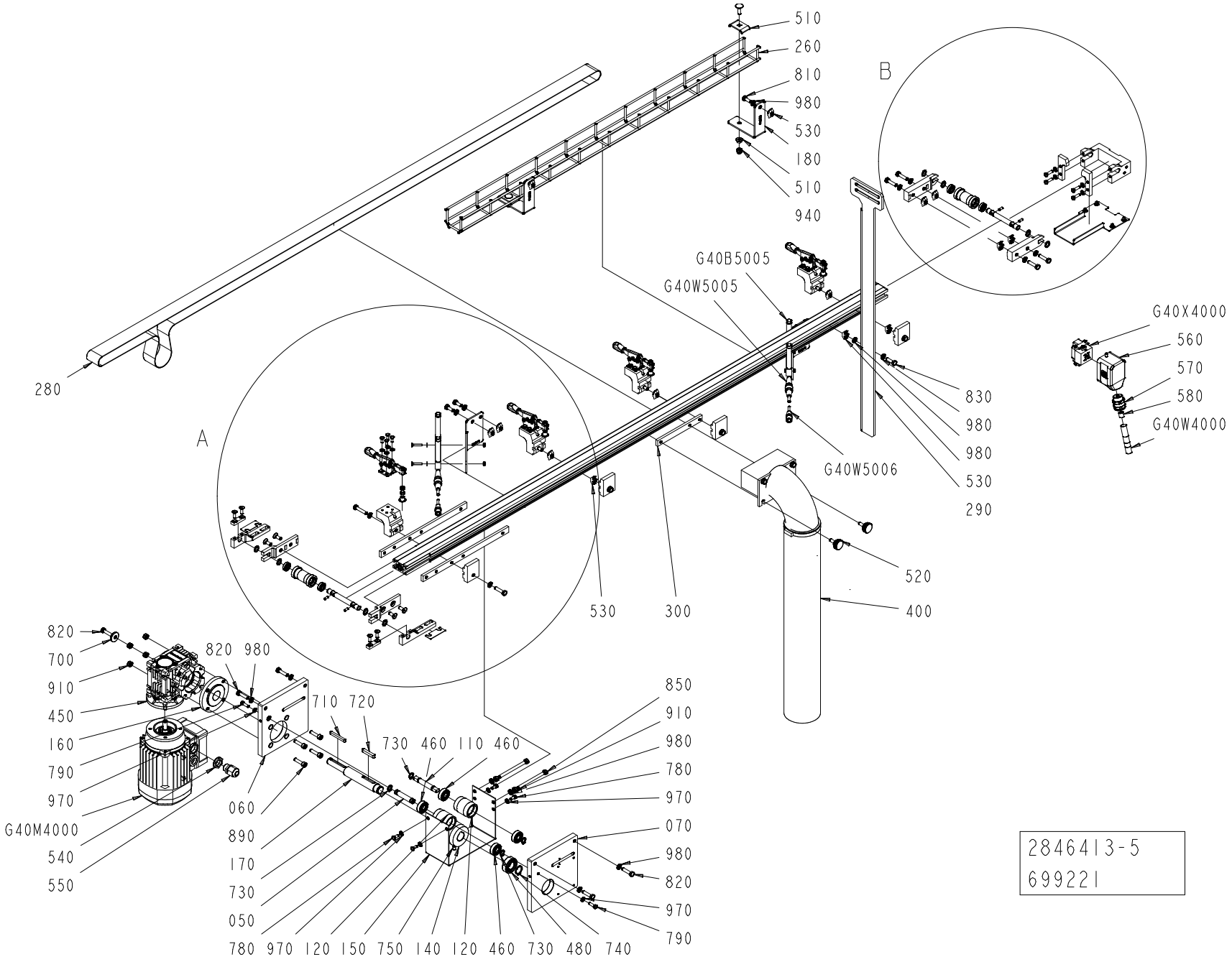

2846413-5
699221

ECM: 746918
Group number: 2846413-0400
Assembly Drawing: 2846413-5_1_AA

This list refers to drawings on pages 640 to 642

Pos	Part No	Description	Qty	Unit	Page No
Common Parts					
0010	3108404-0000	SHAFT	2	PC	
0020	3108405-0000	ROLLER	2	PC	
0030	3353746-0000	BRACKET	2	PC	
0040	3108407-0000	BRACKET	2	PC	
0050	3108408-0000	SHAFT	1	PC	
0060	3108409-0000	PLATE	1	PC	
0070	3108410-0000	PLATE	1	PC	
0080	3108411-0000	PLATE	1	PC	
0090	3108412-0000	PLATE	1	PC	
0100	2885916-0000	PLATE	2	PC	
0110	3108414-0000	SHAFT	1	PC	
0120	3108415-0000	IDLER ROLLER	2	PC	
0130	3108416-0000	BRACKET	2	PC	
0140	3108417-0000	ROLLER	1	PC	
0150	3108418-0000	COVER	1	PC	
0160	3108419-0000	FLANGE	1	PC	
0170	3108420-0000	SHAFT	1	PC	
0180	3353745-0000	CANTILEVER	2	PC	
0190	3108422-0000	PLATE	2	PC	
0200	3108423-0000	BRACKET	2	PC	
0210	3108424-0000	BRACKET	1	PC	
0220	3108425-0000	ANCHOR	4	PC	
0230	3108426-0000	ANCHOR	4	PC	
0240	3108427-0000	PLATE	2	PC	
0250	3108428-0000	COVER	1	PC	
0260	3108429-0000	CABLE CONDUIT	1	PC	
0270	3108430-0000	PROFILE	1	PC	
0280	3365207-0000	BELT	1	PC	
0290	3108431-0000	BRACKET	1	PC	
0300	3108432-0000	BRACKET	1	PC	
0400	3108433-0100	DISCHARGE DEVICE	1	PC	644
0450	3365195-0000	WORM GEAR	1	PC	
0460	344224-0200	BALL BEARING 10/26X8	4	PC	
0470	90603-2322	BALL BEARING 10/19X5	4	PC	
0480	344224-0203	BALL BEARING 17/35X10	1	PC	
0490	3108434-0000	LOCKING LEVER	4	PC	
0500	3124539-0000	STOP SCREW	4	PC	
0510	3108436-0000	CLAMP	2	PC	
0520	3108437-0000	HANDLE	2	PC	
0530	90013-0035	NUT GROOVE, HAMMER-HEAD M6 FE	16	PC	
0540	90458-0322	NUT, M16X1,5	1	PC	
0550	90458-0306	CABLE GLAND, M16X1,5, 5311 1010	1	PC	
0560	90459-1458	HOOD, SIDE ENTRY, HAN6E, 19 30 006 1540	1	PC	
0570	90458-0406	CABLE GLAND, VK 22052Y	1	PC	
0580	353249-0004	INSERT, SINGLE HOLE, E152 13	1	PC	
0590	90600-2375	LENS, E39-S65C	1	PC	
0700	315125-0153	WASHER HIGH, TBRSB 6,4X22X4 A4	1	PC	
0710	315701-0209	PARALLEL KEY W. ROUND ENDS, 5X5X45 MM	1	PC	
0720	315701-0238	PARALLEL KEY W. ROUND ENDS, 6X6X36 MM	1	PC	
0730	90141-0016	RETAINING RING FOR SHAFT DIN 471 10 SS	12	PC	
0740	90141-0017	RETAINING RING FOR SHAFT DIN 471 17 SS	1	PC	
0750	90459-5152	SCREW HEX.SOCK.SET CONEPT. MS6SS M6X10 A	1	PC	
0760	312318-0289	SET SCREW, CUP END ISO4029 M4X10 A4	4	PC	
0770	312105-0289	SCREW, M6S ISO 4017 M4X10 A4 70	16	PC	
0780	312105-0325	SCREW, M6S ISO 4017 M5X10 A4 80	4	PC	
0790	312105-0329	SCREW, M6S ISO 4017 M5X16 A4 80	6	PC	
0810	312105-0368	SCREW, M6S ISO 4017 M6X16 A4 80	6	PC	
0820	312105-0372	SCREW, M6S ISO 4017 M6X25 A4 80	12	PC	
0830	312105-0370	SCREW, M6S ISO 4017 M6X20 A4 80	1	PC	
0840	312109-0374	SCREW, M6S ISO 4017 M6X30 A4 80	4	PC	
0850	312109-0386	SCREW, M6S ISO 4017 M6X80 A4 80	2	PC	
0860	312155-0329	SCREW DIN 7991 MF6S M5X16 A4 70	4	PC	
0870	312155-0368	SCREW DIN 7991 MF6S M6X16 A4 70	4	PC	
0890	312115-0372	SCREW ISO4762 M6X25 A4 80	4	PC	
0910	312605-0316	HEXAGON NUT, M6M M6 A280	6	PC	
0920	312810-0310	HEXAGON NUT, NY-LOCK M3 FZB	8	PC	
0930	312705-0314	NUT HEX. DOMED CAP MHM-6 M5 A280	4	PC	
0940	312705-0316	HEX. DOMED CAP MHM-6 M6 A280	2	PC	
0950	315103-0124	WASHER PLAIN, 3,2X/6X0,5 BR NI PL	8	PC	
0960	315103-0136	WASHER PLAIN, 4,3X8X0,8 BR NI PL	20	PC	
0970	315103-0146	WASHER PLAIN, 5,3X10X1 BR NI PL	10	PC	
0980	315103-0153	WASHER PLAIN, 6,4X12X1,5 BR NI PL	26	PC	
0990	312105-0287	SCREW, M6S ISO 4017 M4X8 A4 70	4	PC	
1000	312810-0312	HEXAGON NUT, NY-LOCK M4 FZB	4	PC	
G40B5001	90606-2469	FORK SENSOR, WFM80-60P321	1	PC	
G40B5005	90606-2469	FORK SENSOR, WFM80-60P321	1	PC	
G40M4000	90603-2676	MOTOR 3GAA052002-CSA	1	PC	
G40W4000	315743-0009	OLFLEX CONTROL TM 4G1,5, 281604	2.500	M	
G40W5001	344264-0006	SENSOR CABLE, EVT243	1	PC	
G40W5002	344261-0020	SENSOR CABLE, EVT263	1	PC	
G40W5005	344264-0006	SENSOR CABLE, EVT243	1	PC	
G40W5006	344261-0010	SENSOR CABLE, EVT262	1	PC	
G40X4000	90110-0052	MALE INSERT, HAN E06, 0933 0062 601	1	PC	

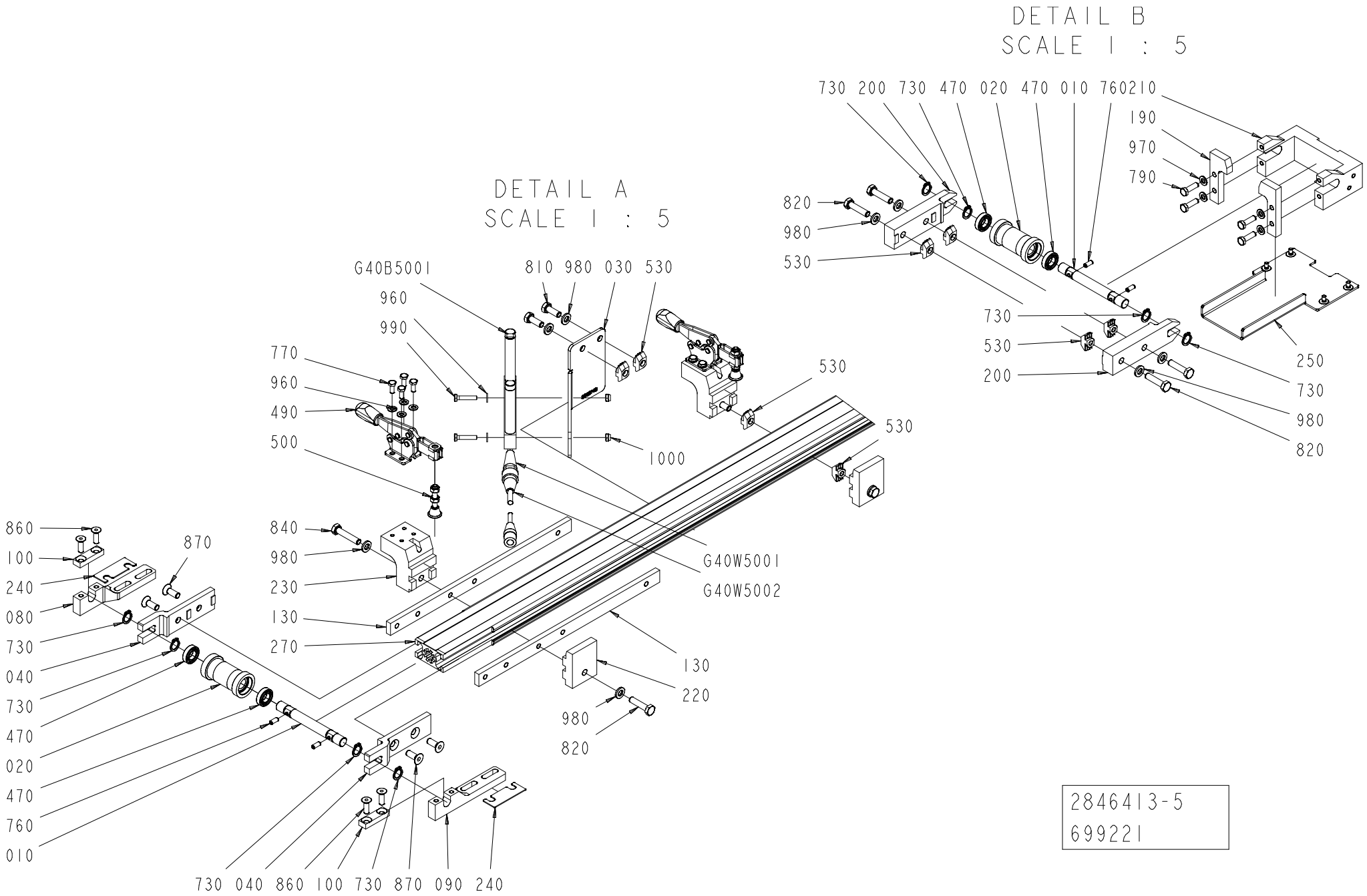
DETAIL B
SCALE 1 : 5
730 200 730 470 020 470 010 760210
190
970
790
820
980
530
730
530
200
250
730
980
820
DETAIL A
SCALE 1 : 5
G40B5001
810 980 030 530
960
990
770
960
490
500
530
530
1000
860
100
240
080
730
040
730
470
020
470
760
010
870
840
980
230
130
270
G40W5001
G40W5002
130
220
980
820
730 040 860 100 730 870 090 240
2846413-5
699221

ECM: 746918
Group number: 2846413-0400
Assembly Drawing: 2846413-5_2_AA

This list refers to drawings on pages 640 to 642

Pos	Part No	Description	Qty	Unit	Page No

SEE LIST FOLLOWING DRAWING ON PAGE: 640

Pos	Part No	Description	Qty	Unit	Page No

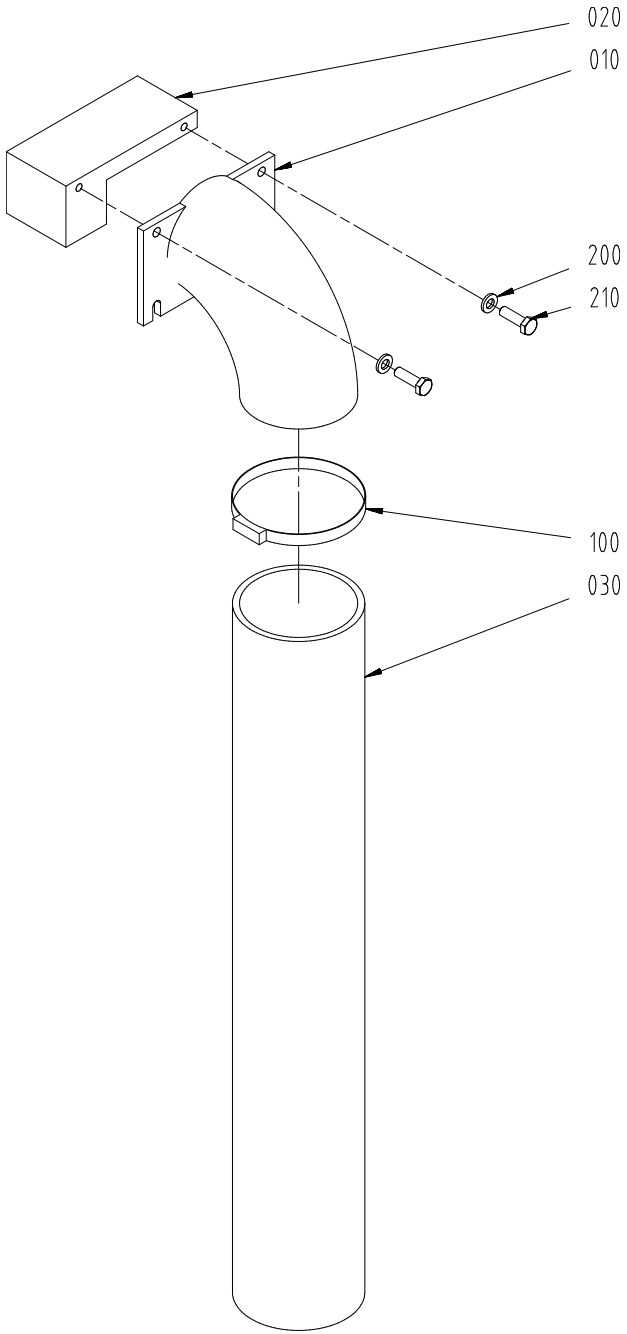
020
010
200
210
100
030

ECM: 482216
Group number: 3108433-0100
Assembly Drawing: 3108433-1_1_AA

Pos	Part No	Description	Qty	Unit	Page No
Common Parts					
010	3108438-0000	CURVE	1	PC	
020	3108439-0000	SUPPORT	1	PC	
030	3108440-0000	TUBE	1	PC	
100	3108441-0000	TIE	1	PC	
200	315103-0153	WASHER PLAIN, 6,4X12X1,5 BR NI PL	2	PC	
210	312105-0370	SCREW, M6S ISO 4017 M6X20 A4 80	2	PC	

Pos	Part No	Description	Qty	Unit	Page No

This page intentionally left blank

SPC

Spare Parts Catalogue

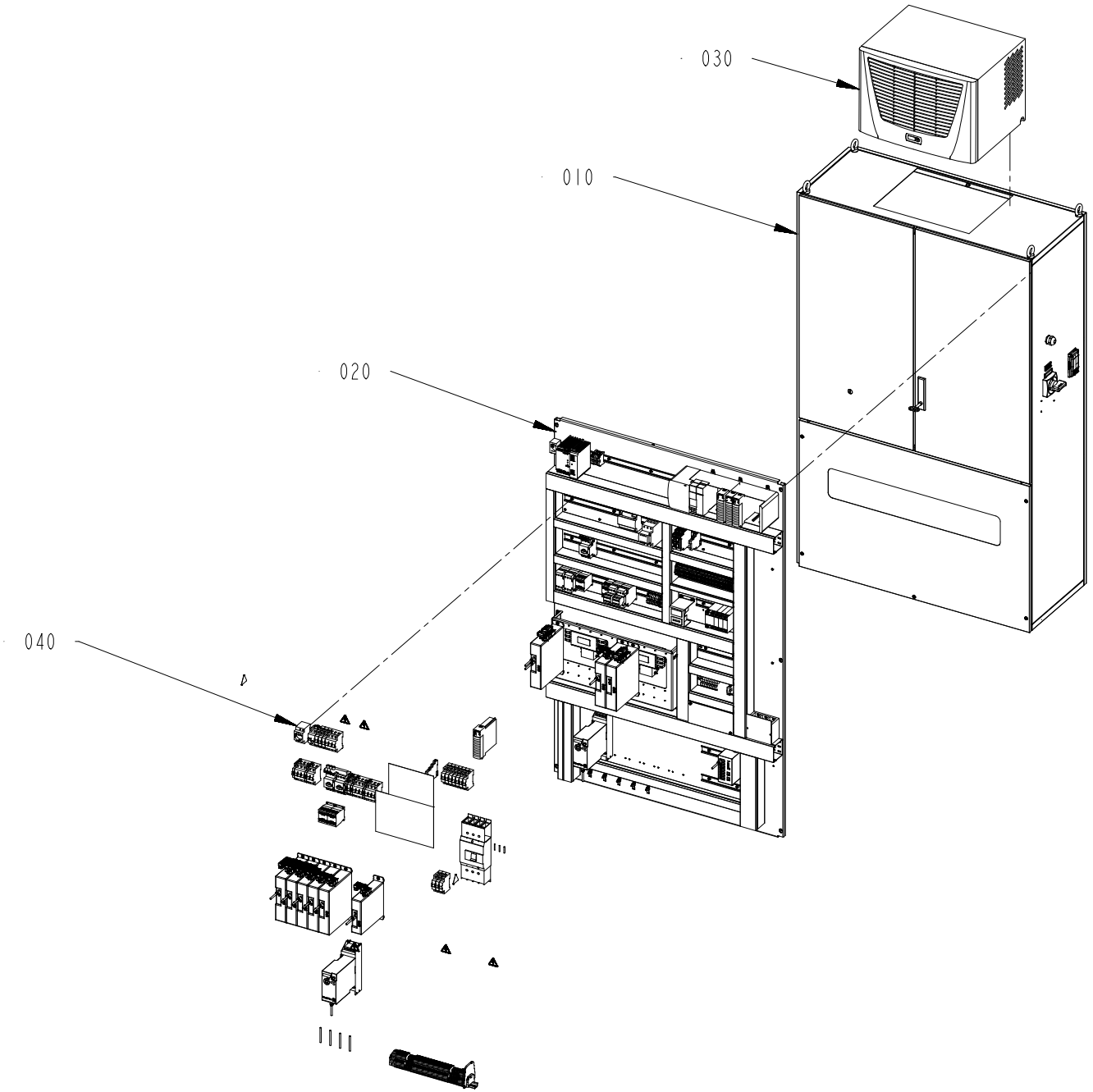
030
010
020
040

ECM: 736843
Group number: 662911-0400
Assembly Drawing: 662911-5_1_AA

Pos	Part No	Description	Qty	Unit	Page No
CE					
040	2841404-0400	ELECTRICAL CONVERSION	1	PC	650, 654, 656, 658, 660, 662
UL, CSA					
040	3190285-0200	ELECTRICAL CONVERSION	1	PC	672, 676, 678, 680, 682, 684
Common Parts					
010	2833406-0400	CABINET	1	PC	694
020	2833407-0400	CONTROL BOARD	1	PC	702
030	2833408-0300	COOLING UNIT	1	PC	760
050	2833409-0300	CABLE SET	1	PC	762
060	3405806-0100	COMMUNICATION UNIT	1	PC	764

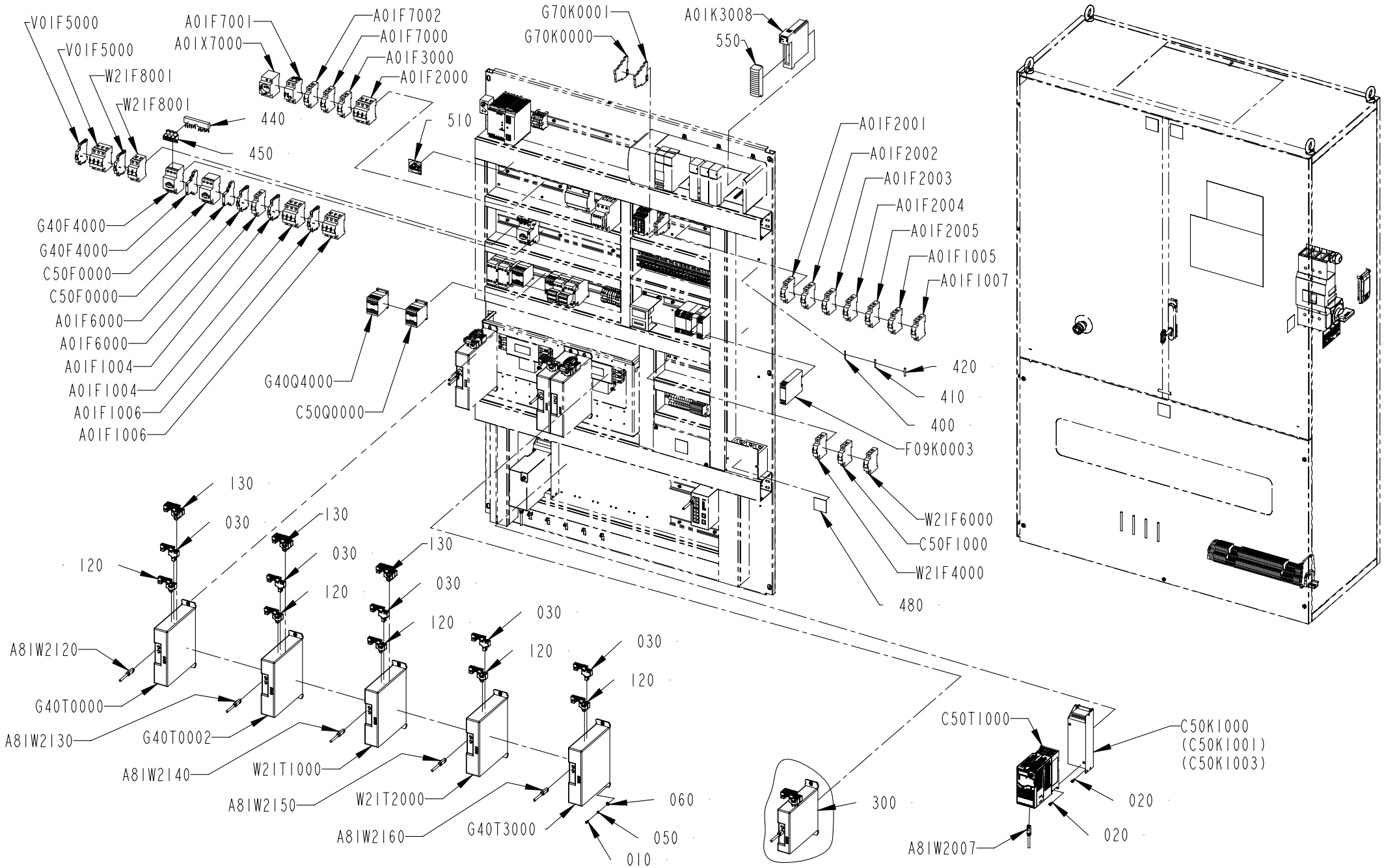
V01F5000
V01F5000
W21F8001
W21F8001
A01F7001
A01X7000
A01F7002
A01F7000
A01F3000
A01F2000
440
450
510
G70K0001
G70K0000
A01K3008
550
A01F2001
A01F2002
A01F2003
A01F2004
A01F2005
A01F1005
A01F1007
G40F4000
G40F4000
C50F0000
C50F0000
A01F6000
A01F6000
A01F1004
A01F1004
A01F1006
A01F1006
G40Q4000
C50Q0000
420
410
400
F09K0003
W21F6000
C50F1000
W21F4000
480
130
030
120
130
030
120
130
030
120
030
120
030
120
A81W2120
G40T0000
A81W2130
G40T0002
A81W2140
W21T1000
A81W2150
W21T2000
A81W2160
G40T3000
060
050
010
300
C50T1000
C50K1000
(C50K1001)
(C50K1003)
020
020
A81W2007

ECM: 808569
Group number: 2841404-0400
Assembly Drawing: 2841404-23_1_AB

This list refers to drawings on pages 650 to 662

Pos	Part No	Description	Qty	Unit	Page No
CAP 30/FLEX TBA STREAMCAP1000, CAP 30/FLEX TBA SLIMCAP1000, CAP 30/FLEX TBA SLIMCAP2000, CAP 30/FLEX TBA STREAMCAP200, CAP 30/FLEX TBA HELICAP2 23, CAP 30/FLEX TBA HELICAP 27 See page: 650, 654					
CAP30/FLEX TPA STREAMCAP 1000, CAP30/FLEX TPA STREAMCAP 500, CAP 30/FLEX TPA HELICAP 27, CAP 30/FLEX TGA 1000CR, CAP 30/FLEX TGA 1000LF See page: 656, 658					
CAP 30/FLEX TGA 0500SQ, CAP 30/FLEX TGA 0750SQ, CAP 30/FLEX TGA 1000SQ, CAP 30/FLEX TGA 1500SQ See page: 660, 662					
300	3405810-0100	POSITIONING UNIT	1	PC	664
CAP 30/FLEX TBA STREAMCAP1000, CAP 30/FLEX TBA SLIMCAP1000, CAP 30/FLEX TBA SLIMCAP2000, CAP 30/FLEX TBA STREAMCAP200, CAP 30/FLEX TBA HELICAP2 23, CAP 30/FLEX TBA HELICAP 27 See page: 650, 654					
CAP 30/FLEX TGA 0500SQ, CAP 30/FLEX TGA 0750SQ, CAP 30/FLEX TGA 1000SQ, CAP 30/FLEX TGA 1500SQ See page: 660, 662					
110	3386021-0000	FUSE PANEL LABEL	1	PC	
CAP 30/FLEX TBA STREAMCAP1000, CAP 30/FLEX TBA SLIMCAP1000, CAP 30/FLEX TBA HELICAP 27, CAP 30/FLEX TBA SLIMCAP2000, CAP 30/FLEX TBA STREAMCAP200, CAP 30/FLEX TBA HELICAP2 23 See page: 650, 654					
CAP30/FLEX TPA STREAMCAP 1000, CAP30/FLEX TPA STREAMCAP 500, CAP 30/FLEX TPA HELICAP 27, CAP 30/FLEX TGA 1000CR, CAP 30/FLEX TGA 1000LF See page: 656, 658					
CAP 30/FLEX TGA 0500SQ, CAP 30/FLEX TGA 0750SQ, CAP 30/FLEX TGA 1000SQ, CAP 30/FLEX TGA 1500SQ See page: 660, 662					
A01W3027	351423-0006	CABLE UNITRONIC LIYCY 5X0,34	3	M	
CAP 30/FLEX TBA STREAMCAP1000, CAP 30/FLEX TBA SLIMCAP1000, CAP 30/FLEX TBA SLIMCAP2000, CAP 30/FLEX TBA STREAMCAP200, CAP 30/FLEX TBA HELICAP2 23, CAP 30/FLEX TBA HELICAP 27 See page: 650, 654					
CAP30/FLEX TPA STREAMCAP 1000, CAP30/FLEX TPA STREAMCAP 500, CAP 30/FLEX TPA HELICAP 27, CAP 30/FLEX TGA 1000CR, CAP 30/FLEX TGA 1000LF See page: 656, 658					
CAP 30/FLEX TGA 0500SQ, CAP 30/FLEX TGA 0750SQ, CAP 30/FLEX TGA 1000SQ, CAP 30/FLEX TGA 1500SQ See page: 660, 662					
020	312115-0327	SCREW ISO4762 M5X12 A4 80	6	PC	
400	351160-0102	WIRE AWM 1X0,75 MM2 DARKBLUE	458	M	
410	351164-0105	WIRE AWM 1X2,5 MM2 BLACK	65	M	
420	351164-0107	WIRE AWM 1X6 MM2 BLACK	39	M	
550	90459-2488	REMOVABLE TERMINAL BLOCK 36 POINTS	1	PC	
A01K3008	90600-4033	DIG OUTPUT MODULE, 1756-OB16IS	1	PC	
A01W3025	351423-0006	CABLE UNITRONIC LIYCY 5X0,34	3.400	M	
A01W3026	351423-0006	CABLE UNITRONIC LIYCY 5X0,34	3	M	
A01W3028	351423-0006	CABLE UNITRONIC LIYCY 5X0,34	1.600	M	
C50F0000	90459-5323	OVERLOAD PROTECTION, PKZM0-1 072734	1	PC	
C50F1000	351416-0060	MINIATURE CIRC. BREAK., FAZ -D6 1-POLE	1	PC	
C50K1000	90605-9527	PF 525 EMC LINE FILTER, 240V, 0.4KW A	1	PC	
C50Q0000	90606-8399	CONTACTOR 4KW 24VDC, DILM9-01	1	PC	
C50T1000	90605-9347	FC POWERFLEX 525, 230V 1PH, 0.4KW A	1	PC	
G40F4000	90259-0313	AUXILIARY SWITCH, NHI21-PKZ0	1	PC	
G40F4000	90459-5321	OVERLOAD PROTECTION, PKZM0-0.4 072732	1	PC	
G40Q4000	90606-8399	CONTACTOR 4KW 24VDC, DILM9-01	1	PC	
G40T0000	90605-9390	AMP.KINETIX 5500, 2198-H025-ERS, SERIE A	1	PC	
G40T0002	90605-9390	AMP.KINETIX 5500, 2198-H025-ERS, SERIE A	1	PC	
G40T3000	90605-9389	AMP.KINETIX 5500, 2198-H015-ERS, SERIE A	1	PC	
G70K0000	90601-6652	OPTOCOUPLER, PLC-OSC-24DC/24DC/2	1	PC	
G70K0001	90601-6652	OPTOCOUPLER, PLC-OSC-24DC/24DC/2	1	PC	
CAP 30/FLEX TBA STREAMCAP200, CAP 30/FLEX TBA HELICAP2 23, CAP 30/FLEX TBA HELICAP 27, CAP 30/FLEX TBA STREAMCAP1000, CAP 30/FLEX TBA SLIMCAP1000, CAP 30/FLEX TBA SLIMCAP2000 See page: 650, 654					
CAP30/FLEX TPA STREAMCAP 1000, CAP30/FLEX TPA STREAMCAP 500, CAP 30/FLEX TPA HELICAP 27, CAP 30/FLEX TGA 1000CR, CAP 30/FLEX TGA 1000LF See page: 656, 658					
CAP 30/FLEX TGA 0500SQ, CAP 30/FLEX TGA 0750SQ, CAP 30/FLEX TGA 1000SQ, CAP 30/FLEX TGA 1500SQ See page: 660, 662					
450	90600-1461	INCOMING TERMINAL, BK25/3-PKZ0-E	1	PC	
C50F0000	90259-0313	AUXILIARY SWITCH, NHI21-PKZ0	1	PC	
CAP 30/FLEX TBA STREAMCAP1000, CAP 30/FLEX TBA SLIMCAP1000, CAP 30/FLEX TBA SLIMCAP2000, CAP 30/FLEX TBA STREAMCAP200, CAP 30/FLEX TBA HELICAP2 23, CAP 30/FLEX TBA HELICAP 27 See page: 650, 654					
CAP30/FLEX TPA STREAMCAP 1000, CAP30/FLEX TPA STREAMCAP 500, CAP 30/FLEX TPA HELICAP 27, CAP 30/FLEX TGA 1000CR, CAP 30/FLEX TGA 1000LF See page: 656, 658					
CAP 30/FLEX TGA 1500SQ, CAP 30/FLEX TGA 0500SQ, CAP 30/FLEX TGA 0750SQ, CAP 30/FLEX TGA 1000SQ See page: 660, 662					
F09K0003	90459-2291	SAFETY RELAY, E1T	1	PC	
CAP30/FLEX TPA STREAMCAP 1000, CAP30/FLEX TPA STREAMCAP 500, CAP 30/FLEX TPA HELICAP 27, CAP 30/FLEX TGA 1000CR, CAP 30/FLEX TGA 1000LF See page: 656, 658					
110	3386025-0000	FUSE PANEL LABEL	1	PC	
200	2895147-0300	PACKAGE ALIGNER	1	PC	666, 668
Common Parts					
010	312115-0289	SCREW ISO4762 M4X10 A4 80	10	PC	
030	90606-0481	CONNECTOR KIT, 2198-H040-D-T, SERIE A	5	PC	
050	315402-0136	LOCK WASHER, DIN127B 4,1 A4, M4-5/32	10	PC	
060	90005-0082	WASHER PLAIN ROUND 4,3(M4)/12,H=1	10	PC	
120	90606-0482	CONN. KITS KINETIX, 2198-H040-P-T, SER A	5	PC	
130	90606-0501	CONN. KITS KINETIX, 2198-H040-A-T, SER A	3	PC	
440	90259-0315	CIRCUIT BREAKER , B3.1/2-PKZ0	1	PC	
470	90459-6617	COVER 4-POLE, NZM1-4-XKSA	2	PC	
480	359705-0015	WARNING SIGN ISO, ELECTRIC HAZARD	7	PC	
490	90600-2068	DELIVERED DESIGN SIGN, 90600-2068	1	PC	
500	3402970-0000	MARKING	1	PC	
510	351554-0009	MAND. ACTION SIGN, READ MAINT M S, 50 MM	1	PC	
A01F1004	90459-5813	AUXILIARY CONTACT, FAZ-XHIN11	1	PC	
A01F1004	354002-0250	MINIATURE CIRCUIT BREAKER, FAZ-C25/3	1	PC	
A01F1005	354000-0060	MINIATURE CIRCUIT BREAKER, FAZ-C6/1	1	PC	
A01F1006	90459-5813	AUXILIARY CONTACT, FAZ-XHIN11	1	PC	
A01F1006	354002-0250	MINIATURE CIRCUIT BREAKER, FAZ-C25/3	1	PC	
A01F1007	354000-0060	MINIATURE CIRCUIT BREAKER, FAZ-C6/1	1	PC	
A01F2000	354002-0060	MINIATURE CIRCUIT BREAKER, FAZ-C6/3	1	PC	
A01F2001	354000-0040	MINIATURE CIRCUIT BREAKER, FAZ-C4/1	1	PC	
A01F2002	354000-0040	MINIATURE CIRCUIT BREAKER, FAZ-C4/1	1	PC	
A01F2003	354000-0040	MINIATURE CIRCUIT BREAKER, FAZ-C4/1	1	PC	

Pos	Part No	Description	Qty	Unit	Page No
A01F2004	354000-0040	MINIATURE CIRCUIT BREAKER, FAZ-C4/1	1	PC	
A01F2005	354000-0060	MINIATURE CIRCUIT BREAKER, FAZ-C6/1	1	PC	
A01F3000	354000-0040	MINIATURE CIRCUIT BREAKER, FAZ-C4/1	1	PC	
A01F6000	351416-0100	MINIATURE CIRC. BREAK., FAZ -D10 1-POLE	1	PC	
A01F6000	90459-5813	AUXILIARY CONTACT, FAZ-XHIN11	1	PC	
A01F7000	354000-0040	MINIATURE CIRCUIT BREAKER, FAZ-C4/1	1	PC	
A01F7001	90459-5811	RESIDUAL CURRENT DEVICE, FI-25/2/003-A	1	PC	
A01F7002	354000-0100	MINIATURE CIRCUIT BREAKER, FAZ-C10/1	1	PC	
A01Q1000	90600-5543	CIRCUIT BREAKER, NZMB1-4-A32	1	PC	
A01X0006	2841403-0400	PLINTH	1	PC	670
A01X7000	90459-3845	WALL SOCKET, Z-SD230	1	PC	
A81W2007	351501-0020	ETHERNET PATCH CABLE, FL CAT5 PATCH 2,0	1	PC	
A81W2120	351501-0003	ETHERNET PATCH CABLE, FL CAT5 PATCH 0,3	1	PC	
A81W2130	351501-0003	ETHERNET PATCH CABLE, FL CAT5 PATCH 0,3	1	PC	
A81W2140	351501-0003	ETHERNET PATCH CABLE, FL CAT5 PATCH 0,3	1	PC	
A81W2150	351501-0003	ETHERNET PATCH CABLE, FL CAT5 PATCH 0,3	1	PC	
A81W2160	351501-0003	ETHERNET PATCH CABLE, FL CAT5 PATCH 0,3	1	PC	
V01F5000	90459-5813	AUXILIARY CONTACT, FAZ-XHIN11	1	PC	
V01F5000	354002-0200	MINIATURE CIRCUIT BREAKER, FAZ-C20/3	1	PC	
W21F4000	351416-0100	MINIATURE CIRC. BREAK., FAZ -D10 1-POLE	1	PC	
W21F6000	351416-0100	MINIATURE CIRC. BREAK., FAZ -D10 1-POLE	1	PC	
W21F8001	90459-5813	AUXILIARY CONTACT, FAZ-XHIN11	1	PC	
W21F8001	354001-0100	MINIATURE CIRCUIT BREAKER, FAZ-C10/2	1	PC	
W21T1000	90605-9390	AMP.KINETIX 5500, 2198-H025-ERS, SERIE A	1	PC	
W21T2000	90605-9390	AMP.KINETIX 5500, 2198-H025-ERS, SERIE A	1	PC	

Pos	Part No	Description	Qty	Unit	Page No

This page intentionally left blank

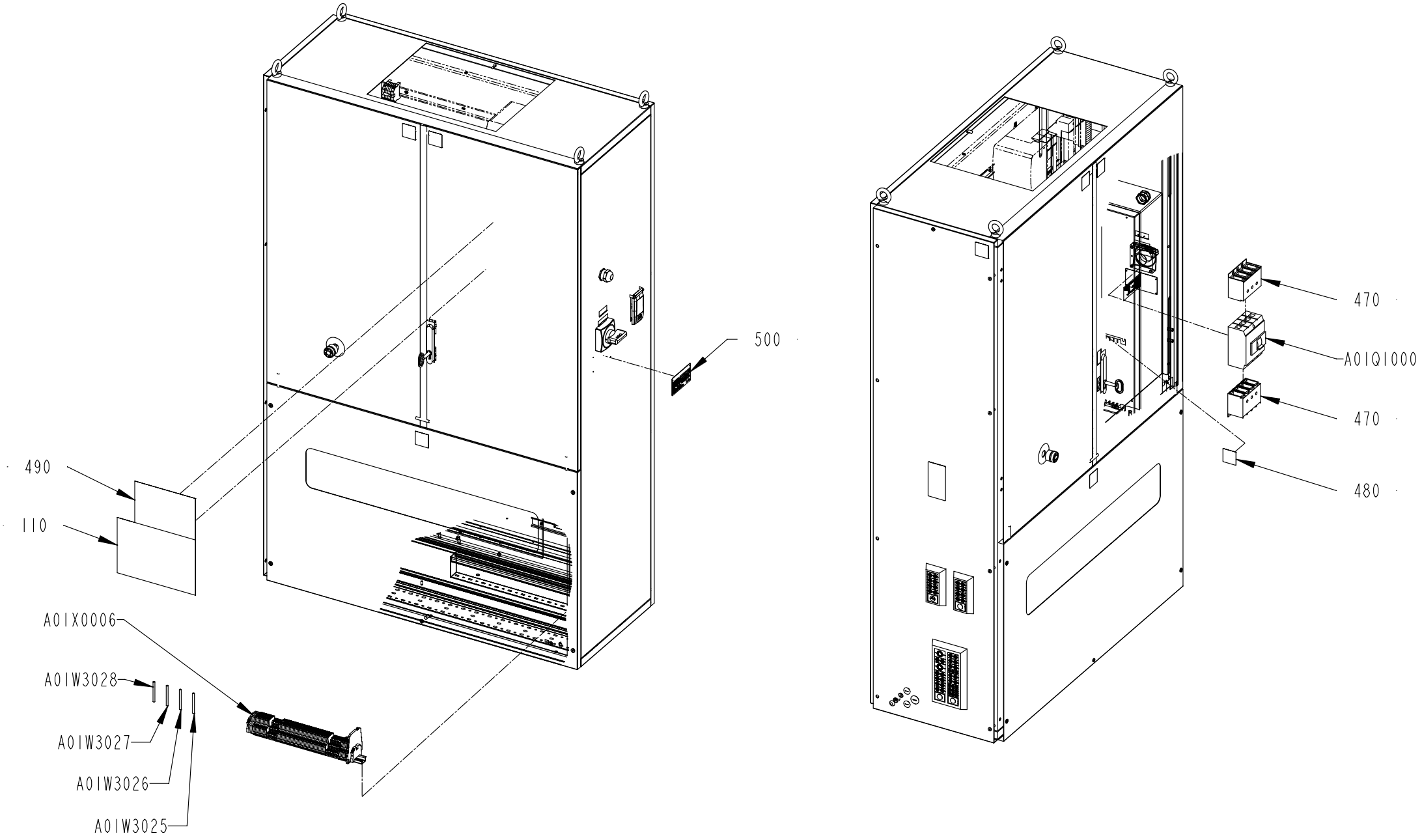
500
490
110
A01X0006
A01W3028
A01W3027
A01W3026
A01W3025
470
A01Q1000
470
480

This list refers to drawings on pages 650 to 662

Pos	Part No	Description	Qty	Unit	Page No

SEE LIST FOLLOWING DRAWING ON PAGE: 650

Pos	Part No	Description	Qty	Unit	Page No

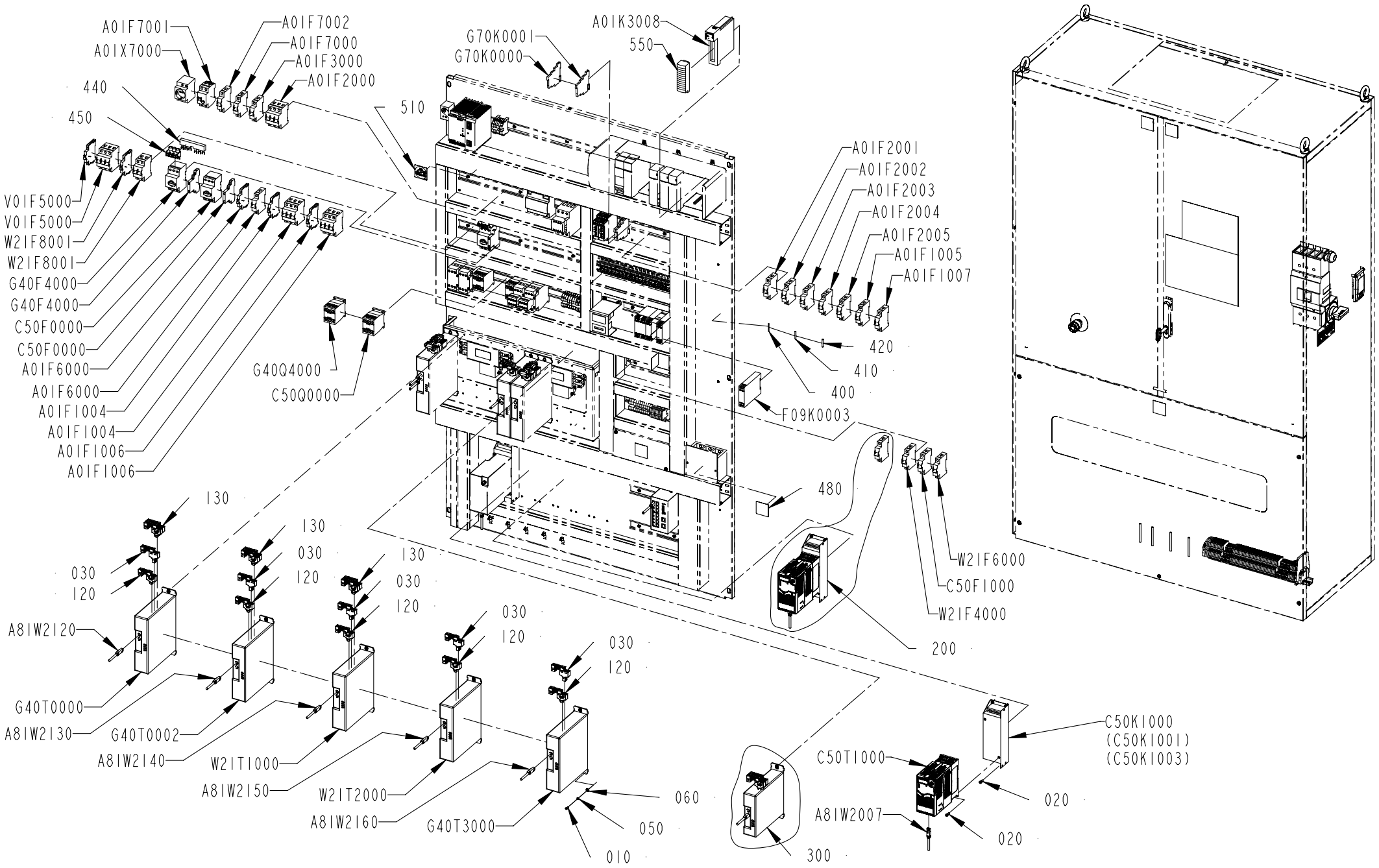
A01F7001
A01F7002
A01X7000
A01F7000
A01F3000
A01F2000
440
450
510
G70K0001
G70K0000
A01K3008
550
V01F5000
V01F5000
W21F8001
W21F8001
G40F4000
G40F4000
C50F0000
C50F0000
A01F6000
A01F6000
A01F1004
A01F1004
A01F1006
A01F1006
G40Q4000
C50Q0000
A01F2001
A01F2002
A01F2003
A01F2004
A01F2005
A01F1005
A01F1007
420
410
400
F09K0003
480
W21F6000
C50F1000
W21F4000
200
130
030
120
A81W2120
G40T0000
A81W2130
130
030
120
G40T0002
A81W2140
W21T1000
130
030
120
A81W2150
W21T2000
A81W2160
030
120
G40T3000
060
050
010
030
120
300
C50T1000
A81W2007
C50K1000
(C50K1001)
(C50K1003)
020
020

This list refers to drawings on pages 650 to 662

Pos	Part No	Description	Qty	Unit	Page No

SEE LIST FOLLOWING DRAWING ON PAGE: 650

Pos	Part No	Description	Qty	Unit	Page No

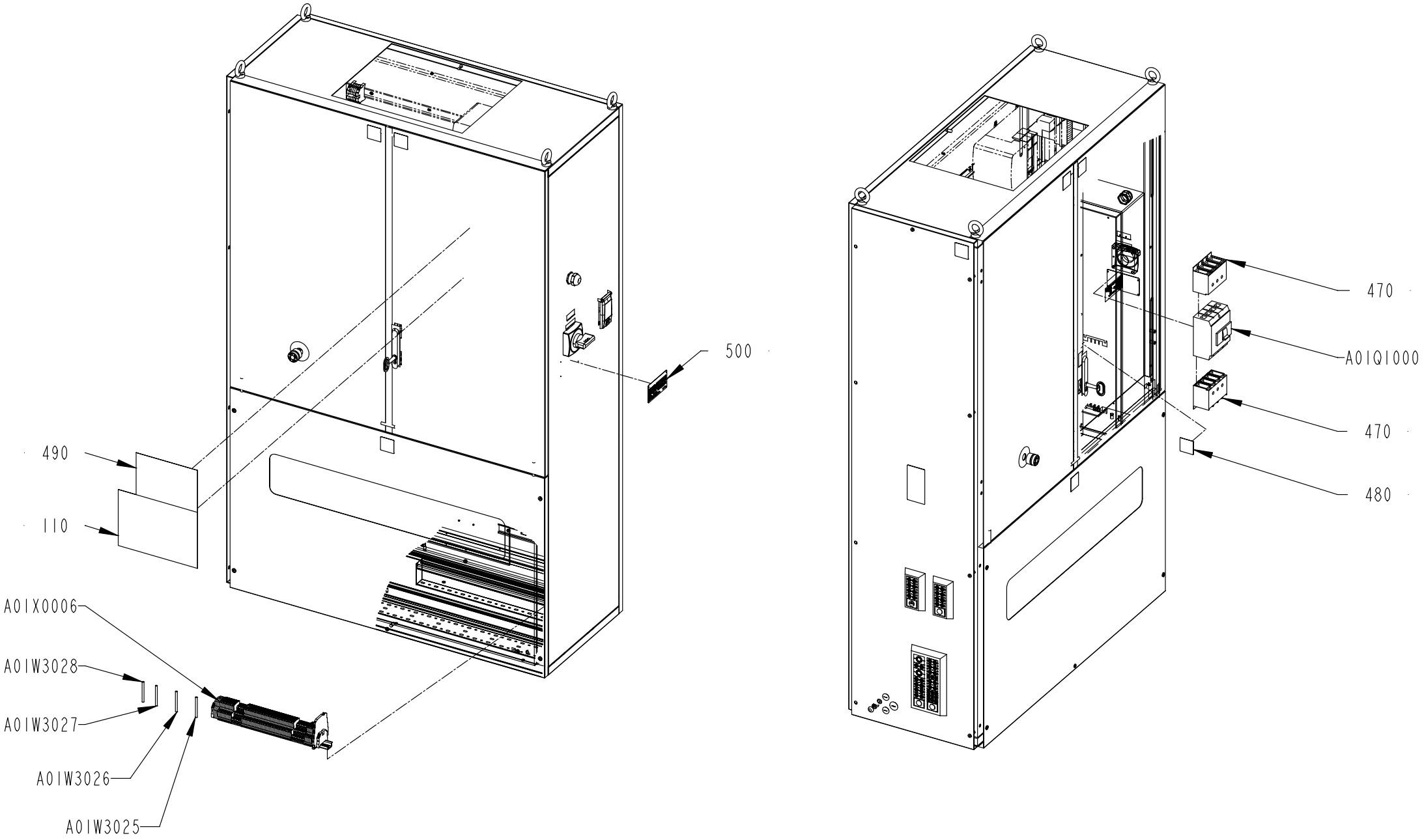
500
490
110
A01X0006
A01W3028
A01W3027
A01W3026
A01W3025
470
A01Q1000
470
480

This list refers to drawings on pages 650 to 662

Pos	Part No	Description	Qty	Unit	Page No

SEE LIST FOLLOWING DRAWING ON PAGE: 650

Pos	Part No	Description	Qty	Unit	Page No

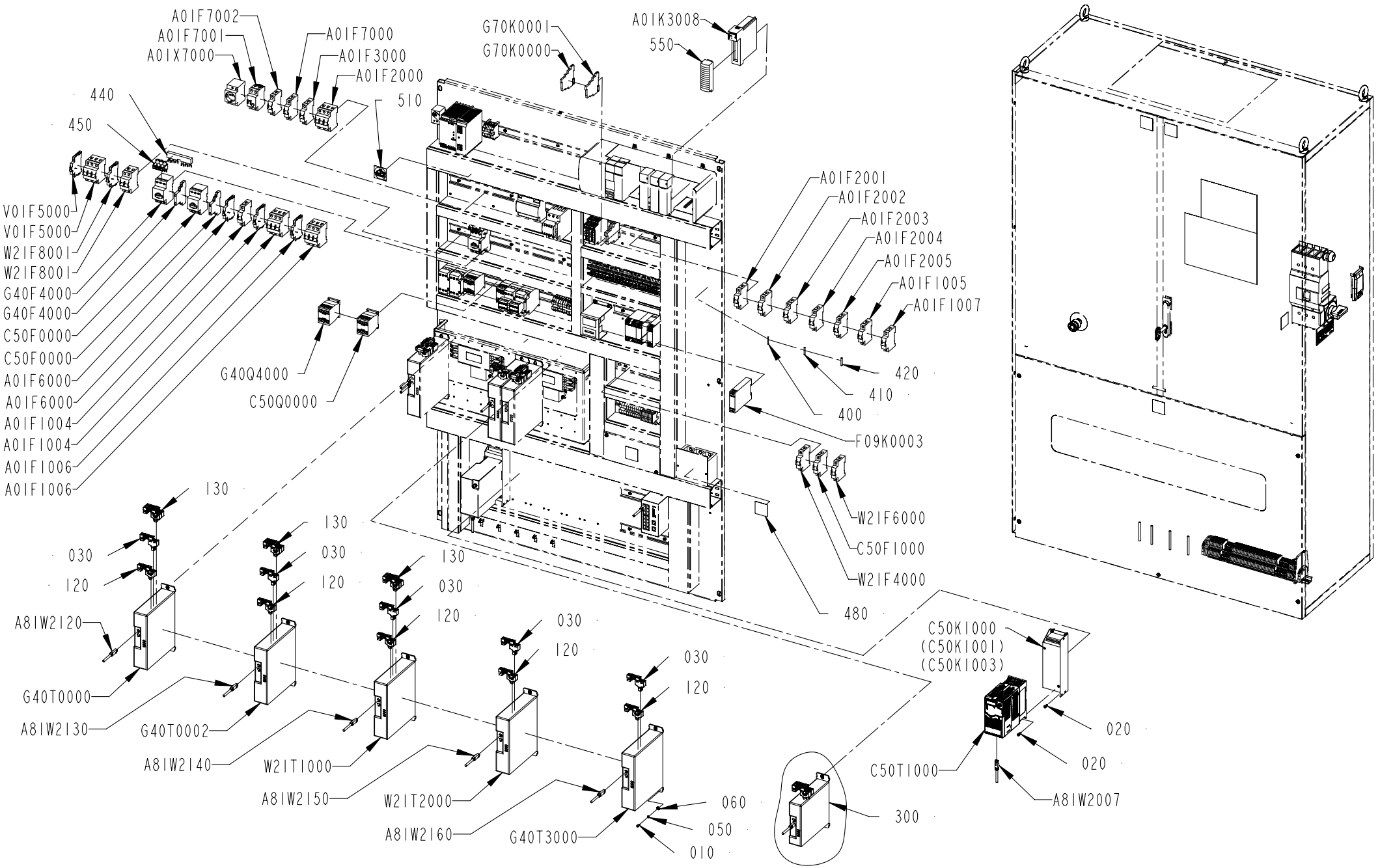
A01F7002
A01F7001
A01X7000
A01F7000
A01F3000
A01F2000
510
440
450
V01F5000
V01F5000
W21F8001
W21F8001
G40F4000
G40F4000
C50F0000
C50F0000
A01F6000
A01F6000
A01F1004
A01F1004
A01F1006
A01F1006
G70K0001
G70K0000
A01K3008
550
A01F2001
A01F2002
A01F2003
A01F2004
A01F2005
A01F1005
A01F1007
420
410
400
F09K0003
W21F6000
C50F1000
W21F4000
480
G40Q4000
C50Q0000
130
030
120
A81W2120
G40T0000
A81W2130
130
030
120
G40T0002
A81W2140
130
030
120
W21T1000
A81W2150
030
120
W21T2000
A81W2160
030
120
060
050
010
G40T3000
300
C50K1000
(C50K1001)
(C50K1003)
020
020
C50T1000
A81W2007

This list refers to drawings on pages 650 to 662

Pos	Part No	Description	Qty	Unit	Page No

SEE LIST FOLLOWING DRAWING ON PAGE: 650

Pos	Part No	Description	Qty	Unit	Page No

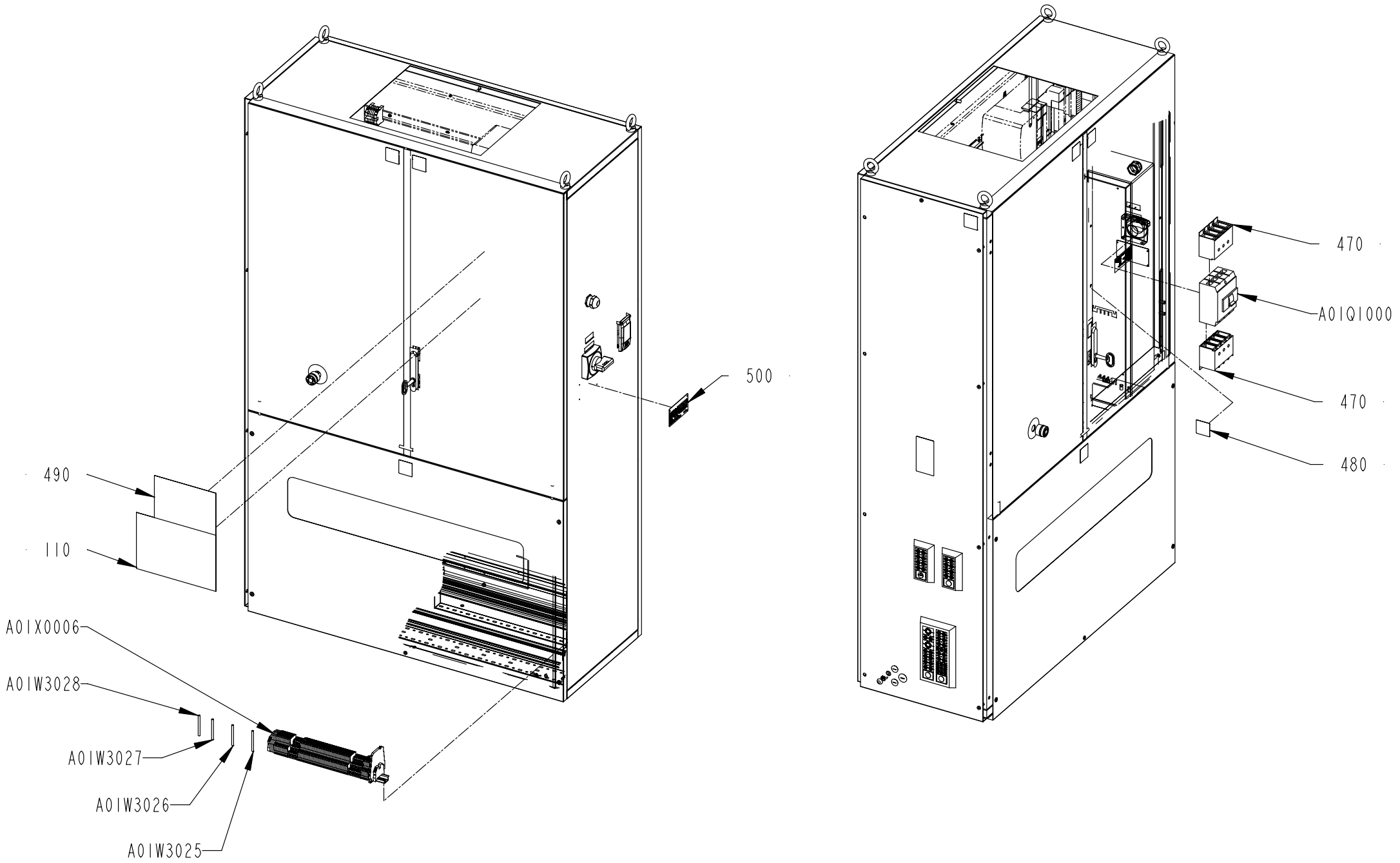
500
490
110
A01X0006
A01W3028
A01W3027
A01W3026
A01W3025
470
A01Q1000
470
480

This list refers to drawings on pages 650 to 662

Pos	Part No	Description	Qty	Unit	Page No

SEE LIST FOLLOWING DRAWING ON PAGE: 650

Pos	Part No	Description	Qty	Unit	Page No

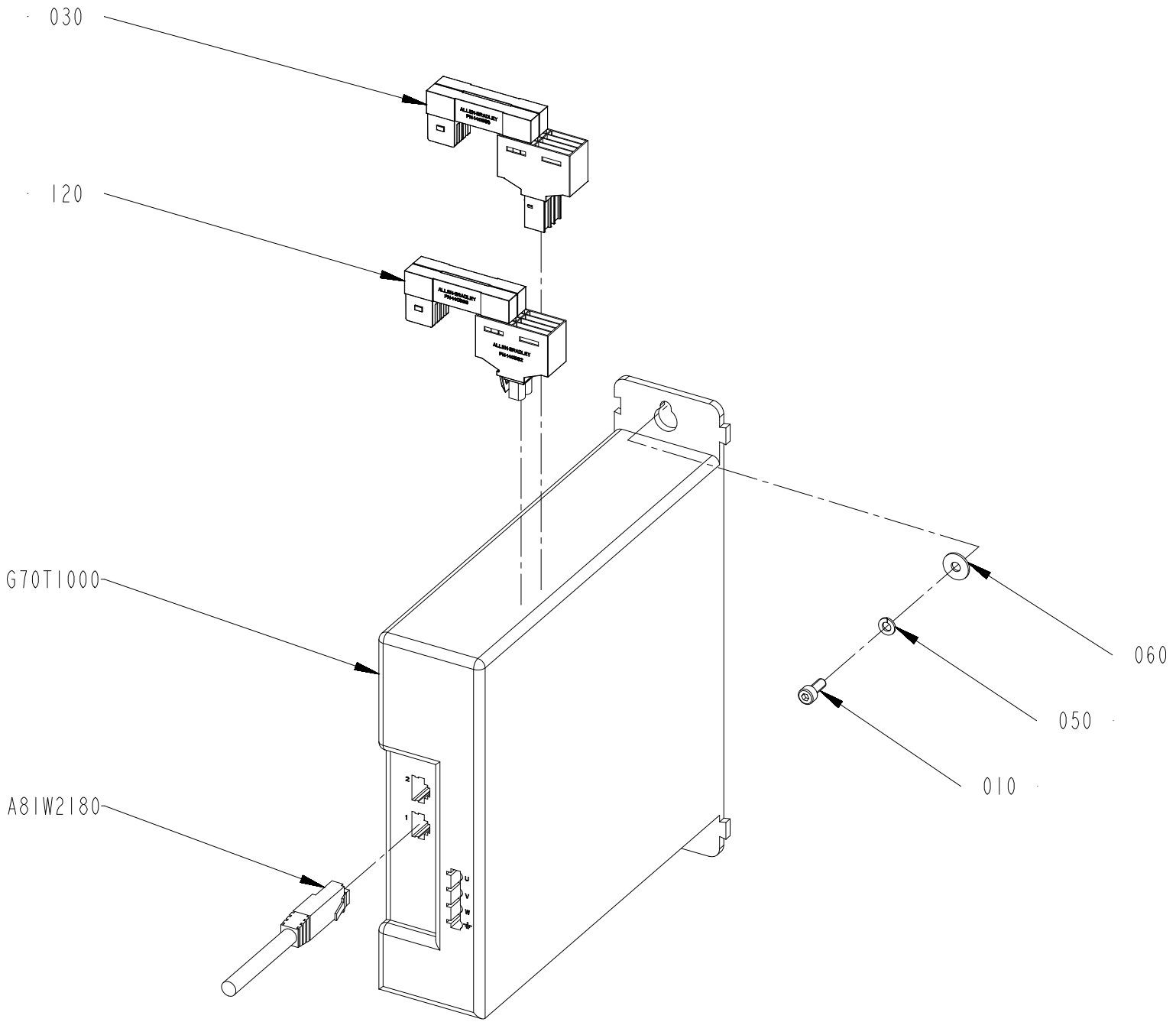
030
120
G70T1000
A8IW2180
060
050
010

ECM: 737184
Group number: 3405810-0100
Assembly Drawing: 3405810-1_1_AA

Pos	Part No	Description	Qty	Unit	Page No
POSITIONING DEVICE					
010	312115-0289	SCREW ISO4762 M4X10 A4 80	2	PC	
030	90606-0481	CONNECTOR KIT, 2198-H040-D-T, SERIE A	1	PC	
050	315402-0136	LOCK WASHER, DIN127B 4,1 A4, M4-5/32	2	PC	
060	90005-0082	WASHER PLAIN ROUND 4,3(M4)/12,H=1	2	PC	
120	90606-0482	CONN. KITS KINETIX, 2198-H040-P-T, SER A	1	PC	
A81W2180	351501-0003	ETHERNET PATCH CABLE, FL CAT5 PATCH 0,3	1	PC	
G70T1000	90605-9388	AMP.KINETIX 5500, 2198-H008-ERS, SERIE A	1	PC	

Pos	Part No	Description	Qty	Unit	Page No

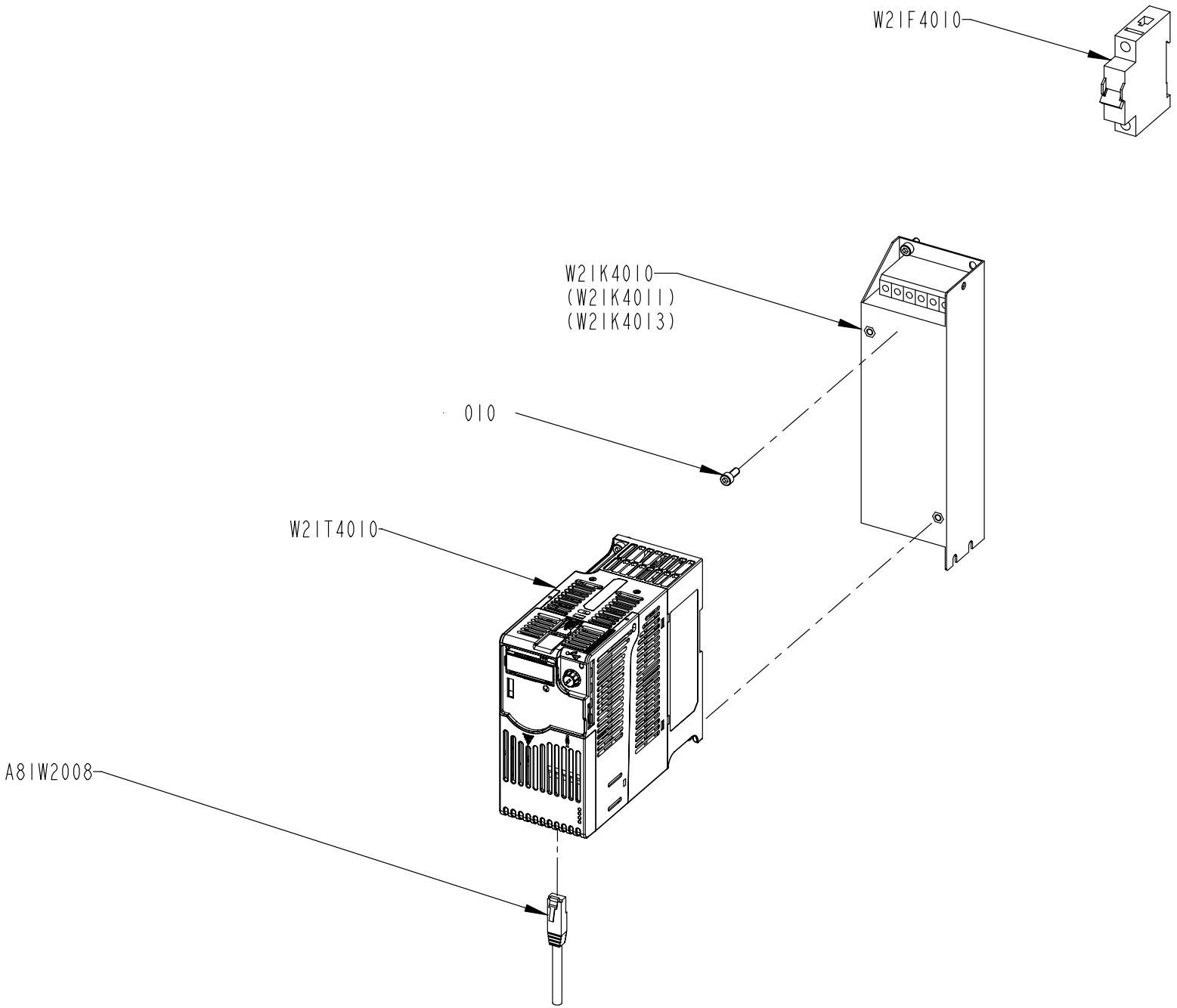
W2IF4010
W2IK4010
(W2IK4011)
(W2IK4013)
010
W2IT4010
A8IW2008

ECM: 831223
Group number: 2895147-0300
Assembly Drawing: 2895147-4_1_AB

This list refers to drawings on pages 666 to 668

Pos	Part No	Description	Qty	Unit	Page No
CE	See page: 666				
W21F4010	351416-0060	MINIATURE CIRC. BREAK., FAZ -D6 1-POLE	1	PC	
UL, CSA	See page: 668				
W21F4010	315747-0060	MINIATURE CIRCUIT BREAKER, FAZ-D6/1-NA	1	PC	
Common Parts					
010	312115-0327	SCREW ISO4762 M5X12 A4 80	6	PC	
A81W2008	351501-0015	ETHERNET PATCH CABLE, FL CAT5 PATCH 1,5	1	PC	
W21K4010	90605-9527	PF 525 EMC LINE FILTER, 240V, 0.4KW A	1	PC	
W21T4010	90605-9347	FC POWERFLEX 525, 230V 1PH, 0.4KW A	1	PC	

Pos	Part No	Description	Qty	Unit	Page No

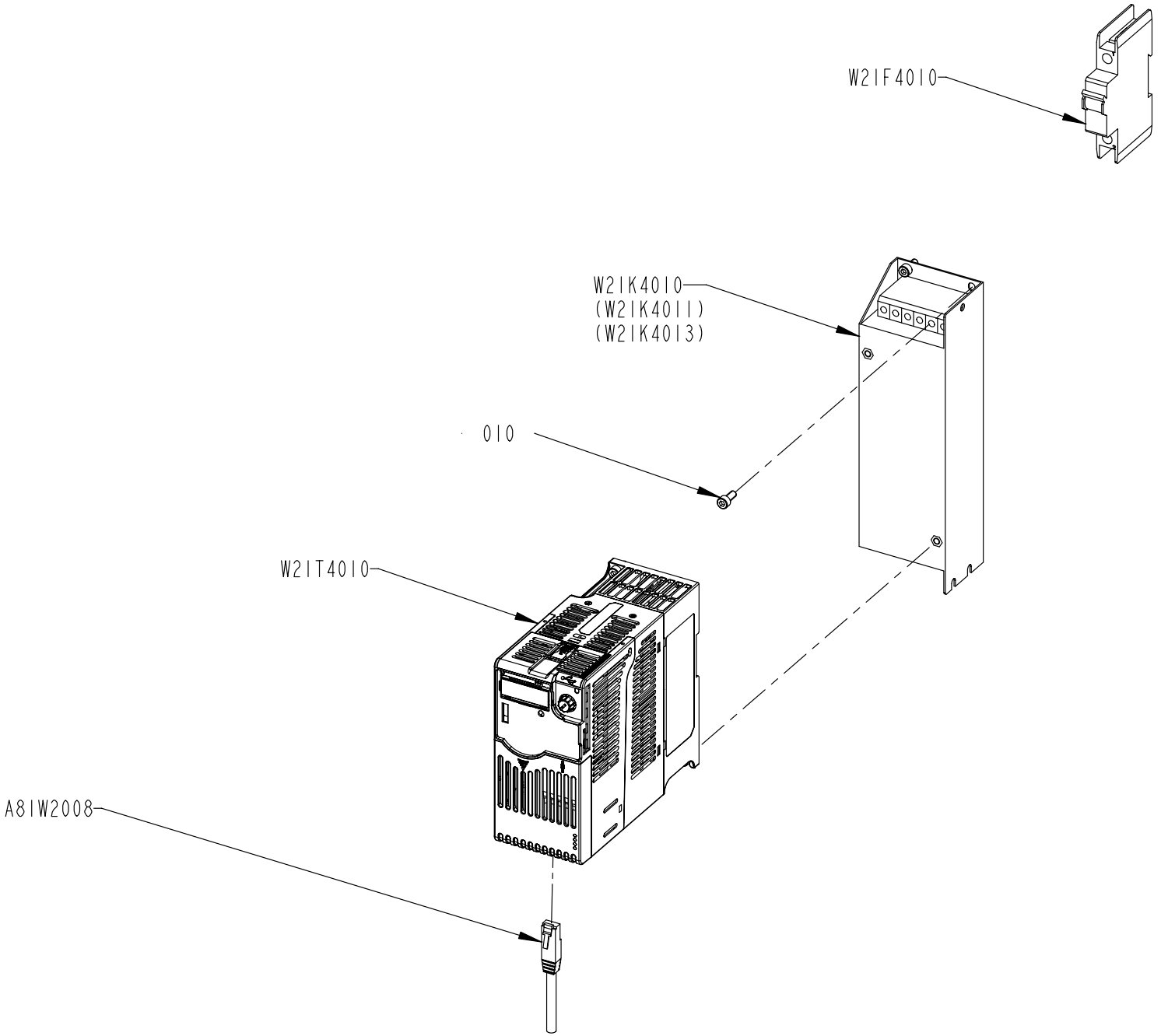
W2IF4010
W2IK4010
(W2IK4011)
(W2IK4013)
010
W2IT4010
A8IW2008

Pos	Part No	Description	Qty	Unit	Page No

SEE LIST FOLLOWING DRAWING ON PAGE: 666

Pos	Part No	Description	Qty	Unit	Page No

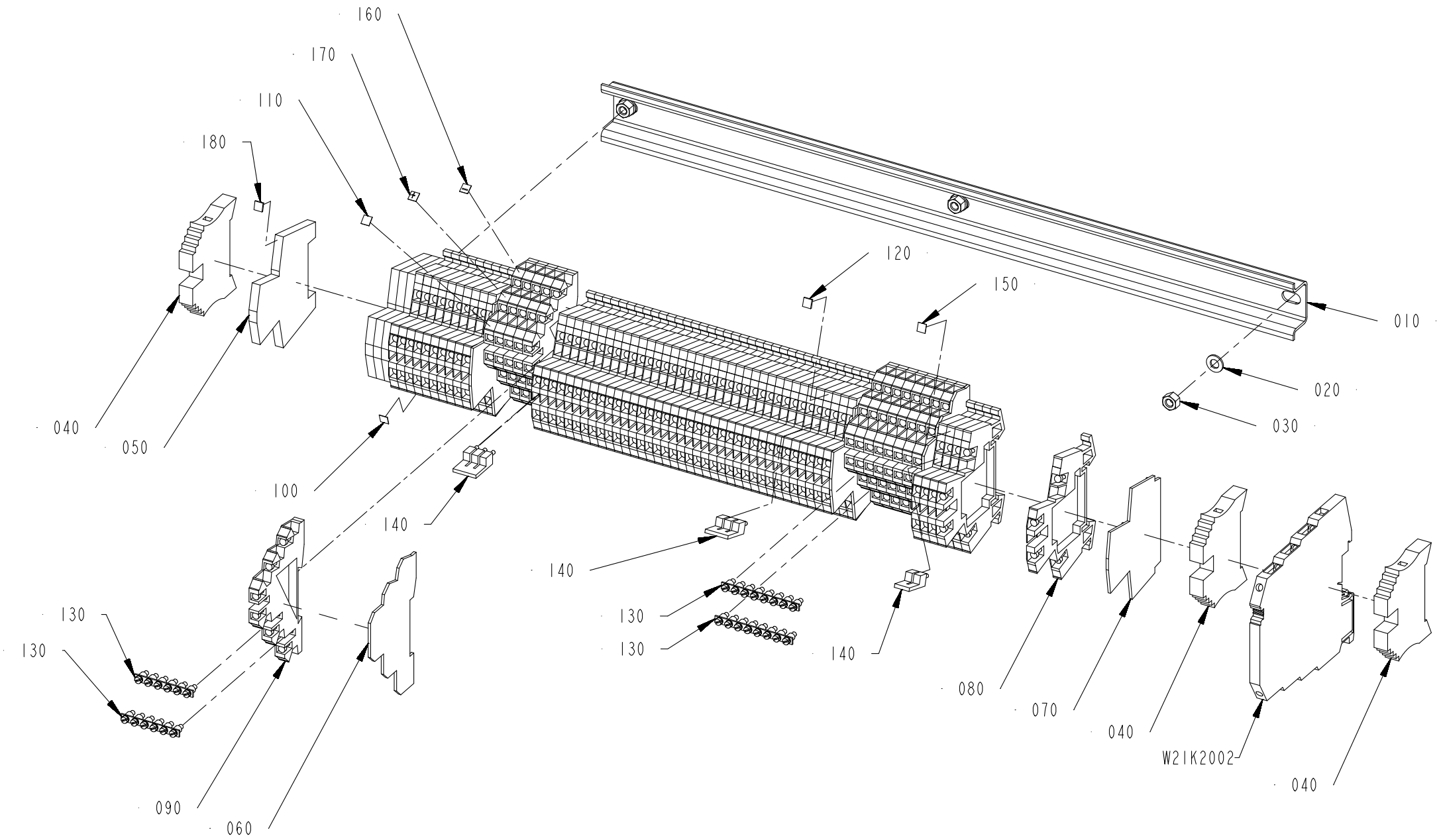
160
170
110
180
040
050
100
140
140
130
130
130
130
140
120
150
010
020
030
080
070
040
W21K2002
040
090
060

ECM: 733905
Group number: 2841403-0400
Assembly Drawing: 2841403-7_1_AA

Pos	Part No	Description	Qty	Unit	Page No
STREAMCAP500, STREAMCAP1000, SLIMCAP 2000, SLIMCAP 1000, STREAMCAP200, HELICAP2 23, HELICAP 27					
040	353031-0203	END BRACKET, WEW 35/2	3	PC	
060	353032-0302	END PLATE, AP DLD2,5 DB	2	PC	
070	353032-0009	END PLATE, WAP WDK 2,5	3	PC	
080	90077-0113	TERMINAL BLOCK WDK 2.5	52	PC	
090	353021-0302	TERMINAL, DLD 2,5/35	14	PC	
100	359011-0807	MARKING, DEK 5 FW 1-50	2	PC	
110	359011-0809	MARKING, DEK 5 FW 101-150	2	PC	
130	353034-0404	BRIDGE CONNECTOR Q 10 DLI	4	PC	
140	353034-0030	BRIDGE CONNECTOR WQV 2,5/10	3	PC	
160	359011-0818	MARKING, DEK 5GW (-)	1	PC	
170	359011-0817	MARKING, DEK 5GW (+)	1	PC	
180	90604-9505	MARKING, DEK 5 FWZ E1-E50	1	PC	
W21K2002	90603-2696	SURGE PROTECTION DEV., LIT 4X1-24	1	PC	
Common Parts					
010	3430409-0000	RAIL	1	PC	
020	315105-0146	WASHER PLAIN, 5,3X10X1 A4 BRB	3	PC	
030	312605-0314	HEXAGON NUT, M6M M5 A280	3	PC	
050	353024-0212	EARTH TERMINAL WDK 2,5 PE	4	PC	
120	359011-0806	MARKING, DEK 5 FW 1-200	2	PC	
150	359011-0811	MARKING, DEK 5 FW 201-250	2	PC	

Pos	Part No	Description	Qty	Unit	Page No

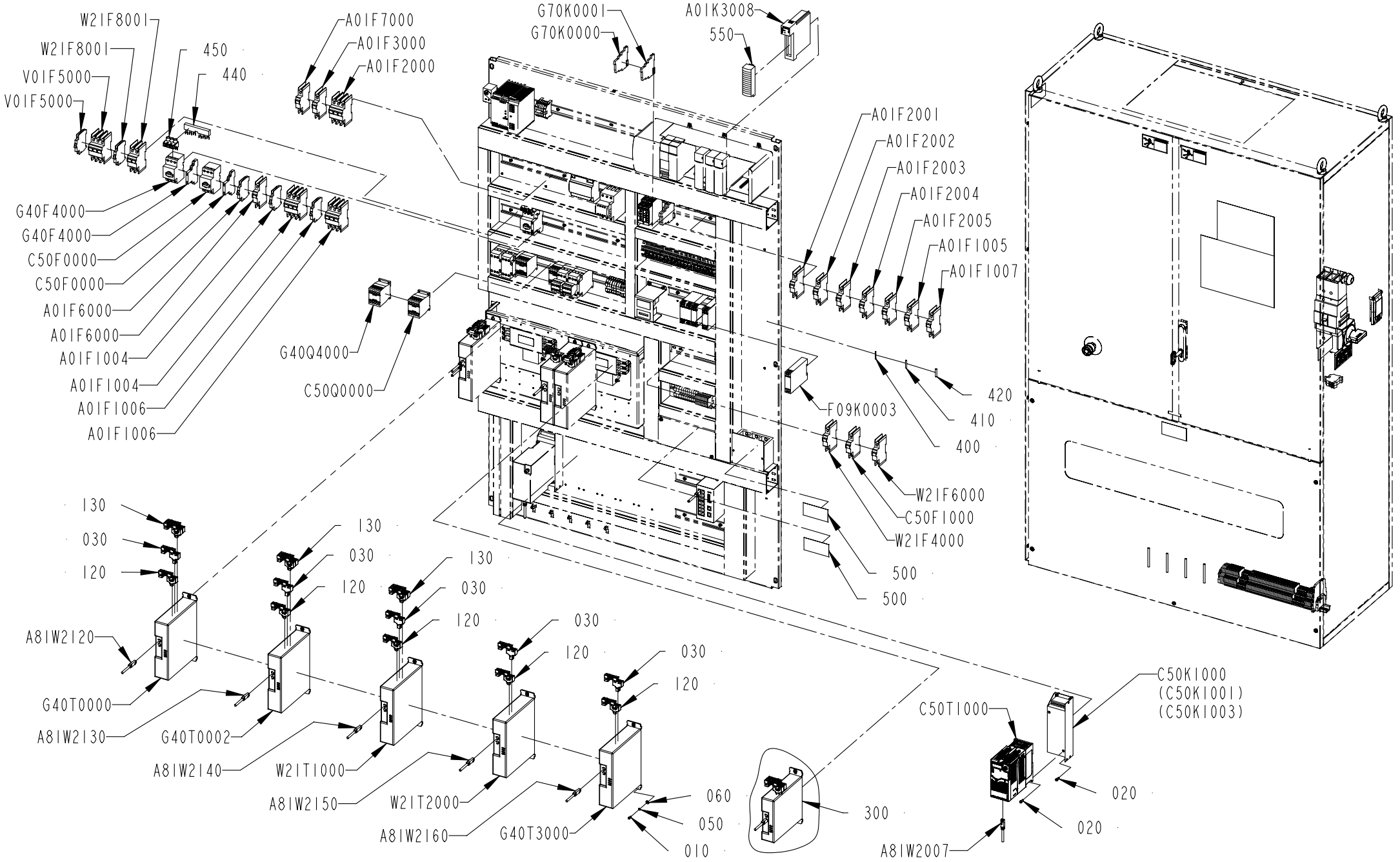
W2IF8001
W2IF8001
V0IF5000
V0IF5000
450
440
A0IF7000
A0IF3000
A0IF2000
G70K0001
G70K0000
A0IK3008
550
A0IF2001
A0IF2002
A0IF2003
A0IF2004
A0IF2005
A0IF1005
A0IF1007
G40F4000
G40F4000
C50F0000
C50F0000
A0IF6000
A0IF6000
A0IF1004
A0IF1004
A0IF1006
A0IF1006
G40Q4000
C50Q0000
F09K0003
420
410
400
W2IF6000
C50F1000
W2IF4000
500
500
130
030
120
A8IW2120
G40T0000
A8IW2130
130
030
120
G40T0002
A8IW2140
130
030
120
W2IT1000
A8IW2150
030
120
W2IT2000
A8IW2160
030
120
G40T3000
060
050
010
300
C50K1000
(C50K1001)
(C50K1003)
C50T1000
020
020
A8IW2007

ECM: 808570
Group number: 3190285-0200
Assembly Drawing: 3190285-9_1_AB

This list refers to drawings on pages 672 to 684

Pos	Part No	Description	Qty	Unit	Page No
CAP 30/FLEX TBA STREAMCAP1000, CAP 30/FLEX TBA SLIMCAP1000, CAP 30/FLEX TBA SLIMCAP2000, CAP 30/FLEX TBA STREAMCAP200, CAP 30/FLEX TBA HELICAP2 23, CAP 30/FLEX TBA HELICAP 27 See page: 672, 676					
CAP30/FLEX TPA STREAMCAP 1000, CAP30/FLEX TPA STREAMCAP 500, CAP 30/FLEX TPA HELICAP 27, CAP 30/FLEX TGA 1000CR, CAP 30/FLEX TGA 1000LF See page: 678, 680					
CAP 30/FLEX TGA 0500SQ, CAP 30/FLEX TGA 0750SQ, CAP 30/FLEX TGA 1000SQ, CAP 30/FLEX TGA 1500SQ See page: 682, 684					
300	3405810-0100	POSITIONING UNIT	1	PC	686
CAP 30/FLEX TBA STREAMCAP1000, CAP 30/FLEX TBA SLIMCAP1000, CAP 30/FLEX TBA SLIMCAP2000, CAP 30/FLEX TBA STREAMCAP200, CAP 30/FLEX TBA HELICAP2 23, CAP 30/FLEX TBA HELICAP 27 See page: 672, 676					
CAP 30/FLEX TGA 0500SQ, CAP 30/FLEX TGA 0750SQ, CAP 30/FLEX TGA 1000SQ, CAP 30/FLEX TGA 1500SQ See page: 682, 684					
110	3386027-0000	FUSE PANEL LABEL	1	PC	
CAP 30/FLEX TBA HELICAP 27, CAP 30/FLEX TBA STREAMCAP1000, CAP 30/FLEX TBA SLIMCAP1000, CAP 30/FLEX TBA SLIMCAP2000, CAP 30/FLEX TBA STREAMCAP200, CAP 30/FLEX TBA HELICAP2 23 See page: 672, 676					
CAP30/FLEX TPA STREAMCAP 1000, CAP30/FLEX TPA STREAMCAP 500, CAP 30/FLEX TPA HELICAP 27, CAP 30/FLEX TGA 1000CR, CAP 30/FLEX TGA 1000LF See page: 678, 680					
CAP 30/FLEX TGA 0500SQ, CAP 30/FLEX TGA 0750SQ, CAP 30/FLEX TGA 1000SQ, CAP 30/FLEX TGA 1500SQ See page: 682, 684					
C50K1000	90605-9527	PF 525 EMC LINE FILTER, 240V, 0.4KW A	1	PC	
CAP 30/FLEX TBA STREAMCAP1000, CAP 30/FLEX TBA SLIMCAP1000, CAP 30/FLEX TBA SLIMCAP2000, CAP 30/FLEX TBA STREAMCAP200, CAP 30/FLEX TBA HELICAP2 23, CAP 30/FLEX TBA HELICAP 27 See page: 672, 676					
CAP30/FLEX TPA STREAMCAP 1000, CAP30/FLEX TPA STREAMCAP 500, CAP 30/FLEX TPA HELICAP 27, CAP 30/FLEX TGA 1000CR, CAP 30/FLEX TGA 1000LF See page: 678, 680					
CAP 30/FLEX TGA 0500SQ, CAP 30/FLEX TGA 0750SQ, CAP 30/FLEX TGA 1000SQ, CAP 30/FLEX TGA 1500SQ See page: 682, 684					
020	312115-0327	SCREW ISO4762 M5X12 A4 80	6	PC	
400	351160-0102	WIRE AWM 1X0,75 MM2 DARKBLUE	458	M	
410	351164-0105	WIRE AWM 1X2,5 MM2 BLACK	65	M	
420	351164-0107	WIRE AWM 1X6 MM2 BLACK	39	M	
550	90459-2488	REMOVABLE TERMINAL BLOCK 36 POINTS	1	PC	
A01K3008	90600-4033	DIG OUTPUT MODULE, 1756-OB16IS	1	PC	
A01W3025	351423-0006	CABLE UNITRONIC LIYCY 5X0,34	3.400	M	
A01W3026	351423-0006	CABLE UNITRONIC LIYCY 5X0,34	3	M	
A01W3027	351423-0006	CABLE UNITRONIC LIYCY 5X0,34	3	M	
A01W3028	351423-0006	CABLE UNITRONIC LIYCY 5X0,34	1.600	M	
C50F0000	90259-0313	AUXILIARY SWITCH, NHI21-PKZ0	1	PC	
C50F0000	90459-5323	OVERLOAD PROTECTION, PKZM0-1 072734	1	PC	
C50F1000	315747-0060	MINIATURE CIRCUIT BREAKER, FAZ-D6/1-NA	1	PC	
C50Q0000	90606-8399	CONTACTOR 4KW 24VDC, DILM9-01	1	PC	
C50T1000	90605-9347	FC POWERFLEX 525, 230V 1PH, 0.4KW A	1	PC	
F09K0003	90459-2291	SAFETY RELAY, E1T	1	PC	
G40F4000	90459-5321	OVERLOAD PROTECTION, PKZM0-0.4 072732	1	PC	
G40F4000	90259-0313	AUXILIARY SWITCH, NHI21-PKZ0	1	PC	
G40Q4000	90606-8399	CONTACTOR 4KW 24VDC, DILM9-01	1	PC	
G40T0000	90605-9390	AMP.KINETIX 5500, 2198-H025-ERS, SERIE A	1	PC	
G40T0002	90605-9390	AMP.KINETIX 5500, 2198-H025-ERS, SERIE A	1	PC	
G40T3000	90605-9389	AMP.KINETIX 5500, 2198-H015-ERS, SERIE A	1	PC	
G70K0000	90601-6652	OPTOCOUPLER, PLC-OSC-24DC/24DC/2	1	PC	
G70K0001	90601-6652	OPTOCOUPLER, PLC-OSC-24DC/24DC/2	1	PC	
CAP 30/FLEX TBA STREAMCAP1000, CAP 30/FLEX TBA SLIMCAP1000, CAP 30/FLEX TBA SLIMCAP2000, CAP 30/FLEX TBA STREAMCAP200, CAP 30/FLEX TBA HELICAP2 23, CAP 30/FLEX TBA HELICAP 27 See page: 672, 676					
CAP 30/FLEX TGA 1000CR, CAP 30/FLEX TGA 1000LF, CAP30/FLEX TPA STREAMCAP 1000, CAP30/FLEX TPA STREAMCAP 500, CAP 30/FLEX TPA HELICAP 27 See page: 678, 680					
CAP 30/FLEX TGA 1000SQ, CAP 30/FLEX TGA 1500SQ, CAP 30/FLEX TGA 0500SQ, CAP 30/FLEX TGA 0750SQ See page: 682, 684					
450	90600-1461	INCOMING TERMINAL, BK25/3-PKZ0-E	1	PC	
CAP 30/FLEX TPA HELICAP 27, CAP 30/FLEX TGA 1000CR, CAP 30/FLEX TGA 1000LF, CAP30/FLEX TPA STREAMCAP 1000, CAP30/FLEX TPA STREAMCAP 500 See page: 678, 680					
110	3386031-0000	FUSE PANEL LABEL	1	PC	
CAP30/FLEX TPA STREAMCAP 1000, CAP30/FLEX TPA STREAMCAP 500, CAP 30/FLEX TPA HELICAP 27, CAP 30/FLEX TGA 1000CR, CAP 30/FLEX TGA 1000LF See page: 678, 680					
200	2895147-0300	PACKAGE ALIGNER	1	PC	688, 690
Common Parts					
010	312115-0289	SCREW ISO4762 M4X10 A4 80	10	PC	
030	90606-0481	CONNECTOR KIT, 2198-H040-D-T, SERIE A	5	PC	
050	315402-0136	LOCK WASHER, DIN127B 4,1 A4, M4-5/32	10	PC	
060	90005-0082	WASHER PLAIN ROUND 4,3(M4)/12,H=1	10	PC	
120	90606-0482	CONN. KITS KINETIX, 2198-H040-P-T, SER A	5	PC	
130	90606-0501	CONN. KITS KINETIX, 2198-H040-A-T, SER A	3	PC	
440	90259-0315	CIRCUIT BREAKER , B3.1/2-PKZ0	1	PC	
470	90600-5270	COVER 3-POLE, NZM1-XKSA	2	PC	
480	359715-0100	WARNING SIGN ANSI (H), ELECTRIC SHOCK	2	PC	
490	90600-5812	DELIVERED DESIGN SIGN, SELF-ADHESIVE	1	PC	
500	90603-2736	WARNING SIGN ANSI(H),HAZ.VOLT.DISCONNECT	5	PC	
510	353034-0033	BRIDGE CONNECTOR WQV 10/10	1	PC	
520	90459-3068	TERMINAL PLINTH, WDU 10	2	PC	
530	359011-0807	MARKING, DEK 5 FW 1-50	1	PC	
540	3402971-0000	SIGN	1	PC	
A01F1004	90600-5517	AUXILIARY CONTACT, Z-NHK 248434	1	PC	
A01F1004	315746-0250	MINIATURE CIRCUIT BREAKER, FAZ-C25/3-NA	1	PC	
A01F1005	315744-0060	MINIATURE CIRCUIT BREAKER, FAZ-C6/1-NA	1	PC	
A01F1006	90600-5517	AUXILIARY CONTACT, Z-NHK 248434	1	PC	
A01F1006	315746-0250	MINIATURE CIRCUIT BREAKER, FAZ-C25/3-NA	1	PC	
A01F1007	315744-0060	MINIATURE CIRCUIT BREAKER, FAZ-C6/1-NA	1	PC	
A01F2000	315746-0060	MINIATURE CIRCUIT BREAKER, FAZ-C6/3-NA	1	PC	
A01F2001	315744-0040	MINIATURE CIRCUIT BREAKER, FAZ-C4/1-NA	1	PC	
A01F2002	315744-0040	MINIATURE CIRCUIT BREAKER, FAZ-C4/1-NA	1	PC	
A01F2003	315744-0040	MINIATURE CIRCUIT BREAKER, FAZ-C4/1-NA	1	PC	
A01F2004	315744-0040	MINIATURE CIRCUIT BREAKER, FAZ-C4/1-NA	1	PC	

ECM: 808570
Group number: 3190285-0200
Assembly Drawing: 3190285-9_1_AB

This list refers to drawings on pages 672 to 684

Pos	Part No	Description	Qty	Unit	Page No
A01F2005	315744-0060	MINIATURE CIRCUIT BREAKER, FAZ-C6/1-NA	1	PC	
A01F3000	315744-0040	MINIATURE CIRCUIT BREAKER, FAZ-C4/1-NA	1	PC	
A01F6000	90600-5517	AUXILIARY CONTACT, Z-NHK 248434	1	PC	
A01F6000	315747-0100	MINIATURE CIRCUIT BREAKER, FAZ-D10/1-NA	1	PC	
A01F7000	315744-0040	MINIATURE CIRCUIT BREAKER, FAZ-C4/1-NA	1	PC	
A01Q1000	351436-0032	CIRCUIT BREAKER, NZMB1-A32-NA	1	PC	
A01X0006	2841403-0400	PLINTH	1	PC	692
A81W2007	351501-0020	ETHERNET PATCH CABLE, FL CAT5 PATCH 2,0	1	PC	
A81W2120	351501-0003	ETHERNET PATCH CABLE, FL CAT5 PATCH 0,3	1	PC	
A81W2130	351501-0003	ETHERNET PATCH CABLE, FL CAT5 PATCH 0,3	1	PC	
A81W2140	351501-0003	ETHERNET PATCH CABLE, FL CAT5 PATCH 0,3	1	PC	
A81W2150	351501-0003	ETHERNET PATCH CABLE, FL CAT5 PATCH 0,3	1	PC	
A81W2160	351501-0003	ETHERNET PATCH CABLE, FL CAT5 PATCH 0,3	1	PC	
V01F5000	90600-5517	AUXILIARY CONTACT, Z-NHK 248434	1	PC	
V01F5000	315746-0200	MINIATURE CIRCUIT BREAKER, FAZ-C20/3-NA	1	PC	
W21F4000	315747-0100	MINIATURE CIRCUIT BREAKER, FAZ-D10/1-NA	1	PC	
W21F6000	315747-0100	MINIATURE CIRCUIT BREAKER, FAZ-D10/1-NA	1	PC	
W21F8001	315745-0100	MINIATURE CIRCUIT BREAKER, FAZ-C10/2-NA	1	PC	
W21F8001	90600-5517	AUXILIARY CONTACT, Z-NHK 248434	1	PC	
W21T1000	90605-9390	AMP.KINETIX 5500, 2198-H025-ERS, SERIE A	1	PC	
W21T2000	90605-9390	AMP.KINETIX 5500, 2198-H025-ERS, SERIE A	1	PC	

Pos	Part No	Description	Qty	Unit	Page No

This page intentionally left blank

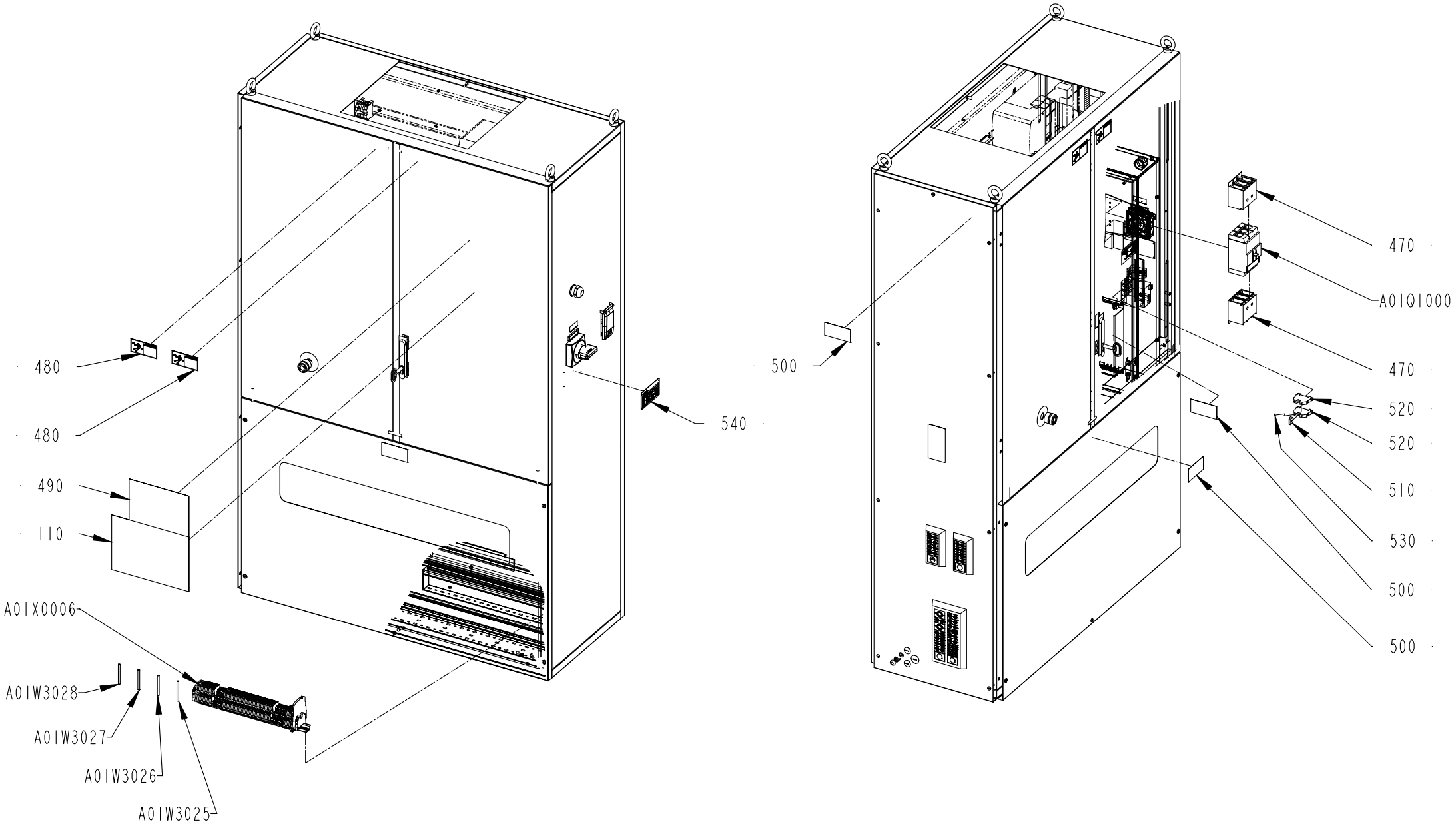
480
480
490
110
A01X0006
A01W3028
A01W3027
A01W3026
A01W3025
540
500
470
A01Q1000
470
520
520
510
530
500
500

This list refers to drawings on pages 672 to 684

Pos	Part No	Description	Qty	Unit	Page No

SEE LIST FOLLOWING DRAWING ON PAGE: 672

Pos	Part No	Description	Qty	Unit	Page No

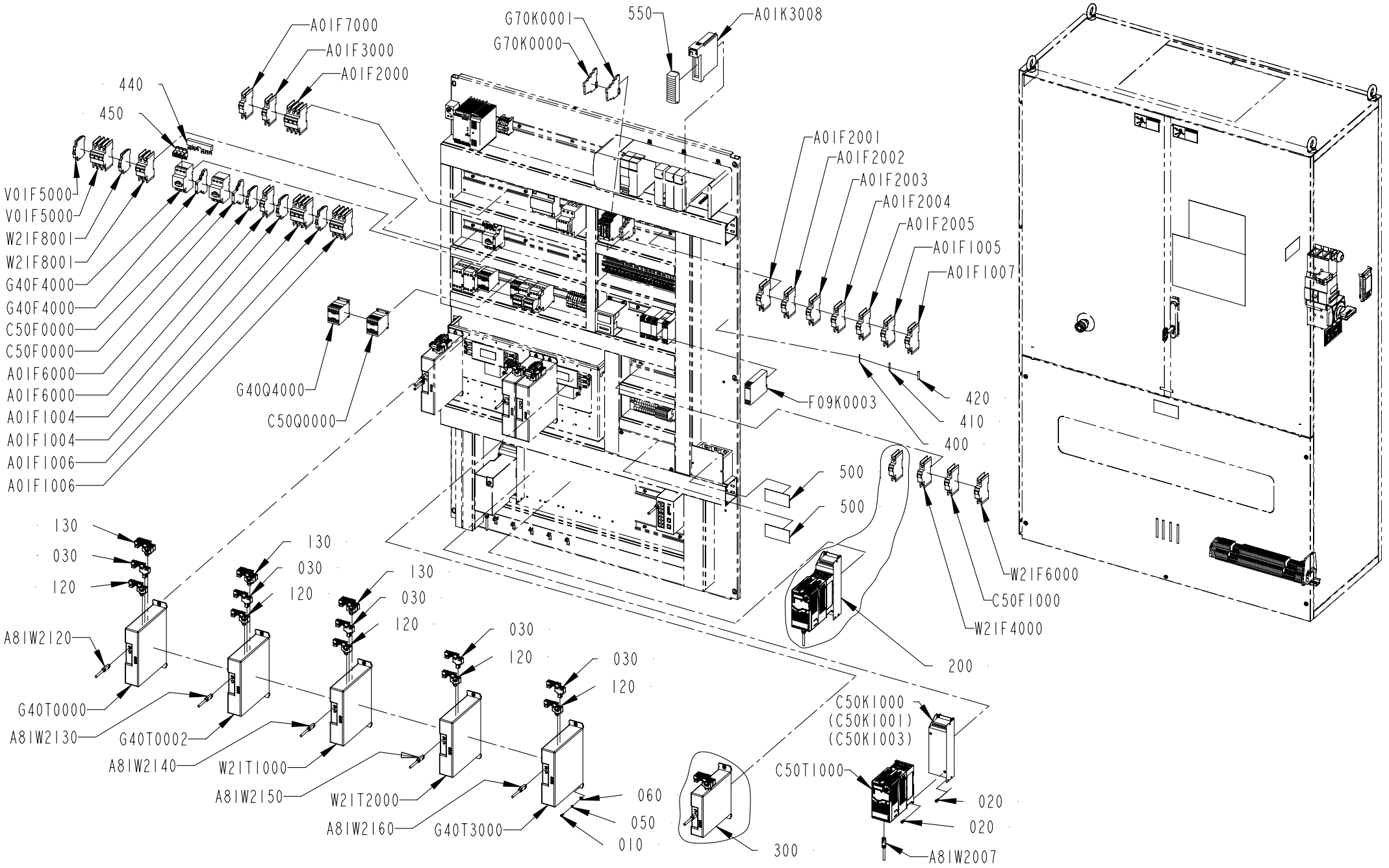
A01F7000
A01F3000
A01F2000
G70K0001
G70K0000
550
A01K3008
440
450
V01F5000
V01F5000
W21F8001
W21F8001
G40F4000
G40F4000
C50F0000
C50F0000
A01F6000
A01F6000
A01F1004
A01F1004
A01F1006
A01F1006
A01F2001
A01F2002
A01F2003
A01F2004
A01F2005
A01F1005
A01F1007
G40Q4000
C50Q0000
F09K0003
420
410
400
500
500
W21F6000
C50F1000
W21F4000
200
130
030
120
A81W2120
G40T0000
A81W2130
G40T0002
A81W2140
W21T1000
A81W2150
W21T2000
A81W2160
G40T3000
060
050
010
300
C50K1000
(C50K1001)
(C50K1003)
C50T1000
020
020
A81W2007

This list refers to drawings on pages 672 to 684

Pos	Part No	Description	Qty	Unit	Page No

SEE LIST FOLLOWING DRAWING ON PAGE: 672

Pos	Part No	Description	Qty	Unit	Page No

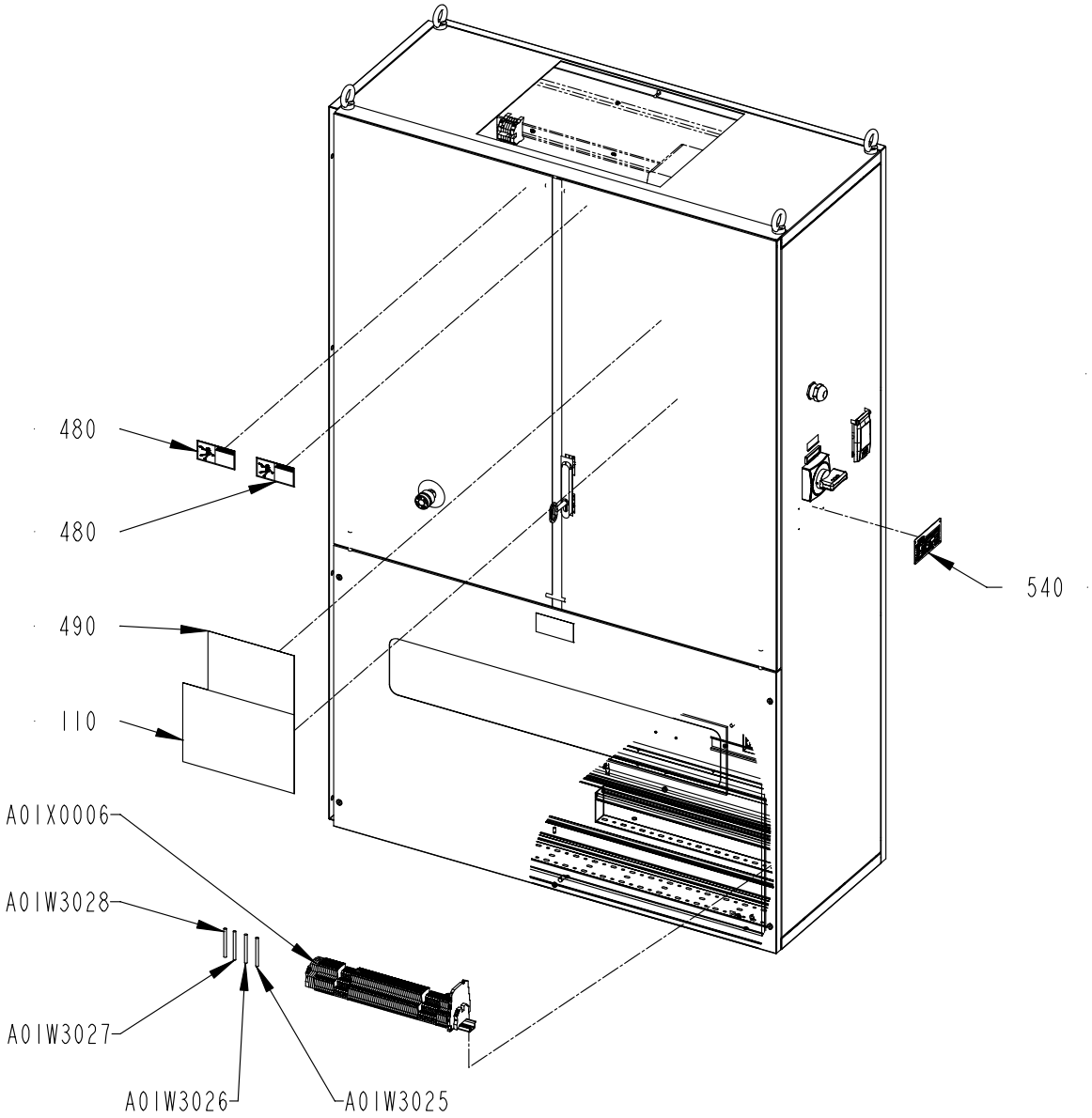
480
480
490
110
A01X0006
A01W3028
A01W3027
A01W3026
A01W3025
540

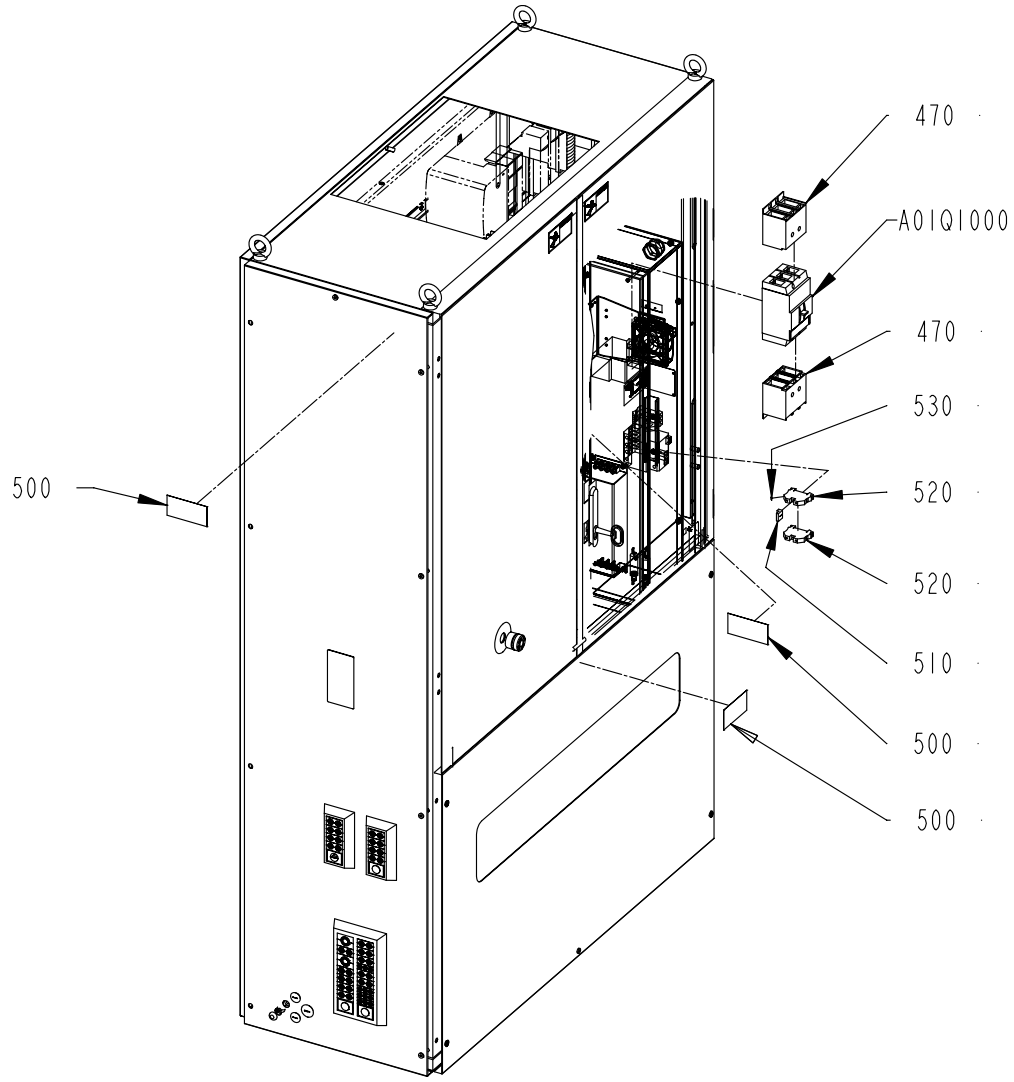
500
470
A01Q1000
470
530
520
520
510
500
500

This list refers to drawings on pages 672 to 684

Pos	Part No	Description	Qty	Unit	Page No

SEE LIST FOLLOWING DRAWING ON PAGE: 672

Pos	Part No	Description	Qty	Unit	Page No

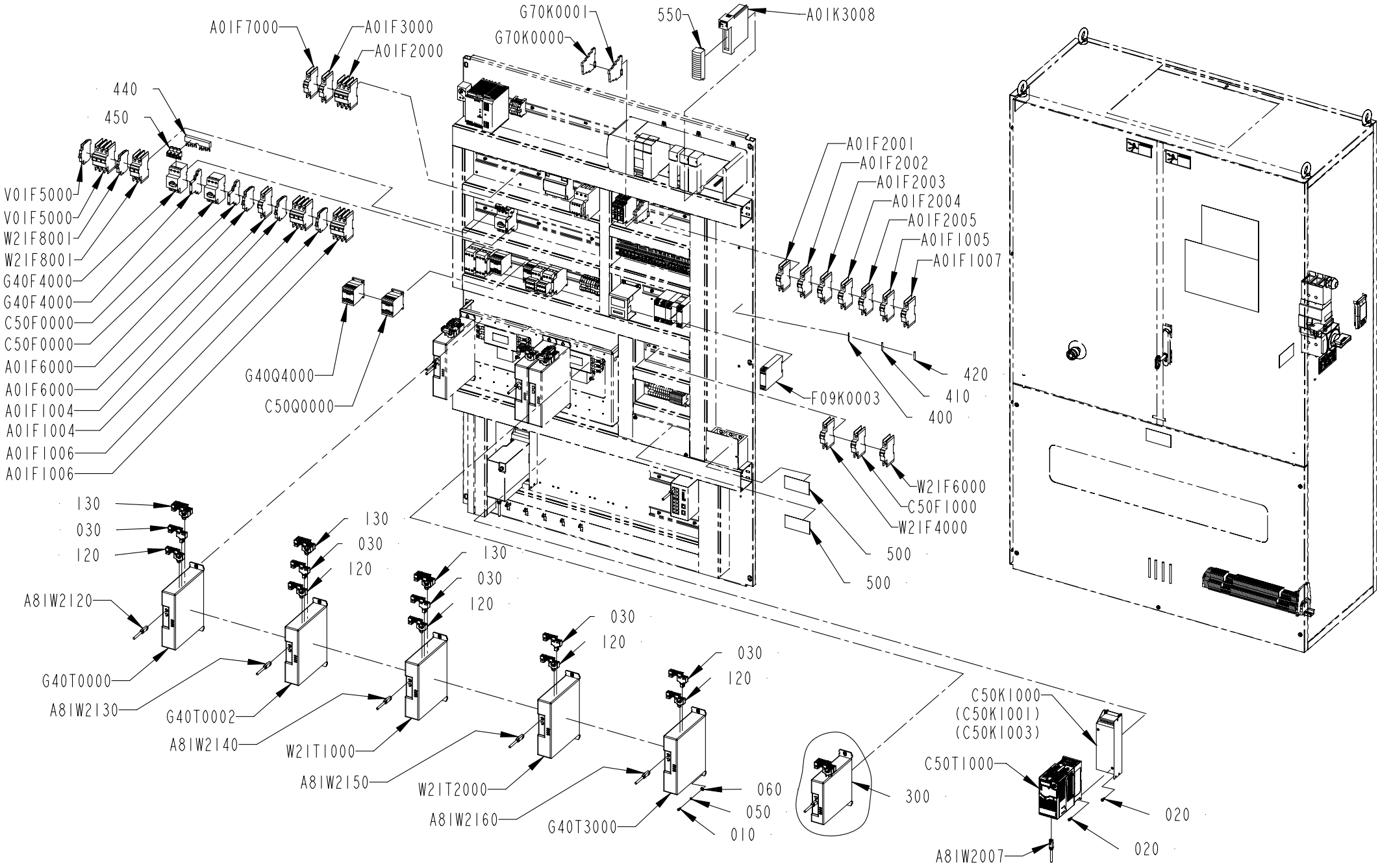
A01F7000
A01F3000
A01F2000
G70K0001
G70K0000
550
A01K3008
440
450
V01F5000
V01F5000
W21F8001
W21F8001
G40F4000
G40F4000
C50F0000
C50F0000
A01F6000
A01F6000
A01F1004
A01F1004
A01F1006
A01F1006
G40Q4000
C50Q0000
A01F2001
A01F2002
A01F2003
A01F2004
A01F2005
A01F1005
A01F1007
420
410
400
F09K0003
W21F6000
C50F1000
W21F4000
500
500
130
030
120
A81W2120
G40T0000
A81W2130
G40T0002
A81W2140
W21T1000
A81W2150
W21T2000
A81W2160
G40T3000
060
050
010
300
C50K1000
(C50K1001)
(C50K1003)
C50T1000
020
020
A81W2007

This list refers to drawings on pages 672 to 684

Pos	Part No	Description	Qty	Unit	Page No

SEE LIST FOLLOWING DRAWING ON PAGE: 672

Pos	Part No	Description	Qty	Unit	Page No

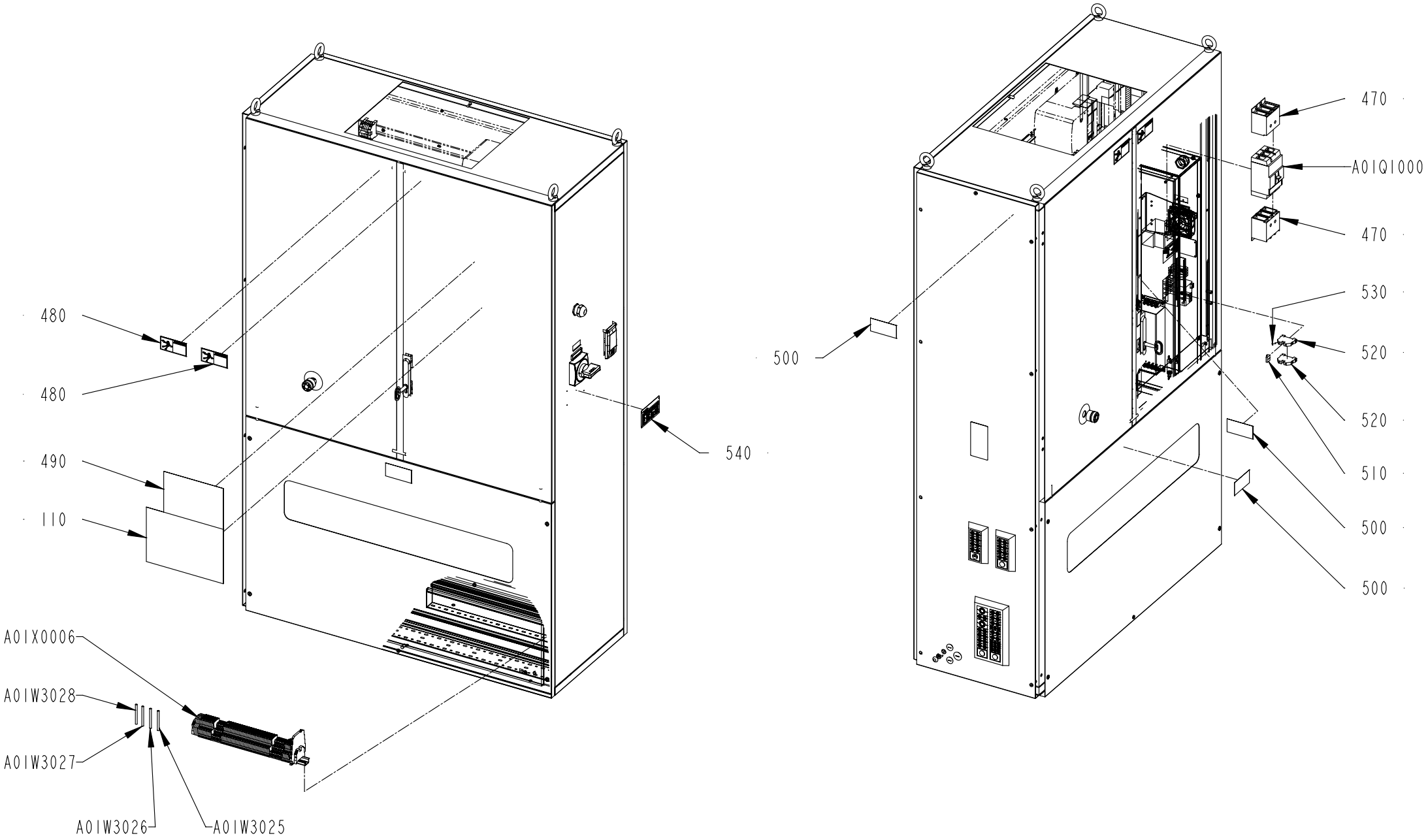
480
480
490
110
540
A01X0006
A01W3028
A01W3027
A01W3026
A01W3025
500
470
A01Q1000
470
530
520
520
510
500
500

This list refers to drawings on pages 672 to 684

Pos	Part No	Description	Qty	Unit	Page No

SEE LIST FOLLOWING DRAWING ON PAGE: 672

Pos	Part No	Description	Qty	Unit	Page No

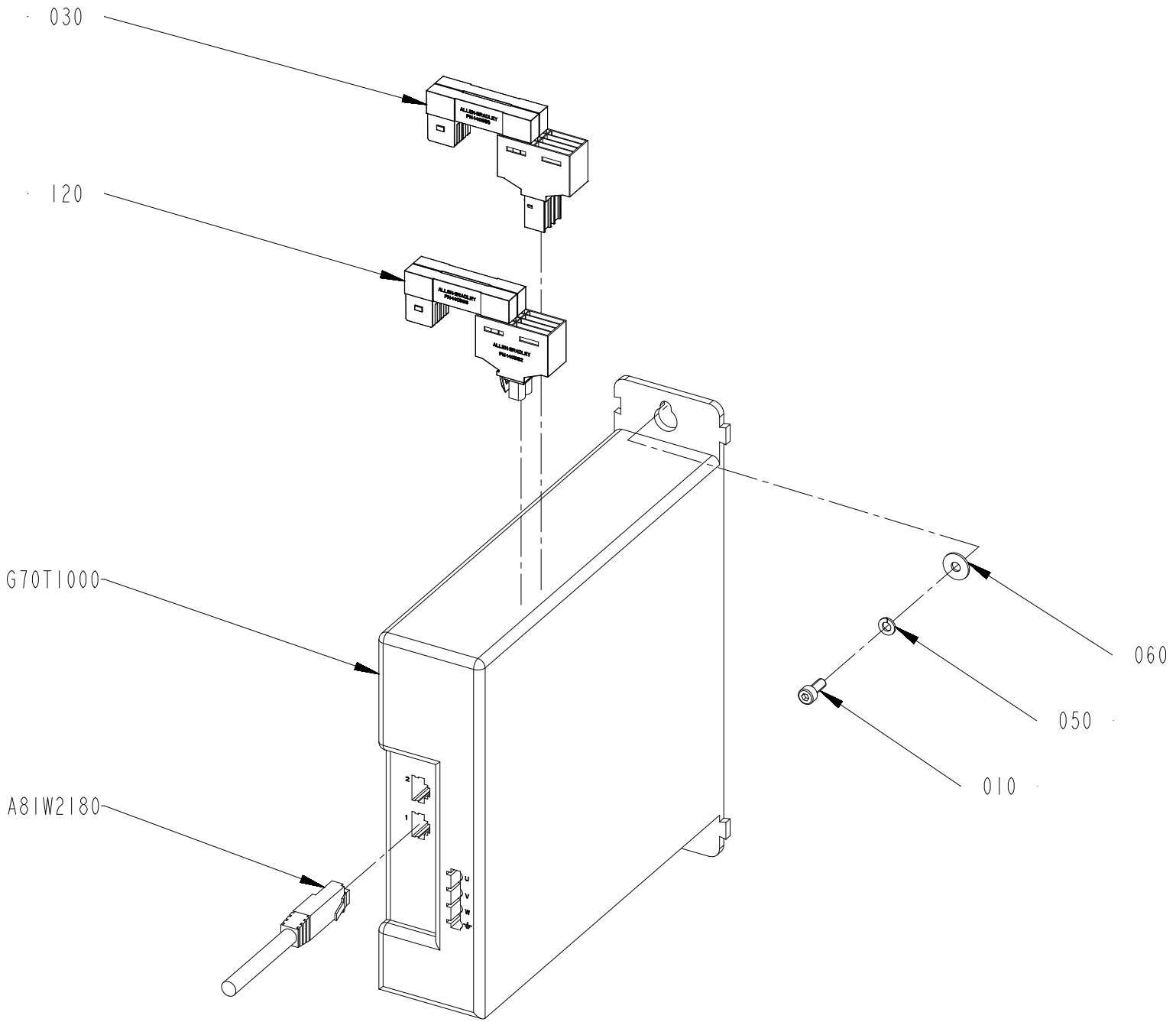
030
120
G70T1000
A8IW2180
060
050
010

ECM: 737184
Group number: 3405810-0100
Assembly Drawing: 3405810-1_1_AA

Pos	Part No	Description	Qty	Unit	Page No
POSITIONING DEVICE					
010	312115-0289	SCREW ISO4762 M4X10 A4 80	2	PC	
030	90606-0481	CONNECTOR KIT, 2198-H040-D-T, SERIE A	1	PC	
050	315402-0136	LOCK WASHER, DIN127B 4,1 A4, M4-5/32	2	PC	
060	90005-0082	WASHER PLAIN ROUND 4,3(M4)/12,H=1	2	PC	
120	90606-0482	CONN. KITS KINETIX, 2198-H040-P-T, SER A	1	PC	
A81W2180	351501-0003	ETHERNET PATCH CABLE, FL CAT5 PATCH 0,3	1	PC	
G70T1000	90605-9388	AMP.KINETIX 5500, 2198-H008-ERS, SERIE A	1	PC	

Pos	Part No	Description	Qty	Unit	Page No

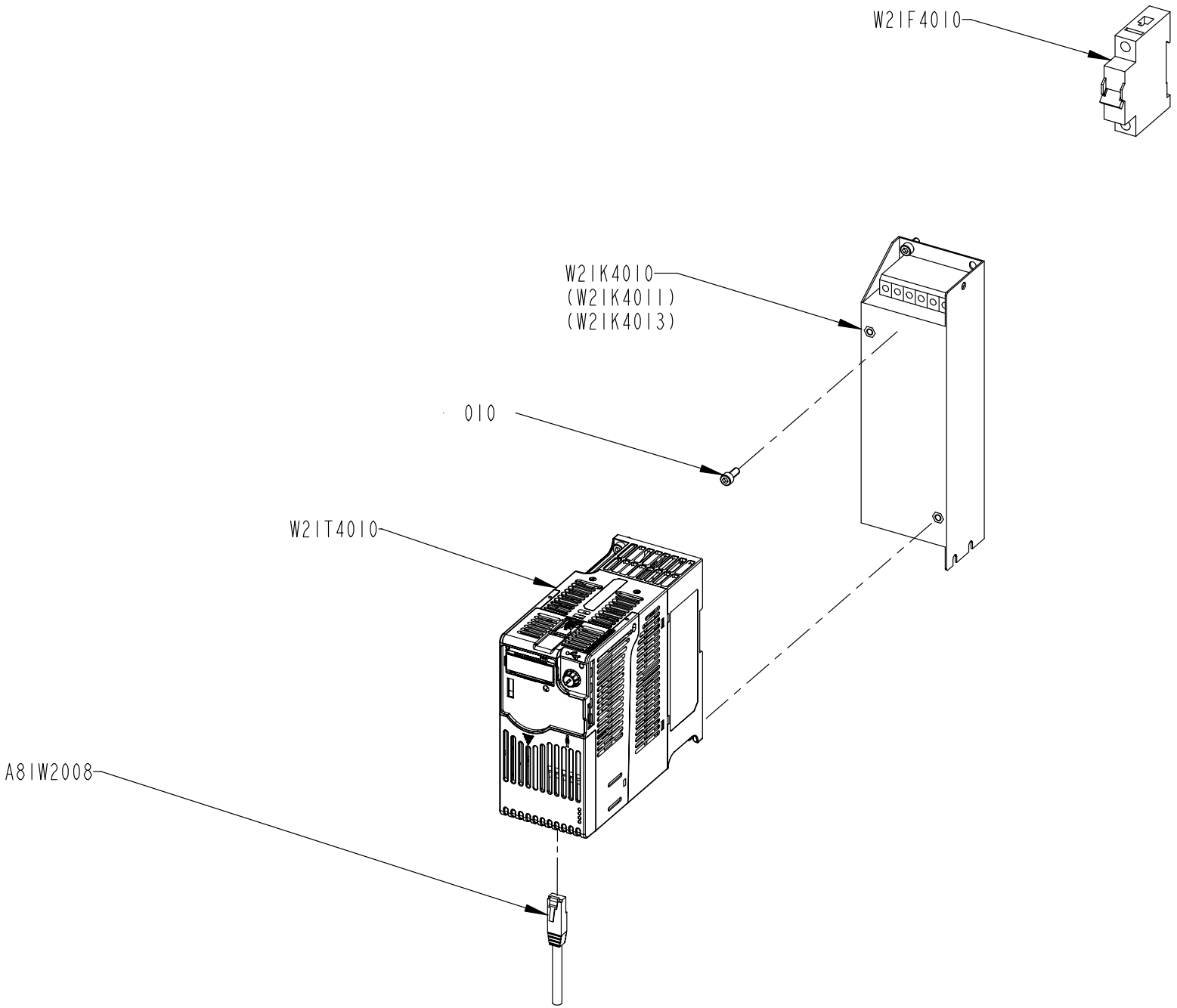
W2IF4010
W2IK4010
(W2IK4011)
(W2IK4013)
010
W2IT4010
A8IW2008

ECM: 831223
Group number: 2895147-0300
Assembly Drawing: 2895147-4_1_AB

This list refers to drawings on pages 688 to 690

Pos	Part No	Description	Qty	Unit	Page No
CE	See page: 688				
W21F4010	351416-0060	MINIATURE CIRC. BREAK., FAZ -D6 1-POLE	1	PC	
UL, CSA	See page: 690				
W21F4010	315747-0060	MINIATURE CIRCUIT BREAKER, FAZ-D6/1-NA	1	PC	
Common Parts					
010	312115-0327	SCREW ISO4762 M5X12 A4 80	6	PC	
A81W2008	351501-0015	ETHERNET PATCH CABLE, FL CAT5 PATCH 1,5	1	PC	
W21K4010	90605-9527	PF 525 EMC LINE FILTER, 240V, 0.4KW A	1	PC	
W21T4010	90605-9347	FC POWERFLEX 525, 230V 1PH, 0.4KW A	1	PC	

Pos	Part No	Description	Qty	Unit	Page No

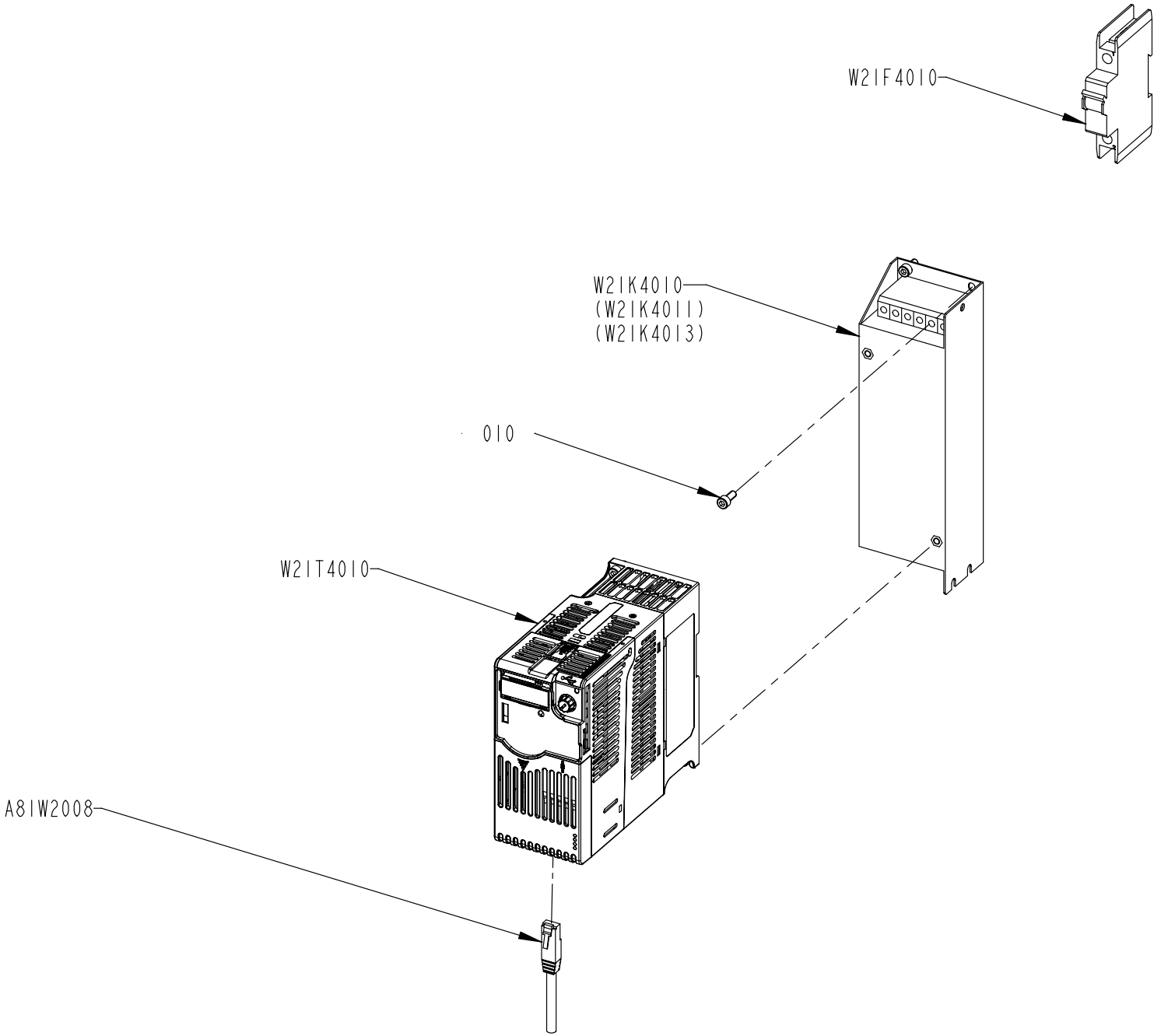
W2IF4010
W2IK4010
(W2IK4011)
(W2IK4013)
010
W2IT4010
A8IW2008

This list refers to drawings on pages 688 to 690

Pos	Part No	Description	Qty	Unit	Page No

SEE LIST FOLLOWING DRAWING ON PAGE: 688

Pos	Part No	Description	Qty	Unit	Page No

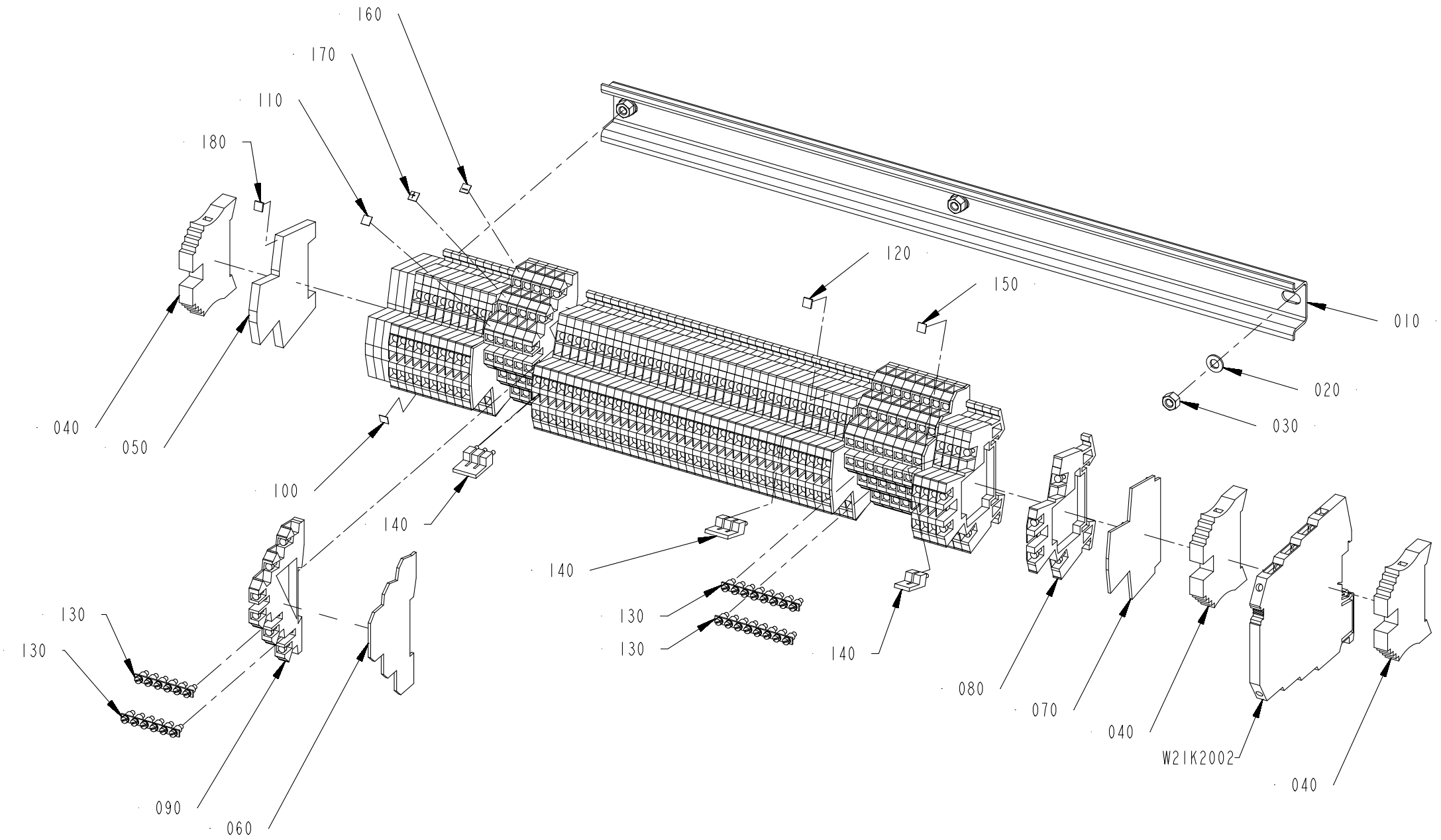
160
170
110
180
040
050
100
140
120
150
010
020
030
140
130
130
130
130
140
080
070
040
W21K2002
040
090
060

ECM: 733905
Group number: 2841403-0400
Assembly Drawing: 2841403-7_1_AA

Pos	Part No	Description	Qty	Unit	Page No
STREAMCAP500, STREAMCAP1000, SLIMCAP 2000, SLIMCAP 1000, STREAMCAP200, HELICAP2 23, HELICAP 27					
040	353031-0203	END BRACKET, WEW 35/2	3	PC	
060	353032-0302	END PLATE, AP DLD2,5 DB	2	PC	
070	353032-0009	END PLATE, WAP WDK 2,5	3	PC	
080	90077-0113	TERMINAL BLOCK WDK 2.5	52	PC	
090	353021-0302	TERMINAL, DLD 2,5/35	14	PC	
100	359011-0807	MARKING, DEK 5 FW 1-50	2	PC	
110	359011-0809	MARKING, DEK 5 FW 101-150	2	PC	
130	353034-0404	BRIDGE CONNECTOR Q 10 DLI	4	PC	
140	353034-0030	BRIDGE CONNECTOR WQV 2,5/10	3	PC	
160	359011-0818	MARKING, DEK 5GW (-)	1	PC	
170	359011-0817	MARKING, DEK 5GW (+)	1	PC	
180	90604-9505	MARKING, DEK 5 FWZ E1-E50	1	PC	
W21K2002	90603-2696	SURGE PROTECTION DEV., LIT 4X1-24	1	PC	
Common Parts					
010	3430409-0000	RAIL	1	PC	
020	315105-0146	WASHER PLAIN, 5,3X10X1 A4 BRB	3	PC	
030	312605-0314	HEXAGON NUT, M6M M5 A280	3	PC	
050	353024-0212	EARTH TERMINAL WDK 2,5 PE	4	PC	
120	359011-0806	MARKING, DEK 5 FW 1-200	2	PC	
150	359011-0811	MARKING, DEK 5 FW 201-250	2	PC	

Pos	Part No	Description	Qty	Unit	Page No

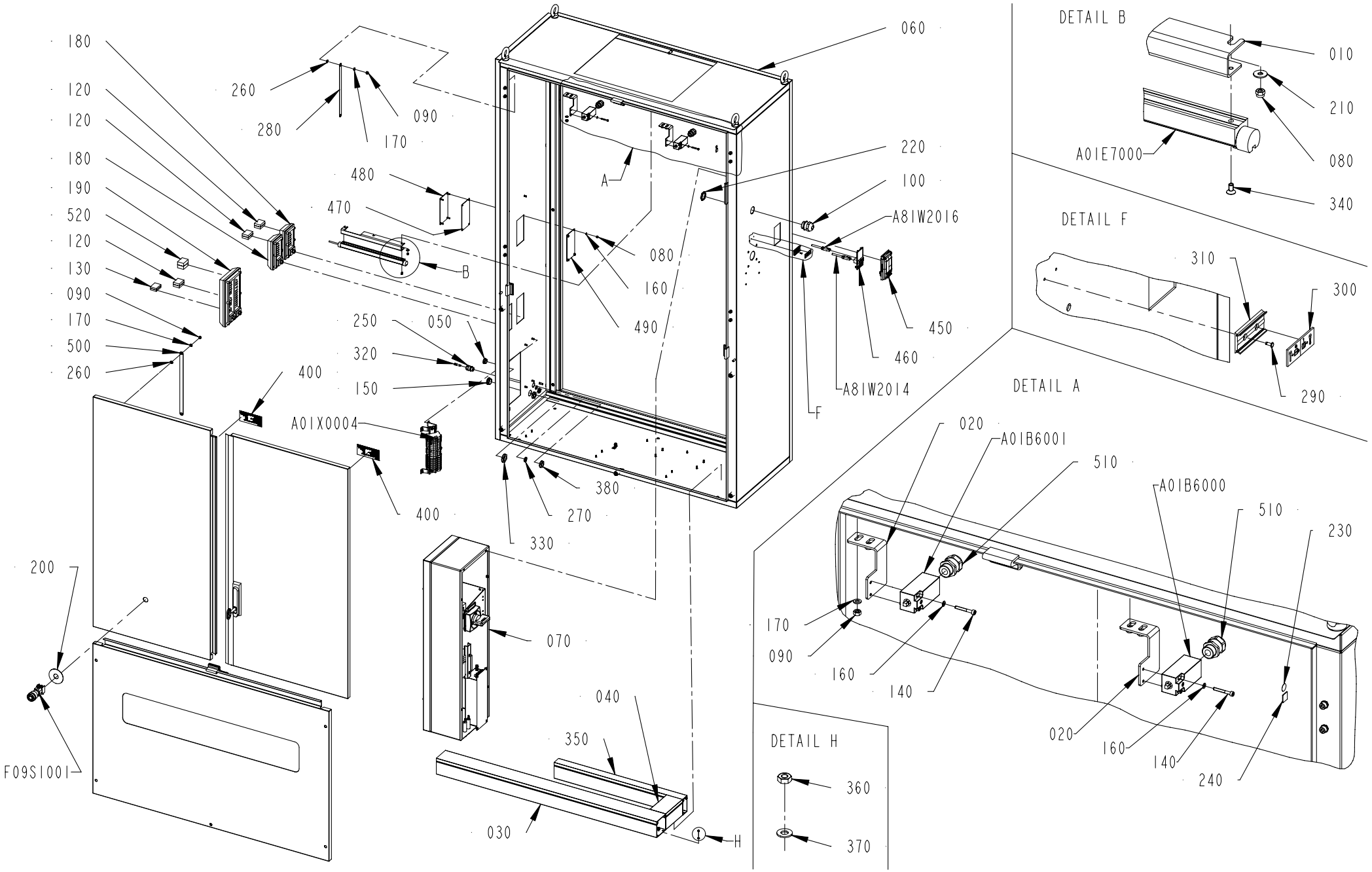
180
120
120
180
190
520
120
130
090
170
500
260
260
280
090
170
480
470
B
060
A
220
100
A81W2016
080
160
490
450
460
A81W2014
F
250
050
320
150
400
A01X0004
400
380
270
330
200
070
040
350
030
H
F09S1001
DETAIL B
010
210
080
340
A01E7000
DETAIL F
310
300
290
DETAIL A
020
A01B6001
510
A01B6000
510
230
170
090
160
140
020
160
140
240
DETAIL H
360
370

ECM: 821999
Group number: 2833406-0400
Assembly Drawing: 2833406-4_1_AB

Pos	Part No	Description	Qty	Unit	Page No
Common Parts					
010	3062041-0000	SUPPORT	1	PC	
020	2839225-0000	BRACKET	2	PC	
030	3415801-0000	CABLE DUCT	1	PC	
040	3415802-0000	CABLE DUCT	1	PC	
050	90458-1308	BLIND PLUG CIRCULAR, M20X1,5 514GFK/220	2	PC	
060	3412501-0000	WELDED CABINET	1	PC	
070	2833410-0300	BOX	1	PC	696
080	312812-0312	HEXAGON NUT, NY-LOCK M4 A4 80	7	PC	
090	312605-0316	HEXAGON NUT, M6M M6 A280	21	PC	
100	90458-0309	CABLE GLAND, M32X1,5, 5311 1040	1	PC	
120	90458-1174	MULTI DIAMETER MODULE, CM 20W40	18	PC	
130	90458-1175	MULTI DIAMETER MODULE, CM 15W40	4	PC	
140	312115-0299	SCREW ISO4762 M4X30 A4 80	4	PC	
150	90458-1309	BLIND PLUG CIRCULAR, M25X1,5 514GFK/225	1	PC	
160	315105-0136	WASHER PLAIN, 4,3X8X0,8 A4 BRB	8	PC	
170	315105-0153	WASHER PLAIN, 6,4X12X1,5 A4 BRB	21	PC	
180	90458-1178	FRAME, CF 8	2	PC	
190	90458-1179	FRAME, CF 32	1	PC	
200	486826-0001	SIGN "EMERGENCY STOP"	1	PC	
210	90005-0082	WASHER PLAIN ROUND 4,3(M4)/12,H=1	3	PC	
220	353250-0032	GLAND LOCK NUT, M32X1,5	1	PC	
230	2608177-0000	SIGN	16	PC	
240	90194-0152	SIGN, EARTH	17	PC	
250	90458-0314	CABLE GLAND, M16X1,5, 5311 1110	2	PC	
260	90062-0015	LOCK WASHER SERRAT.EXT.GEAR,6,4/11 H=0,7	17	PC	
270	353250-0016	GLAND LOCK NUT, M16X1,5	2	PC	
280	90600-2904	EARTH BRAID, 250/16/8,5	2	PC	
290	311520-0320	RIVET, BLANK 2,4X6	6	PC	
300	359241-0803	SIGN: "SUPPLY DISCONNECTING DEVICE"	1	PC	
310	359240-0100	SIGN HOLDER FOR 359240-0001	1	PC	
320	342715-0102	BLIND PLUG 6 MM	2	PC	
330	90458-0324	NUT, M25X1,5	1	PC	
340	312155-0287	SCREW DIN 7991 MF6S M4X8 A4 70	2	PC	
350	3415803-0000	CABLE DUCT	1	PC	
360	90099-0191	HEXAGON NYLON NUT, M4X0,7	48	PC	
370	90005-0064	WASHER PL.RND.NYL.4,3/9, H=0,8	16	PC	
380	90458-0323	NUT, M20X1,5	2	PC	
400	90459-7229	IDENTIFICATION SINGLE CONDUCTORS SIGN	2	PC	
450	90605-5642	SERVICE PANEL, VS-SI-EB-EMV-1	1	PC	
460	90603-6835	FRONT PLATE, VS-SI-FP-2RJ45-5-MOD-BU/BU	1	PC	
470	2868066-0000	GASKET	1	PC	
480	2868065-0000	PLATE	1	PC	
490	2868064-0000	PLATE	1	PC	
500	90458-1870	EMC EARTH BRAID, 16MM2 L=300MM	7	PC	
510	90458-0307	CABLE GLAND, M20X1,5, 5311 1020	2	PC	
520	90458-1173	MULTI DIAMETER MODULE, CM 30W40	2	PC	
A01B6000	90602-8807	LIMIT SW. SZ 2586.010	1	PC	
A01B6001	90602-8807	LIMIT SW. SZ 2586.010	1	PC	
A01E7000	90606-7666	SLIM LED LIQ 12 LIGHT FIXTURE	1	PC	
A01X0004	2840918-0300	PLINTH	1	PC	700
A81W2014	351501-0020	ETHERNET PATCH CABLE, FL CAT5 PATCH 2,0	1	PC	
A81W2016	351501-0020	ETHERNET PATCH CABLE, FL CAT5 PATCH 2,0	1	PC	
F09S1001	90605-9819	EMERG. STOP SWITCH, 704.064.2+704.910.4	1	PC	

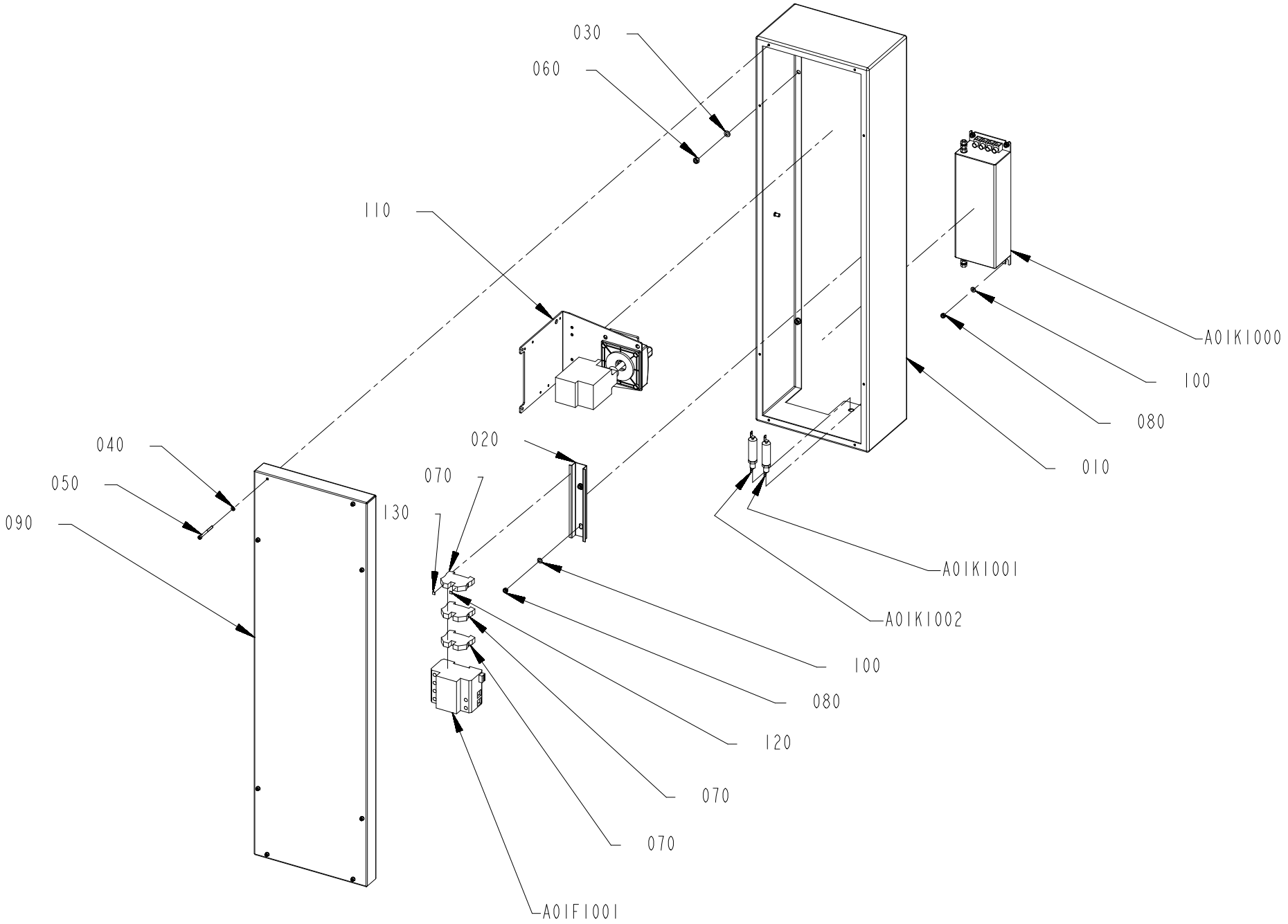
030
060
110
040
050
090
130
020
070
A01K1000
100
080
010
A01K1001
A01K1002
100
080
120
070
070
A01F1001

ECM: 731306
Group number: 2833410-0300
Assembly Drawing: 2833410-3_1_AA

Pos	Part No	Description	Qty	Unit	Page No
Common Parts					
010	3190281-0000	BOX	1	PC	
020	2835456-0000	RAIL	1	PC	
030	315105-0153	WASHER PLAIN, 6,4X12X1,5 A4 BRB	6	PC	
040	315105-0136	WASHER PLAIN, 4,3X8X0,8 A4 BRB	8	PC	
050	312115-0304	SCREW ISO4762 M4X45 A4 80	8	PC	
060	312605-0316	HEXAGON NUT, M6M M6 A280	6	PC	
070	353024-0207	EARTH TERMINAL WPE 10	3	PC	
080	312812-0314	HEXAGON NUT, NY-LOCK M5 A4 80	6	PC	
090	2835450-0000	COVER	1	PC	
100	315105-0146	WASHER PLAIN, 5,3X10X1 A4 BRB	6	PC	
110	90600-1198	MAIN SWITCH ASSY.,RIGHT SIDE, NZM1-XSM-R	1	PC	
120	90601-6250	MARKING, DEK 5 GW PE	1	PC	
130	90604-9505	MARKING, DEK 5 FWZ E1-E50	1	PC	
A01F1001	90600-7487	SURGE PROTECTION DEV., VAL-MS 230/3+1 FM	1	PC	698
A01K1000	90600-5262	LINE FILTER, B84144A36R120	1	PC	
A01K1001	90600-5266	FEED THROUGH FILTER, B85321A2502W160	1	PC	
A01K1002	90600-5266	FEED THROUGH FILTER, B85321A2502W160	1	PC	

Pos	Part No	Description	Qty	Unit	Page No

This page intentionally left blank

ECM: 674773
Group number: 90600-7487
Assembly Drawing: -

Pos	Part No	Description	Qty	Unit	Page No
Common Parts					
	90600-7488	SURGE PROTECTION DEV., SP, VAL-MS 230 ST	1	PC	
	90600-7489	SURGE PROTECTION DEV., SP, F-MS 12 ST	1	PC	

Pos	Part No	Description	Qty	Unit	Page No

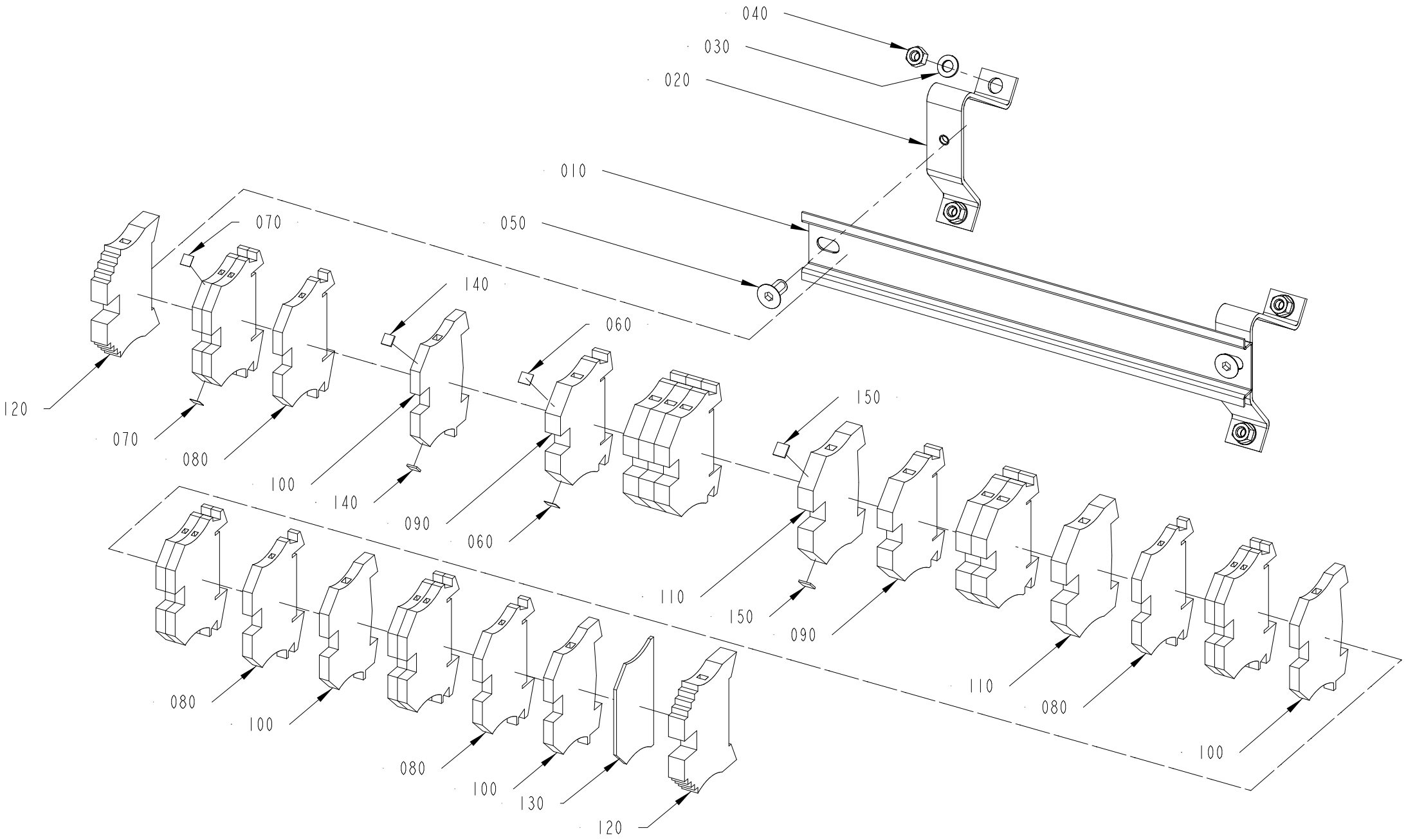
040
030
020
010
050
070
140
060
120
070
080
100
140
090
060
150
110
150
090
080
100
080
100
130
120
110
080
100

ECM: 731307
Group number: 2840918-0300
Assembly Drawing: 2840918-4_1_AA

Pos	Part No	Description	Qty	Unit	Page No
Common Parts					
010	2841402-0000	RAIL	1	PC	
020	90099-0005	MOUNTING RAIL SUPPORT, TSTW 5/M5	2	PC	
030	315105-0146	WASHER PLAIN, 5,3X10X1 A4 BRB	4	PC	
040	312605-0314	HEXAGON NUT, M6M M5 A280	4	PC	
050	312155-0366	SCREW DIN 7991 MF6S M6X12 A4 70	2	PC	
060	359011-0821	MARKING, DEK 6 FW 1-50	2	PC	
070	359011-0807	MARKING, DEK 5 FW 1-50	2	PC	
080	353021-0212	FEED THROUGH TERMINAL, WDU 2,5	12	PC	
090	353021-0214	FEED THROUGH TERMINAL, WDU 6	7	PC	
100	353024-0204	EARTH TERMINAL WPE 2,5	4	PC	
110	353024-0206	EARTH TERMINAL WPE 6	2	PC	
120	353031-0203	END BRACKET, WEW 35/2	2	PC	
130	353032-0004	END PLATE, WAP 2,5-10, BEIGE	1	PC	
140	90604-9505	MARKING, DEK 5 FWZ E1-E50	2	PC	
150	90604-9507	MARKING, DEK 6 FWZ E1-E50	2	PC	

Pos	Part No	Description	Qty	Unit	Page No

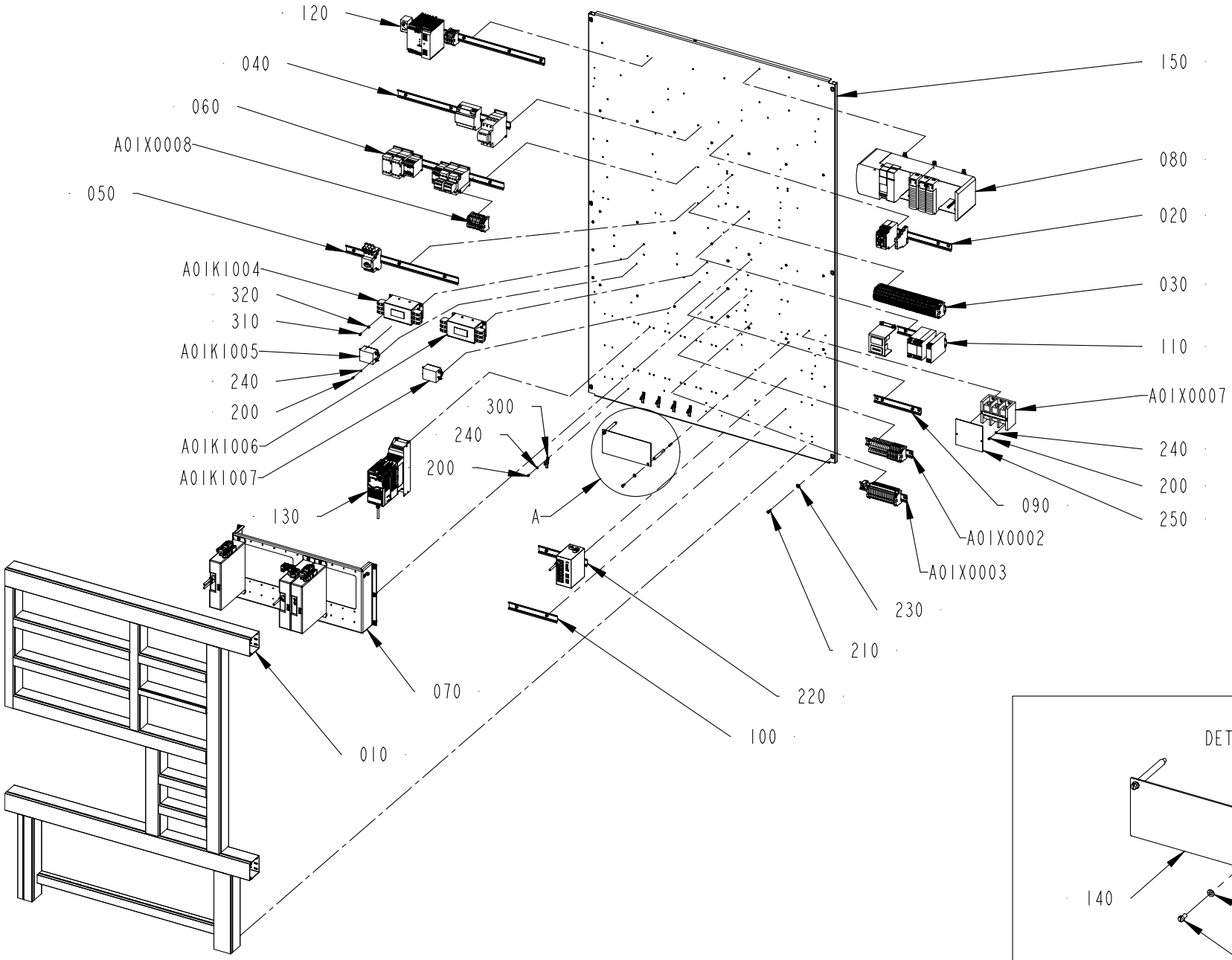
120
040
060
A01X0008
050
A01K1004
320
310
A01K1005
240
200
A01K1006
A01K1007
130
300
240
200
A
010
070
100
220
210
230
A01X0003
A01X0002
090
240
200
250
A01X0007
110
030
020
080
150

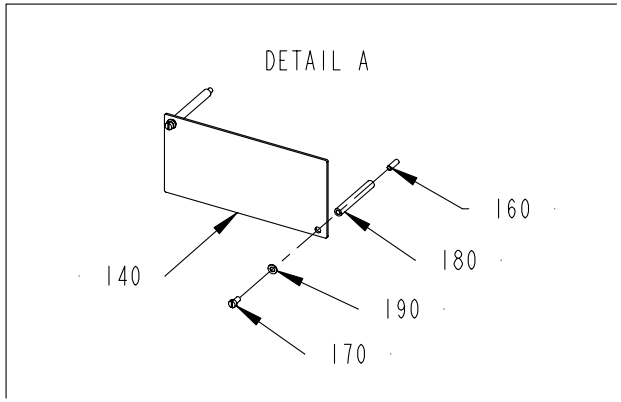
DETAIL A
160
180
140
190
170

ECM: 821997
Group number: 2833407-0400
Assembly Drawing: 2833407-4_1_AB

Pos	Part No	Description	Qty	Unit	Page No
Common Parts					
010	2833412-0200	CABLE DUCT	1	PC	704
020	2835464-0400	DISTRIBUTION TERMINAL	1	PC	706
030	2839229-0300	DISTRIBUTION TERMINAL	1	PC	708
040	2835459-0400	FUSE BOARD 1	1	PC	722
050	2835460-0300	FUSE BOARD 2	1	PC	724
060	2835461-0300	FUSE BOARD 3	1	PC	726
070	2835462-0400	MOTOR DRIVE CONTROL	1	PC	728
080	2835458-0400	PLC	1	PC	730
090	2839222-0200	PLINTH	1	PC	732
100	3388210-0100	RAIL	1	PC	734
110	2839221-0300	PLINTH	1	PC	736
120	2835457-0300	POWER SUPPLY UNIT	1	PC	738, 740
130	3405811-0100	CONVEYOR CONTROL	1	PC	748, 750
140	2845320-0000	PROTECTION	1	PC	
150	3386151-0000	MOUNTING PLATE	1	PC	
160	312318-0370	SET SCREW, CUP END ISO4029 M6X20 A4	2	PC	
170	312125-0366	SLOTTED HEAD SCREW, ISO1207 M6X12 A4	2	PC	
180	1038275-0012	SPACER	2	PC	
190	315105-0153	WASHER PLAIN, 6,4X12X1,5 A4 BRB	2	PC	
200	312125-0289	SLOTTED HEAD SCREW, ISO 1207 M4 X 10 A4	13	PC	
210	312115-0368	SCREW ISO4762 M6X16 A4 80	6	PC	
220	3388211-0100	ETHERNET SWITCH	1	PC	752
230	315105-0165	FWAS080G0-0S, WASHER PLAIN	6	PC	
240	315105-0136	WASHER PLAIN, 4,3X8X0,8 A4 BRB	13	PC	
250	3047311-0000	PROTECTION	1	PC	
300	90604-3308	EMC SHIELD CLAMP, LFZ/SKL 8-11, 36925	5	PC	
310	312125-0325	SCREW ISO 1207 M5X10 A4	8	PC	
320	315105-0146	WASHER PLAIN, 5,3X10X1 A4 BRB	8	PC	
A01K1004	90600-5258	LINE FILTER, B84143A35R106	1	PC	
A01K1005	90600-5253	LINE FILTER, B84113HB60	1	PC	
A01K1006	90600-5258	LINE FILTER, B84143A35R106	1	PC	
A01K1007	90600-5253	LINE FILTER, B84113HB60	1	PC	
A01X0002	2839223-0300	PLINTH	1	PC	754
A01X0003	2839224-0200	PLINTH	1	PC	756
A01X0007	90459-0959	DISTRIBUTOR BLOCK 1492-PD3163	1	PC	
A01X0008	3046886-0300	DISTRIBUTION TERMINAL	1	PC	758

Pos	Part No	Description	Qty	Unit	Page No

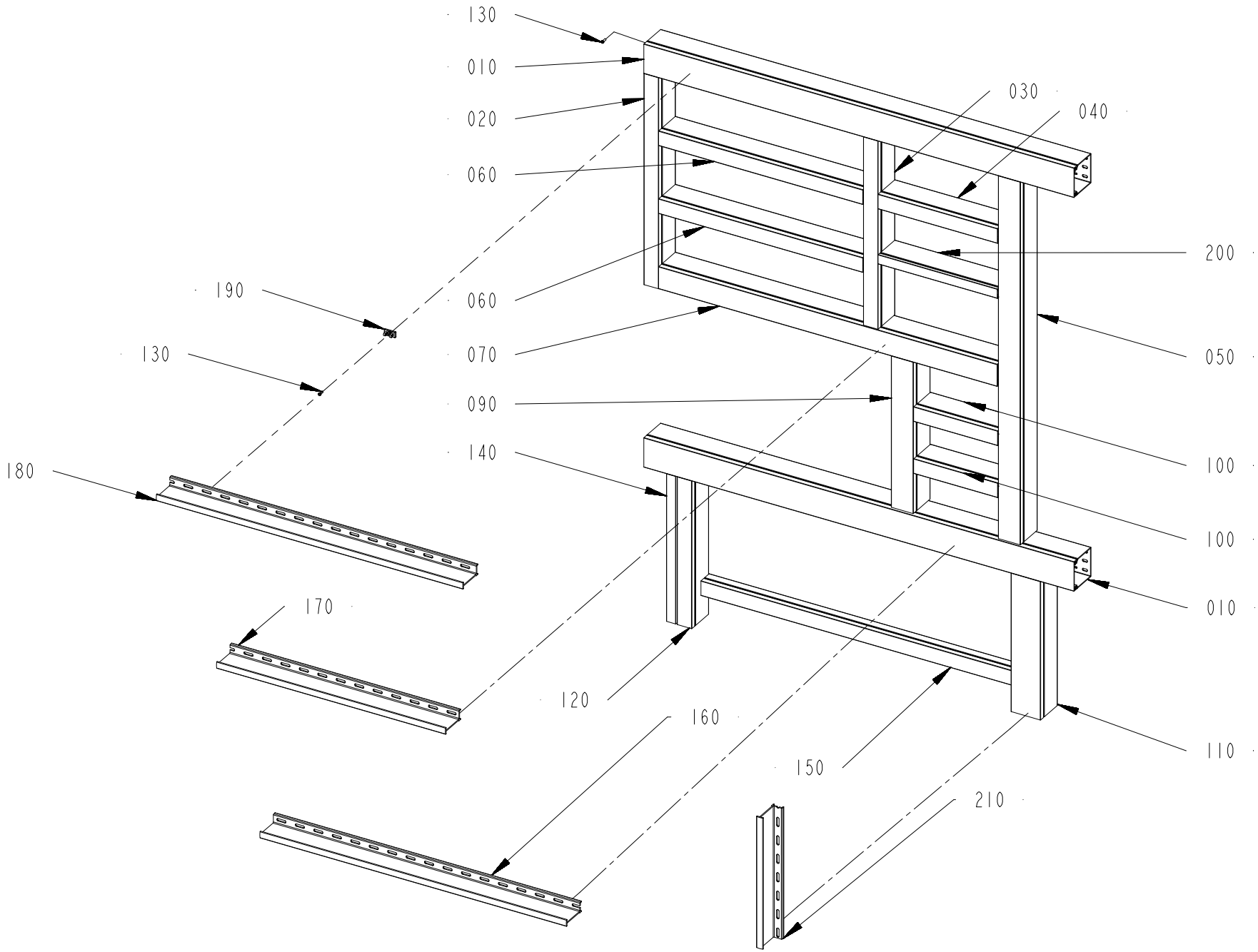
130
010
020
060
190
130
180
060
070
090
140
170
120
160
150
210
030
040
200
050
100
100
010
110

ECM: 731211
Group number: 2833412-0200
Assembly Drawing: 2833412-2_1_AA

Pos	Part No	Description	Qty	Unit	Page No
Common Parts					
010	3386032-0000	CABLE DUCT	2	PC	
020	3386033-0000	CABLE DUCT	1	PC	
030	3386034-0000	CABLE DUCT	1	PC	
040	3386035-0000	CABLE DUCT	1	PC	
050	3386036-0000	CABLE DUCT	1	PC	
060	3386037-0000	CABLE DUCT	2	PC	
070	3386038-0000	CABLE DUCT	1	PC	
090	3386144-0000	CABLE DUCT	1	PC	
100	3386145-0000	CABLE DUCT	2	PC	
110	3386146-0000	CABLE DUCT	1	PC	
120	3386147-0000	CABLE DUCT	1	PC	
130	90287-0124	SCREW PAN HEAD MSCS M4X12 NYLON	74	PC	
140	3386148-0000	CABLE DUCT	1	PC	
150	3386149-0000	CABLE DUCT	1	PC	
160	2841405-0000	DIVIDER	1	PC	
170	2841406-0000	DIVIDER	1	PC	
180	2921902-0000	DIVIDER	1	PC	
190	90600-2830	FASTENING ELEMENT, BLOCKSEP-E 01026	10	PC	
200	3383128-0000	CABLE DUCT	1	PC	
210	3386039-0000	DIVIDER	1	PC	

Pos	Part No	Description	Qty	Unit	Page No

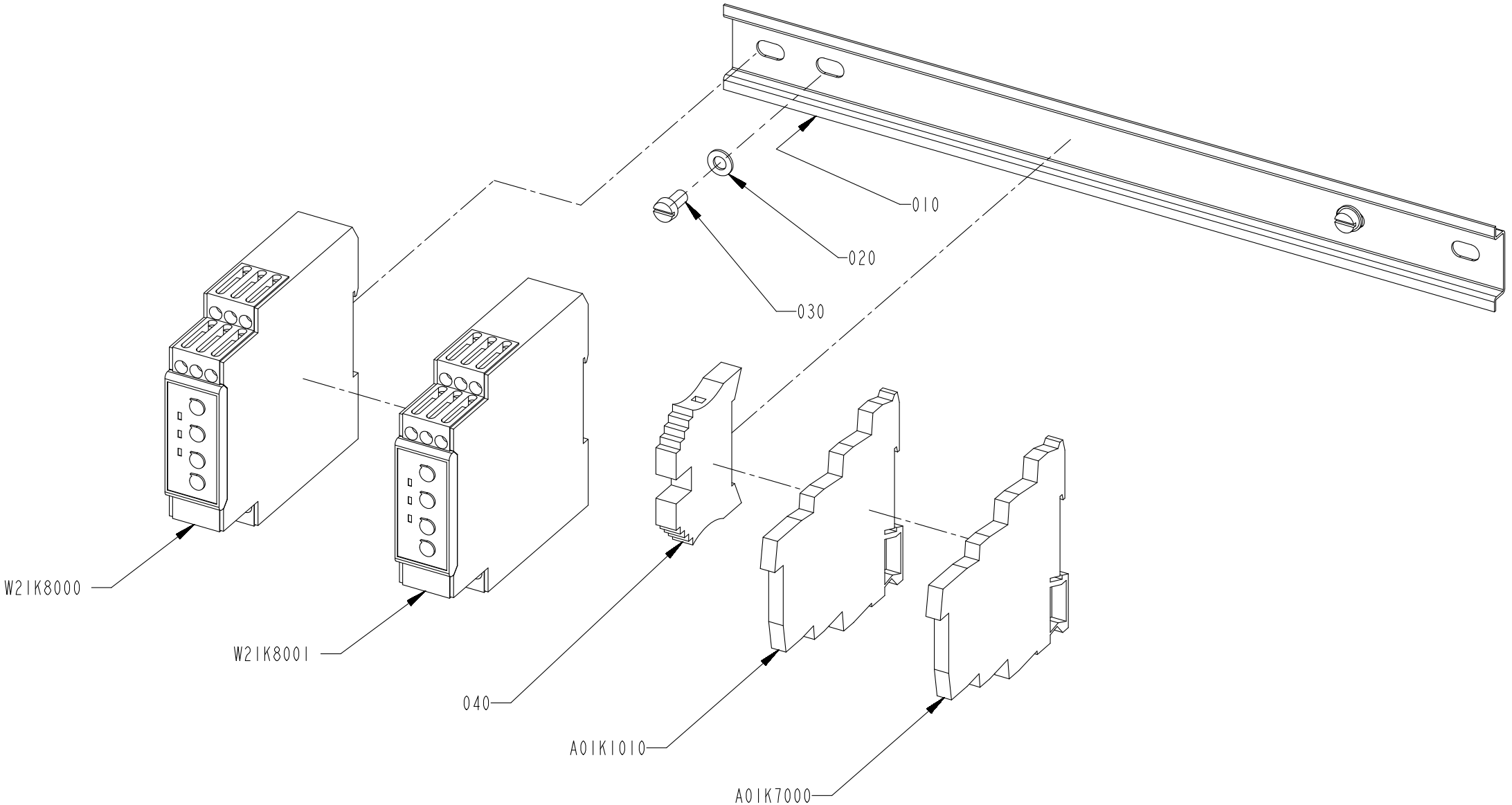
010
020
030
W2IK8000
W2IK8001
040
A0IK1010
A0IK7000

ECM: 733643
Group number: 2835464-0400
Assembly Drawing: 2835464-4_1_AA

Pos	Part No	Description	Qty	Unit	Page No
Common Parts					
010	3388209-0000	RAIL	1	PC	
020	315105-0146	WASHER PLAIN, 5,3X10X1 A4 BRB	2	PC	
030	312125-0325	SCREW ISO 1207 M5X10 A4	2	PC	
040	353031-0203	END BRACKET, WEW 35/2	1	PC	
A01K1010	90601-6650	RELAY, PLC-RSC-24DC/21	1	PC	
A01K7000	90601-6650	RELAY, PLC-RSC-24DC/21	1	PC	
W21K8000	90606-9102	RELAY, K8AK-AS2	1	PC	
W21K8001	90606-9102	RELAY, K8AK-AS2	1	PC	

Pos	Part No	Description	Qty	Unit	Page No

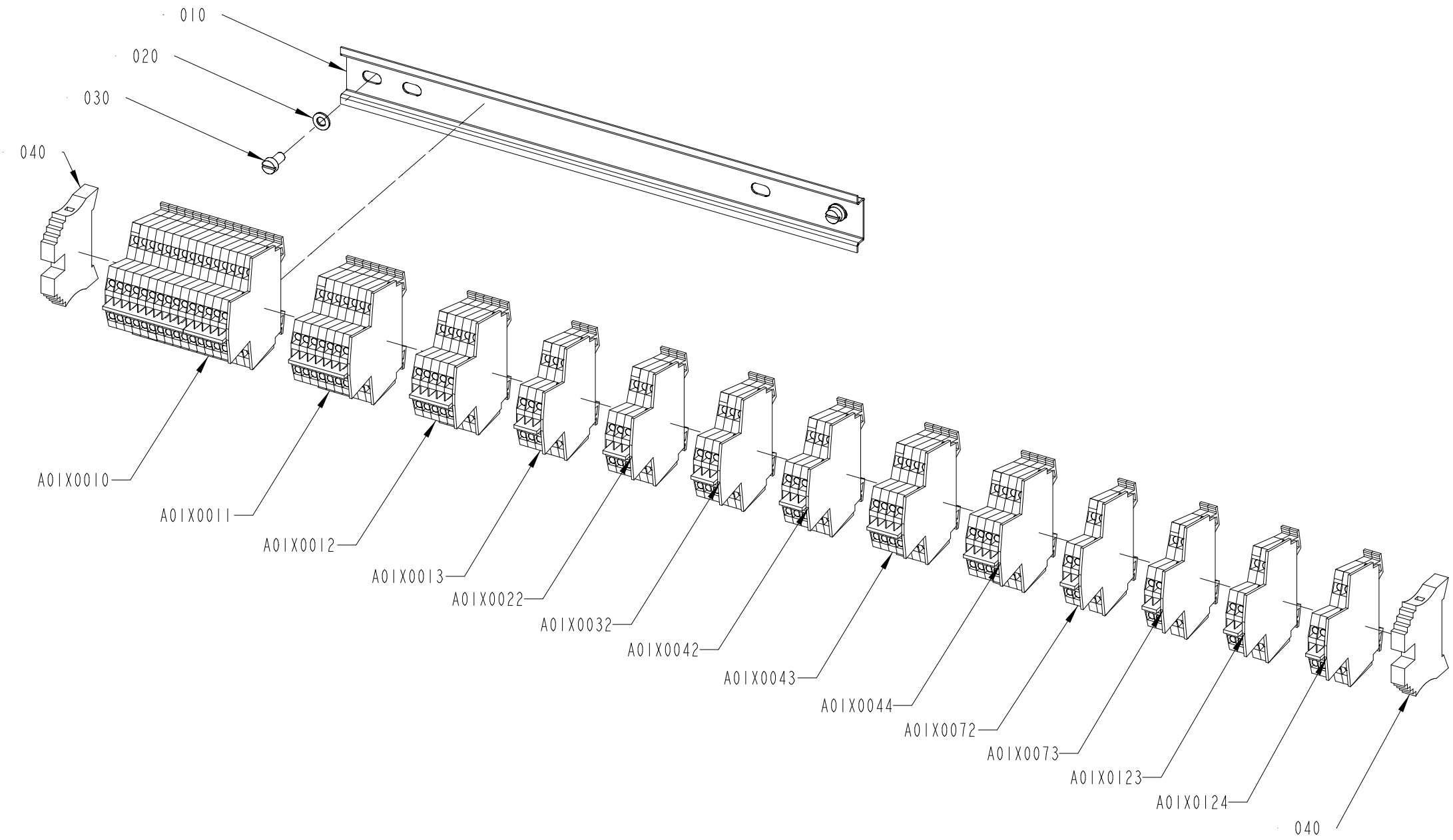
010
020
030
040
A01X0010
A01X0011
A01X0012
A01X0013
A01X0022
A01X0032
A01X0042
A01X0043
A01X0044
A01X0072
A01X0073
A01X0123
A01X0124
040

ECM: 730875
Group number: 2839229-0300
Assembly Drawing: 2839229-3_1_AA

Pos	Part No	Description	Qty	Unit	Page No
Common Parts					
010	3388209-0000	RAIL	1	PC	
020	315105-0146	WASHER PLAIN, 5,3X10X1 A4 BRB	2	PC	
030	312125-0325	SCREW ISO 1207 M5X10 A4	2	PC	
040	353031-0203	END BRACKET, WEW 35/2	2	PC	
A01X0010	2839230-0200	PLINTH	1	PC	710
A01X0011	2840909-0200	PLINTH	1	PC	712
A01X0012	2840910-0200	PLINTH	1	PC	714
A01X0013	2840911-0200	PLINTH	1	PC	716
A01X0022	2840911-0200	PLINTH	1	PC	716
A01X0032	2840911-0200	PLINTH	1	PC	716
A01X0042	2840911-0200	PLINTH	1	PC	716
A01X0043	2840915-0200	PLINTH	1	PC	718
A01X0044	2840915-0200	PLINTH	1	PC	718
A01X0072	2840917-0200	PLINTH	1	PC	720
A01X0073	2840917-0200	PLINTH	1	PC	720
A01X0123	2840917-0200	PLINTH	1	PC	720
A01X0124	2840917-0200	PLINTH	1	PC	720

Pos	Part No	Description	Qty	Unit	Page No

Pos. A01X0010 in BoM 2839229-0300 **PLINTH**

Drawing file:2839230-2_1_AA

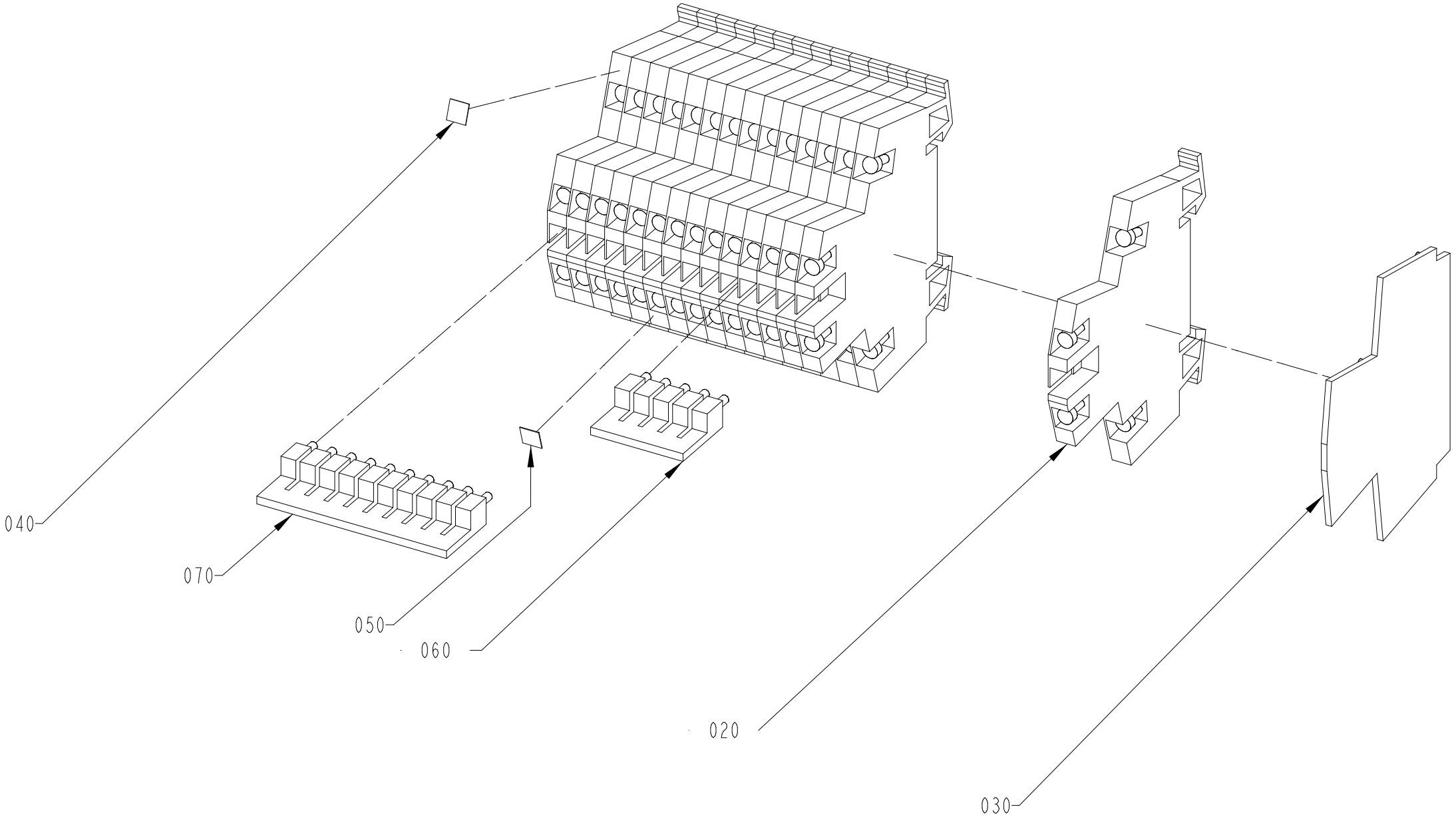

ECM: 730845
Group number: 2839230-0200
Assembly Drawing: 2839230-2_1_AA

Pos	Part No	Description	Qty	Unit	Page No
Common Parts					
020	90459-5253	TERMINAL BLOCK WDK 2,5 V	15	PC	
030	353032-0009	END PLATE, WAP WDK 2,5	1	PC	
040	359011-0807	MARKING, DEK 5 FW 1-50	1	PC	
050	359011-0808	MARKING, DEK 5FW 51-100	1	PC	
060	353034-0030	BRIDGE CONNECTOR WQV 2,5/10	1	PC	
070	353034-0030	BRIDGE CONNECTOR WQV 2,5/10	1	PC	

Pos	Part No	Description	Qty	Unit	Page No

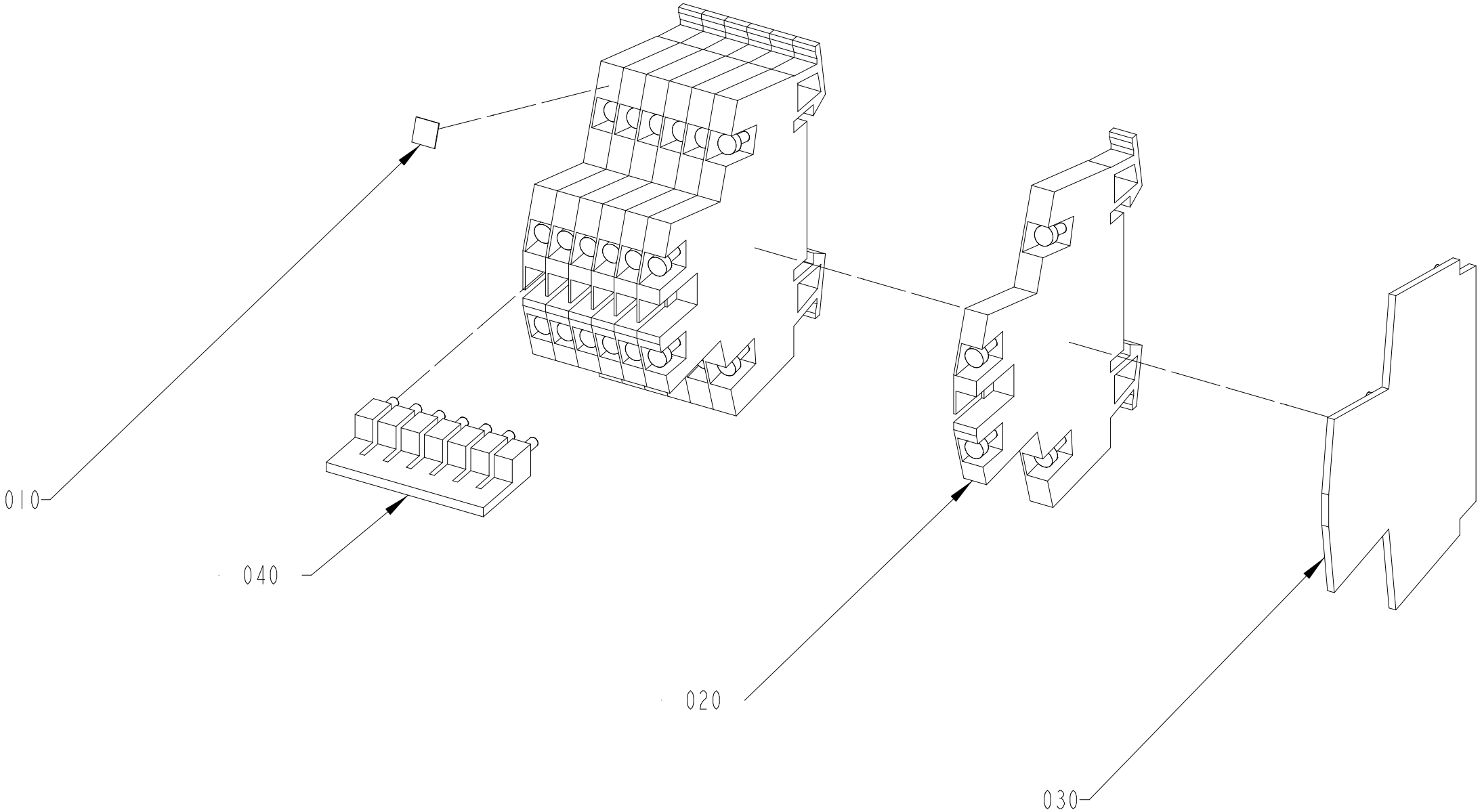
010
040
020
030

ECM: 730846
Group number: 2840909-0200
Assembly Drawing: 2840909-2_1_AA

Pos	Part No	Description	Qty	Unit	Page No
Common Parts					
010	359011-0807	MARKING, DEK 5 FW 1-50	1	PC	
020	90459-5253	TERMINAL BLOCK WDK 2,5 V	7	PC	
030	353032-0009	END PLATE, WAP WDK 2,5	1	PC	
040	353034-0030	BRIDGE CONNECTOR WQV 2,5/10	1	PC	

Pos	Part No	Description	Qty	Unit	Page No

Pos. A01X0012 in BoM 2839229-0300 **PLINTH**

Drawing file:2840910-2_1_AA

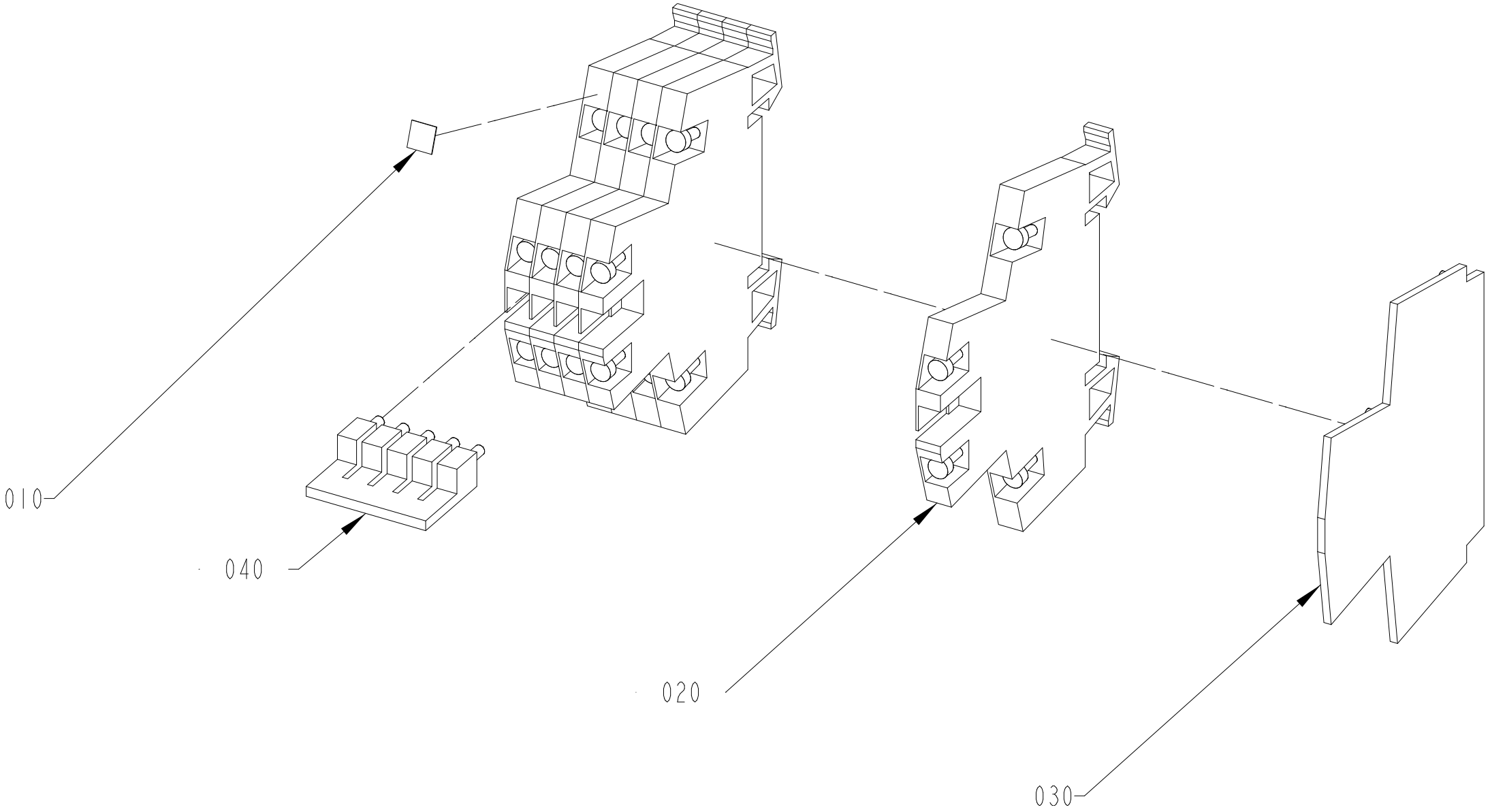

ECM: 730848
Group number: 2840910-0200
Assembly Drawing: 2840910-2_1_AA

Pos	Part No	Description	Qty	Unit	Page No
Common Parts					
010	359011-0807	MARKING, DEK 5 FW 1-50	1	PC	
020	90459-5253	TERMINAL BLOCK WDK 2,5 V	5	PC	
030	353032-0009	END PLATE, WAP WDK 2,5	1	PC	
040	353034-0030	BRIDGE CONNECTOR WQV 2,5/10	1	PC	

Pos	Part No	Description	Qty	Unit	Page No

Pos. A01X0013 in BoM 2839229-0300 **PLINTH**

Drawing file:2840911-2_1_AA

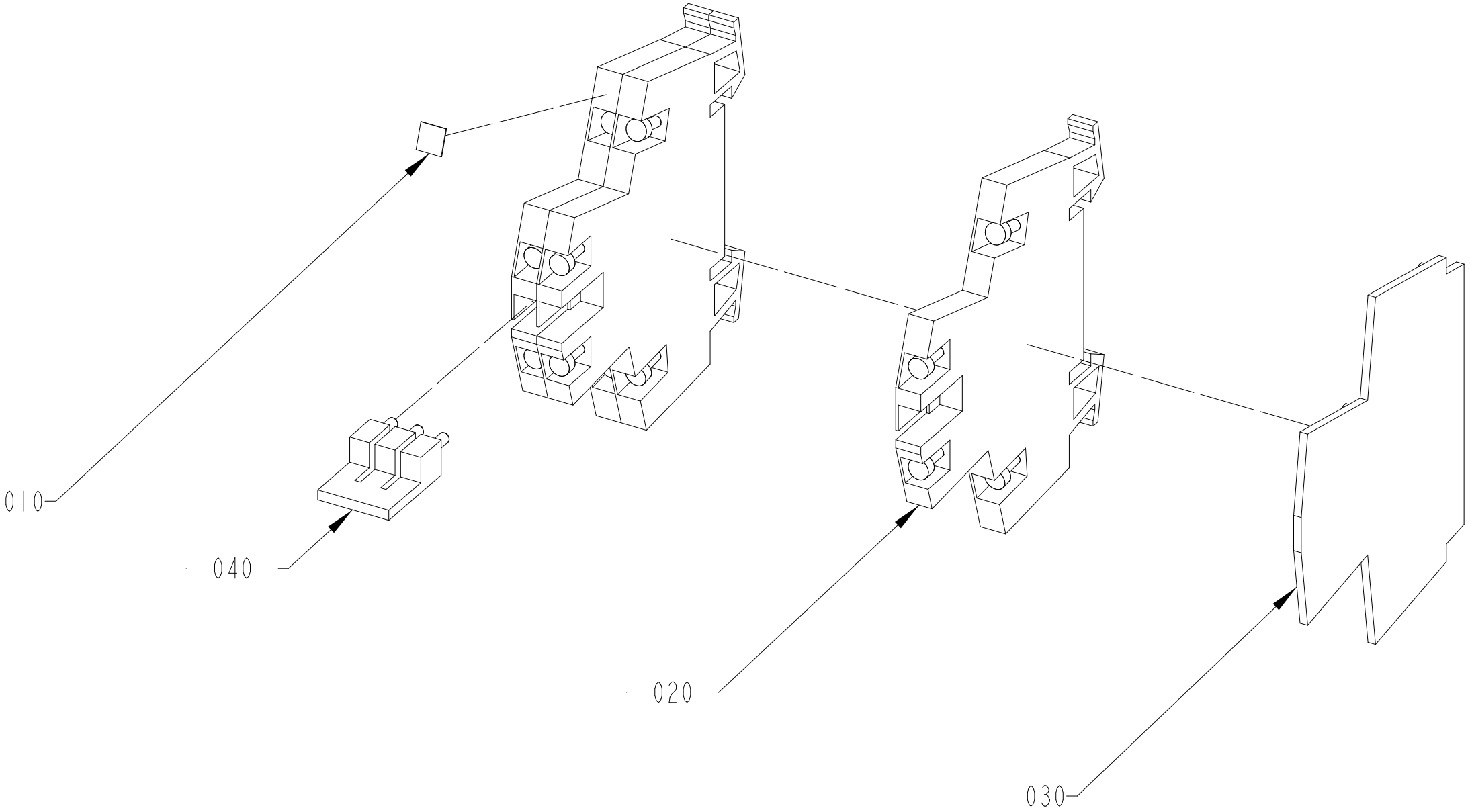

ECM: 730847
Group number: 2840911-0200
Assembly Drawing: 2840911-2_1_AA

Pos	Part No	Description	Qty	Unit	Page No
Common Parts					
010	359011-0807	MARKING, DEK 5 FW 1-50	1	PC	
020	90459-5253	TERMINAL BLOCK WDK 2,5 V	3	PC	
030	353032-0009	END PLATE, WAP WDK 2,5	1	PC	
040	353034-0030	BRIDGE CONNECTOR WQV 2,5/10	1	PC	

Pos	Part No	Description	Qty	Unit	Page No

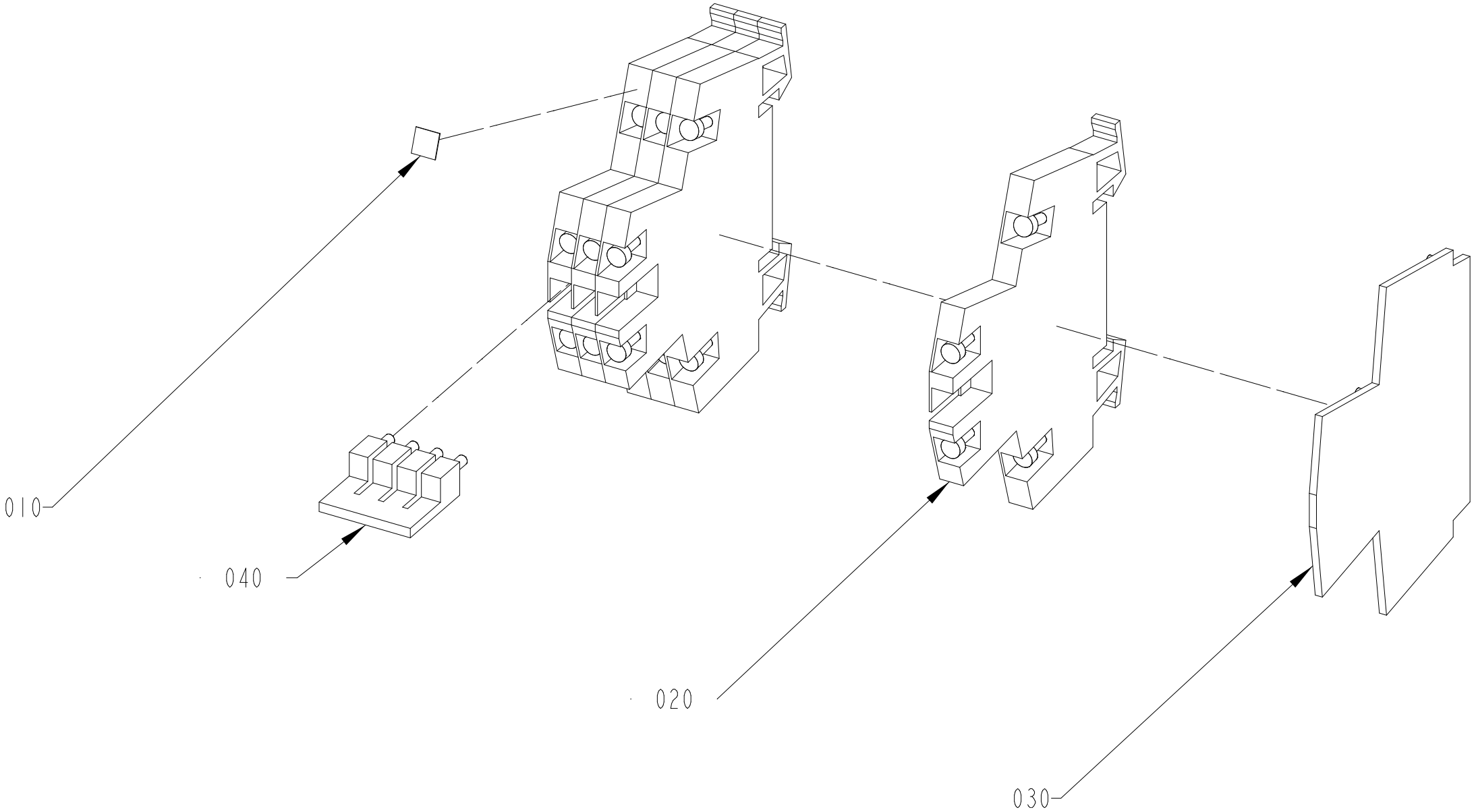
010
040
020
030

ECM: 730862
Group number: 2840915-0200
Assembly Drawing: 2840915-2_1_AA

Pos	Part No	Description	Qty	Unit	Page No
Common Parts					
010	359011-0807	MARKING, DEK 5 FW 1-50	1	PC	
020	90459-5253	TERMINAL BLOCK WDK 2,5 V	4	PC	
030	353032-0009	END PLATE, WAP WDK 2,5	1	PC	
040	353034-0030	BRIDGE CONNECTOR WQV 2,5/10	1	PC	

Pos	Part No	Description	Qty	Unit	Page No

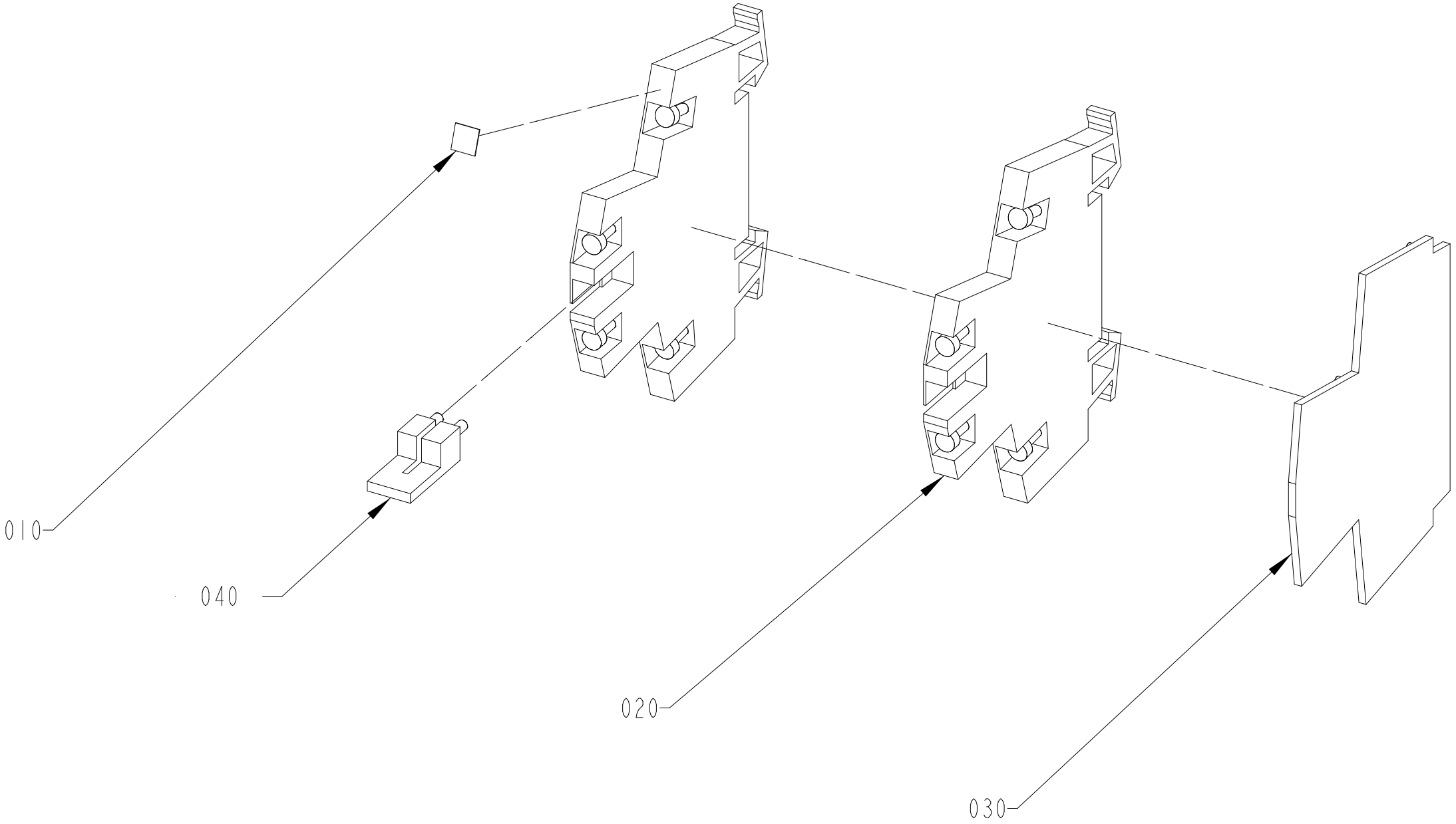
010
040
020
030

ECM: 730861
Group number: 2840917-0200
Assembly Drawing: 2840917-2_1_AA

Pos	Part No	Description	Qty	Unit	Page No
Common Parts					
010	359011-0807	MARKING, DEK 5 FW 1-50	1	PC	
020	90459-5253	TERMINAL BLOCK WDK 2,5 V	2	PC	
030	353032-0009	END PLATE, WAP WDK 2,5	1	PC	
040	353034-0030	BRIDGE CONNECTOR WQV 2,5/10	1	PC	

Pos	Part No	Description	Qty	Unit	Page No

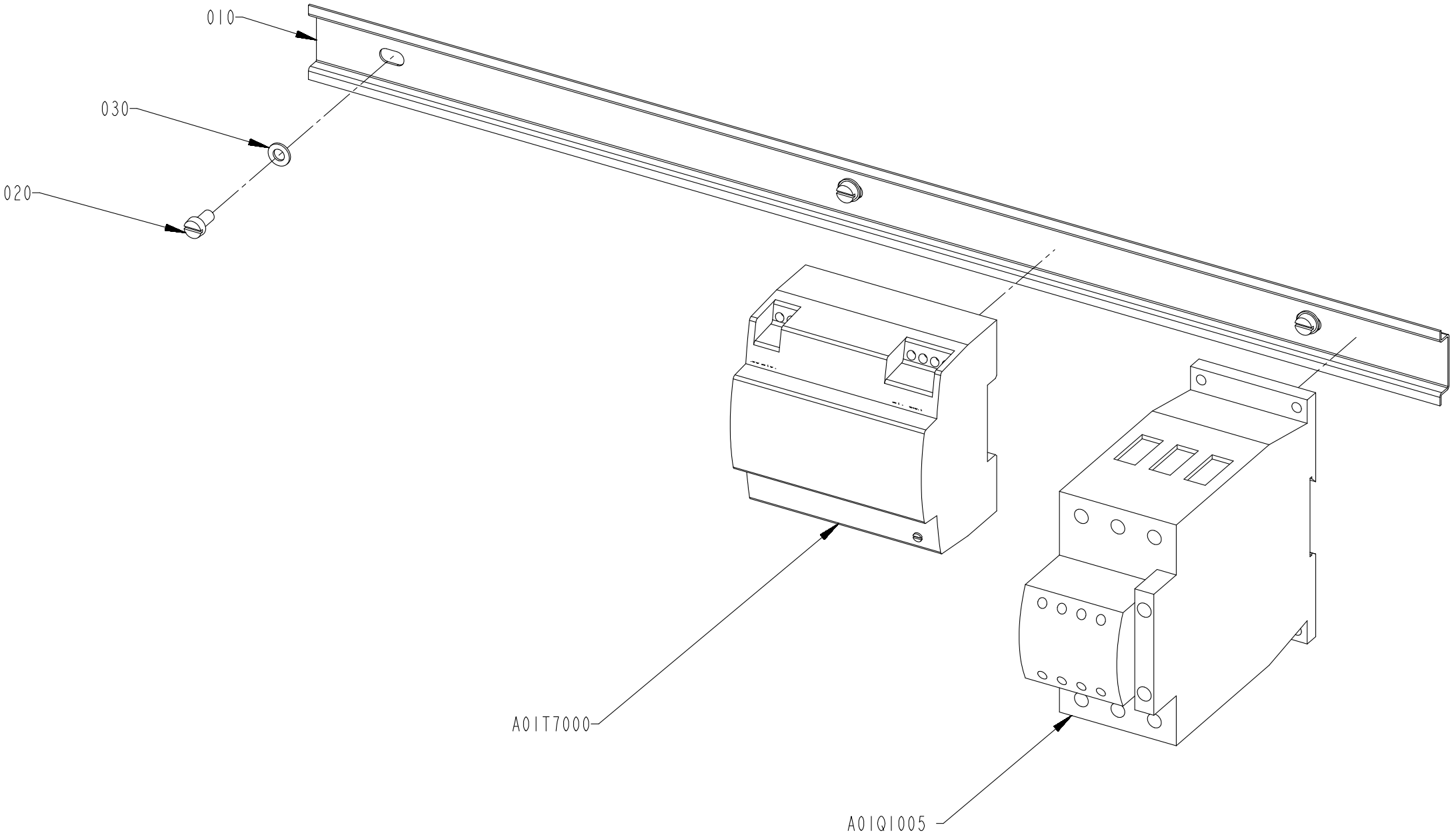
010
030
020
A01T7000
A01Q1005

ECM: 731291
Group number: 2835459-0400
Assembly Drawing: 2835459-4_1_AA

Pos	Part No	Description	Qty	Unit	Page No
Common Parts					
010	2835452-0000	RAIL	1	PC	
020	312125-0325	SCREW ISO 1207 M5X10 A4	3	PC	
030	315105-0146	WASHER PLAIN, 5,3X10X1 A4 BRB	3	PC	
A01Q1005	90600-1759	CONTACTOR22KW24VDCDILM50-22+DILM65-XIP2X	1	PC	
A01T7000	90603-1115	POWER SUPPLY, STEP-PS/1AC/24DC/3,8/C2LPS	1	PC	

Pos	Part No	Description	Qty	Unit	Page No

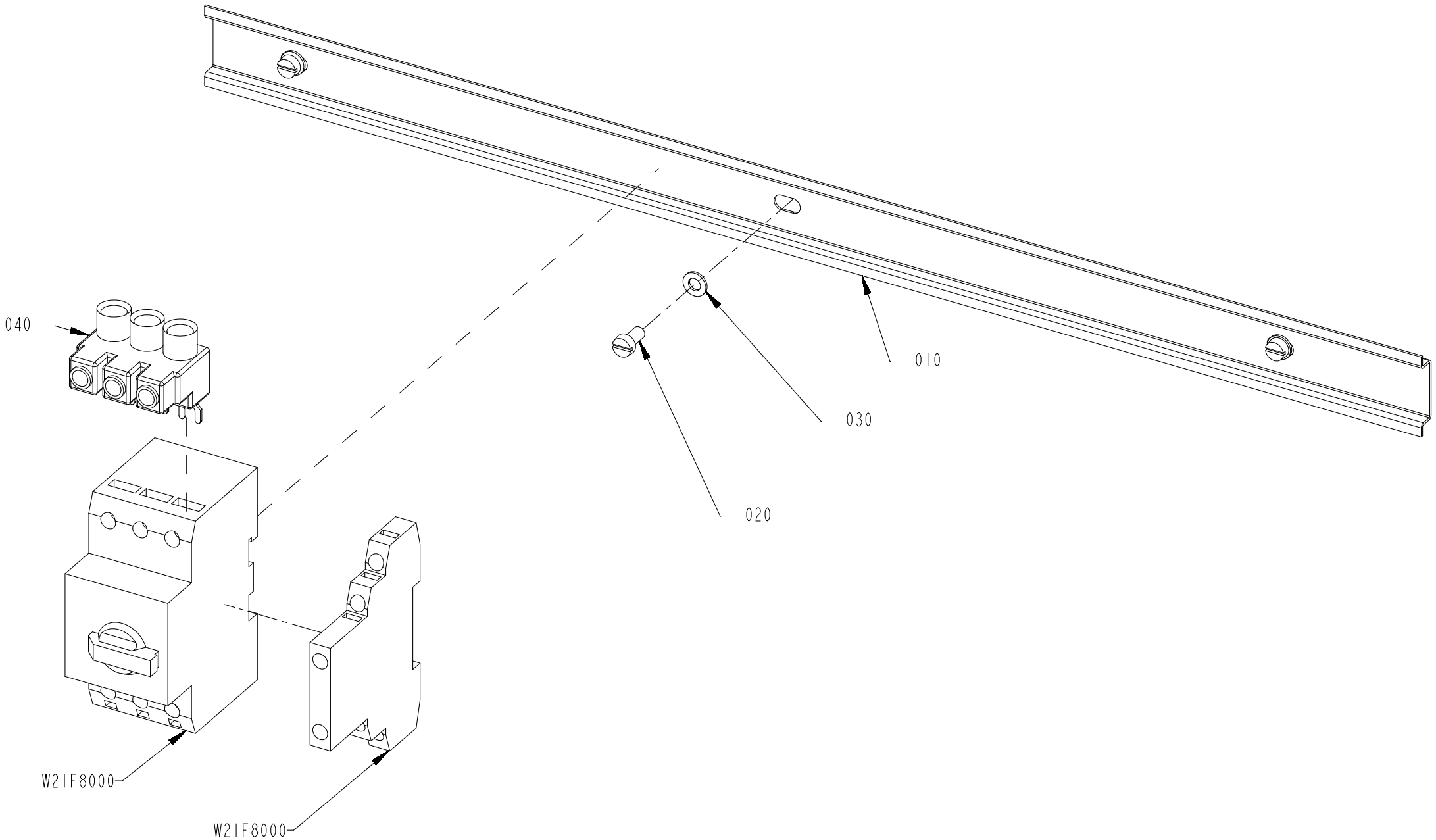
040
010
030
020
W2IF8000
W2IF8000

ECM: 731292
Group number: 2835460-0300
Assembly Drawing: 2835460-3_1_AA

Pos	Part No	Description	Qty	Unit	Page No
Common Parts					
010	2835452-0000	RAIL	1	PC	
020	312125-0325	SCREW ISO 1207 M5X10 A4	3	PC	
030	315105-0146	WASHER PLAIN, 5,3X10X1 A4 BRB	3	PC	
040	90600-1461	INCOMING TERMINAL, BK25/3-PKZ0-E	1	PC	
W21F8000	90459-5326	OVERLOAD PROTECTION, PKZM0-4 072737	1	PC	
W21F8000	90259-0313	AUXILIARY SWITCH, NHI21-PKZ0	1	PC	

Pos	Part No	Description	Qty	Unit	Page No

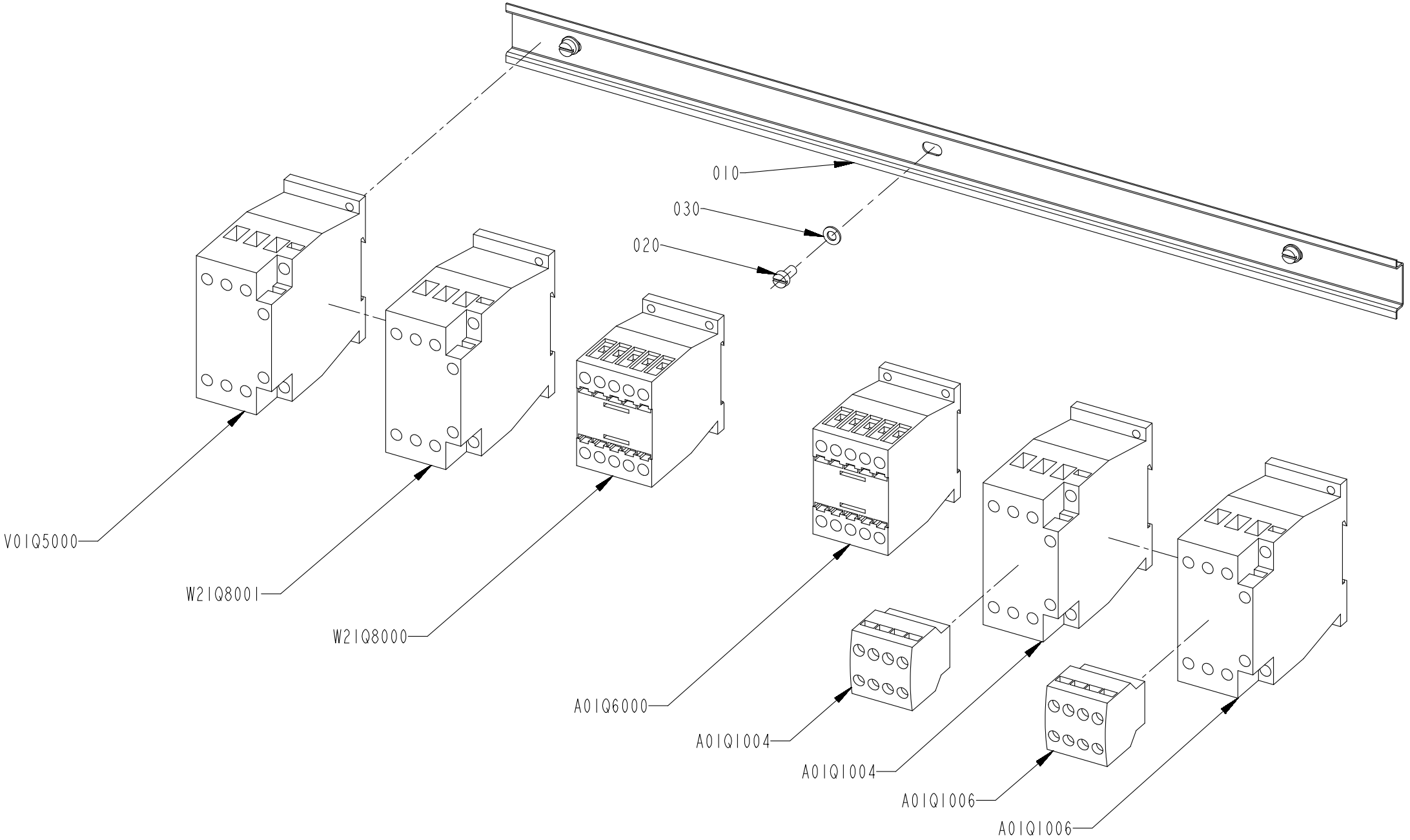
010
030
020
V01Q5000
W21Q8001
W21Q8000
A01Q6000
A01Q1004
A01Q1004
A01Q1006
A01Q1006

ECM: 731293
Group number: 2835461-0300
Assembly Drawing: 2835461-3_1_AA

Pos	Part No	Description	Qty	Unit	Page No
Common Parts					
010	2835452-0000	RAIL	1	PC	
020	312125-0325	SCREW ISO 1207 M5X10 A4	3	PC	
030	315105-0146	WASHER PLAIN, 5,3X10X1 A4 BRB	3	PC	
A01Q1004	90459-5311	CONTACTOR 15KW 24VDC, DILM32-10	1	PC	
A01Q1004	90459-6852	AUXILIARY CONTACT, DILA-XHI22	1	PC	
A01Q1006	90459-5311	CONTACTOR 15KW 24VDC, DILM32-10	1	PC	
A01Q1006	90459-6852	AUXILIARY CONTACT, DILA-XHI22	1	PC	
A01Q6000	90606-8398	CONTACTOR 4KW 24VDC, DILM9-10	1	PC	
V01Q5000	90459-5311	CONTACTOR 15KW 24VDC, DILM32-10	1	PC	
W21Q8000	90606-8398	CONTACTOR 4KW 24VDC, DILM9-10	1	PC	
W21Q8001	90459-5309	CONTACTOR 7,5KW 24VDC, DILM17-10	1	PC	

Pos	Part No	Description	Qty	Unit	Page No

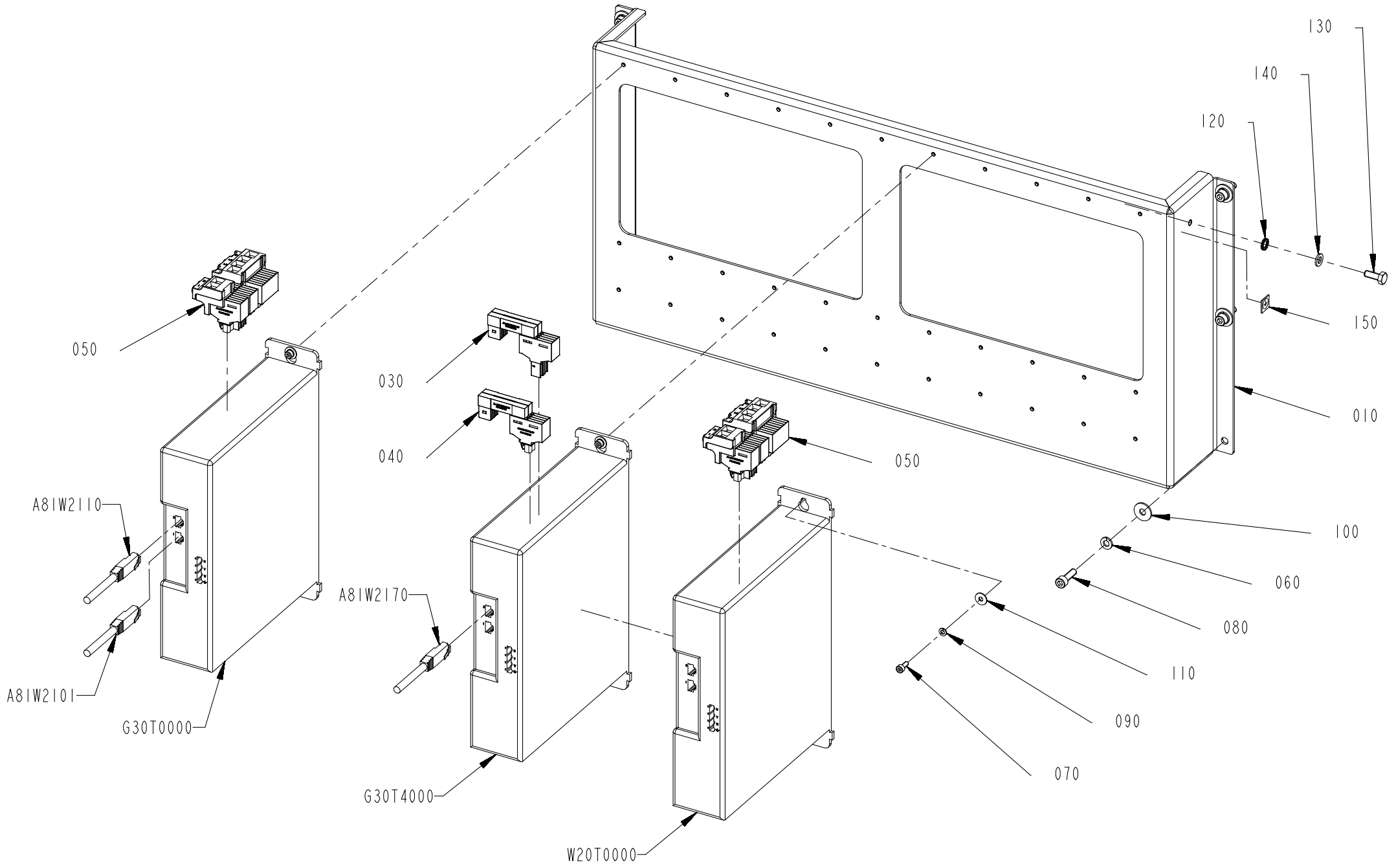
130
140
120
150
010
100
060
080
110
090
070
050
030
040
050
A8IW2110
A8IW2101
G30T0000
A8IW2170
G30T4000
W20T0000

ECM: 733482
Group number: 2835462-0400
Assembly Drawing: 2835462-4_1_AA

Pos	Part No	Description	Qty	Unit	Page No
Common Parts					
010	3388212-0000	BRACKET	1	PC	
030	90606-0481	CONNECTOR KIT, 2198-H040-D-T, SERIE A	1	PC	
040	90606-0482	CONN. KITS KINETIX, 2198-H040-P-T, SER A	1	PC	
050	90606-0502	CONNECTOR KIT, 2198-H040-ADP-IN, SERIE A	2	PC	
060	315402-0150	LOCK WASHER, DIN127B 6,1 A4, M6	6	PC	
070	312115-0289	SCREW ISO4762 M4X10 A4 80	6	PC	
080	312115-0370	SCREW ISO4762 M6X20 A4 80	6	PC	
090	315402-0136	LOCK WASHER, DIN127B 4,1 A4, M4-5/32	6	PC	
100	90005-0060	WASHER PLAIN, RBS 6,4/M6)/18,H=1,5	6	PC	
110	90005-0082	WASHER PLAIN ROUND 4,3(M4)/12,H=1	6	PC	
120	90062-0015	LOCK WASHER SERRAT.EXT.GEAR,6,4/11 H=0,7	1	PC	
130	312105-0368	SCREW, M6S ISO 4017 M6X16 A4 80	1	PC	
140	315105-0153	WASHER PLAIN, 6,4X12X1,5 A4 BRB	1	PC	
150	90194-0152	SIGN, EARTH	1	PC	
A81W2101	351501-0030	ETHERNET PATCH CABLE, FL CAT5 PATCH 3,0	1	PC	
A81W2110	351501-0003	ETHERNET PATCH CABLE, FL CAT5 PATCH 0,3	1	PC	
A81W2170	351501-0003	ETHERNET PATCH CABLE, FL CAT5 PATCH 0,3	1	PC	
G30T0000	90605-9390	AMP.KINETIX 5500, 2198-H025-ERS, SERIE A	1	PC	
G30T4000	90605-9390	AMP.KINETIX 5500, 2198-H025-ERS, SERIE A	1	PC	
W20T0000	90605-9390	AMP.KINETIX 5500, 2198-H025-ERS, SERIE A	1	PC	

Pos	Part No	Description	Qty	Unit	Page No

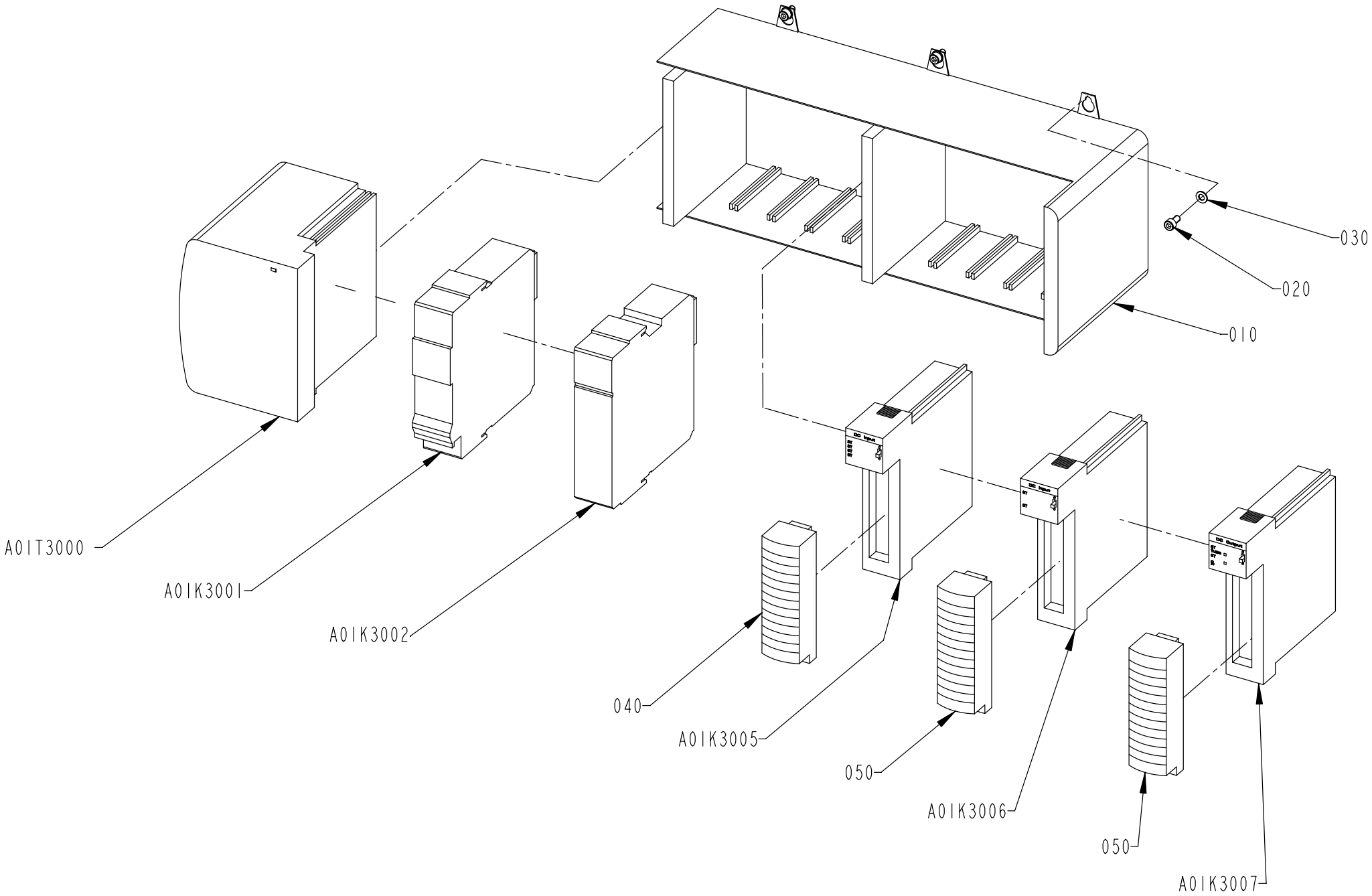
030
020
010
A01T3000
A01K3001
A01K3002
040
A01K3005
050
A01K3006
050
A01K3007

ECM: 808567
Group number: 2835458-0400
Assembly Drawing: 2835458-4_1_AB

Pos	Part No	Description	Qty	Unit	Page No
Common Parts					
010	90459-2458	BASEPLATE, 10 SLOT CONTROLLOGIX CHASSIS	1	PC	
020	312115-0325	SCREW ISO4762 M5X10 A4 80	6	PC	
030	315105-0146	WASHER PLAIN, 5,3X10X1 A4 BRB	6	PC	
040	90459-2488	REMOVABLE TERMINAL BLOCK 36 POINTS	1	PC	
050	90459-2487	REMOVABLE TERMINAL BLOCK 20 POINTS	2	PC	
A01K3001	90605-2744	PROCESSOR L72, SERIES B, 1756-L72/B	1	PC	
A01K3002	90603-5624	ETHERNET DUAL PORT 10-100M, 1756-EN3TR S	1	PC	
A01K3005	90459-6556	DIG INPUT MODULE 32P, 1756-IB32/B	1	PC	
A01K3006	90459-2413	DIG INPUT MODULE 16P, 1756-IB16	1	PC	
A01K3007	90459-2474	DIG OUTPUT MODULE, 1756-OB16E/A	1	PC	
A01T3000	90459-7267	POWER SUPPLY 24VDC, 1756-PB75/B	1	PC	

Pos	Part No	Description	Qty	Unit	Page No

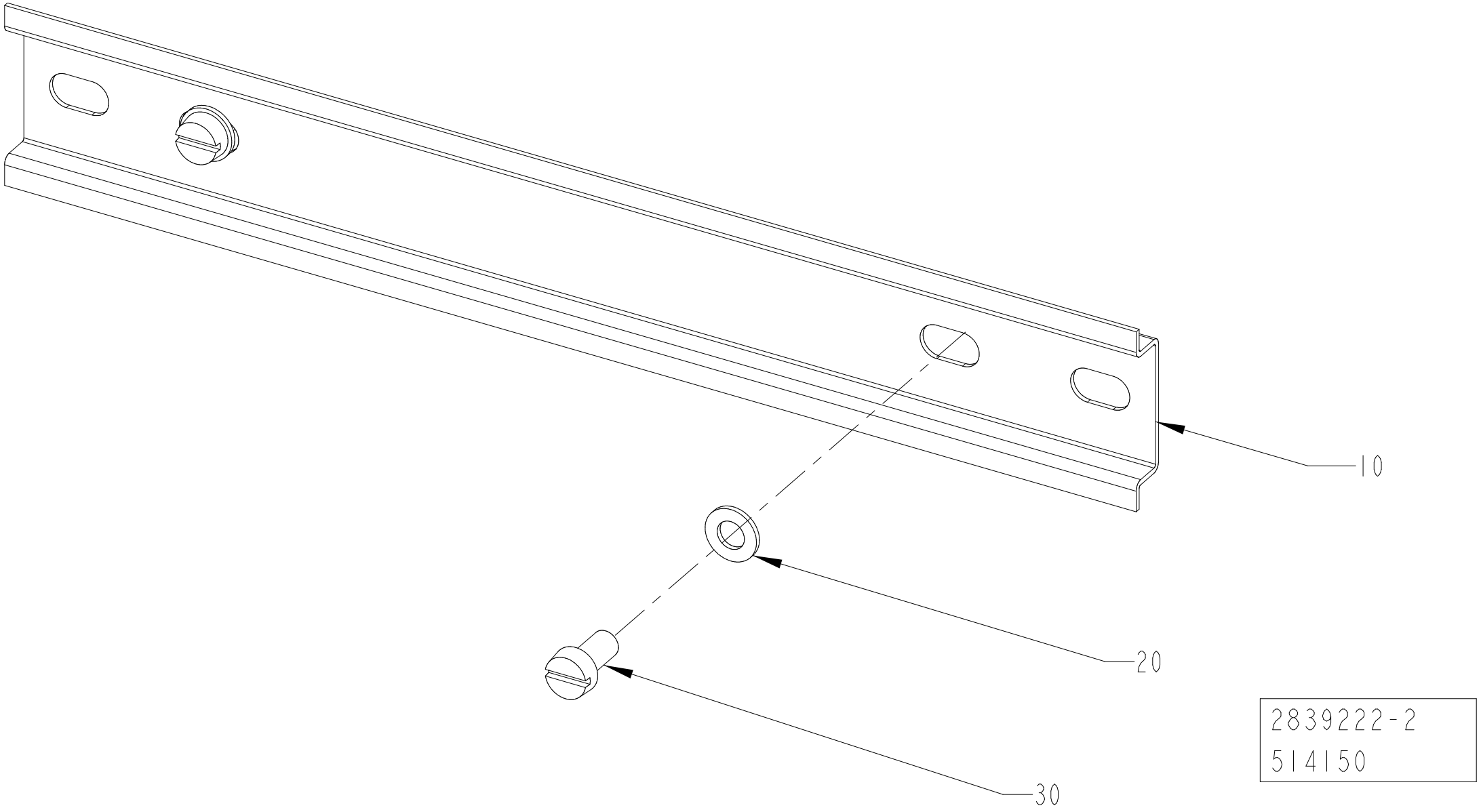
10
20
30
2839222-2
514150

ECM: 520274
Group number: 2839222-0200
Assembly Drawing: 2839222-2_1_AA

Pos	Part No	Description	Qty	Unit	Page No
Common Parts					
010	2835454-0000	RAIL	1	PC	
020	315105-0146	WASHER PLAIN, 5,3X10X1 A4 BRB	2	PC	
030	312125-0325	SCREW ISO 1207 M5X10 A4	2	PC	

Pos	Part No	Description	Qty	Unit	Page No

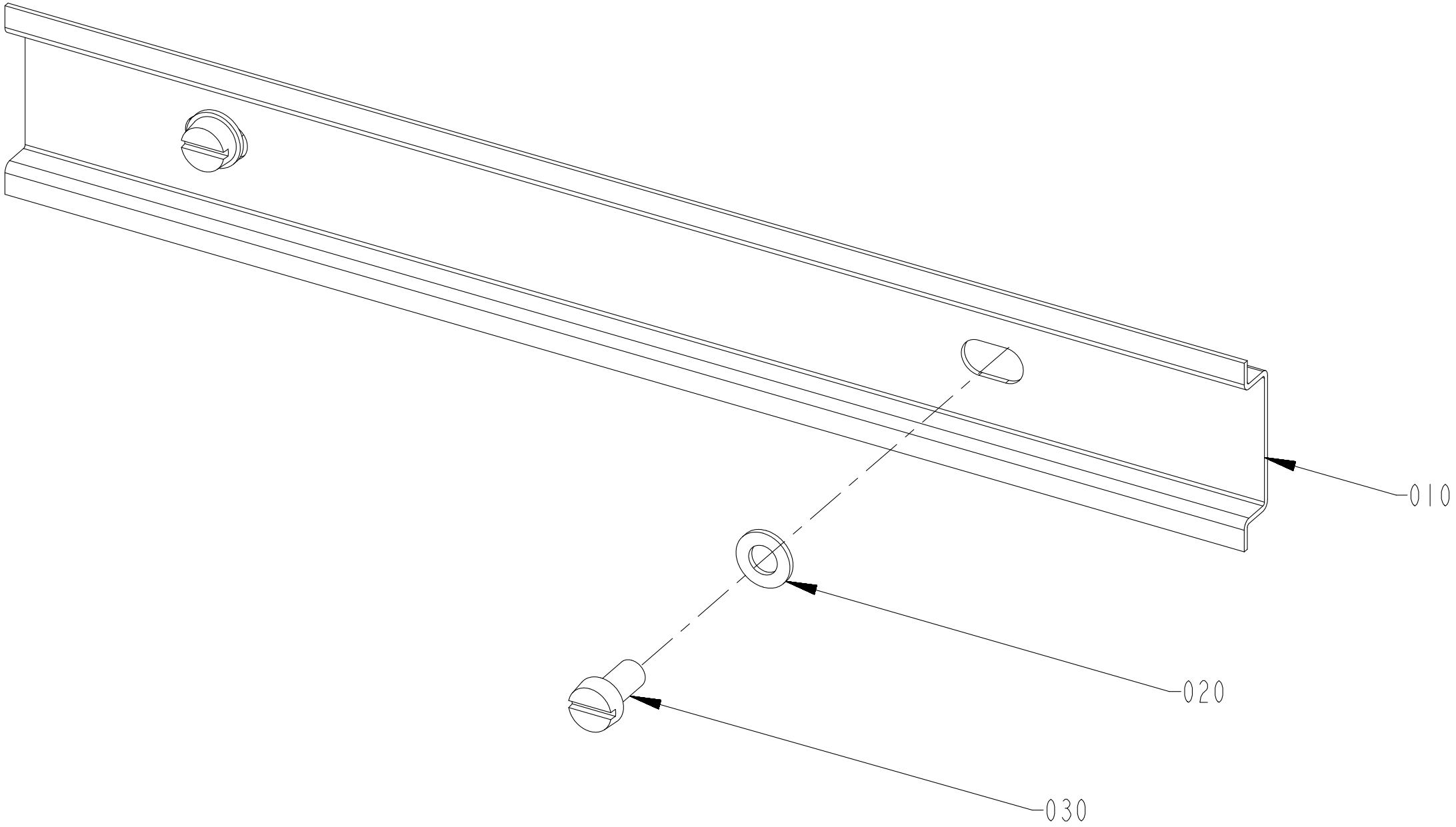
010
020
030

ECM: 730913
Group number: 3388210-0100
Assembly Drawing: 3388210-1_1_AA

Pos	Part No	Description	Qty	Unit	Page No
Common Parts					
010	2835453-0000	RAIL	1	PC	
020	315105-0146	WASHER PLAIN, 5,3X10X1 A4 BRB	2	PC	
030	312125-0325	SCREW ISO 1207 M5X10 A4	2	PC	

Pos	Part No	Description	Qty	Unit	Page No

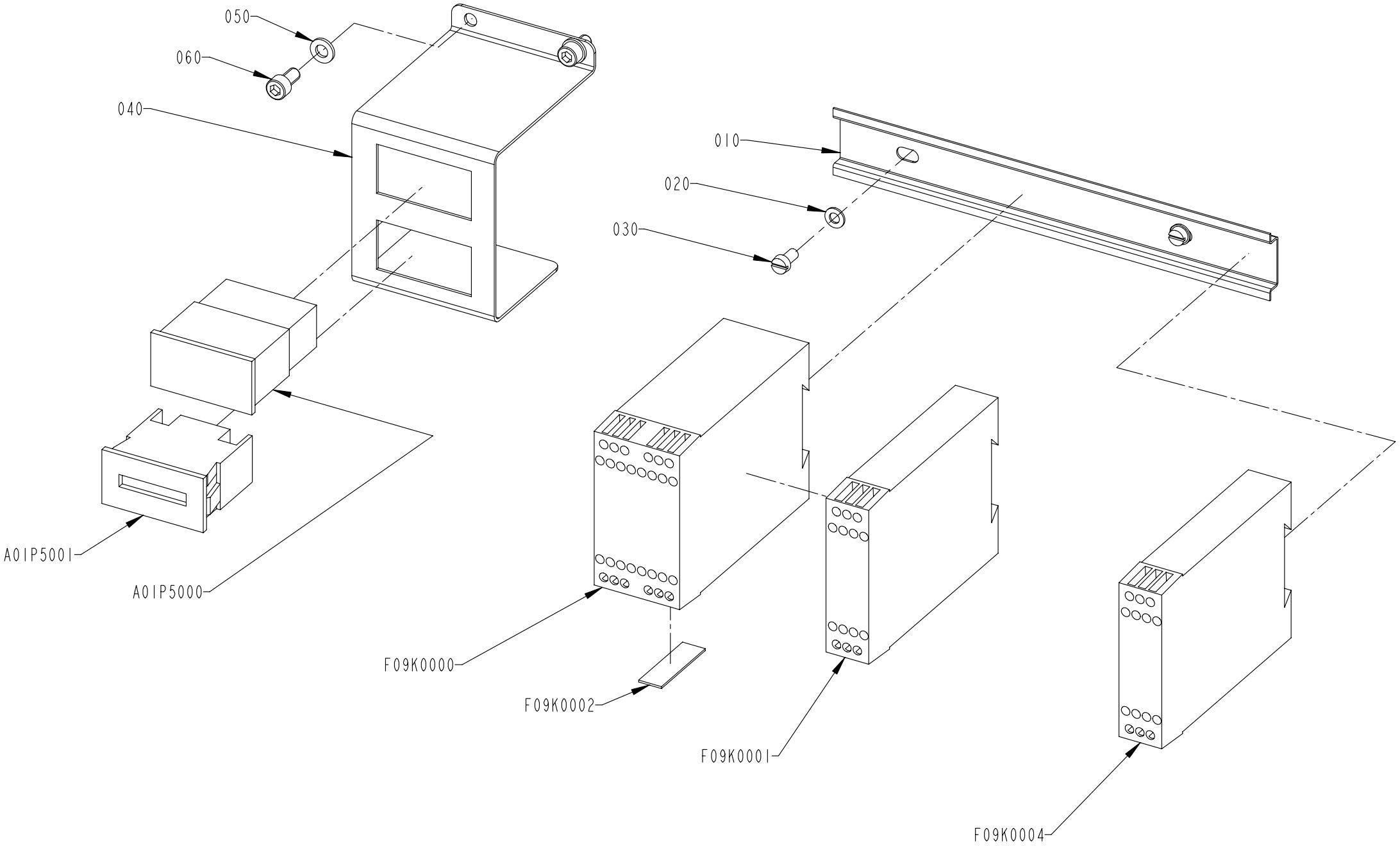
050
060
040
010
020
030
A01P5001
A01P5000
F09K0000
F09K0002
F09K0001
F09K0004

ECM: 808568
Group number: 2839221-0300
Assembly Drawing: 2839221-3_1_AB

Pos	Part No	Description	Qty	Unit	Page No
Common Parts					
010	2835453-0000	RAIL	1	PC	
020	315105-0146	WASHER PLAIN, 5,3X10X1 A4 BRB	2	PC	
030	312125-0325	SCREW ISO 1207 M5X10 A4	2	PC	
040	2839227-0000	SUPPORT	1	PC	
050	315105-0153	WASHER PLAIN, 6,4X12X1,5 A4 BRB	2	PC	
060	312115-0366	SCREW ISO4762 M6X12 A4 80	2	PC	
A01P5000	90053-0029	COUNTER, F524.800FA3C 24VDC	1	PC	
A01P5001	90053-0031	HOUR COUNTER, B 609.10 10-50VDC	1	PC	
F09K0000	90459-6692	SAFETY PLC, PLUTO B20, 2TLA020070R4600	1	PC	
F09K0001	90459-2291	SAFETY RELAY, E1T	1	PC	
F09K0002	90459-4891	IDENTIFIER, IDFIX-RW, 2TLA020070R2100	1	PC	
F09K0004	90459-2291	SAFETY RELAY, E1T	1	PC	

Pos	Part No	Description	Qty	Unit	Page No

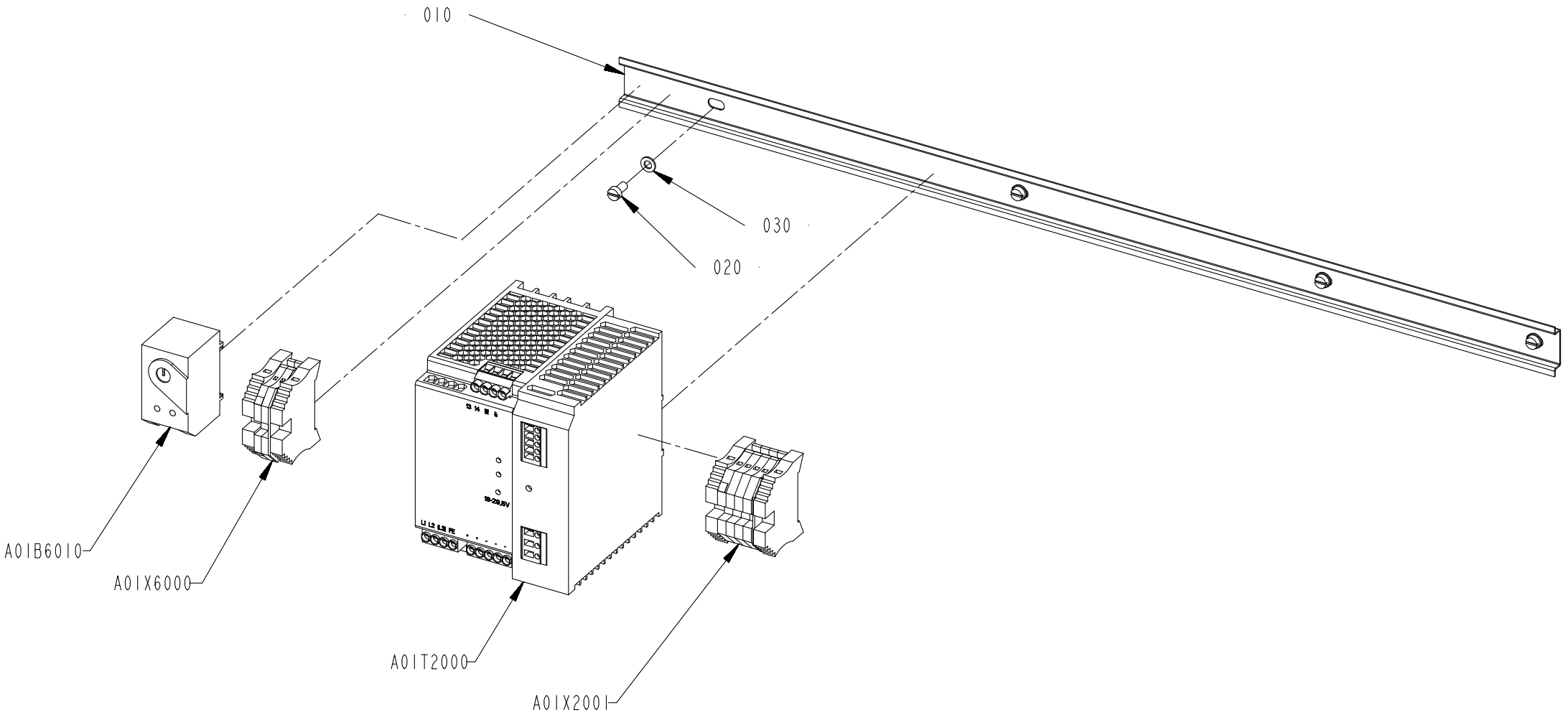
010
030
020
A01B6010
A01X6000
A01T2000
A01X2001

This list refers to drawings on pages 738 to 740

Pos	Part No	Description	Qty	Unit	Page No
POWER SUPPLY DEVICE	See page: 740				
A01T2001	90602-8707	BUFFER UNIT, QUINT-BUFFER/24DC/20	1	PC	
Common Parts					
010	2838476-0000	RAIL	1	PC	
020	312125-0325	SCREW ISO 1207 M5X10 A4	4	PC	
030	315105-0146	WASHER PLAIN, 5,3X10X1 A4 BRB	4	PC	
A01B6010	90606-0465	THERMOSTAT, XSEKTS011	1	PC	
A01T2000	90602-8988	POWER SUPPLY, QUINT-PS/ 3AC/24DC/20	1	PC	742
A01X2001	3363694-0100	PLINTH	1	PC	744
A01X6000	2890591-0300	PLINTH	1	PC	746

Pos	Part No	Description	Qty	Unit	Page No

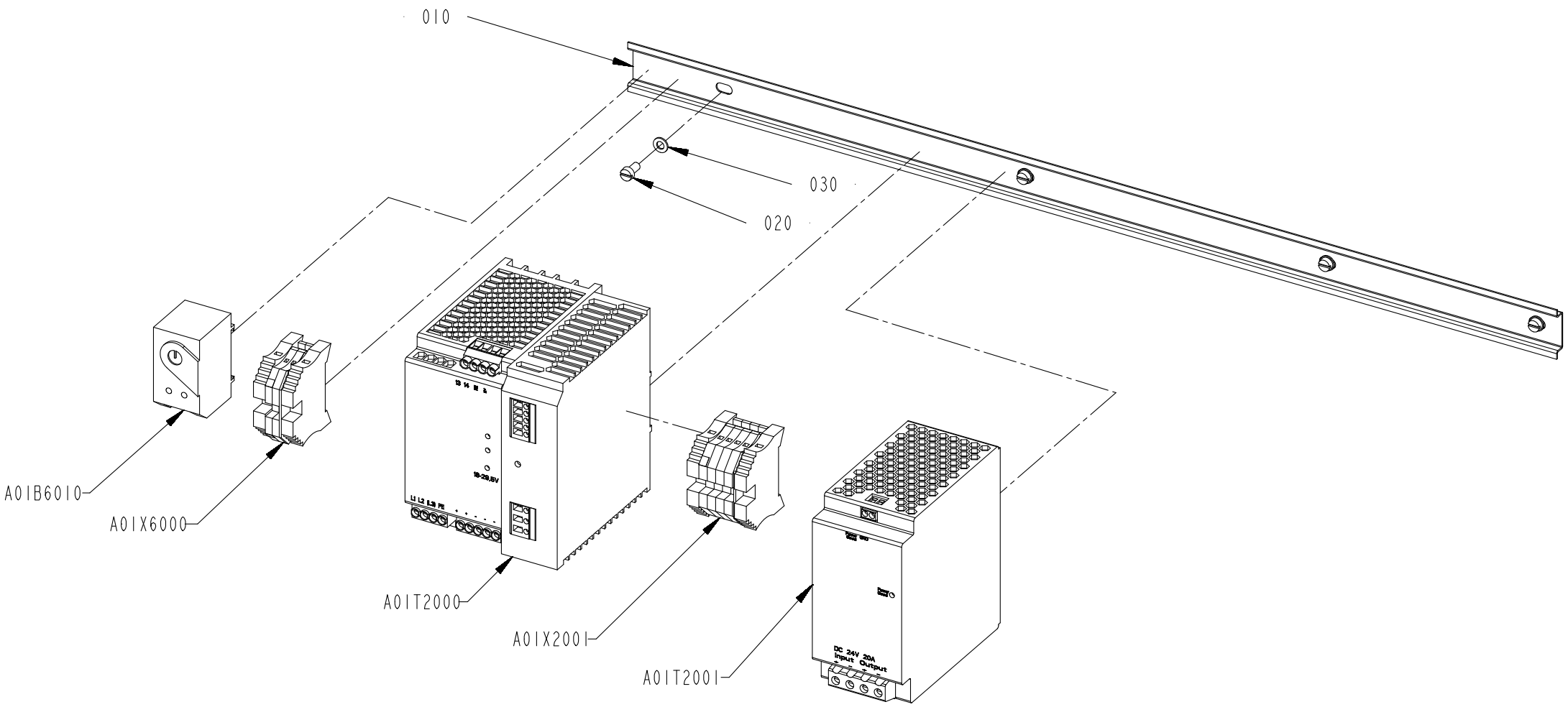
010
030
020
A01B6010
A01X6000
A01T2000
A01X2001
A01T2001
DC 24V 20A
Input Output

This list refers to drawings on pages 738 to 740

Pos	Part No	Description	Qty	Unit	Page No

SEE LIST FOLLOWING DRAWING ON PAGE: 738

Pos	Part No	Description	Qty	Unit	Page No

This page intentionally left blank

ECM: 495207
Group number: 90602-8988
Assembly Drawing: -

Pos	Part No	Description	Qty	Unit	Page No
Common Parts					
	90602-8687	POWER SUPPLY, QUINT-PS/ 3AC/24DC/20	1	PC	
	90602-8987	FILTER, TP-NEF/20A	1	PC	

Pos	Part No	Description	Qty	Unit	Page No

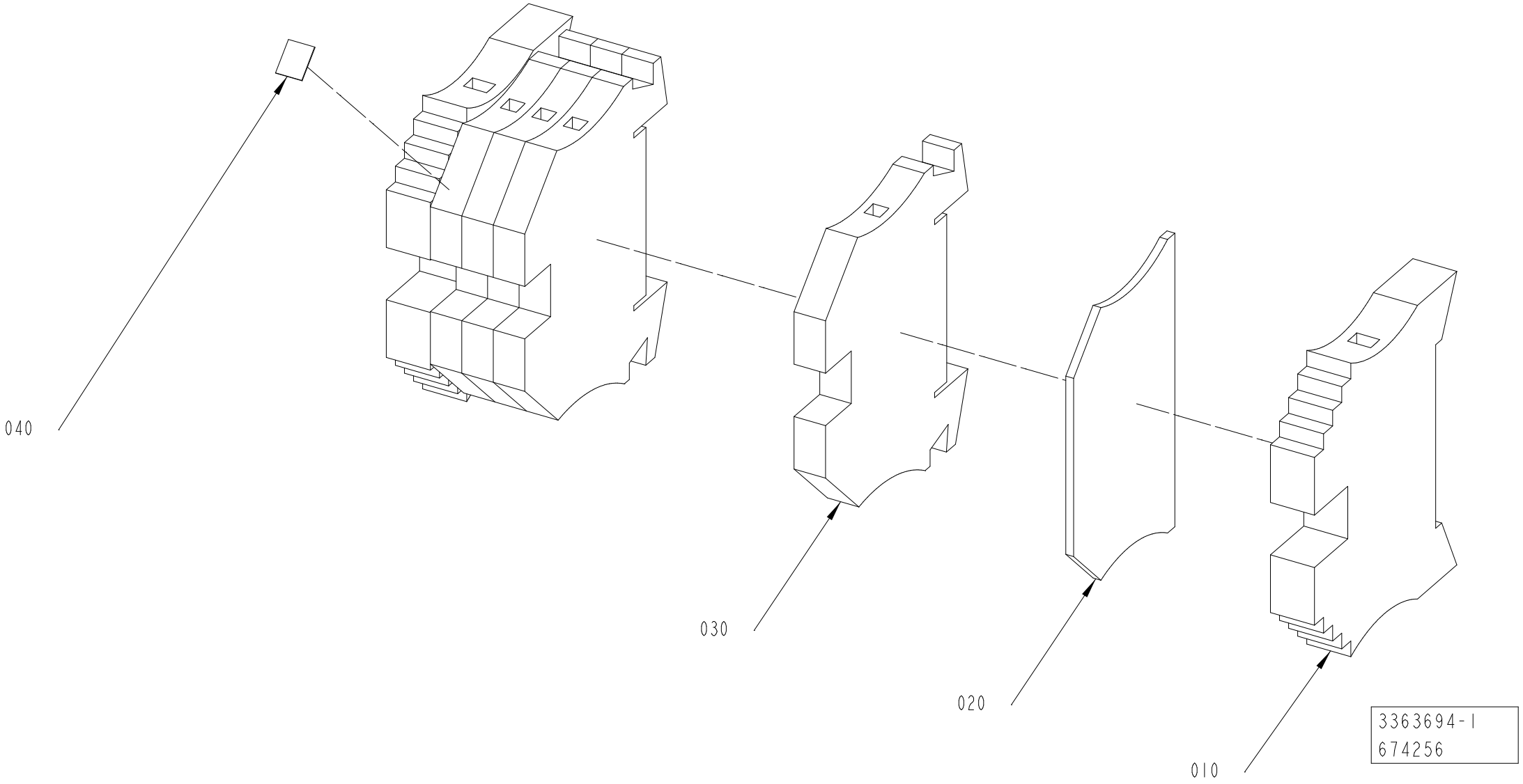
040
030
020
010
3363694-1
674256

ECM: 683470
Group number: 3363694-0100
Assembly Drawing: 3363694-1_1_AA

Pos	Part No	Description	Qty	Unit	Page No
Common Parts					
010	353031-0203	END BRACKET, WEW 35/2	2	PC	
020	353032-0004	END PLATE, WAP 2,5-10, BEIGE	1	PC	
030	353021-0213	FEED THROUGH TERMINAL, WDU 4	4	PC	
040	359011-0821	MARKING, DEK 6 FW 1-50	1	PC	

Pos	Part No	Description	Qty	Unit	Page No

Pos. A01X6000 in BoM 2835457-0300 **PLINTH**

Drawing file:2890591-3_1_AA

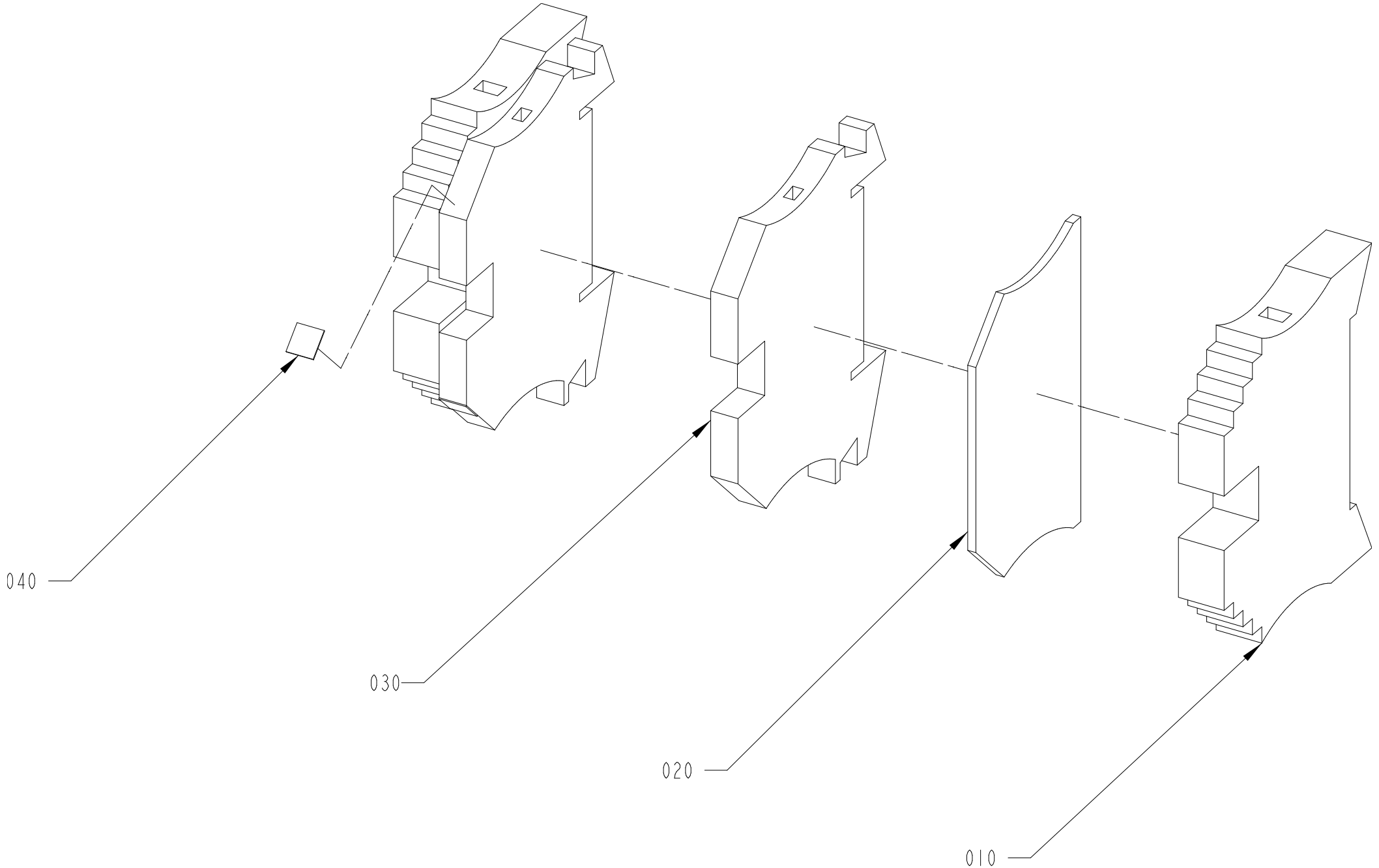

ECM: 730914
Group number: 2890591-0300
Assembly Drawing: 2890591-3_1_AA

Pos	Part No	Description	Qty	Unit	Page No
Common Parts					
010	353031-0203	END BRACKET, WEW 35/2	2	PC	
020	353032-0004	END PLATE, WAP 2,5-10, BEIGE	1	PC	
030	353021-0212	FEED THROUGH TERMINAL, WDU 2,5	2	PC	
040	359011-0807	MARKING, DEK 5 FW 1-50	2	PC	

Pos	Part No	Description	Qty	Unit	Page No

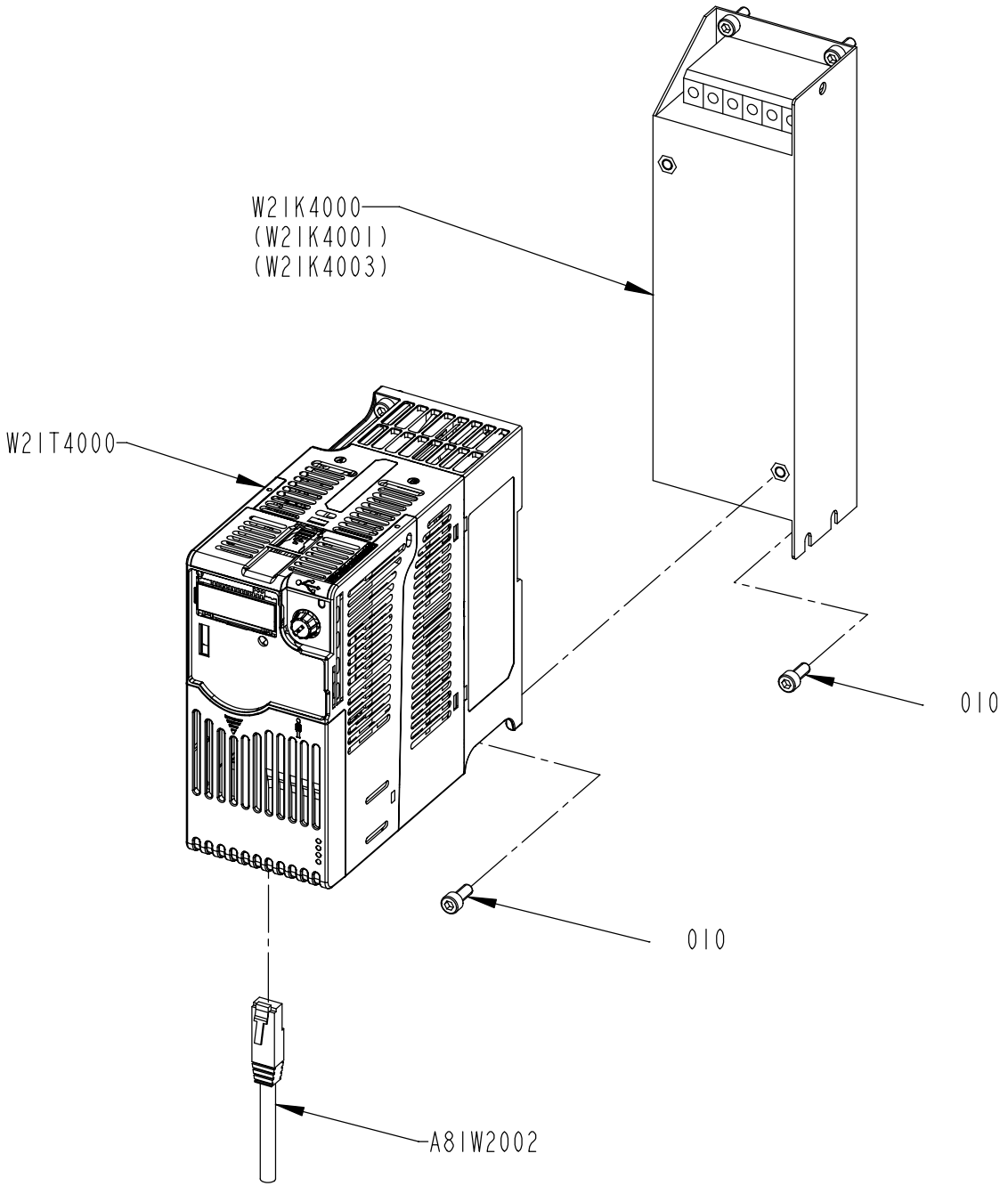
W2IK4000
(W2IK400I)
(W2IK4003)
W2IT4000
010
010
A8IW2002

ECM: 831222
Group number: 3405811-0100
Assembly Drawing: 3405811-1_1_AB

This list refers to drawings on pages 748 to 750

Pos	Part No	Description	Qty	Unit	Page No
With Conveyor Control	See page: 750				
010	312115-0327	SCREW ISO4762 M5X12 A4 80	12	PC	
A81W2006	351501-0015	ETHERNET PATCH CABLE, FL CAT5 PATCH 1,5	1	PC	
W21K6000	90605-9527	PF 525 EMC LINE FILTER, 240V, 0.4KW A	1	PC	
W21T6000	90605-9348	FC POWERFLEX 525, 230V 1PH, 0.75KW A	1	PC	
Without Conveyor Control	See page: 748				
010	312115-0327	SCREW ISO4762 M5X12 A4 80	6	PC	
Common Parts					
A81W2002	351501-0020	ETHERNET PATCH CABLE, FL CAT5 PATCH 2,0	1	PC	
W21K4000	90605-9527	PF 525 EMC LINE FILTER, 240V, 0.4KW A	1	PC	
W21T4000	90605-9348	FC POWERFLEX 525, 230V 1PH, 0.75KW A	1	PC	

Pos	Part No	Description	Qty	Unit	Page No

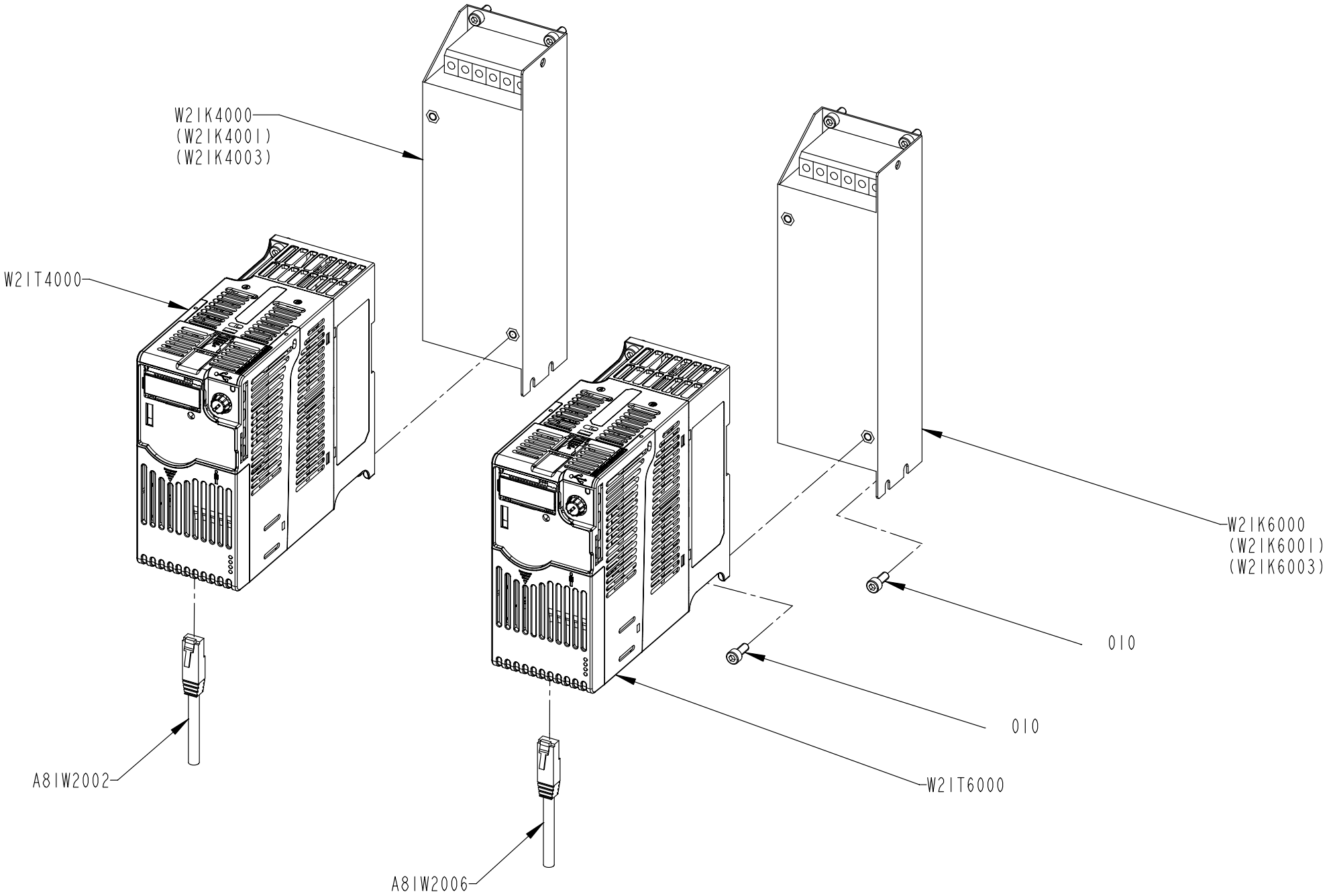
W2IK4000
(W2IK400I)
(W2IK4003)
W2IT4000
W2IK6000
(W2IK600I)
(W2IK6003)
010
010
A8IW2002
W2IT6000
A8IW2006

This list refers to drawings on pages 748 to 750

Pos	Part No	Description	Qty	Unit	Page No

SEE LIST FOLLOWING DRAWING ON PAGE: 748

Pos	Part No	Description	Qty	Unit	Page No

Pos. 220 in BoM 2833407-0400

ETHERNET SWITCH

Drawing file:3388211-1_1_AA

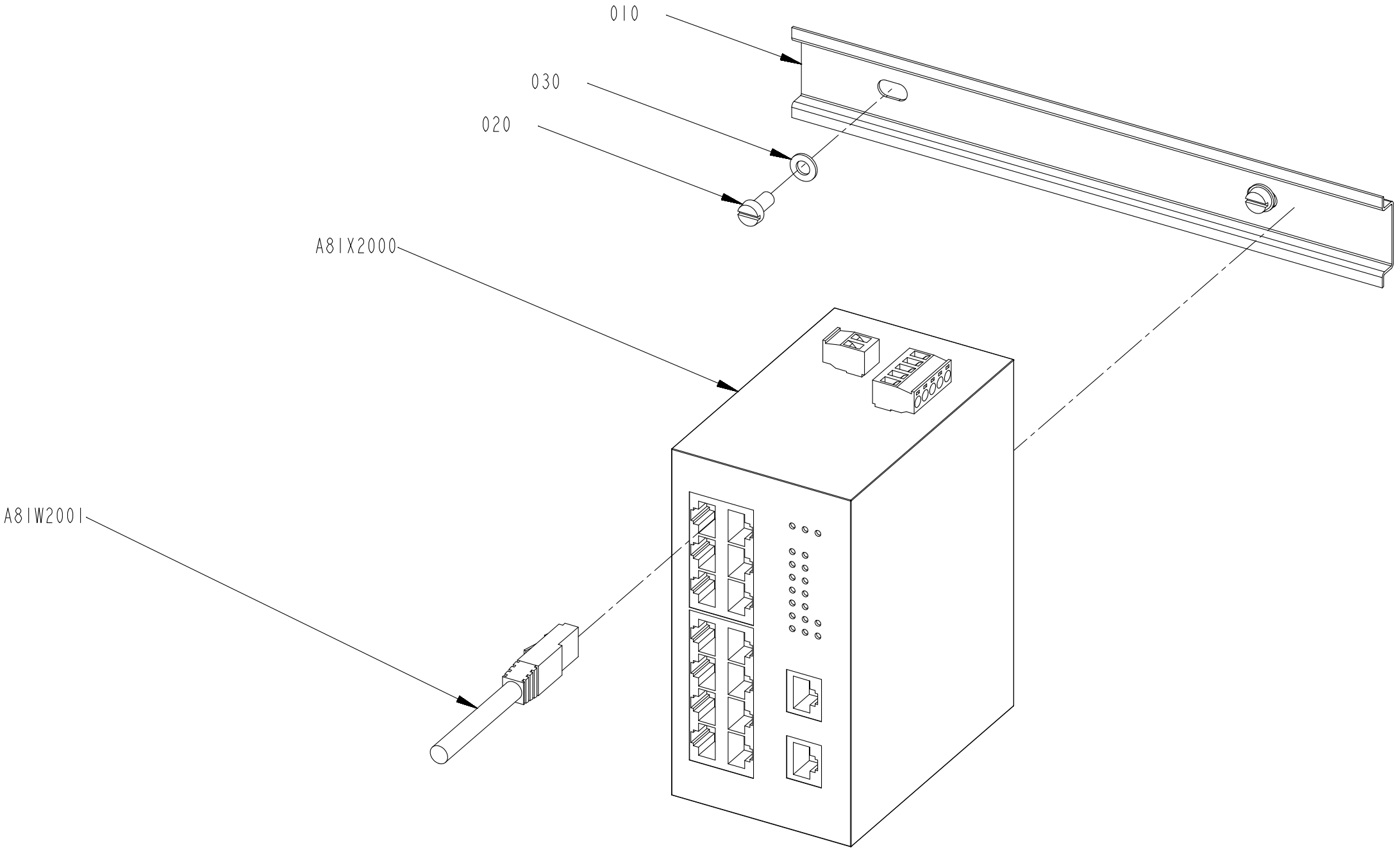

ECM: 731199
Group number: 3388211-0100
Assembly Drawing: 3388211-1_1_AA

Pos	Part No	Description	Qty	Unit	Page No
Common Parts					
010	2835453-0000	RAIL	1	PC	
020	312125-0325	SCREW ISO 1207 M5X10 A4	2	PC	
030	315105-0146	WASHER PLAIN, 5,3X10X1 A4 BRB	2	PC	
A81W2001	351501-0020	ETHERNET PATCH CABLE, FL CAT5 PATCH 2,0	1	PC	
A81X2000	90603-1856	ETHERNET SWITCH,FL SWITCH SFN 16TX/28919	1	PC	

Pos	Part No	Description	Qty	Unit	Page No

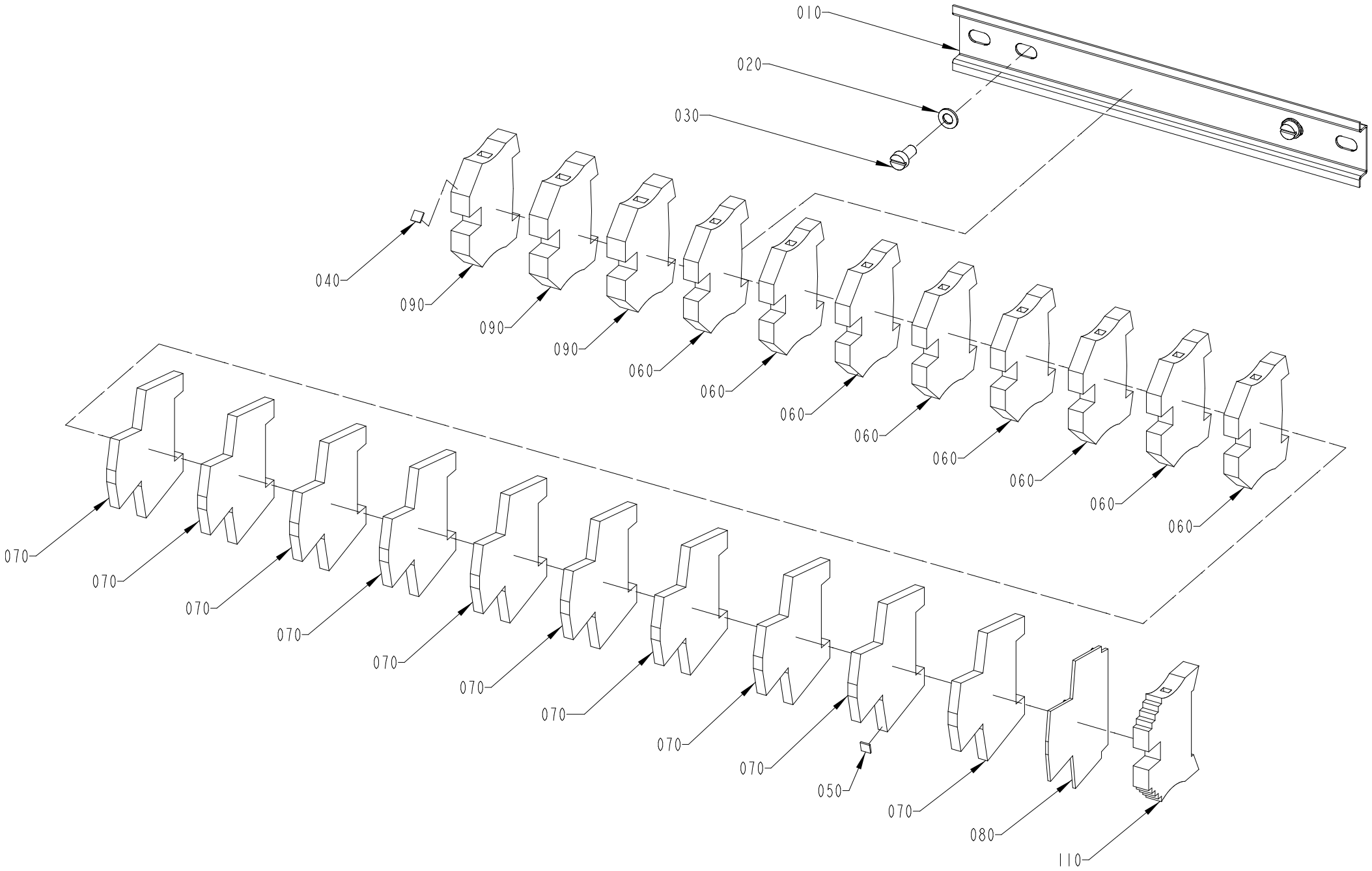
010
020
030
040
090
090
090
060
060
060
060
060
060
060
060
070
070
070
070
070
070
070
070
070
050
070
080
110

ECM: 731202
Group number: 2839223-0300
Assembly Drawing: 2839223-3_1_AA

Pos	Part No	Description	Qty	Unit	Page No
Common Parts					
010	2835454-0000	RAIL	1	PC	
020	315105-0146	WASHER PLAIN, 5,3X10X1 A4 BRB	2	PC	
030	312125-0325	SCREW ISO 1207 M5X10 A4	2	PC	
040	90604-9505	MARKING, DEK 5 FWZ E1-E50	1	PC	
050	90604-9506	MARKING, DEK 5 FWZ E51-E100	1	PC	
060	353024-0206	EARTH TERMINAL WPE 6	8	PC	
070	353024-0212	EARTH TERMINAL WDK 2,5 PE	10	PC	
080	353032-0009	END PLATE, WAP WDK 2,5	1	PC	
090	353024-0207	EARTH TERMINAL WPE 10	3	PC	
110	353031-0203	END BRACKET, WEW 35/2	1	PC	

Pos	Part No	Description	Qty	Unit	Page No

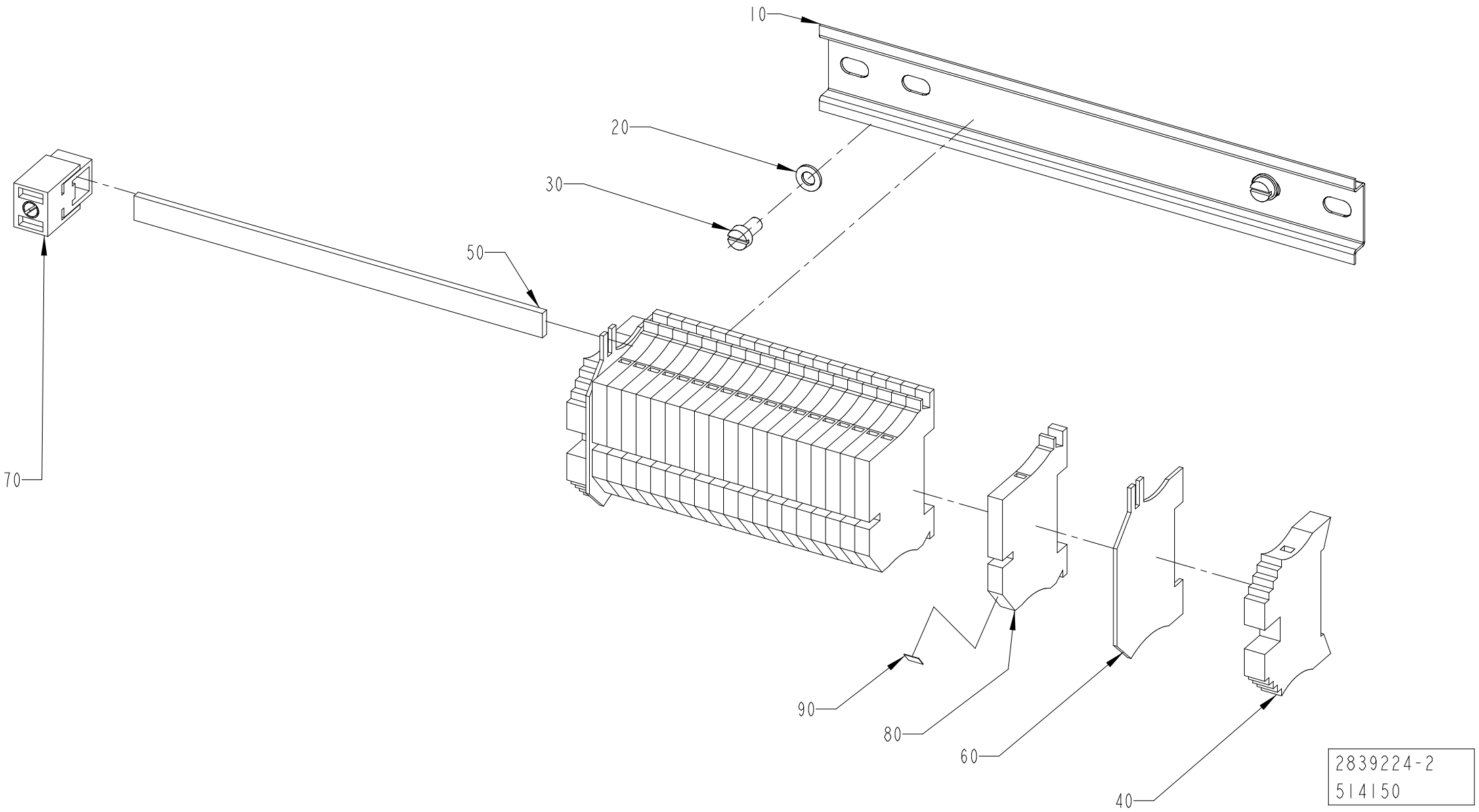
10
20
30
50
70
90
80
60
40
2839224-2
514150

ECM: 521631
Group number: 2839224-0200
Assembly Drawing: 2839224-2_1_AA

Pos	Part No	Description	Qty	Unit	Page No
Common Parts					
010	2835454-0000	RAIL	1	PC	
020	315105-0146	WASHER PLAIN, 5,3X10X1 A4 BRB	2	PC	
030	312125-0325	SCREW ISO 1207 M5X10 A4	2	PC	
040	353031-0203	END BRACKET, WEW 35/2	2	PC	
050	353041-0001	BUS BAR RAIL 10X3MM SSCH	165	MM	
060	353033-0104	END PLATE, WHP2,5-35N/10X3 BL	2	PC	
070	353041-0106	HOLDER ZB35 K 5026.8	1	PC	
080	353022-0002	TERMINAL WNT 4 10X3	20	PC	
090	359011-0821	MARKING, DEK 6 FW 1-50	1	PC	

Pos	Part No	Description	Qty	Unit	Page No

Pos. A01X0008 in BoM 2833407-0400 **DISTRIBUTION TERMINAL**

Drawing file:3046886-3_1_AA

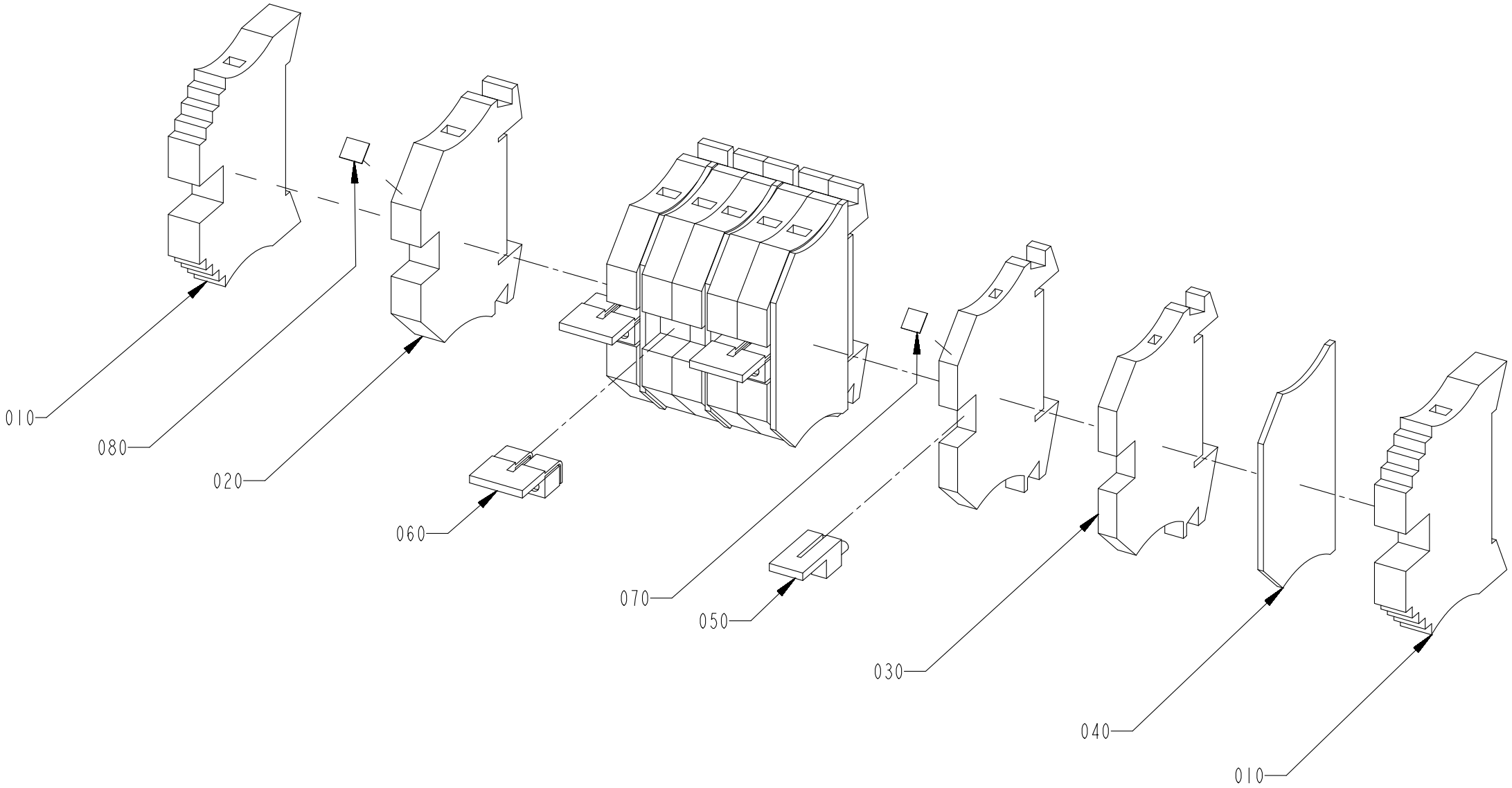

ECM: 731200
Group number: 3046886-0300
Assembly Drawing: 3046886-3_1_AA

Pos	Part No	Description	Qty	Unit	Page No
Common Parts					
010	353031-0203	END BRACKET, WEW 35/2	2	PC	
020	353021-0214	FEED THROUGH TERMINAL, WDU 6	6	PC	
030	353021-0212	FEED THROUGH TERMINAL, WDU 2,5	2	PC	
040	353032-0004	END PLATE, WAP 2,5-10, BEIGE	4	PC	
050	90459-1811	BRIDGE CONNECTOR WQV 2,5/2	1	PC	
060	353034-0018	BRIDGE CONNECTOR WQV 6/2	3	PC	
070	359011-0807	MARKING, DEK 5 FW 1-50	1	PC	
080	359011-0821	MARKING, DEK 6 FW 1-50	1	PC	

Pos	Part No	Description	Qty	Unit	Page No

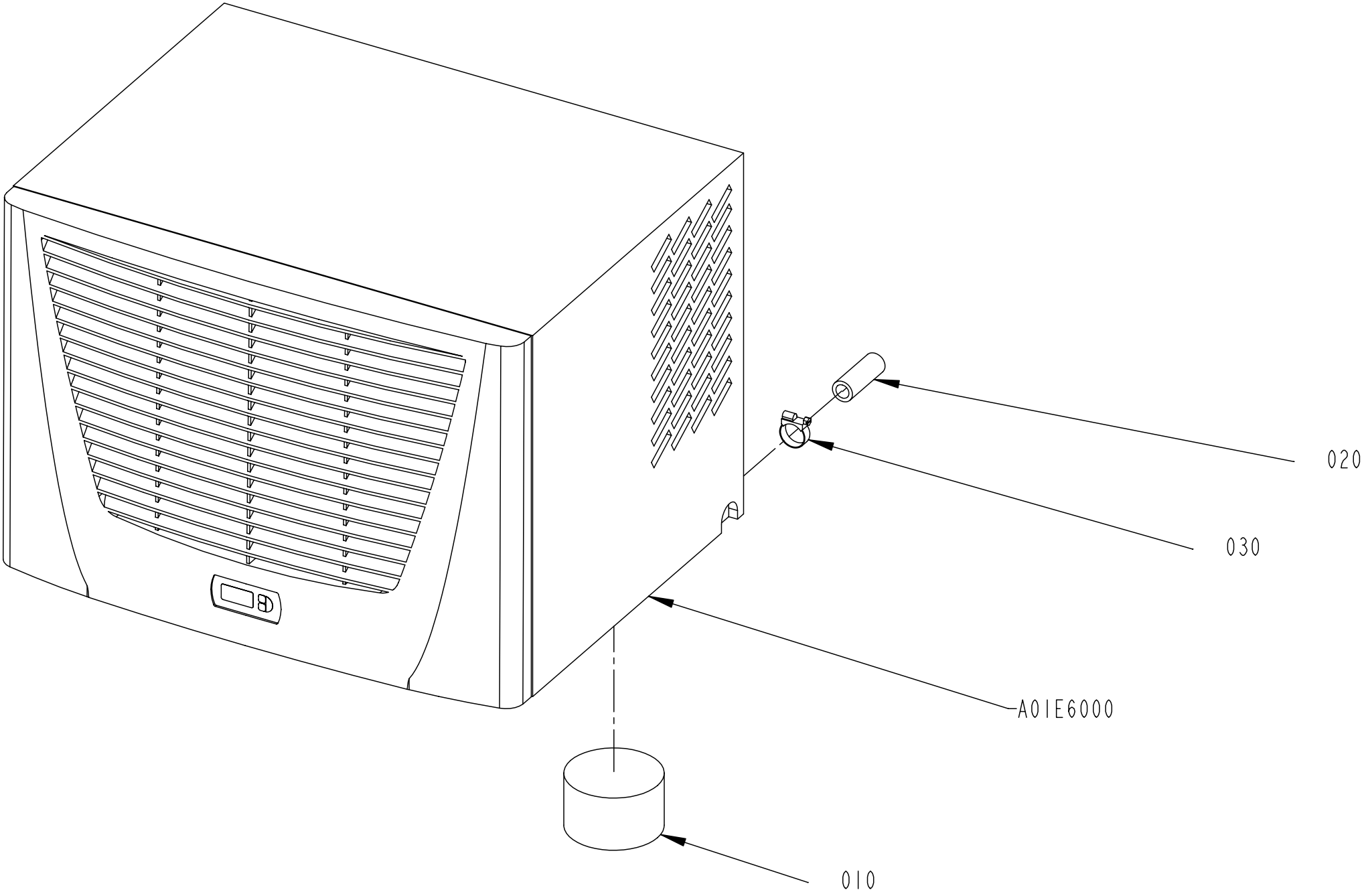
020
030
A01E6000
010

ECM: 808566
Group number: 2833408-0300
Assembly Drawing: 2833408-3_1_AB

Pos	Part No	Description	Qty	Unit	Page No
Common Parts					
010	90520-1378	STOPPER,SK3286880	1	PC	
020	90166-0087	HOSE 15/23 REINF.PVC TRANSP.	3	M	
030	342991-0104	HOSE CLIP,WORM DRIVE TYPE (19)-28	1	PC	
040	318301-0122	LIFTING EYE BOLT, LT M12 FZB	1	PC	
A01E6000	351439-1106	TOP THERM BLUE-E ROOFMOUNT SS, 3385.600	1	PC	

Pos	Part No	Description	Qty	Unit	Page No

This page intentionally left blank

ECM: 767817
Group number: 2833409-0300
Assembly Drawing: -

Pos	Part No	Description	Qty	Unit	Page No
Common Parts					
010	351160-0105	WIRE AWM 1X2,5 MM2 DARKBLUE	4	M	
020	351160-0106	WIRE AWM 1X4 MM2 DARKBLUE	5	M	
030	351161-0104	WIRE AWM 1X1,5 MM2 LIGHTBLUE	13	M	
040	351161-0105	WIRE AWM 1X2,5 MM2 LIGHTBLUE	20	M	
050	351161-0106	WIRE AWM 1X4 MM2 LIGHTBLUE	2.600	M	
060	351161-0107	WIRE AWM 1X6 MM2 LIGHTBLUE	2.600	M	
070	351161-0109	WIRE AWM 1X16 MM2 LIGHTBLUE	2.600	M	
080	351162-0102	WIRE AWM 1X0,75 MM2 YELLOW-GREEN	26	M	
090	351162-0104	WIRE AWM 1X1,5 MM2 YELLOW-GREEN	13	M	
100	351162-0105	WIRE AWM 1X2,5 MM2 YELLOW-GREEN	29	M	
110	351162-0106	WIRE AWM 1X4 MM2 YELLOW-GREEN	6.500	M	
120	351162-0107	WIRE AWM 1X6 MM2 YELLOW-GREEN	2.600	M	
130	351162-0108	WIRE AWM 1X10 MM2 YELLOW-GREEN	3.900	M	
140	351162-0109	WIRE AWM 1X16 MM2 YELLOW-GREEN	3.900	M	
150	351164-0104	WIRE AWM 1X1,5 MM2 BLACK	32	M	
160	351164-0106	WIRE AWM 1X4 MM2 BLACK	13	M	
170	351164-0108	WIRE AWM 1X10 MM2 BLACK	29	M	
180	351164-0109	WIRE AWM 1X16 MM2 BLACK	4	M	
A81W2009	351501-0100	ETHERNET PATCH CABLE, FL CAT5 PATCH 10,0	1	PC	

Pos	Part No	Description	Qty	Unit	Page No

This page intentionally left blank

ECM: 736839
Group number: 3405806-0100
Assembly Drawing: -

Pos	Part No	Description	Qty	Unit	Page No
LINE COMMUNICATION ETHERNET					
020	3405808-0100	COMMUNICATION UNIT	1	PC	766
LINE COMMUNICATION GENIUS					
030	3405809-0100	COMMUNICATION UNIT	1	PC	768
LINE COMMUNICATION SNP					
010	3405807-0100	COMMUNICATION UNIT	1	PC	770

Pos	Part No	Description	Qty	Unit	Page No

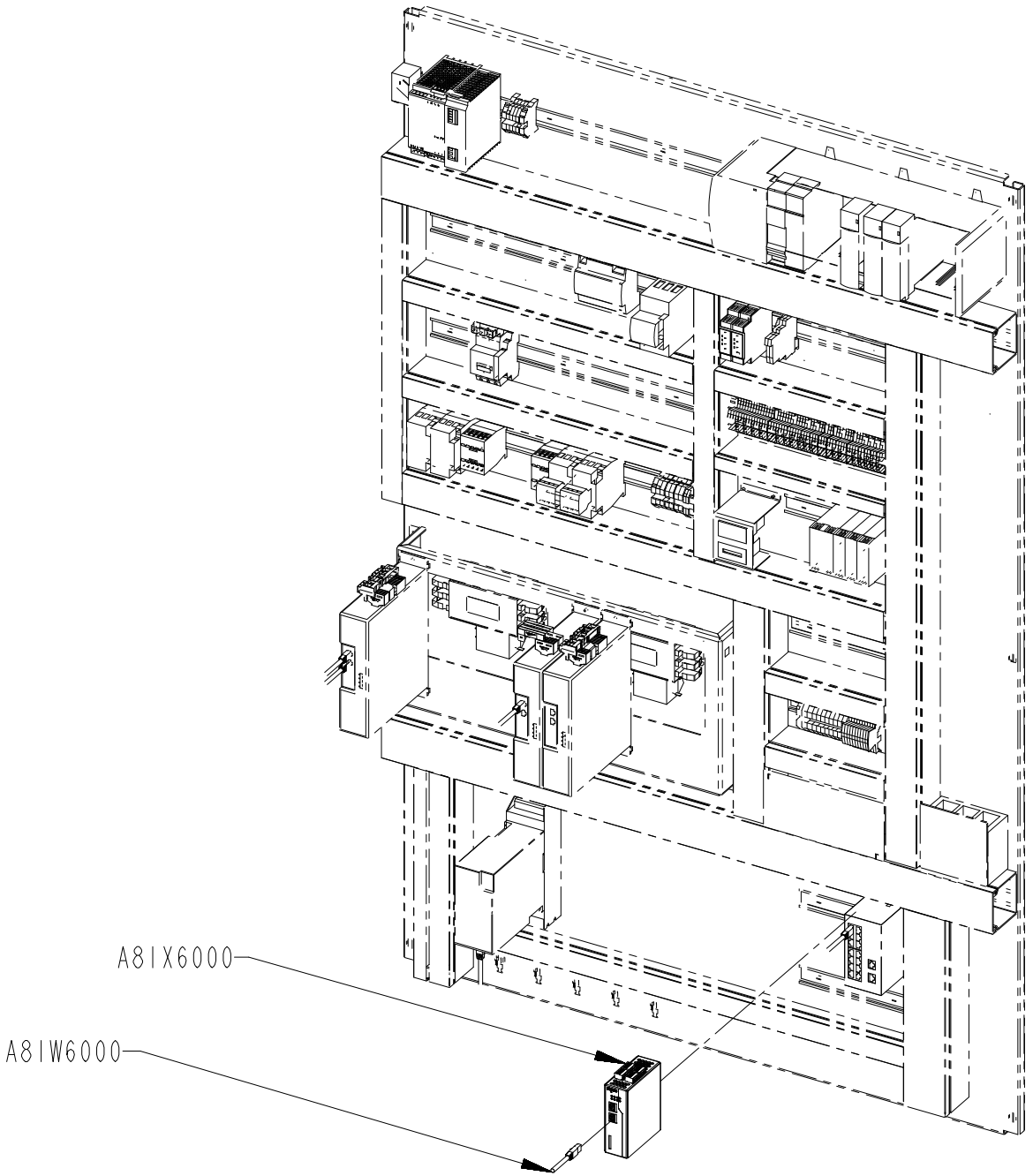
A8IX6000
A8IW6000

Pos	Part No	Description	Qty	Unit	Page No
Common Parts					
A81W6000	351501-0003	ETHERNET PATCH CABLE, FL CAT5 PATCH 0,3	1	PC	
A81X6000	90606-4205	ETHERN. NAT ROUTER,FL MGUARD RS2000 TX-B	1	PC	

Pos	Part No	Description	Qty	Unit	Page No

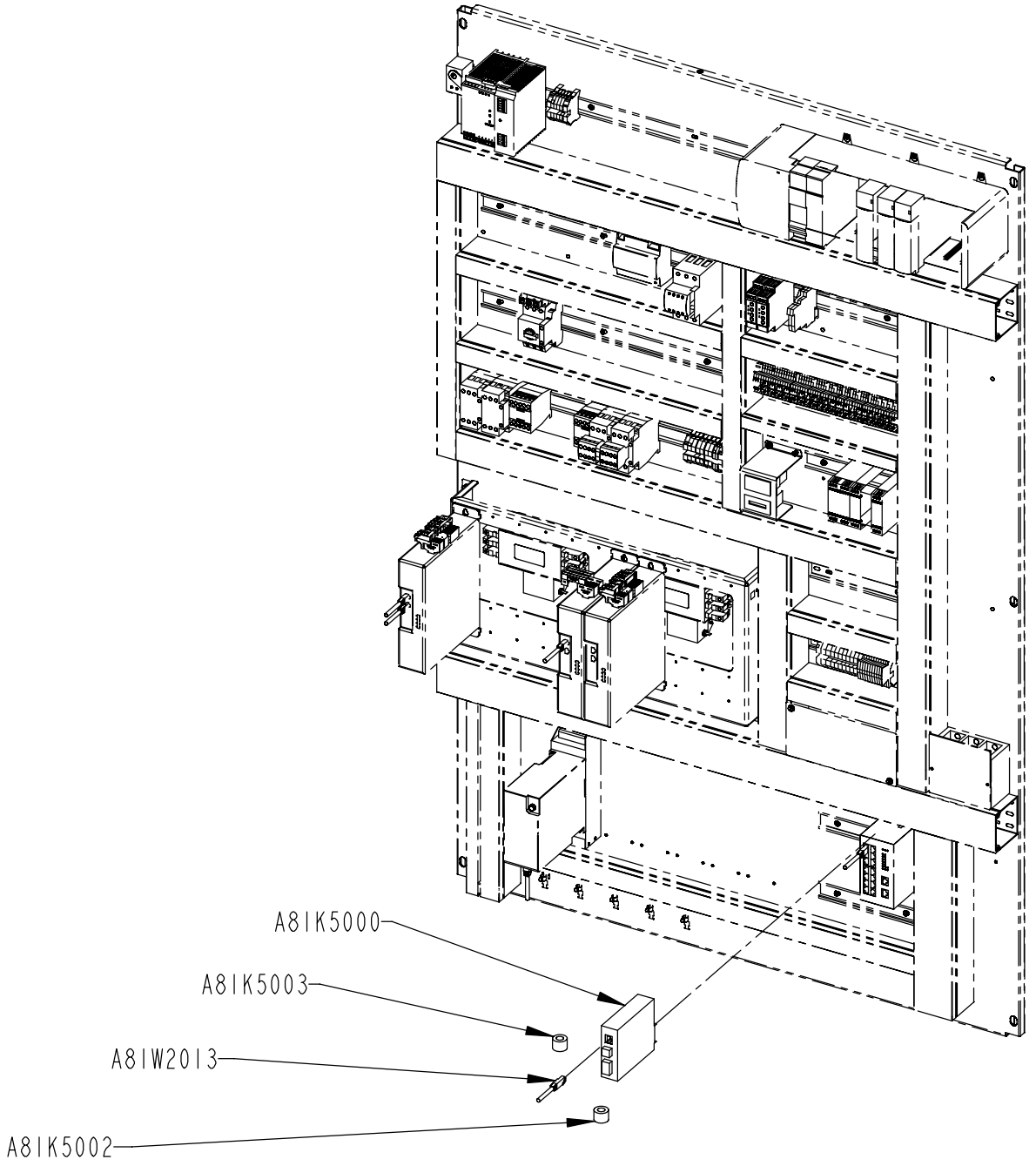
A8IK5000
A8IK5003
A8IW2013
A8IK5002

ECM: 821998
Group number: 3405809-0100
Assembly Drawing: 3405809-1_1_AB

Pos	Part No	Description	Qty	Unit	Page No
Common Parts					
A81K5000	90606-9346	ETHERNET/IP T GENIUS GATEWAY, AN-X2-GENI	1	PC	
A81K5002	90600-5249	FERRITE, B64290L616X38	1	PC	
A81K5003	90600-5249	FERRITE, B64290L616X38	1	PC	
A81W2013	351501-0003	ETHERNET PATCH CABLE, FL CAT5 PATCH 0,3	1	PC	

Pos	Part No	Description	Qty	Unit	Page No

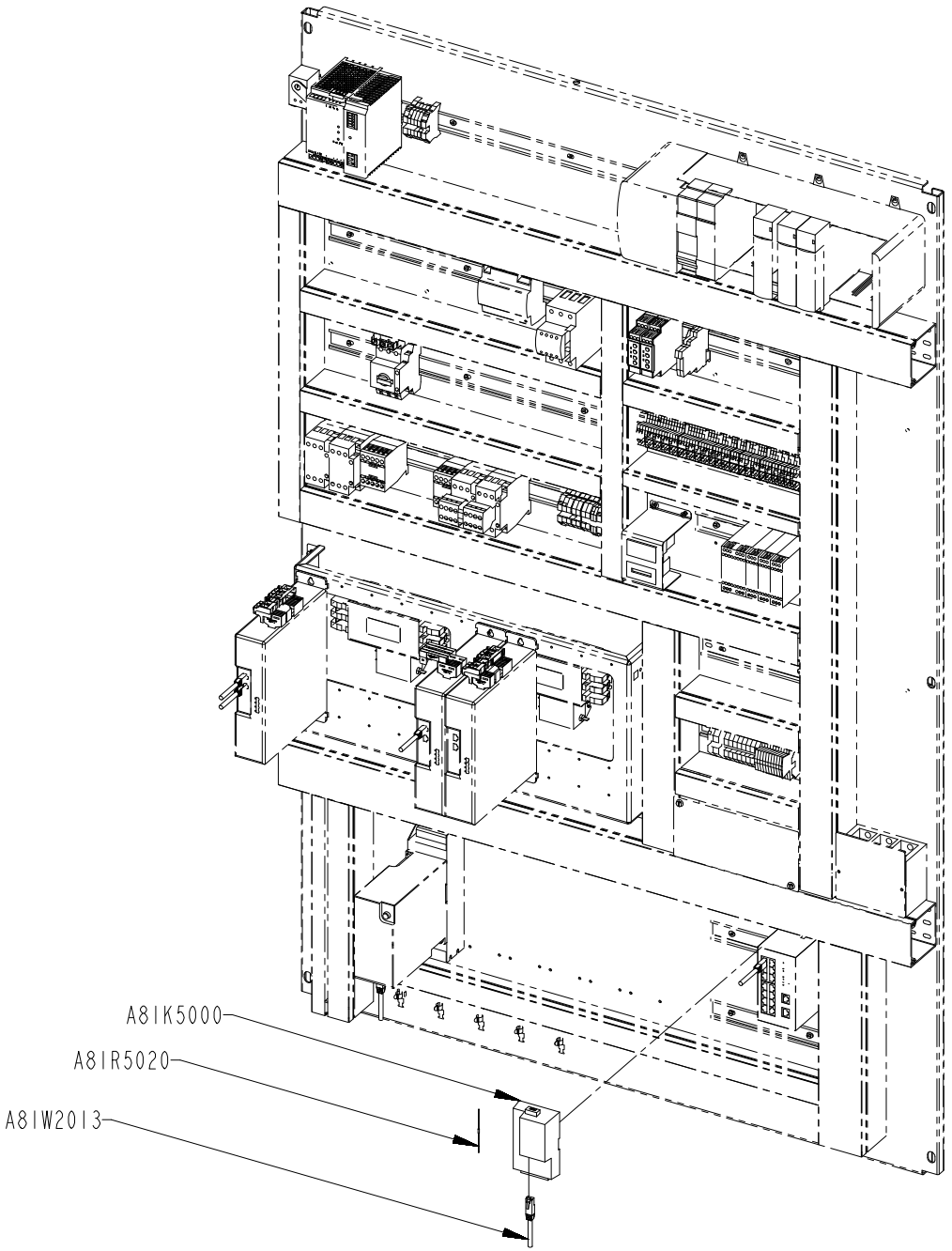
A81K5000
A81R5020
A81W2013

ECM: 736840
Group number: 3405807-0100
Assembly Drawing: 3405807-1_1_AA

Pos	Part No	Description	Qty	Unit	Page No
Common Parts					
A81K5000	90604-5464	QUICKSERVER GATEWAY, FS-QS-1230-0705	1	PC	
A81R5020	90459-2523	TERMINATOR, OPEN STYLE, 1485A-C2	1	PC	
A81W2013	351501-0003	ETHERNET PATCH CABLE, FL CAT5 PATCH 0,3	1	PC	

Pos	Part No	Description	Qty	Unit	Page No

This page intentionally left blank

SPC

Spare Parts Catalogue

This page intentionally left blank

ECM: 822808
Group number: 662913-0400
Assembly Drawing: -

Pos	Part No	Description	Qty	Unit	Page No
Common Parts					
010	2853706-0400	SETTING TOOL	1	PC	776
020	2838693-0200	START-UP KIT	1	PC	784
030	2986247-0300	CAP DETECTOR	1	PC	802
040	3398689-0000	PNEUMATIC DIAGRAM	1	PC	
050	3228275-0000	LUBRICATION DIAGRAM	1	PC	
060	3228191-0000	WATER DIAGRAM	1	PC	
070	2873923-0200	POSITION TEMPLATE	1	PC	812
080	2873953-0200	CAP	1	PC	816
090	3357883-0100	MEASURING TOOL	1	PC	
100	3473222-0100	CABLE MARKING	1	PC	818
110	3473223-0100	SET OF SIGNS	1	PC	820

Pos	Part No	Description	Qty	Unit	Page No

This page intentionally left blank

ECM: 825475
Group number: 2853706-0400
Assembly Drawing: -

Pos	Part No	Description	Qty	Unit	Page No
TBA SLIMCAP1000, TBA STREAMCAP1000, TBA SLIMCAP 2000, TBA HELICAP2 23, TBA HELICAP 27, TGA 0500SQ HELICAP 27, TGA 0750SQ HELICAP 27, TGA 1000SQ HELICAP 27, TGA 1500SQ HELICAP 27, TGA 0500SQ STREAMCAP 1000, TGA 0750SQ STREAMCAP 1000, TGA 1000SQ STREAMCAP 1000, TGA 1500SQ STREAMCAP 1000					
070	2788137-0000	TEMPLATE	1	PC	
TBA SLIMCAP1000, TBA STREAMCAP1000, TBA SLIMCAP 2000, TBA HELICAP2 23, TBA HELICAP 27, TGA 0500SQ HELICAP 27, TGA 0750SQ HELICAP 27, TGA 1000SQ HELICAP 27, TGA 1500SQ HELICAP 27, TGA 0500SQ STREAMCAP 1000, TGA 0750SQ STREAMCAP 1000, TGA 1000SQ STREAMCAP 1000, TGA 1500SQ STREAMCAP 1000, TBA STREAMCAP200, TPA STREAMCAP 1000, TPA STREAMCAP 500, TPA HELICAP 27, TGA 1000CR HELICAP 27, TGA 1000LF HELICAP 27					
040	2736458-0000	TEMPLATE	1	PC	
110	3047353-0000	GUIDE	1	PC	
TBA STREAMCAP200					
060	2939208-0100	SETTING TOOL	1	PC	778
100	3034465-0000	SETTING TOOL	1	PC	
TPA STREAMCAP 1000, TPA STREAMCAP 500, TPA HELICAP 27, TGA 1000CR HELICAP 27, TGA 1000LF HELICAP 27					
070	2873935-0000	TEMPLATE	1	PC	
Common Parts					
010	2715750-0100	TEMPLATE	1	PC	780
020	2716125-0100	SETTING TOOL	1	PC	782
030	3044285-0000	TEMPLATE	2	PC	

Pos	Part No	Description	Qty	Unit	Page No

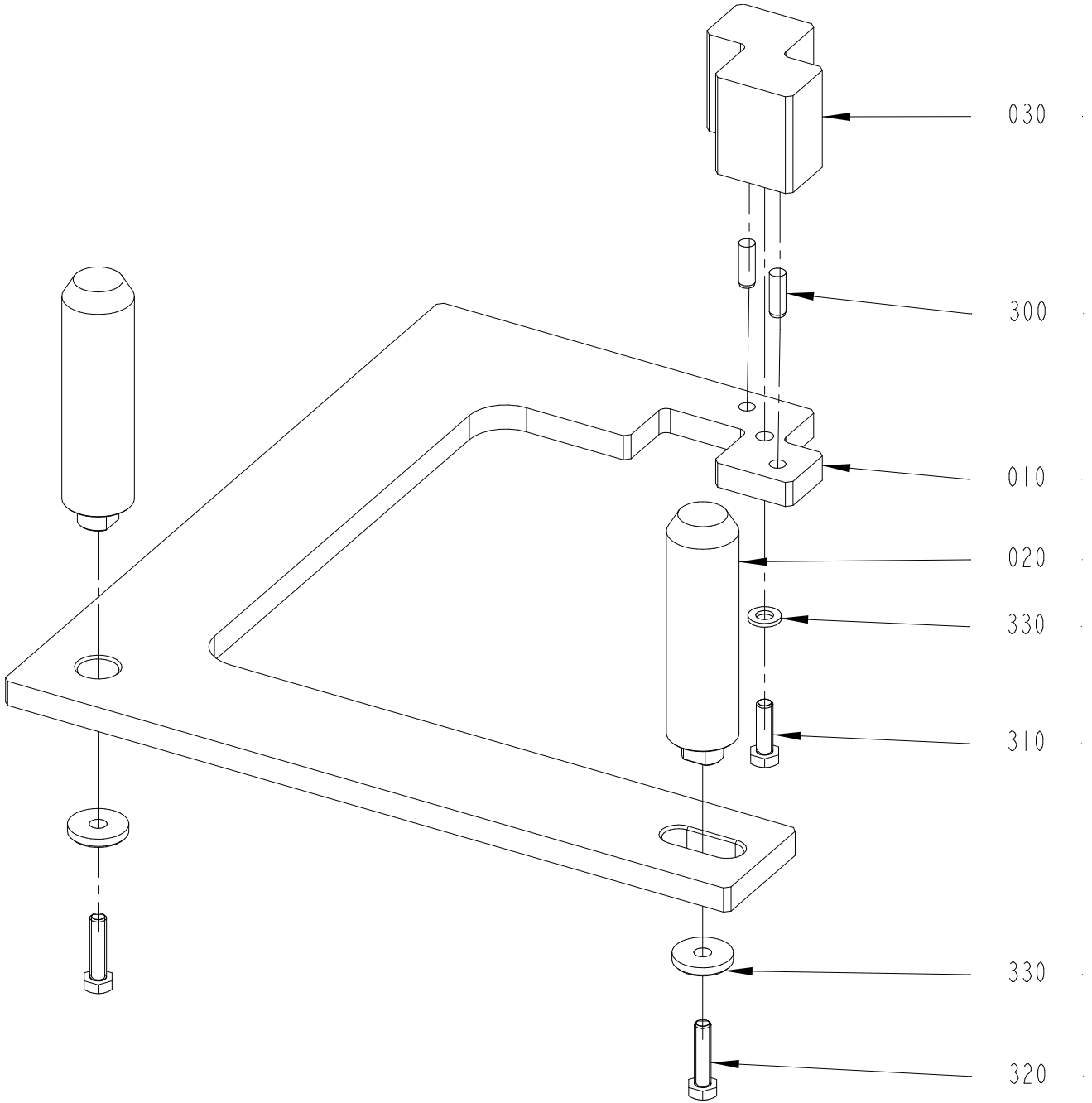

2939208-1
332281

ECM: 349976
Group number: 2939208-0100
Assembly Drawing: 2939208-1_1_AA

Pos	Part No	Description	Qty	Unit	Page No
Common Parts					
010	2939164-0000	SETTING TOOL	1	PC	
020	2939165-0000	SHAFT	2	PC	
030	2939331-0000	TOOL	1	PC	
300	311103-0352	PARALLEL PIN ISO 2338 6M6X18 A1	2	PC	
310	312105-0370	SCREW, M6S ISO 4017 M6X20 A4 80	1	PC	
320	312105-0372	SCREW, M6S ISO 4017 M6X25 A4 80	2	PC	
330	315105-0153	WASHER PLAIN, 6,4X12X1,5 A4 BRB	1	PC	
340	315121-0153	WASHER PLAIN, TBRSB 6,4/22 H=4	2	PC	

Pos	Part No	Description	Qty	Unit	Page No

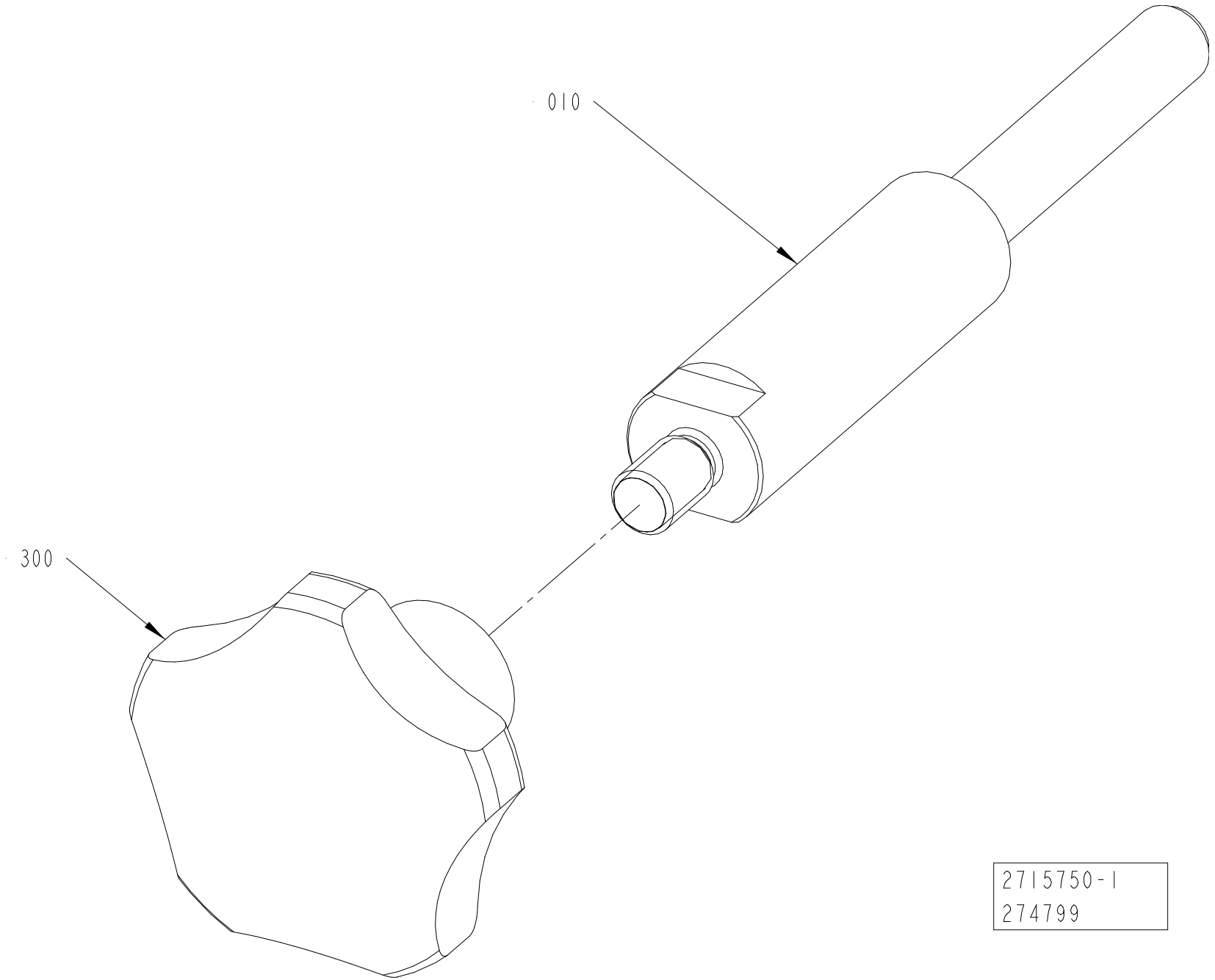
010
300
2715750-1
274799

ECM: 444700
Group number: 2715750-0100
Assembly Drawing: 2715750-1_1_AA

Pos	Part No	Description	Qty	Unit	Page No
Common Parts					
010	2715751-0000	SHAFT	1	PC	
300	90051-0054	STELLAR KNOB, INT. THREAD, NO. 8306-0340	1	PC	

Pos	Part No	Description	Qty	Unit	Page No

Pos. 020 in BoM 2853706-0400

SETTING TOOL

Drawing file:2716125-1_1_AA

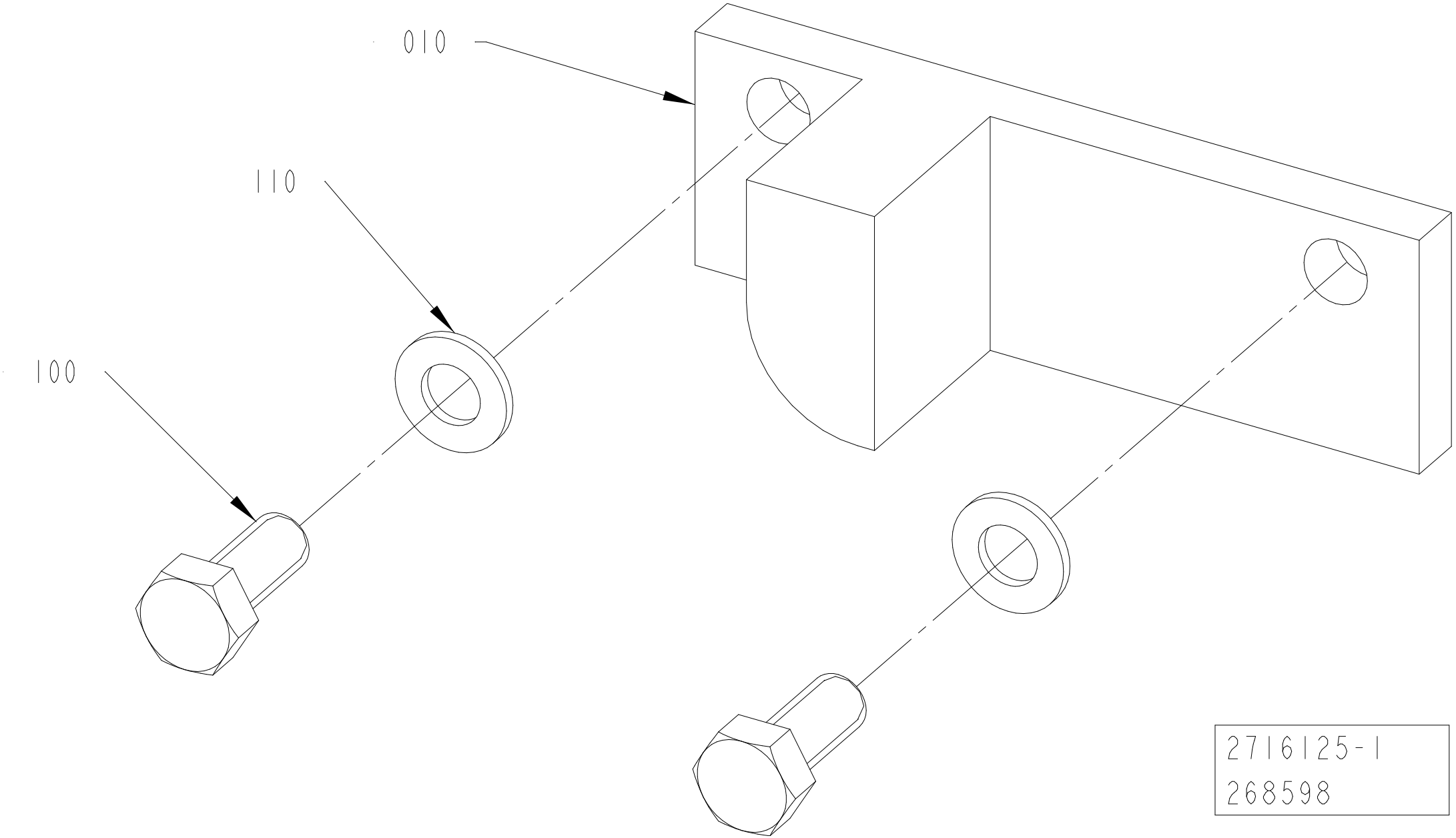

ECM: 269065
Group number: 2716125-0100
Assembly Drawing: 2716125-1_1_AA

Pos	Part No	Description	Qty	Unit	Page No
Common Parts					
010	2716154-0000	SETTING TEMPLATE	1	PC	
100	312105-0327	SCREW, M6S ISO 4017 M5X12 A4 80	2	PC	
110	315105-0146	WASHER PLAIN, 5,3X10X1 A4 BRB	2	PC	

Pos	Part No	Description	Qty	Unit	Page No

This page intentionally left blank

ECM: 843366
Group number: 2838693-0200
Assembly Drawing: -

Pos	Part No	Description	Qty	Unit	Page No
ADHESIVE HENKEL CAPFIX 100					
100	3220230-0100	START-UP KIT	1	PC	786
ADHESIVE HENKEL CAPFIX 500					
100	3296413-0100	START-UP KIT	1	PC	790
ADHESIVE HENKEL CAPFIX 600					
100	3309602-0100	START-UP KIT	1	PC	794
ADHESIVE HENKEL CAPFIX 600 V					
100	3493623-0100	STARTUP KIT	1	PC	798

Pos	Part No	Description	Qty	Unit	Page No

This page intentionally left blank

ECM: 751361
Group number: 3220230-0100
Assembly Drawing: -

Pos	Part No	Description	Qty	Unit	Page No
CAP 30/FLEX HELICAP2 23					
030	90459-3197	SATURN SINGLE-ORIFICE NOZZLE, 322014	2	PC	
CAP 30/FLEX SLIMCAP1000					
030	90439-0155	SATURN SINGLE-ORIFICE NOZZLE, 322012	2	PC	
CAP 30/FLEX SLIMCAP2000					
030	90458-0651	SATURN SINGLE-ORIFICE NOZZLE, 322010	2	PC	
Common Parts					
020	1606000-0000	TETRA PAK CAPFIX 100, ONLY IN BOM	1	PC	788
040	3034434-0000	TENSION SPRING	20	PC	
070	2985810-0000	BRUSH	1	PC	
080	90458-2510	FUSE, ATDR6	3	PC	

Pos	Part No	Description	Qty	Unit	Page No

This page intentionally left blank

ECM: 654539
Group number: 1606000-0000
Assembly Drawing: -

Pos	Part No	Description	Qty	Unit	Page No
Common Parts					
	1606000-0120	TETRA PAK CAPFIX 100, PSC/STARTUP 12KG	1	PC	
	1606000-8000	TETRA PAK CAPFIX 100	1	KG	

Pos	Part No	Description	Qty	Unit	Page No

This page intentionally left blank

ECM: 843367
Group number: 3296413-0100
Assembly Drawing: -

Pos	Part No	Description	Qty	Unit	Page No
CAP 30/FLEX STREAMCAP1000					
030	90439-0155	SATURN SINGLE-ORIFICE NOZZLE, 322012	2	PC	
CAP 30/FLEX STREAMCAP500					
030	90458-0651	SATURN SINGLE-ORIFICE NOZZLE, 322010	2	PC	
Common Parts					
020	1606002-0000	TETRA PAK CAPFIX 500, ONLY IN BOM	1	PC	792
040	3034434-0000	TENSION SPRING	20	PC	
070	2985810-0000	BRUSH	1	PC	
080	90458-2510	FUSE, ATDR6	3	PC	

Pos	Part No	Description	Qty	Unit	Page No

This page intentionally left blank

ECM: 654541
Group number: 1606002-0000
Assembly Drawing: -

Pos	Part No	Description	Qty	Unit	Page No
Common Parts					
	1606002-0120	TETRA PAK CAPFIX 500, PSC/STARTUP 12KG	1	PC	
	1606002-8000	TETRA PAK CAPFIX 500	1	KG	

Pos	Part No	Description	Qty	Unit	Page No

This page intentionally left blank

ECM: 843368
Group number: 3309602-0100
Assembly Drawing: -

Pos	Part No	Description	Qty	Unit	Page No
CAP 30/FLEX SLIMCAP1000, CAP 30/FLEX STREAMCAP1000, CAP 30/FLEX HELICAP2 23, CAP 30/FLEX HELICAP 27					
030	90459-3197	SATURN SINGLE-ORIFICE NOZZLE, 322014	2	PC	
CAP 30/FLEX SLIMCAP2000, CAP 30/FLEX STREAMCAP500					
030	90439-0155	SATURN SINGLE-ORIFICE NOZZLE, 322012	2	PC	
Common Parts					
020	1606004-0000	TETRA PAK CAPFIX 600, ONLY IN BOM	1	PC	796
040	3034434-0000	TENSION SPRING	20	PC	
070	2985810-0000	BRUSH	1	PC	
080	90458-2510	FUSE, ATDR6	3	PC	

Pos	Part No	Description	Qty	Unit	Page No

This page intentionally left blank

ECM: 654543
Group number: 1606004-0000
Assembly Drawing: -

Pos	Part No	Description	Qty	Unit	Page No
Common Parts					
	1606004-0120	TETRA PAK CAPFIX 600, PSC/STARTUP 12KG	1	PC	
	1606004-8000	TETRA PAK CAPFIX 600	1	KG	

Pos	Part No	Description	Qty	Unit	Page No

This page intentionally left blank

ECM: 843369
Group number: 3493623-0100
Assembly Drawing: -

Pos	Part No	Description	Qty	Unit	Page No
CAP 30/FLEX SLIMCAP1000, CAP 30/FLEX STREAMCAP1000, CAP 30/FLEX HELICAP2 23, CAP 30/FLEX HELICAP 27					
030	90459-3197	SATURN SINGLE-ORIFICE NOZZLE, 322014	2	PC	
CAP 30/FLEX SLIMCAP2000, CAP 30/FLEX STREAMCAP500					
030	90439-0155	SATURN SINGLE-ORIFICE NOZZLE, 322012	2	PC	
Common Parts					
020	1606005-0000	TETRA PAK CAPFIX 600 V, HOTMELT ADHESIVE	1	PC	800
040	3034434-0000	TENSION SPRING	20	PC	
070	2985810-0000	BRUSH	1	PC	
080	90458-2510	FUSE, ATDR6	3	PC	

Pos	Part No	Description	Qty	Unit	Page No

This page intentionally left blank

ECM: 787199
Group number: 1606005-0000
Assembly Drawing: -

Pos	Part No	Description	Qty	Unit	Page No
Common Parts					
	1606005-0120	TETRA PAK CAPFIX 600 V,PSC/STARTUP, 12KG	1	PC	
	1606005-8000	TETRA PAK CAPFIX 600 V, TPQ/PALLET	1	KG	

Pos	Part No	Description	Qty	Unit	Page No

Pos. 030 in BoM 662913-0400

CAP DETECTOR

Drawing file:2986247-6_1_AB

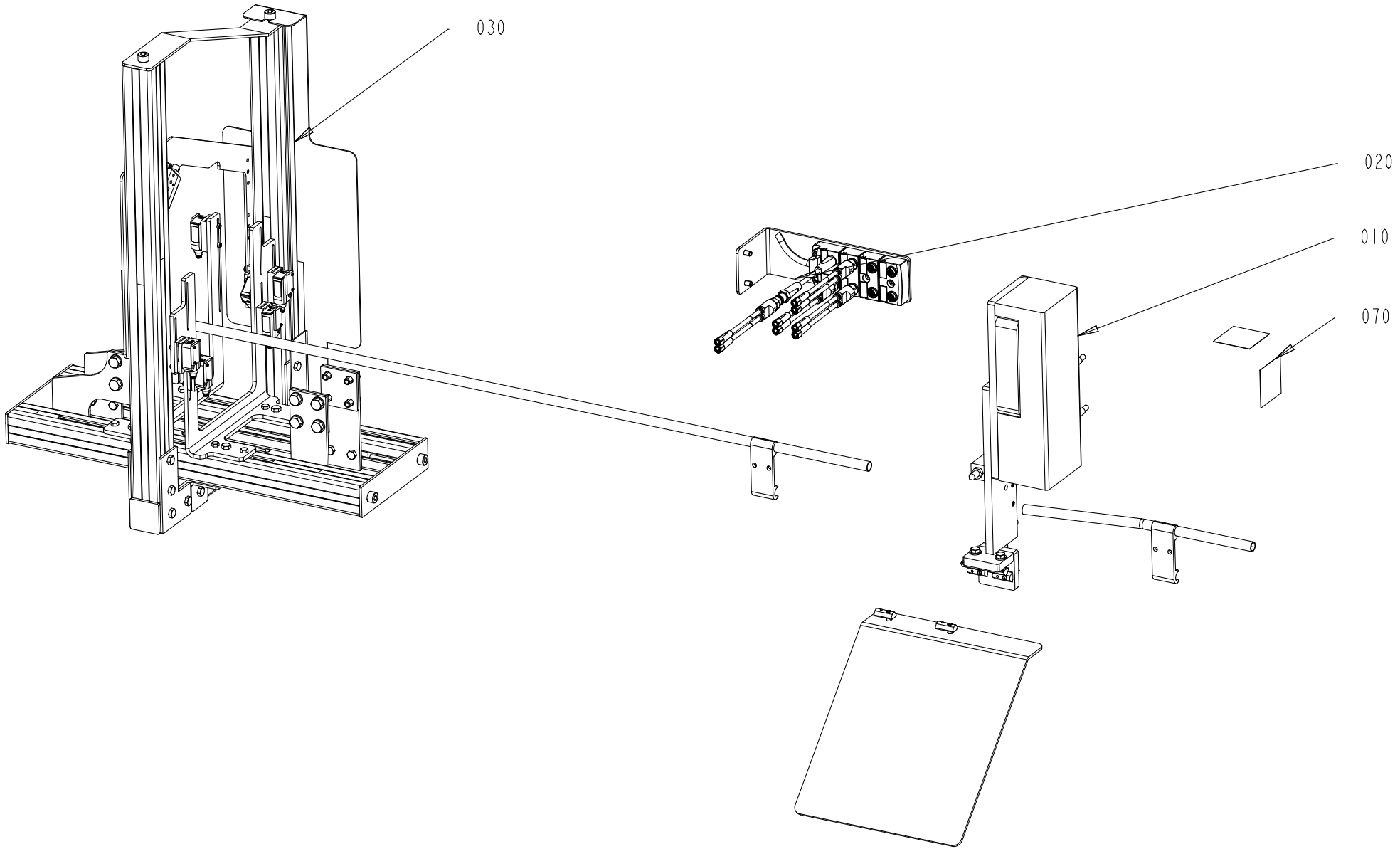

2986247-6
774008

ECM: 850876
Group number: 2986247-0300
Assembly Drawing: 2986247-6_1_AB

Pos	Part No	Description	Qty	Unit	Page No
TPA 1000SQ, TPA 0500SQ, TPA 0750SQ, TBA 2000S SLIMCAP2000, TGA, TBA 1000S SLIMCAP1000, TBA 1000SQ STREAMCAP1000, TBA 1000S HELICAP2 23, TBA 0200SQ STREAMCAP200, TBA 0250SQ STREAMCAP200, TBA 0500SQ STREAMCAP1000, TBA 1500S SLIMCAP 1000, TBA 0200E HELICAP 23, TBA 0500SQ HELICAP 27, TBA 1000SQ HELICAP 27, TBA 0250E HELICAP 23, TBA 1500S HELICAP2 23					
010	3210219-0200	EJECTOR	1	PC	804
030	3210232-0100	PHOTOCELL BRACKET	1	PC	806
Common Parts					
020	2839195-0300	DISTRIBUTOR	1	PC	808
070	3227417-0100	WARNING SIGN	1	PC	810

Pos	Part No	Description	Qty	Unit	Page No

Pos. 010 in BoM 2986247-0300

EJECTOR

Drawing file:3210219-2_1_AA

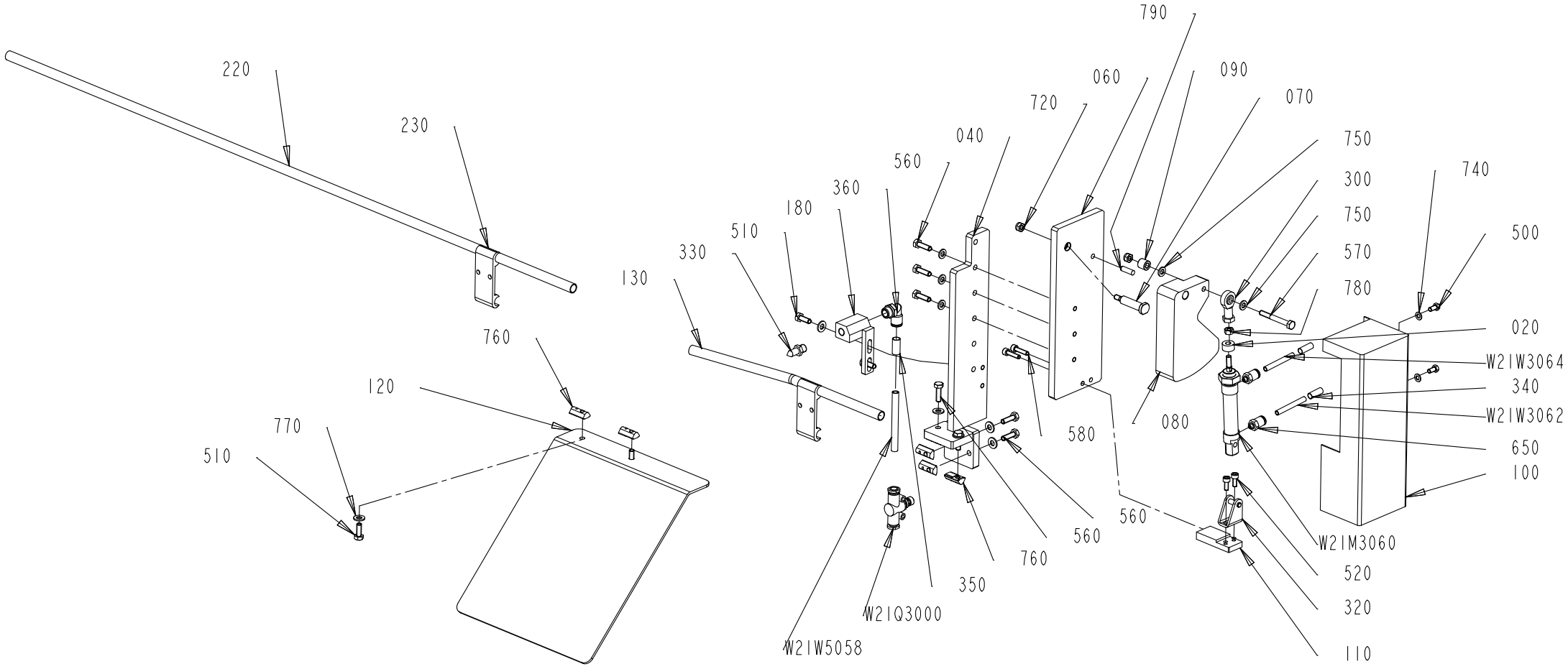

3210219-2
774008

ECM: 774190
Group number: 3210219-0200
Assembly Drawing: 3210219-2_1_AA

Pos	Part No	Description	Qty	Unit	Page No
Common Parts					
020	3249413-0000	SPACER	1	PC	
040	3210228-0000	BRACKET	1	PC	
060	2873876-0000	PLATE	1	PC	
070	3210237-0000	SHAFT	1	PC	
080	3210235-0000	PUSHER	1	PC	
090	2817573-0000	SPACER	1	PC	
100	3210234-0000	COVER	1	PC	
110	3210236-0000	SUPPORT	1	PC	
120	3210229-0000	SLIDE PLATE	1	PC	
130	2818738-0000	RAILING	1	PC	
180	2873866-0000	SUPPORT	1	PC	
220	476221-0013	PIPE	1	PC	
230	1020637-0000	HOLDER	2	PC	
300	90115-0163	ROD END, ID=6 MM, M6X1	1	PC	
320	90459-3655	REAR CLEVIS FOOT MOUNTING, LBN-12/16	1	PC	
330	90424-0087	AIR NOZZLE	1	PC	
340	90459-7369	MARKING FOR PNEUM. TUBING, PRZ06	2	PC	
350	90459-7370	MARKING FOR PNEUM. TUBING, PRZ08	1	PC	
360	351456-3007	PUSH-IN L-FITTING NPQH-L-G14-Q8-P10	1	PC	
500	312105-0325	SCREW, M6S ISO 4017 M5X10 A4 80	3	PC	
510	312105-0368	SCREW, M6S ISO 4017 M6X16 A4 80	4	PC	
520	312115-0327	SCREW ISO4762 M5X12 A4 80	2	PC	
560	312105-0370	SCREW, M6S ISO 4017 M6X20 A4 80	7	PC	
570	312105-0380	SCREW, M6S ISO 4014 M6X50 A4 80	1	PC	
580	312115-0331	SCREW ISO4762 M5X20 A4 80	2	PC	
650	351456-0116	PUSH-IN FITTING NPQH-D-M5-Q6-P10	2	PC	
720	312812-0316	HEXAGON NUT, NY-LOCK M6 A4 80	2	PC	
740	315105-0146	WASHER PLAIN, 5,3X10X1 A4 BRB	3	PC	
750	315105-0153	WASHER PLAIN, 6,4X12X1,5 A4 BRB	5	PC	
760	90459-5134	NUT, T-SLOT M6	6	PC	
770	315105-0156	WASHER PLAIN, 6,7X14X1,5 A4 BRB	8	PC	
780	312605-0316	HEXAGON NUT, M6M M6 A280	1	PC	
W21M3060	90604-3129	DOUBLE ACTING, MINI-ISO, CYL. 16-25	1	PC	
W21Q3000	90459-2777	FLOW CONTROL VALVE, GR-QS-8	1	PC	
W21W3062	315400-0001	TUBE PUN-H-6X1-BL	6	M	
W21W3064	315400-0001	TUBE PUN-H-6X1-BL	6	M	
W21W5058	315400-0004	TUBE PUN-H-8X1,25-BL	150	MM	

Pos	Part No	Description	Qty	Unit	Page No

Pos. 030 in BoM 2986247-0300

PHOTOCELL BRACKET

Drawing file:3210232-1_1_AF

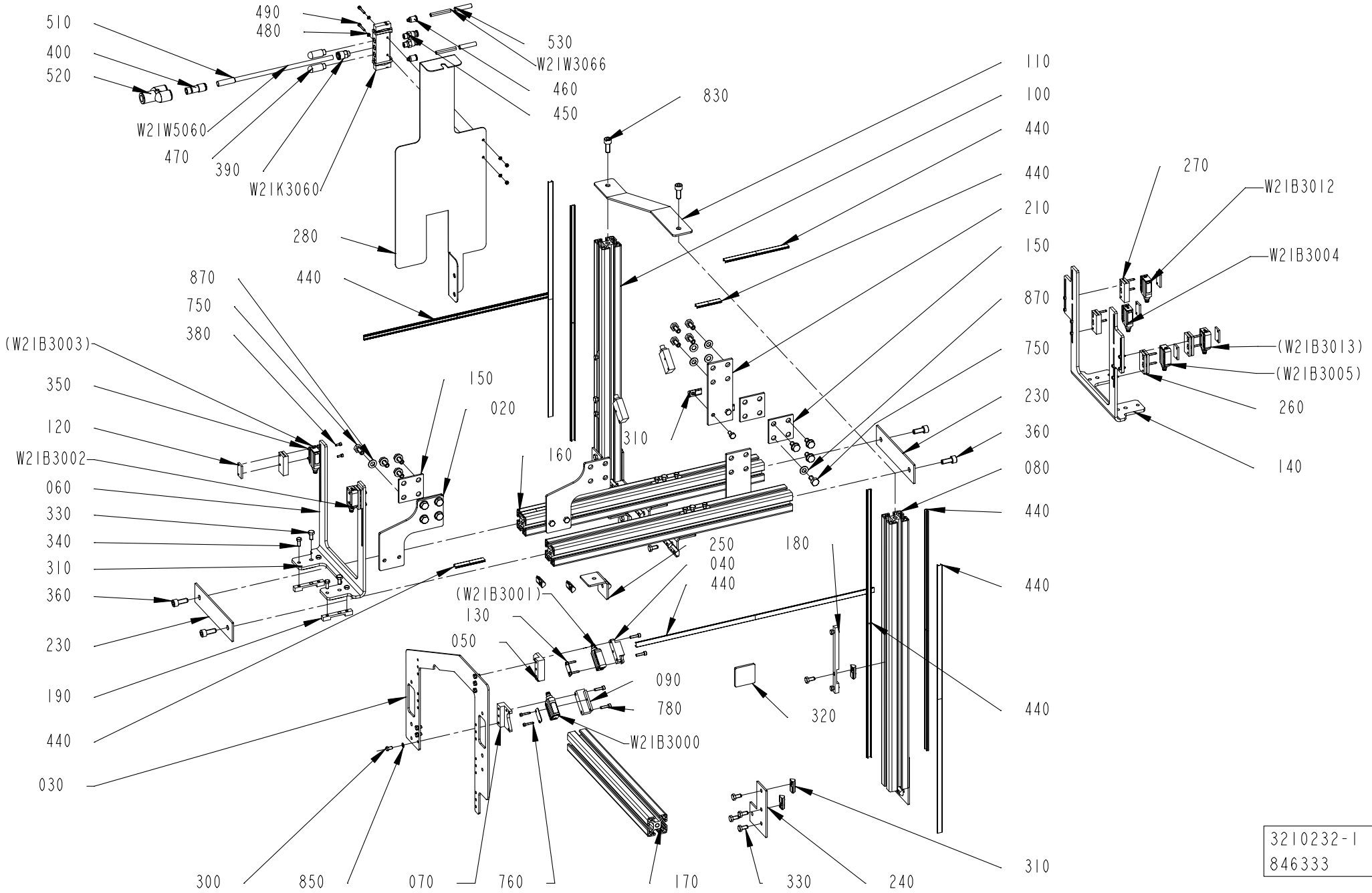

3210232-1
846333

ECM: 846655
Group number: 3210232-0100
Assembly Drawing: 3210232-1_1_AF

Pos	Part No	Description	Qty	Unit	Page No
Common Parts					
020	3210222-0000	SPACER	2	PC	
030	3159870-0000	BRACKET	1	PC	
040	3356197-0000	BRACKET	1	PC	
050	3159886-0000	BRACKET	1	PC	
060	3152710-0000	BRACKET	1	PC	
070	3159887-0000	BRACKET	1	PC	
080	3156384-0000	PROFILE	1	PC	
090	3356198-0000	BRACKET	1	PC	
100	3156385-0000	PROFILE	1	PC	
110	3156411-0000	PLATE	1	PC	
120	3159895-0000	PLATE	6	PC	
130	3159896-0000	PLATE	2	PC	
140	3249881-0000	COVER	1	PC	
150	2815585-0000	SPACER	4	PC	
160	3210220-0000	PROFILE	2	PC	
170	3210223-0000	PROFILE	1	PC	
180	3210225-0000	PLATE	2	PC	
190	3210226-0000	PLATE	4	PC	
210	3210221-0000	SPACER	2	PC	
230	3210227-0000	SPACER	2	PC	
240	3210230-0000	SPACER	4	PC	
250	3210231-0000	SPACER	4	PC	
260	3235825-0000	PLATE	3	PC	
270	3235826-0000	PLATE	3	PC	
280	3246705-0000	COVER	1	PC	
300	312105-0287	SCREW, M6S ISO 4017 M4X8 A4 70	6	PC	
310	90459-5134	NUT, T-SLOT M6	38	PC	
320	90600-1996	CAP 8 40X40 MM, 0.0.026.01	2	PC	
330	312105-0366	SCREW, M6S ISO 4017 M6X12 A4 80	38	PC	
340	312105-0327	SCREW, M6S ISO 4017 M5X12 A4 80	12	PC	
350	312115-0230	SCREW ISO4762 M3X20 A4 80	12	PC	
360	312115-0451	SCREW ISO4762 M8X20 A4 80	4	PC	
380	312115-0222	SCREW ISO4762 M3X8 A4 80	12	PC	
390	351456-0103	PUSH-IN FITTING NPQH-D-G18-Q8-P10	1	PC	
400	351456-1109	PUSH-IN FITTING NPQH-D-S12-Q8-P10	1	PC	
440	90600-1972	COVER PROFILE 8 AL, 0.0.265.50	5	M	
450	90600-4265	PUSH-IN FITTING CRQS-1/8-6	2	PC	
460	90055-0218	STRAIGHT COUPLING, D=6 MM - M5	2	PC	
470	90328-0047	SILENCER, G1/8"	2	PC	
480	315105-0124	WASHER PLAIN, 3,2X6X0,5 A4 BRB	4	PC	
490	312115-0230	SCREW ISO4762 M3X20 A4 80	2	PC	
500	312605-0310	HEXAGON NUT, M6M M3 A280	2	PC	
510	351582-0008	MARKING STRIP, PRZ08T04/09/17/30	1	PC	
520	90055-0147	PUSH-IN Y-CONNECTOR QSY-12	1	PC	
530	351582-0006	MARKING STRIP, PRZ06T04/09/17/30	2	PC	
750	312105-0449	SCREW, M6S ISO 4017 M8X16 A4 80	16	PC	
760	312115-0228	SCREW ISO4762 M3X16 A4 80	4	PC	
780	312115-0293	SCREW ISO4762 M4X16 A4 80	4	PC	
830	312115-0451	SCREW ISO4762 M8X20 A4 80	2	PC	
850	315105-0136	WASHER PLAIN, 4,3X8X0,8 A4 BRB	6	PC	
870	315105-0165	FWAS080G0-0S, WASHER PLAIN	16	PC	
W21B3000	90606-4464	LASER SENSOR, WSE9L-3P2237	1	PC	
W21B3002	90606-4464	LASER SENSOR, WSE9L-3P2237	1	PC	
W21B3004	90606-4464	LASER SENSOR, WSE9L-3P2237	1	PC	
W21B3012	90606-4464	LASER SENSOR, WSE9L-3P2237	1	PC	
W21K3060	90608-7974	VALVE, 573833 / VUWG-L14-B52-G18	1	PC	
W21W3066	315400-0001	TUBE PUN-H-6X1-BL	300	MM	
W21W3068	315400-0001	TUBE PUN-H-6X1-BL	300	MM	
W21W5060	315400-0004	TUBE PUN-H-8X1,25-BL	300	MM	

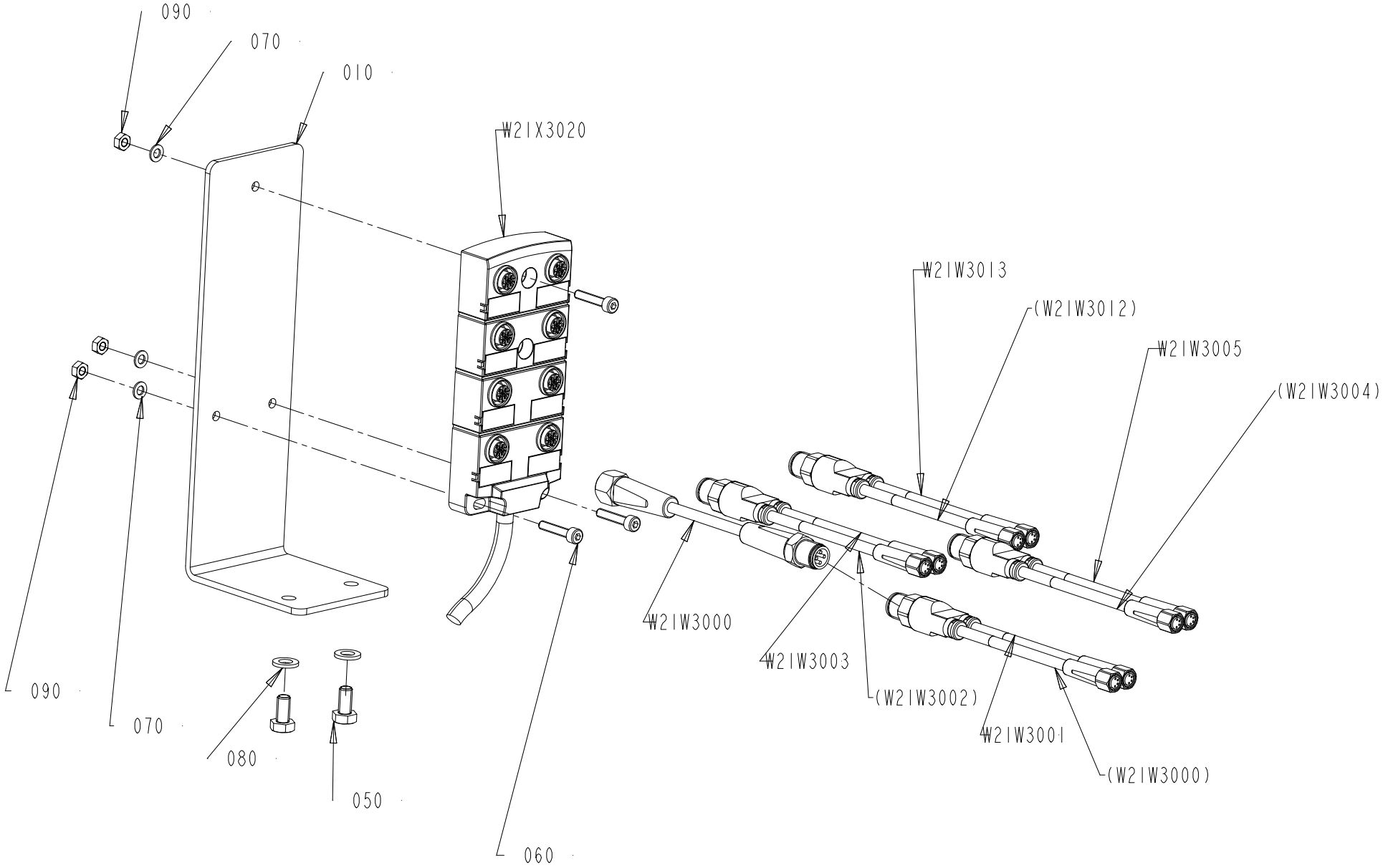

2839195-5
774008

ECM: 768750
Group number: 2839195-0300
Assembly Drawing: 2839195-5_1_AA

Pos	Part No	Description	Qty	Unit	Page No
TPA, TGA, TBA SLIMCAP1000, TBA STREAMCAP1000, TBA SLIMCAP 2000, TBA STREAMCAP200, TBA HELICAP2 23, TBA HELICAP 27					
010	3315733-0000	BRACKET	1	PC	
050	312105-0366	SCREW, M6S ISO 4017 M6X12 A4 80	2	PC	
080	315105-0153	WASHER PLAIN, 6,4X12X1,5 A4 BRB	2	PC	
W21W3000	344267-0006	SENSOR CABLE, EVT041	1	PC	
W21W3000	90603-3979	SENSOR Y-CABLE, EVT339	1	PC	
W21W3012	90603-3979	SENSOR Y-CABLE, EVT339	1	PC	
Common Parts					
060	312115-0295	SCREW ISO4762 M4X20 A4 80	3	PC	
070	315105-0136	WASHER PLAIN, 4,3X8X0,8 A4 BRB	3	PC	
090	312607-0312	HEXAGON NUT, EN 24032 M6M M4 A480	3	PC	
W21W3002	90603-3979	SENSOR Y-CABLE, EVT339	1	PC	
W21W3004	90603-3979	SENSOR Y-CABLE, EVT339	1	PC	
W21X3020	90606-1697	SPLITTER BOX, EBC034	1	PC	

Pos	Part No	Description	Qty	Unit	Page No

Pos. 070 in BoM 2986247-0300

WARNING SIGN

Drawing file:3227417-1_1_AB

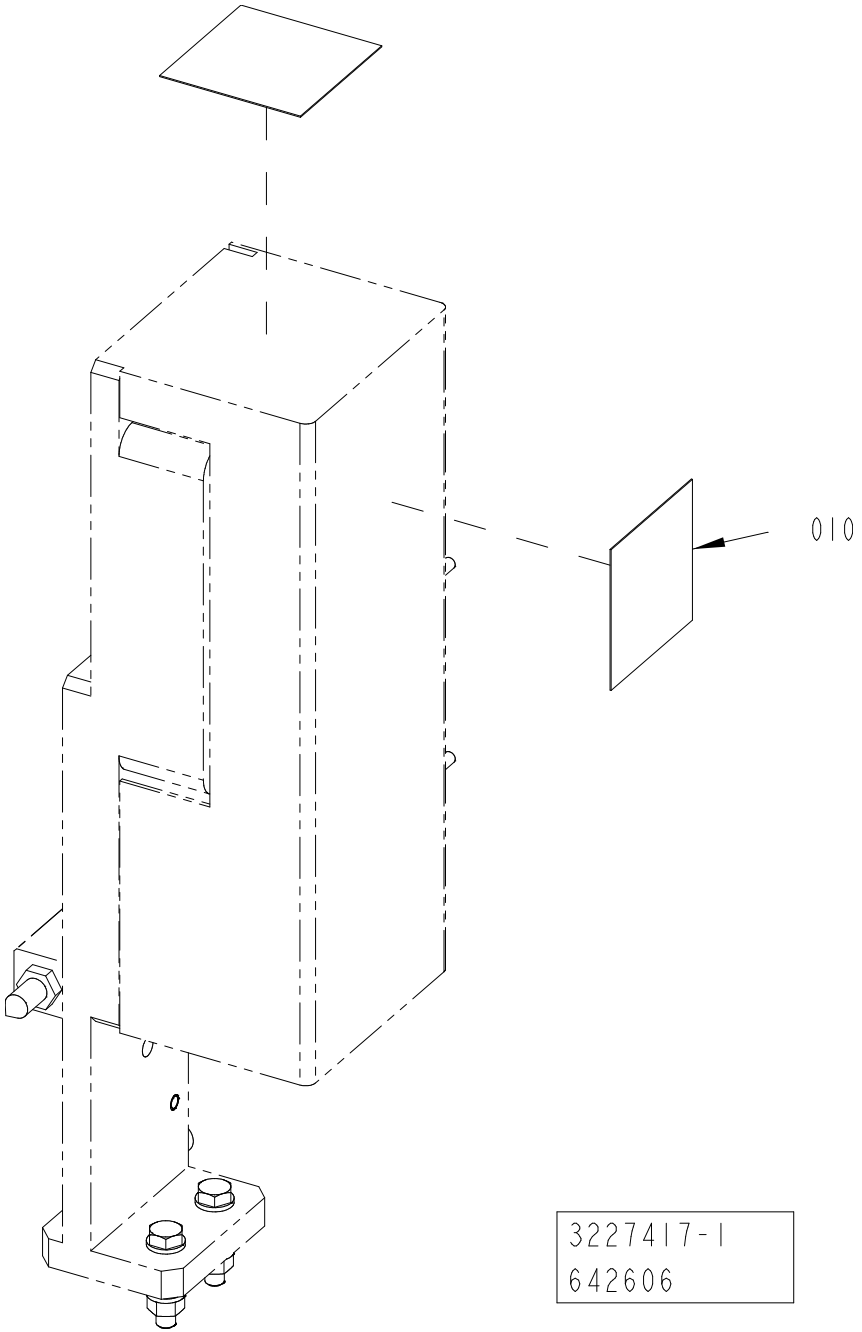

ECM: 653209
Group number: 3227417-0100
Assembly Drawing: 3227417-1_1_AB

Pos	Part No	Description	Qty	Unit	Page No
ANSI					
010	90600-4040	CAUTION SIGN ANSI (H), DO NOT REACH IN	2	PC	
ISO					
010	90459-7584	PROHIBITION SIGN ISO,TP90459758	2	PC	

This page intentionally left blank

ECM: 870551
Group number: 2873923-0200
Assembly Drawing: -

Pos	Part No	Description	Qty	Unit	Page No
TBA 0250E HELICAP 23, TBA 0200E HELICAP 23					
020	3102974-0000	TEMPLATE	1	PC	
TBA 0500SQ HELICAP 27, TBA 1000SQ HELICAP 27, TBA STREAMCAP1000					
010	2506887-0000	TEMPLATE	1	PC	
TBA 1000S HELICAP2 23					
010	2985813-0000	TEMPLATE	1	PC	
TBA 1000S HELICAP2 23, TPA HELICAP 27, TBA 0200E HELICAP 23, TBA 0250E HELICAP 23, TBA 0500SQ HELICAP 27, TBA 1000SQ HELICAP 27, TGA 0500SQ HELICAP 27, TGA 0750SQ HELICAP 27, TGA 1000SQ HELICAP 27, TGA 1500SQ HELICAP 27, TGA 1000CR HELICAP 27, TGA 1000LF HELICAP 27, TBA 1500S HELICAP2 23, TBA 2000S HELICAP 27					
040	3047350-0100	TOOL	1	PC	814
TBA 1500S HELICAP2 23					
010	3238639-0000	TEMPLATE	1	PC	
TBA 2000S HELICAP 27					
010	3324807-0000	TEMPLATE	1	PC	
TBA SLIMCAP 2000					
010	2612679-0000	TEMPLATE	1	PC	
TBA SLIMCAP1000					
010	2547954-0000	TEMPLATE	1	PC	
TBA STREAMCAP200					
010	1548365-0000	TEMPLATE	1	PC	
TGA 0500SQ STREAMCAP 1000, TGA 0750SQ STREAMCAP 1000, TGA 1000SQ STREAMCAP 1000, TGA 0500SQ HELICAP 27, TGA 0750SQ HELICAP 27, TGA 1000SQ HELICAP 27					
020	3131674-0000	TEMPLATE	1	PC	
TGA 1000CR HELICAP 27, TGA 1000LF HELICAP 27					
020	3240398-0000	TEMPLATE	1	PC	
TGA 1000CR HELICAP 27, TGA 1000LF HELICAP 27, TGA 1500SQ HELICAP 27, TPA HELICAP 27, TBA 0200E HELICAP 23, TBA 0250E HELICAP 23, TBA 0500SQ HELICAP 27, TBA 1000SQ HELICAP 27, TBA 1000S HELICAP2 23, TBA 1500S HELICAP2 23, TBA 2000S HELICAP 27, TGA 0500SQ HELICAP 27, TGA 0750SQ HELICAP 27, TGA 1000SQ HELICAP 27					
030	90459-4931	LENS WITH SCALE OF LENGTHS 10X	1	PC	
TGA 1500SQ HELICAP 27, TGA 1500SQ STREAMCAP 1000					
020	3039015-0000	TEMPLATE	1	PC	
TPA HELICAP 27, TPA STREAMCAP 1000					
020	2579622-0000	TEMPLATE	1	PC	
TPA STREAMCAP 1000					
010	2562134-0000	TEMPLATE	1	PC	
TPA STREAMCAP 500					
010	2579623-0000	TEMPLATE	1	PC	
020	2579624-0000	TEMPLATE	1	PC	

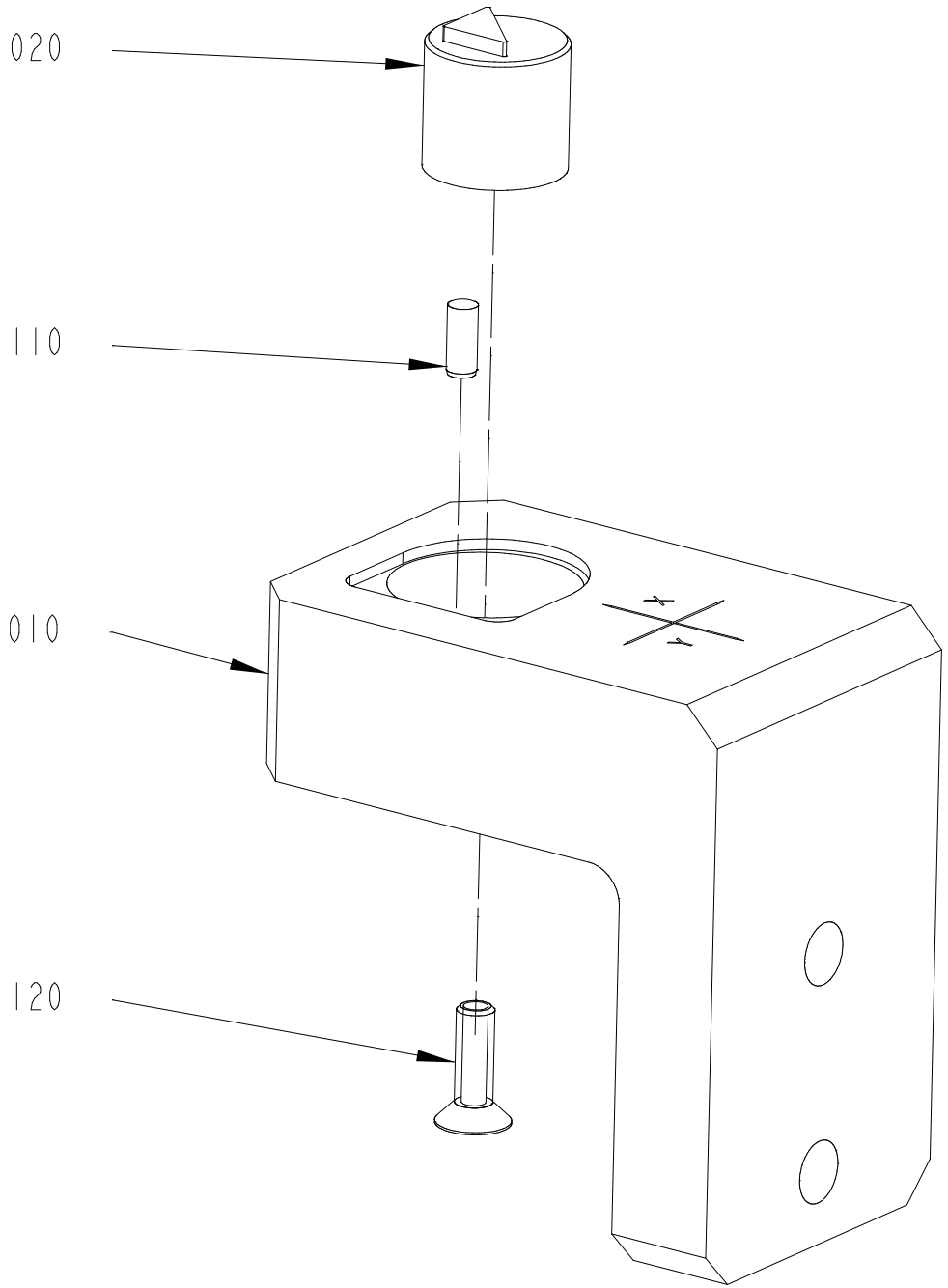

3047350-1
434659

ECM: 635693
Group number: 3047350-0100
Assembly Drawing: 3047350-1_1_AA

Pos	Part No	Description	Qty	Unit	Page No
HELICAP 27					
010	3077736-0000	TEMPLATE	1	PC	
020	3077737-0000	TEMPLATE	1	PC	
HELICAP2 23					
010	3077734-0000	TEMPLATE	1	PC	
020	3047352-0000	TEMPLATE	1	PC	
Common Parts					
110	311103-0267	PARALLEL PIN ISO 2338 4M6X10 A1	1	PC	
120	312155-0329	SCREW DIN 7991 MF6S M5X16 A4 70	1	PC	

Pos	Part No	Description	Qty	Unit	Page No

This page intentionally left blank

ECM: 534843
Group number: 2873953-0200
Assembly Drawing: -

Pos	Part No	Description	Qty	Unit	Page No
HELICAP 27					
010	A100000222	TEST HELICAP3 27 MM WHITE	3.890	KPC	
HELICAP2 23					
010	A100000036	HELICAP2 23 MM WHITE PA001	4.300	KPC	
HELICAP2 23, SLIMCAP 1000, SLIMCAP 2000, STREAMCAP1000, STREAMCAP200, STREAMCAP500					
040	2594996-0000	PLASTIC BAG	1	PC	
SLIMCAP 1000					
010	A894400101	SLIMCAP1 A1 WHITE PA001	3.600	KPC	
020	2529719-0005	BOX SLIMCAP 1000	1	PC	
030	2529720-0037	LABEL	4	PC	
SLIMCAP 2000					
010	A894400201	SLIMCAP1 A2 WHITE PA001	2	KPC	
020	2529719-0006	BOX SLIMCAP 2000	1	PC	
030	2529720-0044	LABEL	4	PC	
STREAMCAP1000					
010	A895800101	STREAMCAP 1W A1 WHITE PA001	3	KPC	
020	2529719-0004	BOX STREAMCAP 1000	1	PC	
030	2529720-0024	LABEL	4	PC	
STREAMCAP200					
010	A896809301	STREAMCAP2.1 A3 WHITE PA001	5	KPC	
020	2529719-0001	BOX STREAMCAP 200	1	PC	
030	2529720-0001	LABEL	1	PC	
STREAMCAP500					
010	A100000063	STREAMCAP5 A2 WHITE PA001	3.500	KPC	
020	2529719-0003	BOX STREAMCAP 500	1	PC	
030	2529720-0016	LABEL	4	PC	

Pos	Part No	Description	Qty	Unit	Page No

This page intentionally left blank

ECM: 822645
Group number: 3473222-0100
Assembly Drawing: -

Pos	Part No	Description	Qty	Unit	Page No
Common Parts					
010	3473203-0000	CABLE MARKING	1	PC	
020	3473206-0000	CABLE MARKING	1	PC	
030	3473208-0000	CABLE MARKING	1	PC	
040	3473210-0000	CABLE MARKING	1	PC	
050	3473212-0000	CABLE MARKING	1	PC	
060	3473214-0000	CABLE MARKING	1	PC	
070	3473216-0000	CABLE MARKING	1	PC	
080	3473218-0000	CABLE MARKING	1	PC	
090	3473220-0000	CABLE MARKING	1	PC	

Pos	Part No	Description	Qty	Unit	Page No

This page intentionally left blank

ECM: 822646
Group number: 3473223-0100
Assembly Drawing: -

Pos	Part No	Description	Qty	Unit	Page No
Common Parts					
010	3473204-0000	SET OF SIGNS	1	PC	
020	3473205-0000	SET OF SIGNS	1	PC	
030	3473207-0000	SET OF SIGNS	1	PC	
040	3473209-0000	SET OF SIGNS	1	PC	
050	3473211-0000	SET OF SIGNS	1	PC	
060	3473213-0000	SET OF SIGNS	1	PC	
070	3473215-0000	SET OF SIGNS	1	PC	
080	3473217-0000	SET OF SIGNS	1	PC	
090	3473219-0000	SET OF SIGNS	1	PC	
100	3473221-0000	SET OF SIGNS	1	PC	

Pos	Part No	Description	Qty	Unit	Page No

This page intentionally left blank

SPC

Spare Parts Catalogue

This page intentionally left blank

ECM: 777374
Group number: 662914-0400
Assembly Drawing: -

Pos	Part No	Description	Qty	Unit	Page No
Common Parts					
0010	2879015-0400	ELECTRICAL DOCUMENT	1	PC	826
0020	2861166-0400	SOFTWARE	1	PC	

This page intentionally left blank

ECM: 735518
Group number: 2879015-0400
Assembly Drawing: -

Pos	Part No	Description	Qty	Unit	Page No
CAP 30/FLEX HELICAP 27, CAP 30/FLEX SLIMCAP1000, CAP 30/FLEX STREAMCAP1000, CAP 30/FLEX SLIMCAP2000, CAP 30/FLEX STREAMCAP500, CAP 30/FLEX STREAMCAP200, CAP 30/FLEX HELICAP2 23					
0010	2861169-0400	ELECTRICAL DOCUMENT	1	PC	

Pos	Part No	Description	Qty	Unit	Page No

This page intentionally left blank

SPC

Spare Parts Catalogue

This page intentionally left blank

ECM: 728458
Group number: 662919-0400
Assembly Drawing: -

Pos	Part No	Description	Qty	Unit	Page No
Common Parts					
010	2944169-0100	TOOL	1	PC	832
020	3134551-0200	BARCODE SCANNER	1	PC	834
030	3139139-0100	TOOL	2	PC	836
040	3243398-0100	HOSE	1	PC	838
050	3243399-0100	OIL GUN	1	PC	840
060	90604-5444	GREASE GUN, 3095514	1	PC	
070	2930179-0200	CONVEYOR CONTROL ACCESSORIES	1	PC	842

Pos	Part No	Description	Qty	Unit	Page No

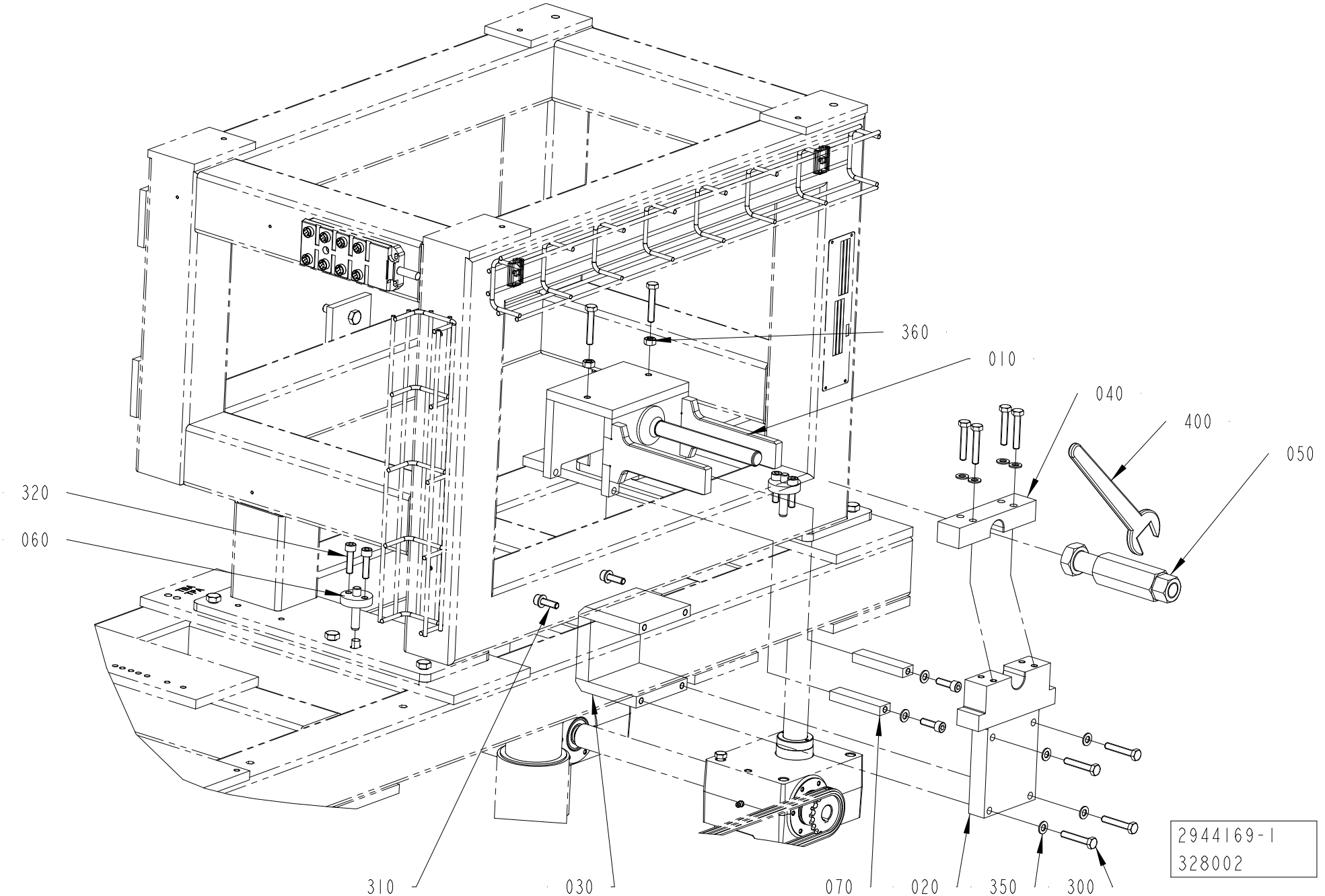
360
010
040
400
050
320
060
310
030
070
020
350
300
2944169-1
328002

ECM: 353684
Group number: 2944169-0100
Assembly Drawing: 2944169-1_1_AA

Pos	Part No	Description	Qty	Unit	Page No
Common Parts					
010	2930204-0000	TOOL	1	PC	
020	2944171-0000	PLATE	1	PC	
030	2944172-0000	CLAMP	1	PC	
040	2944173-0000	BLOCK	1	PC	
050	2944174-0000	NUT	1	PC	
060	2944175-0000	PIN	2	PC	
070	2930205-0000	CLAMP BRACKET	2	PC	
300	312109-0460	SCREW, M6S ISO 4017 M8X45 A4 80	10	PC	
310	312115-0453	SCREW ISO4762 M8X25 A4 80	4	PC	
320	312115-0455	SCREW ISO4762 M8X30 A4 80	4	PC	
350	315105-0165	FWAS080G0-0S, WASHER PLAIN	12	PC	
360	312605-0318	HEXAGON NUT, M6M M8 A280	2	PC	
400	2930222-0000	KEY	1	PC	

Pos	Part No	Description	Qty	Unit	Page No

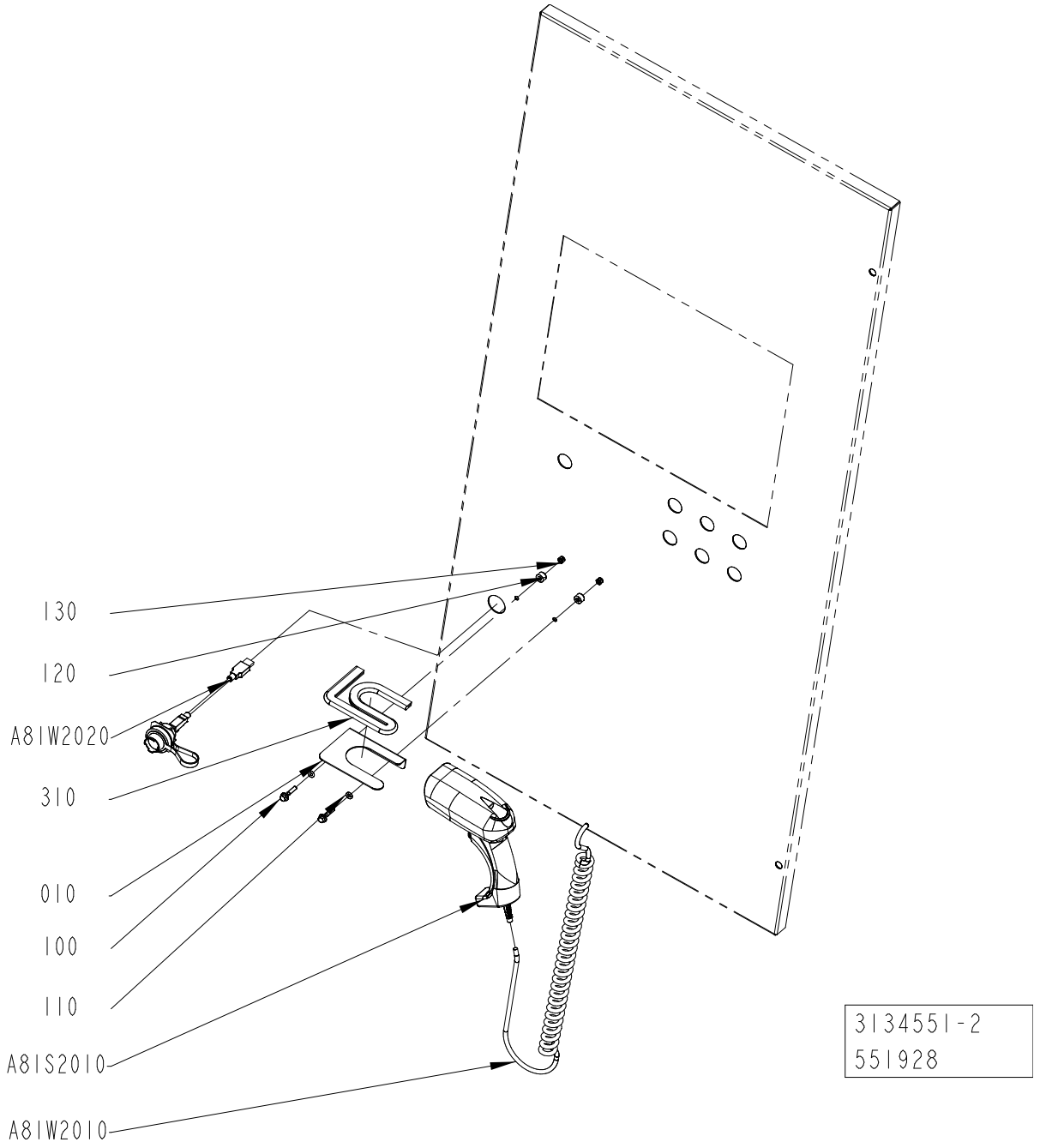
130
120
A81W2020
310
010
100
110
A81S2010
A81W2010
3134551-2
551928

ECM: 833767
Group number: 3134551-0200
Assembly Drawing: 3134551-2_1_AA

Pos	Part No	Description	Qty	Unit	Page No
Common Parts					
010	3096014-0000	BRACKET	1	PC	
100	312108-0333	SCREW EN 1665 TYPE F M5X25 A270	2	PC	
110	315202-0204	"O-RING 5,3X2,4 MM"	2	PC	
120	315741-0102	RETAINING RING, DIN 705 A2 6	2	PC	
130	312812-0314	HEXAGON NUT, NY-LOCK M5 A4 80	2	PC	
310	90143-0097	SELF GRIPPING GASKET, 1011-24	370	MM	
400	3115393-0000	SET OF SIGNS COMPONENT LABEL	2	PC	
410	3115394-0000	SET OF SIGNS CABLE MARKING	2	PC	
420	90143-0073	FLAT GASKET TAPE W. ADHESIVE, 15X3.0	95	MM	
A81S2010	90603-5602	BAR CODE READER, D9330 + CAB-463	1	PC	
A81W2010	90601-6430	USB CABLE, 90601-6430	1	PC	
A81W2020	90600-4778	USB CABLE SET, 5A9000.54	1	PC	

Pos	Part No	Description	Qty	Unit	Page No

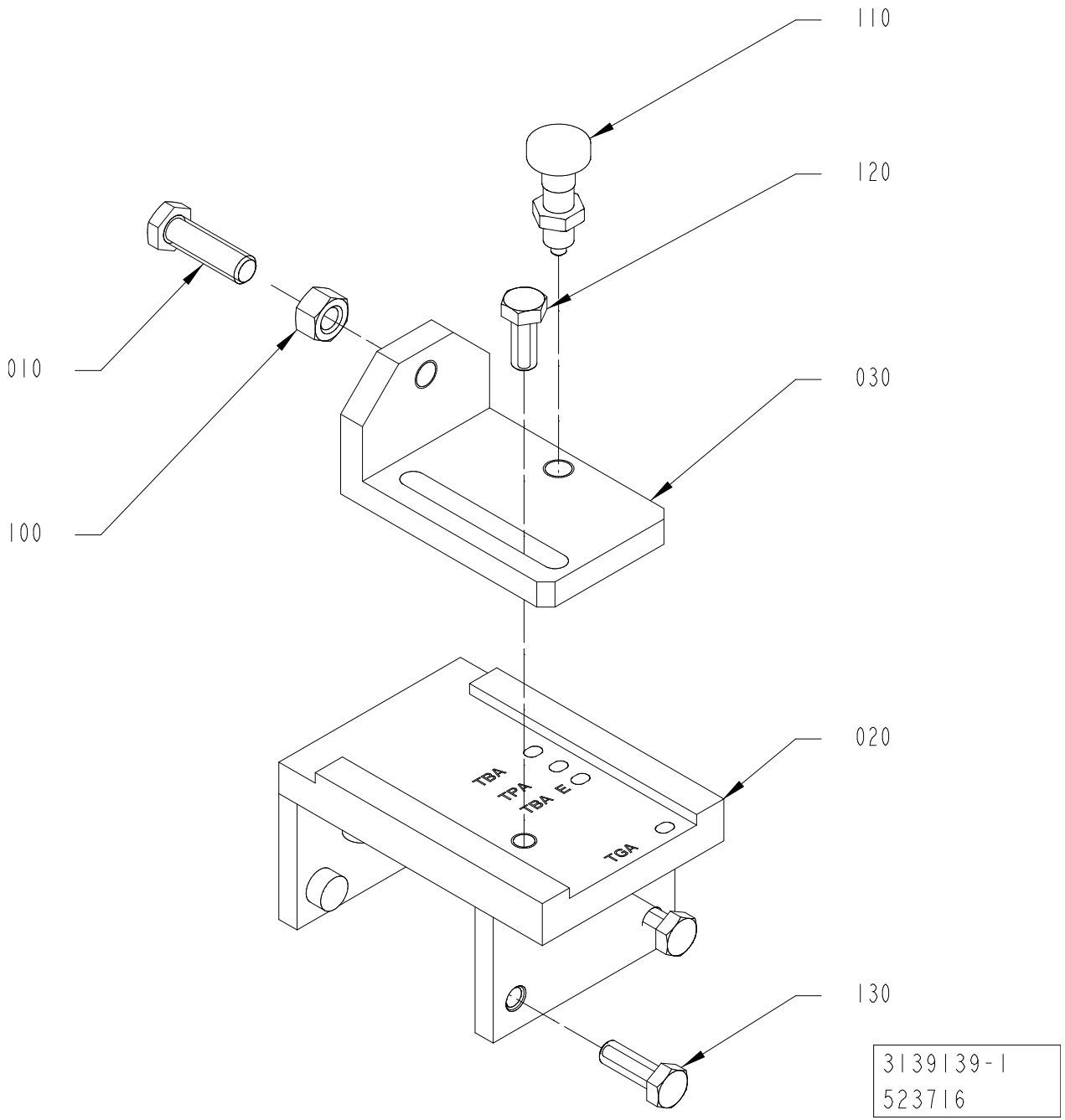
110
120
010
030
100
020
TBA
TPA
TBA E
TGA
130
3139139-1
523716

ECM: 525059
Group number: 3139139-0100
Assembly Drawing: 3139139-1_1_AA

Pos	Part No	Description	Qty	Unit	Page No
Common Parts					
010	3095799-0000	SCREW	1	PC	
020	3139140-0000	BRACKET	1	PC	
030	3186489-0000	POSITION TEMPLATE	1	PC	
100	312605-0322	HEXAGON NUT, M6M M12 A280	1	PC	
110	90459-1940	LOCK KNOB, GN613 NIK 6	1	PC	
120	312105-0493	SCREW, M6S ISO 4017 M10X25 A4 80	1	PC	
130	312105-0495	SCREW, M6S ISO 4017 M10X30 A4 80	2	PC	

Pos	Part No	Description	Qty	Unit	Page No

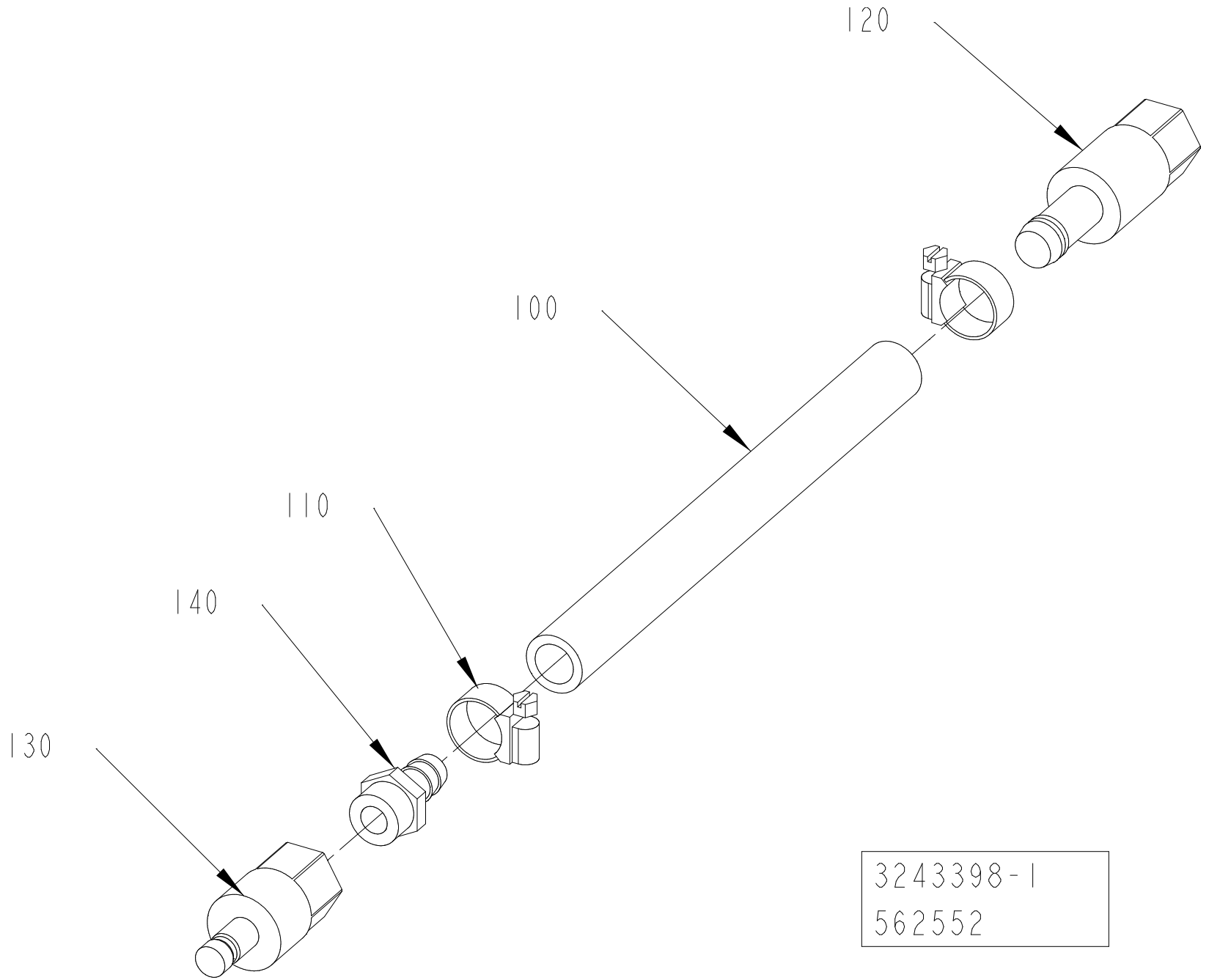
120
100
110
140
130
3243398-1
562552

ECM: 559207
Group number: 3243398-0100
Assembly Drawing: 3243398-1_1_AA

Pos	Part No	Description	Qty	Unit	Page No
Common Parts					
100	90166-0121	HOSE	8	M	
110	342991-0102	HOSE CLIP,WORM DRIVE TYPE (13)-20	2	PC	
120	90163-0075	QUICK COUPLING, (F) LP-006-O-SL013	1	PC	
130	90163-0064	QUICK COUPLING, LP-006-2-WR517-11-1	1	PC	
140	90163-0041	HOSE NIPPLE, EXT.THR. G3/8-12 MM	1	PC	

Pos	Part No	Description	Qty	Unit	Page No

This page intentionally left blank

ECM: 573841
Group number: 3243399-0100
Assembly Drawing: -

Pos	Part No	Description	Qty	Unit	Page No
Common Parts					
100	90459-4996	NEEDLE VALVE 345 BAR, 9N400S	1	PC	
110	342700-0203	NIPPLE HEXAGON,09011317G3/8G1/4	1	PC	
120	342700-0110	NIPPLE EXT.THREAD HEXAGON,09010013G1/4	1	PC	
130	90163-0064	QUICK COUPLING, LP-006-2-WR517-11-1	1	PC	
140	90605-4142	KIT OIL GUN, EL06984595	1	PC	

Pos	Part No	Description	Qty	Unit	Page No

This page intentionally left blank

ECM: 534045
Group number: 2930179-0200
Assembly Drawing: -

Pos	Part No	Description	Qty	Unit	Page No
Common Parts					
010	2930176-0200	SENSOR GROUP	1	PC	844
020	2930177-0200	CABLE MARKING SET	1	PC	846
030	2930178-0200	SENSOR GROUP	1	PC	848

Pos	Part No	Description	Qty	Unit	Page No

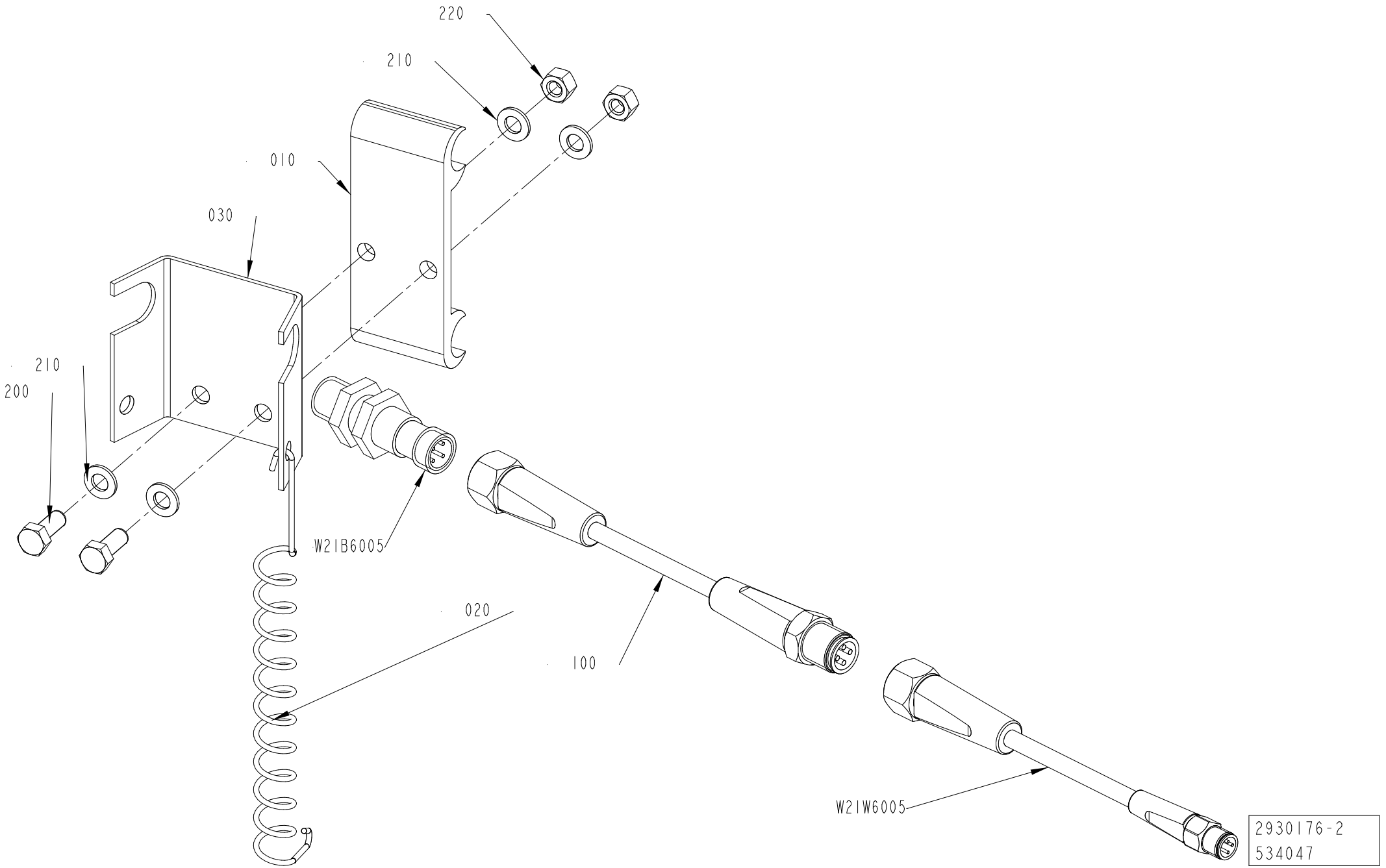
220
210
010
030
210
200
W21B6005
020
100
W21W6005
2930176-2
534047

ECM: 534043
Group number: 2930176-0200
Assembly Drawing: 2930176-2_1_AA

Pos	Part No	Description	Qty	Unit	Page No
Common Parts					
010	1020637-0000	HOLDER	1	PC	
020	532412-0000	SPRING	1	PC	
030	545897-0000	BRACKET	1	PC	
100	344267-0050	SENSOR CABLE, EVT044	1	PC	
200	312105-0327	SCREW, M6S ISO 4017 M5X12 A4 80	2	PC	
210	315105-0146	WASHER PLAIN, 5,3X10X1 A4 BRB	4	PC	
220	312605-0314	HEXAGON NUT, M6M M5 A280	2	PC	
W21B6005	90458-2907	PROX.SWITCH IFS204	1	PC	
W21W6005	344261-0050	SENSOR CABLE, EVT216	1	PC	

Pos	Part No	Description	Qty	Unit	Page No

This page intentionally left blank

ECM: 534658
Group number: 2930177-0200
Assembly Drawing: -

Pos	Part No	Description	Qty	Unit	Page No
Common Parts					
010	1497932-0000	SET OF SIGNS	1	PC	
100	359009-0100	CABLE MARKING, YELLOW, PK2/4"0"	10	PC	
110	359009-0101	CABLE MARKING, YELLOW, PK 2/4"1"	10	PC	
120	359009-0102	CABLE MARKING, YELLOW, PK 2/4"2"	10	PC	
130	359009-0103	CABLE MARKING, YELLOW, PK 2/4"3"	10	PC	
140	359009-0104	CABLE MARKING, YELLOW, PK 2/4"4"	10	PC	
150	359009-0105	CABLE MARKING, YELLOW, PK 2/4"5"	10	PC	
160	359009-0106	CABLE MARKING, YELLOW, PK 2/4"6"	10	PC	
170	359009-0107	CABLE MARKING, YELLOW, PK 2/4"7"	10	PC	
180	359009-0108	CABLE MARKING, YELLOW, PK 2/4"8"	10	PC	
190	359009-0109	CABLE MARKING, YELLOW, PK 2/4"9"	10	PC	
200	359009-0222	CABLE MARKING, YELLOW, PK 2/4" W"	10	PC	
210	352113-0101	CABLE TIE,BLACK 92X	10	PC	
220	359009-0200	CABLE MARKING, YELLOW, PK 2/4" A"	10	PC	
240	359009-0201	CABLE MARKING, YELLOW, PK 2/4" B"	10	PC	
250	359009-0202	CABLE MARKING, YELLOW, PK 2/4" C"	10	PC	
260	359009-0203	CABLE MARKING, YELLOW, PK 2/4" D"	10	PC	
270	359009-0204	CABLE MARKING, YELLOW, PK 2/4" E"	10	PC	
280	359009-0205	CABLE MARKING, YELLOW, PK 2/4" F"	10	PC	
290	359009-0206	CABLE MARKING, YELLOW, PK 2/4" G"	10	PC	
300	359009-0207	CABLE MARKING, YELLOW, PK 2/4" H"	10	PC	
310	359009-0208	CABLE MARKING, YELLOW, PK 2/4" I"	10	PC	
320	359009-0211	CABLE MARKING, YELLOW, PK 2/4" L"	10	PC	
330	359009-0212	CABLE MARKING, YELLOW, PK 2/4" M"	10	PC	
340	359009-0213	CABLE MARKING, YELLOW, PK 2/4" N"	10	PC	
350	359009-0214	CABLE MARKING, YELLOW, PK2/4" O"	10	PC	
360	359009-0215	CABLE MARKING, YELLOW, PK 2/4" P"	10	PC	
370	359009-0216	CABLE MARKING, YELLOW, PK 2/4" Q"	10	PC	
380	359009-0217	CABLE MARKING, YELLOW, PK 2/4" R"	10	PC	
390	359009-0218	CABLE MARKING, YELLOW, PK 2/4" S"	10	PC	
400	359009-0219	CABLE MARKING, YELLOW, PK 2/4" T"	10	PC	
410	359009-0220	CABLE MARKING, YELLOW, PK 2/4" U"	10	PC	
420	359009-0221	CABLE MARKING, YELLOW, PK 2/4" V"	10	PC	
430	359009-0225	CABLE MARKING, YELLOW, PK 2/4" Z"	10	PC	
440	359009-0224	CABLE MARKING, YELLOW, PK 2/4" Y"	10	PC	
450	359009-0223	CABLE MARKING, YELLOW, PK 2/4" X"	10	PC	
460	359009-0210	CABLE MARKING, YELLOW, PK 2/4" K"	10	PC	

Pos	Part No	Description	Qty	Unit	Page No

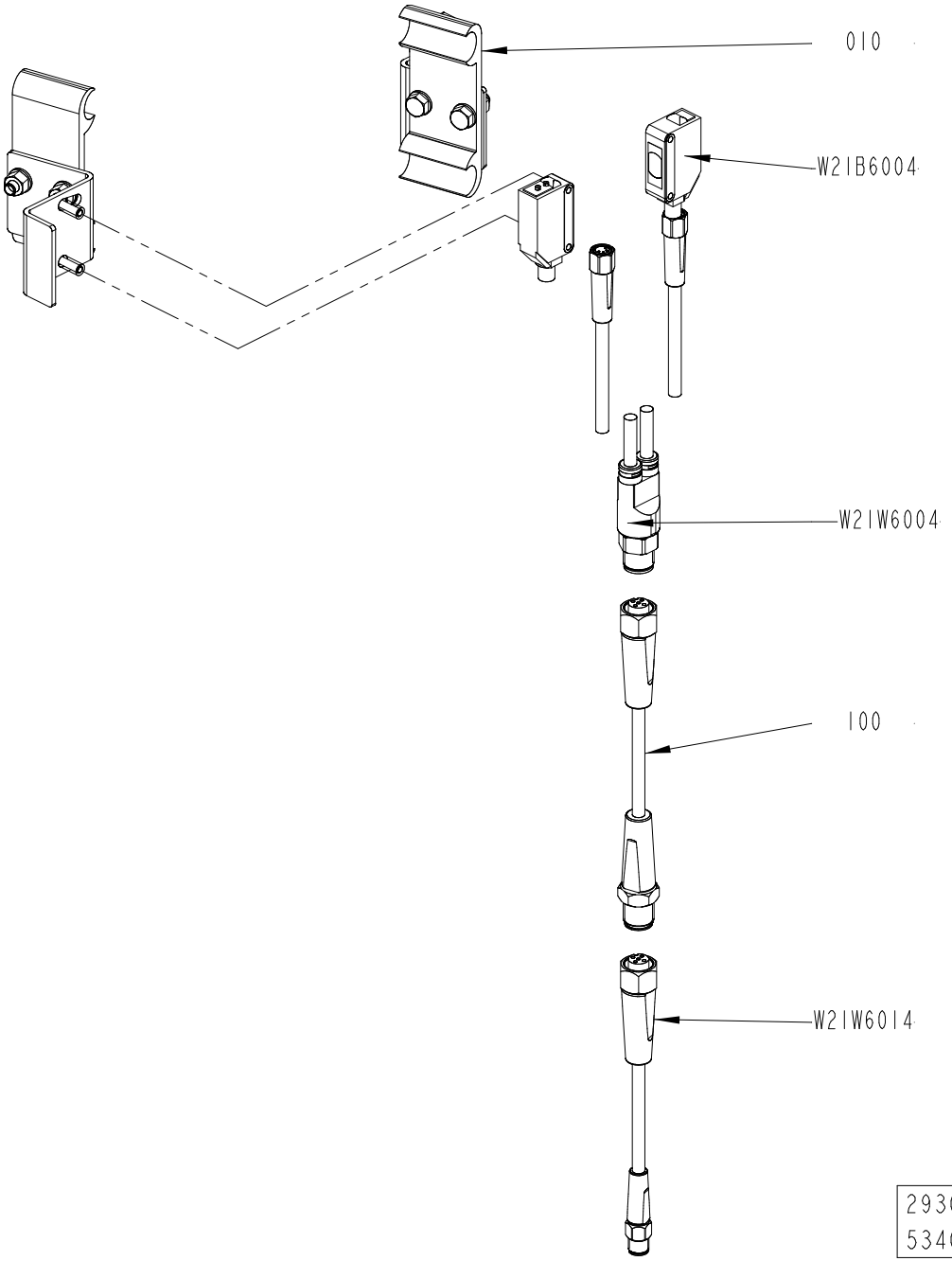
010
W21B6004
W21W6004
100
W21W6014
2930178-2
534047

ECM: 534044
Group number: 2930178-0200
Assembly Drawing: 2930178-2_1_AA

Pos	Part No	Description	Qty	Unit	Page No
Common Parts					
010	2778586-0100	SENSOR	1	PC	850
100	344267-0050	SENSOR CABLE, EVT044	1	PC	
W21B6004	90459-5529	PHOTOCELL E3Z-T86A, SENDER+RECIEVER	1	PC	
W21W6004	90603-3979	SENSOR Y-CABLE, EVT339	1	PC	
W21W6014	344261-0050	SENSOR CABLE, EVT216	1	PC	

Pos	Part No	Description	Qty	Unit	Page No

Pos. 010 in BoM 2930178-0200

SENSOR

Drawing file:2778586-1_1_AC

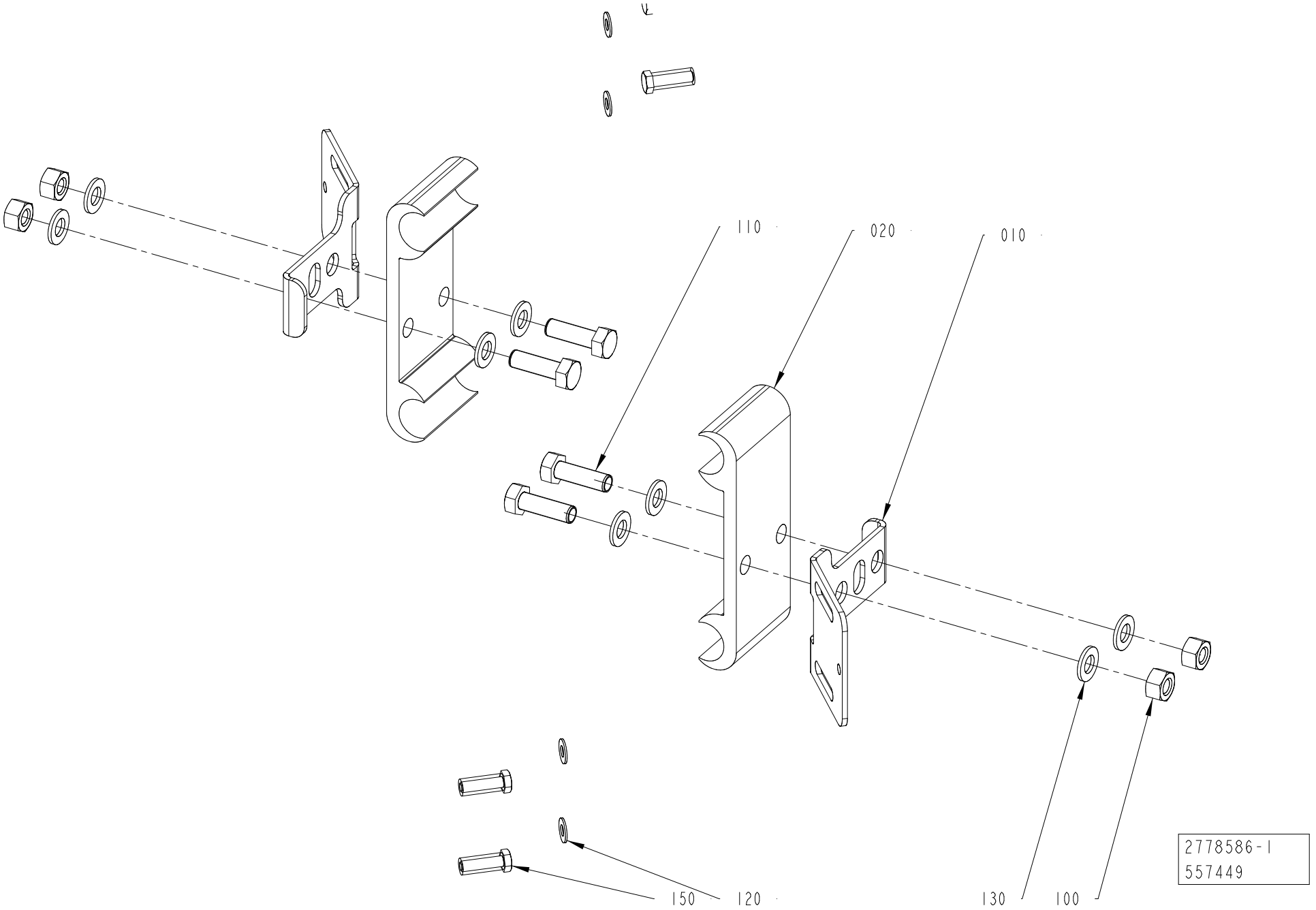

ECM: 563430
Group number: 2778586-0100
Assembly Drawing: 2778586-1_1_AC

Pos	Part No	Description	Qty	Unit	Page No
Common Parts					
010	3252696-0000	BRACKET	2	PC	
020	1020637-0000	HOLDER	2	PC	
100	312605-0314	HEXAGON NUT, M6M M5 A280	4	PC	
110	312105-0329	SCREW, M6S ISO 4017 M5X16 A4 80	4	PC	
120	315106-0124	WASHER PLAIN, M3 ISO7089-3-200 HV A4	4	PC	
130	315105-0146	WASHER PLAIN, 5,3X10X1 A4 BRB	8	PC	
150	90287-0175	SCREW M6S M3X12 A480	4	PC	

Pos	Part No	Description	Qty	Unit	Page No

This page intentionally left blank

SPC

Spare Parts Catalogue

This page intentionally left blank

ECM: 810496
Group number: 662912-0300
Assembly Drawing: -

Pos	Part No	Description	Qty	Unit	Page No
Common Parts					
010	2842806-0100	SHELF	1	PC	856
030	3408456-0100	OK TBA POSITIONING DEVICE	1	PC	858
050	3420950-0100	OK ADHESIVE DETECTOR	1	PC	888

Pos	Part No	Description	Qty	Unit	Page No

Pos. 010 in BoM 662912-0300

SHELF

Drawing file:2842806-1_1_AB

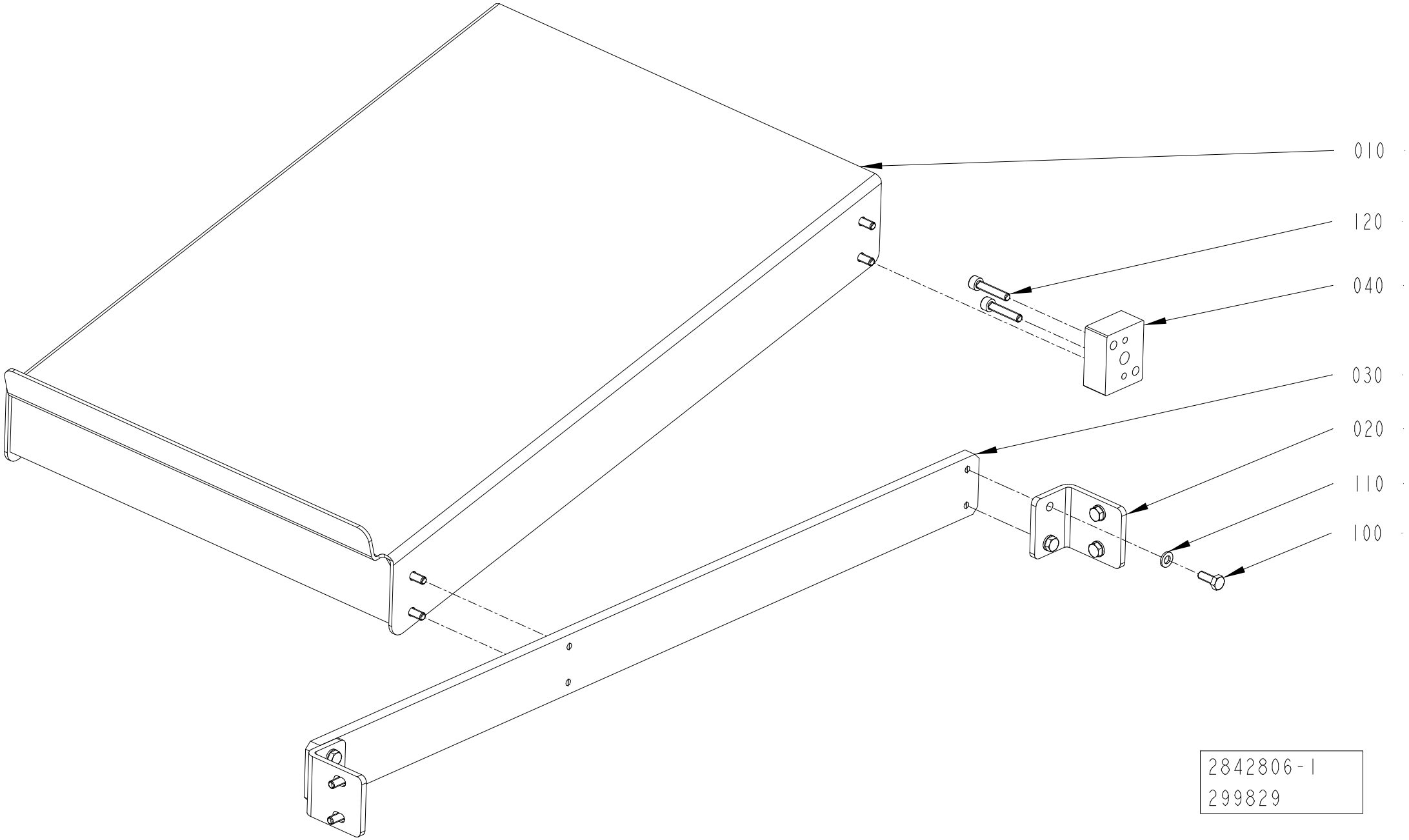

ECM: 310549
Group number: 2842806-0100
Assembly Drawing: 2842806-1_1_AB

Pos	Part No	Description	Qty	Unit	Page No
Common Parts					
010	2842800-0000	SHELF	1	PC	
020	2842804-0000	BRACKET	2	PC	
030	2842803-0000	PLATE	1	PC	
040	2842805-0000	SPACER	1	PC	
100	312105-0368	SCREW, M6S ISO 4017 M6X16 A4 80	12	PC	
110	315105-0153	WASHER PLAIN, 6,4X12X1,5 A4 BRB	12	PC	
120	312115-0374	SCREW ISO4762 M6X30 A4 80	2	PC	

Pos	Part No	Description	Qty	Unit	Page No

This page intentionally left blank

ECM: 739032
Group number: 3408456-0100
Assembly Drawing: -

Pos	Part No	Description	Qty	Unit	Page No
Common Parts					
	3408458-0101	UPDATE PAGES	1	PC	
	3408457-0101	REBUILDING MANUAL	1	PC	
100	3203763-0100	VISION SYSTEM	1	PC	860
110	2873922-0300	CABLE	1	PC	862
120	2703700-0200	GUIDE BRACKET	6	PC	864, 866, 868
130	2839382-0100	MOUNTING PLATE	1	PC	870, 872
140	2780425-0100	CAM	1	PC	874
150	2780560-0300	DRIVE	1	PC	876, 878, 880
160	3405810-0100	POSITIONING UNIT	1	PC	882
170	3087823-0100	TOOL	1	PC	884
180	3134548-0100	ELECTRICAL MATERIALS	1	PC	886

Pos	Part No	Description	Qty	Unit	Page No

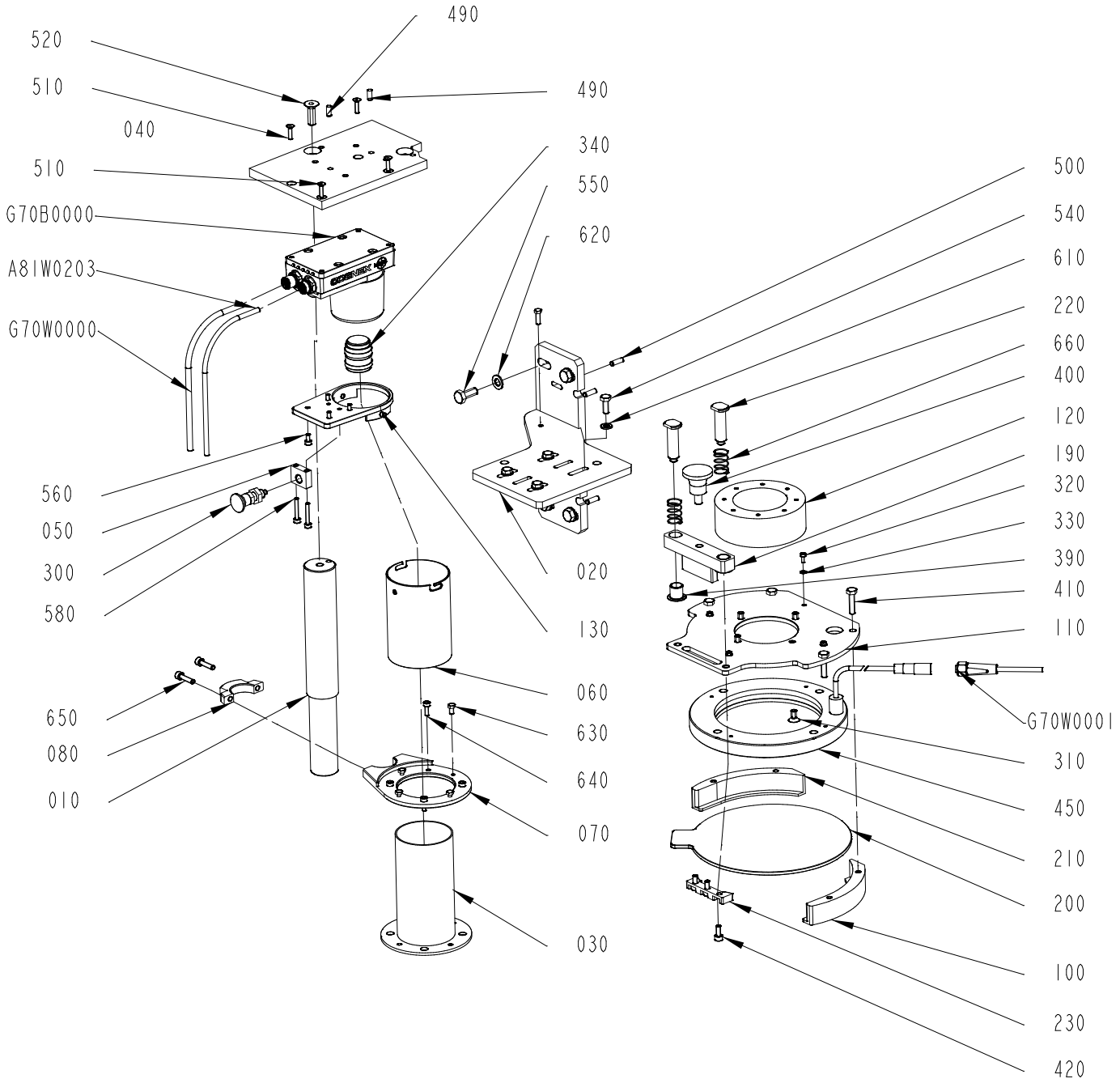

3203763-1
662766

ECM: 662773
Group number: 3203763-0100
Assembly Drawing: 3203763-1_1_AD

Pos	Part No	Description	Qty	Unit	Page No
Common Parts					
010	2985768-0000	COLUMN	1	PC	
020	2792664-0000	BRACKET	1	PC	
030	2557544-0000	PROTECTION	1	PC	
040	3203752-0000	BRACKET	1	PC	
050	2794721-0000	BLOCK	1	PC	
060	2792879-0000	TUBE	1	PC	
070	2794790-0000	CLAMP	1	PC	
080	2873943-0000	CLAMP	1	PC	
100	3095796-0000	HOLDER	1	PC	
110	3095791-0000	PLATE	1	PC	
120	3031442-0000	SPACER	1	PC	
130	2792848-0000	SUPPORT	1	PC	
190	3053477-0000	BRACKET	1	PC	
200	3052393-0000	GLASS COVER	1	PC	
210	3095790-0000	HOLDER	1	PC	
220	3053471-0000	PIN	2	PC	
230	3053478-0000	PUSHER	1	PC	
300	90051-0112	LOCK KNOB, NO. GN 617 NIK5	1	PC	
310	312155-0366	SCREW DIN 7991 MF6S M6X12 A4 70	4	PC	
320	312115-0222	SCREW ISO4762 M3X8 A4 80	4	PC	
330	315106-0124	WASHER PLAIN, M3 ISO7089-3-200 HV A4	4	PC	
340	90459-1180	LENS 16MM IN-SIGHT 4100, HF16HA-1B	1	PC	
390	321156-0188	FLANGE BUSHING, IGLIDUR H370 12X14X15	2	PC	
400	318871-0105	KNOB CIRCULAR, EXT THREAD, NO. 8302-6150	1	PC	
410	312105-0372	SCREW, M6S ISO 4017 M6X25 A4 80	4	PC	
420	312115-0327	SCREW ISO4762 M5X12 A4 80	3	PC	
450	90605-2644	ILLUMINATION, ICRR-LDR2-174LAT	1	PC	
490	311103-0306	PARALLEL PIN ISO 2338 5M6X12 A1	2	PC	
500	311103-0308	PARALLEL PIN ISO 2338 5M6X16 A1	5	PC	
510	312155-0293	SCREW DIN 7991 MF6S M4X16 A4 70	4	PC	
520	312155-0453	SCREW DIN 7991 MF6S M8X25 A4 70	1	PC	
540	312105-0368	SCREW, M6S ISO 4017 M6X16 A4 80	4	PC	
550	312105-0451	SCREW, M6S ISO 4017 M8X20 A4 80	4	PC	
560	312115-0287	SCREW ISO4762 M4X8 A4 80	4	PC	
580	312115-0297	SCREW ISO4762 M4X25 A4 80	2	PC	
610	315105-0153	WASHER PLAIN, 6,4X12X1,5 A4 BRB	4	PC	
620	315105-0165	FWAS080G0-0S, WASHER PLAIN	4	PC	
630	312105-0287	SCREW, M6S ISO 4017 M4X8 A4 70	4	PC	
640	312115-0291	SCREW ISO4762 M4X12 A4 80	4	PC	
650	312115-0331	SCREW ISO4762 M5X20 A4 80	2	PC	
660	90605-3922	COMP. SPRING, 2477, 1X14X25	2	PC	
A81W0203	90600-2103	ETHERNET CABLE, CCB-84901-1004-10	1	PC	
G70B0000	90604-2784	IN-SIGHT 5100 CAMERA, IS5100-01	1	PC	
G70W0000	90600-2102	POWER I/O CABLE, CCB-84901-0103-10	1	PC	
G70W0001	344253-0100	SENSOR CABLE, EVT002	1	PC	

This page intentionally left blank

ECM: 740005
Group number: 2873922-0300
Assembly Drawing: -

Pos	Part No	Description	Qty	Unit	Page No
Common Parts					
G70W1000	351450-1409	POWER/ENCODER CABLE 2090-CSWM1DF-14AA09	1	PC	
G70X1001	90604-8704	CONNECTOR, 2090-K6CK-D15M, SERIE B	1	PC	

Pos	Part No	Description	Qty	Unit	Page No

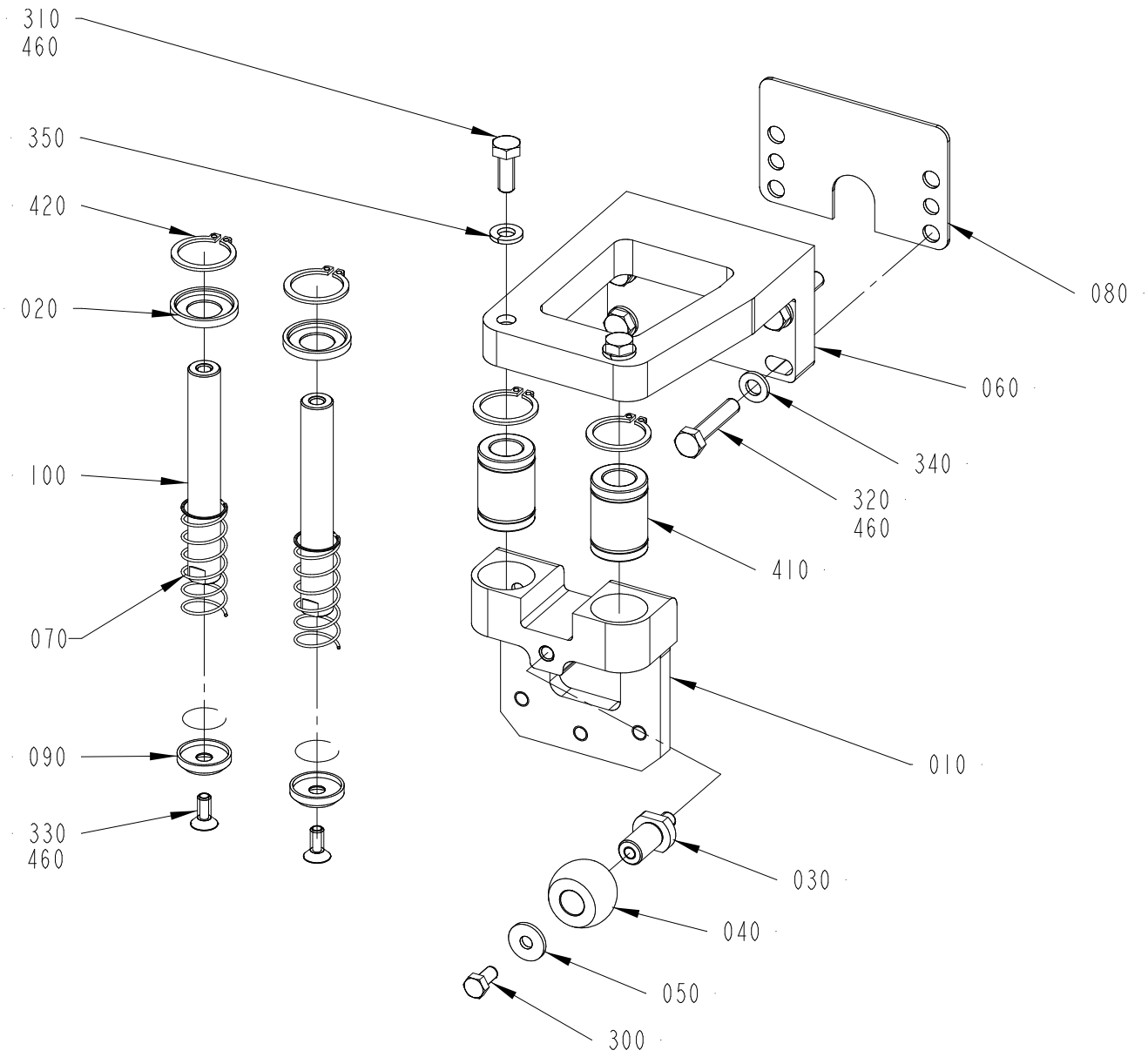

2703700-7
569216

ECM: 861053
Group number: 2703700-0200
Assembly Drawing: 2703700-7_1_AB

This list refers to drawings on pages 864 to 868

Pos	Part No	Description	Qty	Unit	Page No
TBA 0200E HELICAP 23 POSDEVICE, TPA HELICAP 27 POSITIONING DEVICE, TBA 0250E HELICAP 23 POSDEVICE, TGA, TPA STREAMCAP 1000 POSITIONING DEVICE, TPA STREAMCAP 500 POSITIONING DEVICE See page: 866					
060	3143919-0000	HOLDER	1	PC	
TBA 0200E HELICAP 23 POSDEVICE, TPA HELICAP 27 POSITIONING DEVICE, TBA 0250E HELICAP 23 POSDEVICE, TGA, TPA STREAMCAP 1000 POSITIONING DEVICE, TPA STREAMCAP 500 POSITIONING DEVICE See page: 866					
TBA 1000S HELICAP 23 POSDEVICE, TBA HELICAP 27 POSITIONING DEVICE, TBA 1500S HELICAP2 23 POSDEVICE, TBA STREAMCAP 1000 POSITIONING DEVICE, TBA STREAMCAP 200 POSDEVICE See page: 868					
280	3150922-0000	BRACKET	1	PC	
TBA HELICAP 27 POSITIONING DEVICE, TBA 1500S HELICAP2 23 POSDEVICE, TBA STREAMCAP 1000 POSITIONING DEVICE, TBA STREAMCAP 200 POSDEVICE, TBA 1000S HELICAP 23 POSDEVICE See page: 868					
060	3144497-0000	HOLDER	1	PC	
TBA STREAMCAP 1000 NO POSITIONING DEVICE, TBA SLIMCAP 1000 NO POSITIONING DEVICE, TBA SLIMCAP 2000 NO POSITIONING DEVICE, TBA STREAMCAP 200 NO POSDEVICE See page: 864					
020	2751686-0000	WASHER	2	PC	
040	1556630-0000	WHEEL	1	PC	
060	2703692-0000	HOLDER	1	PC	
080	2703702-0000	SHIM	1	PC	
310	312105-0368	SCREW, M6S ISO 4017 M6X16 A4 80	2	PC	
320	312109-0374	SCREW, M6S ISO 4017 M6X30 A4 80	4	PC	
350	315402-0156	LOCK WASHER, DIN127B 6,5 A4, 1/4	2	PC	
410	90600-0375	BALL BUSHING, 12X21X30 MM	2	PC	
420	90600-0373	RETAINING RING FOR SHAFT DIN 471 21 SS	4	PC	
TBA STREAMCAP 1000 NO POSITIONING DEVICE, TBA SLIMCAP 1000 NO POSITIONING DEVICE, TBA SLIMCAP 2000 NO POSITIONING DEVICE, TBA STREAMCAP 200 NO POSDEVICE See page: 864					
TBA STREAMCAP 1000 POSITIONING DEVICE, TBA STREAMCAP 200 POSDEVICE, TBA 1000S HELICAP 23 POSDEVICE, TBA HELICAP 27 POSITIONING DEVICE, TBA 1500S HELICAP2 23 POSDEVICE See page: 868					
050	90005-0139	WASHER PLAIN ROUND 5,2(M5)/15, H=1,6	1	PC	
300	312105-0325	SCREW, M6S ISO 4017 M5X10 A4 80	1	PC	
TBA STREAMCAP 1000 NO POSITIONING DEVICE, TBA SLIMCAP 1000 NO POSITIONING DEVICE, TBA SLIMCAP 2000 NO POSITIONING DEVICE, TBA STREAMCAP 200 NO POSDEVICE See page: 864					
TGA, TPA STREAMCAP 1000 POSITIONING DEVICE, TPA STREAMCAP 500 POSITIONING DEVICE, TBA 0200E HELICAP 23 POSDEVICE, TPA HELICAP 27 POSITIONING DEVICE, TBA 0250E HELICAP 23 POSDEVICE See page: 866					
030	2703683-0000	SHAFT	1	PC	
TBA STREAMCAP 1000 POSITIONING DEVICE, TBA STREAMCAP 200 POSDEVICE, TBA 1000S HELICAP 23 POSDEVICE, TBA HELICAP 27 POSITIONING DEVICE, TBA 1500S HELICAP2 23 POSDEVICE See page: 868					
040	1556630-0000	WHEEL	2	PC	
370	312115-0366	SCREW ISO4762 M6X12 A4 80	4	PC	
TGA, TPA STREAMCAP 1000 POSITIONING DEVICE, TPA STREAMCAP 500 POSITIONING DEVICE, TBA 0200E HELICAP 23 POSDEVICE, TPA HELICAP 27 POSITIONING DEVICE, TBA 0250E HELICAP 23 POSDEVICE See page: 866					
TBA STREAMCAP 1000 POSITIONING DEVICE, TBA STREAMCAP 200 POSDEVICE, TBA 1000S HELICAP 23 POSDEVICE, TBA HELICAP 27 POSITIONING DEVICE, TBA 1500S HELICAP2 23 POSDEVICE See page: 868					
020	2751686-0000	WASHER	4	PC	
080	2780431-0000	SHIM	1	PC	
120	3150919-0000	BRACKET	1	PC	
170	2783465-0000	SHAFT	2	PC	
180	3014020-0000	COMPRESSION SPRING	2	PC	
200	2613995-0000	SPACER	1	PC	
220	2746978-0000	SHAFT	1	PC	
230	2811453-0000	SCREW	2	PC	
260	3151006-0000	SCREW	1	PC	
270	3150924-0000	BLOCK	1	PC	
320	312105-0372	SCREW, M6S ISO 4017 M6X25 A4 80	4	PC	
360	312105-0335	SCREW, M6S ISO 4014 M5X30 A4 80	1	PC	
400	315105-0146	WASHER PLAIN, 5,3X10X1 A4 BRB	1	PC	
410	90600-0375	BALL BUSHING, 12X21X30 MM	4	PC	
420	90600-0373	RETAINING RING FOR SHAFT DIN 471 21 SS	8	PC	
470	312105-0323	"FSCR05080-10, SCREW, M6S"	1	PC	
480	312105-0285	SCREW, M6S ISO 4017 M4X6 A4 70	1	PC	
TGA, TPA STREAMCAP 1000 POSITIONING DEVICE, TPA STREAMCAP 500 POSITIONING DEVICE, TBA 0200E HELICAP 23 POSDEVICE, TPA HELICAP 27 POSITIONING DEVICE, TBA 0250E HELICAP 23 POSDEVICE See page: 866					
040	1556630-0000	WHEEL	3	PC	
050	90005-0139	WASHER PLAIN ROUND 5,2(M5)/15, H=1,6	2	PC	
110	2783460-0000	GUIDE BRACKET	1	PC	
130	2783462-0000	AXLE PIN	1	PC	
140	2715701-0000	AXLE PIN	1	PC	
150	2715704-0000	SLEEVE	1	PC	
160	2715885-0000	TORSION SPRING	1	PC	
190	2715826-0000	DAMPER	1	PC	
210	3158206-0000	ROLLER BRACKET	1	PC	
300	312105-0325	SCREW, M6S ISO 4017 M5X10 A4 80	2	PC	
370	312115-0366	SCREW ISO4762 M6X12 A4 80	6	PC	
380	312318-0285	SET SCREW, CUP END ISO4029 M4X6 A4	2	PC	
390	311103-0268	PARALLEL PIN ISO 2338 4M6X12 A1	2	PC	
430	321154-0180	FLANGE BUSHING, IGLIDUR W300 12X14X12	2	PC	
440	311112-0255	SPRING PIN, ISO 8752 4X18 A2	1	PC	
450	90606-4008	SEALING COMPOUND, ELASTOSIL E41 TRANSP.	1	L	
Common Parts					
010	2716127-0000	SLIDER	1	PC	
070	2703708-0000	SPRING	2	PC	
090	2751687-0000	WASHER	2	PC	
100	90600-0376	SHAFT, LM SHAFT 12 G6 89L M	2	PC	
330	312155-0327	SCREW DIN 7991 MF6S M5X12 A4 70	2	PC	
340	315105-0153	WASHER PLAIN, 6,4X12X1,5 A4 BRB	4	PC	

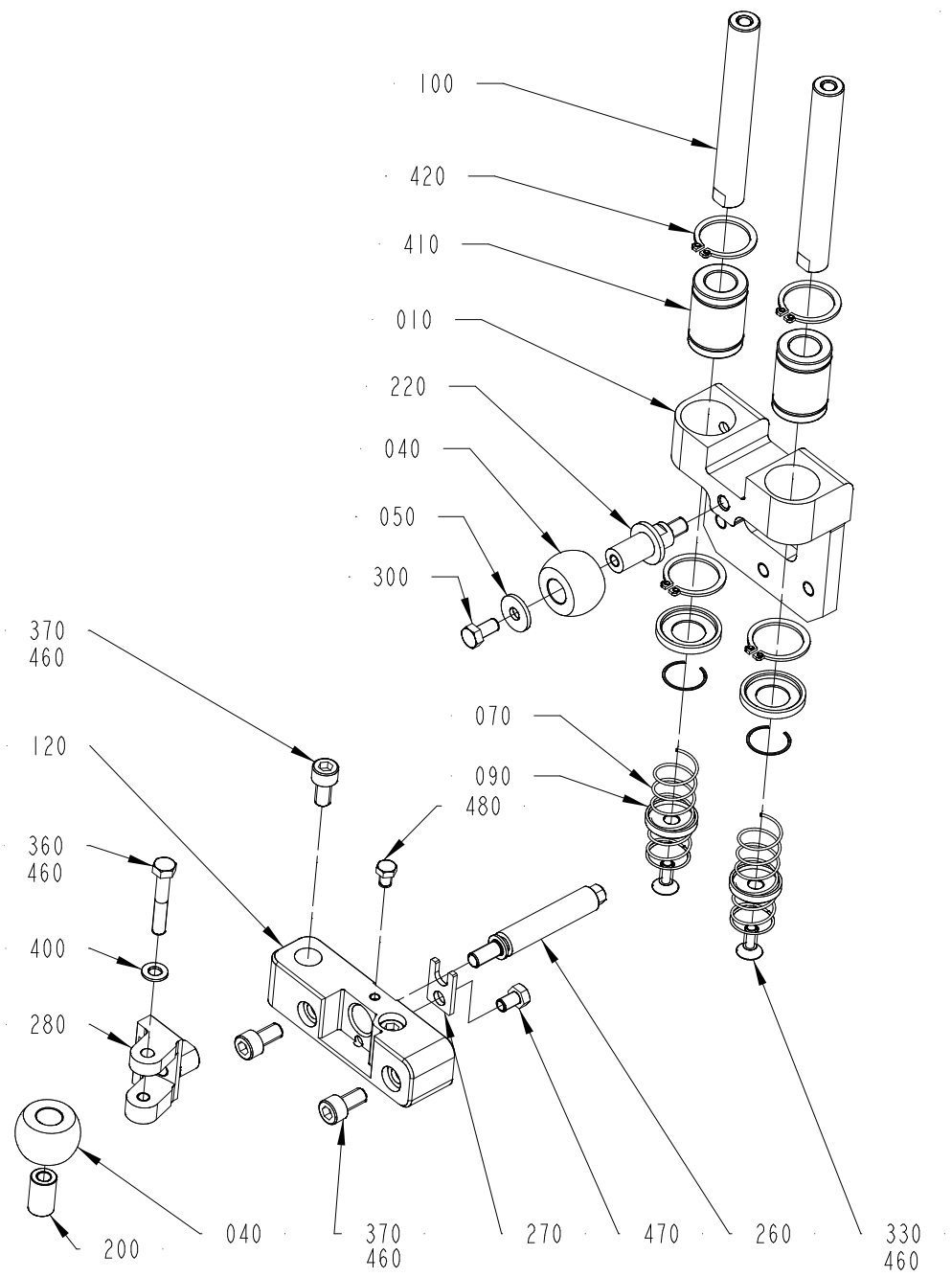

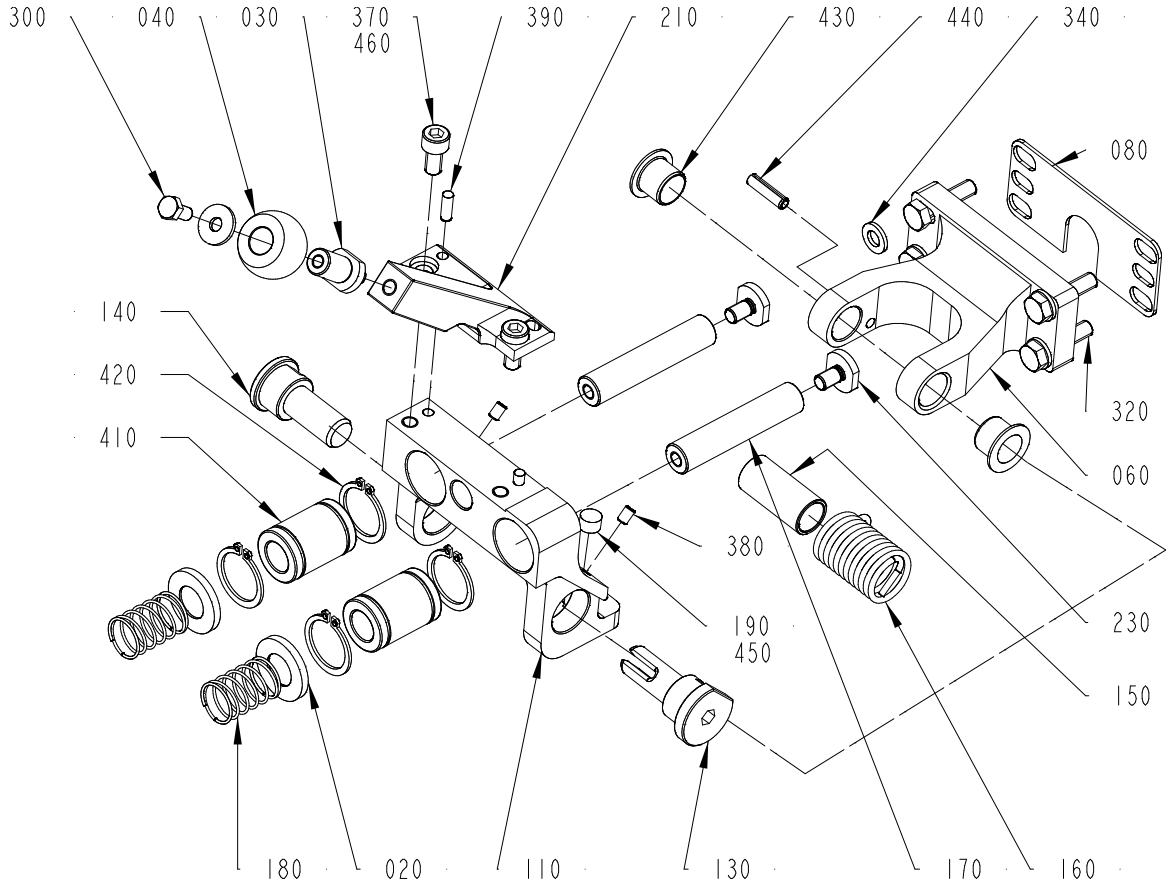

2703700-8
721588

This list refers to drawings on pages 864 to 868

Pos	Part No	Description	Qty	Unit	Page No

SEE LIST FOLLOWING DRAWING ON PAGE: 864

Pos	Part No	Description	Qty	Unit	Page No

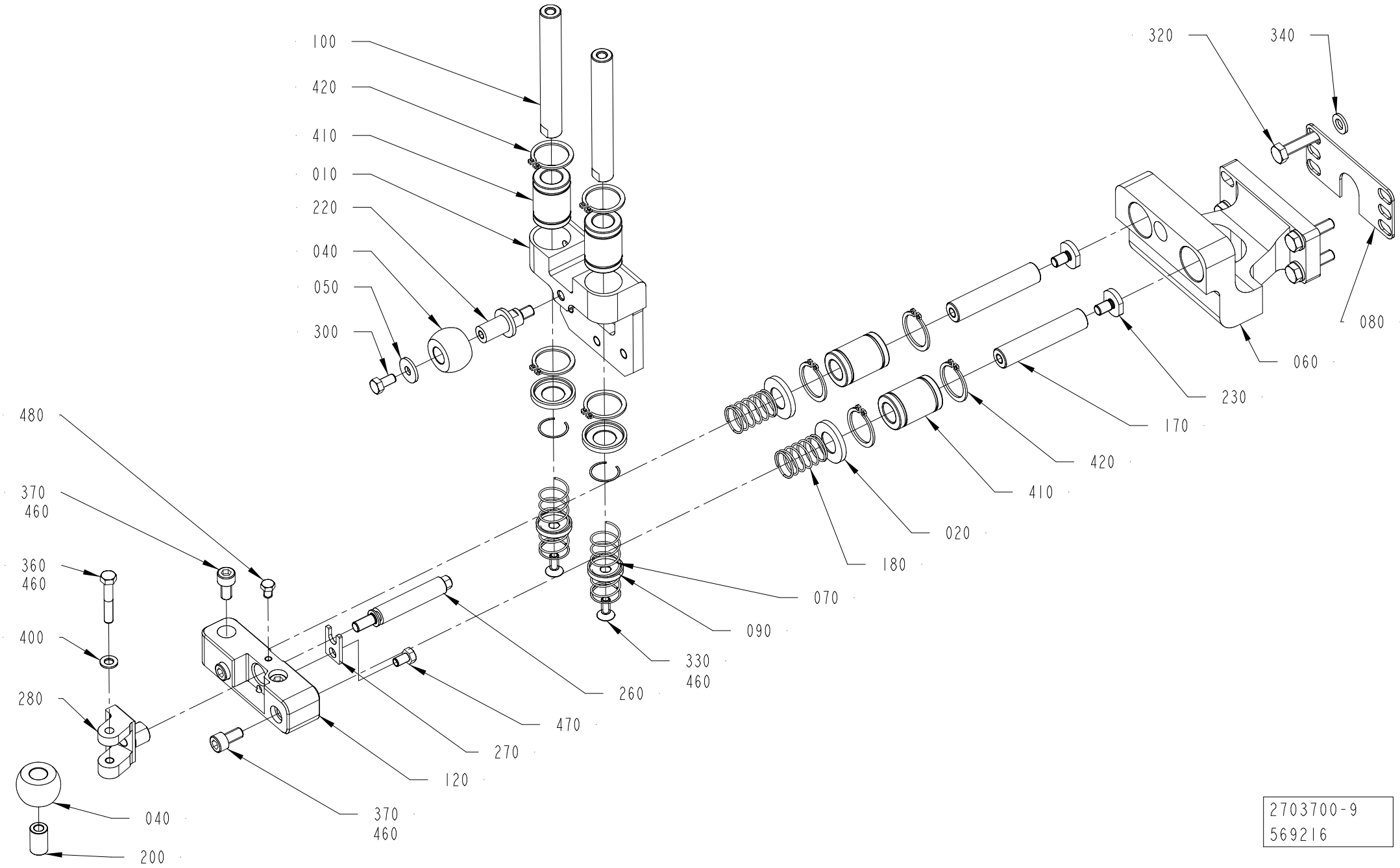

2703700-9
569216

This list refers to drawings on pages 864 to 868

Pos	Part No	Description	Qty	Unit	Page No

SEE LIST FOLLOWING DRAWING ON PAGE: 864

Pos	Part No	Description	Qty	Unit	Page No

Pos. 130 in BoM 3408456-0100

MOUNTING PLATE

Drawing file:2839382-1_1_AA

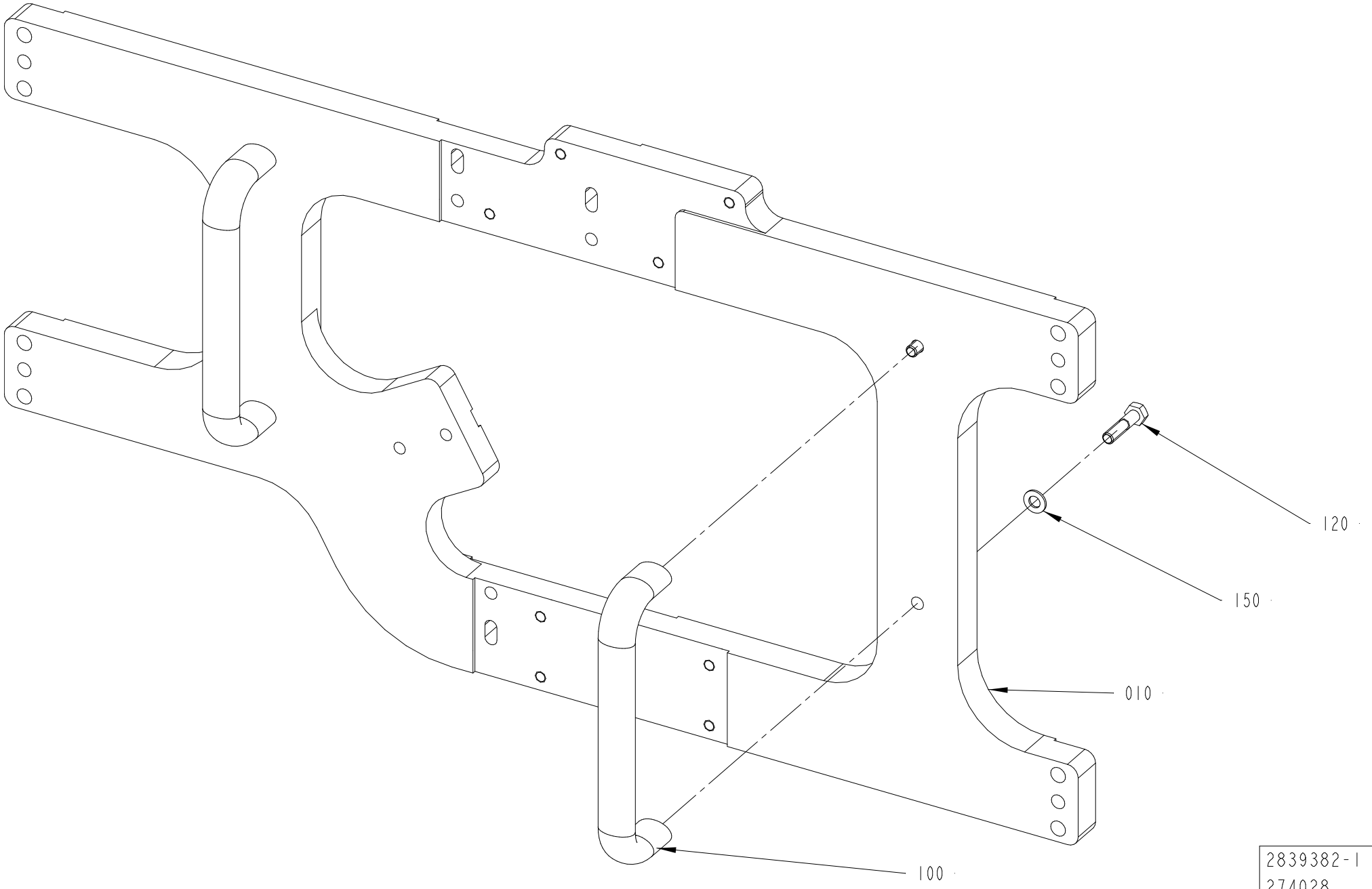

2839382-1
274028

ECM: 505441
Group number: 2839382-0100
Assembly Drawing: 2839382-1_1_AA

This list refers to drawings on pages 870 to 872

Pos	Part No	Description	Qty	Unit	Page No
TBA STREAMCAP 1000 NO POSITIONING DEVICE, TBA SLIMCAP 1000 NO POSITIONING DEVICE, TBA SLIMCAP 2000 NO POSITIONING DEVICE, TBA STREAMCAP 200 NO POSDEVICE See page: 870					
010	2780379-0000	PLATE	1	PC	
TPA, TGA, TBA STREAMCAP 1000 POSITIONING DEVICE, TBA STREAMCAP 200 POSDEVICE, TBA HELICAP 27 POSITIONING DEVICE, TBA HELICAP2 23 POSITIONING DEVICE See page: 872					
010	2780523-0000	PLATE	1	PC	
130	312125-0287	SLOTTED HEAD SCREW, ISO1207 M4X8 A4	2	PC	
160	352113-0203	ANCHOR PLATES FOR STRIPS, TM3S8-M0	2	PC	
170	352113-0104	CABLE TIE, BLACK 300X4,8 MM	2	PC	
Common Parts					
100	90459-3779	HANDLE, GN565 SW 192-M8	2	PC	
120	312105-0457	SCREW, M6S ISO 4014 M8X35 A4 80	4	PC	
150	315105-0165	FWAS080G0-0S, WASHER PLAIN	4	PC	

Pos	Part No	Description	Qty	Unit	Page No

Pos. 130 in BoM 3408456-0100

MOUNTING PLATE

Drawing file:2839382-3_1_AA

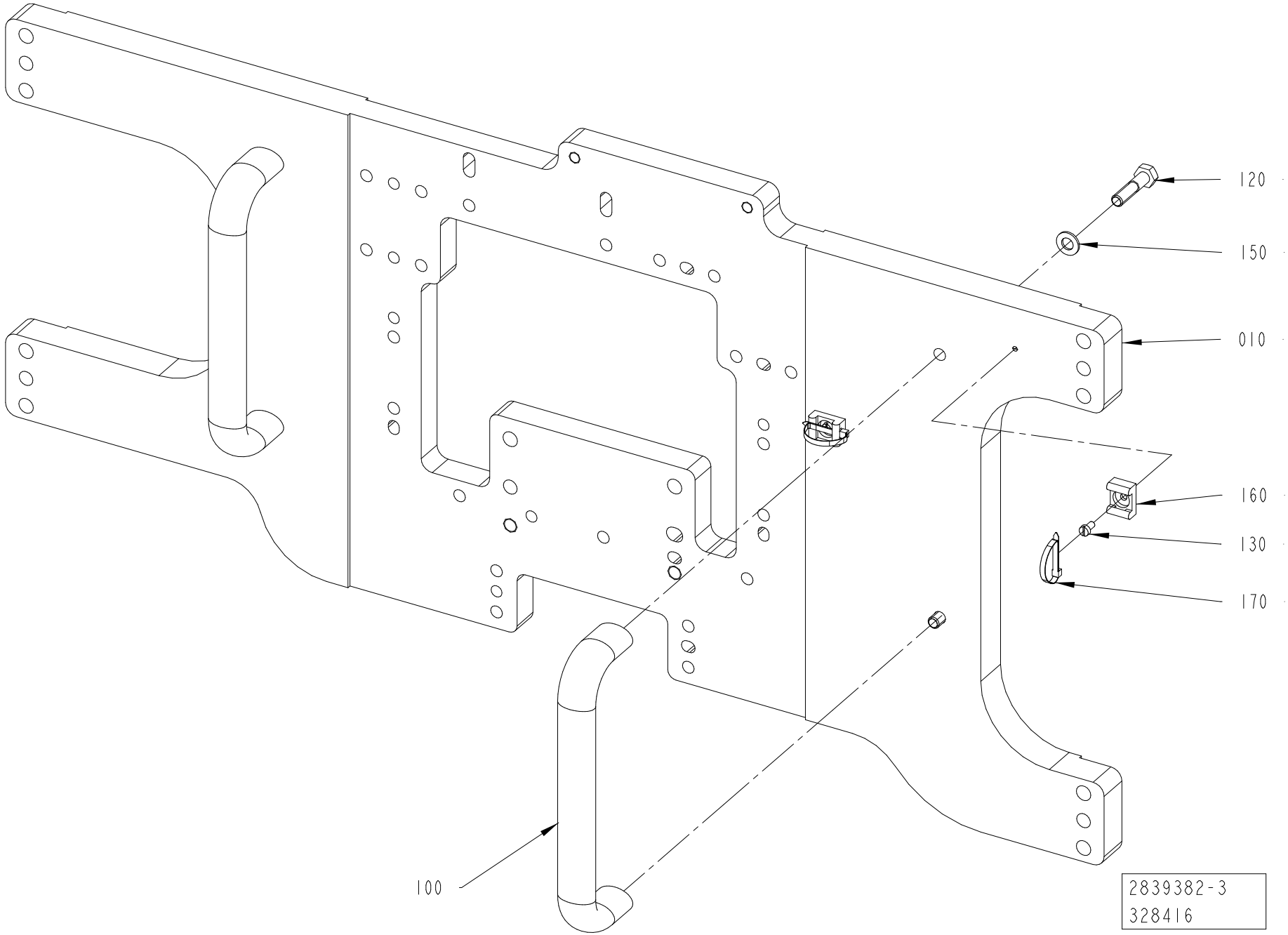

Pos	Part No	Description	Qty	Unit	Page No

SEE LIST FOLLOWING DRAWING ON PAGE: 870

Pos	Part No	Description	Qty	Unit	Page No

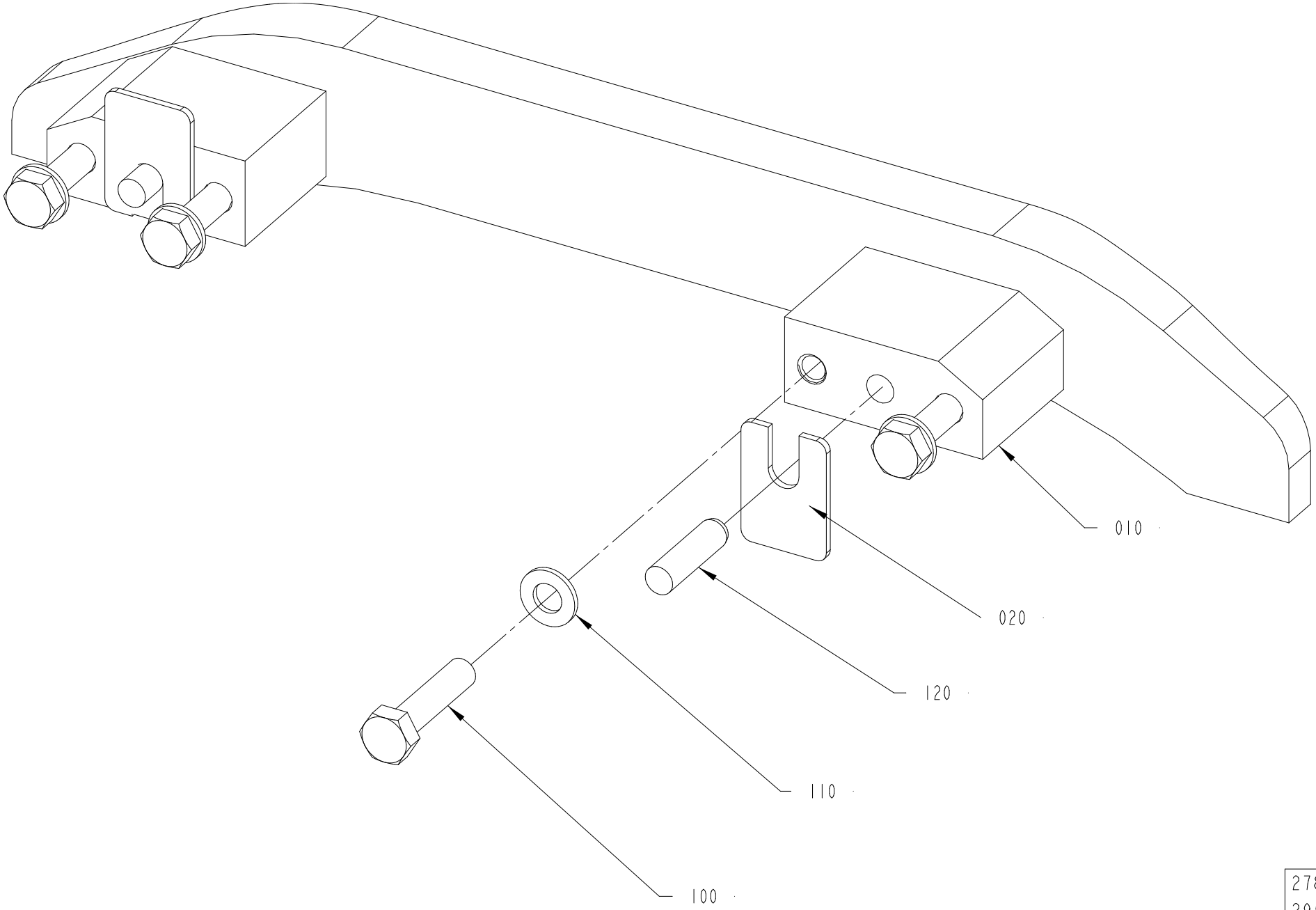

2780425-1
295286

ECM: 349995
Group number: 2780425-0100
Assembly Drawing: 2780425-1_1_AA

Pos	Part No	Description	Qty	Unit	Page No
Common Parts					
010	2801048-0000	CAM	1	PC	
020	2873892-0000	SHIM	2	PC	
100	312105-0457	SCREW, M6S ISO 4014 M8X35 A4 80	4	PC	
110	315106-0165	WASHER PLAIN, M8 ISO7089-8-200 HV A4	4	PC	
120	311103-0405	PARALLEL PIN ISO 2338 8M6X30 A1	2	PC	

Pos	Part No	Description	Qty	Unit	Page No

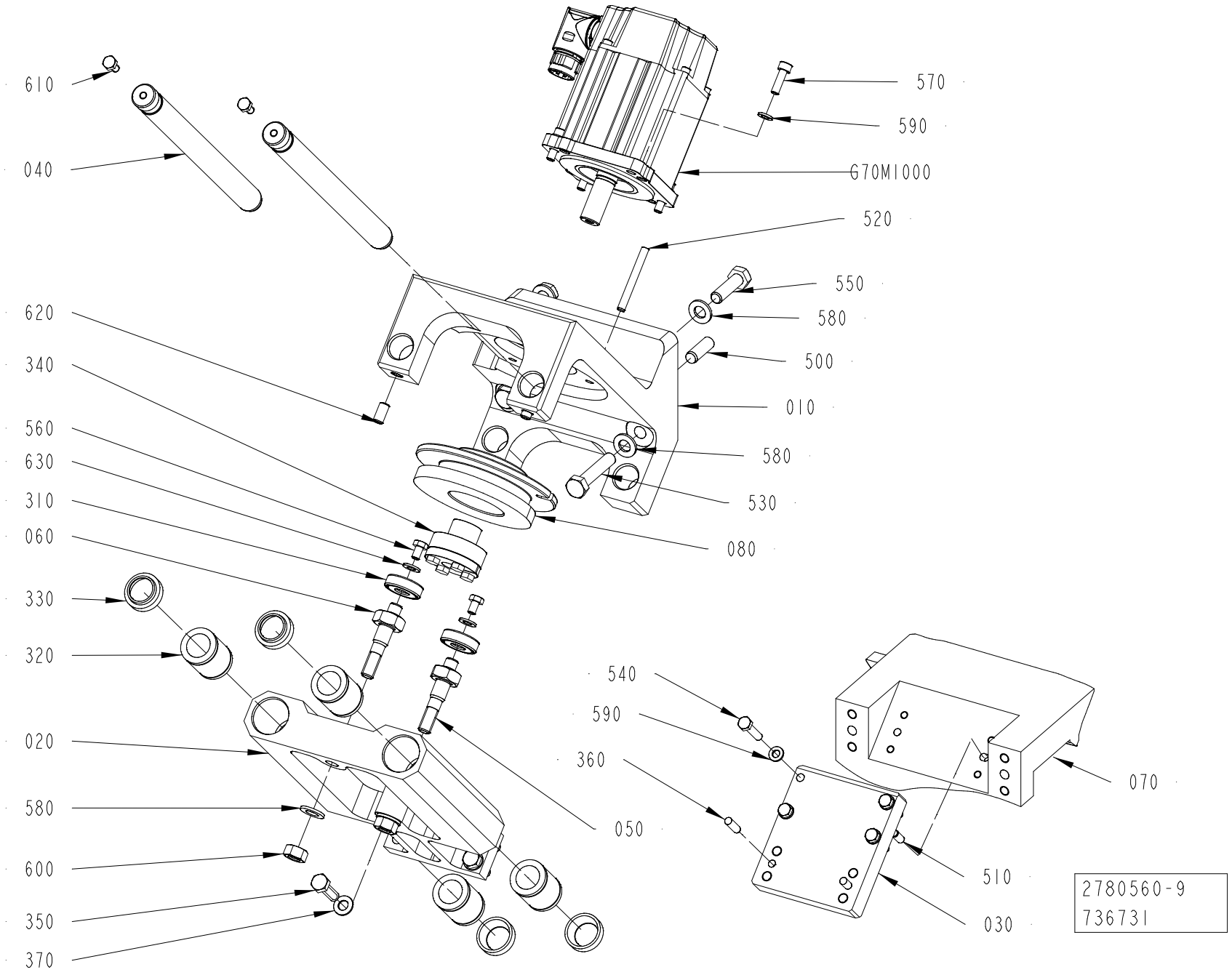
610
040
620
340
560
630
310
060
330
320
020
580
600
350
370
570
590
G70M1000
520
550
580
500
010
580
530
080
540
590
360
070
050
510
030
2780560-9
736731

ECM: 742634
Group number: 2780560-0300
Assembly Drawing: 2780560-9_1_AA

This list refers to drawings on pages 876 to 880

Pos	Part No	Description	Qty	Unit	Page No
TBA 0200E HELICAP 23, TBA 0250E HELICAP 23 See page: 878					
010	3073397-0000	BRACKET	1	PC	
070	3073409-0000	CAM	1	PC	
TBA 0200E HELICAP 23, TBA 0250E HELICAP 23, TPA STREAMCAP 1000, TPA STREAMCAP 500, TPA HELICAP 27 See page: 878					
TBA STREAMCAP1000, TBA STREAMCAP200, TBA 1000S HELICAP2 23, TBA HELICAP 27, TBA 1500S HELICAP2 23 See page: 880					
590	315106-0153	WASHER PLAIN, M6 ISO7089-6-200 HV A4	4	PC	
TBA STREAMCAP1000, TBA STREAMCAP200, TBA 1000S HELICAP2 23, TBA HELICAP 27, TBA 1500S HELICAP2 23 See page: 880					
010	2838722-0000	BRACKET	1	PC	
TPA STREAMCAP 1000, TPA STREAMCAP 500, TPA HELICAP 27 See page: 878					
TBA STREAMCAP1000, TBA STREAMCAP200, TBA 1000S HELICAP2 23, TBA HELICAP 27, TBA 1500S HELICAP2 23 See page: 880					
070	2783479-0000	CAM	1	PC	
TGA See page: 876					
010	2780526-0000	BRACKET	1	PC	
030	2780529-0000	BRACKET	1	PC	
070	2780521-0000	CAM	1	PC	
510	311103-0351	PARALLEL PIN ISO 2338 6M6X16 A1	2	PC	
540	312105-0374	SCREW, M6S ISO 4014 M6X30 A4 80	4	PC	
590	315106-0153	WASHER PLAIN, M6 ISO7089-6-200 HV A4	8	PC	
TPA STREAMCAP 1000, TPA STREAMCAP 500, TPA HELICAP 27 See page: 878					
010	2859960-0000	BRACKET	1	PC	
Common Parts					
020	2780527-0000	CARRIAGE	1	PC	
040	2783477-0000	GUIDE SHAFT	2	PC	
050	2780531-0000	AXLE PIN	1	PC	
060	2780532-0000	AXLE PIN	1	PC	
080	2780533-0000	CAM	1	PC	
310	90603-2378	BALL BEARING, 10X30X9 MM	2	PC	
320	90189-0019	BALL BUSHING, 20X30X30 MM	4	PC	
330	90091-0038	SCRAPER 20X30X10 MM	4	PC	
340	90600-0454	CLAMPING ELEMENT, 16X24 L=16	1	PC	
350	312105-0455	SCREW, M6S ISO 4017 M8X30 A4 80	4	PC	
360	311103-0354	PARALLEL PIN ISO 2338 6M6X22 A1	2	PC	
370	315105-0165	FWAS080G0-0S, WASHER PLAIN	4	PC	
500	311103-0458	PARALLEL PIN ISO 2338 10M6X30 A1	2	PC	
520	311103-0367	PARALLEL PIN ISO 2338 6M6X55 A1	1	PC	
530	312105-0501	SCREW, M6S ISO 4014 M10X50 A4 80	2	PC	
550	312105-0497	SCREW, M6S ISO 4017 M10X35 A4 80	2	PC	
560	312105-0364	"SCREW, M6S ISO 4017 M6X10 A4 80"	2	PC	
570	312115-0370	SCREW ISO4762 M6X20 A4 80	4	PC	
580	315106-0173	"WASHER PLAIN, M10 ISO7089-10-200 HV A4"	6	PC	
600	312605-0320	HEXAGON NUT, M6M M10 A280	2	PC	
610	312105-0366	SCREW, M6S ISO 4017 M6X12 A4 80	2	PC	
620	312318-0449	SET SCREW, CUP END ISO4029 M8X16 A4	2	PC	
630	315105-0156	WASHER PLAIN, 6,7X14X1,5 A4 BRB	2	PC	
G70M1000	90606-2772	SERVO MOTOR, VPL-B1001M-PK12AA, SERIES A	1	PC	

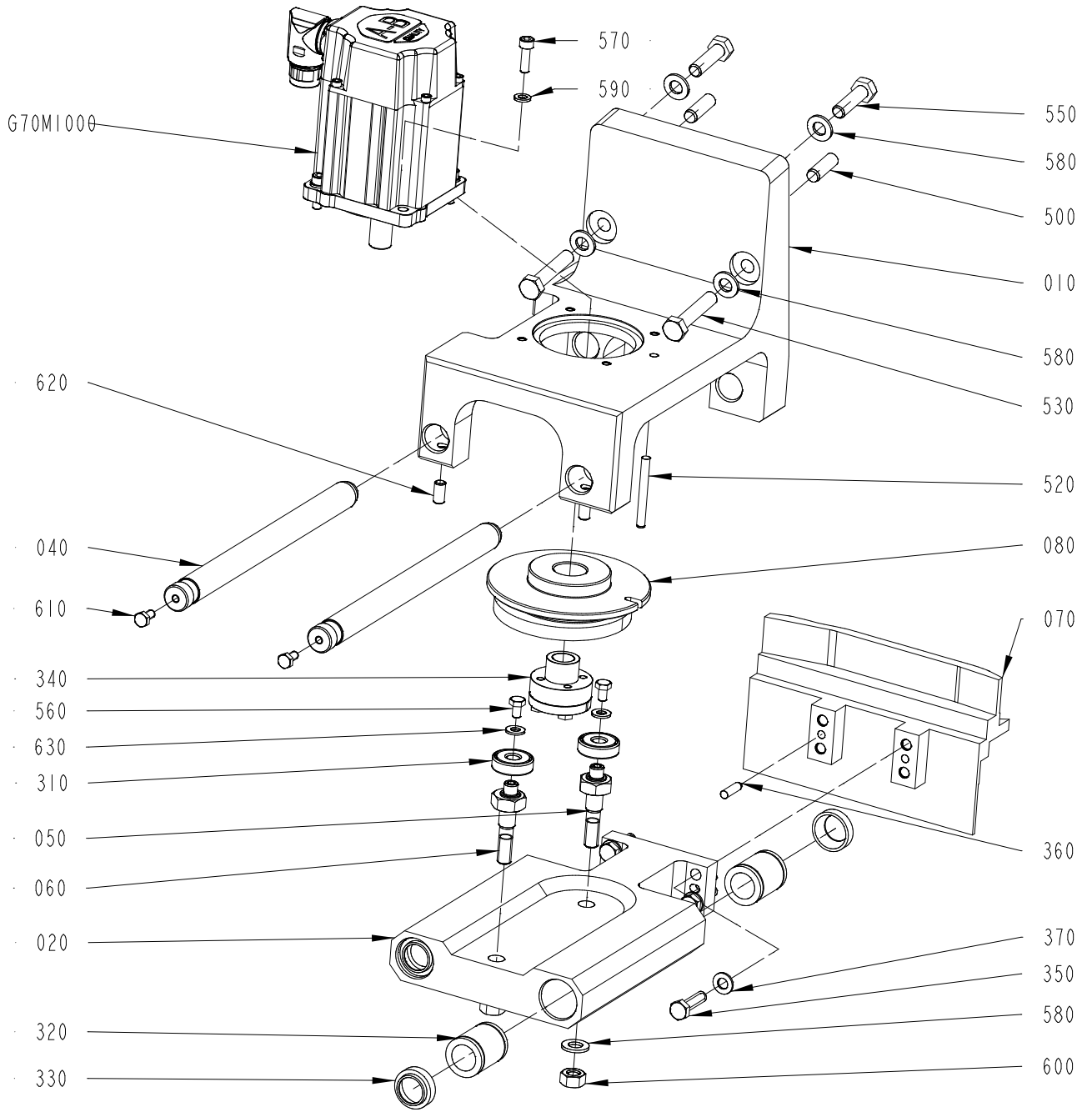
G70M1000
570
590
550
580
500
010
580
530
520
080
070
620
040
610
340
560
630
310
050
060
020
320
330
360
370
350
580
600
2780560-10
736731

Pos	Part No	Description	Qty	Unit	Page No

SEE LIST FOLLOWING DRAWING ON PAGE: 876

Pos	Part No	Description	Qty	Unit	Page No

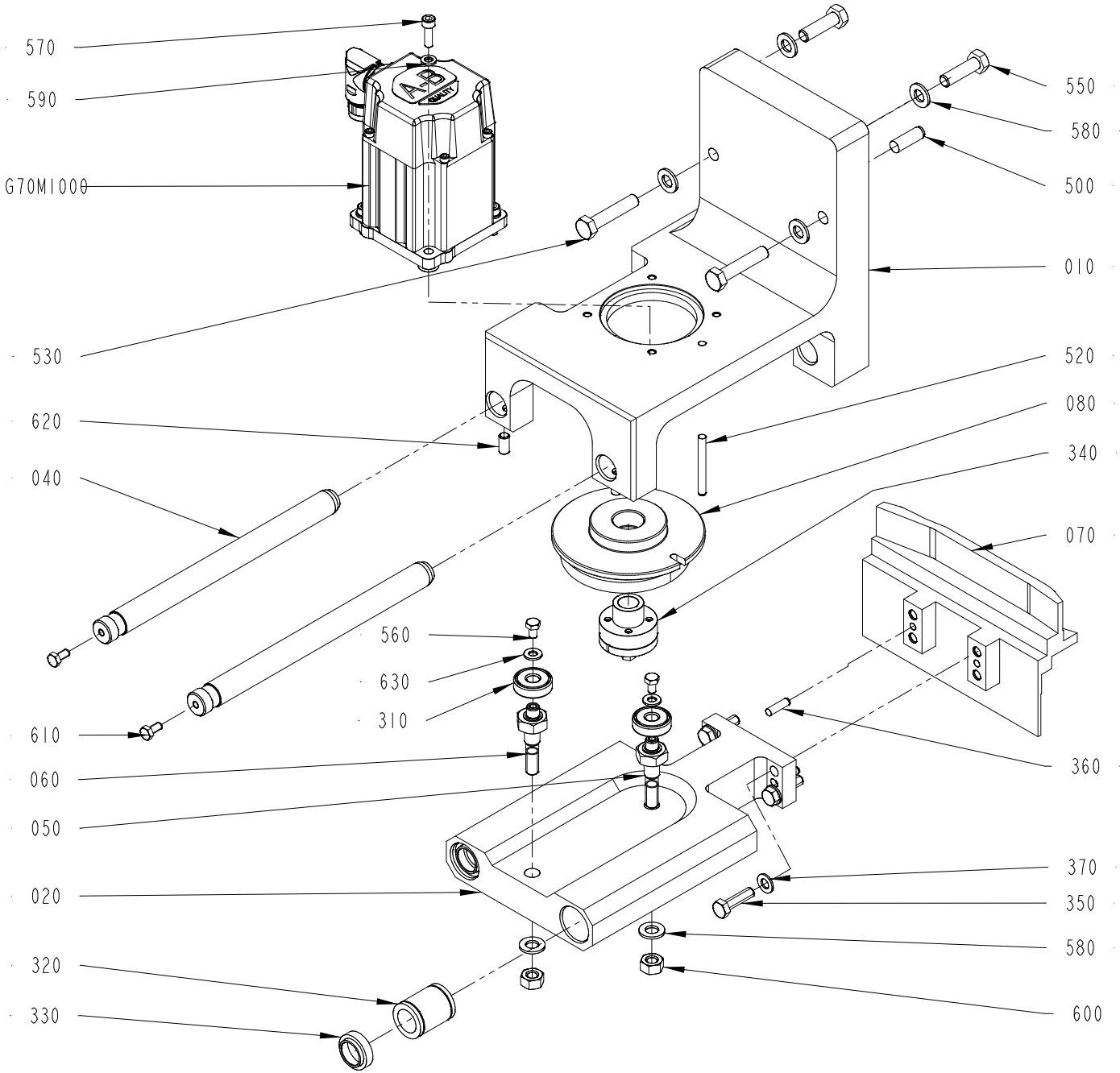
570
590
G70M1000
530
620
040
610
060
050
020
320
330
550
580
500
010
520
080
340
070
560
630
310
360
370
350
580
600
2780560-11
736731

This list refers to drawings on pages 876 to 880

Pos	Part No	Description	Qty	Unit	Page No

SEE LIST FOLLOWING DRAWING ON PAGE: 876

Pos	Part No	Description	Qty	Unit	Page No

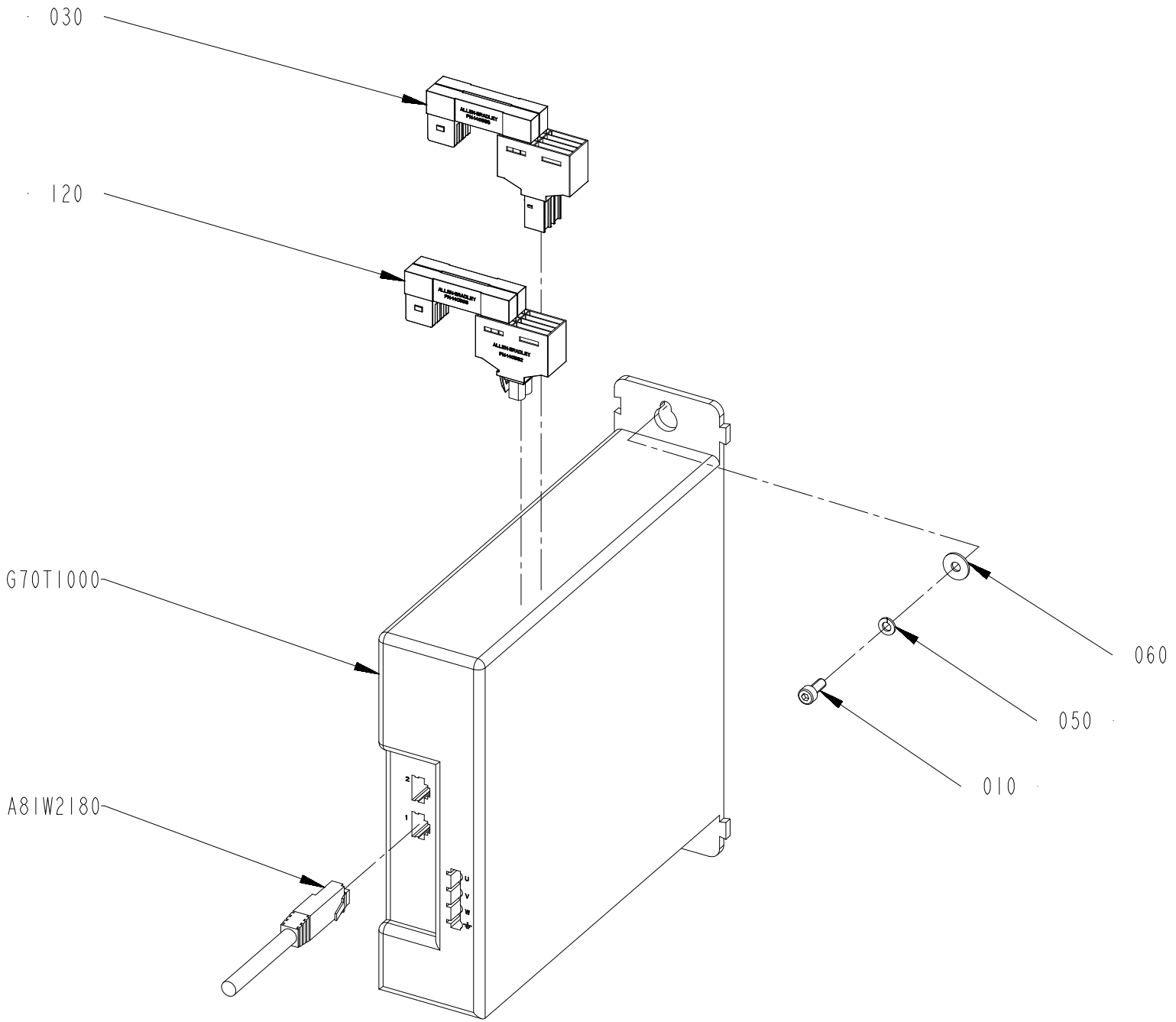
030
120
G70T1000
A8IW2180
060
050
010

ECM: 737184
Group number: 3405810-0100
Assembly Drawing: 3405810-1_1_AA

Pos	Part No	Description	Qty	Unit	Page No
POSITIONING DEVICE					
010	312115-0289	SCREW ISO4762 M4X10 A4 80	2	PC	
030	90606-0481	CONNECTOR KIT, 2198-H040-D-T, SERIE A	1	PC	
050	315402-0136	LOCK WASHER, DIN127B 4,1 A4, M4-5/32	2	PC	
060	90005-0082	WASHER PLAIN ROUND 4,3(M4)/12,H=1	2	PC	
120	90606-0482	CONN. KITS KINETIX, 2198-H040-P-T, SER A	1	PC	
A81W2180	351501-0003	ETHERNET PATCH CABLE, FL CAT5 PATCH 0,3	1	PC	
G70T1000	90605-9388	AMP.KINETIX 5500, 2198-H008-ERS, SERIE A	1	PC	

Pos	Part No	Description	Qty	Unit	Page No

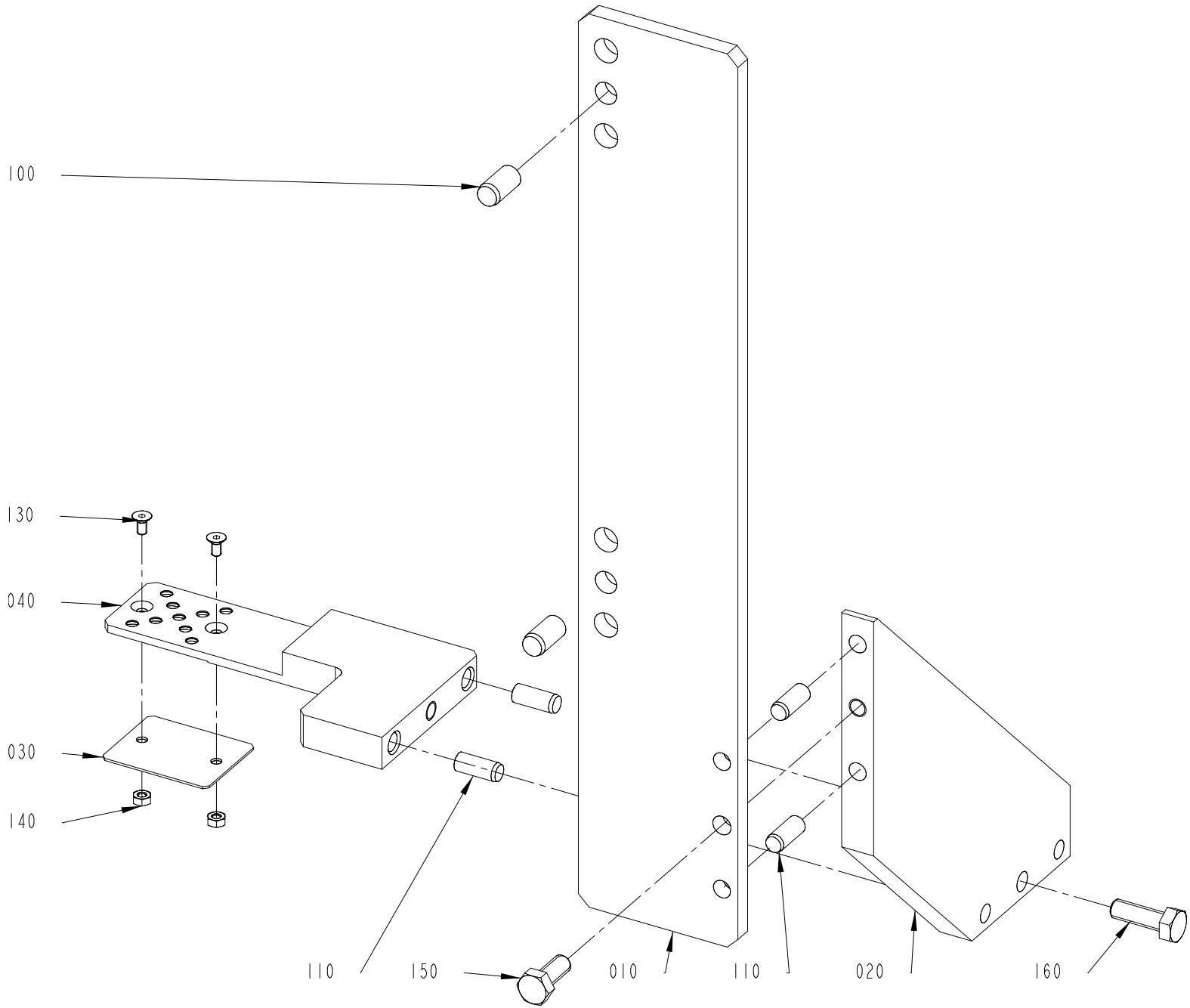

3087823-1
465123

ECM: 850877
Group number: 3087823-0100
Assembly Drawing: 3087823-1_1_AA

Pos	Part No	Description	Qty	Unit	Page No
TBA 0200E HELICAP 23, TBA 0250E HELICAP 23					
020	3161466-0000	PLATE	1	PC	
TBA SLIMCAP1000, TBA STREAMCAP1000, TBA SLIMCAP 2000, TBA STREAMCAP200, TPA STREAMCAP330, TBA 1000S HELICAP2 23, TBA HELICAP 27, TBA 1500S HELICAP2 23					
020	3123927-0000	PLATE	1	PC	
TGA					
020	3143918-0000	PLATE	1	PC	
TPA 0200E DREAMCAP 26, TPA 0250E DREAMCAP 26					
020	3390765-0000	PLATE	1	PC	
TPA STREAMCAP 1000, TPA STREAMCAP 500, TPA HELICAP 27					
020	3089906-0000	PLATE	1	PC	
Common Parts					
010	3087822-0000	PLATE	1	PC	
030	2838782-0000	PLATE	1	PC	
040	3087821-0000	TOOL	1	PC	
100	311103-0454	PARALLEL PIN ISO 2338 10M6X20 A1	2	PC	
110	311103-0401	PARALLEL PIN ISO 2338 8M6X20 A1	4	PC	
130	312155-0287	SCREW DIN 7991 MF6S M4X8 A4 70	2	PC	
140	312605-0312	HEXAGON NUT, M6M M4 A280	2	PC	
150	312105-0451	SCREW, M6S ISO 4017 M8X20 A4 80	1	PC	
160	312105-0453	SCREW, M6S ISO 4017 M8X25 A4 80	1	PC	

Pos	Part No	Description	Qty	Unit	Page No

This page intentionally left blank

ECM: 481440
Group number: 3134548-0100
Assembly Drawing: -

Pos	Part No	Description	Qty	Unit	Page No
Common Parts					
300	353001-0113	END SLEEVE 0,75MM2	30	PC	
390	359000-0300	WIRE MARKING, YELLOW, PA1/3"0"	30	PC	
400	359000-0301	WIRE MARKING, YELLOW, PA1/3"1"	30	PC	
410	359000-0302	WIRE MARKING, YELLOW, PA1/3"2"	30	PC	
420	359000-0303	WIRE MARKING, YELLOW, PA1/3"3"	30	PC	
430	359000-0304	WIRE MARKING, YELLOW, PA1/3"4"	30	PC	
440	359000-0305	WIRE MARKING, YELLOW, PA1/3"5"	30	PC	
450	359000-0306	WIRE MARKING, YELLOW, PA1/3"6"	30	PC	
460	359000-0307	WIRE MARKING, YELLOW, PA1/3"7"	30	PC	
470	359000-0308	WIRE MARKING, YELLOW, PA1/3"8"	30	PC	
480	359000-0309	WIRE MARKING, YELLOW, PA1/3"9"	30	PC	
490	359000-0700	WIRE MARKING, YELLOW, PA1/3"A"	30	PC	
500	359000-0711	WIRE MARKING, YELLOW, PA1/3"L"	30	PC	
510	359000-0722	WIRE MARKING, YELLOW, PA1/3"W"	30	PC	
520	353001-0116	END SLEEVE H0.5/14 ORANGE	20	PC	
530	353001-0119	END SLEEVE H 1.0/14 YELLOW	20	PC	

Pos	Part No	Description	Qty	Unit	Page No

This page intentionally left blank

ECM: 753278
Group number: 3420950-0100
Assembly Drawing: -

Pos	Part No	Description	Qty	Unit	Page No
Common Parts					
	3420952-0101	REBUILDING MANUAL	1	PC	
	3420953-0101	UPDATE PAGES	1	PC	
010	3420951-0100	MECHANICAL REBUILDING	1	PC	890
020	3420954-0100	ELECTRICAL CONVERSION	1	PC	894

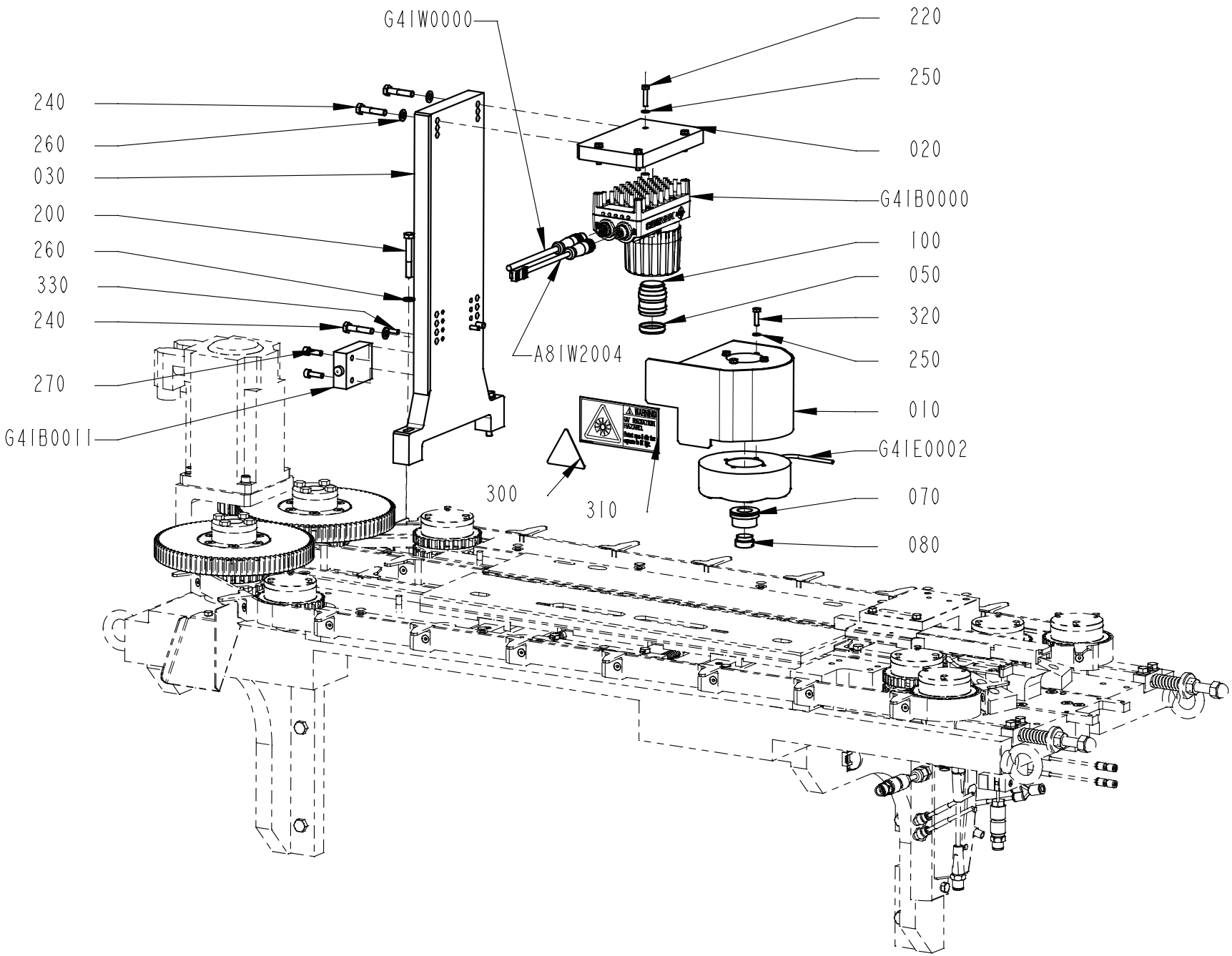
G41W0000
220
250
020
G41B0000
100
050
320
250
010
G41E0002
070
080
240
260
030
200
260
330
240
270
G41B0011
A81W2004
300
310

ECM: 753279
Group number: 3420951-0100
Assembly Drawing: 3420951-1_1_AA

Pos	Part No	Description	Qty	Unit	Page No
HELICAP 27					
070	3224303-0000	CAP	1	PC	
HELICAP 27, HELICAP2 23, STREAMCAP1000					
010	3256152-0000	BRACKET	1	PC	
020	2909157-0000	BRACKET	1	PC	
030	2909158-0000	BRACKET	1	PC	
220	312105-0295	SCREW, M6S ISO 4017 M4X20 A4 70	4	PC	
240	312105-0374	SCREW, M6S ISO 4014 M6X30 A4 80	4	PC	
260	315105-0153	WASHER PLAIN, 6,4X12X1,5 A4 BRB	6	PC	
270	312115-0329	SCREW ISO4762 M5X16 A4 80	2	PC	
320	312105-0293	SCREW, M6S ISO 4017 M4X16 A4 70	4	PC	
330	311103-0271	PARALLEL PIN ISO 2338 4M6X18 A1	2	PC	
HELICAP2 23					
070	3224301-0000	CAP	1	PC	
STREAMCAP1000					
070	3203756-0000	CAP	1	PC	
Common Parts					
050	90606-5311	FILTER, IMBF-BP470-25.5	1	PC	
080	3203757-0000	SCREW PLUG	1	PC	
100	90605-2647	LENS, LFC25F1	1	PC	
200	312105-0379	SCREW, M6S ISO 4014 M6X45 A4 80	2	PC	
250	315105-0136	WASHER PLAIN, 4,3X8X0,8 A4 BRB	8	PC	
300	359705-0033	WARNING SIGN ISO, OPTICAL RADIATION	1	PC	
310	90605-9772	WARNING SIGN ANSI (H), UV RADIATION HAZA	1	PC	
400	3297666-0100	JUNCTION BOX	1	PC	892
A81W2004	90600-2103	ETHERNET CABLE, CCB-84901-1004-10	1	PC	
G41B0000	90605-2649	IN-SIGHT 5600 CAMERA, IS5600-01	1	PC	
G41B0011	90601-1027	LIMIT SWITCH, D4C-1G01 5M	1	PC	
G41E0002	90605-9651	UV ILLUMINATION, LDR2-100UV365-IP	1	PC	
G41W0000	90600-2102	POWER I/O CABLE, CCB-84901-0103-10	1	PC	

Pos	Part No	Description	Qty	Unit	Page No

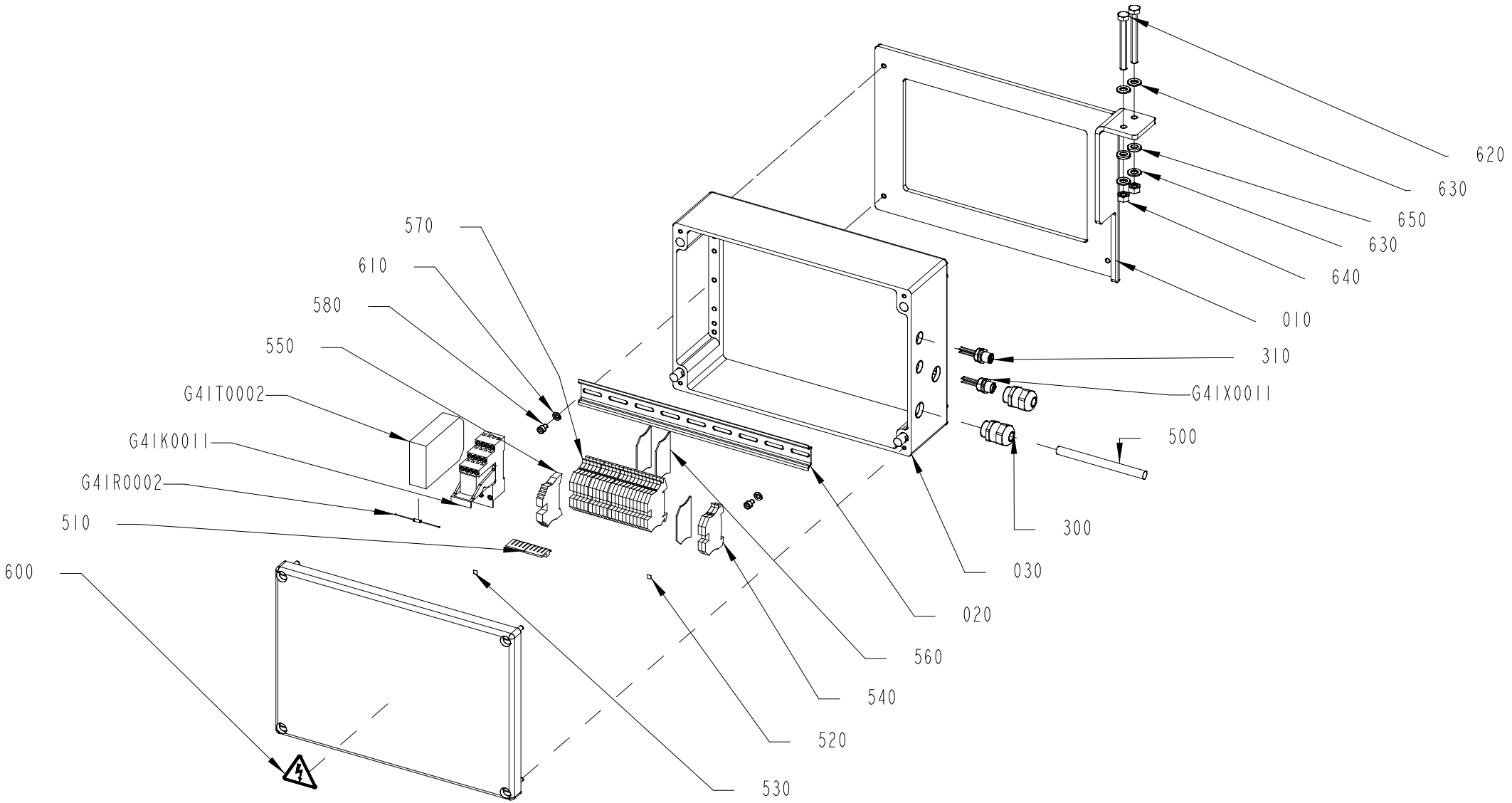

3297666-1
564132

ECM: 663058
Group number: 3297666-0100
Assembly Drawing: 3297666-1_1_AA

Pos	Part No	Description	Qty	Unit	Page No
Common Parts					
010	3311368-0000	SUPPORT	1	PC	
020	3267572-0000	RAIL	1	PC	
030	3267762-0000	CONNECTION BOX	1	PC	
300	90458-0307	CABLE GLAND, M20X1,5, 5311 1020	2	PC	
310	90603-4479	RECEPTACLE M12, SACC-E-M12MS-5CON-M16/..	1	PC	
500	351150-0406	CABLE OLFLEX 7X0,75 MM2 LIGHT/GREY	6	M	
510	353034-0030	BRIDGE CONNECTOR WQV 2,5/10	1	PC	
520	359011-0819	MARKING, EARTH, DEK 5 GW ERDE I.KR.	1	PC	
530	359011-0809	MARKING, DEK 5 FW 101-150	1	PC	
540	353024-0204	EARTH TERMINAL WPE 2,5	2	PC	
550	353031-0203	END BRACKET, WEW 35/2	1	PC	
560	353032-0004	END PLATE, WAP 2,5-10, BEIGE	3	PC	
570	353021-0212	FEED THROUGH TERMINAL, WDU 2,5	21	PC	
580	312115-0323	SCREW ISO4762 M5X8 A4 80	2	PC	
590	312115-0372	SCREW ISO4762 M6X25 A4 80	4	PC	
600	359715-0100	WARNING SIGN ANSI (H), ELECTRIC SHOCK	1	PC	
600	359705-0015	WARNING SIGN ISO, ELECTRIC HAZARD	1	PC	
610	315106-0146	"WASHER PLAIN, M5 ISO7089-5-200 HV A4"	2	PC	
620	312109-0465	SCREW, M6S ISO 4017 M8X70 A4 80	2	PC	
630	315106-0165	WASHER PLAIN, M8 ISO7089-8-200 HV A4	4	PC	
640	312605-0318	HEXAGON NUT, M6M M8 A280	2	PC	
650	315115-0165	WASHER PLAIN, TBRB 8,4/16 H=3	2	PC	
G41K0011	90601-6656	RELAY, PR2-RSC3-LDP-24DC/4X21AU	1	PC	
G41R0002	90602-3851	RESISTANCE FIXED, 3,6 KOHM, 1/2 W	1	PC	
G41T0002	90605-2645	POWER SUPPLY, IQ00-QLC-400-1-TP	1	PC	
G41X0011	90603-4478	RECEPTACLE M12, SACC-E-M12FS-4CON-M16/..	1	PC	

Pos	Part No	Description	Qty	Unit	Page No

This page intentionally left blank

ECM: 753280
Group number: 3420954-0100
Assembly Drawing: -

Pos	Part No	Description	Qty	Unit	Page No
Common Parts					
020	3420955-0100	ELECTRICAL MATERIALS	1	PC	896

This page intentionally left blank

ECM: 753281
Group number: 3420955-0100
Assembly Drawing: -

Pos	Part No	Description	Qty	Unit	Page No
Common Parts					
0010	3420956-0000	SET OF SIGNS	1	PC	
0020	3420957-0000	CABLE MARKING	1	PC	
0100	351160-0102	WIRE AWM 1X0,75 MM2 DARKBLUE	15	M	
0110	359000-0200	WIRE MARKING, YELLOW, PA02/3"0"	20	PC	
0120	359000-0201	WIRE MARKING, YELLOW, PA02/3"1"	30	PC	
0130	359000-0202	WIRE MARKING, YELLOW, PA02/3"2"	20	PC	
0140	359000-0203	YELLOW, PWIRE MARKING, YELLOW, PA02/3"3"	20	PC	
0150	359000-0204	WIRE MARKING, YELLOW, PA02/3"4"	20	PC	
0160	359000-0205	WIRE MARKING, YELLOW, PA02/3"5"	20	PC	
0170	359000-0206	WIRE MARKING, YELLOW, PA02/3"6"	20	PC	
0180	359000-0207	WIRE MARKING, YELLOW, PA02/3"7"	20	PC	
0190	359000-0208	WIRE MARKING, YELLOW, PA02/3"8"	20	PC	
0200	359000-0209	WIRE MARKING, YELLOW, PA02/3"9"	20	PC	
0210	90603-5562	CONNECTOR, SACC-M12FS-5CON-PG 7-VA	1	PC	
0220	90603-5561	CONNECTOR M12 MALE 5-PIN	1	PC	
0230	353001-0113	END SLEEVE 0,75MM2	20	PC	
0240	353001-0116	END SLEEVE H0.5/14 ORANGE	20	PC	
0250	352113-0102	CABLE TIE, BLACK 188X4,8 MM	10	PC	
0260	352113-0103	CABLE TIE, BLACK 290X7,6 MM	10	PC	

Pos	Part No	Description	Qty	Unit	Page No

This page intentionally left blank

SPC

Spare Parts Catalogue

1020637-0000 . . Holder 319, 321, 805, 845, 851
1030335-0000 . . Filter Holder 327
1030338-0000 . . Net 327
1030874-0000 . . Throttle washer 327
1030878-0000 . . Gasket 327
1035792-0000 . . E-Hinge 297
1036329-0000 . . Pin 297
1038275-0012 . . Spacer 703
1129770-0000 . . Blocking Piece 297
1188609-0000 . . Flange Seal 337
1188610-0000 . . Flange Seal 337
1359565-0000 . . Nut 311, 317
1366727-0000 . . Clamp 311, 317
1497932-0000 . . Set Of Signs 847
1539391-0000 . . Round nut 381
1548365-0000 . . Template 813
1550595-2460 . . Sliding Strip 307, 313, 315
1550595-4960 . . Sliding Strip 307, 313, 315
1550743-0200 . . Rail holder 299, 309
1550772-0000 . . Holder 311, 317
1556626-0000 . . Wheel 537
1556630-0000 . . Wheel 529, 865
1606000-0000 . . Tetra Pak CapFix 100, only in BoM 787
1606000-0120 . . Tetra Pak CapFix 100, PSC/Startup 12kg 789
1606000-8000 . . Tetra Pak CapFix 100 789
1606002-0000 . . Tetra Pak CapFix 500, only in BoM 791
1606002-0120 . . Tetra Pak CapFix 500, PSC/Startup 12kg 793
1606002-8000 . . Tetra Pak CapFix 500 793
1606004-0000 . . Tetra Pak CapFix 600, only in BoM 795
1606004-0120 . . Tetra Pak CapFix 600, PSC/Startup 12kg 797
1606004-8000 . . Tetra Pak CapFix 600 797
1606005-0000 . . Tetra Pak CapFix 600 V, Hotmelt adhesive 799
1606005-0120 . . Tetra Pak CapFix 600 V,PSC/Startup, 12kg 801
1606005-8000 . . Tetra Pak CapFix 600 V, TPQ/Pallet 801
1607010-0000 . . Lubricant H1-0500, PAO v320, only in BOM 81, 97, 105, 113, 119, 225
1607010-0005 . . Lubricant H1-0500, PAO v320, 5 L Can 83, 101, 107, 117, 121, 227
1607010-0020 . . Lubricant H1-0500, PAO v320, 20 L Can 83, 101, 107, 117, 121, 227
1607050-0000 . . Dry Lubricant DLT-333, BOM only 367
1607050-0005 . . Dry Lubricant DLT-333, 5 L Canister 369
205438-0000 . . Cable Conduit 337
2470301-0000 . . Lever 585
2470302-0000 . . Hub 585, 589
2470373-0000 . . Lever 589
2504290-0000 . . Plate 321
2506887-0000 . . Template 813
2506940-0000 . . Nozzle 343
2529719-0001 . . Box Streamcap 200 817
2529719-0003 . . Box Streamcap 500 817
2529719-0004 . . Box Streamcap 1000 817
2529719-0005 . . Box Slimcap 1000 817
2529719-0006 . . Box Slimcap 2000 817
2529720-0001 . . Label 817
2529720-0016 . . Label 817
2529720-0024 . . Label 817
2529720-0037 . . Label 817
2529720-0044 . . Label 817
2532619-0000 . . Cover 441
2547915-0000 . . Heating Chamber 341
2547954-0000 . . Template 813
2551030-0000 . . Strut 425, 445
2557544-0000 . . Protection 333, 861
2561206-0000 . . Spacer 307, 313, 315
2561274-0102 . . Railing 299
2562134-0000 . . Template 813
2563891-0000 . . Strut 443
2563892-0000 . . Strut 443
2579622-0000 . . Template 813
2579623-0000 . . Template 813
2579624-0000 . . Template 813
2594996-0000 . . Plastic Bag 817
2595618-0000 . . Bracket 425, 445
2608177-0000 . . Sign 695
2612679-0000 . . Template 813
2613995-0000 . . Spacer 529, 865
2662760-0000 . . Heating Chamber 341
2663999-0000 . . Nipple 327
2684864-0000 . . Shaft 175
2695133-0000 . . Toothed pulley 199
2695134-0000 . . Shaft 199
2695135-0200 . . Pulley 191
2695610-0000 . . Clamp Bracket 201
2696481-0000 . . Block 197

2699305-1996 . . Sliding Strip 307, 313, 315
2699436-0000 . . Spacer 311, 317
2699437-0000 . . Rail holder 311, 317
2699680-0000 . . Screw 469, 471
2699681-0000 . . Spacer 469, 471
2699682-0000 . . Spacer 471
2699683-0000 . . Washer 469
2703670-0100 . . Cap Holders Group 535
2703671-0000 . . Claw 537
2703672-0000 . . Claw 537
2703673-0000 . . Toothed Disc 537
2703683-0000 . . Shaft 529, 865
2703692-0000 . . Holder 529, 865
2703696-0000 . . Protective Cover 471
2703697-0000 . . Side 469
2703700-0200 . . Guide Bracket 527, 859
2703702-0000 . . Shim 529, 865
2703704-0000 . . Spacer Strut 477
2703708-0000 . . Spring 529, 865
2703711-0000 . . Holder 177
2703714-0000 . . Holder 175
2703715-0000 . . Shaft 175
2703725-0000 . . Roller 175
2703842-0000 . . Adjusting Screw 181, 185, 489, 491, 519, 521
270926-0000 . . Nut 339
270927-0000 . . Screw 339
2710819-0000 . . Lid 337
2712603-0000 . . Plate 127
2715666-0000 . . Bracket 169
2715669-0200 . . Toothed pulley 547
2715671-0000 . . Bracket 169
2715695-0000 . . Sleeve 175
2715701-0000 . . Axle Pin 529, 865
2715704-0000 . . Sleeve 529, 865
2715750-0100 . . Template 777
2715751-0000 . . Shaft 781
2715794-0000 . . Arm 175
2715797-0000 . . Bushing 175
2715798-0000 . . Turn Spring 175
2715804-0000 . . Screw 169
2715807-0000 . . Spacer 169
2715813-0000 . . Bracket 175
2715826-0000 . . Damper 529, 865
2715827-0000 . . Holder 537
2715828-0000 . . Claw 537
2715829-0000 . . Claw 537
2715837-0000 . . Key 177
2715885-0000 . . Torsion Spring 529, 865
2715887-0000 . . Puller 537
2715889-0000 . . Finger 601
2715975-0000 . . Finger 595
2715976-0300 . . Toothed Pulley 547
2715978-0000 . . Shaft 553
2716019-0000 . . Shaft 573
2716021-0000 . . Spring 573
2716024-0000 . . Washer 573
2716041-0000 . . Bracket 177
2716046-0200 . . Clamp Unit 579
2716047-0100 . . Height Adjustment 579
2716049-0300 . . Cap Line 547
2716056-0000 . . Arm 175
2716067-0000 . . Guide 607
2716068-0000 . . Guide 607
2716069-0300 . . Guide Rail 607
2716073-0000 . . Belt Holder 201, 213
2716074-0000 . . Bracket 201, 213
2716075-0000 . . Counterweight 201, 213
2716083-0000 . . Bracket 201
2716085-0000 . . Counterweight 201, 213
2716089-0000 . . Fastening Bracket 205
2716090-0200 . . Motion control 191
2716092-0200 . . Transmission Rail 191
2716097-0200 . . Motion control 191
2716116-0000 . . Cam 465
2716125-0100 . . Setting Tool 777
2716127-0000 . . Slider 529, 865
2716138-0000 . . Guide 607
2716139-0000 . . Guide 607
2716149-0200 . . Steering device 567
2716152-0000 . . Plate 569
2716154-0000 . . Setting Template 783
2716156-0000 . . Bracket 569

2716157-0000 . . Bracket 569
2727407-0300 . . Drive Pulley 547
2727408-0000 . . Motor Bracket 565
2727427-0000 . . Gear Wheel 565
2727431-0000 . . Slide Plate 583
2727432-0000 . . Shaft 583
2727434-0000 . . Slide Plate 583
2727438-0000 . . Steering Rail 613
2727440-0000 . . End Support 583
2727442-0000 . . Guide 613
2727446-0000 . . Clamping Part 607
2727447-0000 . . Clamping Part 607
2727448-0000 . . Guide 613
2730989-0000 . . Lever 581
2736447-0000 . . Spacer 553, 573
2736448-0000 . . Cover 559
2736449-0000 . . Cover 553, 573
2736458-0000 . . Template 777
2740299-0200 . . Finger 579
2740300-0000 . . Finger 585
2740371-0200 . . Finger 579
2740372-0000 . . Finger 589
2740373-0000 . . Bracket 581
2740375-0000 . . Bracket 581
2746903-0000 . . Cable Duct 283
2746909-0000 . . Rail 401
2746922-0000 . . Shaft 537
2746928-0300 . . Cap Line 545
2746929-0100 . . Carrier Belt 545
2746933-0300 . . Base Unit 545
2746934-0200 . . Feed Unit 545
2746938-0200 . . Transfer Unit 461
2746939-0200 . . Cap Carrier Group 461
2746941-0200 . . Cap Holders Group 461
2746950-0000 . . Cam 493
2746951-0000 . . Cam 497
2746952-0000 . . Cam 505
2746953-0000 . . Cam 501
2746978-0000 . . Shaft 529, 865
2746982-0000 . . Cam 493
2746985-0000 . . Cam 497
2746987-0000 . . Cam 501
2751655-0100 . . Cam 463
2751656-0100 . . Star Wheel 463
2751657-0200 . . Slider 463
2751658-0200 . . Follower Cam 463
2751664-0300 . . Frame 461
2751667-0200 . . Pressure Finger 169
2751686-0000 . . Washer 529, 865
2751687-0000 . . Washer 529, 865
2751690-0000 . . Shim 613
2751692-0000 . . Bracket 181
2751693-0000 . . Steering 181
2751695-0000 . . Steering 169
2751699-0000 . . Washer 471
2751700-0000 . . Bow Clamp 177
2751702-0000 . . Star Wheel 467
2751703-0000 . . Bracket 469
2751704-0000 . . Pivot Bracket 471
2751705-0000 . . Shaft 471
2751706-0000 . . Flag 467
2751708-0000 . . Curve 169
2751710-0000 . . Support Plate 177
2751712-0000 . . Toothed pulley 181
2751714-0000 . . Support Plate 181
2751721-0000 . . Spacer 169
2751722-0000 . . Curve 169
2751725-0000 . . Bow Clamp 181
2751732-0000 . . Bracket 175
2751733-0000 . . Curve 169
2751739-0000 . . Bracket 469
2751741-0000 . . Bracket 477
2751742-0000 . . Bracket 169
2751747-0000 . . Spacer 181
2751748-0000 . . Sleeve 181
2752105-0000 . . Guide 613
2752106-0000 . . Guide 613
2752107-0000 . . Clamping Part 607
2752108-0000 . . Clamping Part 607
2758505-0400 . . Machine Body 275
2758507-0300 . . Package conveyor 275
2758511-0400 . . Hotmelt Equipment 275

2758512-0200 . . Blowing system 345
2758513-0300 . . Air Supply 275
2758514-0200 . . Water connection 275
2758515-0400 . . Cable Duct 277
2763616-0101 . . Conveyor Body 299
2763616-0102 . . Conveyor Body 299
2763616-0104 . . Conveyor Body 299
2763617-0001 . . Side Plate 307, 313, 315
2763617-0002 . . Side Plate 307, 313, 315
2763617-0004 . . Side Plate 307, 313, 315
2766927-0000 . . Pillar 41, 55
2766944-0000 . . Bracket 125
2766950-0000 . . Shaft 127
2766953-0000 . . Plate 49, 63
2766954-0200 . . Belt Tensioner 39, 53
2766958-0000 . . Shaft 49, 63, 105, 119
2766959-0000 . . Spacer 49, 63, 105, 119
2766962-0000 . . Block 49, 63
2766963-0000 . . Bracket 49, 63
2766964-0000 . . Flange 225, 293
2766968-0000 . . Shaft 293
2766972-0000 . . Shaft 295
2766973-0100 . . Transmission 293
2766974-0000 . . Sleeve 103, 111
2766975-0000 . . Frame 287
2766976-0000 . . Flange 103, 111
2766981-0000 . . Toothed pulley 35, 49, 63
2766989-0000 . . Bracket 105, 119
2766990-0200 . . Brake Unit 73
2766994-0500 . . Acceleration Pusher 73
2768157-0000 . . Puller 537
2769686-0000 . . Cover 75, 81
2769695-0000 . . Bracket 125
2769709-0000 . . Frame 293
2769713-0000 . . Cylindrical Pin 293
2769717-0000 . . Flange 293
2769718-0300 . . Pneumatic Cylinder 123
2769726-0000 . . Bracket 69, 127, 295
2769729-0000 . . Shaft 69, 127
2769738-0100 . . Height Adjustment 277
2769739-0000 . . Disc 225, 293
2769741-0000 . . Spacer 75, 81
2769746-0000 . . Frame 119
2769754-0400 . . Electric Equipment 275
2769760-0300 . . Emergency Stop 413
2769761-0400 . . Machine Body 277
2769773-0000 . . Spacer 85
2773600-0000 . . Spacer 75, 81
2773601-0000 . . Spacer 85
2773604-0000 . . Plate 87
2773615-0000 . . Roller 87
2773622-0300 . . Line Heater 275
2773623-0300 . . Fan System 325
2773627-0000 . . Heat Guard 337
2773630-0000 . . Heat Guard 337
2773632-0000 . . Spacer 125
2773636-0200 . . Belt Tensioner 85
2773637-0000 . . Bracket 87
2773638-0000 . . Plate 87
2773639-0000 . . Shaft 87
2775398-0000 . . Pin 87
2775403-0000 . . Pipe 347
2775404-0000 . . Pipe 347
2775412-0000 . . Plate 85
2775417-0000 . . Bracket 105, 119
2775418-0000 . . Shaft 75
2775420-0000 . . Slide 119
2775421-0000 . . Screw 119
2775423-0000 . . Plate 119
2775427-0000 . . Bracket 75
2775437-0000 . . Toothed pulley 35
2775438-0000 . . Plate 97, 113
2775439-0000 . . Bushing 97, 113
2775442-0000 . . Toothed pulley 43, 57
2775443-0000 . . Spacer 43, 57
2775445-0000 . . Spacer 43, 57
2775446-0000 . . Shaft 43, 57
2775447-0000 . . Bracket 287
2778564-0000 . . Washer 75, 81
2778566-0000 . . Bellows 43, 57
2778571-0000 . . Frame 105
2778580-0000 . . Bracket 321

2778584-0000 . . Bracket 321
2778585-0000 . . Pillar 69
2778586-0100 . . Sensor 299, 849
2778587-0100 . . Sensor 299
2778592-0000 . . Plate 103
2778594-0000 . . Plate 69, 127
2778595-0100 . . Angle 287
2779008-0000 . . Bracket 291
2779009-0000 . . Beam 287
2779013-0000 . . Cam 127
2779014-0000 . . Plate 127
2779057-0000 . . Plate 125
2779062-0000 . . Sprocket 69
2779063-0000 . . Plate 69
2779070-0400 . . Operator Interface 275
2779748-0200 . . Glass Door 413
2779756-0000 . . Shaft 69
2779759-0000 . . Plate 69
2779769-0000 . . Sprocket 295
2779776-0000 . . Plate 287
2779786-0000 . . Plate 287
2779800-0000 . . Plate 283
2779823-0000 . . Bracket 447
2779824-0000 . . Bracket 447
2779831-0000 . . Pipe 139, 299
2779832-0100 . . Glass Door 413
2779834-0100 . . Glass Door 413
2779835-0200 . . Door 413
2780337-0000 . . Curve 169
2780338-0000 . . Bracket 169
2780339-0000 . . Bracket 169
2780341-0000 . . Curve 169
2780342-0000 . . Curve 169
2780343-0000 . . Curve 169
2780344-0000 . . Bracket 169
2780346-0000 . . Arm 175
2780352-0000 . . Holder 175
2780353-0000 . . Bracket 175
2780361-0000 . . Pin 581
2780362-0000 . . Pin 581
2780379-0000 . . Plate 515, 871
2780391-0000 . . Holder 175
2780393-0000 . . Shaft 175
2780394-0000 . . Arm 175
2780425-0100 . . Cam 481, 859
2780431-0000 . . Shim 529, 865
2780452-0000 . . Toothed pulley 553, 573
2780453-0000 . . Toothed pulley 559
2780454-0000 . . Slide Rail 567
2780455-0000 . . Slide Rail 567
2780456-0000 . . Slide Rail 567
2780459-0000 . . Shim 613
2780469-0000 . . Bracket 169
2780497-0100 . . Timing Belt 593
2780509-0100 . . Timing Belt 593
2780521-0000 . . Cam 509, 877
2780523-0000 . . Plate 515, 871
2780526-0000 . . Bracket 509, 877
2780527-0000 . . Carriage 509, 877
2780529-0000 . . Bracket 509, 877
2780531-0000 . . Axle Pin 509, 877
2780532-0000 . . Axle Pin 509, 877
2780533-0000 . . Cam 509, 877
2780560-0300 . . Drive 481, 859
2781283-0000 . . Bracket 381
2781285-0000 . . Strut 425, 445
2781286-0000 . . Hand Wheel 71
2781292-0000 . . Shaft 87
2783460-0000 . . Guide Bracket 529, 865
2783462-0000 . . Axle Pin 529, 865
2783465-0000 . . Shaft 529, 865
2783477-0000 . . Guide Shaft 509, 877
2783479-0000 . . Cam 509, 877
2787230-0100 . . Top Section 413
2787232-0000 . . Plate 447
2788134-0000 . . Cover 41, 55
2788137-0000 . . Template 777
2788144-0000 . . Shaft 71
2788155-0000 . . Angle 287
2788168-0000 . . Plate 129
2788169-0000 . . Plate 103, 111
2788174-0000 . . Lever 125

2788176-0000 . . Pipe 347
2792664-0000 . . Bracket 333, 861
2792848-0000 . . Support 333, 861
2792879-0000 . . Tube 333, 861
2794721-0000 . . Block 333, 861
2794790-0000 . . Clamp 333, 861
2797440-0000 . . Steering Rail 613
2801048-0000 . . Cam 507, 875
2802386-0400 . . Operator Interface 397
2802392-0000 . . Pillar 43, 57
2802404-0100 . . Handle 69
2802405-0000 . . Stop Arm 127
2802417-0000 . . Plate 283
2802629-0000 . . Bracket 181
2802635-0000 . . Support 181, 185
2802637-0000 . . Mounting Sheet 185
2802644-0000 . . Spacer 185
2802645-0200 . . Belt Stretcher 167
2802646-0200 . . Frame Section 167
2802647-0300 . . Drive Unit 167
2802648-0200 . . Cap Holders Group 167
2805461-0000 . . Guide 139
2805468-0000 . . Screw 75
2805686-0000 . . Beam 287
2805687-0100 . . Glass Door 413
2805693-0200 . . Door 413
2805694-0100 . . Glass Door 413
2805697-0000 . . Support 287
2805698-0000 . . Beam 287
2805700-0400 . . Door Safety Switch 375
2807104-0000 . . Beam 287
2811453-0000 . . Screw 529, 865
2812005-0400 . . Elevator 223
2815585-0000 . . Spacer 807
2817573-0000 . . Spacer 805
2817783-0300 . . Plinth 399
2817784-0000 . . Screw 49, 63
2818738-0000 . . Railing 805
2826729-0000 . . Pulley 75, 81
2826741-0400 . . Doors And Covers 275
2826742-0400 . . Cover 413
2826743-0300 . . Cover 413
2826744-0300 . . Cover 431
2830220-0000 . . Beam 287
2833406-0400 . . Cabinet 649
2833407-0400 . . Control Board 649
2833408-0300 . . Cooling Unit 649
2833409-0300 . . Cable Set 649
2833410-0300 . . Box 695
2833412-0200 . . Cable Duct 703
2834311-0000 . . Hub 479
2835450-0000 . . Cover 697
2835452-0000 . . Rail 723, 725, 727
2835453-0000 . . Rail 735, 737, 753
2835454-0000 . . Rail 733, 755, 757
2835456-0000 . . Rail 697
2835457-0300 . . Power Supply Unit 703
2835458-0400 . . PLC 703
2835459-0400 . . Fuse Board 1 703
2835460-0300 . . Fuse Board 2 703
2835461-0300 . . Fuse Board 3 703
2835462-0400 . . Motor Drive Control 703
2835464-0400 . . Distribution Terminal 703
2835939-0000 . . Plate 477
2836263-0000 . . Heat Guard 337
2836507-0300 . . Drive Motor 475
2837072-0300 . . Drive Unit 461
2837073-0200 . . Plate 475
2837175-0000 . . Bearing Half 177
2837191-0000 . . Toothed pulley 177
2837255-0000 . . Washer 177, 181
2837623-0000 . . Bracket 97, 113
2837628-0000 . . Spacer 97, 113
2837631-0000 . . Spacer 185
2838156-0000 . . Bracket 491, 521
2838277-0000 . . Bracket 489, 519
2838476-0000 . . Rail 739
2838647-0200 . . Sliding Rack 31
2838650-0200 . . Sliding Rack 93
2838653-0200 . . Guide Rail 123
2838654-0500 . . Belt Brake 31
2838669-0200 . . Setting Arm 123

2838672-0300 . . Pneumatic Panel 345
2838673-0200 . . Service Unit 349
2838674-0200 . . Service Unit 349
2838679-0000 . . Shaft 347
2838683-0000 . . Plate 125
2838686-0200 . . Air Jet Gun 345
2838690-0000 . . Wheel 127
2838693-0200 . . Start-up kit 775
2838701-0000 . . Holder 541
2838710-0500 . . Worm Gear Motor 85
2838711-0000 . . Claw 537
2838712-0000 . . Claw 537
2838713-0000 . . Puller 537
2838714-0000 . . Law 537
2838715-0000 . . Claw 537
2838716-0000 . . Puller 537
2838722-0000 . . Bracket 509, 877
2838727-0000 . . Curve 169
2838728-0000 . . Adjustment Bracket 169
2838731-0000 . . Cable 523
2838732-0000 . . Cable 523
2838737-0000 . . Curve 169
2838741-0000 . . Bracket 567
2838753-0000 . . Frame 217
2838763-0000 . . Shaft 581
2838764-0000 . . Block 583
2838765-0000 . . Plate 583
2838781-0000 . . Steering 169
2838782-0000 . . Plate 335, 885
2838783-0000 . . Plate 185
2838784-0000 . . Sliding Strip 185
2839195-0300 . . Distributor 803
2839221-0300 . . Plinth 703
2839222-0200 . . Plinth 703
2839223-0300 . . Plinth 703
2839224-0200 . . Plinth 703
2839225-0000 . . Bracket 695
2839227-0000 . . Support 737
2839229-0300 . . Distribution Terminal 703
2839230-0200 . . Plinth 709
2839315-0300 . . Cammodule 461
2839382-0100 . . Mounting Plate 481, 859
2839383-0100 . . Cam 481
2839384-0100 . . Cam 481
2839385-0100 . . Cam 481
2839386-0100 . . Cam 481
2839392-0000 . . Cam 519
2839393-0000 . . Cam 489
2839409-0000 . . Cam 491
2839412-0000 . . Cam 521
2840143-0300 . . Servo Motor 191
2840144-0300 . . Servo Motor 191
2840145-0100 . . Motor Bracket 191
2840146-0100 . . Motor Bracket 191
2840147-0300 . . Fastening Bracket 191
2840680-0000 . . Assembly Plate 215
2840851-0000 . . Block 211
2840909-0200 . . Plinth 709
2840910-0200 . . Plinth 709
2840911-0200 . . Plinth 709
2840915-0200 . . Plinth 709
2840917-0200 . . Plinth 709
2840918-0300 . . Plinth 695
2841344-0000 . . Plate 197
2841345-0000 . . Column 197
2841346-0000 . . Block 197
2841402-0000 . . Rail 701
2841403-0400 . . Plinth 652, 674
2841404-0400 . . Electrical Conversion 649
2841405-0000 . . Divider 705
2841406-0000 . . Divider 705
2841501-0300 . . Frame 191
2842793-0400 . . Door 431
2842794-0400 . . Cover 415
2842795-0100 . . Cover 415
2842799-0000 . . Cover 417
2842800-0000 . . Shelf 437, 857
2842801-0000 . . Cover 433
2842803-0000 . . Plate 437, 857
2842804-0000 . . Bracket 437, 857
2842805-0000 . . Spacer 423, 437, 857
2842806-0100 . . Shelf 433, 855

2842830-0200 . . Support ... 223
2842831-0000 . . Rod ... 225
2842832-0000 . . Bracket ... 225
2842834-0000 . . Flange ... 225
2842835-0000 . . Column ... 225
2842837-0000 . . Plate ... 225
2842838-0000 . . Block ... 225
2843157-0100 . . Clamping Element ... 167
2843158-0000 . . Flange ... 187
2843159-0000 . . Shaft ... 187
2844501-0000 . . Profile ... 419
2844525-0000 . . Cable Duct ... 225
2844526-0000 . . Plate ... 225
2844527-0000 . . Plate ... 225
2845097-0000 . . Spacer ... 225
2845127-0200 . . Setting Arm ... 123
2845320-0000 . . Protection ... 703
2846399-0300 . . Tunnel ... 415
2846403-0000 . . Roller ... 295
2846406-0500 . . Cap Sorter ... 229
2846407-0300 . . Volume Kit ... 229
2846408-0400 . . Volume Kit ... 229
2846413-0400 . . Conveyor Belt ... 619
2846416-0400 . . Feeder ... 223
2852912-0000 . . Connection Pipe ... 223
2852913-0000 . . Connection Pipe ... 223
2853706-0400 . . Setting Tool ... 775
2857743-0000 . . Brush ... 231, 233, 235, 237, 239, 243
2857744-0000 . . Guide ... 235
2857745-0000 . . Guide ... 239
2859960-0000 . . Bracket ... 509, 877
2861166-0400 . . Software ... 825
2861169-0400 . . Electrical Document ... 827
2864281-0000 . . Shim ... 613
2867644-0000 . . Guide ... 607
2867645-0000 . . Guide ... 607
2867646-0000 . . Steering Rail ... 613
2867647-0000 . . Guide ... 613
2867649-0000 . . Guide ... 613
2868064-0000 . . Plate ... 695
2868065-0000 . . Plate ... 695
2868066-0000 . . Gasket ... 695
2873857-0000 . . Cam ... 169
2873859-0000 . . Bracket ... 169
2873860-0000 . . Curve ... 169
2873864-0000 . . Cam ... 169
2873865-0000 . . Pre-Heater ... 337
2873866-0000 . . Support ... 805
2873867-0000 . . Plate ... 337
2873868-0000 . . Bracket ... 169
2873869-0000 . . Curve ... 169
2873870-0000 . . Adjustment Bracket ... 169
2873871-0000 . . Bracket ... 169
2873876-0000 . . Plate ... 805
2873892-0000 . . Shim ... 507, 875
2873895-0000 . . Curve ... 169
2873896-0000 . . Cable Tray ... 217
2873914-0100 . . Cammodule ... 481
2873915-0100 . . Cammodule ... 481
2873916-0100 . . Cammodule ... 481
2873917-0100 . . Cammodule ... 481
2873921-0000 . . Block ... 197
2873922-0300 . . Cable ... 375, 859
2873923-0200 . . Position Template ... 775
2873928-0000 . . Cable Duct ... 283
2873935-0000 . . Template ... 777
2873941-0000 . . Sign ... 69, 287
2873943-0000 . . Clamp ... 333, 861
2873950-0300 . . Cable Set ... 375
2873951-0000 . . Cover ... 149
2873952-0100 . . Cover ... 139
2873953-0200 . . Cap ... 775
2873973-0000 . . Claw ... 537
2873974-0000 . . Claw ... 537
2873975-0000 . . Puller ... 537
2873977-0400 . . Volume Kit ... 229
2873978-0300 . . Volume Kit ... 229
2873979-0000 . . Guide ... 237
2873980-0000 . . Guide ... 243
2874001-0400 . . Volume Kit ... 229
2874003-0000 . . Guide ... 241
2874024-0000 . . Bracket ... 391

2875596-0000 . . Guide 607
2875597-0000 . . Guide 607
2875598-0000 . . Guide 613
2875599-0000 . . Guide 613
2875600-0000 . . Steering Rail 613
2879015-0400 . . Electrical Document 825
2885916-0000 . . Plate 631, 641
2890591-0300 . . Plinth 739
2893414-0000 . . Clamping Part 607
2893415-0000 . . Clamping Part 607
2893416-0000 . . Guide 607
2893417-0000 . . Guide 607
2893419-0000 . . Steering Rail 613
2893420-0000 . . Clamping Part 607
2893421-0000 . . Clamping Part 607
2893422-0000 . . Guide 613
2893423-0000 . . Guide 613
2895147-0300 . . Package Aligner 651, 673
290027-0000 . . Washer 75, 81
2901708-0100 . . Support Tube 191
2907981-0000 . . Nut 139
2909157-0000 . . Bracket 551, 891
2909158-0000 . . Bracket 551, 891
2909473-0000 . . Plate 211
2918904-0000 . . Plate 567
2918905-0000 . . Plate 567
2921902-0000 . . Divider 705
2930158-0000 . . Shaft 559
2930159-0000 . . Locking Hub 559
2930160-0000 . . Spacer 559
2930163-0000 . . Spacer 567
2930176-0200 . . Sensor Group 843
2930177-0200 . . Cable Marking Set 843
2930178-0200 . . Sensor Group 843
2930179-0200 . . Conveyor Control Accessories 831
2930204-0000 . . Tool 833
2930205-0000 . . Clamp Bracket 833
2930210-0000 . . Plate 299
2930211-0000 . . Plate 299
2930214-0000 . . Claw 537
2930215-0000 . . Claw 537
2930216-0000 . . Puller 537
2930222-0000 . . Key 833
2930228-0000 . . Air Nozzle 231, 233, 235, 237, 239, 241, 243
2930229-0000 . . Air Nozzle 233, 235, 237, 239, 241, 243
2930230-0000 . . Air Nozzle 237, 239, 243
2931768-0000 . . Cable Duct 283
2931769-0000 . . Cable Duct 283
2931770-0000 . . Divider 283
2931771-0000 . . Cable Duct 283
2931772-0000 . . Cable Duct 283
2931773-0000 . . Cable Duct 283
2931774-0000 . . Cable Duct 283
2931775-0000 . . Cable Duct 283
2931776-0000 . . Cable Duct 283
2931777-0000 . . Cable Duct 283
2931778-0000 . . Cable Duct 283
2931779-0000 . . Cable Duct 283
2931780-0000 . . Cable Duct 283
2931781-0000 . . Cable Duct 283
2931782-0000 . . Cable Duct 283
2931783-0000 . . Plate 283
2931784-0000 . . Divider 283
2931785-0000 . . Angle 283
2931786-0000 . . Angle 283
2931787-0000 . . Angle 283
2931788-0000 . . Divider 283
2934904-0000 . . Rail Bracket 283
2934905-0000 . . Support 341
2936120-0000 . . Bracket 75
2936506-0000 . . Bracket 81
2936740-0000 . . Bracket 75
2937337-0000 . . Spacer 105, 119
2939164-0000 . . Setting Tool 779
2939165-0000 . . Shaft 779
2939208-0100 . . Setting Tool 777
2939331-0000 . . Tool 779
2940040-0000 . . Support 631
2940041-0000 . . Lock Holder 631
2940042-0000 . . Shim 631
2940569-0000 . . Guide 139
2940677-0000 . . Guide 139

2943597-0000 . . Plate 81
2944164-0000 . . Plate 81
2944169-0100 . . Tool 831
2944171-0000 . . Plate 833
2944172-0000 . . Clamp 833
2944173-0000 . . Block 833
2944174-0000 . . Nut 833
2944175-0000 . . Pin 523, 833
294464-0000 . . Base Plate 339
2965155-0000 . . Support 299
2970129-0000 . . Guide 613
2970130-0000 . . Guide 613
2970131-0000 . . Steering Rail 613
2970138-0000 . . Clamping Part 607
2970139-0000 . . Clamping Part 607
2973942-0000 . . Bracket 581
2973943-0000 . . Plate 589
2974857-0000 . . Screw 573
2974858-0000 . . Nut 573
2981405-0000 . . Air Nozzle 235, 237, 239, 241, 243
2981406-0000 . . Air blow regulator 231, 233, 235, 237, 239, 241, 243
2981409-0000 . . Cam 241
2981410-0000 . . Cam 231, 233, 235, 237, 239, 243
2981411-0000 . . Cam 231, 233, 235, 237, 239, 243
2981418-0000 . . Air Nozzle 233, 241
2983297-0000 . . Follower Arm 537
2985759-0000 . . Holder 631
2985768-0000 . . Column 333, 861
2985770-0000 . . Flange 211
2985771-0000 . . Plate 217
2985772-0000 . . Bracket 213
2985773-0000 . . Bracket 321
2985781-0000 . . Plate 97, 113
2985804-0000 . . Tunnel 431
2985809-0000 . . Housing 125
2985810-0000 . . Brush 787, 791, 795, 799
2985813-0000 . . Template 813
2985842-0000 . . Tunnel 421
2985847-0000 . . Plate 85
2986247-0300 . . CAP Detector 775
2987967-0000 . . Spring Holder 537
2987971-0000 . . Spring Holder 537
2987983-0000 . . Plate 631
2991257-0000 . . Cover 149
3010622-0000 . . Cantilever 75
3010624-0000 . . Cantilever 81
3014020-0000 . . Compression Spring 529, 865
3020132-0000 . . Spring 581
3021525-0000 . . Plate 125
3022021-0000 . . Housing 125
3022022-0000 . . Shaft 125
3022023-0000 . . Shaft 125
3022488-0000 . . Cam 125
3022796-0000 . . Bellows 49, 63, 105, 119
3024866-0000 . . Support 573
3024869-0000 . . Steering Rail 613
3031442-0000 . . Spacer 333, 861
3034434-0000 . . Tension spring 537, 787, 791, 795, 799
3034438-0200 . . Toothed pulley 547
3034439-0300 . . Conveyor Belt 619
3034465-0000 . . Setting Tool 777
3039015-0000 . . Template 813
3039024-0000 . . Frame 523
3039027-0000 . . Plate 287
3039030-0000 . . Toothed pulley 75, 81
3039032-0000 . . Link Attachment 205
3044285-0000 . . Template 777
3046886-0300 . . Distribution Terminal 703
3047311-0000 . . Protection 703
3047341-0000 . . Angle Bracket 283
3047348-0100 . . Glass Door 413
3047350-0100 . . Tool 813
3047352-0000 . . Template 815
3047353-0000 . . Guide 777
3052393-0000 . . Glass Cover 333, 861
3053471-0000 . . Pin 333, 861
3053477-0000 . . Bracket 333, 861
3053478-0000 . . Pusher 333, 861
3056497-0000 . . Door 433
3058564-0000 . . Roller 265
3058565-0000 . . Shaft 265
3058858-0000 . . Door 429

3058859-0000 . . Beam 287
3062041-0000 . . Support 695
3068593-0000 . . Screw 225
3068594-0000 . . Block 225
3068595-0000 . . Block 225
3068596-0000 . . Cover 225
3068597-0000 . . Plate 225
3068635-0400 . . Volume Kit 229
3068636-0000 . . Guide 233
3073396-0000 . . Support 341
3073397-0000 . . Bracket 509, 877
3073401-0000 . . Curve 169
3073402-0000 . . Curve 169
3073403-0000 . . Curve 169
3073404-0000 . . Curve 169
3073405-0000 . . Bracket 169
3073406-0000 . . Holder 175
3073407-0000 . . Curve 169
3073408-0000 . . Bracket 175
3073409-0000 . . Cam 509, 877
3077715-0000 . . Cam 493
3077721-0000 . . Clamping Part 607
3077722-0000 . . Clamping Part 607
3077723-0000 . . Guide 613
3077724-0000 . . Guide 613
3077728-0000 . . Puller 537
3077731-0000 . . Guide 607
3077732-0000 . . Guide 607
3077734-0000 . . Template 815
3077736-0000 . . Template 815
3077737-0000 . . Template 815
3077749-0000 . . Claw 537
3077750-0000 . . Claw 537
3086231-0000 . . Screw 125
3086233-0000 . . Bracket 125
3087821-0000 . . Tool 335, 885
3087822-0000 . . Plate 335, 885
3087823-0100 . . Tool 329, 859
3089906-0000 . . Plate 335, 885
3095787-0000 . . Slide 567
3095790-0000 . . Holder 333, 861
3095791-0000 . . Plate 333, 861
3095793-0000 . . Plate 185
3095794-0000 . . Angle Bracket 185
3095795-0000 . . Sliding Strip 185
3095796-0000 . . Holder 333, 861
3095799-0000 . . Screw 837
3096014-0000 . . Bracket 407, 835
3102968-0300 . . Volume Kit 229
3102969-0100 . . Guide Rail 619
3102974-0000 . . Template 813
3103326-0000 . . Guide 147
3103328-0000 . . Bracket 147
3103670-0000 . . Eccentric Shaft 471
3108404-0000 . . Shaft 631, 641
3108405-0000 . . Roller 631, 641
3108407-0000 . . Bracket 641
3108408-0000 . . Shaft 631, 641
3108409-0000 . . Plate 631, 641
3108410-0000 . . Plate 631, 641
3108411-0000 . . Plate 631, 641
3108412-0000 . . Plate 631, 641
3108413-0300 . . Puller 245
3108414-0000 . . Shaft 631, 641
3108415-0000 . . Idler Roller 631, 641
3108416-0000 . . Bracket 641
3108417-0000 . . Roller 631, 641
3108418-0000 . . Cover 631, 641
3108419-0000 . . Flange 631, 641
3108420-0000 . . Shaft 631, 641
3108422-0000 . . Plate 631, 641
3108423-0000 . . Bracket 641
3108424-0000 . . Bracket 631, 641
3108425-0000 . . Anchor 641
3108426-0000 . . Anchor 641
3108427-0000 . . Plate 631, 641
3108428-0000 . . Cover 631, 641
3108429-0000 . . Cable Conduit 631, 641
3108430-0000 . . Profile 641
3108431-0000 . . Bracket 631, 641
3108432-0000 . . Bracket 641
3108433-0100 . . Discharge Device 631, 641

3108434-0000 . . Locking Lever 631, 641
3108436-0000 . . Clamp 631, 641
3108437-0000 . . Handle 631, 641
3108438-0000 . . Curve 635, 645
3108439-0000 . . Support 635, 645
3108440-0000 . . Tube 635, 645
3108441-0000 . . Tie 635, 645
3108443-0200 . . Rake 245
3108444-0300 . . Body 245
3108445-0200 . . Pneumatic Component 245
3108447-0100 . . Hard Disk 245
3108450-0000 . . Washer 261
3108451-0000 . . Washer 231, 233, 235, 237, 259, 261, 266, 271
3108452-0000 . . Washer 231, 233, 235, 237, 239, 241, 243, 245, 251, 253, 257, 259, 266
3108453-0000 . . Washer 231, 233, 235, 237, 239, 241, 243, 245, 266
3108454-0000 . . Washer 231, 233, 235, 237, 239, 241, 243, 245, 266
3108455-0000 . . Washer 245
3108456-0000 . . Screw 253
3108457-0000 . . Screw 255
3108458-0000 . . Washer 253, 266
3108460-0000 . . Washer 266
3108461-0000 . . Key 265
3108462-0000 . . Screw 257, 265
3108463-0000 . . Taper Pin 231, 233, 235, 237, 239, 241, 243
3108464-0000 . . Stud Bolt 263, 265
3108465-0000 . . Sector 263
3108466-0000 . . Ring 263
3108471-0000 . . Protection Ring 245, 257
3108472-0000 . . Support 265
3108473-0000 . . Cover 265
3108474-0000 . . Cover 265
3108475-0000 . . Plate 265
3108476-0000 . . Carrier 265
3108477-0000 . . Cover 265
3108478-0000 . . Cover 265
3108479-0000 . . Cover 265
3108480-0000 . . Plate 265
3108481-0000 . . Bed 265
3108482-0000 . . Unit Converger 265
3108483-0000 . . Cover 265
3108484-0000 . . Washer 265
3108485-0000 . . Washer 265
3108486-0000 . . Spacer 265
3108487-0000 . . Pin 265
3108488-0000 . . Guide 265
3108489-0000 . . Guide 265
3108490-0000 . . Cover 265
3108491-0000 . . Plate 265
3108492-0000 . . Cable Conduit 265
3108493-0000 . . Washer 265
3108494-0000 . . Plate 265
3108495-0000 . . Roller 265
3108496-0000 . . Plate 265
3108497-0000 . . Gasket 265
3108498-0000 . . Gasket 265
3108499-0000 . . Anchor 265
3108500-0000 . . Shaft 265
3108501-0000 . . Plug 265
3108987-0000 . . Drive Shaft 75, 81
311103-0236 . . . Parallel pin ISO 2338 3m6x16 A1 581
311103-0267 . . . Parallel pin ISO 2338 4m6x10 A1 815
311103-0268 . . . Parallel pin ISO 2338 4m6x12 A1 ..... 231, 233, 235, 237, 239, 241, 243, 529, 865
311103-0271 . . . Parallel pin ISO 2338 4m6x18 A1 ..... 551, 891
311103-0306 . . . Parallel pin ISO 2338 5m6x12 A1 ..... 231, 233, 235, 237, 239, 243, 333, 861
311103-0308 . . . Parallel pin ISO 2338 5m6x16 A1 ..... 333, 469, 861
311103-0348 . . . Parallel pin ISO 2338 6m6x10 A1 ..... 581, 631
311103-0349 . . . Parallel pin ISO 2338 6m6x12 A1 ..... 193, 231, 233, 235, 237, 239, 241, 243, 479, 613
311103-0351 . . . Parallel pin ISO 2338 6m6x16 A1 ..... 55, 287, 489, 509, 519, 569, 877
311103-0352 . . . Parallel pin ISO 2338 6m6x18 A1 ..... 613, 779
311103-0353 . . . Parallel pin ISO 2338 6m6x20 A1 ..... 97, 103, 105, 111, 113, 119, 129, 193, 567, 613
311103-0354 . . . Parallel pin ISO 2338 6m6x22 A1 ..... 471, 509, 877
311103-0356 . . . Parallel pin ISO 2338 6m6x28 A1 583
311103-0357 . . . Parallel pin ISO 2338 6m6x30 A1 245
311103-0365 . . . Parallel pin ISO 2338 6m6x50 A1 225
311103-0367 . . . Parallel pin ISO 2338 6m6x55 A1 ..... 509, 877
311103-0400 . . . Parallel pin ISO 2338 8m6x18 A 157
311103-0401 . . . Parallel pin ISO 2338 8m6x20 A1 ..... 205, 335, 885
311103-0405 . . . Parallel pin ISO 2338 8m6x30 A1 ..... 293, 493, 497, 501, 505, 507, 875
311103-0406 . . . Parallel pin ISO 2338 8m6x32 A1 567
311103-0454 . . . Parallel pin ISO 2338 10m6x20 A1 ..... 335, 523, 885
311103-0458 . . . Parallel pin ISO 2338 10m6x30 A1 ..... 465, 477, 509, 877
311103-0464 . . . Parallel pin ISO 2338 10m6x45 A1 211

311103-1274 . . . Parallel pin ISO 2338 4m6x24 A1 245
311103-1355 . . . Parallel pin ISO 2338 6m6x24 A1 ..... 125, 471
311103-1456 . . . Parallel pin ISO 2338 10m6x24 A1 ..... 217, 523
311112-0208 . . Spring pin, ISO 8752 3x16 A2 175
311112-0255 . . Spring pin, ISO 8752 4x18 A2 ..... 529, 865
311112-0256 . . Spring pin, ISO 8752 4x20 A2 175
311112-0312 . . Spring pin, ISO 8752 5x28 A2 127
311112-0345 . . Spring pin, ISO 8752 6x32 A2 71
311112-0347 . . Spring pin, ISO 8752 6x40 A2 125
311112-0349 . . Spring pin, ISO 8752 6x50 A2 293
3114082-0000 . . Bracket 159
3114083-0000 . . Axle Pin 159, 161
3114084-0000 . . Roll 159, 161
3114692-0000 . . Plate 159
3114810-0100 . . Roller 157
3115079-0000 . . Drive Pulley 75, 81
3115080-0000 . . Flange 75, 81
3115081-0000 . . Spacer 75, 81
3115098-0000 . . Shaft 157
3115099-0300 . . Package Aligner 139
3115101-0000 . . Washer 157
3115103-0000 . . Shaft 157
311520-0320 . . . Rivet, Blank 2,4x6 695
3115224-0000 . . Flange 265
3115225-0000 . . Plate 265
3115226-0000 . . Threaded rod 265
3115227-0000 . . Bar 265
3115228-0000 . . Coupling 265
3115229-0000 . . Washer 265
311523-0142 . . . Blind rivet ISO 15983 -3.2x6 A2/A2 523
3115230-0000 . . Foot 265
3115231-0000 . . Handle 265
3115232-0000 . . Hinge 253, 265
3115233-0000 . . Clamp 245, 265
3115234-0000 . . Cap 245, 265
3115235-0000 . . Magnet 265
3115238-0000 . . Air Nozzle 233
3115239-0000 . . Shaft 245
3115240-0000 . . Reducer 245
3115241-0000 . . Cap 245
3115242-0000 . . Bushing 245
3115243-0000 . . Screw 245
3115244-0000 . . Protective Cover 245
3115245-0000 . . Support 245
3115247-0000 . . Arm 245
3115249-0000 . . Connection Box 245
3115250-0000 . . Block 245
3115251-0000 . . Bracket 245
3115253-0000 . . Support 245
3115254-0000 . . Support 245
3115255-0000 . . Base 245
3115257-0000 . . Connection 245
3115258-0000 . . Connection 245
3115259-0000 . . Cover 235, 237
3115263-0000 . . Clamp 245, 261
3115268-0000 . . Bushing 251
3115269-0000 . . Washer 251
3115270-0000 . . Pin 251
3115271-0000 . . Spring 251
3115273-0000 . . Guide 251
3115274-0000 . . Screw 251, 257
3115275-0000 . . Cover 235, 237
3115277-0000 . . Support 257
3115278-0000 . . Plate 257
3115279-0000 . . Covering 257
3115280-0000 . . Strip 257
3115281-0000 . . Label Tape 235, 237
3115282-0000 . . Foot 257
3115283-0000 . . Clamp 257
3115284-0000 . . Ring 255
3115286-0000 . . Plate 255
3115288-0000 . . Clamp 253
3115289-0000 . . Funnel 253
3115290-0000 . . Damping Element 253
3115291-0000 . . Plate 245
3115300-0000 . . Handle 231, 233, 235, 237, 239, 241, 243, 253
3115303-0000 . . Dip Stick 261
3115305-0000 . . Bracket 261
3115306-0000 . . Pin 261
3115309-0000 . . Bearing 261
3115345-0000 . . Support 235, 237
3115346-0000 . . Carrier 231, 233, 235, 237, 239, 241, 243

3115347-0000 . . Plate 231, 233, 235, 237, 239, 241, 243
3115352-0000 . . Base 235
3115353-0000 . . Puller 235
3115354-0000 . . Plate 233, 235
3115355-0000 . . Brush 235
3115357-0000 . . Scraper 235, 237
3115358-0000 . . Air Nozzle 233, 235, 237, 239, 241, 243
3115360-0000 . . Base 237
3115361-0000 . . Puller 237
3115362-0000 . . Plate 237
3115363-0000 . . Holder 237
3115367-0000 . . Puller 241
3115368-0000 . . Base 231, 233, 239, 241, 243
3115393-0000 . . Set of Signs Component Label 835
3115394-0000 . . Set of Signs Cable Marking 835
3117136-0000 . . Washer 157
3117145-0000 . . Angle 67
3117146-0000 . . Guide 67
3117151-0000 . . Plate 157
3117152-0000 . . Plate 157
3117153-0000 . . Plate 157
3117845-0000 . . Timing Belt 595, 601
3117862-0000 . . Timing Belt 177
3120838-0000 . . Guide 67
3120839-0000 . . Plate 137
3120840-0000 . . Plate 137
3120842-0000 . . Guide 137
312105-0285 . . Screw, M6S ISO 4017 M4x6 A4 70 ..... 137, 529, 537, 607, 865
312105-0287 . . Screw, M6S ISO 4017 M4x8 A4 70 ..... 85, 235, 237, 333, 471, 581, 631, 641, 807, 861
312105-0289 . . Screw, M6S ISO 4017 M4x10 A4 70 ..... 75, 81, 235, 237, 261, 271, 631, 641
312105-0291 . . Screw, M6S ISO 4017 M4x12 A4 70 ..... 155, 175, 177, 337, 553, 573
312105-0293 . . Screw, M6S ISO 4017 M4x16 A4 70 ... 159, 233, 235, 237, 239, 241, 243, 537, 551, 891
312105-0295 . . Screw, M6S ISO 4017 M4x20 A4 70 ..... 147, 155, 551, 581, 891
312105-0297 . . Screw, M6S ISO 4017 M4x25 A4 70 ..... 231, 259
312105-0323 . . "FSCR05080-10, Screw, M6S" 235, 237, 239, 243, 529, 865
312105-0325 . . Screw, M6S ISO 4017 M5x10 A4 80 .... 41, 129, 231, 233, 235, 237, 239, 243, 529, 631, 641, 805, 865
312105-0327 . . Screw, M6S ISO 4017 M5x12 A4 80 ..... 75, 81, 125, 169, 231, 233, 235, 237, 239, 241, 243, 245, 257, 259, 265, 567, 585, 589, 621, 625, 627, 629, 639, 783, 807, 845
312105-0329 . . Screw, M6S ISO 4017 M5x16 A4 80 ..... 75, 81, 91, 159, 161, 169, 231, 233, 235, 237, 239, 241, 243, 251, 259, 265, 319, 321, 623, 631, 637, 641, 851
312105-0331 . . Screw, M6S ISO 4017 M5x20 A4 80 ... 169, 181, 213, 225, 233, 241, 245, 251, 321, 479, 613
312105-0333 . . Screw, M6S ISO 4017 M5x25 A4 80 ..... 217, 225, 253, 471
312105-0335 . . Screw, M6S ISO 4014 M5x30 A4 80 ..... 529, 865
312105-0339 . . Screw, M6S ISO 4014 M5x40 A4 80 169
312105-0343 . . Screw, M6S ISO 4014 M5x60 A4 80 87
312105-0364 . . "Screw, M6S ISO 4017 M6x10 A4 80" 43, 57, 75, 81, 509, 877
312105-0366 . . Screw, M6S ISO 4017 M6x12 A4 80 ..... 41, 55, 67, 137, 159, 175, 235, 237, 239, 243, 283, 287, 311, 317, 417, 419, 423, 433, 439, 477, 509, 541, 553, 573, 807, 809, 877
312105-0368 . . Screw, M6S ISO 4017 M6x16 A4 80 ... 67, 75, 81, 85, 137, 157, 181, 185, 201, 245, 265, 283, 287, 299, 327, 333, 379, 385, 427, 437, 469, 529, 559, 583, 631, 641, 729, 805, 857, 861, 865
312105-0370 . . Screw, M6S ISO 4017 M6x20 A4 80 ..... 75, 81, 103, 111, 119, 125, 127, 157, 161, 169, 181, 185, 199, 201, 213, 287, 291, 311, 317, 367, 381, 523, 583, 613, 631, 635, 641, 645, 779, 805
312105-0371 . . Screw, M6S ISO 4017 M6x22 A4 80 193
312105-0372 . . Screw, M6S ISO 4017 M6x25 A4 80 .... 75, 125, 157, 169, 181, 193, 201, 213, 215, 217, 231, 233, 245, 283, 333, 391, 447, 467, 529, 565, 569, 631, 641, 779, 861, 865
312105-0374 . . Screw, M6S ISO 4014 M6x30 A4 80 ..... 35, 49, 63, 125, 197, 211, 337, 439, 509, 551, 583, 877, 891
312105-0378 . . Screw, M6S ISO 4014 M6x40 A4 80 ..... 169, 181, 217, 293, 567
312105-0379 . . Screw, M6S ISO 4014 M6x45 A4 80 ..... 43, 57, 125, 551, 891
312105-0380 . . Screw, M6S ISO 4014 M6x50 A4 80 805
312105-0382 . . Screw, M6S ISO 4014 M6x60 A4 80 ..... 337, 613
312105-0384 . . Screw, M6S ISO 4014 M6x70 A4 80 569
312105-0388 . . Screw, M6S ISO 4014 M6x90 A4 80 287
312105-0390 . . Screw, M6S ISO 4014 M6x100 A4 80 225
312105-0447 . . Screw M6S ISO 4017 M8x12 A480 327
312105-0449 . . Screw, M6S ISO 4017 M8x16 A4 80 ..... 219, 295, 807
312105-0451 . . Screw, M6S ISO 4017 M8x20 A4 80 ..... 35, 43, 85, 103, 157, 177, 181, 197, 219, 299, 333, 335, 341, 391, 861, 885
312105-0452 . . Screw, M6S ISO 4017 M8x22 A4 80 567
312105-0453 . . Screw, M6S ISO 4017 M8x25 A4 80 ..... 69, 75, 103, 111, 157, 177, 197, 201, 205, 211, 225, 265, 279, 295, 335, 885
312105-0455 . . Screw, M6S ISO 4017 M8x30 A4 80 ..... 57, 75, 91, 125, 127, 177, 197, 213, 217, 225, 293, 509, 877
312105-0457 . . Screw, M6S ISO 4014 M8x35 A4 80 ..... 49, 63, 75, 105, 119, 367, 489, 491, 493, 497, 501, 505, 507, 515, 519, 521, 871, 875
312105-0459 . . Screw, M6S ISO 4014 M8x40 A4 80 ..... 43, 49, 57, 63, 97, 113, 125, 181, 211
312105-0460 . . Screw, M6S ISO 4014 M8x45 A4 80 ..... 49, 63, 185
312105-0462 . . Screw, M6S ISO 4014 M8x55 A4 8002 423
312105-0469 . . Screw, M6S ISO 4014 M8x90 A4 80 ..... 69, 127
312105-0471 . . Screw, M6S ISO 4014 M8x100 A4 80 293
312105-0475 . . Screw, M6S ISO 4014 M8x120 A4 80 125
312105-0489 . . Screw, M6S ISO 4017 M10x16 A4 80 ..... 97, 113
312105-0493 . . Screw, M6S ISO 4017 M10x25 A4 80 837
312105-0495 . . Screw, M6S ISO 4017 M10x30 A4 80 ..... 245, 837

312105-0497 . . Screw, M6S ISO 4017 M10x35 A4 80 ..... 509, 877
312105-0499 . . Screw, M6S ISO 4014 M10x40 A4 80 477
312105-0500 . . Screw, M6S ISO 4014 M10x45 A4 80 ..... 465, 477
312105-0501 . . Screw, M6S ISO 4014 M10x50 A4 80 ..... 509, 877
312105-0515 . . Screw, M6S ISO 4014 M10x120 A4 80 ..... 177, 181
312105-0519 . . Screw, M6S ISO 4014 M10x150 A4 80 225
312108-0327 . . Screw EN 1665 Type F M5x12 A270 147
312108-0329 . . Screw EN 1665 Type F M5x16 A270 565
312108-0333 . . Screw EN 1665 Type F M5x25 A270 835
312108-0374 . . Screw EN 1665 Type F M6x30 A270 573
312108-0449 . . Screw EN 1665 Type F M8x16 A270 ..... 311, 317
312109-0335 . . Screw, M6S ISO 4017 M5x30 A4 80 ..... 231, 233, 239, 245
312109-0339 . . Screw, M6S ISO 4017 M5x40 A4 80 ..... 233, 235, 237, 243
312109-0340 . . Screw, M6S ISO 4017 M5x45 A4 80 ..... 149, 241
312109-0374 . . Screw, M6S ISO 4017 M6x30 A4 80 ..... 217, 529, 641, 865
312109-0376 . . Screw, M6S ISO 4017 M6x35 A4 80 ..... 169, 181
312109-0378 . . Screw, M6S ISO 4017 M6x40 A4 80 ..... 225, 233, 235, 237, 239, 241, 243
312109-0380 . . Screw, M6S ISO 4017 M6x50 A4 80 ..... 193, 211, 225, 231
312109-0386 . . Screw, M6S ISO 4017 M6x80 A4 80 ..... 631, 641
312109-0457 . . Screw, M6S ISO 4017 M8x35 A4 80 177
312109-0459 . . Screw, M6S ISO 4017 M8x40 A4 80 ..... 81, 177, 185
312109-0460 . . Screw, M6S ISO 4017 M8x45 A4 80 833
312109-0461 . . Screw, M6S ISO 4017 M8x50 A4 80 197
312109-0463 . . Screw, M6S ISO 4017 M8x60 A4 80 ..... 177, 211, 265
312109-0465 . . Screw, M6S ISO 4017 M8x70 A4 80 893
312109-0467 . . Screw, M6S ISO 4017 M8x80 A4 80 ..... 75, 81, 245
312109-0500 . . Screw, M6S ISO 4017 M10x45 A4 80 523
312109-0542 . . Screw M6S ISO 4017 M12x50 A280 ..... 105, 119
312109-0552 . . Screw M6S M12x100H A480 287
312111-0515 . . . Screw hex.sock.hd.MC6S 10x120 88 FZB 97, 113, 177
312115-0222 . . . Screw ISO4762 M3x8 A4 80 ..... 137, 283, 333, 807, 861
312115-0228 . . . Screw ISO4762 M3x16 A4 80 ..... 75, 81, 621, 623, 625, 627, 629, 637, 639, 807
312115-0230 . . . Screw ISO4762 M3x20 A4 80 ..... 265, 807
312115-0232 . . . Screw ISO4762 M3x25 A4 80 245
312115-0287 . . . Screw ISO4762 M4x8 A4 80 ..... 235, 237, 265, 283, 333, 861
312115-0289 . . . Screw ISO4762 M4x10 A4 80 ..... 283, 569, 651, 665, 673, 687, 729, 883
312115-0291 . . . Screw ISO4762 M4x12 A4 80 ..... 175, 177, 265, 333, 861
312115-0293 . . . Screw ISO4762 M4x16 A4 80 ..... 129, 245, 265, 523, 581, 807
312115-0295 . . . Screw ISO4762 M4x20 A4 80 ..... 261, 385, 809
312115-0297 . . . Screw ISO4762 M4x25 A4 80 ..... 245, 333, 367, 861
312115-0299 . . . Screw ISO4762 M4x30 A4 80 ..... 245, 695
312115-0303 . . . Screw ISO4762 M4x40 A4 80 367
312115-0304 . . . Screw ISO4762 M4x45 A4 80 697
312115-0323 . . . Screw ISO4762 M5x8 A4 80 ..... 279, 893
312115-0325 . . . Screw ISO4762 M5x10 A4 80 ..... 35, 43, 57, 81, 97, 113, 731
312115-0327 . . . Screw ISO4762 M5x12 A4 80 ..... 91, 129, 231, 233, 297, 333, 337, 651, 667, 673, 689, 749, 805, 861
312115-0329 . . . Screw ISO4762 M5x16 A4 80 ..... 233, 235, 237, 239, 241, 243, 245, 379, 551, 891
312115-0331 . . . Screw ISO4762 M5x20 A4 80 ..... 225, 231, 233, 239, 241, 243, 245, 253, 333, 805, 861
312115-0333 . . . Screw ISO4762 M5x25 A4 80 245
312115-0337 . . . Screw ISO4762 M5x35 A4 80 367
312115-0366 . . . Screw ISO4762 M6x12 A4 80 ..... 41, 55, 103, 111, 133, 135, 265, 297, 529, 537, 737, 865
312115-0368 . . . Screw ISO4762 M6x16 A4 80 ..... 157, 193, 201, 205, 215, 573, 703
312115-0370 . . . Screw ISO4762 M6x20 A4 80 ..... 177, 205, 213, 295, 467, 509, 565, 567, 581, 729, 877
312115-0372 . . . Screw ISO4762 M6x25 A4 80 ..... 97, 113, 193, 231, 233, 235, 237, 239, 241, 243, 265, 631, 641, 893
312115-0374 . . . Screw ISO4762 M6x30 A4 80 ..... 43, 57, 205, 231, 233, 235, 237, 239, 241, 243, 423, 437, 857
312115-0376 . . . Screw ISO4762 M6x35 A4 80 137
312115-0378 . . . Screw ISO4762 M6x40 A4 80 567
312115-0379 . . . Screw ISO4762 M6x45 A4 80 479
312115-0447 . . . Screw ISO4762 M8x12 A4 80 119
312115-0449 . . . Screw ISO4762 M8x16 A4 80 245
312115-0451 . . . Screw ISO4762 M8x20 A4 80 ..... 177, 225, 231, 233, 235, 237, 239, 241, 243, 245, 807
312115-0453 . . . Screw ISO4762 M8x25 A4 80 ..... 91, 97, 113, 207, 209, 265, 479, 833
312115-0455 . . . Screw ISO4762 M8x30 A4 80 ..... 185, 287, 833
312115-0457 . . . Screw ISO4762 M8x35 A4 80 ..... 97, 113, 265
312115-0459 . . . Screw ISO4762 M8x40 A4 80 ..... 105, 119
312115-0460 . . . Screw ISO4762 M8x45 A4 80 177
312115-0461 . . . Screw ISO4762 M8x50 A4 80 ..... 105, 119
312115-0465 . . . Screw ISO4762 M8x70 A4 80 217
312115-0466 . . . Screw ISO4762 M8x75 A4 80 299
312115-0467 . . . Screw ISO4762 M8x80 A4 80 127
312115-0489 . . . Screw ISO4762 M10x16 A4 80 ..... 105, 119, 231, 233, 235, 237, 239, 241, 243
312115-0493 . . . Screw ISO4762 M10x25 A4 80 245
312115-0495 . . . Screw ISO4762 M10x30 A4 80 ..... 231, 233, 235, 237, 239, 241, 243
312115-0540 . . . Screw ISO4762 M12x40 A4 80 287
312122-0291 . . Screw ISO 1207 M4x12 Ni Pl Brass 337
312125-0232 . . Slotted head screw, ISO1207 M3x25 A4 283
312125-0287 . . Slotted head screw, ISO1207 M4x8 A4 ..... 185, 211, 215, 217, 477, 515, 523, 567, 871
312125-0289 . . Slotted head screw, ISO 1207 M4 X 10 A4 ..... 343, 703
312125-0291 . . Slotted head screw, ISO1207 M4x12 A4 225
312125-0307 . . Screw ISO 1207 M4x60 A4 283

312125-0323 . . Slotted head screw, ISO1207 M5x8 A4 ..... 49, 63, 287
312125-0325 . . Screw ISO 1207 M5x10 A4 .....703, 707, 709, 723, 725, 727, 733, 735, 737, 739, 753, 755, 757
312125-0331 . . Slotted head screw, ISO1207 M5x20 A4 185
312125-0366 . . Slotted head screw, ISO1207 M6x12 A4 .....43, 703
312155-0285 . . Screw DIN 7991 MF6S M4x6 A4 70..... 159, 161
312155-0287 . . Screw DIN 7991 MF6S M4x8 A4 70..... 335, 695, 885
312155-0289 . . Screw DIN 7991 MF6S M4x10 A4 70 ..... 231, 233, 235, 237, 239, 241, 243, 265, 595, 601, 607, 613
312155-0291 . . Screw DIN 7991 MF6S M4x12 A4 70 ..... 245, 385, 387
312155-0293 . . Screw DIN 7991 MF6S M4x16 A4 70 ..... 265, 333, 861
312155-0295 . . Screw DIN 7991 MF6S M4x20 A4 70 .....231, 233, 235, 237, 239, 241, 243
312155-0297 . . Screw DIN 7991 MF6S M4x25 A4 70 .....233, 235, 237, 239, 241, 243, 367
312155-0325 . . Screw DIN 7991 MF6S M5x10 A4 70 467
312155-0327 . . Screw DIN 7991 MF6S M5x12 A4 70 .....169, 253, 529, 537, 631, 865
312155-0329 . . Screw DIN 7991 MF6S M5x16 A4 70 .....185, 255, 263, 265, 469, 641, 815
312155-0331 . . Screw DIN 7991 MF6S M5x20 A4 70 253
312155-0335 . . Screw DIN 7991 MF6S M5x30 A4 70 263
312155-0366 . . Screw DIN 7991 MF6S M6x12 A4 70 ..... 333, 701, 861
312155-0368 . . Screw DIN 7991 MF6S M6x16 A4 70 ..... 157, 231, 233, 235, 237, 239, 241, 243, 253, 559, 569, 585, 589, 631, 641
312155-0370 . . Screw DIN 7991 MF6S M6x20 A4 70 .....169, 253, 265, 425, 443, 445, 583
312155-0374 . . Screw DIN 7991 MF6S M6x30 A4 70 ..... 157, 265
312155-0451 . . Screw DIN 7991 MF6S M8x20 A4 70 469
312155-0453 . . Screw DIN 7991 MF6S M8x25 A4 70 ..... 201, 213, 333, 861
312155-0491 . . Screw DIN 7991 MF6S M10x20 A4 70..... 245
312155-0501 . . Screw DIN 7991 MF6S M10x50A4 70 245
312318-0283 . . Set screw, cup end ISO4029 M4x4 A4..... 127
312318-0285 . . Set screw, Cup end ISO4029 M4x6 A4 .....69, 529, 865
312318-0287 . . Set screw, Cup end ISO4029 M4x8 A4 295
312318-0289 . . Set screw, Cup end ISO4029 M4x10 A4..... 631, 641
312318-0323 . . Set screw, Cup end ISO4029 M5x8 A4 265
312318-0360 . . Set screw, Cup end ISO4029 M6x6 A4 ..... 127, 295
312318-0370 . . Set screw, Cup end ISO4029 M6x20 A4..... 703
312318-0447 . . Set screw, Cup end ISO4029 M8x12 A4.....103, 111
312318-0449 . . Set screw, Cup end ISO4029 M8x16 A4..... 509, 877
3123927-0000 . . Plate..... 335, 885
3123928-0000 . . Bracket..... 159
3123929-0000 . . Bracket..... 159
3124360-0000 . . Reduction Sleeve 233, 241
3124361-0000 . . Puller 243
3124364-0000 . . Plate..... 239, 243
3124365-0000 . . Box 239, 243
3124368-0000 . . Puller 239
3124373-0000 . . Puller 233
3124375-0000 . . Cover..... 623
3124376-0000 . . Cover..... 623
3124377-0000 . . Flap..... 621, 623
3124378-0000 . . Air Nozzle..... 623
3124379-0000 . . Fitting.....621, 623, 625, 627, 629, 637, 639
3124380-0000 . . Cover..... 625
3124381-0000 . . Cover..... 625
3124382-0000 . . Flap..... 625
3124383-0000 . . Air Nozzle..... 625
3124384-0000 . . Cover..... 627
3124385-0000 . . Cover..... 627
3124386-0000 . . Flap..... 627
3124387-0000 . . Air Nozzle..... 627
3124388-0000 . . Cover..... 637
3124389-0000 . . Cover..... 637
3124390-0000 . . Flap..... 637
3124391-0000 . . Air Nozzle..... 637
3124394-0000 . . Cover..... 639
3124395-0000 . . Cover..... 639
3124396-0000 . . Flap..... 639
3124397-0000 . . Air Nozzle..... 639
3124398-0000 . . Cover..... 629
3124399-0000 . . Cover..... 629
3124400-0000 . . Flap..... 629
3124401-0000 . . Air Nozzle..... 629
3124420-0000 . . Bracket..... 259
3124421-0000 . . Scraper..... 235, 237
3124422-0000 . . Clamp 235, 237
3124436-0000 . . Belt 265
3124443-0000 . . Support.....235, 237, 239, 241, 243
3124444-0000 . . Air Nozzle..... 233
3124445-0000 . . Guide..... 235
3124446-0000 . . Guide..... 235
3124447-0000 . . Guide..... 237
3124448-0000 . . Guide..... 237
3124449-0000 . . Guide..... 241
3124450-0000 . . Guide..... 241
3124453-0000 . . Guide..... 243

3124454-0000 . . Guide 243
3124455-0000 . . Guide 239
3124456-0000 . . Guide 239
3124457-0000 . . Guide 233
3124458-0000 . . Guide 233
3124459-0000 . . Puller 231
3124460-0000 . . Guide 231
3124461-0000 . . Plate 231
3124463-0000 . . Plate 231
3124468-0000 . . Cover 621
3124469-0000 . . Cover 621
3124470-0000 . . Air Nozzle 621
3124472-0000 . . Shim 245
3124474-0000 . . Flange 271
3124475-0000 . . Spacer 271
3124476-0000 . . Cover 271
3124524-0000 . . Air Nozzle 231
3124525-0000 . . Support 265
3124526-0000 . . Support 265
3124527-0100 . . Support 265
3124528-0000 . . Guide 245
3124529-0000 . . Pin 245
3124530-0000 . . Plate 245
3124531-0000 . . Guide 231
3124532-0000 . . Guide 231
3124533-0000 . . Air Nozzle 231
3124534-0000 . . Locking Lever 245
3124535-0000 . . Stop Screw 245
3124539-0000 . . Stop Screw 631, 641
3124541-0000 . . Air Nozzle 233, 241
312605-0310 . . Hexagon Nut, M6M M3 A280 ..... 69, 287, 807
312605-0312 . . Hexagon Nut, M6M M4 A280 ..... 155, 235, 237, 239, 243, 335, 453, 885
312605-0314 . . Hexagon Nut, M6M M5 A280 ..... 225, 253, 319, 321, 337, 381, 671, 693, 701, 845, 851
312605-0316 . . Hexagon Nut, M6M M6 A280 ..... 125, 157, 161, 205, 265, 283, 287, 391, 399, 401, 417, 419, 423, 433, 443, 631, 641, 695, 697, 805
312605-0318 . . Hexagon Nut, M6M M8 A280 ..... 127, 197, 245, 265, 833, 893
312605-0320 . . Hexagon Nut, M6M M10 A280 ..... 225, 245, 509, 573, 877
312605-0322 . . Hexagon Nut, M6M M12 A280 ..... 245, 837
312605-0326 . . Hexagon Nut, M6M M20 A280 265
312607-0312 . . Hexagon Nut, EN 24032 M6M M4 A480 ..... 385, 809
312607-0314 . . Hexagon Nut, EN 24032 M6M M5 A480 213
312607-0316 . . Hexagon Nut, EN 24032 M6M M6 A480 225
312607-0318 . . Hexagon Nut, EN 24032 M6M M8 A480 ..... 211, 217, 219, 299
312607-0320 . . Hexagon Nut, EN 24032 M6M M10 A480 ..... 105, 119
312607-0326 . . Hexagon Nut, EN 24032 M6M M20 A480 119
312607-0332 . . Hexagon Nut, EN 24032 M6M M30 A480 225
312625-0316 . . Hexagon Thin Nut, EN 24035 ML6M M6 A4 581
312625-0318 . . Hexagon Thin Nut, EN 24035 ML6M M8 A4 75
312625-0330 . . Hexagon Thin Nut, EN 24035 ML6M M27 A4 ..... 97, 113
312635-0320 . . Nut M6M 10X1 Stainless A2 80 581
312705-0310 . . Nut Hex. Domed Cap MHM-6 M3 A2 265
312705-0312 . . Nut Hex. Domed Cap MHM-6 M4 A280 ..... 231, 233, 235, 237, 239, 241, 243, 257, 441
312705-0314 . . Nut Hex. Domed Cap MHM-6 M5 A280 ..... 257, 265, 631, 641
312705-0316 . . Hex. Domed Cap MHM-6 M6 A280 ..... 631, 641
312705-0318 . . Nut Hex. Domed Cap MHM-6 M8 A280 ..... 75, 265
312705-0320 . . Nut Hex. Domed Cap MHM-6 M10 A280 573
312810-0310 . . Hexagon nut, Ny-Lock M3 fzb 265, 631, 641
312810-0312 . . Hexagon nut, Ny-Lock M4 fzb 231, 233, 235, 237, 239, 241, 243, 253, 265, 631, 641
312810-0314 . . Hexagon nut, Ny-Lock M5 fzb 245, 253, 255, 257, 259, 265
312810-0316 . . Hexagon nut, Ny-Lock M6 fzb 253, 265
312810-0320 . . Hexagon nut, Ny-Lock M10 fzb 295
312812-0312 . . Hexagon nut, Ny-Lock M4 A4 80 ..... 367, 537, 695
312812-0314 . . Hexagon nut, Ny-Lock M5 A4 80 ..... 169, 175, 185, 367, 407, 425, 443, 445, 537, 581, 697, 835
312812-0316 . . Hexagon nut, Ny-Lock M6 A4 80 ..... 169, 181, 205, 399, 427, 447, 569, 805
312812-0318 . . Hexagon nut, Ny-Lock M8 A4 80 ..... 87, 287, 295, 367, 391
312812-0320 . . Hexagon nut, Ny-Lock M10 A4 80 87
312812-0322 . . Hexagon nut, Ny-Lock M12 A4 80 187
3131674-0000 . . Template 813
3134548-0100 . . Electrical Materials 859
3134551-0200 . . Barcode Scanner 831
3137424-0000 . . Guide 607
3137425-0000 . . Guide 607
3139123-0100 . . Infeed Guide 139
3139124-0000 . . Bracket 147
3139125-0000 . . Bracket 147
3139139-0100 . . Tool 831
3139140-0000 . . Bracket 837
3141446-0000 . . Guide 607
3143918-0000 . . Plate 335, 885
3143919-0000 . . Holder 529, 865
3144497-0000 . . Holder 529, 865

3147216-0100 . . Guide Rail 619
3147217-0100 . . Guide Rail 619
3147218-0100 . . Guide Rail 619
3147220-0100 . . Guide Rail 619
3147221-0100 . . Guide Rail 619
3147222-0100 . . Guide Rail 619
3147226-0000 . . Adapter..... 43, 49, 57, 63, 75, 81, 97, 105, 113, 119, 181
3149901-0000 . . Plate..... 157
3149906-0000 . . Plate..... 157
3149907-0000 . . Spacer 157
3149908-0000 . . Guide..... 157
3149911-0000 . . Spacer..... 157
3149912-0000 . . Shaft..... 157
3150919-0000 . . Bracket..... 529, 865
3150922-0000 . . Bracket..... 529, 865
3150924-0000 . . Block 529, 865
3151006-0000 . . Screw 529, 865
315103-0124 . . Washer plain, 3,2x/6x0,5 BR Ni pl 265, 621, 623, 625, 627, 629, 639, 641
315103-0136 . . Washer plain, 4,3x8x0,8 BR Ni pl.....231, 233, 235, 237, 239, 241, 243, 245, 253, 259, 261, 266, 631, 641
315103-0146 . . Washer plain, 5,3x10x1 BR Ni pl 231, 233, 235, 237, 239, 241, 243, 245, 251, 253, 257, 259, 266, 621, 623, 625, 627, 629, 631, 637, 639, 641
315103-0153 . . Washer plain, 6,4x12x1,5 BR Ni pl 231, 233, 245, 253, 266, 631, 635, 641, 645
315103-0165 . . Washer plain, 8,4x15x1,5 BR Ni pl 245, 266
315103-0173 . . Washer plain, 10,5x22x2 BR Ni pl 245
315105-0124 . . Washer plain, 3,2x6x0,5 A4 BRB.....75, 81, 137, 283, 807
315105-0136 . . Washer plain, 4,3x8x0,8 A4 BRB..... 75, 81, 85, 137, 147, 175, 177, 283, 337, 367, 385, 441, 453, 471, 523, 551, 553, 573, 581, 607, 695, 697, 703, 807, 809, 891
315105-0146 . . Washer plain, 5,3x10x1 A4 BRB..... 35, 41, 43, 57, 75, 81, 97, 113, 125, 129, 169, 175, 181, 185, 217, 225, 319, 321, 337, 367, 381, 407, 425, 445, 471, 479, 529, 537, 567, 585, 613, 671, 693, 697, 701, 703, 707, 709, 723, 725, 727, 731, 733, 735, 737, 739, 753, 755, 757, 783, 805, 845, 851, 865
315105-0153 . . Washer plain, 6,4x12x1,5 A4 BRB .. 35, 41, 43, 49, 55, 57, 63, 75, 81, 85, 103, 111, 119, 125, 127, 133, 135, 137, 157, 159, 161, 169, 181, 185, 193, 197, 213, 215, 217, 225, 283, 287, 291, 293, 295, 297, 327, 333, 337, 367, 379, 381, 391, 399, 401, 417, 419, 423, 427, 433, 437, 443, 447, 469, 477, 523, 529, 541, 551, 559, 565, 567, 569, 581, 583, 613, 695, 697, 703, 729, 737, 779, 805, 809, 857, 861, 865, 891
315105-0156 . . Washer plain, 6,7x14x1,5 A4 BRB 193, 287, 509, 805, 877
315105-0165 . . FWAS080G0-0S, Washer plain..... 43, 49, 57, 63, 69, 75, 85, 87, 91, 97, 105, 113, 119, 125, 127, 157, 177, 185, 197, 201, 211, 213, 217, 219, 225, 293, 295, 299, 327, 333, 391, 489, 491, 509, 515, 519, 521, 567, 703, 807, 833, 861, 871, 877
315105-0173 . . Washer plain, 10,5x22x2 A4 BRB 87, 97, 113, 177, 295, 523
315105-0178 . . Washer plain, 13x24x2,5 A4 BRB 49, 63, 105, 119, 187, 211
315105-0186 . . Washer plain, 17x30x3 A4 BRB 49, 63
315105-0192 . . Washer plain, 21x36x3 A4 BRB 119
315105-0203 . . Washer plain, 30x52x4 A4 BRB 97, 113
315105-0205 . . Washer plain, 33X50x4 A4 BRB 207
315106-0124 . . Washer plain, M3 ISO7089-3-200 HV A4.....319, 321, 333, 851, 861
315106-0136 . . Washer plain, M4 ISO7089-4-200 HV A4..... 155, 159
315106-0146 . . "Washer plain, M5 ISO7089-5-200 HV A4" 149, 159, 161, 279, 379, 581, 893
315106-0153 . . Washer plain, M6 ISO7089-6-200 HV A4.....67, 75, 81, 199, 201, 205, 439, 467, 509, 573, 877
315106-0165 . . Washer plain, M8 ISO7089-8-200 HV A4.... 103, 111, 205, 279, 341, 479, 493, 497, 501, 505, 507, 875, 893
315106-0173 . . "Washer plain, M10 ISO7089-10-200 HV A4" 465, 477, 509, 877
315106-0178 . . "Washer plain, M12 ISO7089-12-200 HV A4" 139
315115-0165. . . Washer Plain, TBRB 8,4/16 H=3.....35, 125, 127, 185, 279, 293, 295, 893
315115-0173. . . Washer Plain, TBRB 10,5/22 H=4 ..... 181, 523
315121-0153 . . Washer Plain, TBRSB 6,4/22 H=4..... 779
315125-0146 . . Washer high, TBRSB 5.3x15x1 A4 ..... 245, 255, 257
315125-0153 . . Washer high, TBRSB 6,4x22x4 A4 .....157, 169, 175, 283, 337, 391, 447, 553, 559, 565, 573, 631, 641
315125-0165 . . Washer high, TBRSB 8,4x26x5 A4 ..... 75, 81, 181, 211, 225, 287, 299, 367, 423
315125-0173 . . Washer high, TBRSB 10,5x28x6 A4 .....105, 119, 573
315202-0204 . . "O-ring 5,3x2,4 mm"..... 835
315202-0602 . . O-ring 44,04x3,53 mm 97, 113
315202-0702 . . O-ring 12,42x1,78 mm 185
315202-0705 . . O-ring 17,17x1,78 mm 75, 81, 157
315202-0710 . . O-ring 25,12x1,78 mm 181
315202-0713 . . O-ring 29,87x1,78 mm 75, 81
315202-0716 . . O-ring 34,65x1,78 mm 471, 553, 559, 573
315202-0717 . . O-ring 20,29x2,62 mm 43, 57
315202-0732 . . O-ring 44,12x2,62 mm 103, 111
315202-0733 . . O-ring 45,69x2,62 mm 75, 81
315202-0741 . . O-ring 58,42x2,62 mm 43, 57
315221-0169 . . Radial seal 30x47x7 mm 181
315221-0175 . . Radial seal 35x47x7 mm 181
315221-0192 . . Radial seal 45x62x8 mm 75, 81
315221-0196 . . Radial seal 48x62x8 mm 75, 81
315221-0198 . . Radial seal 50x65x8 mm 43, 57
315230-0193 . . Bearing seal G15x23x3 mm..... 585, 589
315230-0274 . . Bearing seal G22x30x4 mm..... 585, 589
315230-0330 . . Seal ring G 28x37x4 ..... 553, 559, 573
315230-0353 . . Bearing seal G30x40x4 mm..... 157
3152710-0000 . . Bracket..... 807
3152724-0000 . . Wheel 157
315400-0001 . . TUBE PUN-H-6X1-BL 87, 133, 135, 349, 367, 393, 541, 805, 807

315400-0004 . . Tube PUN-H-8X1,25-BL 259, 283, 347, 349, 361, 365, 541, 805, 807
315400-0009 . . Tube PUN-H-10X1,5-SW 343
315400-0010 . . Tube PUN-H-12X2-BL 259, 349, 541
315400-0013 . . Tube PUN-H-16-2,5-BL 365
315400-0016 . . Tube PUN-H-4X0,75-BL 259, 349, 541
315402-0136 . . Lock washer, DIN127B 4,1 A4, M4-5/32 ..... 651, 665, 673, 687, 729, 883
315402-0150 . . Lock washer, DIN127B 6,1 A4, M6 729
315402-0156 . . Lock washer, DIN127B 6,5 A4, 1/4 ..... 529, 865
3156384-0000 . . Profile 807
3156385-0000 . . Profile 807
3156411-0000 . . Plate 807
315701-0198 . . Parallel key w. round ends, 5x5x14 mm 157
315701-0208 . . Parallel key w. round ends, 5x5x40 mm 157
315701-0209 . . Parallel key w. round ends, 5x5x45 mm 631, 641
315701-0238 . . Parallel key w. round ends, 6x6x36 mm 631, 641
315701-0241 . . Parallel key w. round ends, 6x6x50 mm 265
315701-0267 . . Parallel key w. round ends, 8x7x30 mm 245
315701-0371 . . Parallel key w. round ends, 14x9x90 mm 105, 119
315705-0232 . . Parallel key w. round ends, 6x6x20 mm 75, 81, 295
315705-0234 . . Parallel key w. round ends, 6x6x25 mm 559
315705-0237 . . Parallel key w. round ends, 6x6x32 mm 225
315705-0239 . . Parallel key w. round ends, 6x6x40 mm 69, 103, 111, 127
315705-0267 . . Parallel key w. round ends, 8x7x30 mm 125
315705-0296 . . Parallel key w. round ends, 10x8x25 mm 43, 57
315705-0303 . . Parallel key w. round ends, 10x8x50 mm 49, 63
315741-0102 . . Retaining ring, DIN 705 A2 6 835
315741-0216 . . Retaining ring, DIN 705 A4 20 ..... 127, 295
315743-0008 . . Olflex Control TM 3G1,5, 281603 389
315743-0009 . . Olflex Control TM 4G1,5, 281604 ..... 266, 389, 631, 641
315743-0024 . . Olflex Control TM 5G6, 281005 389
315744-0040 . . Miniature Circuit Breaker, FAZ-C4/1-NA 673–674
315744-0060 . . Miniature Circuit Breaker, FAZ-C6/1-NA 673–674
315745-0100 . . Miniature Circuit Breaker, FAZ-C10/2-NA 674
315746-0060 . . Miniature Circuit Breaker, FAZ-C6/3-NA 673
315746-0200 . . Miniature Circuit Breaker, FAZ-C20/3-NA 674
315746-0250 . . Miniature Circuit Breaker, FAZ-C25/3-NA 673
315747-0060 . . Miniature Circuit Breaker, FAZ-D6/1-NA 667, 673, 689
315747-0100 . . Miniature Circuit Breaker, FAZ-D10/1-NA 674
315751-0116. . . Retaining ring for Shaft DIN 471 20 SS 87, 199
315751-0130 . . Retaining ring for Shaft DIN 471 50 SS 97, 113
315752-0136 . . Retaining Ring for Bore DIN 472 62 ..... 49, 63, 105, 119
315753-0121 . . Retaining Ring for Bore DIN 472 28 SS 585, 589
315753-0123 . . Retaining Ring for Bore DIN 472 32 SS 265
315753-0130 . . Retaining Ring for Bore DIN 472 47 SS 181, 271
315755-0106 . . Retaining ring Shaft DIN 6799 4 SS 169, 297
315755-0109 . . Retaining ring Shaft DIN 6799 7 SS 471
315756-0009 . . Olflex Control TM CY 4G1,5, 281604CY 245, 389
3158206-0000 . . Roller Bracket 529, 865
3159870-0000 . . Bracket 807
3159886-0000 . . Bracket 807
3159887-0000 . . Bracket 807
3159895-0000 . . Plate 807
3159896-0000 . . Plate 807
3161464-0000 . . Bracket 35, 43, 57, 113
3161465-0000 . . Bracket 35, 43, 57, 97
3161466-0000 . . Plate 335, 885
3162977-0000 . . Guide 139
3166547-0000 . . Bracket 155
3170037-0000 . . Plate 447
3172144-0000 . . Plate 447
3177603-0000 . . Plate 157
3177654-0000 . . Block 287
318301-0122 . . Lifting Eye Bolt, LT M12 FZB 761
3186487-0000 . . Protection Plug 35, 43, 57, 97, 113
3186489-0000 . . Position Template 837
318871-0105 . . Knob Circular, Ext Thread, No. 8302-6150 ..... 333, 861
3190281-0000 . . Box 697
3190285-0200 . . Electrical Conversion 649
3193666-0000 . . Support 137
3193669-0000 . . Support 155
3193670-0000 . . Support 155
3199889-0100 . . Side Adjuster 37
3199890-0100 . . Side Adjuster 37
3199891-0100 . . Drive 39
3199892-0300 . . Package Positioner 31
3199893-0100 . . Package positioner 31
3199894-0100 . . Adjustable guide 93
3199895-0300 . . Package Handling 31
3199896-0200 . . Pneumatic Cylinder 123
3199898-0100 . . Roller 139
3199899-0000 . . Screw 75, 81
3199900-0000 . . Bracket 41

3200713-0000 . . Cover 149
3202908-0000 . . Screw 41, 55, 103, 111
3203258-0000 . . Guide 41, 111
3203260-0000 . . Guide 55, 103
3203747-0000 . . Plate 43
3203752-0000 . . Bracket 333, 861
3203753-0000 . . Support 341
3203756-0000 . . Cap 551, 891
3203757-0000 . . Screw Plug 551, 891
3203761-0200 . . Heater 325
3203763-0100 . . Vision System 329, 859
3203764-0100 . . Heating Element 329
3203766-0100 . . Conversion Group 329
3208104-0000 . . Shaft 181
3208122-0100 . . Photocell Bracket 139
3208157-0100 . . Adjustable guide 37
3208664-0200 . . Central Lubrication 275
3209473-0000 . . Shim 161
3209474-0000 . . Bracket 161
3209475-0000 . . Cover 129
3209476-0000 . . Cover 129
3209477-0000 . . Plate 161
3209478-0000 . . Bracket 161
3209480-0100 . . Frame Upper 39
3209481-0100 . . Frame Upper 53
3210206-0200 . . Lamp 375
3210207-0100 . . Lamp 375
3210208-0000 . . Spacer 385
3210219-0200 . . Ejector 803
3210220-0000 . . Profile 807
3210221-0000 . . Spacer 807
3210222-0000 . . Spacer 807
3210223-0000 . . Profile 807
3210225-0000 . . Plate 807
3210226-0000 . . Plate 807
3210227-0000 . . Spacer 807
3210228-0000 . . Bracket 805
3210229-0000 . . Slide Plate 805
3210230-0000 . . Spacer 807
3210231-0000 . . Spacer 807
3210232-0100 . . Photocell Bracket 803
3210234-0000 . . Cover 805
3210235-0000 . . Pusher 805
3210236-0000 . . Support 805
3210237-0000 . . Shaft 805
321133-0260 . . . Bushing Iglidur G 20x23x20 225
321133-0420 . . . Bushing Iglidur G 40x44x40 225
321153-0500 . . . Flange Bushing, Iglidur G 70X75X50 293
321154-0060 . . . Flange Bushing, Iglidur W300 6X8X6 581
321154-0180 . . . Flange Bushing, Iglidur W300 12X14X12 ..... 529, 865
321155-0062 . . . Flange Bushing, Iglidur X 6X8X8 537
321156-0188 . . . Flange Bushing, Iglidur H370 12X14X15 ..... 333, 861
321158-0060 . . . Flange Bushing, Iglidur J 6X8X6 ..... 585, 589
321158-0142 . . . Flange Bushing, Iglidur J 10X12X12 581
321158-0180 . . . Flange Bushing, Iglidur J 12X14X12 583
321158-0221 . . . Flange Bushing, Iglidur J 16X18X17 ..... 75, 81
3212201-0000 . . Tube Holder 439
321306-0104 . . Ball bearing 20/42x12 ..... 75, 81
321306-0105 . . Ball bearing 25/47x12 181
321308-0101 . . Ball bearing 12/28x8 ..... 585, 589
321309-0102 . . Ball bearing 15/35x11 ..... 553, 559, 573
321309-0105 . . Ball bearing 25/52x15 ..... 49, 63, 105, 119
321314-0105 . . Ball bearing 25/62x17 ..... 49, 63, 105, 119
321330-0105 . . Ang. Ball Bear 25/52x20,6 ..... 43, 57
3216180-0000 . . Pipe 299
3216184-0000 . . Tightening Clamp 391
3217276-0100 . . Drive 53
3217277-0000 . . Plate 41
3217278-0100 . . Warning sign 31
3217280-0000 . . Shaft 75, 81
3217565-0100 . . Door Hinge 277
3217567-0100 . . Warning sign 275
3217906-0000 . . Guide 41
3217907-0000 . . Guide 55
3217908-0000 . . Guide 35
3217909-0000 . . Guide 35
3217910-0000 . . Frame 111
3217911-0000 . . Frame 41
3217912-0000 . . Frame 103
3217913-0000 . . Frame 55
3217924-0000 . . Plate 57
3218060-0100 . . Warning sign 397

3220230-0100 . . Start-up kit 785
3223764-0000 . . Bracket 219
3223765-0000 . . Plate 219
3224301-0000 . . Cap 551, 891
3224303-0000 . . Cap 551, 891
3225865-0000 . . Pulley 75, 81
3227371-0000 . . Shaft 75, 81
3227417-0100 . . Warning sign 803
3228191-0000 . . Water Diagram 775
3228275-0000 . . Lubrication Diagram 775
3235825-0000 . . Plate 807
3235826-0000 . . Plate 807
3238639-0000 . . Template 813
3240398-0000 . . Template 813
3243398-0100 . . Hose 831
3243399-0100 . . Oil Gun 831
3246705-0000 . . Cover 807
3249413-0000 . . Spacer 805
3249881-0000 . . Cover 807
3252597-0000 . . Photocell Bracket 321
3252696-0000 . . Bracket 319, 851
3256152-0000 . . Bracket 551, 891
3257112-0000 . . Push Button Box 441
3257421-0000 . . Plate 75, 81
3257422-0000 . . Plate 75, 81
3267572-0000 . . Rail 279, 893
3267762-0000 . . Connection Box 279, 893
3272544-0000 . . Sign 193
3272545-0000 . . Sign 193
3291724-0000 . . Cover 393
3293084-0000 . . Threaded Connection 343, 365
3295035-0000 . . Flange 97, 113
3296413-0100 . . Start-up kit 785
3296679-0000 . . Cover 97
3297666-0100 . . Junction Box 891
3300287-0000 . . Wheel 157
3309602-0100 . . Start-up kit 785
3311368-0000 . . Support 279, 893
3311662-0000 . . Toothed pulley 559
3314429-0000 . . Pillar 139
3315733-0000 . . Bracket 809
3317858-0000 . . Shaft 157
3317859-0000 . . Cover 157
3319430-0000 . . Spacer 177
3319569-0000 . . Cover 113
3319571-0000 . . Toothed pulley 207, 209
3324807-0000 . . Template 813
3326954-0000 . . Junction Nipple 75, 81
3326956-0000 . . Junction Nipple 43, 49, 57, 63, 97, 105, 113, 119
3328018-0002 . . TPOP Basic V9.1 405
3328027-0201 . . IPC configuration 399
3329211-0000 . . Glass Door 443
3329212-0000 . . Glass Door 413
3329213-0000 . . Glass Door 445
3329214-0000 . . Glass Door 451
3329215-0000 . . Glass Door 453
3329217-0000 . . Glass Door 455
3331455-0000 . . Plate 85
3341018-0000 . . Slide Rail 147
3353745-0000 . . Cantilever 631, 641
3353746-0000 . . Bracket 631, 641
3356197-0000 . . Bracket 807
3356198-0000 . . Bracket 807
3356449-0000 . . Shaft 177
3356451-0000 . . Shaft 97, 113
3357883-0100 . . Measuring Tool 775
3360962-0100 . . Cover 413
3361872-0000 . . Label 523
3363694-0100 . . Plinth 739
3365191-0000 . . Bushing 245
3365192-0000 . . Worm Gear 245
3365194-0000 . . Worm Gear 265
3365195-0000 . . Worm Gear 631, 641
3365197-0000 . . Lid 245
3365198-0000 . . Bracket 245
3365199-0000 . . Base Plate 245
3365200-0000 . . Bracket 245
3365201-0000 . . Dowel 231, 233, 235, 237, 239, 241, 243
3365207-0000 . . Belt 631, 641
3368748-0000 . . Flange 157
3368806-0000 . . Protection 427
3368990-0000 . . Protection 427

3381527-0000 . . Threaded rod 105, 119
3383128-0000 . . Cable Duct 705
3386021-0000 . . Fuse Panel Label 651
3386025-0000 . . Fuse Panel Label 651
3386027-0000 . . Fuse Panel Label 673
3386031-0000 . . Fuse Panel Label 673
3386032-0000 . . Cable Duct 705
3386033-0000 . . Cable Duct 705
3386034-0000 . . Cable Duct 705
3386035-0000 . . Cable Duct 705
3386036-0000 . . Cable Duct 705
3386037-0000 . . Cable Duct 705
3386038-0000 . . Cable Duct 705
3386039-0000 . . Divider 705
3386144-0000 . . Cable Duct 705
3386145-0000 . . Cable Duct 705
3386146-0000 . . Cable Duct 705
3386147-0000 . . Cable Duct 705
3386148-0000 . . Cable Duct 705
3386149-0000 . . Cable Duct 705
3386151-0000 . . Mounting Plate 703
3388209-0000 . . Rail 707, 709
3388210-0100 . . Rail 703
3388211-0100 . . Ethernet Switch 703
3388212-0000 . . Bracket 729
3389205-0000 . . Door 407
3389206-0000 . . Box 399
3390765-0000 . . Plate 885
3397189-0000 . . Support 541
3397195-0000 . . Bracket 349
3397562-0100 . . Door 397
3398007-0100 . . Pneumatic Panel 461
3398689-0000 . . Pneumatic Diagram 775
3402970-0000 . . Marking 651
3402971-0000 . . Sign 673
3402978-0100 . . Adhesive Detector 547
3403447-0000 . . Door 407
3403463-0100 . . Junction Box 277
3405068-0000 . . Box 399
3405806-0100 . . Communication Unit 649
3405807-0100 . . Communication Unit 765
3405808-0100 . . Communication Unit 765
3405809-0100 . . Communication Unit 765
3405810-0100 . . Positioning Unit 651, 673, 859
3405811-0100 . . Conveyor Control 703
3408456-0100 . . OK TBA Positioning Device 855
3408457-0101 . . Rebuilding manual 859
3408458-0101 . . Update Pages 859
3412501-0000 . . Welded Cabinet 695
3412971-0000 . . Toothed Pulley 91
3412973-0000 . . Support 91
3412975-0000 . . Spacer 91
3413327-0000 . . Guide 193
3415801-0000 . . Cable Duct 695
3415802-0000 . . Cable Duct 695
3415803-0000 . . Cable Duct 695
3416656-0100 . . Warning Lamp 375
3416667-0000 . . Plate 379
3417764-0000 . . Beam 253
3417765-0000 . . Beam 253
3417766-0000 . . Plate 253
3417767-0000 . . Bracket 261
3417768-0000 . . Plate 257
3417769-0000 . . Screw 253
3420950-0100 . . OK Adhesive Detector 855
3420951-0100 . . Mechanical Rebuilding 889
3420952-0101 . . Rebuilding manual 889
3420953-0101 . . Update Pages 889
3420954-0100 . . Electrical Conversion 889
3420955-0100 . . Electrical Materials 895
3420956-0000 . . Set Of Signs 897
3420957-0000 . . Cable Marking 897
3422240-0000 . . Beam 287
3422241-0000 . . Beam 287
3423298-0000 . . Beam 287
3423299-0000 . . Beam 287
3423300-0000 . . Beam 287
3423301-0000 . . Beam 287
3423302-0000 . . Glass Door 425
3423307-0000 . . Cover 423
3423308-0000 . . Cover 439
3423309-0000 . . Cover 419

3424179-0000 . . Axle Pin 295
3424558-0000 . . Support 381
3425304-0000 . . Support 381
3425942-0000 . . Frame Upper 287
3425966-0000 . . Cover 439
3425967-0000 . . Cover 419
3426317-0000 . . Spacer 209
3426348-0100 . . Cover 415
3426672-0000 . . Plate 385
3426673-0000 . . Cover 449
342700-0109 . . Nipple ext.thread hexagon, 0901 00 10 259
342700-0110. . . Nipple ext.thread hexagon,09010013G1/4 841
342700-0203 . . Nipple Hexagon,09011317G3/8G1/4 841
342715-0102 . . Blind plug 6 mm 695
3427691-0000 . . Support 391
3428086-0000 . . Support 367
342923-0132 . . Straight Coupl.,Int.Threaded 10/8-G1/4" 343
3429304-0000 . . Beam 287
3429305-0000 . . Beam 287
342946-0133 . . T-Coupling,Union 10/8 343
342991-0102 . . Hose Clip,Worm Drive Type (13)-20 839
342991-0104 . . Hose Clip,Worm Drive Type (19)-28 761
342991-0108 . . "Hose Clip,Worm Drive Type (38)-50" 337
3429991-0000 . . Plate 283
3430409-0000 . . Rail 671, 693
3433159-0000 . . Panel 253
3433160-0000 . . Panel 253
3433161-0000 . . Panel 253
3433167-0000 . . Bracket 257
3433168-0000 . . Screw 251, 257
3433170-0100 . . Sensor 245
3433171-0000 . . Spacer 233, 241
3433173-0000 . . Plate 253
3433174-0000 . . Plate 255
3433175-0000 . . Bushing 261
3433176-0000 . . Bushing 261
3433177-0000 . . Plate 251
3437640-0000 . . Bracket 327
3437723-0000 . . Bracket 327
3437768-0000 . . Bracket 327
3438472-0000 . . Bracket 613
3438473-0000 . . Bracket 613
3438474-0000 . . Bracket 613
3438476-0000 . . Bracket 613
3438477-0000 . . Bracket 613
3438478-0000 . . Bracket 567
344202-0003 . . Cable gland; MS-SC-M, 7-12,5mm, M20x1,5 ..... 157, 245
344224-0200 . . Ball bearing 10/26x8 ..... 631, 641
344224-0202 . . Ball bearing 15/32x9 265
344224-0203 . . Ball bearing 17/35x10 ..... 471, 631, 641
344224-0204 . . B40160040S, Ball bearing 20/42x12 ..... 87, 265
344224-0207 . . Ball bearing 35/62x14 245
344246-0050 . . Sensor cable, EVT127 193
344253-0050 . . Sensor cable, EVT001 ..... 245–246, 299
344253-0100 . . Sensor cable, EVT002 ..... 81, 283, 299, 333, 381, 861
344257-0050 . . Sensor cable, EVT146 367
344261-0006 . . Sensor cable, EVT261 ..... 137, 246
344261-0010 . . Sensor cable, EVT262 ..... 631, 641
344261-0015 . . Sensor cable, EVT264 246
344261-0020 . . Sensor cable, EVT263 ..... 631, 641
344261-0050 . . Sensor cable, EVT216 ..... 125, 266, 299, 845, 849
344264-0006 . . Sensor cable, EVT243 ..... 631, 641
344266-0020 . . Sensor cable, EVT256 155
344267-0006 . . Sensor cable, EVT041 809
344267-0010 . . Sensor cable, EVT042 ..... 477, 581
344267-0050 . . Sensor cable, EVT044 ..... 299, 845, 849
344319-2101 . . Application Module MiniBlue II, 1095703 195
344319-2103 . . Solenoid Saturn SP 4-way 24 VDC, 1095800 195
344319-3001 . . Hot Melt Applicator, 7333040 193
344319-3101 . . Heater Cartridge, 3/8X50 MM 230V-50W 195
344319-3102 . . O-ring, 26,0 X 1.80 mm, Viton, 7333932 195
344319-3103 . . Heater Cartridge, 3/8X76 mm 230V-100W 195
344319-3104 . . Heated insert for manifold, 7333919 195
344319-3105 . . Filter, gun, 200 Mesh, Saturn, 1045520 195
344319-3106 . . Heater cartridge 3/8"x6" 230V-200W 195
344319-3107 . . O-ring, 6*1, Aflas 70, 375291 195
344319-3113. . . Hotmelt Equipment Nordson 195
344319-3114. . . Hotmelt Equipment Nordson 195
344319-3115. . . Hotmelt Equipment Nordson 195
344342-0060 . . Tube 6 mm APA Transp 367
344351-0242 . . Protective Plug PE, GPN 300/F242 349
344351-0280 . . Protective Plug PE, GPN 300/F28 349

344353-0421 . . Finned Plug PE, GPN 320 GL42 1-2 ..... 41, 55
344366-1002 . . Cable Duct PVC 40x40, 4040T1-E 399
344366-1013 . . Cable Duct PVC 40x80, 4080T1-E 399
344373-0030 . . Blanking Plug G1/8, NPQH-BK-G18-P10 235
344373-0040 . . Blanking Plug G1/4, NPQH-BK-G14-P10 541
344373-0050 . . Blanking Plug G3/8, NPQH-BK-G38-P10 541
344375-0004 . . Cable Shoe Ring, 0,5-1,5mm2 M5 Red 337
344375-0012 . . Cable Shoe Ring, 4-6mm2 M4 Yellow 389
344383-0102 . . Valve, VMPA14-M1HF-J-PI 541
344383-0121 . . Valve, VMPA14-M1HF-K-PI 541
344383-0123 . . Valve, VMPA14-M1HF-H-PI 541
344383-0301 . . Endplate Left, VMPAC-EPL-MP-SD25 541
344383-0351 . . Endplate Right, VMPAC-EPR-EX 541
344383-0402 . . Valve Sub-base, VMPAC-AP-14-2 541
344383-0404 . . Valve Sub-base, VMPAC-AP-14-B-2 541
344383-0501 . . Pressure Zone Plug, VMPAC-TE 541
344383-0601 . . Valve Cover, VMPAC-VC-14 541
344383-0703 . . Cable 10m, NEBV-C-S1WA25-F-10-LE25-S5 541
3443928-0000 . . Block 217
344407-0000 . . Klübersynth UH1 14-151, only in BoM 129, 201, 471, 553, 559, 573, 585, 589
344407-0037 . . Klübersynth UH1 14-151, 1kg Can 131, 203, 473, 555, 563, 577, 587, 591
344407-0177 . . Klübersynth UH1 14-151, 25kg Bucket 131, 203, 473, 555, 563, 577, 587, 591
344407-0285 . . Klübersynth UH1 14-151, 45g Tube 131, 203, 473, 555, 563, 577, 587, 591
344407-0591 . . Klübersynth UH1 14-151, 400g Cartridge 131, 203, 473, 555, 563, 577, 587, 591
344414-0000 . . Klüberoil 4 UH1-320N, only in BoM 43, 49, 57, 63, 75, 87, 181
344414-0335 . . Klüberoil 4 UH1-320N, 200 L Drum 47, 51, 61, 65, 79, 89, 183
344414-0764 . . Klüberoil 4 UH1-320N, 5 L Can 47, 51, 61, 65, 79, 89, 183
344414-0766 . . Klüberoil 4 UH1-320N, 20 L Can 47, 51, 61, 65, 79, 89, 183
344447-0000 . . Thread Sealant Loctite 542, only in BoM 43, 57, 75, 97, 113
344447-0050 . . Thread Sealant Loctite 542, 50ml 45, 59, 77, 81, 99, 115
344448-0000 . . Adhesive Loctite 5615 A+B, only in BoM 523
344448-0400 . . Adhesive Loctite 5615 A+B, 400ml 525
3448587-0000 . . Bellows 129
3448589-0100 . . Cover 245
3448635-0100 . . Hotmelt gun 191
3448636-0000 . . Base Plate 193
3448863-0000 . . Bracket 193
3448874-0000 . . Plate 193
3449628-0000 . . Cover 193
3451445-0100 . . Hotmelt Unit 391
3459908-0000 . . Top Support 233
3459909-0000 . . Bottom Support 233
3459910-0000 . . Top Support 231
3459911-0000 . . Bottom Support 231
3462207-0000 . . Support 225
3464963-0000 . . Angle 137
3473203-0000 . . Cable Marking 819
3473204-0000 . . Set Of Signs 821
3473205-0000 . . Set Of Signs 821
3473206-0000 . . Cable Marking 819
3473207-0000 . . Set Of Signs 821
3473208-0000 . . Cable Marking 819
3473209-0000 . . Set Of Signs 821
3473210-0000 . . Cable Marking 819
3473211-0000 . . Set Of Signs 821
3473212-0000 . . Cable Marking 819
3473213-0000 . . Set Of Signs 821
3473214-0000 . . Cable Marking 819
3473215-0000 . . Set Of Signs 821
3473216-0000 . . Cable Marking 819
3473217-0000 . . Set Of Signs 821
3473218-0000 . . Cable Marking 819
3473219-0000 . . Set Of Signs 821
3473220-0000 . . Cable Marking 819
3473221-0000 . . Set Of Signs 821
3473222-0100 . . Cable Marking 775
3473223-0100 . . Set Of Signs 775
3478353-0000 . . Key 97, 113, 177
3493268-0100 . . Drive 95
3493269-0100 . . Frame Bottom 95
3493270-0100 . . Belt Tensioner 95
3493271-0100 . . Frame Bottom 109
3493272-0100 . . Drive 109
3493273-0100 . . Belt Tensioner 109
3493274-0100 . . Side Frame 93
3493275-0100 . . Side Frame 93
3493623-0100 . . Startup Kit 785
3495611-0100 . . Brake Unit 73
3495612-0100 . . Package Line 31
3501860-0000 . . Hose Clip 193
351150-0403. . . Cable Olflex 3x0,75 mm2 light/grey 35 389
351150-0405. . . Cable Olflex 5x0,75 mm2 light/grey 389

351150-0406. . . Cable Olflex 7x0,75 mm2 light/grey 279, 389, 893
351150-0424. . . Cable Olflex 18x0,75 mm2 light/grey 389
351160-0102. . . Wire AWM 1X0,75 mm2 darkblue 651, 673, 897
351160-0105. . . Wire AWM 1x2,5 mm2 darkblue 763
351160-0106. . . Wire AWM 1x4 mm2 darkblue 763
351161-0104. . . Wire AWM 1x1,5 mm2 lightblue 763
351161-0105. . . Wire AWM 1x2,5 mm2 lightblue 763
351161-0106. . . Wire AWM 1x4 mm2 lightblue 763
351161-0107. . . Wire AWM 1x6 mm2 lightblue 763
351161-0109. . . Wire AWM 1x16 mm2 lightblue 763
351162-0102. . . Wire AWM 1x0,75 mm2 yellow-green 763
351162-0104. . . Wire AWM 1x1,5 mm2 yellow-green 763
351162-0105. . . Wire AWM 1x2,5 mm2 yellow-green 763
351162-0106. . . Wire AWM 1x4 mm2 yellow-green 265, 763
351162-0107. . . Wire AWM 1x6 mm2 yellow-green 389, 763
351162-0108. . . Wire AWM 1x10 mm2 yellow-green 763
351162-0109. . . Wire AWM 1x16 mm2 yellow-green 763
351164-0104. . . Wire AWM 1x1,5 mm2 black 763
351164-0105. . . Wire AWM 1x2,5 mm2 black 651, 673
351164-0106. . . Wire AWM 1x4 mm2 black 763
351164-0107. . . Wire AWM 1x6 mm2 black 651, 673
351164-0108. . . Wire AWM 1x10 mm2 black 763
351164-0109. . . Wire AWM 1x16 mm2 black 763
351416-0060 . . Miniature Circ. Break., FAZ -D6 1-pole 651, 667, 689
351416-0100 . . Miniature Circ. Break., FAZ -D10 1-pole 652
351423-0006 . . Cable Unitronic LiYCY 5x0,34 ..... 389, 651, 673
351424-0017 . . Cable Olflex Heat 180 4G4 466343 389
351434-0200 . . GUI SCADA TP-Visu+ RT Win32/64, 2701191 399
351436-0032 . . Circuit Breaker, NZMB1-A32-NA 674
351439-1106. . . Top Therm Blue-e Roofmount SS, 3385.600 761
351450-1409 . . Power/Encoder Cable 2090-CSWM1DF-14AA09 ..... 377, 389, 863
351456-0102 . . Push-in Fitting NPQH-D-G18-Q6-P10 541
351456-0103 . . Push-in Fitting NPQH-D-G18-Q8-P10 807
351456-0105 . . Push-in Fitting NPQH-D-G14-Q12-P10 ..... 259, 349
351456-0106 . . Push-in Fitting NPQH-D-G14-Q6-P10 541
351456-0107 . . Push-in Fitting NPQH-D-G14-Q8-P10 ..... 259, 541
351456-0109 . . Push-in Fitting NPQH-D-G38-Q12-P10 541
351456-0113. . . Push-in Fitting NPQH-D-G12-Q12 283
351456-0116. . . Push-in Fitting NPQH-D-M5-Q6-P10 805
351456-0506 . . Push-in Fitting NPQH-D-G14F-Q8-P10 365
351456-1101. . . Push-in Fitting NPQH-D-S6-Q4-P10 541
351456-1109. . . Push-in Fitting NPQH-D-S12-Q8-P10 ..... 349, 807
351456-3001 . . Push-in L-Fitting NPQH-L-G18-Q4-P10 ..... 231, 237, 239, 243, 259, 349
351456-3002 . . Push-in L-Fitting NPQH-L-G18-Q6-P10 ..... 87, 133, 135, 233, 241
351456-3003 . . Push-in L-Fitting NPQH-L-G18-Q8-P10 ..... 283, 347
351456-3005 . . Push-in L-Fitting NPQH-L-G14-Q12-P10 ..... 259, 361
351456-3007 . . Push-in L-Fitting NPQH-L-G14-Q8-P10 ..... 349, 361, 541, 805
351456-3013 . . Push-in L-Fitting NPQH-L-G12-Q12 353
351456-3105 . . Push-in L-Fitting NPQH-L-Q12-E-P10 349
351456-5007 . . Push-in T-Fitting NPQH-T-G18-Q4-P10 259
351456-5103 . . Push-in T-Fitting NPQH-T-Q12-E-P10 349
351456-5107 . . Push-in T-Fitting NPQH-T-Q6-E-P10 ..... 349, 541
351456-5109 . . Push-in T-Fitting NPQH-T-Q8-E-P10 365
351456-5110. . . Push-in T-Fitting NPQH-T-Q8-Q6-P10 349
351456-6005 . . Push-In Y-Connector NPQH-Y-Q8-E-P10 193
351476-3150 . . Double acting, Round, Cyl. 32-150 ..... 133, 135
351477-0110. . . Nylon Washer G1/4”, 0602 23 11 20 343
351481-5010 . . Proximity Switch for T-slot, SMT-8M-A 581
351485-0009 . . Machine Sign, 200x50 CE EAC 523
351501-0003 . . Ethernet Patch Cable, FL CAT5 PATCH 0,3 ..... 652, 665, 674, 687, 729, 767, 769, 771, 883
351501-0005 . . Ethernet Patch Cable, FL CAT5 PATCH 0,5 399
351501-0015 . . Ethernet Patch Cable, FL CAT5 PATCH 1,5 ..... 667, 689, 749
351501-0020 . . Ethernet Patch Cable, FL CAT5 PATCH 2,0 ..... 652, 674, 695, 749, 753
351501-0030 . . Ethernet Patch Cable, FL CAT5 PATCH 3,0 729
351501-0100 . . Ethernet Patch Cable, FL CAT5 PATCH 10,0 ..... 393, 763
351501-2050 . . Eth. P Cab.SAC-4P-M12MSD/ 5,0-PVC/M12MSD 245
351501-3100 . . Eth. P. Cab. VS-M12MSD-IP20-LI-93P/10,0 283
351532-0000 . . Threadlocker Loctite 2400, BOM only 149, 573, 595, 601
351532-0050 . . Threadlocker Loctite 2400 50 ml 153, 575, 599, 605
351533-0000 . . Threadlocker Loctite 2700, BOM only 537, 553, 559, 569
351533-0050 . . Threadlocker Loctite 2700 50 ml 539, 557, 561, 571
351552-0007 . . Warning Sign ISO, Burn Hazard, 50 mm 193, 457
351552-0015 . . Warning Sign ISO, Electric Hazard, 50mm 457
351553-0013 . . Prohibiti. Sign ISO,Dont wash/Spray,50mm 457
351553-0015 . . Prohibition Sign ISO,Do Not reach,50 mm 457
351554-0009 . . Mand. Action Sign, Read Maint M S, 50 mm 651
351566-0001 . . Danger Sign H, Haz Voltage, Lockout 457
351567-0171 . . Warning Sign H, Hot surface 457
351568-0061 . . Caution Sign H, Moving Parts 457
351569-0001 . . Notice Sign H, Do not spray 457
351582-0006 . . Marking Strip, PRZ06T04/09/17/30 807

351582-0008 . . Marking Strip, PRZ08T04/09/17/30 ..... 193, 807
352113-0101. . . Cable tie,Black 92x 343, 847
352113-0102. . . Cable tie, Black 188x4,8 mm 225, 897
352113-0103. . . Cable tie, Black 290x7,6 mm 897
352113-0104. . . Cable tie, Black 300x4,8 mm 185, 211, 215, 217, 477, 515, 523, 567, 871
352113-0203. . . Anchor plates for strips, TM3S8-M0 ..... 185, 211, 215, 217, 225, 477, 515, 523, 871
352113-0204. . . Anchor plates for strips, TM3S25-M 287
352113-0205. . . Anchor plates for strips, TM2S8-C100 ..... 343, 477, 567
353001-0113. . . End Sleeve 0,75Mm2 ..... 887, 897
353001-0116. . . End Sleeve H0.5/14 Orange 887, 897
353001-0119. . . End Sleeve H 1.0/14 Yellow 887
353021-0212 . . Feed Through Terminal, WDU 2,5 ..... 279, 701, 747, 759, 893
353021-0213 . . Feed Through Terminal, WDU 4 745
353021-0214 . . Feed Through Terminal, WDU 6 ..... 701, 759
353021-0302 . . Terminal, DLD 2,5/35 ..... 671, 693
353022-0002 . . Terminal WNT 4 10x3 757
353024-0204 . . Earth Terminal WPE 2,5 ..... 279, 701, 893
353024-0206 . . Earth Terminal WPE 6 ..... 701, 755
353024-0207 . . Earth Terminal WPE 10 ..... 697, 755
353024-0212 . . Earth Terminal WDK 2,5 PE 401, 671, 693, 755
353031-0203 . . End bracket, WEW 35/2 ..... 279, 401, 671, 693, 701, 707, 709, 745, 747, 755, 757, 759, 893
353032-0004 . . End Plate, WAP 2,5-10, Beige 279, 701, 745, 747, 759, 893
353032-0009 . . End Plate, WAP WDK 2,5 ..... 401, 671, 693, 711, 713, 715, 717, 719, 721, 755
353032-0302 . . End Plate, AP DLD2,5 DB 671, 693
353033-0104 . . End Plate, WHP2,5-35N/10x3 BL 757
353034-0018 . . Bridge connector WQV 6/2 759
353034-0030 . . Bridge connector WQV 2,5/10 ..... 279, 401, 671, 693, 711, 713, 715, 717, 719, 721, 893
353034-0033 . . Bridge connector WQV 10/10 673
353034-0042 . . Bridge connector WQV 2,5/3 401
353034-0404 . . Bridge connector Q 10 DLI 671, 693
353041-0001 . . Bus Bar Rail 10x3mm SSCH 757
353041-0106 . . Holder Zb35 K 5026.8 757
353249-0004 . . Insert, Single hole, E152 13 ..... 245, 631, 641
353249-0012 . . Insert, Single hole, EK154 11 ..... 265, 283, 337, 399
353249-0015 . . Insert, Single hole, EK155 16 ..... 349, 399
353249-0041 . . Insert, Solid, E151 G 245
353249-0054 . . Insert, Single hole, EK156 25 ..... 283, 399
353250-0016 . . Gland lock nut, M16x1,5 695
353250-0032 . . Gland lock nut, M32x1,5 695
354000-0040 . . Miniature Circuit Breaker, FAZ-C4/1 651–652
354000-0060 . . Miniature Circuit Breaker, FAZ-C6/1 651–652
354000-0100 . . Miniature Circuit Breaker, FAZ-C10/1 652
354001-0100 . . Miniature Circuit Breaker, FAZ-C10/2 652
354002-0060 . . Miniature Circuit Breaker, FAZ-C6/3 651
354002-0200 . . Miniature Circuit Breaker, FAZ-C20/3 652
354002-0250 . . Miniature Circuit Breaker, FAZ-C25/3 651
359000-0200 . . Wire marking, Yellow, PA02/3"0" 897
359000-0201 . . Wire marking, Yellow, PA02/3"1" 897
359000-0202 . . Wire marking, Yellow, PA02/3"2" 897
359000-0203 . . Yellow, PWire marking, Yellow, PA02/3"3" 897
359000-0204 . . Wire marking, Yellow, PA02/3"4" 897
359000-0205 . . Wire marking, Yellow, PA02/3"5" 897
359000-0206 . . Wire marking, Yellow, PA02/3"6" 897
359000-0207 . . Wire marking, Yellow, PA02/3"7" 897
359000-0208 . . Wire marking, Yellow, PA02/3"8" 897
359000-0209 . . Wire marking, Yellow, PA02/3"9" 897
359000-0300 . . Wire marking, Yellow, PA1/3"0" 887
359000-0301 . . Wire marking, Yellow, PA1/3"1" 887
359000-0302 . . Wire marking, Yellow, PA1/3"2" 887
359000-0303 . . Wire marking, Yellow, PA1/3"3" 887
359000-0304 . . Wire marking, Yellow, PA1/3"4" 887
359000-0305 . . Wire marking, Yellow, PA1/3"5" 887
359000-0306 . . Wire marking, Yellow, PA1/3"6" 887
359000-0307 . . Wire marking, Yellow, PA1/3"7" 887
359000-0308 . . Wire marking, Yellow, PA1/3"8" 887
359000-0309 . . Wire marking, Yellow, PA1/3"9" 887
359000-0700 . . Wire marking, Yellow, PA1/3"A" 887
359000-0711. . . Wire marking, Yellow, PA1/3"L" 887
359000-0722 . . Wire marking, Yellow, PA1/3"W" 887
359009-0100 . . Cable marking, Yellow, PK2/4"0" 847
359009-0101 . . Cable marking, Yellow, PK 2/4"1" 847
359009-0102 . . Cable marking, Yellow, PK 2/4"2" 847
359009-0103 . . Cable marking, Yellow, PK 2/4"3" 847
359009-0104 . . Cable marking, Yellow, PK 2/4"4" 847
359009-0105 . . Cable marking, Yellow, PK 2/4"5" 847
359009-0106 . . Cable marking, Yellow, PK 2/4"6" 847
359009-0107 . . Cable marking, Yellow, PK 2/4"7" 847
359009-0108 . . Cable marking, Yellow, PK 2/4"8" 847
359009-0109 . . Cable marking, Yellow, PK 2/4"9" 847
359009-0200 . . Cable marking, Yellow, PK 2/4" A" 847
359009-0201 . . Cable marking, Yellow, PK 2/4" B" 847

359009-0202 . . Cable marking, Yellow, PK 2/4" C" 847
359009-0203 . . Cable marking, Yellow, PK 2/4" D" 847
359009-0204 . . Cable marking, Yellow, PK 2/4" E" 847
359009-0205 . . Cable marking, Yellow, PK 2/4" F" 847
359009-0206 . . Cable marking, Yellow, PK 2/4" G" 847
359009-0207 . . Cable marking, Yellow, PK 2/4" H" 847
359009-0208 . . Cable marking, Yellow, PK 2/4" I" 847
359009-0210 . . Cable marking, Yellow, PK 2/4" K" 847
359009-0211. . . Cable marking, Yellow, PK 2/4" L" 847
359009-0212 . . Cable marking, Yellow, PK 2/4" M" 847
359009-0213 . . Cable marking, Yellow, PK 2/4" N" 847
359009-0214 . . Cable marking, Yellow, PK2/4" O" 847
359009-0215 . . Cable marking, Yellow, PK 2/4" P" 847
359009-0216 . . Cable marking, Yellow, PK 2/4" Q" 847
359009-0217 . . Cable marking, Yellow, PK 2/4" R" 847
359009-0218 . . Cable marking, Yellow, PK 2/4" S" 847
359009-0219 . . Cable marking, Yellow, PK 2/4" T" 847
359009-0220 . . Cable marking, Yellow, PK 2/4" U" 847
359009-0221 . . Cable marking, Yellow, PK 2/4" V" 847
359009-0222 . . Cable marking, Yellow, PK 2/4" W" 847
359009-0223 . . Cable marking, Yellow, PK 2/4" X" 847
359009-0224 . . Cable marking, Yellow, PK 2/4" Y" 847
359009-0225 . . Cable marking, Yellow, PK 2/4" Z" 847
359011-0806. . . Marking, DEK 5 FW 1-200 ..... 671, 693
359011-0807. . . Marking, DEK 5 FW 1-50 .... 401, 671, 673, 693, 701, 711, 713, 715, 717, 719, 721, 747, 759
359011-0808. . . Marking, DEK 5FW 51-100 711
359011-0809. . . Marking, DEK 5 FW 101-150 ..... 279, 401, 671, 693, 893
359011-0811. . . Marking, DEK 5 FW 201-250 ..... 671, 693
359011-0817. . . Marking, DEK 5GW (+) 671, 693
359011-0818. . . Marking, DEK 5GW (-) 671, 693
359011-0819. . . Marking, Earth, DEK 5 GW ERDE I.KR. 279, 893
359011-0821. . . Marking, DEK 6 FW 1-50 ..... 701, 745, 757, 759
359240-0100 . . Sign Holder for 359240-0001 695
359241-0803 . . SIGN: "Supply disconnecting device" 695
359705-0015 . . Warning Sign ISO, Electric Hazard 279, 411, 651, 893
359705-0021 . . Warning Sign ISO, Pneumatic Energy 163
359705-0033 . . Warning Sign ISO, Optical Radiation 551, 891
359715-0100 . . Warning Sign ANSI (H), Electric Shock 411, 673, 893
359725-0125 . . Warning Sign ANSI (V), Pneumatic Energy 163
476221-0002 . . Pipe 309
476221-0013 . . Pipe 805
486826-0001 . . Sign "Emergency Stop" 441, 695
531616-0000 . . Holder 391, 419
532412-0000 . . Spring 845
545897-0000 . . Bracket 845
575034-0000 . . Round nut 257, 381
6-4000 0006 08 . . Screw M6S 10 x 110 225
6-526343 02 . . Hexagon nut DN8 Rp1/4" 1.4404 ..... 343, 365
90005-0060 . . Washer Plain, RBS 6,4/M6)/18,H=1,5 ..... 299, 729
90005-0064 . . Washer Pl.Rnd.Nyl.4,3/9, H=0,8 695
90005-0082 . . Washer Plain Round 4,3(M4)/12,H=1 ..... 537, 651, 665, 673, 687, 695, 729, 883
90005-0116. . . Washer Plain Round 8,4(M8)/24, H=2 157
90005-0125 . . Washer Plain Round 5,5/22, H=1,5 FZB 91
90005-0139 . . Washer Plain Round 5,2(M5)/15, H=1,6 ..... 87, 529, 865
90013-0035 . . Nut Groove, Hammer-Head M6 FE 427, 641
90015-0021 . . Lead-in, TET 10-14, E1458023 349
90015-0023 . . Lead-in, TET 7-10, E1458019 379
90017-0029 . . Locking Lever, No. KR8X30-SUS 69, 127, 295, 299
90028-0022 . . Cone Tube 6 Mm. 367
90030-0200 . . Conn. Elbow, WE06LM71 367
90032-0039 . . Block 4 ways 367
90032-0043 . . Distribution Block 3 Ways 367
90051-0054 . . Stellar Knob, Int. Thread, No. 8306-0340 781
90051-0112. . . Lock Knob, No. GN 617 NIK5. ..... 333, 861
90053-0029 . . Counter, F524.800FA3C 24VDC 737
90053-0031 . . Hour Counter, B 609.10 10-50VDC 737
90055-0147 . . Push-In Y-Connector QSY-12 807
90055-0218 . . Straight coupling, D=6 mm - M5 807
90055-0222 . . Elbow With Tailpiece 6/6 mm 541
90062-0015 . . Lock washer Serrat.ext.gear,6,4/11 H=0,7 ..... 695, 729
90062-0060 . . Lock Washer 5,3/10 H=0,6 Fzb 337
90077-0113. . . Terminal block WDK 2.5 ..... 401, 671, 693
90087-0019 . . Plug M10X1 Stainless 367
90091-0038 . . Scraper 20x30x10 mm 509, 877
90091-0304 . . Radial seal 45x65x8 mm Dust lip 49, 63, 105, 119
90091-0322 . . Radial seal 25x42x7 mm Dust lip 75, 81
90092-0054 . . Metering valve 2.801258.1. 367
90099-0005 . . Mounting rail support, TSTW 5/M5. 701
90099-0187 . . Hexagon nut, Lock, M14, DIN985 245
90099-0191 . . Hexagon Nylon Nut, M4x0,7 695
90110-0052. . . Male insert, Han E06, 0933 0062 601 ..... 157, 246, 266, 631, 641

90110-0053 . . Female Insert, HAN 6 E 09 33 006 2701 ..... 157, 283
90110-0095 . . Connector, Plug socket, MSSD-C-4P 361
90115-0134 . . Rod End, id=10 mm, M10x1,25 87
90115-0137 . . Rod End, id=6 mm, M6x1 205
90115-0163 . . Rod End, id=6 mm, M6x1 805
90125-0020 . . Plate complete(BOM) 337
90134-0030 . . Sleeve for plastic tube 367
90134-0039 . . Bushing valve connection 2,5 mm 367
90134-0052 . . Plug dosing block 367
90134-0055 . . Bushing/Nut inlet/outlet 6 mm 367
90134-0058 . . Connection 185
90141-0016 . . Retaining ring for shaft DIN 471 10 SS 631, 641
90141-0017 . . Retaining ring for shaft DIN 471 17 SS 631, 641
90141-0020 . . Retaining Ring for Bore DIN 472 42 SS 265
90143-0071 . . Rubber strip 4x20mm 399
90143-0073 . . Flat Gasket Tape w. Adhesive, 15x3.0 835
90143-0097 . . Self gripping gasket, 1011-24 ..... 407, 835
90143-0098 . . Rubber strip, Clamping, No. 1038-02 447
90152-0051 . . Hose, spiral conduit, 25x18, UL 1816 ..... 265, 337, 399
90152-0060 . . Hose, spiral conduit, 42X35, UL3529 399
90152-0070 . . Flexible Conduit, UL 2721 399
90152-0075 . . Hose 337
90163-0041 . . Hose nipple, ext.thr. G3/8-12 mm 839
90163-0064 . . Quick Coupling, LP-006-2-WR517-11-1 ..... 839, 841
90163-0075 . . Quick Coupling, (F) LP-006-O-SL013 839
90165-0060 . . Pipe Clip for Tube d=5 mm 453
90166-0087 . . Hose 15/23 Reinf.Pvc Transp 761
90166-0113 . . Hose 283
90166-0121 . . Hose 839
90166-0143 . . Tube 2,5 mm PA Transp. 367
90181-0182 . . Bracket, 1149354 283
90181-0183 . . Cable Duct, Fitting, SB-102-S 283, 523
90181-0184 . . Cable Trench Parts 283
90181-0186 . . Cable duct, Elbow bracket, B27 283
90181-0190 . . Cable duct, Wall bracket, B4 Mini 283
90181-0197 . . Cable duct, wire, 65x48 mm, L=2500 mm 285
90181-0314 . . Bolt + Nut, SB-106-S 283
90187-0191 . . Ball valve, R1/8 - hose 6 mm 233, 349
90189-0019 . . Ball bushing, 20x30x30 mm 509, 877
90194-0152 . . Sign, Earth 695, 729
90208-0078 . . Clamping Element, 20X28 L=18 559
90214-0186 . . Ball bearing 30/42x7 ..... 75, 81
90224-0031 . . Conn. Elbow, Art.No 3814 233
90224-0289 . . Bushing, int.ext. thr. R1/8-R1/4 259
90224-0314 . . Distributor Block, FR-4-1/8-B 259
90224-0325 . . Elbow 90 coupl., ext. thread 10/8-G1/4" 343
90224-0372 . . Nipple, ext.thread, hexagon, R1/4-R1/4 361
90226-0458 . . Mounting Screw 407, 417, 419, 423, 429, 433, 439, 449, 451, 455
90235-0748 . . Throttle check valve, GRA-1/4-B 541
90237-0123 . . Lock, 1121-U10C 425, 443, 445
90237-0128 . . Lock Cylinder, 1109-SU125 ..... 425, 443, 445
90237-0144 . . Guide, 1121-SU540 ..... 425, 443, 445
90237-0147 . . Locking Lug, No. 1121-53-0P 425, 443, 445
90237-0175 . . Turning Handle, 1125-U185-0A 425, 443, 445
90240-0262 . . Flange Bushing, Iglidur X 12X14X12 175
90259-0313 . . Auxiliary switch, NHI21-PKZ0 ..... 651, 673, 725
90259-0315 . . Circuit breaker , B3.1/2-PKZ0 ..... 651, 673
90261-0060 . . Plug, Blind, Plastic, No. IKPK25x1, 5 217
90274-0052 . . Level guard, 2.855435.1 371
90287-0124 . . Screw Pan Head MSCS M4x12 NYLON 705
90287-0154 . . Set screw, Dogpoint M6x10 A4 287
90287-0175 . . Screw M6S M3x12 A480 ..... 69, 261, 287, 319, 321, 851
90287-0230 . . Shoulder screw, 6x4/M5 SS 103, 111
90287-0239 . . Shoulder screw, 6x30/M5 SS 205
90287-0295 . . Screw Hex.Sock.Count.MF6S M3x8 A280 569
90328-0017 . . Silencer, d=6 mm74122000 ..... 87, 367
90328-0024 . . Silencer, G3/8" 541
90328-0026 . . Silencer, G1/4" 259, 361
90328-0047 . . Silencer, G1/8" 133, 135, 541, 807
90330-0026 . . Plug, Ext. G-Thread, G1/4 361
90330-0134 . . Reducing nipple, G1/8ext-G1/4int 347
90335-0082 . . Comp. spring, 22180, 1,25x9,25x47,5 569
90347-0011 . . Vibration Damper Megi 781056 287
90415-0030 . . Oil filter PN 100 Ord.no 2.77 10 70.1 367
90415-0326 . . Filter Insert 373
90424-0087 . . Air Nozzle 805
90424-0089 . . Air Nozzle, BSPT1/4, AAB727-1/4-15 347
90439-0155 . . Saturn Single-Orifice Nozzle, 322012 ..... 787, 791, 795, 799
90439-0295 . . Service kit, No. 111940 ..... 327, 391
90458-0048 . . Retaining Ring for Bore DIN 472 62 SS 245
90458-0181 . . Retaining Ring for Bore DIN 472 80 SS 97, 113
90458-0298 . . Base for Tube, PSD-S ME B-P 379

90458-0306 . . Cable gland, M16x1,5, 5311 1010 ..... 265, 631, 641
90458-0307 . . Cable gland, M20x1,5, 5311 1020 ..... 157, 279, 283, 393, 695, 893
90458-0309 . . Cable gland, M32x1,5, 5311 1040 695
90458-0314 . . Cable gland, M16x1,5, 5311 1110 695
90458-0315 . . Cable gland, M20x1,5, 5311 1120 441
90458-0316 . . Cable gland, M25x1,5, 5311 1130 327
90458-0322 . . Nut, M16x1,5 ..... 265, 631, 641
90458-0323 . . Nut, M20x1,5 ..... 283, 337, 393, 399, 695
90458-0324 . . Nut, M25x1,5 ..... 349, 399, 695
90458-0326 . . Nut M40x1,5 ..... 283, 399
90458-0406 . . Cable gland, VK 22052y 245, 631, 641
90458-0430 . . Gland fitting, VK 22054yUL16 ..... 265, 283, 337, 399
90458-0432 . . Gland fitting, VK 22555yUL21 ..... 349, 399
90458-0434 . . Gland fitting, VK 24056yUL29 ..... 283, 399
90458-0460 . . Gland, Lock nut, M16x1,5 245
90458-0499 . . Holder 12 mm No. 82 66861 347
90458-0507 . . Parallel key w. round ends 6x6x60 mm 75, 81
90458-0651 . . Saturn Single-Orifice Nozzle, 322010 ..... 787, 791
90458-0725 . . Tube 400mm, PSD-S ME T-M 400 379
90458-0745 . . Y-Connection 231, 233, 241
90458-1173. . . Multi diameter module, CM 30W40 695
90458-1174. . . Multi diameter module, CM 20W40 695
90458-1175. . . Multi diameter module, CM 15W40 695
90458-1178. . . Frame, CF 8 695
90458-1179. . . Frame, CF 32 695
90458-1308 . . Blind Plug Circular, M20x1,5 514GFK/220 ..... 399, 695
90458-1309 . . Blind Plug Circular, M25x1,5 514GFK/225 ..... 399, 695
90458-1483 . . Spray gun, water G1/4 343
90458-1740 . . Air Gun Assembly, Cejn 199589668 365
90458-1741 . . Hose Assembly, Cejn 19 958 9669 343
90458-1870 . . EMC earth braid, 16mm2 L=300mm 695
90458-2510 . . Fuse, ATDR6 ..... 787, 791, 795, 799
90458-2837 . . Connecting cable KMEB-1-24-5-LED 361
90458-2907 . . Prox.switch IFS204 ..... 125, 245, 261, 477, 845
90458-2932 . . Plain bearing, JUM-02-20 ..... 69, 127, 295
90459-0290 . . Non-return valve, H-QS-6 349
90459-0732 . . Tensioner, type SE-I-15 295
90459-0864 . . Bulkhead connector, 12 mm/M27x1,5 365
90459-0959 . . Distributor Block 1492-Pd3163 703
90459-1018 . . Rod end, ball joint eye M10x1,25 ..... 133, 135
90459-1180. . . Lens 16mm In-sight 4100, HF16HA-1B 333, 861
90459-1395 . . Screw Hex.Sock.Set Conept.MS6SS M4x4 A2 ..... 469, 471
90459-1458 . . Hood, side entry, HAN6E, 19 30 006 1540 ..... 157, 245, 265, 631, 641
90459-1461 . . Housing, 19 30 006 1255 ..... 157, 283
90459-1485 . . Lithium battery, TPOP Maxi 4A0006.00-000 405
90459-1811. . . Bridge connector WQV 2,5/2 ..... 401, 759
90459-1825 . . Elbow With Tailpiece 12/12 mm 349
90459-1858 . . Bracket, MS6-WP 353
90459-1940 . . Lock knob, GN613 NIK 6 837
90459-1971 . . Hose/Gun Module Kit, 1028328 395
90459-1972 . . Fuse Kit, Hose/Gun, 1028331 395
90459-1973 . . Main PCA Serv.Kit, 1028322 395
90459-1974 . . Fuse Kit, Main Circ.Board, 1028329 395
90459-1975 . . Display, CPU Board Serv. Kit, 1028325 395
90459-1976 . . Kit, Operator panel/ enclosure, 1028326 395
90459-1977 . . Service kit, Tank P4, 1051033 395
90459-1978 . . Kit, RTD Temp. Sensor, 1028320 395
90459-1979 . . Serv. Kit, Thermostat, 1028321 395
90459-1980 . . Service kit Manifold assy, 1064651 395
90459-1981 . . Service kit, Manifold assy, 1028309 395
90459-1982 . . Service kit, Press. disc. valve, 1028308 395
90459-1983 . . Heater Block Kit, 1064649 395
90459-1984 . . Kit, Pump Piston, 1028303 395
90459-1985 . . Service kit, Pump Piston, 1028304 395
90459-1986 . . Filter Assy, 100 Mesh, 1028305 395
90459-1987 . . Service kit, Pneum. panel assy, 1028307 395
90459-1988 . . Sub Base Mounting Plate, P4 1120194 395
90459-1989 . . Chassis, P4, 1099401 395
90459-2133 . . Push-in fitting QSSF-1/2-12-B 283
90459-2215 . . Straight coupling, D=16 mm - G1/2" 365
90459-2243 . . Valve, MS4-EE-1/4-10V24 361
90459-2245 . . Distributor, MS4-FRM-1/4 361
90459-2247 . . Bracket, MS4-WP 361
90459-2248 . . Bracket 259, 361
90459-2254 . . Quick Coupling, (M) 10 320 5202 ..... 343, 365
90459-2291 . . Safety relay, E1T 651, 673, 737
90459-2337 . . Shut off valve, MS4-EM1-1/4 361
90459-2339 . . Filter Regulator, MS4-LFR-1/4-D7-ERV-AS 361
90459-2389 . . B71800059TM, Bracket, MS4-LR-WR 259
90459-2413 . . Dig Input Module 16p, 1756-IB16 731
90459-2458 . . Baseplate, 10 Slot ControlLogix Chassis. 731
90459-2474 . . Dig Output Module, 1756-OB16E/A 731

90459-2487 . . Removable Terminal Block 20 Points 731
90459-2488 . . Removable Terminal Block 36 Points 651, 673, 731
90459-2501 . . 5006526, 1734-FPD 401
90459-2505 . . Digital Output 4 PTS, 1734-OB4E Series C 401
90459-2511. . . Analog Output Current Module 2PTS 401
90459-2523 . . Terminator, Open Style, 1485A-C2 771
90459-2526 . . Remote I/O Base Module 8 Points, 1734-TB 401
90459-2553 . . Push-in L-fitting QSL 16 ..... 349, 365
90459-2644 . . Nut Round with slots M30x1,5 SS 75, 81
90459-2726 . . Rubber buffer, S20-01338-01 581
90459-2771 . . Filter, MS6-LFX-1/2-R 353
90459-2777 . . Flow Control Valve, GR-QS-8 805
90459-3068 . . Terminal plinth, WDU 10 673
90459-3081 . . Housing, 19 20 003 1250 283
90459-3197 . . Saturn Single-Orifice Nozzle, 322014 ..... 787, 795, 799
90459-3604 . . Flow Control Valve, GR-QS-6 541
90459-3644 . . Reducer, M20x1,5/M16x1,5 245
90459-3655 . . Rear clevis foot mounting, LBN-12/16 805
90459-3670 . . Hood, Han3A, 19 20 003 1440 245
90459-3779 . . Handle, GN565 SW 192-M8 ..... 515, 871
90459-3810 . . Filter Cartridge, MS6-LFX 359
90459-3811. . . filter Cartridge MS6-LFM-A 357
90459-3812 . . Filter Cartridge, MS6-LFM-B 355
90459-3814 . . Filter Cartridge, MS4-LFP-E 363
90459-3845 . . Wall socket, Z-SD230 652
90459-4164 . . Safety screw, SM4x20, 2TLA020053R4200 381
90459-4165 . . Safety screw, SM4x25, 2TLA020053R4300 ..... 253, 381
90459-4252 . . Cable M12-C101, 2TLA020056R1000 389
90459-4588 . . Radial seal 60x85x8 mm Dust lip 97, 113
90459-4727 . . Standing Bearing, KSTM-20 127
90459-4735 . . Screw, M6S ISO 4017 M8x10 A4 80 ..... 245, 307, 313, 315
90459-4876 . . Cable M12-C312 2TLA020056R2100 381
90459-4891 . . Identifier, IDFIX-RW, 2TLA020070R2100 737
90459-4931 . . Lens with scale of lengths 10X 813
90459-4996 . . Needle valve 345 bar, 9N400S 841
90459-5134 . . Nut, T-slot M6 ..... 805, 807
90459-5152 . . Screw Hex.Sock.Set Conept. MS6SS M6x10 A 631, 641
90459-5253 . . Terminal block WDK 2,5 V 711, 713, 715, 717, 719, 721
90459-5309 . . Contactor 7,5kW 24VDC, DILM17-10 727
90459-5311. . . Contactor 15kW 24VDC, DILM32-10 727
90459-5321 . . Overload protection, PKZM0-0.4 072732 ..... 651, 673
90459-5323 . . Overload protection, PKZM0-1 072734 ..... 651, 673
90459-5326 . . Overload protection, PKZM0-4 072737 725
90459-5529 . . Photocell E3Z-T86A, Sender+Reciever 137, 266, 299, 849
90459-5627 . . Connection, Tina 1A, 2TLA020054R0000 381
90459-5811. . . Residual current device, FI-25/2/003-A 652
90459-5813 . . Auxiliary Contact, FAZ-XHIN11 651–652
90459-5817 . . Regulator, MS4-LR-1/4-D6-A8-AS 349
90459-5949 . . Rear clevis foot mounting, CRLBN-32 ..... 133, 135
90459-6280 . . Nut GUK 5 M25 x 1.5 FZB 43, 49, 57, 63, 75, 81, 105, 119
90459-6426 . . Pressure Guard PEV-1/4-B-OD 361
90459-6556 . . Dig Input Module 32p, 1756-IB32/B 731
90459-6617 . . Cover 4-pole, NZM1-4-XKSA 651
90459-6692 . . Safety PLC, Pluto B20, 2TLA020070R4600 737
90459-6820 . . Female Insert, HAN 4 A, 09 20 004 2711 283
90459-6821 . . Male Insert HAN 4A, 0920 0042 611 246
90459-6852 . . Auxiliary Contact, DILA-XHI22 727
90459-6913 . . Magnetic lock, JSD-ZH-EM1-K 381
90459-6947 . . Photocell, WF 225-B4150 155
90459-6948 . . Inductive sensor, IFS 206 581
90459-7095 . . Cable M12-C112, 2TLA020056R2000 ..... 246, 381
90459-7107 . . Sleeve QSH-16-12 349
90459-7229 . . Identification Single Conductors Sign 695
90459-7267 . . Power supply 24VDC, 1756-PB75/B 731
90459-7333 . . Push-in fitting QSSF-1/4-4-B 349
90459-7344 . . Pressure gauge, MA-40-6-R1/4-EN 349
90459-7368 . . Marking for pneum. tubing, PRZ04 ..... 541, 581
90459-7369 . . Marking for pneum. tubing, PRZ06 ..... 87, 133, 135, 393, 541, 805
90459-7370 . . Marking for pneum. tubing, PRZ08 ..... 347, 349, 541, 805
90459-7372 . . Marking for pneum. tubing, PRZ12 ..... 349, 541
90459-7373 . . Marking for pneum. tubing, PRZ16 365
90459-7426 . . Push-in L-Fitting QSML-M3-3 581
90459-7427 . . Push-in fitting QSM-4-3 581
90459-7428 . . Tube PUN-H-3x0,5-BL 581
90459-7584 . . Prohibition sign ISO,TP90459758 811
90511-0145. . . Logotype "Tetra Pak" for stripe 70mm 287
90511-8563. . . Stripe height 70mm, roll length 25m 287
90520-1378 . . Stopper,SK3286880 761
90600-0347 . . Needle Bearing w/o Cone, 16x24x16mm 585, 589
90600-0349 . . Inner ring, IR12x16x20 ..... 585, 589
90600-0351 . . Comp. spring, 2489, 1,2x9,4x30 583
90600-0373 . . Retaining ring for Shaft DIN 471 21 SS 529, 865

90600-0375 . . Ball bushing, 12x21x30 mm 529, 865
90600-0376 . . Shaft, LM shaft 12 g6 89l M..... 529, 865
90600-0434 . . Guide bar, SSR25-180L-YM G30/30 467
90600-0454 . . Clamping Element, 16X24 L=16 ..... 509, 877
90600-0482 . . Guide bar, SSR 25 305 LYM G32.5/32.5..... 201, 205, 215
90600-0483 . . Guide bar, SSR 25-430LYM G35/35..... 201
90600-0484 . . Guide bar, SSR 25 253L-YM G36.5/36.5 ..... 193, 213
90600-0485 . . Guide bar, SSR25 385L YM G42.5/42.5..... 205
90600-0486 . . Timing belt 50AT10/1120 PU 213
90600-0487 . . Timing belt 50AT10/1410 PU 201
90600-0553 . . Tube, 8x1 mm PTFE..... 193
90600-0656 . . Comp. spring, 6777, 4x36x120 DIN2098..... 187
90600-0658 . . Worm gear screw jack, TP00063000130..... 225, 293
90600-0683 . . Comp. spring, 2496, 1,2x10,4x45..... 175
90600-0684 . . Spacer 75ODX.328IDX.12THK, 102 8115 193
90600-0798 . . Bushing insert, JUM-02-30 .....103, 111
90600-0799 . . Standing Bearing, KSTM-25..... 125
90600-0800 . . Flange Bearing 20x89x20 mm 127, 295
90600-0812 . . Gear box, TP00042000110 69
90600-0814 . . Timing belt 25AT10/5250 PU+35.2.3.6.050..... 139
90600-0815 . . Timing belt 25AT10/4800 PU +32 2.3.6.050 139
90600-0892 . . Needle roller bearing, 50x80x28 mm 97, 113
90600-0934 . . Cable M12-C62, 2TLA020056R0200..... 246
90600-0961 . . Roller chain, simplex 3/8 -159, SS 69
90600-0962 . . Roller chain, simplex 3/8 -243, SS 69
90600-0964 . . Roller chain, simplex 3/8 -333, SS 69
90600-0971 . . Rack, ZRR2-100 287
90600-1001 . . Cross Clamp, 340/68385 347
90600-1002 . . Foot 50000N, HPA125-30-325 ..... 225, 287
90600-1005 . . Worm gear screw jack, TR00042000130 127
90600-1159. . . Roller chain, simplex 3/8 -290, SS 295
90600-1167. . . Plug, Ext. R-Thread, R1/4..... 259
90600-1175. . . Elbow With Tailpiece 8/8 mm 349
90600-1198. . . Main switch assy.,right side, NZM1-XSM-R..... 697
90600-1420 . . Regulator, MS4-LRB-1/4-D6-AS 259
90600-1461 . . Incoming terminal, BK25/3-PKZ0-E 651, 673, 725
90600-1759 . . Contactor22kW24VDCDILM50-22+DILM65-XIP2X 723
90600-1772 . . Screw DIN7984 M6x12 AISI 304..... 607
90600-1972 . . Cover profile 8 Al, 0.0.265.50..... 807
90600-1996 . . Cap 8 40x40 mm, 0.0.026.01..... 807
90600-2026 . . Screw DIN7984 M8x16 AISI 304..... 75, 81
90600-2068 . . Delivered Design Sign, 90600-2068 651
90600-2102 . . Power I/O cable, CCB-84901-0103-10 ..... 333, 551, 861, 891
90600-2103 . . Ethernet cable, CCB-84901-1004-10..... 333, 551, 861, 891
90600-2375 . . Lens, E39-S65C 299, 631, 641
90600-2560 . . Coupling 14x20 mm, 727-38-4838..... 225
90600-2830 . . Fastening element, BLOCKSEP-E 01026 705
90600-2904 . . Earth Braid, 250/16/8,5..... 695
90600-3011. . . Timing belt, 25AT10/5250 PU+35 2.3.7.339 139
90600-3012 . . Timing belt 25AT10/4800 PU+32 2.3.7.339..... 139
90600-3573 . . Socket conn. cable, KMEB-2-24-M12-0,5-LE 259
90600-4033 . . Dig Output Module, 1756-OB16IS 651, 673
90600-4040 . . Caution Sign ANSI (H), Do not reach in 811
90600-4265 . . Push-in fitting CRQS-1/8-6 807
90600-4778 . . USB Cable set, 5A9000.54 ..... 407, 835
90600-5135 . . Bushing, 12x14x8 mm..... 175
90600-5249 . . Ferrite, B64290L616X38..... 769
90600-5253 . . Line Filter, B84113HB60 703
90600-5258 . . Line Filter, B84143A35R106..... 703
90600-5262 . . Line Filter, B84144A36R120..... 697
90600-5266 . . Feed Through Filter, B85321A2502W160 697
90600-5270 . . Cover 3-Pole, NZM1-XKSA..... 673
90600-5517 . . Auxiliary Contact, Z-NHK 248434..... 673–674
90600-5543 . . Circuit Breaker, NZMB1-4-A32..... 652
90600-5812 . . Delivered Design Sign, Self-Adhesive..... 673
90600-5813 . . Solenoid valve, CPE18-M1H-3GL-1/4..... 259
90600-6183 . . Tubular Rivet 3,5x6,2..... 307, 313, 315
90600-7487 . . Surge Protection Dev., VAL-MS 230/3+1 FM 697
90600-7488 . . Surge Protection Dev., SP, VAL-MS 230 ST 699
90600-7489 . . Surge Protection Dev., SP, F-MS 12 ST..... 699
90601-1027 . . Limit switch, D4C-1G01 5M..... 551, 891
90601-2046 . . Captive Screw M6, GUTBG 6-4-12 ..... 421, 433
90601-6250 . . Marking, DEK 5 GW PE..... 697
90601-6430 . . USB Cable, 90601-6430 ..... 407, 835
90601-6650 . . Relay, PLC-RSC-24DC/21..... 401, 707
90601-6652 . . Optocoupler, PLC-OSC-24DC/24DC/2..... 651, 673
90601-6656 . . Relay, PR2-RSC3-LDP-24DC/4X21AU 279, 893
90602-3851 . . Resistance fixed, 3,6 kOhm, 1/2 W 279, 893
90602-4060 . . Light Element, Blue, PSD-S OE LED BU..... 379
90602-4061 . . Light Element, Green, PSD-S OE LED GN 379
90602-4062 . . Light Element, Red, PSD-S OE LED RD..... 379
90602-4063 . . Light Element, Yellow, PSD-S OE LED YE..... 379

90602-4627 . . Terminal Element, PSD-S CE-TM Spring 379
90602-4631 . . Siren 100dB, PSD-S AE SM8-5 100dB/1 379
90602-4674 . . Timing belt 25T10/1150-DL PU ..... .85
90602-4686 . . Timing belt 32TK5K6/780 PU + Minigrip 35, 75, 81
90602-5788 . . Rebuiling kit, Pump 1:6, 110 0297 395
90602-8687 . . Power Supply, QUINT-PS/ 3AC/24DC/20 743
90602-8707 . . Buffer Unit, QUINT-BUFFER/24DC/20 739
90602-8807 . . Limit sw. SZ 2586.010 695
90602-8987 . . Filter, TP-NEF/20A. 743
90602-8988 . . Power Supply, QUINT-PS/ 3AC/24DC/20 739
90602-9237 . . Insert Nut, 101/04.04.3 ..... 597, 603
90603-0408 . . Lubrication Unit, 10P-P4-H1 LM12 367
90603-0831 . . Timing belt 25ATK10/2160 PU 597, 603
90603-1115 . . .Power Supply, STEP-PS/1AC/24DC/3,8/C2LPS 723
90603-1153 . . . Timing belt 50AT10/2700-V PU 179
90603-1154 . . . Insert Nut, 50 M4 x 50AT10-00 179
90603-1856 . . Ethernet switch,FL SWITCH SFN 16TX/28919 753
90603-1938 . . Pressure switch, 1800 kPa, 28545-251-2 367
90603-2066 . . Clamp.Element, Without Sleeve, 32X60 ..... 207, 209
90603-2322 . . Ball bearing 10/19x5 ..... 631, 641
90603-2323 . . Ball Bearing. 199
90603-2378 . . Ball bearing, 10x30x9 mm 469, 471, 509, 877
90603-2476 . . Gears,planetary TP010F-MA3-66-OE1/MPL B4 479
90603-2676 . . Motor 3GAA052002-CSA 631, 641
90603-2696 . . Surge Protection Dev., LIT 4x1-24 ..... 671, 693
90603-2736 . . Warning sign ANSI(H),Haz.volt.Disconnect. 673
90603-3979 . . Sensor Y-cable, EVT339 ..... 81, 137, 266, 299, 809, 849
90603-4384 . . Sensor cable, SAC-5P- 5,0-PUR/M12FS SH 283
90603-4478 . . Receptacle M12, SACC-E-M12FS-4CON-M16/.. ..... 279, 893
90603-4479 . . Receptacle M12, SACC-E-M12MS-5CON-M16/.. ..... 279, 893
90603-4698 . . Filter, MS6-LFM-1/2-ARV-DA. 353
90603-4699 . . Filter, MS6-LFM-1/2-B-R-V-DA 353
90603-5560 . . Connector, SACC-M12MS-5CON-PG 7-VA 193
90603-5561 . . Connector M12 Male 5-pin 551, 897
90603-5562 . . Connector, SACC-M12FS-5CON-PG 7-VA 551, 897
90603-5568 . . Connector, SACC-M12MS-4QO-0,34-VA 581
90603-5569 . . Connector, SACC-M12MS-4QO-0,75-VA 385
90603-5602 . . Bar Code Reader, D9330 + cab-463 ..... 407, 835
90603-5624 . . EtherNet dual port 10-100M, 1756-EN3TR s 731
90603-6835 . . Front Plate, VS-SI-FP-2RJ45-5-MOD-BU/BU 695
90603-9715 . . Spherical Ball Bearing 17/47x19 271
90603-9718 . . Motor 3GAA 062 002-BSC. 245, 266
90604-0093 . . Connection Block, TINA4A 2TLA020054R0300 ..... 246, 381
90604-2784 . . In-Sight 5100 Camera, IS5100-01 ..... 333, 861
90604-3129 . . Double acting, Mini-ISO, Cyl. 16-25 805
90604-3137 . . Double acting, Mini-ISO, Cyl. 32-80 ..... .87
90604-3142 . . Cylinder, Gripper DHPS-16-A-H1-SA. 581
90604-3308 . . EMC Shield Clamp, LFZ/SKL 8-11, 36925 703
90604-3320 . . Hot Melt Unit ProBlue 4, 104 9296 H1 393
90604-3324 . . Comp. spring, 5443, ?x31,2x115 ..... 49, 63, 105, 119
90604-3329 . . Non-return Valve, RVA-M6 ..... 43, 49, 57, 63, 75, 81, 97, 105, 113, 119, 181
90604-3333 . . Guide rail, 15x20x580 129
90604-3589 . . Fan, 2BH1300-7AV15-K43 327
90604-5444 . . Grease Gun, 3095514 831
90604-5445 . . Piston Pump, 90048-041 H1 371
90604-5464 . . QuickServer Gateway, FS-QS-1230-0705 771
90604-6027 . . Plug, Ext. Thread Hex. Socket. G1/4 367
90604-6566 . . Cap, MTC/Z-1/2 371
90604-6568 . . Air Vent, 90605-9354 LM12 371
90604-8448 . . Carriage, SSR25XW1QZSSHHM(GK)(B) BLOCK 193, 201, 205, 213, 469
90604-8704 . . Connector, 2090-K6CK-D15M, Serie B 377, 389, 863
90604-8744 . . Locking Handle, M6x12M 193
90604-9505 . . Marking, DEK 5 FWZ E1-E50 ..... 401, 671, 693, 697, 701, 755
90604-9506 . . Marking, DEK 5 FWZ E51-E100 755
90604-9507 . . Marking, DEK 6 FWZ E1-E50 701
90605-0005 . . Factory Talk Gateway, 9355-OPD2400LENE 399
90605-0584 . . Digital Inp 4 PTS Sink, 1734-IB4 Serie D 401
90605-1044 . . Hose Holder Blue Series, 271486. 219
90605-1284 . . Grease Nipple 45 deg. M6x1, 10606145RF 181
90605-1982 . . Timing belt 25AT10/5250 PU 139
90605-1983 . . Timing belt 25AT10/4800 PU+32 2.3.7.579 139
90605-2644 . . Illumination, ICRR-LDR2-174LAT 333, 861
90605-2645 . . Power Supply, IQ00-QLC-400-1-TP 279, 893
90605-2647 . . Lens, LFC25F1 ..... 551, 891
90605-2649 . . In-Sight 5600 Camera, IS5600-01 ..... 551, 891
90605-2744 . . Processor L72, Series B, 1756-L72/B 731
90605-3869 . . Flange Bushing, Iglidur J 15X17X12 157
90605-3904 . . Comp. spring, 2529, 1,5x?x45 175
90605-3922 . . Comp. spring, 2477, 1x14x25 ..... 333, 861
90605-4142 . . Kit Oil Gun, EL06984595. 841
90605-4349 . . Factory Talk Act. Memory Dongle, 9509-US 399
90605-4806 . . Timing belt 25AT10/4800 PU+32 2.3.7.580 139

90605-4807 . . Timing belt 25AT10/5250 PU+35 2.3.7.580 139
90605-5642 . . Service Panel, VS-SI-EB-EMV-1 695
90605-6942 . . Ball Valve G1/4, 772117 343
90605-9347 . . FC PowerFlex 525, 230V 1ph, 0.4kW A 651, 667, 673, 689
90605-9348 . . FC PowerFlex 525, 230V 1ph, 0.75kW A 749
90605-9388 . . Amp.Kinetix 5500, 2198-H008-ERS, Serie A 665, 687, 883
90605-9389 . . Amp.Kinetix 5500, 2198-H015-ERS, Serie A 651, 673
90605-9390 . . Amp.Kinetix 5500, 2198-H025-ERS, Serie A 651–652, 673–674, 729
90605-9527 . . PF 525 EMC Line Filter, 240V, 0.4kW A 651, 667, 673, 689, 749
90605-9651 . . UV Illumination, LDR2-100UV365-IP 551, 891
90605-9772 . . Warning sign ANSI (H), UV Radiation Haza 551, 891
90605-9819 . . Emerg. Stop Switch, 704.064.2+704.910.4 ..... 399, 441, 695
90606-0355 . . Hard Disk, 5AC901CSSD03 405
90606-0465 . . Thermostat, XSEKTS011 739
90606-0481 . . Connector Kit, 2198-H040-D-T, Serie A 651, 665, 673, 687, 729, 883
90606-0482 . . Conn. Kits Kinetix, 2198-H040-P-T, ser A 651, 665, 673, 687, 729, 883
90606-0501 . . Conn. Kits Kinetix, 2198-H040-A-T, ser A 651, 673
90606-0502 . . Connector Kit, 2198-H040-ADP-IN, Serie A 729
90606-0575 . . Servo motor, VPL-B1002M-PJ12AA, Serie A 565
90606-0860 . . Point I/O Adapt. Mod.,1734-AENTR SerieB 401
90606-1697 . . Splitter box, EBC034 ..... 523, 809
90606-1698 . . Splitter box, EBC026 385
90606-1840 . . Cartridge Heater, 3kW 230V 337
90606-2203 . . Fan Kit, 5AC902.FA00-00 405
90606-2351 . . Grease Nipple str. M10x1, 996-001-890-s3 ..... 43, 49, 57, 63, 75, 81, 97, 105, 113, 119
90606-2469 . . Fork Sensor, WFM80-60P321 ..... 631, 641
90606-2532 . . Insulating Hose Cuff, 1043366 391
90606-2772 . . Servo motor, VPL-B1001M-PK12AA, Series A 509, 877
90606-2776 . . Servo motor, VPL-B1152T-PK12AA, Series A 97, 113, 177
90606-2779 . . Servo motor, VPL-B1153F-PK12AA, Series A 91, 207, 209, 479
90606-4008 . . Sealing Compound, Elastosil E41 Transp. 529, 865
90606-4010 . . Ethernet/IP Card, 1053289 393
90606-4205 . . Ethern. NAT Router,FL MGUARD RS2000 TX-B 767
90606-4344 . . Timing belt 10T5/1215 PU 157
90606-4464 . . Laser sensor, WSE9L-3P2237 ..... 81, 807
90606-4580 . . Safety Sensor, Adam M12-5 DYN-Info 251, 257, 381
90606-4582 . . Safety Sensor, Eva General code 251, 253, 381
90606-4706 . . ArmorBlock Module, 1732E-8CFGM8R, Ser. A 246, 283
90606-4924 . . Screw, CBSTSR5-12 ..... 35, 43, 57, 97, 113, 147
90606-4926 . . Timing belt 25AT10/4810 PU 139
90606-5094 . . Timing belt, 25AT10/5250-BFX-VA 1.2 +35 139
90606-5192 . . Washer ISO 7093 10,5x30x2,5 A2 139
90606-5280 . . Gears, Worm motor SK1SIS31F-IEC63-63S/2 157
90606-5282 . . Worm Gear VDHe063-ML1-10-141-0E0 / MPL-B 177
90606-5283 . . Worm Gear VDHe063-ML1-40-141-0E0 / MPL-B 97, 113
90606-5311 . . . Filter, IMBF-BP470-25.5 ..... 551, 891
90606-5416 . . Quick Coupling, (F) 25KAIW13SPN 343, 365
90606-5755 . . Elbow Pipe Joint,Ext.thread,D=6mm M10x1 367
90606-7666 . . Slim Led LIQ 12 Light Fixture 385, 387, 695
90606-8120 . . Cordset Kit, 1121501 195
90606-8121 . . RTD Hot Melt Hose, Freedom, 1121311 391
90606-8122 . . Quick Coupling, (M)52SBAW13SPN 371
90606-8398 . . Contactor 4kW 24VDC, DILM9-10 727
90606-8399 . . Contactor 4kW 24VDC, DILM9-01 ..... 651, 673
90606-8922 . . Planetary Gear, SK+100X-MF1-10-4H1 ..... 207, 209
90606-8923 . . Planetary Gear, LP070F-MF1-3-1E1 91
90606-9102 . . Relay, K8AK-AS2 707
90606-9103 . . Proportional pressure regulator VPPE 283
90606-9250 . . Guide Rail, F-618179.KUEM12-W 569
90606-9346 . . EtherNet/IP t Genius Gateway, AN-X2-GENI 769
90607-0067 . . Low Head Screw,RSCBT620 193
90607-0070 . . Velcro Strap w/buckle, 25x3 cm, 301841 193
90607-0074 . . Spare Part Kit, 4B1400.00-K56 405
90607-0745 . . USB storage media 16GB, 5MMUSB.016G-C00 405
90608-7974 . . Valve, 573833 / VUWG-L14-B52-G18 807
975887-0000 . . Catch 287

A

A100000036 . . HeliCap2 23 mm White PA001 817
A100000063 . . StreamCap5 A2 White PA001 817
A100000222 . . Test HeliCap3 27 mm White 817
A894400101 . . SlimCap1 A1 White PA001 817
A894400201 . . SlimCap1 A2 White PA001 817
A895800101 . . StreamCap 1w A1 White PA001 817
A896809301 . . StreamCap2.1 A3 White PA001 817

SPC

Spare Parts Catalogue

5006526, 1734-FPD, 90459-2501 401

A

Acceleration Pusher, 2766994-0500 73
Adapter, 3147226-0000 ..... 43, 49, 57, 63, 75, 81, 97, 105, 113, 119, 181
Adhesive Detector, 3402978-0100 547
Adhesive Loctite 5615 A+B, 400ml, 344448-0400 525
Adhesive Loctite 5615 A+B, only in BoM, 344448-0000 523
Adjustable guide, 3199894-0100 93
Adjustable guide, 3208157-0100 37
Adjusting Screw, 2703842-0000 ..... 181, 185, 489, 491, 519, 521
Adjustment Bracket, 2838728-0000 169
Adjustment Bracket, 2873870-0000 169
Air blow regulator, 2981406-0000 ..... 231, 233, 235, 237, 239, 241, 243
Air Gun Assembly, Cejn 199589668, 90458-1740 365
Air Jet Gun, 2838686-0200 345
Air Nozzle, 2930228-0000 ..... 231, 233, 235, 237, 239, 241, 243
Air Nozzle, 2930229-0000 ..... 233, 235, 237, 239, 241, 243
Air Nozzle, 2930230-0000 ..... 237, 239, 243
Air Nozzle, 2981405-0000 ..... 235, 237, 239, 241, 243
Air Nozzle, 2981418-0000 ..... 233, 241
Air Nozzle, 3115238-0000 233
Air Nozzle, 3115358-0000 ..... 233, 235, 237, 239, 241, 243
Air Nozzle, 3124378-0000 623
Air Nozzle, 3124383-0000 625
Air Nozzle, 3124387-0000 627
Air Nozzle, 3124391-0000 637
Air Nozzle, 3124397-0000 639
Air Nozzle, 3124401-0000 629
Air Nozzle, 3124444-0000 233
Air Nozzle, 3124470-0000 621
Air Nozzle, 3124524-0000 231
Air Nozzle, 3124533-0000 231
Air Nozzle, 3124541-0000 ..... 233, 241
Air Nozzle, 90424-0087 805
Air Nozzle, BSPT1/4, AAB727-1/4-15, 90424-0089 347
Air Supply, 2758513-0300 275
Air Vent, 90605-9354 LM12, 90604-6568 371
Amp.Kinetix 5500, 2198-H008-ERS, Serie A, 90605-9388 ..... 665, 687, 883
Amp.Kinetix 5500, 2198-H015-ERS, Serie A, 90605-9389 ..... 651, 673
Amp.Kinetix 5500, 2198-H025-ERS, Serie A, 90605-9390 ..... 651–652, 673–674, 729
Analog Output Current Module 2PTS, 90459-2511 401
Anchor plates for strips, TM2S8-C100, 352113-0205 ..... 343, 477, 567
Anchor plates for strips, TM3S25-M, 352113-0204 287
Anchor plates for strips, TM3S8-M0, 352113-0203 ..... 185, 211, 215, 217, 225, 477, 515, 523, 871
Anchor, 3108425-0000 641
Anchor, 3108426-0000 641
Anchor, 3108499-0000 265
Ang. Ball Bear 25/52x20,6, 321330-0105 ..... 43, 57
Angle Bracket, 3047341-0000 283
Angle Bracket, 3095794-0000 185
Angle, 2778595-0100 287
Angle, 2788155-0000 287
Angle, 2931785-0000 283
Angle, 2931786-0000 283
Angle, 2931787-0000 283
Angle, 3117145-0000 67
Angle, 3464963-0000 137
Application Module MiniBlue II, 1095703, 344319-2101 195
Arm, 2715794-0000 175
Arm, 2716056-0000 175
Arm, 2780346-0000 175
Arm, 2780394-0000 175
Arm, 3115247-0000 245
ArmorBlock Module, 1732E-8CFGM8R, Ser. A, 90606-4706 ..... 246, 283
Assembly Plate, 2840680-0000 215
Auxiliary Contact, DILA-XHI22, 90459-6852 727
Auxiliary Contact, FAZ-XHIN11, 90459-5813 651–652
Auxiliary Contact, Z-NHK 248434, 90600-5517 673–674
Auxiliary switch, NHI21-PKZ0, 90259-0313 ..... 651, 673, 725
Axle Pin, 2715701-0000 ..... 529, 865
Axle Pin, 2780531-0000 ..... 509, 877
Axle Pin, 2780532-0000 ..... 509, 877
Axle Pin, 2783462-0000 ..... 529, 865
Axle Pin, 3114083-0000 ..... 159, 161
Axle Pin, 3424179-0000 295

B

B40160040S, Ball bearing 20/42x12, 344224-0204 ..... 87, 265
B71800059TM, Bracket, MS4-LR-WR, 90459-2389 259
Ball bearing 10/19x5, 90603-2322 ..... 631, 641
Ball bearing 10/26x8, 344224-0200 ..... 631, 641
Ball bearing 12/28x8, 321308-0101 ..... 585, 589
Ball bearing 15/32x9, 344224-0202 265
Ball bearing 15/35x11, 321309-0102 ..... 553, 559, 573
Ball bearing 17/35x10, 344224-0203 ..... 471, 631, 641
Ball bearing 20/42x12, 321306-0104 ..... 75, 81
Ball bearing 25/47x12, 321306-0105 181
Ball bearing 25/52x15, 321309-0105 ..... 49, 63, 105, 119
Ball bearing 25/62x17, 321314-0105 ..... 49, 63, 105, 119
Ball bearing 30/42x7, 90214-0186 ..... 75, 81
Ball bearing 35/62x14, 344224-0207 245

Ball bearing, 10x30x9 mm, 90603-2378 ..... 469, 471, 509, 877
Ball Bearing, 90603-2323 199
Ball bushing, 12x21x30 mm, 90600-0375 ..... 529, 865
Ball bushing, 20x30x30 mm, 90189-0019 ..... 509, 877
Ball Valve G1/4, 772117, 90605-6942 343
Ball valve, R1/8 - hose 6 mm, 90187-0191 ..... 233, 349
Bar Code Reader, D9330 + cab-463, 90603-5602 ..... 407, 835
Bar, 3115227-0000 265
Barcode Scanner, 3134551-0200 831
Base for Tube, PSD-S ME B-P, 90458-0298 379
Base Plate, 294464-0000 339
Base Plate, 3365199-0000 245
Base Plate, 3448636-0000 193
Base Unit, 2746933-0300 545
Base, 3115255-0000 245
Base, 3115352-0000 235
Base, 3115360-0000 237
Base, 3115368-0000 ..... 231, 233, 239, 241, 243
Baseplate, 10 Slot ControlLogix Chassis, 90459-2458 731
Beam, 2779009-0000 287
Beam, 2805686-0000 287
Beam, 2805698-0000 287
Beam, 2807104-0000 287
Beam, 2830220-0000 287
Beam, 3058859-0000 287
Beam, 3417764-0000 253
Beam, 3417765-0000 253
Beam, 3422240-0000 287
Beam, 3422241-0000 287
Beam, 3423298-0000 287
Beam, 3423299-0000 287
Beam, 3423300-0000 287
Beam, 3423301-0000 287
Beam, 3429304-0000 287
Beam, 3429305-0000 287
Bearing Half, 2837175-0000 177
Bearing seal G15x23x3 mm, 315230-0193 ..... 585, 589
Bearing seal G22x30x4 mm, 315230-0274 ..... 585, 589
Bearing seal G30x40x4 mm, 315230-0353 157
Bearing, 3115309-0000 261
Bed, 3108481-0000 265
Bellows, 2778566-0000 ..... 43, 57
Bellows, 3022796-0000 ..... 49, 63, 105, 119
Bellows, 3448587-0000 129
Belt Brake, 2838654-0500 31
Belt Holder, 2716073-0000 ..... 201, 213
Belt Stretcher, 2802645-0200 167
Belt Tensioner, 2766954-0200 ..... 39, 53
Belt Tensioner, 2773636-0200 85
Belt Tensioner, 3493270-0100 95
Belt Tensioner, 3493273-0100 109
Belt, 3124436-0000 265
Belt, 3365207-0000 ..... 631, 641
Blanking Plug G1/4, NPQH-BK-G14-P10, 344373-0040 541
Blanking Plug G1/8, NPQH-BK-G18-P10, 344373-0030 235
Blanking Plug G3/8, NPQH-BK-G38-P10, 344373-0050 541
Blind plug 6 mm, 342715-0102 695
Blind Plug Circular, M20x1,5 514GFK/220, 90458-1308 ..... 399, 695
Blind Plug Circular, M25x1,5 514GFK/225, 90458-1309 ..... 399, 695
Blind rivet ISO 15983 -3.2x6 A2/A2, 311523-0142 523
Block 4 ways, 90032-0039 367
Block, 2696481-0000 197
Block, 2766962-0000 ..... 49, 63
Block, 2794721-0000 ..... 333, 861
Block, 2838764-0000 583
Block, 2840851-0000 211
Block, 2841346-0000 197
Block, 2842838-0000 225
Block, 2873921-0000 197
Block, 2944173-0000 833
Block, 3068594-0000 225
Block, 3068595-0000 225
Block, 3115250-0000 245
Block, 3150924-0000 ..... 529, 865
Block, 3177654-0000 287
Block, 3443928-0000 217
Blocking Piece, 1129770-0000 297
Blowing system, 2758512-0200 345
Body, 3108444-0300 245
Bolt + Nut, SB-106-S, 90181-0314 283
Bottom Support, 3459909-0000 233
Bottom Support, 3459911-0000 231
Bow Clamp, 2751700-0000 177
Bow Clamp, 2751725-0000 181
Box Slimcap 1000, 2529719-0005 817
Box Slimcap 2000, 2529719-0006 817
Box Streamcap 1000, 2529719-0004 817
Box Streamcap 200, 2529719-0001 817
Box Streamcap 500, 2529719-0003 817
Box, 2833410-0300 695
Box, 3124365-0000 ..... 239, 243
Box, 3190281-0000 697
Box, 3389206-0000 399
Box, 3405068-0000 399
Bracket, 1149354, 90181-0182 283
Bracket, 2595618-0000 ..... 425, 445

Bracket, 2715666-0000 169
Bracket, 2715671-0000 169
Bracket, 2715813-0000 175
Bracket, 2716041-0000 177
Bracket, 2716074-0000 ..... 201, 213
Bracket, 2716083-0000 201
Bracket, 2716156-0000 569
Bracket, 2716157-0000 569
Bracket, 2740373-0000 581
Bracket, 2740375-0000 581
Bracket, 2751692-0000 181
Bracket, 2751703-0000 469
Bracket, 2751732-0000 175
Bracket, 2751739-0000 469
Bracket, 2751741-0000 477
Bracket, 2751742-0000 169
Bracket, 2766944-0000 125
Bracket, 2766963-0000 ..... 49, 63
Bracket, 2766989-0000 ..... 105, 119
Bracket, 2769695-0000 125
Bracket, 2769726-0000 ..... 69, 127, 295
Bracket, 2773637-0000 87
Bracket, 2775417-0000 ..... 105, 119
Bracket, 2775427-0000 75
Bracket, 2775447-0000 287
Bracket, 2778580-0000 321
Bracket, 2778584-0000 321
Bracket, 2779008-0000 291
Bracket, 2779823-0000 447
Bracket, 2779824-0000 447
Bracket, 2780338-0000 169
Bracket, 2780339-0000 169
Bracket, 2780344-0000 169
Bracket, 2780353-0000 175
Bracket, 2780469-0000 169
Bracket, 2780526-0000 ..... 509, 877
Bracket, 2780529-0000 ..... 509, 877
Bracket, 2781283-0000 381
Bracket, 2792664-0000 ..... 333, 861
Bracket, 2802629-0000 181
Bracket, 2837623-0000 ..... 97, 113
Bracket, 2838156-0000 ..... 491, 521
Bracket, 2838277-0000 ..... 489, 519
Bracket, 2838722-0000 ..... 509, 877
Bracket, 2838741-0000 567
Bracket, 2839225-0000 695
Bracket, 2842804-0000 ..... 437, 857
Bracket, 2842832-0000 225
Bracket, 2859960-0000 ..... 509, 877
Bracket, 2873859-0000 169
Bracket, 2873868-0000 169
Bracket, 2873871-0000 169
Bracket, 2874024-0000 391
Bracket, 2909157-0000 ..... 551, 891
Bracket, 2909158-0000 ..... 551, 891
Bracket, 2936120-0000 75
Bracket, 2936506-0000 81
Bracket, 2936740-0000 75
Bracket, 2973942-0000 581
Bracket, 2985772-0000 213
Bracket, 2985773-0000 321
Bracket, 3053477-0000 ..... 333, 861
Bracket, 3073397-0000 ..... 509, 877
Bracket, 3073405-0000 169
Bracket, 3073408-0000 175
Bracket, 3086233-0000 125
Bracket, 3096014-0000 ..... 407, 835
Bracket, 3103328-0000 147
Bracket, 3108407-0000 641
Bracket, 3108416-0000 641
Bracket, 3108423-0000 641
Bracket, 3108424-0000 ..... 631, 641
Bracket, 3108431-0000 ..... 631, 641
Bracket, 3108432-0000 641
Bracket, 3114082-0000 159
Bracket, 3115251-0000 245
Bracket, 3115305-0000 261
Bracket, 3123928-0000 159
Bracket, 3123929-0000 159
Bracket, 3124420-0000 259
Bracket, 3139124-0000 147
Bracket, 3139125-0000 147
Bracket, 3139140-0000 837
Bracket, 3150919-0000 ..... 529, 865
Bracket, 3150922-0000 ..... 529, 865
Bracket, 3152710-0000 807
Bracket, 3159870-0000 807
Bracket, 3159886-0000 807
Bracket, 3159887-0000 807
Bracket, 3161464-0000 ..... 35, 43, 57, 113
Bracket, 3161465-0000 ..... 35, 43, 57, 97
Bracket, 3166547-0000 155
Bracket, 3199900-0000 41
Bracket, 3203752-0000 ..... 333, 861
Bracket, 3209474-0000 161
Bracket, 3209478-0000 161

Bracket, 3210228-0000 805
Bracket, 3223764-0000 219
Bracket, 3252696-0000 ..... 319, 851
Bracket, 3256152-0000 ..... 551, 891
Bracket, 3315733-0000 809
Bracket, 3353746-0000 ..... 631, 641
Bracket, 3356197-0000 807
Bracket, 3356198-0000 807
Bracket, 3365198-0000 245
Bracket, 3365200-0000 245
Bracket, 3388212-0000 729
Bracket, 3397195-0000 349
Bracket, 3417767-0000 261
Bracket, 3433167-0000 257
Bracket, 3437640-0000 327
Bracket, 3437723-0000 327
Bracket, 3437768-0000 327
Bracket, 3438472-0000 613
Bracket, 3438473-0000 613
Bracket, 3438474-0000 613
Bracket, 3438476-0000 613
Bracket, 3438477-0000 613
Bracket, 3438478-0000 567
Bracket, 3448863-0000 193
Bracket, 545897-0000 845
Bracket, 90459-2248 ..... 259, 361
Bracket, MS4-WP, 90459-2247 361
Bracket, MS6-WP, 90459-1858 353
Brake Unit, 2766990-0200 73
Brake Unit, 3495611-0100 73
Bridge connector Q 10 DLI, 353034-0404 ..... 671, 693
Bridge connector WQV 10/10, 353034-0033 673
Bridge connector WQV 2,5/10, 353034-0030 ..... 279, 401, 671, 693, 711, 713, 715, 717, 719, 721, 893
Bridge connector WQV 2,5/2, 90459-1811 ..... 401, 759
Bridge connector WQV 2,5/3, 353034-0042 401
Bridge connector WQV 6/2, 353034-0018 759
Brush, 2857743-0000 ..... 231, 233, 235, 237, 239, 243
Brush, 2985810-0000 ..... 787, 791, 795, 799
Brush, 3115355-0000 235
Buffer Unit, QUINT-BUFFER/24DC/20, 90602-8707 739
Bulkhead connector, 12 mm/M27x1,5, 90459-0864 365
Bus Bar Rail 10x3mm SSCH, 353041-0001 757
Bushing Iglidur G 20x23x20, 321133-0260 225
Bushing Iglidur G 40x44x40, 321133-0420 225
Bushing insert, JUM-02-30, 90600-0798 ..... 103, 111
Bushing valve connection 2,5 mm, 90134-0039 367
Bushing, 12x14x8 mm, 90600-5135 175
Bushing, 2715797-0000 175
Bushing, 2775439-0000 ..... 97, 113
Bushing, 3115242-0000 245
Bushing, 3115268-0000 251
Bushing, 3365191-0000 245
Bushing, 3433175-0000 261
Bushing, 3433176-0000 261
Bushing, int.ext. thr. R1/8-R1/4, 90224-0289 259
Bushing/Nut inlet/outlet 6 mm, 90134-0055 367

C

Cabinet, 2833406-0400 649
Cable 10m, NEBV-C-S1WA25-F-10-LE25-S5, 344383-0703 541
Cable Conduit, 205438-0000 337
Cable Conduit, 3108429-0000 ..... 631, 641
Cable Conduit, 3108492-0000 265
Cable Duct PVC 40x40, 4040T1-E, 344366-1002 399
Cable Duct PVC 40x80, 4080T1-E, 344366-1013 399
Cable Duct, 2746903-0000 283
Cable Duct, 2758515-0400 277
Cable Duct, 2833412-0200 703
Cable Duct, 2844525-0000 225
Cable Duct, 2873928-0000 283
Cable Duct, 2931768-0000 283
Cable Duct, 2931769-0000 283
Cable Duct, 2931771-0000 283
Cable Duct, 2931772-0000 283
Cable Duct, 2931773-0000 283
Cable Duct, 2931774-0000 283
Cable Duct, 2931775-0000 283
Cable Duct, 2931776-0000 283
Cable Duct, 2931777-0000 283
Cable Duct, 2931778-0000 283
Cable Duct, 2931779-0000 283
Cable Duct, 2931780-0000 283
Cable Duct, 2931781-0000 283
Cable Duct, 2931782-0000 283
Cable Duct, 3383128-0000 705
Cable Duct, 3386032-0000 705
Cable Duct, 3386033-0000 705
Cable Duct, 3386034-0000 705
Cable Duct, 3386035-0000 705
Cable Duct, 3386036-0000 705
Cable Duct, 3386037-0000 705
Cable Duct, 3386038-0000 705
Cable Duct, 3386144-0000 705
Cable Duct, 3386145-0000 705

Cable Duct, 3386146-0000 705
Cable Duct, 3386147-0000 705
Cable Duct, 3386148-0000 705
Cable Duct, 3386149-0000 705
Cable Duct, 3415801-0000 695
Cable Duct, 3415802-0000 695
Cable Duct, 3415803-0000 695
Cable duct, Elbow bracket, B27, 90181-0186 283
Cable Duct, Fitting, SB-102-S, 90181-0183 ..... 283, 523
Cable duct, Wall bracket, B4 Mini, 90181-0190 283
Cable duct, wire, 65x48 mm, L=2500 mm, 90181-0197 285
Cable gland, M16x1,5, 5311 1010, 90458-0306 ..... 265, 631, 641
Cable gland, M16x1,5, 5311 1110, 90458-0314 695
Cable gland, M20x1,5, 5311 1020, 90458-0307 ..... 157, 279, 283, 393, 695, 893
Cable gland, M20x1,5, 5311 1120, 90458-0315 441
Cable gland, M25x1,5, 5311 1130, 90458-0316 327
Cable gland, M32x1,5, 5311 1040, 90458-0309 695
Cable gland, VK 22052y, 90458-0406 ..... 245, 631, 641
Cable gland; MS-SC-M, 7-12,5mm, M20x1,5, 344202-0003 ..... 157, 245
Cable M12-C101, 2TLA020056R1000, 90459-4252 389
Cable M12-C112, 2TLA020056R2000, 90459-7095 ..... 246, 381
Cable M12-C312 2TLA020056R2100, 90459-4876 381
Cable M12-C62, 2TLA020056R0200, 90600-0934 246
Cable Marking Set, 2930177-0200 843
Cable Marking, 3420957-0000 897
Cable Marking, 3473203-0000 819
Cable Marking, 3473206-0000 819
Cable Marking, 3473208-0000 819
Cable Marking, 3473210-0000 819
Cable Marking, 3473212-0000 819
Cable Marking, 3473214-0000 819
Cable Marking, 3473216-0000 819
Cable Marking, 3473218-0000 819
Cable Marking, 3473220-0000 819
Cable Marking, 3473222-0100 775
Cable marking, Yellow, PK 2/4" A", 359009-0200 847
Cable marking, Yellow, PK 2/4" B", 359009-0201 847
Cable marking, Yellow, PK 2/4" C", 359009-0202 847
Cable marking, Yellow, PK 2/4" D", 359009-0203 847
Cable marking, Yellow, PK 2/4" E", 359009-0204 847
Cable marking, Yellow, PK 2/4" F", 359009-0205 847
Cable marking, Yellow, PK 2/4" G", 359009-0206 847
Cable marking, Yellow, PK 2/4" H", 359009-0207 847
Cable marking, Yellow, PK 2/4" I", 359009-0208 847
Cable marking, Yellow, PK 2/4" K", 359009-0210 847
Cable marking, Yellow, PK 2/4" L", 359009-0211 847
Cable marking, Yellow, PK 2/4" M", 359009-0212 847
Cable marking, Yellow, PK 2/4" N", 359009-0213 847
Cable marking, Yellow, PK 2/4" P", 359009-0215 847
Cable marking, Yellow, PK 2/4" Q", 359009-0216 847
Cable marking, Yellow, PK 2/4" R", 359009-0217 847
Cable marking, Yellow, PK 2/4" S", 359009-0218 847
Cable marking, Yellow, PK 2/4" T", 359009-0219 847
Cable marking, Yellow, PK 2/4" U", 359009-0220 847
Cable marking, Yellow, PK 2/4" V", 359009-0221 847
Cable marking, Yellow, PK 2/4" W", 359009-0222 847
Cable marking, Yellow, PK 2/4" X", 359009-0223 847
Cable marking, Yellow, PK 2/4" Y", 359009-0224 847
Cable marking, Yellow, PK 2/4" Z", 359009-0225 847
Cable marking, Yellow, PK 2/4"1", 359009-0101 847
Cable marking, Yellow, PK 2/4"2", 359009-0102 847
Cable marking, Yellow, PK 2/4"3", 359009-0103 847
Cable marking, Yellow, PK 2/4"4", 359009-0104 847
Cable marking, Yellow, PK 2/4"5", 359009-0105 847
Cable marking, Yellow, PK 2/4"6", 359009-0106 847
Cable marking, Yellow, PK 2/4"7", 359009-0107 847
Cable marking, Yellow, PK 2/4"8", 359009-0108 847
Cable marking, Yellow, PK 2/4"9", 359009-0109 847
Cable marking, Yellow, PK2/4" O", 359009-0214 847
Cable marking, Yellow, PK2/4"0", 359009-0100 847
Cable Olflex 18x0,75 mm2 light/grey, 351150-0424 389
Cable Olflex 3x0,75 mm2 light/grey 35, 351150-0403 389
Cable Olflex 5x0,75 mm2 light/grey, 351150-0405 389
Cable Olflex 7x0,75 mm2 light/grey, 351150-0406 ..... 279, 389, 893
Cable Olflex Heat 180 4G4 466343, 351424-0017 389
Cable Set, 2833409-0300 649
Cable Set, 2873950-0300 375
Cable Shoe Ring, 0,5-1,5mm2 M5 Red, 344375-0004 337
Cable Shoe Ring, 4-6mm2 M4 Yellow, 344375-0012 389
Cable tie, Black 188x4,8 mm, 352113-0102 ..... 225, 897
Cable tie, Black 290x7,6 mm, 352113-0103 897
Cable tie, Black 300x4,8 mm, 352113-0104 ..... 185, 211, 215, 217, 477, 515, 523, 567, 871
Cable tie,Black 92x, 352113-0101 ..... 343, 847
Cable Tray, 2873896-0000 217
Cable Trench Parts, 90181-0184 283
Cable Unitronic LiYCY 5x0,34, 351423-0006 ..... 389, 651, 673
Cable, 2838731-0000 523
Cable, 2838732-0000 523
Cable, 2873922-0300 ..... 375, 859
Cam, 2716116-0000 465
Cam, 2746950-0000 493
Cam, 2746951-0000 497
Cam, 2746952-0000 505
Cam, 2746953-0000 501
Cam, 2746982-0000 493
Cam, 2746985-0000 497

Cam, 2746987-0000 501
Cam, 2751655-0100 463
Cam, 2779013-0000 127
Cam, 2780425-0100 ..... 481, 859
Cam, 2780521-0000 ..... 509, 877
Cam, 2780533-0000 ..... 509, 877
Cam, 2783479-0000 ..... 509, 877
Cam, 2801048-0000 ..... 507, 875
Cam, 2839383-0100 481
Cam, 2839384-0100 481
Cam, 2839385-0100 481
Cam, 2839386-0100 481
Cam, 2839392-0000 519
Cam, 2839393-0000 489
Cam, 2839409-0000 491
Cam, 2839412-0000 521
Cam, 2873857-0000 169
Cam, 2873864-0000 169
Cam, 2981409-0000 241
Cam, 2981410-0000 ..... 231, 233, 235, 237, 239, 243
Cam, 2981411-0000 ..... 231, 233, 235, 237, 239, 243
Cam, 3022488-0000 125
Cam, 3073409-0000 ..... 509, 877
Cam, 3077715-0000 493
Cammodule, 2839315-0300 461
Cammodule, 2873914-0100 481
Cammodule, 2873915-0100 481
Cammodule, 2873916-0100 481
Cammodule, 2873917-0100 481
Cantilever, 3010622-0000 75
Cantilever, 3010624-0000 81
Cantilever, 3353745-0000 ..... 631, 641
Cap 8 40x40 mm, 0.0.026.01, 90600-1996 807
Cap Carrier Group, 2746939-0200 461
CAP Detector, 2986247-0300 775
Cap Holders Group, 2703670-0100 535
Cap Holders Group, 2746941-0200 461
Cap Holders Group, 2802648-0200 167
Cap Line, 2716049-0300 547
Cap Line, 2746928-0300 545
Cap Sorter, 2846406-0500 229
Cap, 2873953-0200 775
Cap, 3115234-0000 ..... 245, 265
Cap, 3115241-0000 245
Cap, 3203756-0000 ..... 551, 891
Cap, 3224301-0000 ..... 551, 891
Cap, 3224303-0000 ..... 551, 891
Cap, MTC/Z-1/2, 90604-6566 371
Captive Screw M6, GUTBG 6-4-12, 90601-2046 ..... 421, 433
Carriage, 2780527-0000 ..... 509, 877
Carriage, SSR25XW1QZSSHHM(GK)(B) BLOCK, 90604-8448 ..... 193, 201, 205, 213, 469
Carrier Belt, 2746929-0100 545
Carrier, 3108476-0000 265
Carrier, 3115346-0000 ..... 231, 233, 235, 237, 239, 241, 243
Cartridge Heater, 3kW 230V, 90606-1840 337
Catch, 975887-0000 287
Caution Sign ANSI (H), Do not reach in, 90600-4040 811
Caution Sign H, Moving Parts, 351568-0061 457
Central Lubrication, 3208664-0200 275
Chassis, P4, 1099401, 90459-1989 395
Circuit breaker , B3.1/2-PKZ0, 90259-0315 ..... 651, 673
Circuit Breaker, NZMB1-4-A32, 90600-5543 652
Circuit Breaker, NZMB1-A32-NA, 351436-0032 674
Clamp Bracket, 2695610-0000 201
Clamp Bracket, 2930205-0000 833
Clamp Unit, 2716046-0200 579
Clamp, 1366727-0000 ..... 311, 317
Clamp, 2794790-0000 ..... 333, 861
Clamp, 2873943-0000 ..... 333, 861
Clamp, 2944172-0000 833
Clamp, 3108436-0000 ..... 631, 641
Clamp, 3115233-0000 ..... 245, 265
Clamp, 3115263-0000 ..... 245, 261
Clamp, 3115283-0000 257
Clamp, 3115288-0000 253
Clamp, 3124422-0000 ..... 235, 237
Clamp.Element, Without Sleeve, 32X60, 90603-2066 ..... 207, 209
Clamping Element, 16X24 L=16, 90600-0454 ..... 509, 877
Clamping Element, 20X28 L=18, 90208-0078 559
Clamping Element, 2843157-0100 167
Clamping Part, 2727446-0000 607
Clamping Part, 2727447-0000 607
Clamping Part, 2752107-0000 607
Clamping Part, 2752108-0000 607
Clamping Part, 2893414-0000 607
Clamping Part, 2893415-0000 607
Clamping Part, 2893420-0000 607
Clamping Part, 2893421-0000 607
Clamping Part, 2970138-0000 607
Clamping Part, 2970139-0000 607
Clamping Part, 3077721-0000 607
Clamping Part, 3077722-0000 607
Claw, 2703671-0000 537
Claw, 2703672-0000 537
Claw, 2715828-0000 537
Claw, 2715829-0000 537

Claw, 2838711-0000 537
Claw, 2838712-0000 537
Claw, 2838715-0000 537
Claw, 2873973-0000 537
Claw, 2873974-0000 537
Claw, 2930214-0000 537
Claw, 2930215-0000 537
Claw, 3077749-0000 537
Claw, 3077750-0000 537
Column, 2841345-0000 197
Column, 2842835-0000 225
Column, 2985768-0000 ..... 333, 861
Communication Unit, 3405806-0100 649
Communication Unit, 3405807-0100 765
Communication Unit, 3405808-0100 765
Communication Unit, 3405809-0100 765
Comp. spring, 22180, 1,25x9,25x47,5, 90335-0082 569
Comp. spring, 2477, 1x14x25, 90605-3922 ..... 333, 861
Comp. spring, 2489, 1,2x9,4x30, 90600-0351 583
Comp. spring, 2496, 1,2x10,4x45, 90600-0683 175
Comp. spring, 2529, 1,5x?x45, 90605-3904 175
Comp. spring, 5443, ?x31,2x115, 90604-3324 ..... 49, 63, 105, 119
Comp. spring, 6777, 4x36x120 DIN2098, 90600-0656 187
Compression Spring, 3014020-0000 ..... 529, 865
Cone Tube 6 Mm, 90028-0022 367
Conn. Elbow, Art.No 3814, 90224-0031 233
Conn. Elbow, WE06LM71, 90030-0200 367
Conn. Kits Kinetix, 2198-H040-A-T, ser A, 90606-0501 ..... 651, 673
Conn. Kits Kinetix, 2198-H040-P-T, ser A, 90606-0482 ..... 651, 665, 673, 687, 729, 883
Connecting cable KMEB-1-24-5-LED, 90458-2837 361
Connection Block, TINA4A 2TLA020054R0300, 90604-0093 ..... 246, 381
Connection Box, 3115249-0000 245
Connection Box, 3267762-0000 ..... 279, 893
Connection Pipe, 2852912-0000 223
Connection Pipe, 2852913-0000 223
Connection, 3115257-0000 245
Connection, 3115258-0000 245
Connection, 90134-0058 185
Connection, Tina 1A, 2TLA020054R0000, 90459-5627 381
Connector Kit, 2198-H040-ADP-IN, Serie A, 90606-0502 729
Connector Kit, 2198-H040-D-T, Serie A, 90606-0481 ..... 651, 665, 673, 687, 729, 883
Connector M12 Male 5-pin, 90603-5561 ..... 551, 897
Connector, 2090-K6CK-D15M, Serie B, 90604-8704 ..... 377, 389, 863
Connector, Plug socket, MSSD-C-4P, 90110-0095 361
Connector, SACC-M12FS-5CON-PG 7-VA, 90603-5562 ..... 551, 897
Connector, SACC-M12MS-4QO-0,34-VA, 90603-5568 581
Connector, SACC-M12MS-4QO-0,75-VA, 90603-5569 385
Connector, SACC-M12MS-5CON-PG 7-VA, 90603-5560 193
Contactor 15kW 24VDC, DILM32-10, 90459-5311 727
Contactor 4kW 24VDC, DILM9-01, 90606-8399 ..... 651, 673
Contactor 4kW 24VDC, DILM9-10, 90606-8398 727
Contactor 7,5kW 24VDC, DILM17-10, 90459-5309 727
Contactor22kW24VDCDILM50-22+DILM65-XIP2X, 90600-1759 723
Control Board, 2833407-0400 649
Conversion Group, 3203766-0100 329
Conveyor Belt, 2846413-0400 619
Conveyor Belt, 3034439-0300 619
Conveyor Body, 2763616-0101 299
Conveyor Body, 2763616-0102 299
Conveyor Body, 2763616-0104 299
Conveyor Control Accessories, 2930179-0200 831
Conveyor Control, 3405811-0100 703
Cooling Unit, 2833408-0300 649
Cordset Kit, 1121501, 90606-8120 195
Counter, F524.800FA3C 24VDC, 90053-0029 737
Counterweight, 2716075-0000 ..... 201, 213
Counterweight, 2716085-0000 ..... 201, 213
Coupling 14x20 mm, 727-38-4838, 90600-2560 225
Coupling, 3115228-0000 265
Cover 3-Pole, NZM1-XKSA, 90600-5270 673
Cover 4-pole, NZM1-4-XKSA, 90459-6617 651
Cover profile 8 Al, 0.0.265.50, 90600-1972 807
Cover, 2532619-0000 441
Cover, 2736448-0000 559
Cover, 2736449-0000 ..... 553, 573
Cover, 2769686-0000 ..... 75, 81
Cover, 2788134-0000 ..... 41, 55
Cover, 2826742-0400 413
Cover, 2826743-0300 413
Cover, 2826744-0300 431
Cover, 2835450-0000 697
Cover, 2842794-0400 415
Cover, 2842795-0100 415
Cover, 2842799-0000 417
Cover, 2842801-0000 433
Cover, 2873951-0000 149
Cover, 2873952-0100 139
Cover, 2991257-0000 149
Cover, 3068596-0000 225
Cover, 3108418-0000 ..... 631, 641
Cover, 3108428-0000 ..... 631, 641
Cover, 3108473-0000 265
Cover, 3108474-0000 265
Cover, 3108477-0000 265
Cover, 3108478-0000 265
Cover, 3108479-0000 265

Cover, 3108483-0000 265
Cover, 3108490-0000 265
Cover, 3115259-0000 ..... 235, 237
Cover, 3115275-0000 ..... 235, 237
Cover, 3124375-0000 623
Cover, 3124376-0000 623
Cover, 3124380-0000 625
Cover, 3124381-0000 625
Cover, 3124384-0000 627
Cover, 3124385-0000 627
Cover, 3124388-0000 637
Cover, 3124389-0000 637
Cover, 3124394-0000 639
Cover, 3124395-0000 639
Cover, 3124398-0000 629
Cover, 3124399-0000 629
Cover, 3124468-0000 621
Cover, 3124469-0000 621
Cover, 3124476-0000 271
Cover, 3200713-0000 149
Cover, 3209475-0000 129
Cover, 3209476-0000 129
Cover, 3210234-0000 805
Cover, 3246705-0000 807
Cover, 3249881-0000 807
Cover, 3291724-0000 393
Cover, 3296679-0000 97
Cover, 3317859-0000 157
Cover, 3319569-0000 113
Cover, 3360962-0100 413
Cover, 3423307-0000 423
Cover, 3423308-0000 439
Cover, 3423309-0000 419
Cover, 3425966-0000 439
Cover, 3425967-0000 419
Cover, 3426348-0100 415
Cover, 3426673-0000 449
Cover, 3448589-0100 245
Cover, 3449628-0000 193
Covering, 3115279-0000 257
Cross Clamp, 340/68385, 90600-1001 347
Curve, 2751708-0000 169
Curve, 2751722-0000 169
Curve, 2751733-0000 169
Curve, 2780337-0000 169
Curve, 2780341-0000 169
Curve, 2780342-0000 169
Curve, 2780343-0000 169
Curve, 2838727-0000 169
Curve, 2838737-0000 169
Curve, 2873860-0000 169
Curve, 2873869-0000 169
Curve, 2873895-0000 169
Curve, 3073401-0000 169
Curve, 3073402-0000 169
Curve, 3073403-0000 169
Curve, 3073404-0000 169
Curve, 3073407-0000 169
Curve, 3108438-0000 ..... 635, 645
Cylinder, Gripper DHPS-16-A-H1-SA, 90604-3142 581
Cylindrical Pin, 2769713-0000 293

D

Damper, 2715826-0000 ..... 529, 865
Damping Element, 3115290-0000 253
Danger Sign H, Haz Voltage, Lockout, 351566-0001 457
Delivered Design Sign, 90600-2068, 90600-2068 651
Delivered Design Sign, Self-Adhesive, 90600-5812 673
Dig Input Module 16p, 1756-IB16, 90459-2413 731
Dig Input Module 32p, 1756-IB32/B, 90459-6556 731
Dig Output Module, 1756-OB16E/A, 90459-2474 731
Dig Output Module, 1756-OB16IS, 90600-4033 ..... 651, 673
Digital Inp 4 PTS Sink, 1734-IB4 Serie D, 90605-0584 401
Digital Output 4 PTS, 1734-OB4E Series C, 90459-2505 401
Dip Stick, 3115303-0000 261
Disc, 2769739-0000 ..... 225, 293
Discharge Device, 3108433-0100 ..... 631, 641
Display, CPU Board Serv. Kit, 1028325, 90459-1975 395
Distribution Block 3 Ways, 90032-0043 367
Distribution Terminal, 2835464-0400 703
Distribution Terminal, 2839229-0300 703
Distribution Terminal, 3046886-0300 703
Distributor Block 1492-Pd3163, 90459-0959 703
Distributor Block, FR-4-1/8-B, 90224-0314 259
Distributor, 2839195-0300 803
Distributor, MS4-FRM-1/4, 90459-2245 361
Divider, 2841405-0000 705
Divider, 2841406-0000 705
Divider, 2921902-0000 705
Divider, 2931770-0000 283
Divider, 2931784-0000 283
Divider, 2931788-0000 283
Divider, 3386039-0000 705
Door Hinge, 3217565-0100 277

Door Safety Switch, 2805700-0400 375
Door, 2779835-0200 413
Door, 2805693-0200 413
Door, 2842793-0400 431
Door, 3056497-0000 433
Door, 3058858-0000 429
Door, 3389205-0000 407
Door, 3397562-0100 397
Door, 3403447-0000 407
Doors And Covers, 2826741-0400 275
Double acting, Mini-ISO, Cyl. 16-25, 90604-3129 805
Double acting, Mini-ISO, Cyl. 32-80, 90604-3137 87
Double acting, Round, Cyl. 32-150, 351476-3150 ..... 133, 135
Dowel, 3365201-0000 ..... 231, 233, 235, 237, 239, 241, 243
Drive Motor, 2836507-0300 475
Drive Pulley, 2727407-0300 547
Drive Pulley, 3115079-0000 ..... 75, 81
Drive Shaft, 3108987-0000 ..... 75, 81
Drive Unit, 2802647-0300 167
Drive Unit, 2837072-0300 461
Drive, 2780560-0300 ..... 481, 859
Drive, 3199891-0100 39
Drive, 3217276-0100 53
Drive, 3493268-0100 95
Drive, 3493272-0100 109
Dry Lubricant DLT-333, 5 L Canister, 1607050-0005 369
Dry Lubricant DLT-333, BOM only, 1607050-0000 367

E

E-Hinge, 1035792-0000 297
Earth Braid, 250/16/8,5, 90600-2904 695
Earth Terminal WDK 2,5 PE, 353024-0212 ..... 401, 671, 693, 755
Earth Terminal WPE 10, 353024-0207 ..... 697, 755
Earth Terminal WPE 2,5, 353024-0204 ..... 279, 701, 893
Earth Terminal WPE 6, 353024-0206 ..... 701, 755
Eccentric Shaft, 3103670-0000 471
Ejector, 3210219-0200 803
Elbow 90 coupl., ext. thread 10/8-G1/4", 90224-0325 343
Elbow Pipe Joint,Ext.thread,D=6mm M10x1, 90606-5755 367
Elbow With Tailpiece 12/12 mm, 90459-1825 349
Elbow With Tailpiece 6/6 mm, 90055-0222 541
Elbow With Tailpiece 8/8 mm, 90600-1175 349
Electric Equipment, 2769754-0400 275
Electrical Conversion, 2841404-0400 649
Electrical Conversion, 3190285-0200 649
Electrical Conversion, 3420954-0100 889
Electrical Document, 2861169-0400 827
Electrical Document, 2879015-0400 825
Electrical Materials, 3134548-0100 859
Electrical Materials, 3420955-0100 895
Elevator, 2812005-0400 223
EMC earth braid, 16mm2 L=300mm, 90458-1870 695
EMC Shield Clamp, LFZ/SKL 8-11, 36925, 90604-3308 703
Emerg. Stop Switch, 704.064.2+704.910.4, 90605-9819 ..... 399, 441, 695
Emergency Stop, 2769760-0300 413
End bracket, WEW 35/2, 353031-0203 ..... 279, 401, 671, 693, 701, 707, 709, 745, 747, 755, 757, 759, 893
End Plate, AP DLD2,5 DB, 353032-0302 ..... 671, 693
End Plate, WAP 2,5-10, Beige, 353032-0004 ..... 279, 701, 745, 747, 759, 893
End Plate, WAP WDK 2,5, 353032-0009 ..... 401, 671, 693, 711, 713, 715, 717, 719, 721, 755
End Plate, WHP2,5-35N/10x3 BL, 353033-0104 757
End Sleeve 0,75Mm2, 353001-0113 ..... 887, 897
End Sleeve H 1.0/14 Yellow, 353001-0119 887
End Sleeve H0.5/14 Orange, 353001-0116 ..... 887, 897
End Support, 2727440-0000 583
Endplate Left, VMPAC-EPL-MP-SD25, 344383-0301 541
Endplate Right, VMPAC-EPR-EX, 344383-0351 541
Eth. P Cab.SAC-4P-M12MSD/ 5,0-PVC/M12MSD, 351501-2050 245
Eth. P. Cab. VS-M12MSD-IP20-LI-93P/10,0, 351501-3100 283
Ethern. NAT Router,FL MGUARD RS2000 TX-B, 90606-4205 767
Ethernet cable, CCB-84901-1004-10, 90600-2103 ..... 333, 551, 861, 891
EtherNet dual port 10-100M, 1756-EN3TR s, 90603-5624 731
Ethernet Patch Cable, FL CAT5 PATCH 0,3, 351501-0003 ..... 652, 665, 674, 687, 729, 767, 769, 771, 883
Ethernet Patch Cable, FL CAT5 PATCH 0,5, 351501-0005 399
Ethernet Patch Cable, FL CAT5 PATCH 1,5, 351501-0015 ..... 667, 689, 749
Ethernet Patch Cable, FL CAT5 PATCH 10,0, 351501-0100 ..... 393, 763
Ethernet Patch Cable, FL CAT5 PATCH 2,0, 351501-0020 ..... 652, 674, 695, 749, 753
Ethernet Patch Cable, FL CAT5 PATCH 3,0, 351501-0030 729
Ethernet Switch, 3388211-0100 703
Ethernet switch,FL SWITCH SFN 16TX/28919, 90603-1856 753
Ethernet/IP Card, 1053289, 90606-4010 393
EtherNet/IP t Genius Gateway, AN-X2-GENI, 90606-9346 769

F

Factory Talk Act. Memory Dongle, 9509-US, 90605-4349 399
Factory Talk Gateway, 9355-OPD2400LENE, 90605-0005 399
Fan Kit, 5AC902.FA00-00, 90606-2203 405
Fan System, 2773623-0300 325
Fan, 2BH1300-7AV15-K43, 90604-3589 327
Fastening Bracket, 2716089-0000 205
Fastening Bracket, 2840147-0300 191
Fastening element, BLOCKSEP-E 01026, 90600-2830 705
FC PowerFlex 525, 230V 1ph, 0.4kW A, 90605-9347 ..... 651, 667, 673, 689

FC PowerFlex 525, 230V 1ph, 0.75kW A, 90605-9348 749
Feed Through Filter, B85321A2502W160, 90600-5266 697
Feed Through Terminal, WDU 2,5, 353021-0212 ..... 279, 701, 747, 759, 893
Feed Through Terminal, WDU 4, 353021-0213 745
Feed Through Terminal, WDU 6, 353021-0214 ..... 701, 759
Feed Unit, 2746934-0200 545
Feeder, 2846416-0400 223
Female Insert, HAN 4 A, 09 20 004 2711, 90459-6820 283
Female Insert, HAN 6 E 09 33 006 2701, 90110-0053 ..... 157, 283
Ferrite, B64290L616X38, 90600-5249 769
Filter Assy, 100 Mesh, 1028305, 90459-1986 395
filter Cartridge MS6-LFM-A, 90459-3811 357
Filter Cartridge, MS4-LFP-E, 90459-3814 363
Filter Cartridge, MS6-LFM-B, 90459-3812 355
Filter Cartridge, MS6-LFX, 90459-3810 359
Filter Holder, 1030335-0000 327
Filter Insert, 90415-0326 373
Filter Regulator, MS4-LFR-1/4-D7-ERV-AS, 90459-2339 361
Filter, gun, 200 Mesh, Saturn, 1045520, 344319-3105 195
Filter, IMBF-BP470-25.5, 90606-5311 ..... 551, 891
Filter, MS6-LFM-1/2-ARV-DA, 90603-4698 353
Filter, MS6-LFM-1/2-B-R-V-DA, 90603-4699 353
Filter, MS6-LFX-1/2-R, 90459-2771 353
Filter, TP-NEF/20A, 90602-8987 743
Finger, 2715889-0000 601
Finger, 2715975-0000 595
Finger, 2740299-0200 579
Finger, 2740300-0000 585
Finger, 2740371-0200 579
Finger, 2740372-0000 589
Finned Plug PE, GPN 320 GL42 1-2, 344353-0421 ..... 41, 55
Fitting, 3124379-0000 ..... 621, 623, 625, 627, 629, 637, 639
Flag, 2751706-0000 467
Flange Bearing 20x89x20 mm, 90600-0800 ..... 127, 295
Flange Bushing, Iglidur G 70X75X50, 321153-0500 293
Flange Bushing, Iglidur H370 12X14X15, 321156-0188 ..... 333, 861
Flange Bushing, Iglidur J 10X12X12, 321158-0142 581
Flange Bushing, Iglidur J 12X14X12, 321158-0180 583
Flange Bushing, Iglidur J 15X17X12, 90605-3869 157
Flange Bushing, Iglidur J 16X18X17, 321158-0221 ..... 75, 81
Flange Bushing, Iglidur J 6X8X6, 321158-0060 ..... 585, 589
Flange Bushing, Iglidur W300 12X14X12, 321154-0180 ..... 529, 865
Flange Bushing, Iglidur W300 6X8X6, 321154-0060 581
Flange Bushing, Iglidur X 12X14X12, 90240-0262 175
Flange Bushing, Iglidur X 6X8X8, 321155-0062 537
Flange Seal, 1188609-0000 337
Flange Seal, 1188610-0000 337
Flange, 2766964-0000 ..... 225, 293
Flange, 2766976-0000 ..... 103, 111
Flange, 2769717-0000 293
Flange, 2842834-0000 225
Flange, 2843158-0000 187
Flange, 2985770-0000 211
Flange, 3108419-0000 ..... 631, 641
Flange, 3115080-0000 ..... 75, 81
Flange, 3115224-0000 265
Flange, 3124474-0000 271
Flange, 3295035-0000 ..... 97, 113
Flange, 3368748-0000 157
Flap, 3124377-0000 ..... 621, 623
Flap, 3124382-0000 625
Flap, 3124386-0000 627
Flap, 3124390-0000 637
Flap, 3124396-0000 639
Flap, 3124400-0000 629
Flat Gasket Tape w. Adhesive, 15x3.0, 90143-0073 835
Flexible Conduit, UL 2721, 90152-0070 399
Flow Control Valve, GR-QS-6, 90459-3604 541
Flow Control Valve, GR-QS-8, 90459-2777 805
Follower Arm, 2983297-0000 537
Follower Cam, 2751658-0200 463
Foot 50000N, HPA125-30-325, 90600-1002 ..... 225, 287
Foot, 3115230-0000 265
Foot, 3115282-0000 257
Fork Sensor, WFM80-60P321, 90606-2469 ..... 631, 641
Frame Bottom, 3493269-0100 95
Frame Bottom, 3493271-0100 109
Frame Section, 2802646-0200 167
Frame Upper, 3209480-0100 39
Frame Upper, 3209481-0100 53
Frame Upper, 3425942-0000 287
Frame, 2751664-0300 461
Frame, 2766975-0000 287
Frame, 2769709-0000 293
Frame, 2769746-0000 119
Frame, 2778571-0000 105
Frame, 2838753-0000 217
Frame, 2841501-0300 191
Frame, 3039024-0000 523
Frame, 3217910-0000 111
Frame, 3217911-0000 41
Frame, 3217912-0000 103
Frame, 3217913-0000 55
Frame, CF 32, 90458-1179 695
Frame, CF 8, 90458-1178 695
Front Plate, VS-SI-FP-2RJ45-5-MOD-BU/BU, 90603-6835 695

"FSCR05080-10, Screw, M6S", 312105-0323 ..... 235, 237, 239, 243, 529, 865
Funnel, 3115289-0000 253
Fuse Board 1, 2835459-0400 703
Fuse Board 2, 2835460-0300 703
Fuse Board 3, 2835461-0300 703
Fuse Kit, Hose/Gun, 1028331, 90459-1972 395
Fuse Kit, Main Circ.Board, 1028329, 90459-1974 395
Fuse Panel Label, 3386021-0000 651
Fuse Panel Label, 3386025-0000 651
Fuse Panel Label, 3386027-0000 673
Fuse Panel Label, 3386031-0000 673
Fuse, ATDR6, 90458-2510 ..... 787, 791, 795, 799
FWAS080G0-0S, Washer plain, 315105-0165 .. 43, 49, 57, 63, 69, 75, 85, 87, 91, 97, 105, 113, 119, 125, 127, 157, 177, 185, 197, 201, 211, 213, 217, 219, 225, 293, 295, 299, 327, 333, 391, 489, 491, 509, 515, 519, 521, 567, 703, 807, 833, 861, 871, 877

G

Gasket, 1030878-0000 327
Gasket, 2868066-0000 695
Gasket, 3108497-0000 265
Gasket, 3108498-0000 265
Gear box, TP00042000110, 90600-0812 69
Gear Wheel, 2727427-0000 565
Gears, Worm motor SK1SIS31F-IEC63-63S/2, 90606-5280 157
Gears,planetary TP010F-MA3-66-OE1/MPL B4, 90603-2476 479
Gland fitting, VK 22054yUL16, 90458-0430 ..... 265, 283, 337, 399
Gland fitting, VK 22555yUL21, 90458-0432 ..... 349, 399
Gland fitting, VK 24056yUL29, 90458-0434 ..... 283, 399
Gland lock nut, M16x1,5, 353250-0016 695
Gland lock nut, M32x1,5, 353250-0032 695
Gland, Lock nut, M16x1,5, 90458-0460 245
Glass Cover, 3052393-0000 ..... 333, 861
Glass Door, 2779748-0200 413
Glass Door, 2779832-0100 413
Glass Door, 2779834-0100 413
Glass Door, 2805687-0100 413
Glass Door, 2805694-0100 413
Glass Door, 3047348-0100 413
Glass Door, 3329211-0000 443
Glass Door, 3329212-0000 413
Glass Door, 3329213-0000 445
Glass Door, 3329214-0000 451
Glass Door, 3329215-0000 453
Glass Door, 3329217-0000 455
Glass Door, 3423302-0000 425
Grease Gun, 3095514, 90604-5444 831
Grease Nipple 45 deg. M6x1, 10606145RF, 90605-1284 181
Grease Nipple str. M10x1, 996-001-890-s3, 90606-2351 ..... 43, 49, 57, 63, 75, 81, 97, 105, 113, 119
GUI SCADA TP-Visu+ RT Win32/64, 2701191, 351434-0200 399
Guide bar, SSR 25 253L-YM G36.5/36.5, 90600-0484 ..... 193, 213
Guide bar, SSR 25 305 LYM G32.5/32.5, 90600-0482 ..... 201, 205, 215
Guide bar, SSR 25-430LYM G35/35, 90600-0483 201
Guide bar, SSR25 385L YM G42.5/42.5, 90600-0485 205
Guide bar, SSR25-180L-YM G30/30, 90600-0434 467
Guide Bracket, 2703700-0200 ..... 527, 859
Guide Bracket, 2783460-0000 ..... 529, 865
Guide rail, 15x20x580, 90604-3333 129
Guide Rail, 2716069-0300 607
Guide Rail, 2838653-0200 123
Guide Rail, 3102969-0100 619
Guide Rail, 3147216-0100 619
Guide Rail, 3147217-0100 619
Guide Rail, 3147218-0100 619
Guide Rail, 3147220-0100 619
Guide Rail, 3147221-0100 619
Guide Rail, 3147222-0100 619
Guide Rail, F-618179.KUEM12-W, 90606-9250 569
Guide Shaft, 2783477-0000 ..... 509, 877
Guide, 1121-SU540, 90237-0144 ..... 425, 443, 445
Guide, 2716067-0000 607
Guide, 2716068-0000 607
Guide, 2716138-0000 607
Guide, 2716139-0000 607
Guide, 2727442-0000 613
Guide, 2727448-0000 613
Guide, 2752105-0000 613
Guide, 2752106-0000 613
Guide, 2805461-0000 139
Guide, 2857744-0000 235
Guide, 2857745-0000 239
Guide, 2867644-0000 607
Guide, 2867645-0000 607
Guide, 2867647-0000 613
Guide, 2867649-0000 613
Guide, 2873979-0000 237
Guide, 2873980-0000 243
Guide, 2874003-0000 241
Guide, 2875596-0000 607
Guide, 2875597-0000 607
Guide, 2875598-0000 613
Guide, 2875599-0000 613
Guide, 2893416-0000 607
Guide, 2893417-0000 607
Guide, 2893422-0000 613

Guide, 2893423-0000 613
Guide, 2940569-0000 139
Guide, 2940677-0000 139
Guide, 2970129-0000 613
Guide, 2970130-0000 613
Guide, 3047353-0000 777
Guide, 3068636-0000 233
Guide, 3077723-0000 613
Guide, 3077724-0000 613
Guide, 3077731-0000 607
Guide, 3077732-0000 607
Guide, 3103326-0000 147
Guide, 3108488-0000 265
Guide, 3108489-0000 265
Guide, 3115273-0000 251
Guide, 3117146-0000 67
Guide, 3120838-0000 67
Guide, 3120842-0000 137
Guide, 3124445-0000 235
Guide, 3124446-0000 235
Guide, 3124447-0000 237
Guide, 3124448-0000 237
Guide, 3124449-0000 241
Guide, 3124450-0000 241
Guide, 3124453-0000 243
Guide, 3124454-0000 243
Guide, 3124455-0000 239
Guide, 3124456-0000 239
Guide, 3124457-0000 233
Guide, 3124458-0000 233
Guide, 3124460-0000 231
Guide, 3124528-0000 245
Guide, 3124531-0000 231
Guide, 3124532-0000 231
Guide, 3137424-0000 607
Guide, 3137425-0000 607
Guide, 3141446-0000 607
Guide, 3149908-0000 157
Guide, 3162977-0000 139
Guide, 3203258-0000 ..... 41, 111
Guide, 3203260-0000 ..... 55, 103
Guide, 3217906-0000 41
Guide, 3217907-0000 55
Guide, 3217908-0000 35
Guide, 3217909-0000 35
Guide, 3413327-0000 193

H

Hand Wheel, 2781286-0000 71
Handle, 2802404-0100 69
Handle, 3108437-0000 ..... 631, 641
Handle, 3115231-0000 265
Handle, 3115300-0000 ..... 231, 233, 235, 237, 239, 241, 243, 253
Handle, GN565 SW 192-M8, 90459-3779 ..... 515, 871
Hard Disk, 3108447-0100 245
Hard Disk, 5AC901CSSD03, 90606-0355 405
Heat Guard, 2773627-0000 337
Heat Guard, 2773630-0000 337
Heat Guard, 2836263-0000 337
Heated insert for manifold, 7333919, 344319-3104 195
Heater Block Kit, 1064649, 90459-1983 395
Heater cartridge 3/8"x6" 230V-200W, 344319-3106 195
Heater Cartridge, 3/8X50 MM 230V-50W, 344319-3101 195
Heater Cartridge, 3/8X76 mm 230V-100W, 344319-3103 195
Heater, 3203761-0200 325
Heating Chamber, 2547915-0000 341
Heating Chamber, 2662760-0000 341
Heating Element, 3203764-0100 329
Height Adjustment, 2716047-0100 579
Height Adjustment, 2769738-0100 277
HeliCap2 23 mm White PA001, A100000036 817
Hex. Domed Cap MHM-6 M6 A280, 312705-0316 ..... 631, 641
Hexagon nut DN8 Rp1/4" 1.4404, 6-526343 02 ..... 343, 365
Hexagon Nut, EN 24032 M6M M10 A480, 312607-0320 ..... 105, 119
Hexagon Nut, EN 24032 M6M M20 A480, 312607-0326 119
Hexagon Nut, EN 24032 M6M M30 A480, 312607-0332 225
Hexagon Nut, EN 24032 M6M M4 A480, 312607-0312 ..... 385, 809
Hexagon Nut, EN 24032 M6M M5 A480, 312607-0314 213
Hexagon Nut, EN 24032 M6M M6 A480, 312607-0316 225
Hexagon Nut, EN 24032 M6M M8 A480, 312607-0318 ..... 211, 217, 219, 299
Hexagon nut, Lock, M14, DIN985, 90099-0187 245
Hexagon Nut, M6M M10 A280, 312605-0320 ..... 225, 245, 509, 573, 877
Hexagon Nut, M6M M12 A280, 312605-0322 ..... 245, 837
Hexagon Nut, M6M M20 A280, 312605-0326 265
Hexagon Nut, M6M M3 A280, 312605-0310 ..... 69, 287, 807
Hexagon Nut, M6M M4 A280, 312605-0312 ..... 155, 235, 237, 239, 243, 335, 453, 885
Hexagon Nut, M6M M5 A280, 312605-0314 ..... 225, 253, 319, 321, 337, 381, 671, 693, 701, 845, 851
Hexagon Nut, M6M M6 A280, 312605-0316 ..... 125, 157, 161, 205, 265, 283, 287, 391, 399, 401, 417, 419, 423, 433, 443, 631, 641, 695, 697, 805
Hexagon Nut, M6M M8 A280, 312605-0318 ..... 127, 197, 245, 265, 833, 893
Hexagon nut, Ny-Lock M10 A4 80, 312812-0320 87
Hexagon nut, Ny-Lock M10 fzb, 312810-0320 295
Hexagon nut, Ny-Lock M12 A4 80, 312812-0322 187
Hexagon nut, Ny-Lock M3 fzb, 312810-0310 ..... 265, 631, 641
Hexagon nut, Ny-Lock M4 A4 80, 312812-0312 ..... 367, 537, 695

Hexagon nut, Ny-Lock M4 fzb, 312810-0312 ..... 231, 233, 235, 237, 239, 241, 243, 253, 265, 631, 641
Hexagon nut, Ny-Lock M5 A4 80, 312812-0314....169, 175, 185, 367, 407, 425, 443, 445, 537, 581, 697, 835
Hexagon nut, Ny-Lock M5 fzb, 312810-0314 .....245, 253, 255, 257, 259, 265
Hexagon nut, Ny-Lock M6 A4 80, 312812-0316..... 169, 181, 205, 399, 427, 447, 569, 805
Hexagon nut, Ny-Lock M6 fzb, 312810-0316 ..... 253, 265
Hexagon nut, Ny-Lock M8 A4 80, 312812-0318..... 87, 287, 295, 367, 391
Hexagon Nylon Nut, M4x0,7, 90099-0191 695
Hexagon Thin Nut, EN 24035 ML6M M27 A4, 312625-0330..... 97, 113
Hexagon Thin Nut, EN 24035 ML6M M6 A4, 312625-0316 581
Hexagon Thin Nut, EN 24035 ML6M M8 A4, 312625-0318 75
Hinge, 3115232-0000..... 253, 265
Holder 12 mm No. 82 66861, 90458-0499 347
Holder Zb35 K 5026.8, 353041-0106 757
Holder, 1020637-0000.....319, 321, 805, 845, 851
Holder, 1550772-0000..... 311, 317
Holder, 2703692-0000..... 529, 865
Holder, 2703711-0000..... 177
Holder, 2703714-0000..... 175
Holder, 2715827-0000..... 537
Holder, 2780352-0000..... 175
Holder, 2780391-0000..... 175
Holder, 2838701-0000..... 541
Holder, 2985759-0000..... 631
Holder, 3073406-0000..... 175
Holder, 3095790-0000..... 333, 861
Holder, 3095796-0000..... 333, 861
Holder, 3115363-0000..... 237
Holder, 3143919-0000..... 529, 865
Holder, 3144497-0000..... 529, 865
Holder, 531616-0000 ..... 391, 419
Hood, Han3A, 19 20 003 1440, 90459-3670..... 245
Hood, side entry, HAN6E, 19 30 006 1540, 90459-1458 .....157, 245, 265, 631, 641
Hose 15/23 Reinf.Pvc Transp., 90166-0087 761
Hose Assembly, Cejn 19 958 9669, 90458-1741..... 343
Hose Clip, 3501860-0000..... 193
Hose Clip,Worm Drive Type (13)-20, 342991-0102..... 839
Hose Clip,Worm Drive Type (19)-28, 342991-0104..... 761
"Hose Clip,Worm Drive Type (38)-50", 342991-0108 337
Hose Holder Blue Series, 271486, 90605-1044 219
Hose nipple, ext.thr. G3/8-12 mm, 90163-0041..... 839
Hose, 3243398-0100 831
Hose, 90152-0075 337
Hose, 90166-0113 283
Hose, 90166-0121 839
Hose, spiral conduit, 25x18, UL 1816, 90152-0051 ..... 265, 337, 399
Hose, spiral conduit, 42X35, UL3529, 90152-0060 399
Hose/Gun Module Kit, 1028328, 90459-1971 395
Hot Melt Applicator, 7333040, 344319-3001..... 193
Hot Melt Unit ProBlue 4, 104 9296 H1, 90604-3320 393
Hotmelt Equipment Nordson, 344319-3113..... 195
Hotmelt Equipment Nordson, 344319-3114..... 195
Hotmelt Equipment Nordson, 344319-3115..... 195
Hotmelt Equipment, 2758511-0400 275
Hotmelt gun, 3448635-0100 191
Hotmelt Unit, 3451445-0100..... 391
Hour Counter, B 609.10 10-50VDC, 90053-0031 737
Housing, 19 20 003 1250, 90459-3081..... 283
Housing, 19 30 006 1255, 90459-1461 ..... 157, 283
Housing, 2985809-0000..... 125
Housing, 3022021-0000..... 125
Hub, 2470302-0000..... 585, 589
Hub, 2834311-0000..... 479

I

Identification Single Conductors Sign, 90459-7229 695
Identifier, IDFIX-RW, 2TLA020070R2100, 90459-4891 737
Idler Roller, 3108415-0000..... 631, 641
Illumination, ICRR-LDR2-174LAT, 90605-2644..... 333, 861
In-Sight 5100 Camera, IS5100-01, 90604-2784..... 333, 861
In-Sight 5600 Camera, IS5600-01, 90605-2649..... 551, 891
Incoming terminal, BK25/3-PKZ0-E, 90600-1461 ..... 651, 673, 725
Inductive sensor, IFS 206, 90459-6948..... 581
Infeed Guide, 3139123-0100 139
Inner ring, IR12x16x20, 90600-0349..... 585, 589
Insert Nut, 101/04.04.3, 90602-9237 ..... 597, 603
Insert Nut, 50 M4 x 50AT10-00, 90603-1154..... 179
Insert, Single hole, E152 13, 353249-0004 ..... 245, 631, 641
Insert, Single hole, EK154 11, 353249-0012..... 265, 283, 337, 399
Insert, Single hole, EK155 16, 353249-0015..... 349, 399
Insert, Single hole, EK156 25, 353249-0054..... 283, 399
Insert, Solid, E151 G, 353249-0041..... 245
Insulating Hose Cuff, 1043366, 90606-2532..... 391
IPC configuration, 3328027-0201 399

J

Junction Box, 3297666-0100 891
Junction Box, 3403463-0100 277
Junction Nipple, 3326954-0000 ..... 75, 81
Junction Nipple, 3326956-0000 .....43, 49, 57, 63, 97, 105, 113, 119

K

Key, 2715837-0000 177
Key, 2930222-0000 833
Key, 3108461-0000 265
Key, 3478353-0000 ..... 97, 113, 177
Kit Oil Gun, EL06984595, 90605-4142 841
Kit, Operator panel/ enclosure, 1028326, 90459-1976 395
Kit, Pump Piston, 1028303, 90459-1984 395
Kit, RTD Temp. Sensor, 1028320, 90459-1978 395
Klüberoil 4 UH1-320N, 20 L Can, 344414-0766 ..... 47, 51, 61, 65, 79, 89, 183
Klüberoil 4 UH1-320N, 200 L Drum, 344414-0335 ..... 47, 51, 61, 65, 79, 89, 183
Klüberoil 4 UH1-320N, 5 L Can, 344414-0764 ..... 47, 51, 61, 65, 79, 89, 183
Klüberoil 4 UH1-320N, only in BoM, 344414-0000 ..... 43, 49, 57, 63, 75, 87, 181
Klübersynth UH1 14-151, 1kg Can, 344407-0037 ..... 131, 203, 473, 555, 563, 577, 587, 591
Klübersynth UH1 14-151, 25kg Bucket, 344407-0177 ..... 131, 203, 473, 555, 563, 577, 587, 591
Klübersynth UH1 14-151, 400g Cartridge, 344407-0591 ..... 131, 203, 473, 555, 563, 577, 587, 591
Klübersynth UH1 14-151, 45g Tube, 344407-0285 ..... 131, 203, 473, 555, 563, 577, 587, 591
Klübersynth UH1 14-151, only in BoM, 344407-0000 ..... 129, 201, 471, 553, 559, 573, 585, 589
Knob Circular, Ext Thread, No. 8302-6150, 318871-0105 ..... 333, 861

L

Label Tape, 3115281-0000 ..... 235, 237
Label, 2529720-0001 817
Label, 2529720-0016 817
Label, 2529720-0024 817
Label, 2529720-0037 817
Label, 2529720-0044 817
Label, 3361872-0000 523
Lamp, 3210206-0200 375
Lamp, 3210207-0100 375
Laser sensor, WSE9L-3P2237, 90606-4464 ..... 81, 807
Law, 2838714-0000 537
Lead-in, TET 10-14, E1458023, 90015-0021 349
Lead-in, TET 7-10, E1458019, 90015-0023 379
Lens 16mm In-sight 4100, HF16HA-1B, 90459-1180 ..... 333, 861
Lens with scale of lengths 10X, 90459-4931 813
Lens, E39-S65C, 90600-2375 ..... 299, 631, 641
Lens, LFC25F1, 90605-2647 ..... 551, 891
Level guard, 2.855435.1, 90274-0052 371
Lever, 2470301-0000 585
Lever, 2470373-0000 589
Lever, 2730989-0000 581
Lever, 2788174-0000 125
Lid, 2710819-0000 337
Lid, 3365197-0000 245
Lifting Eye Bolt, LT M12 FZB, 318301-0122 761
Light Element, Blue, PSD-S OE LED BU, 90602-4060 379
Light Element, Green, PSD-S OE LED GN, 90602-4061 379
Light Element, Red, PSD-S OE LED RD, 90602-4062 379
Light Element, Yellow, PSD-S OE LED YE, 90602-4063 379
Limit sw. SZ 2586.010, 90602-8807 695
Limit switch, D4C-1G01 5M, 90601-1027 ..... 551, 891
Line Filter, B84113HB60, 90600-5253 703
Line Filter, B84143A35R106, 90600-5258 703
Line Filter, B84144A36R120, 90600-5262 697
Line Heater, 2773622-0300 275
Link Attachment, 3039032-0000 205
Lithium battery, TPOP Maxi 4A0006.00-000, 90459-1485 405
Lock Cylinder, 1109-SU125, 90237-0128 ..... 425, 443, 445
Lock Holder, 2940041-0000 631
Lock knob, GN613 NIK 6, 90459-1940 837
Lock Knob, No. GN 617 NIK5, 90051-0112 ..... 333, 861
Lock Washer 5,3/10 H=0,6 Fzb, 90062-0060 337
Lock washer Serrat.ext.gear,6,4/11 H=0,7, 90062-0015 ..... 695, 729
Lock washer, DIN127B 4,1 A4, M4-5/32, 315402-0136 ..... 651, 665, 673, 687, 729, 883
Lock washer, DIN127B 6,1 A4, M6, 315402-0150 729
Lock washer, DIN127B 6,5 A4, 1/4, 315402-0156 ..... 529, 865
Lock, 1121-U10C, 90237-0123 ..... 425, 443, 445
Locking Handle, M6x12M, 90604-8744 193
Locking Hub, 2930159-0000 559
Locking Lever, 3108434-0000 ..... 631, 641
Locking Lever, 3124534-0000 245
Locking Lever, No. KR8X30-SUS, 90017-0029 ..... 69, 127, 295, 299
Locking Lug, No. 1121-53-0P, 90237-0147 ..... 425, 443, 445
Logotype "Tetra Pak" for stripe 70mm, 90511-0145 287
Low Head Screw,RSCBT620, 90607-0067 193
Lubricant H1-0500, PAO v320, 20 L Can, 1607010-0020 ..... 83, 101, 107, 117, 121, 227
Lubricant H1-0500, PAO v320, 5 L Can, 1607010-0005 ..... 83, 101, 107, 117, 121, 227
Lubricant H1-0500, PAO v320, only in BOM, 1607010-0000 ..... 81, 97, 105, 113, 119, 225
Lubrication Diagram, 3228275-0000 775
Lubrication Unit, 10P-P4-H1 LM12, 90603-0408 367

M

Machine Body, 2758505-0400 275
Machine Body, 2769761-0400 277
Machine Sign, 200x50 CE EAC, 351485-0009 523
Magnet, 3115235-0000 265
Magnetic lock, JSD-ZH-EM1-K, 90459-6913 381
Main PCA Serv.Kit, 1028322, 90459-1973 395
Main switch assy.,right side, NZM1-XSM-R, 90600-1198 697
Male Insert HAN 4A, 0920 0042 611, 90459-6821 246
Male insert, Han E06, 0933 0062 601, 90110-0052 ..... 157, 246, 266, 631, 641

Mand. Action Sign, Read Maint M S, 50 mm, 351554-0009 651
Marking for pneum. tubing, PRZ04, 90459-7368 ..... 541, 581
Marking for pneum. tubing, PRZ06, 90459-7369 ..... 87, 133, 135, 393, 541, 805
Marking for pneum. tubing, PRZ08, 90459-7370 ..... 347, 349, 541, 805
Marking for pneum. tubing, PRZ12, 90459-7372 ..... 349, 541
Marking for pneum. tubing, PRZ16, 90459-7373 365
Marking Strip, PRZ06T04/09/17/30, 351582-0006 807
Marking Strip, PRZ08T04/09/17/30, 351582-0008 ..... 193, 807
Marking, 3402970-0000 651
Marking, DEK 5 FW 1-200, 359011-0806 ..... 671, 693
Marking, DEK 5 FW 1-50, 359011-0807 ..... 401, 671, 673, 693, 701, 711, 713, 715, 717, 719, 721, 747, 759
Marking, DEK 5 FW 101-150, 359011-0809 ..... 279, 401, 671, 693, 893
Marking, DEK 5 FW 201-250, 359011-0811 ..... 671, 693
Marking, DEK 5 FWZ E1-E50, 90604-9505 ..... 401, 671, 693, 697, 701, 755
Marking, DEK 5 FWZ E51-E100, 90604-9506 755
Marking, DEK 5 GW PE, 90601-6250 697
Marking, DEK 5FW 51-100, 359011-0808 711
Marking, DEK 5GW (-), 359011-0818 ..... 671, 693
Marking, DEK 5GW (+), 359011-0817 ..... 671, 693
Marking, DEK 6 FW 1-50, 359011-0821 ..... 701, 745, 757, 759
Marking, DEK 6 FWZ E1-E50, 90604-9507 701
Marking, Earth, DEK 5 GW ERDE I.KR., 359011-0819 ..... 279, 893
Measuring Tool, 3357883-0100 775
Mechanical Rebuilding, 3420951-0100 889
Metering valve 2.801258.1, 90092-0054 367
Miniature Circ. Break., FAZ -D10 1-pole, 351416-0100 652
Miniature Circ. Break., FAZ -D6 1-pole, 351416-0060 ..... 651, 667, 689
Miniature Circuit Breaker, FAZ-C10/1, 354000-0100 652
Miniature Circuit Breaker, FAZ-C10/2-NA, 315745-0100 674
Miniature Circuit Breaker, FAZ-C10/2, 354001-0100 652
Miniature Circuit Breaker, FAZ-C20/3-NA, 315746-0200 674
Miniature Circuit Breaker, FAZ-C20/3, 354002-0200 652
Miniature Circuit Breaker, FAZ-C25/3-NA, 315746-0250 673
Miniature Circuit Breaker, FAZ-C25/3, 354002-0250 651
Miniature Circuit Breaker, FAZ-C4/1-NA, 315744-0040 673–674
Miniature Circuit Breaker, FAZ-C4/1, 354000-0040 651–652
Miniature Circuit Breaker, FAZ-C6/1-NA, 315744-0060 673–674
Miniature Circuit Breaker, FAZ-C6/1, 354000-0060 651–652
Miniature Circuit Breaker, FAZ-C6/3-NA, 315746-0060 673
Miniature Circuit Breaker, FAZ-C6/3, 354002-0060 651
Miniature Circuit Breaker, FAZ-D10/1-NA, 315747-0100 674
Miniature Circuit Breaker, FAZ-D6/1-NA, 315747-0060 ..... 667, 673, 689
Motion control, 2716090-0200 191
Motion control, 2716097-0200 191
Motor 3GAA 062 002-BSC, 90603-9718 ..... 245, 266
Motor 3GAA052002-CSA, 90603-2676 ..... 631, 641
Motor Bracket, 2727408-0000 565
Motor Bracket, 2840145-0100 191
Motor Bracket, 2840146-0100 191
Motor Drive Control, 2835462-0400 703
Mounting Plate, 2839382-0100 ..... 481, 859
Mounting Plate, 3386151-0000 703
Mounting rail support, TSTW 5/M5, 90099-0005 701
Mounting Screw, 90226-0458 ..... 407, 417, 419, 423, 429, 433, 439, 449, 451, 455
Mounting Sheet, 2802637-0000 185
Multi diameter module, CM 15W40, 90458-1175 695
Multi diameter module, CM 20W40, 90458-1174 695
Multi diameter module, CM 30W40, 90458-1173 695

N

Needle Bearing w/o Cone, 16x24x16mm, 90600-0347 ..... 585, 589
Needle roller bearing, 50x80x28 mm, 90600-0892 ..... 97, 113
Needle valve 345 bar, 9N400S, 90459-4996 841
Net, 1030338-0000 327
Nipple ext.thread hexagon, 0901 00 10, 342700-0109 259
Nipple ext.thread hexagon,09010013G1/4, 342700-0110 841
Nipple Hexagon,09011317G3/8G1/4, 342700-0203 841
Nipple, 2663999-0000 327
Nipple, ext.thread, hexagon, R1/4-R1/4, 90224-0372 361
Non-return valve, H-QS-6, 90459-0290 349
Non-return Valve, RVA-M6, 90604-3329 ..... 43, 49, 57, 63, 75, 81, 97, 105, 113, 119, 181
Notice Sign H, Do not spray, 351569-0001 457
Nozzle, 2506940-0000 343
Nut Groove, Hammer-Head M6 FE, 90013-0035 ..... 427, 641
Nut GUK 5 M25 x 1.5 FZB, 90459-6280 ..... 43, 49, 57, 63, 75, 81, 105, 119
Nut Hex. Domed Cap MHM-6 M10 A280, 312705-0320 573
Nut Hex. Domed Cap MHM-6 M3 A2, 312705-0310 265
Nut Hex. Domed Cap MHM-6 M4 A280, 312705-0312 ..... 231, 233, 235, 237, 239, 241, 243, 257, 441
Nut Hex. Domed Cap MHM-6 M5 A280, 312705-0314 ..... 257, 265, 631, 641
Nut Hex. Domed Cap MHM-6 M8 A280, 312705-0318 ..... 75, 265
Nut M40x1,5, 90458-0326 ..... 283, 399
Nut M6M 10X1 Stainless A2 80, 312635-0320 581
Nut Round with slots M30x1,5 SS, 90459-2644 ..... 75, 81
Nut, 1359565-0000 ..... 311, 317
Nut, 270926-0000 339
Nut, 2907981-0000 139
Nut, 2944174-0000 833
Nut, 2974858-0000 573
Nut, M16x1,5, 90458-0322 ..... 265, 631, 641
Nut, M20x1,5, 90458-0323 ..... 283, 337, 393, 399, 695
Nut, M25x1,5, 90458-0324 ..... 349, 399, 695
Nut, T-slot M6, 90459-5134 ..... 805, 807
Nylon Washer G1/4”, 0602 23 11 20, 351477-0110 343

O

O-ring 12,42x1,78 mm, 315202-0702 185
O-ring 17,17x1,78 mm, 315202-0705 ..... 75, 81, 157
O-ring 20,29x2,62 mm, 315202-0717 ..... 43, 57
O-ring 25,12x1,78 mm, 315202-0710 181
O-ring 29,87x1,78 mm, 315202-0713 ..... 75, 81
O-ring 34,65x1,78 mm, 315202-0716 ..... 471, 553, 559, 573
O-ring 44,04x3,53 mm, 315202-0602 ..... 97, 113
O-ring 44,12x2,62 mm, 315202-0732 ..... 103, 111
O-ring 45,69x2,62 mm, 315202-0733 ..... 75, 81
"O-ring 5,3x2,4 mm", 315202-0204 835
O-ring 58,42x2,62 mm, 315202-0741 ..... 43, 57
O-ring, 26,0 X 1.80 mm, Viton, 7333932, 344319-3102 195
O-ring, 6*1, Aflas 70, 375291, 344319-3107 195
Oil filter PN 100 Ord.no 2.77 10 70.1, 90415-0030 367
Oil Gun, 3243399-0100 831
OK Adhesive Detector, 3420950-0100 855
OK TBA Positioning Device, 3408456-0100 855
Olflex Control TM 3G1,5, 281603, 315743-0008 389
Olflex Control TM 4G1,5, 281604, 315743-0009 ..... 266, 389, 631, 641
Olflex Control TM 5G6, 281005, 315743-0024 389
Olflex Control TM CY 4G1,5, 281604CY, 315756-0009 ..... 245, 389
Operator Interface, 2779070-0400 275
Operator Interface, 2802386-0400 397
Optocoupler, PLC-OSC-24DC/24DC/2, 90601-6652 ..... 651, 673
Overload protection, PKZM0-0.4 072732, 90459-5321 ..... 651, 673
Overload protection, PKZM0-1 072734, 90459-5323 ..... 651, 673
Overload protection, PKZM0-4 072737, 90459-5326 725

P

Package Aligner, 2895147-0300 ..... 651, 673
Package Aligner, 3115099-0300 139
Package conveyor, 2758507-0300 275
Package Handling, 3199895-0300 31
Package Line, 3495612-0100 31
Package Positioner, 3199892-0300 31
Package positioner, 3199893-0100 31
Panel, 3433159-0000 253
Panel, 3433160-0000 253
Panel, 3433161-0000 253
Parallel key w. round ends 6x6x60 mm, 90458-0507 ..... 75, 81
Parallel key w. round ends, 10x8x25 mm, 315705-0296 ..... 43, 57
Parallel key w. round ends, 10x8x50 mm, 315705-0303 ..... 49, 63
Parallel key w. round ends, 14x9x90 mm, 315701-0371 ..... 105, 119
Parallel key w. round ends, 5x5x14 mm, 315701-0198 157
Parallel key w. round ends, 5x5x40 mm, 315701-0208 157
Parallel key w. round ends, 5x5x45 mm, 315701-0209 ..... 631, 641
Parallel key w. round ends, 6x6x20 mm, 315705-0232 ..... 75, 81, 295
Parallel key w. round ends, 6x6x25 mm, 315705-0234 559
Parallel key w. round ends, 6x6x32 mm, 315705-0237 225
Parallel key w. round ends, 6x6x36 mm, 315701-0238 ..... 631, 641
Parallel key w. round ends, 6x6x40 mm, 315705-0239 ..... 69, 103, 111, 127
Parallel key w. round ends, 6x6x50 mm, 315701-0241 265
Parallel key w. round ends, 8x7x30 mm, 315701-0267 245
Parallel key w. round ends, 8x7x30 mm, 315705-0267 125
Parallel pin ISO 2338 10m6x20 A1, 311103-0454 ..... 335, 523, 885
Parallel pin ISO 2338 10m6x24 A1, 311103-1456 ..... 217, 523
Parallel pin ISO 2338 10m6x30 A1, 311103-0458 ..... 465, 477, 509, 877
Parallel pin ISO 2338 10m6x45 A1, 311103-0464 211
Parallel pin ISO 2338 3m6x16 A1, 311103-0236 581
Parallel pin ISO 2338 4m6x10 A1, 311103-0267 815
Parallel pin ISO 2338 4m6x12 A1, 311103-0268 ..... 231, 233, 235, 237, 239, 241, 243, 529, 865
Parallel pin ISO 2338 4m6x18 A1, 311103-0271 ..... 551, 891
Parallel pin ISO 2338 4m6x24 A1, 311103-1274 245
Parallel pin ISO 2338 5m6x12 A1, 311103-0306 ..... 231, 233, 235, 237, 239, 243, 333, 861
Parallel pin ISO 2338 5m6x16 A1, 311103-0308 ..... 333, 469, 861
Parallel pin ISO 2338 6m6x10 A1, 311103-0348 ..... 581, 631
Parallel pin ISO 2338 6m6x12 A1, 311103-0349 ..... 193, 231, 233, 235, 237, 239, 241, 243, 479, 613
Parallel pin ISO 2338 6m6x16 A1, 311103-0351 ..... 55, 287, 489, 509, 519, 569, 877
Parallel pin ISO 2338 6m6x18 A1, 311103-0352 ..... 613, 779
Parallel pin ISO 2338 6m6x20 A1, 311103-0353 ..... 97, 103, 105, 111, 113, 119, 129, 193, 567, 613
Parallel pin ISO 2338 6m6x22 A1, 311103-0354 ..... 471, 509, 877
Parallel pin ISO 2338 6m6x24 A1, 311103-1355 ..... 125, 471
Parallel pin ISO 2338 6m6x28 A1, 311103-0356 583
Parallel pin ISO 2338 6m6x30 A1, 311103-0357 245
Parallel pin ISO 2338 6m6x50 A1, 311103-0365 225
Parallel pin ISO 2338 6m6x55 A1, 311103-0367 ..... 509, 877
Parallel pin ISO 2338 8m6x18 A, 311103-0400 157
Parallel pin ISO 2338 8m6x20 A1, 311103-0401 ..... 205, 335, 885
Parallel pin ISO 2338 8m6x30 A1, 311103-0405 ..... 293, 493, 497, 501, 505, 507, 875
Parallel pin ISO 2338 8m6x32 A1, 311103-0406 567
PF 525 EMC Line Filter, 240V, 0.4kW A, 90605-9527 ..... 651, 667, 673, 689, 749
Photocell Bracket, 3208122-0100 139
Photocell Bracket, 3210232-0100 803
Photocell Bracket, 3252597-0000 321
Photocell E3Z-T86A, Sender+Reciever, 90459-5529 ..... 137, 266, 299, 849
Photocell, WF 225-B4150, 90459-6947 155
Pillar, 2766927-0000 ..... 41, 55
Pillar, 2778585-0000 69
Pillar, 2802392-0000 ..... 43, 57
Pillar, 3314429-0000 139
Pin, 1036329-0000 297
Pin, 2775398-0000 87
Pin, 2780361-0000 581

Pin, 2780362-0000 581
Pin, 2944175-0000 ..... 523, 833
Pin, 3053471-0000 ..... 333, 861
Pin, 3108487-0000 265
Pin, 3115270-0000 251
Pin, 3115306-0000 261
Pin, 3124529-0000 245
Pipe Clip for Tube d=5 mm, 90165-0060 453
Pipe, 2775403-0000 347
Pipe, 2775404-0000 347
Pipe, 2779831-0000 ..... 139, 299
Pipe, 2788176-0000 347
Pipe, 3216180-0000 299
Pipe, 476221-0002 309
Pipe, 476221-0013 805
Piston Pump, 90048-041 H1, 90604-5445 371
Pivot Bracket, 2751704-0000 471
Plain bearing, JUM-02-20, 90458-2932 ..... 69, 127, 295
Planetary Gear, LP070F-MF1-3-1E1, 90606-8923 91
Planetary Gear, SK+100X-MF1-10-4H1, 90606-8922 ..... 207, 209
Plastic Bag, 2594996-0000 817
Plate complete(BOM), 90125-0020 337
Plate, 2504290-0000 321
Plate, 2712603-0000 127
Plate, 2716152-0000 569
Plate, 2766953-0000 ..... 49, 63
Plate, 2773604-0000 87
Plate, 2773638-0000 87
Plate, 2775412-0000 85
Plate, 2775423-0000 119
Plate, 2775438-0000 ..... 97, 113
Plate, 2778592-0000 103
Plate, 2778594-0000 ..... 69, 127
Plate, 2779014-0000 127
Plate, 2779057-0000 125
Plate, 2779063-0000 69
Plate, 2779759-0000 69
Plate, 2779776-0000 287
Plate, 2779786-0000 287
Plate, 2779800-0000 283
Plate, 2780379-0000 ..... 515, 871
Plate, 2780523-0000 ..... 515, 871
Plate, 2787232-0000 447
Plate, 2788168-0000 129
Plate, 2788169-0000 ..... 103, 111
Plate, 2802417-0000 283
Plate, 2835939-0000 477
Plate, 2837073-0200 475
Plate, 2838683-0000 125
Plate, 2838765-0000 583
Plate, 2838782-0000 ..... 335, 885
Plate, 2838783-0000 185
Plate, 2841344-0000 197
Plate, 2842803-0000 ..... 437, 857
Plate, 2842837-0000 225
Plate, 2844526-0000 225
Plate, 2844527-0000 225
Plate, 2868064-0000 695
Plate, 2868065-0000 695
Plate, 2873867-0000 337
Plate, 2873876-0000 805
Plate, 2885916-0000 ..... 631, 641
Plate, 2909473-0000 211
Plate, 2918904-0000 567
Plate, 2918905-0000 567
Plate, 2930210-0000 299
Plate, 2930211-0000 299
Plate, 2931783-0000 283
Plate, 2943597-0000 81
Plate, 2944164-0000 81
Plate, 2944171-0000 833
Plate, 2973943-0000 589
Plate, 2985771-0000 217
Plate, 2985781-0000 ..... 97, 113
Plate, 2985847-0000 85
Plate, 2987983-0000 631
Plate, 3021525-0000 125
Plate, 3039027-0000 287
Plate, 3068597-0000 225
Plate, 3087822-0000 ..... 335, 885
Plate, 3089906-0000 ..... 335, 885
Plate, 3095791-0000 ..... 333, 861
Plate, 3095793-0000 185
Plate, 3108409-0000 ..... 631, 641
Plate, 3108410-0000 ..... 631, 641
Plate, 3108411-0000 ..... 631, 641
Plate, 3108412-0000 ..... 631, 641
Plate, 3108422-0000 ..... 631, 641
Plate, 3108427-0000 ..... 631, 641
Plate, 3108475-0000 265
Plate, 3108480-0000 265
Plate, 3108491-0000 265
Plate, 3108494-0000 265
Plate, 3108496-0000 265
Plate, 3114692-0000 159
Plate, 3115225-0000 265

Plate, 3115278-0000 257
Plate, 3115286-0000 255
Plate, 3115291-0000 245
Plate, 3115347-0000 ..... 231, 233, 235, 237, 239, 241, 243
Plate, 3115354-0000 ..... 233, 235
Plate, 3115362-0000 237
Plate, 3117151-0000 157
Plate, 3117152-0000 157
Plate, 3117153-0000 157
Plate, 3120839-0000 137
Plate, 3120840-0000 137
Plate, 3123927-0000 ..... 335, 885
Plate, 3124364-0000 ..... 239, 243
Plate, 3124461-0000 231
Plate, 3124463-0000 231
Plate, 3124530-0000 245
Plate, 3143918-0000 ..... 335, 885
Plate, 3149901-0000 157
Plate, 3149906-0000 157
Plate, 3156411-0000 807
Plate, 3159895-0000 807
Plate, 3159896-0000 807
Plate, 3161466-0000 ..... 335, 885
Plate, 3170037-0000 447
Plate, 3172144-0000 447
Plate, 3177603-0000 157
Plate, 3203747-0000 43
Plate, 3209477-0000 161
Plate, 3210225-0000 807
Plate, 3210226-0000 807
Plate, 3217277-0000 41
Plate, 3217924-0000 57
Plate, 3223765-0000 219
Plate, 3235825-0000 807
Plate, 3235826-0000 807
Plate, 3257421-0000 ..... 75, 81
Plate, 3257422-0000 ..... 75, 81
Plate, 3331455-0000 85
Plate, 3390765-0000 885
Plate, 3416667-0000 379
Plate, 3417766-0000 253
Plate, 3417768-0000 257
Plate, 3426672-0000 385
Plate, 3429991-0000 283
Plate, 3433173-0000 253
Plate, 3433174-0000 255
Plate, 3433177-0000 251
Plate, 3448874-0000 193
PLC, 2835458-0400 703
Plinth, 2817783-0300 399
Plinth, 2839221-0300 703
Plinth, 2839222-0200 703
Plinth, 2839223-0300 703
Plinth, 2839224-0200 703
Plinth, 2839230-0200 709
Plinth, 2840909-0200 709
Plinth, 2840910-0200 709
Plinth, 2840911-0200 709
Plinth, 2840915-0200 709
Plinth, 2840917-0200 709
Plinth, 2840918-0300 695
Plinth, 2841403-0400 ..... 652, 674
Plinth, 2890591-0300 739
Plinth, 3363694-0100 739
Plug dosing block, 90134-0052 367
Plug M10X1 Stainless, 90087-0019 367
Plug, 3108501-0000 265
Plug, Blind, Plastic, No. IKPK25x1, 5, 90261-0060 217
Plug, Ext. G-Thread, G1/4, 90330-0026 361
Plug, Ext. R-Thread, R1/4, 90600-1167 259
Plug, Ext. Thread Hex. Socket. G1/4, 90604-6027 367
Pneumatic Component, 3108445-0200 245
Pneumatic Cylinder, 2769718-0300 123
Pneumatic Cylinder, 3199896-0200 123
Pneumatic Diagram, 3398689-0000 775
Pneumatic Panel, 2838672-0300 345
Pneumatic Panel, 3398007-0100 461
Point I/O Adapt. Mod.,1734-AENTR SerieB, 90606-0860 401
Position Template, 2873923-0200 775
Position Template, 3186489-0000 837
Positioning Unit, 3405810-0100 ..... 651, 673, 859
Power I/O cable, CCB-84901-0103-10, 90600-2102 ..... 333, 551, 861, 891
Power supply 24VDC, 1756-PB75/B, 90459-7267 731
Power Supply Unit, 2835457-0300 703
Power Supply, IQ00-QLC-400-1-TP, 90605-2645 ..... 279, 893
Power Supply, QUINT-PS/ 3AC/24DC/20, 90602-8687 743
Power Supply, QUINT-PS/ 3AC/24DC/20, 90602-8988 739
Power Supply, STEP-PS/1AC/24DC/3,8/C2LPS, 90603-1115 723
Power/Encoder Cable 2090-CSWM1DF-14AA09, 351450-1409 ..... 377, 389, 863
Pre-Heater, 2873865-0000 337
Pressure Finger, 2751667-0200 169
Pressure gauge, MA-40-6-R1/4-EN, 90459-7344 349
Pressure Guard PEV-1/4-B-OD, 90459-6426 361
Pressure switch, 1800 kPa, 28545-251-2, 90603-1938 367
Pressure Zone Plug, VMPAC-TE, 344383-0501 541
Processor L72, Series B, 1756-L72/B, 90605-2744 731

Profile, 2844501-0000 419
Profile, 3108430-0000 641
Profile, 3156384-0000 807
Profile, 3156385-0000 807
Profile, 3210220-0000 807
Profile, 3210223-0000 807
Prohibiti. Sign ISO,Dont wash/Spray,50mm, 351553-0013 457
Prohibition Sign ISO,Do Not reach,50 mm, 351553-0015 457
Prohibition sign ISO,TP90459758, 90459-7584 811
Proportional pressure regulator VPPE, 90606-9103 283
Protection Plug, 3186487-0000 ..... 35, 43, 57, 97, 113
Protection Ring, 3108471-0000 ..... 245, 257
Protection, 2557544-0000 ..... 333, 861
Protection, 2845320-0000 703
Protection, 3047311-0000 703
Protection, 3368806-0000 427
Protection, 3368990-0000 427
Protective Cover, 2703696-0000 471
Protective Cover, 3115244-0000 245
Protective Plug PE, GPN 300/F242, 344351-0242 349
Protective Plug PE, GPN 300/F28, 344351-0280 349
Prox.switch IFS204, 90458-2907 ..... 125, 245, 261, 477, 845
Proximity Switch for T-slot, SMT-8M-A, 351481-5010 581
Puller, 2715887-0000 537
Puller, 2768157-0000 537
Puller, 2838713-0000 537
Puller, 2838716-0000 537
Puller, 2873975-0000 537
Puller, 2930216-0000 537
Puller, 3077728-0000 537
Puller, 3108413-0300 245
Puller, 3115353-0000 235
Puller, 3115361-0000 237
Puller, 3115367-0000 241
Puller, 3124361-0000 243
Puller, 3124368-0000 239
Puller, 3124373-0000 233
Puller, 3124459-0000 231
Pulley, 2695135-0200 191
Pulley, 2826729-0000 ..... 75, 81
Pulley, 3225865-0000 ..... 75, 81
Push Button Box, 3257112-0000 441
Push-in fitting CRQS-1/8-6, 90600-4265 807
Push-in Fitting NPQH-D-G12-Q12, 351456-0113 283
Push-in Fitting NPQH-D-G14-Q12-P10, 351456-0105 ..... 259, 349
Push-in Fitting NPQH-D-G14-Q6-P10, 351456-0106 541
Push-in Fitting NPQH-D-G14-Q8-P10, 351456-0107 ..... 259, 541
Push-in Fitting NPQH-D-G14F-Q8-P10, 351456-0506 365
Push-in Fitting NPQH-D-G18-Q6-P10, 351456-0102 541
Push-in Fitting NPQH-D-G18-Q8-P10, 351456-0103 807
Push-in Fitting NPQH-D-G38-Q12-P10, 351456-0109 541
Push-in Fitting NPQH-D-M5-Q6-P10, 351456-0116 805
Push-in Fitting NPQH-D-S12-Q8-P10, 351456-1109 ..... 349, 807
Push-in Fitting NPQH-D-S6-Q4-P10, 351456-1101 541
Push-in fitting QSM-4-3, 90459-7427 581
Push-in fitting QSSF-1/2-12-B, 90459-2133 283
Push-in fitting QSSF-1/4-4-B, 90459-7333 349
Push-in L-Fitting NPQH-L-G12-Q12, 351456-3013 353
Push-in L-Fitting NPQH-L-G14-Q12-P10, 351456-3005 ..... 259, 361
Push-in L-Fitting NPQH-L-G14-Q8-P10, 351456-3007 ..... 349, 361, 541, 805
Push-in L-Fitting NPQH-L-G18-Q4-P10, 351456-3001 ..... 231, 237, 239, 243, 259, 349
Push-in L-Fitting NPQH-L-G18-Q6-P10, 351456-3002 ..... 87, 133, 135, 233, 241
Push-in L-Fitting NPQH-L-G18-Q8-P10, 351456-3003 ..... 283, 347
Push-in L-Fitting NPQH-L-Q12-E-P10, 351456-3105 349
Push-in L-fitting QSL 16, 90459-2553 ..... 349, 365
Push-in L-Fitting QSML-M3-3, 90459-7426 581
Push-in T-Fitting NPQH-T-G18-Q4-P10, 351456-5007 259
Push-in T-Fitting NPQH-T-Q12-E-P10, 351456-5103 349
Push-in T-Fitting NPQH-T-Q6-E-P10, 351456-5107 ..... 349, 541
Push-in T-Fitting NPQH-T-Q8-E-P10, 351456-5109 365
Push-in T-Fitting NPQH-T-Q8-Q6-P10, 351456-5110 349
Push-In Y-Connector NPQH-Y-Q8-E-P10, 351456-6005 193
Push-In Y-Connector QSY-12, 90055-0147 807
Pusher, 3053478-0000 ..... 333, 861
Pusher, 3210235-0000 805

Q

Quick Coupling, (F) 25KAIW13SPN, 90606-5416 ..... 343, 365
Quick Coupling, (F) LP-006-O-SL013, 90163-0075 839
Quick Coupling, (M) 10 320 5202, 90459-2254 ..... 343, 365
Quick Coupling, (M)52SBAW13SPN, 90606-8122 371
Quick Coupling, LP-006-2-WR517-11-1, 90163-0064 ..... 839, 841
QuickServer Gateway, FS-QS-1230-0705, 90604-5464 771

R

Rack, ZRR2-100, 90600-0971 287
Radial seal 25x42x7 mm Dust lip, 90091-0322 ..... 75, 81
Radial seal 30x47x7 mm, 315221-0169 181
Radial seal 35x47x7 mm, 315221-0175 181
Radial seal 45x62x8 mm, 315221-0192 ..... 75, 81
Radial seal 45x65x8 mm Dust lip, 90091-0304 ..... 49, 63, 105, 119
Radial seal 48x62x8 mm, 315221-0196 ..... 75, 81

Radial seal 50x65x8 mm, 315221-0198 ..... 43, 57
Radial seal 60x85x8 mm Dust lip, 90459-4588 ..... 97, 113
Rail Bracket, 2934904-0000 283
Rail holder, 1550743-0200 ..... 299, 309
Rail holder, 2699437-0000 ..... 311, 317
Rail, 2746909-0000 401
Rail, 2835452-0000 ..... 723, 725, 727
Rail, 2835453-0000 ..... 735, 737, 753
Rail, 2835454-0000 ..... 733, 755, 757
Rail, 2835456-0000 697
Rail, 2838476-0000 739
Rail, 2841402-0000 701
Rail, 3267572-0000 ..... 279, 893
Rail, 3388209-0000 ..... 707, 709
Rail, 3388210-0100 703
Rail, 3430409-0000 ..... 671, 693
Railing, 2561274-0102 299
Railing, 2818738-0000 805
Rake, 3108443-0200 245
Rear clevis foot mounting, CRLBN-32, 90459-5949 ..... 133, 135
Rear clevis foot mounting, LBN-12/16, 90459-3655 805
Rebuilding manual, 3408457-0101 859
Rebuilding manual, 3420952-0101 889
Rebuiling kit, Pump 1:6, 110 0297, 90602-5788 395
Receptacle M12, SACC-E-M12FS-4CON-M16/.., 90603-4478 ..... 279, 893
Receptacle M12, SACC-E-M12MS-5CON-M16/.., 90603-4479 ..... 279, 893
Reducer, 3115240-0000 245
Reducer, M20x1,5/M16x1,5, 90459-3644 245
Reducing nipple, G1/8ext-G1/4int, 90330-0134 347
Reduction Sleeve, 3124360-0000 ..... 233, 241
Regulator, MS4-LR-1/4-D6-A8-AS, 90459-5817 349
Regulator, MS4-LRB-1/4-D6-AS, 90600-1420 259
Relay, K8AK-AS2, 90606-9102 707
Relay, PLC-RSC-24DC/21, 90601-6650 ..... 401, 707
Relay, PR2-RSC3-LDP-24DC/4X21AU, 90601-6656 ..... 279, 893
Remote I/O Base Module 8 Points, 1734-TB, 90459-2526 401
Removable Terminal Block 20 Points, 90459-2487 731
Removable Terminal Block 36 Points, 90459-2488 ..... 651, 673, 731
Residual current device, FI-25/2/003-A, 90459-5811 652
Resistance fixed, 3,6 kOhm, 1/2 W, 90602-3851 ..... 279, 893
Retaining Ring for Bore DIN 472 28 SS, 315753-0121 ..... 585, 589
Retaining Ring for Bore DIN 472 32 SS, 315753-0123 265
Retaining Ring for Bore DIN 472 42 SS, 90141-0020 265
Retaining Ring for Bore DIN 472 47 SS, 315753-0130 ..... 181, 271
Retaining Ring for Bore DIN 472 62 SS, 90458-0048 245
Retaining Ring for Bore DIN 472 62, 315752-0136 ..... 49, 63, 105, 119
Retaining Ring for Bore DIN 472 80 SS, 90458-0181 ..... 97, 113
Retaining ring for shaft DIN 471 10 SS, 90141-0016 ..... 631, 641
Retaining ring for shaft DIN 471 17 SS, 90141-0017 ..... 631, 641
Retaining ring for Shaft DIN 471 20 SS, 315751-0116 ..... 87, 199
Retaining ring for Shaft DIN 471 21 SS, 90600-0373 ..... 529, 865
Retaining ring for Shaft DIN 471 50 SS, 315751-0130 ..... 97, 113
Retaining ring Shaft DIN 6799 4 SS, 315755-0106 ..... 169, 297
Retaining ring Shaft DIN 6799 7 SS, 315755-0109 471
Retaining ring, DIN 705 A2 6, 315741-0102 835
Retaining ring, DIN 705 A4 20, 315741-0216 ..... 127, 295
Ring, 3108466-0000 263
Ring, 3115284-0000 255
Rivet, Blank 2,4x6, 311520-0320 695
Rod end, ball joint eye M10x1,25, 90459-1018 ..... 133, 135
Rod End, id=10 mm, M10x1,25, 90115-0134 87
Rod End, id=6 mm, M6x1, 90115-0137 205
Rod End, id=6 mm, M6x1, 90115-0163 805
Rod, 2842831-0000 225
Roll, 3114084-0000 ..... 159, 161
Roller Bracket, 3158206-0000 ..... 529, 865
Roller chain, simplex 3/8 -159, SS, 90600-0961 69
Roller chain, simplex 3/8 -243, SS, 90600-0962 69
Roller chain, simplex 3/8 -290, SS, 90600-1159 295
Roller chain, simplex 3/8 -333, SS, 90600-0964 69
Roller, 2703725-0000 175
Roller, 2773615-0000 87
Roller, 2846403-0000 295
Roller, 3058564-0000 265
Roller, 3108405-0000 ..... 631, 641
Roller, 3108417-0000 ..... 631, 641
Roller, 3108495-0000 265
Roller, 3114810-0100 157
Roller, 3199898-0100 139
Round nut, 1539391-0000 381
Round nut, 575034-0000 ..... 257, 381
RTD Hot Melt Hose, Freedom, 1121311, 90606-8121 391
Rubber buffer, S20-01338-01, 90459-2726 581
Rubber strip 4x20mm, 90143-0071 399
Rubber strip, Clamping, No. 1038-02, 90143-0098 447

S

Safety PLC, Pluto B20, 2TLA020070R4600, 90459-6692 737
Safety relay, E1T, 90459-2291 ..... 651, 673, 737
Safety screw, SM4x20, 2TLA020053R4200, 90459-4164 381
Safety screw, SM4x25, 2TLA020053R4300, 90459-4165 ..... 253, 381
Safety Sensor, Adam M12-5 DYN-Info, 90606-4580 ..... 251, 257, 381
Safety Sensor, Eva General code, 90606-4582 ..... 251, 253, 381
Saturn Single-Orifice Nozzle, 322010, 90458-0651 ..... 787, 791

Saturn Single-Orifice Nozzle, 322012, 90439-0155 ..... 787, 791, 795, 799
Saturn Single-Orifice Nozzle, 322014, 90459-3197 ..... 787, 795, 799
Scraper 20x30x10 mm, 90091-0038 ..... 509, 877
Scraper, 3115357-0000 ..... 235, 237
Scraper, 3124421-0000 ..... 235, 237
Screw DIN 7991 MF6S M10x20 A4 70, 312155-0491 245
Screw DIN 7991 MF6S M10x50A4 70, 312155-0501 245
Screw DIN 7991 MF6S M4x10 A4 70, 312155-0289 ..... 231, 233, 235, 237, 239, 241, 243, 265, 595, 601, 607, 613
Screw DIN 7991 MF6S M4x12 A4 70, 312155-0291 ..... 245, 385, 387
Screw DIN 7991 MF6S M4x16 A4 70, 312155-0293 ..... 265, 333, 861
Screw DIN 7991 MF6S M4x20 A4 70, 312155-0295 ..... 231, 233, 235, 237, 239, 241, 243
Screw DIN 7991 MF6S M4x25 A4 70, 312155-0297 ..... 233, 235, 237, 239, 241, 243, 367
Screw DIN 7991 MF6S M4x6 A4 70, 312155-0285 ..... 159, 161
Screw DIN 7991 MF6S M4x8 A4 70, 312155-0287 ..... 335, 695, 885
Screw DIN 7991 MF6S M5x10 A4 70, 312155-0325 467
Screw DIN 7991 MF6S M5x12 A4 70, 312155-0327 ..... 169, 253, 529, 537, 631, 865
Screw DIN 7991 MF6S M5x16 A4 70, 312155-0329 ..... 185, 255, 263, 265, 469, 641, 815
Screw DIN 7991 MF6S M5x20 A4 70, 312155-0331 253
Screw DIN 7991 MF6S M5x30 A4 70, 312155-0335 263
Screw DIN 7991 MF6S M6x12 A4 70, 312155-0366 ..... 333, 701, 861
Screw DIN 7991 MF6S M6x16 A4 70, 312155-0368 ..... 157, 231, 233, 235, 237, 239, 241, 243, 253, 559, 569, 585, 589, 631, 641
Screw DIN 7991 MF6S M6x20 A4 70, 312155-0370 ..... 169, 253, 265, 425, 443, 445, 583
Screw DIN 7991 MF6S M6x30 A4 70, 312155-0374 ..... 157, 265
Screw DIN 7991 MF6S M8x20 A4 70, 312155-0451 469
Screw DIN 7991 MF6S M8x25 A4 70, 312155-0453 ..... 201, 213, 333, 861
Screw DIN7984 M6x12 AISI 304, 90600-1772 607
Screw DIN7984 M8x16 AISI 304, 90600-2026 ..... 75, 81
Screw EN 1665 Type F M5x12 A270, 312108-0327 147
Screw EN 1665 Type F M5x16 A270, 312108-0329 565
Screw EN 1665 Type F M5x25 A270, 312108-0333 835
Screw EN 1665 Type F M6x30 A270, 312108-0374 573
Screw EN 1665 Type F M8x16 A270, 312108-0449 ..... 311, 317
Screw Hex.Sock.Count.MF6S M3x8 A280, 90287-0295 569
Screw hex.sock.hd.MC6S 10x120 88 FZB, 312111-0515 ..... 97, 113, 177
Screw Hex.Sock.Set Conept. MS6SS M6x10 A, 90459-5152 ..... 631, 641
Screw Hex.Sock.Set Conept.MS6SS M4x4 A2, 90459-1395 ..... 469, 471
Screw ISO 1207 M4x12 Ni Pl Brass, 312122-0291 337
Screw ISO 1207 M4x60 A4, 312125-0307 283
Screw ISO 1207 M5x10 A4, 312125-0325 ..... 703, 707, 709, 723, 725, 727, 733, 735, 737, 739, 753, 755, 757
Screw ISO4762 M10x16 A4 80, 312115-0489 ..... 105, 119, 231, 233, 235, 237, 239, 241, 243
Screw ISO4762 M10x25 A4 80, 312115-0493 245
Screw ISO4762 M10x30 A4 80, 312115-0495 ..... 231, 233, 235, 237, 239, 241, 243
Screw ISO4762 M12x40 A4 80, 312115-0540 287
Screw ISO4762 M3x16 A4 80, 312115-0228 ..... 75, 81, 621, 623, 625, 627, 629, 637, 639, 807
Screw ISO4762 M3x20 A4 80, 312115-0230 ..... 265, 807
Screw ISO4762 M3x25 A4 80, 312115-0232 245
Screw ISO4762 M3x8 A4 80, 312115-0222 ..... 137, 283, 333, 807, 861
Screw ISO4762 M4x10 A4 80, 312115-0289 ..... 283, 569, 651, 665, 673, 687, 729, 883
Screw ISO4762 M4x12 A4 80, 312115-0291 ..... 175, 177, 265, 333, 861
Screw ISO4762 M4x16 A4 80, 312115-0293 ..... 129, 245, 265, 523, 581, 807
Screw ISO4762 M4x20 A4 80, 312115-0295 ..... 261, 385, 809
Screw ISO4762 M4x25 A4 80, 312115-0297 ..... 245, 333, 367, 861
Screw ISO4762 M4x30 A4 80, 312115-0299 ..... 245, 695
Screw ISO4762 M4x40 A4 80, 312115-0303 367
Screw ISO4762 M4x45 A4 80, 312115-0304 697
Screw ISO4762 M4x8 A4 80, 312115-0287 ..... 235, 237, 265, 283, 333, 861
Screw ISO4762 M5x10 A4 80, 312115-0325 ..... 35, 43, 57, 81, 97, 113, 731
Screw ISO4762 M5x12 A4 80, 312115-0327 ..... 91, 129, 231, 233, 297, 333, 337, 651, 667, 673, 689, 749, 805, 861
Screw ISO4762 M5x16 A4 80, 312115-0329 ..... 233, 235, 237, 239, 241, 243, 245, 379, 551, 891
Screw ISO4762 M5x20 A4 80, 312115-0331 ..... 225, 231, 233, 239, 241, 243, 245, 253, 333, 805, 861
Screw ISO4762 M5x25 A4 80, 312115-0333 245
Screw ISO4762 M5x35 A4 80, 312115-0337 367
Screw ISO4762 M5x8 A4 80, 312115-0323 ..... 279, 893
Screw ISO4762 M6x12 A4 80, 312115-0366 ..... 41, 55, 103, 111, 133, 135, 265, 297, 529, 537, 737, 865
Screw ISO4762 M6x16 A4 80, 312115-0368 ..... 157, 193, 201, 205, 215, 573, 703
Screw ISO4762 M6x20 A4 80, 312115-0370 ..... 177, 205, 213, 295, 467, 509, 565, 567, 581, 729, 877
Screw ISO4762 M6x25 A4 80, 312115-0372 ..... 97, 113, 193, 231, 233, 235, 237, 239, 241, 243, 265, 631, 641, 893
Screw ISO4762 M6x30 A4 80, 312115-0374 ..... 43, 57, 205, 231, 233, 235, 237, 239, 241, 243, 423, 437, 857
Screw ISO4762 M6x35 A4 80, 312115-0376 137
Screw ISO4762 M6x40 A4 80, 312115-0378 567
Screw ISO4762 M6x45 A4 80, 312115-0379 479
Screw ISO4762 M8x12 A4 80, 312115-0447 119
Screw ISO4762 M8x16 A4 80, 312115-0449 245
Screw ISO4762 M8x20 A4 80, 312115-0451 ..... 177, 225, 231, 233, 235, 237, 239, 241, 243, 245, 807
Screw ISO4762 M8x25 A4 80, 312115-0453 ..... 91, 97, 113, 207, 209, 265, 479, 833
Screw ISO4762 M8x30 A4 80, 312115-0455 ..... 185, 287, 833
Screw ISO4762 M8x35 A4 80, 312115-0457 ..... 97, 113, 265
Screw ISO4762 M8x40 A4 80, 312115-0459 ..... 105, 119
Screw ISO4762 M8x45 A4 80, 312115-0460 177
Screw ISO4762 M8x50 A4 80, 312115-0461 ..... 105, 119
Screw ISO4762 M8x70 A4 80, 312115-0465 217
Screw ISO4762 M8x75 A4 80, 312115-0466 299
Screw ISO4762 M8x80 A4 80, 312115-0467 127
Screw M6S 10 x 110, 6-4000 0006 08 225
Screw M6S ISO 4017 M12x50 A280, 312109-0542 ..... 105, 119
Screw M6S ISO 4017 M8x12 A480, 312105-0447 327
Screw M6S M12x100H A480, 312109-0552 287
Screw M6S M3x12 A480, 90287-0175 ..... 69, 261, 287, 319, 321, 851
Screw Pan Head MSCS M4x12 NYLON, 90287-0124 705
Screw Plug, 3203757-0000 ..... 551, 891

Screw, 2699680-0000 ..... 469, 471
Screw, 270927-0000 339
Screw, 2715804-0000 169
Screw, 2775421-0000 119
Screw, 2805468-0000 75
Screw, 2811453-0000 ..... 529, 865
Screw, 2817784-0000 ..... 49, 63
Screw, 2974857-0000 573
Screw, 3068593-0000 225
Screw, 3086231-0000 125
Screw, 3095799-0000 837
Screw, 3108456-0000 253
Screw, 3108457-0000 255
Screw, 3108462-0000 ..... 257, 265
Screw, 3115243-0000 245
Screw, 3115274-0000 ..... 251, 257
Screw, 3151006-0000 ..... 529, 865
Screw, 3199899-0000 ..... 75, 81
Screw, 3202908-0000 ..... 41, 55, 103, 111
Screw, 3417769-0000 253
Screw, 3433168-0000 ..... 251, 257
Screw, CBSTSR5-12, 90606-4924 ..... 35, 43, 57, 97, 113, 147
Screw, M6S ISO 4014 M10x120 A4 80, 312105-0515 ..... 177, 181
Screw, M6S ISO 4014 M10x150 A4 80, 312105-0519 225
Screw, M6S ISO 4014 M10x40 A4 80, 312105-0499 477
Screw, M6S ISO 4014 M10x45 A4 80, 312105-0500 ..... 465, 477
Screw, M6S ISO 4014 M10x50 A4 80, 312105-0501 ..... 509, 877
Screw, M6S ISO 4014 M5x30 A4 80, 312105-0335 ..... 529, 865
Screw, M6S ISO 4014 M5x40 A4 80, 312105-0339 169
Screw, M6S ISO 4014 M5x60 A4 80, 312105-0343 87
Screw, M6S ISO 4014 M6x100 A4 80, 312105-0390 225
Screw, M6S ISO 4014 M6x30 A4 80, 312105-0374 ..... 35, 49, 63, 125, 197, 211, 337, 439, 509, 551, 583, 877, 891
Screw, M6S ISO 4014 M6x40 A4 80, 312105-0378 ..... 169, 181, 217, 293, 567
Screw, M6S ISO 4014 M6x45 A4 80, 312105-0379 ..... 43, 57, 125, 551, 891
Screw, M6S ISO 4014 M6x50 A4 80, 312105-0380 805
Screw, M6S ISO 4014 M6x60 A4 80, 312105-0382 ..... 337, 613
Screw, M6S ISO 4014 M6x70 A4 80, 312105-0384 569
Screw, M6S ISO 4014 M6x90 A4 80, 312105-0388 287
Screw, M6S ISO 4014 M8x100 A4 80, 312105-0471 293
Screw, M6S ISO 4014 M8x120 A4 80, 312105-0475 125
Screw, M6S ISO 4014 M8x35 A4 80, 312105-0457 ..... 49, 63, 75, 105, 119, 367, 489, 491, 493, 497, 501, 505, 507, 515, 519, 521, 871, 875
Screw, M6S ISO 4014 M8x40 A4 80, 312105-0459 ..... 43, 49, 57, 63, 97, 113, 125, 181, 211
Screw, M6S ISO 4014 M8x45 A4 80, 312105-0460 ..... 49, 63, 185
Screw, M6S ISO 4014 M8x55 A4 8002, 312105-0462 423
Screw, M6S ISO 4014 M8x90 A4 80, 312105-0469 ..... 69, 127
Screw, M6S ISO 4017 M10x16 A4 80, 312105-0489 ..... 97, 113
Screw, M6S ISO 4017 M10x25 A4 80, 312105-0493 837
Screw, M6S ISO 4017 M10x30 A4 80, 312105-0495 ..... 245, 837
Screw, M6S ISO 4017 M10x35 A4 80, 312105-0497 ..... 509, 877
Screw, M6S ISO 4017 M10x45 A4 80, 312109-0500 523
Screw, M6S ISO 4017 M4x10 A4 70, 312105-0289 ..... 75, 81, 235, 237, 261, 271, 631, 641
Screw, M6S ISO 4017 M4x12 A4 70, 312105-0291 ..... 155, 175, 177, 337, 553, 573
Screw, M6S ISO 4017 M4x16 A4 70, 312105-0293 ..... 159, 233, 235, 237, 239, 241, 243, 537, 551, 891
Screw, M6S ISO 4017 M4x20 A4 70, 312105-0295 ..... 147, 155, 551, 581, 891
Screw, M6S ISO 4017 M4x25 A4 70, 312105-0297 ..... 231, 259
Screw, M6S ISO 4017 M4x6 A4 70, 312105-0285 ..... 137, 529, 537, 607, 865
Screw, M6S ISO 4017 M4x8 A4 70, 312105-0287 ..... 85, 235, 237, 333, 471, 581, 631, 641, 807, 861
Screw, M6S ISO 4017 M5x10 A4 80, 312105-0325 ..... 41, 129, 231, 233, 235, 237, 239, 243, 529, 631, 641, 805, 865
Screw, M6S ISO 4017 M5x12 A4 80, 312105-0327 ..... 75, 81, 125, 169, 231, 233, 235, 237, 239, 241, 243, 245, 257, 259, 265, 567, 585, 589, 621, 625, 627, 629, 639, 783, 807, 845
Screw, M6S ISO 4017 M5x16 A4 80, 312105-0329 ..... 75, 81, 91, 159, 161, 169, 231, 233, 235, 237, 239, 241, 243, 251, 259, 265, 319, 321, 623, 631, 637, 641, 851
Screw, M6S ISO 4017 M5x20 A4 80, 312105-0331 ..... 169, 181, 213, 225, 233, 241, 245, 251, 321, 479, 613
Screw, M6S ISO 4017 M5x25 A4 80, 312105-0333 ..... 217, 225, 253, 471
Screw, M6S ISO 4017 M5x30 A4 80, 312109-0335 ..... 231, 233, 239, 245
Screw, M6S ISO 4017 M5x40 A4 80, 312109-0339 ..... 233, 235, 237, 243
Screw, M6S ISO 4017 M5x45 A4 80, 312109-0340 ..... 149, 241
"Screw, M6S ISO 4017 M6x10 A4 80", 312105-0364 ..... 43, 57, 75, 81, 509, 877
Screw, M6S ISO 4017 M6x12 A4 80, 312105-0366 ..... 41, 55, 67, 137, 159, 175, 235, 237, 239, 243, 283, 287, 311, 317, 417, 419, 423, 433, 439, 477, 509, 541, 553, 573, 807, 809, 877
Screw, M6S ISO 4017 M6x16 A4 80, 312105-0368 ..... 67, 75, 81, 85, 137, 157, 181, 185, 201, 245, 265, 283, 287, 299, 327, 333, 379, 385, 427, 437, 469, 529, 559, 583, 631, 641, 729, 805, 857, 861, 865
Screw, M6S ISO 4017 M6x20 A4 80, 312105-0370 ..... 75, 81, 103, 111, 119, 125, 127, 157, 161, 169, 181, 185, 199, 201, 213, 287, 291, 311, 317, 367, 381, 523, 583, 613, 631, 635, 641, 645, 779, 805
Screw, M6S ISO 4017 M6x22 A4 80, 312105-0371 193
Screw, M6S ISO 4017 M6x25 A4 80, 312105-0372 ..... 75, 125, 157, 169, 181, 193, 201, 213, 215, 217, 231, 233, 245, 283, 333, 391, 447, 467, 529, 565, 569, 631, 641, 779, 861, 865
Screw, M6S ISO 4017 M6x30 A4 80, 312109-0374 ..... 217, 529, 641, 865
Screw, M6S ISO 4017 M6x35 A4 80, 312109-0376 ..... 169, 181
Screw, M6S ISO 4017 M6x40 A4 80, 312109-0378 ..... 225, 233, 235, 237, 239, 241, 243
Screw, M6S ISO 4017 M6x50 A4 80, 312109-0380 ..... 193, 211, 225, 231
Screw, M6S ISO 4017 M6x80 A4 80, 312109-0386 ..... 631, 641
Screw, M6S ISO 4017 M8x10 A4 80, 90459-4735 ..... 245, 307, 313, 315
Screw, M6S ISO 4017 M8x16 A4 80, 312105-0449 ..... 219, 295, 807
Screw, M6S ISO 4017 M8x20 A4 80, 312105-0451 ..... 35, 43, 85, 103, 157, 177, 181, 197, 219, 299, 333, 335, 341, 391, 861, 885
Screw, M6S ISO 4017 M8x22 A4 80, 312105-0452 567
Screw, M6S ISO 4017 M8x25 A4 80, 312105-0453 ..... 69, 75, 103, 111, 157, 177, 197, 201, 205, 211, 225, 265, 279, 295, 335, 885
Screw, M6S ISO 4017 M8x30 A4 80, 312105-0455 ..... 57, 75, 91, 125, 127, 177, 197, 213, 217, 225, 293, 509, 877
Screw, M6S ISO 4017 M8x35 A4 80, 312109-0457 177

Screw, M6S ISO 4017 M8x40 A4 80, 312109-0459 ..... 81, 177, 185
Screw, M6S ISO 4017 M8x45 A4 80, 312109-0460 833
Screw, M6S ISO 4017 M8x50 A4 80, 312109-0461 197
Screw, M6S ISO 4017 M8x60 A4 80, 312109-0463 ..... 177, 211, 265
Screw, M6S ISO 4017 M8x70 A4 80, 312109-0465 893
Screw, M6S ISO 4017 M8x80 A4 80, 312109-0467 ..... 75, 81, 245
Seal ring G 28x37x4, 315230-0330 ..... 553, 559, 573
Sealing Compound, Elastosil E41 Transp., 90606-4008 ..... 529, 865
Sector, 3108465-0000 263
Self gripping gasket, 1011-24, 90143-0097 ..... 407, 835
Sensor cable, EVT001, 344253-0050 ..... 245–246, 299
Sensor cable, EVT002, 344253-0100 ..... 81, 283, 299, 333, 381, 861
Sensor cable, EVT041, 344267-0006 809
Sensor cable, EVT042, 344267-0010 ..... 477, 581
Sensor cable, EVT044, 344267-0050 ..... 299, 845, 849
Sensor cable, EVT127, 344246-0050 193
Sensor cable, EVT146, 344257-0050 367
Sensor cable, EVT216, 344261-0050 ..... 125, 266, 299, 845, 849
Sensor cable, EVT243, 344264-0006 ..... 631, 641
Sensor cable, EVT256, 344266-0020 155
Sensor cable, EVT261, 344261-0006 ..... 137, 246
Sensor cable, EVT262, 344261-0010 ..... 631, 641
Sensor cable, EVT263, 344261-0020 ..... 631, 641
Sensor cable, EVT264, 344261-0015 246
Sensor cable, SAC-5P- 5,0-PUR/M12FS SH, 90603-4384 283
Sensor Group, 2930176-0200 843
Sensor Group, 2930178-0200 843
Sensor Y-cable, EVT339, 90603-3979 ..... 81, 137, 266, 299, 809, 849
Sensor, 2778586-0100 ..... 299, 849
Sensor, 2778587-0100 299
Sensor, 3433170-0100 245
Serv. Kit, Thermostat, 1028321, 90459-1979 395
Service kit Manifold assy, 1064651, 90459-1980 395
Service kit, Manifold assy, 1028309, 90459-1981 395
Service kit, No. 111940, 90439-0295 ..... 327, 391
Service kit, Pneum. panel assy, 1028307, 90459-1987 395
Service kit, Press. disc. valve, 1028308, 90459-1982 395
Service kit, Pump Piston, 1028304, 90459-1985 395
Service kit, Tank P4, 1051033, 90459-1977 395
Service Panel, VS-SI-EB-EMV-1, 90605-5642 695
Service Unit, 2838673-0200 349
Service Unit, 2838674-0200 349
Servo Motor, 2840143-0300 191
Servo Motor, 2840144-0300 191
Servo motor, VPL-B1001M-PK12AA, Series A, 90606-2772 ..... 509, 877
Servo motor, VPL-B1002M-PJ12AA, Serie A, 90606-0575 565
Servo motor, VPL-B1152T-PK12AA, Series A, 90606-2776 ..... 97, 113, 177
Servo motor, VPL-B1153F-PK12AA, Series A, 90606-2779 ..... 91, 207, 209, 479
Set of Signs Cable Marking, 3115394-0000 835
Set of Signs Component Label, 3115393-0000 835
Set Of Signs, 1497932-0000 847
Set Of Signs, 3420956-0000 897
Set Of Signs, 3473204-0000 821
Set Of Signs, 3473205-0000 821
Set Of Signs, 3473207-0000 821
Set Of Signs, 3473209-0000 821
Set Of Signs, 3473211-0000 821
Set Of Signs, 3473213-0000 821
Set Of Signs, 3473215-0000 821
Set Of Signs, 3473217-0000 821
Set Of Signs, 3473219-0000 821
Set Of Signs, 3473221-0000 821
Set Of Signs, 3473223-0100 775
Set screw, Cup end ISO4029 M4x10 A4, 312318-0289 ..... 631, 641
Set screw, cup end ISO4029 M4x4 A4, 312318-0283 127
Set screw, Cup end ISO4029 M4x6 A4, 312318-0285 ..... 69, 529, 865
Set screw, Cup end ISO4029 M4x8 A4, 312318-0287 295
Set screw, Cup end ISO4029 M5x8 A4, 312318-0323 265
Set screw, Cup end ISO4029 M6x20 A4, 312318-0370 703
Set screw, Cup end ISO4029 M6x6 A4, 312318-0360 ..... 127, 295
Set screw, Cup end ISO4029 M8x12 A4, 312318-0447 ..... 103, 111
Set screw, Cup end ISO4029 M8x16 A4, 312318-0449 ..... 509, 877
Set screw, Dogpoint M6x10 A4, 90287-0154 287
Setting Arm, 2838669-0200 123
Setting Arm, 2845127-0200 123
Setting Template, 2716154-0000 783
Setting Tool, 2716125-0100 777
Setting Tool, 2853706-0400 775
Setting Tool, 2939164-0000 779
Setting Tool, 2939208-0100 777
Setting Tool, 3034465-0000 777
Shaft, 2684864-0000 175
Shaft, 2695134-0000 199
Shaft, 2703683-0000 ..... 529, 865
Shaft, 2703715-0000 175
Shaft, 2715751-0000 781
Shaft, 2715978-0000 553
Shaft, 2716019-0000 573
Shaft, 2727432-0000 583
Shaft, 2746922-0000 537
Shaft, 2746978-0000 ..... 529, 865
Shaft, 2751705-0000 471
Shaft, 2766950-0000 127
Shaft, 2766958-0000 ..... 49, 63, 105, 119
Shaft, 2766968-0000 293
Shaft, 2766972-0000 295

Shaft, 2769729-0000 ..... 69, 127
Shaft, 2773639-0000 87
Shaft, 2775418-0000 75
Shaft, 2775446-0000 ..... 43, 57
Shaft, 2779756-0000 69
Shaft, 2780393-0000 175
Shaft, 2781292-0000 87
Shaft, 2783465-0000 ..... 529, 865
Shaft, 2788144-0000 71
Shaft, 2838679-0000 347
Shaft, 2838763-0000 581
Shaft, 2843159-0000 187
Shaft, 2930158-0000 559
Shaft, 2939165-0000 779
Shaft, 3022022-0000 125
Shaft, 3022023-0000 125
Shaft, 3058565-0000 265
Shaft, 3108404-0000 ..... 631, 641
Shaft, 3108408-0000 ..... 631, 641
Shaft, 3108414-0000 ..... 631, 641
Shaft, 3108420-0000 ..... 631, 641
Shaft, 3108500-0000 265
Shaft, 3115098-0000 157
Shaft, 3115103-0000 157
Shaft, 3115239-0000 245
Shaft, 3149912-0000 157
Shaft, 3208104-0000 181
Shaft, 3210237-0000 805
Shaft, 3217280-0000 ..... 75, 81
Shaft, 3227371-0000 ..... 75, 81
Shaft, 3317858-0000 157
Shaft, 3356449-0000 177
Shaft, 3356451-0000 ..... 97, 113
Shaft, LM shaft 12 g6 89l M, 90600-0376 ..... 529, 865
Shelf, 2842800-0000 ..... 437, 857
Shelf, 2842806-0100 ..... 433, 855
Shim, 2703702-0000 ..... 529, 865
Shim, 2751690-0000 613
Shim, 2780431-0000 ..... 529, 865
Shim, 2780459-0000 613
Shim, 2864281-0000 613
Shim, 2873892-0000 ..... 507, 875
Shim, 2940042-0000 631
Shim, 3124472-0000 245
Shim, 3209473-0000 161
Shoulder screw, 6x30/M5 SS, 90287-0239 205
Shoulder screw, 6x4/M5 SS, 90287-0230 ..... 103, 111
Shut off valve, MS4-EM1-1/4, 90459-2337 361
Side Adjuster, 3199889-0100 37
Side Adjuster, 3199890-0100 37
Side Frame, 3493274-0100 93
Side Frame, 3493275-0100 93
Side Plate, 2763617-0001 ..... 307, 313, 315
Side Plate, 2763617-0002 ..... 307, 313, 315
Side Plate, 2763617-0004 ..... 307, 313, 315
Side, 2703697-0000 469
Sign "Emergency Stop", 486826-0001 ..... 441, 695
Sign Holder for 359240-0001, 359240-0100 695
Sign, 2608177-0000 695
Sign, 2873941-0000 ..... 69, 287
Sign, 3272544-0000 193
Sign, 3272545-0000 193
Sign, 3402971-0000 673
Sign, Earth, 90194-0152 ..... 695, 729
SIGN: "Supply disconnecting device", 359241-0803 695
Silencer, d=6 mm74122000, 90328-0017 ..... 87, 367
Silencer, G1/4", 90328-0026 ..... 259, 361
Silencer, G1/8", 90328-0047 ..... 133, 135, 541, 807
Silencer, G3/8", 90328-0024 541
Siren 100dB, PSD-S AE SM8-5 100dB/1, 90602-4631 379
Sleeve for plastic tube, 90134-0030 367
Sleeve QSH-16-12, 90459-7107 349
Sleeve, 2715695-0000 175
Sleeve, 2715704-0000 ..... 529, 865
Sleeve, 2751748-0000 181
Sleeve, 2766974-0000 ..... 103, 111
Slide Plate, 2727431-0000 583
Slide Plate, 2727434-0000 583
Slide Plate, 3210229-0000 805
Slide Rail, 2780454-0000 567
Slide Rail, 2780455-0000 567
Slide Rail, 2780456-0000 567
Slide Rail, 3341018-0000 147
Slide, 2775420-0000 119
Slide, 3095787-0000 567
Slider, 2716127-0000 ..... 529, 865
Slider, 2751657-0200 463
Sliding Rack, 2838647-0200 31
Sliding Rack, 2838650-0200 93
Sliding Strip, 1550595-2460 ..... 307, 313, 315
Sliding Strip, 1550595-4960 ..... 307, 313, 315
Sliding Strip, 2699305-1996 ..... 307, 313, 315
Sliding Strip, 2838784-0000 185
Sliding Strip, 3095795-0000 185
Slim Led LIQ 12 Light Fixture, 90606-7666 ..... 385, 387, 695
SlimCap1 A1 White PA001, A894400101 817

SlimCap1 A2 White PA001, A894400201 817
Slotted head screw, ISO 1207 M4 X 10 A4, 312125-0289 ..... 343, 703
Slotted head screw, ISO1207 M3x25 A4, 312125-0232 283
Slotted head screw, ISO1207 M4x12 A4, 312125-0291 225
Slotted head screw, ISO1207 M4x8 A4, 312125-0287 ..... 185, 211, 215, 217, 477, 515, 523, 567, 871
Slotted head screw, ISO1207 M5x20 A4, 312125-0331 185
Slotted head screw, ISO1207 M5x8 A4, 312125-0323 ..... 49, 63, 287
Slotted head screw, ISO1207 M6x12 A4, 312125-0366 ..... 43, 703
Socket conn. cable, KMEB-2-24-M12-0,5-LE, 90600-3573 259
Software, 2861166-0400 825
Solenoid Saturn SP 4-way 24 VDC, 1095800, 344319-2103 195
Solenoid valve, CPE18-M1H-3GL-1/4, 90600-5813 259
Spacer 75ODX.328IDX.12THK, 102 8115, 90600-0684 193
Spacer Strut, 2703704-0000 477
Spacer, 1038275-0012 703
Spacer, 2561206-0000 ..... 307, 313, 315
Spacer, 2613995-0000 ..... 529, 865
Spacer, 2699436-0000 ..... 311, 317
Spacer, 2699681-0000 ..... 469, 471
Spacer, 2699682-0000 471
Spacer, 2715807-0000 169
Spacer, 2736447-0000 ..... 553, 573
Spacer, 2751721-0000 169
Spacer, 2751747-0000 181
Spacer, 2766959-0000 ..... 49, 63, 105, 119
Spacer, 2769741-0000 ..... 75, 81
Spacer, 2769773-0000 85
Spacer, 2773600-0000 ..... 75, 81
Spacer, 2773601-0000 85
Spacer, 2773632-0000 125
Spacer, 2775443-0000 ..... 43, 57
Spacer, 2775445-0000 ..... 43, 57
Spacer, 2802644-0000 185
Spacer, 2815585-0000 807
Spacer, 2817573-0000 805
Spacer, 2837628-0000 ..... 97, 113
Spacer, 2837631-0000 185
Spacer, 2842805-0000 ..... 423, 437, 857
Spacer, 2845097-0000 225
Spacer, 2930160-0000 559
Spacer, 2930163-0000 567
Spacer, 2937337-0000 ..... 105, 119
Spacer, 3031442-0000 ..... 333, 861
Spacer, 3108486-0000 265
Spacer, 3115081-0000 ..... 75, 81
Spacer, 3124475-0000 271
Spacer, 3149907-0000 157
Spacer, 3149911-0000 157
Spacer, 3210208-0000 385
Spacer, 3210221-0000 807
Spacer, 3210222-0000 807
Spacer, 3210227-0000 807
Spacer, 3210230-0000 807
Spacer, 3210231-0000 807
Spacer, 3249413-0000 805
Spacer, 3319430-0000 177
Spacer, 3412975-0000 91
Spacer, 3426317-0000 209
Spacer, 3433171-0000 ..... 233, 241
Spare Part Kit, 4B1400.00-K56, 90607-0074 405
Spherical Ball Bearing 17/47x19, 90603-9715 271
Splitter box, EBC026, 90606-1698 385
Splitter box, EBC034, 90606-1697 ..... 523, 809
Spray gun, water G1/4, 90458-1483 343
Spring Holder, 2987967-0000 537
Spring Holder, 2987971-0000 537
Spring pin, ISO 8752 3x16 A2, 311112-0208 175
Spring pin, ISO 8752 4x18 A2, 311112-0255 ..... 529, 865
Spring pin, ISO 8752 4x20 A2, 311112-0256 175
Spring pin, ISO 8752 5x28 A2, 311112-0312 127
Spring pin, ISO 8752 6x32 A2, 311112-0345 71
Spring pin, ISO 8752 6x40 A2, 311112-0347 125
Spring pin, ISO 8752 6x50 A2, 311112-0349 293
Spring, 2703708-0000 ..... 529, 865
Spring, 2716021-0000 573
Spring, 3020132-0000 581
Spring, 3115271-0000 251
Spring, 532412-0000 845
Sprocket, 2779062-0000 69
Sprocket, 2779769-0000 295
Standing Bearing, KSTM-20, 90459-4727 127
Standing Bearing, KSTM-25, 90600-0799 125
Star Wheel, 2751656-0100 463
Star Wheel, 2751702-0000 467
Start-up kit, 2838693-0200 775
Start-up kit, 3220230-0100 785
Start-up kit, 3296413-0100 785
Start-up kit, 3309602-0100 785
Startup Kit, 3493623-0100 785
Steering device, 2716149-0200 567
Steering Rail, 2727438-0000 613
Steering Rail, 2797440-0000 613
Steering Rail, 2867646-0000 613
Steering Rail, 2875600-0000 613
Steering Rail, 2893419-0000 613
Steering Rail, 2970131-0000 613

Steering Rail, 3024869-0000 613
Steering, 2751693-0000 181
Steering, 2751695-0000 169
Steering, 2838781-0000 169
Stellar Knob, Int. Thread, No. 8306-0340, 90051-0054 781
Stop Arm, 2802405-0000 127
Stop Screw, 3124535-0000 245
Stop Screw, 3124539-0000 ..... 631, 641
Stopper,SK3286880, 90520-1378 761
Straight Coupl.,Int.Threaded 10/8-G1/4", 342923-0132 343
Straight coupling, D=16 mm - G1/2", 90459-2215 365
Straight coupling, D=6 mm - M5, 90055-0218 807
StreamCap 1w A1 White PA001, A895800101 817
StreamCap2.1 A3 White PA001, A896809301 817
StreamCap5 A2 White PA001, A100000063 817
Strip, 3115280-0000 257
Stripe height 70mm, roll length 25m, 90511-8563 287
Strut, 2551030-0000 ..... 425, 445
Strut, 2563891-0000 443
Strut, 2563892-0000 443
Strut, 2781285-0000 ..... 425, 445
Stud Bolt, 3108464-0000 ..... 263, 265
Sub Base Mounting Plate, P4 1120194, 90459-1988 395
Support Plate, 2751710-0000 177
Support Plate, 2751714-0000 181
Support Tube, 2901708-0100 191
Support, 2792848-0000 ..... 333, 861
Support, 2802635-0000 ..... 181, 185
Support, 2805697-0000 287
Support, 2839227-0000 737
Support, 2842830-0200 223
Support, 2873866-0000 805
Support, 2934905-0000 341
Support, 2940040-0000 631
Support, 2965155-0000 299
Support, 3024866-0000 573
Support, 3062041-0000 695
Support, 3073396-0000 341
Support, 3108439-0000 ..... 635, 645
Support, 3108472-0000 265
Support, 3115245-0000 245
Support, 3115253-0000 245
Support, 3115254-0000 245
Support, 3115277-0000 257
Support, 3115345-0000 ..... 235, 237
Support, 3124443-0000 ..... 235, 237, 239, 241, 243
Support, 3124525-0000 265
Support, 3124526-0000 265
Support, 3124527-0100 265
Support, 3193666-0000 137
Support, 3193669-0000 155
Support, 3193670-0000 155
Support, 3203753-0000 341
Support, 3210236-0000 805
Support, 3311368-0000 ..... 279, 893
Support, 3397189-0000 541
Support, 3412973-0000 91
Support, 3424558-0000 381
Support, 3425304-0000 381
Support, 3427691-0000 391
Support, 3428086-0000 367
Support, 3462207-0000 225
Surge Protection Dev., LIT 4x1-24, 90603-2696 ..... 671, 693
Surge Protection Dev., SP, F-MS 12 ST, 90600-7489 699
Surge Protection Dev., SP, VAL-MS 230 ST, 90600-7488 699
Surge Protection Dev., VAL-MS 230/3+1 FM, 90600-7487 697

T

T-Coupling,Union 10/8, 342946-0133 343
Taper Pin, 3108463-0000 ..... 231, 233, 235, 237, 239, 241, 243
Template, 1548365-0000 813
Template, 2506887-0000 813
Template, 2547954-0000 813
Template, 2562134-0000 813
Template, 2579622-0000 813
Template, 2579623-0000 813
Template, 2579624-0000 813
Template, 2612679-0000 813
Template, 2715750-0100 777
Template, 2736458-0000 777
Template, 2788137-0000 777
Template, 2873935-0000 777
Template, 2985813-0000 813
Template, 3039015-0000 813
Template, 3044285-0000 777
Template, 3047352-0000 815
Template, 3077734-0000 815
Template, 3077736-0000 815
Template, 3077737-0000 815
Template, 3102974-0000 813
Template, 3131674-0000 813
Template, 3238639-0000 813
Template, 3240398-0000 813
Template, 3324807-0000 813

Tension spring, 3034434-0000 ..... 537, 787, 791, 795, 799
Tensioner, type SE-I-15, 90459-0732 295
Terminal block WDK 2,5 V, 90459-5253 ..... 711, 713, 715, 717, 719, 721
Terminal block WDK 2.5, 90077-0113 ..... 401, 671, 693
Terminal Element, PSD-S CE-TM Spring, 90602-4627 379
Terminal plinth, WDU 10, 90459-3068 673
Terminal WNT 4 10x3, 353022-0002 757
Terminal, DLD 2,5/35, 353021-0302 ..... 671, 693
Terminator, Open Style, 1485A-C2, 90459-2523 771
Test HeliCap3 27 mm White, A100000222 817
Tetra Pak CapFix 100, 1606000-8000 789
Tetra Pak CapFix 100, only in BoM, 1606000-0000 787
Tetra Pak CapFix 100, PSC/Startup 12kg, 1606000-0120 789
Tetra Pak CapFix 500, 1606002-8000 793
Tetra Pak CapFix 500, only in BoM, 1606002-0000 791
Tetra Pak CapFix 500, PSC/Startup 12kg, 1606002-0120 793
Tetra Pak CapFix 600 V, Hotmelt adhesive, 1606005-0000 799
Tetra Pak CapFix 600 V, TPQ/Pallet, 1606005-8000 801
Tetra Pak CapFix 600 V,PSC/Startup, 12kg, 1606005-0120 801
Tetra Pak CapFix 600, 1606004-8000 797
Tetra Pak CapFix 600, only in BoM, 1606004-0000 795
Tetra Pak CapFix 600, PSC/Startup 12kg, 1606004-0120 797
Thermostat, XSEKTS011, 90606-0465 739
Thread Sealant Loctite 542, 50ml, 344447-0050 ..... 45, 59, 77, 81, 99, 115
Thread Sealant Loctite 542, only in BoM, 344447-0000 ..... 43, 57, 75, 97, 113
Threaded Connection, 3293084-0000 ..... 343, 365
Threaded rod, 3115226-0000 265
Threaded rod, 3381527-0000 ..... 105, 119
Threadlocker Loctite 2400 50 ml, 351532-0050 ..... 153, 575, 599, 605
Threadlocker Loctite 2400, BOM only, 351532-0000 ..... 149, 573, 595, 601
Threadlocker Loctite 2700 50 ml, 351533-0050 ..... 539, 557, 561, 571
Threadlocker Loctite 2700, BOM only, 351533-0000 ..... 537, 553, 559, 569
Throttle check valve, GRA-1/4-B, 90235-0748 541
Throttle washer, 1030874-0000 327
Tie, 3108441-0000 ..... 635, 645
Tightening Clamp, 3216184-0000 391
Timing belt 10T5/1215 PU, 90606-4344 157
Timing belt 25AT10/4800 PU +32 2.3.6.050, 90600-0815 139
Timing belt 25AT10/4800 PU+32 2.3.7.339, 90600-3012 139
Timing belt 25AT10/4800 PU+32 2.3.7.579, 90605-1983 139
Timing belt 25AT10/4800 PU+32 2.3.7.580, 90605-4806 139
Timing belt 25AT10/4810 PU, 90606-4926 139
Timing belt 25AT10/5250 PU, 90605-1982 139
Timing belt 25AT10/5250 PU+35 2.3.7.580, 90605-4807 139
Timing belt 25AT10/5250 PU+35.2.3.6.050, 90600-0814 139
Timing belt 25ATK10/2160 PU, 90603-0831 ..... 597, 603
Timing belt 25T10/1150-DL PU, 90602-4674 85
Timing belt 32TK5K6/780 PU + Minigrip, 90602-4686 ..... 35, 75, 81
Timing belt 50AT10/1120 PU, 90600-0486 213
Timing belt 50AT10/1410 PU, 90600-0487 201
Timing belt 50AT10/2700-V PU, 90603-1153 179
Timing belt, 25AT10/5250 PU+35 2.3.7.339, 90600-3011 139
Timing belt, 25AT10/5250-BFX-VA 1.2 +35, 90606-5094 139
Timing Belt, 2780497-0100 593
Timing Belt, 2780509-0100 593
Timing Belt, 3117845-0000 ..... 595, 601
Timing Belt, 3117862-0000 177
Tool, 2930204-0000 833
Tool, 2939331-0000 779
Tool, 2944169-0100 831
Tool, 3047350-0100 813
Tool, 3087821-0000 ..... 335, 885
Tool, 3087823-0100 ..... 329, 859
Tool, 3139139-0100 831
Toothed Disc, 2703673-0000 537
Toothed pulley, 2695133-0000 199
Toothed pulley, 2715669-0200 547
Toothed Pulley, 2715976-0300 547
Toothed pulley, 2751712-0000 181
Toothed pulley, 2766981-0000 ..... 35, 49, 63
Toothed pulley, 2775437-0000 35
Toothed pulley, 2775442-0000 ..... 43, 57
Toothed pulley, 2780452-0000 ..... 553, 573
Toothed pulley, 2780453-0000 559
Toothed pulley, 2837191-0000 177
Toothed pulley, 3034438-0200 547
Toothed pulley, 3039030-0000 ..... 75, 81
Toothed pulley, 3311662-0000 559
Toothed pulley, 3319571-0000 ..... 207, 209
Toothed Pulley, 3412971-0000 91
Top Section, 2787230-0100 413
Top Support, 3459908-0000 233
Top Support, 3459910-0000 231
Top Therm Blue-e Roofmount SS, 3385.600, 351439-1106 761
Torsion Spring, 2715885-0000 ..... 529, 865
TPOP Basic V9.1, 3328018-0002 405
Transfer Unit, 2746938-0200 461
Transmission Rail, 2716092-0200 191
Transmission, 2766973-0100 293
Tube 2,5 mm PA Transp., 90166-0143 367
Tube 400mm, PSD-S ME T-M 400, 90458-0725 379
Tube 6 mm APA Transp, 344342-0060 367
Tube Holder, 3212201-0000 439
Tube PUN-H-10X1,5-SW, 315400-0009 343
Tube PUN-H-12X2-BL, 315400-0010 ..... 259, 349, 541
Tube PUN-H-16-2,5-BL, 315400-0013 365

Tube PUN-H-3x0,5-BL, 90459-7428 ... 581
Tube PUN-H-4X0,75-BL, 315400-0016 ... 259, 349, 541
TUBE PUN-H-6X1-BL, 315400-0001 ... 87, 133, 135, 349, 367, 393, 541, 805, 807
Tube PUN-H-8X1,25-BL, 315400-0004 ... 259, 283, 347, 349, 361, 365, 541, 805, 807
Tube, 2792879-0000 ... 333, 861
Tube, 3108440-0000 ... 635, 645
Tube, 8x1 mm PTFE, 90600-0553 ... 193
Tubular Rivet 3,5x6,2, 90600-6183 ... 307, 313, 315
Tunnel, 2846399-0300 ... 415
Tunnel, 2985804-0000 ... 431
Tunnel, 2985842-0000 ... 421
Turn Spring, 2715798-0000 ... 175
Turning Handle, 1125-U185-0A, 90237-0175 ... 425, 443, 445

U

Unit Converger, 3108482-0000 ... 265
Update Pages, 3408458-0101 ... 859
Update Pages, 3420953-0101 ... 889
USB Cable set, 5A9000.54, 90600-4778 ... 407, 835
USB Cable, 90601-6430, 90601-6430 ... 407, 835
USB storage media 16GB, 5MMUSB.016G-C00, 90607-0745 ... 405
UV Illumination, LDR2-100UV365-IP, 90605-9651 ... 551, 891

V

Valve Cover, VMPAC-VC-14, 344383-0601 ... 541
Valve Sub-base, VMPAC-AP-14-2, 344383-0402 ... 541
Valve Sub-base, VMPAC-AP-14-B-2, 344383-0404 ... 541
Valve, 573833 / VUWG-L14-B52-G18, 90608-7974 ... 807
Valve, MS4-EE-1/4-10V24, 90459-2243 ... 361
Valve, VMPA14-M1HF-H-PI, 344383-0123 ... 541
Valve, VMPA14-M1HF-J-PI, 344383-0102 ... 541
Valve, VMPA14-M1HF-K-PI, 344383-0121 ... 541
Velcro Strap w/buckle, 25x3 cm, 301841, 90607-0070 ... 193
Vibration Damper Megi 781056, 90347-0011 ... 287
Vision System, 3203763-0100 ... 329, 859
Volume Kit, 2846407-0300 ... 229
Volume Kit, 2846408-0400 ... 229
Volume Kit, 2873977-0400 ... 229
Volume Kit, 2873978-0300 ... 229
Volume Kit, 2874001-0400 ... 229
Volume Kit, 3068635-0400 ... 229
Volume Kit, 3102968-0300 ... 229

W

Wall socket, Z-SD230, 90459-3845 ... 652
Warning Lamp, 3416656-0100 ... 375
Warning Sign ANSI (H), Electric Shock, 359715-0100 ... 411, 673, 893
Warning sign ANSI (H), UV Radiation Haza, 90605-9772 ... 551, 891
Warning Sign ANSI (V), Pneumatic Energy, 359725-0125 ... 163
Warning sign ANSI(H),Haz.volt.Disconnect, 90603-2736 ... 673
Warning Sign H, Hot surface, 351567-0171 ... 457
Warning Sign ISO, Burn Hazard, 50 mm, 351552-0007 ... 193, 457
Warning Sign ISO, Electric Hazard, 359705-0015 ... 279, 411, 651, 893
Warning Sign ISO, Electric Hazard, 50mm, 351552-0015 ... 457
Warning Sign ISO, Optical Radiation, 359705-0033 ... 551, 891
Warning Sign ISO, Pneumatic Energy, 359705-0021 ... 163
Warning sign, 3217278-0100 ... 31
Warning sign, 3217567-0100 ... 275
Warning sign, 3218060-0100 ... 397
Warning sign, 3227417-0100 ... 803
Washer high, TBRSB 10,5x28x6 A4, 315125-0173 ... 105, 119, 573
Washer high, TBRSB 5.3x15x1 A4, 315125-0146 ... 245, 255, 257
Washer high, TBRSB 6,4x22x4 A4, 315125-0153 ... 157, 169, 175, 283, 337, 391, 447, 553, 559, 565, 573, 631, 641
Washer high, TBRSB 8,4x26x5 A4, 315125-0165 ... 75, 81, 181, 211, 225, 287, 299, 367, 423
Washer ISO 7093 10,5x30x2,5 A2, 90606-5192 ... 139
Washer Pl.Rnd.Nyl.4,3/9, H=0,8, 90005-0064 ... 695
Washer Plain Round 4,3(M4)/12,H=1, 90005-0082 ... 537, 651, 665, 673, 687, 695, 729, 883
Washer Plain Round 5,2(M5)/15, H=1,6, 90005-0139 ... 87, 529, 865
Washer Plain Round 5,5/22, H=1,5 FZB, 90005-0125 ... 91
Washer Plain Round 8,4(M8)/24, H=2, 90005-0116 ... 157
Washer plain, 10,5x22x2 A4 BRB, 315105-0173 ... 87, 97, 113, 177, 295, 523
Washer plain, 10,5x22x2 BR Ni pl, 315103-0173 ... 245
Washer plain, 13x24x2,5 A4 BRB, 315105-0178 ... 49, 63, 105, 119, 187, 211
Washer plain, 17x30x3 A4 BRB, 315105-0186 ... 49, 63
Washer plain, 21x36x3 A4 BRB, 315105-0192 ... 119
Washer plain, 3,2x/6x0,5 BR Ni pl, 315103-0124 ... 265, 621, 623, 625, 627, 629, 639, 641
Washer plain, 3,2x6x0,5 A4 BRB, 315105-0124 ... 75, 81, 137, 283, 807
Washer plain, 30x52x4 A4 BRB, 315105-0203 ... 97, 113
Washer plain, 33X50x4 A4 BRB, 315105-0205 ... 207
Washer plain, 4,3x8x0,8 A4 BRB, 315105-0136 ... 75, 81, 85, 137, 147, 175, 177, 283, 337, 367, 385, 441, 453, 471, 523, 551, 553, 573, 581, 607, 695, 697, 703, 807, 809, 891
Washer plain, 4,3x8x0,8 BR Ni pl, 315103-0136 ... 231, 233, 235, 237, 239, 241, 243, 245, 253, 259, 261, 266, 631, 641
Washer plain, 5,3x10x1 A4 BRB, 315105-0146 ... 35, 41, 43, 57, 75, 81, 97, 113, 125, 129, 169, 175, 181, 185, 217, 225, 319, 321, 337, 367, 381, 407, 425, 445, 471, 479, 529, 537, 567, 585, 613, 671, 693, 697, 701, 703, 707, 709, 723, 725, 727, 731, 733, 735, 737, 739, 753, 755, 757, 783, 805, 845, 851, 865
Washer plain, 5,3x10x1 BR Ni pl, 315103-0146 ... 231, 233, 235, 237, 239, 241, 243, 245, 251, 253, 257, 259, 266, 621, 623, 625, 627, 629, 631, 637, 639, 641
Washer plain, 6,4x12x1,5 A4 BRB, 315105-0153 ... 35, 41, 43, 49, 55, 57, 63, 75, 81, 85, 103, 111, 119, 125, 127, 133, 135, 137, 157, 159, 161, 169, 181, 185, 193, 197, 213, 215, 217, 225, 283, 287, 291,

293, 295, 297, 327, 333, 337, 367, 379, 381, 391, 399, 401, 417, 419, 423, 427, 433, 437, 443, 447, 469, 477, 523, 529, 541, 551, 559, 565, 567, 569, 581, 583, 613, 695, 697, 703, 729, 737, 779, 805, 809, 857, 861, 865, 891
Washer plain, 6,4x12x1,5 BR Ni pl, 315103-0153 ..... 231, 233, 245, 253, 266, 631, 635, 641, 645
Washer plain, 6,7x14x1,5 A4 BRB, 315105-0156 ..... 193, 287, 509, 805, 877
Washer plain, 8,4x15x1,5 BR Ni pl, 315103-0165 ..... 245, 266
"Washer plain, M10 ISO7089-10-200 HV A4", 315106-0173 ..... 465, 477, 509, 877
"Washer plain, M12 ISO7089-12-200 HV A4", 315106-0178 139
Washer plain, M3 ISO7089-3-200 HV A4, 315106-0124 ..... 319, 321, 333, 851, 861
Washer plain, M4 ISO7089-4-200 HV A4, 315106-0136 ..... 155, 159
"Washer plain, M5 ISO7089-5-200 HV A4", 315106-0146 ..... 149, 159, 161, 279, 379, 581, 893
Washer plain, M6 ISO7089-6-200 HV A4, 315106-0153 ..... 67, 75, 81, 199, 201, 205, 439, 467, 509, 573, 877
Washer plain, M8 ISO7089-8-200 HV A4, 315106-0165 ..... 103, 111, 205, 279, 341, 479, 493, 497, 501, 505, 507, 875, 893
Washer Plain, RBS 6,4/M6)/18,H=1,5, 90005-0060 ..... 299, 729
Washer Plain, TBRB 10,5/22 H=4, 315115-0173 ..... 181, 523
Washer Plain, TBRB 8,4/16 H=3, 315115-0165 ..... 35, 125, 127, 185, 279, 293, 295, 893
Washer Plain, TBRSB 6,4/22 H=4, 315121-0153 779
Washer, 2699683-0000 469
Washer, 2716024-0000 573
Washer, 2751686-0000 ..... 529, 865
Washer, 2751687-0000 ..... 529, 865
Washer, 2751699-0000 471
Washer, 2778564-0000 ..... 75, 81
Washer, 2837255-0000 ..... 177, 181
Washer, 290027-0000 ..... 75, 81
Washer, 3108450-0000 261
Washer, 3108451-0000 ..... 231, 233, 235, 237, 259, 261, 266, 271
Washer, 3108452-0000 ..... 231, 233, 235, 237, 239, 241, 243, 245, 251, 253, 257, 259, 266
Washer, 3108453-0000 ..... 231, 233, 235, 237, 239, 241, 243, 245, 266
Washer, 3108454-0000 ..... 231, 233, 235, 237, 239, 241, 243, 245, 266
Washer, 3108455-0000 245
Washer, 3108458-0000 ..... 253, 266
Washer, 3108460-0000 266
Washer, 3108484-0000 265
Washer, 3108485-0000 265
Washer, 3108493-0000 265
Washer, 3115101-0000 157
Washer, 3115229-0000 265
Washer, 3115269-0000 251
Washer, 3117136-0000 157
Water connection, 2758514-0200 275
Water Diagram, 3228191-0000 775
Welded Cabinet, 3412501-0000 695
Wheel, 1556626-0000 537
Wheel, 1556630-0000 ..... 529, 865
Wheel, 2838690-0000 127
Wheel, 3152724-0000 157
Wheel, 3300287-0000 157
Wire AWM 1X0,75 mm2 darkblue, 351160-0102 ..... 651, 673, 897
Wire AWM 1x0,75 mm2 yellow-green, 351162-0102 763
Wire AWM 1x1,5 mm2 black, 351164-0104 763
Wire AWM 1x1,5 mm2 lightblue, 351161-0104 763
Wire AWM 1x1,5 mm2 yellow-green, 351162-0104 763
Wire AWM 1x10 mm2 black, 351164-0108 763
Wire AWM 1x10 mm2 yellow-green, 351162-0108 763
Wire AWM 1x16 mm2 black, 351164-0109 763
Wire AWM 1x16 mm2 lightblue, 351161-0109 763
Wire AWM 1x16 mm2 yellow-green, 351162-0109 763
Wire AWM 1x2,5 mm2 black, 351164-0105 ..... 651, 673
Wire AWM 1x2,5 mm2 darkblue, 351160-0105 763
Wire AWM 1x2,5 mm2 lightblue, 351161-0105 763
Wire AWM 1x2,5 mm2 yellow-green, 351162-0105 763
Wire AWM 1x4 mm2 black, 351164-0106 763
Wire AWM 1x4 mm2 darkblue, 351160-0106 763
Wire AWM 1x4 mm2 lightblue, 351161-0106 763
Wire AWM 1x4 mm2 yellow-green, 351162-0106 ..... 265, 763
Wire AWM 1x6 mm2 black, 351164-0107 ..... 651, 673
Wire AWM 1x6 mm2 lightblue, 351161-0107 763
Wire AWM 1x6 mm2 yellow-green, 351162-0107 ..... 389, 763
Wire marking, Yellow, PA02/3"0", 359000-0200 897
Wire marking, Yellow, PA02/3"1", 359000-0201 897
Wire marking, Yellow, PA02/3"2", 359000-0202 897
Wire marking, Yellow, PA02/3"4", 359000-0204 897
Wire marking, Yellow, PA02/3"5", 359000-0205 897
Wire marking, Yellow, PA02/3"6", 359000-0206 897
Wire marking, Yellow, PA02/3"7", 359000-0207 897
Wire marking, Yellow, PA02/3"8", 359000-0208 897
Wire marking, Yellow, PA02/3"9", 359000-0209 897
Wire marking, Yellow, PA1/3"0", 359000-0300 887
Wire marking, Yellow, PA1/3"1", 359000-0301 887
Wire marking, Yellow, PA1/3"2", 359000-0302 887
Wire marking, Yellow, PA1/3"3", 359000-0303 887
Wire marking, Yellow, PA1/3"4", 359000-0304 887
Wire marking, Yellow, PA1/3"5", 359000-0305 887
Wire marking, Yellow, PA1/3"6", 359000-0306 887
Wire marking, Yellow, PA1/3"7", 359000-0307 887
Wire marking, Yellow, PA1/3"8", 359000-0308 887
Wire marking, Yellow, PA1/3"9", 359000-0309 887
Wire marking, Yellow, PA1/3"A", 359000-0700 887
Wire marking, Yellow, PA1/3"L", 359000-0711 887
Wire marking, Yellow, PA1/3"W", 359000-0722 887
Worm Gear Motor, 2838710-0500 85
Worm gear screw jack, TP00063000130, 90600-0658 ..... 225, 293
Worm gear screw jack, TR00042000130, 90600-1005 127

Worm Gear VDHe063-ML1-10-141-0E0 / MPL-B, 90606-5282 177
Worm Gear VDHe063-ML1-40-141-0E0 / MPL-B, 90606-5283 ..... 97, 113
Worm Gear, 3365192-0000 245
Worm Gear, 3365194-0000 265
Worm Gear, 3365195-0000 ..... 631, 641

Y

Y-Connection, 90458-0745 ..... 231, 233, 241
Yellow, PWire marking, Yellow, PA02/3"3", 359000-0203 897

This page intentionally left blank

SPC

Spare Parts Catalogue

A

A01A4000 . . . 3328027-0201 . . . 404
A01A4000 . . . 3328027-0201 . . . IPC configuration 399

B

A01B6000 . . . 90602-8807 . . . Limit sw. SZ 2586.010 695
A01B6001 . . . 90602-8807 . . . Limit sw. SZ 2586.010 695
A01B6010 . . . 90606-0465 . . . Thermostat, XSEKTS011 739
C50B0013 . . . 90459-5529 . . . Photocell E3Z-T86A, Sender+Reciever 266
C50B1001 . . . 90458-2907 . . . Prox.switch IFS204 245
C50B1002 . . . 90458-2907 . . . Prox.switch IFS204 245
F09B2010 . . 90606-4580 . . Safety Sensor, Adam M12-5 DYN-Info 381
F09B2011 . . 90606-4582 . . Safety Sensor, Eva General code 381
F09B2012 . . 90606-4580 . . Safety Sensor, Adam M12-5 DYN-Info 381
F09B2013 . . 90606-4582 . . Safety Sensor, Eva General code 381
F09B2014 . . 90606-4580 . . Safety Sensor, Adam M12-5 DYN-Info 381
F09B2015 . . 90606-4582 . . Safety Sensor, Eva General code 381
F09B2016 . . 90606-4580 . . Safety Sensor, Adam M12-5 DYN-Info 381
F09B2017 . . 90606-4582 . . Safety Sensor, Eva General code 381
F09B2030 . . 90606-4580 . . Safety Sensor, Adam M12-5 DYN-Info 381
F09B2031 . . 90606-4582 . . Safety Sensor, Eva General code 381
F09B2032 . . 90606-4580 . . Safety Sensor, Adam M12-5 DYN-Info 381
F09B2033 . . 90606-4582 . . Safety Sensor, Eva General code 381
F09B2034 . . 90606-4580 . . Safety Sensor, Adam M12-5 DYN-Info 381
F09B2035 . . 90606-4582 . . Safety Sensor, Eva General code 381
F09B2036 . . 90459-5627 . . Connection, Tina 1A, 2TLA020054R0000 381
F09B2041 . . 90459-6913 . . Magnetic lock, JSD-ZH-EM1-K 381
F09B2042 . . 90459-6913 . . Magnetic lock, JSD-ZH-EM1-K 381
F09B3012 . . 90606-4580 . . Safety Sensor, Adam M12-5 DYN-Info 257
F09B3012 . . 90606-4582 . . Safety Sensor, Eva General code 253
F09B3014 . . 90606-4580 . . Safety Sensor, Adam M12-5 DYN-Info 257
F09B3014 . . 90606-4582 . . Safety Sensor, Eva General code 253
F09B3016 . . 90606-4580 . . Safety Sensor, Adam M12-5 DYN-Info 251
F09B3017 . . 90606-4582 . . Safety Sensor, Eva General code 251
G30B1001 . . . 90459-6947 . . . Photocell, WF 225-B4150 155
G30B1002 . . . 90458-2907 . . . Prox.switch IFS204 477
G40B2000 . . . 90459-6948 . . . Inductive sensor, IFS 206 581
G40B2002 . . . 351481-5010 . . . Proximity Switch for T-slot, SMT-8M-A 581
G40B5001 . . . 90606-2469 . . . Fork Sensor, WFM80-60P321 631, 641
G40B5005 . . . 90606-2469 . . . Fork Sensor, WFM80-60P321 631, 641
G41B0000 . . . 90605-2649 . . . In-Sight 5600 Camera, IS5600-01 551, 891
G41B0011 . . . 90601-1027 . . . Limit switch, D4C-1G01 5M 551, 891
G50B1005 . . . 90458-2907 . . . Prox.switch IFS204 261
G70B0000 . . . 90604-2784 . . . In-Sight 5100 Camera, IS5100-01 333, 861
K01B8001 . . . 90459-6426 . . . Pressure Guard PEV-1/4-B-OD 361
V01B9001 . . . 90603-0408 . . . 370
V01B9001 . . . 90603-0408 . . . Lubrication Unit, 10P-P4-H1 LM12 367
V01B9002 . . . 90603-1938 . . . Pressure switch, 1800 kPa, 28545-251-2 367
W20B0003 . . 90606-4464 . . Laser sensor, WSE9L-3P2237 81
W21B0000 . . 90458-2907 . . Prox.switch IFS204 125
W21B3000 . . 90606-4464 . . Laser sensor, WSE9L-3P2237 807
W21B3002 . . 90606-4464 . . Laser sensor, WSE9L-3P2237 807
W21B3004 . . 90606-4464 . . Laser sensor, WSE9L-3P2237 807
W21B3012 . . 90606-4464 . . Laser sensor, WSE9L-3P2237 807
W21B4002 . . 90459-5529 . . Photocell E3Z-T86A, Sender+Reciever 299
W21B4004 . . 90459-5529 . . Photocell E3Z-T86A, Sender+Reciever 299
W21B4006 . . 90459-5529 . . Photocell E3Z-T86A, Sender+Reciever 299
W21B4008 . . 90459-5529 . . Photocell E3Z-T86A, Sender+Reciever 299
W21B4023 . . 90459-5529 . . Photocell E3Z-T86A, Sender+Reciever 137
W21B6002 . . 90459-5529 . . Photocell E3Z-T86A, Sender+Reciever 299
W21B6004 . . 90459-5529 . . Photocell E3Z-T86A, Sender+Reciever 849
W21B6005 . . 90458-2907 . . Prox.switch IFS204 845

C

A01C4000 . . . 90605-4349 . . . Factory Talk Act. Memory Dongle, 9509-US 399

E

A01E6000 . . . 351439-1106 . . Top Therm Blue-e Roofmount SS, 3385.600 761
A01E7000 . . . 90606-7666 . . . Slim Led LIQ 12 Light Fixture 695
A01E7001 . . . 90606-7666 . . . Slim Led LIQ 12 Light Fixture 385, 387
A01E7002 . . . 90606-7666 . . . Slim Led LIQ 12 Light Fixture 385
G41E0002 . . . 90605-9651 . . . UV Illumination, LDR2-100UV365-IP 551, 891
W21E8001 . . 90606-1840 . . Cartridge Heater, 3kW 230V 337

F

A01F1001 . . 90600-7487 . . 698
A01F1001 . . 90600-7487 . . Surge Protection Dev., VAL-MS 230/3+1 FM 697
A01F1004 . . 315746-0250 . . . Miniature Circuit Breaker, FAZ-C25/3-NA 673

A01F1004 . . 354002-0250 . . .Miniature Circuit Breaker, FAZ-C25/3 651
A01F1004 . . 90459-5813 . . Auxiliary Contact, FAZ-XHIN11 651
A01F1004 . . 90600-5517 . . Auxiliary Contact, Z-NHK 248434 673
A01F1005 . . 315744-0060 . . .Miniature Circuit Breaker, FAZ-C6/1-NA 673
A01F1005 . . 354000-0060 . . .Miniature Circuit Breaker, FAZ-C6/1 651
A01F1006 . . 315746-0250 . . .Miniature Circuit Breaker, FAZ-C25/3-NA 673
A01F1006 . . 354002-0250 . . .Miniature Circuit Breaker, FAZ-C25/3 651
A01F1006 . . 90459-5813 . . Auxiliary Contact, FAZ-XHIN11 651
A01F1006 . . 90600-5517 . . Auxiliary Contact, Z-NHK 248434 673
A01F1007 . . 315744-0060 . . .Miniature Circuit Breaker, FAZ-C6/1-NA 673
A01F1007 . . 354000-0060 . . .Miniature Circuit Breaker, FAZ-C6/1 651
A01F2000 . . 315746-0060 . . .Miniature Circuit Breaker, FAZ-C6/3-NA 673
A01F2000 . . 354002-0060 . . .Miniature Circuit Breaker, FAZ-C6/3 651
A01F2001 . . 315744-0040 . . .Miniature Circuit Breaker, FAZ-C4/1-NA 673
A01F2001 . . 354000-0040 . . .Miniature Circuit Breaker, FAZ-C4/1 651
A01F2002 . . 315744-0040 . . .Miniature Circuit Breaker, FAZ-C4/1-NA 673
A01F2002 . . 354000-0040 . . .Miniature Circuit Breaker, FAZ-C4/1 651
A01F2003 . . 315744-0040 . . .Miniature Circuit Breaker, FAZ-C4/1-NA 673
A01F2003 . . 354000-0040 . . .Miniature Circuit Breaker, FAZ-C4/1 651
A01F2004 . . 315744-0040 . . .Miniature Circuit Breaker, FAZ-C4/1-NA 673
A01F2004 . . 354000-0040 . . .Miniature Circuit Breaker, FAZ-C4/1 652
A01F2005 . . 315744-0060 . . .Miniature Circuit Breaker, FAZ-C6/1-NA 674
A01F2005 . . 354000-0060 . . .Miniature Circuit Breaker, FAZ-C6/1 652
A01F3000 . . 315744-0040 . . .Miniature Circuit Breaker, FAZ-C4/1-NA 674
A01F3000 . . 354000-0040 . . .Miniature Circuit Breaker, FAZ-C4/1 652
A01F6000 . . 315747-0100 . . .Miniature Circuit Breaker, FAZ-D10/1-NA 674
A01F6000 . . 351416-0100 . . .Miniature Circ. Break., FAZ -D10 1-pole 652
A01F6000 . . 90459-5813 . . Auxiliary Contact, FAZ-XHIN11 652
A01F6000 . . 90600-5517 . . Auxiliary Contact, Z-NHK 248434 674
A01F7000 . . 315744-0040 . . .Miniature Circuit Breaker, FAZ-C4/1-NA 674
A01F7000 . . 354000-0040 . . .Miniature Circuit Breaker, FAZ-C4/1 652
A01F7001 . . 90459-5811 . . Residual current device, FI-25/2/003-A 652
A01F7002 . . 354000-0100 . . .Miniature Circuit Breaker, FAZ-C10/1 652
C50F0000 . . .90259-0313 . . .Auxiliary switch, NHI21-PKZ0 ..... 651, 673
C50F0000 . . .90459-5323 . . .Overload protection, PKZM0-1 072734 ..... 651, 673
C50F1000 . . .315747-0060 . . .Miniature Circuit Breaker, FAZ-D6/1-NA 673
C50F1000 . . .351416-0060 . . .Miniature Circ. Break., FAZ -D6 1-pole 651
G40F4000 . . .90259-0313 . . .Auxiliary switch, NHI21-PKZ0 ..... 651, 673
G40F4000 . . .90459-5321 . . .Overload protection, PKZM0-0.4 072732 ..... 651, 673
V01F5000 . . 315746-0200 . . .Miniature Circuit Breaker, FAZ-C20/3-NA 674
V01F5000 . . 354002-0200 . . .Miniature Circuit Breaker, FAZ-C20/3 652
V01F5000 . . 90459-5813 . . Auxiliary Contact, FAZ-XHIN11 652
V01F5000 . . 90600-5517 . . Auxiliary Contact, Z-NHK 248434 674
W21F4000 . . 315747-0100 . . Miniature Circuit Breaker, FAZ-D10/1-NA 674
W21F4000 . . 351416-0100 . . Miniature Circ. Break., FAZ -D10 1-pole 652
W21F4010 . . 315747-0060 . . Miniature Circuit Breaker, FAZ-D6/1-NA 667, 689
W21F4010 . . 351416-0060 . . Miniature Circ. Break., FAZ -D6 1-pole 667, 689
W21F6000 . . 315747-0100 . . Miniature Circuit Breaker, FAZ-D10/1-NA 674
W21F6000 . . 351416-0100 . . Miniature Circ. Break., FAZ -D10 1-pole 652
W21F8000 . . 90259-0313 . . Auxiliary switch, NHI21-PKZ0 725
W21F8000 . . 90459-5326 . . Overload protection, PKZM0-4 072737 725
W21F8001 . . 315745-0100 . . Miniature Circuit Breaker, FAZ-C10/2-NA 674
W21F8001 . . 354001-0100 . . Miniature Circuit Breaker, FAZ-C10/2 652
W21F8001 . . 90459-5813 . . Auxiliary Contact, FAZ-XHIN11 652
W21F8001 . . 90600-5517 . . Auxiliary Contact, Z-NHK 248434 674

G

C50G1064 . . 3115358-0000 . . Air Nozzle 233, 235, 237, 239, 241, 243
C50G1064 . . 3124533-0000 . . Air Nozzle 231
C50G1065 . . 2930228-0000 . . Air Nozzle 231, 233, 235, 237, 239, 241, 243
C50G1066 . . 2930229-0000 . . Air Nozzle 233, 235, 237, 239, 241, 243
C50G1066 . . 3124524-0000 . . Air Nozzle 231
C50G1067 . . 2930228-0000 . . Air Nozzle 231
C50G1067 . . 2930230-0000 . . Air Nozzle 237, 239, 243
C50G1067 . . 2981405-0000 . . Air Nozzle 235, 241
C50G1067 . . 3115238-0000 . . Air Nozzle 233
C50G1068 . . 2930228-0000 . . Air Nozzle 231
C50G1068 . . 2930230-0000 . . Air Nozzle 237, 239, 243
C50G1068 . . 2981405-0000 . . Air Nozzle 235, 241
C50G1068 . . 3115238-0000 . . Air Nozzle 233
C50G1069 . . 2981405-0000 . . Air Nozzle 237, 239, 243
C50G1069 . . 3124524-0000 . . Air Nozzle 231
C50G1070 . . 3124541-0000 . . Air Nozzle 233, 241
C50G1072 . . 3124444-0000 . . Air Nozzle 233
C50G1072 . . 3124533-0000 . . Air Nozzle 231

K

A01K1000 . . .90600-5262 . . .Line Filter, B84144A36R120 697
A01K1001 . . .90600-5266 . . .Feed Through Filter, B85321A2502W160 697
A01K1002 . . .90600-5266 . . .Feed Through Filter, B85321A2502W160 697

A01K1004 . . .90600-5258 . . .Line Filter, B84143A35R106 703
A01K1005 . . .90600-5253 . . .Line Filter, B84113HB60 703
A01K1006 . . .90600-5258 . . .Line Filter, B84143A35R106 703
A01K1007 . . .90600-5253 . . .Line Filter, B84113HB60 703
A01K1010 . . .90601-6650 . . .Relay, PLC-RSC-24DC/21 707
A01K3001 . . .90605-2744 . . .Processor L72, Series B, 1756-L72/B 731
A01K3002 . . .90603-5624 . . .EtherNet dual port 10-100M, 1756-EN3TR s 731
A01K3005 . . .90459-6556 . . .Dig Input Module 32p, 1756-IB32/B 731
A01K3006 . . .90459-2413 . . .Dig Input Module 16p, 1756-IB16 731
A01K3007 . . .90459-2474 . . .Dig Output Module, 1756-OB16E/A 731
A01K3008 . . .90600-4033 . . .Dig Output Module, 1756-OB16IS 651, 673
A01K3020 . . .90606-0860 . . .Point I/O Adapt. Mod.,1734-AENTR SerieB 401
A01K3021 . . .90605-0584 . . .Digital Inp 4 PTS Sink, 1734-IB4 Serie D 401
A01K3022 . . .90605-0584 . . .Digital Inp 4 PTS Sink, 1734-IB4 Serie D 401
A01K3023 . . .90605-0584 . . .Digital Inp 4 PTS Sink, 1734-IB4 Serie D 401
A01K3024 . . .90459-2501 . . .5006526, 1734-FPD 401
A01K3025 . . .90459-2505 . . .Digital Output 4 PTS, 1734-OB4E Series C 401
A01K3026 . . .90459-2505 . . .Digital Output 4 PTS, 1734-OB4E Series C 401
A01K3027 . . .90459-2501 . . .5006526, 1734-FPD 401
A01K3028 . . .90459-2505 . . .Digital Output 4 PTS, 1734-OB4E Series C 401
A01K3029 . . .90459-2505 . . .Digital Output 4 PTS, 1734-OB4E Series C 401
A01K3030 . . .90459-2511 . . Analog Output Current Module 2PTS 401
A01K3034 . . .90601-6650 . . .Relay, PLC-RSC-24DC/21 401
A01K3035 . . .90601-6650 . . .Relay, PLC-RSC-24DC/21 401
A01K3036 . . .90601-6650 . . .Relay, PLC-RSC-24DC/21 401
A01K7000 . . .90601-6650 . . .Relay, PLC-RSC-24DC/21 707
A81K5000 . . .90604-5464 . . .QuickServer Gateway, FS-QS-1230-0705 771
A81K5000 . . .90606-9346 . . .EtherNet/IP t Genius Gateway, AN-X2-GENI 769
A81K5002 . . .90600-5249 . . .Ferrite, B64290L616X38 769
A81K5003 . . .90600-5249 . . .Ferrite, B64290L616X38 769
C50K1000 . . .90605-9527 . . .PF 525 EMC Line Filter, 240V, 0.4kW A 651, 673
C81K4130 . . .90606-4706 . . .ArmorBlock Module, 1732E-8CFGM8R, Ser. A 246
F09K0000 . . 90459-6692 . . Safety PLC, Pluto B20, 2TLA020070R4600 737
F09K0001 . . 90459-2291 . . Safety relay, E1T 737
F09K0002 . . 90459-4891 . . Identifier, IDFIX-RW, 2TLA020070R2100 737
F09K0003 . . 90459-2291 . . Safety relay, E1T 651, 673
F09K0004 . . 90459-2291 . . Safety relay, E1T 737
F09K2040 . . 90601-6650 . . Relay, PLC-RSC-24DC/21 401
F09K3016 . . 90604-0093 . . Connection Block, TINA4A 2TLA020054R0300 246
G40K1000. . . 344319-3001. 194
G40K1000. . . 344319-3001. . . Hot Melt Applicator, 7333040 193
G40K2010. . . 344383-0102. . . Valve, VMPA14-M1HF-J-PI 541
G41K0011. . . 90601-6656. . . Relay, PR2-RSC3-LDP-24DC/4X21AU 279, 893
G70K0000. . . 90601-6652. . . Optocoupler, PLC-OSC-24DC/24DC/2 ..... 651, 673
G70K0001. . . 90601-6652. . . Optocoupler, PLC-OSC-24DC/24DC/2 ..... 651, 673
K01K8000 . . .90459-2243 . . .Valve, MS4-EE-1/4-10V24 361
V01K5010 . . .90606-9103 . . .Proportional pressure regulator VPPE 283
V01K9000 . . .344383-0121 . . .Valve, VMPA14-M1HF-K-PI 541
W01K5000 . . 90606-4010 . . Ethernet/IP Card, 1053289 393
W20K3000 . . 344383-0121 . . Valve, VMPA14-M1HF-K-PI 541
W21K2002 . . 90603-2696 . . Surge Protection Dev., LIT 4x1-24 ..... 671, 693
W21K3010 . . 344383-0102 . . Valve, VMPA14-M1HF-J-PI 541
W21K3060 . . 90608-7974 . . Valve, 573833 / VUWG-L14-B52-G18 807
W21K4000 . . 90605-9527 . . PF 525 EMC Line Filter, 240V, 0.4kW A 749
W21K4010 . . 90605-9527 . . PF 525 EMC Line Filter, 240V, 0.4kW A 667, 689
W21K5000 . . 344383-0123 . . Valve, VMPA14-M1HF-H-PI 541
W21K6000 . . 90605-9527 . . PF 525 EMC Line Filter, 240V, 0.4kW A 749
W21K8000 . . 90606-9102 . . Relay, K8AK-AS2 707
W21K8001 . . 90606-9102 . . Relay, K8AK-AS2 707
W81K4120 . . 90606-4706 . . ArmorBlock Module, 1732E-8CFGM8R, Ser. A 283

M

C50M0000 . . 90603-9718 . . Motor 3GAA 062 002-BSC 266
C50M1000 . . 90603-9718 . . Motor 3GAA 062 002-BSC 245
G30M0000 . . 90606-2779 . . Servo motor, VPL-B1153F-PK12AA, Series A 479
G30M4000 . . 90606-2776 . . Servo motor, VPL-B1152T-PK12AA, Series A 177
G40M0000 . . 90606-2779 . . Servo motor, VPL-B1153F-PK12AA, Series A 207
G40M0002 . . 90606-2779 . . Servo motor, VPL-B1153F-PK12AA, Series A 209
G40M2060 . . 90604-3142 . . Cylinder, Gripper DHPS-16-A-H1-SA 581
G40M3000 . . 90606-0575 . . Servo motor, VPL-B1002M-PJ12AA, Serie A 565
G40M4000 . . 90603-2676 . . Motor 3GAA052002-CSA 631, 641
G70M1000 . . 90606-2772 . . Servo motor, VPL-B1001M-PK12AA, Series A 509, 877
W20M0000 . . 90606-2779 . . Servo motor, VPL-B1153F-PK12AA, Series A 91
W20M0050 . . 90604-3137 . . Double acting, Mini-ISO, Cyl. 32-80 87
W20M0060 . . 351476-3150 . . Double acting, Round, Cyl. 32-150 133
W20M0063 . . 351476-3150 . . Double acting, Round, Cyl. 32-150 135
W21M1000 . . 90606-2776 . . Servo motor, VPL-B1152T-PK12AA, Series A 113
W21M2000 . . 90606-2776 . . Servo motor, VPL-B1152T-PK12AA, Series A 97
W21M3060 . . 90604-3129 . . Double acting, Mini-ISO, Cyl. 16-25 805
W21M4010 . . 90606-5280 . . Gears, Worm motor SK1SIS31F-IEC63-63S/2 157
W21M8000 . . 90604-3589 . . Fan, 2BH1300-7AV15-K43 327

P

A01P5000 . . . 90053-0029 . . . Counter, F524.800FA3C 24VDC 737
A01P5001 . . . 90053-0031 . . . Hour Counter, B 609.10 10-50VDC 737
A01P5011 . . 90602-4062 . . Light Element, Red, PSD-S OE LED RD 379
A01P5012 . . . 90602-4063 . . . Light Element, Yellow, PSD-S OE LED YE 379
A01P5013 . . . 90602-4631 . . . Siren 100dB, PSD-S AE SM8-5 100dB/1 379
A01P5014 . . . 90602-4060 . . . Light Element, Blue, PSD-S OE LED BU 379
A01P5015 . . . 90602-4061 . . . Light Element, Green, PSD-S OE LED GN 379
C50P1050 . . . 90600-1420 . . . Regulator, MS4-LRB-1/4-D6-AS 259
C50P1053 . . . 90600-1420 . . . Regulator, MS4-LRB-1/4-D6-AS 259
C50P1054 . . . 90600-1420 . . . Regulator, MS4-LRB-1/4-D6-AS 259
K40P1050 . . . 90459-7344 . . . Pressure gauge, MA-40-6-R1/4-EN 349

Q

A01Q1000 . . . 351436-0032 . . . Circuit Breaker, NZMB1-A32-NA 674
A01Q1000 . . . 90600-5543 . . . Circuit Breaker, NZMB1-4-A32 652
A01Q1004 . . . 90459-5311 . . . Contactor 15kW 24VDC, DILM32-10 727
A01Q1004 . . . 90459-6852 . . . Auxiliary Contact, DILA-XHI22 727
A01Q1005 . . . 90600-1759 . . . Contactor22kW24VDCDILM50-22+DILM65-XIP2X 723
A01Q1006 . . . 90459-5311 . . . Contactor 15kW 24VDC, DILM32-10 727
A01Q1006 . . . 90459-6852 . . . Auxiliary Contact, DILA-XHI22 727
A01Q6000 . . . 90606-8398 . . . Contactor 4kW 24VDC, DILM9-10 727
C50Q0000 . . 90606-8399 . . Contactor 4kW 24VDC, DILM9-01 ..... 651, 673
G40Q4000 . . 90606-8399 . . Contactor 4kW 24VDC, DILM9-01 ..... 651, 673
K01Q8050 . . . 90459-2337 . . . Shut off valve, MS4-EM1-1/4 361
K20Q0051 . . . 90459-0290 . . . Non-return valve, H-QS-6 349
K20Q0052 . . . 90187-0191 . . . Ball valve, R1/8 - hose 6 mm 349
U01Q0051 . . 90605-6942 . . Ball Valve G1/4, 772117 343
V01Q5000 . . . 90459-5311 . . . Contactor 15kW 24VDC, DILM32-10 727
W21Q3000 . . 90459-2777 . . Flow Control Valve, GR-QS-8 805
W21Q8000 . . 90606-8398 . . Contactor 4kW 24VDC, DILM9-10 727
W21Q8001 . . 90459-5309 . . Contactor 7,5kW 24VDC, DILM17-10 727

R

A81R5020 . . . 90459-2523 . . . Terminator, Open Style, 1485A-C2 771
C50R1000 . . . 90328-0026 . . . Silencer, G1/4" 259
G41R0002 . . 90602-3851 . . Resistance fixed, 3,6 kOhm, 1/2 W 279, 893
K01R8052 . . . 90328-0026 . . . Silencer, G1/4" 361
K01R8053 . . . 90328-0026 . . . Silencer, G1/4" 361
K21R0054 . . . 90459-3604 . . . Flow Control Valve, GR-QS-6 541
K21R3054 . . . 90235-0748 . . . Throttle check valve, GRA-1/4-B 541
K40R1050 . . . 90459-5817 . . . Regulator, MS4-LR-1/4-D6-A8-AS 349
V01R9001 . . . 90328-0024 . . . Silencer, G3/8" 541
V01R9002 . . . 90328-0024 . . . Silencer, G3/8" 541
W20R0051 . . 90328-0017 . . Silencer, d=6 mm74122000 87
W20R0061 . . 90328-0047 . . Silencer, G1/8" 133
W20R0064 . . 90328-0047 . . Silencer, G1/8" 135
W21R5001 . . 90328-0047 . . Silencer, G1/8" 541
W21R5002 . . 90328-0047 . . Silencer, G1/8" 541

S

A81S2010 . . . 90603-5602 . . . Bar Code Reader, D9330 + cab-463 ..... 407, 835
F09S1001 . . 90605-9819 . . Emerg. Stop Switch, 704.064.2+704.910.4 695
F09S1002 . . 90605-9819 . . Emerg. Stop Switch, 704.064.2+704.910.4 399
F09S1003 . . 90605-9819 . . Emerg. Stop Switch, 704.064.2+704.910.4 441

T

A01T2000 . . 90602-8988 742
A01T2000 . . 90602-8988 . . Power Supply, QUINT-PS/ 3AC/24DC/20 739
A01T2001 . . 90602-8707 . . Buffer Unit, QUINT-BUFFER/24DC/20 739
A01T3000 . . 90459-7267 . . Power supply 24VDC, 1756-PB75/B 731
A01T7000 . . 90603-1115 . . Power Supply, STEP-PS/1AC/24DC/3,8/C2LPS 723
C50T1000 . . . 90605-9347 . . . FC PowerFlex 525, 230V 1ph, 0.4kW A 651, 673
G30T0000 . . . 90605-9390 . . . Amp.Kinetix 5500, 2198-H025-ERS, Serie A 729
G30T4000 . . . 90605-9390 . . . Amp.Kinetix 5500, 2198-H025-ERS, Serie A 729
G40T0000 . . . 90605-9390 . . . Amp.Kinetix 5500, 2198-H025-ERS, Serie A 651, 673
G40T0002 . . . 90605-9390 . . . Amp.Kinetix 5500, 2198-H025-ERS, Serie A 651, 673
G40T3000 . . . 90605-9389 . . . Amp.Kinetix 5500, 2198-H015-ERS, Serie A 651, 673
G41T0002 . . . 90605-2645 . . . Power Supply, IQ00-QLC-400-1-TP 279, 893
G70T1000 . . . 90605-9388 . . . Amp.Kinetix 5500, 2198-H008-ERS, Serie A 665, 687, 883
V01T5010 . . 315400-0004 . . . Tube PUN-H-8X1,25-BL 283
V01T5011 . . 315400-0004 . . Tube PUN-H-8X1,25-BL 283
W20T0000 . . 90605-9390 . . Amp.Kinetix 5500, 2198-H025-ERS, Serie A 729
W21T1000 . . 90605-9390 . . Amp.Kinetix 5500, 2198-H025-ERS, Serie A 652, 674
W21T2000 . . 90605-9390 . . Amp.Kinetix 5500, 2198-H025-ERS, Serie A 652, 674
W21T4000 . . 90605-9348 . . FC PowerFlex 525, 230V 1ph, 0.75kW A 749
W21T4010 . . 90605-9347 . . FC PowerFlex 525, 230V 1ph, 0.4kW A 667, 689
W21T6000 . . 90605-9348 . . FC PowerFlex 525, 230V 1ph, 0.75kW A 749

U

C50U1003 . . . 90600-5813 . . . Solenoid valve, CPE18-M1H-3GL-1/4 259
G40U2010 . . 344383-0402 . . Valve Sub-base, VMPAC-AP-14-2 541
V01U9000 . . . 344383-0404 . . . Valve Sub-base, VMPAC-AP-14-B-2 541
V01U9058 . . . 90032-0039 . . . Block 4 ways 367
W20U3000 . . 344383-0402 . . Valve Sub-base, VMPAC-AP-14-2 541
W21U3010 . . 344383-0402 . . Valve Sub-base, VMPAC-AP-14-2 541
W21U5000 . . 344383-0404 . . Valve Sub-base, VMPAC-AP-14-B-2 541

V

K01V8050 . . . 90459-2339 362
K01V8050 . . . 90459-2339 . . . Filter Regulator, MS4-LFR-1/4-D7-ERV-AS 361
K01V8052 . . . 90603-4699 354
K01V8052 . . . 90603-4699 . . . Filter, MS6-LFM-1/2-B-R-V-DA 353
K01V8053 . . . 90603-4698 356
K01V8053 . . . 90603-4698 . . . Filter, MS6-LFM-1/2-ARV-DA 353
K01V8054 . . . 90459-2771 358
K01V8054 . . . 90459-2771 . . . Filter, MS6-LFX-1/2-R 353
V01V5000 . . . 90604-3320 394
V01V5000 . . . 90604-3320 . . . Hot Melt Unit ProBlue 4, 104 9296 H1 393
V01V9002 . . . 90415-0030 372
V01V9002 . . . 90415-0030 . . . Oil filter PN 100 Ord.no 2.77 10 70.1 367

W

A01W3025 . . 351423-0006 . . Cable Unitronic LiYCY 5x0,34 ..... 651, 673
A01W3026 . . 351423-0006 . . Cable Unitronic LiYCY 5x0,34 ..... 651, 673
A01W3027 . . 351423-0006 . . Cable Unitronic LiYCY 5x0,34 ..... 651, 673
A01W3028 . . 351423-0006 . . Cable Unitronic LiYCY 5x0,34 ..... 651, 673
A01W5010 . . 351150-0406 . . Cable Olflex 7x0,75 mm2 light/grey 389
A01W7001 . . 351150-0403 . . Cable Olflex 3x0,75 mm2 light/grey 35 389
A01W7002 . . 351150-0403 . . Cable Olflex 3x0,75 mm2 light/grey 35 389
A01W8010 . . 344383-0703 . . Cable 10m, NEBV-C-S1WA25-F-10-LE25-S5 541
A81W0203 . . 90600-2103 . . Ethernet cable, CCB-84901-1004-10 ..... 333, 861
A81W2001 . . 351501-0020 . . Ethernet Patch Cable, FL CAT5 PATCH 2,0 753
A81W2002 . . 351501-0020 . . Ethernet Patch Cable, FL CAT5 PATCH 2,0 749
A81W2003 . . 351501-3100 . . Eth. P. Cab. VS-M12MSD-IP20-LI-93P/10,0 283
A81W2004 . . 90600-2103 . . Ethernet cable, CCB-84901-1004-10 ..... 551, 891
A81W2006 . . 351501-0015 . . Ethernet Patch Cable, FL CAT5 PATCH 1,5 749
A81W2006 . . 351501-0100 . . Ethernet Patch Cable, FL CAT5 PATCH 10,0 393
A81W2007 . . 351501-0020 . . Ethernet Patch Cable, FL CAT5 PATCH 2,0 ..... 652, 674
A81W2008 . . 351501-0015 . . Ethernet Patch Cable, FL CAT5 PATCH 1,5 ..... 667, 689
A81W2009 . . 351501-0100 . . Ethernet Patch Cable, FL CAT5 PATCH 10,0 763
A81W2010 . . 90601-6430 . . USB Cable, 90601-6430 ..... 407, 835
A81W2013 . . 351501-0003 . . Ethernet Patch Cable, FL CAT5 PATCH 0,3 ..... 769, 771
A81W2014 . . 351501-0020 . . Ethernet Patch Cable, FL CAT5 PATCH 2,0 695
A81W2016 . . 351501-0020 . . Ethernet Patch Cable, FL CAT5 PATCH 2,0 695
A81W2019 . . 351501-0005 . . Ethernet Patch Cable, FL CAT5 PATCH 0,5 399
A81W2020 . . 90600-4778 . . USB Cable set, 5A9000.54 ..... 407, 835
A81W2022 . . 351501-0005 . . Ethernet Patch Cable, FL CAT5 PATCH 0,5 399
A81W2023 . . 351501-2050 . . Eth. P Cab.SAC-4P-M12MSD/ 5,0-PVC/M12MSD 245
A81W2101 . . 351501-0030 . . Ethernet Patch Cable, FL CAT5 PATCH 3,0 729
A81W2110 . . 351501-0003 . . Ethernet Patch Cable, FL CAT5 PATCH 0,3 729
A81W2120 . . 351501-0003 . . Ethernet Patch Cable, FL CAT5 PATCH 0,3 ..... 652, 674
A81W2130 . . 351501-0003 . . Ethernet Patch Cable, FL CAT5 PATCH 0,3 ..... 652, 674
A81W2140 . . 351501-0003 . . Ethernet Patch Cable, FL CAT5 PATCH 0,3 ..... 652, 674
A81W2150 . . 351501-0003 . . Ethernet Patch Cable, FL CAT5 PATCH 0,3 ..... 652, 674
A81W2160 . . 351501-0003 . . Ethernet Patch Cable, FL CAT5 PATCH 0,3 ..... 652, 674
A81W2170 . . 351501-0003 . . Ethernet Patch Cable, FL CAT5 PATCH 0,3 729
A81W2180 . . 351501-0003 . . Ethernet Patch Cable, FL CAT5 PATCH 0,3 ..... 665, 687, 883
A81W4120 . . 344253-0100 . . Sensor cable, EVT002 283
A81W4130 . . 344253-0050 . . Sensor cable, EVT001 245
A81W6000 . . 351501-0003 . . Ethernet Patch Cable, FL CAT5 PATCH 0,3 767
C01W1053 . . 315400-0004 . . Tube PUN-H-8X1,25-BL 259
C01W1054 . . 315400-0010 . . Tube PUN-H-12X2-BL 259
C01W8062 . . 315400-0010 . . Tube PUN-H-12X2-BL 259
C50W0000 . . 315743-0009 . . Olflex Control TM 4G1,5, 281604 266
C50W0004 . . 351150-0405 . . Cable Olflex 5x0,75 mm2 light/grey 389
C50W0010 . . 315743-0009 . . Olflex Control TM 4G1,5, 281604 389
C50W0012 . . 344261-0050 . . Sensor cable, EVT216 266
C50W0013 . . 90603-3979 . . Sensor Y-cable, EVT339 266
C50W1000 . . 315756-0009 . . Olflex Control TM CY 4G1,5, 281604CY 245
C50W1001 . . 344261-0006 . . Sensor cable, EVT261 246
C50W1002 . . 344261-0006 . . Sensor cable, EVT261 246
C50W1004 . . 344253-0050 . . Sensor cable, EVT001 246
C50W1004 . . 90600-3573 . . Socket conn. cable, KMEB-2-24-M12-0,5-LE 259
C50W1005 . . 344261-0015 . . Sensor cable, EVT264 246
C50W1010 . . 315756-0009 . . Olflex Control TM CY 4G1,5, 281604CY 389
C50W1064 . . 315400-0016 . . Tube PUN-H-4X0,75-BL 259
C50W1065 . . 315400-0016 . . Tube PUN-H-4X0,75-BL 259
C50W1066 . . 315400-0016 . . Tube PUN-H-4X0,75-BL 259

C50W1067 . . 315400-0016 . . Tube PUN-H-4X0,75-BL 259
C50W1068 . . 315400-0016 . . Tube PUN-H-4X0,75-BL 259
C50W1069 . . 315400-0016 . . Tube PUN-H-4X0,75-BL 259
C50W2000 . . 351162-0107 . . Wire AWM 1x6 mm2 yellow-green 389
F09W1003 . . 351150-0405 . . Cable Olflex 5x0,75 mm2 light/grey 389
F09W2001 . . 351423-0006 . . Cable Unitronic LiYCY 5x0,34 389
F09W2002 . . 351423-0006 . . Cable Unitronic LiYCY 5x0,34 389
F09W2003 . . 90600-0934 . . Cable M12-C62, 2TLA020056R0200 246
F09W2010 . . 90459-7095 . . Cable M12-C112, 2TLA020056R2000 381
F09W2012 . . 90459-7095 . . Cable M12-C112, 2TLA020056R2000 381
F09W2014 . . 90459-4876 . . Cable M12-C312 2TLA020056R2100 381
F09W2016 . . 90459-4876 . . Cable M12-C312 2TLA020056R2100 381
F09W2030 . . 90459-4252 . . Cable M12-C101, 2TLA020056R1000 389
F09W2030 . . 90459-4876 . . Cable M12-C312 2TLA020056R2100 381
F09W2032 . . 90459-4876 . . Cable M12-C312 2TLA020056R2100 381
F09W2034 . . 90459-4876 . . Cable M12-C312 2TLA020056R2100 381
F09W2041 . . 344253-0100 . . Sensor cable, EVT002 381
F09W2042 . . 344253-0100 . . Sensor cable, EVT002 381
F09W3012 . . 90459-7095 . . Cable M12-C112, 2TLA020056R2000 246
F09W3014 . . 90459-7095 . . Cable M12-C112, 2TLA020056R2000 246
F09W3016 . . 90459-7095 . . Cable M12-C112, 2TLA020056R2000 246
G30W0000 . . 351450-1409 . . Power/Encoder Cable 2090-CSWM1DF-14AA09 389
G30W1001 . . 344266-0020 . . Sensor cable, EVT256 155
G30W1002 . . 344267-0010 . . Sensor cable, EVT042 477
G30W4000 . . 351450-1409 . . Power/Encoder Cable 2090-CSWM1DF-14AA09 389
G40W0000 . . 351450-1409 . . Power/Encoder Cable 2090-CSWM1DF-14AA09 389
G40W0002 . . 351450-1409 . . Power/Encoder Cable 2090-CSWM1DF-14AA09 389
G40W1000 . . 344246-0050 . . Sensor cable, EVT127 193
G40W1001 . . 344246-0050 . . Sensor cable, EVT127 193
G40W1052 . . 90600-0553 . . Tube, 8x1 mm PTFE 193
G40W1053 . . 90600-0553 . . Tube, 8x1 mm PTFE 193
G40W1061 . . 90600-0553 . . Tube, 8x1 mm PTFE 193
G40W2000 . . 344267-0010 . . Sensor cable, EVT042 581
G40W2062 . . 315400-0004 . . Tube PUN-H-8X1,25-BL 541
G40W2064 . . 315400-0004 . . Tube PUN-H-8X1,25-BL 541
G40W2066 . . 90459-7428 . . Tube PUN-H-3x0,5-BL 581
G40W2067 . . 90459-7428 . . Tube PUN-H-3x0,5-BL 581
G40W3000 . . 351450-1409 . . Power/Encoder Cable 2090-CSWM1DF-14AA09 389
G40W4000 . . 315743-0009 . . Olflex Control TM 4G1,5, 281604 ..... 631, 641
G40W4010 . . 315743-0009 . . Olflex Control TM 4G1,5, 281604 389
G40W5001 . . 344264-0006 . . Sensor cable, EVT243 ..... 631, 641
G40W5002 . . 344261-0020 . . Sensor cable, EVT263 ..... 631, 641
G40W5005 . . 344264-0006 . . Sensor cable, EVT243 ..... 631, 641
G40W5006 . . 344261-0010 . . Sensor cable, EVT262 ..... 631, 641
G41W0000 . . 90600-2102 . . Power I/O cable, CCB-84901-0103-10 ..... 551, 891
G70W0000 . . 90600-2102 . . Power I/O cable, CCB-84901-0103-10 ..... 333, 861
G70W0001 . . 344253-0100 . . Sensor cable, EVT002 ..... 333, 861
G70W1000 . . 351450-1409 . . Power/Encoder Cable 2090-CSWM1DF-14AA09 ..... 377, 863
K01W8000 . . 351150-0403 . . Cable Olflex 3x0,75 mm2 light/grey 35 389
K01W8001 . . 351150-0403 . . Cable Olflex 3x0,75 mm2 light/grey 35 389
K01W8051 . . 315400-0010 . . Tube PUN-H-12X2-BL 349
K01W8052 . . 315400-0004 . . Tube PUN-H-8X1,25-BL 361
K01W8054 . . 315400-0010 . . Tube PUN-H-12X2-BL 349
K01W8055 . . 315400-0010 . . Tube PUN-H-12X2-BL 349
K01W8056 . . 315400-0010 . . Tube PUN-H-12X2-BL 349
K01W8058 . . 315400-0010 . . Tube PUN-H-12X2-BL 349
K01W8059 . . 315400-0001 . . TUBE PUN-H-6X1-BL 349
K01W8061 . . 315400-0004 . . Tube PUN-H-8X1,25-BL 349
K01W8061 . . 315400-0010 . . Tube PUN-H-12X2-BL 541
K01W8062 . . 315400-0010 . . Tube PUN-H-12X2-BL 349
K01W8063 . . 315400-0010 . . Tube PUN-H-12X2-BL 349
K01W8065 . . 315400-0010 . . Tube PUN-H-12X2-BL 349
K01W8071 . . 315400-0004 . . Tube PUN-H-8X1,25-BL 349
K01W9056 . . 315400-0001 . . TUBE PUN-H-6X1-BL 367, 541
K20W0050 . . 315400-0001 . . TUBE PUN-H-6X1-BL 349
K20W0052 . . 315400-0001 . . TUBE PUN-H-6X1-BL 349
K20W0053 . . 315400-0001 . . TUBE PUN-H-6X1-BL 349
K20W3054 . . 315400-0004 . . Tube PUN-H-8X1,25-BL 541
K20W3055 . . 315400-0004 . . Tube PUN-H-8X1,25-BL 541
K21W0054 . . 315400-0001 . . TUBE PUN-H-6X1-BL 541
K21W0055 . . 315400-0001 . . TUBE PUN-H-6X1-BL 541
K40W1050 . . 315400-0010 . . Tube PUN-H-12X2-BL 349
K40W1051 . . 315400-0016 . . Tube PUN-H-4X0,75-BL 349
K40W2054 . . 315400-0016 . . Tube PUN-H-4X0,75-BL 541
P01W4001 . . 351150-0424 . . Cable Olflex 18x0,75 mm2 light/grey 389
U01W0051 . . 315400-0009 . . Tube PUN-H-10X1,5-SW 343
U01W0052 . . 315400-0009 . . Tube PUN-H-10X1,5-SW 343
U01W0053 . . 315400-0009 . . Tube PUN-H-10X1,5-SW 343
U01W8053 . . 315400-0004 . . Tube PUN-H-8X1,25-BL 365
U01W8060 . . 315400-0013 . . Tube PUN-H-16-2,5-BL 365
U01W8061 . . 315400-0013 . . Tube PUN-H-16-2,5-BL 365
U01W8062 . . 315400-0013 . . Tube PUN-H-16-2,5-BL 365

U01W8063 . . 315400-0013 . . Tube PUN-H-16-2,5-BL 365
U01W8064 . . 315400-0004 . . Tube PUN-H-8X1,25-BL 365
U01W8075 . . 315400-0004 . . Tube PUN-H-8X1,25-BL 365
V01W5000 . . 315743-0024 . . Olflex Control TM 5G6, 281005..... 389
V01W5010 . . 90603-4384 . . Sensor cable, SAC-5P- 5,0-PUR/M12FS SH..... 283
V01W8057 . . 315400-0001 . . TUBE PUN-H-6X1-BL 393
V01W9001 . . 344257-0050 . . Sensor cable, EVT146..... 367
V01W9002 . . 344257-0050 . . Sensor cable, EVT146..... 367
V01W9052 . . 344342-0060 . . Tube 6 mm APA Transp 367
V01W9053 . . 344342-0060 . . Tube 6 mm APA Transp 367
V01W9055 . . 344342-0060 . . Tube 6 mm APA Transp 367
V01W9056 . . 344342-0060 . . Tube 6 mm APA Transp 367
V01W9080 . . 90166-0143 . . Tube 2,5 mm PA Transp..... 367
V01W9081 . . 90166-0143 . . Tube 2,5 mm PA Transp..... 367
V01W9082 . . 90166-0143 . . Tube 2,5 mm PA Transp..... 367
W20W0000 . . . 351450-1409 . . . Power/Encoder Cable 2090-CSWM1DF-14AA09 389
W20W0003 . . . 90603-3979 . . . Sensor Y-cable, EVT339 81
W20W0030 . . . 344253-0100 . . . Sensor cable, EVT002 81
W20W0051 . . . 315400-0001 . . . TUBE PUN-H-6X1-BL 87
W20W0062 . . . 315400-0001 . . . TUBE PUN-H-6X1-BL 133
W20W0065 . . . 315400-0001 . . . TUBE PUN-H-6X1-BL 135
W20W3055 . . . 315400-0004 . . . Tube PUN-H-8X1,25-BL 347
W21W0000 . . . 344261-0050 . . . Sensor cable, EVT216 125
W21W1000 . . . 351450-1409 . . . Power/Encoder Cable 2090-CSWM1DF-14AA09 389
W21W2000 . . . 351450-1409 . . . Power/Encoder Cable 2090-CSWM1DF-14AA09 389
W21W3000 . . . 344267-0006 . . . Sensor cable, EVT041 809
W21W3000 . . . 90603-3979 . . . Sensor Y-cable, EVT339 809
W21W3002 . . . 90603-3979 . . . Sensor Y-cable, EVT339 809
W21W3004 . . . 90603-3979 . . . Sensor Y-cable, EVT339 809
W21W3012 . . . 90603-3979 . . . Sensor Y-cable, EVT339 809
W21W3062 . . . 315400-0001 . . . TUBE PUN-H-6X1-BL 805
W21W3062 . . . 315400-0016 . . . Tube PUN-H-4X0,75-BL 541
W21W3064 . . . 315400-0001 . . . TUBE PUN-H-6X1-BL 805
W21W3064 . . . 315400-0016 . . . Tube PUN-H-4X0,75-BL 541
W21W3066 . . . 315400-0001 . . . TUBE PUN-H-6X1-BL 807
W21W3068 . . . 315400-0001 . . . TUBE PUN-H-6X1-BL 807
W21W4000 . . . 315756-0009 . . . Olflex Control TM CY 4G1,5, 281604CY 389
W21W4002 . . . 90603-3979 . . . Sensor Y-cable, EVT339 299
W21W4004 . . . 90603-3979 . . . Sensor Y-cable, EVT339 299
W21W4006 . . . 90603-3979 . . . Sensor Y-cable, EVT339 299
W21W4008 . . . 90603-3979 . . . Sensor Y-cable, EVT339 299
W21W4010 . . . 315756-0009 . . . Olflex Control TM CY 4G1,5, 281604CY 389
W21W4012 . . . 344253-0050 . . . Sensor cable, EVT001 299
W21W4014 . . . 344253-0050 . . . Sensor cable, EVT001 299
W21W4016 . . . 344253-0050 . . . Sensor cable, EVT001 299
W21W4018 . . . 344253-0100 . . . Sensor cable, EVT002 299
W21W4022 . . . 344261-0006 . . . Sensor cable, EVT261 137
W21W4023 . . . 90603-3979 . . . Sensor Y-cable, EVT339 137
W21W5050 . . . 315400-0010 . . . Tube PUN-H-12X2-BL 541
W21W5054 . . . 315400-0004 . . . Tube PUN-H-8X1,25-BL 541
W21W5056 . . . 315400-0001 . . . TUBE PUN-H-6X1-BL 541
W21W5058 . . . 315400-0004 . . . Tube PUN-H-8X1,25-BL 805
W21W5060 . . . 315400-0004 . . . Tube PUN-H-8X1,25-BL 807
W21W6002 . . . 90603-3979 . . . Sensor Y-cable, EVT339 299
W21W6004 . . . 90603-3979 . . . Sensor Y-cable, EVT339 849
W21W6005 . . . 344261-0050 . . . Sensor cable, EVT216 845
W21W6012 . . . 344261-0050 . . . Sensor cable, EVT216 299
W21W6014 . . . 344261-0050 . . . Sensor cable, EVT216 849
W21W8000 . . . 315743-0008 . . . Olflex Control TM 3G1,5, 281603..... 389
W21W8001 . . . 351424-0017 . . . Cable Olflex Heat 180 4G4 466343 389

X

A01X0002 . . . 2839223-0300 754
A01X0002 . . . 2839223-0300 . . . Plinth 703
A01X0003 . . . 2839224-0200 756
A01X0003 . . . 2839224-0200 . . . Plinth 703
A01X0004 . . . 2840918-0300 700
A01X0004 . . . 2840918-0300 . . . Plinth 695
A01X0006 . . . 2841403-0400 . . . . 670, 692
A01X0006 . . . 2841403-0400 . . . Plinth 652, 674
A01X0007 . . . 90459-0959 . . . Distributor Block 1492-Pd3163 703
A01X0008 . . . 3046886-0300 758
A01X0008 . . . 3046886-0300 . . . Distribution Terminal 703
A01X0010 . . . 2839230-0200 710
A01X0010 . . . 2839230-0200 . . . Plinth 709
A01X0011 . . 2840909-0200 712
A01X0011 . . 2840909-0200 . . . Plinth 709
A01X0012 . . . 2840910-0200 714
A01X0012 . . . 2840910-0200 . . . Plinth 709
A01X0013 . . . 2840911-0200 . . . Plinth 709
A01X0022 . . . 2840911-0200 . . . Plinth 709

A01X0032 . . . 2840911-0200 . . . Plinth 709
A01X0042 . . . 2840911-0200 . . . Plinth 709
A01X0043 . . . 2840915-0200 . . . Plinth 709
A01X0044 . . . 2840915-0200 . . . Plinth 709
A01X0072 . . . 2840917-0200 . . . Plinth 709
A01X0073 . . . 2840917-0200 . . . Plinth 709
A01X0123 . . . 2840917-0200 . . . Plinth 709
A01X0124 . . . 2840917-0200 . . . Plinth 709
A01X2001 . . . 3363694-0100 744
A01X2001 . . . 3363694-0100 . . . Plinth 739
A01X6000 . . . 2890591-0300 746
A01X6000 . . . 2890591-0300 . . . Plinth 739
A01X7000 . . . 90459-3845 . . . Wall socket, Z-SD230 652
A01X7001 . . . 90606-1698 . . . Splitter box, EBC026 385
A81X2000 . . . 90603-1856 . . . Ethernet switch,FL SWITCH SFN 16TX/28919 753
A81X6000 . . . 90606-4205 . . . Ethern. NAT Router,FL MGUARD RS2000 TX-B 767
C50X0000 . . . 90110-0052 . . . Male insert, Han E06, 0933 0062 601 266
C50X0000 . . . 90110-0053 . . . Female Insert, HAN 6 E 09 33 006 2701 283
C50X0001 . . . 90459-6821 . . . Male Insert HAN 4A, 0920 0042 611 246
C50X1000 . . . 90110-0053 . . . Female Insert, HAN 6 E 09 33 006 2701 283
C50X1004 . . . 90459-6820 . . . Female Insert, HAN 4 A, 09 20 004 2711 283
C50X1010 . . . 90110-0052 . . . Male insert, Han E06, 0933 0062 601 246
F09X2001 . . 90604-0093 . . Connection Block, TINA4A 2TLA020054R0300 381
F09X2002 . . 90604-0093 . . Connection Block, TINA4A 2TLA020054R0300 381
G30X0001 . . . 90604-8704 . . . Connector, 2090-K6CK-D15M, Serie B 389
G30X1020 . . . 90606-1697 . . . Splitter box, EBC034 523
G30X1030 . . . 90606-1697 . . . Splitter box, EBC034 523
G30X4001 . . . 90604-8704 . . . Connector, 2090-K6CK-D15M, Serie B 389
G40X0001 . . . 90604-8704 . . . Connector, 2090-K6CK-D15M, Serie B 389
G40X0003 . . . 90604-8704 . . . Connector, 2090-K6CK-D15M, Serie B 389
G40X3001 . . . 90604-8704 . . . Connector, 2090-K6CK-D15M, Serie B 389
G40X4000 . . . 90110-0052 . . . Male insert, Han E06, 0933 0062 601 . . . . . 631, 641
G40X4000 . . . 90110-0053 . . . Female Insert, HAN 6 E 09 33 006 2701 283
G41X0011 . . . 90603-4478 . . . Receptacle M12, SACC-E-M12FS-4CON-M16/... . . . . 279, 893
G70X1001 . . . 90604-8704 . . . Connector, 2090-K6CK-D15M, Serie B 377, 863
V01X9000 . . . 344383-0301 . . . Endplate Left, VMPAC-EPL-MP-SD25 541
W21X1001 . . 90604-8704 . . Connector, 2090-K6CK-D15M, Serie B 389
W21X2001 . . 90604-8704 . . Connector, 2090-K6CK-D15M, Serie B 389
W21X3020 . . 90606-1697 . . Splitter box, EBC034 809
W21X5000 . . 344383-0351 . . Endplate Right, VMPAC-EPR-EX 541

This page intentionally left blank

Tetra Pak®

Label for 40 mm binder ***Note!*** *This page is generated* ***automatically.***

CAP30/Flex ScrewCap
662950-0400 Issue 2018-02
Doc. No. SPC-3413383-0101

CAP30/Flex ScrewCap 1(2)
662950-0400 Issue 2018-02
Doc. No. SPC-3413383-0101

CAP30/Flex ScrewCap
662950-0400 Issue 2018-02
Doc. No. SPC-3413383-0101

CAP30/Flex ScrewCap 2(2)
662950-0400 Issue 2018-02
Doc. No. SPC-3413383-0101

CAP30/Flex ScrewCap
662950-0400 Issue 2018-02
Doc. No. SPC-3413383-0101

CAP30/Flex ScrewCap 1(2)
662950-0400 Issue 2018-02
Doc. No. SPC-3413383-0101

CAP30/Flex ScrewCap
662950-0400 Issue 2018-02
Doc. No. SPC-3413383-0101

CAP30/Flex ScrewCap 2(2)
662950-0400 Issue 2018-02
Doc. No. SPC-3413383-0101

CAP30/Flex ScrewCap
662950-0400 Issue 2018-02
Doc. No. SPC-3413383-0101

CAP30/Flex ScrewCap1(3)
662950-0400 Issue 2018-02
Doc. No. SPC-3413383-0101

CAP30/Flex ScrewCap
662950-0400 Issue 2018-02
Doc. No. SPC-3413383-0101

CAP30/Flex ScrewCap 2(3)
662950-0400 Issue 2018-02
Doc. No. SPC-3413383-0101

CAP30/Flex ScrewCap
662950-0400 Issue 2018-02
Doc. No. SPC-3413383-0101

CAP30/Flex ScrewCap 3(3)
662950-0400 Issue 2018-02
Doc. No. SPC-3413383-0101

CAP30/Flex ScrewCap
662950-0400 Issue 2018-02
Doc. No. SPC-3413383-0101

CAP30/Flex ScrewCap3(3)
662950-0400 Issue 2018-02
Doc. No. SPC-3413383-0101

CAP30/Flex ScrewCap
662950-0400 Issue 2018-02
Doc. No. SPC-3413383-0101

CAP30/Flex ScrewCap 1(2)
662950-0400 Issue 2018-02
Doc. No. SPC-3413383-0101

CAP30/Flex ScrewCap
662950-0400 Issue 2018-02
Doc. No. SPC-3413383-0101

CAP30/Flex ScrewCap 2(2)
662950-0400 Issue 2018-02
Doc. No. SPC-3413383-0101

CAP30/Flex ScrewCap
662950-0400 Issue 2018-02
Doc. No. SPC-3413383-0101

CAP30/Flex ScrewCap 1(3)
662950-0400 Issue 2018-02
Doc. No. SPC-3413383-0101

CAP30/Flex ScrewCap
662950-0400 Issue 2018-02
Doc. No. SPC-3413383-0101

CAP30/Flex ScrewCap 2(3)
662950-0400 Issue 2018-02
Doc. No. SPC-3413383-0101

CAP30/Flex ScrewCap
662950-0400 Issue 2018-02
Doc. No. SPC-3413383-0101

CAP30/Flex ScrewCap 3(3)
662950-0400 Issue 2018-02
Doc. No. SPC-3413383-0101

CAP30/Flex ScrewCap
662950-0400 Issue 2018-02
Doc. No. SPC-3413383-0101

CAP30/Flex ScrewCap 3(3)
662950-0400 Issue 2018-02
Doc. No. SPC-3413383-0101

CAP30/Flex ScrewCap
662950-0400 Issue 2018-02
Doc. No. SPC-3413383-0101

CAP30/Flex ScrewCap
662950-0400 Issue 2018-02
Doc. No. SPC-3413383-0101

CAP30/Flex ScrewCap
662950-0400 Issue 2018-02
Doc. No. SPC-3413383-0101

CAP30/Flex ScrewCap 1(3)
662950-0400 Issue 2018-02
Doc. No. SPC-3413383-0101

CAP30/Flex ScrewCap 1(2)
662950-0400 Issue 2018-02
Doc. No. SPC-3413383-0101

CAP30/Flex ScrewCap 2(3)
662950-0400 Issue 2018-02
Doc. No. SPC-3413383-0101

CAP30/Flex ScrewCap 2(2)
662950-0400 Issue 2018-02
Doc. No. SPC-3413383-0101

CAP30/Flex ScrewCap 3(3)
662950-0400 Issue 2018-02
Doc. No. SPC-3413383-0101