EM

Electrical Manual

Cardboard Packer 30 Speed

663151-0200

TechPub_2614345_0108 - EM_3047614_0103_fro.fm

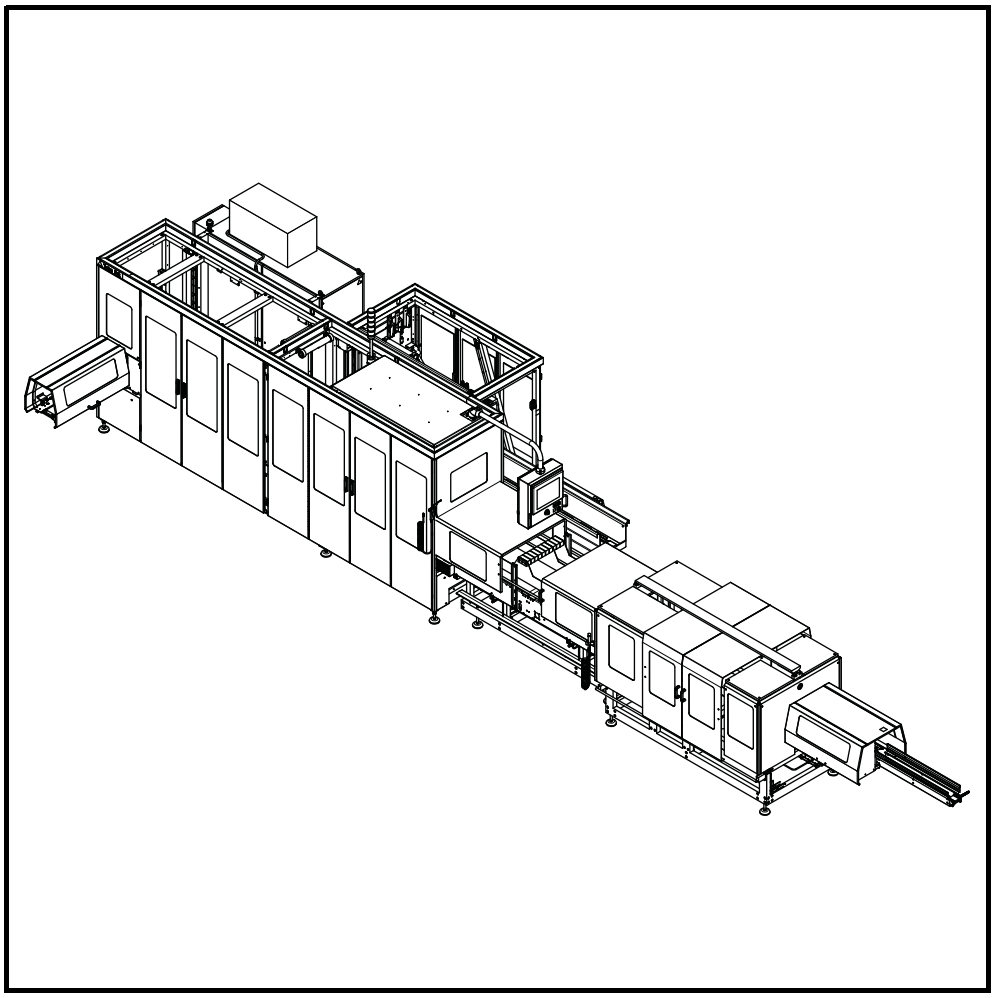

WARNING

Read and follow all safety precaution instructions throughout this manual and on safety signs attached to this equipment.
Failure to follow all safety precaution instructions could result in death or serious injury.

Tetra Pak

Doc. No. EM-3047614-0103

Copyright © 2010 Tetra Pak Group

All rights reserved. No part of this document may be reproduced or copied in any form or by any means without written permission from Tetra Pak Packaging Solutions.

Tetra Pak and all Tetra Pak products are trademarks belonging to the Tetra Pak Group.

The content of this manual is in accordance with the design and construction of the machine or equipment at the time of publishing. Tetra Pak reserves the right to introduce design modifications without prior notice.

The English language version of this document contains the original instructions. All other language versions are translations of the original instructions.

This document was produced by:

Tetra Pak Packaging Solutions
Via Delfini 1
41123 Modena
Italy

Additional copies can be ordered from Tetra Pak. When ordering additional copies, always provide the document number.

Doc. No. EM-3047614-0103

Issue 2010-10

TechPub_2614345_0108 - EM_3047614_0103_fro.fm

This manual is valid for:

Series No./ Machine No. Sign.

EM

Electrical Manual

Cardboard Packer 30 Speed
663151-0200

Electrical ECM No.: 456517
Valid from Series No.: 75723/00088

TechPub_2614345_0108 - EM_3047614_0103_fro.fm

Machine or equipment configurations that this manual is valid for are described on the next page.

i Introduction

ii Safety Precautions

1 Electrical System Description

2 Document List

3 Position Summary

4 Circuit Diagrams

5 Line Summary

6 Cabinet Terminal Summary

7 Terminal Strip Overview

8 Cable Connection List

9 Mains Connection

10 Drawing Remarks

11 Engineering Change Description

12 Other Information

13 Program Documents

Doc. No. EM-3047614-0103

Issue 2010-10

Tetra Pak

Tetra Pak Packaging Solutions

Valid for:

Name	Drawing Specification and Development Step	Additional Information
Cardboard Packer 30 Speed	663151-0200	Optional Equipment: WA - Wrap Around unit

TechPub_2614345_0108 - EM_3047614_0103_fro.fm

Update Log for Doc. No. EM-3047614-0103

This table shows all changes made to this manual, including installed rebuilding kits, added or removed pages. Page numbering on added pages begins with UP.

Date	Installed Kit	Added Pages (Doc. No.)	Removed Pages	Signature

TechPub_2614345_0108 - EM_3047614_0103_fro.fm

Date	Installed Kit	Added Pages (Doc. No.)	Removed Pages	Signature

TechPub_2614345_0108 - EM_3047614_0103_fro.fm

i Introduction

TechPub_2614345_0108 - in02_3056458_01.fm

About the Introduction Chapter

This chapter contains basic information about this manual and the related Tetra Pak equipment.

TechPub_2614345_0108 - in02_3056458_01.fm

Abbreviations and Terminology . . . . . i - 5
Manual Information . . . . . i - 6
Delivered Manuals . . . . . i - 6
Page Layout . . . . . i - 7
Page Numbering. . . . . i - 8
Typographical Conventions . . . . . i - 8
Symbols . . . . . i - 8
Machine Introduction . . . . . i - 9
Intended Use of the Equipment . . . . . i - 9
Manufacturer . . . . . i - 9
Support and Feedback . . . . . i - 9
Declaration of Conformity . . . . . i - 9
Identification . . . . . i - 10
CE Classification . . . . . i - 10
Machine Plate . . . . . i - 10
Orientation . . . . . i - 11
Hygiene. . . . . i - 13
How to Use This EM . . . . . i - 14
Reference Designation . . . . . i - 16
List of Function Codes . . . . . i - 17
Optional Equipment . . . . . i - 18
How to Trace an Electrical Component . . . . . i - 19
Example 1: How to Trace a Line . . . . . i - 19
Example 2: How to Trace a Contactor . . . . . i - 21
Example 3: How to Trace a Terminal in the Electrical Cabinet . . . . . i - 22
Example 4: How to Trace a Terminal Outside the Electrical Cabinet . . . . . i - 23

TechPub_2614345_0108 - in02_3056458_01.fm

Example 5: How to Trace a Network. . . . . i - 24

Example 6: How to Find Electrical Components Using the SPC. . . . . i - 27

TechPub_2614345_0108 - in02_3056458_01.fm

Abbreviations and Terminology

Abbreviation/ Terminology	Meaning	Translation
CBA	Carton Bottle Aseptic	
CBP	Cardboard Packer	
CE	Communautés Européennes/ European Communities	
CPU	Central Processing Unit	
DDC	Double Discharge Conveyor	
EEA	European Economic Area	
EM	Electrical Manual	
IM	Installation Manual	
I/O	Input / Output (module)	
LC	Line Controller	
LED	Light Emitting Diode	
LH	Left Hand	
max	Maximum	
min	Minimum	
MM	Maintenance Manual	
OK	Optional Kit	
OE	Optional Equipment	
OM	Operation Manual	
PLC	Programmable Logic Controller	
PLMS	Packaging Line Monitoring System	
RAM	Random Access Memory	
RH	Right Hand	
ROM	Read Only Memory	
SP	Service Pack	
SPC	Spare Parts Catalogue	
TBA	Tetra Brik Aseptic	
TD	Turning Device	
TPMS	Tetra Pak Maintenance System	
TPOP	Tetra Pak Operator Panel	
Tray OF	Tetra Tray with Over Flaps	
WA	Wrap Around unit	
WAIF	Tetra Wrap Around box with Inside top Flap	
WASF	Tetra Wrap Around box with Side Flap	

TechPub_2614345_0108 - in02_3056458_01.fm

Manual Information

Tetra Pak recommends reading all delivered manuals carefully. Make sure that the delivered manuals are available to personnel who operate or maintain the equipment.

It is important to keep this manual for the lifetime of the equipment and to pass the manual on to any subsequent holder or user.

Tetra Pak will not be held responsible for any damage to the equipment caused by not following the instructions given in this manual.

Delivered Manuals

Manuals delivered with this equipment:

- EM
  The Electrical Manual provides technicians with information about the equipment's electrical system.
- IM
  The Installation Manual provides technicians with information required to safely install the equipment.
- MM
  The Maintenance Manual provides technicians with information on maintaining the equipment.
- OM
  The Operation Manual manual provides the operator with information on handling and operating the equipment before, during, and after production.
- SPC
  The Spare Parts Catalogue provides the information necessary to order spare parts from Tetra Pak.

TechPub_2614345_0108 - in02_3056458_01.fm

Page Layout

Every main page in a manual contains a header and a footer. The page header contains the chapter name (1) and the section name (2). The page footer contains the page number (3), and the document number (4). See also the Page Numbering section.

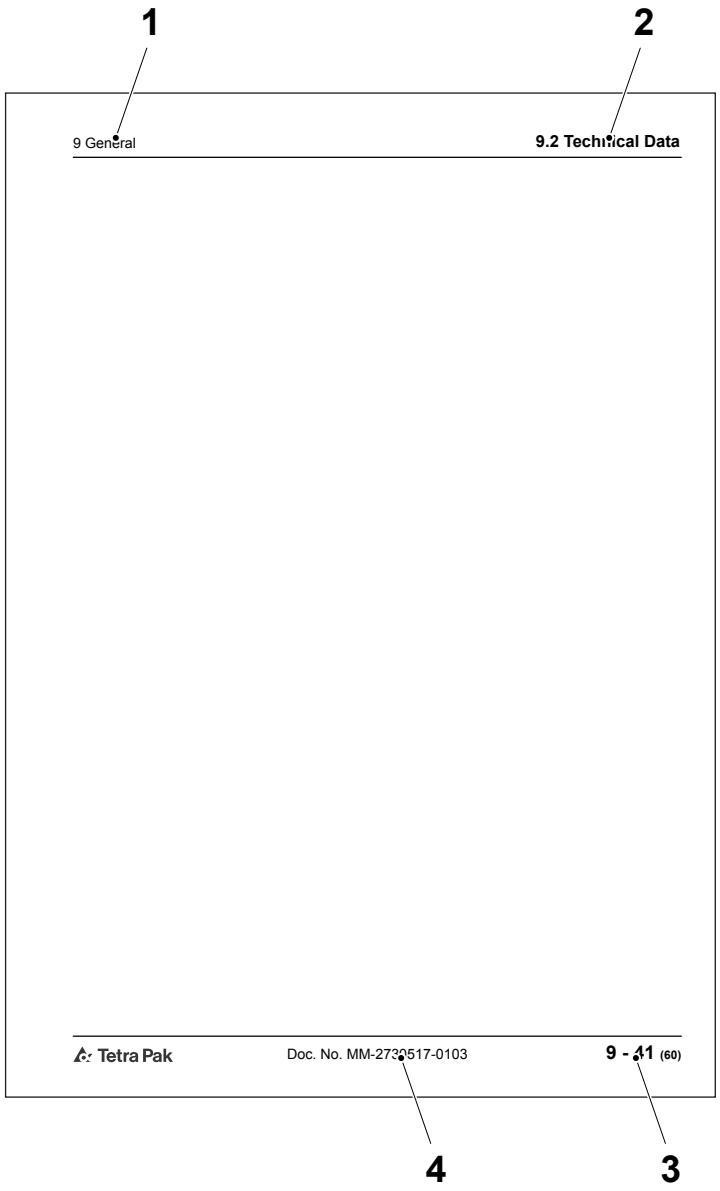

1 Chapter name
2 Section name
3 Page number
4 Document number

TechPub_2614345_0108 - in02_3056458_01.fm

Page Numbering

A page number has three parts:

- chapter number (1)
- consecutive page number (2) within the chapter
- total number of pages (3) in the chapter.

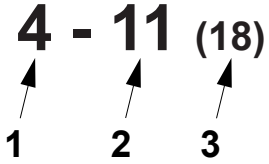

1 Chapter number
2 Consecutive page number
3 Total number of pages

Typographical Conventions

Controls on the operator panel, emergency stop devices, and program steps are printed in CAPITAL LETTERS.

Menu names, button names and other text displayed in software are printed in `Courier`.

Cross-references are underlined.

Symbols

Symbols used in illustrations.

	A pointer arrow indicates the position of an object.
	A zoom arrow indicates that an object view is enlarged. The arrow points towards the enlarged view of the object.
	A rotation movement arrow indicates rotational movement of an object. The arrow points in the direction of rotation.
	A straight movement arrow indicates movement of an object. The arrow points in the direction of movement.

TechPub_2614345_0108 - in02_3056458_01.fm

Machine Introduction

Intended Use of the Equipment

The intended use of this Tetra Pak equipment is to place packages approved by Tetra Pak into units made of corrugated cardboard.

All other use is prohibited. Tetra Pak will not be held responsible for injury or damage if the equipment is used for any other purpose than the intended use described above.

Manufacturer

This Tetra Pak equipment has been manufactured by

Tetra Pak Packaging Solutions
Via Delfini 1
41123 Modena
Italy

Support and Feedback

If you encounter problems when operating this equipment or have other inquiries, comments, or suggestions for improvement, contact Tetra Pak.

Declaration of Conformity

A copy of the Declaration of Conformity can be found in the Installation Manual. The signed Declaration of Conformity is delivered separately with the equipment.

TechPub_2614345_0108 - in02_3056458_01.fm

Identification

CE Classification

This equipment complies with the basic health and safety regulations of the European Economic Area (EEA).

Machine Plate

The illustration below shows an example of the machine plate and its location on the equipment. The machine plate carries data needed when contacting Tetra Pak concerning this specific equipment.

Make sure that the equipment data in the front pages of this manual corresponds to the machine plate data and the machine specification.

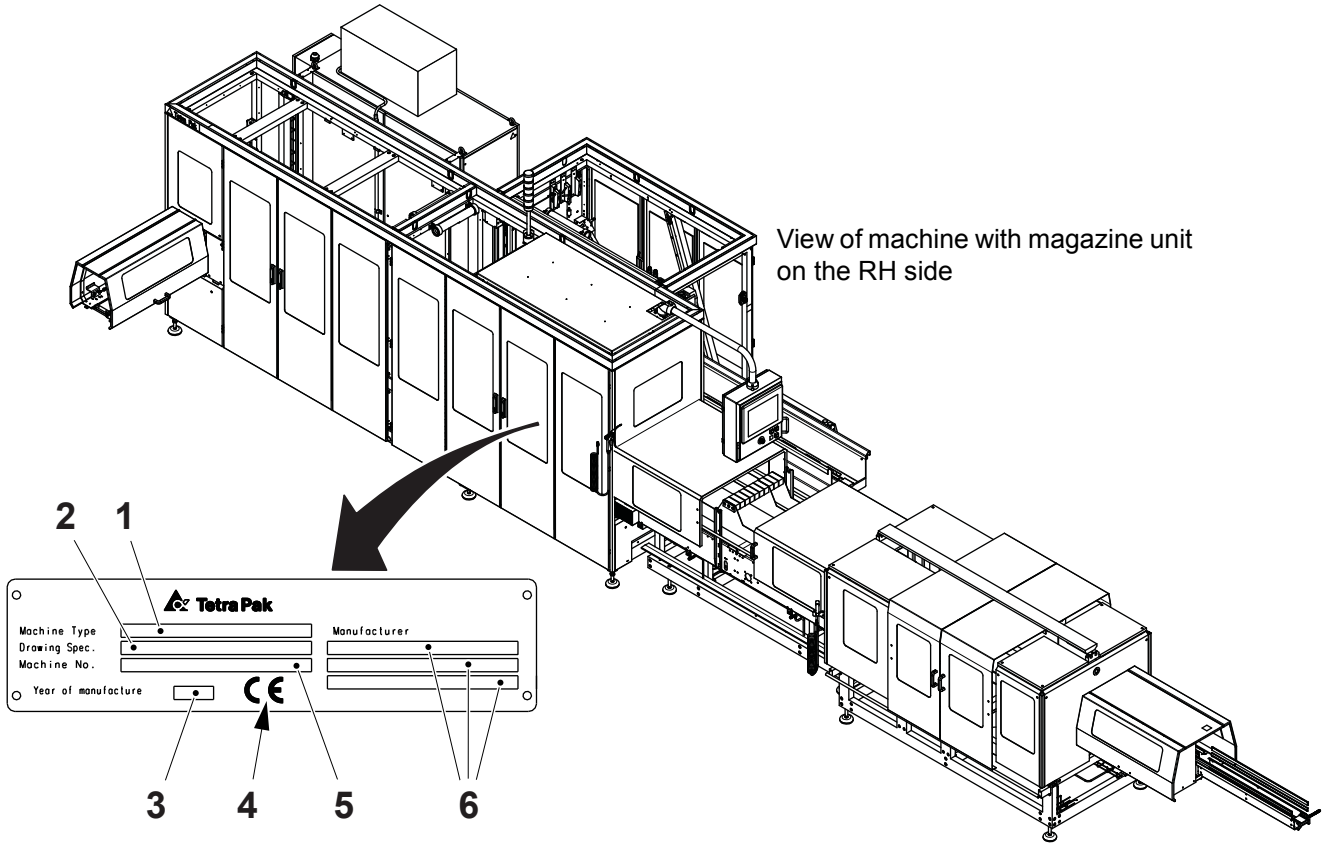

View of machine with magazine unit on the RH side

1 Machine type
2 Drawing specifications
3 Year of manufacture
4 CE mark
5 Machine serial number
6 Manufacturer (name and address)

TechPub_2614345_0108 - in02_3056458_01.fm

Orientation

The illustration below shows the orientation of the equipment. This orientation information will be used throughout this manual. The arrows indicate the flow of material.

Orientation for Machines with Magazine Unit on the RH side

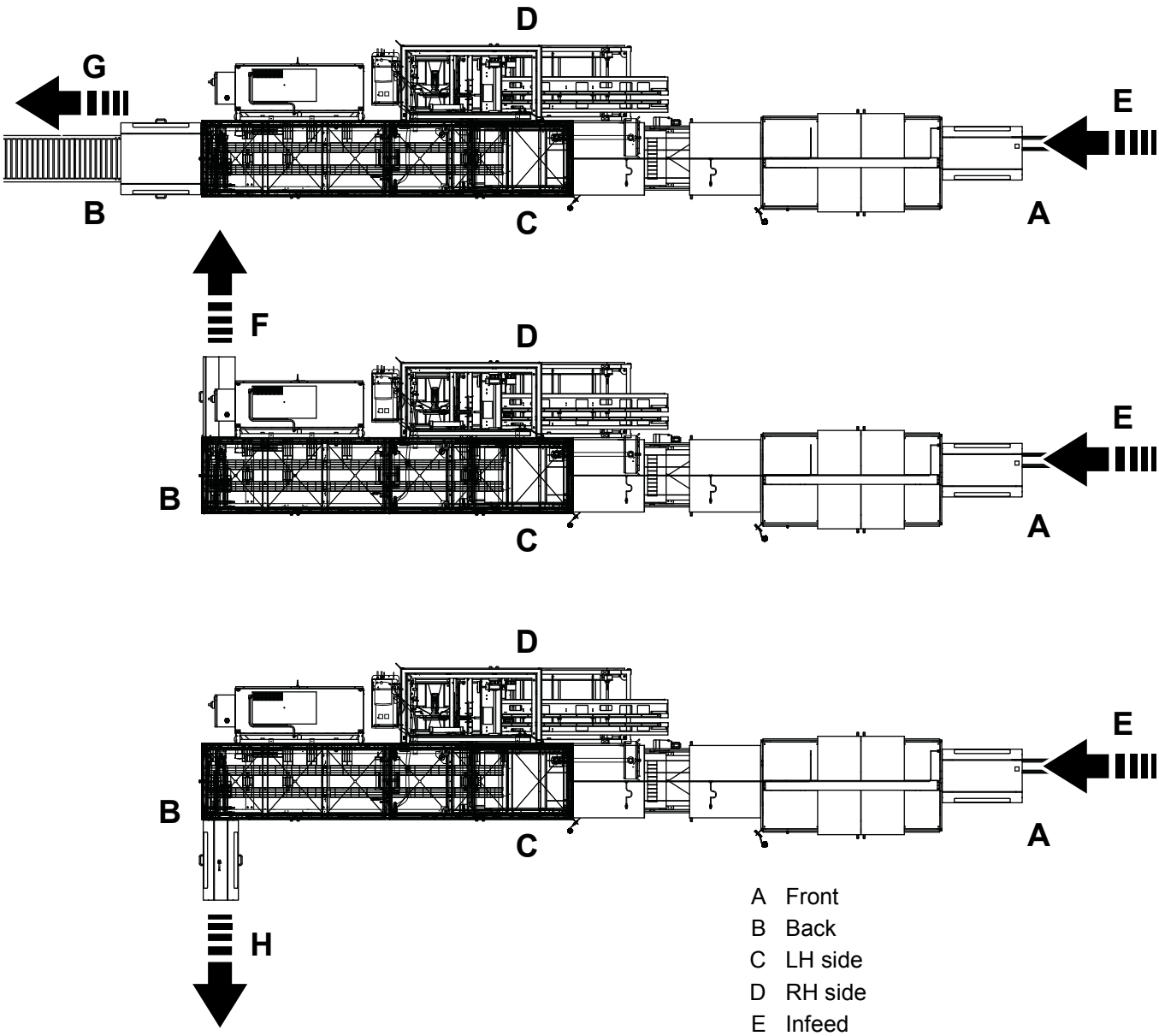

A Front
B Back
C LH side
D RH side
E Infeed
F Outfeed - RH side
G Outfeed - Straight
H Outfeed - LH side

(Cont'd)

TechPub_2614345_0108 - in02_3056458_01.fm

(Cont'd)

Orientation for Machines with Magazine Unit on the LH side

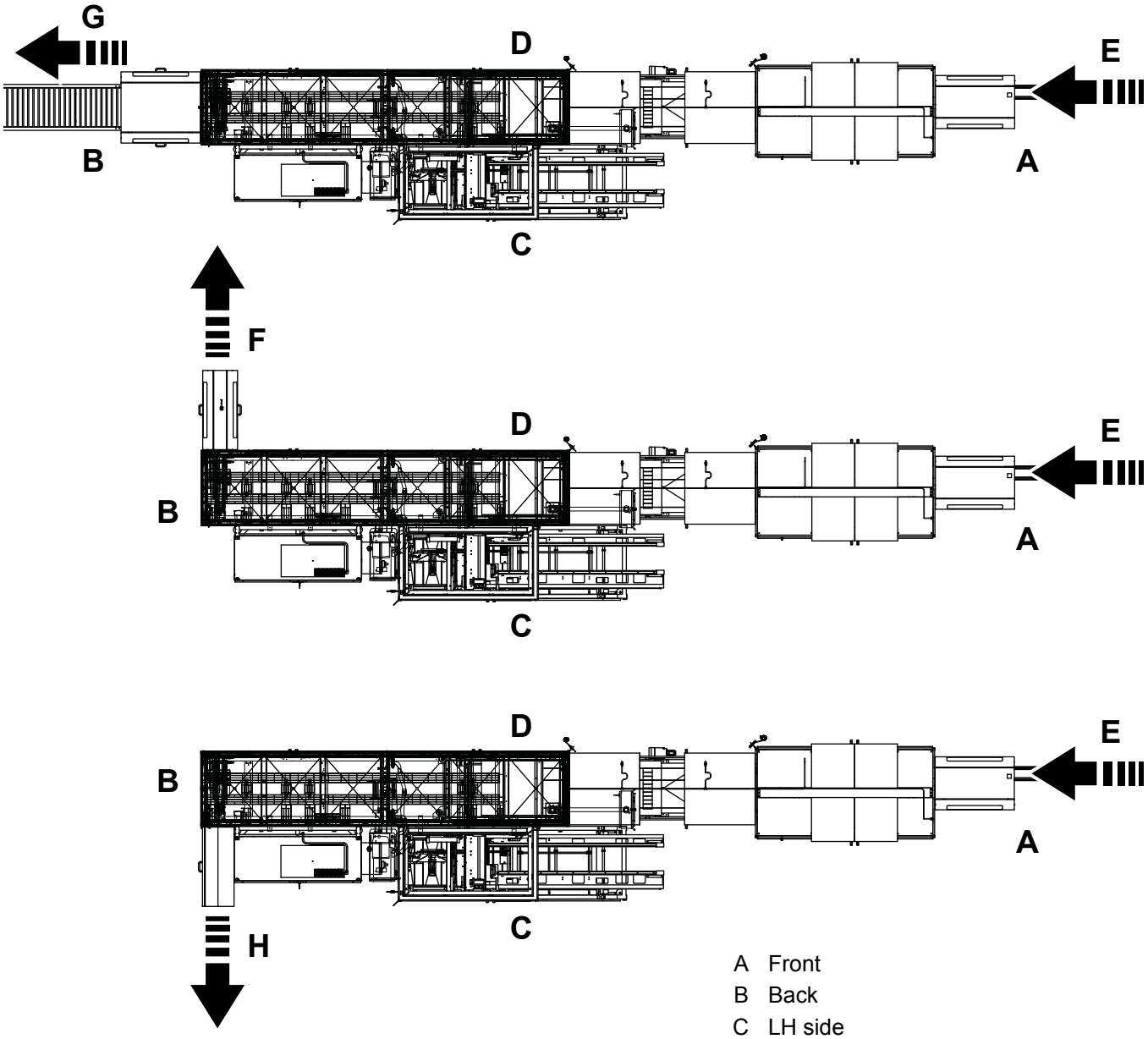

A Front
B Back
C LH side
D RH side
E Infeed
F Outfeed - RH side
G Outfeed - Straight
H Outfeed - LH side

TechPub_2614345_0108 - in02_3056458_01.fm

Hygiene

- Never clean the floors or the machine in the filling room (area) when the machine is in production.
- Compressed air used for cleaning purposes is to be used only for cleaning filters and should only be used outside of the filling room (area) or in the final folder compartment of the filling machine.
- Disinfect your hands before touching anything that may come into contact with the product. Use code H disinfectant. See the Technical Data chapter of the Maintenance Manual.
- Keep your hands and gloves clean.
- Always wear some type of hair protection (cap or hairnet) and clean clothes (preferably white).
- Do not wear a watch, ring, necklace, earrings, or any other exposed jewellery.

TechPub_2614345_0108 - in02_3056458_01.fm

How to Use This EM

Chapters in this EM.

Chapter	Name	Drawing No.
i	Introduction	
ii	Safety Precautions	
1	Electrical Systems Description	
2	Document List	xxxxxxx-0001
3	Position Summary	xxxxxxx-0002
4	Circuit Diagrams	xxxxxxx-0003
5	Line Summary	xxxxxxx-0004
6	Cabinet Terminal Summary	xxxxxxx-0005
7	Terminal Strip Overview	xxxxxxx-0006
8	Cable Connection List	xxxxxxx-0007
9	Mains Connection	xxxxxxx-0008
10	Drawing Remarks	xxxxxxx-0098
11	Engineering Change Description	xxxxxxx-0099
12	Other Information, for example - Bill of Materials - Fuse Panel	-
13	Program Documents	-

The Document List chapter is a table of contents for the chapters 3 to 9, listing all drawings included.

In the Circuit Diagrams, the first pages are reserved for distribution terminals and the last pages can be used for pre-connected cables. Pre-connected cables are connected to spare terminals and are reserved for future use.

The diagrams in the Mains Connection chapter shows how the machine should be connected to the local supply, the dimensions of the connection cable, and the connection of the matching transformer, when used.

The Drawing Remarks chapter lists the drawing remarks indicated with a number in the drawing.

The Program Documents chapter contains the PLC programs for this equipment.

(Cont'd)

TechPub_2614345_0108 - in02_3056458_01.fm

(Cont'd)

The documents and drawings are identified by drawing number (1), version code (2), and page number (3). The page number is the consecutive numbering of the pages that belong to the main number and is used as a reference in the diagrams.

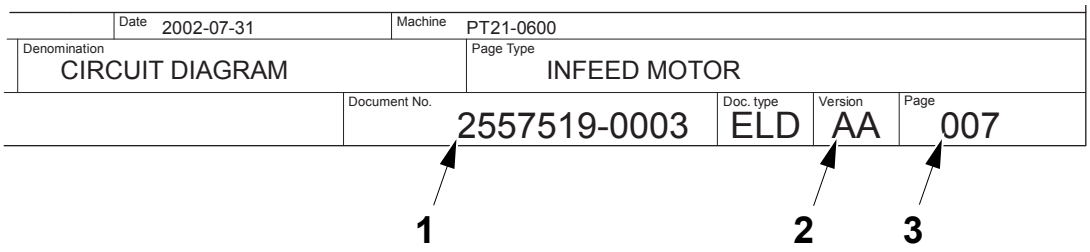

1 Drawing number
2 Version code
3 Page number

TechPub_2614345_0108 - in02_3056458_01.fm

Reference Designation

Components are identified by the reference designation, defined by a function code (1), and a component code (2).

The object code for the group level (3) refers to the purpose or task of the group level that the component serves or supplies. See the List of Function Codes section.

The object code for the component level (4) refers to the purpose or task of the current object. The letter is in accordance with international standards. Examples: Code P for components that present information, such as an alarm lamp, a clock, or a volt meter. Code M for components that provide mechanical energy such as an actuator, or an electric motor.

Tetra Pak has chosen to always use the function oriented structure for reference designation. The prefix indicating function oriented structure (=) is not shown in the reference designation.

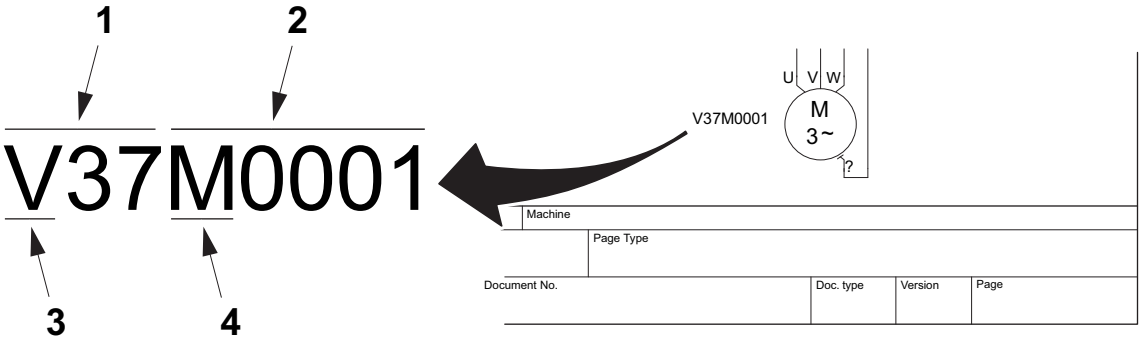

1 Function code
2 Component code
3 Object code, group level
4 Object code, component level

TechPub_2614345_0108 - in02_3056458_01.fm

List of Function Codes

Function codes for this equipment.

Function Code	Identification
A01	Service and supply
F09	Safety
W30	Infeed unit
C35	Accumulation unit
X40	Grouping unit
C45	Magazine unit
W50	Feed unit
T55	Turning Device unit
V60	Wrap Around unit
A81	Communication

TechPub_2614345_0108 - in02_3056458_01.fm

Optional Equipment

An optional equipment designation indicates that the component belongs to specific optional equipment.The designation numbers for this equipment are explained in the Drawing Remarks chapter.

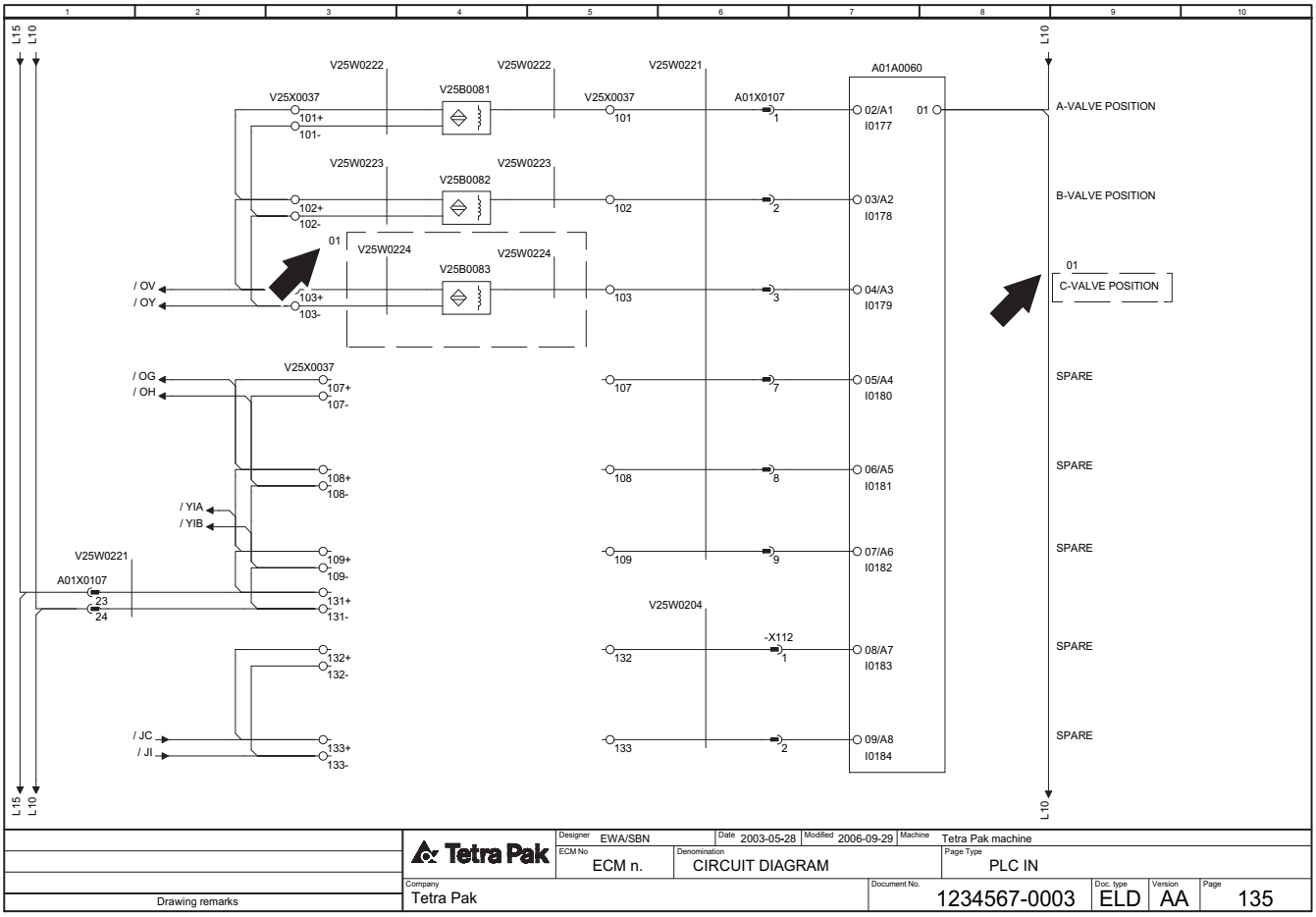

TechPub_2614345_0108 - in02_3056458_01.fm

How to Trace an Electrical Component

Start tracing an electrical component by finding the correct list with page and column references to the Circuit Diagram.

Example 1 on pages i-19 to i-20 illustrates how to trace a Line. Use the Line Summary.

Example 2 on page i-21 illustrates how to trace a contactor. Find page references in the Position Summary. The procedure is identical when tracing sensors or other components. For cables, the page references are in the Cable Connection List. The number of spare cores is shown in the cable connection list.

Examples 3 and 4 on pages i-22 to i-23 illustrate how to trace a terminal. Find page references for terminals *in* the electrical cabinet in the Cabinet Terminal Summary, and page references for terminals *outside* the electrical cabinet in the Terminal Strip Overview.

Example 5 on pages i-24 to i-26 illustrates how to trace a network (DeviceNet, Ethernet etc.). The last pages of the Circuit Diagrams are reserved for the network layout; these provide an overview of the network with cross references to locate the components in the circuit diagrams.

Example 6 on page i-27 illustrates how to locate a component in the Spare Parts Catalogue, SPC.

Example 1: How to Trace a Line

Supply Voltage and Line Connection Order

The supply voltage in the electrical cabinet has power voltage and control voltage designations.

- Power voltage: lines with designations ending with 01 to 09, for example, L03 and L803
- Control voltage: lines with designations ending with 10 to 99, for example, L12 and L812

The line connection order is shown in the Line Summary.

(Cont'd)

TechPub_2614345_0108 - in02_3056458_01.fm

(Cont'd)

How to Trace a Line

The illustration below shows how to trace line connection L10 from the component terminal A01X0107:24 to A01A0060:01.

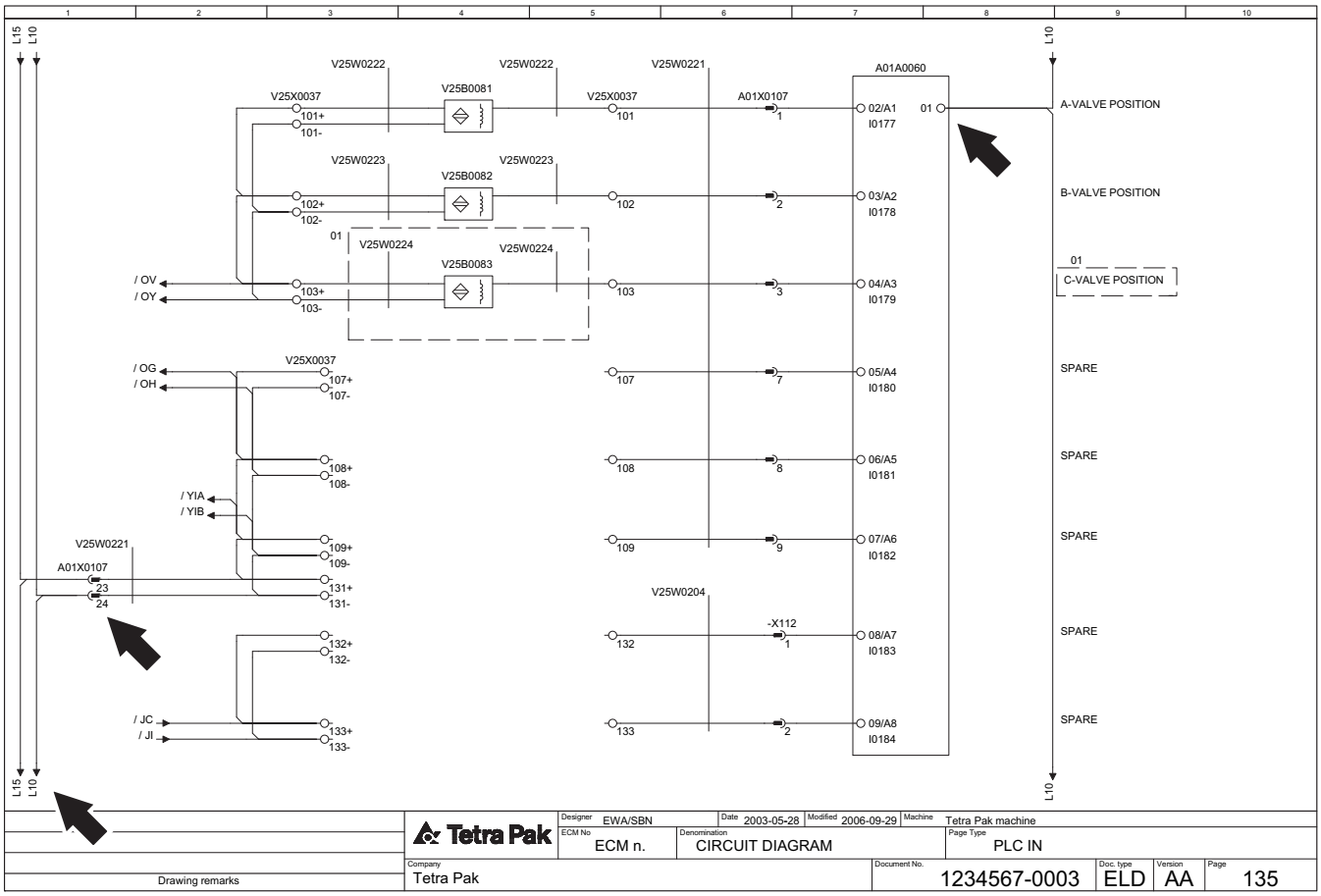

Line summary of 1234567-0003

Line	From	Page.Col.	Opt.	Area/Color
L10				
	A01XL0010:1	001 .1		0.75/L. BU
	A01X0107:24	135 .1		
	A01A0060:01	135 .8		

TechPub_2614345_0108 - in02_3056458_01.fm

Example 2: How to Trace a Contactor

The illustration below shows how to trace contactor A01K0074 to page 188, column 6 in the Circuit diagram.

Related contacts are traced with a cross reference to page 004, column 3.

Note! For master and slave components, such as coils and contacts, only the master is reported in the Position Summary. The slave shows the page and column references of the master.

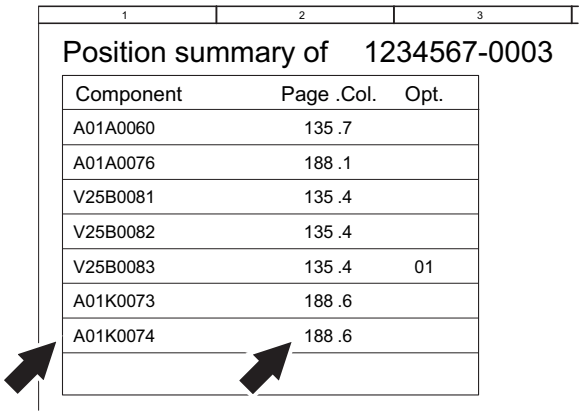

Position summary of 1234567-0003

Component	Page .Col.	Opt.
A01A0060	135 .7	
A01A0076	188 .1	
V25B0081	135 .4	
V25B0082	135 .4	
V25B0083	135 .4	01
A01K0073	188 .6	
A01K0074	188 .6	

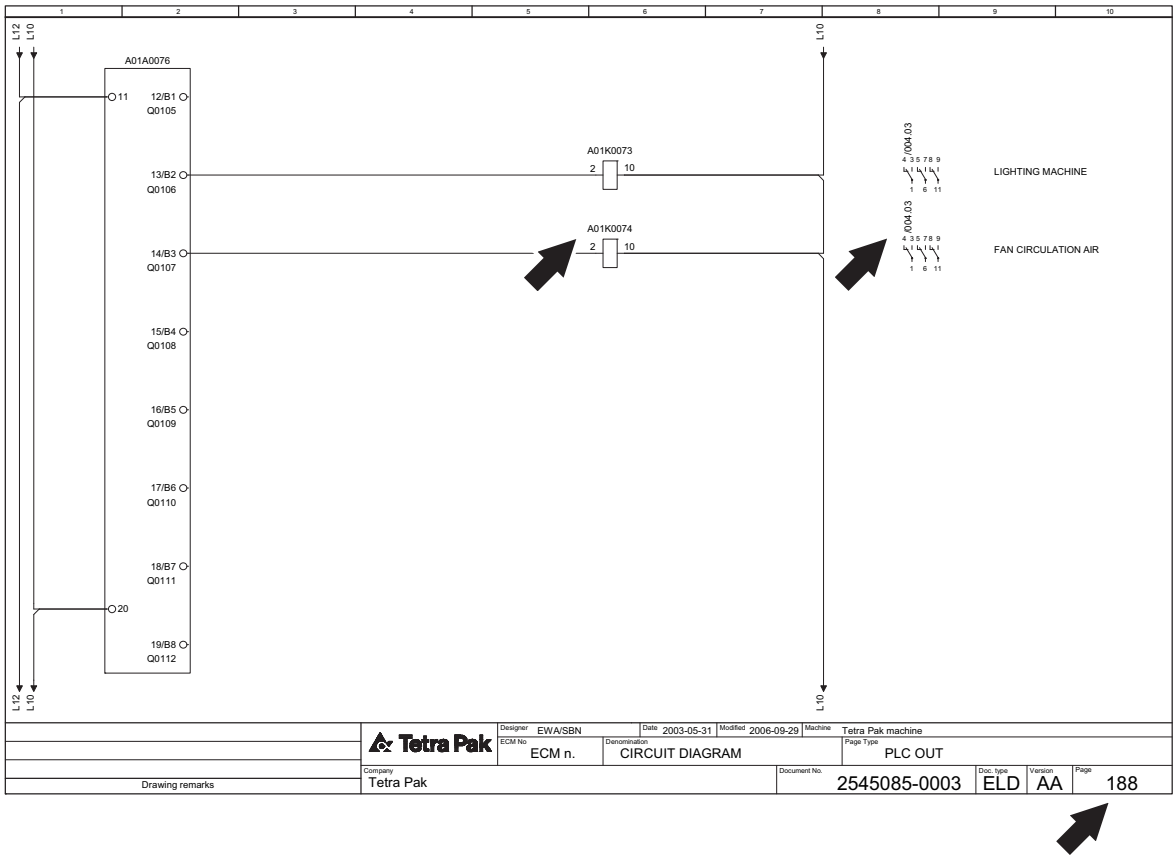

TechPub_2614345_0108 - in02_3056458_01.fm

Example 3: How to Trace a Terminal in the Electrical Cabinet

The Cabinet Terminal Summary refers to the page and column where the relevant terminal is to be found.

The illustration below shows how to trace terminal A01X0107:1 to page 135, column 6 in the Circuit diagram.

Cabinet terminal summary of 1234567-0003

Terminal	Page .Col.	Opt.
A01X0107:1	135 .6	
A01X0107:2	135 .6	
A01X0107:3	135 .6	
A01X0107:4		
A01X0107:5		
A01X0107:6		
A01X0107:7	135 .6	
A01X0107:8	135 .6	
A01X0107:9	135 .6	

Terminal	Page .Col.	Opt.

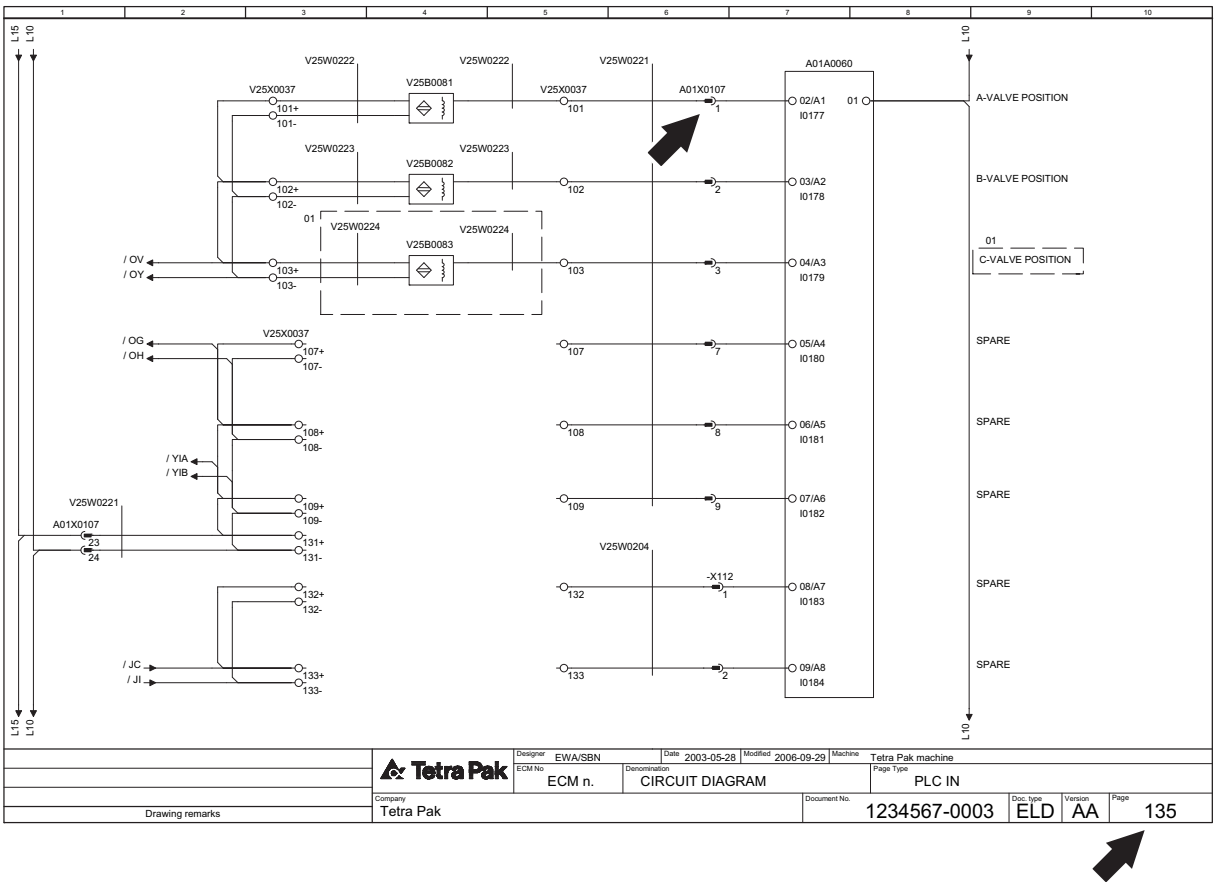

TechPub_2614345_0108 - in02_3056458_01.fm

Example 4: How to Trace a Terminal Outside the Electrical Cabinet

The Terminal Strip Overview refer to the page and column where the relevant terminal is to be found.

The illustration below shows how to trace terminal V25X0037:101+ to page 135, column 3 in the Circuit diagram. Note the connected component, V25B0081.

Terminal strip of 1234567-0003

V25X0037

From	Cable	Internal Jumper	Terminal	External Jumper	Cable	To	Page.Col.	Option	Function text
A01X0107:1	V25W0221 :1		101		V25W0222 :BK	V25B0081:	135 .5		
			101+		V25W0222 :BN	V25B0081:	135 .3		
			101-		V25W0222 :BU	V25B0081:	135 .3		
A01X0107:2	V25W0221 :2		102		V25W0223 :BK	V25B0082:	135 .5		
			102+		V25W0223 :BN	V25B0082:	135 .3		
			102-		V25W0223 :BU	V25B0082:	135 .3		
A01X0107:3	V25W0221 :3		103		V25W0224 :BK	V25B0083:	135 .5	01	
			103+		V25W0224 :BN	V25B0083:	135 .3	01	
			103-		V25W0224 :BU	V25B0083:	135 .3	01	
			104						

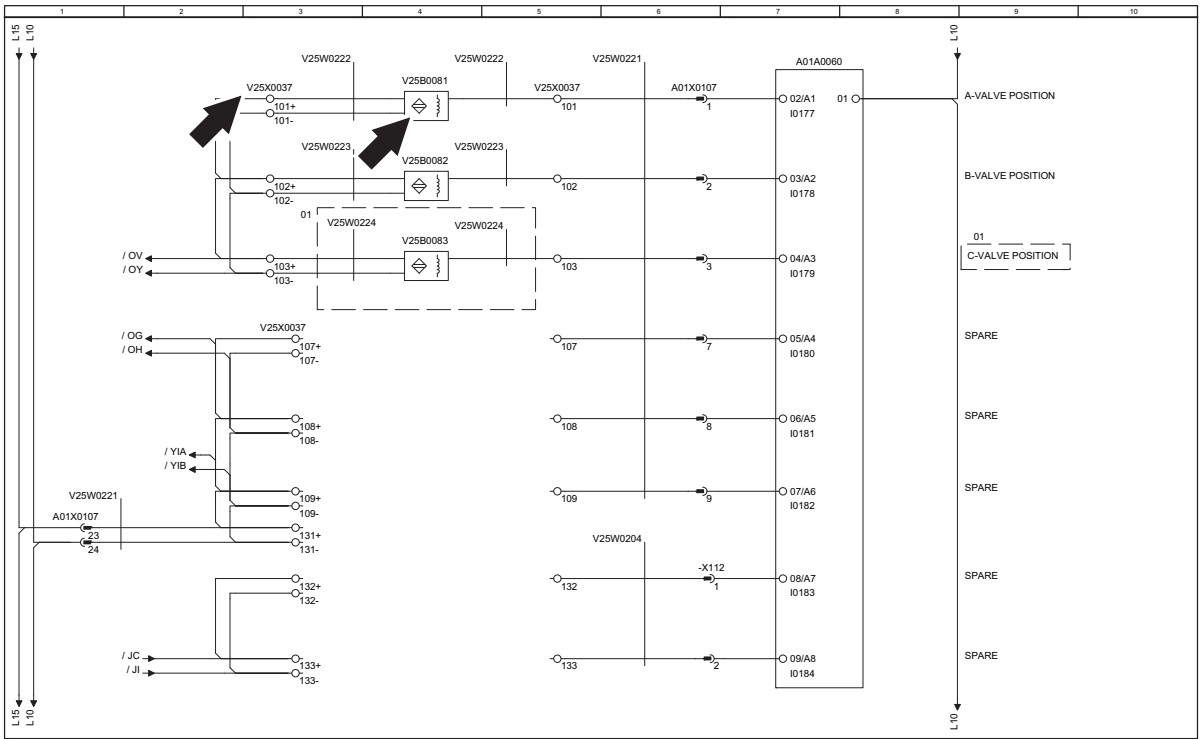

TechPub_2614345_0108 - in02_3056458_01.fm

Example 5: How to Trace a Network

The illustration below shows how to find the component A20K5020, the terminal strip A20X5540 and the network cable A20W5510 in the network overview page(s).

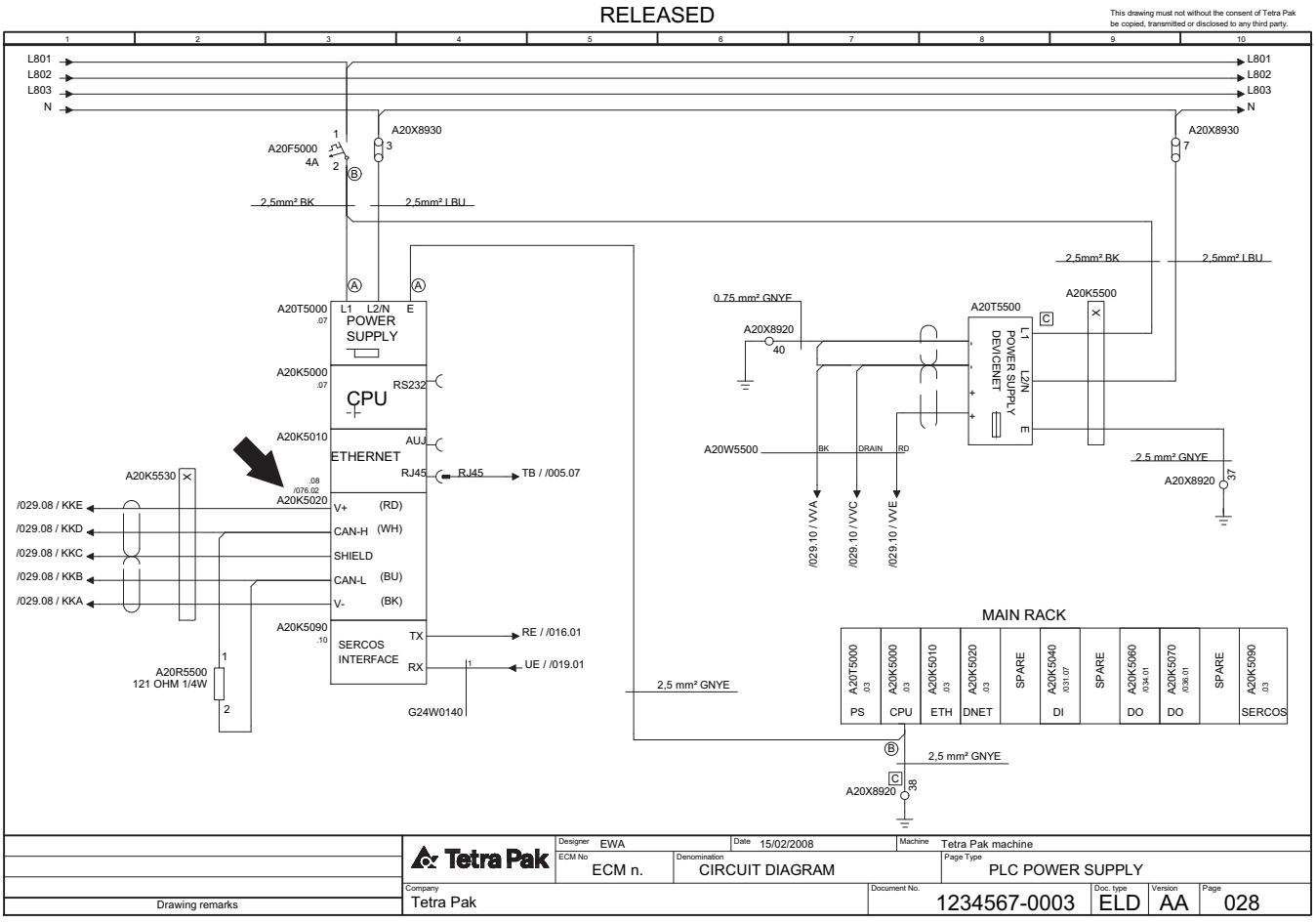

(Cont'd)

TechPub_2614345_0108 - in02_3056458_01.fm

(Cont'd)

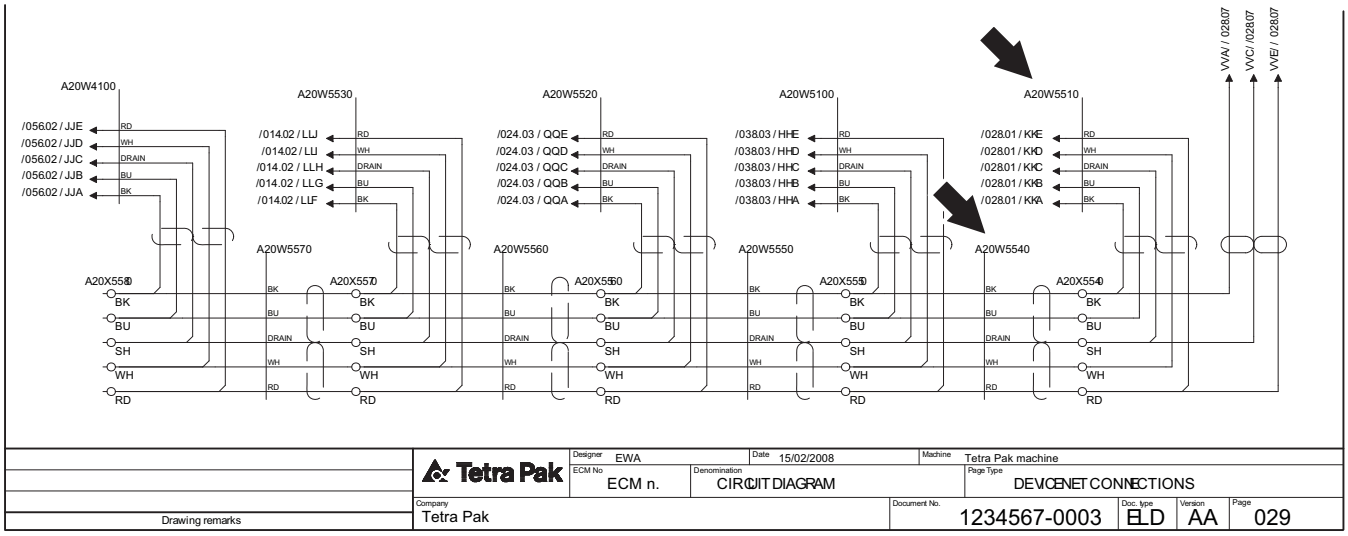

The figure reference, for example; “Fig C” or “Fig G” in the Network Overview page, refers to the Network Figure Drawing which provides a description of the component wiring, see the following page.

TechPub_2614345_0108 - in02_3056458_01.fm

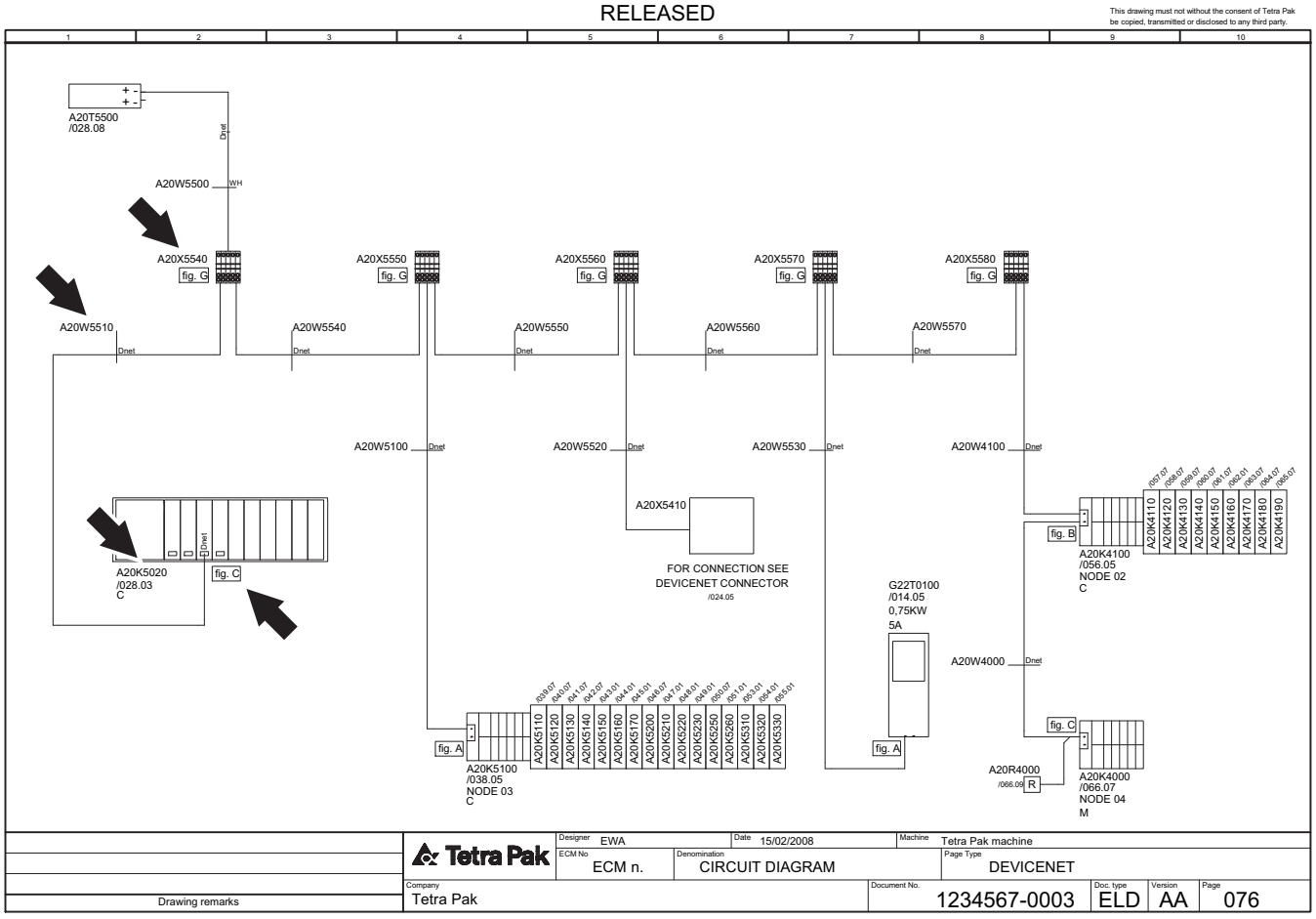

(Cont'd)

(Cont'd)

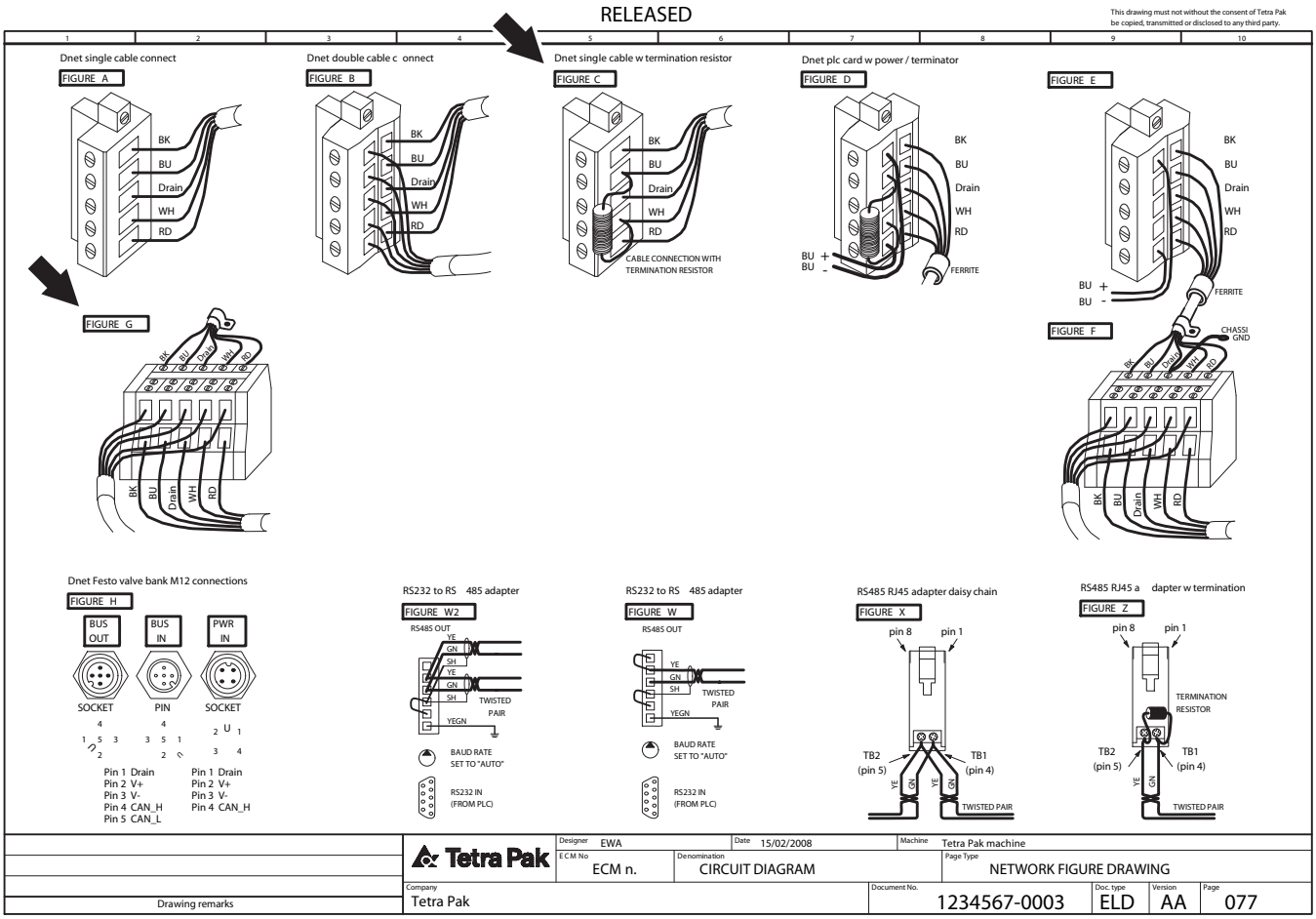

TechPub_2614345_0108 - in02_3056458_01.fm

Example 6: How to Find Electrical Components Using the SPC

The Reference Designation Parts Index in the Spare Parts Catalogue, SPC, is used to locate electrical parts. For SPCs without a Reference Designation Parts Index, see the Component Location chapter in this manual.

The illustration below shows how to find component A04B0041 in the SPC. The Reference Designation Parts Index refers to page 2-5. In the drawing on page 2-4, the position number is the same as the reference designation for the component.

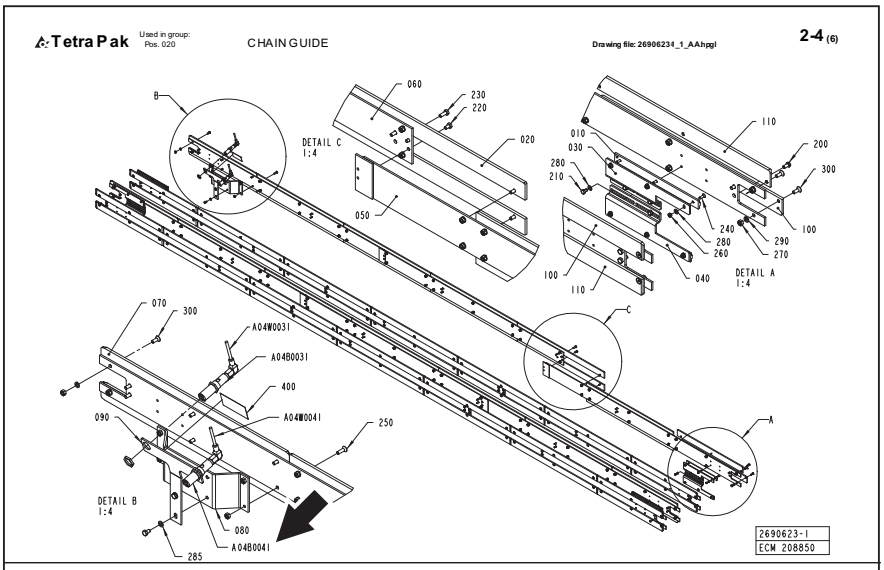

ECM: 209071 - 50001231
Group number: 2690623-0100
Assembly Drawing: 2690623-1_1_AA
This list covers pages from 2-2 to 2-5

Pos	Part No	UN	Qty	Description	Page No
-					
010	2597877-0000		8	CHAIN GUIDE	
020	2653358-0000		40	CHAIN GUIDE	
030	2653365-0000		4	SUPPORT	
040	2653366-0000		4	SUPPORT	
050	2653367-0000		8	PLATE	
060	2653368-0000		4	PLATE	
070	2653369-0000		8	CHAIN GUIDE	
080	2690632-0000		1	HOLDER	
090	2690633-0000		1	HOLDER	
100	2730969-0000		4	CHAIN GUIDE	
110	2730970-0000		4	CHAIN GUIDE	
200	90458-0072		8	SCREW ISO 7380 S M6X12 A2	
210	312105-0287		16	SCREW M6S ISO4017 M4X8 A470	
220	312105-0364		18	SCREW M6S ISO 4017 M6X10 A480	
230	312105-0368		40	SCREW M6S ISO 4017 M6X16 A480	
240	312155-0291		24	SCREW DIN 7991 MF6S M4X12 A4 70	
250	312155-0370		4	SCREW DIN 7991 MF6S M6X20 A4 70	
260	312605-0312		24	HEXAGON NUT, M6M M4 A280	
270	312605-0316		168	HEXAGON NUT, M6M M6 A280	
280	315105-0146		40	WASHER BRB5,3X10RFR	
285	315105-0153		2	WASHER BRB6,4X12RFR	
290	315[illegible]-0156		164	LOCK WASHER FBB 6,5	
300	[illegible]78		164	SCREW DIN 7991 MF6S M6X16 A4 70	
400	[illegible]698		1	WARNING SIGN ISO, LASER RADIATION	
A04W0041	[illegible]-0050		1	ACTUATOR/SENSOR CABLE RKWTN 4-225/5M	
A04W0031	[illegible]12-0050		1	ACTUATOR/SENSOR CABLE RKWTN 4-225/5M	
A04B0041	90459-5012		1	LASER SENSOR, YD24PA3	
C05C0041	2690632-0000		1	HOLDER	
C05C0031	2653367-0000		8	PLATE	
T04B0031	90459-5012		1	LASER SENSOR, YD24PA3	
T05C0041	2653369-0000		8	CHAIN GUIDE	
T05C0031	2653368-0000		4	PLATE	

Tetra Pak — iv-2 (4)
Doc No: SPC-654654-0101

Pos	Part No	Description	Page No
A			
F09A0332	[illegible]	THERMOCOUPLE CABLE K/PVC/20AWG 2X0,5MM2	1-3, 1-5
T03A0321	[illegible]9	THERMOCOUPLE CABLE K/PVC/20AWG 2X0,5MM2	1-3, 1-5
T03A0322	[illegible]30	HEATING ELEMENT, 3000W, 220V	1-3, 1-5
B			
A04B0041	90459-5012	LASER SENSOR, YD24PA3	2-3, 2-5
C01B0001	351120-0145	CABLE SILFLEX SIHF 3X2,5 0046020	1-3, 1-5
C32B0001	90220-2259	THERMOCOUPLE CABLE K/PVC/20AWG 2X0,5MM2	1-3, 1-5
T04B0031	90459-5012	LASER SENSOR, YD24PA3	2-3, 2-5
C			
C05C0031	2653367-0000	PLATE	2-3, 2-5
C05C0041	2690632-0000	HOLDER	2-3, 2-5
T05C0031	2653368-0000	PLATE	2-3, 2-5

Page No

2-5 (6)
: No: SPC-654654-0101

TechPub_2614345_0108 - in02_3056458_01.fm

This page intentionally left blank

TechPub_2614345_0108 - in02_3056458_01.fm

ii Safety Precautions

TechPub_2614345_0108 - sp03_3056459_01.fm

Description

Safety Precaution Instructions

WARNING

Read and understand this manual before using the machine.
Failure to follow safety precautions and instructions can result in death or serious injury.

Definition of Lockout Procedure

A lockout procedure is a procedure to put each necessary energy isolating device in its safe position to prevent the energisation of the equipment, such as when a maintenance procedure should be carried out.

A lockout is the use of a device, for example, a padlock, to make sure that an energy isolating device cannot be operated.

An energy isolating device is a mechanical device that physically prevents transmission or release of energy, such as a power supply disconnector.

TechPub_2614345_0108 - sp03_3056459_01.fm

Safety Messages Description . . . . . ii - 5
Personnel Requirements . . . . . ii - 6
Skilled Person . . . . . ii - 6
Instructed Person. . . . . ii - 6
Safety Signs . . . . . ii - 7
Locations of Safety Signs . . . . . ii - 9
Locations of Safety Signs, WA (OE). . . . . ii - 11
Protective Devices. . . . . ii - 12
Emergency Stop. . . . . ii - 12
Emergency Stop Buttons . . . . . ii - 13
Safeguards . . . . . ii - 14
Warning Lamp . . . . . ii - 18
Audible Alarm. . . . . ii - 18
Safe Manual Handling . . . . . ii - 19
Personal Protection. . . . . ii - 20
Noise . . . . . ii - 20
Entanglement . . . . . ii - 20
Hazardous Substances . . . . . ii - 21
Disposal of Chemical Substances . . . . . ii - 22
Supply Systems. . . . . ii - 23
Power Supply . . . . . ii - 23
Residual Voltage . . . . . ii - 24
Electrical Cabinet. . . . . ii - 25
Socket Outlet . . . . . ii - 26
Air Supply . . . . . ii - 27
Water Supply . . . . . ii - 28

TechPub_2614345_0108 - sp03_3056459_01.fm

Hotmelt Equipment . . . . . ii - 29

General . . . . . ii - 29

Hotmelt Unit . . . . . ii - 30

Hotmelt Guns . . . . . ii - 31

TechPub_2614345_0108 - sp03_3056459_01.fm

Safety Messages Description

A safety message is always accompanied by a safety alert symbol and a signal word.

The safety alert symbol is used to alert about potential personal injury hazards. To avoid hazards, obey all safety messages that follow this symbol.

The following safety alert symbols and signal words are used in this manual to inform the user of hazards.

DANGER	Danger indicates an imminently hazardous situation which, if not avoided, **will** result in **death or serious injury**.
WARNING	Warning indicates a potentially hazardous situation which, if not avoided, **could** result in **death or serious injury**.
CAUTION	Caution indicates a potentially hazardous situation which, if not avoided, **may** result in **minor or moderate injury.** It may also be used to alert against unsafe practices.
CAUTION	Caution without the safety alert symbol indicates a potentially hazardous situation which, if not avoided, **may** result in **property damage**.

TechPub_2614345_0108 - sp03_3056459_01.fm

Personnel Requirements

Note! Personnel includes all persons working on or near this equipment.

Only skilled or instructed persons are allowed to work with this equipment.

Skilled Person

A skilled person must have relevant education and experience to enable him or her to identify hazards, analyse risks, and avoid hazards which electricity, machinery, chemicals, other energies, and supply systems on this equipment can create.

Skilled persons must meet local regulations, such as certifications and qualifications for working with these energies and systems.

Instructed Person

An instructed person must be adequately advised or supervised by a skilled person. The skilled person enables the instructed person to identify hazards, analyse risks, and avoid hazards which electricity, machinery, chemicals, other energies, and supply systems on this equipment can create.

TechPub_2614345_0108 - sp03_3056459_01.fm

Safety Signs

WARNING

Damaged or missing safety signs.
Safety signs are used to indicate safety hazards.
If the signs are missing or damaged, they can not fulfil this function. Replace all missing or damaged safety signs immediately.

Safety signs are attached to the equipment. The table below lists all the signs that are used, and illustrations show their locations on the equipment. Each position number refers to two standards of a safety sign in the table, but only one is used on the equipment.

- Make sure that each safety sign is legible and in its correct position after installation and maintenance.
- Replace all missing or damaged safety signs immediately.

Pos.	ISO standard	ANSI standard
1		
	Hazardous voltage. Will shock, burn, or cause death. Follow lockout procedure before maintenance.	
2		
	Hazardous voltage. Can shock, burn, or cause death. Read Maintenance Manual (MM) before using this socket outlet.	
3		
	Risk of equipment damage. Do not let water into this area.	

TechPub_2614345_0108 - sp03_3056459_01.fm

Pos.	ISO standard	ANSI standard
4	 **Burn hazard.** Trapped heat energy. Do not touch.	
5	 **Hot surface.** Do not touch. Follow lockout procedure before maintenance.	
6	 **Do not reach in.** Moving parts may cause injury Follow instructions for safe work practice.	

TechPub_2614345_0108 - sp03_3056459_01.fm

Locations of Safety Signs

The illustration shows where the safety signs are located. The position numbers refer to the table in the Safety Signs section.

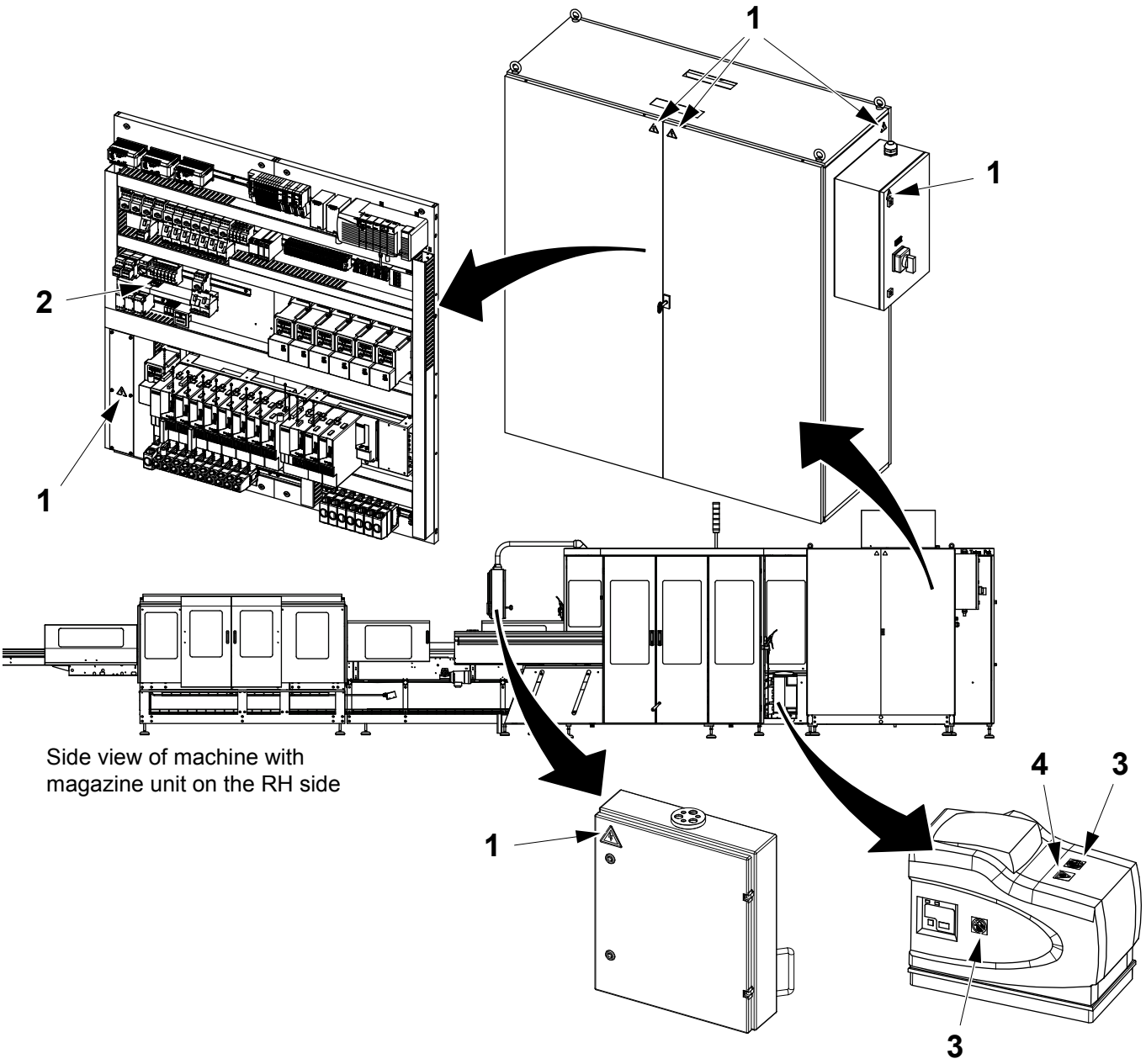

Side view of machine with magazine unit on the RH side

(Cont'd)

TechPub_2614345_0108 - sp03_3056459_01.fm

(Cont'd)

The illustration shows where the safety signs are located. The position numbers refer to the table in the Safety Signs section.

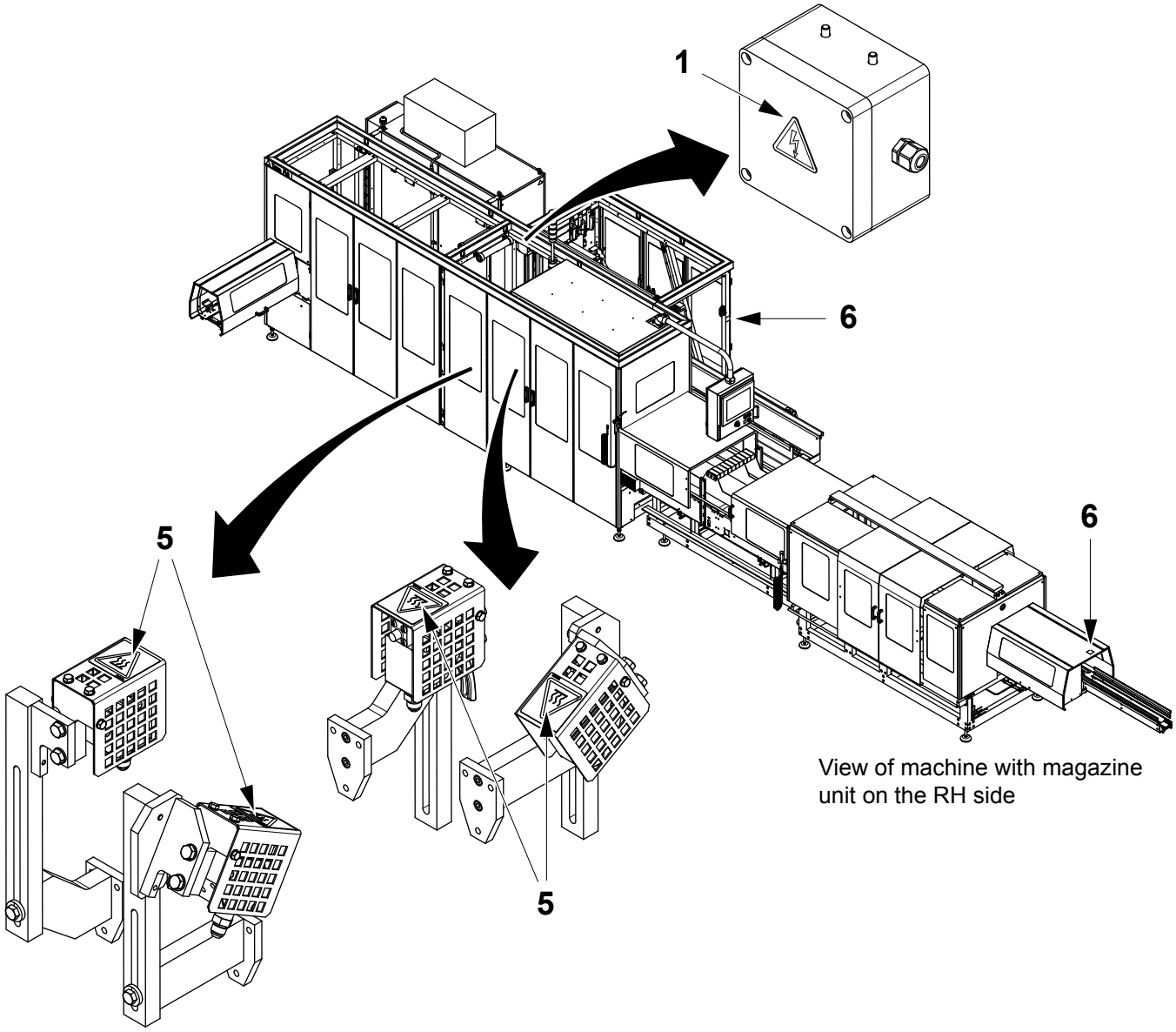

View of machine with magazine unit on the RH side

TechPub_2614345_0108 - sp03_3056459_01.fm

Locations of Safety Signs, WA (OE)

The illustration shows where the safety signs are located. The position numbers refer to the table in the Safety Signs section.

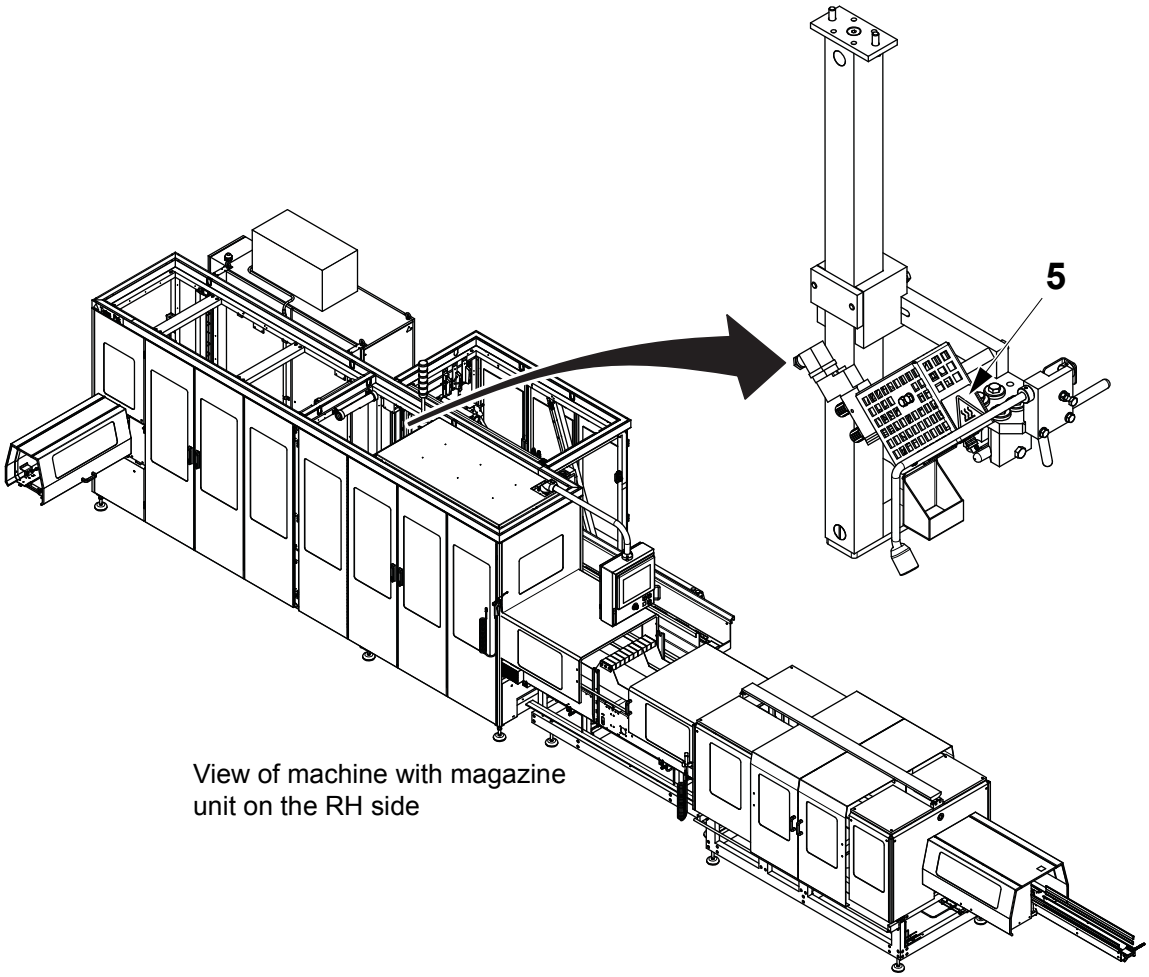

View of machine with magazine unit on the RH side

TechPub_2614345_0108 - sp03_3056459_01.fm

Protective Devices

There are different kinds of protective device designed to ensure safe use of the equipment. See the sections below.

WARNING

Hazardous zones.

Hazardous zones are safeguarded and provided with protective devices. Do not inch or run this equipment if any protective device is inoperative.

Change inoperative components of the safety system immediately.

For the locations of safeguards and/or other protective devices not mentioned in this section, see the Maintenance Manual.

DANGER

Hazardous voltage.

Will shock, burn, or cause death.

Hazardous voltage remains ON after activating an EMERGENCY STOP.

Emergency Stop

Emergency stop devices are used to stop this equipment immediately in an hazardous situation. Learn the positions of all emergency stop devices and how to use them.

Instructions for a normal production stop are included in the Stop chapter of the Operation Manual.

TechPub_2614345_0108 - sp03_3056459_01.fm

Emergency Stop Buttons

Push one of the EMERGENCY STOP buttons to stop this equipment immediately.

The location of each EMERGENCY STOP button is shown by an arrow.

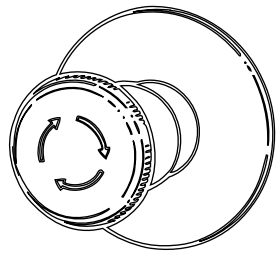

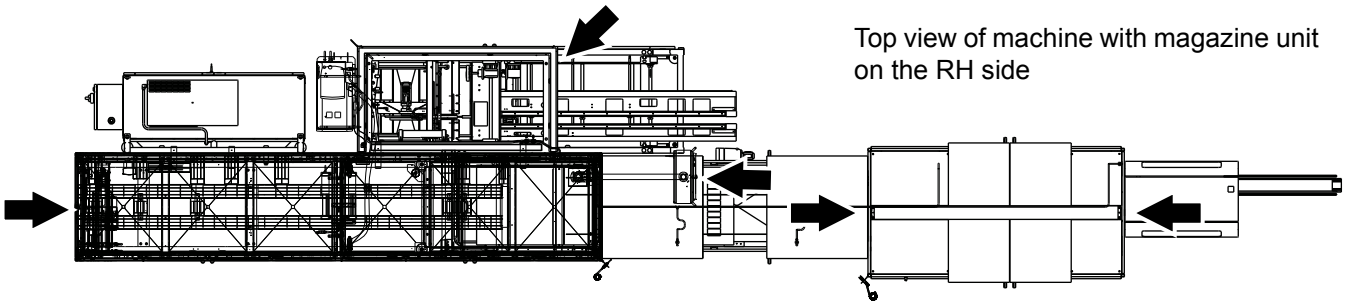

Top view of machine with magazine unit on the RH side

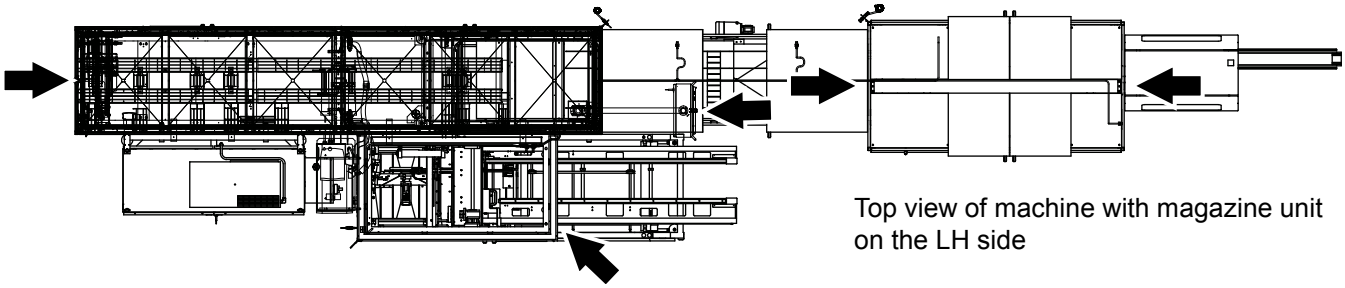

Top view of machine with magazine unit on the LH side

TechPub_2614345_0108 - sp03_3056459_01.fm

Safeguards

WARNING
Moving machinery.
Never defeat or bypass the interlocking devices.

Movable guards, for example, doors and covers leading to hazardous zones, are fitted with interlocking devices where required. These devices are usually electric safety switches that are parts of the safety system and must never be defeated, bypassed, or otherwise made inoperative.

CAUTION
Corners and edges.
Close the doors, guards, or parts of the equipment unless they must be open during work.

CAUTION
Burn hazard.
Parts of the equipment protected by guards may be hot after operation. Allow components to cool down or use personal protective equipment.

After installation and maintenance, and before this equipment is inched or run, check that all safeguards are in place and that they operate correctly.

(Cont'd)

TechPub_2614345_0108 - sp03_3056459_01.fm

(Cont'd)

Machines with Straight Outfeed Conveyor

CAUTION

Equipment damage.

The equipment can be damaged if it is not stopped in the correct way. Never stop this equipment by opening a movable guard, for example, a door or cover, equipped with an interlocking device.

The location of each interlocking guard is shown by an arrow.

Top view of machine with magazine unit on the RH side

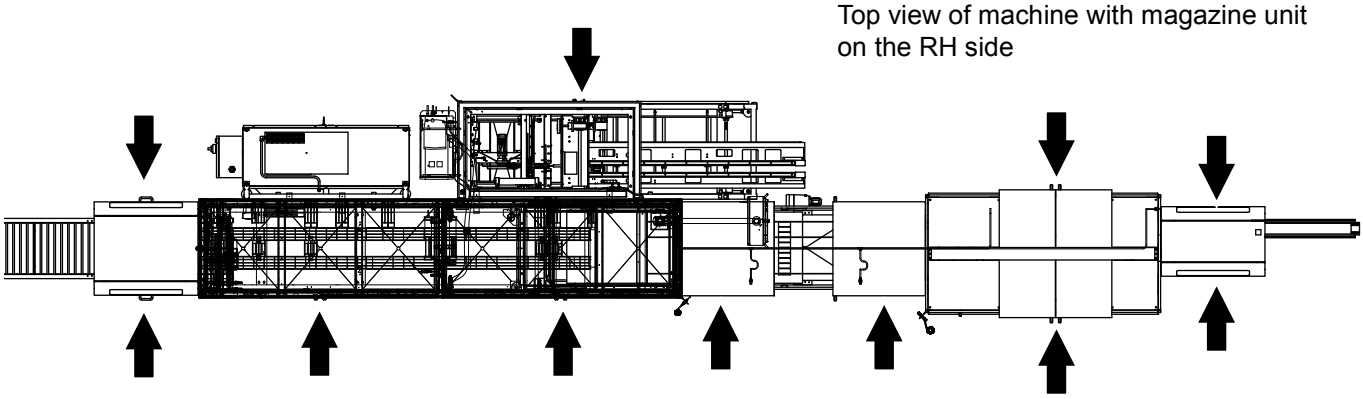

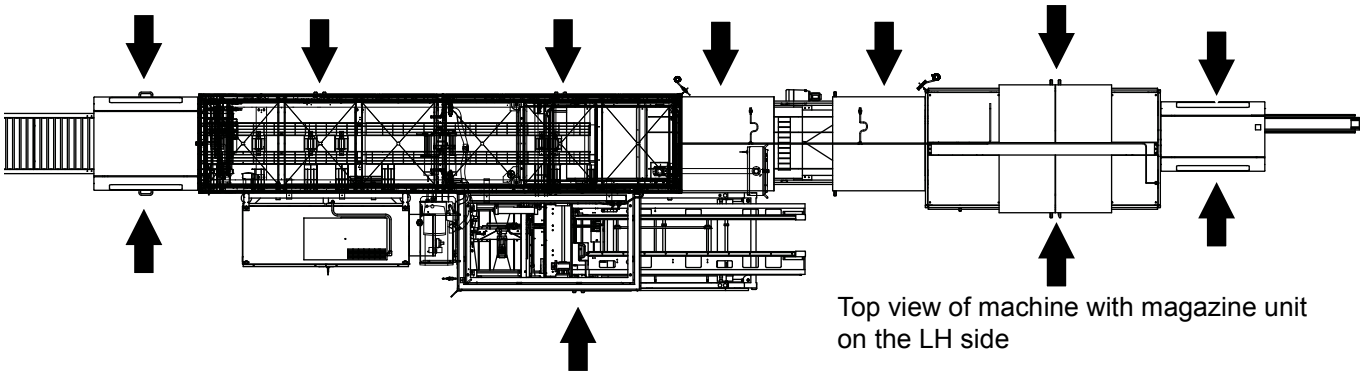

Top view of machine with magazine unit on the LH side

(Cont'd)

TechPub_2614345_0108 - sp03_3056459_01.fm

(Cont'd)

Machines with Outfeed Conveyor and Magazine Unit on the Same Side

CAUTION

Equipment damage.

The equipment can be damaged if it is not stopped in the correct way. Never stop this equipment by opening a movable guard, for example, a door or cover, equipped with an interlocking device.

The location of each interlocking guard is shown by an arrow.

Top view of machine with magazine unit on the RH side

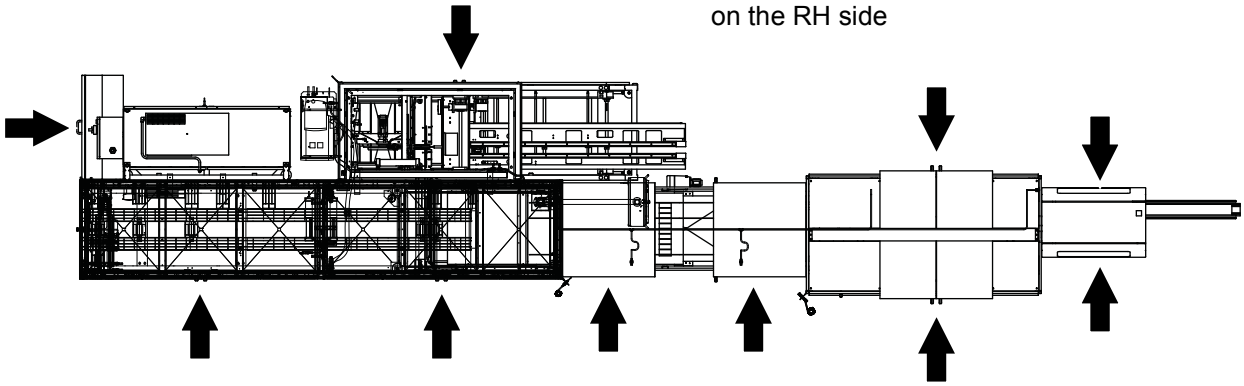

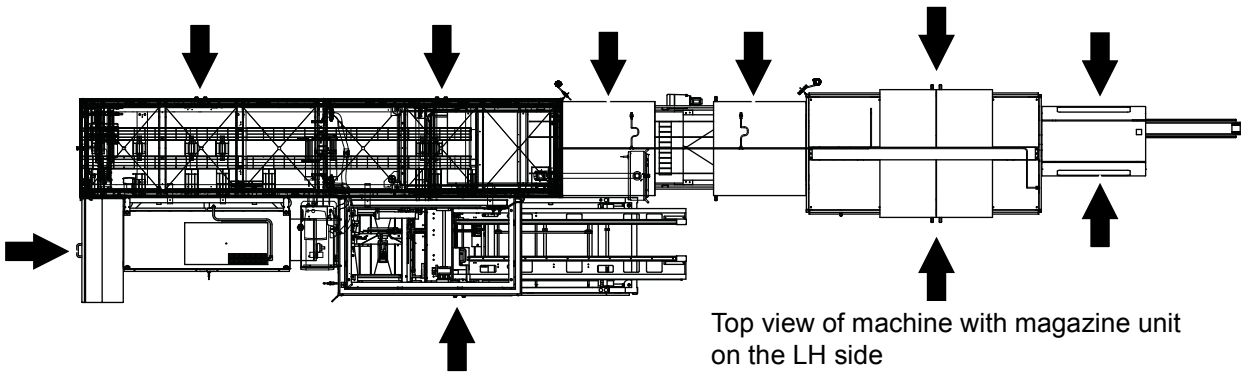

Top view of machine with magazine unit on the LH side

TechPub_2614345_0108 - sp03_3056459_01.fm

(Cont'd)

(Cont'd)

Machines with Outfeed Conveyor and Magazine Unit on Opposite Sides

CAUTION

Equipment damage.

The equipment can be damaged if it is not stopped in the correct way. Never stop this equipment by opening a movable guard, for example, a door or cover, equipped with an interlocking device.

The location of each interlocking guard is shown by an arrow.

Top view of machine with magazine unit on the RH side

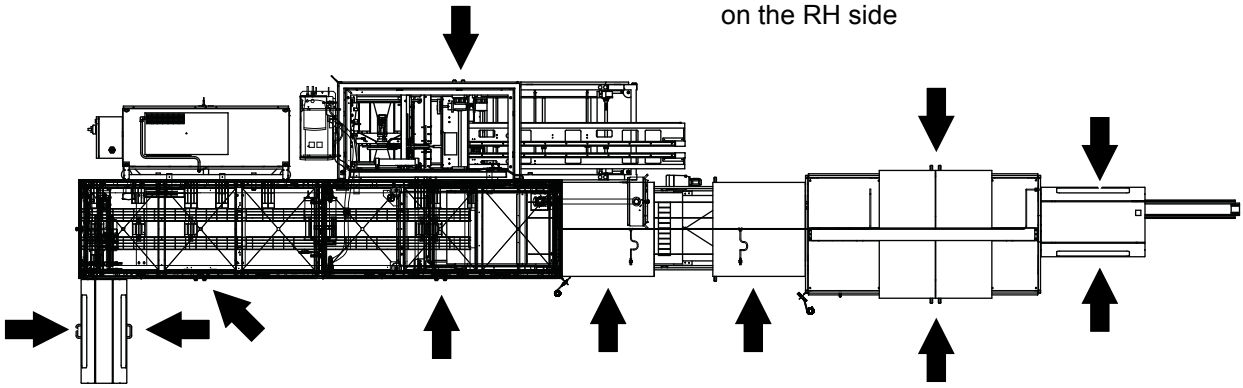

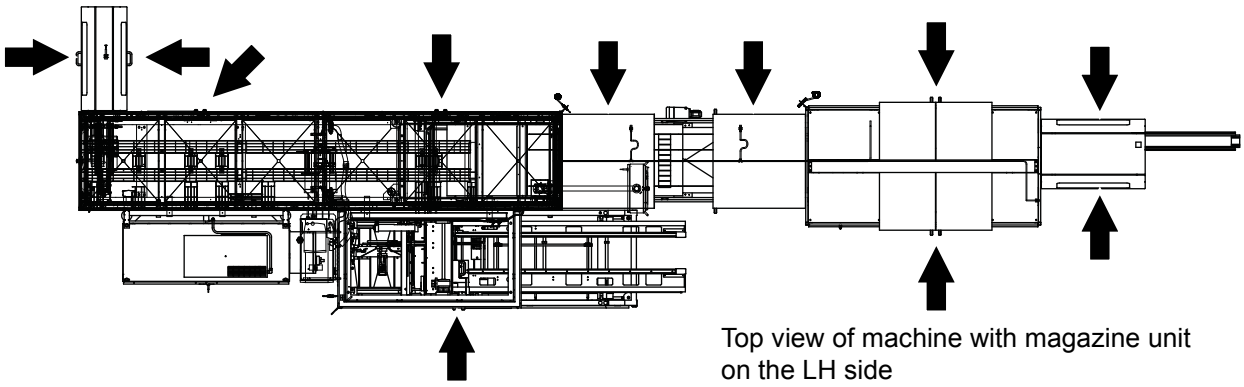

Top view of machine with magazine unit on the LH side

TechPub_2614345_0108 - sp03_3056459_01.fm

Warning Lamp

A warning lamp is a column of warning lights:

- A red light (2) indicates a hazardous condition. This is a situation that requires immediate action.
- A yellow light (3) indicates an abnormal or impending critical condition. This is a condition calling for action by the operator.
- A blue light (4) indicates that operator action is required.
- A green light (5) indicates a normal condition.

Audible Alarm

The audible alarm (1) produces a warning signal every time this equipment is about to start. The warning signal sounds for approximately three seconds prior to starting to alert personnel.

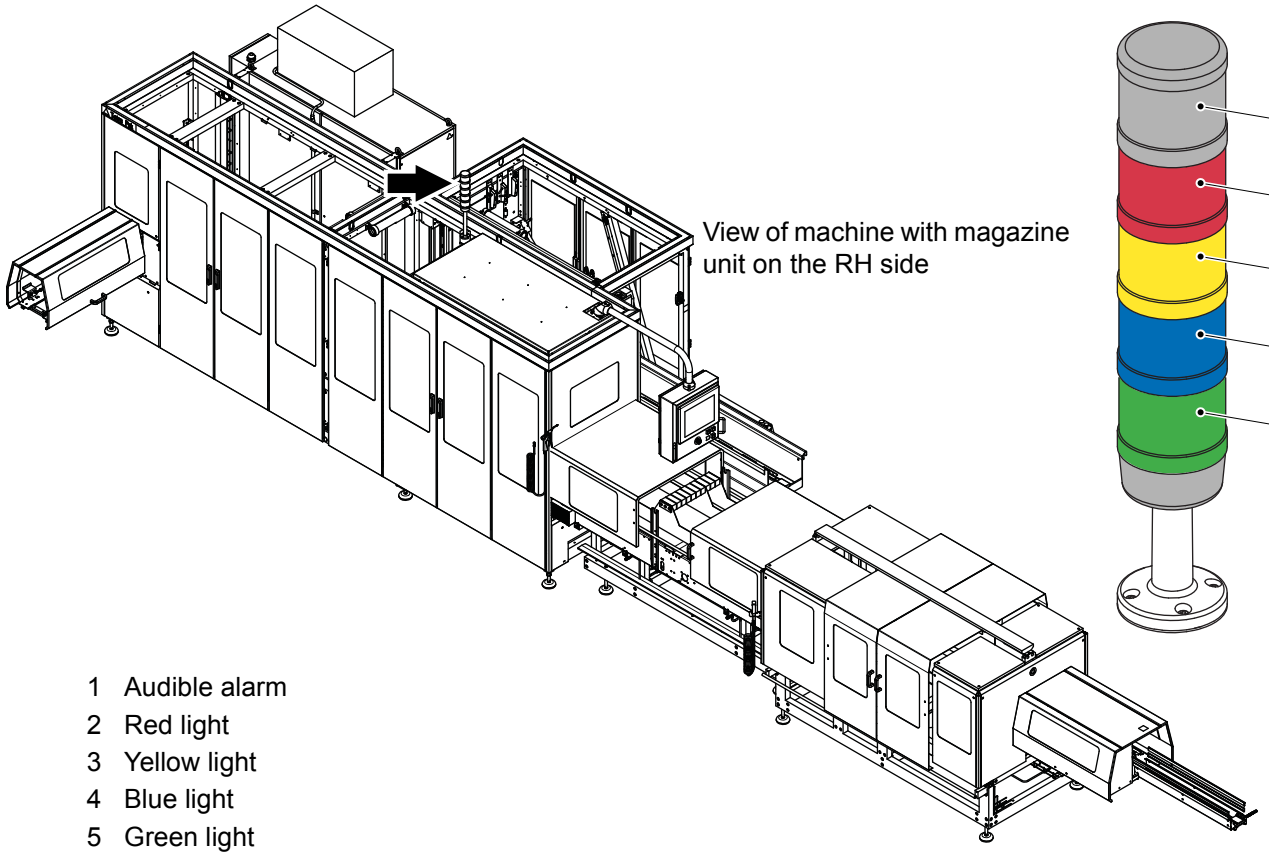

1 Audible alarm
2 Red light
3 Yellow light
4 Blue light
5 Green light

TechPub_2614345_0108 - sp03_3056459_01.fm

Safe Manual Handling

Use mechanical lifting aids whenever possible. If mechanical lifting aids are not available, do not attempt to lift loads over 23 kg without the assistance of a colleague. Avoid lifting below knee height and above shoulder height. If it is necessary to lift from the floor, follow the instructions below to reduce the risk of back and disc injuries.

- Use safety shoes and be sure that the surface of the floor is not slippery.
- Get close to the load.
- Take a wide stance and find the best positions for your feet.
- Bend your hips and knees, and use your leg muscles.
- Keep the load close to your body.
- Do not twist your body while moving the load.
- Take small steps when turning.

In order to reduce the risk of injury to discs and back muscles, be careful to not bend or twist your back when lifting. Keep the load close to your body to reduce the strain on your back.

To reduce the ergonomic risks to each individual operator, job rotation is recommended, so that recovery and variety are provided.

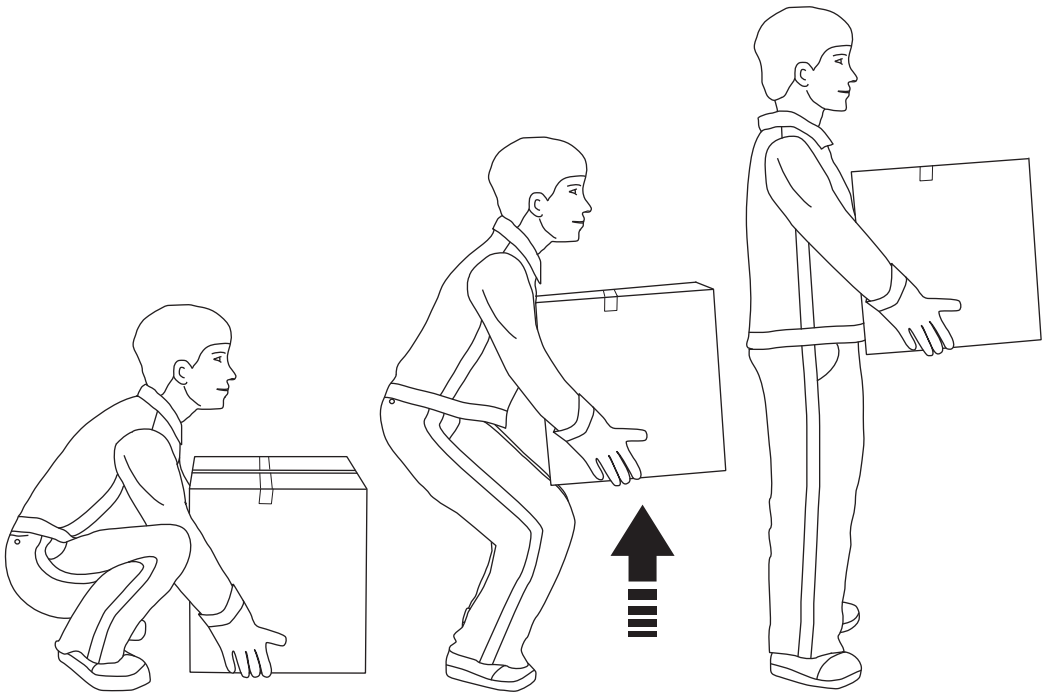

TechPub_2614345_0108 - sp03_3056459_01.fm

Personal Protection

This section applies to all personnel at all times when this equipment is in operation. For special personal protective equipment required when handling hazardous substances, see the Hazardous Substances section.

Noise

CAUTION

Hazardous noise.

May cause impaired hearing.

Hearing protection is recommended whenever this equipment is in operation.

Entanglement

WARNING

Risk of entanglement.

Do not wear jewellery or loose clothing when working on or near this equipment. Restrain long hair with, for example, clips or rubber bands.

TechPub_2614345_0108 - sp03_3056459_01.fm

Hazardous Substances

WARNING

Contact with chemicals can cause death, serious injury, or illness.
Always read and follow the instructions in the safety data sheet supplied by the manufacturer or local supplier, when handling chemicals.

Make sure that

- the safety data sheet is available
- the showers work
- an eyewash device, movable or wall-mounted, is available and operational
- additional washing facilities are nearby.

Note! Learn the locations of all washing facilities in order to act immediately in case of an accident.





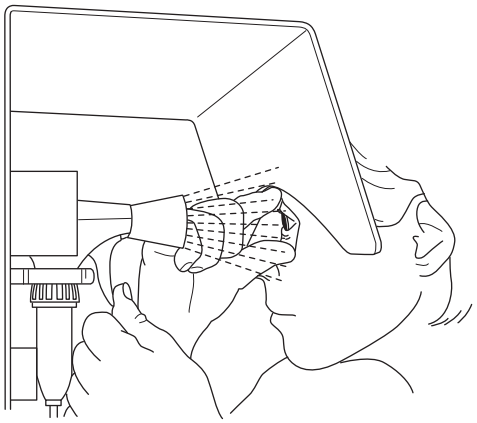

TechPub_2614345_0108 - sp03_3056459_01.fm

Disposal of Chemical Substances

Always read and follow the disposal instructions in the safety data sheet supplied by the manufacturer or local supplier.

It is strongly recommended that used chemical containers are

- disposed of according to the instructions immediately after use
- not used as disposal containers for other chemicals in order to avoid uncontrolled chemical reactions within the container.

TechPub_2614345_0108 - sp03_3056459_01.fm

Supply Systems

Power Supply

DANGER

Hazardous voltage and moving machinery.
The power supply disconnector must be turned off and secured with a lock before any maintenance.

Note! The key to the lock must be removed by the technician and retained in his/her possession until all work is completed.

DANGER

Hazardous voltage can be present with the power supply switched off.
Circuits identified by orange-coloured conductors are not disconnected by the main power supply disconnector. The location of the power supply disconnector of these circuits is described in the Maintenance Manual procedures that include work on these types of circuit.

Certain maintenance procedures may require power supply systems to be on. These exceptions are clearly stated in the Maintenance Manual.

The illustrations show the power supply disconnector and its location.

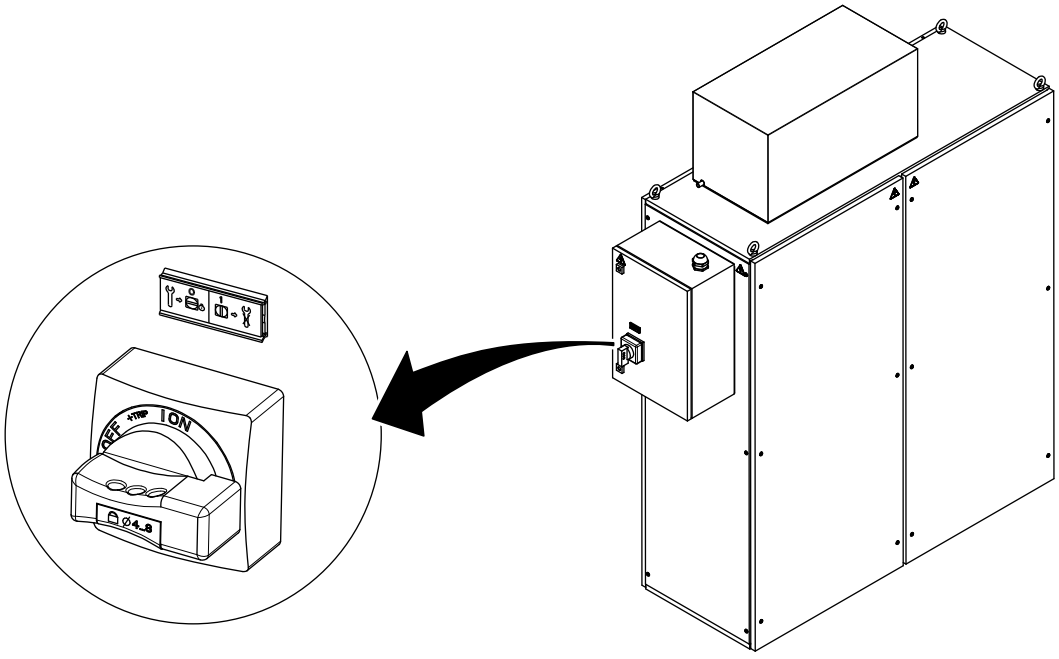

TechPub_2614345_0108 - sp03_3056459_01.fm

Residual Voltage

DANGER

Hazardous voltage.
Will shock, burn, or cause death.
After the power supply disconnector is turned off, residual voltage remains in the capacitor circuits.
Wait five minutes before opening the enclosure containing these circuits.
Ensure that no residual voltage remains on the capacitors before touching them.

TechPub_2614345_0108 - sp03_3056459_01.fm

Electrical Cabinet

DANGER

Hazardous voltage.
Will shock, burn, or cause death.
Parts behind doors to electrical enclosures may be live. The power supply disconnector must be turned off and secured with a lock before performing maintenance inside the electrical cabinet.

Note! The key to the lock must be removed by the technician and retained in his/her possession until all work is completed.

The use of a key or a tool is necessary to access to the electrical cabinet.

Make sure that the electrical cabinet doors are closed after working inside the electrical cabinet. Doors with lock must be locked.

The location of the electrical cabinet is shown by an arrow.

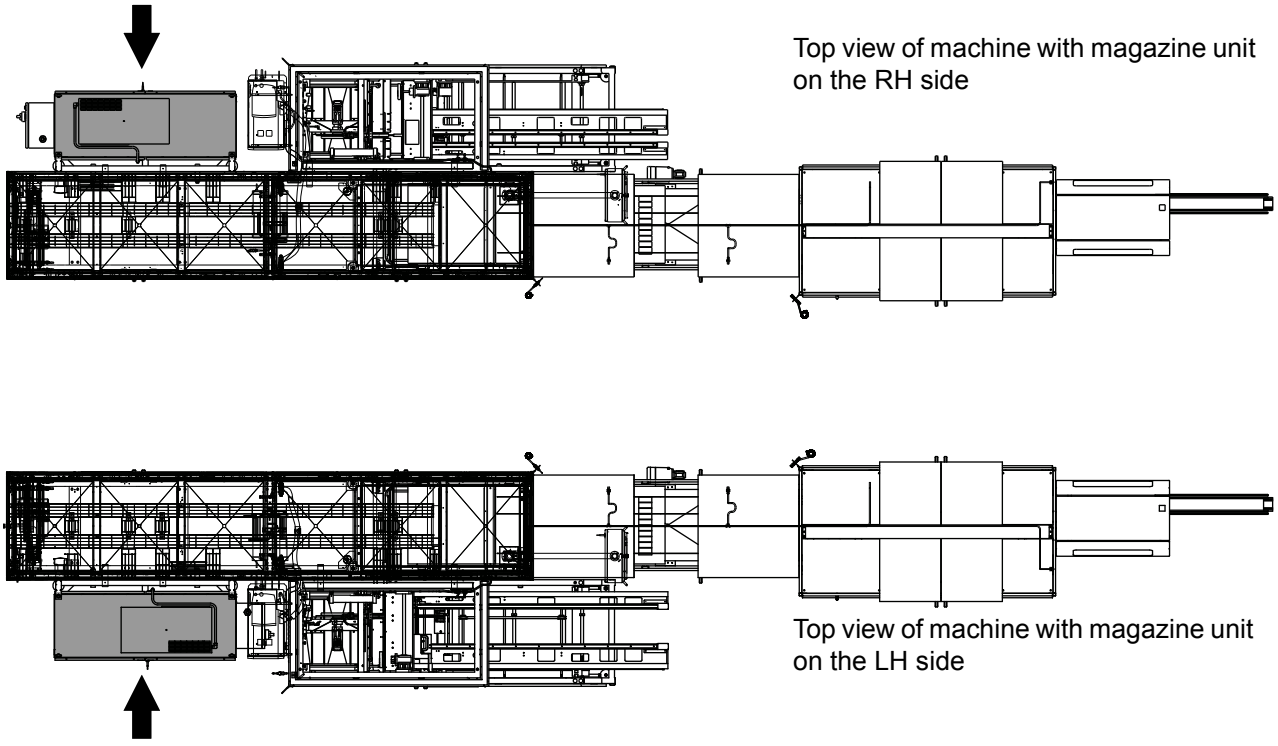

Top view of machine with magazine unit on the RH side

Top view of machine with magazine unit on the LH side

TechPub_2614345_0108 - sp03_3056459_01.fm

Socket Outlet

WARNING

Hazardous voltage.

Can shock, burn, or cause death. Read the Maintenance Manual before using this socket outlet.

The socket outlet (1) is connected to a residual current device (2) to protect users against electrical shock if there is an earth fault in the connected equipment. The residual current device must be tested each time before the socket outlet is being used. See the MM for test procedure.

The illustrations show the socket outlet (1), the residual current device (2) and their locations.

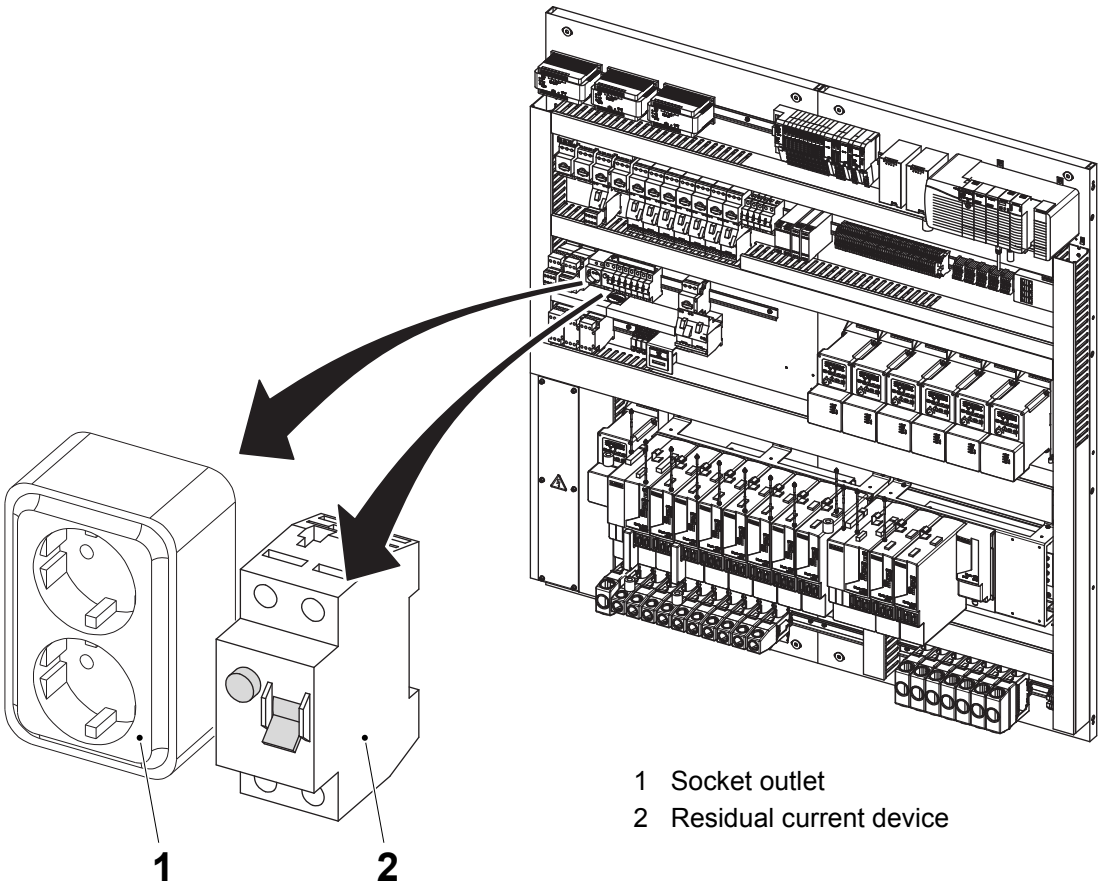

1 Socket outlet
2 Residual current device

TechPub_2614345_0108 - sp03_3056459_01.fm

Air Supply

WARNING

Compressed air and moving machinery.
Close the main air valve and lock it, and safely release compressed air from the air system before any maintenance.

Note! The key to the lock must be removed by the technician and retained in his/her possession until all work is completed.

Certain maintenance procedures may require air supply systems to be on. These exceptions are clearly stated in the Maintenance Manual.

The illustrations show the shut off valve (1) and its location.

Turn the knob (2) to the position showed in the illustration. Move the lock slide (3) forward and install the padlock (4).

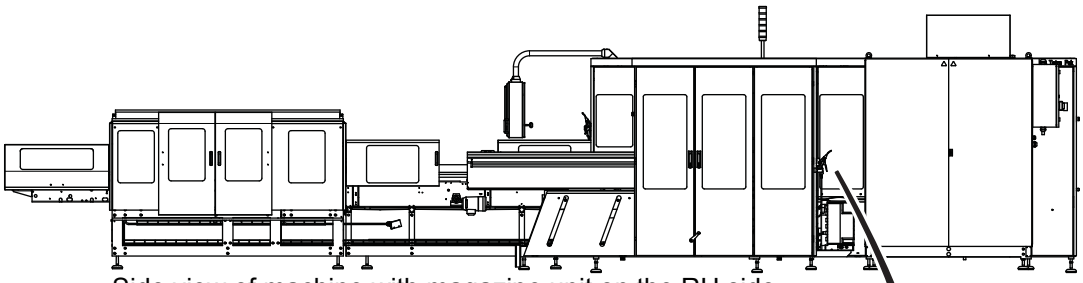

Side view of machine with magazine unit on the RH side

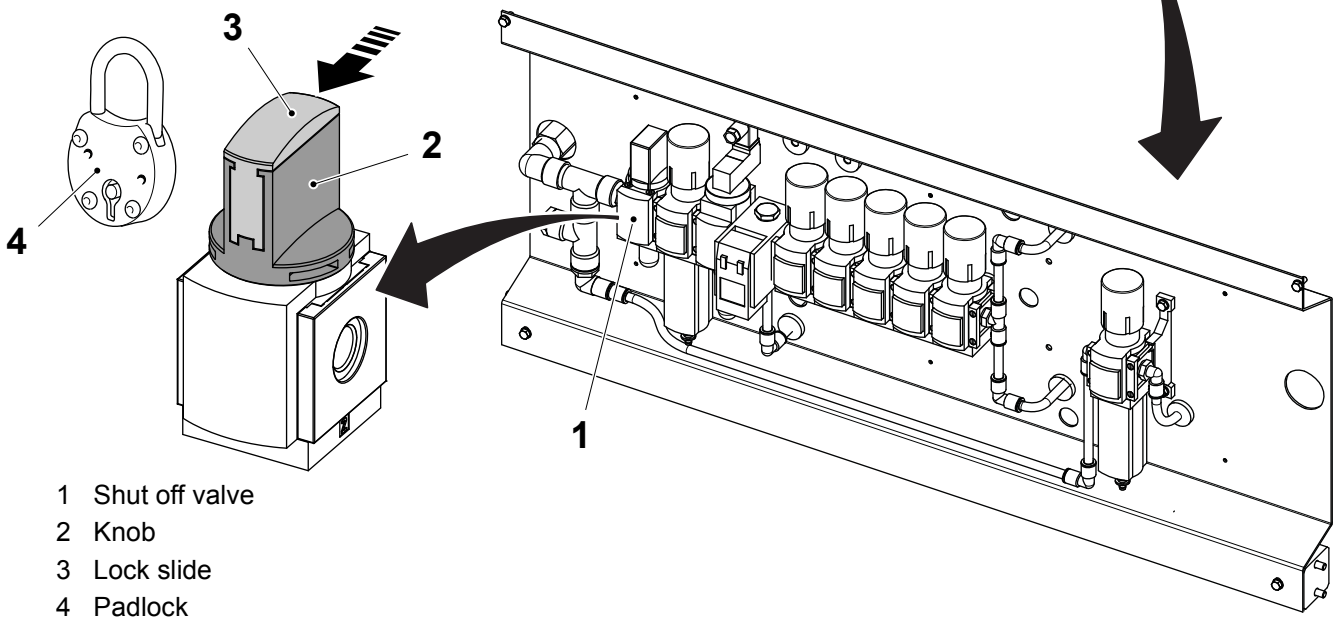

1 Shut off valve
2 Knob
3 Lock slide
4 Padlock

TechPub_2614345_0108 - sp03_3056459_01.fm

Water Supply

CAUTION

Water under pressure.

Close the water supply valves before any maintenance.

Certain maintenance procedures may require water supply systems to be on. These exceptions are clearly stated in the Maintenance Manual.

The illustrations show the water supply valve (1) and its location.

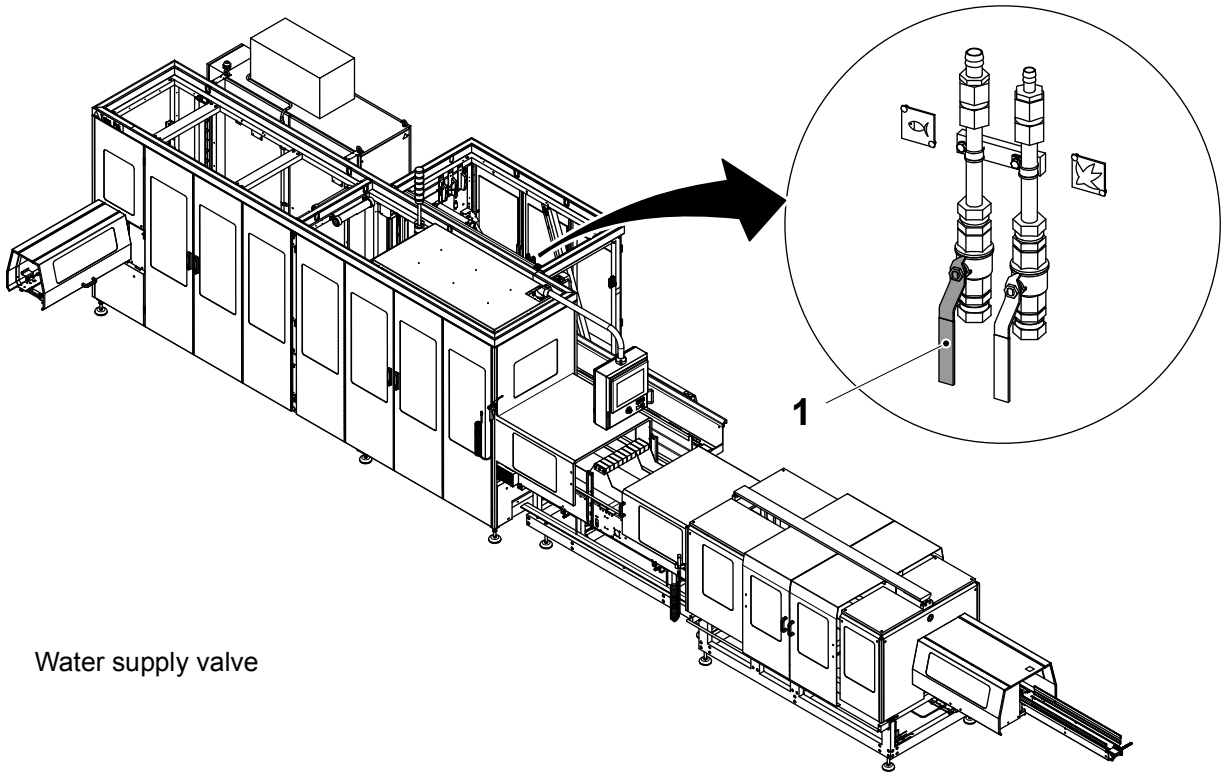

1 Water supply valve

TechPub_2614345_0108 - sp03_3056459_01.fm

Hotmelt Equipment

General

DANGER

Risk of electrical shock.
The voltage is 400V inside the hotmelt unit. Risk of immediate danger to life through electrical shock.

WARNING

Risk of personal injury.
All service work on the hotmelt unit must be carried out by authorised personnel.

Always wear safety glasses, protective gloves, and other protective clothing to avoid injuries caused by splashing hotmelt material.

Failure to relieve any remaining air or liquid (adhesive) pressure may cause serious injuries through burning when the hotmelt filter is detached or flushed.

Never remove any part or component until air and electrical supply to the machine have been disconnected and the pressure of the hotmelt in the system has been relieved.

Note! Always refer to the documentation provided from Nordson Corporation before doing any kind of work on the hotmelt equipment. The Hotmelt Material Applicator manual is included at delivery from Tetra Pak. The section Hotmelt equipment in this manual only deals with what is specific for this machine.

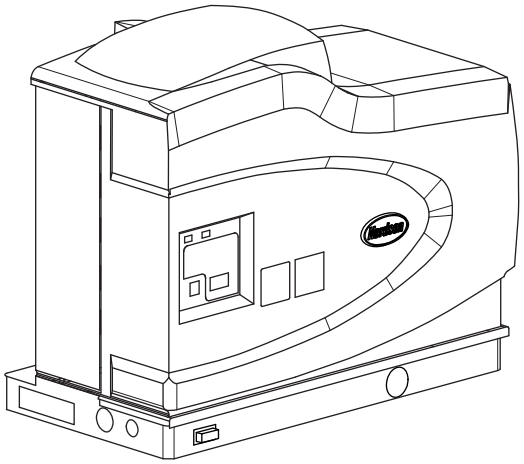

TechPub_2614345_0108 - sp03_3056459_01.fm

Hotmelt Unit

DANGER

Risk of electrical shock.

Never flush water or any other liquid towards the hotmelt unit when cleaning the machine. Failure to observe will result in danger to your life.

WARNING

Risk of burns.

During heating and production the hotmelt gets hot. Beware of the entrapped heat inside the unit when service is performed!
During tank drainage never touch the drain shut!

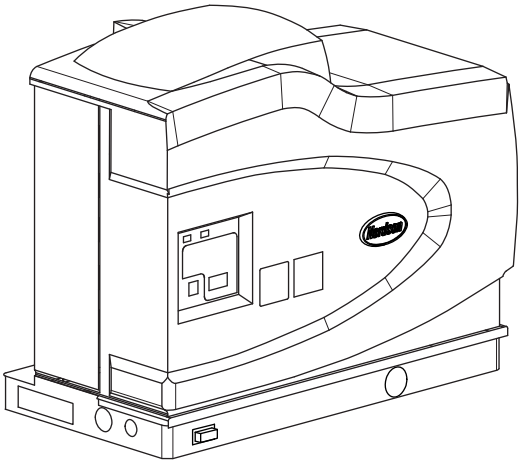

TechPub_2614345_0108 - sp03_3056459_01.fm

Hotmelt Guns

WARNING

Risk of electrical shock.

Never flush water or any other liquid towards the hotmelt guns when cleaning the machine. Failure to observe will result in danger to your life.

WARNING

Risk of burns.

During PREHEATING, the cover of the hotmelt guns become very hot and there is risk of severe burns.

Never touch the covers of the hotmelt applicators!

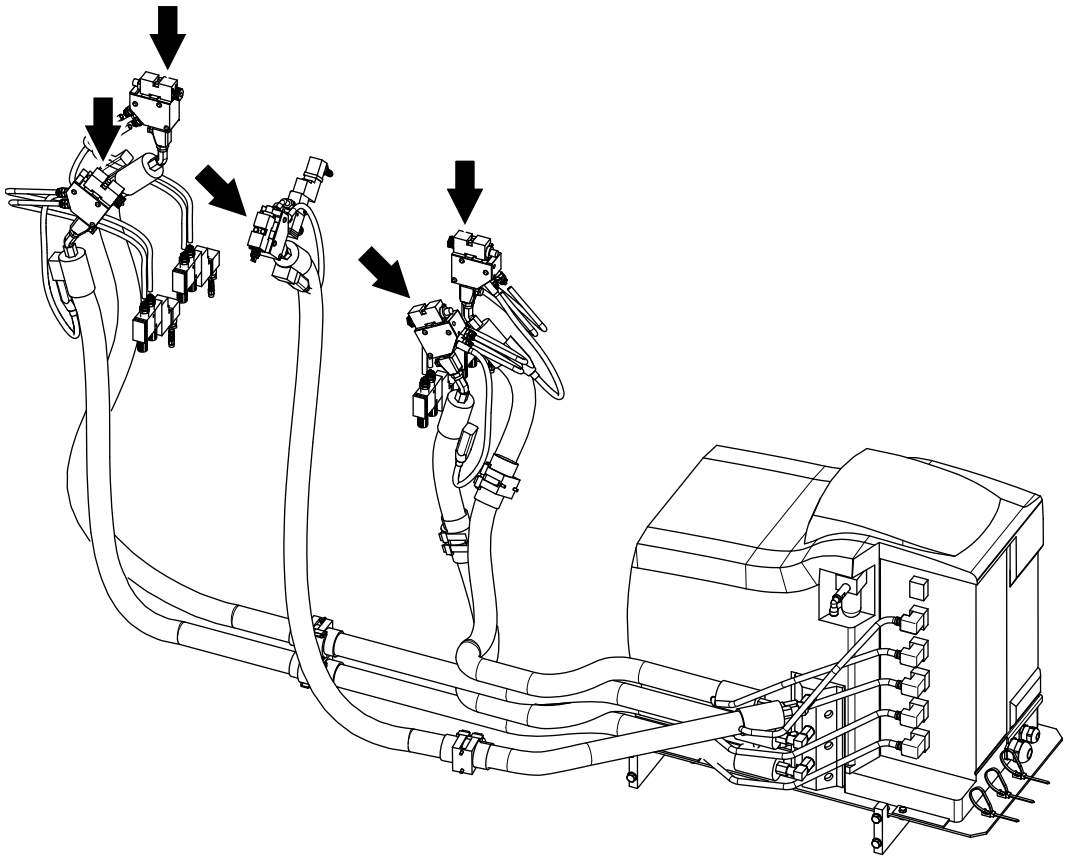

TechPub_2614345_0108 - sp03_3056459_01.fm

This page intentionally left blank

TechPub_2614345_0108 - sp03_3056459_01.fm

1 Electrical System Description

TechPub_2614345_0108 - 0101_3056477_01.fm

Description

This chapter contains a description of the electrical safety system.

TechPub_2614345_0108 - 0101_3056477_01.fm

1.1 Safety System . . . . . 1 - 5

1.1-1 Safety System - Description . . . . . 1 - 5

TechPub_2614345_0108 - 0101_3056477_01.fm

This page intentionally left blank

TechPub_2614345_0108 - 0101_3056477_01.fm

1.1 Safety System

1.1-1 Safety System - Description

All the safety lines are managed from the PLUTO B20 device which is a safety PLC with customized I/O and programmable software inside.

The main relays are as follows:

- Safety relay: PLUTO B20 Jokab
- Expansion relay: E1T0,5s Jokab.

The safety lines are summarized in the following illustration:

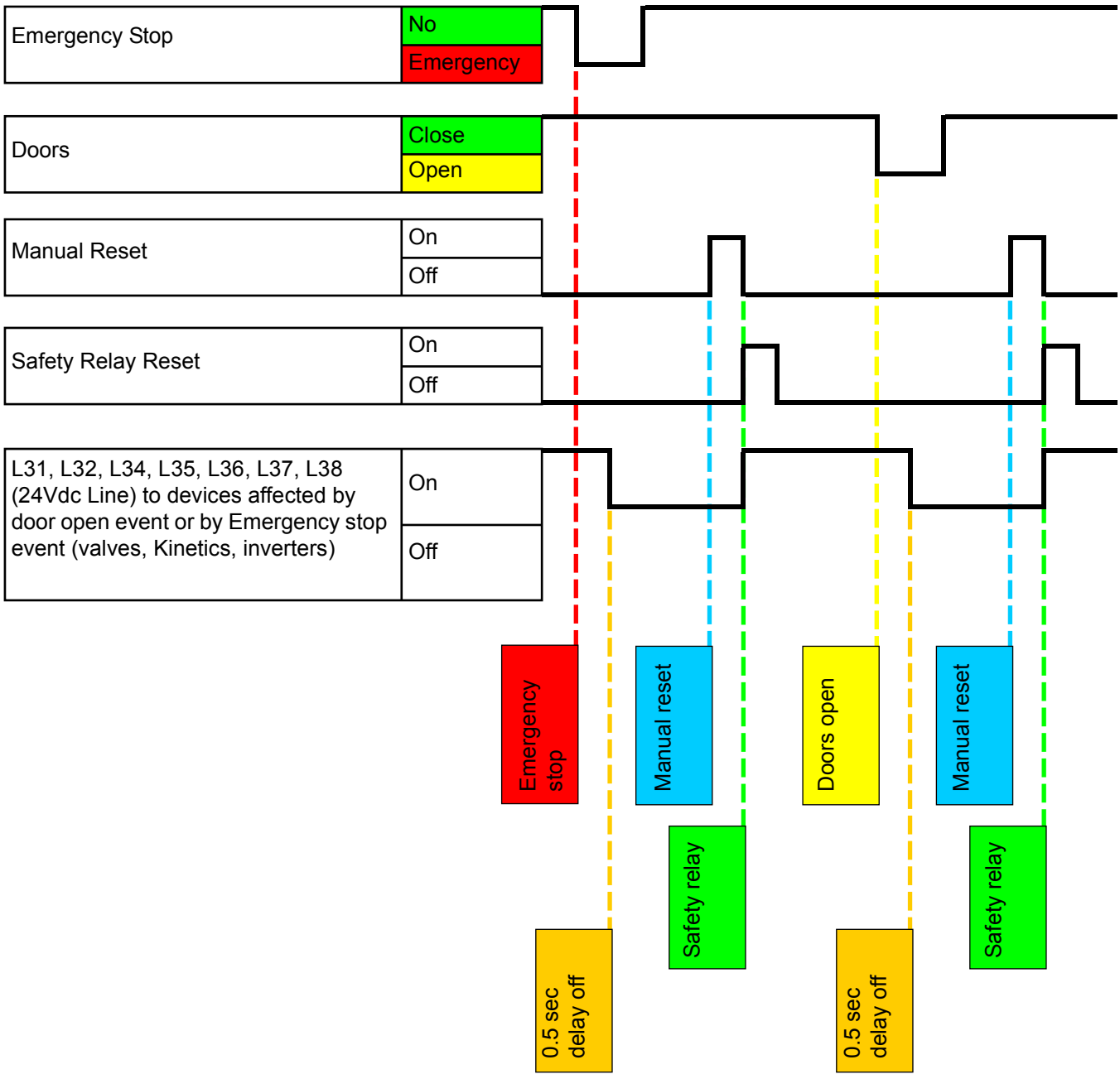

TechPub_2614345_0108 - 0101_3056477_01.fm

This page intentionally left blank

TechPub_2614345_0108 - 0101_3056477_01.fm

2 Document List

TechPub_2614345_0108 - 0201_3056478_01.fm

Description

This chapter is a table of contents that includes the drawing specification for each electrical document valid for the equipment.

TechPub_2614345_0108 - 0201_3056478_01.fm

This drawing must not without the consent of Tetra Pak be copied, transmitted or disclosed to any third party.

RELEASED

Documents list

Drawing No	Page type	Denomination	Version
3037928-0001:001	DOCUMENT LIST	DOCUMENT LIST	AC
3037928-0001:002	DOCUMENT LIST	DOCUMENT LIST	AC
3037928-0001:003	DOCUMENT LIST	DOCUMENT LIST	AC
3037928-0001:004	DOCUMENT LIST	DOCUMENT LIST	AC
3037928-0001:005	DOCUMENT LIST	DOCUMENT LIST	AC
3037928-0002:001	POSITION SUMMARY	POSITION SUMMARY	AC
3037928-0002:002	POSITION SUMMARY	POSITION SUMMARY	AC
3037928-0002:003	POSITION SUMMARY	POSITION SUMMARY	AC
3037928-0002:004	POSITION SUMMARY	POSITION SUMMARY	AC
3037928-0003:001	CIRCUIT DIAGRAM	TERMINALS	AC
3037928-0003:002	CIRCUIT DIAGRAM	MAINS CONNECTION	AC
3037928-0003:003	CIRCUIT DIAGRAM	24V POWER SUPPLY	AC
3037928-0003:004	CIRCUIT DIAGRAM	LIGHT FIXTURES	AC
3037928-0003:005	CIRCUIT DIAGRAM	ELECTRICAL CABINET COOLING	AC
3037928-0003:006	CIRCUIT DIAGRAM	HOTMELT UNIT	AC
3037928-0003:007	CIRCUIT DIAGRAM	COOLER E.C. & SERVO POWER SUPPLY	AC
3037928-0003:008	CIRCUIT DIAGRAM	DIVIDER X SERVO MOTOR	AC
3037928-0003:009	CIRCUIT DIAGRAM	DIVIDER BELT BRAKE SERVO MOTOR	AC
3037928-0003:010	CIRCUIT DIAGRAM	FEED SERVO MOTOR	AC
3037928-0003:011	CIRCUIT DIAGRAM	INDEXING CONVEYOR SERVO MOTOR	AC
3037928-0003:012	CIRCUIT DIAGRAM	PUSH FLIGHT BAR SERVO MOTOR	AC
3037928-0003:013	CIRCUIT DIAGRAM	STOP FLIGHT BAR SERVO MOTOR	AC
3037928-0003:014	CIRCUIT DIAGRAM	GROUPING STOPPER SERVO MOTOR	AC
3037928-0003:015	CIRCUIT DIAGRAM	VACUUM ARM SERVO MOTOR	AC
3037928-0003:016	CIRCUIT DIAGRAM	SERVO POWER SUPPLY	AC
3037928-0003:017	CIRCUIT DIAGRAM	FLAP FOLDER LEFT SERVO MOTOR	AC
3037928-0003:018	CIRCUIT DIAGRAM	FLAP FOLDER RIGHT SERVO MOTOR	AC
3037928-0003:019	CIRCUIT DIAGRAM	WRAP SERVO MOTOR	AC
3037928-0003:020	CIRCUIT DIAGRAM	DRIVE UNIT SERVO	AC
3037928-0003:021	CIRCUIT DIAGRAM	WRAP LIFT MOTOR	AC
3037928-0003:022	CIRCUIT DIAGRAM	INFEED CONVEYOR MOTOR	AC
3037928-0003:023	CIRCUIT DIAGRAM	INFEED BELT BRAKE MOTORS	AC
3037928-0003:024	CIRCUIT DIAGRAM	DIVIDER CONVEYOR MOTOR	AC
3037928-0003:025	CIRCUIT DIAGRAM	ACCUMULATION CONVEYOR MOTOR	AC
3037928-0003:026	CIRCUIT DIAGRAM	GROUPING CONVEYOR MOTOR	AC
3037928-0003:027	CIRCUIT DIAGRAM	FEEDER BELT MOTOR	AC
3037928-0003:028	CIRCUIT DIAGRAM	EXTERNAL DISCHARGE CONVEYOR MOTOR	AC
3037928-0003:029	CIRCUIT DIAGRAM	PLC POWER SUPPLY	AC
3037928-0003:030	CIRCUIT DIAGRAM	ETHERNET SWITCH & TPOP	AC
3037928-0003:031	CIRCUIT DIAGRAM	TPOP PANEL TERMINALS	AC
3037928-0003:032	CIRCUIT DIAGRAM	DEVICENET COMMUNICATION	AC
3037928-0003:033	CIRCUIT DIAGRAM	PLC RACK (COMMUNICATION UNIT)	AC
3037928-0003:034	CIRCUIT DIAGRAM	SERCOS COMMUNICATION	AC
3037928-0003:035	CIRCUIT DIAGRAM	EMERGENCY STOP SAFETY	AC
3037928-0003:036	CIRCUIT DIAGRAM	EMERGENCY STOP	AC
3037928-0003:037	CIRCUIT DIAGRAM	SAFETY EMERGENCY	AC

Tetra Pak

Designer ACH
ECM No 456516
Date 26/06/2010
Denomination DOCUMENT LIST
Machine CBP 30 Speed 0200
Page Type DOCUMENT LIST
Document No. 3037928-0001
Doc. type ELD
Version AC
Page 001
Company Tetra Pak (Italy)
Drawing remarks

This drawing must not be copied, transmitted or disclosed to any third party without the consent of Tetra Pak

RELEASED

Documents list

Drawing No	Page type	Denomination	Version
3037928-0003:038	CIRCUIT DIAGRAM	SAFETY DOORS	AC
3037928-0003:039	CIRCUIT DIAGRAM	SAFETY DOORS	AC
3037928-0003:040	CIRCUIT DIAGRAM	PLC-IN	AC
3037928-0003:041	CIRCUIT DIAGRAM	PLC-IN	AC
3037928-0003:042	CIRCUIT DIAGRAM	PLC-IN	AC
3037928-0003:043	CIRCUIT DIAGRAM	PLC-IN	AC
3037928-0003:044	CIRCUIT DIAGRAM	PLC-ADN	AC
3037928-0003:045	CIRCUIT DIAGRAM	PLC-IN	AC
3037928-0003:046	CIRCUIT DIAGRAM	PLC-IN	AC
3037928-0003:047	CIRCUIT DIAGRAM	PLC-IN	AC
3037928-0003:048	CIRCUIT DIAGRAM	PLC-IN	AC
3037928-0003:049	CIRCUIT DIAGRAM	PLC-IN	AC
3037928-0003:050	CIRCUIT DIAGRAM	PLC-IN	AC
3037928-0003:051	CIRCUIT DIAGRAM	PLC-OUT	AC
3037928-0003:052	CIRCUIT DIAGRAM	PLC-OUT	AC
3037928-0003:053	CIRCUIT DIAGRAM	PLC-OUT	AC
3037928-0003:054	CIRCUIT DIAGRAM	PLC-OUT	AC
3037928-0003:056	CIRCUIT DIAGRAM	PLC-FPD	AC
3037928-0003:057	CIRCUIT DIAGRAM	PLC-OUT	AC
3037928-0003:058	CIRCUIT DIAGRAM	PLC-OUT	AC
3037928-0003:059	CIRCUIT DIAGRAM	PLC-FPD	AC
3037928-0003:060	CIRCUIT DIAGRAM	PLC-OUT	AC
3037928-0003:061	CIRCUIT DIAGRAM	PLC-EP24DC	AC
3037928-0003:062	CIRCUIT DIAGRAM	PLC THERMOCOUPLE IN	AC
3037928-0003:063	CIRCUIT DIAGRAM	DEVICENET NODES 24V POWER SUPPLY	AC
3037928-0003:064	CIRCUIT DIAGRAM	DEVICENET NODES 24V POWER SUPPLY	AC
3037928-0003:065	CIRCUIT DIAGRAM	DEVICENET NODES 24V POWER SUPPLY	AC
3037928-0003:066	CIRCUIT DIAGRAM	DEVICENET NODES 24V POWER SUPPLY	AC
3037928-0003:067	CIRCUIT DIAGRAM	PLC-IN	AC
3037928-0003:068	CIRCUIT DIAGRAM	PLC-IN/OUT	AC
3037928-0003:069	CIRCUIT DIAGRAM	PLC-IN/OUT	AC
3037928-0003:070	CIRCUIT DIAGRAM	PLC-IN/OUT	AC
3037928-0003:071	CIRCUIT DIAGRAM	PLC-IN	AC
3037928-0003:072	CIRCUIT DIAGRAM	PLC-IN	AC
3037928-0003:073	CIRCUIT DIAGRAM	PLC-IN/OUT	AC
3037928-0003:074	CIRCUIT DIAGRAM	PLC-IN/OUT	AC
3037928-0003:075	CIRCUIT DIAGRAM	PLC-IN/OUT	AC
3037928-0003:076	CIRCUIT DIAGRAM	PLC-IN	AC
3037928-0003:077	CIRCUIT DIAGRAM	PLC-OUT	AC
3037928-0003:078	CIRCUIT DIAGRAM	PLC-OUT	AC
3037928-0003:079	CIRCUIT DIAGRAM	PLC-IN/OUT	AC
3037928-0003:080	CIRCUIT DIAGRAM	PLC-OUT	AC
3037928-0003:081	CIRCUIT DIAGRAM	PLC-OUT	AC
3037928-0003:082	CIRCUIT DIAGRAM	PLC-IN	AC
3037928-0003:083	CIRCUIT DIAGRAM	PLC-IN/OUT	AC
3037928-0003:084	CIRCUIT DIAGRAM	EXTERNAL EQUIPMENT	AC

Tetra Pak

Designer ACH
ECM No 456516
Date 26/06/2010
Denomination DOCUMENT LIST
Machine CBP 30 Speed 0200
Page Type DOCUMENT LIST
Document No. 3037928-0001
Doc. type ELD
Version AC
Page 002
Company Tetra Pak (Italy)
Drawing remarks

This drawing must not be copied, transmitted or disclosed to any third party without the consent of Tetra Pak

RELEASED

Documents list

Drawing No	Page type	Denomination	Version
3037928-0003:085	CIRCUIT DIAGRAM	EARTHS CONNECTION	AC
3037928-0003:086	CIRCUIT DIAGRAM	SERVO MOTORS CONNECTIONS	AC
3037928-0003:087	CIRCUIT DIAGRAM	ETHERNET COMMUNICATION	AC
3037928-0003:088	CIRCUIT DIAGRAM	NETWORK LAYOUT DEVICENET	AC
3037928-0003:089	CIRCUIT DIAGRAM	FIGURE DRAWINGS	AC
3037928-0004:001	LINE SUMMARY	LINE SUMMARY	AC
3037928-0004:002	LINE SUMMARY	LINE SUMMARY	AC
3037928-0004:003	LINE SUMMARY	LINE SUMMARY	AC
3037928-0004:004	LINE SUMMARY	LINE SUMMARY	AC
3037928-0004:005	LINE SUMMARY	LINE SUMMARY	AC
3037928-0005:001	CABINET TERMINAL SUMMARY	CABINET TERMINAL SUMMARY	AC
3037928-0005:002	CABINET TERMINAL SUMMARY	CABINET TERMINAL SUMMARY	AC
3037928-0005:003	CABINET TERMINAL SUMMARY	CABINET TERMINAL SUMMARY	AC
3037928-0005:004	CABINET TERMINAL SUMMARY	CABINET TERMINAL SUMMARY	AC
3037928-0005:005	CABINET TERMINAL SUMMARY	CABINET TERMINAL SUMMARY	AC
3037928-0005:006	CABINET TERMINAL SUMMARY	CABINET TERMINAL SUMMARY	AC
3037928-0006:001	TERMINAL STRIP OVERVIEW	TERMINAL STRIP OVERVIEW	AC
3037928-0006:002	TERMINAL STRIP OVERVIEW	TERMINAL STRIP OVERVIEW	AC
3037928-0006:003	TERMINAL STRIP OVERVIEW	TERMINAL STRIP OVERVIEW	AC
3037928-0006:004	TERMINAL STRIP OVERVIEW	TERMINAL STRIP OVERVIEW	AC
3037928-0006:005	TERMINAL STRIP OVERVIEW	TERMINAL STRIP OVERVIEW	AC
3037928-0006:006	TERMINAL STRIP OVERVIEW	TERMINAL STRIP OVERVIEW	AC
3037928-0006:007	TERMINAL STRIP OVERVIEW	TERMINAL STRIP OVERVIEW	AC
3037928-0006:008	TERMINAL STRIP OVERVIEW	TERMINAL STRIP OVERVIEW	AC
3037928-0006:009	TERMINAL STRIP OVERVIEW	TERMINAL STRIP OVERVIEW	AC
3037928-0006:010	TERMINAL STRIP OVERVIEW	TERMINAL STRIP OVERVIEW	AC
3037928-0006:011	TERMINAL STRIP OVERVIEW	TERMINAL STRIP OVERVIEW	AC
3037928-0006:012	TERMINAL STRIP OVERVIEW	TERMINAL STRIP OVERVIEW	AC
3037928-0006:013	TERMINAL STRIP OVERVIEW	TERMINAL STRIP OVERVIEW	AC
3037928-0006:014	TERMINAL STRIP OVERVIEW	TERMINAL STRIP OVERVIEW	AC
3037928-0006:015	TERMINAL STRIP OVERVIEW	TERMINAL STRIP OVERVIEW	AC
3037928-0006:016	TERMINAL STRIP OVERVIEW	TERMINAL STRIP OVERVIEW	AC
3037928-0006:017	TERMINAL STRIP OVERVIEW	TERMINAL STRIP OVERVIEW	AC
3037928-0006:018	TERMINAL STRIP OVERVIEW	TERMINAL STRIP OVERVIEW	AC
3037928-0006:019	TERMINAL STRIP OVERVIEW	TERMINAL STRIP OVERVIEW	AC
3037928-0006:020	TERMINAL STRIP OVERVIEW	TERMINAL STRIP OVERVIEW	AC
3037928-0006:021	TERMINAL STRIP OVERVIEW	TERMINAL STRIP OVERVIEW	AC
3037928-0006:022	TERMINAL STRIP OVERVIEW	TERMINAL STRIP OVERVIEW	AC
3037928-0006:023	TERMINAL STRIP OVERVIEW	TERMINAL STRIP OVERVIEW	AC
3037928-0006:024	TERMINAL STRIP OVERVIEW	TERMINAL STRIP OVERVIEW	AC
3037928-0006:025	TERMINAL STRIP OVERVIEW	TERMINAL STRIP OVERVIEW	AC
3037928-0006:026	TERMINAL STRIP OVERVIEW	TERMINAL STRIP OVERVIEW	AC
3037928-0006:027	TERMINAL STRIP OVERVIEW	TERMINAL STRIP OVERVIEW	AC
3037928-0006:028	TERMINAL STRIP OVERVIEW	TERMINAL STRIP OVERVIEW	AC
3037928-0006:029	TERMINAL STRIP OVERVIEW	TERMINAL STRIP OVERVIEW	AC
3037928-0006:030	TERMINAL STRIP OVERVIEW	TERMINAL STRIP OVERVIEW	AC

Tetra Pak

Designer ACH
ECM No 456516
Date 26/06/2010
Denomination DOCUMENT LIST
Machine CBP 30 Speed 0200
Page Type DOCUMENT LIST
Document No. 3037928-0001
Doc. type ELD
Version AC
Page 003
Company Tetra Pak (Italy)

Drawing remarks

This drawing must not be copied, transmitted or disclosed to any third party without the consent of Tetra Pak

RELEASED

Documents list

Drawing No	Page type	Denomination	Version
3037928-0006:031	TERMINAL STRIP OVERVIEW	TERMINAL STRIP OVERVIEW	AC
3037928-0006:032	TERMINAL STRIP OVERVIEW	TERMINAL STRIP OVERVIEW	AC
3037928-0006:033	TERMINAL STRIP OVERVIEW	TERMINAL STRIP OVERVIEW	AC
3037928-0006:034	TERMINAL STRIP OVERVIEW	TERMINAL STRIP OVERVIEW	AC
3037928-0006:035	TERMINAL STRIP OVERVIEW	TERMINAL STRIP OVERVIEW	AC
3037928-0006:036	TERMINAL STRIP OVERVIEW	TERMINAL STRIP OVERVIEW	AC
3037928-0006:037	TERMINAL STRIP OVERVIEW	TERMINAL STRIP OVERVIEW	AC
3037928-0006:038	TERMINAL STRIP OVERVIEW	TERMINAL STRIP OVERVIEW	AC
3037928-0006:039	TERMINAL STRIP OVERVIEW	TERMINAL STRIP OVERVIEW	AC
3037928-0006:040	TERMINAL STRIP OVERVIEW	TERMINAL STRIP OVERVIEW	AC
3037928-0006:041	TERMINAL STRIP OVERVIEW	TERMINAL STRIP OVERVIEW	AC
3037928-0006:042	TERMINAL STRIP OVERVIEW	TERMINAL STRIP OVERVIEW	AC
3037928-0006:043	TERMINAL STRIP OVERVIEW	TERMINAL STRIP OVERVIEW	AC
3037928-0006:044	TERMINAL STRIP OVERVIEW	TERMINAL STRIP OVERVIEW	AC
3037928-0006:045	TERMINAL STRIP OVERVIEW	TERMINAL STRIP OVERVIEW	AC
3037928-0006:046	TERMINAL STRIP OVERVIEW	TERMINAL STRIP OVERVIEW	AC
3037928-0006:047	TERMINAL STRIP OVERVIEW	TERMINAL STRIP OVERVIEW	AC
3037928-0006:048	TERMINAL STRIP OVERVIEW	TERMINAL STRIP OVERVIEW	AC
3037928-0006:049	TERMINAL STRIP OVERVIEW	TERMINAL STRIP OVERVIEW	AC
3037928-0006:050	TERMINAL STRIP OVERVIEW	TERMINAL STRIP OVERVIEW	AC
3037928-0006:051	TERMINAL STRIP OVERVIEW	TERMINAL STRIP OVERVIEW	AC
3037928-0006:052	TERMINAL STRIP OVERVIEW	TERMINAL STRIP OVERVIEW	AC
3037928-0006:053	TERMINAL STRIP OVERVIEW	TERMINAL STRIP OVERVIEW	AC
3037928-0006:054	TERMINAL STRIP OVERVIEW	TERMINAL STRIP OVERVIEW	AC
3037928-0007:001	CABLE CONNECTION LIST	CABLE CONNECTION LIST	AC
3037928-0007:002	CABLE CONNECTION LIST	CABLE CONNECTION LIST	AC
3037928-0007:003	CABLE CONNECTION LIST	CABLE CONNECTION LIST	AC
3037928-0007:004	CABLE CONNECTION LIST	CABLE CONNECTION LIST	AC
3037928-0007:005	CABLE CONNECTION LIST	CABLE CONNECTION LIST	AC
3037928-0007:006	CABLE CONNECTION LIST	CABLE CONNECTION LIST	AC
3037928-0007:007	CABLE CONNECTION LIST	CABLE CONNECTION LIST	AC
3037928-0007:008	CABLE CONNECTION LIST	CABLE CONNECTION LIST	AC
3037928-0007:009	CABLE CONNECTION LIST	CABLE CONNECTION LIST	AC
3037928-0007:010	CABLE CONNECTION LIST	CABLE CONNECTION LIST	AC
3037928-0007:011	CABLE CONNECTION LIST	CABLE CONNECTION LIST	AC
3037928-0007:012	CABLE CONNECTION LIST	CABLE CONNECTION LIST	AC
3037928-0007:013	CABLE CONNECTION LIST	CABLE CONNECTION LIST	AC
3037928-0007:014	CABLE CONNECTION LIST	CABLE CONNECTION LIST	AC
3037928-0007:015	CABLE CONNECTION LIST	CABLE CONNECTION LIST	AC
3037928-0007:016	CABLE CONNECTION LIST	CABLE CONNECTION LIST	AC
3037928-0007:017	CABLE CONNECTION LIST	CABLE CONNECTION LIST	AC
3037928-0007:018	CABLE CONNECTION LIST	CABLE CONNECTION LIST	AC
3037928-0007:019	CABLE CONNECTION LIST	CABLE CONNECTION LIST	AC
3037928-0007:020	CABLE CONNECTION LIST	CABLE CONNECTION LIST	AC
3037928-0007:021	CABLE CONNECTION LIST	CABLE CONNECTION LIST	AC
3037928-0007:022	CABLE CONNECTION LIST	CABLE CONNECTION LIST	AC

Machine: CBP 30 Speed 0200
Page Type: DOCUMENT LIST
Document No.: 3037928-0001
Doc. type: ELD
Version: AC
Page: 004
Date: 26/06/2010
Denomination: DOCUMENT LIST
Designer: ACH
ECM No: 456516
Tetra Pak
Company: Tetra Pak (Italy)
Drawing remarks

RELEASED

This drawing must not without the consent of Tetra Pak be copied, transmitted or disclosed to any third party.

Documents list

Drawing No	Page type	Denomination	Version
3037928-0007:023	CABLE CONNECTION LIST	CABLE CONNECTION LIST	AC
3037928-0007:024	CABLE CONNECTION LIST	CABLE CONNECTION LIST	AC
3037928-0007:025	CABLE CONNECTION LIST	CABLE CONNECTION LIST	AC
3037928-0007:026	CABLE CONNECTION LIST	CABLE CONNECTION LIST	AC
3037928-0008:001	MAINS CONNECTION	MAINS CONNECTION	AC
3037928-0008:002	MAINS CONNECTION	MAINS CONNECTION	AC

Drawing remarks

Tetra Pak

Designer ACH	Date 26/06/2010	Machine CBP 30 Speed 0200	
ECM No 456516	Denomination DOCUMENT LIST	Page Type DOCUMENT LIST	
Company Tetra Pak (Italy)	Document No. 3037928-0001	Doc. type ELD	Version AC	Page 005

This page intentionally left blank

3 Position Summary

TechPub_2614345_0108 - 0301_3056479_01.fm

Description

This chapter is a list of all electrical components that are shown in the electrical drawings, with page references to the drawings where they are located.

TechPub_2614345_0108 - 0301_3056479_01.fm

This drawing must not without the consent of Tetra Pak be copied, transmitted or disclosed to any third party.

Position summary of 3037928 -0003

Component	Page .Col.	Opt.
01E6000	005 .1	
81K601	033 .3	GENIUS
81K602	033 .2	GENIUS
81K603	033 .2	GENIUS
81T600	033 .2	GENIUS
A01A4000	087 .8	
A01B4010	020 .5	
A01B4020	070 .3	
A01B6010	062 .3	
A01B6020	040 .3	
A01E7000	004 .7	
A01E7110	004 .3	
A01E7120	004 .3	
A01E7130	004 .3	
A01E7140	004 .3	
A01F1010	002 .4	
A01F1020	007 .2	
A01F1030	008 .3	
A01F1040	016 .1	
A01F1050	017 .3	
A01F2000	003 .2	
A01F2010	003 .2	
A01F2020	003 .5	
A01F2030	003 .9	
A01F3000	029 .3	
A01F4000	030 .8	
A01F6000	005 .1	
A01F6100	005 .6	

Component	Page .Col.	Opt.
A01F7000	004 .2	
A01F7010	004 .9	
A01F7020	004 .9	
A01K1010	002 .5	
A01K3010	029 .3	
A01K3020	029 .3	
A01K3030	029 .3	
A01K3040	029 .3	
A01K3050	040 .7	
A01K3070	029 .3	
A01K3080	029 .2	
A01K3120	030 .3	
A01K3200	088 .7	
A01K3210	045 .7	
A01K3220	046 .7	
A01K3230	047 .7	
A01K3240	048 .7	
A01K3250	049 .7	
A01K3260	050 .7	
A01K3270	051 .1	
A01K3280	052 .1	
A01K3290	053 .1	
A01K3300	054 .1	
A01K3340	061 .7	
A01K3350	062 .7	
A01K3400	056 .7	
A01K3410	057 .1	
A01K3420	058 .1	

Component	Page .Col.	Opt.
A01K3500	059 .7	
A01K3510	060 .1	
A01K8100	078 .2	
A01P4260	077 .1	
A01P4270	077 .1	
A01P4280	077 .1	
A01P4290	077 .1	
A01P4400	077 .1	
A01P9000	054 .6	
A01Q1000	002 .2	
A01Q1020	053 .6	
A01Q1040	053 .6	
A01Q1060	036 .7	
A01Q1070	036 .7	
A01Q6000	052 .5	
A01Q6100	054 .6	
A01Q7000	052 .5	
A01S4300	031 .5	
A01S4310	031 .6	
A01S4320	031 .8	
A01T2000	003 .2	
A01T2010	003 .5	
A01T2020	003 .8	
A01T3000	029 .3	
A01T4000	030 .8	
A01V1000	002 .5	
A01V1020	007 .2	
A01V1030	008 .3	

Component	Page .Col.	Opt.
A01V1040	016 .1	
A01V1050	017 .3	
A81K4000	032 .9	
A81S2010	031 .1	
A81T4000	088 .3	
B0006	005 .8	
B0007	005 .9	
C35B1100	071 .3	
C35B1110	071 .3	
C35B1120	071 .3	
C35B1130	071 .3	
C35B1140	071 .3	
C35B1150	071 .3	
C35B1160	071 .3	
C35B1170	071 .3	
C35B1180	072 .3	
C35B1190	072 .3	
C35F1000	025 .5	
C35K1400	074 .2	
C35K8000	071 .5	
C35K8200	072 .5	
C35K8400	073 .5	
C35K8600	074 .5	
C35M1000	025 .9	
C35Q1000	060 .4	
C35R8420	073 .7	
C35T1000	025 .5	
C35V1000	025 .5	

Drawing remarks

Tetra Pak

Designer	ACH	Date	26/06/2010	Machine	CBP 30 Speed 0200
ECM No	456516	Denomination	POSITION SUMMARY	Page Type	POSITION SUMMARY
Company	Tetra Pak (Italy)	Document No.	3037928-0002	Doc. type	ELD
				Version	AC
				Page	001

This drawing must not without the consent of Tetra Pak be copied, transmitted or disclosed to any third party.

Position summary of 3037928 -0003

Component	Page .Col.	Opt.
C45B1100	076 .3	
C45B1110	076 .3	
C45B2100	076 .3	
C45B2110	076 .3	
C45B2200	015 .9	
C45B3100	076 .3	
C45F3000	027 .6	
C45K1210	078 .2	
C45K2000	015 .6	
C45K2010	015 .8	
C45K2210	078 .2	
C45K3200	080 .2	
C45K4200	078 .2	
C45K8000	076 .5	
C45K8200	077 .5	
C45K8400	078 .5	
C45M2000	015 .1	
C45M3000	027 .9	
C45Q3000	058 .4	
C45R8420	078 .7	
C45T2000	015 .1	
C45T3000	027 .5	
C45V3000	027 .6	
C1712	005 .3	
C1713	005 .7	
F09B0100	035 .3	
F09B1200	037 .2	
F09B1300	037 .3	

Component	Page .Col.	Opt.
F09B1500	037 .7	
F09B1600	037 .8	
F09B1700	037 .8	
F09B2100	038 .1	
F09B2110	038 .2	
F09B2120	070 .3	
F09B2200	038 .2	
F09B2210	038 .3	
F09B2220	068 .3	
F09B2300	038 .3	
F09B2310	038 .4	
F09B2320	074 .3	
F09B2400	038 .4	
F09B2410	038 .5	
F09B2420	073 .3	
F09B2500	038 .5	
F09B2510	038 .5	
F09B2520	069 .3	
F09B2600	038 .6	
F09B2610	038 .6	
F09B2620	068 .3	
F09B2700	038 .7	
F09B2710	038 .7	
F09B2720	074 .3	
F09B2800	038 .7	
F09B2810	038 .8	
F09B2820	075 .2	
F09B3100	039 .1	

Component	Page .Col.	Opt.
F09B3110	039 .2	
F09B3120	081 .3	
F09B3200	039 .2	
F09B3210	039 .3	
F09B3300	039 .3	
F09B3310	039 .4	
F09B3400	039 .4	
F09B3410	039 .5	
F09B3420	077 .3	
F09B3500	039 .5	
F09B3510	039 .5	
F09B3520	081 .3	
F09B3600	039 .6	
F09B3610	039 .6	
F09B3620	075 .2	
F09B3700	039 .7	
F09B3710	039 .7	
F09B3720	081 .3	
F09B3800	039 .7	
F09B3810	039 .8	
F09K0000	035 .6	
F09K0010	036 .3	
F09K0020	036 .3	
F09K0040	035 .9	
F09K1100	037 .1	
F09K1400	037 .4	
F09K1800	037 .9	
F09R0000	035 .6	

Component	Page .Col.	Opt.
M0001	005 .1	
M0002	005 .3	
M0003	005 .7	
P0001	005 .5	
V01F5000	006 .4	
V01Q5000	052 .5	
V01V5000	006 .3	
V60B2100	083 .2	WRAP
V60B3100	083 .3	WRAP
V60B3110	083 .3	WRAP
V60B4210	020 .4	WRAP
V60F3000	021 .5	
V60K1000	019 .8	WRAP
V60K1010	019 .6	WRAP
V60K1200	083 .2	WRAP
V60K1210	083 .2	WRAP
V60K4200	080 .2	WRAP
V60K8000	083 .5	WRAP
V60M1000	019 .1	WRAP
V60M3000	021 .5	WRAP
V60Q3000	057 .5	
V60Q3010	057 .5	
V60T1000	019 .5	WRAP
W30B1160	068 .3	
W30B1170	068 .3	
W30B2120	069 .3	
W30B2130	069 .3	
W30B2140	069 .3	

Drawing remarks

Tetra Pak

Designer ACH | Date 26/06/2010 | Machine CBP 30 Speed 0200

ECM No 456516 | Denomination POSITION SUMMARY | Page Type POSITION SUMMARY

Company Tetra Pak (Italy) | Document No. 3037928-0002 | Doc. type ELD | Version AC | Page 002

This drawing must not without the consent of Tetra Pak be copied, transmitted or disclosed to any third party.

Position summary of 3037928 -0003

Component	Page .Col.	Opt.
W30B2150	069 .3	
W30B2160	069 .3	
W30B2170	069 .3	
W30B4120	067 .3	
W30B4130	067 .3	
W30B5100	008 .9	
W30B6100	020 .5	
W30B6110	074 .3	
W30B6120	020 .5	
W30B6130	073 .3	
W30F2000	022 .5	
W30F3000	023 .3	
W30F4000	024 .5	
W30K0400	051 .6	
W30K5000	008 .6	
W30K5010	008 .8	
W30K6000	009 .7	
W30K6010	009 .8	
W30K8000	067 .5	
W30K8200	068 .5	
W30K8400	069 .5	
W30K8600	070 .5	
W30K8900	063 .6	
W30M2000	022 .9	
W30M3010	023 .6	
W30M3020	023 .9	
W30M4000	024 .9	
W30M5000	008 .1	

Component	Page .Col.	Opt.
W30M6000	009 .1	
W30Q2000	060 .4	
W30Q3000	060 .4	
W30Q3010	023 .6	
W30Q3020	023 .9	
W30Q4000	060 .4	
W30T2000	022 .5	
W30T3000	023 .3	
W30T4000	024 .5	
W30T5000	008 .1	
W30T6000	009 .1	
W30V2000	022 .5	
W30V3000	023 .3	
W30V4000	024 .5	
W50B1100	010 .10	
W50B1120	082 .3	
W50B1140	076 .3	
W50B3100	079 .3	
W50B4100	082 .3	
W50B4110	082 .3	
W50B4120	082 .3	DDC
W50B4150	082 .3	DDC
W50B4160	082 .3	DDC
W50F4000	028 .5	
W50K0400	051 .6	
W50K1000	010 .7	
W50K1010	010 .8	
W50K1210	079 .2	

Component	Page .Col.	Opt.
W50K1220	079 .2	
W50K1230	078 .1	
W50K1240	010 .6	
W50K3200	080 .2	
W50K3210	080 .2	
W50K3220	080 .2	WRAP
W50K3230	080 .2	WRAP
W50K5000	017 .8	
W50K6000	018 .8	
W50K8000	082 .5	
W50K8200	079 .5	
W50K8400	080 .5	
W50K8600	081 .5	
W50M1000	010 .1	
W50M4000	028 .9	
W50M5000	017 .1	
W50M6000	018 .1	
W50Q4000	057 .5	
W50T1000	010 .1	
W50T4000	028 .5	
W50T5000	017 .5	
W50T6000	018 .1	
W50V4000	028 .5	
X40B1100	074 .3	
X40B1110	074 .3	
X40B1120	074 .3	
X40B1130	074 .3	
X40B2120	075 .2	

Component	Page .Col.	Opt.
X40B2130	075 .2	
X40B3100	075 .2	
X40B3110	076 .3	
X40B3200	075 .2	
X40B3210	076 .3	
X40B7110	079 .3	
X40B7120	079 .3	
X40F3000	026 .5	
X40K1010	011 .8	
X40K2000	012 .6	
X40K2010	012 .8	
X40K4000	014 .6	
X40K4010	014 .8	
X40K4200	080 .3	CBA
X40K5000	013 .6	
X40K5010	013 .8	
X40K7100	080 .2	
X40K8000	075 .3	
X40M1000	011 .1	
X40M2000	012 .1	
X40M3000	026 .9	
X40M4000	014 .1	
X40M5000	013 .1	
X40Q3000	058 .4	
X40T1000	011 .1	
X40T2000	012 .1	
X40T3000	026 .5	
X40T4000	014 .1	

Drawing remarks

Tetra Pak

Designer ACH	Date 26/06/2010	Machine CBP 30 Speed 0200	
ECM No 456516	Denomination POSITION SUMMARY	Page Type POSITION SUMMARY	
Company Tetra Pak (Italy)	Document No. 3037928-0002	Doc. type ELD	Version AC	Page 003

This drawing must not without the consent of Tetra Pak be copied, transmitted or disclosed to any third party.

1 | 2 | 3 | 4 | 5 | 6 | 7 | 8 | 9 | 10

Position summary of 3037928 -0003

Component	Page .Col.	Opt.
X40T5000	013 .1	
X40V3000	026 .5	

Component	Page .Col.	Opt.

Component	Page .Col.	Opt.

Component	Page .Col.	Opt.

Drawing remarks

Tetra Pak

Designer ACH	Date 26/06/2010	Machine CBP 30 Speed 0200	
ECM No 456516	Denomination POSITION SUMMARY	Page Type POSITION SUMMARY	
Company Tetra Pak (Italy)	Document No. 3037928-0002	Doc. type ELD	Version AC	Page 004

4 Circuit Diagrams

TechPub_2614345_0108 - 0401_3056480_01.fm

Description

This chapter contains all component drawings, such as programmable logic controller (PLC) modules, terminals, and cables.

TechPub_2614345_0108 - 0401_3056480_01.fm

RELEASED

This drawing must not without the consent of Tetra Pak be copied, transmitted or disclosed to any third party.

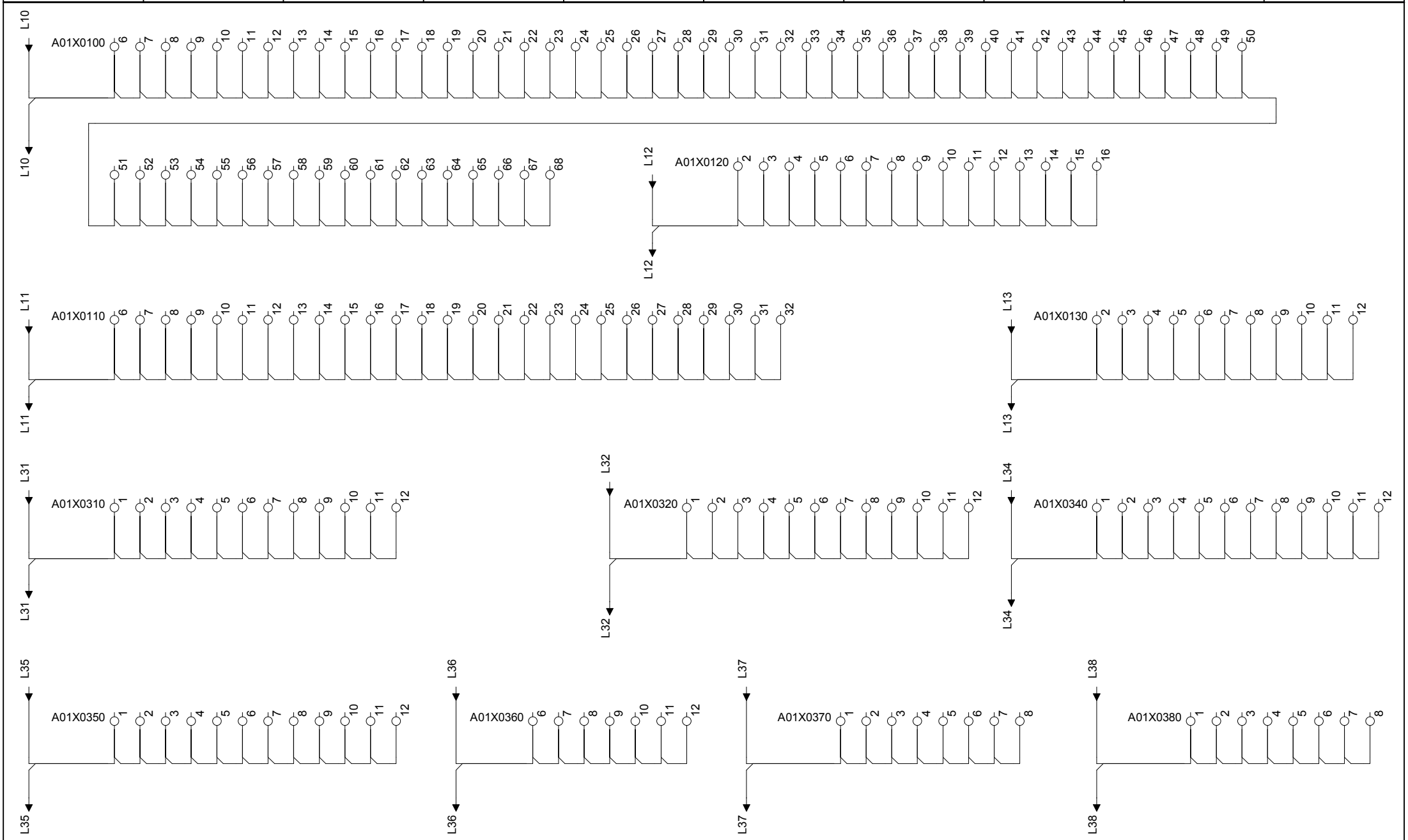

Drawing remarks	Tetra Pak	Designer ACH	Date 26/06/2010	Machine CBP 30 Speed 0200	
		ECM No 456516	Denomination CIRCUIT DIAGRAM	Page Type TERMINALS	
	Company Tetra Pak (Italy)	Document No. 3037928-0003	Doc. type ELD	Version AC	Page 001

RELEASED

This drawing must not without the consent of Tetra Pak be copied, transmitted or disclosed to any third party.

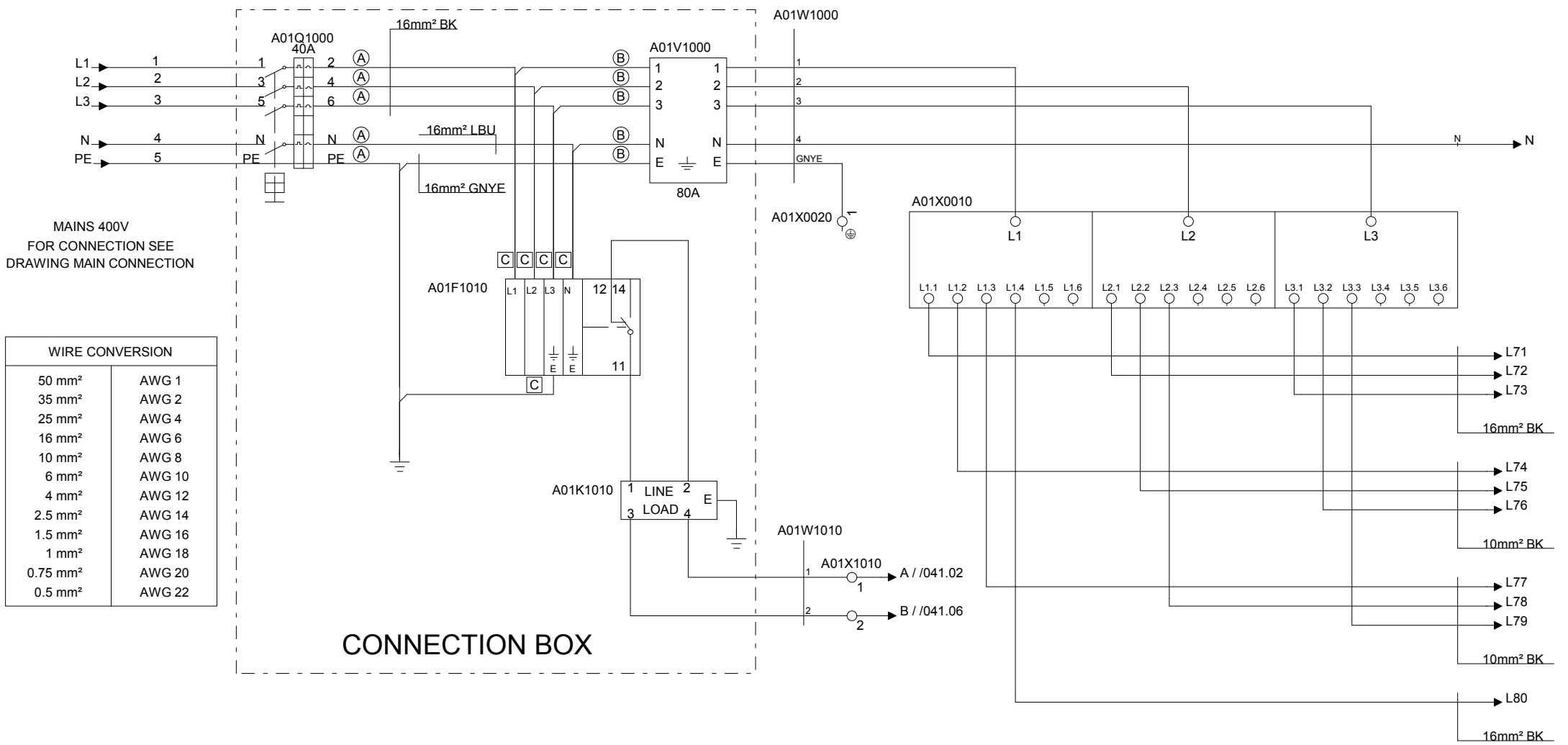

WIRE CONVERSION	
50 mm²	AWG 1
35 mm²	AWG 2
25 mm²	AWG 4
16 mm²	AWG 6
10 mm²	AWG 8
6 mm²	AWG 10
4 mm²	AWG 12
2.5 mm²	AWG 14
1.5 mm²	AWG 16
1 mm²	AWG 18
0.75 mm²	AWG 20
0.5 mm²	AWG 22

FOR TYPE OF WIRING, INSTRUCTIONS ETC.
SEE SPECIFICATION FOR TP SUBSUPPLIERS US 3502.22

WHERE NOTHING ELSE IS SAID
OR LINE SUMMARY IS VALID: 0,75 mmq BU

Drawing remarks

Tetra Pak

Designer	Date	Machine
ACH	26/06/2010	CBP 30 Speed 0200

ECM No	Denomination	Page Type
456516	CIRCUIT DIAGRAM	MAINS CONNECTION

Company	Document No.	Doc. type	Version	Page
Tetra Pak (Italy)	3037928-0003	ELD	AC	002

RELEASED

This drawing must not without the consent of Tetra Pak be copied, transmitted or disclosed to any third party.

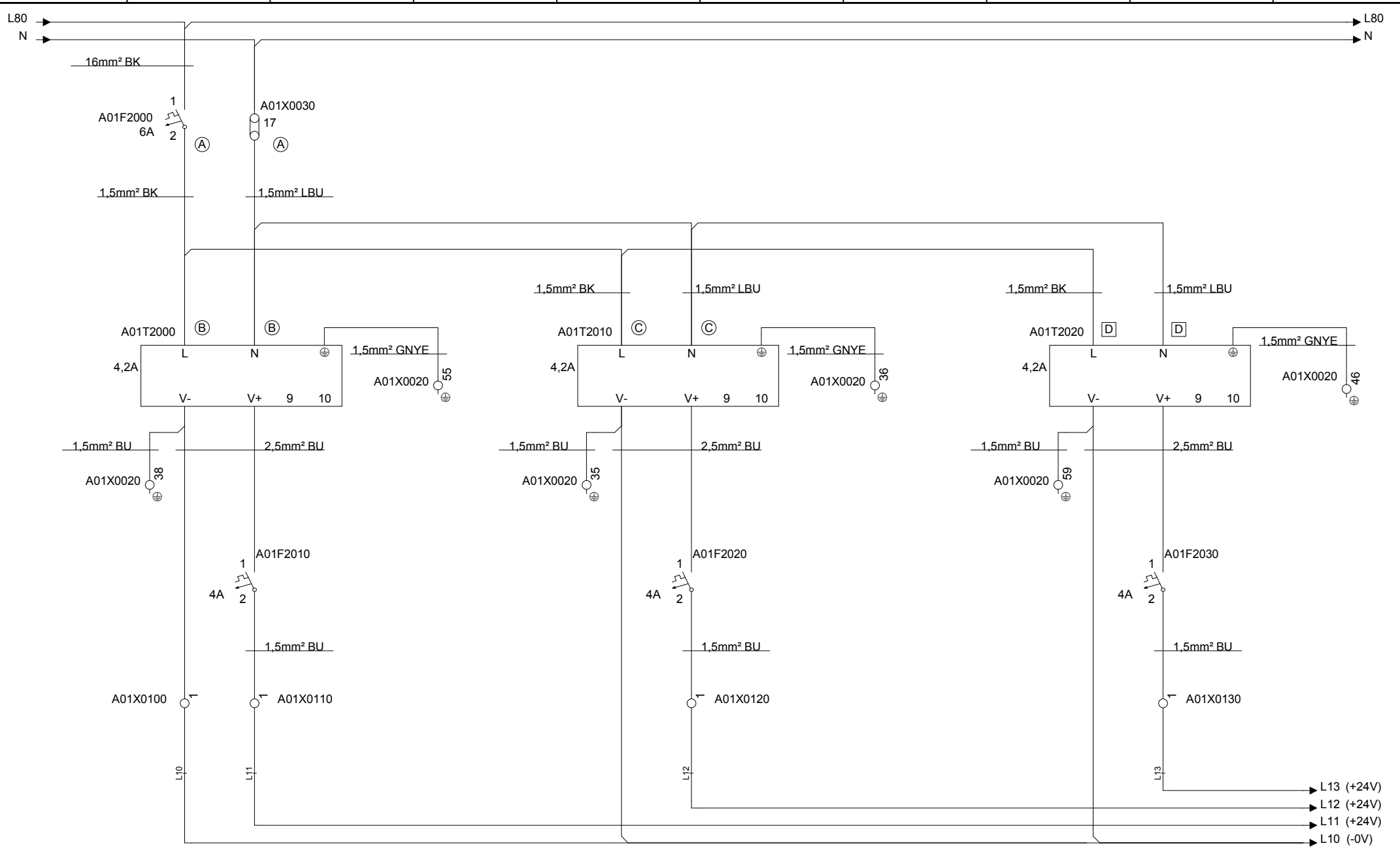

Tetra Pak	Designer ACH	Date 26/06/2010	Machine CBP 30 Speed 0200	
	ECM No 456516	Denomination CIRCUIT DIAGRAM	Page Type 24V POWER SUPPLY	
Drawing remarks	Company Tetra Pak (Italy)	Document No. 3037928-0003	Doc. type ELD	Version AC	Page 003

RELEASED

This drawing must not without the consent of Tetra Pak be copied, transmitted or disclosed to any third party.

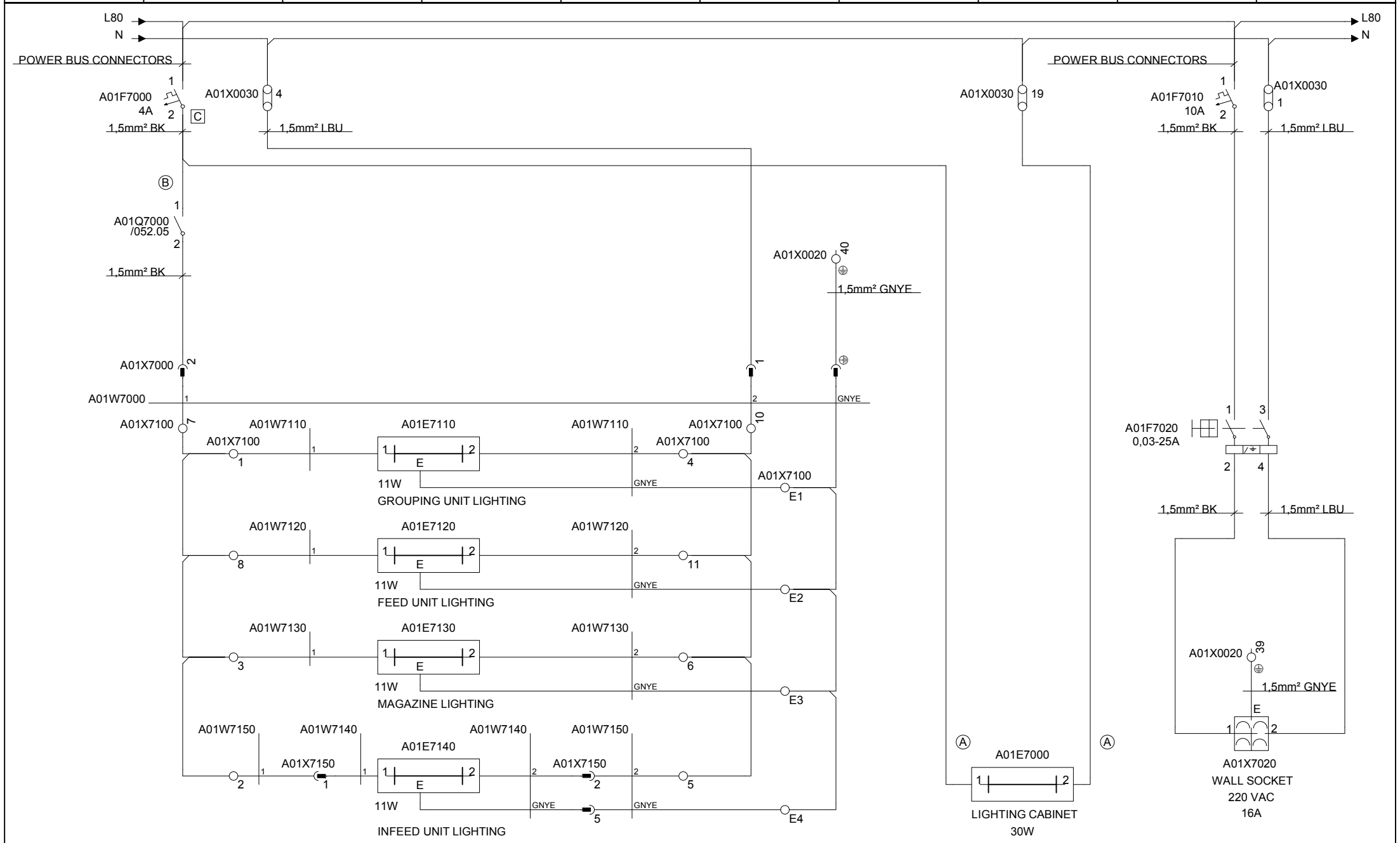

Tetra Pak	Designer ACH	Date 26/06/2010	Machine CBP 30 Speed 0200		
	ECM No 456516	Denomination CIRCUIT DIAGRAM	Page Type LIGHT FIXTURES		
Drawing remarks	Company Tetra Pak (Italy)	Document No. 3037928-0003	Doc. type ELD	Version AC	Page 004

RELEASED

This drawing must not without the consent of Tetra Pak be copied, transmitted or disclosed to any third party.

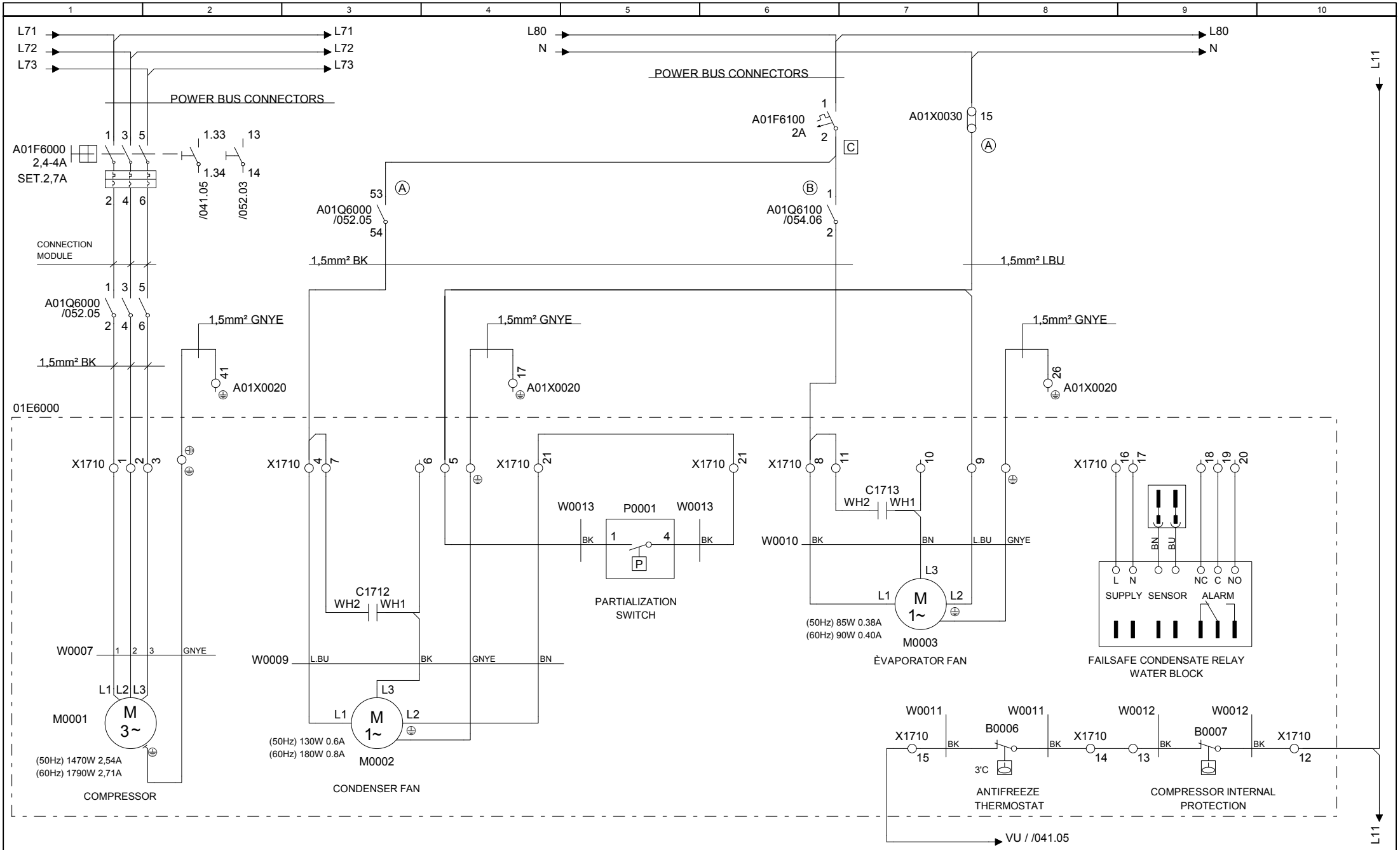

Tetra Pak	Designer ACH	Date 26/06/2010	Machine CBP 30 Speed 0200	
	ECM No 456516	Denomination CIRCUIT DIAGRAM	Page Type ELECTRICAL CABINET COOLING	
Drawing remarks	Company Tetra Pak (Italy)	Document No. 3037928-0003	Doc. type ELD	Version AC	Page 005

This drawing must not without the consent of Tetra Pak be copied, transmitted or disclosed to any third party.

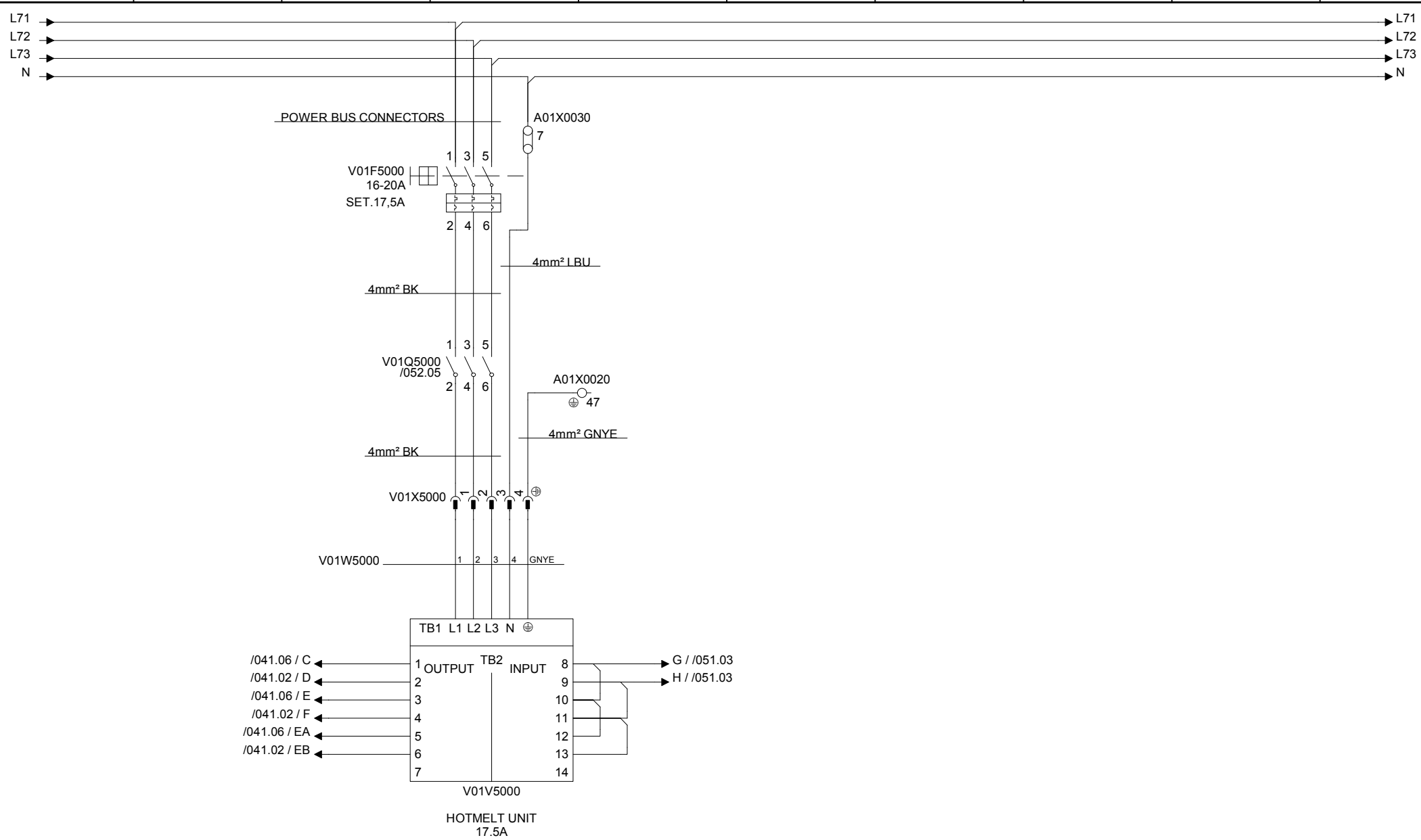

Drawing remarks	Tetra Pak	Designer ACH	Date 26/06/2010	Machine CBP 30 Speed 0200	
		ECM No 456516	Denomination CIRCUIT DIAGRAM	Page Type HOTMELT UNIT	
		Company Tetra Pak (Italy)	Document No. 3037928-0003	Doc. type ELD	Version AC	Page 006

RELEASED

This drawing must not without the consent of Tetra Pak be copied, transmitted or disclosed to any third party.

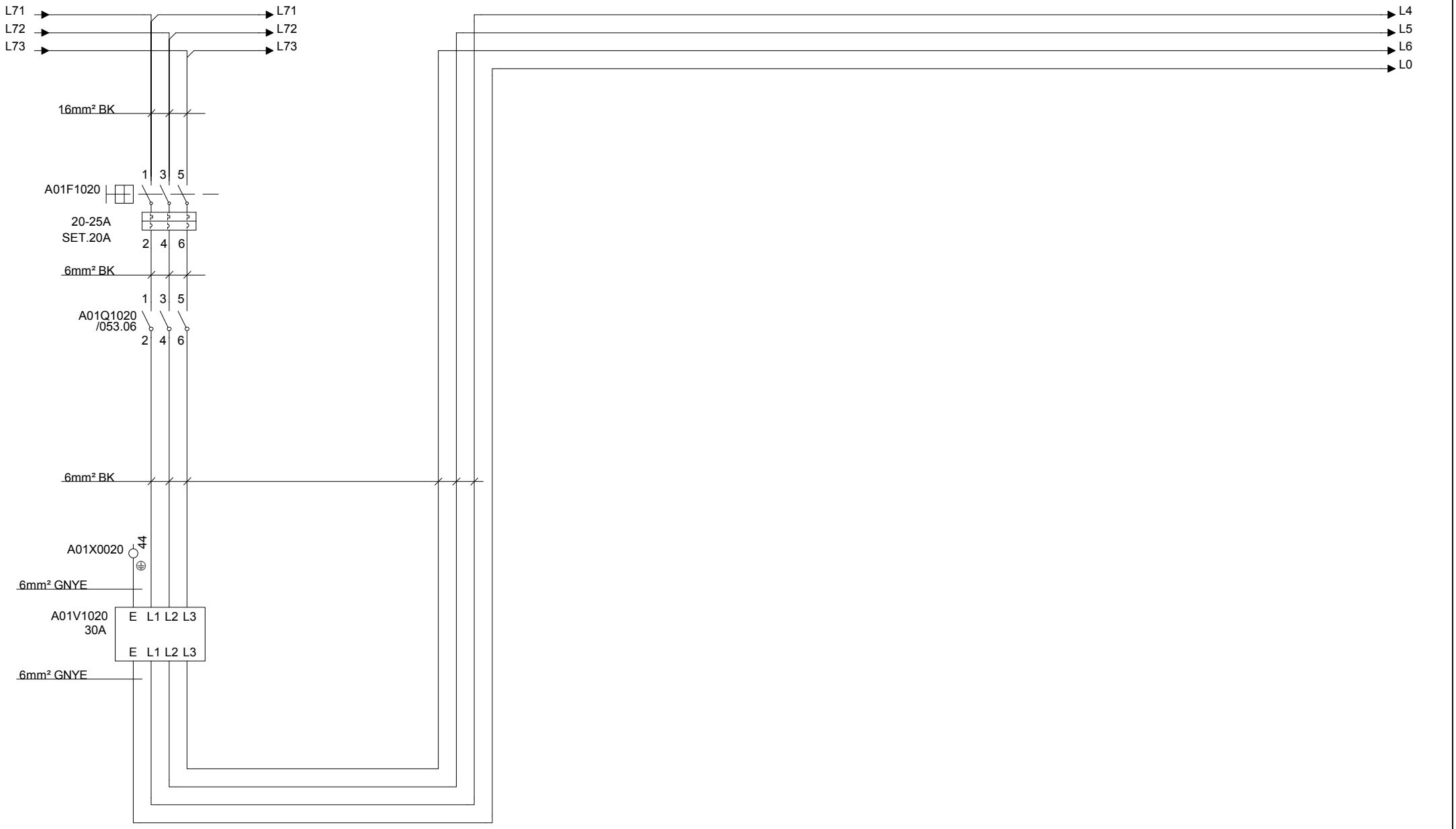

Drawing remarks

Tetra Pak

Designer ACH	Date 26/06/2010	Machine CBP 30 Speed 0200			
ECM No 456516	Denomination CIRCUIT DIAGRAM	Page Type COOLER E.C. & SERVO POWER SUPPLY			
Company Tetra Pak (Italy)	Document No. 3037928-0003	Doc. type ELD	Version AC	Page 007	

RELEASED

This drawing must not without the consent of Tetra Pak be copied, transmitted or disclosed to any third party.

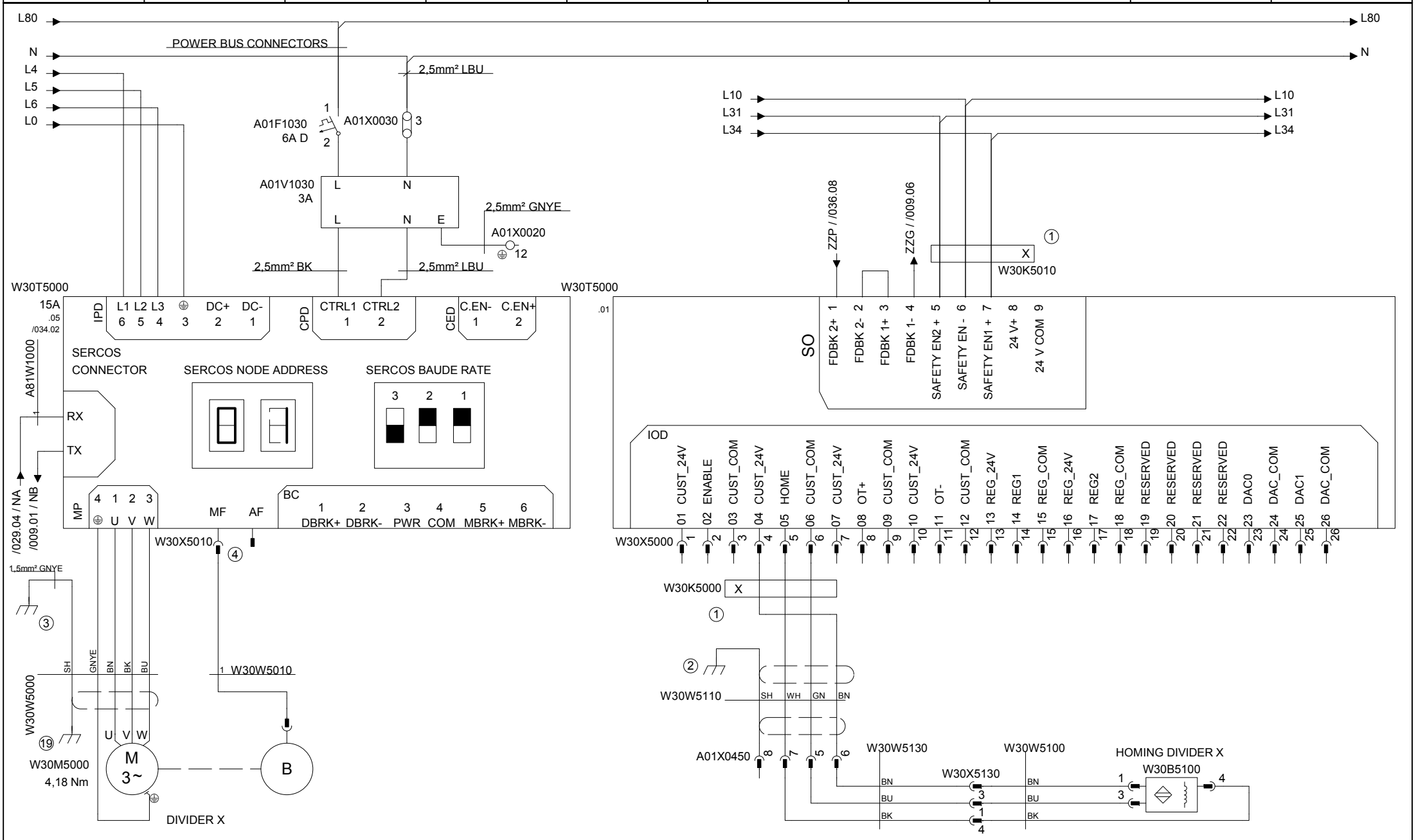

Drawing remarks	Tetra Pak	Designer ACH	Date 26/06/2010	Machine CBP 30 Speed 0200	
		ECM No 456516	Denomination CIRCUIT DIAGRAM	Page Type DIVIDER X SERVO MOTOR	
		Company Tetra Pak (Italy)	Document No. 3037928-0003	Doc. type ELD	Version AC	Page 008

RELEASED

This drawing must not without the consent of Tetra Pak be copied, transmitted or disclosed to any third party.

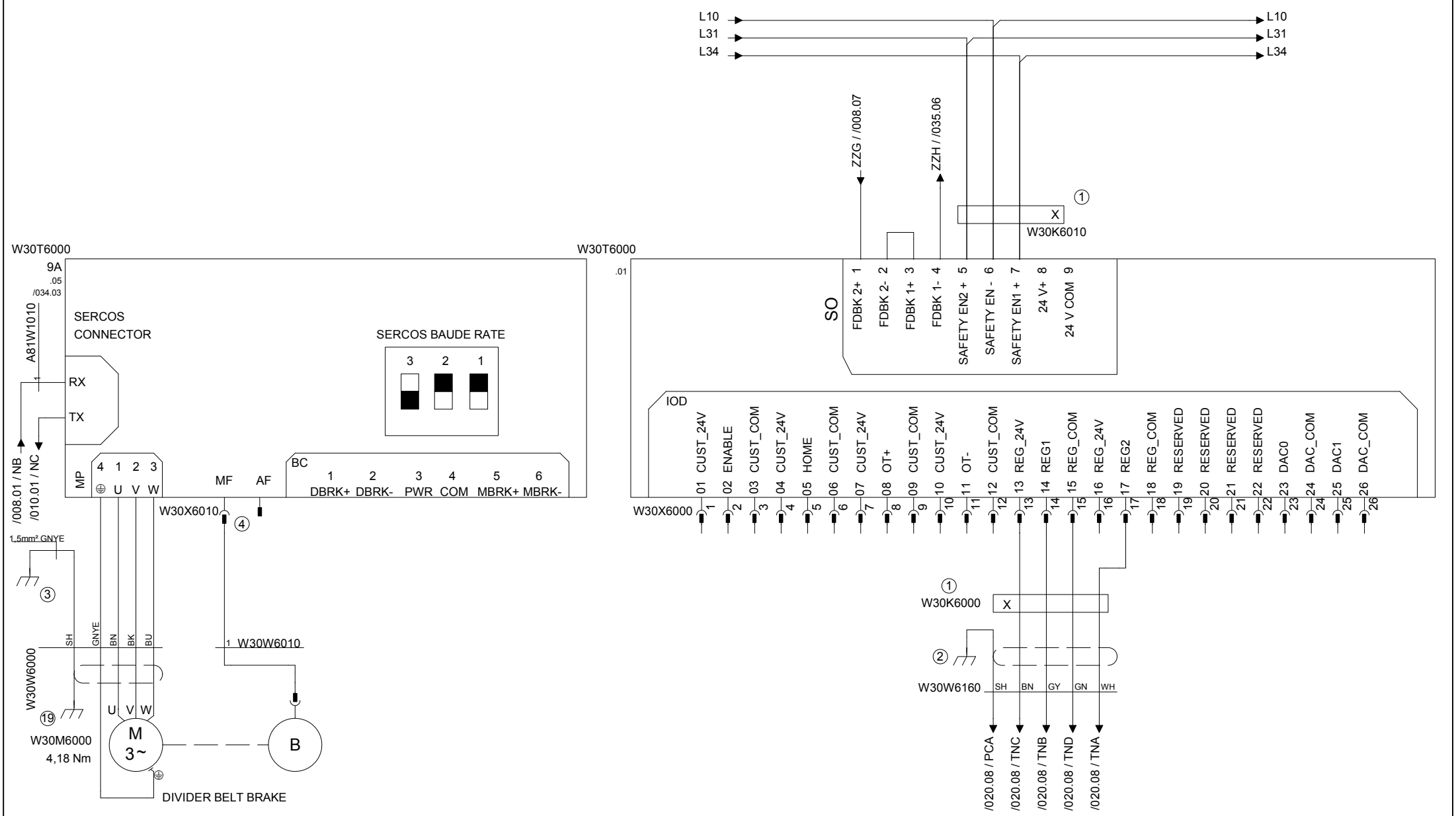

Drawing remarks	Tetra Pak	Designer ACH	Date 26/06/2010	Machine CBP 30 Speed 0200	
		ECM No 456516	Denomination CIRCUIT DIAGRAM	Page Type DIVIDER BELT BRAKE SERVO MOTOR	
		Company Tetra Pak (Italy)	Document No. 3037928-0003	Doc. type ELD	Version AC	Page 009

RELEASED

This drawing must not without the consent of Tetra Pak be copied, transmitted or disclosed to any third party.

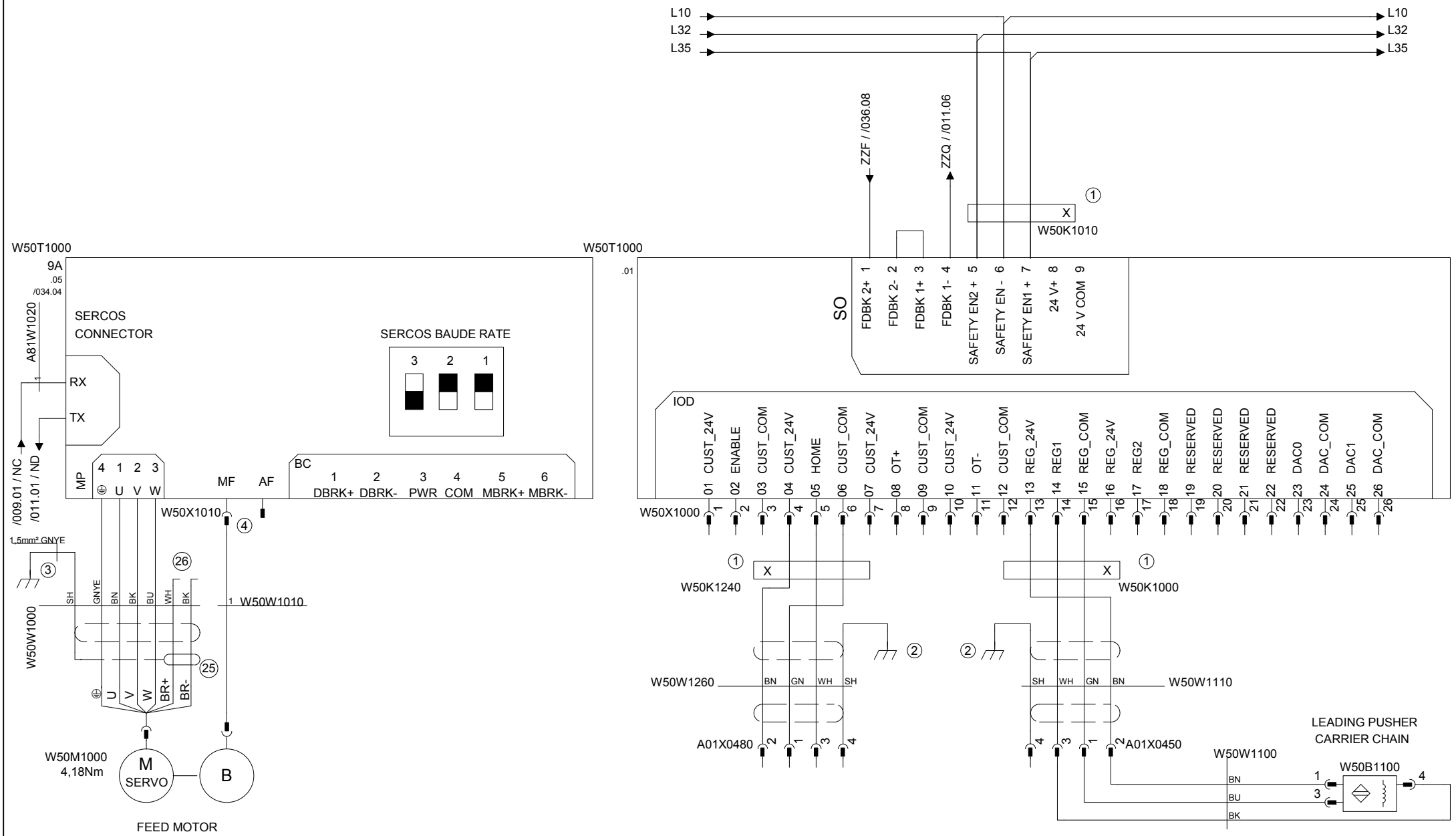

Drawing remarks	Tetra Pak	Designer ACH	Date 26/06/2010	Machine CBP 30 Speed 0200		
		ECM No 456516	Denomination CIRCUIT DIAGRAM	Page Type FEED SERVO MOTOR		
		Company Tetra Pak (Italy)	Document No. 3037928-0003	Doc. type ELD	Version AC	Page 010

RELEASED

This drawing must not without the consent of Tetra Pak be copied, transmitted or disclosed to any third party.



Drawing remarks	Tetra Pak	Designer ACH	Date 26/06/2010	Machine CBP 30 Speed 0200
		ECM No 456516	Denomination CIRCUIT DIAGRAM	Page Type INDEXING CONVEYOR SERVO MOTOR
		Company Tetra Pak (Italy)	Document No. 3037928-0003	Doc. type ELD / Version AC / Page 011

This drawing must not without the consent of Tetra Pak be copied, transmitted or disclosed to any third party.

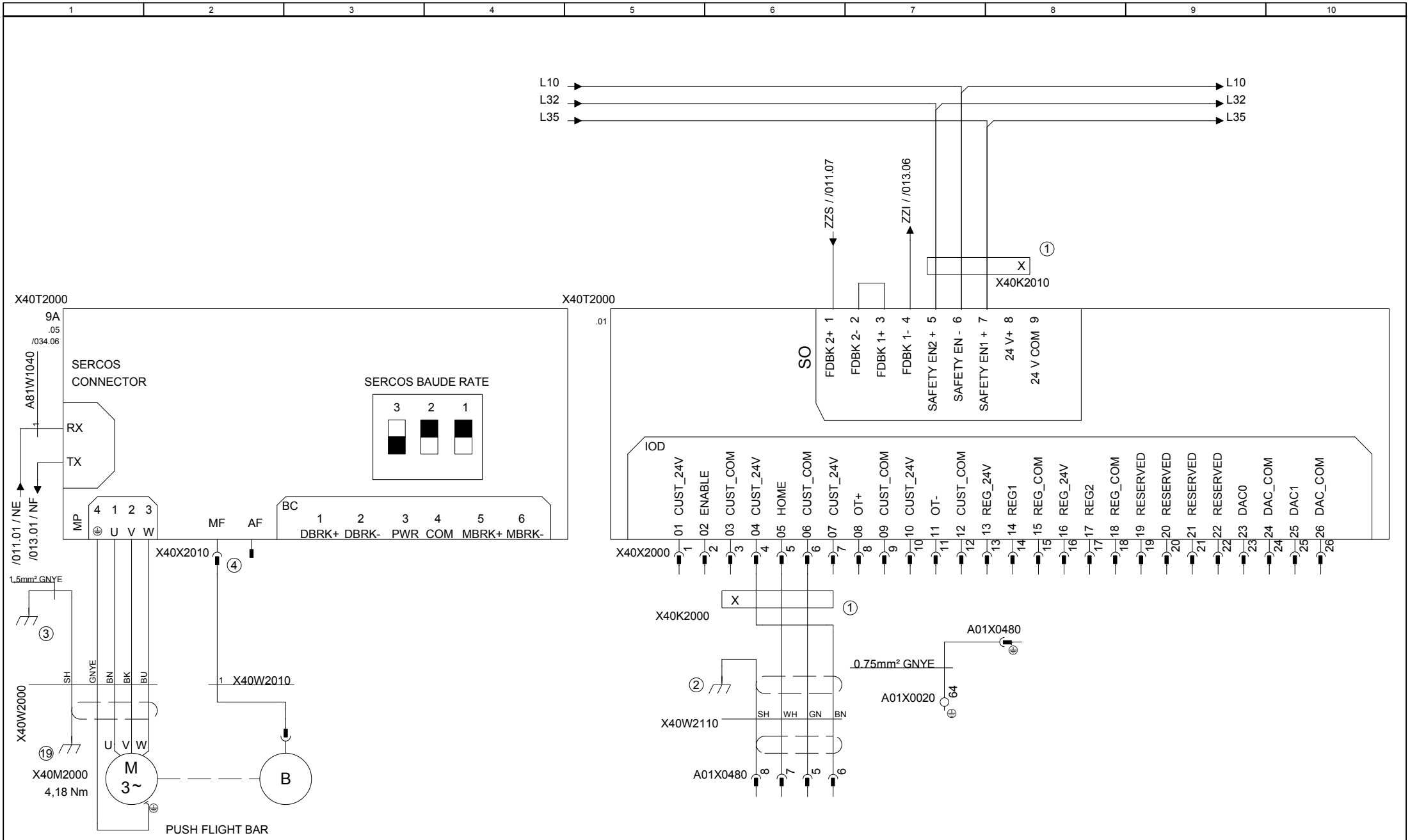

Drawing remarks	Tetra Pak	Designer ACH	Date 26/06/2010	Machine CBP 30 Speed 0200	
		ECM No 456516	Denomination CIRCUIT DIAGRAM	Page Type PUSH FLIGHT BAR SERVO MOTOR	
	Company Tetra Pak (Italy)	Document No. 3037928-0003	Doc. type ELD	Version AC	Page 012

This drawing must not without the consent of Tetra Pak
be copied, transmitted or disclosed to any third party.

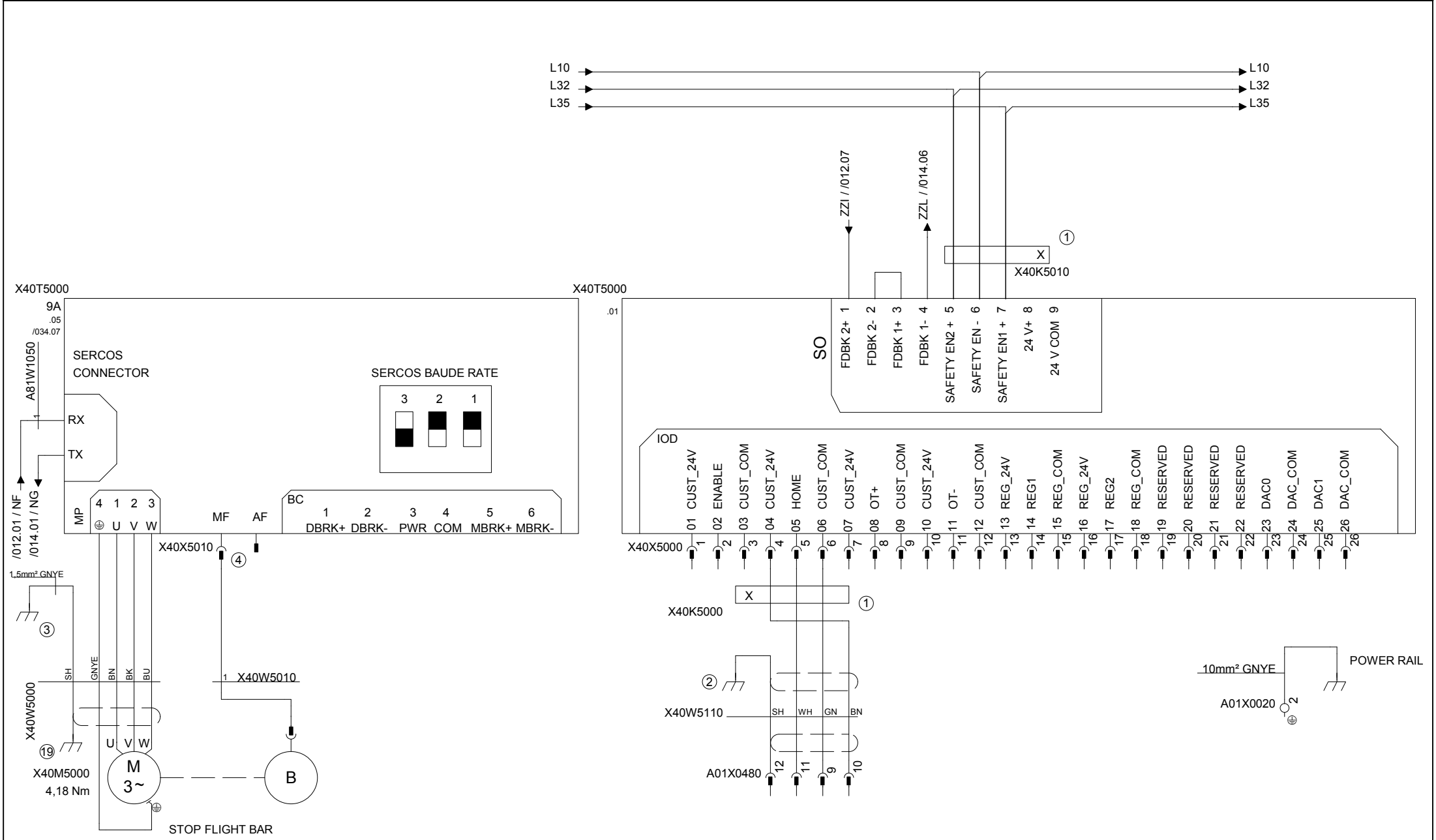

Drawing remarks	Tetra Pak	Designer ACH	Date 26/06/2010	Machine CBP 30 Speed 0200	
		ECM No 456516	Denomination CIRCUIT DIAGRAM	Page Type STOP FLIGHT BAR SERVO MOTOR	
	Company Tetra Pak (Italy)	Document No. 3037928-0003	Doc. type ELD	Version AC	Page 013

RELEASED

This drawing must not without the consent of Tetra Pak
be copied, transmitted or disclosed to any third party.

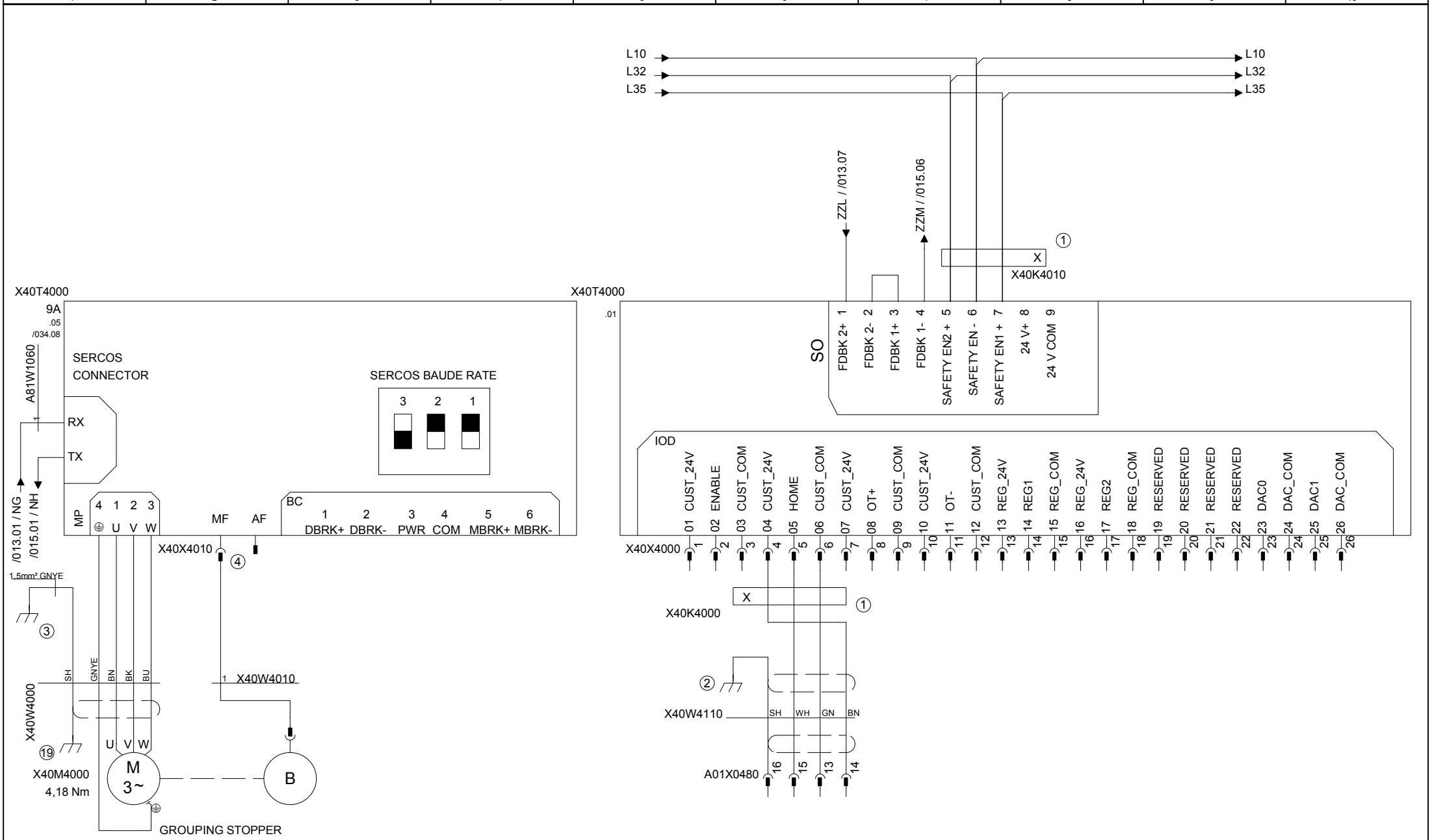

Drawing remarks	Tetra Pak	Designer ACH	Date 26/06/2010	Machine CBP 30 Speed 0200
		ECM No 456516	Denomination CIRCUIT DIAGRAM	Page Type GROUPING STOPPER SERVO MOTOR
	Company Tetra Pak (Italy)	Document No. 3037928-0003	Doc. type ELD	Version AC	Page 014

RELEASED

This drawing must not without the consent of Tetra Pak be copied, transmitted or disclosed to any third party.

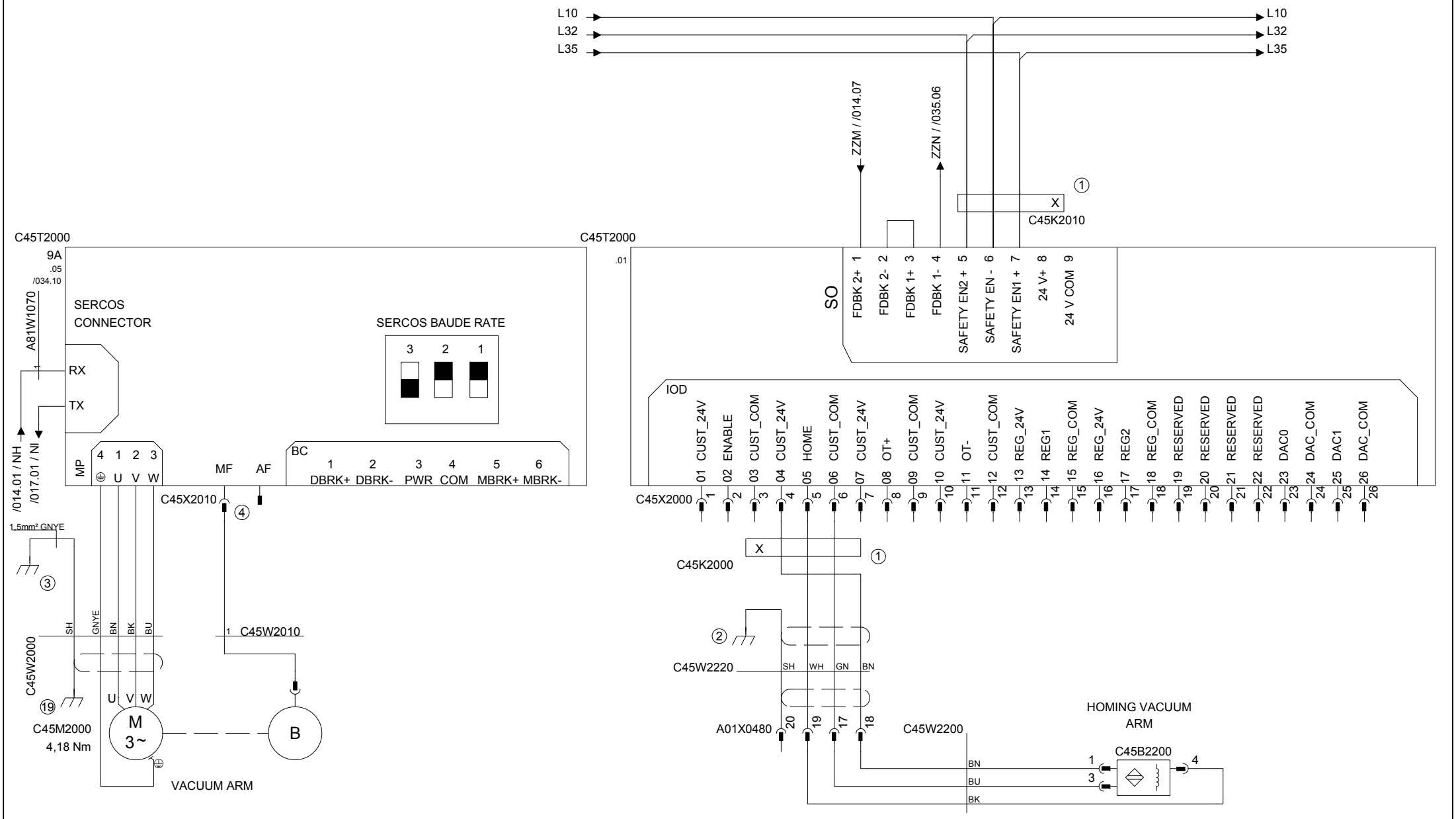

Drawing remarks	Tetra Pak	Designer ACH	Date 26/06/2010	Machine CBP 30 Speed 0200	
		ECM No 456516	Denomination CIRCUIT DIAGRAM	Page Type VACUUM ARM SERVO MOTOR	
	Company Tetra Pak (Italy)	Document No. 3037928-0003	Doc. type ELD	Version AC	Page 015

RELEASED

This drawing must not without the consent of Tetra Pak be copied, transmitted or disclosed to any third party.

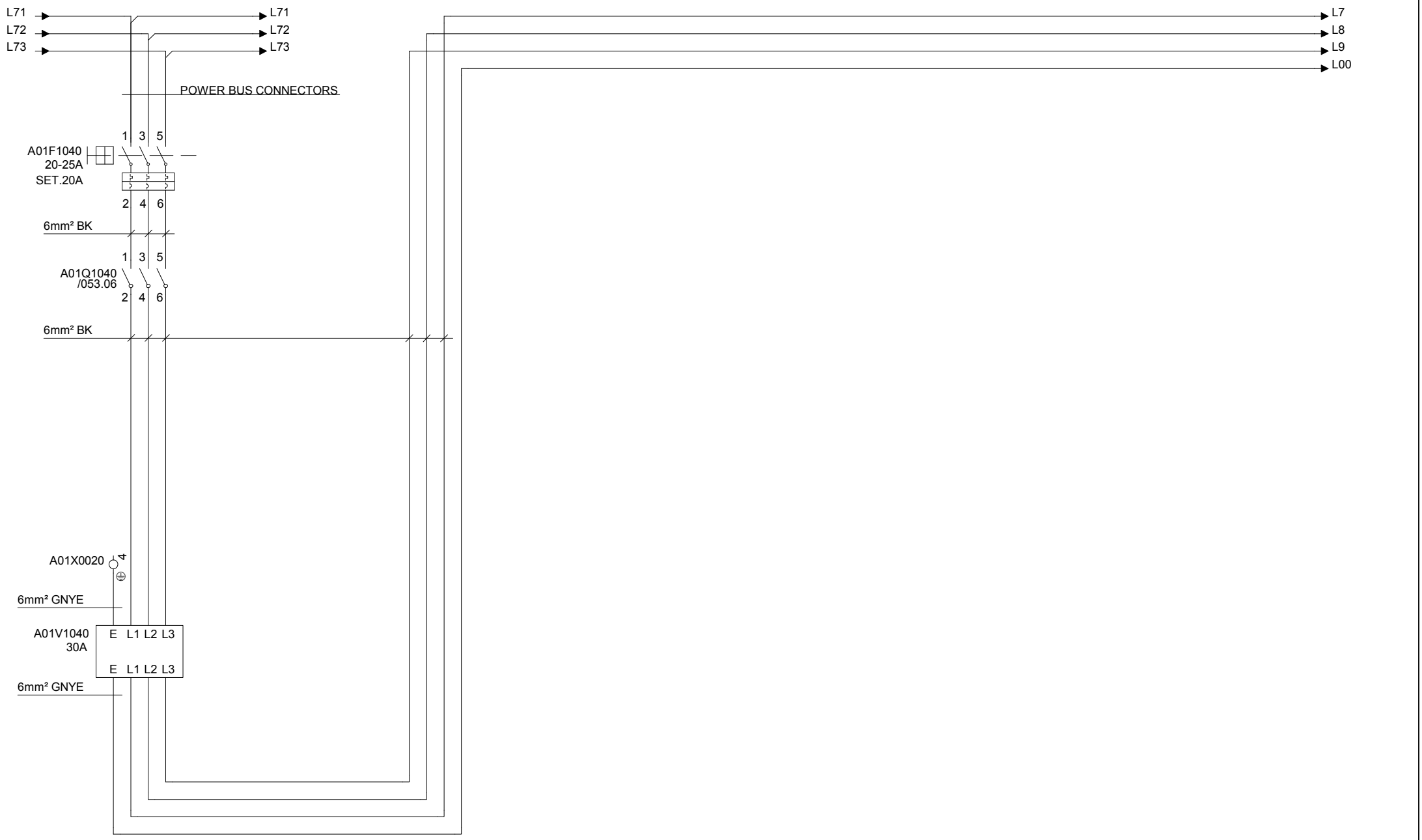

Drawing remarks

Tetra Pak

Designer ACH	Date 26/06/2010	Machine CBP 30 Speed 0200			
ECM No 456516	Denomination CIRCUIT DIAGRAM	Page Type SERVO POWER SUPPLY			
Company Tetra Pak (Italy)	Document No. 3037928-0003	Doc. type ELD	Version AC	Page 016	

RELEASED

This drawing must not without the consent of Tetra Pak be copied, transmitted or disclosed to any third party.

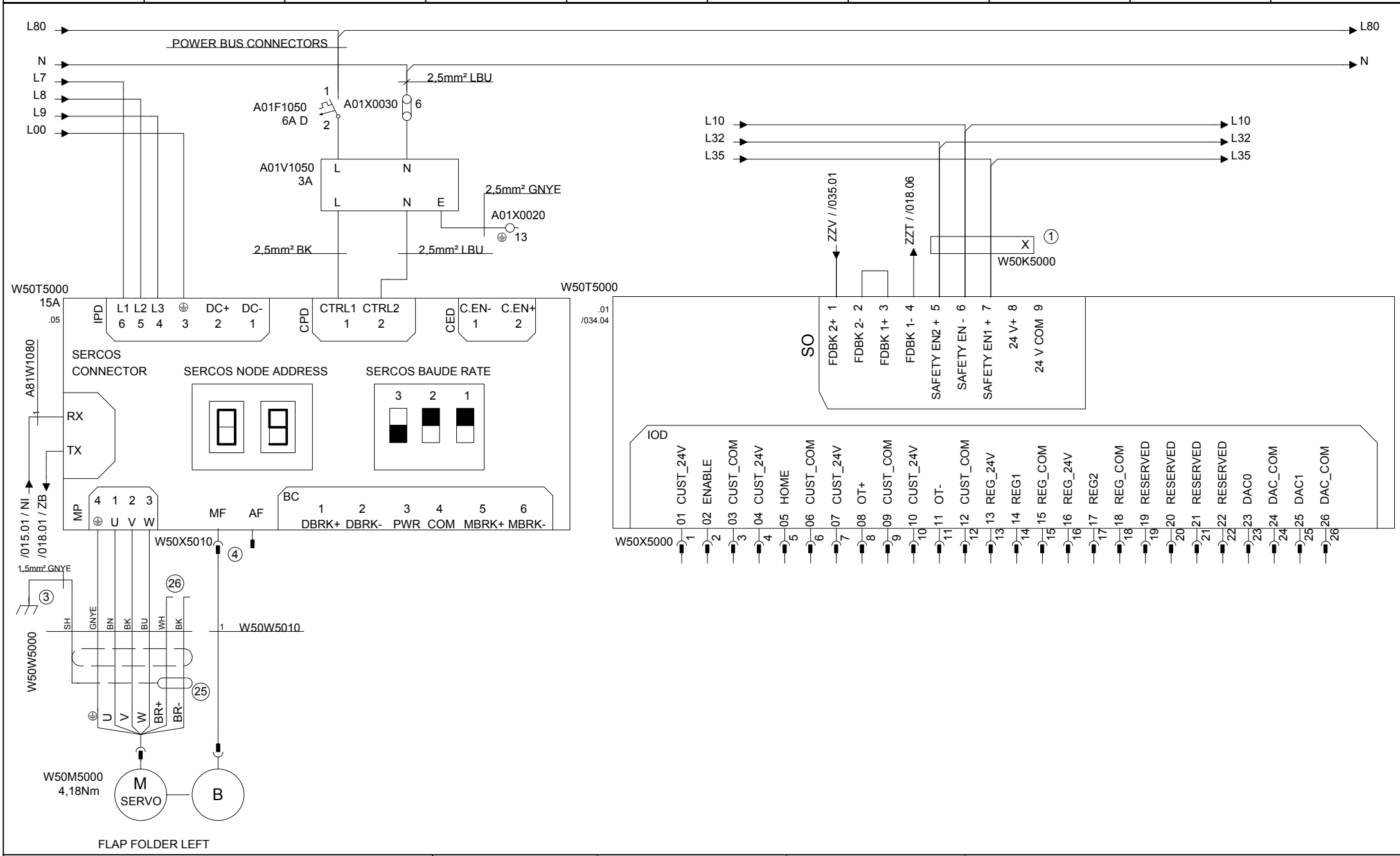

FLAP FOLDER LEFT

Tetra Pak	Designer ACH	Date 26/06/2010	Machine CBP 30 Speed 0200	
	ECM No 456516	Denomination CIRCUIT DIAGRAM	Page Type FLAP FOLDER LEFT SERVO MOTOR	
Drawing remarks	Company Tetra Pak (Italy)	Document No. 3037928-0003	Doc. type ELD	Version AC	Page 017

RELEASED

This drawing must not without the consent of Tetra Pak be copied, transmitted or disclosed to any third party.

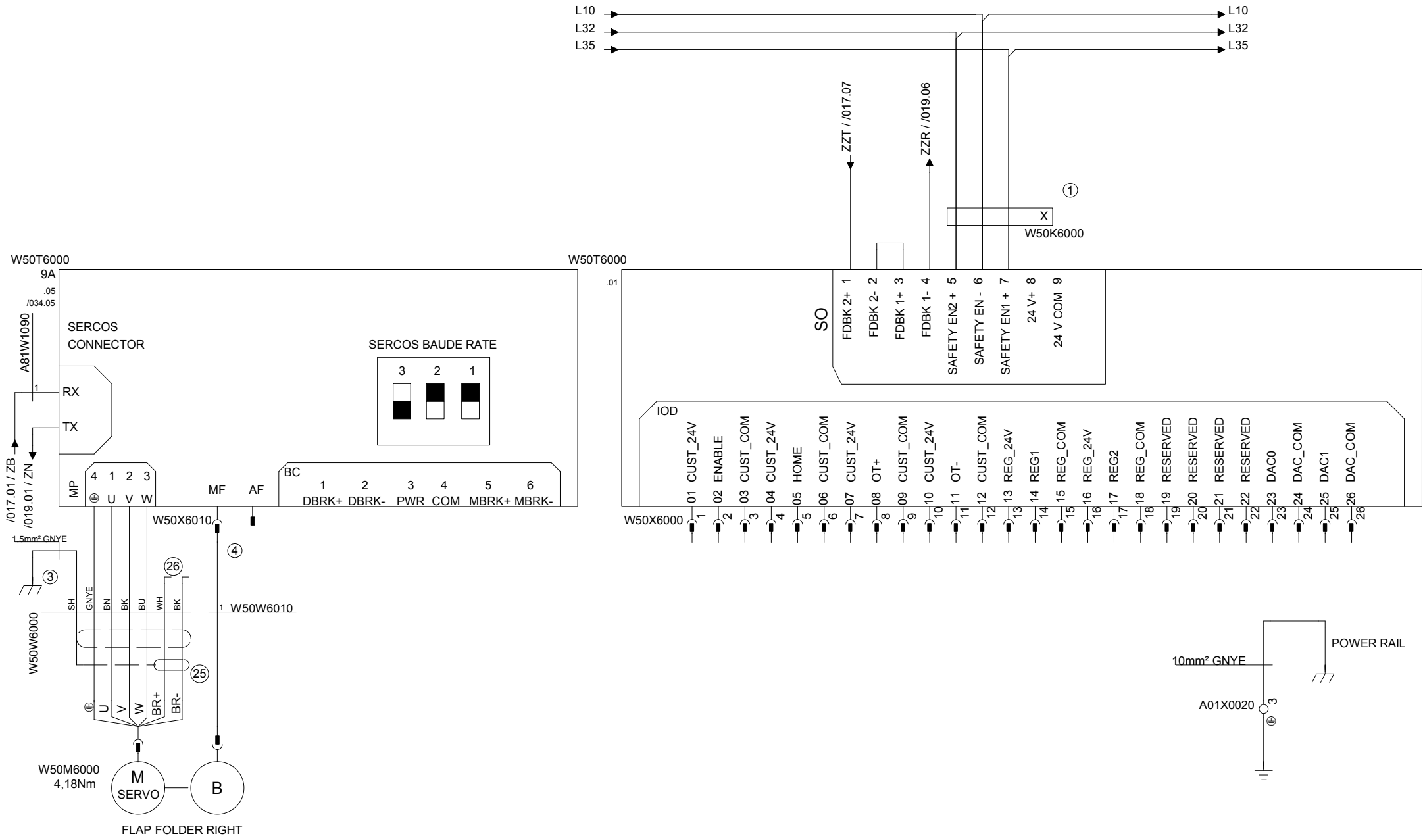

Drawing remarks	Tetra Pak	Designer ACH	Date 26/06/2010	Machine CBP 30 Speed 0200	
		ECM No 456516	Denomination CIRCUIT DIAGRAM	Page Type FLAP FOLDER RIGHT SERVO MOTOR	
		Company Tetra Pak (Italy)	Document No. 3037928-0003	Doc. type ELD	Version AC	Page 018

RELEASED

This drawing must not without the consent of Tetra Pak be copied, transmitted or disclosed to any third party.

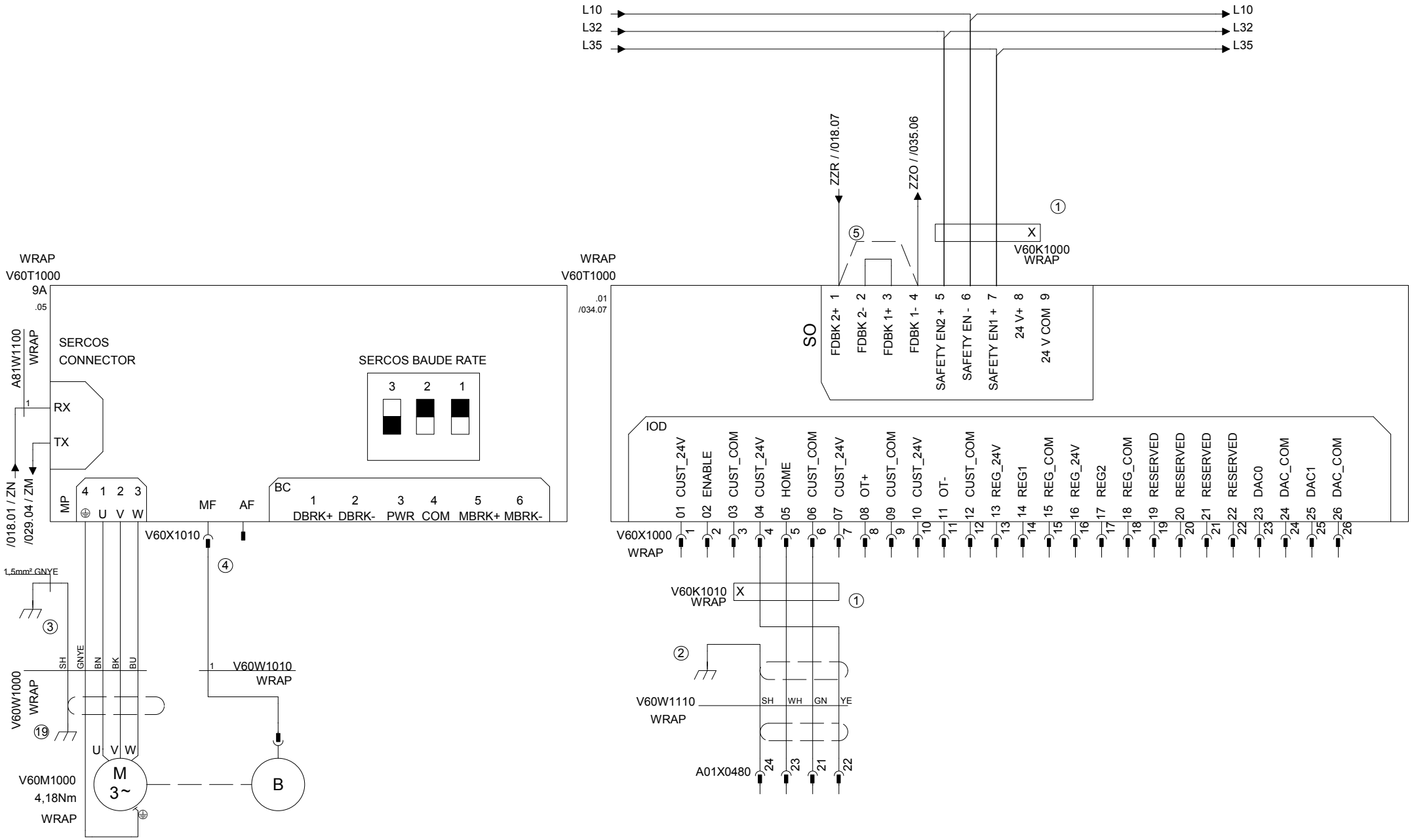

Drawing remarks	Tetra Pak	Designer ACH	Date 26/06/2010	Machine CBP 30 Speed 0200	
		ECM No 456516	Denomination CIRCUIT DIAGRAM	Page Type WRAP SERVO MOTOR	
	Company Tetra Pak (Italy)	Document No. 3037928-0003	Doc. type ELD	Version AC	Page 019

RELEASED

This drawing must not without the consent of Tetra Pak be copied, transmitted or disclosed to any third party.

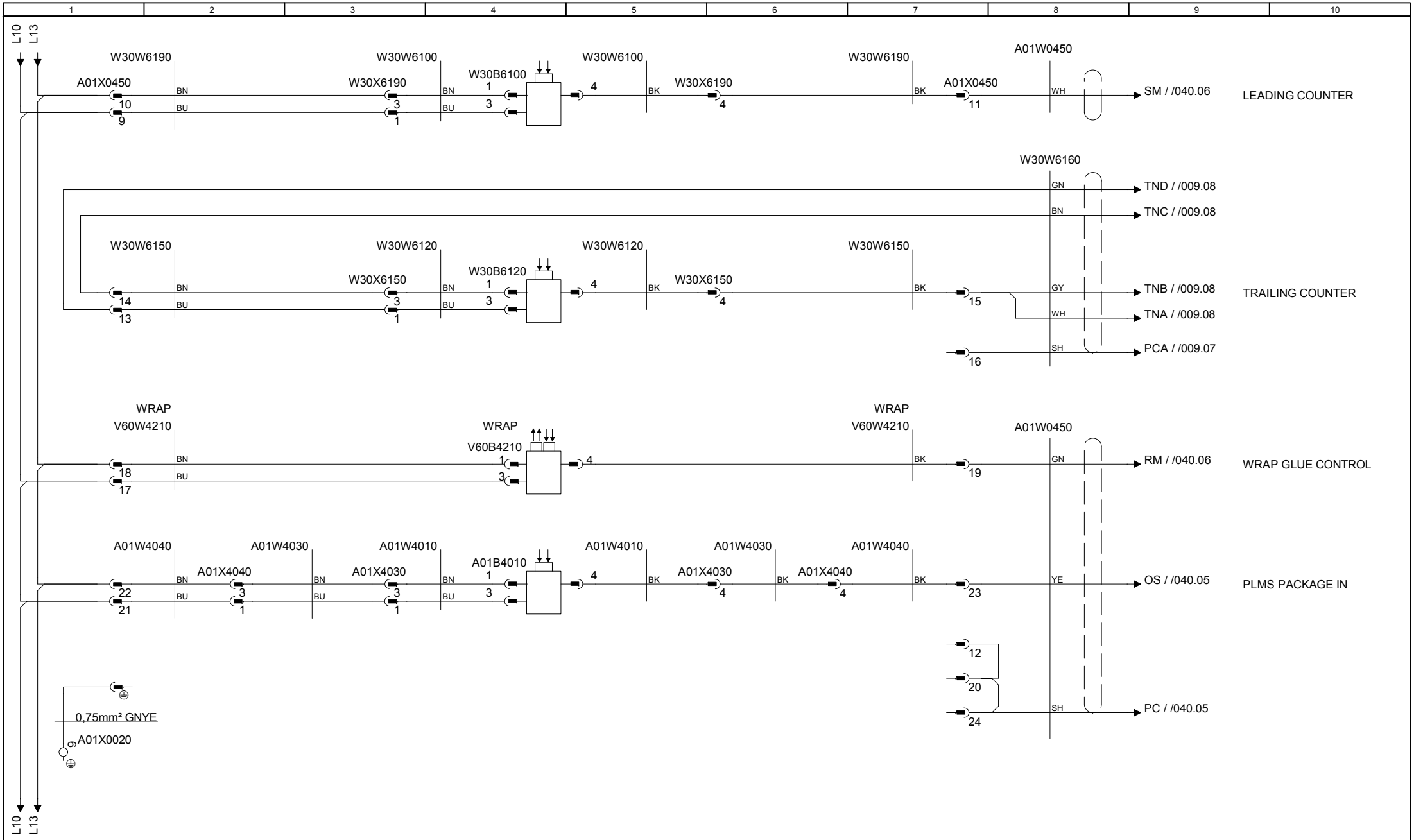

Drawing remarks	Tetra Pak	Designer ACH	Date 26/06/2010	Machine CBP 30 Speed 0200	
		ECM No 456516	Denomination CIRCUIT DIAGRAM	Page Type DRIVE UNIT SERVO	
	Company Tetra Pak (Italy)	Document No. 3037928-0003	Doc. type ELD	Version AC	Page 020

RELEASED

This drawing must not without the consent of Tetra Pak
be copied, transmitted or disclosed to any third party.

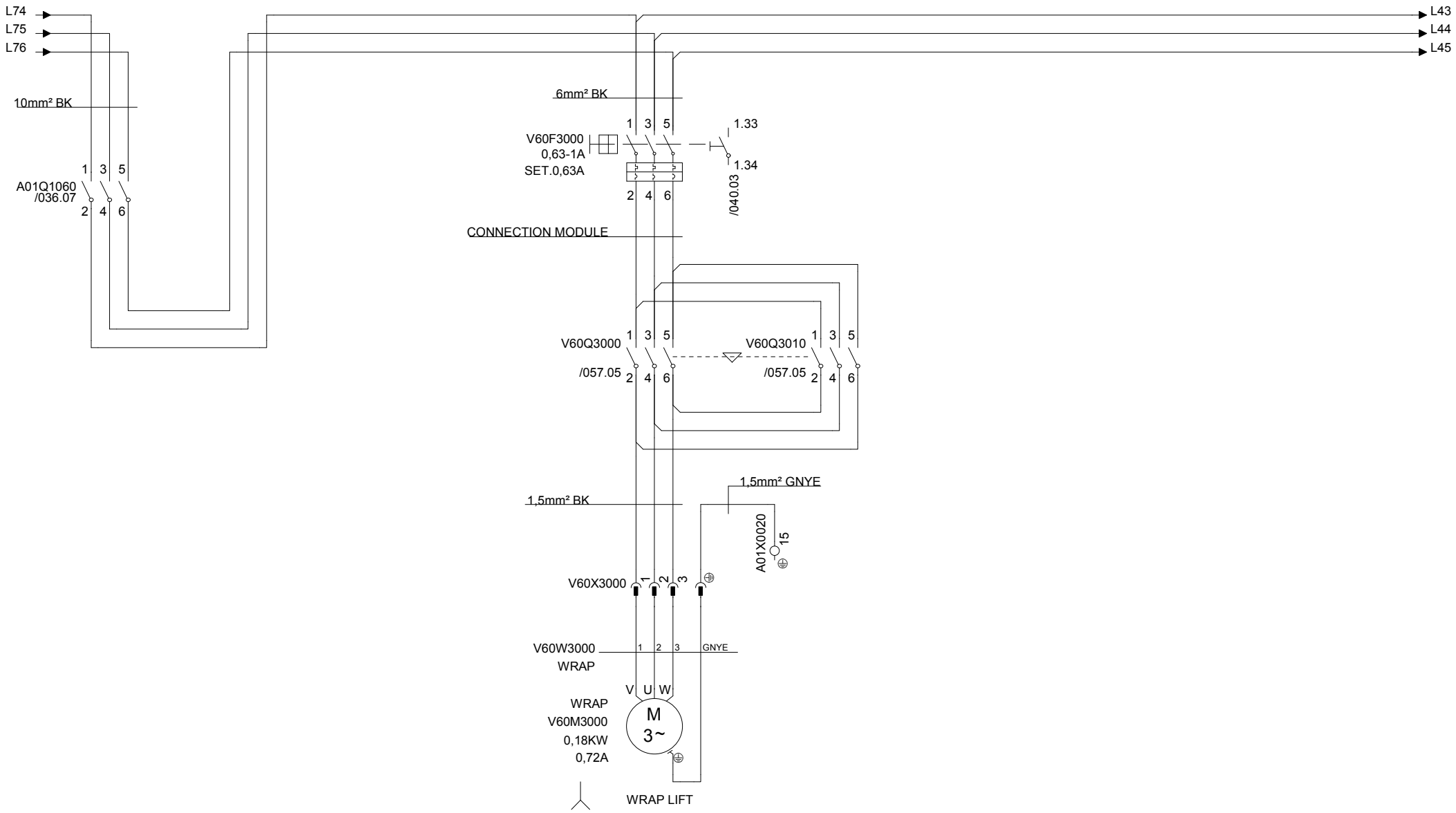

Drawing remarks	Tetra Pak	Designer ACH	Date 26/06/2010	Machine CBP 30 Speed 0200	
		ECM No 456516	Denomination CIRCUIT DIAGRAM	Page Type WRAP LIFT MOTOR	
	Company Tetra Pak (Italy)	Document No. 3037928-0003	Doc. type ELD	Version AC	Page 021

RELEASED

This drawing must not without the consent of Tetra Pak be copied, transmitted or disclosed to any third party.

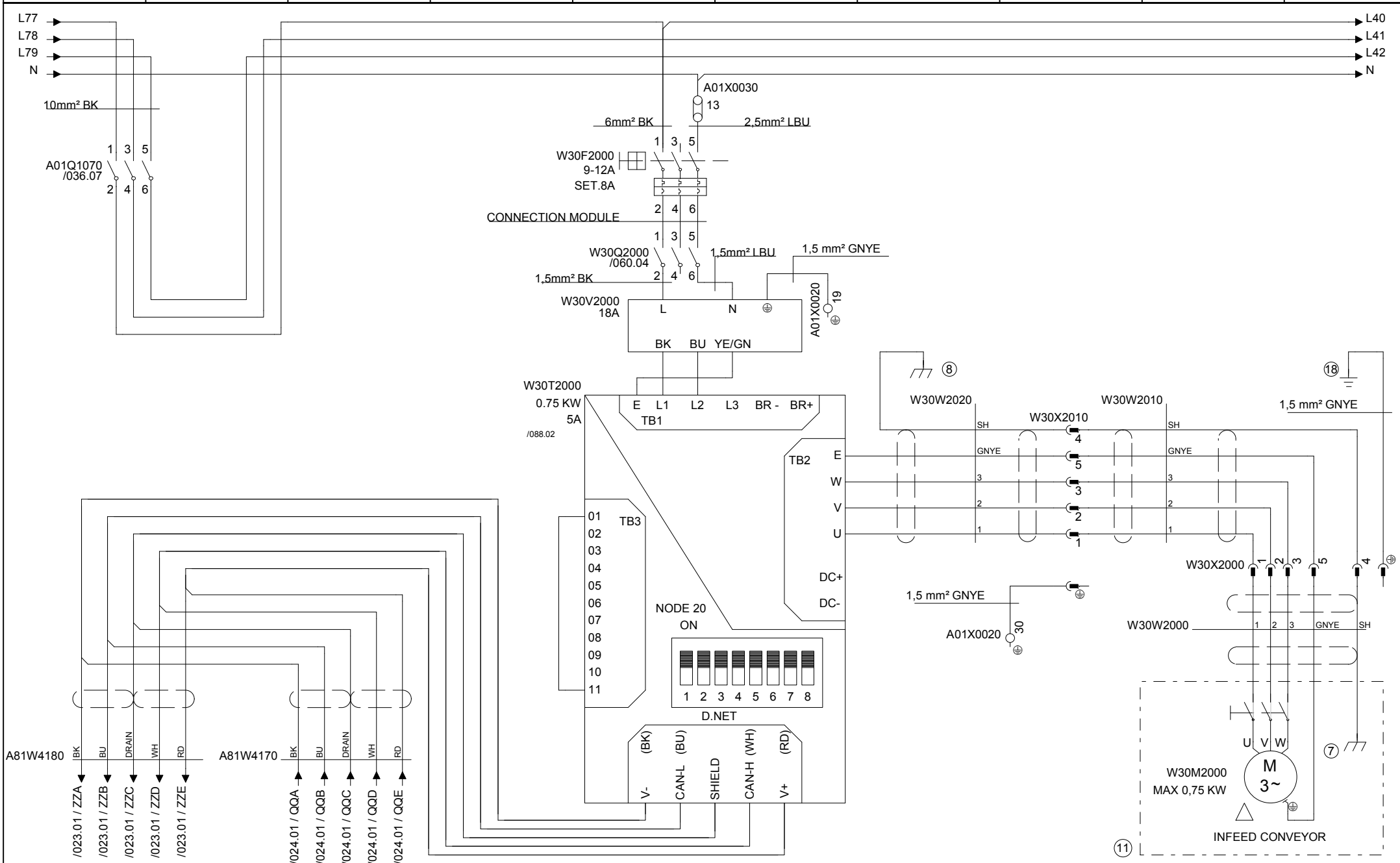

Drawing remarks	Tetra Pak	Designer ACH	Date 26/06/2010	Machine CBP 30 Speed 0200	
		ECM No 456516	Denomination CIRCUIT DIAGRAM	Page Type INFEED CONVEYOR MOTOR	
	Company Tetra Pak (Italy)	Document No. 3037928-0003	Doc. type ELD	Version AC	Page 022

RELEASED

This drawing must not without the consent of Tetra Pak be copied, transmitted or disclosed to any third party.

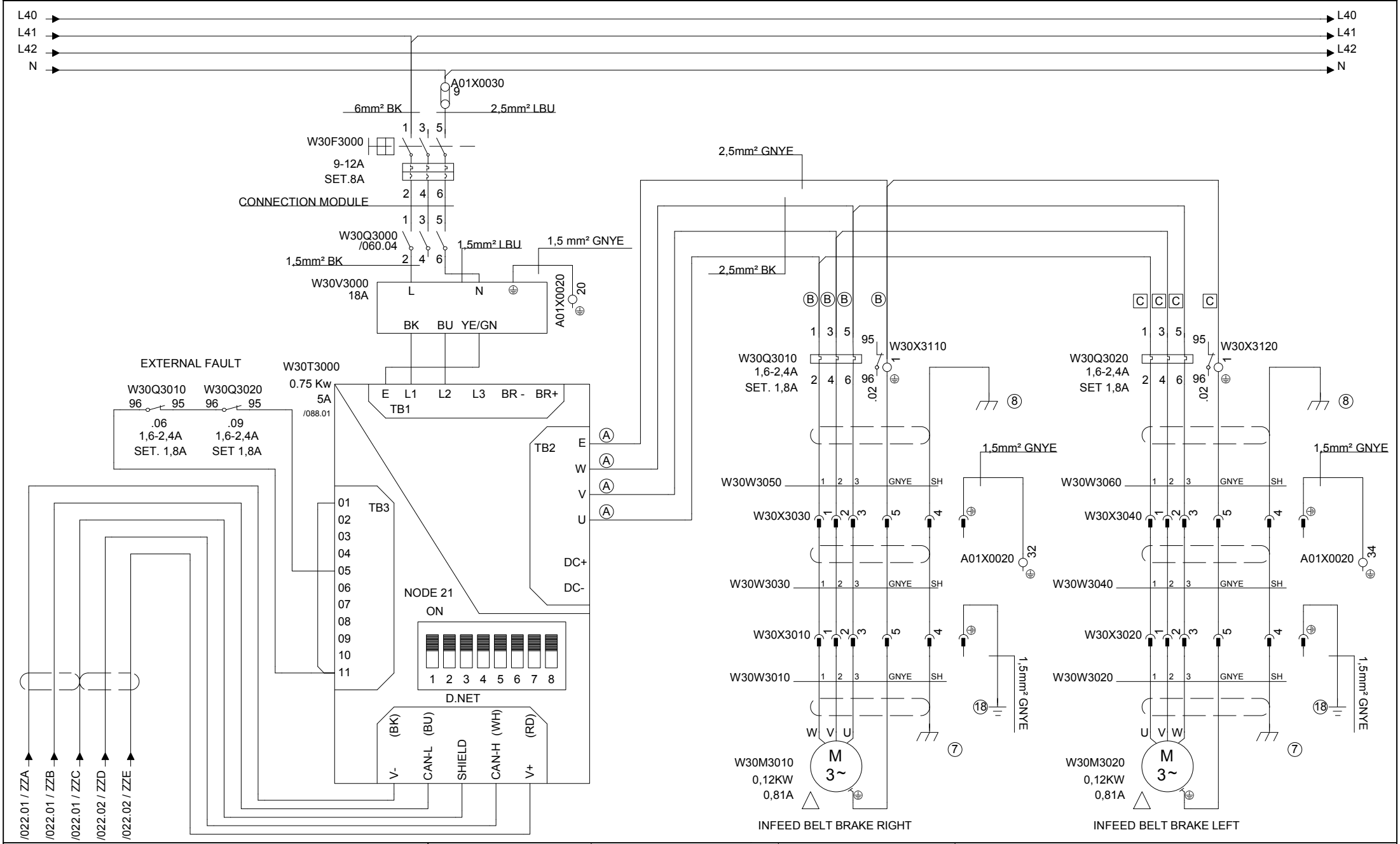

Drawing remarks	Tetra Pak	Designer ACH	Date 26/06/2010	Machine CBP 30 Speed 0200
		ECM No 456516	Denomination CIRCUIT DIAGRAM	Page Type INFEED BELT BRAKE MOTORS
		Company Tetra Pak (Italy)	Document No. 3037928-0003	Doc. type ELD / Version AC / Page 023

RELEASED

This drawing must not without the consent of Tetra Pak be copied, transmitted or disclosed to any third party.

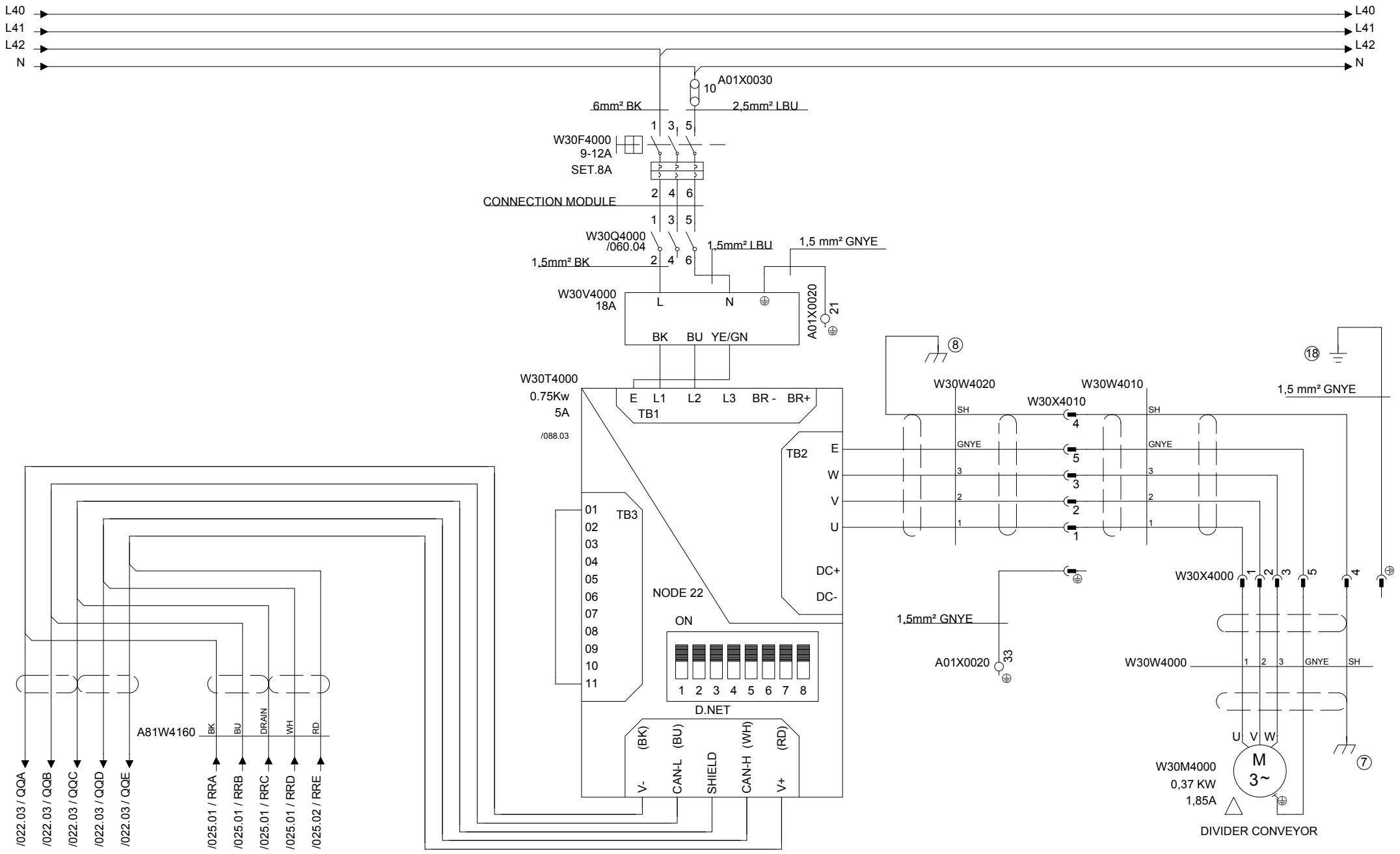

Drawing remarks	Tetra Pak	Designer ACH	Date 26/06/2010	Machine CBP 30 Speed 0200
		ECM No 456516	Denomination CIRCUIT DIAGRAM	Page Type DIVIDER CONVEYOR MOTOR
		Company Tetra Pak (Italy)	Document No. 3037928-0003	Doc. type ELD / Version AC / Page 024

RELEASED

This drawing must not without the consent of Tetra Pak be copied, transmitted or disclosed to any third party.

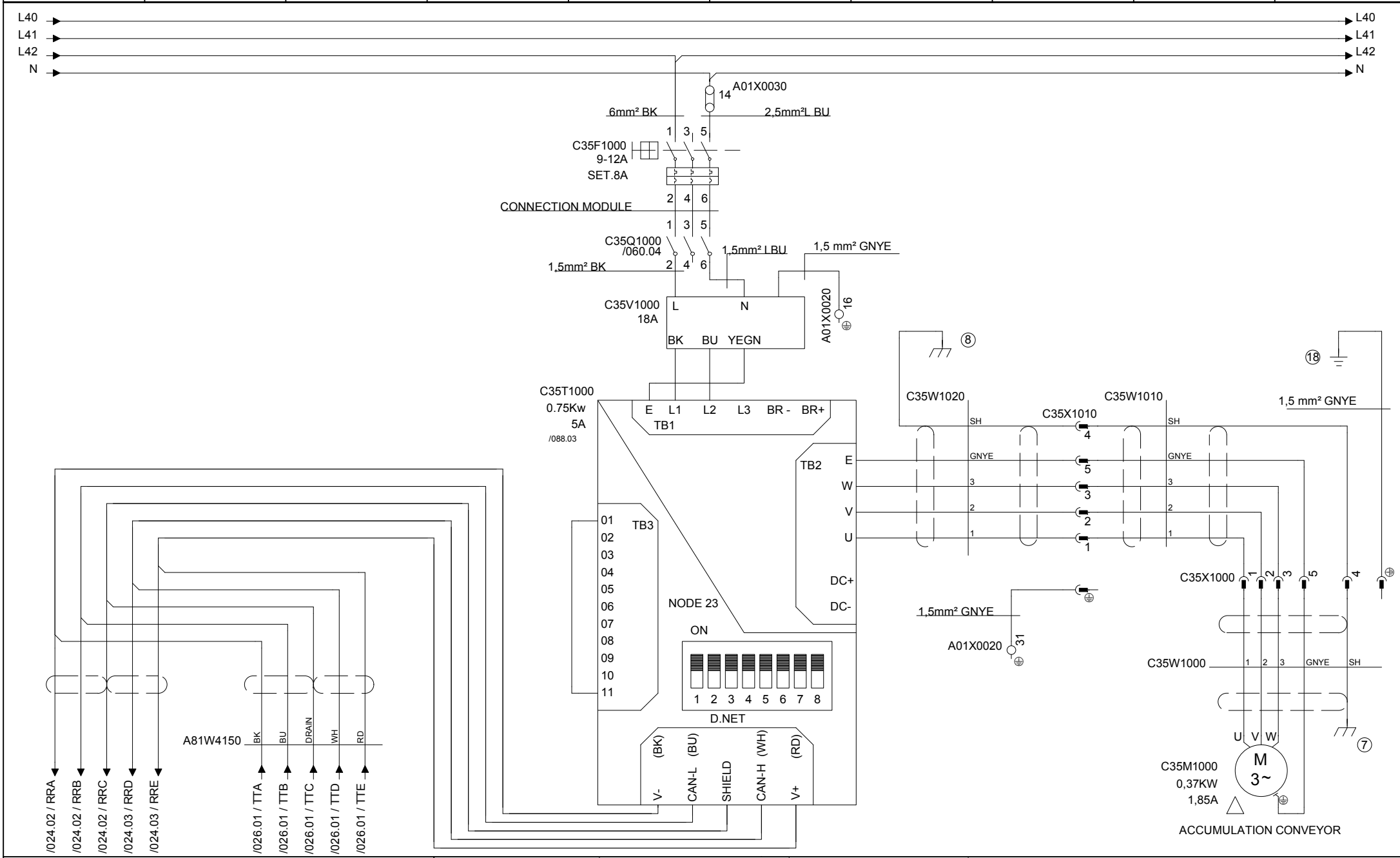

Tetra Pak	Designer ACH	Date 26/06/2010	Machine CBP 30 Speed 0200	
	ECM No 456516	Denomination CIRCUIT DIAGRAM	Page Type ACCUMULATION CONVEYOR MOTOR	
Drawing remarks	Company Tetra Pak (Italy)	Document No. 3037928-0003	Doc. type ELD	Version AC	Page 025

RELEASED

This drawing must not without the consent of Tetra Pak be copied, transmitted or disclosed to any third party.

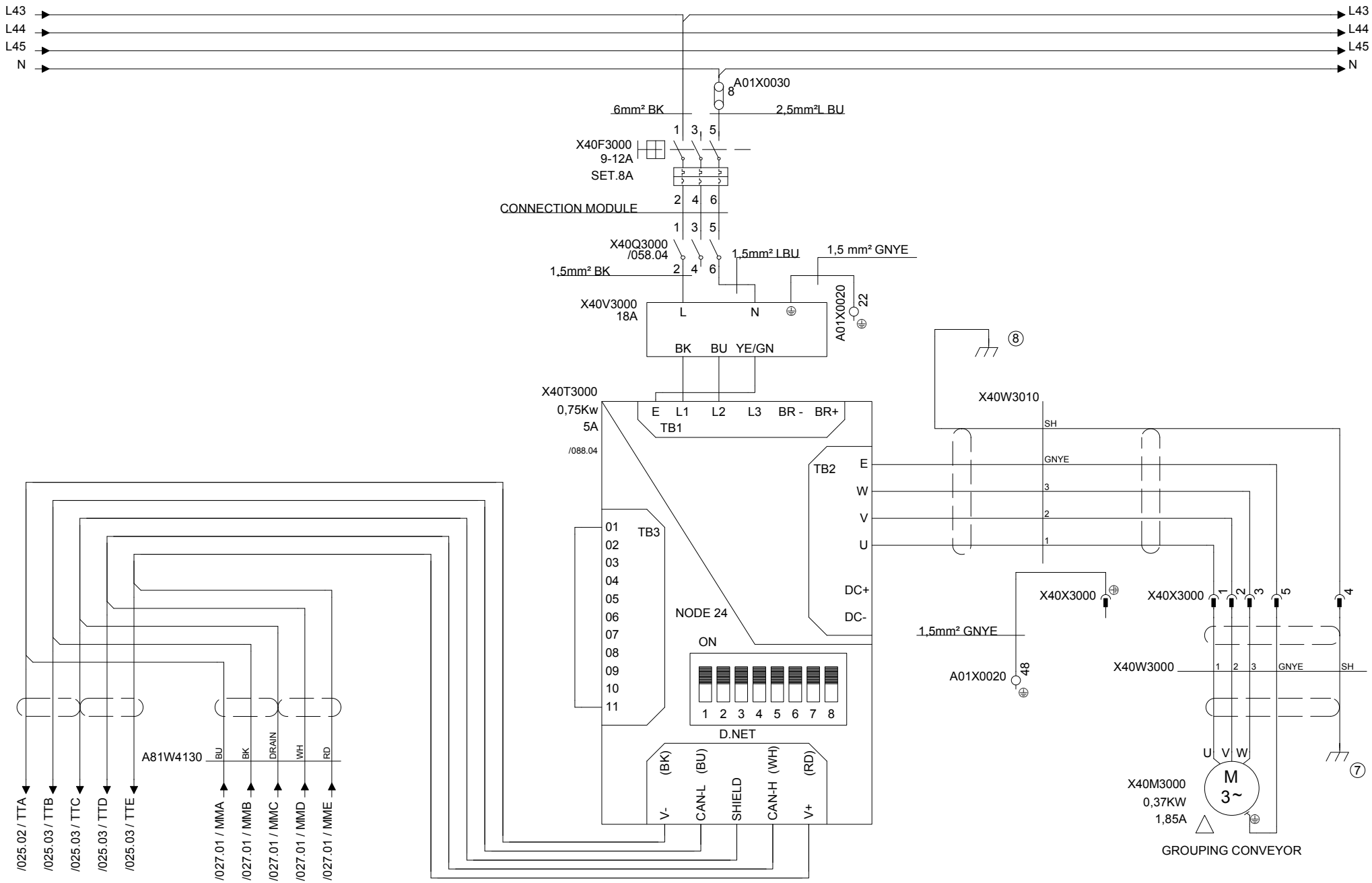

Drawing remarks	Tetra Pak	Designer ACH	Date 26/06/2010	Machine CBP 30 Speed 0200	
		ECM No 456516	Denomination CIRCUIT DIAGRAM	Page Type GROUPING CONVEYOR MOTOR	
		Company Tetra Pak (Italy)	Document No. 3037928-0003	Doc. type ELD	Version AC	Page 026

RELEASED

This drawing must not without the consent of Tetra Pak be copied, transmitted or disclosed to any third party.

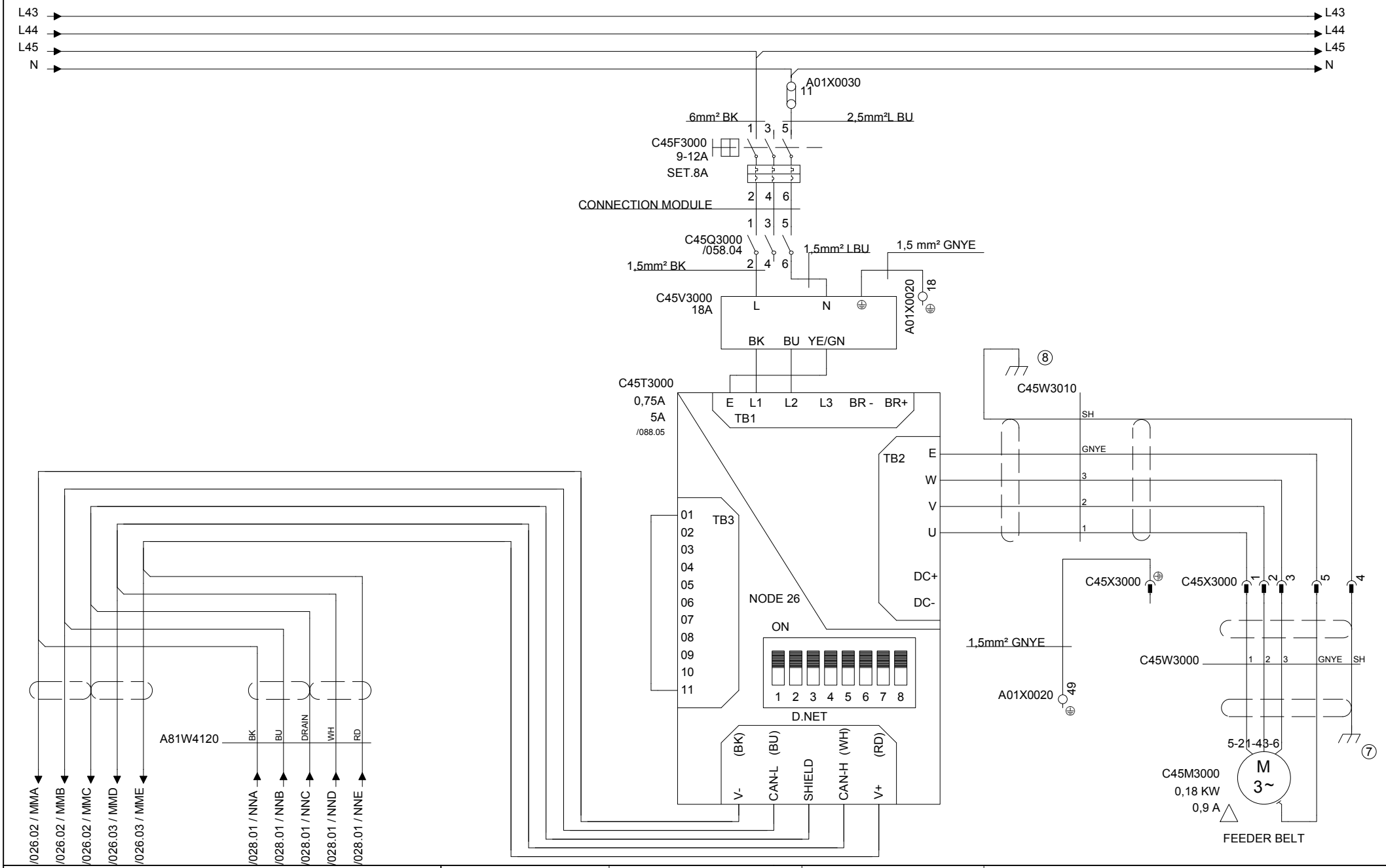

Drawing remarks	Tetra Pak	Designer ACH	Date 26/06/2010	Machine CBP 30 Speed 0200	
		ECM No 456516	Denomination CIRCUIT DIAGRAM	Page Type FEEDER BELT MOTOR	
	Company Tetra Pak (Italy)	Document No. 3037928-0003	Doc. type ELD	Version AC	Page 027

RELEASED

This drawing must not without the consent of Tetra Pak be copied, transmitted or disclosed to any third party.

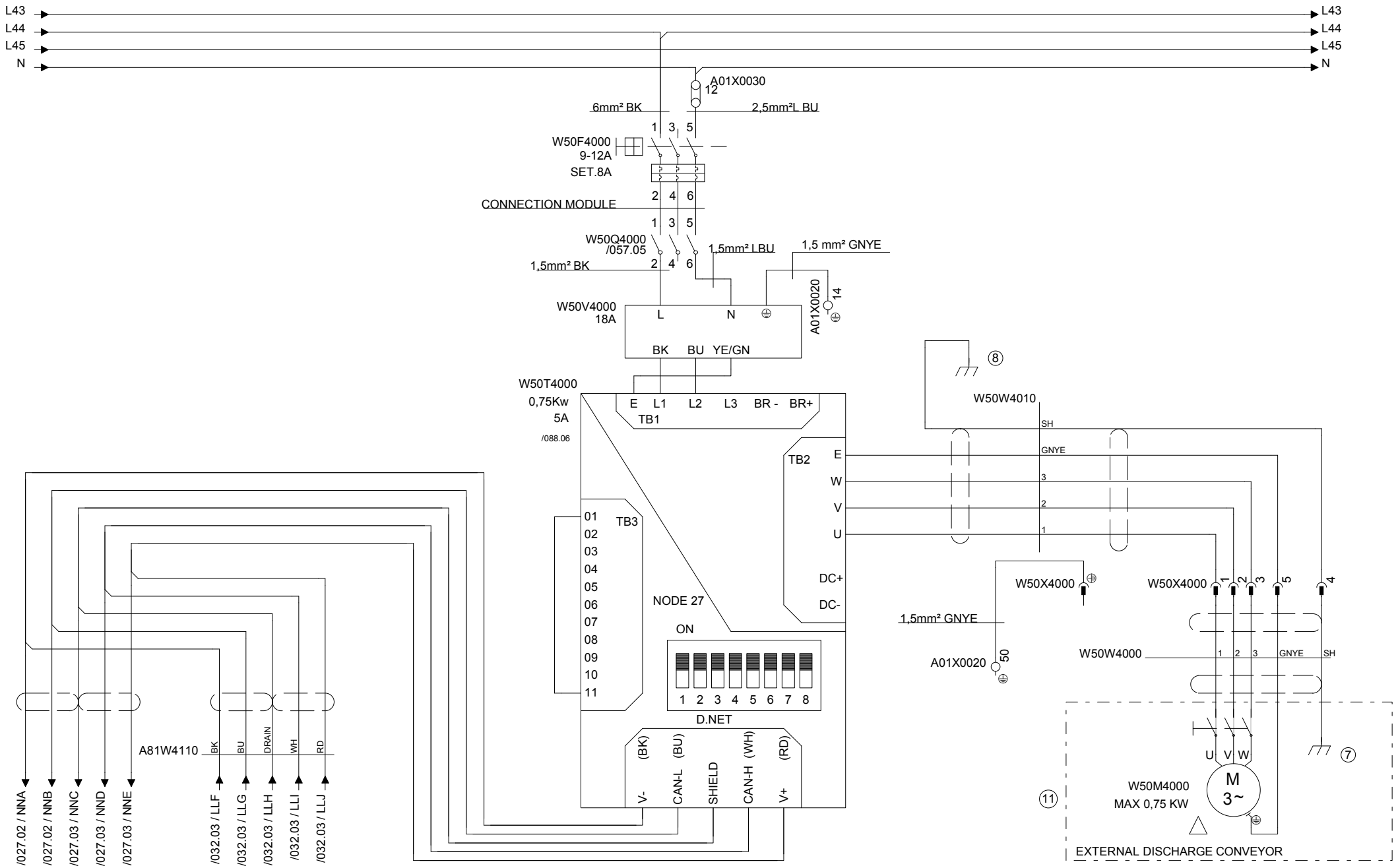

Tetra Pak	Designer ACH	Date 26/06/2010	Machine CBP 30 Speed 0200	
	ECM No 456516	Denomination CIRCUIT DIAGRAM	Page Type EXTERNAL DISCHARGE CONVEYOR MOTOR	
Drawing remarks	Company Tetra Pak (Italy)	Document No. 3037928-0003	Doc. type ELD	Version AC	Page 028

RELEASED

This drawing must not without the consent of Tetra Pak be copied, transmitted or disclosed to any third party.

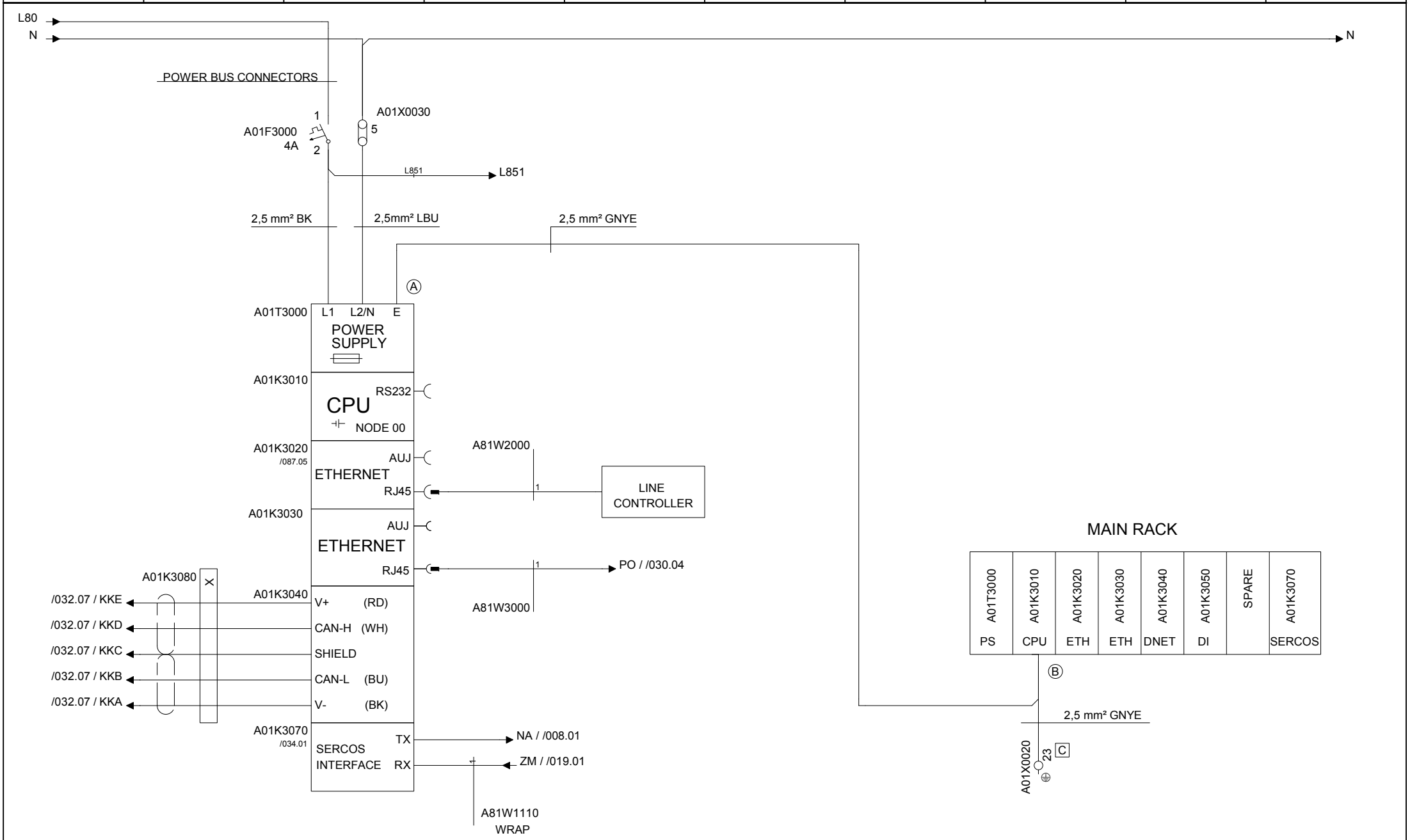

Drawing remarks	Tetra Pak	Designer ACH	Date 26/06/2010	Machine CBP 30 Speed 0200	
		ECM No 456516	Denomination CIRCUIT DIAGRAM	Page Type PLC POWER SUPPLY	
	Company Tetra Pak (Italy)	Document No. 3037928-0003	Doc. type ELD	Version AC	Page 029

This drawing must not without the consent of Tetra Pak
be copied, transmitted or disclosed to any third party.

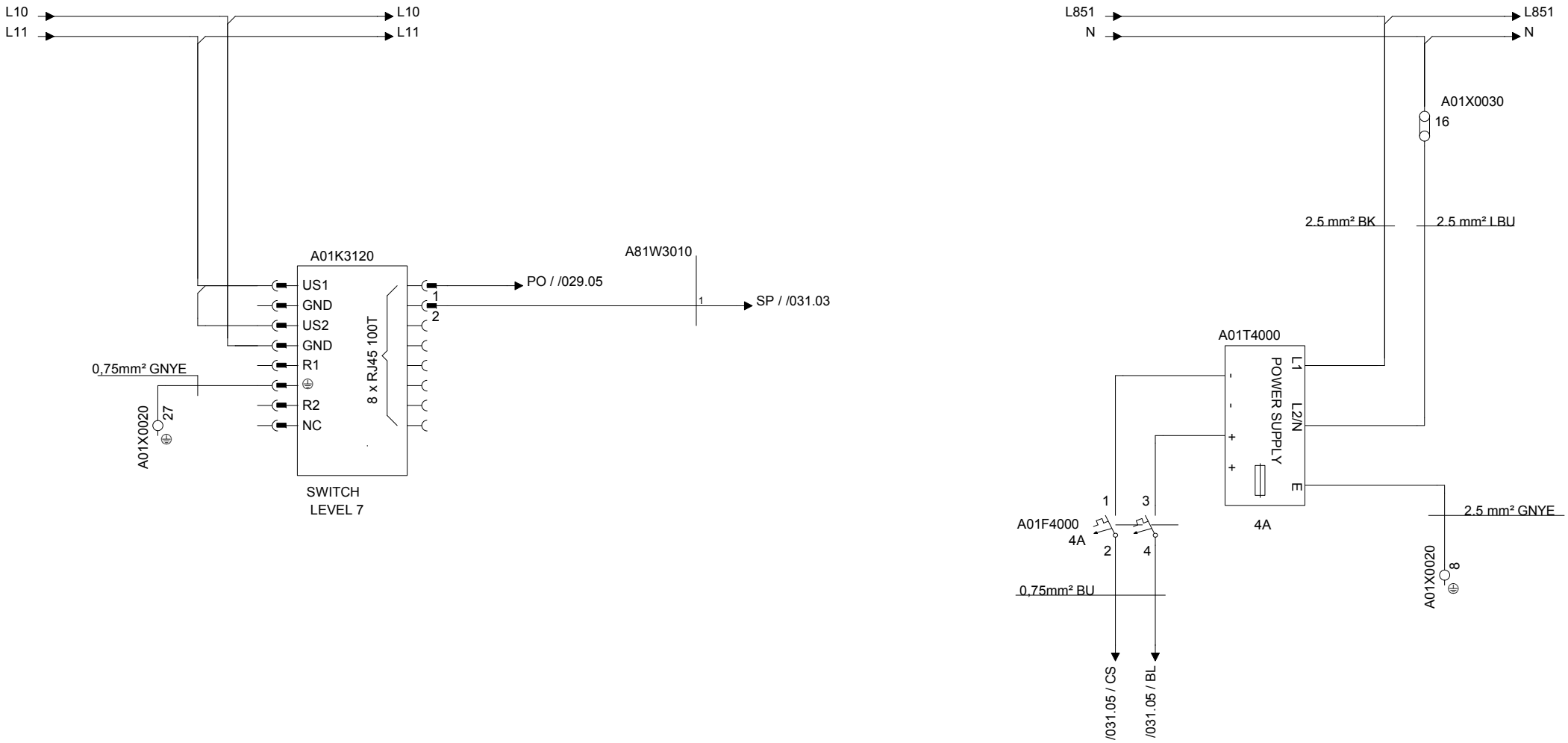

	Tetra Pak	Designer ACH	Date 26/06/2010	Machine CBP 30 Speed 0200	
		ECM No 456516	Denomination CIRCUIT DIAGRAM	Page Type ETHERNET SWITCH & TPOP	
Drawing remarks		Company Tetra Pak (Italy)	Document No. 3037928-0003	Doc. type ELD	Version AC	Page 030

RELEASED

This drawing must not without the consent of Tetra Pak be copied, transmitted or disclosed to any third party.

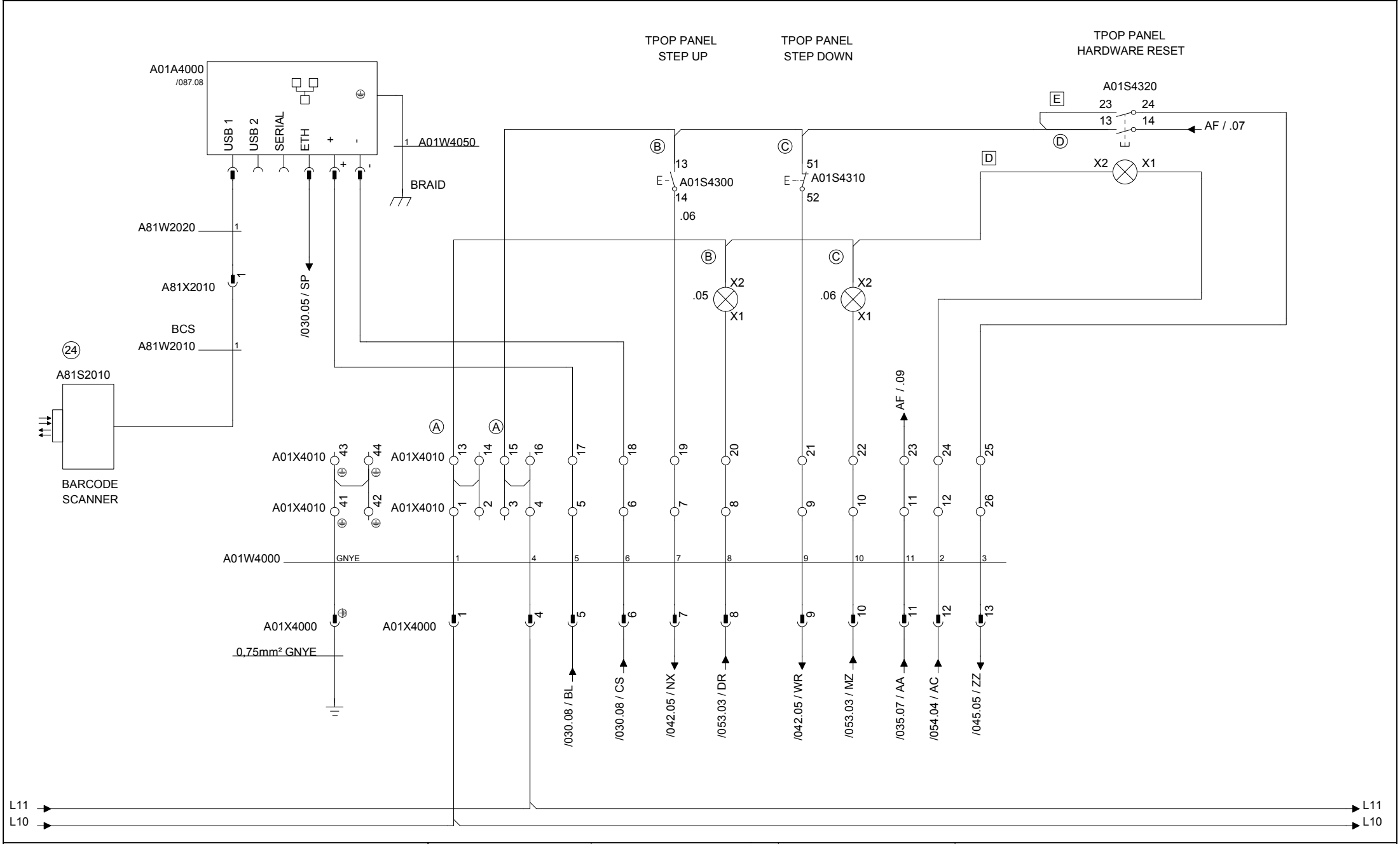

Drawing remarks	Tetra Pak	Designer ACH	Date 26/06/2010	Machine CBP 30 Speed 0200	
		ECM No 456516	Denomination CIRCUIT DIAGRAM	Page Type TPOP PANEL TERMINALS	
		Company Tetra Pak (Italy)	Document No. 3037928-0003	Doc. type ELD	Version AC	Page 031

RELEASED

This drawing must not without the consent of Tetra Pak be copied, transmitted or disclosed to any third party.

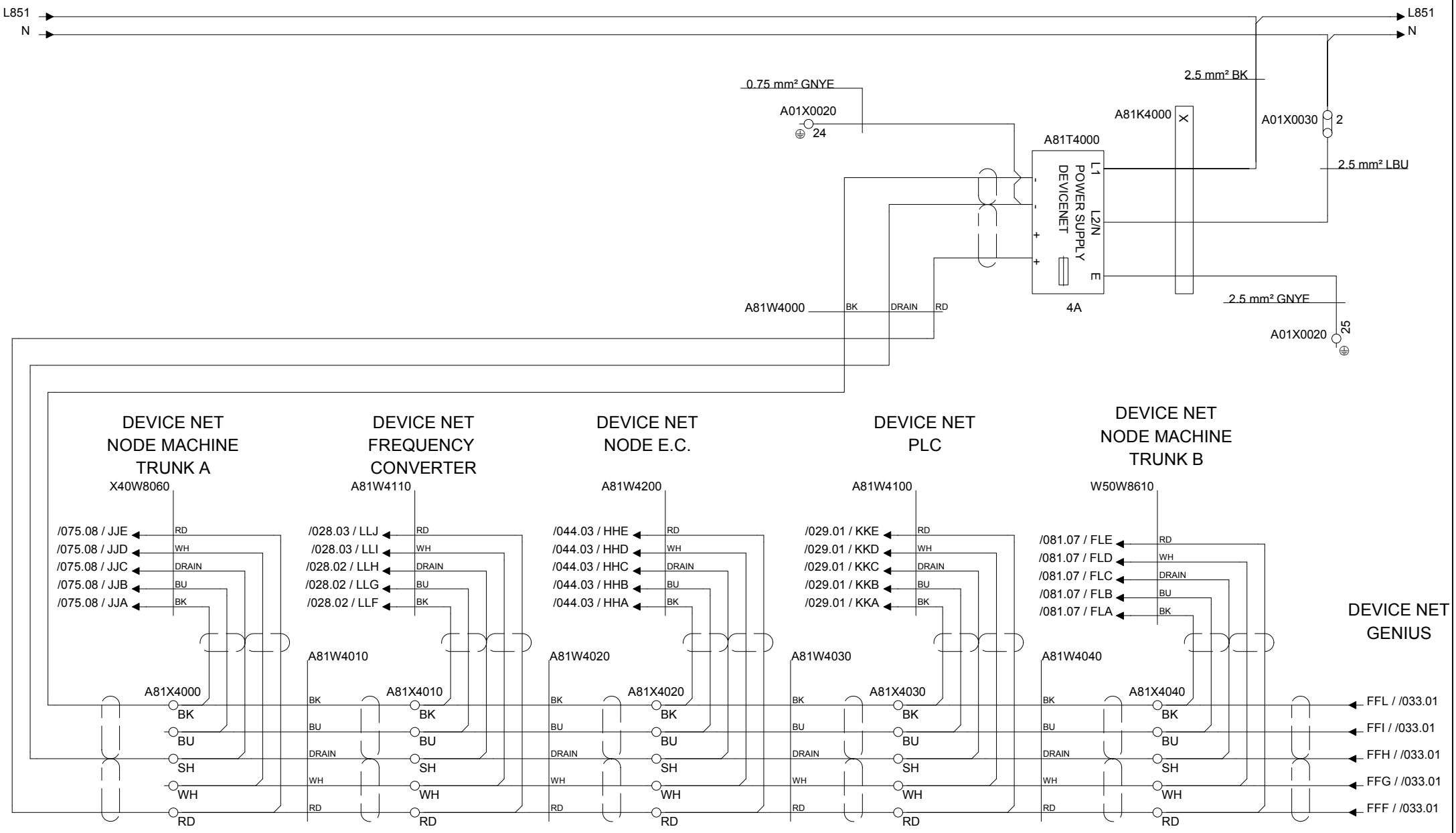

Drawing remarks	Tetra Pak	Designer ACH	Date 26/06/2010	Machine CBP 30 Speed 0200	
		ECM No 456516	Denomination CIRCUIT DIAGRAM	Page Type DEVICENET COMMUNICATION	
	Company Tetra Pak (Italy)	Document No. 3037928-0003	Doc. type ELD	Version AC	Page 032

RELEASED

This drawing must not without the consent of Tetra Pak be copied, transmitted or disclosed to any third party.

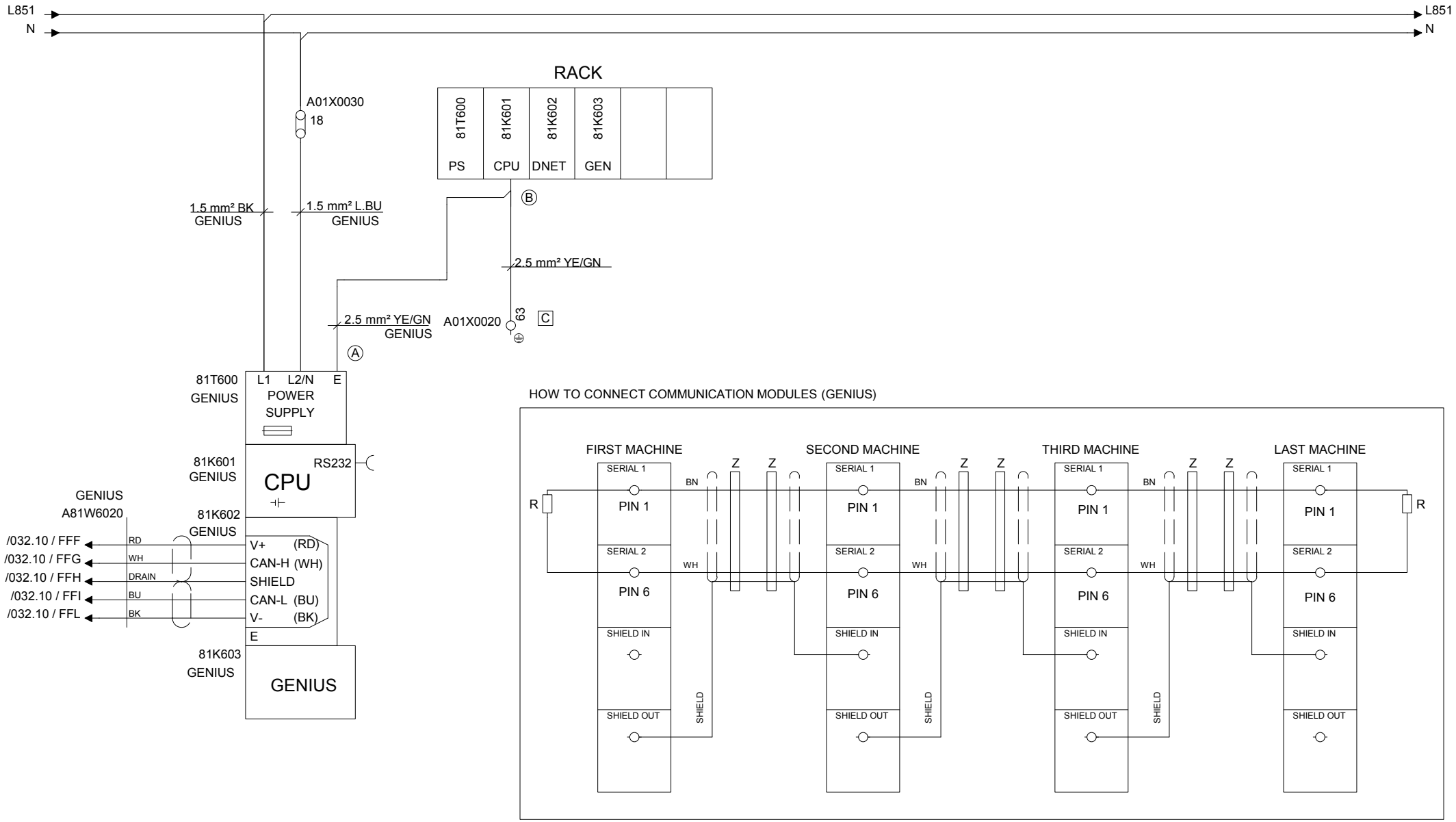

Drawing remarks	Tetra Pak	Designer ACH	Date 26/06/2010	Machine CBP 30 Speed 0200	
		ECM No 456516	Denomination CIRCUIT DIAGRAM	Page Type PLC RACK (COMMUNICATION UNIT)	
		Company Tetra Pak (Italy)	Document No. 3037928-0003	Doc. type ELD	Version AC	Page 033

RELEASED

This drawing must not without the consent of Tetra Pak
be copied, transmitted or disclosed to any third party.

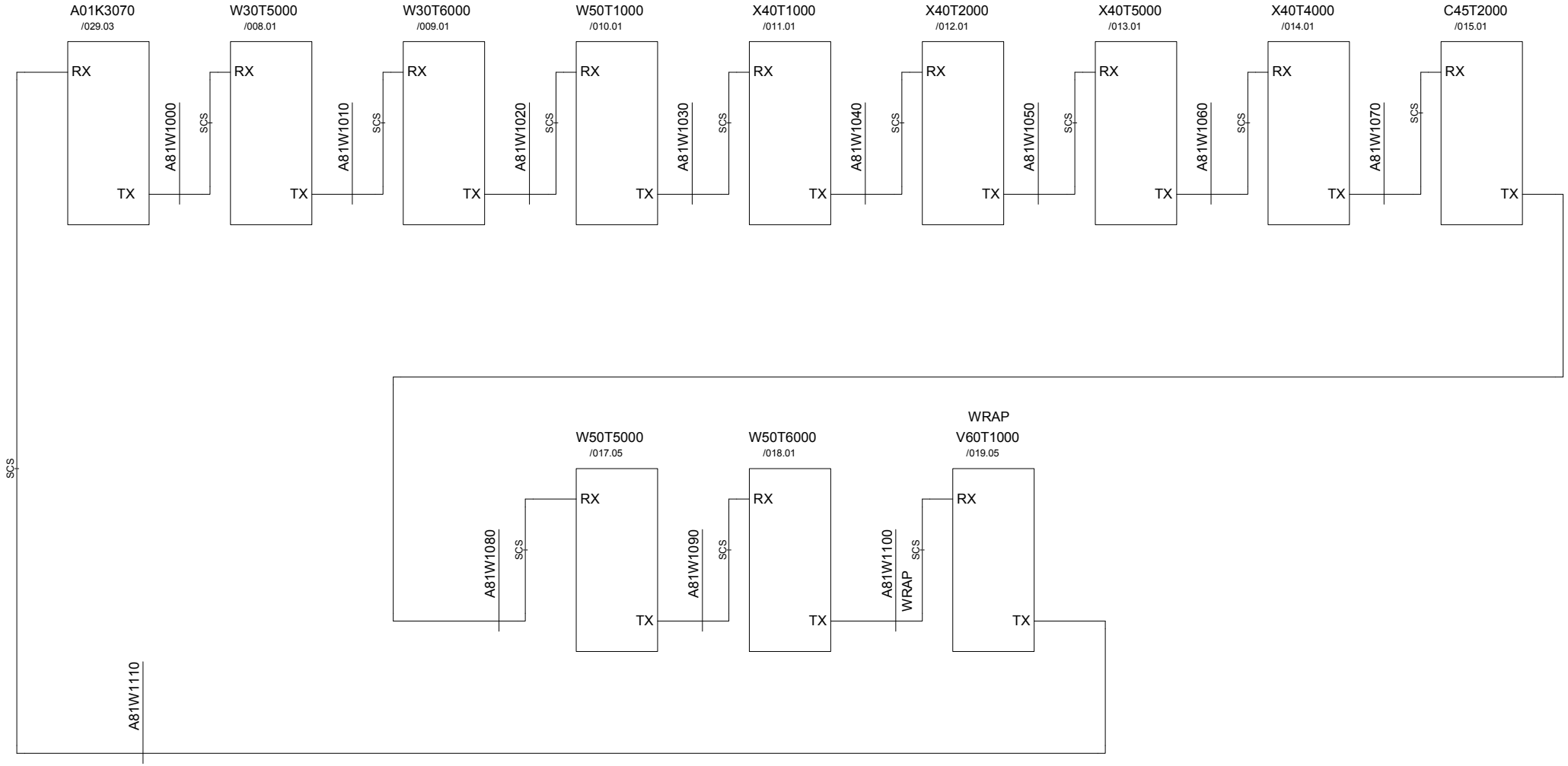

Drawing remarks	Tetra Pak	Designer ACH	Date 26/06/2010	Machine CBP 30 Speed 0200	
		ECM No 456516	Denomination CIRCUIT DIAGRAM	Page Type SERCOS COMMUNICATION	
	Company Tetra Pak (Italy)	Document No. 3037928-0003	Doc. type ELD	Version AC	Page 034

RELEASED

This drawing must not without the consent of Tetra Pak be copied, transmitted or disclosed to any third party.

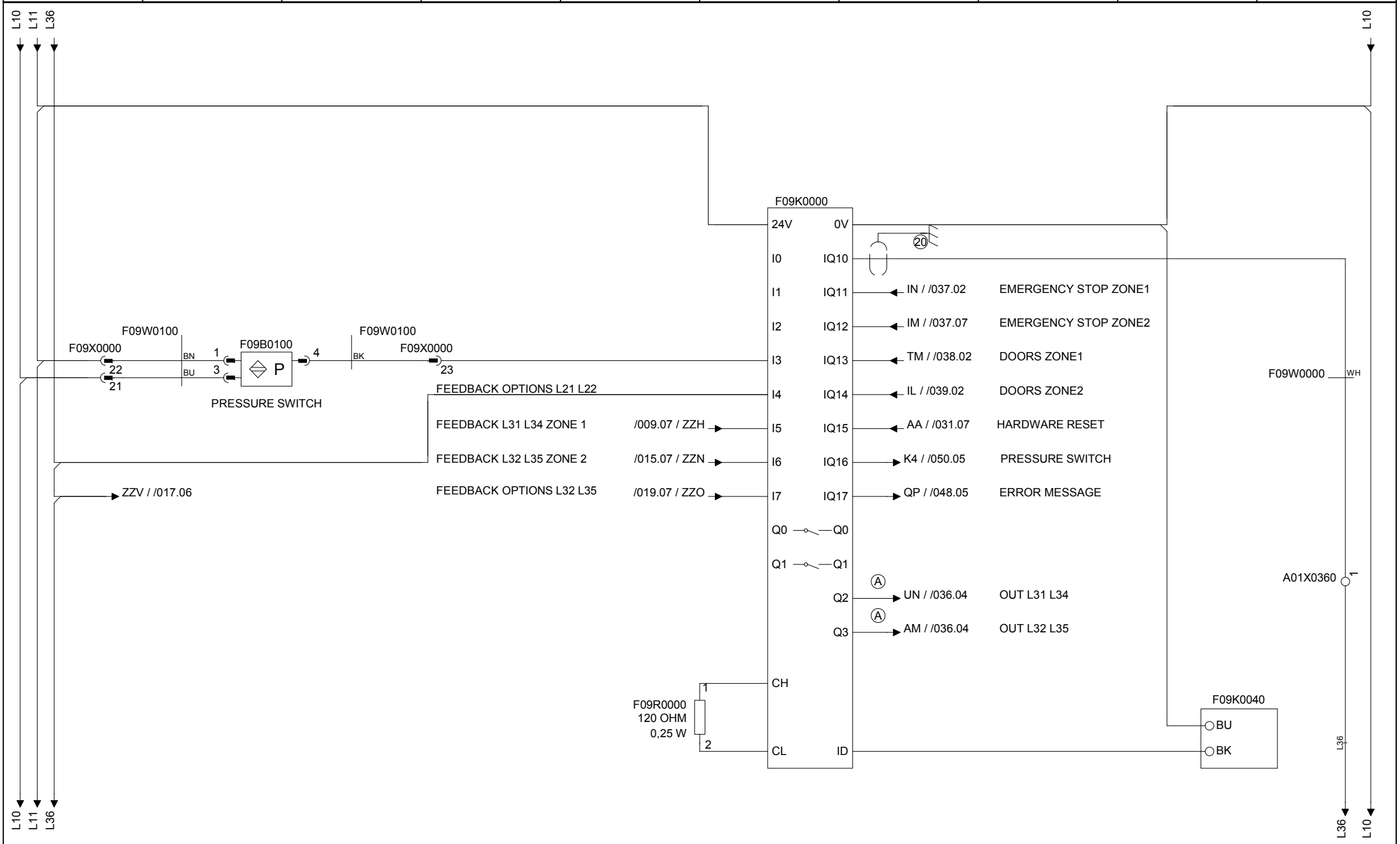

Drawing remarks	Tetra Pak	Designer ACH	Date 26/06/2010	Machine CBP 30 Speed 0200	
		ECM No 456516	Denomination CIRCUIT DIAGRAM	Page Type EMERGENCY STOP SAFETY	
	Company Tetra Pak (Italy)	Document No. 3037928-0003	Doc. type ELD	Version AC	Page 035

RELEASED

This drawing must not without the consent of Tetra Pak be copied, transmitted or disclosed to any third party.

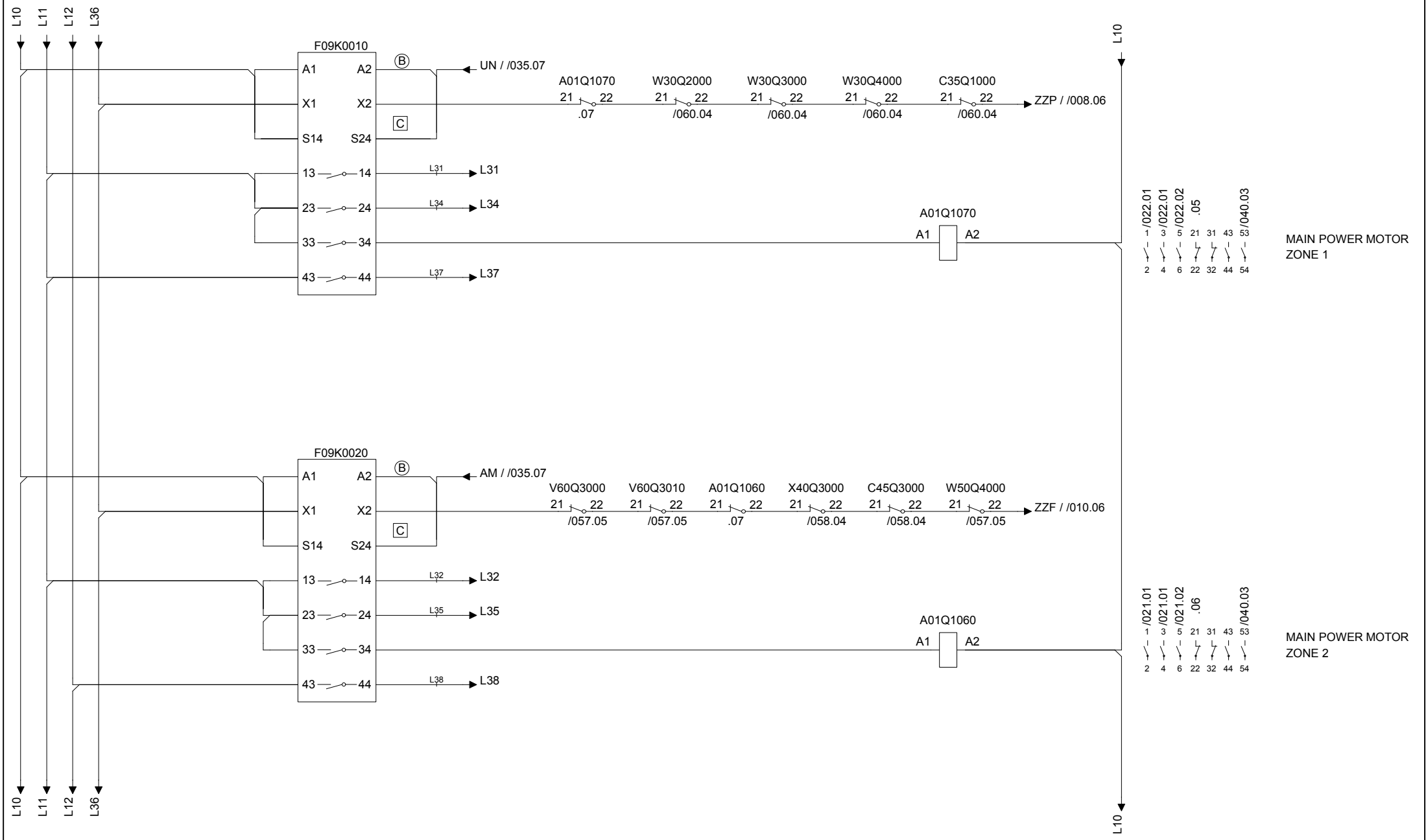

Drawing remarks	Tetra Pak	Designer ACH	Date 26/06/2010	Machine CBP 30 Speed 0200	
		ECM No 456516	Denomination CIRCUIT DIAGRAM	Page Type EMERGENCY STOP	
	Company Tetra Pak (Italy)	Document No. 3037928-0003	Doc. type ELD	Version AC	Page 036

RELEASED

This drawing must not without the consent of Tetra Pak be copied, transmitted or disclosed to any third party.

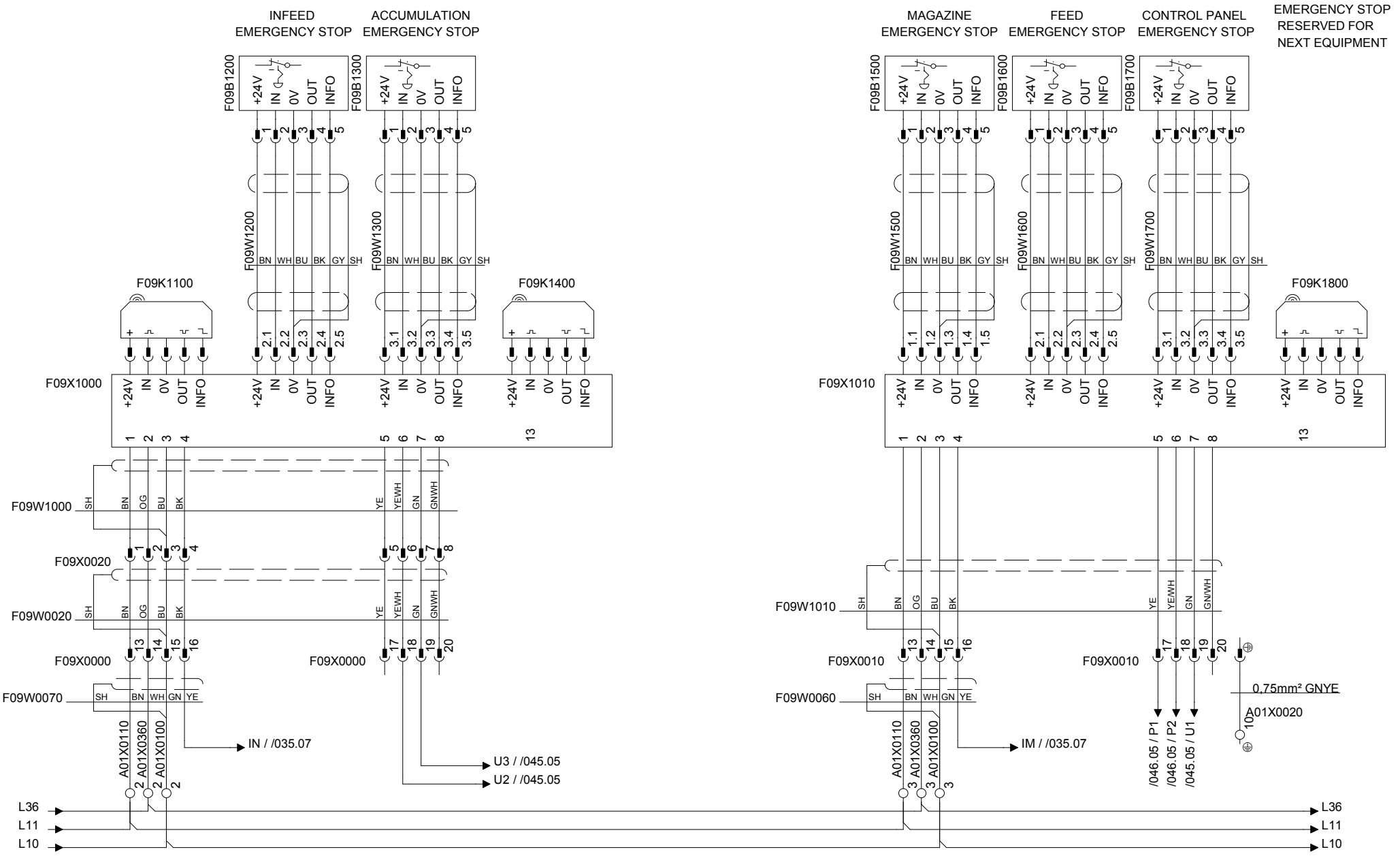

Tetra Pak	Designer ACH	Date 26/06/2010	Machine CBP 30 Speed 0200	
	ECM No 456516	Denomination CIRCUIT DIAGRAM	Page Type SAFETY EMERGENCY	
Drawing remarks	Company Tetra Pak (Italy)	Document No. 3037928-0003	Doc. type ELD	Version AC	Page 037

RELEASED

This drawing must not without the consent of Tetra Pak be copied, transmitted or disclosed to any third party.

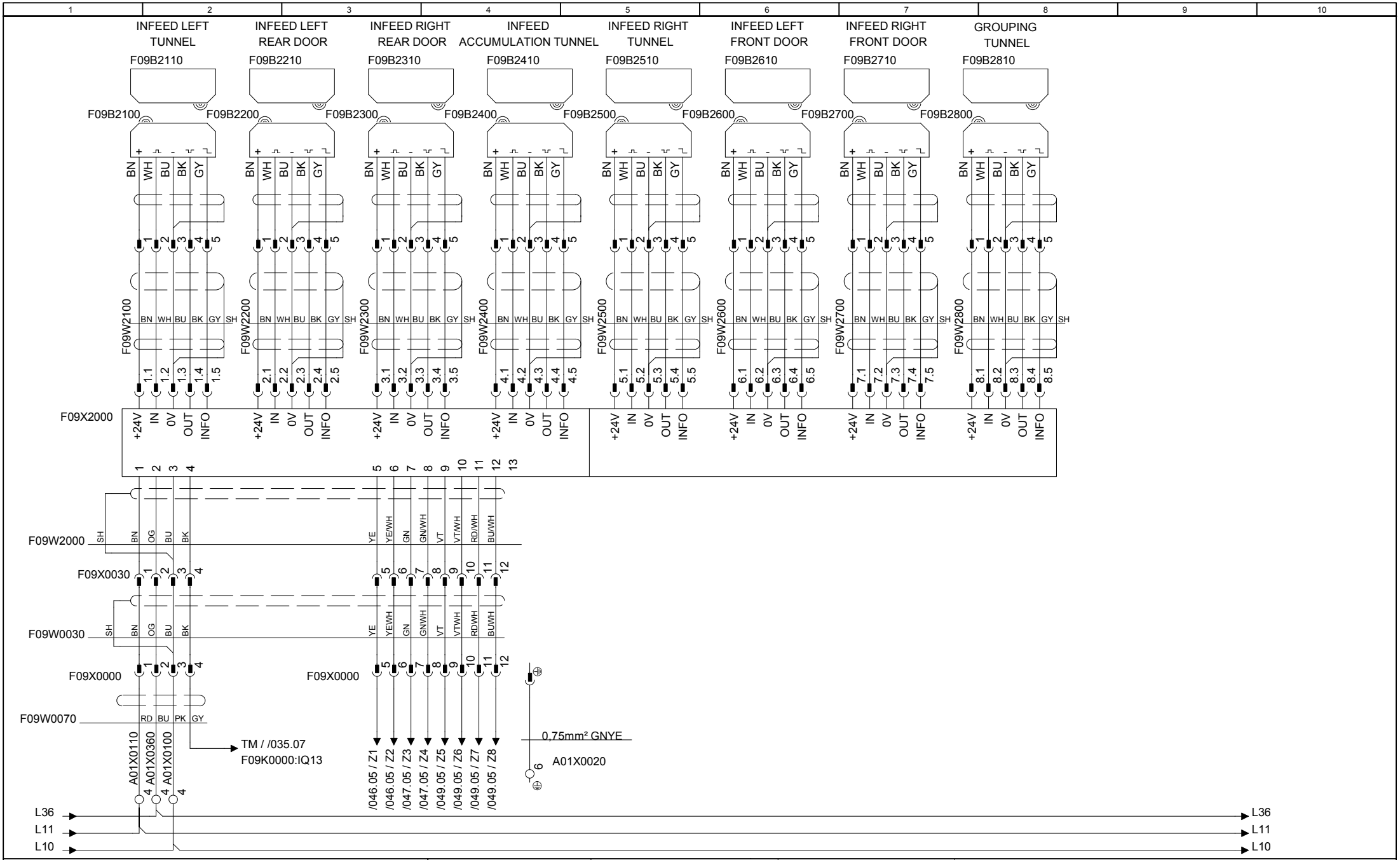

Tetra Pak	Designer ACH	Date 26/06/2010	Machine CBP 30 Speed 0200		
	ECM No 456516	Denomination CIRCUIT DIAGRAM	Page Type SAFETY DOORS		
Drawing remarks	Company Tetra Pak (Italy)	Document No. 3037928-0003	Doc. type ELD	Version AC	Page 038

RELEASED

This drawing must not without the consent of Tetra Pak be copied, transmitted or disclosed to any third party.

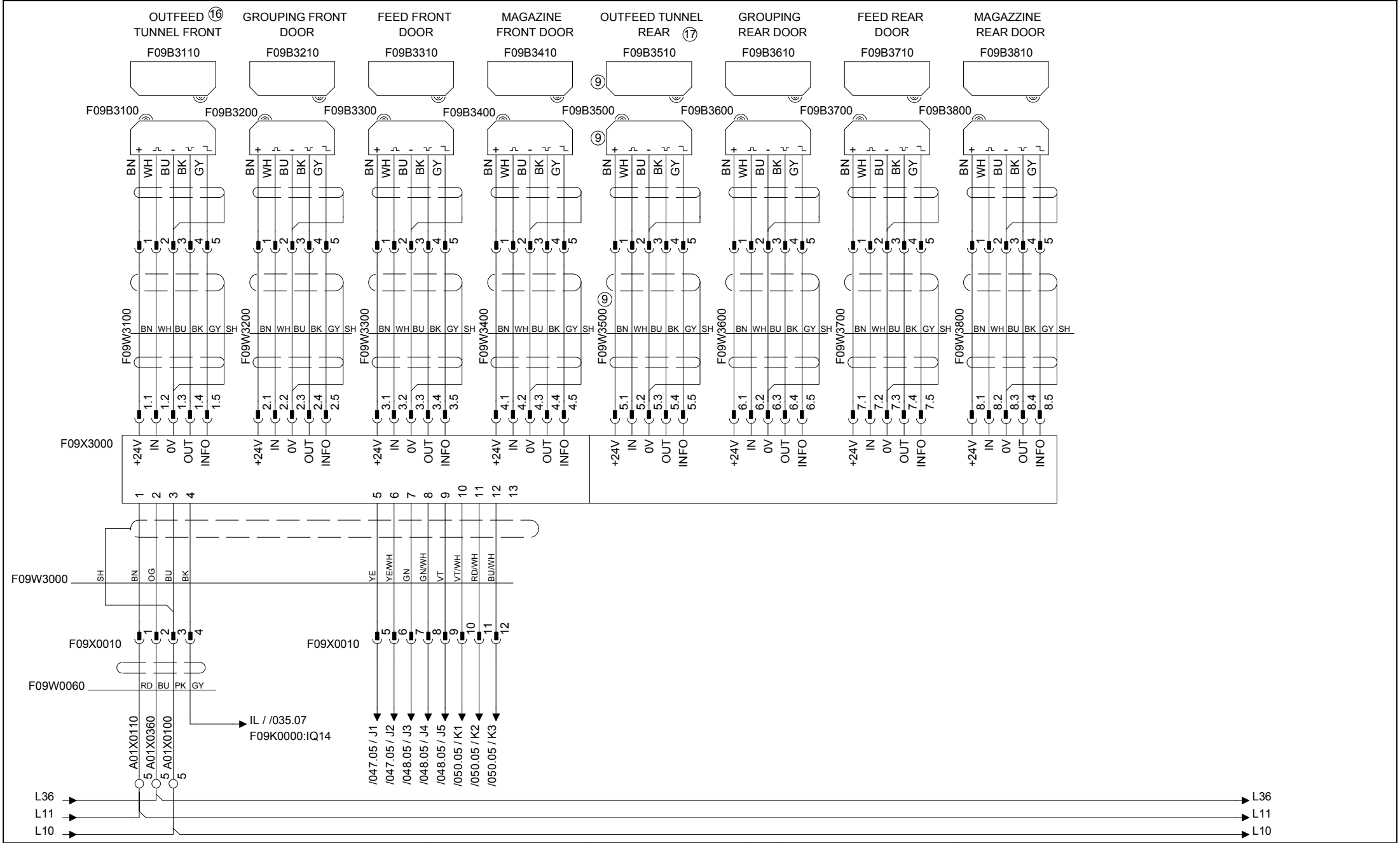

Tetra Pak	Designer ACH	Date 26/06/2010	Machine CBP 30 Speed 0200		
	ECM No 456516	Denomination CIRCUIT DIAGRAM	Page Type SAFETY DOORS		
Drawing remarks	Company Tetra Pak (Italy)	Document No. 3037928-0003	Doc. type ELD	Version AC	Page 039

RELEASED

This drawing must not without the consent of Tetra Pak be copied, transmitted or disclosed to any third party.

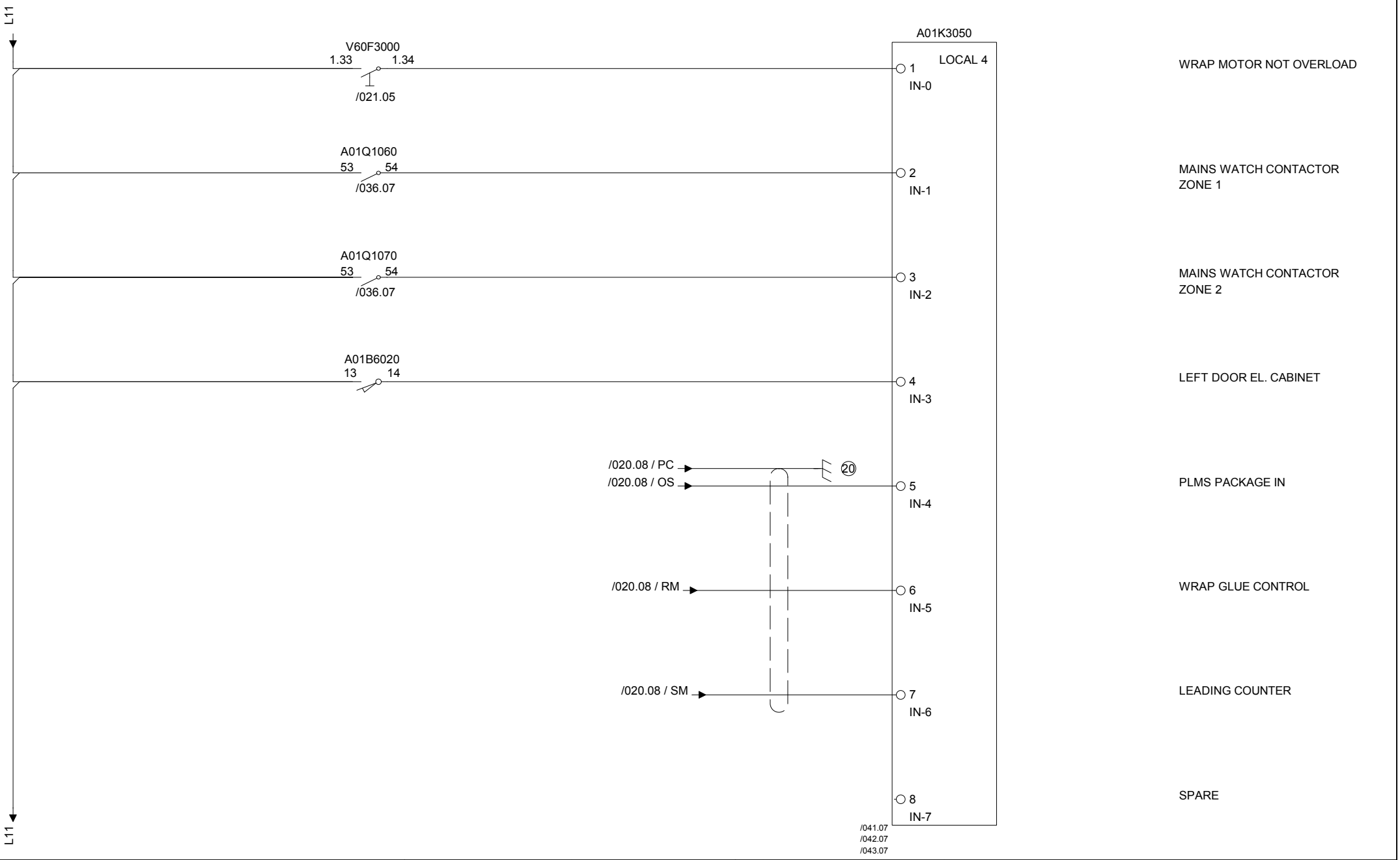

Drawing remarks	Tetra Pak	Designer ACH	Date 26/06/2010	Machine CBP 30 Speed 0200
		ECM No 456516	Denomination CIRCUIT DIAGRAM	Page Type PLC-IN
	Company Tetra Pak (Italy)	Document No. 3037928-0003	Doc. type ELD	Version AC	Page 040

RELEASED

This drawing must not without the consent of Tetra Pak be copied, transmitted or disclosed to any third party.

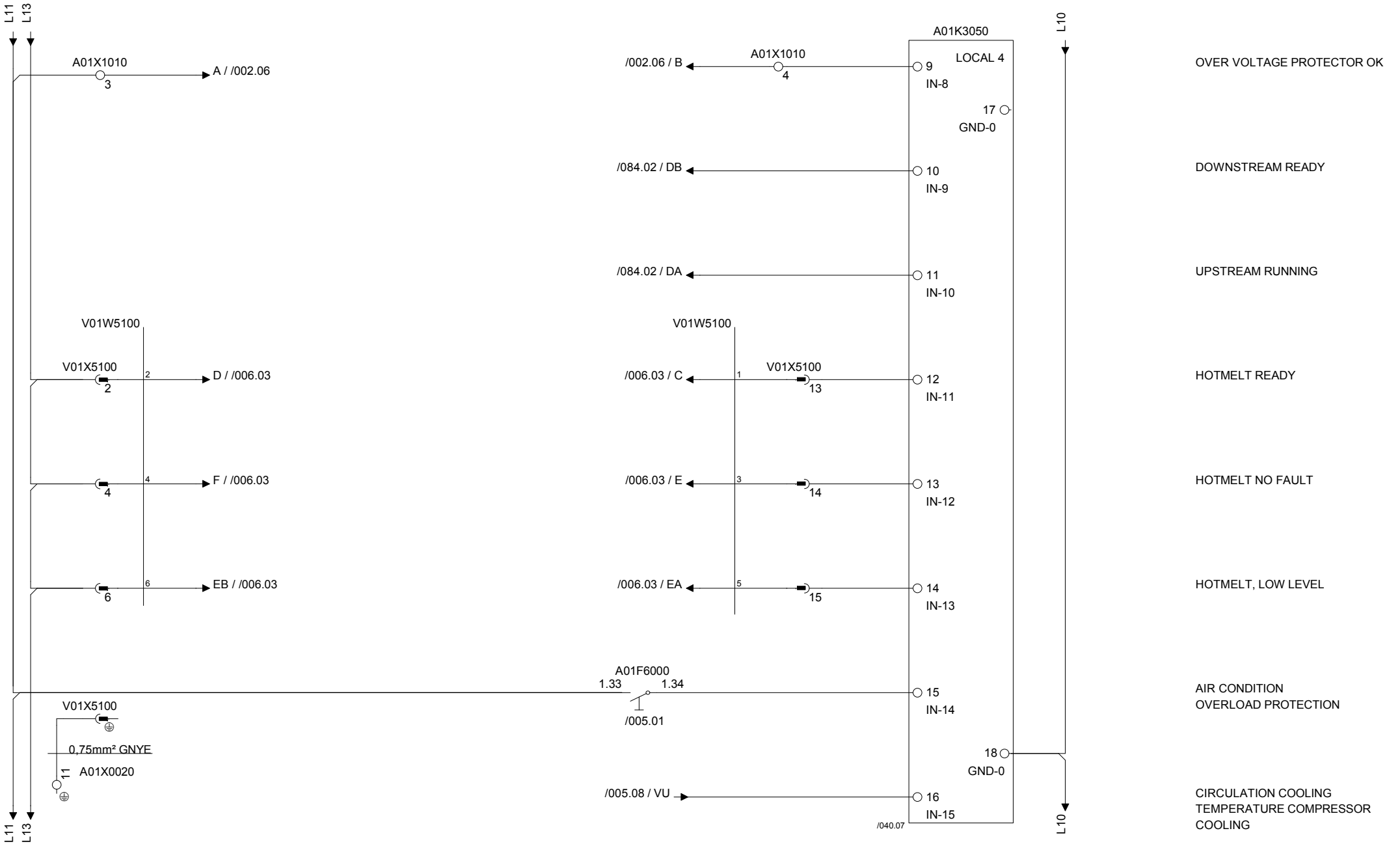

Drawing remarks	Tetra Pak	Designer ACH	Date 26/06/2010	Machine CBP 30 Speed 0200			
		ECM No 456516	Denomination CIRCUIT DIAGRAM	Page Type PLC-IN			
		Company Tetra Pak (Italy)	Document No. 3037928-0003	Doc. type ELD	Version AC	Page 041	

This drawing must not without the consent of Tetra Pak be copied, transmitted or disclosed to any third party.

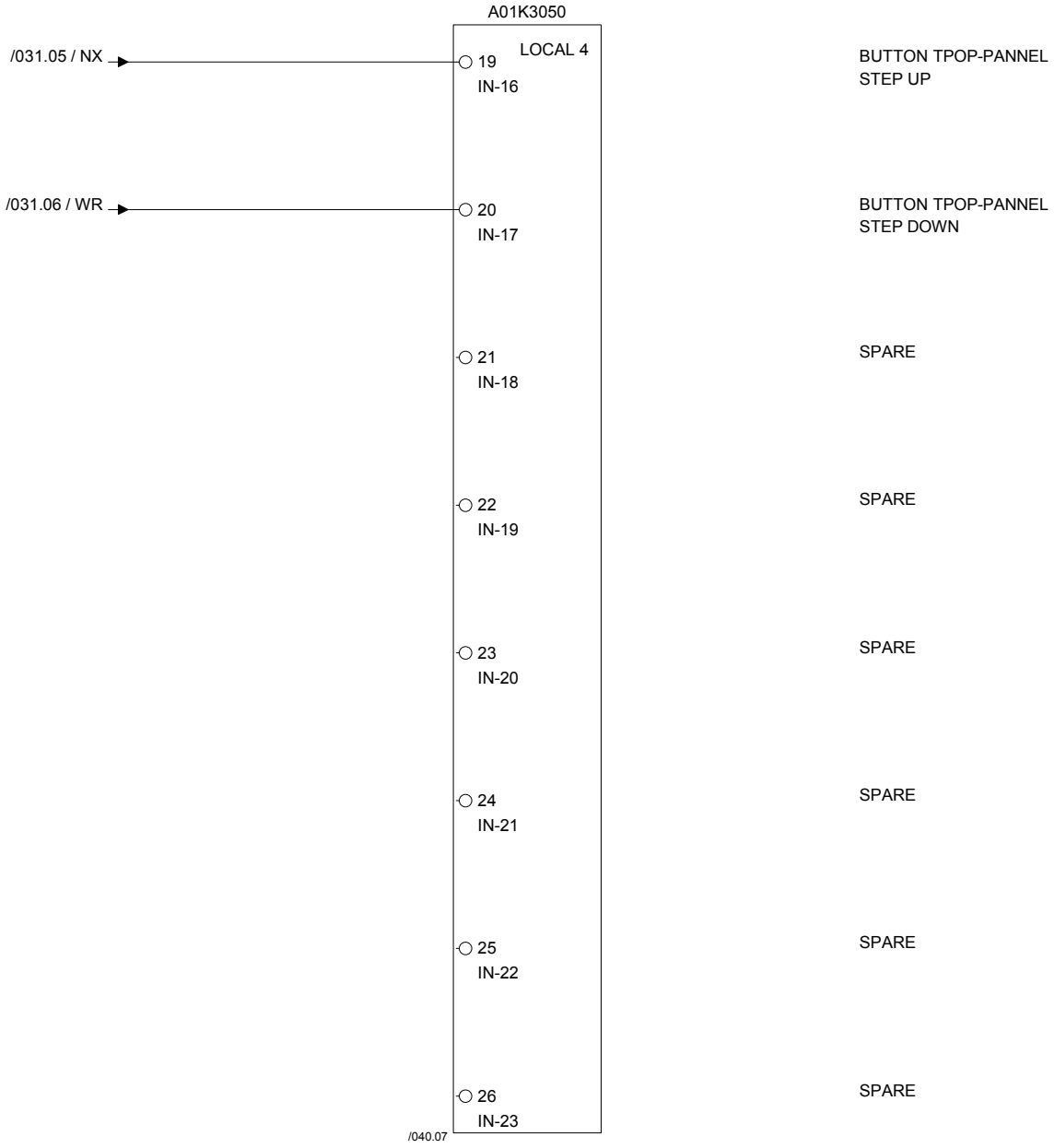

Drawing remarks	Tetra Pak	Designer ACH	Date 26/06/2010	Machine CBP 30 Speed 0200
		ECM No 456516	Denomination CIRCUIT DIAGRAM	Page Type PLC-IN
	Company Tetra Pak (Italy)	Document No. 3037928-0003	Doc. type ELD	Version AC	Page 042

RELEASED

This drawing must not without the consent of Tetra Pak be copied, transmitted or disclosed to any third party.

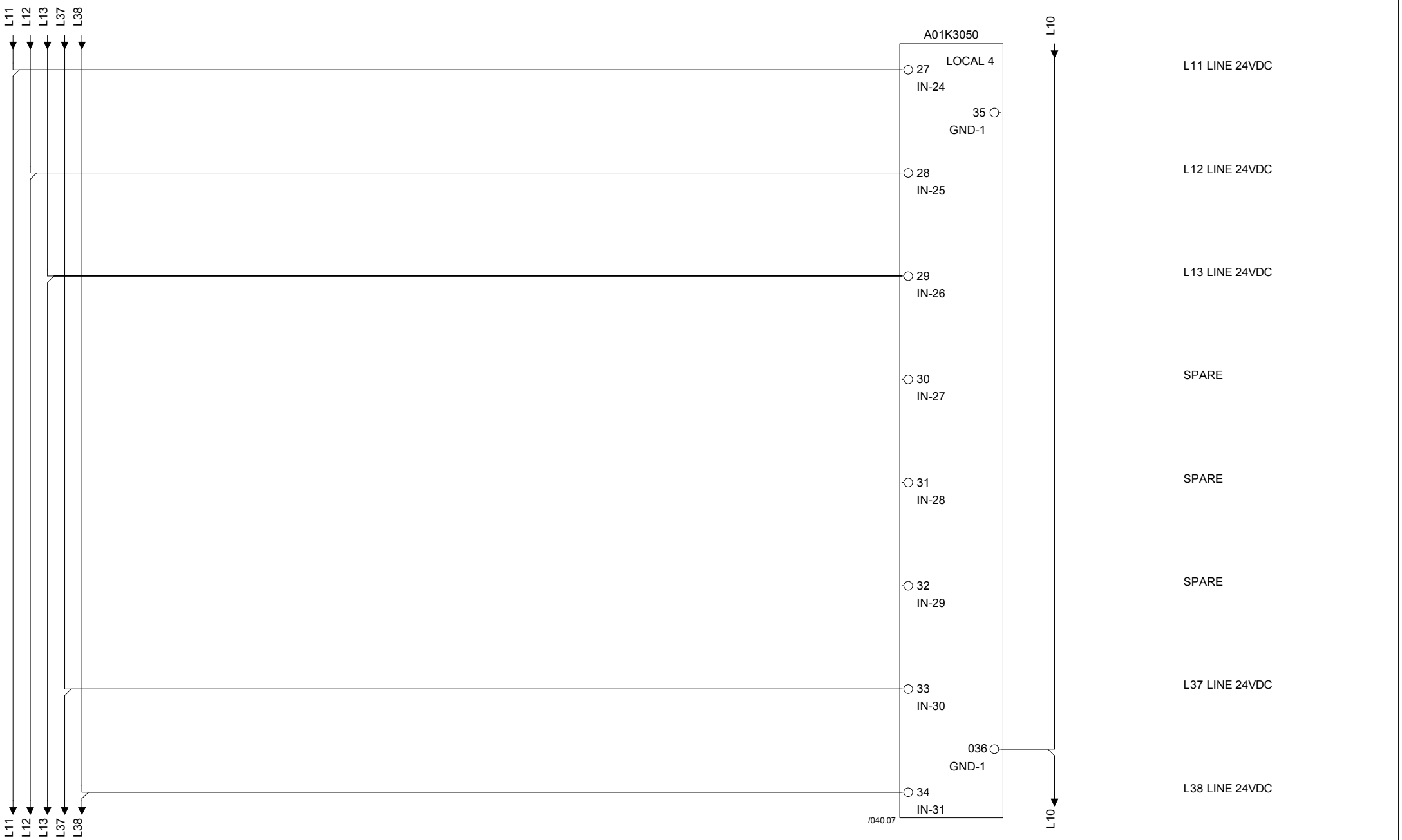

Drawing remarks	Tetra Pak	Designer ACH	Date 26/06/2010	Machine CBP 30 Speed 0200
		ECM No 456516	Denomination CIRCUIT DIAGRAM	Page Type PLC-IN
		Company Tetra Pak (Italy)	Document No. 3037928-0003	Doc. type ELD / Version AC / Page 043

This drawing must not without the consent of Tetra Pak
be copied, transmitted or disclosed to any third party.

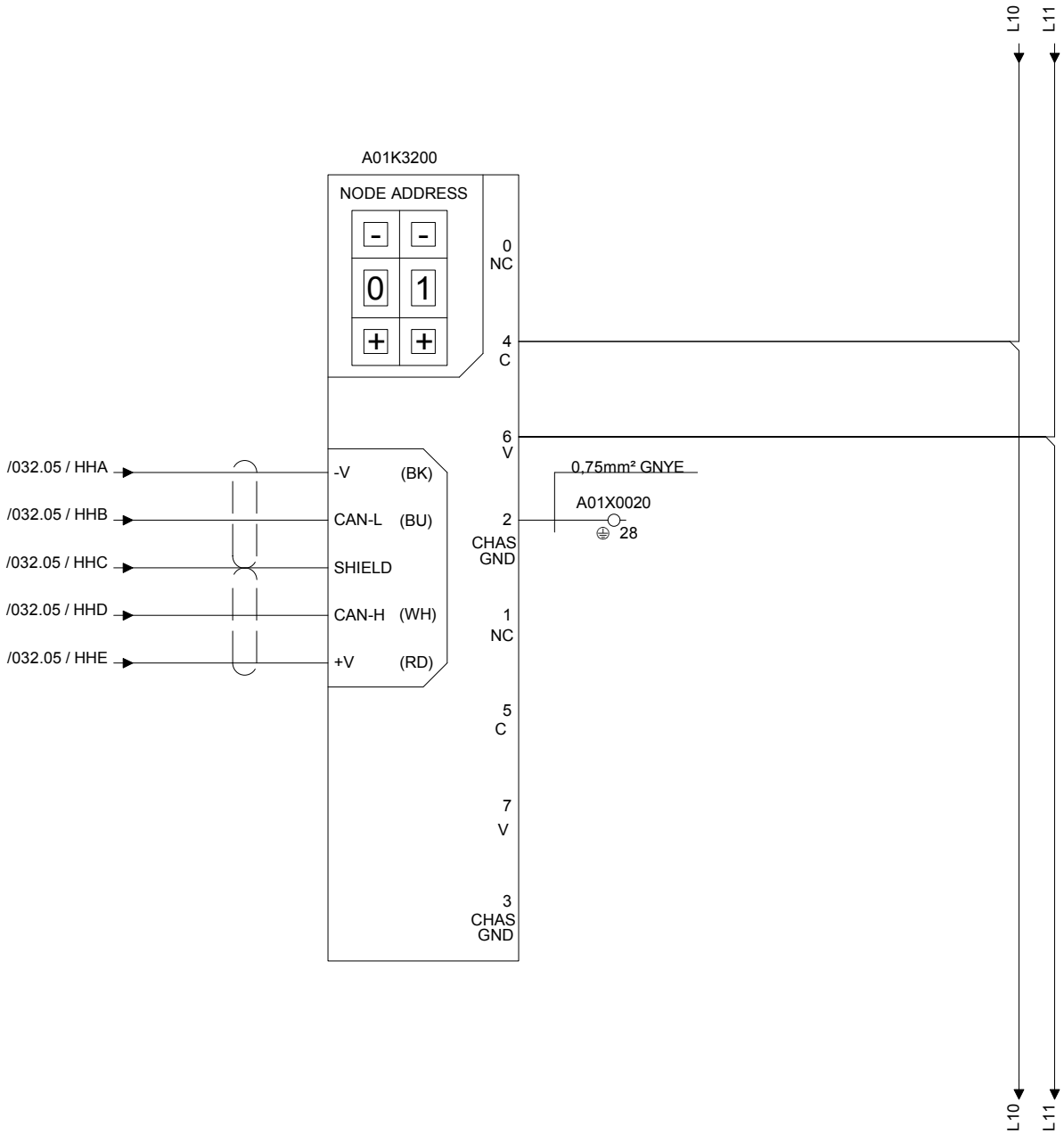

	Tetra Pak	Designer ACH	Date 26/06/2010	Machine CBP 30 Speed 0200	
		ECM No 456516	Denomination CIRCUIT DIAGRAM	Page Type PLC-ADN	
Drawing remarks		Company Tetra Pak (Italy)	Document No. 3037928-0003	Doc. type ELD	Version AC	Page 044

This drawing must not without the consent of Tetra Pak be copied, transmitted or disclosed to any third party.

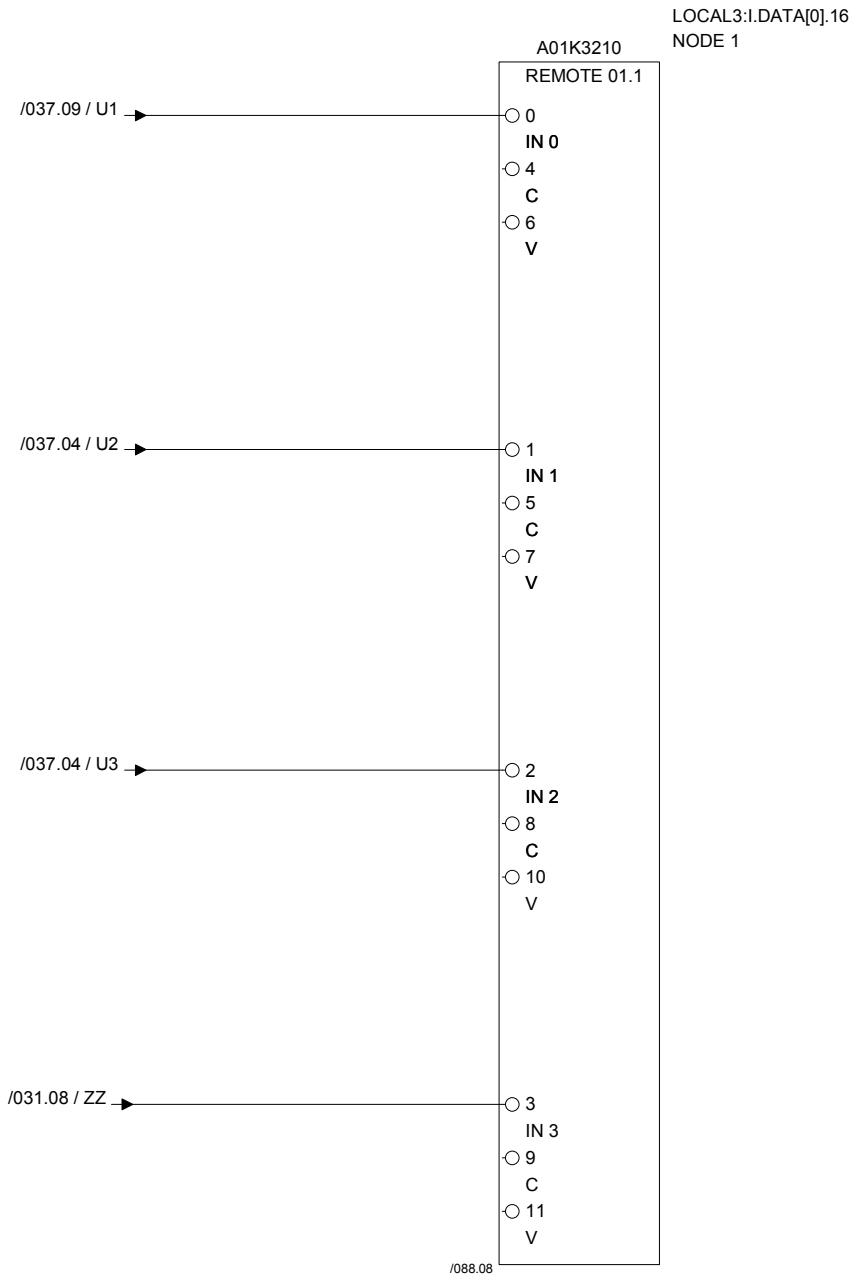

Drawing remarks	Tetra Pak	Designer ACH	Date 26/06/2010	Machine CBP 30 Speed 0200
		ECM No 456516	Denomination CIRCUIT DIAGRAM	Page Type PLC-IN
		Company Tetra Pak (Italy)	Document No. 3037928-0003	Doc. type ELD / Version AC / Page 045

This drawing must not without the consent of Tetra Pak be copied, transmitted or disclosed to any third party.

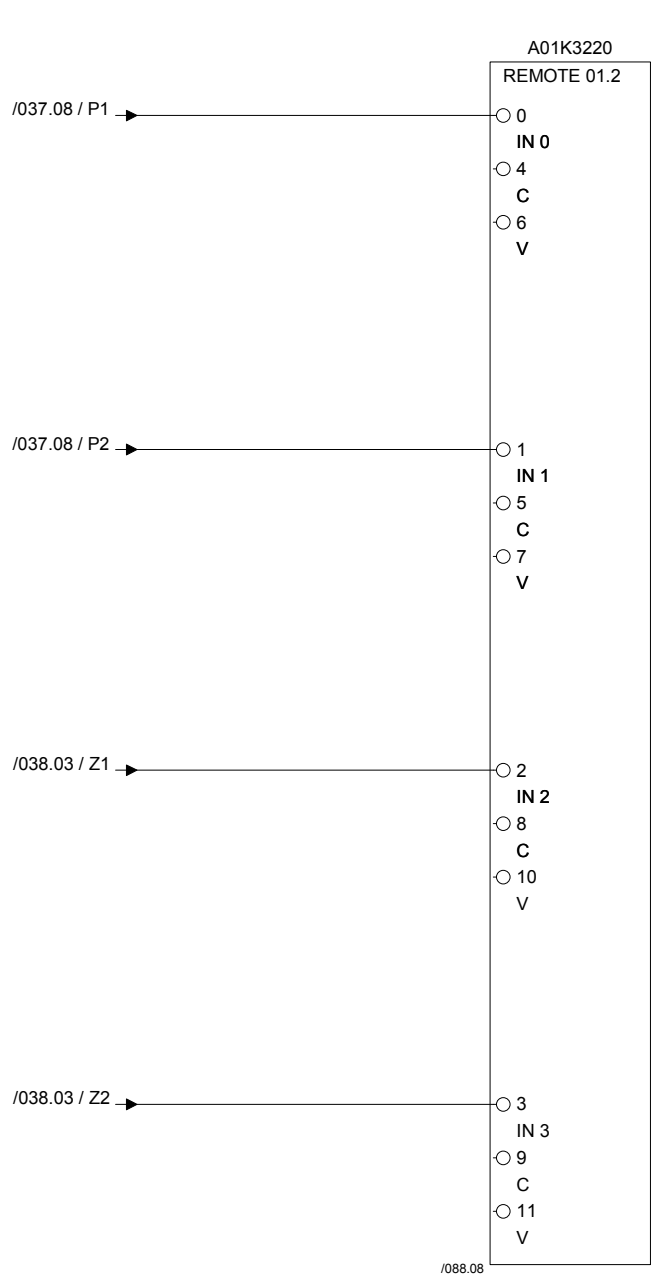

Drawing remarks	Tetra Pak	Designer ACH	Date 26/06/2010	Machine CBP 30 Speed 0200	
		ECM No 456516	Denomination CIRCUIT DIAGRAM	Page Type PLC-IN	
	Company Tetra Pak (Italy)	Document No. 3037928-0003	Doc. type ELD	Version AC	Page 046

This drawing must not without the consent of Tetra Pak be copied, transmitted or disclosed to any third party.

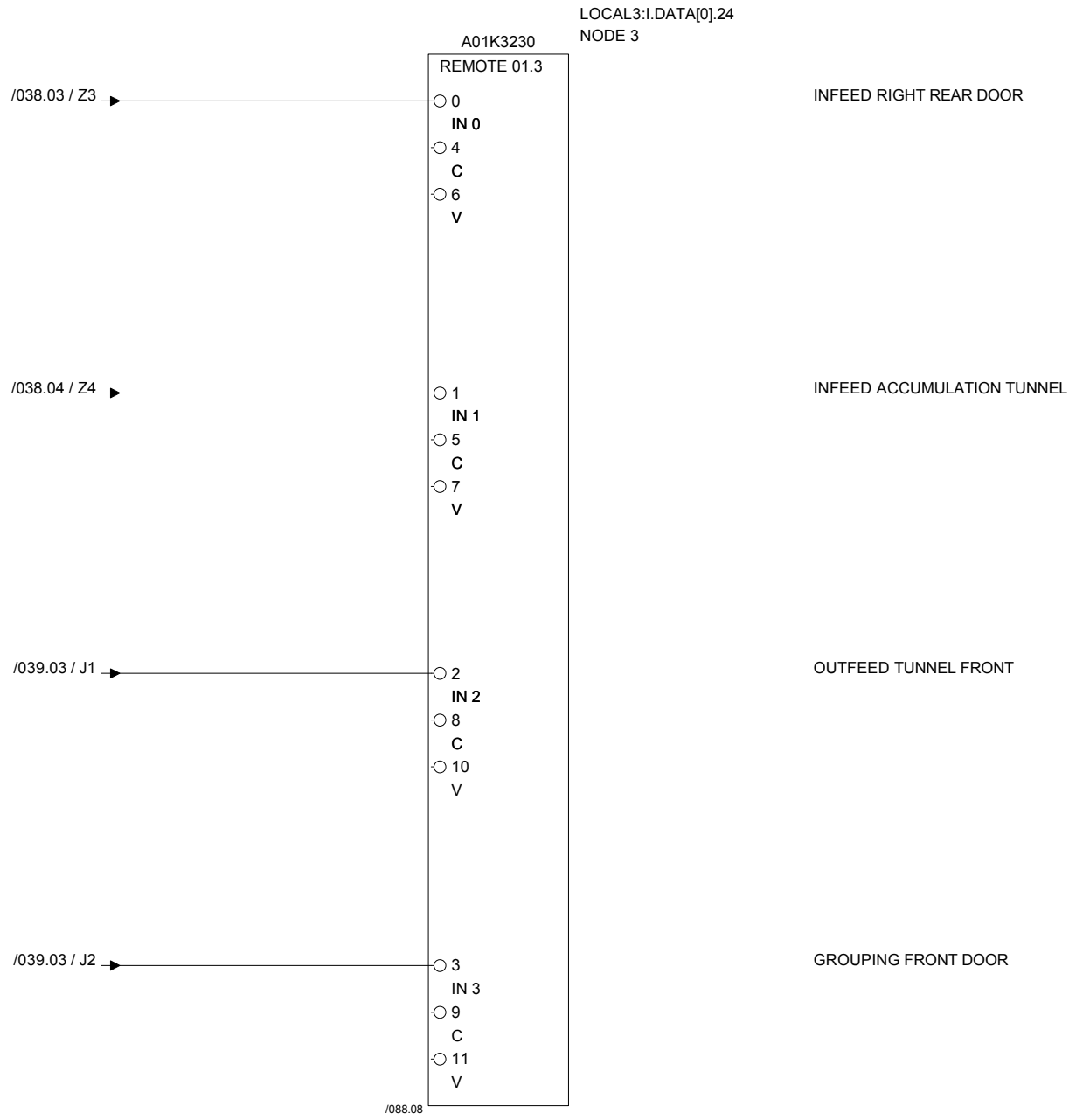

Drawing remarks	Tetra Pak	Designer ACH	Date 26/06/2010	Machine CBP 30 Speed 0200
		ECM No 456516	Denomination CIRCUIT DIAGRAM	Page Type PLC-IN
	Company Tetra Pak (Italy)	Document No. 3037928-0003	Doc. type ELD	Version AC / Page 047

RELEASED

This drawing must not without the consent of Tetra Pak be copied, transmitted or disclosed to any third party.

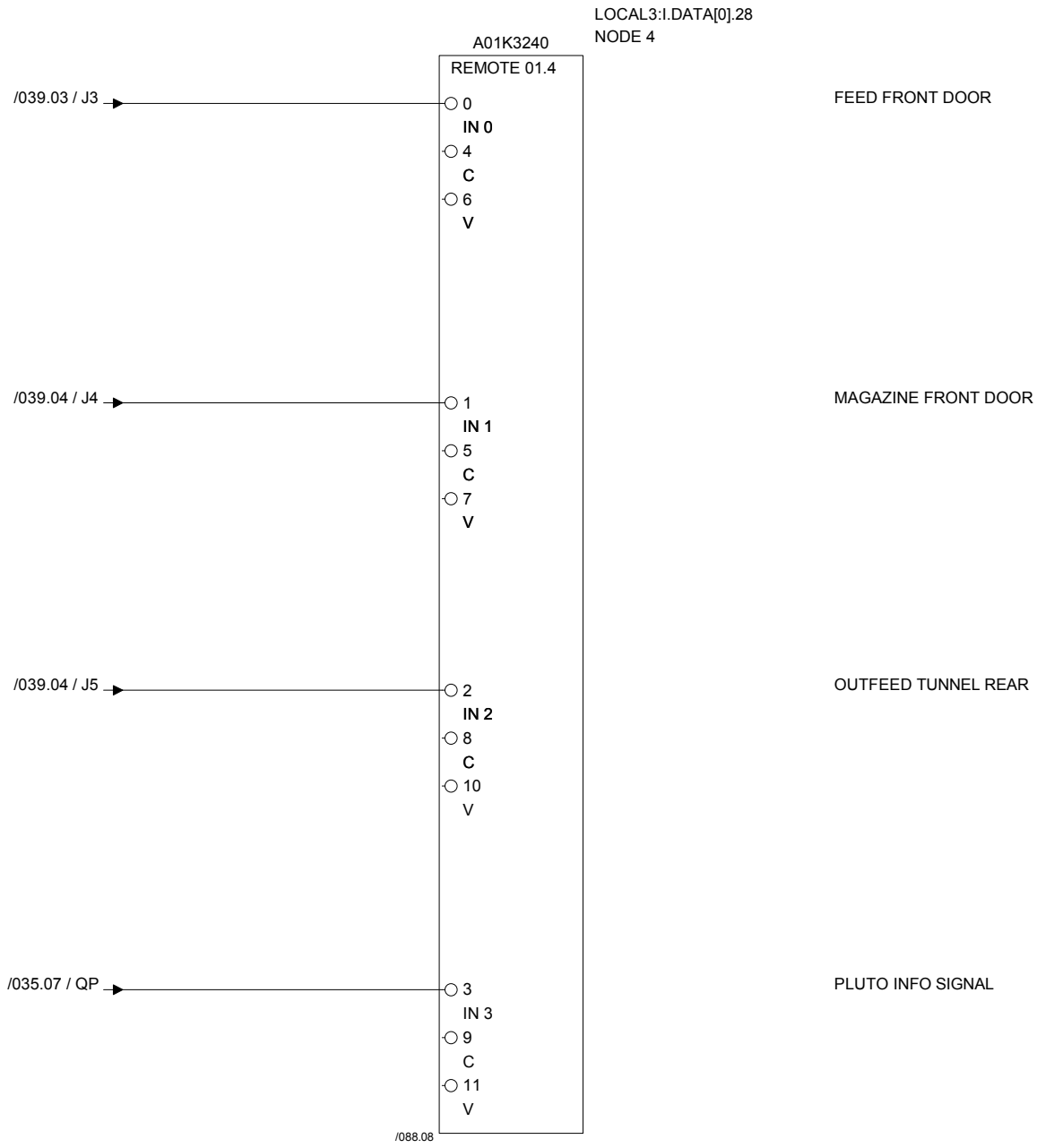

Drawing remarks	Tetra Pak	Designer ACH	Date 26/06/2010	Machine CBP 30 Speed 0200	
		ECM No 456516	Denomination CIRCUIT DIAGRAM	Page Type PLC-IN	
	Company Tetra Pak (Italy)	Document No. 3037928-0003	Doc. type ELD	Version AC	Page 048

RELEASED

This drawing must not without the consent of Tetra Pak be copied, transmitted or disclosed to any third party.

1 2 3 4 5 6 7 8 9 10

LOCAL3:I.DATA[1].0
NODE 5

A01K3250
REMOTE 01.5

/038.04 / Z5 → 0 IN 0 4 C 6 V — INFEED RIGHT TUNNEL

/038.04 / Z6 → 1 IN 1 5 C 7 V — INFEED LEFT FRONT DOOR

/038.04 / Z7 → 2 IN 2 8 C 10 V — INFEED RIGHT FRONT DOOR

/038.04 / Z8 → 3 IN 3 9 C 11 V — GROUPING TUNNEL

/088.08

Drawing remarks	Tetra Pak	Designer ACH	Date 26/06/2010	Machine CBP 30 Speed 0200			
		ECM No 456516	Denomination CIRCUIT DIAGRAM	Page Type PLC-IN			
		Company Tetra Pak (Italy)	Document No. 3037928-0003	Doc. type ELD	Version AC	Page 049	

RELEASED

This drawing must not without the consent of Tetra Pak be copied, transmitted or disclosed to any third party.

1	2	3	4	5	6	7	8	9	10

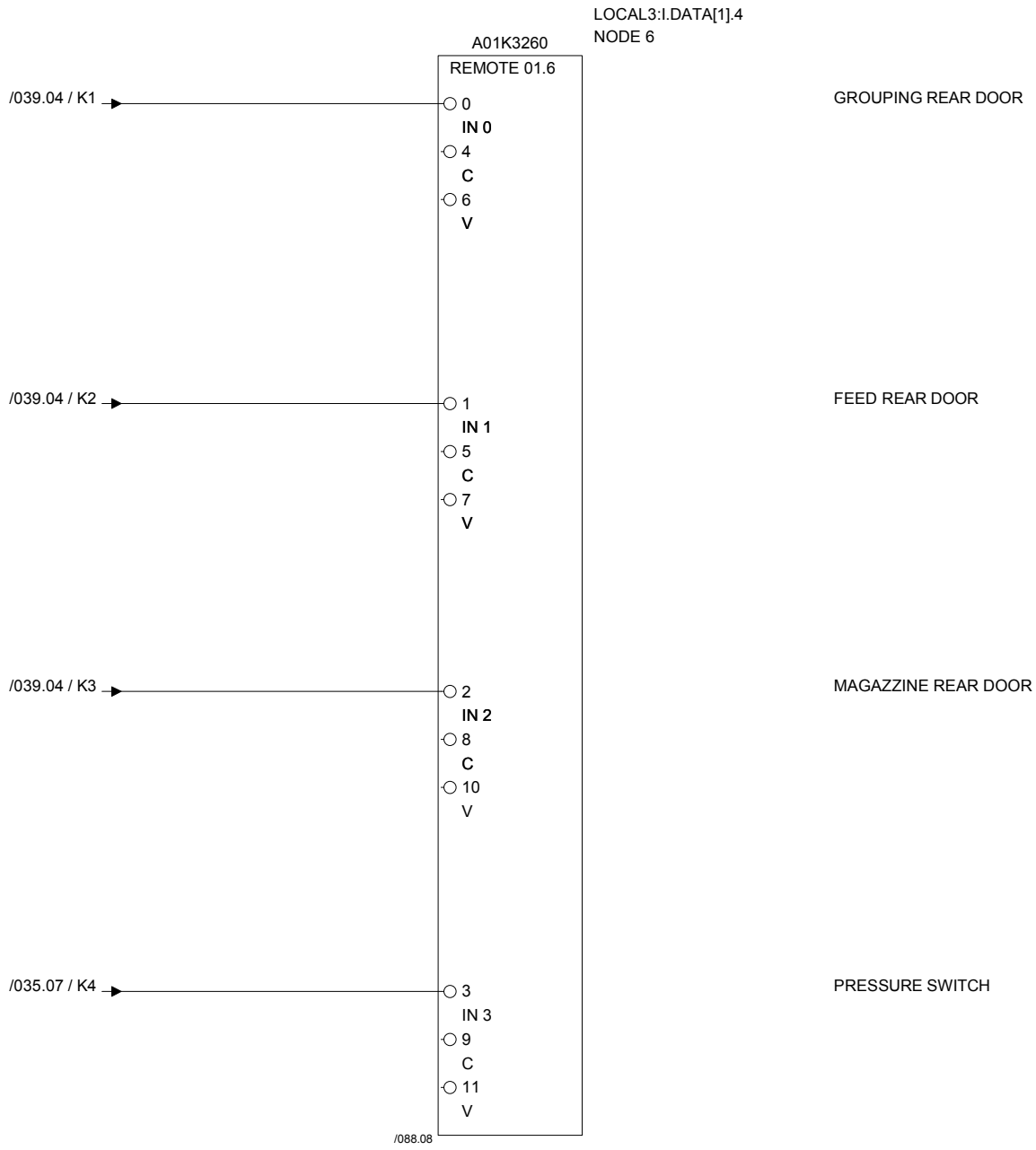

	Tetra Pak	Designer ACH	Date 26/06/2010	Machine CBP 30 Speed 0200			
		ECM No 456516	Denomination CIRCUIT DIAGRAM	Page Type PLC-IN			
Drawing remarks		Company Tetra Pak (Italy)	Document No. 3037928-0003	Doc. type ELD	Version AC	Page 050	

This drawing must not without the consent of Tetra Pak be copied, transmitted or disclosed to any third party.

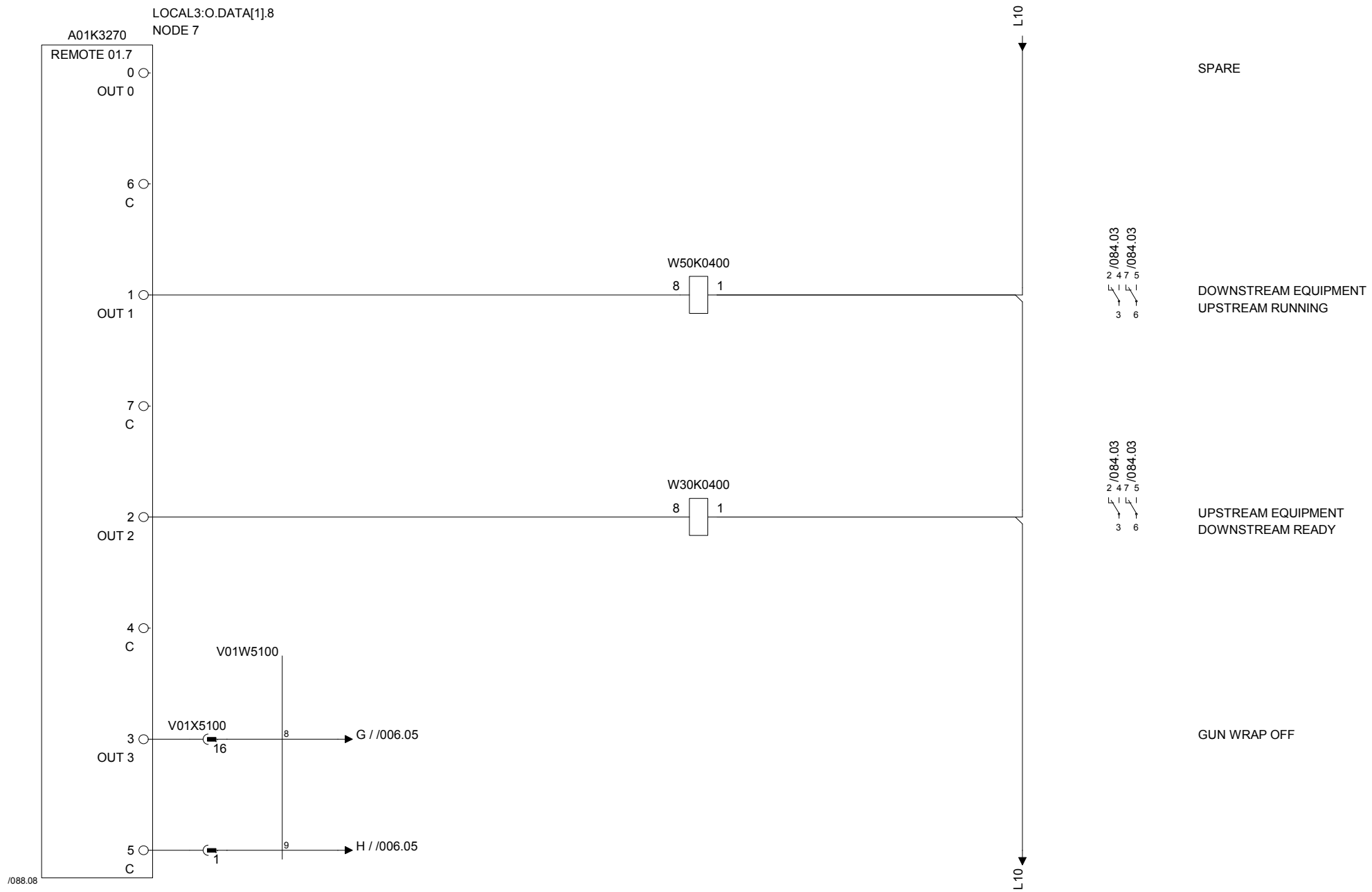

Drawing remarks	Tetra Pak	Designer ACH	Date 26/06/2010	Machine CBP 30 Speed 0200
		ECM No 456516	Denomination CIRCUIT DIAGRAM	Page Type PLC-OUT
		Company Tetra Pak (Italy)	Document No. 3037928-0003	Doc. type ELD / Version AC / Page 051

This drawing must not without the consent of Tetra Pak be copied, transmitted or disclosed to any third party.

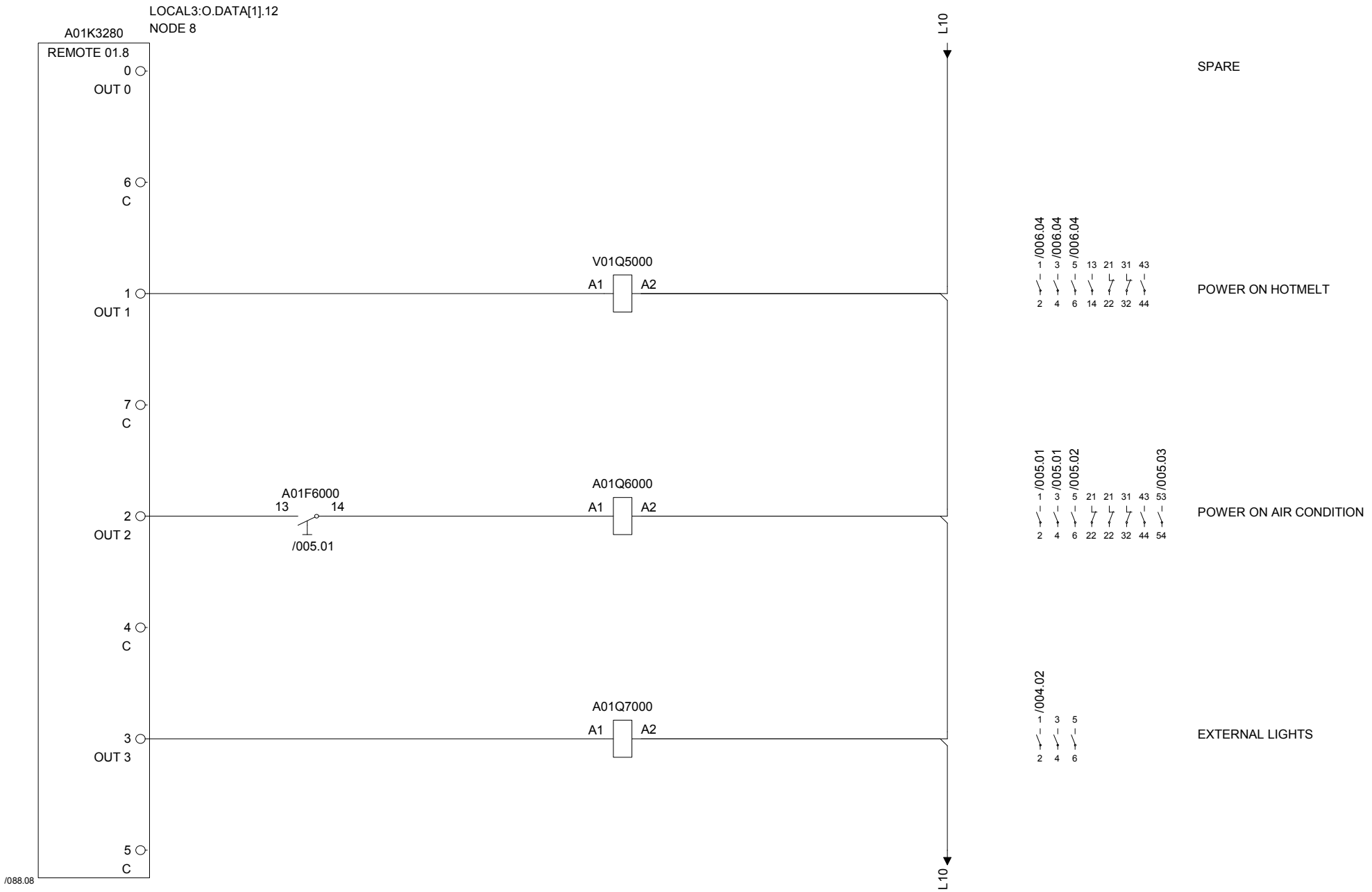

Drawing remarks	Tetra Pak	Designer ACH	Date 26/06/2010	Machine CBP 30 Speed 0200
		ECM No 456516	Denomination CIRCUIT DIAGRAM	Page Type PLC-OUT
		Company Tetra Pak (Italy)	Document No. 3037928-0003	Doc. type ELD / Version AC / Page 052

RELEASED

This drawing must not without the consent of Tetra Pak be copied, transmitted or disclosed to any third party.

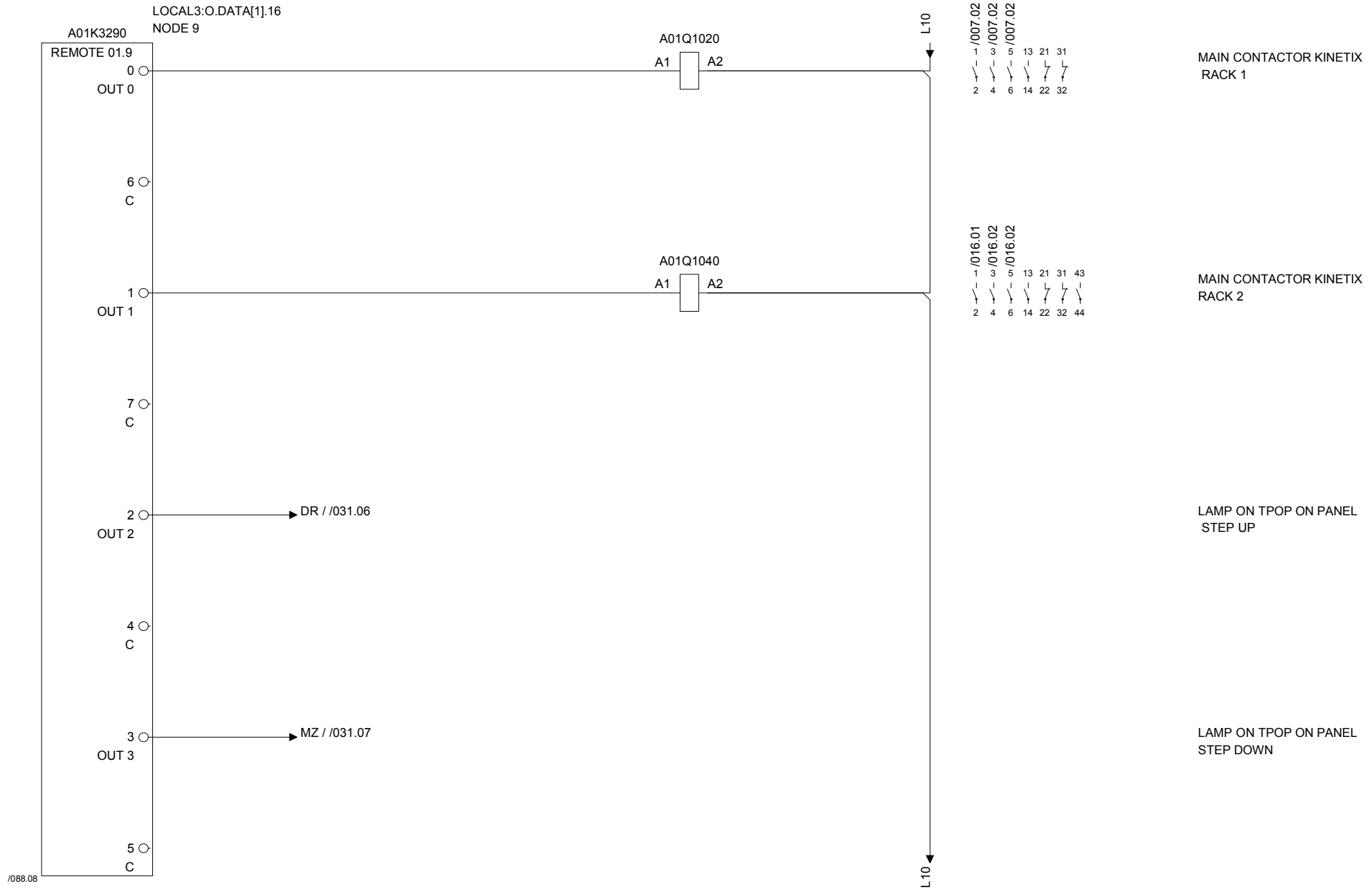

Drawing remarks	Tetra Pak	Designer ACH	Date 26/06/2010	Machine CBP 30 Speed 0200
		ECM No 456516	Denomination CIRCUIT DIAGRAM	Page Type PLC-OUT
	Company Tetra Pak (Italy)	Document No. 3037928-0003	Doc. type ELD	Version AC	Page 053

RELEASED

This drawing must not without the consent of Tetra Pak be copied, transmitted or disclosed to any third party.

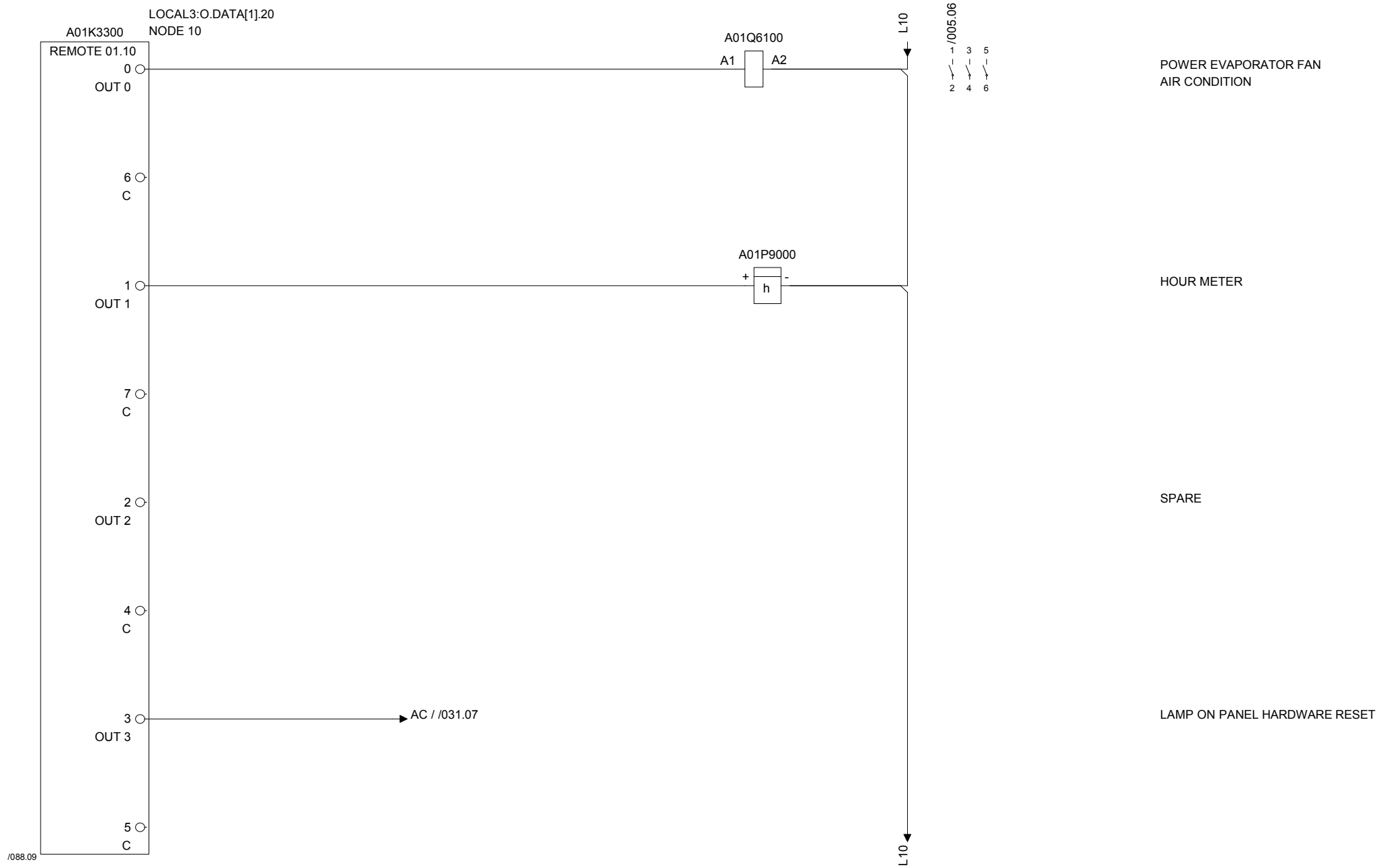

Drawing remarks	Tetra Pak	Designer ACH	Date 26/06/2010	Machine CBP 30 Speed 0200	
		ECM No 456516	Denomination CIRCUIT DIAGRAM	Page Type PLC-OUT	
		Company Tetra Pak (Italy)	Document No. 3037928-0003	Doc. type ELD	Version AC	Page 054

This drawing must not without the consent of Tetra Pak
be copied, transmitted or disclosed to any third party.

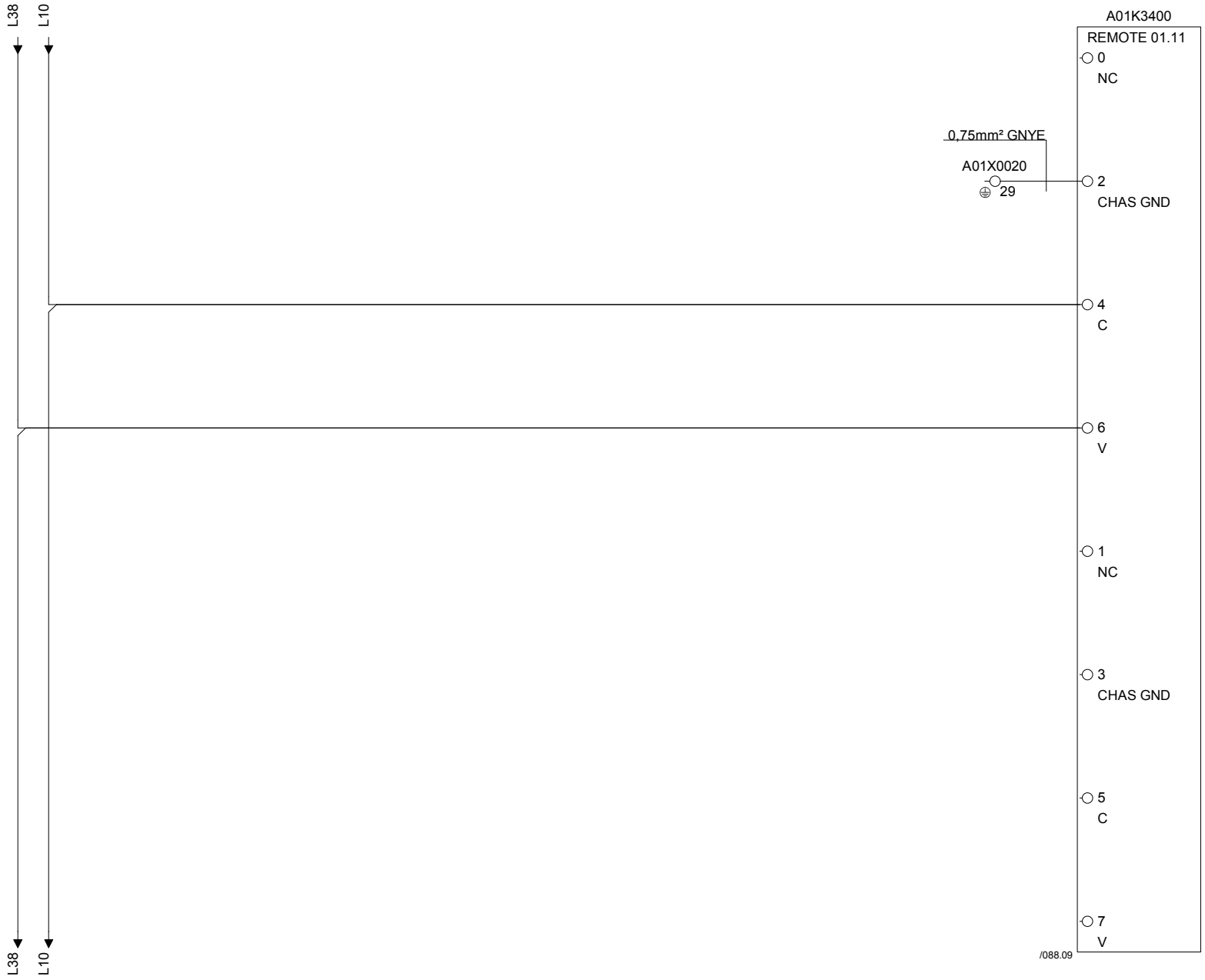

Drawing remarks	Tetra Pak	Designer ACH	Date 26/06/2010	Machine CBP 30 Speed 0200	
		ECM No 456516	Denomination CIRCUIT DIAGRAM	Page Type PLC-FPD	
	Company Tetra Pak (Italy)	Document No. 3037928-0003	Doc. type ELD	Version AC	Page 056

RELEASED

This drawing must not without the consent of Tetra Pak be copied, transmitted or disclosed to any third party.

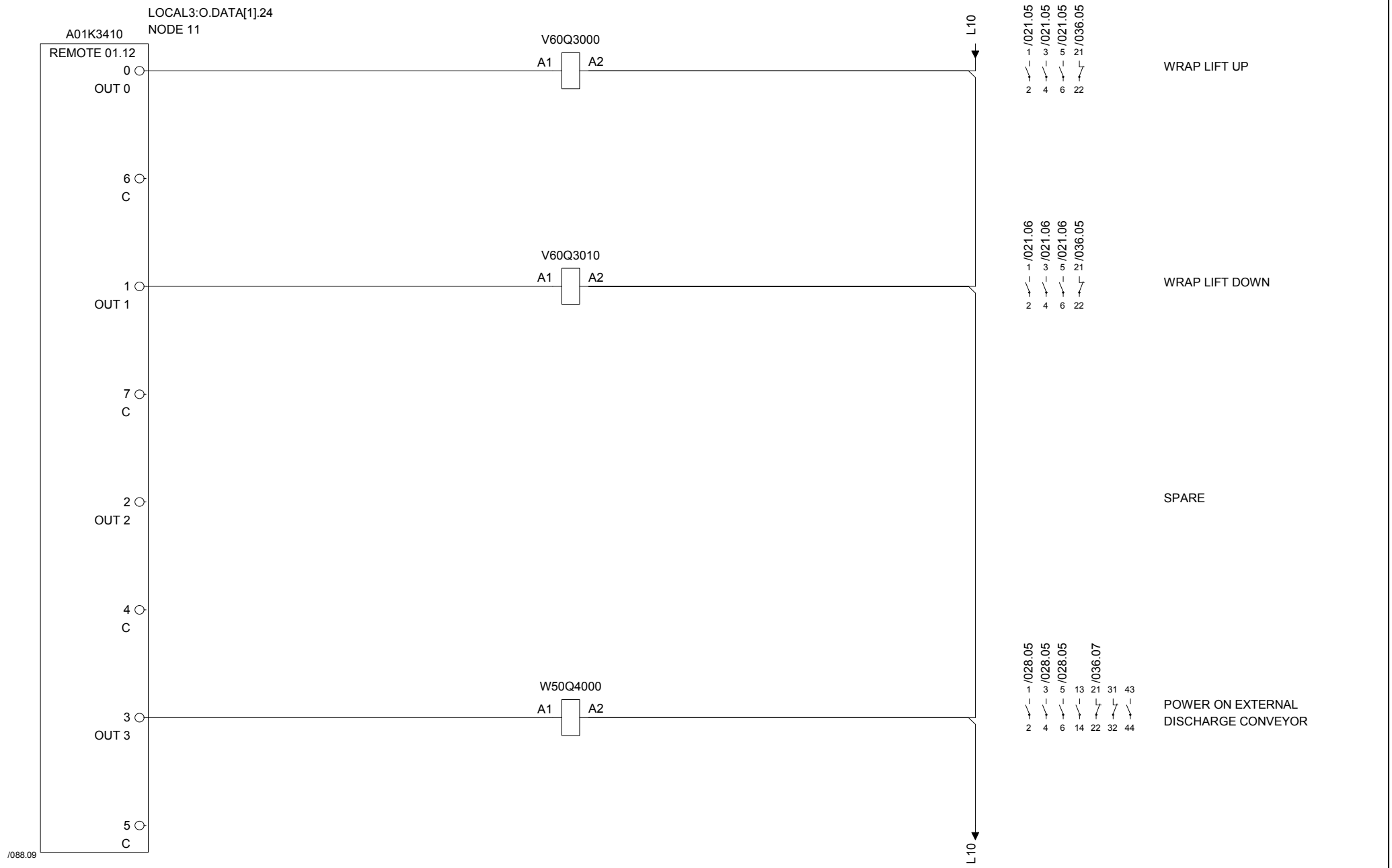

Drawing remarks	Tetra Pak	Designer ACH	Date 26/06/2010	Machine CBP 30 Speed 0200	
		ECM No 456516	Denomination CIRCUIT DIAGRAM	Page Type PLC-OUT	
	Company Tetra Pak (Italy)	Document No. 3037928-0003	Doc. type ELD	Version AC	Page 057

RELEASED

This drawing must not without the consent of Tetra Pak be copied, transmitted or disclosed to any third party.

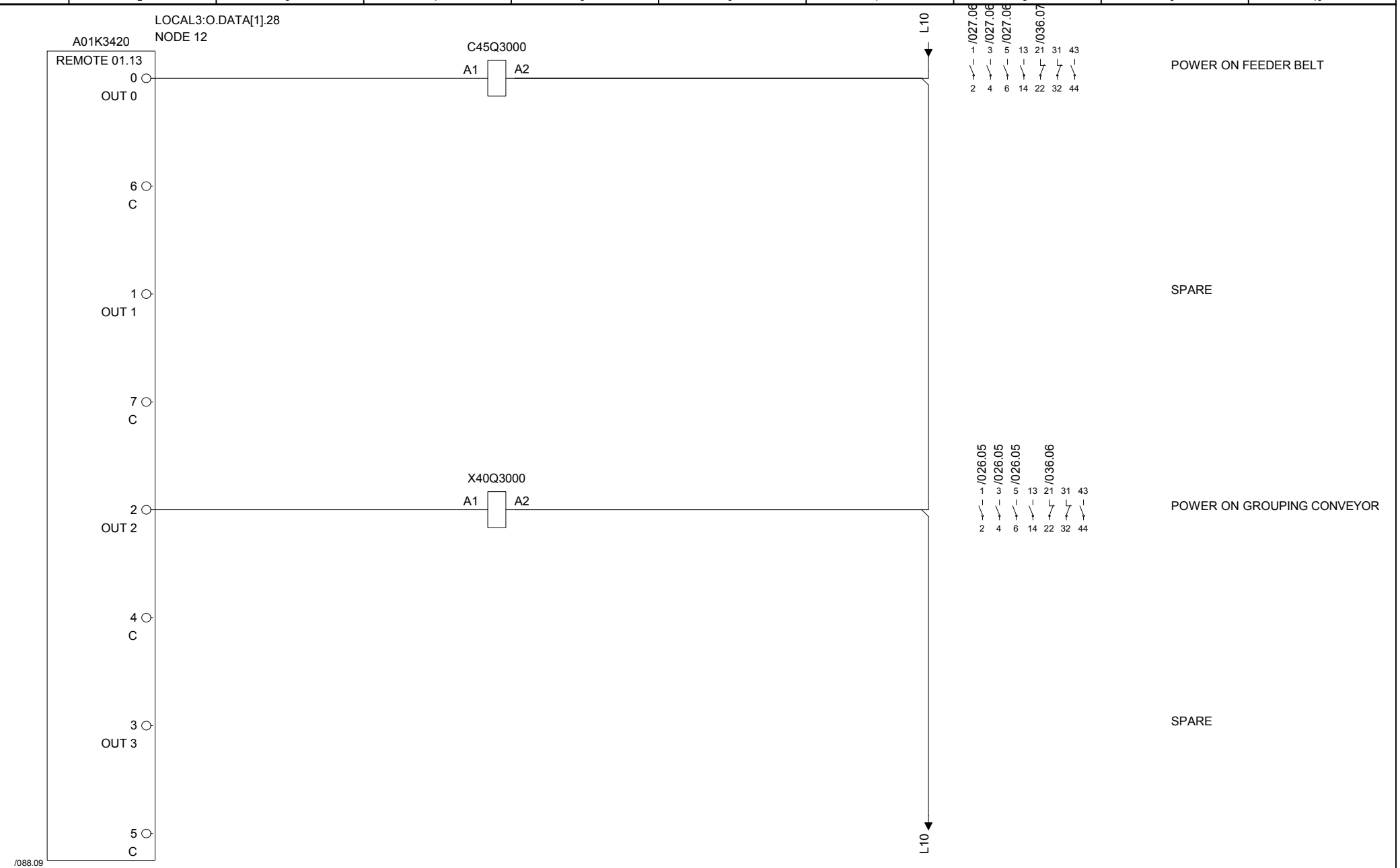

Drawing remarks	Tetra Pak	Designer ACH	Date 26/06/2010	Machine CBP 30 Speed 0200
		ECM No 456516	Denomination CIRCUIT DIAGRAM	Page Type PLC-OUT
		Company Tetra Pak (Italy)	Document No. 3037928-0003	Doc. type ELD / Version AC / Page 058

RELEASED

This drawing must not without the consent of Tetra Pak be copied, transmitted or disclosed to any third party.

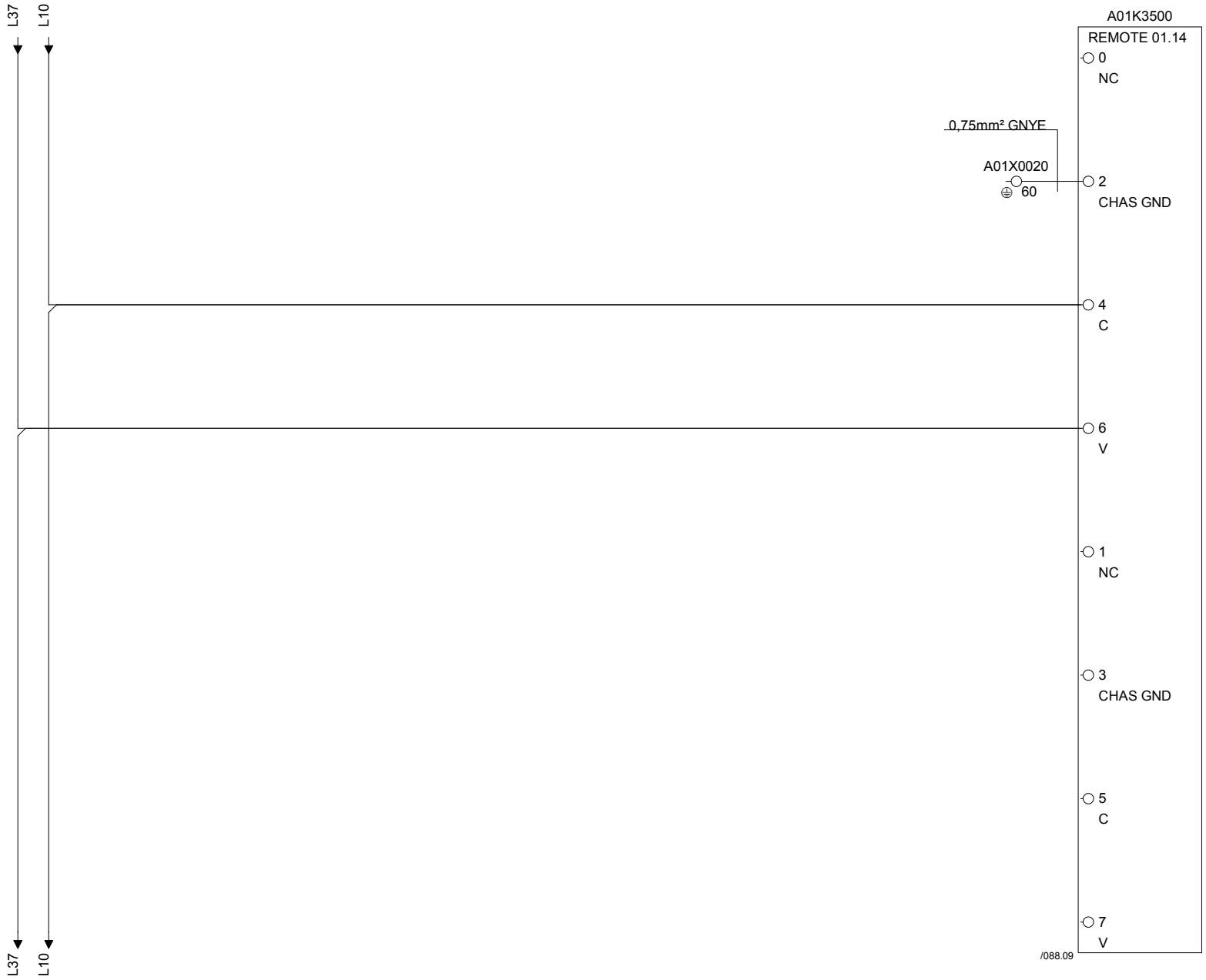

Drawing remarks	Tetra Pak	Designer ACH	Date 26/06/2010	Machine CBP 30 Speed 0200	
		ECM No 456516	Denomination CIRCUIT DIAGRAM	Page Type PLC-FPD	
		Company Tetra Pak (Italy)	Document No. 3037928-0003	Doc. type ELD	Version AC	Page 059

RELEASED

This drawing must not without the consent of Tetra Pak be copied, transmitted or disclosed to any third party.

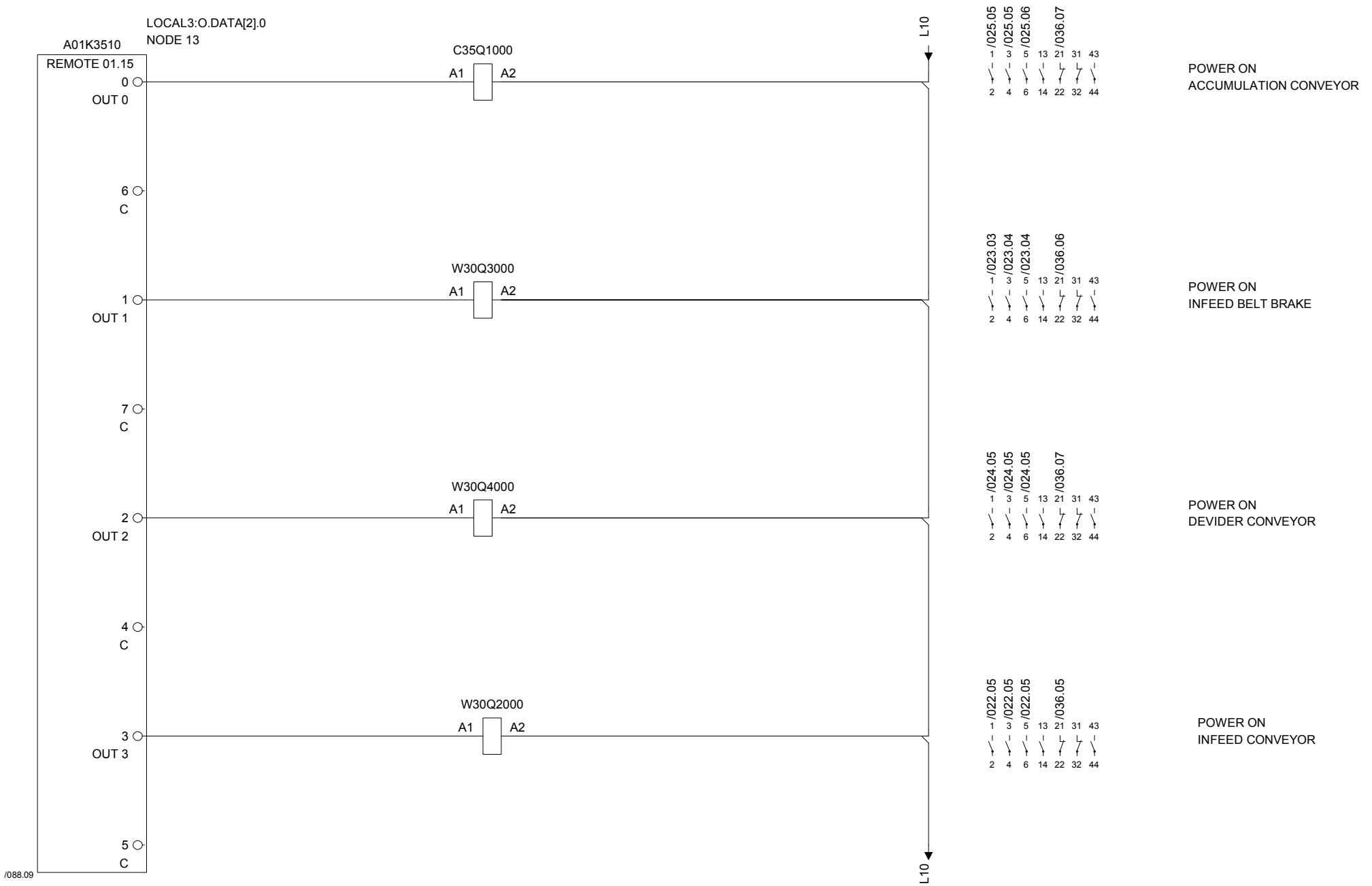

Drawing remarks	Tetra Pak	Designer ACH	Date 26/06/2010	Machine CBP 30 Speed 0200
		ECM No 456516	Denomination CIRCUIT DIAGRAM	Page Type PLC-OUT
	Company Tetra Pak (Italy)	Document No. 3037928-0003	Doc. type ELD	Version AC	Page 060

This drawing must not without the consent of Tetra Pak
be copied, transmitted or disclosed to any third party.

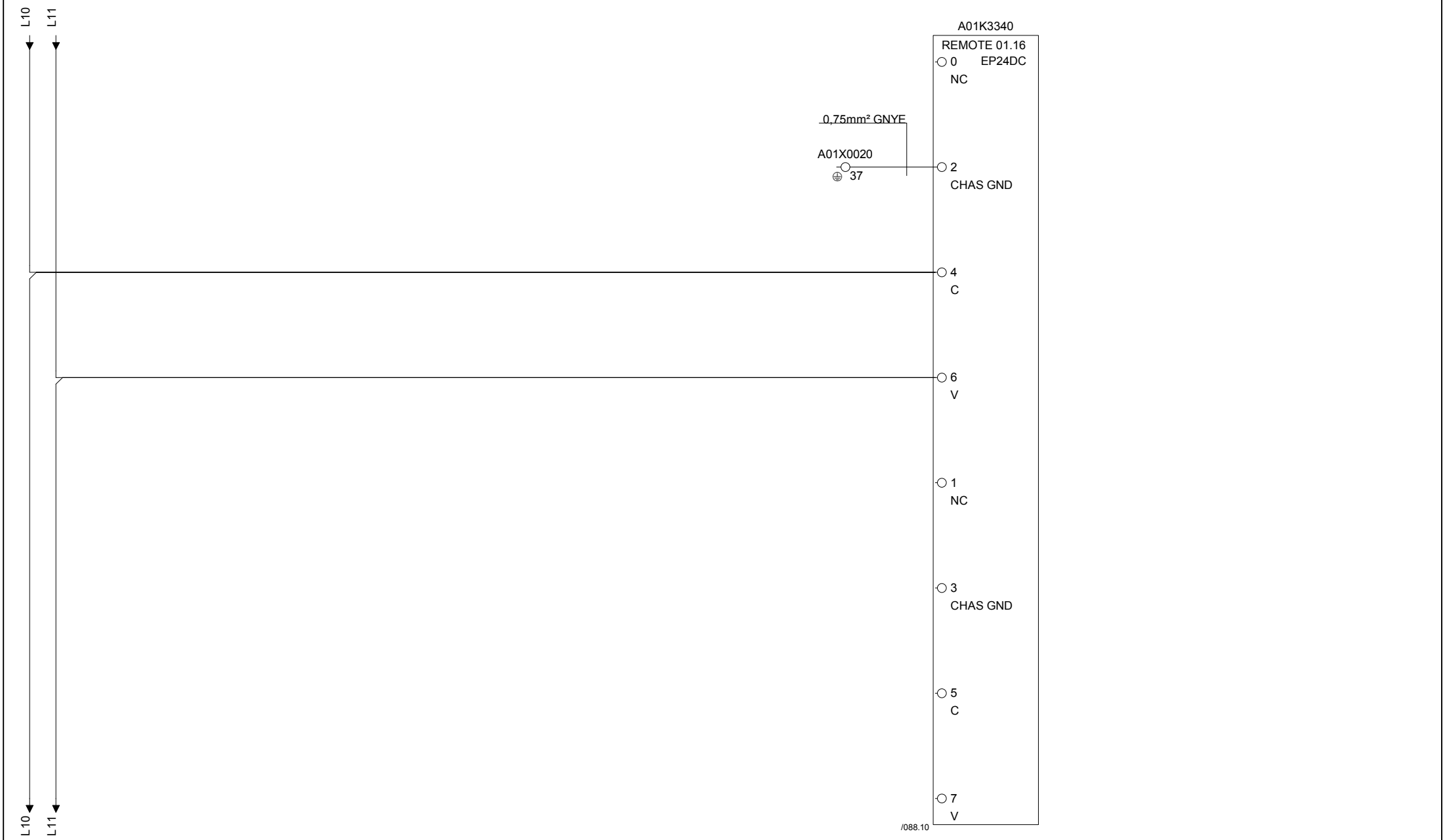

Drawing remarks	Tetra Pak	Designer ACH	Date 26/06/2010	Machine CBP 30 Speed 0200
		ECM No 456516	Denomination CIRCUIT DIAGRAM	Page Type PLC-EP24DC
		Company Tetra Pak (Italy)	Document No. 3037928-0003	Doc. type ELD / Version AC / Page 061

RELEASED

This drawing must not without the consent of Tetra Pak be copied, transmitted or disclosed to any third party.

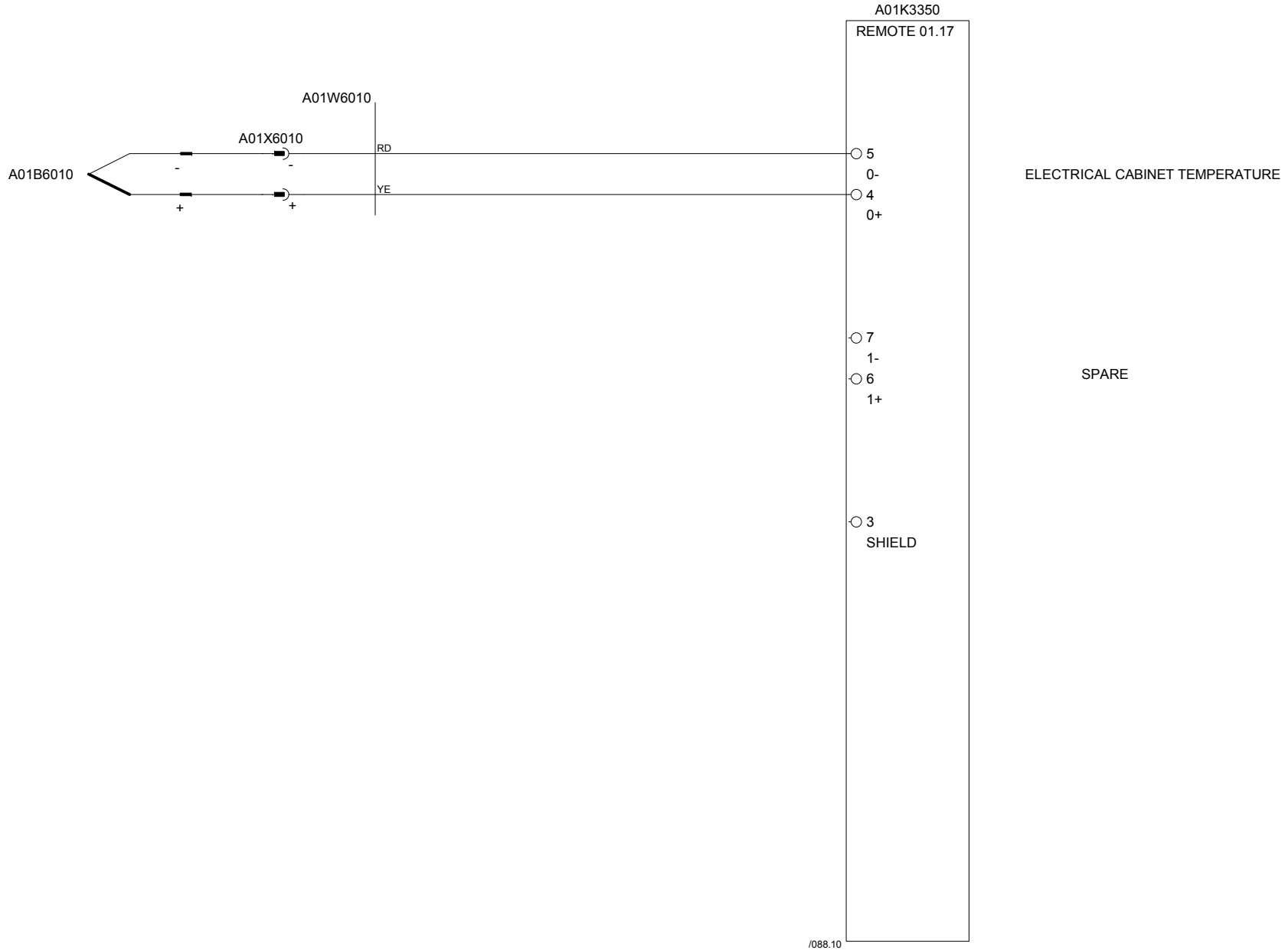

	Tetra Pak	Designer ACH	Date 26/06/2010	Machine CBP 30 Speed 0200			
		ECM No 456516	Denomination CIRCUIT DIAGRAM	Page Type PLC THERMOCOUPLE IN			
Drawing remarks		Company Tetra Pak (Italy)	Document No. 3037928-0003	Doc. type ELD	Version AC	Page 062	

RELEASED

This drawing must not without the consent of Tetra Pak be copied, transmitted or disclosed to any third party.

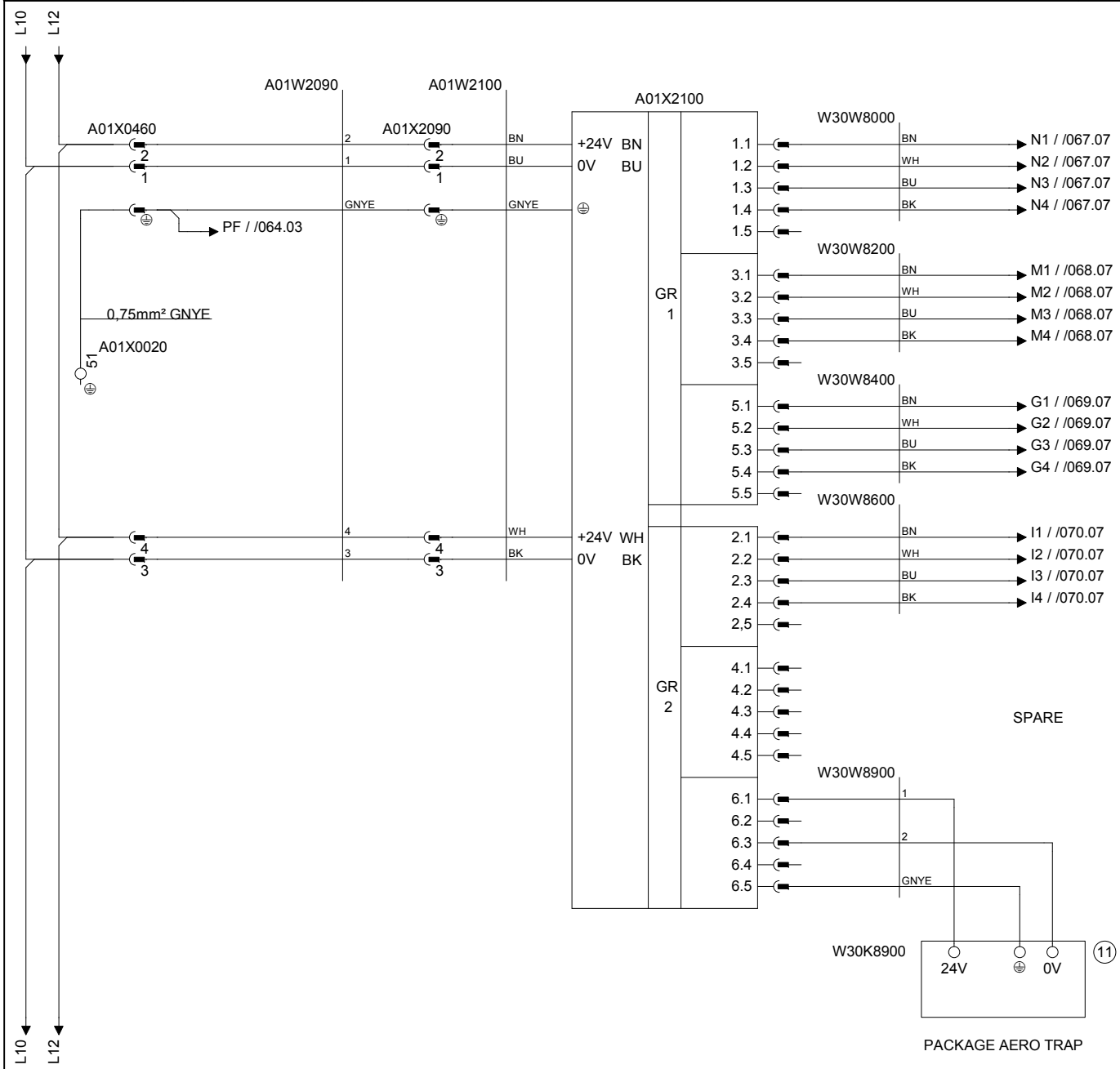

Drawing remarks	Tetra Pak	Designer ACH	Date 26/06/2010	Machine CBP 30 Speed 0200	
		ECM No 456516	Denomination CIRCUIT DIAGRAM	Page Type DEVICENET NODES 24V POWER SUPPLY	
	Company Tetra Pak (Italy)	Document No. 3037928-0003	Doc. type ELD	Version AC	Page 063

RELEASED

This drawing must not without the consent of Tetra Pak be copied, transmitted or disclosed to any third party.

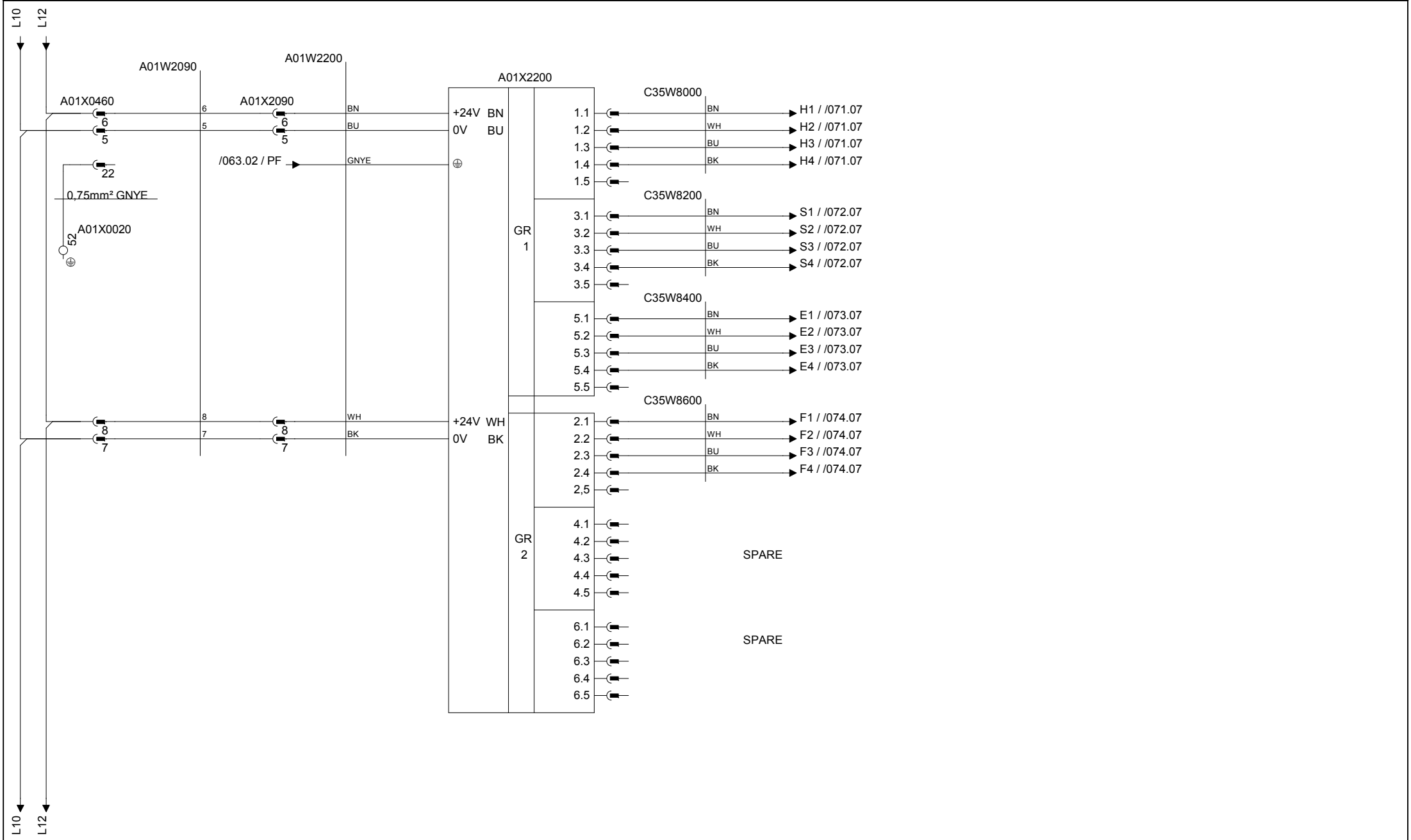

Drawing remarks	Tetra Pak	Designer ACH	Date 26/06/2010	Machine CBP 30 Speed 0200	
		ECM No 456516	Denomination CIRCUIT DIAGRAM	Page Type DEVICENET NODES 24V POWER SUPPLY	
	Company Tetra Pak (Italy)	Document No. 3037928-0003	Doc. type ELD	Version AC	Page 064

RELEASED

This drawing must not without the consent of Tetra Pak be copied, transmitted or disclosed to any third party.

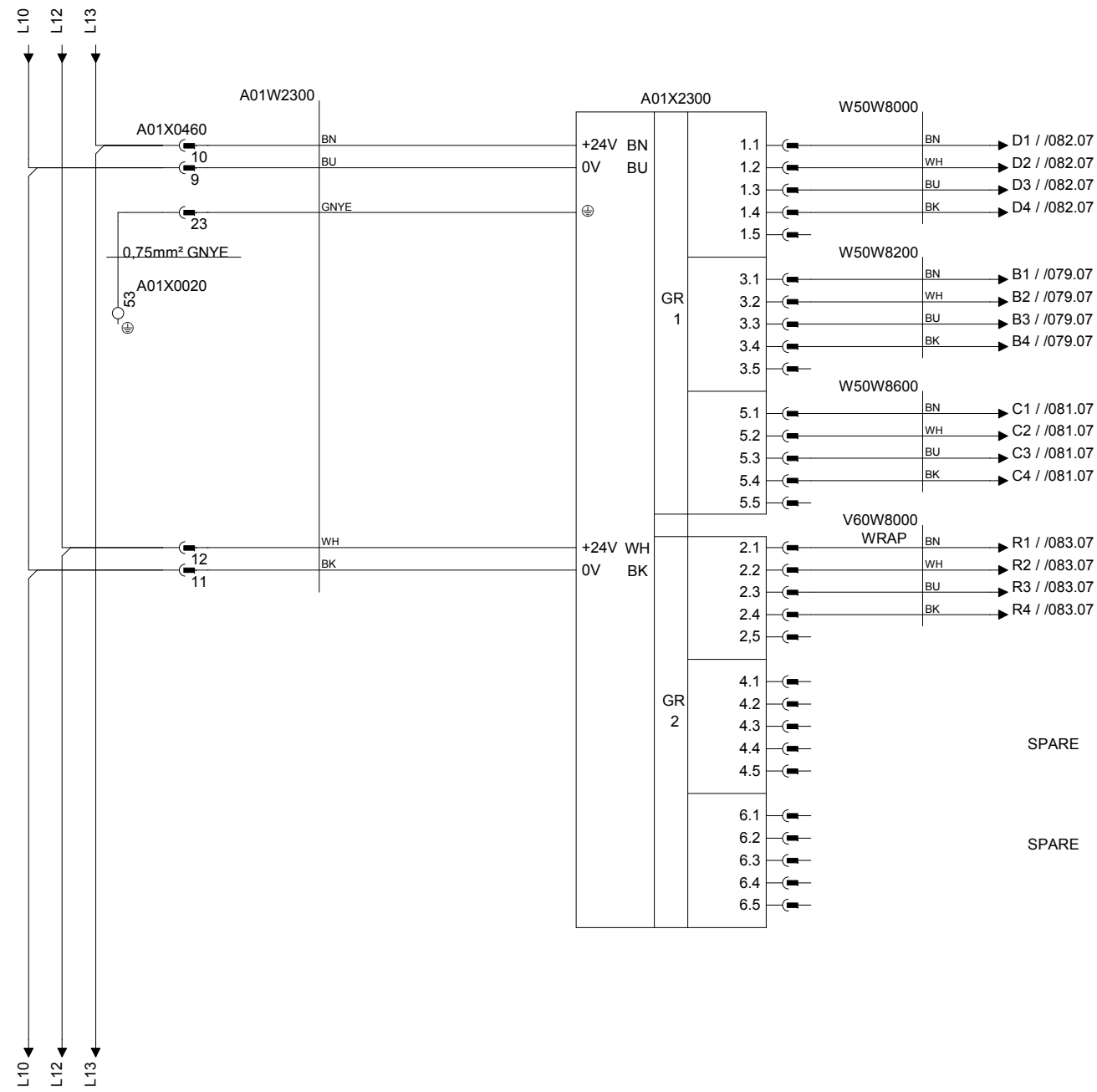

Drawing remarks	Tetra Pak	Designer ACH	Date 26/06/2010	Machine CBP 30 Speed 0200	
		ECM No 456516	Denomination CIRCUIT DIAGRAM	Page Type DEVICENET NODES 24V POWER SUPPLY	
	Company Tetra Pak (Italy)	Document No. 3037928-0003	Doc. type ELD	Version AC	Page 065

RELEASED

This drawing must not without the consent of Tetra Pak be copied, transmitted or disclosed to any third party.

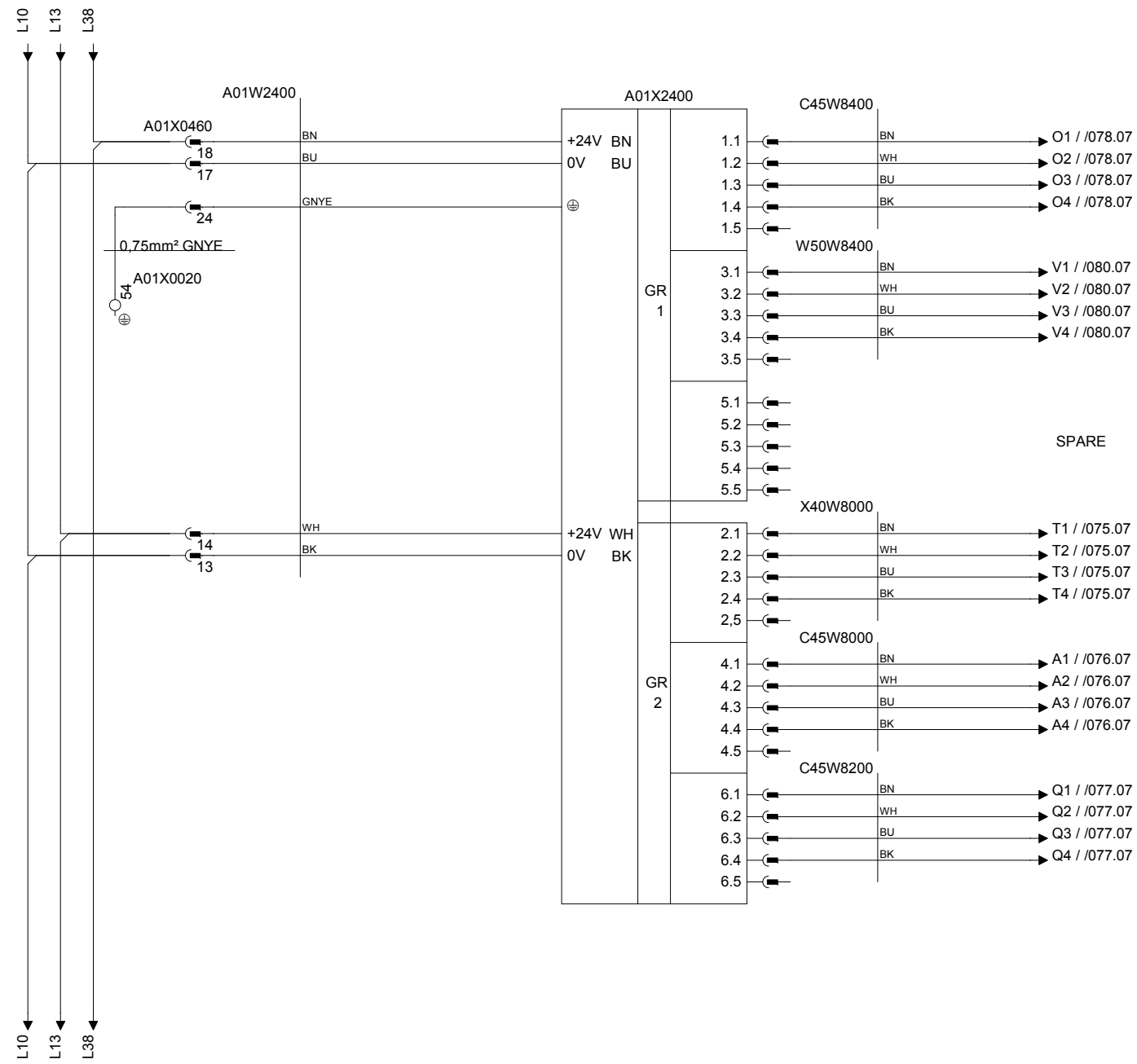

Drawing remarks	Tetra Pak	Designer ACH	Date 26/06/2010	Machine CBP 30 Speed 0200	
		ECM No 456516	Denomination CIRCUIT DIAGRAM	Page Type DEVICENET NODES 24V POWER SUPPLY	
	Company Tetra Pak (Italy)	Document No. 3037928-0003	Doc. type ELD	Version AC	Page 066

RELEASED

This drawing must not without the consent of Tetra Pak be copied, transmitted or disclosed to any third party.

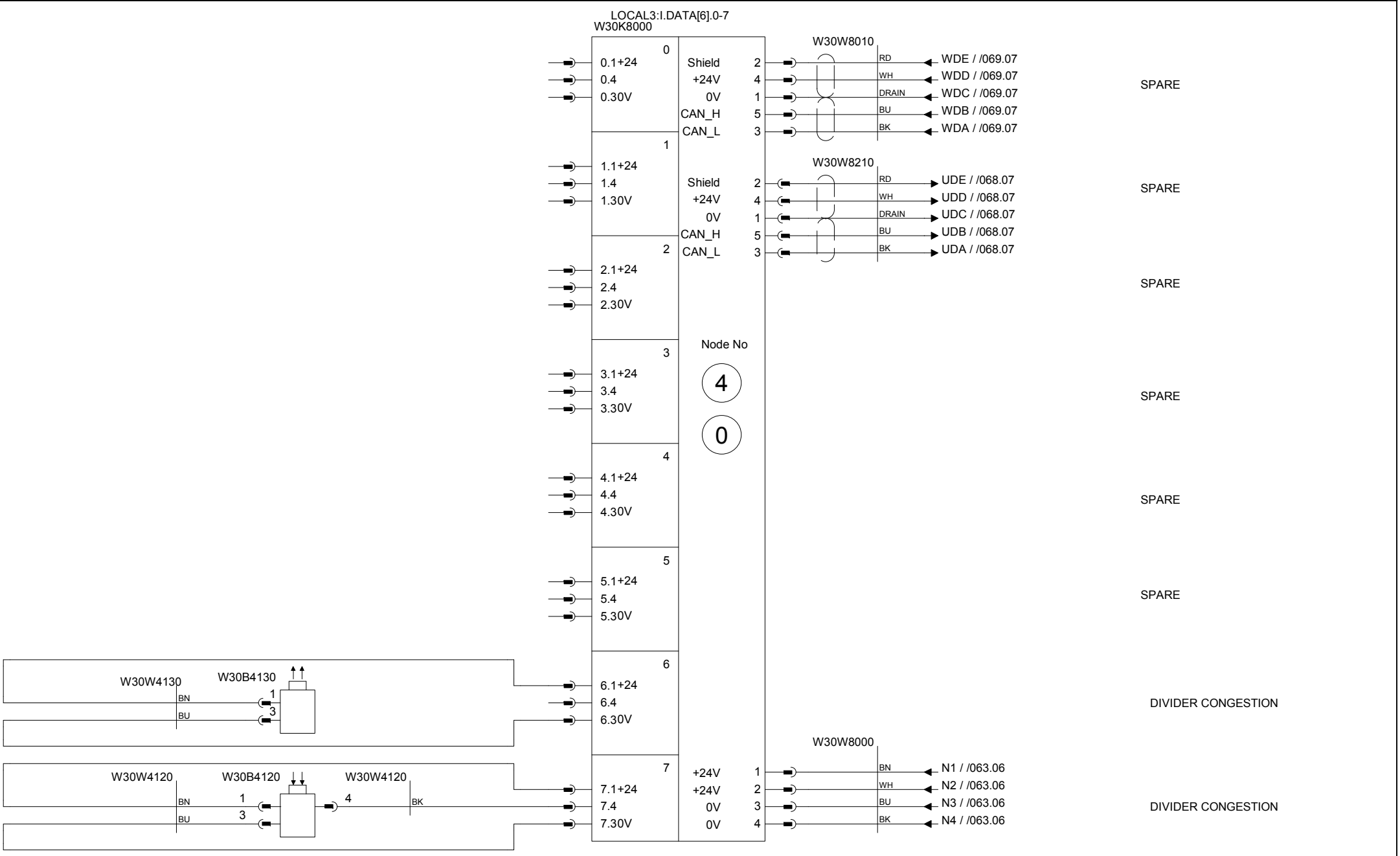

Drawing remarks	Tetra Pak	Designer ACH	Date 26/06/2010	Machine CBP 30 Speed 0200
		ECM No 456516	Denomination CIRCUIT DIAGRAM	Page Type PLC-IN
	Company Tetra Pak (Italy)	Document No. 3037928-0003	Doc. type ELD	Version AC	Page 067

RELEASED

This drawing must not without the consent of Tetra Pak be copied, transmitted or disclosed to any third party.

LOCAL3:I.DATA[6].8-15

W30K8200

W30W1230 W30X1230 W30W1170 W30B1170 BN BU BN BU 1 3 1 3 12

W30W1240 W30X1240 W30W1160 W30B1160 W30W1160 W30X1240 W30W1240 BN BU BN BU BK BK 1 3 1 3 4 4 12

F09W2220 F09B2220 F09W2220 BU BK 3 4

F09W2620 F09B2620 F09W2620 BU BK 3 4

0	0.1+24	Shield	2
	0.4	+24V	4
	0.30V	0V	1
		CAN_H	5
		CAN_L	3
1	1.1+24	Shield	2
	1.4	+24V	4
	1.30V	0V	1
		CAN_H	5
		CAN_L	3
2	2.1+24		
	2.4		
	2.30V		
3	3.1+24	Node No	
	3.4	4	
	3.30V	1	
4	4.1+24		
	4.4		
	4.30V		
5	5.1+24		
	5.4		
	5.30V		
6	6.1+24		
	6.4		
	6.30V		
7	7.1+24	+24V	1
	7.4	+24V	2
	7.30V	0V	3
		0V	4

W30W8210

RD	UDE / /067.07	OVERFLOW / PACKAGE COMING
WH	UDD / /067.07	
DRAIN	UDC / /067.07	
BU	UDB / /067.07	
BK	UDA / /067.07	

C35W8210

RD	FDE / /072.07	OVERFLOW / PACKAGE COMING
WH	FDD / /072.07	
DRAIN	FDC / /072.07	
BU	FDB / /072.07	
BK	FDA / /072.07	

INFEED LEFT REAR DOOR LOCKER

INFEED LEFT FRONT DOOR LOCKER

SPARE

SPARE

SPARE

W30W8200

BN	M1 / /063.06	SPARE
WH	M2 / /063.06	
BU	M3 / /063.06	
BK	M4 / /063.06	

Drawing remarks	Tetra Pak	Designer ACH	Date 26/06/2010	Machine CBP 30 Speed 0200		
		ECM No 456516	Denomination CIRCUIT DIAGRAM	Page Type PLC-IN/OUT		
		Company Tetra Pak (Italy)	Document No. 3037928-0003	Doc. type ELD	Version AC	Page 068

RELEASED

This drawing must not without the consent of Tetra Pak be copied, transmitted or disclosed to any third party.

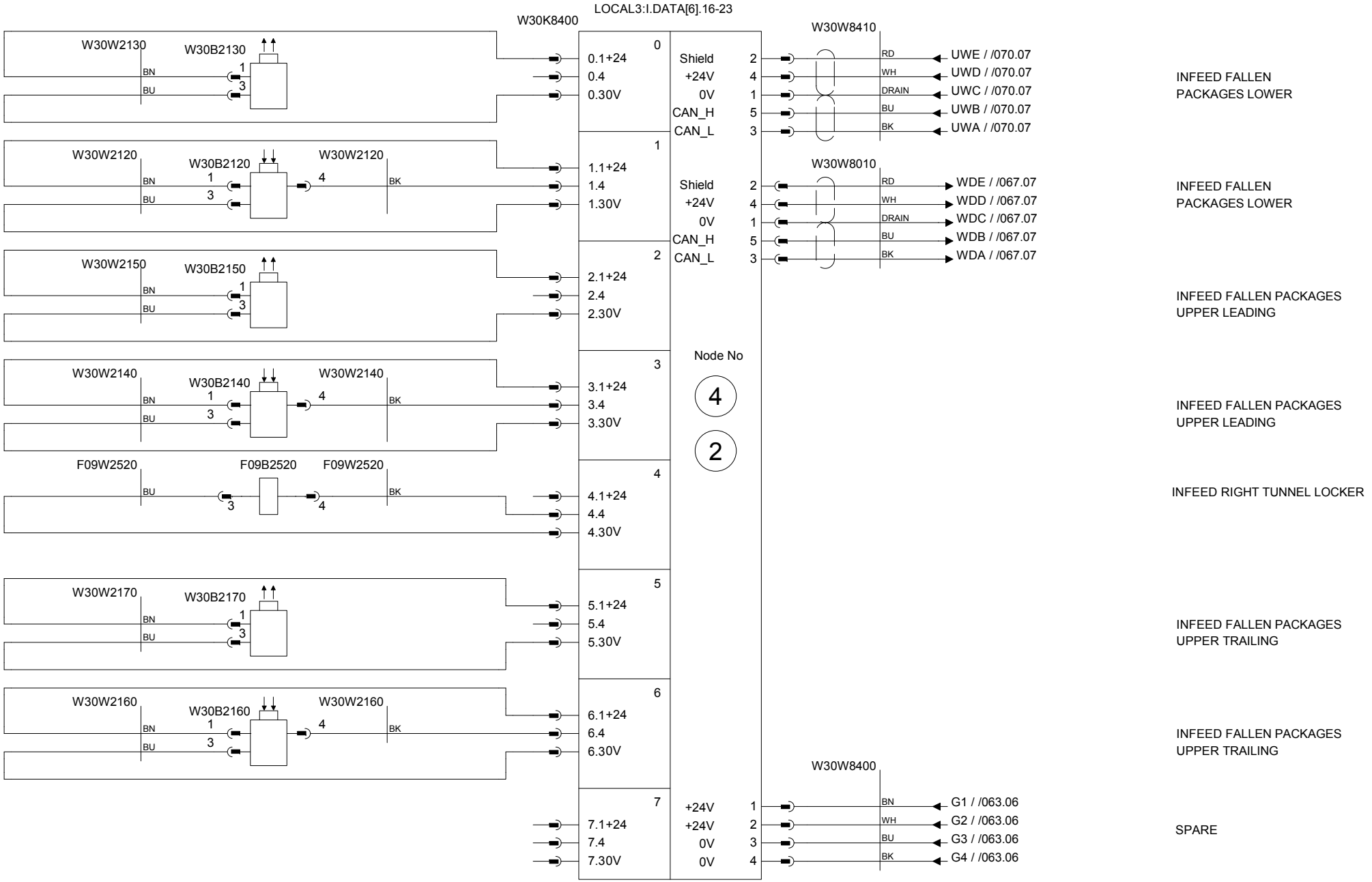

Drawing remarks	Tetra Pak	Designer ACH	Date 26/06/2010	Machine CBP 30 Speed 0200
		ECM No 456516	Denomination CIRCUIT DIAGRAM	Page Type PLC-IN/OUT
	Company Tetra Pak (Italy)	Document No. 3037928-0003	Doc. type ELD	Version AC	Page 069

RELEASED

This drawing must not without the consent of Tetra Pak be copied, transmitted or disclosed to any third party.

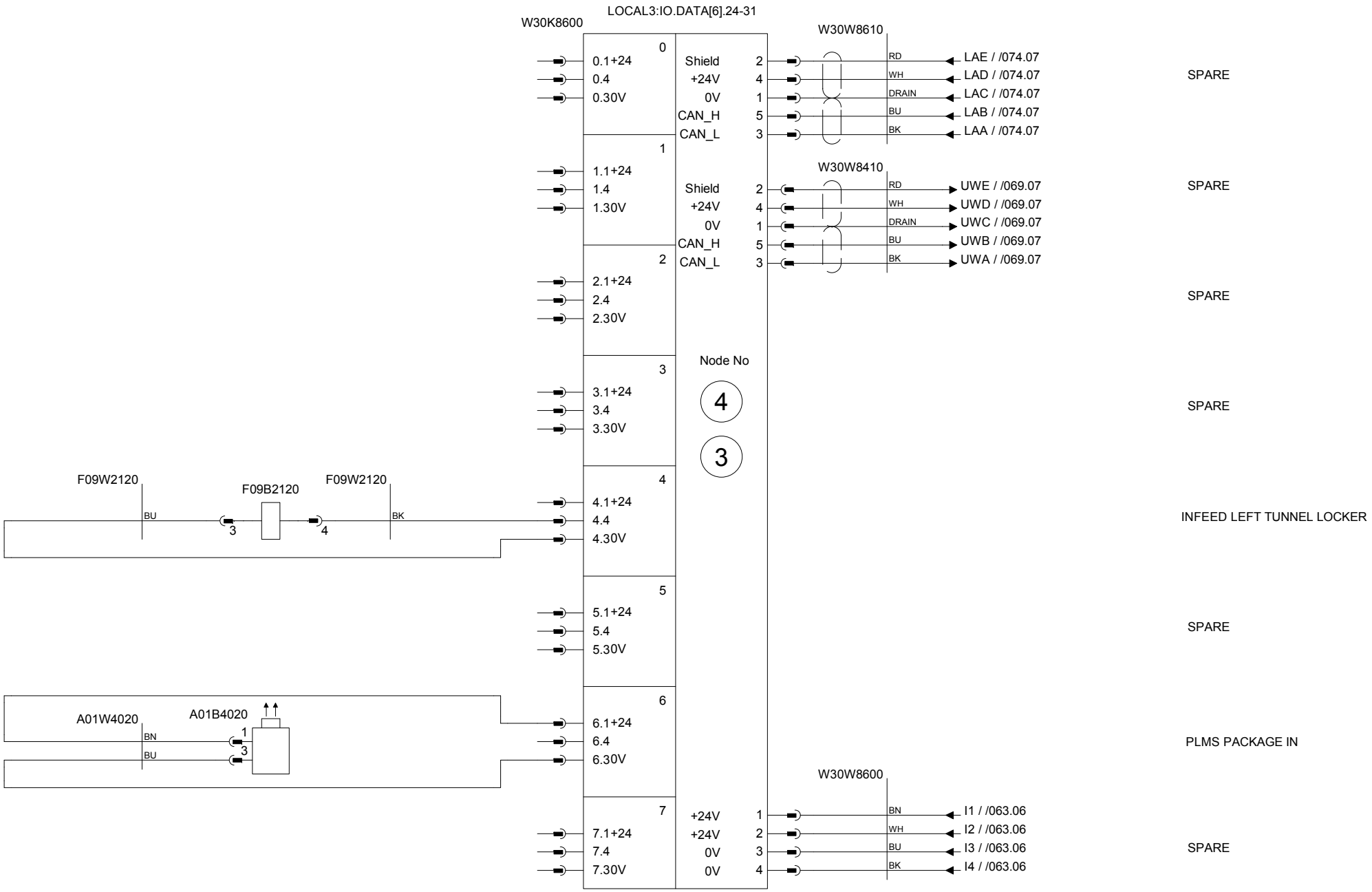

Drawing remarks	Tetra Pak	Designer ACH	Date 26/06/2010	Machine CBP 30 Speed 0200	
		ECM No 456516	Denomination CIRCUIT DIAGRAM	Page Type PLC-IN/OUT	
	Company Tetra Pak (Italy)	Document No. 3037928-0003	Doc. type ELD	Version AC	Page 070

RELEASED

This drawing must not without the consent of Tetra Pak be copied, transmitted or disclosed to any third party.

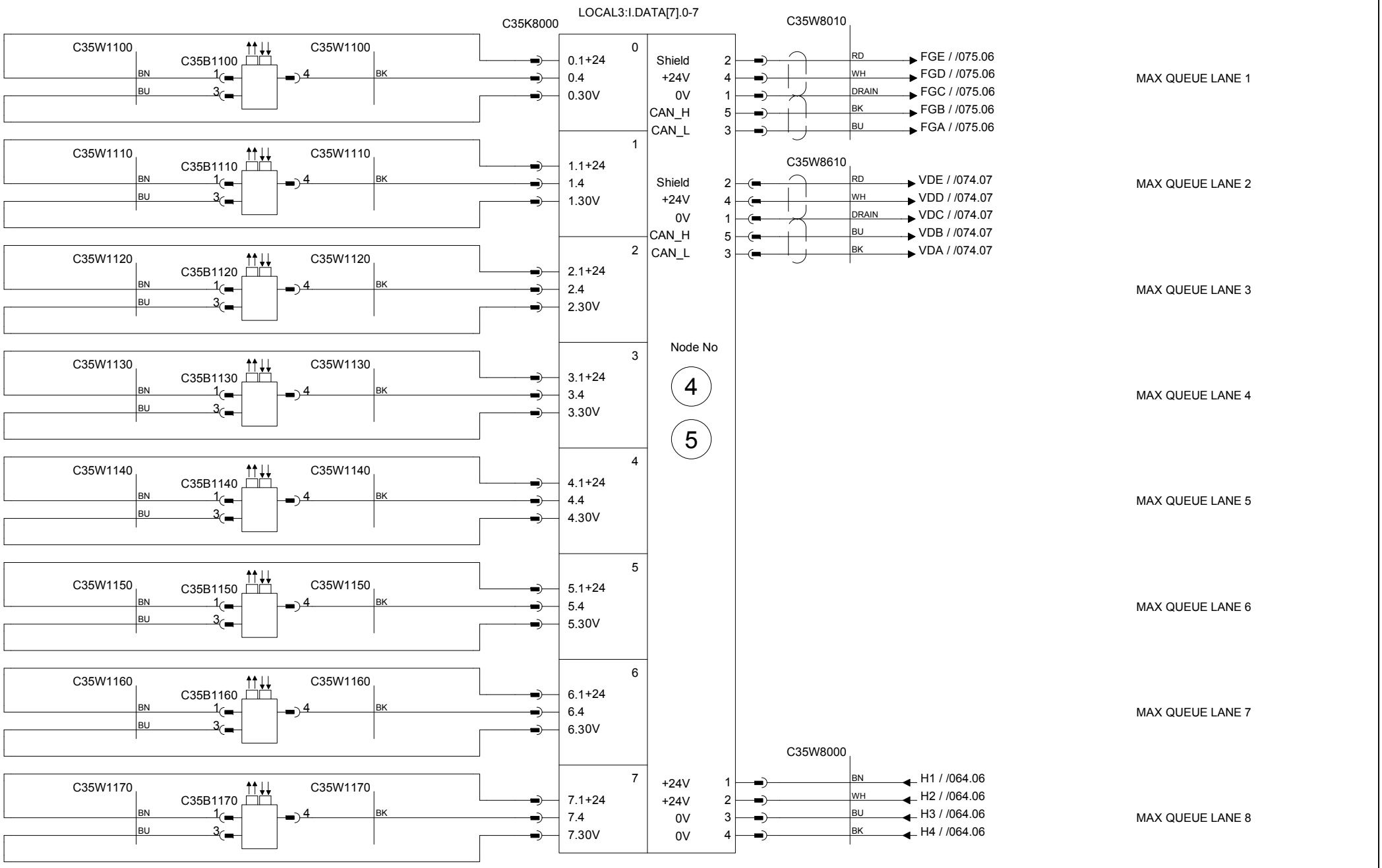

Drawing remarks	Tetra Pak	Designer ACH	Date 26/06/2010	Machine CBP 30 Speed 0200
		ECM No 456516	Denomination CIRCUIT DIAGRAM	Page Type PLC-IN
	Company Tetra Pak (Italy)	Document No. 3037928-0003	Doc. type ELD	Version AC	Page 071

RELEASED

This drawing must not without the consent of Tetra Pak be copied, transmitted or disclosed to any third party.

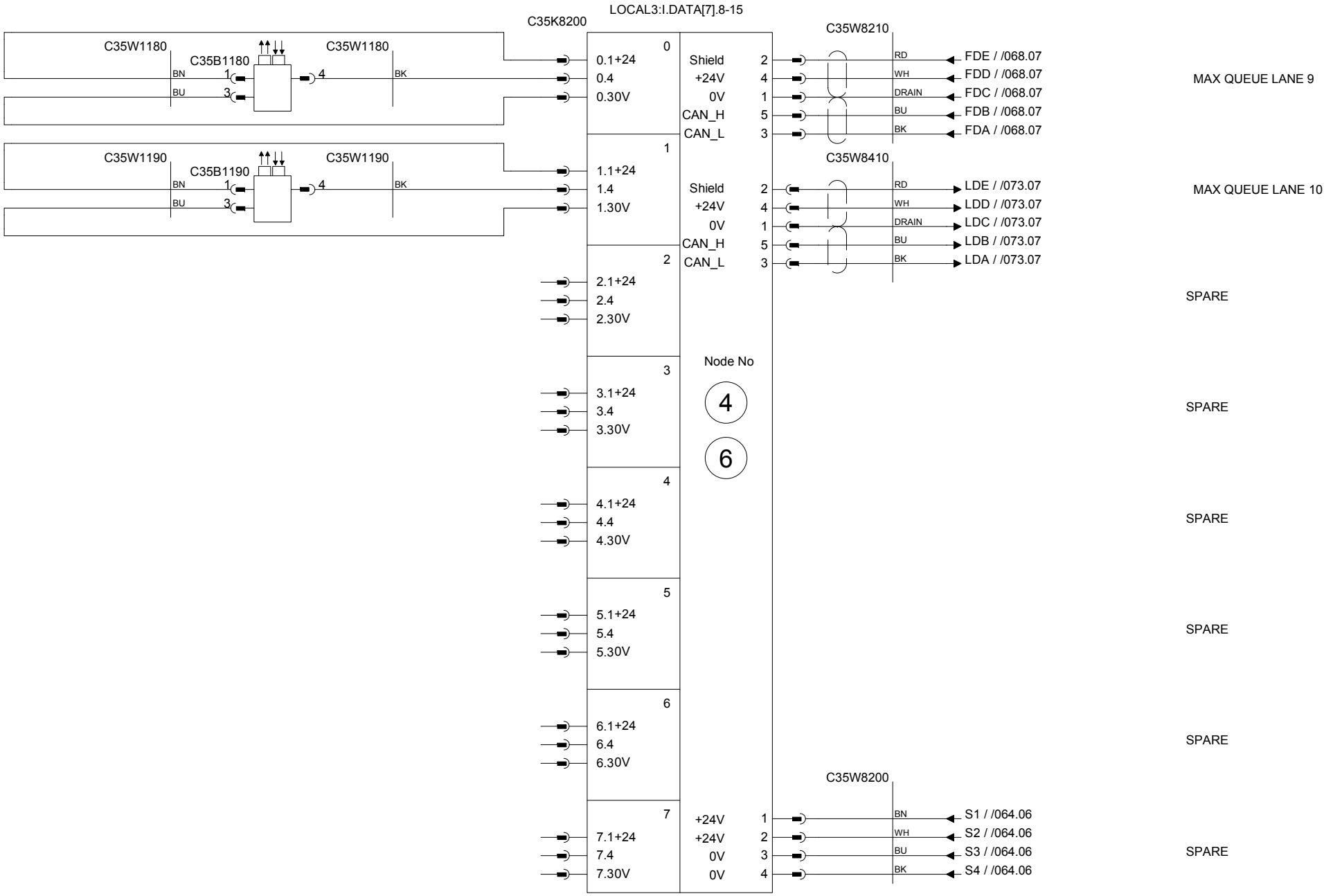

Drawing remarks	Tetra Pak	Designer ACH	Date 26/06/2010	Machine CBP 30 Speed 0200
		ECM No 456516	Denomination CIRCUIT DIAGRAM	Page Type PLC-IN
	Company Tetra Pak (Italy)	Document No. 3037928-0003	Doc. type ELD	Version AC	Page 072

RELEASED

This drawing must not without the consent of Tetra Pak be copied, transmitted or disclosed to any third party.

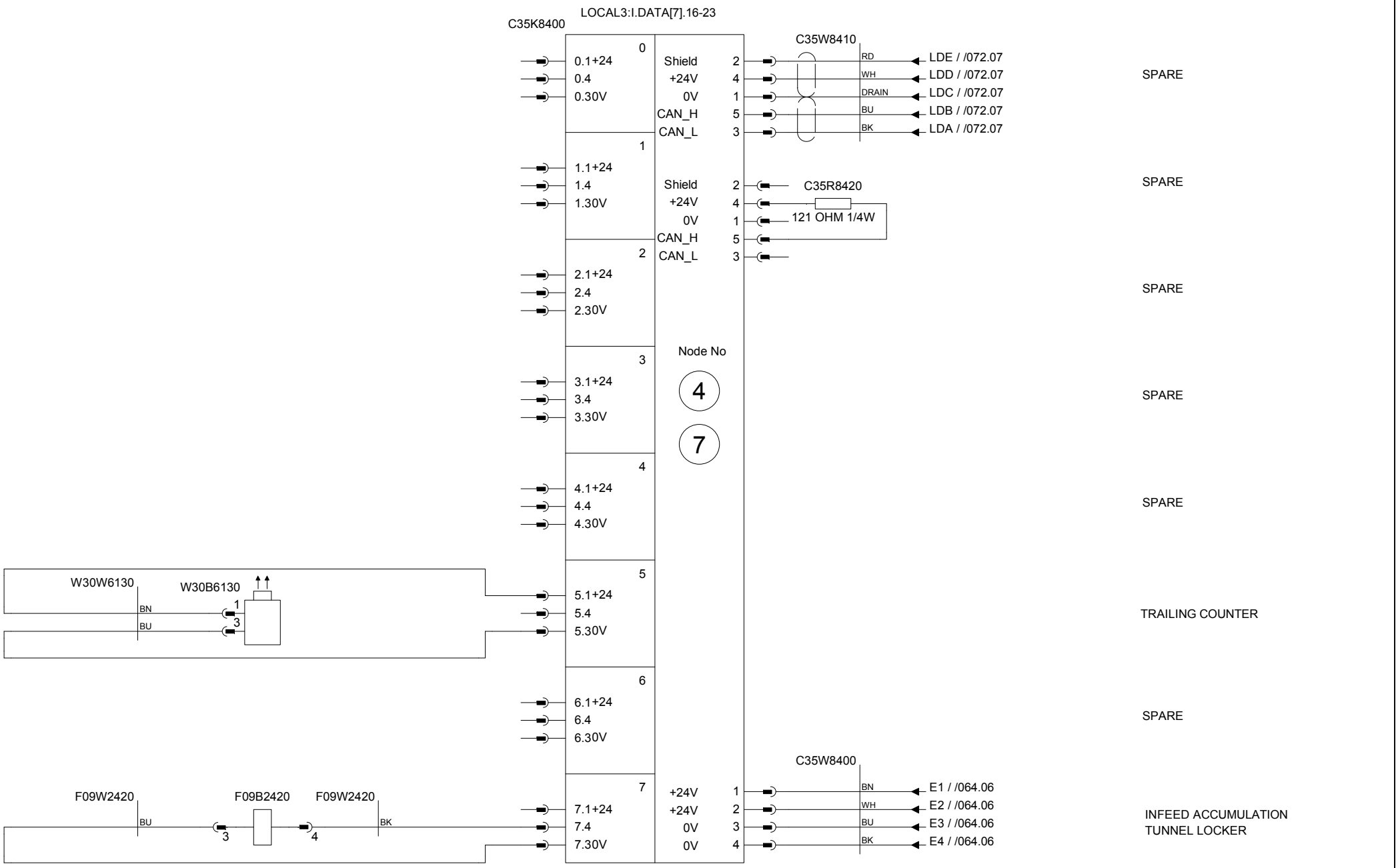

Drawing remarks	Tetra Pak	Designer ACH	Date 26/06/2010	Machine CBP 30 Speed 0200	
		ECM No 456516	Denomination CIRCUIT DIAGRAM	Page Type PLC-IN/OUT	
		Company Tetra Pak (Italy)	Document No. 3037928-0003	Doc. type ELD	Version AC	Page 073

RELEASED

This drawing must not without the consent of Tetra Pak be copied, transmitted or disclosed to any third party.

LOCAL3:I.DATA[7].24-31

C35K8600

C35W1400 — BU — C35K1400 (1, 2) — C35W1400 — BK

W30W6110 — BN, BU — W30B6110 (1, 3)

X40W1110 — BN, BU — X40B1110 (1, 3)

X40W1100 — BN, BU — X40B1100 (1, 3) — X40W1100 — BK (4)

X40W1130 — BN, BU — X40B1130 (1, 3)

X40W1120 — BN, BU — X40B1120 (1, 3) — X40W1120 — BK (4)

F09W2320 — BU — F09B2320 (3, 4) — F09W2320 — BK

F09W2720 — BU — F09B2720 (3, 4) — F09W2720 — BK

0	0.1+24	Shield	2	C35W8610
	0.4	+24V	4	
	0.30V	0V	1	
		CAN_H	5	
		CAN_L	3	
1	1.1+24	Shield	2	W30W8610
	1.4	+24V	4	
	1.30V	0V	1	
		CAN_H	5	
		CAN_L	3	
2	2.1+24			
	2.4			
	2.30V			
3	3.1+24			
	3.4			
	3.30V			
4	4.1+24			
	4.4			
	4.30V			
5	5.1+24			
	5.4			
	5.30V			
6	6.1+24			
	6.4			
	6.30V			
7	7.1+24	+24V	1	C35W8600
	7.4	+24V	2	
	7.30V	0V	3	
		0V	4	

Node No: 4 8

C35W8610

RD	VDE / /071.07	ACCUMULATION CONVEYOR WATER LUBRICATION
WH	VDD / /071.07	
DRAIN	VDC / /071.07	
BU	VDB / /071.07	
BK	VDA / /071.07	

W30W8610

RD	LAE / /070.07	LEADING COUNTER
WH	LAD / /070.07	
DRAIN	LAC / /070.07	
BU	LAB / /070.07	
BK	LAA / /070.07	

MIN QUEUE ACCUMULATION

MIN QUEUE ACCUMULATION

INDEX FALLEN PACKAGE

INDEX FALLEN PACKAGE

INFEED RIGHT REAR DOOR LOCKER

C35W8600

BN	F1 / /064.06	INFEED RIGHT FRONT DOOR LOCKER
WH	F2 / /064.06	
BU	F3 / /064.06	
BK	F4 / /064.06	

Drawing remarks

Tetra Pak

Designer ACH	Date 26/06/2010	Machine CBP 30 Speed 0200	
ECM No 456516	Denomination CIRCUIT DIAGRAM	Page Type PLC-IN/OUT	
Company Tetra Pak (Italy)	Document No. 3037928-0003	Doc. type ELD	Version AC	Page 074

RELEASED

This drawing must not without the consent of Tetra Pak be copied, transmitted or disclosed to any third party.

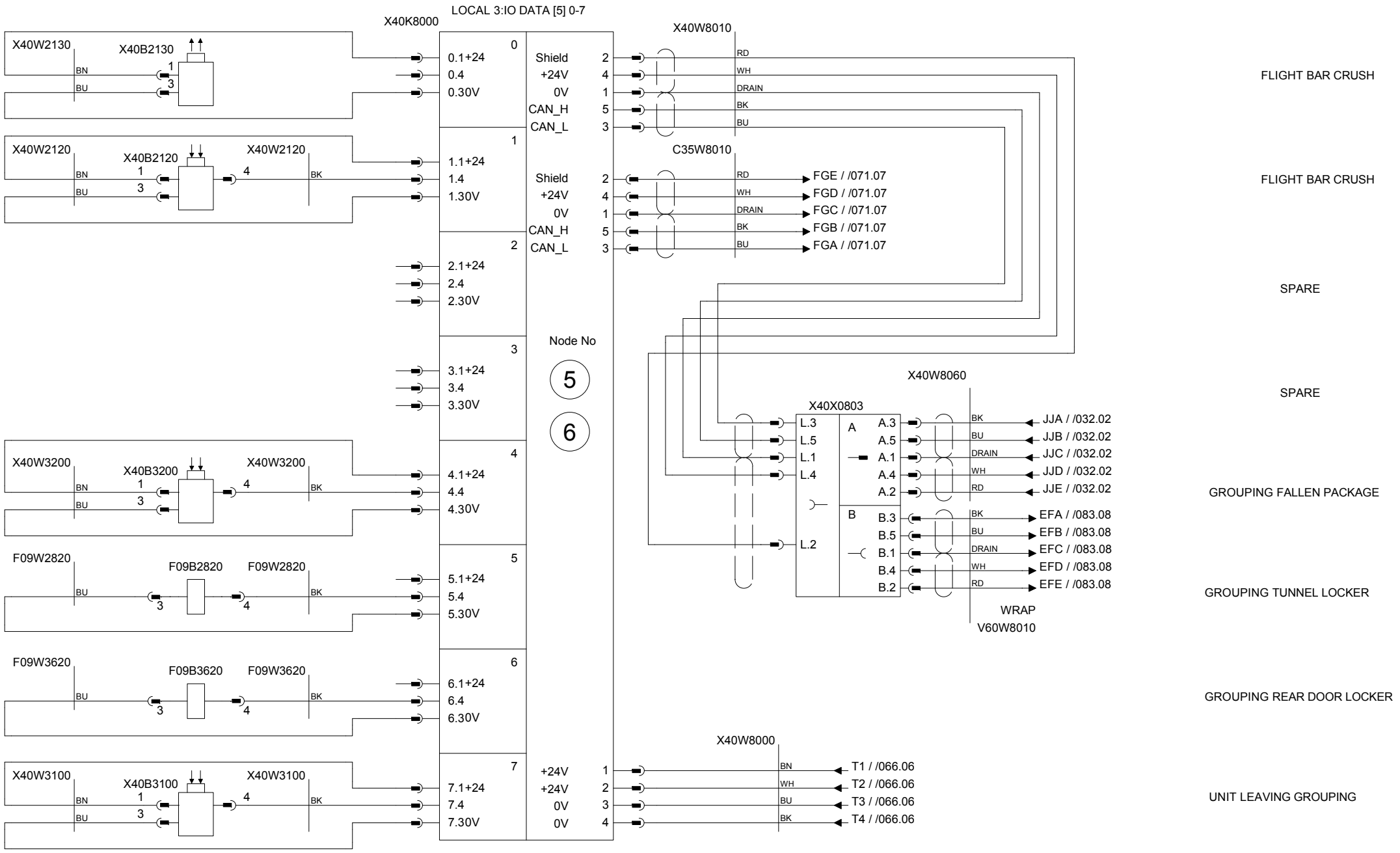

Drawing remarks	Tetra Pak	Designer ACH	Date 26/06/2010	Machine CBP 30 Speed 0200	
		ECM No 456516	Denomination CIRCUIT DIAGRAM	Page Type PLC-IN/OUT	
	Company Tetra Pak (Italy)	Document No. 3037928-0003	Doc. type ELD	Version AC	Page 075

RELEASED

This drawing must not without the consent of Tetra Pak be copied, transmitted or disclosed to any third party.

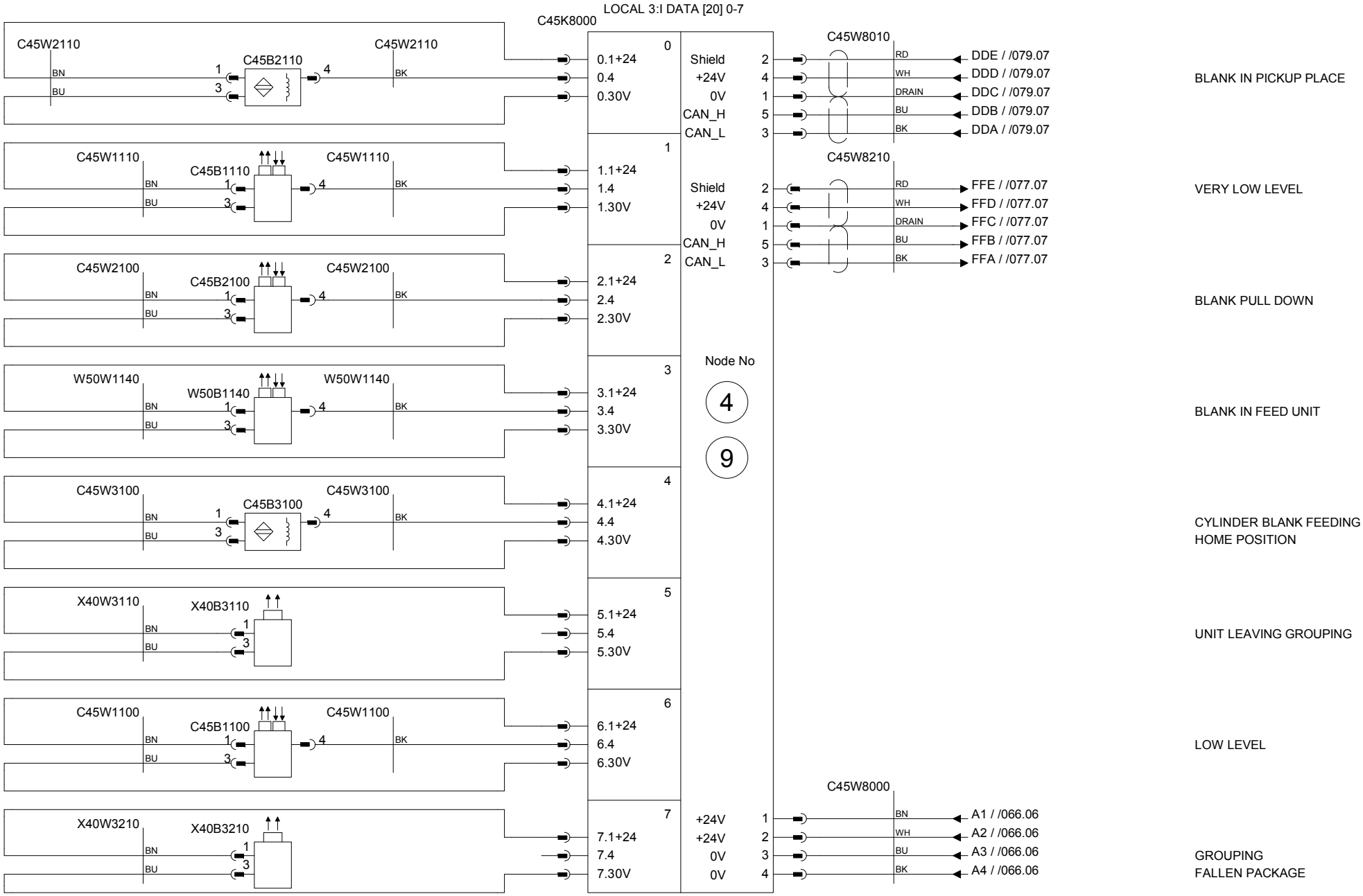

Drawing remarks	Tetra Pak	Designer ACH	Date 26/06/2010	Machine CBP 30 Speed 0200
		ECM No 456516	Denomination CIRCUIT DIAGRAM	Page Type PLC-IN
	Company Tetra Pak (Italy)	Document No. 3037928-0003	Doc. type ELD	Version AC	Page 076

RELEASED

This drawing must not without the consent of Tetra Pak be copied, transmitted or disclosed to any third party.

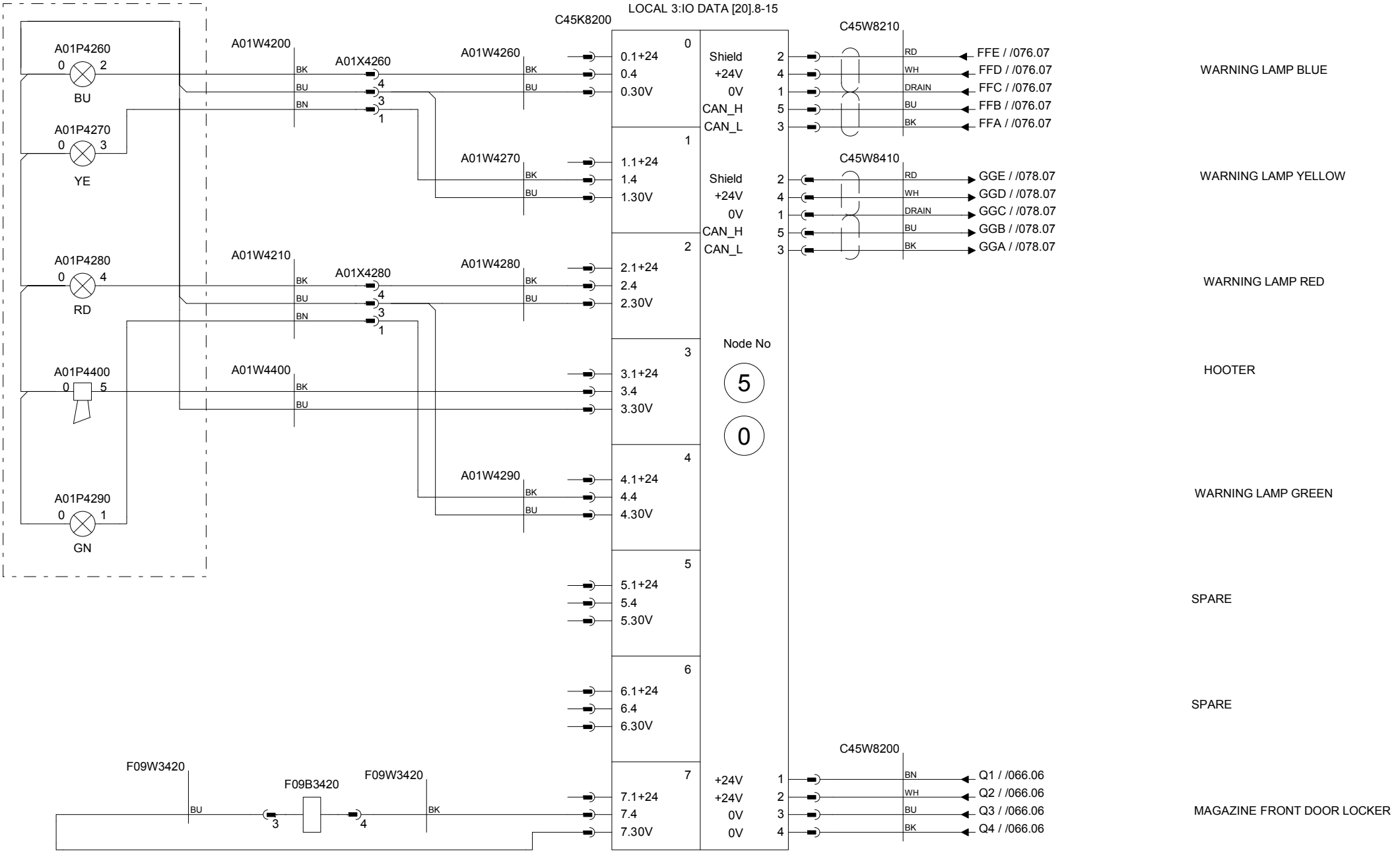

Drawing remarks	Tetra Pak	Designer ACH	Date 26/06/2010	Machine CBP 30 Speed 0200	
		ECM No 456516	Denomination CIRCUIT DIAGRAM	Page Type PLC-OUT	
	Company Tetra Pak (Italy)	Document No. 3037928-0003	Doc. type ELD	Version AC	Page 077

RELEASED

This drawing must not without the consent of Tetra Pak be copied, transmitted or disclosed to any third party.

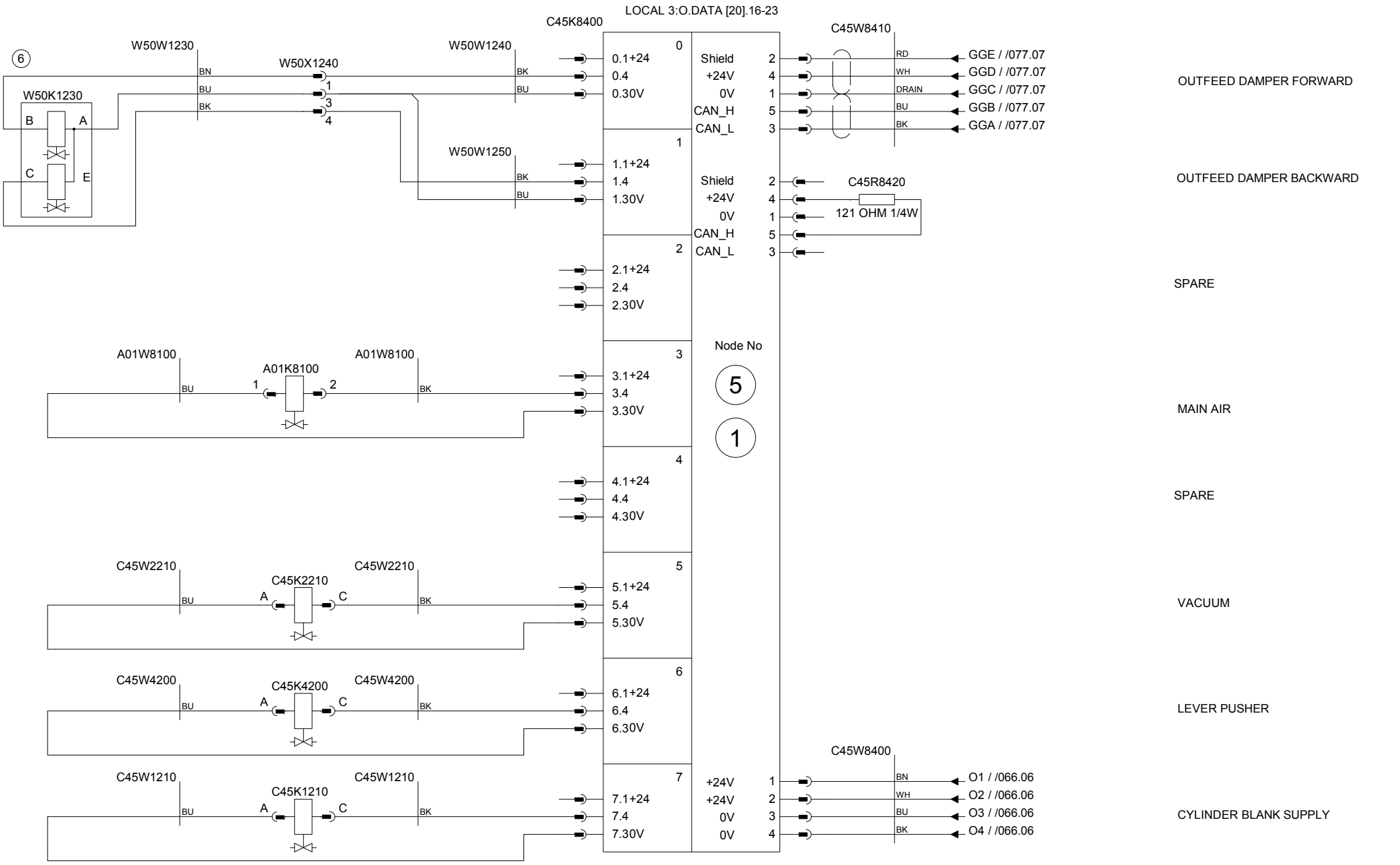

Tetra Pak	Designer ACH	Date 26/06/2010	Machine CBP 30 Speed 0200		
	ECM No 456516	Denomination CIRCUIT DIAGRAM	Page Type PLC-OUT		
Drawing remarks	Company Tetra Pak (Italy)	Document No. 3037928-0003	Doc. type ELD	Version AC	Page 078

RELEASED

This drawing must not without the consent of Tetra Pak be copied, transmitted or disclosed to any third party.

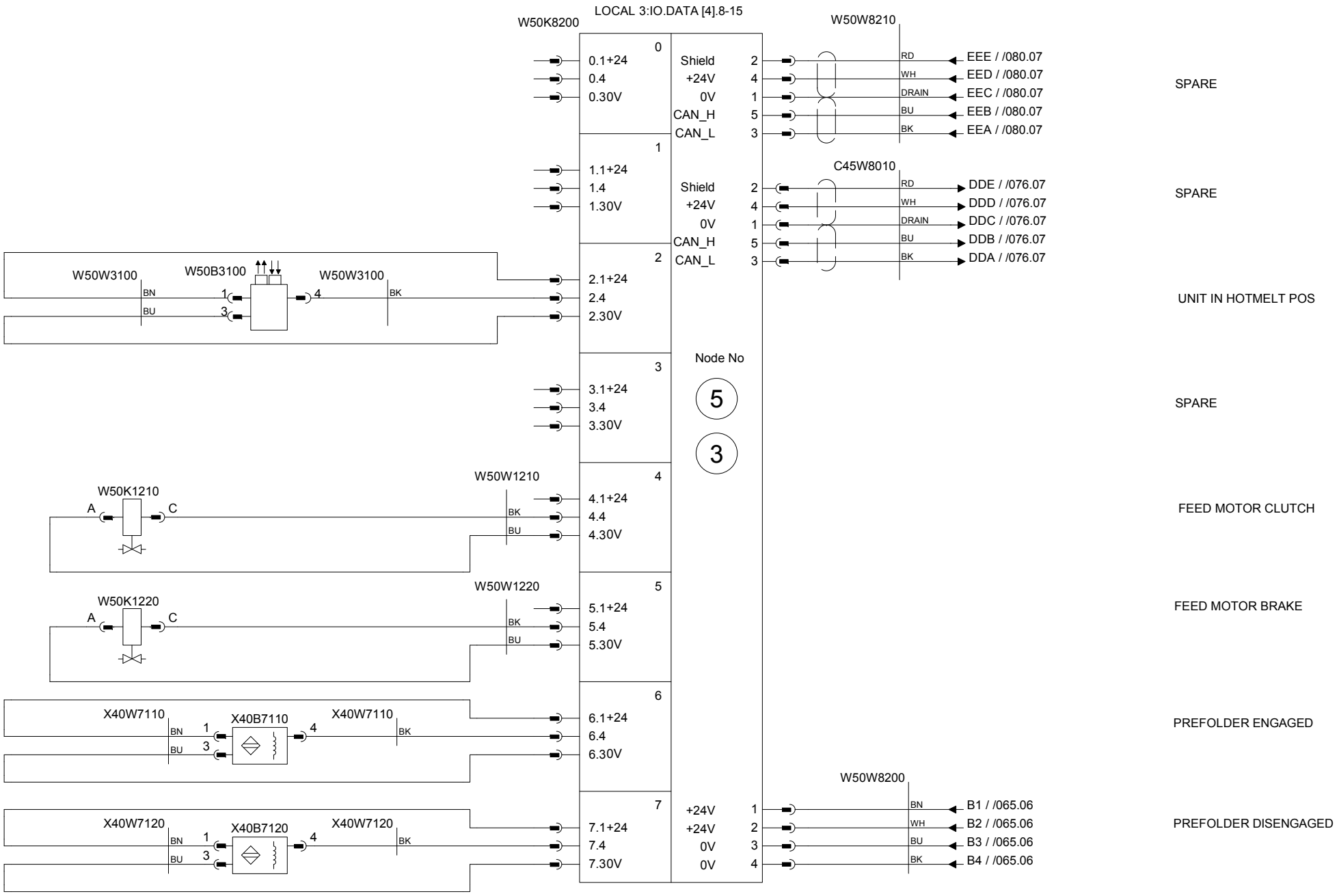

Drawing remarks	Tetra Pak	Designer ACH	Date 26/06/2010	Machine CBP 30 Speed 0200	
		ECM No 456516	Denomination CIRCUIT DIAGRAM	Page Type PLC-IN/OUT	
	Company Tetra Pak (Italy)	Document No. 3037928-0003	Doc. type ELD	Version AC	Page 079

RELEASED

This drawing must not without the consent of Tetra Pak be copied, transmitted or disclosed to any third party.

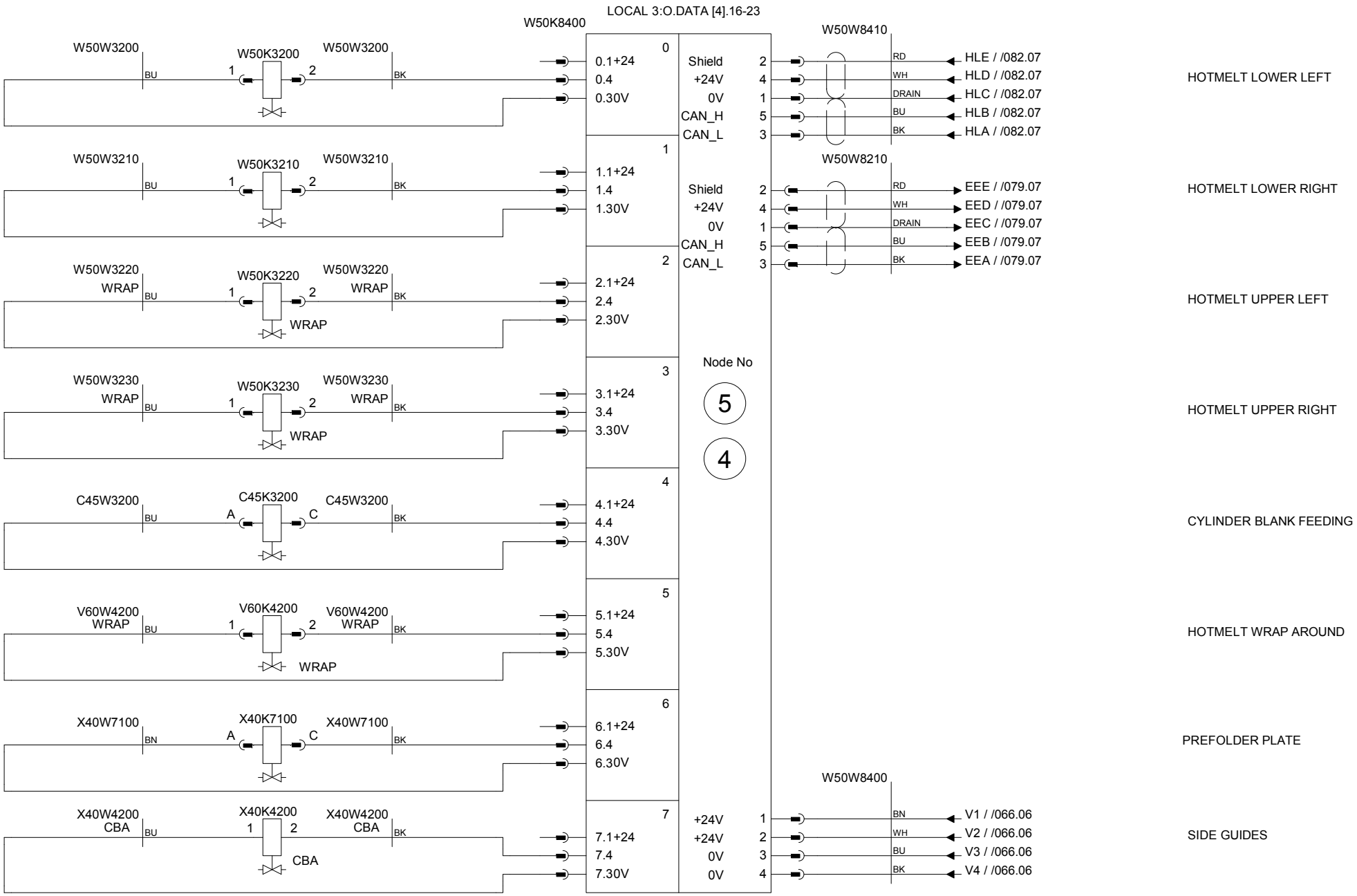

Drawing remarks	Tetra Pak	Designer ACH	Date 26/06/2010	Machine CBP 30 Speed 0200
		ECM No 456516	Denomination CIRCUIT DIAGRAM	Page Type PLC-OUT
	Company Tetra Pak (Italy)	Document No. 3037928-0003	Doc. type ELD	Version AC	Page 080

RELEASED

This drawing must not without the consent of Tetra Pak be copied, transmitted or disclosed to any third party.

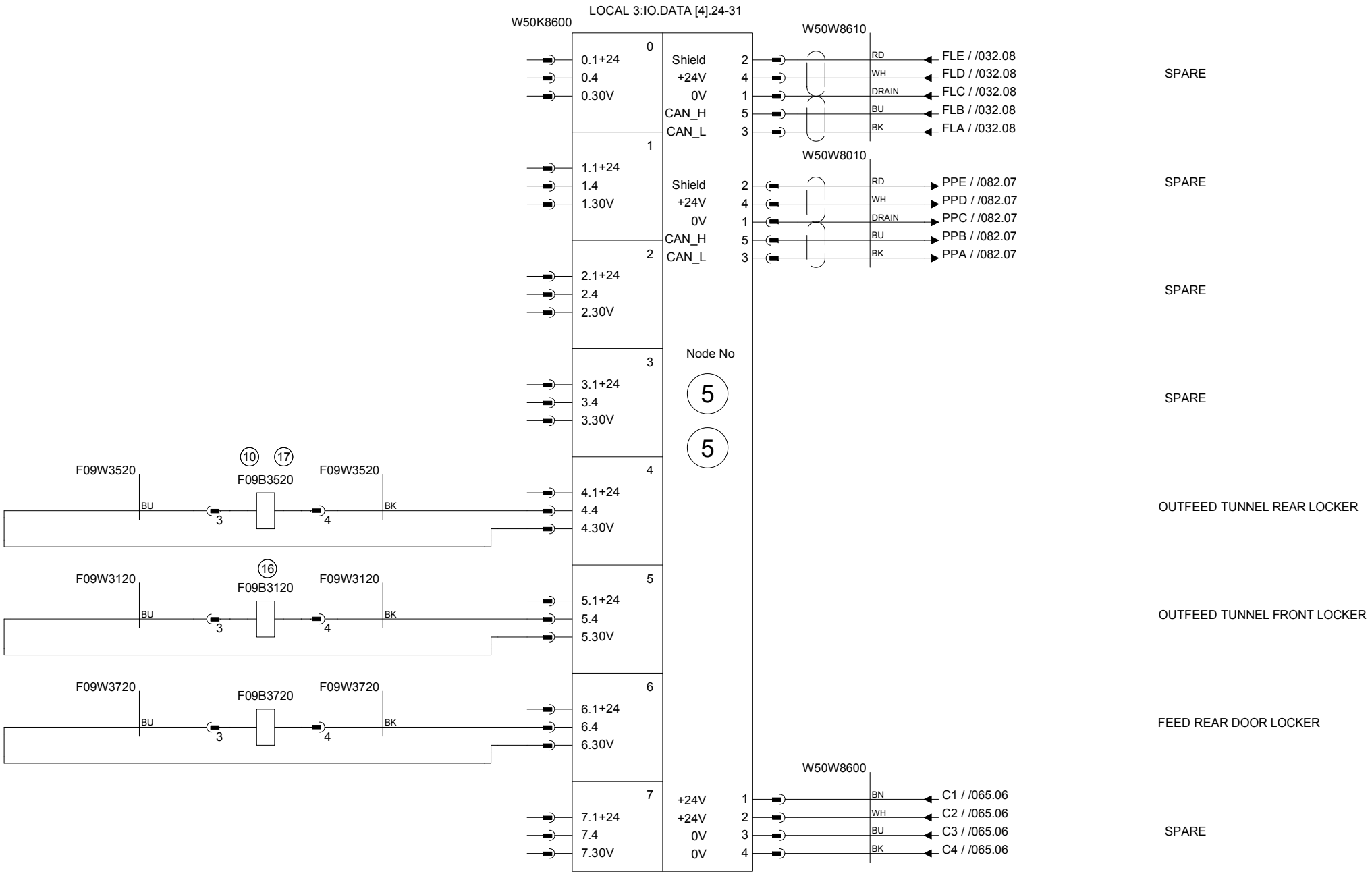

Drawing remarks	Tetra Pak	Designer ACH	Date 26/06/2010	Machine CBP 30 Speed 0200	
		ECM No 456516	Denomination CIRCUIT DIAGRAM	Page Type PLC-OUT	
		Company Tetra Pak (Italy)	Document No. 3037928-0003	Doc. type ELD	Version AC	Page 081

RELEASED

This drawing must not without the consent of Tetra Pak be copied, transmitted or disclosed to any third party.

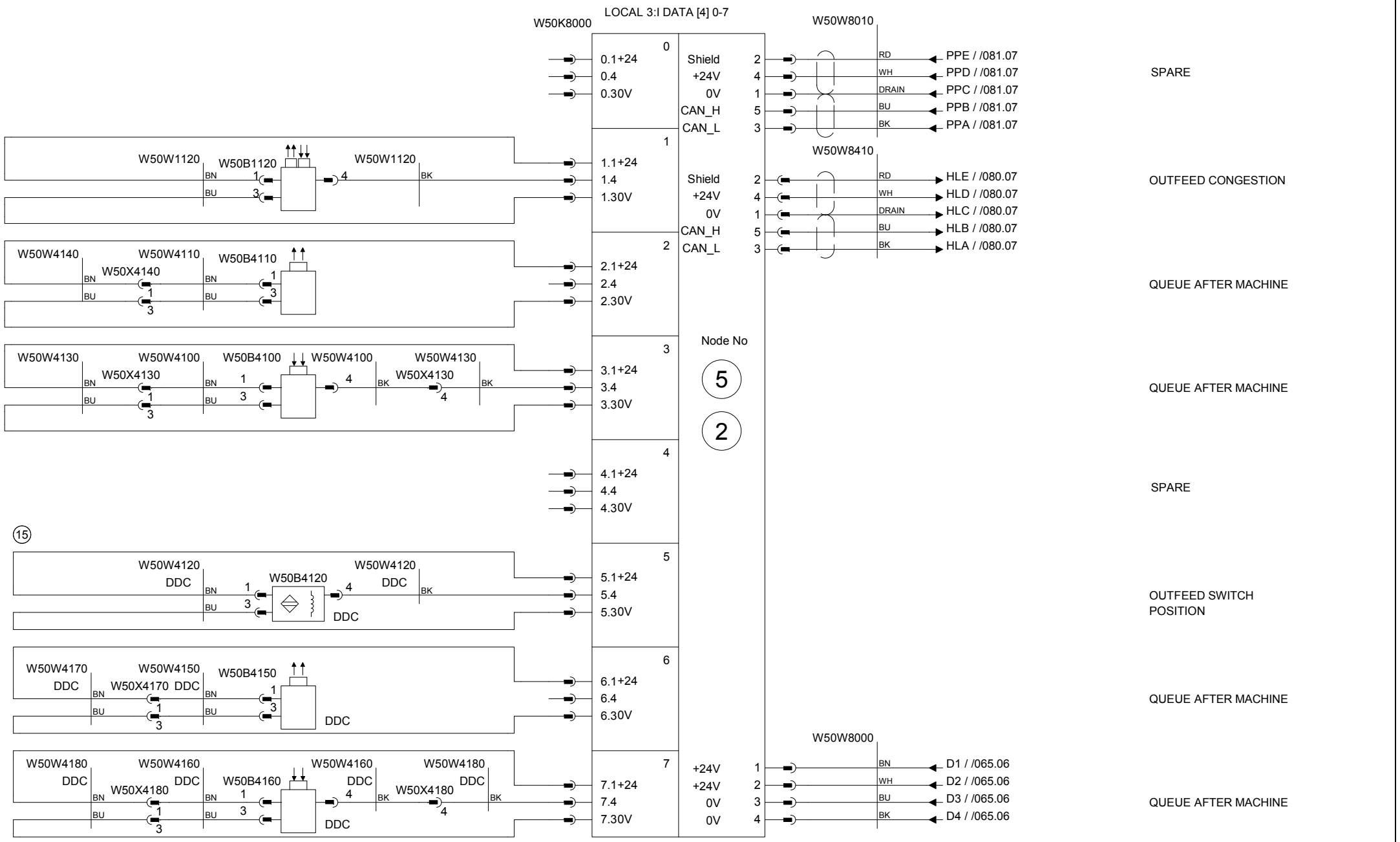

Drawing remarks	Tetra Pak	Designer ACH	Date 26/06/2010	Machine CBP 30 Speed 0200
		ECM No 456516	Denomination CIRCUIT DIAGRAM	Page Type PLC-IN
		Company Tetra Pak (Italy)	Document No. 3037928-0003	Doc. type ELD / Version AC / Page 082

RELEASED

This drawing must not without the consent of Tetra Pak be copied, transmitted or disclosed to any third party.

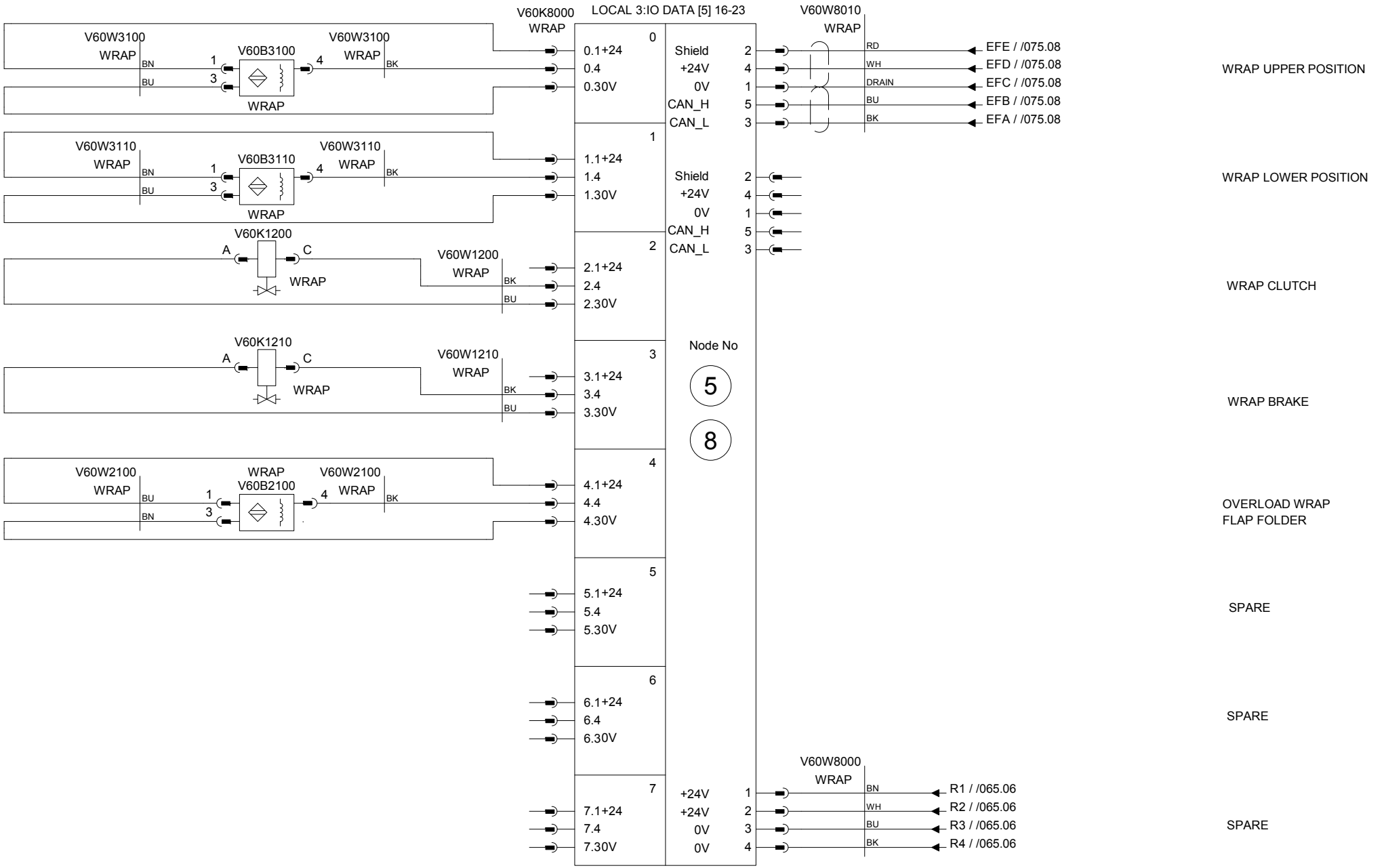

Drawing remarks	Tetra Pak	Designer ACH	Date 26/06/2010	Machine CBP 30 Speed 0200			
		ECM No 456516	Denomination CIRCUIT DIAGRAM	Page Type PLC-IN/OUT			
	Company Tetra Pak (Italy)		Document No. 3037928-0003	Doc. type ELD	Version AC	Page 083	

This drawing must not without the consent of Tetra Pak be copied, transmitted or disclosed to any third party.

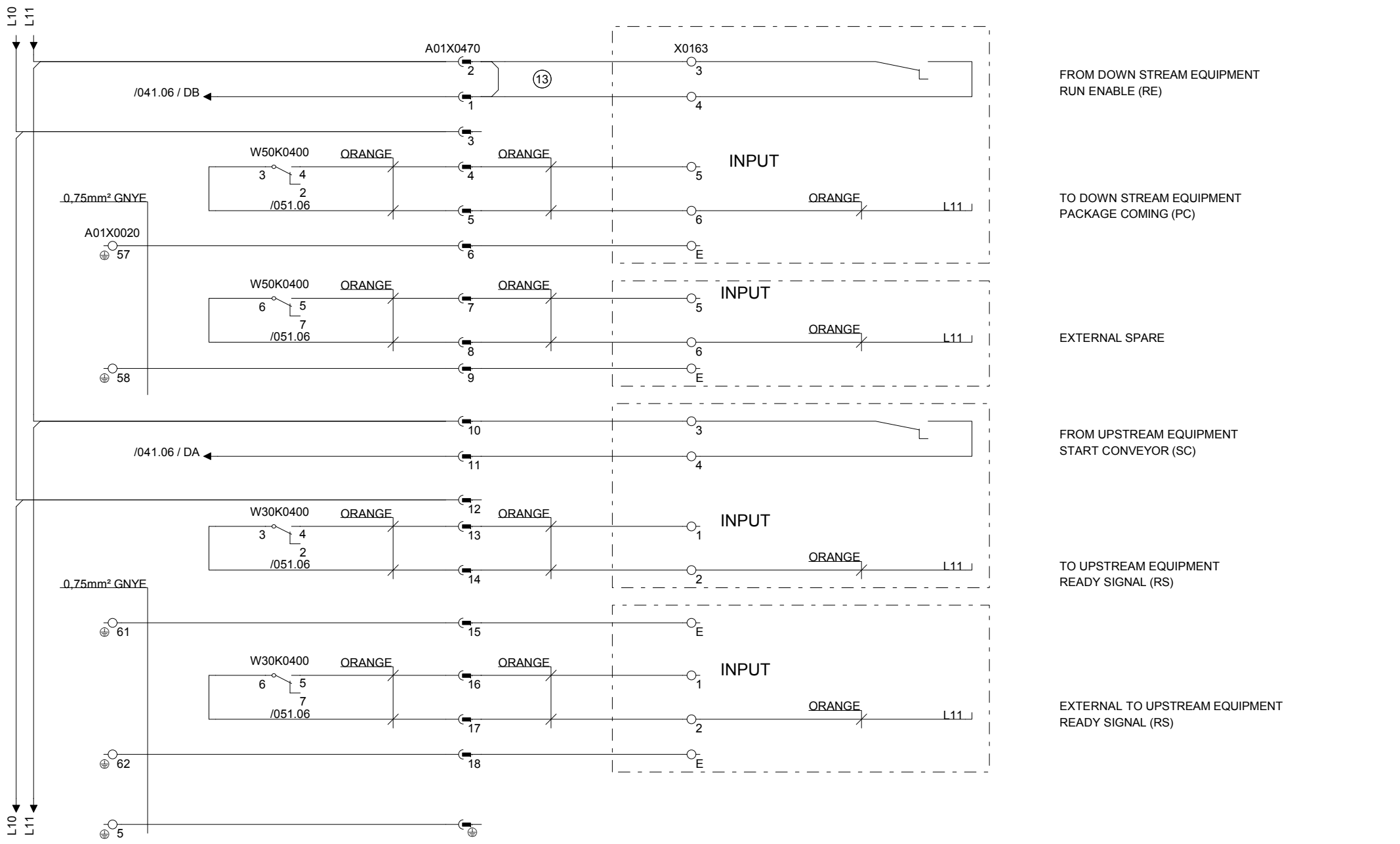

Drawing remarks	Tetra Pak	Designer ACH	Date 26/06/2010	Machine CBP 30 Speed 0200	
		ECM No 456516	Denomination CIRCUIT DIAGRAM	Page Type EXTERNAL EQUIPMENT	
	Company Tetra Pak (Italy)	Document No. 3037928-0003	Doc. type ELD	Version AC	Page 084

This drawing must not without the consent of Tetra Pak be copied, transmitted or disclosed to any third party.

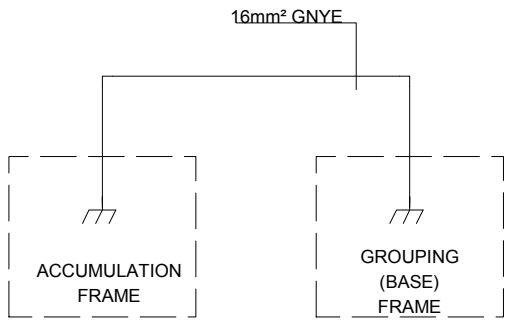

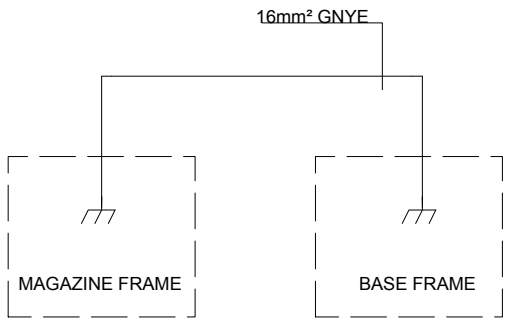

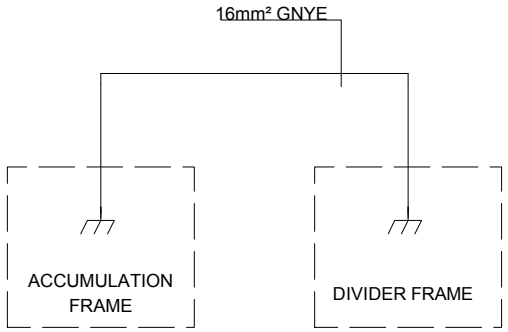

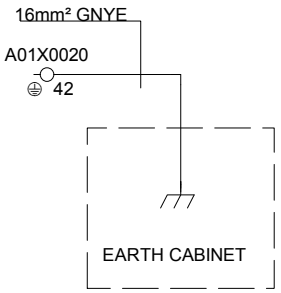

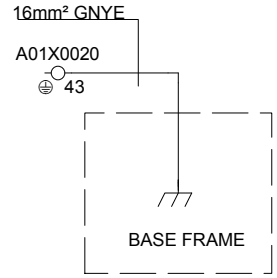

Drawing remarks	Tetra Pak	Designer ACH	Date 26/06/2010	Machine CBP 30 Speed 0200	
		ECM No 456516	Denomination CIRCUIT DIAGRAM	Page Type EARTHS CONNECTION	
		Company Tetra Pak (Italy)	Document No. 3037928-0003	Doc. type ELD / Version AC	Page 085

This drawing must not without the consent of Tetra Pak
be copied, transmitted or disclosed to any third party.

1	2	3	4	5	6	7	8	9	10

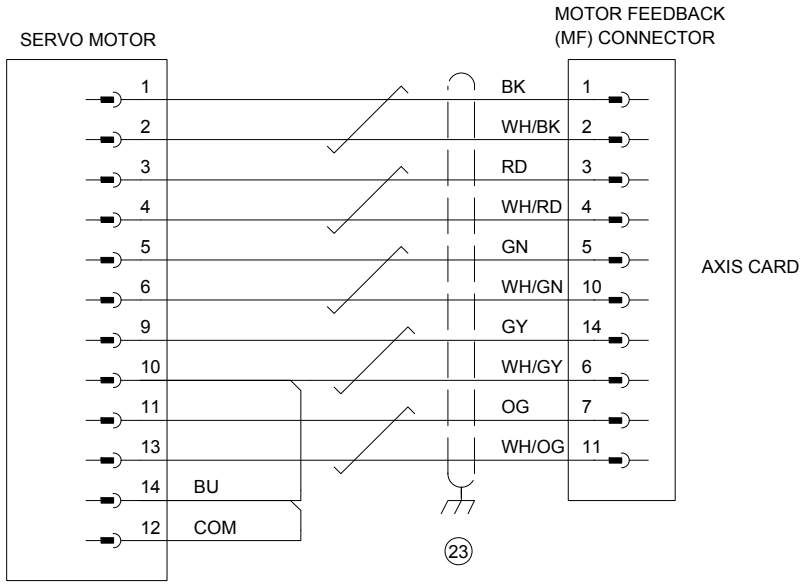

Drawing remarks

Tetra Pak

Designer ACH	Date 26/06/2010	Machine CBP 30 Speed 0200			
ECM No 456516	Denomination CIRCUIT DIAGRAM	Page Type SERVO MOTORS CONNECTIONS			
Company Tetra Pak (Italy)	Document No. 3037928-0003	Doc. type ELD	Version AC	Page 086	

RELEASED

This drawing must not without the consent of Tetra Pak be copied, transmitted or disclosed to any third party.

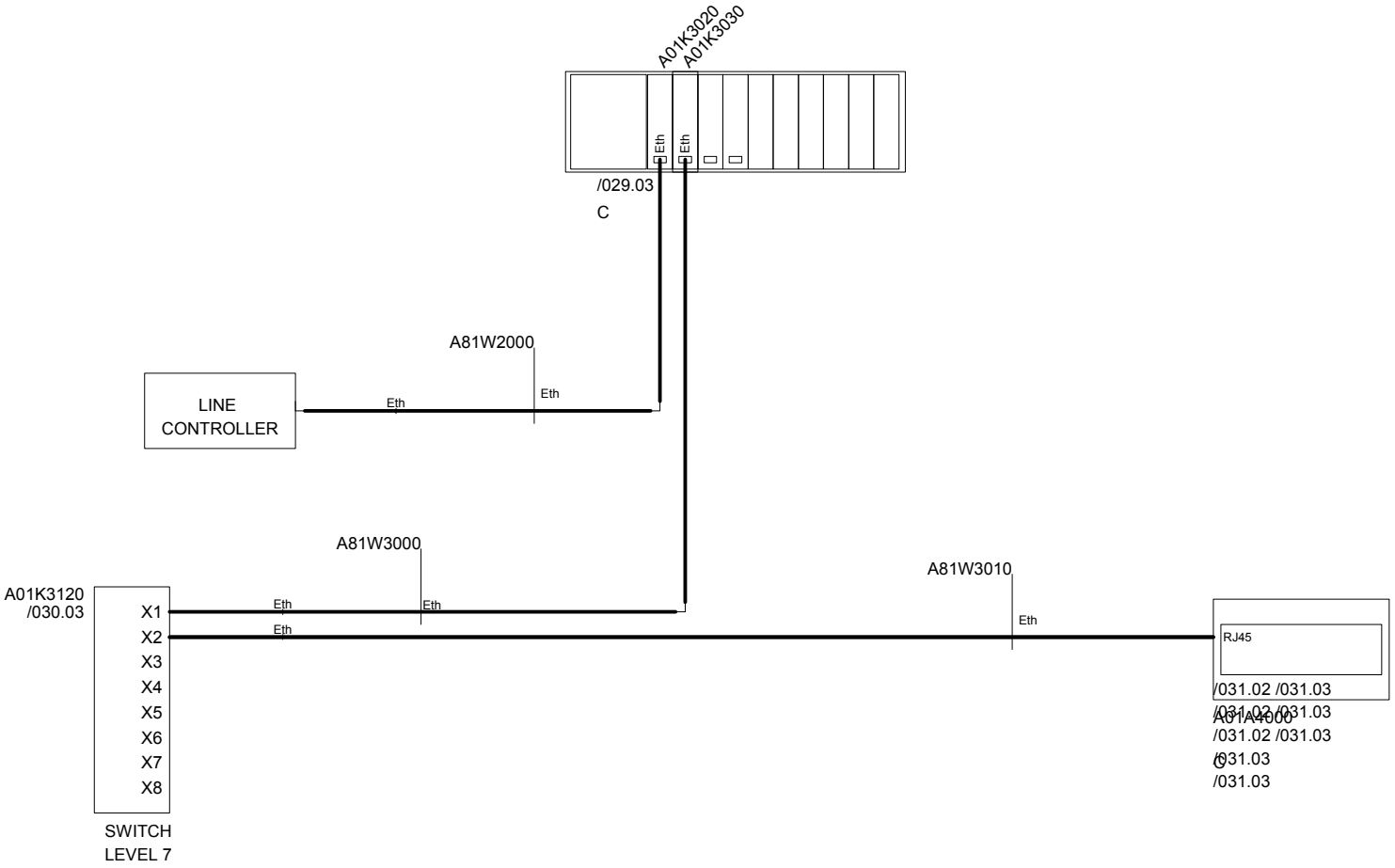

Drawing remarks	Tetra Pak	Designer ACH	Date 26/06/2010	Machine CBP 30 Speed 0200	
		ECM No 456516	Denomination CIRCUIT DIAGRAM	Page Type ETHERNET COMMUNICATION	
	Company Tetra Pak (Italy)	Document No. 3037928-0003	Doc. type ELD	Version AC	Page 087

RELEASED

This drawing must not without the consent of Tetra Pak be copied, transmitted or disclosed to any third party.

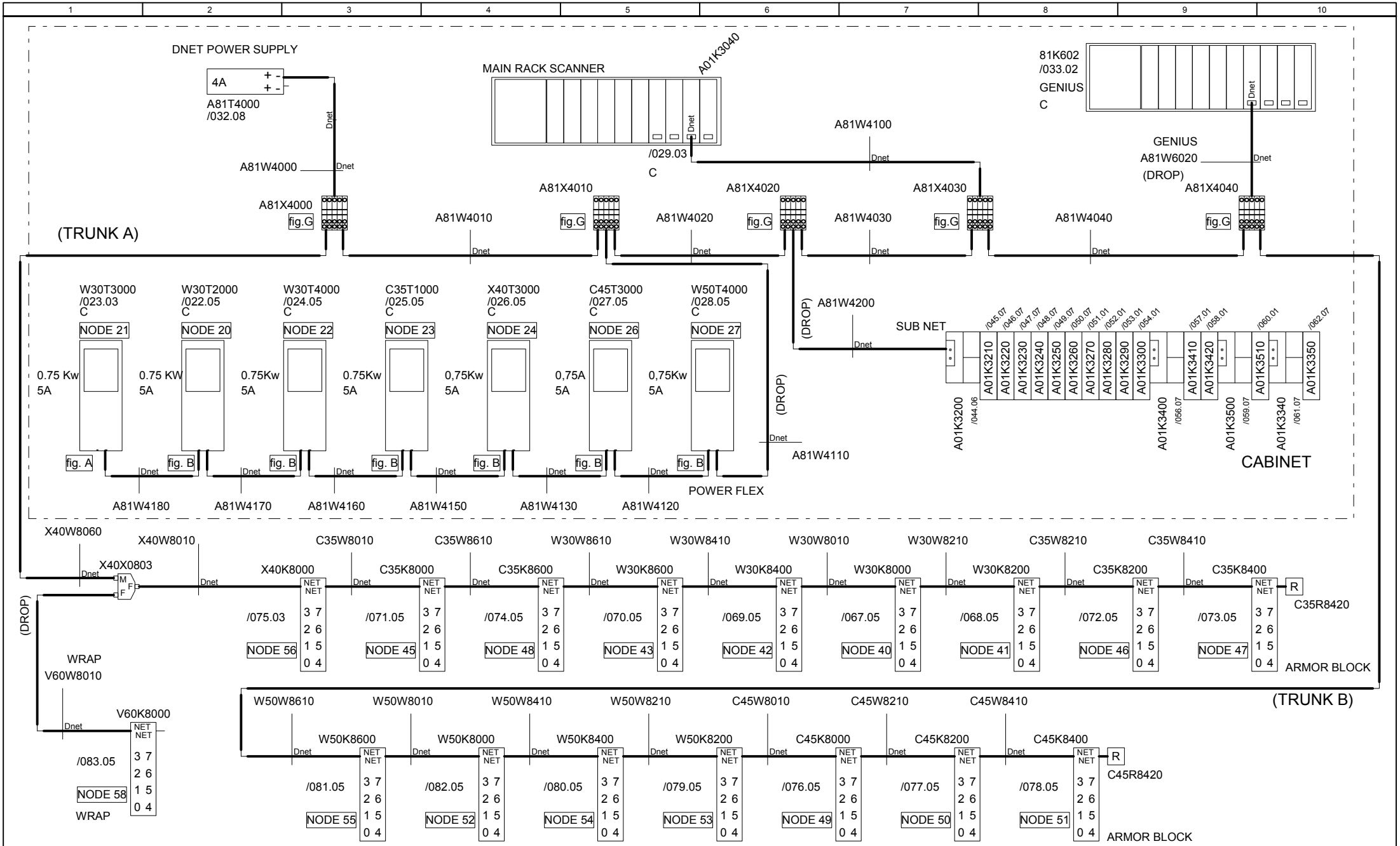

Drawing remarks	Tetra Pak	Designer ACH	Date 26/06/2010	Machine CBP 30 Speed 0200
		ECM No 456516	Denomination CIRCUIT DIAGRAM	Page Type NETWORK LAYOUT DEVICENET
		Company Tetra Pak (Italy)	Document No. 3037928-0003	Doc. type ELD / Version AC / Page 088

This drawing must not without the consent of Tetra Pak be copied, transmitted or disclosed to any third party.

Dnet single cable connect

FIGURE A

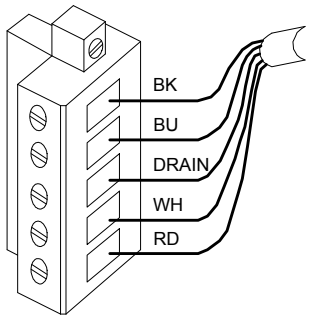

Dnet double cable connect

FIGURE B

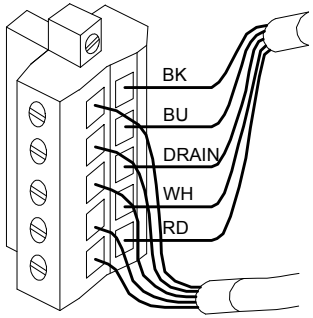

Dnet single cable w termination resistor

FIGURE C

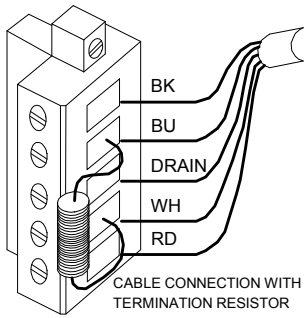

Dnet plc card w power / terminator

FIGURE D

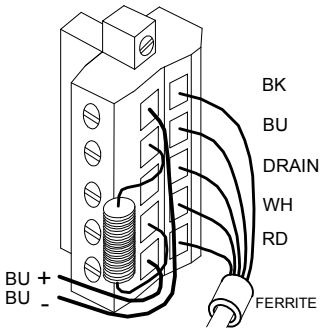

FIGURE E

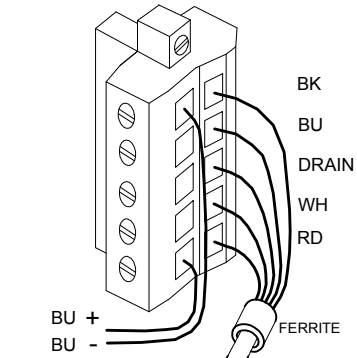

ARMOSTART external connections

FIGURE L

INPUT CONNECTOR	OUTPUT CONNECTOR	DEVICENET CONNECTOR	MOTOR CONNECTOR
SOCKET	PIN	SOCKET	SOCKET
Pin 1 +V Out	Pin 1 PE	Pin 1 Drain (NC)	Pin 1 T1 Black
Pin 2 Input 1 or 3	Pin 2 Return	Pin 2 +VDNet	Pin 2 T2 White
Pin 3 Comm	Pin 3 Relay Out	Pin 3 -VDNet	Pin 3 T3 Red
Pin 4 Input 0 or 2		Pin 4 CAN_H	Pin 4 GND Green
Pin 5 NC (No Connection)			

FIGURE G

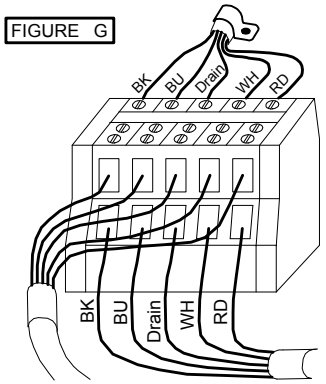

Dnet plc card w ferrite

FIGURE I

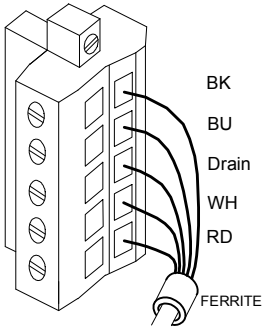

FIGURE F

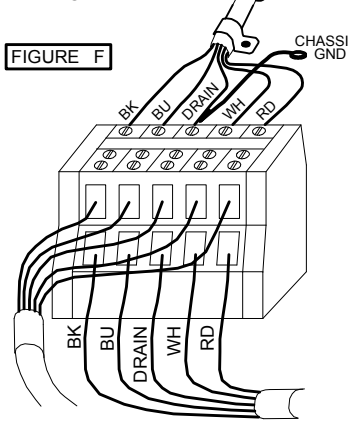

Dnet Festo valve bank M12 connections

FIGURE H

BUS OUT	BUS IN	PWR IN
SOCKET	PIN	SOCKET
Pin 1 Drain	Pin 1 Drain	
Pin 2 V+	Pin 2 V+	
Pin 3 V-	Pin 3 V-	
Pin 4 CAN_H	Pin 4 CAN_H	
Pin 5 CAN_L		

RS232 to RS485 adapter

FIGURE W2

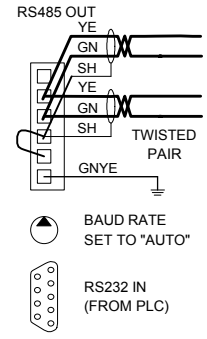

RS232 to RS485 adapter

FIGURE W

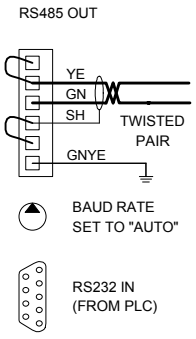

RS485 RJ45 adapter daisy chain

FIGURE X

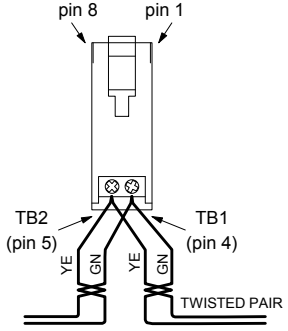

RS485 RJ45 adapter w termination

FIGURE Z

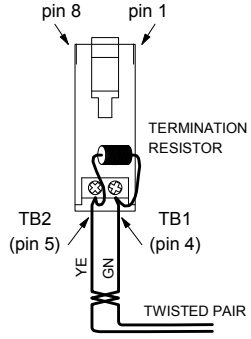

Drawing remarks

Tetra Pak

Designer ACH	Date 26/06/2010	Machine CBP 30 Speed 0200	
ECM No 456516	Denomination CIRCUIT DIAGRAM	Page Type FIGURE DRAWINGS	
Company Tetra Pak (Italy)	Document No. 3037928-0003	Doc. type ELD	Version AC	Page 089

5 Line Summary

TechPub_2614345_0108 - 0501_3056481_01.fm

Description

All connections inside the electrical cabinet are listed in this chapter.

TechPub_2614345_0108 - 0501_3056481_01.fm

This drawing must not without the consent of Tetra Pak
be copied, transmitted or disclosed to any third party.

Line summary of 3037928 -0003

Line	From	Page.Col.	Opt.	Area/Color
L10				
	A01X0100:1	003 .2		2,5 BU
	A01T2000:V-	003 .2		
L10				
	A01X0100:6	001 .1		0,75 BU
	A01K3400:4	056 .7		
L10				
	A01X0100:7	001 .1		0,75 BU
	A01K3500:4	059 .7		
L10				
	A01X0100:8	001 .2		0,75 BU
	A01X0460:1	063 .1		
L10				
	A01X0100:9	001 .2		0,75 BU
	A01X0460:3	063 .1		
L10				
	A01X0100:10	001 .2		0,75 BU
	A01X0460:5	064 .1		
L10				
	A01X0100:11	001 .2		0,75 BU
	A01X0460:7	064 .1		
L10				
	A01X0100:12	001 .2		0,75 BU
	A01X0460:9	065 .2		
L10				
	A01X0100:13	001 .3		0,75 BU
	A01X0460:11	065 .2		

Line	From	Page.Col.	Opt.	Area/Color
L10				
	A01X0100:14	001 .3		0,75 BU
	A01X0460:17	066 .2		
L10				
	A01X0100:15	001 .3		0,75 BU
	A01X0460:13	066 .2		
L10				
	A01X0100:16	001 .3		0,75 BU
	A01X0470:3	084 .4		
L10				
	A01X0100:17	001 .3		0,75 BU
	A01X0470:12	084 .4		
L10				
	A01X0100:18	001 .3		0,75 BU
	A01X0450:9	020 .1		
L10				
	A01X0100:20	001 .4		0,75 BU
	A01X0450:17	020 .1		
L10				
	A01X0100:21	001 .4		0,75 BU
	A01X0450:21	020 .1		
L10				
	A01X0100:22	001 .4		2,5 BU
	A01T2010:V-	003 .5		
L10				
	A01X0100:23	001 .4		0,75 BU
	W30T5000:6	008 .7		

Line	From	Page.Col.	Opt.	Area/Color
L10				
	A01X0100:24	001 .5		0,75 BU
	W30T6000:6	009 .7		
L10				
	A01X0100:25	001 .5		0,75 BU
	W50T1000:6	010 .7		
L10				
	A01X0100:26	001 .5		0,75 BU
	X40T1000:6	011 .7		
L10				
	A01X0100:27	001 .5		0,75 BU
	X40T2000:6	012 .7		
L10				
	A01X0100:28	001 .5		0,75 BU
	X40T5000:6	013 .7		
L10				
	A01X0100:29	001 .6		0,75 BU
	X40T4000:6	014 .7		
L10				
	A01X0100:30	001 .6		0,75 BU
	C45T2000:6	015 .7		
L10				
	A01X0100:31	001 .6		0,75 BU
	W50T5000:6	017 .7		
L10				
	A01X0100:32	001 .6		0,75 BU
	W50T6000:6	018 .7		

Drawing remarks

Tetra Pak

Designer ACH	Date 26/06/2010	Machine CBP 30 Speed 0200	
ECM No 456516	Denomination LINE SUMMARY	Page Type LINE SUMMARY	
Company Tetra Pak (Italy)	Document No. 3037928-0004	Doc. type ELD	Version AC	Page 001

This drawing must not without the consent of Tetra Pak be copied, transmitted or disclosed to any third party.

Line summary of 3037928 -0003

Line	From	Page.Col.	Opt.	Area/Color
L10				
	A01X0100:33	001 .6		0,75 BU
	V60T1000:6	019 .7	WRAP	
L10				
	A01X0100:34	001 .6		2,5 BU
	A01T2020:V-	003 .8		
L10				
	A01X0100:35	001 .7		0,75 BU
	A01K3120:GND	030 .3		
L10				
	A01X0100:36	001 .7		0,75 BU
	A01X4000:1	031 .4		
L10				
	A01X0100:37	001 .7		0,75 BU
	F09X0000:21	035 .1		
L10				
	A01X0100:38	001 .7		0,75 BU
	F09K0000:0V	035 .6		
	F09K0040:BU	035 .9		
L10				
	A01X0100:39	001 .7		0,75 BU
	F09K0010:A1	036 .3		
L10				
	A01X0100:40	001 .8		0,75 BU
	A01Q6000:A2	052 .5		
	V01Q5000:A2	052 .5		
	W30Q2000:A2	060 .4		

Line	From	Page.Col.	Opt.	Area/Color
	W30Q2000:A2	060 .4		
	W30Q3000:A2	060 .4		
L10				
	A01X0100:41	001 .8		0,75 BU
	W30Q4000:A2	060 .4		
	C35Q1000:A2	060 .4		
	X40Q3000:A2	058 .4		
	C45Q3000:A2	058 .4		
	W50Q4000:A2	057 .5		
L10				
	A01X0100:42	001 .8		0,75 BU
	A01Q1040:A2	053 .6		
	A01Q1020:A2	053 .6		
	A01Q1060:A2	036 .7		
	A01Q1070:A2	036 .7		
L10				
	A01X0100:43	001 .8		0,75 BU
	V60Q3010:A2	057 .5		
	V60Q3000:A2	057 .5		
	A01Q6100:A2	054 .6		
	A01Q7000:A2	052 .5		
	W30K0400:1	051 .6		
	W50K0400:1	051 .6		
	A01P9000:-	054 .6		
L10				
	A01X0100:45	001 .8		0,75 BU
	A01K3050:036	043 .8		
L10				

Line	From	Page.Col.	Opt.	Area/Color
	A01X0100:46	001 .9		0,75 BU
	A01K3200:4	044 .6		
L10				
	A01X0100:47	001 .9		0,75 BU
	A01K3340:4	061 .7		
L10				
	A01X0100:48	001 .9		0,75 BU
	A01K3050:18	041 .8		
L10				
	A01X0100:50	001 .9		0,75 BU
	F09K0020:A1	036 .3		
L10				
	A01X0100:51	001 .1		0,75 BU
	F09K0020:S14	036 .3		
L10				
	A01X0100:53	001 .2		0,75 BU
	F09K0010:S14	036 .3		
L10				
	A01X0100:55	001 .2		2,5 BU
	A01X0100:56	001 .2		
L11				
	A01X0110:1	003 .2		2,5 BU
	A01F2010:2	003 .2		
L11				
	A01X0110:6	001 .1		0,75 BU
	A01X0470:10	084 .4		

Drawing remarks

Tetra Pak

Designer ACH	Date 26/06/2010	Machine CBP 30 Speed 0200	
ECM No 456516	Denomination LINE SUMMARY	Page Type LINE SUMMARY	
Company Tetra Pak (Italy)	Document No. 3037928-0004	Doc. type ELD	Version AC	Page 002

This drawing must not without the consent of Tetra Pak be copied, transmitted or disclosed to any third party.

Line summary of 3037928 -0003

Line	From	Page.Col.	Opt.	Area/Color
L11				
	A01X0110:7	001 .1		0,75 BU
	X1710:12	005 .10		
L11				
	A01X0110:8	001 .2		0,75 BU
	A01K3120:US1	030 .3		
L11				
	A01X0110:9	001 .2		0,75 BU
	A01X4000:4	031 .4		
L11				
	A01X0110:10	001 .2		0,75 BU
	F09X0000:22	035 .1		
L11				
	A01X0110:11	001 .2		0,75 BU
	F09K0000:24V	035 .6		
L11				
	A01X0110:12	001 .2		0,75 BU
	F09K0010:13	036 .3		
L11				
	A01X0110:13	001 .3		0,75 BU
	F09K0020:13	036 .3		
L11				
	A01X0110:14	001 .3		0,75 BU
	V60F3000:1.33	040 .3		
	A01Q1060:53	040 .3		
	A01Q1070:53	040 .3		
	A01B6020:13	040 .3		

Line	From	Page.Col.	Opt.	Area/Color
L11				
	A01X0110:15	001 .3		0,75 BU
	A01F6000:1.33	041 .5		
	A01X1010:3	041 .1		
L11				
	A01X0110:16	001 .3		0,75 BU
	A01K3050:27	043 .7		
L11				
	A01X0110:17	001 .3		0,75 BU
	A01K3200:6	044 .6		
L11				
	A01X0110:18	001 .3		0,75 BU
	A01K3340:6	061 .7		
L11				
	A01X0110:19	001 .4		0,75 BU
	A01X0470:2	084 .4		
L11				
	A01X0110:20	001 .4		0,75 BU
	F09K0010:23	036 .3		
L11				
	A01X0110:21	001 .4		0,75 BU
	F09K0010:33	036 .3		
L11				
	A01X0110:22	001 .4		0,75 BU
	F09K0010:43	036 .3		
L11				

Line	From	Page.Col.	Opt.	Area/Color
	A01X0110:23	001 .4		0,75 BU
	F09K0020:23	036 .3		
L11				
	A01X0110:24	001 .5		0,75 BU
	F09K0020:33	036 .3		
L11				
	A01X0110:26	001 .5		0,75 BU
	A01K3120:US2	030 .3		
L12				
	A01X0120:1	003 .5		2,5 BU
	A01F2020:2	003 .5		
L12				
	A01X0120:2	001 .6		0,75 BU
	A01K3050:28	043 .7		
L12				
	A01X0120:3	001 .6		0,75 BU
	A01X0460:2	063 .1		
L12				
	A01X0120:4	001 .6		0,75 BU
	A01X0460:4	063 .1		
L12				
	A01X0120:5	001 .6		0,75 BU
	A01X0460:6	064 .1		
L12				
	A01X0120:6	001 .6		0,75 BU
	A01X0460:8	064 .1		

Drawing remarks

Tetra Pak

Designer ACH	Date 26/06/2010	Machine CBP 30 Speed 0200	
ECM No 456516	Denomination LINE SUMMARY	Page Type LINE SUMMARY	
Company Tetra Pak (Italy)	Document No. 3037928-0004	Doc. type ELD	Version AC	Page 003

This drawing must not without the consent of Tetra Pak be copied, transmitted or disclosed to any third party.

Line summary of 3037928 -0003

Line	From	Page.Col.	Opt.	Area/Color
L12				
	A01X0120:7	001 .7		0,75 BU
	A01X0460:12	065 .2		
L12				
	A01X0120:13	001 .8		0,75 BU
	F09K0020:43	036 .3		
L13				
	A01X0130:1	003 .9		2,5 BU
	A01F2030:2	003 .9		
L13				
	A01X0130:2	001 .8		0,75 BU
	A01K3050:29	043 .7		
L13				
	A01X0130:3	001 .8		0,75 BU
	A01X0460:10	065 .2		
L13				
	A01X0130:5	001 .9		0,75 BU
	A01X0460:14	066 .2		
L13				
	A01X0130:6	001 .9		0,75 BU
	A01X0450:10	020 .1		
L13				
	A01X0130:8	001 .9		0,75 BU
	A01X0450:18	020 .1		
L13				
	A01X0130:9	001 .10		0,75 BU
	A01X0450:22	020 .1		
L13				
	A01X0130:10	001 .10		0,75 BU
	V01X5100:2	041 .1		
L13				
	A01X0130:11	001 .10		0,75 BU
	V01X5100:6	041 .1		
L13				
	A01X0130:12	001 .10		0,75 BU
	V01X5100:4	041 .1		
L31				
	A01X0310:1	001 .1		2,5 BU
	F09K0010:14	036 .3		
L31				
	A01X0310:2	001 .1		0,75 BU
	W30T5000:5	008 .7		
L31				
	A01X0310:3	001 .2		0,75 BU
	W30T6000:5	009 .7		
L32				
	A01X0320:1	001 .5		0,75 BU
	F09K0020:14	036 .3		
L32				
	A01X0320:2	001 .6		0,75 BU
	W50T1000:5	010 .7		
L32				
	A01X0320:3	001 .6		0,75 BU
	X40T1000:5	011 .7		
L32				
	A01X0320:4	001 .6		0,75 BU
	X40T2000:5	012 .7		
L32				
	A01X0320:5	001 .6		0,75 BU
	X40T5000:5	013 .7		
L32				
	A01X0320:6	001 .6		0,75 BU
	X40T4000:5	014 .7		
L32				
	A01X0320:7	001 .6		0,75 BU
	C45T2000:5	015 .7		
L32				
	A01X0320:8	001 .7		0,75 BU
	W50T5000:5	017 .7		
L32				
	A01X0320:9	001 .7		0,75 BU
	W50T6000:5	018 .7		
L32				
	A01X0320:10	001 .7		0,75 BU
	V60T1000:5	019 .7	WRAP	
L34				
	A01X0340:1	001 .8		0,75 BU
	F09K0010:24	036 .3		
L34				
	A01X0340:2	001 .8		0,75 BU
	W30T5000:7	008 .8		

Drawing remarks

Tetra Pak

Designer ACH	Date 26/06/2010	Machine CBP 30 Speed 0200	
ECM No 456516	Denomination LINE SUMMARY	Page Type LINE SUMMARY	
Company Tetra Pak (Italy)	Document No. 3037928-0004	Doc. type ELD	Version AC	Page 004

This drawing must not without the consent of Tetra Pak be copied, transmitted or disclosed to any third party.

Line summary of 3037928 -0003

Line	From	Page.Col.	Opt.	Area/Color
L34				
	A01X0340:3	001 .9		0,75 BU
	W30T6000:7	009 .8		
L35				
	A01X0350:1	001 .1		0,75 BU
	F09K0020:24	036 .3		
L35				
	A01X0350:2	001 .1		0,75 BU
	W50T1000:7	010 .8		
L35				
	A01X0350:3	001 .2		0,75 BU
	X40T1000:7	011 .8		
L35				
	A01X0350:4	001 .2		0,75 BU
	X40T2000:7	012 .8		
L35				
	A01X0350:5	001 .2		0,75 BU
	X40T5000:7	013 .8		
L35				
	A01X0350:6	001 .2		0,75 BU
	X40T4000:7	014 .8		
L35				
	A01X0350:7	001 .2		0,75 BU
	C45T2000:7	015 .8		
L35				
	A01X0350:8	001 .3		0,75 BU
	W50T5000:7	017 .8		

Line	From	Page.Col.	Opt.	Area/Color
L35				
	A01X0350:9	001 .3		0,75 BU
	W50T6000:7	018 .8		
L35				
	A01X0350:10	001 .3		0,75 BU
	V60T1000:7	019 .8	WRAP	
L36				
	A01X0360:1	035 .10		0,75 BU
	F09K0000:IQ10	035 .6		
L36				
	A01X0360:6	001 .4		0,75 BU
	W50T5000:1	017 .6		
L36				
	A01X0360:7	001 .4		0,75 BU
	F09K0000:I4	035 .6		
L36				
	A01X0360:8	001 .5		0,75 BU
	F09K0010:X1	036 .3		
L36				
	A01X0360:9	001 .5		0,75 BU
	F09K0020:X1	036 .3		
L37				
	A01X0370:1	001 .6		0,75 BU
	F09K0010:44	036 .3		
L37				
	A01X0370:2	001 .7		0,75 BU
	A01K3050:33	043 .7		

Line	From	Page.Col.	Opt.	Area/Color
L37				
	A01X0370:3	001 .7		0,75 BU
	A01K3500:6	059 .7		
L38				
	A01X0380:1	001 .9		
	F09K0020:44	036 .3		
L38				
	A01X0380:2	001 .9		
	A01K3050:34	043 .7		
L38				
	A01X0380:3	001 .9		
	A01K3400:6	056 .7		
L38				
	A01X0380:4	001 .10		
	A01X0460:18	066 .2		
L851				
	A01T3000:L1	029 .3		1.5 BK
	A01F3000:2	029 .3		
	A01T4000:L1	030 .9		
	A81T4000:L1	032 .8		
	81T600:L1	033 .2	GENIUS	

Drawing remarks

Tetra Pak

Designer ACH | Date 26/06/2010 | Machine CBP 30 Speed 0200

ECM No 456516 | Denomination LINE SUMMARY | Page Type LINE SUMMARY

Company Tetra Pak (Italy) | Document No. 3037928-0004 | Doc. type ELD | Version AC | Page 005

This page intentionally left blank

6 Cabinet Terminal Summary

TechPub_2614345_0108 - 0601_3056482_01.fm

Description

All terminals inside the electrical cabinet are listed in this chapter. The field *Opt.* specifies if the terminal is reserved for an option.

TechPub_2614345_0108 - 0601_3056482_01.fm

This drawing must not without the consent of Tetra Pak be copied, transmitted or disclosed to any third party.

Cabinet terminal summary of 3037928 -0003

Terminal	Page .Col.	Opt.
A01X0020:1	002 .6	
A01X0020:2	013 .9	
A01X0020:3	018 .9	
A01X0020:4	016 .1	
A01X0020:5	084 .1	
A01X0020:6	038 .4	
A01X0020:7		
A01X0020:8	030 .10	
A01X0020:9	020 .1	
A01X0020:10	037 .9	
A01X0020:11	041 .1	
A01X0020:12	008 .4	
A01X0020:13	017 .4	
A01X0020:14	028 .6	
A01X0020:15	021 .6	
A01X0020:16	025 .6	
A01X0020:17	005 .4	
A01X0020:18	027 .7	
A01X0020:19	022 .6	
A01X0020:20	023 .5	
A01X0020:21	024 .6	
A01X0020:22	026 .6	
A01X0020:23	029 .8	
A01X0020:24	032 .6	
A01X0020:25	032 .10	
A01X0020:26	005 .8	
A01X0020:27	030 .2	
A01X0020:28	044 .6	

Terminal	Page .Col.	Opt.
A01X0020:29	056 .6	
A01X0020:30	022 .8	
A01X0020:31	025 .8	
A01X0020:32	023 .8	
A01X0020:33	024 .8	
A01X0020:34	023 .10	
A01X0020:35	003 .5	
A01X0020:36	003 .7	
A01X0020:37	061 .6	
A01X0020:38	003 .2	
A01X0020:39	004 .9	
A01X0020:40	004 .6	
A01X0020:41	005 .2	
A01X0020:42	085 .6	
A01X0020:43	085 .8	
A01X0020:44	007 .2	
A01X0020:45		
A01X0020:46	003 .10	
A01X0020:47	006 .5	
A01X0020:48	026 .7	
A01X0020:49	027 .8	
A01X0020:50	028 .7	
A01X0020:51	063 .1	
A01X0020:52	064 .1	
A01X0020:53	065 .1	
A01X0020:54	066 .1	
A01X0020:55	003 .4	
A01X0020:56		

Terminal	Page .Col.	Opt.
A01X0020:57	084 .1	
A01X0020:58	084 .1	
A01X0020:59	003 .8	
A01X0020:60	059 .7	
A01X0020:61	084 .1	
A01X0020:62	084 .1	
A01X0020:63	033 .4	GENIUS
A01X0020:64	012 .7	
A01X0020:65		
A01X0020:66		
A01X0020:67		
A01X0020:68		
A01X0020:69		
A01X0020:70		
A01X0020:71		
A01X0020:72		
A01X0020:73		
A01X0020:74		
A01X0020:75		
A01X0020:76		
A01X0020:77		
A01X0020:78		
A01X0020:79		
A01X0020:80		
A01X0020:81		
A01X0020:82		
A01X0030:1	004 .10	
A01X0030:2	032 .10	

Terminal	Page .Col.	Opt.
A01X0030:3	008 .3	
A01X0030:4	004 .2	
A01X0030:5	029 .3	
A01X0030:6	017 .3	
A01X0030:7	006 .4	
A01X0030:8	026 .5	
A01X0030:9	023 .4	
A01X0030:10	024 .5	
A01X0030:11	027 .6	
A01X0030:12	028 .5	
A01X0030:13	022 .5	
A01X0030:14	025 .6	
A01X0030:15	005 .7	
A01X0030:16	030 .9	
A01X0030:17	003 .2	
A01X0030:18	033 .3	GENIUS
A01X0030:19	004 .8	
A01X0030:20		
A01X0030:21		
A01X0030:22		
A01X0100:1	003 .2	
A01X0100:2	037 .2	
A01X0100:3	037 .7	
A01X0100:4	038 .2	
A01X0100:5	039 .2	
A01X0100:6	001 .1	
A01X0100:7	001 .1	
A01X0100:8	001 .2	

Drawing remarks

Tetra Pak

Designer	Date	Machine
ACH	26/06/2010	CBP 30 Speed 0200

ECM No	Denomination	Page Type
456516	CABINET TERMINAL SUMMARY	CABINET TERMINAL SUMMARY

Company	Document No.	Doc. type	Version	Page
Tetra Pak (Italy)	3037928-0005	ELD	AC	001

This drawing must not without the consent of Tetra Pak be copied, transmitted or disclosed to any third party.

Cabinet terminal summary of 3037928 -0003

Terminal	Page .Col.	Opt.
A01X0100:9	001 .2	
A01X0100:10	001 .2	
A01X0100:11	001 .2	
A01X0100:12	001 .2	
A01X0100:13	001 .3	
A01X0100:14	001 .3	
A01X0100:15	001 .3	
A01X0100:16	001 .3	
A01X0100:17	001 .3	
A01X0100:18	001 .3	
A01X0100:19	001 .4	
A01X0100:20	001 .4	
A01X0100:21	001 .4	
A01X0100:22	001 .4	
A01X0100:23	001 .4	
A01X0100:24	001 .5	
A01X0100:25	001 .5	
A01X0100:26	001 .5	
A01X0100:27	001 .5	
A01X0100:28	001 .5	
A01X0100:29	001 .6	
A01X0100:30	001 .6	
A01X0100:31	001 .6	
A01X0100:32	001 .6	
A01X0100:33	001 .6	
A01X0100:34	001 .6	
A01X0100:35	001 .7	
A01X0100:36	001 .7	

Terminal	Page .Col.	Opt.
A01X0100:37	001 .7	
A01X0100:38	001 .7	
A01X0100:39	001 .7	
A01X0100:40	001 .8	
A01X0100:41	001 .8	
A01X0100:42	001 .8	
A01X0100:43	001 .8	
A01X0100:44	001 .8	
A01X0100:45	001 .8	
A01X0100:46	001 .9	
A01X0100:47	001 .9	
A01X0100:48	001 .9	
A01X0100:49	001 .9	
A01X0100:50	001 .9	
A01X0100:51	001 .1	
A01X0100:52	001 .1	
A01X0100:53	001 .2	
A01X0100:54	001 .2	
A01X0100:55	001 .2	
A01X0100:56	001 .2	
A01X0100:57	001 .2	
A01X0100:58	001 .3	
A01X0100:59	001 .3	
A01X0100:60	001 .3	
A01X0100:61	001 .3	
A01X0100:62	001 .3	
A01X0100:63	001 .3	
A01X0100:64	001 .4	

Terminal	Page .Col.	Opt.
A01X0100:65	001 .4	
A01X0100:66	001 .4	
A01X0100:67	001 .4	
A01X0100:68	001 .4	
A01X0110:1	003 .2	
A01X0110:2	037 .1	
A01X0110:3	037 .7	
A01X0110:4	038 .1	
A01X0110:5	039 .1	
A01X0110:6	001 .1	
A01X0110:7	001 .1	
A01X0110:8	001 .2	
A01X0110:9	001 .2	
A01X0110:10	001 .2	
A01X0110:11	001 .2	
A01X0110:12	001 .2	
A01X0110:13	001 .3	
A01X0110:14	001 .3	
A01X0110:15	001 .3	
A01X0110:16	001 .3	
A01X0110:17	001 .3	
A01X0110:18	001 .3	
A01X0110:19	001 .4	
A01X0110:20	001 .4	
A01X0110:21	001 .4	
A01X0110:22	001 .4	
A01X0110:23	001 .4	
A01X0110:24	001 .5	

Terminal	Page .Col.	Opt.
A01X0110:25	001 .5	
A01X0110:26	001 .5	
A01X0110:27	001 .5	
A01X0110:28	001 .5	
A01X0110:29	001 .6	
A01X0110:30	001 .6	
A01X0110:31	001 .6	
A01X0110:32	001 .6	
A01X0120:1	003 .5	
A01X0120:2	001 .6	
A01X0120:3	001 .6	
A01X0120:4	001 .6	
A01X0120:5	001 .6	
A01X0120:6	001 .6	
A01X0120:7	001 .7	
A01X0120:8	001 .7	
A01X0120:9	001 .7	
A01X0120:10	001 .7	
A01X0120:11	001 .7	
A01X0120:12	001 .8	
A01X0120:13	001 .8	
A01X0120:14	001 .8	
A01X0120:15	001 .8	
A01X0120:16	001 .8	
A01X0130:1	003 .9	
A01X0130:2	001 .8	
A01X0130:3	001 .8	
A01X0130:4	001 .9	

Drawing remarks

Tetra Pak

Designer ACH | Date 26/06/2010 | Machine CBP 30 Speed 0200

ECM No 456516 | Denomination CABINET TERMINAL SUMMARY | Page Type CABINET TERMINAL SUMMARY

Company Tetra Pak (Italy) | Document No. 3037928-0005 | Doc. type ELD | Version AC | Page 002

This drawing must not without the consent of Tetra Pak be copied, transmitted or disclosed to any third party.

Cabinet terminal summary of 3037928 -0003

Terminal	Page .Col.	Opt.
A01X0130:5	001 .9	
A01X0130:6	001 .9	
A01X0130:7	001 .9	
A01X0130:8	001 .9	
A01X0130:9	001 .10	
A01X0130:10	001 .10	
A01X0130:11	001 .10	
A01X0130:12	001 .10	
A01X0310:1	001 .1	
A01X0310:2	001 .1	
A01X0310:3	001 .2	
A01X0310:4	001 .2	
A01X0310:5	001 .2	
A01X0310:6	001 .2	
A01X0310:7	001 .2	
A01X0310:8	001 .3	
A01X0310:9	001 .3	
A01X0310:10	001 .3	
A01X0310:11	001 .3	
A01X0310:12	001 .3	
A01X0320:1	001 .5	
A01X0320:2	001 .6	
A01X0320:3	001 .6	
A01X0320:4	001 .6	
A01X0320:5	001 .6	
A01X0320:6	001 .6	
A01X0320:7	001 .6	
A01X0320:8	001 .7	

Terminal	Page .Col.	Opt.
A01X0320:9	001 .7	
A01X0320:10	001 .7	
A01X0320:11	001 .7	
A01X0320:12	001 .7	
A01X0340:1	001 .8	
A01X0340:2	001 .8	
A01X0340:3	001 .9	
A01X0340:4	001 .9	
A01X0340:5	001 .9	
A01X0340:6	001 .9	
A01X0340:7	001 .9	
A01X0340:8	001 .10	
A01X0340:9	001 .10	
A01X0340:10	001 .10	
A01X0340:11	001 .10	
A01X0340:12	001 .10	
A01X0350:1	001 .1	
A01X0350:2	001 .1	
A01X0350:3	001 .2	
A01X0350:4	001 .2	
A01X0350:5	001 .2	
A01X0350:6	001 .2	
A01X0350:7	001 .2	
A01X0350:8	001 .3	
A01X0350:9	001 .3	
A01X0350:10	001 .3	
A01X0350:11	001 .3	
A01X0350:12	001 .3	

Terminal	Page .Col.	Opt.
A01X0360:1	035 .10	
A01X0360:2	037 .2	
A01X0360:3	037 .7	
A01X0360:4	038 .2	
A01X0360:5	039 .2	
A01X0360:6	001 .4	
A01X0360:7	001 .4	
A01X0360:8	001 .5	
A01X0360:9	001 .5	
A01X0360:10	001 .5	
A01X0360:11	001 .5	
A01X0360:12	001 .5	
A01X0370:1	001 .6	
A01X0370:2	001 .7	
A01X0370:3	001 .7	
A01X0370:4	001 .7	
A01X0370:5	001 .7	
A01X0370:6	001 .7	
A01X0370:7	001 .8	
A01X0370:8	001 .8	
A01X0380:1	001 .9	
A01X0380:2	001 .9	
A01X0380:3	001 .9	
A01X0380:4	001 .10	
A01X0380:5	001 .10	
A01X0380:6	001 .10	
A01X0380:7	001 .10	
A01X0380:8	001 .10	

Terminal	Page .Col.	Opt.
A01X0450:1	010 .8	
A01X0450:2	010 .8	
A01X0450:3	010 .8	
A01X0450:4	010 .8	
A01X0450:5	008 .6	
A01X0450:6	008 .6	
A01X0450:7	008 .6	
A01X0450:8	008 .6	
A01X0450:9	020 .1	
A01X0450:10	020 .1	
A01X0450:11	020 .7	
A01X0450:12	020 .7	
A01X0450:13	020 .1	
A01X0450:14	020 .1	
A01X0450:15	020 .7	
A01X0450:16	020 .7	
A01X0450:17	020 .1	
A01X0450:18	020 .1	
A01X0450:19	020 .7	
A01X0450:20	020 .7	
A01X0450:21	020 .1	
A01X0450:22	020 .1	
A01X0450:23	020 .7	
A01X0450:24	020 .7	
A01X0450:⏚	020 .1	
A01X0460:1	063 .1	
A01X0460:2	063 .1	
A01X0460:3	063 .1	

Drawing remarks

Tetra Pak

Designer ACH | Date 26/06/2010 | Machine CBP 30 Speed 0200

ECM No 456516 | Denomination CABINET TERMINAL SUMMARY | Page Type CABINET TERMINAL SUMMARY

Company Tetra Pak (Italy) | Document No. 3037928-0005 | Doc. type ELD | Version AC | Page 003

This drawing must not without the consent of Tetra Pak be copied, transmitted or disclosed to any third party.

1 2 3 4 5 6 7 8 9 10

Cabinet terminal summary of 3037928 -0003

Terminal	Page .Col.	Opt.
A01X0460:4	063 .1	
A01X0460:5	064 .1	
A01X0460:6	064 .1	
A01X0460:7	064 .1	
A01X0460:8	064 .1	
A01X0460:9	065 .2	
A01X0460:10	065 .2	
A01X0460:11	065 .2	
A01X0460:12	065 .2	
A01X0460:13	066 .2	
A01X0460:14	066 .2	
A01X0460:15		
A01X0460:16		
A01X0460:17	066 .2	
A01X0460:18	066 .2	
A01X0460:19		
A01X0460:20		
A01X0460:21		
A01X0460:22	064 .1	
A01X0460:23	065 .2	
A01X0460:24	066 .2	
A01X0460:⏚	063 .1	
A01X0470:1	084 .4	
A01X0470:2	084 .4	
A01X0470:3	084 .4	
A01X0470:4	084 .4	
A01X0470:5	084 .4	
A01X0470:6	084 .4	

Terminal	Page .Col.	Opt.
A01X0470:7	084 .4	
A01X0470:8	084 .4	
A01X0470:9	084 .4	
A01X0470:10	084 .4	
A01X0470:11	084 .4	
A01X0470:12	084 .4	
A01X0470:13	084 .4	
A01X0470:14	084 .4	
A01X0470:15	084 .4	
A01X0470:16	084 .4	
A01X0470:17	084 .4	
A01X0470:18	084 .4	
A01X0470:19		
A01X0470:20		
A01X0470:21		
A01X0470:22		
A01X0470:23		
A01X0470:24		
A01X0470:⏚	084 .4	
A01X0480:1	010 .6	
A01X0480:2	010 .6	
A01X0480:3	010 .6	
A01X0480:4	010 .6	
A01X0480:5	012 .6	
A01X0480:6	012 .6	
A01X0480:7	012 .6	
A01X0480:8	012 .6	
A01X0480:9	013 .6	

Terminal	Page .Col.	Opt.
A01X0480:10	013 .6	
A01X0480:11	013 .6	
A01X0480:12	013 .6	
A01X0480:13	014 .6	
A01X0480:14	014 .6	
A01X0480:15	014 .6	
A01X0480:16	014 .6	
A01X0480:17	015 .6	
A01X0480:18	015 .6	
A01X0480:19	015 .6	
A01X0480:20	015 .6	
A01X0480:21	019 .6	
A01X0480:22	019 .6	
A01X0480:23	019 .6	
A01X0480:24	019 .6	
A01X0480:⏚	012 .8	
A01X1010:1	002 .6	
A01X1010:2	002 .6	
A01X1010:3	041 .1	
A01X1010:4	041 .6	
A01X1010:5		
A01X1010:6		
A01X1010:7		
A01X1010:8		
A01X1010:9		
A01X1010:10		
A01X4000:1	031 .4	
A01X4000:2		

Terminal	Page .Col.	Opt.
A01X4000:3		
A01X4000:4	031 .4	
A01X4000:5	031 .5	
A01X4000:6	031 .5	
A01X4000:7	031 .5	
A01X4000:8	031 .6	
A01X4000:9	031 .6	
A01X4000:10	031 .7	
A01X4000:11	031 .7	
A01X4000:12	031 .7	
A01X4000:13	031 .8	
A01X4000:14		
A01X4000:15		
A01X4000:16		
A01X4000:17		
A01X4000:18		
A01X4000:19		
A01X4000:20		
A01X4000:21		
A01X4000:22		
A01X4000:23		
A01X4000:24		
A01X4000:⏚	031 .3	
A01X7000:1	004 .6	
A01X7000:2	004 .2	
A01X7000:3		
A01X7000:4		
A01X7000:5		

Drawing remarks

Tetra Pak

Designer	ACH	Date	26/06/2010	Machine	CBP 30 Speed 0200
ECM No	456516	Denomination	CABINET TERMINAL SUMMARY	Page Type	CABINET TERMINAL SUMMARY
Company	Tetra Pak (Italy)	Document No.	3037928-0005	Doc. type / Version / Page	ELD / AC / 004

This drawing must not without the consent of Tetra Pak be copied, transmitted or disclosed to any third party.

1 2 3 4 5 6 7 8 9 10

Cabinet terminal summary of 3037928 -0003

Terminal	Page .Col.	Opt.
A01X7000:6		
A01X7000:⏚	004 .6	
A81X2010:1	031 .2	
A81X4000:BK	032 .2	
A81X4000:BU	032 .2	
A81X4000:RD	032 .2	
A81X4000:SH	032 .2	
A81X4000:WH	032 .2	
A81X4010:BK	032 .3	
A81X4010:BU	032 .3	
A81X4010:RD	032 .3	
A81X4010:SH	032 .3	
A81X4010:WH	032 .3	
A81X4020:BK	032 .5	
A81X4020:BU	032 .5	
A81X4020:RD	032 .5	
A81X4020:SH	032 .5	
A81X4020:WH	032 .5	
A81X4030:BK	032 .7	
A81X4030:BU	032 .7	
A81X4030:RD	032 .7	
A81X4030:SH	032 .7	
A81X4030:WH	032 .7	
A81X4040:BK	032 .8	
A81X4040:BU	032 .8	
A81X4040:RD	032 .8	
A81X4040:SH	032 .8	
A81X4040:WH	032 .8	

Terminal	Page .Col.	Opt.
C35X1000:1	025 .9	
C35X1000:2	025 .9	
C35X1000:3	025 .10	
C35X1000:4	025 .10	
C35X1000:5	025 .10	
C35X1000:6		
C35X1000:⏚	025 .10	
C45X3000:1	027 .9	
C45X3000:2	027 .9	
C45X3000:3	027 .9	
C45X3000:4	027 .10	
C45X3000:5	027 .10	
C45X3000:6		
C45X3000:⏚	027 .8	
F09X0000:1	038 .1	
F09X0000:2	038 .2	
F09X0000:3	038 .2	
F09X0000:4	038 .2	
F09X0000:5	038 .3	
F09X0000:6	038 .3	
F09X0000:7	038 .3	
F09X0000:8	038 .4	
F09X0000:9	038 .4	
F09X0000:10	038 .4	
F09X0000:11	038 .4	
F09X0000:12	038 .4	
F09X0000:13	037 .1	
F09X0000:14	037 .2	

Terminal	Page .Col.	Opt.
F09X0000:15	037 .2	
F09X0000:16	037 .2	
F09X0000:17	037 .3	
F09X0000:18	037 .3	
F09X0000:19	037 .3	
F09X0000:20	037 .4	
F09X0000:21	035 .1	
F09X0000:22	035 .1	
F09X0000:23	035 .4	
F09X0000:24		
F09X0000:⏚	037 .9	
F09X0010:1	039 .1	
F09X0010:2	039 .2	
F09X0010:3	039 .2	
F09X0010:4	039 .2	
F09X0010:5	039 .3	
F09X0010:6	039 .3	
F09X0010:7	039 .3	
F09X0010:8	039 .4	
F09X0010:9	039 .4	
F09X0010:10	039 .4	
F09X0010:11	039 .4	
F09X0010:12	039 .4	
F09X0010:13	037 .7	
F09X0010:14	037 .7	
F09X0010:15	037 .7	
F09X0010:16	037 .7	
F09X0010:17	037 .8	

Terminal	Page .Col.	Opt.
F09X0010:18	037 .8	
F09X0010:19	037 .9	
F09X0010:20	037 .9	
F09X0010:21		
F09X0010:22		
F09X0010:23		
F09X0010:24		
F09X0010:⏚	038 .4	
V01X5000:1	006 .4	
V01X5000:2	006 .4	
V01X5000:3	006 .4	
V01X5000:4	006 .4	
V01X5000:5		
V01X5000:6		
V01X5000:⏚	006 .4	
V01X5100:1	051 .2	
V01X5100:2	041 .1	
V01X5100:3		
V01X5100:4	041 .1	
V01X5100:5		
V01X5100:6	041 .1	
V01X5100:7		
V01X5100:8		
V01X5100:9		
V01X5100:10		
V01X5100:11		
V01X5100:12		
V01X5100:13	041 .6	

Drawing remarks

Tetra Pak

Designer ACH	Date 26/06/2010	Machine CBP 30 Speed 0200	
ECM No 456516	Denomination CABINET TERMINAL SUMMARY	Page Type CABINET TERMINAL SUMMARY	
Company Tetra Pak (Italy)	Document No. 3037928-0005	Doc. type ELD	Version AC	Page 005

This drawing must not without the consent of Tetra Pak be copied, transmitted or disclosed to any third party.

Cabinet terminal summary of 3037928 -0003

Terminal	Page .Col.	Opt.
V01X5100:14	041 .6	
V01X5100:15	041 .6	
V01X5100:16	051 .2	
V01X5100:17		
V01X5100:18		
V01X5100:19		
V01X5100:20		
V01X5100:21		
V01X5100:22		
V01X5100:23		
V01X5100:24		
V01X5100:⏚	041 .1	
V60X3000:1	021 .5	
V60X3000:2	021 .5	
V60X3000:3	021 .5	
V60X3000:4		
V60X3000:5		
V60X3000:6		
V60X3000:⏚	021 .5	
W30X2000:1	022 .9	
W30X2000:2	022 .9	
W30X2000:3	022 .10	
W30X2000:4	022 .10	
W30X2000:5	022 .10	
W30X2000:6		
W30X2000:⏚	022 .10	
W30X3010:1	023 .6	
W30X3010:2	023 .6	

Terminal	Page .Col.	Opt.
W30X3010:3	023 .7	
W30X3010:4	023 .7	
W30X3010:5	023 .7	
W30X3010:6		
W30X3010:⏚	023 .7	
W30X3020:1	023 .9	
W30X3020:2	023 .9	
W30X3020:3	023 .9	
W30X3020:4	023 .10	
W30X3020:5	023 .9	
W30X3020:6		
W30X3020:⏚	023 .10	
W30X3110:1	023 .7	
W30X3120:1	023 .9	
W30X4000:1	024 .9	
W30X4000:2	024 .9	
W30X4000:3	024 .10	
W30X4000:4	024 .10	
W30X4000:5	024 .10	
W30X4000:6		
W30X4000:⏚	024 .10	
W50X4000:1	028 .9	
W50X4000:2	028 .9	
W50X4000:3	028 .9	
W50X4000:4	028 .10	
W50X4000:5	028 .9	
W50X4000:6		
W50X4000:⏚	028 .8	

Terminal	Page .Col.	Opt.
X40X3000:1	026 .9	
X40X3000:2	026 .9	
X40X3000:3	026 .9	
X40X3000:4	026 .10	
X40X3000:5	026 .9	
X40X3000:6		
X40X3000:⏚	026 .8	
X0163:1	084 .5	
X0163:1	084 .5	
X0163:2	084 .5	
X0163:2	084 .5	
X0163:3	084 .5	
X0163:3	084 .5	
X0163:4	084 .5	
X0163:4	084 .5	
X0163:5	084 .5	
X0163:5	084 .5	
X0163:6	084 .5	
X0163:6	084 .5	
X0163:E	084 .5	
X0163:E	084 .5	
X0163:E	084 .5	
X0163:E	084 .5	

Terminal	Page .Col.	Opt.

Drawing remarks

Tetra Pak

Designer ACH	Date 26/06/2010	Machine CBP 30 Speed 0200	
ECM No 456516	Denomination CABINET TERMINAL SUMMARY	Page Type CABINET TERMINAL SUMMARY	
Company Tetra Pak (Italy)	Document No. 3037928-0005	Doc. type ELD	Version AC	Page 006

7 Terminal Strip Overview

TechPub_2614345_0108 - 0701_3056483_01.fm

Description

All terminals used in the equipment except for those in the electrical cabinet are listed in this chapter.

TechPub_2614345_0108 - 0701_3056483_01.fm

This drawing must not without the consent of Tetra Pak
be copied, transmitted or disclosed to any third party.

1 2 3 4 5 6 7 8 9 10

Terminal strip of 3037928 -0003

A01X2090

From	Cable	Internal Jumper	Terminal	External Jumper	Cable	To	Page.Col.	Option	Function text
A01X0460:1	A01W2090 :1		1		A01W2100 :BU	A01X2100:0V	063 .3		
A01X0460:2	A01W2090 :2		2		A01W2100 :BN	A01X2100:+24V	063 .3		
A01X0460:3	A01W2090 :3		3		A01W2100 :BK	A01X2100:0V	063 .3		
A01X0460:4	A01W2090 :4		4		A01W2100 :WH	A01X2100:+24V	063 .3		
A01X0460:5	A01W2090 :5		5		A01W2200 :BU	A01X2200:0V	064 .2		
A01X0460:6	A01W2090 :6		6		A01W2200 :BN	A01X2200:+24V	064 .2		
A01X0460:7	A01W2090 :7		7		A01W2200 :BK	A01X2200:0V	064 .2		
A01X0460:8	A01W2090 :8		8		A01W2200 :WH	A01X2200:+24V	064 .2		
			9						
			10						
A01X0460:⏚	A01W2090 :GNYE		⏚		A01W2100 :GNYE	A01X2100:⏚	063 .3		

Drawing remarks

Tetra Pak

Designer ACH	Date 26/06/2010	Machine CBP 30 Speed 0200		
ECM No 456516	Denomination TERMINAL STRIP OVERVIEW	Page Type TERMINAL STRIP OVERVIEW		
Company Tetra Pak (Italy)	Document No. 3037928-0006	Doc. type ELD	Version AC	Page 001

This drawing must not without the consent of Tetra Pak
be copied, transmitted or disclosed to any third party.

Terminal strip of 3037928 -0003

A01X4010

From	Cable	Internal Jumper	Terminal	External Jumper	Cable	To	Page.Col.	Option	Function text
			1		A01W4000 :1	A01X4000:1	031 .4		
			2				031 .4		
			3				031 .4		
			4		A01W4000 :4	A01X4000:4	031 .4		
			5		A01W4000 :5	A01X4000:5	031 .5		
			6		A01W4000 :6	A01X4000:6	031 .5		
			7		A01W4000 :7	A01X4000:7	031 .5		
			8		A01W4000 :8	A01X4000:8	031 .6		
			9		A01W4000 :9	A01X4000:9	031 .6		
			10		A01W4000 :10	A01X4000:10	031 .7		
			11		A01W4000 :11	A01X4000:11	031 .7		
			12		A01W4000 :2	A01X4000:12	031 .7		
A01S4300:X2			13				031 .4		
			14				031 .4		
A01S4300:13			15				031 .4		
			16				031 .4		
A01A4000:+			17				031 .5		
A01A4000:-			18				031 .5		
A01S4300:14			19				031 .5		
A01S4300:X1			20				031 .6		
A01S4310:52			21				031 .6		
A01S4310:X1			22				031 .7		
A01S4320:14			23				031 .7		
A01S4320:X1			24				031 .7		
A01S4320:24			25				031 .8		
			26		A01W4000 :3	A01X4000:13	031 .8		
			41		A01W4000 :GNYE	A01X4000:⏚	031 .3		
			42				031 .3		
			43				031 .3		

Drawing remarks

Tetra Pak

Designer ACH	Date 26/06/2010	Machine CBP 30 Speed 0200	
ECM No 456516	Denomination TERMINAL STRIP OVERVIEW	Page Type TERMINAL STRIP OVERVIEW	
Company Tetra Pak (Italy)	Document No. 3037928-0006	Doc. type ELD	Version AC	Page 002

RELEASED

This drawing must not without the consent of Tetra Pak be copied, transmitted or disclosed to any third party.

Terminal strip of 3037928 -0003

A01X4010

From	Cable	Internal Jumper	Terminal	External Jumper	Cable	To	Page.Col.	Option	Function text
			44				031 .3		

Drawing remarks	Tetra Pak	Designer ACH	Date 26/06/2010	Machine CBP 30 Speed 0200	
		ECM No 456516	Denomination TERMINAL STRIP OVERVIEW	Page Type TERMINAL STRIP OVERVIEW	
		Company Tetra Pak (Italy)	Document No. 3037928-0006	Doc. type ELD / Version AC	Page 003

This drawing must not without the consent of Tetra Pak be copied, transmitted or disclosed to any third party.

1 2 3 4 5 6 7 8 9 10

Terminal strip of 3037928 -0003

A01X4030

From	Cable	Internal Jumper	Terminal	External Jumper	Cable	To	Page.Col.	Option	Function text
A01X4040:1	A01W4030 :BU		1		A01W4010 :BU	A01B4010:3	020 .3		PLMS PACKAGE IN
			2						
A01X4040:3	A01W4030 :BN		3		A01W4010 :BN	A01B4010:1	020 .3		PLMS PACKAGE IN
A01X4040:4	A01W4030 :BK		4		A01W4010 :BK	A01B4010:4	020 .6		PLMS PACKAGE IN

Drawing remarks

Tetra Pak

Designer ACH	Date 26/06/2010	Machine CBP 30 Speed 0200	
ECM No 456516	Denomination TERMINAL STRIP OVERVIEW	Page Type TERMINAL STRIP OVERVIEW	
Company Tetra Pak (Italy)	Document No. 3037928-0006	Doc. type ELD	Version AC	Page 004

This drawing must not without the consent of Tetra Pak be copied, transmitted or disclosed to any third party.

1 2 3 4 5 6 7 8 9 10

Terminal strip of 3037928 -0003

A01X4040

From	Cable	Internal Jumper	Terminal	External Jumper	Cable	To	Page.Col.	Option	Function text
A01X0450:21	A01W4040 :BU		1		A01W4030 :BU	A01X4030:1	020 .2		PLMS PACKAGE IN
			2						
A01X0450:22	A01W4040 :BN		3		A01W4030 :BN	A01X4030:3	020 .2		PLMS PACKAGE IN
A01X0450:23	A01W4040 :BK		4		A01W4030 :BK	A01X4030:4	020 .6		PLMS PACKAGE IN

Drawing remarks

Tetra Pak

Designer ACH	Date 26/06/2010	Machine CBP 30 Speed 0200	
ECM No 456516	Denomination TERMINAL STRIP OVERVIEW	Page Type TERMINAL STRIP OVERVIEW	
Company Tetra Pak (Italy)	Document No. 3037928-0006	Doc. type ELD	Version AC	Page 005

This drawing must not without the consent of Tetra Pak be copied, transmitted or disclosed to any third party.

1 2 3 4 5 6 7 8 9 10

Terminal strip of 3037928 -0003

A01X4260

From	Cable	Internal Jumper	Terminal	External Jumper	Cable	To	Page.Col.	Option	Function text
C45K8200:1.4	A01W4270 :BK		1		A01W4200 :BN	A01P4270:3	077 .3		WARNING LAMP YELLOW
C45K8200:0.3	A01W4260 :BU		3		A01W4200 :BU	A01P4260:0	077 .3		WARNING LAMP BLUE
C45K8200:1.3	A01W4270 :BU								
C45K8200:0.4	A01W4260 :BK		4		A01W4200 :BK	A01P4260:2	077 .3		WARNING LAMP BLUE

Drawing remarks

Tetra Pak

Designer ACH	Date 26/06/2010	Machine CBP 30 Speed 0200	
ECM No 456516	Denomination TERMINAL STRIP OVERVIEW	Page Type TERMINAL STRIP OVERVIEW	
Company Tetra Pak (Italy)	Document No. 3037928-0006	Doc. type ELD	Version AC	Page 006

This drawing must not without the consent of Tetra Pak be copied, transmitted or disclosed to any third party.

1 2 3 4 5 6 7 8 9 10

Terminal strip of 3037928 -0003

A01X4280

From	Cable	Internal Jumper	Terminal	External Jumper	Cable	To	Page.Col.	Option	Function text
C45K8200:4.4	A01W4290 :BK		1		A01W4210 :BN	A01P4290:1	077 .3		WARNING LAMP GREEN
C45K8200:2.3	A01W4280 :BU		3		A01W4210 :BU	A01P4260:0	077 .3		WARNING LAMP BLUE
C45K8200:4.3	A01W4290 :BU								
C45K8200:2.4	A01W4280 :BK		4		A01W4210 :BK	A01P4280:4	077 .3		WARNING LAMP RED

Drawing remarks

Tetra Pak

Designer ACH	Date 26/06/2010	Machine CBP 30 Speed 0200	
ECM No 456516	Denomination TERMINAL STRIP OVERVIEW	Page Type TERMINAL STRIP OVERVIEW	
Company Tetra Pak (Italy)	Document No. 3037928-0006	Doc. type ELD	Version AC	Page 007

This drawing must not without the consent of Tetra Pak
be copied, transmitted or disclosed to any third party.

1 | 2 | 3 | 4 | 5 | 6 | 7 | 8 | 9 | 10

Terminal strip of 3037928 -0003

A01X6010

From	Cable	Internal Jumper	Terminal	External Jumper	Cable	To	Page.Col.	Option	Function text
A01K3350:4	A01W6010 :YE		+			A01B6010:+	062 .4		ELECTRICAL CABINET TEMPERATURE
A01K3350:5	A01W6010 :RD		-			A01B6010:-	062 .4		ELECTRICAL CABINET TEMPERATURE

Drawing remarks

Tetra Pak

Designer ACH	Date 26/06/2010	Machine CBP 30 Speed 0200		
ECM No 456516	Denomination TERMINAL STRIP OVERVIEW	Page Type TERMINAL STRIP OVERVIEW		
Company Tetra Pak (Italy)	Document No. 3037928-0006	Doc. type ELD	Version AC	Page 008

This drawing must not without the consent of Tetra Pak be copied, transmitted or disclosed to any third party.

1 | 2 | 3 | 4 | 5 | 6 | 7 | 8 | 9 | 10

Terminal strip of 3037928 -0003

A01X7100

From	Cable	Internal Jumper	Terminal	External Jumper	Cable	To	Page.Col.	Option	Function text
			1		A01W7110 :1	A01E7110:1	004 .2		GROUPING UNIT LIGHTING
			2		A01W7150 :1	A01X7150:1	004 .2		
			3		A01W7130 :1	A01E7130:1	004 .2		MAGAZINE LIGHTING
			4		A01W7110 :2	A01E7110:2	004 .5		GROUPING UNIT LIGHTING
			5		A01W7150 :2	A01X7150:2	004 .5		
			6		A01W7130 :2	A01E7130:2	004 .5		MAGAZINE LIGHTING
			7		A01W7000 :1	A01X7000:2	004 .2		
			8		A01W7120 :1	A01E7120:1	004 .2		FEED UNIT LIGHTING
			9						
			10		A01W7000 :2	A01X7000:1	004 .6		
			11		A01W7120 :2	A01E7120:2	004 .5		FEED UNIT LIGHTING
			12						
			E1		A01W7110 :GNYE	A01E7110:E	004 .6		GROUPING UNIT LIGHTING
					A01W7000 :GNYE	A01X7000:⏚			
			E2		A01W7120 :GNYE	A01E7120:E	004 .6		FEED UNIT LIGHTING
			E3		A01W7130 :GNYE	A01E7130:E	004 .6		MAGAZINE LIGHTING
			E4		A01W7150 :GNYE	A01X7150:5	004 .6		
			E5						

Drawing remarks

Tetra Pak

Designer ACH	Date 26/06/2010	Machine CBP 30 Speed 0200	
ECM No 456516	Denomination TERMINAL STRIP OVERVIEW	Page Type TERMINAL STRIP OVERVIEW	
Company Tetra Pak (Italy)	Document No. 3037928-0006	Doc. type ELD	Version AC	Page 009

This drawing must not without the consent of Tetra Pak
be copied, transmitted or disclosed to any third party.

1 | 2 | 3 | 4 | 5 | 6 | 7 | 8 | 9 | 10

Terminal strip of 3037928 -0003

A01X7150

From	Cable	Internal Jumper	Terminal	External Jumper	Cable	To	Page.Col.	Option	Function text
A01X7100:2	A01W7150 :1		1		A01W7140 :1	A01E7140:1	004 .3		INFEED UNIT LIGHTING
A01X7100:5	A01W7150 :2		2		A01W7140 :2	A01E7140:2	004 .5		INFEED UNIT LIGHTING
			3						
			4						
A01X7100:E4	A01W7150 :GNYE		5		A01W7140 :GNYE	A01E7140:E	004 .5		INFEED UNIT LIGHTING

Drawing remarks

Tetra Pak

Designer ACH	Date 26/06/2010	Machine CBP 30 Speed 0200	
ECM No 456516	Denomination TERMINAL STRIP OVERVIEW	Page Type TERMINAL STRIP OVERVIEW	
Company Tetra Pak (Italy)	Document No. 3037928-0006	Doc. type ELD	Version AC	Page 010

This drawing must not without the consent of Tetra Pak be copied, transmitted or disclosed to any third party.

1 2 3 4 5 6 7 8 9 10

Terminal strip of 3037928 -0003

C35X1010

From	Cable	Internal Jumper	Terminal	External Jumper	Cable	To	Page.Col.	Option	Function text
C35T1000:U	C35W1020 :1		1		C35W1010 :1	C35X1000:1	025 .8		ACCUMULATION CONVEYOR
C35T1000:V	C35W1020 :2		2		C35W1010 :2	C35X1000:2	025 .8		ACCUMULATION CONVEYOR
C35T1000:W	C35W1020 :3		3		C35W1010 :3	C35X1000:3	025 .8		ACCUMULATION CONVEYOR
PE:	C35W1020 :SH		4		C35W1010 :SH	C35X1000:4	025 .8		ACCUMULATION CONVEYOR
C35T1000:E	C35W1020 :GNYE		5		C35W1010 :GNYE	C35X1000:5	025 .8		
			6						
A01X0020:31			⏚				025 .8		

Drawing remarks

Tetra Pak

Designer ACH	Date 26/06/2010	Machine CBP 30 Speed 0200		
ECM No 456516	Denomination TERMINAL STRIP OVERVIEW	Page Type TERMINAL STRIP OVERVIEW		
Company Tetra Pak (Italy)	Document No. 3037928-0006	Doc. type ELD	Version AC	Page 011

This drawing must not without the consent of Tetra Pak be copied, transmitted or disclosed to any third party.

1 2 3 4 5 6 7 8 9 10

Terminal strip of 3037928 -0003

F09B1200

From	Cable	Internal Jumper	Terminal	External Jumper	Cable	To	Page.Col.	Option	Function text
F09B1200:+24V			1		F09W1200 :BN	F09X1000:2.1	037 .2		INFEED EMERGENCY STOP
F09B1200:IN			2		F09W1200 :WH	F09X1000:2.2	037 .2		INFEED EMERGENCY STOP
F09B1200:0V			3		F09W1200 :BU	F09X1000:2.3	037 .3		INFEED EMERGENCY STOP
F09B1200:OUT			4		F09W1200 :BK	F09X1000:2.4	037 .3		INFEED EMERGENCY STOP
F09B1200:INFO			5		F09W1200 :GY	F09X1000:2.5	037 .3		INFEED EMERGENCY STOP

Drawing remarks

Tetra Pak

Designer ACH	Date 26/06/2010	Machine CBP 30 Speed 0200	
ECM No 456516	Denomination TERMINAL STRIP OVERVIEW	Page Type TERMINAL STRIP OVERVIEW	
Company Tetra Pak (Italy)	Document No. 3037928-0006	Doc. type ELD	Version AC	Page 012

This drawing must not without the consent of Tetra Pak
be copied, transmitted or disclosed to any third party.

1 2 3 4 5 6 7 8 9 10

Terminal strip of 3037928 -0003

F09B1300

From	Cable	Internal Jumper	Terminal	External Jumper	Cable	To	Page.Col.	Option	Function text
F09B1300:+24V			1		F09W1300 :BN	F09X1000:3.1	037 .3		ACCUMULATION EMERGENCY STOP
F09B1300:IN			2		F09W1300 :WH	F09X1000:3.2	037 .3		ACCUMULATION EMERGENCY STOP
F09B1300:0V			3		F09W1300 :BU	F09X1000:3.3	037 .3		ACCUMULATION EMERGENCY STOP
F09B1300:OUT			4		F09W1300 :BK	F09X1000:3.4	037 .4		ACCUMULATION EMERGENCY STOP
F09B1300:INFO			5		F09W1300 :GY	F09X1000:3.5	037 .4		ACCUMULATION EMERGENCY STOP

Drawing remarks

Tetra Pak

Designer ACH	Date 26/06/2010	Machine CBP 30 Speed 0200	
ECM No 456516	Denomination TERMINAL STRIP OVERVIEW	Page Type TERMINAL STRIP OVERVIEW	
Company Tetra Pak (Italy)	Document No. 3037928-0006	Doc. type ELD	Version AC	Page 013

This drawing must not without the consent of Tetra Pak be copied, transmitted or disclosed to any third party.

1 2 3 4 5 6 7 8 9 10

Terminal strip of 3037928 -0003

F09B1500

From	Cable	Internal Jumper	Terminal	External Jumper	Cable	To	Page.Col.	Option	Function text
F09X1010:1.1	F09W1500 :BN		1			F09B1500:+24V	037 .7		MAGAZINE EMERGENCY STOP
F09X1010:1.2	F09W1500 :WH		2			F09B1500:IN	037 .7		MAGAZINE EMERGENCY STOP
F09X1010:1.3	F09W1500 :BU		3			F09B1500:0V	037 .7		MAGAZINE EMERGENCY STOP
F09X1010:1.4	F09W1500 :BK		4			F09B1500:OUT	037 .7		MAGAZINE EMERGENCY STOP
F09X1010:1.5	F09W1500 :GY		5			F09B1500:INFO	037 .7		MAGAZINE EMERGENCY STOP

Drawing remarks

Tetra Pak

Designer ACH	Date 26/06/2010	Machine CBP 30 Speed 0200	
ECM No 456516	Denomination TERMINAL STRIP OVERVIEW	Page Type TERMINAL STRIP OVERVIEW	
Company Tetra Pak (Italy)	Document No. 3037928-0006	Doc. type ELD	Version AC	Page 014

This drawing must not without the consent of Tetra Pak be copied, transmitted or disclosed to any third party.

1 2 3 4 5 6 7 8 9 10

Terminal strip of 3037928 -0003

F09B1600

From	Cable	Internal Jumper	Terminal	External Jumper	Cable	To	Page.Col.	Option	Function text
F09X1010:2.1	F09W1600 :BN		1			F09B1600:+24V	037 .8		FEED EMERGENCY STOP
F09X1010:2.2	F09W1600 :WH		2			F09B1600:IN	037 .8		FEED EMERGENCY STOP
F09X1010:2.3	F09W1600 :BU		3			F09B1600:0V	037 .8		FEED EMERGENCY STOP
F09X1010:2.4	F09W1600 :BK		4			F09B1600:OUT	037 .8		FEED EMERGENCY STOP
F09X1010:2.5	F09W1600 :GY		5			F09B1600:INFO	037 .8		FEED EMERGENCY STOP

Drawing remarks

Tetra Pak

Designer ACH	Date 26/06/2010	Machine CBP 30 Speed 0200	
ECM No 456516	Denomination TERMINAL STRIP OVERVIEW	Page Type TERMINAL STRIP OVERVIEW	
Company Tetra Pak (Italy)	Document No. 3037928-0006	Doc. type ELD	Version AC	Page 015

This drawing must not without the consent of Tetra Pak be copied, transmitted or disclosed to any third party.

1 2 3 4 5 6 7 8 9 10

Terminal strip of 3037928 -0003

F09B1700

From	Cable	Internal Jumper	Terminal	External Jumper	Cable	To	Page.Col.	Option	Function text
F09X1010:3.1	F09W1700 :BN		1			F09B1700:+24V	037 .8		CONTROL PANEL EMERGENCY STOP
F09X1010:3.2	F09W1700 :WH		2			F09B1700:IN	037 .8		CONTROL PANEL EMERGENCY STOP
F09X1010:3.3	F09W1700 :BU		3			F09B1700:0V	037 .9		CONTROL PANEL EMERGENCY STOP
F09X1010:3.4	F09W1700 :BK		4			F09B1700:OUT	037 .9		CONTROL PANEL EMERGENCY STOP
F09X1010:3.5	F09W1700 :GY		5			F09B1700:INFO	037 .9		CONTROL PANEL EMERGENCY STOP

Drawing remarks

Tetra Pak

Designer ACH	Date 26/06/2010	Machine CBP 30 Speed 0200	
ECM No 456516	Denomination TERMINAL STRIP OVERVIEW	Page Type TERMINAL STRIP OVERVIEW	
Company Tetra Pak (Italy)	Document No. 3037928-0006	Doc. type ELD	Version AC	Page 016

This drawing must not without the consent of Tetra Pak
be copied, transmitted or disclosed to any third party.

1 2 3 4 5 6 7 8 9 10

Terminal strip of 3037928 -0003

F09X0020

From	Cable	Internal Jumper	Terminal	External Jumper	Cable	To	Page.Col.	Option	Function text
F09X0000:13	F09W0020 :BN		1		F09W1000 :BN	F09X1000:1	037 .1		SAFETY EMRGENCY F09X1000
F09X0000:14	F09W0020 :OG		2		F09W1000 :OG	F09X1000:2	037 .2		SAFETY EMRGENCY F09X1000
F09X0000:15	F09W0020 :BU		3		F09W1000 :BU	F09X1000:3	037 .2		SAFETY EMRGENCY F09X1000
					F09W1000 :SH	F09W1000:			
F09X0000:16	F09W0020 :BK		4		F09W1000 :BK	F09X1000:4	037 .2		SAFETY EMRGENCY F09X1000
F09X0000:17	F09W0020 :YE		5		F09W1000 :YE	F09X1000:5	037 .3		SAFETY EMRGENCY F09X1000
F09X0000:18	F09W0020 :YEWH		6		F09W1000 :YEWH	F09X1000:6	037 .3		SAFETY EMRGENCY F09X1000
F09X0000:19	F09W0020 :GN		7		F09W1000 :GN	F09X1000:7	037 .3		SAFETY EMRGENCY F09X1000
F09X0000:20	F09W0020 :GNWH		8		F09W1000 :GNWH	F09X1000:8	037 .4		SAFETY EMRGENCY F09X1000
			9						
			10						
			11						
			12						
			13						
			14						
			15						
			16						
			⏚						

Drawing remarks

Tetra Pak

Designer ACH	Date 26/06/2010	Machine CBP 30 Speed 0200	
ECM No 456516	Denomination TERMINAL STRIP OVERVIEW	Page Type TERMINAL STRIP OVERVIEW	
Company Tetra Pak (Italy)	Document No. 3037928-0006	Doc. type ELD	Version AC	Page 017

This drawing must not without the consent of Tetra Pak
be copied, transmitted or disclosed to any third party.

1 2 3 4 5 6 7 8 9 10

Terminal strip of 3037928 -0003

F09X0030

From	Cable	Internal Jumper	Terminal	External Jumper	Cable	To	Page.Col.	Option	Function text
F09X0000:1	F09W0030 :BN		1		F09W2000 :BN	F09X2000:1	038 .1		SAFETY DOORS F09X2000
F09X0000:2	F09W0030 :OG		2		F09W2000 :OG	F09X2000:2	038 .2		SAFETY DOORS F09X2000
F09X0000:3	F09W0030 :BU		3		F09W2000 :BU	F09X2000:3	038 .2		SAFETY DOORS F09X2000
					F09W2000 :SH	F09W2000:			
F09X0000:4	F09W0030 :BK		4		F09W2000 :BK	F09X2000:4	038 .2		SAFETY DOORS F09X2000
F09X0000:5	F09W0030 :YE		5		F09W2000 :YE	F09X2000:5	038 .3		SAFETY DOORS F09X2000
F09X0000:6	F09W0030 :YEWH		6		F09W2000 :YE/WH	F09X2000:6	038 .3		SAFETY DOORS F09X2000
F09X0000:7	F09W0030 :GN		7		F09W2000 :GN	F09X2000:7	038 .3		SAFETY DOORS F09X2000
F09X0000:8	F09W0030 :GNWH		8		F09W2000 :GN/WH	F09X2000:8	038 .4		SAFETY DOORS F09X2000
F09X0000:9	F09W0030 :VT		9		F09W2000 :VT	F09X2000:9	038 .4		SAFETY DOORS F09X2000
F09X0000:10	F09W0030 :VTWH		10		F09W2000 :VT/WH	F09X2000:10	038 .4		SAFETY DOORS F09X2000
F09X0000:11	F09W0030 :RDWH		11		F09W2000 :RD/WH	F09X2000:11	038 .4		SAFETY DOORS F09X2000
F09X0000:12	F09W0030 :BUWH		12		F09W2000 :BU/WH	F09X2000:12	038 .4		SAFETY DOORS F09X2000
			13						
			14						
			15						
			16						
			⏚						

Drawing remarks

Tetra Pak

Designer ACH	Date 26/06/2010	Machine CBP 30 Speed 0200	
ECM No 456516	Denomination TERMINAL STRIP OVERVIEW	Page Type TERMINAL STRIP OVERVIEW	
Company Tetra Pak (Italy)	Document No. 3037928-0006	Doc. type ELD	Version AC	Page 018

This drawing must not without the consent of Tetra Pak
be copied, transmitted or disclosed to any third party.

1 2 3 4 5 6 7 8 9 10

Terminal strip of 3037928 -0003

F09X1000

From	Cable	Internal Jumper	Terminal	External Jumper	Cable	To	Page.Col.	Option	Function text
			1.1						
			1.2						
			1.3						
			1.4						
			1.5						
			2.1		F09W1200 :BN	F09B1200:1	037 .2		INFEED EMERGENCY STOP
			2.2		F09W1200 :WH	F09B1200:2	037 .2		INFEED EMERGENCY STOP
			2.3		F09W1200 :BU	F09B1200:3	037 .3		INFEED EMERGENCY STOP
			2.4		F09W1200 :BK	F09B1200:4	037 .3		INFEED EMERGENCY STOP
			2.5		F09W1200 :GY	F09B1200:5	037 .3		INFEED EMERGENCY STOP
			3.1		F09W1300 :BN	F09B1300:1	037 .3		ACCUMULATION EMERGENCY STOP
			3.2		F09W1300 :WH	F09B1300:2	037 .3		ACCUMULATION EMERGENCY STOP
			3.3		F09W1300 :BU	F09B1300:3	037 .3		ACCUMULATION EMERGENCY STOP
			3.4		F09W1300 :BK	F09B1300:4	037 .4		ACCUMULATION EMERGENCY STOP
			3.5		F09W1300 :GY	F09B1300:5	037 .4		ACCUMULATION EMERGENCY STOP
			4.1						
			4.2						
			4.3						
			4.4						
			4.5						

Drawing remarks

Tetra Pak

Designer ACH	Date 26/06/2010	Machine CBP 30 Speed 0200	
ECM No 456516	Denomination TERMINAL STRIP OVERVIEW	Page Type TERMINAL STRIP OVERVIEW	
Company Tetra Pak (Italy)	Document No. 3037928-0006	Doc. type ELD	Version AC	Page 019

This drawing must not without the consent of Tetra Pak be copied, transmitted or disclosed to any third party.

1 2 3 4 5 6 7 8 9 10

Terminal strip of 3037928 -0003

F09X1010

From	Cable	Internal Jumper	Terminal	External Jumper	Cable	To	Page.Col.	Option	Function text
			1.1		F09W1500 :BN	F09B1500:1	037 .7		MAGAZINE EMERGENCY STOP
			1.2		F09W1500 :WH	F09B1500:2	037 .7		MAGAZINE EMERGENCY STOP
			1.3		F09W1500 :BU	F09B1500:3	037 .7		MAGAZINE EMERGENCY STOP
			1.4		F09W1500 :BK	F09B1500:4	037 .7		MAGAZINE EMERGENCY STOP
			1.5		F09W1500 :GY	F09B1500:5	037 .7		MAGAZINE EMERGENCY STOP
			2.1		F09W1600 :BN	F09B1600:1	037 .8		FEED EMERGENCY STOP
			2.2		F09W1600 :WH	F09B1600:2	037 .8		FEED EMERGENCY STOP
			2.3		F09W1600 :BU	F09B1600:3	037 .8		FEED EMERGENCY STOP
			2.4		F09W1600 :BK	F09B1600:4	037 .8		FEED EMERGENCY STOP
			2.5		F09W1600 :GY	F09B1600:5	037 .8		FEED EMERGENCY STOP
			3.1		F09W1700 :BN	F09B1700:1	037 .8		CONTROL PANEL EMERGENCY STOP
			3.2		F09W1700 :WH	F09B1700:2	037 .8		CONTROL PANEL EMERGENCY STOP
			3.3		F09W1700 :BU	F09B1700:3	037 .9		CONTROL PANEL EMERGENCY STOP
			3.4		F09W1700 :BK	F09B1700:4	037 .9		CONTROL PANEL EMERGENCY STOP
			3.5		F09W1700 :GY	F09B1700:5	037 .9		CONTROL PANEL EMERGENCY STOP
			4.1						
			4.2						
			4.3						
			4.4						
			4.5						

Drawing remarks

Tetra Pak

Designer ACH	Date 26/06/2010	Machine CBP 30 Speed 0200	
ECM No 456516	Denomination TERMINAL STRIP OVERVIEW	Page Type TERMINAL STRIP OVERVIEW	
Company Tetra Pak (Italy)	Document No. 3037928-0006	Doc. type ELD	Version AC	Page 020

This drawing must not without the consent of Tetra Pak
be copied, transmitted or disclosed to any third party.

1 2 3 4 5 6 7 8 9 10

Terminal strip of 3037928 -0003

F09X2000

From	Cable	Internal Jumper	Terminal	External Jumper	Cable	To	Page.Col.	Option	Function text
			1.1		F09W2100 :BN	F09B2100:1	038 .1		INFEED LEFT TUNNEL
			1.2		F09W2100 :WH	F09B2100:2	038 .2		INFEED LEFT TUNNEL
			1.3		F09W2100 :BU	F09B2100:3	038 .2		INFEED LEFT TUNNEL
			1.4		F09W2100 :BK	F09B2100:4	038 .2		INFEED LEFT TUNNEL
			1.5		F09W2100 :GY	F09B2100:5	038 .2		INFEED LEFT TUNNEL
			2.1		F09W2200 :BN	F09B2200:1	038 .2		INFEED LEFT REAR DOOR
			2.2		F09W2200 :WH	F09B2200:2	038 .2		INFEED LEFT REAR DOOR
			2.3		F09W2200 :BU	F09B2200:3	038 .3		INFEED LEFT REAR DOOR
			2.4		F09W2200 :BK	F09B2200:4	038 .3		INFEED LEFT REAR DOOR
			2.5		F09W2200 :GY	F09B2200:5	038 .3		INFEED LEFT REAR DOOR
			3.1		F09W2300 :BN	F09B2300:1	038 .3		INFEED RIGHT REAR DOOR
			3.2		F09W2300 :WH	F09B2300:2	038 .3		INFEED RIGHT REAR DOOR
			3.3		F09W2300 :BU	F09B2300:3	038 .3		INFEED RIGHT REAR DOOR
			3.4		F09W2300 :BK	F09B2300:4	038 .4		INFEED RIGHT REAR DOOR
			3.5		F09W2300 :GY	F09B2300:5	038 .4		INFEED RIGHT REAR DOOR
			4.1		F09W2400 :BN	F09B2400:1	038 .4		INFEED ACCUMULATION TUNNEL
			4.2		F09W2400 :WH	F09B2400:2	038 .4		INFEED ACCUMULATION TUNNEL
			4.3		F09W2400 :BU	F09B2400:3	038 .4		INFEED ACCUMULATION TUNNEL
			4.4		F09W2400 :BK	F09B2400:4	038 .4		INFEED ACCUMULATION TUNNEL
			4.5		F09W2400 :GY	F09B2400:5	038 .5		INFEED ACCUMULATION TUNNEL
			5.1		F09W2500 :BN	F09B2500:1	038 .5		INFEED RIGHT TUNNEL
			5.2		F09W2500 :WH	F09B2500:2	038 .5		INFEED RIGHT TUNNEL
			5.3		F09W2500 :BU	F09B2500:3	038 .5		INFEED RIGHT TUNNEL
			5.4		F09W2500 :BK	F09B2500:4	038 .5		INFEED RIGHT TUNNEL
			5.5		F09W2500 :GY	F09B2500:5	038 .5		INFEED RIGHT TUNNEL
			6.1		F09W2600 :BN	F09B2600:1	038 .6		INFEED LEFT FRONT DOOR
			6.2		F09W2600 :WH	F09B2600:2	038 .6		INFEED LEFT FRONT DOOR
			6.3		F09W2600 :BU	F09B2600:3	038 .6		INFEED LEFT FRONT DOOR
			6.4		F09W2600 :BK	F09B2600:4	038 .6		INFEED LEFT FRONT DOOR
			6.5		F09W2600 :GY	F09B2600:5	038 .6		INFEED LEFT FRONT DOOR

Drawing remarks

Tetra Pak

Designer ACH	Date 26/06/2010	Machine CBP 30 Speed 0200	
ECM No 456516	Denomination TERMINAL STRIP OVERVIEW	Page Type TERMINAL STRIP OVERVIEW	
Company Tetra Pak (Italy)	Document No. 3037928-0006	Doc. type ELD	Version AC	Page 021

This drawing must not without the consent of Tetra Pak
be copied, transmitted or disclosed to any third party.

1 2 3 4 5 6 7 8 9 10

Terminal strip of 3037928 -0003

F09X2000

From	Cable	Internal Jumper	Terminal	External Jumper	Cable	To	Page.Col.	Option	Function text
			7.1		F09W2700 :BN	F09B2700:1	038 .7		INFEED RIGHT FRONT DOOR
			7.2		F09W2700 :WH	F09B2700:2	038 .7		INFEED RIGHT FRONT DOOR
			7.3		F09W2700 :BU	F09B2700:3	038 .7		INFEED RIGHT FRONT DOOR
			7.4		F09W2700 :BK	F09B2700:4	038 .7		INFEED RIGHT FRONT DOOR
			7.5		F09W2700 :GY	F09B2700:5	038 .7		INFEED RIGHT FRONT DOOR
			8.1		F09W2800 :BN	F09B2800:1	038 .7		GROUPING TUNNEL
			8.2		F09W2800 :WH	F09B2800:2	038 .8		GROUPING TUNNEL
			8.3		F09W2800 :BU	F09B2800:3	038 .8		GROUPING TUNNEL
			8.4		F09W2800 :BK	F09B2800:4	038 .8		GROUPING TUNNEL
			8.5		F09W2800 :GY	F09B2800:5	038 .8		GROUPING TUNNEL

Drawing remarks

Tetra Pak

Designer ACH	Date 26/06/2010	Machine CBP 30 Speed 0200	
ECM No 456516	Denomination TERMINAL STRIP OVERVIEW	Page Type TERMINAL STRIP OVERVIEW	
Company Tetra Pak (Italy)	Document No. 3037928-0006	Doc. type ELD	Version AC	Page 022

This drawing must not without the consent of Tetra Pak
be copied, transmitted or disclosed to any third party.

1 2 3 4 5 6 7 8 9 10

Terminal strip of 3037928 -0003

F09X2120

From	Cable	Internal Jumper	Terminal	External Jumper	Cable	To	Page.Col.	Option	Function text
			1						
			2						
W30K8600:4.3	F09W2120 :BU		3			F09B2120:	070 .2		INFEED LEFT TUNNEL LOCKER
W30K8600:4.4	F09W2120 :BK		4			F09B2120:	070 .3		INFEED LEFT TUNNEL LOCKER

Drawing remarks

Tetra Pak

Designer ACH	Date 26/06/2010	Machine CBP 30 Speed 0200	
ECM No 456516	Denomination TERMINAL STRIP OVERVIEW	Page Type TERMINAL STRIP OVERVIEW	
Company Tetra Pak (Italy)	Document No. 3037928-0006	Doc. type ELD	Version AC	Page 023

This drawing must not without the consent of Tetra Pak be copied, transmitted or disclosed to any third party.

1 2 3 4 5 6 7 8 9 10

Terminal strip of 3037928 -0003

F09X2220

From	Cable	Internal Jumper	Terminal	External Jumper	Cable	To	Page.Col.	Option	Function text
			1						
			2						
W30K8200:2.3	F09W2220 :BU		3			F09B2220:	068 .3		INFEED LEFT REAR DOOR LOCKER
W30K8200:2.4	F09W2220 :BK		4			F09B2220:	068 .3		INFEED LEFT REAR DOOR LOCKER

Drawing remarks

Tetra Pak

Designer ACH	Date 26/06/2010	Machine CBP 30 Speed 0200	
ECM No 456516	Denomination TERMINAL STRIP OVERVIEW	Page Type TERMINAL STRIP OVERVIEW	
Company Tetra Pak (Italy)	Document No. 3037928-0006	Doc. type ELD	Version AC	Page 024

This drawing must not without the consent of Tetra Pak be copied, transmitted or disclosed to any third party.

1 2 3 4 5 6 7 8 9 10

Terminal strip of 3037928 -0003

F09X2320

From	Cable	Internal Jumper	Terminal	External Jumper	Cable	To	Page.Col.	Option	Function text
			1						
			2						
C35K8600:6.3	F09W2320 :BU		3			F09B2320:	074 .2		INFEED RIGHT REAR DOOR LOCKER
C35K8600:6.4	F09W2320 :BK		4			F09B2320:	074 .3		INFEED RIGHT REAR DOOR LOCKER

Drawing remarks

Tetra Pak

Designer ACH	Date 26/06/2010	Machine CBP 30 Speed 0200	
ECM No 456516	Denomination TERMINAL STRIP OVERVIEW	Page Type TERMINAL STRIP OVERVIEW	
Company Tetra Pak (Italy)	Document No. 3037928-0006	Doc. type ELD	Version AC	Page 025

This drawing must not without the consent of Tetra Pak be copied, transmitted or disclosed to any third party.

1 2 3 4 5 6 7 8 9 10

Terminal strip of 3037928 -0003

F09X2420

From	Cable	Internal Jumper	Terminal	External Jumper	Cable	To	Page.Col.	Option	Function text
			1						
			2						
C35K8400:7.3	F09W2420 :BU		3			F09B2420:	073 .2		INFEED ACCUMULATION TUNNEL LOCKER
C35K8400:7.4	F09W2420 :BK		4			F09B2420:	073 .3		INFEED ACCUMULATION TUNNEL LOCKER

Drawing remarks

Tetra Pak

Designer ACH	Date 26/06/2010	Machine CBP 30 Speed 0200	
ECM No 456516	Denomination TERMINAL STRIP OVERVIEW	Page Type TERMINAL STRIP OVERVIEW	
Company Tetra Pak (Italy)	Document No. 3037928-0006	Doc. type ELD	Version AC	Page 026

This drawing must not without the consent of Tetra Pak
be copied, transmitted or disclosed to any third party.

1 | 2 | 3 | 4 | 5 | 6 | 7 | 8 | 9 | 10

Terminal strip of 3037928 -0003

F09X2520

From	Cable	Internal Jumper	Terminal	External Jumper	Cable	To	Page.Col.	Option	Function text
			1						
			2						
W30K8400:4.3	F09W2520 :BU		3			F09B2520:	069 .2		INFEED RIGHT TUNNEL LOCKER
W30K8400:4.4	F09W2520 :BK		4			F09B2520:	069 .3		INFEED RIGHT TUNNEL LOCKER

Drawing remarks

Tetra Pak

Designer ACH	Date 26/06/2010	Machine CBP 30 Speed 0200	
ECM No 456516	Denomination TERMINAL STRIP OVERVIEW	Page Type TERMINAL STRIP OVERVIEW	
Company Tetra Pak (Italy)	Document No. 3037928-0006	Doc. type ELD	Version AC	Page 027

This drawing must not without the consent of Tetra Pak
be copied, transmitted or disclosed to any third party.

1 2 3 4 5 6 7 8 9 10

Terminal strip of 3037928 -0003

F09X2620

From	Cable	Internal Jumper	Terminal	External Jumper	Cable	To	Page.Col.	Option	Function text
			1						
			2						
W30K8200:3.3	F09W2620 :BU		3			F09B2620:	068 .3		INFEED LEFT FRONT DOOR LOCKER
W30K8200:3.4	F09W2620 :BK		4			F09B2620:	068 .3		INFEED LEFT FRONT DOOR LOCKER

Drawing remarks

Tetra Pak

Designer ACH	Date 26/06/2010	Machine CBP 30 Speed 0200	
ECM No 456516	Denomination TERMINAL STRIP OVERVIEW	Page Type TERMINAL STRIP OVERVIEW	
Company Tetra Pak (Italy)	Document No. 3037928-0006	Doc. type ELD	Version AC	Page 028

This drawing must not without the consent of Tetra Pak be copied, transmitted or disclosed to any third party.

1 2 3 4 5 6 7 8 9 10

Terminal strip of 3037928 -0003

F09X2720

From	Cable	Internal Jumper	Terminal	External Jumper	Cable	To	Page.Col.	Option	Function text
			1						
			2						
C35K8600:7.3	F09W2720 :BU		3			F09B2720:	074 .2		INFEED RIGHT FRONT DOOR LOCKER
C35K8600:7.4	F09W2720 :BK		4			F09B2720:	074 .3		INFEED RIGHT FRONT DOOR LOCKER

Drawing remarks

Tetra Pak

Designer ACH	Date 26/06/2010	Machine CBP 30 Speed 0200	
ECM No 456516	Denomination TERMINAL STRIP OVERVIEW	Page Type TERMINAL STRIP OVERVIEW	
Company Tetra Pak (Italy)	Document No. 3037928-0006	Doc. type ELD	Version AC	Page 029

This drawing must not without the consent of Tetra Pak be copied, transmitted or disclosed to any third party.

1 2 3 4 5 6 7 8 9 10

Terminal strip of 3037928 -0003

F09X2820

From	Cable	Internal Jumper	Terminal	External Jumper	Cable	To	Page.Col.	Option	Function text
			1						
			2						
X40K8000:5.3	F09W2820 :BU		3			F09B2820:	075 .2		GROUPING TUNNEL LOCKER
X40K8000:5.4	F09W2820 :BK		4			F09B2820:	075 .2		GROUPING TUNNEL LOCKER

Drawing remarks

Tetra Pak

Designer ACH	Date 26/06/2010	Machine CBP 30 Speed 0200	
ECM No 456516	Denomination TERMINAL STRIP OVERVIEW	Page Type TERMINAL STRIP OVERVIEW	
Company Tetra Pak (Italy)	Document No. 3037928-0006	Doc. type ELD	Version AC	Page 030

This drawing must not without the consent of Tetra Pak
be copied, transmitted or disclosed to any third party.

1 2 3 4 5 6 7 8 9 10

Terminal strip of 3037928 -0003

F09X3000

From	Cable	Internal Jumper	Terminal	External Jumper	Cable	To	Page.Col.	Option	Function text
			1.1		F09W3100 :BN	F09B3100:1	039 .1		OUTFEED TUNNEL FRONT
			1.2		F09W3100 :WH	F09B3100:2	039 .2		OUTFEED TUNNEL FRONT
			1.3		F09W3100 :BU	F09B3100:3	039 .2		OUTFEED TUNNEL FRONT
			1.4		F09W3100 :BK	F09B3100:4	039 .2		OUTFEED TUNNEL FRONT
			1.5		F09W3100 :GY	F09B3100:5	039 .2		OUTFEED TUNNEL FRONT
			2.1		F09W3200 :BN	F09B3200:1	039 .2		GROUPING FRONT DOOR
			2.2		F09W3200 :WH	F09B3200:2	039 .2		GROUPING FRONT DOOR
			2.3		F09W3200 :BU	F09B3200:3	039 .3		GROUPING FRONT DOOR
			2.4		F09W3200 :BK	F09B3200:4	039 .3		GROUPING FRONT DOOR
			2.5		F09W3200 :GY	F09B3200:5	039 .3		GROUPING FRONT DOOR
			3.1		F09W3300 :BN	F09B3300:1	039 .3		FEED FRONT DOOR
			3.2		F09W3300 :WH	F09B3300:2	039 .3		FEED FRONT DOOR
			3.3		F09W3300 :BU	F09B3300:3	039 .3		FEED FRONT DOOR
			3.4		F09W3300 :BK	F09B3300:4	039 .4		FEED FRONT DOOR
			3.5		F09W3300 :GY	F09B3300:5	039 .4		FEED FRONT DOOR
			4.1		F09W3400 :BN	F09B3400:1	039 .4		MAGAZINE FRONT DOOR
			4.2		F09W3400 :WH	F09B3400:2	039 .4		MAGAZINE FRONT DOOR
			4.3		F09W3400 :BU	F09B3400:3	039 .4		MAGAZINE FRONT DOOR
			4.4		F09W3400 :BK	F09B3400:4	039 .4		MAGAZINE FRONT DOOR
			4.5		F09W3400 :GY	F09B3400:5	039 .5		MAGAZINE FRONT DOOR
			5.1		F09W3500 :BN	F09B3500:1	039 .5		OUTFEED TUNNEL REAR
			5.2		F09W3500 :WH	F09B3500:2	039 .5		OUTFEED TUNNEL REAR
			5.3		F09W3500 :BU	F09B3500:3	039 .5		OUTFEED TUNNEL REAR
			5.4		F09W3500 :BK	F09B3500:4	039 .5		OUTFEED TUNNEL REAR
			5.5		F09W3500 :GY	F09B3500:5	039 .5		OUTFEED TUNNEL REAR
			6.1		F09W3600 :BN	F09B3600:1	039 .6		GROUPING REAR DOOR
			6.2		F09W3600 :WH	F09B3600:2	039 .6		GROUPING REAR DOOR
			6.3		F09W3600 :BU	F09B3600:3	039 .6		GROUPING REAR DOOR
			6.4		F09W3600 :BK	F09B3600:4	039 .6		GROUPING REAR DOOR
			6.5		F09W3600 :GY	F09B3600:5	039 .6		GROUPING REAR DOOR

Drawing remarks

Tetra Pak

Designer ACH	Date 26/06/2010	Machine CBP 30 Speed 0200	
ECM No 456516	Denomination TERMINAL STRIP OVERVIEW	Page Type TERMINAL STRIP OVERVIEW	
Company Tetra Pak (Italy)	Document No. 3037928-0006	Doc. type ELD	Version AC	Page 031

This drawing must not without the consent of Tetra Pak be copied, transmitted or disclosed to any third party.

1 2 3 4 5 6 7 8 9 10

Terminal strip of 3037928 -0003

F09X3000

From	Cable	Internal Jumper	Terminal	External Jumper	Cable	To	Page.Col.	Option	Function text
			7.1		F09W3700 :BN	F09B3700:1	039 .7		FEED REAR DOOR
			7.2		F09W3700 :WH	F09B3700:2	039 .7		FEED REAR DOOR
			7.3		F09W3700 :BU	F09B3700:3	039 .7		FEED REAR DOOR
			7.4		F09W3700 :BK	F09B3700:4	039 .7		FEED REAR DOOR
			7.5		F09W3700 :GY	F09B3700:5	039 .7		FEED REAR DOOR
			8.1		F09W3800 :BN	F09B3800:1	039 .7		MAGAZZINE REAR DOOR
			8.2		F09W3800 :WH	F09B3800:2	039 .8		MAGAZZINE REAR DOOR
			8.3		F09W3800 :BU	F09B3800:3	039 .8		MAGAZZINE REAR DOOR
			8.4		F09W3800 :BK	F09B3800:4	039 .8		MAGAZZINE REAR DOOR
			8.5		F09W3800 :GY	F09B3800:5	039 .8		MAGAZZINE REAR DOOR

Drawing remarks

Tetra Pak

Designer ACH	Date 26/06/2010	Machine CBP 30 Speed 0200	
ECM No 456516	Denomination TERMINAL STRIP OVERVIEW	Page Type TERMINAL STRIP OVERVIEW	
Company Tetra Pak (Italy)	Document No. 3037928-0006	Doc. type ELD	Version AC	Page 032

This drawing must not without the consent of Tetra Pak
be copied, transmitted or disclosed to any third party.

1 | 2 | 3 | 4 | 5 | 6 | 7 | 8 | 9 | 10

Terminal strip of 3037928 -0003

F09X3120

From	Cable	Internal Jumper	Terminal	External Jumper	Cable	To	Page.Col.	Option	Function text
			1						
			2						
W50K8600:5.3	F09W3120 :BU		3			F09B3120:	081 .2		OUTFEED TUNNEL FRONT LOCKER
W50K8600:5.4	F09W3120 :BK		4			F09B3120:	081 .3		OUTFEED TUNNEL FRONT LOCKER

Drawing remarks

Tetra Pak

Designer ACH	Date 26/06/2010	Machine CBP 30 Speed 0200	
ECM No 456516	Denomination TERMINAL STRIP OVERVIEW	Page Type TERMINAL STRIP OVERVIEW	
Company Tetra Pak (Italy)	Document No. 3037928-0006	Doc. type ELD	Version AC	Page 033

This drawing must not without the consent of Tetra Pak
be copied, transmitted or disclosed to any third party.

1 2 3 4 5 6 7 8 9 10

Terminal strip of 3037928 -0003

F09X3420

From	Cable	Internal Jumper	Terminal	External Jumper	Cable	To	Page.Col.	Option	Function text
			1						
			2						
C45K8200:7.3	F09W3420 :BU		3			F09B3420:	077 .2		MAGAZINE FRONT DOOR LOCKER
C45K8200:7.4	F09W3420 :BK		4			F09B3420:	077 .3		MAGAZINE FRONT DOOR LOCKER

Drawing remarks

Tetra Pak

Designer ACH	Date 26/06/2010	Machine CBP 30 Speed 0200	
ECM No 456516	Denomination TERMINAL STRIP OVERVIEW	Page Type TERMINAL STRIP OVERVIEW	
Company Tetra Pak (Italy)	Document No. 3037928-0006	Doc. type ELD	Version AC	Page 034

This drawing must not without the consent of Tetra Pak be copied, transmitted or disclosed to any third party.

1 2 3 4 5 6 7 8 9 10

Terminal strip of 3037928 -0003

F09X3520

From	Cable	Internal Jumper	Terminal	External Jumper	Cable	To	Page.Col.	Option	Function text
			1						
			2						
W50K8600:4.3	F09W3520 :BU		3			F09B3520:	081 .2		OUTFEED TUNNEL REAR LOCKER
W50K8600:4.4	F09W3520 :BK		4			F09B3520:	081 .3		OUTFEED TUNNEL REAR LOCKER

Drawing remarks

Tetra Pak

Designer ACH	Date 26/06/2010	Machine CBP 30 Speed 0200	
ECM No 456516	Denomination TERMINAL STRIP OVERVIEW	Page Type TERMINAL STRIP OVERVIEW	
Company Tetra Pak (Italy)	Document No. 3037928-0006	Doc. type ELD	Version AC	Page 035

This drawing must not without the consent of Tetra Pak
be copied, transmitted or disclosed to any third party.

1 | 2 | 3 | 4 | 5 | 6 | 7 | 8 | 9 | 10

Terminal strip of 3037928 -0003

F09X3620

From	Cable	Internal Jumper	Terminal	External Jumper	Cable	To	Page.Col.	Option	Function text
			1						
			2						
X40K8000:6.3	F09W3620 :BU		3			F09B3620:	075 .2		GROUPING REAR DOOR LOCKER
X40K8000:6.4	F09W3620 :BK		4			F09B3620:	075 .2		GROUPING REAR DOOR LOCKER

Drawing remarks

Tetra Pak

Designer ACH	Date 26/06/2010	Machine CBP 30 Speed 0200	
ECM No 456516	Denomination TERMINAL STRIP OVERVIEW	Page Type TERMINAL STRIP OVERVIEW	
Company Tetra Pak (Italy)	Document No. 3037928-0006	Doc. type ELD	Version AC	Page 036

This drawing must not without the consent of Tetra Pak be copied, transmitted or disclosed to any third party.

1 2 3 4 5 6 7 8 9 10

Terminal strip of 3037928 -0003

F09X3720

From	Cable	Internal Jumper	Terminal	External Jumper	Cable	To	Page.Col.	Option	Function text
			1						
			2						
W50K8600:6.3	F09W3720 :BU		3			F09B3720:	081 .2		FEED REAR DOOR LOCKER
W50K8600:6.4	F09W3720 :BK		4			F09B3720:	081 .3		FEED REAR DOOR LOCKER

Drawing remarks

Tetra Pak

Designer ACH	Date 26/06/2010	Machine CBP 30 Speed 0200	
ECM No 456516	Denomination TERMINAL STRIP OVERVIEW	Page Type TERMINAL STRIP OVERVIEW	
Company Tetra Pak (Italy)	Document No. 3037928-0006	Doc. type ELD	Version AC	Page 037

This drawing must not without the consent of Tetra Pak
be copied, transmitted or disclosed to any third party.

1 2 3 4 5 6 7 8 9 10

Terminal strip of 3037928 -0003

W30X1230

From	Cable	Internal Jumper	Terminal	External Jumper	Cable	To	Page.Col.	Option	Function text
W30K8200:0.1	W30W1230 :BN		1		W30W1170 :BN	W30B1170:1	068 .2		OVERFLOW / PACKAGE COMING
			2						
W30K8200:0.3	W30W1230 :BU		3		W30W1170 :BU	W30B1170:3	068 .2		OVERFLOW / PACKAGE COMING
			4						

Drawing remarks

Tetra Pak

Designer ACH	Date 26/06/2010	Machine CBP 30 Speed 0200		
ECM No 456516	Denomination TERMINAL STRIP OVERVIEW	Page Type TERMINAL STRIP OVERVIEW		
Company Tetra Pak (Italy)	Document No. 3037928-0006	Doc. type ELD	Version AC	Page 038

This drawing must not without the consent of Tetra Pak be copied, transmitted or disclosed to any third party.

1 2 3 4 5 6 7 8 9 10

Terminal strip of 3037928 -0003

W30X1240

From	Cable	Internal Jumper	Terminal	External Jumper	Cable	To	Page.Col.	Option	Function text
W30K8200:1.1	W30W1240 :BN		1		W30W1160 :BN	W30B1160:1	068 .2		OVERFLOW / PACKAGE COMING
			2						
W30K8200:1.3	W30W1240 :BU		3		W30W1160 :BU	W30B1160:3	068 .2		OVERFLOW / PACKAGE COMING
W30K8200:1.4	W30W1240 :BK		4		W30W1160 :BK	W30B1160:4	068 .4		OVERFLOW / PACKAGE COMING

Drawing remarks

Tetra Pak

Designer ACH	Date 26/06/2010	Machine CBP 30 Speed 0200		
ECM No 456516	Denomination TERMINAL STRIP OVERVIEW	Page Type TERMINAL STRIP OVERVIEW		
Company Tetra Pak (Italy)	Document No. 3037928-0006	Doc. type ELD	Version AC	Page 039

RELEASED

This drawing must not without the consent of Tetra Pak be copied, transmitted or disclosed to any third party.

Terminal strip of 3037928 -0003

W30X2010

From	Cable	Internal Jumper	Terminal	External Jumper	Cable	To	Page.Col.	Option	Function text
W30T2000:U	W30W2020 :1		1		W30W2010 :1	W30X2000:1	022 .8		INFEED CONVEYOR
W30T2000:V	W30W2020 :2		2		W30W2010 :2	W30X2000:2	022 .8		INFEED CONVEYOR
W30T2000:W	W30W2020 :3		3		W30W2010 :3	W30X2000:3	022 .8		INFEED CONVEYOR
PE:	W30W2020 :SH		4		W30W2010 :SH	W30X2000:4	022 .8		INFEED CONVEYOR
W30T2000:E	W30W2020 :GNYE		5		W30W2010 :GNYE	W30X2000:5	022 .8		
			6						
A01X0020:30			⏚				022 .8		

Drawing remarks

Tetra Pak

Designer ACH	Date 26/06/2010	Machine CBP 30 Speed 0200	
ECM No 456516	Denomination TERMINAL STRIP OVERVIEW	Page Type TERMINAL STRIP OVERVIEW	
Company Tetra Pak (Italy)	Document No. 3037928-0006	Doc. type ELD	Version AC	Page 040

This drawing must not without the consent of Tetra Pak be copied, transmitted or disclosed to any third party.

1 2 3 4 5 6 7 8 9 10

Terminal strip of 3037928 -0003

W30X3030

From	Cable	Internal Jumper	Terminal	External Jumper	Cable	To	Page.Col.	Option	Function text
W30Q3010:2	W30W3050 :1		1		W30W3030 :1	W30X3010:1	023 .6		INFEED BELT BRAKE RIGHT
W30Q3010:4	W30W3050 :2		2		W30W3030 :2	W30X3010:2	023 .6		INFEED BELT BRAKE RIGHT
W30Q3010:6	W30W3050 :3		3		W30W3030 :3	W30X3010:3	023 .7		INFEED BELT BRAKE RIGHT
PE:	W30W3050 :SH		4		W30W3030 :SH	W30X3010:4	023 .7		INFEED BELT BRAKE RIGHT
W30X3110:1	W30W3050 :GNYE		5		W30W3030 :GNYE	W30X3010:5	023 .7		
			6						
A01X0020:32			⏚				023 .7		

Drawing remarks

Tetra Pak

Designer ACH	Date 26/06/2010	Machine CBP 30 Speed 0200		
ECM No 456516	Denomination TERMINAL STRIP OVERVIEW	Page Type TERMINAL STRIP OVERVIEW		
Company Tetra Pak (Italy)	Document No. 3037928-0006	Doc. type ELD	Version AC	Page 041

This drawing must not without the consent of Tetra Pak be copied, transmitted or disclosed to any third party.

1 2 3 4 5 6 7 8 9 10

Terminal strip of 3037928 -0003

W30X3040

From	Cable	Internal Jumper	Terminal	External Jumper	Cable	To	Page.Col.	Option	Function text
W30Q3020:2	W30W3060 :1		1		W30W3040 :1	W30X3020:1	023 .9		INFEED BELT BRAKE LEFT
W30Q3020:4	W30W3060 :2		2		W30W3040 :2	W30X3020:2	023 .9		INFEED BELT BRAKE LEFT
W30Q3020:6	W30W3060 :3		3		W30W3040 :3	W30X3020:3	023 .9		INFEED BELT BRAKE LEFT
PE:	W30W3060 :SH		4		W30W3040 :SH	W30X3020:4	023 .10		INFEED BELT BRAKE LEFT
W30X3120:1	W30W3060 :GNYE		5		W30W3040 :GNYE	W30X3020:5	023 .9		
			6						
A01X0020:34			⏚				023 .10		

Drawing remarks

Tetra Pak

Designer ACH	Date 26/06/2010	Machine CBP 30 Speed 0200	
ECM No 456516	Denomination TERMINAL STRIP OVERVIEW	Page Type TERMINAL STRIP OVERVIEW	
Company Tetra Pak (Italy)	Document No. 3037928-0006	Doc. type ELD	Version AC	Page 042

This drawing must not without the consent of Tetra Pak be copied, transmitted or disclosed to any third party.

1 2 3 4 5 6 7 8 9 10

Terminal strip of 3037928 -0003

W30X4010

From	Cable	Internal Jumper	Terminal	External Jumper	Cable	To	Page.Col.	Option	Function text
W30T4000:U	W30W4020 :1		1		W30W4010 :1	W30X4000:1	024 .8		DIVIDER CONVEYOR
W30T4000:V	W30W4020 :2		2		W30W4010 :2	W30X4000:2	024 .8		DIVIDER CONVEYOR
W30T4000:W	W30W4020 :3		3		W30W4010 :3	W30X4000:3	024 .8		DIVIDER CONVEYOR
PE:	W30W4020 :SH		4		W30W4010 :SH	W30X4000:4	024 .8		DIVIDER CONVEYOR
W30T4000:E	W30W4020 :GNYE		5		W30W4010 :GNYE	W30X4000:5	024 .8		
			6						
A01X0020:33			⏚				024 .8		

Drawing remarks

Tetra Pak

Designer ACH	Date 26/06/2010	Machine CBP 30 Speed 0200	
ECM No 456516	Denomination TERMINAL STRIP OVERVIEW	Page Type TERMINAL STRIP OVERVIEW	
Company Tetra Pak (Italy)	Document No. 3037928-0006	Doc. type ELD	Version AC	Page 043

This drawing must not without the consent of Tetra Pak
be copied, transmitted or disclosed to any third party.

1 2 3 4 5 6 7 8 9 10

Terminal strip of 3037928 -0003
W30X5000

From	Cable	Internal Jumper	Terminal	External Jumper	Cable	To	Page.Col.	Option	Function text
			1				008 .5		
			2				008 .6		
			3				008 .6		
			4		W30W5110 :BN	A01X0450:6	008 .6		HOMING DIVIDER X
			5		W30W5110 :WH	A01X0450:7	008 .6		HOMING DIVIDER X
			6		W30W5110 :GN	A01X0450:5	008 .6		HOMING DIVIDER X
			7				008 .6		
			8				008 .7		
			9				008 .7		
			10				008 .7		
			11				008 .7		
			12				008 .7		
			13				008 .8		
			14				008 .8		
			15				008 .8		
			16				008 .8		
			17				008 .8		
			18				008 .8		
			19				008 .9		
			20				008 .9		
			21				008 .9		
			22				008 .9		
			23				008 .9		
			24				008 .10		
			25				008 .10		
			26				008 .10		

Drawing remarks

Tetra Pak

Designer ACH	Date 26/06/2010	Machine CBP 30 Speed 0200	
ECM No 456516	Denomination TERMINAL STRIP OVERVIEW	Page Type TERMINAL STRIP OVERVIEW	
Company Tetra Pak (Italy)	Document No. 3037928-0006	Doc. type ELD	Version AC	Page 044

This drawing must not without the consent of Tetra Pak be copied, transmitted or disclosed to any third party.

1 2 3 4 5 6 7 8 9 10

Terminal strip of 3037928 -0003

W30X5130

From	Cable	Internal Jumper	Terminal	External Jumper	Cable	To	Page.Col.	Option	Function text
A01X0450:5	W30W5130 :BU		1		W30W5100 :BU	W30B5100:3	008 .7		HOMING DIVIDER X
			2						
A01X0450:6	W30W5130 :BN		3		W30W5100 :BN	W30B5100:1	008 .7		HOMING DIVIDER X
A01X0450:7	W30W5130 :BK		4		W30W5100 :BK	W30B5100:4	008 .7		HOMING DIVIDER X

Drawing remarks

Tetra Pak

Designer ACH	Date 26/06/2010	Machine CBP 30 Speed 0200	
ECM No 456516	Denomination TERMINAL STRIP OVERVIEW	Page Type TERMINAL STRIP OVERVIEW	
Company Tetra Pak (Italy)	Document No. 3037928-0006	Doc. type ELD	Version AC	Page 045

This drawing must not without the consent of Tetra Pak
be copied, transmitted or disclosed to any third party.

1 2 3 4 5 6 7 8 9 10

Terminal strip of 3037928 -0003
W30X6150

From	Cable	Internal Jumper	Terminal	External Jumper	Cable	To	Page.Col.	Option	Function text
A01X0450:13	W30W6150 :BU		1		W30W6120 :BU	W30B6120:3	020 .3		TRAILING COUNTER
			2						
A01X0450:14	W30W6150 :BN		3		W30W6120 :BN	W30B6120:1	020 .3		TRAILING COUNTER
A01X0450:15	W30W6150 :BK		4		W30W6120 :BK	W30B6120:4	020 .6		TRAILING COUNTER

Drawing remarks

Tetra Pak

Designer ACH	Date 26/06/2010	Machine CBP 30 Speed 0200	
ECM No 456516	Denomination TERMINAL STRIP OVERVIEW	Page Type TERMINAL STRIP OVERVIEW	
Company Tetra Pak (Italy)	Document No. 3037928-0006	Doc. type ELD	Version AC	Page 046

This drawing must not without the consent of Tetra Pak be copied, transmitted or disclosed to any third party.

1 2 3 4 5 6 7 8 9 10

Terminal strip of 3037928 -0003

W30X6190

From	Cable	Internal Jumper	Terminal	External Jumper	Cable	To	Page.Col.	Option	Function text
A01X0450:9	W30W6190 :BU		1		W30W6100 :BU	W30B6100:3	020 .3		LEADING COUNTER
			2						
A01X0450:10	W30W6190 :BN		3		W30W6100 :BN	W30B6100:1	020 .3		LEADING COUNTER
A01X0450:11	W30W6190 :BK		4		W30W6100 :BK	W30B6100:4	020 .6		LEADING COUNTER

Drawing remarks

Tetra Pak

Designer ACH	Date 26/06/2010	Machine CBP 30 Speed 0200	
ECM No 456516	Denomination TERMINAL STRIP OVERVIEW	Page Type TERMINAL STRIP OVERVIEW	
Company Tetra Pak (Italy)	Document No. 3037928-0006	Doc. type ELD	Version AC	Page 047

This drawing must not without the consent of Tetra Pak
be copied, transmitted or disclosed to any third party.

1 2 3 4 5 6 7 8 9 10

Terminal strip of 3037928 -0003
W50X1000

From	Cable	Internal Jumper	Terminal	External Jumper	Cable	To	Page.Col.	Option	Function text
			1				010 .5		
			2				010 .6		
			3				010 .6		
			4		W50W1260 :BN	A01X0480:2	010 .6		HOMING FEED MOTOR
			5		W50W1260 :WH	A01X0480:3	010 .6		HOMING FEED MOTOR
			6		W50W1260 :GN	A01X0480:1	010 .6		HOMING FEED MOTOR
			7				010 .6		
			8				010 .7		
			9				010 .7		
			10				010 .7		
			11				010 .7		
			12				010 .7		
			13		W50W1110 :BN	A01X0450:2	010 .8		LEADING PUSHER CARRIER CHAIN
			14		W50W1110 :WH	A01X0450:3	010 .8		LEADING PUSHER CARRIER CHAIN
			15		W50W1110 :GN	A01X0450:1	010 .8		LEADING PUSHER CARRIER CHAIN
			16				010 .8		
			17				010 .8		
			18				010 .8		
			19				010 .9		
			20				010 .9		
			21				010 .9		
			22				010 .9		
			23				010 .9		
			24				010 .10		
			25				010 .10		
			26				010 .10		

Drawing remarks

Tetra Pak

Designer ACH	Date 26/06/2010	Machine CBP 30 Speed 0200	
ECM No 456516	Denomination TERMINAL STRIP OVERVIEW	Page Type TERMINAL STRIP OVERVIEW	
Company Tetra Pak (Italy)	Document No. 3037928-0006	Doc. type ELD	Version AC	Page 048

This drawing must not without the consent of Tetra Pak be copied, transmitted or disclosed to any third party.

1 2 3 4 5 6 7 8 9 10

Terminal strip of 3037928 -0003

W50X1240

From	Cable	Internal Jumper	Terminal	External Jumper	Cable	To	Page.Col.	Option	Function text
C45K8400:0.4	W50W1240 :BK		1		W50W1230 :BN	W50K1230:B	078 .3		OUTFEED DAMPER FORWARD
			2						
C45K8400:0.3	W50W1240 :BU		3		W50W1230 :BU	W50K1230:A	078 .3		OUTFEED DAMPER FORWARD
C45K8400:1.3	W50W1250 :BU								
C45K8400:1.4	W50W1250 :BK		4		W50W1230 :BK	W50K1230:C	078 .3		OUTFEED DAMPER FORWARD

Drawing remarks

Tetra Pak

Designer ACH	Date 26/06/2010	Machine CBP 30 Speed 0200		
ECM No 456516	Denomination TERMINAL STRIP OVERVIEW	Page Type TERMINAL STRIP OVERVIEW		
Company Tetra Pak (Italy)	Document No. 3037928-0006	Doc. type ELD	Version AC	Page 049

This drawing must not without the consent of Tetra Pak be copied, transmitted or disclosed to any third party.

1 2 3 4 5 6 7 8 9 10

Terminal strip of 3037928 -0003

W50X4130

From	Cable	Internal Jumper	Terminal	External Jumper	Cable	To	Page.Col.	Option	Function text
W50K8000:3.1	W50W4130 :BN		1		W50W4100 :BN	W50B4100:1	082 .2		QUEUE AFTER MACHINE
			2						
W50K8000:3.3	W50W4130 :BU		3		W50W4100 :BU	W50B4100:3	082 .2		QUEUE AFTER MACHINE
W50K8000:3.4	W50W4130 :BK		4		W50W4100 :BK	W50B4100:4	082 .4		QUEUE AFTER MACHINE

Drawing remarks

Tetra Pak

Designer ACH	Date 26/06/2010	Machine CBP 30 Speed 0200	
ECM No 456516	Denomination TERMINAL STRIP OVERVIEW	Page Type TERMINAL STRIP OVERVIEW	
Company Tetra Pak (Italy)	Document No. 3037928-0006	Doc. type ELD	Version AC	Page 050

RELEASED

This drawing must not without the consent of Tetra Pak be copied, transmitted or disclosed to any third party.

Terminal strip of 3037928 -0003

W50X4140

From	Cable	Internal Jumper	Terminal	External Jumper	Cable	To	Page.Col.	Option	Function text
W50K8000:2.1	W50W4140 :BN		1		W50W4110 :BN	W50B4110:1	082 .2		QUEUE AFTER MACHINE
			2						
W50K8000:2.3	W50W4140 :BU		3		W50W4110 :BU	W50B4110:3	082 .2		QUEUE AFTER MACHINE
			4						

Drawing remarks

Tetra Pak

Designer ACH	Date 26/06/2010	Machine CBP 30 Speed 0200		
ECM No 456516	Denomination TERMINAL STRIP OVERVIEW	Page Type TERMINAL STRIP OVERVIEW		
Company Tetra Pak (Italy)	Document No. 3037928-0006	Doc. type ELD	Version AC	Page 051

This drawing must not without the consent of Tetra Pak be copied, transmitted or disclosed to any third party.

1 2 3 4 5 6 7 8 9 10

Terminal strip of 3037928 -0003

W50X4170

From	Cable	Internal Jumper	Terminal	External Jumper	Cable	To	Page.Col.	Option	Function text
W50K8000:6.1	W50W4170 :BN		1		W50W4150 :BN	W50B4150:1	082 .2		QUEUE AFTER MACHINE
			2						
W50K8000:6.3	W50W4170 :BU		3		W50W4150 :BU	W50B4150:3	082 .2		QUEUE AFTER MACHINE
			4						

Drawing remarks

Tetra Pak

Designer ACH	Date 26/06/2010	Machine CBP 30 Speed 0200		
ECM No 456516	Denomination TERMINAL STRIP OVERVIEW	Page Type TERMINAL STRIP OVERVIEW		
Company Tetra Pak (Italy)	Document No. 3037928-0006	Doc. type ELD	Version AC	Page 052

This drawing must not without the consent of Tetra Pak be copied, transmitted or disclosed to any third party.

1 2 3 4 5 6 7 8 9 10

Terminal strip of 3037928 -0003

W50X4180

From	Cable	Internal Jumper	Terminal	External Jumper	Cable	To	Page.Col.	Option	Function text
W50K8000:7.1	W50W4180 :BN		1		W50W4160 :BN	W50B4160:1	082 .2		QUEUE AFTER MACHINE
			2						
W50K8000:7.3	W50W4180 :BU		3		W50W4160 :BU	W50B4160:3	082 .2		QUEUE AFTER MACHINE
W50B4160:4	W50W4160 :BK		4		W50W4180 :BK	W50K8000:7.4	082 .4		

Drawing remarks

Tetra Pak

Designer ACH	Date 26/06/2010	Machine CBP 30 Speed 0200	
ECM No 456516	Denomination TERMINAL STRIP OVERVIEW	Page Type TERMINAL STRIP OVERVIEW	
Company Tetra Pak (Italy)	Document No. 3037928-0006	Doc. type ELD	Version AC	Page 053

This drawing must not without the consent of Tetra Pak
be copied, transmitted or disclosed to any third party.

1 2 3 4 5 6 7 8 9 10

Terminal strip of 3037928 -0003

X1710

From	Cable	Internal Jumper	Terminal	External Jumper	Cable	To	Page.Col.	Option	Function text
A01Q6000:2			1		W0007 :1	M0001:L1	005 .1		COMPRESSOR
A01Q6000:4			2		W0007 :2	M0001:L2	005 .1		COMPRESSOR
A01Q6000:6			3		W0007 :3	M0001:L3	005 .2		COMPRESSOR
			4			A01Q6000:54	005 .3		POWER ON AIR CONDITION
					W0009 :L.BU	M0002:L1			CONDENSER FAN
A01X0030:15			5		W0013 :BK	P0001:1	005 .4		PARTIALIZATIONSWITCH
			6			C1712:WH1	005 .3		
			7			C1712:WH2	005 .3		
A01Q6100:2			8		W0010 :BK	M0003:L1	005 .6		ÈVAPORATOR FAN
			9		W0010 :L.BU	M0003:L2	005 .7		ÈVAPORATOR FAN
			10			C1713:WH1	005 .7		
			11			C1713:WH2	005 .6		
A01K3120:US1			12		W0012 :BK	B0007:	005 .10		COMPRESSOR INTERNALPROTECTION
						A01X0110:6			
			13		W0012 :BK	B0007:	005 .9		COMPRESSOR INTERNALPROTECTION
			14		W0011 :BK	B0006:	005 .8		ANTIFREEZE THERMOSTAT
A01K3050:16			15		W0011 :BK	B0006:	005 .7		ANTIFREEZE THERMOSTAT
			16				005 .8		
			17				005 .9		
			18				005 .9		
			19				005 .9		
			20				005 .9		
			21		W0009 :BN	M0002:L2	005 .4		CONDENSER FAN
			21		W0013 :BK	P0001:4	005 .6		PARTIALIZATIONSWITCH
A01X0020:41			⏚		W0007 :GNYE	M0001:⏚	005 .2		COMPRESSOR
A01X0020:17			⏚		W0009 :GNYE	M0002:⏚	005 .4		CONDENSER FAN
A01X0020:26			⏚		W0010 :GNYE	M0003:⏚	005 .8		ÈVAPORATOR FAN

Drawing remarks

Tetra Pak

Designer ACH	Date 26/06/2010	Machine CBP 30 Speed 0200	
ECM No 456516	Denomination TERMINAL STRIP OVERVIEW	Page Type TERMINAL STRIP OVERVIEW	
Company Tetra Pak (Italy)	Document No. 3037928-0006	Doc. type ELD	Version AC	Page 054

8 Cable Connection List

TechPub_2614345_0108 - 0801_3056484_01.fm

Description

All cable connections used in the equipment are listed in this chapter.

TechPub_2614345_0108 - 0801_3056484_01.fm

This drawing must not without the consent of Tetra Pak be copied, transmitted or disclosed to any third party.

Cable Connection List of 3037928 -0003

From	Cable	To	Page.Col.	Option
	W0007			
X1710:1	1	M0001:L1	+C/005.01	
X1710:2	2	M0001:L2	+C/005.01	
X1710:3	3	M0001:L3	+C/005.01	
X1710:⏚	GNYE	M0001:⏚	+C/005.01	
	W0009			
C1712:WH1	BK	M0002:L3	+C/005.03	
X1710:4	L.BU	M0002:L1	+C/005.03	
X1710:21	BN	M0002:L2	+C/005.03	
X1710:⏚	GNYE	M0002:⏚	+C/005.03	
	W0010			
X1710:8	BK	M0003:L1	+C/005.06	
X1710:9	L.BU	M0003:L2	+C/005.06	
C1713:WH1	BN	M0003:L3	+C/005.06	
X1710:⏚	GNYE	M0003:⏚	+C/005.06	
	W0011			
X1710:15	BK	B0006:	+C/005.07	
X1710:14	BK	B0006:	+C/005.08	
	W0012			
X1710:13	BK	B0007:	+C/005.09	
X1710:12	BK	B0007:	+C/005.09	
	W0013			
X1710:5	BK	P0001:1	+C/005.05	
X1710:21	BK	P0001:4	+C/005.06	
	A01W0450			
A01X0450:19	GN	A01K3050:6	+C/020.08	
	BN			

From	Cable	To	Page.Col.	Option
A01X0450:23	YE	A01K3050:5	+C/020.08	
A01X0450:11	WH	A01K3050:7	+C/020.08	
A01X0450:24	SH	PE:	+C/020.08	
	A01W1000			
A01X0010:L1	1	A01V1000:1	+C/002.06	
A01X0010:L2	2	A01V1000:2	+C/002.06	
A01X0010:L3	3	A01V1000:3	+C/002.06	
A01X0030:17	4	A01V1000:N	+C/002.06	
A01X0020:1	GNYE	A01V1000:E	+C/002.06	
	A01W1010			
A01X1010:1	1	A01K1010:4	+C/002.06	
A01X1010:2	2	A01K1010:3	+C/002.06	
	A01W2090			
A01X0460:1	1	A01X2090:1	+C/063.02	
A01X0460:2	2	A01X2090:2	+C/063.02	
A01X0460:3	3	A01X2090:3	+C/063.02	
A01X0460:4	4	A01X2090:4	+C/063.02	
A01X0460:5	5	A01X2090:5	+C/064.02	
A01X0460:6	6	A01X2090:6	+C/064.02	
A01X0460:7	7	A01X2090:7	+C/064.02	
A01X0460:8	8	A01X2090:8	+C/064.02	
	9			
	10			
	11			
A01X0460:⏚	GNYE	A01X2090:⏚	+C/063.02	
	A01W2100			
A01X2090:1	BU	A01X2100:0V	+C/063.03	
A01X2090:3	BK	A01X2100:0V	+C/063.03	
A01X2090:2	BN	A01X2100:+24V	+C/063.03	
A01X2090:4	WH	A01X2100:+24V	+C/063.03	

Drawing remarks

Tetra Pak

Designer ACH	Date 26/06/2010	Machine CBP 30 Speed 0200	
ECM No 456516	Denomination CABLE CONNECTION LIST	Page Type CABLE CONNECTION LIST	
Company Tetra Pak (Italy)	Document No. 3037928-0007	Doc. type ELD	Version AC	Page 001

This drawing must not without the consent of Tetra Pak be copied, transmitted or disclosed to any third party.

Cable Connection List of 3037928 -0003

From	Cable	To	Page.Col.	Option
	RD			
A01X2090:⏚	GNYE	A01X2100:⏚	+C/063.03	
	SH			
	A01W2200			
A01X2090:5	BU	A01X2200:0V	+C/064.03	
A01X2090:7	BK	A01X2200:0V	+C/064.03	
A01X2090:6	BN	A01X2200:+24V	+C/064.03	
A01X2090:8	WH	A01X2200:+24V	+C/064.03	
	RD			
A01X0460:⏚	GNYE	A01X2200:⏚	+C/064.03	
	SH			
	A01W2300			
A01X0460:9	BU	A01X2300:0V	+C/065.02	
A01X0460:11	BK	A01X2300:0V	+C/065.02	
A01X0460:10	BN	A01X2300:+24V	+C/065.02	
A01X0460:12	WH	A01X2300:+24V	+C/065.02	
	RD			
A01X0460:23	GNYE	A01X2300:⏚	+C/065.02	
	SH			
	A01W2400			
A01X0460:17	BU	A01X2400:0V	+C/066.02	
A01X0460:13	BK	A01X2400:0V	+C/066.02	
A01X0460:18	BN	A01X2400:+24V	+C/066.02	
A01X0460:14	WH	A01X2400:+24V	+C/066.02	
	RD			
A01X0460:24	GNYE	A01X2400:⏚	+C/066.02	
	SH			
	A01W4000			
A01X4010:1	1	A01X4000:1	+C/031.03	
A01X4010:12	2	A01X4000:12	+C/031.03	

From	Cable	To	Page.Col.	Option
A01X4010:26	3	A01X4000:13	+C/031.03	
A01X4010:4	4	A01X4000:4	+C/031.03	
A01X4010:5	5	A01X4000:5	+C/031.03	
A01X4010:6	6	A01X4000:6	+C/031.03	
A01X4010:7	7	A01X4000:7	+C/031.03	
A01X4010:8	8	A01X4000:8	+C/031.03	
A01X4010:9	9	A01X4000:9	+C/031.03	
A01X4010:10	10	A01X4000:10	+C/031.03	
A01X4010:11	11	A01X4000:11	+C/031.03	
	12			
A01X4010:41	GNYE	A01X4000:⏚	+C/031.03	
	A01W4010			
A01X4030:3	BN	A01B4010:1	+C/020.04	
A01X4030:1	BU	A01B4010:3	+C/020.04	
A01X4030:4	BK	A01B4010:4	+C/020.05	
	A01W4020			
A01B4020:1	BN	W30K8600:6.1	+C/070.02	
A01B4020:3	BU	W30K8600:6.3	+C/070.02	
	A01W4030			
A01X4040:3	BN	A01X4030:3	+C/020.03	
A01X4040:1	BU	A01X4030:1	+C/020.03	
A01X4040:4	BK	A01X4030:4	+C/020.06	
	A01W4040			
A01X0450:22	BN	A01X4040:3	+C/020.02	
A01X0450:21	BU	A01X4040:1	+C/020.02	
A01X0450:23	BK	A01X4040:4	+C/020.07	
	A01W4050			
A01A4000:⏚	1	GND:	+C/031.04	

Drawing remarks

Tetra Pak

Designer ACH	Date 26/06/2010	Machine CBP 30 Speed 0200	
ECM No 456516	Denomination CABLE CONNECTION LIST	Page Type CABLE CONNECTION LIST	
Company Tetra Pak (Italy)	Document No. 3037928-0007	Doc. type ELD	Version AC	Page 002

This drawing must not without the consent of Tetra Pak be copied, transmitted or disclosed to any third party.

Cable Connection List of 3037928 -0003

From	Cable	To	Page.Col.	Option
A01W4200				
A01X4260:4	BK	A01P4260:2	+C/077.03	
A01X4260:1	BN	A01P4270:3	+C/077.03	
A01X4260:3	BU	A01P4260:0	+C/077.03	
A01W4210				
A01X4280:4	BK	A01P4280:4	+C/077.03	
A01X4280:1	BN	A01P4290:1	+C/077.03	
A01X4280:3	BU	A01P4260:0	+C/077.03	
A01W4260				
A01X4260:4	BK	C45K8200:0.4	+C/077.04	
A01X4260:3	BU	C45K8200:0.3	+C/077.04	
A01W4270				
A01X4260:1	BK	C45K8200:1.4	+C/077.04	
A01X4260:3	BU	C45K8200:1.3	+C/077.04	
A01W4280				
A01X4280:4	BK	C45K8200:2.4	+C/077.04	
A01X4280:3	BU	C45K8200:2.3	+C/077.04	
A01W4290				
A01X4280:1	BK	C45K8200:4.4	+C/077.04	
A01X4280:3	BU	C45K8200:4.3	+C/077.04	
A01W4400				
C45K8200:3.4	BK	A01P4400:5	+C/077.03	
C45K8200:3.3	BU	A01P4260:0	+C/077.03	
A01W6010				
A01X6010:-	RD	A01K3350:5	+C/062.04	
A01X6010:+	YE	A01K3350:4	+C/062.04	

From	Cable	To	Page.Col.	Option
A01W7000				
A01X7000:2	1	A01X7100:7	+C/004.02	
A01X7000:1	2	A01X7100:10	+C/004.02	
A01X7000:⏚	GNYE	A01X7100:E1	+C/004.02	
A01W7110				
A01X7100:1	1	A01E7110:1	+C/004.03	
A01X7100:4	2	A01E7110:2	+C/004.05	
A01X7100:E1	GNYE	A01E7110:E	+C/004.05	
A01W7120				
A01X7100:8	1	A01E7120:1	+C/004.03	
A01X7100:11	2	A01E7120:2	+C/004.05	
A01X7100:E2	GNYE	A01E7120:E	+C/004.05	
A01W7130				
A01X7100:3	1	A01E7130:1	+C/004.03	
A01X7100:6	2	A01E7130:2	+C/004.05	
A01X7100:E3	GNYE	A01E7130:E	+C/004.05	
A01W7140				
A01X7150:1	1	A01E7140:1	+C/004.03	
A01X7150:2	2	A01E7140:2	+C/004.04	
A01X7150:5	GNYE	A01E7140:E	+C/004.04	
A01W7150				
A01X7100:2	1	A01X7150:1	+C/004.02	
A01X7100:5	2	A01X7150:2	+C/004.05	
A01X7100:E4	GNYE	A01X7150:5	+C/004.05	
A01W8100				
	BN			
A01K8100:1	BU	C45K8400:3.3	+C/078.02	

Drawing remarks

Tetra Pak

Designer ACH	Date 26/06/2010	Machine CBP 30 Speed 0200	
ECM No 456516	Denomination CABLE CONNECTION LIST	Page Type CABLE CONNECTION LIST	
Company Tetra Pak (Italy)	Document No. 3037928-0007	Doc. type ELD	Version AC	Page 003

This drawing must not without the consent of Tetra Pak be copied, transmitted or disclosed to any third party.

Cable Connection List of 3037928 -0003

From	Cable	To	Page.Col.	Option
A01K8100:2	BK	C45K8400:3.4	+C/078.04	
W30T5000:RX	A81W1000 1	A01K3070:TX	+C/008.01	
W30T5000:TX	A81W1010 1	W30T6000:RX	+C/009.01	
W30T6000:TX	A81W1020 1	W50T1000:RX	+C/010.01	
W50T1000:TX	A81W1030 1	X40T1000:RX	+C/011.01	
X40T1000:TX	A81W1040 1	X40T2000:RX	+C/012.01	
X40T2000:TX	A81W1050 1	X40T5000:RX	+C/013.01	
X40T5000:TX	A81W1060 1	X40T4000:RX	+C/014.01	
X40T4000:TX	A81W1070 1	C45T2000:RX	+C/015.01	
C45T2000:TX	A81W1080 1	W50T5000:RX	+C/017.01	
W50T5000:TX	A81W1090 1	W50T6000:RX	+C/018.01	
W50T6000:TX	A81W1100 1	V60T1000:RX	+C/019.01	WRAP

From	Cable	To	Page.Col.	Option
V60T1000:TX	A81W1110 1	A01K3070:RX	+C/029.04	
	A81W2000 1	A01X3020:	+C/029.04	
A81X2010:1	A81W2010 1	A81S2010:	+C/031.02	
A01A4000:	A81W2020 1	A81X2010:1	+C/031.02	
A01X3120:1	A81W3000 1	A01X3030:	+C/029.04	
A01X3120:2	A81W3010 1	A01A4000:	+C/030.05	
A81X4000:BK	A81W4000 BK	A81T4000:-	+C/032.06	
	WH			
A81X4000:RD	RD	A81T4000:+	+C/032.06	
A81X4000:SH	DRAIN	A81T4000:-	+C/032.06	
A81X4000:BK	A81W4010 BK	A81X4010:BK	+C/032.03	
A81X4000:BU	BU	A81X4010:BU	+C/032.03	
A81X4000:WH	WH	A81X4010:WH	+C/032.03	
A81X4000:RD	RD	A81X4010:RD	+C/032.03	
A81X4000:SH	DRAIN	A81X4010:SH	+C/032.03	
A81X4010:BK	A81W4020 BK	A81X4020:BK	+C/032.04	

Drawing remarks

Tetra Pak

Designer ACH	Date 26/06/2010	Machine CBP 30 Speed 0200	
ECM No 456516	Denomination CABLE CONNECTION LIST	Page Type CABLE CONNECTION LIST	
Company Tetra Pak (Italy)	Document No. 3037928-0007	Doc. type ELD	Version AC	Page 004

This drawing must not without the consent of Tetra Pak be copied, transmitted or disclosed to any third party.

Cable Connection List of 3037928 -0003

From	Cable	To	Page.Col.	Option
A81X4010:BU	BU	A81X4020:BU	+C/032.04	
A81X4010:WH	WH	A81X4020:WH	+C/032.04	
A81X4010:RD	RD	A81X4020:RD	+C/032.04	
A81X4010:SH	DRAIN	A81X4020:SH	+C/032.04	
	A81W4030			
A81X4020:BK	BK	A81X4030:BK	+C/032.06	
A81X4020:BU	BU	A81X4030:BU	+C/032.06	
A81X4020:WH	WH	A81X4030:WH	+C/032.06	
A81X4020:RD	RD	A81X4030:RD	+C/032.06	
A81X4020:SH	DRAIN	A81X4030:SH	+C/032.06	
	A81W4040			
A81X4030:BK	BK	A81X4040:BK	+C/032.08	
A81X4030:BU	BU	A81X4040:BU	+C/032.08	
A81X4030:WH	WH	A81X4040:WH	+C/032.08	
A81X4030:RD	RD	A81X4040:RD	+C/032.08	
A81X4030:SH	DRAIN	A81X4040:SH	+C/032.08	
	A81W4100			
A81X4030:BK	BK	A01K3040:V-	+C/032.07	
A81X4030:BU	BU	A01K3040:CAN-L	+C/032.07	
A81X4030:WH	WH	A01K3040:CAN-H	+C/032.07	
A81X4030:RD	RD	A01K3040:V+	+C/032.07	
A81X4030:SH	DRAIN	A01K3040:SHIELD	+C/032.07	
	A81W4110			
A81X4010:BK	BK	W50T4000:V-	+C/028.02	
A81X4010:BU	BU	W50T4000:CAN-L	+C/028.02	
A81X4010:WH	WH	W50T4000:CAN-H	+C/028.02	
A81X4010:RD	RD	W50T4000:V+	+C/028.02	
A81X4010:SH	DRAIN	W50T4000:SHIELD	+C/028.02	
	A81W4120			

From	Cable	To	Page.Col.	Option
C45T3000:V-	BK	W50T4000:V-	+C/027.02	
C45T3000:CAN-L	BU	W50T4000:CAN-L	+C/027.02	
C45T3000:CAN-H	WH	W50T4000:CAN-H	+C/027.02	
C45T3000:V+	RD	W50T4000:V+	+C/027.02	
C45T3000:SHIELD	DRAIN	W50T4000:SHIELD	+C/027.02	
	A81W4130			
X40T3000:CAN-L	BK	C45T3000:CAN-L	+C/026.02	
X40T3000:V-	BU	C45T3000:V-	+C/026.02	
X40T3000:CAN-H	WH	C45T3000:CAN-H	+C/026.02	
X40T3000:V+	RD	C45T3000:V+	+C/026.02	
X40T3000:SHIELD	DRAIN	C45T3000:SHIELD	+C/026.02	
	A81W4150			
C35T1000:V-	BK	X40T3000:V-	+C/025.02	
C35T1000:CAN-L	BU	X40T3000:CAN-L	+C/025.02	
C35T1000:CAN-H	WH	X40T3000:CAN-H	+C/025.02	
C35T1000:V+	RD	X40T3000:V+	+C/025.02	
C35T1000:SHIELD	DRAIN	X40T3000:SHIELD	+C/025.02	
	A81W4160			
W30T4000:V-	BK	C35T1000:V-	+C/024.02	
W30T4000:CAN-L	BU	C35T1000:CAN-L	+C/024.02	
W30T4000:CAN-H	WH	C35T1000:CAN-H	+C/024.02	
W30T4000:V+	RD	C35T1000:V+	+C/024.02	
W30T4000:SHIELD	DRAIN	C35T1000:SHIELD	+C/024.02	
	A81W4170			
W30T2000:V-	BK	W30T4000:V-	+C/022.02	
W30T2000:CAN-L	BU	W30T4000:CAN-L	+C/022.02	
W30T2000:CAN-H	WH	W30T4000:CAN-H	+C/022.02	
W30T2000:V+	RD	W30T4000:V+	+C/022.02	
W30T2000:SHIELD	DRAIN	W30T4000:SHIELD	+C/022.02	

Drawing remarks

Tetra Pak

Designer ACH	Date 26/06/2010	Machine CBP 30 Speed 0200	
ECM No 456516	Denomination CABLE CONNECTION LIST	Page Type CABLE CONNECTION LIST	
Company Tetra Pak (Italy)	Document No. 3037928-0007	Doc. type ELD	Version AC	Page 005

This drawing must not without the consent of Tetra Pak be copied, transmitted or disclosed to any third party.

Cable Connection List of 3037928 -0003

From	Cable	To	Page.Col.	Option
	A81W4180			
W30T2000:V-	BK	W30T3000:V-	+C/022.01	
W30T2000:CAN-L	BU	W30T3000:CAN-L	+C/022.01	
W30T2000:CAN-H	WH	W30T3000:CAN-H	+C/022.01	
W30T2000:V+	RD	W30T3000:V+	+C/022.01	
W30T2000:SHIELD	DRAIN	W30T3000:SHIELD	+C/022.01	
	A81W4200			
A81X4020:BK	BK	A01K3200:-V	+C/032.05	
A81X4020:BU	BU	A01K3200:CAN-L	+C/032.05	
A81X4020:WH	WH	A01K3200:CAN-H	+C/032.05	
A81X4020:RD	RD	A01K3200:+V	+C/032.05	
A81X4020:SH	DRAIN	A01K3200:SHIELD	+C/032.05	
	A81W6020			
A81X4040:BK	BK	81K602:V-	+C/033.02	GENIUS
A81X4040:BU	BU	81K602:CAN-L	+C/033.02	GENIUS
A81X4040:WH	WH	81K602:CAN-H	+C/033.02	GENIUS
A81X4040:RD	RD	81K602:V+	+C/033.02	GENIUS
A81X4040:SH	DRAIN	81K602:SHIELD	+C/033.02	GENIUS
	C35W1000			
C35X1000:1	1	C35M1000:U	+C/025.09	
C35X1000:2	2	C35M1000:V	+C/025.09	
C35X1000:3	3	C35M1000:W	+C/025.09	
C35X1000:5	GNYE	C35M1000:⏚	+C/025.09	
C35X1000:4	SH	PE:	+C/025.09	
	C35W1010			
C35X1010:1	1	C35X1000:1	+C/025.09	
C35X1010:2	2	C35X1000:2	+C/025.09	
C35X1010:3	3	C35X1000:3	+C/025.09	
C35X1010:5	GNYE	C35X1000:5	+C/025.09	
C35X1010:4	SH	C35X1000:4	+C/025.09	
	C35W1020			
C35X1010:1	1	C35T1000:U	+C/025.07	
C35X1010:2	2	C35T1000:V	+C/025.07	
C35X1010:3	3	C35T1000:W	+C/025.07	
C35X1010:5	GNYE	C35T1000:E	+C/025.07	
C35X1010:4	SH	PE:	+C/025.07	
	C35W1100			
C35B1100:1	BN	C35K8000:0.1	+C/071.02	
C35B1100:3	BU	C35K8000:0.3	+C/071.02	
C35B1100:4	BK	C35K8000:0.4	+C/071.04	
	C35W1110			
C35B1110:1	BN	C35K8000:1.1	+C/071.02	
C35B1110:3	BU	C35K8000:1.3	+C/071.02	
C35B1110:4	BK	C35K8000:1.4	+C/071.04	
	C35W1120			
C35B1120:1	BN	C35K8000:2.1	+C/071.02	
C35B1120:3	BU	C35K8000:2.3	+C/071.02	
C35B1120:4	BK	C35K8000:2.4	+C/071.04	
	C35W1130			
C35B1130:1	BN	C35K8000:3.1	+C/071.02	
C35B1130:3	BU	C35K8000:3.3	+C/071.02	
C35B1130:4	BK	C35K8000:3.4	+C/071.04	
	C35W1140			
C35B1140:1	BN	C35K8000:4.1	+C/071.02	
C35B1140:3	BU	C35K8000:4.3	+C/071.02	
C35B1140:4	BK	C35K8000:4.4	+C/071.04	

Drawing remarks

Tetra Pak

Designer ACH	Date 26/06/2010	Machine CBP 30 Speed 0200	
ECM No 456516	Denomination CABLE CONNECTION LIST	Page Type CABLE CONNECTION LIST	
Company Tetra Pak (Italy)	Document No. 3037928-0007	Doc. type ELD	Version AC	Page 006

This drawing must not without the consent of Tetra Pak be copied, transmitted or disclosed to any third party.

Cable Connection List of 3037928 -0003

From	Cable	To	Page.Col.	Option
	C35W1150			
C35B1150:1	BN	C35K8000:5.1	+C/071.02	
C35B1150:3	BU	C35K8000:5.3	+C/071.02	
C35B1150:4	BK	C35K8000:5.4	+C/071.04	
	C35W1160			
C35B1160:1	BN	C35K8000:6.1	+C/071.02	
C35B1160:3	BU	C35K8000:6.3	+C/071.02	
C35B1160:4	BK	C35K8000:6.4	+C/071.04	
	C35W1170			
C35B1170:1	BN	C35K8000:7.1	+C/071.02	
C35B1170:3	BU	C35K8000:7.3	+C/071.02	
C35B1170:4	BK	C35K8000:7.4	+C/071.04	
	C35W1180			
C35B1180:1	BN	C35K8200:0.1	+C/072.02	
C35B1180:3	BU	C35K8200:0.3	+C/072.02	
C35B1180:4	BK	C35K8200:0.4	+C/072.04	
	C35W1190			
C35B1190:1	BN	C35K8200:1.1	+C/072.02	
C35B1190:3	BU	C35K8200:1.3	+C/072.02	
C35B1190:4	BK	C35K8200:1.4	+C/072.04	
	C35W1400			
	BN			
C35K1400:1	BU	C35K8600:0.3	+C/074.02	
C35K1400:2	BK	C35K8600:0.4	+C/074.04	
	C35W8000			
A01X2200:1.1	BN	C35K8000:1	+C/064.06	
A01X2200:1.2	WH	C35K8000:2	+C/064.06	
A01X2200:1.3	BU	C35K8000:3	+C/064.06	
A01X2200:1.4	BK	C35K8000:4	+C/064.06	
	C35W8010			
C35K8000:5	BK	X40K8000:5	+C/071.07	
C35K8000:3	BU	X40K8000:3	+C/071.07	
C35K8000:4	WH	X40K8000:4	+C/071.07	
C35K8000:2	RD	X40K8000:2	+C/071.07	
C35K8000:1	DRAIN	X40K8000:1	+C/071.07	
	C35W8200			
A01X2200:3.1	BN	C35K8200:1	+C/064.06	
A01X2200:3.2	WH	C35K8200:2	+C/064.06	
A01X2200:3.3	BU	C35K8200:3	+C/064.06	
A01X2200:3.4	BK	C35K8200:4	+C/064.06	
	C35W8210			
W30K8200:3	BK	C35K8200:3	+C/068.06	
W30K8200:5	BU	C35K8200:5	+C/068.06	
W30K8200:4	WH	C35K8200:4	+C/068.06	
W30K8200:2	RD	C35K8200:2	+C/068.06	
W30K8200:1	DRAIN	C35K8200:1	+C/068.06	
	C35W8400			
A01X2200:5.1	BN	C35K8400:1	+C/064.06	
A01X2200:5.2	WH	C35K8400:2	+C/064.06	
A01X2200:5.3	BU	C35K8400:3	+C/064.06	
A01X2200:5.4	BK	C35K8400:4	+C/064.06	
	C35W8410			
C35K8200:3	BK	C35K8400:3	+C/072.07	
C35K8200:5	BU	C35K8400:5	+C/072.07	
C35K8200:4	WH	C35K8400:4	+C/072.07	
C35K8200:2	RD	C35K8400:2	+C/072.07	

Drawing remarks

Tetra Pak

Designer ACH	Date 26/06/2010	Machine CBP 30 Speed 0200	
ECM No 456516	Denomination CABLE CONNECTION LIST	Page Type CABLE CONNECTION LIST	
Company Tetra Pak (Italy)	Document No. 3037928-0007	Doc. type ELD	Version AC	Page 007

This drawing must not without the consent of Tetra Pak be copied, transmitted or disclosed to any third party.

Cable Connection List of 3037928 -0003

From	Cable	To	Page.Col.	Option
C35K8200:1	DRAIN	C35K8400:1	+C/072.07	
C35W8600				
A01X2200:2.1	BN	C35K8600:1	+C/064.06	
A01X2200:2.2	WH	C35K8600:2	+C/064.06	
A01X2200:2.3	BU	C35K8600:3	+C/064.06	
A01X2200:2.4	BK	C35K8600:4	+C/064.06	
C35W8610				
C35K8000:3	BK	C35K8600:3	+C/071.06	
C35K8000:5	BU	C35K8600:5	+C/071.06	
C35K8000:4	WH	C35K8600:4	+C/071.06	
C35K8000:2	RD	C35K8600:2	+C/071.06	
C35K8000:1	DRAIN	C35K8600:1	+C/071.06	
C45W1100				
C45B1100:1	BN	C45K8000:6.1	+C/076.02	
C45B1100:3	BU	C45K8000:6.3	+C/076.02	
C45B1100:4	BK	C45K8000:6.4	+C/076.04	
C45W1110				
C45B1110:1	BN	C45K8000:1.1	+C/076.02	
C45B1110:3	BU	C45K8000:1.3	+C/076.02	
C45B1110:4	BK	C45K8000:1.4	+C/076.04	
C45W1210				
	BN			
C45K1210:A	BU	C45K8400:7.3	+C/078.02	
C45K1210:C	BK	C45K8400:7.4	+C/078.04	
C45W2000				
C45T2000:U	BN	C45M2000:U	+C/015.01	
C45T2000:V	BK	C45M2000:V	+C/015.01	
C45T2000:W	BU	C45M2000:W	+C/015.01	

From	Cable	To	Page.Col.	Option
C45T2000:⏚	GNYE	C45M2000:⏚	+C/015.01	
PE:	SH	PE:	+C/015.01	
C45W2010				
C45X2010:	1	C45M2000:	+C/015.03	
C45W2100				
C45B2100:1	BN	C45K8000:2.1	+C/076.02	
C45B2100:3	BU	C45K8000:2.3	+C/076.02	
C45B2100:4	BK	C45K8000:2.4	+C/076.04	
C45W2110				
C45B2110:1	BN	C45K8000:0.1	+C/076.01	
C45B2110:3	BU	C45K8000:0.3	+C/076.01	
C45B2110:4	BK	C45K8000:0.4	+C/076.04	
C45W2200				
A01X0480:17	BU	C45B2200:3	+C/015.07	
A01X0480:18	BN	C45B2200:1	+C/015.07	
A01X0480:19	BK	C45B2200:4	+C/015.07	
C45W2210				
	BN			
C45K2210:A	BU	C45K8400:5.3	+C/078.02	
C45K2210:C	BK	C45K8400:5.4	+C/078.04	
C45W2220				
A01X0480:20	SH	PE:	+C/015.06	
A01X0480:19	WH	C45X2000:5	+C/015.06	
A01X0480:17	GN	C45X2000:6	+C/015.06	
A01X0480:18	BN	C45X2000:4	+C/015.06	
C45W3000				
C45X3000:1	1	C45M3000:5-2	+C/027.09	

Drawing remarks

Tetra Pak

Designer ACH	Date 26/06/2010	Machine CBP 30 Speed 0200	
ECM No 456516	Denomination CABLE CONNECTION LIST	Page Type CABLE CONNECTION LIST	
Company Tetra Pak (Italy)	Document No. 3037928-0007	Doc. type ELD	Version AC	Page 008

This drawing must not without the consent of Tetra Pak be copied, transmitted or disclosed to any third party.

Cable Connection List of 3037928 -0003

From	Cable	To	Page.Col.	Option
C45X3000:2	2	C45M3000:1-4	+C/027.09	
C45X3000:3	3	C45M3000:3-6	+C/027.09	
C45X3000:5	GNYE	C45M3000:	+C/027.09	
C45X3000:4	SH	PE:	+C/027.09	
	C45W3010			
C45X3000:1	1	C45T3000:U	+C/027.08	
C45X3000:2	2	C45T3000:V	+C/027.08	
C45X3000:3	3	C45T3000:W	+C/027.08	
C45X3000:5	GNYE	C45T3000:E	+C/027.08	
C45X3000:4	SH	PE:	+C/027.08	
	C45W3100			
C45B3100:1	BN	C45K8000:4.1	+C/076.02	
C45B3100:3	BU	C45K8000:4.3	+C/076.02	
C45B3100:4	BK	C45K8000:4.4	+C/076.04	
	C45W3200			
	BN			
C45K3200:A	BU	W50K8400:4.3	+C/080.02	
C45K3200:C	BK	W50K8400:4.4	+C/080.04	
	C45W4200			
C45K4200:C	BK	C45K8400:6.4	+C/078.04	
C45K4200:A	BU	C45K8400:6.3	+C/078.02	
	C45W8000			
A01X2400:4.1	BN	C45K8000:1	+C/066.05	
A01X2400:4.2	WH	C45K8000:2	+C/066.05	
A01X2400:4.3	BU	C45K8000:3	+C/066.05	
A01X2400:4.4	BK	C45K8000:4	+C/066.05	
	C45W8010			
C45K8000:3	BK	W50K8200:3	+C/079.07	

From	Cable	To	Page.Col.	Option
C45K8000:5	BU	W50K8200:5	+C/079.07	
C45K8000:4	WH	W50K8200:4	+C/079.07	
C45K8000:2	RD	W50K8200:2	+C/079.07	
C45K8000:1	DRAIN	W50K8200:1	+C/079.07	
	C45W8200			
A01X2400:6.1	BN	C45K8200:1	+C/066.05	
A01X2400:6.2	WH	C45K8200:2	+C/066.05	
A01X2400:6.3	BU	C45K8200:3	+C/066.05	
A01X2400:6.4	BK	C45K8200:4	+C/066.05	
	C45W8210			
C45K8000:3	BK	C45K8200:3	+C/076.07	
C45K8000:5	BU	C45K8200:5	+C/076.07	
C45K8000:4	WH	C45K8200:4	+C/076.07	
C45K8000:1	DRAIN	C45K8200:1	+C/076.07	
C45K8000:2	RD	C45K8200:2	+C/076.07	
	C45W8400			
A01X2400:1.1	BN	C45K8400:1	+C/066.05	
A01X2400:1.2	WH	C45K8400:2	+C/066.05	
A01X2400:1.3	BU	C45K8400:3	+C/066.05	
A01X2400:1.4	BK	C45K8400:4	+C/066.05	
	C45W8410			
C45K8200:3	BK	C45K8400:3	+C/077.07	
C45K8200:5	BU	C45K8400:5	+C/077.07	
C45K8200:4	WH	C45K8400:4	+C/077.07	
C45K8200:2	RD	C45K8400:2	+C/077.07	
C45K8200:1	DRAIN	C45K8400:1	+C/077.07	
	F09W0000			
A01X0360:1	WH	F09K0000:IQ10	+C/035.10	
	BN			

Drawing remarks

Tetra Pak

Designer ACH	Date 26/06/2010	Machine CBP 30 Speed 0200	
ECM No 456516	Denomination CABLE CONNECTION LIST	Page Type CABLE CONNECTION LIST	
Company Tetra Pak (Italy)	Document No. 3037928-0007	Doc. type ELD	Version AC	Page 009

This drawing must not without the consent of Tetra Pak be copied, transmitted or disclosed to any third party.

Cable Connection List of 3037928 -0003

From	Cable	To	Page.Col.	Option
F09W0000:	SH	PE:	+C/035.07	
	F09W0020			
F09X0020:4	BK	F09X0000:16	+C/037.01	
F09X0020:3	BU	F09X0000:15	+C/037.01	
F09X0020:1	BN	F09X0000:13	+C/037.01	
	BG			
F09X0020:5	YE	F09X0000:17	+C/037.01	
F09X0020:7	GN	F09X0000:19	+C/037.01	
	VT			
	PK			
F09X0020:2	OG	F09X0000:14	+C/037.01	
	TRANS			
	RDWH			
	BUWH			
F09X0020:6	YEWH	F09X0000:18	+C/037.01	
F09X0020:8	GNWH	F09X0000:20	+C/037.01	
	VTWH			
	GNYE			
F09W0020:	SH	F09X0000:15	+C/037.01	
	F09W0030			
F09X0030:4	BK	F09X0000:4	+C/038.01	
F09X0030:3	BU	F09X0000:3	+C/038.01	
F09X0030:1	BN	F09X0000:1	+C/038.01	
	BG			
F09X0030:5	YE	F09X0000:5	+C/038.01	
F09X0030:7	GN	F09X0000:7	+C/038.01	
F09X0030:9	VT	F09X0000:9	+C/038.01	
	PK			
F09X0030:2	OG	F09X0000:2	+C/038.01	
	TRANS			
F09X0030:11	RDWH	F09X0000:11	+C/038.01	
F09X0030:12	BUWH	F09X0000:12	+C/038.01	

From	Cable	To	Page.Col.	Option
F09X0030:6	YEWH	F09X0000:6	+C/038.01	
F09X0030:8	GNWH	F09X0000:8	+C/038.01	
F09X0030:10	VTWH	F09X0000:10	+C/038.01	
	GNYE			
F09W0030:	SH	F09X0000:3	+C/038.01	
	F09W0060			
F09X0010:14	WH	A01X0360:3	+C/037.06	
F09X0010:13	BN	A01X0110:3	+C/037.06	
F09X0010:15	GN	A01X0100:3	+C/037.06	
F09X0010:16	YE	F09K0000:IQ12	+C/037.06	
F09X0010:4	GY	F09K0000:IQ14	+C/039.01	
F09X0010:3	PK	A01X0100:5	+C/039.01	
F09X0010:2	BU	A01X0360:5	+C/039.01	
F09X0010:1	RD	A01X0110:5	+C/039.01	
F09W0060:	SH	A01X0100:3	+C/037.06	
	F09W0070			
F09X0000:14	WH	A01X0360:2	+C/037.01	
F09X0000:13	BN	A01X0110:2	+C/037.01	
F09X0000:15	GN	A01X0100:2	+C/037.01	
F09X0000:16	YE	F09K0000:IQ11	+C/037.01	
F09X0000:4	GY	F09K0000:IQ13	+C/038.01	
F09X0000:3	PK	A01X0100:4	+C/038.01	
F09X0000:2	BU	A01X0360:4	+C/038.01	
F09X0000:1	RD	A01X0110:4	+C/038.01	
F09W0070:	SH	A01X0100:2	+C/037.01	
	F09W0100			
F09X0000:22	BN	F09B0100:1	+C/035.02	
F09X0000:21	BU	F09B0100:3	+C/035.02	
F09X0000:23	BK	F09B0100:4	+C/035.03	

Drawing remarks

Tetra Pak

Designer ACH	Date 26/06/2010	Machine CBP 30 Speed 0200	
ECM No 456516	Denomination CABLE CONNECTION LIST	Page Type CABLE CONNECTION LIST	
Company Tetra Pak (Italy)	Document No. 3037928-0007	Doc. type ELD	Version AC	Page 010

This drawing must not without the consent of Tetra Pak be copied, transmitted or disclosed to any third party.

Cable Connection List of 3037928 -0003

From	Cable	To	Page.Col.	Option
	F09W1000			
F09X1000:4	BK	F09X0020:4	+C/037.01	
F09X1000:3	BU	F09X0020:3	+C/037.01	
F09X1000:1	BN	F09X0020:1	+C/037.01	
	BG			
F09X1000:5	YE	F09X0020:5	+C/037.01	
F09X1000:7	GN	F09X0020:7	+C/037.01	
	VT			
	PK			
F09X1000:2	OG	F09X0020:2	+C/037.01	
	TRANS			
	RDWH			
	BUWH			
F09X1000:6	YEWH	F09X0020:6	+C/037.01	
F09X1000:8	GNWH	F09X0020:8	+C/037.01	
	VTWH			
	GNYE			
F09W1000:	SH	F09X0020:3	+C/037.01	
	F09W1010			
	GN/YE			
F09X1010:4	BK	F09X0010:16	+C/037.06	
F09X1010:3	BU	F09X0010:15	+C/037.06	
F09X1010:1	BN	F09X0010:13	+C/037.06	
	L.BN			
F09X1010:5	YE	F09X0010:17	+C/037.06	
F09X1010:7	GN	F09X0010:19	+C/037.06	
	VT			
	PK			
F09X1010:2	OG	F09X0010:14	+C/037.06	
	BL			
	RD/WH			
	BU/WH			

From	Cable	To	Page.Col.	Option
F09X1010:6	YE/WH	F09X0010:18	+C/037.06	
F09X1010:8	GN/WH	F09X0010:20	+C/037.06	
	VT/WH			
F09W1010:	SH	F09X0010:15	+C/037.06	
	F09W1200			
F09B1200:1	BN	F09X1000:2.1	+C/037.02	
F09B1200:2	WH	F09X1000:2.2	+C/037.02	
F09B1200:3	BU	F09X1000:2.3	+C/037.02	
F09B1200:4	BK	F09X1000:2.4	+C/037.02	
F09B1200:5	GY	F09X1000:2.5	+C/037.02	
	SH	F09X1000:2.3	+C/037.02	
	F09W1300			
F09B1300:1	BN	F09X1000:3.1	+C/037.03	
F09B1300:2	WH	F09X1000:3.2	+C/037.03	
F09B1300:3	BU	F09X1000:3.3	+C/037.03	
F09B1300:4	BK	F09X1000:3.4	+C/037.03	
F09B1300:5	GY	F09X1000:3.5	+C/037.03	
	SH	F09X1000:3.3	+C/037.03	
	F09W1500			
F09B1500:1	BN	F09X1010:1.1	+C/037.07	
F09B1500:2	WH	F09X1010:1.2	+C/037.07	
F09B1500:3	BU	F09X1010:1.3	+C/037.07	
F09B1500:4	BK	F09X1010:1.4	+C/037.07	
F09B1500:5	GY	F09X1010:1.5	+C/037.07	
	SH	F09X1010:1.3	+C/037.07	
	F09W1600			
F09B1600:1	BN	F09X1010:2.1	+C/037.07	
F09B1600:2	WH	F09X1010:2.2	+C/037.07	
F09B1600:3	BU	F09X1010:2.3	+C/037.07	
F09B1600:4	BK	F09X1010:2.4	+C/037.07	

Drawing remarks

Tetra Pak

Designer: ACH	Date: 26/06/2010	Machine: CBP 30 Speed 0200	
ECM No: 456516	Denomination: CABLE CONNECTION LIST	Page Type: CABLE CONNECTION LIST	
Company: Tetra Pak (Italy)	Document No.: 3037928-0007	Doc. type: ELD	Version: AC	Page: 011

This drawing must not without the consent of Tetra Pak be copied, transmitted or disclosed to any third party.

Cable Connection List of 3037928 -0003

From	Cable	To	Page.Col.	Option
F09B1600:5	GY	F09X1010:2.5	+C/037.07	
	SH	F09X1010:2.3	+C/037.07	
	F09W1700			
F09B1700:1	BN	F09X1010:3.1	+C/037.08	
F09B1700:2	WH	F09X1010:3.2	+C/037.08	
F09B1700:3	BU	F09X1010:3.3	+C/037.08	
F09B1700:4	BK	F09X1010:3.4	+C/037.08	
F09B1700:5	GY	F09X1010:3.5	+C/037.08	
	SH	F09X1010:3.3	+C/037.08	
	F09W2000			
	GN/YE			
F09X2000:4	BK	F09X0030:4	+C/038.01	
F09X2000:3	BU	F09X0030:3	+C/038.01	
F09X2000:1	BN	F09X0030:1	+C/038.01	
	L.BN			
F09X2000:5	YE	F09X0030:5	+C/038.01	
F09X2000:7	GN	F09X0030:7	+C/038.01	
F09X2000:9	VT	F09X0030:9	+C/038.01	
	PK			
F09X2000:2	OG	F09X0030:2	+C/038.01	
	BL			
F09X2000:11	RD/WH	F09X0030:11	+C/038.01	
F09X2000:12	BU/WH	F09X0030:12	+C/038.01	
F09X2000:6	YE/WH	F09X0030:6	+C/038.01	
F09X2000:8	GN/WH	F09X0030:8	+C/038.01	
F09X2000:10	VT/WH	F09X0030:10	+C/038.01	
F09W2000:	SH	F09X0030:3	+C/038.01	
	F09W2100			
F09B2100:1	BN	F09X2000:1.1	+C/038.01	
F09B2100:2	WH	F09X2000:1.2	+C/038.01	
F09B2100:3	BU	F09X2000:1.3	+C/038.01	

From	Cable	To	Page.Col.	Option
F09B2100:4	BK	F09X2000:1.4	+C/038.01	
F09B2100:5	GY	F09X2000:1.5	+C/038.01	
	SH	F09X2000:1.3	+C/038.01	
	F09W2120			
F09X2120:4	BK	W30K8600:4.4	+C/070.04	
F09X2120:3	BU	W30K8600:4.3	+C/070.02	
	F09W2200			
F09B2200:1	BN	F09X2000:2.1	+C/038.02	
F09B2200:2	WH	F09X2000:2.2	+C/038.02	
F09B2200:3	BU	F09X2000:2.3	+C/038.02	
F09B2200:4	BK	F09X2000:2.4	+C/038.02	
F09B2200:5	GY	F09X2000:2.5	+C/038.02	
	SH	F09X2000:2.3	+C/038.02	
	F09W2220			
F09X2220:4	BK	W30K8200:2.4	+C/068.04	
F09X2220:3	BU	W30K8200:2.3	+C/068.02	
	F09W2300			
F09B2300:1	BN	F09X2000:3.1	+C/038.03	
F09B2300:2	WH	F09X2000:3.2	+C/038.03	
F09B2300:3	BU	F09X2000:3.3	+C/038.03	
F09B2300:4	BK	F09X2000:3.4	+C/038.03	
F09B2300:5	GY	F09X2000:3.5	+C/038.03	
	SH	F09X2000:3.3	+C/038.03	
	F09W2320			
	BN			
F09X2320:3	BU	C35K8600:6.3	+C/074.02	
F09X2320:4	BK	C35K8600:6.4	+C/074.04	

Drawing remarks

Tetra Pak

Designer ACH	Date 26/06/2010	Machine CBP 30 Speed 0200	
ECM No 456516	Denomination CABLE CONNECTION LIST	Page Type CABLE CONNECTION LIST	
Company Tetra Pak (Italy)	Document No. 3037928-0007	Doc. type ELD	Version AC	Page 012

This drawing must not without the consent of Tetra Pak be copied, transmitted or disclosed to any third party.

Cable Connection List of 3037928 -0003

From	Cable	To	Page.Col.	Option
F09W2400				
F09B2400:1	BN	F09X2000:4.1	+C/038.04	
F09B2400:2	WH	F09X2000:4.2	+C/038.04	
F09B2400:3	BU	F09X2000:4.3	+C/038.04	
F09B2400:4	BK	F09X2000:4.4	+C/038.04	
F09B2400:5	GY	F09X2000:4.5	+C/038.04	
	SH	F09X2000:4.3	+C/038.04	
F09W2420				
F09X2420:4	BK	C35K8400:7.4	+C/073.04	
F09X2420:3	BU	C35K8400:7.3	+C/073.02	
F09W2500				
F09B2500:1	BN	F09X2000:5.1	+C/038.05	
F09B2500:2	WH	F09X2000:5.2	+C/038.05	
F09B2500:3	BU	F09X2000:5.3	+C/038.05	
F09B2500:4	BK	F09X2000:5.4	+C/038.05	
F09B2500:5	GY	F09X2000:5.5	+C/038.05	
	SH	F09X2000:5.3	+C/038.05	
F09W2520				
F09X2520:4	BK	W30K8400:4.4	+C/069.04	
F09X2520:3	BU	W30K8400:4.3	+C/069.02	
F09W2600				
F09B2600:1	BN	F09X2000:6.1	+C/038.06	
F09B2600:2	WH	F09X2000:6.2	+C/038.06	
F09B2600:3	BU	F09X2000:6.3	+C/038.06	
F09B2600:4	BK	F09X2000:6.4	+C/038.06	
F09B2600:5	GY	F09X2000:6.5	+C/038.06	
	SH	F09X2000:6.3	+C/038.06	
F09W2620				
F09X2620:4	BK	W30K8200:3.4	+C/068.04	
F09X2620:3	BU	W30K8200:3.3	+C/068.02	
F09W2700				
F09B2700:1	BN	F09X2000:7.1	+C/038.07	
F09B2700:2	WH	F09X2000:7.2	+C/038.07	
F09B2700:3	BU	F09X2000:7.3	+C/038.07	
F09B2700:4	BK	F09X2000:7.4	+C/038.07	
F09B2700:5	GY	F09X2000:7.5	+C/038.07	
	SH	F09X2000:7.3	+C/038.07	
F09W2720				
	BN			
F09X2720:3	BU	C35K8600:7.3	+C/074.02	
F09X2720:4	BK	C35K8600:7.4	+C/074.04	
F09W2800				
F09B2800:1	BN	F09X2000:8.1	+C/038.07	
F09B2800:2	WH	F09X2000:8.2	+C/038.07	
F09B2800:3	BU	F09X2000:8.3	+C/038.07	
F09B2800:4	BK	F09X2000:8.4	+C/038.07	
F09B2800:5	GY	F09X2000:8.5	+C/038.07	
	SH	F09X2000:8.3	+C/038.07	
F09W2820				
	BN			
F09X2820:3	BU	X40K8000:5.3	+C/075.01	
F09X2820:4	BK	X40K8000:5.4	+C/075.03	
F09W3000				
	GN/YE			
F09X3000:4	BK	F09X0010:4	+C/039.01	
F09X3000:3	BU	F09X0010:3	+C/039.01	
F09X3000:1	BN	F09X0010:1	+C/039.01	

Drawing remarks

Tetra Pak

Designer ACH	Date 26/06/2010	Machine CBP 30 Speed 0200	
ECM No 456516	Denomination CABLE CONNECTION LIST	Page Type CABLE CONNECTION LIST	
Company Tetra Pak (Italy)	Document No. 3037928-0007	Doc. type ELD	Version AC	Page 013

RELEASED

This drawing must not without the consent of Tetra Pak be copied, transmitted or disclosed to any third party.

Cable Connection List of 3037928 -0003

From	Cable	To	Page.Col.	Option
	L.BN			
F09X3000:5	YE	F09X0010:5	+C/039.01	
F09X3000:7	GN	F09X0010:7	+C/039.01	
F09X3000:9	VT	F09X0010:9	+C/039.01	
	PK			
F09X3000:2	OG	F09X0010:2	+C/039.01	
	BL			
F09X3000:11	RD/WH	F09X0010:11	+C/039.01	
F09X3000:12	BU/WH	F09X0010:12	+C/039.01	
F09X3000:6	YE/WH	F09X0010:6	+C/039.01	
F09X3000:8	GN/WH	F09X0010:8	+C/039.01	
F09X3000:10	VT/WH	F09X0010:10	+C/039.01	
F09W3000:	SH	F09X0010:3	+C/039.01	
F09W3100				
F09B3100:1	BN	F09X3000:1.1	+C/039.01	
F09B3100:2	WH	F09X3000:1.2	+C/039.01	
F09B3100:3	BU	F09X3000:1.3	+C/039.01	
F09B3100:4	BK	F09X3000:1.4	+C/039.01	
F09B3100:5	GY	F09X3000:1.5	+C/039.01	
	SH	F09X3000:1.3	+C/039.01	
F09W3120				
	BN			
F09X3120:3	BU	W50K8600:5.3	+C/081.02	
F09X3120:4	BK	W50K8600:5.4	+C/081.04	
F09W3200				
F09B3200:1	BN	F09X3000:2.1	+C/039.02	
F09B3200:2	WH	F09X3000:2.2	+C/039.02	
F09B3200:3	BU	F09X3000:2.3	+C/039.02	
F09B3200:4	BK	F09X3000:2.4	+C/039.02	
F09B3200:5	GY	F09X3000:2.5	+C/039.02	
	SH	F09X3000:2.3	+C/039.02	

From	Cable	To	Page.Col.	Option
F09W3300				
F09B3300:1	BN	F09X3000:3.1	+C/039.03	
F09B3300:2	WH	F09X3000:3.2	+C/039.03	
F09B3300:3	BU	F09X3000:3.3	+C/039.03	
F09B3300:4	BK	F09X3000:3.4	+C/039.03	
F09B3300:5	GY	F09X3000:3.5	+C/039.03	
	SH	F09X3000:3.3	+C/039.03	
F09W3400				
F09B3400:1	BN	F09X3000:4.1	+C/039.04	
F09B3400:2	WH	F09X3000:4.2	+C/039.04	
F09B3400:3	BU	F09X3000:4.3	+C/039.04	
F09B3400:4	BK	F09X3000:4.4	+C/039.04	
F09B3400:5	GY	F09X3000:4.5	+C/039.04	
	SH	F09X3000:4.3	+C/039.04	
F09W3420				
F09X3420:4	BK	C45K8200:7.4	+C/077.04	
F09X3420:3	BU	C45K8200:7.3	+C/077.02	
F09W3500				
F09B3500:1	BN	F09X3000:5.1	+C/039.05	
F09B3500:2	WH	F09X3000:5.2	+C/039.05	
F09B3500:3	BU	F09X3000:5.3	+C/039.05	
F09B3500:4	BK	F09X3000:5.4	+C/039.05	
F09B3500:5	GY	F09X3000:5.5	+C/039.05	
	SH	F09X3000:5.3	+C/039.05	
F09W3520				
	BN			
F09X3520:3	BU	W50K8600:4.3	+C/081.02	
F09X3520:4	BK	W50K8600:4.4	+C/081.04	

Drawing remarks

Tetra Pak

Designer ACH	Date 26/06/2010	Machine CBP 30 Speed 0200	
ECM No 456516	Denomination CABLE CONNECTION LIST	Page Type CABLE CONNECTION LIST	
Company Tetra Pak (Italy)	Document No. 3037928-0007	Doc. type ELD	Version AC	Page 014

This drawing must not without the consent of Tetra Pak be copied, transmitted or disclosed to any third party.

Cable Connection List of 3037928 -0003

From	Cable	To	Page.Col.	Option
F09W3600				
F09B3600:1	BN	F09X3000:6.1	+C/039.06	
F09B3600:2	WH	F09X3000:6.2	+C/039.06	
F09B3600:3	BU	F09X3000:6.3	+C/039.06	
F09B3600:4	BK	F09X3000:6.4	+C/039.06	
F09B3600:5	GY	F09X3000:6.5	+C/039.06	
	SH	F09X3000:6.3	+C/039.06	
F09W3620				
	BN			
F09X3620:3	BU	X40K8000:6.3	+C/075.01	
F09X3620:4	BK	X40K8000:6.4	+C/075.03	
F09W3700				
F09B3700:1	BN	F09X3000:7.1	+C/039.07	
F09B3700:2	WH	F09X3000:7.2	+C/039.07	
F09B3700:3	BU	F09X3000:7.3	+C/039.07	
F09B3700:4	BK	F09X3000:7.4	+C/039.07	
F09B3700:5	GY	F09X3000:7.5	+C/039.07	
	SH	F09X3000:7.3	+C/039.07	
F09W3720				
	BN			
F09X3720:3	BU	W50K8600:6.3	+C/081.02	
F09X3720:4	BK	W50K8600:6.4	+C/081.04	
F09W3800				
F09B3800:1	BN	F09X3000:8.1	+C/039.07	
F09B3800:2	WH	F09X3000:8.2	+C/039.07	
F09B3800:3	BU	F09X3000:8.3	+C/039.07	
F09B3800:4	BK	F09X3000:8.4	+C/039.07	
F09B3800:5	GY	F09X3000:8.5	+C/039.07	
	SH	F09X3000:8.3	+C/039.07	

From	Cable	To	Page.Col.	Option
V01W5000				
V01X5000:1	1	V01V5000:L1	+C/006.03	
V01X5000:2	2	V01V5000:L2	+C/006.03	
V01X5000:3	3	V01V5000:L3	+C/006.03	
V01X5000:4	4	V01V5000:N	+C/006.03	
V01X5000:⏚	GNYE	V01V5000:⏚	+C/006.03	
V01W5100				
V01X5100:13	1	V01V5000:1	+C/041.06	
V01X5100:2	2	V01V5000:2	+C/041.02	
V01X5100:14	3	V01V5000:3	+C/041.06	
V01X5100:4	4	V01V5000:4	+C/041.02	
V01X5100:15	5	V01V5000:5	+C/041.06	
V01X5100:6	6	V01V5000:6	+C/041.02	
	7			
V01X5100:16	8	V01V5000:8	+C/051.03	
V01X5100:1	9	V01V5000:9	+C/051.03	
	10			
	11			
	GNYE			
V60W1000				
	GNYE			
V60T1000:U	BN	V60M1000:U	+C/019.01	WRAP
V60T1000:V	BK	V60M1000:V	+C/019.01	WRAP
V60T1000:W	BU	V60M1000:W	+C/019.01	WRAP
PE:	SH	PE:	+C/019.01	WRAP
V60T1000:⏚	GNYE	V60M1000:⏚	+C/019.01	WRAP
V60W1010				
V60X1010:	1	V60M1000:	+C/019.02	WRAP

Drawing remarks

Tetra Pak

Designer ACH	Date 26/06/2010	Machine CBP 30 Speed 0200	
ECM No 456516	Denomination CABLE CONNECTION LIST	Page Type CABLE CONNECTION LIST	
Company Tetra Pak (Italy)	Document No. 3037928-0007	Doc. type ELD	Version AC	Page 015

This drawing must not without the consent of Tetra Pak be copied, transmitted or disclosed to any third party.

Cable Connection List of 3037928 -0003

From	Cable	To	Page.Col.	Option
	V60W1110			
	SH			
A01X0480:21	GN	V60X1000:6	+C/019.05	WRAP
A01X0480:24	SH	PE:	+C/019.05	WRAP
A01X0480:22	YE	V60X1000:4	+C/019.05	WRAP
A01X0480:23	WH	V60X1000:5	+C/019.05	WRAP
	V60W1200			
V60K1200:C	BK	V60K8000:2.4	+C/083.04	WRAP
V60K1200:A	BU	V60K8000:2.3	+C/083.04	WRAP
	V60W1210			
V60K1210:A	BU	V60K8000:3.3	+C/083.04	WRAP
V60K1210:C	BK	V60K8000:3.4	+C/083.04	WRAP
	V60W2100			
V60B2100:3	BN	V60K8000:4.3	+C/083.02	WRAP
V60B2100:1	BU	V60K8000:4.1	+C/083.02	WRAP
V60B2100:4	BK	V60K8000:4.4	+C/083.04	WRAP
	V60W3000			
V60X3000:1	1	V60M3000:V	+C/021.05	WRAP
V60X3000:2	2	V60M3000:U	+C/021.05	WRAP
V60X3000:3	3	V60M3000:W	+C/021.05	WRAP
V60X3000:⏚	GNYE	V60M3000:⏚	+C/021.05	WRAP
	V60W3100			
V60B3100:1	BN	V60K8000:0.1	+C/083.02	WRAP
V60B3100:3	BU	V60K8000:0.3	+C/083.02	WRAP
V60B3100:4	BK	V60K8000:0.4	+C/083.04	WRAP
	V60W3110			
V60B3110:1	BN	V60K8000:1.1	+C/083.02	WRAP
V60B3110:3	BU	V60K8000:1.3	+C/083.02	WRAP
V60B3110:4	BK	V60K8000:1.4	+C/083.04	WRAP
	V60W4200			
	BN			
V60K4200:1	BU	W50K8400:5.3	+C/080.02	WRAP
V60K4200:2	BK	W50K8400:5.4	+C/080.04	WRAP
	V60W4210			
A01X0450:17	BU	V60B4210:3	+C/020.02	WRAP
A01X0450:18	BN	V60B4210:1	+C/020.02	WRAP
A01X0450:19	BK	V60B4210:4	+C/020.07	WRAP
	V60W8000			
A01X2300:2.1	BN	V60K8000:1	+C/065.06	WRAP
A01X2300:2.2	WH	V60K8000:2	+C/065.06	WRAP
A01X2300:2.3	BU	V60K8000:3	+C/065.06	WRAP
A01X2300:2.4	BK	V60K8000:4	+C/065.06	WRAP
	V60W8010			
X40X0803:B.2	RD	V60K8000:2	+C/075.07	WRAP
X40X0803:B.4	WH	V60K8000:4	+C/075.07	WRAP
X40X0803:B.5	BU	V60K8000:5	+C/075.07	WRAP
X40X0803:B.1	DRAIN	V60K8000:1	+C/075.07	WRAP
X40X0803:B.3	BK	V60K8000:3	+C/075.07	WRAP
	W30W1160			
W30X1240:1	BN	W30B1160:1	+C/068.02	
W30X1240:3	BU	W30B1160:3	+C/068.02	
W30X1240:4	BK	W30B1160:4	+C/068.03	
	W30W1170			
W30X1230:1	BN	W30B1170:1	+C/068.02	
W30X1230:3	BU	W30B1170:3	+C/068.02	

Drawing remarks

Tetra Pak

Designer ACH	Date 26/06/2010	Machine CBP 30 Speed 0200	
ECM No 456516	Denomination CABLE CONNECTION LIST	Page Type CABLE CONNECTION LIST	
Company Tetra Pak (Italy)	Document No. 3037928-0007	Doc. type ELD	Version AC	Page 016

This drawing must not without the consent of Tetra Pak be copied, transmitted or disclosed to any third party.

Cable Connection List of 3037928 -0003

From	Cable	To	Page.Col.	Option
	W30W1230			
W30X1230:1	BN	W30K8200:0.1	+C/068.01	
W30X1230:3	BU	W30K8200:0.3	+C/068.01	
	W30W1240			
W30X1240:1	BN	W30K8200:1.1	+C/068.01	
W30X1240:3	BU	W30K8200:1.3	+C/068.01	
W30X1240:4	BK	W30K8200:1.4	+C/068.04	
	W30W2000			
W30X2000:1	1	W30M2000:U	+C/022.09	
W30X2000:2	2	W30M2000:V	+C/022.09	
W30X2000:3	3	W30M2000:W	+C/022.09	
W30X2000:5	GNYE	W30M2000:⏚	+C/022.09	
W30X2000:4	SH	PE:	+C/022.09	
	W30W2010			
W30X2010:1	1	W30X2000:1	+C/022.09	
W30X2010:2	2	W30X2000:2	+C/022.09	
W30X2010:3	3	W30X2000:3	+C/022.09	
W30X2010:5	GNYE	W30X2000:5	+C/022.09	
W30X2010:4	SH	W30X2000:4	+C/022.09	
	W30W2020			
W30X2010:1	1	W30T2000:U	+C/022.07	
W30X2010:2	2	W30T2000:V	+C/022.07	
W30X2010:3	3	W30T2000:W	+C/022.07	
W30X2010:5	GNYE	W30T2000:E	+C/022.07	
W30X2010:4	SH	PE:	+C/022.07	
	W30W2120			
W30B2120:1	BN	W30K8400:1.1	+C/069.02	
W30B2120:3	BU	W30K8400:1.3	+C/069.02	

From	Cable	To	Page.Col.	Option
W30B2120:4	BK	W30K8400:1.4	+C/069.04	
	W30W2130			
W30B2130:1	BN	W30K8400:0.1	+C/069.02	
W30B2130:3	BU	W30K8400:0.3	+C/069.02	
	W30W2140			
W30B2140:1	BN	W30K8400:3.1	+C/069.02	
W30B2140:3	BU	W30K8400:3.3	+C/069.02	
W30B2140:4	BK	W30K8400:3.4	+C/069.04	
	W30W2150			
W30B2150:1	BN	W30K8400:2.1	+C/069.02	
W30B2150:3	BU	W30K8400:2.3	+C/069.02	
	W30W2160			
W30B2160:1	BN	W30K8400:6.1	+C/069.02	
W30B2160:3	BU	W30K8400:6.3	+C/069.02	
W30B2160:4	BK	W30K8400:6.4	+C/069.04	
	W30W2170			
W30B2170:1	BN	W30K8400:5.1	+C/069.02	
W30B2170:3	BU	W30K8400:5.3	+C/069.02	
	W30W3010			
W30X3010:1	1	W30M3010:W	+C/023.06	
W30X3010:2	2	W30M3010:V	+C/023.06	
W30X3010:3	3	W30M3010:U	+C/023.06	
W30X3010:5	GNYE	W30M3010:⏚	+C/023.06	
W30X3010:4	SH	PE:	+C/023.06	
	W30W3020			
W30X3020:1	1	W30M3020:U	+C/023.08	
W30X3020:2	2	W30M3020:V	+C/023.08	

Drawing remarks

Tetra Pak

Designer ACH	Date 26/06/2010	Machine CBP 30 Speed 0200	
ECM No 456516	Denomination CABLE CONNECTION LIST	Page Type CABLE CONNECTION LIST	
Company Tetra Pak (Italy)	Document No. 3037928-0007	Doc. type ELD	Version AC	Page 017

This drawing must not without the consent of Tetra Pak be copied, transmitted or disclosed to any third party.

Cable Connection List of 3037928 -0003

From	Cable	To	Page.Col.	Option
W30X3020:3	3	W30M3020:W	+C/023.08	
W30X3020:5	GNYE	W30M3020:⏚	+C/023.08	
W30X3020:4	SH	PE:	+C/023.08	
	W30W3030			
W30X3030:1	1	W30X3010:1	+C/023.06	
W30X3030:2	2	W30X3010:2	+C/023.06	
W30X3030:3	3	W30X3010:3	+C/023.06	
W30X3030:5	GNYE	W30X3010:5	+C/023.06	
W30X3030:4	SH	W30X3010:4	+C/023.06	
	W30W3040			
W30X3040:1	1	W30X3020:1	+C/023.08	
W30X3040:2	2	W30X3020:2	+C/023.08	
W30X3040:3	3	W30X3020:3	+C/023.08	
W30X3040:5	GNYE	W30X3020:5	+C/023.08	
W30X3040:4	SH	W30X3020:4	+C/023.08	
	W30W3050			
W30X3030:1	1	W30Q3010:2	+C/023.06	
W30X3030:2	2	W30Q3010:4	+C/023.06	
W30X3030:3	3	W30Q3010:6	+C/023.06	
W30X3030:5	GNYE	W30X3110:1	+C/023.06	
W30X3030:4	SH	PE:	+C/023.06	
	W30W3060			
W30X3040:1	1	W30Q3020:2	+C/023.09	
W30X3040:2	2	W30Q3020:4	+C/023.09	
W30X3040:3	3	W30Q3020:6	+C/023.09	
W30X3040:5	GNYE	W30X3120:1	+C/023.09	
W30X3040:4	SH	PE:	+C/023.09	
	W30W4000			
W30X4000:1	1	W30M4000:U	+C/024.09	

From	Cable	To	Page.Col.	Option
W30X4000:2	2	W30M4000:V	+C/024.09	
W30X4000:3	3	W30M4000:W	+C/024.09	
W30X4000:5	GNYE	W30M4000:⏚	+C/024.09	
W30X4000:4	SH	PE:	+C/024.09	
	W30W4010			
W30X4010:1	1	W30X4000:1	+C/024.09	
W30X4010:2	2	W30X4000:2	+C/024.09	
W30X4010:3	3	W30X4000:3	+C/024.09	
W30X4010:5	GNYE	W30X4000:5	+C/024.09	
W30X4010:4	SH	W30X4000:4	+C/024.09	
	W30W4020			
W30X4010:1	1	W30T4000:U	+C/024.07	
W30X4010:2	2	W30T4000:V	+C/024.07	
W30X4010:3	3	W30T4000:W	+C/024.07	
W30X4010:5	GNYE	W30T4000:E	+C/024.07	
W30X4010:4	SH	PE:	+C/024.07	
	W30W4120			
W30B4120:1	BN	W30K8000:7.1	+C/067.02	
W30B4120:3	BU	W30K8000:7.3	+C/067.02	
W30B4120:4	BK	W30K8000:7.4	+C/067.04	
	W30W4130			
W30B4130:1	BN	W30K8000:6.1	+C/067.02	
W30B4130:3	BU	W30K8000:6.3	+C/067.02	
	W30W5000			
W30T5000:U	BN	W30M5000:U	+C/008.01	
W30T5000:V	BK	W30M5000:V	+C/008.01	
W30T5000:W	BU	W30M5000:W	+C/008.01	
W30T5000:⏚	GNYE	W30M5000:⏚	+C/008.01	
PE:	SH	PE:	+C/008.01	

Drawing remarks

Tetra Pak

Designer ACH	Date 26/06/2010	Machine CBP 30 Speed 0200	
ECM No 456516	Denomination CABLE CONNECTION LIST	Page Type CABLE CONNECTION LIST	
Company Tetra Pak (Italy)	Document No. 3037928-0007	Doc. type ELD	Version AC	Page 018

This drawing must not without the consent of Tetra Pak be copied, transmitted or disclosed to any third party.

Cable Connection List of 3037928 -0003

From	Cable	To	Page.Col.	Option
	W30W5010			
W30X5010:	1	W30M5000:	+C/008.03	
	W30W5100			
W30X5130:4	BK	W30B5100:4	+C/008.08	
W30X5130:3	BN	W30B5100:1	+C/008.08	
W30X5130:1	BU	W30B5100:3	+C/008.08	
	W30W5110			
A01X0450:5	GN	W30X5000:6	+C/008.06	
A01X0450:6	BN	W30X5000:4	+C/008.06	
	YE			
A01X0450:7	WH	W30X5000:5	+C/008.06	
A01X0450:8	SH	PE:	+C/008.06	
	W30W5130			
A01X0450:6	BN	W30X5130:3	+C/008.07	
A01X0450:5	BU	W30X5130:1	+C/008.07	
A01X0450:7	BK	W30X5130:4	+C/008.07	
	SH			
	W30W6000			
W30T6000:U	BN	W30M6000:U	+C/009.01	
W30T6000:V	BK	W30M6000:V	+C/009.01	
W30T6000:W	BU	W30M6000:W	+C/009.01	
W30T6000:⏚	GNYE	W30M6000:⏚	+C/009.01	
PE:	SH	PE:	+C/009.01	
	W30W6010			
W30X6010:	1	W30M6000:	+C/009.03	
	W30W6100			
W30X6190:3	BN	W30B6100:1	+C/020.04	

From	Cable	To	Page.Col.	Option
W30X6190:1	BU	W30B6100:3	+C/020.04	
W30X6190:4	BK	W30B6100:4	+C/020.05	
	W30W6110			
W30B6110:1	BN	C35K8600:1.1	+C/074.02	
W30B6110:3	BU	C35K8600:1.3	+C/074.02	
	BK			
	W30W6120			
W30X6150:3	BN	W30B6120:1	+C/020.04	
W30X6150:1	BU	W30B6120:3	+C/020.04	
W30X6150:4	BK	W30B6120:4	+C/020.05	
	W30W6130			
W30B6130:1	BN	C35K8400:5.1	+C/073.02	
W30B6130:3	BU	C35K8400:5.3	+C/073.02	
	BK			
	W30W6150			
A01X0450:14	BN	W30X6150:3	+C/020.02	
A01X0450:13	BU	W30X6150:1	+C/020.02	
A01X0450:15	BK	W30X6150:4	+C/020.07	
	W30W6160			
A01X0450:15	GY	W30X6000:14	+C/020.08	
A01X0450:15	WH	W30X6000:17	+C/020.08	
	YE			
A01X0450:13	GN	W30X6000:15	+C/020.08	
A01X0450:14	BN	W30X6000:13	+C/020.08	
A01X0450:16	SH	PE:	+C/020.08	
	W30W6190			
A01X0450:10	BN	W30X6190:3	+C/020.02	
A01X0450:9	BU	W30X6190:1	+C/020.02	

Drawing remarks

Tetra Pak

Designer ACH	Date 26/06/2010	Machine CBP 30 Speed 0200	
ECM No 456516	Denomination CABLE CONNECTION LIST	Page Type CABLE CONNECTION LIST	
Company Tetra Pak (Italy)	Document No. 3037928-0007	Doc. type ELD	Version AC	Page 019

RELEASED

This drawing must not without the consent of Tetra Pak be copied, transmitted or disclosed to any third party.

Cable Connection List of 3037928 -0003

From	Cable	To	Page.Col.	Option
A01X0450:11	BK	W30X6190:4	+C/020.07	
	W30W8000			
A01X2100:1.1	BN	W30K8000:1	+C/063.06	
A01X2100:1.2	WH	W30K8000:2	+C/063.06	
A01X2100:1.3	BU	W30K8000:3	+C/063.06	
A01X2100:1.4	BK	W30K8000:4	+C/063.06	
	W30W8010			
W30K8000:3	BK	W30K8400:3	+C/067.07	
W30K8000:5	BU	W30K8400:5	+C/067.07	
W30K8000:4	WH	W30K8400:4	+C/067.07	
W30K8000:2	RD	W30K8400:2	+C/067.07	
W30K8000:1	DRAIN	W30K8400:1	+C/067.07	
	W30W8200			
A01X2100:3.1	BN	W30K8200:1	+C/063.06	
A01X2100:3.2	WH	W30K8200:2	+C/063.06	
A01X2100:3.3	BU	W30K8200:3	+C/063.06	
A01X2100:3.4	BK	W30K8200:4	+C/063.06	
	W30W8210			
W30K8000:3	BK	W30K8200:3	+C/067.07	
W30K8000:5	BU	W30K8200:5	+C/067.07	
W30K8000:4	WH	W30K8200:4	+C/067.07	
W30K8000:2	RD	W30K8200:2	+C/067.07	
W30K8000:1	DRAIN	W30K8200:1	+C/067.07	
	W30W8400			
A01X2100:5.1	BN	W30K8400:1	+C/063.06	
A01X2100:5.2	WH	W30K8400:2	+C/063.06	
A01X2100:5.3	BU	W30K8400:3	+C/063.06	
A01X2100:5.4	BK	W30K8400:4	+C/063.06	
	W30W8410			

From	Cable	To	Page.Col.	Option
W30K8400:3	BK	W30K8600:3	+C/069.07	
W30K8400:5	BU	W30K8600:5	+C/069.07	
W30K8400:4	WH	W30K8600:4	+C/069.07	
W30K8400:2	RD	W30K8600:2	+C/069.07	
W30K8400:1	DRAIN	W30K8600:1	+C/069.07	
	W30W8600			
A01X2100:2.1	BN	W30K8600:1	+C/063.06	
A01X2100:2.2	WH	W30K8600:2	+C/063.06	
A01X2100:2.3	BU	W30K8600:3	+C/063.06	
A01X2100:2.4	BK	W30K8600:4	+C/063.06	
	W30W8610			
W30K8600:3	BK	C35K8600:3	+C/070.07	
W30K8600:5	BU	C35K8600:5	+C/070.07	
W30K8600:4	WH	C35K8600:4	+C/070.07	
W30K8600:2	RD	C35K8600:2	+C/070.07	
W30K8600:1	DRAIN	C35K8600:1	+C/070.07	
	W30W8900			
A01X2100:6.1	1	W30K8900:24V	+C/063.06	
A01X2100:6.3	2	W30K8900:0V	+C/063.06	
A01X2100:6.5	GNYE	W30K8900:⏚	+C/063.06	
	W50W1000			
W50T1000:⏚	GNYE	W50M1000:⏚	+C/010.01	
W50T1000:U	BN	W50M1000:U	+C/010.01	
W50T1000:V	BK	W50M1000:V	+C/010.01	
W50T1000:W	BU	W50M1000:W	+C/010.01	
	WH	W50M1000:BR+	+C/010.01	
	BK	W50M1000:BR-	+C/010.01	
PE:	SH		+C/010.01	

Drawing remarks

Tetra Pak

Designer ACH	Date 26/06/2010	Machine CBP 30 Speed 0200	
ECM No 456516	Denomination CABLE CONNECTION LIST	Page Type CABLE CONNECTION LIST	
Company Tetra Pak (Italy)	Document No. 3037928-0007	Doc. type ELD	Version AC	Page 020

This drawing must not without the consent of Tetra Pak be copied, transmitted or disclosed to any third party.

Cable Connection List of 3037928 -0003

From	Cable	To	Page.Col.	Option
	W50W1010			
W50X1010:	1	W50M1000:	+C/010.03	
	W50W1100			
A01X0450:3	BK	W50B1100:4	+C/010.09	
A01X0450:2	BN	W50B1100:1	+C/010.09	
A01X0450:1	BU	W50B1100:3	+C/010.09	
	W50W1110			
A01X0450:1	GN	W50X1000:15	+C/010.07	
A01X0450:2	BN	W50X1000:13	+C/010.07	
	YE			
A01X0450:3	WH	W50X1000:14	+C/010.07	
A01X0450:4	SH	PE:	+C/010.07	
	W50W1120			
W50B1120:1	BN	W50K8000:1.1	+C/082.02	
W50B1120:3	BU	W50K8000:1.3	+C/082.02	
W50B1120:4	BK	W50K8000:1.4	+C/082.04	
	W50W1140			
W50B1140:1	BN	C45K8000:3.1	+C/076.02	
W50B1140:3	BU	C45K8000:3.3	+C/076.02	
W50B1140:4	BK	C45K8000:3.4	+C/076.04	
	W50W1210			
W50K1210:C	BK	W50K8200:4.4	+C/079.04	
W50K1210:A	BU	W50K8200:4.3	+C/079.04	
	W50W1220			
W50K1220:C	BK	W50K8200:5.4	+C/079.04	
W50K1220:A	BU	W50K8200:5.3	+C/079.04	
	W50W1230			

From	Cable	To	Page.Col.	Option
W50X1240:1	BN	W50K1230:B	+C/078.02	
W50X1240:3	BU	W50K1230:A	+C/078.02	
W50X1240:4	BK	W50K1230:C	+C/078.02	
	W50W1240			
	BN			
W50X1240:3	BU	C45K8400:0.3	+C/078.04	
W50X1240:1	BK	C45K8400:0.4	+C/078.04	
	W50W1250			
	BN			
W50X1240:3	BU	C45K8400:1.3	+C/078.04	
W50X1240:4	BK	C45K8400:1.4	+C/078.04	
	W50W1260			
A01X0480:2	BN	W50X1000:4	+C/010.05	
A01X0480:3	WH	W50X1000:5	+C/010.05	
A01X0480:1	GN	W50X1000:6	+C/010.05	
A01X0480:4	SH	PE:	+C/010.05	
	W50W3100			
W50B3100:1	BN	W50K8200:2.1	+C/079.02	
W50B3100:3	BU	W50K8200:2.3	+C/079.02	
W50B3100:4	BK	W50K8200:2.4	+C/079.04	
	W50W3200			
W50K3200:2	BK	W50K8400:0.4	+C/080.04	
W50K3200:1	BU	W50K8400:0.3	+C/080.02	
	W50W3210			
W50K3210:2	BK	W50K8400:1.4	+C/080.04	
W50K3210:1	BU	W50K8400:1.3	+C/080.02	

Drawing remarks

Tetra Pak

Designer: ACH	Date: 26/06/2010	Machine: CBP 30 Speed 0200	
ECM No: 456516	Denomination: CABLE CONNECTION LIST	Page Type: CABLE CONNECTION LIST	
Company: Tetra Pak (Italy)	Document No.: 3037928-0007	Doc. type: ELD	Version: AC	Page: 021

This drawing must not without the consent of Tetra Pak be copied, transmitted or disclosed to any third party.

Cable Connection List of 3037928 -0003

From	Cable	To	Page.Col.	Option
	W50W3220			
W50K3220:2	BK	W50K8400:2.4	+C/080.04	
W50K3220:1	BU	W50K8400:2.3	+C/080.02	
	W50W3230			
W50K3230:2	BK	W50K8400:3.4	+C/080.04	
W50K3230:1	BU	W50K8400:3.3	+C/080.02	
	W50W4000			
W50X4000:1	1	W50M4000:U	+C/028.08	
W50X4000:2	2	W50M4000:V	+C/028.08	
W50X4000:3	3	W50M4000:W	+C/028.08	
W50X4000:5	GNYE	W50M4000:⏚	+C/028.08	
W50X4000:4	SH	PE:	+C/028.08	
	W50W4010			
W50X4000:1	1	W50T4000:U	+C/028.08	
W50X4000:2	2	W50T4000:V	+C/028.08	
W50X4000:3	3	W50T4000:W	+C/028.08	
W50X4000:5	GNYE	W50T4000:E	+C/028.08	
W50X4000:4	SH	PE:	+C/028.08	
	W50W4100			
W50X4130:1	BN	W50B4100:1	+C/082.02	
W50X4130:3	BU	W50B4100:3	+C/082.02	
W50X4130:4	BK	W50B4100:4	+C/082.03	
	W50W4110			
W50X4140:1	BN	W50B4110:1	+C/082.02	
W50X4140:3	BU	W50B4110:3	+C/082.02	
	W50W4120			
W50B4120:1	BN	W50K8000:5.1	+C/082.02	DDC
W50B4120:3	BU	W50K8000:5.3	+C/082.02	DDC
W50B4120:4	BK	W50K8000:5.4	+C/082.04	DDC
	W50W4130			
W50X4130:1	BN	W50K8000:3.1	+C/082.01	
W50X4130:3	BU	W50K8000:3.3	+C/082.01	
W50X4130:4	BK	W50K8000:3.4	+C/082.04	
	W50W4140			
W50X4140:1	BN	W50K8000:2.1	+C/082.01	
W50X4140:3	BU	W50K8000:2.3	+C/082.01	
	W50W4150			
W50X4170:3	BU	W50B4150:3	+C/082.02	DDC
W50X4170:1	BN	W50B4150:1	+C/082.02	DDC
	W50W4160			
W50X4180:3	BU	W50B4160:3	+C/082.02	DDC
W50X4180:1	BN	W50B4160:1	+C/082.02	DDC
W50X4180:4	BK	W50B4160:4	+C/082.03	DDC
	W50W4170			
W50X4170:3	BU	W50K8000:6.3	+C/082.01	DDC
W50X4170:1	BN	W50K8000:6.1	+C/082.01	DDC
	W50W4180			
W50X4180:4	BK	W50K8000:7.4	+C/082.04	DDC
W50X4180:3	BU	W50K8000:7.3	+C/082.01	DDC
W50X4180:1	BN	W50K8000:7.1	+C/082.01	DDC
	W50W5000			
W50T5000:⏚	GNYE	W50M5000:⏚	+C/017.01	
W50T5000:U	BN	W50M5000:U	+C/017.01	
W50T5000:V	BK	W50M5000:V	+C/017.01	

Drawing remarks

Tetra Pak

Designer: ACH	Date: 26/06/2010	Machine: CBP 30 Speed 0200	
ECM No: 456516	Denomination: CABLE CONNECTION LIST	Page Type: CABLE CONNECTION LIST	
Company: Tetra Pak (Italy)	Document No.: 3037928-0007	Doc. type: ELD	Version: AC	Page: 022

This drawing must not without the consent of Tetra Pak be copied, transmitted or disclosed to any third party.

Cable Connection List of 3037928 -0003

From	Cable	To	Page.Col.	Option
W50T5000:W	BU	W50M5000:W	+C/017.01	
	WH	W50M5000:BR+	+C/017.01	
	BK	W50M5000:BR-	+C/017.01	
PE:	SH		+C/017.01	
	W50W5010			
W50X1010:	1	W50M5000:	+C/017.03	
	W50W6000			
W50T6000:⏚	GNYE	W50M6000:⏚	+C/018.01	
W50T6000:U	BN	W50M6000:U	+C/018.01	
W50T6000:V	BK	W50M6000:V	+C/018.01	
W50T6000:W	BU	W50M6000:W	+C/018.01	
	WH	W50M6000:BR+	+C/018.01	
	BK	W50M6000:BR-	+C/018.01	
PE:	SH		+C/018.01	
	W50W6010			
W50X6010:	1	W50M6000:	+C/018.02	
	W50W8000			
A01X2300:1.1	BN	W50K8000:1	+C/065.06	
A01X2300:1.2	WH	W50K8000:2	+C/065.06	
A01X2300:1.3	BU	W50K8000:3	+C/065.06	
A01X2300:1.4	BK	W50K8000:4	+C/065.06	
	W50W8010			
W50K8600:3	BK	W50K8000:3	+C/082.07	
W50K8600:5	BU	W50K8000:5	+C/082.07	
W50K8600:4	WH	W50K8000:4	+C/082.07	
W50K8600:2	RD	W50K8000:2	+C/082.07	
W50K8600:1	DRAIN	W50K8000:1	+C/082.07	
	W50W8200			

From	Cable	To	Page.Col.	Option
A01X2300:3.1	BN	W50K8200:1	+C/065.06	
A01X2300:3.2	WH	W50K8200:2	+C/065.06	
A01X2300:3.3	BU	W50K8200:3	+C/065.06	
A01X2300:3.4	BK	W50K8200:4	+C/065.06	
	W50W8210			
W50K8200:3	BK	W50K8400:3	+C/079.07	
W50K8200:5	BU	W50K8400:5	+C/079.07	
W50K8200:4	WH	W50K8400:4	+C/079.07	
W50K8200:2	RD	W50K8400:2	+C/079.07	
W50K8200:1	DRAIN	W50K8400:1	+C/079.07	
	W50W8400			
A01X2400:3.1	BN	W50K8400:1	+C/066.05	
A01X2400:3.2	WH	W50K8400:2	+C/066.05	
A01X2400:3.3	BU	W50K8400:3	+C/066.05	
A01X2400:3.4	BK	W50K8400:4	+C/066.05	
	W50W8410			
W50K8400:3	BK	W50K8000:3	+C/082.07	
W50K8400:5	BU	W50K8000:5	+C/082.07	
W50K8400:4	WH	W50K8000:4	+C/082.07	
W50K8400:2	RD	W50K8000:2	+C/082.07	
W50K8400:1	DRAIN	W50K8000:1	+C/082.07	
	W50W8600			
A01X2300:5.1	BN	W50K8600:1	+C/065.06	
A01X2300:5.2	WH	W50K8600:2	+C/065.06	
A01X2300:5.3	BU	W50K8600:3	+C/065.06	
A01X2300:5.4	BK	W50K8600:4	+C/065.06	
	W50W8610			
A81X4040:BK	BK	W50K8600:3	+C/032.08	
A81X4040:BU	BU	W50K8600:5	+C/032.08	

Drawing remarks

Tetra Pak

Designer ACH	Date 26/06/2010	Machine CBP 30 Speed 0200	
ECM No 456516	Denomination CABLE CONNECTION LIST	Page Type CABLE CONNECTION LIST	
Company Tetra Pak (Italy)	Document No. 3037928-0007	Doc. type ELD	Version AC	Page 023

This drawing must not without the consent of Tetra Pak be copied, transmitted or disclosed to any third party.

Cable Connection List of 3037928 -0003

From	Cable	To	Page.Col.	Option
A81X4040:WH	WH	W50K8600:4	+C/032.08	
A81X4040:RD	RD	W50K8600:2	+C/032.08	
A81X4040:SH	DRAIN	W50K8600:1	+C/032.08	
	X40W1000			
X40T1000:U	BN	X40M1000:U	+C/011.01	
X40T1000:V	BK	X40M1000:V	+C/011.01	
X40T1000:W	BU	X40M1000:W	+C/011.01	
X40T1000:⏚	GNYE	X40M1000:⏚	+C/011.01	
PE:	SH	PE:	+C/011.01	
	X40W1010			
X40X1010:	1	X40M1000:	+C/011.03	
	X40W1100			
X40B1100:1	BN	C35K8600:3.1	+C/074.02	
X40B1100:3	BU	C35K8600:3.3	+C/074.02	
X40B1100:4	BK	C35K8600:3.4	+C/074.04	
	X40W1110			
X40B1110:1	BN	C35K8600:2.1	+C/074.02	
X40B1110:3	BU	C35K8600:2.3	+C/074.02	
	BK			
	X40W1120			
X40B1120:1	BN	C35K8600:5.1	+C/074.02	
X40B1120:3	BU	C35K8600:5.3	+C/074.02	
X40B1120:4	BK	C35K8600:5.4	+C/074.04	
	X40W1130			
X40B1130:1	BN	C35K8600:4.1	+C/074.02	
X40B1130:3	BU	C35K8600:4.3	+C/074.02	
	BK			
	X40W2000			
X40T2000:U	BN	X40M2000:U	+C/012.01	
X40T2000:V	BK	X40M2000:V	+C/012.01	
X40T2000:W	BU	X40M2000:W	+C/012.01	
X40T2000:⏚	GNYE	X40M2000:⏚	+C/012.01	
PE:	SH	PE:	+C/012.01	
	X40W2010			
X40X2010:	1	X40M2000:	+C/012.03	
	X40W2110			
A01X0480:8	SH	PE:	+C/012.06	
A01X0480:7	WH	X40X2000:5	+C/012.06	
A01X0480:5	GN	X40X2000:6	+C/012.06	
A01X0480:6	BN	X40X2000:4	+C/012.06	
	X40W2120			
X40B2120:1	BN	X40K8000:1.1	+C/075.01	
X40B2120:3	BU	X40K8000:1.3	+C/075.01	
X40B2120:4	BK	X40K8000:1.4	+C/075.03	
	X40W2130			
X40B2130:1	BN	X40K8000:0.1	+C/075.01	
X40B2130:3	BU	X40K8000:0.3	+C/075.01	
	BK			
	X40W3000			
X40X3000:1	1	X40M3000:U	+C/026.09	
X40X3000:2	2	X40M3000:V	+C/026.09	
X40X3000:3	3	X40M3000:W	+C/026.09	
X40X3000:5	GNYE	X40M3000:⏚	+C/026.09	
X40X3000:4	SH	PE:	+C/026.09	

Drawing remarks

Tetra Pak

Designer ACH	Date 26/06/2010	Machine CBP 30 Speed 0200	
ECM No 456516	Denomination CABLE CONNECTION LIST	Page Type CABLE CONNECTION LIST	
Company Tetra Pak (Italy)	Document No. 3037928-0007	Doc. type ELD	Version AC	Page 024

This drawing must not without the consent of Tetra Pak be copied, transmitted or disclosed to any third party.

Cable Connection List of 3037928 -0003

From	Cable	To	Page.Col.	Option
X40W3010				
X40X3000:1	1	X40T3000:U	+C/026.08	
X40X3000:2	2	X40T3000:V	+C/026.08	
X40X3000:3	3	X40T3000:W	+C/026.08	
X40X3000:5	GNYE	X40T3000:E	+C/026.08	
X40X3000:4	SH	PE:	+C/026.08	
X40W3100				
X40B3100:1	BN	X40K8000:7.1	+C/075.01	
X40B3100:3	BU	X40K8000:7.3	+C/075.01	
X40B3100:4	BK	X40K8000:7.4	+C/075.03	
X40W3110				
X40B3110:1	BN	C45K8000:5.1	+C/076.02	
X40B3110:3	BU	C45K8000:5.3	+C/076.02	
	BK			
X40W3200				
X40B3200:1	BN	X40K8000:4.1	+C/075.01	
X40B3200:3	BU	X40K8000:4.3	+C/075.01	
X40B3200:4	BK	X40K8000:4.4	+C/075.03	
X40W3210				
X40B3210:1	BN	C45K8000:7.1	+C/076.02	
X40B3210:3	BU	C45K8000:7.3	+C/076.02	
	BK			
X40W4000				
X40T4000:U	BN	X40M4000:U	+C/014.01	
X40T4000:V	BK	X40M4000:V	+C/014.01	
X40T4000:W	BU	X40M4000:W	+C/014.01	
X40T4000:⏚	GNYE	X40M4000:⏚	+C/014.01	
PE:	SH	PE:	+C/014.01	

From	Cable	To	Page.Col.	Option
X40W4010				
X40X4010:	1	X40M4000:	+C/014.03	
X40W4110				
A01X0480:16	SH	PE:	+C/014.06	
A01X0480:15	WH	X40X4000:5	+C/014.06	
A01X0480:13	GN	X40X4000:6	+C/014.06	
A01X0480:14	BN	X40X4000:4	+C/014.06	
X40W4200				
	BN			
X40K4200:1	BU	W50K8400:7.3	+C/080.02	
X40K4200:2	BK	W50K8400:7.4	+C/080.04	
X40W5000				
X40T5000:U	BN	X40M5000:U	+C/013.01	
X40T5000:V	BK	X40M5000:V	+C/013.01	
X40T5000:W	BU	X40M5000:W	+C/013.01	
X40T5000:⏚	GNYE	X40M5000:⏚	+C/013.01	
PE:	SH	PE:	+C/013.01	
X40W5010				
X40X5010:	1	X40M5000:	+C/013.03	
X40W5110				
A01X0480:12	SH	PE:	+C/013.06	
A01X0480:11	WH	X40X5000:5	+C/013.06	
A01X0480:9	GN	X40X5000:6	+C/013.06	
A01X0480:10	BN	X40X5000:4	+C/013.06	
X40W7100				
X40K7100:A	BN	W50K8400:6.3	+C/080.02	
	BU			

Drawing remarks

Tetra Pak

Designer ACH	Date 26/06/2010	Machine CBP 30 Speed 0200	
ECM No 456516	Denomination CABLE CONNECTION LIST	Page Type CABLE CONNECTION LIST	
Company Tetra Pak (Italy)	Document No. 3037928-0007	Doc. type ELD	Version AC	Page 025

This drawing must not without the consent of Tetra Pak be copied, transmitted or disclosed to any third party.

Cable Connection List of 3037928 -0003

From	Cable	To	Page.Col.	Option
X40K7100:C	BK	W50K8400:6.4	+C/080.04	
	X40W7110			
X40B7110:3	BU	W50K8200:6.3	+C/079.02	
X40B7110:4	BK	W50K8200:6.4	+C/079.04	
X40B7110:1	BN	W50K8200:6.1	+C/079.02	
	X40W7120			
X40B7120:1	BN	W50K8200:7.1	+C/079.02	
X40B7120:4	BK	W50K8200:7.4	+C/079.04	
X40B7120:3	BU	W50K8200:7.3	+C/079.02	
	X40W8000			
A01X2400:2.1	BN	X40K8000:1	+C/066.05	
A01X2400:2.2	WH	X40K8000:2	+C/066.05	
A01X2400:2.3	BU	X40K8000:3	+C/066.05	
A01X2400:2.4	BK	X40K8000:4	+C/066.05	
	X40W8010			
X40K8000:3	BU	X40X0803:	+C/075.06	
X40K8000:5	BK	X40X0803:	+C/075.06	
X40K8000:1	DRAIN	X40X0803:	+C/075.06	
X40K8000:4	WH	X40X0803:	+C/075.06	
X40K8000:2	RD	X40X0803:	+C/075.06	
	X40W8060			
A81X4000:RD	RD	X40X0803:A.2	+C/075.07	
A81X4000:WH	WH	X40X0803:A.4	+C/075.07	
A81X4000:BU	BU	X40X0803:A.5	+C/075.07	
A81X4000:SH	DRAIN	X40X0803:A.1	+C/075.07	
A81X4000:BK	BK	X40X0803:A.3	+C/075.07	

From	Cable	To	Page.Col.	Option

Drawing remarks

Tetra Pak

Designer ACH	Date 26/06/2010	Machine CBP 30 Speed 0200	
ECM No 456516	Denomination CABLE CONNECTION LIST	Page Type CABLE CONNECTION LIST	
Company Tetra Pak (Italy)	Document No. 3037928-0007	Doc. type ELD	Version AC	Page 026

9 Mains Connection

TechPub_2614345_0108 - 0901_3056485_01.fm

Description

The drawings that show the connection from the mains power to the electrical cabinet are included in this chapter.

TechPub_2614345_0108 - 0901_3056485_01.fm

This drawing must not without the consent of Tetra Pak
be copied, transmitted or disclosed to any third party.

Main voltage 200-600V except 400/230V

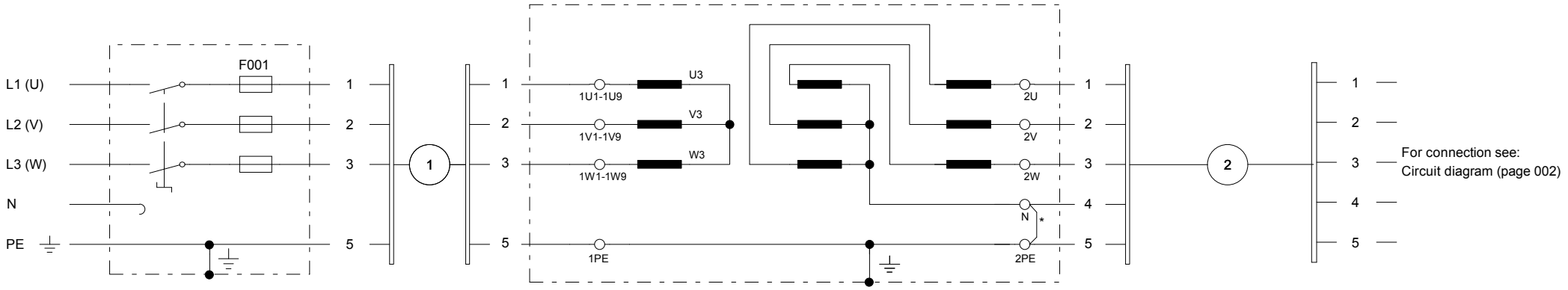

Mains

Customer´s fuse box

Matching transformer connection according
to diagram Mains Conncetion page 002

* NOTE: Make sure that the bridge is connected.

Main switch

Main voltage 400/230V

FUSE	CABLE AREA mm²	MAIN SWITCH	
			I >
63 A	4X16/16	40 A	300 A

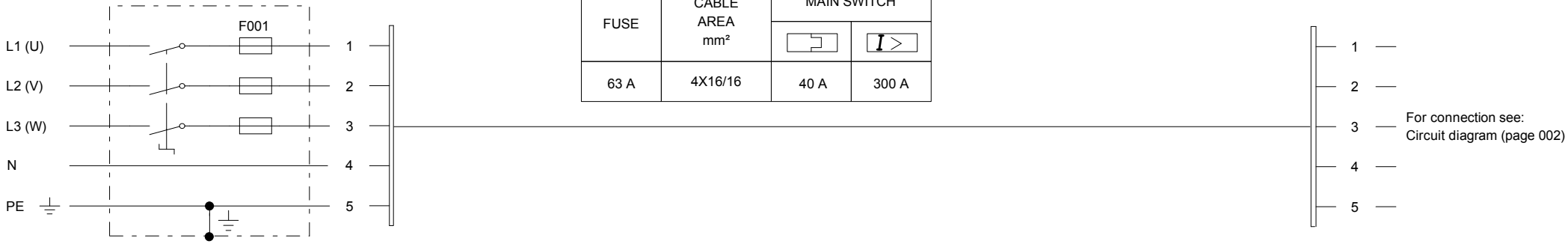

Mains

Customer´s fuse box

ATTENTION: The dimensiong of the main cable and protective grounding has to be carried out according to current local regulations.

Main switch

Drawing remarks	Tetra Pak	Designer ACH	Date 26/06/2010	Machine CBP 30 Speed 0200		
		ECM No 456516	Denomination MAINS CONNECTION	Page Type MAINS CONNECTION		
		Company Tetra Pak (Italy)	Document No. 3037928-0008	Doc. type ELD	Version AC	Page 001

This drawing must not without the consent of Tetra Pak
be copied, transmitted or disclosed to any third party.

1	2	3	4	5	6	7	8	9	10

MAIN VOLTAGE	FUSES (SLOW) F001	AREA TO COPPER (CU) CABLE WITH No. ①	②	MAIN SWICTH SETTING VALUE	CONNECTIONS ON MATCHING TRANSFORMER		
V	A	mm²	mm²	A	MAINS	TAP	CONNECT
600/347 3x600	63	3X6/6	4X10/10	40	L1 L2 L3 PE	1U9 1V9 1W9 ⏚	1U3 - U4 1V3 - V4 1W3 - W4
550/318 3x550	63	3X6/6	4X10/10	40	L1 L2 L3 PE	1U8 1V8 1W8 ⏚	1U3 - U4 1V3 - V4 1W3 - W4
500/289 3x500	80	3X10/10	4X10/10	40	L1 L2 L3 PE	1U7 1V7 1W7 ⏚	1U3 - U4 1V3 - V4 1W3 - W4
480/277 3x480	80	3X10/10	4X10/10	40	L1 L2 L3 PE	1U6 1V6 1W6 ⏚	1U3 - U4 1V3 - V4 1W3 - W4
440/254 3x440	80	3X10/10	4X10/10	40	L1 L2 L3 PE	1U5 1V5 1W5 ⏚	1U2 - U4 1V2 - V4 1W2 - W4
415/240 3x415	80	3X10/10	4X10/10	40	L1 L2 L3 PE	1U5 1V5 1W5 ⏚	1U1 - U4 1V1 - V4 1W1 - W4
3x400	100	3X10/10	4X16/16	40	L1 L2 L3 PE	1U4 1V4 1W4 ⏚	1U1 - U4 1V1 - V4 1W1 - W4
240/140 3x240	160	3X25/16	4X25/16	40	L1 L2 L3 PE	1U3 1V3 1W3 ⏚	U3 - U4 1U3-1U6 V3 - V4 1V3-1V6 W3 - W4 1W3-1W6
220/127 3x220	160	3X35/16	4X25/16	40	L1 L2 L3 PE	1U2 1V2 1W2 ⏚	U3 - U4 1U2-1U5 V3 - V4 1V2-1V5 W3 - W4 1W2-1W5
200/115 3x200	200	3X35/16	4X25/16	40	L1 L2 L3 PE	1U1 1V1 1W1 ⏚	U3 - U4 1U1-1U4 V3 - V4 1V1-1V4 W3 - W4 1W1-1W4

MATCHING TRANSFORMER

37KVA (90245-0023)

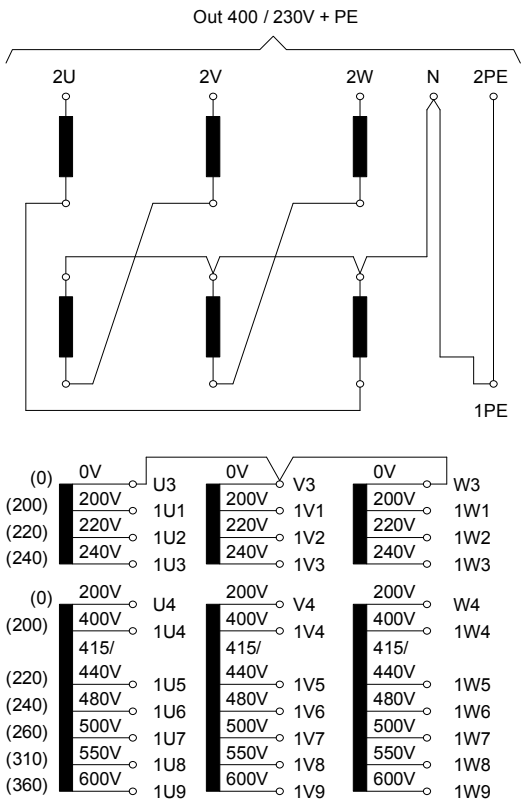

ATTENTION:

Cable areas are dimensioned according to
Tetra Pak standard (KA2721.20) , 40 'C ambient temperature
and cable installed according to installation method E
(multi-core cable in free air on a metal ladder in one layer
and without spacing between 3 cables).
National regulations have to be followed in each country.
Tetra Pak is not responsible for the dimensioning at installation.
Tetra Pak only provides recomendations.

Drawing remarks

Tetra Pak

Designer	Date	Machine
ACH	26/06/2010	CBP 30 Speed 0200

ECM No	Denomination	Page Type
456516	MAINS CONNECTION	MAINS CONNECTION

Company	Document No.	Doc. type	Version	Page
Tetra Pak (Italy)	3037928-0008	ELD	AC	002

10 Drawing Remarks

TechPub_2614345_0108 - 1001_3056486_01.fm

Description

The following pages contain the drawing remarks referenced in chapter 4 Circuit Diagrams.

TechPub_2614345_0108 - 1001_3056486_01.fm

Drawing No.	Page	Note	Remark
3037928-0003	008	1	TWO TURNS.
		2	CONNECT SHIELD TO CHASSIS.
		3	SHIELD MUST BE GROUNDED ON THE CLIP ON TOP OF THE DRIVER.
		4	SEE CONNECTION PAGE 86.
		19	THE SCREEN IS CONNECTED TO MOTOR CHASSIS BY THE COMPRESSOR GLAND.
	009	1	TWO TURNS.
		2	CONNECT SHIELD TO CHASSIS.
		3	SHIELD MUST BE GROUNDED ON THE CLIP ON TOP OF THE DRIVER.
		4	SEE CONNECTION PAGE 86.
		19	THE SCREEN IS CONNECTED TO MOTOR CHASSIS BY THE COMPRESSOR GLAND.
	010	1	TWO TURNS.
		2	CONNECT SHIELD TO CHASSIS.
		3	SHIELD MUST BE GROUNDED ON THE CLIP ON TOP OF THE DRIVER.
		4	SEE CONNECTION PAGE 86.
		25	CONNECT THE SHIELD OF THE MOTOR BRAKE WIRES TO THE DRIVER SHIELDING CLAMP.
		26	THEY MUST BE CUT AND ISOLATED AT THE KINETIX SIDE.
	011	1	TWO TURNS.
		3	SHIELD MUST BE GROUNDED ON THE CLIP ON TOP OF THE DRIVER.
		4	SEE CONNECTION PAGE 86.
		19	THE SCREEN IS CONNECTED TO MOTOR CHASSIS BY THE COMPRESSOR GLAND.
	012	1	TWO TURNS.
		2	CONNECT SHIELD TO CHASSIS.
		3	SHIELD MUST BE GROUNDED ON THE CLIP ON TOP OF THE DRIVER.
		4	SEE CONNECTION PAGE 86.
		19	THE SCREEN IS CONNECTED TO MOTOR CHASSIS BY THE COMPRESSOR GLAND.
	013	1	TWO TURNS.
		2	CONNECT SHIELD TO CHASSIS.
		3	SHIELD MUST BE GROUNDED ON THE CLIP ON TOP OF THE DRIVER.
		4	SEE CONNECTION PAGE 86.
		19	THE SCREEN IS CONNECTED TO MOTOR CHASSIS BY THE COMPRESSOR GLAND.
	014	1	TWO TURNS.
		2	CONNECT SHIELD TO CHASSIS.
		3	SHIELD MUST BE GROUNDED ON THE CLIP ON TOP OF THE DRIVER.
		4	SEE CONNECTION PAGE 86.
		19	THE SCREEN IS CONNECTED TO MOTOR CHASSIS BY THE COMPRESSOR GLAND.
	015	1	TWO TURNS.

This drawing must not without the consent of Tetra Pak be copied, transmitted or disclosed to any third party.

Drawing No.	Page	Note	Remark
		2	CONNECT SHIELD TO CHASSIS.
		3	SHIELD MUST BE GROUNDED ON THE CLIP ON TOP OF THE DRIVER.
		4	SEE CONNECTION PAGE 86.
		19	THE SCREEN IS CONNECTED TO MOTOR CHASSIS BY THE COMPRESSOR GLAND.
	017	1	TWO TURNS.
		2	CONNECT SHIELD TO CHASSIS.
		3	SHIELD MUST BE GROUNDED ON THE CLIP ON TOP OF THE DRIVER.
		4	SEE CONNECTION PAGE 86.
		25	CONNECT THE SHIELD OF THE MOTOR BRAKE WIRES TO THE DRIVER SHIELDING CLAMP.
		26	THEY MUST BE CUT AND ISOLATED AT THE KINETIX SIDE.
	018	1	TWO TURNS.
		3	SHIELD MUST BE GROUNDED ON THE CLIP ON TOP OF THE DRIVER.
		4	SEE CONNECTION PAGE 86.
		25	CONNECT THE SHIELD OF THE MOTOR BRAKE WIRES TO THE DRIVER SHIELDING CLAMP.
		26	THEY MUST BE CUT AND ISOLATED AT THE KINETIX SIDE.
	019	1	TWO TURNS.
		2	CONNECT SHIELD TO CHASSIS.
		3	SHIELD MUST BE GROUNDED ON THE CLIP ON TOP OF THE DRIVER.
		4	SEE CONNECTION PAGE 86.
		5	REMOVE THE BRIDGE IF THE OPTION IS INSTALLED
		19	THE SCREEN IS CONNECTED TO MOTOR CHASSIS BY THE COMPRESSOR GLAND.
	022	7	CONNECT INSIDE EMC CABLE GLAND.
		8	CONNECT TO SHILD CLIP ON FRAME BELOW DRIVER.
		11	EXTERNAL DEVICE NOT PROVIDED WITH THE MACHINE.
		18	TO BE CONNECTED ON THE PLATE
	023	7	CONNECT INSIDE EMC CABLE GLAND.
		8	CONNECT TO SHILD CLIP ON FRAME BELOW DRIVER.
		18	TO BE CONNECTED ON THE PLATE
	024	7	CONNECT INSIDE EMC CABLE GLAND.
		8	CONNECT TO SHILD CLIP ON FRAME BELOW DRIVER.
		18	TO BE CONNECTED ON THE PLATE
	025	7	CONNECT INSIDE EMC CABLE GLAND.
		8	CONNECT TO SHILD CLIP ON FRAME BELOW DRIVER.
		18	TO BE CONNECTED ON THE PLATE
	026	7	CONNECT INSIDE EMC CABLE GLAND.
		8	CONNECT TO SHILD CLIP ON FRAME BELOW DRIVER.
	027	7	CONNECT INSIDE EMC CABLE GLAND.
		8	CONNECT TO SHILD CLIP ON FRAME BELOW DRIVER.
	028	7	CONNECT INSIDE EMC CABLE GLAND.
		8	CONNECT TO SHILD CLIP ON FRAME BELOW DRIVER.

This drawing must not without the consent of Tetra Pak be copied, transmitted or disclosed to any third party.

Drawing No.	Page	Note	Remark
		11	EXTERNAL DEVICE NOT PROVIDED WITH THE MACHINE.
	031	24	INSTALLED IN CASE OF BARCODE SCANNER OPTIONAL EQUIPMENT.
	035	20	SHIELD MUST BE CONNECTED TO THE PLATE BY CABLE CLAMP.
	039	9	IN CASE OF RIGHT MAGAZINE AND RIGHT OUTFEED OR LEFT MAGAZINE AND LEFT OUTFEED, THOSE COMPONENTS ARE REPLACED BY ONE TINA 1A SIGNED F09W3500 INSTALLED ON F09X3000.
		16	CHANGE FROM FRONT TO RIGHT IN CASE OF STRAIGHT OUTFEED.
		17	CHANGE FROM REAR TO LEFT IN CASE OF STRAIGHT OUTFEED.
	040	20	SHIELD MUST BE CONNECTED TO THE PLATE BY CABLE CLAMP.
	063	11	EXTERNAL DEVICE NOT PROVIDED WITH THE MACHINE.
	068	12	USED AS OVERFLOW PHOTOCELL IN CASE OF LC CONFIGURATION. USED AS PACKAGE COMING PHOTOCELLS IN THE OTHER CASES. CABLE W30W1230 AND W30W1240 HAVE TO BE USED ONLY WHEN PHOTOCELLS ARE USED AS PACKAGE COMING FUNCTION.
	078	6	NOT INSTALLED IN CASE OF OUTFEED STRAIGHT CONVEYOR.
	081	10	COMPONENT NOT INSTALLED IN CASE OF RIGHT MAGAZINE AND RIGHT OUTFEED OR LEFT MAGAZINE AND LEFT OUTFEED.
		16	CHANGE FROM FRONT TO RIGHT IN CASE OF STRAIGHT OUTFEED.
		17	CHANGE FROM REAR TO LEFT IN CASE OF STRAIGHT OUTFEED.
	082	15	INSTALLED IN CASE OF BYPASS CONVEYOR (DOUBLE DISCHARGE CONVEYOR – DDC-).
	084	13	TO BRIDGE A01X0470:1/2 IF NO MACHINE IS CONNECTED.
	086	23	CONNECTED TO THE CONNECTOR PREDISPOSITION.
2831413-0008	001	1	MAKE THE BRIDGE USING A CONN. AREA NOT SMALLER THEN 16 mm².
	002	2	RECOMMENDED MAIN FUSE TO ACHIEVE SELECTIVITY.

This drawing must not without the consent of Tetra Pak be copied, transmitted or disclosed to any third party.

This page intentionally left blank

11 Engineering Change Description

TechPub_2614345_0108 - 1101_3056487_01.fm

Description

This chapter describes the changes introduced with the ECM.

TechPub_2614345_0108 - 1101_3056487_01.fm

ECM No.	Drawing No.	Alteration
456516	3037928-0001:AC	DOCUMENT LIST: CHANGED ACCORDING TO UPDATE NEW AC VERSION.
	3037928-0002:AC	POSITION SUMMARY: CHANGED ACCORDING TO UPDATE CIRCUIT DIAGRAM.
	3037928-0003:AC	**SH.010:** CHANGED CABLE W50W1000 AND SIGN W50X1010. **SH.017:** CHANGED CABLE W50W5000 AND SIGN W50X5010 IS ADDED. REMOVED BRIDGE WITH NOTE 5. **SH.018:** CHANGED CABLE W50W6000 AND SIGN W50X6010 IS ADDED. REMOVED BRIDGE WITH NOTE 5. **SH.019:** THE SIGN OF THE CONNECTOR V60X1010 IS ADDED. **SH.031:** INTRODUCED BARCODE SCANNER O.E. PREDISPOSITION. **SH.079:** SENSOR X40B7110 AND X40B7120 ARE ADDED. **SH.086:** REFERENCE OF COLORS TO SERVO MOTOR CONNECTIONS ARE MOVED FOR BETTER UNDERSTANDING.
	3037928-0004:AC	LINE SUMMARY: CHANGED ACCORDING TO UPDATE CIRCUIT DIAGRAM.
	3037928-0005:AC	CABINET TERMINAL SUMMARY: CHANGED ACCORDING TO UPDATE CIRCUIT DIAGRAM.
	3037928-0006:AC	TERMINAL STRIP OVERVIEW: CHANGED ACCORDING TO UPDATE CIRCUIT DIAGRAM.
	3037928-0007:AC	CABLE CONNECTION LIST: CHANGED ACCORDING TO UPDATE CIRCUIT DIAGRAM
	3037928-0008:AC	MAINS CONNECTION: CHANGED ACCORDING TO UPDATE CIRCUIT DIAGRAM.
	3037928-0098:AC	DRAWING REMARKS: CHANGED ACCORDING TO UPDATE NEW AC VERSION.
	3037928-0099:AC	EC DESCRIPTION: CHANGED ACCORDING TO UPDATE NEW AC VERSION.
433902	3037928-0001:AB	DOCUMENT LIST: CHANGED ACCORDING TO UPDATE NEW AB VERSION.
	3037928-0002:AB	POSITION SUMMARY: CHANGED ACCORDING TO UPDATE CIRCUIT DIAGRAM.
	3037928-0003:AB	**SH.017:** WRAP AXIS HAS BEEN REPLACED BY FLAP FOLDER LEFT AXIS. **SH.018:** THE PAGE IS ADDED. **SH.019:** THE PAGE IS ADDED BY ADDING WRAP AXIS. ON WRAP OPTION THE DASHED LINES HAS BEEN REMOVED. **SH.020:** WRAP OPTION ATTRIBUTES ARE ADDED ON V60B4210 AND ON ITS CABLE.

This drawing must not without the consent of Tetra Pak be copied, transmitted or disclosed to any third party.

ECM No.	Drawing No.	Alteration
		SH.021: ELECTRICAL CHARACTERISTICS OF V60M3000 ARE CORRECTED. ON WRAP OPTION THE DASHED LINES HAS BEEN REMOVED. **SH.027:** ELECTRICAL CHARACTERISTICS OF C45M3000 ARE CORRECTED. **SH.029:** INTERRUPTION POINT ZM ARE UPGRADE. **SH.031:** WIRE 12 OF A01W4000 IS CHANGED TO WIRE 2. **SH.033:** ON GENIUS OPTION THE DASHED LINES HAS BEEN REMOVED. **SH.034:** MODULE W50T5000 AND W50T6000 ARE ADDED. ON WRAP OPTION THE DASHED LINES HAS BEEN REMOVED. **SH.065:** ON WRAP OPTION THE DASHED LINES HAS BEEN REMOVED. **SH.075:** FUNCTION TEXT OF PHOTOCELL X40B3200 HAS BEEN CORRECTED. **SH.076:** FUNCTION TEXT OF PHOTOCELL X40B3210 HAS BEEN CORRECTED. **SH.079:** SENSOR W50B2100 AND W50B2110 ARE DELETED. VALVE W50K1210 IS CHANGED FROM BISTABLE TO MONOSTABLE TYPE. **SH.080:** VALVE X40K7100 IS ADDED. ON WRAP AND CBA OPTIONS THE DASHED LINES HAS BEEN REMOVED. **SH.082:** ON DDC OPTION THE DASHED LINES HAS BEEN REMOVED. **SH.083:** VALVE V60K1200 IS CHANGED FROM BISTABLE TO MONOSTABLE TYPE. NOTES 22 ARE REMOVED. ON WRAP OPTION THE DASHED LINES HAS BEEN REMOVED.
	3037928-0004:AB	LINE SUMMARY: CHANGED ACCORDING TO UPDATE CIRCUIT DIAGRAM.
	3037928-0005:AB	CABINET TERMINAL SUMMARY: CHANGED ACCORDING TO UPDATE CIRCUIT DIAGRAM.
	3037928-0006:AB	TERMINAL STRIP OVERVIEW: CHANGED ACCORDING TO UPDATE CIRCUIT DIAGRAM.
	3037928-0007:AB	CABLE CONNECTION LIST: CHANGED ACCORDING TO UPDATE CIRCUIT DIAGRAM
	3037928-0008:AB	MAINS CONNECTION: CHANGED ACCORDING TO UPDATE CIRCUIT DIAGRAM. **SH.001:** NAME OF PHASES ARE CORRECTED.
	3037928-0098:AB	DRAWING REMARKS: CHANGED ACCORDING TO UPDATE NEW AB VERSION.
	3037928-0099:AB	EC DESCRIPTION: CHANGED ACCORDING TO UPDATE NEW AB VERSION.
399800		DOCUMENTATION INTRODUCED.

This drawing must not without the consent of Tetra Pak be copied, transmitted or disclosed to any third party.

12 Other Information

TechPub_2614345_0108 - 1201_3056488_01.fm

Description

This chapter is used for Bills of Material, Fuse Panel Labels, and so on.

TechPub_2614345_0108 - 1201_3056488_01.fm

12.1 Bills of Material . . . . . 12 - 5

12.2 Fuse Panel Label . . . . . 12 - 7

TechPub_2614345_0108 - 1201_3056488_01.fm

This page intentionally left blank

TechPub_2614345_0108 - 1201_3056488_01.fm

12.1 Bills of Material

This chapter includes the lists of the documents and programs.

TechPub_2614345_0108 - 1201_3056488_01.fm

This page intentionally left blank

TechPub_2614345_0108 - 1201_3056488_01.fm

ECM P420567(L399801)
Release date 2009.10.16

Chg	Position	Sp	SH	Description	As	Cr	Identity	DTp	Prt	Vs	Unit	Column quantity All	ECM
I	0010			Electrical Document	X		2886976-0200				PC	1	420567
I	0020			Software	X		2924583-0100				PC	1	420567

ECM	P420566(L399801)	P436502(L433904)	P466223(L456517)
Release date	2009.10.16	2010.05.18	2010.09.01

Chg	Position	Sp	SH	Description	As	Cr	Identity	DTp	Prt	Vs	Unit	Column quantity All	ECM
I	0010			DOCUMENTS LIST			3037928-0001	ELD	000	AC		x	466223
I	0020			POSITION SUMMARY			3037928-0002	ELD	000	AC		x	466223
I	0030			CIRCUIT DIAGRAM			3037928-0003	ELD	000	AC		x	466223
I	0040			LINE SUMMARY			3037928-0004	ELD	000	AC		x	466223
I	0050			CABINET TERMINAL SUMMARY			3037928-0005	ELD	000	AC		x	466223
I	0060			TERMINAL STRIP OVERVIEW			3037928-0006	ELD	000	AC		x	466223
I	0070			CABLE CONNECTION LIST			3037928-0007	ELD	000	AC		x	466223
I	0080			MAINS CONNECTION			3037928-0008	ELD	000	AC		x	466223
I	0098			DRAWING REMARKS			3037928-0098	ELD	000	AC		x	466223
I	0099			Engineering Change Description			3037928-0099	ELD	000	AC		x	466223

ECM	P323267(L320184)	P331825(L342172)	P395587(L369555)	P420565(L399801)	P466224(L456517)
Release date	2007.11.01	2008.09.30	2009.04.27	2009.10.16	2010.09.01

Chg	Position	Sp	SH	Description	As	Cr	Identity	DTp	Prt	Vs	Unit	Column quantity All	ECM
I	0010			Software CD	Y		2886185-0006				PC	1	466224

ECM P466225(L456517)
Release date 2010.09.01

Chg	Position	Sp	SH	Description	As	Cr	Identity	DTp	Prt	Vs	Unit	Column quantity All	ECM
I	0010			Label CD I t e m t e x t SOFTWARE CD			2886188-0006				PC	1	466225
I	0020			COMPACT DISC RECORDABLE		N	90458-0118				PC	1	466225
I	0030			Program Object Code I t e m t e x t PLC			2886189-1006				PC	1	466225
I	0040			Program Object Code I t e m t e x t FIRMWARE			2886191-1006				PC	1	466225
I	0050			Program Object Code I t e m t e x t DEVICENET CONFIG SW			2886192-1003				PC	1	466225
I	0060			Program Object Code I t e m t e x t EDS FILE			2886193-1004				PC	1	466225
I	0070			Program Object Code I t e m t e x t SAFETY SYSTEM			2886194-1002				PC	1	466225
I	0080			Program Object Code I t e m t e x t PLC GENIUS			2886195-1003				PC	1	466225
I	0090			Program Object Code I t e m t e x t HMI			2886196-1006				PC	1	466225
I	0100			Program Object Code I t e m t e x t PLMS CONFIG			2886197-1006				PC	1	466225

12.2 Fuse Panel Label

This chapter shows the location and the setting of the fuses.

TechPub_2614345_0108 - 1201_3056488_01.fm

This page intentionally left blank

TechPub_2614345_0108 - 1201_3056488_01.fm

©Tetra Pak. All rights reserved; any copying, transmittal or disclosure subject to Tetra Pak's written approval.

3054998 AA

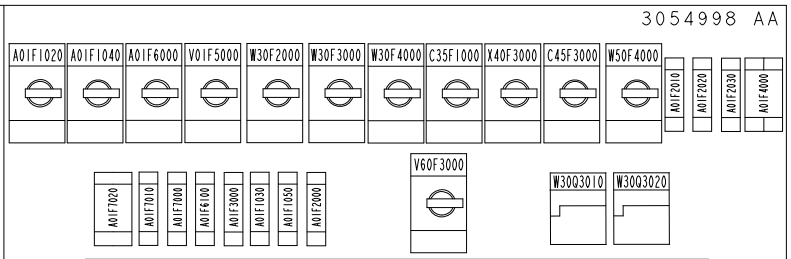

POS	FUNCTION	SETTING
A01F1020	MAIN POWER SERVO SYSTEM 1	20 A
A01F1040	MAIN POWER SERVO SYSTEM 2	20 A
A01F6000	ELECTRICAL CABINET COOLING CIRCULATION	2,7 A
V01F5000	HOTMELT UNIT	17.5 A
W30F2000	INFEED CONVEYOR	8 A
W30F3000	INFEED BELT BRAKE	8 A
W30F4000	DIVIDER CONVEYOR	8 A
C35F1000	ACCUMULATION CONVEYOR	8 A
X40F3000	GROUPING CONVEYOR	8 A
C45F3000	FEEDER BELT	8 A
W50F4000	EXTERNAL DISCHARGE CONVEYOR	8 A
V60F3000	WRAP LIFT	0.63 A
W30Q3010	INFEED BELT BRAKE RIGHT	1.8 A
W30Q3020	INFEED BELT BRAKE LEFT	1.8 A

POS	FUNCTION		FUSE TYPE
A01F2010	24 VDC POWER SUPPLY	4A	FAZ-C4/1
A01F2020	24 VDC POWER SUPPLY	4A	FAZ-C4/1
A01F2030	24 VDC POWER SUPPLY	4A	FAZ-C4/1
A01F4000	TPOP PANEL POWER SUPPLY	4A	FAZ-C4/2
A01F7020	WALL SOCKET		FI-25/2/003-A
A01F7010	WALL SOCKET	10A	FAZ-C10/1
A01F7000	MACHINE AND CABINET LIGHTING	4A	FAZ-C4/1
A01F6100	FAN ELECTRICAL CABINET COOLING	2A	FAZ-C2/1
A01F3000	PLC,TPOP AND DEVICE NET POWER SUPPLY	4A	FAZ-C4/1
A01F1030	ELECTRONIC POWER SERVO SYSTEM 1	6A	FAZ-D6/1
A01F1050	ELECTRONIC POWER SERVO SYSTEM 2	6A	FAZ-D6/1
A01F2000	POWER SUPPLY 24 VCC	6A	FAZ-C6/1

132±2

108±2

CBP 30 Speed

0 10 20 30 40 50 60 70 80 90 100 mm

BLACK PRINTING ON WHITE PAPER
PLASTIC EMBEDDED
SHINY SURFACE

Release Level: Released		ECM No: 417206	PDM Version Drawing 1.3 Model 1.4
Marked according to standard B 2103.10 Method/Size: NO/-		Unless otherwise stated: SHARP EDGES BROKEN; Scale: 1:1	Surface Roughness
Material: ---			Surface Treatment: ---
Designer: MOGI	Date: 2009-09-15	Denomination: FUSE PANEL LABEL ---	
Company: Tetra Pak (Italy)			
Hygienic demands: NC			
Tetra Pak	Drawing No: 3054998	Document Type: DRA	R3 Version: AA / Page: 1(1)

Pro/ENGINEER - A3

This page intentionally left blank

13 Program Documents

TechPub_2614345_0108 - 1301_3056489_01.fm

Description

The program document used for this machine is contained on a CDROM. For installation instructions, see the MM.

TechPub_2614345_0108 - 1301_3056489_01.fm

13.1 Software CD Content. . . . . 13 - 5

TechPub_2614345_0108 - 1301_3056489_01.fm

This page intentionally left blank

TechPub_2614345_0108 - 1301_3056489_01.fm

13.1 Software CD Content

The software CD contains the following machine programs:

- PLC Motion program
- Firmware program
- Device Net Config
- EDS file program
- PLC Safety program
- PLC Genius program
- HMI program
- PLMS Config program.

TechPub_2614345_0108 - 1301_3056489_01.fm

This page intentionally left blank

TechPub_2614345_0108 - 1301_3056489_01.fm

Note! *This page is generated* ***automatically****.*
using the ***variable definitions*** *made in the* ***front page*** *file!*

Cardboard Packer 30 Speed
663151-0200
Issue 2010-10 Doc. No. EM-3047614-0103

Cardboard Packer 30 Speed 1(2)
663151-0200
Issue 2010-10 Doc. No. EM-3047614-0103

Cardboard Packer 30 Speed
663151-0200
Issue 2010-10 Doc. No. EM-3047614-0103

Cardboard Packer 30 Speed 1(2)
663151-0200
Issue 2010-10 Doc. No. EM-3047614-0103

Cardboard Packer 30 Speed
663151-0200
Issue 2010-10 Doc. No. EM-3047614-0103

Cardboard Packer 30 Speed 1(2)
663151-0200
Issue 2010-10 Doc. No. EM-3047614-0103

Cardboard Packer 30 Speed
663151-0200
Issue 2010-10 Doc. No. EM-3047614-0103

Cardboard Packer 30 Speed 1(2)
663151-0200
Issue 2010-10 Doc. No. EM-3047614-0103

Cardboard Packer 30 Speed
663151-0200
Issue 2010-10 Doc. No. EM-3047614-0103

Cardboard Packer 30 Speed 2(2)
663151-0200
Issue 2010-10 Doc. No. EM-3047614-0103

Cardboard Packer 30 Speed
663151-0200
Issue 2010-10 Doc. No. EM-3047614-0103

Cardboard Packer 30 Speed 2(2)
663151-0200
Issue 2010-10 Doc. No. EM-3047614-0103

Cardboard Packer 30 Speed
663151-0200
Issue 2010-10 Doc. No. EM-3047614-0103

Cardboard Packer 30 Speed 2(2)
663151-0200
Issue 2010-10 Doc. No. EM-3047614-0103

Cardboard Packer 30 Speed
663151-0200
Issue 2010-10 Doc. No. EM-3047614-0103

Cardboard Packer 30 Speed 2(2)
663151-0200
Issue 2010-10 Doc. No. EM-3047614-0103

40 mm Full width ***Note!*** *This page is generated* ***automatically****.*
using the ***variable definitions*** *made in the* ***front page*** *file!*

Cardboard Packer 30 Speed
663151-0200

Issue 2010-10 Doc. No. EM-3047614-0103

Cardboard Packer 30 Speed 1(2)
663151-0200

Issue 2010-10 Doc. No. EM-3047614-0103

Cardboard Packer 30 Speed
663151-0200

Issue 2010-10 Doc. No. EM-3047614-0103

Cardboard Packer 30 Speed 1(2)
663151-0200

Issue 2010-10 Doc. No. EM-3047614-0103

Cardboard Packer 30 Speed
663151-0200

Issue 2010-10 Doc. No. EM-3047614-0103

Cardboard Packer 30 Speed 1(2)
663151-0200

Issue 2010-10 Doc. No. EM-3047614-0103

Cardboard Packer 30 Speed
663151-0200

Issue 2010-10 Doc. No. EM-3047614-0103

Cardboard Packer 30 Speed 2(2)
663151-0200

Issue 2010-10 Doc. No. EM-3047614-0103

Cardboard Packer 30 Speed
663151-0200

Issue 2010-10 Doc. No. EM-3047614-0103

Cardboard Packer 30 Speed 2(2)
663151-0200

Issue 2010-10 Doc. No. EM-3047614-0103

Cardboard Packer 30 Speed
663151-0200

Issue 2010-10 Doc. No. EM-3047614-0103

Cardboard Packer 30 Speed 2(2)
663151-0200

Issue 2010-10 Doc. No. EM-3047614-0103