EM

Electrical Manual

Cardboard Packer 32 by Tetra Pak

673852-0400

IEC

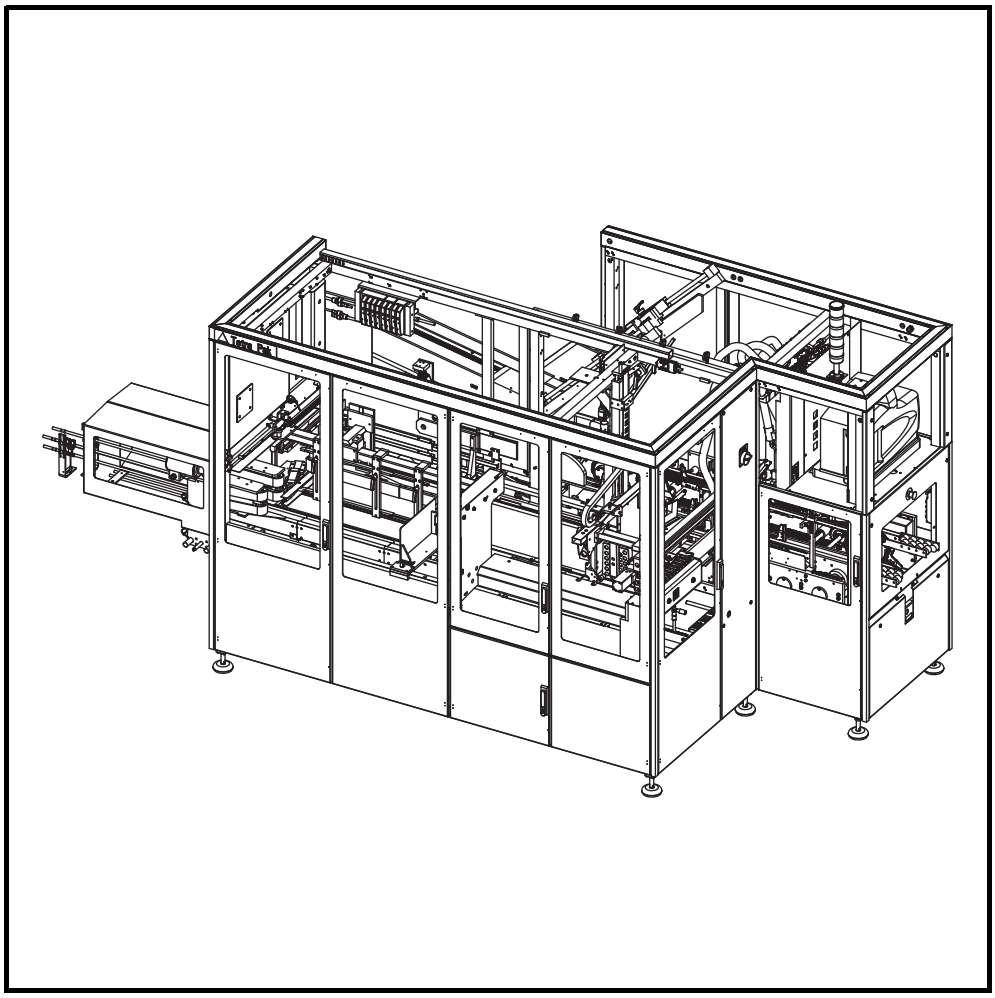

WARNING

Read and follow all safety precaution instructions throughout this manual and on safety signs attached to this equipment.
Failure to follow all safety precaution instructions could result in death or serious injury.

Tetra Pak

Doc. No. EM-3025061-0103

Copyright © 2009 Tetra Pak Group

All rights reserved. No part of this document may be reproduced or copied in any form or by any means without written permission from Tetra Pak Packaging Solutions AB.

Tetra Pak and all Tetra Pak products are trademarks belonging to the Tetra Pak Group.

The content of this manual is in accordance with the design and construction of the machine or equipment at the time of publishing. Tetra Pak reserves the right to introduce design modifications without prior notice.

The English language version of this document contains the original instructions. All other language versions are translations of the original instructions.

This document was produced by:

Tetra Pak Packaging Solutions AB
Ruben Rausings gata
S-221 86 Lund
Sweden

Additional copies can be ordered from Tetra Pak. When ordering additional copies, always provide the document number.

Doc. No. EM-3025061-0103

Issue 2009-12

This manual is valid for:

Series No./ Machine No. Sign.

EM

Electrical Manual

Cardboard Packer 32 by Tetra Pak 673852-0400

This manual is valid for all countries **except** USA and Canada.

Machine or equipment configurations that this manual is valid for are described on the next page.

i Introduction

ii Safety Precautions

1 Electrical Systems Description

2 Document List

3 Position Summary

4 Circuit Diagrams

5 Line Summary

6 Cabinet Terminal Summery

7 Terminal Strip Overview

8 Cable Connection List

9 Mains Connection

10 Drawing Remarks

11 Other Information

12 Program Documents

Doc. No. EM-3025061-0103

Issue 2009-12

Tetra Pak

Tetra Pak Packaging Solutions AB

Valid for:

Name	Drawing Specification and Development Step	Additional Information
Cardboard Packer 32 by Tetra Pak	673852-0400	Optional Equipment: Air Jet Gun 2802489-0200 OK Spray Gun 1287076-0300 Ilumination 1287186-0300 Discharge Unit 2525701-0400 Discharge Unit, Roller Conveyor 2511012-0400 Photocell Unit, (Infeed Conveyor) 2802448-0200 Photocell Unit, (Discharge Unit) 2802464-0200 Cooling Unit 2792385-0200 Light Barrier Unit 2834002-0200

Update Log for Doc. No. EM-3025061-0103

This table shows all changes made to this manual, including installed rebuilding kits, added or removed pages. Page numbering on added pages begins with UP.

Date	Installed Kit	Added Pages (Doc. No.)	Removed Pages	Signature

Date	Installed Kit	Added Pages (Doc. No.)	Removed Pages	Signature

i Introduction

About the Introduction Chapter

This chapter contains basic information about this manual and the related Tetra Pak equipment.

Abbreviations and Terminology . . . . . i - 5
Manual Information . . . . . i - 6
Delivered Manuals . . . . . i - 6
Page Layout . . . . . i - 7
Page Numbering. . . . . i - 8
Typographical Conventions . . . . . i - 8
Symbols . . . . . i - 8
Machine Introduction . . . . . i - 9
Intended Use of the Equipment . . . . . i - 9
Manufacturer . . . . . i - 9
Support and Feedback . . . . . i - 9
Declaration of Conformity . . . . . i - 9
Identification . . . . . i - 10
CE Classification . . . . . i - 10
Machine Plate . . . . . i - 10
Orientation . . . . . i - 11
Machine Variants . . . . . i - 12
Hygiene. . . . . i - 13
How to Use This EM . . . . . i - 14
Reference Designation . . . . . i - 15
List of Function Codes . . . . . i - 16
Optional Equipment . . . . . i - 17
How to Trace an Electrical Component . . . . . i - 18
Example 1: How to Trace a Line . . . . . i - 18
Example 2: How to Trace a Contactor . . . . . i - 20
Example 3: How to Trace a Terminal in the Electrical Cabinet . . . . . i - 21

Example 4: How to Trace a Terminal Outside the Electrical Cabinet . . . . . i - 22

Example 5: How to Trace a Network. . . . . i - 23

Example 6: How to Find Electrical Components Using the SPC. . . . . i - 26

Abbreviations and Terminology

Abbreviation/ Terminology	Meaning	Translation
CE	Communautés Européennes / European Communities	
CPU	Central Processing Unit	
CSA	Canadian Standards Association	
EEA	European Economic Area	
EM	Electrical Manual	
IM	Installation Manual	
I/O	Input / Output (module)	
LED	Light Emitting Diode	
LH	Left Hand	
OM	Operation Manual	
MM	Maintenance Manual	
PLC	Programmable Logic Controller	
PLMS	Packaging Line Monitoring System	
RH	Right Hand	
SPC	Spare Parts Catalogue	
TPOP	Tetra Pak Operator Panel	
UL	Underwriters Laboratory	
WA	Wraparound unit	

Manual Information

Tetra Pak recommends reading all delivered manuals carefully. Make sure that the delivered manuals are available to personnel who operate or maintain the equipment.

It is important to keep this manual for the lifetime of the equipment and to pass the manual on to any subsequent holder or user.

Tetra Pak will not be held responsible for any damage to the equipment caused by not following the instructions given in this manual.

Delivered Manuals

Manuals delivered with this equipment:

- EM
  The Electrical Manual provides technicians with information about the equipment's electrical system.
- IM
  The Installation Manual provides technicians with information required to safely install the equipment.
- MM
  The Maintenance Manual provides technicians with information on maintaining the equipment.
- OM
  The Operation Manual manual provides the operator with information on handling and operating the equipment before, during, and after production.
- SPC
  The Spare Parts Catalogue provides the information necessary to order spare parts from Tetra Pak.

Page Layout

Every main page in a manual contains a header and a footer. The page header contains the chapter name (1) and the section name (2). The page footer contains the page number (3), and the document number (4). See also the Page Numbering section.

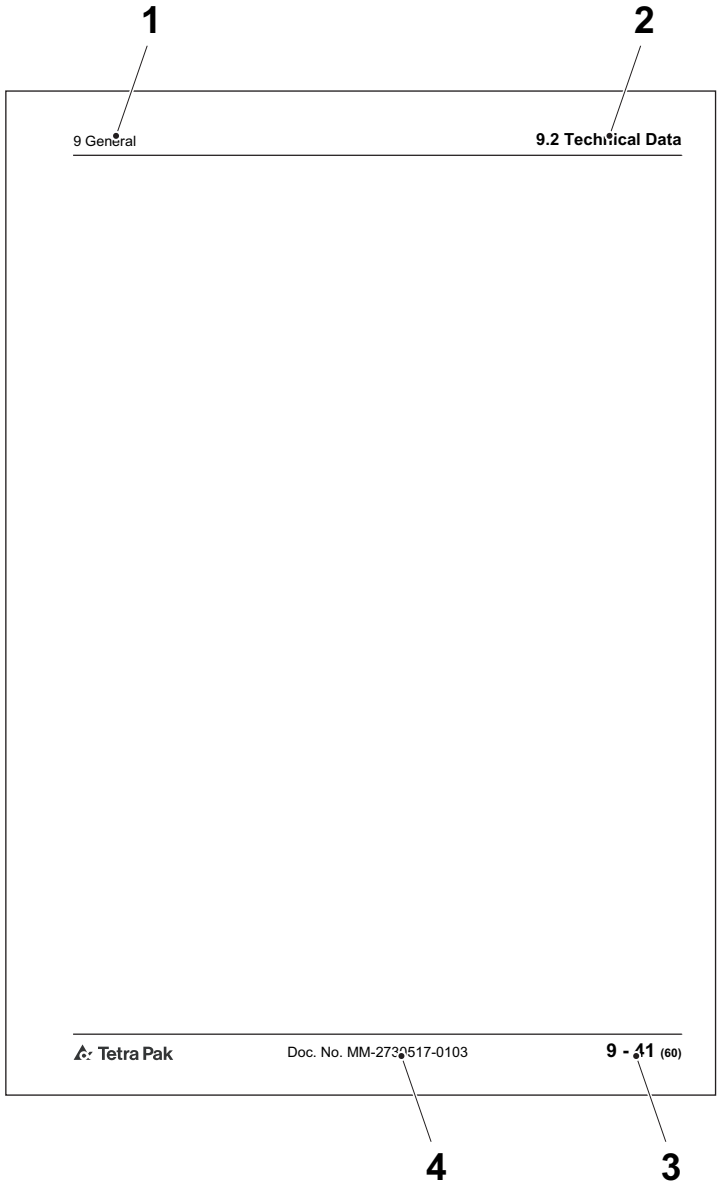

1 Chapter name
2 Section name
3 Page number
4 Document number

Page Numbering

A page number has three parts:

- chapter number (1)
- consecutive page number (2) within the chapter
- total number of pages (3) in the chapter.

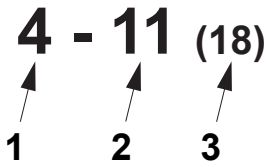

1 Chapter number
2 Consecutive page number
3 Total number of pages

Typographical Conventions

Controls on the operator panel, emergency stop devices, and program steps are printed in CAPITAL LETTERS.

Menu names, button names and other text displayed in software are printed in `Courier`.

Cross-references are underlined.

Symbols

Symbols used in illustrations.

	A pointer arrow indicates the position of an object.
	A zoom arrow indicates that an object view is enlarged. The arrow points towards the enlarged view of the object.
	A rotation movement arrow indicates rotational movement of an object. The arrow points in the direction of rotation.
	A straight movement arrow indicates movement of an object. The arrow points in the direction of movement.

Machine Introduction

Intended Use of the Equipment

The intended use of this Tetra Pak equipment is to place packages approved by Tetra Pak Packaging Solutions AB into units made of corrugated cardboard.

All other use is prohibited. Tetra Pak will not be held responsible for injury or damage if the equipment is used for any other purpose than the intended use described above.

Manufacturer

This Tetra Pak equipment has been manufactured by

Tetra Pak Packaging Solutions AB
Ruben Rausings gata
S-221 86 Lund
Sweden

Support and Feedback

If you encounter problems when operating this equipment or have other inquiries, comments, or suggestions for improvement, contact Tetra Pak.

Declaration of Conformity

A copy of the Declaration of Conformity can be found in the Installation Manual. The signed Declaration of Conformity is delivered separately with the equipment.

Identification

CE Classification

This equipment complies with the basic health and safety regulations of the European Economic Area (EEA).

Machine Plate

The illustration below shows an example of the machine plate and its location on the equipment. The machine plate carries data needed when contacting Tetra Pak concerning this specific equipment.

Make sure that the equipment data in the front pages of this manual corresponds to the machine plate data and the machine specification.

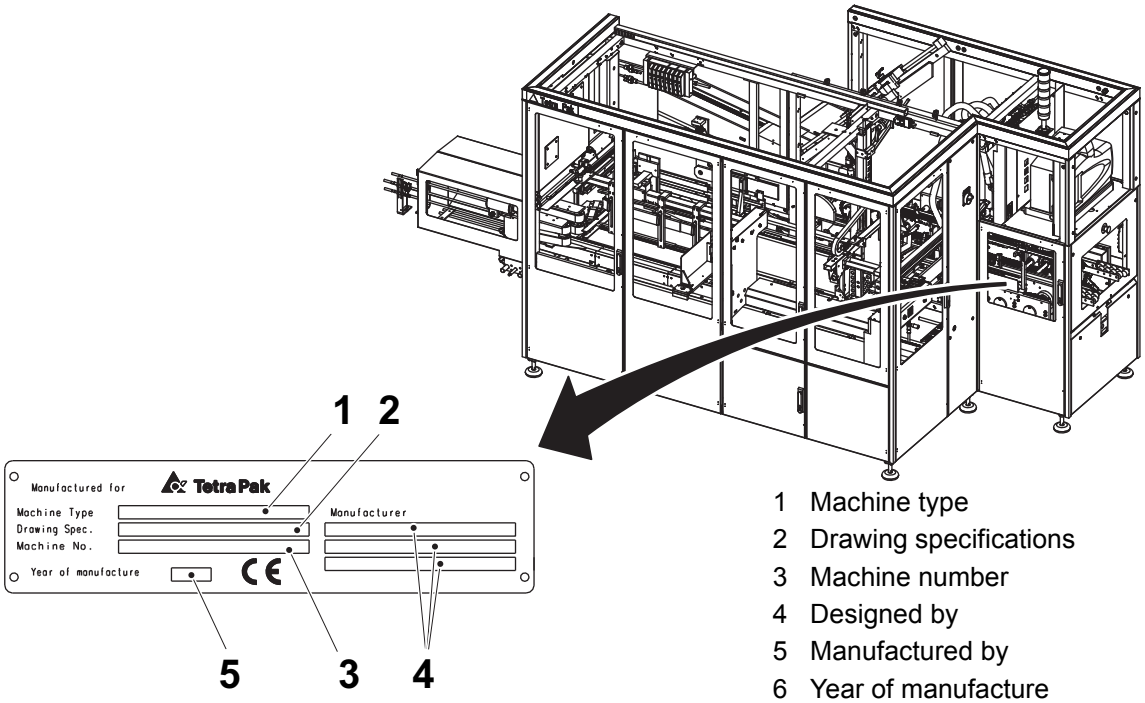

1 Machine type
2 Drawing specifications
3 Machine number
4 Designed by
5 Manufactured by
6 Year of manufacture

Orientation

The illustration below shows the orientation of the equipment. This orientation information will be used throughout this manual. The arrows indicate the flow of material.

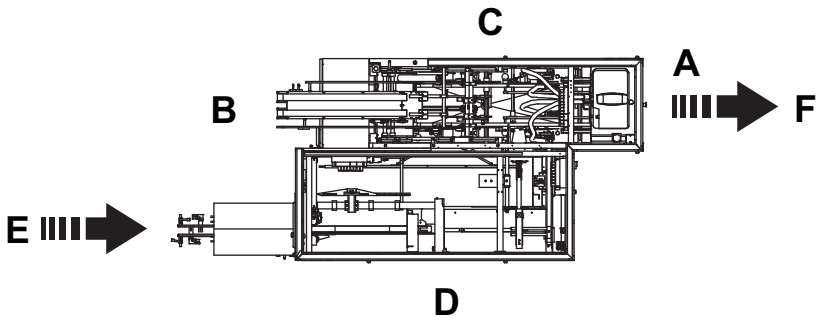

The illustration shows Z-infeed, RH version.

A Front
B Rear
C Left-hand side
D Right-hand side
E Infeed
F Discharge

Machine Variants

Z-infeed, RH version

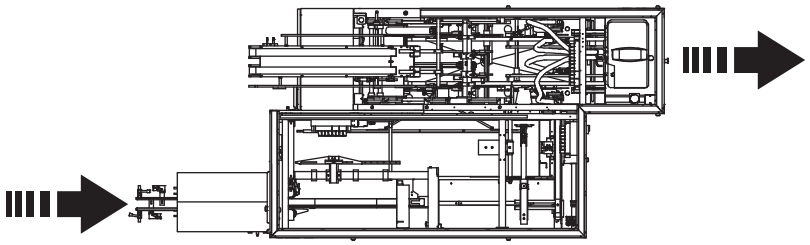

Z-infeed, LH version

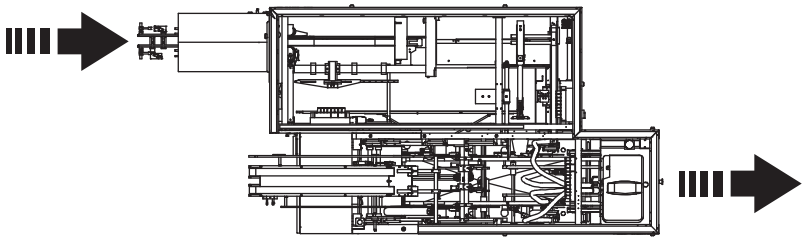

U-infeed, RH version

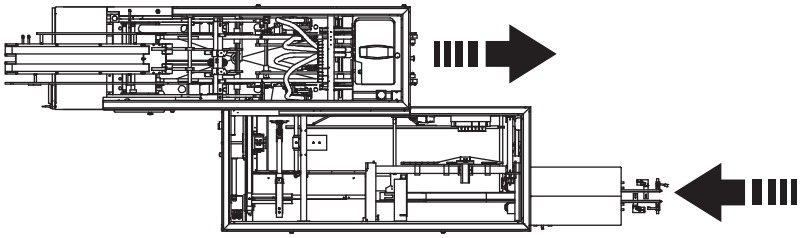

U-infeed, LH version

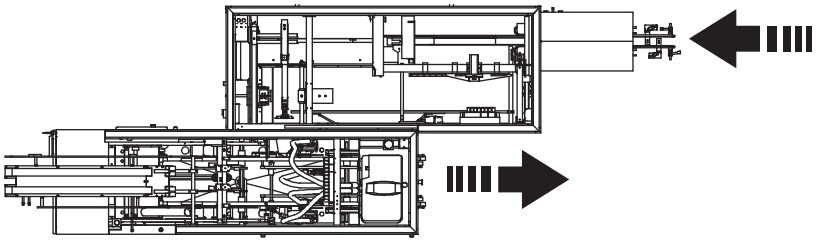

Hygiene

- Keep your hands and gloves clean.
- Always wear some type of hair protection (cap or hairnet) and clean clothes (preferably white).
- Do not wear a watch, ring, necklace, earrings, or any other exposed jewellery

How to Use This EM

Chapters in this EM.

Chapter	Name	Drawing No.
i	Introduction	
ii	Safety Precautions	
1	Electrical Systems Description	
2	Document List	3027725-0001
3	Position Summary	3027725-0002
4	Circuit Diagrams	3027725-0003
5	Line Summary	3027725-0004
6	Cabinet Terminal Summary	3027725-0005
7	Terminal Strip Overview	3027725-0006
8	Cable Connection List	3027725-0007
9	Mains Connection	3027725-0008
10	Drawing Remarks	
11	Other Information	
12	Program Documents	

The Document List chapter is a table of contents for the chapters 3 to 9, listing all drawings included.

In the Circuit Diagrams, the first pages are reserved for distribution terminals and the last pages can be used for pre-connected cables. Pre-connected cables are connected to spare terminals and are reserved for future use.

The diagrams in the Mains Connection chapter show how the machine should be connected to the local supply, the dimensions of the connection cable, and the connection of the matching transformer, when used.

The Drawing Remarks chapter lists the drawing remarks indicated with a number in the drawing.

(Cont'd)

(Cont'd)

The documents and drawings are identified by drawing number (1), version code (2), and page number (3). The page number is the consecutive numbering of the pages that belong to the main number and is used as a reference in the diagrams.

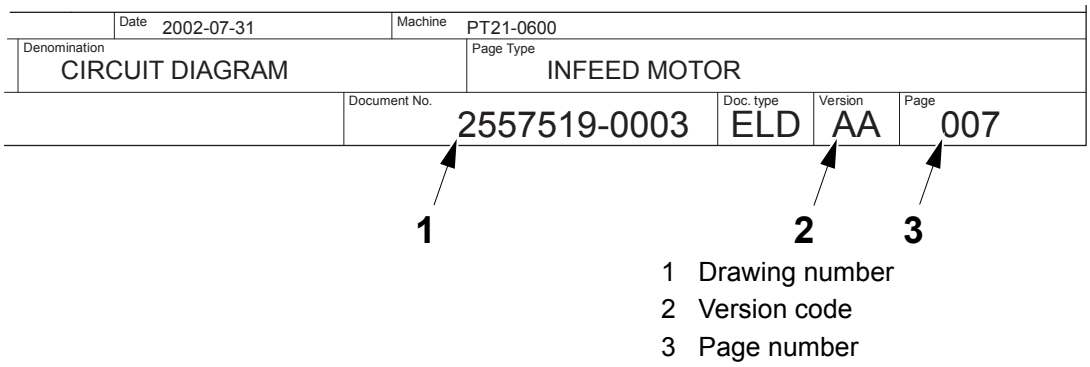

1 Drawing number
2 Version code
3 Page number

Reference Designation

Components are identified by the reference designation, defined by a function code (1), and a component code (2).

The object code for the group level (3) refers to the purpose or task of the group level that the component serves or supplies. See the List of Function Codes section.

The object code for the component level (4) refers to the purpose or task of the current object. The letter is in accordance with international standards. Examples: Code P for components that present information, such as an alarm lamp, a clock, or a volt meter. Code M for components that provide mechanical energy such as an actuator, or an electric motor.

Tetra Pak has chosen to always use the function oriented structure for reference designation. The prefix indicating function oriented structure (=) is not shown in the reference designation.

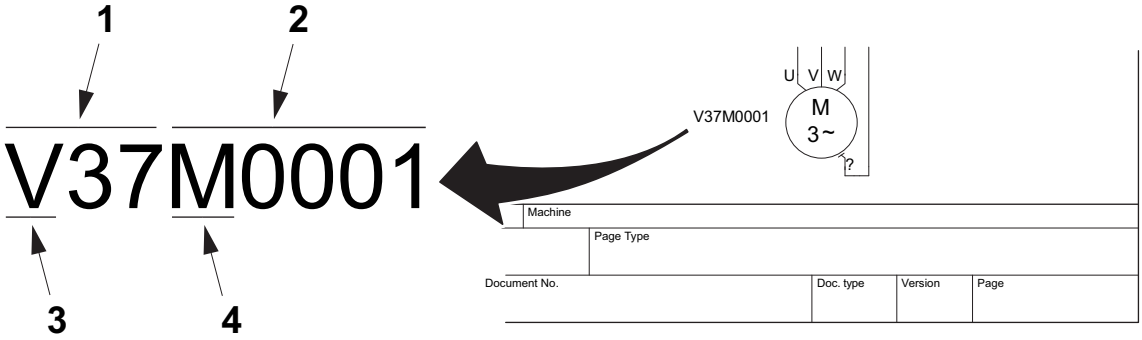

1 Function code
2 Component code
3 Object code, group level
4 Object code, component level

List of Function Codes

Function codes for this equipment.

Function Code	Identification
01	Supply and service
09	Safety
10	External up stream
14	Package turner
30	Infeed
40	Pattern forming
50	Tray forming
90	External down stream

For detailed information about the function codes, See drawing standard DS 208.29.

Optional Equipment

An optional equipment designation indicates that the component belongs to specific optional equipment. The designation numbers for this equipment are explained in the Drawing Remarks chapter.

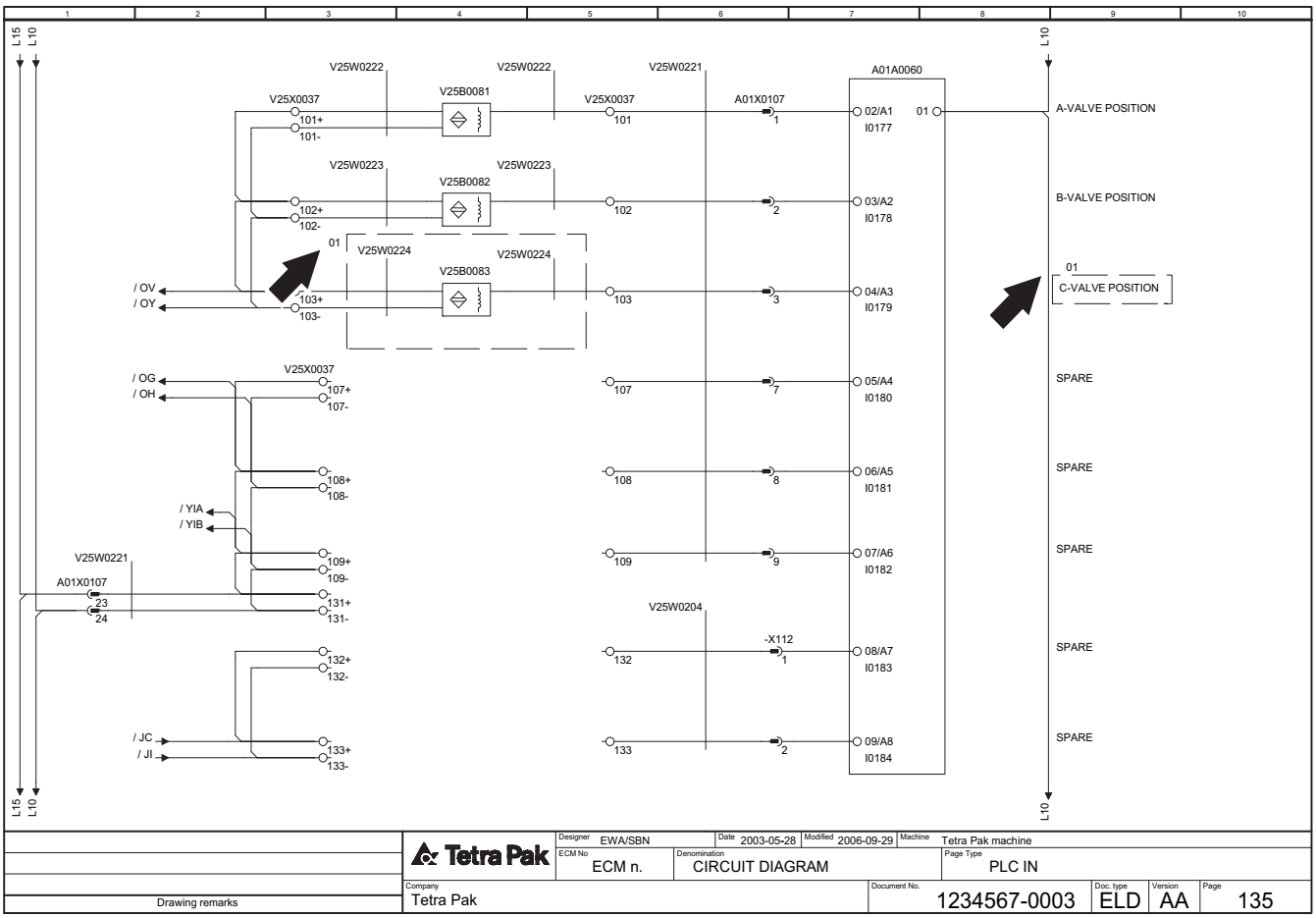

How to Trace an Electrical Component

Start tracing an electrical component by finding the correct list with page and column references to the Circuit Diagram.

Example 1 on pages i-18 to i-19 illustrates how to trace a Line. Use the Line Summary.

Example 2 on page i-20 illustrates how to trace a contactor. Find page references in the Position Summary. The procedure is identical when tracing sensors or other components. For cables, the page references are in the Cable Connection List. The number of spare cores is shown in the cable connection list.

Examples 3 and 4 on pages i-21 to i-22 illustrate how to trace a terminal. Find page references for terminals *in* the electrical cabinet in the Cabinet Terminal Summary, and page references for terminals *outside* the electrical cabinet in the Terminal Strip Ov erview.

Example 5 on pages i-23 to i-25 illustrates how to trace a network (DeviceNet, Ethernet etc.). The last pages of the Circuit Diagrams are reserved for the network layout; these provide an overview of the network with cross references to locate the components in the circuit diagrams.

Example 6 on page i-23 illustrates how to locate a component in the Spare Parts Catalogue, SPC.

Example 1: How to Trace a Line

Supply Voltage and Line Connection Order

The supply voltage in the electrical cabinet has power voltage and control voltage designations.

- Power voltage: lines with designations ending with 01 to 09, for example, L03 and L803
- Control voltage: lines with designations ending with 10 to 99, for example, L12 and L812

The line connection order is shown in the Line Summary.

(Cont'd)

(Cont'd)

How to Trace a Line

The illustration below shows how to trace line connection L10 from the component terminal A01X0107:24 to A01A0060:01.

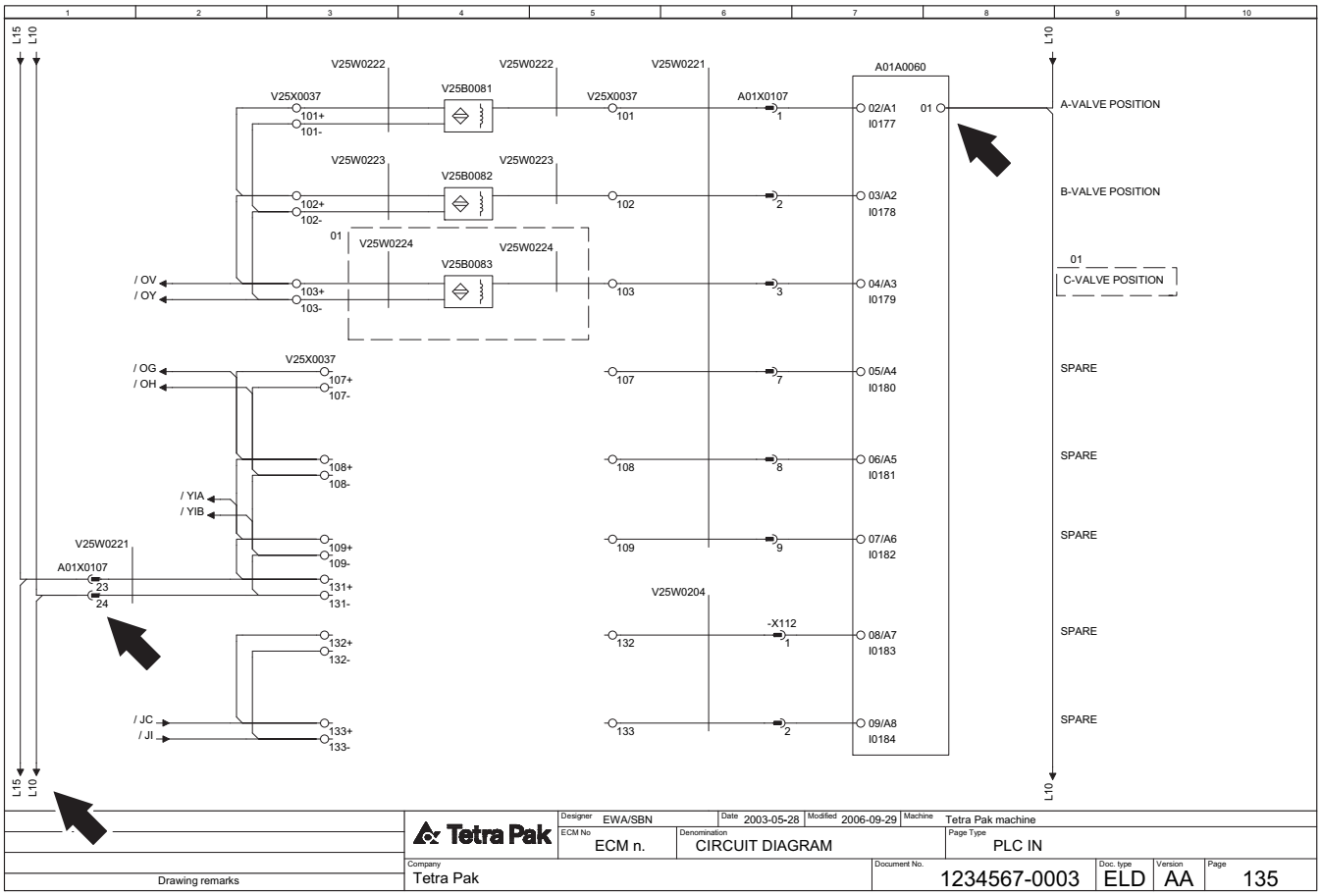

Line summary of 1234567-0003

Line	From	Page.Col.	Opt.	Area/Color
L10				
	A01XL0010:1	001 .1		0.75/L. BU
	A01X0107:24	135 .1		
	A01A0060:01	135 .8		

Example 2: How to Trace a Contactor

The illustration below shows how to trace contactor A01K0074 to page 188, column 6 in the Circuit diagram.

Related contacts are traced with a cross reference to page 004, column 3.

Note! For master and slave components, such as coils and contacts, only the master is reported in the Position Summary. The slave shows the page and column references of the master.

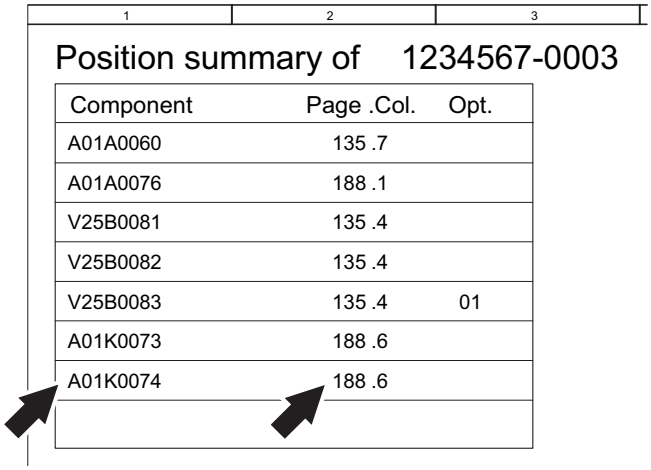

Position summary of 1234567-0003

Component	Page .Col.	Opt.
A01A0060	135 .7	
A01A0076	188 .1	
V25B0081	135 .4	
V25B0082	135 .4	
V25B0083	135 .4	01
A01K0073	188 .6	
A01K0074	188 .6	

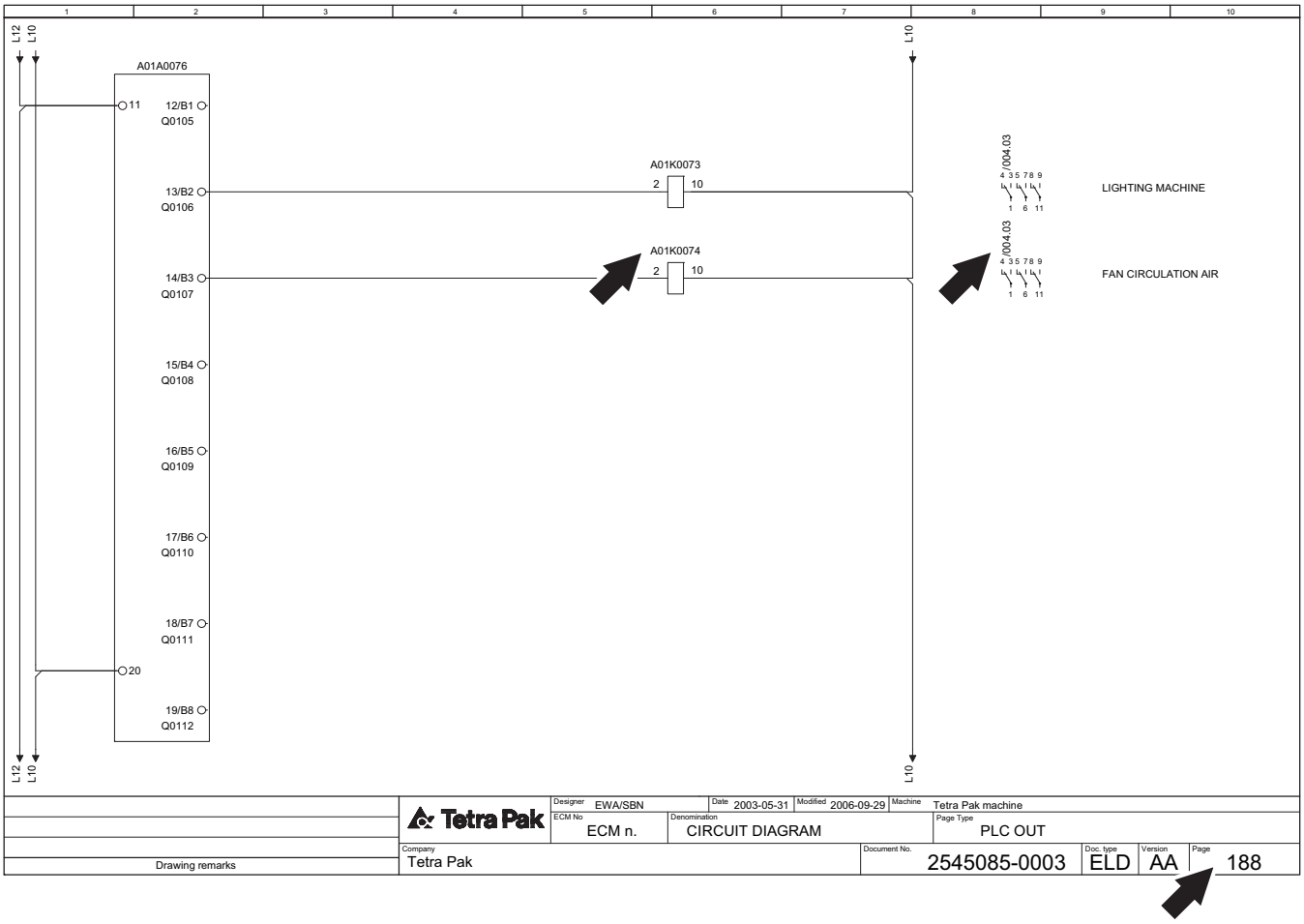

Example 3: How to Trace a Terminal in the Electrical Cabinet

The Cabinet Terminal Summary refers to the page and column where the relevant terminal is to be found.

The illustration below shows how to trace terminal A01X0107:1 to page 135, column 6 in the Circuit diagram.

Cabinet terminal summary of 1234567-0003

Terminal	Page .Col.	Opt.
A01X0107:1	135 .6	
A01X0107:2	135 .6	
A01X0107:3	135 .6	
A01X0107:4		
A01X0107:5		
A01X0107:6		
A01X0107:7	135 .6	
A01X0107:8	135 .6	
A01X0107:9	135 .6	

Terminal	Page .Col.	Opt.

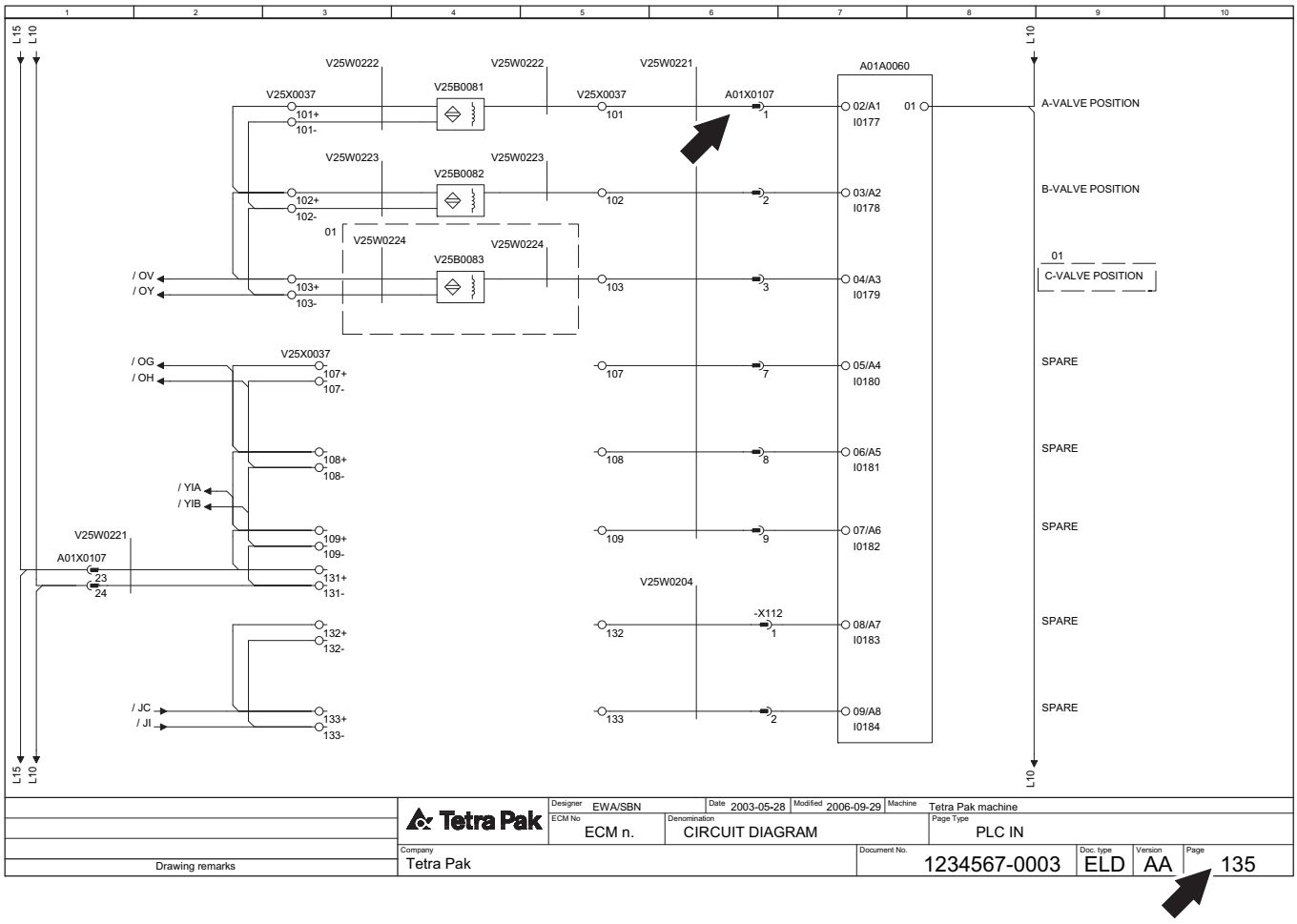

Example 4: How to Trace a Terminal Outside the Electrical Cabinet

The Terminal Strip Overview refer to the page and column where the relevant terminal is to be found.

The illustration below shows how to trace terminal V25X0037:101+ to page 135, column 3 in the Circuit diagram. Note the connected component, V25B0081.

Terminal strip of 1234567-0003

V25X0037

From	Cable	Internal Jumper	Terminal	External Jumper	Cable	To	Page.Col.	Option	Function text
A01X0107:1	V25W0221 :1		101		V25W0222 :BK	V25B0081:	135 .5		
			101+		V25W0222 :BN	V25B0081:	135 .3		
			101-		V25W0222 :BU	V25B0081:	135 .3		
A01X0107:2	V25W0221 :2		102		V25W0223 :BK	V25B0082:	135 .5		
			102+		V25W0223 :BN	V25B0082:	135 .3		
			102-		V25W0223 :BU	V25B0082:	135 .3		
A01X0107:3	V25W0221 :3		103		V25W0224 :BK	V25B0083:	135 .5	01	
			103+		V25W0224 :BN	V25B0083:	135 .3	01	
			103-		V25W0224 :BU	V25B0083:	135 .3	01	
			104						

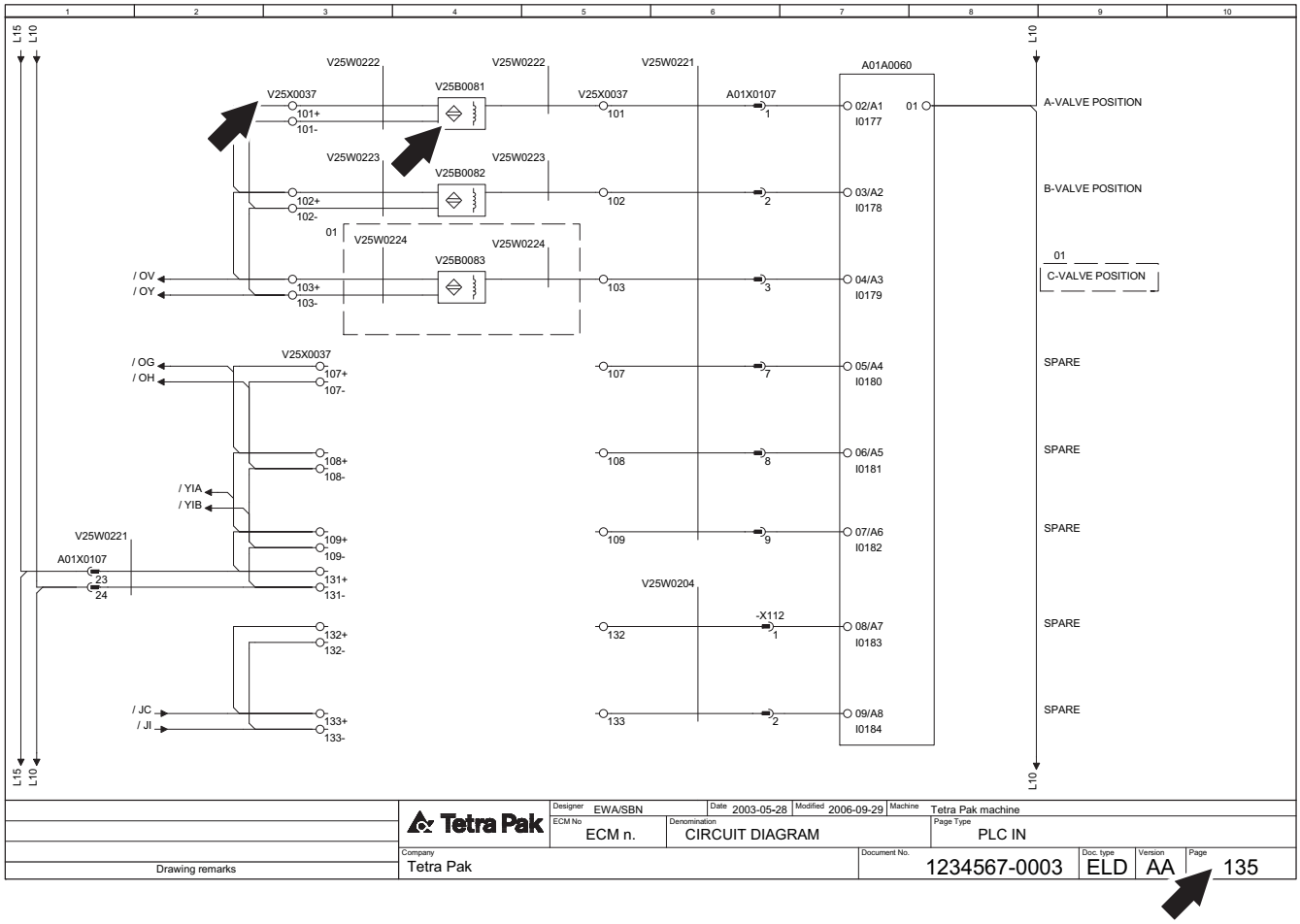

Example 5: How to Trace a Network

The illustration below shows how to find the component A20K5020 , the terminal strip A20X5540 and the network cable A20W5510 in the network overview page(s).

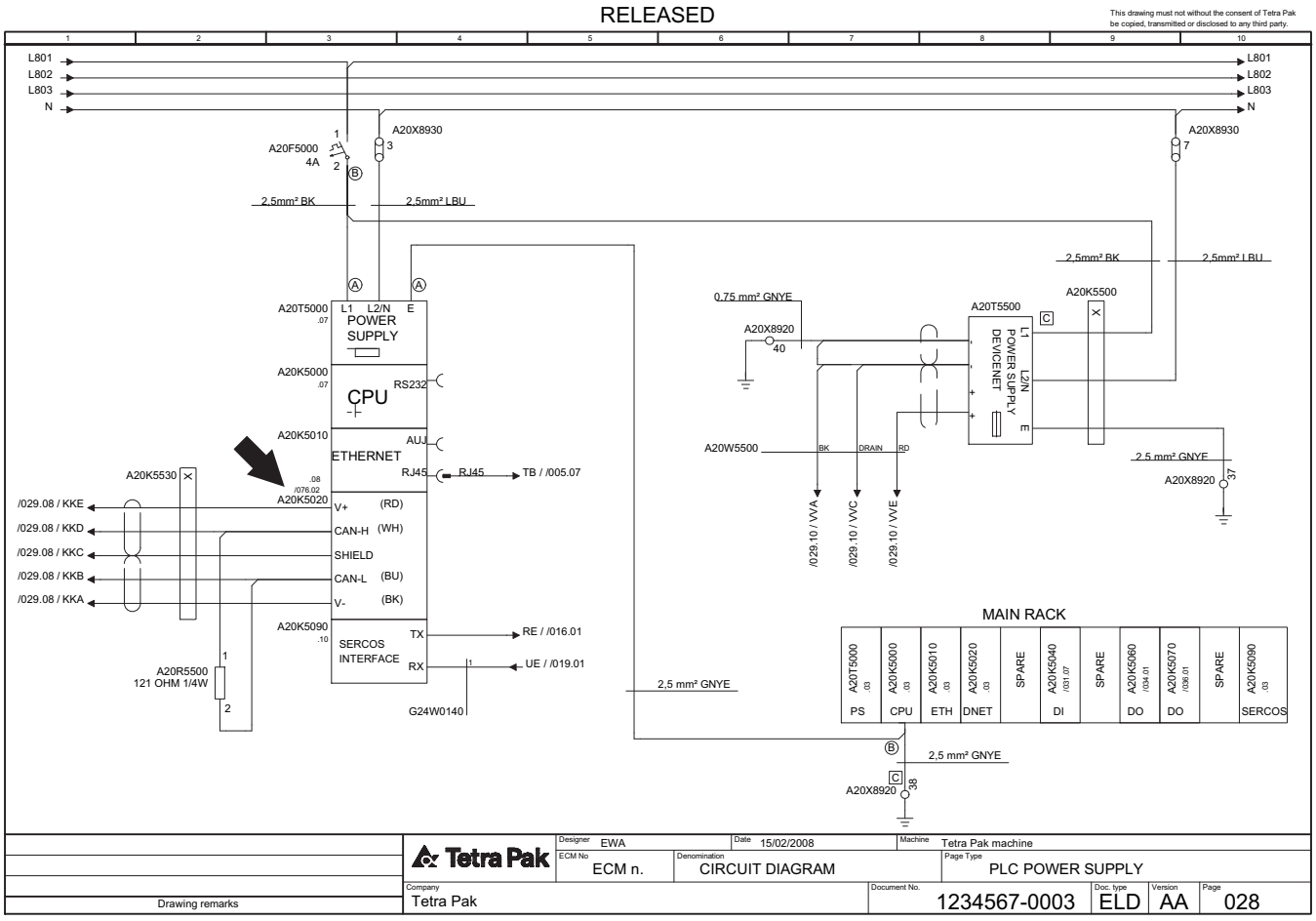

(Cont'd)

(Cont'd)

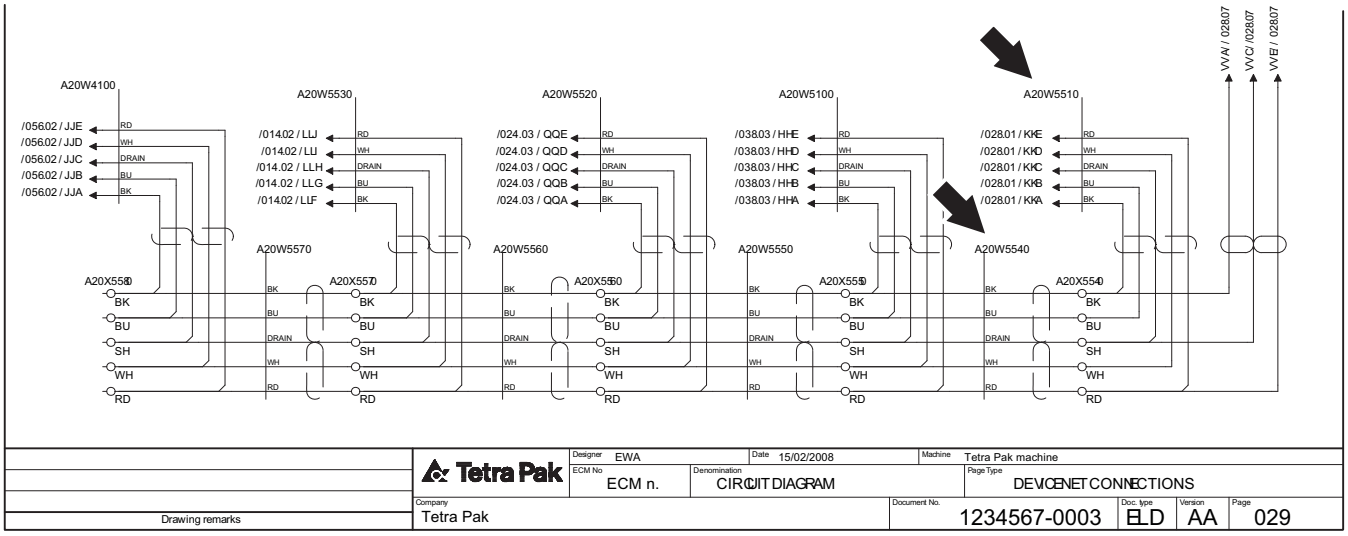

The figure reference, for example; “Fig C” or “Fig G” in the Network Overview page, refers to the Network Figure Drawing which provides a description of the component wiring, see the following page.

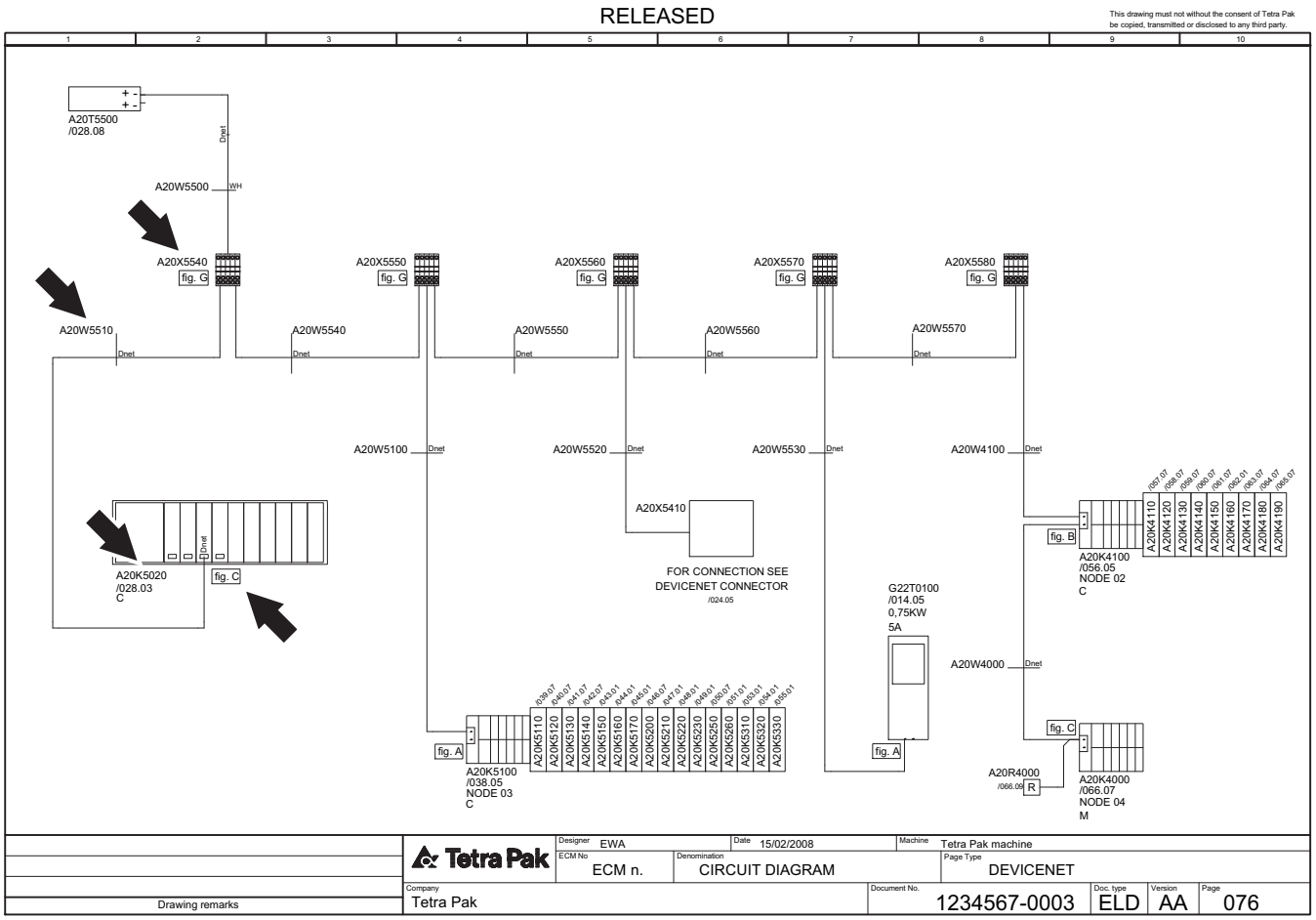

(Cont'd)

(Cont'd)

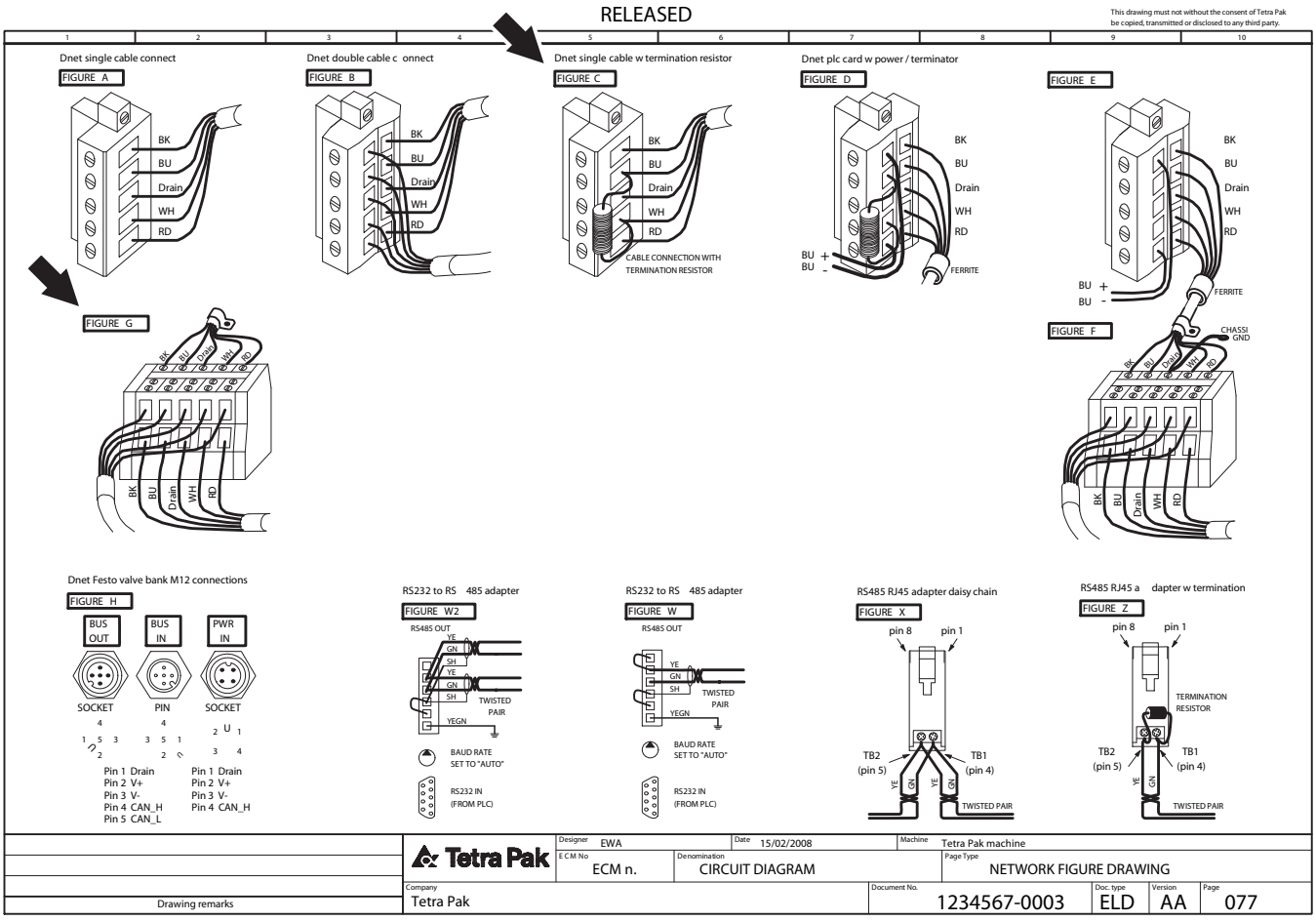
RELEASED
This drawing must not without the consent of Tetra Pak be copied, transmitted or disclosed to any third party.
Dnet single cable connect
FIGURE A
BK
BU
Drain
WH
RD
Dnet double cable c onnect
FIGURE B
Dnet single cable w termination resistor
FIGURE C
CABLE CONNECTION WITH TERMINATION RESISTOR
Dnet plc card w power / terminator
FIGURE D
BU +
BU -
FERRITE
FIGURE E
FIGURE G
FIGURE F
CHASSI GND
Dnet Festo valve bank M12 connections
FIGURE H
BUS OUT
BUS IN
PWR IN
SOCKET
PIN
SOCKET
Pin 1 Drain
Pin 2 V+
Pin 3 V-
Pin 4 CAN_H
Pin 5 CAN_L
RS232 to RS 485 adapter
FIGURE W2
RS485 OUT
YE
GN
SH
TWISTED PAIR
YEGN
BAUD RATE SET TO "AUTO"
RS232 IN (FROM PLC)
RS232 to RS 485 adapter
FIGURE W
RS485 adapter daisy chain
FIGURE X
pin 8
pin 1
TB2 (pin 5)
TB1 (pin 4)
RS485 RJ45 a dapter w termination
FIGURE Z
TERMINATION RESISTOR
Tetra Pak
Designer EWA
Date 15/02/2008
Machine Tetra Pak machine
E.C.M No ECM n.
Denomination CIRCUIT DIAGRAM
Page Type NETWORK FIGURE DRAWING
Company Tetra Pak
Document No. 1234567-0003
Doc. type ELD
Version AA
Page 077
Drawing remarks

Example 6: How to Find Electrical Components Using the SPC

The Reference Designation Parts Index in the Spare Parts Catalogue, SPC, is used to locate electrical parts. For SPCs without a Reference Designation Parts Index, see the Component Location chapter in this manual.

The illustration below shows how to find component A04B0041 in the SPC. The Reference Designation Parts Index refers to page 2-5. In the drawing on page 2-4, the position number is the same as the reference designation for the component.

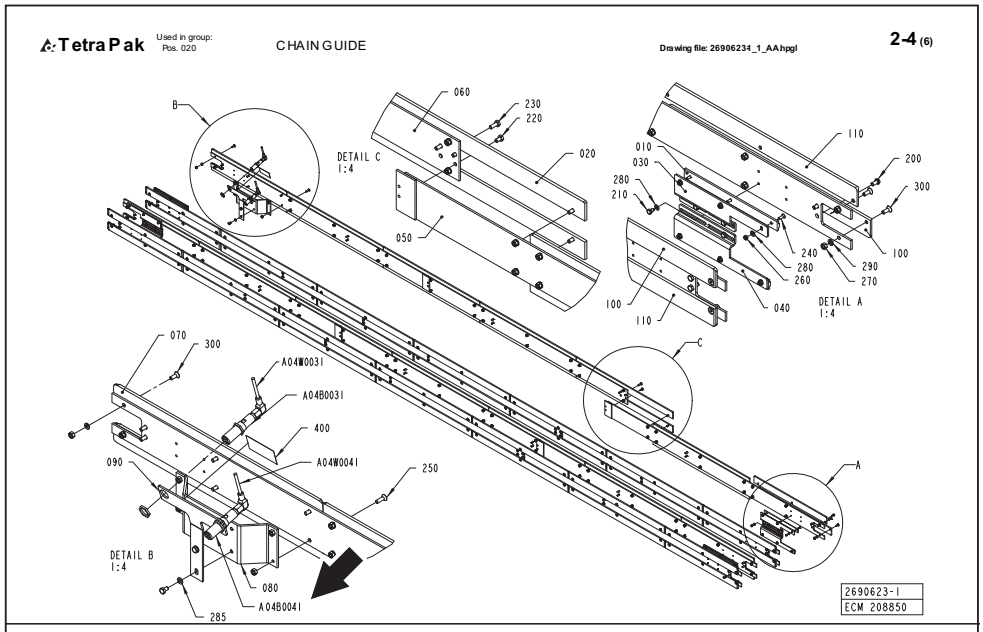

ECM: 209071 - 50001231
Group number: 2690623-0100
Assembly Drawing: 2690623-1_1_AA

This list covers pages from 2-2 to 2-5

Pos	Part No	UN	Qty	Description	Page No
-					
010	2597877-0000		8	CHAIN GUIDE	
020	2653358-0000		40	CHAIN GUIDE	
030	2653365-0000		4	SUPPORT	
040	2653366-0000		4	SUPPORT	
050	2653367-0000		8	PLATE	
060	2653368-0000		4	PLATE	
070	2653369-0000		8	CHAIN GUIDE	
080	2690632-0000		1	HOLDER	
090	2690633-0000		1	HOLDER	
100	2730969-0000		4	CHAIN GUIDE	
110	2730970-0000		4	CHAIN GUIDE	
200	90458-9072		8	SCREW ISO 7380 S M6X12 A2	
210	312105-0287		16	SCREW M6S ISO4017 M4X8 A470	
220	312105-0364		18	SCREW M6S ISO 4017 M6X10 A480	
230	312105-0368		40	SCREW M6S ISO 4017 M6X16 A480	
240	312155-0291		24	SCREW DIN 7991 MF6S M4X12 A4 70	
250	312155-0370		4	SCREW DIN 7991 MF6S M6X20 A4 70	
260	312605-0312		24	HEXAGON NUT, M6M M4 A280	
270	312605-0316		168	HEXAGON NUT, M6M M6 A280	
280	315105-0146		40	WASHER BRB5,3X10RFR	
285	315105-0153		2	WASHER BRB6,4X12RFR	
290	315402-0156		164	LOCK WASHER FBB 6,5	
300	31[illegible]-0368		164	SCREW DIN 7991 MF6S M6X16 A4 70	
400	[illegible]98		1	WARNING SIGN ISO, LASER RADIATION	
A04W0041	[illegible]-0050		1	ACTUATOR/SENSOR CABLE RKWTN 4-225/5M	
A04W0031	[illegible]-0050		1	ACTUATOR/SENSOR CABLE RKWTN 4-225/5M	
A04B0041	90459-5012		1	LASER SENSOR, YD24PA3	
C05C0041	2690632-0000		1	HOLDER	
C05C0031	2653367-0000		8	PLATE	
T04B0031	90459-5012		1	LASER SENSOR, YD24PA3	
T05C0041	2653369-0000		8	CHAIN GUIDE	
T05C0031	2653368-0000		4	PLATE	

Tetra Pak — iv-2 (4)
Doc No: SPC-654654-0101

Pos	Part No	Description	Page No
A			
F09A0332	"02[illegible]1	THERMOCOUPLE CABLE K/PVC/20AWG 2X0,5MM2	1-3, 1-5
T03A0321	[illegible]9	THERMOCOUPLE CABLE K/PVC/20AWG 2X0,5MM2	1-3, 1-5
T03A0322	[illegible]030	HEATING ELEMENT, 3000W, 220V	1-3, 1-5
B			
A04B0041	90459-5012	LASER SENSOR, YD24PA3	2-3, 2-5
C01B0001	351120-0145	CABLE SILFLEX SIHF 3X2,5 0046020	1-3, 1-5
C32B0001	90220-2259	THERMOCOUPLE CABLE K/PVC/20AWG 2X0,5MM2	1-3, 1-5
T04B0031	90459-5012	LASER SENSOR, YD24PA3	2-3, 2-5
C			
C05C0031	2653367-0000	PLATE	2-3, 2-5
C05C0041	2690632-0000	HOLDER	2-3, 2-5
T05C0031	2653368-0000	PLATE	2-3, 2-5

Page No

2-5 (6)
: No: SPC-654654-0101

ii Safety Precautions

Safety Precaution Instructions

WARNING

Read all safety precaution instructions throughout this manual and on safety signs attached to this equipment.
Failure to follow all safety precaution instructions could result in death or serious injury.

Definition of Lockout Procedure

A lockout procedure is a procedure to put each necessary energy isolating device in its safe position to prevent the energisation of the equipment, such as when a maintenance procedure should be carried out.

A lockout is the use of a device, for example, a padlock, to make sure that an energy isolating device cannot be operated.

An energy isolating device is a mechanical device that physically prevents transmission or release of energy, such as a power supply disconnector.

Safety Messages Description . . . . . ii - 5
Personnel Requirements . . . . . ii - 6
Skilled Person . . . . . ii - 6
Instructed Person. . . . . ii - 6
Safety Signs . . . . . ii - 7
Locations of Safety Signs . . . . . ii - 9
Protective Devices. . . . . ii - 10
Emergency Stop. . . . . ii - 10
Emergency Stop Push-Buttons . . . . . ii - 11
Safeguards . . . . . ii - 12
Infeed Conveyor. . . . . ii - 14
Warning Lamp . . . . . ii - 15
Audible Alarm. . . . . ii - 15
Personal Protection. . . . . ii - 16
Noise Hazard . . . . . ii - 16
Entanglement Hazard . . . . . ii - 16
Ergonomic Hazard . . . . . ii - 16
Supply Systems. . . . . ii - 17
Power Supply . . . . . ii - 17
Residual Voltage . . . . . ii - 17
Electrical Cabinet. . . . . ii - 18
Socket Outlet . . . . . ii - 19
Air Supply . . . . . ii - 20
Water Supply . . . . . ii - 21
Hotmelt Equipment . . . . . ii - 22
Lifting Accessories . . . . . ii - 24
Production Mode Changes . . . . . ii - 24
Discharge Unit . . . . . ii - 24

This page intentionally left blank

Safety Messages Description

A safety message is always accompanied by a safety alert symbol and a signal word.

The safety alert symbol is used to alert about potential personal injury hazards. To avoid hazards, obey all safety messages that follow this symbol.

The following safety alert symbols and signal words are used in this manual to inform the user of hazards.

DANGER	Danger indicates an imminently hazardous situation which, if not avoided, will result in death or serious injury.
WARNING	Warning indicates a potentially hazardous situation which, if not avoided, **could** result in **death or serious injury**.
CAUTION	Caution indicates a potentially hazardous situation which, if not avoided, **may** result in **minor or moderate injury.** It may also be used to alert against unsafe practices.
CAUTION	Caution without the safety alert symbol indicates a potentially hazardous situation which, if not avoided, **may** result in **property damage**.

Personnel Requirements

Note! Personnel includes all persons working on or near this equipment.

Only skilled or instructed persons are allowed to work with this equipment.

Skilled Person

A skilled person must have relevant education and experience to enable him or her to identify hazards, analyse risks, and avoid hazards which electricity, machinery, chemicals, other energies, and supply systems on this equipment can create.

Skilled persons must meet local regulations, such as certifications and qualifications for working with these energies and systems.

Instructed Person

An instructed person must be adequately advised or supervised by a skilled person. The skilled person enables the instructed person to identify hazards, analyse risks, and avoid hazards which electricity, machinery, chemicals, other energies, and supply systems on this equipment can create.

Safety Signs

WARNING

Damaged or missing safety signs increase the risk of death or serious injury.

Replace all missing or damaged safety signs immediately.

Safety signs are attached to the equipment. The table below lists all the signs that are used, and illustrations show their locations on the equipment. Each position number refers to two variants of a safety sign in the table, but only one is used on the equipment.

- Make sure that each safety sign is legible and in its correct position after installation and maintenance.
- Replace all missing or damaged safety signs immediately.

Pos.	ISO sign	ANSI sign
1	 **Hazardous voltage.** Will shock, burn, or cause death. Follow lockout procedure before maintenance.	
2	 **Burn hazard.** Trapped heat energy. Do not touch.	
3	 **Risk of equipment damage**. Do not let water into this area.	
4	 **Hot surface.** Do not touch. Follow lockout procedure before maintenance.	

Pos.	ISO sign	ANSI sign
5		
6		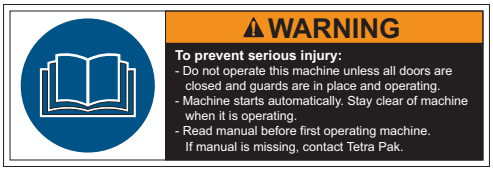
7		
8		
9		

Trapped pneumatic energy.
Moving parts could cause serious injury.
Follow lockout procedure before maintenance.

To prevent serious injury:
- Do not operate this machine unless all doors are closed and guards are in place and operating.
- Machine starts automatically. Stay clear of machine when it is operating.
- Read manual before first operating machine. If manual is missing, contact Tetra Pak.

Do not reach in.
Moving parts may cause injury.
Follow instructions for safe work practice.

Hazardous voltage.
Can shock, burn, or cause death.
Read Maintenance Manual (MM) before using this socket outlet.

Hazardous residual voltage on capacitors.
Will shock, burn or cause death. Do not touch until safe.
Follow instructions for safe work practices.

Locations of Safety Signs

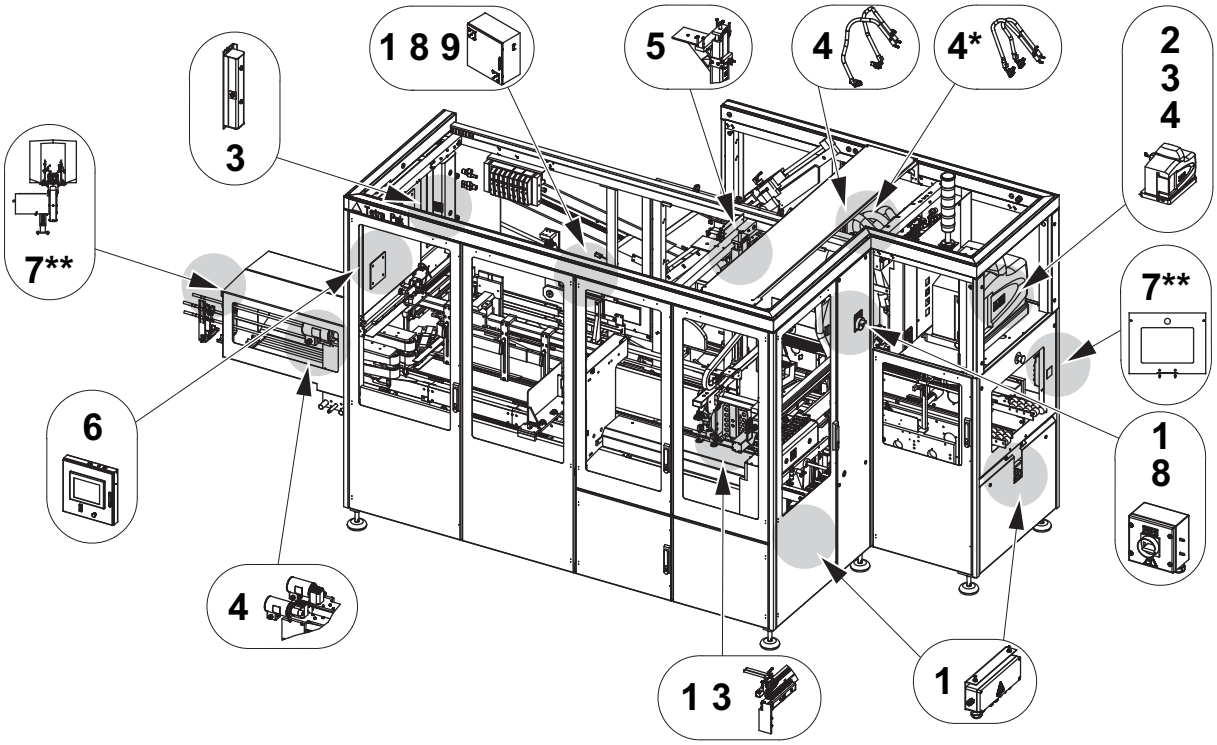

* Only valid for machines that are equipped with Wraparound Unit.
** Also valid for machines with tunnels

Protective Devices

There are different kinds of protective device designed to ensure safe use of the equipment. See the sections below.

WARNING

Hazardous zones.

Hazardous zones are safeguarded and provided with protective devices. Do not inch or run this equipment if any protective device is inoperative.

Change inoperative components of the safety system immediately.

For the locations of safeguards and/or other protective devices not mentioned in this section, see the Maintenance Manual.

WARNING

Hazardous voltage.

Hazardous voltage remains on this equipment after activating an EMERGENCY STOP or an interlocking device.

Emergency Stop

Emergency stop devices are used to stop this equipment immediately in an hazardous situation. Learn the positions of all emergency stop devices and how to use them.

Instructions for a normal production stop are included in the Stop chapter of the Operation Manual.

Emergency Stop Push-Buttons

Push one of the EMERGENCY STOP push-buttons to stop this equipment immediately.

The location of each EMERGENCY STOP push-button is shown by an arrow.

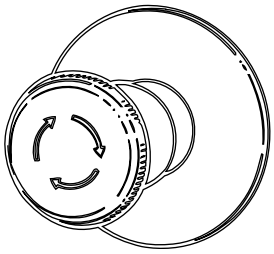

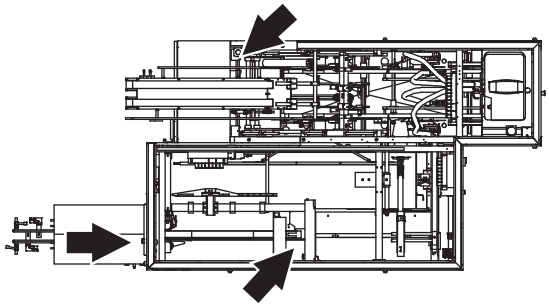

Z-infeed, RH version

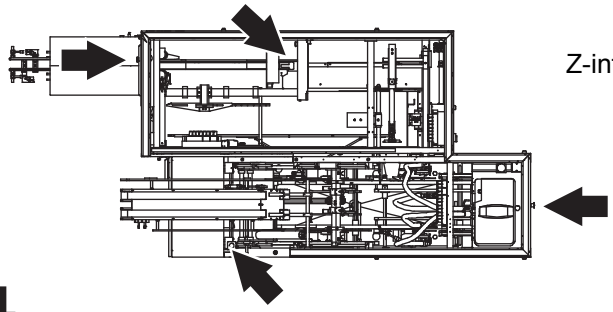

Z-infeed, LH version

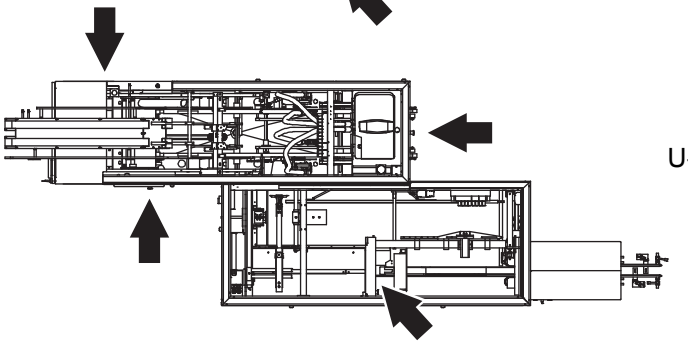

U-infeed, RH version

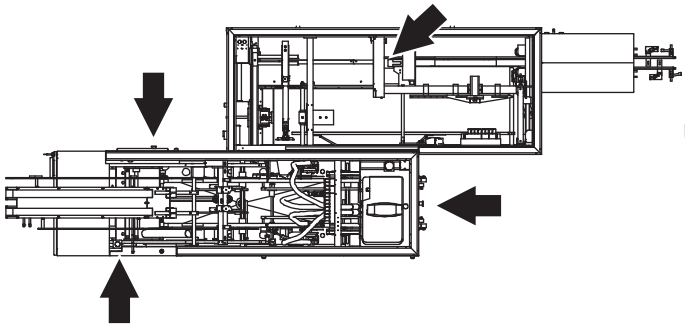

U-infeed, LH version

Safeguards

WARNING
Moving machinery.
Never defeat or bypass the interlocking devices.

Movable guards, for example, doors and covers leading to hazardous zones, are fitted with interlocking devices where required. These devices are usually electric safety switches that are parts of the safety system and must never be defeated, bypassed, or otherwise made inoperative.

WARNING
Corners and edges.
To prevent injury from corners and edges of open doors and covers, close them unless they must be open during such work. Be careful when working under an open door, cover or elsewhere below parts of the equipment with corners and edges.

CAUTION
Burn hazard.
Parts of this equipment may be hot after operation.

After installation and maintenance, and before this equipment is inched or run, check that all safeguards are in place and that they operate correctly.

(Cont'd)

(Cont'd)

CAUTION
Equipment damage.
Never stop this equipment by opening an interlocking guard.

The location of each interlocking guard is shown by an arrow.

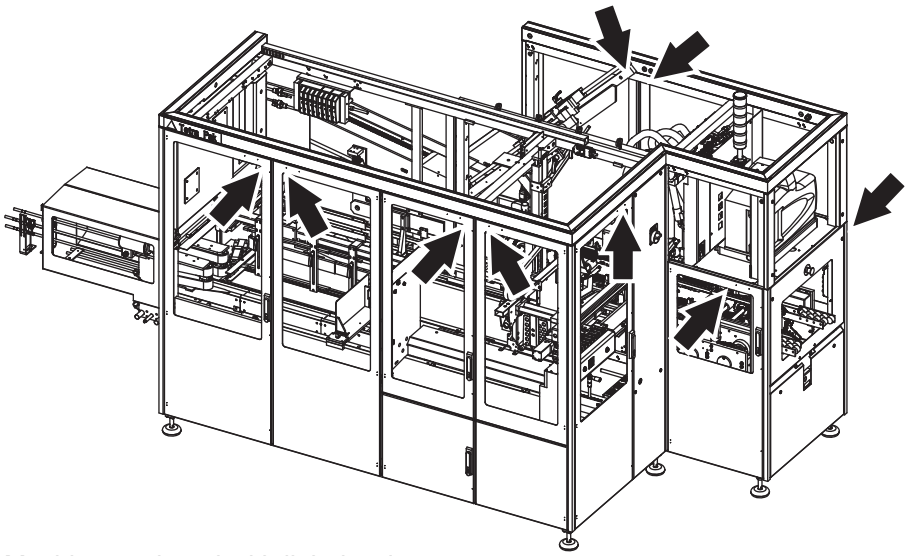

Machine equipped with light barrier.

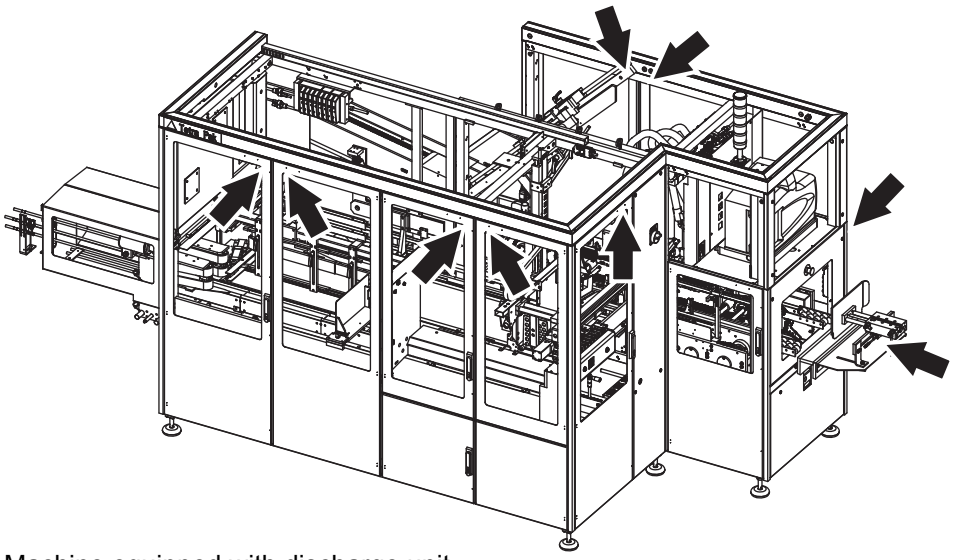

Machine equipped with discharge unit.

(Cont'd)

(Cont'd)

Infeed Conveyor

WARNING

If a door is opened, the infeed conveyor (1) might still be in motion.
The conveyor stops when the machine is stepped down to IDLE or when an EMERGENCY STOP button is pushed or when the machine is completely turned OFF.

To stop the conveyor (1), do one of the following:

- Step down to IDLE.
- Press one of the EMERGENCY STOP buttons. For locations, see Section Emergency Stop Push-Buttons.
- Turn the machine OFF.

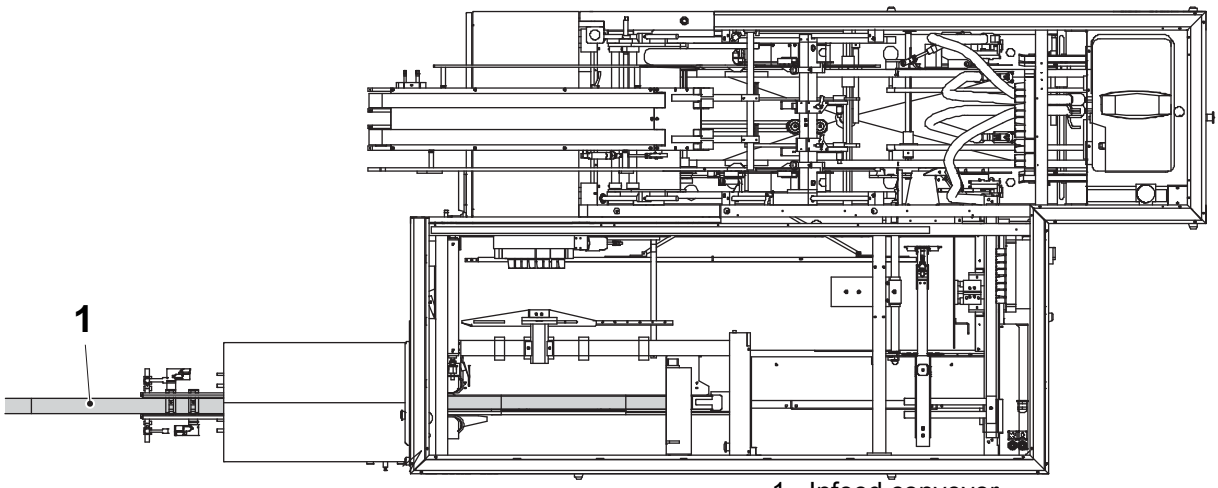

1 Infeed conveyor

Warning Lamp

A warning lamp is a column of warning lights:

- A red light (2) indicates a hazardous condition. This is a situation that requires immediate action.
- A yellow light (3) indicates an abnormal or impending critical condition. This is a condition calling for action by the operator.
- A blue light (4) indicates that operator action is required.
- A green light (5) indicates a normal condition.

Audible Alarm

The audible alarm (1) produces a warning signal before the safety circuit is reset.The warning signal sounds for approximately three seconds to alert personnel. The reset of the safety circuit will make it possible to step up the machine and allow the equipment to start.

The illustration shows Z-infeed, RH version machine.

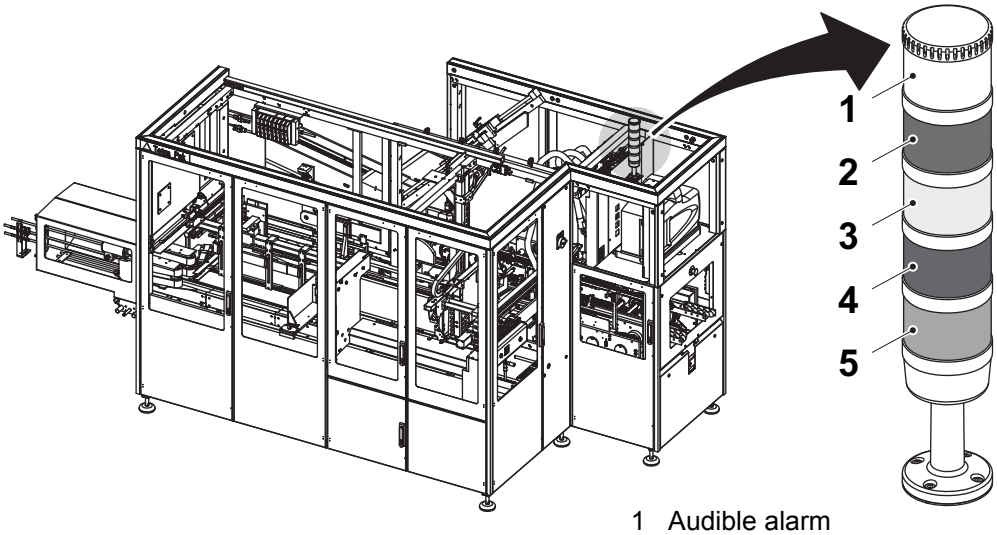

1 Audible alarm
2 Red light
3 Yellow light
4 Blue light
5 Green light

Personal Protection

This section applies to all personnel at all times when this equipment is in operation.

Noise Hazard

CAUTION

Hazardous noise.

Risk of impaired hearing.

Hearing protection is recommended whenever this equipment is in operation.

Entanglement Hazard

WARNING

Risk of entanglement.

Do not wear jewellery or loose clothing when working on or near this equipment. Long hair may not be loose.

Ergonomic Hazard

WARNING

Ergonomic hazard.

Handling materials and supplies, for the machine, can be repetitive manual work and involve ergonomic hazards with risk for personal injury.

Materials and supplies should be located. e.g. layout design, to avoid twisting the body or bending the back when placing them into the machine. It is recommended to use aids such as a lifting table or lifting device for these tasks.

Follow instructions for safe work practices.

Supply Systems

Power Supply

DANGER

Hazardous voltage and moving machinery.
The power supply disconnector must be turned off and secured with a lock before any maintenance.

Note! The key to the lock must be removed by the technician and retained in his/her possession until all work is completed.

Certain maintenance procedures may require power supply systems to be on. These exceptions are clearly stated in the Maintenance Manual.

The illustrations show the power supply disconnector and its location.

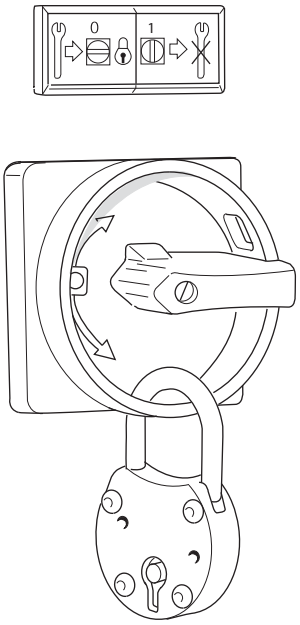

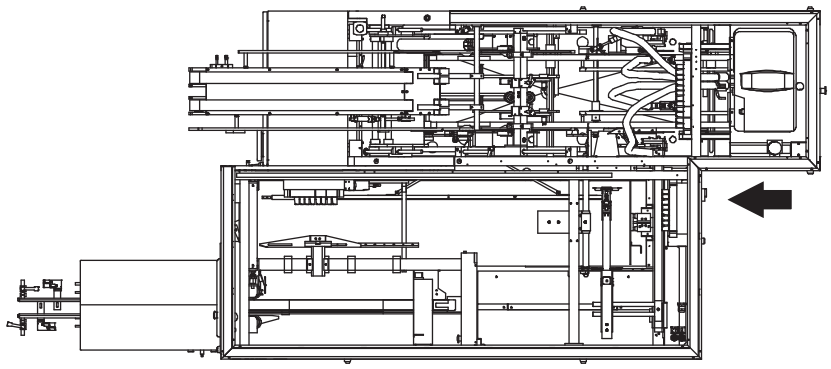

Residual Voltage

DANGER

Hazardous voltage.
Do not touch any terminals immediately after the power supply disconnector is turned off. Ensure that no residual voltage remains on the capacitors before touching. Wait five minutes. Failure to observe this information will cause death or serious injury.

After the power supply disconnector is turned off, residual voltage remains in the capacitor circuits.

Electrical Cabinet

DANGER

Hazardous voltage.
Will shock, burn, or cause death.
The power supply disconnector must be turned off and secured with a lock before maintenance inside the electrical cabinet.

Note! The key to the lock must be removed by the technician and retained in his/her possession until all work is completed.

Make sure that the electrical cabinet doors are closed after working inside the electrical cabinet. Doors with lock must be locked.

The location of the electrical cabinet is shown by an arrow.

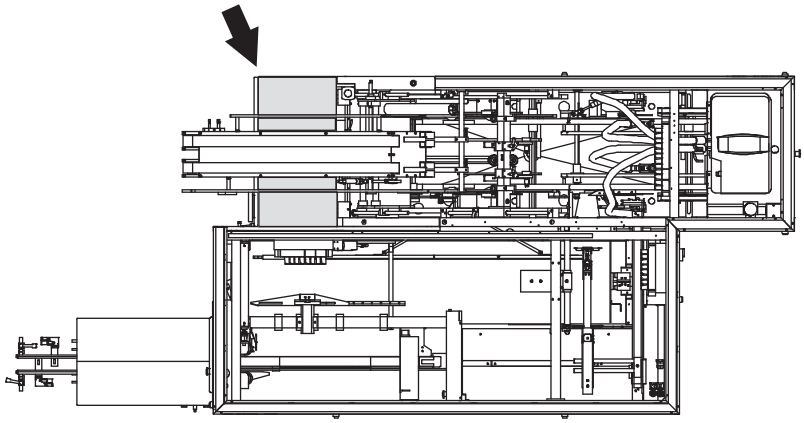

Socket Outlet

WARNING

Hazardous voltage.

Can shock, burn, or cause death. Read the Maintenance Manual before using this socket outlet.

The wall socket (1) is connected to a residual current device (2) to protect users against electrical shock if there is an earth fault in the connected equipment. The residual current device shall be tested each time before the socket outlet is being used. See the MM for test procedure.

The illustrations show the wall socket, the residual current device, and their location.

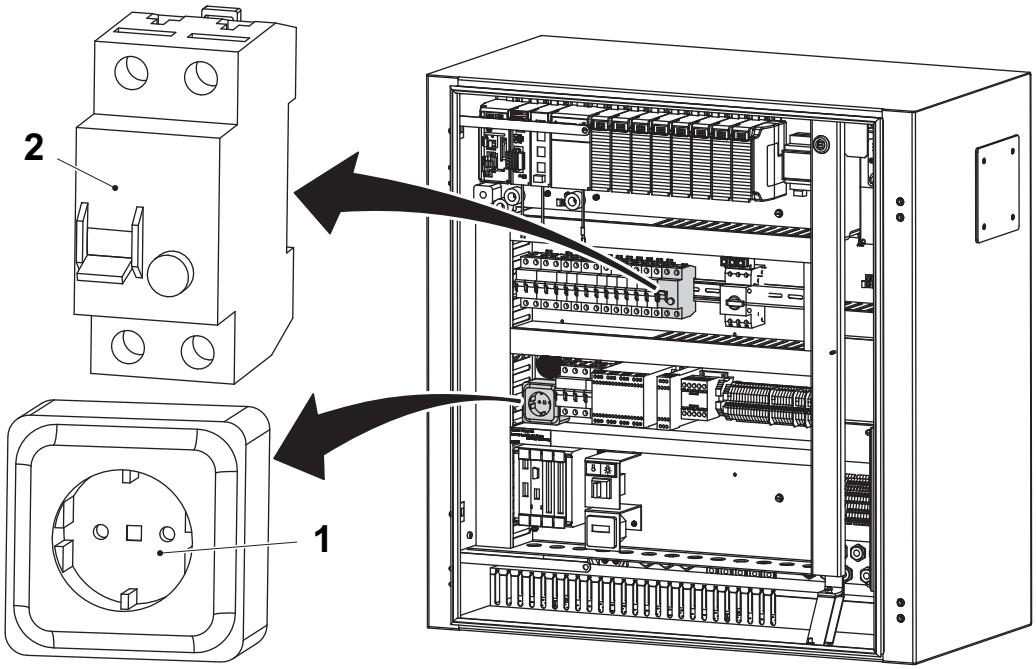

1 Wall socket A01X0070
2 Residual current device A01F0070

Air Supply

WARNING

Compressed air and moving machinery.
Close the shut off valve and lock it before any maintenance.

Note! The key to the lock must be removed by the technician and retained in his/her possession until all work is completed.

Certain maintenance procedures may require air supply systems to be on. These exceptions are clearly stated in the Maintenance Manual.

The illustrations show the shut off valve (1) and its location.

Turn the knob (2) to the position showed in the illustration. Move the lock slide (3) forward and install the padlock (4).

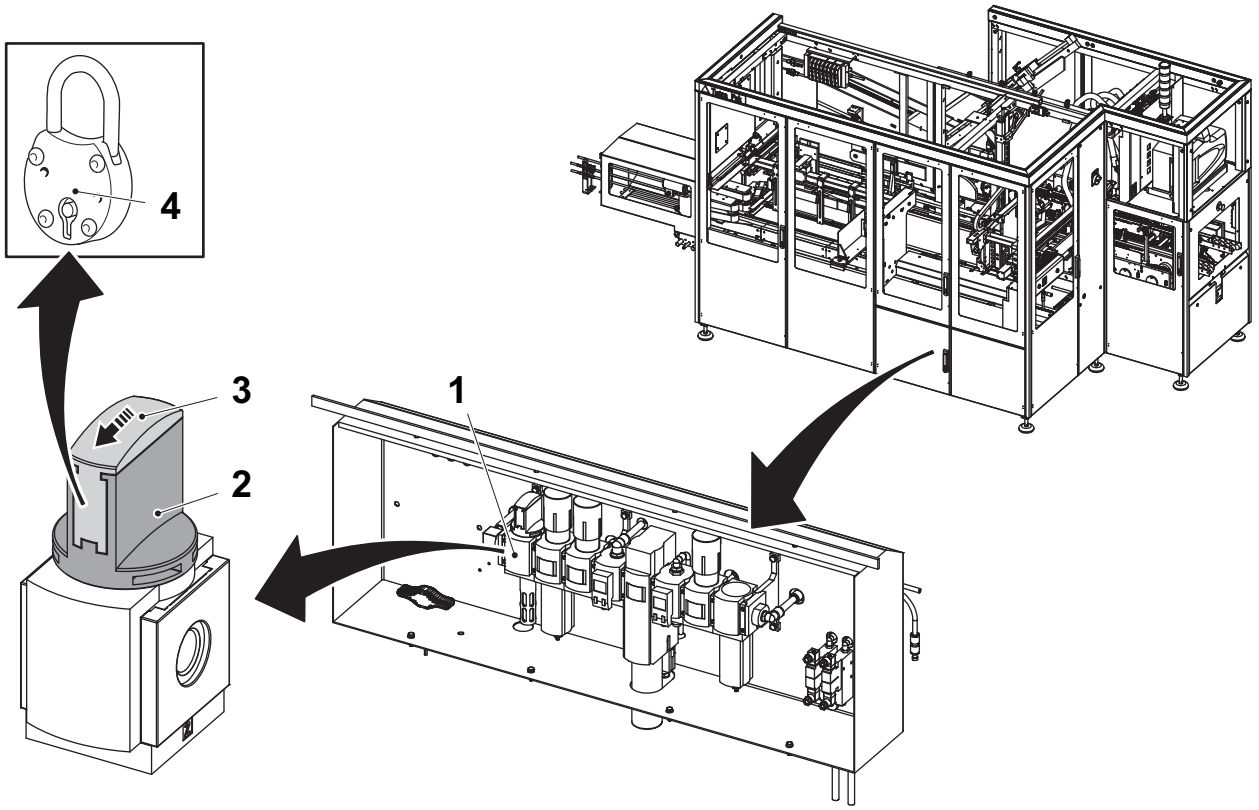

1 Shut off valve
2 Knob
3 Lock slide
4 Pad lock

Water Supply

CAUTION
Water under pressure.
Close the water supply valves before any maintenance.

Note! The key to the lock must be removed by the technician and retained in his/her possession until all work is completed.

Certain maintenance procedures may require water supply systems to be on. These exceptions are clearly stated in the Maintenance Manual.

The illustrations show the water supply valve (1), and its location.

Turn the arm (2) to the position showed in the illustration. Install the padlock (3) in the hole (4).

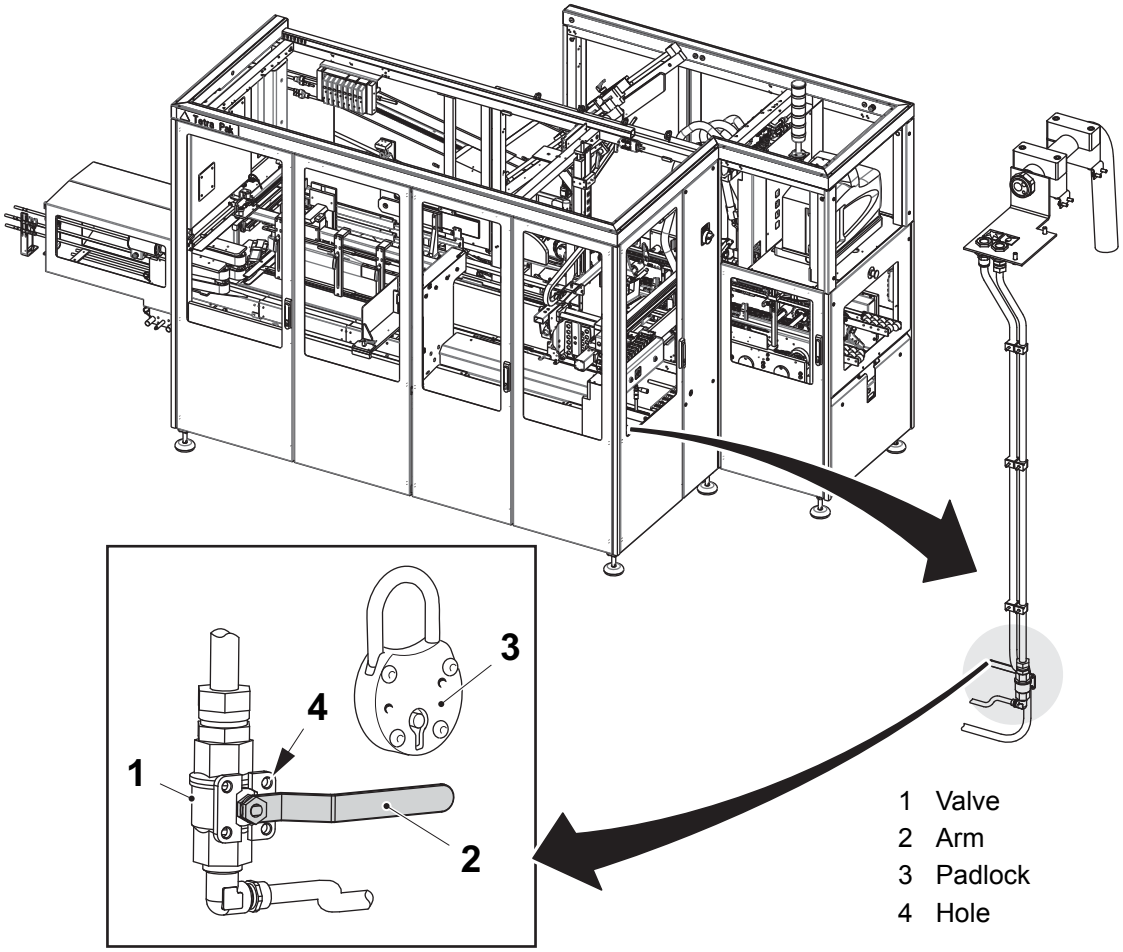

1 Valve
2 Arm
3 Padlock
4 Hole

Hotmelt Equipment

DANGER

Hazardous voltage.
The voltage is 400V inside the hotmelt unit. Risk of immediate danger to life through electrical shock.

Never flush water or any other liquid towards the hotmelt unit when cleaning the machine. Failure to obey will result in danger to your life.

WARNING

Important when working on hotmelt equipment.
All service work on the hotmelt unit must be carried out by authorized personnel. Always wear safety glasses, protective gloves, and other protective clothing to avoid injuries caused by splashing adhesive.

Never remove any part or component until air and the electrical supply to the machine have been disconnected and the pressure of the adhesive in the system has been relieved.

Failure to relieve any remaining air or liquid (adhesive) pressure may cause serious injuries from burning when the hotmelt filter is detached or flushed.

During heating and production the unit gets hot. The hotmelt tank contains heated adhesive which can cause serious injuries. Do not touch the adhesive!

During tank drainage never touch the drain shut!

(Cont'd)

(Cont'd)

WARNING

Burn hazard.

The hotmelt nozzles and their covers are very hot and there is risk of severe burns. Never touch the hotmelt nozzles or their covers!

Note! The section Hotmelt equipment in this manual only deals with what is specific for this machine.

Always refer to the documentation provided from Nordson Corporation (is included in english in the delivery from Tetra Pak) before doing any kind of work on the hotmelt equipment.

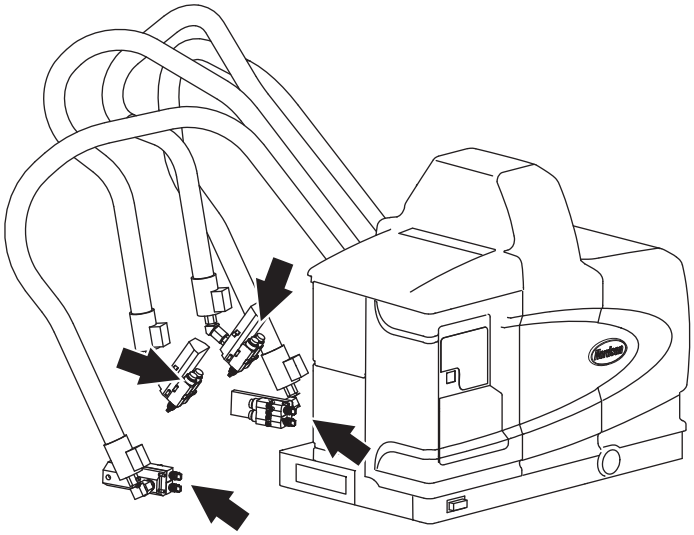

Lifting Accessories

All lifting accessories supplied by Tetra Pak, such as lifting yokes and eyebolts, must be used as intended only. Their correct use is described for each instruction requiring a lifting accessory. Lifting accessories must be stored in a safe place.

Production Mode Changes

All changes concerning packing pattern and infeed alternatives must be carried out by **skilled personnel** only.

Discharge Unit

WARNING

Machine directive.

In order to fulfil the safety demands associated with the CE sign, the machine must be equipped either with one of the optional kits described in the Installation manual, or with any similar equipment that also complies with Machine Directive 2006/42/EC and sub directives.

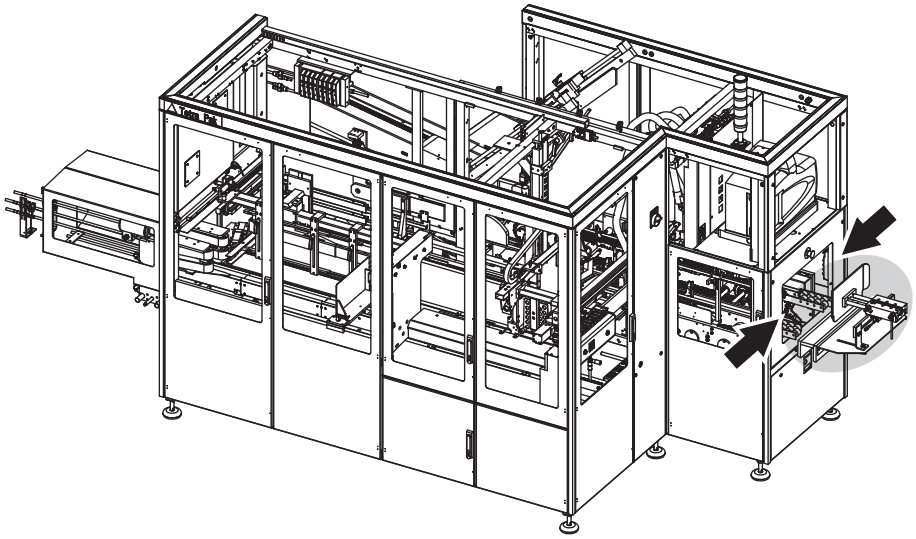

Location of the discharge unit

1 Electrical Systems Description

Description

This chapter contains a description of the electrical systems in the machine.

1.1 Emergency Stops . . . . . 1 - 5

1.2 Door Circuit . . . . . 1 - 6

1.3 Door Circuit Options . . . . . 1 - 7

1.4 Safety Relay . . . . . 1 - 8

1.5 Light Barrier . . . . . 1 - 12

This page intentionally left blank

1.1 Emergency Stops

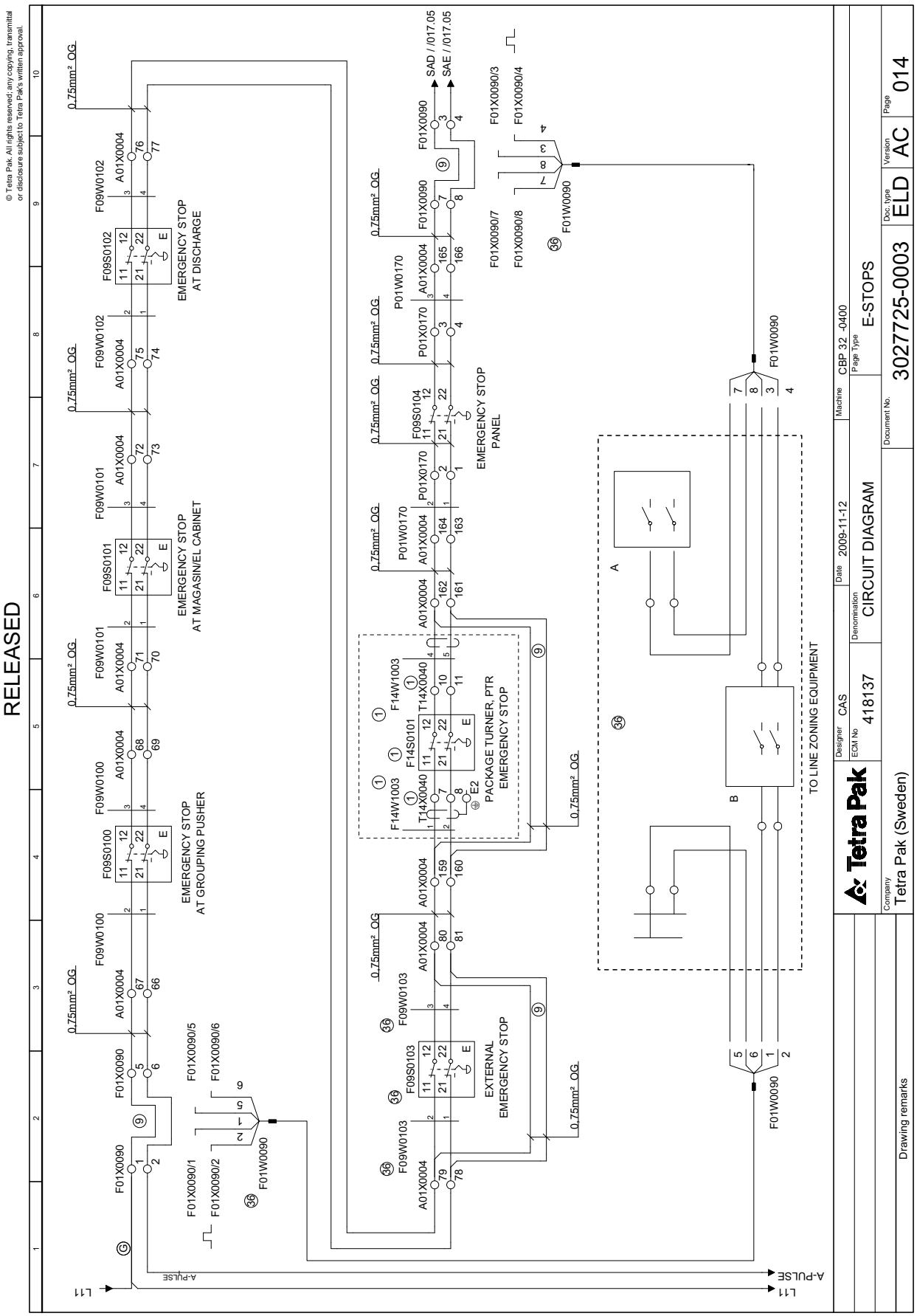

1.2 Door Circuit

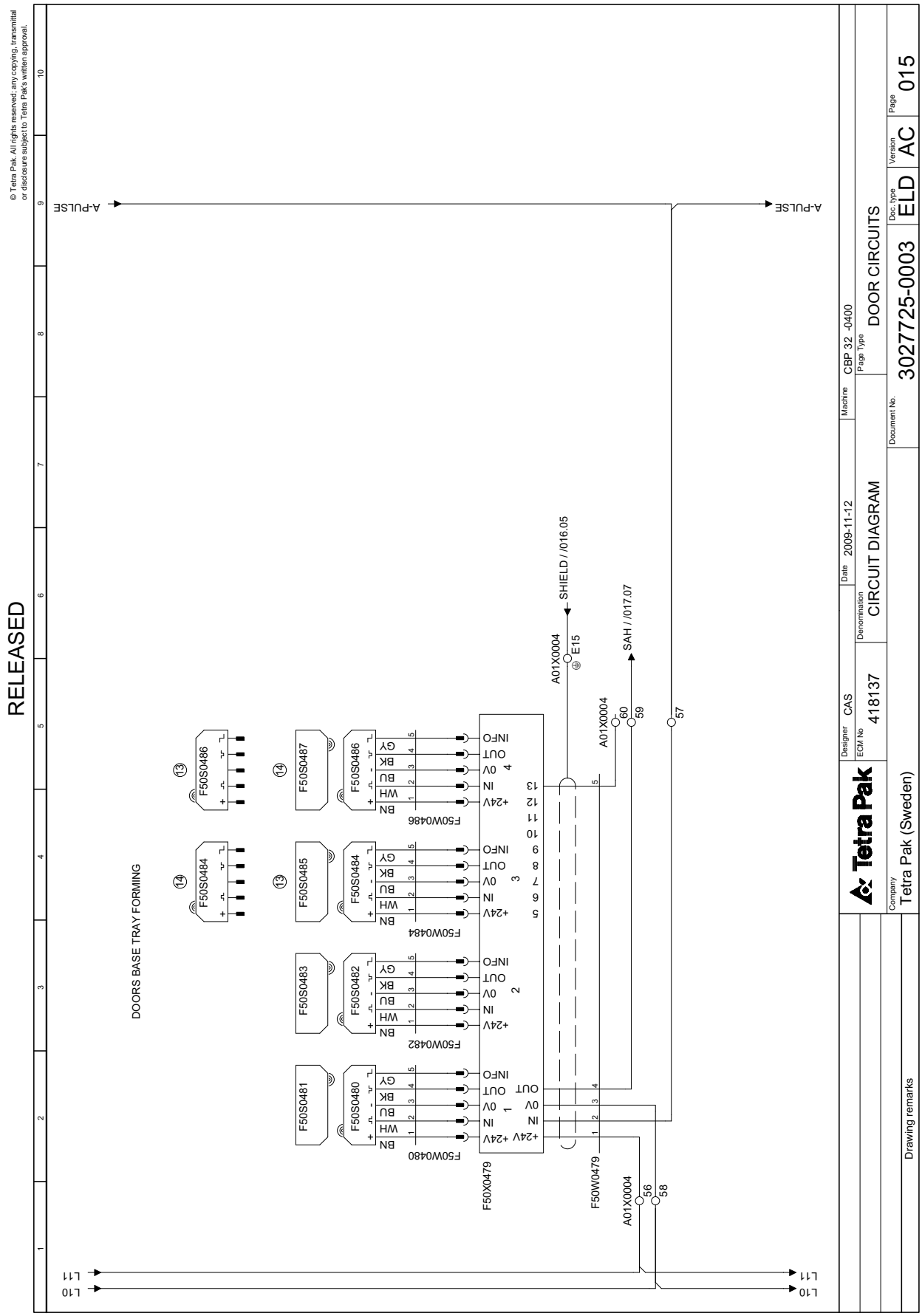

1.3 Door Circuit Options

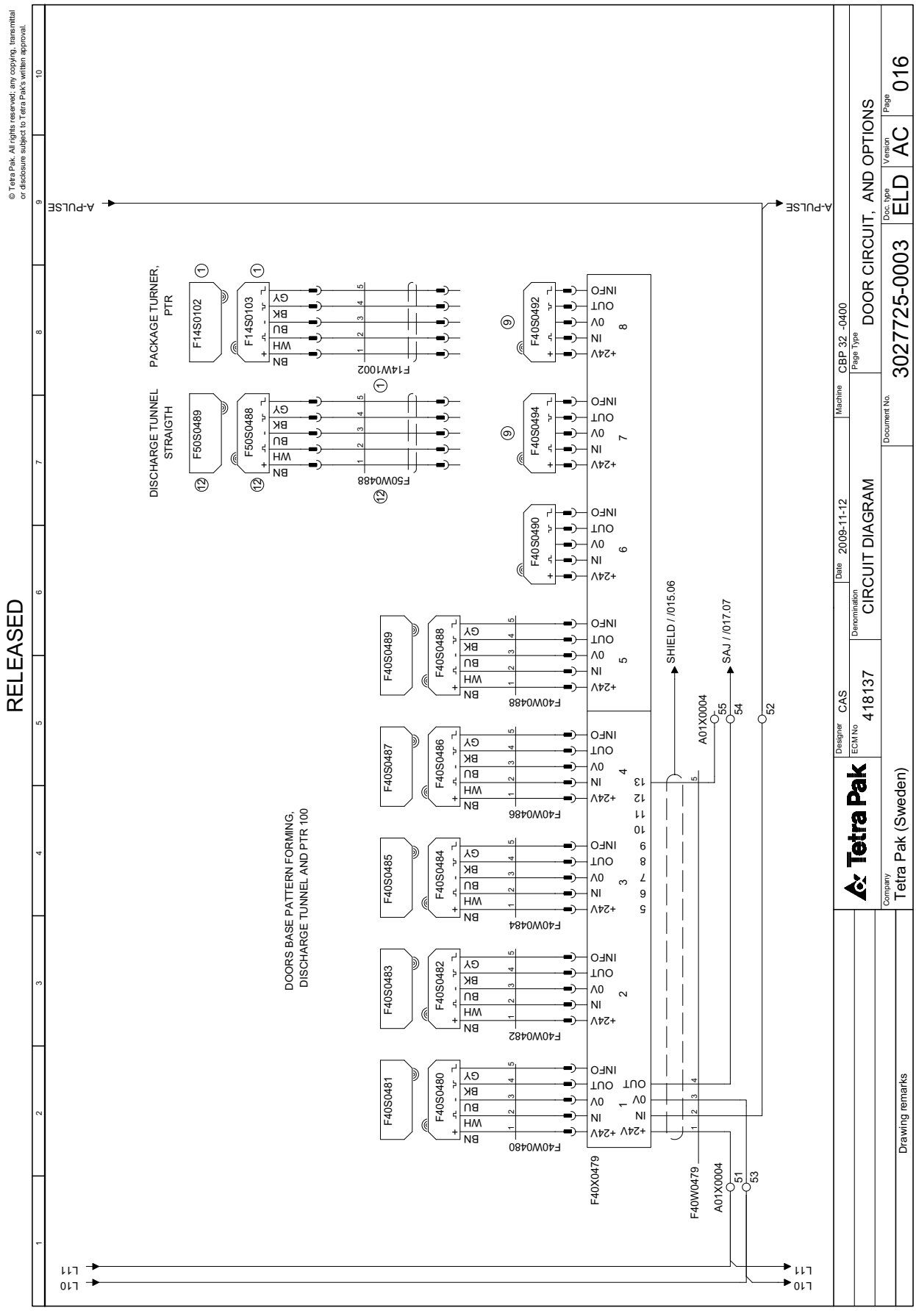

1.4 Safety Relay

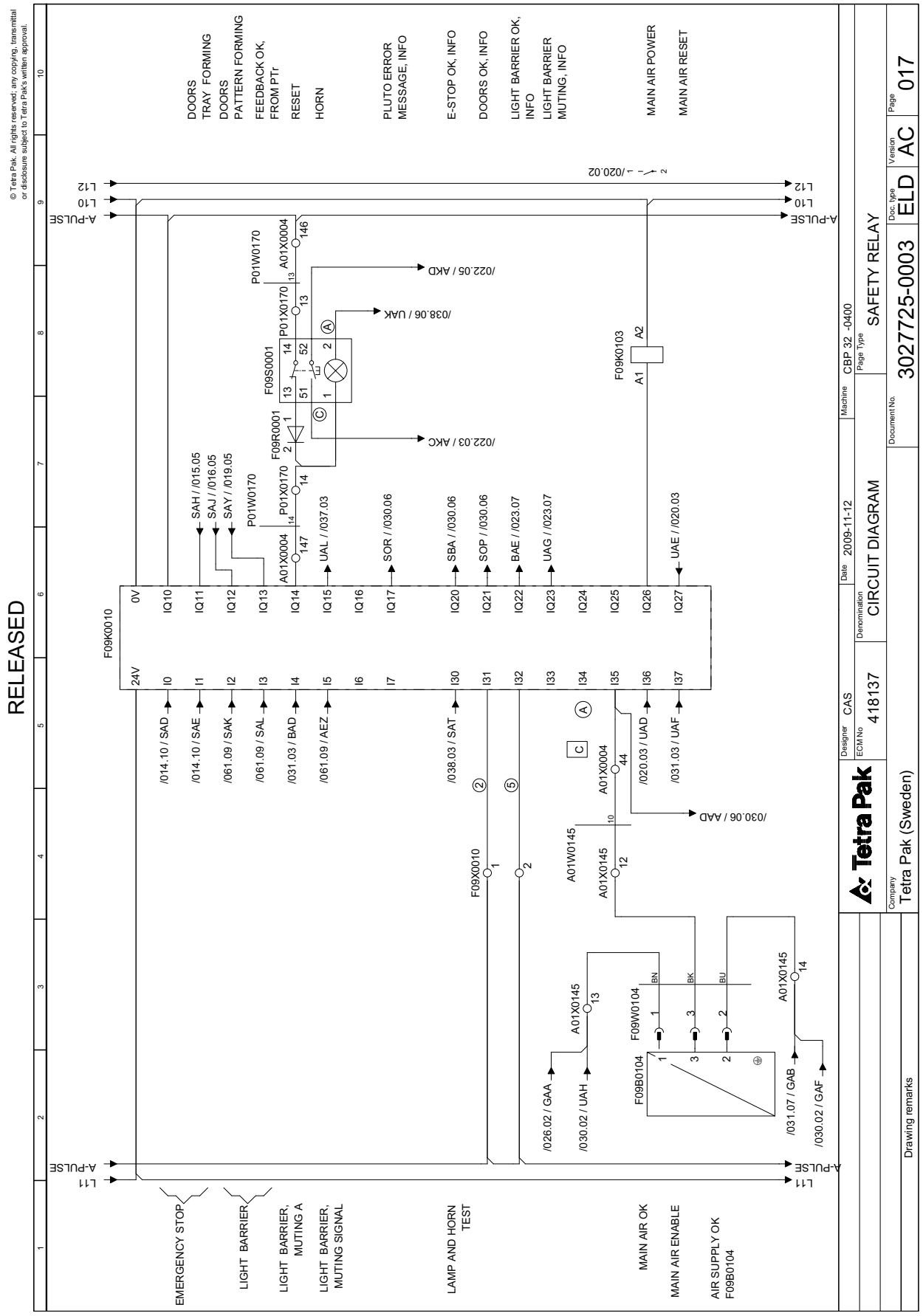

(Cont'd)

(Cont'd)

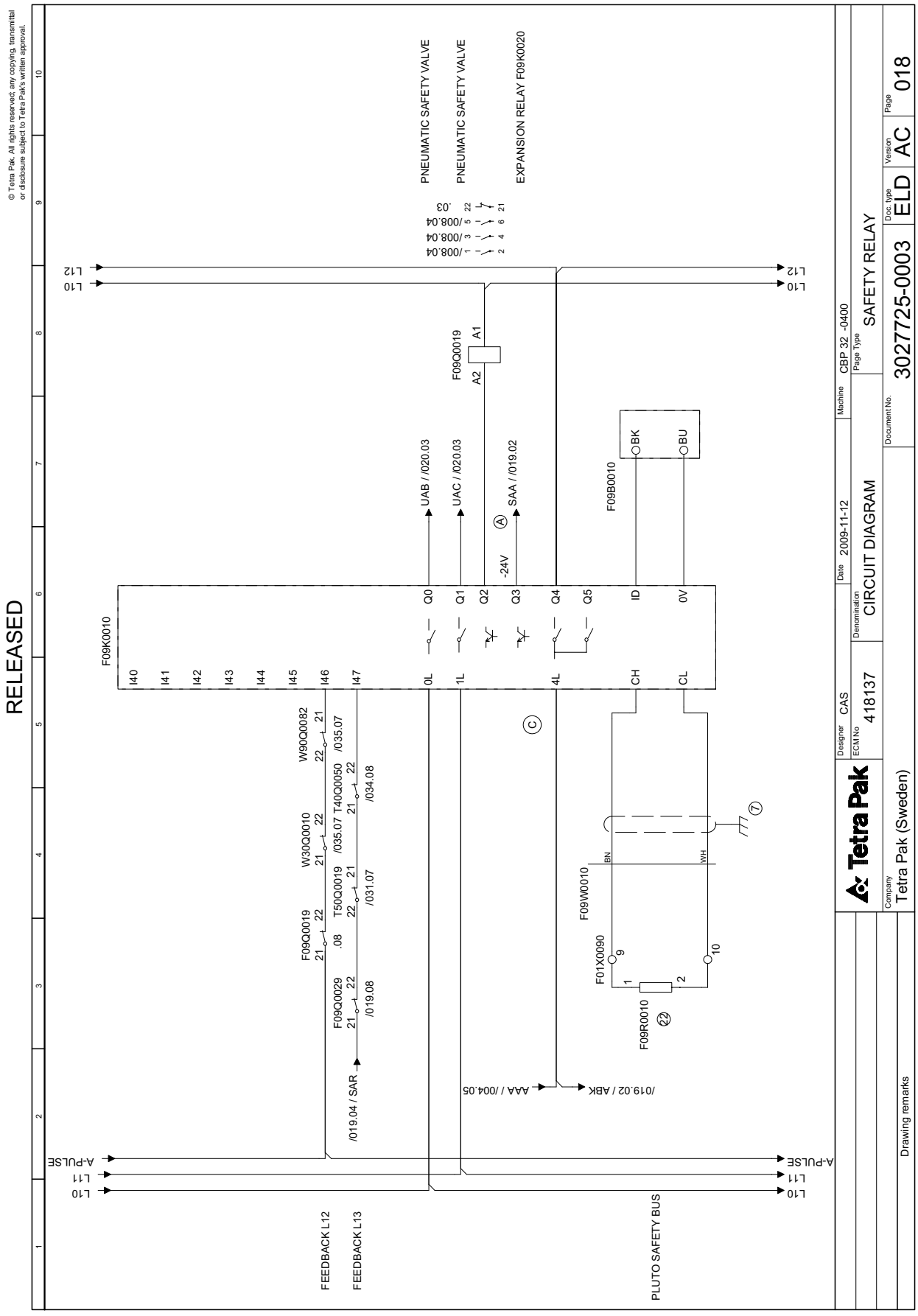
RELEASED
© Tetra Pak. All rights reserved; any copying, transmittal or disclosure subject to Tetra Pak's written approval.
PNEUMATIC SAFETY VALVE
PNEUMATIC SAFETY VALVE
EXPANSION RELAY F09K0020
F09K0010
F09Q0019
F09B0010
F09W0010
F01X0090
F09R0010
F09Q0029
T50Q0019
T40Q0050
W30Q0010
W90Q0082
UAB / /020.03
UAC / /020.03
SAA / /019.02
AAA / /004.05
/019.02 / ABK
/019.04 / SAR
FEEDBACK L12
FEEDBACK L13
PLUTO SAFETY BUS
A-PULSE
L10
L11
L12
Tetra Pak
Designer CAS
Date 2009-11-12
Machine CBP 32 -0400
ECM No 418137
Denomination CIRCUIT DIAGRAM
Page Type SAFETY RELAY
Document No. 3027725-0003
Doc. type ELD
Version AC
Page 018
Company Tetra Pak (Sweden)
Drawing remarks

(Cont'd)

(Cont'd)

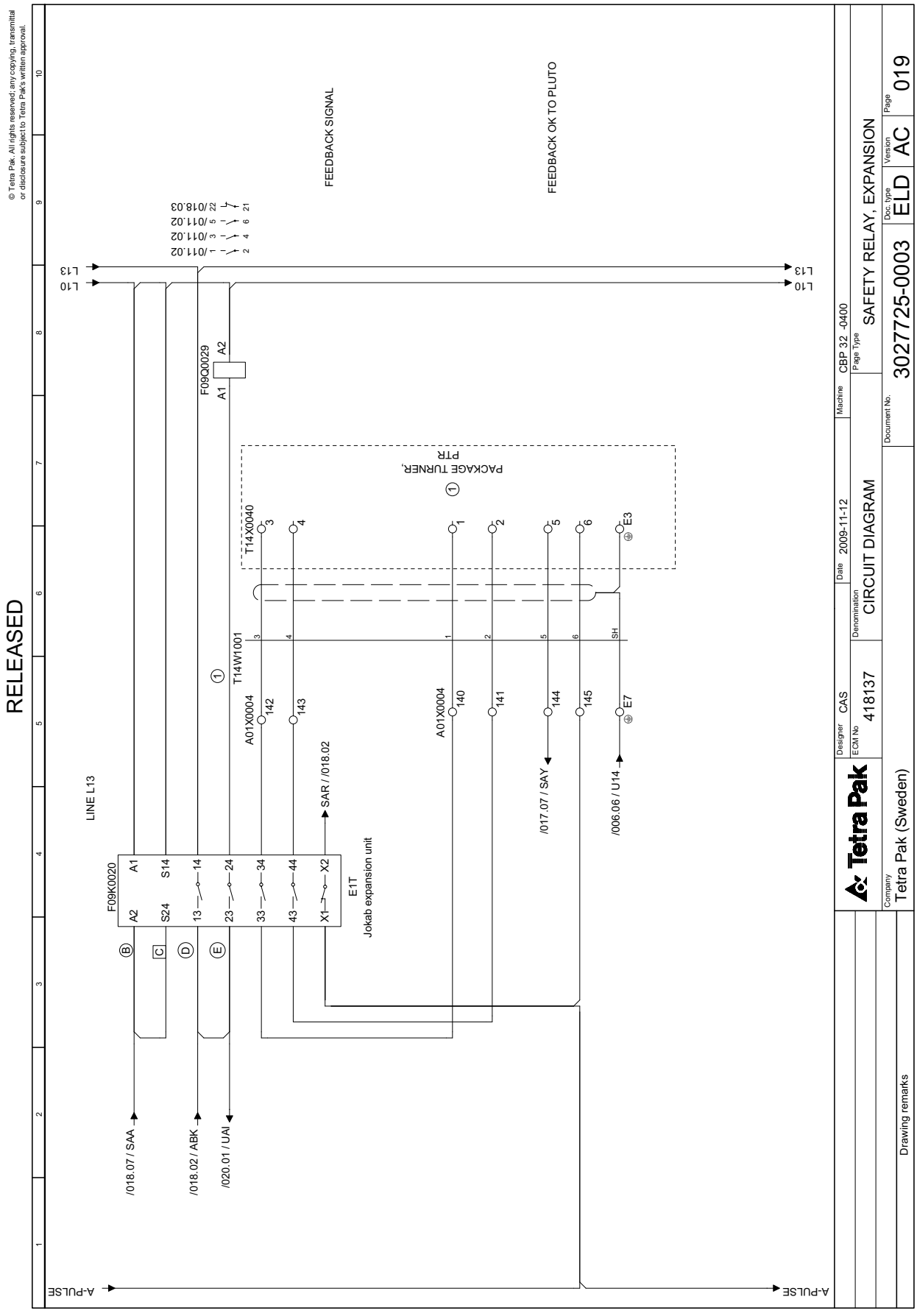
RELEASED
© Tetra Pak. All rights reserved; any copying, transmittal or disclosure subject to Tetra Pak's written approval.
L13
L10
/011.02
/011.02
/011.02
/018.03
FEEDBACK SIGNAL
FEEDBACK OK TO PLUTO
F09Q0029
A2
A1
PACKAGE TURNER, PTR
T14X0040
T14W1001
A01X0004
142
143
140
141
144
145
E3
E7
LINE L13
F09K0020
A1
S14
A2
S24
13
14
23
24
33
34
43
44
X1
X2
E1T
Jokab expansion unit
SAR / /018.02
/017.07 / SAY
/006.06 / U14
/018.07 / SAA
/018.02 / ABK
/020.01 / UAI
A-PULSE
Designer CAS
ECM No 418137
Date 2009-11-12
Denomination CIRCUIT DIAGRAM
Machine CBP 32 -0400
Page Type SAFETY RELAY, EXPANSION
Document No. 3027725-0003
Doc. type ELD
Version AC
Page 019
Company Tetra Pak (Sweden)
Drawing remarks
Tetra Pak

(Cont'd)

(Cont'd)

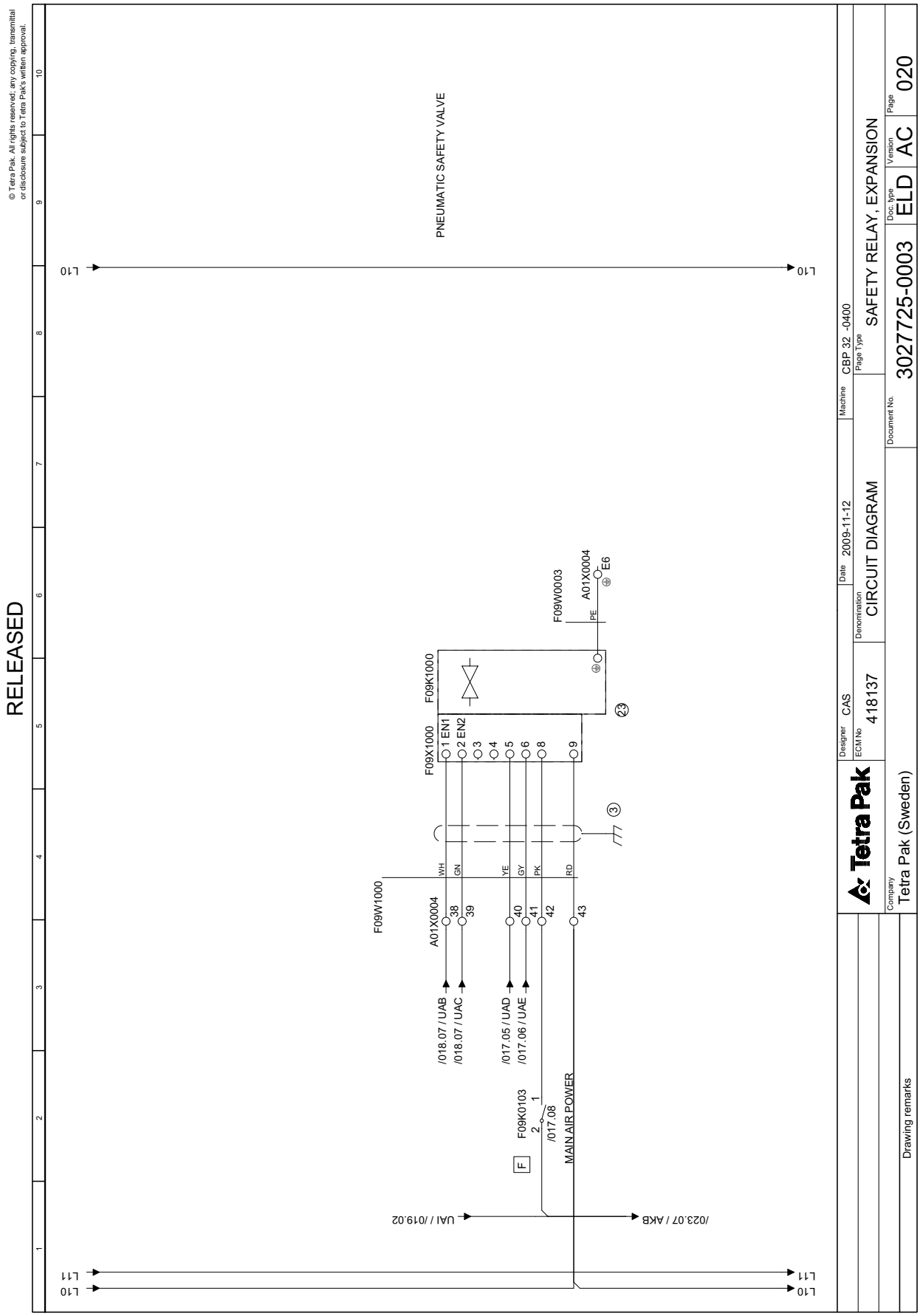
RELEASED
© Tetra Pak. All rights reserved; any copying, transmittal or disclosure subject to Tetra Pak's written approval.
PNEUMATIC SAFETY VALVE
L10
L11
F09W1000
A01X0004
38
39
40
41
42
43
WH
GN
YE
GY
PK
RD
F09X1000
1 EN1
2 EN2
3
4
5
6
8
9
F09K1000
F09W0003
A01X0004
E6
PE
/018.07 / UAB
/018.07 / UAC
/017.05 / UAD
/017.06 / UAE
F09K0103
/017.08
MAIN AIR POWER
UAI / /019.02
/023.07 / AKB
Designer CAS
Date 2009-11-12
Machine CBP 32 -0400
Tetra Pak
ECN No 418137
Denomination CIRCUIT DIAGRAM
Page Type SAFETY RELAY, EXPANSION
Company Tetra Pak (Sweden)
Document No. 3027725-0003
Doc. type ELD
Version AC
Page 020
Drawing remarks

1.5 Light Barrier

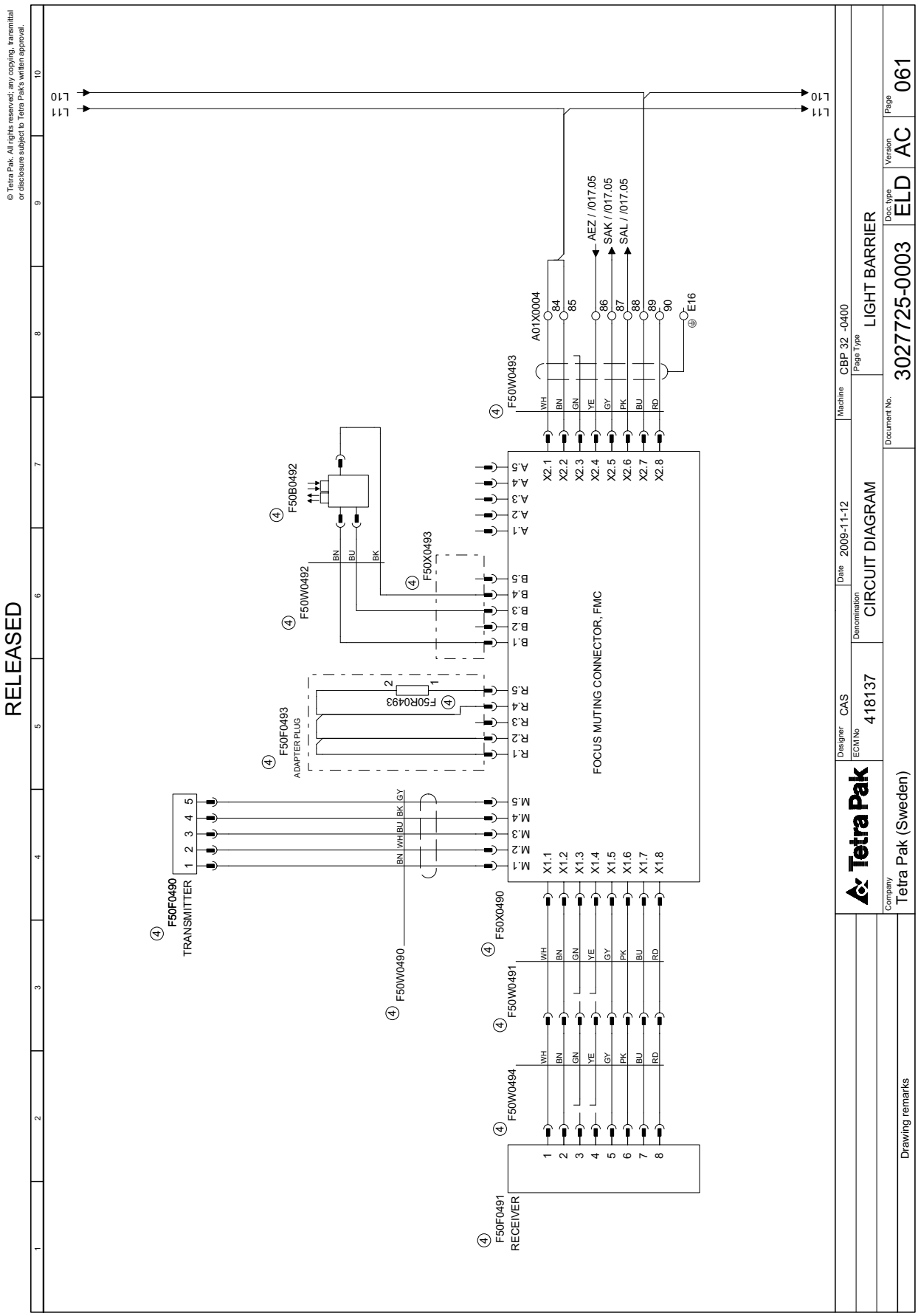

2 Document List

Description

This chapter contains a table of contents listing the electrical diagrams for each electrical document valid for the equipment.

© Tetra Pak. All rights reserved; any copying, transmittal or disclosure subject to Tetra Pak's written approval.

RELEASED

Documents list

Drawing No	Page	Denomination	Page type	Version
3027725-0001	001	DOCUMENT LIST	DOCUMENT LIST	AC
3027725-0001	002	DOCUMENT LIST	DOCUMENT LIST	AC
3027725-0001	003	DOCUMENT LIST	DOCUMENT LIST	AC
3027725-0002	001	POSITION SUMMARY	POSITION SUMMARY	AC
3027725-0002	002	POSITION SUMMARY	POSITION SUMMARY	AC
3027725-0002	003	POSITION SUMMARY	POSITION SUMMARY	AC
3027725-0003	001	CIRCUIT DIAGRAM	DISTRIBUTION TERMINALS	AC
3027725-0003	002	CIRCUIT DIAGRAM	DISTRIBUTION TERMINALS	AC
3027725-0003	003	CIRCUIT DIAGRAM	MAINS	AC
3027725-0003	004	CIRCUIT DIAGRAM	POWER SUPPLIES	AC
3027725-0003	005	CIRCUIT DIAGRAM	POWER SUPPLIES	AC
3027725-0003	006	CIRCUIT DIAGRAM	POWER SUPPLY DEVICE NET	AC
3027725-0003	007	CIRCUIT DIAGRAM	WALL SOCKET, FAN, PLC UPPLY	AC
3027725-0003	008	CIRCUIT DIAGRAM	POWER DISTRIBUTION	AC
3027725-0003	009	CIRCUIT DIAGRAM	FREQ. CONVERTER INFEED, EXT. CONV.	AC
3027725-0003	010	CIRCUIT DIAGRAM	FREQUENCY CONVERTER BELT BRAKE	AC
3027725-0003	011	CIRCUIT DIAGRAM	MAIN SHAFT, TRANSFER BELT	AC
3027725-0003	012	CIRCUIT DIAGRAM	FREQ. CONVERTER FEEDING MOTOR	AC
3027725-0003	013	CIRCUIT DIAGRAM	COMMUNICATIONS	AC
3027725-0003	014	CIRCUIT DIAGRAM	E-STOPS	AC
3027725-0003	015	CIRCUIT DIAGRAM	DOOR CIRCUITS	AC
3027725-0003	016	CIRCUIT DIAGRAM	DOOR CIRCUIT, AND OPTIONS	AC
3027725-0003	017	CIRCUIT DIAGRAM	SAFETY RELAY	AC
3027725-0003	018	CIRCUIT DIAGRAM	SAFETY RELAY	AC
3027725-0003	019	CIRCUIT DIAGRAM	SAFETY RELAY, EXPANSION	AC
3027725-0003	020	CIRCUIT DIAGRAM	SAFETY RELAY, EXPANSION	AC
3027725-0003	021	CIRCUIT DIAGRAM	ILLUMINATORS CONTROL ON MACHINE	AC
3027725-0003	022	CIRCUIT DIAGRAM	INPUTS A01K0033	AC
3027725-0003	023	CIRCUIT DIAGRAM	INPUTS A01K0033	AC
3027725-0003	024	CIRCUIT DIAGRAM	INPUTS A01X0144	AC
3027725-0003	025	CIRCUIT DIAGRAM	INPUTS A01K0034	AC
3027725-0003	026	CIRCUIT DIAGRAM	INPUTS A01K0034	AC
3027725-0003	027	CIRCUIT DIAGRAM	INPUTS A01K0035 ANGLE ENC. MAIN SHAFT	AC
3027725-0003	028	CIRCUIT DIAGRAM	INPUTS A01K0035 ANGLE ENC.FEEDING	AC
3027725-0003	029	CIRCUIT DIAGRAM	INPUTS A01K0036	AC
3027725-0003	030	CIRCUIT DIAGRAM	INPUTS A01K0036	AC
3027725-0003	031	CIRCUIT DIAGRAM	OUTPUTS A01K0037	AC
3027725-0003	032	CIRCUIT DIAGRAM	OUTPUTS A01K0037	AC
3027725-0003	033	CIRCUIT DIAGRAM	OUTPUTS A01K0038	AC
3027725-0003	034	CIRCUIT DIAGRAM	OUTPUTS A01K0038	AC
3027725-0003	035	CIRCUIT DIAGRAM	OUTPUTS A01K0039	AC
3027725-0003	036	CIRCUIT DIAGRAM	OUTPUTS A01K0039	AC
3027725-0003	037	CIRCUIT DIAGRAM	OUTPUTS A01K0040	AC
3027725-0003	038	CIRCUIT DIAGRAM	OUTPUTS A01K0040	AC
3027725-0003	039	CIRCUIT DIAGRAM	POWER DISTRIBUTION DEVICE A01X0180	AC
3027725-0003	040	CIRCUIT DIAGRAM	POWER DISTRIBUTION DEVICE A01X0181	AC

Tetra Pak

Designer CAS | Date 2009-11-12 | Machine CBP 32 -0400

ECM No 418137 | Denomination DOCUMENT LIST | Page Type DOCUMENT LIST

Company Tetra Pak (Sweden) | Drawing remarks | Document No. 3027725-0001 | Doc. type ELD | Version AC | Page 001

© Tetra Pak. All rights reserved; any copying, transmittal or disclosure subject to Tetra Pak's written approval.

RELEASED

Documents list

Drawing No	Page	Denomination	Page type	Version
3027725-0003	041	CIRCUIT DIAGRAM	POWER DISTRIBUTION DEVICE A01X0182	AC
3027725-0003	042	CIRCUIT DIAGRAM	ARMOR BLOCK A01X0143	AC
3027725-0003	043	CIRCUIT DIAGRAM	ARMOR BLOCK A01X0151	AC
3027725-0003	044	CIRCUIT DIAGRAM	ARMOR BLOCK A01X0141	AC
3027725-0003	045	CIRCUIT DIAGRAM	ARMOR BLOCK A01X0142	AC
3027725-0003	046	CIRCUIT DIAGRAM	ARMOR BLOCK A01X0140	AC
3027725-0003	047	CIRCUIT DIAGRAM	ARMOR BLOCK A01X0150	AC
3027725-0003	048	CIRCUIT DIAGRAM	ARMOR BLOCK A01X0152	AC
3027725-0003	049	CIRCUIT DIAGRAM	ARMOR BLOCK A01X0153	AC
3027725-0003	050	CIRCUIT DIAGRAM	ARMOR BLOCK A01X0149	AC
3027725-0003	051	CIRCUIT DIAGRAM	POWER DISTRIBUTION DEVICE A01X0183	AC
3027725-0003	052	CIRCUIT DIAGRAM	VALV PANEL A01X0040 BASE	AC
3027725-0003	053	CIRCUIT DIAGRAM	VALV PANEL A01X0040 EXPANSION	AC
3027725-0003	054	CIRCUIT DIAGRAM	VALV PANEL A01X0041 BASE	AC
3027725-0003	055	CIRCUIT DIAGRAM	VALV PANEL A01X0041 EXPANSION	AC
3027725-0003	056	CIRCUIT DIAGRAM	VALV PANEL A01X0050 BASE	AC
3027725-0003	057	CIRCUIT DIAGRAM	VALV PANEL A01X0050 EXPANSION	AC
3027725-0003	058	CIRCUIT DIAGRAM	VALV PANEL A01X0050 EXPANSION	AC
3027725-0003	059	CIRCUIT DIAGRAM	SERVO CONTROLLER	AC
3027725-0003	060	CIRCUIT DIAGRAM	SERVO AXIS INTERFACE	AC
3027725-0003	061	CIRCUIT DIAGRAM	LIGHT BARRIER	AC
3027725-0003	062	CIRCUIT DIAGRAM	LINE COMMUNICATION	AC
3027725-0003	200	CIRCUIT DIAGRAM	BUS CONNECTORS	AC
3027725-0003	201	CIRCUIT DIAGRAM	BUS SYSTEMS	AC
3027725-0003	202	CIRCUIT DIAGRAM	BUS SYSTEMS	AC
3027725-0004	001	LINE SUMMARY	LINE SUMMARY	AC
3027725-0004	002	LINE SUMMARY	LINE SUMMARY	AC
3027725-0004	003	LINE SUMMARY	LINE SUMMARY	AC
3027725-0004	004			AC
3027725-0005	001	CABINET TERMINAL SUMMARY	Terminal diagram: A01X0000 (E2 - 71)	AC
3027725-0005	002	CABINET TERMINAL SUMMARY	Terminal diagram: A01X0004 (72 - 3)	AC
3027725-0005	003	CABINET TERMINAL SUMMARY	Terminal diagram: A01X0090 (4 - 0V)	AC
3027725-0006	001	TERMINAL STRIP OVERVIEW	Terminal diagram: A01X0145 (1 - E2)	AC
3027725-0006	002	TERMINAL STRIP OVERVIEW	Terminal diagram: A01X0148 (1 - E1)	AC
3027725-0006	003	TERMINAL STRIP OVERVIEW	Terminal diagram: A01X0155 (1 - E5)	AC
3027725-0006	004	TERMINAL STRIP OVERVIEW	Terminal diagram: A01X0155 (E6 - E7)	AC
3027725-0006	005	TERMINAL STRIP OVERVIEW	Terminal diagram: F09X0010 (1 - 2)	AC
3027725-0006	006	TERMINAL STRIP OVERVIEW	Terminal diagram: P01X0170 (1 - E2)	AC
3027725-0006	007	TERMINAL STRIP OVERVIEW	Terminal diagram: T14X0040 (1 - E3)	AC
3027725-0006	008	TERMINAL STRIP OVERVIEW	Terminal diagram: T40X0040 (1 - 7)	AC
3027725-0006	009	TERMINAL STRIP OVERVIEW	Terminal diagram: W10X0900 (1A - E1)	AC
3027725-0007	001	CABLE CONNECTION LIST	CABLE CONNECTION LIST	AC
3027725-0007	002	CABLE CONNECTION LIST	CABLE CONNECTION LIST	AC
3027725-0007	003	CABLE CONNECTION LIST	CABLE CONNECTION LIST	AC
3027725-0007	004	CABLE CONNECTION LIST	CABLE CONNECTION LIST	AC
3027725-0007	005	CABLE CONNECTION LIST	CABLE CONNECTION LIST	AC

Tetra Pak
Designer CAS
ECM No 418137
Date 2009-11-12
Denomination DOCUMENT LIST
Machine CBP 32 -0400
Page Type DOCUMENT LIST
Document No. 3027725-0001
Doc. type ELD
Version AC
Page 002
Company Tetra Pak (Sweden)
Drawing remarks

© Tetra Pak. All rights reserved; any copying, transmittal or disclosure subject to Tetra Pak's written approval.

RELEASED

Documents list

Drawing No	Page	Denomination	Page type	Version
3027725-0007	006	CABLE CONNECTION LIST	CABLE CONNECTION LIST	AC
3027725-0007	007	CABLE CONNECTION LIST	CABLE CONNECTION LIST	AC
3027725-0007	008	CABLE CONNECTION LIST	CABLE CONNECTION LIST	AC
3027725-0007	009	CABLE CONNECTION LIST	CABLE CONNECTION LIST	AC
3027725-0007	010	CABLE CONNECTION LIST	CABLE CONNECTION LIST	AC
3027725-0007	011	CABLE CONNECTION LIST	CABLE CONNECTION LIST	AC
3027725-0007	012	CABLE CONNECTION LIST	CABLE CONNECTION LIST	AC
3027725-0007	013	CABLE CONNECTION LIST	CABLE CONNECTION LIST	AC
3027725-0007	014	CABLE CONNECTION LIST	CABLE CONNECTION LIST	AC
3027725-0007	015	CABLE CONNECTION LIST	CABLE CONNECTION LIST	AC
3027725-0007	016	CABLE CONNECTION LIST	CABLE CONNECTION LIST	AC
3027725-0008	001	MAINS CONNECTION	MAINS CONNECTION	AC
3027725-0008	002	MAINS CONNECTION	MAINS CONNECTION	AC

Tetra Pak

Designer CAS | Date 2009-11-12 | Machine CBP 32 -0400 | Page Type DOCUMENT LIST

ECM No 418137 | Denomination DOCUMENT LIST | Document No. 3027725-0001 | Doc. type ELD | Version AC | Page 003

Company Tetra Pak (Sweden)

Drawing remarks

This page intentionally left blank

3 Position Summary

Description

This chapter contains a list of all electrical components, except terminals and cables, that are shown in the circuit diagrams, with page references to the diagrams where they are located.

RELEASED

© Tetra Pak. All rights reserved; any copying, transmittal or disclosure subject to Tetra Pak's written approval.

Position summary of 3027725-0003

Component	Page .Col.	Opt.
A01B0101	042 .4	
A01B0121	022 .5	
A01B0131	026 .4	
A01E0001	007 .5	34
A01F0000	003 .4	
A01F0001	007 .1	
A01F0011	004 .3	
A01F0016	004 .3	
A01F0029	007 .8	
A01F0070	007 .1	
A01K0000	003 .5	
A01K0001	003 .5	
A01K0030	007 .8	
A01K0031	006 .3	
A01K0032	013 .3	
A01K0033	022 .8	
A01K0034	025 .7	
A01K0035	027 .7	
A01K0036	029 .7	
A01K0037	031 .1	
A01K0038	033 .1	
A01K0039	035 .1	
A01K0040	037 .1	
A01K0120	053 .5	
A01K0130	031 .5	25
A01K0405	013 .7	8
A01M0001	007 .3	34
A01Q0000	003 .1	

Component	Page .Col.	Opt.
A01R0424	054 .7	
A01R0443	052 .7	
A01S0001	022 .4	
A01S0002	038 .5	
A01T0011	004 .3	
A01T0029	007 .7	
A01V0000	003 .5	
A01V0029	007 .7	
A01V0032	059 .9	
A01X 0070	007 .1	
C50B0102	047 .3	
C50B0104	047 .3	
C50B0106	048 .3	
C50B0231	047 .4	
C50K0230	057 .5	
F09B0010	018 .7	
F09B0104	017 .2	
F09K0010	018 .5	
F09K0020	019 .3	
F09K0103	017 .8	
F09K1000	020 .5	
F09Q0019	018 .8	
F09R0001	017 .7	
F09R0010	018 .3	
F09S0001	017 .7	
F09S0100	014 .4	
F09S0101	014 .6	
F09S0102	014 .8	

Component	Page .Col.	Opt.
F09S0103	014 .2	
F09S0104	014 .7	
F14S0101	014 .5	1
F14S0102	016 .8	1
F14S0103	016 .8	1
F40S0480	016 .2	
F40S0481	016 .2	
F40S0482	016 .3	
F40S0483	016 .3	
F40S0484	016 .4	
F40S0485	016 .4	
F40S0486	016 .4	
F40S0487	016 .5	
F40S0488	016 .5	
F40S0489	016 .6	
F40S0490	016 .6	
F40S0492	016 .8	
F40S0494	016 .7	
F50B0492	061 .7	4
F50F0490	061 .4	4
F50F0491	061 .2	4
F50F0493	061 .5	4
F50R0493	061 .5	4
F50S0480	015 .2	
F50S0481	015 .2	
F50S0482	015 .3	
F50S0483	015 .3	
F50S0484	015 .4	

Component	Page .Col.	Opt.
F50S0485	015 .4	
F50S0486	015 .4	
F50S0487	015 .5	
F50S0488	016 .7	12
F50S0489	016 .7	12
P01A0080	007 .8	
P01F0015	005 .3	
P01M0002	007 .4	33
P01P0030	038 .5	
P01P0102	037 .5	
P01T0015	005 .3	
R14K0101	202 .4	1
T14F0000	008 .8	
T14K0100	202 .4	1
T14K0101	202 .4	1
T40B0100	045 .4	
T40B0101	047 .3	
T40B0102	045 .4	
T40B0103	047 .3	
T40B0106	023 .4	
T40B0201	046 .4	
T40B0202	046 .4	
T40B0221	044 .4	
T40B0252	050 .3	
T40B0260	030 .4	
T40B0262	044 .3	
T40B0264	030 .4	
T40B0266	045 .4	

Drawing remarks

Tetra Pak

Designer CAS | Date 2009-11-12 | Machine CBP 32 -0400

ECM No 418137 | Denomination POSITION SUMMARY | Page Type POSITION SUMMARY

Company Tetra Pak (Sweden) | Document No. 3027725-0002 | Doc. type ELD | Version AC | Page 001

RELEASED

© Tetra Pak. All rights reserved; any copying, transmittal or disclosure subject to Tetra Pak's written approval.

Position summary of 3027725-0003

Component	Page .Col.	Opt.
T40B0267	044 .3	
T40B0271	047 .4	
T40B0301	026 .4	
T40B0302	026 .4	
T40B0311	026 .4	
T40B0320	045 .4	
T40B0322	045 .4	28
T40F0050	011 .3	
T40K0020	059 .2	
T40K0021	059 .2	
T40K0022	059 .4	
T40K0023	059 .6	
T40K0024	059 .8	
T40K0030	060 .4	
T40K0031	060 .2	
T40K0040	060 .9	
T40K0041	060 .7	
T40K0190	053 .5	
T40K0200	052 .5	
T40K0220	052 .5	
T40K0230	053 .5	
T40K0240	053 .5	
T40K0250	052 .5	
T40K0260	054 .5	
T40K0261	044 .3	
T40K0262	044 .3	
T40K0270	052 .5	
T40K0280	054 .5	

Component	Page .Col.	Opt.
T40K0300	055 .5	
T40K0310	054 .5	
T40K0320	055 .5	
T40K0322	055 .5	
T40M0030	060 .3	
T40M0040	060 .8	
T40M0050	011 .4	
T40R0039	060 .3	
T40T0050	011 .2	
T40V0050	011 .3	
T50B0021	027 .2	
T50B0031	028 .2	
T50B0100	025 .5	
T50F0020	011 .7	
T50F0030	012 .3	
T50K0260	057 .5	
T50K0270	056 .5	
T50K0280	058 .5	
T50M0020	011 .9	
T50M0030	012 .4	
T50Q0019	031 .7	
T50R0030	201 .8	
T50T0020	011 .7	
T50T0030	012 .2	
T50V0020	011 .7	
T50V0030	012 .3	
U01E0103	008 .1	15
U01E0104	008 .3	15

Component	Page .Col.	Opt.
U01F0103	008 .1	
U01Q0103	021 .7	
U01S0104	021 .2	
U01T0014	006 .3	
U50K0240	042 .3	
U50K0250	042 .3	
V10K0950	035 .5	27
V14K0101	202 .4	1
V50B0373	043 .4	26
V50B0381	043 .4	26
V50F0010	008 .5	
V50K0200	035 .5	
V50K0300	057 .5	
V50K0310	033 .5	
V50K0320	033 .5	
V50K0330	033 .5	
V50K0340	033 .5	
V50K0350	033 .5	26
V50K0360	033 .5	26
V50K0370	056 .5	26
V50K0380	056 .5	26
V50K0390	057 .5	
V50Q0010	035 .7	
V50V0010	008 .5	
W10B0902	026 .5	16
W10B0903	026 .3	16
W10B0904	026 .5	16
W10B0905	026 .3	16

Component	Page .Col.	Opt.
W10B0906	050 .3	31
W10K0099	037 .7	
W10K0901	038 .5	16
W30B0100	024 .7	
W30B0101	024 .6	
W30B0110	046 .4	
W30B0111	046 .3	
W30B0114	046 .4	
W30B0115	046 .3	
W30B0116	024 .7	
W30B0117	024 .6	
W30B0118	046 .4	
W30B0119	046 .3	
W30B0140	050 .3	
W30B0242	047 .4	
W30F0010	009 .2	
W30F0082	009 .6	
W30F0083	010 .6	
W30F0084	010 .9	
W30K0240	031 .5	
W30M0010	009 .4	
W30M0083	010 .6	
W30M0084	010 .9	
W30Q0010	035 .7	
W30R0082	201 .9	
W30T0010	009 .2	
W30T0082	010 .3	
W30V0010	009 .2	

Drawing remarks

Tetra Pak

Designer CAS | Date 2009-11-12 | Machine CBP 32 -0400

ECM No 418137 | Denomination POSITION SUMMARY | Page Type POSITION SUMMARY

Company Tetra Pak (Sweden) | Document No. 3027725-0002 | Doc. type ELD | Version AC | Page 002

RELEASED

© Tetra Pak. All rights reserved; any copying, transmittal or disclosure subject to Tetra Pak's written approval.

1 2 3 4 5 6 7 8 9 10

Position summary of 3027725-0003

Component	Page .Col.	Opt.
W30V0082	010 .4	
W50B0116	049 .3	
W50B0118	049 .3	
W50B0191	049 .3	
W50B0211	044 .4	
W50B0212	044 .4	
W50K0210	054 .5	
W50K0290	056 .5	
W50K0400	049 .3	
W90B0910	049 .3	
W90F0082	009 .9	
W90K0098	037 .7	
W90M0082	009 .9	
W90Q0082	035 .7	
W90S0082	009 .9	

Component	Page .Col.	Opt.

Component	Page .Col.	Opt.

Component	Page .Col.	Opt.

Drawing remarks

Tetra Pak

Designer CAS	Date 2009-11-12	Machine CBP 32 -0400	
ECM No 418137	Denomination POSITION SUMMARY	Page Type POSITION SUMMARY	
Company Tetra Pak (Sweden)	Document No. 3027725-0002	Doc. type ELD	Version AC	Page 003

This page intentionally left blank

4 Circuit Diagrams

Description

All diagrams describing connections for components, such as programmable logic controller modules, terminals, and cables, are included in this chapter.

RELEASED

© Tetra Pak. All rights reserved; any copying, transmittal or disclosure subject to Tetra Pak's written approval.

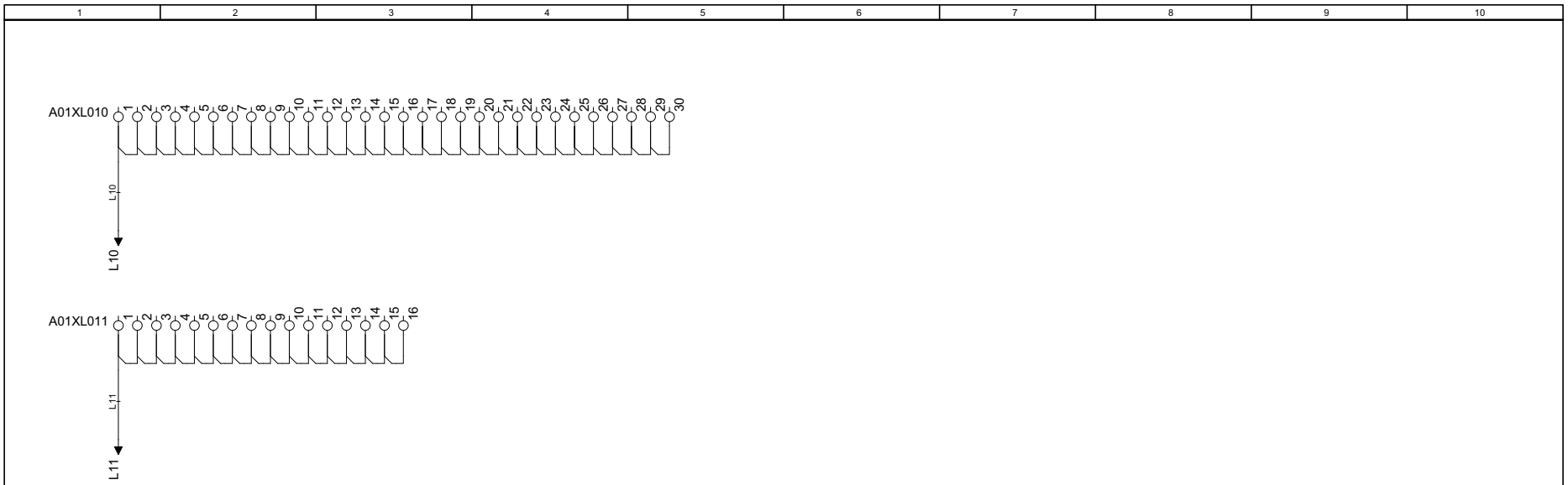

	Tetra Pak	Designer CAS	Date 2009-11-12	Machine CBP 32 -0400				
		ECM No 418137	Denomination CIRCUIT DIAGRAM	Page Type DISTRIBUTION TERMINALS				
Drawing remarks		Company Tetra Pak (Sweden)	Document No. 3027725-0003	Doc. type ELD	Version AC	Page 001		

RELEASED

© Tetra Pak. All rights reserved; any copying, transmittal or disclosure subject to Tetra Pak's written approval.

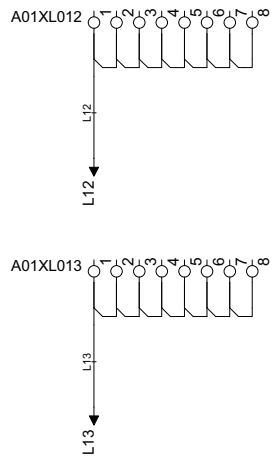

	Tetra Pak	Designer CAS	Date 2009-11-12	Machine CBP 32 -0400				
		ECM No 418137	Denomination CIRCUIT DIAGRAM	Page Type DISTRIBUTION TERMINALS				
Drawing remarks	Company Tetra Pak (Sweden)		Document No. 3027725-0003	Doc. type ELD	Version AC	Page 002		

RELEASED

© Tetra Pak. All rights reserved; any copying, transmittal or disclosure subject to Tetra Pak's written approval.

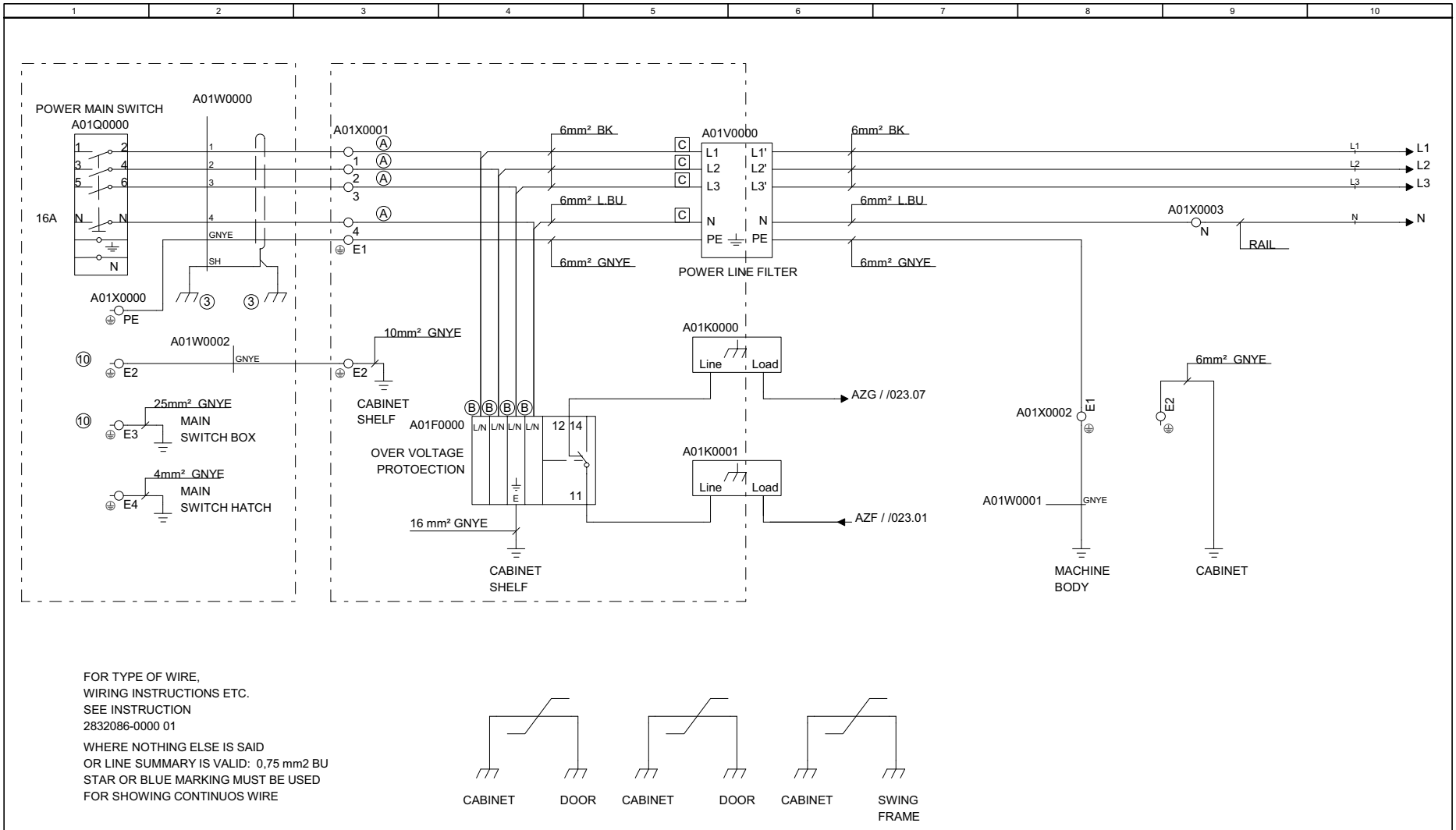

FOR TYPE OF WIRE,
WIRING INSTRUCTIONS ETC.
SEE INSTRUCTION
2832086-0000 01

WHERE NOTHING ELSE IS SAID
OR LINE SUMMARY IS VALID: 0,75 mm2 BU
STAR OR BLUE MARKING MUST BE USED
FOR SHOWING CONTINUOS WIRE

Drawing remarks	Tetra Pak	Designer CAS	Date 2009-11-12	Machine CBP 32 -0400			
		ECM No 418137	Denomination CIRCUIT DIAGRAM	Page Type MAINS			
	Company Tetra Pak (Sweden)	Document No. 3027725-0003	Doc. type ELD	Version AC	Page 003		

RELEASED

© Tetra Pak. All rights reserved; any copying, transmittal or disclosure subject to Tetra Pak's written approval.

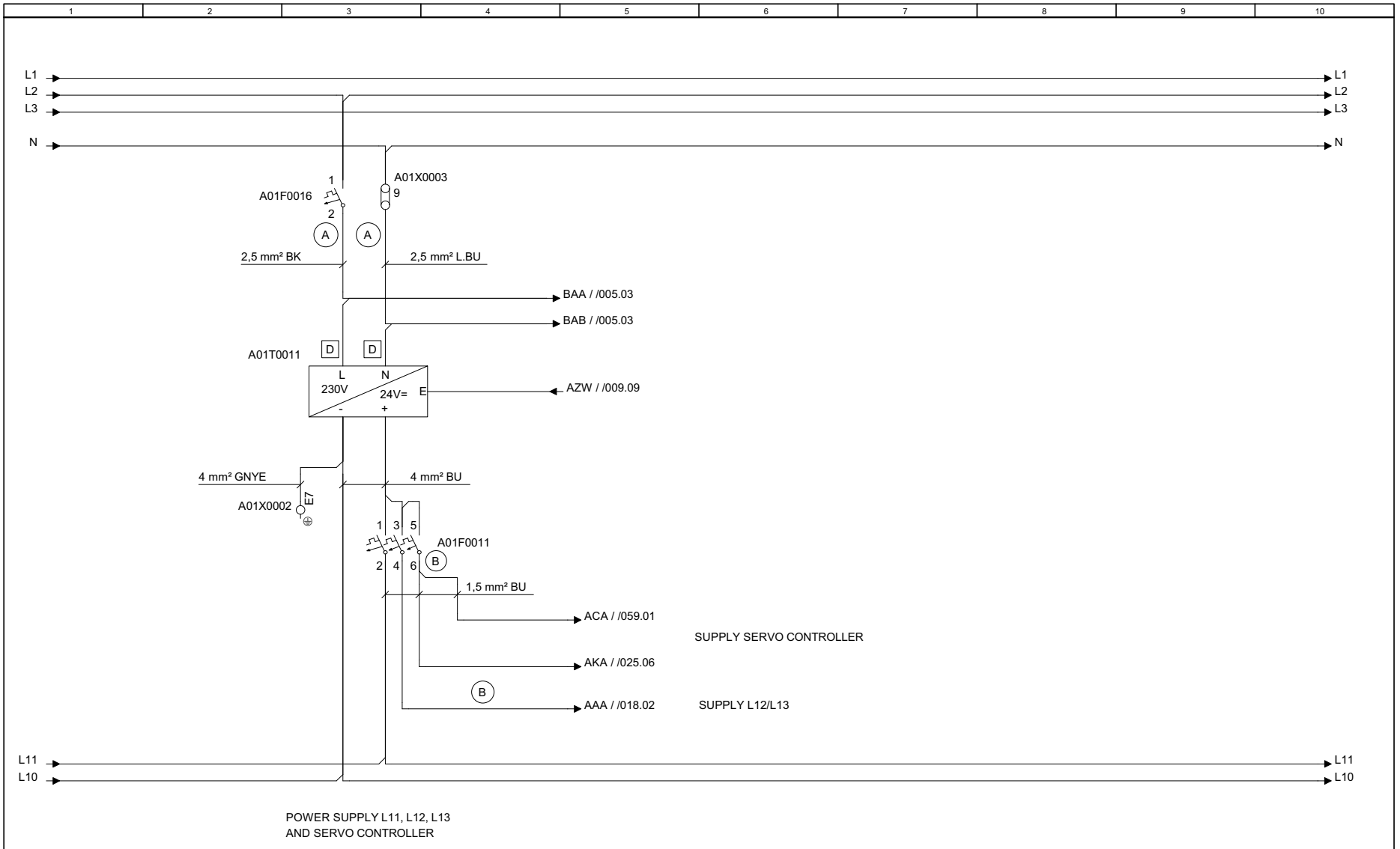

Tetra Pak	Designer CAS	Date 2009-11-12	Machine CBP 32 -0400	
	ECM No 418137	Denomination CIRCUIT DIAGRAM	Page Type POWER SUPPLIES	
Drawing remarks	Company Tetra Pak (Sweden)	Document No. 3027725-0003	Doc. type ELD	Version AC / Page 004

RELEASED

© Tetra Pak. All rights reserved; any copying, transmittal or disclosure subject to Tetra Pak's written approval.

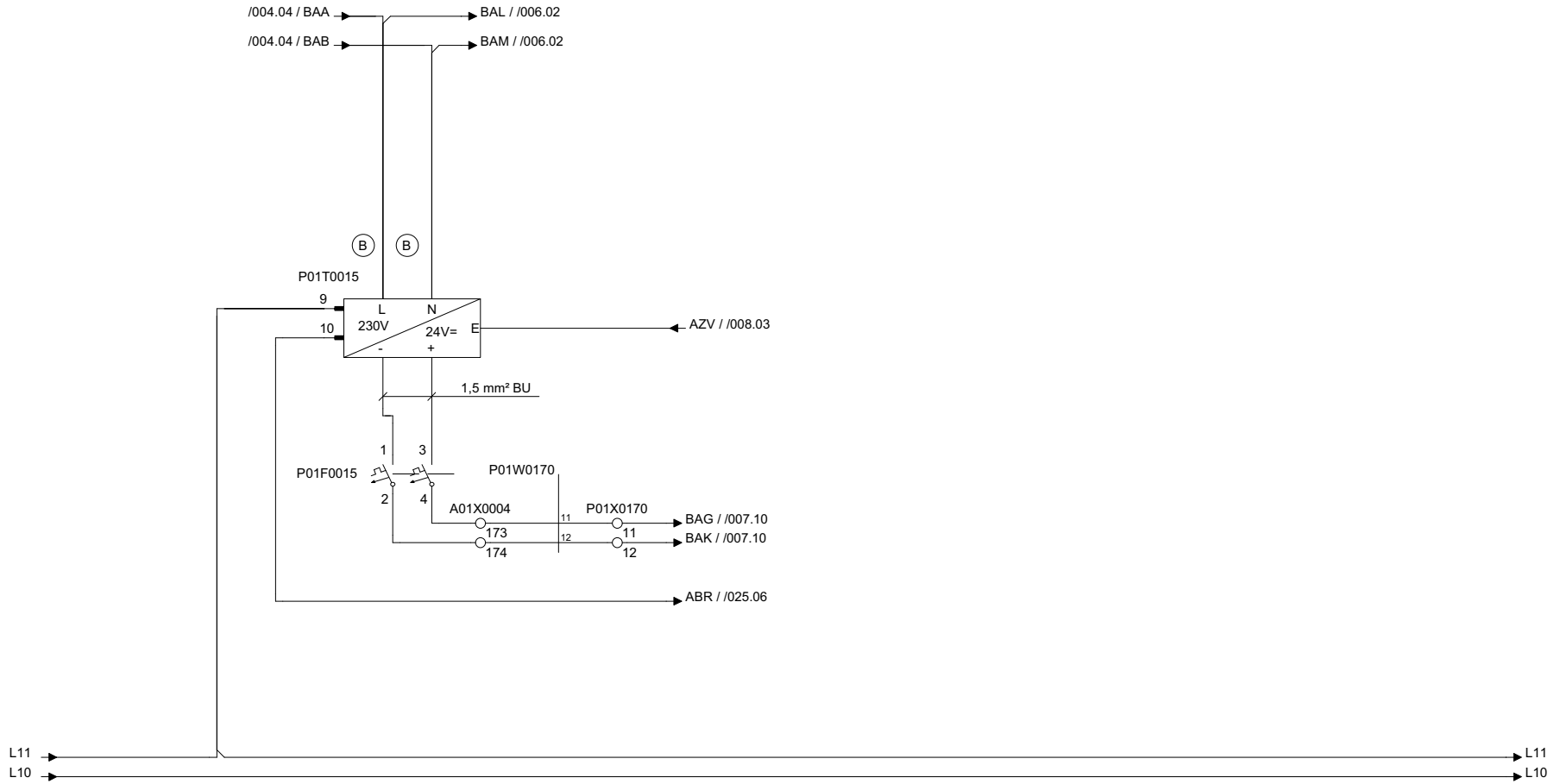

POWER SUPPLY DISPLAY

	Tetra Pak	Designer CAS	Date 2009-11-12	Machine CBP 32 -0400				
		ECM No 418137	Denomination CIRCUIT DIAGRAM	Page Type POWER SUPPLIES				
Drawing remarks		Company Tetra Pak (Sweden)	Document No. 3027725-0003	Doc. type ELD	Version AC	Page 005		

RELEASED

© Tetra Pak. All rights reserved; any copying, transmittal or disclosure subject to Tetra Pak's written approval.

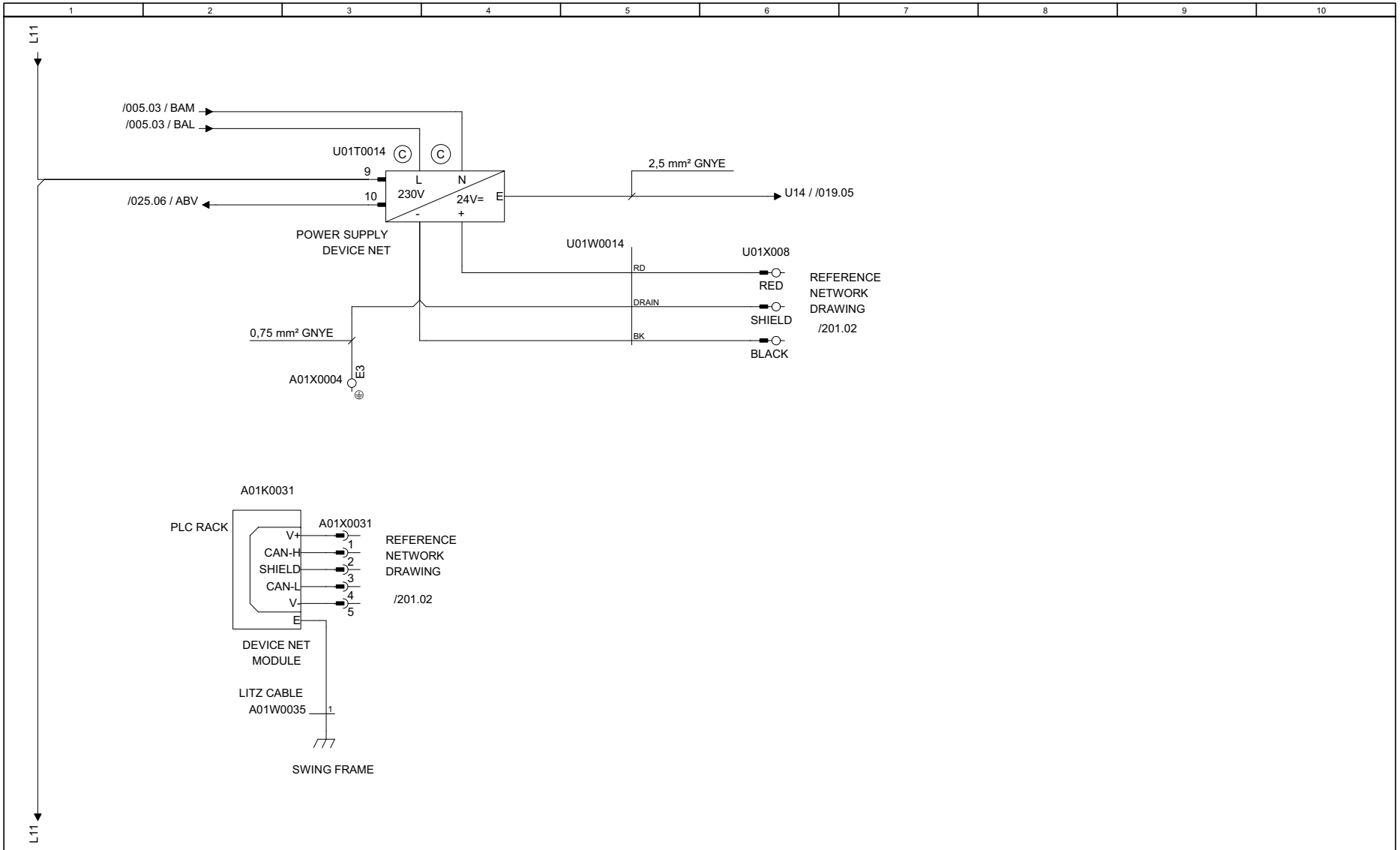

	Tetra Pak	Designer CAS	Date 2009-11-12	Machine CBP 32 -0400	
		ECM No 418137	Denomination CIRCUIT DIAGRAM	Page Type POWER SUPPLY DEVICE NET	
Drawing remarks	Company Tetra Pak (Sweden)	Document No. 3027725-0003	Doc. type ELD	Version AC	Page 006

RELEASED

© Tetra Pak. All rights reserved; any copying, transmittal or disclosure subject to Tetra Pak's written approval.

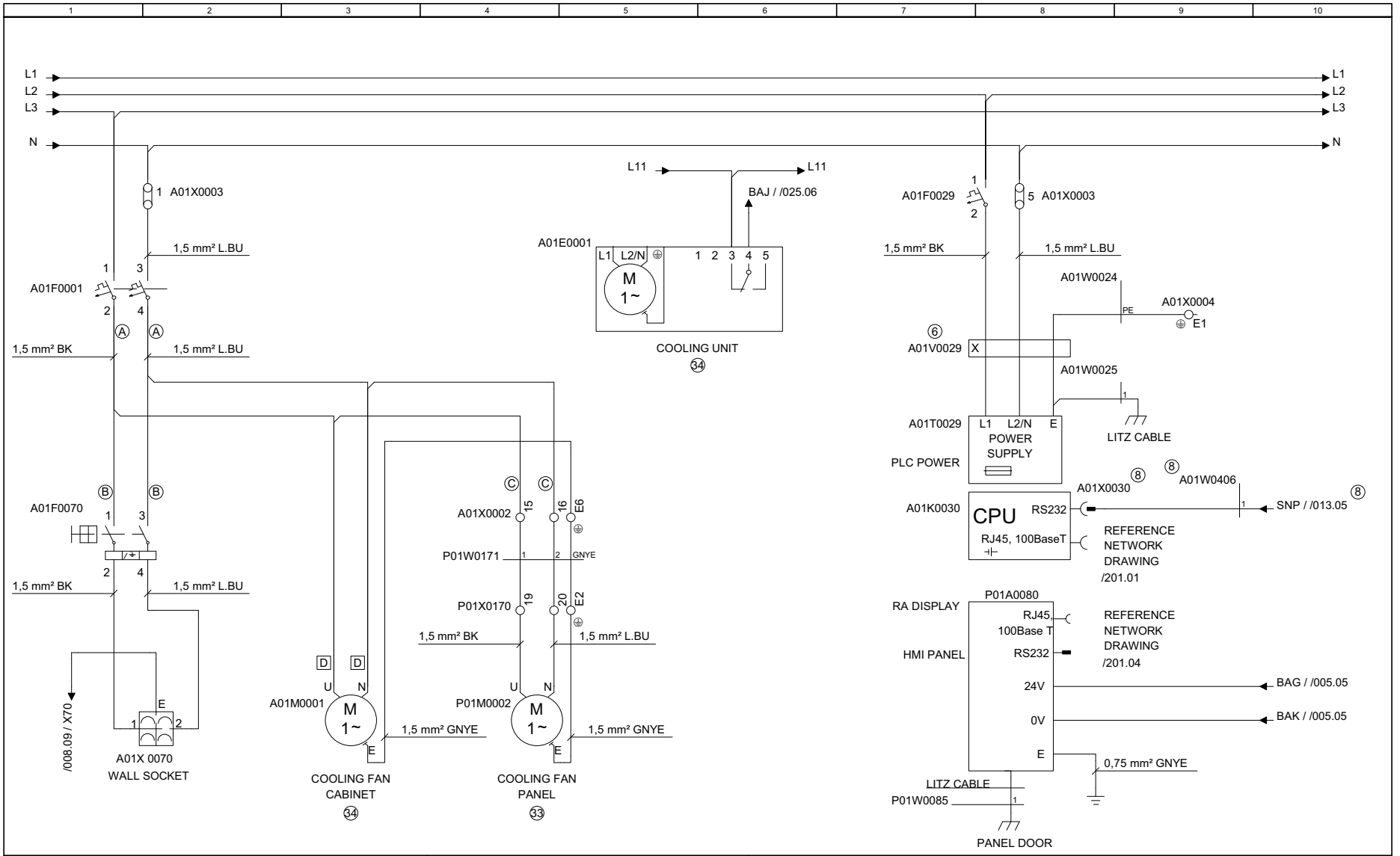

Drawing remarks	Tetra Pak	Designer CAS	Date 2009-11-12	Machine CBP 32 -0400			
		ECM No 418137	Denomination CIRCUIT DIAGRAM	Page Type WALL SOCKET, FAN, PLC UPPLY			
		Company Tetra Pak (Sweden)	Document No. 3027725-0003	Doc. type ELD	Version AC	Page 007	

RELEASED

© Tetra Pak. All rights reserved; any copying, transmittal or disclosure subject to Tetra Pak's written approval.

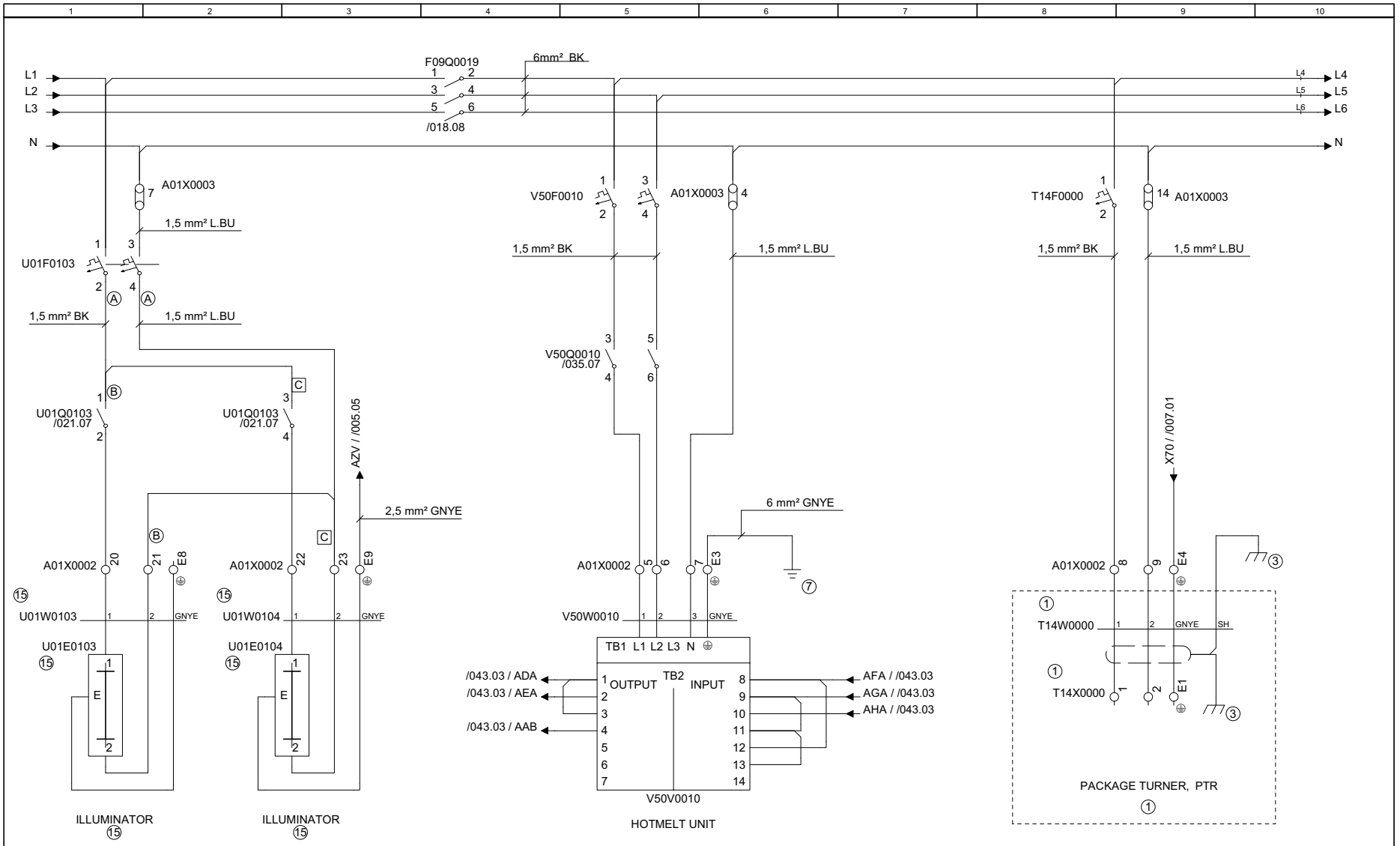

	Tetra Pak	Designer CAS	Date 2009-11-12	Machine CBP 32 -0400	
		ECM No 418137	Denomination CIRCUIT DIAGRAM	Page Type POWER DISTRIBUTION	
Drawing remarks	Company Tetra Pak (Sweden)	Document No. 3027725-0003	Doc. type ELD	Version AC	Page 008

RELEASED

© Tetra Pak. All rights reserved; any copying, transmittal or disclosure subject to Tetra Pak's written approval.

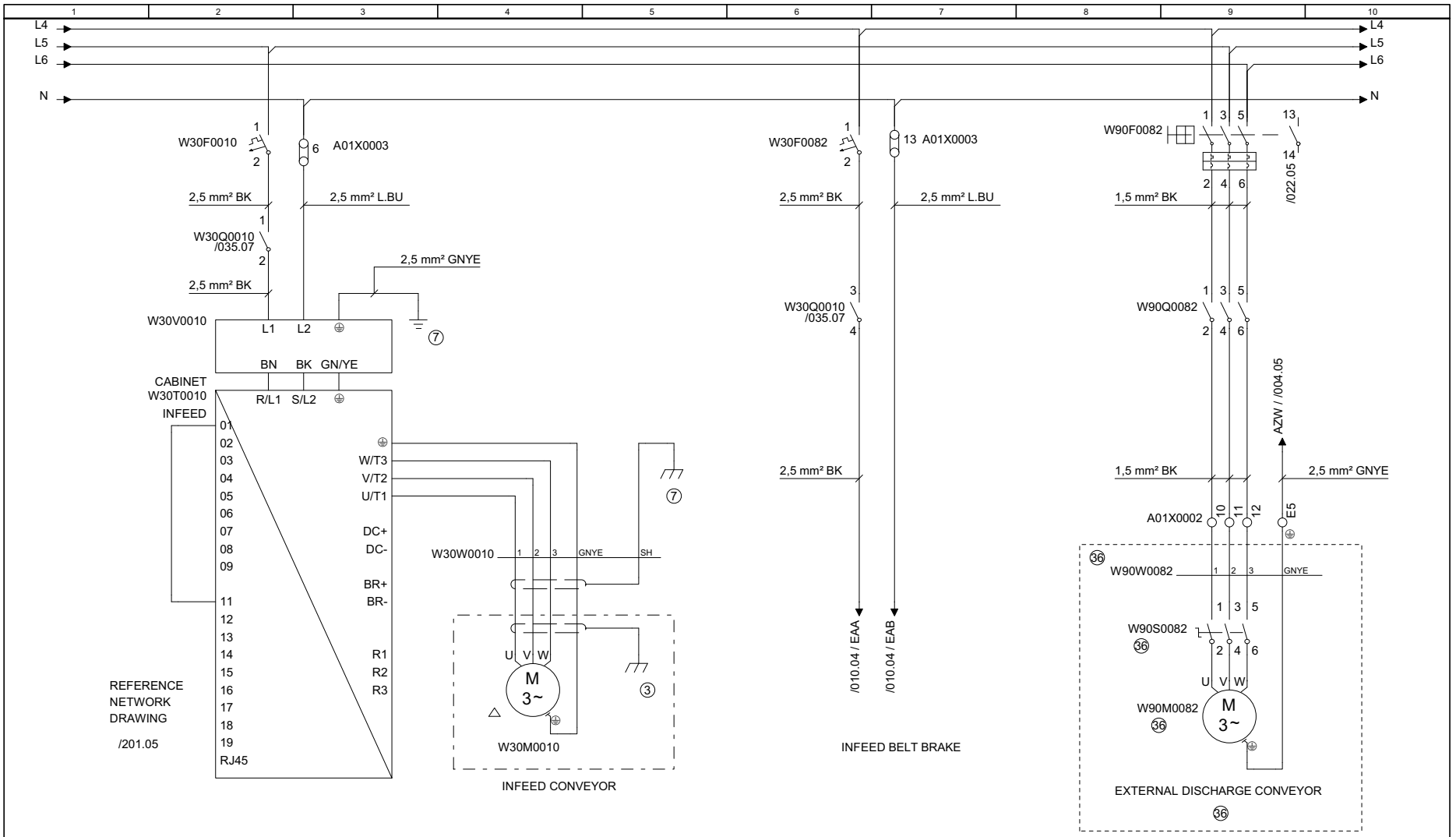

Drawing remarks	Tetra Pak	Designer CAS	Date 2009-11-12	Machine CBP 32 -0400	
		ECM No 418137	Denomination CIRCUIT DIAGRAM	Page Type FREQ. CONVERTER INFEED, EXT. CONV.	
		Company Tetra Pak (Sweden)	Document No. 3027725-0003	Doc. type ELD	Version AC	Page 009

RELEASED

© Tetra Pak. All rights reserved; any copying, transmittal or disclosure subject to Tetra Pak's written approval.

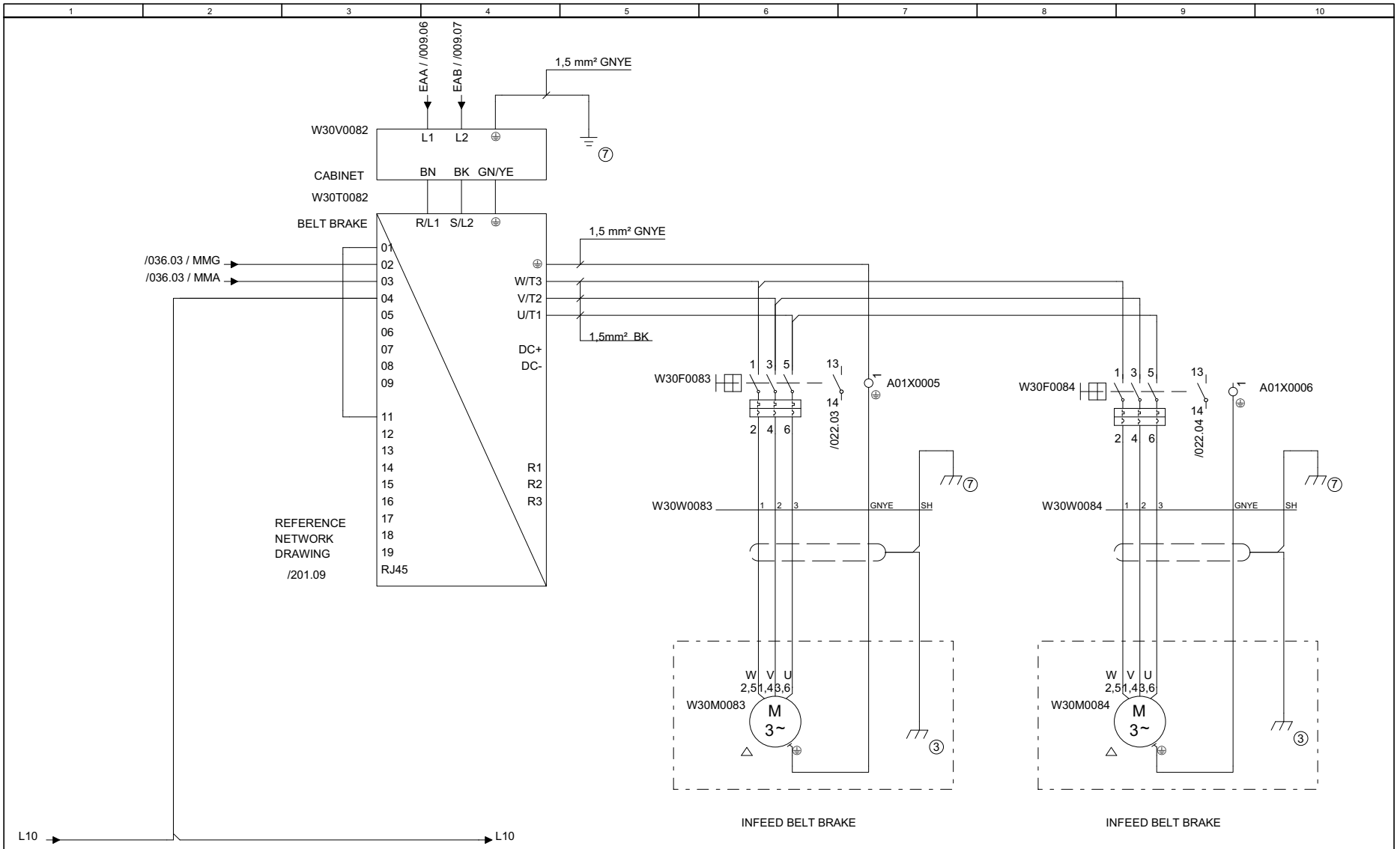

	Designer CAS	Date 2009-11-12	Machine CBP 32 -0400	
Tetra Pak	ECM No 418137	Denomination CIRCUIT DIAGRAM	Page Type FREQUENCY CONVERTER BELT BRAKE	
Drawing remarks	Company Tetra Pak (Sweden)	Document No. 3027725-0003	Doc. type ELD	Version AC	Page 010

RELEASED

© Tetra Pak. All rights reserved; any copying, transmittal or disclosure subject to Tetra Pak's written approval.

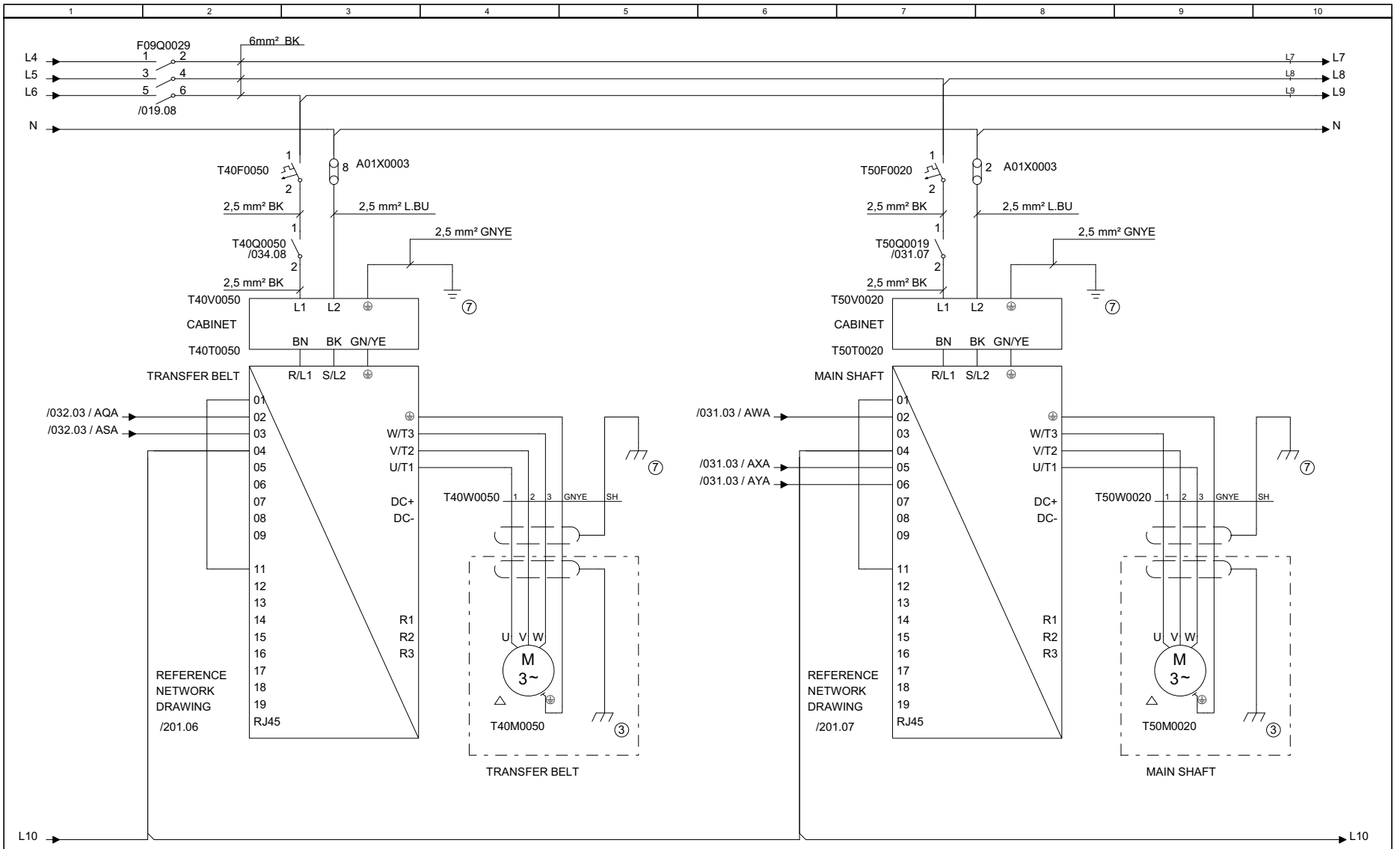

Drawing remarks	Designer CAS	Date 2009-11-12	Machine CBP 32 -0400		
	ECM No 418137	Denomination CIRCUIT DIAGRAM	Page Type MAIN SHAFT, TRANSFER BELT		
	Company Tetra Pak (Sweden)	Document No. 3027725-0003	Doc. type ELD	Version AC	Page 011

RELEASED

© Tetra Pak. All rights reserved; any copying, transmittal or disclosure subject to Tetra Pak's written approval.

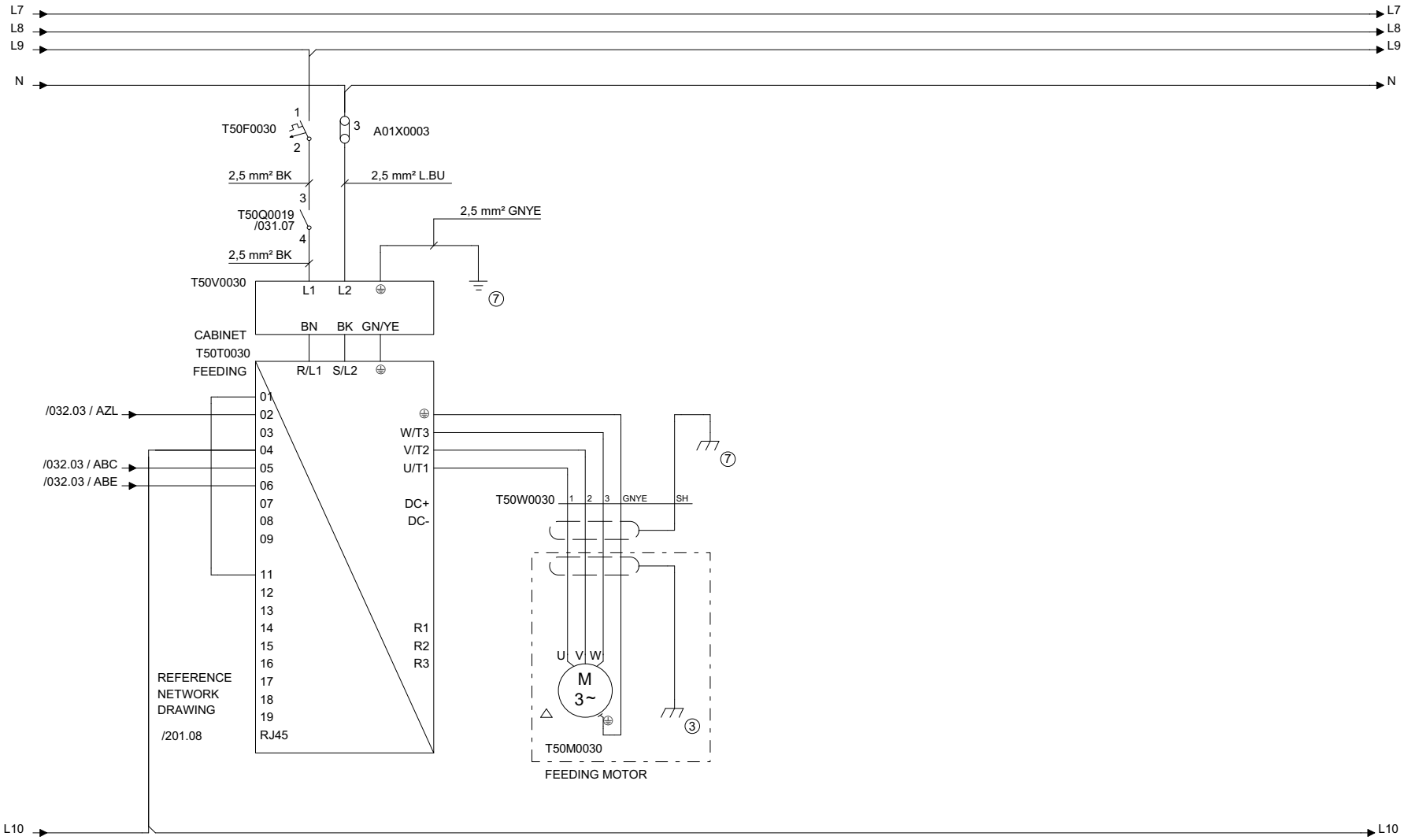

Drawing remarks	Tetra Pak	Designer CAS	Date 2009-11-12	Machine CBP 32 -0400
		ECM No 418137	Denomination CIRCUIT DIAGRAM	Page Type FREQ. CONVERTER FEEDING MOTOR
	Company Tetra Pak (Sweden)	Document No. 3027725-0003	Doc. type ELD	Version AC / Page 012

RELEASED

© Tetra Pak. All rights reserved; any copying, transmittal or disclosure subject to Tetra Pak's written approval.

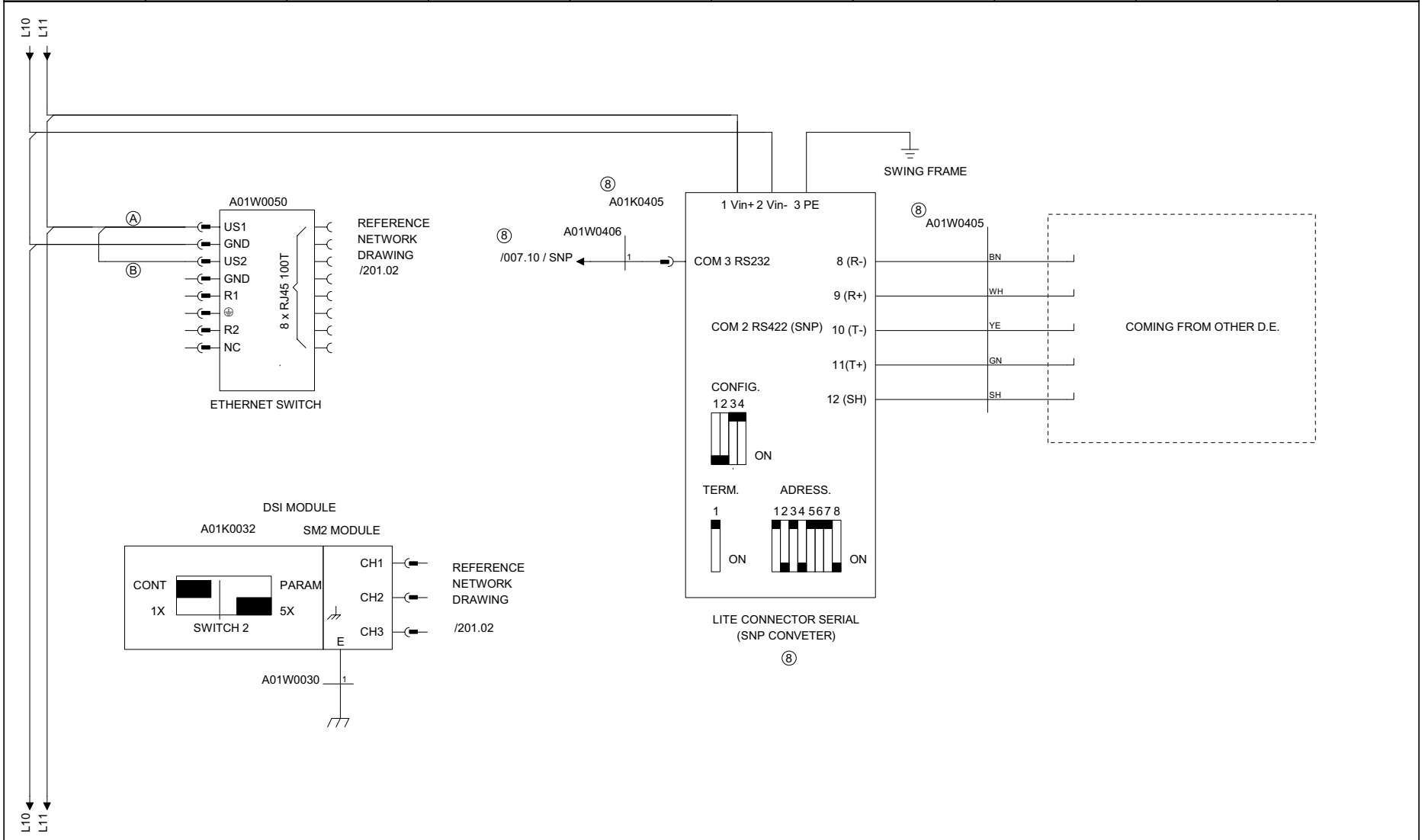

Drawing remarks	Tetra Pak	Designer CAS	Date 2009-11-12	Machine CBP 32 -0400				
		ECM No 418137	Denomination CIRCUIT DIAGRAM	Page Type COMMUNICATIONS				
		Company Tetra Pak (Sweden)	Document No. 3027725-0003	Doc. type ELD	Version AC	Page 013		

RELEASED

© Tetra Pak. All rights reserved; any copying, transmittal or disclosure subject to Tetra Pak's written approval.

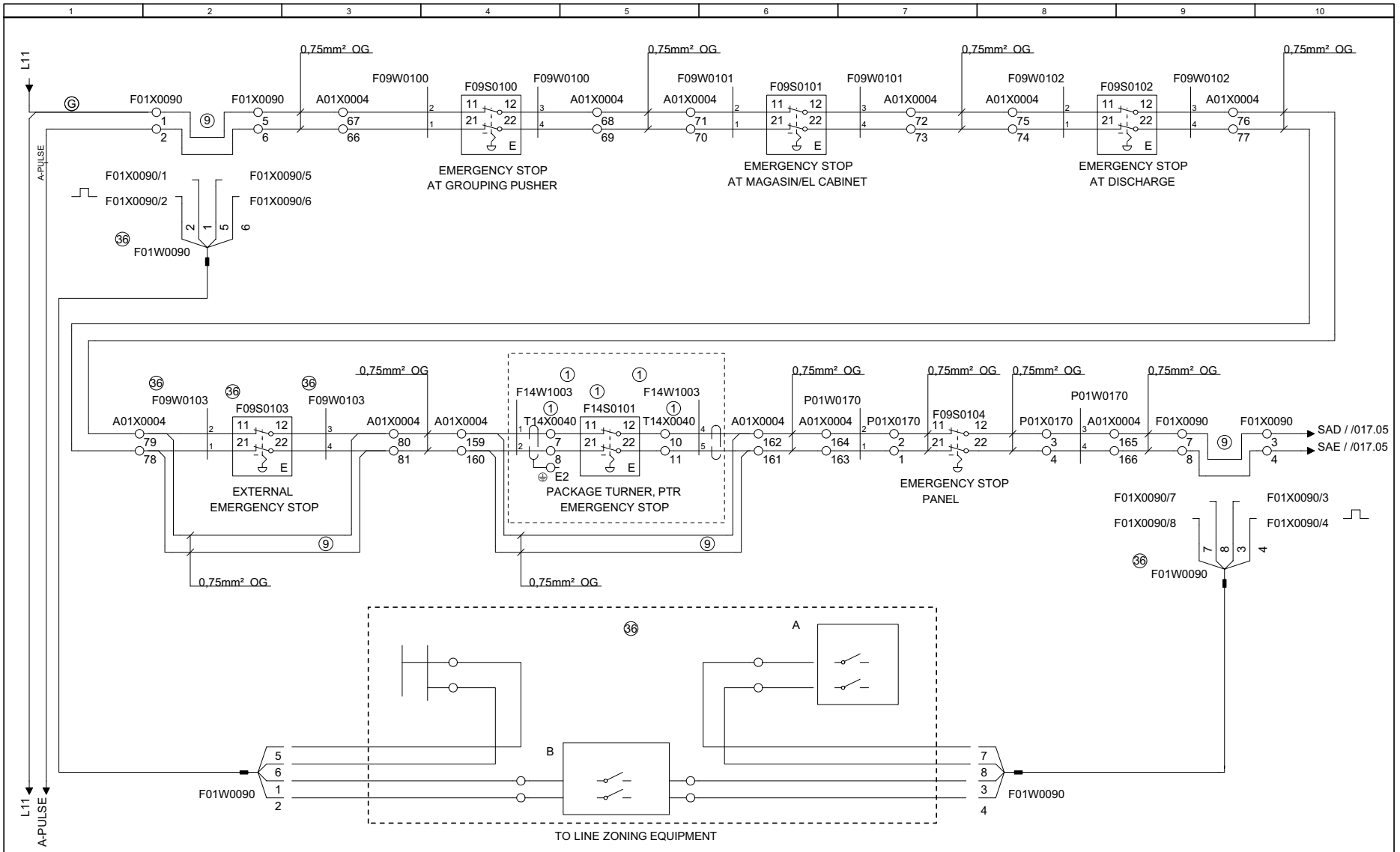

	Designer CAS	Date 2009-11-12	Machine CBP 32 -0400		
	ECM No 418137	Denomination CIRCUIT DIAGRAM	Page Type E-STOPS		
Drawing remarks	Company Tetra Pak (Sweden)	Document No. 3027725-0003	Doc. type ELD	Version AC	Page 014

RELEASED

© Tetra Pak. All rights reserved; any copying, transmittal or disclosure subject to Tetra Pak's written approval.

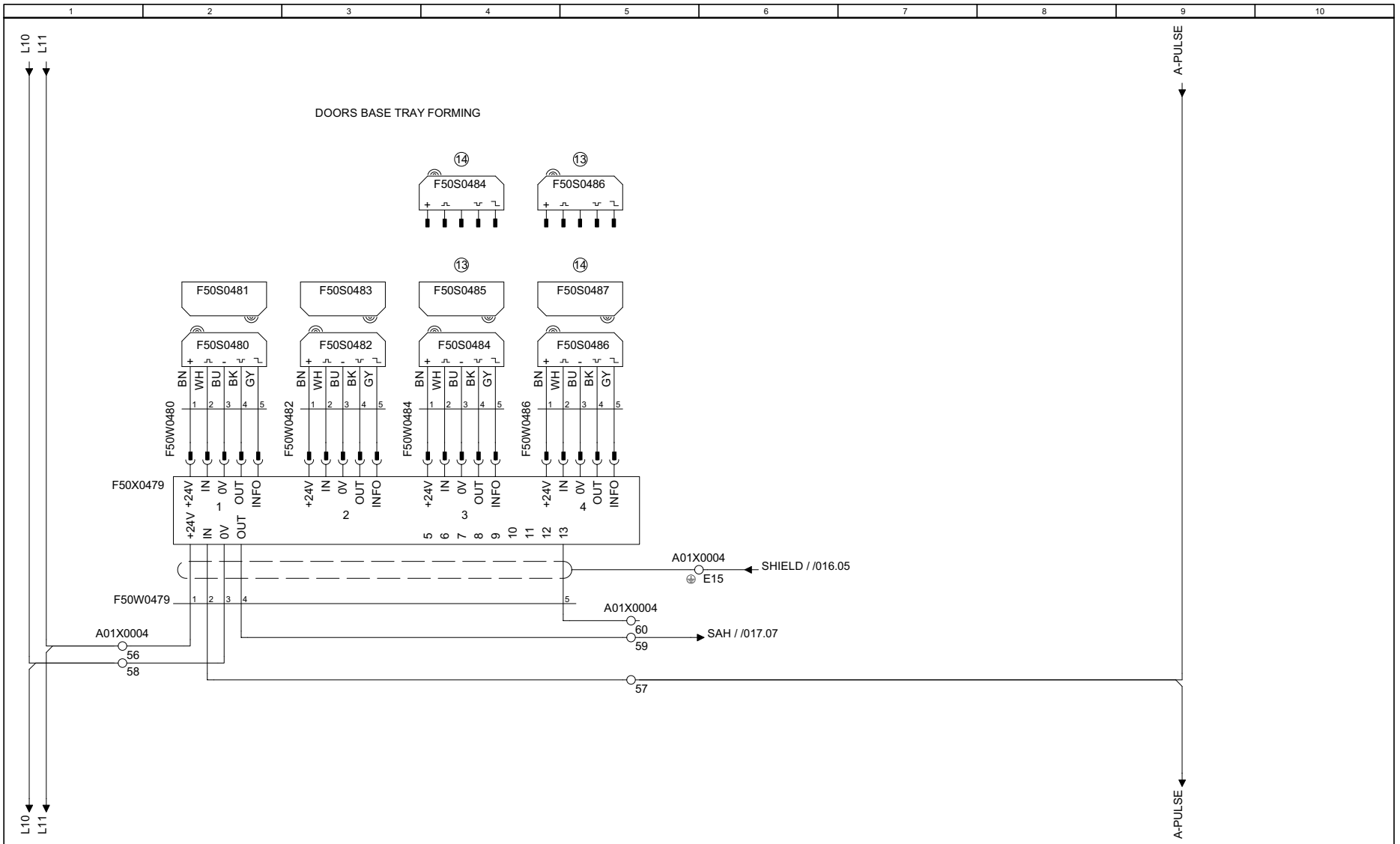

Drawing remarks	Tetra Pak	Designer CAS	Date 2009-11-12	Machine CBP 32 -0400			
		ECM No 418137	Denomination CIRCUIT DIAGRAM	Page Type DOOR CIRCUITS			
	Company Tetra Pak (Sweden)		Document No. 3027725-0003	Doc. type ELD	Version AC	Page 015	

RELEASED

© Tetra Pak. All rights reserved; any copying, transmittal or disclosure subject to Tetra Pak's written approval.

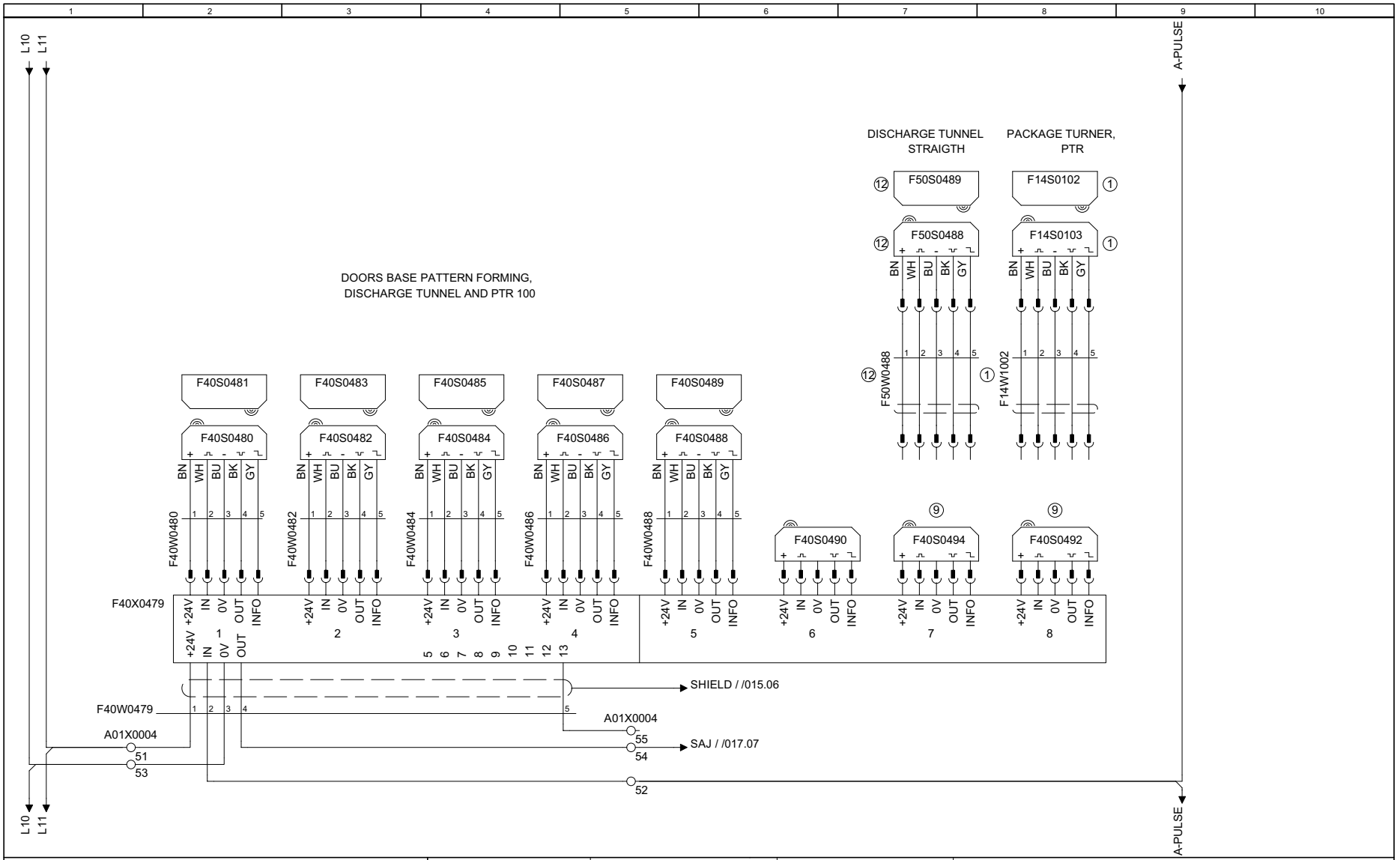

	Designer CAS	Date 2009-11-12	Machine CBP 32 -0400		
	ECM No 418137	Denomination CIRCUIT DIAGRAM	Page Type DOOR CIRCUIT, AND OPTIONS		
Drawing remarks	Company Tetra Pak (Sweden)	Document No. 3027725-0003	Doc. type ELD	Version AC	Page 016

RELEASED

© Tetra Pak. All rights reserved; any copying, transmittal or disclosure subject to Tetra Pak's written approval.

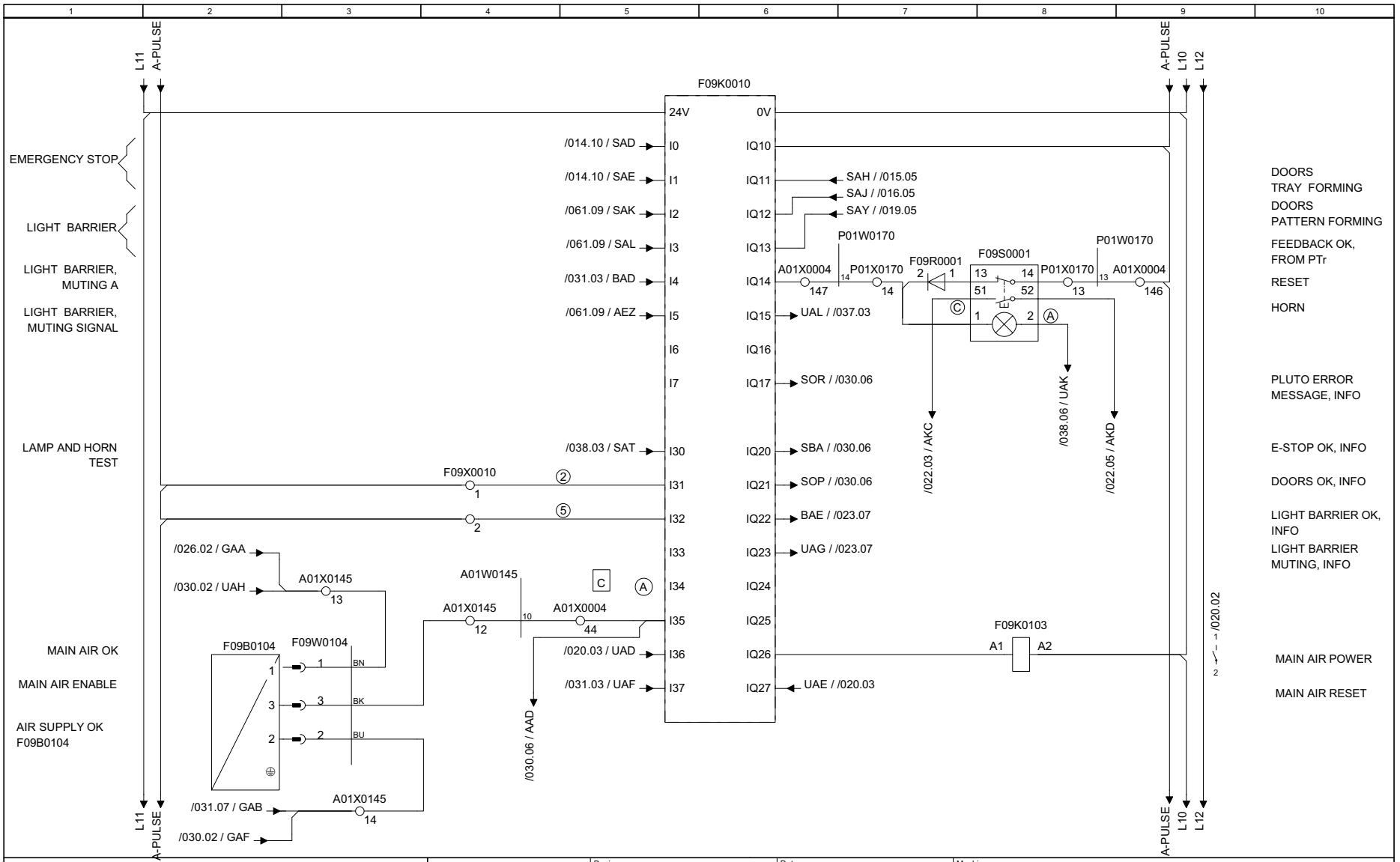

Drawing remarks	Tetra Pak	Designer CAS	Date 2009-11-12	Machine CBP 32 -0400			
		ECM No 418137	Denomination CIRCUIT DIAGRAM	Page Type SAFETY RELAY			
	Company Tetra Pak (Sweden)		Document No. 3027725-0003	Doc. type ELD	Version AC	Page 017	

RELEASED

© Tetra Pak. All rights reserved; any copying, transmittal or disclosure subject to Tetra Pak's written approval.

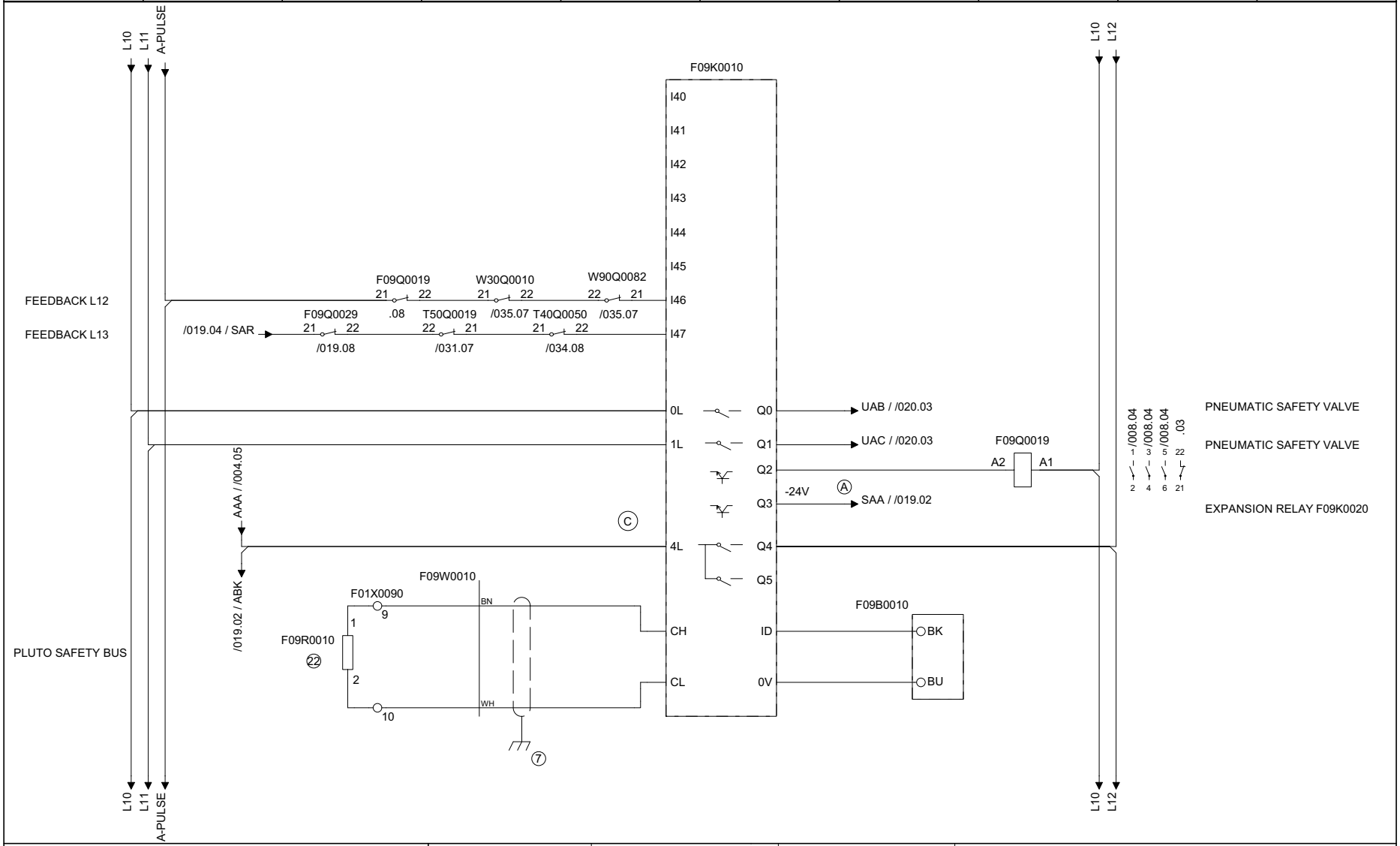

	Tetra Pak	Designer CAS	Date 2009-11-12	Machine CBP 32 -0400			
		ECM No 418137	Denomination CIRCUIT DIAGRAM	Page Type SAFETY RELAY			
Drawing remarks	Company Tetra Pak (Sweden)	Document No. 3027725-0003	Doc. type ELD	Version AC	Page 018		

RELEASED

© Tetra Pak. All rights reserved; any copying, transmittal or disclosure subject to Tetra Pak's written approval.

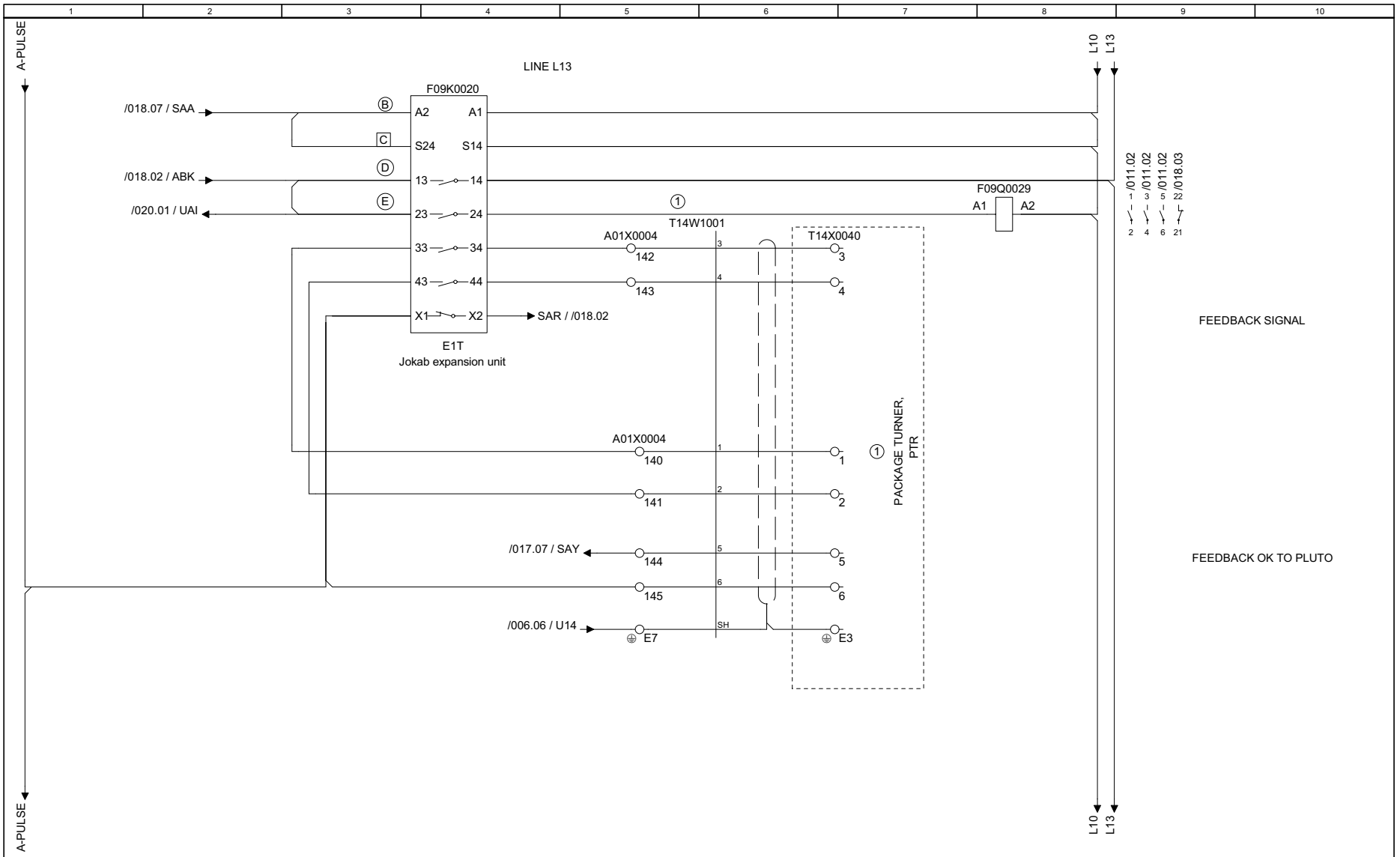

	Tetra Pak	Designer CAS	Date 2009-11-12	Machine CBP 32 -0400			
		ECM No 418137	Denomination CIRCUIT DIAGRAM	Page Type SAFETY RELAY, EXPANSION			
Drawing remarks		Company Tetra Pak (Sweden)	Document No. 3027725-0003	Doc. type ELD	Version AC	Page 019	

RELEASED

© Tetra Pak. All rights reserved; any copying, transmittal or disclosure subject to Tetra Pak's written approval.

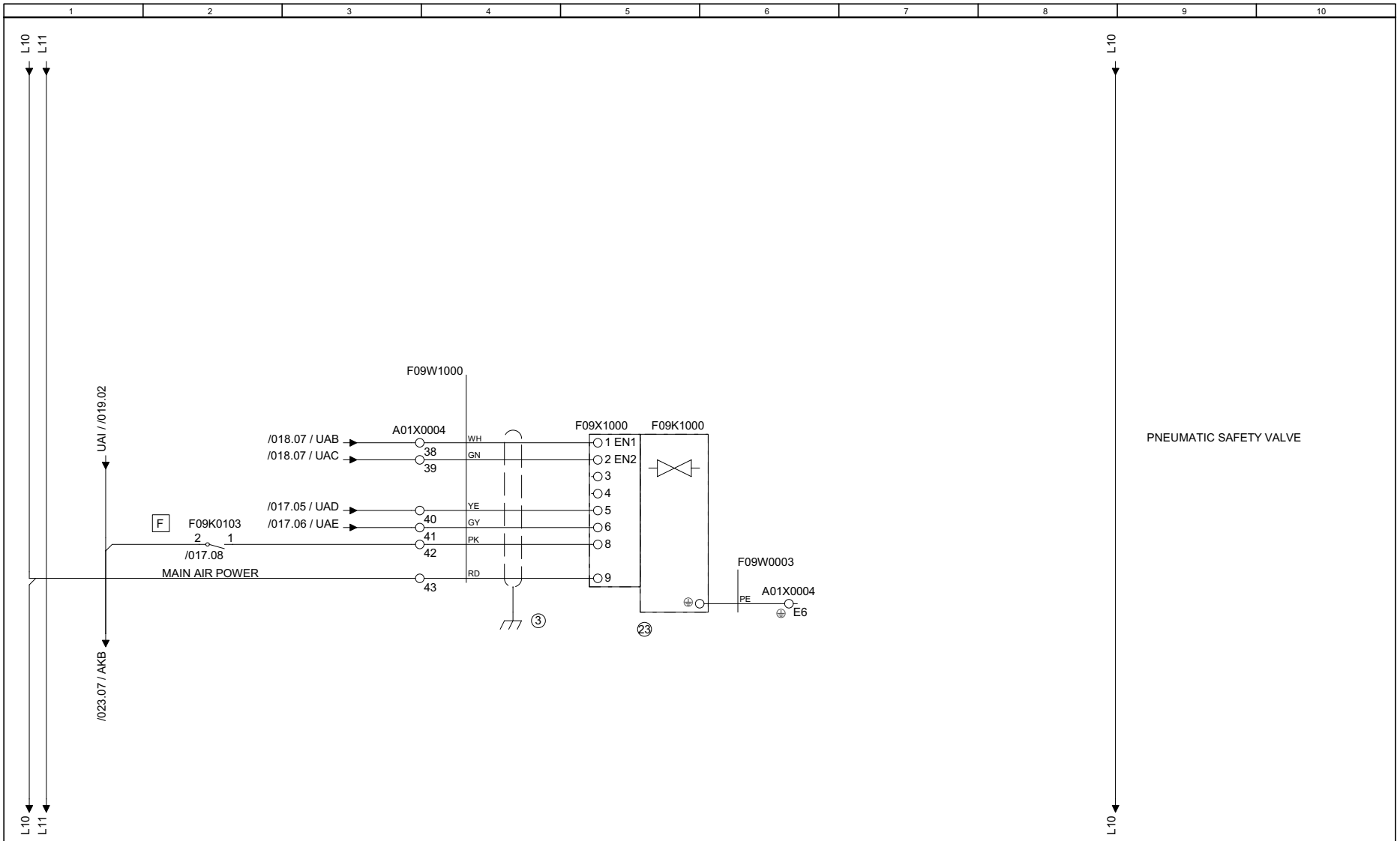

	Tetra Pak	Designer CAS	Date 2009-11-12	Machine CBP 32 -0400	
		ECM No 418137	Denomination CIRCUIT DIAGRAM	Page Type SAFETY RELAY, EXPANSION	
Drawing remarks	Company Tetra Pak (Sweden)	Document No. 3027725-0003	Doc. type ELD	Version AC	Page 020

RELEASED

© Tetra Pak. All rights reserved; any copying, transmittal or disclosure subject to Tetra Pak's written approval.

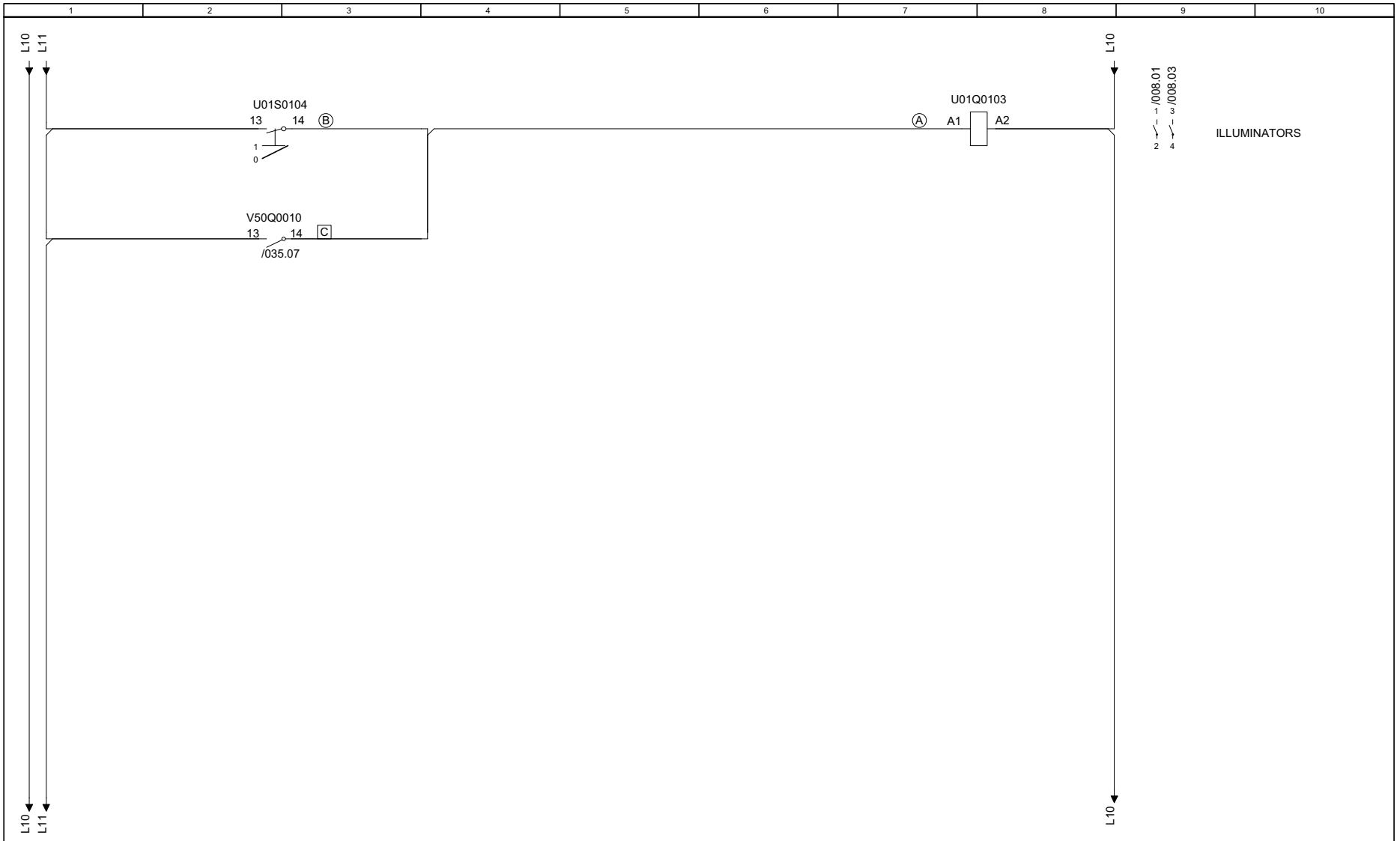

	Tetra Pak	Designer CAS	Date 2009-11-12	Machine CBP 32 -0400			
		ECM No 418137	Denomination CIRCUIT DIAGRAM	Page Type ILLUMINATORS CONTROL ON MACHINE			
Drawing remarks		Company Tetra Pak (Sweden)	Document No. 3027725-0003	Doc. type ELD	Version AC	Page 021	

RELEASED

© Tetra Pak. All rights reserved; any copying, transmittal or disclosure subject to Tetra Pak's written approval.

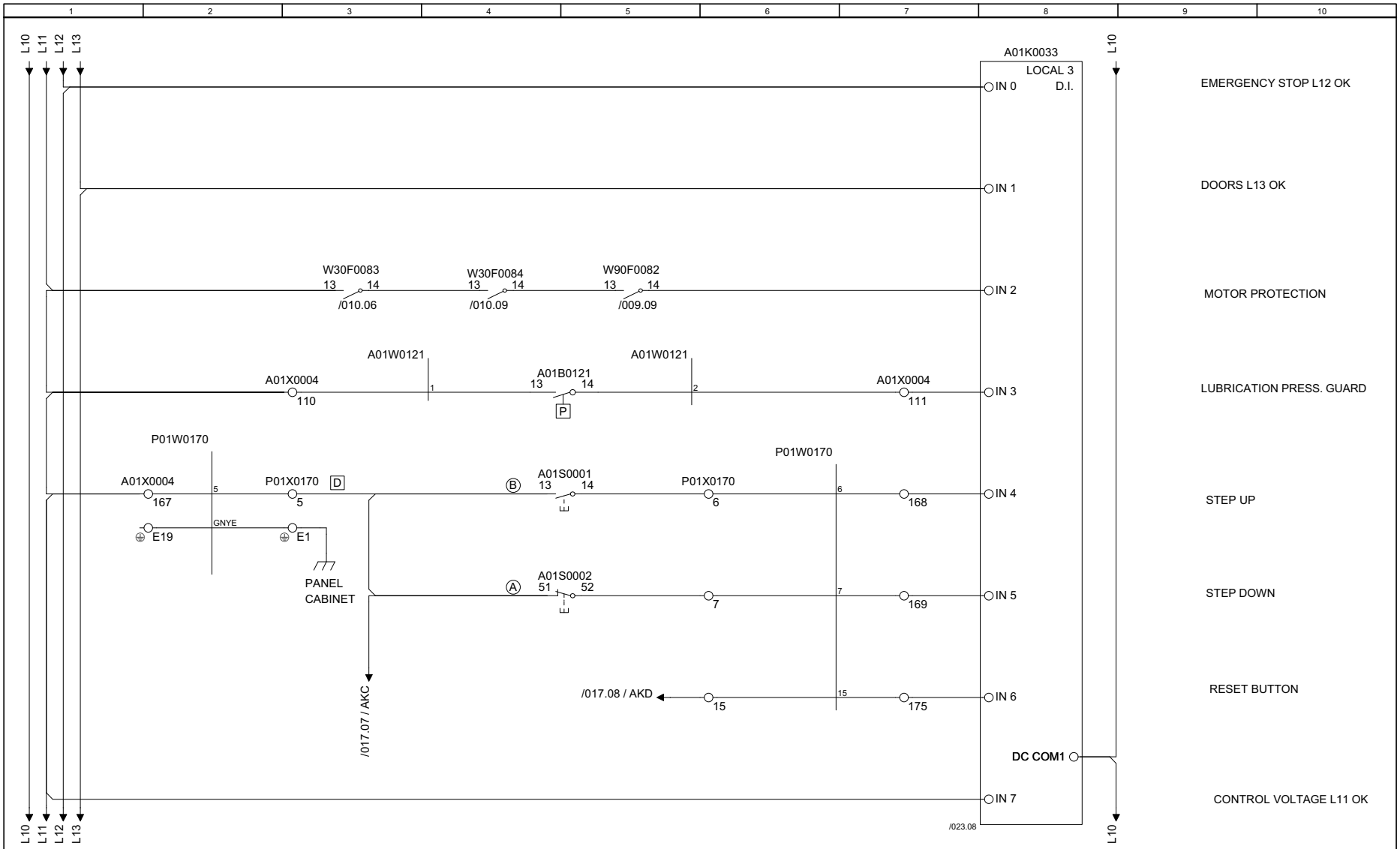

	Tetra Pak	Designer CAS	Date 2009-11-12	Machine CBP 32 -0400			
		ECM No 418137	Denomination CIRCUIT DIAGRAM	Page Type INPUTS A01K0033			
Drawing remarks	Company Tetra Pak (Sweden)	Document No. 3027725-0003		Doc. type ELD	Version AC	Page 022	

RELEASED

© Tetra Pak. All rights reserved; any copying, transmittal or disclosure subject to Tetra Pak's written approval.

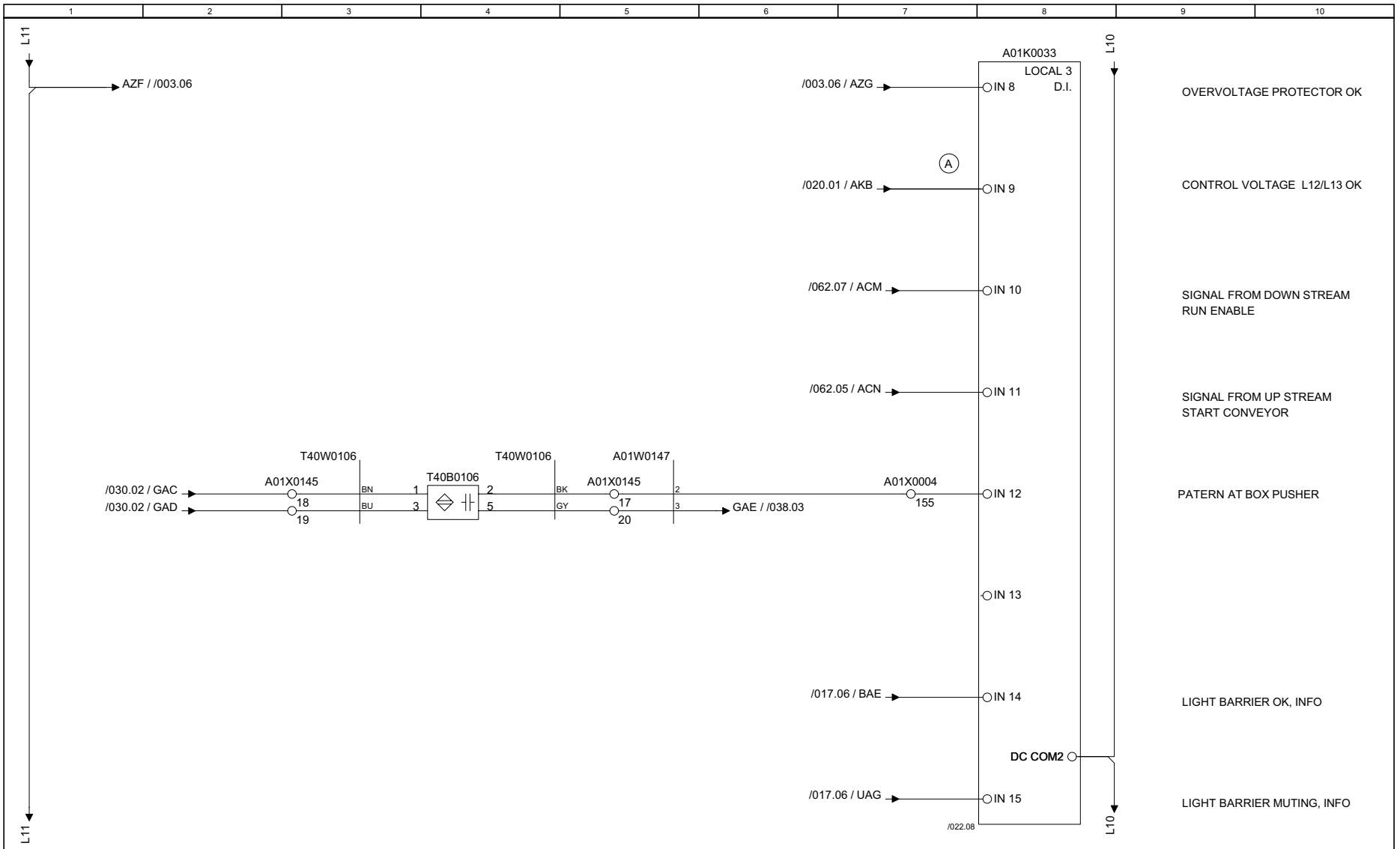

	Tetra Pak	Designer CAS	Date 2009-11-12	Machine CBP 32 -0400			
		ECM No 418137	Denomination CIRCUIT DIAGRAM	Page Type INPUTS A01K0033			
Drawing remarks		Company Tetra Pak (Sweden)	Document No. 3027725-0003	Doc. type ELD	Version AC	Page 023	

RELEASED

© Tetra Pak. All rights reserved; any copying, transmittal or disclosure subject to Tetra Pak's written approval.

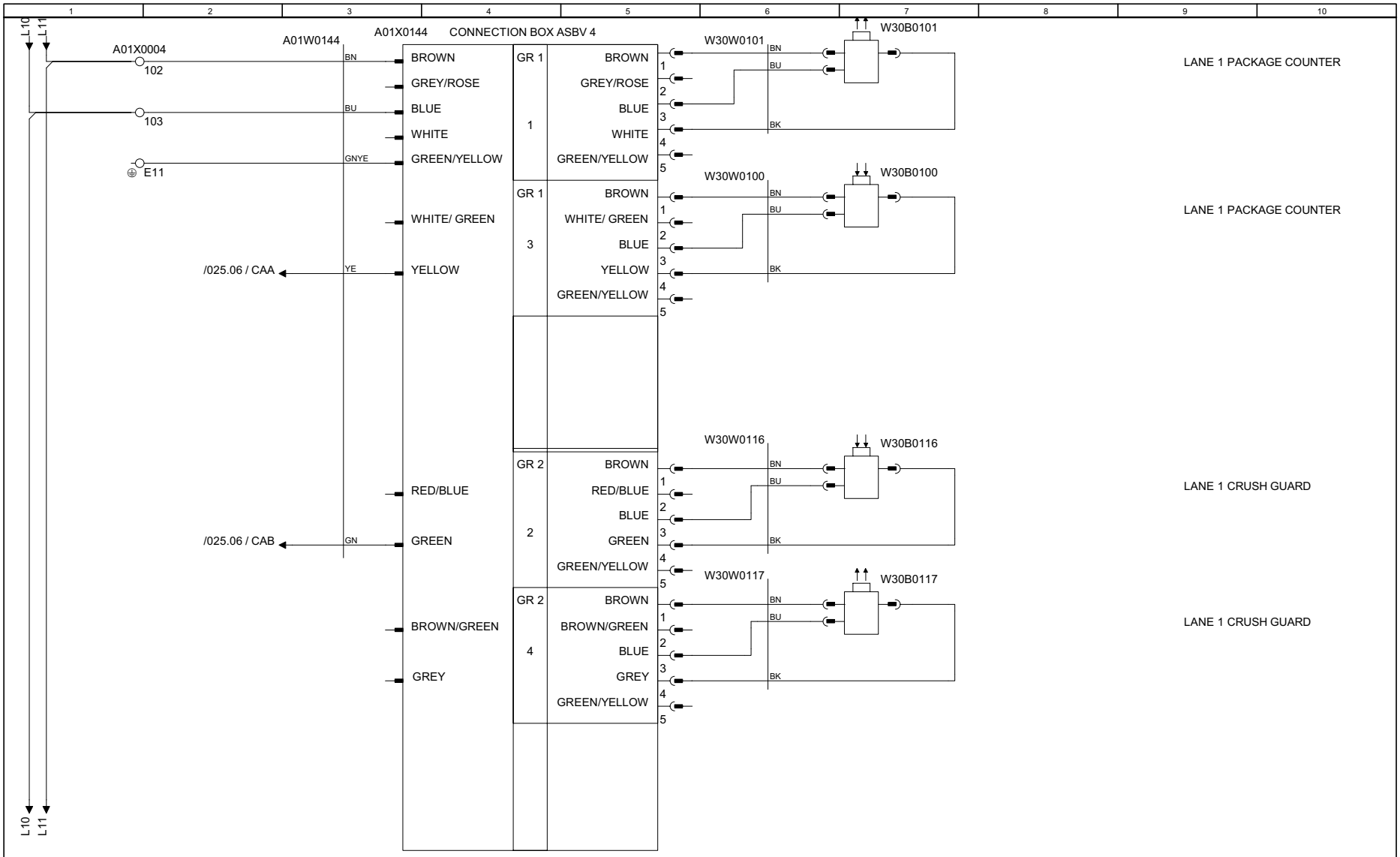

Drawing remarks	Tetra Pak	Designer CAS	Date 2009-11-12	Machine CBP 32 -0400	
		ECM No 418137	Denomination CIRCUIT DIAGRAM	Page Type INPUTS A01X0144	
	Company Tetra Pak (Sweden)	Document No. 3027725-0003	Doc. type ELD	Version AC	Page 024

RELEASED

© Tetra Pak. All rights reserved; any copying, transmittal or disclosure subject to Tetra Pak's written approval.

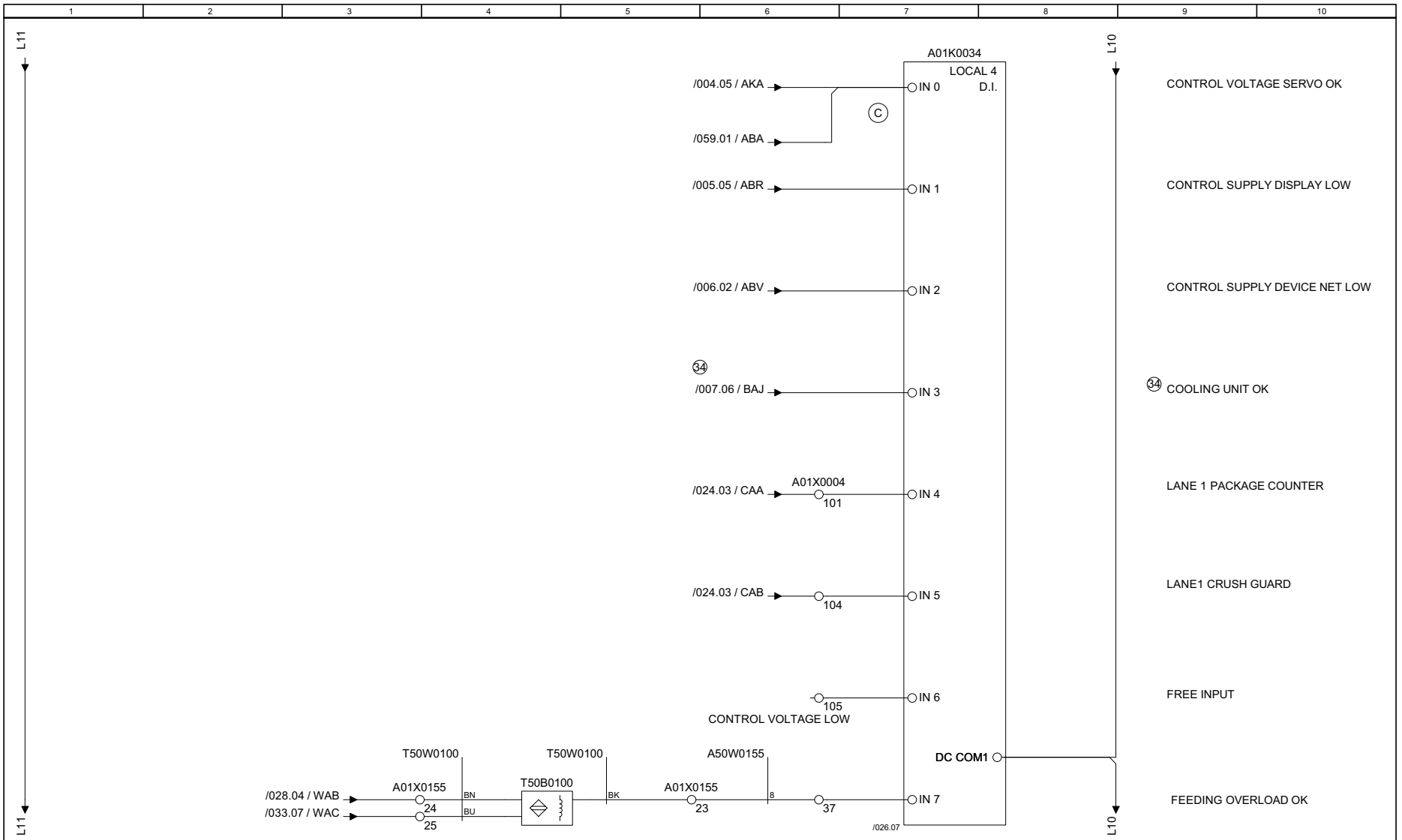

Drawing remarks	Tetra Pak	Designer CAS	Date 2009-11-12	Machine CBP 32 -0400			
		ECM No 418137	Denomination CIRCUIT DIAGRAM	Page Type INPUTS A01K0034			
	Company Tetra Pak (Sweden)		Document No. 3027725-0003	Doc. type ELD	Version AC	Page 025	

RELEASED

© Tetra Pak. All rights reserved; any copying, transmittal or disclosure subject to Tetra Pak's written approval.

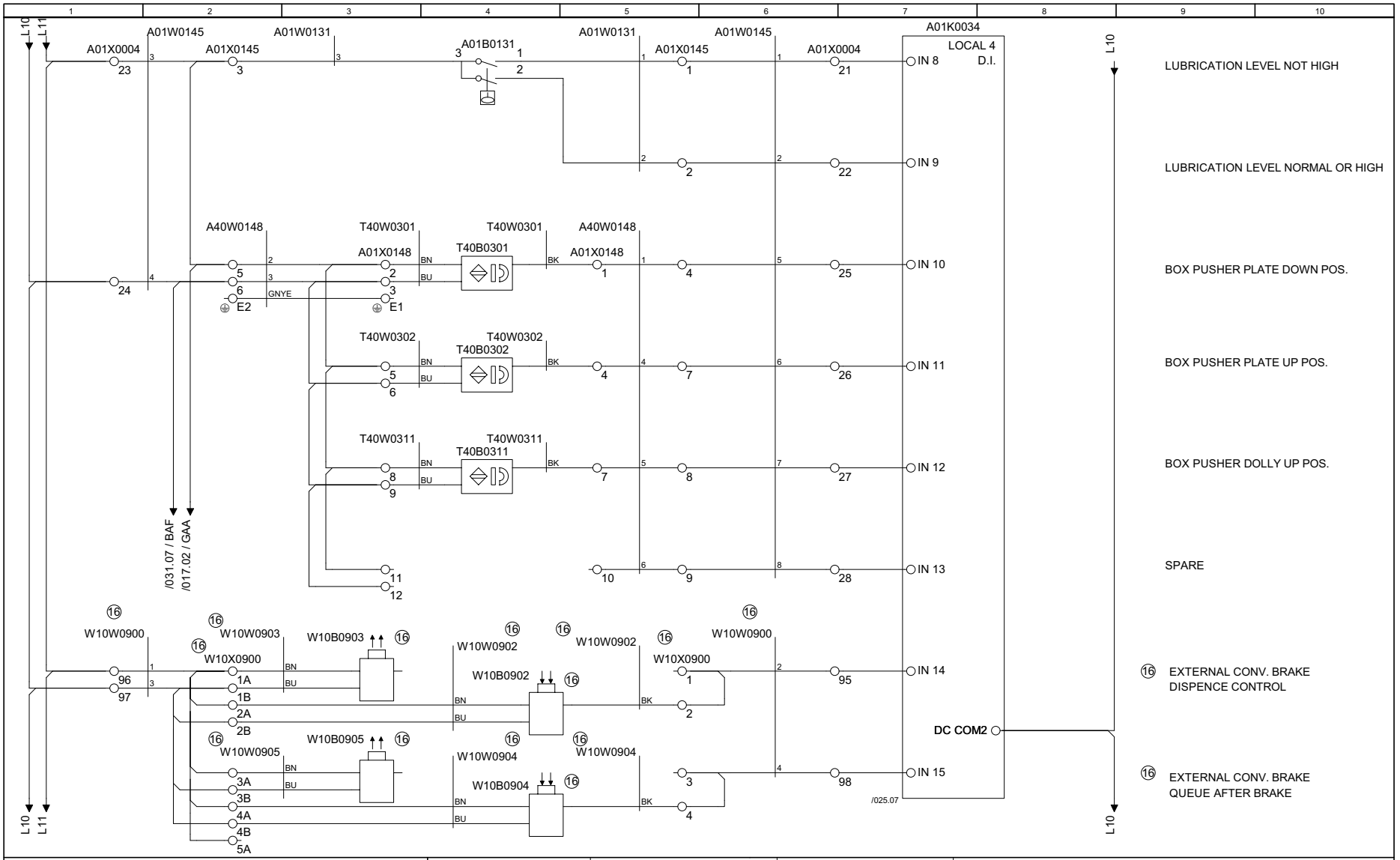

Drawing remarks	Tetra Pak	Designer CAS	Date 2009-11-12	Machine CBP 32 -0400	
		ECM No 418137	Denomination CIRCUIT DIAGRAM	Page Type INPUTS A01K0034	
	Company Tetra Pak (Sweden)	Document No. 3027725-0003	Doc. type ELD	Version AC	Page 026

RELEASED

© Tetra Pak. All rights reserved; any copying, transmittal or disclosure subject to Tetra Pak's written approval.

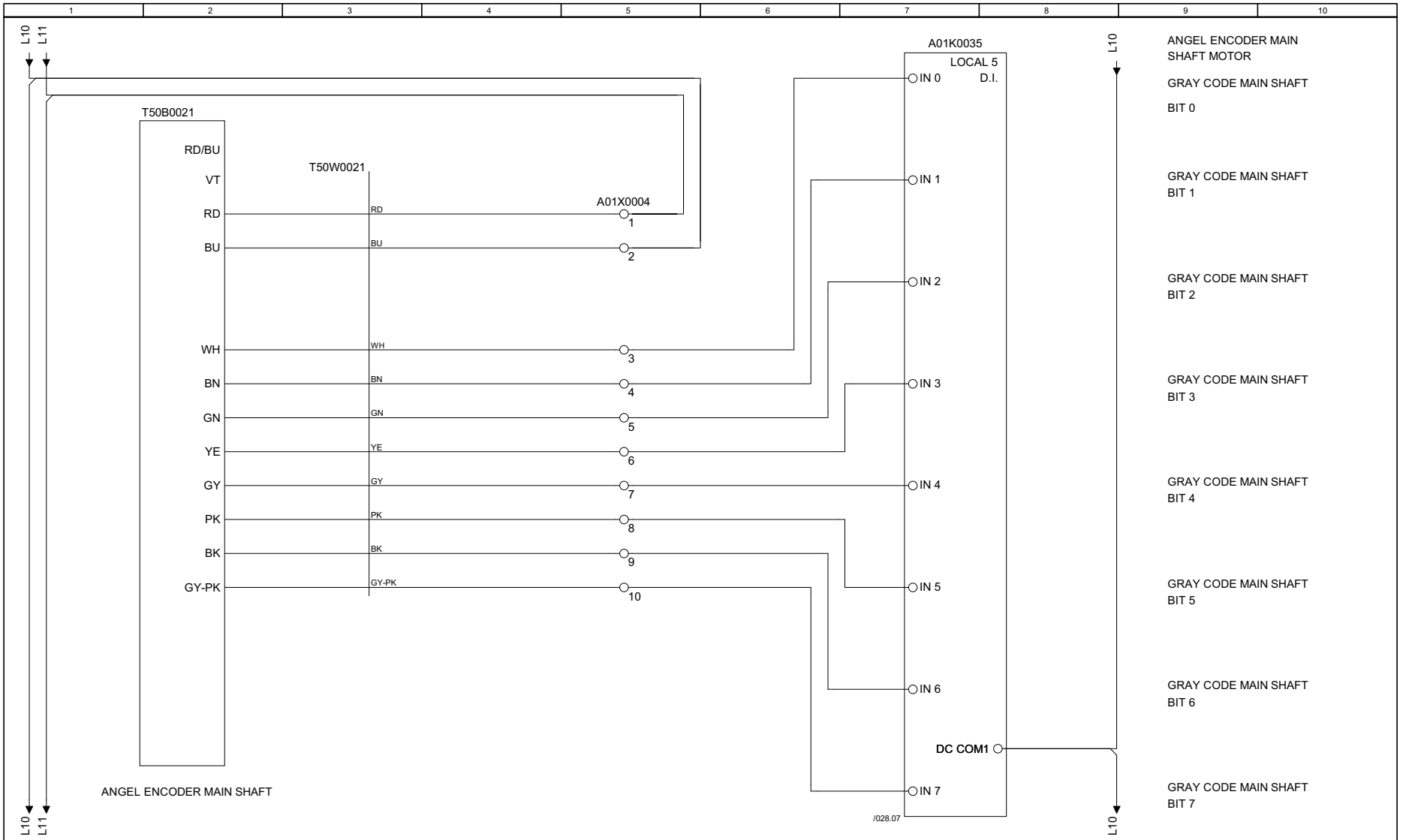

Drawing remarks	Tetra Pak	Designer CAS	Date 2009-11-12	Machine CBP 32 -0400			
		ECM No 418137	Denomination CIRCUIT DIAGRAM	Page Type INPUTS A01K0035 ANGLE ENC. MAIN SHAFT			
	Company Tetra Pak (Sweden)		Document No. 3027725-0003	Doc. type ELD	Version AC	Page 027	

RELEASED

© Tetra Pak. All rights reserved; any copying, transmittal or disclosure subject to Tetra Pak's written approval.

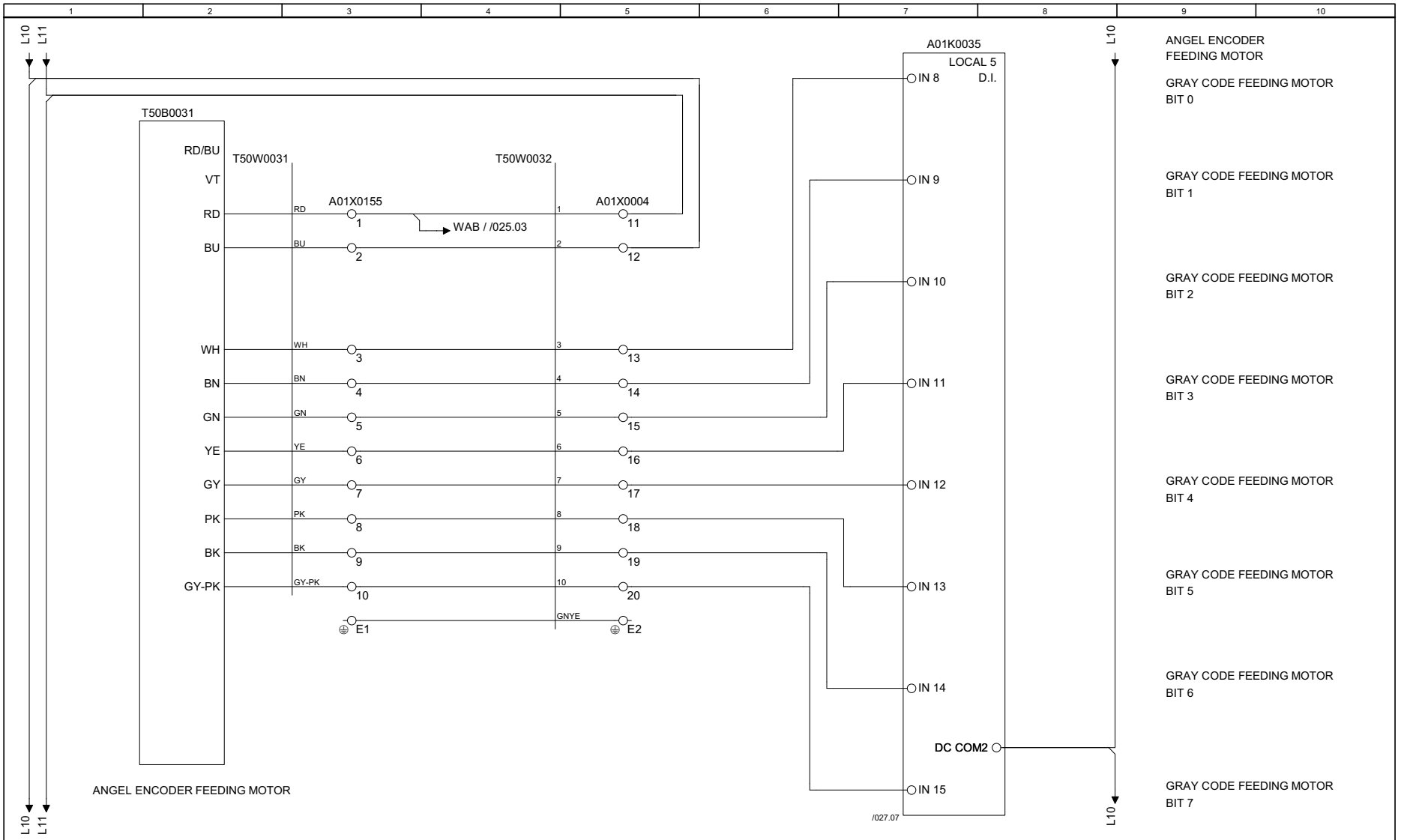

	Tetra Pak	Designer CAS	Date 2009-11-12	Machine CBP 32 -0400			
		ECM No 418137	Denomination CIRCUIT DIAGRAM	Page Type INPUTS A01K0035 ANGLE ENC.FEEDING			
Drawing remarks	Company Tetra Pak (Sweden)	Document No. 3027725-0003	Doc. type ELD	Version AC	Page 028		

RELEASED

© Tetra Pak. All rights reserved; any copying, transmittal or disclosure subject to Tetra Pak's written approval.

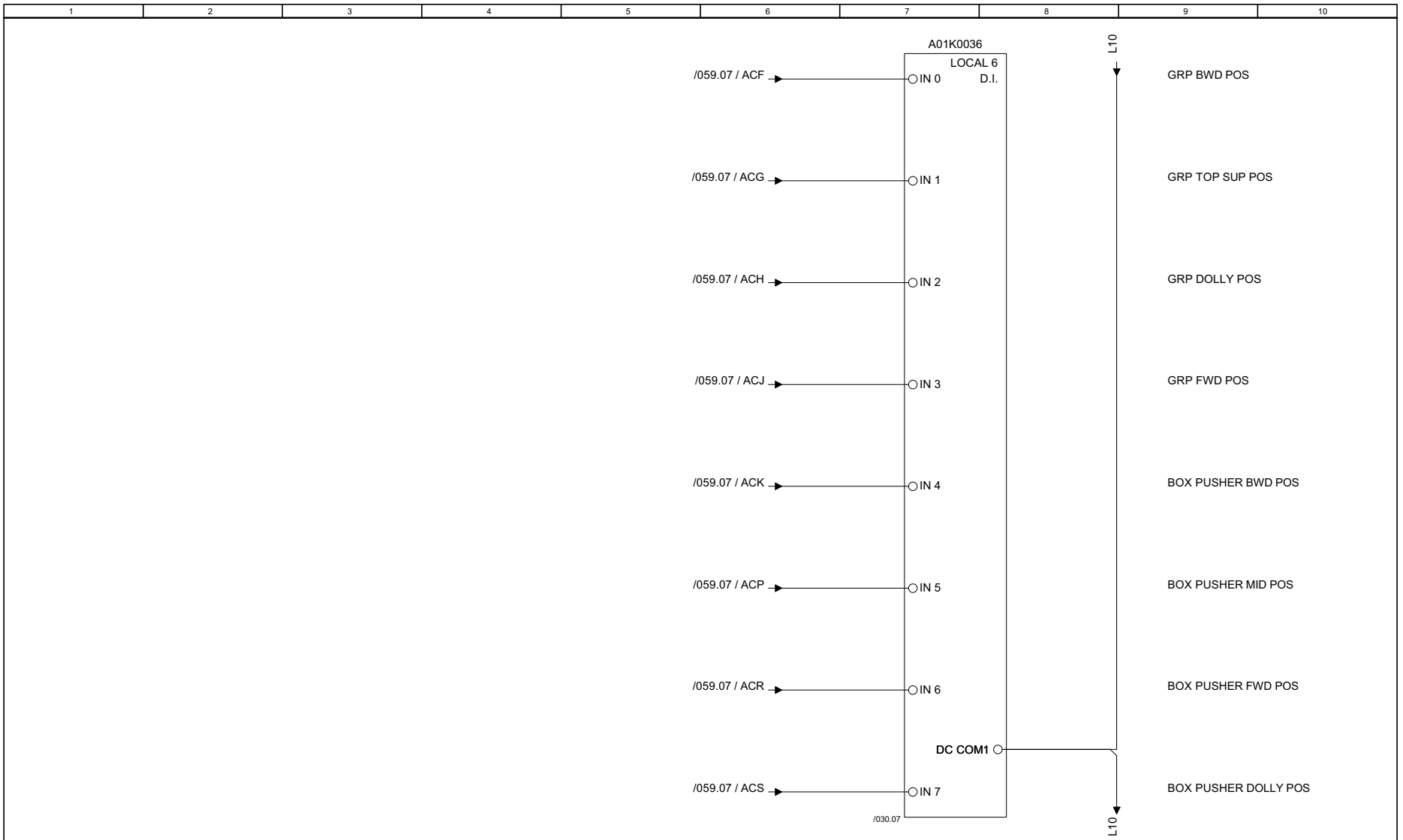

	Tetra Pak	Designer CAS	Date 2009-11-12	Machine CBP 32 -0400				
		ECM No 418137	Denomination CIRCUIT DIAGRAM	Page Type INPUTS A01K0036				
Drawing remarks		Company Tetra Pak (Sweden)	Document No. 3027725-0003	Doc. type ELD	Version AC	Page 029		

RELEASED

© Tetra Pak. All rights reserved; any copying, transmittal or disclosure subject to Tetra Pak's written approval.

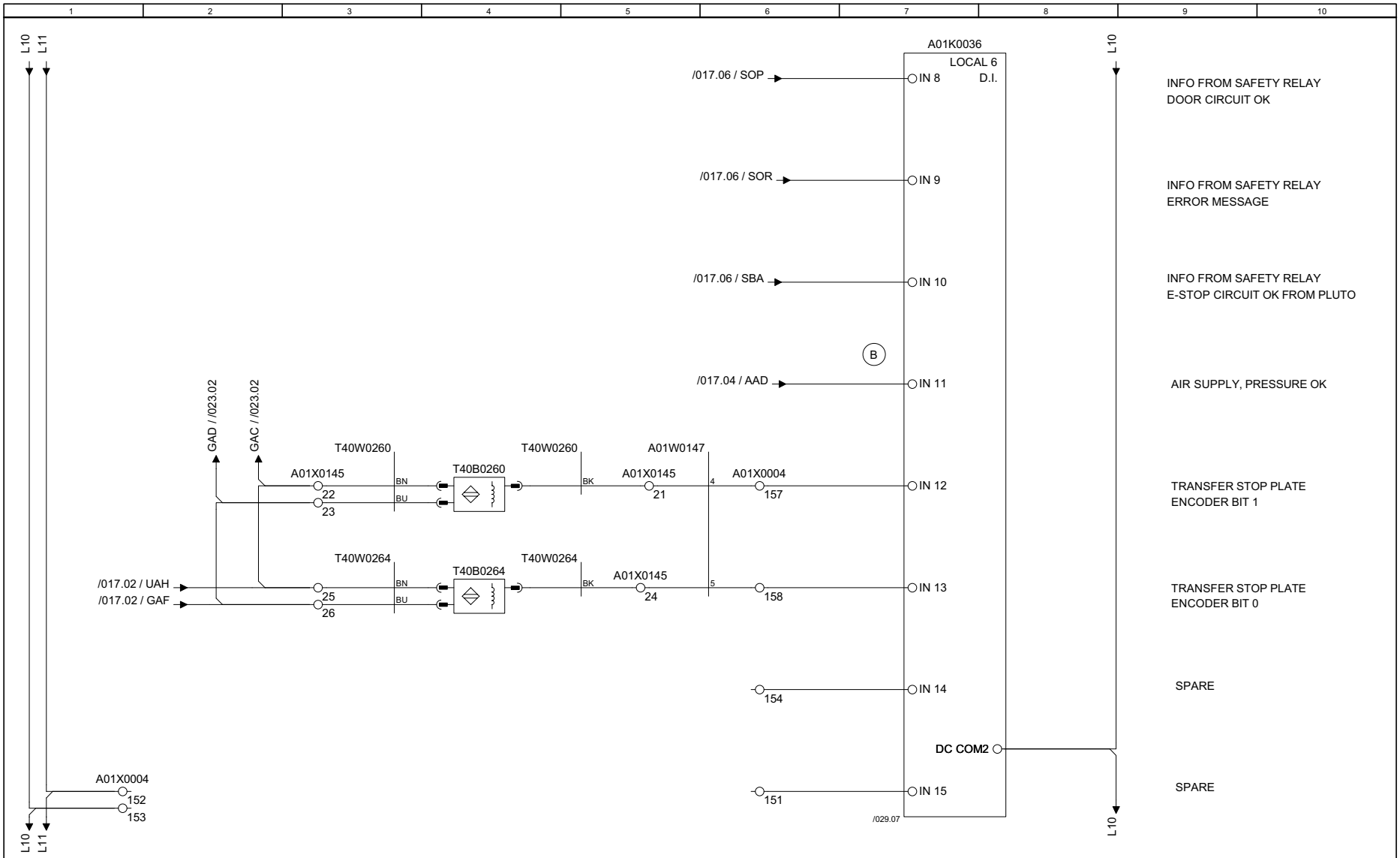

	Tetra Pak	Designer CAS	Date 2009-11-12	Machine CBP 32 -0400	
		ECM No 418137	Denomination CIRCUIT DIAGRAM	Page Type INPUTS A01K0036	
Drawing remarks	Company Tetra Pak (Sweden)	Document No. 3027725-0003	Doc. type ELD	Version AC	Page 030

RELEASED

© Tetra Pak. All rights reserved; any copying, transmittal or disclosure subject to Tetra Pak's written approval.

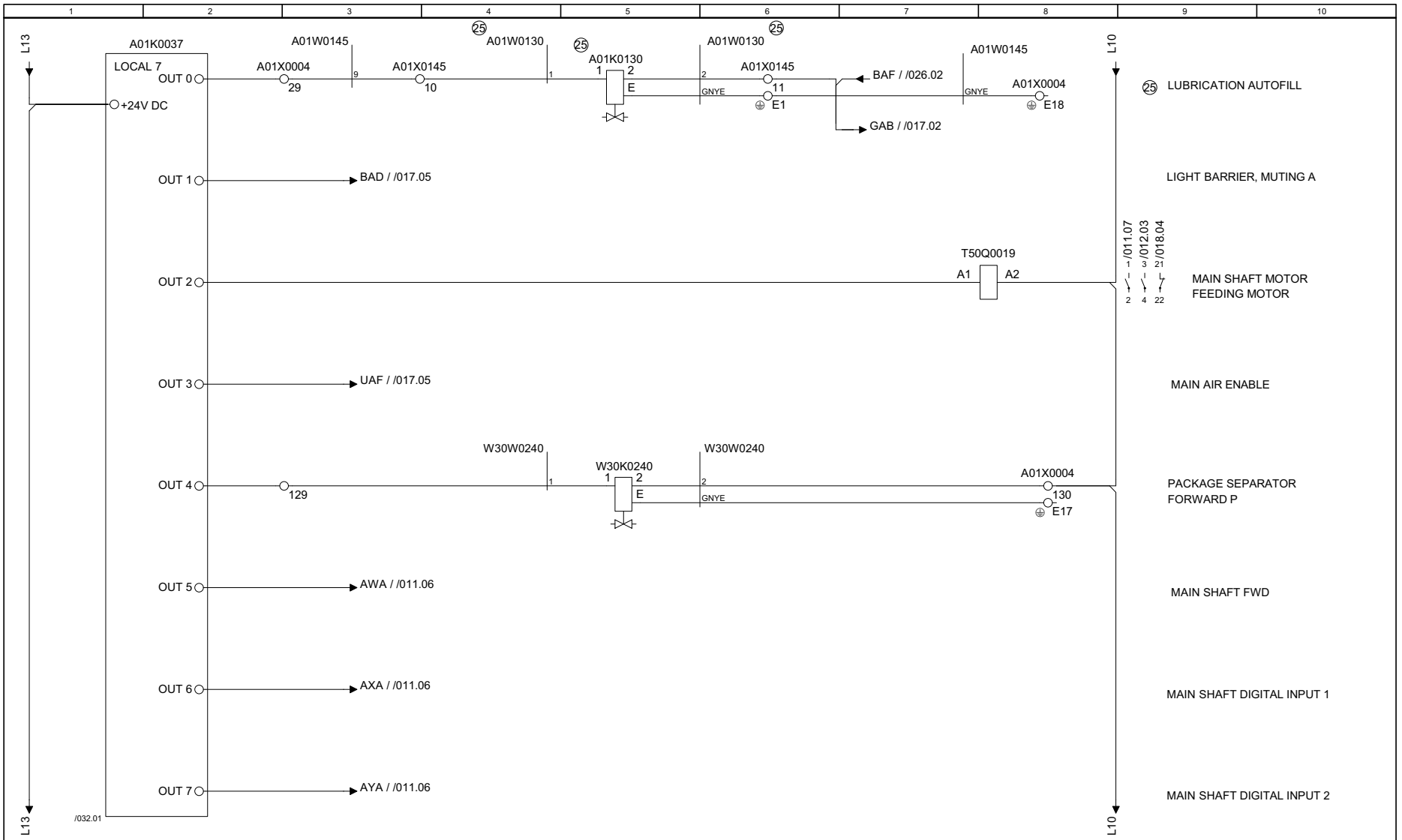

	Tetra Pak	Designer CAS	Date 2009-11-12	Machine CBP 32 -0400			
		ECM No 418137	Denomination CIRCUIT DIAGRAM	Page Type OUTPUTS A01K0037			
Drawing remarks		Company Tetra Pak (Sweden)	Document No. 3027725-0003	Doc. type ELD	Version AC	Page 031	

RELEASED

© Tetra Pak. All rights reserved; any copying, transmittal or disclosure subject to Tetra Pak's written approval.

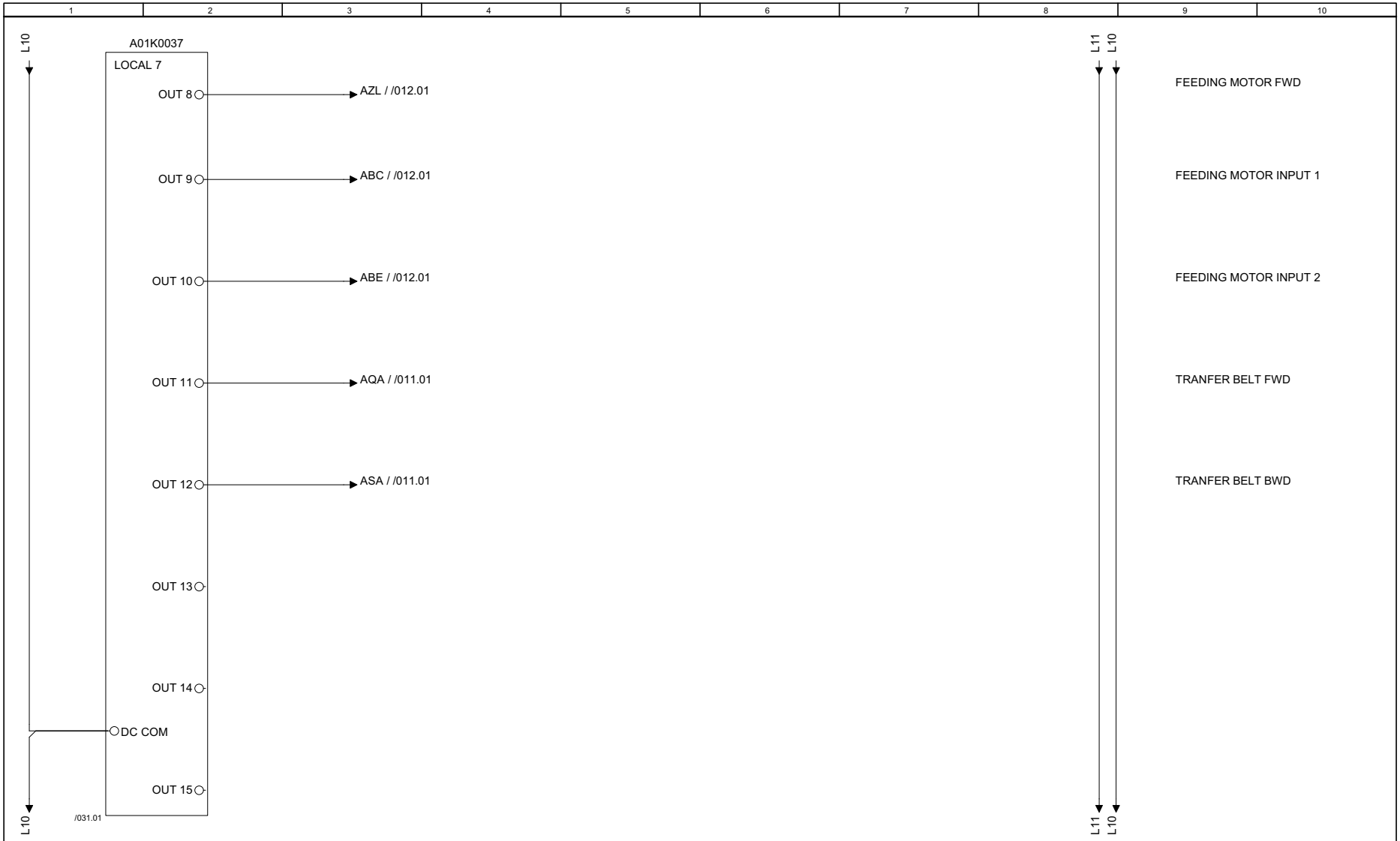

	Tetra Pak	Designer CAS	Date 2009-11-12	Machine CBP 32 -0400
		ECM No 418137	Denomination CIRCUIT DIAGRAM	Page Type OUTPUTS A01K0037
Drawing remarks	Company Tetra Pak (Sweden)	Document No. 3027725-0003	Doc. type ELD	Version AC / Page 032

RELEASED

© Tetra Pak. All rights reserved; any copying, transmittal or disclosure subject to Tetra Pak's written approval.

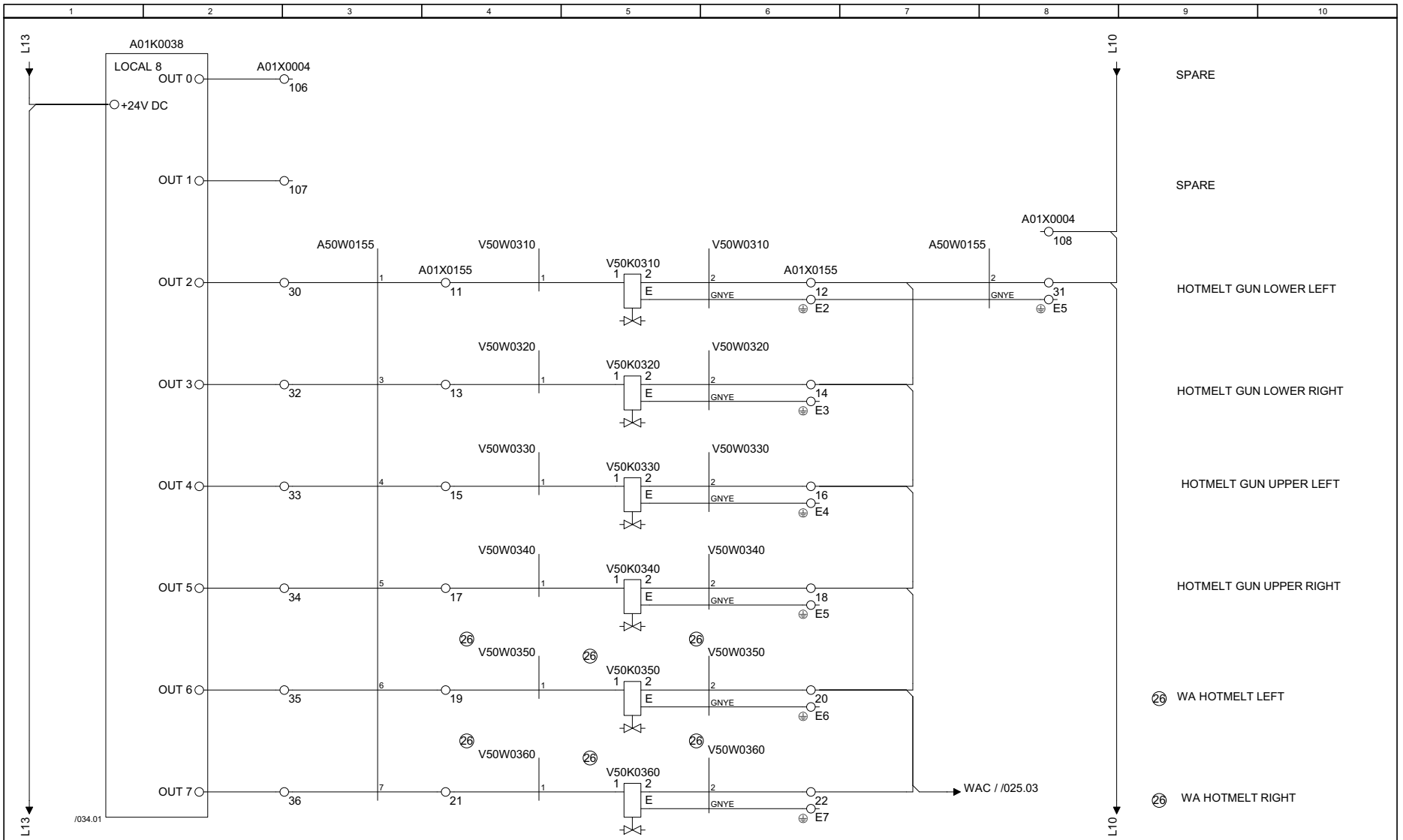

Drawing remarks	Tetra Pak	Designer CAS	Date 2009-11-12	Machine CBP 32 -0400			
		ECM No 418137	Denomination CIRCUIT DIAGRAM	Page Type OUTPUTS A01K0038			
	Company Tetra Pak (Sweden)		Document No. 3027725-0003	Doc. type ELD	Version AC	Page 033	

RELEASED

© Tetra Pak. All rights reserved; any copying, transmittal or disclosure subject to Tetra Pak's written approval.

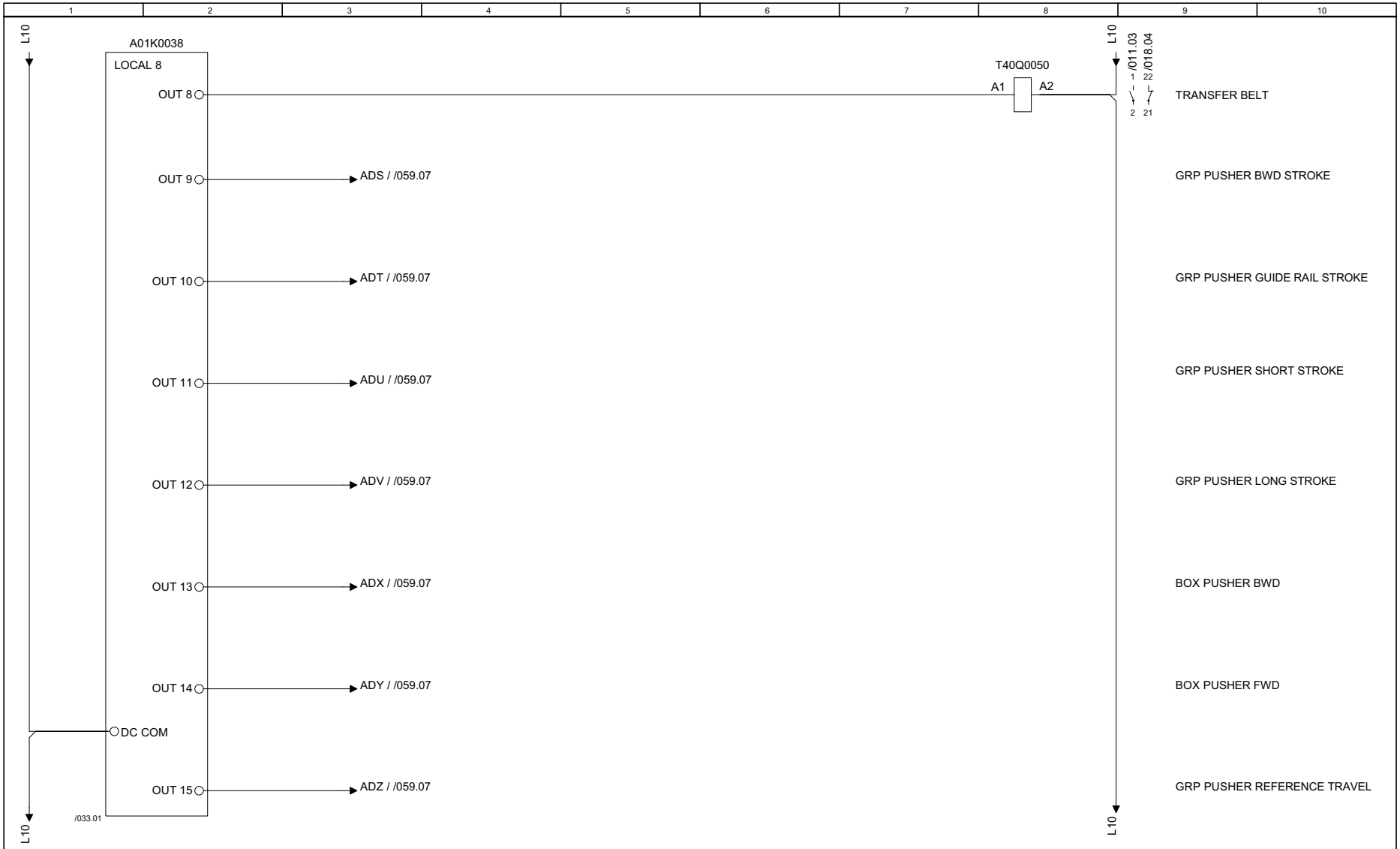

Drawing remarks	Tetra Pak	Designer CAS	Date 2009-11-12	Machine CBP 32 -0400
		ECM No 418137	Denomination CIRCUIT DIAGRAM	Page Type OUTPUTS A01K0038
	Company Tetra Pak (Sweden)	Document No. 3027725-0003	Doc. type ELD	Version AC	Page 034

RELEASED

© Tetra Pak. All rights reserved; any copying, transmittal or disclosure subject to Tetra Pak's written approval.

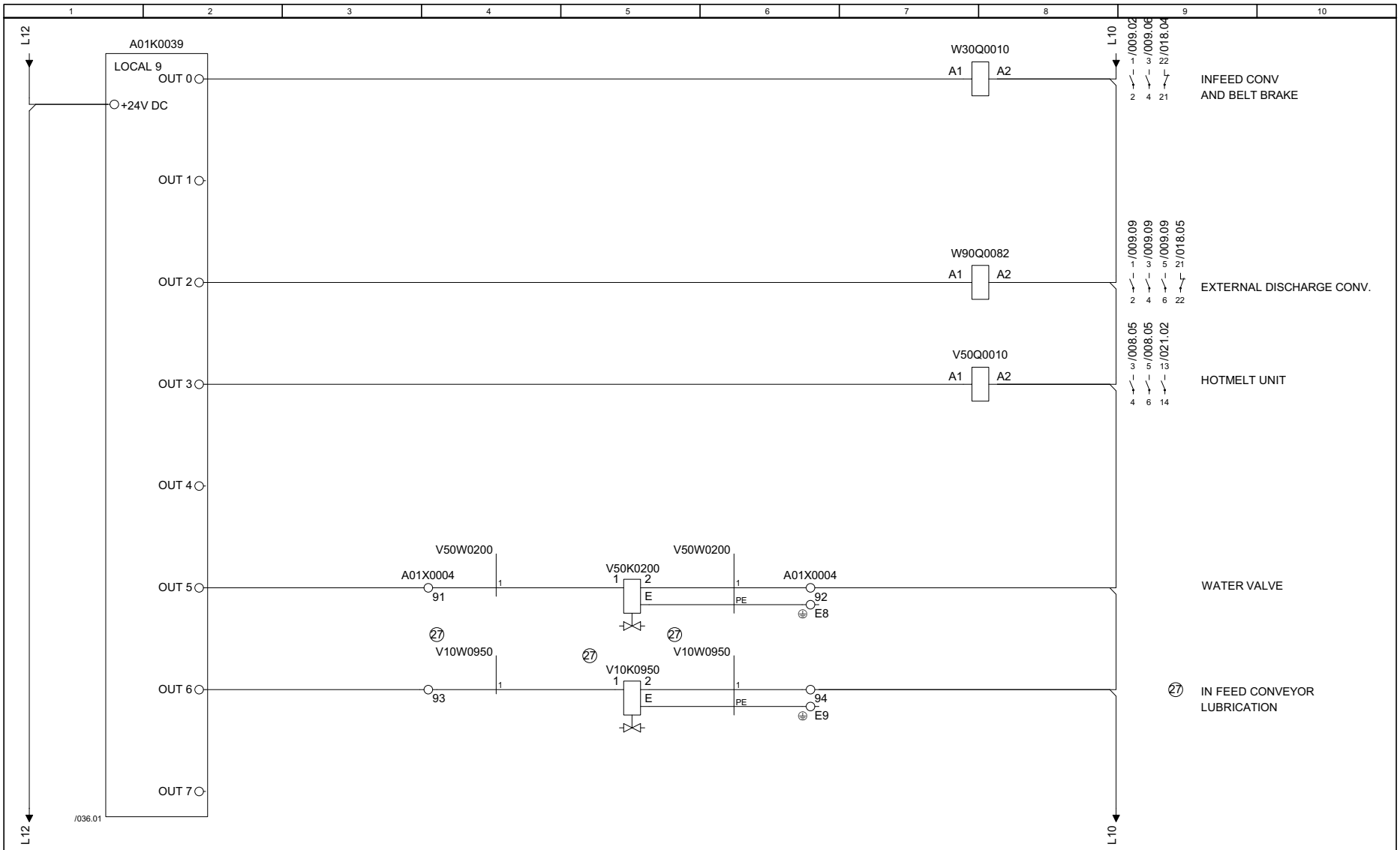

Drawing remarks	Tetra Pak	Designer CAS	Date 2009-11-12	Machine CBP 32 -0400			
		ECM No 418137	Denomination CIRCUIT DIAGRAM	Page Type OUTPUTS A01K0039			
	Company Tetra Pak (Sweden)	Document No. 3027725-0003	Doc. type ELD	Version AC	Page 035		

RELEASED

© Tetra Pak. All rights reserved; any copying, transmittal or disclosure subject to Tetra Pak's written approval.

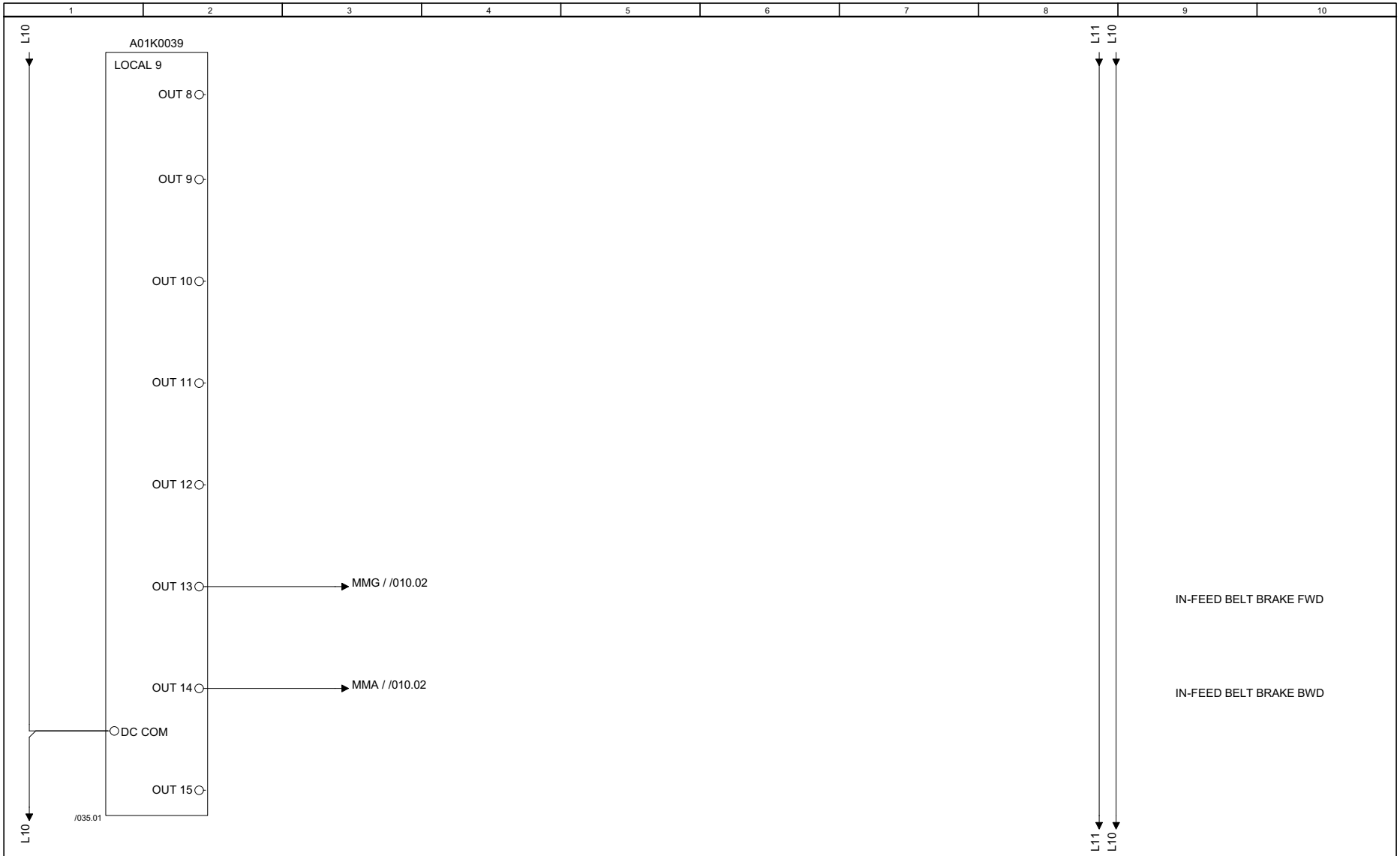

	Tetra Pak	Designer CAS	Date 2009-11-12	Machine CBP 32 -0400			
		ECM No 418137	Denomination CIRCUIT DIAGRAM	Page Type OUTPUTS A01K0039			
Drawing remarks	Company Tetra Pak (Sweden)		Document No. 3027725-0003	Doc. type ELD	Version AC	Page 036	

RELEASED

© Tetra Pak. All rights reserved; any copying, transmittal or disclosure subject to Tetra Pak's written approval.

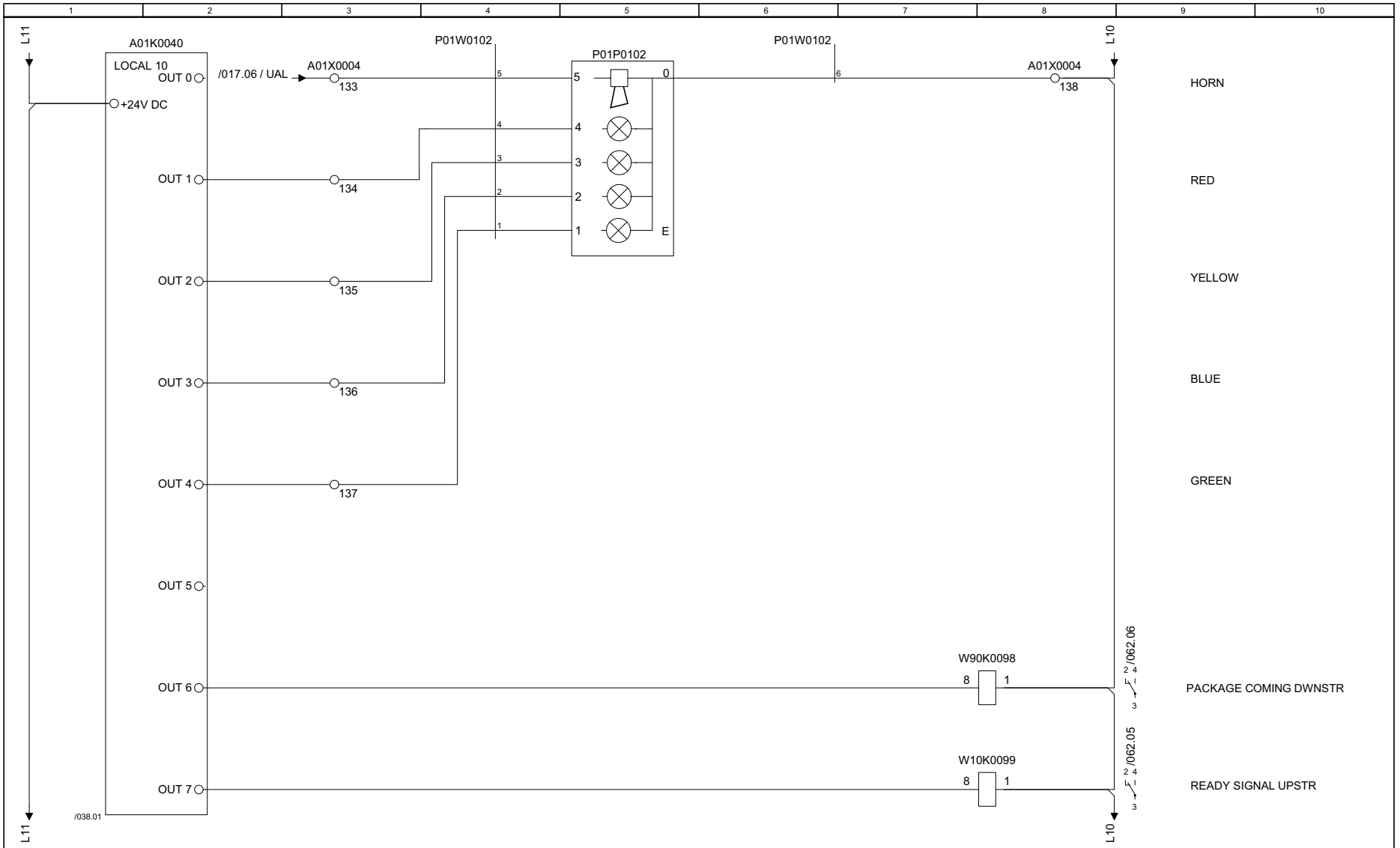

	Designer CAS	Date 2009-11-12	Machine CBP 32 -0400				
	ECM No 418137	Denomination CIRCUIT DIAGRAM	Page Type OUTPUTS A01K0040				
Drawing remarks	Company Tetra Pak (Sweden)	Document No. 3027725-0003	Doc. type ELD	Version AC	Page 037		

RELEASED

© Tetra Pak. All rights reserved; any copying, transmittal or disclosure subject to Tetra Pak's written approval.

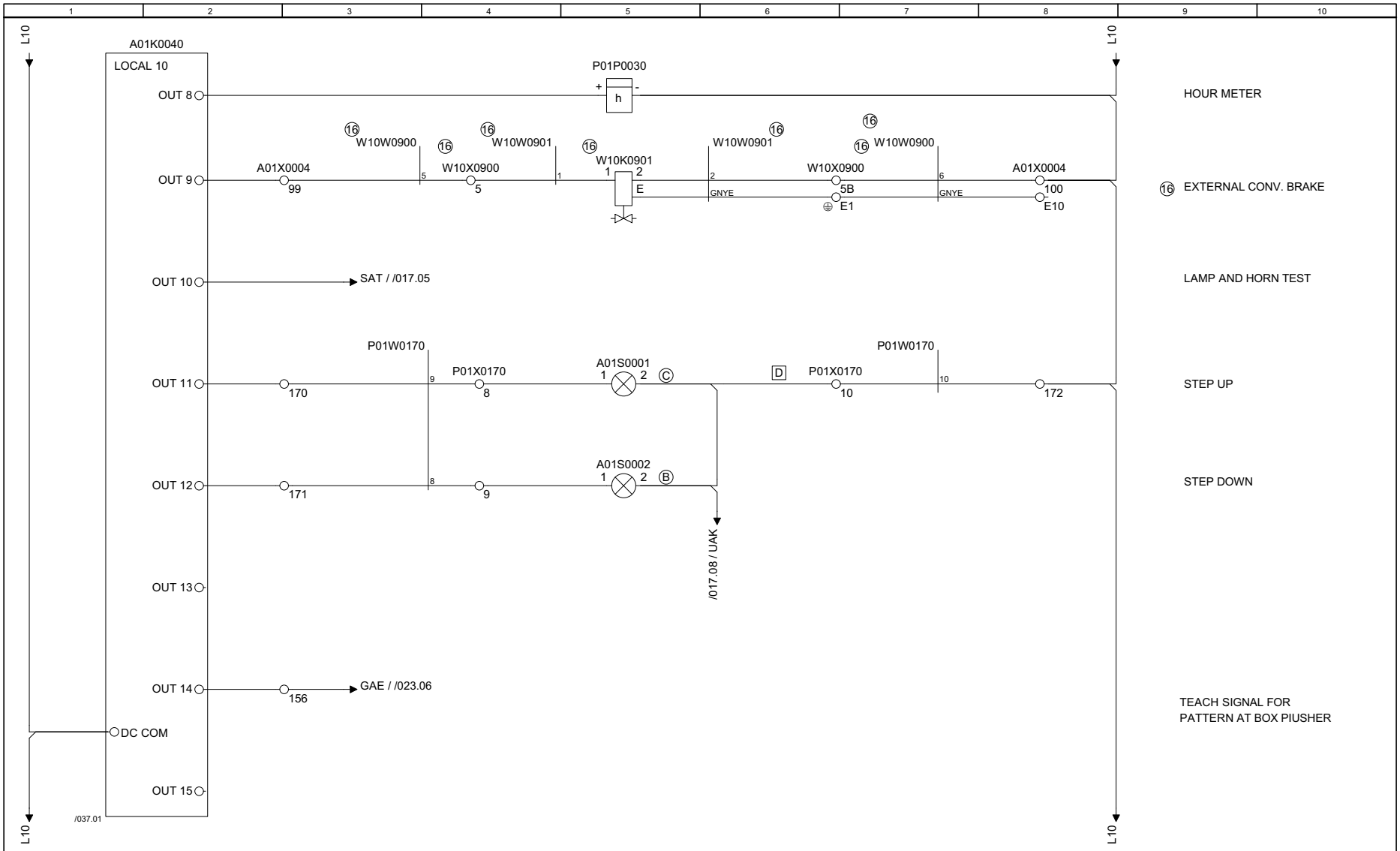

	Tetra Pak	Designer CAS	Date 2009-11-12	Machine CBP 32 -0400			
		ECM No 418137	Denomination CIRCUIT DIAGRAM	Page Type OUTPUTS A01K0040			
Drawing remarks	Company Tetra Pak (Sweden)	Document No. 3027725-0003	Doc. type ELD	Version AC	Page 038		

RELEASED

© Tetra Pak. All rights reserved; any copying, transmittal or disclosure subject to Tetra Pak's written approval.

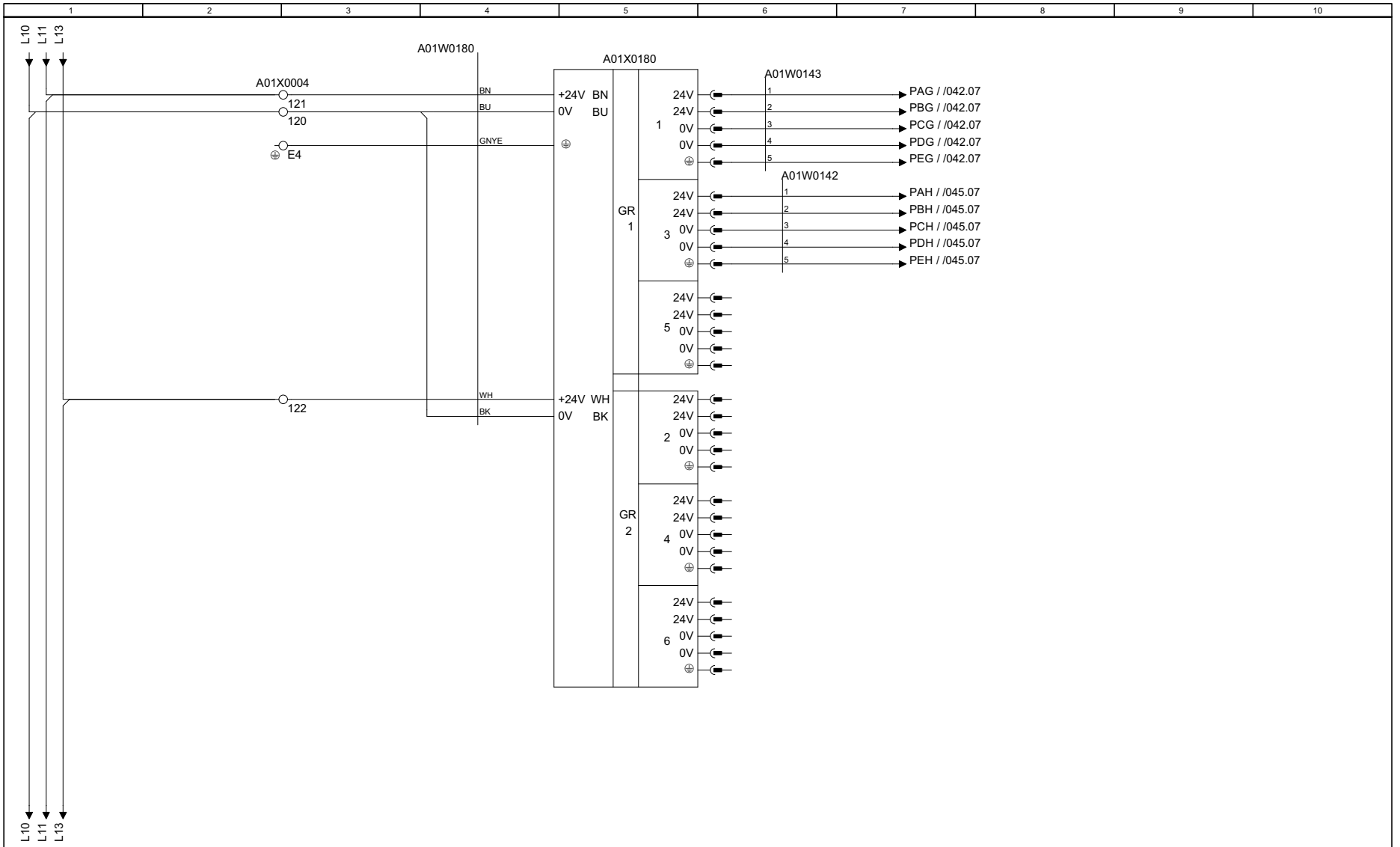

Drawing remarks	Tetra Pak	Designer CAS	Date 2009-11-12	Machine CBP 32 -0400			
		ECM No 418137	Denomination CIRCUIT DIAGRAM	Page Type POWER DISTRIBUTION DEVICE A01X0180			
	Company Tetra Pak (Sweden)		Document No. 3027725-0003	Doc. type ELD	Version AC	Page 039	

RELEASED

© Tetra Pak. All rights reserved; any copying, transmittal or disclosure subject to Tetra Pak's written approval.

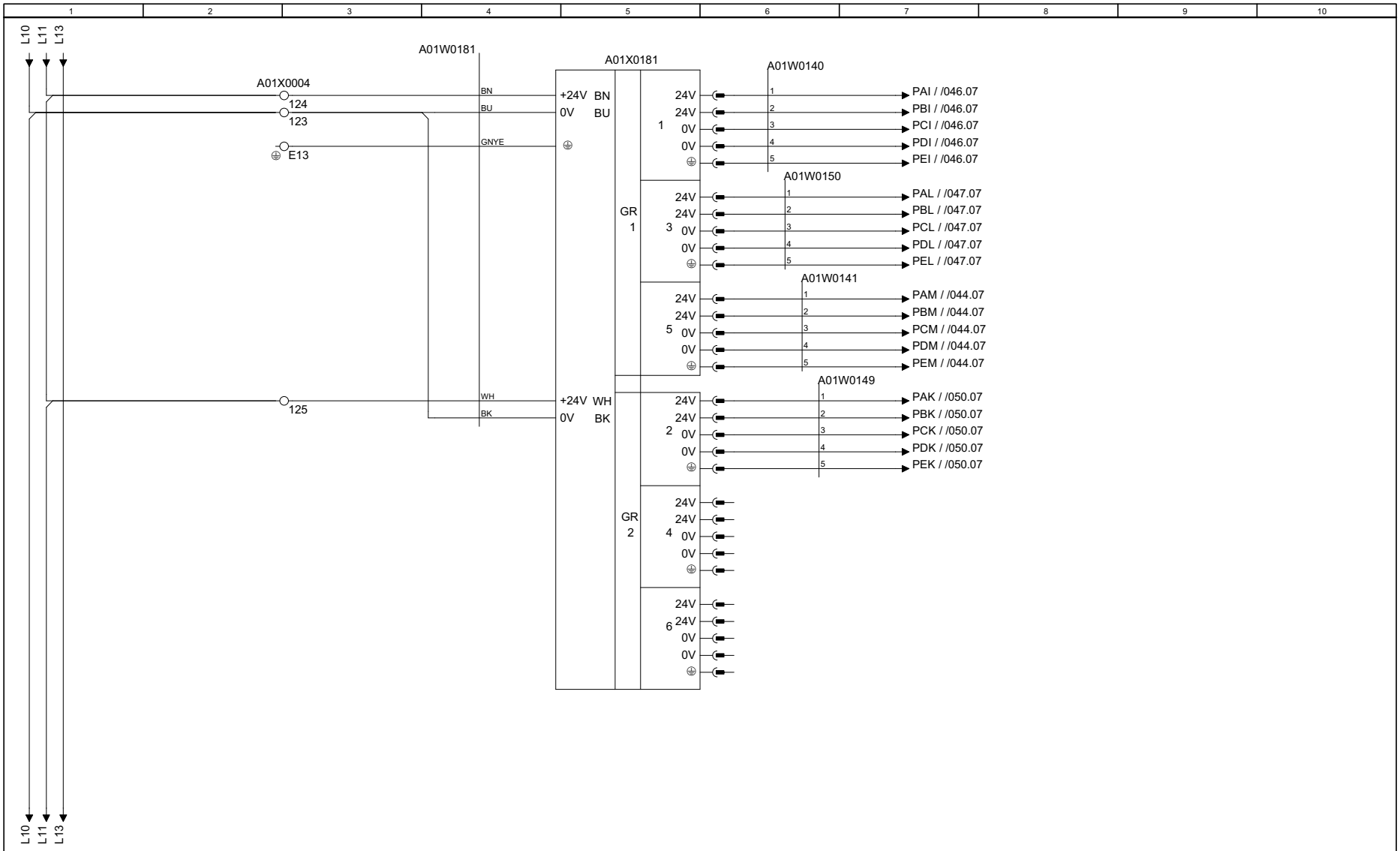

Drawing remarks	Tetra Pak	Designer CAS	Date 2009-11-12	Machine CBP 32 -0400
		ECM No 418137	Denomination CIRCUIT DIAGRAM	Page Type POWER DISTRIBUTION DEVICE A01X0181
	Company Tetra Pak (Sweden)	Document No. 3027725-0003	Doc. type ELD	Version AC / Page 040

RELEASED

© Tetra Pak. All rights reserved; any copying, transmittal or disclosure subject to Tetra Pak's written approval.

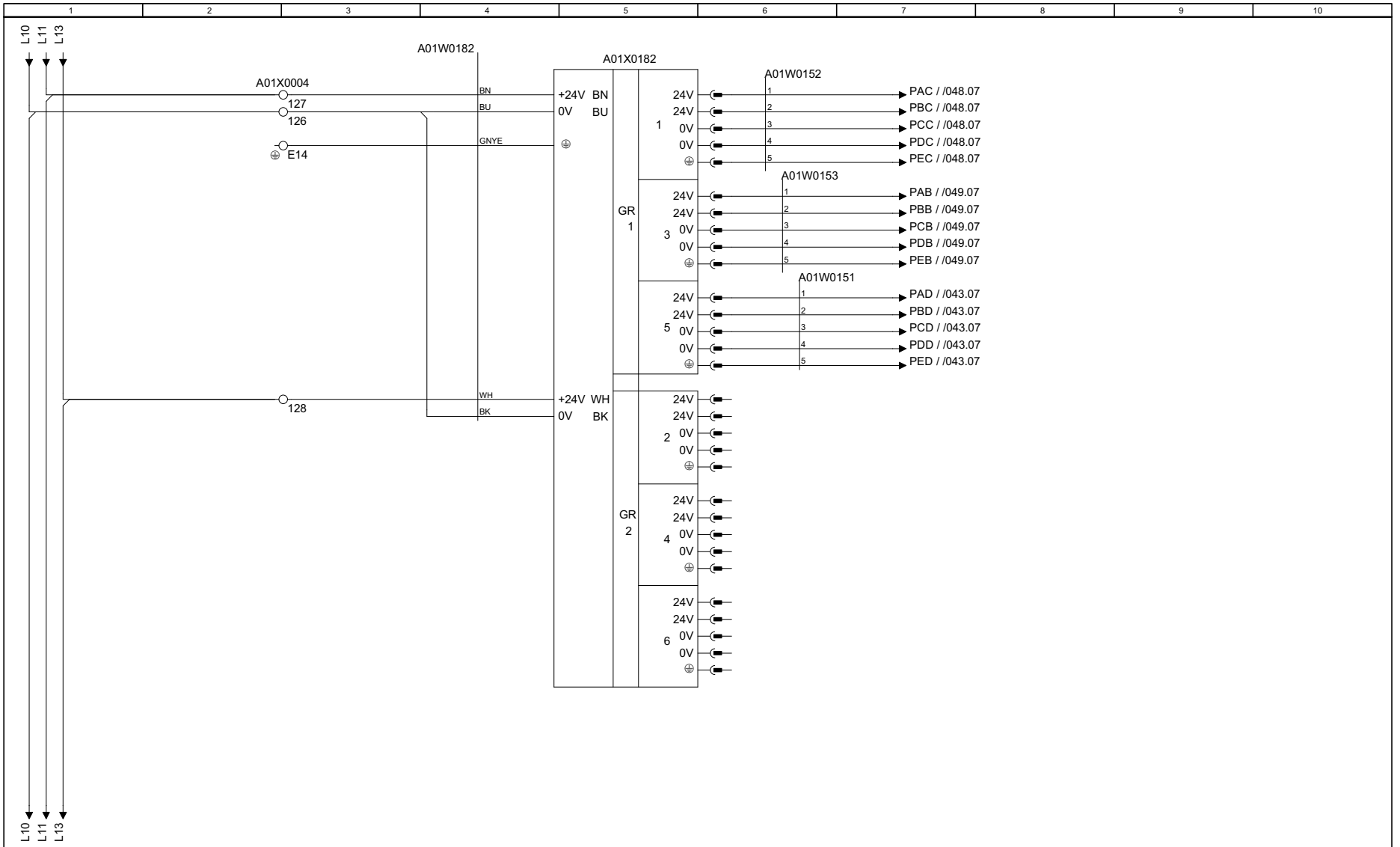

Drawing remarks	Tetra Pak	Designer CAS	Date 2009-11-12	Machine CBP 32 -0400			
		ECM No 418137	Denomination CIRCUIT DIAGRAM	Page Type POWER DISTRIBUTION DEVICE A01X0182			
	Company Tetra Pak (Sweden)		Document No. 3027725-0003	Doc. type ELD	Version AC	Page 041	

RELEASED

© Tetra Pak. All rights reserved; any copying, transmittal or disclosure subject to Tetra Pak's written approval.

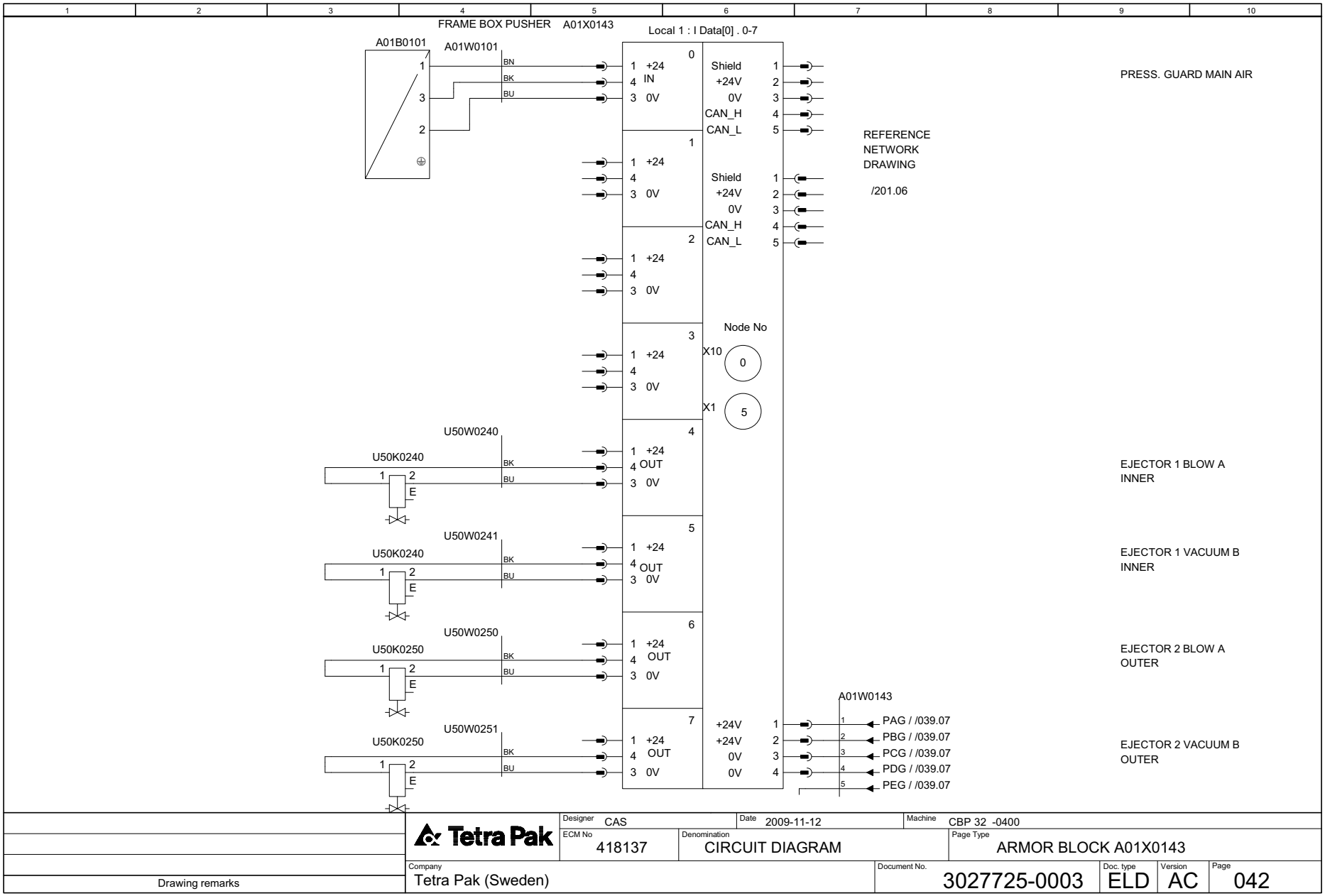

	Designer CAS	Date 2009-11-12	Machine CBP 32 -0400	
	ECM No 418137	Denomination CIRCUIT DIAGRAM	Page Type ARMOR BLOCK A01X0143	
Drawing remarks	Company Tetra Pak (Sweden)	Document No. 3027725-0003	Doc. type ELD	Version AC	Page 042

RELEASED

© Tetra Pak. All rights reserved; any copying, transmittal or disclosure subject to Tetra Pak's written approval.

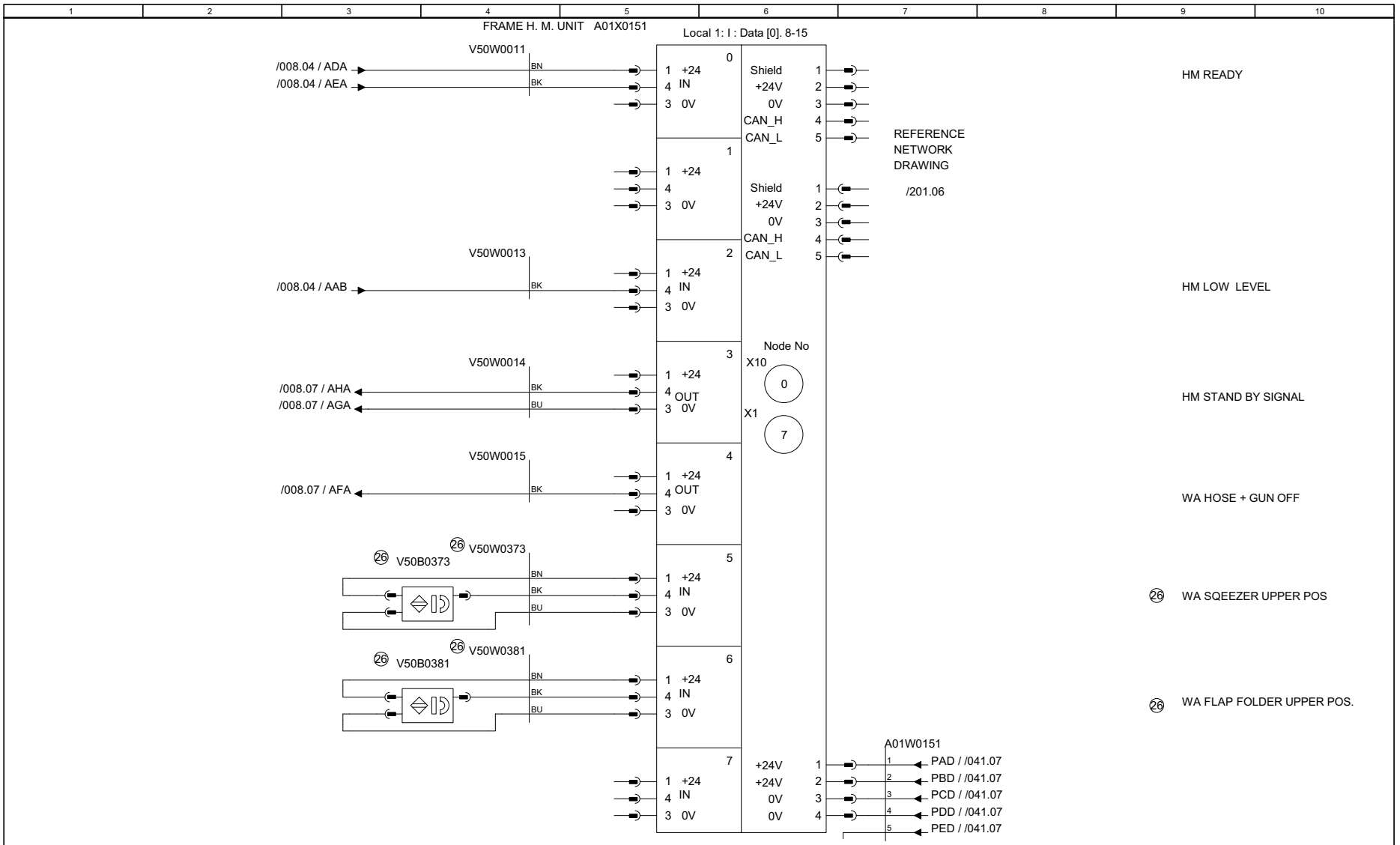

Drawing remarks	Tetra Pak	Designer CAS	Date 2009-11-12	Machine CBP 32 -0400			
		ECM No 418137	Denomination CIRCUIT DIAGRAM	Page Type ARMOR BLOCK A01X0151			
		Company Tetra Pak (Sweden)	Document No. 3027725-0003	Doc. type ELD	Version AC	Page 043	

RELEASED

© Tetra Pak. All rights reserved; any copying, transmittal or disclosure subject to Tetra Pak's written approval.

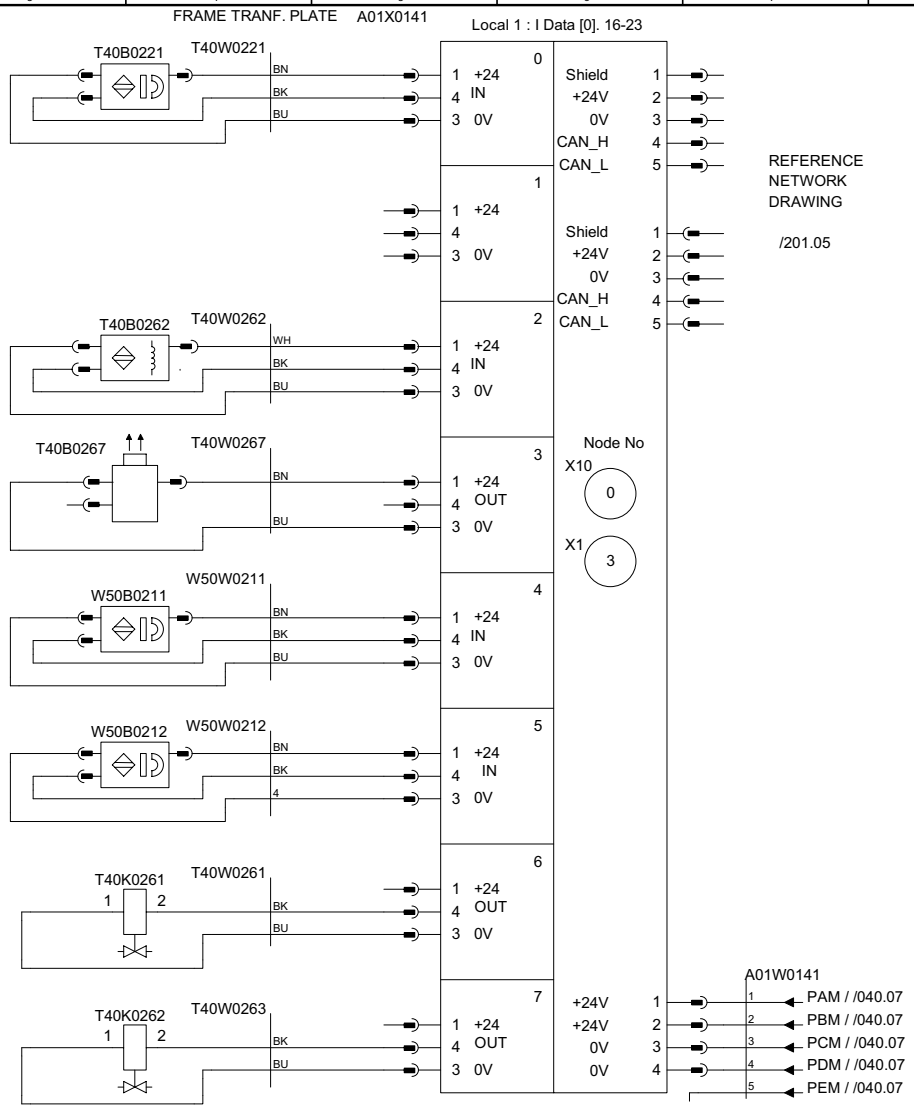

Drawing remarks	Tetra Pak	Designer CAS	Date 2009-11-12	Machine CBP 32 -0400			
		ECM No 418137	Denomination CIRCUIT DIAGRAM	Page Type ARMOR BLOCK A01X0141			
	Company Tetra Pak (Sweden)		Document No. 3027725-0003	Doc. type ELD	Version AC	Page 044	

RELEASED

© Tetra Pak. All rights reserved; any copying, transmittal or disclosure subject to Tetra Pak's written approval.

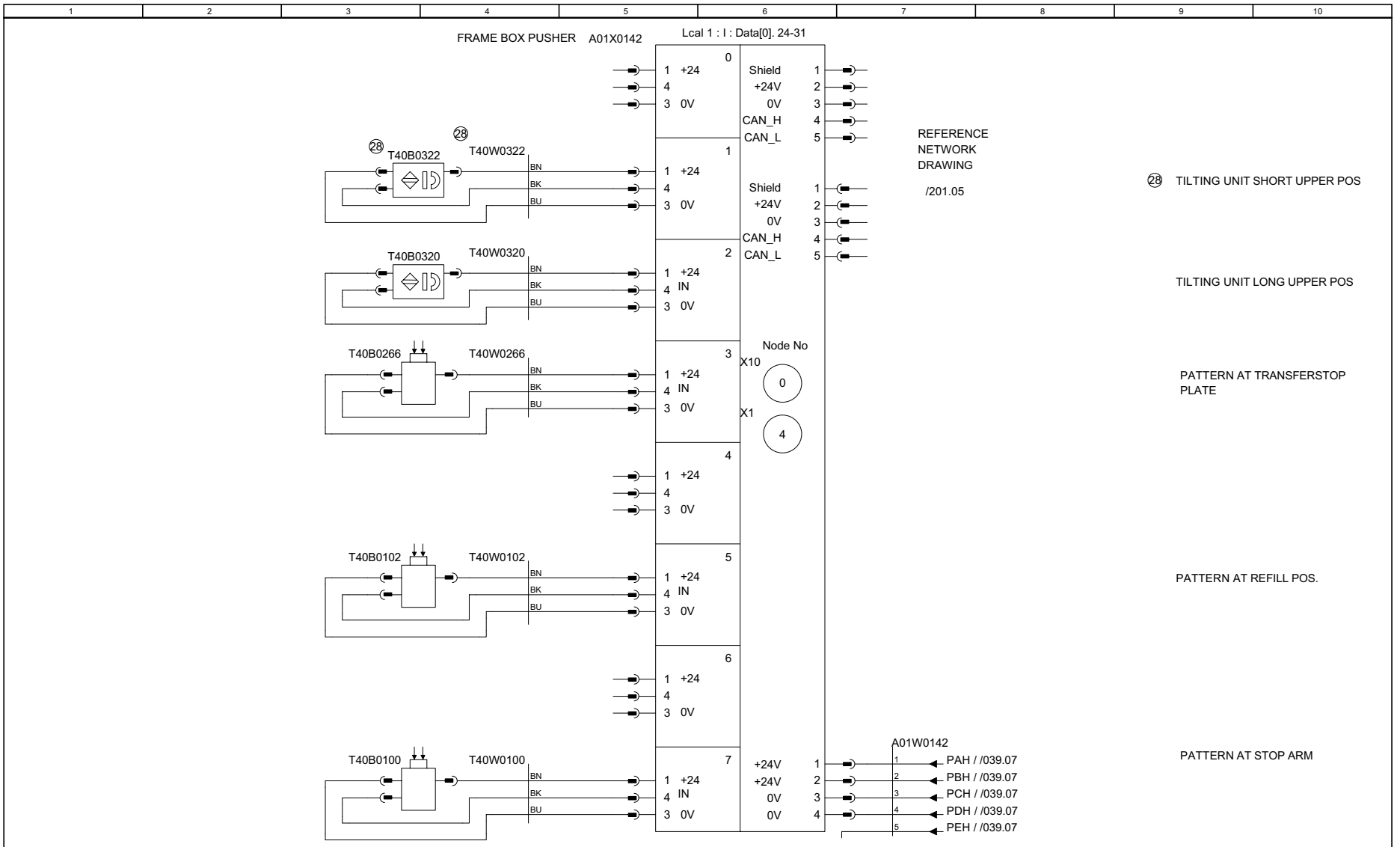

	Tetra Pak	Designer CAS	Date 2009-11-12	Machine CBP 32 -0400			
		ECM No 418137	Denomination CIRCUIT DIAGRAM	Page Type ARMOR BLOCK A01X0142			
Drawing remarks		Company Tetra Pak (Sweden)	Document No. 3027725-0003	Doc. type ELD	Version AC	Page 045	

RELEASED

© Tetra Pak. All rights reserved; any copying, transmittal or disclosure subject to Tetra Pak's written approval.

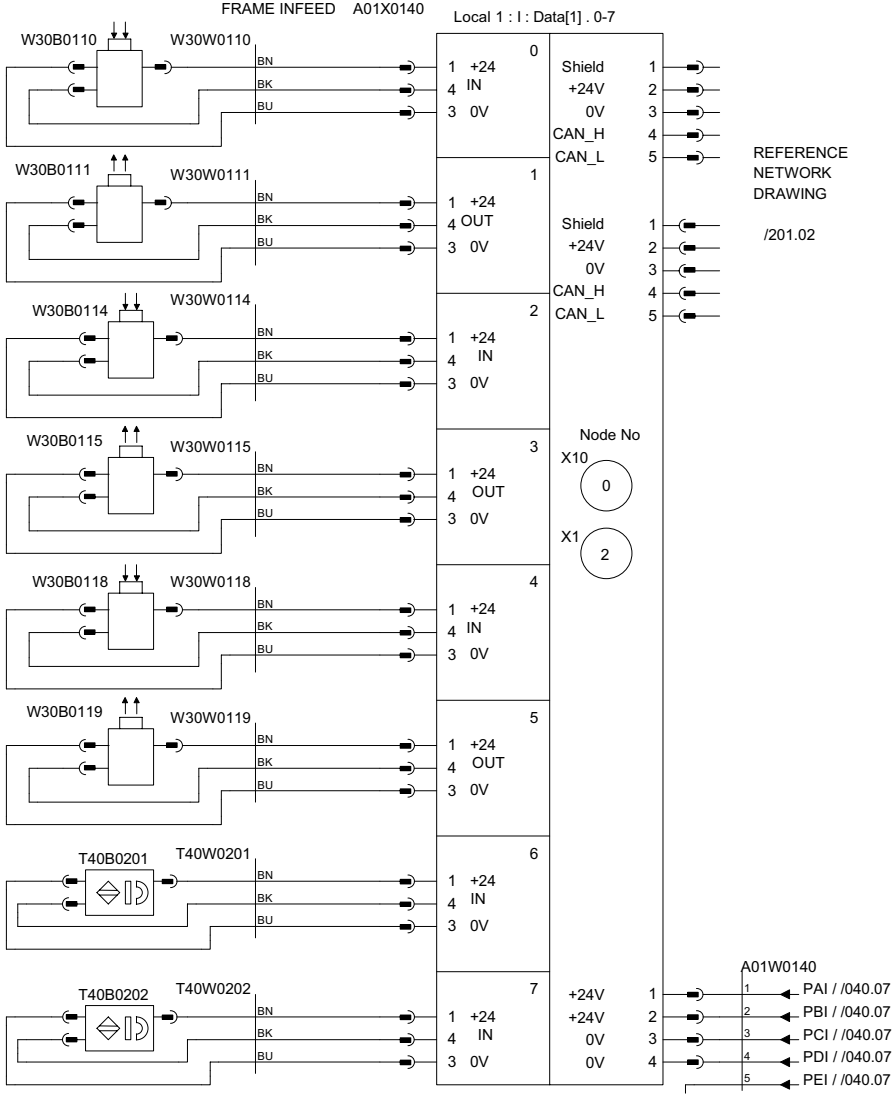

Drawing remarks	Tetra Pak	Designer CAS	Date 2009-11-12	Machine CBP 32 -0400
		ECM No 418137	Denomination CIRCUIT DIAGRAM	Page Type ARMOR BLOCK A01X0140
	Company Tetra Pak (Sweden)	Document No. 3027725-0003	Doc. type ELD	Version AC	Page 046

RELEASED

© Tetra Pak. All rights reserved; any copying, transmittal or disclosure subject to Tetra Pak's written approval.

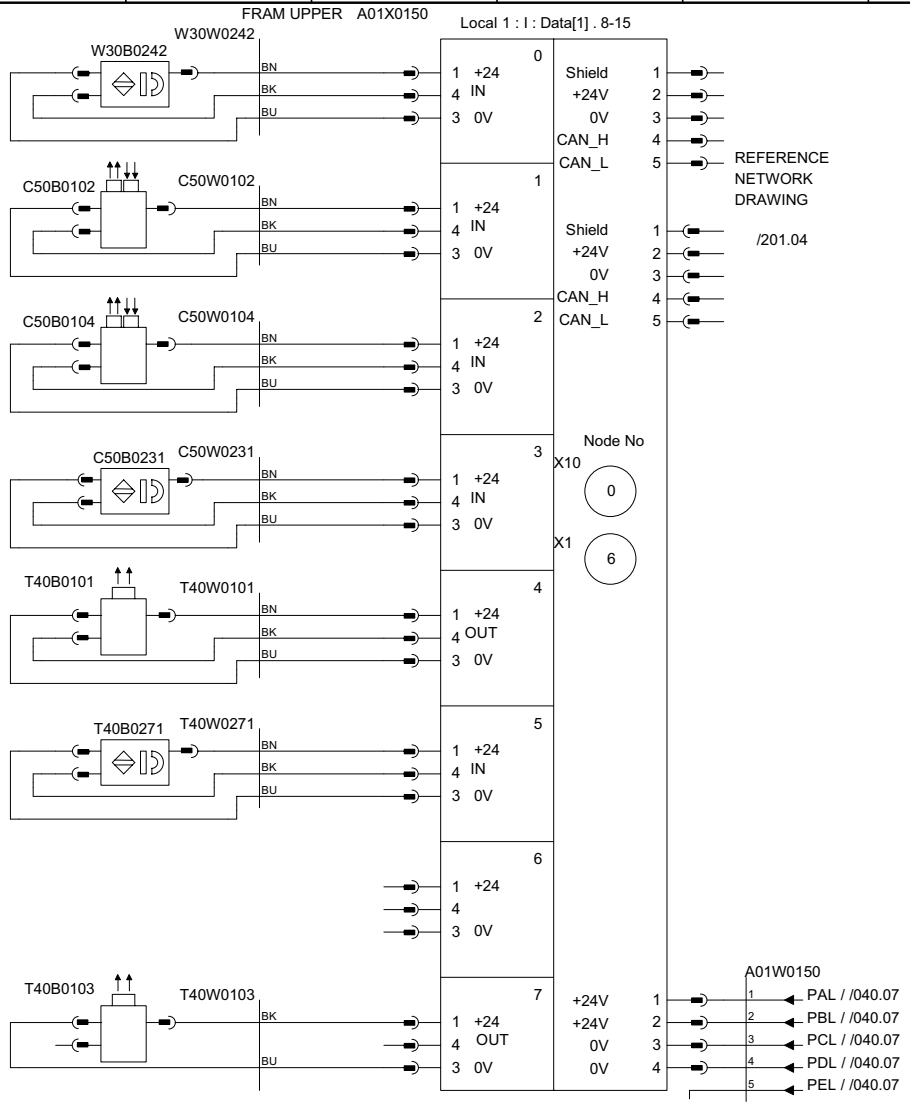

Drawing remarks	Tetra Pak	Designer CAS	Date 2009-11-12	Machine CBP 32 -0400				
		ECM No 418137	Denomination CIRCUIT DIAGRAM	Page Type ARMOR BLOCK A01X0150				
		Company Tetra Pak (Sweden)	Document No. 3027725-0003	Doc. type ELD	Version AC	Page 047		

RELEASED

© Tetra Pak. All rights reserved; any copying, transmittal or disclosure subject to Tetra Pak's written approval.

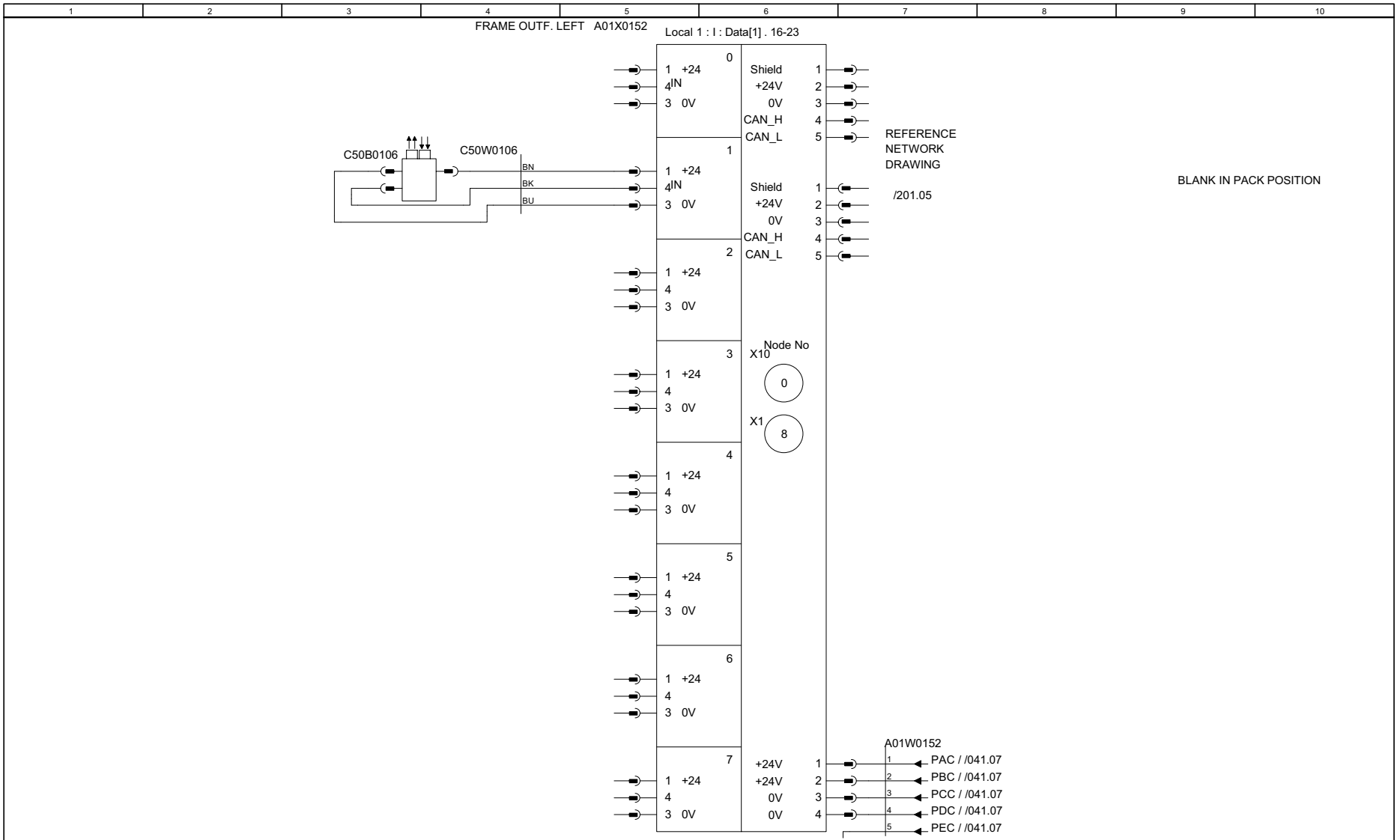

	Tetra Pak	Designer CAS	Date 2009-11-12	Machine CBP 32 -0400			
		ECM No 418137	Denomination CIRCUIT DIAGRAM	Page Type ARMOR BLOCK A01X0152			
Drawing remarks	Company Tetra Pak (Sweden)	Document No. 3027725-0003	Doc. type ELD	Version AC	Page 048		

RELEASED

© Tetra Pak. All rights reserved; any copying, transmittal or disclosure subject to Tetra Pak's written approval.

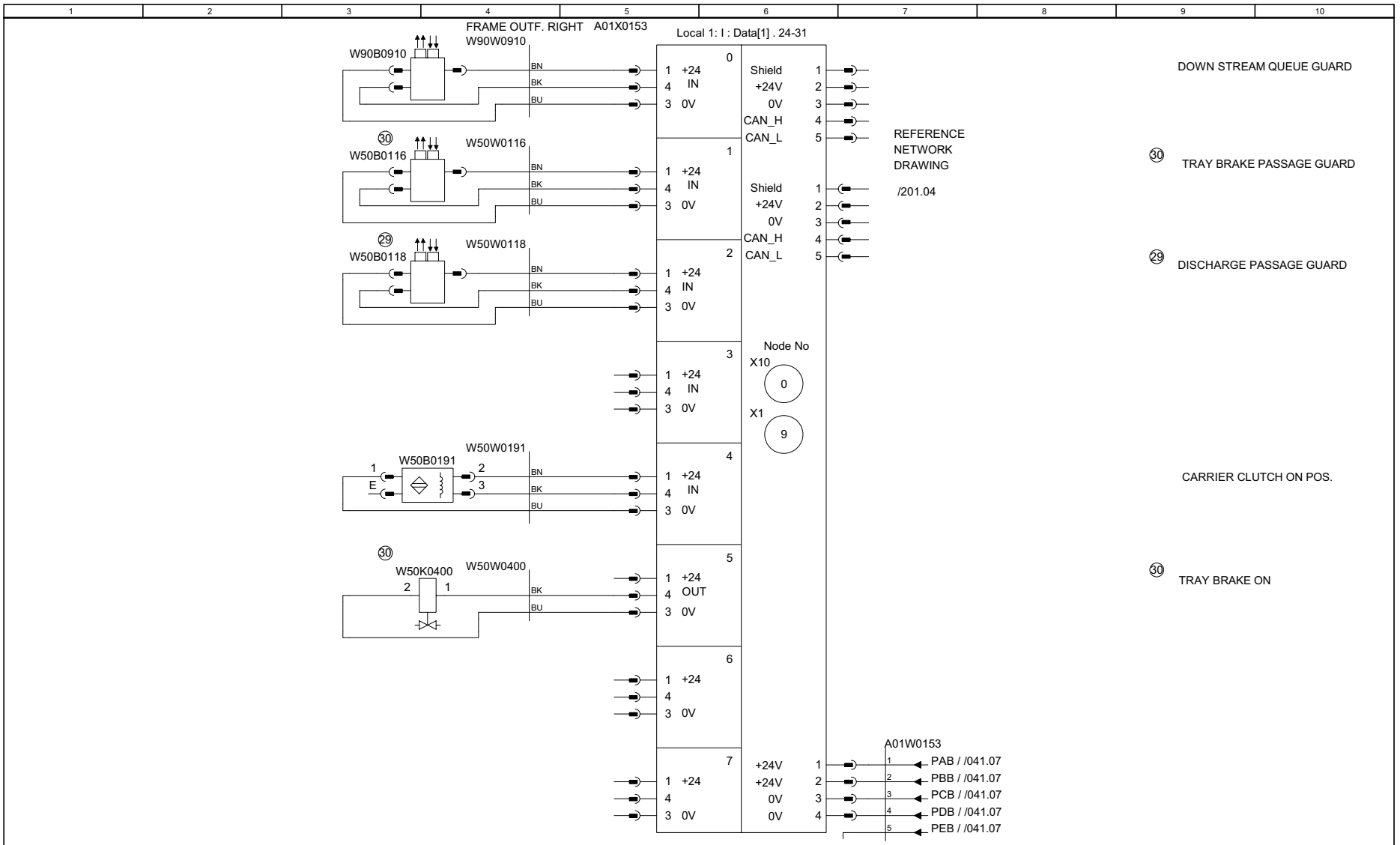

Drawing remarks	Tetra Pak	Designer CAS	Date 2009-11-12	Machine CBP 32 -0400			
		ECM No 418137	Denomination CIRCUIT DIAGRAM	Page Type ARMOR BLOCK A01X0153			
		Company Tetra Pak (Sweden)	Document No. 3027725-0003	Doc. type ELD	Version AC	Page 049	

RELEASED

© Tetra Pak. All rights reserved; any copying, transmittal or disclosure subject to Tetra Pak's written approval.

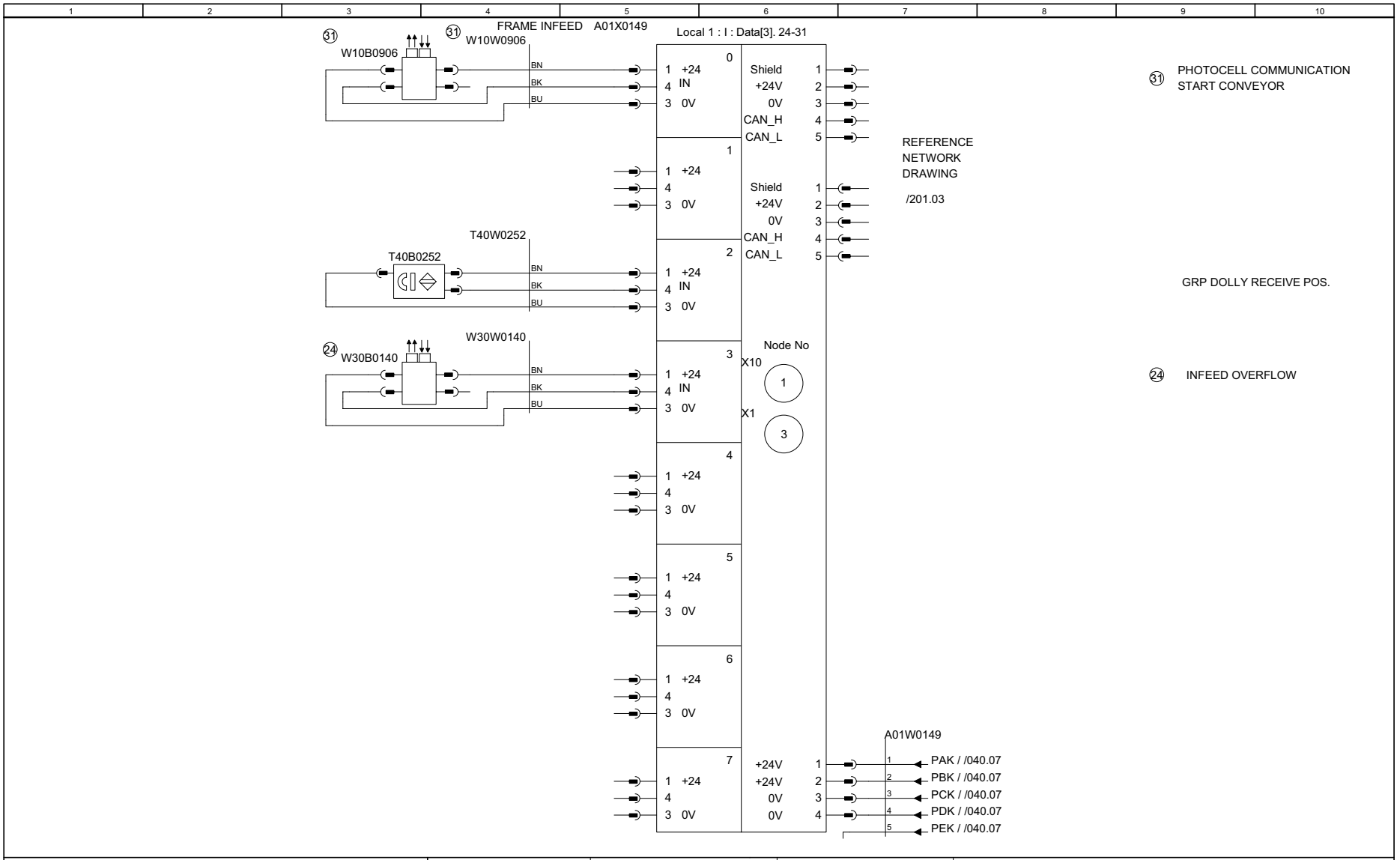

Drawing remarks	Tetra Pak	Designer CAS	Date 2009-11-12	Machine CBP 32 -0400			
		ECM No 418137	Denomination CIRCUIT DIAGRAM	Page Type ARMOR BLOCK A01X0149			
	Company Tetra Pak (Sweden)	Document No. 3027725-0003	Doc. type ELD	Version AC	Page 050		

RELEASED

© Tetra Pak. All rights reserved; any copying, transmittal or disclosure subject to Tetra Pak's written approval.

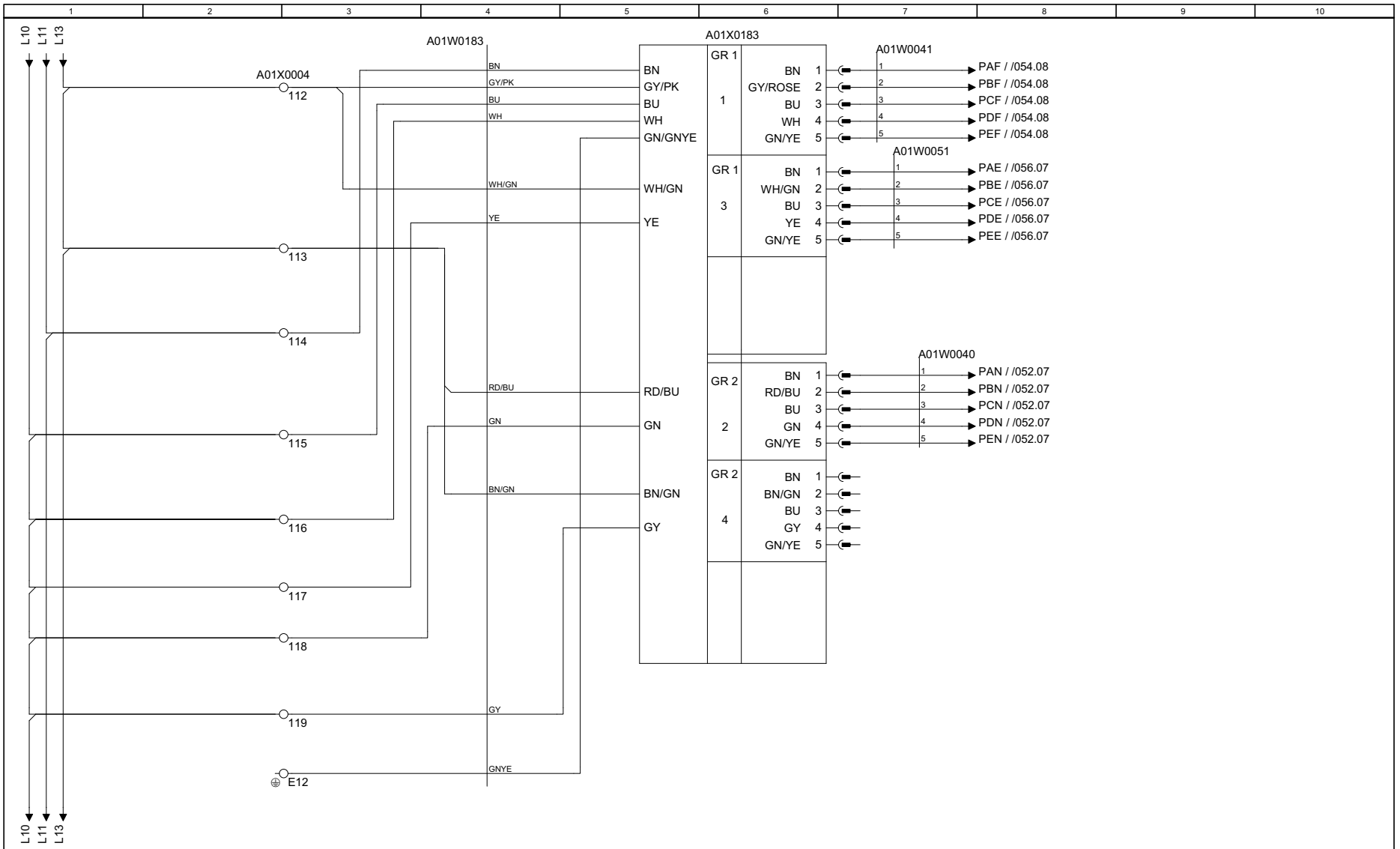

Drawing remarks	Tetra Pak	Designer CAS	Date 2009-11-12	Machine CBP 32 -0400			
		ECM No 418137	Denomination CIRCUIT DIAGRAM	Page Type POWER DISTRIBUTION DEVICE A01X0183			
		Company Tetra Pak (Sweden)	Document No. 3027725-0003	Doc. type ELD	Version AC	Page 051	

RELEASED

© Tetra Pak. All rights reserved; any copying, transmittal or disclosure subject to Tetra Pak's written approval.

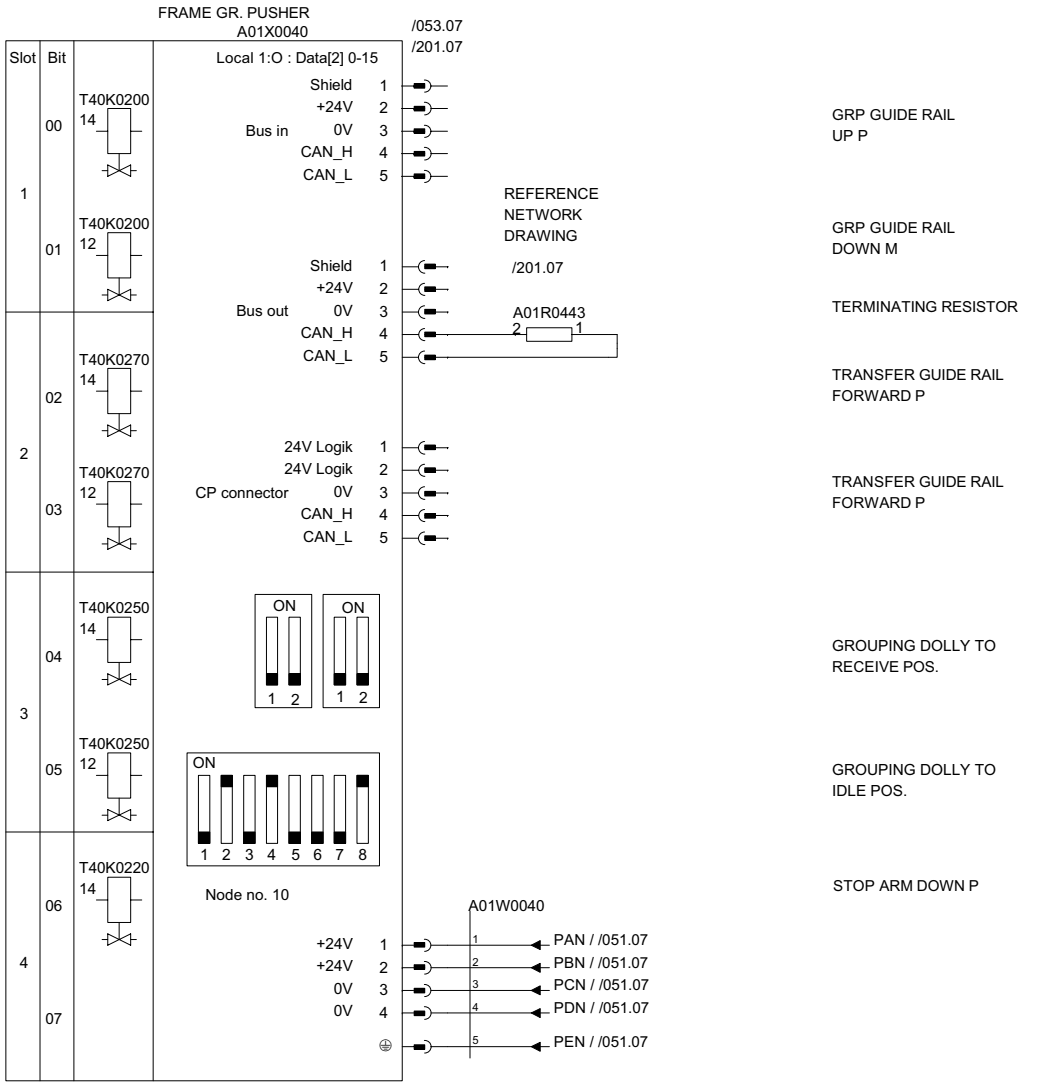

Drawing remarks	Tetra Pak	Designer CAS	Date 2009-11-12	Machine CBP 32 -0400			
		ECM No 418137	Denomination CIRCUIT DIAGRAM	Page Type VALV PANEL A01X0040 BASE			
	Company Tetra Pak (Sweden)	Document No. 3027725-0003	Doc. type ELD	Version AC	Page 052		

RELEASED

© Tetra Pak. All rights reserved; any copying, transmittal or disclosure subject to Tetra Pak's written approval.

FRAME GR. PUSHER
A01X0040 /052.07

Slot	Bit		Local 1 : O : Data[2]. 0-15
5	08	T40K0240 14	GROUPING PLATE DOWN P
	09		
6	10	T40K0230 14	GROUPING TOP SUPPORT DOWN P
	11	T40K0230 12	GROUPING TOP SUPPORT UP M
7	12	T40K0190 14	GROUPING PUSHER BRAKE OFF
	13		
8	14	A01K0120 14	OIL PUMP ON
	15		

Drawing remarks	Tetra Pak	Designer CAS	Date 2009-11-12	Machine CBP 32 -0400			
		ECM No 418137	Denomination CIRCUIT DIAGRAM	Page Type VALV PANEL A01X0040 EXPANSION			
	Company Tetra Pak (Sweden)		Document No. 3027725-0003	Doc. type ELD	Version AC	Page 053	

RELEASED

© Tetra Pak. All rights reserved; any copying, transmittal or disclosure subject to Tetra Pak's written approval.

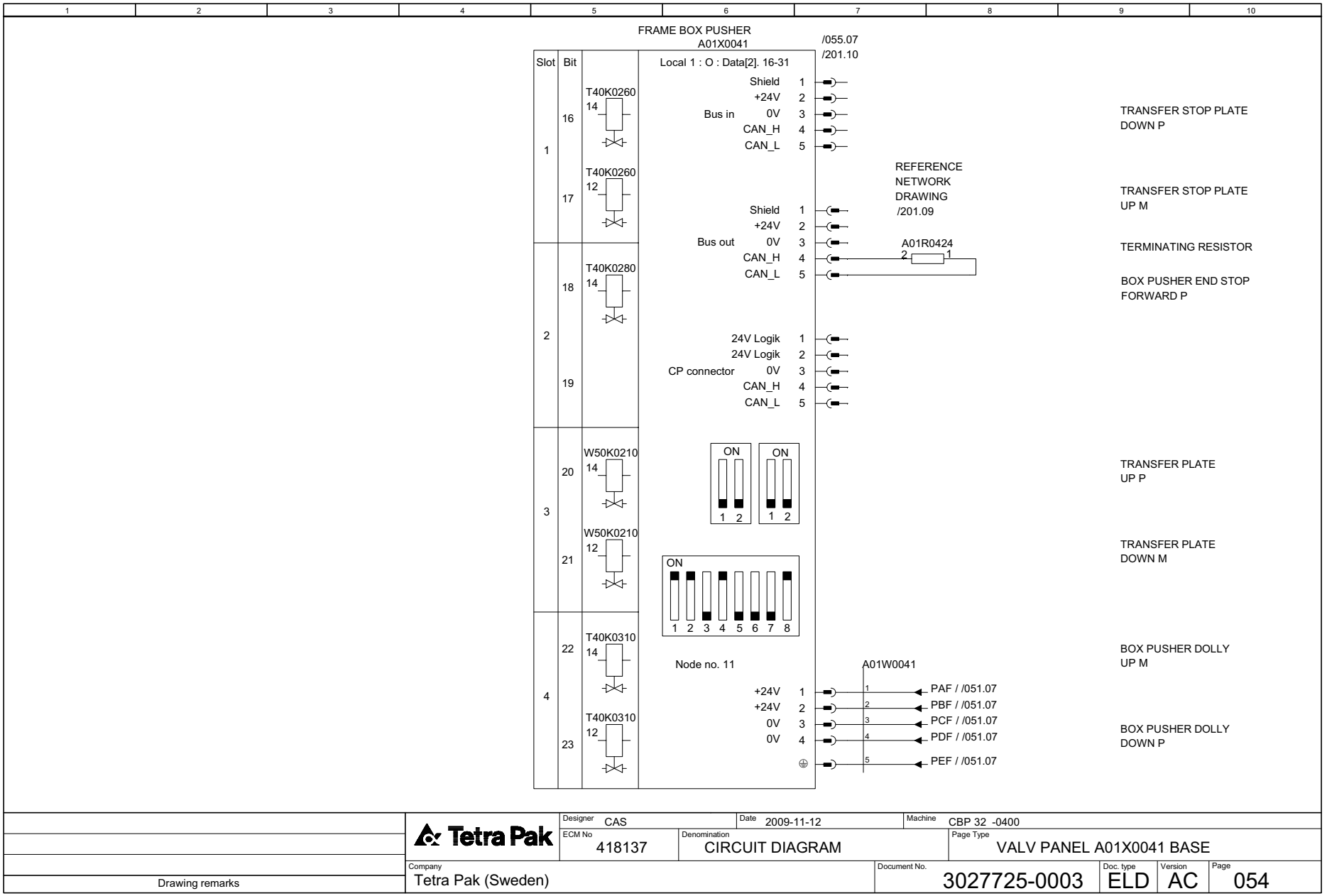

	Designer CAS	Date 2009-11-12	Machine CBP 32 -0400	
Tetra Pak	ECM No 418137	Denomination CIRCUIT DIAGRAM	Page Type VALV PANEL A01X0041 BASE	
Drawing remarks	Company Tetra Pak (Sweden)	Document No. 3027725-0003	Doc. type ELD	Version AC	Page 054

RELEASED

© Tetra Pak. All rights reserved; any copying, transmittal or disclosure subject to Tetra Pak's written approval.

FRAME BOX PUSHER
A01X0041 /054.07

Slot	Bit		Local 1 : O : Data[2]. 16-31
5	24	T40K0320 14	
	25	T40K0320 12	
6	26	T40K0322 14	(28)
	27	T40K0322 12	
7	28	T40K0300 14	
	29	T40K0300 1 2	
8	30		
	31		

TILTING UNIT LONG
UP P

TILTING UNIT LONG
DOWN M

(28) TILTING UNIT SHORT
UP P

(28) TILTING UNIT SHORT
DOWN M

BOX PUSHER PLATE
UP P

BOX PUSHER PLATE
DOWN M

Drawing remarks	Tetra Pak	Designer CAS	Date 2009-11-12	Machine CBP 32 -0400			
		ECM No 418137	Denomination CIRCUIT DIAGRAM	Page Type VALV PANEL A01X0041 EXPANSION			
	Company Tetra Pak (Sweden)		Document No. 3027725-0003	Doc. type ELD	Version AC	Page 055	

RELEASED

© Tetra Pak. All rights reserved; any copying, transmittal or disclosure subject to Tetra Pak's written approval.

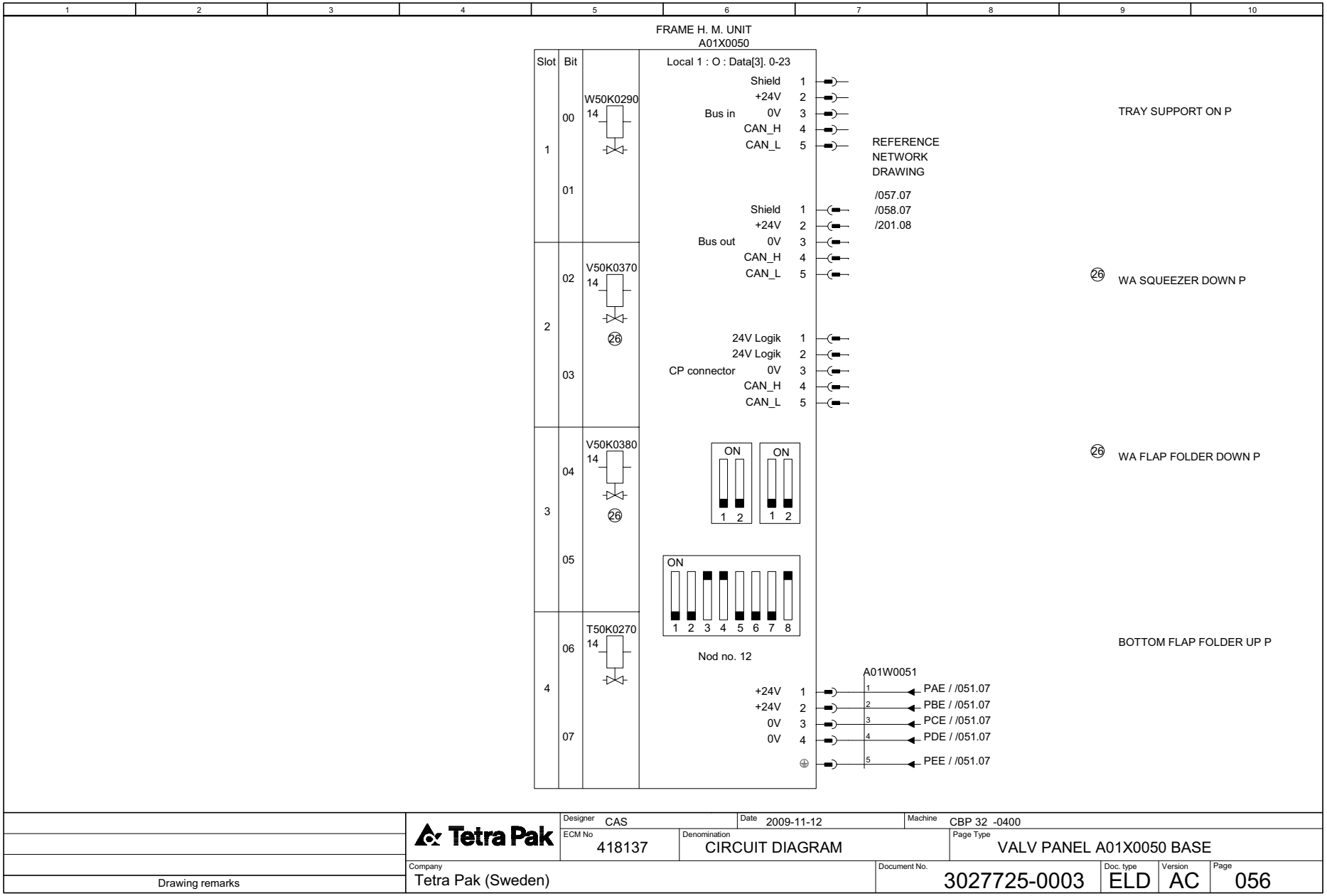

Drawing remarks	Designer CAS	Date 2009-11-12	Machine CBP 32 -0400	
	ECM No 418137	Denomination CIRCUIT DIAGRAM	Page Type VALV PANEL A01X0050 BASE	
	Company Tetra Pak (Sweden)	Document No. 3027725-0003	Doc. type ELD	Version AC	Page 056

RELEASED

© Tetra Pak. All rights reserved; any copying, transmittal or disclosure subject to Tetra Pak's written approval.

FRAME H. M. UNIT
A01X0050 /056.07

Slot	Bit		Local 1 : O : Data[3]. 0-23
5	08	C50K0230 14	MAGAZINE FEEDER ON M
	09		
6	10	V50K0300 14	BOTTOM SQUEEZER ON P
	11		
7	12	T50K0260 14	FOLDING BAR ON P
	13		
8	14	V50K0390 14	⑳ DISCHARGE SUPPORT FWD P
	15	⑳	

Drawing remarks	Tetra Pak	Designer CAS	Date 2009-11-12	Machine CBP 32 -0400	
		ECM No 418137	Denomination CIRCUIT DIAGRAM	Page Type VALV PANEL A01X0050 EXPANSION	
	Company Tetra Pak (Sweden)		Document No. 3027725-0003	Doc. type ELD	Version AC	Page 057

RELEASED

© Tetra Pak. All rights reserved; any copying, transmittal or disclosure subject to Tetra Pak's written approval.

1	2	3	4	5	6	7	8	9	10

FRAME H. M. UNIT
A01X0050 /056.07

Slot	Bit		Local 1 : O : Data[3]. 0-23
9	16	T50K0280 14	
	17		
10	18		
	19		
11	20		
	21		
12	22		
	23		

PACKING END STOP ON P

	Tetra Pak	Designer CAS	Date 2009-11-12	Machine CBP 32 -0400
		ECM No 418137	Denomination CIRCUIT DIAGRAM	Page Type VALV PANEL A01X0050 EXPANSION
Drawing remarks	Company Tetra Pak (Sweden)		Document No. 3027725-0003	Doc. type ELD / Version AC / Page 058

RELEASED

© Tetra Pak. All rights reserved; any copying, transmittal or disclosure subject to Tetra Pak's written approval.

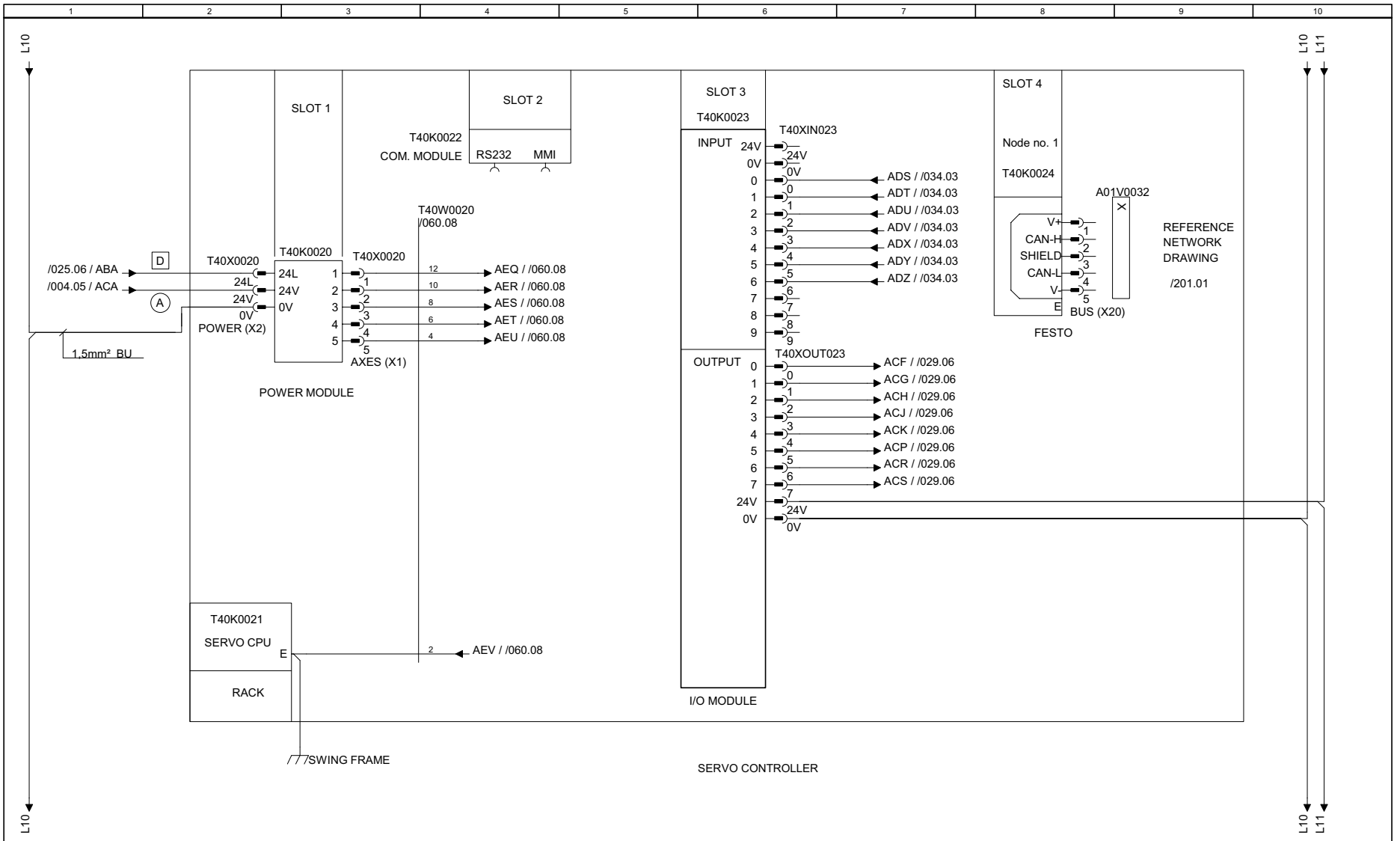

Drawing remarks	Tetra Pak	Designer CAS	Date 2009-11-12	Machine CBP 32 -0400			
		ECM No 418137	Denomination CIRCUIT DIAGRAM	Page Type SERVO CONTROLLER			
		Company Tetra Pak (Sweden)	Document No. 3027725-0003	Doc. type ELD	Version AC	Page 059	

RELEASED

© Tetra Pak. All rights reserved; any copying, transmittal or disclosure subject to Tetra Pak's written approval.

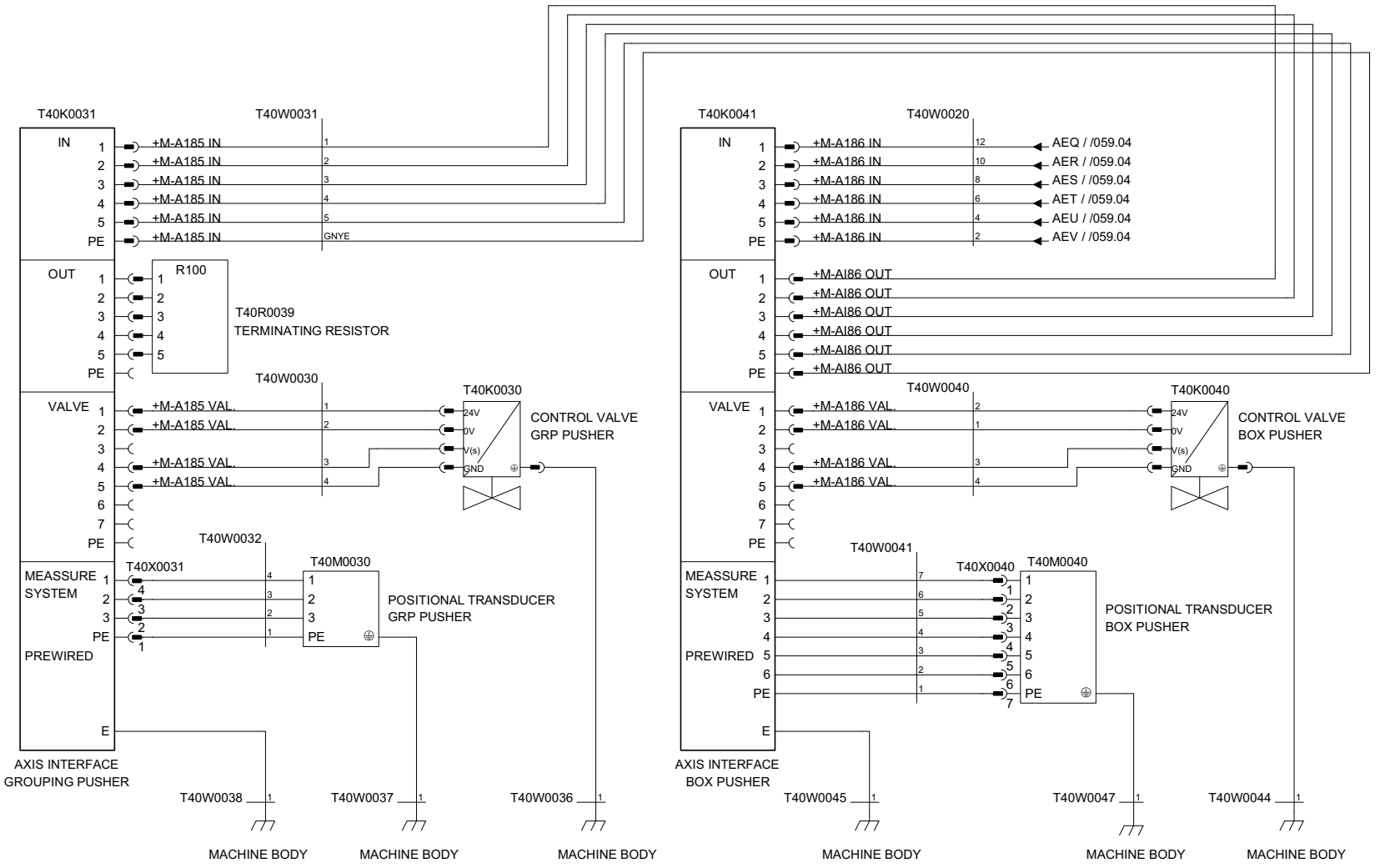

	Tetra Pak	Designer CAS	Date 2009-11-12	Machine CBP 32 -0400			
		ECM No 418137	Denomination CIRCUIT DIAGRAM	Page Type SERVO AXIS INTERFACE			
Drawing remarks	Company Tetra Pak (Sweden)	Document No. 3027725-0003	Doc. type ELD	Version AC	Page 060		

RELEASED

© Tetra Pak. All rights reserved; any copying, transmittal or disclosure subject to Tetra Pak's written approval.

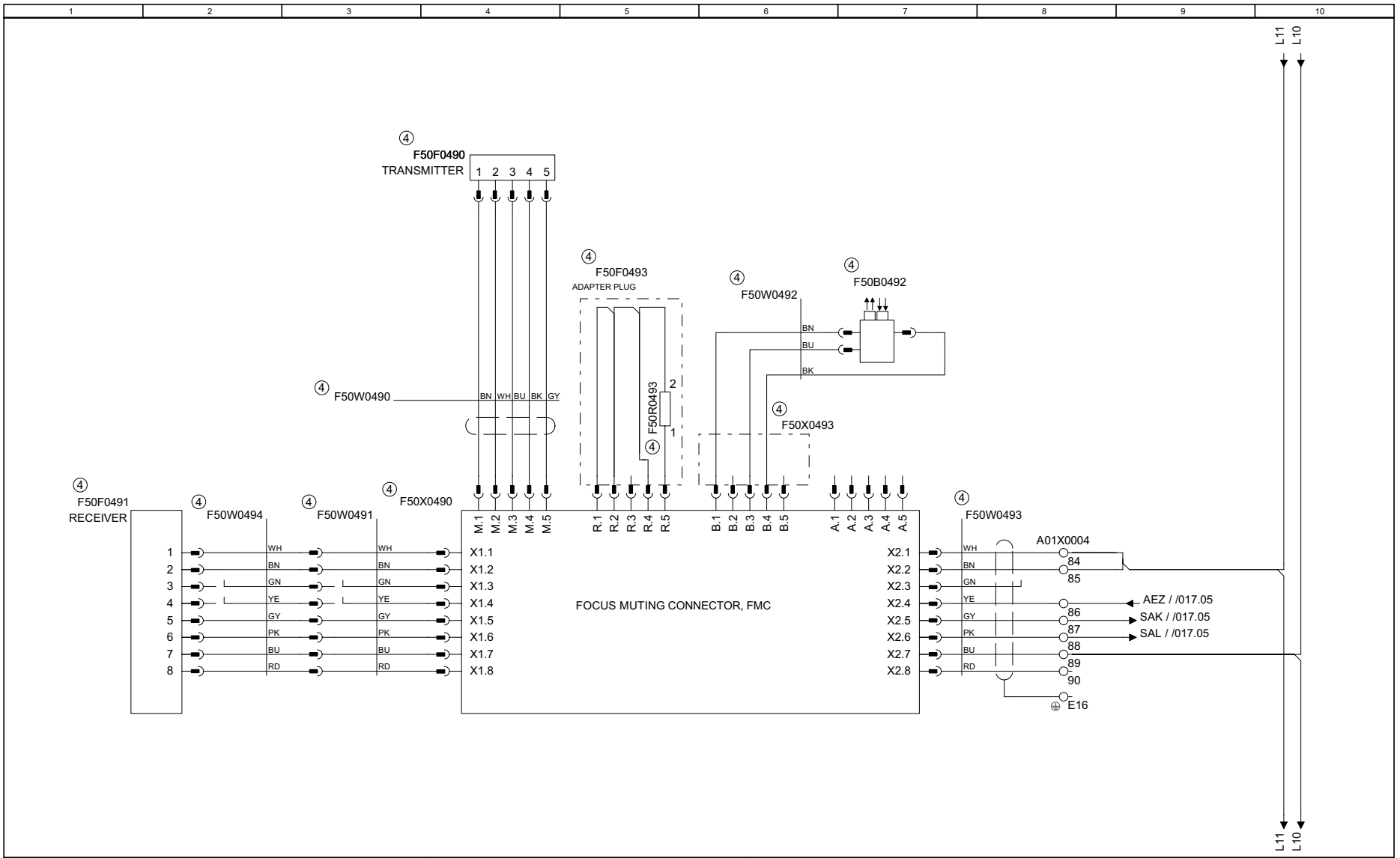

	Tetra Pak	Designer CAS	Date 2009-11-12	Machine CBP 32 -0400			
		ECM No 418137	Denomination CIRCUIT DIAGRAM	Page Type LIGHT BARRIER			
Drawing remarks		Company Tetra Pak (Sweden)	Document No. 3027725-0003	Doc. type ELD	Version AC	Page 061	

RELEASED

© Tetra Pak. All rights reserved; any copying, transmittal or disclosure subject to Tetra Pak's written approval.

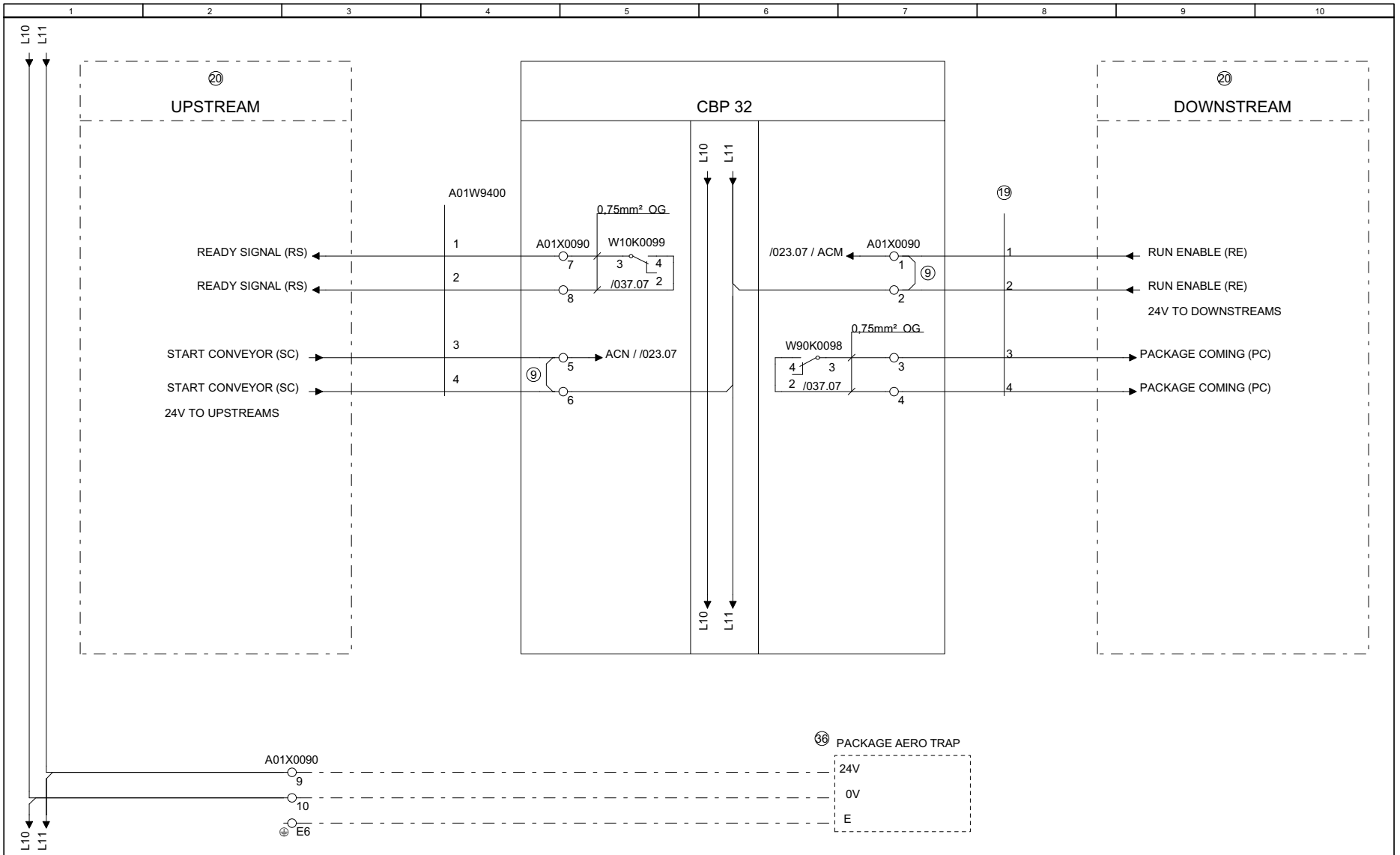

Drawing remarks	Tetra Pak	Designer CAS	Date 2009-11-12	Machine CBP 32 -0400	
		ECM No 418137	Denomination CIRCUIT DIAGRAM	Page Type LINE COMMUNICATION	
	Company Tetra Pak (Sweden)	Document No. 3027725-0003	Doc. type ELD	Version AC	Page 062

RELEASED

© Tetra Pak. All rights reserved; any copying, transmittal or disclosure subject to Tetra Pak's written approval.

Dnet single cable connect

FIGURE A

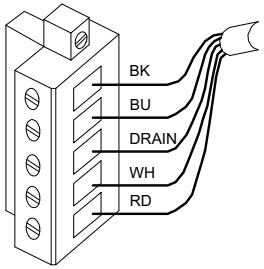

Dnet double cable connect

FIGURE B

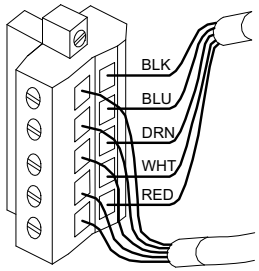

Dnet single cable w termination resistor

FIGURE C

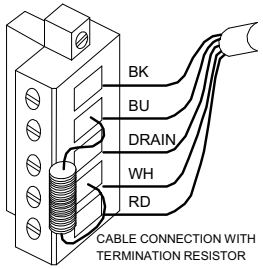

Dnet plc card w power / terminator

FIGURE D

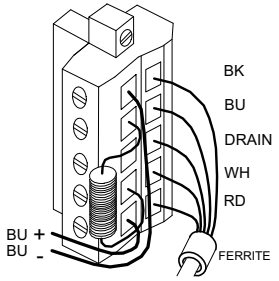

FIGURE F

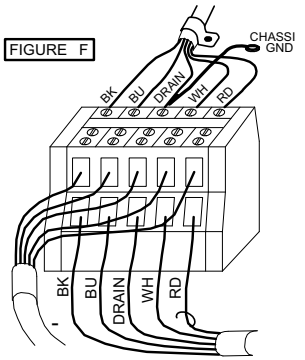

RS232 to RS485 adapter

FIGURE W2

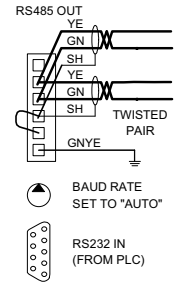

Dnet Armor block connect

FIGURE H1

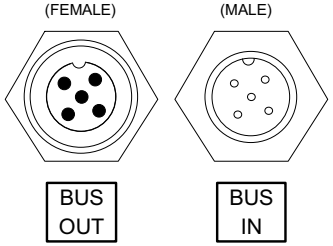

Dnet Festo valve bank M12 connections

FIGURE H

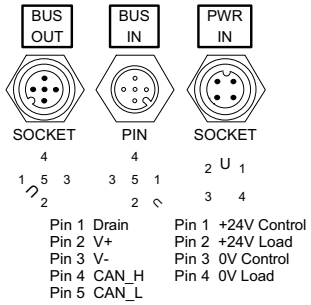

Rockwell VFD serial communication

FIGURE W3

RJ45 w termination
grounded shield term. 19

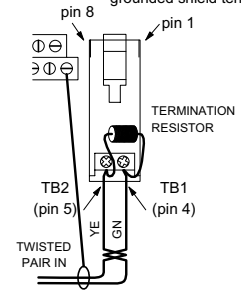

RS485 RJ45 adapter daisy chain

FIGURE X

shield out grounded
to terminal 19.

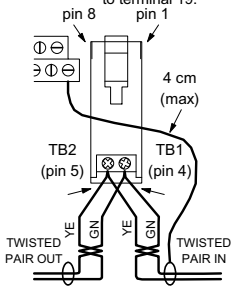

RS485 RJ45 adapter

FIGURE Y

shield grounded

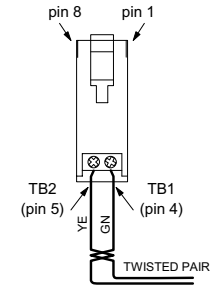

RS485 RJ45 adapter w termination

FIGURE Z

ungrounded shield

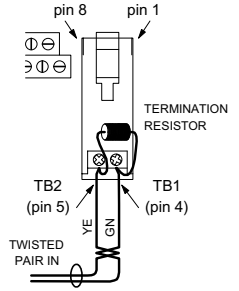

Drawing remarks	Tetra Pak	Designer CAS	Date 2009-11-12	Machine CBP 32 -0400			
		ECM No 418137	Denomination CIRCUIT DIAGRAM	Page Type BUS CONNECTORS			
		Company Tetra Pak (Sweden)	Document No. 3027725-0003	Doc. type ELD	Version AC	Page 200	

RELEASED

© Tetra Pak. All rights reserved; any copying, transmittal or disclosure subject to Tetra Pak's written approval.

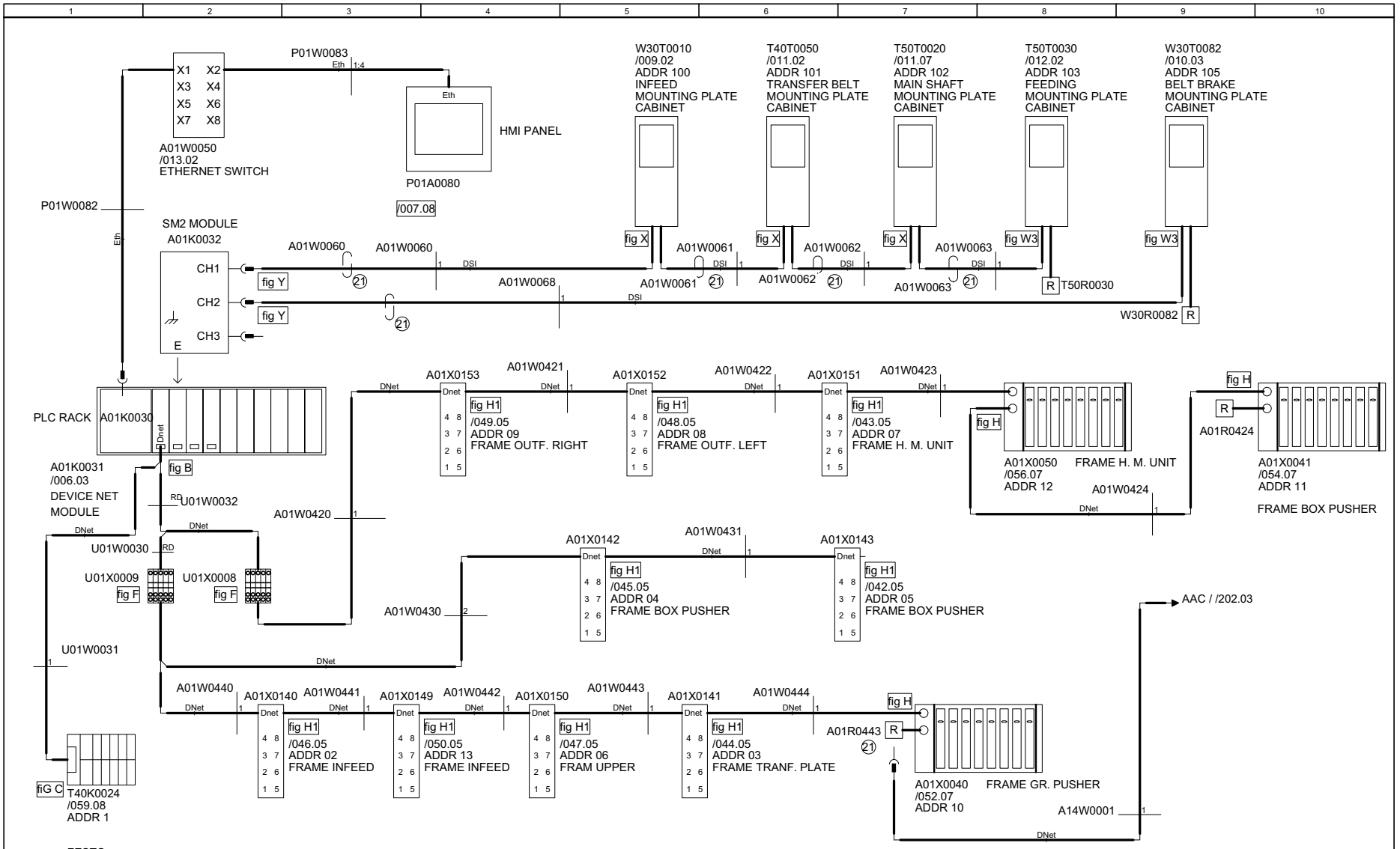

	Tetra Pak	Designer CAS	Date 2009-11-12	Machine CBP 32 -0400			
		ECM No 418137	Denomination CIRCUIT DIAGRAM	Page Type BUS SYSTEMS			
Drawing remarks	Company Tetra Pak (Sweden)	Document No. 3027725-0003	Doc. type ELD	Version AC	Page 201		

RELEASED

© Tetra Pak. All rights reserved; any copying, transmittal or disclosure subject to Tetra Pak's written approval.

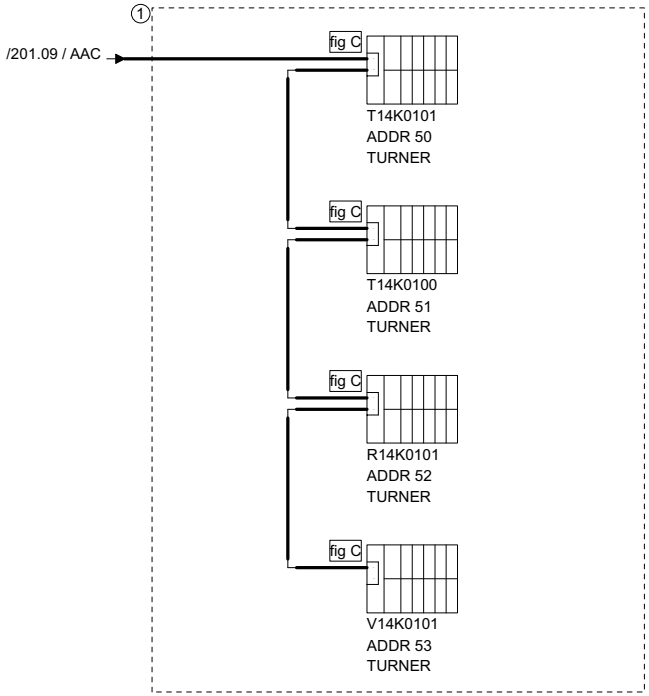

	Tetra Pak	Designer CAS	Date 2009-11-12	Machine CBP 32 -0400				
		ECM No 418137	Denomination CIRCUIT DIAGRAM	Page Type BUS SYSTEMS				
Drawing remarks		Company Tetra Pak (Sweden)	Document No. 3027725-0003	Doc. type ELD	Version AC	Page 202		

This page intentionally left blank

5 Line Summary

Description

This chapter contains a description of the lines inside the electrical cabinet that supply power to the components and the connection order of the components for each line.

RELEASED

© Tetra Pak. All rights reserved; any copying, transmittal or disclosure subject to Tetra Pak's written approval.

Line summary of 3027725-0003

Line	From	Page.Col.	Opt.	Area/Color
A-PULSE				
	F09X0010:1	017 .4		
	F09X0010:2	017 .4		
	F09K0020:X1	019 .3		
	F09K0010:IQ10	017 .6		
	F09Q0019:21	018 .3		
	A01X0004:52	016 .5		
	A01X0004:57	015 .5		
	A01X0004:145	019 .5		
	A01X0004:146	017 .9		
	F01X0090:2	014 .2		
L1				
	A01V0000:L1'	003 .5		6 mm² BK
	F09Q0019:1	008 .4		
	U01F0103:1	008 .1		
L2				
	A01V0000:L2'	003 .5		6 mm² BK
	F09Q0019:3	008 .4		
	A01F0029:1	007 .8		
	A01F0016:1	004 .3		
L3				
	A01V0000:L3'	003 .5		6 mm² BK
	F09Q0019:5	008 .4		
	A01F0001:1	007 .1		
L4				
	F09Q0029:1	011 .2		
	F09Q0019:2	008 .4		

Line	From	Page.Col.	Opt.	Area/Color
	F09Q0019:2	008 .4		
	T14F0000:1	008 .8		
	V50F0010:1	008 .5		
	W30F0082:1	009 .6		
	W90F0082:1	009 .9		
L5				
	F09Q0029:3	011 .2		6 mm² BK
	F09Q0019:4	008 .4		
	V50F0010:3	008 .5		
	W30F0010:1	009 .2		
	W90F0082:3	009 .9		
L6				
	F09Q0029:5	011 .2		6 mm² BK
	F09Q0019:6	008 .4		
	W90F0082:5	009 .9		
L8				
	F09Q0029:4	011 .2		6 mm² BK
	T50F0020:1	011 .7		
L9				
	F09Q0029:6	011 .2		6 mm² BK
	T40F0050:1	011 .3		
	T50F0030:1	012 .3		
L10				
	A01XL010:1	001 .1		4 mm² BU
	A01T0011:-	004 .3		
	A01X0002:E7	004 .3		
L10				

Line	From	Page.Col.	Opt.	Area/Color
	A01XL010:2	001 .1		1,5 mm² BU
	T40X0020:0V	059 .2		
L10				
	A01XL010:3	001 .1		0,75 mm² BU
	T40T0050:04	011 .2		
	T50T0020:04	011 .7		
	T50T0030:04	012 .2		
	W30T0082:04	010 .3		
L10				
	A01XL010:4	001 .2		0,75 mm² BU
	A01K0033:DC COM1	022 .8		
	A01K0033:DC COM2	023 .8		
L10				
	A01XL010:5	001 .2		0,75 mm² BU
	A01K0034:DC COM1	025 .8		
	A01K0034:DC COM2	026 .8		
L10				
	A01XL010:6	001 .2		0,75 mm² BU
	A01K0035:DC COM1	027 .8		
	A01K0035:DC COM2	028 .8		
L10				
	A01XL010:7	001 .2		0,75 mm² BU
	A01K0036:DC COM1	029 .8		
	A01K0036:DC COM2	030 .8		
L10				
	A01XL010:8	001 .2		0,75 mm² BU
	A01K0037:DC COM	032 .1		

Drawing remarks

Tetra Pak

Designer	Date	Machine
CAS	2009-11-12	CBP 32 -0400

ECM No	Denomination	Page Type
418137	LINE SUMMARY	LINE SUMMARY

Company	Document No.	Doc. type	Version	Page
Tetra Pak (Sweden)	3027725-0004	ELD	AC	001

RELEASED

© Tetra Pak. All rights reserved; any copying, transmittal or disclosure subject to Tetra Pak's written approval.

Line summary of 3027725-0003

Line	From	Page.Col.	Opt.	Area/Color
L10				
	A01XL010:9	001 .2		0,75 mm² BU
	A01K0038:DC COM	034 .1		
L10				
	A01XL010:10	001 .2		0,75 mm² BU
	A01K0039:DC COM	036 .1		
L10				
	A01XL010:11	001 .2		0,75 mm² BU
	A01K0040:DC COM	038 .1		
L10				
	A01XL010:12	001 .3		0,75 mm² BU
	F09K0010:0V	017 .6		
	F09K0010:0L	018 .5		
L10				
	A01XL010:13	001 .3		0,75 mm² BU
	F09K0020:A1	019 .3		
	F09K0020:S14	019 .3		
	F09K0103:A2	017 .8		
L10				
	A01XL010:14	001 .3		0,75 mm² BU
	F09Q0019:A1	018 .8		
	F09Q0029:A2	019 .8		
	U01Q0103:A2	021 .7		
	W30Q0010:A2	035 .7		
	T40Q0050:A2	034 .8		
L10				
	A01XL010:15	001 .3		0,75 mm² BU
	V50Q0010:A2	035 .7		
	T50Q0019:A2	031 .7		
	W90Q0082:A2	035 .7		
	W90K0098:1	037 .7		
	W10K0099:1	037 .7		
L10				
	A01XL010:16	001 .3		
	A01X0004:2	027 .5		
	A01X0004:12	028 .5		
	A01X0004:24	026 .1		
	A01X0004:31	033 .8		
	A01X0004:43	020 .3		
	A01X0004:53	016 .1		
	A01X0004:58	015 .1		
	A01X0004:89	061 .8		
L10				
	A01XL010:17	001 .3		
	A01X0004:92	035 .6		
	A01X0004:94	035 .6		
	A01X0004:97	026 .1		
	A01X0004:100	038 .8		
	A01X0004:103	024 .1		
	A01X0004:108	033 .8		
	A01X0004:115	051 .3		
	A01X0004:116	051 .3		
	A01X0004:117	051 .3		
	A01X0004:118	051 .3		
	A01X0004:118	051 .3		
	A01X0004:119	051 .3		
	A01X0004:120	039 .3		
L10				
	A01XL010:18	001 .3		
	A01X0004:123	040 .3		
	A01X0004:126	041 .3		
	A01X0004:130	031 .8		
	A01X0004:138	037 .8		
	A01X0004:153	030 .1		
	A01X0004:172	038 .8		
L10				
	A01XL010:19	001 .3		0,75 mm² BU
	A01X0090:10	062 .3		
L10				
	A01XL010:20	001 .4		0,75 mm² BU
	P01P0030:-	038 .5		
	T40XOUT023:0V	059 .6		
L10				
	A01XL010:21	001 .4		0,75 mm² BU
	A01W0050:GND	013 .2		
L10				
	A01XL010:22	001 .4		0,75 mm² BU
	A01K0405:2 Vin-	013 .7	8	
L11				
	A01XL011:1	001 .1		1,5 mm² BU
	A01F0011:2	004 .3		

Drawing remarks

Tetra Pak

Designer	Date	Machine
CAS	2009-11-12	CBP 32 -0400

ECM No	Denomination	Page Type
418137	LINE SUMMARY	LINE SUMMARY

Company	Document No.	Doc. type	Version	Page
Tetra Pak (Sweden)	3027725-0004	ELD	AC	002

RELEASED

© Tetra Pak. All rights reserved; any copying, transmittal or disclosure subject to Tetra Pak's written approval.

Line summary of 3027725-0003

Line	From	Page.Col.	Opt.	Area/Color
L11				
	A01XL011:2	001 .1		0,75 mm² BU
	P01T0015:9	005 .3		
	U01T0014:9	006 .3		
L11				
	A01XL011:3	001 .1		0,75 mm² BU
	A01K0040:+24V DC	037 .1		
	F09K0010:24V	017 .6		
	F09K0010:1L	018 .5		
	U01S0104:13	021 .2		
L11				
	A01XL011:5	001 .2		0,75 mm² BU
	T40XOUT023:24V	059 .6		
L11				
	A01XL011:6	001 .2		0,75 mm² BU
	V50Q0010:13	021 .2		
	A01W0050:US1	013 .2		
	A01W0050:US2	013 .2		
L11				
	A01XL011:7	001 .2		
	A01X0004:1	027 .5		
	A01X0004:11	028 .5		
	A01X0004:23	026 .1		
	A01X0004:51	016 .1		
	A01X0004:56	015 .1		
	A01X0004:84	061 .8		
	A01X0004:85	061 .8		

Line	From	Page.Col.	Opt.	Area/Color
L11				
	A01XL011:8	001 .2		
	A01X0004:96	026 .1		
	A01X0004:102	024 .1		
	A01X0004:110	022 .3		
	A01X0004:114	051 .3		
	A01X0004:121	039 .3		
	A01X0004:124	040 .3		
	A01X0004:125	040 .3		
	A01X0004:127	041 .3		
	A01X0004:152	030 .1		
	A01X0004:167	022 .2		
L11				
	A01XL011:9	001 .2		0,75 mm² BU
	A01X0090:2	062 .7		
	A01X0090:6	062 .5		
	A01X0090:9	062 .3		
	W30F0083:13	022 .3		
L11				
	A01XL011:10	001 .2		0,75 mm² BU
	A01E0001:3	007 .5	34	
L11				
	A01XL011:11	001 .2		0,75 mm² BU
	A01K0001: Load	003 .5		
L11				
	A01XL011:12	001 .3		0,75 mm² BU
	A01K0405:1 Vin+	013 .7	8	

Line	From	Page.Col.	Opt.	Area/Color
L11				
	A01XL011:13	001 .3		0,75 mm² BU
	F01X0090:1	014 .2		
L11				
	A01XL011:14	001 .3		
	A01K0033:IN 7	022 .8		
L12				
	A01XL012:1	002 .1		0,75 mm² BU
	F09K0010:Q4	018 .5		
L12				
	A01XL012:2	002 .1		0,75 mm² BU
	A01K0033:IN 0	022 .8		
L12				
	A01XL012:3	002 .1		0,75 mm² BU
	A01K0039:+24V DC	035 .1		
L13				
	A01XL013:1	002 .1		0,75 mm² BU
	F09K0020:14	019 .3		
L13				
	A01XL013:2	002 .1		0,75 mm² BU
	A01K0033:IN 1	022 .8		
L13				
	A01XL013:3	002 .1		0,75 mm² BU
	A01K0037:+24V DC	031 .1		
L13				
	A01XL013:4	002 .2		0,75 mm² BU
	A01K0038:+24V DC	033 .1		

Drawing remarks

Tetra Pak

Designer	Date	Machine
CAS	2009-11-12	CBP 32 -0400

ECM No	Denomination	Page Type
418137	LINE SUMMARY	LINE SUMMARY

Company	Document No.	Doc. type	Version	Page
Tetra Pak (Sweden)	3027725-0004	ELD	AC	003

RELEASED

© Tetra Pak. All rights reserved; any copying, transmittal or disclosure subject to Tetra Pak's written approval.

1 2 3 4 5 6 7 8 9 10

Line summary of 3027725-0003

Line	From	Page.Col.	Opt.	Area/Color
L13				
	A01XL013:5	002 .2		
	A01X0004:112	051 .3		
	A01X0004:113	051 .3		
	A01X0004:122	039 .3		
	A01X0004:128	041 .3		

Line	From	Page.Col.	Opt.	Area/Color

Line	From	Page.Col.	Opt.	Area/Color

Drawing remarks

Tetra Pak

Designer CAS | Date 2009-11-12 | Machine CBP 32 -0400

ECM No 418137 | Denomination | Page Type

Company Tetra Pak (Sweden) | Document No. 3027725-0004 | Doc. type ELD | Version AC | Page 004

6 Cabinet Terminal Summery

Description

All terminals inside the electrical cabinet are listed in this chapter with a page reference to the circuit diagrams.

RELEASED

© Tetra Pak. All rights reserved; any copying, transmittal or disclosure subject to Tetra Pak's written approval.

Cabinet terminal summary of 3027725-0003

Terminal	Page .Col.	Opt.
A01X0000:E2	003 .1	
A01X0000:E3	003 .1	
A01X0000:E4	003 .1	
A01X0000:PE	003 .1	
A01X0001:1	003 .3	
A01X0001:2	003 .3	
A01X0001:3	003 .3	
A01X0001:4	003 .3	
A01X0001:E1	003 .3	
A01X0001:E2	003 .3	
A01X0002:E1	003 .8	
A01X0002:E2	003 .8	
A01X0002:5	008 .5	
A01X0002:6	008 .5	
A01X0002:7	008 .5	
A01X0002:E3	008 .6	
A01X0002:8	008 .8	
A01X0002:9	008 .9	
A01X0002:E4	008 .9	
A01X0002:10	009 .9	
A01X0002:11	009 .9	
A01X0002:12	009 .9	
A01X0002:E5	009 .9	
A01X0002:15	007 .4	
A01X0002:16	007 .4	
A01X0002:E6	007 .5	
A01X0002:E7	004 .3	
A01X0002:20	008 .1	

Terminal	Page .Col.	Opt.
A01X0002:21	008 .2	
A01X0002:E8	008 .2	
A01X0002:22	008 .3	
A01X0002:23	008 .3	
A01X0002:E9	008 .3	
A01X0003:N	003 .9	
A01X0003:1	007 .2	
A01X0003:2	011 .8	
A01X0003:3	012 .3	
A01X0003:4	008 .6	
A01X0003:5	007 .8	
A01X0003:6	009 .3	
A01X0003:7	008 .1	
A01X0003:8	011 .3	
A01X0003:9	004 .3	
A01X0003:13	009 .7	
A01X0003:14	008 .9	
A01X0004:1	027 .5	
A01X0004:2	027 .5	
A01X0004:3	027 .5	
A01X0004:4	027 .5	
A01X0004:5	027 .5	
A01X0004:6	027 .5	
A01X0004:7	027 .5	
A01X0004:8	027 .5	
A01X0004:9	027 .5	
A01X0004:10	027 .5	
A01X0004:E1	007 .9	

Terminal	Page .Col.	Opt.
A01X0004:11	028 .5	
A01X0004:12	028 .5	
A01X0004:13	028 .5	
A01X0004:14	028 .5	
A01X0004:15	028 .5	
A01X0004:16	028 .5	
A01X0004:17	028 .5	
A01X0004:18	028 .5	
A01X0004:19	028 .5	
A01X0004:20	028 .5	
A01X0004:E2	028 .5	
A01X0004:21	026 .6	
A01X0004:22	026 .6	
A01X0004:23	026 .1	
A01X0004:24	026 .1	
A01X0004:25	026 .6	
A01X0004:26	026 .6	
A01X0004:27	026 .6	
A01X0004:28	026 .6	
A01X0004:29	031 .3	
A01X0004:E3	006 .3	
A01X0004:30	033 .3	
A01X0004:31	033 .8	
A01X0004:32	033 .3	
A01X0004:E4	039 .3	
A01X0004:33	033 .3	
A01X0004:34	033 .3	
A01X0004:35	033 .3	

Terminal	Page .Col.	Opt.
A01X0004:36	033 .3	
A01X0004:E5	033 .8	
A01X0004:37	025 .6	
A01X0004:38	020 .3	
A01X0004:39	020 .3	
A01X0004:40	020 .3	
A01X0004:41	020 .3	
A01X0004:42	020 .3	
A01X0004:43	020 .3	
A01X0004:E6	020 .6	
A01X0004:44	017 .5	
A01X0004:51	016 .1	
A01X0004:52	016 .5	
A01X0004:53	016 .1	
A01X0004:54	016 .5	
A01X0004:55	016 .5	
A01X0004:56	015 .1	
A01X0004:57	015 .5	
A01X0004:58	015 .1	
A01X0004:59	015 .5	
A01X0004:60	015 .5	
A01X0004:E7	019 .5	
A01X0004:66	014 .3	
A01X0004:67	014 .3	
A01X0004:68	014 .5	
A01X0004:69	014 .5	
A01X0004:70	014 .5	
A01X0004:71	014 .5	

Drawing remarks

Tetra Pak

Designer	Date	Machine
CAS	2009-11-12	CBP 32 -0400

ECM No	Denomination	Page Type
418137	CABINET TERMINAL SUMMARY	Terminal diagram: A01X0000 (E2 - 71)

Company	Document No.	Doc. type	Version	Page
Tetra Pak (Sweden)	3027725-0005	ELD	AC	001

RELEASED

© Tetra Pak. All rights reserved; any copying, transmittal or disclosure subject to Tetra Pak's written approval.

Cabinet terminal summary of 3027725-0003

Terminal	Page .Col.	Opt.
A01X0004:72	014 .7	
A01X0004:73	014 .7	
A01X0004:74	014 .8	
A01X0004:75	014 .8	
A01X0004:76	014 .9	
A01X0004:77	014 .9	
A01X0004:78	014 .1	
A01X0004:79	014 .1	
A01X0004:80	014 .3	
A01X0004:81	014 .3	
A01X0004:84	061 .8	
A01X0004:85	061 .8	
A01X0004:E8	035 .6	
A01X0004:86	061 .8	
A01X0004:87	061 .8	
A01X0004:E9	035 .6	
A01X0004:88	061 .8	
A01X0004:89	061 .8	
A01X0004:90	061 .8	
A01X0004:91	035 .4	
A01X0004:92	035 .6	
A01X0004:93	035 .4	
A01X0004:94	035 .6	
A01X0004:95	026 .6	
A01X0004:96	026 .1	
A01X0004:97	026 .1	
A01X0004:98	026 .6	
A01X0004:99	038 .3	

Terminal	Page .Col.	Opt.
A01X0004:100	038 .8	
A01X0004:E10	038 .8	
A01X0004:101	025 .6	
A01X0004:102	024 .1	
A01X0004:103	024 .1	
A01X0004:104	025 .6	
A01X0004:105	025 .6	
A01X0004:106	033 .3	
A01X0004:107	033 .3	
A01X0004:108	033 .8	
A01X0004:110	022 .3	
A01X0004:E11	024 .1	
A01X0004:111	022 .7	
A01X0004:112	051 .3	
A01X0004:113	051 .3	
A01X0004:114	051 .3	
A01X0004:115	051 .3	
A01X0004:116	051 .3	
A01X0004:117	051 .3	
A01X0004:118	051 .3	
A01X0004:119	051 .3	
A01X0004:E12	051 .3	
A01X0004:120	039 .3	
A01X0004:121	039 .3	
A01X0004:122	039 .3	
A01X0004:E13	040 .3	
A01X0004:123	040 .3	
A01X0004:124	040 .3	

Terminal	Page .Col.	Opt.
A01X0004:125	040 .3	
A01X0004:126	041 .3	
A01X0004:E14	041 .3	
A01X0004:127	041 .3	
A01X0004:128	041 .3	
A01X0004:129	031 .3	
A01X0004:130	031 .8	
A01X0004:133	037 .3	
A01X0004:134	037 .3	
A01X0004:135	037 .3	
A01X0004:136	037 .3	
A01X0004:E15	015 .6	
A01X0004:137	037 .3	
A01X0004:138	037 .8	
A01X0004:140	019 .5	
A01X0004:141	019 .5	
A01X0004:142	019 .5	
A01X0004:143	019 .5	
A01X0004:144	019 .5	
A01X0004:145	019 .5	
A01X0004:146	017 .9	
A01X0004:147	017 .6	
A01X0004:151	030 .6	
A01X0004:152	030 .1	
A01X0004:153	030 .1	
A01X0004:154	030 .6	
A01X0004:155	023 .7	
A01X0004:E16	061 .8	

Terminal	Page .Col.	Opt.
A01X0004:156	038 .3	
A01X0004:157	030 .6	
A01X0004:158	030 .6	
A01X0004:159	014 .4	
A01X0004:160	014 .4	
A01X0004:161	014 .6	
A01X0004:162	014 .6	
A01X0004:163	014 .6	
A01X0004:164	014 .6	
A01X0004:165	014 .8	
A01X0004:166	014 .8	
A01X0004:167	022 .2	
A01X0004:168	022 .7	
A01X0004:169	022 .7	
A01X0004:170	038 .3	
A01X0004:171	038 .3	
A01X0004:172	038 .8	
A01X0004:173	005 .4	
A01X0004:174	005 .4	
A01X0004:E17	031 .8	
A01X0004:E18	031 .8	
A01X0004:E19	022 .2	
A01X0004:175	022 .7	
A01X0005:1	010 .7	
A01X0006:1	010 .9	
A01X0090:1	062 .7	
A01X0090:2	062 .7	
A01X0090:3	062 .7	

Drawing remarks

Tetra Pak

Designer	Date	Machine
CAS	2009-11-12	CBP 32 -0400

ECM No	Denomination	Page Type
418137	CABINET TERMINAL SUMMARY	Terminal diagram: A01X0004 (72 - 3)

Company	Document No.	Doc. type	Version	Page
Tetra Pak (Sweden)	3027725-0005	ELD	AC	002

RELEASED

© Tetra Pak. All rights reserved; any copying, transmittal or disclosure subject to Tetra Pak's written approval.

Cabinet terminal summary of 3027725-0003

Terminal	Page .Col.	Opt.
A01X0090:4	062 .7	
A01X0090:5	062 .5	
A01X0090:6	062 .5	
A01X0090:7	062 .5	
A01X0090:8	062 .5	
A01X0090:9	062 .3	
A01X0090:10	062 .3	
A01X0090:E6	062 .3	
F01X0090:1	014 .2	
F01X0090:2	014 .2	
F01X0090:3	014 .10	
F01X0090:4	014 .10	
F01X0090:5	014 .2	
F01X0090:6	014 .2	
F01X0090:7	014 .9	
F01X0090:8	014 .9	
F01X0090:9	018 .3	
F01X0090:10	018 .3	
F09X0010:1	017 .4	
F09X0010:2	017 .4	
T14X0000:1	008 .8	1
T14X0000:2	008 .9	
T14X0000:E1	008 .9	
T14X0040:1	019 .6	
T14X0040:2	019 .6	
T14X0040:3	019 .6	1
T14X0040:4	019 .6	
T14X0040:5	019 .6	

Terminal	Page .Col.	Opt.
T14X0040:6	019 .6	
T14X0040:7	014 .4	1
T14X0040:8	014 .4	
T14X0040:10	014 .5	
T14X0040:11	014 .5	
T14X0040:E2	014 .4	
T14X0040:E3	019 .6	
T40X0020:24L	059 .2	
T40X0020:24V	059 .2	
T40X0020:0V	059 .2	
T40X0020:1	059 .3	
T40X0020:2	059 .3	
T40X0020:3	059 .3	
T40X0020:4	059 .3	
T40X0020:5	059 .3	
T40X0024:1	059 .8	
T40X0024:2	059 .8	
T40X0024:3	059 .8	
T40X0024:4	059 .8	
T40X0024:5	059 .8	
T40X0040:1	060 .8	
T40X0040:2	060 .8	
T40X0040:3	060 .8	
T40X0040:4	060 .8	
T40X0040:5	060 .8	
T40X0040:6	060 .8	
T40X0040:7	060 .8	
T40XIN023:0	059 .6	

Terminal	Page .Col.	Opt.
T40XIN023:1	059 .6	
T40XIN023:2	059 .6	
T40XIN023:3	059 .6	
T40XIN023:4	059 .6	
T40XIN023:5	059 .6	
T40XIN023:6	059 .6	
T40XIN023:7	059 .6	
T40XIN023:8	059 .6	
T40XIN023:9	059 .6	
T40XIN023:24V	059 .6	
T40XIN023:0V	059 .6	
T40XOUT023:0	059 .6	
T40XOUT023:1	059 .6	
T40XOUT023:2	059 .6	
T40XOUT023:3	059 .6	
T40XOUT023:4	059 .6	
T40XOUT023:5	059 .6	
T40XOUT023:6	059 .6	
T40XOUT023:7	059 .6	
T40XOUT023:24V	059 .6	
T40XOUT023:0V	059 .6	

Terminal	Page .Col.	Opt.

Drawing remarks

Tetra Pak

Designer CAS	Date 2009-11-12	Machine CBP 32 -0400	
ECM No 418137	Denomination CABINET TERMINAL SUMMARY	Page Type Terminal diagram: A01X0090 (4 - 0V)	
Company Tetra Pak (Sweden)	Document No. 3027725-0005	Doc. type ELD	Version AC	Page 003

This page intentionally left blank

7 Terminal Strip Overview

Description

All terminal strips outside the electrical cabinet are listed in this chapter with a page reference to the circuit diagrams.

RELEASED

© Tetra Pak. All rights reserved; any copying, transmittal or disclosure subject to Tetra Pak's written approval.

Terminal strip of 3027725-0003

A01X0145

From	Cable	Internal Jumper	Terminal	External Jumper	Cable	To	Page.Col.	Option	Function text
A01X0004:21	A01W0145 :1		1		A01W0131 :1	A01B0131:1	026 .5		
A01X0004:22	A01W0145 :2		2		A01W0131 :2	A01B0131:2	026 .5		
A01X0004:23	A01W0145 :3		3		A01W0131 :3	A01B0131:3	026 .2		
A01X0004:25	A01W0145 :5		4		A40W0148 :1	A01X0148:1	026 .5		
			5		A40W0148 :2	A01X0148:2	026 .2		
A01X0004:24	A01W0145 :4		6		A40W0148 :3	A01X0148:3	026 .2		
A01X0004:26	A01W0145 :6		7		A40W0148 :4	A01X0148:4	026 .5		
A01X0004:27	A01W0145 :7		8		A40W0148 :5	A01X0148:7	026 .5		
A01X0004:28	A01W0145 :8		9		A40W0148 :6	A01X0148:10	026 .5		
A01X0004:29	A01W0145 :9		10		A01W0130 :1	A01K0130:1	031 .3		LUBRICATION AUTOFILL
			11		A01W0130 :2	A01K0130:2	031 .6		LUBRICATION AUTOFILL
A01X0004:44	A01W0145 :10		12		F09W0104 :BK	F09B0104:3	017 .4		AIR SUPPLY OK F09B0104
			13		F09W0104 :BN	F09B0104:1	017 .3		AIR SUPPLY OK F09B0104
			14		F09W0104 :BU	F09B0104:2	017 .3		AIR SUPPLY OK F09B0104
A01X0004:155	A01W0147 :2		17		T40W0106 :BK	T40B0106:2	023 .5		PATERN AT BOX PUSHER
			18		T40W0106 :BN	T40B0106:1	023 .3		PATERN AT BOX PUSHER
			19		T40W0106 :BU	T40B0106:3	023 .3		PATERN AT BOX PUSHER
A01X0004:156	A01W0147 :3		20		T40W0106 :GY	T40B0106:5	023 .5		PATERN AT BOX PUSHER
A01X0004:157	A01W0147 :4		21		T40W0260 :BK	T40B0260:	030 .5		TRANSFER STOP PLATEENCODER BIT 1
			22		T40W0260 :BN	T40B0260:	030 .3		TRANSFER STOP PLATEENCODER BIT 1
			23		T40W0260 :BU	T40B0260:	030 .3		TRANSFER STOP PLATEENCODER BIT 1
A01X0004:158	A01W0147 :5		24		T40W0264 :BK	T40B0264:	030 .5		TRANSFER STOP PLATEENCODER BIT 0
			25		T40W0264 :BN	T40B0264:	030 .3		TRANSFER STOP PLATEENCODER BIT 0
			26		T40W0264 :BU	T40B0264:	030 .3		TRANSFER STOP PLATEENCODER BIT 0
A01X0004:E18	A01W0145 :GNYE		E1		A01W0130 :GNYE	A01K0130:E	031 .6		LUBRICATION AUTOFILL
			E2		A40W0148 :GNYE	A01X0148:E1	026 .2		

Drawing remarks

Tetra Pak

Designer	Date	Machine
CAS	2009-11-12	CBP 32 -0400

ECM No	Denomination	Page Type
418137	TERMINAL STRIP OVERVIEW	Terminal diagram: A01X0145 (1 - E2)

Company	Document No.	Doc. type	Version	Page
Tetra Pak (Sweden)	3027725-0006	ELD	AC	001

RELEASED

© Tetra Pak. All rights reserved; any copying, transmittal or disclosure subject to Tetra Pak's written approval.

Terminal strip of 3027725-0003 A01X0148

From	Cable	Internal Jumper	Terminal	External Jumper	Cable	To	Page.Col.	Option	Function text
A01X0145:4	A40W0148 :1		1		T40W0301 :BK	T40B0301:	026 .5		
A01X0145:5	A40W0148 :2		2		T40W0301 :BN	T40B0301:	026 .3		
A01X0145:6	A40W0148 :3		3		T40W0301 :BU	T40B0301:	026 .3		
A01X0145:7	A40W0148 :4		4		T40W0302 :BK	T40B0302:	026 .5		
			5		T40W0302 :BN	T40B0302:	026 .3		
			6		T40W0302 :BU	T40B0302:	026 .3		
A01X0145:8	A40W0148 :5		7		T40W0311 :BK	T40B0311:	026 .5		
			8		T40W0311 :BN	T40B0311:	026 .3		
			9		T40W0311 :BU	T40B0311:	026 .3		
A01X0145:9	A40W0148 :6		10				026 .5		
			11				026 .3		
			12				026 .3		
A01X0145:E2	A40W0148 :GNYE		E1				026 .3		

Drawing remarks

Tetra Pak

Designer CAS | Date 2009-11-12 | Machine CBP 32 -0400

ECM No 418137 | Denomination TERMINAL STRIP OVERVIEW | Page Type Terminal diagram: A01X0148 (1 - E1)

Company Tetra Pak (Sweden) | Document No. 3027725-0006 | Doc. type ELD | Version AC | Page 002

RELEASED

© Tetra Pak. All rights reserved; any copying, transmittal or disclosure subject to Tetra Pak's written approval.

Terminal strip of 3027725-0003

A01X0155

From	Cable	Internal Jumper	Terminal	External Jumper	Cable	To	Page.Col.	Option	Function text
A01X0004:11	T50W0032 :1		1		T50W0031 :RD	T50B0031:RD	028 .3		ANGEL ENCODER FEEDING MOTOR
A01X0004:12	T50W0032 :2		2		T50W0031 :BU	T50B0031:BU	028 .3		ANGEL ENCODER FEEDING MOTOR
A01X0004:13	T50W0032 :3		3		T50W0031 :WH	T50B0031:WH	028 .3		ANGEL ENCODER FEEDING MOTOR
A01X0004:14	T50W0032 :4		4		T50W0031 :BN	T50B0031:BN	028 .3		ANGEL ENCODER FEEDING MOTOR
A01X0004:15	T50W0032 :5		5		T50W0031 :GN	T50B0031:GN	028 .3		ANGEL ENCODER FEEDING MOTOR
A01X0004:16	T50W0032 :6		6		T50W0031 :YE	T50B0031:YE	028 .3		ANGEL ENCODER FEEDING MOTOR
A01X0004:17	T50W0032 :7		7		T50W0031 :GY	T50B0031:GY	028 .3		ANGEL ENCODER FEEDING MOTOR
A01X0004:18	T50W0032 :8		8		T50W0031 :PK	T50B0031:PK	028 .3		ANGEL ENCODER FEEDING MOTOR
A01X0004:19	T50W0032 :9		9		T50W0031 :BK	T50B0031:BK	028 .3		ANGEL ENCODER FEEDING MOTOR
A01X0004:20	T50W0032 :10		10		T50W0031 :GY-PK	T50B0031:GY-PK	028 .3		ANGEL ENCODER FEEDING MOTOR
A01X0004:E2	T50W0032 :GNYE		E1				028 .3		
A01X0004:30	A50W0155 :1		11		V50W0310 :1	V50K0310:1	033 .4		HOTMELT GUN LOWER LEFT
A01X0004:31	A50W0155 :2		12		V50W0310 :2	V50K0310:2	033 .6		HOTMELT GUN LOWER LEFT
A01X0004:32	A50W0155 :3		13		V50W0320 :1	V50K0320:1	033 .4		HOTMELT GUN LOWER RIGHT
			14		V50W0320 :2	V50K0320:2	033 .6		HOTMELT GUN LOWER RIGHT
A01X0004:33	A50W0155 :4		15		V50W0330 :1	V50K0330:1	033 .4		HOTMELT GUN UPPER LEFT
			16		V50W0330 :2	V50K0330:2	033 .6		HOTMELT GUN UPPER LEFT
A01X0004:34	A50W0155 :5		17		V50W0340 :1	V50K0340:1	033 .4		HOTMELT GUN UPPER RIGHT
			18		V50W0340 :2	V50K0340:2	033 .6		HOTMELT GUN UPPER RIGHT
A01X0004:E5	A50W0155 :GNYE		E2		V50W0310 :GNYE	V50K0310:E	033 .6		HOTMELT GUN LOWER LEFT
A01X0004:35	A50W0155 :6		19		V50W0350 :1	V50K0350:1	033 .4		WA HOTMELT LEFT
			20		V50W0350 :2	V50K0350:2	033 .6		WA HOTMELT LEFT
A01X0004:36	A50W0155 :7		21		V50W0360 :1	V50K0360:1	033 .4		WA HOTMELT RIGHT
			22		V50W0360 :2	V50K0360:2	033 .6		WA HOTMELT RIGHT
A01X0004:37	A50W0155 :8		23		T50W0100 :BK	T50B0100:	025 .5		FEEDING OVERLOAD OK
			24		T50W0100 :BN	T50B0100:	025 .3		FEEDING OVERLOAD OK
			25		T50W0100 :BU	T50B0100:	025 .3		FEEDING OVERLOAD OK
			E3		V50W0320 :GNYE	V50K0320:E	033 .6		HOTMELT GUN LOWER RIGHT
			E4		V50W0330 :GNYE	V50K0330:E	033 .6		HOTMELT GUN UPPER LEFT
			E5		V50W0340 :GNYE	V50K0340:E	033 .6		HOTMELT GUN UPPER RIGHT

Drawing remarks

Tetra Pak

Designer	Date	Machine
CAS	2009-11-12	CBP 32 -0400

ECM No	Denomination	Page Type
418137	TERMINAL STRIP OVERVIEW	Terminal diagram: A01X0155 (1 - E5)

Company	Document No.	Doc. type	Version	Page
Tetra Pak (Sweden)	3027725-0006	ELD	AC	003

RELEASED

© Tetra Pak. All rights reserved; any copying, transmittal or disclosure subject to Tetra Pak's written approval.

1	2	3	4	5	6	7	8	9	10

Terminal strip of 3027725-0003
A01X0155

From		Cable	Internal Jumper	Terminal	External Jumper	Cable		To	Page.Col.	Option	Function text
				E6		V50W0350 :GNYE		V50K0350:E	033 .6		WA HOTMELT LEFT
				E7		V50W0360 :GNYE		V50K0360:E	033 .6		WA HOTMELT RIGHT

Drawing remarks

Tetra Pak

Designer	Date	Machine
CAS	2009-11-12	CBP 32 -0400

ECM No	Denomination	Page Type
418137	TERMINAL STRIP OVERVIEW	Terminal diagram: A01X0155 (E6 - E7)

Company	Document No.	Doc. type	Version	Page
Tetra Pak (Sweden)	3027725-0006	ELD	AC	004

RELEASED

© Tetra Pak. All rights reserved; any copying, transmittal or disclosure subject to Tetra Pak's written approval.

Terminal strip of 3027725-0003

F09X0010

From	Cable	Internal Jumper	Terminal	External Jumper	Cable	To	Page.Col.	Option	Function text
A01X0004:52			1			F09K0010:I31	017 .4		
F09K0010:IQ10			2			F09K0010:I32	017 .4		

Drawing remarks	Designer CAS	Date 2009-11-12	Machine CBP 32 -0400	
	ECM No 418137	Denomination TERMINAL STRIP OVERVIEW	Page Type Terminal diagram: F09X0010 (1 - 2)	
	Company Tetra Pak (Sweden)	Document No. 3027725-0006	Doc. type ELD	Version AC	Page 005

RELEASED

© Tetra Pak. All rights reserved; any copying, transmittal or disclosure subject to Tetra Pak's written approval.

Terminal strip of 3027725-0003

P01X0170

From	Cable	Internal Jumper	Terminal	External Jumper	Cable	To	Page.Col.	Option	Function text
A01X0004:163	P01W0170 :1		1			F09S0104:21	014 .7		EMERGENCY STOP PANEL
A01X0004:164	P01W0170 :2		2			F09S0104:11	014 .7		EMERGENCY STOP PANEL
A01X0004:165	P01W0170 :3		3		:3	F09S0104:12	014 .8		EMERGENCY STOP PANEL
A01X0004:166	P01W0170 :4		4		:4	F09S0104:22	014 .8		EMERGENCY STOP PANEL
A01X0004:167	P01W0170 :5		5			A01S0001:13	022 .3		STEP UP
A01X0004:168	P01W0170 :6		6			A01S0001:14	022 .6		STEP UP
A01X0004:169	P01W0170 :7		7			A01S0002:52	022 .6		STEP DOWN
A01X0004:170	P01W0170 :9		8			A01S0001:1	038 .4		STEP UP
A01X0004:171	P01W0170 :8		9			A01S0002:1	038 .4		STEP DOWN
A01X0004:172	P01W0170 :10		10			A01S0001:2	038 .6		STEP UP
A01X0004:173	P01W0170 :11		11			P01A0080:24V	005 .4		HMI PANEL
A01X0004:174	P01W0170 :12		12			P01A0080:0V	005 .4		HMI PANEL
A01X0004:146	P01W0170 :13		13			F09S0001:14	017 .8		
A01X0004:147	P01W0170 :14		14			F09S0001:1	017 .7		
A01X0004:175	P01W0170 :15		15		:15	F09S0001:52	022 .6		
A01X0002:15	P01W0171 :1		19			P01M0002:U	007 .4		COOLING FANPANEL
A01X0002:16	P01W0171 :2		20			P01M0002:N	007 .4		COOLING FANPANEL
A01X0004:E19	P01W0170 :GNYE		E1			J1176:	022 .3		PANELCABINET
A01X0002:E6	P01W0171 :GNYE		E2		:GNYE	P01M0002:E	007 .5		COOLING FANPANEL

Drawing remarks	Tetra Pak	Designer CAS	Date 2009-11-12	Machine CBP 32 -0400
		ECM No 418137	Denomination TERMINAL STRIP OVERVIEW	Page Type Terminal diagram: P01X0170 (1 - E2)
	Company Tetra Pak (Sweden)	Document No. 3027725-0006	Doc. type ELD	Version AC / Page 006

RELEASED

© Tetra Pak. All rights reserved; any copying, transmittal or disclosure subject to Tetra Pak's written approval.

Terminal strip of 3027725-0003

T14X0040

From	Cable	Internal Jumper	Terminal	External Jumper	Cable	To	Page.Col.	Option	Function text
A01X0004:140	T14W1001 :1		1				019 .6		
A01X0004:141	T14W1001 :2		2				019 .6		
A01X0004:142	T14W1001 :3		3				019 .6	1	
A01X0004:143	T14W1001 :4		4				019 .6		
A01X0004:144	T14W1001 :5		5				019 .6		
A01X0004:145	T14W1001 :6		6				019 .6		
A01X0004:159	F14W1003 :1		7			F14S0101:11	014 .4	1	PACKAGE TURNER, PTR EMERGENCY STOP
A01X0004:160	F14W1003 :2		8			F14S0101:21	014 .4		PACKAGE TURNER, PTR EMERGENCY STOP
A01X0004:162	F14W1003 :4		10		:3	F14S0101:12	014 .5		PACKAGE TURNER, PTR EMERGENCY STOP
A01X0004:161	F14W1003 :5		11		:4	F14S0101:22	014 .5		PACKAGE TURNER, PTR EMERGENCY STOP
F14W1003:	F14W1003		E2				014 .4		
T14W1001:	T14W1001		E3				019 .6		

Drawing remarks

Tetra Pak

Designer CAS	Date 2009-11-12	Machine CBP 32 -0400	
ECM No 418137	Denomination TERMINAL STRIP OVERVIEW	Page Type Terminal diagram: T14X0040 (1 - E3)	
Company Tetra Pak (Sweden)	Document No. 3027725-0006	Doc. type ELD	Version AC	Page 007

RELEASED

© Tetra Pak. All rights reserved; any copying, transmittal or disclosure subject to Tetra Pak's written approval.

Terminal strip of 3027725-0003 T40X0040

From	Cable	Internal Jumper	Terminal	External Jumper	Cable	To	Page.Col.	Option	Function text
T40K0041:1	T40W0041 :7		1				060 .8		
T40K0041:2	T40W0041 :6		2				060 .8		
T40K0041:3	T40W0041 :5		3				060 .8		
T40K0041:4	T40W0041 :4		4				060 .8		
T40K0041:5	T40W0041 :3		5				060 .8		
T40K0041:6	T40W0041 :2		6				060 .8		
T40K0041:PE	T40W0041 :1		7				060 .8		

Drawing remarks

Tetra Pak

Designer CAS | Date 2009-11-12 | Machine CBP 32 -0400

ECM No 418137 | Denomination TERMINAL STRIP OVERVIEW | Page Type Terminal diagram: T40X0040 (1 - 7)

Company Tetra Pak (Sweden) | Document No. 3027725-0006 | Doc. type ELD | Version AC | Page 008

RELEASED

© Tetra Pak. All rights reserved; any copying, transmittal or disclosure subject to Tetra Pak's written approval.

Terminal strip of 3027725-0003

W10X0900

From	Cable	Internal Jumper	Terminal	External Jumper	Cable	To	Page.Col.	Option	Function text
A01X0004:96	W10W0900 :1		1A		W10W0903 :BN	W10B0903:	026 .2		EXTERNAL CONV. BRAKEDISPENCE CONTROL
A01X0004:95	W10W0900 :2		1				026 .5	16	
A01X0004:97	W10W0900 :3		1B		W10W0903 :BU	W10B0903:	026 .2		EXTERNAL CONV. BRAKEDISPENCE CONTROL
			2A		W10W0902 :BN	W10B0902:	026 .2		
			2		W10W0902 :BK	W10B0902:	026 .5		
			2B		W10W0902 :BU	W10B0902:	026 .2		
			3A		W10W0905 :BN	W10B0905:	026 .2		EXTERNAL CONV. BRAKEQUEUE AFTER BRAKE
A01X0004:98	W10W0900 :4		3				026 .5		
			3B		W10W0905 :BU	W10B0905:	026 .2		EXTERNAL CONV. BRAKEQUEUE AFTER BRAKE
			4A		W10W0904 :BN	W10B0904:	026 .2		
			4		W10W0904 :BK	W10B0904:	026 .5		
			4B		W10W0904 :BU	W10B0904:	026 .2		
			5A				026 .2		
A01X0004:99	W10W0900 :5		5		W10W0901 :1	W10K0901:1	038 .4		EXTERNAL CONV. BRAKE
A01X0004:100	W10W0900 :6		5B		W10W0901 :2	W10K0901:2	038 .6	16	EXTERNAL CONV. BRAKE
A01X0004:E10	W10W0900 :GNYE		E1		W10W0901 :GNYE	W10K0901:E	038 .6		EXTERNAL CONV. BRAKE

Drawing remarks

Tetra Pak

Designer CAS | Date 2009-11-12 | Machine CBP 32 -0400

ECM No 418137 | Denomination TERMINAL STRIP OVERVIEW | Page Type Terminal diagram: W10X0900 (1A - E1)

Company Tetra Pak (Sweden) | Document No. 3027725-0006 | Doc. type ELD | Version AC | Page 009

This page intentionally left blank

8 Cable Connection List

Description

All cables for the equipment, with their used and spare cores, are listed in this chapter.

RELEASED

© Tetra Pak. All rights reserved; any copying, transmittal or disclosure subject to Tetra Pak's written approval.

Cable Connection List of 3027725-0003

From	Cable	To	Page.Col.	Option
	A01W0000			
A01X0001:4	4	A01Q0000:N	+C/003.02	
A01X0001:3	3	A01Q0000:6	+C/003.02	
A01X0001:2	2	A01Q0000:4	+C/003.02	
A01X0001:1	1	A01Q0000:2	+C/003.02	
A01X0001:E1	GNYE	A01X0000:PE	+C/003.02	
A01W0000:	SH	J601:	+C/003.02	
A01W0000:		J1054:	+C/003.02	
	A01W0001			
A01X0002:E1	GNYE	J0001:	+C/003.08	
	A01W0002			
A01X0000:E2	GNYE	A01X0001:E2	+C/003.02	
	A01W0024			
A01X0004:E1	PE	A01T0029:E	+C/007.09	
	A01W0025			
A01T0029:E	1	J0463:	+C/007.09	
	A01W0030			
A01K0032:E	1	J1164:	+C/013.03	
	A01W0035			
A01K0031:E	1	J0462:	+C/006.03	
	A01W0040			
A01X0183:1	1	A01X0040:1	+C/051.07	
A01X0183:2	2	A01X0040:2	+C/051.07	
A01X0183:3	3	A01X0040:3	+C/051.07	
A01X0183:4	4	A01X0040:4	+C/051.07	
A01X0183:5	5	A01X0040:⏚	+C/051.07	

From	Cable	To	Page.Col.	Option
	A01W0041			
A01X0183:1	1	A01X0041:1	+C/051.07	
A01X0183:2	2	A01X0041:2	+C/051.07	
A01X0183:3	3	A01X0041:3	+C/051.07	
A01X0183:4	4	A01X0041:4	+C/051.07	
A01X0183:5	5	A01X0041:⏚	+C/051.07	
	A01W0051			
A01X0183:1	1	A01X0050:1	+C/051.07	
A01X0183:2	2	A01X0050:2	+C/051.07	
A01X0183:3	3	A01X0050:3	+C/051.07	
A01X0183:4	4	A01X0050:4	+C/051.07	
A01X0183:5	5	A01X0050:⏚	+C/051.07	
	A01W0060			
A01K0032:CH1	1	W30T0010:RJ45	+C/201.04	
	A01W0061			
W30T0010:RJ45	1	T40T0050:RJ45	+C/201.06	
	A01W0062			
T40T0050:RJ45	1	T50T0020:RJ45	+C/201.07	
	A01W0063			
T50T0020:RJ45	1	T50T0030:RJ45	+C/201.08	
	A01W0068			
A01K0032:CH2	1	W30T0082:RJ45	+C/201.04	
	A01W0101			
A01B0101:1	BN	A01X0143:1	+C/042.04	
A01B0101:3	BK	A01X0143:4	+C/042.04	
A01B0101:2	BU	A01X0143:3	+C/042.04	

Drawing remarks

Tetra Pak

Designer	Date	Machine
CAS	2009-11-12	CBP 32 -0400

ECM No	Denomination	Page Type
418137	CABLE CONNECTION LIST	CABLE CONNECTION LIST

Company	Document No.	Doc. type	Version	Page
Tetra Pak (Sweden)	3027725-0007	ELD	AC	001

RELEASED

© Tetra Pak. All rights reserved; any copying, transmittal or disclosure subject to Tetra Pak's written approval.

Cable Connection List of 3027725-0003

From	Cable	To	Page.Col.	Option
	A01W0121			
A01X0004:110	1	A01B0121:13	+C/022.04	
A01X0004:111	2	A01B0121:14	+C/022.05	
	A01W0130			
A01X0145:10	1	A01K0130:1	+C/031.04	
A01X0145:E1	GNYE	A01K0130:E	+C/031.06	
A01X0145:11	2	A01K0130:2	+C/031.06	
	A01W0131			
A01X0145:3	3	A01B0131:3	+C/026.03	
A01X0145:1	1	A01B0131:1	+C/026.05	
A01X0145:2	2	A01B0131:2	+C/026.05	
	A01W0140			
A01X0181:24V	1	A01X0140:1	+C/040.06	
A01X0181:24V	2	A01X0140:2	+C/040.06	
A01X0181:0V	3	A01X0140:3	+C/040.06	
A01X0181:0V	4	A01X0140:4	+C/040.06	
A01X0181:⏚	5		+C/040.06	
	A01W0141			
A01X0181:24V	1	A01X0141:1	+C/040.06	
A01X0181:24V	2	A01X0141:2	+C/040.06	
A01X0181:0V	3	A01X0141:3	+C/040.06	
A01X0181:0V	4	A01X0141:4	+C/040.06	
A01X0181:⏚	5		+C/040.06	
	A01W0142			
A01X0180:24V	1	A01X0142:1	+C/039.06	
A01X0180:24V	2	A01X0142:2	+C/039.06	
A01X0180:0V	3	A01X0142:3	+C/039.06	
A01X0180:0V	4	A01X0142:4	+C/039.06	

From	Cable	To	Page.Col.	Option
A01X0180:⏚	5		+C/039.06	
	A01W0143			
A01X0180:24V	1	A01X0143:1	+C/039.06	
A01X0180:24V	2	A01X0143:2	+C/039.06	
A01X0180:0V	3	A01X0143:3	+C/039.06	
A01X0180:0V	4	A01X0143:4	+C/039.06	
A01X0180:⏚	5		+C/039.06	
	A01W0144			
A01X0004:E11	GNYE	A01X0144:	+C/024.03	
A01X0004:103	BU	A01X0144:	+C/024.03	
A01X0004:102	BN	A01X0144:	+C/024.03	
A01X0004:101	YE	A01X0144:	+C/024.03	
A01X0004:104	GN	A01X0144:	+C/024.03	
	A01W0145			
A01X0145:6	4	A01X0004:24	+C/026.02	
A01X0145:3	3	A01X0004:23	+C/026.02	
A01X0145:9	8	A01X0004:28	+C/026.06	
A01X0145:8	7	A01X0004:27	+C/026.06	
A01X0145:7	6	A01X0004:26	+C/026.06	
A01X0145:4	5	A01X0004:25	+C/026.06	
A01X0145:2	2	A01X0004:22	+C/026.06	
A01X0145:1	1	A01X0004:21	+C/026.06	
A01X0145:10	9	A01X0004:29	+C/031.03	
A01X0145:E1	GNYE	A01X0004:E18	+C/031.07	
A01X0145:12	10	A01X0004:44	+C/017.04	
	A01W0147			
A01X0145:17	2	A01X0004:155	+C/023.05	
A01X0145:24	5	A01X0004:158	+C/030.06	
A01X0145:21	4	A01X0004:157	+C/030.06	
A01X0145:20	3	A01X0004:156	+C/023.05	

Drawing remarks

Tetra Pak

Designer	Date	Machine
CAS	2009-11-12	CBP 32 -0400

ECM No	Denomination	Page Type
418137	CABLE CONNECTION LIST	CABLE CONNECTION LIST

Company	Document No.	Doc. type	Version	Page
Tetra Pak (Sweden)	3027725-0007	ELD	AC	002

RELEASED

© Tetra Pak. All rights reserved; any copying, transmittal or disclosure subject to Tetra Pak's written approval.

Cable Connection List of 3027725-0003

From	Cable	To	Page.Col.	Option
	A01W0149			
A01X0181:24V	1	A01X0149:1	+C/040.06	
A01X0181:24V	2	A01X0149:2	+C/040.06	
A01X0181:0V	3	A01X0149:3	+C/040.06	
A01X0181:0V	4	A01X0149:4	+C/040.06	
A01X0181:⏚	5		+C/040.06	
	A01W0150			
A01X0181:24V	1	A01X0150:1	+C/040.06	
A01X0181:24V	2	A01X0150:2	+C/040.06	
A01X0181:0V	3	A01X0150:3	+C/040.06	
A01X0181:0V	4	A01X0150:4	+C/040.06	
A01X0181:⏚	5		+C/040.06	
	A01W0151			
A01X0182:24V	1	A01X0151:1	+C/041.06	
A01X0182:24V	2	A01X0151:2	+C/041.06	
A01X0182:0V	3	A01X0151:3	+C/041.06	
A01X0182:0V	4	A01X0151:4	+C/041.06	
A01X0182:⏚	5		+C/041.06	
	A01W0152			
A01X0182:24V	1	A01X0152:1	+C/041.06	
A01X0182:24V	2	A01X0152:2	+C/041.06	
A01X0182:0V	3	A01X0152:3	+C/041.06	
A01X0182:0V	4	A01X0152:4	+C/041.06	
A01X0182:⏚	5		+C/041.06	
	A01W0153			
A01X0182:24V	1	A01X0153:1	+C/041.06	
A01X0182:24V	2	A01X0153:2	+C/041.06	
A01X0182:0V	3	A01X0153:3	+C/041.06	
A01X0182:0V	4	A01X0153:4	+C/041.06	

From	Cable	To	Page.Col.	Option
A01X0182:⏚	5		+C/041.06	
	A01W0180			
A01X0004:122	WH	A01X0180:+24V	+C/039.04	
A01X0004:E4	GNYE	A01X0180:⏚	+C/039.04	
A01X0004:121	BN	A01X0180:+24V	+C/039.04	
A01X0004:120	BK	A01X0180:0V	+C/039.04	
A01X0004:120	BU	A01X0180:0V	+C/039.04	
	A01W0181			
A01X0004:125	WH	A01X0181:+24V	+C/040.04	
A01X0004:E13	GNYE	A01X0181:⏚	+C/040.04	
A01X0004:124	BN	A01X0181:+24V	+C/040.04	
A01X0004:123	BK	A01X0181:0V	+C/040.04	
A01X0004:123	BU	A01X0181:0V	+C/040.04	
	A01W0182			
A01X0004:128	WH	A01X0182:+24V	+C/041.04	
A01X0004:E14	GNYE	A01X0182:⏚	+C/041.04	
A01X0004:127	BN	A01X0182:+24V	+C/041.04	
A01X0004:126	BK	A01X0182:0V	+C/041.04	
A01X0004:126	BU	A01X0182:0V	+C/041.04	
	A01W0183			
A01X0004:112	WH/GN	A01X0183:WH/GN	+C/051.04	
A01X0004:112	GY/PK	A01X0183:GY/PK	+C/051.04	
A01X0004:114	BN	A01X0183:BN	+C/051.04	
A01X0004:115	BU	A01X0183:BU	+C/051.04	
A01X0004:116	WH	A01X0183:WH	+C/051.04	
A01X0004:117	YE	A01X0183:YE	+C/051.04	
A01X0004:118	GN	A01X0183:GN	+C/051.04	
A01X0004:113	BN/GN	A01X0183:BN/GN	+C/051.04	
A01X0004:113	RD/BU	A01X0183:RD/BU	+C/051.04	
A01X0004:119	GY	A01X0183:GY	+C/051.04	

Drawing remarks

Tetra Pak

Designer	Date	Machine
CAS	2009-11-12	CBP 32 -0400

ECM No	Denomination	Page Type
418137	CABLE CONNECTION LIST	CABLE CONNECTION LIST

Company	Document No.	Doc. type	Version	Page
Tetra Pak (Sweden)	3027725-0007	ELD	AC	003

RELEASED

© Tetra Pak. All rights reserved; any copying, transmittal or disclosure subject to Tetra Pak's written approval.

Cable Connection List of 3027725-0003

From	Cable	To	Page.Col.	Option
A01X0004:E12	GNYE	A01X0183:GN/GNYE	+C/051.04	
	A01W0405			
	SH	A01K0405:12 (SH)	+C/013.07	
	GN	A01K0405:11(T+)	+C/013.07	
	YE	A01K0405:10 (T-)	+C/013.07	
	WH	A01K0405:9 (R+)	+C/013.07	
	BN	A01K0405:8 (R-)	+C/013.07	
	A01W0406			
A01X0030:	1	A01K0405:COM 3 R	+C/007.09	
	A01W0420			
U01X0008:	1	A01X0153:Dnet	+C/201.03	
	A01W0421			
A01X0153:	1	A01X0152:Dnet	+C/201.05	
	A01W0422			
A01X0152:	1	A01X0151:Dnet	+C/201.06	
	A01W0423			
A01X0151:	1	A01X0050:Dnet In	+C/201.07	
	A01W0424			
A01X0050:Dnet Ou	1	A01X0041:Dnet In	+C/201.09	
	A01W0430			
U01X0009:	2	A01X0142:Dnet	+C/201.04	
	A01W0431			
A01X0142:	1	A01X0143:Dnet	+C/201.06	
	A01W0440			

From	Cable	To	Page.Col.	Option
U01X0009:	1	A01X0140:Dnet	+C/201.02	
	A01W0441			
A01X0140:	1	A01X0149:Dnet	+C/201.03	
	A01W0442			
A01X0149:	1	A01X0150:Dnet	+C/201.04	
	A01W0443			
A01X0150:	1	A01X0141:Dnet	+C/201.05	
	A01W0444			
A01X0141:	1	A01X0040:Dnet In	+C/201.06	
	A14W0001			
J1178:	1	T14K0101:Dnet In	+C/201.09	
	A40W0148			
A01X0145:E2	GNYE	A01X0148:E1	+C/026.02	
A01X0145:6	3	A01X0148:3	+C/026.02	
A01X0145:5	2	A01X0148:2	+C/026.02	
A01X0145:9	6	A01X0148:10	+C/026.05	
A01X0145:8	5	A01X0148:7	+C/026.05	
A01X0145:7	4	A01X0148:4	+C/026.05	
A01X0145:4	1	A01X0148:1	+C/026.05	
	A50W0155			
A01X0155:23	8	A01X0004:37	+C/025.06	
A01X0155:21	7	A01X0004:36	+C/033.03	
A01X0155:19	6	A01X0004:35	+C/033.03	
A01X0155:17	5	A01X0004:34	+C/033.03	
A01X0155:15	4	A01X0004:33	+C/033.03	
A01X0155:13	3	A01X0004:32	+C/033.03	
A01X0155:11	1	A01X0004:30	+C/033.03	

Drawing remarks

Tetra Pak

Designer	Date	Machine
CAS	2009-11-12	CBP 32 -0400

ECM No	Denomination	Page Type
418137	CABLE CONNECTION LIST	CABLE CONNECTION LIST

Company	Document No.	Doc. type	Version	Page
Tetra Pak (Sweden)	3027725-0007	ELD	AC	004

RELEASED

© Tetra Pak. All rights reserved; any copying, transmittal or disclosure subject to Tetra Pak's written approval.

Cable Connection List of 3027725-0003

From	Cable	To	Page.Col.	Option
A01X0155:E2	GNYE	A01X0004:E5	+C/033.08	
A01X0155:12	2	A01X0004:31	+C/033.08	
	C50W0102			
C50B0102:	BN	A01X0150:1	+C/047.04	
C50B0102:	BK	A01X0150:4	+C/047.04	
C50B0102:	BU	A01X0150:3	+C/047.04	
	C50W0104			
C50B0104:	BN	A01X0150:1	+C/047.04	
C50B0104:	BK	A01X0150:4	+C/047.04	
C50B0104:	BU	A01X0150:3	+C/047.04	
	C50W0106			
C50B0106:	BN	A01X0152:1	+C/048.04	
C50B0106:	BK	A01X0152:4	+C/048.04	
C50B0106:	BU	A01X0152:3	+C/048.04	
	C50W0231			
C50B0231:	BN	A01X0150:1	+C/047.04	
C50B0231:	BK	A01X0150:4	+C/047.04	
C50B0231:	BU	A01X0150:3	+C/047.04	
	F09W0003			
A01X0004:E6	PE	F09K1000:⏚	+C/020.06	
	F09W0010			
F01X0090:10	WH	F09K0010:CL	+C/018.04	
F01X0090:9	BN	F09K0010:CH	+C/018.04	
J1258:	SH	F09W0010:	+C/018.04	
	F09W0100			
A01X0004:66	1	F09S0100:21	+C/014.04	
A01X0004:67	2	F09S0100:11	+C/014.04	

From	Cable	To	Page.Col.	Option
A01X0004:69	4	F09S0100:22	+C/014.04	
A01X0004:68	3	F09S0100:12	+C/014.04	
	F09W0101			
A01X0004:70	1	F09S0101:21	+C/014.06	
A01X0004:71	2	F09S0101:11	+C/014.06	
A01X0004:73	4	F09S0101:22	+C/014.07	
A01X0004:72	3	F09S0101:12	+C/014.07	
	F09W0102			
A01X0004:74	1	F09S0102:21	+C/014.08	
A01X0004:75	2	F09S0102:11	+C/014.08	
A01X0004:77	4	F09S0102:22	+C/014.09	
A01X0004:76	3	F09S0102:12	+C/014.09	
	F09W0103			
A01X0004:78	1	F09S0103:21	+C/014.02	
A01X0004:79	2	F09S0103:11	+C/014.02	
A01X0004:80	3	F09S0103:12	+C/014.03	
A01X0004:81	4	F09S0103:22	+C/014.03	
	F09W0104			
A01X0145:13	BN	F09B0104:1	+C/017.03	
A01X0145:14	BU	F09B0104:2	+C/017.03	
A01X0145:12	BK	F09B0104:3	+C/017.03	
	F09W1000			
A01X0004:38	WH	F09X1000:1 EN1	+C/020.04	
	BN			
A01X0004:40	YE	F09X1000:5	+C/020.04	
A01X0004:39	GN	F09X1000:2 EN2	+C/020.04	
A01X0004:41	GY	F09X1000:6	+C/020.04	
A01X0004:42	PK	F09X1000:8	+C/020.04	
	BU			

Drawing remarks

Tetra Pak

Designer	Date	Machine
CAS	2009-11-12	CBP 32 -0400

ECM No	Denomination	Page Type
418137	CABLE CONNECTION LIST	CABLE CONNECTION LIST

Company	Document No.	Doc. type	Version	Page
Tetra Pak (Sweden)	3027725-0007	ELD	AC	005

RELEASED

© Tetra Pak. All rights reserved; any copying, transmittal or disclosure subject to Tetra Pak's written approval.

Cable Connection List of 3027725-0003

From	Cable	To	Page.Col.	Option
A01X0004:43	RD	F09X1000:9	+C/020.04	
J1255:	SH	F09W1000:	+C/020.04	
	SH			
	SH			
	SH			
	SH			
	F14W1002			
J1201:	1	J1202:	+C/016.08	
J1203:	2	J1204:	+C/016.08	
J1205:	3	J1206:	+C/016.08	
J1207:	4	J1208:	+C/016.08	
J1209:	5	J1210:	+C/016.08	
	F14W1003			
A01X0004:160	2	T14X0040:8	+C/014.04	
A01X0004:159	1	T14X0040:7	+C/014.04	
F14W1003:		T14X0040:E2	+C/014.04	
A01X0004:162	4	T14X0040:10	+C/014.06	
A01X0004:161	5	T14X0040:11	+C/014.06	
	F40W0479			
A01X0004:51	1	F40X0479:+24V	+C/016.02	
A01X0004:52	2	F40X0479:IN	+C/016.02	
A01X0004:53	3	F40X0479:0V	+C/016.02	
A01X0004:54	4	F40X0479:OUT	+C/016.02	
A01X0004:55	5	F40X0479:13	+C/016.02	
A01X0004:E15	SH	F40W0479:	+C/016.05	
	F40W0480			
F40S0480:BN	1	J1211:	+C/016.02	
F40S0480:WH	2	J1212:	+C/016.02	
F40S0480:BU	3	J1213:	+C/016.02	
F40S0480:BK	4	J1214:	+C/016.02	

From	Cable	To	Page.Col.	Option
F40S0480:GY	5	J1215:	+C/016.02	
	F40W0482			
F40S0482:BN	1	J1216:	+C/016.03	
F40S0482:WH	2	J1217:	+C/016.03	
F40S0482:BU	3	J1218:	+C/016.03	
F40S0482:BK	4	J1219:	+C/016.03	
F40S0482:GY	5	J1220:	+C/016.03	
	F40W0484			
F40S0484:BN	1	J1221:	+C/016.03	
F40S0484:WH	2	J1222:	+C/016.03	
F40S0484:BU	3	J1223:	+C/016.03	
F40S0484:BK	4	J1224:	+C/016.03	
F40S0484:GY	5	J1225:	+C/016.03	
	F40W0486			
F40S0486:BN	1	J1226:	+C/016.04	
F40S0486:WH	2	J1227:	+C/016.04	
F40S0486:BU	3	J1228:	+C/016.04	
F40S0486:BK	4	J1229:	+C/016.04	
F40S0486:GY	5	J1230:	+C/016.04	
	F40W0488			
F40S0488:BN	1	J1231:	+C/016.05	
F40S0488:WH	2	J1232:	+C/016.05	
F40S0488:BU	3	J1233:	+C/016.05	
F40S0488:BK	4	J1234:	+C/016.05	
F40S0488:GY	5	J1235:	+C/016.05	
	F50W0479			
A01X0004:56	1	F50X0479:+24V	+C/015.02	
A01X0004:57	2	F50X0479:IN	+C/015.02	
A01X0004:58	3	F50X0479:0V	+C/015.02	

Drawing remarks

Tetra Pak

Designer	Date	Machine
CAS	2009-11-12	CBP 32 -0400

ECM No	Denomination	Page Type
418137	CABLE CONNECTION LIST	CABLE CONNECTION LIST

Company	Document No.	Doc. type	Version	Page
Tetra Pak (Sweden)	3027725-0007	ELD	AC	006

RELEASED

© Tetra Pak. All rights reserved; any copying, transmittal or disclosure subject to Tetra Pak's written approval.

Cable Connection List of 3027725-0003

From	Cable	To	Page.Col.	Option
A01X0004:59	4	F50X0479:OUT	+C/015.02	
A01X0004:60	5	F50X0479:13	+C/015.02	
A01X0004:E15	SH	F50W0479:	+C/015.05	
	F50W0480			
F50S0480:BN	1	J662:	+C/015.02	
F50S0480:WH	2	J663:	+C/015.02	
F50S0480:BU	3	J664:	+C/015.02	
F50S0480:BK	4	J665:	+C/015.02	
F50S0480:GY	5	J666:	+C/015.02	
	F50W0482			
F50S0482:BN	1	J667:	+C/015.03	
F50S0482:WH	2	J668:	+C/015.03	
F50S0482:BU	3	J669:	+C/015.03	
F50S0482:BK	4	J670:	+C/015.03	
F50S0482:GY	5	J671:	+C/015.03	
	F50W0484			
F50S0484:BN	1	J672:	+C/015.03	
F50S0484:WH	2	J673:	+C/015.03	
F50S0484:BU	3	J674:	+C/015.03	
F50S0484:BK	4	J675:	+C/015.03	
F50S0484:GY	5	J676:	+C/015.03	
	F50W0486			
F50S0486:BN	1	J677:	+C/015.04	
F50S0486:WH	2	J678:	+C/015.04	
F50S0486:BU	3	J679:	+C/015.04	
F50S0486:BK	4	J680:	+C/015.04	
F50S0486:GY	5	J681:	+C/015.04	
	F50W0488			
J1236:	1	J1237:	+C/016.07	

From	Cable	To	Page.Col.	Option
J1238:	2	J1239:	+C/016.07	
J1240:	3	J1241:	+C/016.07	
J1242:	4	J1243:	+C/016.07	
J1244:	5	J1245:	+C/016.07	
	F50W0490			
F50F0490:1	BN	F50X0490:M.1	+C/061.03	
F50F0490:2	WH	F50X0490:M.2	+C/061.03	
F50F0490:3	BU	F50X0490:M.3	+C/061.03	
F50F0490:4	BK	F50X0490:M.4	+C/061.03	
F50F0490:5	GY	F50X0490:M.5	+C/061.03	
	F50W0491			
F50X0490:X1.1	WH	J1259:	+C/061.03	
F50X0490:X1.2	BN	J1260:	+C/061.03	
F50X0490:X1.5	GY	J1263:	+C/061.03	
F50X0490:X1.6	PK	J1264:	+C/061.03	
F50X0490:X1.7	BU	J1265:	+C/061.03	
F50X0490:X1.8	RD	J1266:	+C/061.03	
F50X0490:X1.3	GN		+C/061.03	
F50X0490:X1.4	YE		+C/061.03	
	F50W0492			
F50X0490:B.1	BN	F50B0492:	+C/061.06	
F50X0490:B.3	BU	F50B0492:	+C/061.06	
F50X0490:B.4	BK	F50B0492:	+C/061.06	
	F50W0493			
A01X0004:90	RD	F50X0490:X2.8	+C/061.07	
A01X0004:89	BU	F50X0490:X2.7	+C/061.07	
A01X0004:88	PK	F50X0490:X2.6	+C/061.07	
A01X0004:87	GY	F50X0490:X2.5	+C/061.07	
A01X0004:86	YE	F50X0490:X2.4	+C/061.07	
	GN	F50X0490:X2.3	+C/061.07	

Drawing remarks

Tetra Pak

Designer	Date	Machine
CAS	2009-11-12	CBP 32 -0400

ECM No	Denomination	Page Type
418137	CABLE CONNECTION LIST	CABLE CONNECTION LIST

Company	Document No.	Doc. type	Version	Page
Tetra Pak (Sweden)	3027725-0007	ELD	AC	007

RELEASED

© Tetra Pak. All rights reserved; any copying, transmittal or disclosure subject to Tetra Pak's written approval.

Cable Connection List of 3027725-0003

From	Cable	To	Page.Col.	Option
A01X0004:85	BN	F50X0490:X2.2	+C/061.07	
A01X0004:84	WH	F50X0490: X2.1	+C/061.07	
A01X0004:E16		F50W0493:	+C/061.08	
	F50W0494			
F50F0491:1	WH	J1259:	+C/061.02	
F50F0491:2	BN	J1260:	+C/061.02	
F50F0491:5	GY	J1263:	+C/061.02	
F50F0491:6	PK	J1264:	+C/061.02	
F50F0491:7	BU	J1265:	+C/061.02	
F50F0491:8	RD	J1266:	+C/061.02	
	GN	J1261:	+C/061.02	
	YE	J1262:	+C/061.02	
	P01W0083			
	4	P01A0080:Eth	+C/201.03	
A01K0030:	1	P01A0080:Eth	+C/201.03	
	P01W0085			
	1	J797:	+C/007.07	
	P01W0102			
A01X0004:138	6	P01P0102:0	+C/037.06	
A01X0004:137	1	P01P0102:1	+C/037.04	
A01X0004:136	2	P01P0102:2	+C/037.04	
A01X0004:135	3	P01P0102:3	+C/037.04	
A01X0004:134	4	P01P0102:4	+C/037.04	
A01X0004:133	5	P01P0102:5	+C/037.04	
	P01W0170			
A01X0004:163	1	P01X0170:1	+C/014.07	
A01X0004:164	2	P01X0170:2	+C/014.07	
A01X0004:165	3	P01X0170:3	+C/014.08	
A01X0004:166	4	P01X0170:4	+C/014.08	

From	Cable	To	Page.Col.	Option
A01X0004:167	5	P01X0170:5	+C/022.02	
A01X0004:168	6	P01X0170:6	+C/022.06	
A01X0004:169	7	P01X0170:7	+C/022.06	
A01X0004:171	8	P01X0170:9	+C/038.04	
A01X0004:170	9	P01X0170:8	+C/038.04	
A01X0004:172	10	P01X0170:10	+C/038.07	
A01X0004:173	11	P01X0170:11	+C/005.04	
A01X0004:174	12	P01X0170:12	+C/005.04	
A01X0004:146	13	P01X0170:13	+C/017.08	
A01X0004:147	14	P01X0170:14	+C/017.07	
A01X0004:175	15	P01X0170:15	+C/022.06	
	16			
	17			
A01X0004:E19	GNYE	P01X0170:E1	+C/022.02	
	P01W0171			
A01X0002:15	1	P01X0170:19	+C/007.04	
A01X0002:16	2	P01X0170:20	+C/007.04	
A01X0002:E6	GNYE	P01X0170:E2	+C/007.04	
	T14W0000			
A01X0002:8	1	T14X0000:1	+C/008.08	
A01X0002:9	2	T14X0000:2	+C/008.08	
A01X0002:E4	GNYE	T14X0000:E1	+C/008.08	
T14W0000:	SH	J1252:	+C/008.09	
T14W0000:	SH	J1253:	+C/008.08	
	T14W1001			
A01X0004:143	4	T14X0040:4	+C/019.06	
A01X0004:142	3	T14X0040:3	+C/019.06	
A01X0004:145	6	T14X0040:6	+C/019.06	
A01X0004:144	5	T14X0040:5	+C/019.06	
A01X0004:141	2	T14X0040:2	+C/019.06	
A01X0004:140	1	T14X0040:1	+C/019.06	

Drawing remarks

Tetra Pak

Designer	Date	Machine
CAS	2009-11-12	CBP 32 -0400

ECM No	Denomination	Page Type
418137	CABLE CONNECTION LIST	CABLE CONNECTION LIST

Company	Document No.	Doc. type	Version	Page
Tetra Pak (Sweden)	3027725-0007	ELD	AC	008

RELEASED

© Tetra Pak. All rights reserved; any copying, transmittal or disclosure subject to Tetra Pak's written approval.

Cable Connection List of 3027725-0003

From	Cable	To	Page.Col.	Option
A01X0004:E7	SH	T14W1001:	+C/019.06	
T14W1001:		T14X0040:E3	+C/019.06	
	T40W0020			
T40X0020:1	12	J0039:+M-A186	+C/059.03	
T40X0020:2	10	J0039:+M-A186	+C/059.03	
T40X0020:3	8	J0039:+M-A186	+C/059.03	
T40X0020:4	6	J0039:+M-A186	+C/059.03	
T40X0020:5	4	J0039:+M-A186	+C/059.03	
T40K0021:E	2	J0039:+M-A186	+C/059.03	
	T40W0030			
J0031:+M-A185	2	T40K0030:	+C/060.04	
J0031:+M-A185	1	T40K0030:	+C/060.04	
J0031:+M-A185	3	T40K0030:	+C/060.04	
J0031:+M-A185	4	T40K0030:	+C/060.04	
	T40W0031			
J0032:+M-A185	1	J0037:+M-AI86	+C/060.04	
J0032:+M-A185	2	J0037:+M-AI86	+C/060.04	
J0032:+M-A185	3	J0037:+M-AI86	+C/060.04	
J0032:+M-A185	4	J0037:+M-AI86	+C/060.04	
J0032:+M-A185	5	J0037:+M-AI86	+C/060.04	
J0032:+M-A185	GNYE	J0037:+M-AI86	+C/060.04	
	T40W0032			
T40X0031:1	1	T40M0030:PE	+C/060.03	
T40X0031:2	2	T40M0030:3	+C/060.03	
T40X0031:3	3	T40M0030:2	+C/060.03	
T40X0031:4	4	T40M0030:1	+C/060.03	
	T40W0036			
J0035:	1	J0036:	+C/060.05	
	T40W0037			

From	Cable	To	Page.Col.	Option
T40M0030:⏚	1	J0034:	+C/060.04	
	T40W0038			
T40K0031:E	1	J0033:	+C/060.03	
	T40W0040			
J0038:+M-A186	1	T40K0040:	+C/060.08	
J0038:+M-A186	2	T40K0040:	+C/060.08	
J0038:+M-A186	3	T40K0040:	+C/060.08	
J0038:+M-A186	4	T40K0040:	+C/060.08	
	T40W0041			
T40X0040:7	1	T40K0041:PE	+C/060.07	
T40X0040:6	2	T40K0041:6	+C/060.07	
T40X0040:5	3	T40K0041:5	+C/060.07	
T40X0040:4	4	T40K0041:4	+C/060.07	
T40X0040:3	5	T40K0041:3	+C/060.07	
T40X0040:2	6	T40K0041:2	+C/060.07	
T40X0040:1	7	T40K0041:1	+C/060.07	
	T40W0044			
J0041:	1	J0042:	+C/060.10	
	T40W0045			
T40K0041:E	1	J0040:	+C/060.07	
	T40W0047			
T40M0040:⏚	1	J806:	+C/060.09	
	T40W0050			
T40T0050:U/T1	1	T40M0050:U	+C/011.05	
T40T0050:V/T2	2	T40M0050:V	+C/011.05	
T40T0050:W/T3	3	T40M0050:W	+C/011.05	

Drawing remarks

Tetra Pak

Designer	Date	Machine
CAS	2009-11-12	CBP 32 -0400

ECM No	Denomination	Page Type
418137	CABLE CONNECTION LIST	CABLE CONNECTION LIST

Company	Document No.	Doc. type	Version	Page
Tetra Pak (Sweden)	3027725-0007	ELD	AC	009

RELEASED

© Tetra Pak. All rights reserved; any copying, transmittal or disclosure subject to Tetra Pak's written approval.

Cable Connection List of 3027725-0003

From	Cable	To	Page.Col.	Option
T40T0050:⏚	GNYE	T40M0050:⏚	+C/011.05	
T40W0050:	SH	J0015:	+C/011.05	
T40W0050:	SH	J0016:	+C/011.05	
	T40W0100			
T40B0100:	BN	A01X0142:1	+C/045.04	
T40B0100:	BK	A01X0142:4	+C/045.04	
T40B0100:	BU	A01X0142:3	+C/045.04	
	T40W0101			
T40B0101:	BN	A01X0150:1	+C/047.04	
T40B0101:	BK	A01X0150:4	+C/047.04	
T40B0101:	BU	A01X0150:3	+C/047.04	
	T40W0102			
T40B0102:	BN	A01X0142:1	+C/045.04	
T40B0102:	BK	A01X0142:4	+C/045.04	
T40B0102:	BU	A01X0142:3	+C/045.04	
	T40W0103			
T40B0103:	BU	A01X0150:3	+C/047.04	
T40B0103:	BK	A01X0150:1	+C/047.04	
	T40W0106			
A01X0145:19	BU	T40B0106:3	+C/023.03	
A01X0145:18	BN	T40B0106:1	+C/023.03	
A01X0145:20	GY	T40B0106:5	+C/023.04	
A01X0145:17	BK	T40B0106:2	+C/023.04	
	T40W0201			
T40B0201:	BN	A01X0140:1	+C/046.04	
T40B0201:	BK	A01X0140:4	+C/046.04	
T40B0201:	BU	A01X0140:3	+C/046.04	
	T40W0202			
T40B0202:	BN	A01X0140:1	+C/046.04	
T40B0202:	BK	A01X0140:4	+C/046.04	
T40B0202:	BU	A01X0140:3	+C/046.04	
	T40W0221			
T40B0221:	BN	A01X0141:1	+C/044.04	
T40B0221:	BK	A01X0141:4	+C/044.04	
T40B0221:	BU	A01X0141:3	+C/044.04	
	T40W0252			
T40B0252:	BU	A01X0149:3	+C/050.04	
T40B0252:	BK	A01X0149:4	+C/050.04	
T40B0252:	BN	A01X0149:1	+C/050.04	
	T40W0260			
A01X0145:23	BU	T40B0260:	+C/030.03	
A01X0145:22	BN	T40B0260:	+C/030.03	
A01X0145:21	BK	T40B0260:	+C/030.05	
	T40W0261			
T40K0261:2	BK	A01X0141:4	+C/044.04	
T40K0261:1	BU	A01X0141:3	+C/044.04	
	T40W0262			
T40B0262:	BK	A01X0141:4	+C/044.04	
T40B0262:	WH	A01X0141:1	+C/044.04	
T40B0262:	BU	A01X0141:3	+C/044.04	
	T40W0263			
T40K0262:2	BK	A01X0141:4	+C/044.04	
T40K0262:1	BU	A01X0141:3	+C/044.04	

Drawing remarks

Tetra Pak

Designer	Date	Machine
CAS	2009-11-12	CBP 32 -0400

ECM No	Denomination	Page Type
418137	CABLE CONNECTION LIST	CABLE CONNECTION LIST

Company	Document No.	Doc. type	Version	Page
Tetra Pak (Sweden)	3027725-0007	ELD	AC	010

RELEASED

© Tetra Pak. All rights reserved; any copying, transmittal or disclosure subject to Tetra Pak's written approval.

Cable Connection List of 3027725-0003

From	Cable	To	Page.Col.	Option
	T40W0264			
A01X0145:26	BU	T40B0264:	+C/030.03	
A01X0145:25	BN	T40B0264:	+C/030.03	
A01X0145:24	BK	T40B0264:	+C/030.05	
	T40W0266			
T40B0266:	BN	A01X0142:1	+C/045.04	
T40B0266:	BK	A01X0142:4	+C/045.04	
T40B0266:	BU	A01X0142:3	+C/045.04	
	T40W0267			
T40B0267:	BN	A01X0141:1	+C/044.04	
T40B0267:	BU	A01X0141:3	+C/044.04	
	T40W0271			
T40B0271:	BN	A01X0150:1	+C/047.04	
T40B0271:	BK	A01X0150:4	+C/047.04	
T40B0271:	BU	A01X0150:3	+C/047.04	
	T40W0301			
A01X0148:3	BU	T40B0301:	+C/026.03	
A01X0148:2	BN	T40B0301:	+C/026.03	
A01X0148:1	BK	T40B0301:	+C/026.04	
	T40W0302			
A01X0148:6	BU	T40B0302:	+C/026.03	
A01X0148:5	BN	T40B0302:	+C/026.03	
A01X0148:4	BK	T40B0302:	+C/026.04	
	T40W0311			
A01X0148:9	BU	T40B0311:	+C/026.03	
A01X0148:8	BN	T40B0311:	+C/026.03	
A01X0148:7	BK	T40B0311:	+C/026.04	

From	Cable	To	Page.Col.	Option
	T40W0320			
T40B0320:	BN	A01X0142:1	+C/045.04	
T40B0320:	BK	A01X0142:4	+C/045.04	
T40B0320:	BU	A01X0142:3	+C/045.04	
	T40W0322			
T40B0322:	BN	A01X0142:1	+C/045.04	
T40B0322:	BK	A01X0142:4	+C/045.04	
T40B0322:	BU	A01X0142:3	+C/045.04	
	T50W0020			
T50T0020:W/T3	1	T50M0020:U	+C/011.09	
T50T0020:V/T2	2	T50M0020:V	+C/011.09	
T50T0020:U/T1	3	T50M0020:W	+C/011.09	
T50T0020:⏚	GNYE	T50M0020:⏚	+C/011.09	
T50W0020:	SH	J0020:	+C/011.09	
T50W0020:	SH	J0021:	+C/011.09	
	T50W0021			
A01X0004:10	GY-PK	T50B0021:GY-PK	+C/027.03	
A01X0004:9	BK	T50B0021:BK	+C/027.03	
A01X0004:8	PK	T50B0021:PK	+C/027.03	
A01X0004:7	GY	T50B0021:GY	+C/027.03	
A01X0004:6	YE	T50B0021:YE	+C/027.03	
A01X0004:5	GN	T50B0021:GN	+C/027.03	
A01X0004:4	BN	T50B0021:BN	+C/027.03	
A01X0004:3	WH	T50B0021:WH	+C/027.03	
A01X0004:2	BU	T50B0021:BU	+C/027.03	
A01X0004:1	RD	T50B0021:RD	+C/027.03	
	T50W0030			
T50T0030:U/T1	1	T50M0030:U	+C/012.05	
T50T0030:V/T2	2	T50M0030:V	+C/012.05	

Drawing remarks

Tetra Pak

Designer	Date	Machine
CAS	2009-11-12	CBP 32 -0400

ECM No	Denomination	Page Type
418137	CABLE CONNECTION LIST	CABLE CONNECTION LIST

Company	Document No.	Doc. type	Version	Page
Tetra Pak (Sweden)	3027725-0007	ELD	AC	011

RELEASED

© Tetra Pak. All rights reserved; any copying, transmittal or disclosure subject to Tetra Pak's written approval.

Cable Connection List of 3027725-0003

From	Cable	To	Page.Col.	Option
T50T0030:W/T3	3	T50M0030:W	+C/012.05	
T50T0030:⏚	GNYE	T50M0030:⏚	+C/012.05	
T50W0030:	SH	J0025:	+C/012.05	
T50W0030:	SH	J0026:	+C/012.05	
	T50W0031			
A01X0155:10	GY-PK	T50B0031:GY-PK	+C/028.03	
A01X0155:9	BK	T50B0031:BK	+C/028.03	
A01X0155:8	PK	T50B0031:PK	+C/028.03	
A01X0155:7	GY	T50B0031:GY	+C/028.03	
A01X0155:6	YE	T50B0031:YE	+C/028.03	
A01X0155:5	GN	T50B0031:GN	+C/028.03	
A01X0155:4	BN	T50B0031:BN	+C/028.03	
A01X0155:3	WH	T50B0031:WH	+C/028.03	
A01X0155:2	BU	T50B0031:BU	+C/028.03	
A01X0155:1	RD	T50B0031:RD	+C/028.03	
	T50W0032			
A01X0155:E1	GNYE	A01X0004:E2	+C/028.04	
A01X0155:10	10	A01X0004:20	+C/028.04	
A01X0155:9	9	A01X0004:19	+C/028.04	
A01X0155:8	8	A01X0004:18	+C/028.04	
A01X0155:7	7	A01X0004:17	+C/028.04	
A01X0155:6	6	A01X0004:16	+C/028.04	
A01X0155:5	5	A01X0004:15	+C/028.04	
A01X0155:4	4	A01X0004:14	+C/028.04	
A01X0155:3	3	A01X0004:13	+C/028.04	
A01X0155:2	2	A01X0004:12	+C/028.04	
A01X0155:1	1	A01X0004:11	+C/028.04	
	T50W0100			
A01X0155:25	BU	T50B0100:	+C/025.04	
A01X0155:24	BN	T50B0100:	+C/025.04	
A01X0155:23	BK	T50B0100:	+C/025.05	

From	Cable	To	Page.Col.	Option
	U01W0014			
U01T0014:-	BK	J1181:	+C/006.05	
U01T0014:-	DRAIN	J1180:	+C/006.05	
U01T0014:+	RD	J1179:	+C/006.05	
	U01W0030			
U01X0009:	RD	U01X0008:	+C/201.02	
	U01W0031			
T40K0024:	1	A01K0031:Dnet	+C/201.01	
	U01W0032			
A01K0031:Dnet	RD	U01X0008:	+C/201.02	
	U01W0103			
A01X0002:20	1	U01E0103:1	+C/008.01	
A01X0002:21	2	U01E0103:2	+C/008.01	
A01X0002:E8	GNYE	U01E0103:E	+C/008.01	
	U01W0104			
A01X0002:22	1	U01E0104:1	+C/008.03	
A01X0002:23	2	U01E0104:2	+C/008.03	
A01X0002:E9	GNYE	U01E0104:E	+C/008.03	
	U50W0240			
U50K0240:1	BK	A01X0143:4	+C/042.04	
U50K0240:2	BU	A01X0143:3	+C/042.04	
	U50W0241			
U50K0240:1	BK	A01X0143:4	+C/042.04	
U50K0240:2	BU	A01X0143:3	+C/042.04	

Drawing remarks

Tetra Pak

Designer	Date	Machine
CAS	2009-11-12	CBP 32 -0400

ECM No	Denomination	Page Type
418137	CABLE CONNECTION LIST	CABLE CONNECTION LIST

Company	Document No.	Doc. type	Version	Page
Tetra Pak (Sweden)	3027725-0007	ELD	AC	012

RELEASED

© Tetra Pak. All rights reserved; any copying, transmittal or disclosure subject to Tetra Pak's written approval.

Cable Connection List of 3027725-0003

From	Cable	To	Page.Col.	Option
	U50W0250			
U50K0250:1	BK	A01X0143:4	+C/042.04	
U50K0250:2	BU	A01X0143:3	+C/042.04	
	U50W0251			
U50K0250:1	BK	A01X0143:4	+C/042.04	
U50K0250:2	BU	A01X0143:3	+C/042.04	
	V10W0950			
A01X0004:93	1	V10K0950:1	+C/035.04	
A01X0004:E9	PE	V10K0950:E	+C/035.06	
A01X0004:94	1	V10K0950:2	+C/035.06	
	V50W0010			
A01X0002:5	1	V50V0010:L1	+C/008.05	
A01X0002:6	2	V50V0010:L2	+C/008.05	
A01X0002:7	3	V50V0010:N	+C/008.05	
A01X0002:E3	GNYE	V50V0010:⏚	+C/008.05	
	V50W0011			
V50V0010:1	BN	A01X0151:1	+C/043.04	
V50V0010:2	BK	A01X0151:4	+C/043.04	
	V50W0013			
V50V0010:4	BK	A01X0151:4	+C/043.04	
	V50W0014			
V50V0010:9	BU	A01X0151:3	+C/043.04	
V50V0010:10	BK	A01X0151:4	+C/043.04	
	V50W0015			
V50V0010:8	BK	A01X0151:4	+C/043.04	
	V50W0200			
A01X0004:91	1	V50K0200:1	+C/035.04	
A01X0004:E8	PE	V50K0200:E	+C/035.06	
A01X0004:92	1	V50K0200:2	+C/035.06	
	V50W0310			
A01X0155:11	1	V50K0310:1	+C/033.04	
A01X0155:E2	GNYE	V50K0310:E	+C/033.06	
A01X0155:12	2	V50K0310:2	+C/033.06	
	V50W0320			
A01X0155:13	1	V50K0320:1	+C/033.04	
A01X0155:E3	GNYE	V50K0320:E	+C/033.06	
A01X0155:14	2	V50K0320:2	+C/033.06	
	V50W0330			
A01X0155:15	1	V50K0330:1	+C/033.04	
A01X0155:E4	GNYE	V50K0330:E	+C/033.06	
A01X0155:16	2	V50K0330:2	+C/033.06	
	V50W0340			
A01X0155:17	1	V50K0340:1	+C/033.04	
A01X0155:E5	GNYE	V50K0340:E	+C/033.06	
A01X0155:18	2	V50K0340:2	+C/033.06	
	V50W0350			
A01X0155:19	1	V50K0350:1	+C/033.04	
A01X0155:E6	GNYE	V50K0350:E	+C/033.06	
A01X0155:20	2	V50K0350:2	+C/033.06	
	V50W0360			
A01X0155:21	1	V50K0360:1	+C/033.04	
A01X0155:E7	GNYE	V50K0360:E	+C/033.06	
A01X0155:22	2	V50K0360:2	+C/033.06	

Drawing remarks

Tetra Pak

Designer	Date	Machine
CAS	2009-11-12	CBP 32 -0400

ECM No	Denomination	Page Type
418137	CABLE CONNECTION LIST	CABLE CONNECTION LIST

Company	Document No.	Doc. type	Version	Page
Tetra Pak (Sweden)	3027725-0007	ELD	AC	013

RELEASED

© Tetra Pak. All rights reserved; any copying, transmittal or disclosure subject to Tetra Pak's written approval.

Cable Connection List of 3027725-0003

From	Cable	To	Page.Col.	Option
	V50W0373			
V50B0373:	BN	A01X0151:1	+C/043.04	
V50B0373:	BK	A01X0151:4	+C/043.04	
V50B0373:	BU	A01X0151:3	+C/043.04	
	V50W0381			
V50B0381:	BN	A01X0151:1	+C/043.04	
V50B0381:	BK	A01X0151:4	+C/043.04	
V50B0381:	BU	A01X0151:3	+C/043.04	
	W10W0900			
A01X0004:97	3	W10X0900:1B	+C/026.02	
A01X0004:96	1	W10X0900:1A	+C/026.02	
A01X0004:98	4	W10X0900:3	+C/026.06	
A01X0004:95	2	W10X0900:1	+C/026.06	
A01X0004:99	5	W10X0900:5	+C/038.03	
A01X0004:E10	GNYE	W10X0900:E1	+C/038.07	
A01X0004:100	6	W10X0900:5B	+C/038.07	
	W10W0901			
W10X0900:5	1	W10K0901:1	+C/038.04	
W10X0900:E1	GNYE	W10K0901:E	+C/038.06	
W10X0900:5B	2	W10K0901:2	+C/038.06	
	W10W0902			
W10X0900:2B	BU	W10B0902:	+C/026.04	
W10X0900:2A	BN	W10B0902:	+C/026.04	
W10X0900:2	BK	W10B0902:	+C/026.05	
	W10W0903			
W10X0900:1B	BU	W10B0903:	+C/026.03	
W10X0900:1A	BN	W10B0903:	+C/026.03	
	W10W0904			
W10X0900:4B	BU	W10B0904:	+C/026.04	
W10X0900:4A	BN	W10B0904:	+C/026.04	
W10X0900:4	BK	W10B0904:	+C/026.05	
	W10W0905			
W10X0900:3B	BU	W10B0905:	+C/026.03	
W10X0900:3A	BN	W10B0905:	+C/026.03	
	W10W0906			
W10B0906:	BN	A01X0149:1	+C/050.04	
W10B0906:	BK	A01X0149:4	+C/050.04	
W10B0906:	BU	A01X0149:3	+C/050.04	
	W30W0010			
W30T0010:U/T1	1	W30M0010:U	+C/009.04	
W30T0010:V/T2	2	W30M0010:V	+C/009.04	
W30T0010:W/T3	3	W30M0010:W	+C/009.04	
W30T0010:⏚	GNYE	W30M0010:⏚	+C/009.04	
W30W0010:		J0050:	+C/009.05	
W30W0010:	SH	J0051:	+C/009.04	
	W30W0083			
W30F0083:2	1	W30M0083:2,5	+C/010.07	
W30F0083:4	2	W30M0083:1,4	+C/010.07	
W30F0083:6	3	W30M0083:3,6	+C/010.07	
A01X0005:1	GNYE	W30M0083:⏚	+C/010.07	
W30W0083:	SH	J758:	+C/010.07	
W30W0083:	SH	J1166:	+C/010.07	
	W30W0084			
W30F0084:2	1	W30M0084:2,5	+C/010.09	
W30F0084:4	2	W30M0084:1,4	+C/010.09	
W30F0084:6	3	W30M0084:3,6	+C/010.09	

Drawing remarks

Tetra Pak

Designer	Date	Machine
CAS	2009-11-12	CBP 32 -0400

ECM No	Denomination	Page Type
418137	CABLE CONNECTION LIST	CABLE CONNECTION LIST

Company	Document No.	Doc. type	Version	Page
Tetra Pak (Sweden)	3027725-0007	ELD	AC	014

RELEASED

© Tetra Pak. All rights reserved; any copying, transmittal or disclosure subject to Tetra Pak's written approval.

Cable Connection List of 3027725-0003

From	Cable	To	Page.Col.	Option
A01X0006:1	GNYE	W30M0084:⏚	+C/010.09	
W30W0084:		J1159:	+C/010.09	
W30W0084:	SH	J1167:	+C/010.09	
	W30W0100			
W30B0100:	BN	J1038:	+C/024.06	
W30B0100:	BU	J1040:	+C/024.06	
W30B0100:	BK	J1041:	+C/024.06	
	W30W0101			
W30B0101:	BN	J1033:	+C/024.06	
W30B0101:	BU	J1035:	+C/024.06	
W30B0101:	BK	J1036:	+C/024.06	
	W30W0110			
W30B0110:	BN	A01X0140:1	+C/046.04	
W30B0110:	BK	A01X0140:4	+C/046.04	
W30B0110:	BU	A01X0140:3	+C/046.04	
	W30W0111			
W30B0111:	BN	A01X0140:1	+C/046.04	
W30B0111:	BK	A01X0140:4	+C/046.04	
W30B0111:	BU	A01X0140:3	+C/046.04	
	W30W0114			
W30B0114:	BN	A01X0140:1	+C/046.04	
W30B0114:	BK	A01X0140:4	+C/046.04	
W30B0114:	BU	A01X0140:3	+C/046.04	
	W30W0115			
W30B0115:	BN	A01X0140:1	+C/046.04	
W30B0115:	BK	A01X0140:4	+C/046.04	
W30B0115:	BU	A01X0140:3	+C/046.04	
	W30W0116			
W30B0116:	BN	J1043:	+C/024.06	
W30B0116:	BU	J1045:	+C/024.06	
W30B0116:	BK	J1046:	+C/024.06	
	W30W0117			
W30B0117:	BN	J1048:	+C/024.06	
W30B0117:	BU	J1050:	+C/024.06	
W30B0117:	BK	J1051:	+C/024.06	
	W30W0118			
W30B0118:	BN	A01X0140:1	+C/046.04	
W30B0118:	BK	A01X0140:4	+C/046.04	
W30B0118:	BU	A01X0140:3	+C/046.04	
	W30W0119			
W30B0119:	BN	A01X0140:1	+C/046.04	
W30B0119:	BK	A01X0140:4	+C/046.04	
W30B0119:	BU	A01X0140:3	+C/046.04	
	W30W0140			
W30B0140:	BN	A01X0149:1	+C/050.04	
W30B0140:	BK	A01X0149:4	+C/050.04	
W30B0140:	BU	A01X0149:3	+C/050.04	
	W30W0240			
A01X0004:129	1	W30K0240:1	+C/031.04	
A01X0004:E17	GNYE	W30K0240:E	+C/031.06	
A01X0004:130	2	W30K0240:2	+C/031.06	
	W30W0242			
W30B0242:	BN	A01X0150:1	+C/047.04	
W30B0242:	BK	A01X0150:4	+C/047.04	
W30B0242:	BU	A01X0150:3	+C/047.04	

Drawing remarks

Tetra Pak

Designer	Date	Machine
CAS	2009-11-12	CBP 32 -0400

ECM No	Denomination	Page Type
418137	CABLE CONNECTION LIST	CABLE CONNECTION LIST

Company	Document No.	Doc. type	Version	Page
Tetra Pak (Sweden)	3027725-0007	ELD	AC	015

RELEASED

© Tetra Pak. All rights reserved; any copying, transmittal or disclosure subject to Tetra Pak's written approval.

Cable Connection List of 3027725-0003

From	Cable	To	Page.Col.	Option
	W50W0116			
W50B0116:	BN	A01X0153:1	+C/049.04	
W50B0116:	BK	A01X0153:4	+C/049.04	
W50B0116:	BU	A01X0153:3	+C/049.04	
	W50W0118			
W50B0118:	BN	A01X0153:1	+C/049.04	
W50B0118:	BK	A01X0153:4	+C/049.04	
W50B0118:	BU	A01X0153:3	+C/049.04	
	W50W0191			
W50B0191:1	BU	A01X0153:3	+C/049.04	
W50B0191:3	BK	A01X0153:4	+C/049.04	
W50B0191:2	BN	A01X0153:1	+C/049.04	
	W50W0211			
W50B0211:	BN	A01X0141:1	+C/044.04	
W50B0211:	BK	A01X0141:4	+C/044.04	
W50B0211:	BU	A01X0141:3	+C/044.04	
	W50W0212			
W50B0212:	BN	A01X0141:1	+C/044.04	
W50B0212:	BK	A01X0141:4	+C/044.04	
W50B0212:	4	A01X0141:3	+C/044.04	
	W50W0400			
W50K0400:1	BK	A01X0153:4	+C/049.04	
W50K0400:2	BU	A01X0153:3	+C/049.04	
	W90W0082			
A01X0002:10	1	W90S0082:1	+C/009.09	
A01X0002:11	2	W90S0082:3	+C/009.09	
A01X0002:12	3	W90S0082:5	+C/009.09	

From	Cable	To	Page.Col.	Option
A01X0002:E5	GNYE	W90M0082:⏚	+C/009.09	
	W90W0910			
W90B0910:	BN	A01X0153:1	+C/049.04	
W90B0910:	BK	A01X0153:4	+C/049.04	
W90B0910:	BU	A01X0153:3	+C/049.04	

Drawing remarks

Tetra Pak

Designer	Date	Machine
CAS	2009-11-12	CBP 32 -0400

ECM No	Denomination	Page Type
418137	CABLE CONNECTION LIST	CABLE CONNECTION LIST

Company	Document No.	Doc. type	Version	Page
Tetra Pak (Sweden)	3027725-0007	ELD	AC	016

9 Mains Connection

Description

The diagrams that show the connection from the mains power to the equipment are included in this chapter.

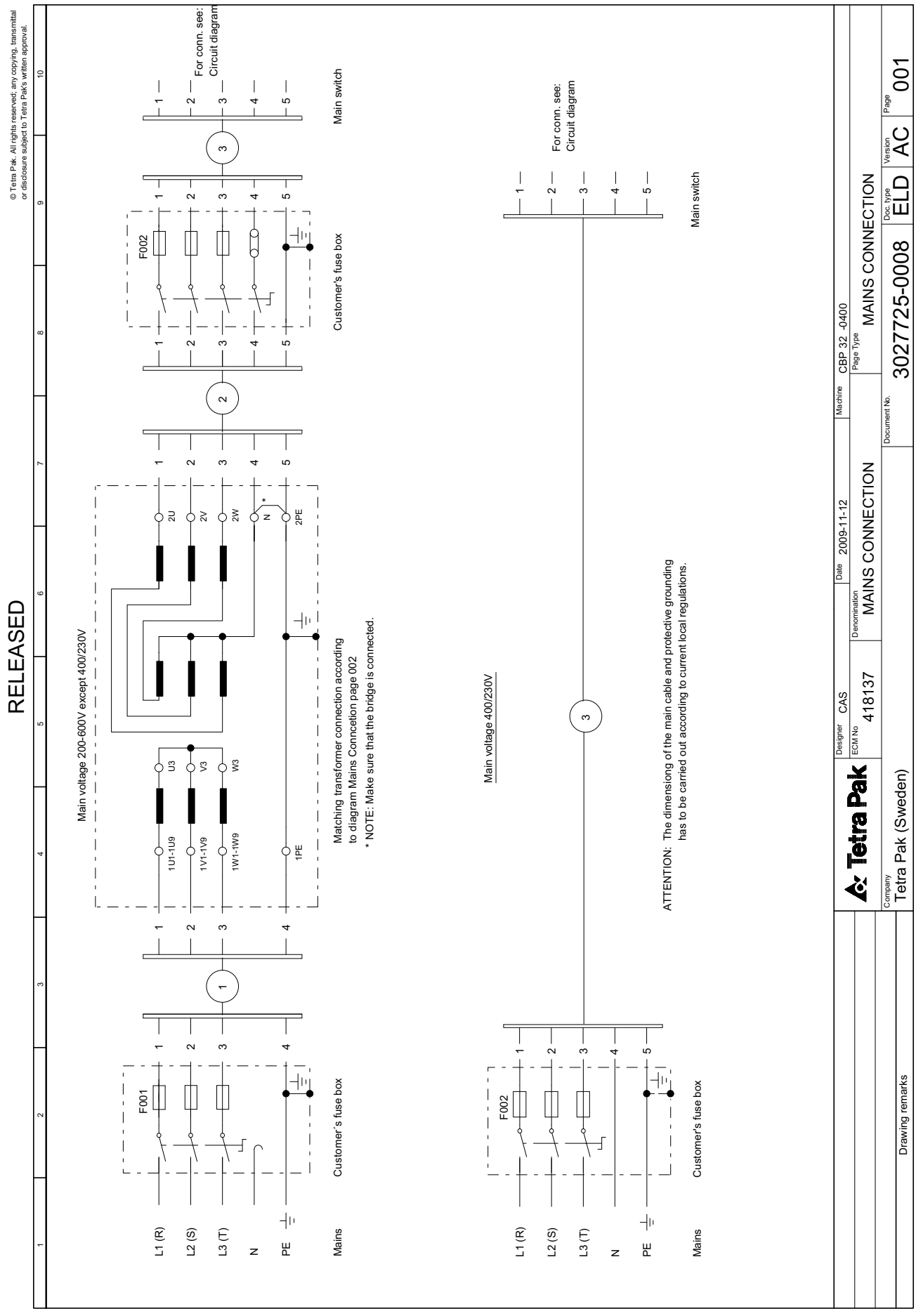
RELEASED
© Tetra Pak. All rights reserved; any copying, transmittal or disclosure subject to Tetra Pak's written approval.
Main voltage 200-600V except 400/230V
F001
F002
L1 (R)
L2 (S)
L3 (T)
N
PE
Mains
Customer´s fuse box
1U1-1U9
1V1-1V9
1W1-1W9
1PE
U3
V3
W3
2U
2V
2W
2PE
N
*
Matching transformer connection according to diagram Mains Conncetion page 002
* NOTE: Make sure that the bridge is connected.
For conn. see: Circuit diagram
Main switch
Customer's fuse box
Main voltage 400/230V
ATTENTION: The dimensiong of the main cable and protective grounding has to be carried out according to current local regulations.
Designer CAS
Date 2009-11-12
Machine CBP 32 -0400
ECM No 418137
Denomination MAINS CONNECTION
Page Type MAINS CONNECTION
Company Tetra Pak (Sweden)
Drawing remarks
Document No. 3027725-0008
Doc. type ELD
Version AC
Page 001

RELEASED

© Tetra Pak. All rights reserved; any copying, transmittal or disclosure subject to Tetra Pak's written approval.

1	2	3	4	5	6	7	8	9	10

MAIN VOLTAGE	FUSES (SLOW) F001	FUSES (SLOW) F002	AREA TO COPPER (CU) CABLE WITH No. 1	2	3	CONNECTIONS ON MATCHING TRANSFORMER MAINS	TAP	CONNECT
V	A	A	mm²	mm²	mm²			
600/347 3x600	10	16	3x4/4	4x4/4	4x4/4	L1 L2 L3 PE	1U9 1V9 1W9 ⏚	1U3 - U4 1V3 - V4 1W3 - W4
550/318 3x550	10	16	3x4/4	4x4/4	4x4/4	L1 L2 L3 PE	1U8 1V8 1W8 ⏚	1U3 - U4 1V3 - V4 1W3 - W4
500/289 3x500	10	16	3x4/4	4x4/4	4x4/4	L1 L2 L3 PE	1U7 1V7 1W7 ⏚	1U3 - U4 1V3 - V4 1W3 - W4
480/277 3x480	10	16	3x4/4	4x4/4	4x4/4	L1 L2 L3 PE	1U6 1V6 1W6 ⏚	1U3 - U4 1V3 - V4 1W3 - W4
440/254 3x440	10	16	3x4/4	4x4/4	4x4/4	L1 L2 L3 PE	1U5 1V5 1W5 ⏚	1U2 - U4 1V2 - V4 1W2 - W4
415/240 3x415	16	16	3x4/4	4x4/4	4x4/4	L1 L2 L3 PE	1U5 1V5 1W5 ⏚	1U1 - U4 1V1 - V4 1W1 - W4
3x400	16	16	3x4/4	4x4/4	4x4/4	L1 L2 L3 PE	1U4 1V4 1W4 ⏚	1U1 - U4 1V1 - V4 1W1 - W4
400/230		16			4x4/4			
380/220 3x380	16	16	3x4/4	4x4/4	4x4/4	L1 L2 L3 PE	1U9 1V9 1W9 ⏚	1U3 - 1U5 1V3 - 1V5 1W3 - 1W5
240/140 3x240	20	16	3x6/6	4x4/4	4x4/4	L1 L2 L3 PE	1U3 1V3 1W3 ⏚	U3 - U4 1U3-1U6 V3 - V4 1V3-1V6 W3 - W4 1W3-1W6
220/127 3x220	20	16	3x6/6	4x4/4	4x4/4	L1 L2 L3 PE	1U2 1V2 1W2 ⏚	U3 - U4 1U2-1U5 V3 - V4 1V2-1V5 W3 - W4 1W2-1W5
200/115 3x200	20	16	3x6/6	4x4/4	4x4/4	L1 L2 L3 PE	1U1 1V1 1W1 ⏚	U3 - U4 1U1-1U4 V3 - V4 1V1-1V4 W3 - W4 1W1-1W4

MATCHING TRANSFORMER

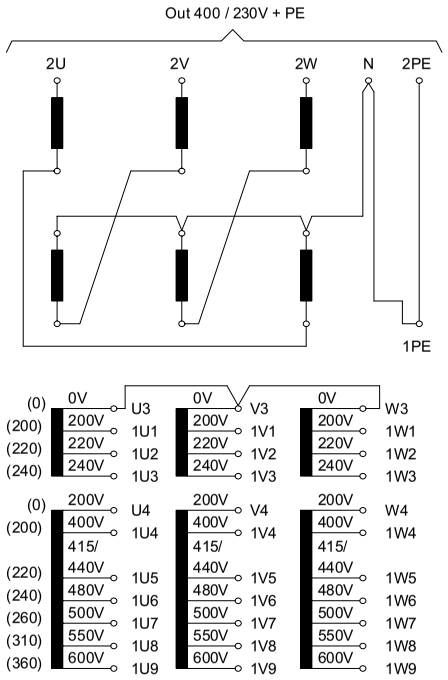

ATTENTION:

Cable areas are dimensioned according to Swedish regulations (ELSÄK-FS 1999:5 and SS4241424:6) 40 C ambient temp and cable on metal ladder with space between the cables.
National regulations have to be followed in each country.
Tetra Pak is not responsible for the dimensioning at installation.
Tetra Pak only provides recomendations.

Drawing remarks	Tetra Pak	Designer CAS	Date 2009-11-12	Machine CBP 32 -0400		
		ECM No 418137	Denomination MAINS CONNECTION	Page Type MAINS CONNECTION		
	Company Tetra Pak (Sweden)	Document No. 3027725-0008	Doc. type ELD	Version AC	Page 002	

10 Drawing Remarks

Description

This chapter contains a list of the drawing remarks indicated with a number in the drawing.

10.1 Drawing Remarks

Drawing No.	Page	Note	Remark
3027725-0003	8	1	OPTION PTr.
	14		
	16		
	19		
	202		
	17	2	Disconnect when OPTION PTr
	3	3	Shield connected to cable gland.
	8		
	9		
	10		
	11		
	12		
	20		
	61	4	OPTION Light Barrier
	17	5	Disconnect when OPTION Light Barrier
	7	6	Two turns through ferrite.
	8	7	Clamped to assembly plate.
	9		
	10		
	11		
	12		
	18		
	7	8	OPTION PLMS SNP
	13		
	14	9	Disconnect link when ALTERATION is used.
	16		
	3	10	See Installation Manual
	-	11	-
	16	12	OPTION Tunnel Straight
	15	13	Connected at U-Left.
	15	14	Connected at U-Right.
	8	15	OPTION Illumination
	26	16	OPTION External Brake
	38		
	-	17	-
	-	18	-
	62	19	For Cable number see Down Stream Machine document.
	62	20	If more than ONE machine is connected this is considered to be the Left Machine.
	201	21	Shield clamped to mounting plate.
	18	22	Remove resistor when CAN-bus is used as Line Communication.

Drawing No.	Page	Note	Remark
3027725-0003	20	23	Connection to earth connection on the valve.
	50	24	Only when Line Controller or Tetra Recart.
	31	25	OPTION Lubrication Autofill
	33	26	OPTION WA
	43		
	56		
	35	27	OPTION Infeed Conveyor Lubrication
	45	28	OPTION Variable Tilt
	55		
	49	29	For discharge Left/Right/Trough
	57		
	49	30	For discharge Through
	50	31	OPTION Photocell Communication
	-	32	-
	7	33	OPTION Cooling Fan Panel
	7	34	OPTION Cooling Unit
	25		
	-	35	-
	9	36	External Equipment
	14		
	62		

11 Other Information

Description

This chapter contains a list of the engineering change description.

11.1 Engineering Change Description

ECM No.	Drawing No.	Alteration
394806	3027725-AA	Released dev. Step -0400 version AA.
414216	3027725-AB	Released dev. Step –0400 version AB. Corrections of electrical drawing E-plan.
418137	3027725-AC	Released dev. Step –0400 version AC. Corrections of electrical drawing E-plan.

This page intentionally left blank

12 Program Documents

Description

This chapter contains where to find the program documents.

12.1 Program Documents

The list 3027724-0002 contains all the softwares that are on the CD.

This page intentionally left blank

Tetra Pak

Note! *This page is generated **automatically**.*
*using the **variable definitions** made in the **front page** file!*

Cardboard Packer 32 by Tetra Pak
673852-0400
Issue 2009-12 Doc. No. EM-3025061-0103

Cardboard Packer 32 by Tetra Pak 1(2)
673852-0400
Issue 2009-12 Doc. No. EM-3025061-0103

Cardboard Packer 32 by Tetra Pak
673852-0400
Issue 2009-12 Doc. No. EM-3025061-0103

Cardboard Packer 32 by Tetra Pak 1(2)
673852-0400
Issue 2009-12 Doc. No. EM-3025061-0103

Cardboard Packer 32 by Tetra Pak
673852-0400
Issue 2009-12 Doc. No. EM-3025061-0103

Cardboard Packer 32 by Tetra Pak 1(2)
673852-0400
Issue 2009-12 Doc. No. EM-3025061-0103

Cardboard Packer 32 by Tetra Pak
673852-0400
Issue 2009-12 Doc. No. EM-3025061-0103

Cardboard Packer 32 by Tetra Pak 1(2)
673852-0400
Issue 2009-12 Doc. No. EM-3025061-0103

Cardboard Packer 32 by Tetra Pak
673852-0400
Issue 2009-12 Doc. No. EM-3025061-0103

Cardboard Packer 32 by Tetra Pak 2(2)
673852-0400
Issue 2009-12 Doc. No. EM-3025061-0103

Cardboard Packer 32 by Tetra Pak
673852-0400
Issue 2009-12 Doc. No. EM-3025061-0103

Cardboard Packer 32 by Tetra Pak 2(2)
673852-0400
Issue 2009-12 Doc. No. EM-3025061-0103

Cardboard Packer 32 by Tetra Pak
673852-0400
Issue 2009-12 Doc. No. EM-3025061-0103

Cardboard Packer 32 by Tetra Pak 2(2)
673852-0400
Issue 2009-12 Doc. No. EM-3025061-0103

Cardboard Packer 32 by Tetra Pak
673852-0400
Issue 2009-12 Doc. No. EM-3025061-0103

Cardboard Packer 32 by Tetra Pak 2(2)
673852-0400
Issue 2009-12 Doc. No. EM-3025061-0103

40 mm Full width **Note!** *This page is generated **automatically**.*
*using the **variable definitions** made in the **front page** file!*

Cardboard Packer 32 by Tetra Pak
673852-0400

Issue 2009-12 Doc. No. EM-3025061-0103

Cardboard Packer 32 by Tetra Pak
673852-0400

Issue 2009-12 Doc. No. EM-3025061-0103

Cardboard Packer 32 by Tetra Pak 1(2)
673852-0400

Issue 2009-12 Doc. No. EM-3025061-0103

Cardboard Packer 32 by Tetra Pak 1(2)
673852-0400

Issue 2009-12 Doc. No. EM-3025061-0103

Cardboard Packer 32 by Tetra Pak
673852-0400

Issue 2009-12 Doc. No. EM-3025061-0103

Cardboard Packer 32 by Tetra Pak 1(2)
673852-0400

Issue 2009-12 Doc. No. EM-3025061-0103

Cardboard Packer 32 by Tetra Pak
673852-0400

Issue 2009-12 Doc. No. EM-3025061-0103

Cardboard Packer 32 by Tetra Pak 2(2)
673852-0400

Issue 2009-12 Doc. No. EM-3025061-0103

Cardboard Packer 32 by Tetra Pak
673852-0400

Issue 2009-12 Doc. No. EM-3025061-0103

Cardboard Packer 32 by Tetra Pak 2(2)
673852-0400

Issue 2009-12 Doc. No. EM-3025061-0103

Cardboard Packer 32 by Tetra Pak
673852-0400

Issue 2009-12 Doc. No. EM-3025061-0103

Cardboard Packer 32 by Tetra Pak 2(2)
673852-0400

Issue 2009-12 Doc. No. EM-3025061-0103