IM

Installation Manual

Cardboard Packer 32 by Tetra Pak

673852-0400

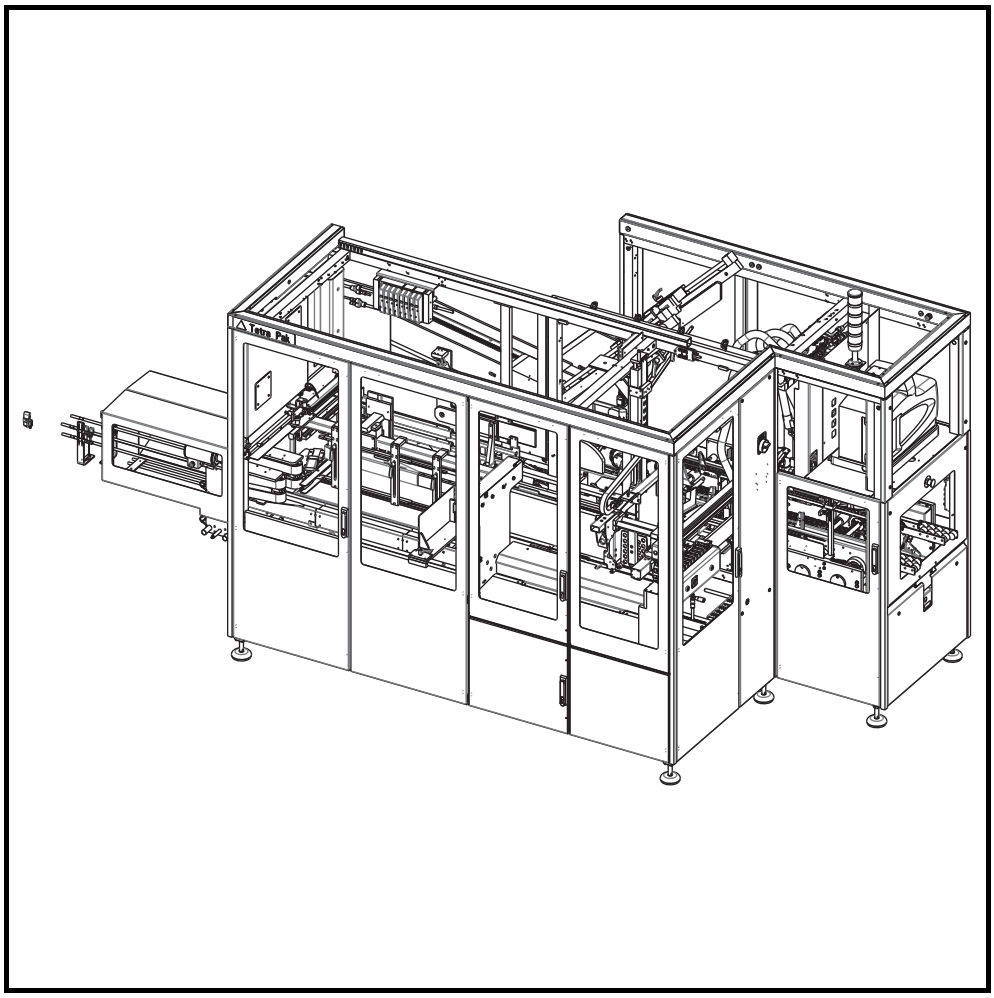

WARNING

Read and follow all safety precaution instructions throughout this manual and on safety signs attached to this equipment.

Failure to follow all safety precaution instructions could result in death or serious injury.

Tetra Pak

Doc. No. IM-3025062-0105

Copyright © 2009 Tetra Pak Group

All rights reserved. No part of this document may be reproduced or copied in any form or by any means without written permission from Tetra Pak Packaging Solutions AB.

Tetra Pak and all Tetra Pak products are trademarks belonging to the Tetra Pak Group.

The content of this manual is in accordance with the design and construction of the machine or equipment at the time of publishing. Tetra Pak reserves the right to introduce design modifications without prior notice.

The English language version of this document contains the original instructions. All other language versions are translations of the original instructions.

This document was produced by:

Tetra Pak Packaging Solutions AB
Ruben Rausings gata
SE-221 86 Lund
Sweden

Additional copies can be ordered from Tetra Pak. When ordering additional copies, always provide the document number.

Doc. No. IM-3025062-0105

Issue 2010-10

This manual is valid for:

Series No./ Machine No. Sign.

IM

Installation Manual

Cardboard Packer 32 by Tetra Pak
673852-0400

i Introduction

ii Safety Precautions

1 Technical Specifications

2 Preparatory Requirements

3 Mechanical Completion

4 Commissioning

5 Performance Validation

6 Disassembly and Removal

Machine or equipment configurations that this manual is valid for are described on the next page.

Doc. No. IM-3025062-0105

Issue 2010-10

Tetra Pak

Tetra Pak Packaging Solutions AB

Valid for:

Name	Drawing Specification and Development Step	Additional Information
Cardboard Packer 32 by Tetra Pak	673852-0400	

Optional Equipment:

Name	Drawing Specification and Development Step	Additional Information
Illumination	1287186-0300	not valid for USA and Canada
Light Barrier Unit	2834002-0200	
Air Jet Gun	2802489-0200	
OK Spray Gun	1287076-0300	
Discharge Unit, Roller Conveyor	2511012-0400	
Discharge Conveyor	2970888-0100	
Cooling Unit	2792385-0200	
Photocell Unit, Com Start Conveyor	2802448-0300	
6 Channel Hotmelt	3090149-0100	
Variable Tilt	3101123-0100	

Update Log for Doc. No. IM-3025062-0105

This table shows all changes made to this manual, including installed rebuilding kits, added or removed pages. Page numbering on added pages begins with UP.

Date	Installed Kit	Added Pages (Doc. No.)	Removed Pages	Signature

Date	Installed Kit	Added Pages (Doc. No.)	Removed Pages	Signature

i Introduction

About the Introduction Chapter

This chapter contains basic information about this manual and the related Tetra Pak equipment.

Abbreviations and Terminology . . . . . i - 5
Manual Information . . . . . i - 6
Delivered Manuals . . . . . i - 6
Page Layout . . . . . i - 7
Page Numbering. . . . . i - 8
Typographical Conventions . . . . . i - 8
Symbols . . . . . i - 8
Machine Introduction . . . . . i - 9
Intended Use of the Equipment . . . . . i - 9
Manufacturer . . . . . i - 9
Support and Feedback . . . . . i - 9
Declaration of Conformity . . . . . i - 9
Identification . . . . . i - 17
CE Classification . . . . . i - 17
Machine Plate . . . . . i - 17
Orientation . . . . . i - 18
Hygiene. . . . . i - 19
How to Use This IM . . . . . i - 20
Purpose of the IM . . . . . i - 20
Installation Workflow . . . . . i - 20

This page intentionally left blank

Abbreviations and Terminology

Abbreviation/ Terminology	Meaning	Translation
CBP 32	Cardboard Packer 32	
CE	Communautés Européennes/European Communities	
CPU	Central Processing Unit	
CSA	Canadian Standards Association	
EEA	European Economic Area	
EM	Electrical Manual	
IM	Installation Manual	
I/O	Input / Output (module)	
LED	Light Emitting Diode	
LH	Left Hand	
MM	Maintenance Manual	
OM	Operation Manual	
PC	Package Conveyor	
PLC	Programmable Logic Controller	
PLMS	Packaging Line Monitoring System	
RH	Right Hand	
SPC	Spare Parts Catalogue	
TPC	Tetra Package Conveyor	
TPOP	Tetra Pak Operator Panel	
TUC	Tetra Unit Conveyor	
UC	Unit Conveyor	
WA	Wraparound unit	

Manual Information

Tetra Pak recommends reading all delivered manuals carefully. Make sure that the delivered manuals are available to personnel who operate or maintain the equipment.

It is important to keep this manual for the lifetime of the equipment and to pass the manual on to any subsequent holder or user.

Tetra Pak will not be held responsible for any damage to the equipment caused by not following the instructions given in this manual.

Delivered Manuals

Manuals delivered with this equipment:

- EM
  The Electrical Manual provides technicians with information about the equipment's electrical system.
- IM
  The Installation Manual provides technicians with information required to safely install the equipment.
- MM
  The Maintenance Manual provides technicians with information on maintaining the equipment.
- OM
  The Operation Manual manual provides the operator with information on handling and operating the equipment before, during, and after production.
- SPC
  The Spare Parts Catalogue provides the information necessary to order spare parts from Tetra Pak

Page Layout

Every main page in a manual contains a header and a footer. The page header contains the chapter name (1) and the section name (2). The page footer contains the page number (3), and the document number (4). See also the Page Numbering section.

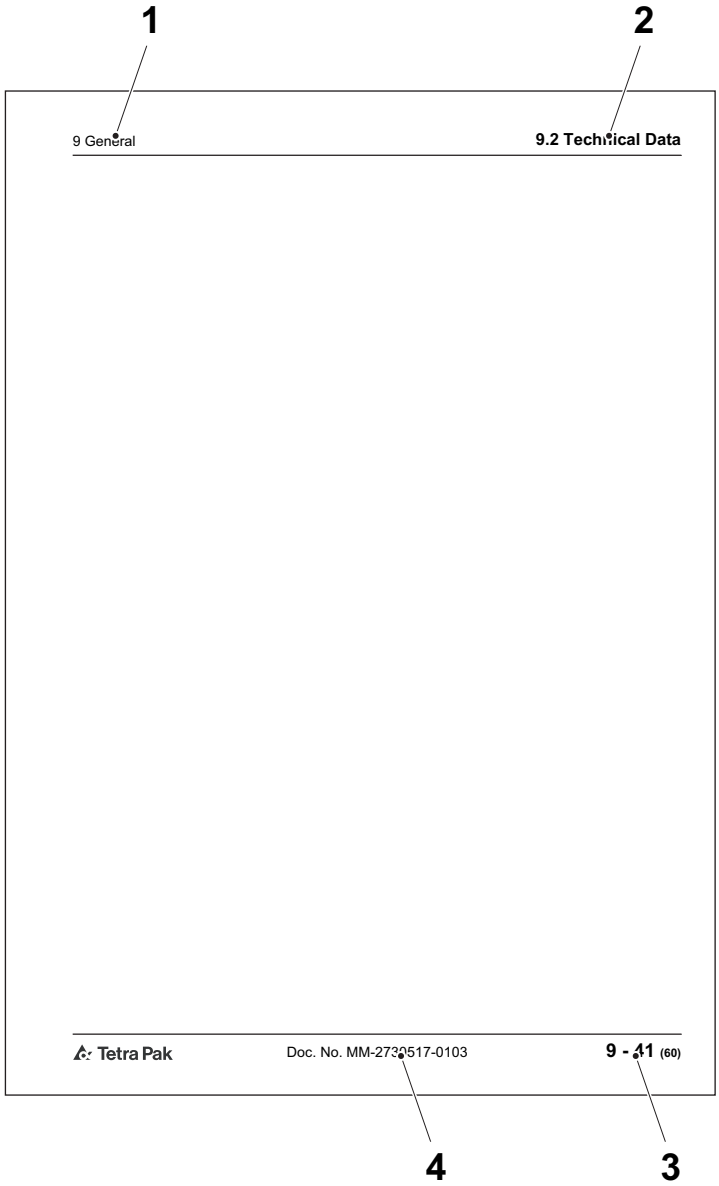

1 Chapter name
2 Section name
3 Page number
4 Document number

Page Numbering

A page number has three parts:

- chapter number (1)
- consecutive page number (2) within the chapter
- total number of pages (3) in the chapter.

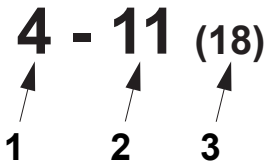

1 Chapter number
2 Consecutive page number
3 Total number of pages

Typographical Conventions

Controls on the operator panel, emergency stop devices, and program steps are printed in CAPITAL LETTERS.

Menu names, button names and other text displayed in software are printed in `Courier`.

Cross-references are underlined.

Symbols

Symbols used in illustrations.

	A pointer arrow indicates the position of an object.
	A zoom arrow indicates that an object view is enlarged. The arrow points towards the enlarged view of the object.
	A rotation movement arrow indicates rotational movement of an object. The arrow points in the direction of rotation.
	A straight movement arrow indicates movement of an object. The arrow points in the direction of movement.

Machine Introduction

Intended Use of the Equipment

The intended use of this Tetra Pak equipment is to place packages approved by Tetra Pak Packaging Solutions AB into units made of corrugated cardboard.

All other use is prohibited. Tetra Pak will not be held responsible for injury or damage if the equipment is used for any other purpose than the intended use described above.

Manufacturer

This Tetra Pak equipment has been manufactured by

Tetra Pak Packaging Solutions AB
Ruben Rausings gata
SE-221 86 Lund
Sweden

Support and Feedback

If you encounter problems when operating this equipment or have other inquiries, comments, or suggestions for improvement, contact Tetra Pak.

Declaration of Conformity

A copy of the Declaration of Conformity can be found below. The signed Declaration of Conformity is delivered separately with the equipment.

Tetra Pak

Declaration of Conformity

Tetra Pak Packaging Solutions AB
Ruben Rausings Gata
SE-221 86 Lund
Sweden

declare that this machine/ equipment/ complex installation:

Cardboard Packer 32 by Tetra Pak
673852-0400

is in conformity with the following harmonized standards:

EN 415-7:2006+A1:2008
EN 61000-6-2:2005
EN 61000-6-4:2007

and is in conformity with the provisions of the Directive(s) - including amendments:

- [X] 98/37/EC Machinery (until Dec. 28, 2009)
- [X] 2006/42/EC Machinery (from Dec. 29, 2009)
- [X] 2004/108/EC Electromagnetic compatibility (EMC)
- [X] 2006/95/EC Low Voltage

The following person is authorised to compile the technical file:

Robert Bertilsson
Tetra Pak Packaging Solution AB
Ruben Rausings gata
SE-221 86 Lund
Sweden

Lund 2009-08-28

Robert Bertilsson
Manager Cardboard & Straw

Techical File CD-1620096

English
FORM 5293 version 2009-07-16

Tetra Pak

Konformitätserklärung

Tetra Pak Packaging Solutions AB
Ruben Rausings Gata
SE-221 86 Lund
Sweden

erklärt hiermit, dass diese Maschine / Anlage /
komplexe Einrichtung:

Cardboard Packer 32 by Tetra Pak
673852-0400

konform ist mit den folgenden harmonisierten Standards:

EN 415-7:2006+A1:2008
EN 61000-6-2:2005
EN 61000-6-4:2007

und übereinstimmt mit den Vorschriften der Richtlinien
einschließlich deren Ergänzungen:

- [x] 98/37/EC Maschine (bis 28. Dez. 2009)
- [x] 2006/42/EG Maschine (ab 29. Dez. 2009)
- [x] 2004/108/EC Elektromagnetische Verträglichkeit (EMV)
- [x] 2006/95/EC Niederspannung

Folgender Person ist es gestattet, die technischen Unterlagen
zusammenzustellen:

Robert Bertilsson
Tetra Pak Packaging Solution AB
Ruben Rausings gata
SE-221 86 Lund
Sweden

Lund 2009-08-28

Robert Bertilsson
Manager Cardboard & Straw

Deutsch/German
Techical File CD-1620096 FORM 5293 version 2009-07-16

Tetra Pak

Konformitetserklæring

Tetra Pak Packaging Solutions AB
Ruben Rausings Gata
SE-221 86 Lund
Sweden

erklærer at dette maskineri/dette udstyr/
kompleks installation:

Cardboard Packer 32 by Tetra Pak
673852-0400

holder følgende harmoniserede standarder:

EN 415-7:2006+A1:2008
EN 61000-6-2:2005
EN 61000-6-4:2007

samt bestemmelserne iht. direktivet/direktiverne,
inkl. ændringer:

- [x] 98/37/EC Maskineri (indtil 28. dec. 2009)
- [x] 2006/42/EC Maskineri (fra 29. dec. 2009)
- [x] 2004/108/EC Elektromagnetisk kompatibilitet
- [x] 2006/95/EC Lav spænding

Følgende person er authoriseret til at udarbejde den tekniske fil:

Robert Bertilsson
Tetra Pak Packaging Solution AB
Ruben Rausings gata
SE-221 86 Lund
Sweden

Lund 2009-08-28

Robert Bertilsson
Manager Cardboard & Straw

Dansk/Danish
Techical File CD-1620096 FORM 5293 version 2009-07-16

Tetra Pak

Declaración de Conformidad

Tetra Pak Packaging Solutions AB
Ruben Rausings Gata
SE-221 86 Lund
Sweden

declaramos que esta máquina/equipo/instalación compleja

Cardboard Packer 32 by Tetra Pak
673852-0400

es conforme a los siguientes estándares armonizados:

EN 415-7:2006+A1:2008
EN 61000-6-2:2005
EN 61000-6-4:2007

y cumple con lo que dicta(n) la(s) Directiva(s) - y
sucesivas modificaciones:

- [x] 98/37/EC máquinas (hasta el 28 de diciembre de 2009)
- [x] 2006/42/EC máquinas (a partir del 29 de diciembre de 2009)
- [x] 2004/108/EC compatibilidad electromagnética
- [x] 2006/95/EC equipo eléctrico diseñado para el uso dentro de ciertos límites de voltaje

La persona indicada a continuación está autorizada para compilar el
archivo técnico:

Robert Bertilsson
Tetra Pak Packaging Solution AB
Ruben Rausings gata
SE-221 86 Lund
Sweden

Lund 2009-08-28

Robert Bertilsson
Manager Cardboard & Straw

Español/Spanish
Techical File CD-1620096 FORM 5293 version 2009-07-16

Tetra Pak

Yhdenmukaistusvakuutus

Tetra Pak Packaging Solutions AB
Ruben Rausings Gata
SE-221 86 Lund
Sweden

vakuuttaa, että allamainittu kone/koneen osa/laitteisto/kompleks
asennus:

Cardboard Packer 32 by Tetra Pak
673852-0400

vastaa seuraavia harmonisoituja standardeja:

EN 415-7:2006+A1:2008
EN 61000-6-2:2005
EN 61000-6-4:2007

sekä seuraavia direktiivejä ja niihin liittyviä muutoksia

- [x] 98/37/EY Kone (28.12. 2009 asti)
- [x] 2006/42/EY Kone (29.12 2009 alkaen)
- [x] 2004/108/EY Sähkömagneettinen yhteensopivuus
- [x] 2006/95/EY Pienjännite

Seuraava henkilö on valtuutettu täyttämään teknisen tiedoston:

Robert Bertilsson
Tetra Pak Packaging Solution AB
Ruben Rausings gata
SE-221 86 Lund
Sweden

Lund 2009-08-28

Robert Bertilsson
Manager Cardboard & Straw

Suomi/Finnish
Techical File CD-1620096 FORM 5293 version 2009-07-16

Tetra Pak

Déclaration de Conformité

Tetra Pak Packaging Solutions AB
Ruben Rausings Gata
SE-221 86 Lund
Sweden

déclare que la présente machine / l'équipement / l'installation complexe :

Cardboard Packer 32 by Tetra Pak
673852-0400

est conforme aux normes harmonisées suivantes :

EN 415-7:2006+A1:2008
EN 61000-6-2:2005
EN 61000-6-4:2007

et est conforme aux dispositions des directives suivantes (amendements compris) :

- [x] 98/37/EC Machine (en vigueur jusqu'au 28 déc. 2009)
- [x] 2006/42/EC Machine (en vigueur à partir du 29 déc. 2009)
- [x] 2004/108/EC Compatibilité électromagnétique (EMC)
- [x] 2006/95/EC Basse tension

La personne suivante est autorisée à élaborer le dossier technique :

Robert Bertilsson
Tetra Pak Packaging Solution AB
Ruben Rausings gata
SE-221 86 Lund
Sweden

Lund 2009-08-28

Robert Bertilsson
Manager Cardboard & Straw

Français / French
Techical File CD-1620096 FORM 5293 version 2009-07-16

Tetra Pak

Δήλωση Συμμόρφωσης

Tetra Pak Packaging Solutions AB
Ruben Rausings Gata
SE-221 86 Lund
Sweden

δηλώνει ότι η μηχανή / ο εξοπλισμός / σύνθετες εγκατάστασεις:

Cardboard Packer 32 by Tetra Pak
673852-0400

είναι σε συμμόρφωση με τα ακόλουθα εναρμονισμένα πρότυπα:

EN 415-7:2006+A1:2008
EN 61000-6-2:2005
EN 61000-6-4:2007

και είναι σε συμμόρφωση με τις διατάξεις της(των) Οδηγίας(ών) - συμπεριλαμβανόμενων των τροπολογιών:

- [x] 98/37/ΕΚ Μηχανημάτων (έως Δεκ. 28, 2009)
- [x] 2006/42/ΕΚ Μηχανημάτων (από Δεκ. 29, 2009)
- [x] 2004/108/ΕΚ Ηλεκτρομαγνητικής Συμβατότητας (EMC)
- [x] 2006/95/ΕΚ Χαμηλής Τάσης

Το παρακάτω άτομο είναι εξουσιοδοτημένο να συντάξει τον τεχνικό φάκελο:

Robert Bertilsson
Tetra Pak Packaging Solution AB
Ruben Rausings gata
SE-221 86 Lund
Sweden

Lund 2009-08-28

Robert Bertilsson
Manager Cardboard & Straw

Ελληνικά/Greek
Techical File CD-1620096 FORM 5293 version 2009-07-16

Tetra Pak

Verklaring van Overeenstemming

Tetra Pak Packaging Solutions AB
Ruben Rausings Gata
SE-221 86 Lund
Sweden

verklaart dat deze machine/uitrusting/ complexe installatie:

Cardboard Packer 32 by Tetra Pak
673852-0400

overeenstemt met de volgende geharmoniseerde normen:

EN 415-7:2006+A1:2008
EN 61000-6-2:2005
EN 61000-6-4:2007

en overeenstemt met de bepalingen van de Richtlijn(en) - inclusief amendementen:

- [x] 98/37/EG Machine(s) (tot 28 dec 2009)
- [x] 2006/42/EG Machine(s) (vanaf 29 dec 2009)
- [x] 2004/108/ EG Elektromagnetische compatibiliteit (EMC)
- [x] 2006/95/EC Laagspanning

De volgende persoon heeft toestemming om het technische dossier samen te stellen:

Robert Bertilsson
Tetra Pak Packaging Solution AB
Ruben Rausings gata
SE-221 86 Lund
Sweden

Lund 2009-08-28

Robert Bertilsson
Manager Cardboard & Straw

Nederlands/Dutch
Techical File CD-1620096 FORM 5293 version 2009-07-16

Tetra Pak

Erklæring om samsvar

Tetra Pak Packaging Solutions AB
Ruben Rausings Gata
SE-221 86 Lund
Sweden

erklærer at denne maskinen / dette utstyret / denne komplekse installasjonen:

Cardboard Packer 32 by Tetra Pak
673852-0400

er i samsvar med følgende harmoniserte standarder:

EN 415-7:2006+A1:2008
EN 61000-6-2:2005
EN 61000-6-4:2007

og er i samsvar med bestemmelsene i følgende direktiver med endringer:

- [x] 98/37/EF Maskiner (til 28. desember 2009)
- [x] 2006/42/EF Maskiner (fra 29. desember 2009)
- [x] 2004/108/EF Elektromagnetisk kompatibilitet (EMC)
- [x] 2006/95/EF Lavspenning

Følgende person er autorisert til å kompilere den tekniske filen:

Robert Bertilsson
Tetra Pak Packaging Solution AB
Ruben Rausings gata
SE-221 86 Lund
Sweden

Lund 2009-08-28

Robert Bertilsson
Manager Cardboard & Straw

Norsk/Norwegian
Techical File CD-1620096 FORM 5293 version 2009-07-16

Tetra Pak

Declaração de Conformidade

Tetra Pak Packaging Solutions AB
Ruben Rausings Gata
SE-221 86 Lund
Sweden

declaramos que a máquina/ equipamento/ instalação complexa:

Cardboard Packer 32 by Tetra Pak
673852-0400

está em conformidade com as seguintes normas harmonizadas:

EN 415-7:2006+A1:2008
EN 61000-6-2:2005
EN 61000-6-4:2007

e está em conformidade com as disposições da(s) Directiva(s) - inclusive as sucessivas modificações:

- [x] 98/37/EC Máquinas (até ao dia 28 de Dezembro de 2009)
- [x] 2006/42/EC Máquinas (a partir do dia 29 de Dezembro de 2009)
- [x] 2004/108/CE Compatibilidade electromagnética (CEM)
- [x] 2006/95/CE Baixa Tensão

A pessoa abaixo está autorizada a compilar o ficheiro técnico:

Robert Bertilsson
Tetra Pak Packaging Solution AB
Ruben Rausings gata
SE-221 86 Lund
Sweden

Lund 2009-08-28

Robert Bertilsson
Manager Cardboard & Straw

Português/Portuguese
Techical File CD-1620096 FORM 5293 version 2009-07-16

Tetra Pak

Samræmisyfirlýsing

Tetra Pak Packaging Solutions AB
Ruben Rausings Gata
SE-221 86 Lund
Sweden

lýsa hér með yfir að viðkomandi vélbúnaður/búnaður/ uppsetning samstæðu:

Cardboard Packer 32 by Tetra Pak
673852-0400

er í samræmi við eftirfarandi samræmda staðla:

EN 415-7:2006+A1:2008
EN 61000-6-2:2005
EN 61000-6-4:2007

og í samræmi við ákvæði þessara tilskipana - að meðtöldum breytingum:

- [x] 98/37/EB Vélbúnaður (til 28. des. 2009)
- [x] 2006/42/EB Vélbúnaður (frá 29. des. 2009)
- [x] 2004/108/EB Rafsegulsviðssamhæfi (EMC)
- [x] 2006/95/EB Lágspenna

Eftirfarandi einstaklingur hefur heimild til að taka saman tækniskjalið:

Robert Bertilsson
Tetra Pak Packaging Solution AB
Ruben Rausings gata
SE-221 86 Lund
Sweden

Lund 2009-08-28

Robert Bertilsson
Manager Cardboard & Straw

Íslenska/Icelandic
Techical File CD-1620096 FORM 5293 version 2009-07-16

Tetra Pak

Dichiarazione di Conformità

Tetra Pak Packaging Solutions AB
Ruben Rausings Gata
SE-221 86 Lund
Sweden

dichiara che questa macchina/ apparecchiatura/ installazione complessa:

Cardboard Packer 32 by Tetra Pak
673852-0400

è conforme alle seguenti norme armonizzate:

EN 415-7:2006+A1:2008
EN 61000-6-2:2005
EN 61000-6-4:2007

ed in conformità con quanto disposto nelle Direttive - e relativi emendamenti:

- [x] 98/37/EC Macchinari (fino al 28 dicembre 2009)
- [x] 2006/42/EC Macchinari (dal 29 dicembre 2009)
- [x] 2004/108/EC Compatibilità elettromagnetica (EMC)
- [x] 2006/95/EC Bassa tensione

La seguente persona è autorizzata a redigere il file tecnico:

Robert Bertilsson
Tetra Pak Packaging Solution AB
Ruben Rausings gata
SE-221 86 Lund
Sweden

Lund 2009-08-28

Robert Bertilsson
Manager Cardboard & Straw

Italiano/Italian
Techical File CD-1620096 FORM 5293 version 2009-07-16

Tetra Pak

Försäkran om överensstämmelse

Tetra Pak Packaging Solutions AB
Ruben Rausings Gata
SE-221 86 Lund
Sweden

försäkrar att denna maskin/utrustning/komplexa anläggning:

Cardboard Packer 32 by Tetra Pak
673852-0400

är i överensstämmelse med följande harmoniserade standarder:

EN 415-7:2006+A1:2008
EN 61000-6-2:2005
EN 61000-6-4:2007

och överensstämmer med bestämmelserna i följande direktiv inklusive tillhörande ändringar:

- [x] 98/37/EG, maskiner (till den 28 dec 2009)
- [x] 2006/42/EG, maskiner (från den 29 dec 2009)
- [x] 2004/108/EG, elektromagnetisk kompatibilitet (EMC)
- [x] 2006/95/EG, lågspänning

Följande person är behörig att ställa samman den tekniska dokumentationen:

Robert Bertilsson
Tetra Pak Packaging Solution AB
Ruben Rausings gata
SE-221 86 Lund
Sweden

Lund 2009-08-28

Robert Bertilsson
Manager Cardboard & Straw

Svenska/Swedish
Techical File CD-1620096 FORM 5293 version 2009-07-16

Tetra Pak

Prohlášení o shodě

Tetra Pak Packaging Solutions AB
Ruben Rausings Gata
SE-221 86 Lund
Sweden

prohlašuje, že tento stroj/vybavení/komplexní instalace:

Cardboard Packer 32 by Tetra Pak
673852-0400

je v souladu s následujícími sladěnými normami:

EN 415-7:2006+A1:2008
EN 61000-6-2:2005
EN 61000-6-4:2007

a je v souladu s ustanoveními následujících směrnic
včetně jejich dodatků:

- [x] 98/37/EC Strojní zařízení (do 28. prosince 2009)
- [x] 2006/42/EC Strojní zařízení (od 29. prosince 2009)
- [x] 2004/108/EC Elektromagnetická kompatibilita
- [x] 2006/95/EC Nízké napětí

Ke zpracování technických souborů je oprávněna následující osoba:

Robert Bertilsson
Tetra Pak Packaging Solution AB
Ruben Rausings gata
SE-221 86 Lund
Sweden

Lund 2009-08-28

Robert Bertilsson
Manager Cardboard & Straw

Čeština/Czech
Techical File CD-1620096 FORM 5293 version 2009-07-16

Tetra Pak

Vastavuse Deklaratsioon

Tetra Pak Packaging Solutions AB
Ruben Rausings Gata
SE-221 86 Lund
Sweden

deklareerib, et käesolev masin/seade/komplekspaigaldis:

Cardboard Packer 32 by Tetra Pak
673852-0400

vastab järgmistele harmoniseeritud standardite nõuetele:

EN 415-7:2006+A1:2008
EN 61000-6-2:2005
EN 61000-6-4:2007

ja on vastavuses direktiivide sätetega
kaasa arvatud muudatused:

- [x] 98/37/EÜ Masinad (kuni 28. detsember 2009)
- [x] 2006/42/EÜ Masinad (alates 29. detsember 2009)
- [x] 2004/108/EC Elektromagnetiline ühilduvus
- [x] 2006/95/EC Madalpinge

Tehnilise faili koostamiseks on luba järgmisel isikul:

Robert Bertilsson
Tetra Pak Packaging Solution AB
Ruben Rausings gata
SE-221 86 Lund
Sweden

Lund 2009-08-28

Robert Bertilsson
Manager Cardboard & Straw

Eesti/Estonian
Techical File CD-1620096 FORM 5293 version 2009-07-16

Tetra Pak

Megfelelőségi Nyilatkozat

Tetra Pak Packaging Solutions AB
Ruben Rausings Gata
SE-221 86 Lund
Sweden

nyilatkozom, hogy ez a gép/berendezés/komplex összeszerelés:

Cardboard Packer 32 by Tetra Pak
673852-0400

megfelel a következő harmonizált szabványoknak:

EN 415-7:2006+A1:2008
EN 61000-6-2:2005
EN 61000-6-4:2007

és megfelel a következő, módosításokat is magukban foglaló
Direktíváknak:

- [x] 98/37/EC Gépek (2009 december 28.-ig)
- [x] 2006/42/EC Gépek (2009 december 29.-től)
- [x] 2004/108/EC Elektromágneses összeférhetőség (EMC)
- [x] 2006/95/EC Alacsony feszültségi direktíva

A műszaki dokumentum összeállítására jogosult személy:

Robert Bertilsson
Tetra Pak Packaging Solution AB
Ruben Rausings gata
SE-221 86 Lund
Sweden

Lund 2009-08-28

Robert Bertilsson
Manager Cardboard & Straw

Magyar/Hungarian
Techical File CD-1620096 FORM 5293 version 2009-07-16

Tetra Pak

Atbilstības deklarācija

Tetra Pak Packaging Solutions AB
Ruben Rausings Gata
SE-221 86 Lund
Sweden

deklarējam to, ka šī mašīna/iekārta/sarežģīta instalācija:

Cardboard Packer 32 by Tetra Pak
673852-0400

atbilst šādiem harmonizētajiem standartiem:

EN 415-7:2006+A1:2008
EN 61000-6-2:2005
EN 61000-6-4:2007

un ir saskaņā ar direktīvas(u) prasībām,
ieskaitot direktīvas(u) labojumus:

- [x] 98/37/EK Mašīnas (līdz 2009. g. 28. dec.)
- [x] 2006/42/EK Mašīnas (no 2009. g. 29. dec.)
- [x] 2004/108/EK Elektromagnētiskā savietojamība
- [x] 2006/95/EK Zemspriegums

Sastādīt tehnisko lietu ir pilnvarota šāda persona:

Robert Bertilsson
Tetra Pak Packaging Solution AB
Ruben Rausings gata
SE-221 86 Lund
Sweden

Lund 2009-08-28

Robert Bertilsson
Manager Cardboard & Straw

Latviski/Latvian
Techical File CD-1620096 FORM 5293 version 2009-07-16

Tetra Pak

Deklaracja Zgodności

Tetra Pak Packaging Solutions AB
Ruben Rausings Gata
SE-221 86 Lund
Sweden

deklaruje, że niniejsza maszyna/wyposażenie/
instalacja kompleksowa:

Cardboard Packer 32 by Tetra Pak
673852-0400

jest zgodna z następującymi normami zharmonizowanymi:

EN 415-7:2006+A1:2008
EN 61000-6-2:2005
EN 61000-6-4:2007

oraz jest zgodna z postanowieniami następujących Dyrektyw,
wraz ze zmianami:

- [x] 98/37/WE Maszyny (obowiązująca do 28 grudnia 2009)
- [x] 2006/42/WE Maszyny (obowiązująca od 29 grudnia 2009)
- [x] 2004/108/WE Kompatybilność elektromagnetyczna
- [x] 2006/95/WE Niskonapięciowy sprzęt elektryczny

Następująca osoba jest upoważniona do opracowania pliku technicznego:

Robert Bertilsson
Tetra Pak Packaging Solution AB
Ruben Rausings gata
SE-221 86 Lund
Sweden

Lund 2009-08-28

Robert Bertilsson
Manager Cardboard & Straw

Tetra Pak

Atitikties deklaracija

Tetra Pak Packaging Solutions AB
Ruben Rausings Gata
SE-221 86 Lund
Sweden

pareiškia, kad šis mechanizmas/įrenginys/kompleksinė įranga:

Cardboard Packer 32 by Tetra Pak
673852-0400

atitinka šiuos darniuosius standartus:

EN 415-7:2006+A1:2008
EN 61000-6-2:2005
EN 61000-6-4:2007

taip pat atitinka šių direktyvų nuostatas,
įskaitant jų pataisas:

- [x] 98/37/EB mašinų direktyva (iki 2009 m. gruodžio 28 d.)
- [x] 2006/42/EB mašinų direktyva (nuo 2009 m. gruodžio 29 d.)
- [x] 2004/108/EB direktyva dėl elektromagnetinio suderinamumo
- [x] 2006/95/EB žemųjų įtampų direktyva

Techninį failą sudaryti įgaliotas šis asmuo:

Robert Bertilsson
Tetra Pak Packaging Solution AB
Ruben Rausings gata
SE-221 86 Lund
Sweden

Lund 2009-08-28

Robert Bertilsson
Manager Cardboard & Straw

Tetra Pak

ДЕКЛАРАЦИЯ ЗА СЪОТВЕТСТВИЕ

Tetra Pak Packaging Solutions AB
Ruben Rausings Gata
SE-221 86 Lund
Sweden

декларира, че тази машина/ оборудване/ сложна инсталация:

Cardboard Packer 32 by Tetra Pak
673852-0400

е в съответствие със следните хармонизационни стандарти:

EN 415-7:2006+A1:2008
EN 61000-6-2:2005
EN 61000-6-4:2007

и е в съответствие с клаузите на Директивата(ите): -
включително поправките:

- [x] 98/37/EC Машини (до 28 Дек., 2009)
- [x] 2006/42/EC Машини (от 29 Дек., 2009)
- [x] 2004/108/EC Електромагнитна съвместимост (EMC)
- [x] 2006/95/EC Нисък волтаж

Следното лице е оторизирано да попълни техническия файл:

Robert Bertilsson
Tetra Pak Packaging Solution AB
Ruben Rausings gata
SE-221 86 Lund
Sweden

Lund 2009-08-28

Robert Bertilsson
Manager Cardboard & Straw

Tetra Pak

Declarație de conformitate

Tetra Pak Packaging Solutions AB
Ruben Rausings Gata
SE-221 86 Lund
Sweden

declară că această maşină/ echipament/ instalație complexă:

Cardboard Packer 32 by Tetra Pak
673852-0400

este în conformitate cu următoarele standarde armonizate:

EN 415-7:2006+A1:2008
EN 61000-6-2:2005
EN 61000-6-4:2007

şi este în conformitate cu prevederile Directivelor -
inclusiv cu amendamentele:

- [x] 98/37/EC Utilaje (până la 28.12.2009)
- [x] 2006/42/EC Utilaje (de la 29.12.2009)
- [x] 2004/108/EC Compatibilitate electromagnetică (EMC)
- [x] 2006/95/EC Joasă tensiune

Următoarea persoană este autorizată să redacteze dosarul tehnic:

Robert Bertilsson
Tetra Pak Packaging Solution AB
Ruben Rausings gata
SE-221 86 Lund
Sweden

Lund 2009-08-28

Robert Bertilsson
Manager Cardboard & Straw

Tetra Pak

Vyhlásenie o zhode

Tetra Pak Packaging Solutions AB
Ruben Rausings Gata
SE-221 86 Lund
Sweden

vyhlasuje, že tento stroj/zariadenie/komplexná inštalácia

Cardboard Packer 32 by Tetra Pak
673852-0400

zodpovedá požiadavkám nasledujúcich harmonizovaných noriem

EN 415-7:2006+A1:2008
EN 61000-6-2:2005
EN 61000-6-4:2007

a je v zhode s ustanoveniami Smernice (Smerníc) -
vrátane ich zmien a doplnkov:

[x] 98/37/ES Strojárska (do 28. decembra 2009)
[x] 2006/42/ES Strojárska (od 29. decembra 2009)
[x] 2004/108/ES Elektromagnetická kompatibilita (EMC)
[x] 2006/95/ES Nízkonapäťové zariadenia

Nasledujúca osoba je oprávnená zostavovať súbor technickej dokumentácie:

Robert Bertilsson
Tetra Pak Packaging Solution AB
Ruben Rausings gata
SE-221 86 Lund
Sweden

Lund 2009-08-28

Robert Bertilsson
Manager Cardboard & Straw

Slovensky/Slovak

Techical File CD-1620096 FORM 5293 version 2009-07-16

Tetra Pak

Deklaracija o Skladnosti

Tetra Pak Packaging Solutions AB
Ruben Rausings Gata
SE-221 86 Lund
Sweden

izjavljam, da je ta stroj/oprema/kompleksna namestitev

Cardboard Packer 32 by Tetra Pak
673852-0400

izdelan v skladu z naslednjimi standardi

EN 415-7:2006+A1:2008
EN 61000-6-2:2005
EN 61000-6-4:2007

in v skladu z direktivo (direktivami) - vključno z dopolnil

[x] 98/37/EC Varnost strojev (do 28. dec. 2009)
[x] 2006/42/EC Varnost strojev (od 29. dec. 2009)
[x] 2004/108/EC Elektromagnetna združljivost (EMC)
[x] 2006/95/EC Električna oprema, namenjena za uporabo v določenih napetostnih območjih

Oseba, ki je pooblaščena za sestavljanje tehnične datoteke:

Robert Bertilsson
Tetra Pak Packaging Solution AB
Ruben Rausings gata
SE-221 86 Lund
Sweden

Lund 2009-08-28

Robert Bertilsson
Manager Cardboard & Straw

Slovenščina/Slovenian

Techical File CD-1620096 FORM 5293 version 2009-07-16

Identification

CE Classification

This equipment complies with the basic health and safety regulations of the European Economic Area (EEA).

Machine Plate

The illustration below shows an example of the machine plate and its location on the equipment. The machine plate carries data needed when contacting Tetra Pak concerning this specific equipment.

Make sure that the equipment data in the front pages of this manual corresponds to the machine plate data and the machine specification.

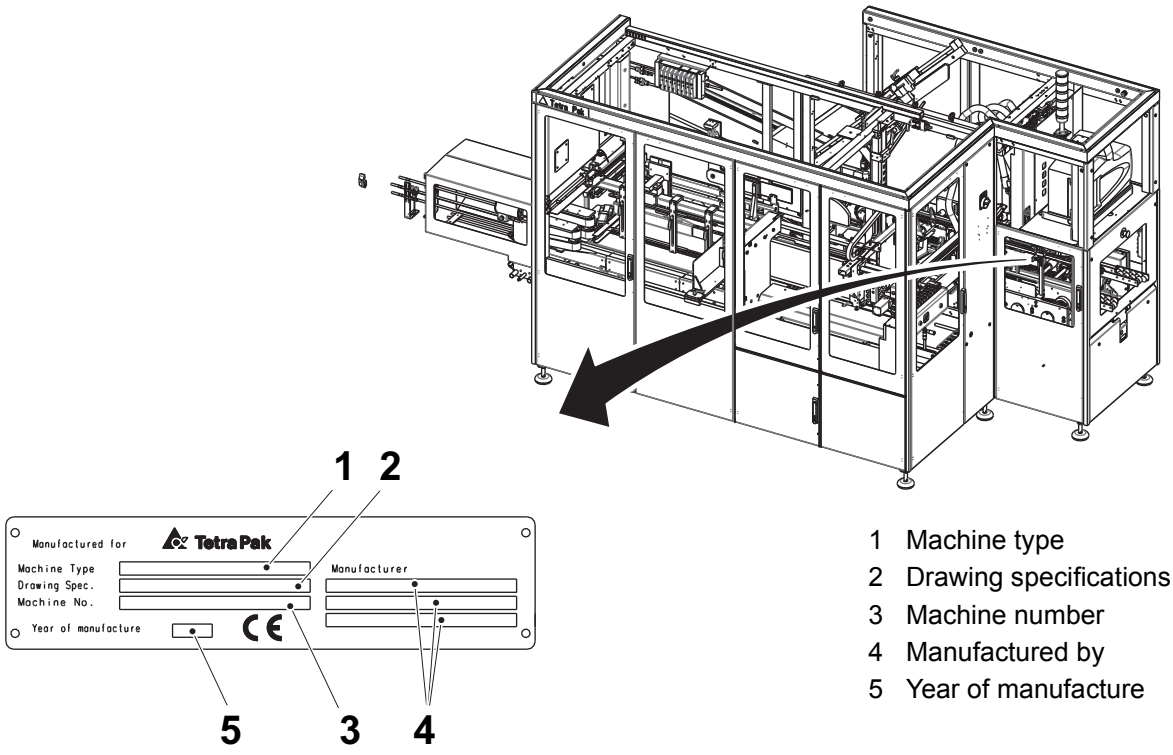

1 Machine type
2 Drawing specifications
3 Machine number
4 Manufactured by
5 Year of manufacture

Orientation

The illustration below shows the orientation of the equipment. This orientation information will be used throughout this manual. The arrows indicate the flow of material.

Z-infeed, RH version

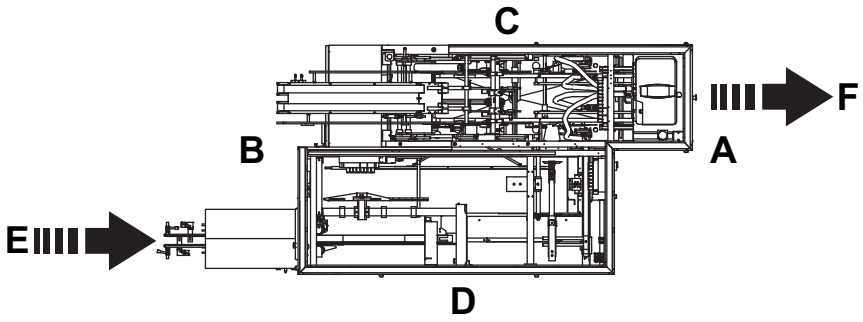

Z-infeed, LH version

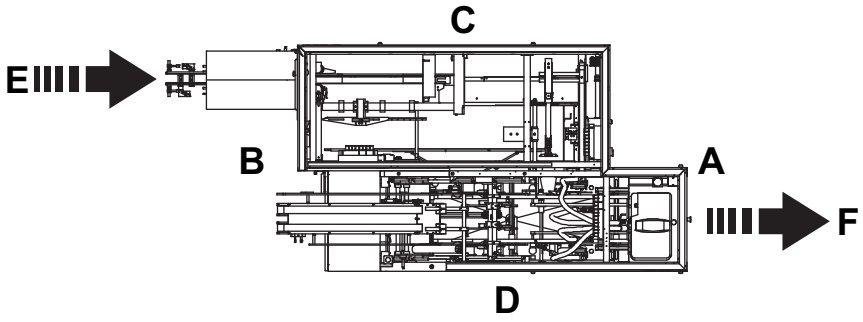

U-infeed, RH version

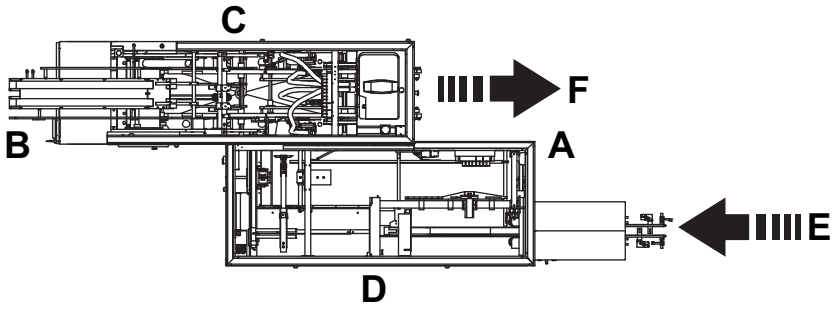

U-infeed, LH version

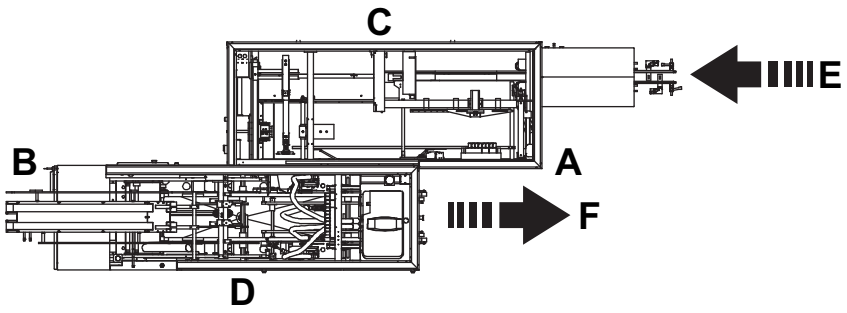

A Front
B Rear
C Left-hand side
D Right-hand side
E Infeed
F Discharge

Hygiene

- Never clean the floors or the machine when the machine is in production.
- Keep your hands and gloves clean.
- Always wear some type of hair protection (cap or hairnet) and clean clothes (preferably white).
- Do not wear a watch, ring, necklace, earrings, or any other exposed jewellery.

How to Use This IM

Note! Package Turner 100 is an optional module operating under the Cardboard Packer 32 by Tetra Pak. For more information regarding PTr100, see the Operation Manual for PTr100.

Purpose of the IM

The IM provides technical specifications and preparatory information needed during the quotation of the equipment and during the entire installation process. The IM describes the equipment requirements in the packaging line. It also provides instructions on how to mechanically install, commission, and validate the performance of the equipment, and how to disassemble and remove the equipment.

The intended users of the IM are project managers, installation planners, installation technicians, and other technicians involved in the equipment installation project.

Installation Workflow

An installation of any Tetra Pak equipment follows the Installation to Performance process. The process consists of five main activities and the IM is structured to support the process. See the illustration and the table below.

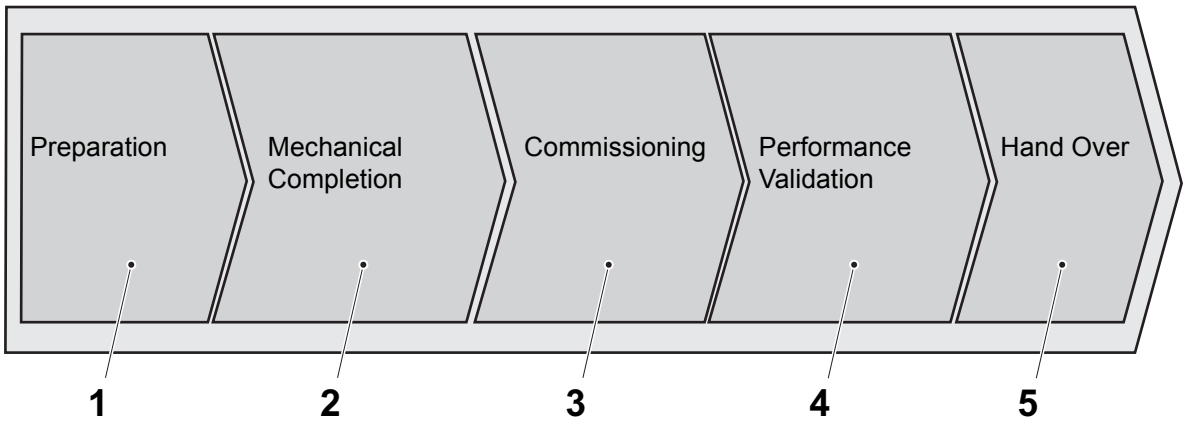

Pos.	Process Activity	End State	Related IM Chapters	Intended User
1	Preparation	Equipment at prepared site	Chapter 1 and 2	Installation planner/ Project leader
2	Mechanical Completion	Equipment mechanically installed	Chapter 3	Installation technician
3	Commissioning	Equipment commissioned and functionally validated	Chapter 4	Installation technician
4	Performance Validation	Equipment performance validated	Chapter 5	Project leader
5	Hand Over	Contract fulfilled	-	-

ii Safety Precautions

Description

Safety Precaution Instructions

WARNING

Read and understand this manual before using the machine.
Failure to follow safety precautions and instructions can result in death or serious injury.

Definition of Lockout Procedure

A lockout procedure is a procedure to put each necessary energy isolating device in its safe position to prevent the energisation of the equipment, such as when a maintenance procedure should be carried out.

A lockout is the use of a device, for example, a padlock, to make sure that an energy isolating device cannot be operated.

An energy isolating device is a mechanical device that physically prevents transmission or release of energy, such as a power supply disconnector.

Safety Messages Description . . . . . ii - 5
Personnel Requirements . . . . . ii - 6
Skilled Person . . . . . ii - 6
Instructed Person. . . . . ii - 6
Safety Signs . . . . . ii - 7
Locations of Safety Signs . . . . . ii - 10
Protective Devices. . . . . ii - 11
Emergency Stop. . . . . ii - 11
Emergency Stop Buttons . . . . . ii - 12
Safeguards . . . . . ii - 13
Infeed Conveyor. . . . . ii - 15
Warning Lamp . . . . . ii - 16
Audible Alarm. . . . . ii - 16
Safe Manual Handling . . . . . ii - 17
Personal Protection. . . . . ii - 18
Noise . . . . . ii - 18
Entanglement . . . . . ii - 18
Supply Systems. . . . . ii - 19
Power Supply . . . . . ii - 19
Residual Voltage . . . . . ii - 20
Electrical Cabinet. . . . . ii - 20
Socket Outlet . . . . . ii - 21
Air Supply . . . . . ii - 22
Water Supply . . . . . ii - 23
Hotmelt Equipment . . . . . ii - 24
Lifting Accessories . . . . . ii - 26
Production Mode Changes . . . . . ii - 26

Discharge Unit . . . . . ii - 26

Safety Messages Description

A safety message is always accompanied by a safety alert symbol and a signal word.

The safety alert symbol is used to alert about potential personal injury hazards. To avoid hazards, obey all safety messages that follow this symbol.

The following safety alert symbols and signal words are used in this manual to inform the user of hazards.

DANGER	Danger indicates an imminently hazardous situation which, if not avoided, **will** result in **death or serious injury**.
WARNING	Warning indicates a potentially hazardous situation which, if not avoided, **could** result in **death or serious injury**.
CAUTION	Caution indicates a potentially hazardous situation which, if not avoided, **may** result in **minor or moderate injury.** It may also be used to alert against unsafe practices.
CAUTION	Caution without the safety alert symbol indicates a potentially hazardous situation which, if not avoided, **may** result in **property damage**.

Personnel Requirements

Note! Personnel includes all persons working on or near this equipment.

Only skilled or instructed persons are allowed to work with this equipment.

Skilled Person

A skilled person must have relevant education and experience to enable him or her to identify hazards, analyse risks, and avoid hazards which electricity, machinery, chemicals, other energies, and supply systems on this equipment can create.

Skilled persons must meet local regulations, such as certifications and qualifications for working with these energies and systems.

Instructed Person

An instructed person must be adequately advised or supervised by a skilled person. The skilled person enables the instructed person to identify hazards, analyse risks, and avoid hazards which electricity, machinery, chemicals, other energies, and supply systems on this equipment can create.

Safety Signs

WARNING

Damaged or missing safety signs.
Safety signs are used to indicate safety hazards.
If the signs are missing or damaged, they can not fulfil this function. Replace all missing or damaged safety signs immediately.

Safety signs are attached to the equipment. The table below lists all the signs that are used, and illustrations show their locations on the equipment. Each position number refers to two standards of a safety sign in the table, but only one is used on the equipment.

- Make sure that each safety sign is legible and in its correct position after installation and maintenance.
- Replace all missing or damaged safety signs immediately.

Pos.	ISO standard	ANSI standard
1	 **Hazardous voltage.** Will shock, burn, or cause death. Follow lockout procedure before maintenance.	
2	 **Burn hazard.** Trapped heat energy. Do not touch.	
3	 **Risk of equipment damage**. Do not let water into this area.	

Pos.	ISO standard	ANSI standard
4		
	Hot surface. Do not touch. Follow lockout procedure before maintenance.	
5		
	Trapped pneumatic energy. Moving parts could cause serious injury. Follow lockout procedure before maintenance.	
6		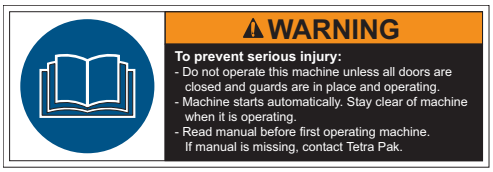
	To prevent serious injury: - Do not operate this machine unless all doors are closed and guards are in place and operating. - Machine starts automatically. Stay clear of machine when it is operating. - Read manual before first operating machine. If manual is missing, contact Tetra Pak.	
7		
	Do not reach in. Moving parts may cause injury Follow instructions for safe work practice.	
8		
	Hazardous voltage. Can shock, burn, or cause death. Read Maintenance Manual (MM) before using this socket outlet.	

Pos.	ISO standard	ANSI standard
9		
	Hazardous residual voltage on capacitors. Will shock, burn or cause death. Do not touch until safe. Follow instructions for safe work practices.	

Locations of Safety Signs

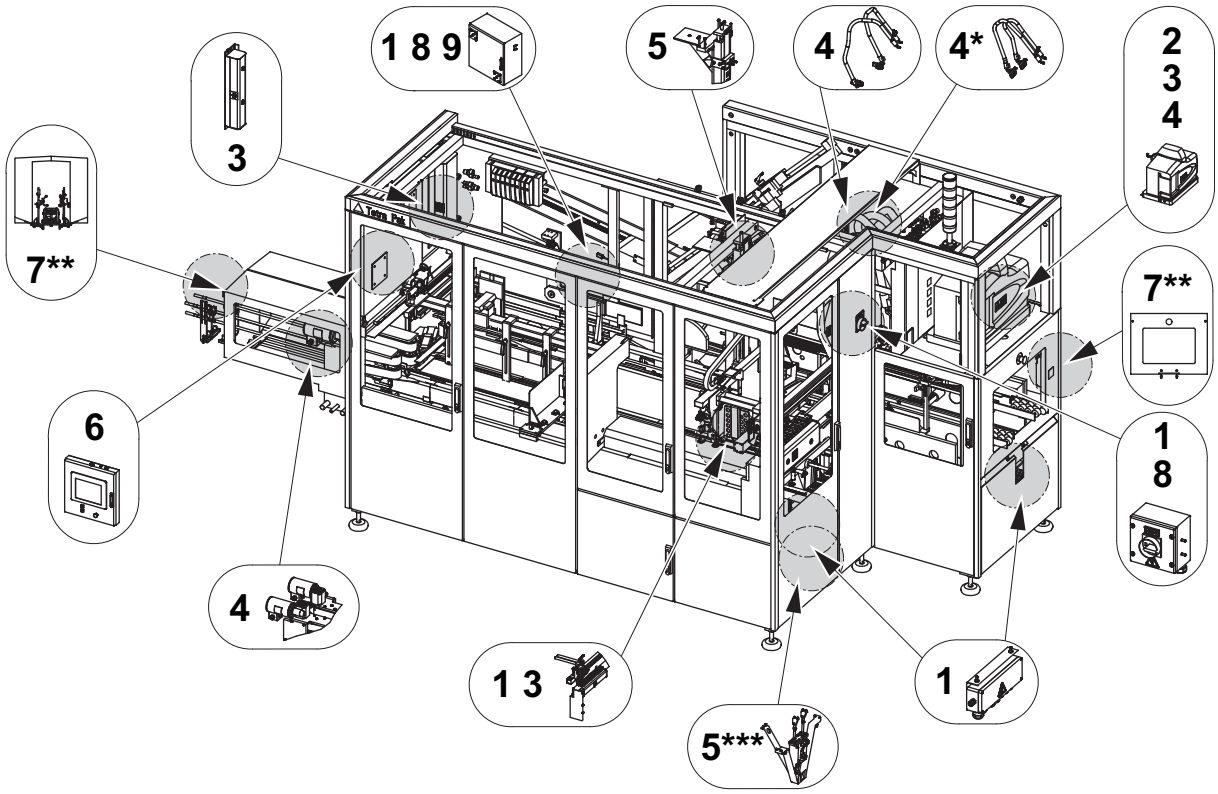

* Only valid for machines that are equipped with Wraparound Unit.

** Also valid for machines with tunnels

*** Only valid for machines equipped with Variable Tilt

Protective Devices

There are different kinds of protective device designed to ensure safe use of the equipment. See the sections below.

WARNING

Hazardous zones.

Hazardous zones are safeguarded and provided with protective devices. Do not inch or run this equipment if any protective device is inoperative.

Change inoperative components of the safety system immediately.

For the locations of safeguards and/or other protective devices not mentioned in this section, see the Maintenance Manual.

DANGER

Hazardous voltage.

Will shock, burn, or cause death.

Hazardous voltage remains ON after activating an EMERGENCY STOP.

Emergency Stop

Emergency stop devices are used to stop this equipment immediately in an hazardous situation. Learn the positions of all emergency stop devices and how to use them.

Instructions for a normal production stop are included in the Stop chapter of the Operation Manual.

Emergency Stop Buttons

Push one of the EMERGENCY STOP buttons to stop this equipment immediately.

The location of each EMERGENCY STOP button is shown by an arrow.

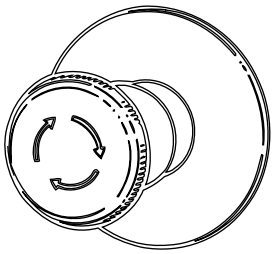

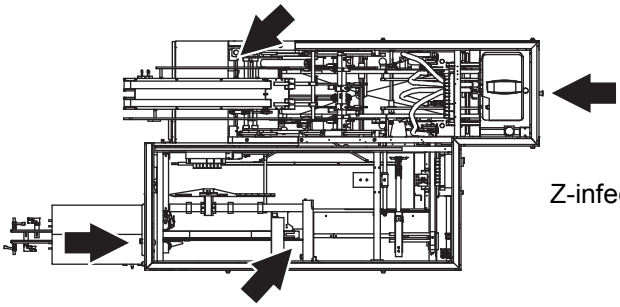

Z-infeed, RH version

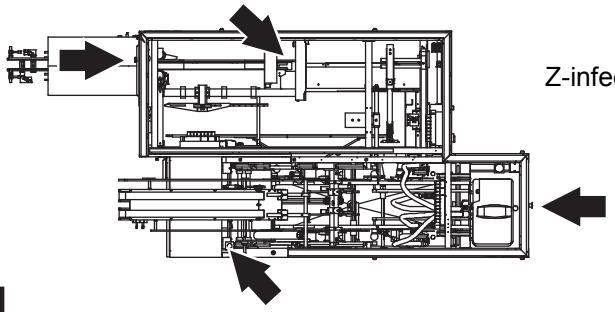

Z-infeed, LH version

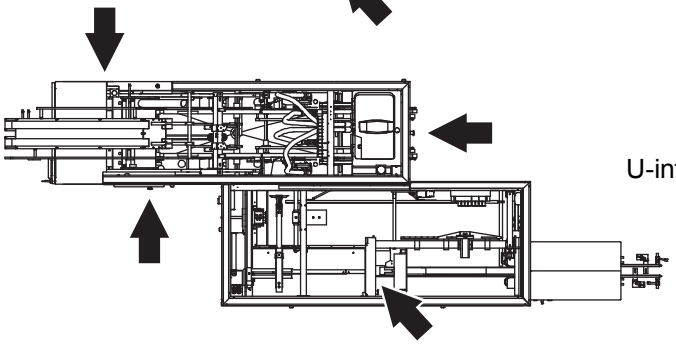

U-infeed, RH version

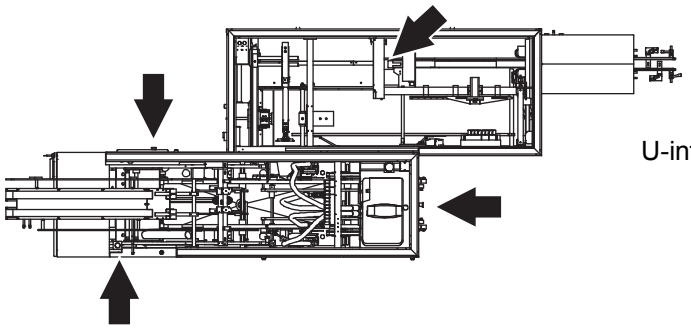

U-infeed, LH version

Safeguards

WARNING

Moving machinery parts.

Never defeat or bypass the interlocking devices.

Movable guards, for example, doors and covers leading to hazardous zones, are fitted with interlocking devices where required. These devices are usually electric safety switches that are parts of the safety system and must never be defeated, bypassed, or otherwise made inoperative.

CAUTION

Corners and edges.

Close the doors, guards, or parts of the equipment unless they must be open during work.

CAUTION

Burn hazard.

Parts of the equipment protected by guards may be hot after operation. Allow components to cool down or use personal protective equipment.

After installation and maintenance, and before this equipment is inched or run, check that all safeguards are in place and that they operate correctly.

(Cont'd)

(Cont'd)

CAUTION
Equipment damage.
The equipment can be damaged if it is not stopped in the correct way. Never stop this equipment by opening a movable guard, for example, a door or cover, equipped with an interlocking device.

The location of each interlocking device is shown by an arrow.

Machine equipped with light barrier

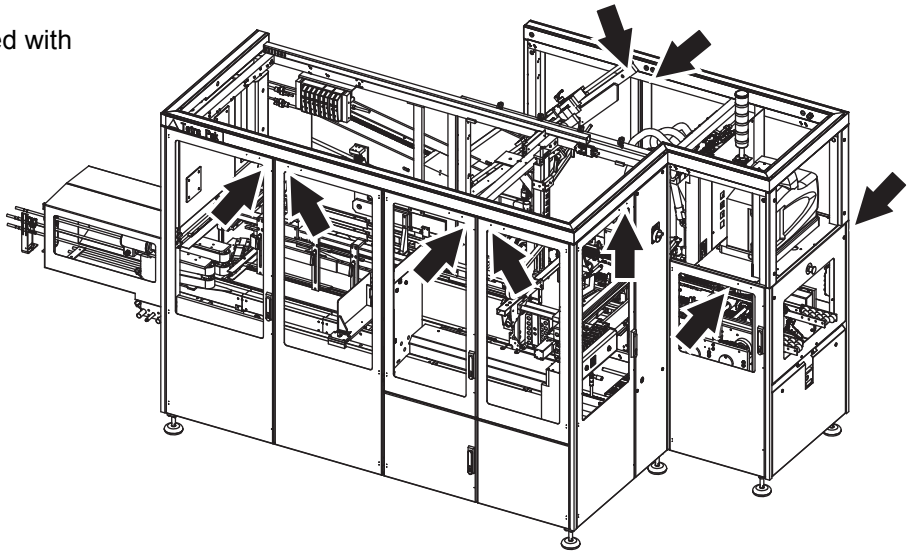

Machine equipped with discharge unit

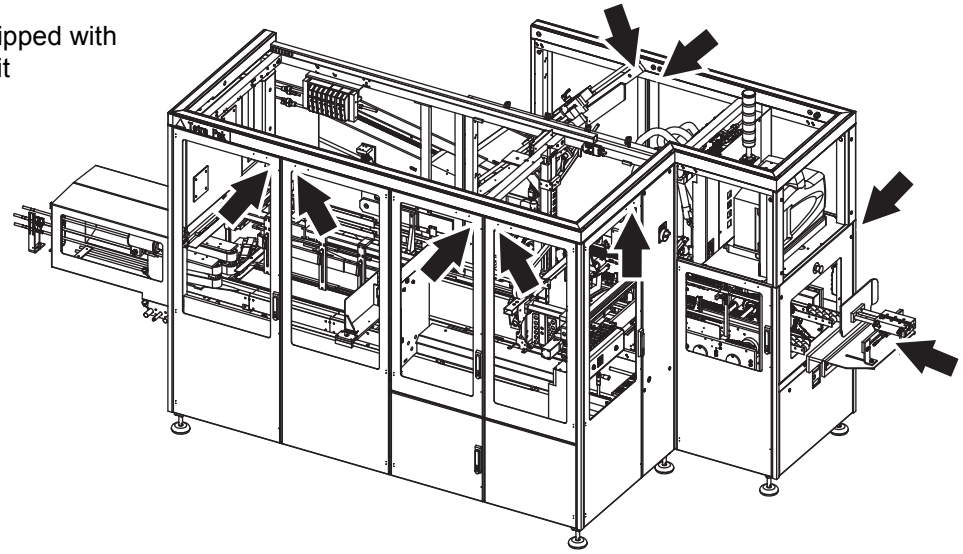

(Cont'd)

(Cont'd)

Infeed Conveyor

WARNING

If a door is opened, the infeed conveyor might still be in motion.
The conveyor stops when the machine is stepped down to IDLE or when an EMERGENCY STOP button is pushed or when the machine is completely turned OFF.

To stop the conveyor (1), do one of the following:

- Step down to IDLE.
- Press one of the EMERGENCY STOP buttons. For locations, see Section Emergency Stop Buttons.
- Turn the machine OFF.

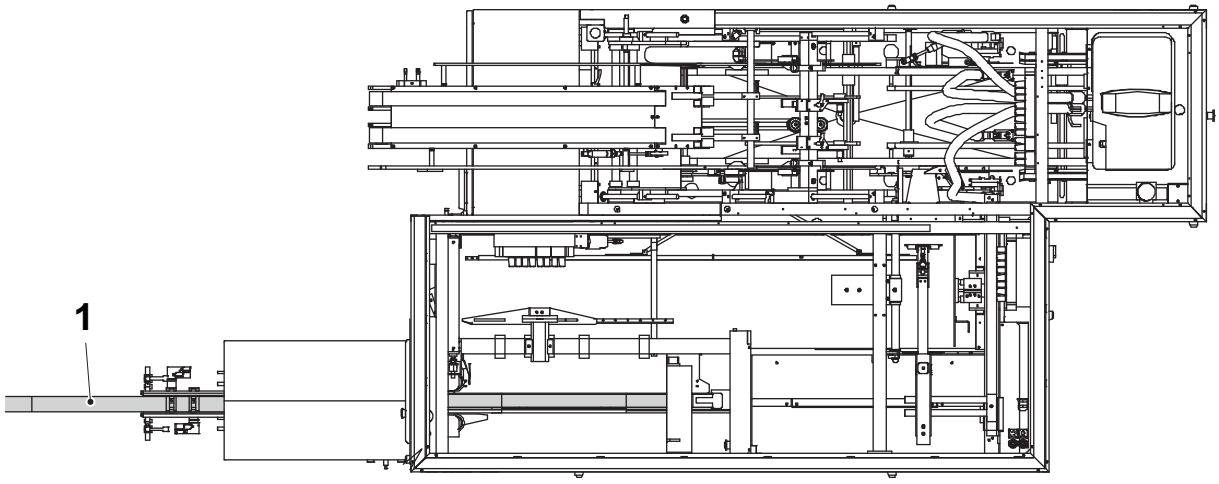

1 Infeed conveyor

Warning Lamp

A warning lamp is a column of warning lights:

- A red light 2) indicates a hazardous condition. This is a situation that requires immediate action.
- A yellow light (3) indicates an abnormal or impending critical condition. This is a condition calling for action by the operator.
- A blue light (4) indicates that operator action is required.
- A green light (5) indicates a normal condition.

Audible Alarm

The audible alarm (1) produces a warning signal before the safety circuit is reset.The warning signal sounds for approximately three seconds to alert personnel. The reset of the safety circuit will make it possible to step up the machine and allow the equipment to start.

The illustration shows Z-infeed, RH version machine.

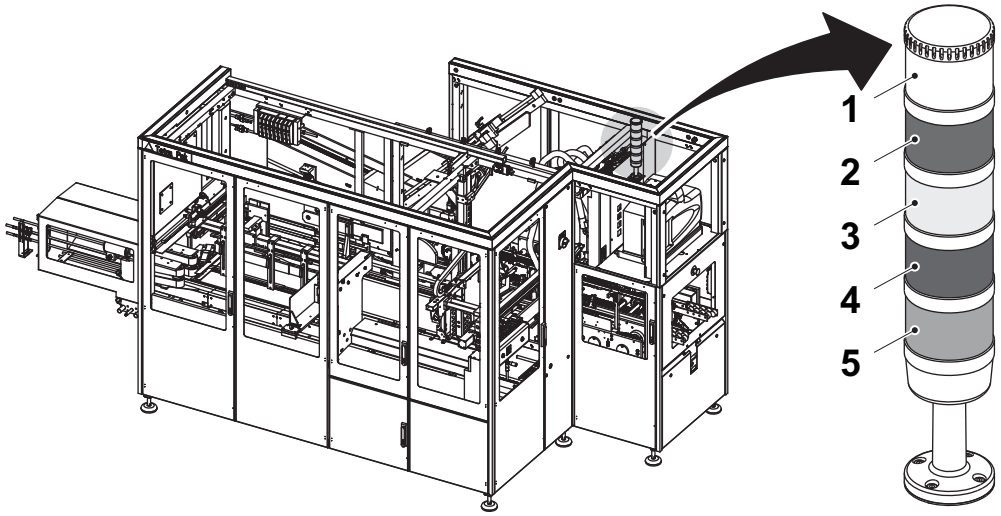

1 Audible alarm
2 Red light
3 Yellow light
4 Blue light
5 Green light

Safe Manual Handling

Use mechanical lifting aids whenever possible. If mechanical lifting aids are not available, do not attempt to lift loads over 23 kg without the assistance of a colleague. Avoid lifting below knee height and above shoulder height. If it is necessary to lift from the floor, follow the instructions below to reduce the risk of back and disc injuries.

- Use safety shoes and be sure that the surface of the floor is not slippery.
- Get close to the load.
- Take a wide stance and find the best positions for your feet.
- Bend your hips and knees, and use your leg muscles.
- Keep the load close to your body.
- Do not twist your body while moving the load.
- Take small steps when turning.

In order to reduce the risk of injury to discs and back muscles, be careful to not bend or twist your back when lifting. Keep the load close to your body to reduce the strain on your back.

To reduce the ergonomic risks to each individual operator, job rotation is recommended, so that recovery and variety are provided.

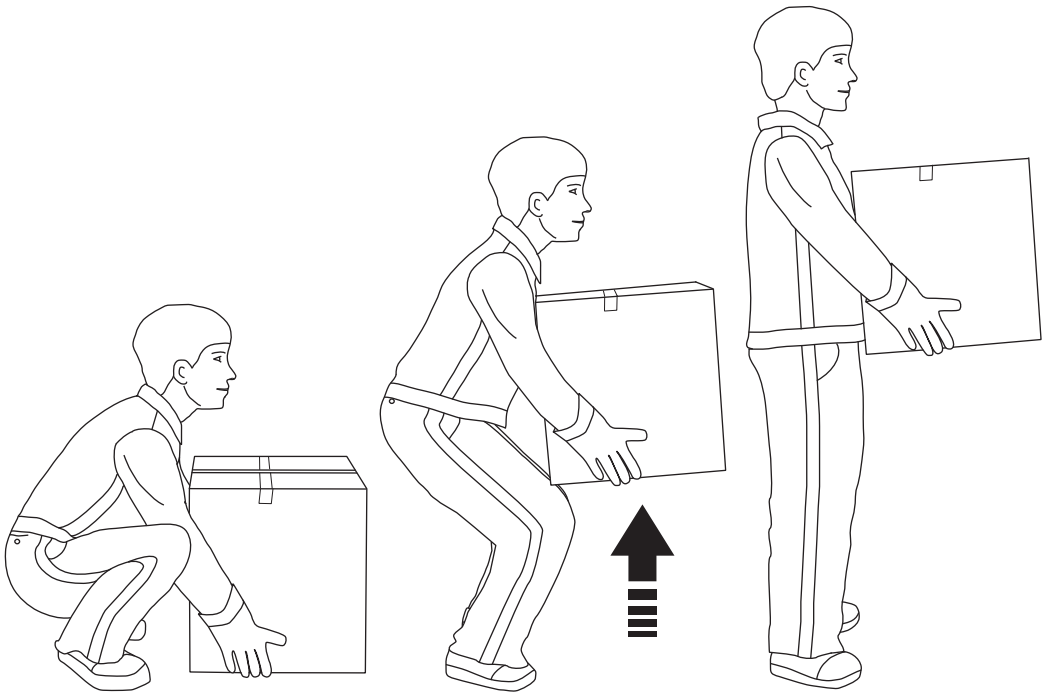

Personal Protection

This section applies to all personnel at all times when this equipment is in operation.

Noise

CAUTION

Hazardous noise.

May cause impaired hearing.

Hearing protection is recommended whenever this equipment is in operation.

Entanglement

WARNING

Risk of entanglement.

Do not wear jewellery or loose clothing when working on or near this equipment. Restrain long hair with, for example, clips or rubber bands.

Supply Systems

Power Supply

DANGER

Hazardous voltage and moving machinery.
The power supply disconnector must be turned off and secured with a lock before any maintenance.

Note! The key to the lock must be removed by the technician and retained in his/her possession until all work is completed.

DANGER

Hazardous voltage can be present with the power supply switched off.
Circuits identified by orange-coloured conductors are not disconnected by the main power supply disconnector. The location of the power supply disconnector of these circuits is described in the Maintenance Manual procedures that include work on these types of circuit.

Certain maintenance procedures may require power supply systems to be on. These exceptions are clearly stated in the Maintenance Manual.

The illustrations show the power supply disconnector and its location.

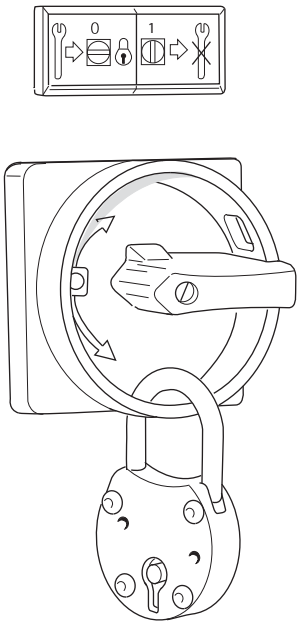

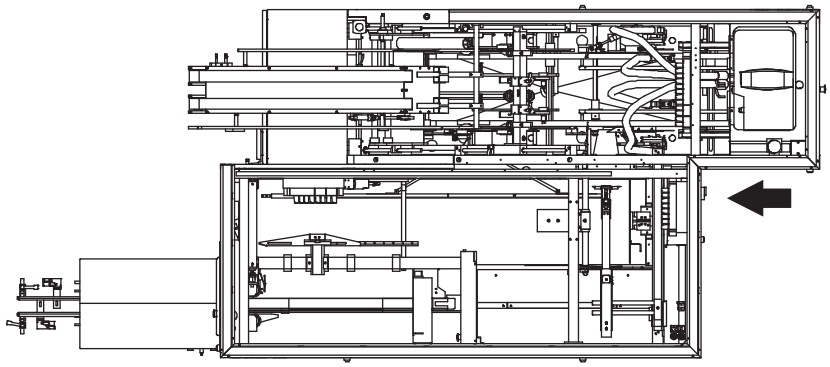

Residual Voltage

DANGER

Hazardous voltage.
Will shock, burn, or cause death.
After the power supply disconnector is turned off, residual voltage remains in the capacitor circuits.
Wait five minutes before opening the enclosure containing these circuits.
Ensure that no residual voltage remains on the capacitors before touching them.

Electrical Cabinet

DANGER

Hazardous voltage.
Will shock, burn, or cause death.
Parts behind doors to electrical enclosures may be live. The power supply disconnector must be turned off and secured with a lock before performing maintenance inside the electrical cabinet.

Note! The key to the lock must be removed by the technician and retained in his/her possession until all work is completed.

The use of a key or a tool is necessary to access to the electrical cabinet.

Make sure that the electrical cabinet doors are closed after working inside the electrical cabinet. Doors with locks must be locked.

The location of each electrical cabinet is shown by an arrow.

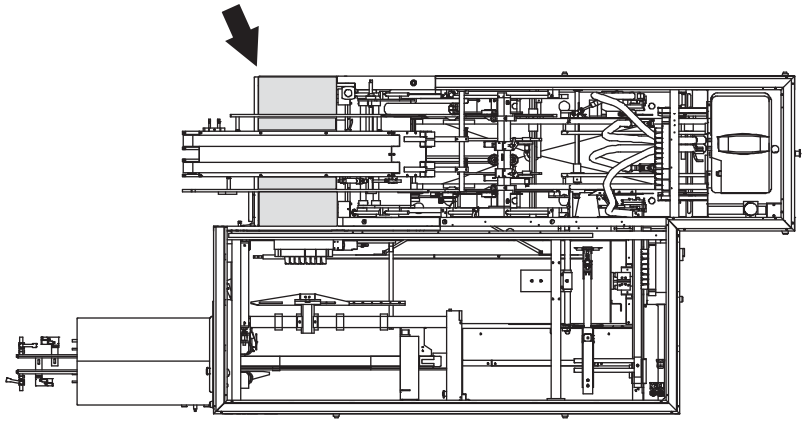

Socket Outlet

WARNING

Hazardous voltage.
Can shock, burn, or cause death.
Read the Maintenance Manual before using this socket outlet.

The socket outlet (1) is connected to a residual current device (2) to protect users against electrical shock if there is an earth fault in the connected equipment. The residual current device must be tested each time before the socket outlet is being used. See the MM for test procedure.

The illustrations show the wall socket, the residual current device, and their locations.

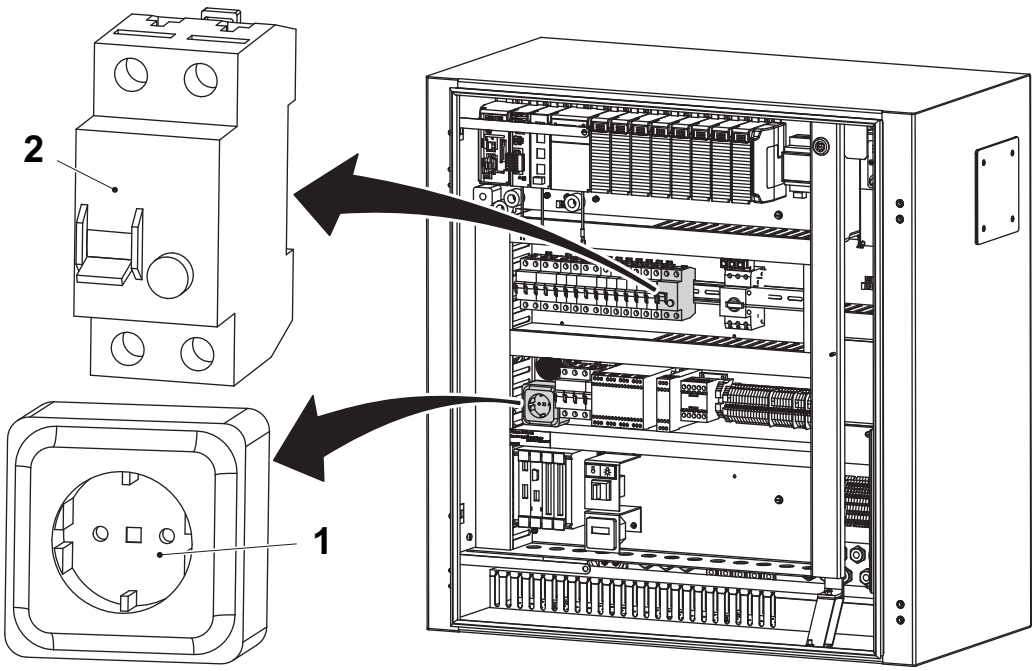

1 Wall socket A01X0070
2 Residual current device A01F0070

Air Supply

WARNING

Compressed air and moving machinery.
Close the main air valve and lock it, and safely release compressed air from the air system before any maintenance.

Note! The key to the lock must be removed by the technician and retained in his/her possession until all work is completed.

Certain maintenance procedures may require air supply systems to be on. These exceptions are clearly stated in the Maintenance Manual.

The illustrations show the main air valve (1), the lock (2), and their location.

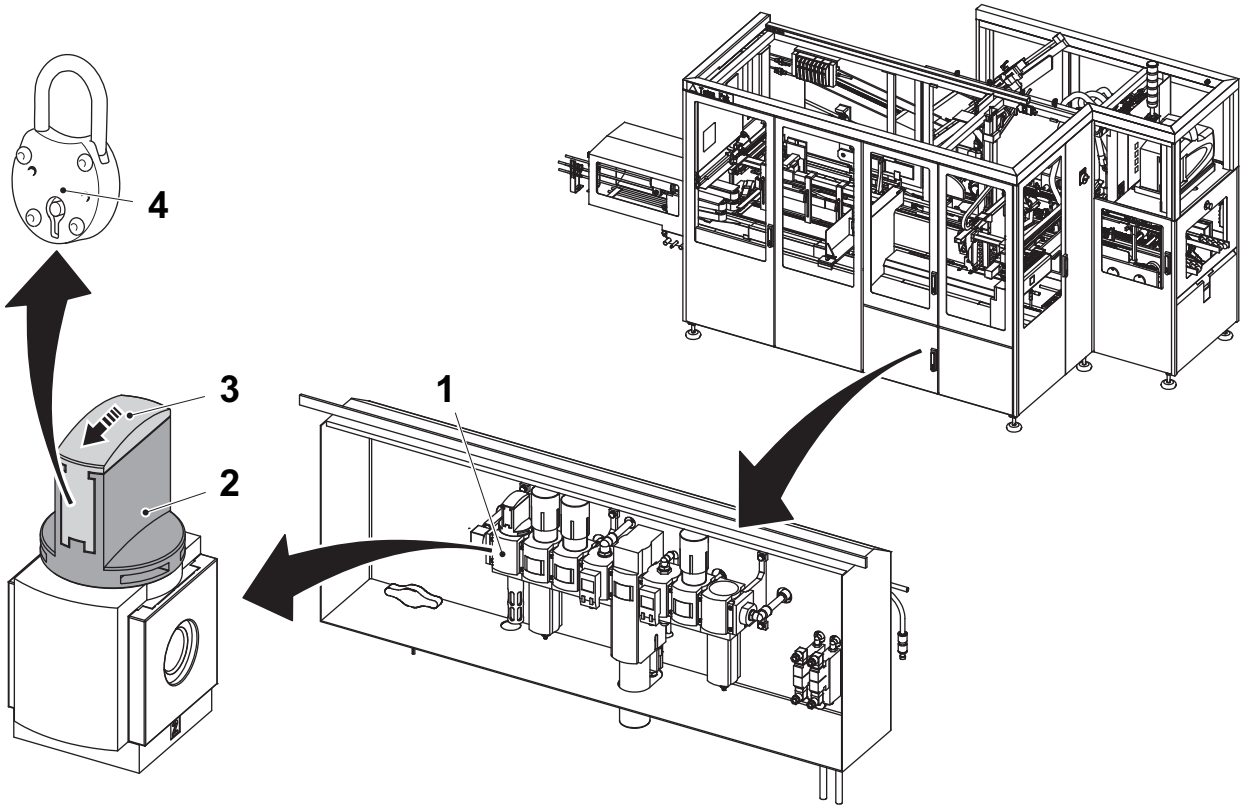

1 Shut off valve, A01K0101
2 Knob
3 Lock slide
4 Lock

Water Supply

CAUTION
Water under pressure.
Close the water supply valves before any maintenance.

Certain maintenance procedures may require water supply systems to be on. These exceptions are clearly stated in the Maintenance Manual.

The illustrations show the water supply valve (1), and its location.

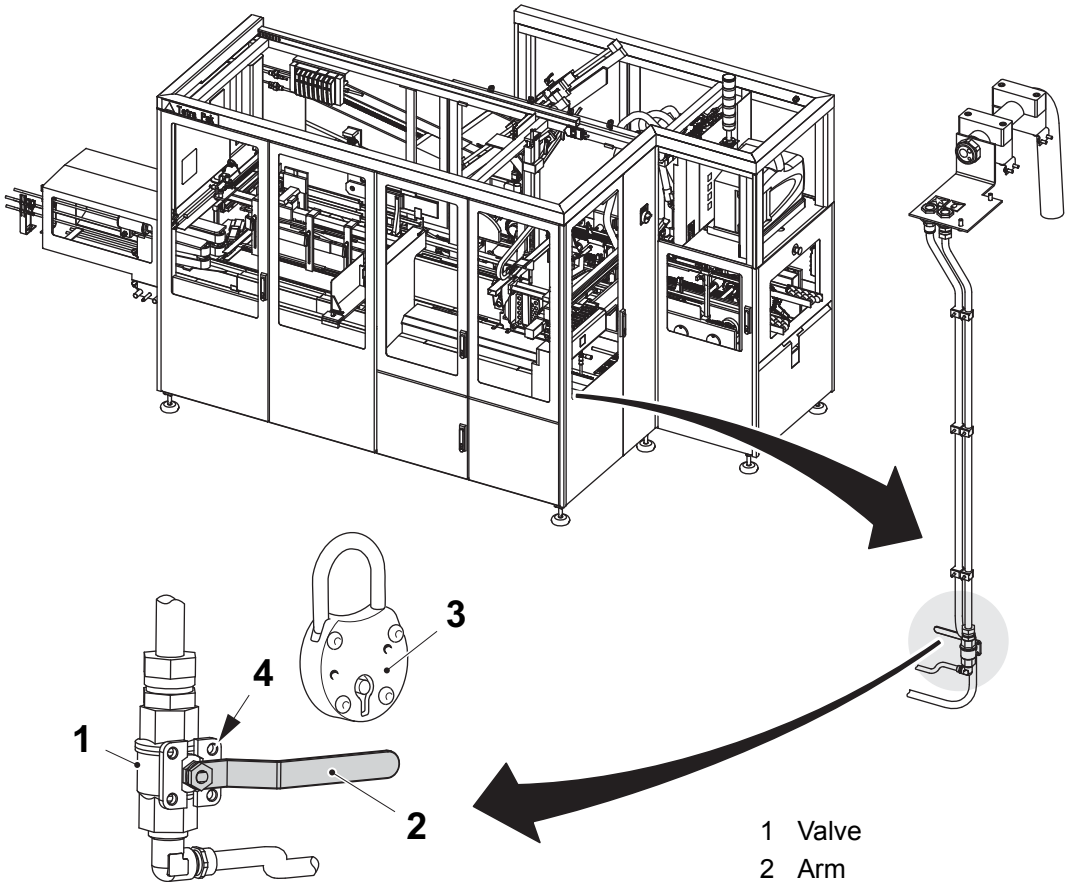

1 Valve
2 Arm
3 Lock
4 Hole

Hotmelt Equipment

DANGER

Hazardous voltage.
The voltage is 400V inside the hotmelt unit. Risk of immediate danger to life through electrical shock.

Never flush water or any other liquid towards the hotmelt unit when cleaning the machine. Failure to obey will result in danger to your life.

WARNING

Important when working on hotmelt equipment.
All service work on the hotmelt unit must be carried out by authorized personnel. Always wear safety glasses, protective gloves, and other protective clothing to avoid injuries caused by splashing adhesive.

Never remove any part or component until air and the electrical supply to the machine have been disconnected and the pressure of the adhesive in the system has been relieved.

Failure to relieve any remaining air or liquid (adhesive) pressure may cause serious injuries from burning when the hotmelt filter is detached or flushed.

During heating and production the unit gets hot. The hotmelt tank contains heated adhesive which can cause serious injuries. Do not touch the adhesive!

During tank drainage never touch the drain shut!

(Cont'd)

(Cont'd)

WARNING

Burn hazard.

The hotmelt nozzles and their covers are very hot and there is risk of severe burns. Never touch the hotmelt nozzles or their covers!

Note! The section Hotmelt equipment in this manual only deals with what is specific for this machine.

Always refer to the documentation provided from Nordson Corporation (is included in english in the delivery from Tetra Pak) before doing any kind of work on the hotmelt equipment.

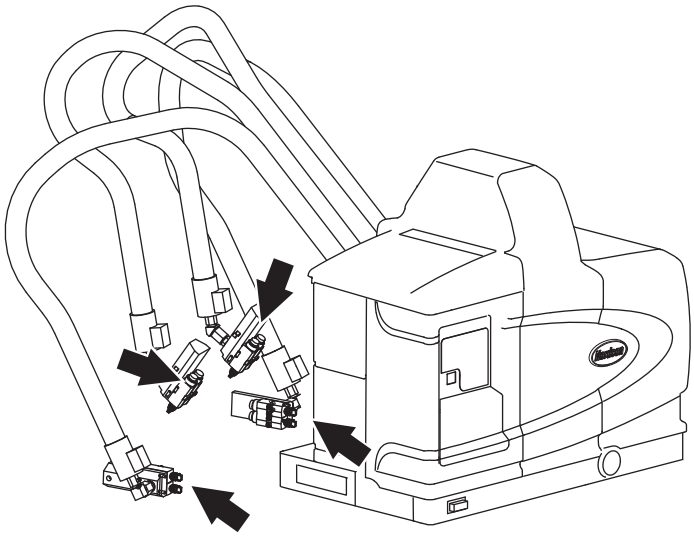

Lifting Accessories

All lifting accessories supplied by Tetra Pak, such as lifting yokes and eyebolts, must be used as intended only. Their correct use is described for each instruction requiring a lifting accessory. Lifting accessories must be stored in a safe place.

Production Mode Changes

All changes concerning packing pattern and infeed alternatives must be carried out by **skilled personnel** only.

Discharge Unit

WARNING

Machine directive.

In order to fulfil the safety demands associated with the CE sign, the machine must be equipped either with one of the optional kits described in the Installation manual, or with any similar equipment that also complies with Machine Directive 2006/42/EC and sub directives.

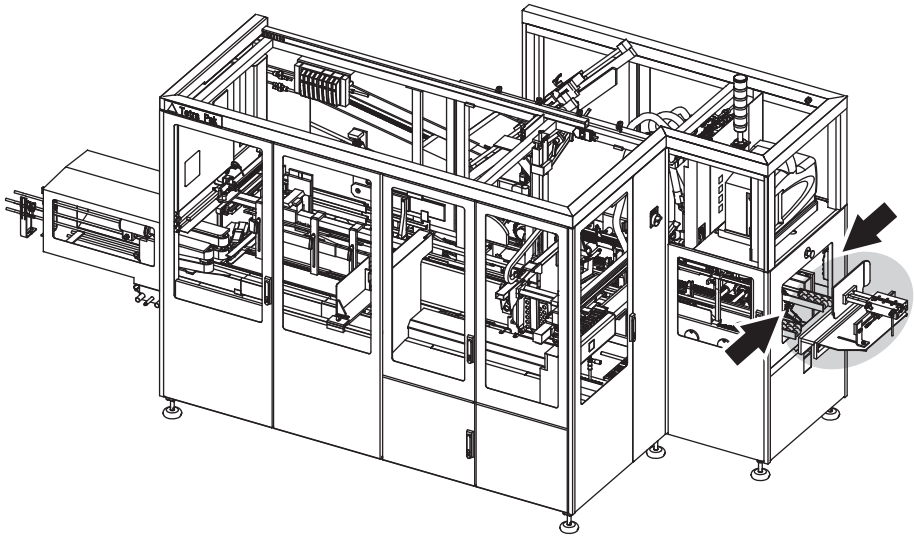

Location of the discharge unit

1 Technical Specifications

About the Technical Specifications Chapter

This chapter describes the equipment's technical specification and data. The information is used during the planning and installation of the equipment.

1.1 Installation Drawings. . . . . 1 - 5
1.1.1 Infeed. . . . . 1 - 5
1.1.2 Infeed with PTr100 . . . . . 1 - 7
1.1.3 Z-infeed . . . . . 1 - 9
1.1.4 U-infeed. . . . . 1 - 11
1.1.5 Operating Area . . . . . 1 - 13
1.1.6 Discharge Unit (Optional) . . . . . 1 - 15
1.1.6.1 Tetra Unit Conveyor 24 - Left/Right Out. . . . . 1 - 15
1.1.6.2 Tetra Roller Conveyor 58 . . . . . 1 - 17
1.2 Equipment Specification. . . . . 1 - 19
1.2.1 Capacity . . . . . 1 - 19
1.2.2 Configurations and Limitations . . . . . 1 - 19
1.2.2.1 Optional Equipment. . . . . 1 - 20
1.2.2.2 Change-Over Time. . . . . 1 - 20
1.2.3 Mass and Dimensions . . . . . 1 - 21
1.2.3.1 Main Machine . . . . . 1 - 21
1.2.3.2 Discharge, Optional Equipment . . . . . 1 - 21
1.2.4 Infeed and Discharge Requirements . . . . . 1 - 22
1.2.4.1 Infeed Conveyors. . . . . 1 - 22
1.2.4.2 Discharge Conveyors . . . . . 1 - 22
1.2.4.3 Conveyor Lubrication . . . . . 1 - 22
1.2.5 Additional Equipment . . . . . 1 - 23
1.2.6 Start Up Material. . . . . 1 - 23
1.2.7 Production Material . . . . . 1 - 23
1.3 Lifting and Transportation Data . . . . . 1 - 24
1.3.1 Crate Data . . . . . 1 - 24
1.3.2 Auxiliary Equipment . . . . . 1 - 24
1.3.3 Space Requirements . . . . . 1 - 24
1.4 Utility and Utility Connection Data. . . . . 1 - 25

1.4.1 Electrical Power Specification . . . . . 1 - 25
1.4.2 Compressed Air Specification . . . . . 1 - 25
1.4.3 Water Supply Specification . . . . . 1 - 26
1.5 Hygiene Function Connection Data . . . . . 1 - 27
1.5.1 Manual Cleaning . . . . . 1 - 27
1.6 Communication . . . . . 1 - 28
1.6.1 Signals when Line Controller. . . . . 1 - 28
1.6.1.1 From Line Controller to CBP 32 . . . . . 1 - 28
1.6.1.2 From CBP 32 to Line Controller . . . . . 1 - 29
1.7 Noise . . . . . 1 - 30
1.8 Emissions . . . . . 1 - 31
1.9 Material Specification . . . . . 1 - 32
1.9.1 Consumption . . . . . 1 - 32
1.9.2 Distribution Units . . . . . 1 - 32
1.9.3 Wraparound Unit . . . . . 1 - 33
1.9.4 Corrugated Board . . . . . 1 - 34

1.1 Installation Drawings

1.1.1 Infeed

Note! The conveyor chain is driven from the machine.

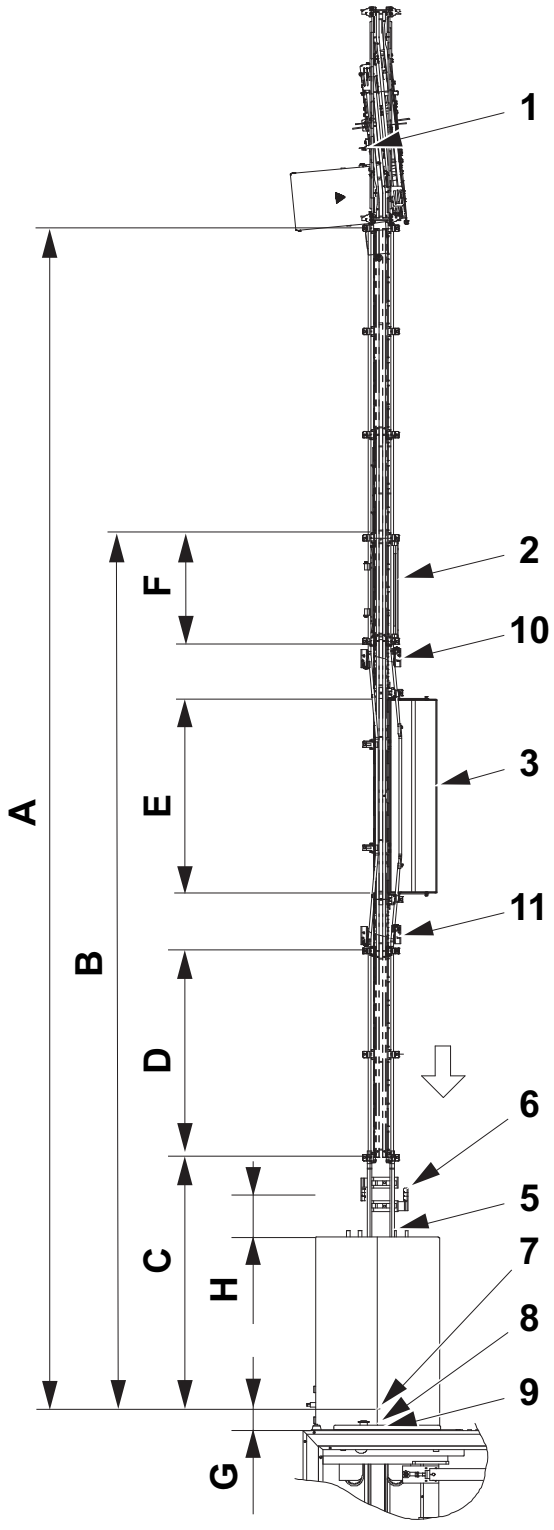

No Ethernet or Recart (No Line Controller)

Pos.		Description
1	W10B0906	Photocell unit start conveyor 2802448 (optional equipment) for Line automation choice “Photocell control”
2	W10K0901	Hose brake (not included). The placement of the hose brake is dependent on the packaging and the lane configuration
3		Package trap alternative conveyor (not included). Mandatory for portion packs.
5		One meter railing (included)
6		Queue guard double (included)
7		Connection point for infeed conveyor
8		Connection for internal conveyor lubrication 342960-133
9		Connection for air to hose brake
10	W10B0902 W10B0903	Photocell unit (not included): Hose brake dispense control
11	W10B0904 W10B0905	Photocell unit (not included): Hose brake queue after brake

Distance (mm)	Note
A ≥ 3000	Max distance between drive and End Unit see PIM Conveyor
B B ≥ 2000 B ≥ 3500	Must be straight conveyor Straight conveyor family packages. Straight conveyor portion packages.
C = 1000	Conveyor not included
D = 1000	Conveyor not included
E = 1000	
F = 500	
G = 85	
H ≈ 200	

(Cont'd)

(Cont'd)

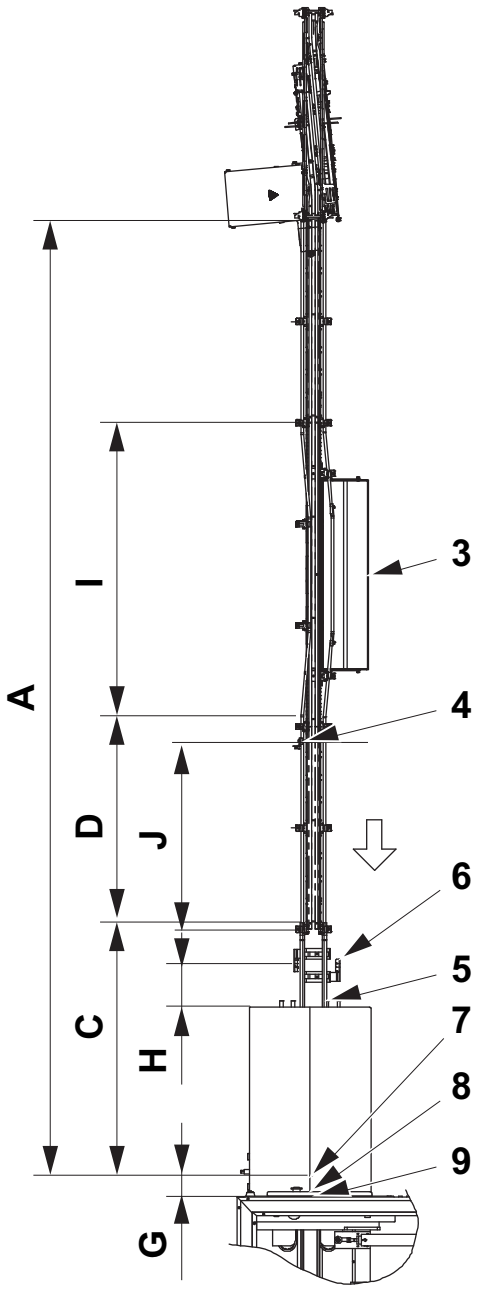

Ethernet or Recart (Line Controller)

Pos.		Description
3		Package trap alternative conveyor (not included). Mandatory for portion packages.
4	W30B0140	Photocell unit overflow (included)
5		One meter railing (included)
6		Queue guard double (included)
7		Connection point for infeed conveyor
8		Connection for internal conveyor lubrication 342960-133
9		Connection for air to hose brake

Distance (mm)	Note
A ≥ 3000	Max distance between drive and End Unit see PIM Conveyor
C = 1000	Conveyor not included
D = 1000	Conveyor not included
G = 85	
H ≈ 200	
I = 500 or 1500	Package trap
J = 900 to 1100	

1.1.2 Infeed with PTr100

Note! The conveyor chain is driven from the machine.

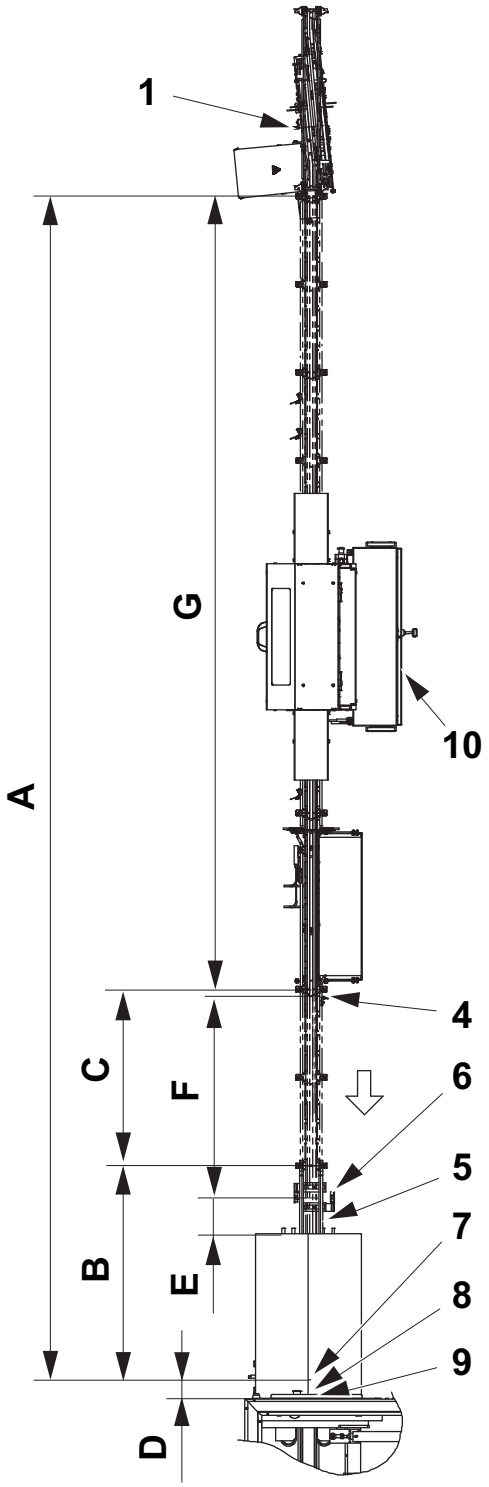

Infeed Right Z-form
Infeed Left U-form

Pos.		Description
1	W10B0906	Photocell unit start conveyor 2802448 (optional equipment) for line automation choice “Photocell control”
4	W30B0140	Photocell unit overflow (included), for Ethernet (Line controller) or Recart.
5		One meter railing (included)
6		Queue guard double (included)
7		Connection point for infeed conveyor
8		Connection for internal conveyor lubrication 342960-133
9		Connection for air to PTr100
10		Package Turner 100 by Tetra Pak (PTr100)

Distance (mm)	Note
A	Maximum distance between drive and End Unit see PIM conveyor
B = 1000	Conveyor not included
C = 1000	Conveyor not included
D = 85	
E ≈ 200	
F = 900 to 1000	
G = 4500	See installation drawing PTr100

(Cont'd)

(Cont'd)

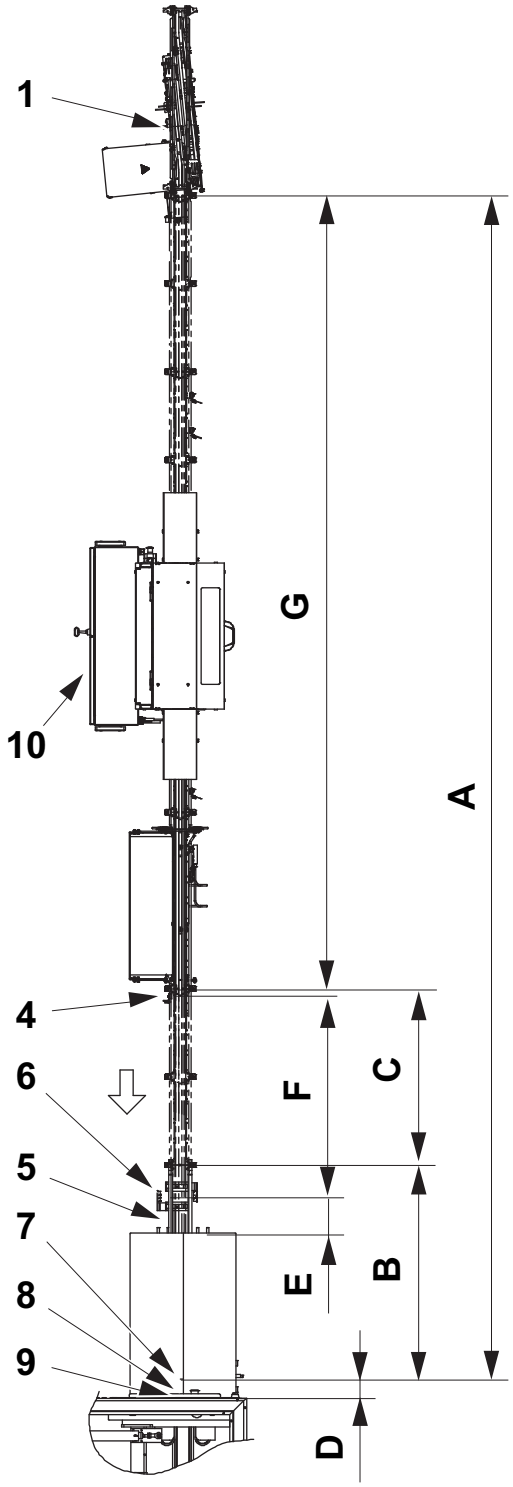

Infeed Right U-form
Infeed Left Z-form

Pos.		Description
1	W10B0906	Photocell unit start conveyor 2802448 (optional equipment) for line automation choice “Photocell control”
4	W30B0140	Photocell unit overflow (included) for Ethernet (Line controller) or Recart.
5		One meter railing (included)
6		Queue guard double (included)
7		Connection point for infeed conveyor
8		Connection for internal conveyor lubrication 342960-133
9		Connection for air to PTr100
10		Package Turner 100 by Tetra Pak (PTr100)

Distance (mm)	Note
A	Maximum distance between drive and End Unit see PIM conveyor
B = 1000	Conveyor not included
C = 1000	Conveyor not included
D = 85	
E ≈ 200	
F = 900 to 1000	
G = 4500	See installation drawing PTr100

1.1.3 Z-infeed

To connect extra equipment, see 3.2.3.7 Optional Equipment.

Note! The conveyor chain is driven from the machine.

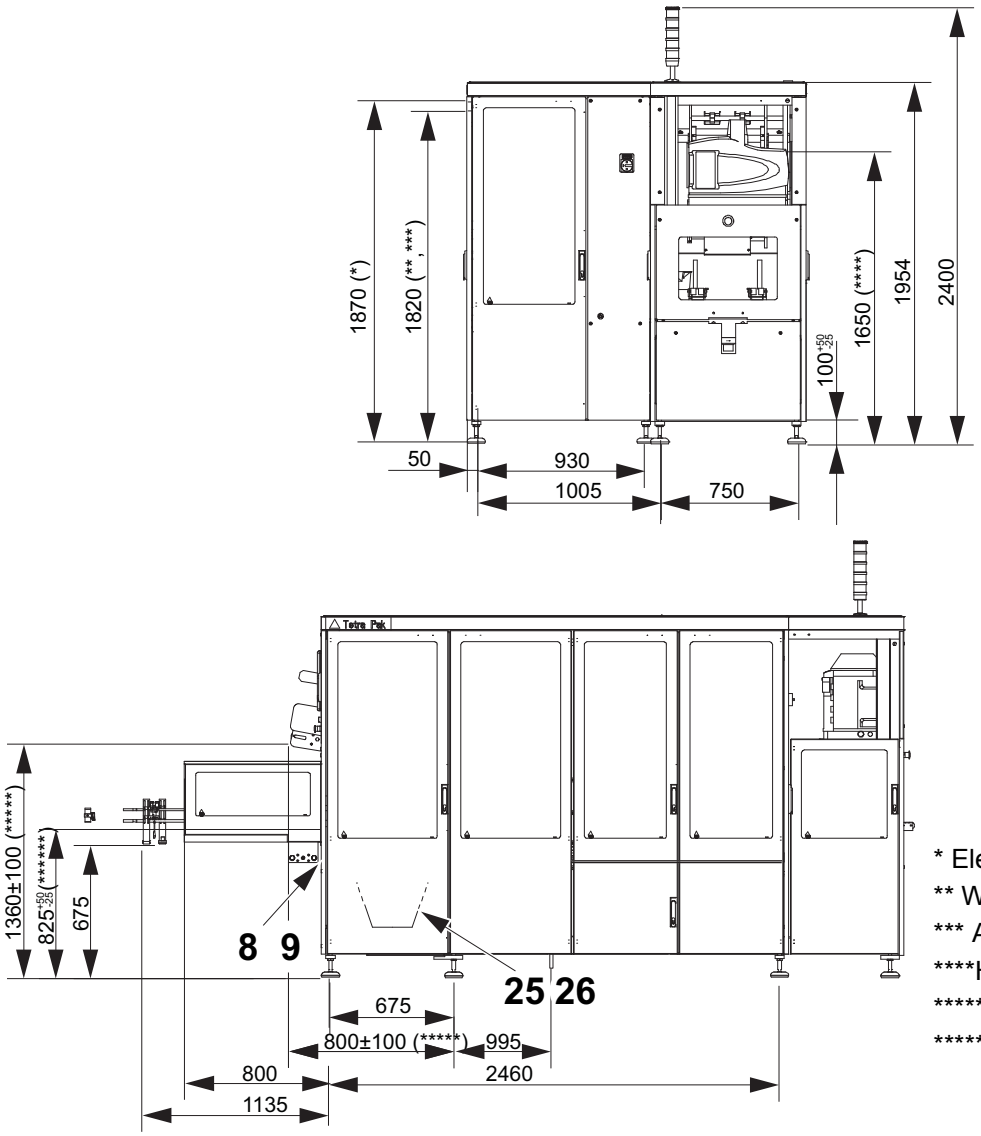

8 Connection for internal conveyor lubrication 342960-133
9 Connection for air to hose brake
25 Chain tensioner (included)
26 Conveyor chain, 3.2 m for package conveyor and 3.4 m for unit conveyor (not included)

(Cont'd)

(Cont'd)

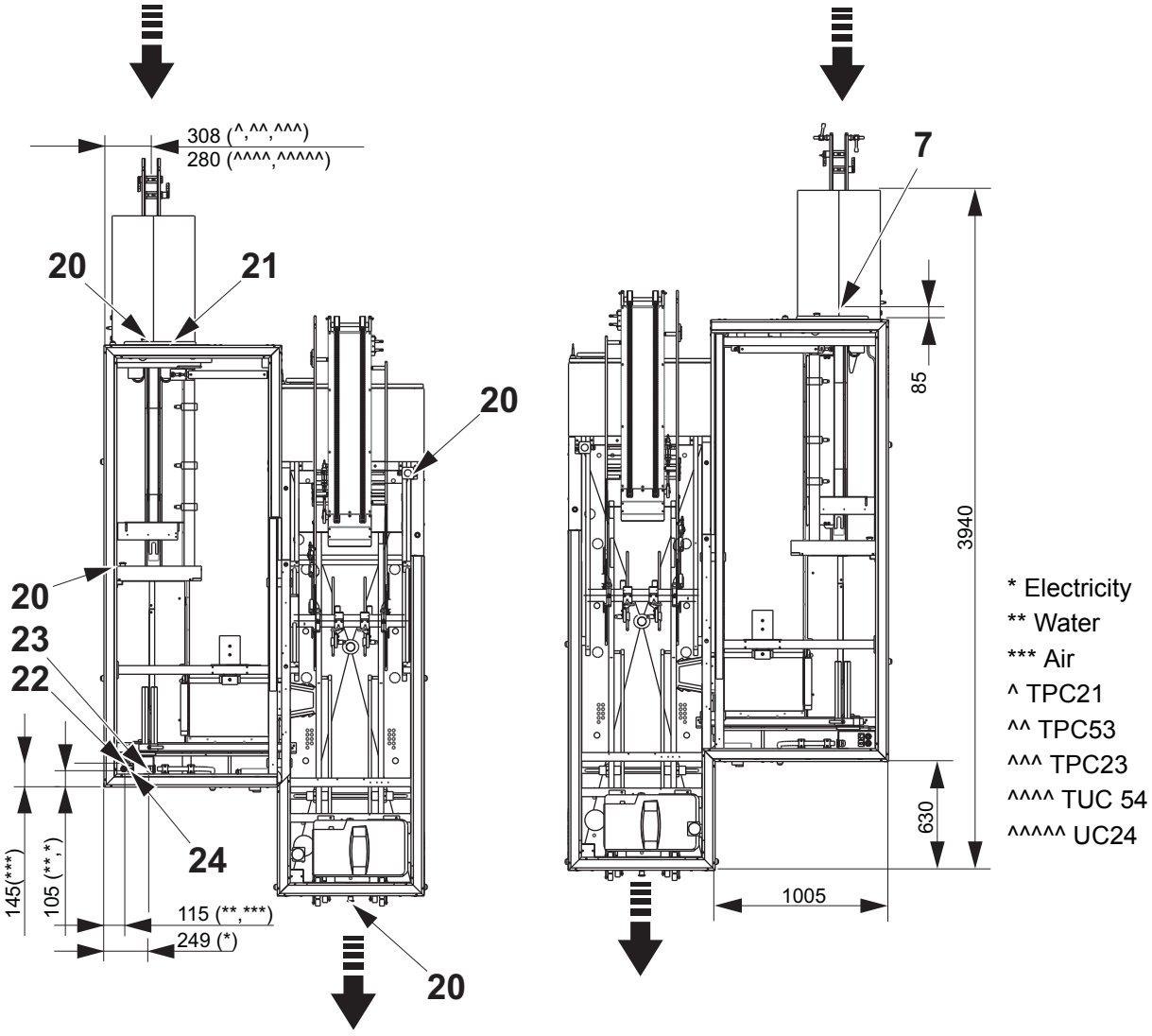

7 Connection point for infeed conveyor
20 Emergency stop
21 Control panel
22 Air connection 1/2” or “quick release coupling” ATLAS COPCO MTI5
23 Electrical connection (Approximately 5 m of cable needed
24 Water connection (pistol) 1/2”

1.1.4 U-infeed

To connect extra equipment, see 3.2.3.7 Optional Equipment.

Note! The conveyor chain is driven from the machine.

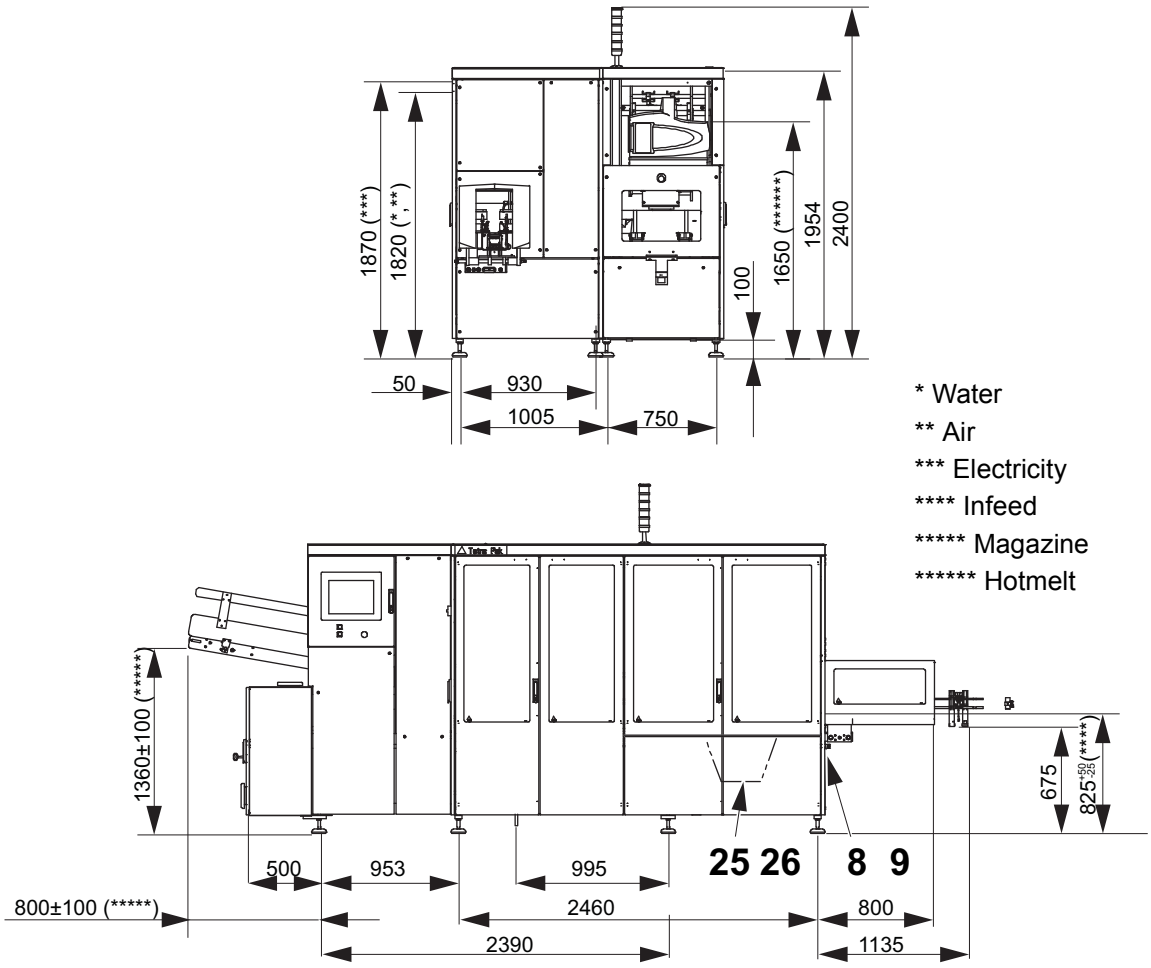

8 Connection for internal conveyor lubrication 342960-133
9 Connection for air to hose brake
25 Chain tensioner (included)
26 Conveyor chain, 3.2 m for package conveyor and 3.4 m for unit conveyor (not included)

(Cont'd)

(Cont'd)

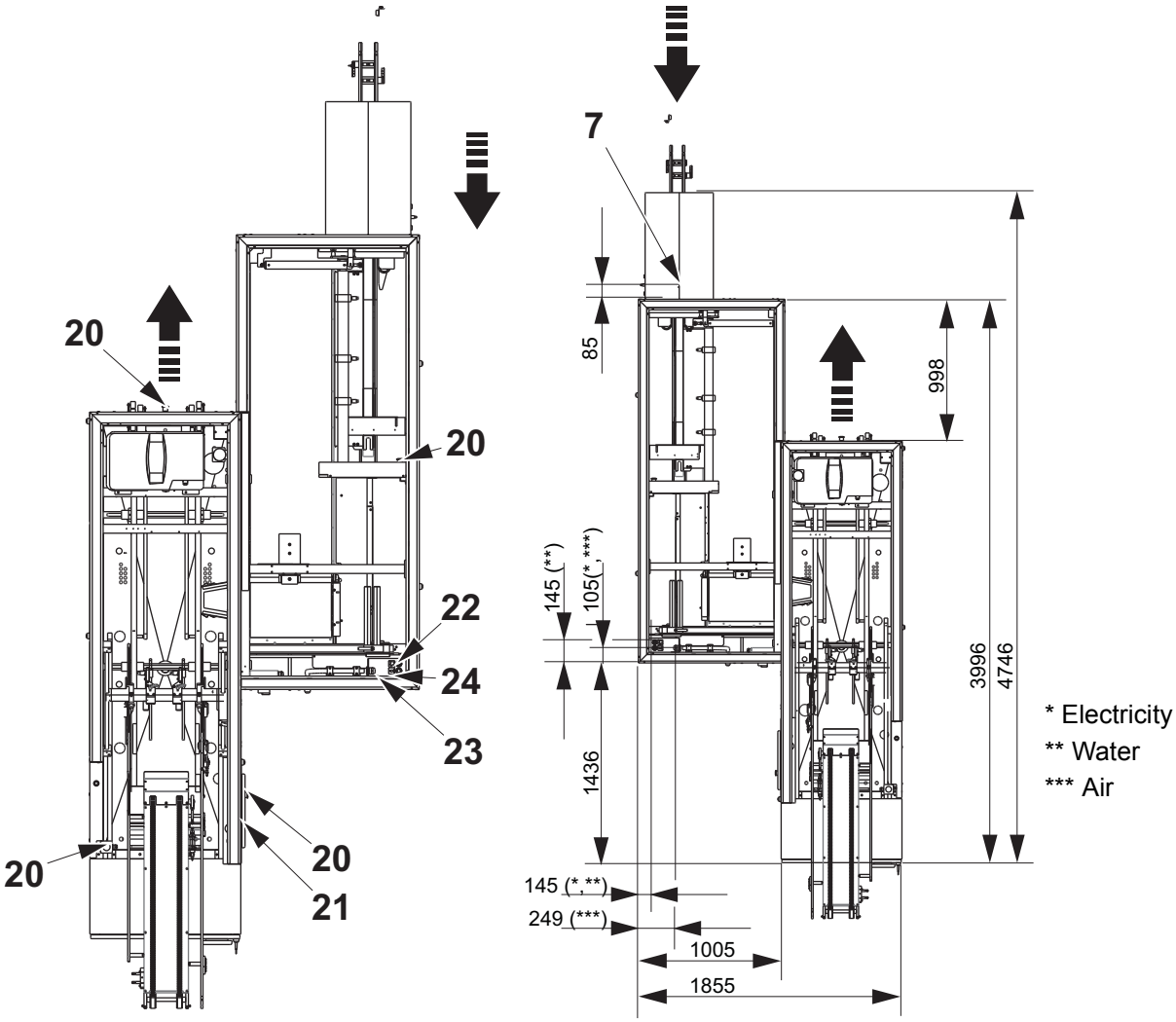

7 Connection point for infeed conveyor
20 Emergency stop
21 Control panel
22 Air connection 1/2” or “quick release coupling” ATLAS COPCO MTI5
23 Electrical connection (Approximately 5 m of cable needed
24 Water connection (pistol) 1/2”

1.1.5 Operating Area

Z-infeed, RH version

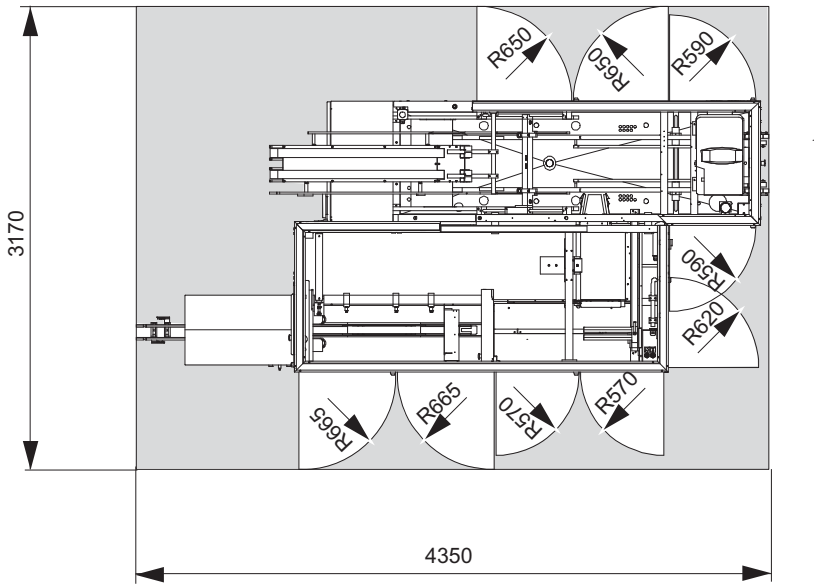

Z-infeed, LH version

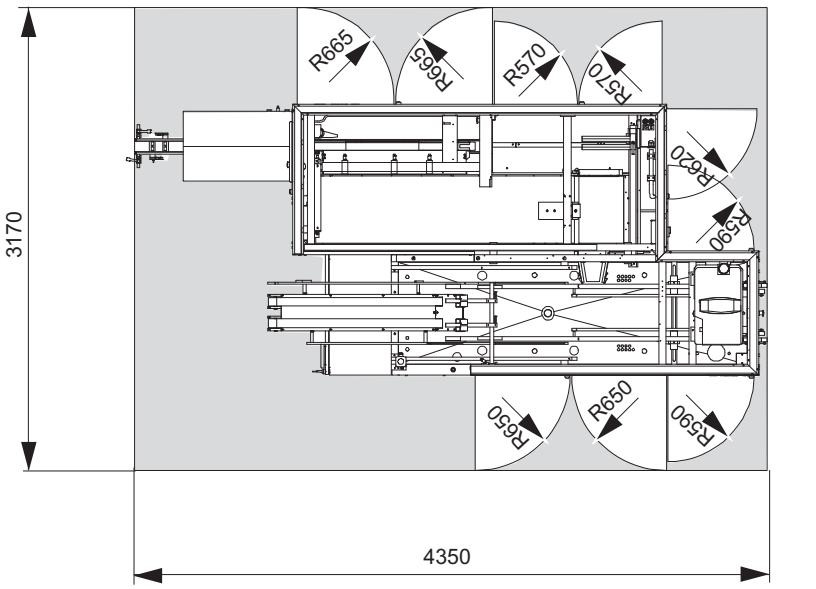

(Cont'd)

(Cont'd)

U-infeed, LH version

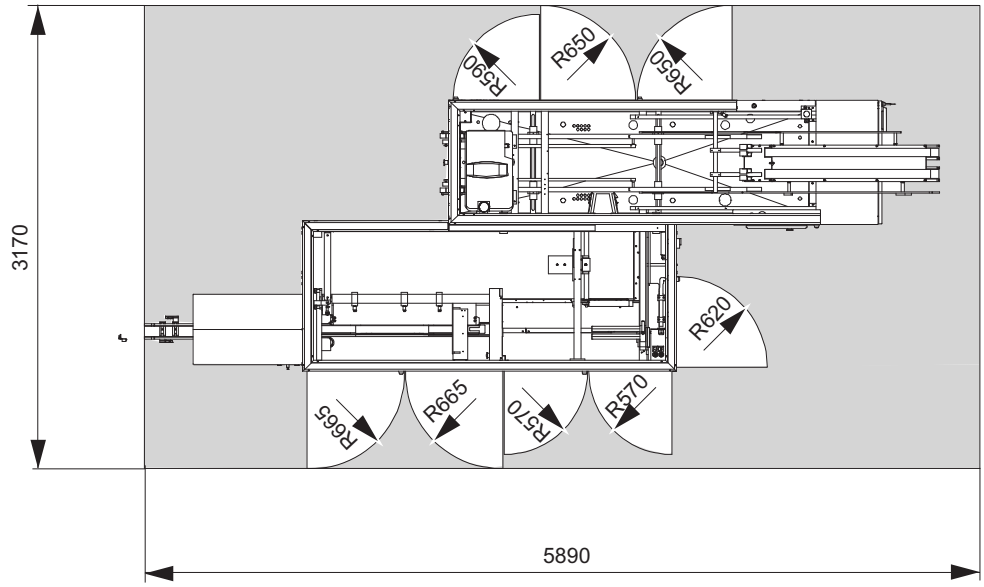

U-infeed, RH version

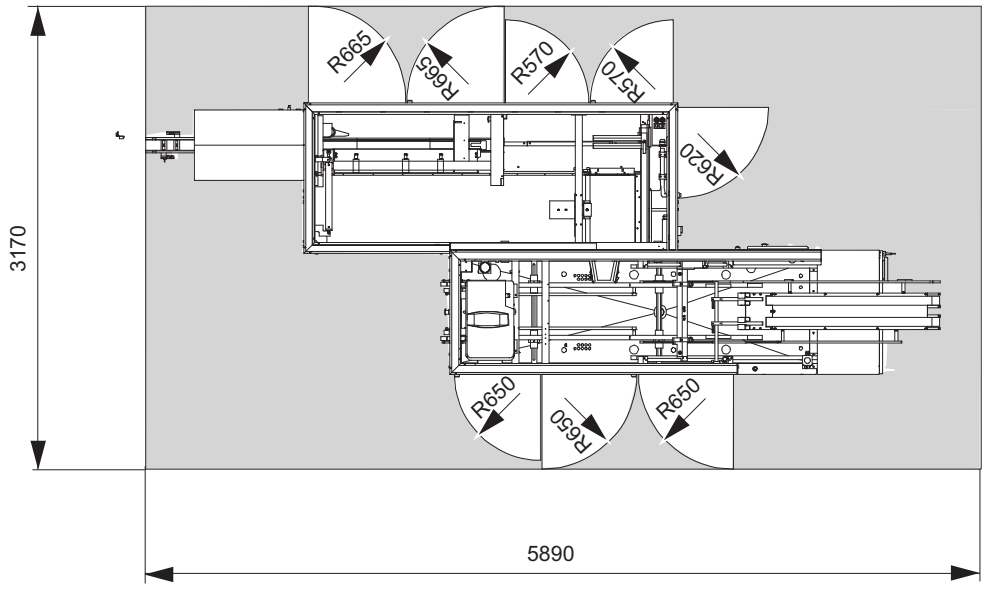

1.1.6 Discharge Unit (Optional)

WARNING

Safety demands.

Due to the various demands of discharge units, the outlet is covered by a plate that has to be removed and replaced by a safety device that fulfils the Machinery directive 2006/42/EC and sub directives.

In order to fulfil the safety demands associated with the CE sign, the machine must be equipped either with one of the Discharge Units described in this manual, or with any similar equipment that also complies with Machine Directive 2006/42/EC and sub directives.

1.1.6.1 Tetra Unit Conveyor 24 - Left/Right Out

Note! The discharge unit is **not** included. It is available as option according to the table below.

The machine must be equipped with a light barrier, available as Optional Equipment 2834002-0200.

Discharge unit	Width	Left out	Right out
Discharge conveyor 2970888-0100		-0101	-0102

Discharge unit	Left/Right out
Shipping weight	20 kg
Shipping volume	360 dm^3
Required chain length	1.7 m

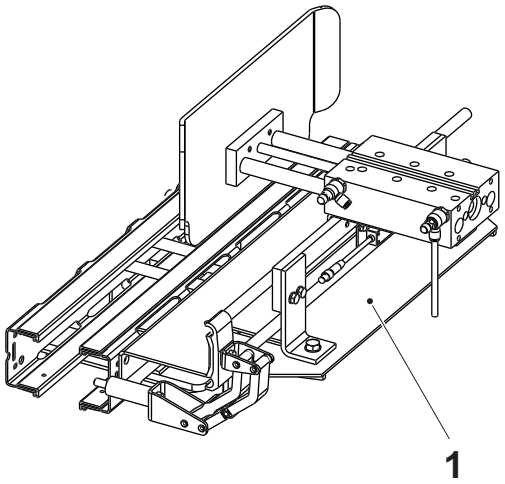

1 Discharge conveyor

(Cont'd)

(Cont'd)

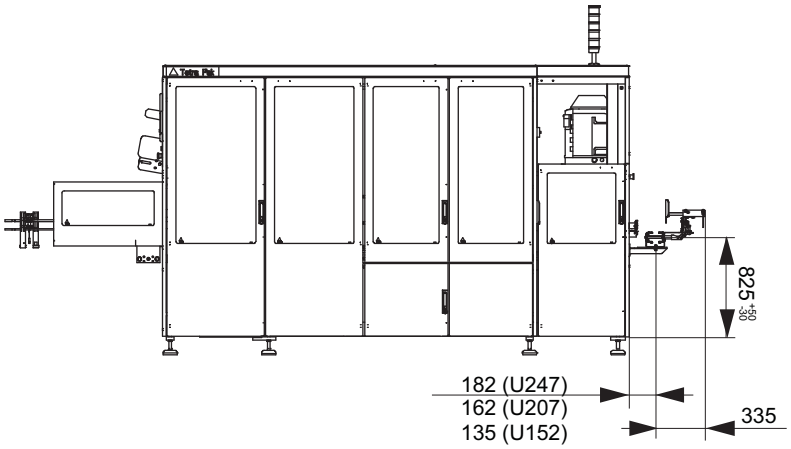

Left out

Right out

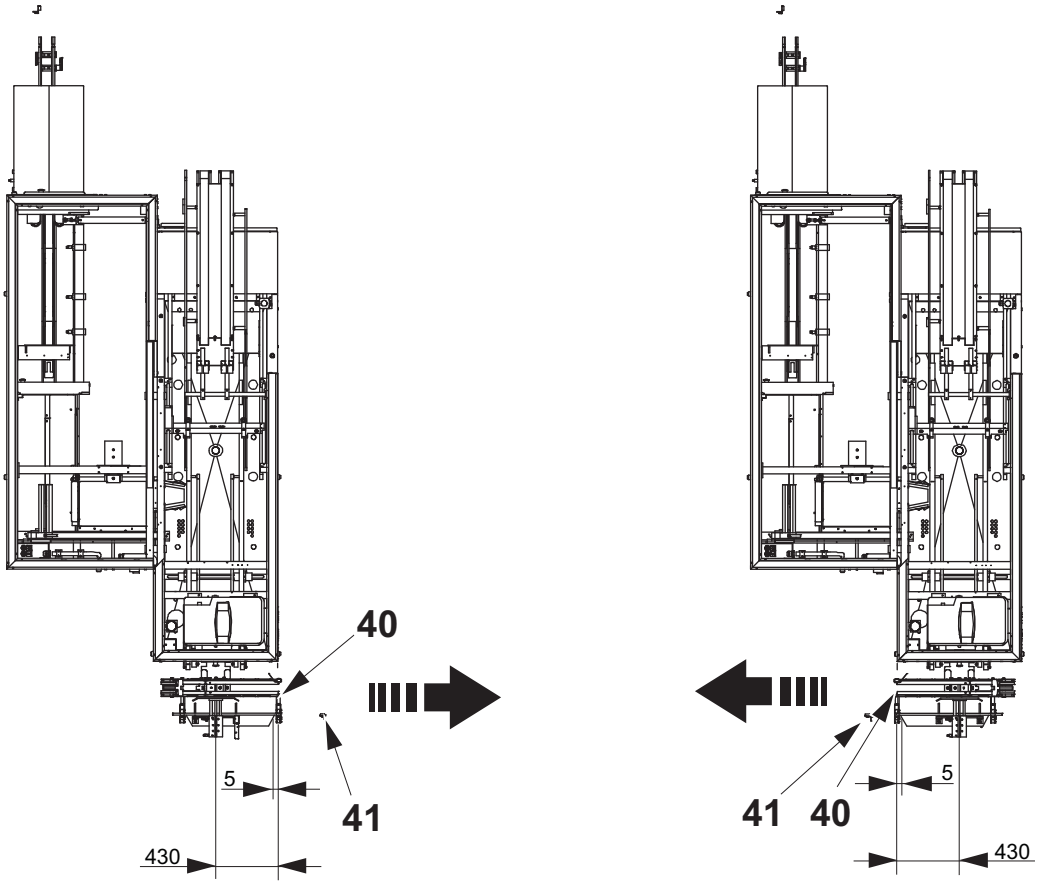

40 Connection point for unit conveyor
41 Photocell 2970844 and bracket 2970893

1.1.6.2 Tetra Roller Conveyor 58

Note! The discharge unit is **not** included. It is available as option according to the table below.
If no discharge tunnel is installed, the machine must be equipped with a light barrier, available as Optional Equipment 2834002-0200.

For discharge right out or left out, no tunnels are available and light barrier must be chosen. For discharge straight out it is possible to choose between tunnel and light barrier.

Discharge unit 2511012-0400	
Discharge tunnel 2525709-0400	
Discharge conveyor 2525710-0200	This roller conveyor is not driven. Leg is included (height 500 to 900 mm).

Discharge unit	
Shipping weight	74 kg
Shipping volume	540 dm^3

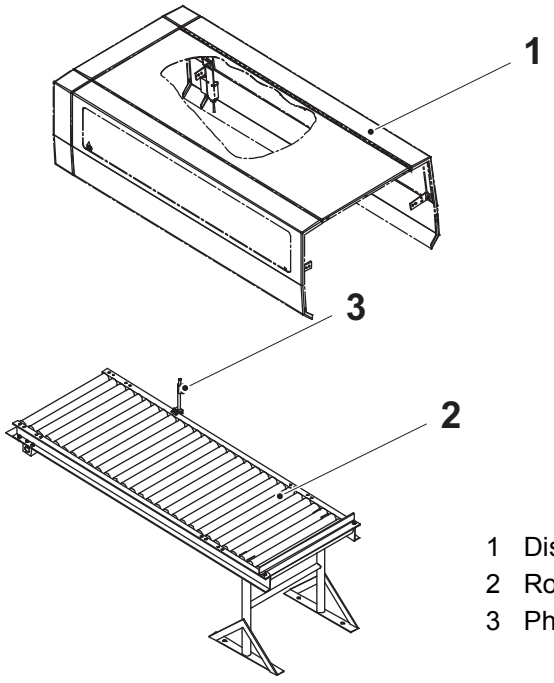

1 Discharge tunnel
2 Roller conveyor
3 Photocell Downstream Queue guard

(Cont'd)

(Cont'd)

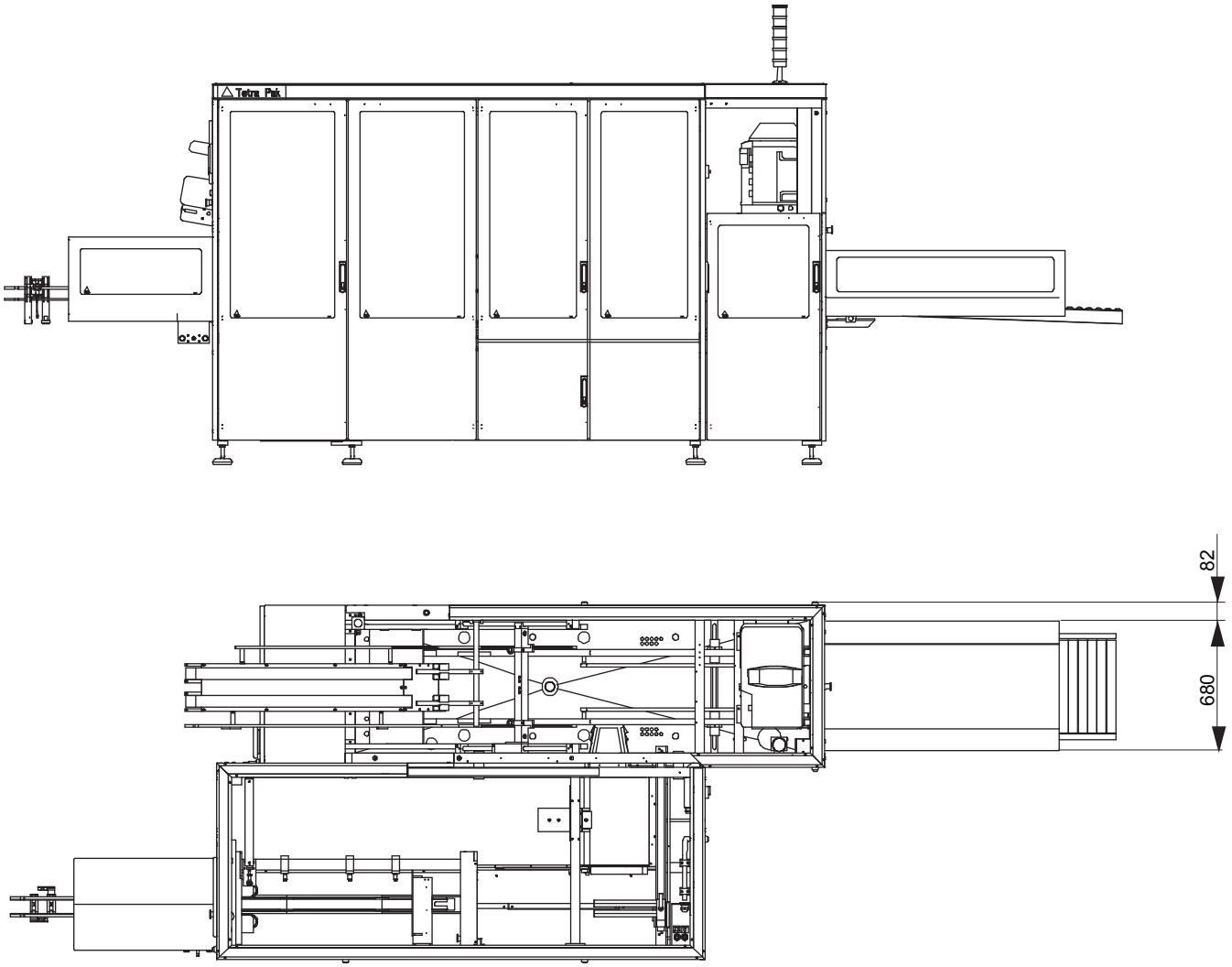

1.2 Equipment Specification

1.2.1 Capacity

Type	Packages per hour
Family packages (500ml, 750ml and 1000ml)	<8000+20%
Portion packages (200ml. 250ml, and 330ml)	<9000+20%

1.2.2 Configurations and Limitations

Machine Variant	Infeed Side	Discharge Side
Z-infeed	Left hand 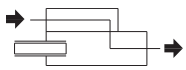	Left 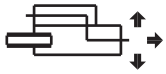 Straight Right
	Right hand 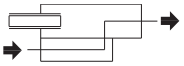	
U-infeed	Left hand 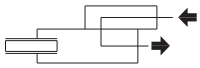	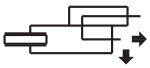 Straight Right
	Right hand 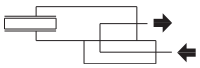	Left 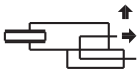 Straight

1.2.2.1 Optional Equipment

Type	TP No.	Note
Air jet Gun	2802489-0200	
Spray Gun	1287076-0300	
Illumination	1287186-0300	Not valid for USA and Canada
Light Barrier Unit	2834002-0200	
Discharge Conveyor	2970888-0100	
Discharge Unit Roller Conveyor	2511012-0400	
Photocell Unit (Com start conveyor)	2802448-0300	
Cooling Unit	2792385-0200	The equipment shall be equipped with a cooling device for the electrical cabinet when the ambient installation temperature exceeds +30ºC (+86ºF).
6 Channel Hotmelt	3090149-0100	
Variable Tilt	3101123-0100	

1.2.2.2 Change-Over Time

Change-over times [b)]	
Different package height (different unit height	15 minutes
Different packing pattern (different unit length)	15 minutes
Different packing pattern (different unit width)	15 minutes
Different packing pattern (different unit width, length and height)	45 minutes
b) The change-over times are valid for a trained person.	

1.2.3 Mass and Dimensions

1.2.3.1 Main Machine

Machine Variant	**Weight (kg)**	**Length** (mm)	**Width** (mm)	**Height (mm)**
Z-infeed	1725 (with WA + 75)	3600	2100	2200
U-infeed	1725 (with WA + 75)	4650	2100	2200

1.2.3.2 Discharge, Optional Equipment

Note! The discharge unit is not included. It is available as option according to the table below.
The machine must be equipped with a light barrier, available as Optional Equipment 2834002-0200.

Tetra Unit Conveyor 24 - Left/Right Out				
Machine Variant		**Shipping Weight (kg)**	**Shipping volume**	**Required chain length**
Left out	-0101	20	360 dm^3	1.7 m
Right out	-0102	20	360 dm^3	1.7 m
Tetra Roller Conveyor 58				
Machine Variant		**Shipping Weight (kg)**	**Shipping volume**	
Straight		74	540 dm^3	

1.2.4 Infeed and Discharge Requirements

1.2.4.1 Infeed Conveyors

For single packages and multipacks [a)]

Conveyor	**Height**	**Width**	**Required chain length**
Tetra Unit Conveyor 24 and Tetra Unit Conveyor 54	See 1.1 Installation Drawings		3.4 m (excluded)
Tetra Package Conveyor 21 and Tetra Package Conveyor 23	See 1.1 Installation Drawings		3,2 m (excluded)
Chain tensioner on infeed conveyor shall be used with this equipment. Chain tensioner is included for all the conveyor types.			

1.2.4.2 Discharge Conveyors

For distribution units[a)]

Conveyor	**Discharge side**	**Height**	**Width**	**Required chain length**
Tetra Unit Conveyor 24	Right, left	See 1.1.6.1 Tetra Unit Conveyor 24 - Left/Right Out		2 m
Tetra Roller Conveyor 58	Straight	See 1.1.6.2 Tetra Roller Conveyor 58		
This machine fulfils the safety demands when light barrier 2834002, cover 2525709 or similar equipment which fulfils Machine directive 2006/42/EC and sub directives is mounted.				

[a)] For further information see Chapter 3 Mechanical Completion.

1.2.4.3 Conveyor Lubrication

This section is **only** valid for Tetra Pak conveyors in the production line, **not** for conveyors inside the machine.

Note! In order to have optimized line performance it is **very** important that the conveyor lubrication is set in accordance with the conveyor lubrication technical manual (TeM).

1.2.5 Additional Equipment

Material	TP No.	Note
Forklift	-	

1.2.6 Start Up Material

The following material is needed during start up of the equipment.

Material	TP No.	Note

1.2.7 Production Material

The following material is needed during production.

Material	TP No.	Note
Blanks	-	See 1.9.2 Distribution Units
Adhesive	-	See Operation Manual, Technical Data
Lubrication oil	-	See Operation Manual, Technical Data

1.3 Lifting and Transportation Data

1.3.1 Crate Data

Contents	Weight (kg)	Length (mm)	Width (mm)	Height (mm)
Machine equipped with Z- or U-infeed	2125	4900	2200	2250

1.3.2 Auxiliary Equipment

Equipment	Note	Quantity
Fork lift truck	Minimum capacity 4000 kg	1
Spirit level	TP No. 90243-0163	1
Pneumatic or electric powered wrench		1
Step ladder	2 m (7 ft.)	1
Wrench to machine feet	Key Grip 17 mm	1
Wrench to machine feet	Key Grip 30 mm	1

1.3.3 Space Requirements

Make sure that doors and passages are wide and high enough to pass with the equipment.

Measure and mark the designated position of the machine. For recommended clearances around the machine, see Section 1.1 Installation Drawings.

Ceiling Height

The ceiling **must** be at least 2700 mm.

1.4 Utility and Utility Connection Data

1.4.1 Electrical Power Specification

WARNING

This product can cause a current in the protective earthing conductor. The external protective conductor associated with the power supply to this product must have a cross-sectional area of at least 10 mm^2. Where a residual current-operated protective (RCD) or monitoring (RCM) device is used for protection in case of direct or indirect contact, only an RCD or RCM of Type B is allowed on the supply side of this product.

Electricity	
Control system	Compact Logix
Power consumption (Consumption measured at 7000 p/h, packing pattern 2*6 TBA1000S, including WA	
Production	Average 2,1 +/- 0.7 kW Peak 3,3 +/- 0,7 kW
Preheating	Average 2,9 +/- 0.7 kW Peak 3,2 +/- 0,7 kW
Voltage/frequency	3/N/PE~50Hz 400/230V 3/N/PE~60Hz 400/230V
Fuse dimension	16 A
Cable area (min.)	4 mm^2
Connection	See Electrical Manual (EM)

1.4.2 Compressed Air Specification

Compressed air	
Consumption (consumption measured at 7000 p/h, packing pattern 2*6 TBA1000S, including WA):	Average 465 +/- 14 ln/min Peak 950 +/- 19 ln/min
Maximum particles size	50 мm
Connection thread	G 1/2" internal
Connection	Dim. 1/2” or Atlas Copco MT15
Incoming pressure	7 to 10 bar

1.4.3 Water Supply Specification

The table below shows the water pressure when cleaning the machine.

Characteristic	Value
Min. inlet pressure	160 kPa (1.6 bar)
Max. inlet pressure	350 kPa (3.5 bar)
Min. flow	8 m^3/h

1.5 Hygiene Function Connection Data

1.5.1 Manual Cleaning

Hot and cold water must be available for cleaning the machine. For information on the cleaning, see the Chapter Care and Cleaning in the Operation Manual.

1.6 Communication

1.6.1 Signals when Line Controller

The tables below refers to the signal exchange between the Line Controller and the Cardboard Packer 32 when the machine is set to run towards a Line Controller.

1.6.1.1 From Line Controller to CBP 32

Signal	Machine State and Conditions
Start Production	Cardboard Packer 32 starts producing. The infeed conveyor starts running.
Stop Immediate	Line Controller detected that a machine downstream from the Cardboard Packer 32 has stopped. The Cardboard Packer 32 stops discharging trays immediately, but continues to take in packages until the machine is full.
Normal Stop	Line Controller detected that a machine has stopped upstream from the Cardboard Packer 32. The Cardboard Packer 32 remains active until it has received the fed out packages from the upstreams machine.
End Production	The Line Controller commands the Cardboard Packer 32 to perform an End of Production procedure.
Lubrication	Commands a lubrication procedure during preparation, before starting production.
Cleaning	Commands a cleaning procedure.
Reset package counters	Commands Cardboard Packer 32 to reset LC package counters
Command outfeed capacity	The nominal capacity that Cardboard Packer 32 should use if not in speed mode
Max allowed capacity	The capacity that Cardboard Packer 32 should use when in speed mode

1.6.1.2 From CBP 32 to Line Controller

Signal	Machine State and Conditions
Blocked	Cardboard Packer 32 has stopped because of a fault condition.
Blocking	Cardboard Packer 32 has a fault condition that will eventually stop the machine, but the machine is still in Receive and/or Deliver.
Preparation	Cardboard Packer 32 is powered and is running the preparation procedure but is not ready to receive a start command and can not accept incoming packages.
Ready for Production	Cardboard Packer 32 is ready to start and awaiting a start signal from the line controller. The infeed and normally also the discharge conveyor is stopped. The Cardboard Packer 32 does not accept nor deliver any packages.
Receive	The machine is waiting to receive or receiving packages but not delivering.
Receive and Deliver	Cardboard Packer 32 is delivering trays and can also receive or is receiving packages from an upstream machine.
Deliver	Cardboard Packer 32 is in production and is delivering packages but can not receive any packages.
Overflow	Cardboard Packer 32 is in overflow on the infeed section.
End Production Concluded	The machine has received End production command and has finished to deliver packages (i.e. less than one packing pattern of unprocessed packages are inside the machine).
Normal stop Concluded	The machine has received a NormalStop and has finished to deliver packages (i.e. emptied all sections that can be emptied without running end production).
Not Connected	The bit is on when the “Line controller” control commands are bypassed in the Equipment (by a function in the HMI).
Material request	Signal that material needs to be refilled, Hotmelt, Cardboard or Lubrication oil
Max capacity	The machines maximum capacity for the current packing pattern.
Actual Capacity Outfeed	The speed that Cardboard Packer 32 uses out of the two available from the Line Controller
Packages in	Number of packages counted in (different from PLMS counters)
Packages out	Number of packages counted out (different from PLMS counters)
Recipe list	The list of recipe names in the Cardboard Packer 32 together with the max capacity for each recipe
Machine number	Sends the machine nr to the line controller
Machine development step	Sends the development step to the line controller

1.7 Noise

CAUTION

Hazardous noise.

Risk of impaired hearing. Hearing protection is recommended whenever this equipment is in operation.

The following table give the noise level measurements for Cardboard Packer 32 machines under the following conditions:

- machine on a concrete floor supported by standard feet
- production under normal operating conditions at 7000 p/h

Values declared in accordance with ISO 4871			
Symbol	Definition	Declared value	Notes
L_{WA} K_{WA}	Measured A-weighted sound power level Uncertainty factor	94.5 dB(A) 2.5 dB(A)	Values determined using the basic standard ISO 3744 (Engineering method)
L_{pA} K_{pA}	Emission sound pressure level, operator position Uncertainty factor	75.5 dB(A) 2.5 dB(A)	Values determined using the basic standard ISO 11204 (Engineering method)

1.8 Emissions

The Cardboard Packer 32 by Tetra Pak produces no significant emissions to air.

1.9 Material Specification

1.9.1 Consumption

Production material	
Consumption:	Blank consumption = $\frac{A}{B}$ (blank/hour) A: Capacity of filling machine (packages/hour) B: Number of packages/blank
Blank	Adhesive
Tetra Tray - Tray - Tray OF	 0.5 kg/1000 blanks 1.0 kg/1000 blanks
Tetra Wraparound Box - WAMF - WAIF - WASF	 1.0 kg/1000 blanks 1.5 kg/1000 blanks 1.5 kg/1000 blanks

1.9.2 Distribution Units

Note! If any other unit is chosen than Tetra Tray, a Wraparound unit is needed.

Types of distribution units

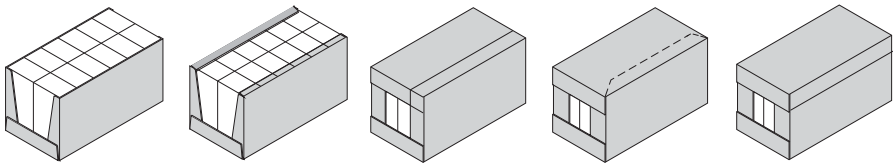

Abbreviations	
Tetra **Tray**	Tray
Tetra **Tray** with **O**ver **F**laps	Tray OF
Tetra **W**rap**A**round box with **M**eeting **F**laps	WAMF
Tetra **W**rap**A**round box with **I**nside top **F**lap	WAIF
Tetra **W**rap**A**round box with **S**ide **F**lap	WASF

1.9.3 Wraparound Unit

Note! These units need a Wraparound unit installed in the machine.

Wraparound boxes
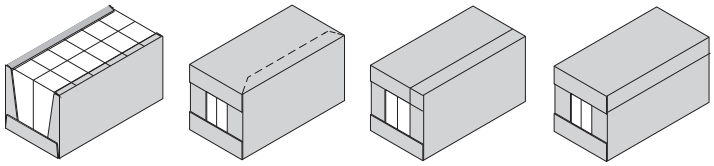
Different end flap size for the Tetra Wraparound Boxes
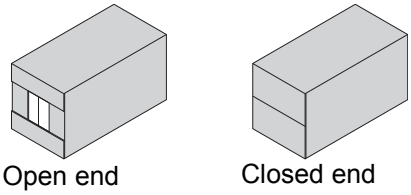
Maximum flap length 85 mm. The machine is set for open end as standard.

1.9.4 Corrugated Board

Recommended quality: B-Flute
Data:
Edgewise crush > 4.2 kN/m
Bursting strength >1000 kPa
Flat crush >250 kPa
Water absorption < 28 g/m^2

Make sure that blanks used in a CBP 32 have:

- crease (1)
- matrix crease (2)
- cut crease (3)

in accordance with Cardboard and Straw official blank drawings. The illustration below shows the blank drawing.

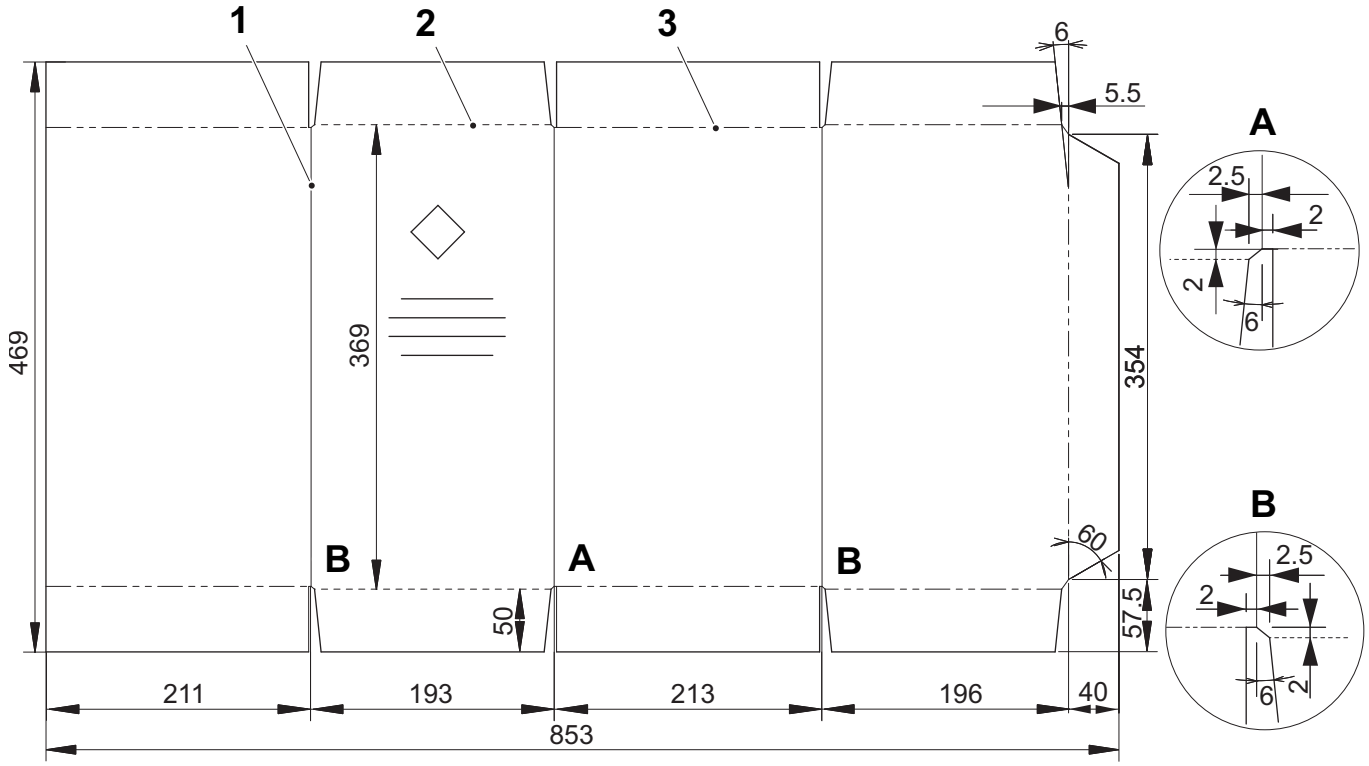

1 Crease
2 Matrix crease
3 Cut crease

2 Preparatory Requirements

About the Preparatory Requirements Chapter

This chapter describes preparatory requirements and recommendations to ensure a good installation. Its purpose is to help the installation technicians and other involved in the installation project to quickly locate information about the site preparation, including requirements for utility, space, tools, and other required installation equipment, and specific construction details.

2.1 Organization and Training . . . . . 2 - 5
2.1.1 Resources . . . . . 2 - 5
2.1.2 Special Skills . . . . . 2 - 5
2.1.3 Special Practices . . . . . 2 - 5
2.1.4 Training . . . . . 2 - 5
2.2 Consumables . . . . . 2 - 6
2.2.1 Cleaning and Disinfecting Agents . . . . . 2 - 6
2.3 Maintenance Details . . . . . 2 - 7
2.4 Spare Parts Supply . . . . . 2 - 8
2.4.1 Start-Up Parts . . . . . 2 - 8
2.4.2 Parts Inventory Management System . . . . . 2 - 8
2.4.3 Parts Recommendation Tool . . . . . 2 - 8
2.5 Quality Level and Procedures . . . . . 2 - 9
2.5.1 Good Manufacturing Practices . . . . . 2 - 9
2.6 Site Preparations . . . . . 2 - 10
2.6.1 General Requirements . . . . . 2 - 10
2.6.2 Floor . . . . . 2 - 10
2.6.3 Space Requirement . . . . . 2 - 10

This page intentionally left blank

2.1 Organization and Training

2.1.1 Resources

	Personnel	Time	Note
During Installation	1 technician, 1 electrician	Approximately 6 hours	
During Production	1 operator	16-128 minutes	Scheduled operator time during production (8 hours)
During Maintenance	Tetra Pak personnel	3,69 hours	Average preventive maintenance during 1000 hours production
	Final user personnel	3,02 hours	

2.1.2 Special Skills

During the start-up of the equipment, a person with the ability to set up the machine configuration page in the HMI, must be available.

2.1.3 Special Practices

Tetra Pak recommends that Tetra Pak staff and the final users cooperate during installation, commissioning, and validation of the equipment. The cooperation is a part of the training in how to operate and maintain the equipment.

2.1.4 Training

All operators of the equipment must have participated at a Tetra Pak operator training.

2.2 Consumables

2.2.1 Cleaning and Disinfecting Agents

See Operation Manual, chapter 10 Technical Data.

2.3 Maintenance Details

Tetra Pak recommends that the Tetra Pak Maintenance System (TPMS) is used. See the TPMS section in the Maintenance Manual for more information.

For information about how to perform the daily and weekly care, see the Operation Manual.

2.4 Spare Parts Supply

The spare parts supply must be managed to ensure the availability of needed spare parts. Tetra Pak provides services to support the spare parts supply.

2.4.1 Start-Up Parts

Start-Up Parts is a service that supports the final user of the equipment in optimizing the on-site parts inventory for selected equipment. The service is available during the first 12 months of production or 3000 hours of production. Tetra Pak and the final user regularly analyse parts consumption and optimize the inventory accordingly.

The service gives good parts management, optimized total parts cost, easy access to the right parts at the right time, improved cash flow, and reduced working capital, all of which leads to increased production availability.

2.4.2 Parts Inventory Management System

Parts Inventory Management System (PIMS) has been developed to provide an appropriate level of administration and control of the stock held on the final user's site. The main purpose of the system is to optimize the quantity of stock held, in order to ensure that the correct spare parts are available when needed.

2.4.3 Parts Recommendation Tool

The Parts Recommendation Tool identifies the type and quantity of parts the final user of the equipment should have on hand when installing new equipment. This recommendation focuses on the first 3000 production hours and is based on the final user's operation, equipment, and level of security and risk.

2.5 Quality Level and Procedures

2.5.1 Good Manufacturing Practices

Good Manufacturing Practices (GMPs) are guidelines used by food processing and packing facilites. Important GMPs are listed below:

- Keep facilites clean and in good repair.
- Use well constructed trash receptacles and keep them clean and in good repair.
- Provide adequate ventilation to minimize odours and vapours.
- Provide adaquate floor drainage for water, cleaning solutions and product that is relased onto the floor.
- Sewers and drains must be accessable for cleaning. Drains should never be located directly undereath the equipment.
- Provide convenient hand washing facilities with warm running water.
- Provide properly designed heating, venting and air condition (HVAC) systems to reduce the risk of airborne contamination.
- Provide proper personal hygiene apparel as described in your facility's GMPs and operating and safety procedures.

2.6 Site Preparations

2.6.1 General Requirements

Place the equipment in a working environment that is compatible with the hygienic design and function of the machine. We recommend that you take advantage of Tetra Pak's technical consulting services during the planning stages.

Note! Installation of the Cardboard Packer 32 machine does not require advanced site preparation.

2.6.2 Floor

To obtain a proper production it is necessary that the machine is standing stable on the floor. It is important that the floor is in a good state condition.

2.6.3 Space Requirement

For space required, see 1.1 Installation Drawings.

3 Mechanical Completion

About the Mechanical Completion Chapter

This chapter describes the mechanical completion of the equipment. The mechanical completion covers all activities from receipt of the equipment until the equipment is mechanically installed. The mechanical completion activity is finalized when a mechanical completion certificate is signed.

The chapter includes procedures to receive, assemble, and install the equipment. It also includes a checklist used to verify that the equipment is mechanical correctly installed.

3.1 Crate Handling . . . . . 3 - 5
3.1.1 Goods Reception and Storage . . . . . 3 - 5
3.1.1.1 Lifting and Unloading the Crated Equipment . . . . 3 - 5
3.1.1.2 Inspection . . . . . 3 - 8
3.1.1.3 Lifting Devices . . . . . 3 - 8
3.1.2 Moving the Crated Equipment . . . . . 3 - 9
3.1.3 Storing the Crated Equipment . . . . . 3 - 10
3.1.3.1 Short Term Storing . . . . . 3 - 10
3.1.4 Delivery Checks . . . . . 3 - 11
3.1.5 Opening the Crate . . . . . 3 - 12
3.1.6 Disposal of Reusable Material and Waste . . . . . 3 - 15
3.2 Positioning and Assembly . . . . . 3 - 16
3.2.1 Moving and Positioning . . . . . 3 - 16
3.2.1.1 Centre of Gravity Point . . . . . 3 - 17
3.2.1.2 Fork Lift Position . . . . . 3 - 18
3.2.2 Levelling . . . . . 3 - 19
3.2.3 Assembly . . . . . 3 - 20
3.2.3.1 Warning Lamp . . . . . 3 - 20
3.2.3.2 Infeed Conveyor . . . . . 3 - 21
3.2.3.3 Hose Brake (Not Included in the Machine) . . . . . 3 - 27
3.2.3.4 Internal Conveyor Lubrication . . . . . 3 - 27
3.2.3.5 Discharge Safety Device . . . . . 3 - 28
3.2.3.6 Queue Downstream Photocell Unit . . . . . 3 - 29
3.2.3.7 Optional Equipment . . . . . 3 - 30
3.3 Equipment Interfaces and Connections . . . . . 3 - 35
3.3.1 Utility Connections . . . . . 3 - 35
3.3.2 Electrical Connections . . . . . 3 - 37
3.3.2.1 Main Power Supply Cable . . . . . 3 - 38
3.3.2.2 Ethernet Cable . . . . . 3 - 39
3.3.2.3 SNP cable . . . . . 3 - 39

3.3.2.4 Line communication (X90 relay) cables . . . . . 3 - 39

3.4 Restore Tools and Site . . . . . 3 - 40

3.5 Mechanical Completion Inspection . . . . . 3 - 41

3.5.1 Equipment Interfaces and Connections. . . . . 3 - 42

3.5.2 Mechanical Completion Inspection . . . . . 3 - 43

3.1 Crate Handling

3.1.1 Goods Reception and Storage

Inspect the crate for signs of damage. If any signs of damage is found, follow the appropriate local regulations, and contact the transportation company.

3.1.1.1 Lifting and Unloading the Crated Equipment

DANGER

Immediate danger to life.

To ensure safe and efficient handling of the crate, carefully study the following instructions.

Symbol	Meaning
	Centre of gravity
	Lifting points for chains, cables, ropes or slings.
	This way up
	Fragile
	Keep dry
HANDLE WITH CARE	“Handle with care” warning
NOT TO BE DROPPED	“Not to be dropped” warning
	“Do not stack on top” warning
GROSS KG.	“Gross weight” value
NET KG.	“Net weight” value
REMOVE THIS SIDE FIRST	“Remove this side first” first side to remove from crate. **Note!** This is an additional label that does not exist on all crates.

3.1.1.1.1 Location of Packing List

The packing list is located inside the inspection hatch. See the arrow in the illustration below.

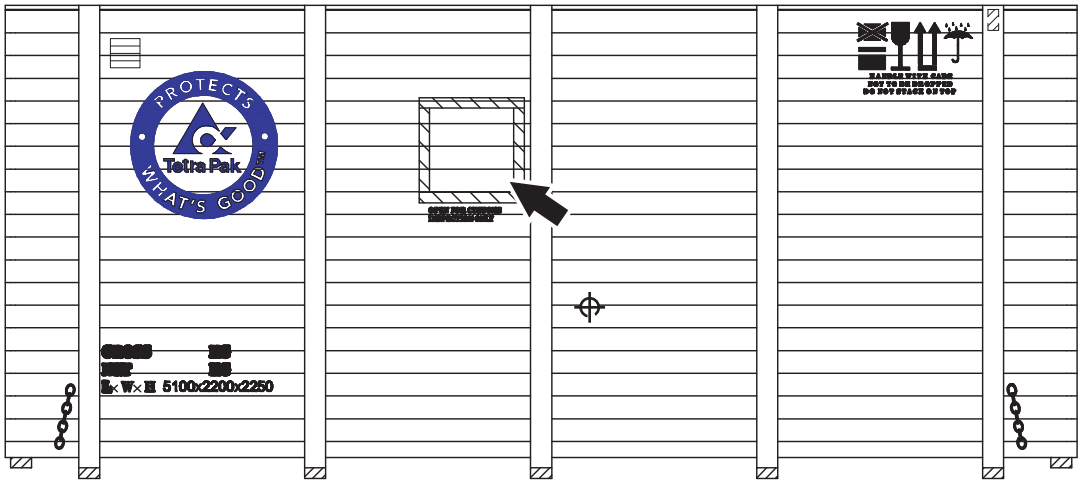

3.1.1.1.2 Correct Fork Lift Points

DANGER

Risk of crushing.

The crate may tilt if not observing the centre of gravity or the fork lift points. Failure to observe may result in immediate danger to life and/or major damage to equipment.

The crate is marked with centre of gravity symbol (1).

The lifting forks (2). must be positioned at equal distances from the symbol when lifting the crate. The forks should be set as wide as possible.

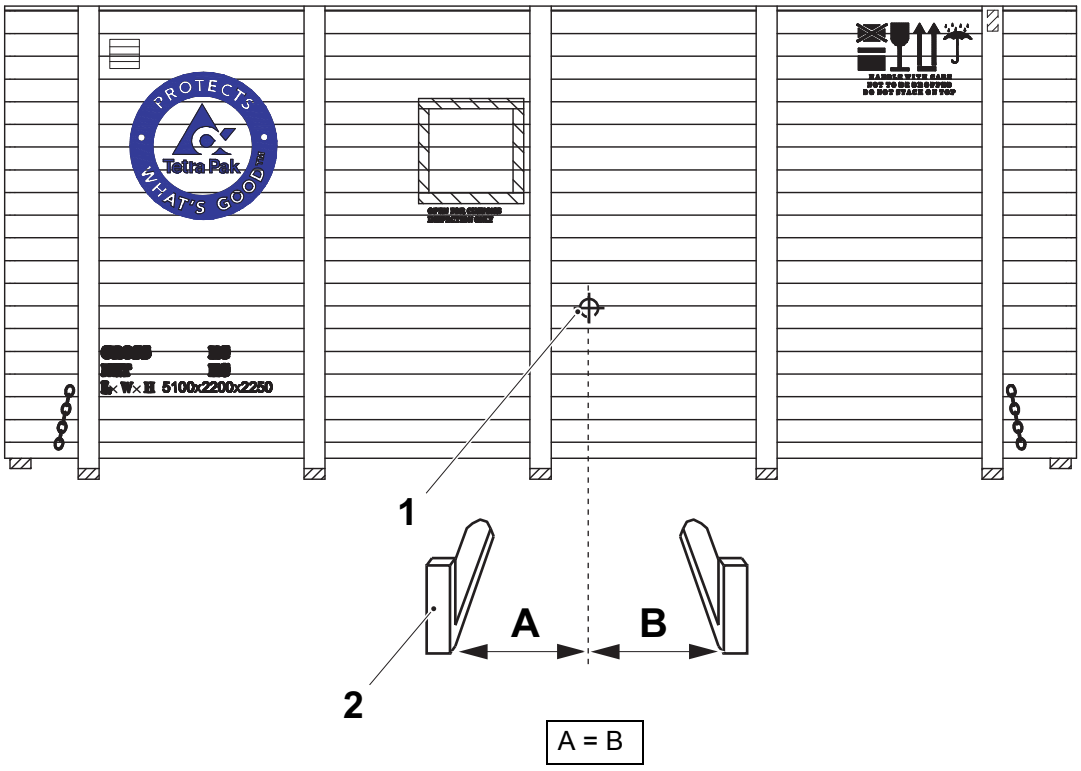

1 Centre of gravity symbol
2 Lifting fork

3.1.1.2 Inspection

a) Use the packing list to check that nothing is missing.

b) Inspect the equipment for damage.

c) Open the machine document box and check that the documentation corresponds with the machine and the machine number.

3.1.1.3 Lifting Devices

See 1.3.2 Auxiliary Equipment before lifting and unloading.

3.1.2 Moving the Crated Equipment

For mass and dimensions of the crate, see Section 1.3.1 Crate Data.

a) Lift the crate. Lift only enough to clear the floor.

b) Make sure that the crate remains stable on the lifting equipment.

CAUTION

Move the crate slowly and gently.

c) Move the crate to its destination.

d) Look through the customs inspection panel to see in what way the contents are facing. Position the crate to face the most convenient direction.

e) Lower the crate gently to the floor, leaving enough room around it for easy access to all sides.

f) Make sure that the crate is firmly supported. Put blocks or plates under it if necessary.

g) Remove the lifting equipment.

3.1.3 Storing the Crated Equipment

CAUTION
Risk of equipment damage.
Store the crates indoors. Exposure to damp or too high or low temperatures may damage the equipment.

The crate delivered is intended to be **used for transport and short term storing**. If storing the contents for a long time, the contents have to be repacked in a suitable and well ventilated (open) crate.

3.1.3.1 Short Term Storing

a) If the crate is wet /damp and only has to be stored short term, open it immediately allowing the contents to dry.

b) Make sure that the storage environment respects the following conditions:

Contents	Recommended storage temperature	Recommended storage humidity	Special recommendations
Machine	-20°C to +70°C	10 to 95%	Keep dry to prevent condensation and corrosion on connections inside the electrical cabinet.
Cardboard	< 30°C	Approximately 65%	
Adhesive	10 to 30°C		The adhesive can be stored for a maximum of one year. Try to avoid dust and damp in the storage facility. The first box in should be the first box out.

3.1.4 Delivery Checks

WARNING

Risk of personal injury.

Follow the recommendations below to avoid injury when unpacking the machine.

a) Examine the outside of the crates before starting to unload, and record any damage. This information must later be recorded on the Transport Damage Report.

b) Record the readings of the humidity indicators and tipping indicators attached to the outside of the crates (if present). This information must later be recorded on the Transport Damage Report.

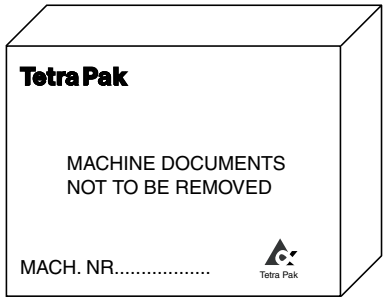

3.1.5 Opening the Crate

WARNING

Risk of crushing.

The crate sides may tilt during removal. Failure to observe can result in serious personal injury.

a) Remove the bolts on the front edge (1) of the top lid.

b) Remove the bolts on the rear edge (2) of the top lid.

c) Remove the bolts on the sides (3) and (4) of the top lid.

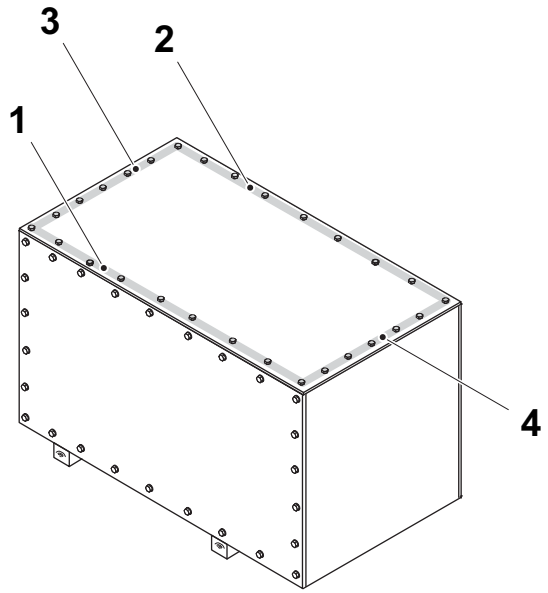

1 Front edge
2 Rear edge
3 Side
4 Side

(Cont'd)

(Cont'd)

d) Use the forklift truck to lift off the top lid.

Note! Use a crowbar or a similar tool to lift up the front edge (1) of the top lid so the forks can reach under the lid.

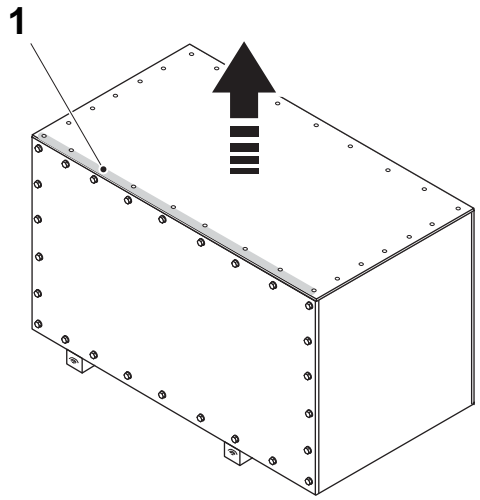

1 Front edge

e) Remove the cross beams (5). The number and location of the cross beams (5) may vary depending of machine variant.

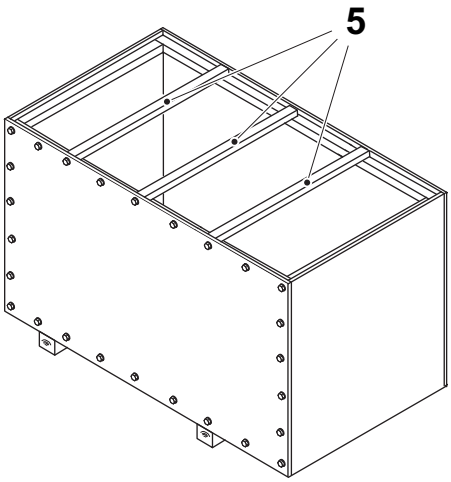

5 Cross beam

(Cont'd)

(Cont'd)

f) Before removing any bolts, position a forklift truck with its forks (6) in the direction indicated with an arrow in the illustration. This will protect the front from falling.

Note! Start with the side marked “Remove this side first” if such a marking is present on the crate.

g) Remove the bolts on the sides (7) and (8).

h) Remove the bolts on the upper edge (9) of the crate.

i) Remote the bolts on the lower edge (10) of the crate.

Note! Do not remove the corner bolts (11) yet.

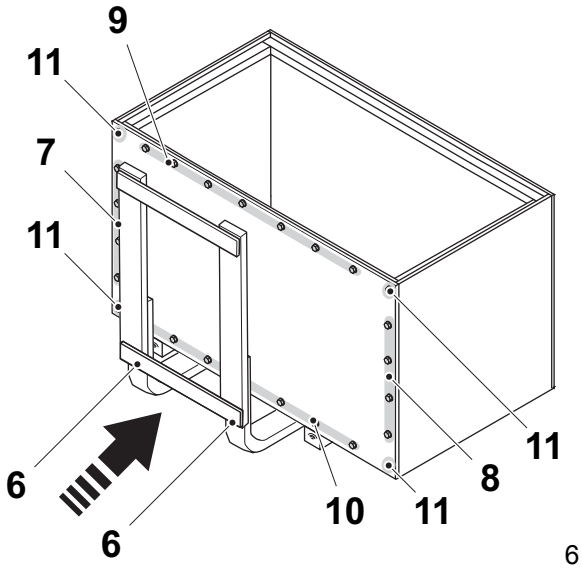

6 Forks
7 Side
8 Side
9 Upper edge
10 Lower edge
11 Bolt

(Cont'd)

(Cont'd)

j) Make sure that the forks (6) are close to the front.

k) Remove the corner bolts (11) and lower the front against the forklift truck.

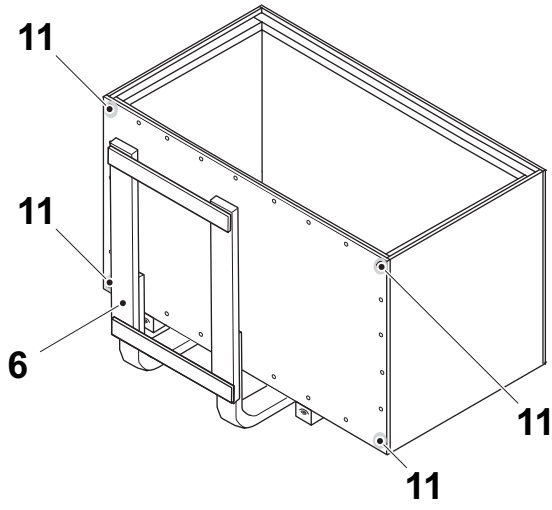

6 Forks
11 Bolt

l) Remove the beam (12).

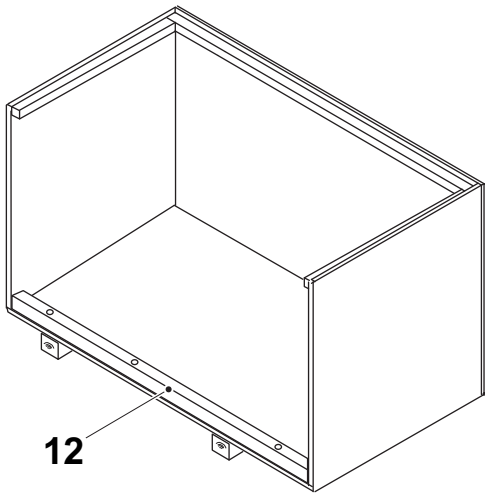

12 Beam

3.1.6 Disposal of Reusable Material and Waste

Reusable Packing Materials and Structures

Reusable packing materials and structures should be collected and re-used in accordance with local regulations.

Non Reusable Packing Materials and Structures

Non reusable packing materials and structures should be collected and disposed of in accordance with local regulations.

3.2 Positioning and Assembly

3.2.1 Moving and Positioning

DANGER

Immediate danger to life.

The machine may tilt if not observing the centre of gravity or the fork lift points. Failure to observe may result in immediate danger to life and major damage to equipment.

Use the correct lifting equipment. See the section 1.3.2 Auxiliary Equipment.

a) Check that the machine can be transported to the assembly site without any problems regarding ceiling height, doors, passages.

b) Remove the machine from the crate. Lift only enough to clear the crate. When lifting the machine using a fork lift truck, use the fork lift positions as shown in Section 3.2.1.2 Fork Lift Position.

c) Manoeuvre the machine out of the crate.

d) Lower the machine feet approximately 85 mm to facilitate the levelling later on.

e) Move the main body to its place of production and position it. See also the measurements given in Section 1.1 Installation Drawings.

The following table contains data needed for handling the uncrated machine:

Machine variant	Weight (kg)	Length (mm)	Width (mm)	Height (mm)
Z-infeed	1725 (with WA + 75)	3600	2100	2200
U-infeed	1725 (with WA + 75)	4650	2100	2200

(Cont'd)

(Cont'd)

3.2.1.1 Centre of Gravity Point

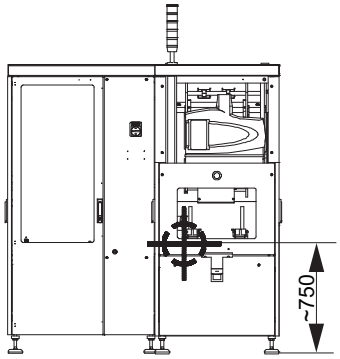



Centre of gravity

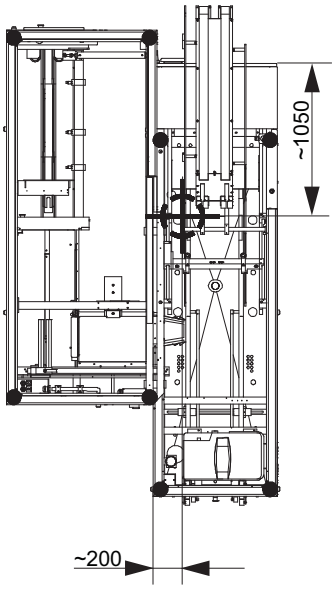

Z-infeed

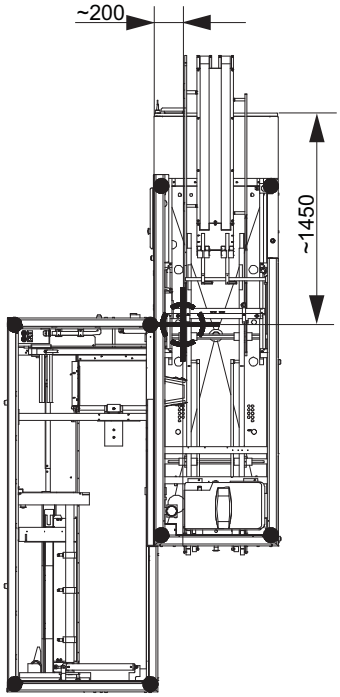

U-infeed

3.2.1.2 Fork Lift Position

Beware not to hit the machine feet with the fork lift. It could result in serious frame damage on the machine.

Put the forks (3) according to the drawing below. Fork length must reach across both the Tray forming (1) and Pattern forming (2).

Z-infeed

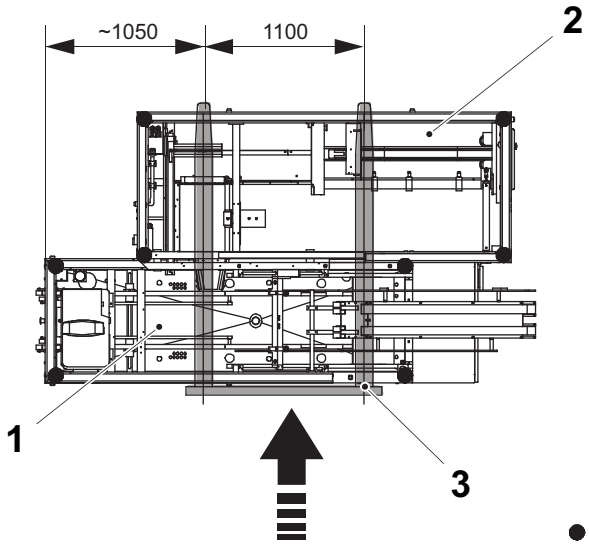

Machine foot

U-infeed

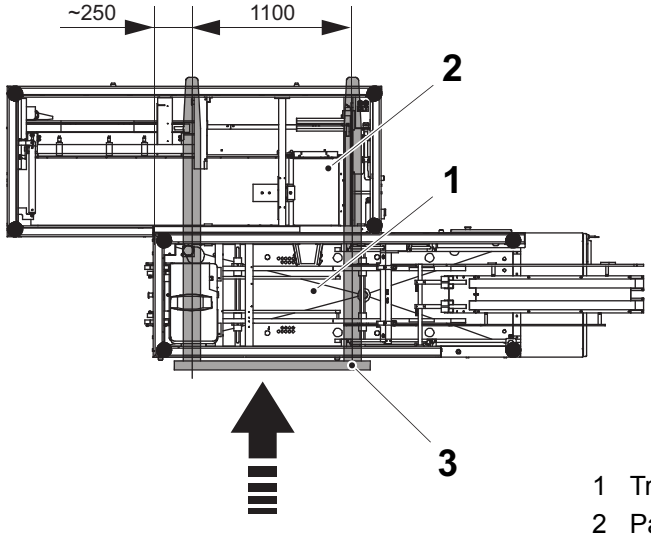

1 Tray forming
2 Pattern forming
3 Forks

3.2.2 Levelling

a) Check that the machine is positioned straight with for example a measuring tape. This to facilitate the connection of the infeed conveyor.

b) Check that the machine is in level with for example a spirit level. Put the spirit level in a central place in the machine, for example on the beam (1) between the tray forming and the pattern forming. If necessary, adjust by turning the machine feet (2) to a level of longitudinally ±1 mm/m. Hydraulic jacks can be used to facilitate the setting.

c) Make sure that the infeed height is correct, see 1.1 Installation Drawings.

d) Check that the feet are fasten in a proper way.

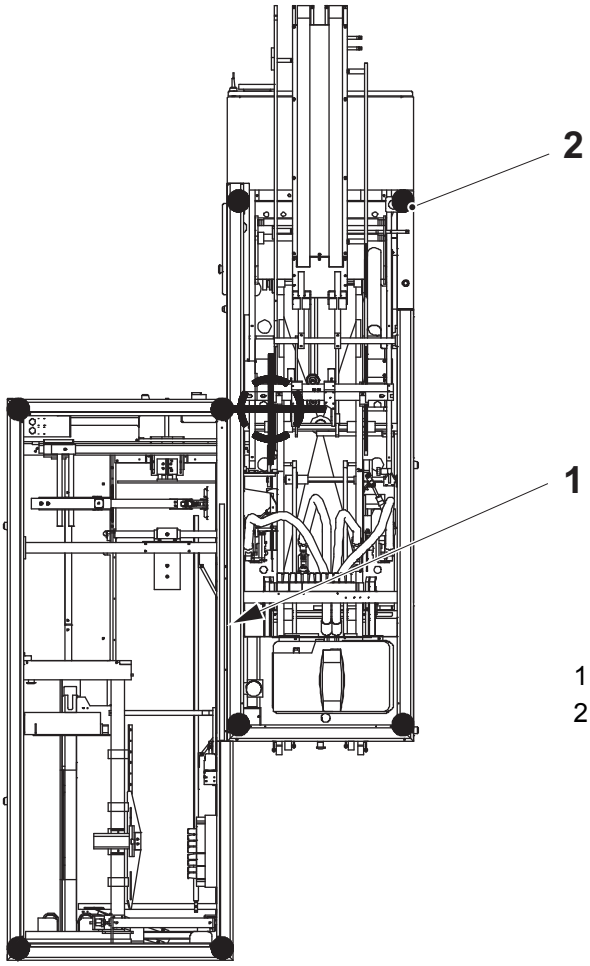

1 Beam
2 Machine foot (8 pieces)

3.2.3 Assembly

3.2.3.1 Warning Lamp

The warning lamp has been mounted upside down in order for the machine to fit in the crate.

a) Loosen the warning lamp (1).

b) Turn the warning lamp and assemble it in the same holes as it was assembled before, with the same screws on the same place. The warning lamp can be assembled under point (2), (3), (4) or (5), depending on which type of infeed the machine has.

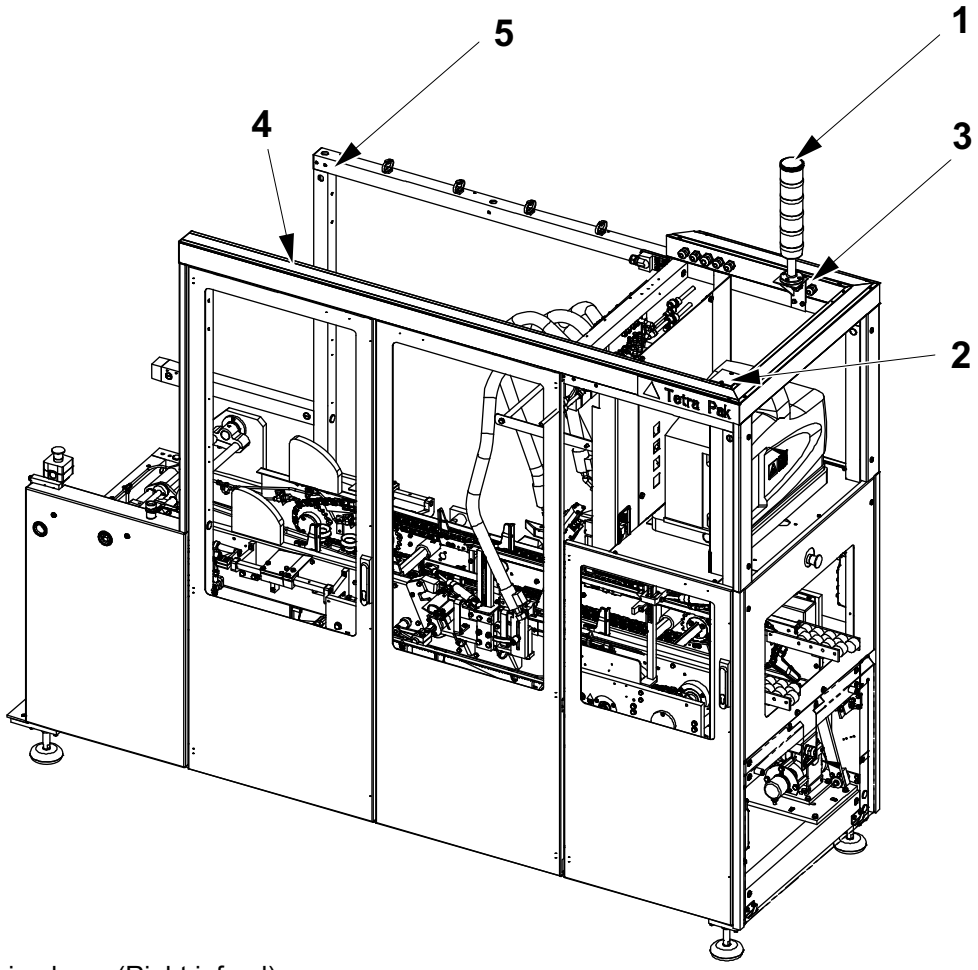

1 Warning lamp
2 Position for warning lamp (Right infeed)
3 Position for warning lamp (Left infeed)
4 Alternative place for warning lamp (Right infeed)
5 Alternative place for warning lamp (Left infeed)

3.2.3.2 Infeed Conveyor

The infeed conveyors that can be used are:

- Tetra Package Conveyor 21 (TPC 21)
- Package Conveyor 23 (PC 23)
- Unit Conveyor 24 (UC 24)
- Tetra Unit Conveyor 54 (TUC 54)

a) Assemble the conveyor body (1) to the machine.

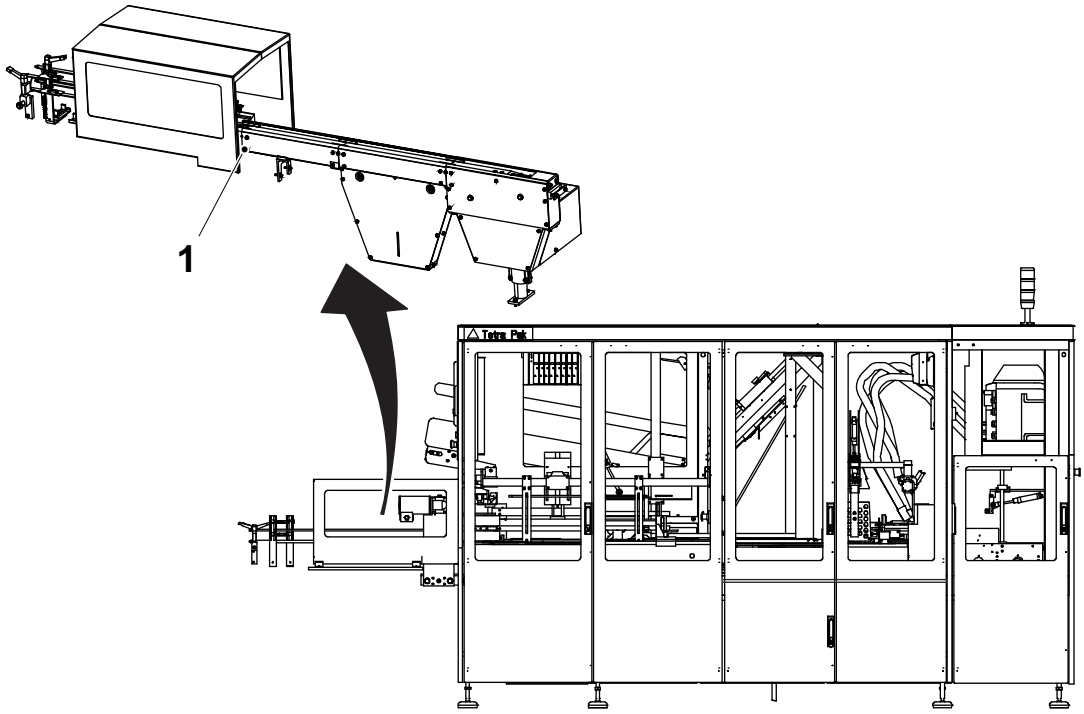

1 Attachment point
2 Conveyor body

Railing

Depending on which infeed conveyor the machine is equipped with, it is different railings to assemble, see the illustrations below.

a) Assemble the railing (1) to the conveyor body (2).

b) Assemble the railing (1) to the brake unit (3). For more information about measurements, see Section 1.1 Installation Drawings.

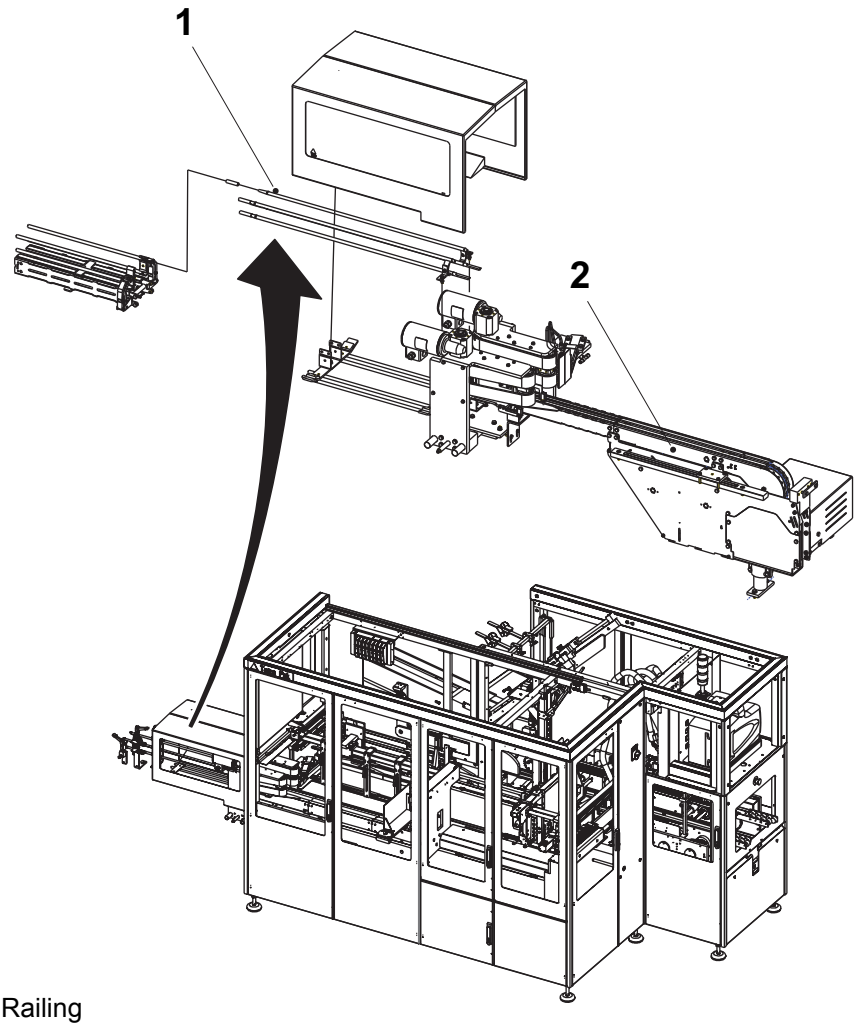

1 Railing
2 Conveyor body
3 Brake unit

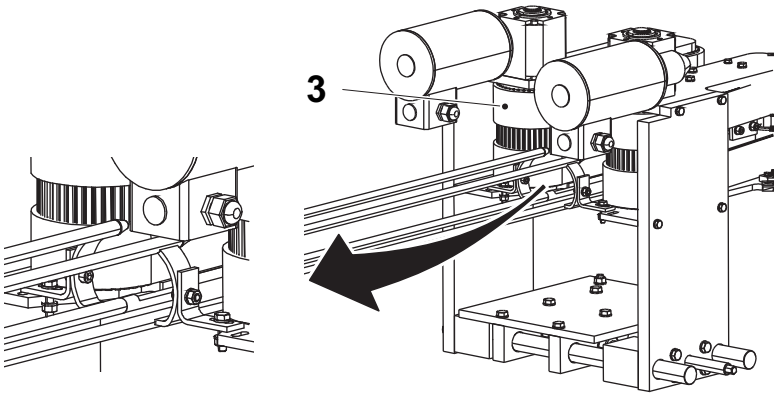

Queue Guard, Double

Depending on which infeed conveyor the machine is equipped with there are different queue guards to assemble, see the illustrations below.

Assemble the photocells (1), (2), (3), (4), (5), and (6) to the holders (7). For more information about measurements, see 1.1.1 Infeed and 1.1.3 Z-infeed.

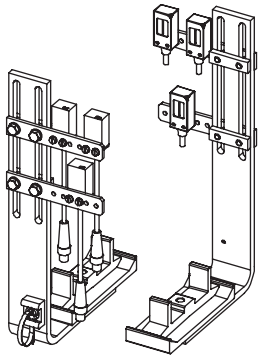

TPC 21

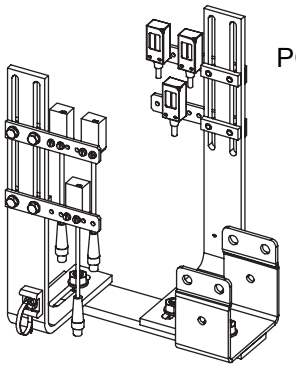

PC 23

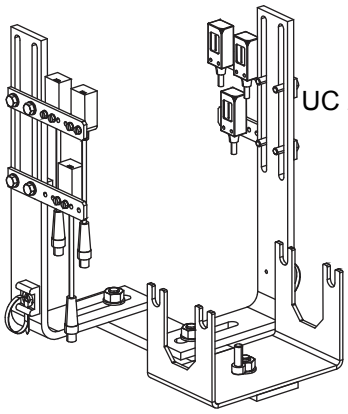

UC 24

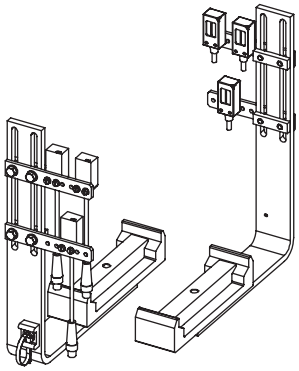

TUC 54

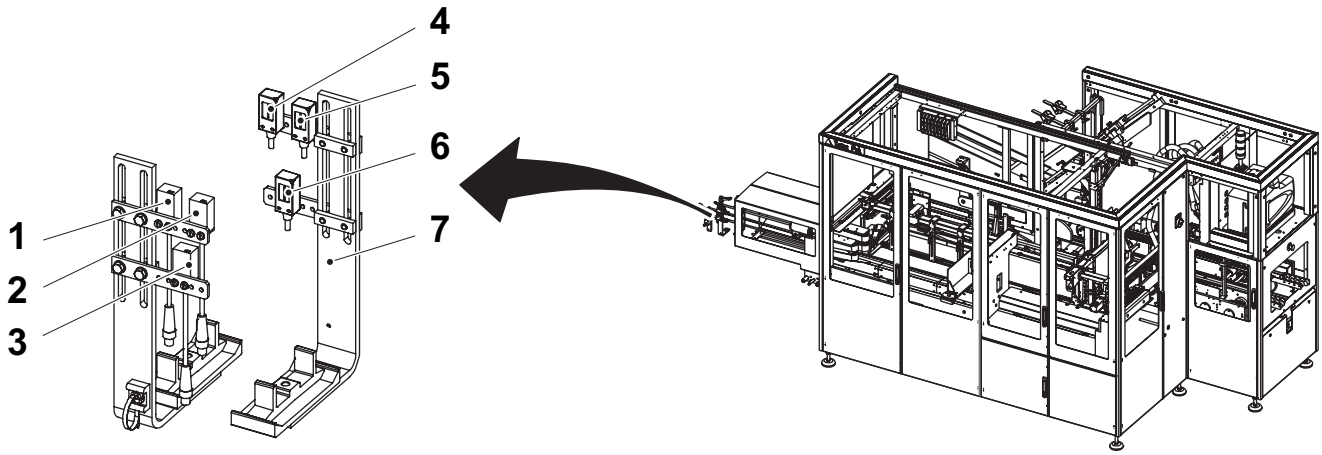

1 Photocell W30B0115, *W30B0114
2 Photocell W30B0119, *W30B0118
3 Photocell W30B0111, *W30B0110
4 Photocell W30B0114, *W30B0115
5 Photocell W30B0118, *W30B0119
6 Photocell W30B0110, *W30B0111
7 Holder

* Z-infeed RH and U-infeed LH

Units on the infeed conveyor depending on line automation

Depending on Line automation choice in HMI configuration page, see 4.1.1-1 Control Panel - Set TPOP. There are different types of units that can be installed, see configuration table below.

a) Set the start conveyor photocell (1) in the transfer between the Cardboard Packer 32 infeed conveyor and previous conveyor.

b) Set the infeed overflow photocell (2) to distance A from the queue guard double (3).

c) If external conveyor brake is installed:

– set photocell dispense control (5) to distance B measured from grip area of brake.

Note! It shall read in a straight line across the conveyor (not angled).

– set photocell queue after brake (6) to distance A.

Configuration Line Automation

Material/Equipment				Line automation choice (HMI configuration page)			
Pos	**Reference designation**	**Placement**	**Function**	**Line controller (Ethernet)**	**X90 relay control**	**Photocell control**	**No Line automation**
1	W10B0906	Conveyor intersection, see picture	Photocell, start conveyor	Not allowed	Not allowed	Install	Not allowed
2	W30B0140	A	Photocell, infeed overflow	Install	Install if Tetra Recart else Not installed	Not allowed	Not allowed
3	W30B0110, W30B0111, W30B0114, W30B0115, W30B0118, W30B0119	see 1.1.1 Infeed	Infeed queue/ fallen pack/ speed	Install	Install	Install	Install
4	W10K0901	see 1.1.1 Infeed	External conveyor brake:	Not allowed	Optional	Optional	Optional
5	W10B0902, W10B0903	B	Photocell, dispense control	Not allowed	Optional	Optional	Optional
6	W10B0904, W10B0905	A	Photocell, queue after brake	Not allowed	Optional	Optional	Optional
7	-	see 1.1.1 Infeed	Package trap	Optional	Optional	Optional	Optional

(Cont'd)

(Cont'd)

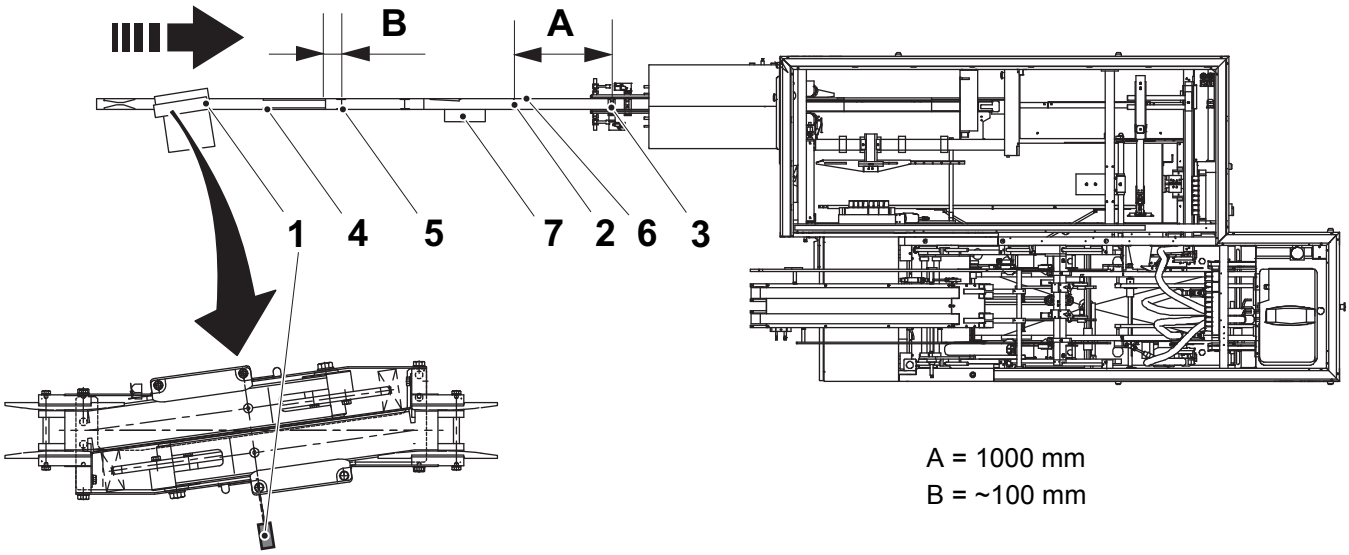

A = 1000 mm
B = ~100 mm

1 Photocell unit (Start conveyor) W10B0906
2 Photocell unit (Infeed overflow) W30B0140
3 Queue guard double
4 External conveyor brake W10K0901
5 Photocell unit (External conveyor brake, dispense control) W10B0902, W10B0903
6 Photocell unit (External conveyor brake, queue after brake) W10B0904, W10B0905
7 Package trap Aero

Tunnel

WARNING

Moving parts can cause serious injuries.
Never run the machine if the tunnel is not fitted.

a) Loosen the clamping plates (1) and remove the tunnel (2).

b) Assemble the brackets (3) to the infeed conveyor.

c) Assemble the tunnel (2) to the clamping plates (1).

For more information about the measurements, see 1.1 Installation Drawings.

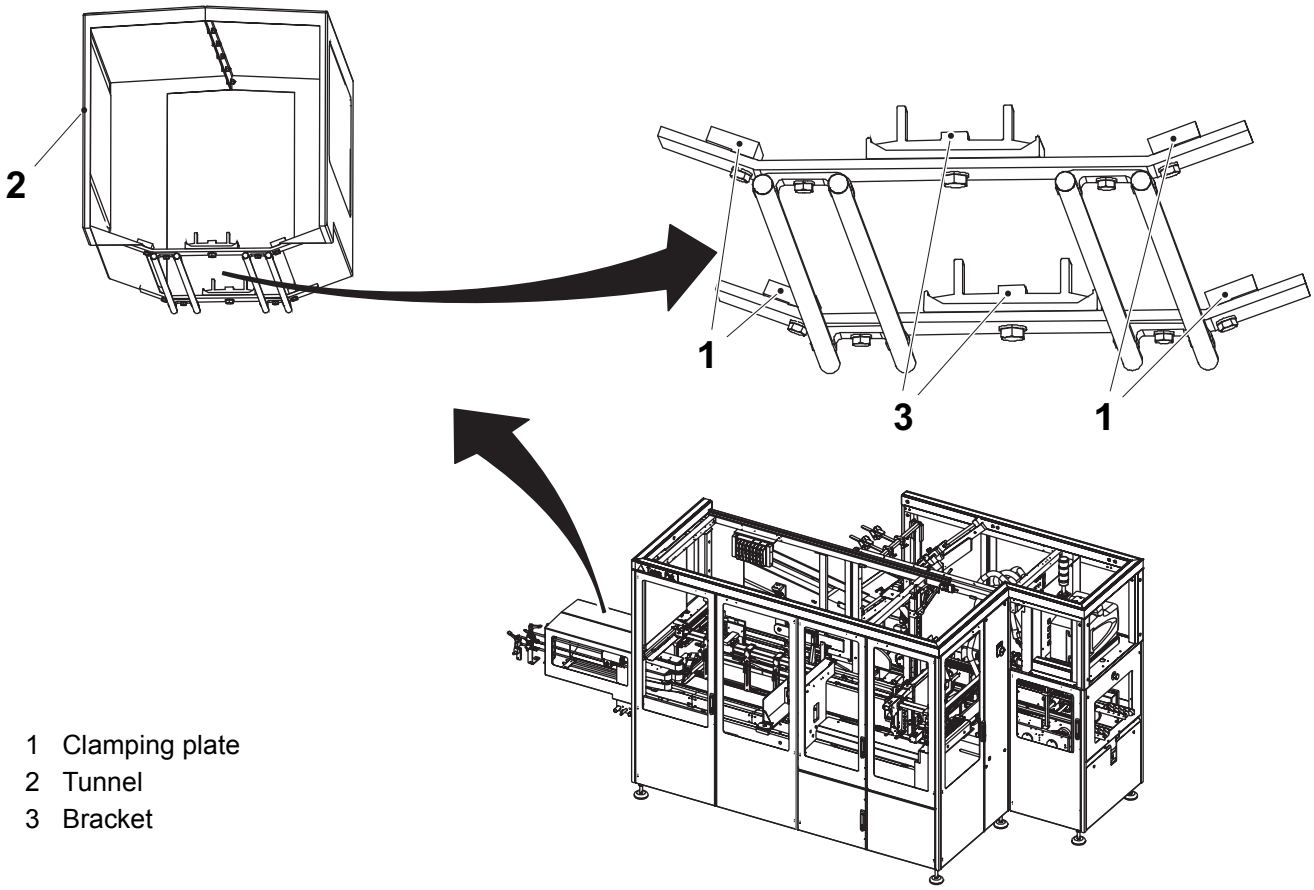

1 Clamping plate
2 Tunnel
3 Bracket

3.2.3.3 Hose Brake (Not Included in the Machine)

Assemble the hose brake (1) according to the measurements in section 1.1 Installation Drawings and the hose brake photocells (3) according to chapter 3.2.3.2 Infeed Conveyor section Units on the infeed conveyor depending on line automation

See also 3.3 Equipment Interfaces and Connections. Perform the electrical connection according to the Electrical Manual.

3.2.3.4 Internal Conveyor Lubrication

Connect the machine for internal conveyor lubrication (2), see 1.1 Installation Drawings. See also 3.3 Equipment Interfaces and Connections.

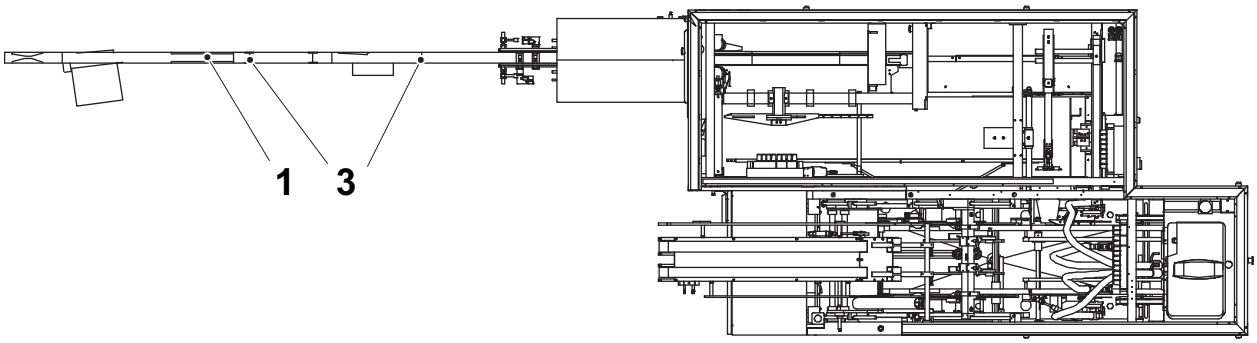

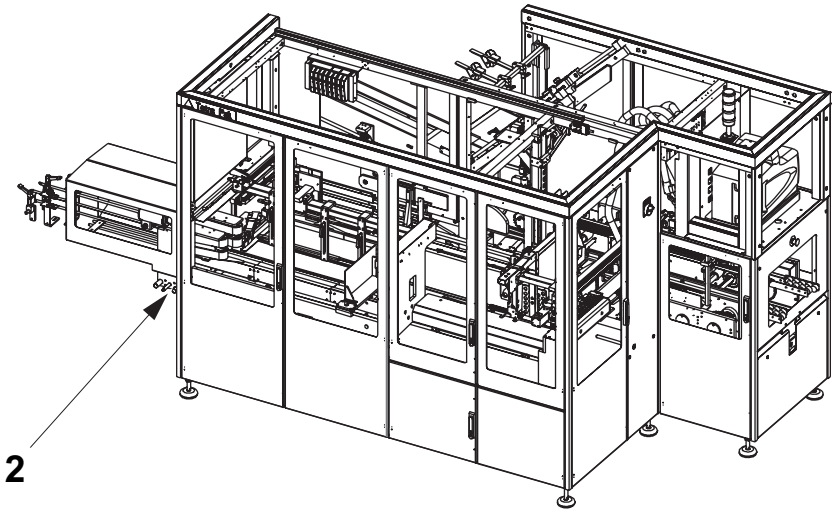

1 Hose brake
2 Internal conveyor lubrication connection
3 Hose brake photocells

3.2.3.5 Discharge Safety Device

WARNING

Machine directive.

Due to the various demands of discharge units, the outlet is covered by a guard plate (1) that has to be removed and replaced by a safety device that fulfils the Machinery directive 2006/42/EC and sub directives.

See 1.1.6 Discharge Unit (Optional) for approved safety devices.

Remove the guard plate (1).

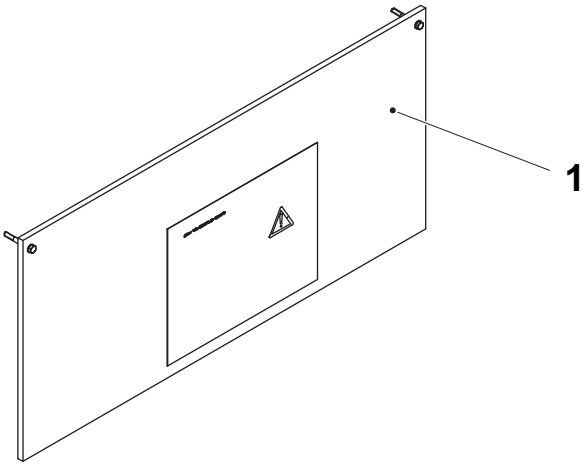

1 Guard plate

3.2.3.6 Queue Downstream Photocell Unit

A photocell unit (1) should be assembled to control the queue downstream when using conveyors at discharge side. The position of the photocell unit has to be where it can indicate if a queue is built up from the machine downstream. It should be possible for the Cardboard Packer 32 to stop if the queue is becoming to long.

The distance A must be minimum 1 meter, and the photocell must be mounted at the distance B from the connection point (2) with the next conveyor.

Note! The photocell (1) must NOT be mounted on the Cardboard Packer 32 driven conveyor (3), since then false alarm might occur when the Cardboard Packer 32 conveyor stops.

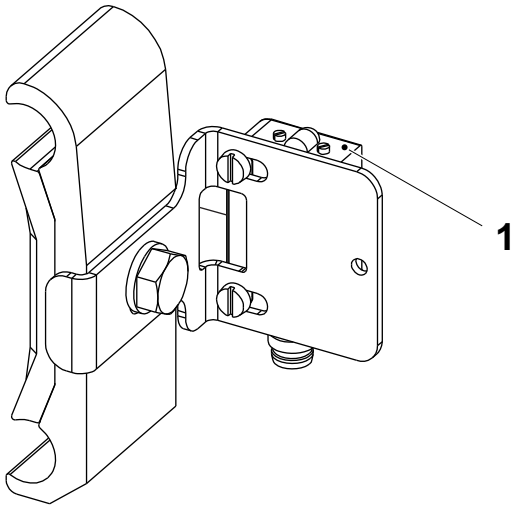

A = Minimum 1000 mm
B = About 1 tray length for the longest tray to be run

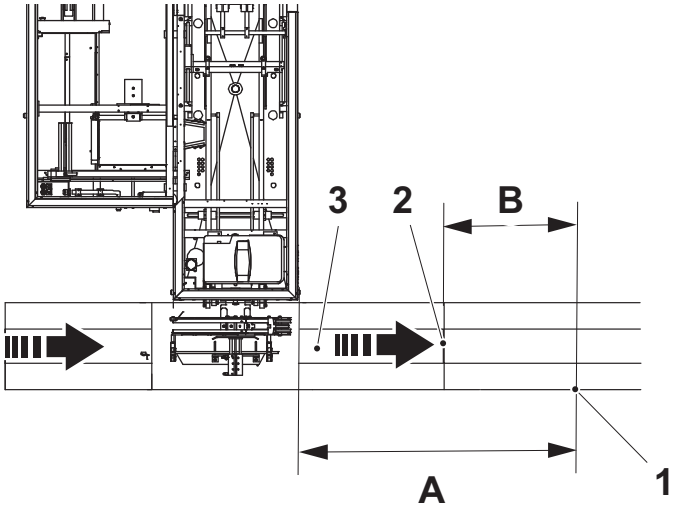

1 Photocell W90B0910
2 Conveyor connection point
3 Cardboard Packer 32 driven conveyor

3.2.3.7 Optional Equipment

WARNING

Machine directive.

In order to fulfil the safety demands associated with the CE sign, the machine must be equipped either with the optional components described in section 1.1.6 Discharge Unit (Optional), or with any similar equipment that also complies with Machine Directive 2006/42/EC and sub directives.

Discharge Unit for Tetra Unit Conveyor 24

A machine can be equipped with any of the following types of discharge units:

- Left Out
- Right Out

Tip! For more information about the measurements, see 1.1 Installation Drawings.

Assembly

a) Assemble the bracket (1) to the machine with the screws (2).

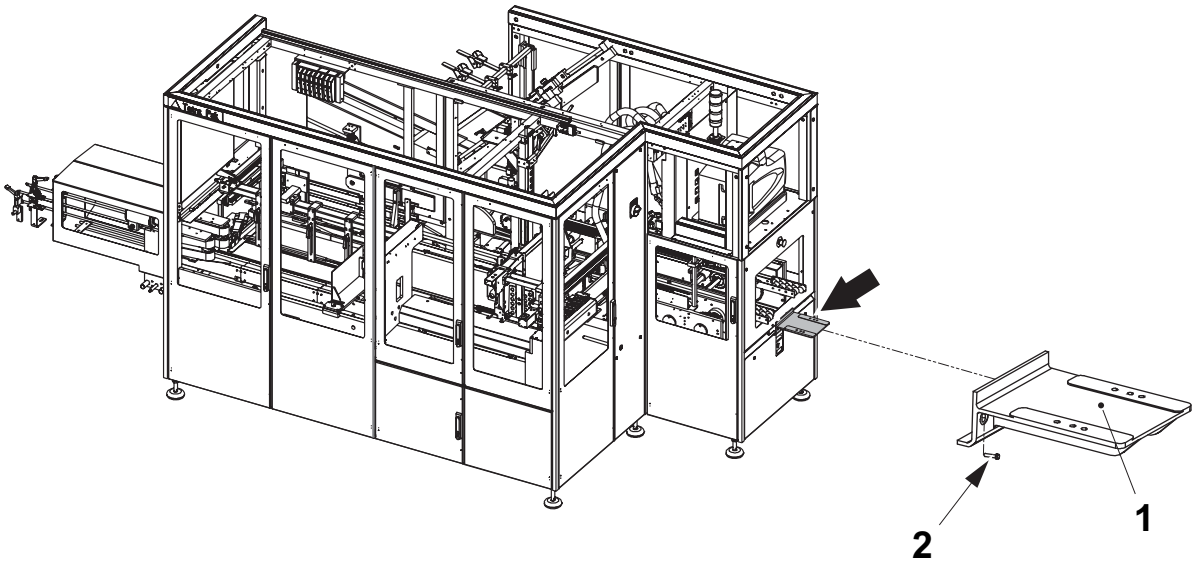

1 Bracket
2 Screw (2 pieces)

(Cont'd)

(Cont'd)

b) Fit the conveyor (3) to the bracket (1) with the clamps (4) and the screws (5). Use one of the holes (A), (B) or (C) according to the table below.

c) Fit the discharge support (6) to the conveyor (3).

d) Set the discharge support, see Discharge Support - Set.

e) Fit the gable plate (7) on the conveyor railing.

Note! Switch side of the gable plate (7) depending on right or left discharge direction.

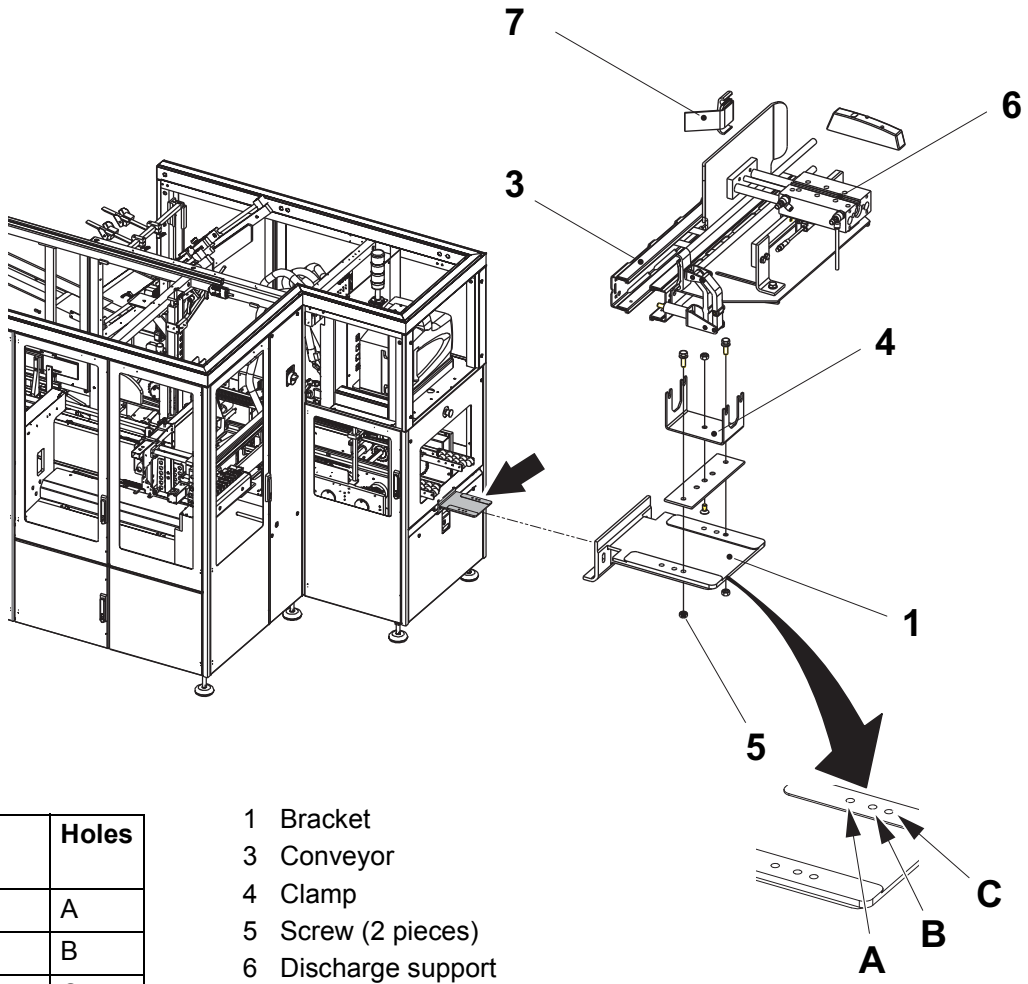

Discharge unit width	Holes
U152	A
U207	B
U247	C

1 Bracket
3 Conveyor
4 Clamp
5 Screw (2 pieces)
6 Discharge support
7 Gable Plate

Discharge Support - Set

Adjust the speed of the cylinder (3) with the throttles (2) and (4) as follows:

a) Loosen screws (5).

b) Pull in the cylinder close to the railing.

c) Tighten the screws (5).

d) Adjust the throttle (2) to set the plus movement.

e) Adjust the throttle (4) until the discharge support plate (1) damp down the tray when the tray hits the discharge support plate (1).

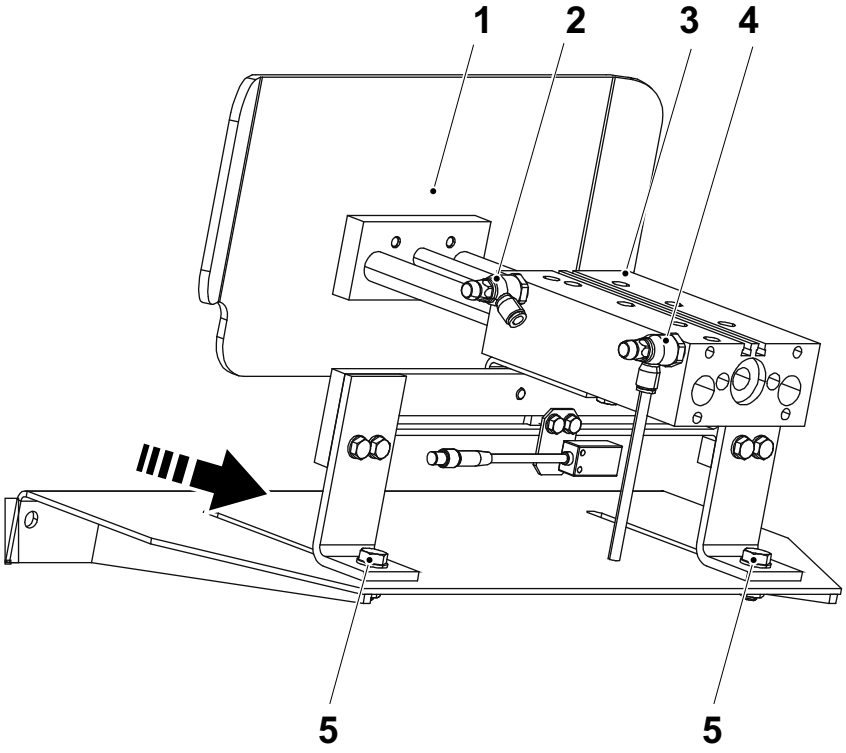

1 Discharge support plate
2 Throttle
3 Cylinder V50M0390
4 Throttle
5 Screw

(Cont'd)

(Cont'd)

f) Set the position A for photocell (6). If the distance A is more than 100 mm, it can lower the capacity but the discharge will be more safe. The purpose of the photocell (6) is to detect when it is possible for the discharge support plate (1) to receive a new tray when they come out from the machine. The photocell (6) also detects that the tray has went away on the conveyor (without a crash).

Note! If the conveyor direction is opposite from the indicated, the distance A refers to the other edge of the tray.

g) Set the reading distance for the photocell (6) to sense maximum the distance B. The photocell (6) may not detect longer than to the rail (7) closest to the discharge of the machine.

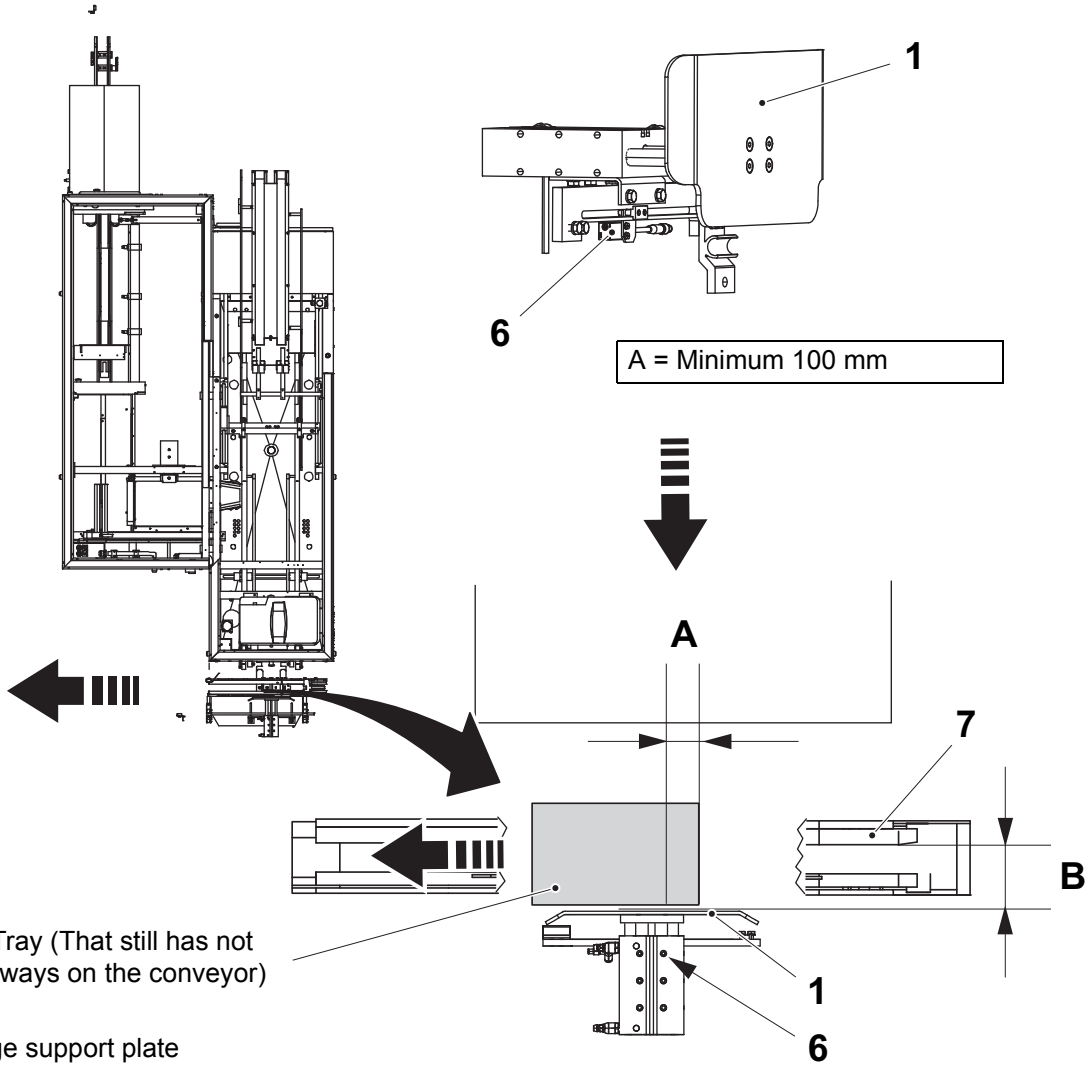

1 Discharge support plate
6 Photocell W50B0118
7 Rail

Discharge Unit for Tetra Roller Conveyor 58

To assemble the discharge unit (1) at the front of the machine, do the following:

a) Assemble the bracket (2) to the machine using the screws (4).

b) Assemble the discharge unit (1) to the bracket (2).

c) Tighten the screws (3).

d) If the discharge unit continues onto another conveyor, remove the stop (6).

Note! The tunnel (5) shall be placed horizontally (0°) and not parallel to the conveyor (1).

For more information about the measurements, see 1.1.6.2 Tetra Roller Conveyor 58.

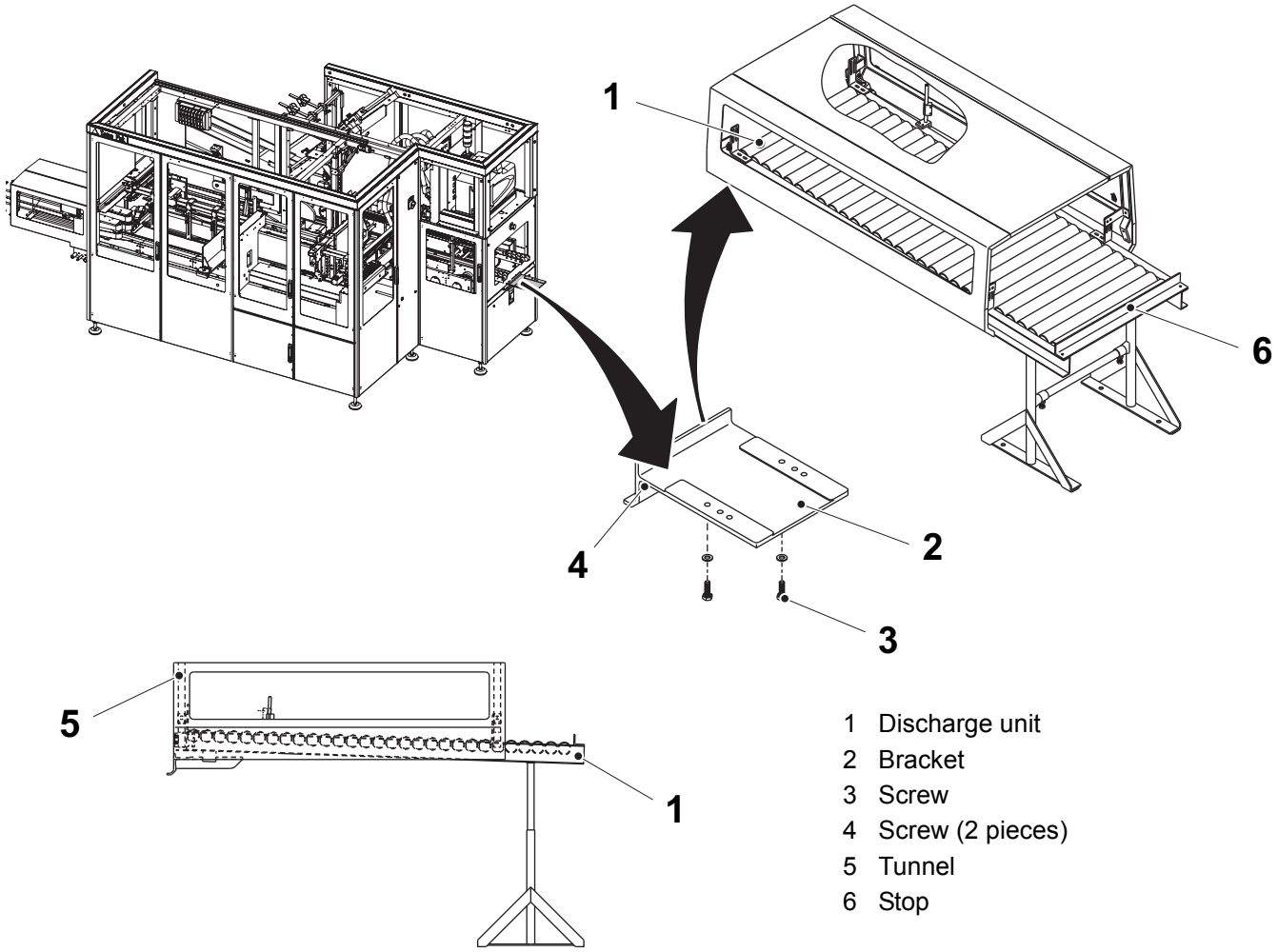

1 Discharge unit
2 Bracket
3 Screw
4 Screw (2 pieces)
5 Tunnel
6 Stop

3.3 Equipment Interfaces and Connections

3.3.1 Utility Connections

WARNING

Risk of personal injury.

Make sure that air supply to the machine is switched OFF before performing any connection work.

Inlet/Outlet Connections for Compressed Air and Water

a) Connect the water hose to the water connection (1).

b) Connect the compressed air hose to the air connection (2).

See 1.4 Utility and Utility Connection Data, 1.1.1 Infeed and 1.1.3 Z-infeed for measurements.

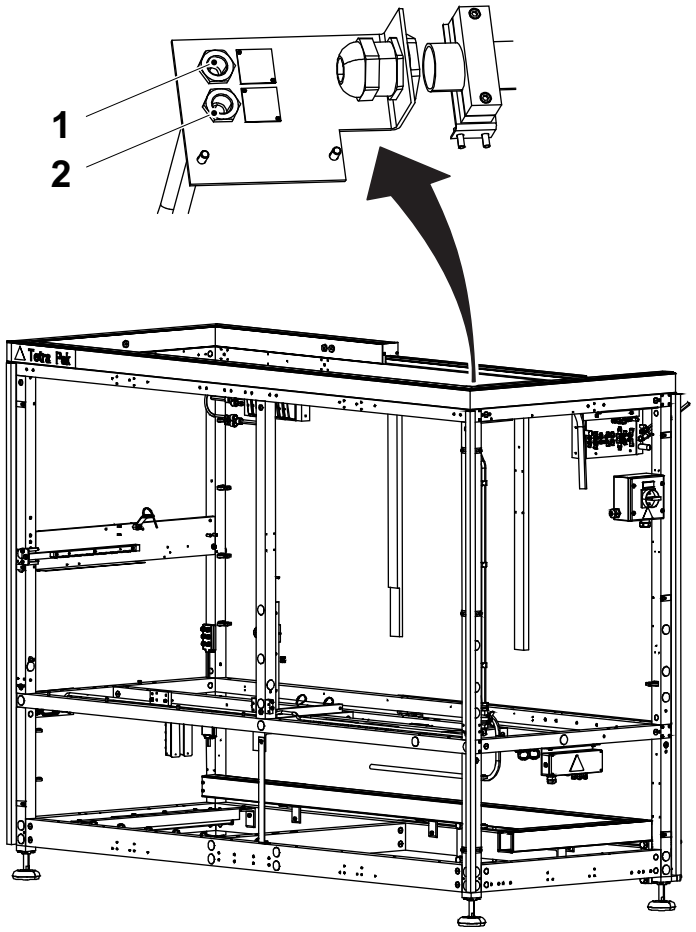

1 Water connection 1/2”

2 Compressed air connection 1/2” or quick release coupling

(Cont'd)

(Cont'd)

c) Connect the spray gun hose to the spray gun connection (3).

d) Connect the hose brake hose to the hose brake connection (4).

e) Connect the lubrication hose to the internal conveyor lubrication connection (5). For lubrication use in first hand liquid conveyor lubrication. If it is not available, use water.

f) Connect the air jet gun hose to the air jet gun connection (6).

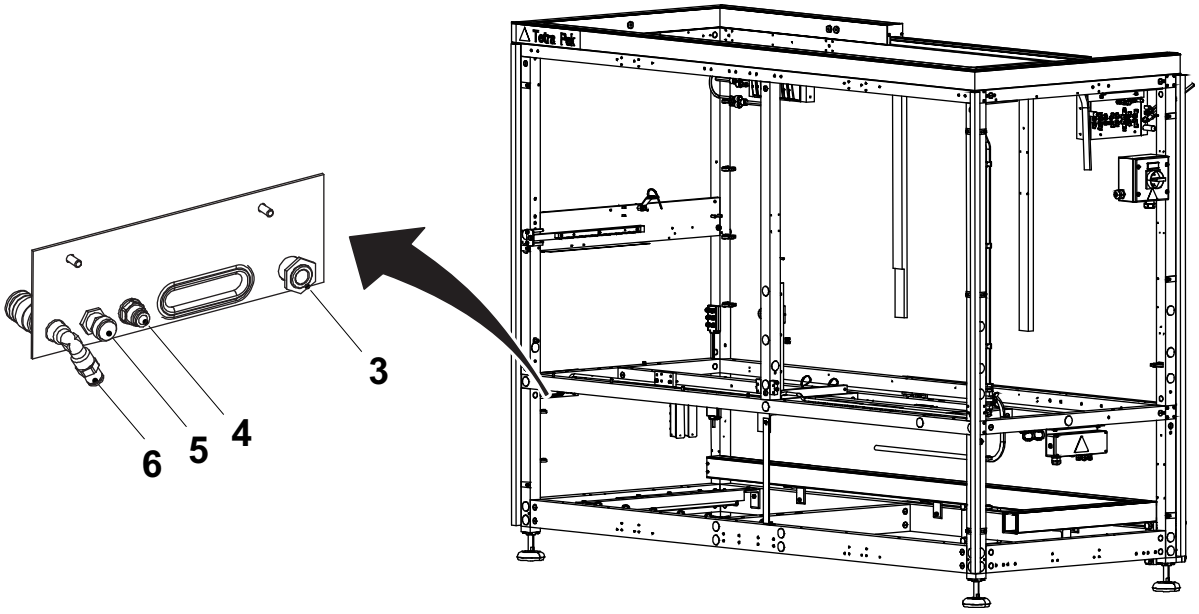

3 Spray gun connection (optional)
4 Hose brake/ Package Turner 100 (Air)
5 Internal conveyor lubrication connection
6 Air jet gun connection (optional)

3.3.2 Electrical Connections

DANGER

Risk of electrical shock and short circuits.
Make sure that power is switched OFF upstream before performing any work on cables and electrical components.

Perform the electrical connection according to the Electrical Manual. See also 1.1 Installation Drawings.

3.3.2.1 Main Power Supply Cable

a) Install the additional protective conductor (1), the supplementary bonding to the building's equipotential net (2) and the power supply cable (3) through the cable gland (4) and further through the stainless steel pipe (5).

Note! The main supply cable must be routed minimum 1 m straight up from the top of the machine before it turns away. The main supply cable must never be routed through the machine.

b) Connect the power supply cable (3) to the main switch (6).

c) Connect the additional protective conductor (1) to the earth terminal marked E2 inside the main switch cabinet (6).

d) Connect the supplementary bonding (2) to the earth terminal marked E3 inside the main switch cabinet (6).

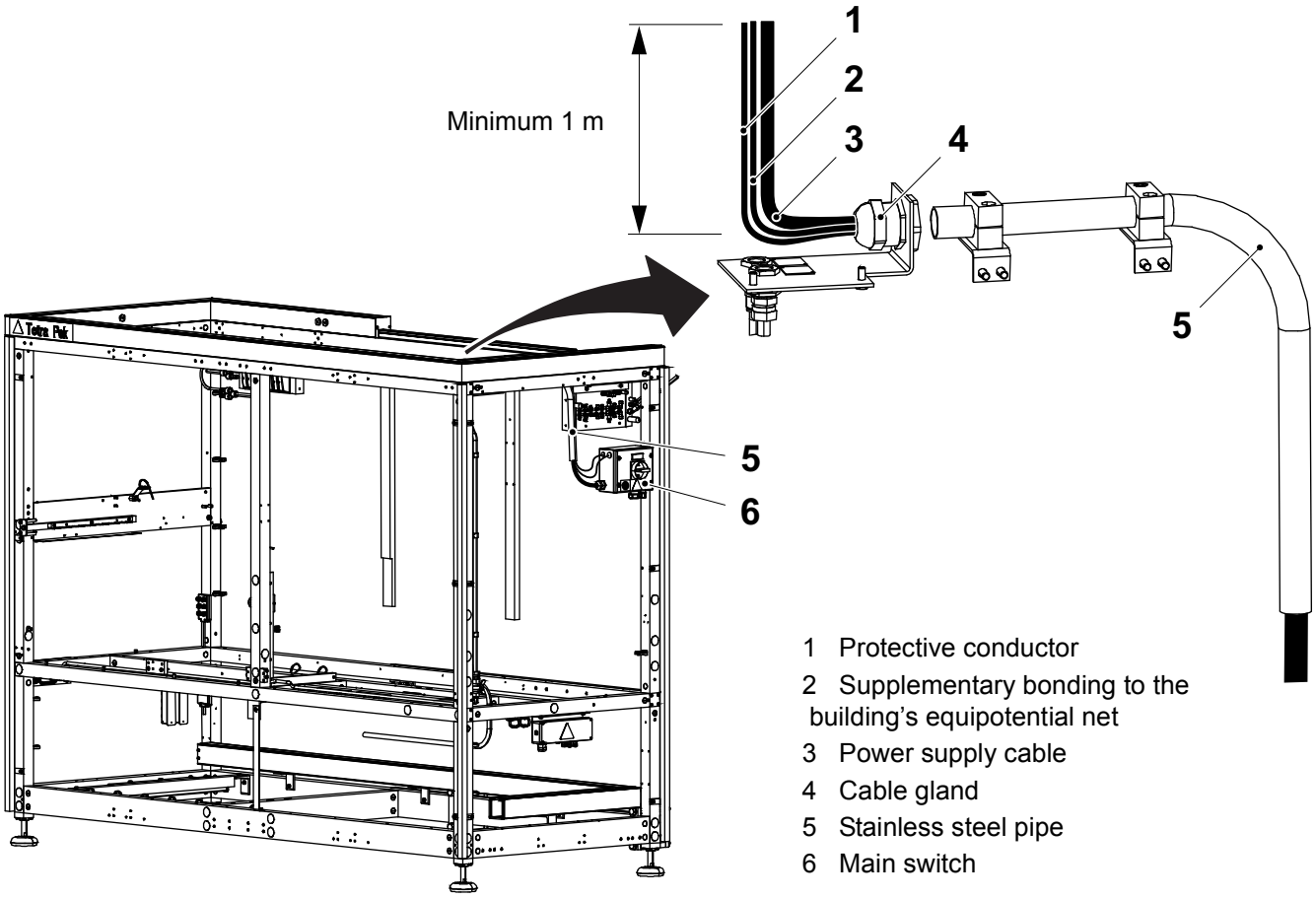

1 Protective conductor
2 Supplementary bonding to the building's equipotential net
3 Power supply cable
4 Cable gland
5 Stainless steel pipe
6 Main switch

3.3.2.2 Ethernet Cable

a) If Line Controller or PPQ (Tetra Recart) Connect the incoming ethernet cable to the ethernet switch (1) in the electrical cabinet.

b) Perform the electrical connection according to the Electrical Manual.

3.3.2.3 SNP cable

If SNP, connect the SNP cable according to the Electrical Manual at the SNP converter (2).

3.3.2.4 Line communication (X90 relay) cables

If Line communication (X90 relay), connect the upstream and/or downstream signals according to the Electrical Manual.

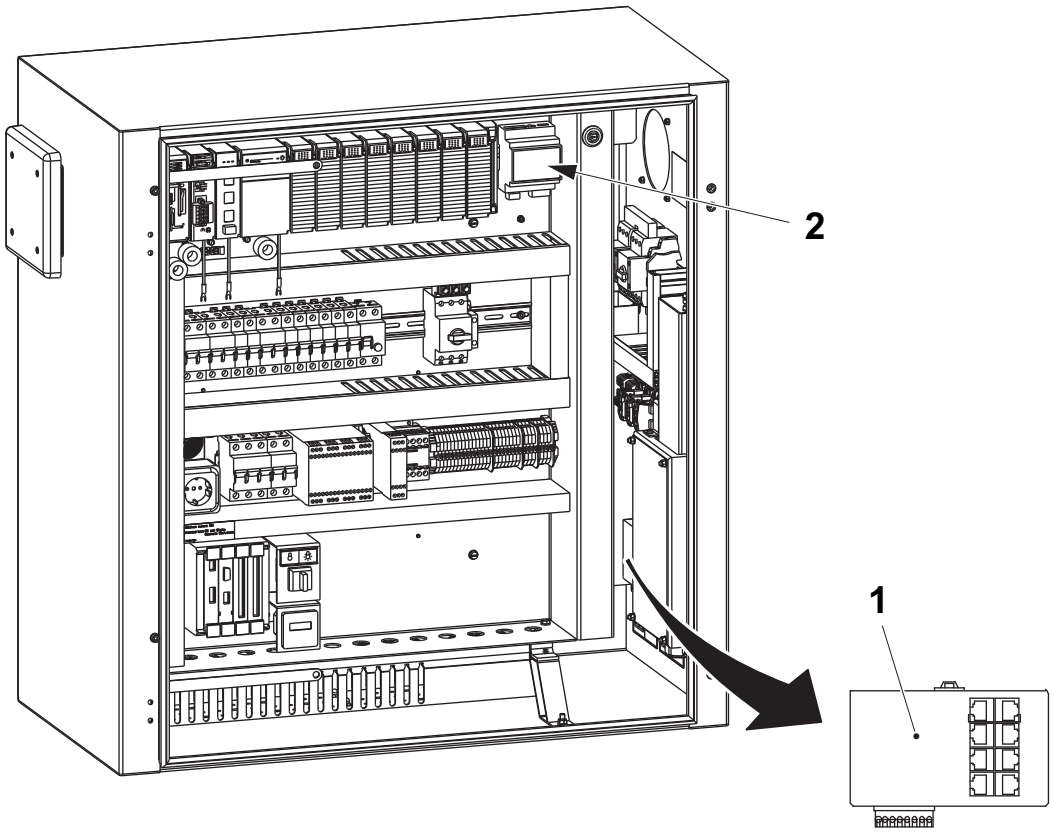

1 Ethernet switch
2 SNP converter

3.4 Restore Tools and Site

Make sure that

- all protective plastic is removed from the equipment
- all lifting tools and other installation tools are removed from the area around the equipment
- the area around the equipment is properly cleaned
- the equipment is properly cleaned
- the site is restored to production status

3.5 Mechanical Completion Inspection

The purpose of the mechanical completion inspection is to verify that the equipment in question has been delivered and is installed in accordance with the relevant documentation. This inspection must be carried out in conjunction with all involved parties, and prior to commissioning. All relevant installation documents are to be used for this task.

Defects or faults together with necessary actions and timing to correct the deviations must be recorded in the checklist. See Section 3.5 Mechanical Completion Inspection. Commissioning must not be started until the mechanical completion inspection has been completed.

WARNING

Immediate danger to life.

During the final installation check, it is important that the procedures are followed very carefully since the safety devices may be non-functional. One of the reasons to make the final installation check is to check that the safety devices are functioning correctly.

Use the checklist as follows:

- Under Note, document any deviations, incorrect values, or comments.
- Under Signature, sign that the check is performed.

No.	Text	Reference Document (IM unless other document specified)	Note	Signature
1	All equipment has been delivered according to packing list. All delivered equipment has been checked for transport damages All transport damages have been reported.	Packing list Crate opening/Damage report (ItP)		
2	Ensure that the documents below are available in the correct EU language, quantity (2 of each), and correspond with the specific machine. – IM – MM – OM – SPC – EM All documentation has been stored as agreed with the user.			
3	The disposal/return of crates, and so on, has been taken care of as agreed with the user.			
4	The machine is positioned according to approved layout and without interference with operating area.	Layout drawing		
5	All the pipes and hoses entering through the lead-through plate under the platform are connected.			
6	All protective covers are in place and secure			
7	All the doors open and close correctly			

3.5.1 Equipment Interfaces and Connections

	Check	**Reference document (IM unless other document specified)**	**Note**	**Signature**
1	Electrical supply: – fuse rating checked – cable installation is finished – connection of phases, neutral, and earth have been checked – all protective covers are in place and secure.			
2	The main supply cable is not routed through the machine. It is routed 1 m straight up from the top of the machine before it turns away			
3	There are no leakages from the utility connections: – compressed air – water			
4	Electrical site test	KA 2727.10 DE-P474 DE-P475		

3.5.2 Mechanical Completion Inspection

	Check	**Reference document IM unless other document specified**	**Note**	**Signature**
1	Position and assembly of equipment verified.	IM/Layout drawing		
2	Layout drawing(s) updated to “as built” status if applicable.			
3	Connections (utilities, product lines, CIP lines, and communication) verified.			
4	Risk and safety assessment completed.	KA 2157.12 KA 2157.01		
5	Mechanical completion certificate issued.			

No.	Text	Done
1	Inspect the compressed air connection. Make sure that the connection is done correctly.	
2	Inspect the electrical connection. Make sure that the connection is done correctly.	
3	Make sure that all delivered equipment is assembled in accordance with the instruction in the 3.2 Positioning and Assembly chapter.	
4	Make sure that the machine is correctly connected to the infeed and discharge conveyors. Set the infeed conveyor length via the TPOP.	
5	Check the direction of rotation for motor T40M0050; that the transfer belt moves towards the end stop.	
6	Check all pressure gauges settings according to the Operation Manual.	
7	Check the machine programme (function, program steps, and alarms) as described in the Operation Manual.	
8	Make sure that the Start-up kit is delivered together with the machine.	

Note! This machine has been tested with dummies and might need a fine tuning on settings to fit packages at site. Note that filling machine packages made of fibre can differ from each other.

Follow these steps to complete the installation check. See the Maintenance Manual for settings.

No.	Text	MM Procedure
1	Fold a tray manually and check that the packages are fitting in the current tray. The packages shall fit exactly.	

4 Commissioning

About the Commissioning Chapter

This chapter describes the commissioning of the equipment. The commissioning covers all activities from the first start up of the equipment until the equipment is validated and ready for commercial production. The commissioning activity is finalized when a commissioning certificate is signed.

4.1 Functional Validation . . . . . 4 - 5

4.1.1 Set and Check Machine . . . . . 4 - 5

4.1.1-1 Control Panel - Set TPOP . . . . . 4 - 6

4.1.1-2 Machine - Check before Test Run . . . . . 4 - 13

4.1.1-3 PLMS - Install config file . . . . . 4 - 13

4.1.1-4 Machine - Set before Test Run . . . . . 4 - 14

4.1.2 Test Run . . . . . 4 - 19

4.2 Commissioning Inspection. . . . . 4 - 20

4.2.1 Commissioning Inspection . . . . . 4 - 21

This page intentionally left blank

4.1 Functional Validation

4.1.1 Set and Check Machine

These procedures are performed to check for smooth mechanical movement and to verify that no components have come loose or moved out of alignment during shipping.

4.1.1-1 Control Panel - Set TPOP

Machine Status	Power supply disconnector ON Air valve OFF

Configure the TPOP on the machine by entering the following information. See the Operation Manual for descriptions and detailed explanations of the TPOP.

- Set user.
- Set the date and time (see the Maintenance Manual).
- Set language group
  - Press the SYSTEM SETUP button (1) and then SHUT DOWN (2)
  - Press the CONFIRMATION button (2) to shut down the HMI or the CANCEL button (4) to abort the operation.

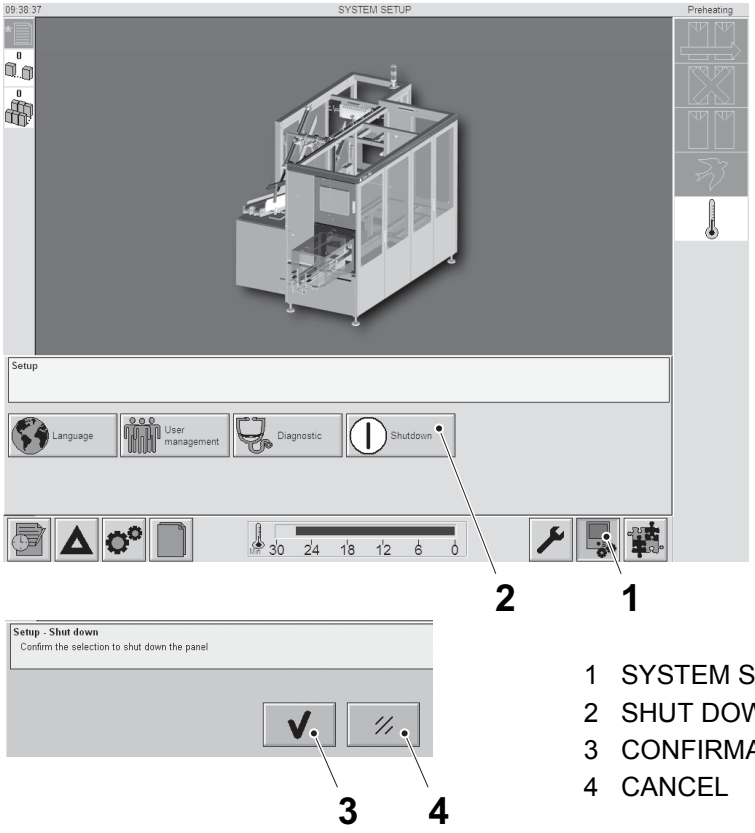

1 SYSTEM SETUP
2 SHUT DOWN
3 CONFIRMATION
4 CANCEL

(Cont'd)

(Cont'd)

– Press LOAD APPLICATION (5) to select the required language group.
– Press RUN APPLICATION (6) to start the application with your selected language group.

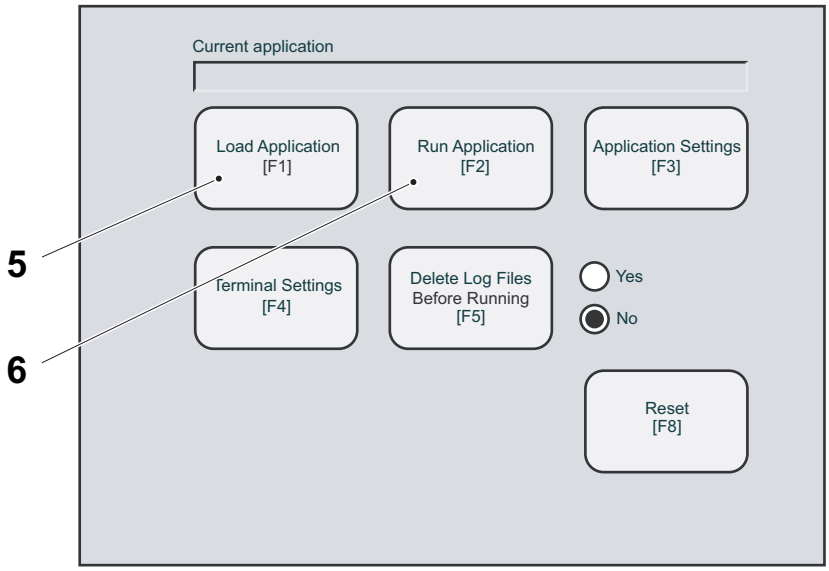

5 LOAD APPLICATION [F1]
6 RUN APPLICATION [F2]

Group A		Group B		Group C	
English	01	English	01	English	01
Swedish	02	Czech	17	Arabic	21
German	03	Serbian	19	Persian	22
French	04	Croatian	31	Malay	23
Spanish	05	Slovenian	32	Japanese	24
Italian	06	Slovak	33	Simplified Chinese	25
Portuguese	07	Romanian	35	Thai	28
Danish	08	Bulgarian	36	Korean	30
Greek	09	Bosnian	37	Traditional Chinese	53
Finnish	11	Hungarian	52	Vietnamese	54
Polish	18	Macedonian	38		
Dutch	26	Russian	12		
Norwegian	27	Latvian	13		
Icelandic	29	Estonian	14		
Turkish	20	Lithuanian	15		

(Cont'd)

(Cont'd)

- Set the language.
  - Press the LANGUAGE button (1).
  - The selectable languages (2) are shown.
  - Press the ADD LANGUAGE button (3) to add a language.
  - Press the LANGUAGE button (4) multiple times until the desired language is shown.
  - The selected language is now loaded and selectable.

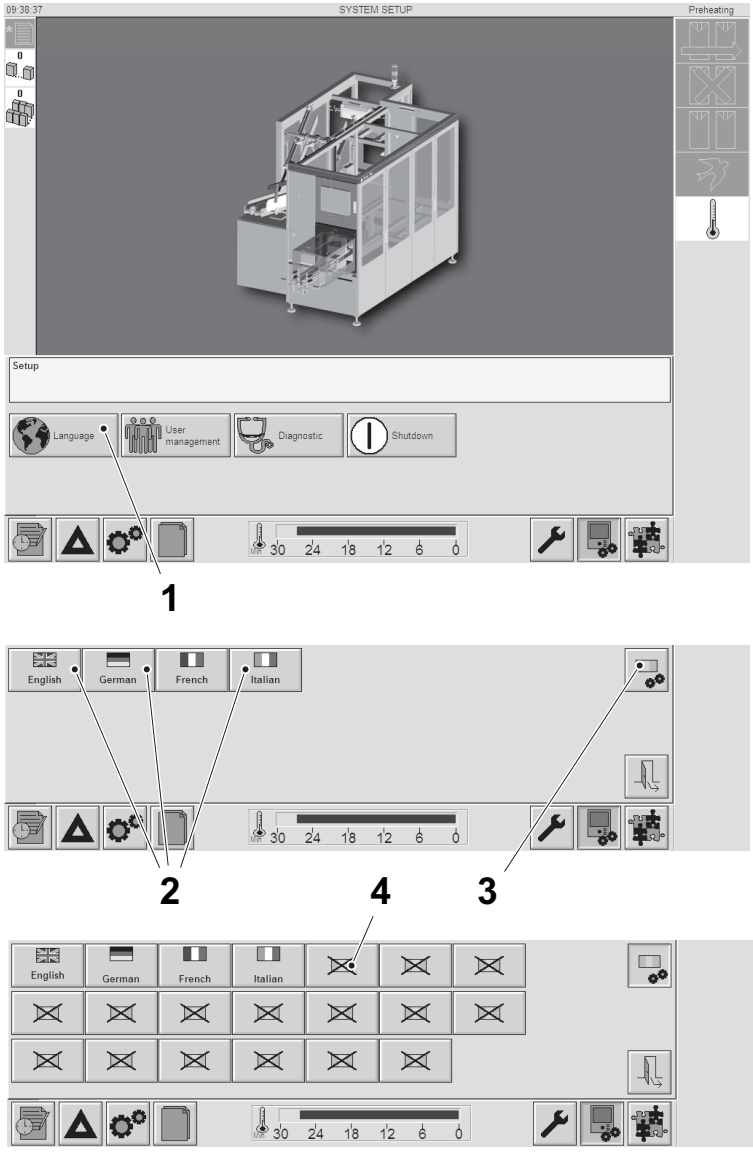

1 LANGUAGE
2 Selectable languages
3 ADD LANGUAGE
4 LANGUAGE

(Cont'd)

(Cont'd)

- Check the machine number. Check that the machine number (4) matches the machine number of the machine plate. Step down the machine to ladder step IDLE to change this setting.
- Set Line automation type
  - Chose Line automation type (1) depending on installation
- Set PLMS type
  - Choose PLMS type (2) depending on installation.
  - If PLMS SNP is chosen also set correct SNP Id (3) (default for single Cardboard Packer 32 is 9400).
  - If PLMS PPQ is chosen and dual Cardboard Packer 32 are installed, select the correct machine position (5)

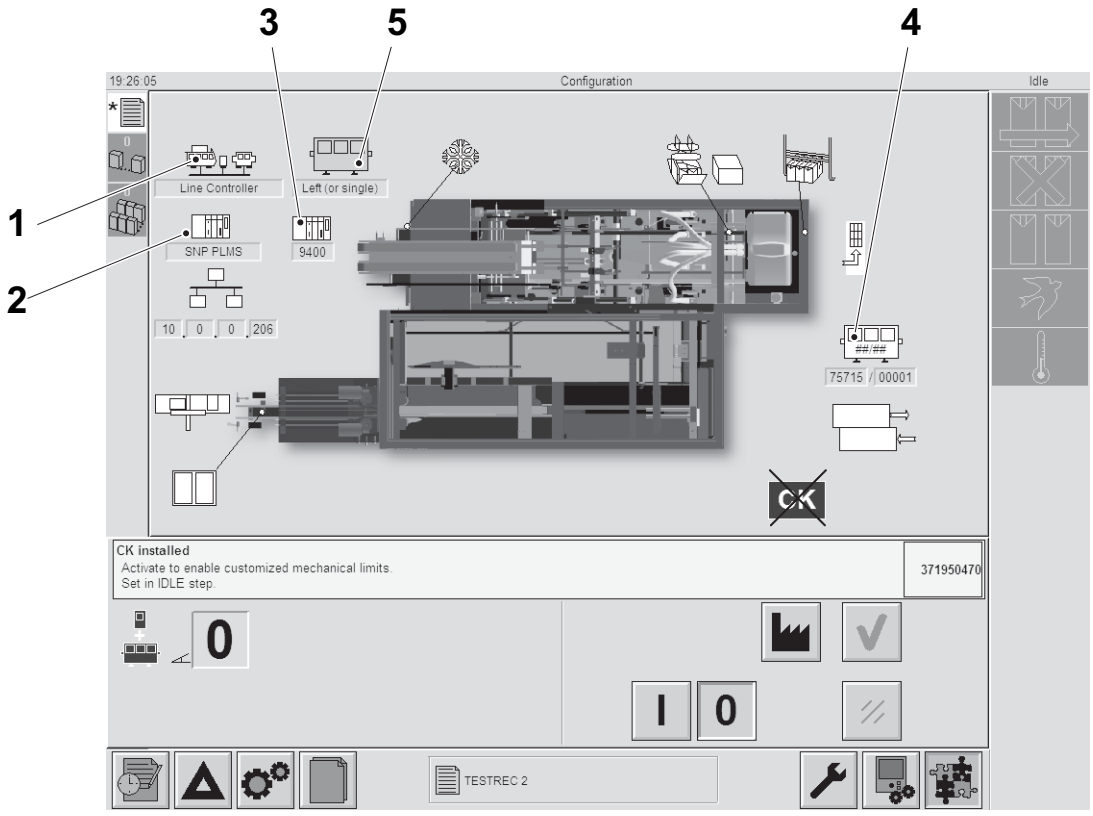

1 Line automation type
2 PLMS type
3 SNP Id
4 Machine number
5 Machine Position

Infeed

Log in as minimum technician and do the settings below.

a) Push the INFEED CONVEYOR TYPE button (1) to select infeed conveyor type.
   - TPC21 (single)
   - PC23 (single wide)
   - TUC54 (unit, same speed as TUC56)
   - UC24 (unit)
   - OTHER

(Cont'd)

(Cont'd)

b) If infeed conveyor type is set to OTHER, push the INFEED CONVEYOR FACTOR button (2), to enter correct factor for conveyor speed. To set the correct factor:

a) Temporarily set Line automation type (3) to `No Line Automation.`

b) Step the machine to production and measure the infeed conveyor speed with a tachnometer in m/min.

c) Tune this factor until measured speed matches the set conveyor speed (set in the in feed maintenance window).

Note! Do not forget to change line automation type (3) back to the correct type when done.

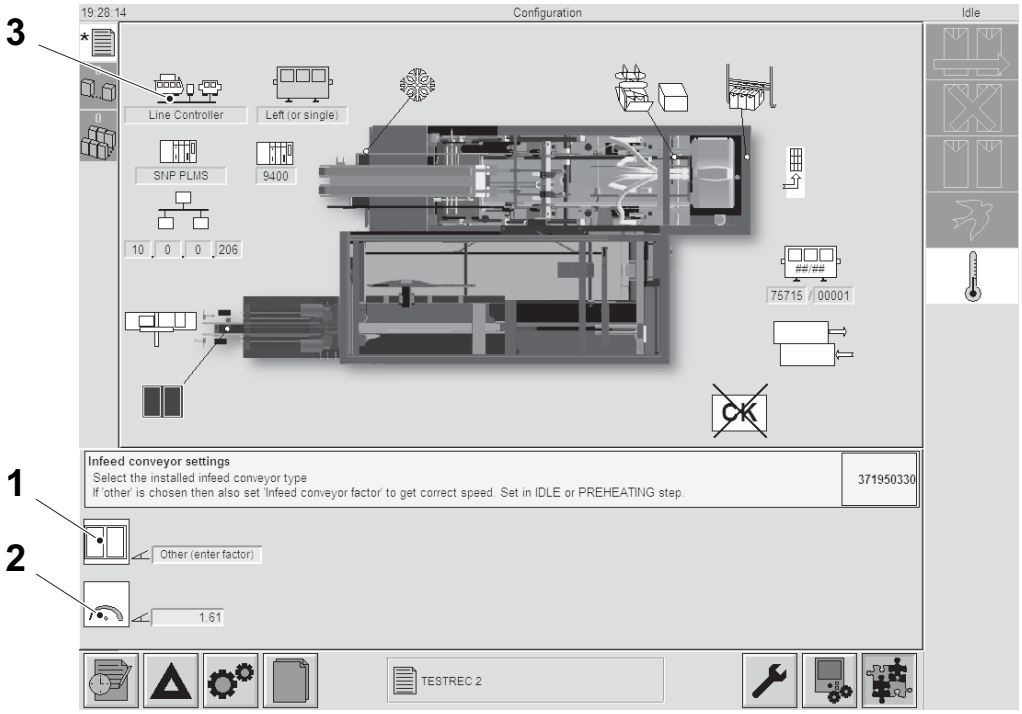

1 Infeed conveyor type
2 Infeed conveyor factor
3 Line automation type

Discharge

a) Push the DISCHARGE TYPE button (1) to select the discharge type.
   - straight discharge
   - angled discharge (left or right).

b) Push the DISCHARGE CONVEYOR SPEED button (2) to enter discharge conveyor speed.

c) Push the button DISCHARGE CONVEYOR LENGTH (3) to enter the length of the discharge conveyor controlled by the CBP32.

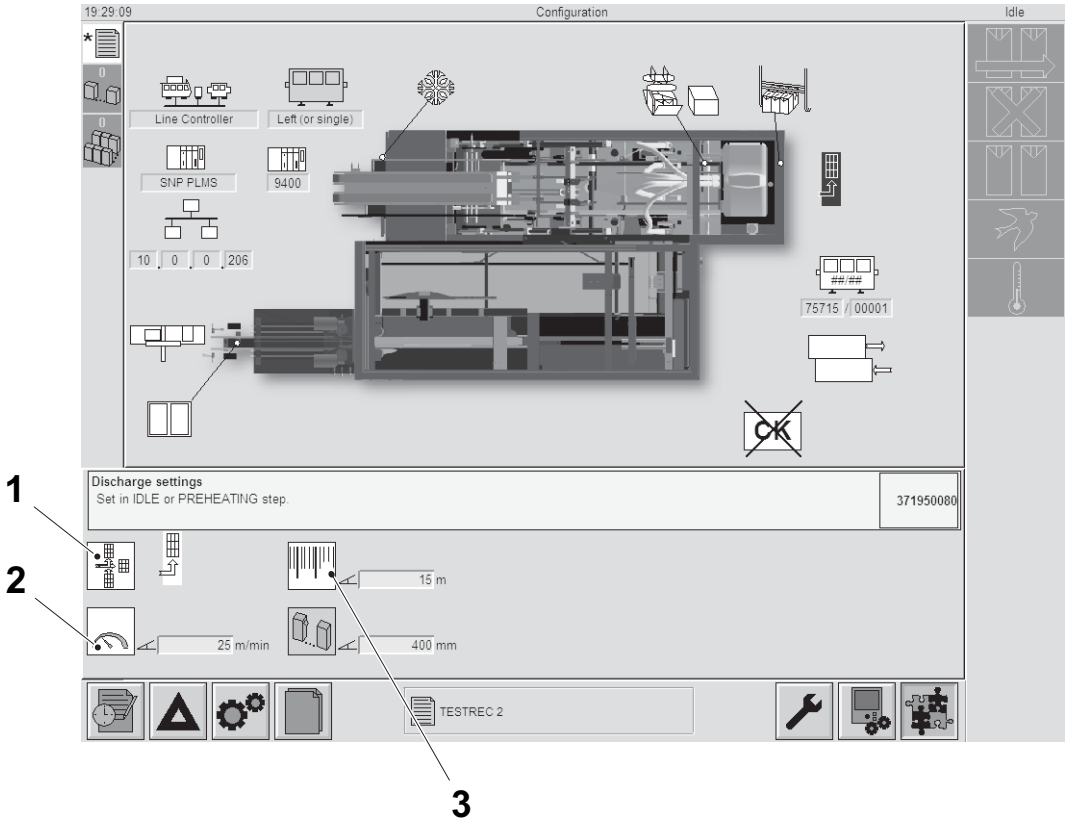

1 Discharge type
2 Discharge conveyor speed
3 Discharge conveyor length

4.1.1-2 Machine - Check before Test Run

Machine Status	Power supply disconnector OFF Air valve OFF

Before the test run of the equipment, complete the following checks. Make sure that

- all installation checks have been completed
- all required production personnel are available
- the operators have been trained and informed about
  - machine operation
  - use of the Operation Manual
  - emergency stops and utility supply shut-off devices
  - safety and hazard information
- all site preparation is finished
- the utility pipes have been pressure tested
- the welds have been treated
- the insulation work is finished
- the paint work is finished
- the floor work is finished, including gutters and drains
- the utility supplies are sufficient and stable
  - compressed air
  - water
  - electrical power
- the utility supply shut-off devices are working properly
- all consumables are available in sufficient supply and properly stored
  - blanks
  - hotmelt

4.1.1-3 PLMS - Install config file

Install config file into filler, see Maintenance Manual of filling machine Chapter x.x-x Install DE Config Files. PLMS config file for CBP 32 is located on the Software CD.

4.1.1-4 Machine - Set before Test Run

The Final Inspection Report (FIR) is located inside the electrical cabinet. It contains

- the dimensions of the packages that the machine has been set for
- the drawing of the cardboard blanks that the machine has been set for.

If the dimensions of the packages or cardboard blanks differs from what the machine has been set for, the machine settings must be adjusted.

a) Measure a package and a cardboard blank.

b) Make adjustments of the critical parameters in the order as shown in the table on the following pages.

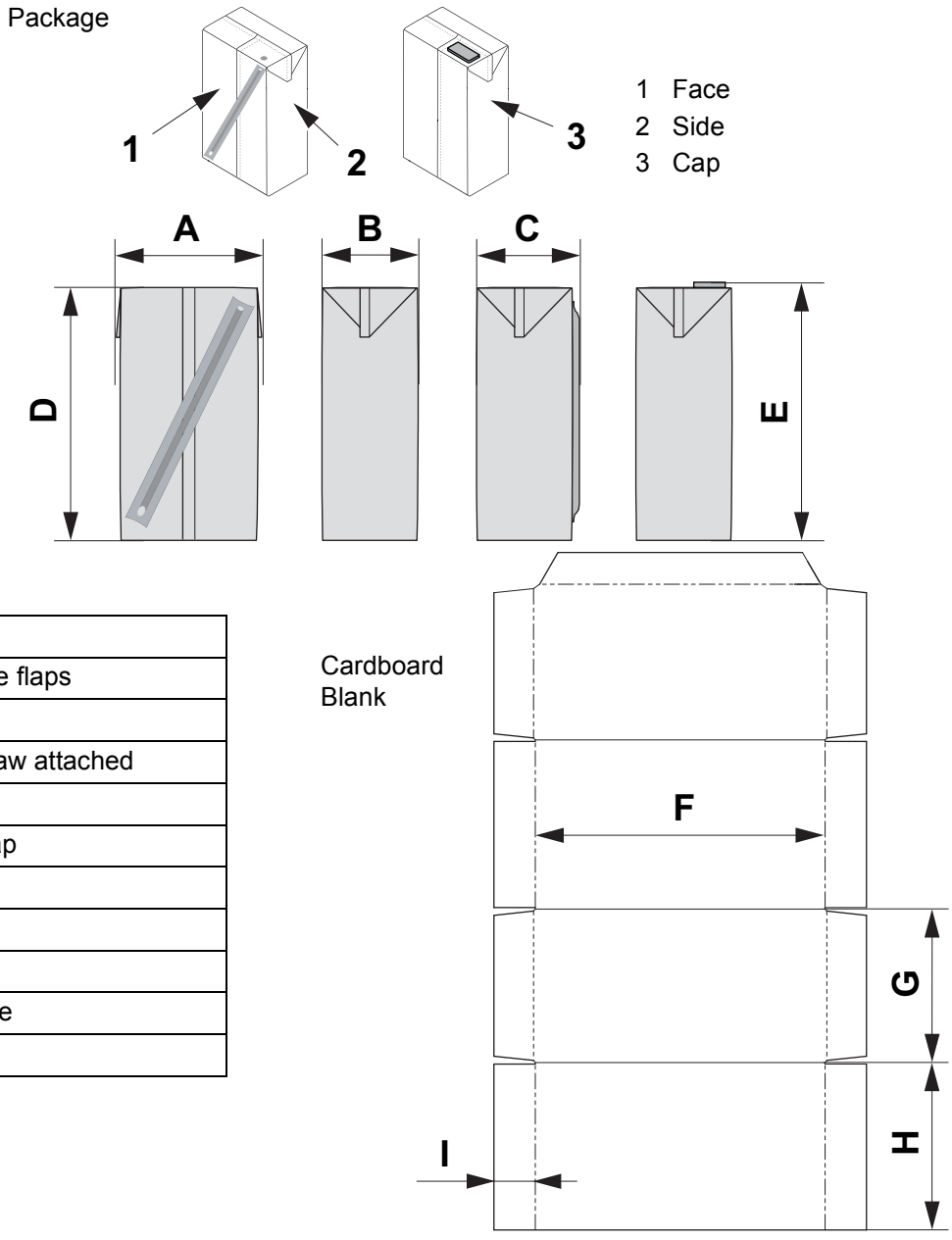

Package
A = Face width over the flaps
B = Side width
C = Side width with straw attached
D = Height
E = Height including cap
Blank
F = Length
G = Width
H = Height of blank side
I = Flap length

Standard Machine	Critical Parameter								
Machine Settings, see the Maintenance Manual (MM-3025058-xxxx)	Package			Blank					Notes / Comments
	Not turned package		Height (D) or (E)	Length (F)	Width (G)	Height of side (H)	Flap length (I)	Thickness	
	Face (A)	Side (B) or (C)							
1.1.1-1 Railing - Set		1							
1.5.1-2 Brake unit - Set		2							
1.5.2-1 End Stop Grouping - Set: Distance Between the End Stop Grouping and the Guide Rail	1								
2.2.1-4 Grouping Pusher - Set Back Position		3							
2.2.1-5 Grouping Pusher - Set Rails: Set length of rails, distance A and C	2								
1.5.4-2 Grouping Top Support - Set: Width Position		4							
1.5.4-2 Grouping Top Support - Set: Height position			1						
1.5.4-2 Grouping Top Support - Set: Length position	3								
2.2.2-3 Grouping Dolly - Set: Length	5								
2.2.4-2 Stop Arm - Set: Set distance to infeed guide rail.	4								
2.2.3-3 Transfer Guide Rail - Set		5							

Standard Machine	Critical Parameter								
Machine Settings, see the Maintenance Manual (MM-3025058-xxxx)	**Package**			**Blank**					**Notes / Comments**
	Not turned package		**Height (D) or (E)**	**Length (F)**	**Width (G)**	**Height of side (H)**	**Flap length (I)**	**Thickness**	
	Face (A)	**Side (B) or (C)**							
2.2.5-3 Box pusher End stop - Set ultra sonic sensor	9								
2.2.5-2 Box pusher End Stop - Set: Set distance B.	6				5				For machines equipped with optional equipment Variable Tilt, see Procedure 9.10.4-2 Box pusher End Stop - Set.
2.2.5-2 Box pusher End Stop - Set: Set stroke length C.	7								
2.2.7-4 Box pusher - Set back position		6							
2.2.6-4 Box Pusher Plate/Box Pusher Dolly - Set: Set height position, C.			2						
2.2.6-4 Box Pusher Plate/Box Pusher Dolly - Set: Set length position, D and E		7							
2.2.6-4 Box Pusher Plate/Box Pusher Dolly - Set: Positioning of the Pusher Plate and Dolly	8				8				
6.7.3-4 Creating a New Recipe: Set Transfer stop plate height.			3						

Standard Machine	Critical Parameter								
Machine Settings, see the Maintenance Manual (MM-3025058-xxxx)	Package			Blank					Notes / Comments
	Not turned package		Height (D) or (E)	Length (F)	Width (G)	Height of side (H)	Flap length (I)	Thickness	
	Face (A)	Side (B) or (C)							
2.2.8-3 Transfer Plate Guide - Set: Alignment at Magazine side	13				6				
2.2.8-3 Transfer Plate Guide - Set: Alignment at Box Pusher Cylinder Side	14				7				
3.3-1 Feed Unit - Set: Distance between side plates		8		1					
3.3.2-1 Carrier chain inside - Set: Carrier Chain Inside Setting	9				4				
4.1-1 Magazine Unit - Set: Height position			4			1			
4.1 Magazine Unit - Set: Steering Position, distance E		9		2			1		
4.3-1 Magazine Top Unit - Set: Set distance C.	10		5		1	2			
4.3-1 Magazine Top Unit - Set: Vertical Position of the Folding Arms			6			3			
3.4.2-2 Suction cups - Set	11				2				
3.3.6-3 Tray Holder - Set	12				3				
3.3.8-2 Folding station - Set: Set the distance A.	15				9				
3.3.9-3 Packing End Stop - Set: Set the distance A.							2		
3.3.9-3 Packing End Stop - Set: Tray Height Setting			7			4			

Standard Machine	Critical Parameter								
Machine Settings, see the Maintenance Manual (MM-3025058-xxxx)	Package			Blank					Notes / Comments
	Not turned package		Height (D) or (E)	Length (F)	Width (G)	Height of side (H)	Flap length (I)	Thickness	
	Face (A)	Side (B) or (C)							
3.3.9-3 Packing End Stop - Set: Set the correct spacers between the guide rail plates								1	
3.3.10-3 Bottom squeezer - Set									
5.2-3 WA Squeezer - Set: Set the distance C.		10		3					
5.2-3 WA Squeezer - Set: Set the distance A.			8						
5.2-3 WA Squeezer - Set: Vibration damper, distance D									
3.3.15-3 Tray support - Set: Tray width	16				10				
3.3.15-3 Tray support - Set: Tray Length		11		4					
3.3.15-3 Tray support - Set: Height			9			6			
3.5.1-6 Hotmelt equipment - Set Gun: Set gun and adjust adhesive dot position			10			7	5		

4.1.2 Test Run

- Run the machine, see the Operation Manual for instructions. Check that all functions, machine programs, and alarms are working.
- Make sure that the machine stops when an EMERGENCY STOP button is pushed. Test **all** EMERGENCY STOP buttons. See Emergency Stop Buttons in the Safety Precautions chapter.

WARNING

Risk of serious injuries.

Never run the machine if any of the emergency stop buttons is non-operational.

- Make sure that the machine stops when the covers fitted with safety switches are opened. This should be tested for **all** safety switches. Make sure that all covers are fitted to the machine before it is run. If the machine is equipped with tunnels, also check the safety switches on the tunnels. See section Safeguards in the Safety Precautions chapter.

WARNING

Risk of serious injuries.

Never run the machine if any safety switch is non-operational or any safety cover is not fitted.

- Check that the conveyor speed is equal to the “Tested conveyor speed” on the enclosed Final test report. If it is not, the conveyor speed must be adjusted, see the Maintenance Manual.
- Make sure that there are no abnormal noises, vibrations, etc. when the machine is running.

4.2 Commissioning Inspection

The purpose of the commissioning inspection is to verify that the equipment in question is ready for commercial production. This inspection must be carried out in conjunction with all involved parties, and prior to the performance validation.

Defects or faults together with necessary actions and timing to correct the deviations must be recorded in the checklist. See Section 4.2.1 Commissioning Inspection. Performance validation must not be started until the commissioning inspection has been completed.

Use the checklist as follows:

- Under Note, document any deviations, incorrect values, or comments.
- Under Value, document the actual value.
- Under Signature, sign that the check is performed.

No.	Check	Reference document IM unless other document specified	Note	Signature
1	Inspect the compressed air connection. Make sure that the connection is done correctly.			
2	Inspect the electrical connection. Make sure that the connection is done correctly.			
3	Make sure that all delivered equipment is assembled in accordance with the instruction in the 3 Mechanical Completion chapter.			
4	Make sure that the machine is correctly connected to the infeed and discharge conveyors. Set the infeed conveyor length via the TPOP.			
5	Check the direction of rotation for motor T40M0050; that the transfer belt moves towards the end stop.			
6	Check all pressure gauges settings according to the Operation Manual (OM).			

7	Check the machine programme (function, program steps, and alarms) as described in the Operation Manual (OM).			
8	Make sure that the Start-up kit is delivered together with the machine.			
9	Fold a tray manually and check that the packages are fitting in the current tray. The packages shall fit exactly.			

4.2.1 Commissioning Inspection

No.	Check	Reference document IM unless other document specified	Note	Signature
1	Functional validation performed.			
2	Commissioning validation performed.			
3	Commissioning certificate issued.			

This page intentionally left blank

5 Performance Validation

About the Performance Validation Chapter

This chapter describes the performance validation of the equipment. The performance validation covers the activities from when the equipment is ready for commercial production until the equipment is handed over to the final user.

The chapter includes information on how to verify that the equipment achieves the performance targets during commercial production.

5.1 Performance Preconditions . . . . . 5 - 5

5.2 Commercial Production . . . . . 5 - 6

5.3 Monitor and Improve the Performance . . . . . 5 - 7

5.4 Performance Test . . . . . 5 - 8

5.5 Performance Validation Inspection . . . . . 5 - 9

5.5.1 Performance Validation Criteria . . . . . 5 - 9

5.5.2 Performance Validation Completed . . . . . 5 - 10

This page intentionally left blank

5.1 Performance Preconditions

To ensure an effective and successful performance validation, the following has to be in place prior to the execution of the performance validation:

- Commercial production: commercial production must have started.
- Attendance: both Tetra Pak and the final user must have appointed representatives to participate in the performance validation.
- Operation: the equipment must be operated according to the Operation Manual for each component in the line.

  Qualified personnel from the final user should operate the equipment during the performance validation procedures.
- Production plan: a production plan covering the duration of the performance validation must be available and agreed between Tetra Pak and the final user of the equipment before the start of performance validation.

  The production plan should reflect the normal constant running conditions, including the range of products and packaging material that the final user intends to use with the equipment, as well as any expected product changes.

  The production plan should include, in particular
  - production schedule and resources
  - volume to be produced
  - number of product changes and product availability
  - number of design changes and packaging/additional material availability
- Packaging material: all packaging materials and secondary packaging material must be available.
- Consumables: all relevant consumables (hotmelt, lubricants, and so on) have to be available.
- Parts: an adequate supply of spare parts must be maintained on site according to Tetra Pak recommendations.

5.2 Commercial Production

The performance validation is performed when the equipment runs in commercial production. See the sales agreement for more information.

5.3 Monitor and Improve the Performance

During the performance monitoring period the actual performance of the equipment is measured and any non-performance issues are solved. See the sales agreement for more information.

5.4 Performance Test

During the performance test the actual performance of the equipment during a pre-defined period is measured. The result of the performance test is recorded as the certified performance in the performance certificate. See the sales agreement for more information.

5.5 Performance Validation Inspection

The purpose of the performance validation inspection is to verify that the equipment in question fulfils the performance agreed upon. This inspection must be carried out in conjunction with all involved parties, prior to final hand over of the equipment.

Defects or faults together with necessary actions and time to correct the deviations must be recorded in the checklist. See Section 5.5.1 Performance Validation Criteria.

Use the checklist as follows:

- Under Note, document any deviations, incorrect values, or comments.
- Under Signature, sign that the check is performed.

5.5.1 Performance Validation Criteria

No.	Check	Reference document IM unless other document specified	Note	Signature
1	Commercial production started.			
2	The General Performance Preconditions are fulfilled.	Sales agreement with schedules		
3	The Special Performance Preconditions are fulfilled (if applicable).	Sales agreement with schedules		
4	A production plan for the performance validation period is established and communicated.	Sales agreement with schedules		
5	The Machine Mechanical Efficiency (MME) and Line Machine Mechanical Efficiency (LMME) has been monitored and optimized.			

5.5.2 Performance Validation Completed

No.	Check	Reference document IM unless other document specified	Note	Signature
1	Performance certificate issued.			

6 Disassembly and Removal

About the Disassembly and Removal Chapter

This chapter contains information about how to safely disassemble and remove the equipment for reuse in another location or for final disposal.

6.1 Disconnect Utilities . . . . . 6 - 5
6.1.1 Compressed Air . . . . . 6 - 5
6.1.2 Electricity . . . . . 6 - 5
6.1.3 Water . . . . . 6 - 5
6.2 Disassemble Machine . . . . . 6 - 6
6.3 Preparation for Storage. . . . . 6 - 7
6.4 Moving . . . . . 6 - 8
6.5 Re-crating. . . . . 6 - 9
6.6 Return to the manufacturer . . . . . 6 - 10
6.7 Final Disposal . . . . . 6 - 11

This page intentionally left blank

6.1 Disconnect Utilities

6.1.1 Compressed Air

WARNING

Risk of personal injury.

Make sure that air supply to the machine is switched OFF before performing any disconnection work.

Disconnect the compressed air from the pressure regulator, also see 3.3 Equipment Interfaces and Connections.

6.1.2 Electricity

WARNING

Risk of electrical shock and short circuits.

Make sure that power is switched OFF upstream before performing any work on cables and electrical components.

Disconnect the electricity, see the Electrical Manual, also see 3.3 Equipment Interfaces and Connections.

6.1.3 Water

WARNING

Risk of personal injury.

Make sure that water supply to the machine is switched OFF before performing any disconnection work.

Disconnect the water hose from the hose brake connection, also see 3.3 Equipment Interfaces and Connections.

6.2 Disassemble Machine

WARNING

Risk of personal injury.

Before disassembling the machine, read the Safety precautions.

Disassemble the machine in the reverse of the order described in section 3.2.3 Assembly.

6.3 Preparation for Storage

If the machine is going to be transported to a storage site, then see 3.1.3 Storing the Crated Equipment for more information about environmental factors, such as acceptable storage humidity and temperature range.

6.4 Moving

DANGER

Immediate danger to life.

The machine may tilt if the centre of gravity or the forklift points is not observed. Failure to observe these may result in immediate danger to life and/or major damage to equipment.

Prior to lifting and moving the machine from its production site, do the following:

- check that the machine can be transported without any problems with ceiling height, doors, passages, and so on.
- make sure that the machine can be lifted in accordance to section 1.3 Lifting and Transportation Data, and 3.1.2 Moving the Crated Equipment.

6.5 Re-crating

Read the instructions in 3.1.5 Opening the Crate, and re-crate the machine in the reverse order.

6.6 Return to the manufacturer

Prepare the equipment for transport. See sections 6.1 Disconnect Utilities and 6.2 Disassemble Machine.

Contact the local service organisation for further instructions and to arrange shipment.

6.7 Final Disposal

Contact your Tetra Pak market company for more information about final disposal and reuse.

If the machine is to be permanently disposed of, perform the following operations:

a) Remove all packaging material and straws, and dispose of these according to local regulations.

b) Empty the hotmelt from the hotmelt equipment according to the Nordson Manual. Dispose of the hotmelt according to local regulations.

c) Empty the oil from the central lubrication system. Dispose of the oil in compliance with local regulations.

d) Disassemble the machine as far as possible and separate the following materials:
   - stainless steel (panels and doors)
   - cast iron
   - aluminium
   - glass (windows, and so on)
   - rubber (seals, O-rings, and so on)
   - nylon and other plastics
   - electrical cables
   - hydraulic and pneumatic hoses
   - electrical components (batteries, and so on)

e) Recycle or dispose of all materials, groups, and components according to local regulations.

This page intentionally left blank


Tetra Pak

Note! *This page is generated* ***automatically****.*
using the ***variable definitions*** *made in the* ***front page*** *file!*

Cardboard Packer 32 by Tetra Pak
673852-0400
Issue 2010-10 Doc. No. IM-3025062-0105

Cardboard Packer 32 by Tetra Pak 1(2)
673852-0400
Issue 2010-10 Doc. No. IM-3025062-0105

Cardboard Packer 32 by Tetra Pak
673852-0400
Issue 2010-10 Doc. No. IM-3025062-0105

Cardboard Packer 32 by Tetra Pak 1(2)
673852-0400
Issue 2010-10 Doc. No. IM-3025062-0105

Cardboard Packer 32 by Tetra Pak
673852-0400
Issue 2010-10 Doc. No. IM-3025062-0105

Cardboard Packer 32 by Tetra Pak 1(2)
673852-0400
Issue 2010-10 Doc. No. IM-3025062-0105

Cardboard Packer 32 by Tetra Pak
673852-0400
Issue 2010-10 Doc. No. IM-3025062-0105

Cardboard Packer 32 by Tetra Pak 1(2)
673852-0400
Issue 2010-10 Doc. No. IM-3025062-0105

Cardboard Packer 32 by Tetra Pak
673852-0400
Issue 2010-10 Doc. No. IM-3025062-0105

Cardboard Packer 32 by Tetra Pak 2(2)
673852-0400
Issue 2010-10 Doc. No. IM-3025062-0105

Cardboard Packer 32 by Tetra Pak
673852-0400
Issue 2010-10 Doc. No. IM-3025062-0105

Cardboard Packer 32 by Tetra Pak 2(2)
673852-0400
Issue 2010-10 Doc. No. IM-3025062-0105

Cardboard Packer 32 by Tetra Pak
673852-0400
Issue 2010-10 Doc. No. IM-3025062-0105

Cardboard Packer 32 by Tetra Pak 2(2)
673852-0400
Issue 2010-10 Doc. No. IM-3025062-0105

Cardboard Packer 32 by Tetra Pak
673852-0400
Issue 2010-10 Doc. No. IM-3025062-0105

Cardboard Packer 32 by Tetra Pak 2(2)
673852-0400
Issue 2010-10 Doc. No. IM-3025062-0105

40 mm Full width ***Note!*** *This page is generated* ***automatically****.*
using the ***variable definitions*** *made in the* ***front page*** *file!*

Cardboard Packer 32 by Tetra Pak
673852-0400

Issue 2010-10 Doc. No. IM-3025062-0105

Cardboard Packer 32 by Tetra Pak 1(2)
673852-0400

Issue 2010-10 Doc. No. IM-3025062-0105

Cardboard Packer 32 by Tetra Pak
673852-0400

Issue 2010-10 Doc. No. IM-3025062-0105

Cardboard Packer 32 by Tetra Pak 1(2)
673852-0400

Issue 2010-10 Doc. No. IM-3025062-0105

Cardboard Packer 32 by Tetra Pak
673852-0400

Issue 2010-10 Doc. No. IM-3025062-0105

Cardboard Packer 32 by Tetra Pak 1(2)
673852-0400

Issue 2010-10 Doc. No. IM-3025062-0105

Cardboard Packer 32 by Tetra Pak
673852-0400

Issue 2010-10 Doc. No. IM-3025062-0105

Cardboard Packer 32 by Tetra Pak 2(2)
673852-0400

Issue 2010-10 Doc. No. IM-3025062-0105

Cardboard Packer 32 by Tetra Pak
673852-0400

Issue 2010-10 Doc. No. IM-3025062-0105

Cardboard Packer 32 by Tetra Pak 2(2)
673852-0400

Issue 2010-10 Doc. No. IM-3025062-0105

Cardboard Packer 32 by Tetra Pak
673852-0400

Issue 2010-10 Doc. No. IM-3025062-0105

Cardboard Packer 32 by Tetra Pak 2(2)
673852-0400

Issue 2010-10 Doc. No. IM-3025062-0105