MM

Maintenance Manual

Cardboard Packer 32 by Tetra Pak

673852-0400

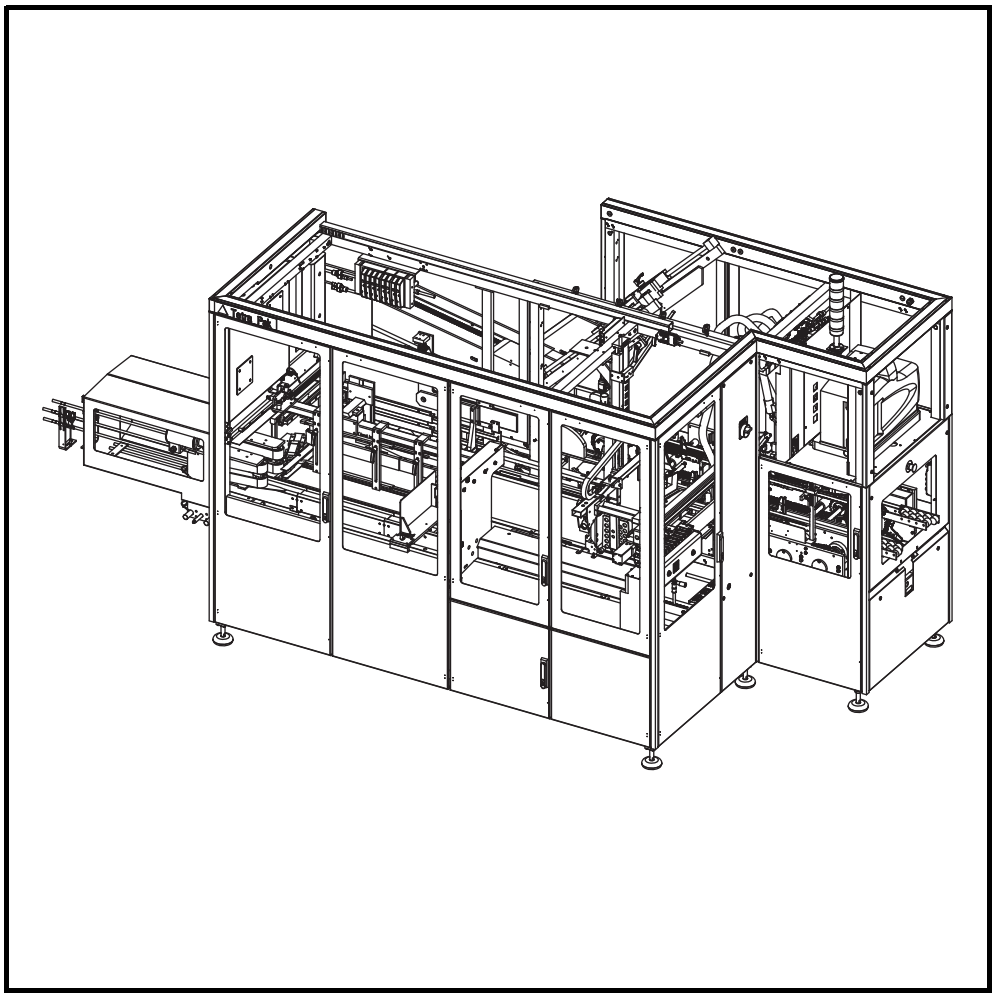

WARNING

Read and follow all safety precaution instructions throughout this manual and on safety signs attached to this equipment.
Failure to follow all safety precaution instructions could result in death or serious injury.

Tetra Pak

Doc. No. MM-3025058-0104

Copyright © 2009 Tetra Pak Group

All rights reserved. No part of this document may be reproduced or copied in any form or by any means without written permission from Tetra Pak Packaging Solutions AB.

Tetra Pak and all Tetra Pak products are trademarks belonging to the Tetra Pak Group.

The content of this manual is in accordance with the design and construction of the machine or equipment at the time of publishing. Tetra Pak reserves the right to introduce design modifications without prior notice.

The English version of this document is the original language version.

This document was produced by:

Tetra Pak Packaging Solutions AB
Ruben Rausings gata
SE-221 86 Lund
Sweden

Additional copies can be ordered from Tetra Pak. When ordering additional copies, always provide the document number.

Doc. No. MM-3025058-0104

Issue 2010-05

This manual is valid for:

Series No./ Machine No. Sign.

MM

Maintenance Manual

Cardboard Packer 32 by Tetra Pak
673852-0400

i Introduction

ii Safety Precautions

1 Infeed

2 Pattern Forming

3 Tray Forming

4 Magazine Unit

5 Wraparound Unit

6 Electrical Equipment

7 Central Lubrication

8 Regular Accessories

9 Optional Equipment

10 General

iii Index

Machine or equipment configurations that this manual is valid for are described on the next page.

Doc. No. MM-3025058-0104

Issue 2010-05

Tetra Pak

Tetra Pak Packaging Solutions AB

Valid for:

Name	Drawing Specification and Development Step	Additional Information
Cardboard Packer 32 by Tetra Pak	673852-0400	Optional Equipment: Air Jet Gun 2802489-0200 OK Spray Gun 1287076-0300 Ilumination 1287186-0300 Discharge Conveyer 2970888-0100 Discharge Unit, Roller Conveyor 2511012-0400 Photocell Unit, Com Start Conveyer 2802448-0300 Cooling Unit 2792385-0200 Light Barrier Unit 2834002-0200 6 Channel Hotmelt 3090149-0100

Update Log for Doc. No. MM-3025058-0104

This table shows all changes made to this manual, including installed rebuilding kits, added or removed pages. Page numbering on added pages begins with UP.

Date	Installed Kit	Added Pages (Doc. No.)	Removed Pages	Signature

Date	Installed Kit	Added Pages (Doc. No.)	Removed Pages	Signature

i Introduction

About the Introduction Chapter

This chapter contains basic information about this manual and the related Tetra Pak equipment.

Abbreviations and Terminology . . . . . i - 5
Manual Information . . . . . i - 6
Delivered Manuals . . . . . i - 6
Page Layout . . . . . i - 7
Page Numbering. . . . . i - 8
Typographical Conventions . . . . . i - 8
Symbols . . . . . i - 8
Machine Introduction . . . . . i - 9
Intended Use of the Equipment . . . . . i - 9
Manufacturer . . . . . i - 9
Support and Feedback . . . . . i - 9
Declaration of Conformity . . . . . i - 9
Identification . . . . . i - 10
CE Classification . . . . . i - 10
Machine Plate . . . . . i - 10
Orientation . . . . . i - 11
Hygiene. . . . . i - 12
How to Use This MM . . . . . i - 13
Procedures . . . . . i - 13
Procedure Start Table . . . . . i - 13
TPMS . . . . . i - 14
Planned Maintenance Program . . . . . i - 14
Checklists and Spare Parts Recommendations . . i - 14

This page intentionally left blank

Abbreviations and Terminology

Abbreviation/ Terminology	Meaning	Translation
CE	Communautés Européennes/European Communities	
CPU	Central Processing Unit	
CSA	Canadian Standards Association	
EEA	European Economic Area	
EM	Electrical Manual	
IM	Installation Manual	
I/O	Input / Output (module)	
LED	Light Emitting Diode	
LH	Left Hand	
MM	Maintenance Manual	
OM	Operation Manual	
PLC	Programmable Logic Controller	
PLMS	Packaging Line Monitoring System	
RH	Right Hand	
SDS	Safety Data Sheet	
SPC	Spare Parts Catalogue	
TPC	Tetra Package Conveyor	
TPMS	Tetra Pak Maintenance System	
TPOP	Tetra Pak Operator Panel	
TUC	Tetra Unit Conveyor	
UC	Unit Conveyor	
UL	Underwriters Laboratory	
WA	Wraparound unit	

Manual Information

Tetra Pak recommends reading all delivered manuals carefully. Make sure that the delivered manuals are available to personnel who operate or maintain the equipment.

It is important to keep this manual for the lifetime of the equipment and to pass the manual on to any subsequent holder or user.

Tetra Pak will not be held responsible for any damage to the equipment caused by not following the instructions given in this manual.

Delivered Manuals

Manuals delivered with this equipment:

- EM
  The Electrical Manual provides technicians with information about the equipment's electrical system.
- IM
  The Installation Manual provides technicians with information required to safely install the equipment.
- MM
  The Maintenance Manual provides technicians with information on maintaining the equipment.
- OM
  The Operation Manual manual provides the operator with information on handling and operating the equipment before, during, and after production.
- SPC
  The Spare Parts Catalogue provides the information necessary to order spare parts from Tetra Pak

Page Layout

Every main page in a manual contains a header and a footer. The page header contains the chapter name (1) and the section name (2). The page footer contains the page number (3), and the document number (4). See also the Page Numbering section.

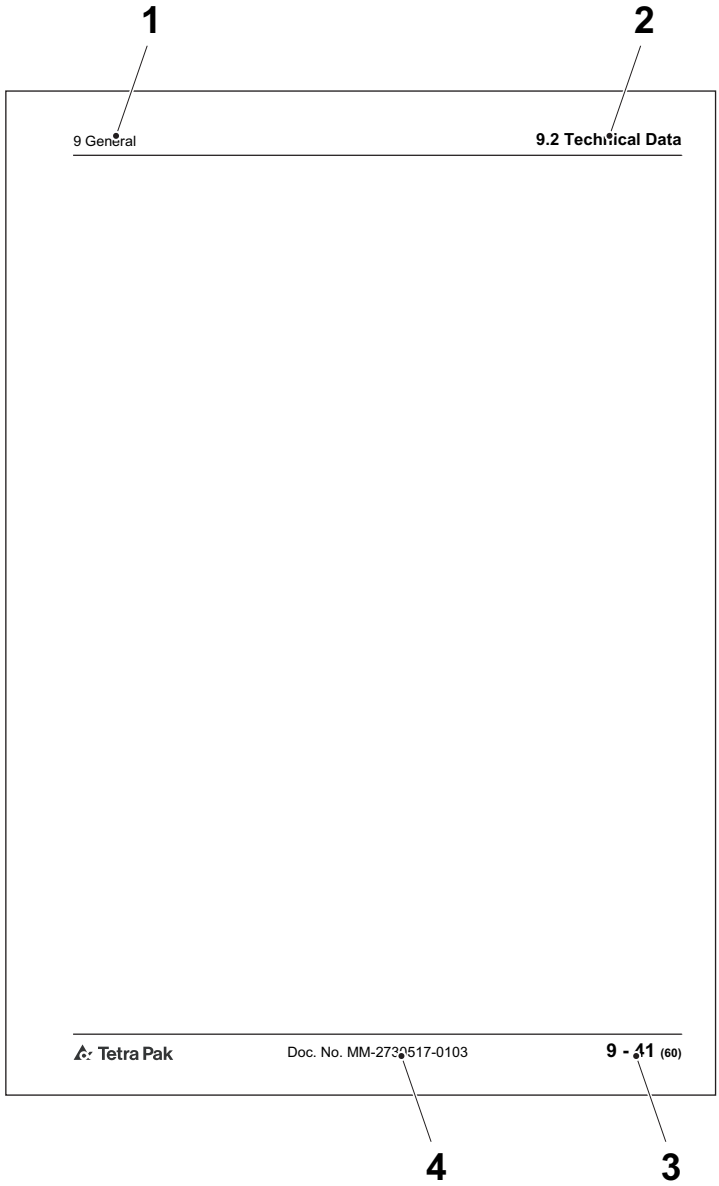

1 Chapter name
2 Section name
3 Page number
4 Document number

Page Numbering

A page number has three parts:

- chapter number (1)
- consecutive page number (2) within the chapter
- total number of pages (3) in the chapter.

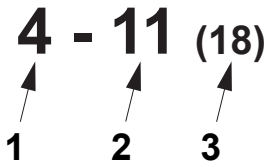

1 Chapter number
2 Consecutive page number
3 Total number of pages

Typographical Conventions

Controls on the operator panel, emergency stop devices, and program steps are printed in CAPITAL LETTERS.

Menu names, button names and other text displayed in software are printed in `Courier`.

Cross-references are underlined.

Symbols

Symbols used in illustrations.

	A pointer arrow indicates the position of an object.
	A zoom arrow indicates that an object view is enlarged. The arrow points towards the enlarged view of the object.
	A rotation movement arrow indicates rotational movement of an object. The arrow points in the direction of rotation.
	A straight movement arrow indicates movement of an object. The arrow points in the direction of movement.

Machine Introduction

Intended Use of the Equipment

The intended use of this Tetra Pak equipment is to place packages approved by Tetra Pak Packaging Solutions AB into units made of corrugated cardboard.

All other use is prohibited. Tetra Pak will not be held responsible for injury or damage if the equipment is used for any other purpose than the intended use described above.

Manufacturer

This Tetra Pak equipment has been manufactured by

Tetra Pak Packaging Solutions AB
Ruben Rausings gata
SE-221 86 Lund
Sweden

Support and Feedback

If you encounter problems when operating this equipment or have other inquiries, comments, or suggestions for improvement, contact Tetra Pak.

Declaration of Conformity

A copy of the Declaration of Conformity can be found in the Installation Manual. The signed Declaration of Conformity is delivered separately with the equipment.

Identification

CE Classification

This equipment complies with the basic health and safety regulations of the European Economic Area (EEA).

Machine Plate

The illustration below shows an example of the machine plate and its location on the equipment. The machine plate carries data needed when contacting Tetra Pak concerning this specific equipment.

Make sure that the equipment data in the front pages of this manual corresponds to the machine plate data and the machine specification.

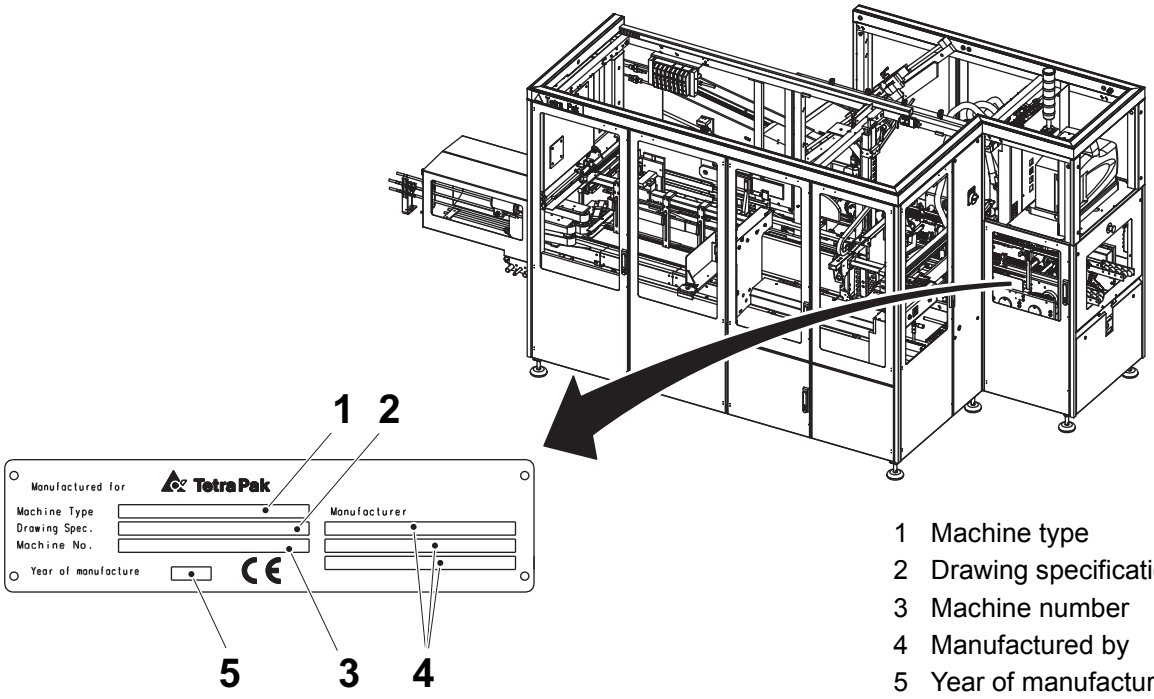

1 Machine type
2 Drawing specifications
3 Machine number
4 Manufactured by
5 Year of manufacture

Orientation

The illustration below shows the orientation of the equipment. This orientation information will be used throughout this manual. The arrows indicate the flow of material.

Z-infeed, RH version

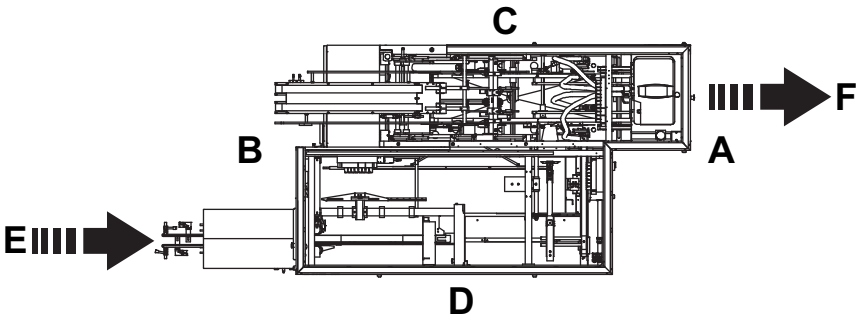

Z-infeed, LH version

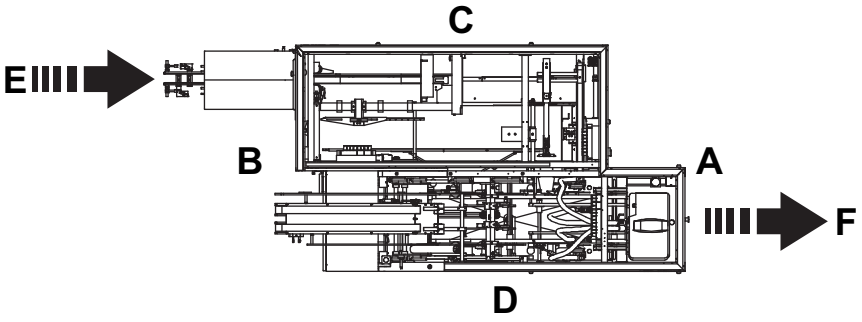

U-infeed, RH version

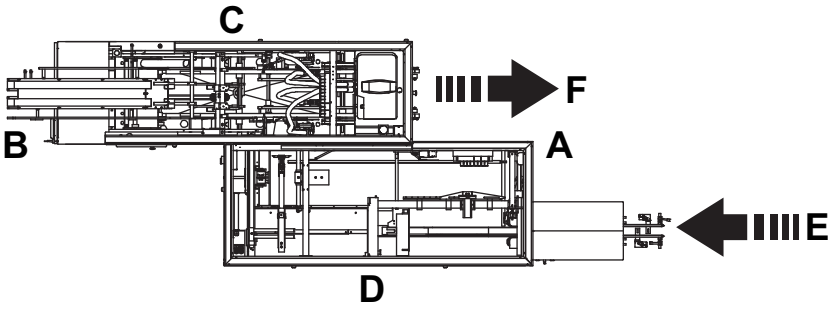

U-infeed, LH version

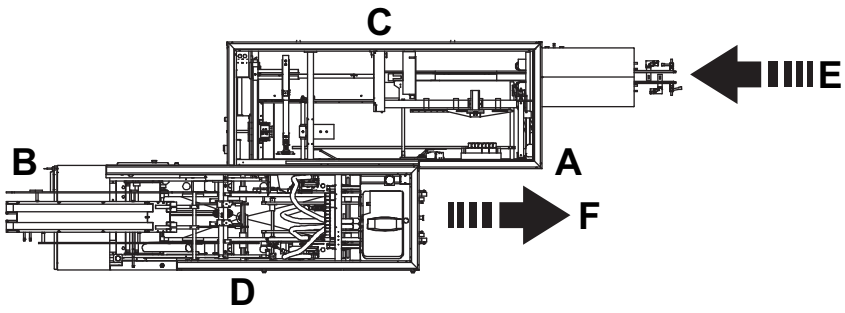

A Front
B Rear
C Left-hand side
D Right-hand side
E Infeed
F Discharge

Hygiene

- Keep your hands and gloves clean.
- Always wear some type of hair protection (cap or hairnet) and clean clothes (preferably white).
- Do not wear a watch, ring, necklace, earrings, or any other exposed jewellery.

How to Use This MM

Procedures

The name of the chapters and sections in the MM correspond to the groups in the structure of the equipment. Procedures correspond to a chapter or a section:

- The hyphens indicate that it is a procedure heading. The example shows a heading for Procedure number 3 in Section 1.5.
- The text after the second hyphen tells what type of procedure it is. Check, Change, and Set are common procedure types.

1.5-3 Outfeed Servo - Change Bearings

Maintenance procedures in this manual are connected to the Tetra Pak Maintenance System, TPMS. See the TPMS section.

Procedure Start Table

Procedures in this manual begin with a table providing information needed to perform the procedure.

- Machine Status (1) shows actuator status, program step, and any other machine status necessary to begin the procedure.
- Special Equipment (2) shows a list of personal protective equipment and special tools that are not normally carried by a service technician, but are needed in the procedure.
- Consumables (3) shows items, such as lubricants, that are required to perform the procedure. Consumables do not include replacement parts.
- SPC Reference (4) shows the assembly number, found in the index of the SPC.

1	Machine Status	Power supply disconnector OFF Air valve OFF Water valve OFF
2	Special Equipment	Hook spanner TP No. 777170-0105 Dial indicator
3	Consumables	Grease code F
4	SPC Reference	2501234-0100

1 Machine Status
2 Special Equipment
3 Consumables
4 SPC Reference

TPMS

To ensure uninterrupted production, all machines and equipment must be maintained on a regular basis.

Tetra Pak has developed a planned maintenance system to keep pace with the ongoing development of new and existing machines and equipment from Tetra Pak, and to meet the demands set by Tetra Pak's customers for higher efficiency and better economy.

Planned Maintenance Program

The Tetra Pak planned maintenance system reduces unplanned downtime and maintenance time for complete production lines, as well as for individual machines and equipment.

With the Tetra Pak planned maintenance system, preventive maintenance can be performed before production is affected. The system is continually updated based on experience with Tetra Pak machines and equipment worldwide.

The Tetra Pak planned maintenance system maintains records of when maintenance is performed, when parts are changed, whether alterations are made, and so on. These records, combined with usage statistics, enable reliable predictions of the service life of all machine and equipment parts.

Checklists and Spare Parts Recommendations

Customers using the Tetra Pak planned maintenance system receive checklists from their local Tetra Pak office whenever planned maintenance is due. These checklists are individualised for each of Tetra Pak's customer, according to the type of machine, equipment usage, and maintenance occasion. In addition, the system recommends spare parts, rotation units, tools, and templates according to the statistics collected.

Tip! Contact the local Tetra Pak office for additional information about the Tetra Pak Maintenance System and its planned maintenance program.

ii Safety Precautions

Safety Precaution Instructions

WARNING

Read all safety precaution instructions throughout this manual and on safety signs attached to this equipment.
Failure to follow all safety precaution instructions could result in death or serious injury.

Definition of Lockout Procedure

A lockout procedure is a procedure to put each necessary energy isolating device in its safe position to prevent the energisation of the equipment, such as when a maintenance procedure should be carried out.

A lockout is the use of a device, for example, a padlock, to make sure that an energy isolating device cannot be operated.

An energy isolating device is a mechanical device that physically prevents transmission or release of energy, such as a power supply disconnector.

Safety Messages Description . . . . . ii - 5
Personnel Requirements . . . . . ii - 6
Skilled Person . . . . . ii - 6
Instructed Person. . . . . ii - 6
Safety Signs . . . . . ii - 7
Locations of Safety Signs . . . . . ii - 9
Protective Devices. . . . . ii - 10
Emergency Stop. . . . . ii - 10
Emergency Stop Push-Buttons . . . . . ii - 11
Safeguards . . . . . ii - 12
Infeed Conveyor. . . . . ii - 14
Warning Lamp . . . . . ii - 15
Audible Alarm. . . . . ii - 15
Personal Protection. . . . . ii - 16
Noise Hazard . . . . . ii - 16
Entanglement Hazard . . . . . ii - 16
Ergonomic Hazard . . . . . ii - 16
Supply Systems. . . . . ii - 17
Power Supply . . . . . ii - 17
Residual Voltage . . . . . ii - 17
Electrical Cabinet. . . . . ii - 18
Socket Outlet . . . . . ii - 19
Air Supply . . . . . ii - 20
Water Supply . . . . . ii - 21
Hotmelt Equipment . . . . . ii - 22
Lifting Accessories . . . . . ii - 24
Production Mode Changes . . . . . ii - 24
Discharge Unit . . . . . ii - 24

This page intentionally left blank

Safety Messages Description

A safety message is always accompanied by a safety alert symbol and a signal word.

The safety alert symbol is used to alert about potential personal injury hazards. To avoid hazards, obey all safety messages that follow this symbol.

The following safety alert symbols and signal words are used in this manual to inform the user of hazards.

DANGER	Danger indicates an imminently hazardous situation which, if not avoided, will result in death or serious injury.
WARNING	Warning indicates a potentially hazardous situation which, if not avoided, **could** result in **death or serious injury**.
CAUTION	Caution indicates a potentially hazardous situation which, if not avoided, **may** result in **minor or moderate injury.** It may also be used to alert against unsafe practices.
CAUTION	Caution without the safety alert symbol indicates a potentially hazardous situation which, if not avoided, **may** result in **property damage**.

Personnel Requirements

Note! Personnel includes all persons working on or near this equipment.

Only skilled or instructed persons are allowed to work with this equipment.

Skilled Person

A skilled person must have relevant education and experience to enable him or her to identify hazards, analyse risks, and avoid hazards which electricity, machinery, chemicals, other energies, and supply systems on this equipment can create.

Skilled persons must meet local regulations, such as certifications and qualifications for working with these energies and systems.

Instructed Person

An instructed person must be adequately advised or supervised by a skilled person. The skilled person enables the instructed person to identify hazards, analyse risks, and avoid hazards which electricity, machinery, chemicals, other energies, and supply systems on this equipment can create.

Safety Signs

WARNING

Damaged or missing safety signs increase the risk of death or serious injury.

Replace all missing or damaged safety signs immediately.

Safety signs are attached to the equipment. The table below lists all the signs that are used, and illustrations show their locations on the equipment. Each position number refers to two variants of a safety sign in the table, but only one is used on the equipment.

- Make sure that each safety sign is legible and in its correct position after installation and maintenance.
- Replace all missing or damaged safety signs immediately.

Pos.	ISO sign	ANSI sign
1		
	Hazardous voltage. Will shock, burn, or cause death. Follow lockout procedure before maintenance.	
2		
	Burn hazard. Trapped heat energy. Do not touch.	
3		
	Risk of equipment damage. Do not let water into this area.	
4		
	Hot surface. Do not touch. Follow lockout procedure before maintenance.	

Pos.	ISO sign	ANSI sign
5		
6		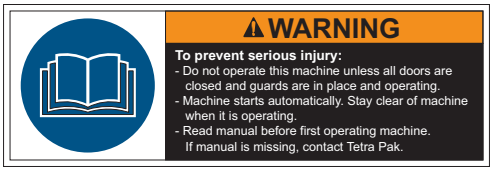
7		
8		
9		

Trapped pneumatic energy.
Moving parts could cause serious injury.
Follow lockout procedure before maintenance.

To prevent serious injury:
- Do not operate this machine unless all doors are closed and guards are in place and operating.
- Machine starts automatically. Stay clear of machine when it is operating.
- Read manual before first operating machine. If manual is missing, contact Tetra Pak.

Do not reach in.
Moving parts may cause injury.
Follow instructions for safe work practice.

Hazardous voltage.
Can shock, burn, or cause death.
Read Maintenance Manual (MM) before using this socket outlet.

Hazardous residual voltage on capacitors.
Will shock, burn or cause death. Do not touch until safe.
Follow instructions for safe work practices.

Locations of Safety Signs

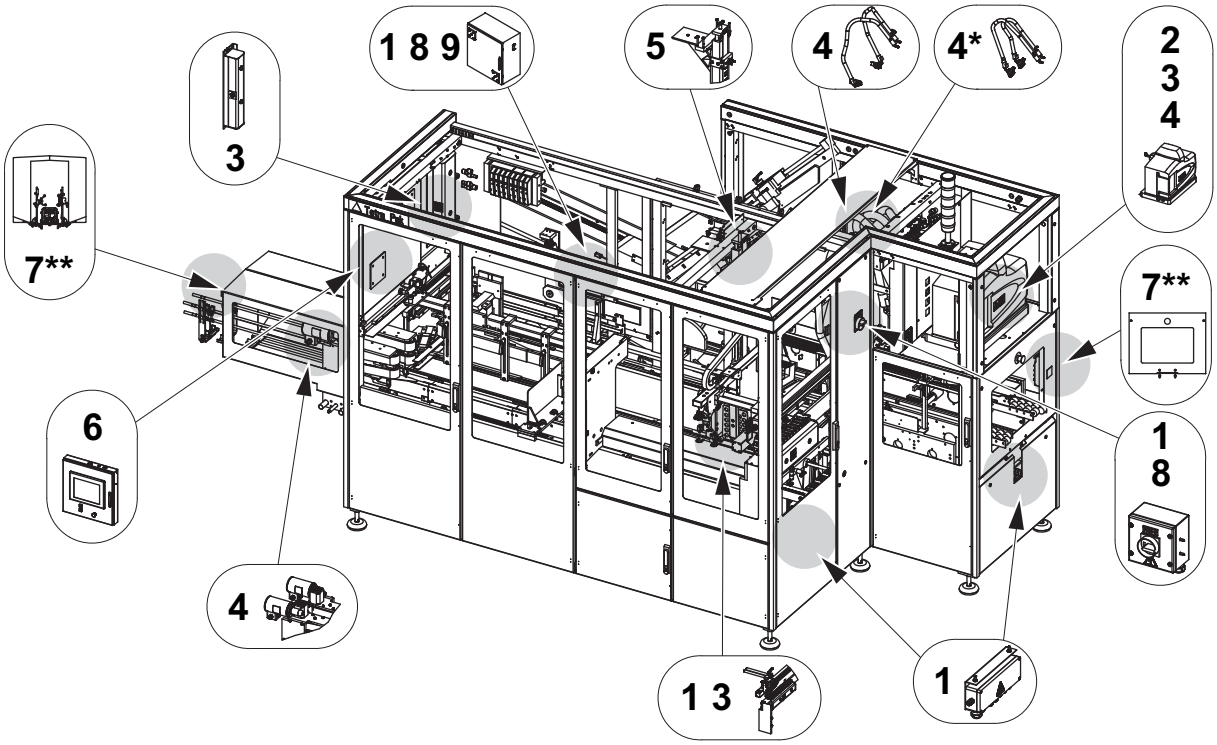

* Only valid for machines that are equipped with Wraparound Unit.
** Also valid for machines with tunnels

Protective Devices

There are different kinds of protective device designed to ensure safe use of the equipment. See the sections below.

WARNING

Hazardous zones.

Hazardous zones are safeguarded and provided with protective devices. Do not inch or run this equipment if any protective device is inoperative.

Change inoperative components of the safety system immediately.

For the locations of safeguards and/or other protective devices not mentioned in this section, see the Maintenance Manual.

WARNING

Hazardous voltage.

Hazardous voltage remains on this equipment after activating an EMERGENCY STOP or an interlocking device.

Emergency Stop

Emergency stop devices are used to stop this equipment immediately in an hazardous situation. Learn the positions of all emergency stop devices and how to use them.

Instructions for a normal production stop are included in the Stop chapter of the Operation Manual.

Emergency Stop Push-Buttons

Push one of the EMERGENCY STOP push-buttons to stop this equipment immediately.

The location of each EMERGENCY STOP push-button is shown by an arrow.

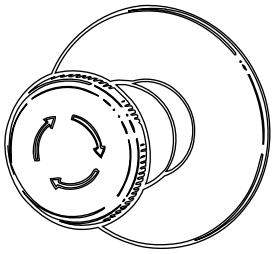

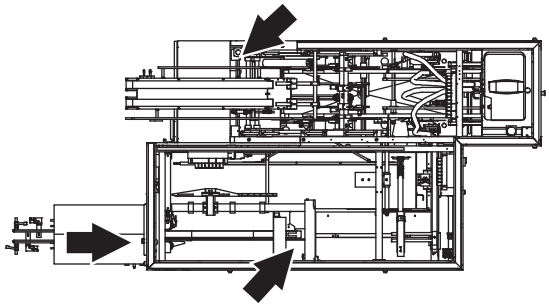

Z-infeed, RH version

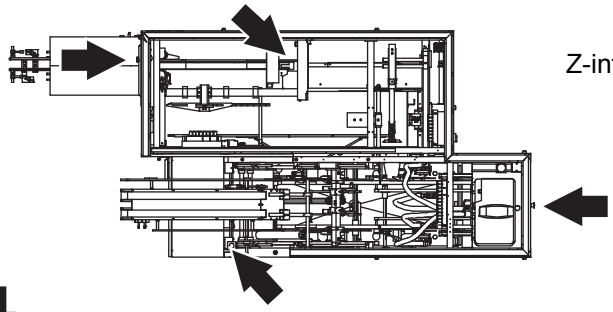

Z-infeed, LH version

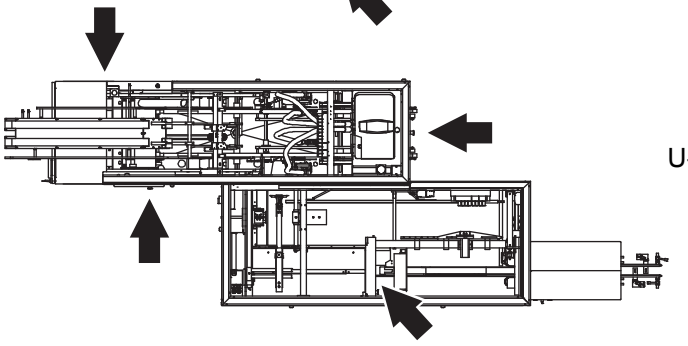

U-infeed, RH version

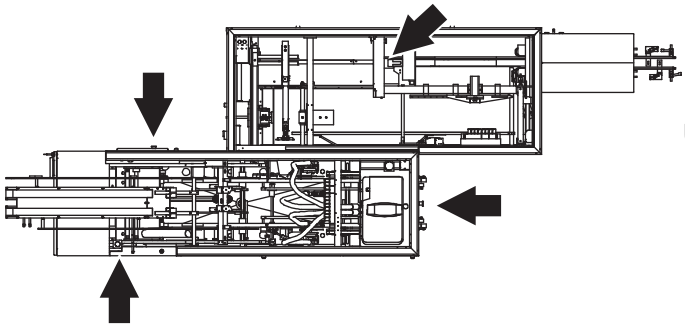

U-infeed, LH version

Safeguards

WARNING
Moving machinery.
Never defeat or bypass the interlocking devices.

Movable guards, for example, doors and covers leading to hazardous zones, are fitted with interlocking devices where required. These devices are usually electric safety switches that are parts of the safety system and must never be defeated, bypassed, or otherwise made inoperative.

WARNING
Corners and edges.
To prevent injury from corners and edges of open doors and covers, close them unless they must be open during such work. Be careful when working under an open door, cover or elsewhere below parts of the equipment with corners and edges.

CAUTION
Burn hazard.
Parts of this equipment may be hot after operation.

After installation and maintenance, and before this equipment is inched or run, check that all safeguards are in place and that they operate correctly.

(Cont'd)

(Cont'd)

CAUTION
Equipment damage.
Never stop this equipment by opening an interlocking guard.

The location of each interlocking guard is shown by an arrow.

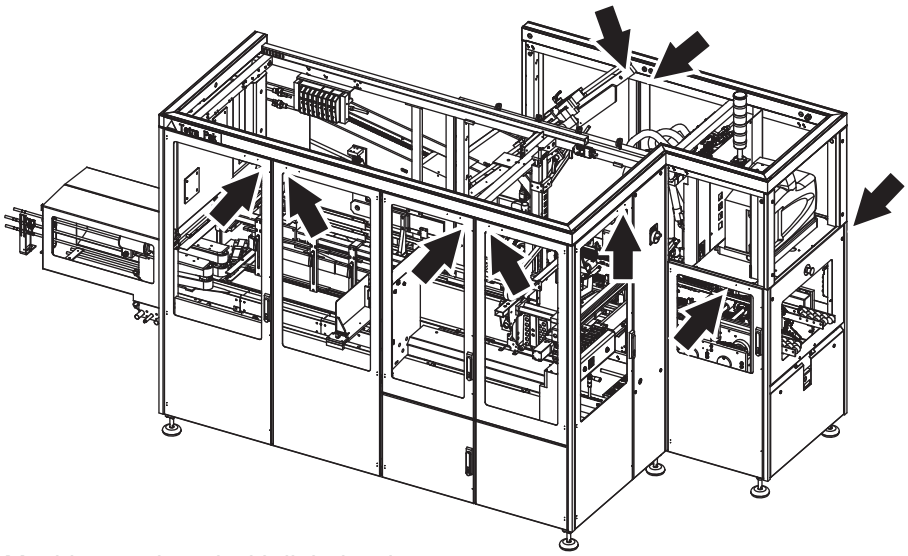

Machine equipped with light barrier.

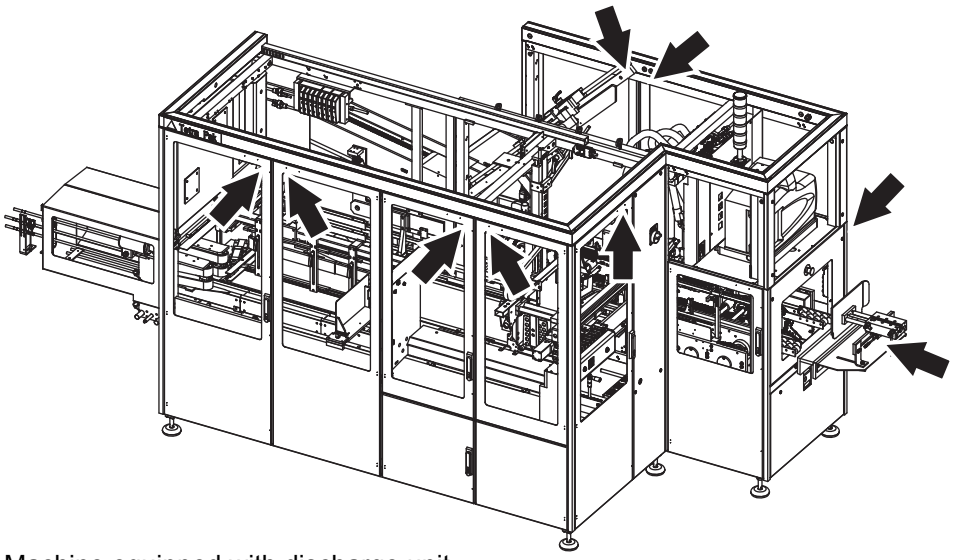

Machine equipped with discharge unit.

(Cont'd)

(Cont'd)

Infeed Conveyor

WARNING

If a door is opened, the infeed conveyor (1) might still be in motion.
The conveyor stops when the machine is stepped down to IDLE or when an EMERGENCY STOP button is pushed or when the machine is completely turned OFF.

To stop the conveyor (1), do one of the following:

- Step down to IDLE.
- Press one of the EMERGENCY STOP buttons. For locations, see Section Emergency Stop Push-Buttons.
- Turn the machine OFF.

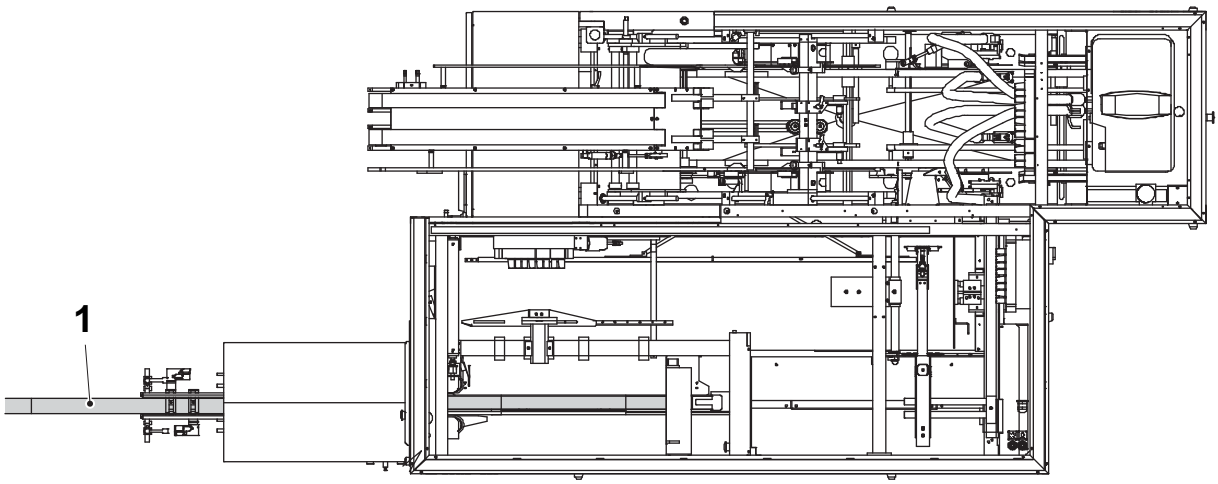

1 Infeed conveyor

Warning Lamp

A warning lamp is a column of warning lights:

- A red light (2) indicates a hazardous condition. This is a situation that requires immediate action.
- A yellow light (3) indicates an abnormal or impending critical condition. This is a condition calling for action by the operator.
- A blue light (4) indicates that operator action is required.
- A green light (5) indicates a normal condition.

Audible Alarm

The audible alarm (1) produces a warning signal before the safety circuit is reset.The warning signal sounds for approximately three seconds to alert personnel. The reset of the safety circuit will make it possible to step up the machine and allow the equipment to start.

The illustration shows Z-infeed, RH version machine.

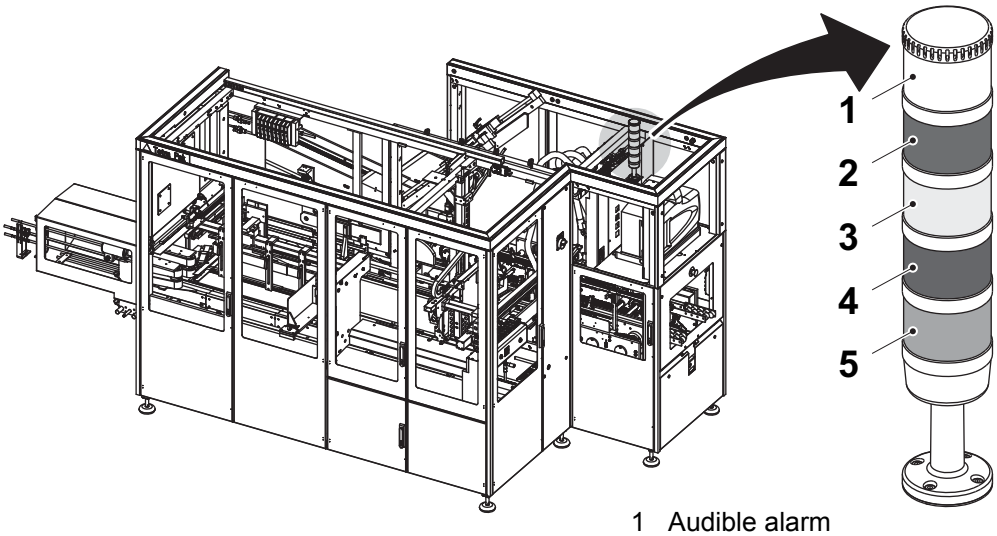

1 Audible alarm
2 Red light
3 Yellow light
4 Blue light
5 Green light

Personal Protection

This section applies to all personnel at all times when this equipment is in operation.

Noise Hazard

CAUTION

Hazardous noise.

Risk of impaired hearing.

Hearing protection is recommended whenever this equipment is in operation.

Entanglement Hazard

WARNING

Risk of entanglement.

Do not wear jewellery or loose clothing when working on or near this equipment. Long hair may not be loose.

Ergonomic Hazard

WARNING

Ergonomic hazard.

Handling materials and supplies, for the machine, can be repetitive manual work and involve ergonomic hazards with risk for personal injury.

Materials and supplies should be located. e.g. layout design, to avoid twisting the body or bending the back when placing them into the machine. It is recommended to use aids such as a lifting table or lifting device for these tasks.

Follow instructions for safe work practices.

Supply Systems

Power Supply

DANGER

Hazardous voltage and moving machinery.
The power supply disconnector must be turned off and secured with a lock before any maintenance.

Note! The key to the lock must be removed by the technician and retained in his/her possession until all work is completed.

Certain maintenance procedures may require power supply systems to be on. These exceptions are clearly stated in the Maintenance Manual.

The illustrations show the power supply disconnector and its location.

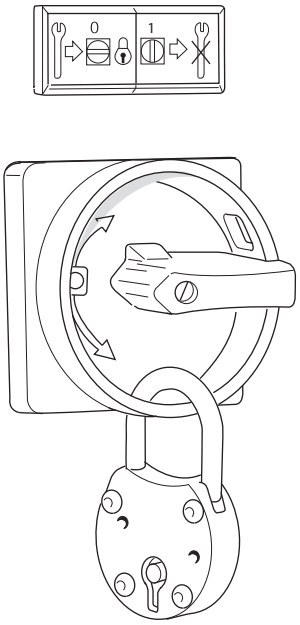

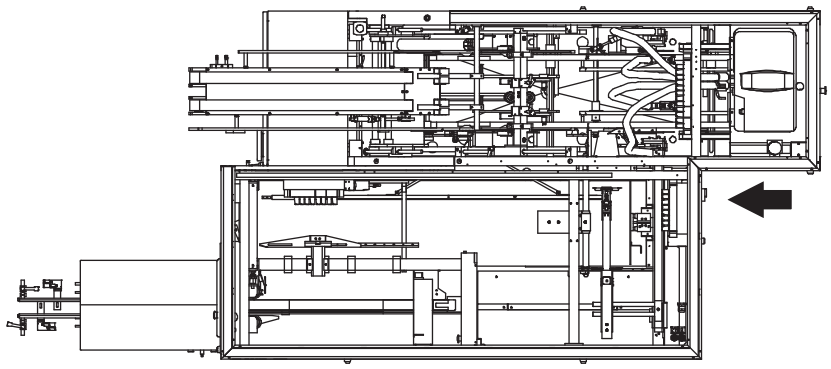

Residual Voltage

DANGER

Hazardous voltage.
Do not touch any terminals immediately after the power supply disconnector is turned off. Ensure that no residual voltage remains on the capacitors before touching. Wait five minutes. Failure to observe this information will cause death or serious injury.

After the power supply disconnector is turned off, residual voltage remains in the capacitor circuits.

Electrical Cabinet

DANGER

Hazardous voltage.
Will shock, burn, or cause death.
The power supply disconnector must be turned off and secured with a lock before maintenance inside the electrical cabinet.

Note! The key to the lock must be removed by the technician and retained in his/her possession until all work is completed.

Make sure that the electrical cabinet doors are closed after working inside the electrical cabinet. Doors with lock must be locked.

The location of the electrical cabinet is shown by an arrow.

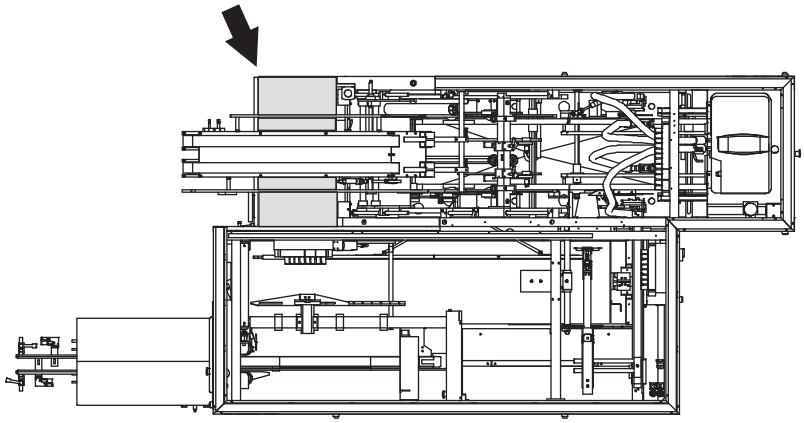

Socket Outlet

WARNING

Hazardous voltage.

Can shock, burn, or cause death. Read the Maintenance Manual before using this socket outlet.

The wall socket (1) is connected to a residual current device (2) to protect users against electrical shock if there is an earth fault in the connected equipment. The residual current device shall be tested each time before the socket outlet is being used. See the MM for test procedure.

The illustrations show the wall socket, the residual current device, and their location.

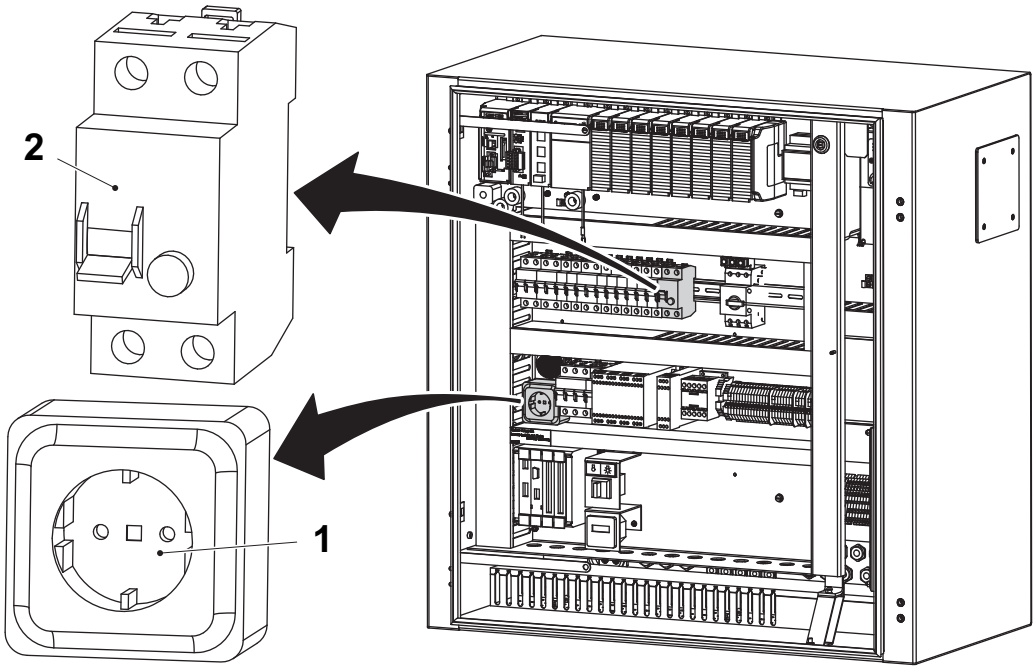

1 Wall socket A01X0070
2 Residual current device A01F0070

Air Supply

WARNING

Compressed air and moving machinery.
Close the shut off valve and lock it before any maintenance.

Note! The key to the lock must be removed by the technician and retained in his/her possession until all work is completed.

Certain maintenance procedures may require air supply systems to be on. These exceptions are clearly stated in the Maintenance Manual.

The illustrations show the shut off valve (1) and its location.

Turn the knob (2) to the position showed in the illustration. Move the lock slide (3) forward and install the padlock (4).

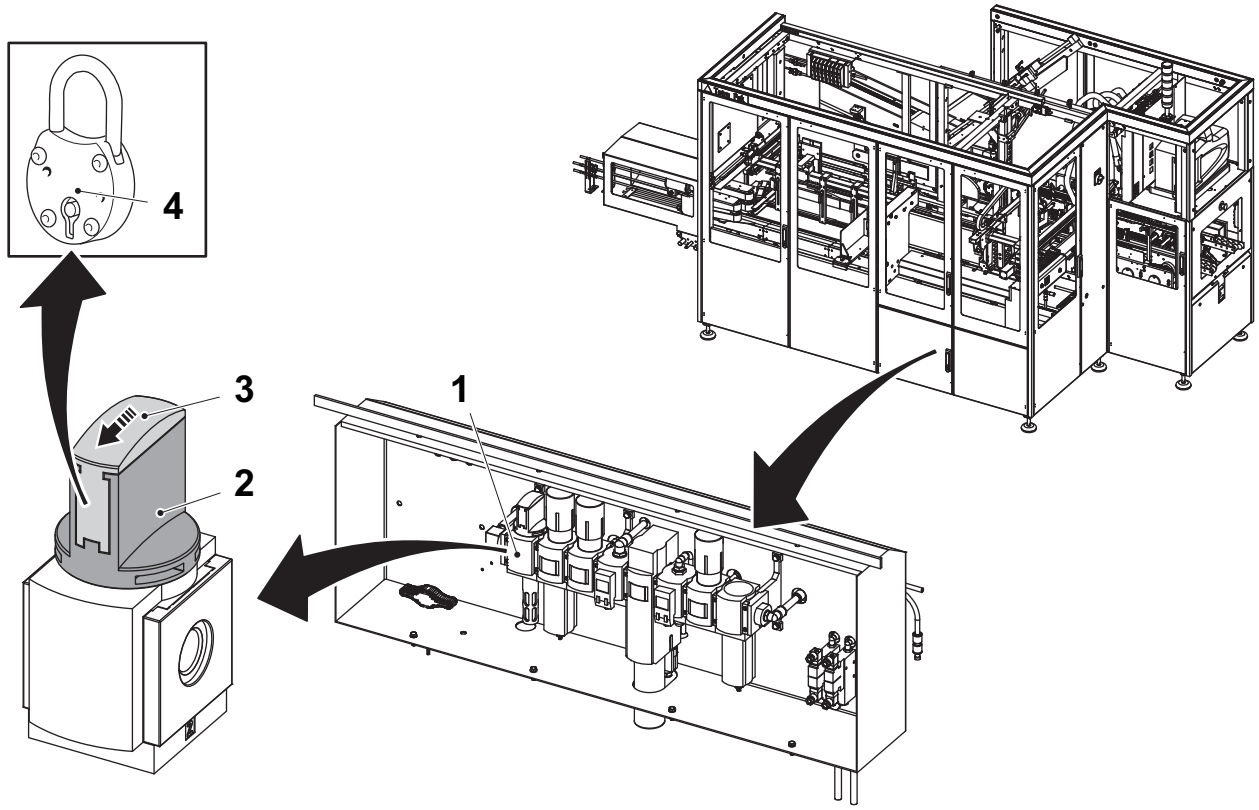

1 Shut off valve
2 Knob
3 Lock slide
4 Pad lock

Water Supply

CAUTION
Water under pressure.
Close the water supply valves before any maintenance.

Note! The key to the lock must be removed by the technician and retained in his/her possession until all work is completed.

Certain maintenance procedures may require water supply systems to be on. These exceptions are clearly stated in the Maintenance Manual.

The illustrations show the water supply valve (1), and its location.

Turn the arm (2) to the position showed in the illustration. Install the padlock (3) in the hole (4).

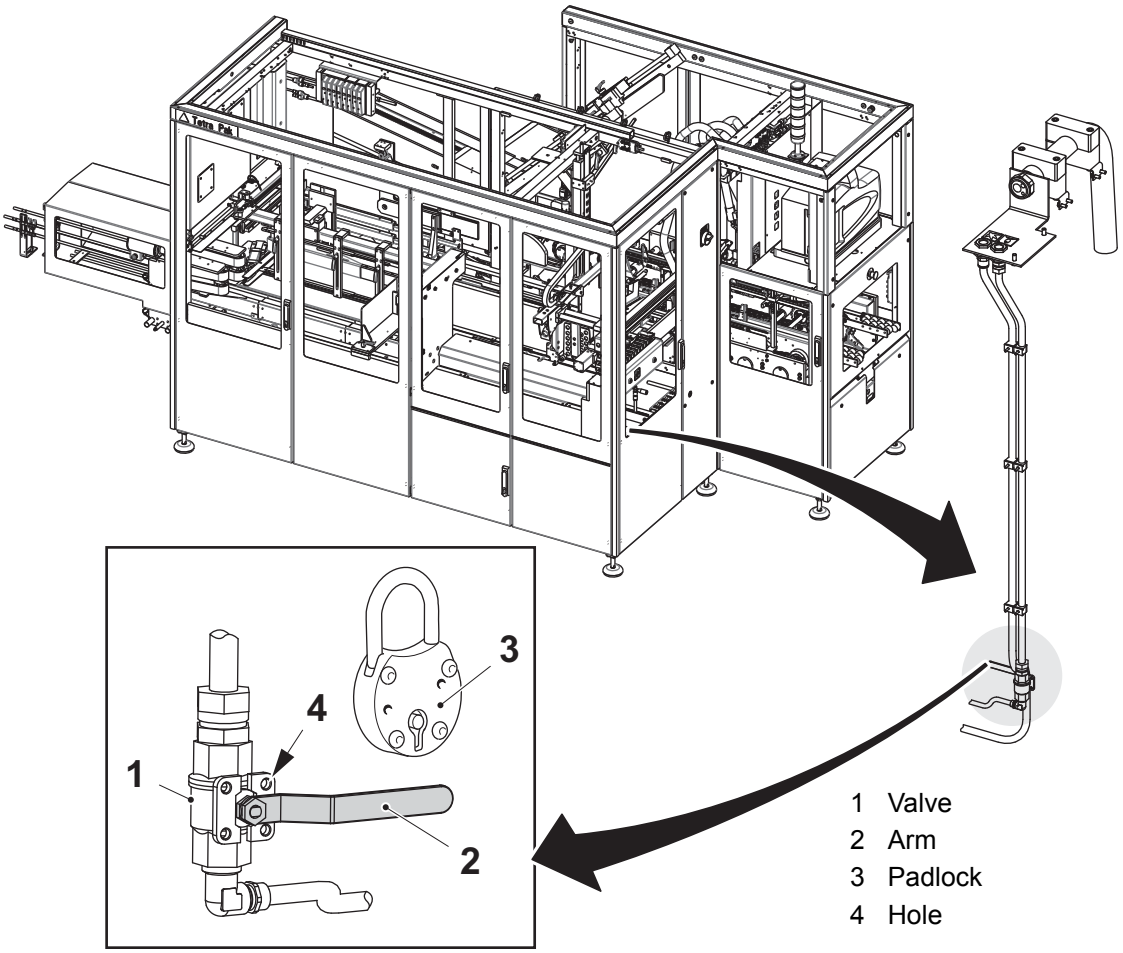

1 Valve
2 Arm
3 Padlock
4 Hole

Hotmelt Equipment

DANGER

Hazardous voltage.
The voltage is 400V inside the hotmelt unit. Risk of immediate danger to life through electrical shock.

Never flush water or any other liquid towards the hotmelt unit when cleaning the machine. Failure to obey will result in danger to your life.

WARNING

Important when working on hotmelt equipment.
All service work on the hotmelt unit must be carried out by authorized personnel. Always wear safety glasses, protective gloves, and other protective clothing to avoid injuries caused by splashing adhesive.

Never remove any part or component until air and the electrical supply to the machine have been disconnected and the pressure of the adhesive in the system has been relieved.

Failure to relieve any remaining air or liquid (adhesive) pressure may cause serious injuries from burning when the hotmelt filter is detached or flushed.

During heating and production the unit gets hot. The hotmelt tank contains heated adhesive which can cause serious injuries. Do not touch the adhesive!

During tank drainage never touch the drain shut!

(Cont'd)

(Cont'd)

WARNING

Burn hazard.

The hotmelt nozzles and their covers are very hot and there is risk of severe burns. Never touch the hotmelt nozzles or their covers!

Note! The section Hotmelt equipment in this manual only deals with what is specific for this machine.

Always refer to the documentation provided from Nordson Corporation (is included in english in the delivery from Tetra Pak) before doing any kind of work on the hotmelt equipment.

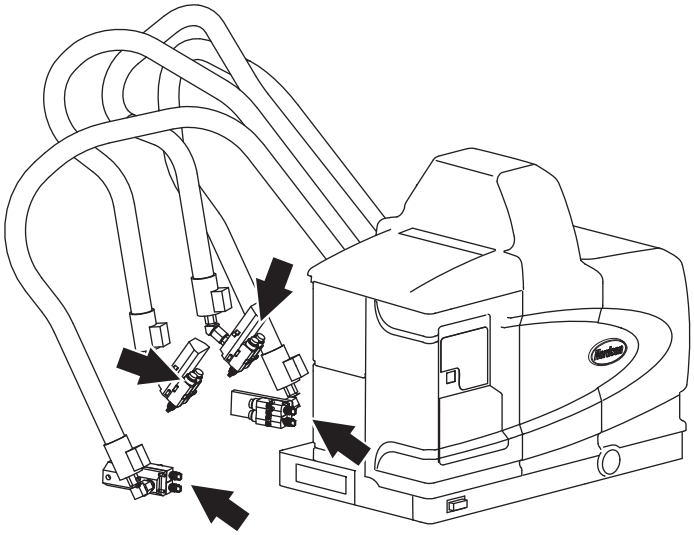

Lifting Accessories

All lifting accessories supplied by Tetra Pak, such as lifting yokes and eyebolts, must be used as intended only. Their correct use is described for each instruction requiring a lifting accessory. Lifting accessories must be stored in a safe place.

Production Mode Changes

All changes concerning packing pattern and infeed alternatives must be carried out by **skilled personnel** only.

Discharge Unit

WARNING

Machine directive.

In order to fulfil the safety demands associated with the CE sign, the machine must be equipped either with one of the optional kits described in the Installation manual, or with any similar equipment that also complies with Machine Directive 2006/42/EC and sub directives.

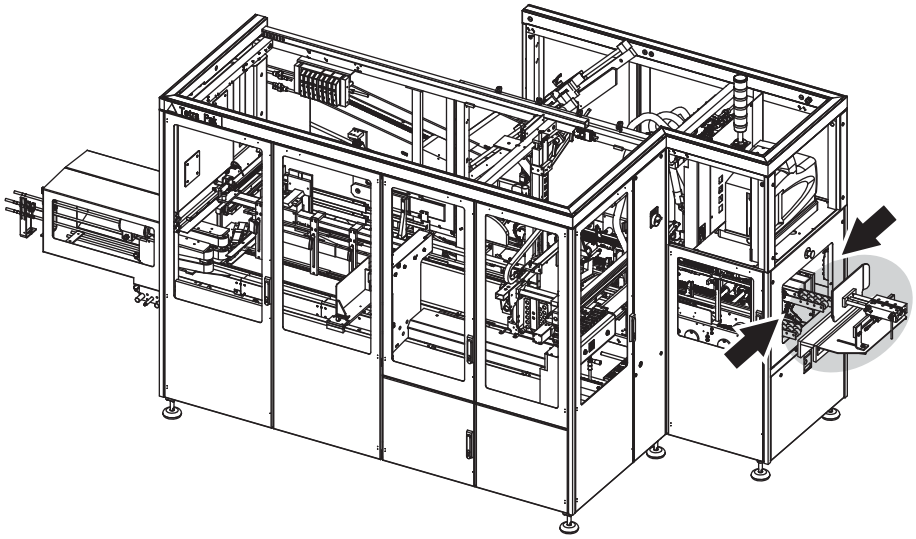

Location of the discharge unit

1 Infeed

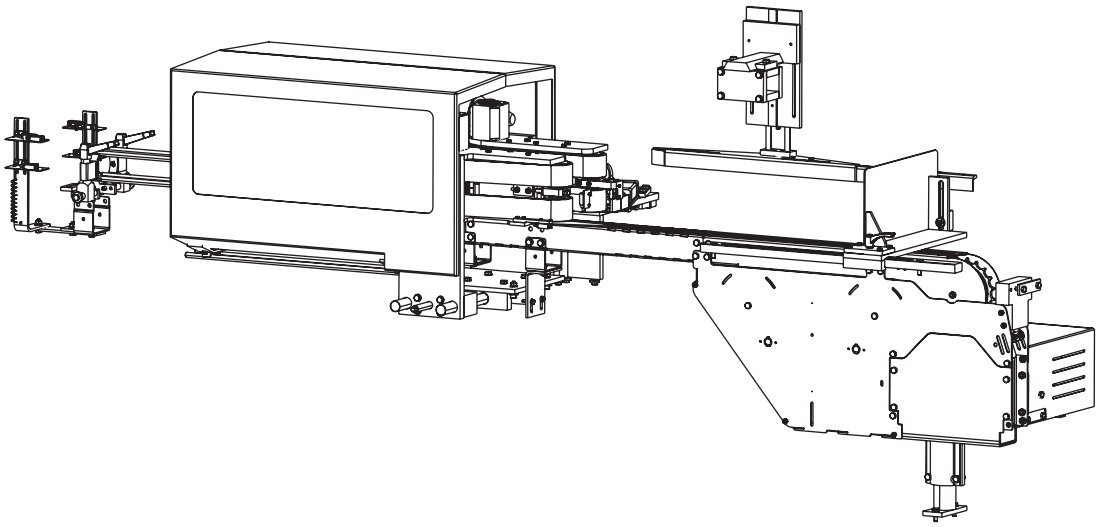

Description

SPC Reference	673827

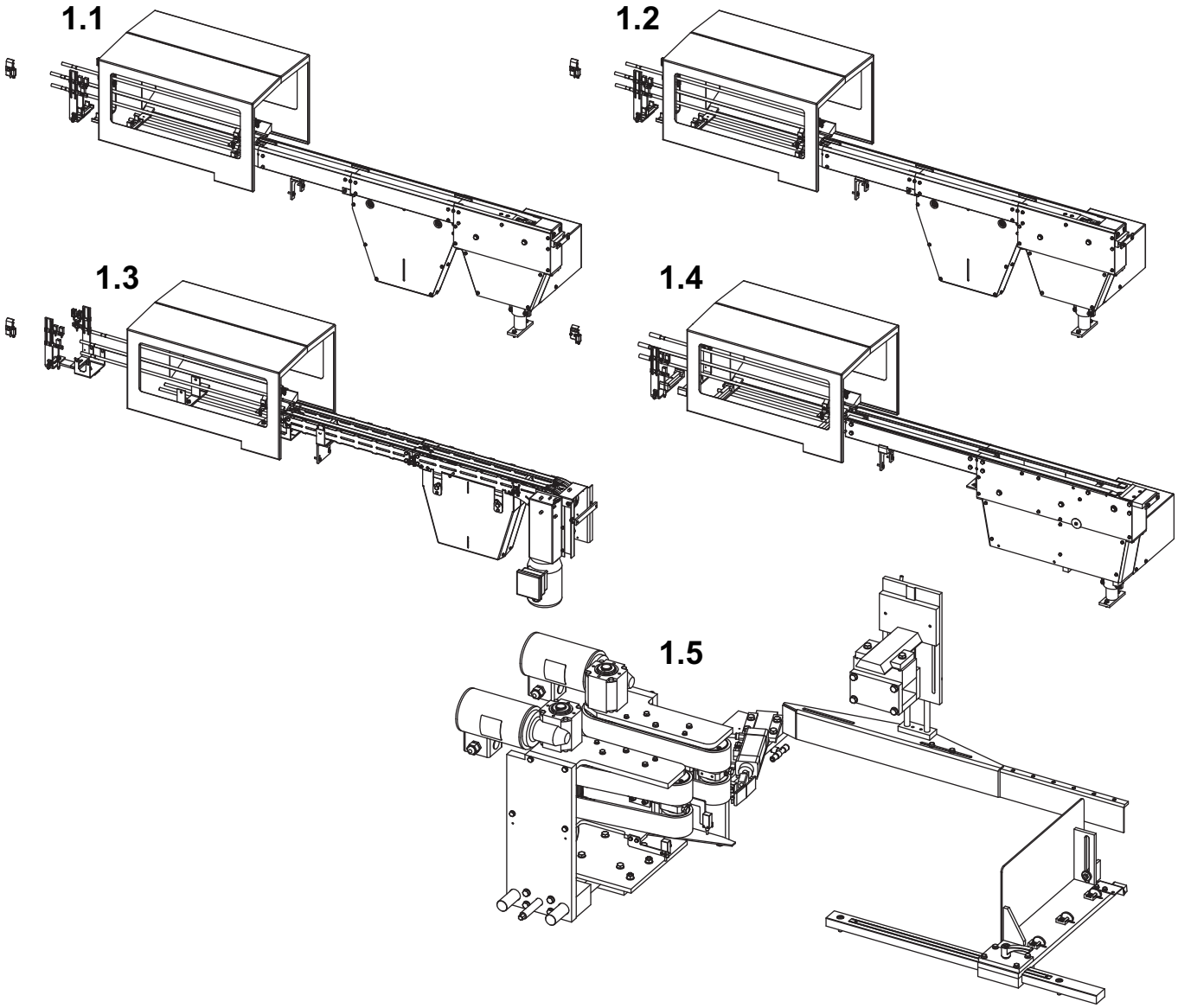

1.1 Package Conveyor TPC21/TPC53
1.2 Package Conveyor 23
1.3 Unit Conveyor 24
1.4 Unit Conveyor 54
1.5 Infeed section

Functional Description 1 - 5

1.1 Package Conveyor TPC21/TPC53 . . . . . 1 - 6

1.1.1 Railing . . . . . 1 - 6

1.1.1-1 Railing - Set . . . . . 1 - 6

1.1.2 Queue Guard, Double . . . . . 1 - 8

1.1.2-1 Queue Guard, Double - Set Photocells . . . . . 1 - 8

1.2 Package Conveyor 23 . . . . . 1 - 9

1.2.1 Railing . . . . . 1 - 9

1.2.1-1 Railing - Set . . . . . 1 - 9

1.2.2 Queue Guard, Double . . . . . 1 - 9

1.2.2-1 Queue Guard, Double - Set Photocells . . . . . 1 - 9

1.3 Unit Conveyor 24 . . . . . 1 - 10

1.3.1 Railing . . . . . 1 - 10

1.3.1-1 Railing - Set . . . . . 1 - 10

1.3.2 Queue Guard, Double . . . . . 1 - 10

1.3.2-1 Queue Guard, Double - Set Photocells . . . . . 1 - 10

1.3.3 Drive Unit . . . . . 1 - 11

1.3.3-1 Drive Unit - Change Timing Belt . . . . . 1 - 11

1.4 Unit Conveyor 54 . . . . . 1 - 13

1.4.1 Railing . . . . . 1 - 13

1.4.1-1 Railing - Set . . . . . 1 - 13

1.4.2 Queue Guard, Double . . . . . 1 - 13

1.4.2-1 Queue Guard, Double - Set Photocells . . . . . 1 - 13

1.5 Infeed Section . . . . . 1 - 14

1.5.1 Brake Unit . . . . . 1 - 14

1.5.1-1 Brake Unit - Change . . . . . 1 - 14

1.5.1-2 Brake Unit - Set . . . . . 1 - 20

1.5.1-3 Brake Unit - Set Belt Tension . . . . . 1 - 23

1.5.2 End Stop Grouping . . . . . 1 - 24

1.5.2-1 End Stop Grouping - Set . . . . . 1 - 24
1.5.3 Package Separator . . . . . 1 - 26
1.5.3-1 Package Separator - Change . . . . . 1 - 26
1.5.3-2 Package Separator - Set . . . . . 1 - 28
1.5.4 Grouping Top Support . . . . . 1 - 29
1.5.4-1 Grouping Top Support - Change Cylinder . . . . . 1 - 29
1.5.4-2 Grouping Top Support - Set . . . . . 1 - 30

Functional Description

The functional description gives a rough explanation of the package flow through the Cardboard Packer 32.

Infeed Module

The infeed conveyor passes the packages through a belt brake (1) that, separates the incoming packages by running in a higher speed than the infeed conveyor. At the infeed belt brake there are two photocells. The first photocell counts the incoming packages and the second photocell checks for clearance before the package separator moves out.

If an error is spotted there are two different retry sequences to either run the belt slowly forward to release current package or to reverse the belt brake slowly to draw out the overflow package.

The grouping plate (3) guides the incoming packages in a straight line on the conveyor. To guide the packages the grouping plate raises the end towards the conveyor side and creates a guiding edge towards the bottom part of the packages.

When the infeed conveyor have finished counting in the right amount of packages, the package separator (2) moves out.

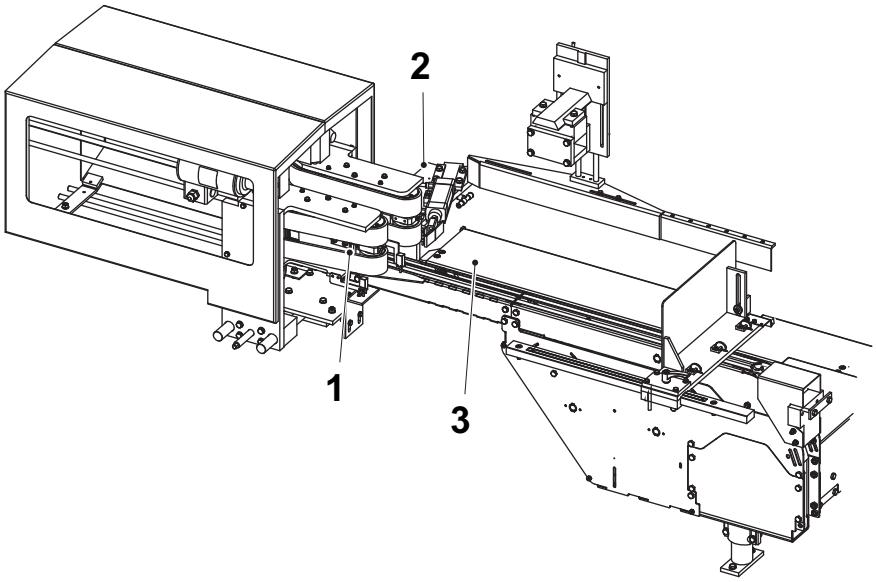

1 Brake Unit
2 Package separator
3 Grouping plate

1.1 Package Conveyor TPC21/TPC53

SPC Reference	2718846

1.1.1 Railing

1.1.1-1 Railing - Set

Machine Status	Power supply disconnector OFF Air valve OFF
SPC Reference	2833996

a) Put a package (1) on the conveyor.

b) Loosen the nuts (2).

c) Turn the railings (3) and set the distances A and B.

d) Tighten the nuts (2).

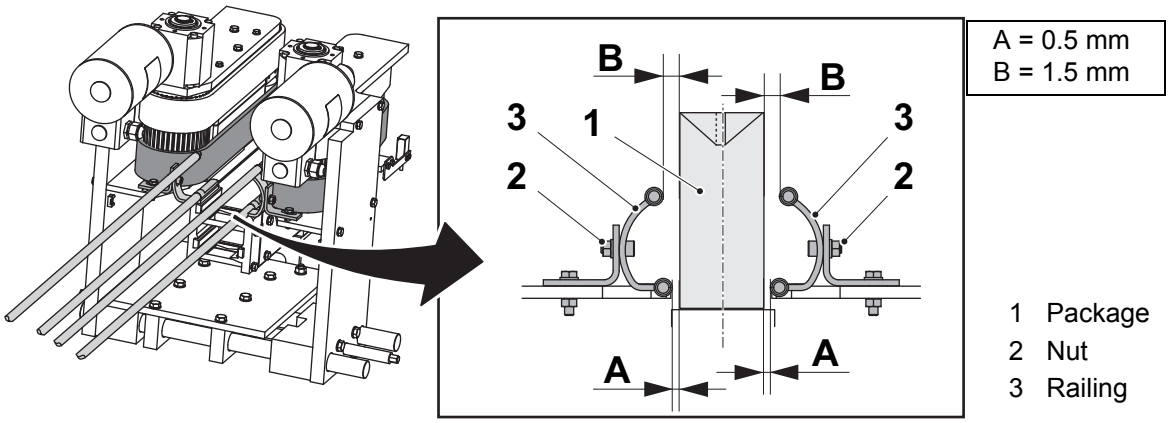

(Cont'd)

(Cont'd)

e) Loosen the screw (4) on the railing bracket.

f) Set the distance C between the lower railing (3) and the brake unit's timing belt (5).

g) Tighten the screw (4).

h) Repeat the setting on the other brake unit.

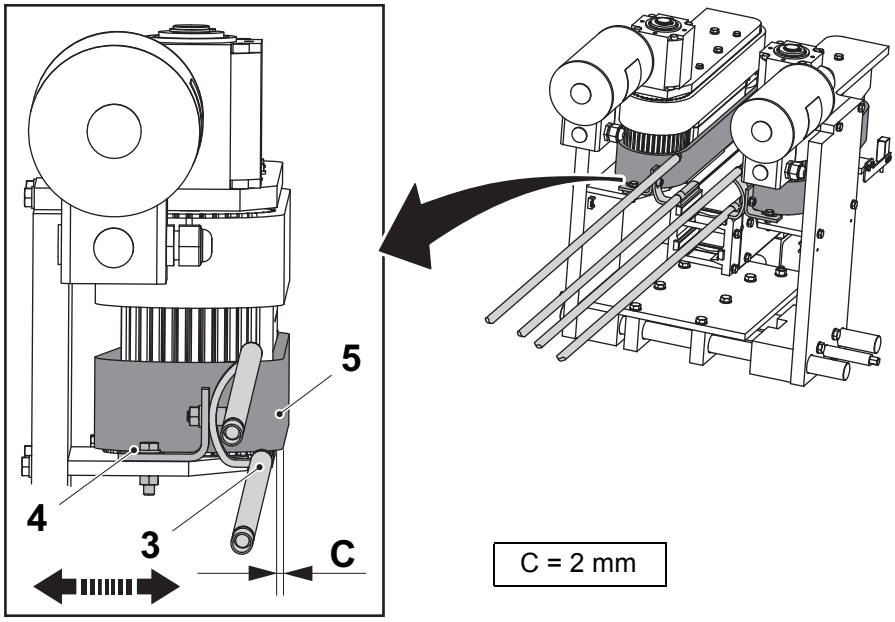

C = 2 mm

3 Railing
4 Screw
5 Timing belt

1.1.2 Queue Guard, Double

1.1.2-1 Queue Guard, Double - Set Photocells

Machine Status	Power supply disconnector ON Air valve OFF
SPC Reference	2718856

a) Set the photocells (1), (2), (4) and (5) to detect a standing package. It must be high enough not to detect a fallen package (7).

b) Set the photocells (3) and (6) height to detect the package laying down (7).

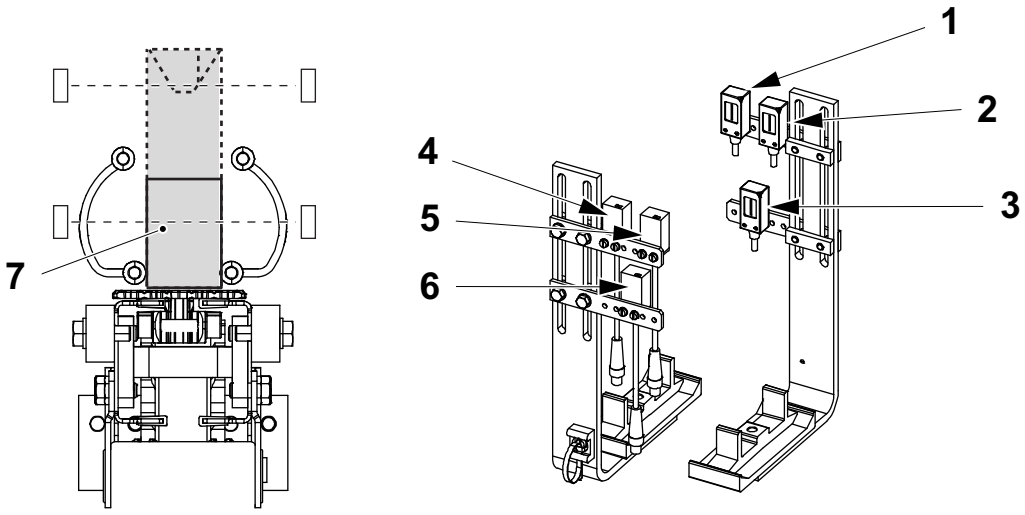

1 Photocell W30B0118, *W30B0115
2 Photocell W30B0114,*W30B0119
3 Photocell W30B0110, *W30B0111
4 Photocell W30B0119, *W30B0114
5 Photocell W30B0115, *W30B0118
6 Photocell W30B0111, *W30B0110
7 Laying package

*Z-infeed RH version, U-infeed LH version

1.2 Package Conveyor 23

SPC Reference	2718847

1.2.1 Railing

1.2.1-1 Railing - Set

Machine Status	Power supply disconnector OFF Air valve OFF
SPC Reference	2833997

Set the railings according to 1.1.1-1 Railing - Set.

1.2.2 Queue Guard, Double

1.2.2-1 Queue Guard, Double - Set Photocells

Machine Status	Power supply disconnector ON Air valve OFF
SPC Reference	2718883

Set the queue guard according to 1.1.2-1 Queue Guard, Double - Set Photocells.

1.3 Unit Conveyor 24

SPC Reference	

1.3.1 Railing

1.3.1-1 Railing - Set

Machine Status	Power supply disconnector OFF Air valve OFF
SPC Reference	

Set the railings according to 1.1.1-1 Railing - Set.

1.3.2 Queue Guard, Double

1.3.2-1 Queue Guard, Double - Set Photocells

Machine Status	Power supply disconnector ON Air valve OFF
SPC Reference	

Set the queue guard according to 1.1.2-1 Queue Guard, Double - Set Photocells.

1.3.3 Drive Unit

1.3.3-1 Drive Unit - Change Timing Belt

Machine Status	Power supply disconnector ON Air valve OFF
SPC Reference	

a) Remove the screws (1) and belonging washers.
b) Remove the protection plate (2).
c) Remove the screws (3) and belonging washers.
d) Remove the cover (4).

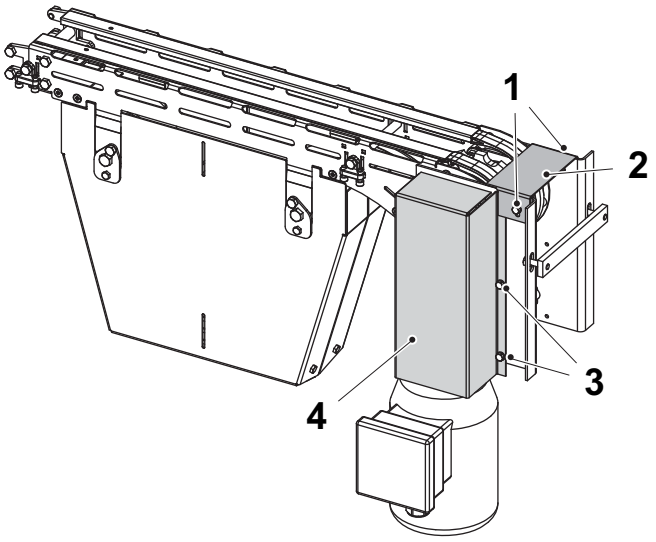

1 Screw
2 Protection plate
3 Screw
4 Cover

(Cont'd)

(Cont'd)

e) Loosen the screws (5) and (6).

f) Push up the motor (7) in the upper position and tighten the screws (5) and (6).

g) Change the timing belt (8) and assemble in the reverse order.

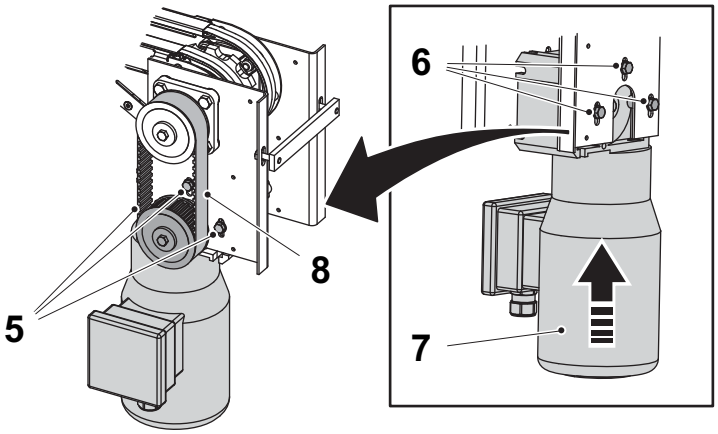

5 Screw
6 Screw
7 Motor
8 Timing belt

1.4 Unit Conveyor 54

SPC Reference	2718848

1.4.1 Railing

1.4.1-1 Railing - Set

Machine Status	Power supply disconnector OFF Air valve OFF
SPC Reference	2833998

Set the railings according to 1.1.1-1 Railing - Set.

1.4.2 Queue Guard, Double

1.4.2-1 Queue Guard, Double - Set Photocells

Machine Status	Power supply disconnector ON Air valve OFF
SPC Reference	2718858

Set the queue guard according to 1.1.2-1 Queue Guard, Double - Set Photocells.

1.5 Infeed Section

SPC Reference	2851987

1.5.1 Brake Unit

1.5.1-1 Brake Unit - Change

Machine Status	Power supply disconnector OFF Air valve OFF
SPC Reference	2834009, 2834010

a) Remove the screws (1) and the tunnel (2).
b) Remove the screws (3) and the railings (4).
c) Remove the photocell brackets (5).
d) Remove the covers (6).
e) Disconnect the cables (7).

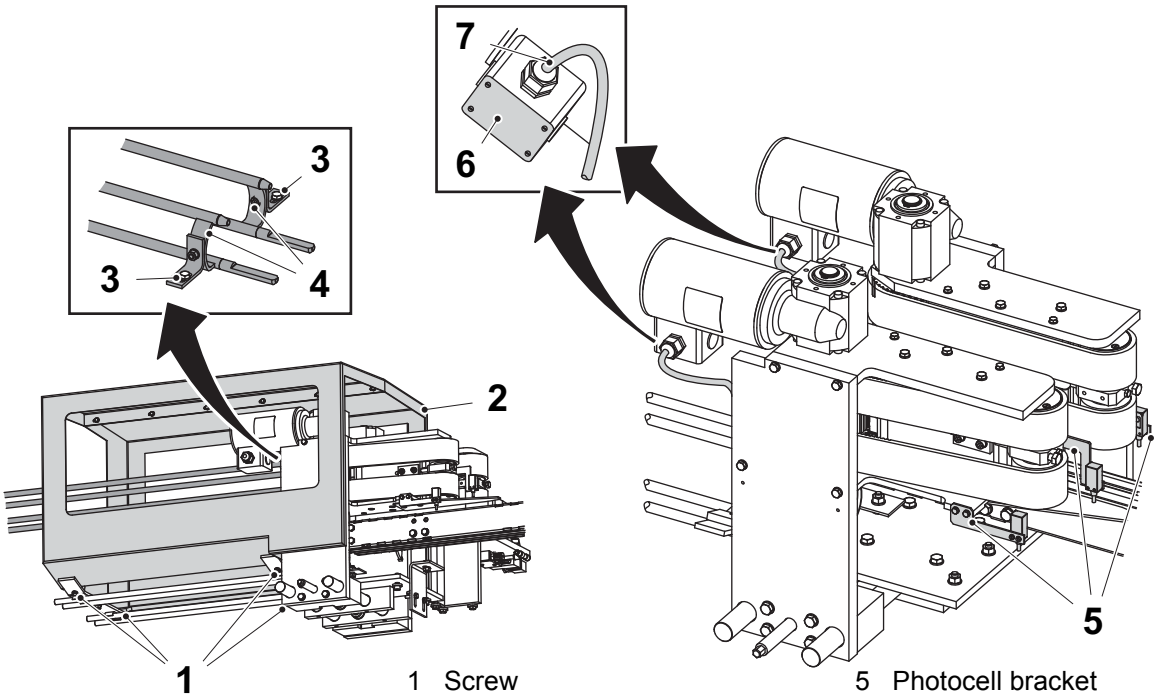

1 Screw
2 Tunnel
3 Screw
4 Railing
5 Photocell bracket
6 Cover
7 Cable

(Cont'd)

(Cont'd)

f) Loosen the screws (8) and (9) to release the tension of the timing belts (10).

g) Remove the screws (11).

h) Hold the brake unit (12) and remove the screw joint (13).

i) Remove the brake unit (12).

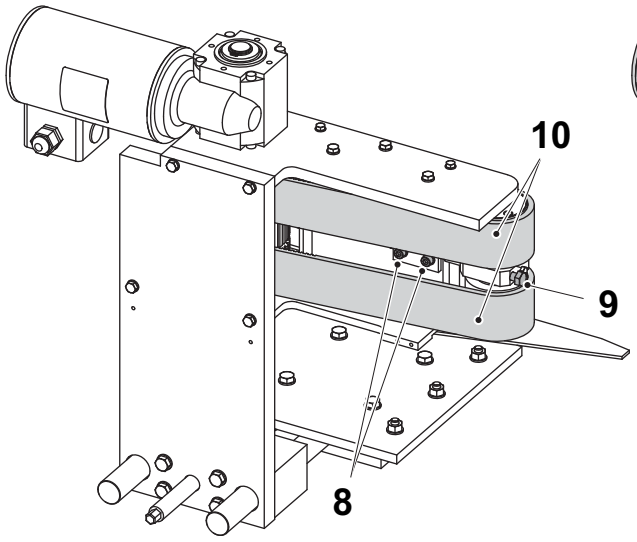

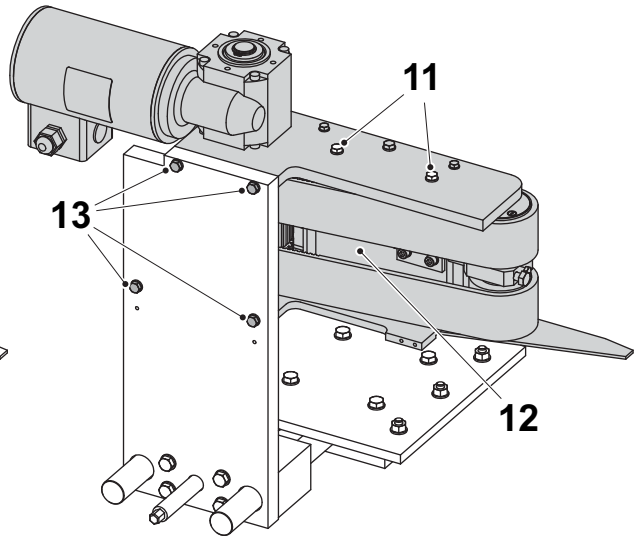

8 Screw
9 Screw
10 Timing belt
11 Screw
12 Brake unit
13 Screw

(Cont'd)

(Cont'd)

j) Remove the screw joints (14) and (15).
k) Remove the screw (16).
l) Loosen the screw (17) and turn the guide (18) 180°.
m) Remove the screw (19) and the fastening plate (20).
n) Twist off the timing belts (10).

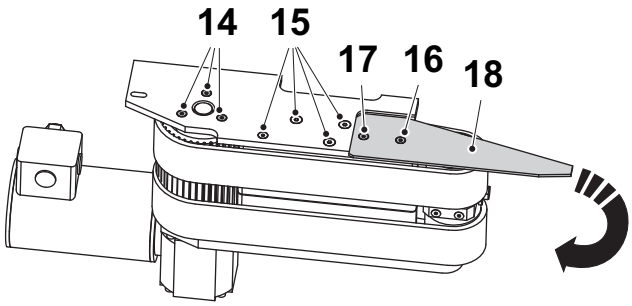

14 Screw
15 Screw
16 Screw
17 Screw
18 Guide

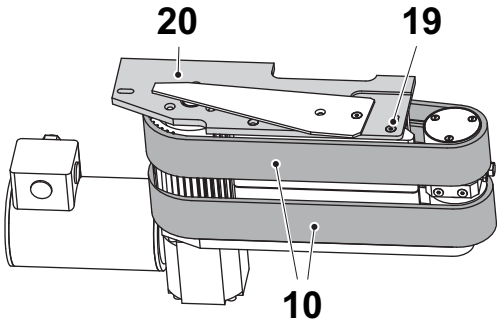

10 Timing belt
19 Screw
20 Fastening plate

(Cont'd)

(Cont'd)

o) Remove the screws (21), the plate (22) and the runner unit (23).
p) Loosen the screw (24).
q) Remove screw joint (25) and the washer (26).
r) Remove the washer (27) and change the O-ring 28).
s) Remove the retaining ring (29) and the washer (30).
t) Press down the shaft (31) and remove the runner (32).
u) Change the ball bearings (34) and the V-ring (33).

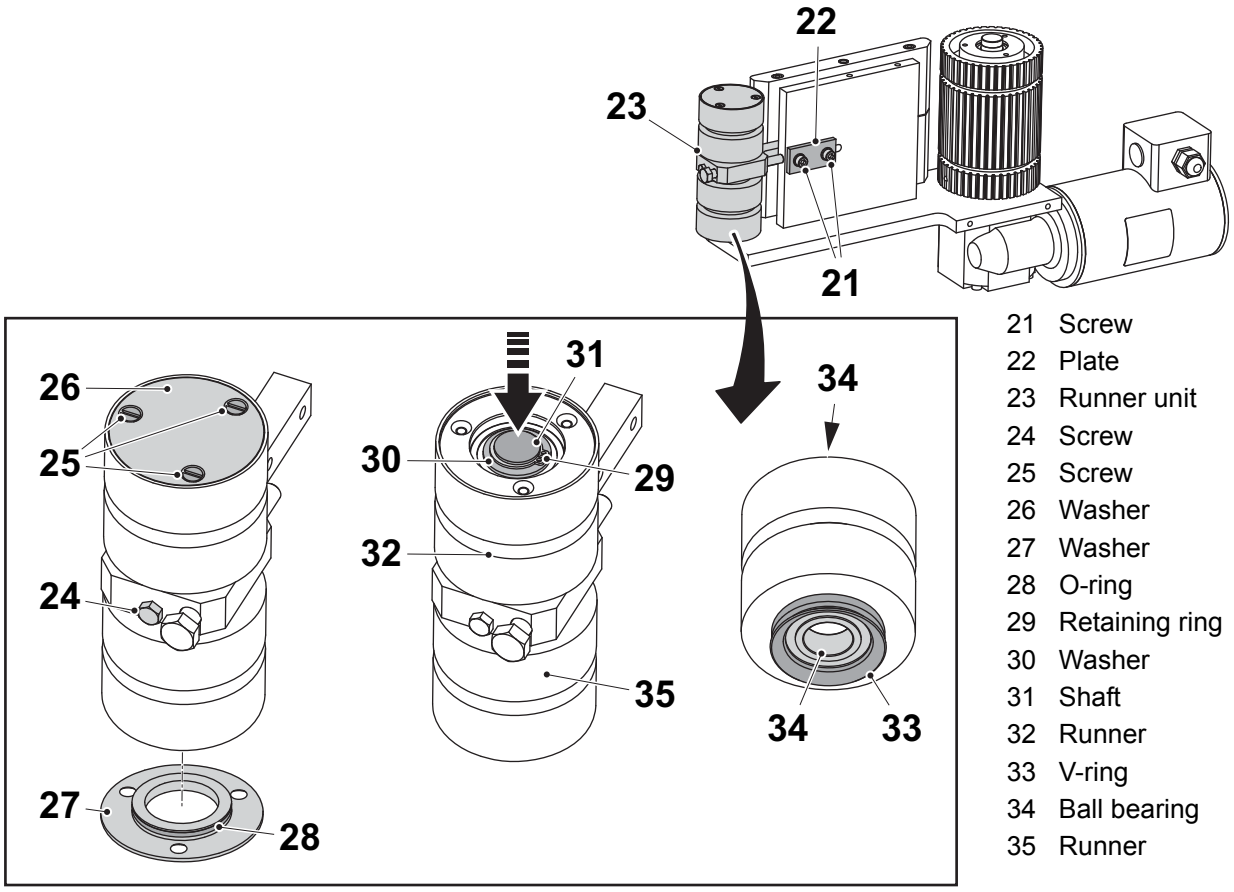

21 Screw
22 Plate
23 Runner unit
24 Screw
25 Screw
26 Washer
27 Washer
28 O-ring
29 Retaining ring
30 Washer
31 Shaft
32 Runner
33 V-ring
34 Ball bearing
35 Runner

(Cont'd)

(Cont'd)

v) Loosen the screw (36).

w) Press down the shaft (37) so the shaft is released from the ball bearing (38).

x) Remove the toothed pulley (39).

y) Remove the bearing housing (40) and change the ball bearing (38).

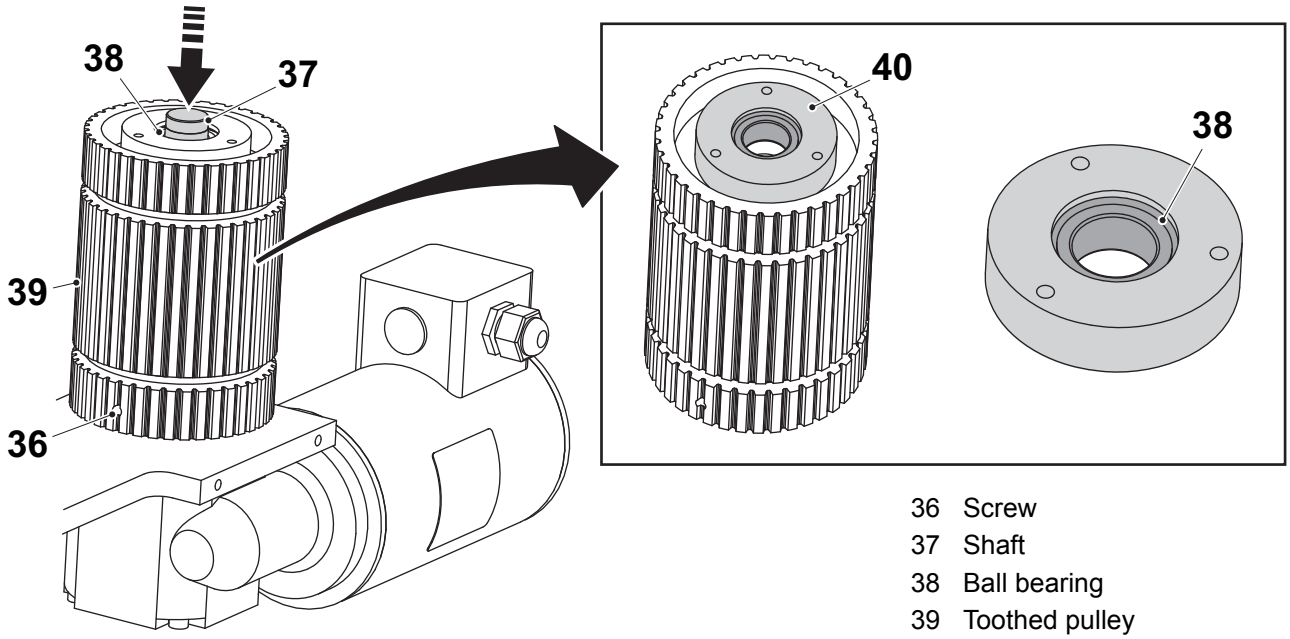

36 Screw
37 Shaft
38 Ball bearing
39 Toothed pulley
40 Bearing housing

(Cont'd)

(Cont'd)

z) Remove the spacer (41)

aa) Press down the shaft (37).

ab) Remove the screw joint (42) and change the motor (43).

ac) Fit the new timing belts and assemble the brake unit in the reverse order.

ad) Set the belt tension, see 1.5.1-3 Brake Unit - Set Belt Tension.

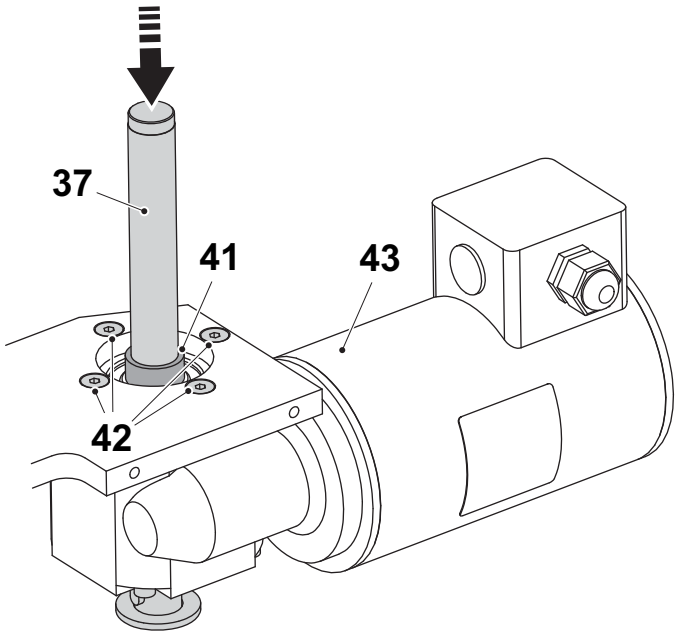

37 Shaft
41 Spacer
42 Screw
43 Motor W30M0083

1.5.1-2 Brake Unit - Set

Machine Status	Power supply disconnector OFF Air valve OFF
SPC Reference	2834009, 2834010

a) Turn the shaft (1) with a 10 mm spanner to set the distance A between the timing belt (2) and the grouping plate (3).

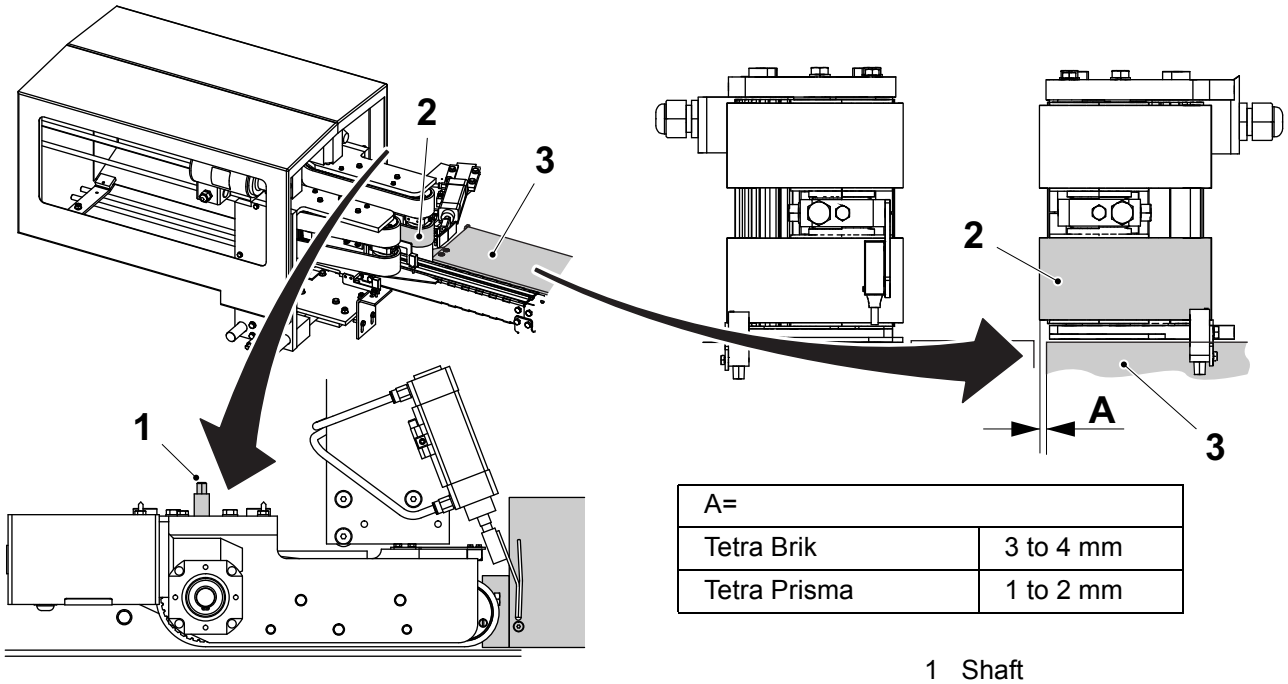

A=	
Tetra Brik	3 to 4 mm
Tetra Prisma	1 to 2 mm

1 Shaft
2 Timing belt
3 Grouping plate

(Cont'd)

(Cont'd)

b) Loosen the screws (4) and set the distance B between the guide (5) and the timing belt (6).

c) Place a package (7) between the timing belts on the conveyor chain.

d) Turn the shaft (8) with a 10 mm spanner until the timing belts touch the package.
Turn additional:
- minimum 1.5 revs for hard packages.
- maximum 3 revs for soft packages, for example Tetra Prisma.

Note! If the package shape is affected after exiting the belt brake, is the belt brake tightened to much.

e) Remove the package (7).

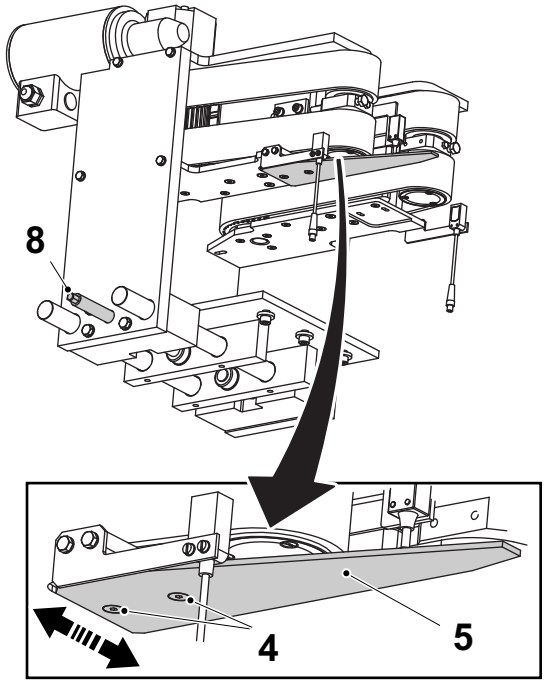

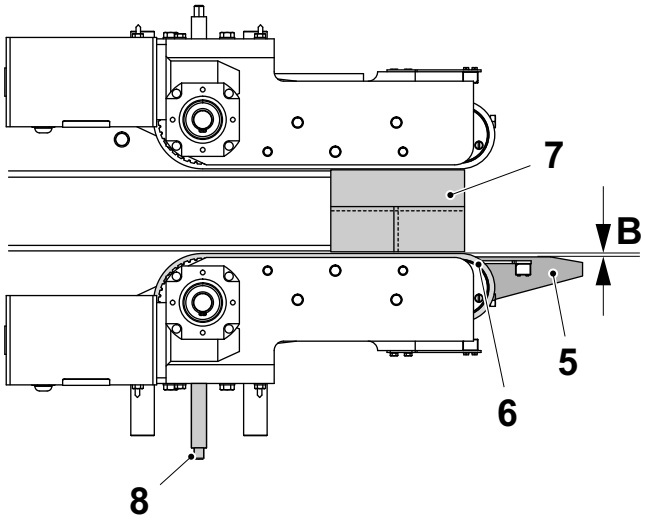

B=	
Tetra Brik	4 mm
Tetra Prisma	2 mm

4 Screw
5 Guide
6 Timing belt
7 Package
8 Shaft

(Cont'd)

(Cont'd)

f) Loosen the screw joint (9) and set the distance C between the fastening plate (10) and the conveyor chain (11).

g) Tighten the screw joint (9).

h) Repeat the setting on the other side.

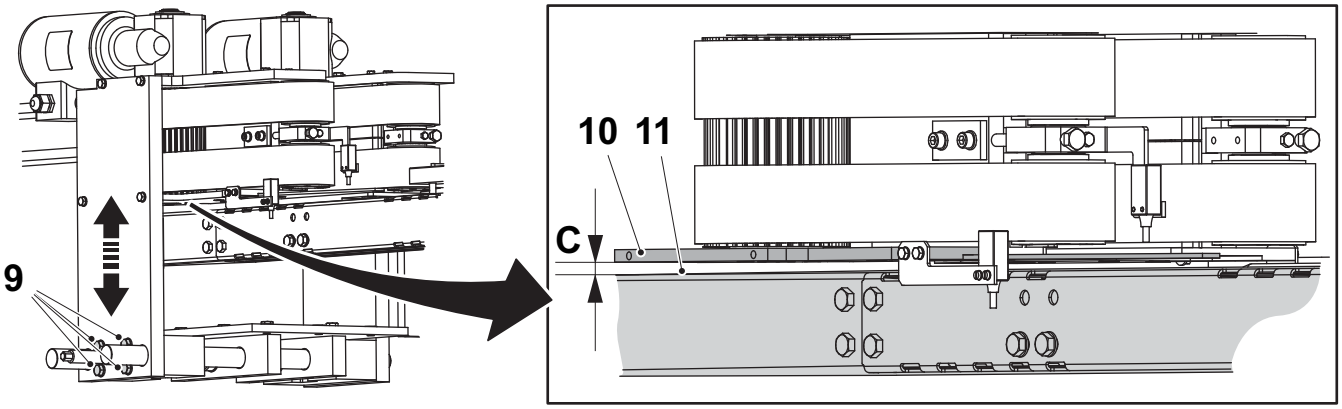

C= 1 to 2 mm

9 Screw
10 Fastening plate
11 Conveyor chain

1.5.1-3 Brake Unit - Set Belt Tension

Machine Status	Power supply disconnector OFF Air valve OFF
SPC Reference	2834009, 2834010

a) Loosen the screws (1).

b) Adjust the tension of timing belts (3) by:
- Turn the screw (2) to the left to release the belt tension.
- Turn the screw (2) to the right to stretch the belt tension.

c) Tighten the screws (1).

d) Repeat the method on the timing belts (4).

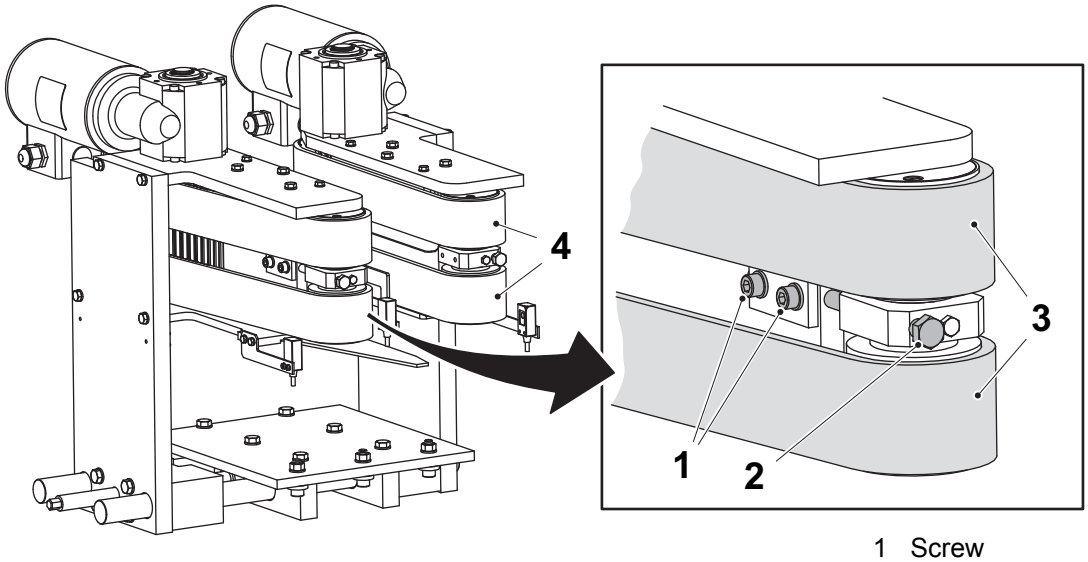

1 Screw
2 Screw
3 Timing belt
4 Timing belt

1.5.2 End Stop Grouping

1.5.2-1 End Stop Grouping - Set

Machine Status	Power supply disconnector ON Air valve ON
SPC Reference	2895021

Distance between the End Stop Grouping and the Guide Rail

a) Loosen the locking lever (1).

b) Lift up the stop arm (2) and set the distance A between the slide plate (3) and the guide rail (4). Tighten the locking lever (1).

Note! The number of packages in front of the grouping pusher should be equally divisible by the selected packing pattern width.

c) Set the stop arm width position, see 2.2.4-2 Stop Arm - Set

A = B + 3 to 10 mm

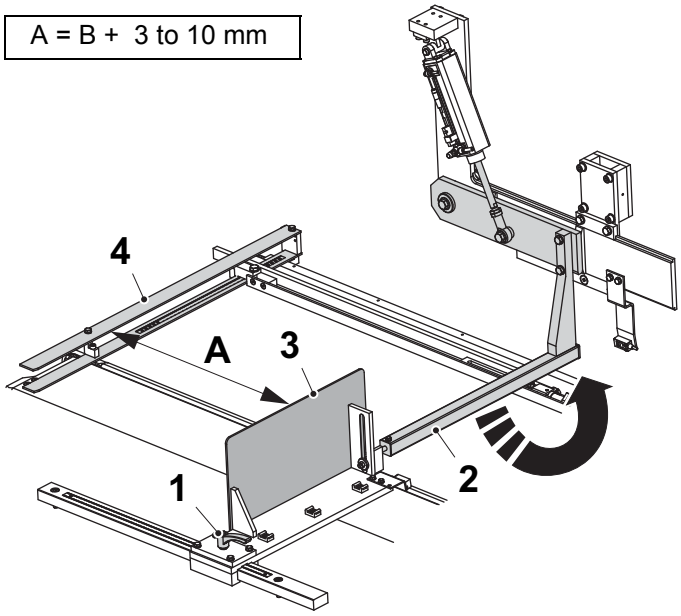

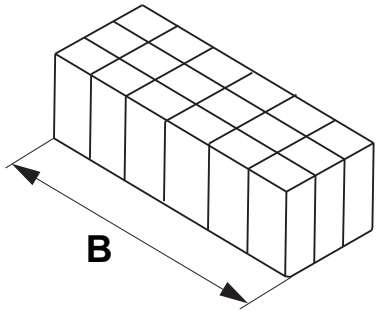

1 Locking lever
2 Stop arm
3 Slide plate
4 Guide rail

(Cont'd)

(Cont'd)

Height Position

d) Loosen the nut (5) and set the height of the holder (6) to fit the lower position of the stop arm (2).

e) If necessary set the stop arm (2), see 2.2.4-2 Stop Arm - Set.

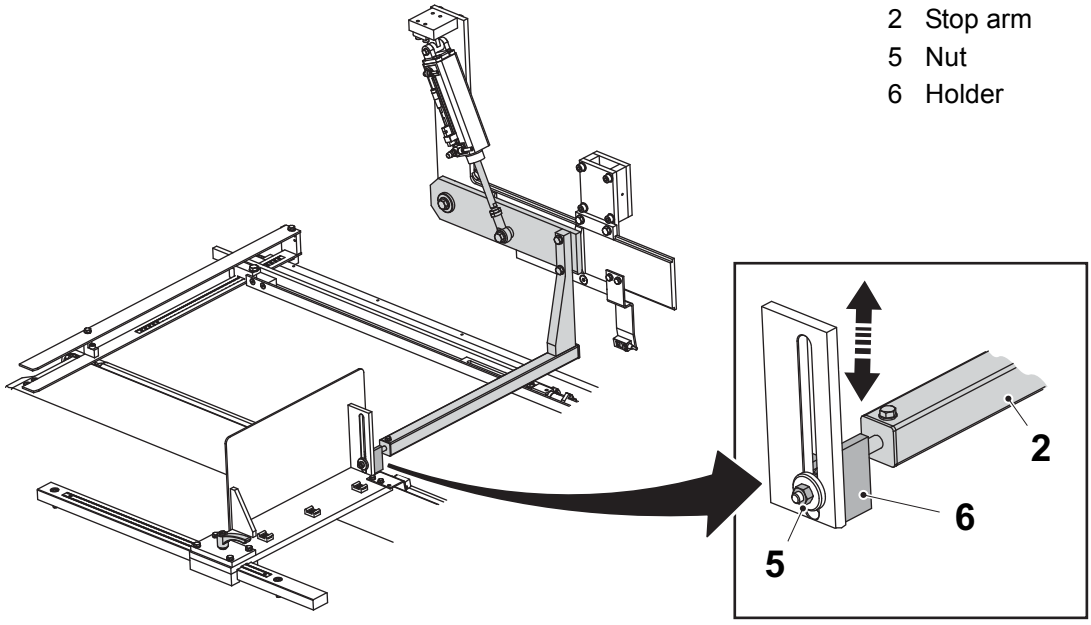

1.5.3 Package Separator

1.5.3-1 Package Separator - Change

Machine Status	Power supply disconnector OFF Air valve OFF
SPC Reference	2752732

a) Disconnect the tubes (1) and the cable (2) from the cylinder (3).
b) Loosen the screws (4).
c) Remove the screws (5) and the clamp rail (6).
d) Remove the cylinder with belonging mounting plate (7).

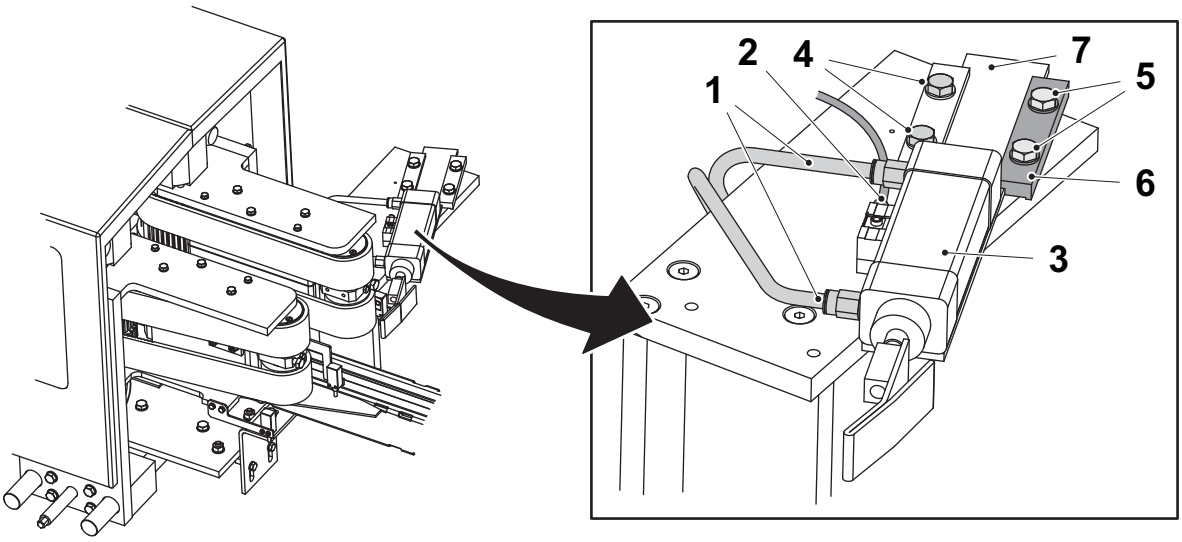

1 Tube
2 Cable
3 Cylinder W30M0240
4 Screw
5 Screw
6 Clamp rail
7 Mounting plate

(Cont'd)

(Cont'd)

e) Remove the screw joint (8) and the mounting plate (7) from the cylinder.
f) Remove the rule plate (9) from the cylinder's piston rod.
g) Reassemble the parts (7), (8) and (9) on the new cylinder.
h) Assemble the cylinder on the machine in reverse order.

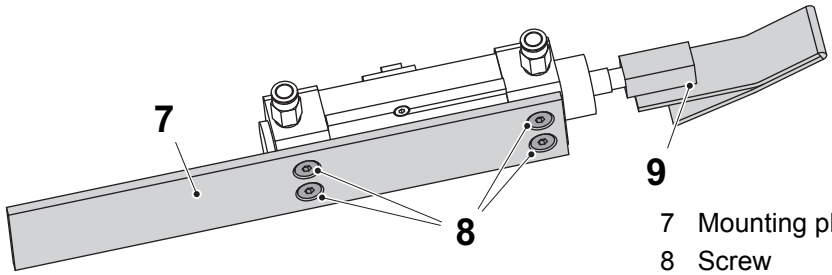

7 Mounting plate
8 Screw
9 Rule plate

1.5.3-2 Package Separator - Set

Machine Status	Power supply disconnector OFF Air valve OFF
SPC Reference	2752732

a) Pull out the package separator's cylinder (1) piston rod to plus position.

b) Loosen the screws (2).

c) Set the cylinder (1) so the rule plate's (3) outer part is align with the transfer unit's guide rail guide rail (4). The cylinder is adjustable in both length and sideways.

d) Tighten the screws (2).

e) Check so there is signal between the photocells (5) and (6).

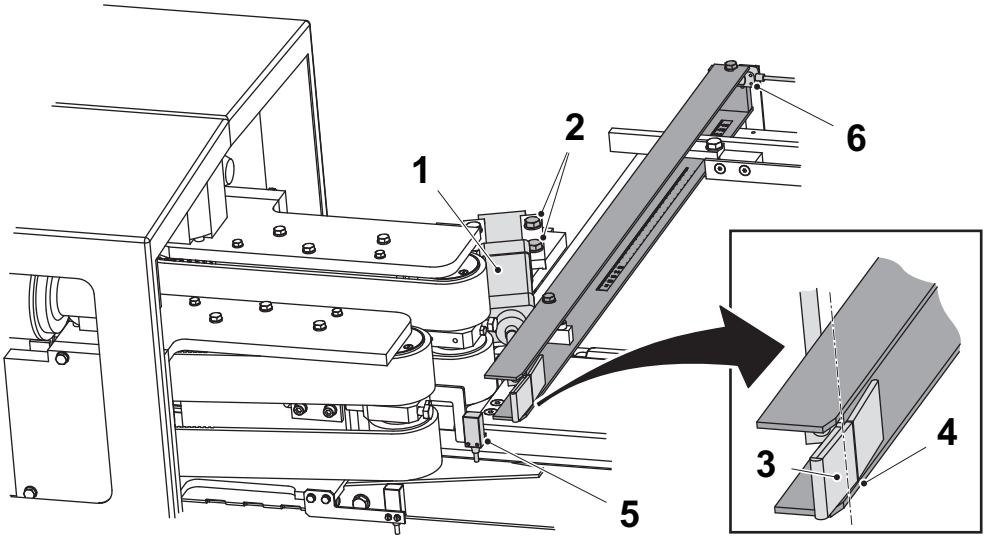

1 Cylinder W30M0240
2 Screw
3 Rule plate
4 Guide rail
5 Photocell W30B0116
6 Photocell W30B0117

1.5.4 Grouping Top Support

1.5.4-1 Grouping Top Support - Change Cylinder

Machine Status	Power supply disconnector OFF Air valve OFF
SPC Reference	2763068

a) Disconnect the tubes (1) from the cylinder (2).
b) Remove the screws (3) and (4).
c) Remove the cylinder (2).
d) Remove the screws (5) and reassemble them on the new cylinder.
e) Assemble the cylinder on the machine in reverse order.
f) Set the grouping top support, see 1.5.4-2 Grouping Top Support - Set.

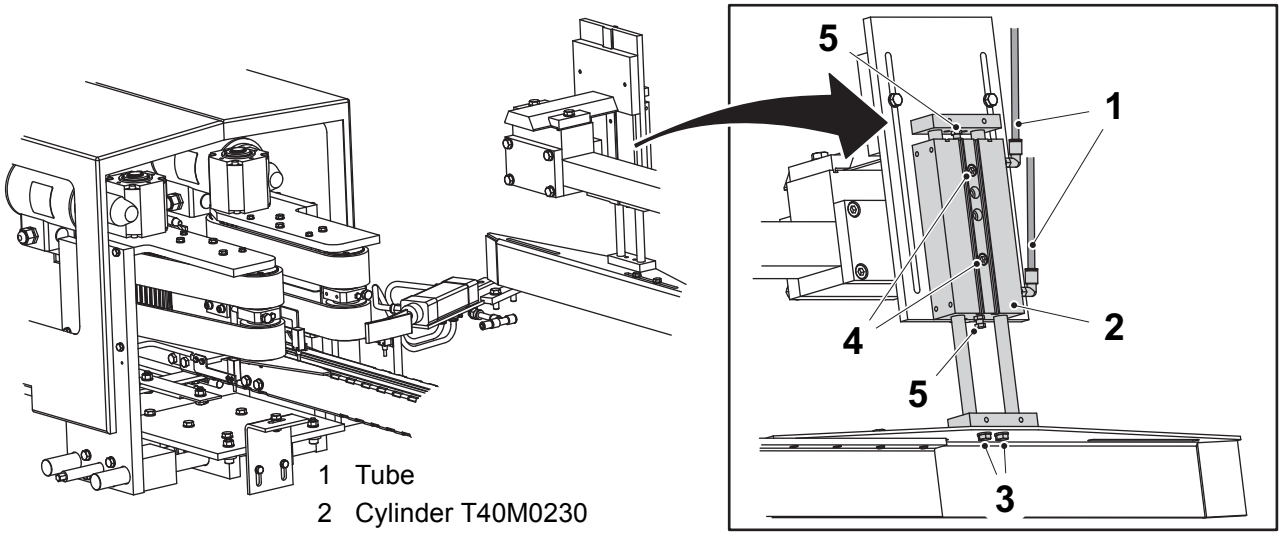

1 Tube
2 Cylinder T40M0230
3 Screw
4 Screw
5 Screw

1.5.4-2 Grouping Top Support - Set

Machine Status	Power supply disconnector OFF Air valve OFF
SPC Reference	2763068

Width Position

a) Make sure that the grouping pusher is set according to 2.2.1-4 Grouping Pusher - Set Back Position.

b) Loosen the screws (1) and set the grouping top support's guide (2) to be aligned according to the grouping plate (3).

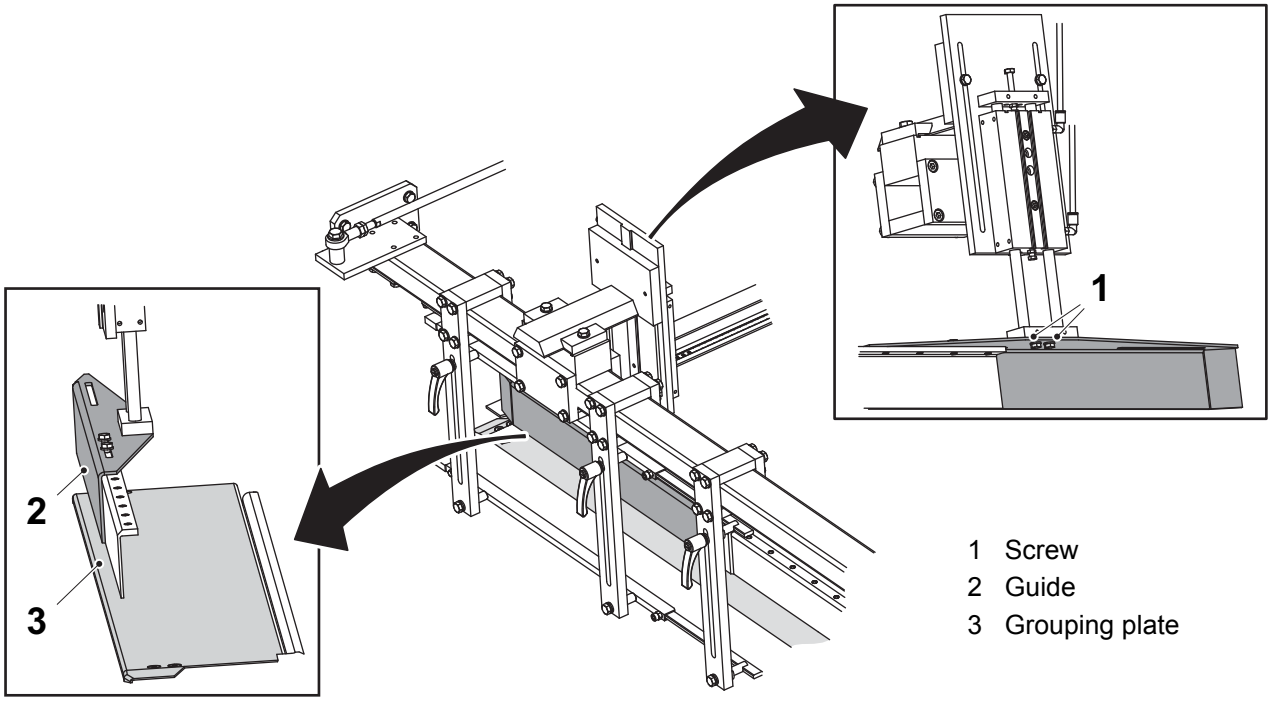

1 Screw
2 Guide
3 Grouping plate

(Cont'd)

(Cont'd)

c) Loosen the screw (4).

d) Set the grouping top support's guide (2) at distance A to the grouping plate (3).

e) Tighten the screw (4)

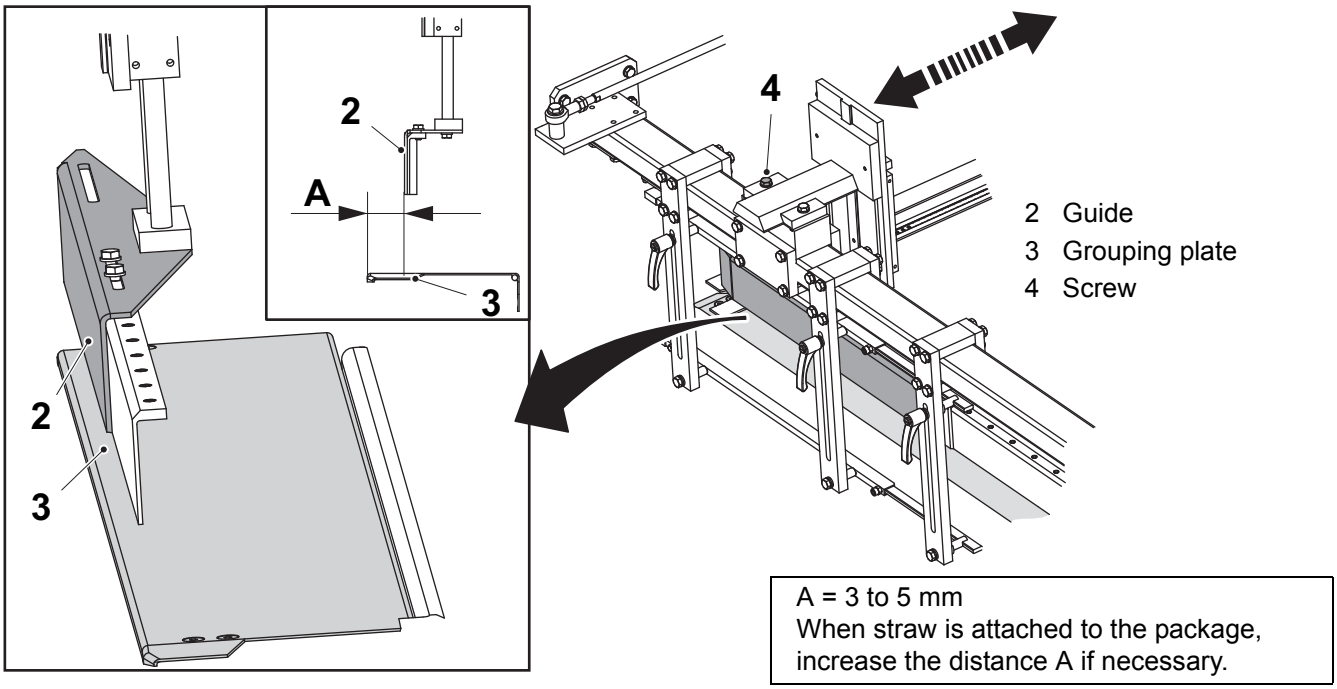

(Cont'd)

(Cont'd)

Height Position

Note! If the packages have a tendency to fall into the grouping plate, use the grouping top support to support the packages. Otherwise turn off the grouping top support via the TPOP.

f) Set the cylinder (5) in plus position.

g) Loosen the screws (6) and set the distance B.

h) If the screw (7) is to short set the cylinder (5) in minus position and change it to a longer screw (8) and set the distance B.

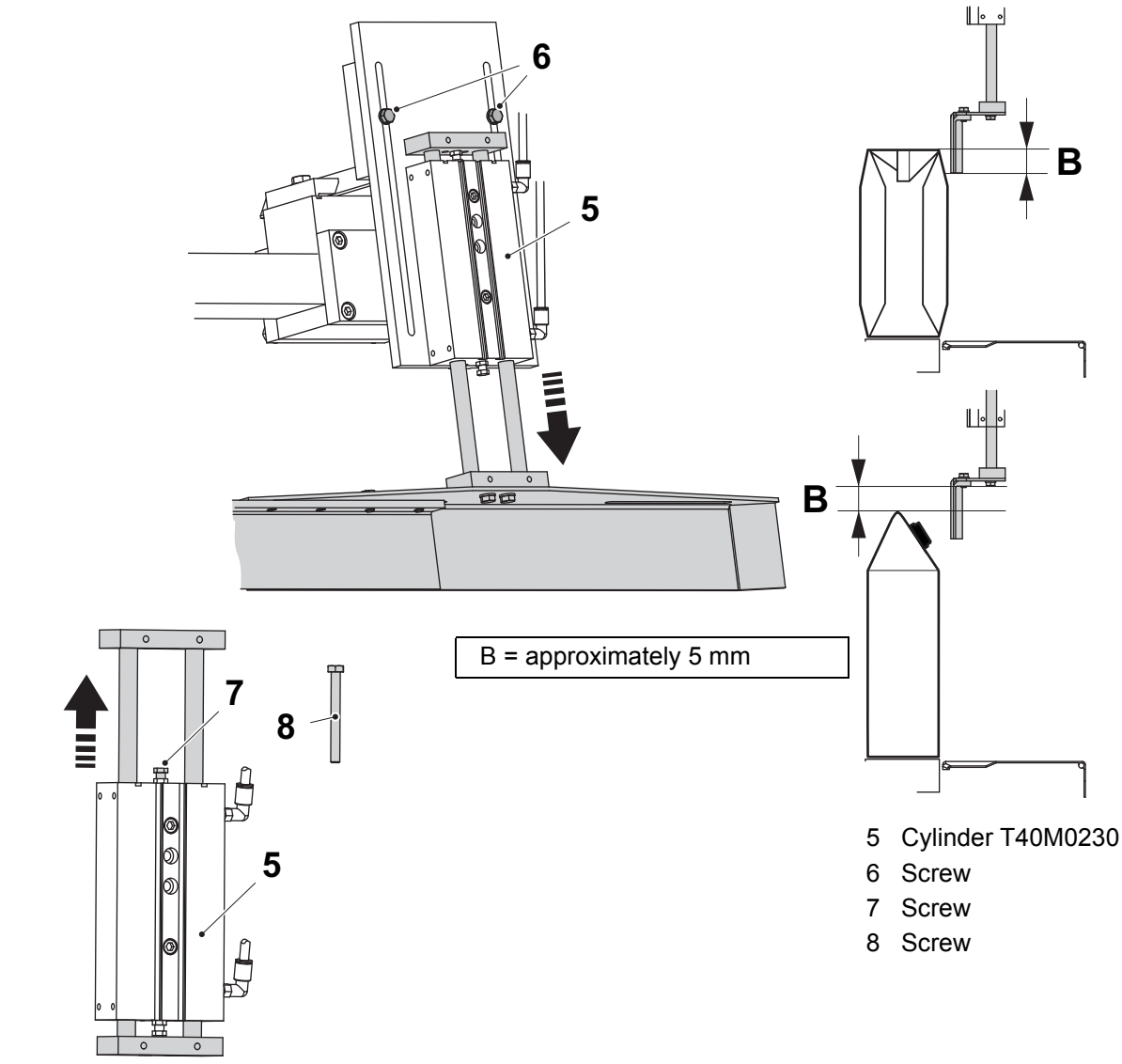

B = approximately 5 mm

5 Cylinder T40M0230
6 Screw
7 Screw
8 Screw

(Cont'd)

(Cont'd)

Length Position

i) Loosen the screws (9).

j) Adjust the grouping top supports's guide bending (10) is aligned with the grouping pusher's guide (11).

k) Tighten the screws (9).

l) Loosen the screws (12).

m) Set the edge of the guide rail (13) at distance C to the end stop grouping (14).

n) Tighten the screws (12).

o) Place a package (15) against the transfer unit's guide rail (16) and check so it is aligned with the grouping top supports's guide bending (10).

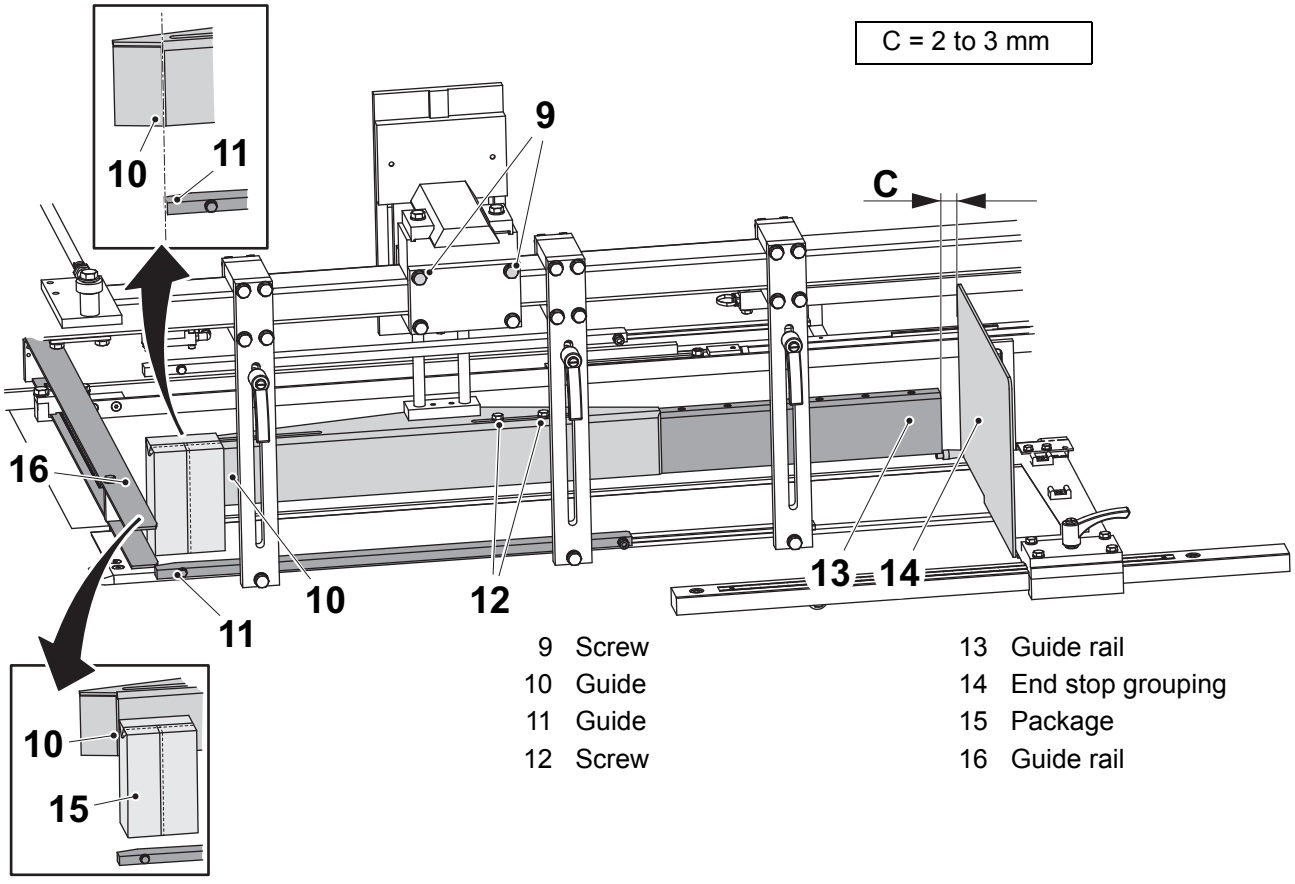

9	Screw	13	Guide rail
10	Guide	14	End stop grouping
11	Guide	15	Package
12	Screw	16	Guide rail

This page intentionally left blank

2 Pattern Forming

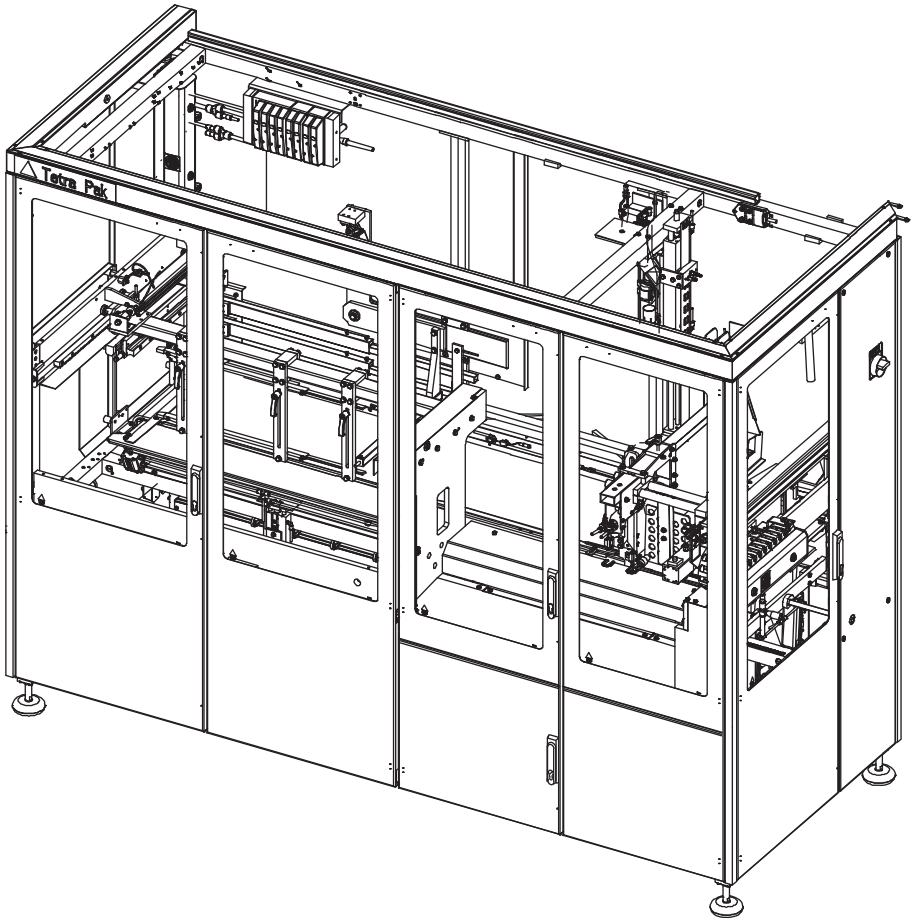

Description

SPC Reference	673833

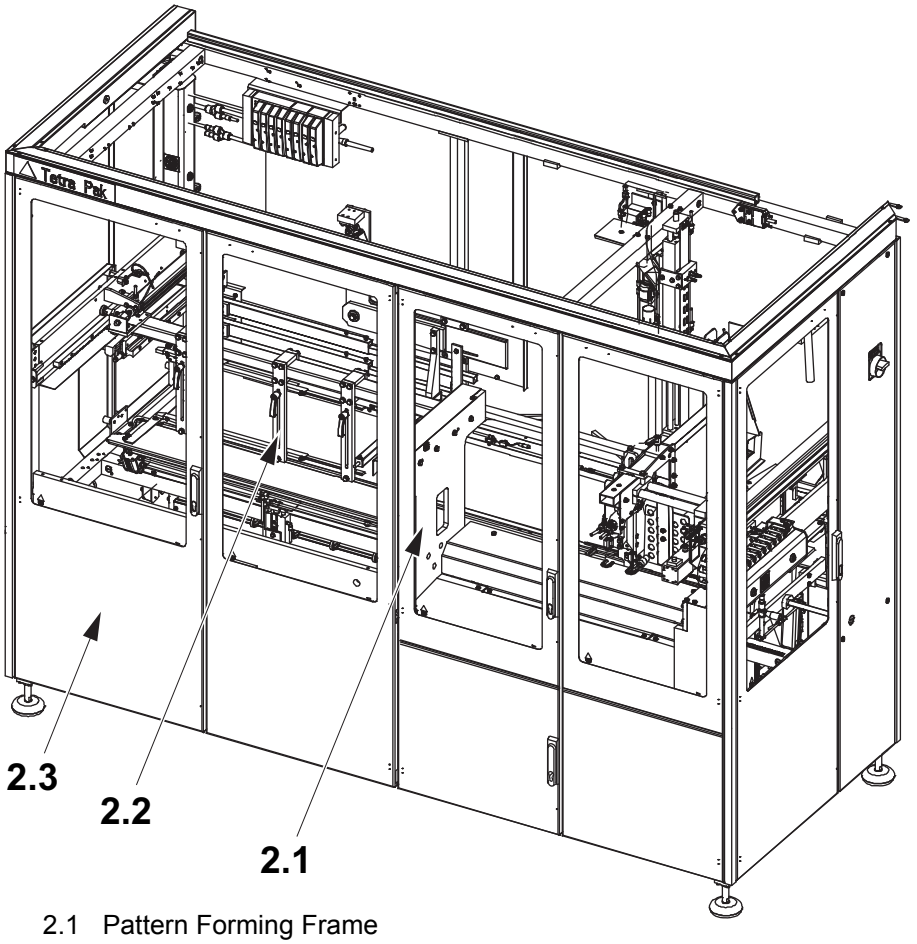

2.1 Pattern Forming Frame
2.2 Transfer Unit
2.3 Covering Pattern Forming (no procedure described)

Functional Description 2 - 7

2.1 Pattern Forming Frame . . . . . 2 - 10

2.1.1 Pneumatic Cabinet . . . . . 2 - 10

2.1.1-1 Pneumatic Cabinet - Set Shut Off Valve . . . . . 2 - 10

2.1.1-2 Pneumatic Cabinet - Clean Filter Regulator . . . 2 - 11

2.1.1-3 Pneumatic Cabinet - Set Filter Regulator . . . . . 2 - 13

2.1.1-4 Pneumatic Cabinet - Set Safety Valve . . . . . 2 - 14

2.1.1-5 Pneumatic Cabinet - Set Pressure Sensor . . . . . 2 - 17

2.1.1-6 Pneumatic Cabinet - Set Cylinders . . . . . 2 - 22

2.1.1-7 Pneumatic Cabinet - Set Pressure Regulators . . 2 - 24

2.2 Transfer Unit . . . . . 2 - 25

2.2.1 Grouping Pusher . . . . . 2 - 25

2.2.1-1 Grouping Pusher - Check . . . . . 2 - 25

2.2.1-2 Grouping Pusher - Change . . . . . 2 - 26

2.2.1-3 Grouping Pusher - Set Position . . . . . 2 - 27

2.2.1-4 Grouping Pusher - Set Back Position . . . . . 2 - 28

2.2.1-5 Grouping Pusher - Set Rails . . . . . 2 - 30

2.2.1-6 Grouping Pusher - Set Guide Rail Position . . . . 2 - 32

2.2.2 Grouping Dolly . . . . . 2 - 34

2.2.2-1 Grouping Dolly - Check . . . . . 2 - 34

2.2.2-2 Grouping Dolly - Change . . . . . 2 - 35

2.2.2-3 Grouping Dolly - Set . . . . . 2 - 36

2.2.3 Transfer Guide Rail . . . . . 2 - 41

2.2.3-1 Transfer Guide Rail - Check Cylinder . . . . . 2 - 41

2.2.3-2 Transfer Guide Rail - Change Cylinder . . . . . 2 - 42

2.2.3-3 Transfer Guide Rail - Set . . . . . 2 - 43

2.2.4 Stop Arm . . . . . 2 - 44

2.2.4-1 Stop Arm - Change . . . . . 2 - 44

2.2.4-2 Stop Arm - Set . . . . . 2 - 45

2.2.5 Box Pusher End Stop . . . . . 2 - 47

2.2.5-1 Box Pusher End Stop - Change Cylinder . . . . . 2 - 47

2.2.5-2 Box Pusher End Stop - Set . . . . . 2 - 49

2.2.5-3 Box Pusher End Stop - Set Ultrasonic Sensor . . 2 - 54

2.2.6 Box Pusher Plate/Box Pusher Dolly . . . . . 2 - 56

2.2.6-1 Box Pusher Plate/Box Pusher Dolly - Check . . 2 - 56

2.2.6-2 Box Pusher Plate/Box Pusher Dolly - Change Cylinders . . . . . 2 - 57

2.2.6-3 Box Pusher Plate/Box Pusher Dolly - Change Bushings and Vibration Dampers . . . . . 2 - 58

2.2.6-4 Box Pusher Plate/Box Pusher Dolly - Set . . . . . 2 - 59

2.2.7 Box Pusher Cylinder . . . . . 2 - 63

2.2.7-1 Box Pusher Cylinder - Check . . . . . 2 - 63

2.2.7-2 Box Pusher Cylinder - Change . . . . . 2 - 64

2.2.7-3 Box Pusher Cylinder - Set . . . . . 2 - 65

2.2.7-4 Box Pusher Cylinder - Set Back Position . . . . . 2 - 66

2.2.8 Transfer Plate Guide . . . . . 2 - 68

2.2.8-1 Transfer Plate Guide - Check . . . . . 2 - 68

2.2.8-2 Transfer Plate Guide - Change Parts . . . . . 2 - 69

2.2.8-3 Transfer Plate Guide - Set . . . . . 2 - 70

2.2.9 Volume Plate . . . . . 2 - 73

2.2.9-1 Volume Plate - Change . . . . . 2 - 73

2.2.9-2 Volume Plate - Set Flap . . . . . 2 - 74

2.2.10 Transfer Belt . . . . . 2 - 75

2.2.10-1 Transfer Belt - Check Chain . . . . . 2 - 75

2.2.10-2 Transfer Belt - Change . . . . . 2 - 76

2.2.11 Transfer Belt, Grouping Plate. . . . . 2 - 77

2.2.11-1 Transfer Belt, Grouping Plate - Change Cylinders . . . . . 2 - 77

2.2.11-2 Transfer Belt, Grouping Plate - Set . . . . . 2 - 78

2.2.12 Transfer Belt, Guide Rail. . . . . 2 - 80

2.2.12-1 Transfer Belt, Guide Rail - Change Cylinders . . 2 - 80

2.2.13 Transfer Belt, Tilting Unit . . . . . 2 - 81

2.2.13-1 Transfer Belt, Tilting Unit - Change . . . . . 2 - 81

2.2.13-2 Transfer Belt, Tilting Unit - Set . . . . . 2 - 82

2.2.14 Transfer Stop Plate . . . . . 2 - 83

2.2.14-1 Transfer Stop Plate - Change . . . . . 2 - 83

2.2.14-2 Transfer Stop Plate - Set . . . . . 2 - 84

2.3 Covering Pattern Forming . . . . . 2 - 90

2.3-1 Covering Pattern Forming - No Procedure Described . . . . . 2 - 90

This page intentionally left blank

Functional Description

The functional description gives a rough explanation of the package flow through the Cardboard Packer 32.

Pattern Forming Module

In the text below the pattern being delivered from the grouping pusher (1) will be referred to as a big pattern.The pattern being pushed into the tray will be referred to as small pattern.

The pattern forming module consists of a grouping area and a box pusher area.

Grouping Area

When the package separator reaches outer position the grouping plate (2) tilts down and the grouping pusher (1) pushes the packages onto the grouping plate.

The grouping guide rail, placed between the grouping plate (2) and the transfer belt (3) has three positions:

- The higher position has two functions. The first function is used to prevent packages from falling forward when pushed onto the grouping plate (2). The second function is used to guide the big pattern when it is transferred towards the tilting unit.
- The middle position is used to prevent the big pattern from moving back onto the grouping plate (2), when the grouping pusher (1) returns from its long stroke.
- The lower position is used when the packages are pushed onto the transfer belt (3).

(Cont'd)

(Cont'd)

When the grouping plate (2) is full or it is time to do the final stroke, the grouping pusher (1) continues to push the rows onto the transfer belt (3).

When all rows are moved to the transfer belt (3), the big pattern is completed and waits for the transfer belt (3) to stop. The guide rail moves to middle position and guides the big pattern along the transfer belt (3). Simultaneously the stop arm is raised to allow the pattern to pass.

Note! The grouping pusher is shown in long stroke forward position.

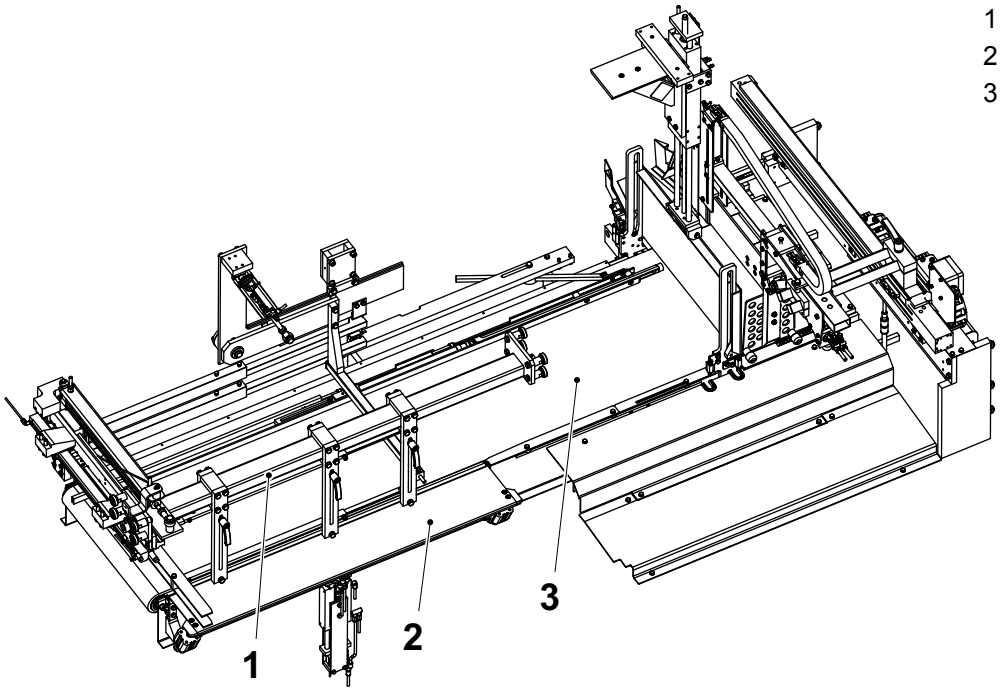

1 Grouping pusher
2 Grouping plate
3 Transfer belt

Box Pusher Area

The box pusher area consists of a tilt unit (4), transfer stop plate (5) and a box pusher (6).

Tilting Unit

When the transfer belt (3) moves the big packing pattern towards the box pusher area, an ultra sonic sensor at the box pusher end stop (7), detects the big packing pattern and stops the transfer belt (3). Then the end of the transfer belt (3) is tilted and creates a gap in the big pattern.

Transfer Stop Plate

The transfer stop plate (5) separates the small pattern on the tilting unit (4) from the big pattern standing on the other side of the transfer stop plate (5) by moving down between them. Then the tilting unit (4) rises again and the transfer stop plate (5) stays down.

Box Pusher

When the pack station in the tray forming module is ready to receive packages, the box pusher (6) starts pushing the small pattern standing between the end stop and the transfer stop plate (5) into the cardboard tray.

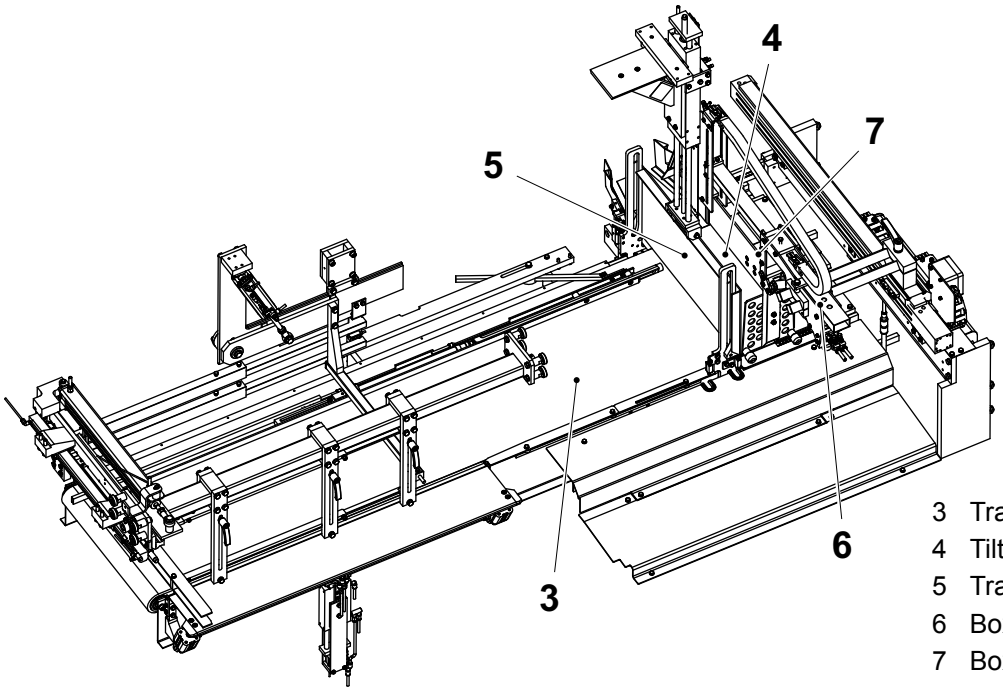

3 Transfer belt
4 Tilting unit
5 Transfer stop plate
6 Box pusher
7 Box pusher end stop

2.1 Pattern Forming Frame

SPC Reference	2782787

2.1.1 Pneumatic Cabinet

2.1.1-1 Pneumatic Cabinet - Set Shut Off Valve

Machine Status	Power supply disconnector ON Air valve ON
SPC Reference	2752678

The shut off valve's (1) knob direction is the same as the flow direction and can be set in two positions:

- Closed (3)
  Shut off the air supply by turning the knob (2) clockwise.
- Open (4)
  Turn on the air supply by turning the knob (2) counter clockwise.

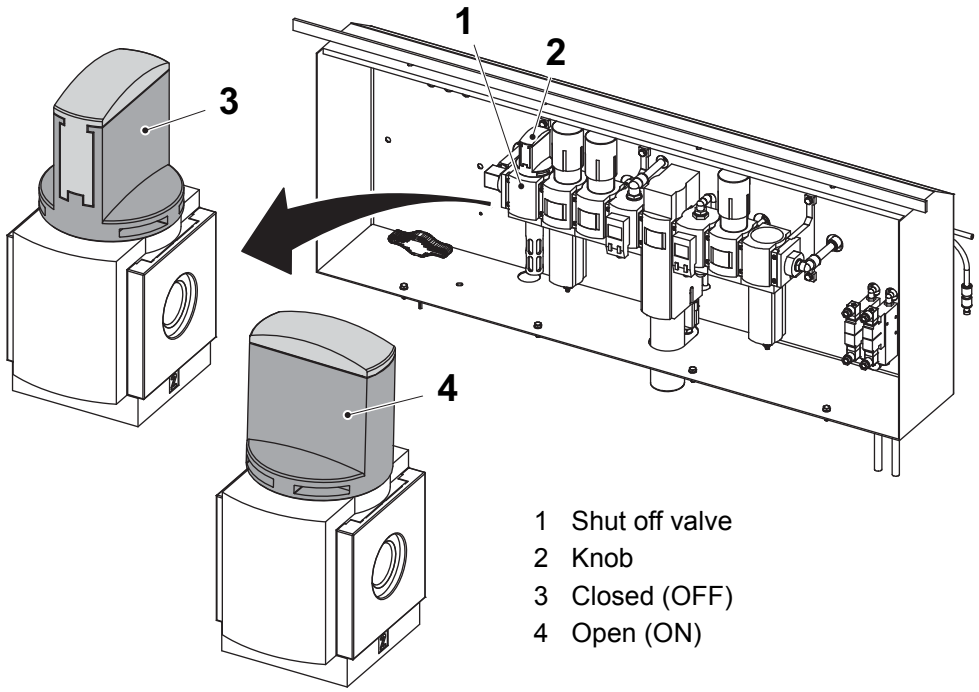

1 Shut off valve
2 Knob
3 Closed (OFF)
4 Open (ON)

2.1.1-2 Pneumatic Cabinet - Clean Filter Regulator

Machine Status	Power supply disconnector OFF Air valve OFF
SPC Reference	2752678

WARNING

Risk of injuries.

The system must be depressurized before cleaning. For more information see the ii Safety Precautions chapter.

a) Shut off the air supply to the filter regulator (1) by pressing down and turning the knob (2) clockwise.

Tip! All valves are possible to lock if necessary.

b) Press the button (3) downwards.

c) Turn the filter bowl (4) counter clockwise. Jerk it and pull gentle downwards.

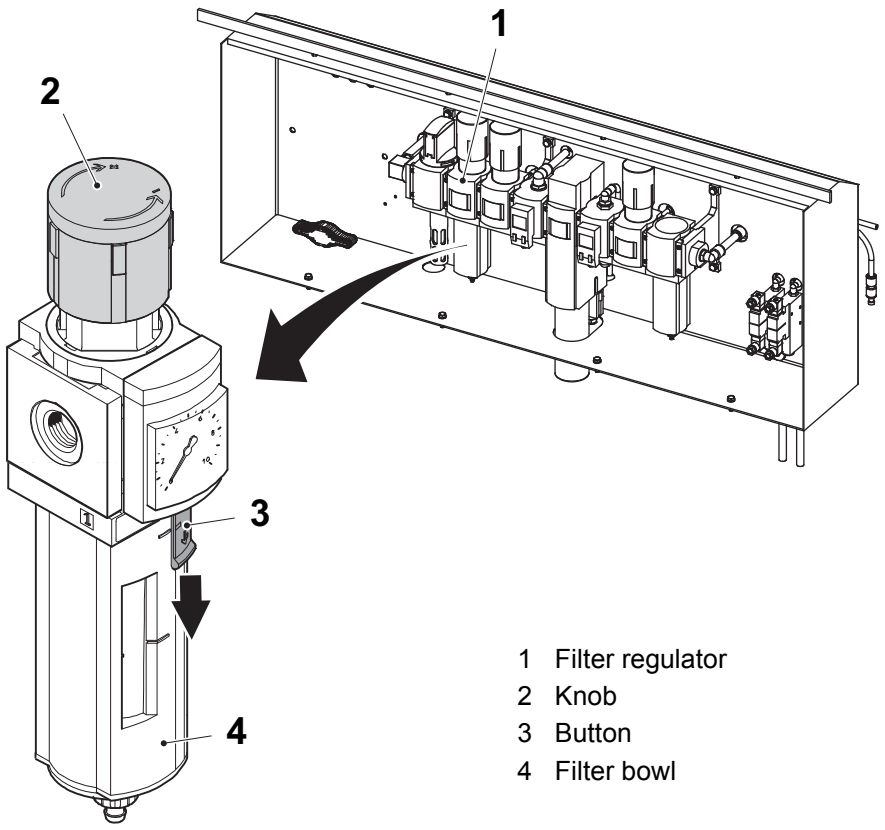

1 Filter regulator
2 Knob
3 Button
4 Filter bowl

(Cont'd)

(Cont'd)

d) Turn the separating plate (4) counter clockwise.

e) Remove the separating plate (4) and the filter element (5).

Tip! A cleaned filter get clogged much quicker than a new filter. It is recommended to change the filter instead of cleaning it.

f) Change the filter element (5) or clean it with water (maximum + 60°C), soup suds or petroleum ether (free of compounds).

Note! Only hold the clean filter in the lower end!

g) Reinstall the separating plate (4).

WARNING

Risk of personal injury!
The filter bowl must be turned fully to the right into the body before pressurizing the unit.

h) Reinstall the filter bowl (3). Make sure that the locking pin (6) points towards the large recess (7) in the housing.

i) Turn the filter bowl (3) clockwise until a clicking sound is sound. To get in place it might be necessary to jerk it a bit!

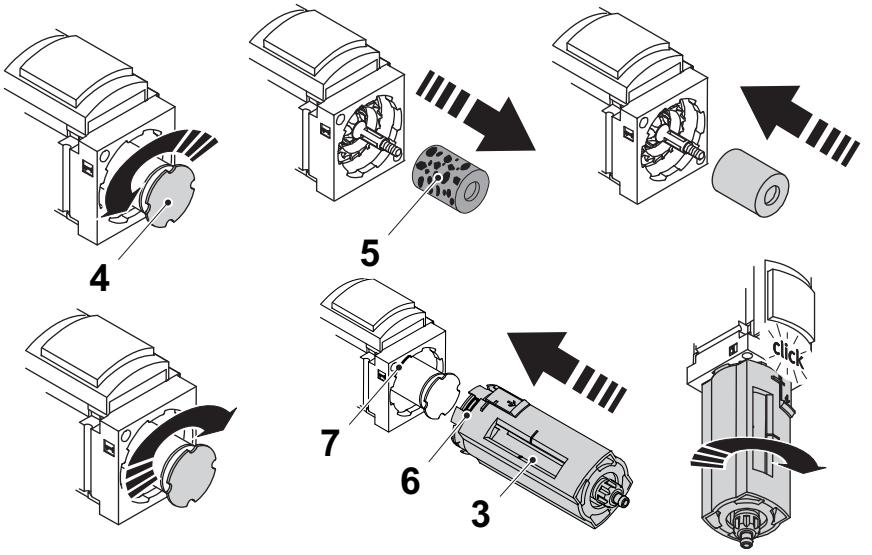

3 Filter bowl
5 Separating plate
6 Filter element
7 Locking pin
8 Large recess

2.1.1-3 Pneumatic Cabinet - Set Filter Regulator

Machine Status	Power supply disconnector ON Air valve ON
SPC Reference	2752678

Press down and turn the knob (1) on the filter regulator (2) and set the working pressure according to section Air Pressure in the Section 3.5.1-2 Hotmelt Equipment - Set.

The working pressure is stated on the pressure gauge (3).

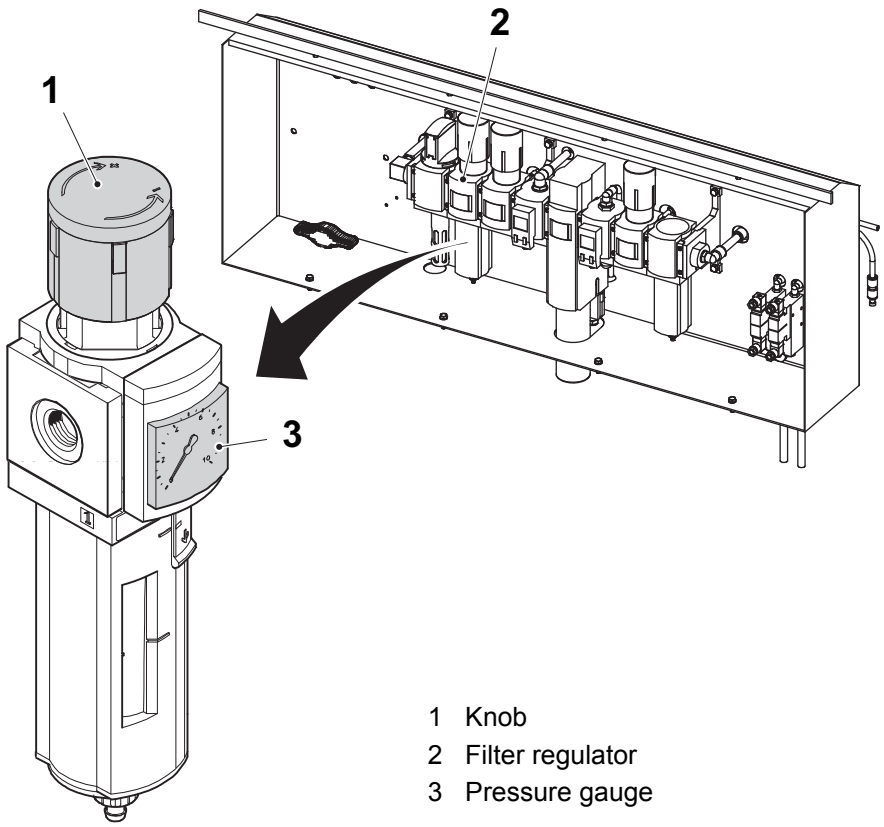

1 Knob
2 Filter regulator
3 Pressure gauge

2.1.1-4 Pneumatic Cabinet - Set Safety Valve

Machine Status	Power supply disconnector ON Air valve ON
SPC Reference	2752678

The adjustment screw (1), on the soft start valve (2), should be turned fully to the counter-clockwise to have a quick pressure buildup.
To achieve a smoother pressure buildup turn the adjustment screw (1) maximum four turns clockwise (from the screw is turned up maximum).

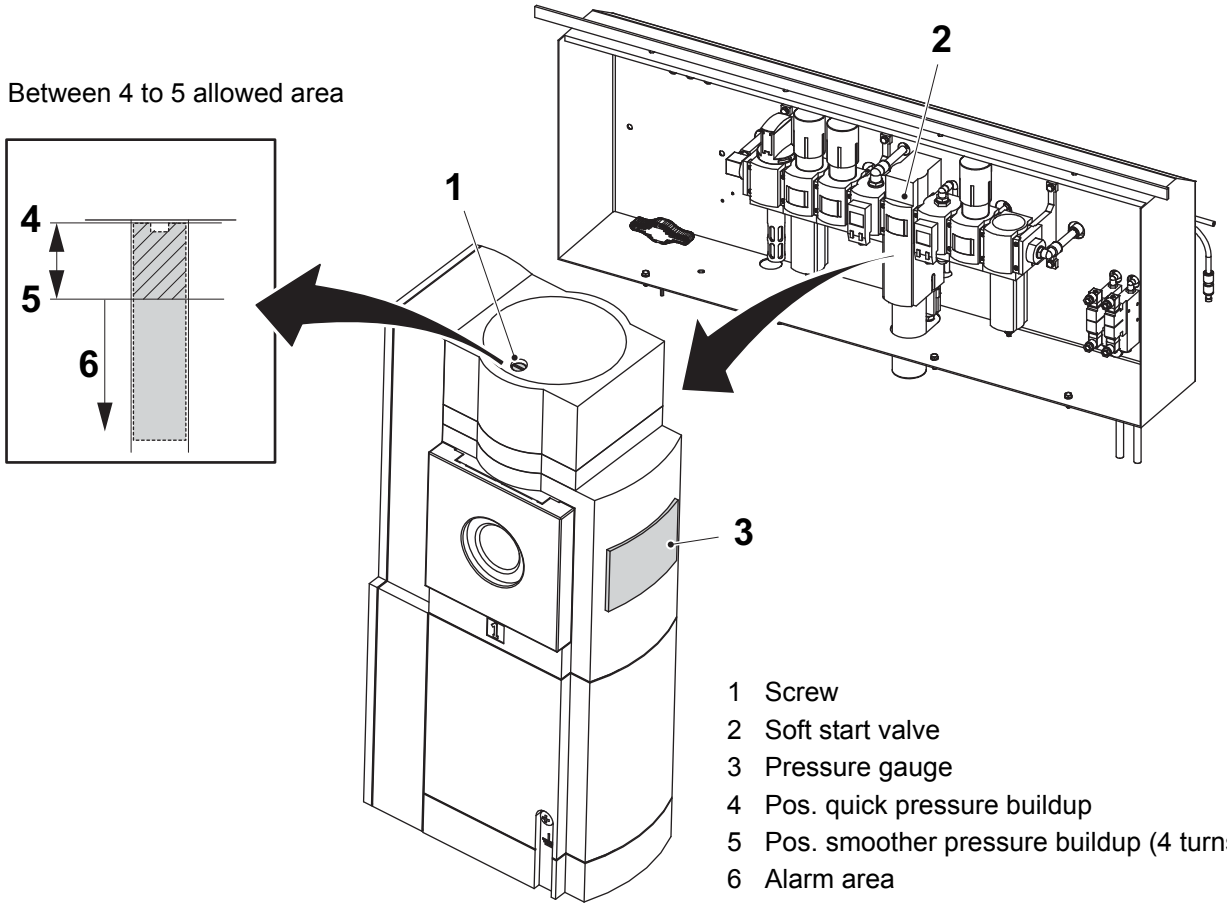

1 Screw
2 Soft start valve
3 Pressure gauge
4 Pos. quick pressure buildup
5 Pos. smoother pressure buildup (4 turns)
6 Alarm area

(Cont'd)

(Cont'd)

Diagnostics and error handling

LED display

Operating statuses and faults are indicated by flashing LEDs.

Power LED (green)	Error LED (red)	Diagnosis
Off	Off	Operating voltage not applied
Lights up for approxmately 6 seconds after switching on	Lights up for approxmately 6 seconds after switching on	Safety valve runs through all tests when started up
Flashes at 1 second intervals	Off	Safety valve is in the exhaust state
Permanetly illuminated	Off	Safety valve is in the pressirise state
4 x briefly	Flashes at 1 second intervals	Fault code

Fault code

The fault code is indicated by four brief flashes of the Power LED (7) (green). Then the Error LED (8) (red) displays the fault code (number of flash pulses = fault code).

The flash pulses for both LEDs repeat continuously. The LEDs only stop flashing when the operating voltage is swithed off in order to eliminate the fault.

Fault code	Fault
1	Software fault
2	Memory fault
3	Hardware fault
4	Valve fault
5	Valve guide faults
6	Pneumatic fault
7	SPI fault
8	Faulty inputs EN1 - EN2
9	Start-up faults
10	Automatic start-up faults
11	Internal fault

(Cont'd)

(Cont'd)

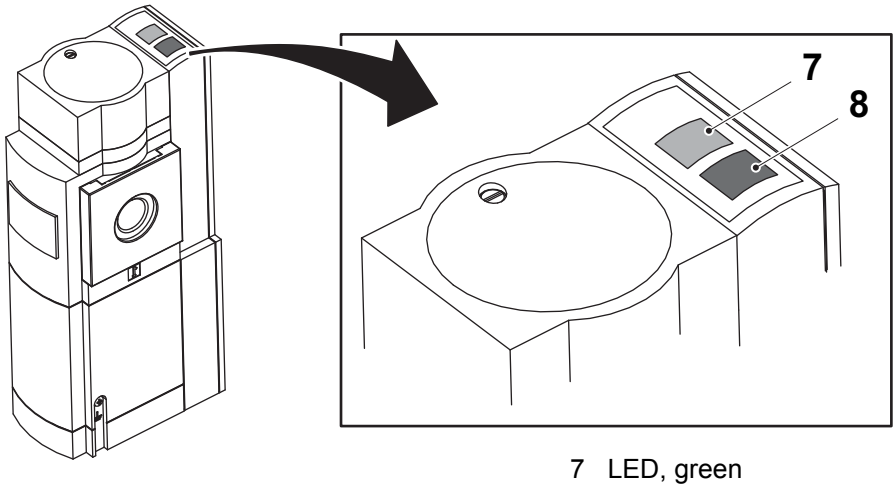

7 LED, green
8 LED, red

2.1.1-5 Pneumatic Cabinet - Set Pressure Sensor

Machine Status	Power supply disconnector ON Air valve ON
SPC Reference	2752678

All settings is to be done both on the air supply pressor sensor (4) and the main air pressure sensor (5)

Basic Setting

Press the UP- (1) and DOWN-KEY (2), at the same time, once and the setting for minimum value is shown.

Press the UP- (1) and DOWN-KEY (2), at the same time, twice and the setting for maximum value is shown.

Press the UP-KEY (1) to view the current settings on the display (6).

Unit Definition

a) Press the EDIT button (3) with a pointed object.

b) Press the UP- (1) or DOWN-KEY (2) to find the unit definition and confirm the choice by pressing the EDIT button (3).

c) Press the UP-KEY (1) to select between the pressure units: Bar, Pascal or PSI. The default unit is always Bar.

d) Confirm with the EDIT button (3).

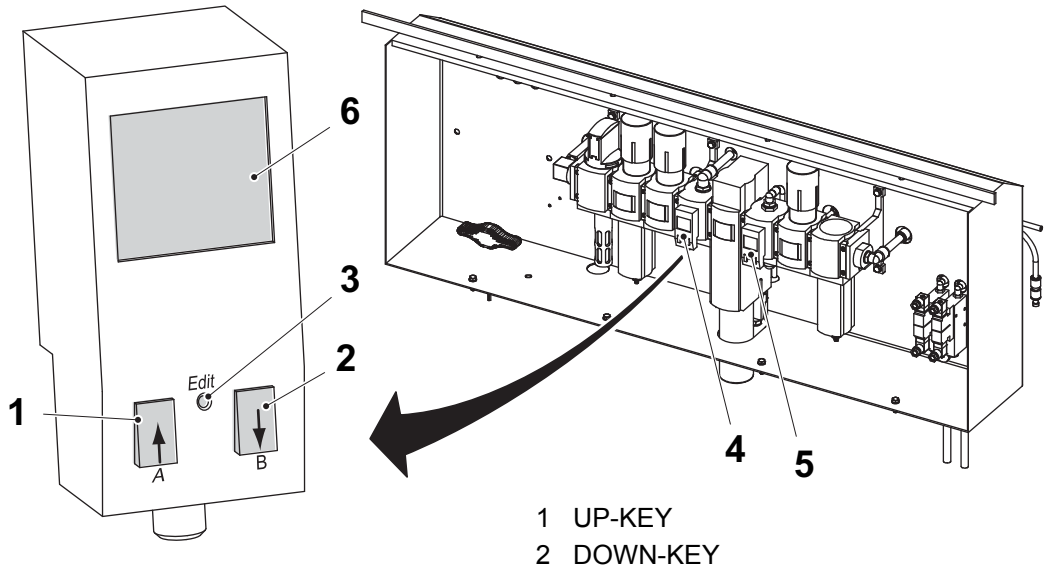

1 UP-KEY
2 DOWN-KEY
3 EDIT button
4 Pressure sensor for air supply
5 Pressure sensor for main air pressure
6 Display

(Cont'd)

(Cont'd)

Password Definition

a) Press the UP- (1) or DOWN-KEY (2) to find the password definition and confirm the choice by pressing the EDIT button (3).

b) Select either:

- 0 = No password
- 1 = Password

Note! The default value is 0.

c) Confirm the setting by pressing the EDIT button (3).

d) If password protection is chosen, choose the password with the UP- (1) or /and DOWN-KEY (2) and confirm the setting with the EDIT button (3).

e) Press the EDIT button (3) once more to return to the main menu.

Remove a Password

a) Turn off power supply disconnector.

b) Press the EDIT button (3), UP-KEY (1) and DOWN-KEY (2), simultaneously, while turning on power supply disconnector.

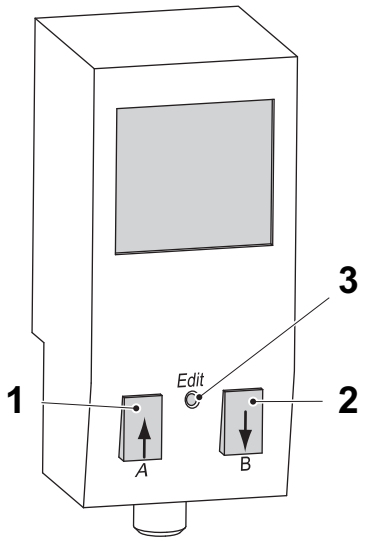

1 UP-KEY
2 DOWN-KEY
3 EDIT button

(Cont'd)

(Cont'd)

Parameter Settings

a) Press the EDIT button (3) twice with a pointed object.

b) Press the UP- (1) or DOWN-KEY (2) to select between: threshold- or window comparator. Choose window comparator (7). The selected value starts flashing.

c) Confirm the setting by pressing the EDIT button (3).

d) Press the UP- (1) or DOWN-KEy (2) to set air pressure 3.8 bar (0.38 MPa, 55.1 PSI).

e) Confirm the setting by pressing the EDIT button (3).

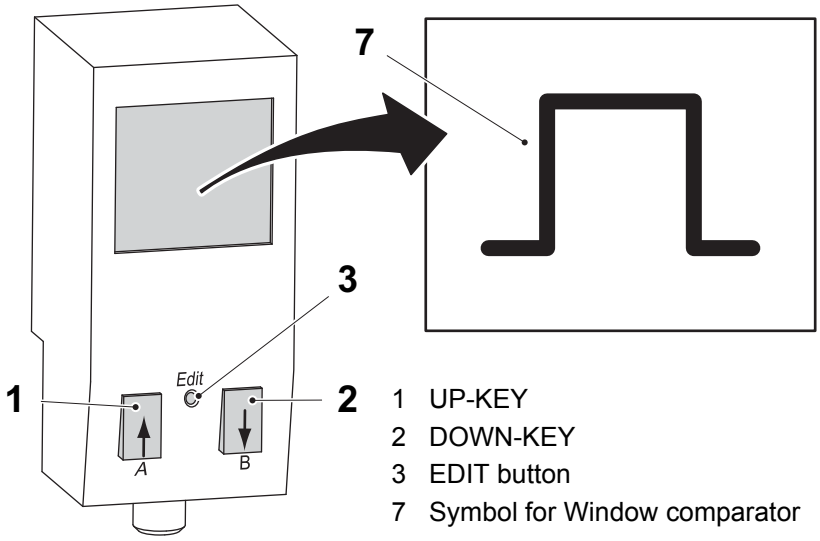

1 UP-KEY
2 DOWN-KEY
3 EDIT button
7 Symbol for Window comparator

(Cont'd)

(Cont'd)

f) Press the UP- (1) or DOWN-KEY (2) to set shut off pressure to 6 bar (0.6 MPa, 87 PSI).

g) Confirm the setting by pressing the EDIT button (3).

h) Press the UP- (1) or DOWN-KEY (2) to select hysteresis value [HY].

i) Press the UP- (1) or DOWN-KEY (2) to set hysteresis value to 0.2 bar (0.02 MPa, 2.9 PSI).

j) Confirm the setting by pressing the EDIT button (3).

k) Press the UP- (1) or DOWN-KEY (2) to select between normally open or normally closed. Choose normally open [NO]

l) Confirm the choice by pressing the EDIT button (3).

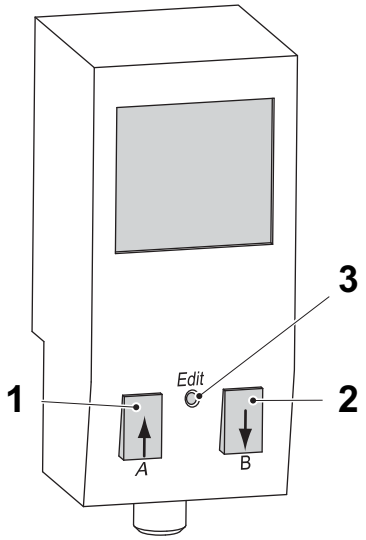

1 UP-KEY
2 DOWN-KEY
3 EDIT button

(Cont'd)

(Cont'd)

Set Air Pressure during Production

a) Check the air pressure on the manometer (1) on the filter regulator (2).

b) Set the pressure according to Section 3.5.1-2 Hotmelt Equipment - Set and subsection Air Pressure.

c) Adjust the air pressure with the pressure gauge (3).

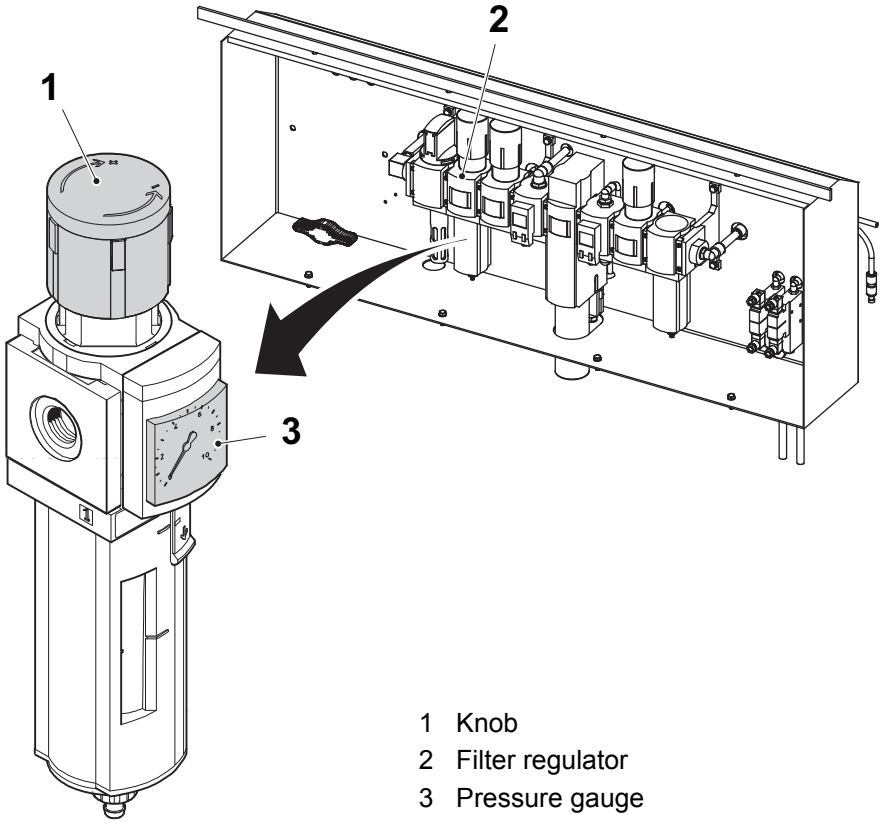

1 Knob
2 Filter regulator
3 Pressure gauge

2.1.1-6 Pneumatic Cabinet - Set Cylinders

Machine Status	Power supply disconnector ON Air valve ON

Speed Setting

Set the plus and minus movement speed of the cylinder with the throttles on the valve concerned. See the table below.

Cylinder	Unit	Plus	Minus
A01M0120	Oil pump	N/A	N/A
W30M0240	Package separator	N/A	N/A
T40M0030	Grouping pusher	N/A	N/A
T40M0040	Box pusher	N/A	N/A
T40M0190	Grouping pusher Brake	N/A	N/A
T40M0200	Guide rail (Grouping)	N/A	N/A
T40M0201	Guide rail (Grouping)	N/A	N/A
T40M0220	Stop arm *)	Normal	N/A
T40M0230	Grouping top support	N/A	N/A
T40M0240	Grouping plate **)	Normal	N/A
T40M0241	Grouping plate **)	Normal	N/A
T40M0250	Grouping dolly	N/A	N/A
T40M0260	Transfer stop plate	N/A	N/A
T40M0270	Transfer guide rail	N/A	N/A
T40M0280	Box pusher end stop *)	N/A	Normal
T40M0300	Box pusher plate***)	Fast	Normal
T40M0310	Box pusher dolly*)	Fast	Fast
T40M0320	Tilting unit	N/A	N/A
T40M0321	Tilting unit	N/A	N/A

*) Set with the throttles on the cylinder.

**) Set with the throttles on the back of the valve panel.

***) Set with the throttles mounted on the hoses close to the cylinder.

(Cont'd)

(Cont'd)

Cylinder	Unit	Plus	Minus
W50M0190	Carrier clutch	N/A	N/A
W50M0210	Transfer plate guide**)	Fast	Normal
C50M0230	Mag drive roller	N/A	N/A
T50M0260	Folding station	N/A	N/A
T50M0270	Folding station	N/A	N/A
T50M0280	Packing end stop *)	Set so that the Folding plate is in plus position before pushed packages hits Folding plate	N/A
W50M0290	Tray support	N/A	N/A
W50M0291	Tray support	N/A	N/A
W50M0300	Bottom squeezer	N/A	N/A
W50M0301	Bottom squeezer	N/A	N/A
W50M0370	WA squeezer *) ***)	Fast	Fast
W50M0371	WA squeezer *) ***)	Fast	Fast
V50M0380	WA flap folder *) ***)	Fast	Fast
V50M0390	Discharge support *) ****)	Fast	N/A

*) Set with the throttles on the cylinder.

**) Set with the trottles on the back of the valve panel.

***) The cylinders are only used for machines equipped with Wraparound unit.

****) The cylinder is not used for straight discharge.

2.1.1-7 Pneumatic Cabinet - Set Pressure Regulators

Machine Status	Power supply disconnector ON Air valve ON
SPC Reference	2752678

Set the following pressure regulators according to Section 3.5.1-2 Hotmelt Equipment - Set and subsection Air Pressure.

Regulator	**Function**
A01R0114	Suction cups, magazine unit
A01R0112	Hotmelt gun

2.2 Transfer Unit

SPC Reference	2792365

2.2.1 Grouping Pusher

2.2.1-1 Grouping Pusher - Check

Machine Status	Power supply disconnector OFF Air valve OFF
SPC Reference	2763044

a) Check for play in the ball bearings (1).

b) Move the gear wheel (2) and check for play in the flange bushing (3).

c) Check the rail (4) for wear and damage.

d) Repeat on the opposite side.

e) Check the cylinder (5) for wear and leakage.

f) Change all worn or damaged parts, see 2.2.1-2 Grouping Pusher - Change.

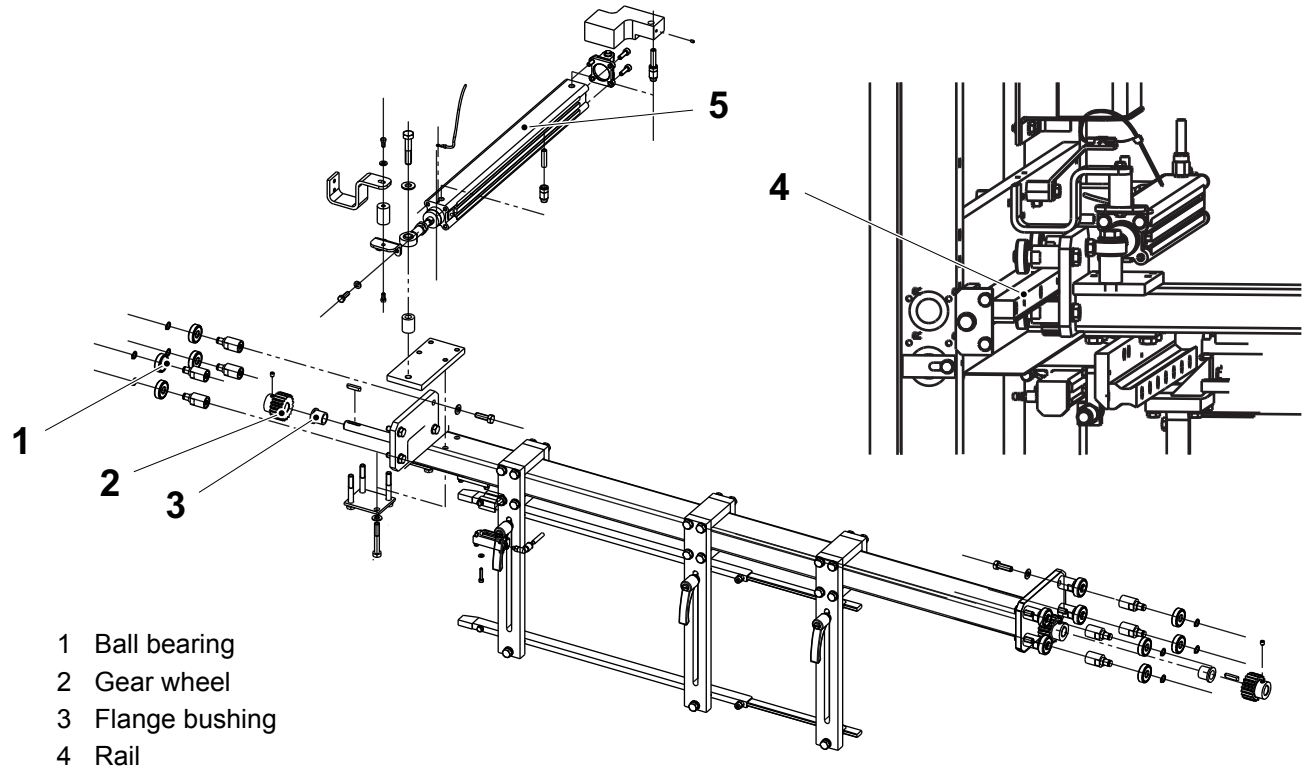

1 Ball bearing
2 Gear wheel
3 Flange bushing
4 Rail
5 Cylinder T40M0030

2.2.1-2 Grouping Pusher - Change

Machine Status	Power supply disconnector OFF Air valve OFF
SPC Reference	2763044

a) Disassemble and change the ball bearings (1) and the flange bushings (2) according to the illustration below.

b) If necessary change the rail (3).

c) Repeat on the opposite side.

d) Change the cylinder (4) if necessary.

e) Assemble in the reverse order.

f) Set the grouping pusher, see 2.2.1-4 Grouping Pusher - Set Back Position.

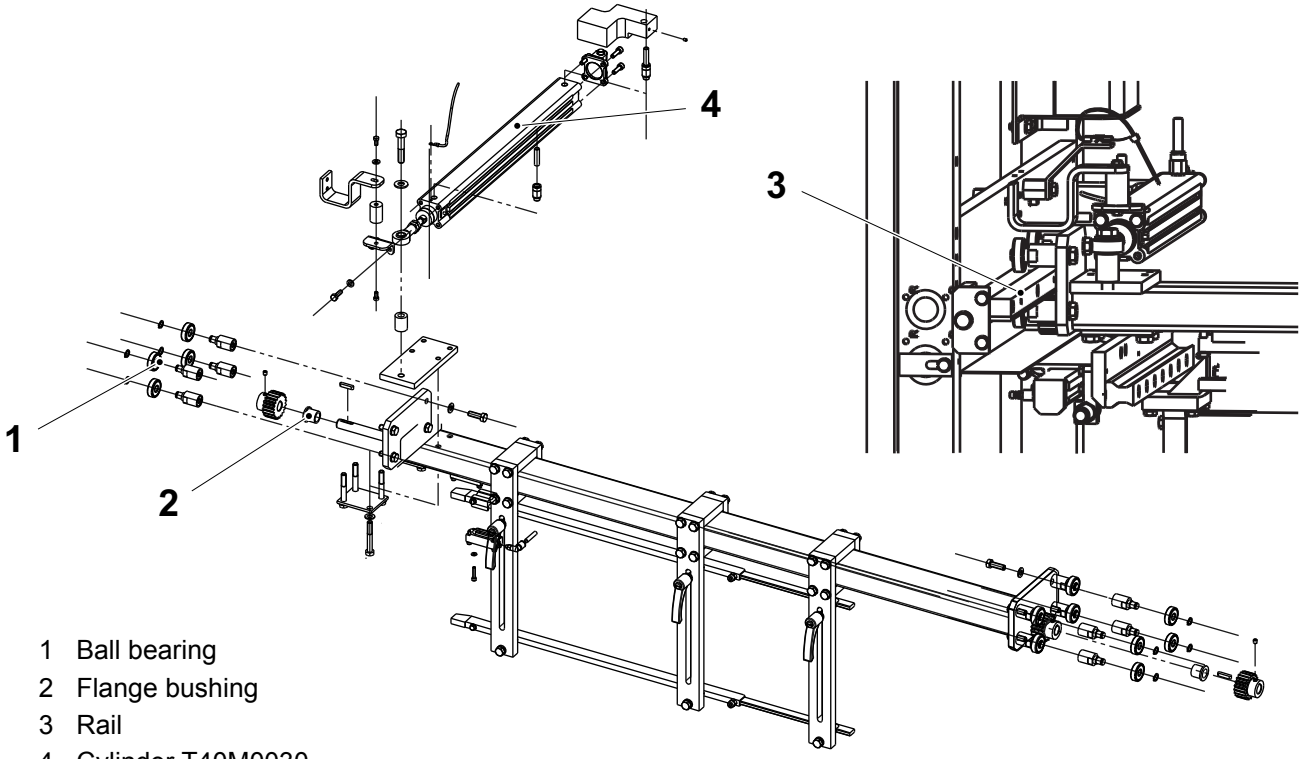

1 Ball bearing
2 Flange bushing
3 Rail
4 Cylinder T40M0030

2.2.1-3 Grouping Pusher - Set Position

Machine Status	Power supply disconnector OFF Air valve OFF
SPC Reference	2763044

a) Check so the piston rod (1) move's easily in and out.

b) Set the piston rod (1) in minus position (inner end position).

CAUTION

Be careful when adjusting. Do not move the piston rod (1) at all.

c) Loosen the nut (2).

d) Remove the screw (3) from the rod end (4).

e) Set the distance A between the inner edge of the guide rail (5) and the inner edge of the rail (6).

f) Hold the piston rod (1) and adjust the rod end (4) until it is centred with its attachment on the bracket (7).

g) Reassemble the screw (3).

h) Tighten the nut (2).

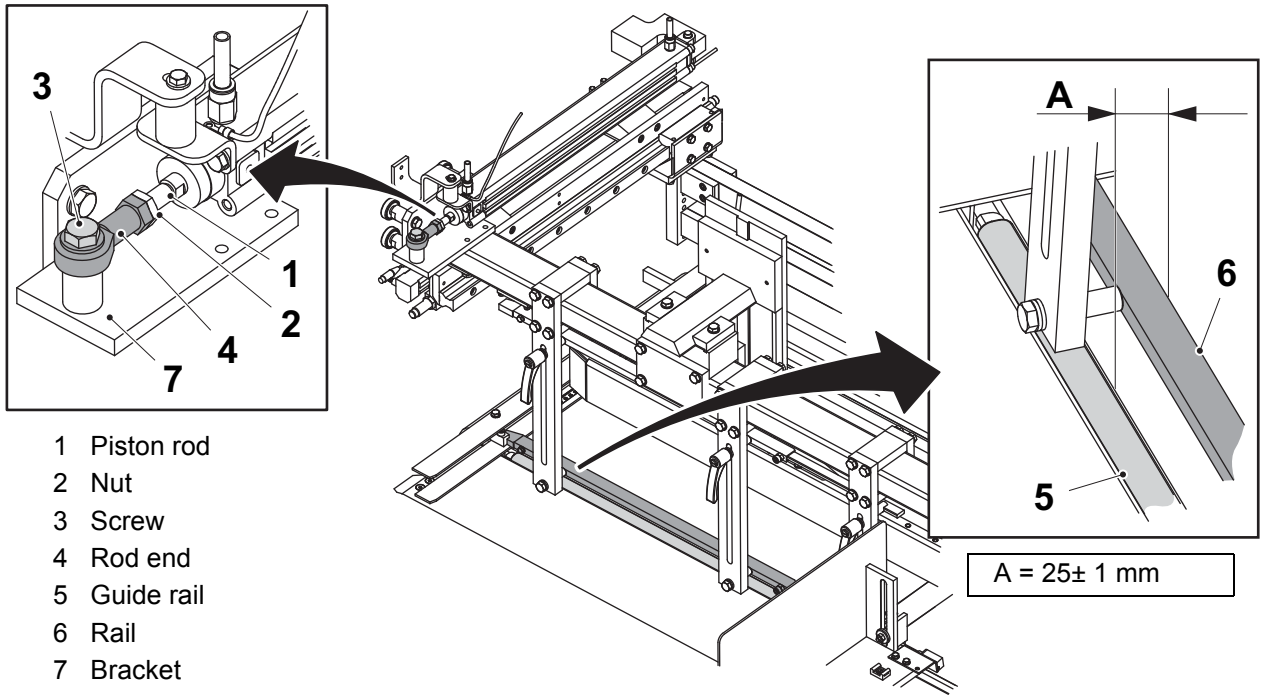

1 Piston rod
2 Nut
3 Screw
4 Rod end
5 Guide rail
6 Rail
7 Bracket

2.2.1-4 Grouping Pusher - Set Back Position

Machine Status	Power supply disconnector ON Air valve OFF
SPC Reference	2763044

a) Set the position, see 2.2.1-3 Grouping Pusher - Set Position.

b) Make sure that the machine is in step PREHEATING (1).

c) Run the function; GROUPING PUSHER, BACK POSITION (2) via the TPOP, see 6.8.3-1 TPOP Settings - Pattern Forming.

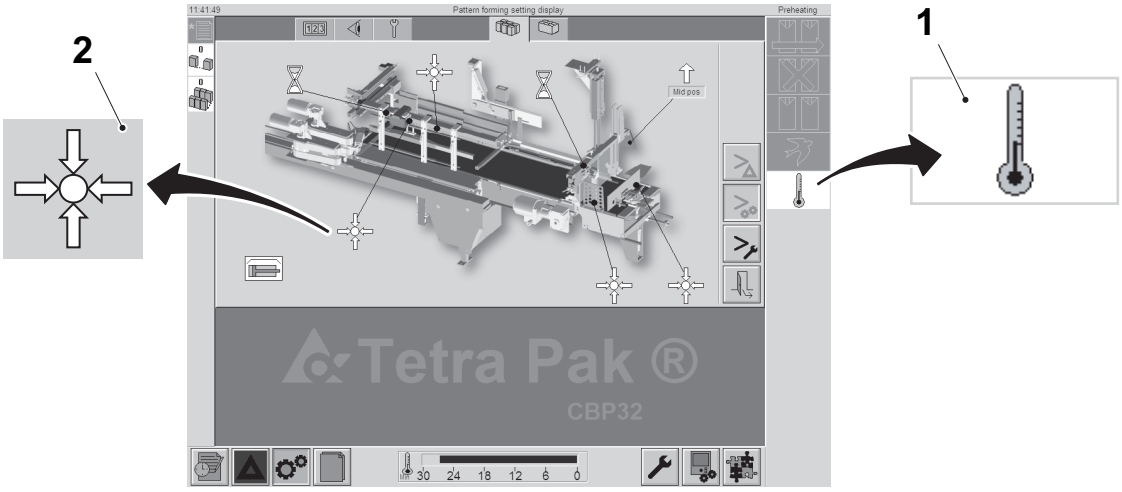

1 PREHEATING
2 GROUPING PUSHER, BACK POSITION

(Cont'd)

1 Rail
2 Steering rail
3 Screw
4 Screw
5 Package separator

(Cont'd)

Note! The guide (3) on the rail (4) can be turned around. If the straight corner on the guide is towards the packages, the packages are pushed forward in a straighter row but are more sensitive to be stucked. The bevelled corner on the guide (3) towards the packages gives the opposite effect.

d) Move the grouping pusher (5) according to the distance A between the rail (10) and the guide (6) on the brake unit. The new value for the grouping pusher position is shown in the display (7). It is possible to abort the function by pressing the DESELECT button (8) and the CONFIRMATION button (9).

e) Press the CONFIRMATION button (9) and the new value for the grouping pusher position is saved and is shown in the display (10).

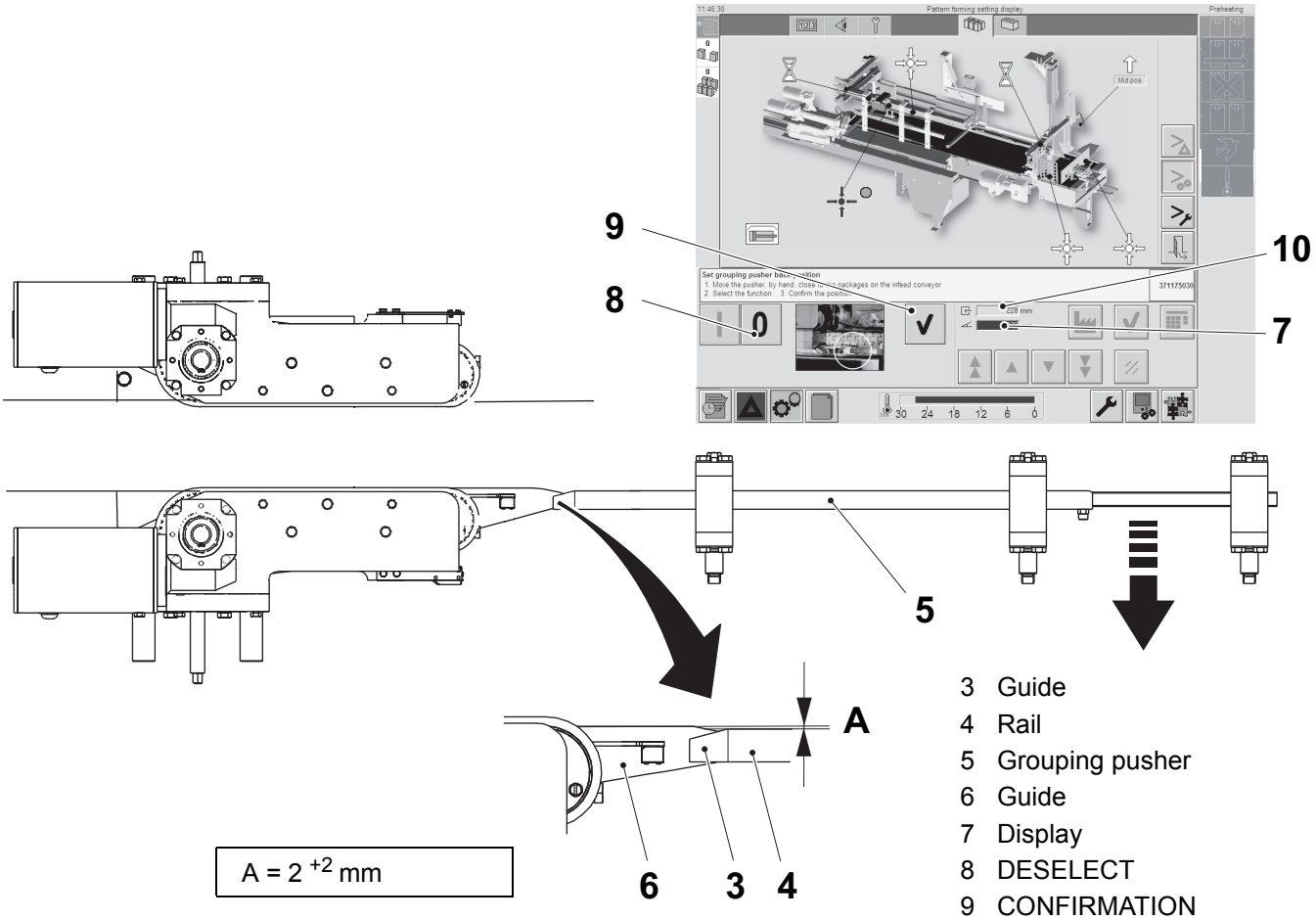

3 Guide
4 Rail
5 Grouping pusher
6 Guide
7 Display
8 DESELECT
9 CONFIRMATION
10 Display

2.2.1-5 Grouping Pusher - Set Rails

Machine Status	Power supply disconnector ON Air valve OFF
SPC Reference	2763044

a) Set the position, see 2.2.1-3 Grouping Pusher - Set Position.

b) Loosen the the locking screws (3).

c) Adjust the rails (1) on the pusher not to interfere with the steering rail (2).

d) Set the distance A between the rails (1) and the steering rail (2). Tighten the locking screws.

e) Loosen the screws (4) to adjust the package separator (5) plus position to be aligned with the steering rail (2) and minus position to distance B. Tighten the screws.

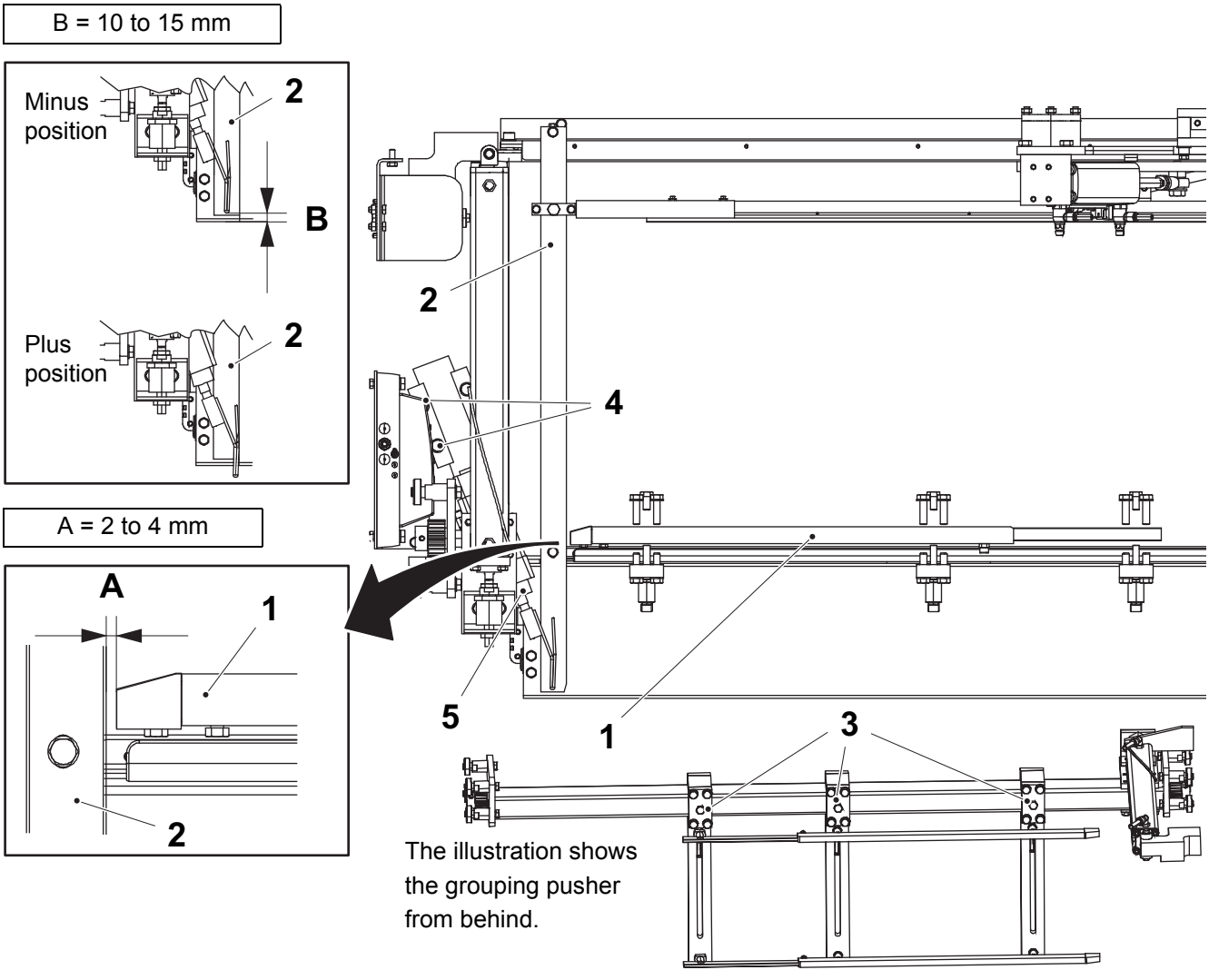

(Cont'd)

(Cont'd)

f) Loosen the locking screws (6) with the allen key, see 8.1 Setting Tools. Set the rails (7) and (8) at the distance C from the plate (9). Tighten the locking screws (6).

g) Loosen the locking screw (3) and adjust the bracket (10) horizontally.

Note! When small packaging patterns used remove the bracket (10).

h) Loosen the locking levers (11) and set the upper rail (1:1) as high as possible on the packages. Tighten the locking levers (11). Move the grouping pusher and check that the locking levers (11) do not interfere with something.

i) Check so the brackets (10) and (12) not interfere with the grouping plate (13) when the grouping plate is in its highest position. If not, loosen the screw joints (14) on the brackets (11) and (12). Adjust the height and tighten the the screw joints.

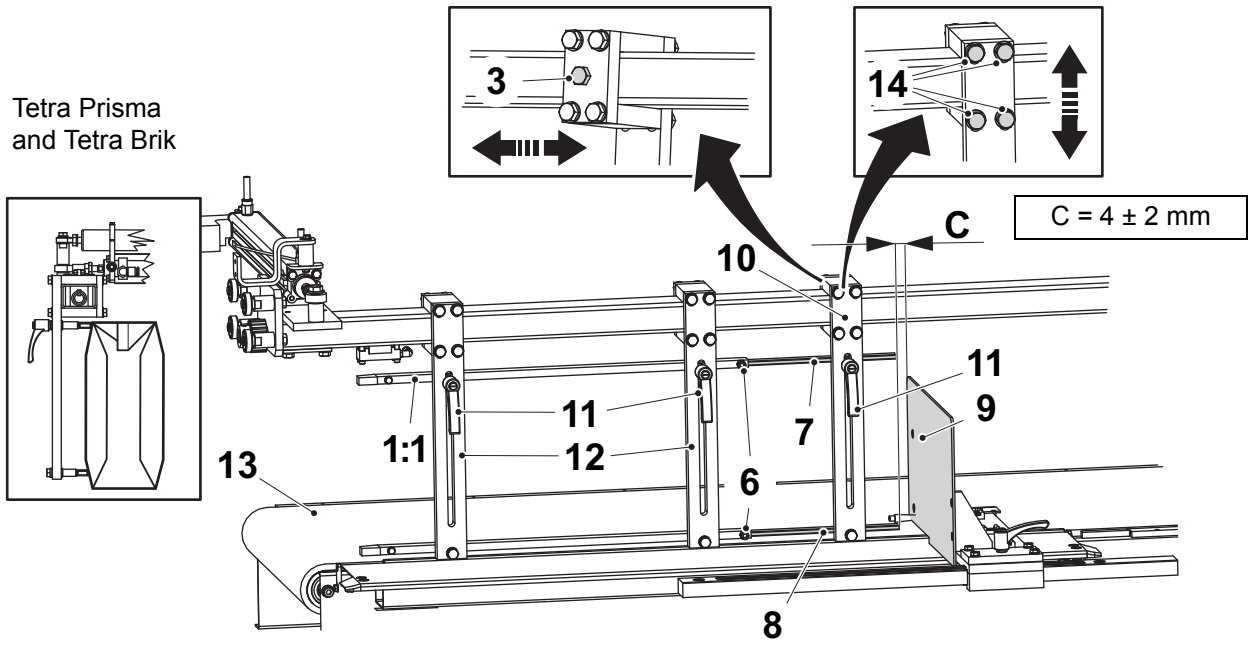

1:1 Rail
3 Screw
11 Screw
12 Rail
13 Rail
14 Plate
15 Bracket
16 Locking lever
17 Bracket
18 Grouping plate
19 Screw (12 pcs)

2.2.1-6 Grouping Pusher - Set Guide Rail Position

Machine Status	Power supply disconnector ON Air valve OFF
SPC Reference	2763044

a) Set the position of the guide rail, see 2.2.1-3 Grouping Pusher - Set Position.

b) Make sure that the machine is in step PREHEATING (1).

c) Run the function; Grouping pusher guide rail position (2) via the TPOP, see 6.8.3-1 TPOP Settings - Pattern Forming.

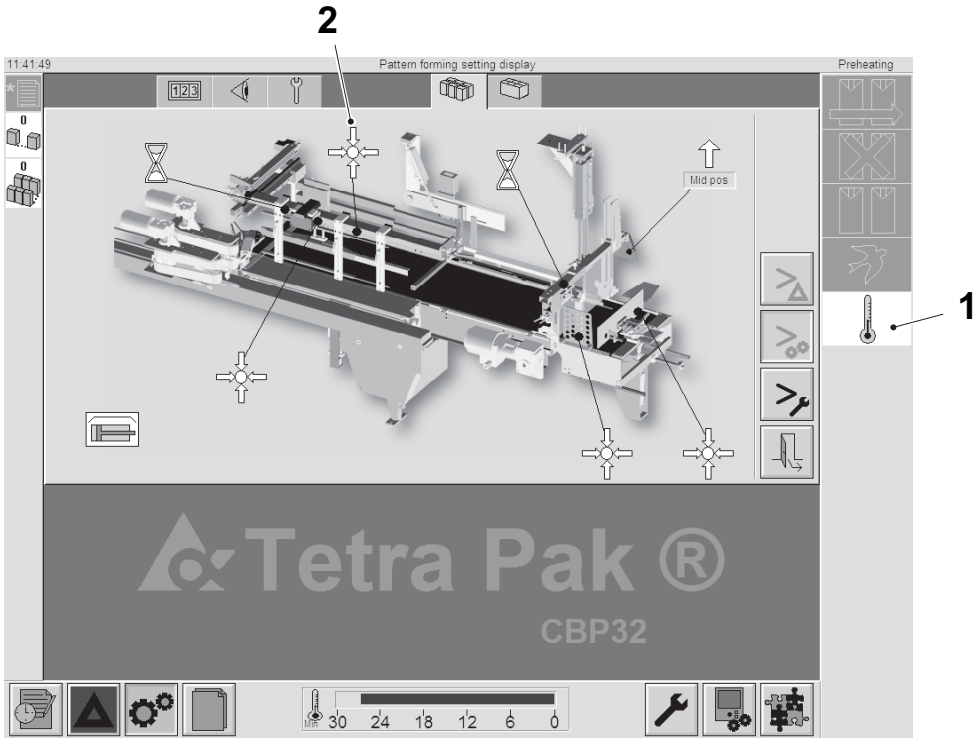

1 PREHEATING
2 Grouping pusher guide rail position

(Cont'd)

(Cont'd)

d) Move the grouping pusher (3) until the rail (4) is aligned with the guide rail (5). The new value for the grouping pusher position is shown in the display (6). It is possible to abort the function by pressing the DESELECT button (7) and the CONFIRMATION button (8).

e) Press the CONFIRMATION button (8) and the new value for the grouping pusher position is saved and is shown in the display (9).

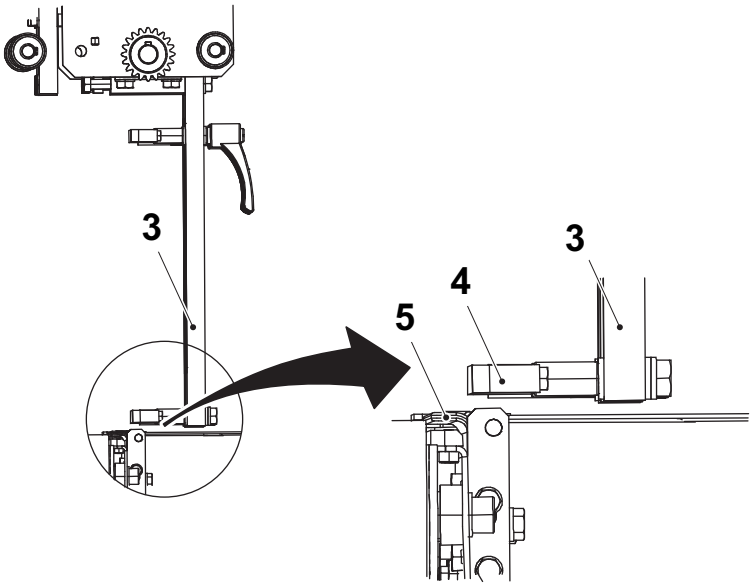

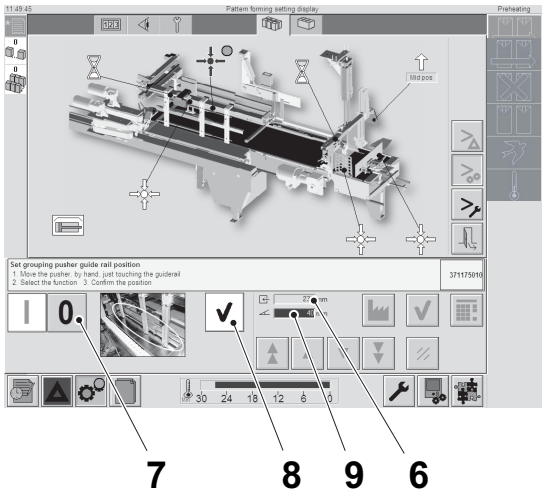

3 Grouping pusher
4 Rail
5 Guide rail
6 Display
7 DESELECT
8 CONFIRMATION
9 Display

2.2.2 Grouping Dolly

2.2.2-1 Grouping Dolly - Check

Machine Status	Power supply disconnector OFF Air valve OFF
SPC Reference	2718873

a) Check the cylinder (1) for wear and leakage.

b) Check the shock absorber (2) for wear and damage.

c) Check the flexible chain (3) and lubrication hose (4) for wear and damage.

d) Change if necessary according to 2.2.2-2 Grouping Dolly - Change.

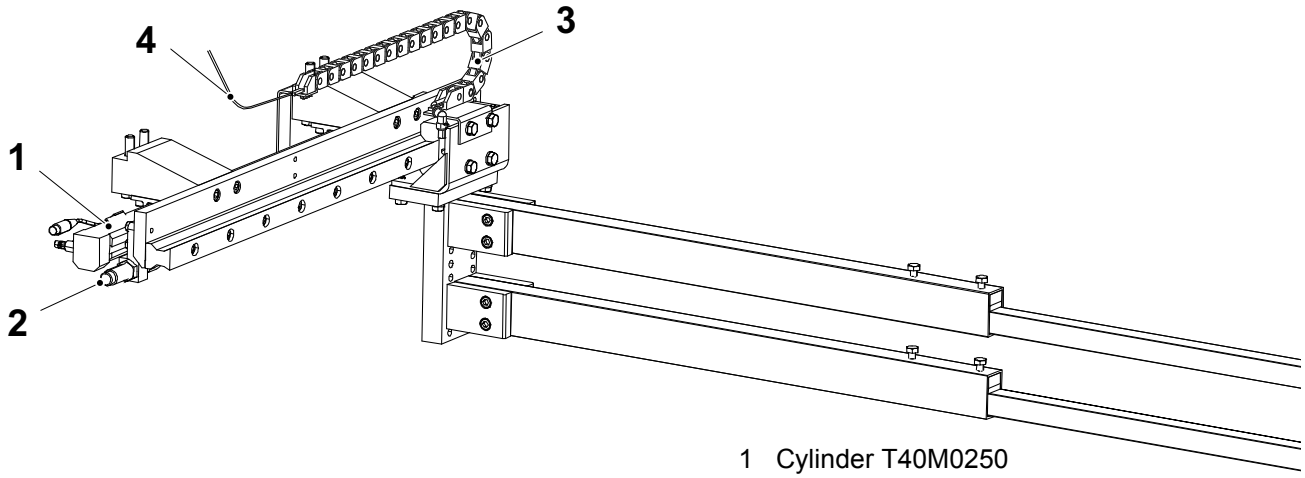

1 Cylinder T40M0250
2 Shock absorber
3 Flexible chain
4 Lubrication hose

2.2.2-2 Grouping Dolly - Change

Machine Status	Power supply disconnector OFF Air valve OFF
SPC Reference	2718873

a) Disconnect the air hoses from the cylinder (1).
b) Remove the cylinder (1).
c) Change the shock absorber (2) and the cylinder (1).
d) Change if necessary the flexible chain (3) and the lubrication hose (4).
e) Connect in the reverse order.
f) Set the grouping dolly, see 2.2.2-3 Grouping Dolly - Set.

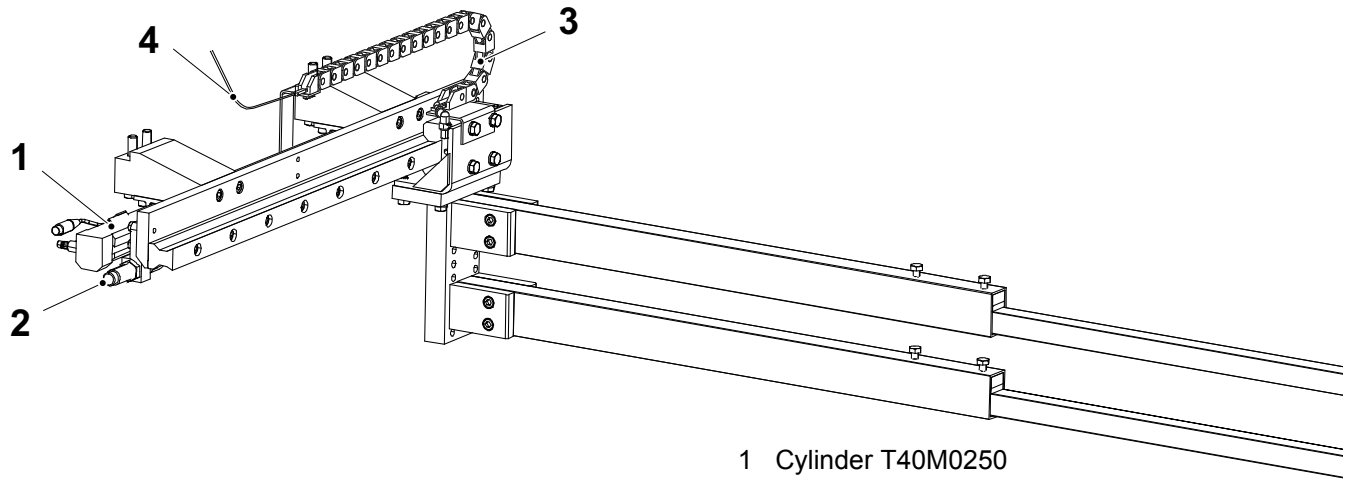

1 Cylinder T40M0250
2 Shock absorber
3 Flexible chain
4 Lubrication hose

2.2.2-3 Grouping Dolly - Set

Machine Status	Power supply disconnector OFF Air valve OFF
SPC Reference	2718873

Length

a) Loosen the screws (1).

b) Adjust the profiles (2) until the length of the profiles (2) and (3) is 5 to 10 mm shorter than the length of the packing pattern.

c) Fasten the screws (1).

Height

a) Loosen the screw (4).

b) Set the profiles (3) in a height position where it supports the packages the best.

c) Fasten the screw (4).

Cylinder Speed

Use the throttle (5) to set the movement on the cylinder (6) towards the grouping pusher. Set it to be fast.

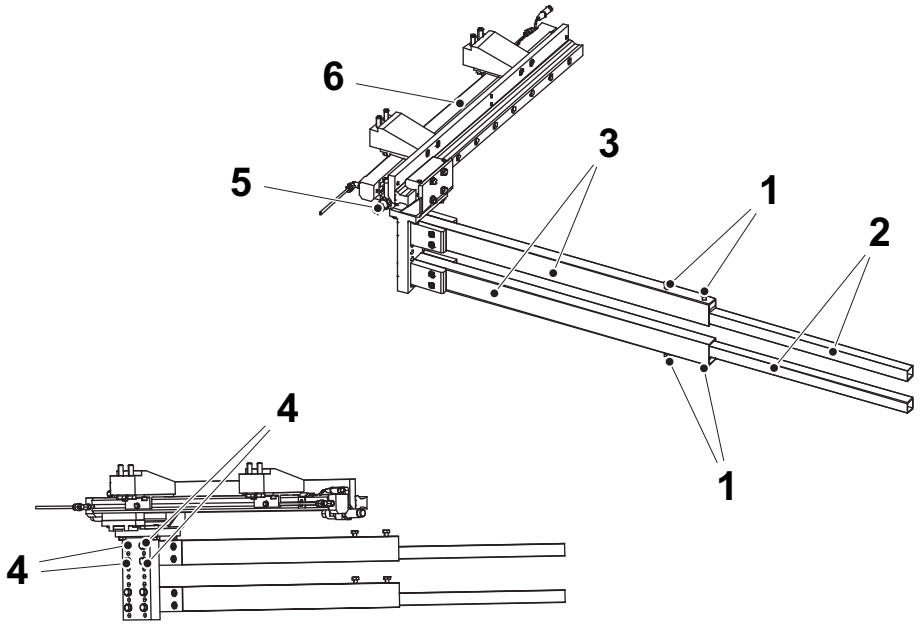

1 Screw
2 Profile
3 Profile
4 Screw
5 Throttle
6 Cylinder T40M0250

(Cont'd)

(Cont'd)

Shock Absorber

a) Loosen the jam nut (1) on the rear shock absorber (2).

b) Push in the end knob (4) to its end position and set the distance A by turn the sleeve (5).

c) Tighten the jam nut (1).

d) Repeat the setting on the front shock absorber (3).

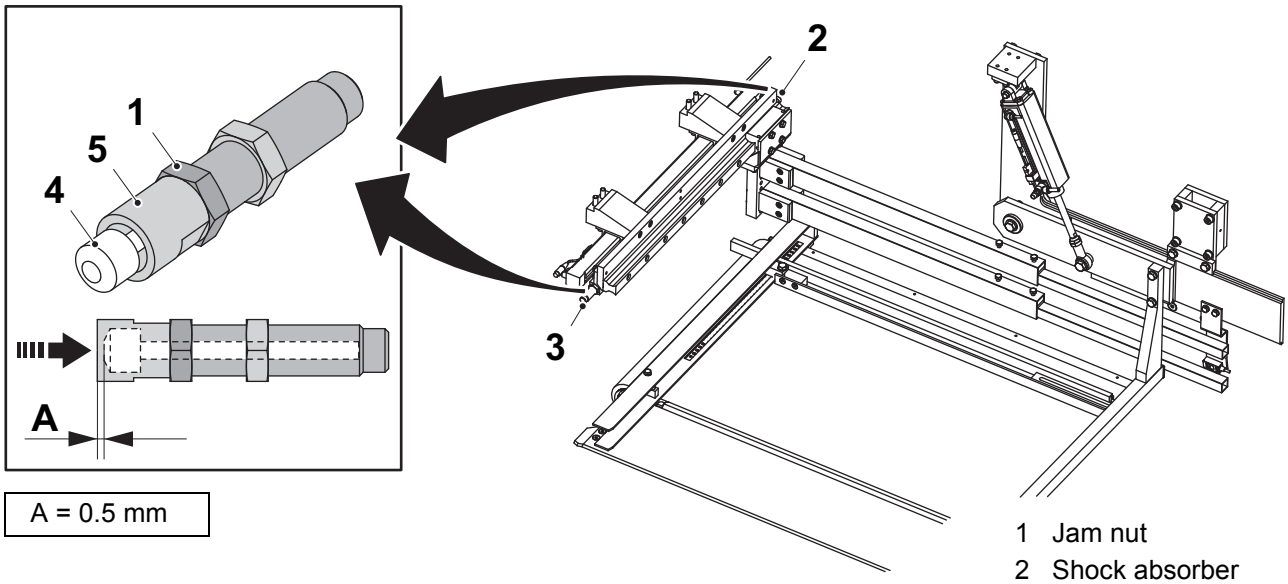

A = 0.5 mm

1 Jam nut
2 Shock absorber
3 Shock absorber
4 End knob
5 Sleeve

(Cont'd)

(Cont'd)

e) Loosen the screws (6).

f) Move the cylinder (7) and set the distance B between the guide rail's inner edge (8) and the grouping dolly's profile (9).

g) Tighten the screws (6).

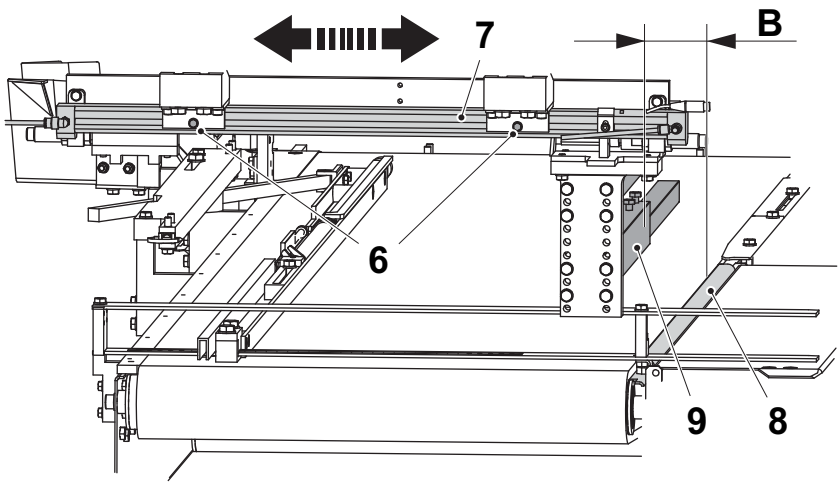

B = 11 mm

6 Screw
7 Cylinder T40M0250
8 Guide rail
9 Profile

(Cont'd)

(Cont'd)

h) Move the grouping dolly to the front position.

i) Set the distance C between the guide rail's inner edge (8) and the grouping dolly's profile (9).

j) Loosen the jam nut (10) and turn the shock absorber (3) with an allen key until the sleeve (5) touch the stop lug (11).

k) Tighten the jam nut (10).

3 Shock absorber
5 Sleeve
8 Guide rail
9 Profile
10 Jam nut
11 Stop lug

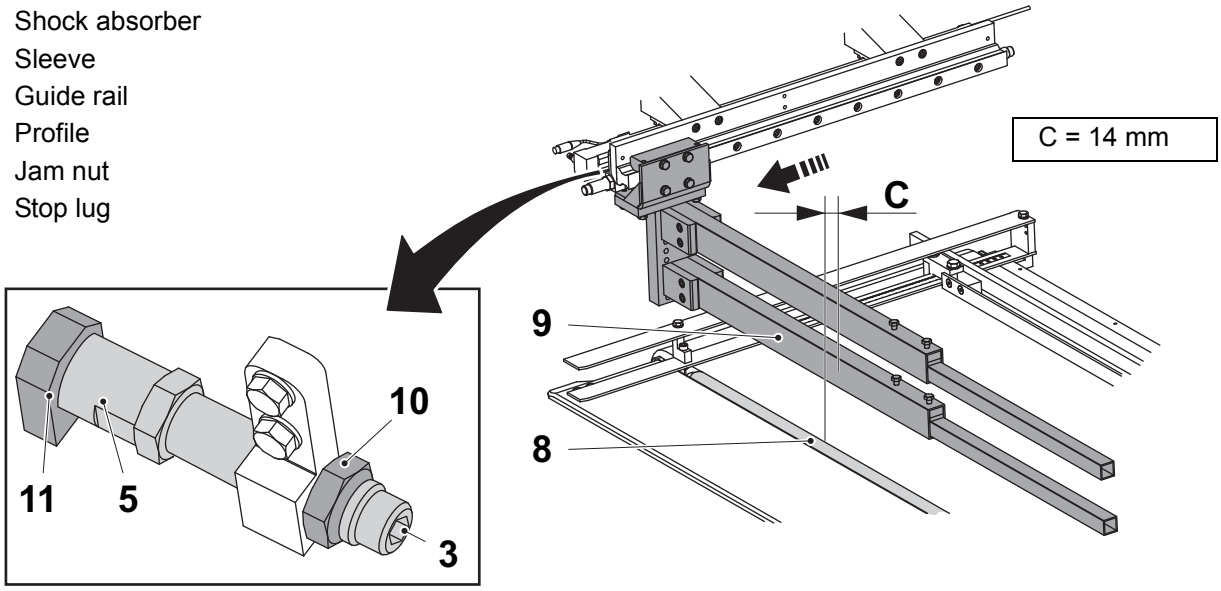

(Cont'd)

(Cont'd)

l) Move the grouping dolly to the rear position.

m) Set the grouping dolly's profile (9) in aligned position with the slide rail's other edge 12).

n) Loosen the jam nut (10) and turn the shock absorber (2) with an allen key until the sleeve (5) touch the stop lug (11).

o) Tighten the jam nut (10).

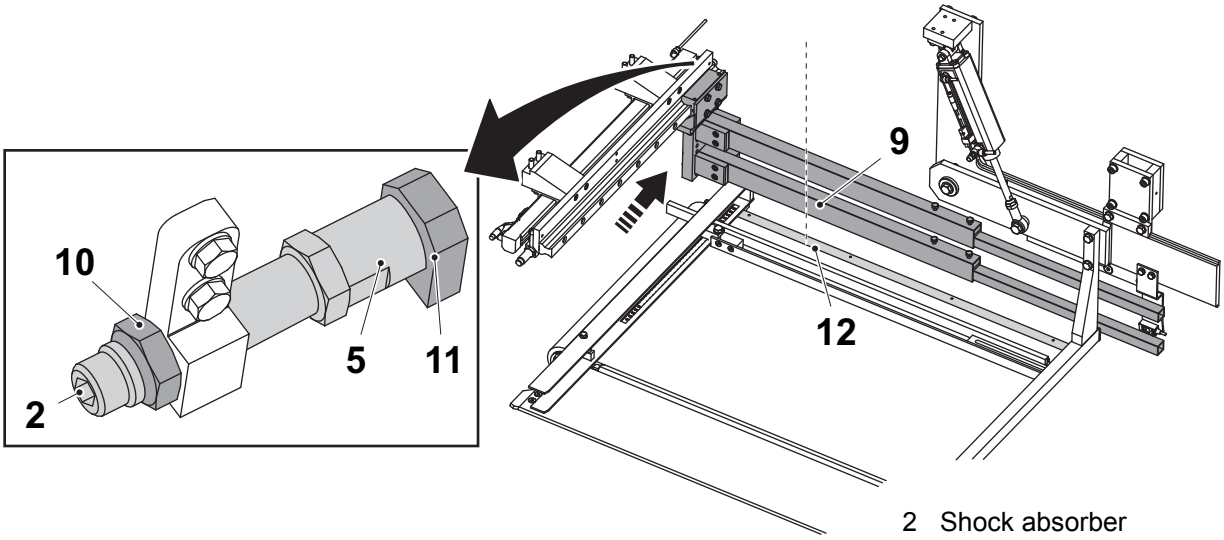

2 Shock absorber
5 Sleeve
8 Guide rail
9 Profile
10 Jam nut
11 Stop lug
12 Slide rail

2.2.3 Transfer Guide Rail

2.2.3-1 Transfer Guide Rail - Check Cylinder

Machine Status	Power supply disconnector OFF Air valve OFF
SPC Reference	2752731

Check the cylinder (1) for wear or leakage.

Change if necessary according to 2.2.3-2 Transfer Guide Rail - Change Cylinder.

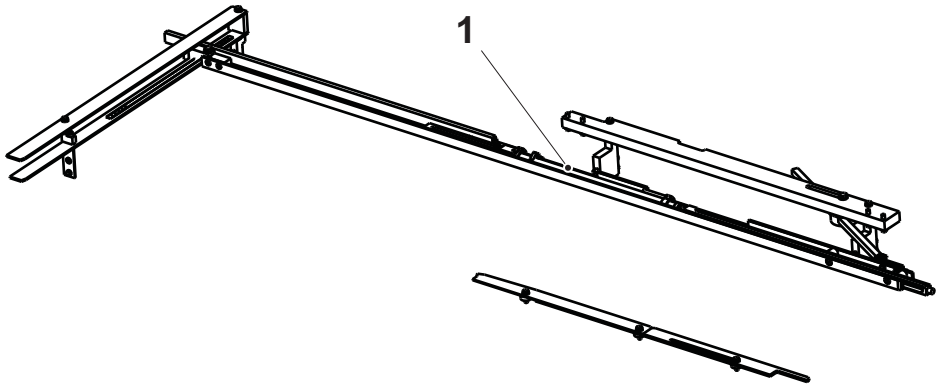

1 Cylinder T40M0270

2.2.3-2 Transfer Guide Rail - Change Cylinder

Machine Status	Power supply disconnector OFF Air valve OFF
SPC Reference	2752731

a) Disconnect the proximity sensor (1).

b) Disconnect the air hose connections (2) to the cylinder (3).

c) Remove the screw (4), the washer (5), the two screws (6), and the screw (7).

d) Remove the screw (8), the two washers (9), and the two nuts (10).

e) Remove the piston rod coupling (11).

f) Remove and change the cylinder (3).

g) Assemble in the reverse order.

h) Set the transfer guide rail, see 2.2.3-3 Transfer Guide Rail - Set.

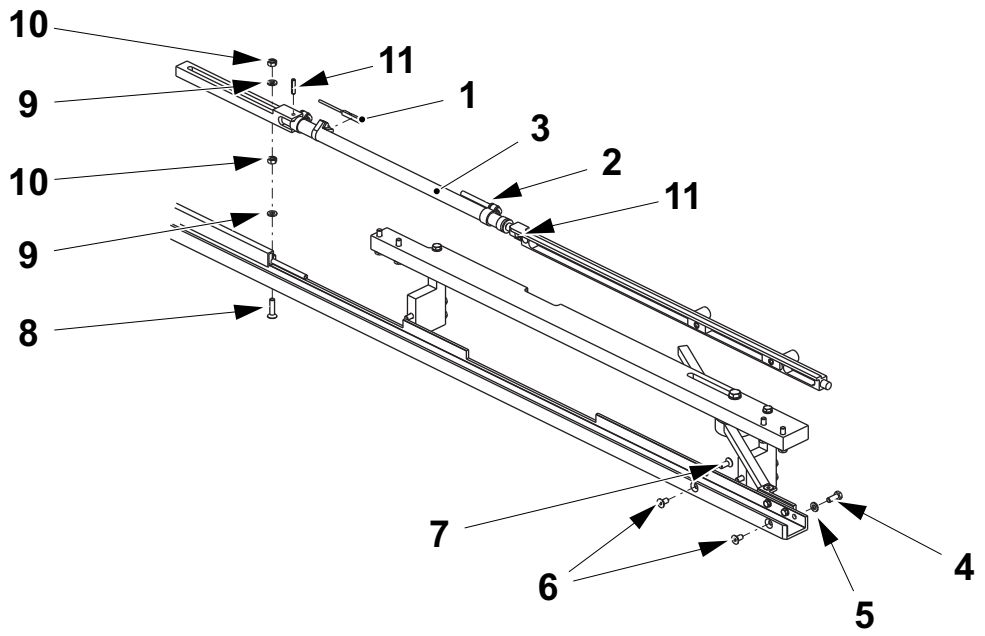

1 Proximity sensor T40B0271
2 Air hose connection
3 Cylinder T40M0270
4 Screw
5 Washer
6 Screw
7 Screw
8 Screw
9 Washer
10 Nut
11 Piston rod coupling

2.2.3-3 Transfer Guide Rail - Set

Machine Status	Power supply disconnector OFF Air valve OFF
SPC Reference	2752731

a) Loosen the screws (1) and (2).

b) Set the distance A between the guide rails (3) and (4).

c) Tighten the screws (1) and (2).

A = Packing pattern length + 15 to 25 mm, except TPA packing + 5 to 10 mm.

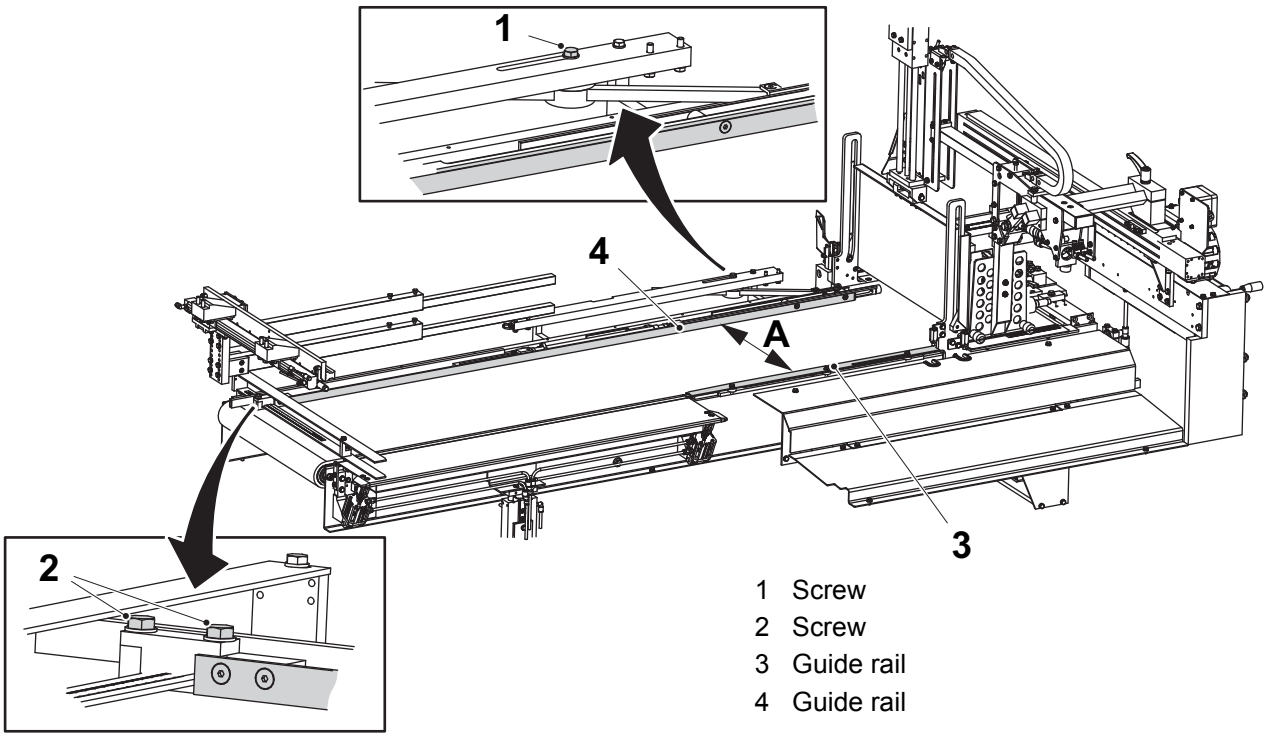

1 Screw
2 Screw
3 Guide rail
4 Guide rail

2.2.4 Stop Arm

2.2.4-1 Stop Arm - Change

Machine Status	Power supply disconnector OFF Air valve OFF
SPC Reference	1287902

a) Disconnect the air hoses from the cylinder (1).
b) Remove the cylinder (1).
c) Replace the rod end (2).
d) Fit and connect the new cylinder.
e) Replace the ball bearings (3).
f) Set the stop arm, see 2.2.4-2 Stop Arm - Set.

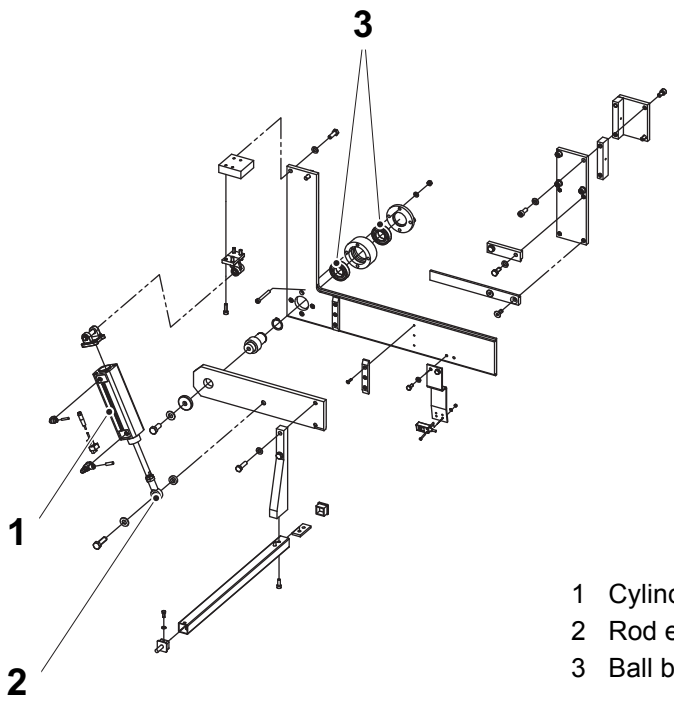

1 Cylinder T40M0220
2 Rod end
3 Ball bearing

2.2.4-2 Stop Arm - Set

Machine Status	Power supply disconnector ON Air valve OFF
SPC Reference	1287902

Height Position

a) Loosen the screw joint (1).

b) Adjust the stop arm (2) as close as possible to the guide rail (3) without obstructing the packages when in its upper position, that is the packages must be able to pass under the stop arm (2).

c) Tighten the screw joint (1).

d) Set the width position, see Width Position.

e) Loosen the nut (4) and set the height of the holder (5) to fit the lower position of the stop arm (2).

1 Screw joint
2 Stop arm
3 Guide rail
4 Nut
5 Holder

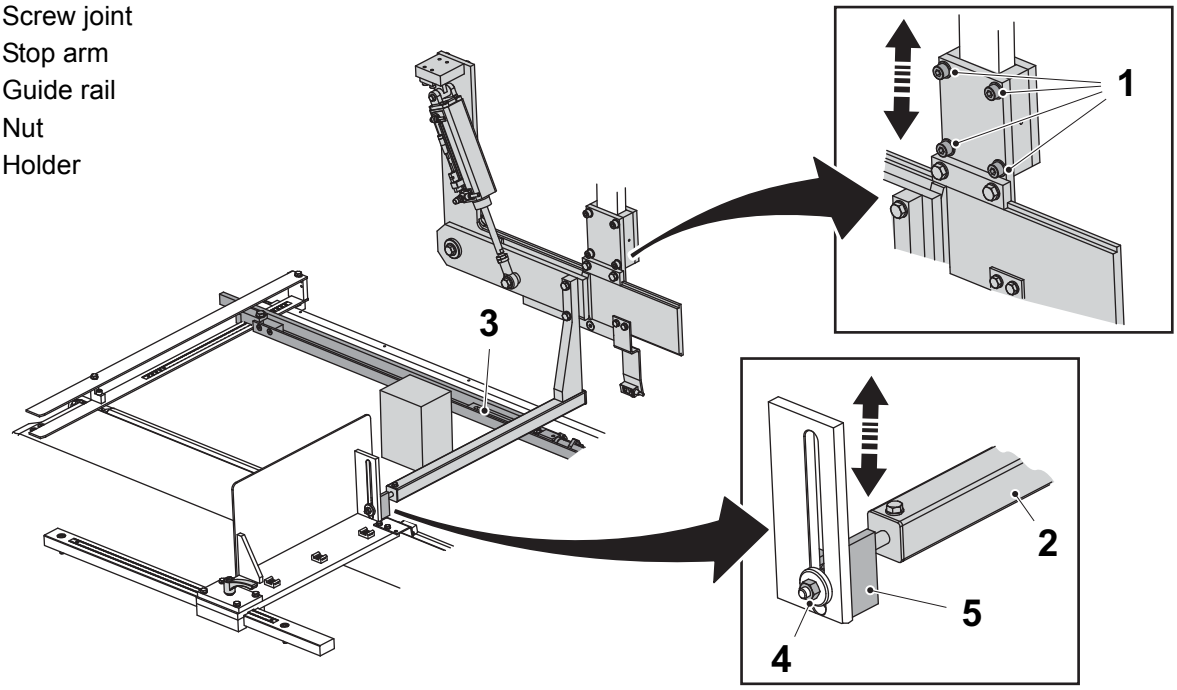

(Cont'd)

(Cont'd)

Width Position

a) Loosen the screws (6).

b) Move the stop arm (2) so it is aligned with the holder (5) on the end stop grouping.

c) Tighten the screws (6).

d) Adjust the holder (5), see Height Position.

e) Set the speed of the cylinder (7) according to 2.1.1-6 Pneumatic Cabinet - Set Cylinders.

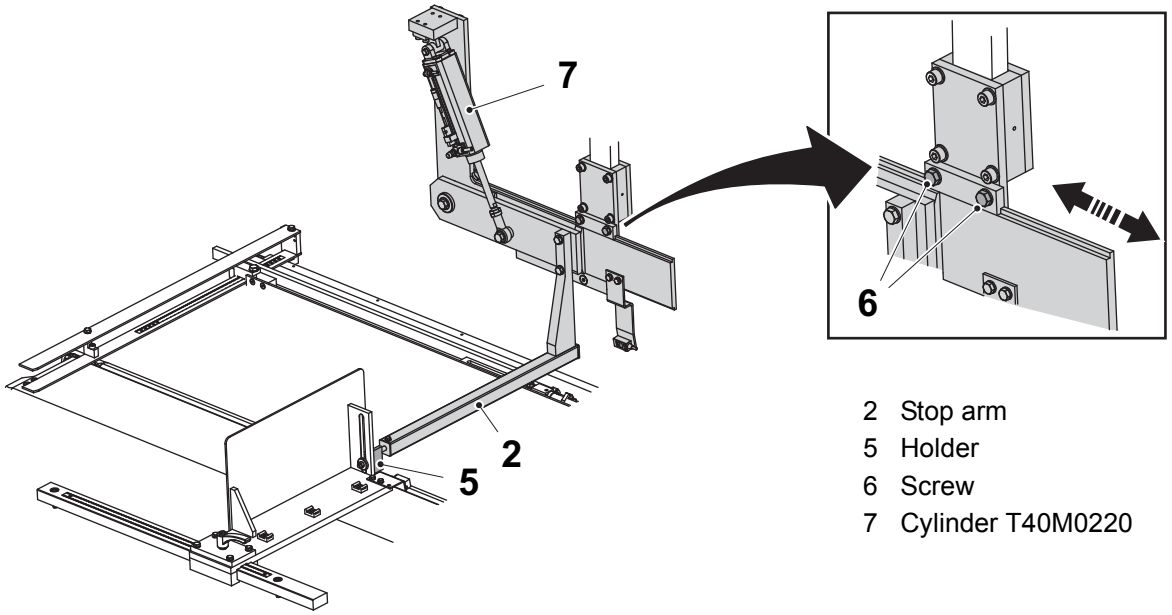

2 Stop arm
5 Holder
6 Screw
7 Cylinder T40M0220

2.2.5 Box Pusher End Stop

2.2.5-1 Box Pusher End Stop - Change Cylinder

Machine Status	Power supply disconnector OFF Air valve OFF
SPC Reference	2782781

a) Remove the screw joint (1) and the plate (2) from the cylinder (3).

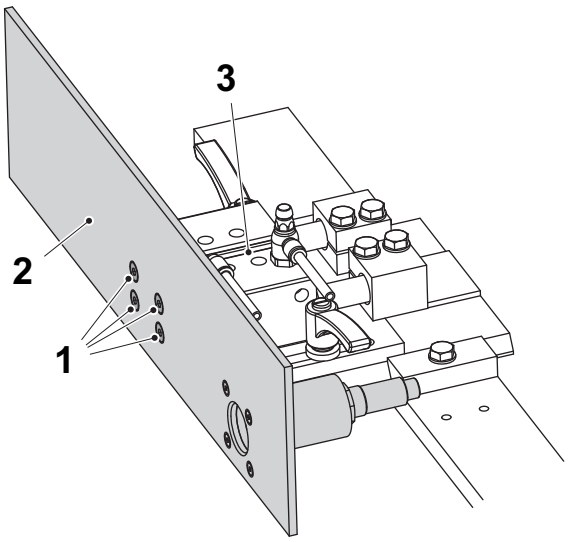

1 Screw joint
2 Plate
3 Cylinder T40M0280

b) Note the tubings (1) position and disconnect them from the cylinder.

c) Loosen the screw (5) and remove the cylinder unit from the machine.

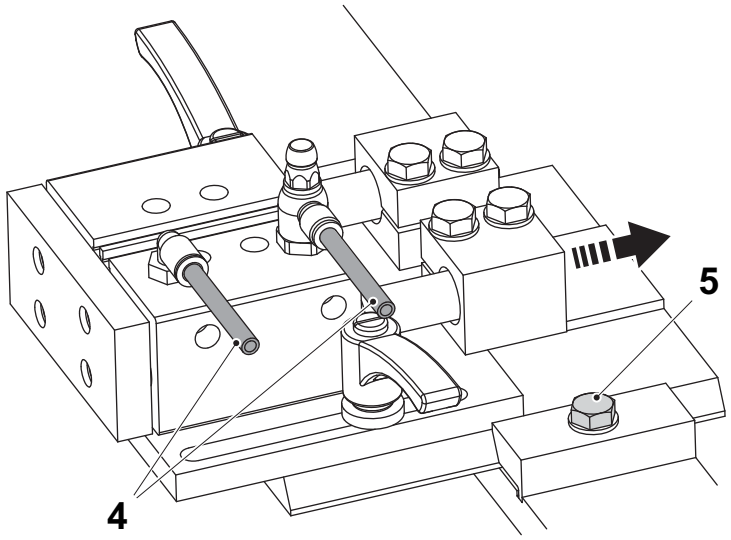

4 Tubing
5 Screw

(Cont'd)

(Cont'd)

d) Loosen the screw joint (6) and remove the stop lugs (7).

e) Loosen the locking levers (8) and move the cylinder unit to the end position.

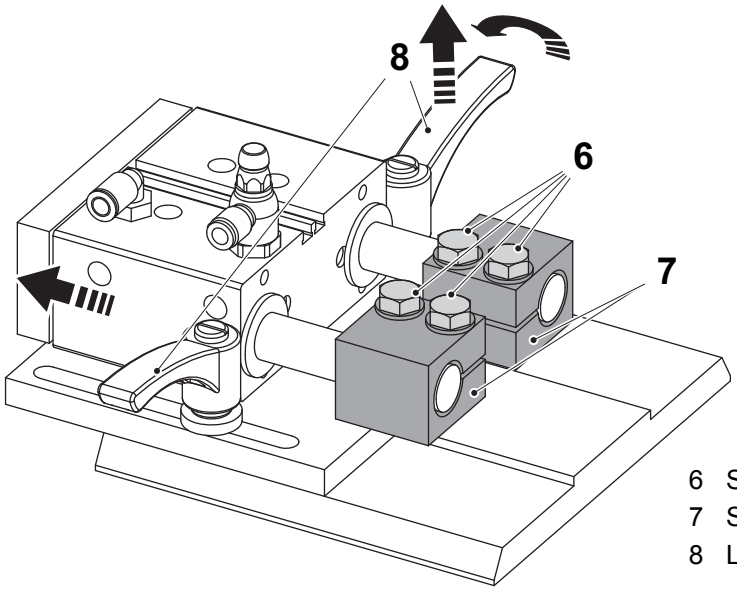

6 Screw joint
7 Stop lug
8 Locking lever

f) Remove the screw joint (9) and the cylinder.

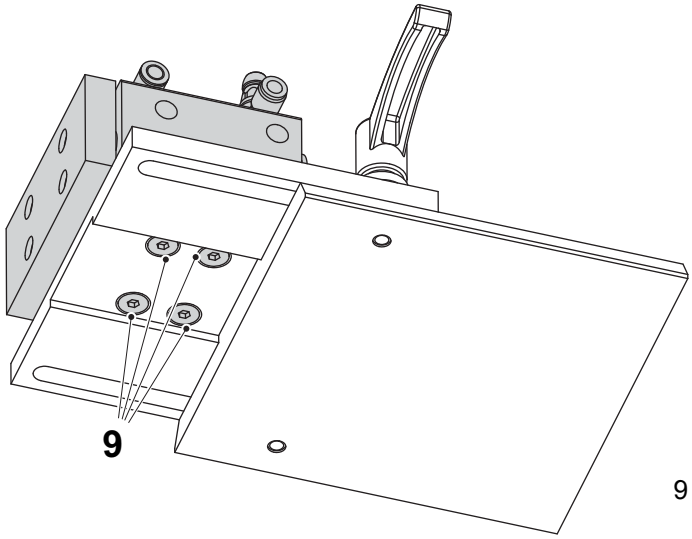

9 Screw joint

g) Assemble in the reverse order.

h) Set the box pusher end stop, see 2.2.5-2 Box Pusher End Stop - Set.

2.2.5-2 Box Pusher End Stop - Set

Machine Status	Power supply disconnector OFF Air valve OFF
SPC Reference	2782781

Note! The piston rod must be fully retracted, otherwise the setting will be incorrect.

Z-Infeed

a) Make sure that the cylinder (1) is in its minus position.

b) Loosen the locking levers (2).

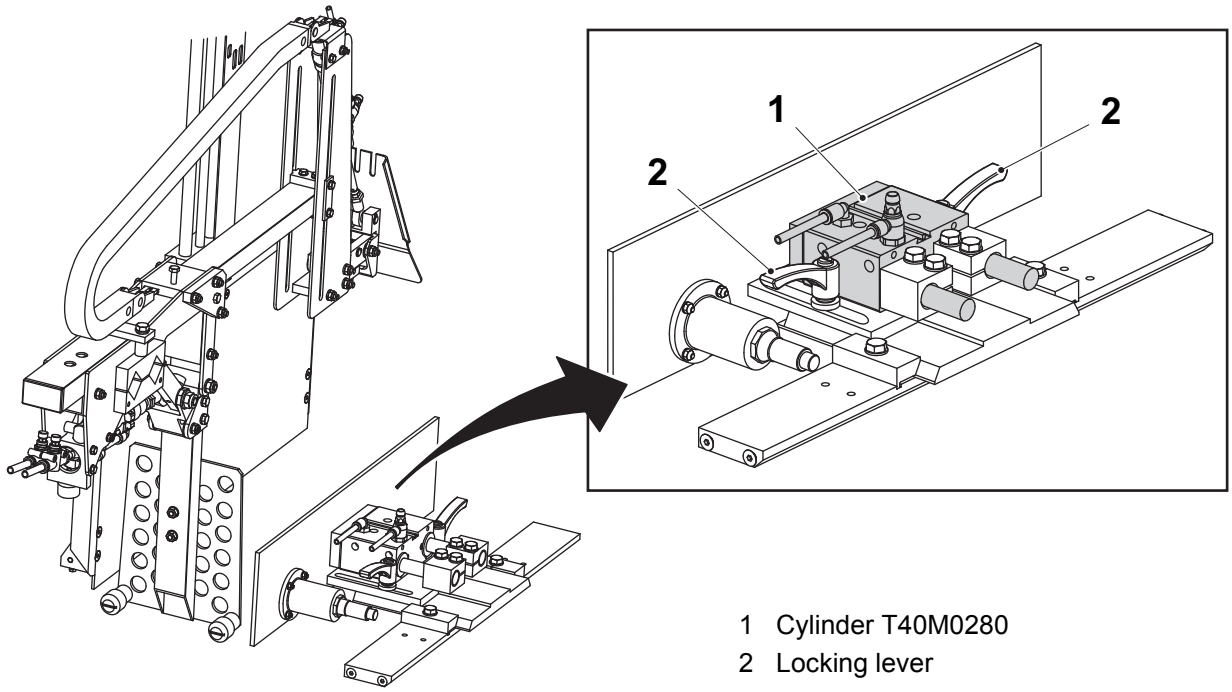

1 Cylinder T40M0280
2 Locking lever

(Cont'd)

(Cont'd)

c) Measure the packing pattern (3), distance A.

d) Move the entire end stop (4) to set distance B between the box pusher end stop plate (5) and the transfer stop plate (6).

e) Tighten the locking levers (2).

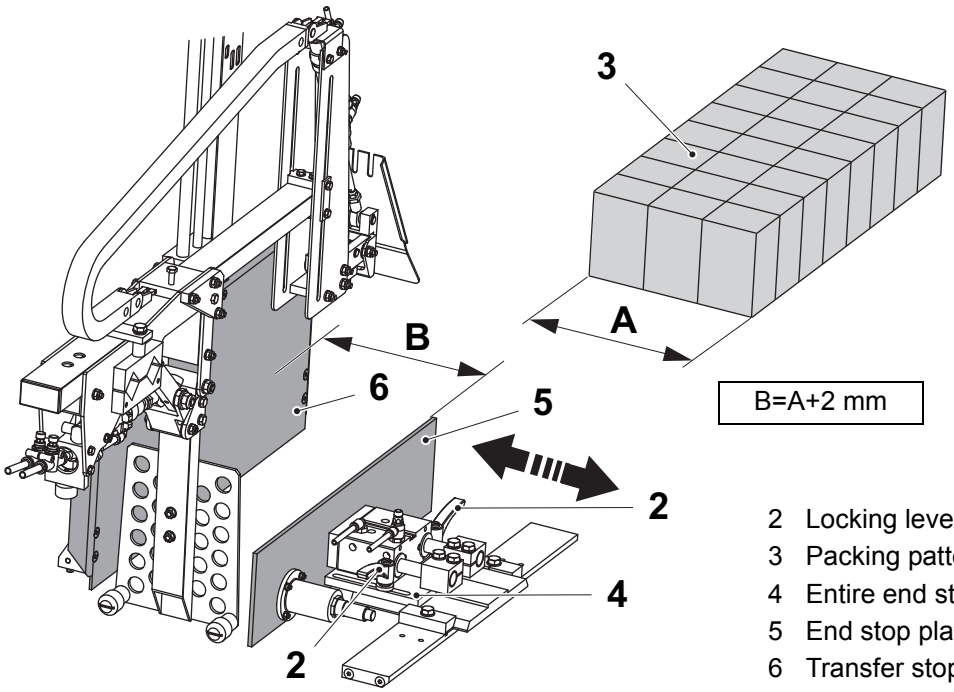

2 Locking lever
3 Packing pattern
4 Entire end stop
5 End stop plate
6 Transfer stop plate

(Cont'd)

(Cont'd)

f) Loosen the screws (7).

g) Measure the packing pattern (3), distance D.

h) Set the distance C between the stop lugs (8) and the washer (9).

Note! The distance C is only a starting position not a fixed measure.

i) Tighten the screws (7).

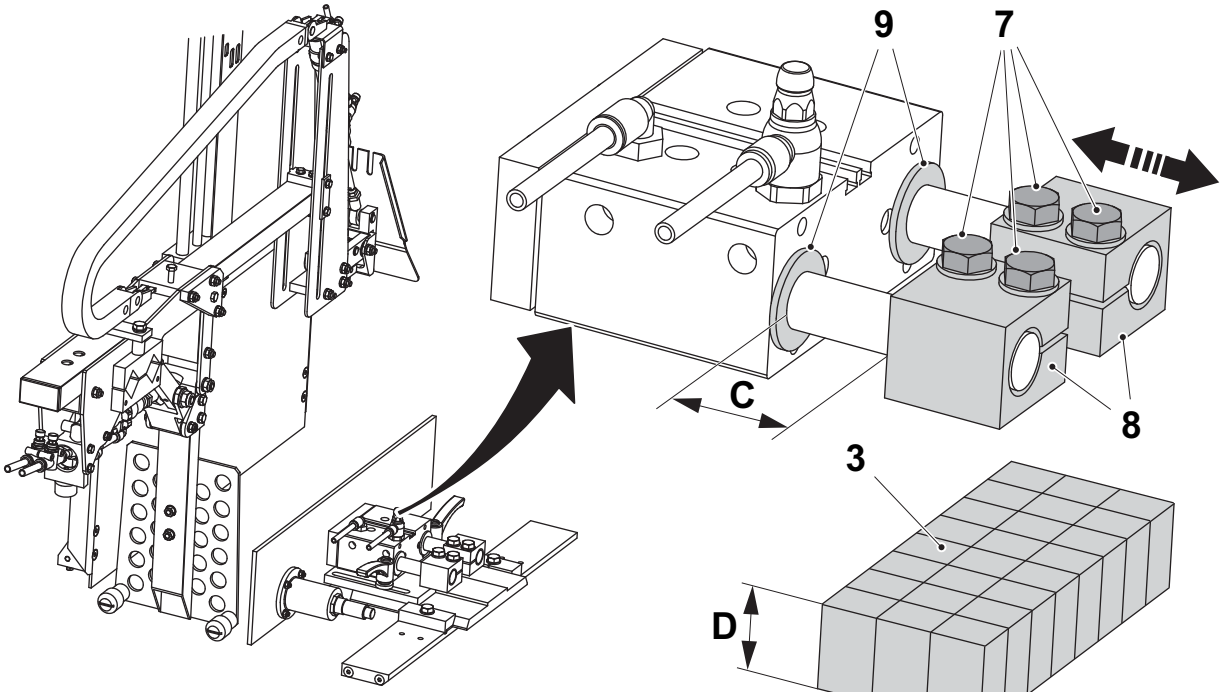

	C=5 to 8	C=10 to 13	C=15 to 20
D	<100	100-200	>200

3 Packing pattern
7 Screw
8 Stop lug
9 Washer

(Cont'd)

(Cont'd)

Note! If the transfer stop plate (6) touches the packaging pattern in position 1 (10) increase distance C.
If the transfer stop plate (6) touches the packaging pattern in position 2 (11) decrease distance C.

j) Set the pusher plate and the dolly, see the sub section Positioning of the Pusher Plate and Dolly in the section 2.2.6-4 Box Pusher Plate/Box Pusher Dolly - Set.

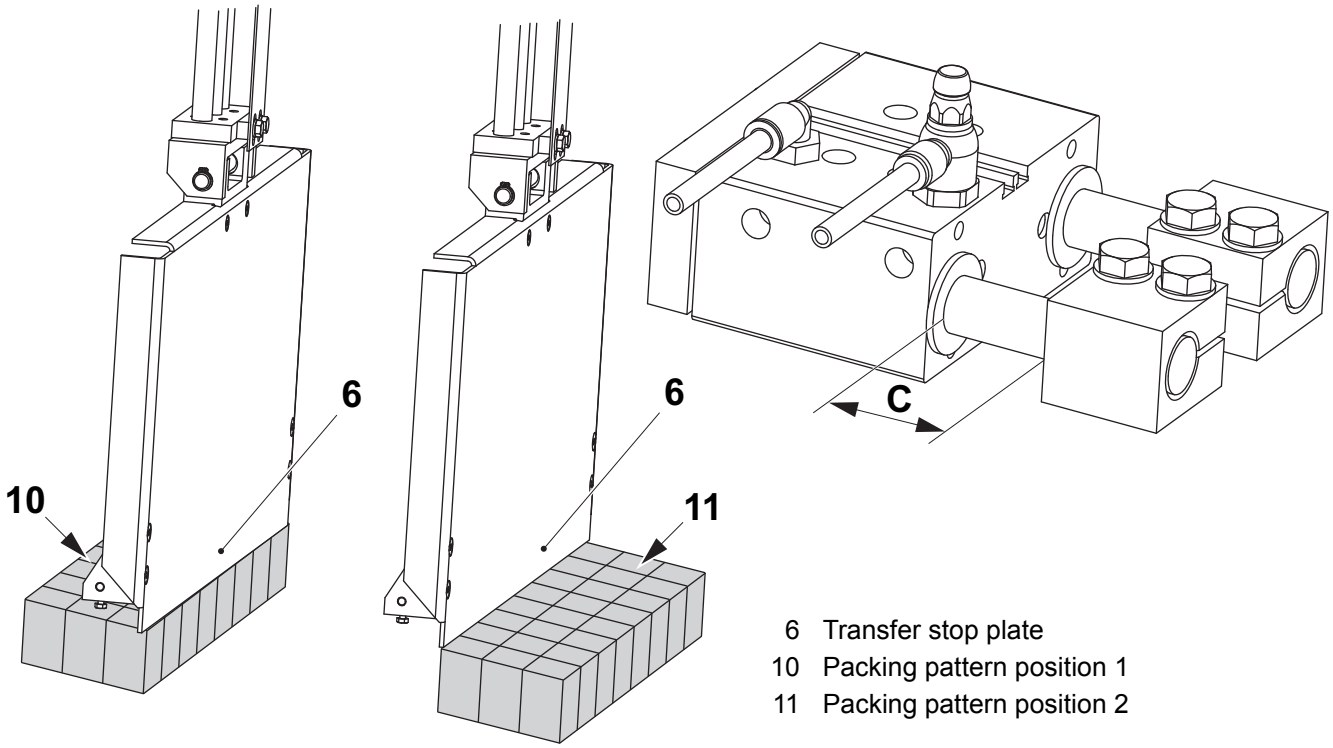

6 Transfer stop plate
10 Packing pattern position 1
11 Packing pattern position 2

(Cont'd)

(Cont'd)

U-Infeed

Note! Make sure that there is space for the pusher plate (12) and the end stop plate (13) so that they do not collide.

a) Loosen the screw (14) and set the scale (15) according to the width on the packing pattern by moving the plate (16).

b) Turn the adjusting screw (17) with the crank (18) and set the scale (19) according to the width on the packing pattern.

Note! Make sure so the guide (20) not collide with the guide plate (21)

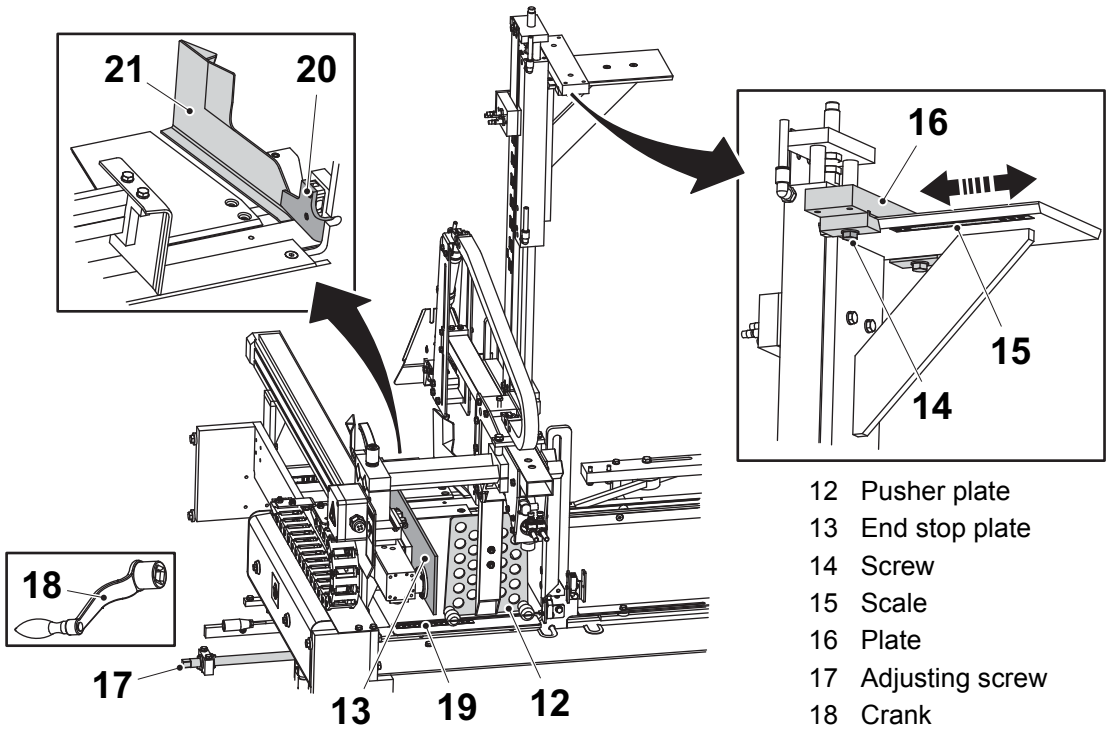

12 Pusher plate
13 End stop plate
14 Screw
15 Scale
16 Plate
17 Adjusting screw
18 Crank
19 Scale
20 Guide
21 Guide plate

2.2.5-3 Box Pusher End Stop - Set Ultrasonic Sensor

Machine Status	Power supply disconnector ON Air valve ON
SPC Reference	2782781

a) If the cylinders (1) and (2) are not in plus position step up the machine to PRODUCTION and then shut off the machine.

b) Use the nuts (3) to set the distance A between the plate (4) and the sensor (5) to distance A.

c) Place the package (6) at distance B between the plate (4) and the package (6).

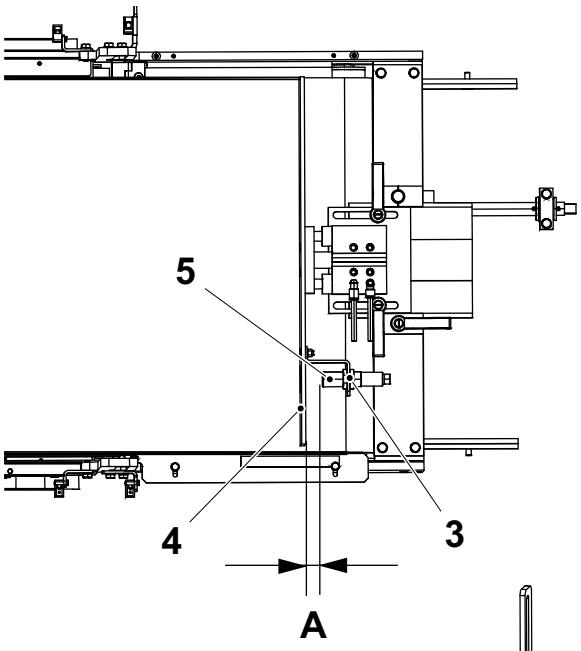

A = 25 mm

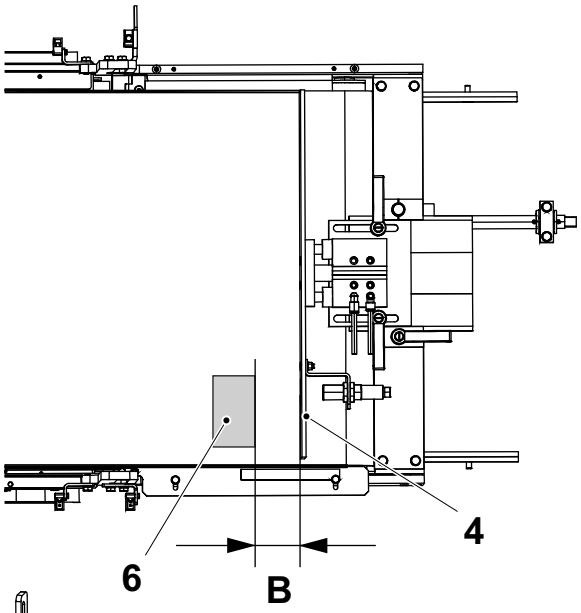

B = 100 mm

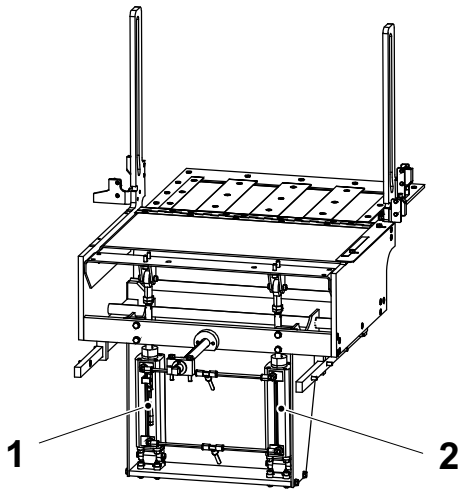

1 Cylinder T40M0320
2 Cylinder T40M0321
3 Nut (2 pcs)
4 Plate
5 Sensor T40B0106
6 Package

(Cont'd)

(Cont'd)

d) Make sure that the machine is in step PREHEATING (7).

e) Run the function; Set pattern at box pusher (ultra sonic) (8) via the TPOP, see 6.8.3-1 TPOP Settings - Pattern Forming.

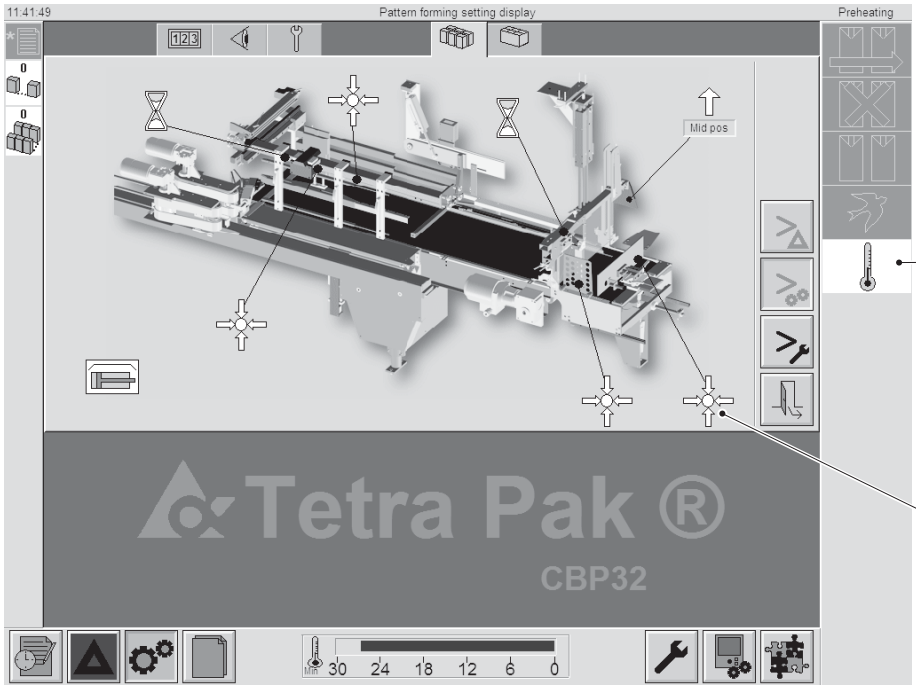

7 PREHEATING

8 Set pattern at box pusher (ultra sonic)

2.2.6 Box Pusher Plate/Box Pusher Dolly

2.2.6-1 Box Pusher Plate/Box Pusher Dolly - Check

Machine Status	Power supply disconnector OFF Air valve OFF
SPC Reference	2504337, 2504338

Check the following parts for wear or leakage:

- cylinders (1) and (2)
- rod ends (3)
- bushings (4)
- vibration dampers (5)
- shafts (6)
- spring (7)

Change if necessary according to 2.2.6-2 Box Pusher Plate/Box Pusher Dolly - Change Cylinders, 2.2.6-3 Box Pusher Plate/Box Pusher Dolly - Change Bushings and Vibration Dampers.

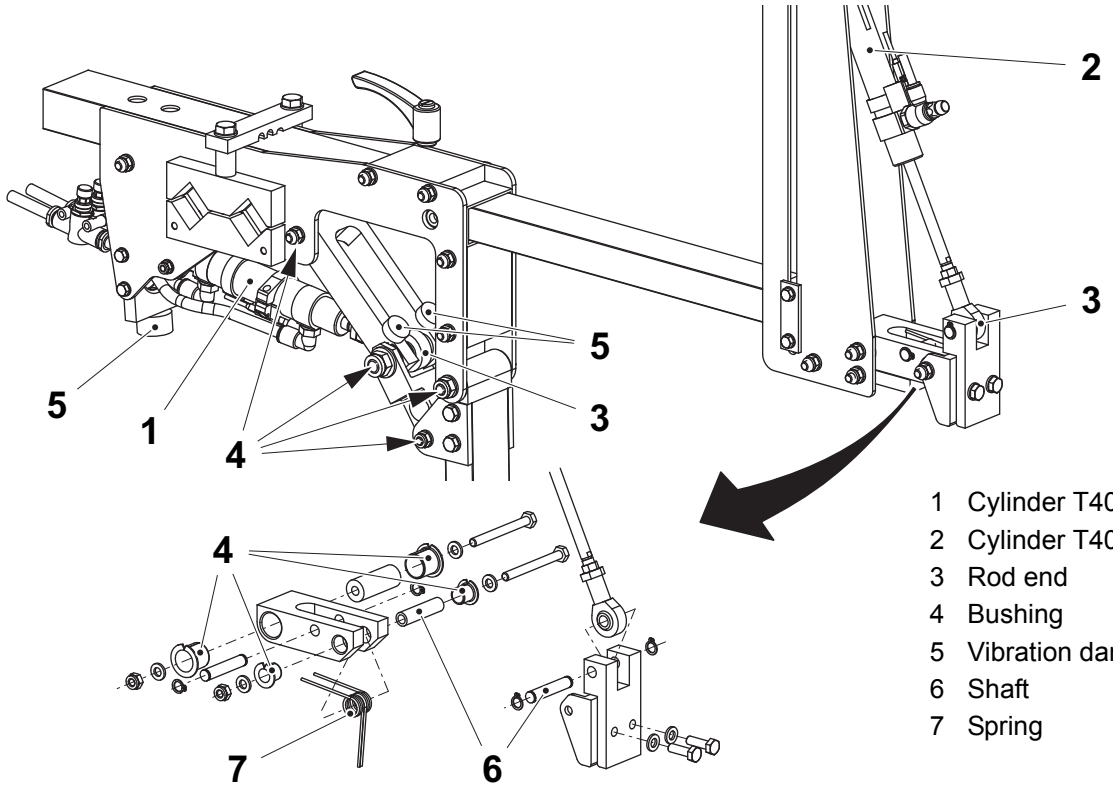

1 Cylinder T40M0300
2 Cylinder T40M0310
3 Rod end
4 Bushing
5 Vibration damper
6 Shaft
7 Spring

2.2.6-2 Box Pusher Plate/Box Pusher Dolly - Change Cylinders

Machine Status	Power supply disconnector OFF Air valve OFF
SPC Reference	2504337, 2504338

a) Disconnect the air hoses and proximity sensors from the cylinders (1) and (2).

b) Remove the retaining rings (3). Pull out the shaft (4) and replace it.

c) Remove the screw (5) and pull out the shaft. Pull out the cylinder (1).

d) Replace the rod end (6).

e) Remove the screw (7) and the nut (8). Pull out the shaft (9) and replace it. Replace the spring (10). When assemble the spring, place it under the shaft.

f) Fit and connect the new cylinder in the reverse order.

g) Remove the screw (11) and pull out the shaft.

h) Remove the screw (12) and pull out the cylinder (2).

i) Replace the rod end (13).

j) Fit and connect the new cylinder in the reverse order.

k) Set according to 2.2.6-4 Box Pusher Plate/Box Pusher Dolly - Set.

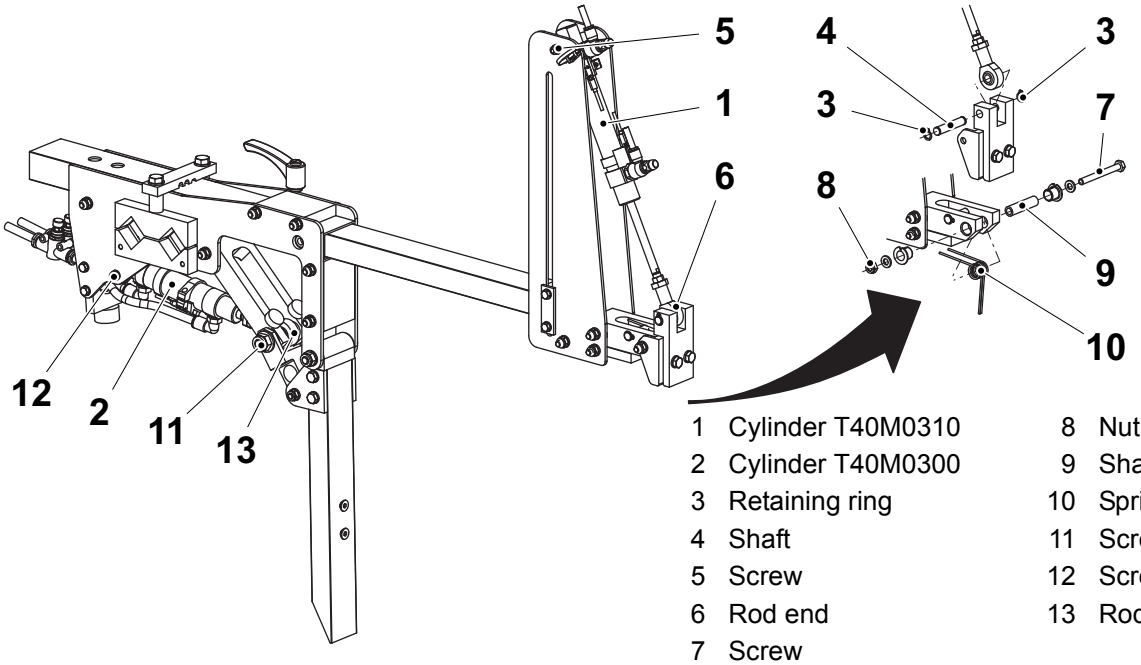

1 Cylinder T40M0310
2 Cylinder T40M0300
3 Retaining ring
4 Shaft
5 Screw
6 Rod end
7 Screw
8 Nut
9 Shaft
10 Spring
11 Screw
12 Screw
13 Rod end

2.2.6-3 Box Pusher Plate/Box Pusher Dolly - Change Bushings and Vibration Dampers

Machine Status	Power supply disconnector OFF Air valve OFF
SPC Reference	2504337, 2504338

a) Remove the screw (1), the nut (2) and the washers (3) and pull out the link arm (4).

b) Replace the vibration dampers (5) and the bushings (6).

c) Assemble the link arm (4), the screws (1), the nut (2) and the washers (3) in the reverse order.

d) Remove the screws (7), the retaining rings (8), the shafts (9) and pull out the arm (10).

e) Replace the bushings (11).

f) Assemble the arm (10), the screws (7), the shafts (9) and the retaining rings (8) in the reverse order.

g) Set according to 2.2.6-4 Box Pusher Plate/Box Pusher Dolly - Set.

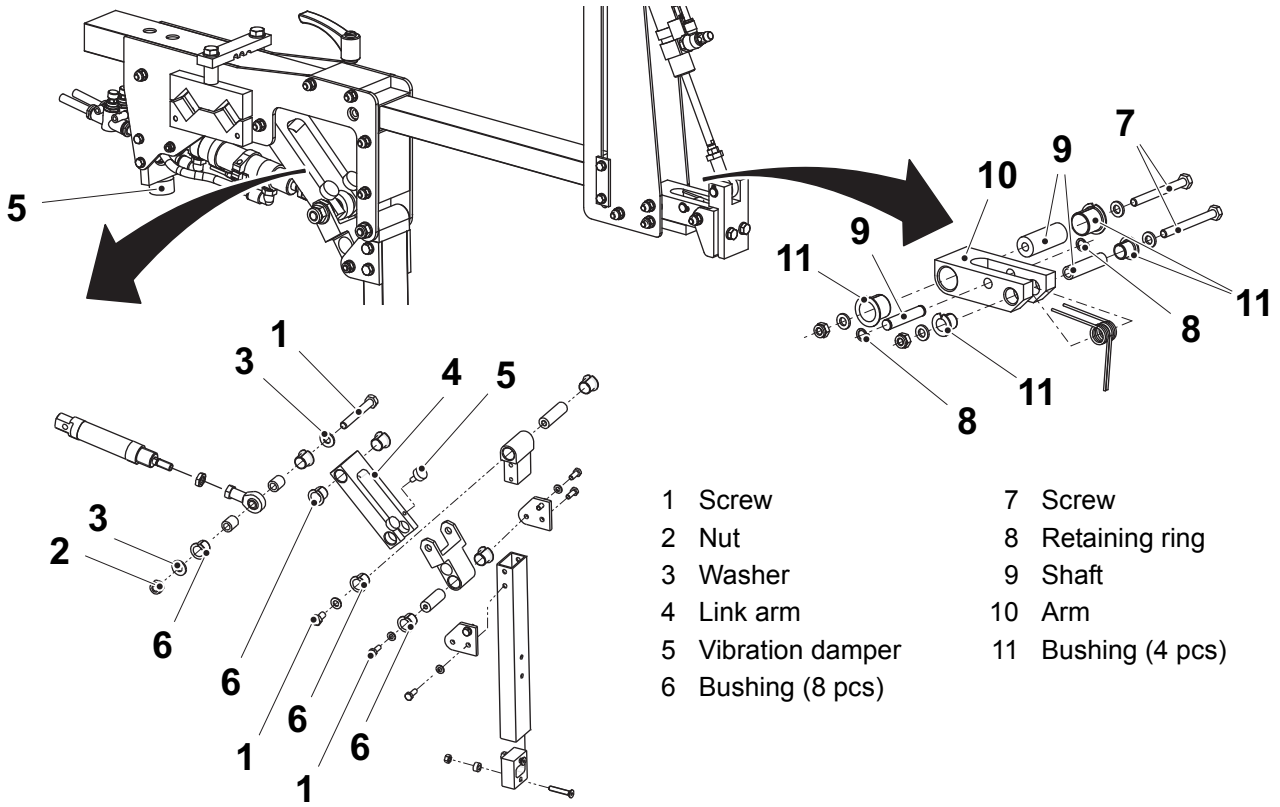

1	Screw	7	Screw
2	Nut	8	Retaining ring
3	Washer	9	Shaft
4	Link arm	10	Arm
5	Vibration damper	11	Bushing (4 pcs)
6	Bushing (8 pcs)		

2.2.6-4 Box Pusher Plate/Box Pusher Dolly - Set

Machine Status	Power supply disconnector OFF Air valve OFF
SPC Reference	2504337, 2504338

Front Position

a) Adjust with the screw (7) and set the distance B.

b) Loosen the screws (5).

c) Set the pusher plate (3) in down position.

d) With the knee joint (6) in down position, pull the pusher plate (3) towards upper position without moving the knee joint and fasten the screws (5) before releasing.

e) Push the box pusher unit until the cylinder (1) is in its front end position.

f) Loosen the screws (2), under the cylinder (1).

g) Set the pusher plate (3) to distance A between the crease of the tray (4) and the pusher plate (3).

h) Fasten the screws (2).

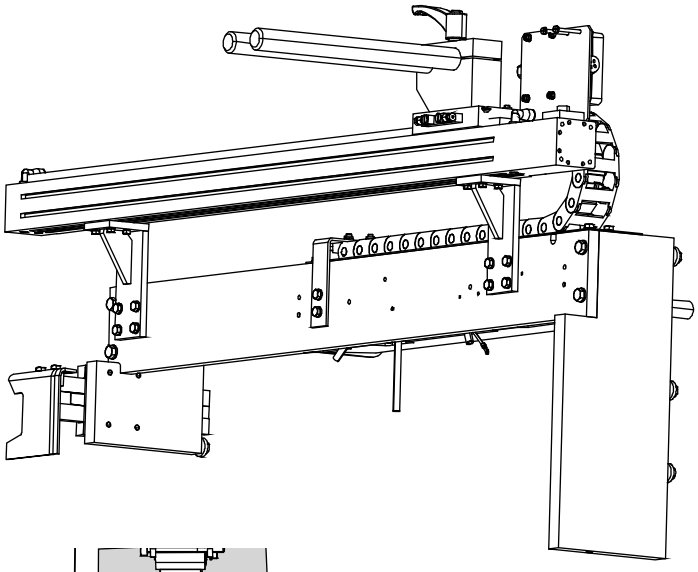

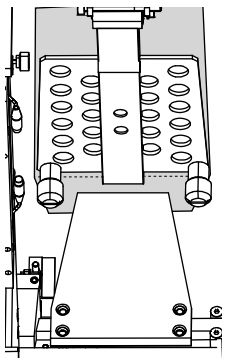

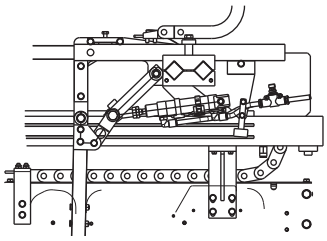

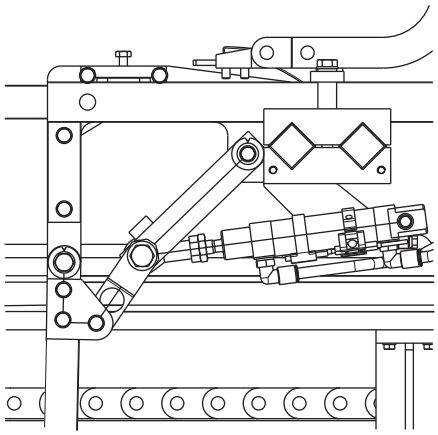

A = 5 mm
B = 1.3 ± 0.2 mm

1 Cylinder T40M0040
2 Screws
3 Pusher plate
4 Tray
5 Screw (5 pcs)
6 Knee joint
7 Screw

(Cont'd)

(Cont'd)

Height Position

i) Make sure that the transfer guide rail is set according to 2.2.3-3 Transfer Guide Rail - Set.

j) Loosen the screws (8).

k) Make sure that the cylinder (9) is in plus position.

l) Adjust the dolly (10) according to distance C.

m) Fasten the screws (8).

n) Set the cylinder, see 2.1.1-6 Pneumatic Cabinet - Set Cylinders.

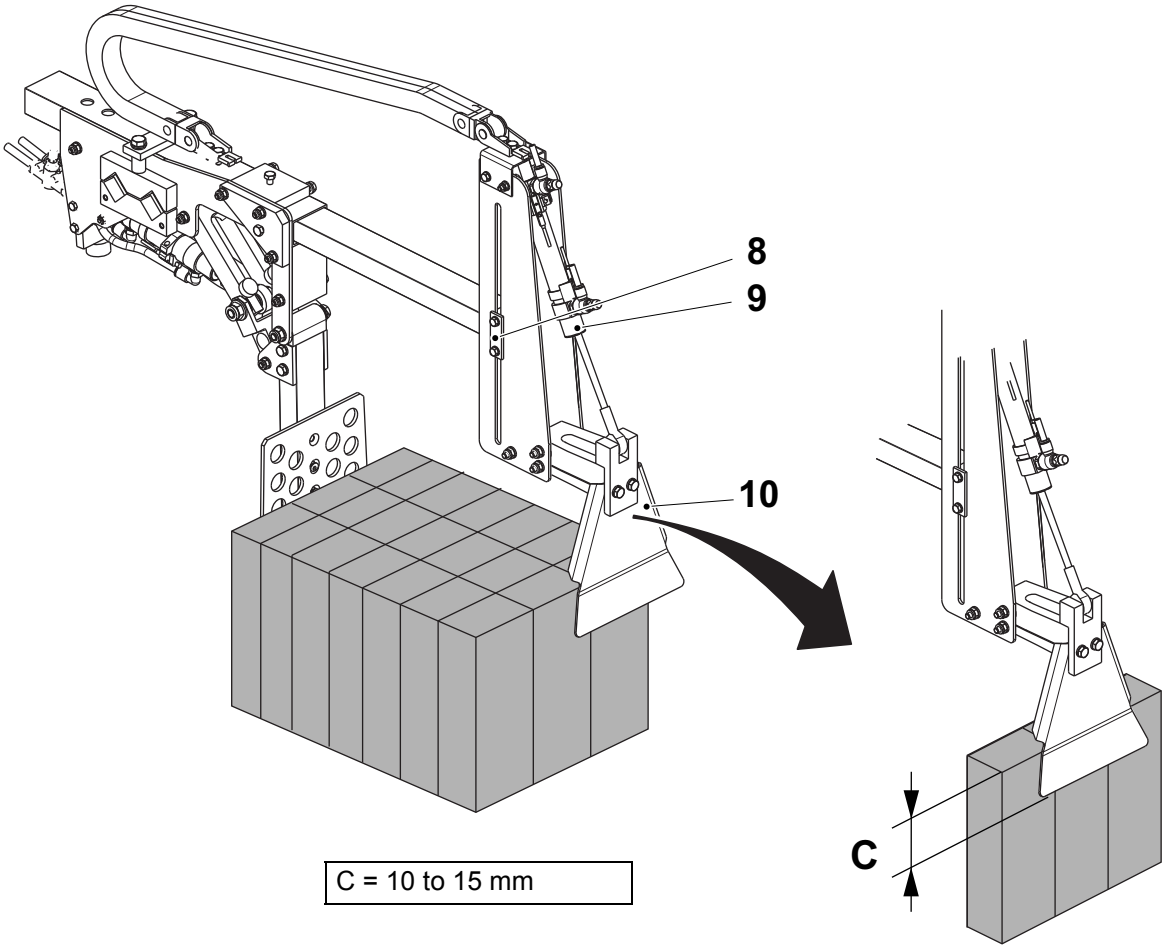

8 Screw (2 pcs)
9 Cylinder T40M0310
10 Dolly

(Cont'd)

(Cont'd)

Length Position

o) Adjust the screw (11) until it is possible to press the dolly (10) the distance D.

p) Loosen the locking screws (12).

q) Adjust the length according to distance E.

Note! By hand, move the cylinder (9) to plus position so the dolly (10) presses slightly against the packages.

r) Fasten the screws (12).

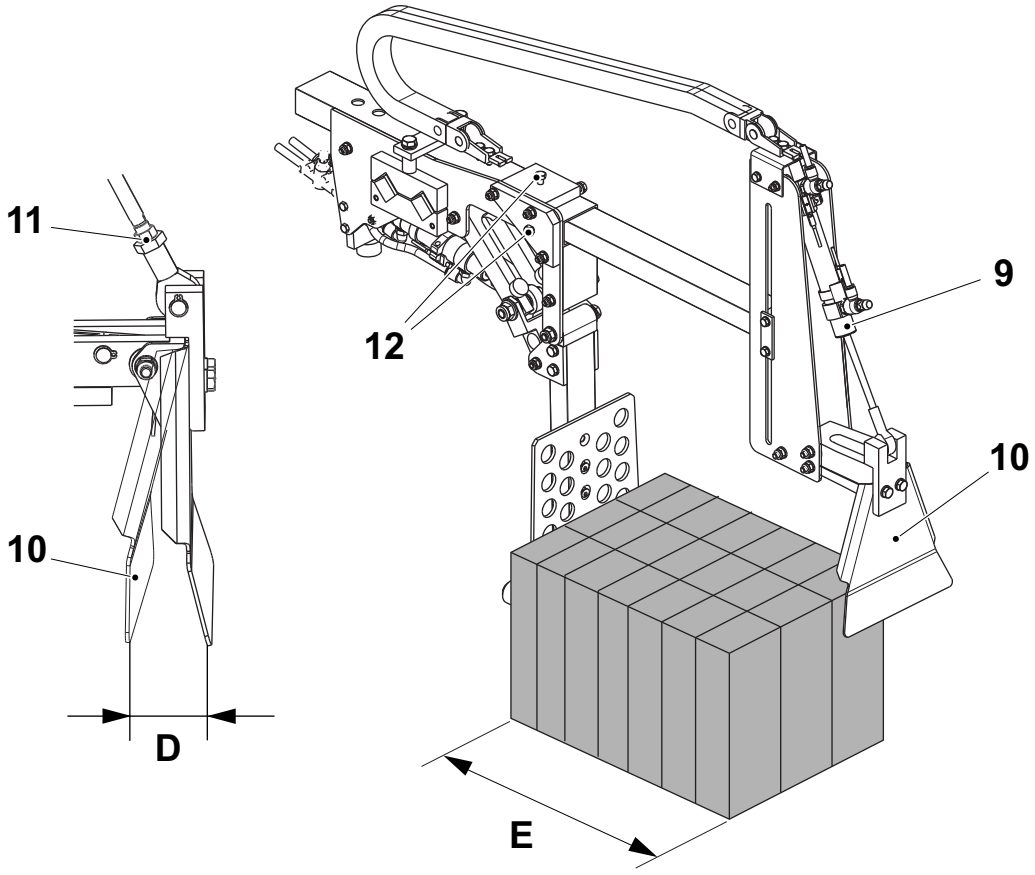

D = 30 ± 3 mm
E = Packing pattern length + 5 to 10 mm

9 Cylinder T40M0310
10 Dolly
11 Screw
12 Screw (2 pcs)

(Cont'd)

(Cont'd)

Positioning of the Pusher Plate and Dolly

s) Make sure that the box pusher end stop is set according to 2.2.5-2 Box Pusher End Stop - Set.

t) Use the locking lever (14) and centre the pusher plate (3) and the dolly (10) over the packages.

u) Lift up the transfer stop plate (13) and the pusher plate (3) and check that they do not collide. If the pusher plate (3) is too wide, change it. See 2.2.9-1 Volume Plate - Change.

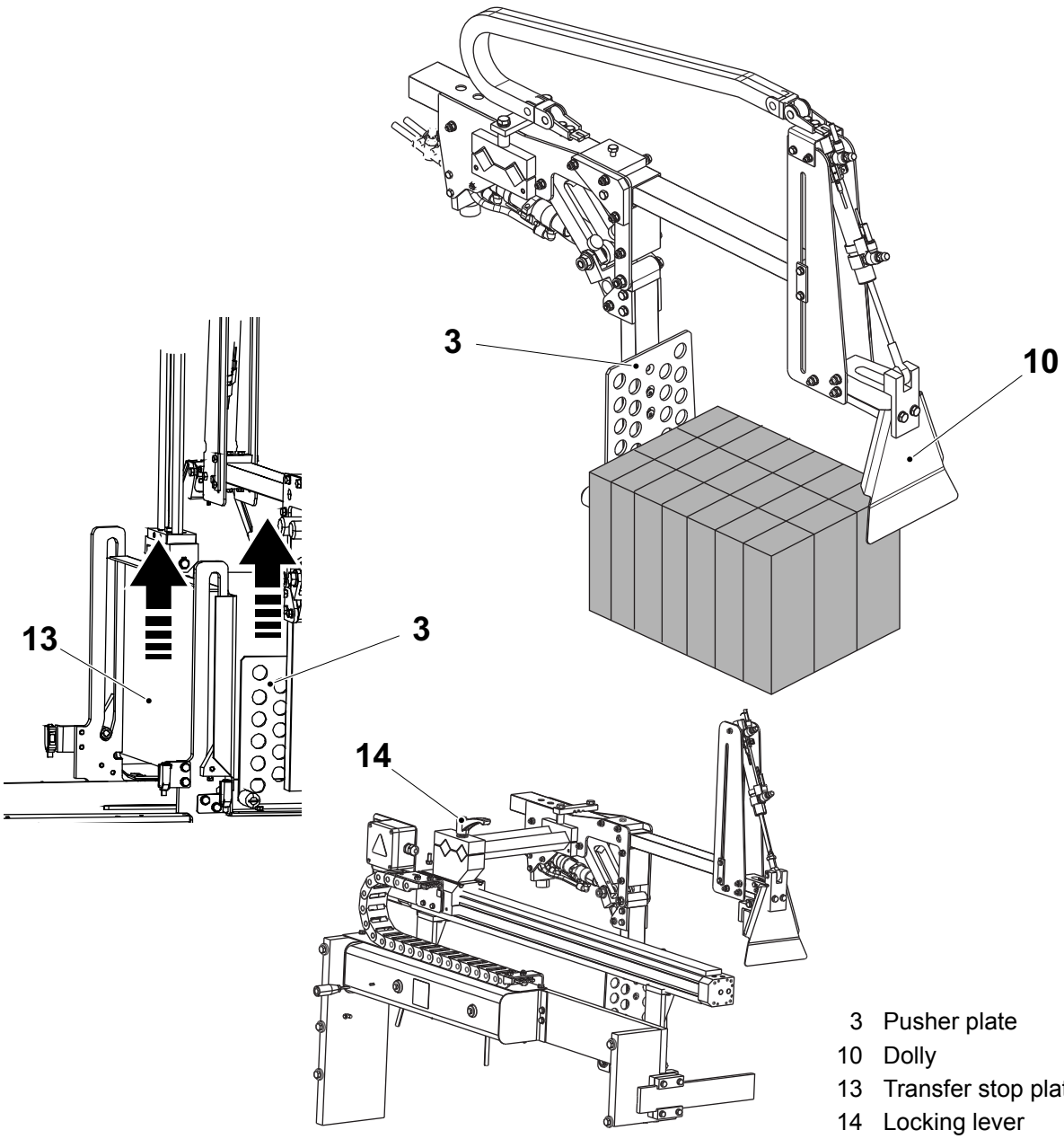

3 Pusher plate
10 Dolly
13 Transfer stop plate
14 Locking lever

2.2.7 Box Pusher Cylinder

2.2.7-1 Box Pusher Cylinder - Check

Machine Status	Power supply disconnector OFF Air valve OFF
SPC Reference	2782784

a) Check the cylinder (1) for leakage. Check the flexible chain (2), the lubrication hose (3) and the steerings (4) for wear.

b) Change if necessary according to 2.2.7-2 Box Pusher Cylinder - Change.

c) Check also the lubrication of the parts. If there is no proper lubrication, check the function of the central lubrication system.

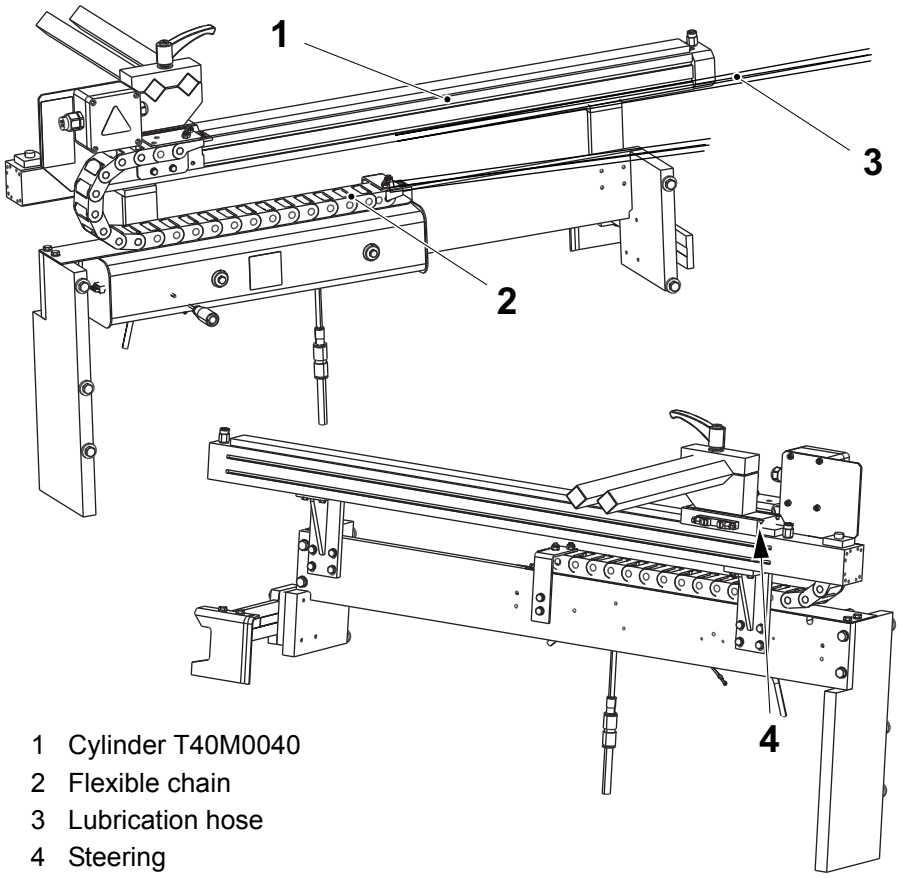

1 Cylinder T40M0040
2 Flexible chain
3 Lubrication hose
4 Steering

2.2.7-2 Box Pusher Cylinder - Change

Machine Status	Power supply disconnector OFF Air valve OFF
SPC Reference	2782784

a) Disconnect the air hose connections (1) and (2) from the cylinder (3) and the lubrication hoses (4).

b) Remove the locking lever (5), the plate (6), the bracket (7) by the screws (8) and the shafts (9).

c) Remove the connections (1) and (10) and the ground cable (11).

d) Remove the plate (12) by the screws (13).

e) Remove the screws (14) and change the steerings (15).

f) Change the cylinder (3), and if necessary the flexible chain (17) and the lubrication hoses (4).

g) Assemble in the reverse order.

h) Set the box pusher cylinder, see 2.2.7-3 Box Pusher Cylinder - Set.

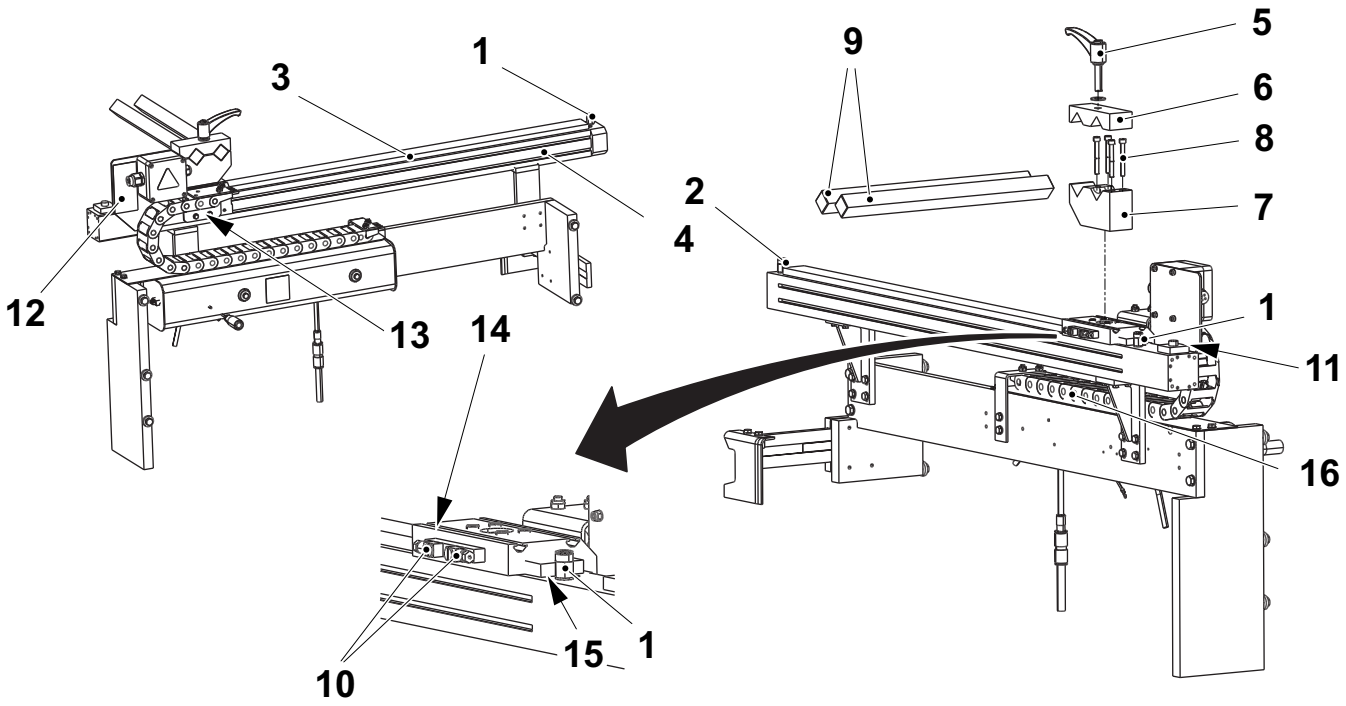

1 Air hose connection
2 Air hose connection
3 Cylinder T40M0040
4 Lubrication hose
5 Locking lever
6 Plate
7 Bracket
8 Screw
9 Shaft
10 Connection
11 Ground cable
12 Plate
13 Screw
14 Screw
15 Steering
16 Flexible chain

2.2.7-3 Box Pusher Cylinder - Set

Machine Status	Power supply disconnector OFF Air valve OFF
SPC Reference	2782784

Set the steering rail (1) according to 2.2.8-3 Transfer Plate Guide - Set.

Set the flap (2) according to 2.2.9-2 Volume Plate - Set Flap.

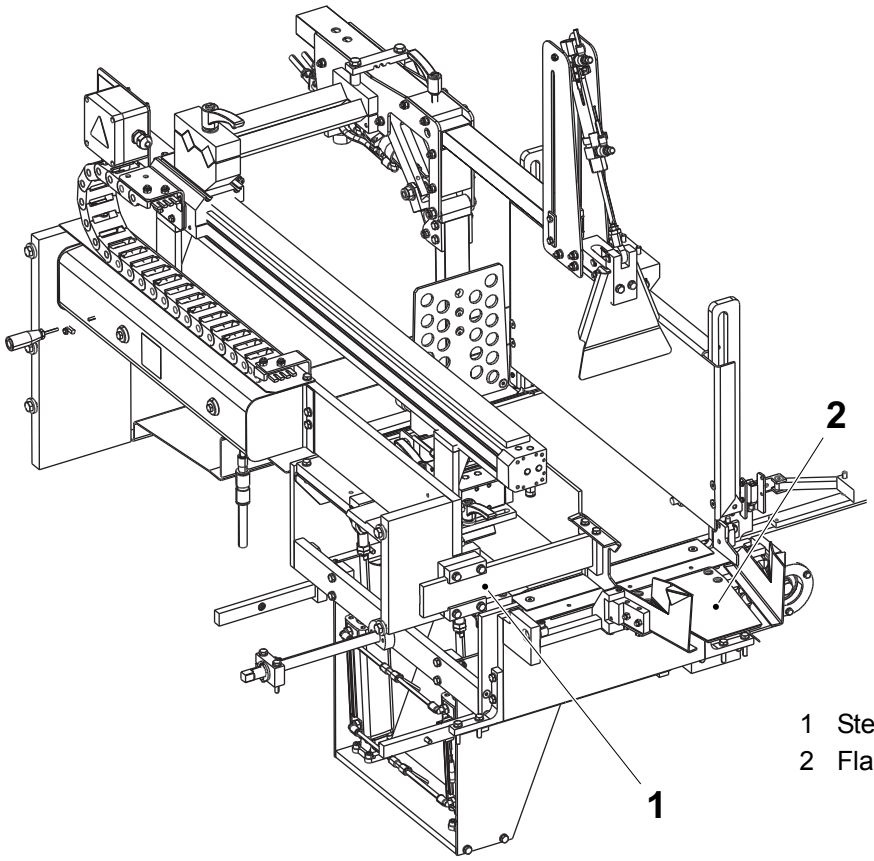

1 Steering rail
2 Flap

2.2.7-4 Box Pusher Cylinder - Set Back Position

Machine Status	Power supply disconnector ON Air valve OFF
SPC Reference	2782784

a) Move by hand the box pusher cylinder unit (1) to its back position.

b) Make sure that the transfer guide rail is set, see 2.2.3-3 Transfer Guide Rail - Set and that the box pusher plate and dolly front position is set, see 2.2.6-4 Box Pusher Plate/Box Pusher Dolly - Set, subsection Front Position.

c) Make sure that the machine is in step PREHEATING (2).

d) Run the function; Set box pusher back position (3) via the TPOP, see 6.8.3-1 TPOP Settings - Pattern Forming.

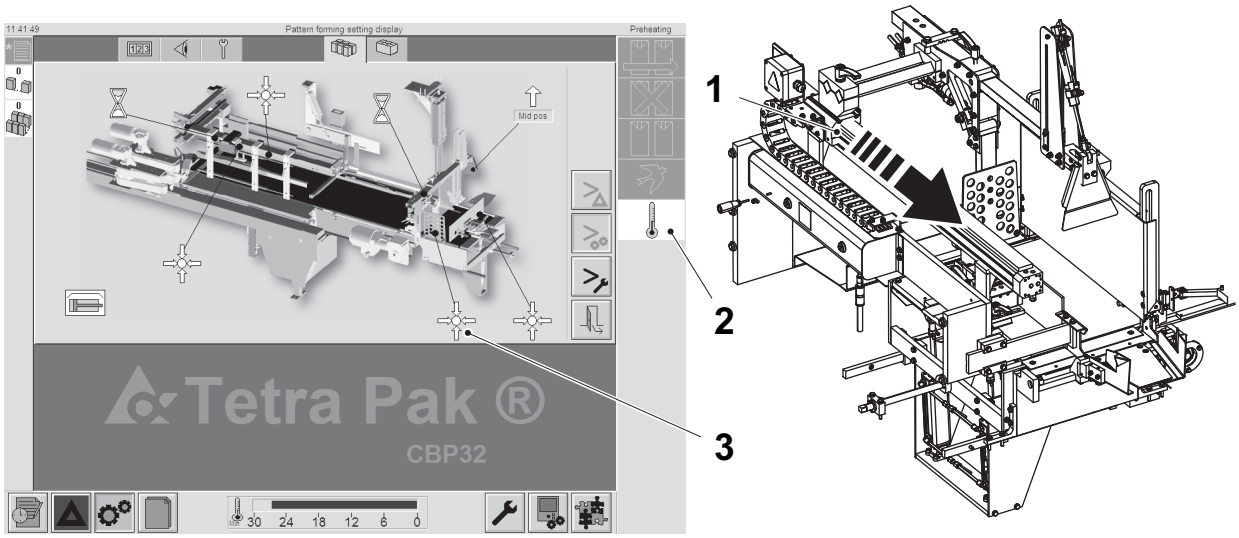

1 Box pusher cylinder unit
2 PREHEATING
3 Set box pusher back position

(Cont'd)

(Cont'd)

e) The value for the last saved position of the box pusher is shown in the display (4).

f) Set the distance A between the pusher plate (5) and the guide rail (6) in the TPOP. The pusher plate shall not hit the packages arriving on the transfer belt.

g) It is possible to abort the function by pressing the DESELECT button (7) and the CONFIRMATION button (8).

h) Press the CONFIRMATION button (8) and the new value is saved and is shown in the display (9).

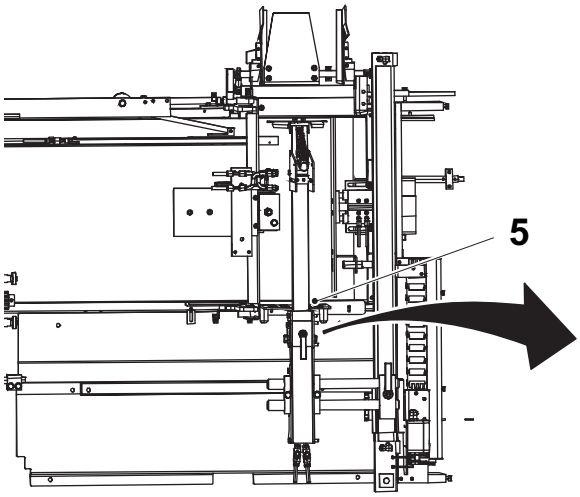

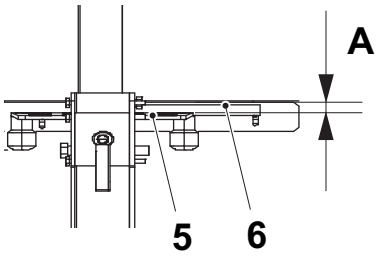

A=3 to 5 mm

When the straw is attached to the package, increase the measure A if necessary.

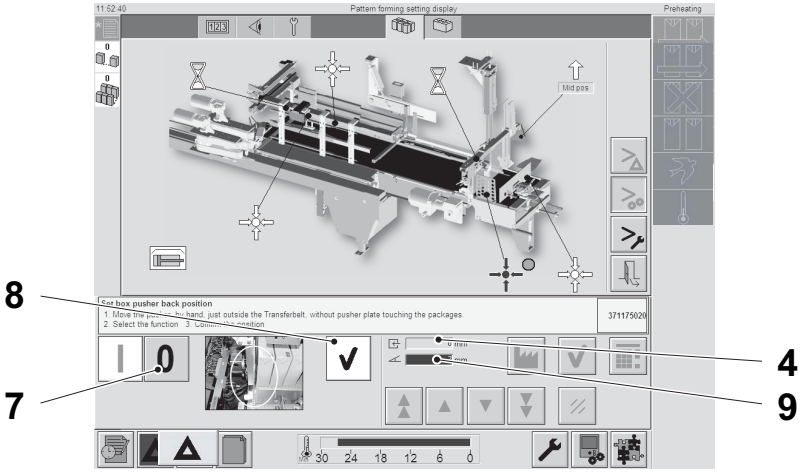

4 Display
5 Pusher plate
6 Guide rail
7 DESELECT
8 CONFIRMATION
9 Display

2.2.8 Transfer Plate Guide

2.2.8-1 Transfer Plate Guide - Check

Machine Status	Power supply disconnector OFF Air valve OFF
SPC Reference	2787831

Check the following parts for wear and damages:

- cylinder (1), check also for leakage
- rod end (2)
- bracket (3)
- bushings (4)
- springs (5)

Change all worn or damaged parts according to 2.2.8-2 Transfer Plate Guide - Change Parts.

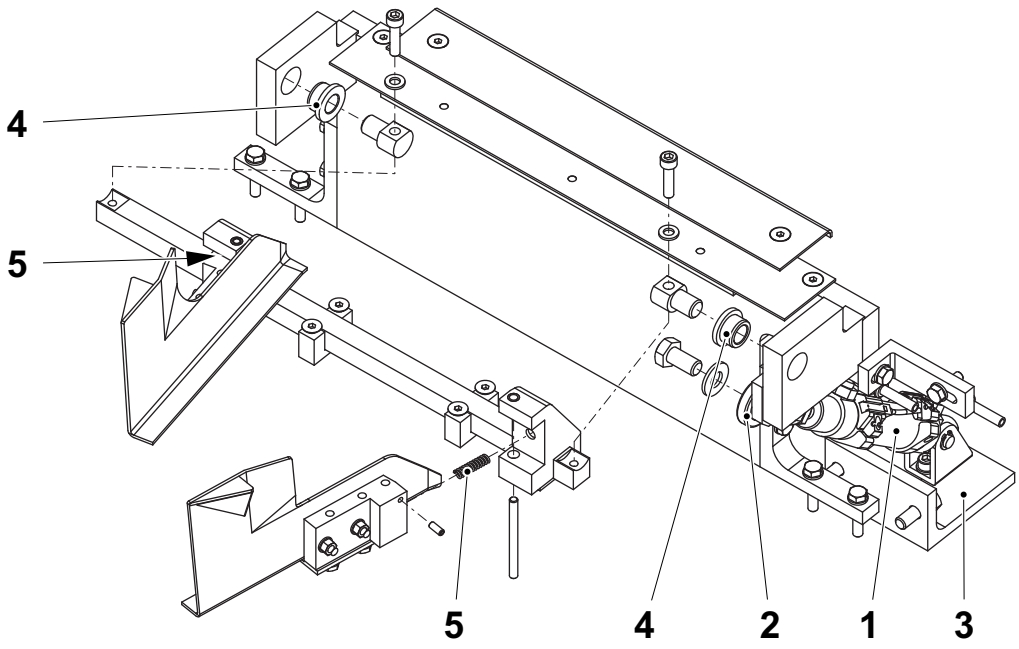

1 Cylinder W50M0210
2 Rod end
3 Bracket
4 Bushing
5 Spring

2.2.8-2 Transfer Plate Guide - Change Parts

Machine Status	Power supply disconnector OFF Air valve OFF
SPC Reference	2787831

a) Disable the hoses from the cylinder (1).

b) Disassemble and change the cylinder (1), the rod end (2), the bracket (3), the bushings (4), and the springs (5) according to the illustration below.

c) Assemble in the reverse order.

d) Set the transfer plate guide, see 2.2.8-3 Transfer Plate Guide - Set.

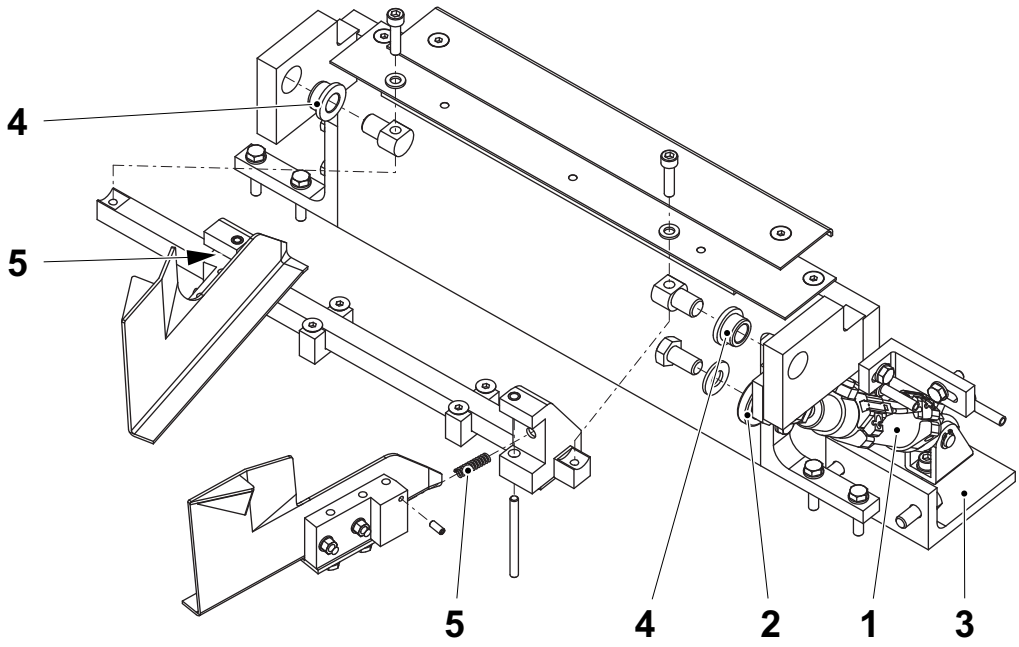

1 Cylinder W50M0210
2 Rod end
3 Bracket
4 Bushing
5 Spring

2.2.8-3 Transfer Plate Guide - Set

Machine Status	Power supply disconnector OFF Air valve OFF
SPC Reference	2787831

Alignment at the Grouping Plate Side

a) Make sure that the transfer stop plate is set according to 2.2.14-2 Transfer Stop Plate - Set.

b) Place a tray (1) in pack position at the milled marks (2) and (3).

Increase according to the size of the tray:

c) Loosen the screws (4) and move the guide plate (5). Tighten the screws (4).

d) Place something with a straight edge, for example a ruler, towards the tray (1) and the transfer stop plate (6). Check that the tray (1) and the transfer stop plate (6) are aligned. If not, move the transfer stop plate towards the grouping plate by cranking the shaft (7) and thereafter adjust with the screws (8) until the transfer stop plate is straight.

Decrease according to the size of the tray:

e) Move the transfer stop plate towards the box pusher (9) by loosen the screws (8) and thereafter the shaft (7) until the transfer stop plate is straight.

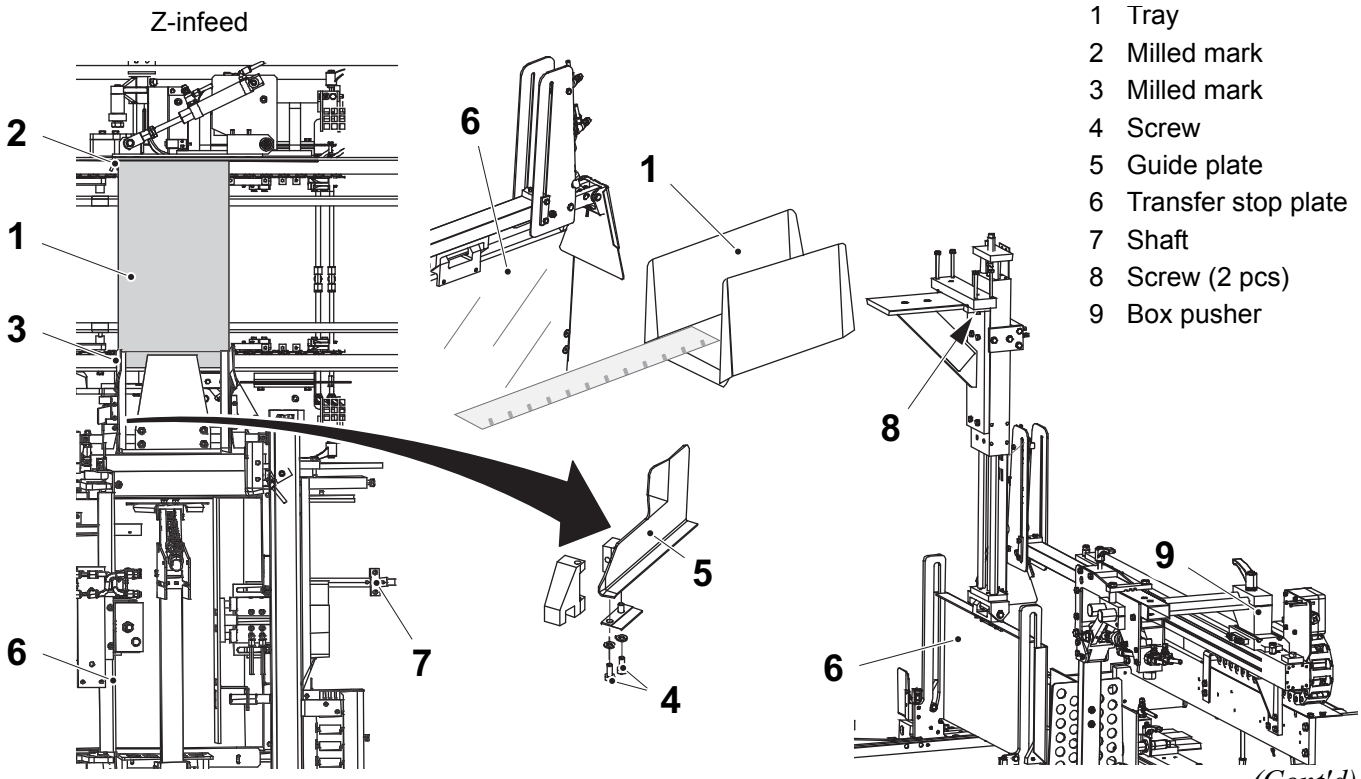

(Cont'd)

(Cont'd)

f) Lift up the transfer stop plate (6) and the pusher plate (10) and check that they do not collide. If necessary, loosen the locking lever (11) and move the box pusher (9).

g) Loosen the screws (4) and adjust the guide plate (5) so that it does not open wider than the inner measurement A of the tray (1). Tighten the screws (4).

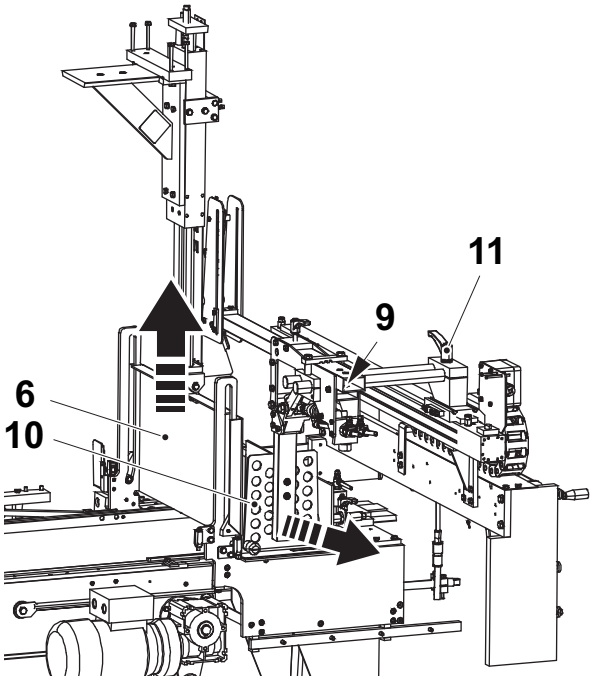

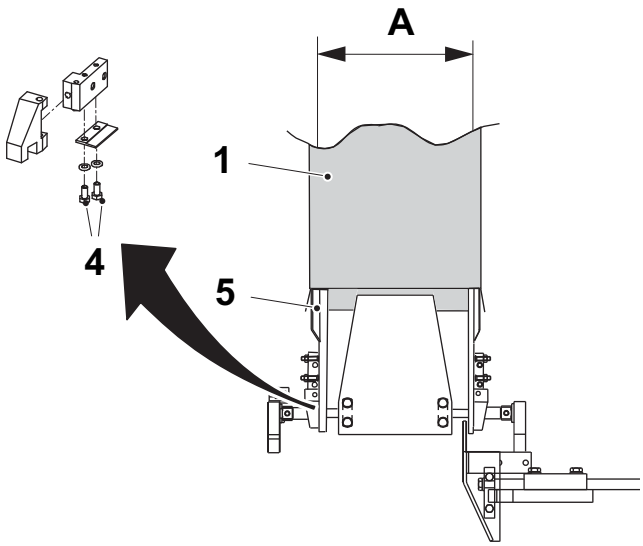

1 Tray
4 Screw
5 Guide plate
6 Transfer stop plate
9 Box pusher
10 Pusher plate
11 Locking lever

(Cont'd)

(Cont'd)

Alignment at the Box Pusher Cylinder Side

h) Set the box pusher end stop, see Section 2.2.5-2 Box Pusher End Stop - Set.

i) Adjust with the screws (11) and set the bracket (12) to be aligned with the plate (13).

j) Loosen the screws (14) and adjust the guide plate (15) so that it does not open wider than the inner measurement A of the tray (1). Tighten the screws (14).

k) Make sure that the folding station is set according to 3.3.8-2 Folding Station - Set.

l) Set the box pusher plate/dolly, see Section 2.2.6-4 Box Pusher Plate/Box Pusher Dolly - Set and Subsection Positioning of the Pusher Plate and Dolly.

m) Centre the volume plate (16) to the tray (1).

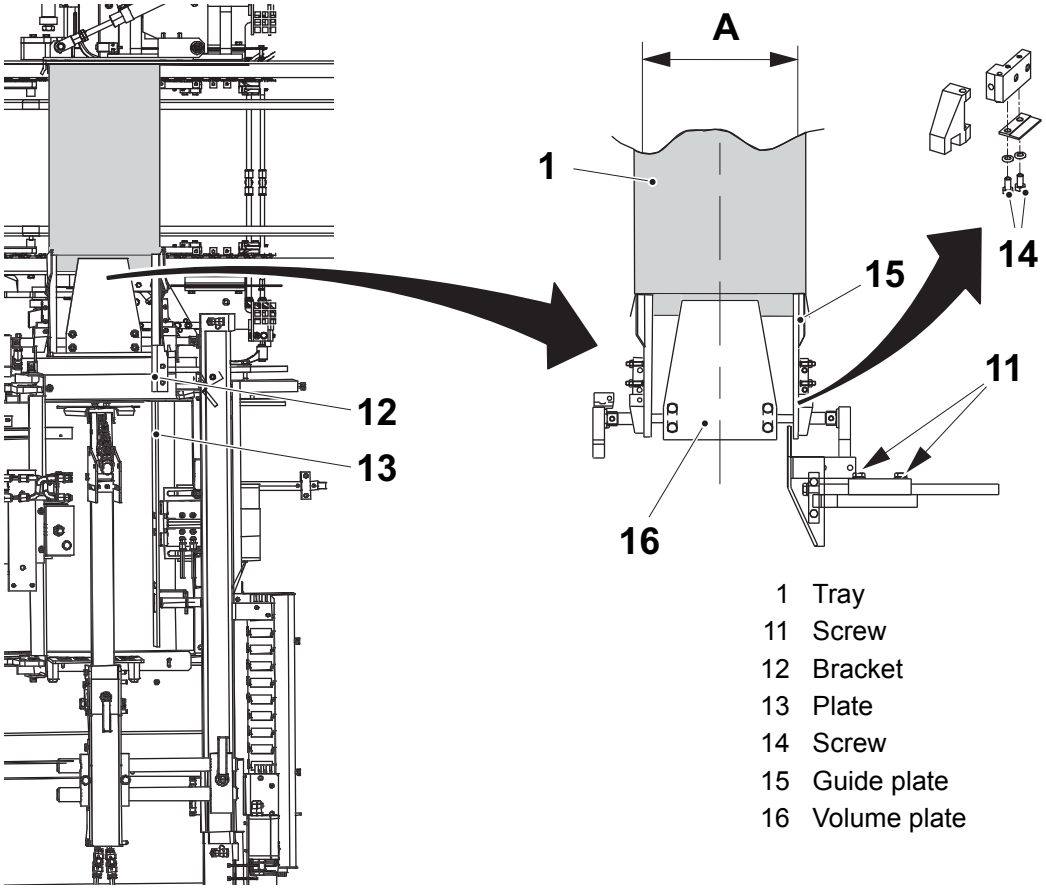

1 Tray
11 Screw
12 Bracket
13 Plate
14 Screw
15 Guide plate
16 Volume plate

2.2.9 Volume Plate

2.2.9-1 Volume Plate - Change

Machine Status	Power supply disconnector OFF Air valve OFF
SPC Reference	2844976

a) Remove the screws (1), (2) and (3).

b) Change the pusher plate (4), the dolly (5) and the flap (6) depending on package width, see SPC reference.

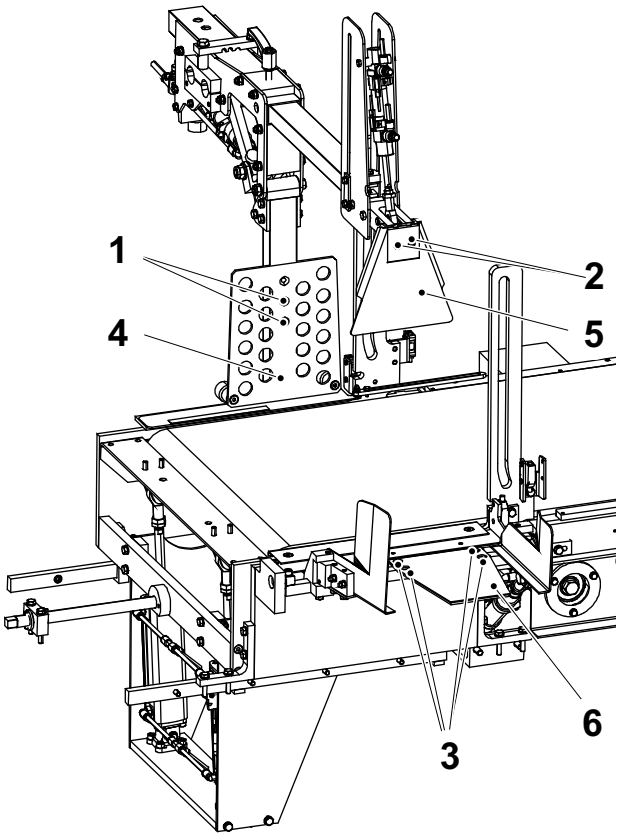

1 Screw
2 Screw
3 Screw
4 Pusher plate
5 Dolly
6 Flap

2.2.9-2 Volume Plate - Set Flap

Machine Status	Power supply disconnector OFF Air valve OFF
SPC Reference	2844976

a) Place a tray (1) and move the flap (2) into position shown in the illustration below.

b) Adjust on the piston rod head (3) and set the flap (2). The underside of the flap (2) is to be aligned with the upper side of the tray (1).

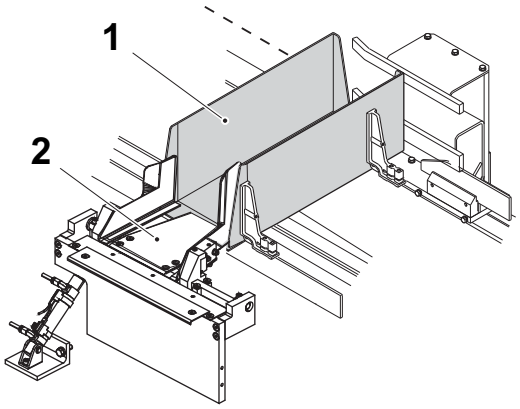

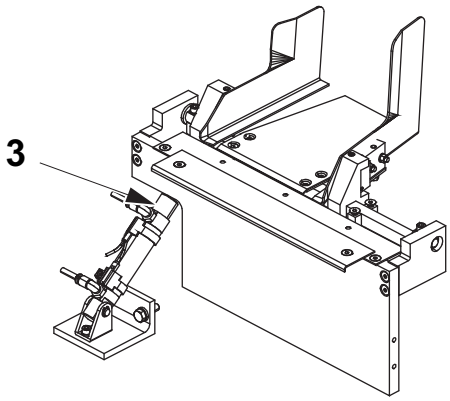

1 Tray
2 Flap
3 Piston rod head

2.2.10 Transfer Belt

2.2.10-1 Transfer Belt - Check Chain

Machine Status	Power supply disconnector OFF Air valve OFF
SPC Reference	2787868

Check if the chain (1) is worn or damaged. Change if necessary, see 2.2.10-2 Transfer Belt - Change.

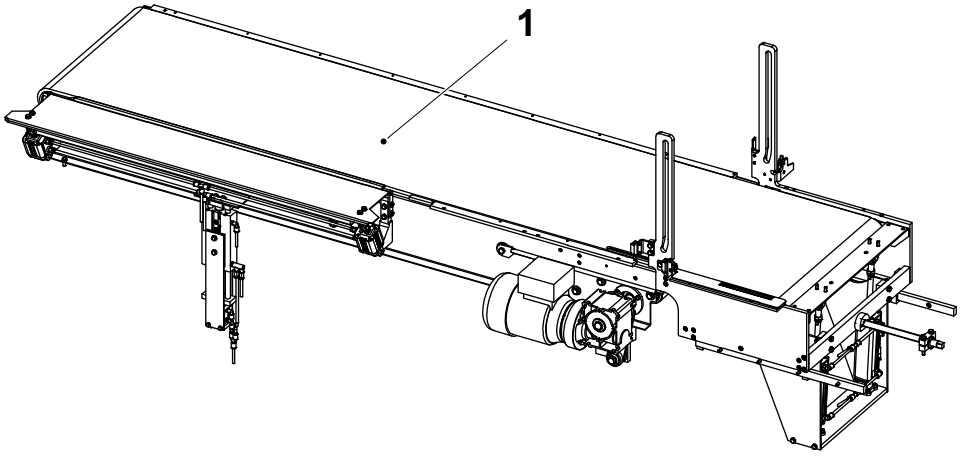

1 Chain

2.2.10-2 Transfer Belt - Change

Machine Status	Power supply disconnector OFF Air valve OFF
SPC Reference	2787868

a) Remove the transfer guide rail (1) and the slide rail (2).

b) Remove the plates (3).

c) Remove the cover (4) on the motor.

d) Lift the belt (5) at position A. Use a screw driver and remove the retension clips (6) from the side of the belt. Pull out the pin (7) through the belt and the belt is divided into two parts.

e) Assemble the new belt with the old belt.

f) Move the belt (5) manually by cranking the fan rotors until it has rotated one turn and it is possible to assemble the new belt.

g) Assemble the cover (4), the plates (3), the transfer guide rail (1), and the slide rail (2) in the reverse order.

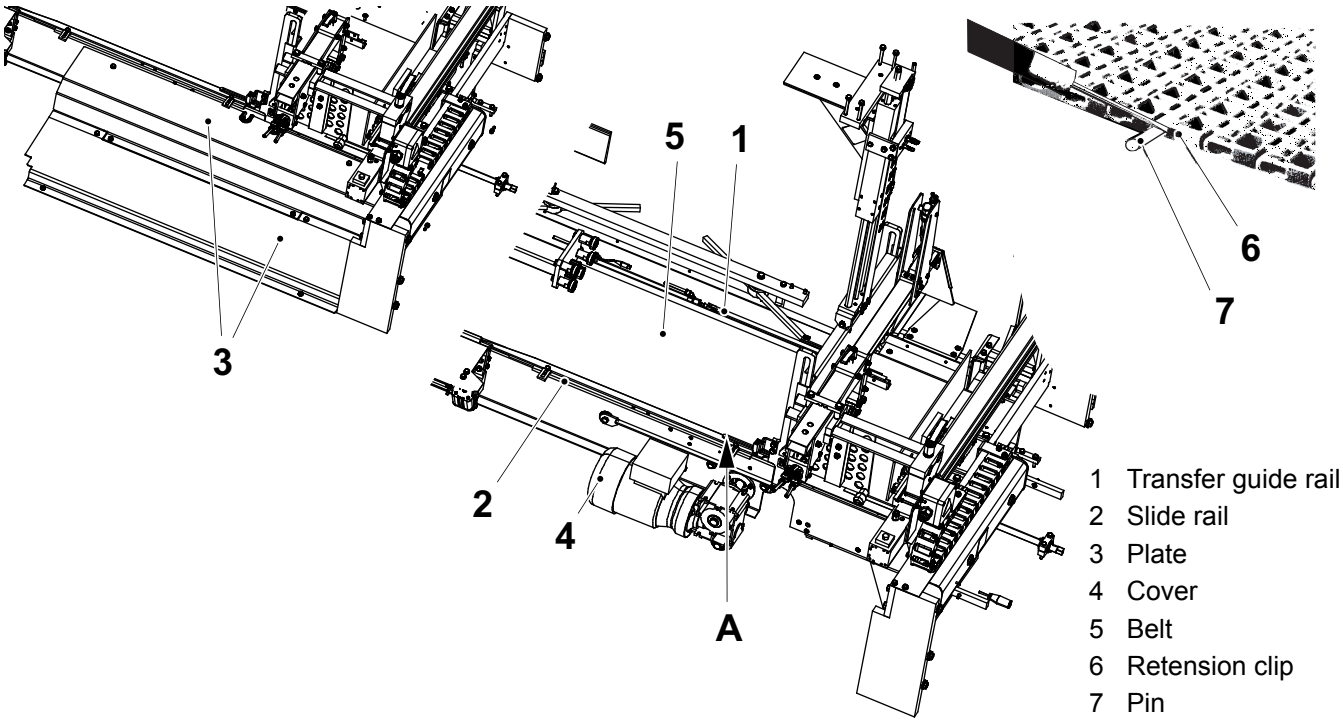

1 Transfer guide rail
2 Slide rail
3 Plate
4 Cover
5 Belt
6 Retension clip
7 Pin

2.2.11 Transfer Belt, Grouping Plate

2.2.11-1 Transfer Belt, Grouping Plate - Change Cylinders

Machine Status	Power supply disconnector OFF Air valve OFF
SPC Reference	2718824

a) Disconnect the air hoses to the cylinders (1) and (2).

b) Remove the cylinders (1) and (2).

c) Fit and connect the new cylinders and the hoses.

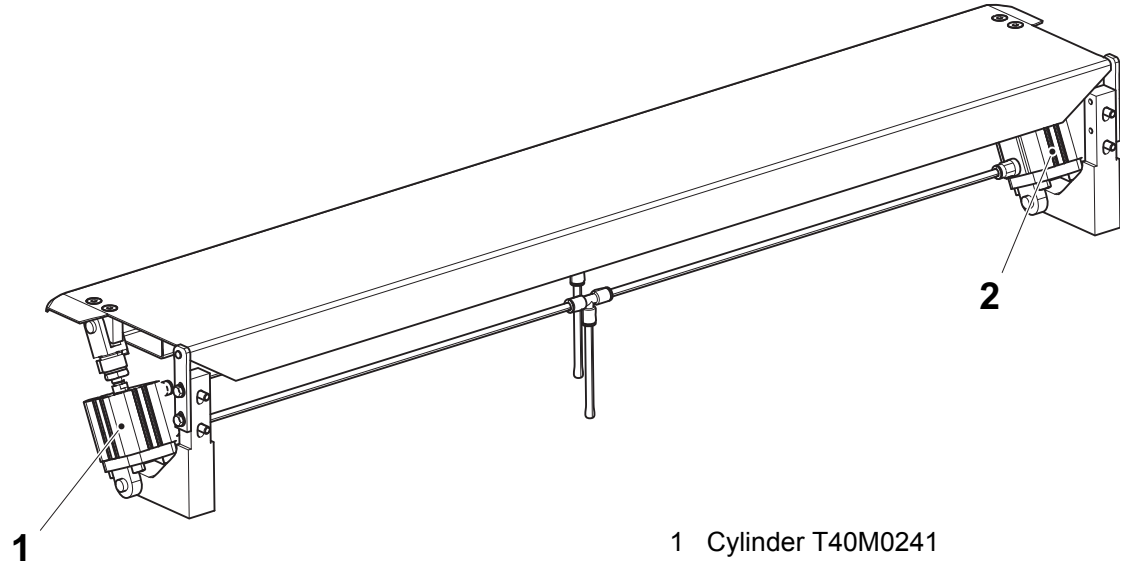

1 Cylinder T40M0241
2 Cylinder T40M0240

2.2.11-2 Transfer Belt, Grouping Plate - Set

Machine Status	Power supply disconnector OFF Air valve OFF
SPC Reference	2718824

a) Shut off the air supply by turning the shut off valve's knob (1) clockwise.

b) Loosen the screws (2) and set the distance A between the brake unit (4) and the conveyor chain (5), tighten the screws.

c) Make sure that the conveyor chain (5) is parallel with the transfer belt (6), if not loosen the screw (3) and adjust sideways, tighten the screw.
Loosen the screws (7) and (8) and adjust the rear edge of the conveyor, tighten the screws.
Use a spirit level and check that the conveyor is balanced.

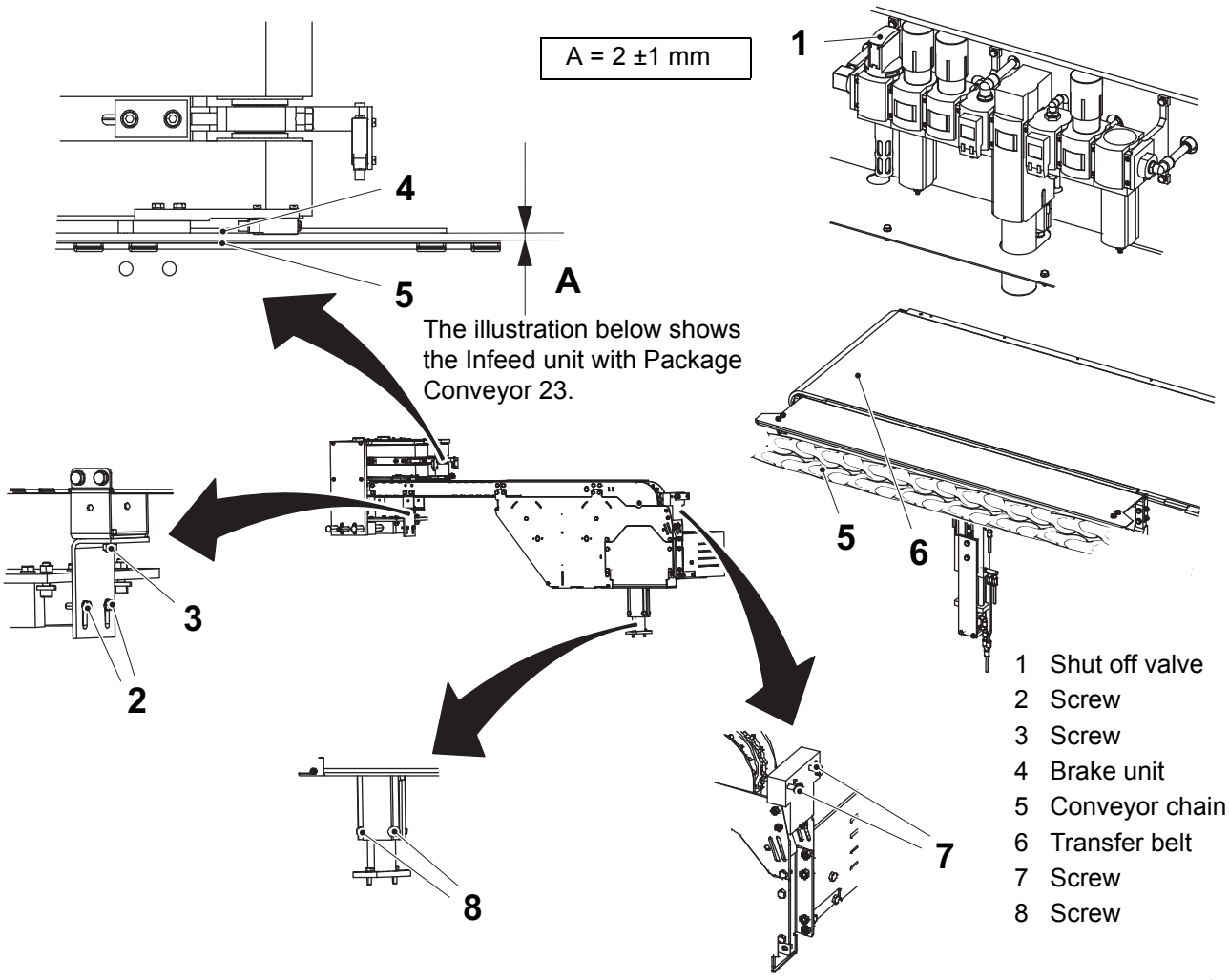

(Cont'd)

(Cont'd)

d) With the guide rail (9) in its lower position, adjust the grouping plate to be in line with the guide rail (9) and the conveyor chain (5) as follows:

- Use the screws (10) to adjust the height of the grouping plate on the side towards the guide rail (9).
- Use the screws (11) to adjust the height of the whole grouping plate.
- Use the piston rod (12) to adjust the height of the grouping plate on the side towards the conveyor chain (5).

e) Set the machine in step AIR ON.

f) Make sure that the grouping plate (13) do not interfere with the timing belts (14) on the brake unit. If necessary, lower the transfer belt (6) with the screws (2) and (7) and lower the grouping plate on the piston rod (12).

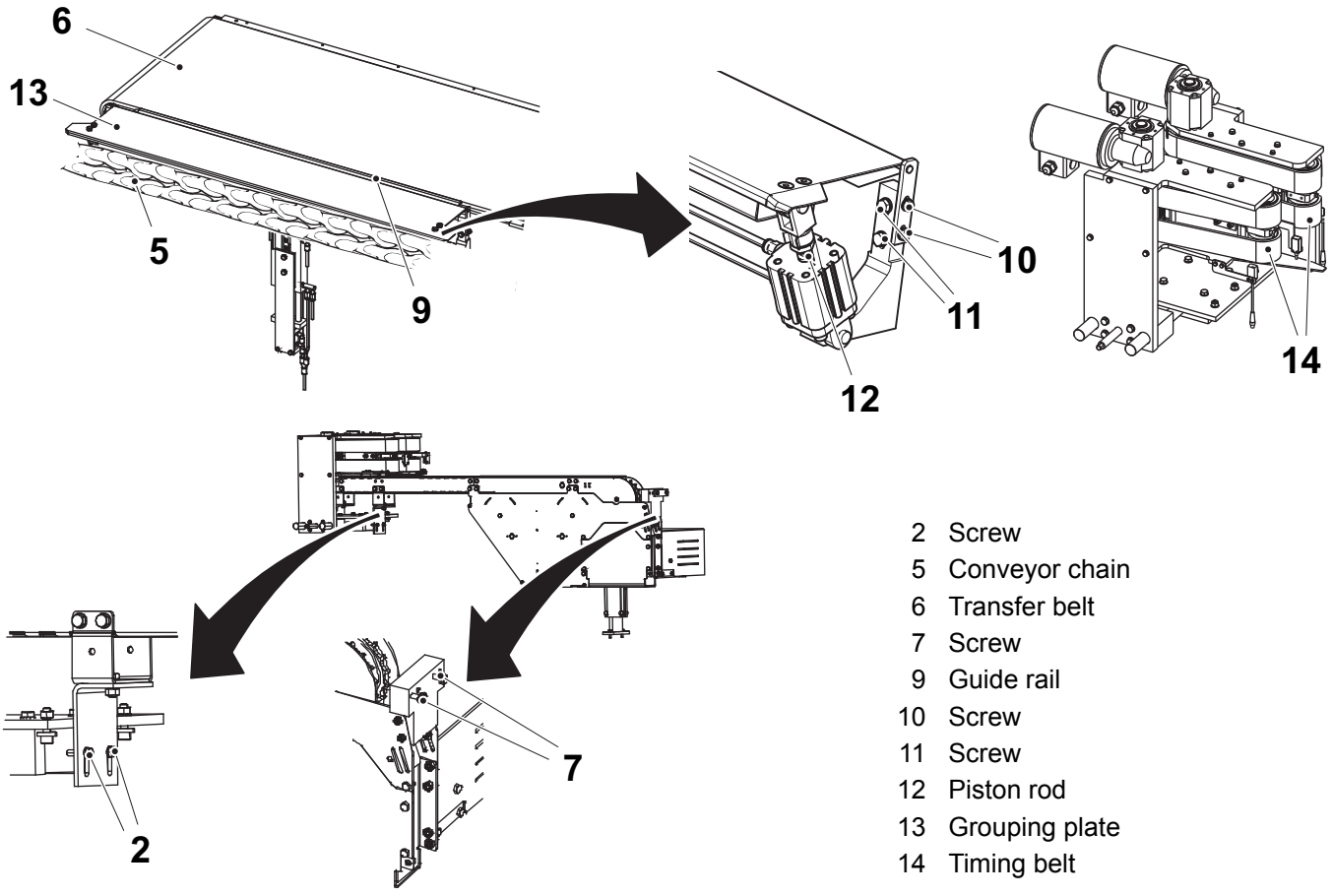

2 Screw
5 Conveyor chain
6 Transfer belt
7 Screw
9 Guide rail
10 Screw
11 Screw
12 Piston rod
13 Grouping plate
14 Timing belt

2.2.12 Transfer Belt, Guide Rail

2.2.12-1 Transfer Belt, Guide Rail - Change Cylinders

Machine Status	Power supply disconnector OFF Air valve OFF
SPC Reference	2752706

a) Disconnect the air hoses from the cylinders (1) and (2).

b) Remove the cylinders (1) and (2).

c) Replace the vibration damper (3).

d) Assemble and connect the new cylinders.

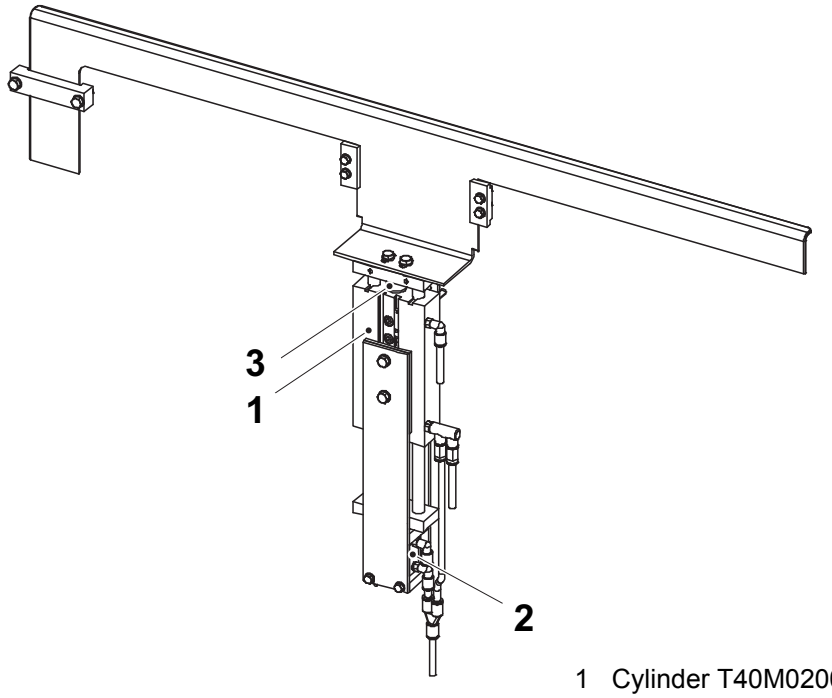

1 Cylinder T40M0200
2 Cylinder T40M0201
3 Vibration damper

2.2.13 Transfer Belt, Tilting Unit

2.2.13-1 Transfer Belt, Tilting Unit - Change

Machine Status	Power supply disconnector OFF Air valve OFF
SPC Reference	2771210

a) Remove the screws (1).

b) Change the cylinder (2) and/or (3) if the cylinder leaks.

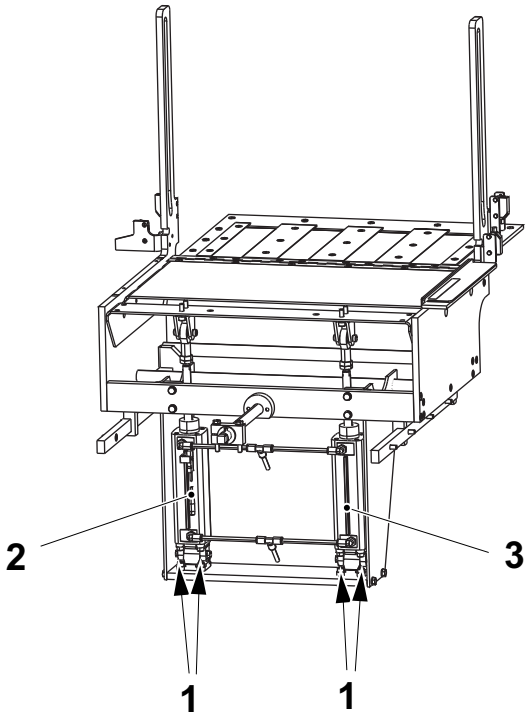

1 Screw
2 Cylinder T40M0320
3 Cylinder T40M0321

2.2.13-2 Transfer Belt, Tilting Unit - Set

Machine Status	Power supply disconnector OFF Air valve ON
SPC Reference	2771210

WARNING

Compressed air and moving machinery.
The transfer stop plate contains entrapped compressed air, which could cause serious injuries.

a) If the cylinders (1) and (2) is not in plus position step up the machine to step PRODUCTION and then shut off the machine.

b) Use the nuts (3) and set the transfer belt (4) to distance A above the plate (5).

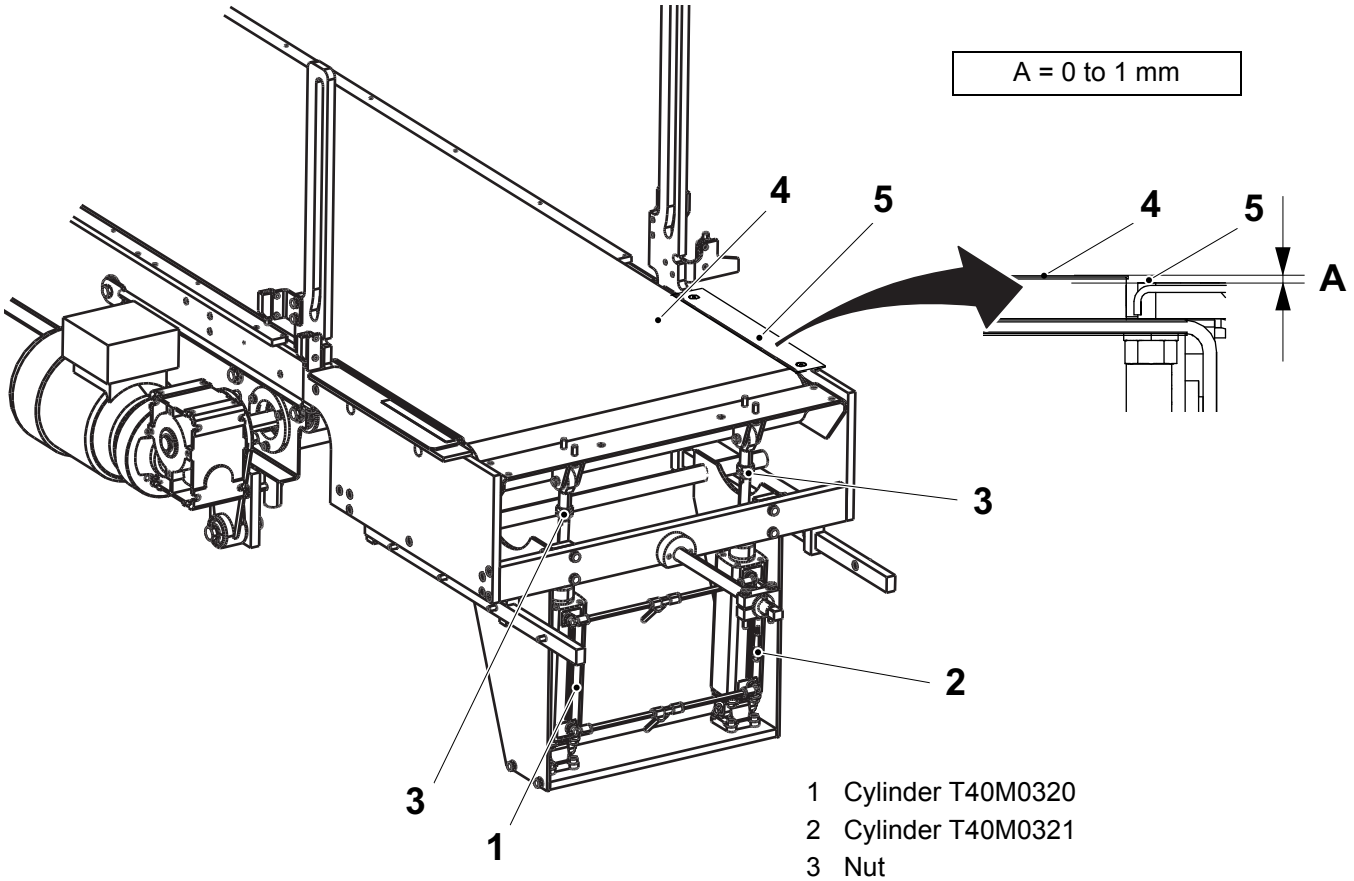

1 Cylinder T40M0320
2 Cylinder T40M0321
3 Nut
4 Transfer belt
5 Plate

2.2.14 Transfer Stop Plate

2.2.14-1 Transfer Stop Plate - Change

Machine Status	Power supply disconnector OFF Air valve OFF
SPC Reference	2782751

a) Remove the rollers (1) and change them.

b) Remove the retaining ring (2) and the shaft (3).

c) Remove the bracket (4).

d) Remove the inductive switches (5), (6) and (7) by removing the bracket (8).

e) Remove the screws (9), (10), and (11).

f) Remove the cylinder (12) and change the cylinder and the shock absorber (13).

g) Assemble the transfer stop plate in the reverse order.

h) Set the transfer stop plate, see 2.2.14-2 Transfer Stop Plate - Set.

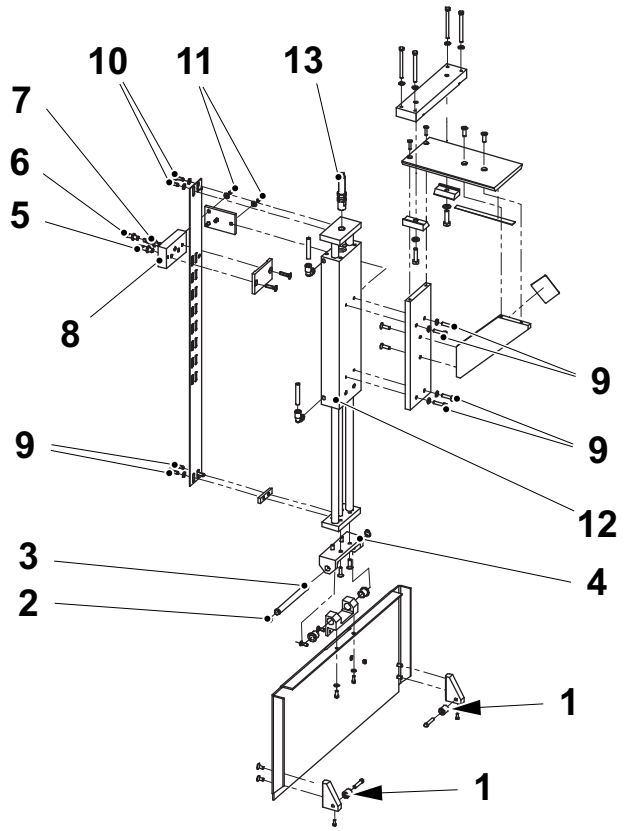

1 Roll
2 Retaining ring
3 Shaft
4 Bracket
5 Inductive switch T40B0264
6 Inductive switch T40B0260
7 Inductive switch T40B0262
8 Bracket
9 Screw
10 Screw
11 Screw
12 Cylinder T40M260
13 Shock absorber

2.2.14-2 Transfer Stop Plate - Set

Machine Status	Power supply disconnector OFF Air valve ON
SPC Reference	2782751

a) Loosen the jam nut (1) on the shock absorber (2).

b) Push in the end knob (3) to its end position and set the distance A by turn the sleeve (4).

c) Tighten the jam nut (1).

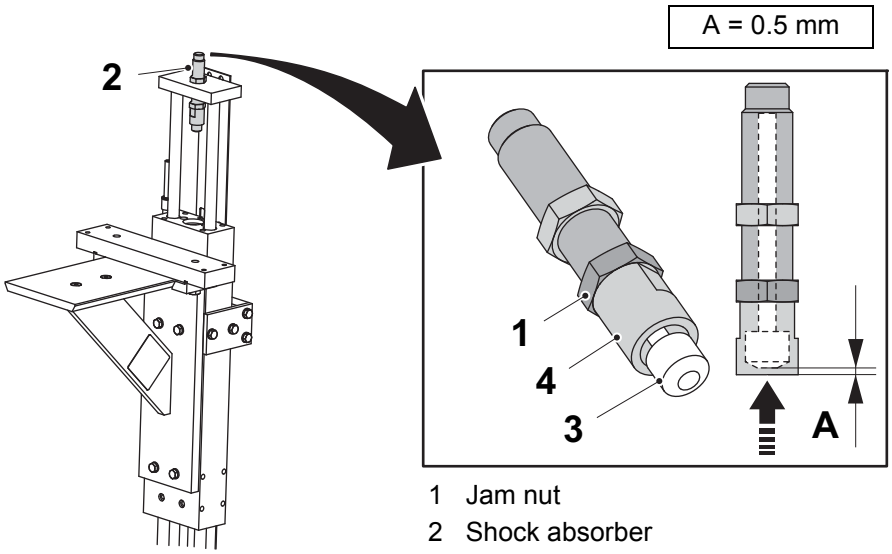

1 Jam nut
2 Shock absorber
3 End knob
4 Sleeve

(Cont'd)

(Cont'd)

d) Set the regulators (5) and (6).

Regulator	Pressure		
	Bar	MPa	PSI
T40R0261	2.5(1)	0.25(1)	36.3(1)
T40R0262	4.0	0.4	58.0
(1) Basic setting			

e) The transfer stop plate (7) should be balanced so it moves up and down equally easy. If not, adjust the pressure on the regulator (5).

f) Lift the stop plate to the top position and make sure that it does not move down when released. If necessary, lower the pressure on the regulator (5).

g) When lifting the transfer stop plate (7) by hand, check that the rollers (8) and (9) moves easily in the slots (10) in the plate (7). If not, loosen the screw joint (11) and adjust the cylinder (12).

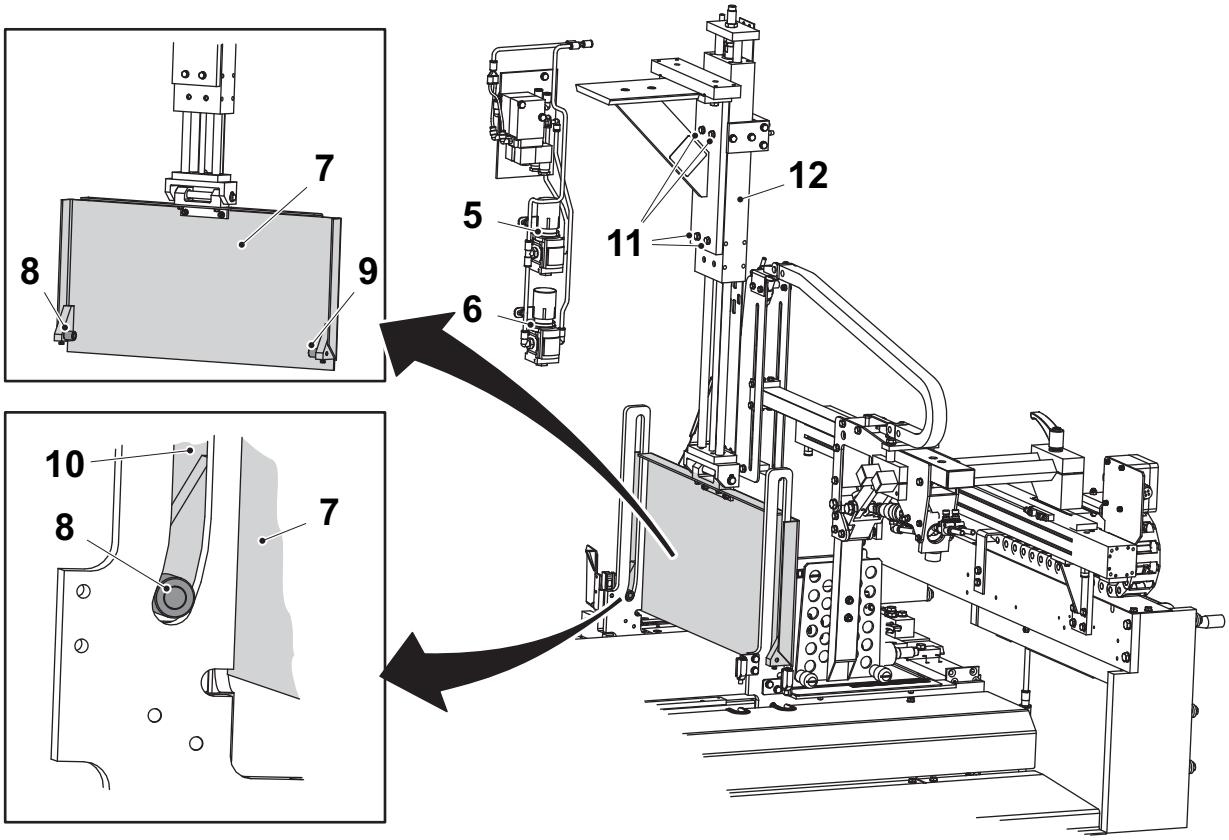

5 Regulator T40R0261
6 Regulator T40R0262
7 Transfer stop plate
8 Roll
9 Roll
10 Slot
11 Screw joint
12 Cylinder T40M0260

(Cont'd)

(Cont'd)

h) Loosen the jam nut (13).

i) When the shock absorber (2) is fully compressed set the distance B between the roll (8) and the plate (14) by turning the shock absorber (2) with an allen key.

j) Tighten the jam nut (13).

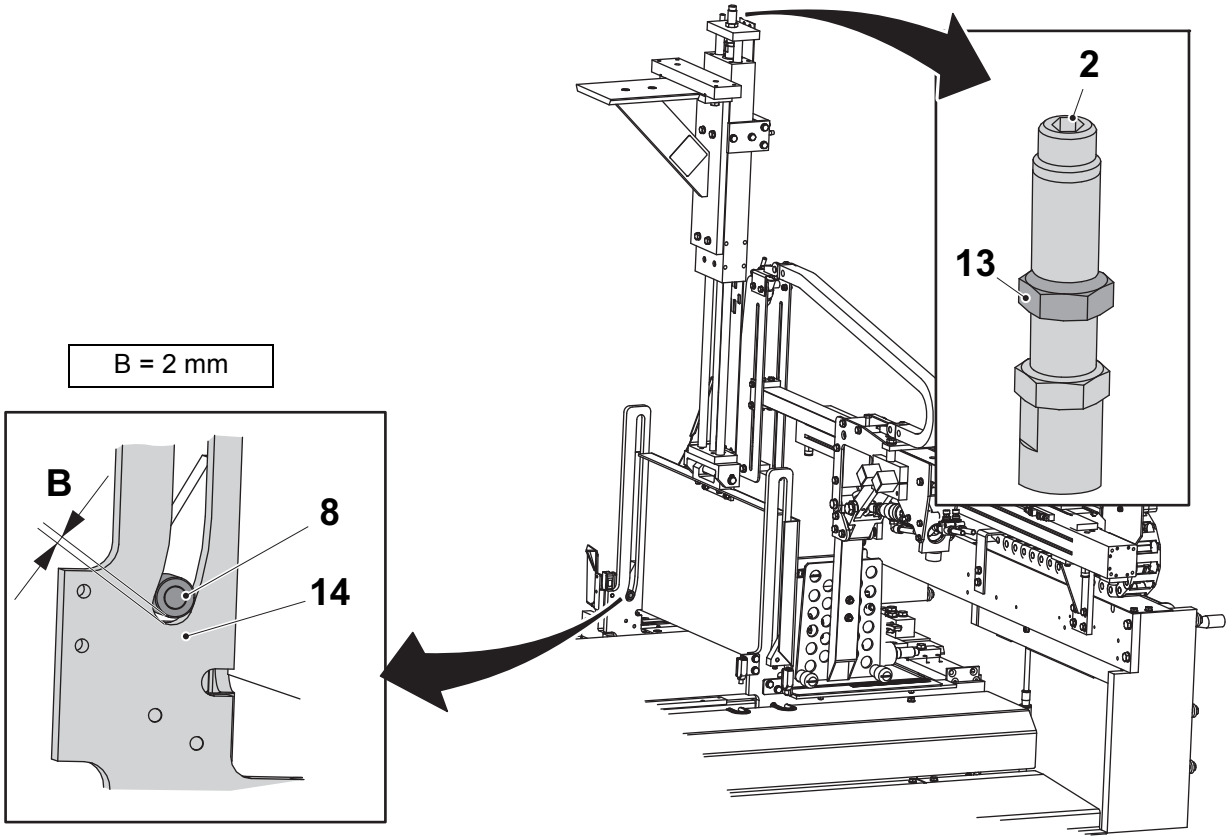

2 Shock absorber
8 Roll
13 Jam nut
14 Plate

(Cont'd)

(Cont'd)

Inductive Switches

k) Note the cables position. Disconnect the cables from the inductive switches (15), (16) and (17).

l) Remove the screws (18).

m) Move down the slide plates (19).

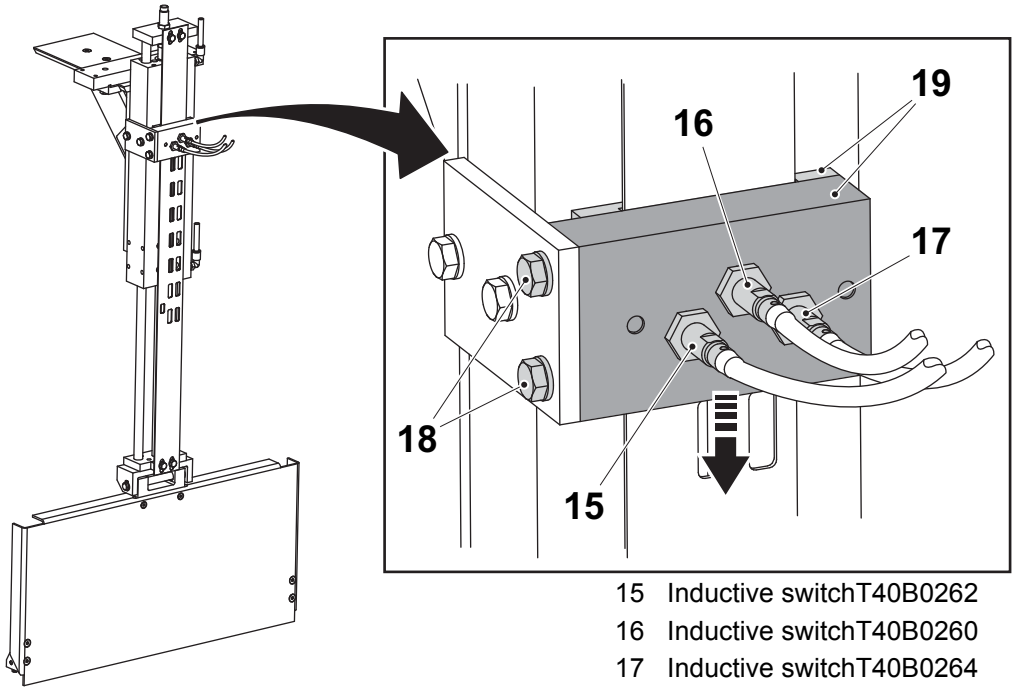

15 Inductive switchT40B0262
16 Inductive switchT40B0260
17 Inductive switchT40B0264
18 Screw
19 Slide plate

(Cont'd)

(Cont'd)

n) Remove the screws (20) and separate the slide plates (19).

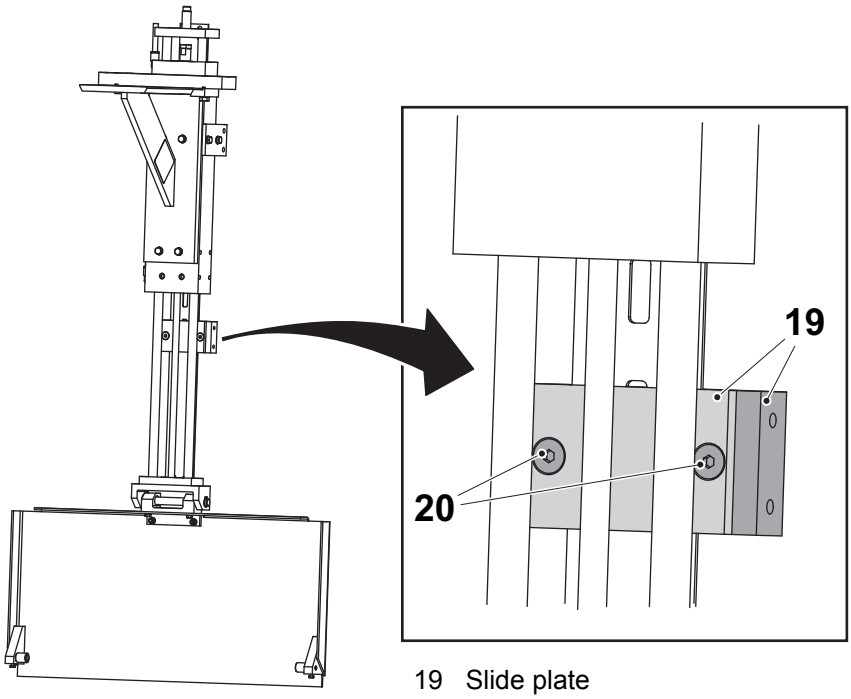

19 Slide plate
20 Screw

o) Set the inductive switches (15), (16) and (17) at distance C.

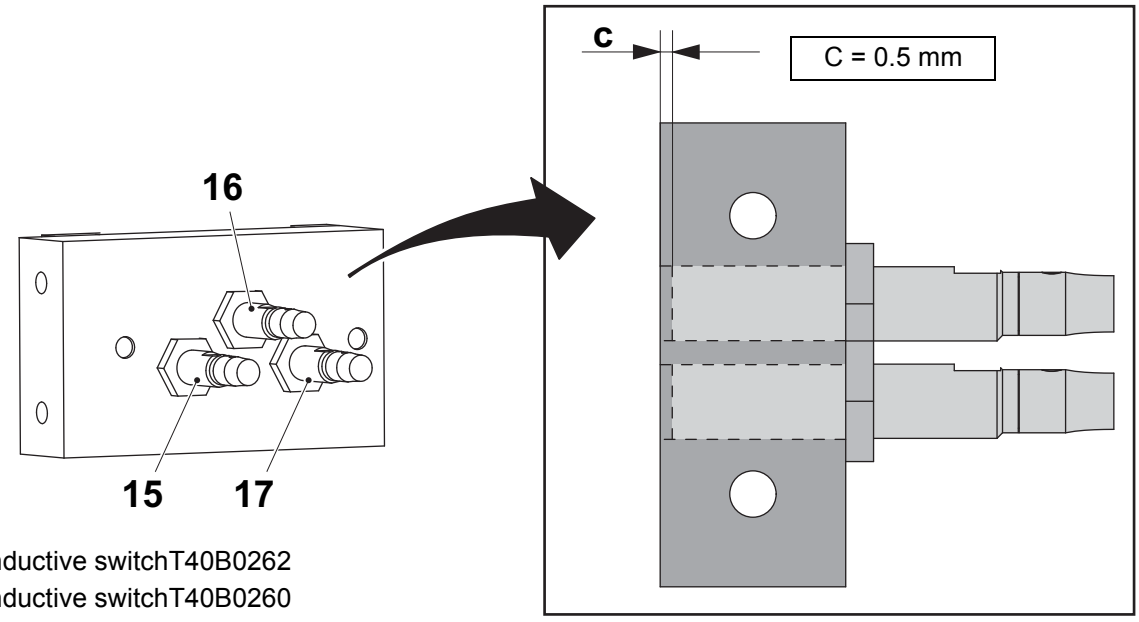

15 Inductive switchT40B0262
16 Inductive switchT40B0260
17 Inductive switchT40B0264

(Cont'd)

(Cont'd)

p) Reinstall the slide plates.

q) Connect the cables to the switches.

r) Make sure that the transfer stop plate is in lower position. Then the inductive switches will not be enabled.

s) Loosen the screws (21) and (22) and adjust the plate (23). Tighten the screws.

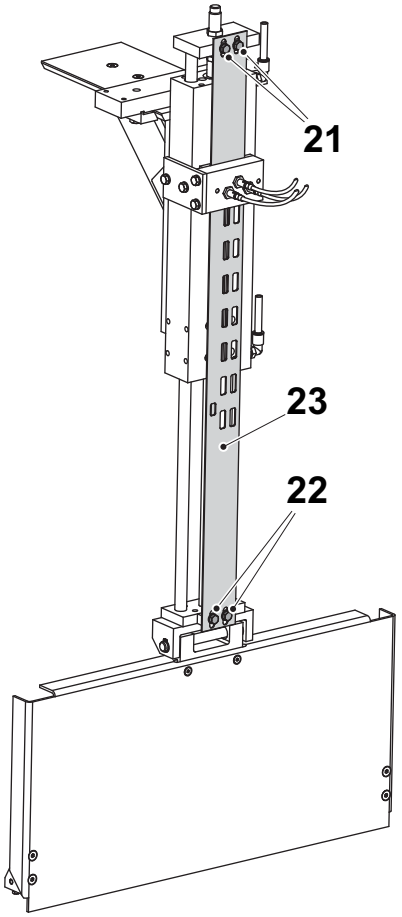

21 Screw
22 Screw
23 Plate

2.3 Covering Pattern Forming

2.3-1 Covering Pattern Forming - No Procedure Described

SPC Reference	2787855

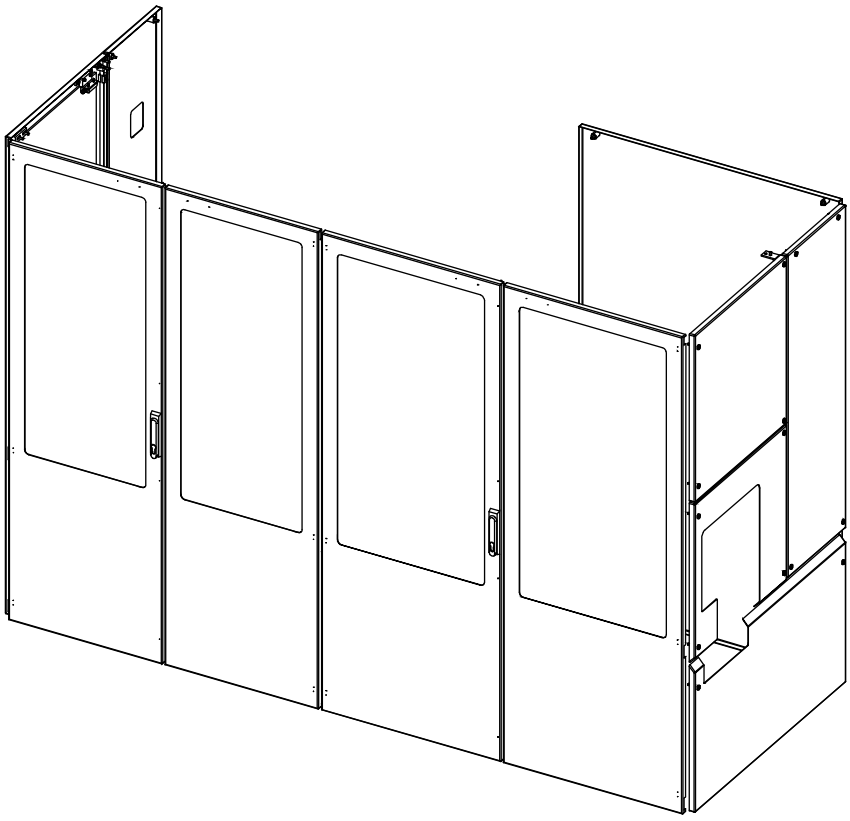

3 Tray Forming

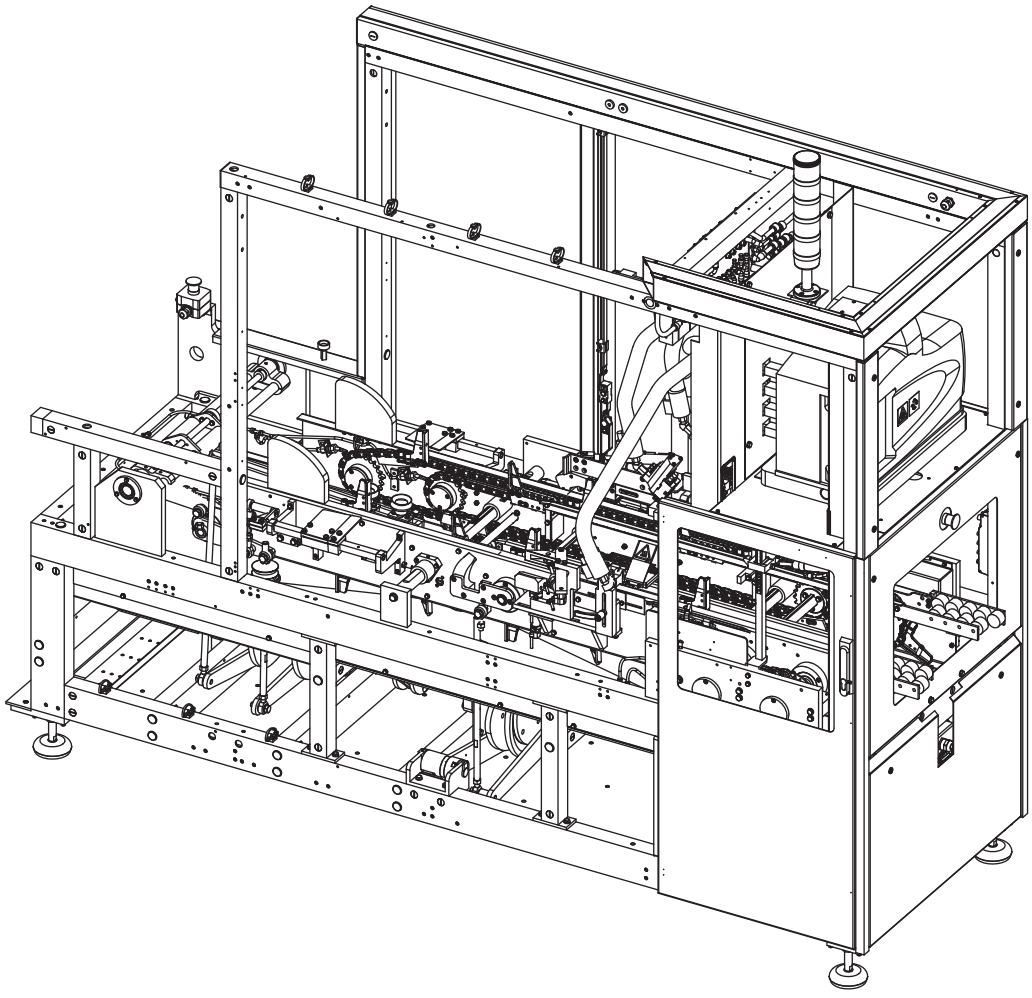

Description

SPC Reference	673832

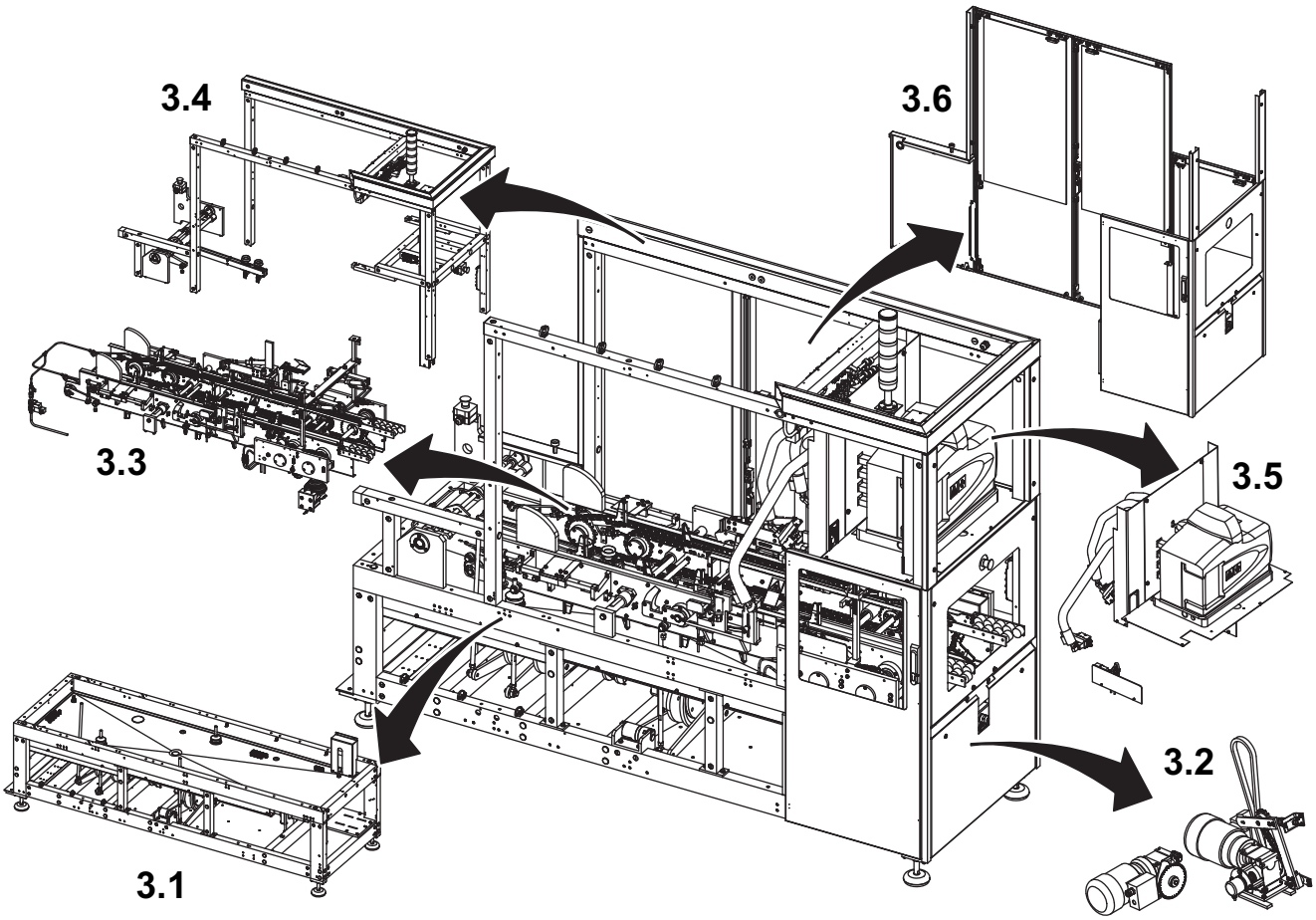

3.1 Bottom section
3.2 Drive unit
3.3 Feed unit
3.4 Upper section
3.5 Hotmelt unit
3.6 Covering tray forming

Functional Description . . . . . 3 - 7

3.1 Bottom Section . . . . . 3 - 11

3.1.1 Curve Arm Magazine . . . . . 3 - 11

3.1.1-1 Curve Arm Magazine - Check . . . . . 3 - 11

3.1.1-2 Curve Arm Magazine - Change . . . . . 3 - 12

3.1.1-3 Curve Arm Magazine - Set . . . . . 3 - 13

3.1.2 Curve Arm Tray Holder . . . . . 3 - 14

3.1.2-1 Curve Arm Tray Holder - Check . . . . . 3 - 14

3.1.2-2 Curve Arm Tray Holder - Change . . . . . 3 - 15

3.1.3 Curve Arms Side Folder . . . . . 3 - 16

3.1.3-1 Curve Arms Side Folder - Check . . . . . 3 - 16

3.1.3-2 Curve Arms Side Folder - Change . . . . . 3 - 17

3.1.4 Main Shaft Rear . . . . . 3 - 18

3.1.4-1 Main Shaft Rear - Set Cams . . . . . 3 - 18

3.1.4-2 Main Shaft Rear - Lubricate . . . . . 3 - 19

3.1.5 Main Shaft Front . . . . . 3 - 20

3.1.5-1 Main Shaft Front - Set Cams . . . . . 3 - 20

3.1.5-2 Main Shaft Front - Lubricate . . . . . 3 - 22

3.1.6 Encoder Main Shaft . . . . . 3 - 23

3.1.6-1 Encoder Main Shaft - Set Angle Encoder . . . . . 3 - 23

3.2 Drive Unit . . . . . 3 - 25

3.2.1 Motor Feeding . . . . . 3 - 25

3.2.1-1 Motor Feeding - Check . . . . . 3 - 25

3.2.2 Overload Feeding . . . . . 3 - 26

3.2.2-1 Overload Feeding - Check . . . . . 3 - 26

3.2.2-2 Overload Feeding - Set Safety Clutch . . . . . 3 - 27

3.2.3 Encoder Feeding . . . . . 3 - 29

3.2.3-1 Encoder Feeding - Set Angle Encoder . . . . . 3 - 29

3.3 Feed Unit . . . . . 3 - 32

3.3-1 Feed Unit - Set . . . . . 3 - 32

3.3.1 Carrier Chain Outside . . . . . 3 - 34

3.3.1-1 Carrier Chain Outside - Set Chain Tension . . . . 3 - 34
3.3.1-2 Carrier Chain Outside - Set . . . . . 3 - 35
3.3.2 Carrier Chain Inside . . . . . 3 - 37
3.3.2-1 Carrier Chain Inside - Set . . . . . 3 - 37
3.3.2-2 Carrier Chain Inside - Set Chain Tension . . . . . 3 - 40
3.3.3 Chain Lubrication . . . . . 3 - 41
3.3.3-1 Chain Lubrication - Check Function . . . . . 3 - 41
3.3.3-2 Chain Lubrication - Set . . . . . 3 - 42
3.3.4 Carrier Sprocket Inside. . . . . 3 - 43
3.3.4-1 Carrier Sprocket Inside - Check . . . . . 3 - 43
3.3.4-2 Carrier Sprocket Inside - Change . . . . . 3 - 44
3.3.5 Carrier Sprocket Outside . . . . . 3 - 45
3.3.5-1 Carrier Sprocket Outside - Check . . . . . 3 - 45
3.3.5-2 Carrier Sprocket Outside - Change . . . . . 3 - 46
3.3.6 Tray Holder. . . . . 3 - 47
3.3.6-1 Tray Holder - Check . . . . . 3 - 47
3.3.6-2 Tray Holder - Change . . . . . 3 - 48
3.3.6-3 Tray Holder - Set . . . . . 3 - 49
3.3.7 Side Folder. . . . . 3 - 52
3.3.7-1 Side Folder - Check . . . . . 3 - 52
3.3.7-2 Side Folder - Set . . . . . 3 - 53
3.3.7-3 Side Folder - Change . . . . . 3 - 54
3.3.8 Folding Station . . . . . 3 - 55
3.3.8-1 Folding Station - Change . . . . . 3 - 55
3.3.8-2 Folding Station - Set . . . . . 3 - 56
3.3.9 Packing End Stop . . . . . 3 - 57
3.3.9-1 Packing End Stop - Check . . . . . 3 - 57
3.3.9-2 Packing End Stop - Change . . . . . 3 - 58
3.3.9-3 Packing End Stop - Set . . . . . 3 - 59
3.3.10 Bottom Squeezer. . . . . 3 - 64
3.3.10-1 Bottom Squeezer - Check . . . . . 3 - 64
3.3.10-2 Bottom Squeezer - Change . . . . . 3 - 65
3.3.10-3 Bottom Squeezer - Set . . . . . 3 - 66

3.3.11 Carrier Shaft Outside . . . . . 3 - 68
3.3.11-1 Carrier Shaft Outside - Change . . . . . 3 - 68
3.3.12 Carrier Shaft Inside . . . . . 3 - 69
3.3.12-1 Carrier Shaft Inside - Change . . . . . 3 - 69
3.3.13 Chain Tensioner . . . . . 3 - 70
3.3.13-1 Chain Tensioner - Change . . . . . 3 - 70
3.3.13-2 Chain Tensioner - Set Tension . . . . . 3 - 71
3.3.14 Carrier Clutch . . . . . 3 - 72
3.3.14-1 Carrier Clutch - Change Cylinder . . . . . 3 - 72
3.3.14-2 Carrier Clutch - Set . . . . . 3 - 73
3.3.15 Tray Support . . . . . 3 - 74
3.3.15-1 Tray Support - Check . . . . . 3 - 74
3.3.15-2 Tray Support - Change . . . . . 3 - 75
3.3.15-3 Tray Support - Set . . . . . 3 - 76
3.3.16 Bottom Folder Rail . . . . . 3 - 81
3.3.16-1 Bottom Folder Rail - Set . . . . . 3 - 81
3.3.17 Carrier Frame . . . . . 3 - 83
3.3.17-1 Carrier Frame - Check Wheels . . . . . 3 - 83
3.4 Upper Section . . . . . 3 - 84
3.4.1 Magazine Arm . . . . . 3 - 84
3.4.1-1 Magazine Arm - Check . . . . . 3 - 84
3.4.1-2 Magazine Arm - Change . . . . . 3 - 85
3.4.1-3 Magazine Arm - Set . . . . . 3 - 86
3.4.2 Suction Cup . . . . . 3 - 87
3.4.2-1 Suction Cup - Check . . . . . 3 - 87
3.4.2-2 Suction Cup - Set . . . . . 3 - 88
3.5 Hotmelt Unit . . . . . 3 - 89
3.5.1 Hotmelt Equipment . . . . . 3 - 89
3.5.1-1 Hotmelt Equipment - Check . . . . . 3 - 89
3.5.1-2 Hotmelt Equipment - Set . . . . . 3 - 90
3.5.1-3 Hotmelt Equipment - Change Adhesive . . . . . 3 - 98
3.5.1-4 Hotmelt Equipment - Change Filter . . . . . 3 - 99

3.5.1-5 Hotmelt Equipment - Change Gun . . . . . 3 - 101
3.5.1-6 Hotmelt Equipment - Set Gun . . . . . 3 - 102
3.5.1-7 Hotmelt Equipment - Bleed System . . . . . 3 - 104
3.5.1-8 Hotmelt Equipment - Hotmelt Temperature Low Alarm . . . . . 3 - 107

3.6 Covering Tray Forming . . . . . 3 - 108

3.6-1 Covering Tray Forming - No Procedure Described . . . . . 3 - 108

Functional Description

The functional description gives a rough explanation of the package flow through the Cardboard Packer 32.

Tray Forming Module

The tray forming module consists of a magazine, main shaft, feed chain, picking station, pack station, gluing station and a discharge area.

Magazine

The timing belts (1) feeds blanks to the picking position (4).

The photocell (3) at the picking position (4) needs to detect blanks, to have the machine ready to be stepped into production.

See also, Functional Description chapter 4 Magazine Unit.

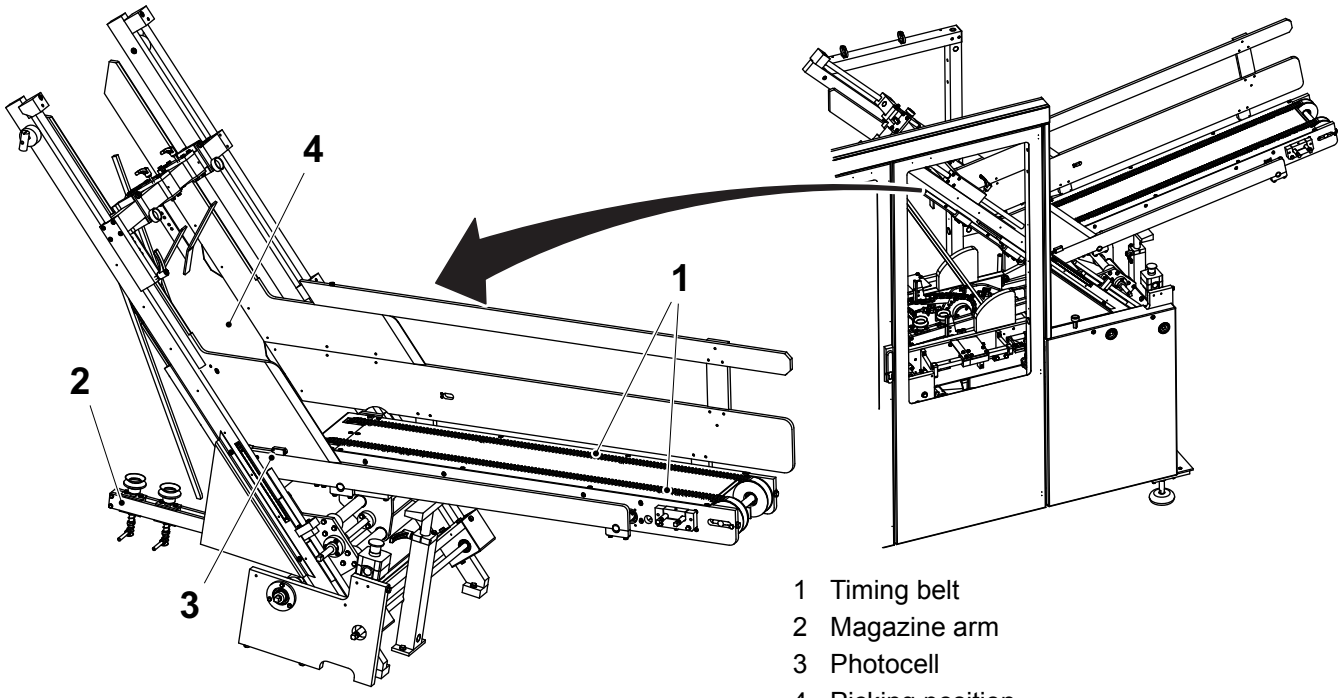

1 Timing belt
2 Magazine arm
3 Photocell
4 Picking position

Main Shaft

The main shaft (1) is driven by an electric motor (3) and is carrying cams (4) that controls the magazine arm, the tray holders and the two folding arms.

Magazine arm

The magazine arm (2) picks blanks from the magazine picking position.

Tray Holders

The tray holders (5) are securing that the tray is held down.

Two Folding Arms

The two folding arms (6) are used in the pack station.

Carrier Chain

The carrier chain (7) is driven by an electric motor (3). Carriers mounted on the carrier chain move the tray between the different areas and the tray is finally discharged onto the discharge area.

(Cont'd)

(Cont'd)

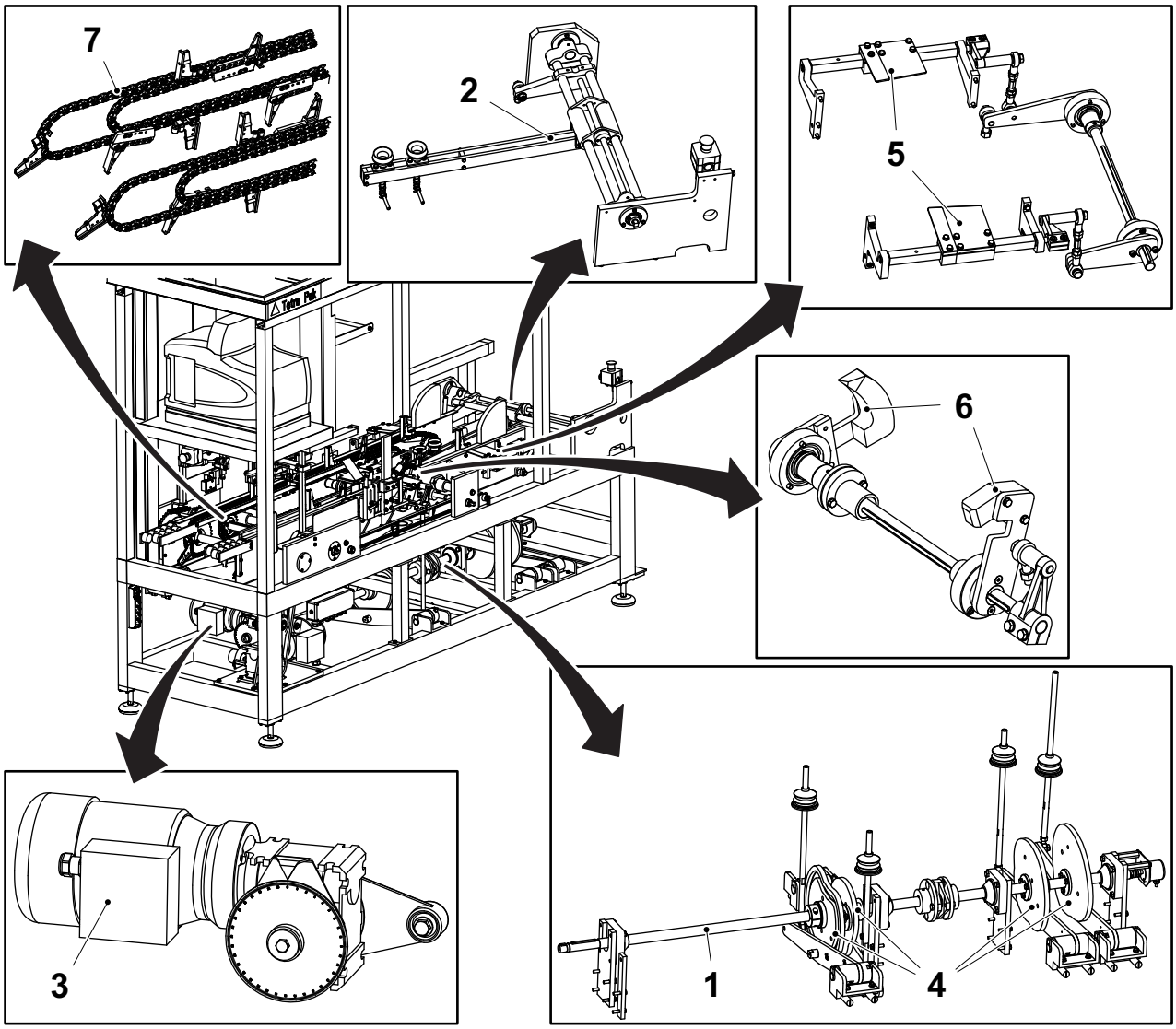

1 Main shaft
2 Magazine arm
3 Electrical motor
4 Cam
5 Tray holder
6 Folding arm
7 Carrier chain

(Cont'd)

(Cont'd)

Picking Area

The magazine arm draws the blank down from the magazine in between the carriers at this station. The blank long sides are raised during this movement.

Packing Area

The blank outer end are folded during movement to the packing area, and upon arrival the blank are ready to receive packages.Upon arrival the transfer plate moves down and creates a bridge to the pattern forming module and the station is ready to receive packages from the pattern forming module.

Gluing Area

Adhesive is applied to the tray during movement to the gluing area. When in position, the tray is finally folded.

The gluing station can have an optional wrap around unit installed and under these circumstances it is able to fold and glue trays with lids (Tetra Wrap Around box with Inside top Flap - WAIF, Tetra Wrap Around box with Side Flap - WASF, Tetra Wrap Around box with Meeting Flaps - WAMF, Tetra Tray Over Flap- TOF).

Discharge Area

The completed tray is transferred to either a motor driven discharge conveyor or a non driven roller conveyor. The conveyor delivers the tray to the next equipment conveyor or to manual off loading at the end of the conveyor.

The areas 8 to 11 described below are name of functions used in this manual and are not found as machine components.

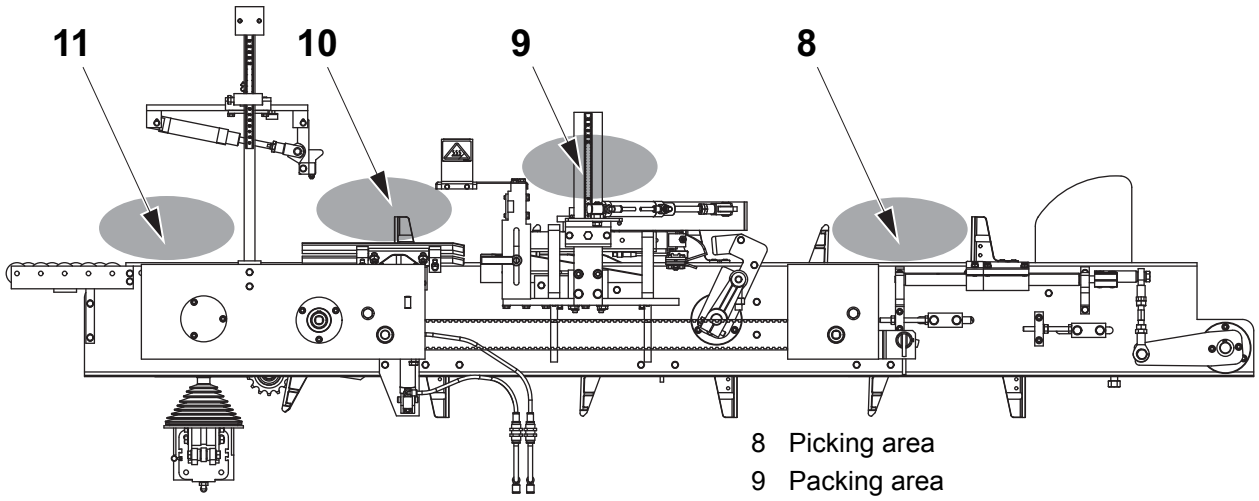

8 Picking area
9 Packing area
10 Gluing area
11 Discharge area

3.1 Bottom Section

SPC Reference	2771136

3.1.1 Curve Arm Magazine

3.1.1-1 Curve Arm Magazine - Check

Machine Status	Power supply disconnector OFF Air valve OFF
SPC Reference	1021000

a) Check for play in the rod ends (1) and the cam roller (2). If there is more play than 10 mm when moving the arm with the suction cups, change the rod ends and the cam roller. See 3.1.1-2 Curve Arm Magazine - Change.

b) Check the rubber bellows (3) for wear. Change if necessary.

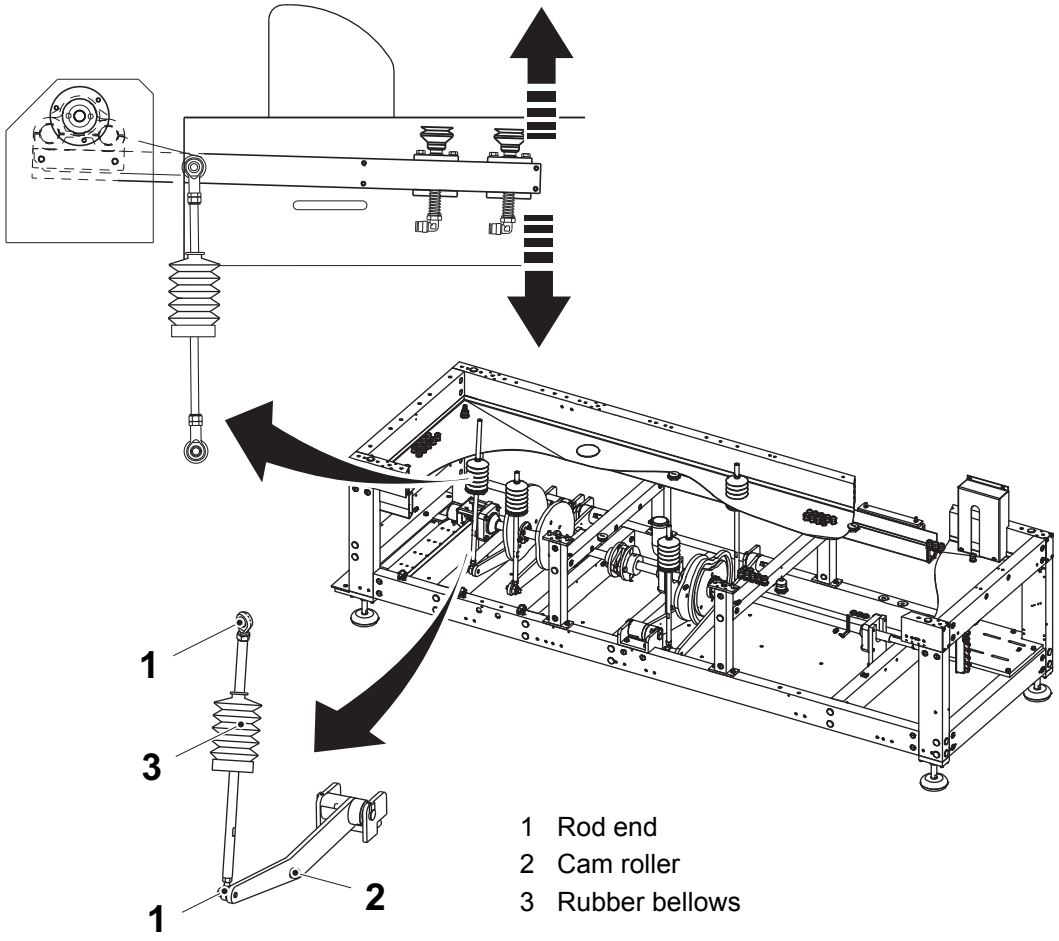

1 Rod end
2 Cam roller
3 Rubber bellows

3.1.1-2 Curve Arm Magazine - Change

Machine Status	Power supply disconnector OFF Air valve OFF
SPC Reference	1021000

a) Remove the screws (1) and the screws (2).
b) Loosen the cam roller (3) and move the arm (4) aside.
c) Change the cam roller.
d) Remove the screw (5) and the nut (6).
e) Change the rod ends (7).
f) Change if necessary the rubber bellows (8).
g) Assemble the operating arm magazine in the reverse order.
h) Set the lower position of the operating arm magazine, see 3.1.1-3 Curve Arm Magazine - Set.

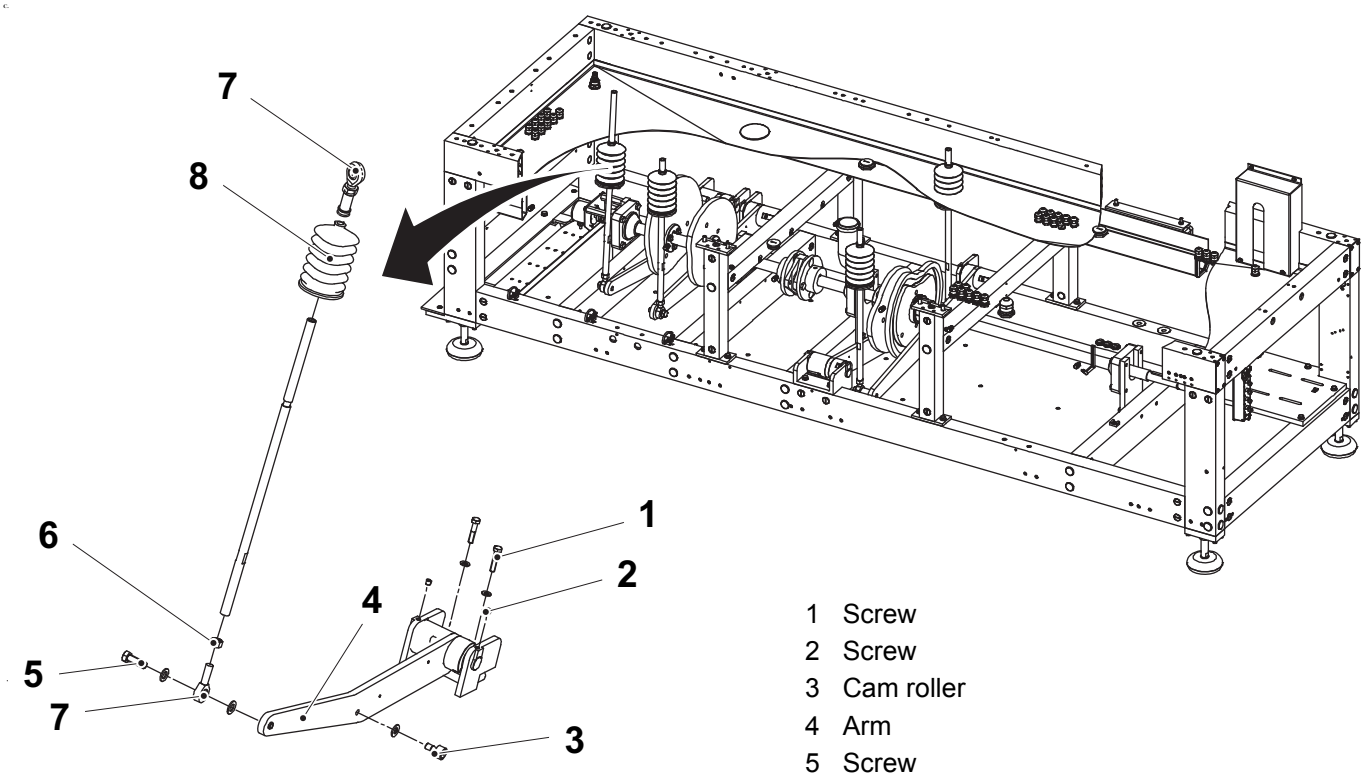

1 Screw
2 Screw
3 Cam roller
4 Arm
5 Screw
6 Nut
7 Rod end
8 Rubber bellows

3.1.1-3 Curve Arm Magazine - Set

Machine Status	Power supply disconnector OFF Air valve OFF
SPC Reference	1021000

a) Remove the motor fan cover (1). Turn the fan blades (2) carefully, by hand, until the scale (3) is on 0° on the scale.

b) Loosen the nuts on the rod ends (5).

c) Set the distance A between side plate (7) and the suction cups (8).

d) Turn the fan blades (2) carefully, by hand, until the scale (3) is on 160° on the scale.

e) Adjust the rod end (4) for the distance B.

f) The suction cups (8) will be at distance B from the egde of the side steering (9).

g) Tighten the nuts.

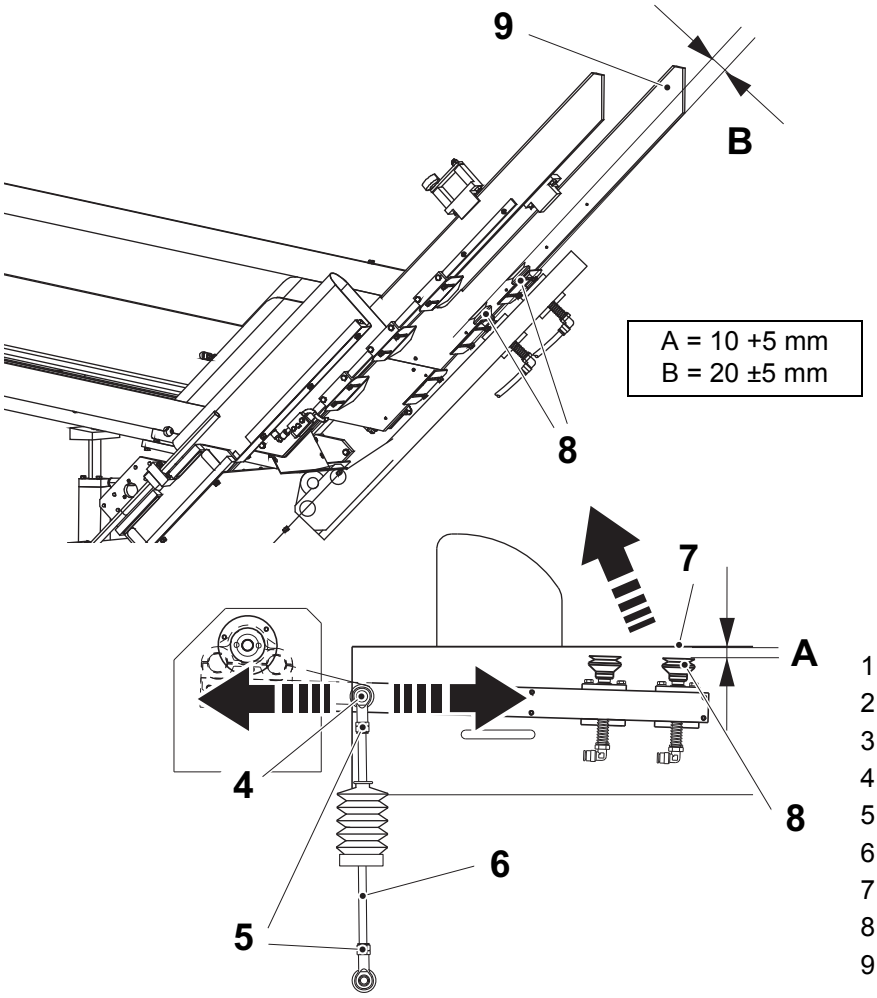

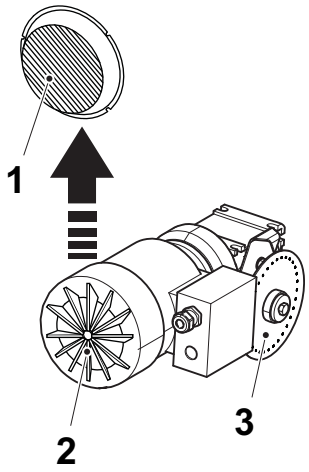

1 Fan cover
2 Fan blade
3 Scale
4 Rod end
5 Rod end
6 Link arm
7 Side plate
8 Suction cup
9 Side steering

3.1.2 Curve Arm Tray Holder

3.1.2-1 Curve Arm Tray Holder - Check

Machine Status	Power supply disconnector OFF Air valve OFF
SPC Reference	1021009

a) Check for play in the rod ends (1) and the cam roller (2), see 3.3.6-1 Tray Holder - Check.

b) Check the rubber bellows (3) for wear. Change if necessary, see 3.1.2-2 Curve Arm Tray Holder - Change.

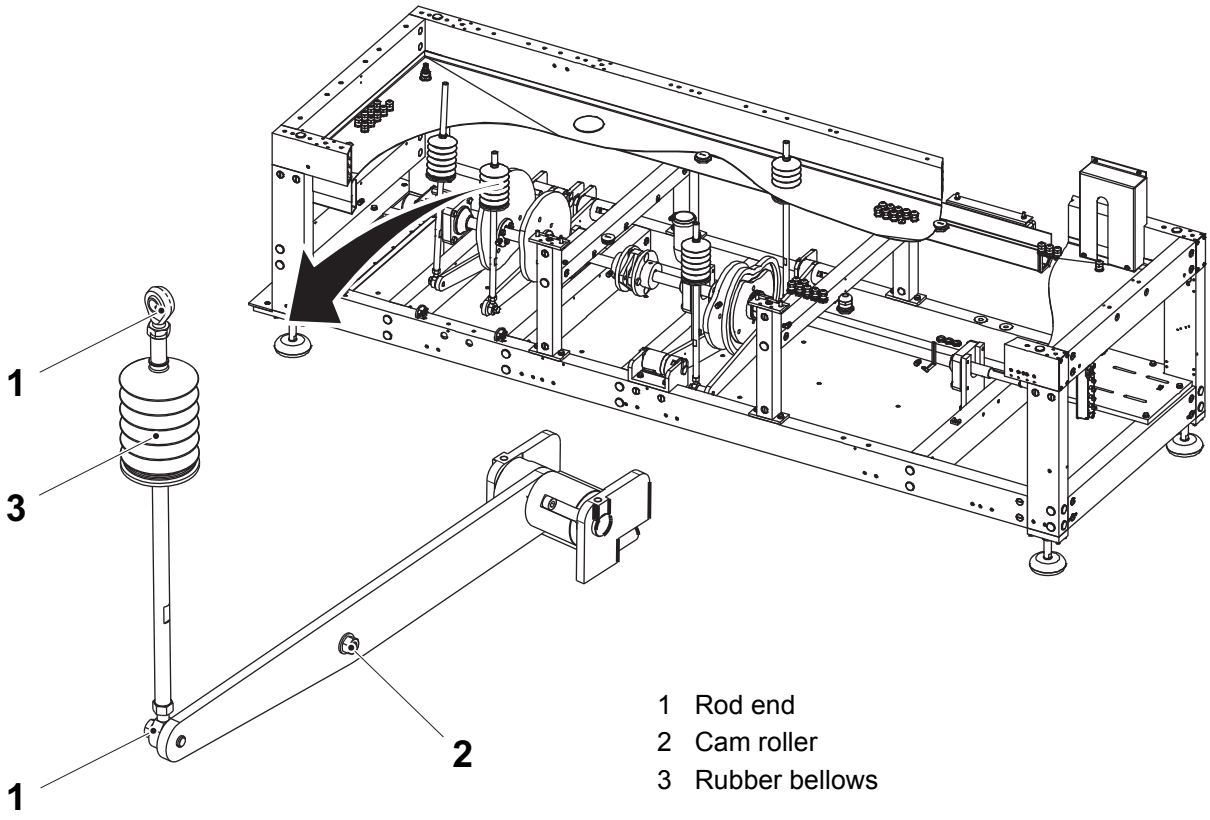

1 Rod end
2 Cam roller
3 Rubber bellows

3.1.2-2 Curve Arm Tray Holder - Change

Machine Status	Power supply disconnector OFF Air valve OFF
SPC Reference	1021009

To change the rod ends (1), the cam roller (2) and the rubber bellows (3), see Section 3.1.1-2 Curve Arm Magazine - Change.

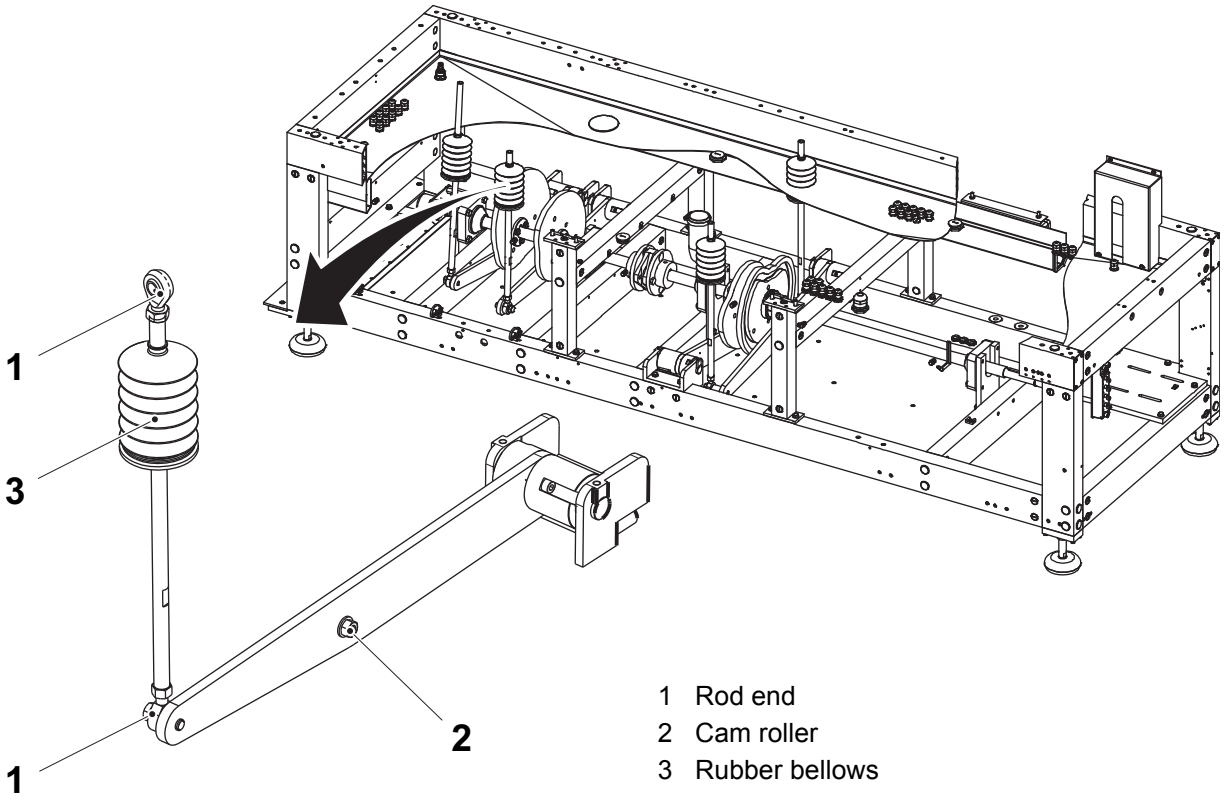

1 Rod end
2 Cam roller
3 Rubber bellows

3.1.3 Curve Arms Side Folder

3.1.3-1 Curve Arms Side Folder - Check

Machine Status	Power supply disconnector OFF Air valve OFF
SPC Reference	1021019

On the inside towards the Pattern Forming

a) Check for play in the rod ends (1) and the cam roller (2), see Section 3.3.6-1 Tray Holder - Check.

b) Check the rubber bellows (3) for wear.

c) Check the rod ends (4) and the cam roller (5) on the link arm on the other side.

d) Check the rubber bellows (6) for wear.

e) If necessary change, see 3.1.3-2 Curve Arms Side Folder - Change.

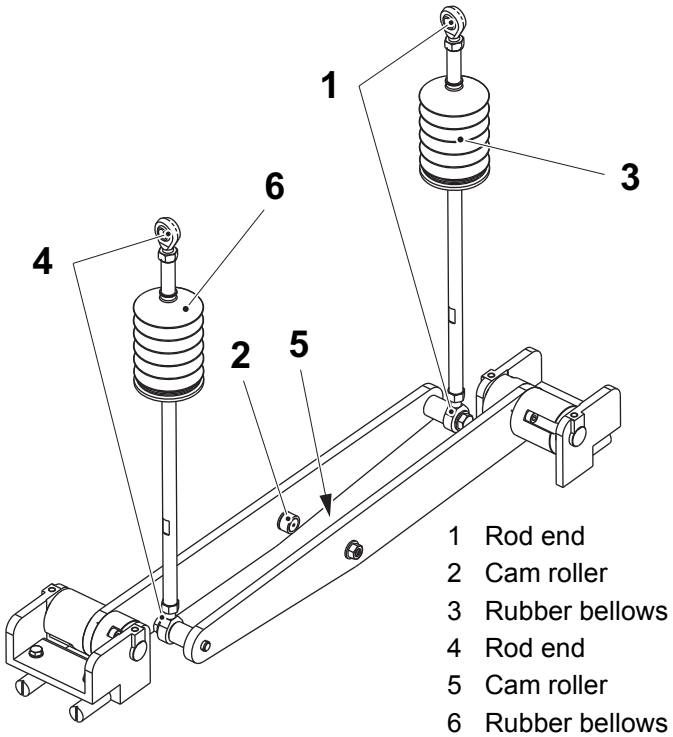

1 Rod end
2 Cam roller
3 Rubber bellows
4 Rod end
5 Cam roller
6 Rubber bellows

3.1.3-2 Curve Arms Side Folder - Change

Machine Status	Power supply disconnector OFF Air valve OFF
SPC Reference	1021019

To change the rod ends (1), the cam roller (2) and the rubber bellows (3), see Section 3.1.1-2 Curve Arm Magazine - Change.

If necessary change the parts on both the link arms.

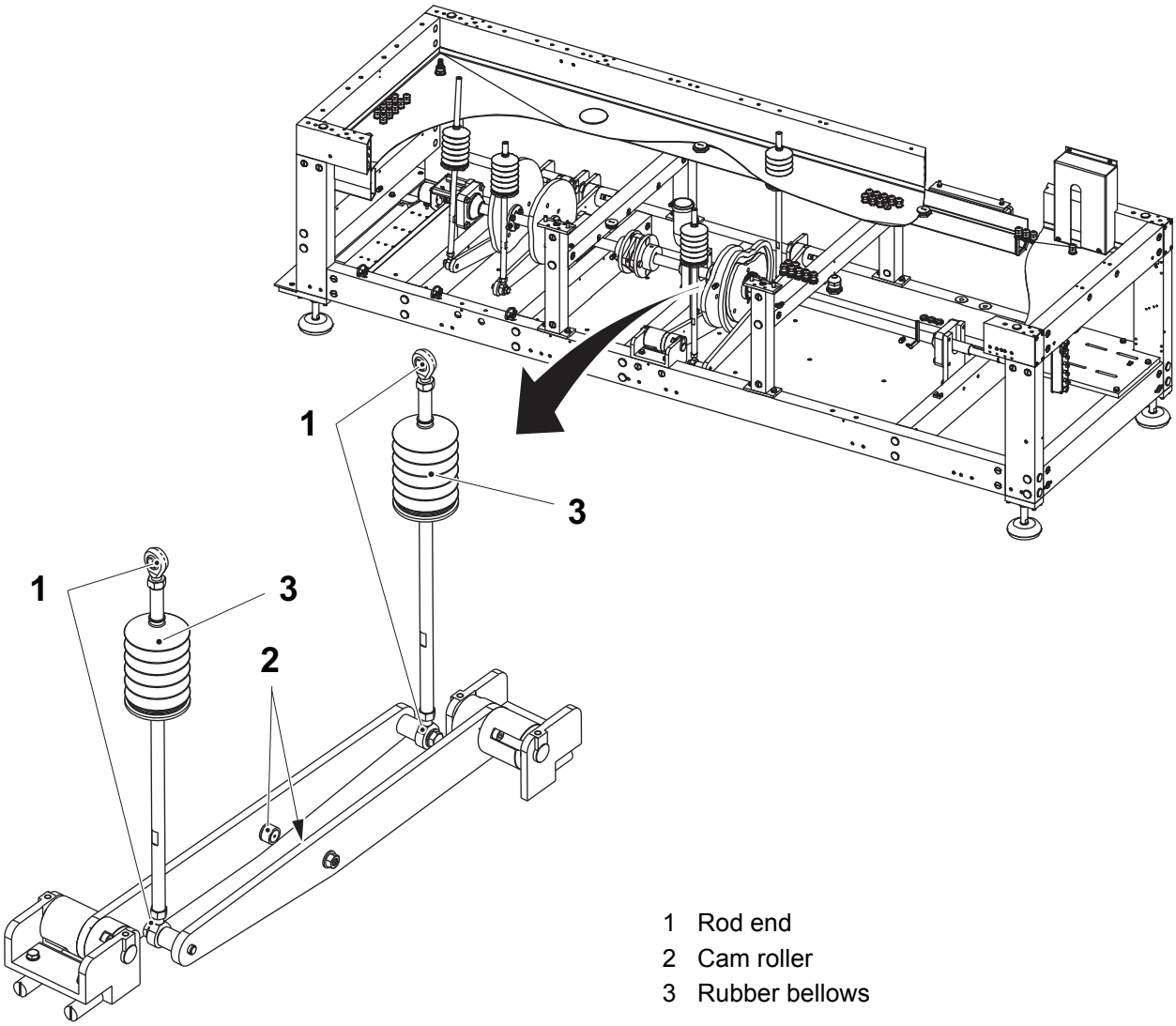

1 Rod end
2 Cam roller
3 Rubber bellows

3.1.4 Main Shaft Rear

3.1.4-1 Main Shaft Rear - Set Cams

Machine Status	Power supply disconnector OFF Air valve OFF
SPC Reference	556641

a) Loosen the screw joint (1).

b) Turn the operating arm magazine cam (2) until the mark line (3) is coincident with the correct value on the degree scale (4), see the table below.

Note! If the distance A is more than 50 mm increase the degrees on the cam. If the distance A is less than 50 mm decrease the degrees on the cam.

c) Tighten the screws.

d) Repeat items a) to c) on the curve arm tray holder cam (5).

Cam	**Degree**
Operating arm magazine cam, pos (2)	175° ±5°
Curve arm tray holder cam, pos (5)	265° ±10°

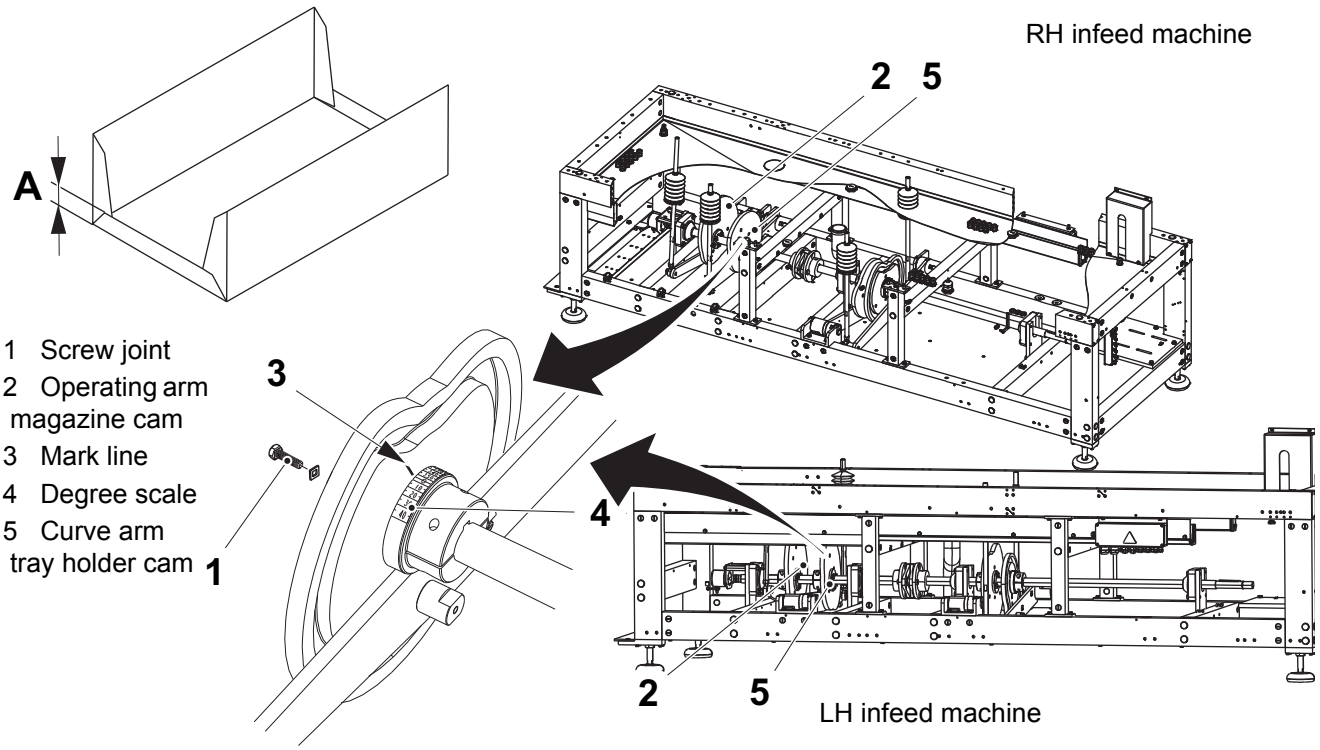

3.1.4-2 Main Shaft Rear - Lubricate

Machine Status	Power supply disconnector OFF Air valve OFF
Special Equipment	Grease gun
Consumables	Grease, code F
SPC Reference	556641

Lubricate the flange bearings (1) and (2).

Use a grease gun on the nipple (3) and (4) and fill up until the grease is visible.

Note! The illustration shows a right hand infeed machine.

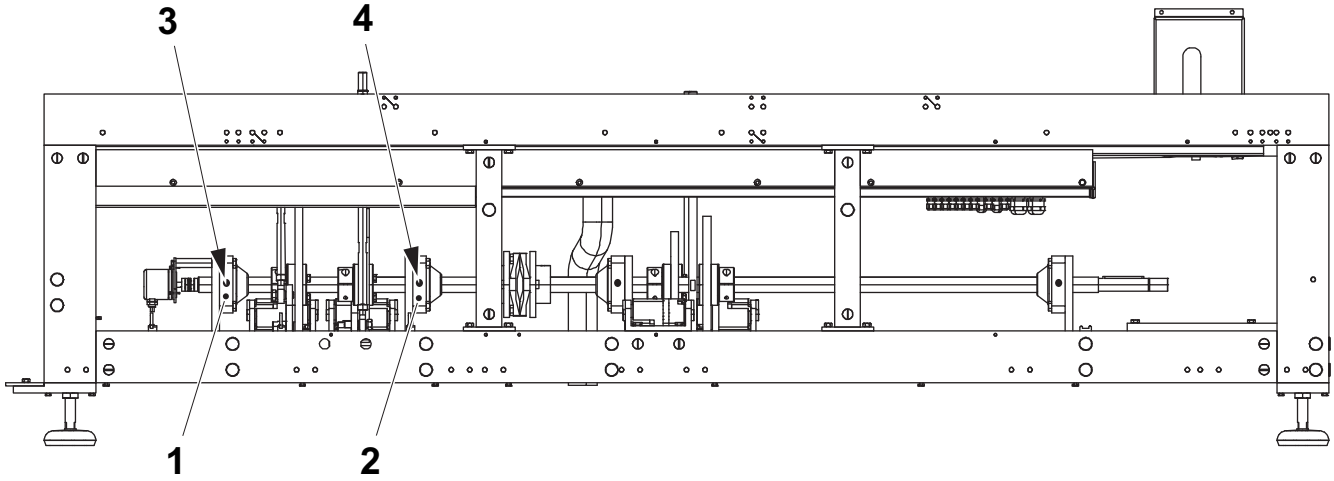

1 Flange bearing
2 Flange bearing
3 Nipple
4 Nipple

3.1.5 Main Shaft Front

3.1.5-1 Main Shaft Front - Set Cams

Machine Status	Power supply disconnector OFF Air valve OFF
SPC Reference	556654

a) Loosen the screws joint (1).

b) Turn the curve arms side folder cam (2) until the mark line (3) coincides with the correct value on the degree scale (4), see the table below.

c) Tighten the screws.

d) Repeat items a) to c) for the curve arms side folder cam (5).

Tip! To prevent the flap folder from getting in contact with the following tray, the curve arms side folder cam (2) may be adjusted ±5°.

Cam	LH infeed	RH infeed
Curve arms side folder cam, pos (2), (pattern forming side)	45° ±5°	15° ±5°
Curve arms side folder cam, pos (5)	340° ±5°	265° ±5°

1 Screw joint
2 Curve arms side folder cam (pattern forming side)
3 Mark line
4 Degree scale
5 Curve arms side folder cam

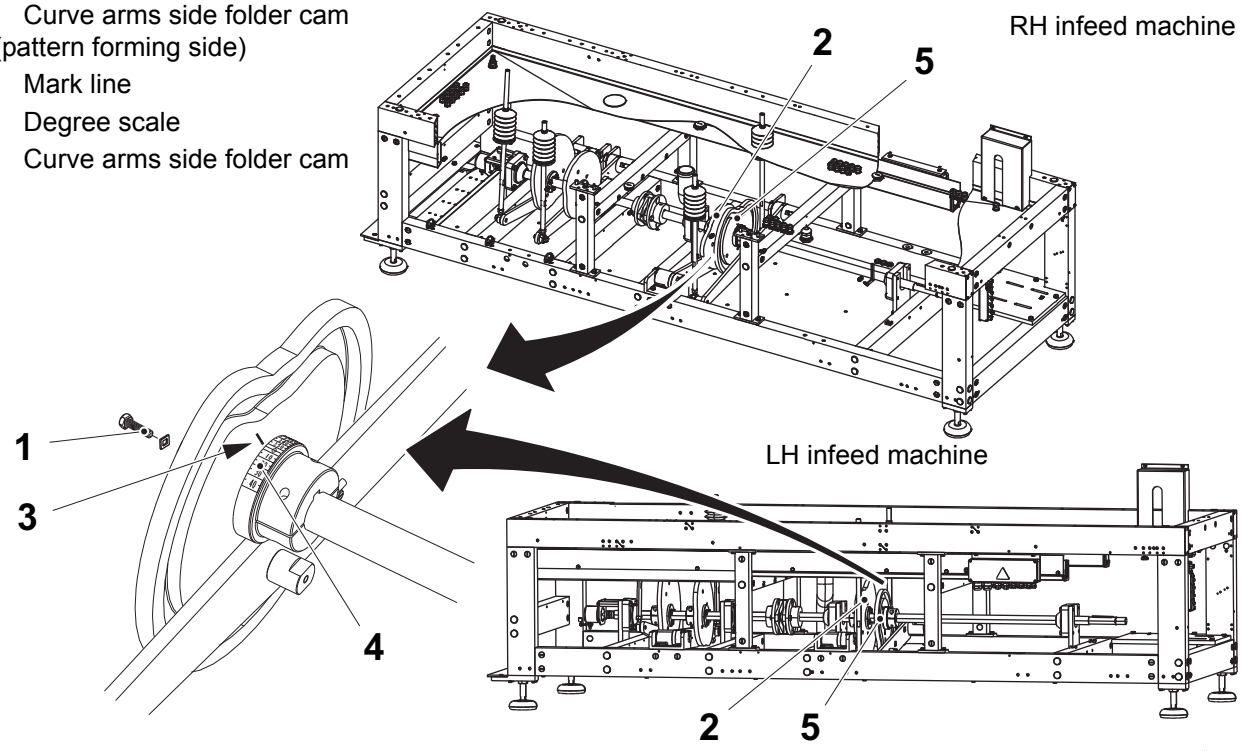

(Cont'd)

(Cont'd)

Flap Folder Setting

a) Remove the motor fan cover (1). Turn the fan blades (2) carefully, by hand, until the scale (3) is on zero. Fit the motor fan cover.

b) Loosen the screws (4).

c) Set the plate with the lug (5) to be horizontal, as shown in the illustration below.

d) Fasten the screws (4).

e) Adjust with the nut (6) on the cylinder until the rail (7) and the side plate (8) are parallel.

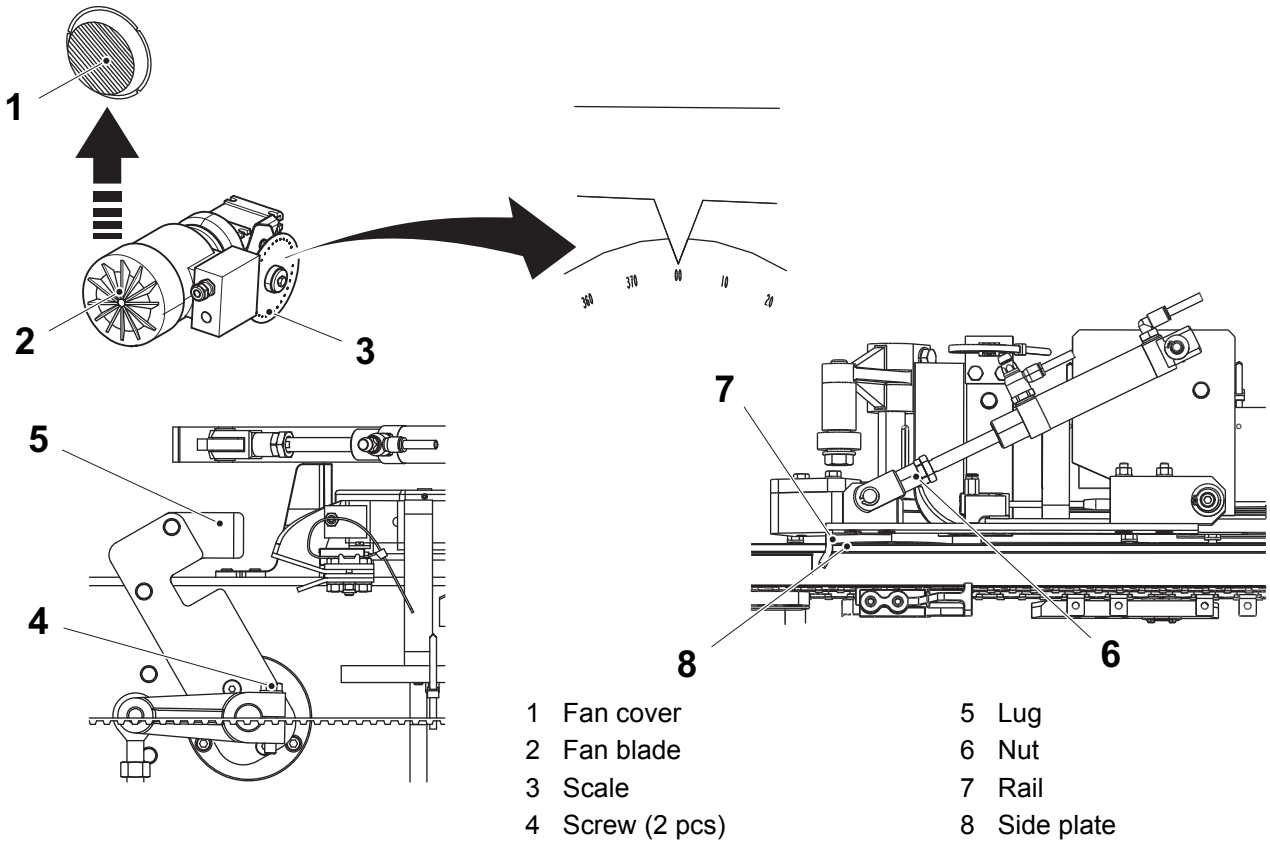

1 Fan cover
2 Fan blade
3 Scale
4 Screw (2 pcs)
5 Lug
6 Nut
7 Rail
8 Side plate

3.1.5-2 Main Shaft Front - Lubricate

Machine Status	Power supply disconnector OFF Air valve OFF
Special Equipment	Grease gun
Consumables	Lithium grease, EP type, Shell Alvania EP2 TP No. 90 296-68
SPC Reference	556654

WARNING

Risk of personal injury!

Certain lubricants can cause injury if they come into contact with the eyes, skin, mucous membranes, or clothing. Always follow the manufacturer's instructions for handling chemical products.

Lubricate the flange bearings (1) and (2).

Use a grease gun on the nipples (3) and (4) and fill up until the grease runs over.

Note! The picture shows a right hand infeed machine.

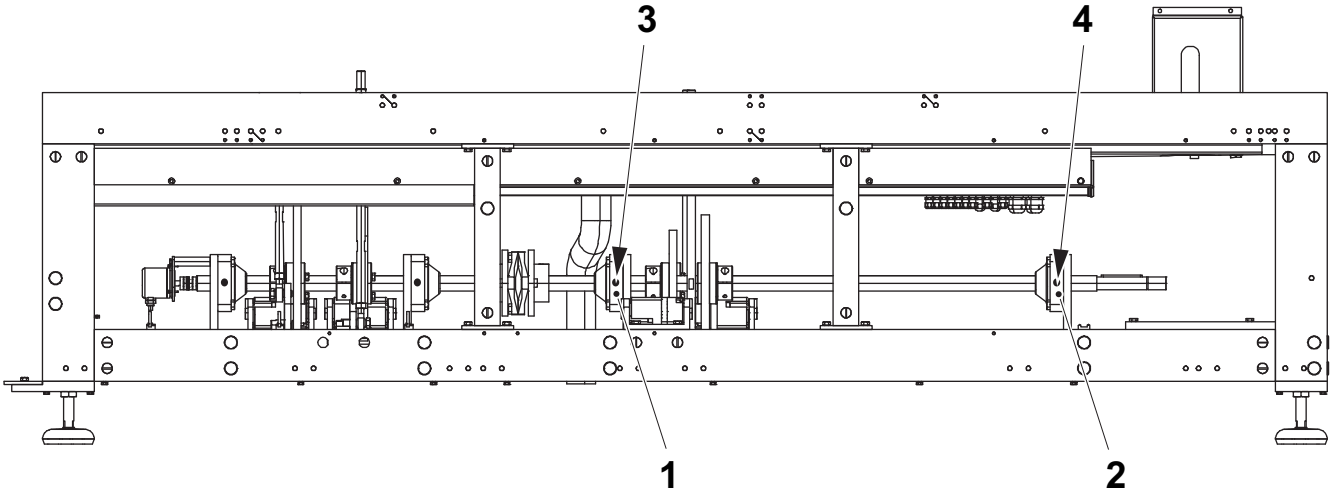

1 Flange bearing
2 Flange bearing
3 Nipple
4 Nipple

3.1.6 Encoder Main Shaft

3.1.6-1 Encoder Main Shaft - Set Angle Encoder

Machine Status	Power supply disconnector ON Air valve OFF
SPC Reference	1021982

WARNING

Risk of personal injury.

Watch your fingers when working in this area. Moving parts can cause serious injuries. Make sure that nobody starts the machine during the setting.

a) Remove the motor fan cover (1).
Turn the fan blades (2) carefully, by hand, until the scale (3) is on ZERO position.
Reinstall the cover.

b) Make sure that the machine is in step PREHEATING (4).

c) Run the function; Encoder main shaft position (5) via the TPOP, see 6.8.3-2 TPOP Settings - Tray Forming.

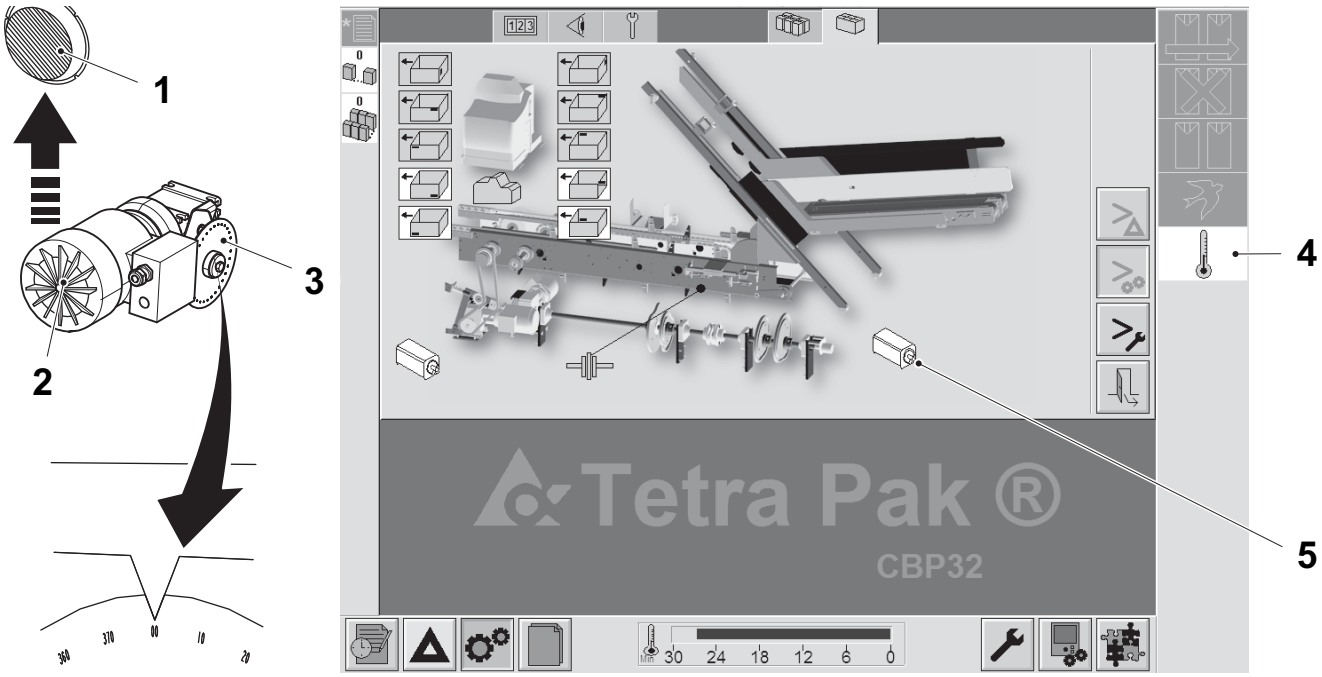

1 Fan cover
2 Fan blade
3 Scale
4 Step PREHEATING
5 Encoder main shaft position function

(Cont'd)

(Cont'd)

d) Loosen the screws (6) and turn the angle encoder (7), by hand, until the **yellow** part of the warning lamp (8) is lit or the TPOP shows the value 0 (9). Use the table below to orientate to the yellow part of the warning lamp.

Warning lamp colour	Encoder position
Flashing red	16° to 127°
Red	4° to 15°
Yellow-Red	1° to 3°
Yellow	0°
Yellow-Blue	253° to 255°
Blue	241° to 252°
Flashing blue	128° to 240°

e) Tighten the screws (6) and check the settings.

f) Press the DESELECT button (10) and the CONFIRMATION button (11) to stop the function.

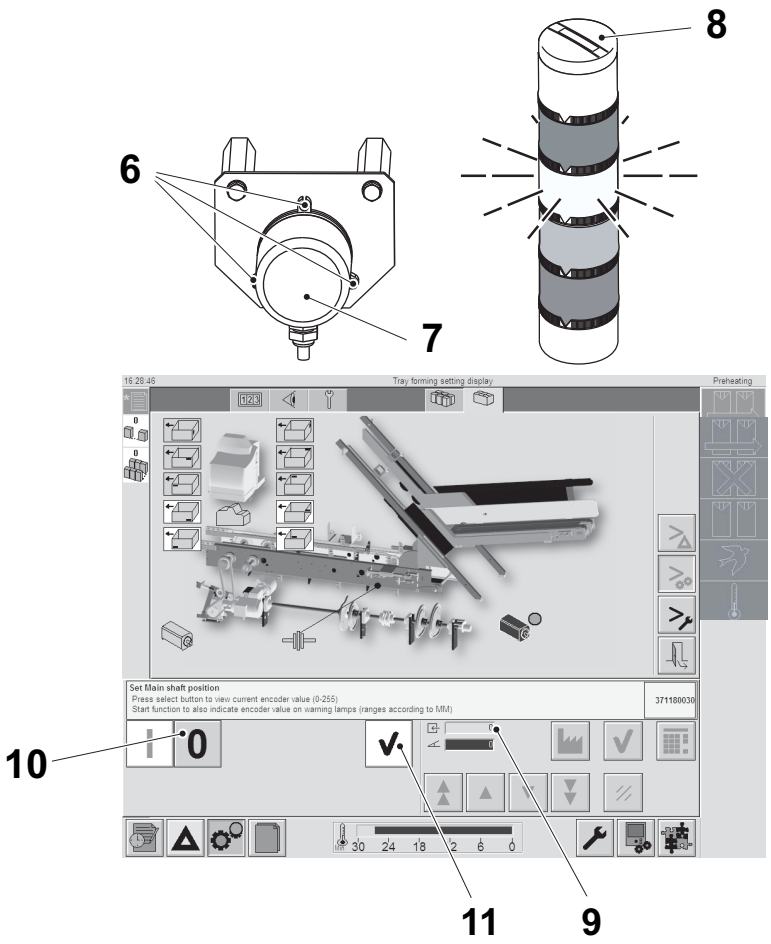

6 Screw
7 Angle encoder
8 Warning lamp
9 Value
10 DESELECT
11 CONFIRMATION

3.2 Drive Unit

SPC Reference	2771173

3.2.1 Motor Feeding

3.2.1-1 Motor Feeding - Check

Machine Status	Power supply disconnector OFF Air valve OFF
SPC Reference	556626

Check the tension of the chain (1). The chain is to be stretched but not too tightened. Remove the slack. Change the chain if necessary.

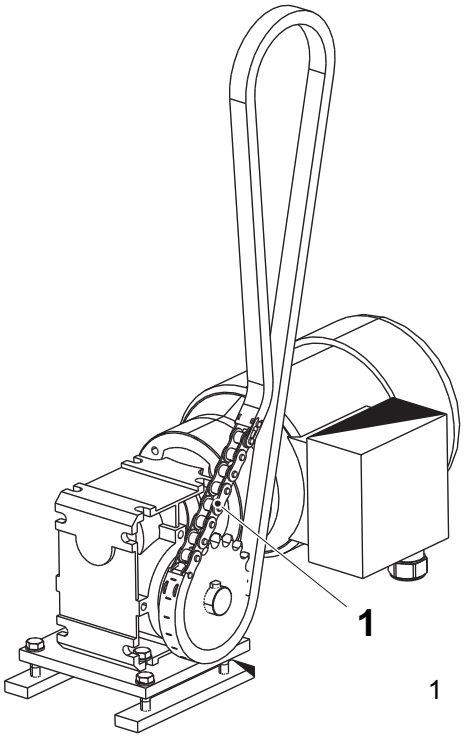

1 Chain

3.2.2 Overload Feeding

3.2.2-1 Overload Feeding - Check

Machine Status	Power supply disconnector OFF Air valve OFF
SPC Reference	1021996

a) Remove the chain (1).

b) Move the sprocket (2) and check for play in the ball bearings (3). Change the ball bearings (3) if necessary.

c) Check the slider (4) and the sprocket (2) for wear. Change if necessary.

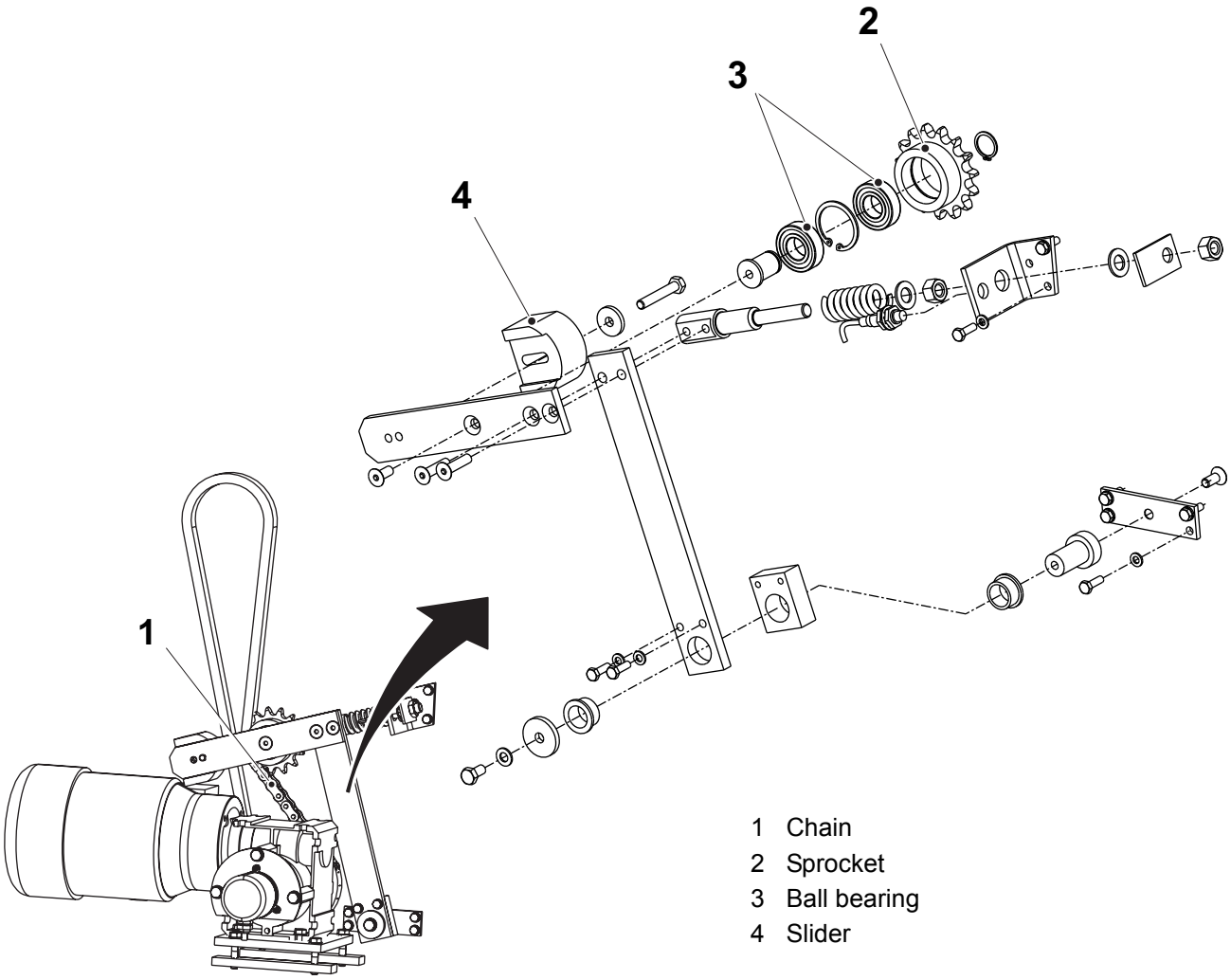

1 Chain
2 Sprocket
3 Ball bearing
4 Slider

3.2.2-2 Overload Feeding - Set Safety Clutch

Machine Status	Power supply disconnector ON Air valve OFF
SPC Reference	1021996

a) Make sure that the chain tension is set, see Sections 3.3.1-1 Carrier Chain Outside - Set Chain Tension and 3.3.2-2 Carrier Chain Inside - Set Chain Tension.

b) Loosen, or remove the screw that fastens the slider (1). Move the slider until it touches the chain (2). See figure 1. Tighten the screw. If necessary, turn the slider (1), and adjust the chain tension from inside and out. See figure 2.

c) Adjust the position of the proximity sensor (3) until it is activated by the flag (4).

d) Loosen the nuts (5). Perform a basic setting of distance A. Tighten the nuts. If the overload protection still is released it is necessary to tighten the compression spring (6) harder.

e) The chain should run in an easy way. Check this by separating the chain (2). Note in which cogs the chain lies for later mounting in the same cogs.

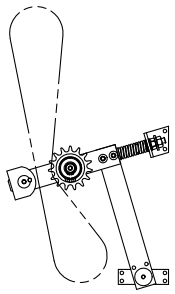

Fig.1

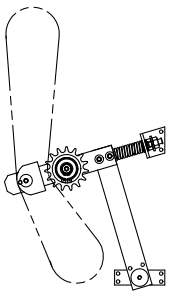

Fig.2

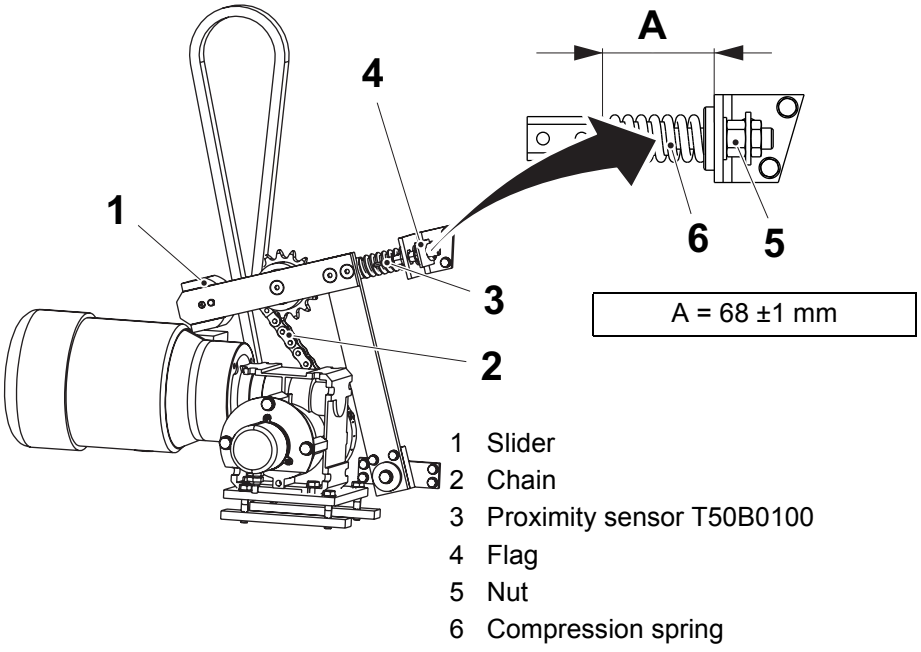

(Cont'd)

(Cont'd)

f) Mark the position of the carrier (7).

g) Turn the shaft (8) with the crank (9). The shaft is to be turned without strain.

h) Replace the chain (2) in the same cogs, see item e).

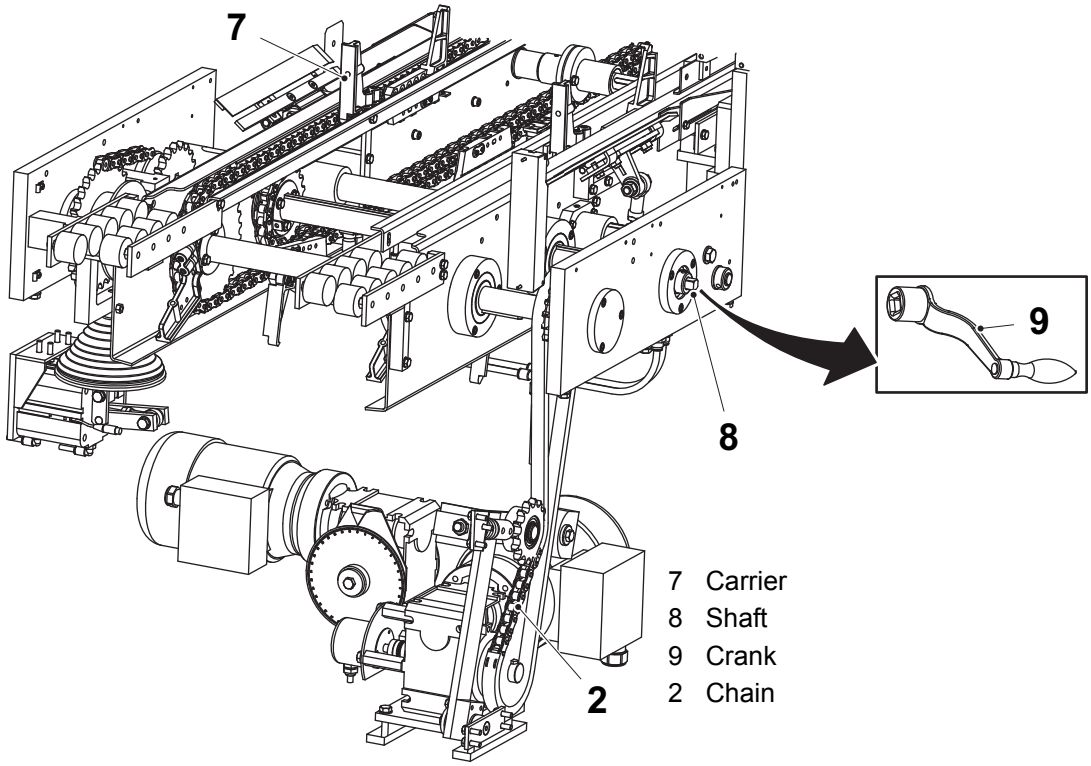

3.2.3 Encoder Feeding

3.2.3-1 Encoder Feeding - Set Angle Encoder

Machine status	Power supply disconnector ON Air valve OFF
SPC Reference	556636

WARNING

Risk of personal injury!

Watch your fingers when working in this area. Moving parts can cause serious injuries. In case of accident, use an EMERGENCY STOP button.

a) Check that the position of the carrier chain outside is set, see 3.3.1-2 Carrier Chain Outside - Set.

b) Make sure that the machine is in step PREHEATING (1).

c) Run the function ENCODER FEEDING CHAIN POSITION (2) via the TPOP.

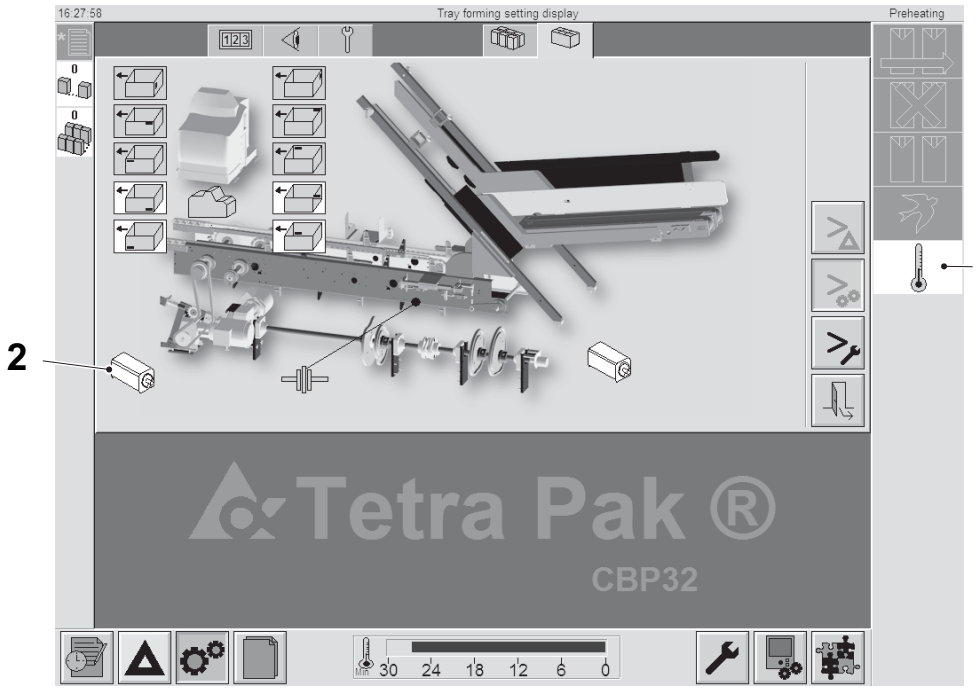

1 Step PREHEATING
2 ENCODER FEEDING CHAIN POSITION

(Cont'd)

(Cont'd)

d) Remove the protection plate (3).

e) Loosen the screw joint (4).

f) Turn the angle encoder (5), by hand, until the **yellow** part of the warning lamp (6) is lit or the TPOP shows the value zero in field (7).
Use the table below to orientate to the yellow part of the warning lamp.

Warning lamp colour	Encoder position
Flashing red	16° to127°
Red	4° to 15°
Yellow-Red	1° to 3°
Yellow	0°
Yellow-Blue	253° to 255°
Blue	241° to 252°
Flashing blue	128° to 240°

g) Tighten the screw joint (4) and check the settings.

h) Reinstall the protection plate (3).

i) Press the DESELECT button (7) and the CONFIRMATION button (8) to stop the function.

(Cont'd)

(Cont'd)

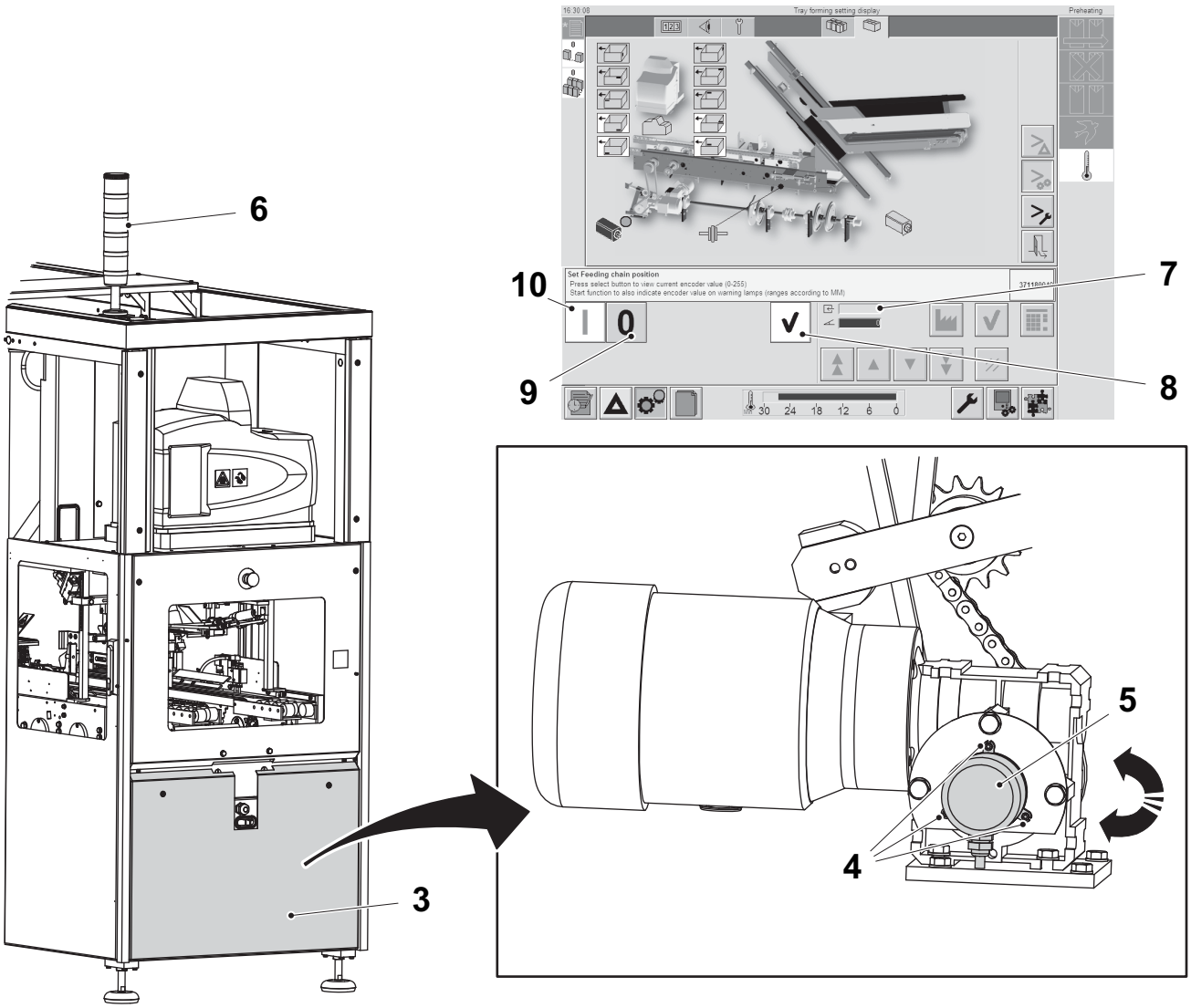

3 Protection plate
4 Screw
5 Angle encoder
6 Warning lamp
7 Value field
8 CONFIRMATION
9 DESELECT
10 SELECT

3.3 Feed Unit

3.3-1 Feed Unit - Set

Machine Status	Power supply disconnector OFF Air valve OFF
SPC Reference	2771174

Parallel Setting of the Side Plate towards the Pattern Forming

a) Loosen the grub screw at the bearing housing (1) at the steering front (2).

b) Loosen the grub screw (3) at the bearing housing (4) at the steering rear (5).

c) Move the side plate (6) according to distance A between the side plate (6) and the inside of the frame (7).

Note! The side plate (6) and the frame (7) should be parallel at both ends of the feed unit.

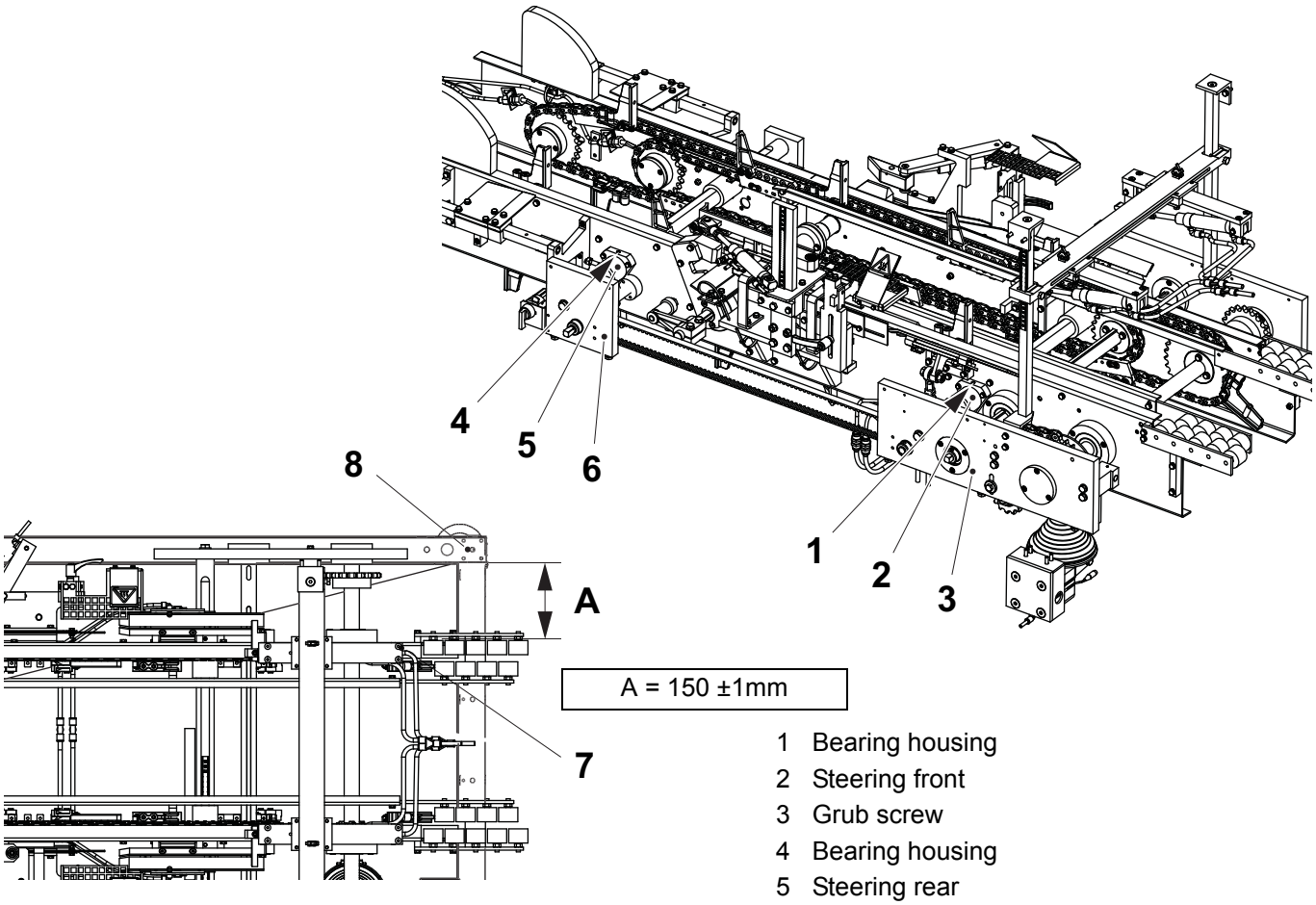

A = 150 ±1mm

1 Bearing housing
2 Steering front
3 Grub screw
4 Bearing housing
5 Steering rear
6 Side plate
7 Frame

(Cont'd)

(Cont'd)

Basic Parallel Setting between Side Plates

a) Make sure that the side plate (12) is parallel with the frame, see Parallel Setting of the Side Plate towards the Pattern Forming on previous page.

b) Loosen the screw (8) at the threaded shaft (9).

c) Check that the threaded shaft (9) stand still while cranking. If not loosen the screw (10).

d) Crank the shaft (11) until the side plates (12) and (13) are parallel. Tighten the screws (8) and (10).

Tip! Measure the distance between the side plates, at both ends.

Distance Setting between Side Plates

e) Make sure that nothing is stuck between the side plates.

f) Use the scales (14) while cranking the side plate (13) and set the distance B.

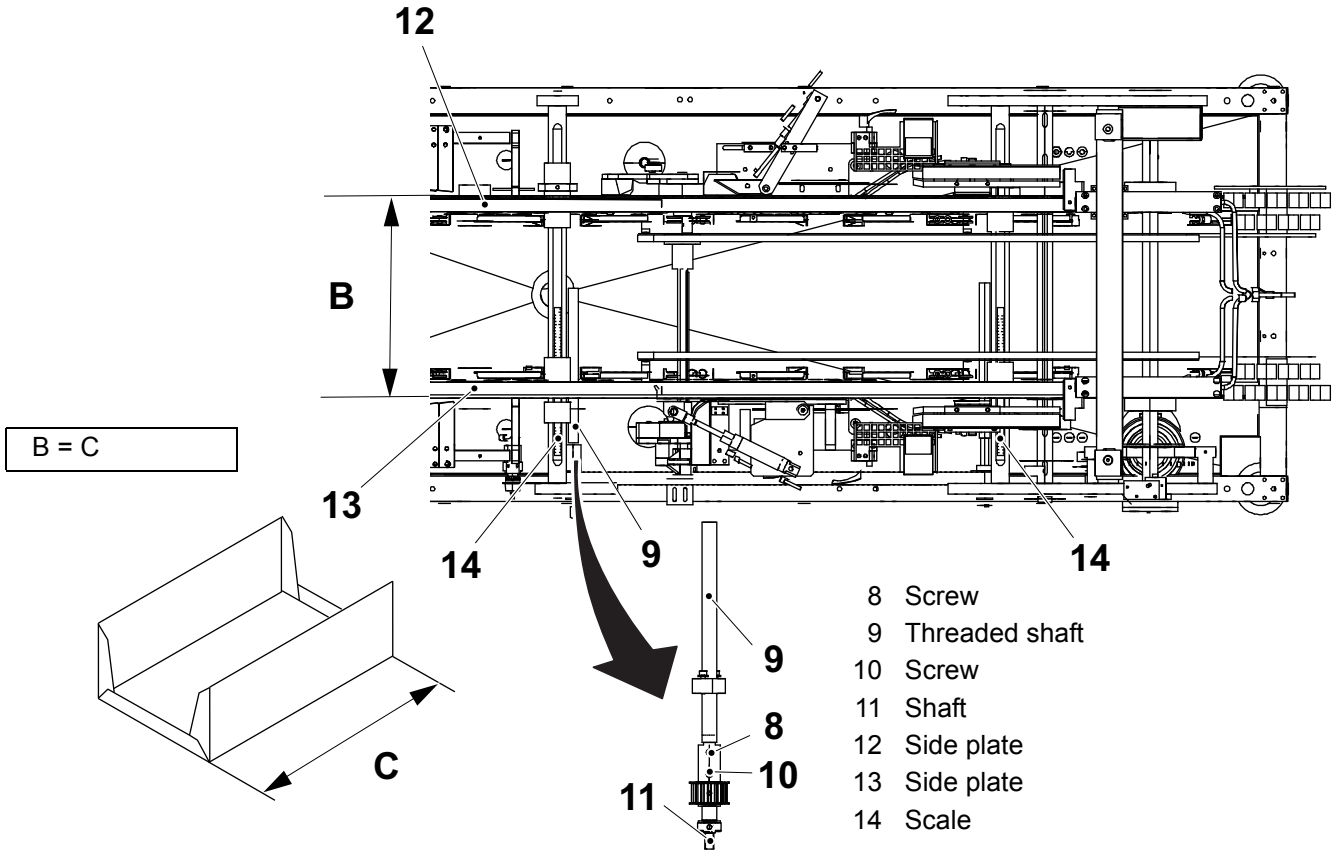

3.3.1 Carrier Chain Outside

3.3.1-1 Carrier Chain Outside - Set Chain Tension

Machine Status	Power supply disconnector OFF Air valve OFF
SPC Reference	1021096

a) Loosen the screws (1).

b) Loosen the nut (2).

c) Adjust with the screw (3).

d) Tighten the screws (1) and the nut (2).

e) Adjust the tension of both the chains. The chains are to be stretched but not too tightened.

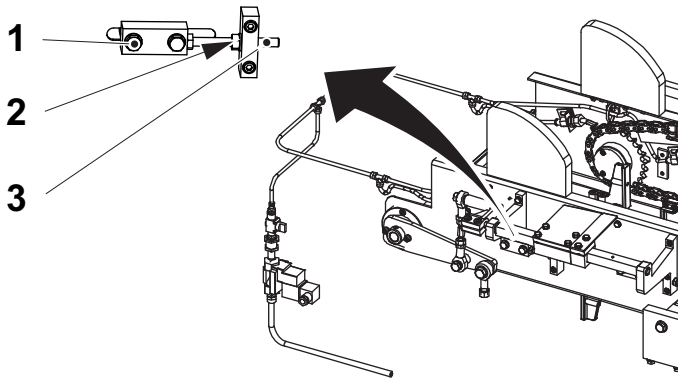

1 Screw
2 Nut
3 Screw

3.3.1-2 Carrier Chain Outside - Set

Machine Status	Power supply disconnector OFF Air valve OFF
SPC Reference	1021096

a) Make sure that the chain tension is set, see Sections 3.3.1-1 Carrier Chain Outside - Set Chain Tension and 3.3.2-2 Carrier Chain Inside - Set Chain Tension.

b) Place a composing stick (1) on the side plate (2).
Use the grub screws (3) to set the distance A at the bottom of the carrier links (4) on the outside chains.

c) Check so the carrier links (4:1) and (4:2) are parallels with the respective mark lines (5) and (6) on the side plates (2) and (7).
Also check that the carrier links are aligned.
If not do following:
   - Remove the motor fan cover (8) from the motor (9).
   - Turn the motor fan blades by hand until the carrier link (4:1) is parallel with the mark line (5).
   - Loosen the screw joint (10) on the sprockets (11).
   - Turn the sprocket (10) with help of the carrier link (4:3) until the carrier link (4:2) is parallel with the mark line (6).
   - Tighten the screwjoint (10).
   - Reinstall the motor fan cover (8) on the motor (9).

d) Make sure that the encoder feeding angle is set, see 3.2.3-1 Encoder Feeding - Set Angle Encoder.

(Cont'd)

(Cont'd)

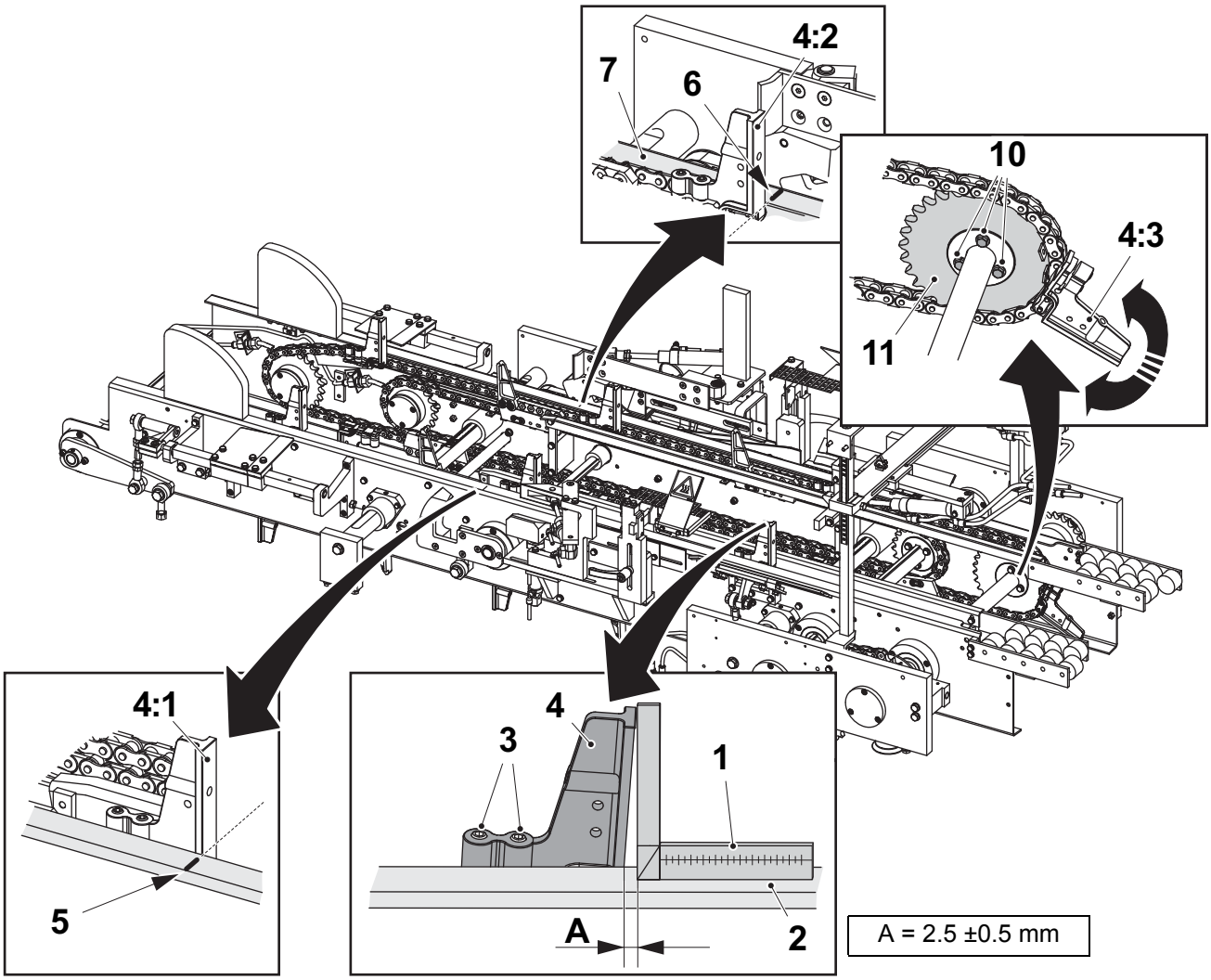

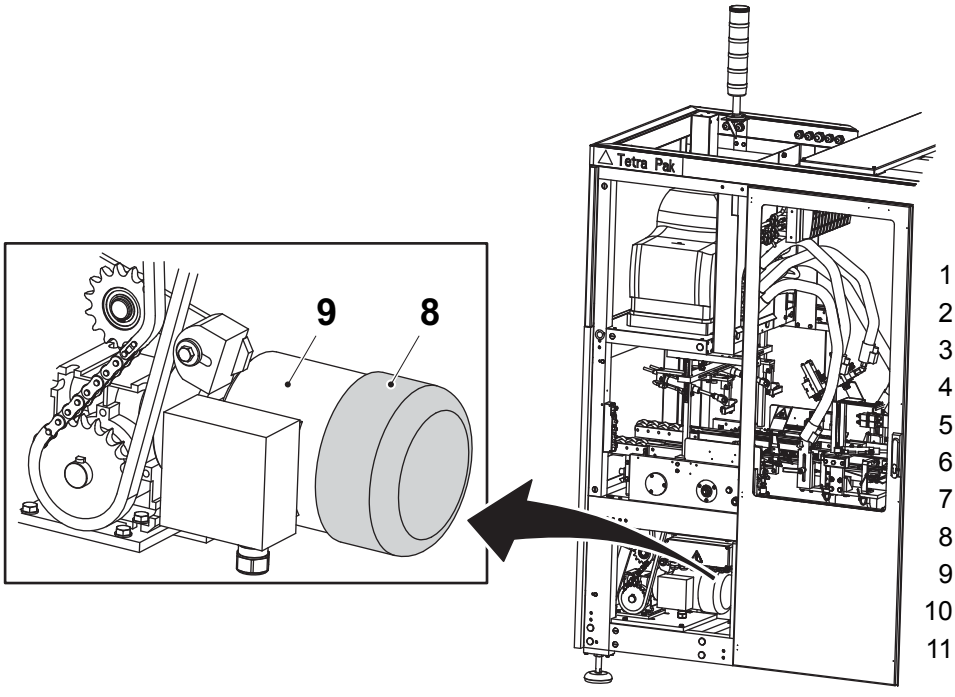

1 Composing stick
2 Side plate
3 Grub screw
4 Carrier
5 Mark line
6 Mark line
7 Side plate
8 Fan cover
9 Motor
10 Screw joint
11 Sprocket

3.3.2 Carrier Chain Inside

3.3.2-1 Carrier Chain Inside - Set

Machine Status	Power supply disconnector ON Air valve ON
SPC Reference	1021093

Make sure that the chain tension is set, see Section 3.3.2-2 Carrier Chain Inside - Set Chain Tension.

During the setting it will be necessary to inch the chain to set all the carriers.

Inch the Chain

a) Make sure that the machine is in step AIR (1).

b) Run the function; Feeding chain jog via the TPOP (2), see 6.8.4-4 TPOP Maintenance - Tray Forming.



1 AIR
2 Feeding chain jog function

(Cont'd)

(Cont'd)

Carrier Chain Inside Setting

a) Make sure that the carriers (3) and (4) are mounted in the correct position for the packing pattern width, see the table below. Remove the screws (5) to set.

b) Set the carrier (3) to be parallel with the other side carrier. Loosen the screws (6) on the sprocket (7), until it becomes loose. Adjust the position and tighten the screws (6).

c) Continue with the section Tray Width Setting on next page.

Note! It is only necessary to adjust one chain!

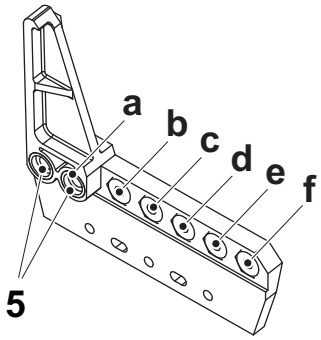

Tray width (mm)	Position
109 to144	a
128 to 178	b
147 to 197	c
166 to 216	d
185 to 235	e
204 to -	f

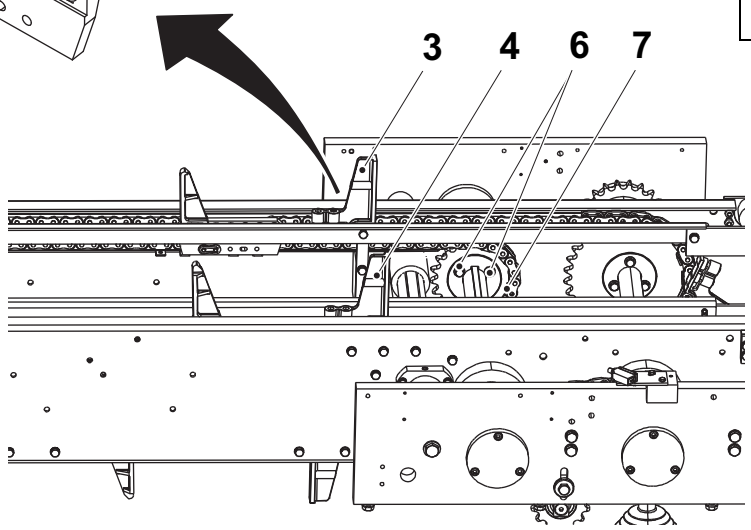

3 Carrier
4 Carrier
5 Screw
6 Screw
7 Sprocket

(Cont'd)

(Cont'd)

Tray Width Setting

d) Turn the selector actuator (8) to setting position (9).

e) Use a crank on the shaft (10) to adjust the distance A between the carriers (11) and (12).

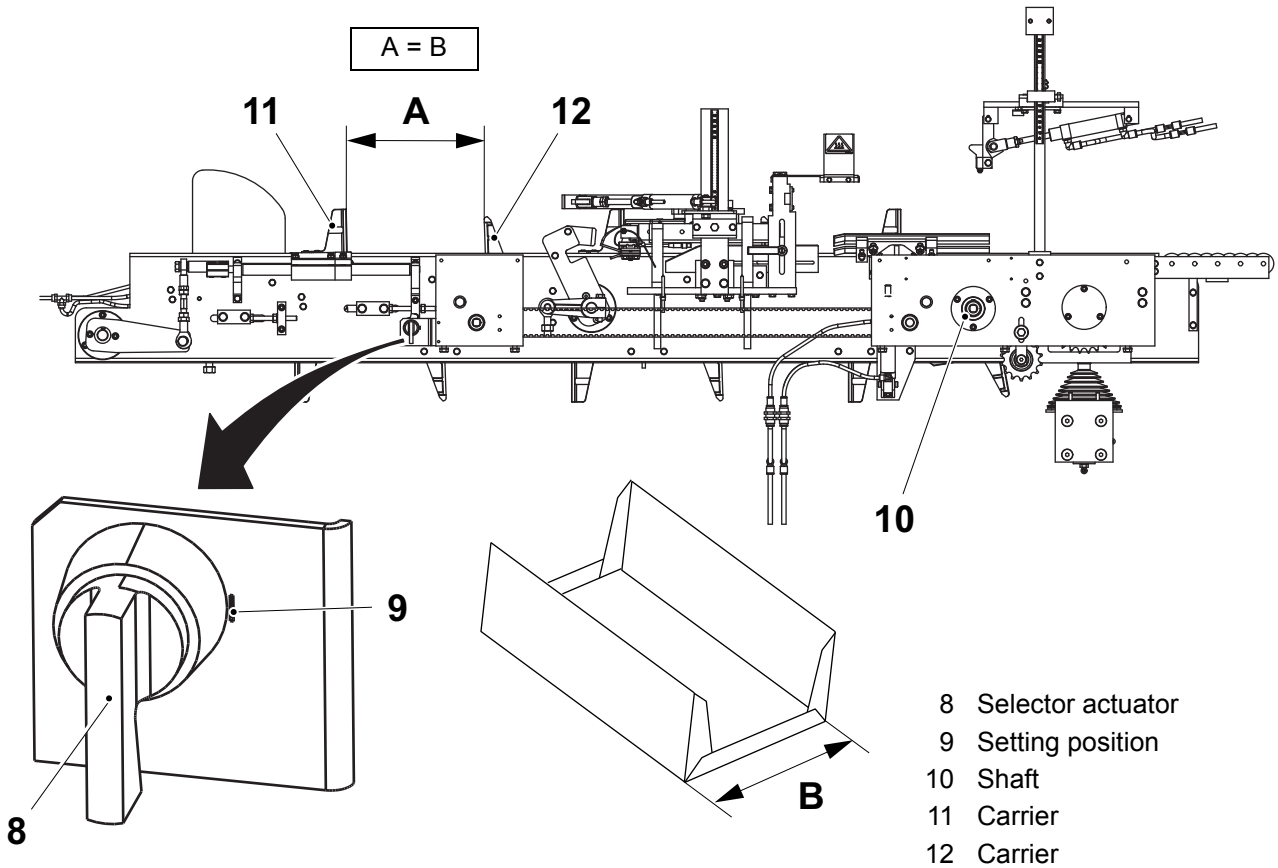

8 Selector actuator
9 Setting position
10 Shaft
11 Carrier
12 Carrier

3.3.2-2 Carrier Chain Inside - Set Chain Tension

Machine Status	Power supply disconnector OFF Air valve OFF
SPC Reference	1021093

a) Loosen the screws (1).

b) Loosen the nut (2).

c) Adjust with the screw (3).

d) Tighten the screws (1) and the nut (2).

e) Adjust the tension of both the chains. The chains are to be stretched but not too tightened.

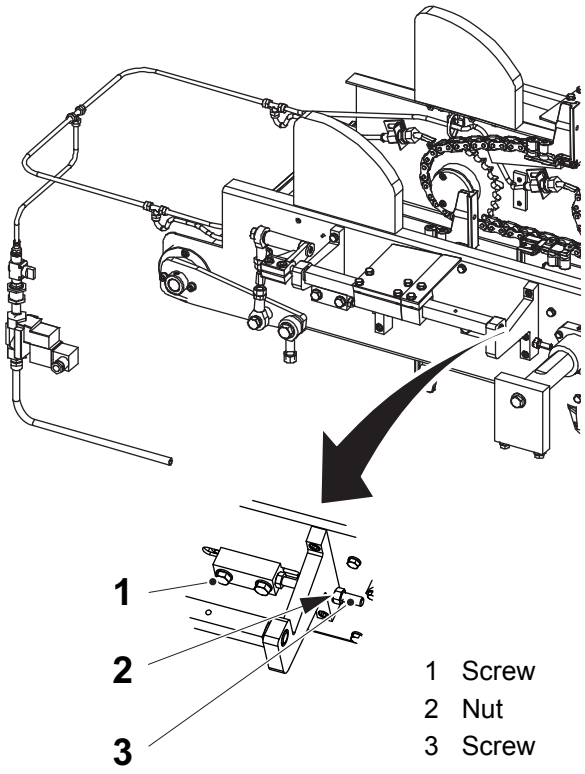

3.3.3 Chain Lubrication

3.3.3-1 Chain Lubrication - Check Function

Machine Status	Power supply disconnector ON Air valve ON Water ON
SPC Reference	1287010

a) Make sure that the machine is in step PRODUCTION.

b) Check that the chain lubrication nozzles (1) work properly. The chains (2) are to be little wet of water.

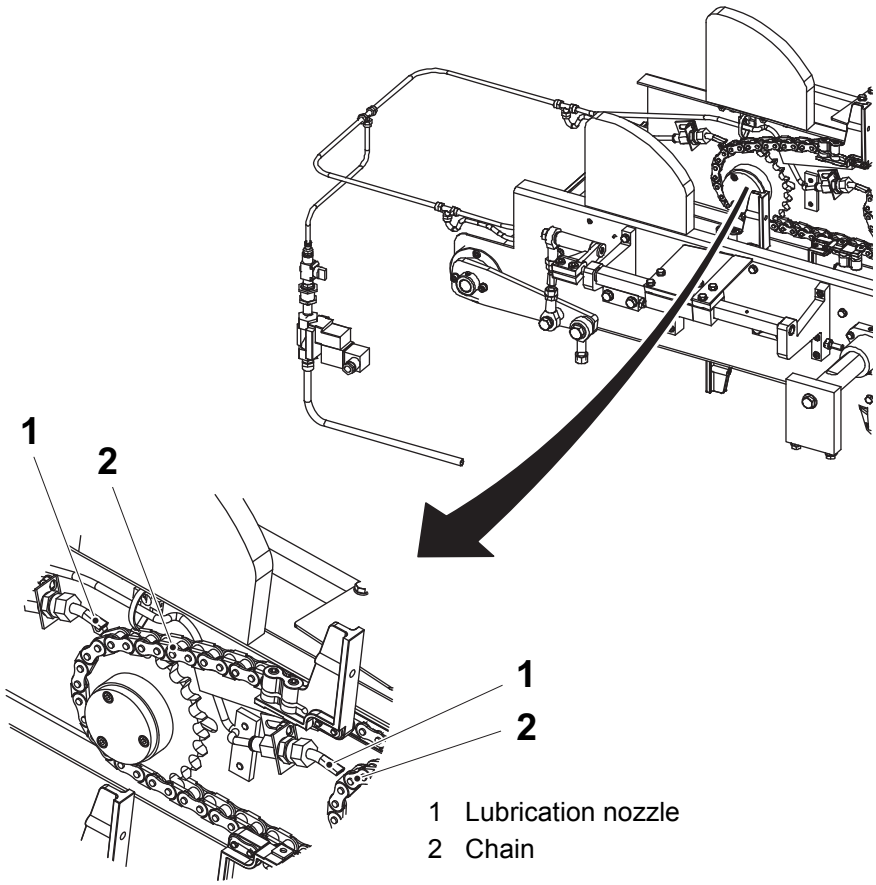

1 Lubrication nozzle
2 Chain

3.3.3-2 Chain Lubrication - Set

Machine Status	Power supply disconnector ON Air valve ON Water ON
SPC Reference	1287010

a) Adjust the lubrication flow with the shut-off valve (1).

b) Adjust the distance A between the nozzles (2) and the chain.

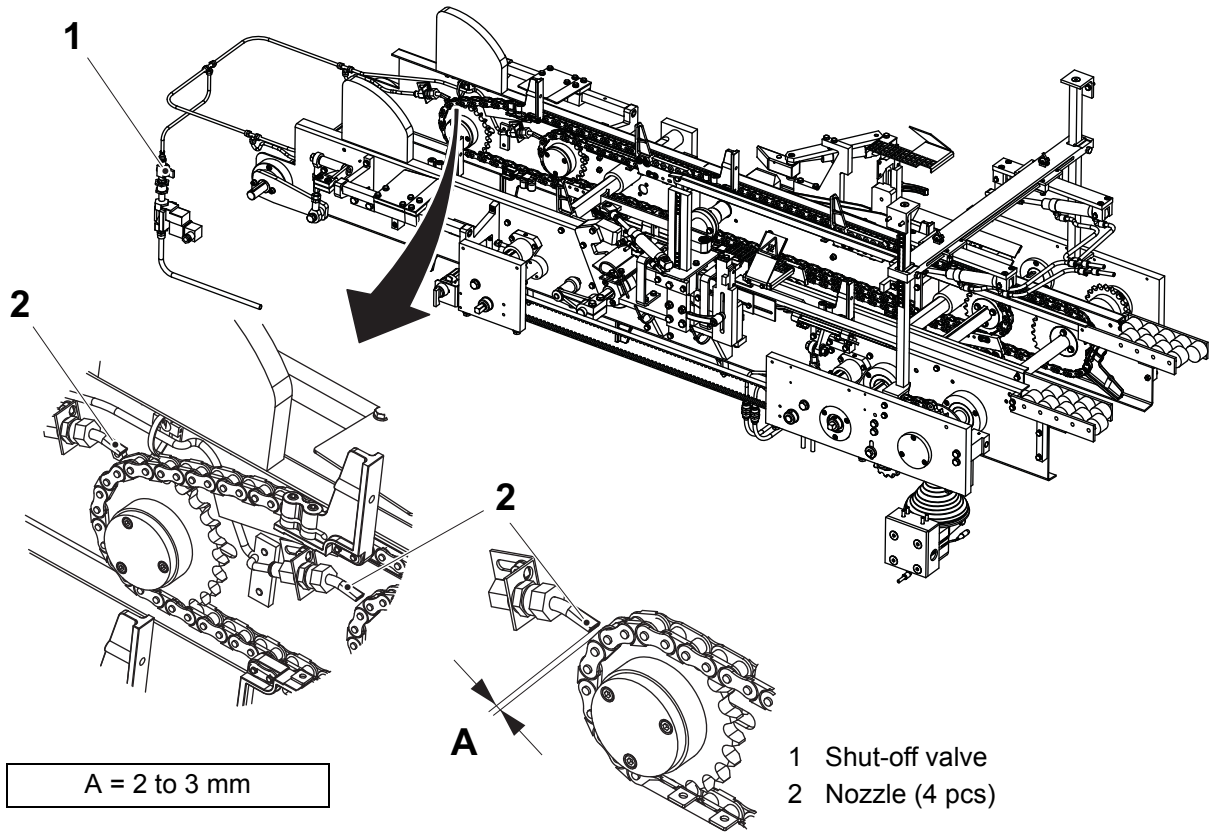

1 Shut-off valve
2 Nozzle (4 pcs)

3.3.4 Carrier Sprocket Inside

3.3.4-1 Carrier Sprocket Inside - Check

Machine Status	Power supply disconnector OFF Air valve OFF
SPC Reference	1021072

a) Remove the bearing cover (1) and check if there is water or rust inside the sprocket (2). Change the ball bearings (3) and the seal rings (4), see 3.3.4-2 Carrier Sprocket Inside - Change.

b) Check the chain tension at the lower side of the chains (5). The chains must not be stretched tighter than to eliminate play. If necessary set the tension, see 3.3.2-2 Carrier Chain Inside - Set Chain Tension.

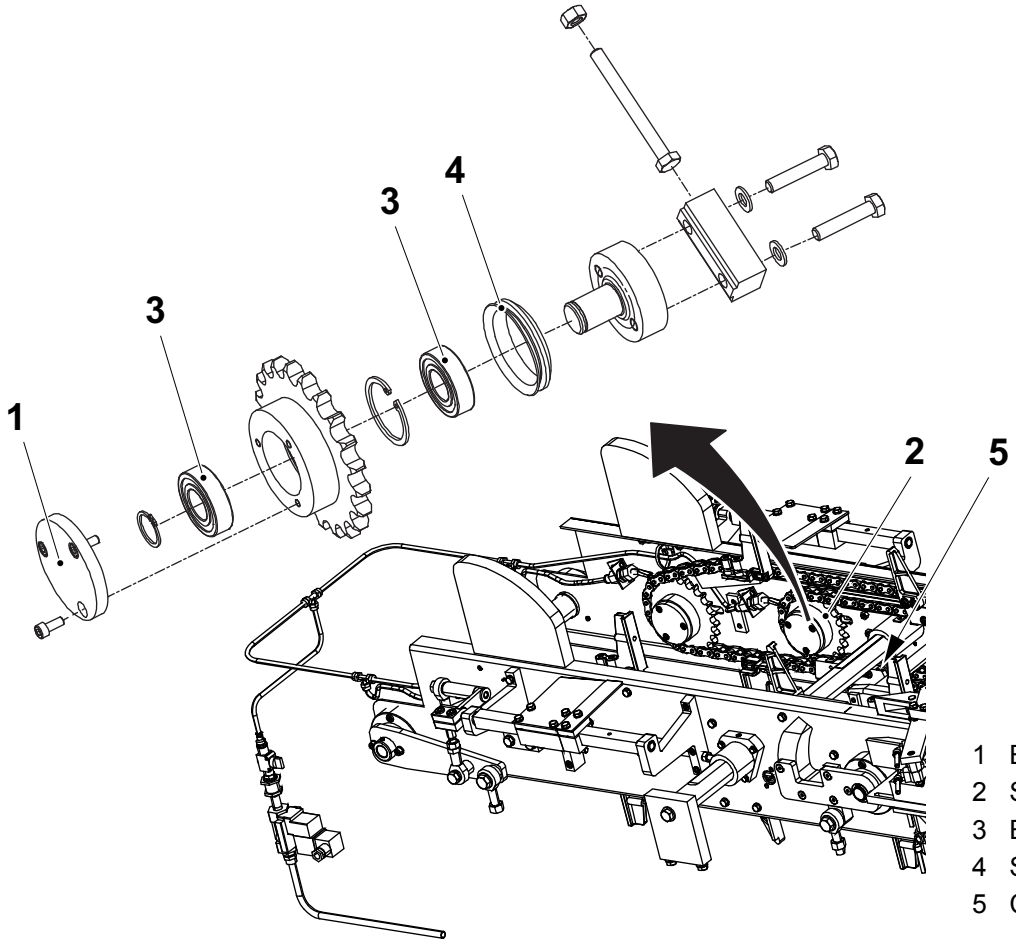

1 Bearing cover
2 Sprocket
3 Ball bearing
4 Seal ring
5 Chain

3.3.4-2 Carrier Sprocket Inside - Change

Machine Status	Power supply disconnector OFF Air valve OFF
SPC Reference	1021072

a) Loosen the screws (1).

b) Loosen the screw (2) to release the tension of the chains.

c) Remove the connecting link and remove the chains.

d) Disassemble and change the ball bearings (3) and the seal rings (4).

e) Assemble in the reverse order.

f) Set the chain tension, see 3.3.2-2 Carrier Chain Inside - Set Chain Tension.

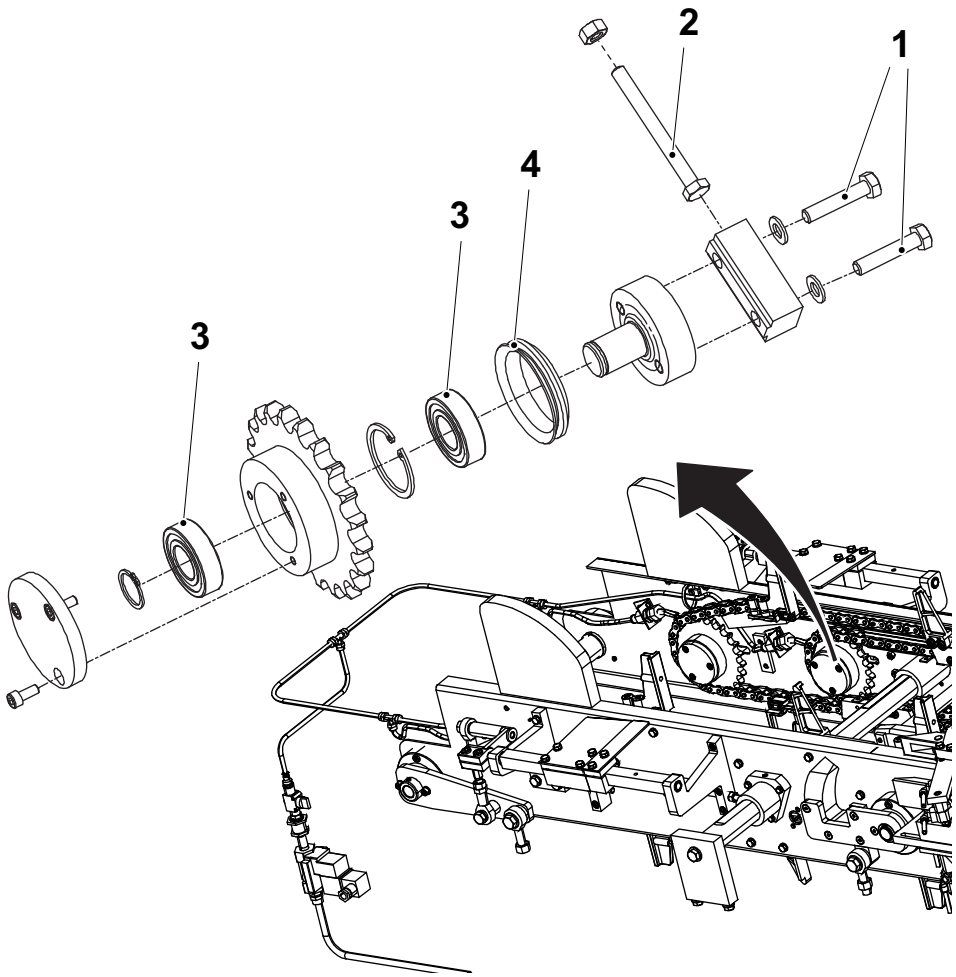

1 Screw
2 Screw
3 Ball bearing
4 Seal ring

3.3.5 Carrier Sprocket Outside

3.3.5-1 Carrier Sprocket Outside - Check

Machine Status	Power supply disconnector OFF Air valve OFF
SPC Reference	1021067

a) Check if there is rust or water inside the sprocket (1) according to 3.3.4-1 Carrier Sprocket Inside - Check.

b) Change if necessary according to section 3.3.5-2 Carrier Sprocket Outside - Change.

c) Check the chain (2) tension according to 3.3.4-1 Carrier Sprocket Inside - Check item b). If necessary set the tension, see 3.3.1-1 Carrier Chain Outside - Set Chain Tension.

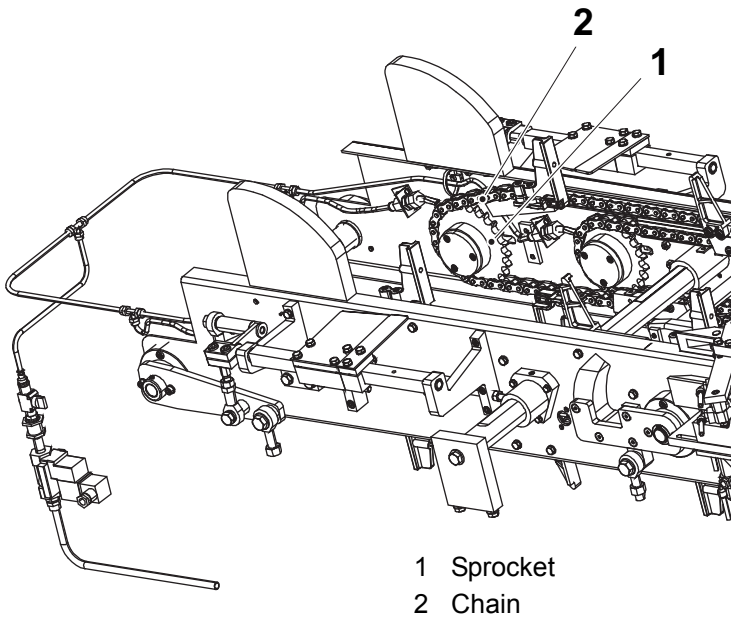

1 Sprocket
2 Chain

3.3.5-2 Carrier Sprocket Outside - Change

Machine Status	Power supply disconnector OFF Air valve OFF
SPC Reference	1021067

a) Change the ball bearings (1) and the seal rings (2) according to 3.3.4-2 Carrier Sprocket Inside - Change.

b) Set the chain (3) tension according to 3.3.1-1 Carrier Chain Outside - Set Chain Tension.

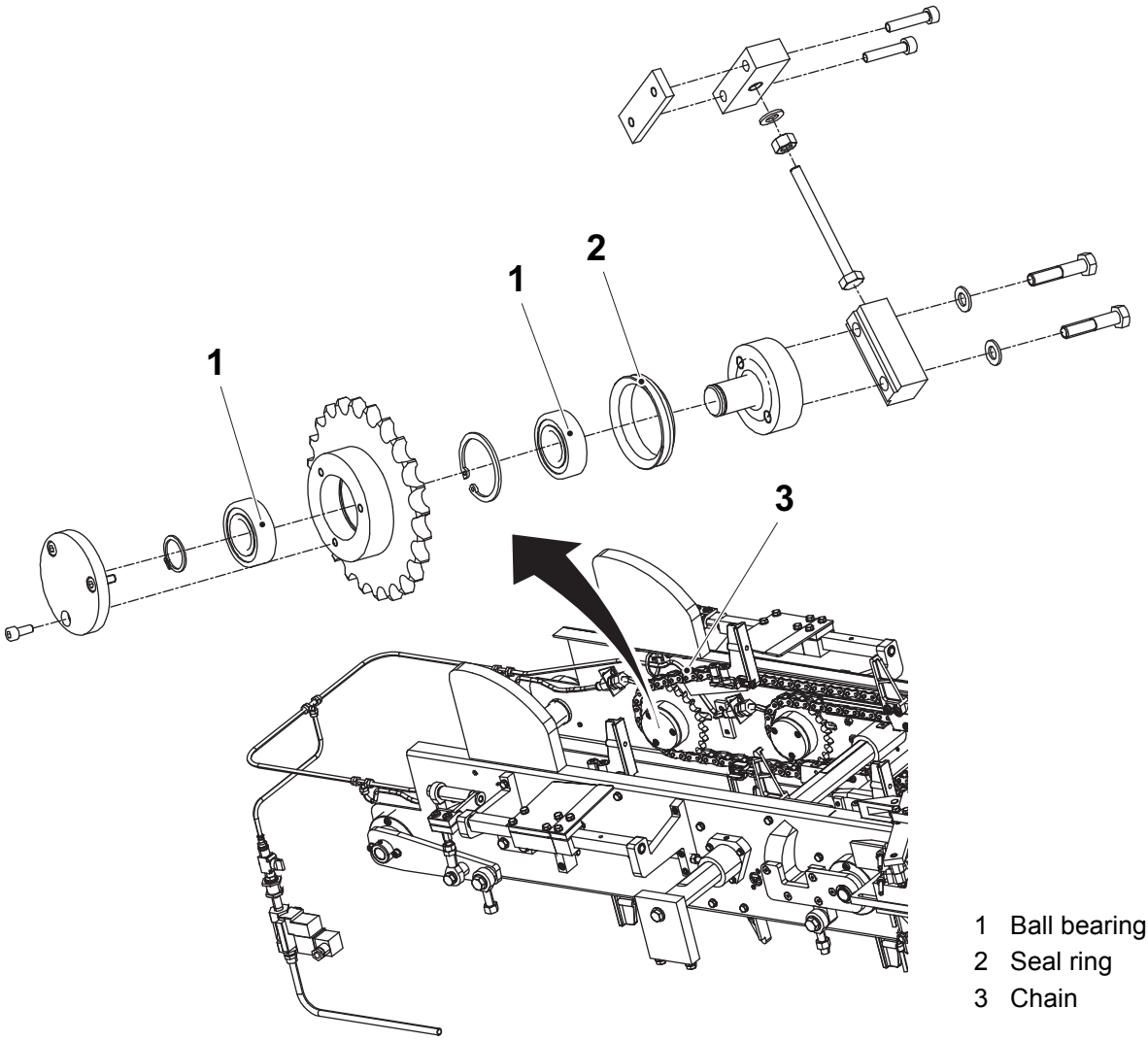

1 Ball bearing
2 Seal ring
3 Chain

3.3.6 Tray Holder

3.3.6-1 Tray Holder - Check

Machine Status	Power supply disconnector OFF Air valve OFF
SPC Reference	1021098

a) Check if there is more play than 3 mm furthest on the movement when lifting the plate (1). If necessary change the rod ends (2), the hub (3), the radial seal (4), and the ball bearing (5). If necessary also change the flange bushings (6), the flat wedge (7) and the parallel key (8).

b) Check if there is more play than 5 mm furthest on the movement when lifting the plate (9). If necessary change the rod ends (10), the hub (11), the bearing housing (12), the ball bearing (13). If necessary also change the flange bushings (14).

c) Change according to 3.3.6-2 Tray Holder - Change.

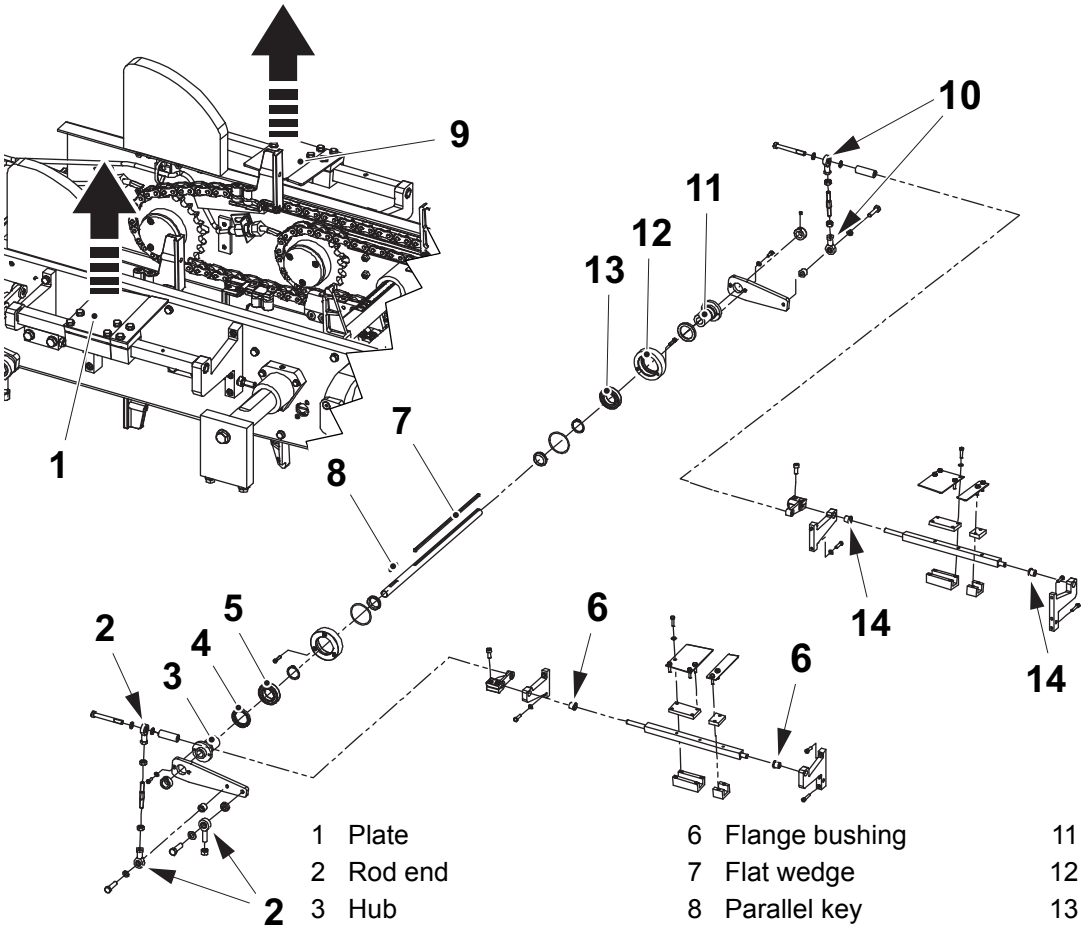

1 Plate
2 Rod end
3 Hub
4 Radial seal
5 Ball bearing
6 Flange bushing
7 Flat wedge
8 Parallel key
9 Plate
10 Rod end
11 Hub
12 Bearing housing
13 Ball bearing
14 Flange bushing

3.3.6-2 Tray Holder - Change

Machine Status	Power supply disconnector OFF Air valve OFF
SPC Reference	1021098

a) Remove the rod ends (1) and change them.
b) Remove the arm (2).
c) Pull out the hub (3) from the axle (4) and change the hub.
d) Remove the screws (5) and pull out the bearing housing (6).
e) Disassemble and change the radial seal (7) and the ball bearing (8).
f) Change the flat wedge (9) and the parallel key (10).
g) Remove the arm (11) and the bracket (12) and change the flange bushing (13).
h) Remove the axle (14) and change the flange bushing (15).
i) Repeat items a) to e) on the opposite side of the tray holder.
j) Assemble in the reverse order.
k) Set the tray holder, see 3.3.6-3 Tray Holder - Set.

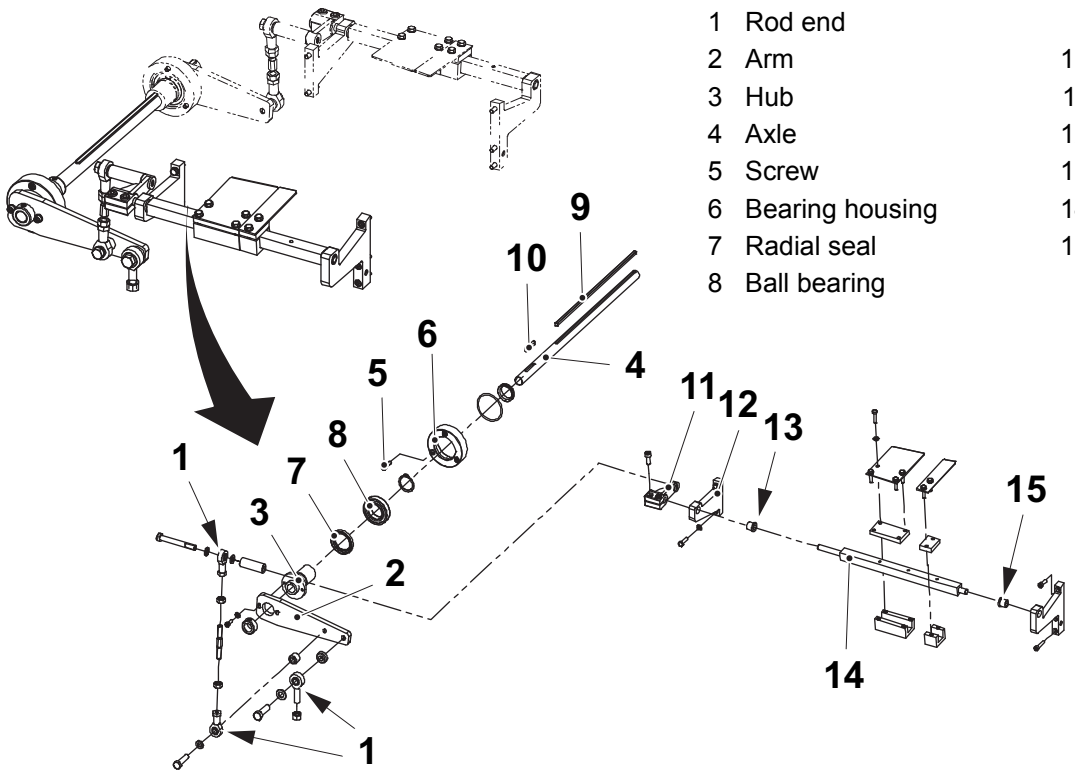

1 Rod end
2 Arm
3 Hub
4 Axle
5 Screw
6 Bearing housing
7 Radial seal
8 Ball bearing
9 Flat wedge
10 Parallel key
11 Arm
12 Bracket
13 Flange bushing
14 Axle
15 Flange bushing

3.3.6-3 Tray Holder - Set

Machine Status	Power supply disconnector OFF Air valve OFF
SPC Reference	1021098

WARNING

Risk of serious personal injury!

Failure to observe this information could result in serious personal injury.

Alignment

a) Make sure that the rear main shaft is set correctly, see 3.1.4-1 Main Shaft Rear - Set Cams.

b) Remove the fan cover (1).

c) Crank with the fan wheel the scale (2) to 20°.

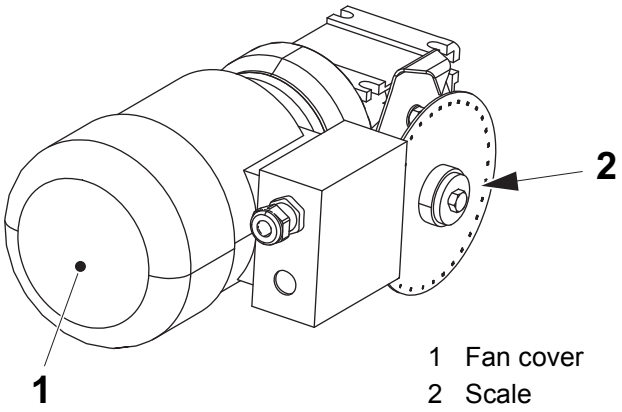

1 Fan cover
2 Scale

(Cont'd)

(Cont'd)

d) Loosen the lock nuts (3) on each of the two connecting link ends. Rotate the link arm (4) to obtain the distance A. Tighten the lock nuts (3).

e) Loosen the screws (5), and lift the plates (6) to distance B between the plates (6) and the side plates (7). Tighten the screws.

f) Reset the scale (2) to 0° with the fan wheel.

g) Reinstall the fan cover (1).

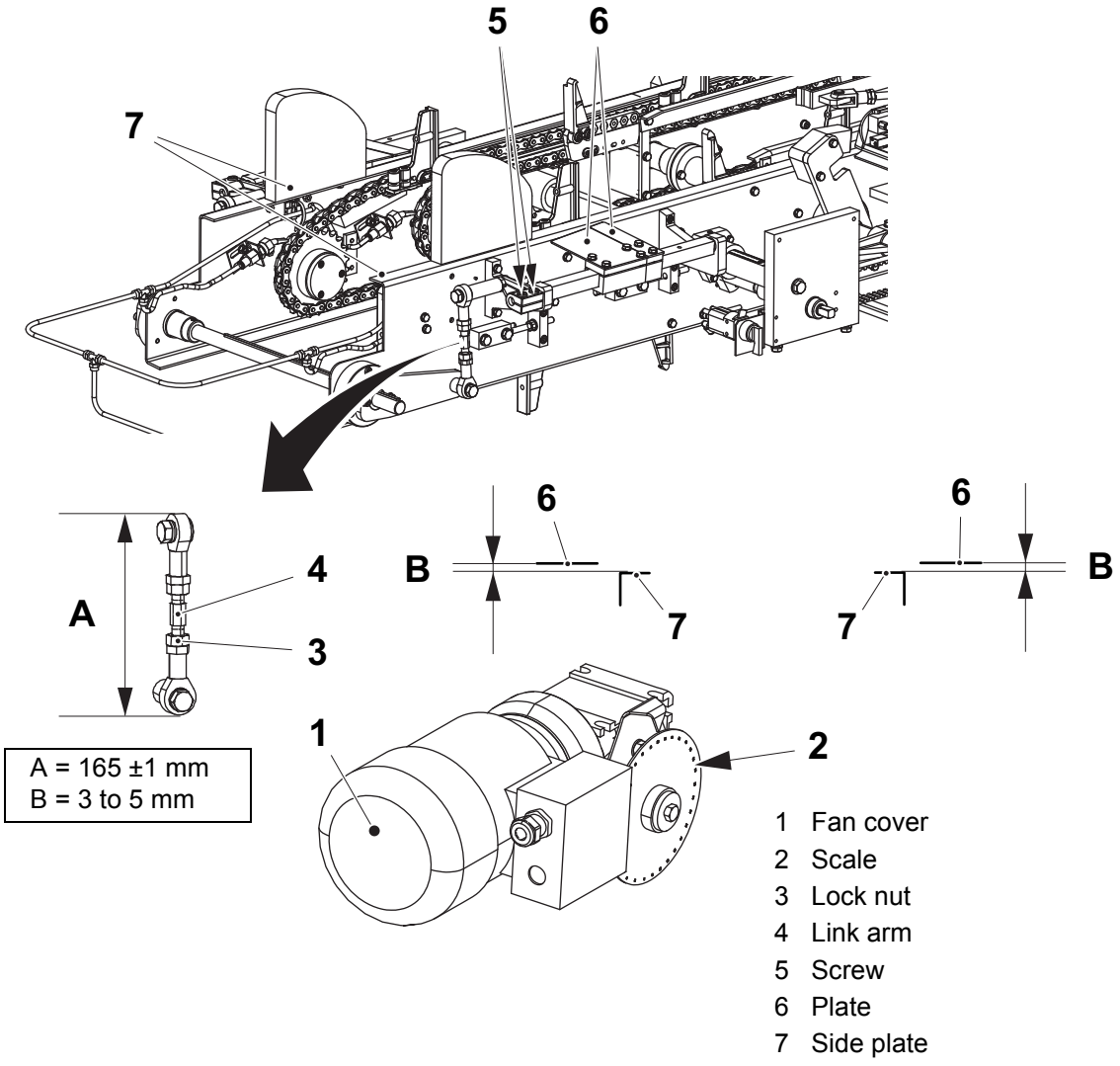

(Cont'd)

(Cont'd)

Position

a) Set the carriers (1) and (2) on the marks (3) at the side plates.

b) Place a tray (4) in position.

c) Loosen the screws (5) on the plate (6), and adjust the plate to the distance A. Tighten the screws.

d) Loosen the screws (7) on the plate (8) and adjust the plate to the distance B. Tighten the screws.

e) Set the distances A and B on the other side on the tray holder.

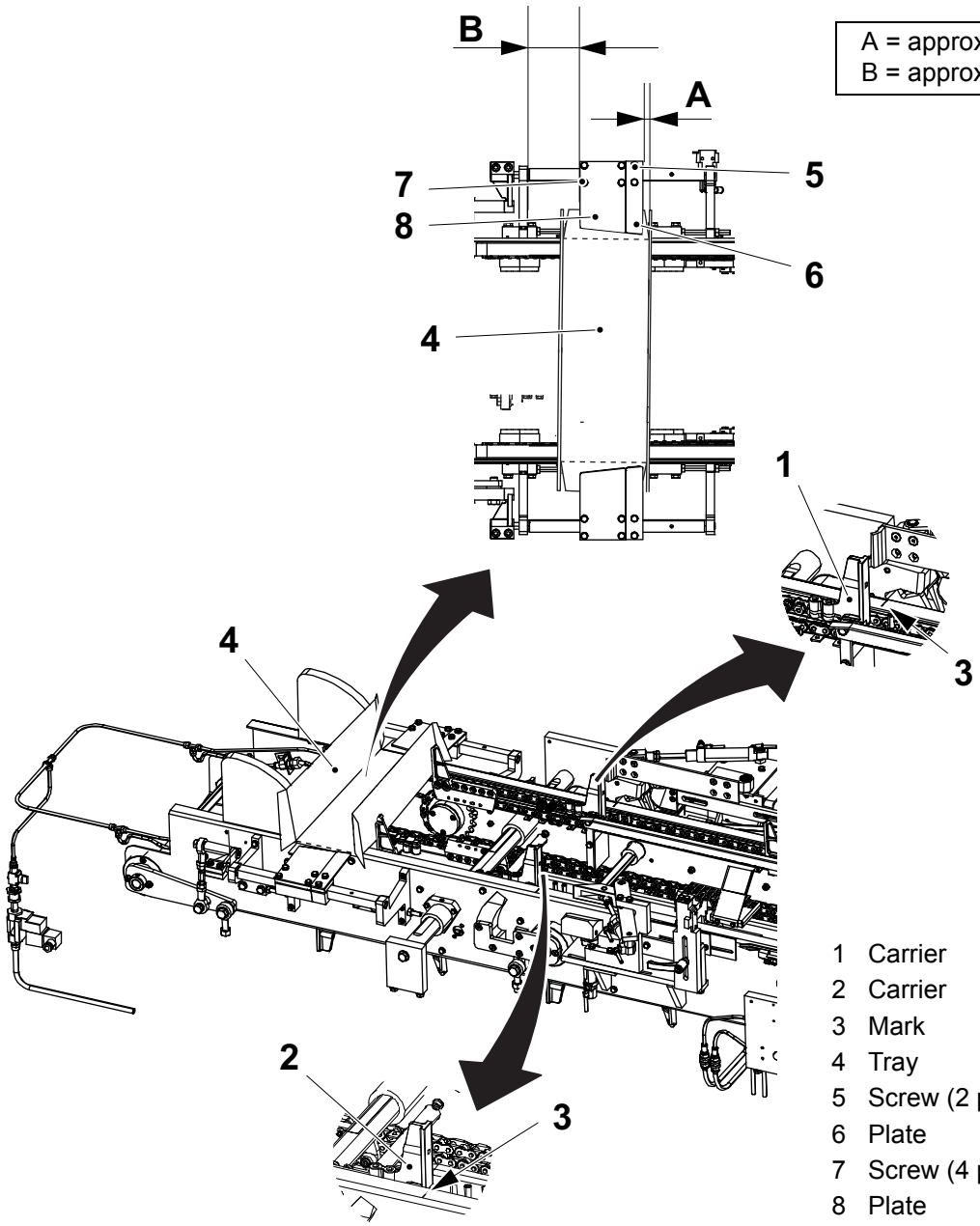

A = approximately 10-15 mm
B = approximately 95-100 mm

1 Carrier
2 Carrier
3 Mark
4 Tray
5 Screw (2 pcs)
6 Plate
7 Screw (4 pcs)
8 Plate

3.3.7 Side Folder

3.3.7-1 Side Folder - Check

Machine Status	Power supply disconnector OFF Air valve OFF
SPC Reference	1021119

a) Check if there is more play than 4 mm when moving the arm (1). If necessary, change the rod end (2), the hub (3), the seal rings (4), the ball bearing (5), and the O-ring (6). If necessary, also change the ball bearings (7) and the seal ring (8).

b) Check if there is more play than 4 mm when moving the arm (9). If necessary, change the rod end (10), the hub (11), the seal rings (12), the ball bearing (13), and the O-ring (14).

c) If necessary, change according to 3.3.7-3 Side Folder - Change.

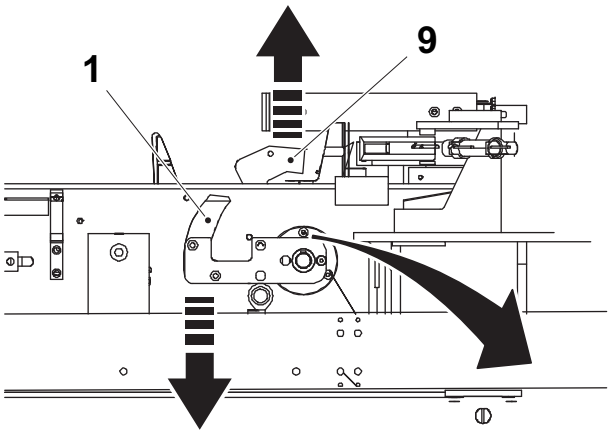

1 Arm
2 Rod end
3 Hub
4 Seal ring
5 Ball bearing
6 O-ring
7 Ball bearing
8 Seal ring
9 Arm
10 Rod end
11 Hub
12 Seal ring
13 Ball bearing
14 O-ring

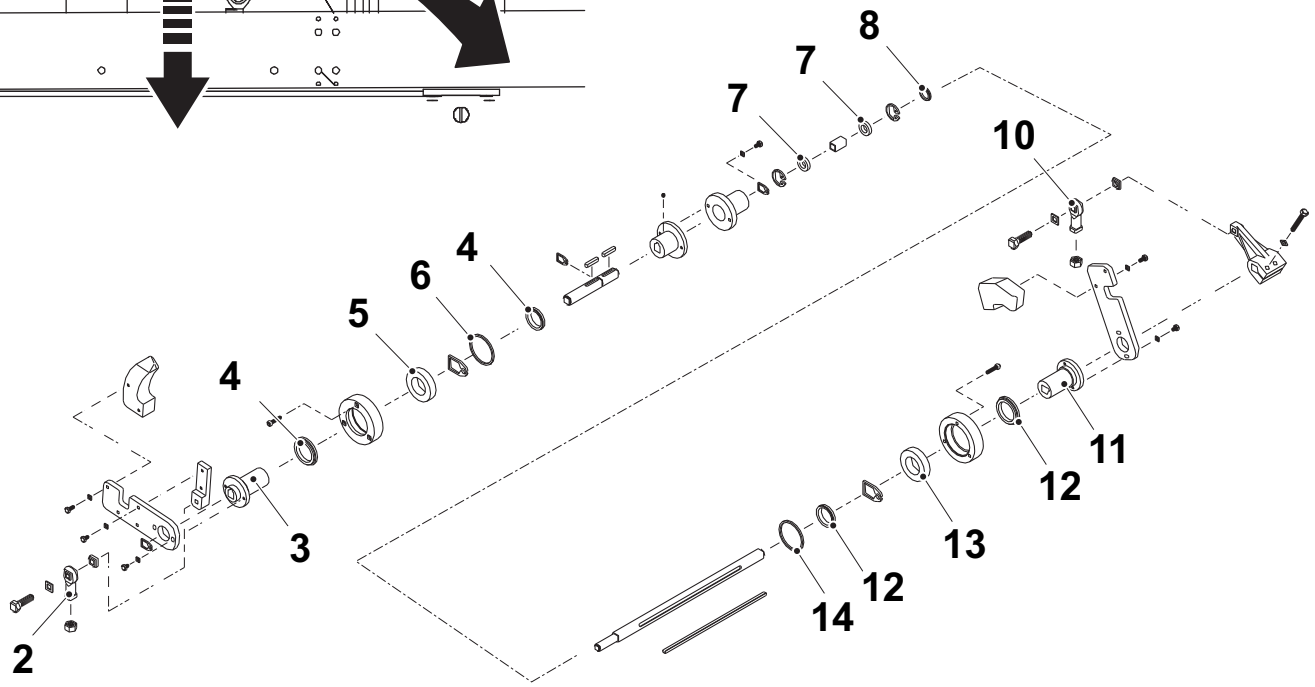

3.3.7-2 Side Folder - Set

Machine Status	Power supply disconnector OFF Air valve OFF
SPC Reference	1021119

a) Remove the fan cover (1).

b) Crank with the fan wheel until the arm (2) is in its bottom position. The scale (3) is between 145° and 345°.

c) Reinstall the fan cover (1).

d) Check that the arm (2) is distance A below the base plane (4). If not, remove the screw (5) and adjust on the rod end (6).

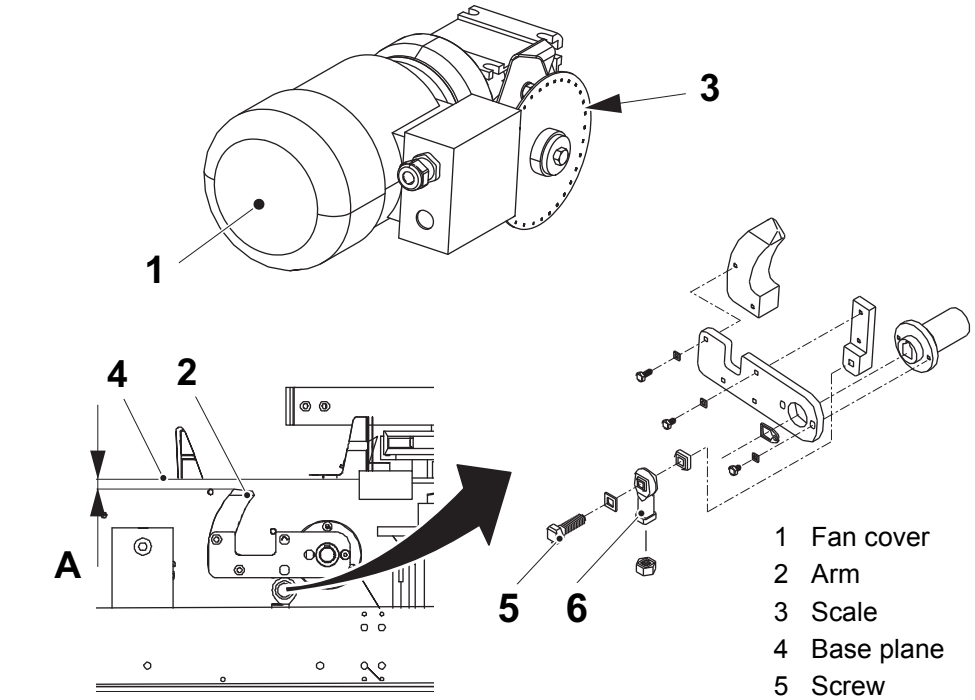

1 Fan cover
2 Arm
3 Scale
4 Base plane
5 Screw
6 Rod end

A = 2 to 3 mm

3.3.7-3 Side Folder - Change

Machine Status	Power supply disconnector OFF Air valve OFF
SPC Reference	1021119

a) Remove the rod end (1) and change it.

b) Remove the arm (2).

c) Pull out the hub (3) and change it.

d) Remove the bearing housing (4) and disassemble it. Change the seal rings (5), the ball bearing (6), and the O-ring (7).

e) Remove the hubs (8) and (9) and change the ball bearings (10) and the seal ring (11).

f) Repeat items a) to c) on the opposite side of the side folder.

g) Remove the bearing housing (12) and disassemble it. Change the seal rings (13), the ball bearing (14), and the O-ring (15).

h) Assemble in the reverse order.

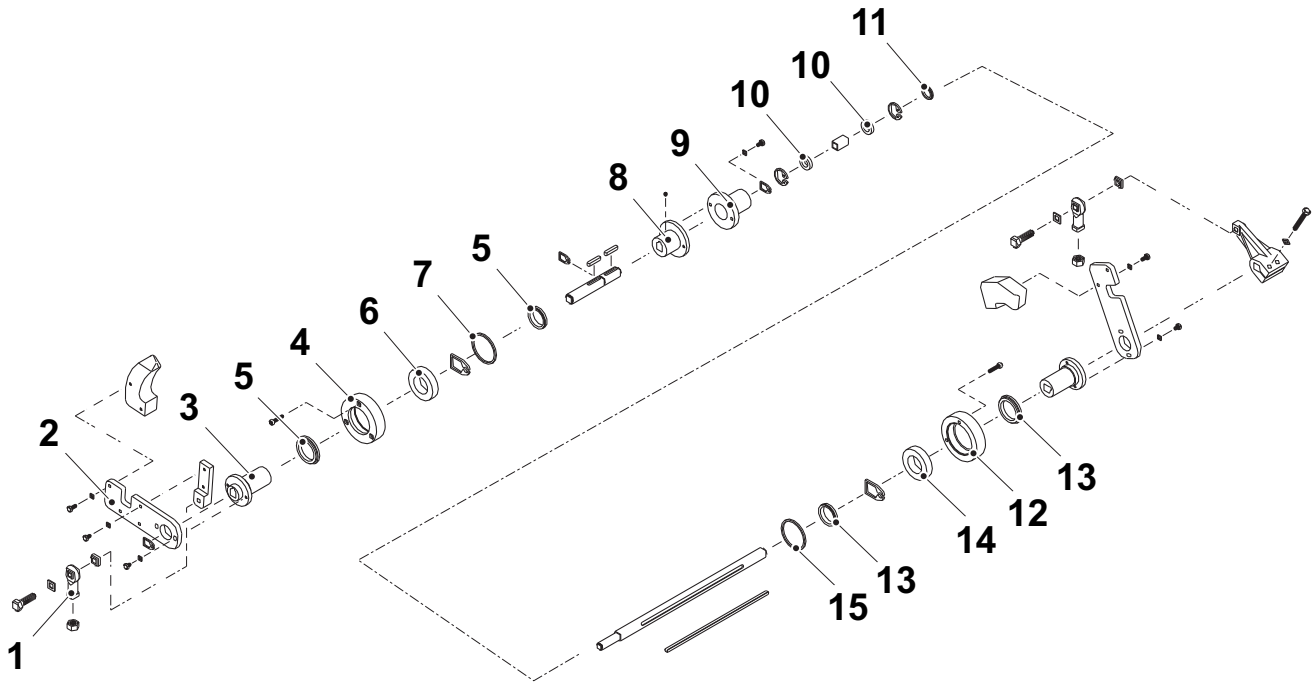

1 Rod end
2 Arm
3 Hub
4 Bearing housing
5 Seal ring
6 Ball bearing
7 O-ring
8 Hub
9 Hub
10 Ball bearing
11 Seal ring
12 Bearing housing
13 Seal ring
14 Ball bearing
15 O-ring

3.3.8 Folding Station

3.3.8-1 Folding Station - Change

Machine Status	Power supply disconnector OFF Air valve OFF
SPC Reference	2763130

a) Remove the cylinder (1).
b) Change the flange bushings (2) and the cylinder (1).
c) Remove the screw (3).
d) Remove the cylinder (4) and change it.
e) Connect the new cylinders.
f) Set the folding station, see 3.3.8-2 Folding Station - Set.

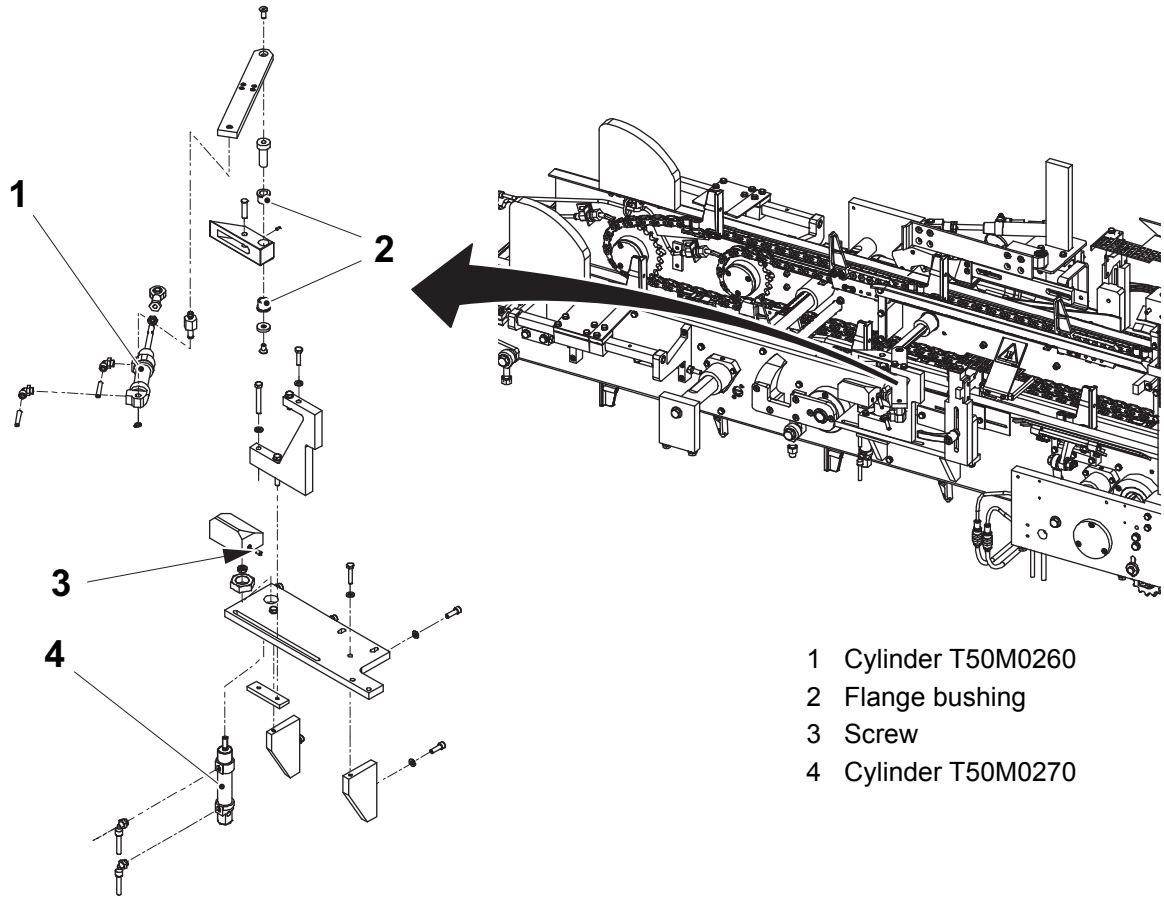

1 Cylinder T50M0260
2 Flange bushing
3 Screw
4 Cylinder T50M0270

3.3.8-2 Folding Station - Set

Machine Status	Power supply disconnector OFF Air valve OFF
SPC Reference	2763130

a) Make sure that the tray (1) is in pack position.

b) With the cylinder (2) in plus position, loosen the nut (3).

c) Adjust the bracket (4) to support the tray. The bracket (4) is to be align with the tray (1) and the side plate (5) according to figure 1.

d) Tighten the nut (3).

e) With the cylinder (2) in minus position, loosen the screws (6).

f) Set the distance A between the tray (1) and the bracket (4). Adjust the bracket (4) not to interfere with the moving tray (1).

g) Tighten the screws (6).

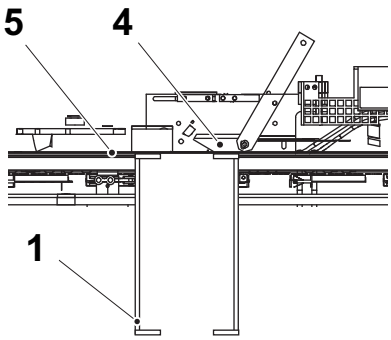

Figure 1

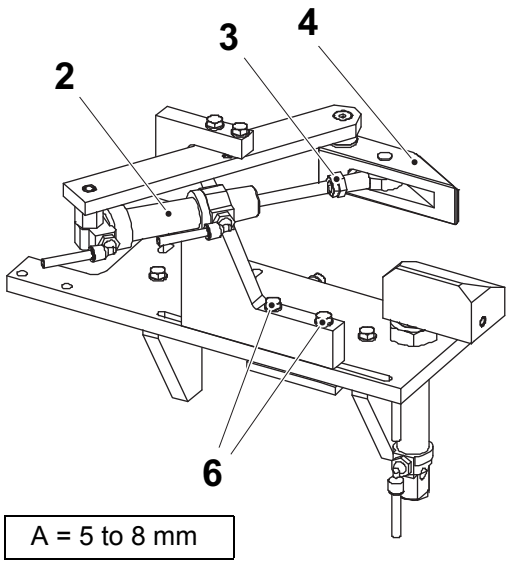

A = 5 to 8 mm

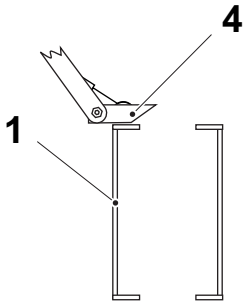

The bracket with the cylinder in plus position

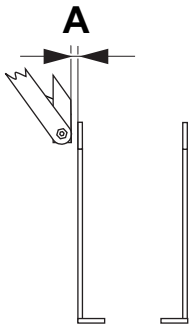

The bracket with the cylinder in minus position

1 Tray
2 Cylinder T50M0260
3 Nut
4 Bracket
5 Side plate
6 Screw

3.3.9 Packing End Stop

3.3.9-1 Packing End Stop - Check

Machine Status	Power supply disconnector OFF Air valve OFF
SPC Reference	2763129

a) Move the rail (1) and check for play. If necessary change the flange bushings (2) and (3), see 3.3.9-2 Packing End Stop - Change.

b) Check the cylinder (4) for wear, damage and leakage. Change if necessary, see 3.3.9-2 Packing End Stop - Change.

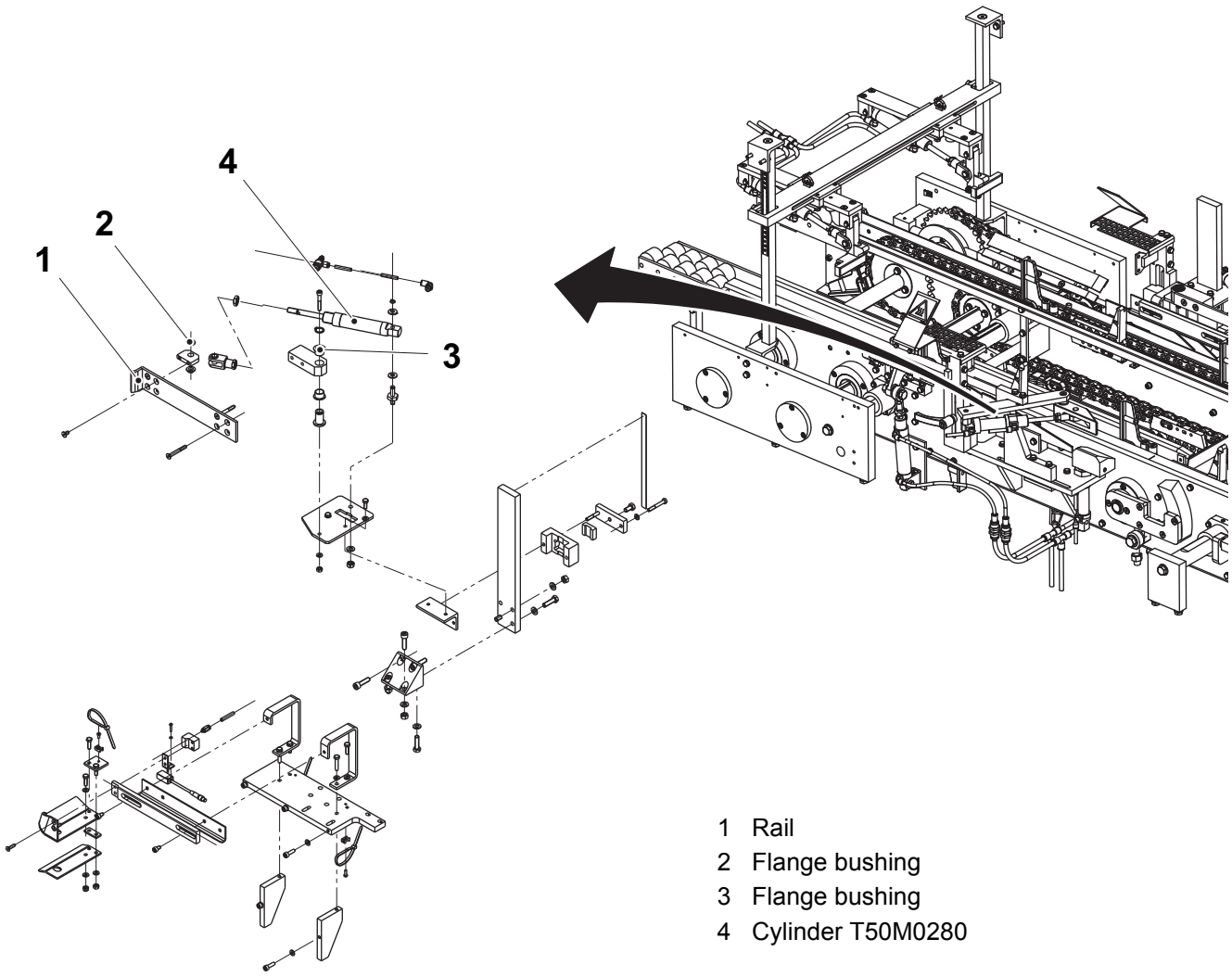

1 Rail
2 Flange bushing
3 Flange bushing
4 Cylinder T50M0280

3.3.9-2 Packing End Stop - Change

Machine Status	Power supply disconnector OFF Air valve OFF
SPC Reference	2763129

a) Disassemble and change the flange bushings (1) and (2) and the cylinder (3) as necessary according to the illustration below.

b) Assemble in the reverse order.

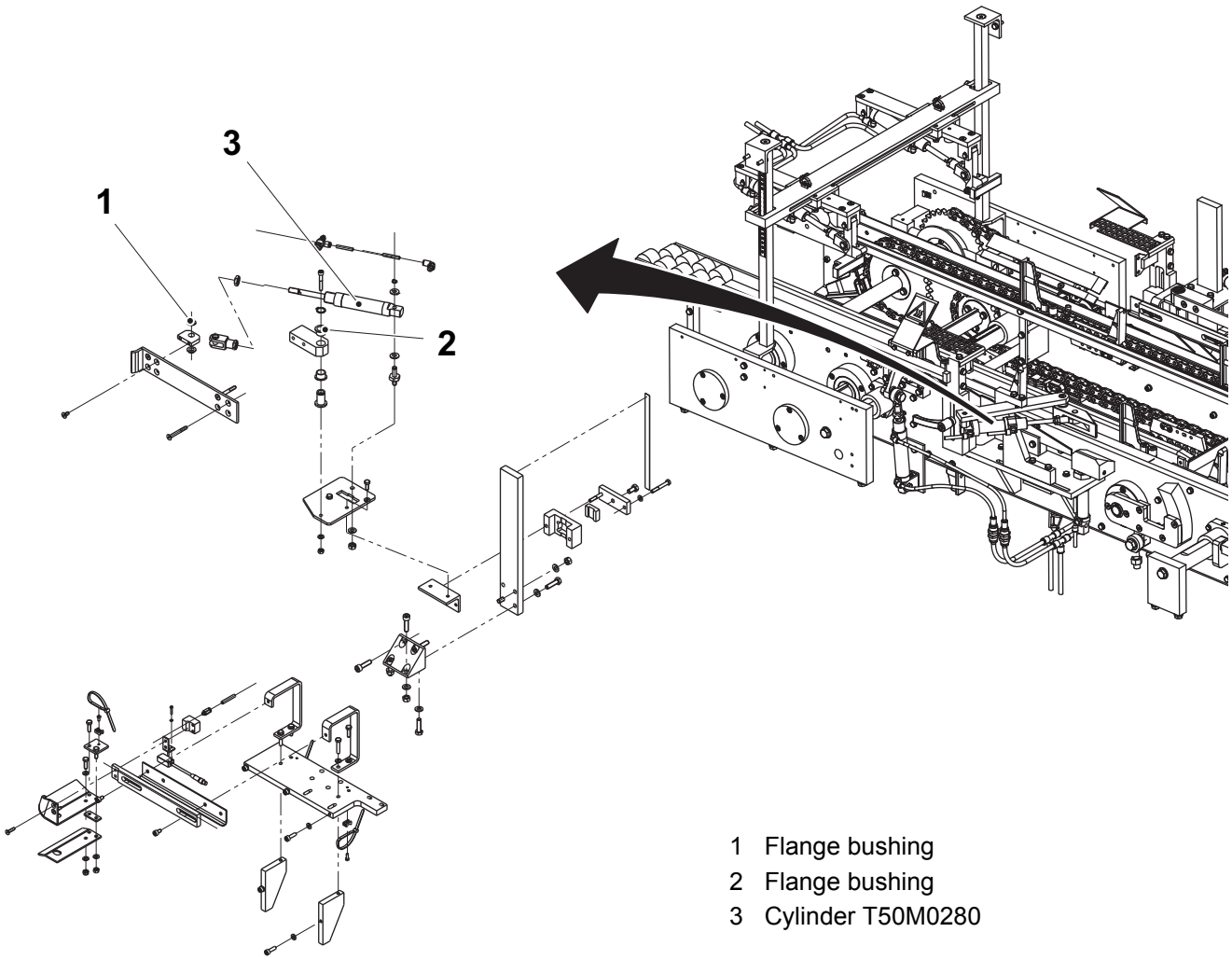

1 Flange bushing
2 Flange bushing
3 Cylinder T50M0280

3.3.9-3 Packing End Stop - Set

Machine Status	Power supply disconnector OFF Air valve OFF
SPC Reference	2763129

Make sure that the chain tension is set, see Sections 3.3.1-1 Carrier Chain Outside - Set Chain Tension and 3.3.2-2 Carrier Chain Inside - Set Chain Tension.

Tray Height Setting

a) Loosen the screw (1).

b) Position the rail (2) as high up on the tray as possible. The scale (4) should show the height of the tray.

Note! If the height of the tray is below 110 mm, change the rail (2) to the lower rail (3). When changing the rail, it is not possible to use the scale as a reference tool.

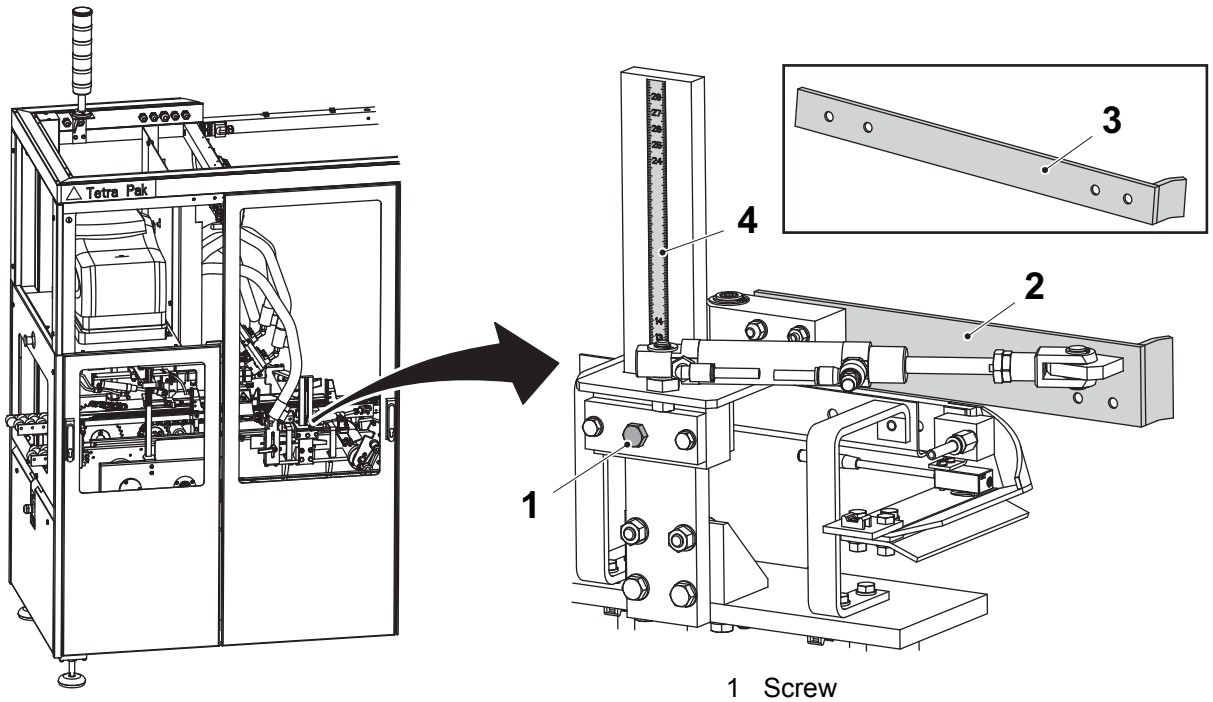

1 Screw
2 Rail (high)
3 Rail (low)
4 Scale

(Cont'd)

(Cont'd)

c) Set the sensitivity of the photocell (5) so it indicate the distance A under the guide rail (6), see 6.10-1 Control Devices and Sensors - Set Photocells.

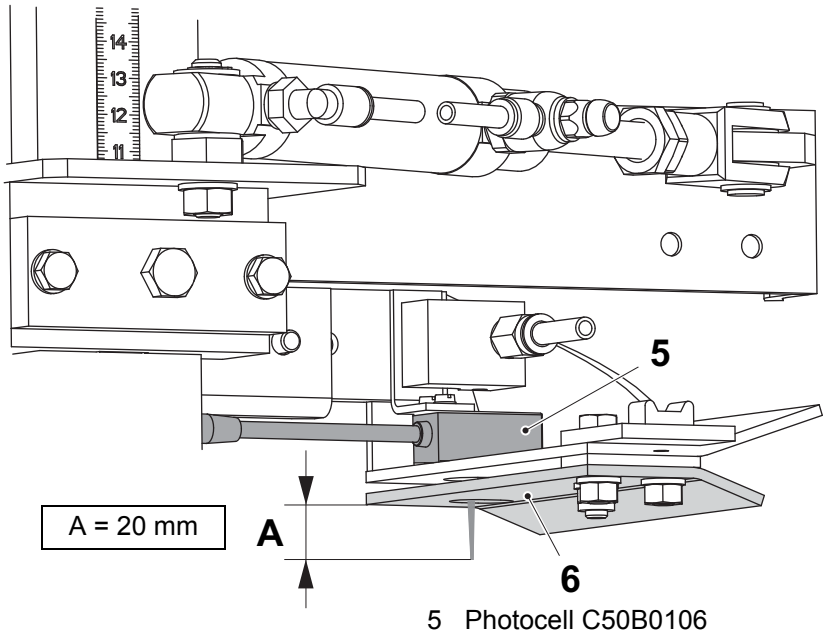

5 Photocell C50B0106
6 Guide rail

(Cont'd)

(Cont'd)

d) Loosen the screws (7).

e) Move the guide rail (8) and set the distance B between the guide rail and the carrier (9).

f) Tighten the screws (7).

Note! When using trays with flaps that are shorter than the lug (10), set the guide rail (8) close to the lug (10). When using trays with 85 mm flap, set the guide rail to its back position.

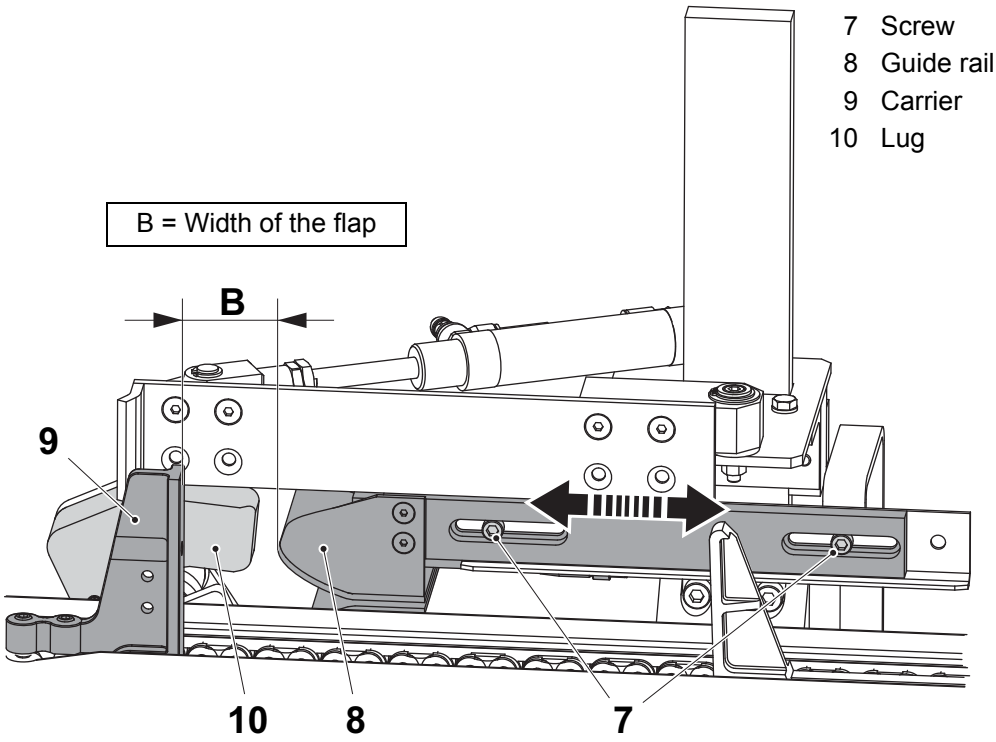

(Cont'd)

(Cont'd)

There are two spacers (11) and (12) with different thickness, 3 mm and 4 mm. Use the one that is somewhat thicker than the cardboard.

Change the spacer and set the plate as follows:

g) Remove the screw joint (13) and the spacer (12).

h) Loosen the locking nut (14) and the screw (15).

i) Remove the spacer (11).

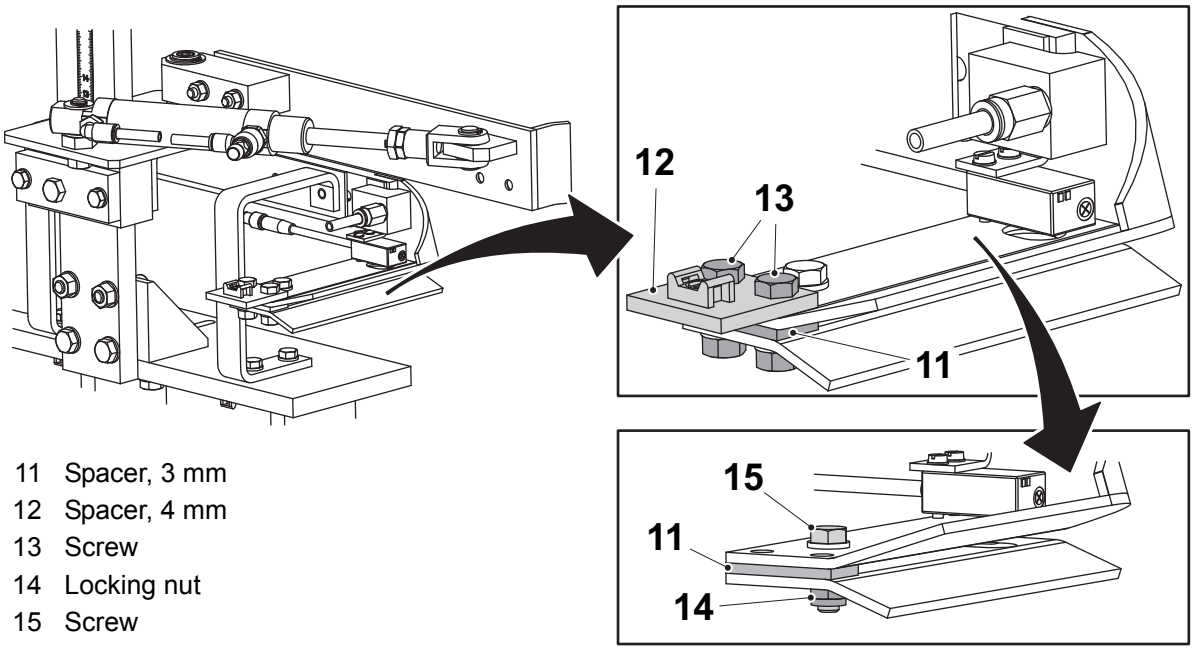

11 Spacer, 3 mm
12 Spacer, 4 mm
13 Screw
14 Locking nut
15 Screw

(Cont'd)

(Cont'd)

j) Install the spacer (12) between the guide rails (6) and (8).

k) Install the spacer (11) and reinstall the screw joint (13).

l) Set the pressure of the guide rails (6) and (8) with the screw (15). It should keep the cardboard tray in place when the flaps are folded, without squeezing it.

m) Tighten the locking nut (14).

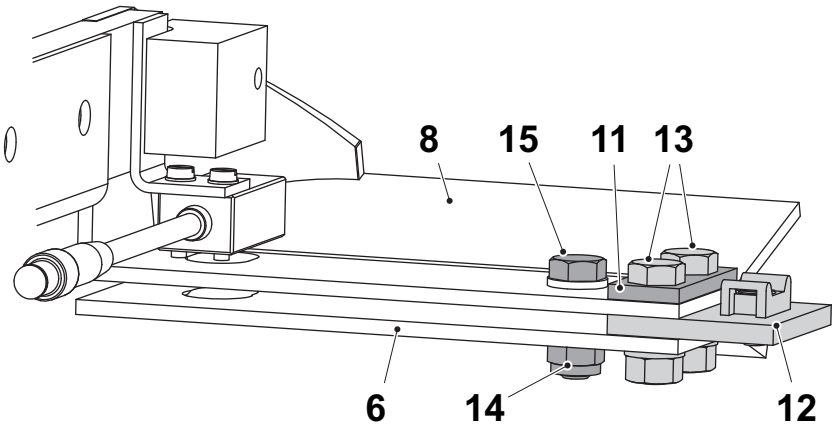

6 Guide rail
8 Guide rail
11 Spacer, 3 mm
12 Spacer, 4 mm
13 Screw
14 Locking nut
15 Screw

3.3.10 Bottom Squeezer

3.3.10-1 Bottom Squeezer - Check

Machine Status	Power supply disconnector OFF Air valve OFF
SPC Reference	2752705

a) Move the part of the bottom squeezer (1) with the cylinder (2) and the rod end (3) and check for play. If necessary change the rod end (3) and the bearing bushings (4).

b) Check the cylinder (2) for wear and leakage.

c) Change if necessary according to 3.3.10-2 Bottom Squeezer - Change.

d) Repeat on the other side of the bottom squeezer.

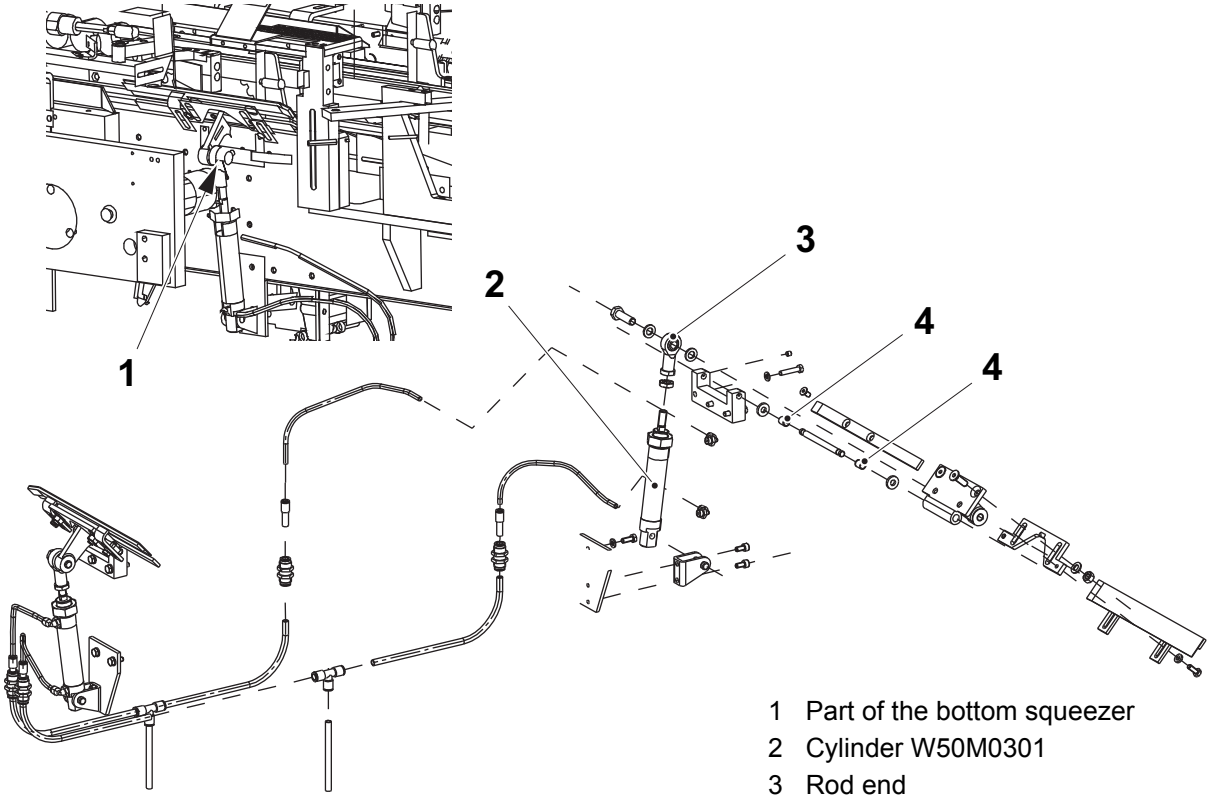

1 Part of the bottom squeezer
2 Cylinder W50M0301
3 Rod end
4 Bearing bushing

3.3.10-2 Bottom Squeezer - Change

Machine Status	Power supply disconnector OFF Air valve OFF
SPC Reference	2752705

a) Remove the screws (1).
b) Remove the cylinder (2) and change the rod end (3) and the cylinder.
c) Change the bearing bushings (4).
d) Assemble in the reverse order.
e) Repeat on the other side of the bottom squeezer.
f) Set the bottom squeezer, see 3.3.10-3 Bottom Squeezer - Set.

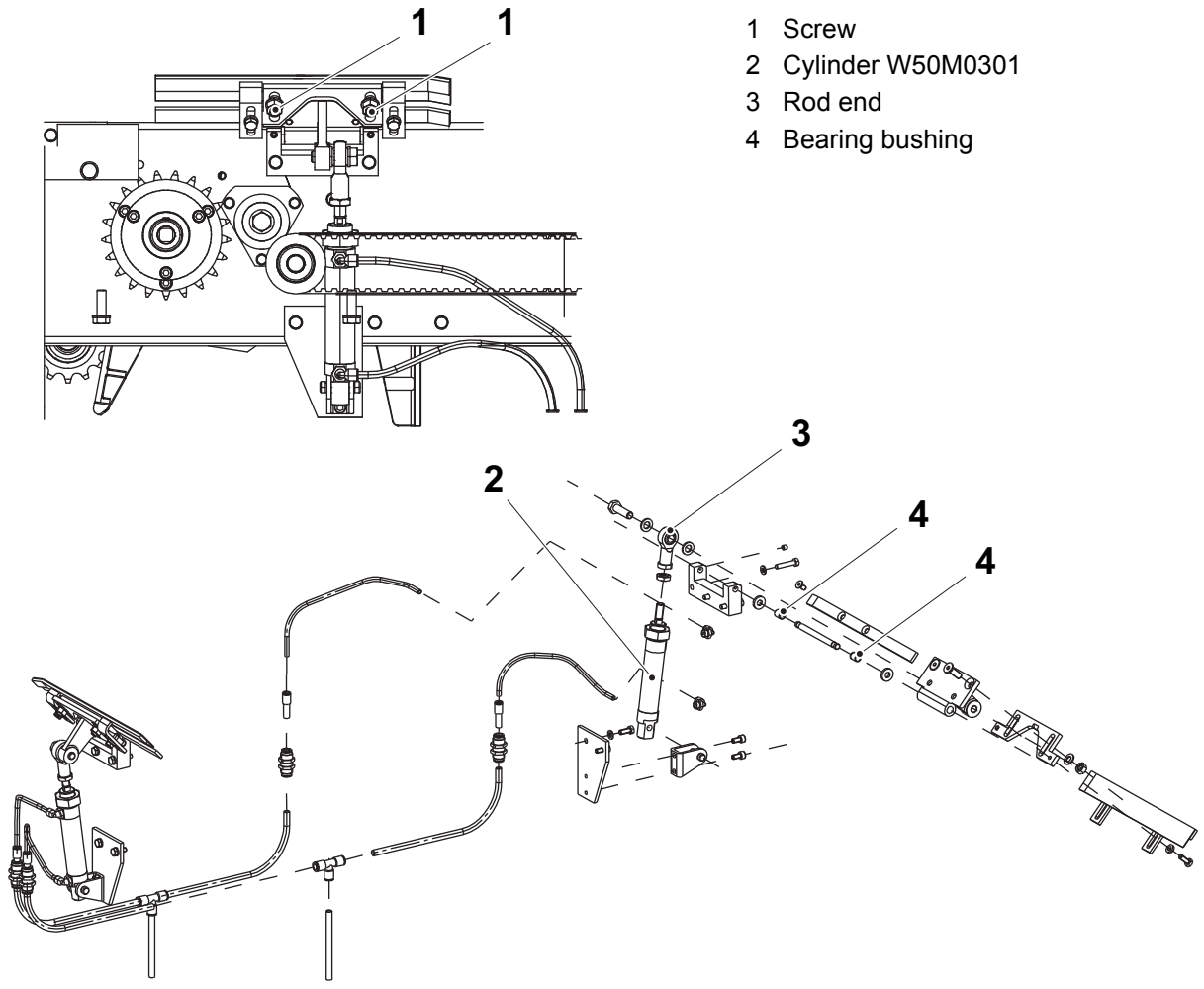

1 Screw
2 Cylinder W50M0301
3 Rod end
4 Bearing bushing

3.3.10-3 Bottom Squeezer - Set

Machine Status	Power supply disconnector OFF Air valve OFF
SPC Reference	2752705

a) Fold both the bottom squeezer units (1) and (2) up to 90°, see the illustration below.

b) Loosen the screws (3) and set the upper squeezer rail (4) 2 mm below the upper part of the tray flap (5). The squeezer rail shall push on the gluing.

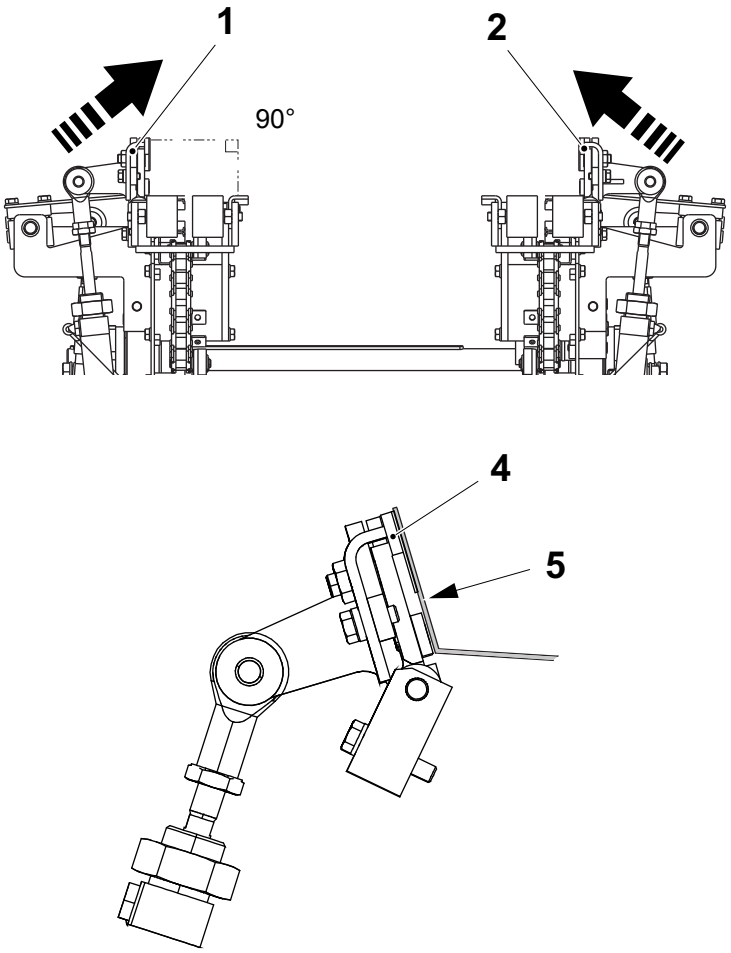

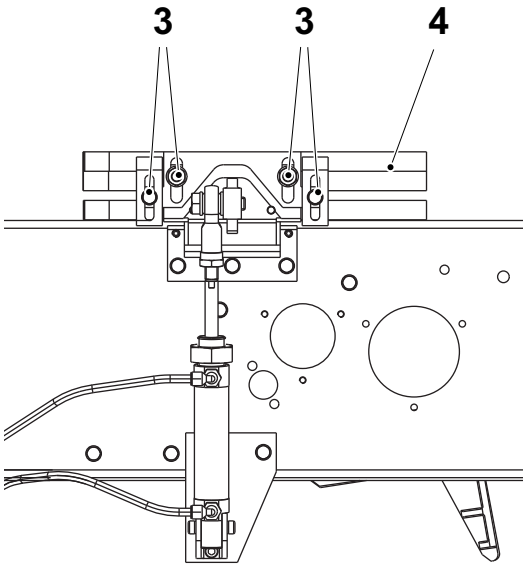

1 Bottom squeezer
2 Bottom squeezer
3 Screw
4 Rail
5 Tray flap

(Cont'd)

(Cont'd)

c) Measure the distance A between the top edges of the squeezers and note the value.

d) Reduce the distance A with 2 mm on each side. Use the counter nut (6) and adjust on the rod end (7) on both the cylinders.

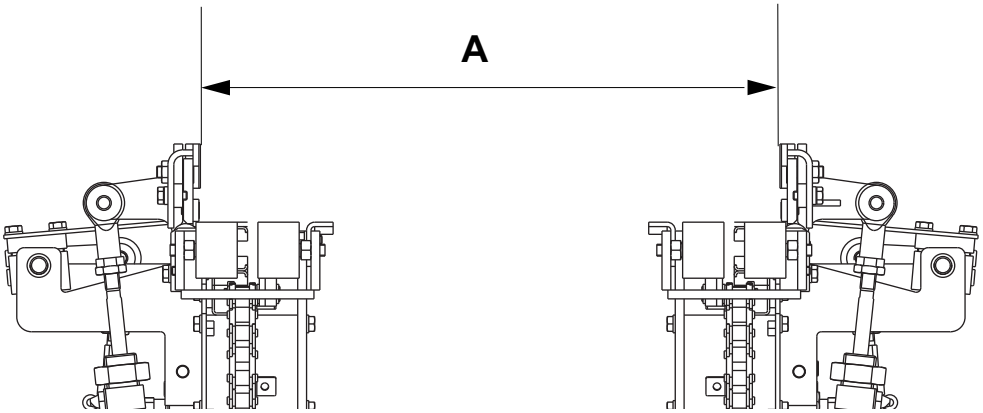

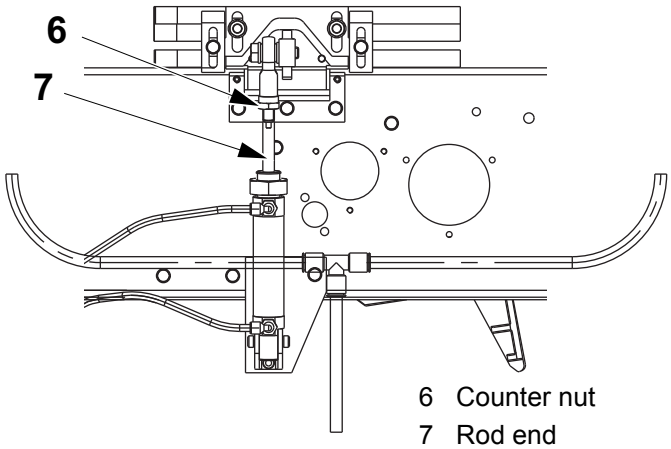

6 Counter nut
7 Rod end

3.3.11 Carrier Shaft Outside

3.3.11-1 Carrier Shaft Outside - Change

Machine Status	Power supply disconnector OFF Air valve OFF
SPC Reference	1021052

a) Disassemble and change the ball bearings (1), the seal rings (2) and the V-ring (3) as necessary according to the illustration below.

b) Assemble in the reverse order.

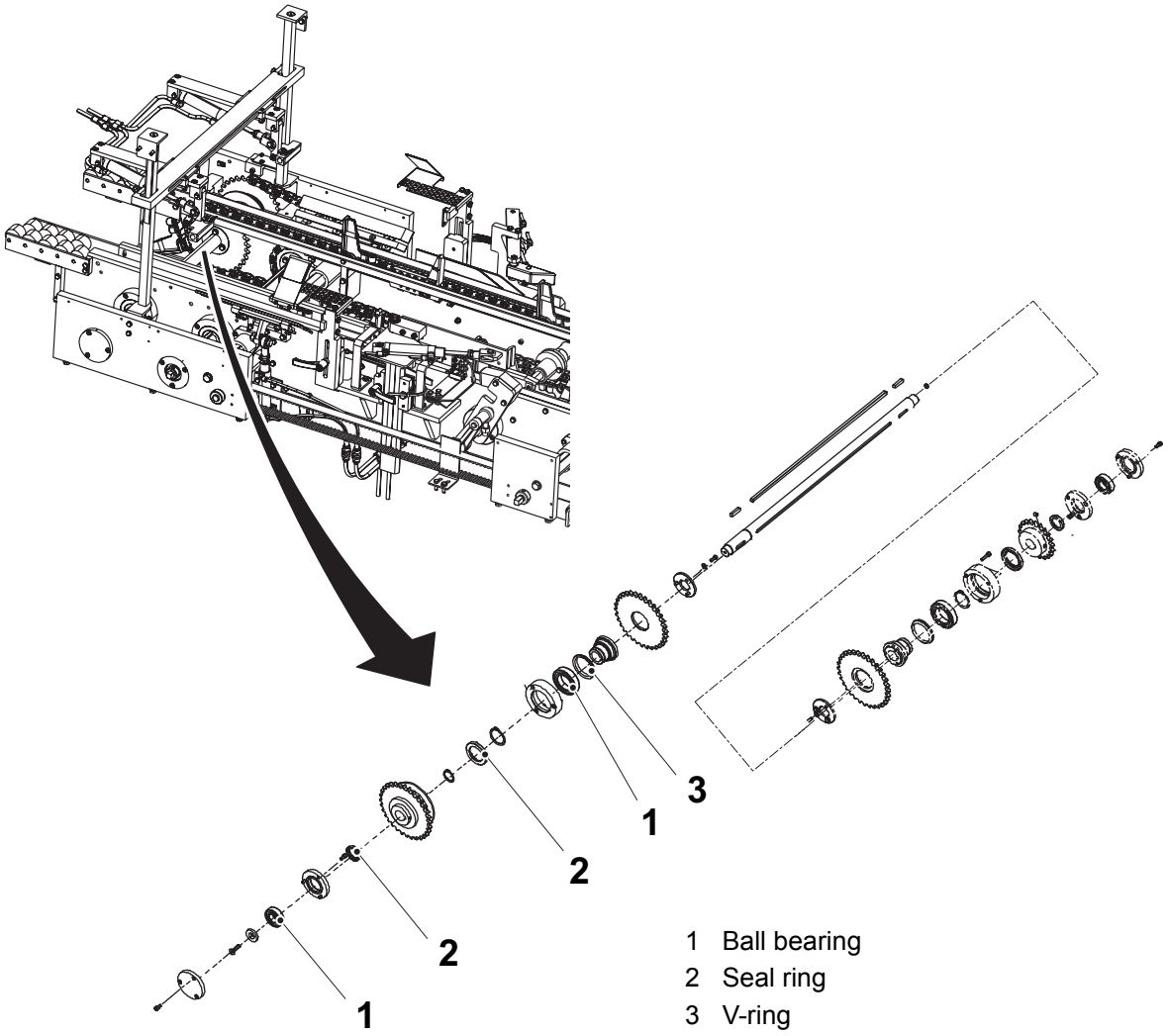

1 Ball bearing
2 Seal ring
3 V-ring

3.3.12 Carrier Shaft Inside

3.3.12-1 Carrier Shaft Inside - Change

Machine Status	Power supply disconnector OFF Air valve OFF
SPC Reference	1021060

a) Disassemble and change the ball bearings (1), the seal rings (2) and the V-ring (3) as necessary according to the illustration below.

b) Assemble in the reverse order.

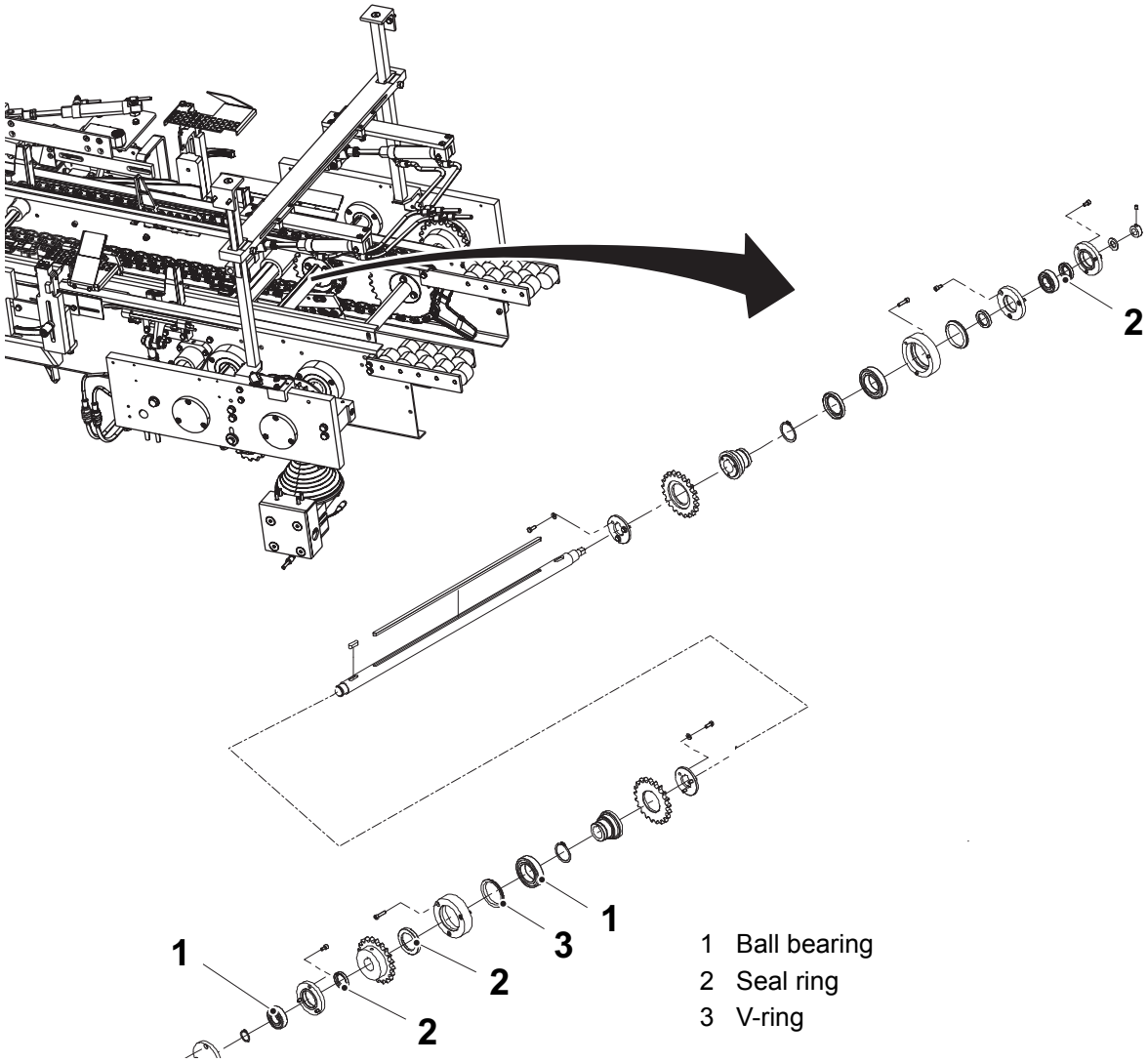

3.3.13 Chain Tensioner

3.3.13-1 Chain Tensioner - Change

Machine Status	Power supply disconnector OFF Air valve OFF
SPC Reference	1021326

Change the chain (1) and the ball bearings (2).

Set the chain tension, see 3.3.13-2 Chain Tensioner - Set Tension.

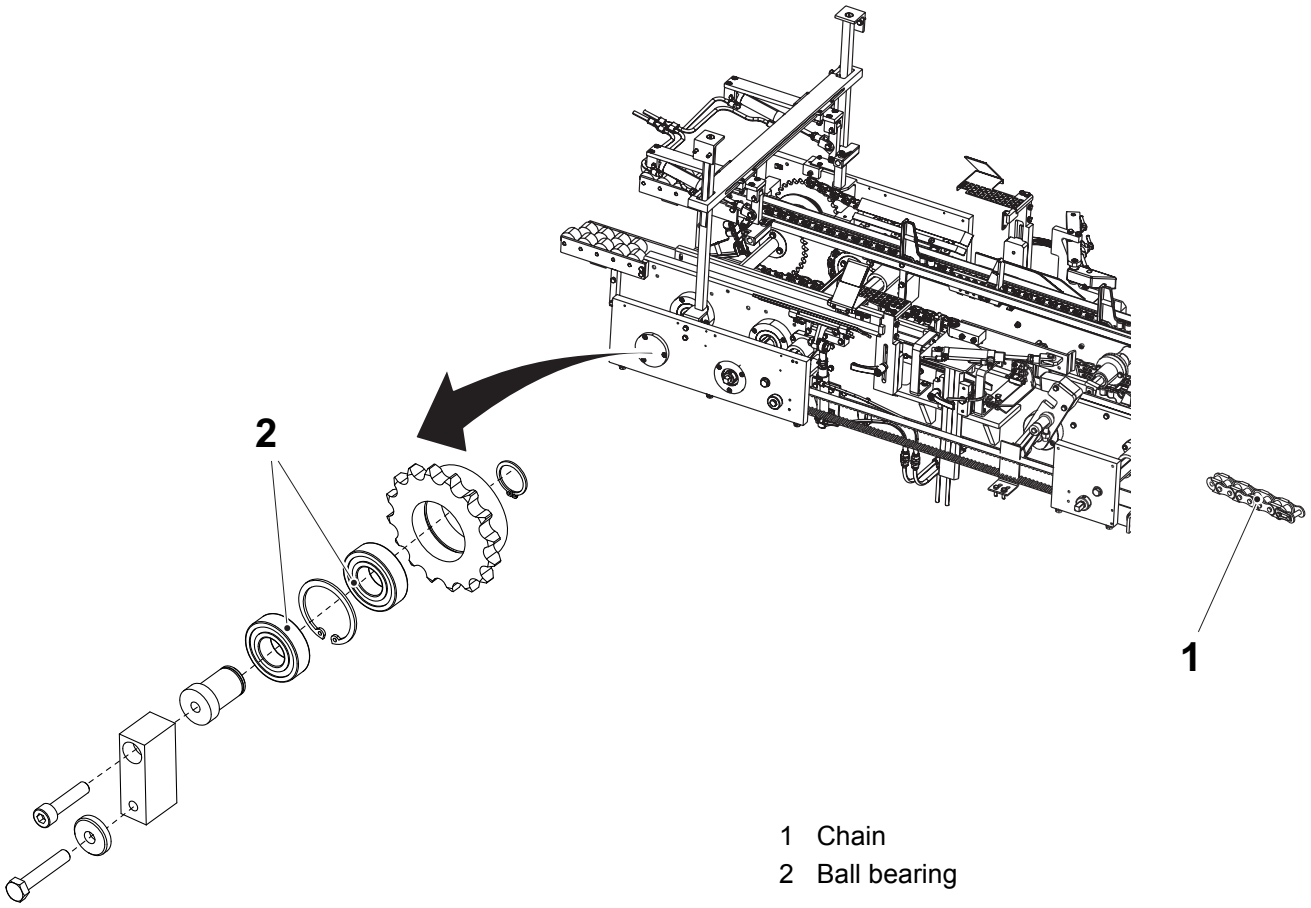

1 Chain
2 Ball bearing

3.3.13-2 Chain Tensioner - Set Tension

Machine Status	Power supply disconnector OFF Air valve OFF
SPC Reference	1021326

a) Set the chain (1) tension by loosening the screw (2).

b) Move the bracket and the sprocket (3) until the chain is stretched but not too tight.

c) Tighten the screw (2).

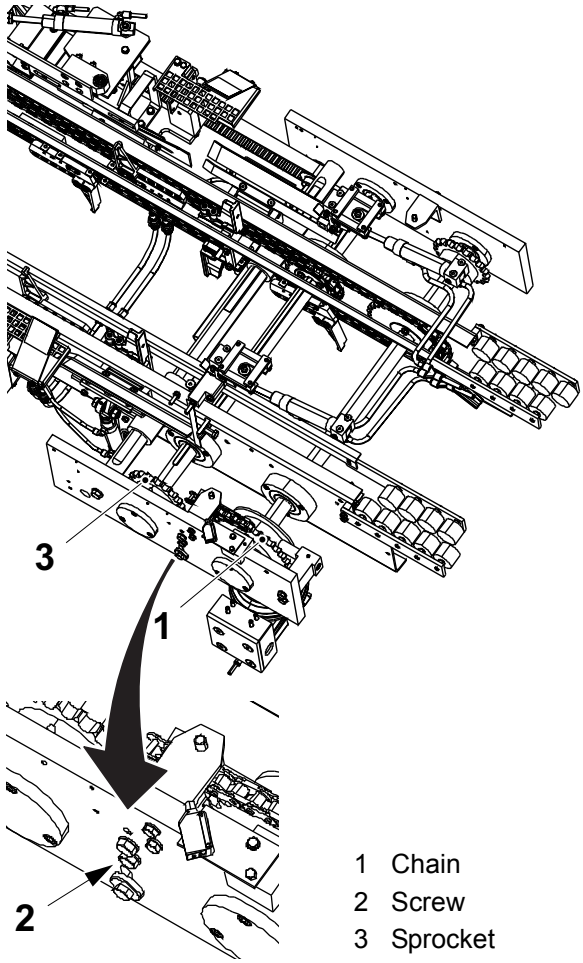

1 Chain
2 Screw
3 Sprocket

3.3.14 Carrier Clutch

3.3.14-1 Carrier Clutch - Change Cylinder

Machine Status	Power supply disconnector OFF Air valve OFF
SPC Reference	2504342

a) Remove the screw (1), the washers (2) and the nut (3).

b) Remove the elbow couplings (4) and the proximity sensor (5).

c) Remove the screws (6) and the cylinder (7).

d) Loosen the nut (8) and remove the link arm (9) from the cylinder.

e) Change the cylinder and assemble in reverse order.

f) If necessary check the function, see Tray Width Setting.

g) If necessary set the clutch, see 3.3.14-2 Carrier Clutch - Set and 3.3.2-1 Carrier Chain Inside - Set.

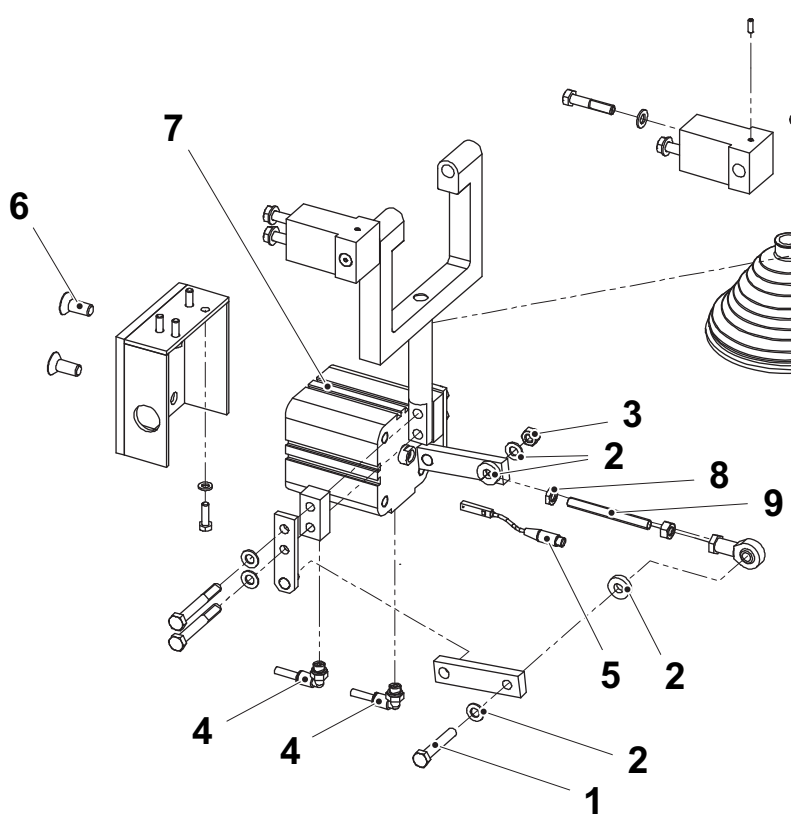

1 Screw
2 Washer
3 Nut
4 Elbow coupling
5 Proximity sensor W50B0191
6 Screw (4 pcs)
7 Cylinder W50M0190
8 Nut
9 Link arm

3.3.14-2 Carrier Clutch - Set

Machine Status	Power supply disconnector OFF Air valve OFF
SPC Reference	2504342

a) Loosen either the nut (1) or the nut (2) on the link arm to adjust distance A between the flange (3) and the fork (4).

Note! Make distance A as minimal as possible, without interference between the flange (3) and the fork (4).

b) Tighten the nut (1) or (2).

c) Check the function, see Tray Width Setting.

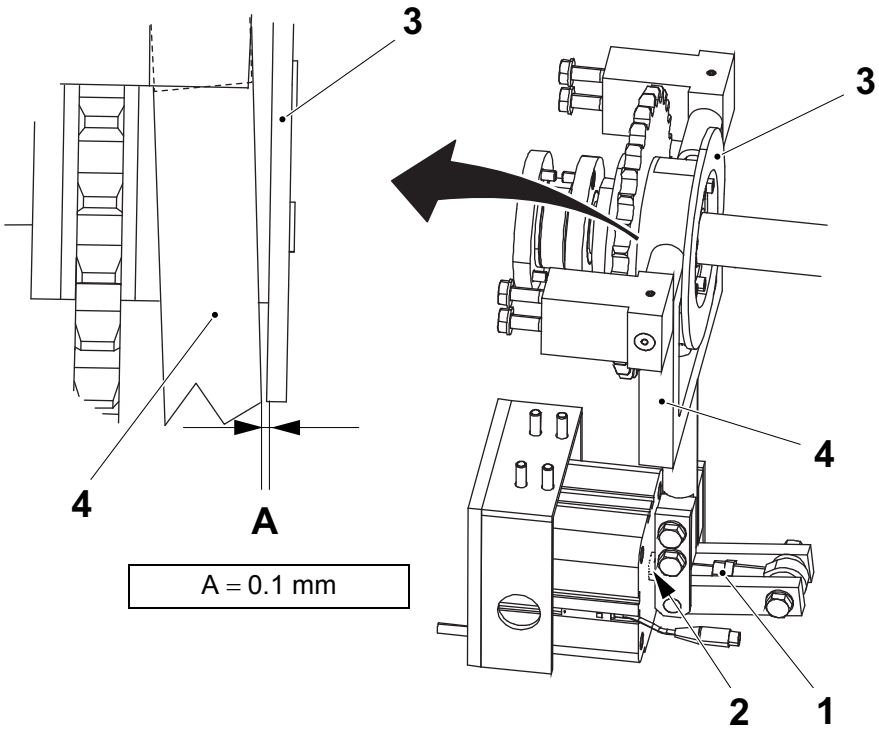

1 Nut
2 Nut
3 Flange
4 Fork

3.3.15 Tray Support

3.3.15-1 Tray Support - Check

Machine Status	Power supply disconnector OFF Air valve OFF
SPC Reference	2877500

Check the cylinder (1), the bearings (2), and the rubber buffer (3) for wear and damages. Repeat on the other side of the tray support. If necessary change the cylinders, bearings and the rubber buffer according to 3.3.15-2 Tray Support - Change.

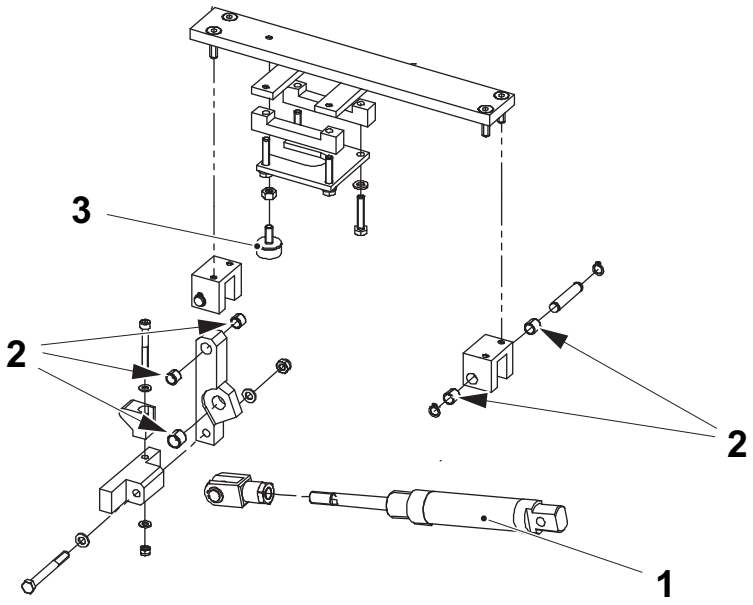

1 Cylinder W50M0291
2 Bearing
3 Rubber buffer

3.3.15-2 Tray Support - Change

Machine Status	Power supply disconnector OFF Air valve OFF
SPC Reference	2877500

a) Remove the screws (1), (2) and (3).

b) Change the cylinder (4), the bearings (5), and the rubber buffer (6).

c) Repeat on the other side of the tray support.

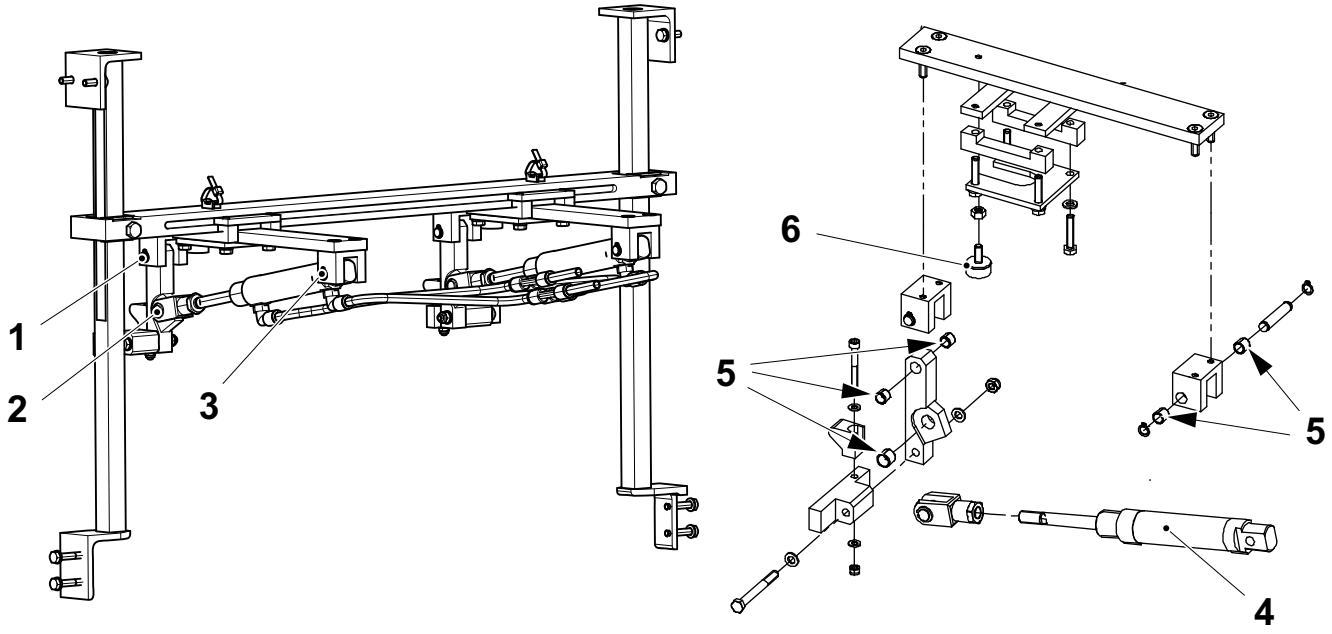

1 Screw
2 Screw
3 Screw
4 Cylinder W50M0291
5 Bearing
6 Rubber buffer

3.3.15-3 Tray Support - Set

Machine Status	Power supply disconnector OFF Air valve OFF
SPC Reference	2877500

a) Make sure that the wrap around squeezer is set, see 5.2-3 Wa Squeezer - Set.

b) Set the arm (1) vertical by loosen the jam nut (2) and turn the piston rod (3) with a spanner on the spanner slot (4).
Tighten the jam nut.

c) Repeat on the other side of the tray support.

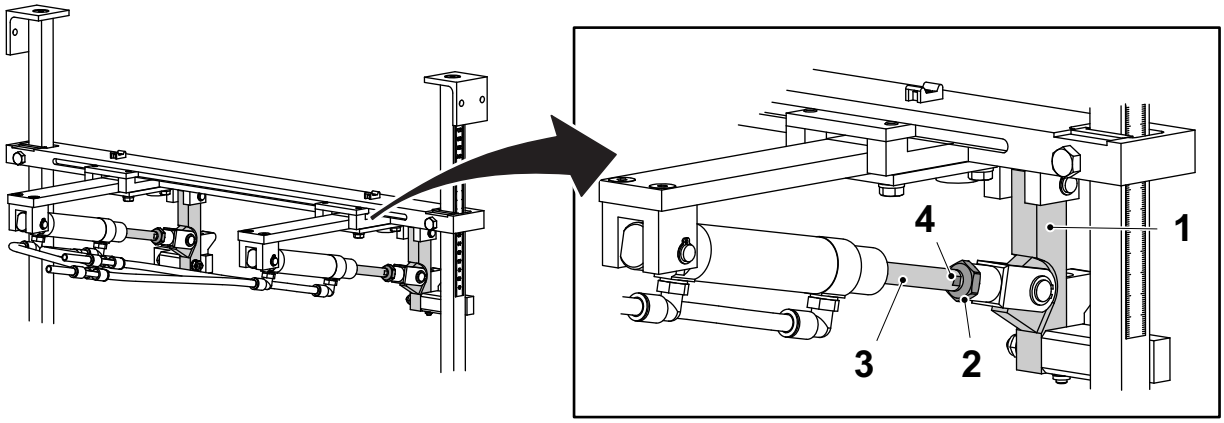

1 Arm
2 Nut
3 Piston rod
4 Spanner slot

(Cont'd)

(Cont'd)

Height

d) Set the hight by loosen the locking screws (5) and move the mounting beam (6).

e) The scale (7) on the tray support should be set at the same value as the scale (8) on the wa squeezer.

f) Check that the upper egde of the support (9) is at distance A between the support and the tray (10).

g) Repeat on the other side of the tray support.

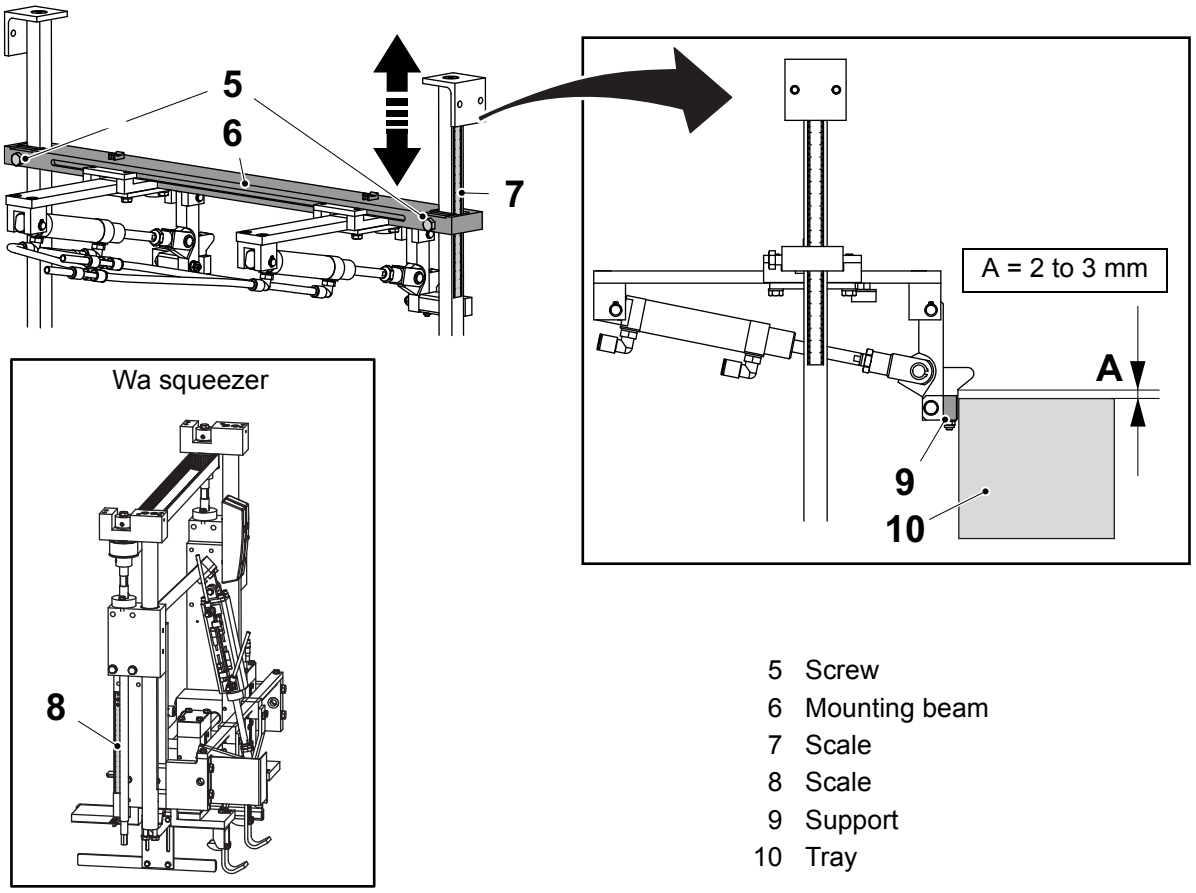

5 Screw
6 Mounting beam
7 Scale
8 Scale
9 Support
10 Tray

(Cont'd)

(Cont'd)

Rubber Buffer

h) Loosen the nut (11) and turn the rubber buffer (12) until it is tighten against the bracket (13).

i) Lift up the cylinder (14) as high as possible towards the rubber buffer. Turn the rubber buffer (12) until it touches the cylinder (14) and turn one to two revolution more.

j) Tighten the nut (11).

k) Repeat on the other side of the tray support.

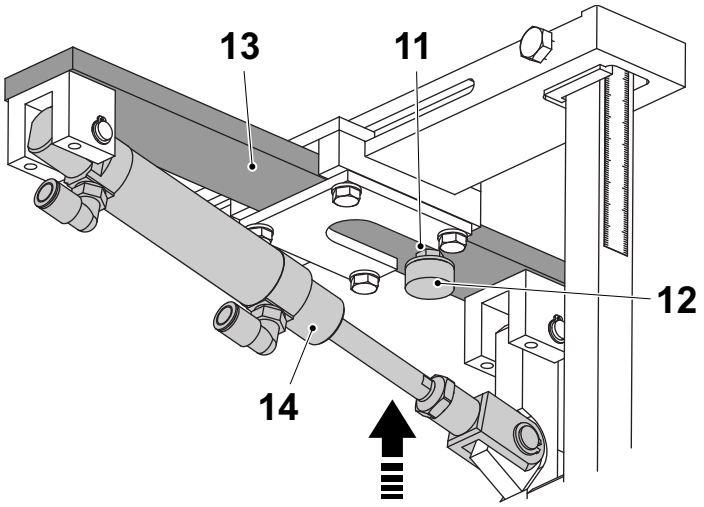

11 Nut
12 Rubber buffer
13 Bracket
14 Cylinder W50M0291

(Cont'd)

(Cont'd)

Tray Width

l) Loosen the screw joint (15).

m) Move the bracket (13) until the support (9) is aligned and also 90° towards with the carrier finger (16).

n) Tighten the screw joint.

o) Repeat on the other side of the tray support.

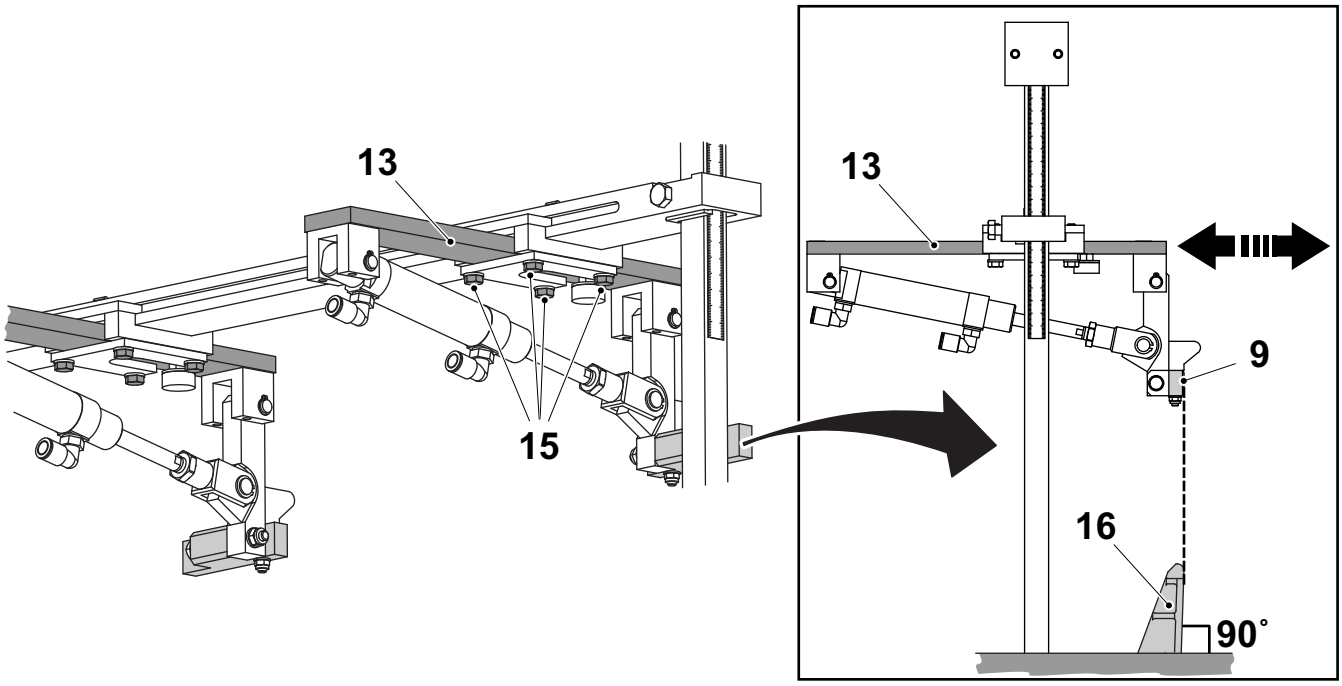

9 Support
13 Bracket
15 Screw joint
16 Carrier finger

(Cont'd)

(Cont'd)

Tray Length

Tray length less than 270 mm, see fig. 1

p) Loosen the screw joints (15) on both sides of the tray support.

q) Move the bracket (17) with its cylinder all the way to the side so it is not in use. Tighten the screw joint.

r) Move bracket (18) so the support (9) is centered with the tray (10). Tighten the screw joint.

Note! Make sure that the tray support does not crash with something when the cylinders moves.

Tray length more than 270 mm, see fig. 2

s) Loosen the screw joints (15) on both sides of the tray support.

t) Move the bracket (17) and (18) sideways until the bracket (12) is almost at the box's (6) outer edge.

u) Move the bracket (12) sideways until the supports (9) are almost at the tray's (10) outer edge.
Make sure that the tray width setting is not changed. Tighten the screw joints.

Note! Make sure that the tray support does not crash with something when the cylinders moves.

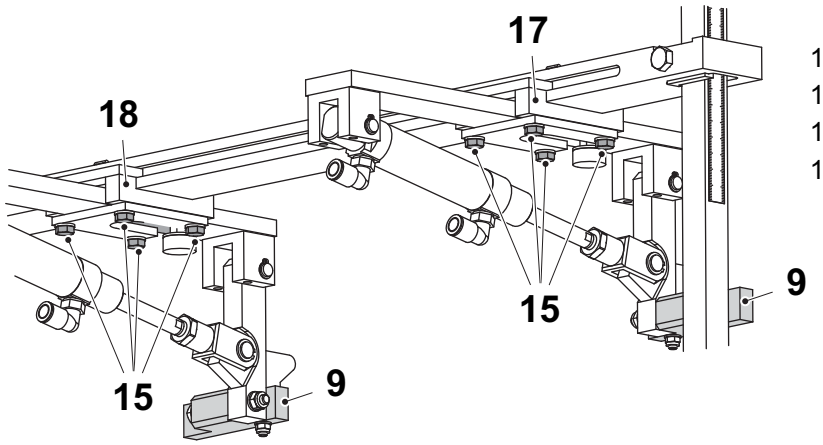

9 Support
10 Tray
15 Screw joint
17 Bracket
18 Bracket

Fig. 2

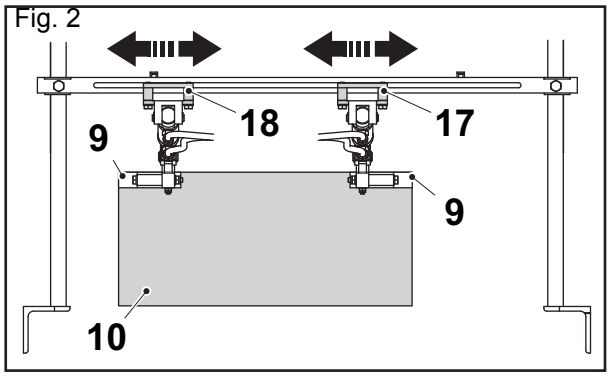

Fig. 1

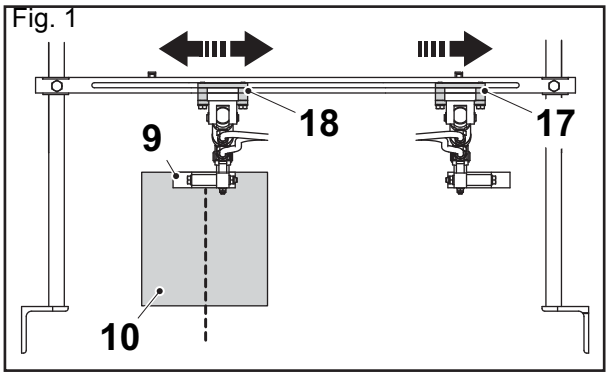

3.3.16 Bottom Folder Rail

3.3.16-1 Bottom Folder Rail - Set

Machine Status	Power supply disconnector OFF Air valve OFF
SPC Reference	1021290

a) With the tray (1) in pack position, set the distance A between the rail (2) and the tray bottom flap, without touching the bottom flap folder. To set, loosen the screws (3) and move the rail. The rail (2) is divided, and the length can be set.

Note! If the packing width is less than 170 mm, make distance A as small as possible.

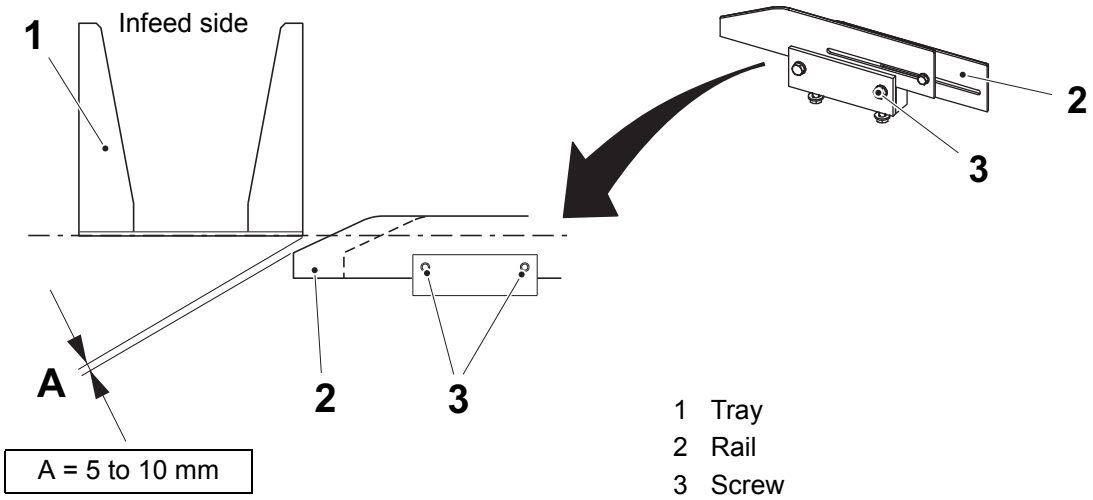

1 Tray
2 Rail
3 Screw

(Cont'd)

(Cont'd)

b) Loosen the screws (4) and (5) and set the rails (6) as close as possible to the squeezer (7).

c) Set the distance B from the guide rails (8). This setting depends on tray width and flap length.

d) Tighten the screws (4) and (5).

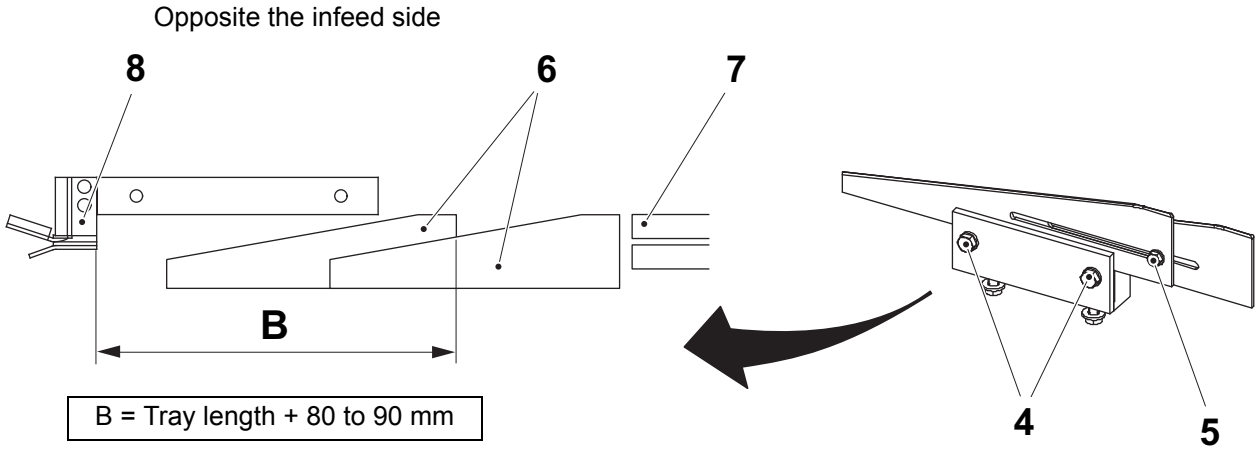

4 Screw
5 Screw
6 Rail
7 Squeezer
8 Guide rail

3.3.17 Carrier Frame

3.3.17-1 Carrier Frame - Check Wheels

Machine Status	Power supply disconnector OFF Air valve OFF
SPC Reference	2763105

Check the wheels (1) for wear. If necessary, change the wheels.

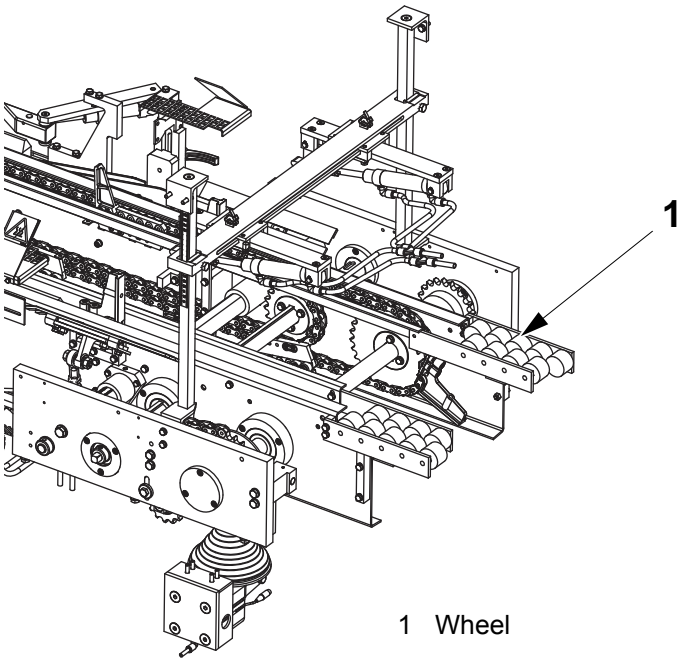

1 Wheel

3.4 Upper Section

SPC Reference	2771175

3.4.1 Magazine Arm

3.4.1-1 Magazine Arm - Check

Machine Status	Power supply disconnector OFF Air valve OFF
SPC Reference	1021143

Check the following parts for wear:

- ball bearings (1)
- bearing bushing (2)
- steel bushings (3)
- sealing rings (4)
- rod end (5)

Change if necessary, see 3.4.1-2 Magazine Arm - Change.

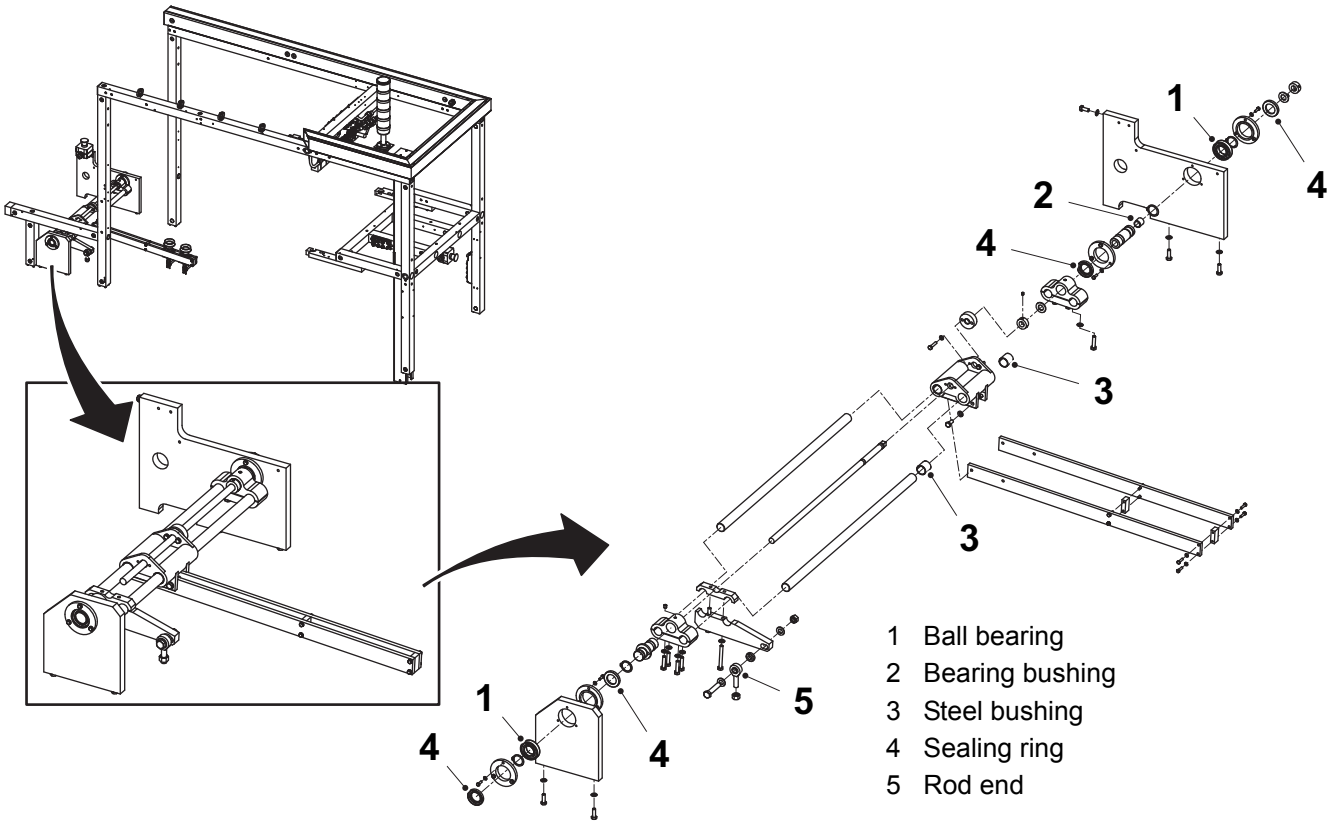

3.4.1-2 Magazine Arm - Change

Machine Status	Power supply disconnector OFF Air valve OFF
SPC Reference	1021143

Change the following parts:

- ball bearings (1)
- bearing bushing (2)
- steel bushings (3)
- sealing rings (4)
- rod end (5)

Set the magazine arm, see 3.4.1-3 Magazine Arm - Set.

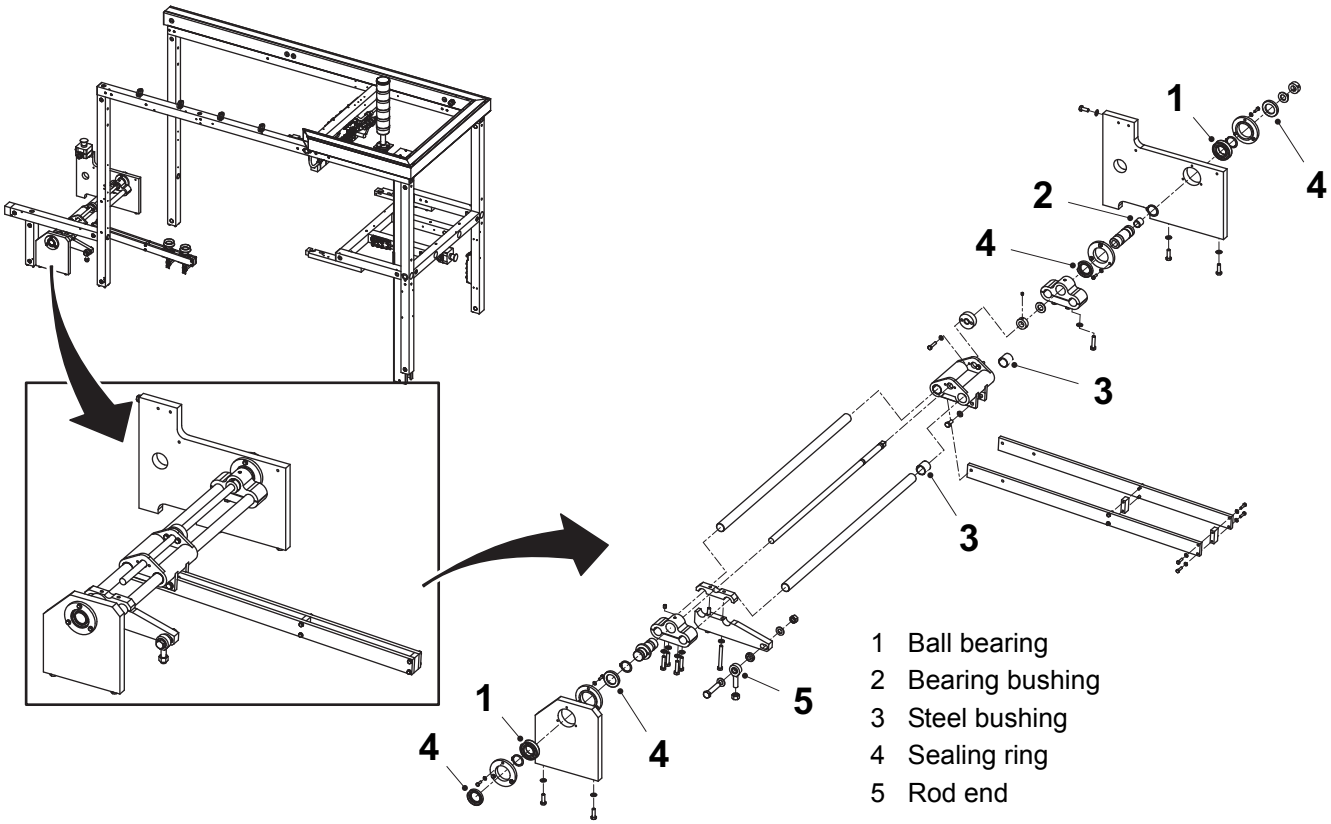

3.4.1-3 Magazine Arm - Set

Machine Status	Power supply disconnector OFF Air valve OFF
SPC Reference	1021143

a) Turn the adjusting screw (1) with the crank (2) until the arm (3) is centred between the feeding unit's carrier chains (4).

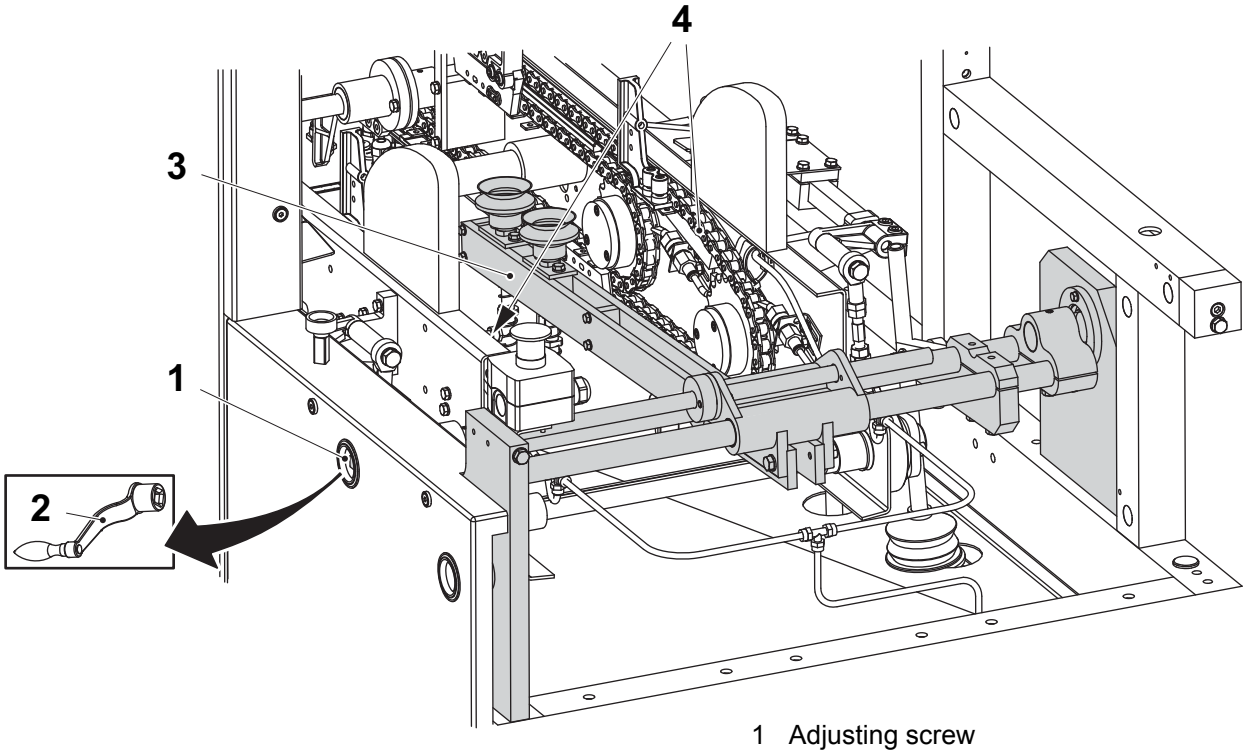

1 Adjusting screw
2 Crank
3 Arm
4 Carrier chain

3.4.2 Suction Cup

3.4.2-1 Suction Cup - Check

Machine Status	Power supply disconnector OFF Air valve OFF
SPC Reference	1021160

Check the suction cup (1) and the spring (2) for wear. Check the filter (3) for clogging. Change the suction cup (1) if necessary.

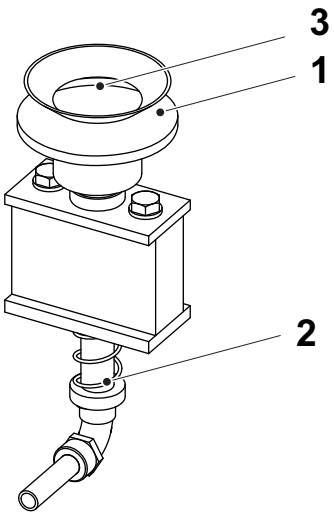

1 Suction cup
2 Spring
3 Filter

3.4.2-2 Suction Cup - Set

Machine Status	Power supply disconnector OFF Air valve OFF
SPC Reference	1021160

Centre the suction cups (1) to the bottom creases of the blank.

a) Loosen the screws (2).
b) Move the upper holders (3).
c) Tighten the screws (2).

Note! The suction cup arm is too short to make it possible to centre the suction cups exactly on large blanks.

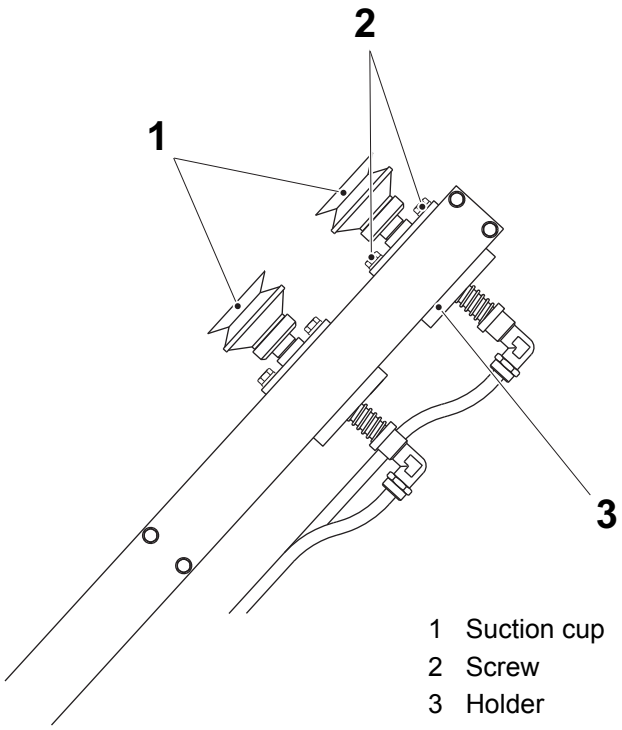

1 Suction cup
2 Screw
3 Holder

3.5 Hotmelt Unit

3.5.1 Hotmelt Equipment

3.5.1-1 Hotmelt Equipment - Check

Machine Status	Power supply disconnector ON Air valve ON
SPC Reference	2752733

WARNING

Risk of burns.

During heating and production the hotmelt unit gets hot. Do not touch the hotmelt unit. Wear safety glasses, protective gloves, and other protective clothing.

Check the hoses (1) and the connections (2) for leakage.

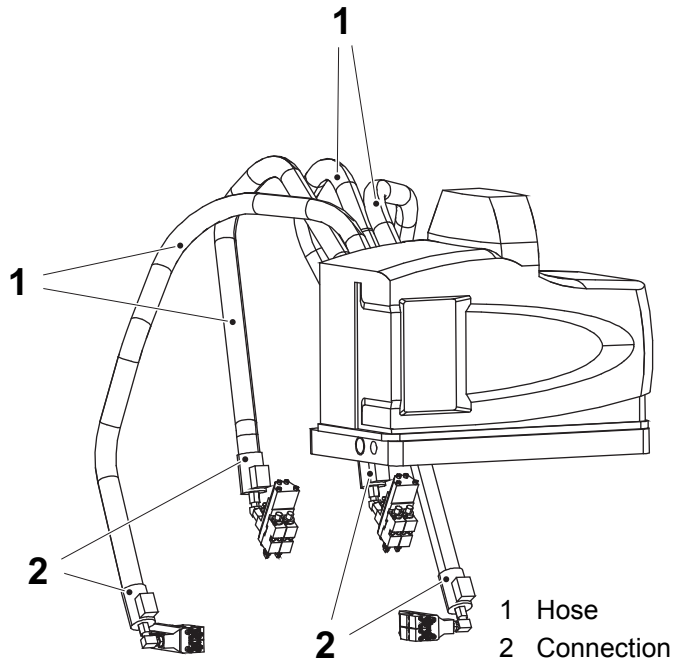

3.5.1-2 Hotmelt Equipment - Set

Machine Status	Power supply disconnector ON Air valve ON
Consumables	10.3.2 Adhesive
SPC Reference	2752733

WARNING

Risk of burns.

During heating and production the hotmelt unit gets hot. Do not touch the hotmelt unit and beware of the entrapped heat inside the unit. Wear safety glasses, protective gloves, and other protective clothing.

Make sure that there is adhesive in the tank (1) and switch ON (2) the hotmelt unit.
For recommended type of adhesive, see Chapter 10 General.

Note! The colour of the adhesive should be light yellow. If the adhesive has become brown, exchange it. In order to obtain a prolonged lifetime of the adhesive, the temperature can be decreased during longer production stops.

Tip! When connecting hoses, always use port 1 (3). The port position is stamped on the face of the manifold!

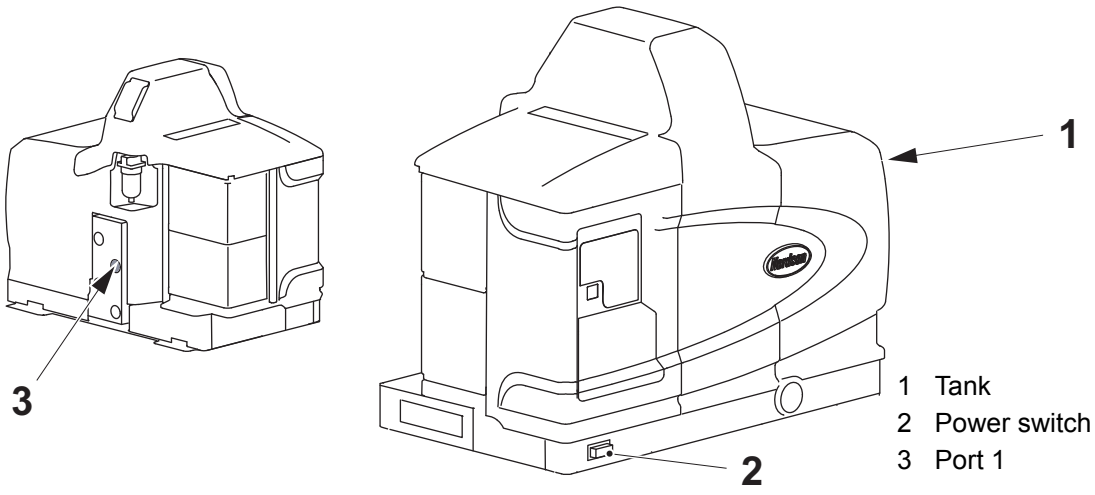

(Cont'd)

(Cont'd)

Operator Panel Overview

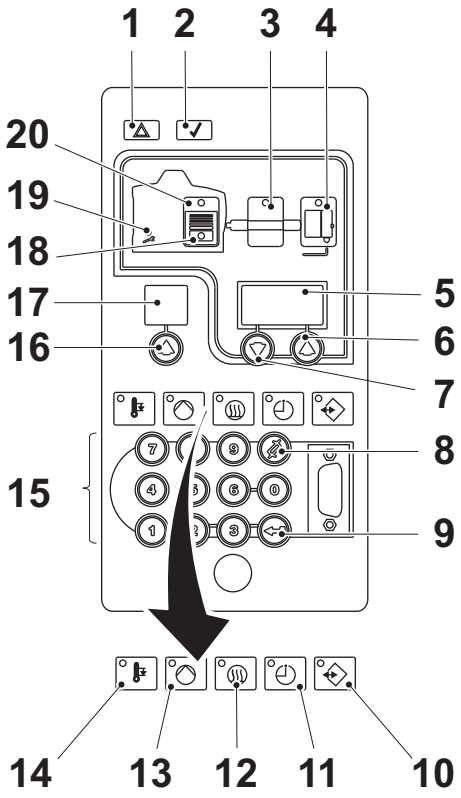

1 Fault LED
2 Ready LED
3 Hose-key
4 Gun-key
5 Multipurpose display
6 Up-key for multipurpose display
7 Down-key for multipurpose display
8 Clear/Reset-key
9 Enter-key
10 Setup-key
11 Seven day clock-key
12 Heater-key
13 Pump-key
14 Standby-key
15 Keypad
16 Up-key for selector display
17 Selector display
18 Low level LED
19 Service LED
20 Tank-key

Note! For further information read the Nordson Pro Blue Adhesive Melters Manual.

(Cont'd)

(Cont'd)

Connection of Hoses and Cords

For 6 Channel Hotmelt, see 9.9-1 Connection of hoses and cords.

- The cordset from the gun on tray forming RH is to be connected from the hose port (1) to the connection (2) on the hotmelt unit.
- The cordset from the gun on wraparound unit RH is to be connected from the hose port (3) to the connection (4) on the hotmelt unit.
- The cordset from the gun on tray forming LH is to be connected from the hose port (5) to the connection (8) on the hotmelt unit.
- The cordset from the gun on wraparound unit LH is to be connected from the hose port (7) to the connection (6) on the hotmelt unit.

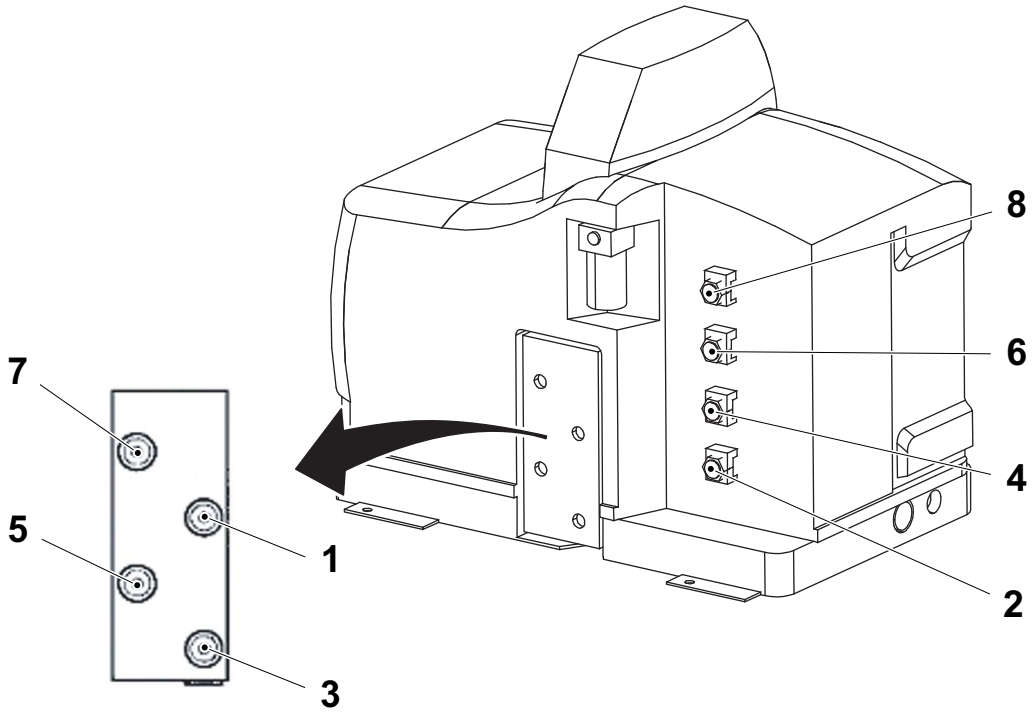

1 Hose port
2 Connection
3 Hose port
4 Connection
5 Hose port
6 Connection
7 Hose port
8 Connection

(Cont'd)

(Cont'd)

Parameter Settings

Parameter	Function	Description	Setting
4	System-ready time delay	Allows you to set the amount of additional time for adhesive to melt after all zones have reached their set point temperatures.	0 minutes
20	Celsius/Fahrenheit	Allows you to display temperature measurements in Celsius or Fahrenheit. 0 = Celsius 1 = Fahrenheit	Celsius
21	Over temperature delta	Allows you to specify the maximum temperature the features 1-3 can reach before the system initiates a fault condition.	15°C
22	Under temperature delta	The number of degrees that the temperature of any component can decrease from its set point temperature before an under temperature fault (F2) occurs.	5°C
30	Standard input 1	Hose/Gun 3 Enable/Disable	6
31	Standard input 2	Standby on/off	1
32	Standard input 3	Hose/Gun 4 Enable/Disable	7
33*	**Standard input 4**	**Hose/Gun 5 Enable/Disable**	**8**
34*	**Optional input 1**	**Hose/Gun 6 Enable/Disable**	**9**
40	Standard output 1	Ready and Pump is on	2
41	Standard output 2	Low level	4

* Parameters 33 and 34 are valid only for machines equipped with 6 Channel Hotmelt

(Cont'd)

(Cont'd)

Set the parameters as follows:

a) Press Setup-key (1) and the selector display (2) flashes. Use Up-key (3) (or keypad, 8) to select parameter and confirm with the enter-key (4).

b) Then the multipurpose display (5) starts flashing. Use Up-key (6), or Down-key (7) (or use the keypad, (8)) to select required value and confirm with the enter-key (4).

Tip! If the setting is unadjustable the display is password protected! For further information read Nordson Pro Blue Adhesive Melters Manual.

c) When the selector display shows next parameter and setting, either continue with next parameter or exit by pressing the setup-key (1) twice.

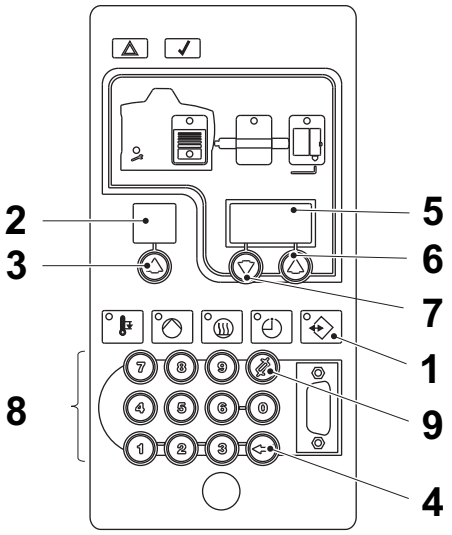

1 Setup-key
2 Selector display
3 Up-key
4 Enter-key
5 Multipurpose display
6 Up-key
7 Down-key
8 Keypad
9 Clear/Reset-key

(Cont'd)

(Cont'd)

Tank, Hoses and Guns Temperature

Note! Too high temperature will make the adhesive deteriorate quicker, resulting in reduced quality and **too low temperature** results in threads of adhesive, and increased cooling-off time.

Set the temperature of the tank as follows:

a) Press tank-key (1) for 3 seconds.

b) The digit “1” appears flashing in selector display (2). If the digit “0” appears, press up-key (3) (or keypad, 8) for selector display until digit “1” appears. Confirm the choice by pressing enter-key (4).

c) The multipurpose display (5) starts flashing. Press the multipurpose display Down-key (6) or Up-key (7) (or keypad, 8) to enter the required value. There are different settings for different types of adhesive and ambient temperature, see 10.3.2 Adhesive.

d) Confirm the setting by pressing enter-key (4).

e) Exit by pressing the setup-key twice.

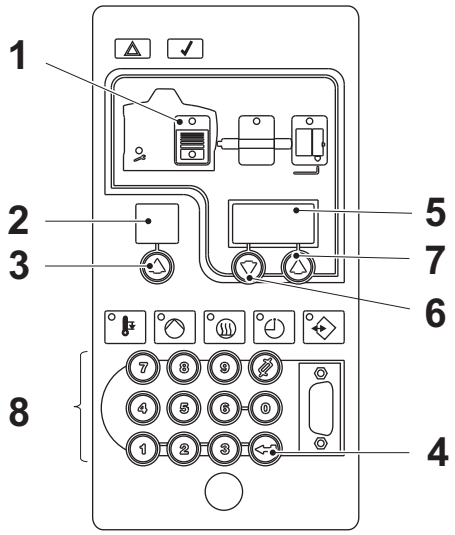

1 Tank-key
2 Selector display
3 Up-key
4 Enter-key
5 Multipurpose display
6 Down-key
7 Up-key
8 Keypad

(Cont'd)

(Cont'd)

Note! Remember to set **all** hoses and guns!

Set the temperature of the hoses and guns as follows:

f) Press the hose-key (1) to specify the hose set point temperature or the gun-key (2) to specify the gun set point temperature. Press the key for 3 seconds.

g) The digit “1” appears flashing in selector display (3). Press up-key (4) (or keypad, 9) for selector display until digit 0 appears. Confirm the choice by pressing enter-key (5).

h) The multipurpose display (6) starts flashing. Press the multipurpose display Down-key (7) or Up-key (8) (or keypad, 9) to enter the required value. There are different settings for different types of adhesive and ambient temperature, see 10.3.2 Adhesive.

i) Confirm the setting by pressing enter-key (5).

j) Exit by pressing the setup-key twice.

k) Press heater-key (10) to heat up the hotmelt unit.

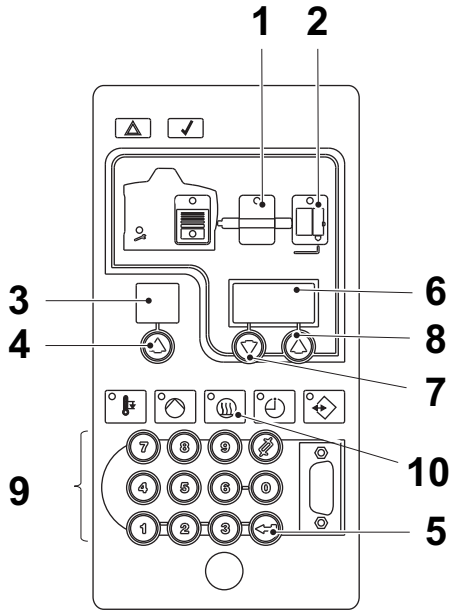

1 Hose-key
2 Gun-key
3 Selector display
4 Up-key
5 Enter-key
6 Multipurpose display
7 Down-key
8 Up-key
9 Keypad
10 Heater-key

(Cont'd)

(Cont'd)

Air Pressure

Function	Value Bar (MPa)
Working pressure	5.5 (0.55)
Vacuum regulator (suction cups)	5 (0.5)
Hotmelt guns	4.0 to 4.5 (0.4 to 0.45)
Hotmelt unit	≈ 3.0 (0.3)*
* Basic setting (affect the adhesive quantity)	

Set the air pressure values according to the table above.

a) Set the pressure on the hotmelt unit by turning the pressure adjustment screw (1) on the hotmelt unit. The pressure is stated on the pressure gauge (2).

b) Set the hotmelt gun pressure with the knob (3). The pressure is stated on the pressure gauge (4).

c) Set the vacuum regulator pressure with the knob (5). The pressure is stated on the pressure gauge (6).

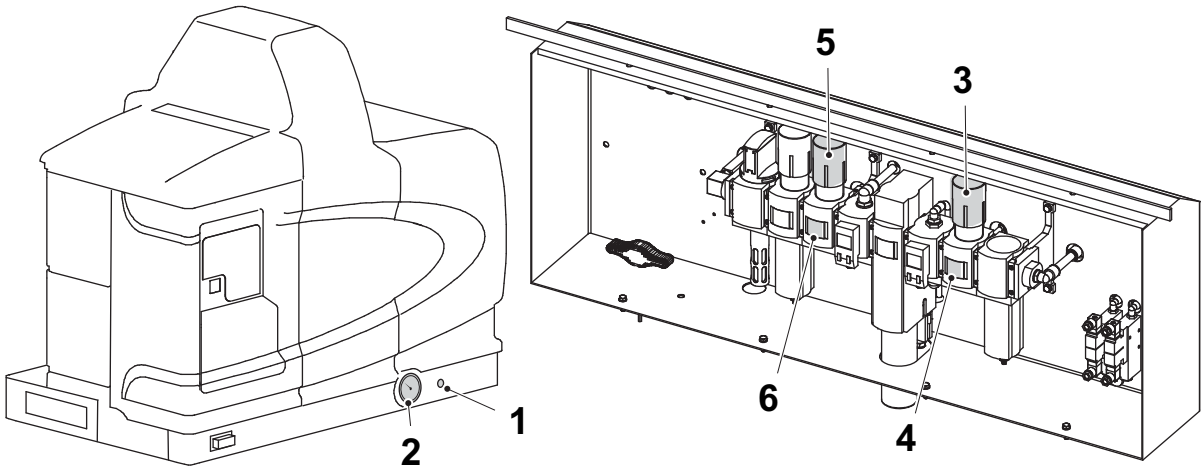

1 Pressure adjustment screw
2 Pressure gauge
3 Knob
4 Pressure gauge, gun
5 Knob
6 Pressure gauge, vacuum regulator

3.5.1-3 Hotmelt Equipment - Change Adhesive

Machine Status	Power supply disconnector ON Air valve ON
Consumables	10.3.2 Adhesive
SPC Reference	2752733

WARNING

Risk of burns.

Hot adhesive. Wear safety glasses, protective gloves, and other protective clothing to avoid injuries from adhesive pouring out. During tank drainage never touch the drain shut (1)!

A splash guard is needed in front of the drain shut (1) when the tank is almost empty because the last adhesive can splash.

Note! The machine must be preheated before the work can start.

a) Place a container under the drain shut (1).

b) Pull down the drain shut (1).

c) Open the drain valve (2) by slowly turning it to the left until the adhesive begins to flow.

d) Empty the tank (3).

e) Close the drain valve (2) and pull up the drain shut (1). Fill the tank (3) with adhesive.

f) Bleed the system, see 3.5.1-7 Hotmelt Equipment - Bleed System.

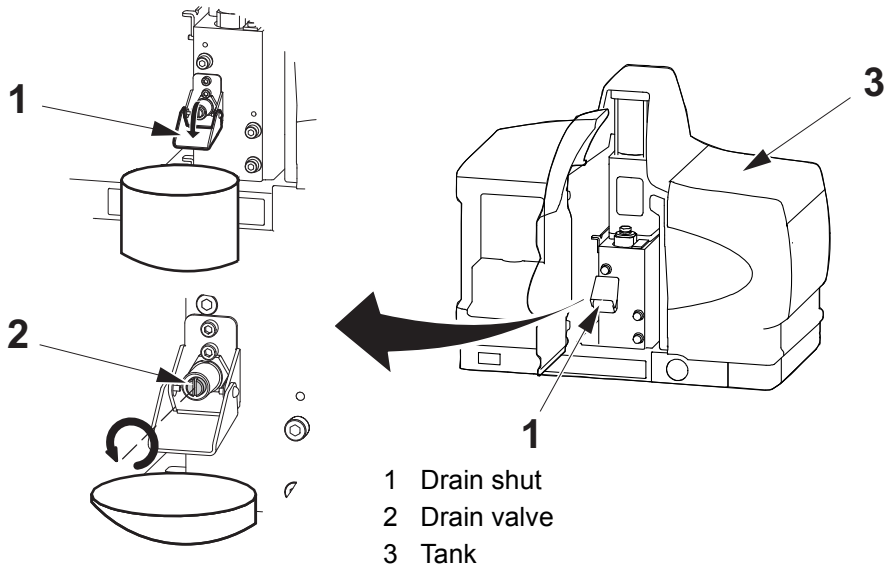

1 Drain shut
2 Drain valve
3 Tank

3.5.1-4 Hotmelt Equipment - Change Filter

Machine Status	Power supply disconnector OFF Air valve OFF
SPC Reference	2752733

WARNING

Risk of burns.

Hot adhesive. Wear safety glasses, protective gloves, and other protective clothing to avoid injuries from adhesive pouring out.

Note! The machine must be preheated, and the guns have reached operating temperature before the work can start.

a) Press the PUMP-KEY (1) to stop the pump.

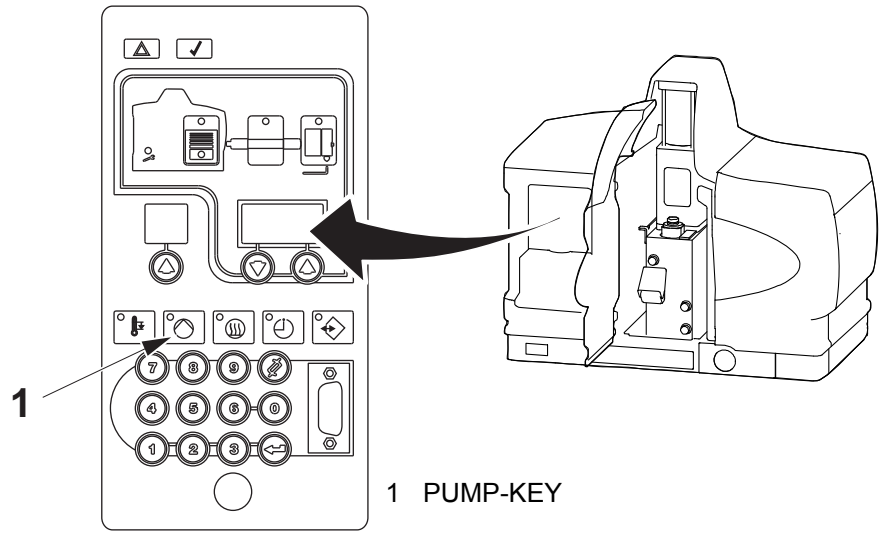

1 PUMP-KEY

(Cont'd)

(Cont'd)

b) Remove the filter bracket (2) with an 8 mm allen key (3).

c) Change the filter element (4).

d) Check that the O-ring (4) is in good condition.
Reinstall the filter bracket (2). Tightening torque: 4.5 Nm.

e) Remove the filter (6) and change the filter. Repeat on all the guns.

f) Press the PUMP-KEY (1) to start the pump.

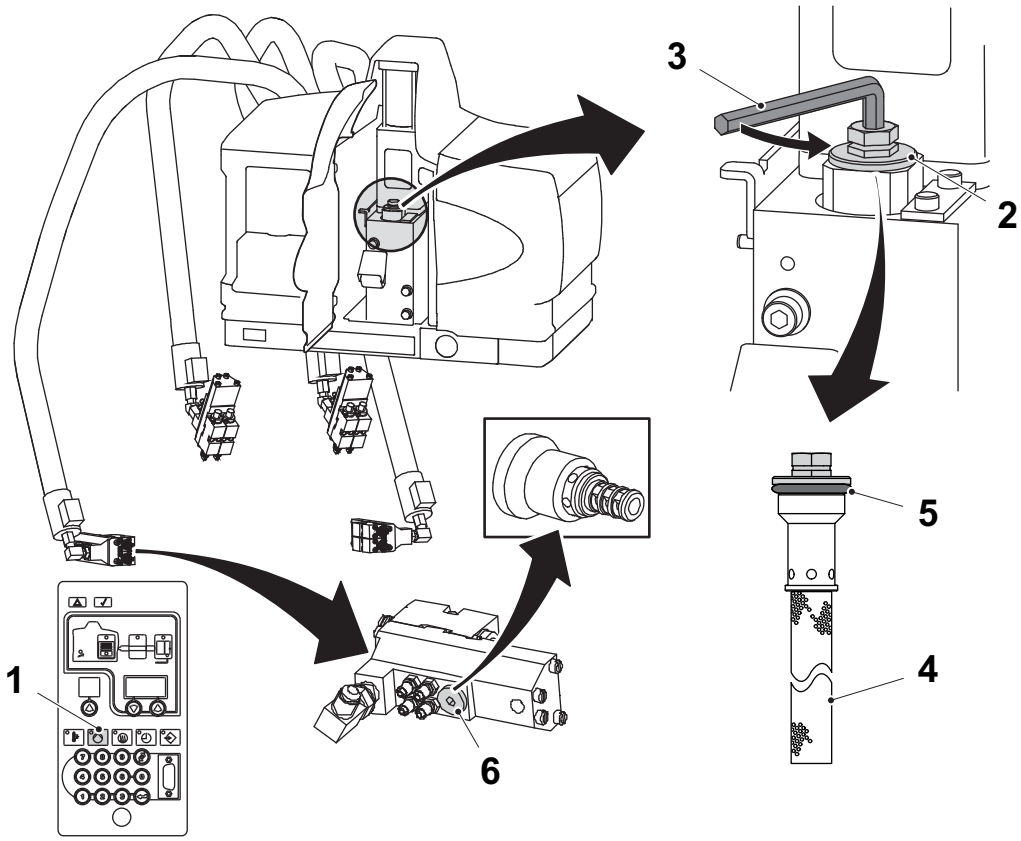

1 PUMP-KEY
2 Filter bracket
3 Allen key
4 Filter element
5 O-ring
6 Filter

3.5.1-5 Hotmelt Equipment - Change Gun

Machine Status	Power supply disconnector ON Air valve OFF
SPC Reference	2752733

WARNING

Risk of burns.

Hot adhesive. Wear safety glasses, protective gloves, and other protective clothing to avoid injuries from adhesive pouring out.

Note! The guns have had reached operating temperature. Zero the pump air pressure.

a) Make sure that the machine is in step PREHEATING.

b) Remove the air hoses to the gun (1).

c) Remove the module (2) by using the screws (3).

Note! Check that the o-rings are in good condition and positioned correctly.

d) Separate the gun and the hose (4). Replace the gun. Fit and tighten the screws (3).

e) Repeat the items b) to d) on the other guns.

f) Set the guns, see 3.5.1-6 Hotmelt Equipment - Set Gun.

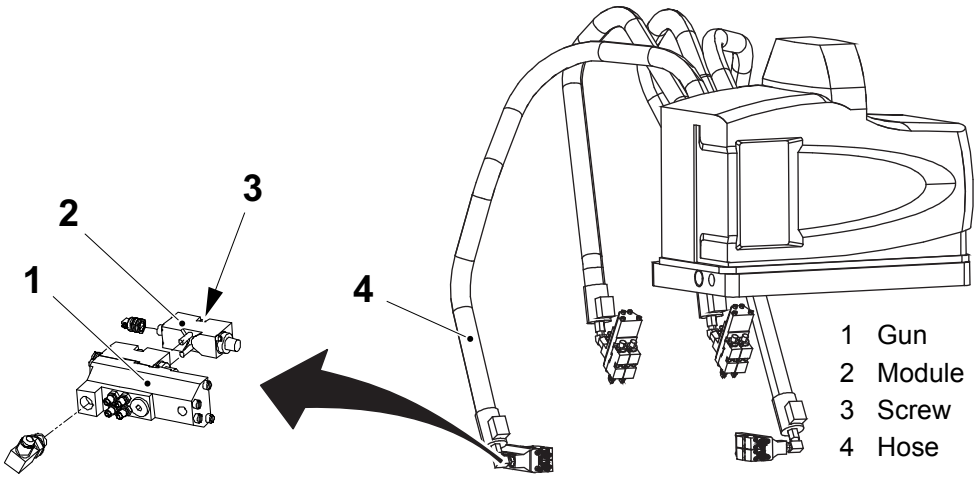

3.5.1-6 Hotmelt Equipment - Set Gun

Machine Status	Power supply disconnector ON Air valve ON
SPC Reference	2752733

WARNING

Risk of burns.

The guns are hot. Wear safety glasses, protective gloves, and other protective clothing to avoid injuries from adhesive pouring out.

Adjust adhesive dot position

a) Adjust the gun position up/down with the locking lever (1).

b) On the side opposite the pattern forming, it is possible to fine adjust the gun position sideways with the screws (2) under the bracket.

Tune a separate dot position

a) To tune up/down, turn the nozzle (3).

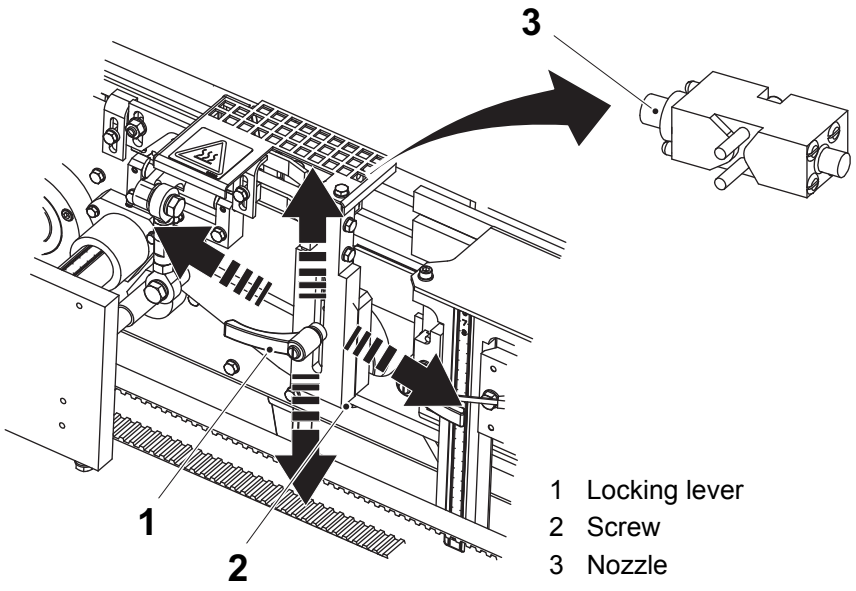

1 Locking lever
2 Screw
3 Nozzle

(Cont'd)

(Cont'd)

b) Tuning sideways is done from the TPOP. Make sure that the machine is in step PREHEATING (4).

c) Perform the setting Adhesive dot position hotmelt unit (5) via the TPOP, see 6.8.3-2 TPOP Settings - Tray Forming. Continue if required with the other dot positions.



4 Machine steps
5 Adhesive dot position hotmelt unit setting

3.5.1-7 Hotmelt Equipment - Bleed System

Machine Status	Power supply disconnector ON Air valve ON
SPC Reference	2752733

WARNING

Risk of burns.

Hot adhesive and oil. Wear safety glasses, protective gloves, and other protective clothing to avoid injuries from adhesive and oil pouring out through the nozzles.

Note! The machine must be preheated, and the guns have reached operating temperature.

a) Navigate to the SETTINGS (1) TRAY FORMING (2) window.

b) Log in as minimum power operator.

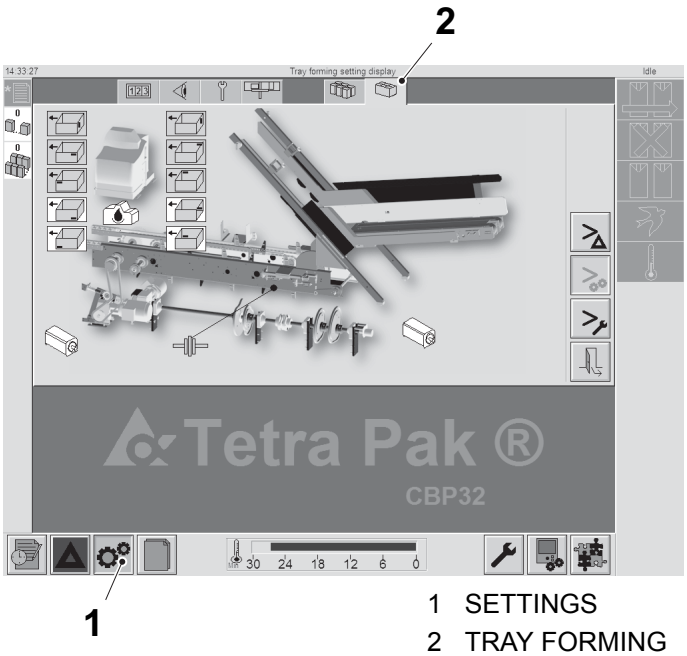

1 SETTINGS
2 TRAY FORMING

(Cont'd)

(Cont'd)

c) Install the bleed containers (3) and (4) over the hotmelt nozzles according to illustration, for the hoses that shall be bled.

WARNING

Be VERY careful when removing the containers, since the hotmelt core can still be in liquid form even if there is a "skin" on the hotmelt in the container.

Illustration installing containers

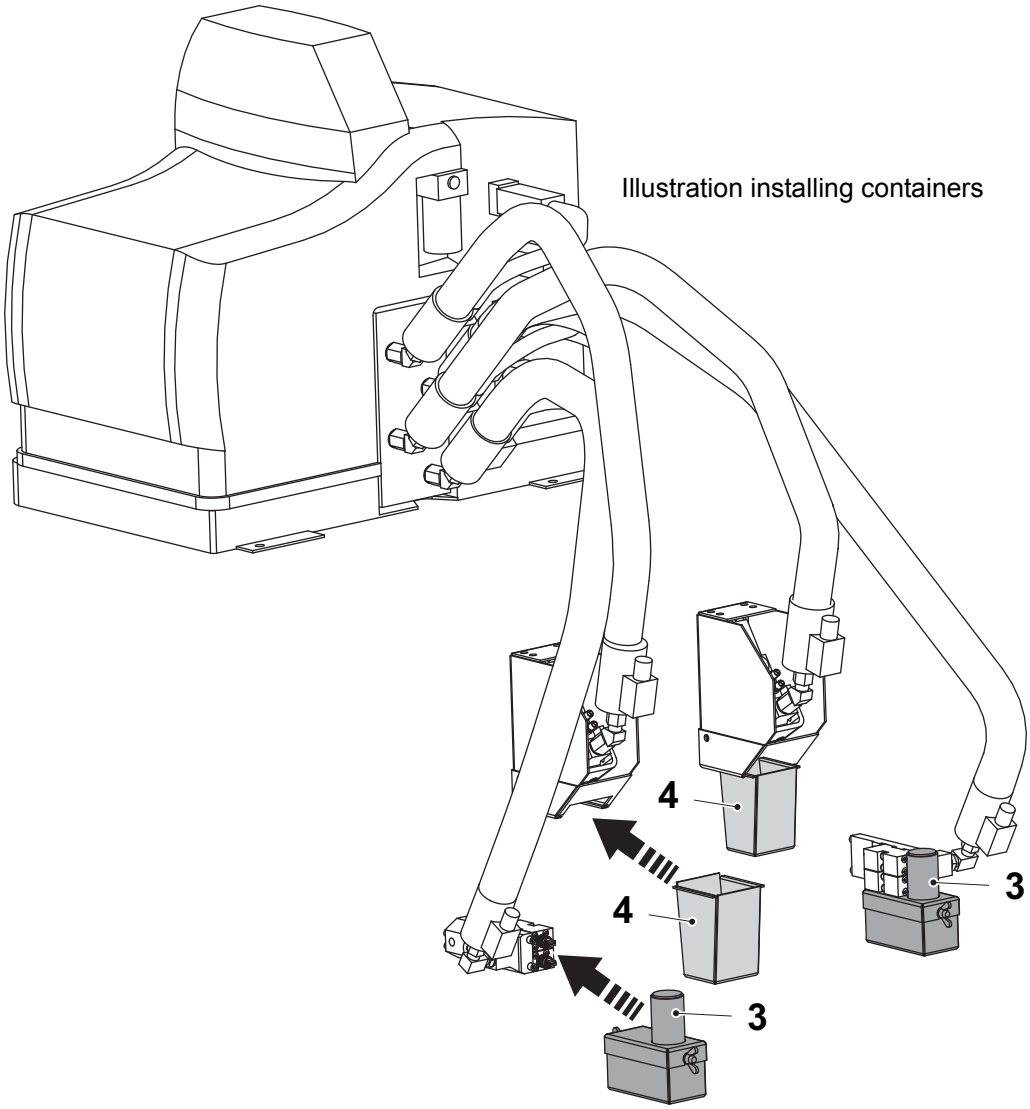

3 Container, lower
4 Container, upper

(Cont'd)

(Cont'd)

d) Press the BLEED HOTMELT HOSES button (5).

e) Follow the DYNAMIC HELP TEXT (6). It will guide what should be done to complete the bleeding process.

One or more hoses/guns can be bled at the same time by pressing respective SELECT button (7:..).

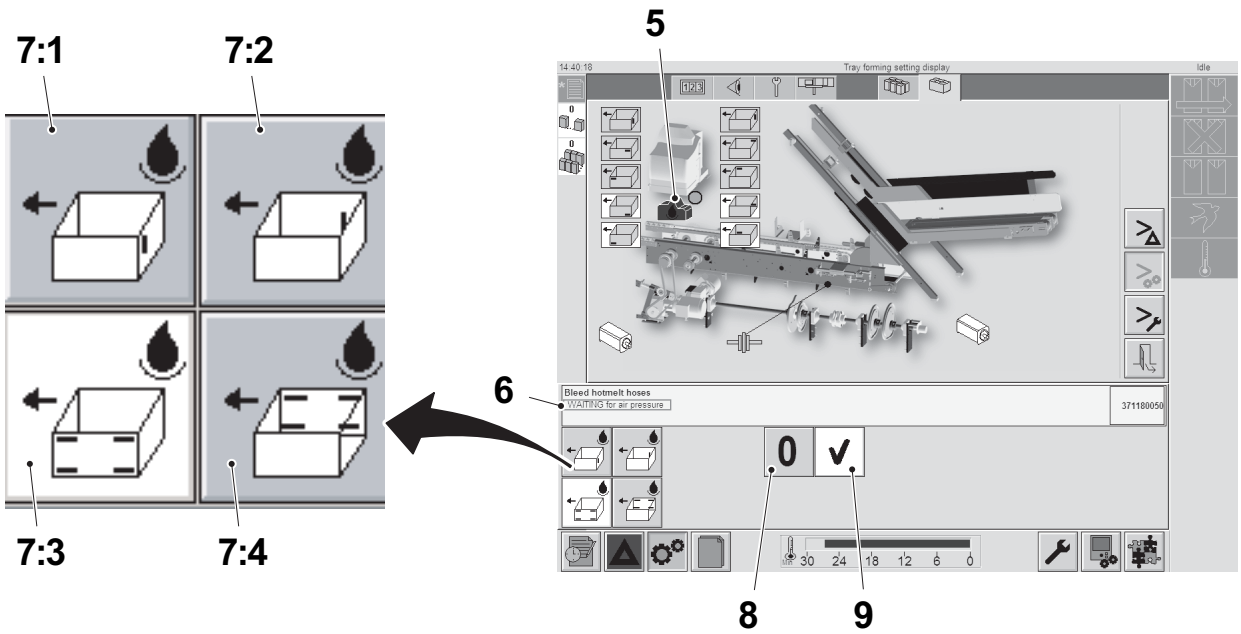

SELECT button for:

7:1 Left WA hose/both guns
(enabled only if Wrap Around is installed)

7:2 Right WA hose/both guns
enabled only if Wrap Around is installed)

7:3 Left lower hose/both guns

7:4 Right lower hose/both guns.

5 BLEED HOTMELT HOSES button

6 DYNAMIC HELP TEXT

8 0 button

9 CONFORMATION button

Note! Hose/gun positions are seen in the discharge direction, as indicated on the symbol.

3.5.1-8 Hotmelt Equipment - Hotmelt Temperature Low Alarm

Machine Status	Power supply disconnector ON Air valve ON
SPC Reference	2752733

If the guns are cooled down an alarm called hotmelt temperature low (1) locks the hotmelt unit. The hotmelt unit needs to be reset and reheated.

a) Press the clear/reset-key (2).

b) Press the heater-key (3).

c) The hotmelt unit starts to heat up.

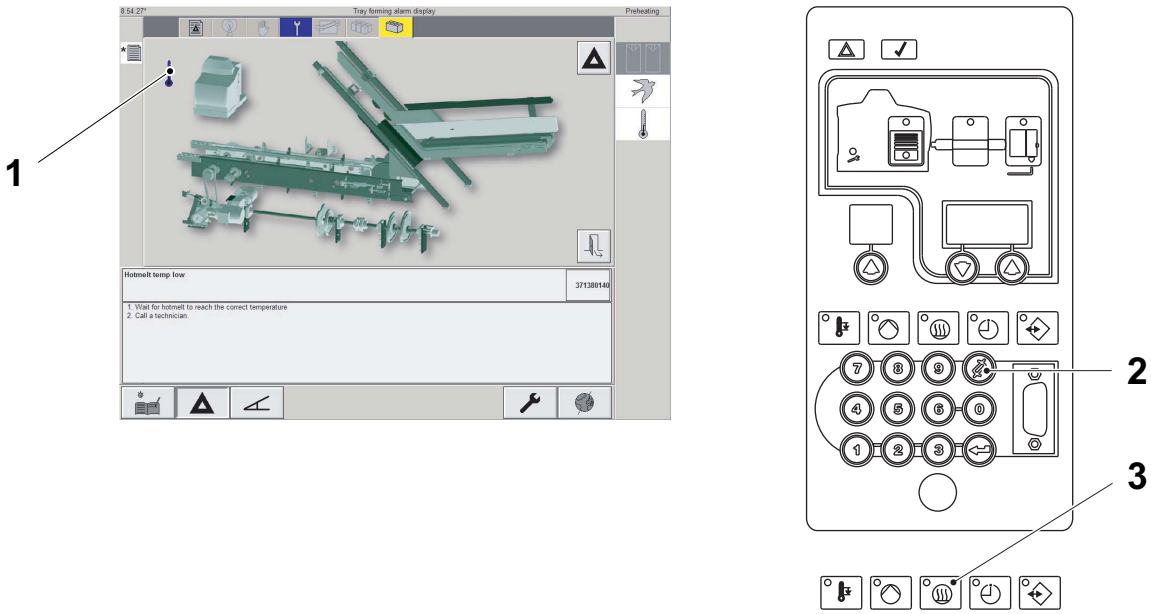

1 Hotmelt temperature low alarm
2 Clear/Reset-key
3 Heater-key

3.6 Covering Tray Forming

3.6-1 Covering Tray Forming - No Procedure Described

SPC Reference	2771151

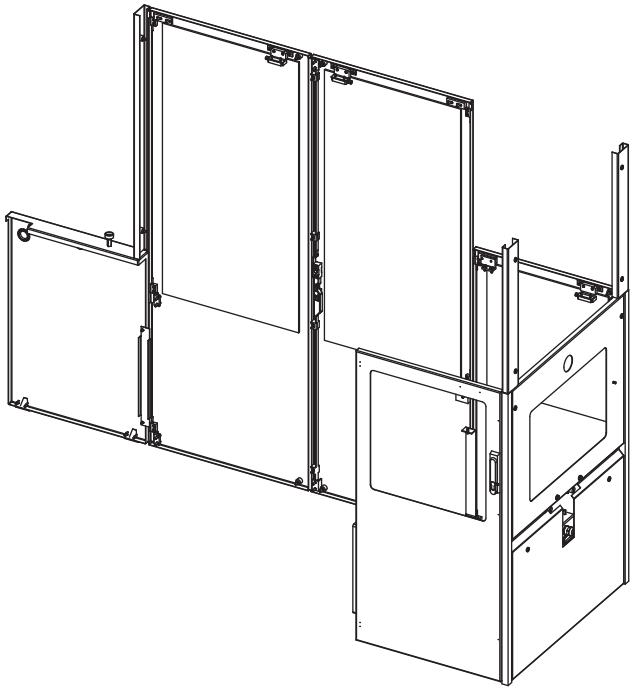

4 Magazine Unit

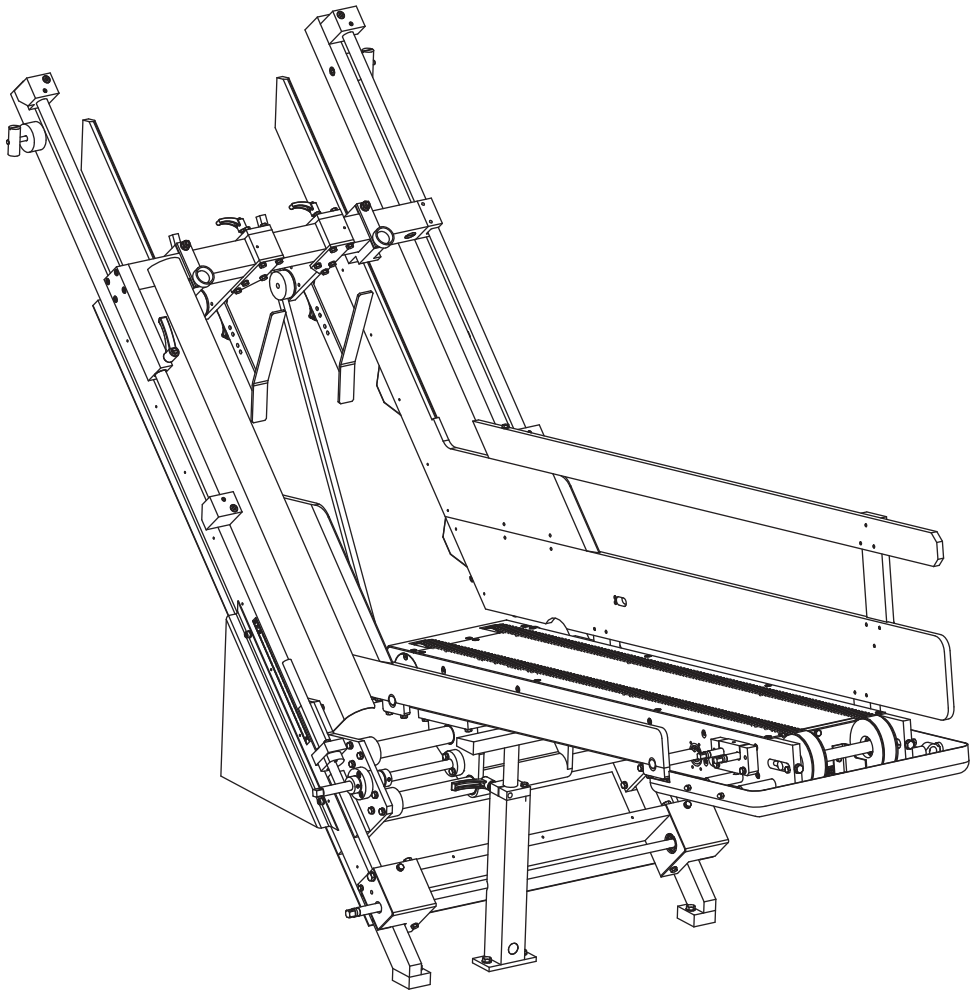

Description

SPC Reference	673828

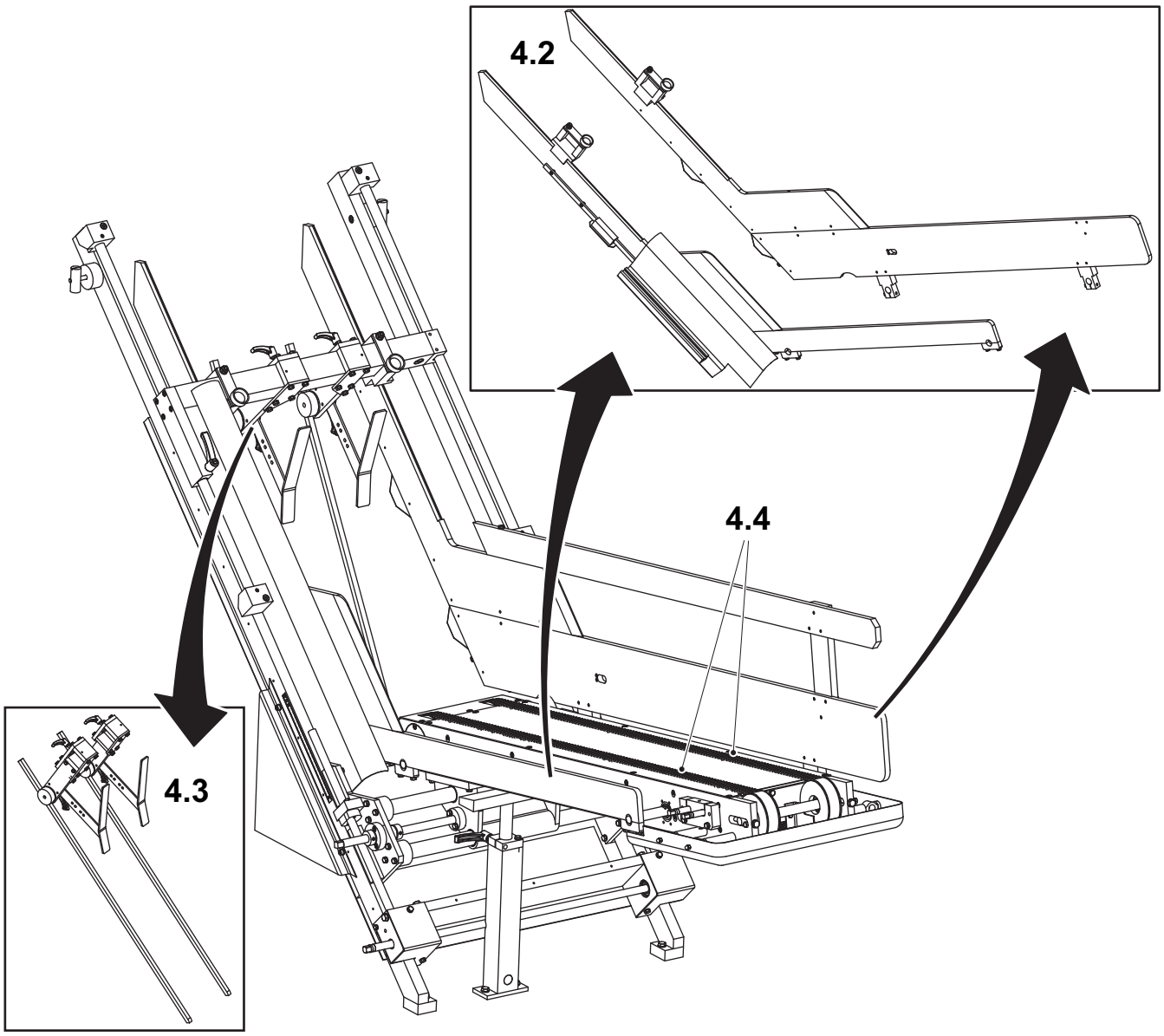

4.2 Mag side steering
4.3 Mag top unit
4.4 Timing Belt

Functional Description . . . . . 4 - 5

4.1 Magazine Unit . . . . . 4 - 7

4.1-1 Magazine Unit - Set . . . . . 4 - 7

4.2 Mag Side Steering . . . . . 4 - 13

4.2-1 Mag Side Steering - Set Nozzles . . . . . 4 - 13

4.2-2 Mag Side Steering - Set Side Plates . . . . . 4 - 14

4.2-3 Mag Side Steering - Set Photocell . . . . . 4 - 16

4.3 Mag Top Unit . . . . . 4 - 17

4.3-1 Mag Top Unit - Set . . . . . 4 - 17

4.4 Timing Belt . . . . . 4 - 20

4.4-1 Timing Belt - Check . . . . . 4 - 20

4.4-2 Timing Belt - Change . . . . . 4 - 21

4.4-3 Timing Belt - Set Belt Tension . . . . . 4 - 25

This page intentionally left blank

Functional Description

When the production is started, the timing belts (1) runs until the photocell (2) on the upper part of the magazine senses the blanks (3). Then the timing belt (1) stops after a short time delay.

The blanks (3) are placed between the carriers (4) by means of a pulldown arm (5). The arm has two suction cups (6), which adhere to the blank when the arm is in its upper position.

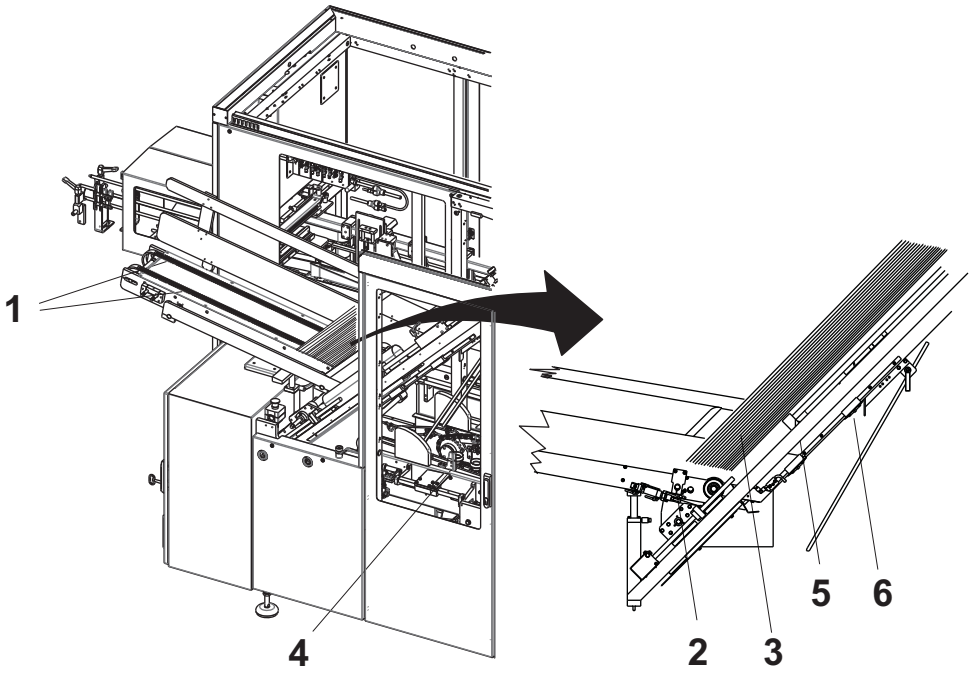

1 Timing belt
2 Photocell C50B0104
3 Blank
4 Carrier
5 Pulldown arm
6 Suction cup (2 pieces)

This page intentionally left blank

4.1 Magazine Unit

4.1-1 Magazine Unit - Set

Machine Status	Power supply disconnector OFF Air valve OFF
SPC Reference	673828

Height Position

a) Make sure that there are no blanks in the magazine.

b) Loosen the locking lever (1) and lower the support plate (2).

c) Check that the folding arms (3) are not in the way. If necessary, loosen the locking levers (4) and move the folding arms. Tighten the locking levers.

d) Measure the blank according to the illustration on the next page, and use the value A to set the height position of the magazine unit. Turn the axle (5) until value A is reached on the scale (6) at point B onthe rail (7).

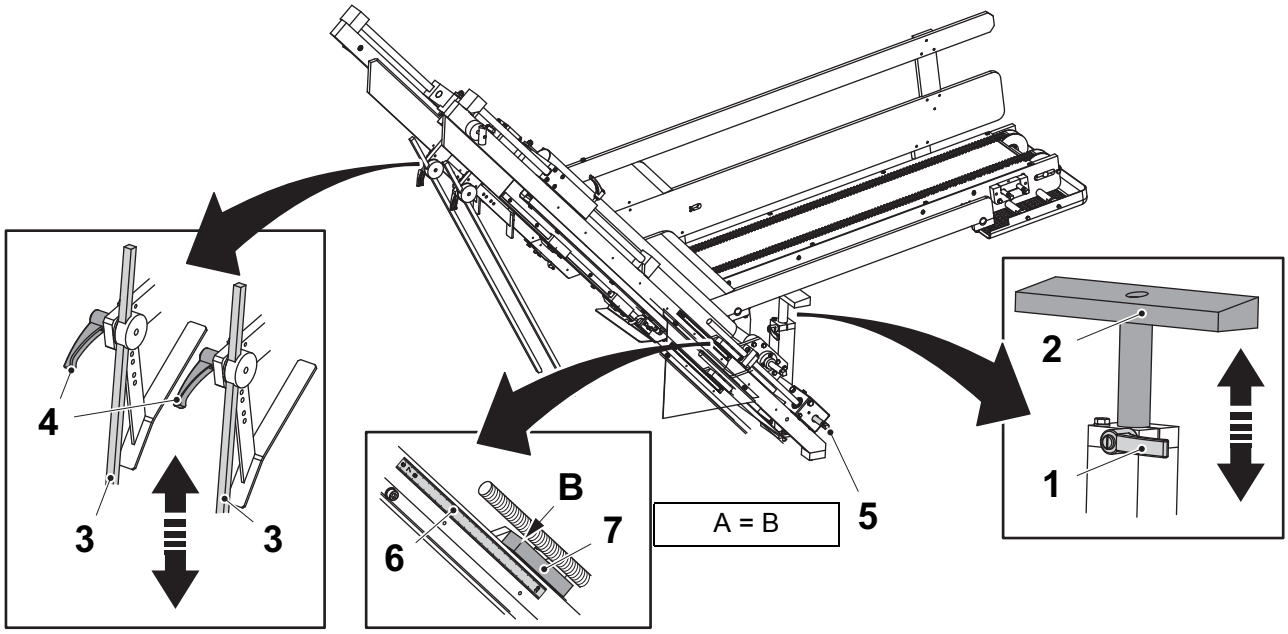

1 Locking lever
2 Support plate
3 Folding arm
4 Locking lever
5 Axle
6 Scale
7 Rail

(Cont'd)

(Cont'd)

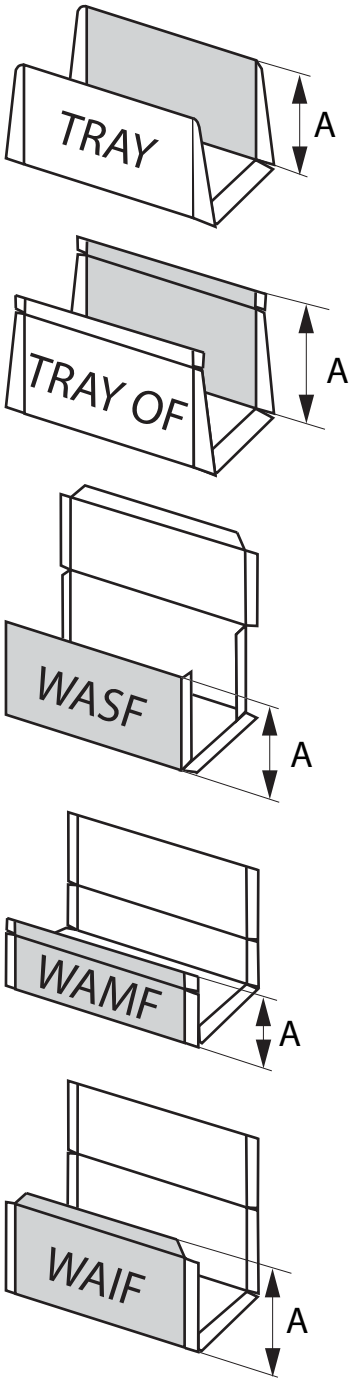

Tetra **Tray**

Tetra **Tray** with **O**ver**F**laps

Tetra **W**raparound box with **S**ide **F**lap

Tetra **W**raparound box with **M**eeting **F**laps

Tetra **W**raparound box with **I**nside top **F**lap

(Cont'd)

(Cont'd)

e) Set the steering position see Steering Position on next page.

f) To check the height position of the magazine unit, measure distance C between the threaded adjusting screw (8) and the edge of the guide (9). Note the measurement. Measure the distance D between the threaded adjusting screw (8) and the bottom crease (10) of the blank. The distances C and D are to be the same. If necessary turn the axle (5) to adjust.

g) Loose the locking lever (1) and adjust the support plate (2) so that the magazine rests on it. Tighten the locking lever.

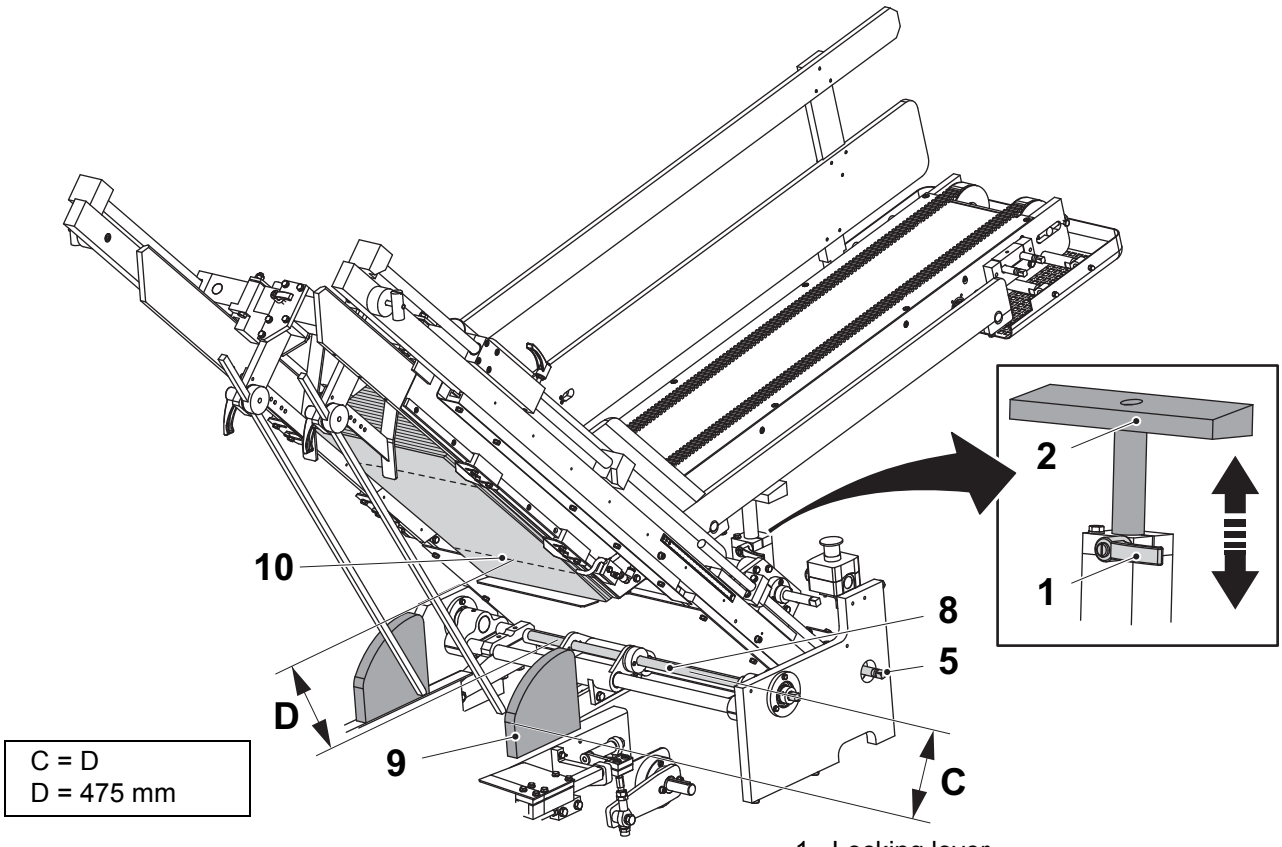

C = D
D = 475 mm

1 Locking lever
2 Support plate
5 Axle
8 Adjusting screw
9 Guide
10 Bottom crease

(Cont'd)

(Cont'd)

Steering Position

a) Loosen the knobs (11) on the holders (12).

b) Loosen the screw (13).

c) Measure the blank according to the distance E.
Turn the shafts (14) and (15) to adjust distance F between the steerings (16) and (17).

d) Make sure that distance G and H are same between the side plates (18) and the steerings (16) and (17).

e) Tighten the screw (13).

Note! When distance I exceeded, the holders (12) can not be used. Move them to a position inside the steerings.

Tip! Lift the magazine to easily remove or refit the holders from the groove. Use the back end of the magazine to remove or refit.

(Cont'd)

(Cont'd)

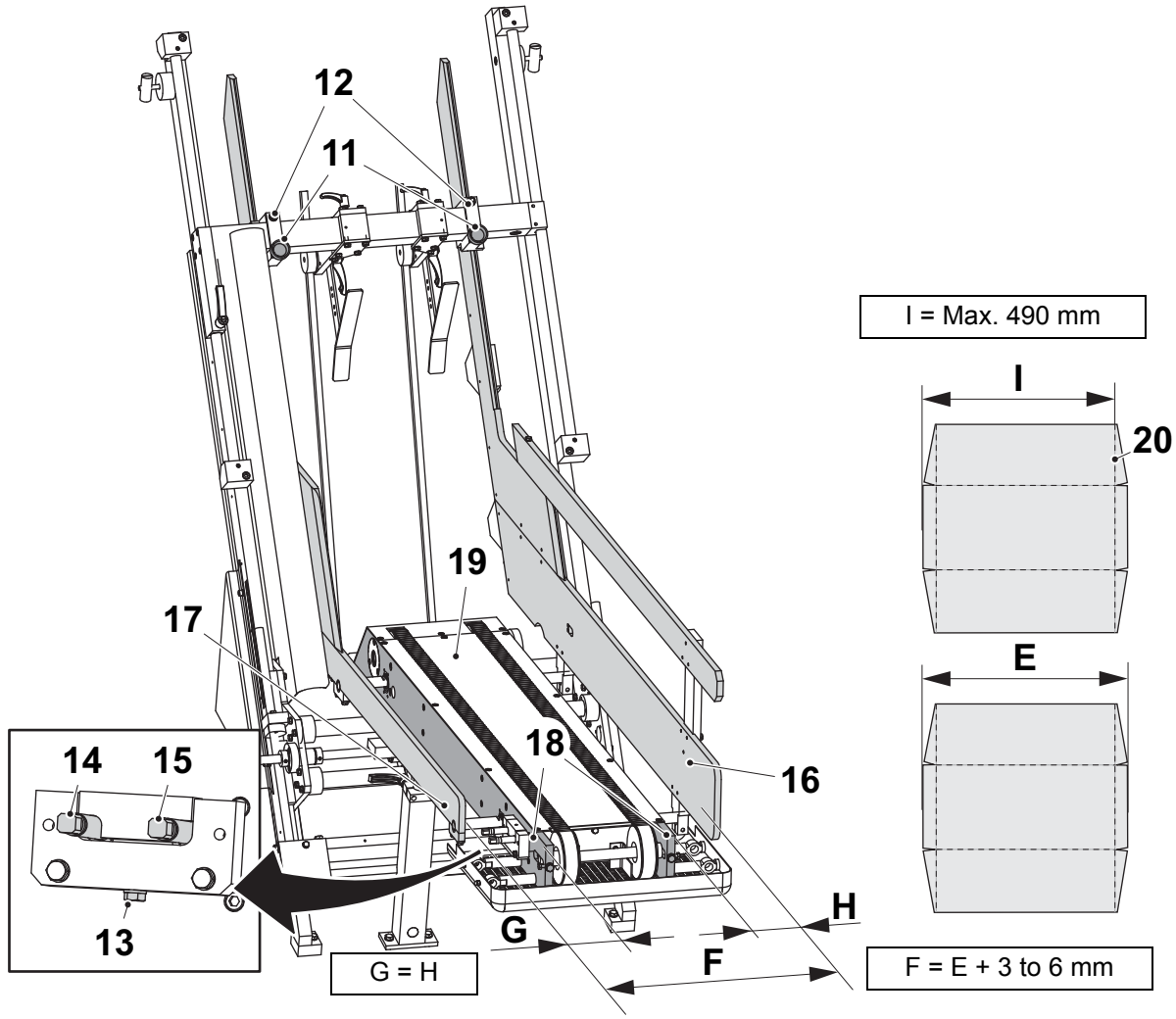

11 Knob
12 Holder
13 Screw
14 Shaft
15 Shaft
16 Steering
17 Steering
18 Side plate
19 Magazine body
20 Crease

(Cont'd)

(Cont'd)

Sideways Position

a) Loosen the knobs (11) on the holders (12).

b) Measure distance J on the short end of the blank.

c) Set the distance K between the steering (21) and the frame (22) on the Pattern Forming side by turning the adjusting screw (23).

d) Tighten the knobs (11).

e) Load blanks into the magazine and check that the distance K is correct.

Top Unit

Set the top unit according to section 4.3-1 Mag Top Unit - Set.

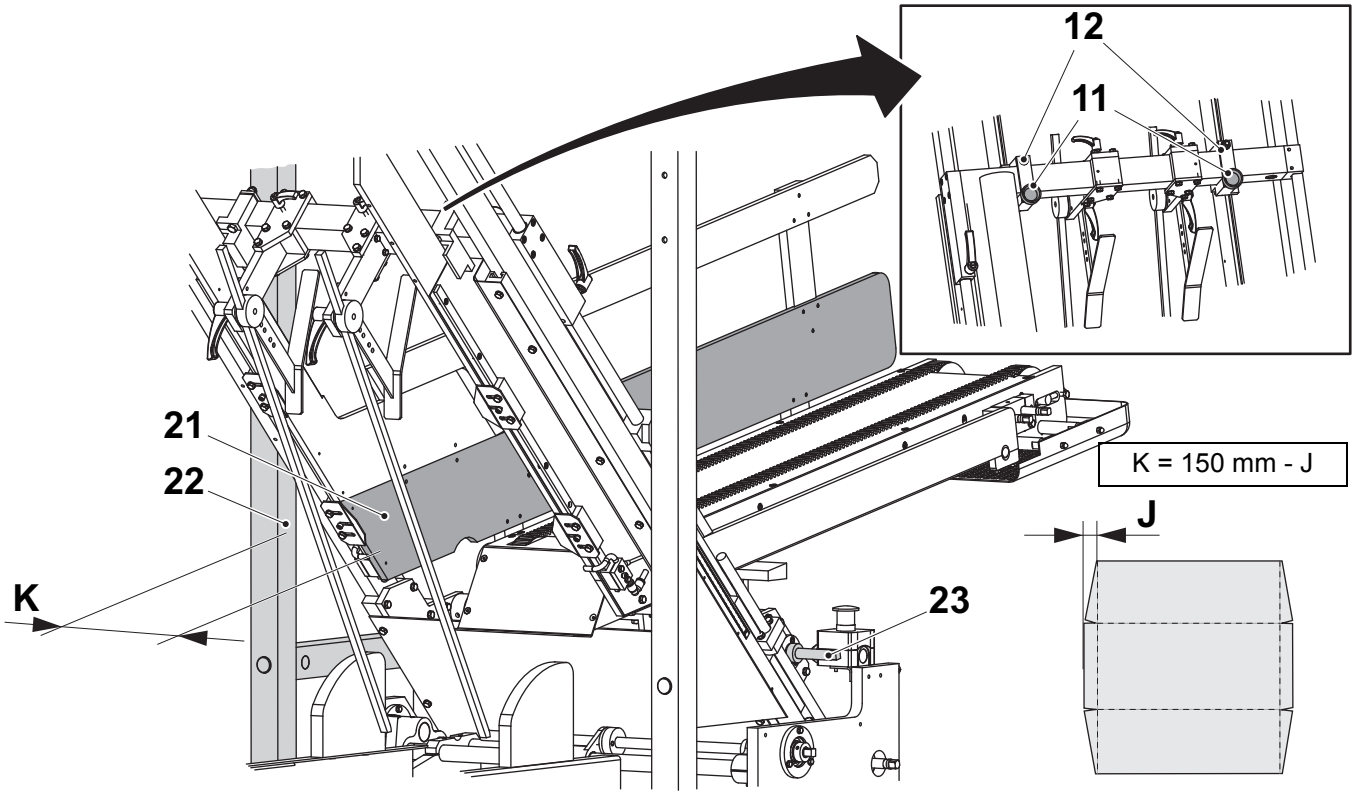

11 Knob
12 Holder
21 Steering
22 Frame
23 Adjusting screw

4.2 Mag Side Steering

4.2-1 Mag Side Steering - Set Nozzles

Machine Status	Power supply disconnector OFF Air valve OFF
SPC Reference	1021178

a) Make sure that the magazine unit is set according to section 4.1 Magazine Unit.

b) Load blanks (1) into the magazine.

c) Loosen the screw (2) on the pipe holder (3) and set the height position so the opening of the nozzle is aligned with the crease (6).

d) Tighten the screw (2).

e) Loosen the screws (4) and turn the nozzle (5) so the opening of the nozzle is aligned with the crease (6).

f) Tighten the screw (4).

g) Repeat items c) to f) for the nozzle on the opposite side.

h) Calibrate the angle and position of the nozzles, to ensure that one blank at a time is pulled down from the magazine by blowing air between the first and second blank.

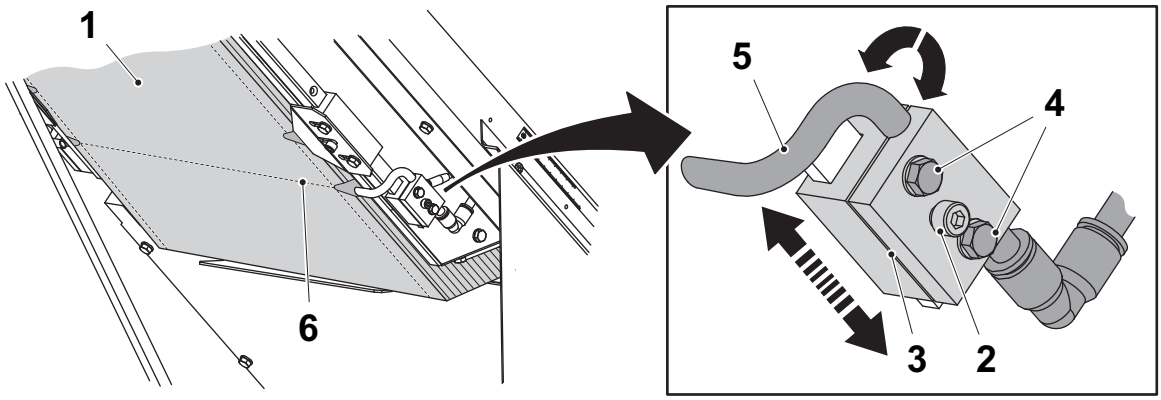

1 Blank
2 Screw
3 Pipe holder
4 Screw
5 Nozzle
6 Crease

4.2-2 Mag Side Steering - Set Side Plates

Machine Status	Power supply disconnector OFF Air valve OFF
SPC Reference	1021178

a) Loosen the screw (1) and adjust the plate (2) vertically.
Tighten the screw (1).

b) Loosen the screws (3) and set the distance A by adjust the plate (2) horizontally.
Tighten the screws (3).

c) Repeat the methods on the other side.

d) See the adjustments for the different blanks on the next page.

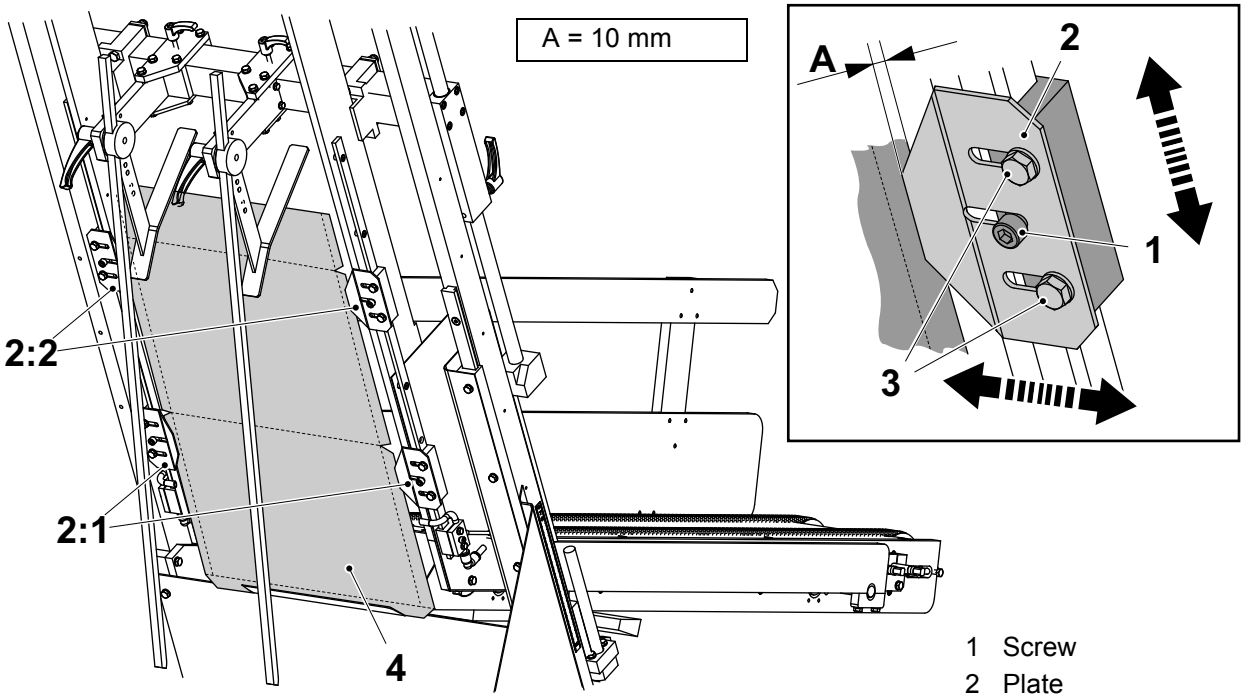

1 Screw
2 Plate
3 Screw
4 Blank
2:1 Lower plate
2:2 Upper plate

(Cont'd)

(Cont'd)

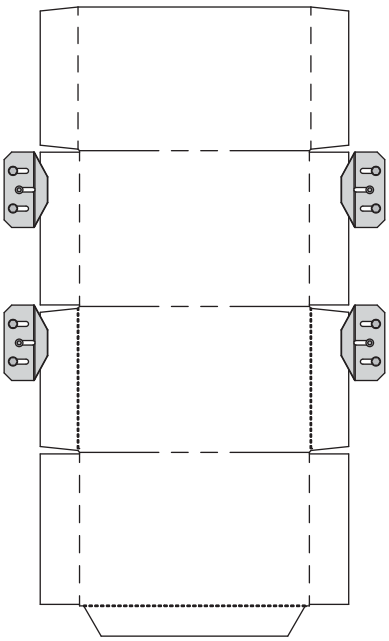

WAIF

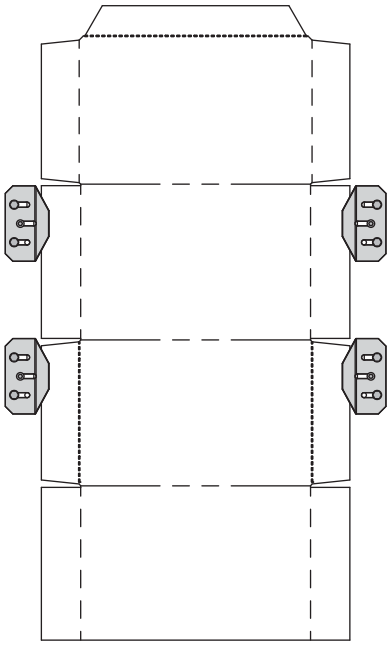

WASF

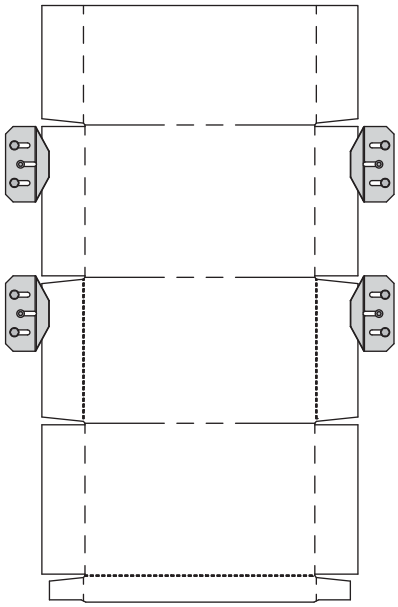

WAMF

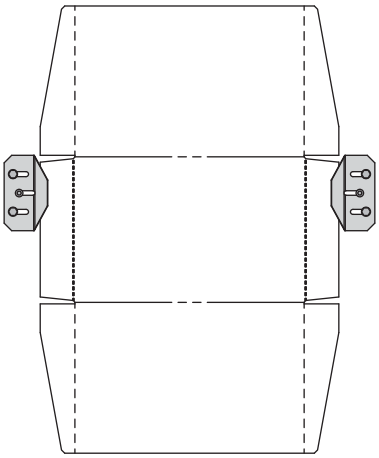

TRAY

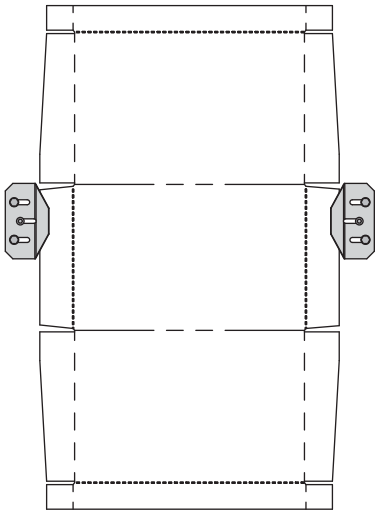

TRAY OF

4.2-3 Mag Side Steering - Set Photocell

Machine Status	Power supply disconnector OFF Air valve ON
SPC Reference	1021178

a) Make sure that there are blanks in the magazine unit.

b) Set the photocells (1) and (2) to be activated at approximately 100 to 150 mm out from respective photocells.

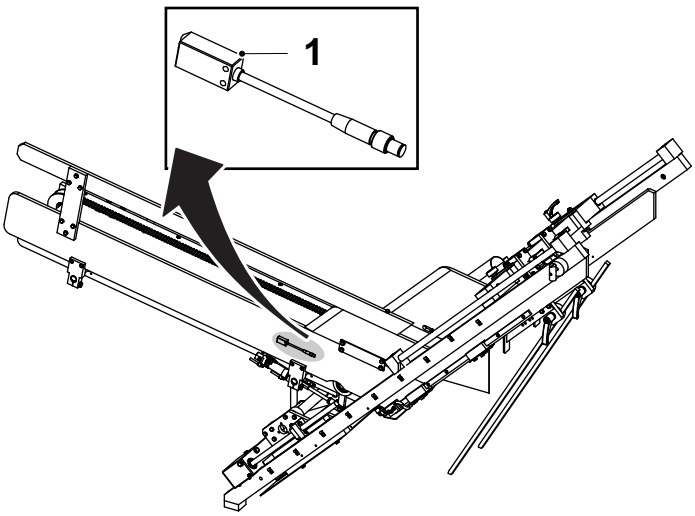

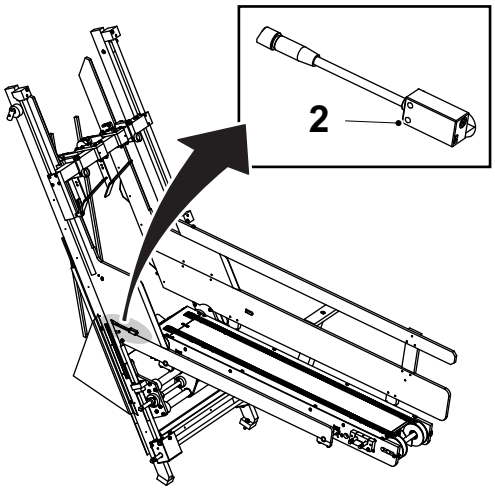

1 Photocell C50B0102 Level
2 Photocell C50B0104 Feeding

4.3 Mag Top Unit

4.3-1 Mag Top Unit - Set

Machine Status	Power supply disconnector OFF Air valve OFF
SPC Reference	1021179

CAUTION

Risk of crush!

Failure to observe this information **could result in minor personal injury!**

Note! This is a basic setting, and changes might be necessary for a proper function.

Make sure that the settings in section 4.1 Magazine Unit are done.

Top Flap Adjuster Setting

a) Load the magazine unit with blanks until the distance A is achieved.

b) Loosen the locking lever (1).

c) Move the top flap adjuster (2) and set the distance B between the support arms (3) and the top of the blanks (4).

d) Tighten the locking lever (1).

Note! To the feeding of blanks shall perfectly work must the magazine unit loaded with blanks according the distance A or more.

e) Continue with vertical and horizontal setting of the folding arms, see Vertical Position of the Folding Arms and Horizontal Position of the Folding Arms.

(Cont'd)

(Cont'd)

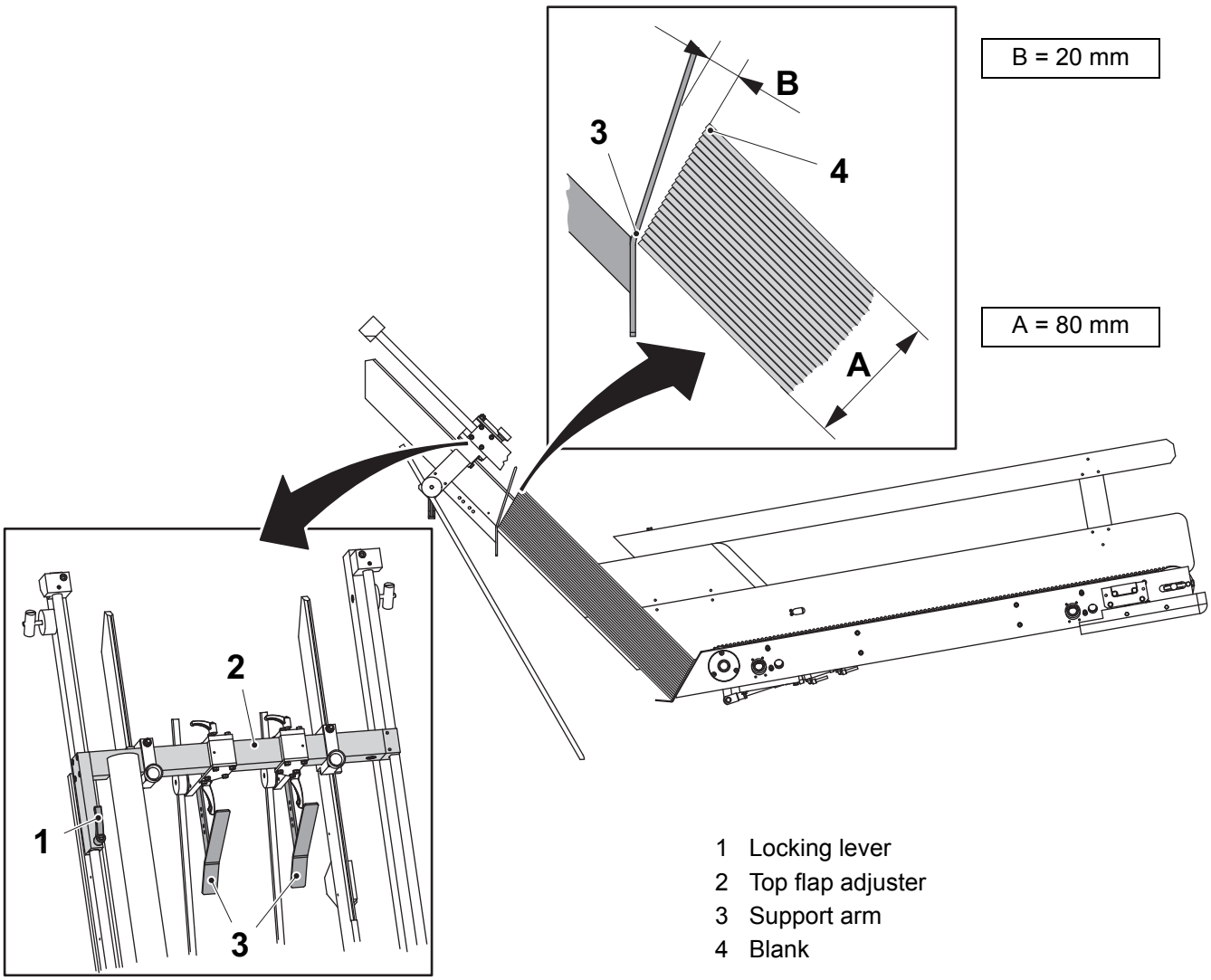

1 Locking lever
2 Top flap adjuster
3 Support arm
4 Blank

(Cont'd)

(Cont'd)

Vertical Position of the Folding Arms

a) Loosen the locking levers (5).

b) Adjust the folding arms (6) according to distance C, to make the folded blanks (7) pass under them.

c) Tighten the locking levers (5).

Horizontal Position of the Folding Arms

a) Loosen the locking levers (8).

b) Move the folding arms (6) so that they are centered over the carriers and in line with the edge of the carrier fingers (9).

c) Tighten the locking levers (8).

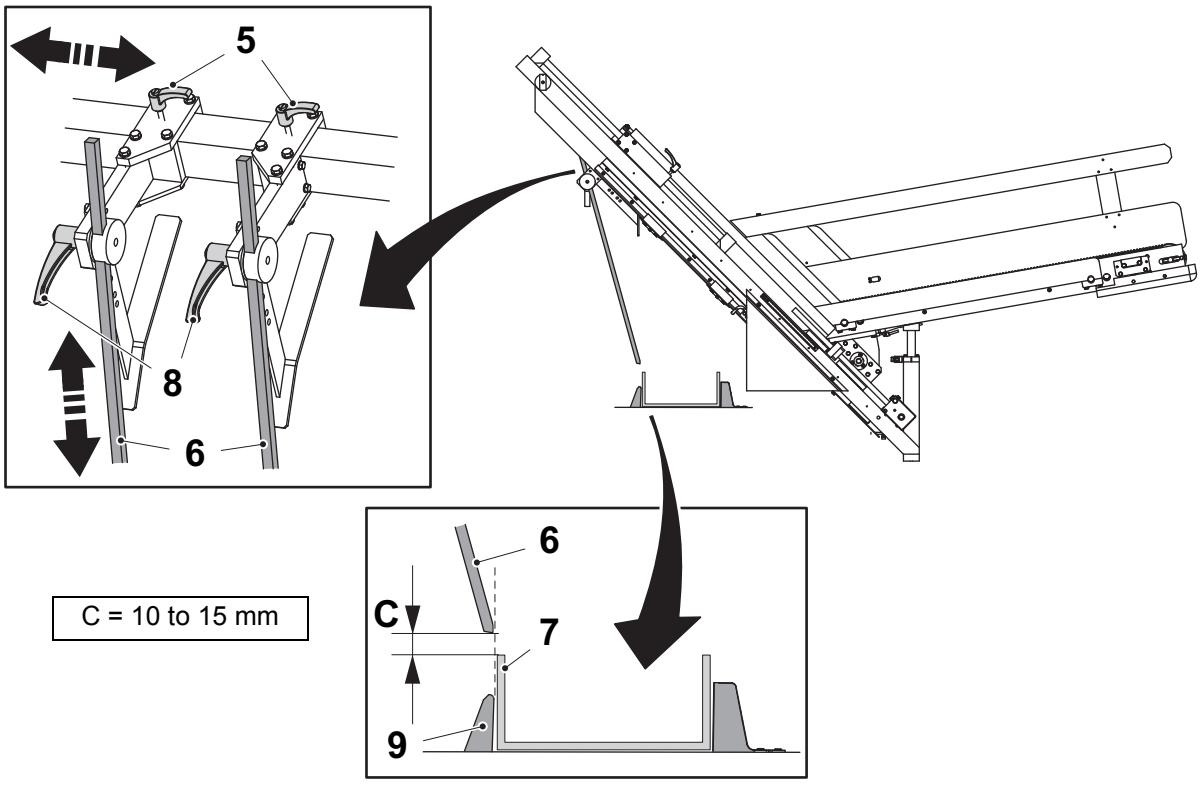

C = 10 to 15 mm

5 Locking lever
6 Folding arm
7 Folded blank
8 Locking lever
9 Carrier finger

4.4 Timing Belt

4.4-1 Timing Belt - Check

Machine Status	Power supply disconnector OFF Air valve OFF
SPC Reference	673828-3

Check if the timing belts (1) and (2) are worn or damaged. Change if necessary, see 4.4-2 Timing Belt - Change.

Check also the tension of the timing belt. If necessary, set the tension according to 4.4-3 Timing Belt - Set Belt Tension.

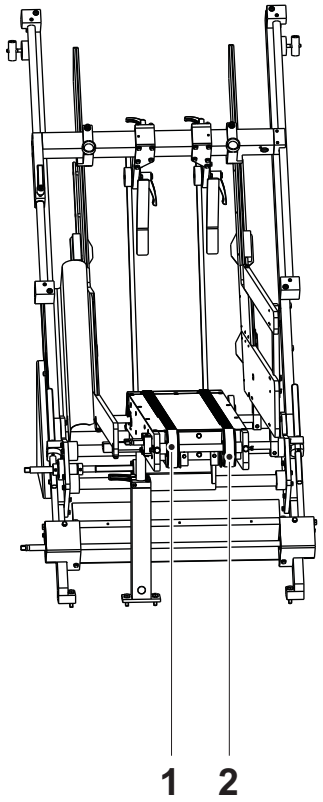

1 Timing belt
2 Timing belt

4.4-2 Timing Belt - Change

Machine Status	Power supply disconnector OFF Air valve OFF
SPC Reference	673828

a) Loosen the locking screw (1).

b) Remove the adjustment screw (2).

c) Repeat items a) and b) on the other timing belt tension.

d) Loosen the screws (3) on the side plate's holder (4).

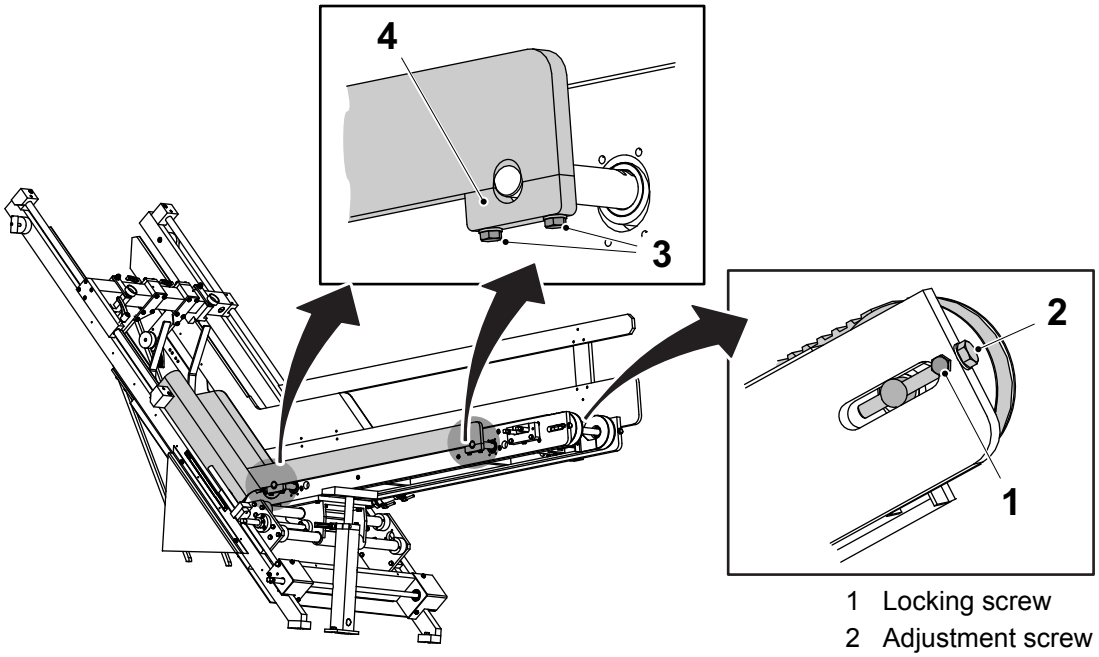

1 Locking screw
2 Adjustment screw
3 Screw (4 pcs)
4 Holder (2 pcs)

(Cont'd)

(Cont'd)

e) Remove the screw joints (5), (7) and the cover plates (6), (8).

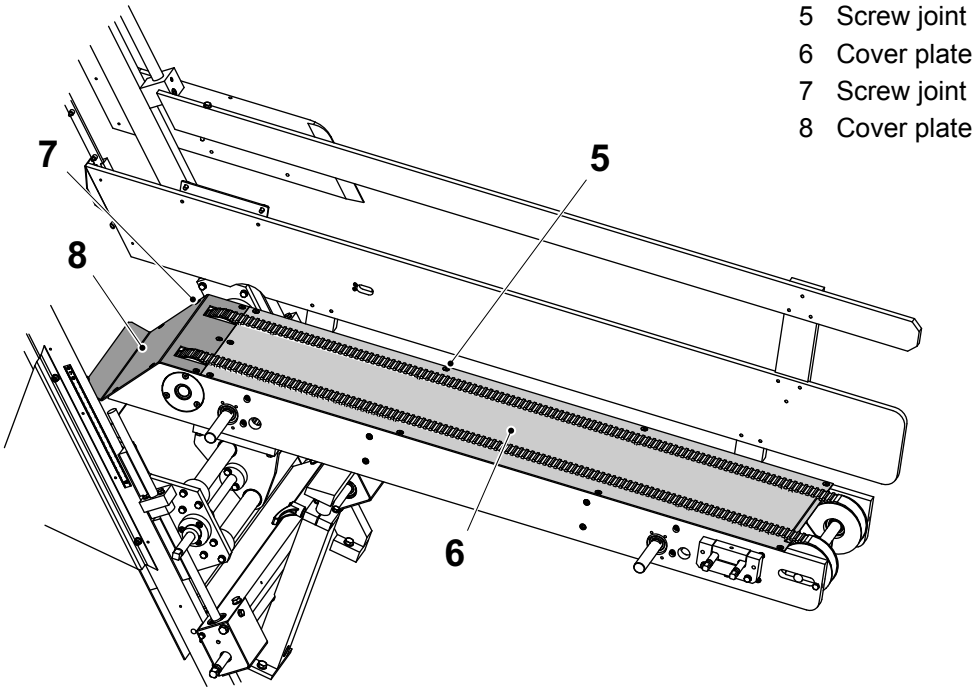

(Cont'd)

(Cont'd)

f) Loosen the screw (9).
g) Remove the screws (10).
h) Remove the screws joint (11) and the side plate (12).

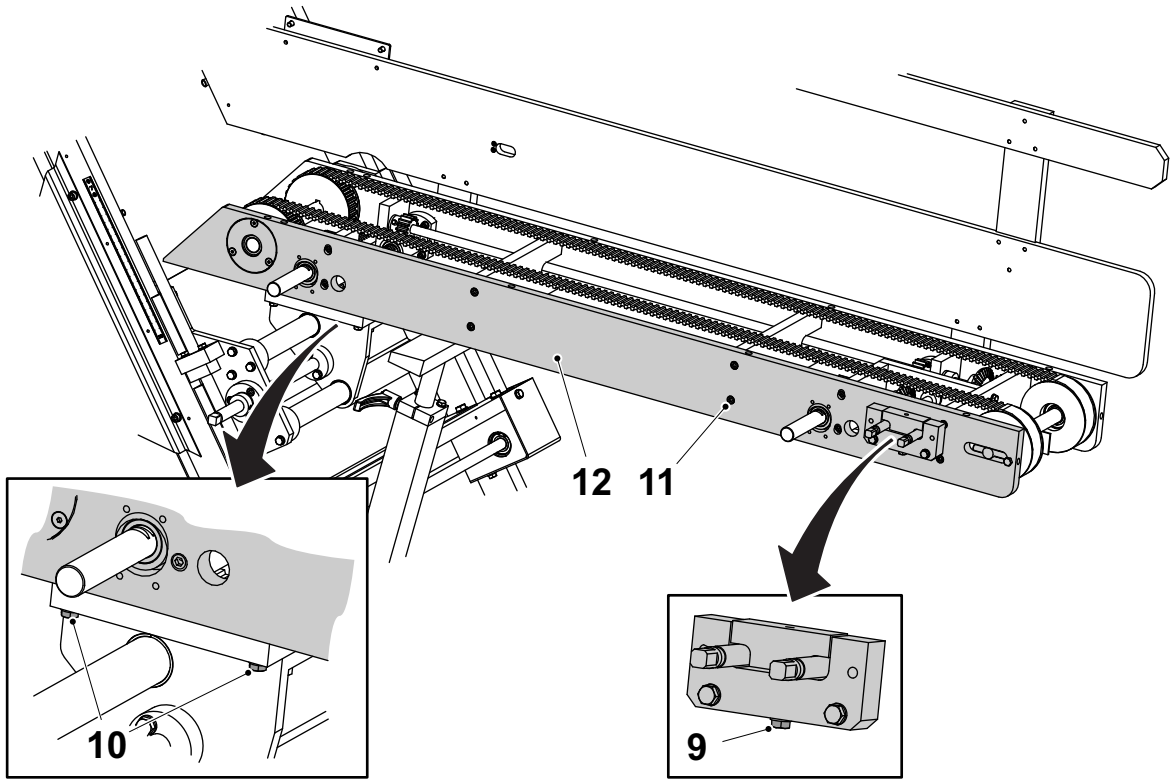

9 Screw
10 Screw
11 Screw joint
12 Side plate

(Cont'd)

(Cont'd)

i) Push in the rolls (13) and (14) to slacken the timing belts (15) and (16).

j) Remove the timing belts (15) and (16).

k) Start with assemble the timing belt (16) on the toothed pulley (17) and finish with the installation on the roll (14).

l) Repeat the method k) for installation of the timing belt (15).

m) Reassemble in reverse order.

n) Set the belt tension, see 4.4-3 Timing Belt - Set Belt Tension.

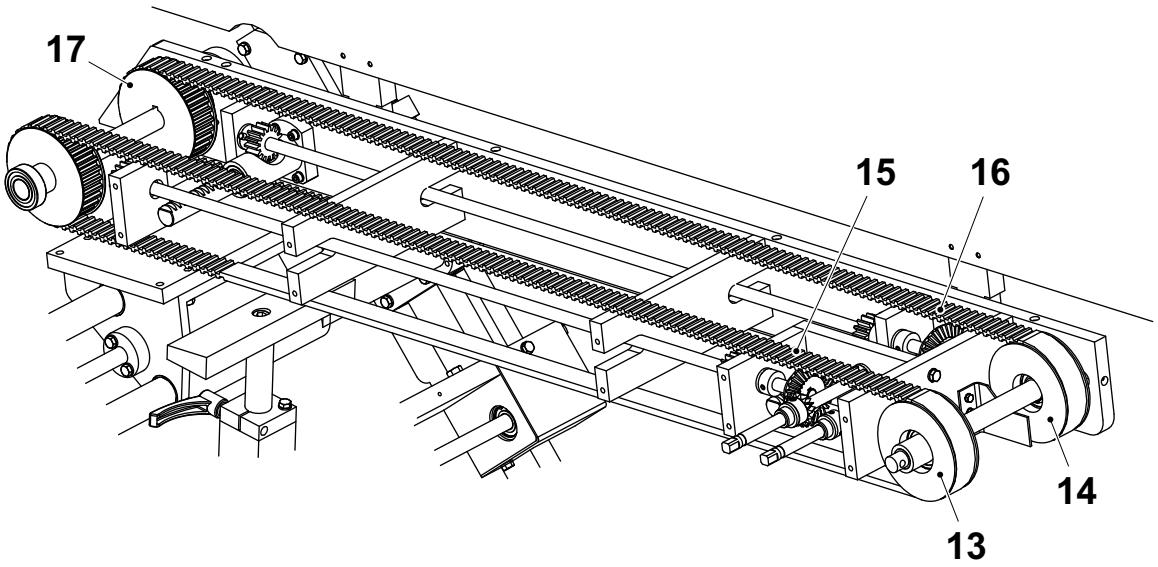

13 Roll
14 Roll
15 Timing belt
16 Timing belt
17 Toothed pulley

4.4-3 Timing Belt - Set Belt Tension

Machine Status	Power supply disconnector OFF Air valve OFF
SPC Reference	673828

a) Loosen the locking screw (1).

b) Adjust the belt tension to distance A between the timing belt (2) and the side plate (3) at point B with the adjustment screw (4).

c) Lift the timing belt (2) with handpower and feel if the resistance is the same on both sides of the belt.

d) Tighten the locking screw (1).

e) Check and set the tension on the other timing belt (5).

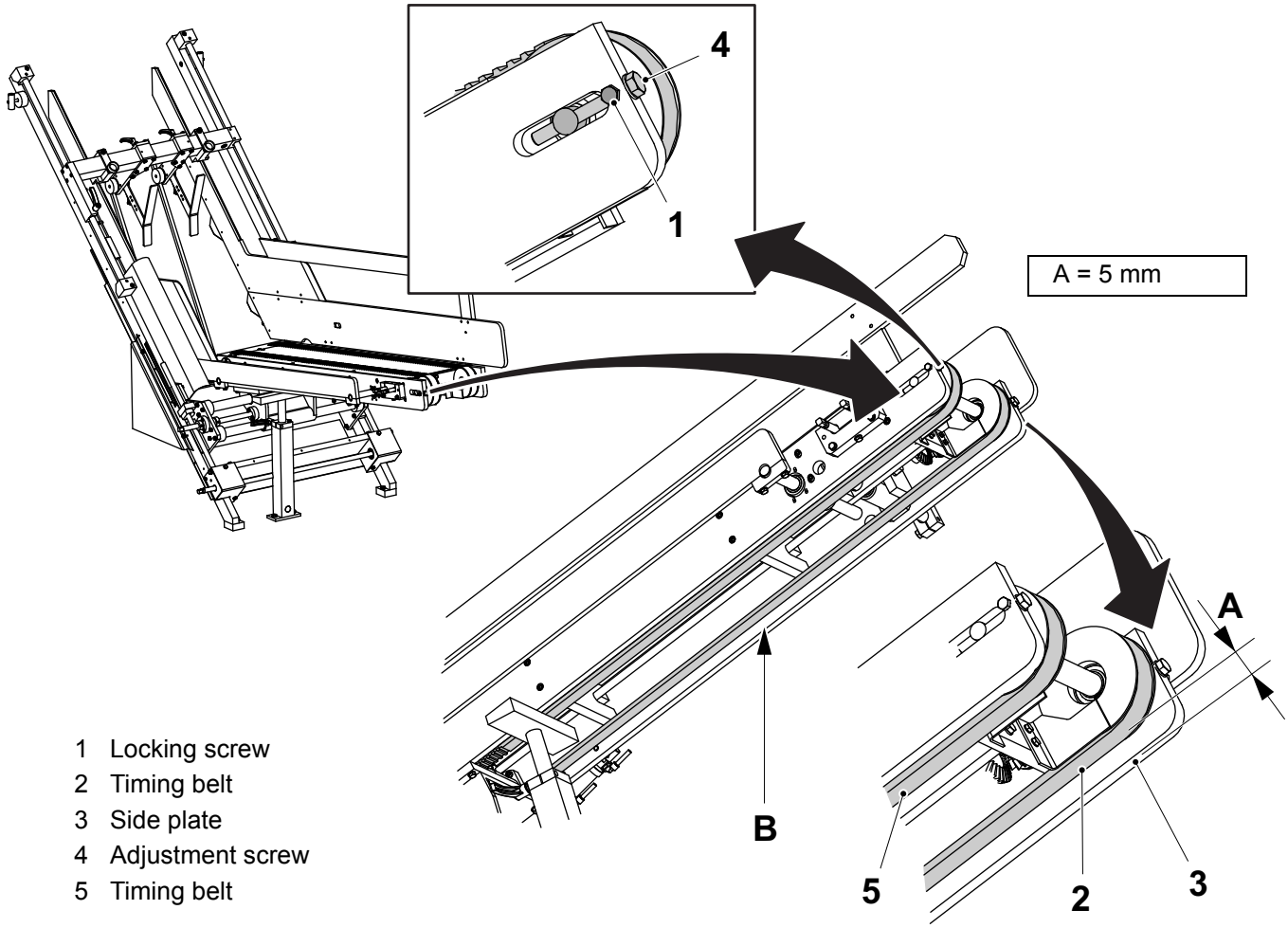

1 Locking screw
2 Timing belt
3 Side plate
4 Adjustment screw
5 Timing belt

This page intentionally left blank

5 Wraparound Unit

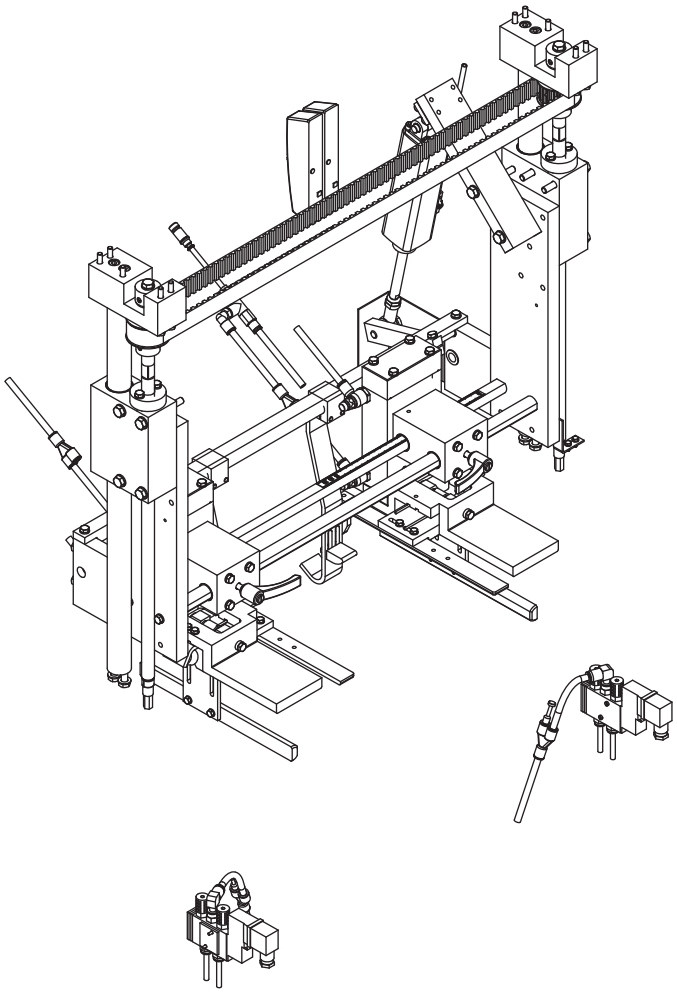

Description

SPC Reference	673836

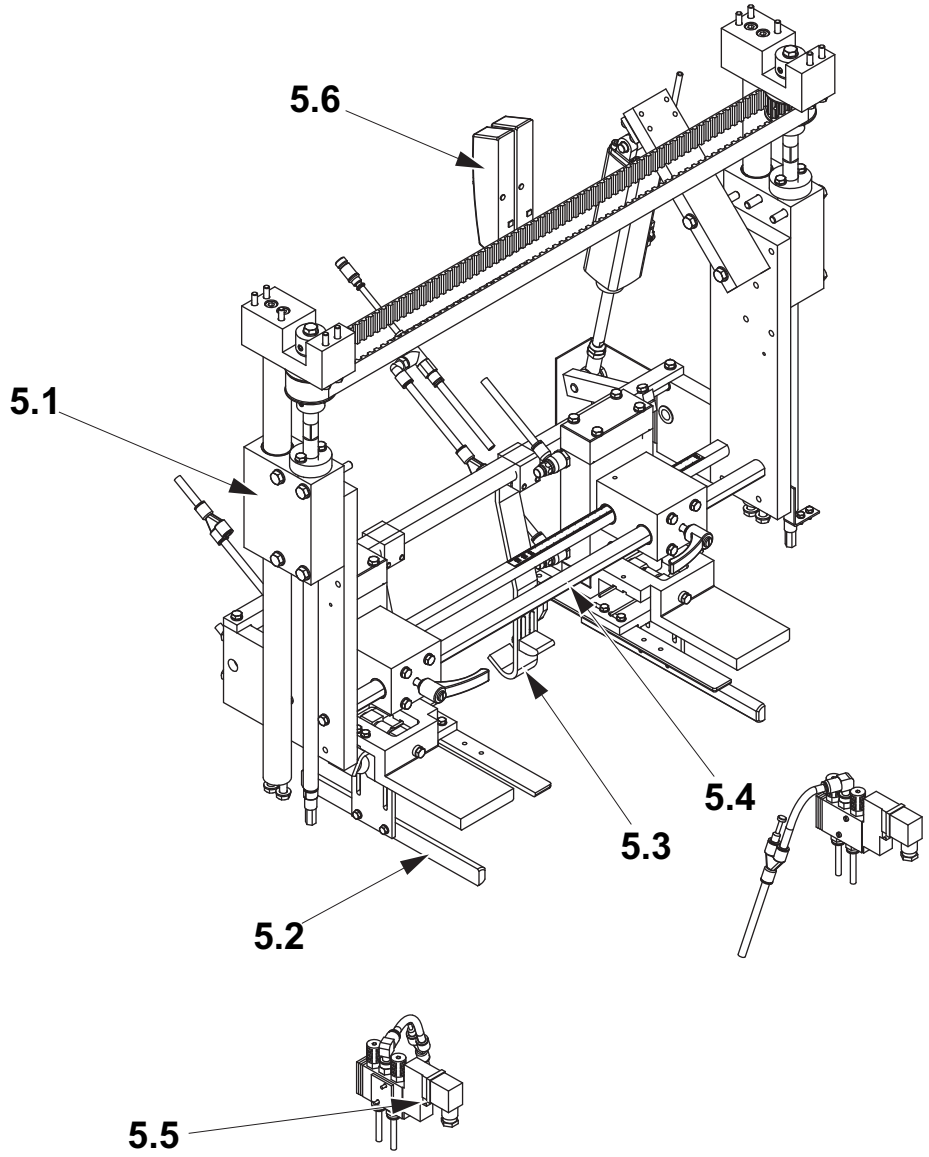

5.1 Wa height adjustment*
5.2 Wa squeezer
5.3 Wa flap folder
5.4 Wa frame*
5.5 Wa hotmelt equipment*
5.6 Wa valve*
* no procedure described

Functional Description . . . . . 5 - 5

5.1 Wa Height Adjustment . . . . . 5 - 6

5.1-1 Wa Height Adjustment - No Procedure Described 5 - 6

5.2 Wa Squeezer . . . . . 5 - 7

5.2-1 Wa Squeezer - Check . . . . . 5 - 7

5.2-2 Wa Squeezer - Change . . . . . 5 - 8

5.2-3 Wa Squeezer - Set . . . . . 5 - 9

5.3 Wa Flap Folder . . . . . 5 - 12

5.3-1 Wa Flap Folder - Check . . . . . 5 - 12

5.3-2 Wa Flap Folder - Change Parts . . . . . 5 - 13

5.3-3 Wa Flap Folder - Set . . . . . 5 - 14

5.4 Wa Frame . . . . . 5 - 17

5.4-1 Wa Frame - No Procedure Described . . . . . 5 - 17

5.5 Wa Hotmelt Equipment . . . . . 5 - 18

5.5-1 Wa Hotmelt Equipment - No Procedure Described . . . . . 5 - 18

5.6 Wa Valve . . . . . 5 - 19

5.6-1 Wa Valve - No Procedure Described . . . . . 5 - 19

This page intentionally left blank

Functional Description

If the machine is equipped for production of enclosing boxes, a Wraparound unit is installed in the folding bar. For some box types, the Wraparound unit is also equipped with hotmelt guns (1) for the purpose of applying adhesive to the side of the box. Before the box stops, adhesive is applied in accordance with an angle value, supplied by the angle encoder of the feeding chain.

When the folding unit (2) moves down, it folds the box and keeps it under pressure while the adhesive solidifies. The folding unit (2) is operated by the two pneumatic cylinders (3) and (4).

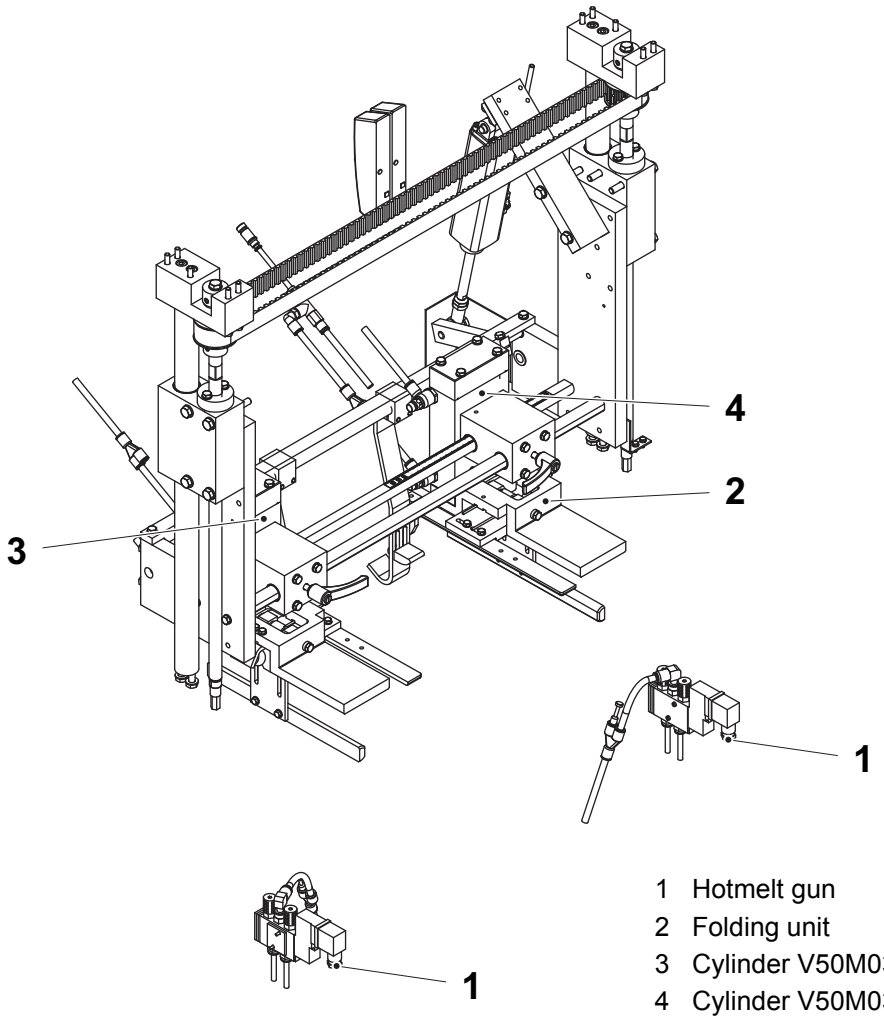

1 Hotmelt gun
2 Folding unit
3 Cylinder V50M0370
4 Cylinder V50M0371

5.1 Wa Height Adjustment

5.1-1 Wa Height Adjustment - No Procedure Described

SPC Reference	1074251

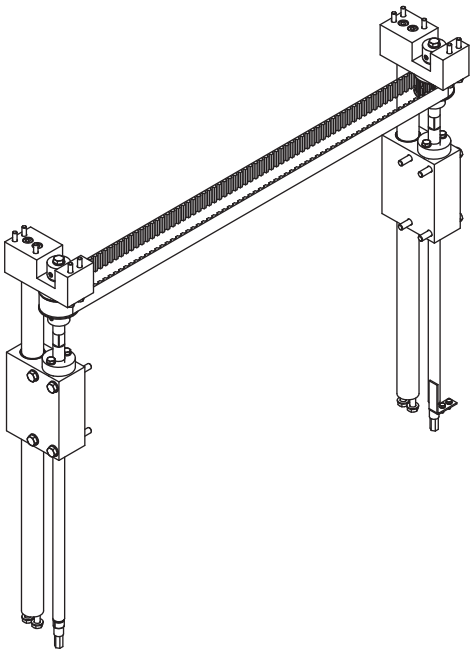

5.2 Wa Squeezer

5.2-1 Wa Squeezer - Check

Machine Status	Power supply disconnector OFF Air valve OFF
SPC Reference	1543805

Check the following parts for wear and damages:

- bushings (1)
- cylinders (2) and (3)
- springs (4)
- bushings (5)

Change any worn or damaged part according to 5.2-2 Wa Squeezer - Change.

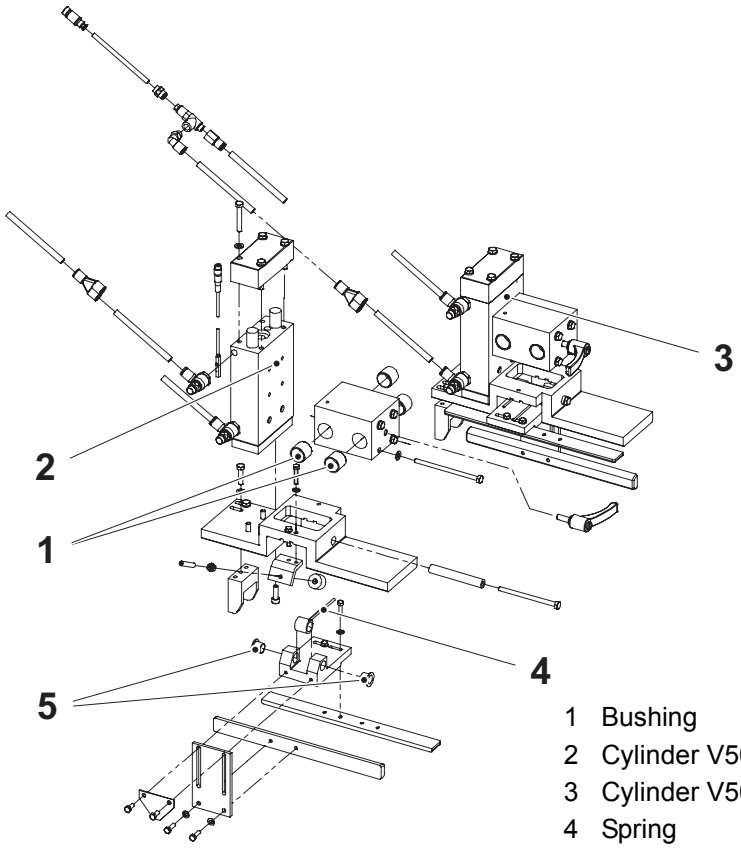

1 Bushing
2 Cylinder V50M0370
3 Cylinder V50M0371
4 Spring
5 Bushing

5.2-2 Wa Squeezer - Change

Machine Status	Power supply disconnector OFF Air valve OFF
SPC Reference	1543805

Change the following parts:

- bushings (1)
- cylinder (2)
- cylinder (3)
- spring (4)
- bushing (5)

Set the squeezer, see 5.2-3 Wa Squeezer - Set.

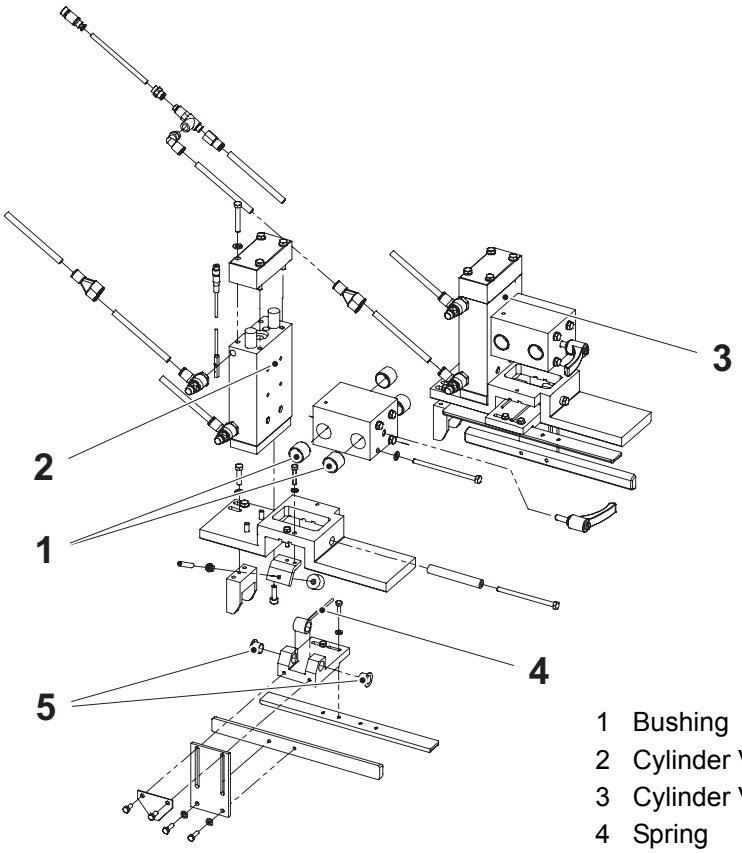

1 Bushing
2 Cylinder V50M0370
3 Cylinder V50M3071
4 Spring
5 Bushing

5.2-3 Wa Squeezer - Set

Machine Status	Power supply disconnector OFF Air valve OFF
SPC Reference	1543805

a) Loosen the locking lever (1).

b) Loosen the stop screws (2) and crank the key grips (3). Set the height adjustments, distance A, using the scale (4). Fasten the stop screws (2).

c) Set the sideways adjustments, distance B on the pattern forming side and tighten the locking lever (1).

d) Loosen the locking lever (5).

e) Use the scale (6) and the side of the slider (7) as a measurement point to set the distance C. Tighten the locking lever (5).

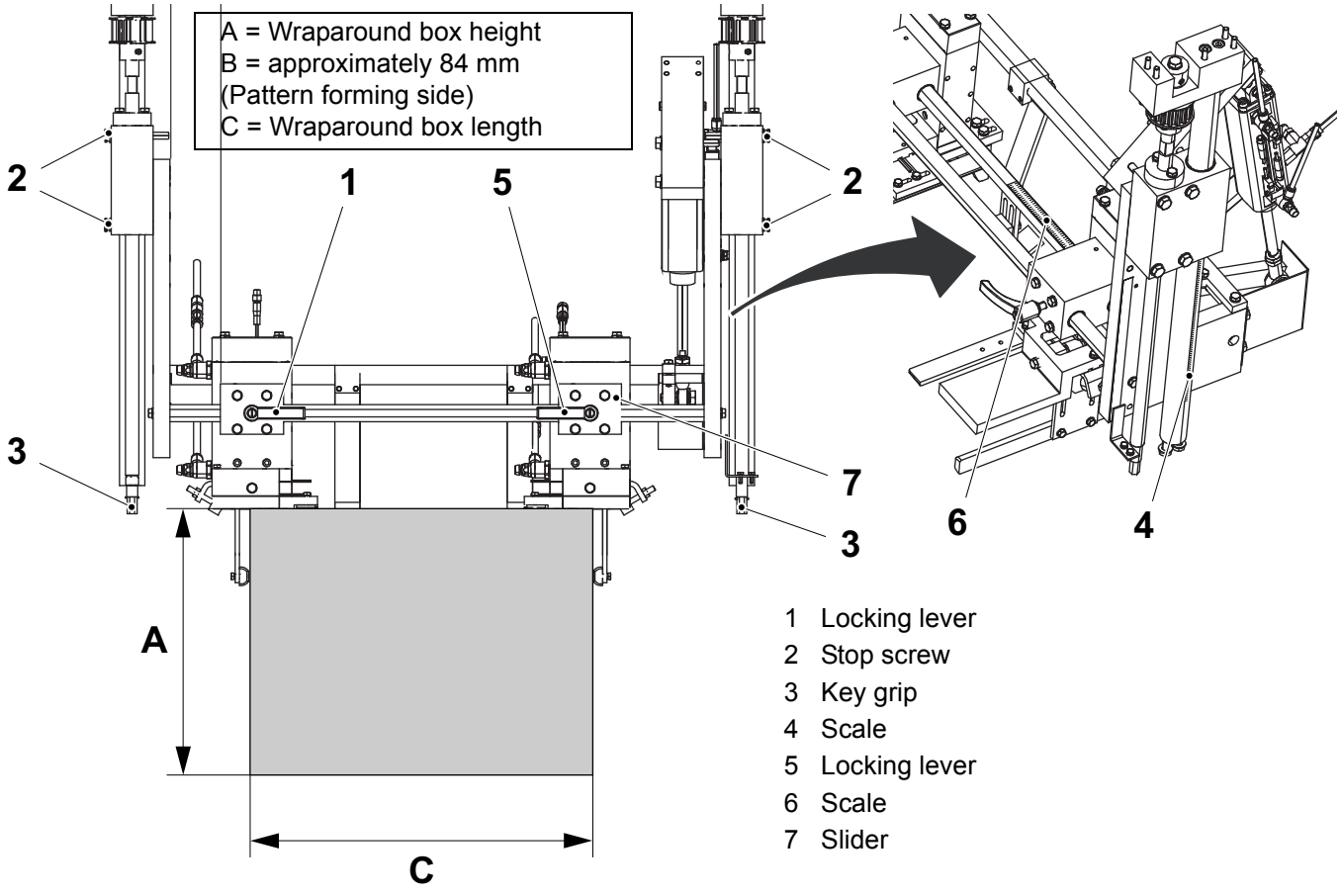

1 Locking lever
2 Stop screw
3 Key grip
4 Scale
5 Locking lever
6 Scale
7 Slider

(Cont'd)

(Cont'd)

f) With a wraparound box (8) in position check that the upper and lower pressure rails (9) support the box when the cylinders (10) and (11) are in their lower position. If not, repeat item a) - e).

g) The pressure rails (9) shall weigh down on the gluing. If necessary, loosen the screws (12) and move the pressure rails (9) up or down.

Vibration Damper

h) Set the distance D between the stop (13) and the vibration damper (14).

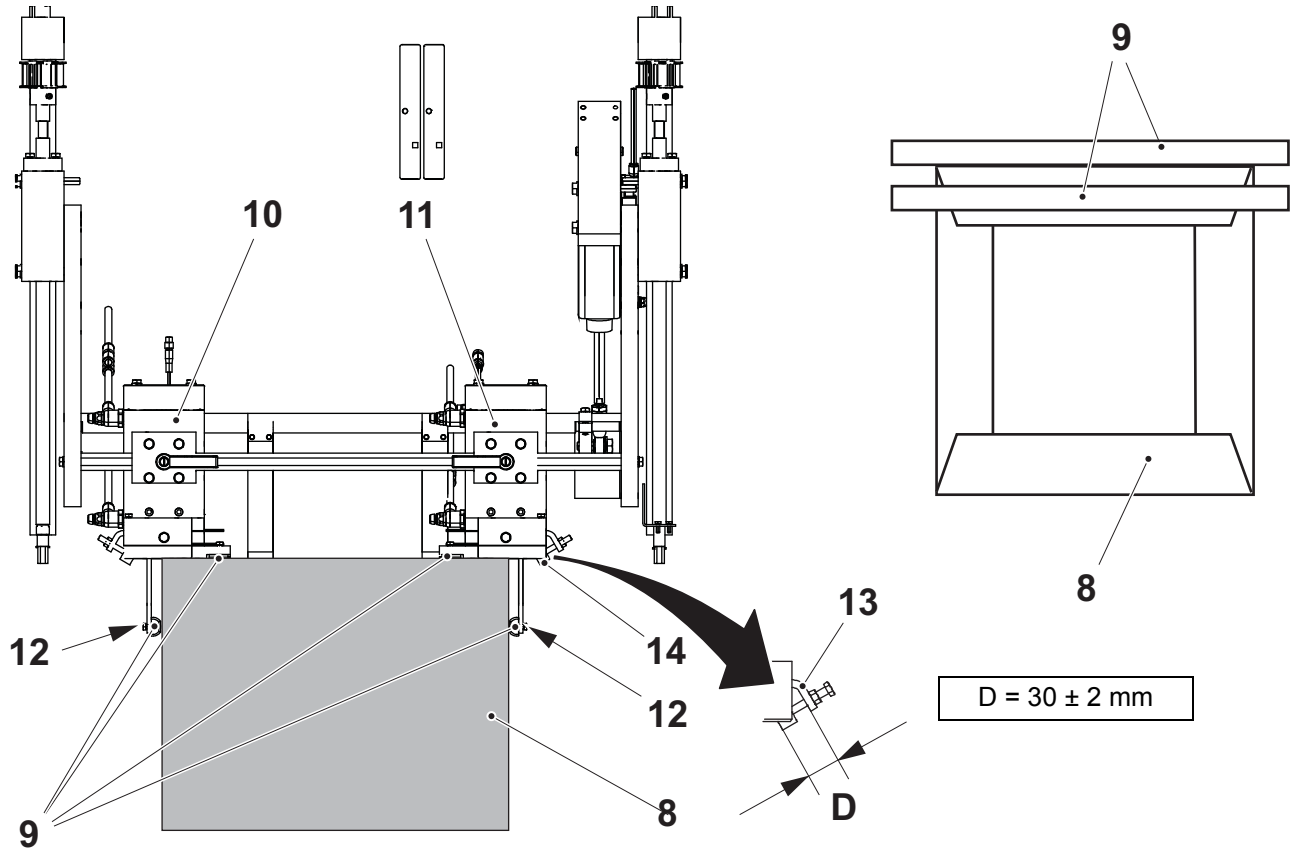

8 Wraparound box
9 Pressure rail
10 Cylinder V50M0370
11 Cylinder V50M0371
12 Screw
13 Stop
14 Vibration damper

(Cont'd)

(Cont'd)

Proximity Sensor

i) Set the proximity sensor (15) in the highest position on the cylinder (10). The proximity sensor (15) should be engaged when the cylinder is in its minus position.

Note! The delay of the flap folder up movement increases when lowering the proximity sensor (15). The proximity sensor has an influence on the flap folder (16) when WAIF is used.

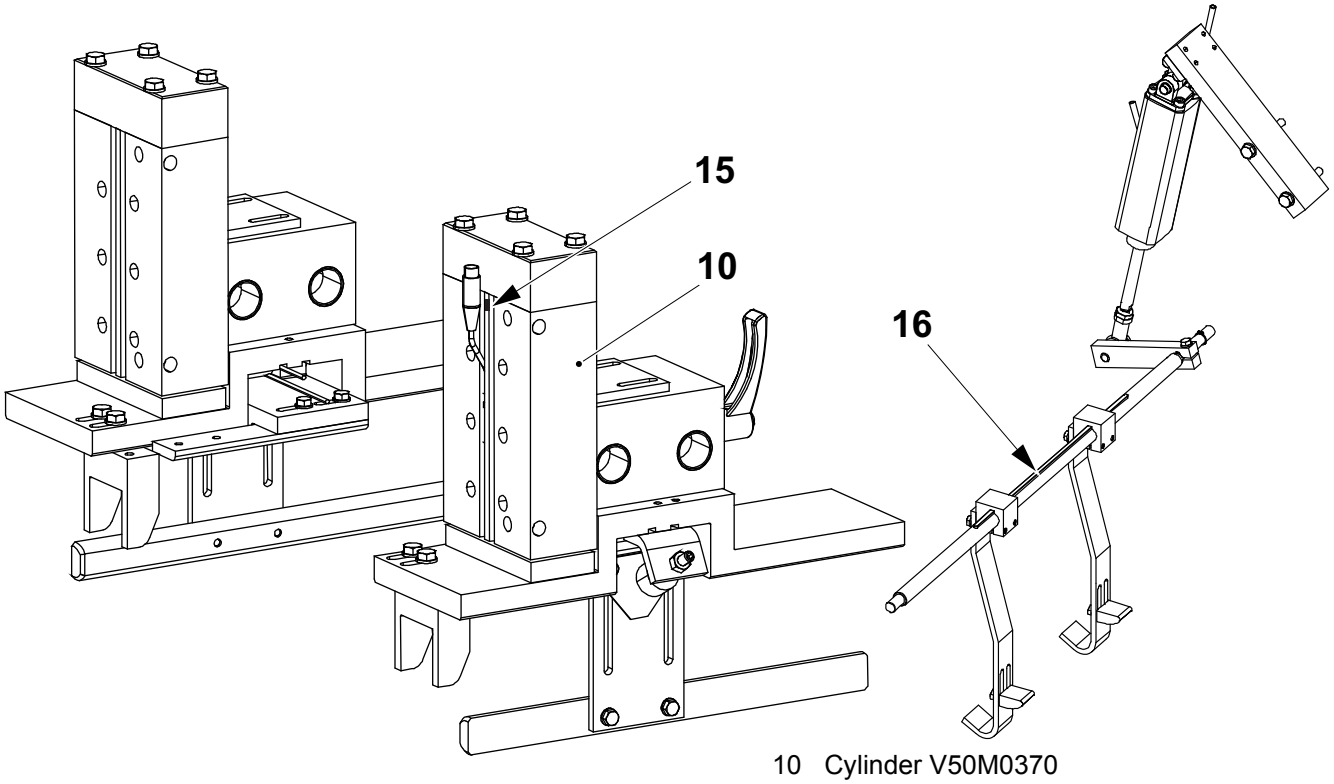

10 Cylinder V50M0370
15 Proximity sensor V50B0373
16 Flap folder

5.3 Wa Flap Folder

5.3-1 Wa Flap Folder - Check

Machine Status	Power supply disconnector OFF Air valve OFF
SPC Reference	1543806

Check the bushings (1) in the frame for excessive play.

Check the function of the cylinder (2).

Change worn or damaged parts according to 5.3-2 Wa Flap Folder - Change Parts.

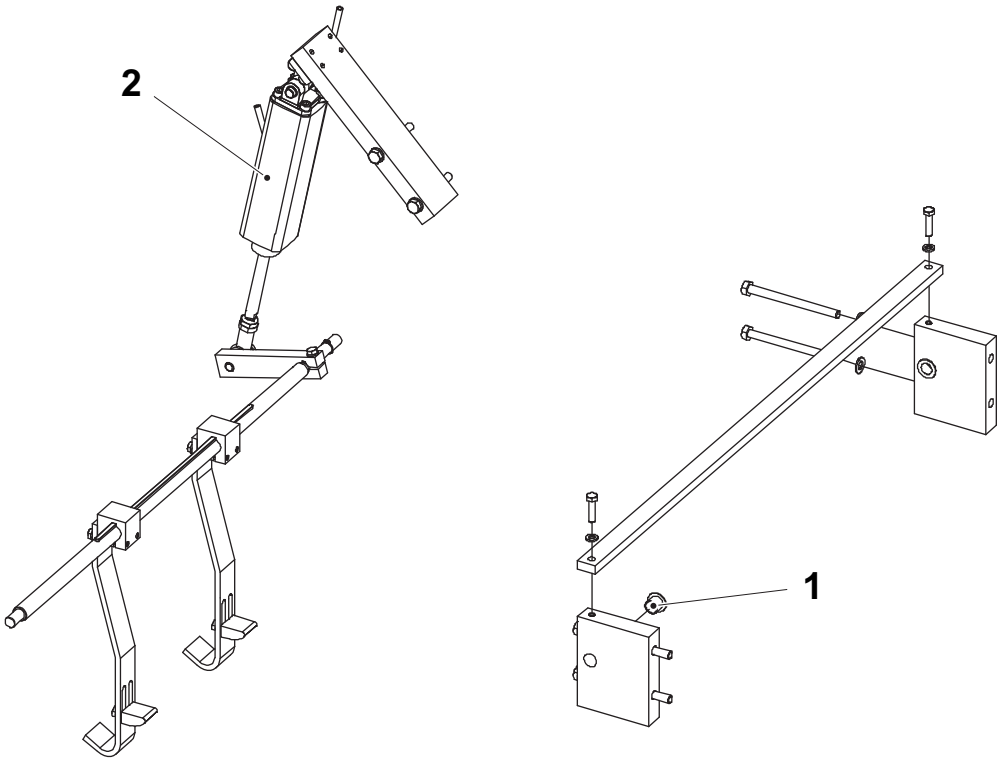

1 Bushing
2 Cylinder V50M0380

5.3-2 Wa Flap Folder - Change Parts

Machine Status	Power supply disconnector OFF Air valve OFF
SPC Reference	1543806

a) Disassemble and change parts as necessary according to the illustration below.

b) Assemble in the reverse order.

c) Set the flap folder, see 5.3-3 Wa Flap Folder - Set.

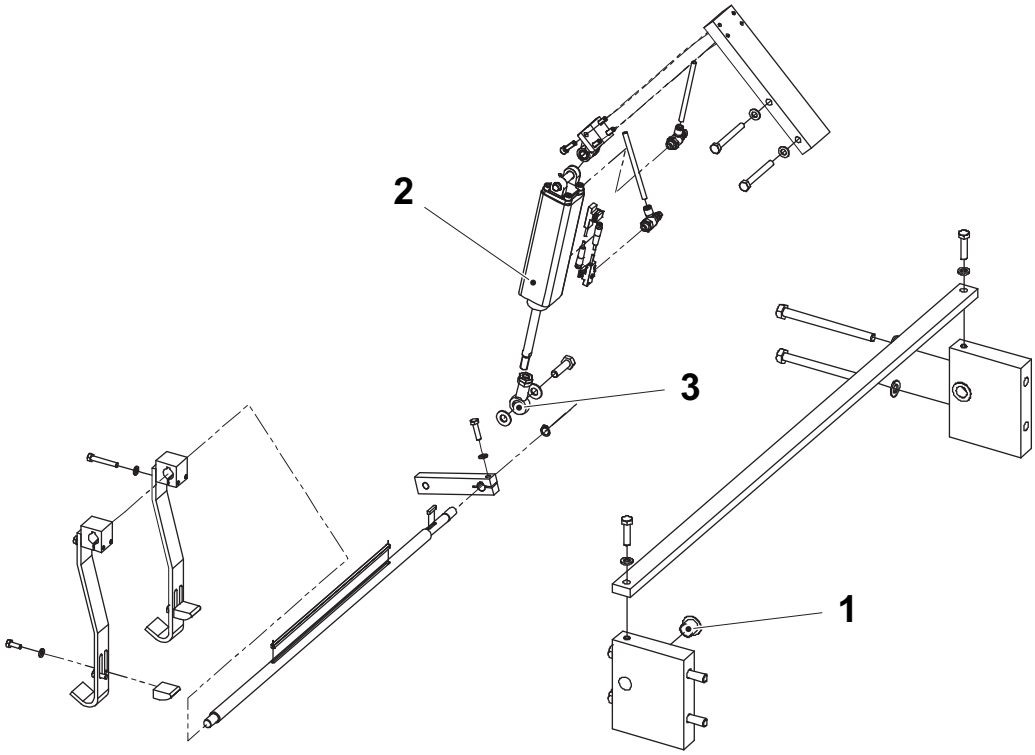

1 Bushing
2 Cylinder V50M0380
3 Rod end

5.3-3 Wa Flap Folder - Set

Machine Status	Power supply disconnector OFF Air valve OFF
SPC Reference	1543806

WAIF, WAMF and TRAY
The holders (1) on the flap folder should fold the wraparound box (3) so that the angle between the bottom and the side of the wraparound box is 90°.

a) Loosen the jam nut (5) and set the angle by adjust the piston rod head (4) length.
Tighten the jam nut (5).

b) Loosen the screw joints (8) and set the distance A between the location pieces (7) and the wraparound box (3).
Tighten the screw joints (8).

c) Loosen the screw joints (6) and adjust the holders (1) to be centred on the tray.
Tighten the screw joints (6).

Note! The location pieces (5) together with the tray support supports the wraparound box's width. For more information about the tray support, see 3.3.15-3 Tray Support - Set.

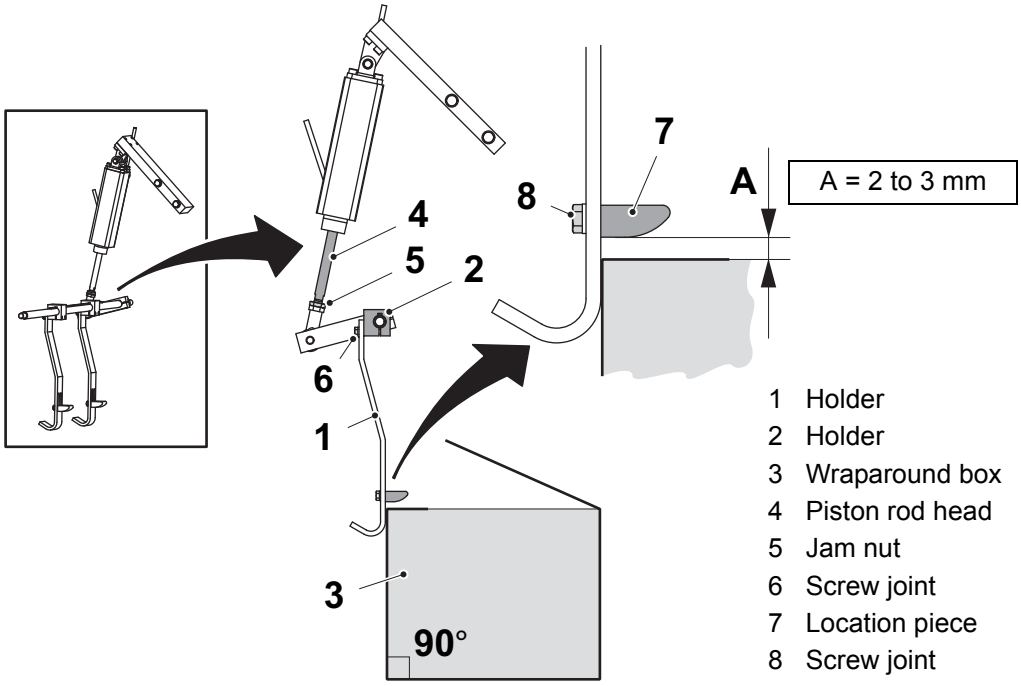

(Cont'd)

(Cont'd)

WASF

The holders (1) on the flap folder should fold the wraparound box (3) so that the angle between the bottom and the side of the wraparound box is 90°.

a) Loosen the jam nut (5) and set the angle by adjust the piston rod head (4) length.
Tighten the jam nut (5).

b) Loosen the screw joints (6) and adjust the holders (1) to be centred on the tray.
Tighten the screw joints (6).

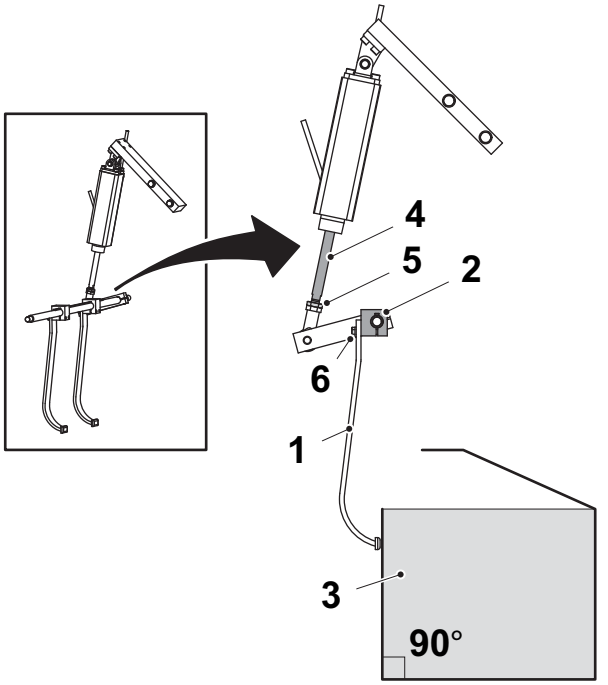

1 Holder
2 Holder
3 Wraparound box
4 Piston rod head
5 Jam nut
6 Screw joint

(Cont'd)

(Cont'd)

Adjust Adhesive Dot Position

WASF: Loosen the screws (9) and set the hotmelt guns in the lower position. Tighten the screws (9).

WAIF: Loosen the screws (9) and set the hotmelt gun in the upper position. Tighten the screws (9).

Set the height of the dot:

a) Loosen the screws (10) and adjust the dot position to distance A. Tighten the screws (10).

Tune the dot position sideways:

b) Adjust the dot positions (11) with the nozzles (12) equally placed on the tray according to the illustration below.

Set the position of the gunholders:

c) Loosen the knobs (13).

d) Move the gun holders (14) sideways. Place them where the guns get the straightest shooting angle possible.

Set the dot position via the TPOP:

e) Set the positions of the dots, see 3.5.1-6 Hotmelt Equipment - Set Gun Item c).

CAUTION

Make sure that the folding flap can move between the gunholders (14) without obstruction!

f) Tighten the knobs (13).

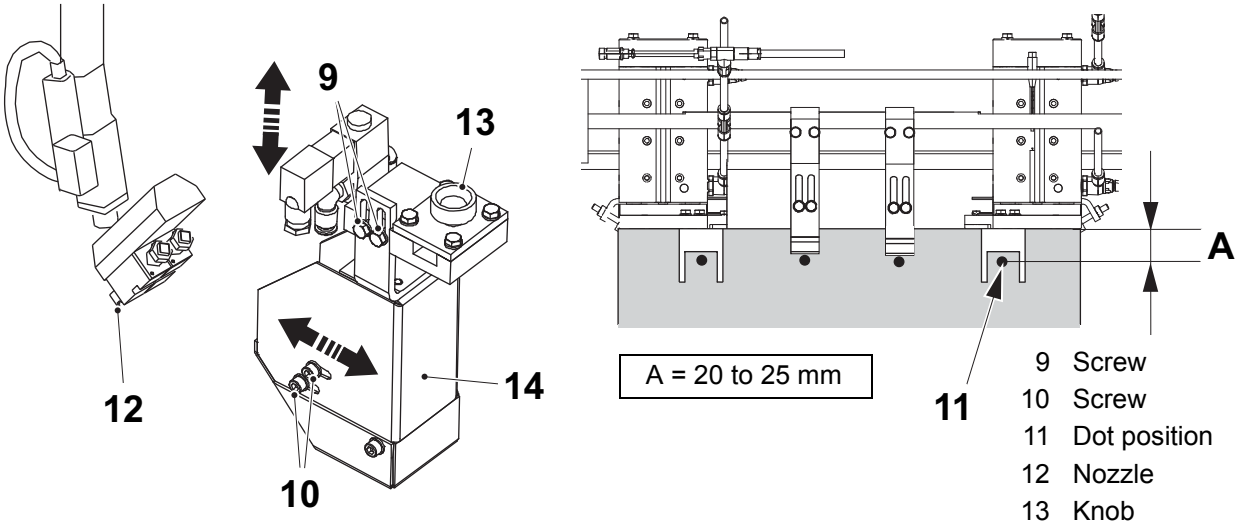

5.4 Wa Frame

5.4-1 Wa Frame - No Procedure Described

SPC Reference	1543807

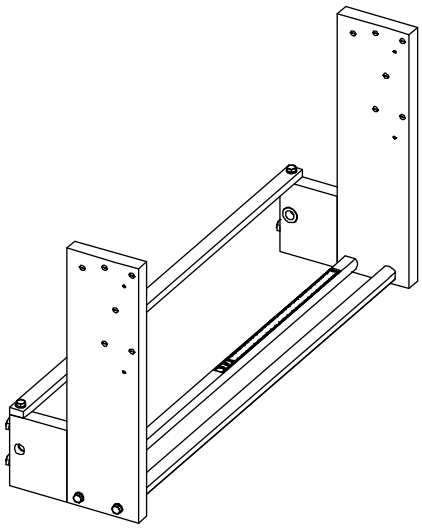

5.5 Wa Hotmelt Equipment

5.5-1 Wa Hotmelt Equipment - No Procedure Described

SPC Reference	2763050

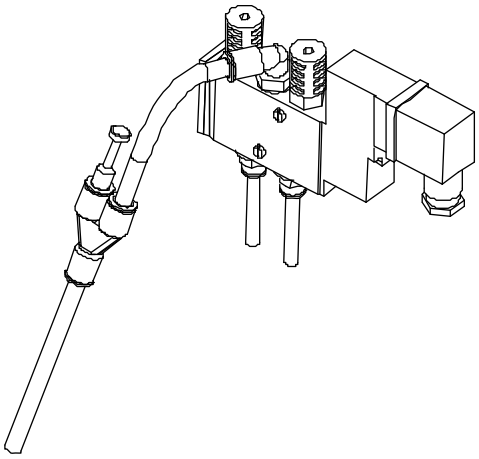

5.6 Wa Valve

5.6-1 Wa Valve - No Procedure Described

SPC Reference	2763067

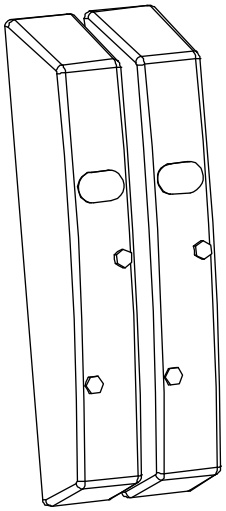

This page intentionally left blank

6 Electrical Equipment

Description

SPC Reference	673837

6.1 PLC . . . . . 6 - 7

6.1-1 PLC - Description . . . . . 6 - 7
6.1-2 PLC - CPU Status indication . . . . . 6 - 8
6.1-3 PLC - Configure PC . . . . . 6 - 10
6.1-4 PLC - Configure RS Linx classic . . . . . 6 - 17
6.1-5 PLC - Set IP Address . . . . . 6 - 20
6.1-6 PLC - Download PLC Program . . . . . 6 - 22
6.1-7 PLC - Install Module . . . . . 6 - 37
6.1-8 PLC - Remove Module . . . . . 6 - 39
6.1-9 PLC - Change CPU Battery . . . . . 6 - 40
6.1-10 PLC - Change Power Supply Fuse . . . . . 6 - 42
6.1-11 PLC - Change Power Supply Module . . . . . 6 - 43
6.1-12 PLC - Disconnect/Connect Digital I/0 Module Terminal Block . . . . . 6 - 44
6.1-13 PLC - SM2 Configuration . . . . . 6 - 45
6.1-14 PLC - SM2 Troubleshooting . . . . . 6 - 46

6.2 Distributed I/O and Network . . . . . 6 - 48

6.2-1 Armor Block - Set Node Address . . . . . 6 - 48
6.2-2 Armor Block - Troubleshooting . . . . . 6 - 50
6.2-3 Valve Panel - Description . . . . . 6 - 53
6.2-4 Valve panel - set device net address . . . . . 6 - 55
6.2-5 Valve panel - Trouble shooting . . . . . 6 - 57
6.2-6 Servo system device net card . . . . . 6 - 60
6.2-7 DeviceNet Scanner (SDN) . . . . . 6 - 62
6.2-8 DeviceNet Scanner - Troubleshoot . . . . . 6 - 63
6.2-9 Device Net Scanner - Download program . . . . . 6 - 68

6.3 Frequency Converter . . . . . 6 - 77

6.3-1 Frequency Converter - Description . . . . . 6 - 77
6.3-2 Frequency Converter - Change . . . . . 6 - 78
6.3-3 Frequency Converter - Set . . . . . 6 - 80
6.3-4 Frequency Converter - Fault Codes . . . . . 6 - 88

6.4 Servo System . . . . . 6 - 90

6.4.1 System overview . . . . . 6 - 90

6.4.1-1 Removing Modules . . . . . 6 - 91

6.4.1-2 Installing Modules . . . . . 6 - 92

6.4.2 Servo Commissioning . . . . . 6 - 93

6.4.2-1 Grouping Pusher Reference Run . . . . . 6 - 93

6.4.2-2 Axis Identification . . . . . 6 - 95

6.4.2-3 Axis Identification via the Computer . . . . . 6 - 96

6.4.3 Download Software . . . . . 6 - 100

6.4.3-1 Check Firmware Version . . . . . 6 - 100

6.4.3-2 Download Firmware . . . . . 6 - 101

6.4.3-3 Download Project . . . . . 6 - 103

6.4.4 Troubleshooting . . . . . 6 - 104

6.4.4-1 LED info . . . . . 6 - 104

6.4.4-2 Error Messages on the HMI of the CBP32 . . . 6 - 107

6.4.4-3 Festo Pneumatic servo error message checklist 6 - 108

6.4.4-4 Errors when not positioning . . . . . 6 - 133

6.4.4-5 Errors in Positioning . . . . . 6 - 134

6.5 Light Barrier Unit . . . . . 6 - 135

6.5-1 Light Barrier Unit - Description . . . . . 6 - 135

6.5-2 Light Barrier Unit - Focus, 4 LED Signals in Normal Operation, Description . . . . . 6 - 136

6.5-3 Light Barrier Unit - Alignment Procedure . . . 6 - 138

6.5-4 Light Barrier Unit - Focus, LED Error Signals, Description . . . . . 6 - 140

6.5-5 Light Barrier Unit - Muting Function . . . . . 6 - 142

6.5-6 Light Barrier Unit - FMC1 . . . . . 6 - 143

6.5-7 Light Barrier Unit - Receiver Unit . . . . . 6 - 144

6.5-8 Light Barrier Unit - Clean . . . . . 6 - 145

6.5-9 Light Barrier Unit - Final Checks . . . . . 6 - 146

6.6 PLUTO Manager . . . . . 6 - 147

6.6-1 PLUTO Manager - Description . . . . . 6 - 147

6.6-2 PLUTO Manger - Install . . . . . 6 - 148

6.6-3 PLUTO Manager - Set Project . . . . . 6 - 149

6.6-4 PLUTO Manager - Check Firmware and

Software . . . . . 6 - 150
6.6-5 PLUTO Manager - Set an ID-Fix address . . . . 6 - 151
6.6-6 PLUTO Manager - Install PLUTO without PC 6 - 153
6.6-7 PLUTO Manager - Install PLUTO from PC . . 6 - 154
6.6-8 PLUTO Manager - Remove Firmware alarms . 6 - 155
6.6-9 PLUTO Manager - Change Firmware . . . . . 6 - 156
6.6-10 PLUTO Manager - Troubleshoot Safety System . . . . . 6 - 158
6.6-11 PLUTO Manager - Safety Switch Fault Codes 6 - 161

6.7 Circuit Breaker . . . . . 6 - 162

6.7.1 Overload Protection . . . . . 6 - 162

6.7.1-1 Overload Protection - Change Fuse . . . . . 6 - 162
6.7.1-2 Overload Protection - Change Ferraz Fuse . . . 6 - 164

6.7.2 Automatic Fuses . . . . . 6 - 165

6.7.2-1 Automatic Fuses - Reset Fuse in Miniature Circuit Breaker . . . . . 6 - 165

6.7.3 Residual Current Device . . . . . 6 - 166

6.7.3-1 Residual Current Device - Check Function . . . 6 - 166

6.8 TPOP Panel . . . . . 6 - 167

6.8.1 Change values . . . . . 6 - 167

6.8.1-1 TPOP Settings - Description . . . . . 6 - 167

6.8.2 TPOP Machine Setup . . . . . 6 - 169

6.8.2-1 Setup - Add Language . . . . . 6 - 169
6.8.2-2 Start-Up Language Setup . . . . . 6 - 170
6.8.2-3 Remove Existing Application Program . . . . . 6 - 173
6.8.2-4 Download Application Program (Memory media) . . . . . 6 - 176

6.8.3 TPOP Configuration Window . . . . . 6 - 185

6.8.3-1 TPOP Settings - Pattern Forming . . . . . 6 - 186
6.8.3-2 TPOP Settings - Tray Forming . . . . . 6 - 190
6.8.3-3 TPOP Open an Existing Recipe . . . . . 6 - 191
6.8.3-4 Creating a New Recipe . . . . . 6 - 192

6.8.4 TPOP Maintenance . . . . . 6 - 200

6.8.4-1 TPOP Maintenance - Service . . . . . 6 - 200
6.8.4-2 TPOP Maintenance - Infeed . . . . . 6 - 201
6.8.4-3 TPOP Maintenance - Pattern Forming . . . . . 6 - 202
6.8.4-4 TPOP Maintenance - Tray Forming . . . . . 6 - 203

6.8.5 TPOP User Management. . . . . 6 - 204

6.8.5-1 TPOP User Management - Description . . . . . 6 - 204
6.8.5-2 TPOP User Management - Log On as a User . 6 - 206
6.8.5-3 TPOP User Management - Change User Password . . . . . 6 - 209

6.8.6 Communication Configuration between PLC and TPOP . . . . . 6 - 214

6.8.6-1 TPOP - Check/Set IP Address and Subnet Mask Address . . . . . 6 - 214
6.8.6-2 TPOP - Download Program . . . . . 6 - 222

6.9 Proof Test . . . . . 6 - 227

6.9-1 Safeguard - Test . . . . . 6 - 227
6.9-2 Emergency Stop - Test . . . . . 6 - 229

6.10 Control Devices and Sensors . . . . . 6 - 231

6.10-1 Control Devices and Sensors - Set Photocells . 6 - 231

6.11 Ventilation . . . . . 6 - 235

6.11-1 Ventilation - Check Filter and Fan . . . . . 6 - 235

6.12 PLMS NRG Upgrade . . . . . 6 - 236

6.12-1 PLMS NRG upgrade in filling machine . . . . . 6 - 236

6.13 PLMS SNP (option) . . . . . 6 - 239

6.13-1 PLMS SNP - Select . . . . . 6 - 239
6.13-2 SNP Module - Change . . . . . 6 - 240
6.13-3 SNP Module - Set . . . . . 6 - 241
6.13-4 LED Description . . . . . 6 - 242
6.13-5 PLMS SNP DATA COLLECTION . . . . . 6 - 243

6.1 PLC

6.1-1 PLC - Description

The text and illustrations about the PLC power supply, PLC digital input/ output module, and the PLC SM2 are from Rockwell Automation user manuals.

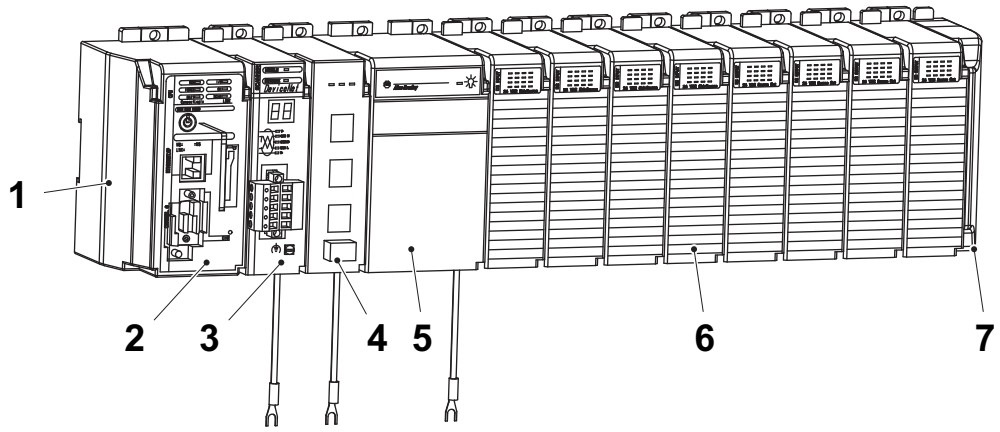

1 Battery door
2 CPU
3 Device net
4 SM2/Modbus
5 Power supply
6 Digital I/0
7 End cap terminator

6.1-2 PLC - CPU Status indication

Machine Status	Power supply disconnector ON
SPC Reference	2538101

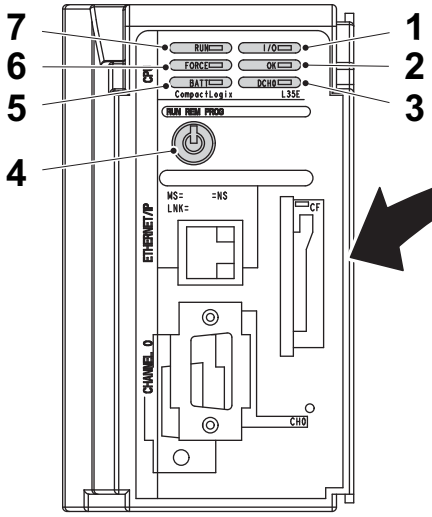

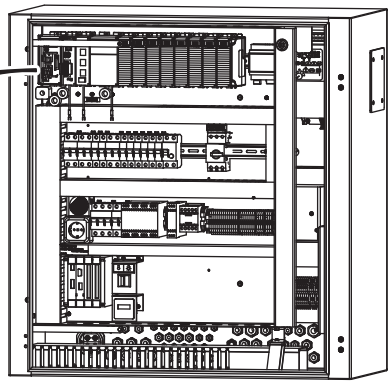

1 1/0 LED
2 OK LED
3 DCH-0
4 Key
5 BATT LED
6 FORCE LED
7 RUN LED

Indicator:	Colour:	Description:
RUN	Off	The controller is in Program or Test mode.
	Fixed green	The controller is in Run mode.
I/0	Off	There are no devices in the I/O configuration of the controller. or The controller does not contain a project (controller memory is empty).
	Fixed green	The controller is communicating with all the devices in its I/O configuration.
	Flashing green	One or more devices in the I/O configuration of the controller are not responding.
	Flashing red	The chassis is bad. Replace the chassis.
FORCE	Off	No tags contain I/O force values. I/O forces are inactive (disabled).
	Fixed yellow	I/O forces are active (enabled). I/O force values may or may not exist.
DCH-0	Off	There is no activity.
	Fixed green	Data is being received or transmitted.

(Cont'd)

(Cont'd)

Indicator:	Colour:	Description:
BAT	Off	The battery supports memory.
	Fixed red	The battery is not installed. or The battery is 95% discharged and should be replaced.
OK	Off	No power is applied.
	Flashing red	If the controller is a new controller, then the controller requires a firmware update. If the controller is not a new controller, then Board Major fault has occurred. To clear the fault, either turn the key to PROG, then to RUN and then back to PROG again or go on-line with RSLogix 5000 software.
	Fixed red	The controller detected a non-recoverable fault, so it cleared the project from memory. To recover: 1. Cycle power to the chassis. 2. Download the project. 3. Change to Run mode. If the OK LED remains solid red, contact your Rockwell Automation representative or local distributor.
	Fixed green	The controller is OK.
	Flashing green	The controller is storing or loading a project to or from nonvolatile memory.

6.1-3 PLC - Configure PC

Machine Status	Power supply disconnector ON Air OFF
Special Equipment	PC with CD drive and ethernet port Ethernet communication cable

Before data can be sent to the PLC controller from the PC via an ethernet cable, the PC network settings must first be configured. The following procedure describes how to configure the PC network communications.

Check Decimal Symbol

Note! RSLogix 5000 requires the decimal symbol to be expressed as a dot, otherwise incorrect data could be loaded. Check that the PC operating system has the decimal symbol expressed as a dot and not a comma.

a) Open the START MENU (1) and select settings (2) then select CONTROL PANEL (3) to open the control panel window.

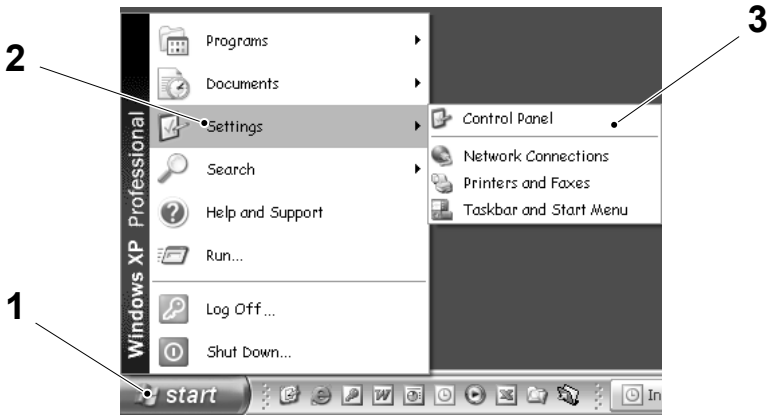

1 Start menu
2 Settings
3 Control Panel

(Cont'd)

(Cont'd)

b) Select REGIONAL AND LANGUAGE OPTIONS to open the regional and LANGUAGE OPTIONS WINDOW (4).

c) Check that the decimal symbol in the NUMBER box (5) is a dot and not a comma.

d) If the decimal symbol is currently a comma (at position indicated with the arrow), select the CUSTOMIZE button (6) and replace the comma with the dot in the CUSTOMIZE REGIONAL OPTIONS window (7).

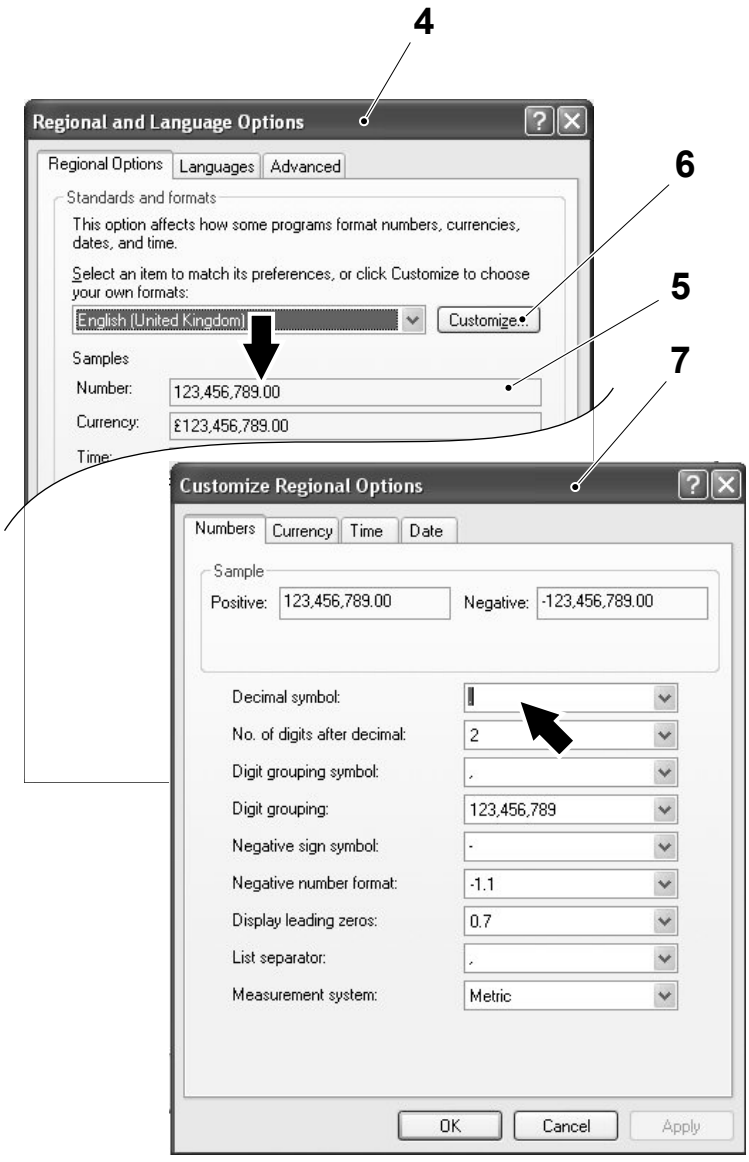

4 Regional and Language Options window
5 Number box
6 Customize button
7 Customize Regional Options window

(Cont'd)

(Cont'd)

Disable Firewall Protection

Open the Symantec client firewall program on the PC and perform one of the following to disable the firewall protection:

- To disable the firewall perform the following;
  - if not already selected, select the security option (1).
  - select the turn OFF button (2).
  - in the protection alert window (3) select the amount of time to disable the firewall from the drop down list (4).
  - select the OK button (5).

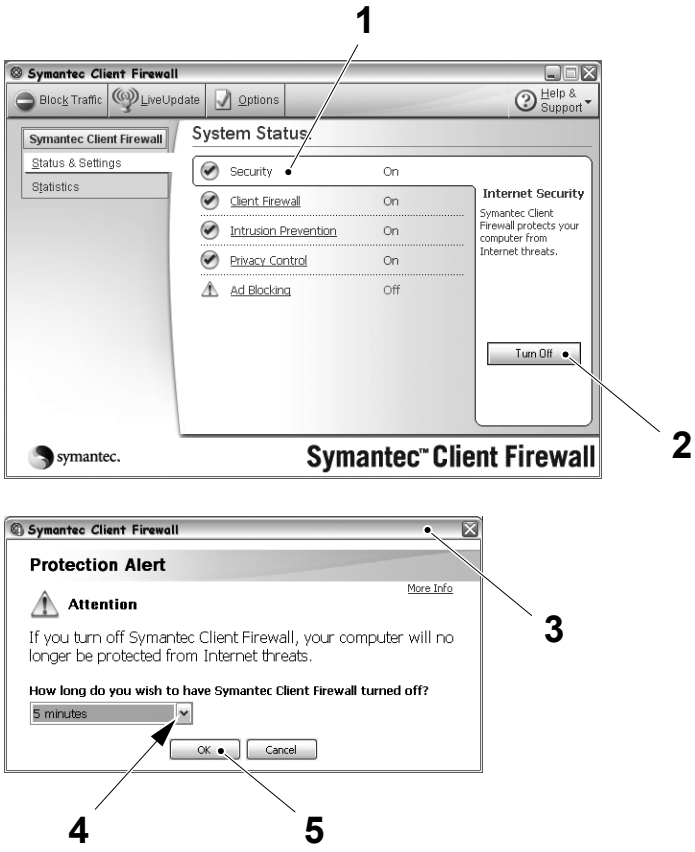

1 Security option
2 Turn off button
3 Protection alert window
4 Drop down list
5 OK button

(Cont'd)

(Cont'd)

Configure PC IP Address

a) Open the start menu (1) on the PC and select settings (2), control panel and then network connections (3) to open the Network Connections window (4).

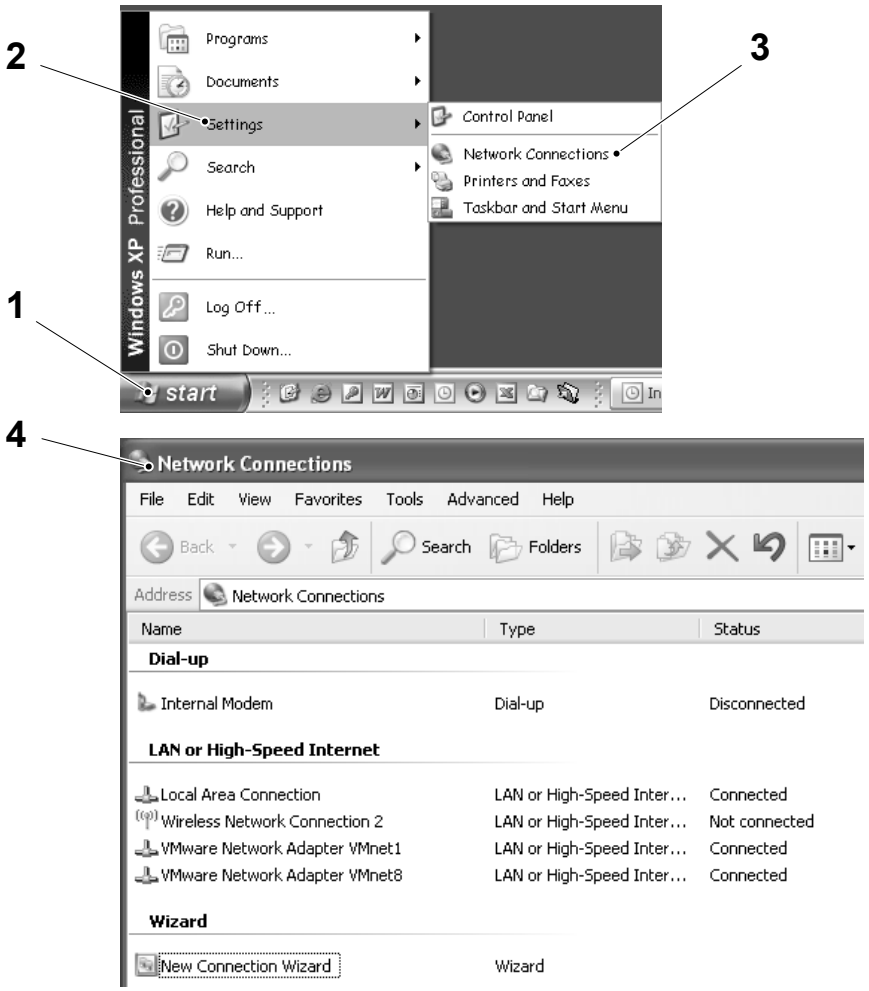

1 Start menu
2 Settings
3 Network connections
4 Network connections window

(Cont'd)

(Cont'd)

Note! The local area connection (5) is given only as an example, if multiple area connections are listed in the network connections window (4), select the required network connection.

b) In the network connections window (4) select the local area connection (5) and right click the PC mouse to select properties (6).

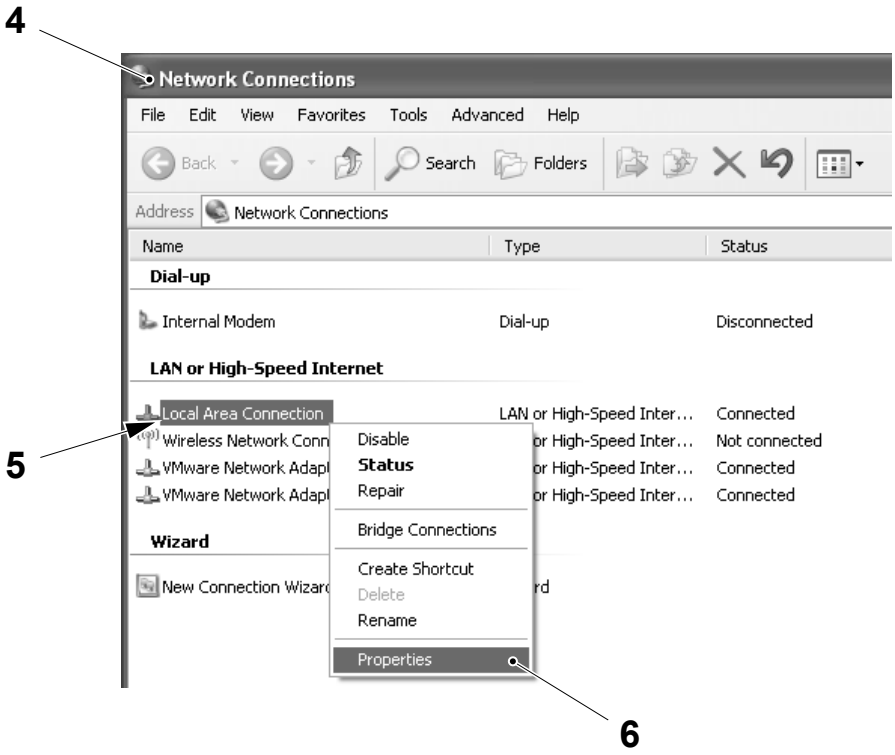

4 Network connections window
5 Local area connection
6 Properties window

(Cont'd)

(Cont'd)

c) In the local area connection properties window (7) select internet protocol (TCP/IP) (8) and then select properties (9).

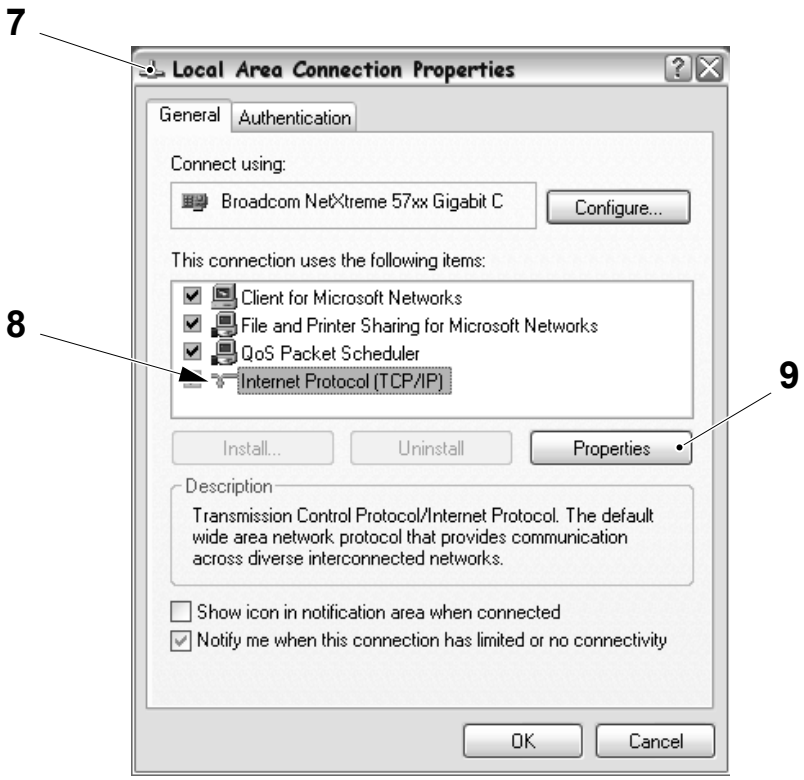

(Cont'd)

(Cont'd)

d) Select the USE THE FOLLOWING IP ADDRESS button (10) and the USE THE FOLLOWING DNS SERVER ADDRESSES button (11).

e) In the IP ADDRESS box (12) enter an IP address using the following format: 10.0.100.XX, where "XX" is a unique number not already assigned to any PC or PLC controller connected to the same network. Allowed range between 10.0.100.0 to 10.0.100.99

f) In the SUBNET MASK box (13) enter the subnet mask as indicated in the illustration.

g) Select the OK button (14) to confirm the setting and close the window.

h) Close the LOCAL AREA CONNECTION PROPERTIES window (7).

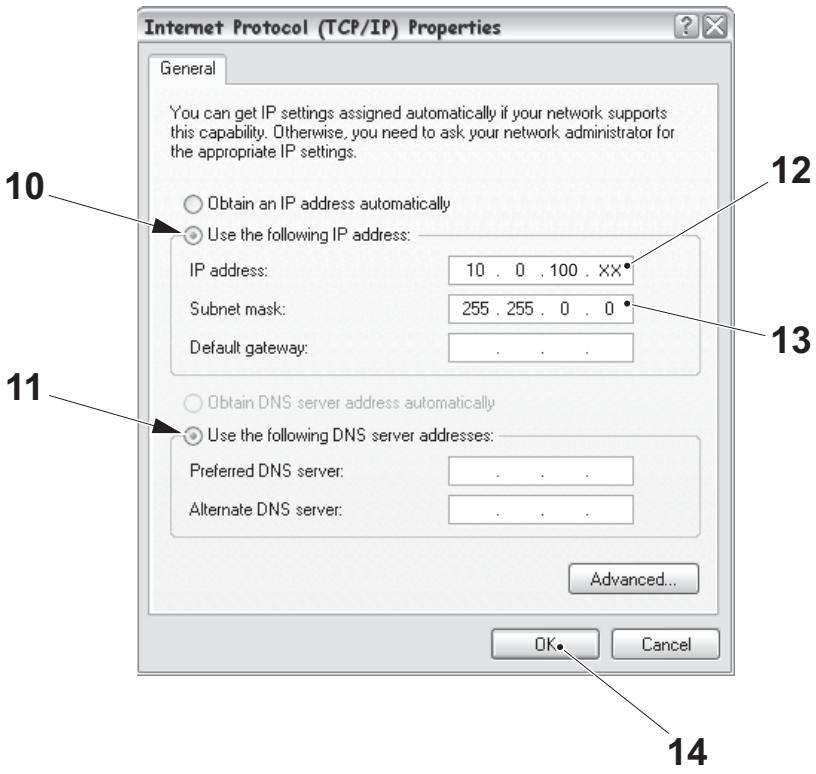

7 Use the following IP address button
8 Use the following DNS server addresses button
9 IP address box
10 Subnet mask box
11 OK button

6.1-4 PLC - Configure RS Linx classic

Machine Status	Power supply disconnector ON Air OFF
Special Equipment	PC with CD drive and ethernet port Ethernet communication cable

The RSLinx software enables seamless communication between the PC and the Rockwell PLC controller and its components over different networks such as ethernet and DeviceNet. Before communication is possible, the network and IP addresses for the PC and Rockwell PLC controller must be set in RSLinx as follows:

a) Open the START MENU on the PC and select PROGRAMS (1), ROCKWELL SOFTWARE (2), RSLINX (3) and then RSLINX CLASSIC (4).

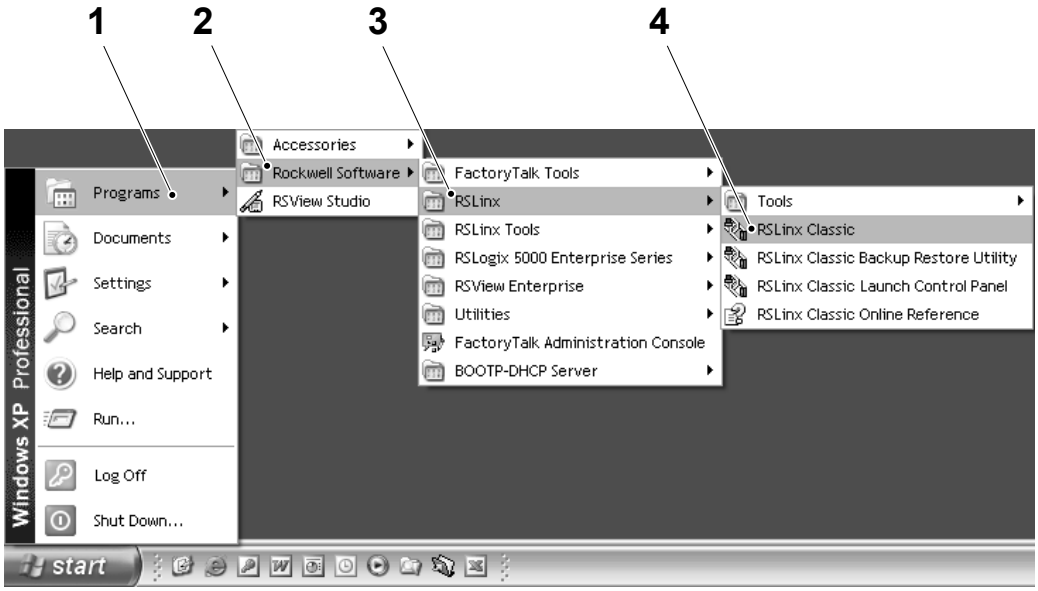

1 Programs
2 Rockwell software
3 RSLinx
4 RSLinx Classic

(Cont'd)

(Cont'd)

b) The RSLINX CLASSIC window (5) appears, select the COMMUNICATIONS menu (15) and then select the CONFIGURE DRIVERS button (6).

c) In the CONFIGURE DRIVERS window (7), select ETHERNET/IP DRIVER (8) from the DROP DOWN menu.

d) Select the ADD NEW button (9).

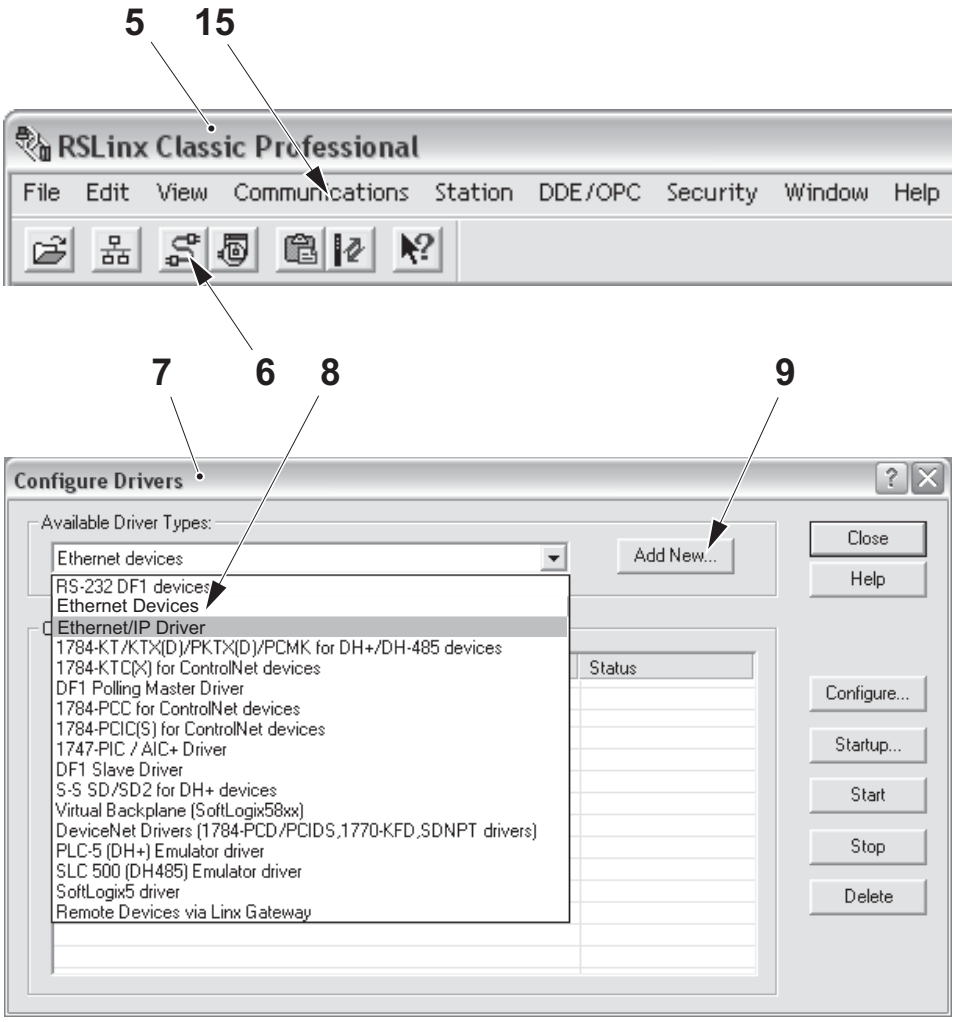

5 RSlinx gateway window
6 Configure drivers button
7 Configure drivers window
8 Ethernet/IP Driver
9 Add new button
15 Communications menu

(Cont'd)

(Cont'd)

e) Accept the default driver name that appears by selecting the OK button (10).

f) Select BROWSE LOCAL SUBNET (11) and press the OK button (12).

g) Press CLOSE button (13) in CONFIGURE DRIVERS window.

h) If RSLogix 5000 is running, then shut it down now.

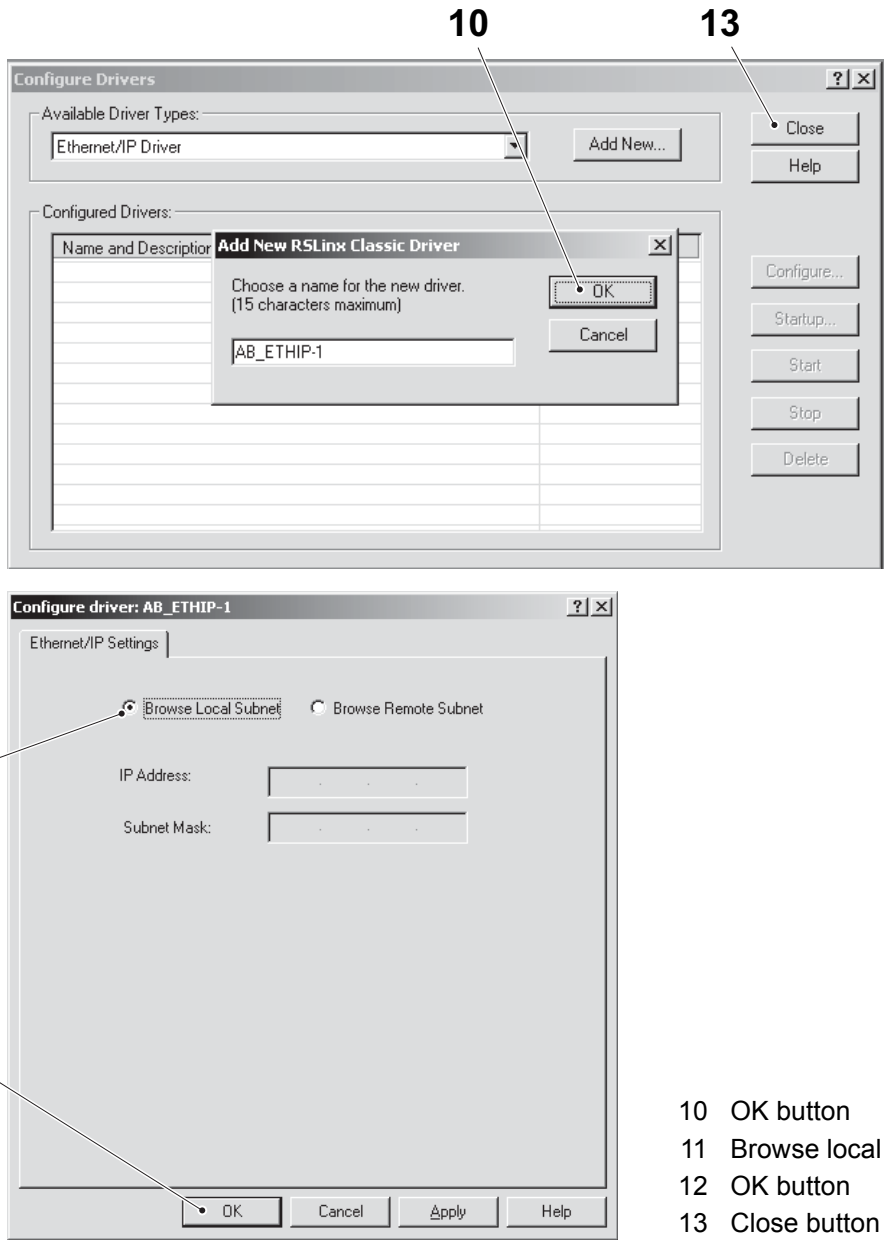

10 OK button
11 Browse local subnet
12 OK button
13 Close button

6.1-5 PLC - Set IP Address

If the PLC CPU has been replaced, the IP address needs to be set as follows.

a) Check that the PLC "BAT" LED is NOT red. If it is red, connect the battery according to MM.

b) Connect the Ethernet cable from PC to PLC and disable any PC firewall.

c) Disconnect the Ethernet cable from the HMI panel temporarily (to prevent mix up of MAC addresses when setting IP address).

d) Start the program BootP/DHCP server and wait for the NETWORK SETTING (1) window appears. It is appears only first time the program run.

e) FIRST TIME: Enter 255.255.0.0. in field SUBNET MASK (2) and push the OK button (3).

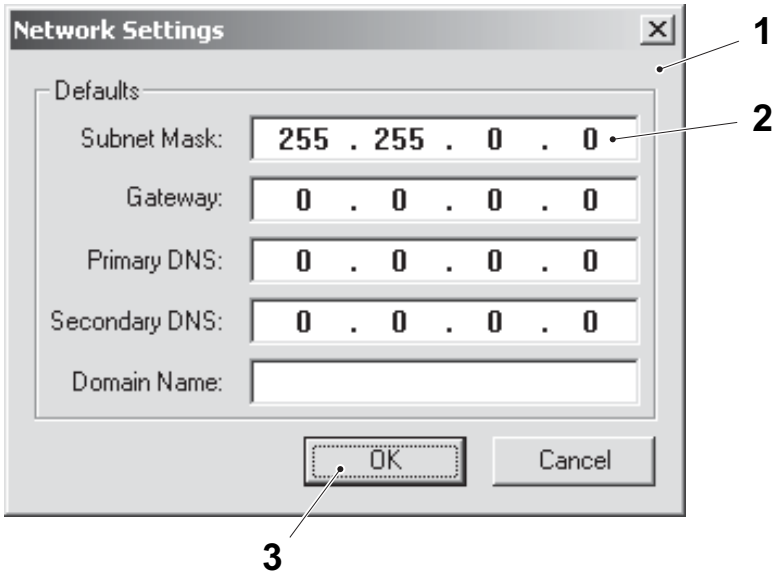

1 Network setting window
2 Subnet mask field
3 OK button

(Cont'd)

(Cont'd)

f) Wait for an address to appear in the request history window (4). If no entries appear, shut down and restart the PLC on fuse A01F0029 and wait for messages to appear.

g) Mark one of the entries type BootP (5) and click the add to relation list button (6).

h) Enter the PLC IP (default for single machine 10.0.0.206) in the pop up window and press OK. The entry is copied to the relation list (7).

i) If the message Sent 10.0.0.206 to Ethernet address..... appears in the status bar (8) and the IP address (9) shown in the request history window (4), the IP address is set (if not repeat the procedure from item d)).

j) Press the Disable BOOTP/DHCP button (10).

k) Close the BootP/DHCP and choose save changes NO.

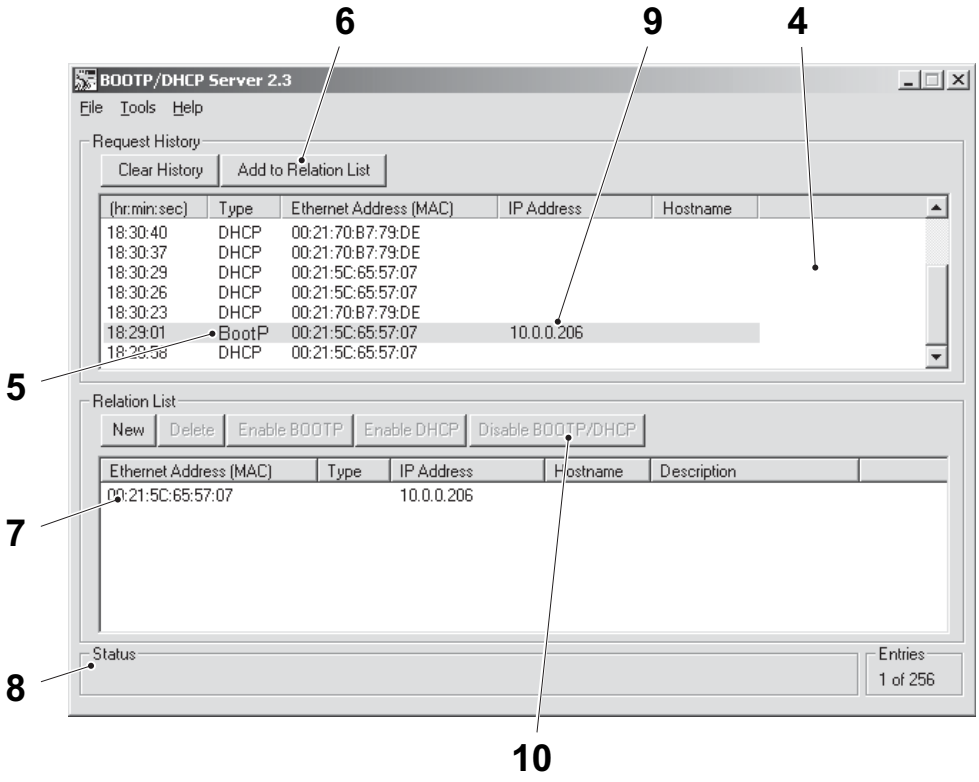

4 Request history window
5 BootP
6 Add to relation list button
7 Relation list
8 Status bar
9 IP address
10 Disable BOOTP/DHCP button

6.1-6 PLC - Download PLC Program

Machine Status	Power Supply Disconnector ON Air Valve OFF Program in STEP IDLE
Special Equipment	PC with CD drive and ethernet port Ethernet communication cable

Note! To connect to the PLC using an ethernet communication cable, the PC must first be configured for this type of communication. See 6.1-3 PLC - Configure PC and 6.1-4 PLC - Configure RS Linx classic.

a) Connect the ethernet communication cable between a vacant connection port on the ethernet switch (1) and the PC (2).

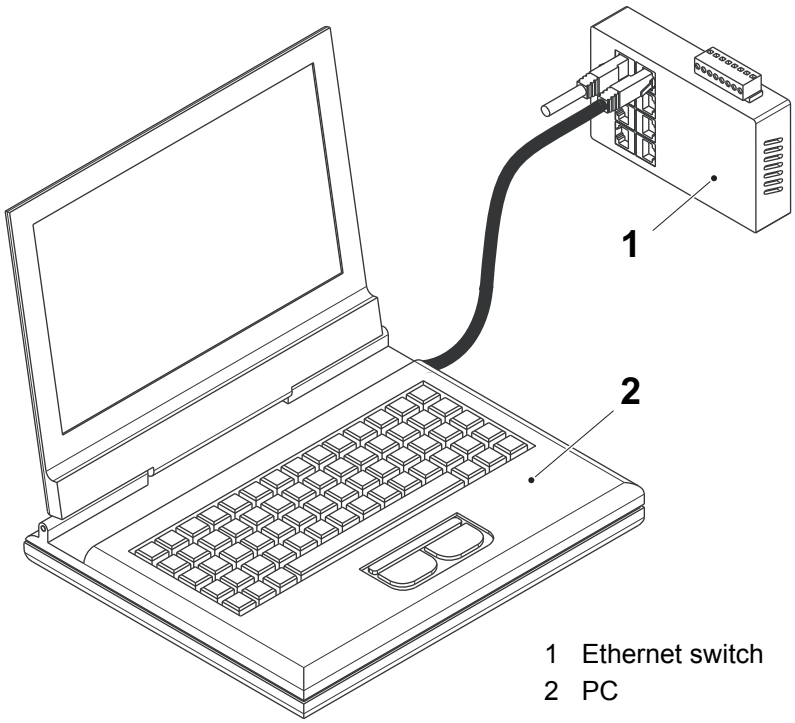

1 Ethernet switch
2 PC

(Cont'd)

(Cont'd)

b) Make sure the power supply disconnector switch is ON and the machine is in STEP IDLE.

c) Insert the Software CD into the PC CD drive.

d) Browse to the CD drive and copy the compressed PLC program to the PC desktop and extract the program file with the format *.ACD.

e) Double click on the program file to automatically start the RSLogix program and open the program file.

f) Make sure that the PLC program mode switch is in position rem (middle position).

g) Use the COMMUNICATIONS menu (3) in RSLogix and select GO ONLINE (4).

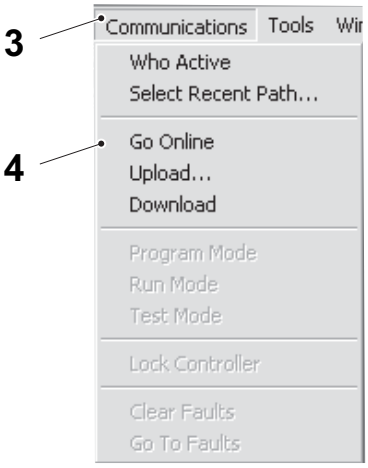

3 Communications menu
4 GO ONLINE

(Cont'd)

(Cont'd)

h) The CONNECTED TO GO ONLINE window (5) should appear.

Note! If you get a pop up saying "failed to go online with the controller", check ehternet cable connection from PC to switch and switch to PLC, then press OK. If WHO ACTIVE window (7) does not appear, press WHO ACTIVE button (6). Manually browse and select “00, CompactLogix Processor, CBP32" on IP 10.0.0.206 (default IP) as displayed in the WHO ACTIVE window (7) picture. Click GO ONLINE button (8).

Note! - If you get a pop up asking to "Update firmware", then choose "update firmware"

- Select firmware 16.4.74 and push UPDATE, proceed? "Yes", continue? "OK". Update is made in two steps. Between each step and when finished, the control flash is waiting for power up for 300 seconds. If the timer runs out probably not "Disabled BOOTP/DHCP”is selected. Restart if time out occurs which is described in chapter 6.1-5 PLC - Set IP Address.

- When both OK LED and Ehternet port NS LED are showing fixed light, is the firmware update completed.

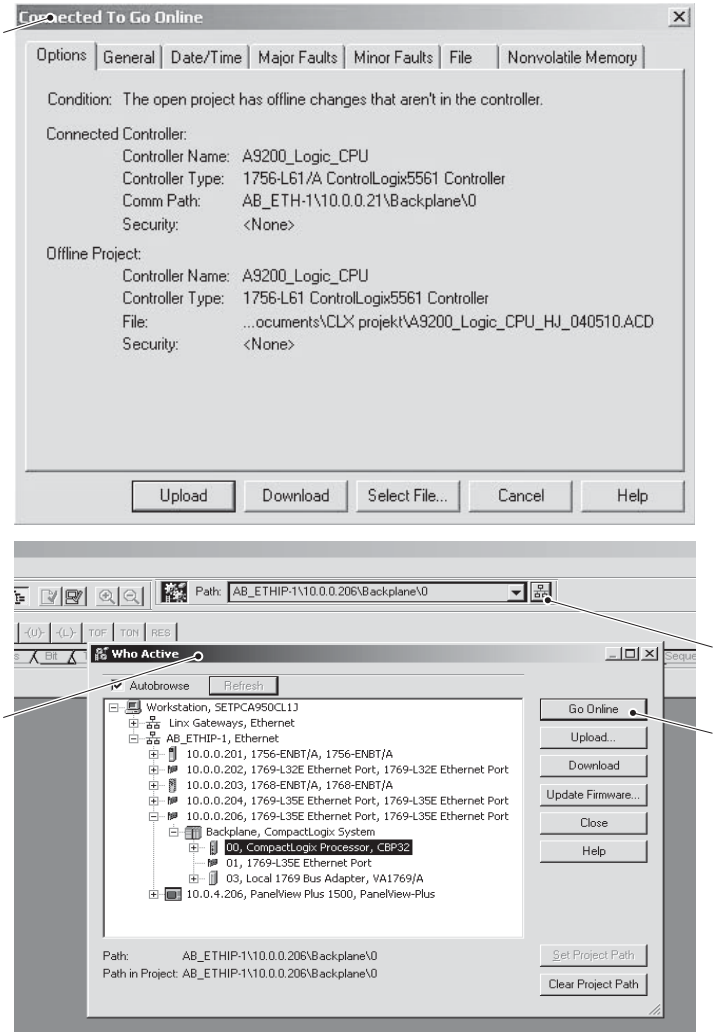

5 Connected to GO ONLINE window
6 WHO ACTIVE button
7 WHO ACTIVE window
8 GO ONLINE button

(Cont'd)

(Cont'd)

i) Select the DOWNLOAD button (9).

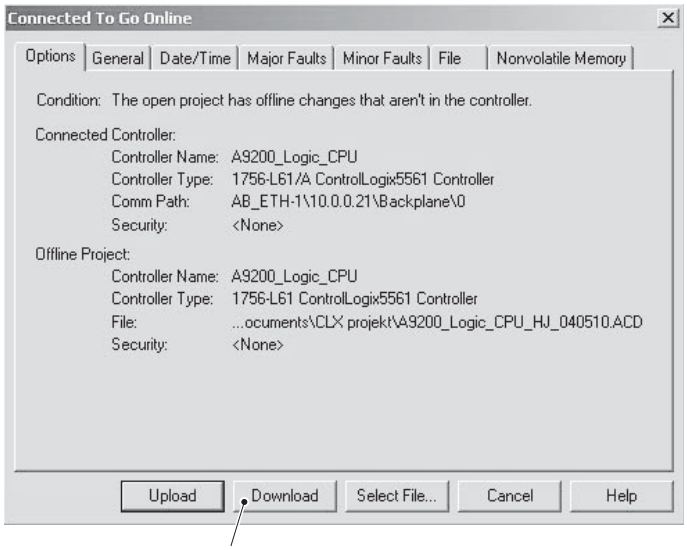

9 DOWNLOAD button

j) In the DOWNLOAD window (10), select the DOWNLOAD button (11).

Note! - Settings that have not been saved in the recipe will be overwritten.

- HMI package counter values will always be overwritten.
- Configuration page settings will remain.

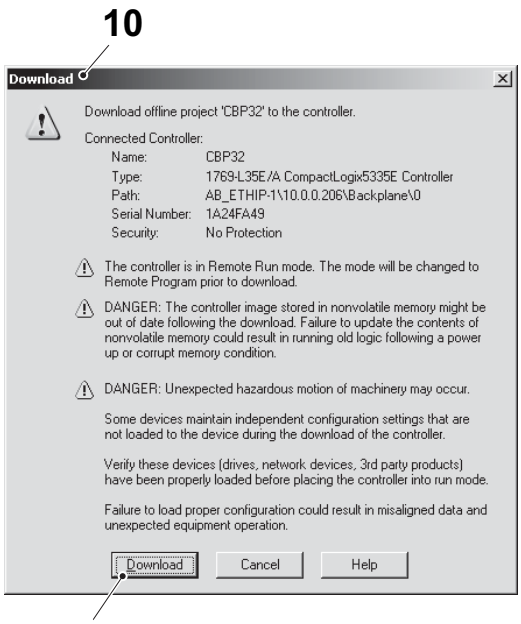

10 DOWNLOAD window
11 DOWNLOAD button

(Cont'd)

(Cont'd)

k) If the question APPLY SERIAL CONFIGURATION CHANGES? shown, press the YES button.

l) When the dialogue box (12) appears, press the YES button (13).

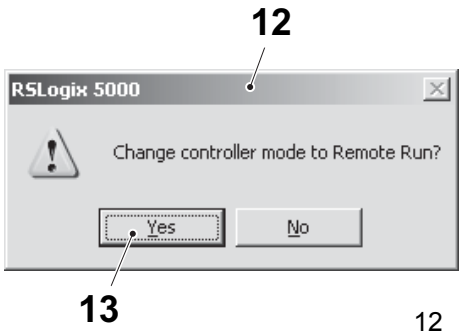

12 Dialogue box
13 YES button

m) Continue to Set Nonvolatile Memory, to store the PLC program and Firmware to flash.

Set Nonvolatile Memory

a) Select the COMMUNICATION MENU (1) and then select GO OFFLINE (2).

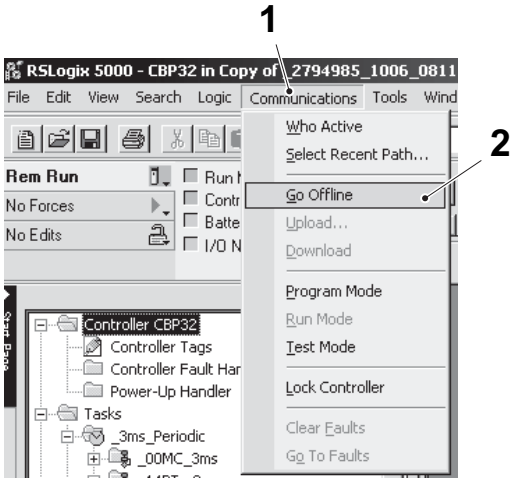

1 COMMUNICATION menu
2 GO OFF LINE

(Cont'd)

(Cont'd)

b) In the RSLOGIX 5000 window (3), select the CONTROLLER PROPERTIES button (4). The CONTROLLER PROPERTIES window (5) open

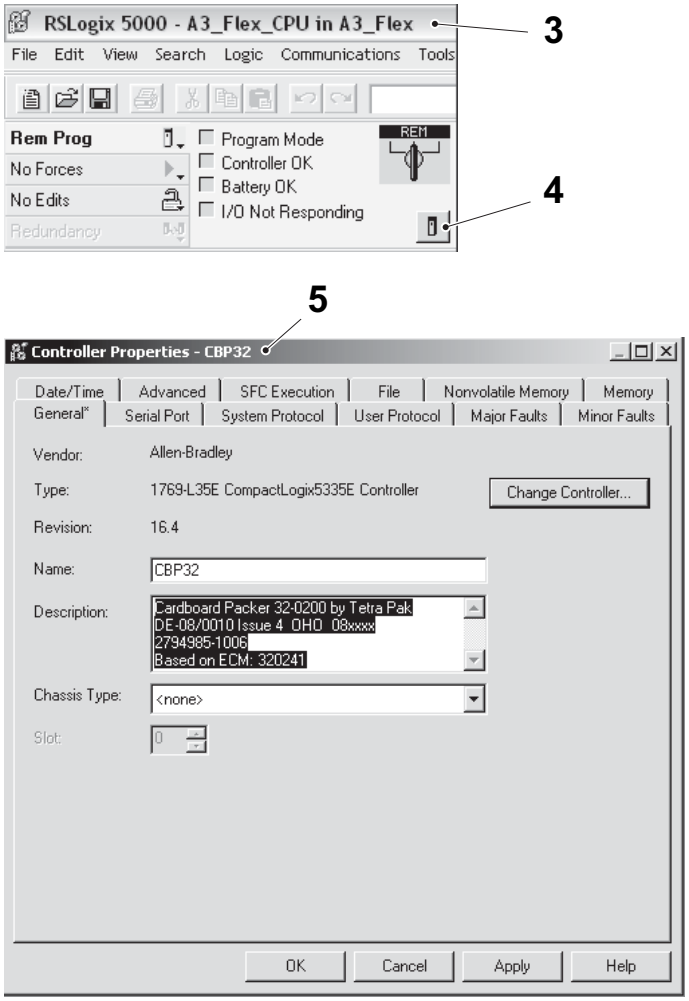

3 RSLOGIX 5000 window
4 CONTROLLER PROPERTIES button
5 CONTROLLER PROPERTIES window

(Cont'd)

(Cont'd)

c) Select the GENERAL tab (4). Mark the entire text in DESCRIPTION box (5) and copy the text.

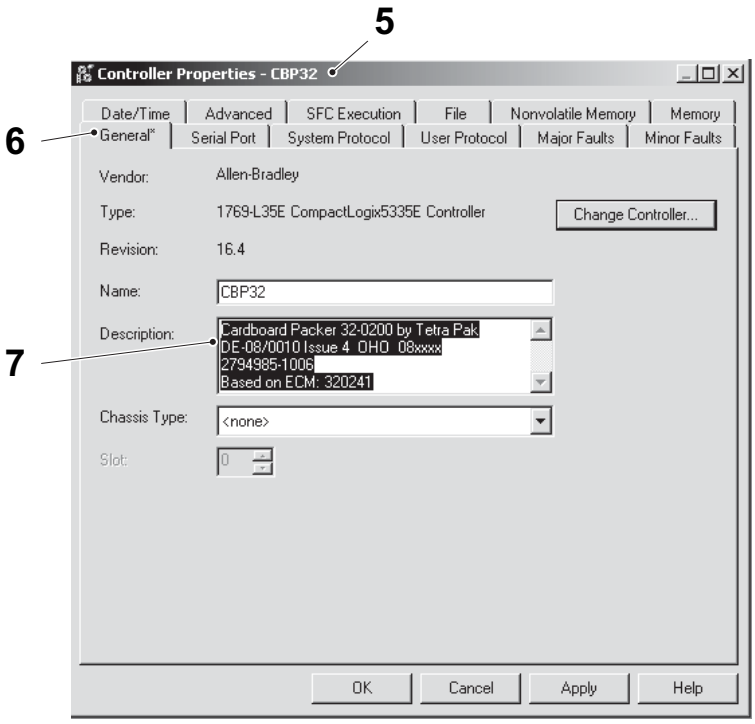

5 CONTROLLER PROPERTIES window
6 General tab
7 Description box

d) Select the COMMUNICATIONS menu (1) and then select GO ONLINE (8).

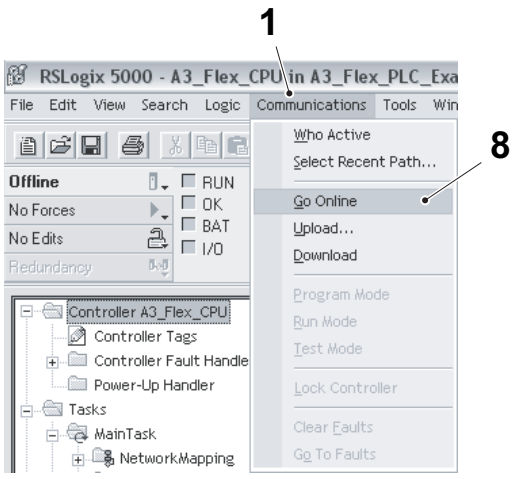

1 COMMUNICATION menu
8 GO ON LINE

(Cont'd)

(Cont'd)

e) Select the COMMUNICATIONS menu (1), then select PROGRAM MODE (13).

f) When the RSLOGIX box appears, select the YES button (12) to put the PLC in PROGRAM mode.

Note! If PLC fails to enter program mode, a message box appears. Confirm the message and retry from item e).

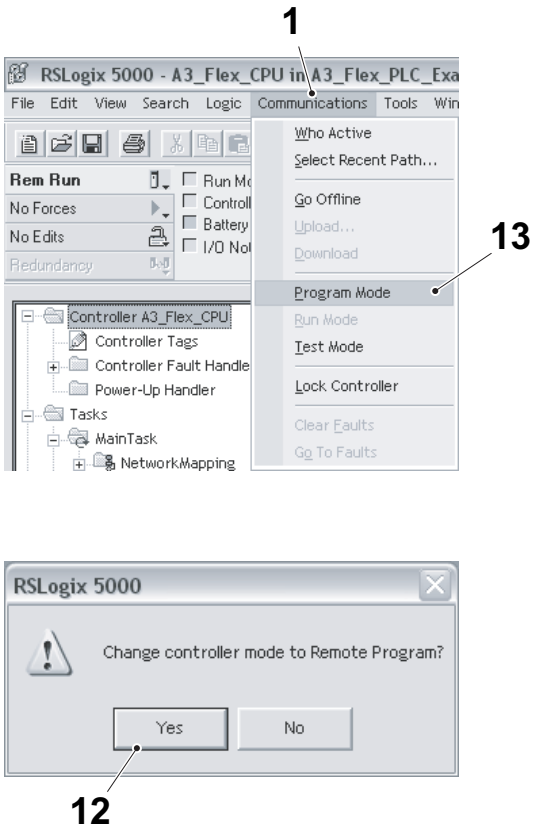

1 COMMUNICATION menu
12 YES button
13 PROGRAM MODE

(Cont'd)

(Cont'd)

g) Select the NONVOLATILE MEMORY tab (14) in CONTROLLER PROPERTIES window (15).

h) Select the LOAD/STORE button (16).

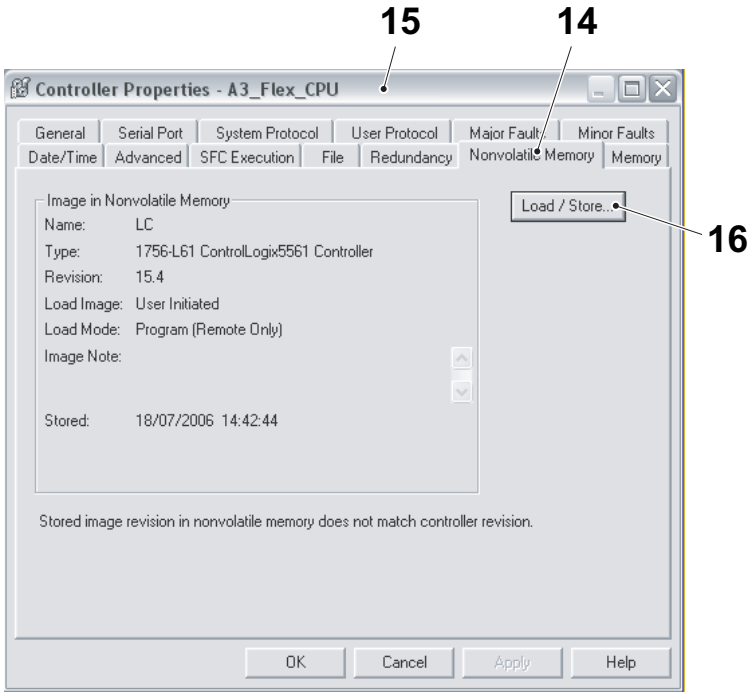

14 NONVOLATILE MEMORY tab
15 CONTROLLER PROPERTIES window
16 LOAD/STORE button

(Cont'd)

(Cont'd)

i) In the NONVOLATILE MEMORY LOAD/STORE window (17), select ON CORRUPT MEMORY (18) from the drop down list of the LOAD IMAGE option.

j) Select RUN (REMOTE ONLY) (19) from the drop down list of the LOAD MODE option.

k) Click in the IMAGE NOTE box (20), then paste the previously copied text.

l) Select ENABLE AND STORE FILES TO IMAGE (21) from the drop down list of the AUTOMATIC FIRMWARE UPDATE option.

m) Select the STORE button (22).

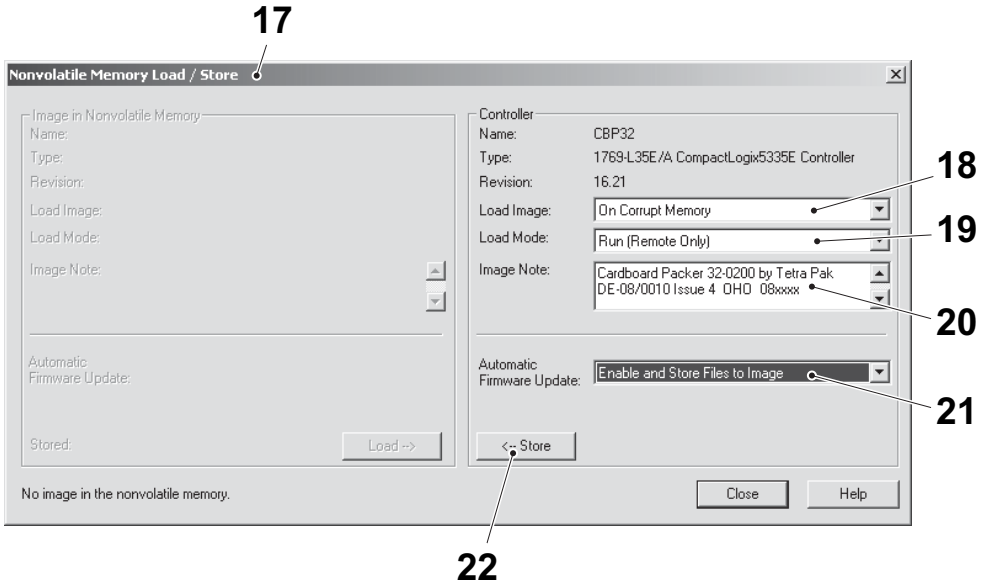

17 NONVOLATILE MEMORY LOAD/STORE window
18 ON CORRUPT MEMORY
19 RUN (REMOTE ONLY)
20 IMAGE NOTE box
21 ENABLE AND STORE FILES TO IMAGE
22 STORE button

(Cont'd)

(Cont'd)

n) Select the YES button (23) to confirm the store.

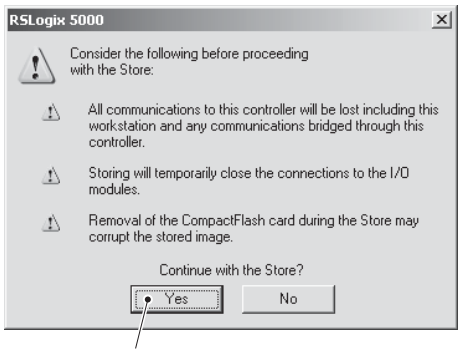

23 YES button

o) Select the YES button (24) to confirm the store.

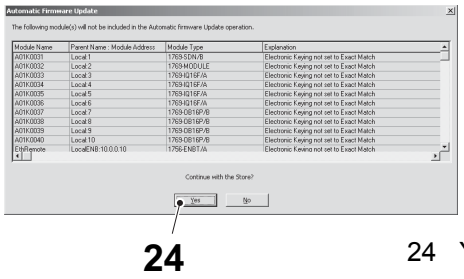

24 YES button

p) During the process a dialogue box indicates that the store is in progress. Read the message and select the OK button (25).

Tip! Some seconds after OK and MS LED's on PLC CPU emits fixed green light, the store is complete.

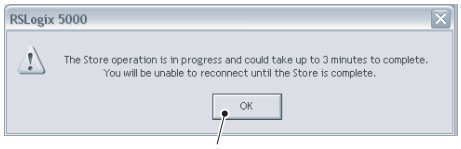

24 OK button

(Cont'd)

(Cont'd)

q) Select the OK button (19) to close the CONTROLLER PROPERTIES window (8).

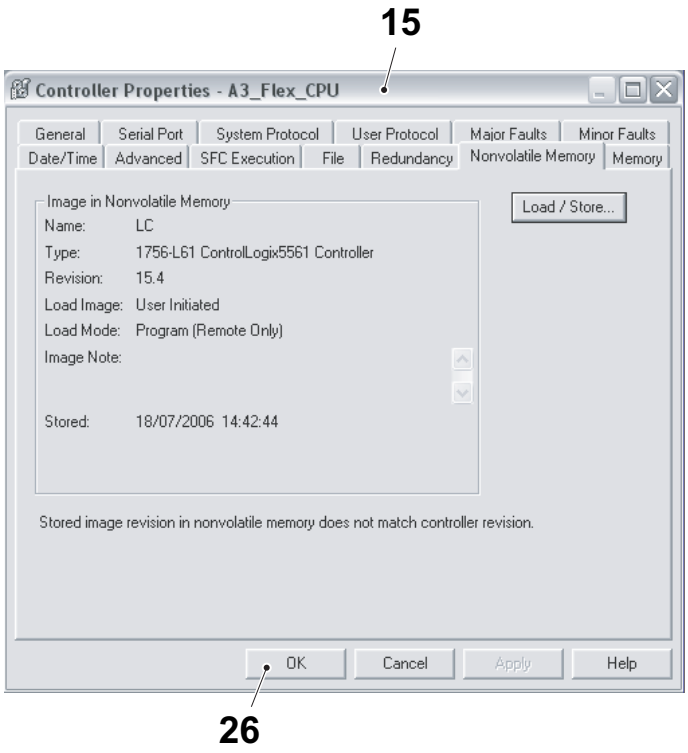

15 CONTROLLER PROPERTIES window
26 OK button

(Cont'd)

(Cont'd)

r) Select the COMMUNICATION menu (1) and then select GO ONLINE (2).

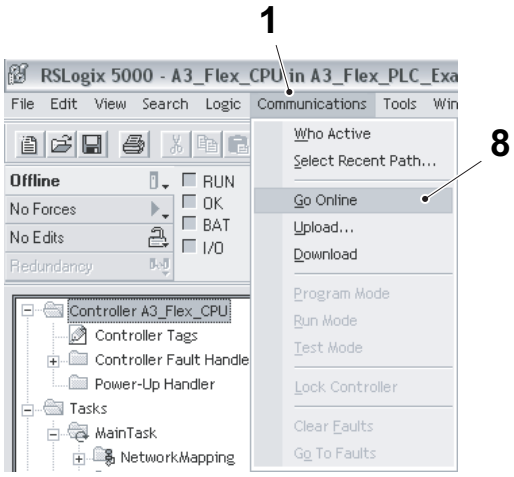

1 COMMUNICATION menu
8 GO ON LINE

s) On CORRELATION popup (27) select the NO button (28).

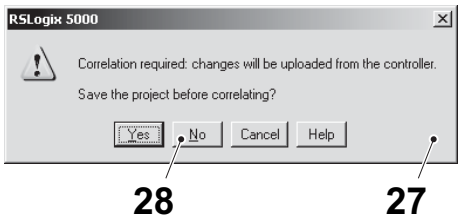

27 CORRELATION popup
28 NO button

t) Select the COMMUNICATION menu (1), then select RUN mode (20) to put the PLC in RUN mode.

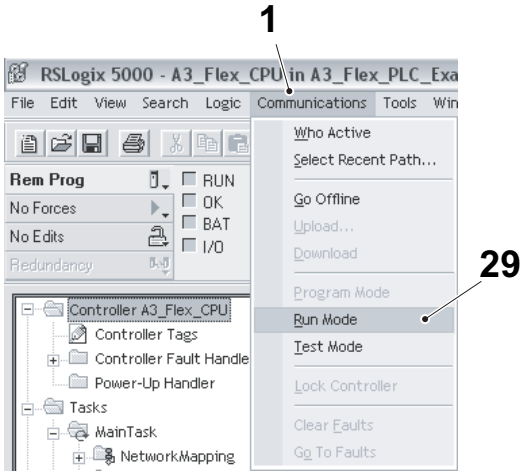

1 COMMUNICATION menu
8 GO ON LINE

(Cont'd)

(Cont'd)

u) Press the yes buttonOn REMOTE RUN popup (30) select the YES button (31).

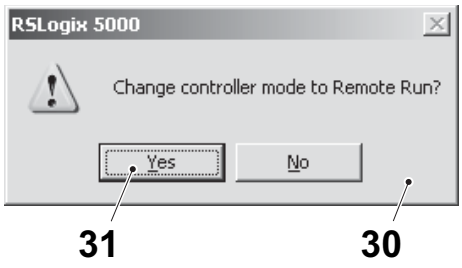

30 REMOTE RUN popup
31 YES button

v) Select FILE menu (32) and select EXIT (33).

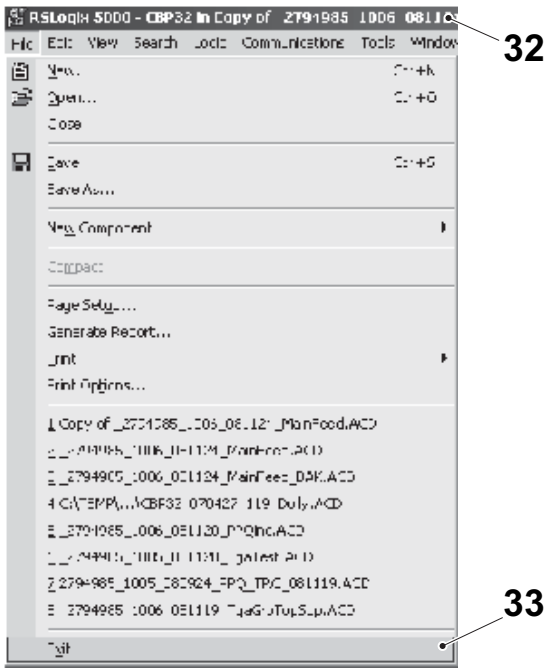

32 FILE menu
33 EXIT

w) On SAVE popup (34) select the YES button (35) to save changes.

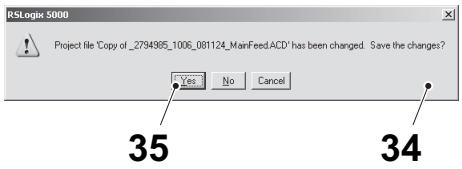

34 SAVE popup
35 YES button

6.1-7 PLC - Install Module

Machine Status	Power supply disconnector OFF Air valve OFF
SPC Reference	2538101

When installing I/O modules, DeviceNet, SM2 or other modules it is very important that the bus connectors (6) are securely locked together to ensure proper electrical connection.

If installing an SM2 module, set the module according to section Configuration Mode and Single/Multi-Drive Operation Switch Locations.

a) Check that the bus lever (2) of the module to be installed is in the unlocked (fully right) position. If the module to be installed is inserted between two modules, also the right hand module bus lever must be in unlocked position.

b) Use the upper tongue-and-groove slot (3) and the lower tongue-and-groove slot (4) to secure the modules together (or to a controller).

c) Move the module back along the tongue-and-groove slots until the bus connectors (6) line up with each other.

d) Push down the upper mounting tabs (1) and push up the lower mounting tabs (5).

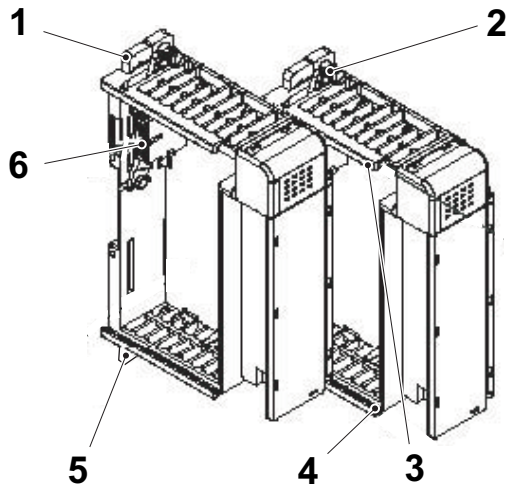

1 Upper mounting tab
2 Bus lever
3 Upper tongue-and-groove slot
4 Lower tongue-and-groove slot
5 Lower mounting tab
6 Bus connector

(Cont'd)

(Cont'd)

e) Push the bus lever (2) back slightly to clear the positioning tab (7). Use your fingers or a small screw driver.

f) To allow communication between the controller and module, move the bus lever (2) fully to the left until it clicks. Ensure it is locked firmly in place.

g) If the module to be installed is inserted between two modules, also the right hand module must be locked as described in step e) and f).

h) Install an end cap terminator (8) to the last module in the system by using the tongue-and groove slots as before.

i) Lock the end cap bus terminator (9) by pushing it into place.

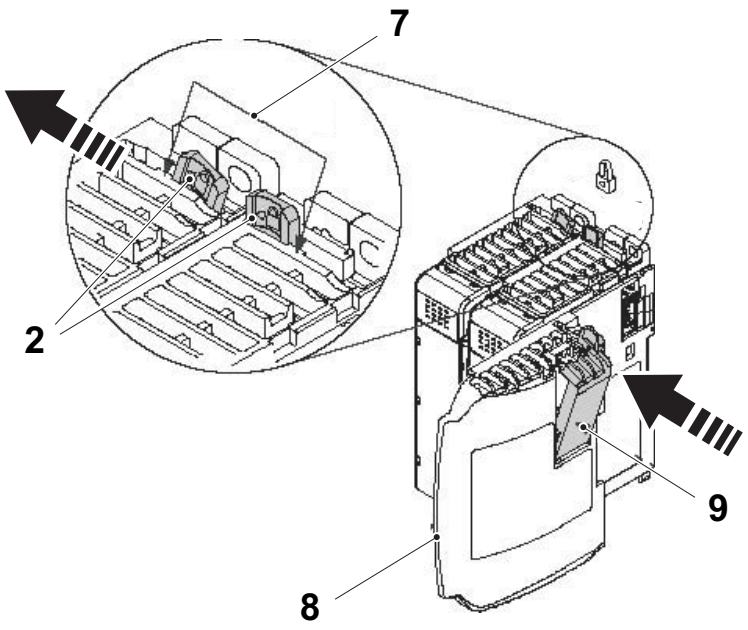

2 Bus lever
7 Positioning tab
8 End cap terminator
9 End cap bus terminator

6.1-8 PLC - Remove Module

Machine Status	Power supply disconnector OFF Air valve OFF
SPC Reference	2538101

a) Pull up the upper mounting tabs (1) and pull down the lower mounting tabs (7) by using for example a small blade screw driver.

b) Move the bus lever (2) of the module to be removed to the unlocked (fully right) position. If the module to be removed is inserted between two modules, also the right hand module bus lever must be in unlocked position.

c) If the module to be removed is the last module in the system, there is an end cap terminator (4) attached. Remove the end cap terminator (4) by unlock (fully right) the end cap terminator lever (3) and slide it along the tongue-and-groove slots (5) and (6).

d) Remove the module by sliding it along the tongue-and-groove slots (5) and (6).

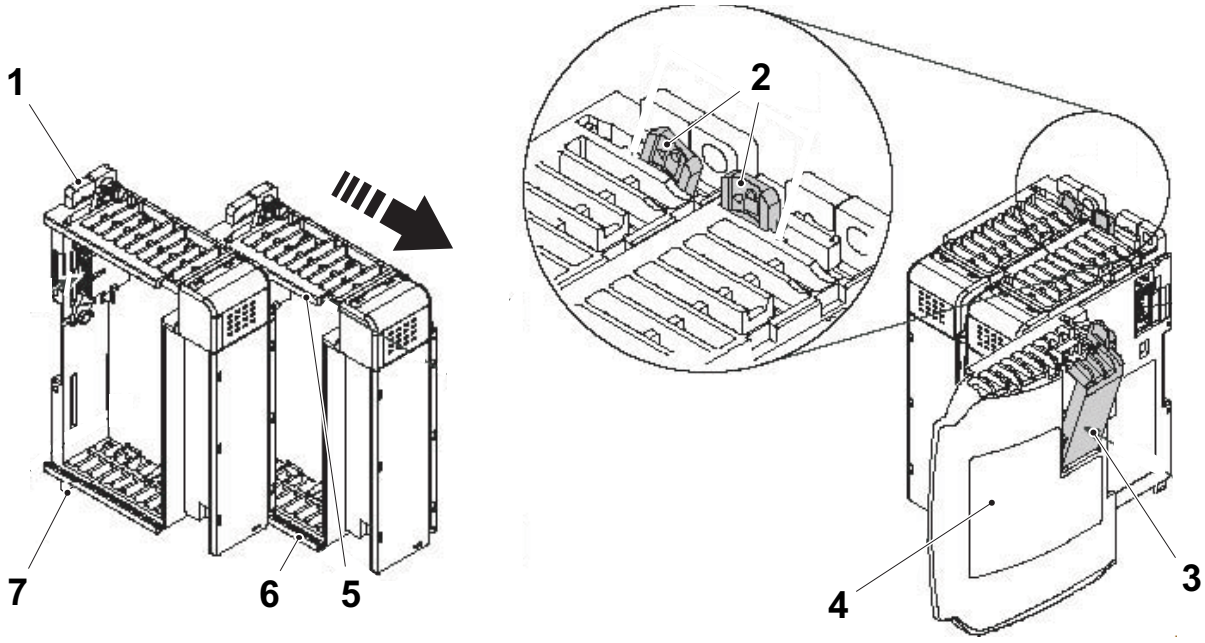

1 Upper mounting tab
2 Bus lever
3 End cap terminator lever
4 End cap terminator
5 Upper tongue-and-groove slot
6 Lower tongue-and-groove slot
7 Lower mounting tab

6.1-9 PLC - Change CPU Battery

Machine Status	Power supply disconnector OFF Air valve OFF
Consumables	Battery 1769-BA
SPC Reference	2538101

WARNING

Risk of electroshock.

When connecting or disconnection the battery an electrical arc can occur. This could cause an explosion in hazardous location installations. Be sure that power is removed or the area is nonhazardous before proceeding.

When the battery indicator (1) lights up, the battery must be changed.

a) Disconnect the ethernet cable (2) and the channel 0 cable (3).

b) Remove the CPU as described in section 6.1-8 PLC - Remove Module.

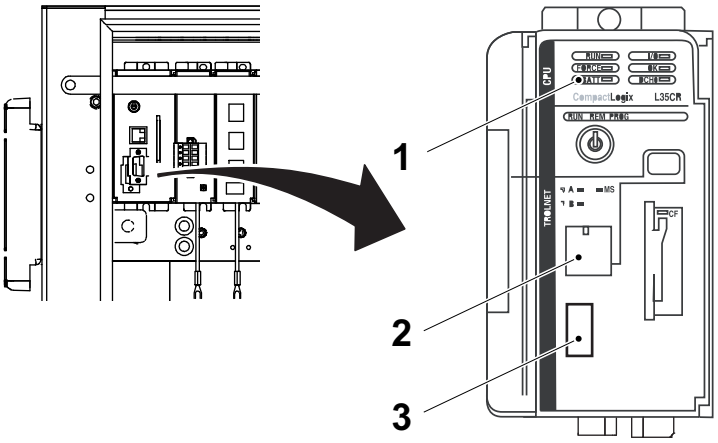

1 Indicator
2 Ethernet cable
3 Channel 0 cable

(Cont'd)

(Cont'd)

c) Gently pull the lock tab (6) on the battery door (4) away from the CPU module while sliding the battery door (4) forward.

Note! Do not remove the plastic insulation covering the battery. The insulation is necessary to protect the battery contacts.

d) Change the battery (7) in the battery compartment (8) and insert the battery connector (5) into the connector port located on the CPU module circuit board.

e) Slide the battery door (4) back until it clicks into position.

f) Reinstall the CPU as described in section 6.1-7 PLC - Install Module.

g) Reconnect the Ethernet cable (2) and the channel 0 cable (3).

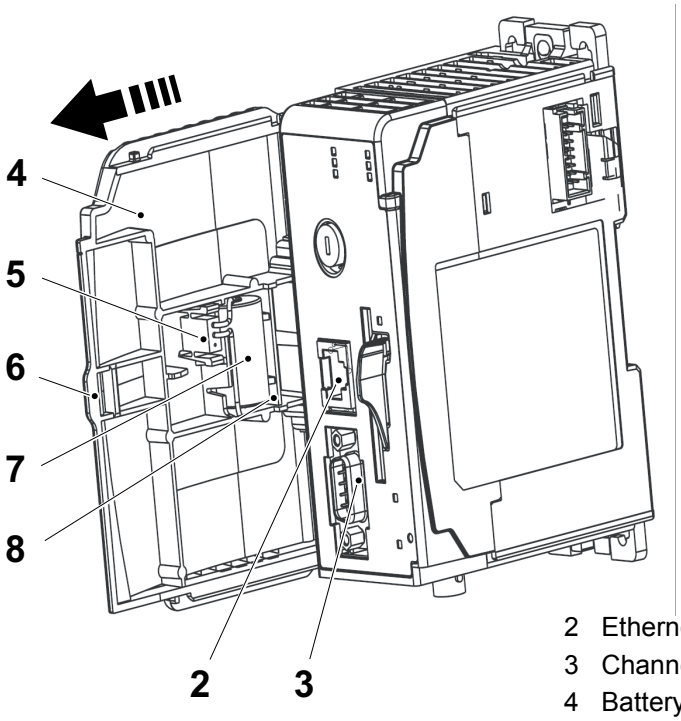

2 Ethernet cable
3 Channel 0 cable
4 Battery door
5 Battery connector
6 Lock tab
7 Battery
8 Battery compartment

6.1-10 PLC - Change Power Supply Fuse

Machine Status	Power supply disconnector OFF Air valve OFF
SPC Reference	2538101

a) Remove Compact Logix system power and correct the conditions causing the short circuit.

b) Remove fuse housing cover (1). Place a slotted screwdriver under the tab (2) to remove.

c) Remove the front access fuse. Use a fuse puller or similar device to remove the fuse. Use care so that the printed circuit board and surrounding electronics are not damaged.

d) Replace the front access fuse. Center the replacement fuse over the fuse clip and press down. If a tool is used to press the fuse in place, apply pressure to the metal end caps only, not the center of the fuse.

e) Assemble the fuse housing cover.

f) Restore Compact Logix system power.

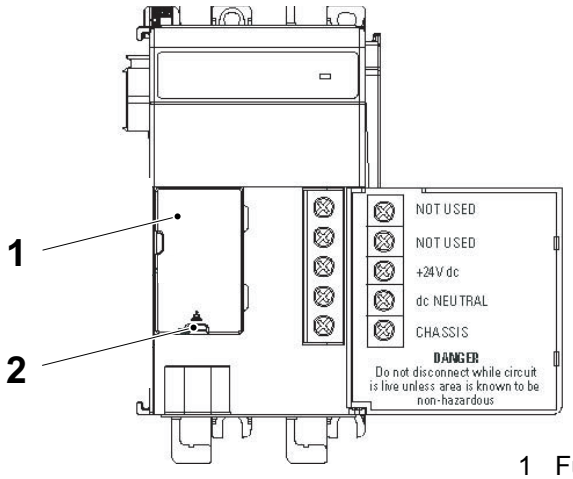

1 Fuse housing cover
2 Tab

6.1-11 PLC - Change Power Supply Module

Machine Status	Power supply disconnector OFF Air valve OFF
SPC Reference	2538101

WARNING

Risk of electroshock.

When connecting or disconnection the power supply an electrical arc can occur. This could cause an explosion in hazardous location installations. Be sure that power is removed or the area is nonhazardous before proceeding.

a) Open the door (2) and disconnect the power cables (4).

b) Disconnect the ground cable (3).

c) Change the power supply moduleas described in sections 6.1-8 PLC - Remove Module and 6.1-7 PLC - Install Module.

d) Connect the ground cable (3).

e) Connect the power cables (4) to the power supply terminal (1) according to the Electrical Manual (EM), chapter 4 Circuit Diagrams.

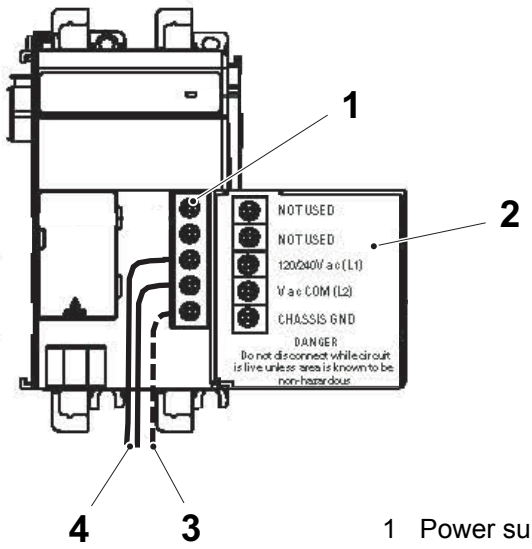

1 Power supply terminal
2 Door
3 Earth/ground cable
4 Power cables

6.1-12 PLC - Disconnect/Connect Digital I/0 Module Terminal Block

Machine Status	Power supply disconnector OFF Air valve OFF
SPC Reference	2538101

a) Loosen the upper retaining screw (1) and the lower retaining screw (2). The terminal block will back away from the module if the screws are removed.

b) When both screws (1) and (2) are removed pull the terminal block to disconnect.

c) Install the terminal block, torque the retaining screws to 0.46 Nm (4.1 in-lbs).

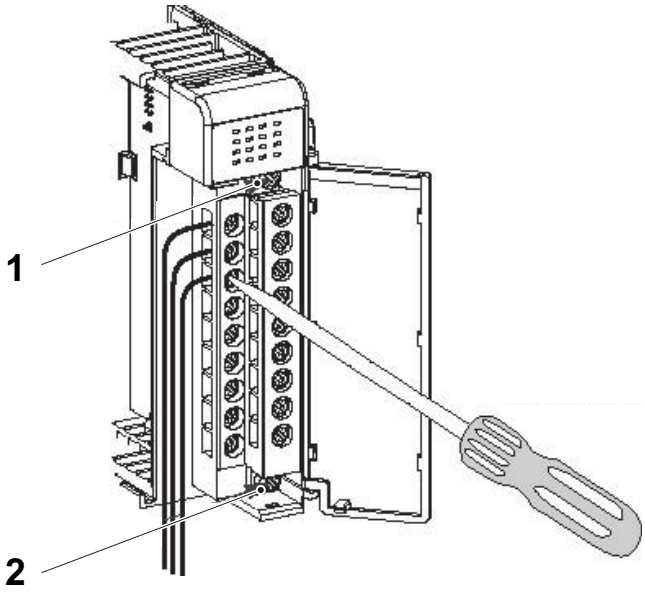

1 Upper retaining screw
2 Lower retaining screw

6.1-13 PLC - SM2 Configuration

Machine Status	Power supply disconnector OFF Air valve OFF
SPC Reference	2538101

Configuration Mode and Single/Multi-Drive Operation Switch Locations

CAUTION

Before inserting or removing modules you must be electrostatically discharged.

Note! When handling the card hold it by the card edges. Do not touch the solder side or component side.

a) Remove the SM2/Modbus module.

b) Set the switches at Controller position (CONT) and Multi-drive operation position (5X), see the illustration below.

c) Reinstall the SM2/Modbus module.

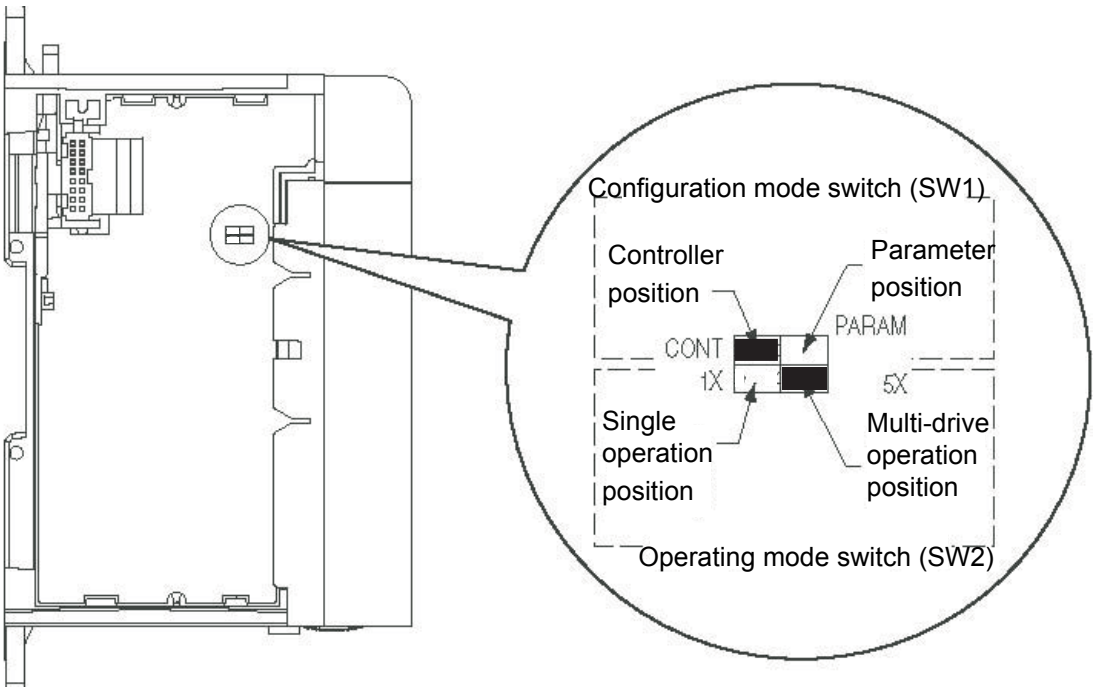

Module A01K0032

6.1-14 PLC - SM2 Troubleshooting

Machine Status	Power supply disconnector ON Air valve OFF
SPC Reference	2538101

The SM2 module has four status indicators. They can be viewed on the front of the module.

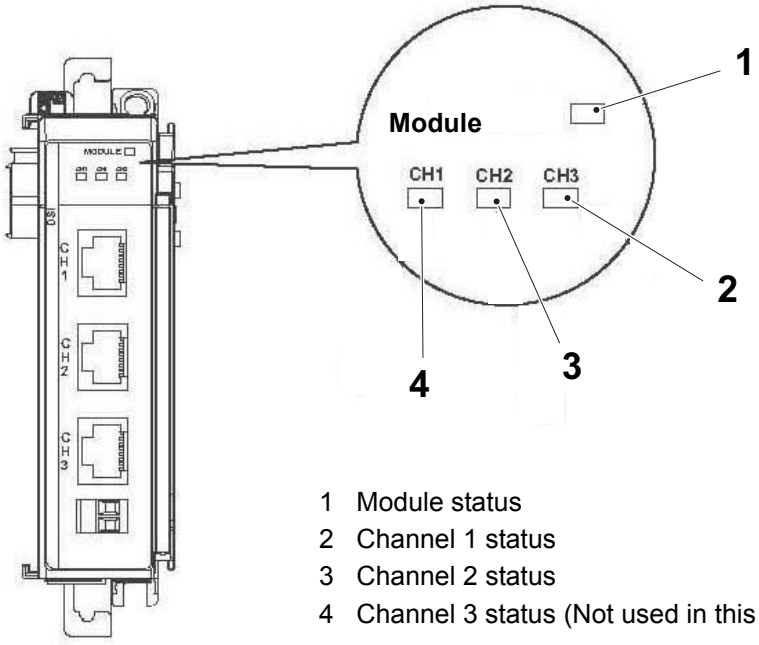

1 Module status
2 Channel 1 status
3 Channel 2 status
4 Channel 3 status (Not used in this machine)

Module Status Indicator

The MODULE status indicator is a bicolor red and green LED.

Status	Cause	Corrective Action
Off	The module is not powered.	Apply power to the module
Flashing red	The module's configuration data is not valid.	– Change the controller configuration data to valid settings. – Reset the module parameters to their default settings, and then reset the module.
Solid red	The module was unable to establish communication with the controller.	Cycle power to the controller.
Flashing green	The module is establishing communications with the controller.	Normal behavior -- no action required.
Solid green	The module has established communications with the controller.	Normal behavior -- no action required.
Flashing red/green	The module is in boot mode.	Flash download the application code to the module.

(Cont'd)

(Cont'd)

CH1 - CH3 status indicators

The CH1, CH2, and CH3 status indicators are bicolor red and green LEDs. In this machine only CH1 and CH2 is used, so CH3 status is Off.

Status	Cause	Corrective Action
Off	– The module is not powered. – The channel is not connected to a DSI-supported drive. – The channel is operating in Modbus RTU Master mode, but is not transmitting.	– Apply power to the module. – Apply power to the DSI-supported drive. – Connect the module channel to the drive using a communications cable.
Flashing red	– In Multi-Drive mode, the channel is not receiving communication from one or more configured drives. – (In Single mode, the channel is not receiving communication from the drive.)	– Verify that the 22-RJ45CBL-C* communications cable is securely connected and not damaged. Replace cable if necessary. – Verify the settings for the node address and data rate parameters in the drive, 6.3-3 Frequency Converter - Set – Cycle power to the drive. – Verify the setting for the DSI I/O Cfg x parameter. – Verify the settings for the Drv x Addr x parameters.
Flashing green	– The channel is properly connected and is communicating with the drive, but is not sending I/O to the drive. –The channel is operating in Modbus RTU Master mode, and is transmitting.	No action required.
Solid green	The channel is properly connected and is communicating with the drive, and is sending I/O to the drive.	No action required.

6.2 Distributed I/O and Network

6.2-1 Armor Block - Set Node Address

Machine Status	Power supply disconnector OFF Air valve OFF
SPC Reference	2763116-0200

The text and illustrations about the armorblock are from Rockwell Automation user manuals.

CAUTION

This equipment is sensitive to electrostatic discharge, which can cause internal damage and affect normal operation. Follow these guidelines when you handle this equipment:

- Touch a grounded object to discharge potential static.
- Wear an approved grounding wriststrap.
- Do not touch connectors or pins on component boards.
- Do not touch circuit components inside the equipment.
- If available, use a static-safe workstation.
- When not in use, store the equipment in appropriate static-safe packaging.

Note! Valid node addresses are **00** through **63**.

Tip! Each module is shipped set for node address 63.

a) Remove the caps (1) on the front of the module to access the switches.

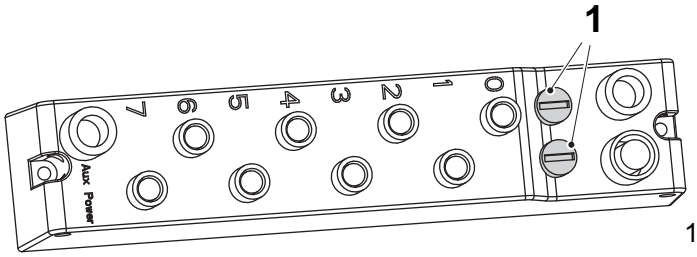

1 Cap

(Cont'd)

(Cont'd)

b) Set the node address according to the Electrical Manual (EM).

- The two switches are:
  - X10 (2) most significant digit
  - X1 (3) least significant digit

c) To set the node address, use a small blade screwdriver to rotate the switches. Line up the cut out (4) on the switch with the number setting to use and then apply power when all have been set.

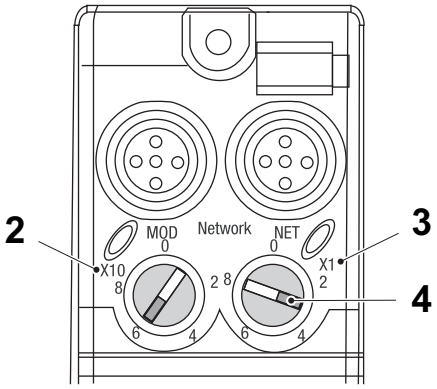

2 Node number (switch X10)
3 Node number (switch X1)
4 Cut out

The rotary switches are read periodically. If the switches have been changed since the last time they were read and they no longer match the on line address, a minor fault will occur, which is indicated by a flashing red MOD LED (5). Settings between 64 and 99 cause the module to use the last valid node address stored internally. Example: The last setting internally was 40. If a change is made to 68, and then you power up, the address will default to 40.

The module is equipped with AutoBaud detect. AutoBaud lets the module read the settings already in use on the DeviceNet network and automatically adjusts to follow those settings.

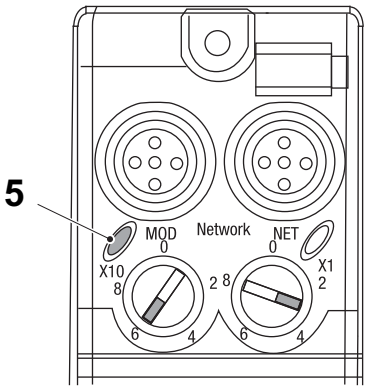

5 LED

6.2-2 Armor Block - Troubleshooting

Machine Status	Power supply disconnector OFF Air valve OFF
SPC Reference	2763116-0200

a) At the armor block module, note the status indicated by the mod LED (1), net LED (2), aux power 3) and the I/O LED (4).

b) Use the following tables to determine the cause of the error.

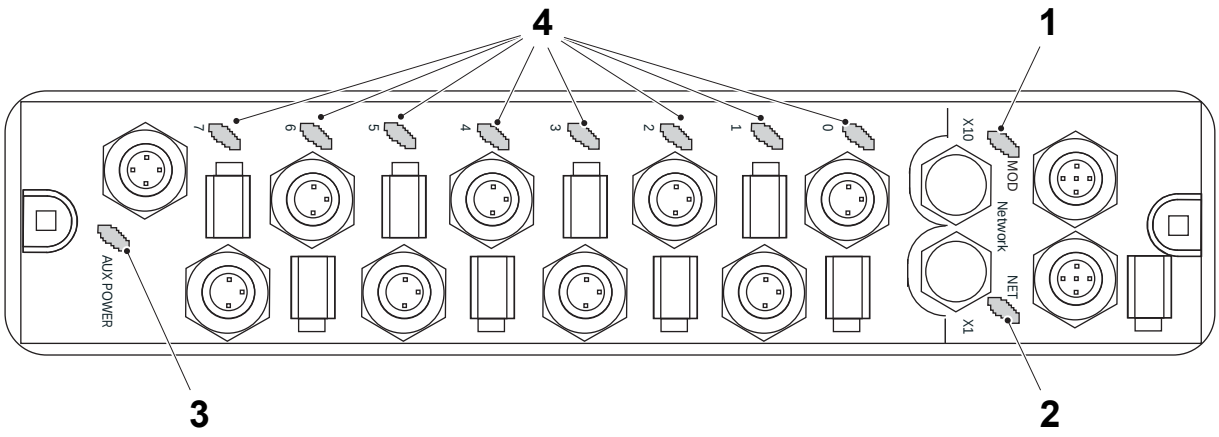

1 Mod LED
2 Net LED
3 Aux power
4 I/0 LED

(Cont'd)

(Cont'd)

NET LED

State	Status	Cause	Action
Off	No power or not online.	The module is not online.	Wait until the module has completed the dup_MAC_id test or power the module.
Green	Online connected.	Device is operating normally and is online with connections established.	None.
Flashing green	Online but not connected.	The module is online with connections established.	Establish connections to other nodes.
Red	Critical link failure.	Failed communication module.	Check the communication and cycle power.
Flashing red	Connection time out.	An I/O connection has timed out.	Cycle power to the module.

MOD LED

State	Status	Cause	Action
Off	No power.	There is no power applied to the module.	Apply power to the module.
Green	Module operational.	The module is operating normally.	None.
Flashing green	Module needs commissioning.	The module needs commissioning due to missing, incomplete or an incorrect configuration.	Check the configuration and cycle power.
Red	Minor fault.	The module has a recoverable fault.	Check the configuration and cycle power.
Flashing red	Critical fault.	Watchdog time out or the module has an unrecoverable fault.	Cycle power to the module. If this not solve the problem contact the Tetra Pak service desk. The module may need to be changed.

(Cont'd)

(Cont'd)

AUX POWER LED

State	Status	Cause	Action
Off	No auxiliary power.	There is no auxiliary power applied to the module.	Apply auxiliary power to the module.
Green	Auxiliary power present.	There is auxiliary power applied to the module.	None.

I/O LED

State	Status	Cause	Action
Off	Output not energized or no valid input.	Output is not energized or input is not valid.	None.
Yellow	Output energized or valid input.	Output is energized or input is valid.	None.

6.2-3 Valve Panel - Description

Machine Status	Power supply disconnector OFF Air valve OFF
SPC Reference	2752714, 2763086, 2763089

The following display and operating elements can be found on the valve side of the CDVI with DI connection “DeviceNet“.

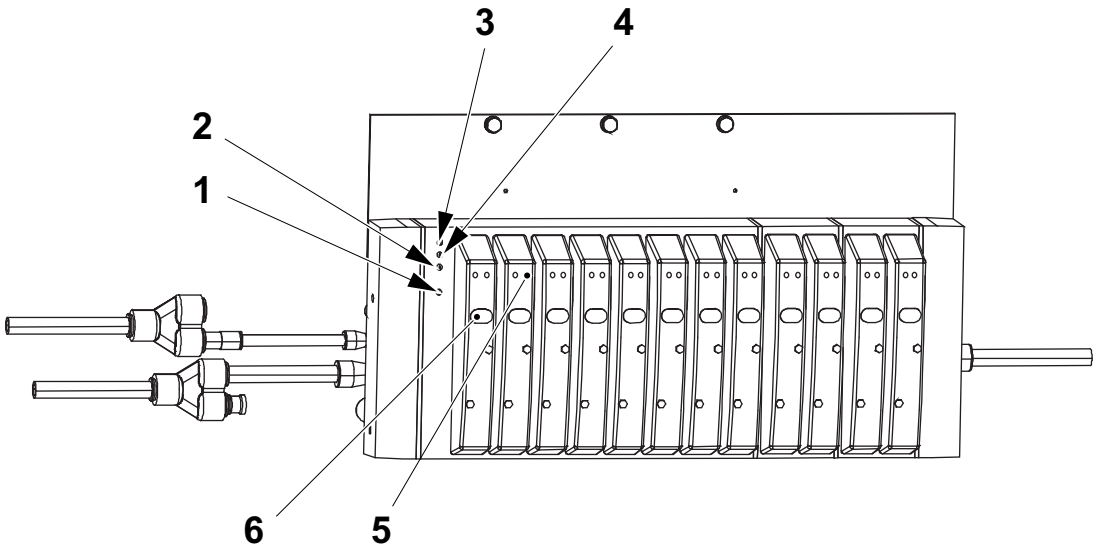

1 Green/red CP “Compact Performance“, CP extension modules

2 Green/red LED MNS “Module/Network Status“

3 Green LED PS “Power System“, operating voltage for electronics

4 Green LED PL “Power Load“, Load voltage for valves

5 Yellow LEDs, status display of the valve coils

6 Manual overrides (per valve solenoid coil)

(Cont'd)

(Cont'd)

The following electrical connecting elements can be found on the connection side of the CDVI with DI connection “DeviceNet“.

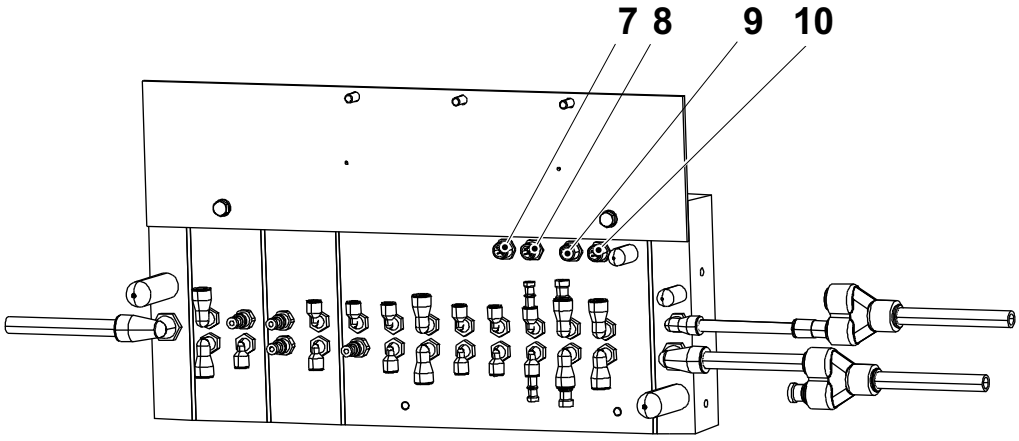

7 Field bus output
8 Field bus input
9 CP extension
10 Power supply plug

6.2-4 Valve panel - set device net address

Machine Status	Power supply disconnector OFF

The CDVI-DN contains electrostatically sensitive components.

- Do not therefore touch the electrical contacts of the components.
- Observe the regulations for handling electrostatically sensitive components.

Remove

a) Loosen the fastening screws (1) on the left-hand end plate by approximately one turn.

b) Unscrew the two fastening screws (1) completely and then avoid tilting and squeezing the separator plate (seal) (2).

c) Pull off the left-hand end plate (3).

The illustration shows a setting example from the EM.

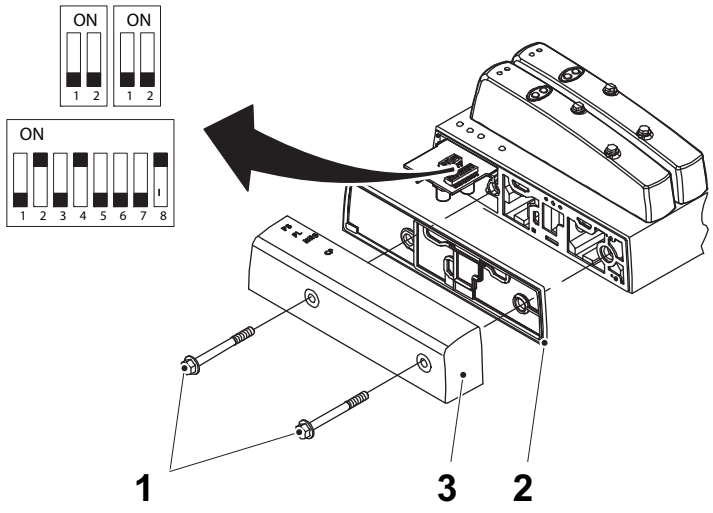

1 Screw
2 Separator plate
3 End plate

(Cont'd)

(Cont'd)

Set

a) Set the CDVI-DN according to the Electrical Manual (EM).

Install

a) Place the separator plate (seal) (2) on the base block (4). The separator plate must sit correctly on the guide sleeves of the base block.

b) Position also the left-hand end plate (3).

c) Tighten the fastening screws (1) in alternate sequence. Tightening torque 3.5 Nm to 4 Nm.

Note! Make sure that the separator plate (seal) is not squashed on one side as a result of unequal tightening of the cover screws.
The requirements of the IP protection class cannot be fulfilled if a seal is squashed.

The illustration shows a setting example from the EM.

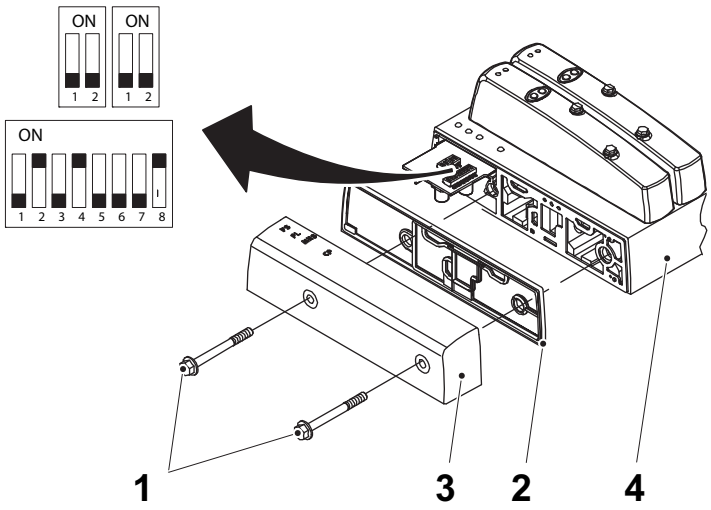

1 Screw
2 Separator plate
3 End plate
4 Base block

6.2-5 Valve panel - Trouble shooting

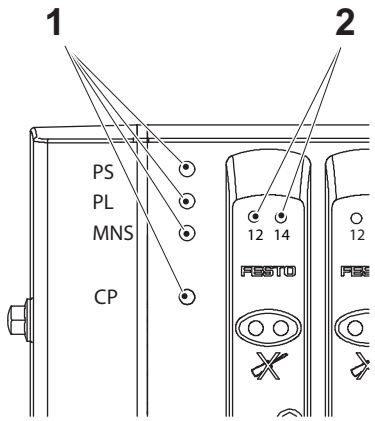

1 - PS “Power System“
Operating voltage for electronics
- PL “Power Load“
Load voltage for valves
- MNS “Module/Network Status“
- CP “Compact performance“
CP extension module

2 Status display of the valve coils

Normal Operating Status

In the normal operating status the LEDs light up green.

Lights up Flashes Out

LED	Sequence	Status	Cause	Action
PS	ON OFF	Green lights up	Power supply for the electronics OK.	None
PL	ON OFF	Green lights up	Power supply for valves and CP outputs OK.	None
MNS	ON OFF	Green lights up	CDVI-DN is assigned to a master.	None
CP	ON OFF	Green lights up	CP extension OK (if it exists).	None
CP	ON OFF	Out	Without CP extension.	None

(Cont'd)

(Cont'd)

Fault Displays of the LEDs

Fault diagnosis with the LEDs PS and PL.

The LEDs PS (Power System) and PL (Power Load) indicate faults in the power supply.

LED	Sequence	Status	Cause	Action
PS ○	ON OFF	Out	Operating voltage for the electronics not applied.	Check the power supply of the electronics (pin 1) on the cable side.
PS ☼	ON OFF	Green flashes	Operating voltage Electronics < 20.4 V	Check the power supply of the electronics (pin 1) on the cable side. Switch power off and then on again.
PL ○	ON OFF	Out	Load voltage (for valves and CP outputs) not applied.	Check power supply for the valves (pin 2) on the cable side.
PL ☼	ON OFF	Green flashes	Load voltage (for valves and CP outputs) < 21.6 V	

Pin assignment of the power supply connection on the valve terminal side

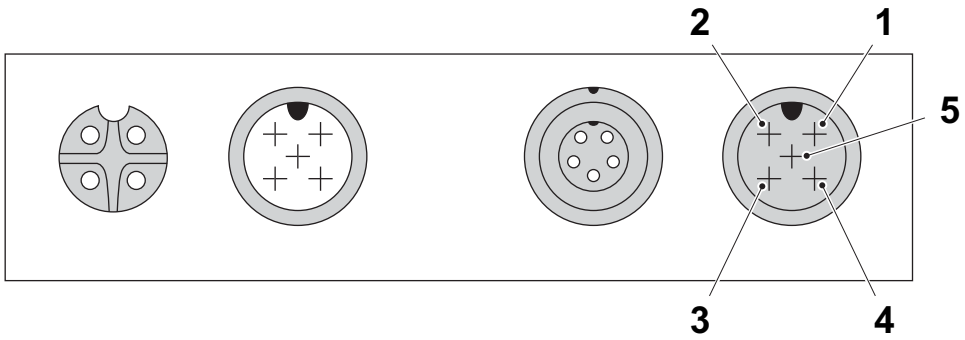

1 24 V DC operating voltage for electronics (and input modules on the CP string)
2 24 V DC load voltage for the valves (and outputs)
3 0 V electronics (and output modules on the CP string)
4 0 V load voltage for valves (and outputs)
5 Earth/ground connection

(Cont'd)

(Cont'd)

Fault Diagnosis with the LED MNS (DeviceNet)

LED	Sequence	Status	Cause	Action
MNS ○	ON OFF	Out	- Operating voltage for the electronics not applied. - Dup_MAC_ID-Test *) is not yet concluded	Check operating voltage supply (pin 1) on the cable side. Wait for the end of the test If the LED remains out: Station number perhaps assigned twice, correct station numbers.
MNS ☼	ON OFF	Green flashes	- CDVI-DN is not to a master. - Dup_MAC_ID-concluded, but has no connection field bus.	Check configuration Master is probably not in the RUN mode: Check master status.
MNS ☼	ON OFF	Red flashes	- Connection time-out or - Fault in the master.	Clarify and eliminate cause of time-out. Check master status.
MNS ●	ON OFF	Red lights up	- Communication fault. - Hardware fault which cannot be rectified.	Check the baud rate setting and the connection to the network. Replace CDVI-DN, servicing required.
MNS ☼		Red-green flashes	- Specific communication faults.	* Check field bus. * Check master status.
*) Test algorithm which ensures that station numbers on the network are not assigned twice. The test is usually carried out automatically when the network connection is set up.				

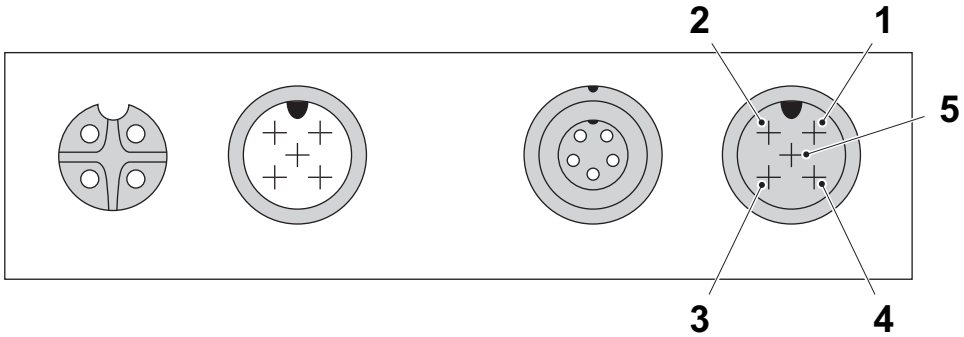

1 24 V DC operating voltage for electronics (and input modules on the CP string)
2 24 V DC load voltage for the valves (and outputs)
3 0 V electronics (and output modules on the CP string)
4 0 V load voltage for valves (and outputs)
5 Earth/ground connection

6.2-6 Servo system device net card

The device net card is located in the rack of the SPC200.The baud rate and node address of the card is automatically set after downloading the project to the SPC200.

Note! The device net card will only function with firmware v.4.9 or higher loaded in the SPC200.

For information about the other cards and software downloading, see 6.4 Servo System.

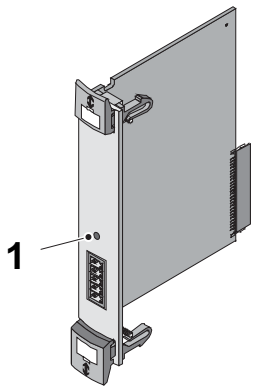

1 MOD/NET LED (two-colour LED)

Normal Operating Status

In the normal operating status the LEDs light up green.

Lights up Flashes Out

LED	Status	Cause	Action
	Green lights up	Normal; the SPC200 is online and is connected to a communication partner.	None

(Cont'd)

(Cont'd)

Fault display of the MOD/NET LED

LED	Status	Cause	Action
	Out	- The bus interface of the SPC200 is not supplied with current. - The SPC200 does not recognize any communication on the bus.	Check the power supply to the bus interface/internal logic. Check the physical connection to the bus and the terminating resister.
	Green flashes	The SPC200 is ready for data exchange and is online on the bus. However, there is no communication with a master. It is possible that the SPC200 is not yet assigned to a master.	Complete the configuration. Check/correct the Scan List of the relevant master.
	Red lights up	Serious communication fault - The SPC200 has discovered too many faulty telegrams on the bus and no longer participates in the bus communication. The SPC200 is in the Bus-Off status. or - The field bus address of the field bus module has been assigned twice.	Bad physical bus connection; check connection. Bus is very faulty; eliminate faults, check screening/ shield. Power supply to the bus has been interrupted. Correct wrong-polarity data cables of a slave. Check/correct baud rate. Correct field bus address.
	Red flashes	Fault can be rectified - The SPC200 has recognized Communication-Time-Out. - The SPC200 has not been addressed for a long time (Time-Out-time	Physical bus connection interrupted. Check the master for communication ability. Reset the Time-Out status of the SPC200 by new allocation. Connect the SPC200 to the bus again.

6.2-7 DeviceNet Scanner (SDN)

The DeviceNet Scanner (1) is located in the CompactLogix system. The scanner connects the external DeviceNet modules to the PLC.

Status indicators and an alphanumeric display are provided to report the status of the module and the DeviceNet.

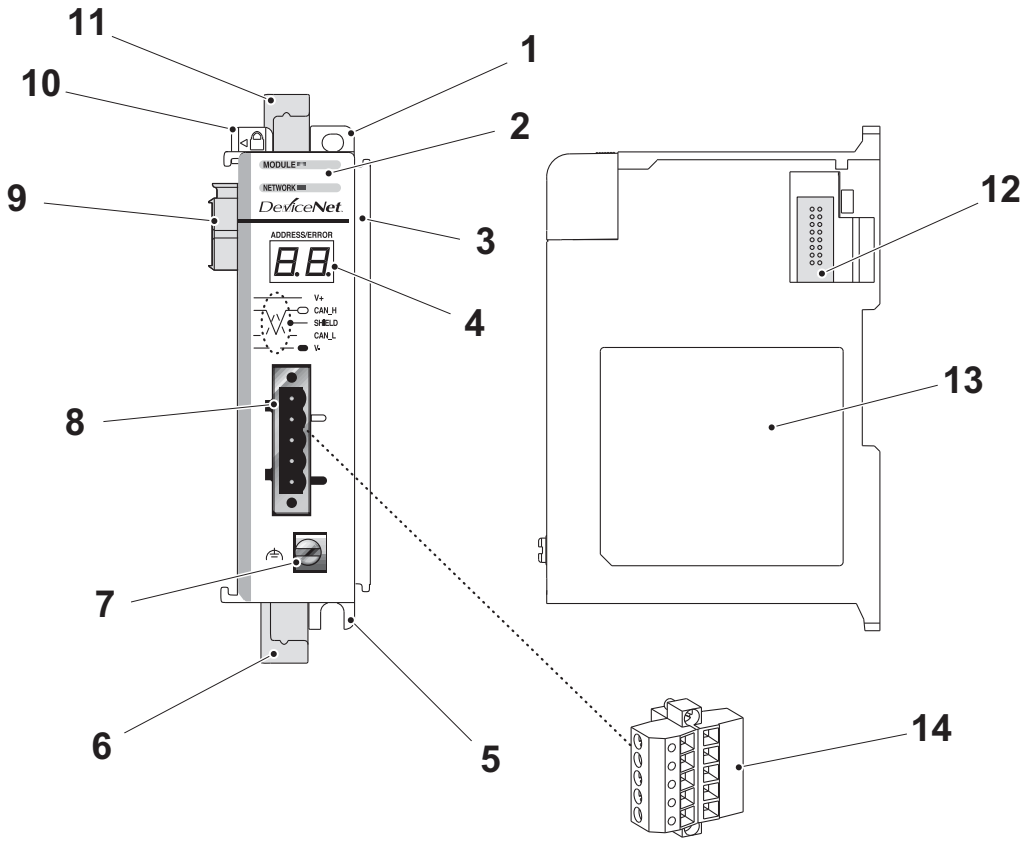

1 Upper panel mounting tab
2 Module and Network status LEDs
3 Bus connector with male pins
4 Address and Error numeric display
5 Lower panel mounting tab
6 Lower DIN rail latch
7 Lower DIN rail latch
8 DeviceNet mating male receptacle
9 Movable bus connector with pins
10 Bus lever (with locking function)
11 Upper DIN rail latch
12 Bus connector with male pin
13 Nameplate label
14 Removable DeviceNet female connector

6.2-8 DeviceNet Scanner - Troubleshoot

Machine Status	Power supply disconnector ON
SPC Reference	

Troubleshooting the Status Indicators and Numeric Display

To locate the source of the error and find the cause, follow the instructions below.

a) At the CompactLogix chassis in the electrical cabinet, note the status on the DeviceNet scanner indicated by the:
   - Numeric display (1)
   - Network LED (2)
   - Module LED (3)

b) Use the tables on the following pages to determine the cause of the error.

Tip! See EM for the Device net overview, containing node addresses and placement of the slave modules.

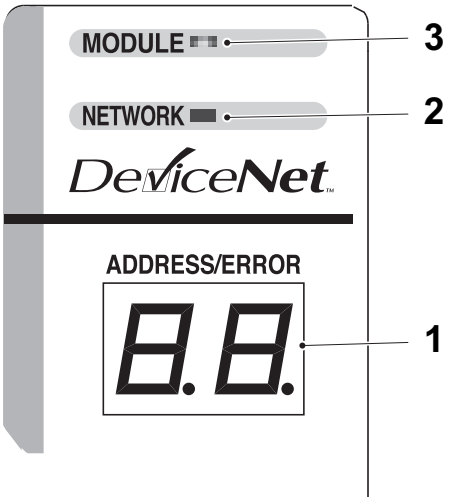

1 Display
2 Network LED
3 Module LED

(Cont'd)

(Cont'd)

Status Indicators and Numeric Display

This table summarizes the meanings of the status indicators and the numeric codes.

Indicator	Status	Cause	Action
Module	OFF	No power applied to module.	Apply power.
	Flashing green	No bus master (CompactLogix controller) present.	Verify module connectors are properly seated. If they are, cycle power to the controller. If this does not correct the problem, replace the controller. If replacing the controller does not correct the problem, replace the scanner.
	Solid green	Normal operation.	No action required.
	Flashing red	Recoverable Fault - Memory has been erased or is being programmed.	Complete flash update or start a new update.
		Bad firmware in module.	Replace firmware.
	Solid red	Unrecoverable fault.	Verify module connectors are properly seated. If the are, verify that bus terminator / end cap is installed. Cycle power. If still faulted, replace the module.
Network	OFF	No module power, no network power, or communications are not occurring between the module and the DeviceNet network. (This may be an acceptable condition.)	Verify module has power. Check that the DeviceNet cable is securely connected and the DeviceNet network is powered. Verify that network power is adequate (11...5V DC.)
	Flashing green	Device is operational. There are no connections established with any of the network devices.	If the module is supposed to be controlling DeviceNet slaves, configure the module's scanlist.
	Solid green	Normal operation. Scanlist if configured. Module is not in Idle mode	No action required.
	Flashing red	One or more of the devices that the scanner module is communicating with is in a timed out state.	Monitor the status display, or the module's status field to determine which slave device is offline.
	Solid red	Critical network failure. Duplicate DeviceNet node address detected.	Reset module. Change module's node address or change conflicting device's node address. If failure continues, replace module.

(Cont'd)

(Cont'd)

Status Indicators and Numeric Display

Indicator	Status	Indicates
Node Address and Status Display	0...63	DeviceNet node address.
	67...69	Backup status.
	70...99	Error code for the displayed node address.
	Alternating numbers	One is the error code (70...99), and the other is the node number (0...63) that has generated the error.

Error Codes

This table describes the error codes indicated by the numeric display.

Code (decimal)	Name	Cause	Action
67	Backup Mode	Scanner in Backup Scanner mode.	None.
68	No Backup scanner	No backup scanner module present.	Install and configure a backup scanner, if needed.
69	Backup Scanner Invalid CRC	The configuration of the primary and the secondary controller does not match. Either one or both of the configurations is not correct.	Be sure that the same configuration is downloaded to both scanners.
70	Duplicate Node	Controller has Failed Duplicate Node Address Check. The node address selected is already in use.	Change the module's or conflicting device's network address (node number) to an available one.
71	Illegal Scanlist Data	Illegal data in scanlist.	Reconfigure the scanlist table and remove any illegal data.
72	Slave Time out	One of the module's slave devices has stopped communicating	Inspect the module's slave devices and verify the DeviceNet connections.
73	Electronic Key Mismatch	The slave device Vendor ID key parameter does not match the slave's configuration in the module's scanlist.	Make sure that the device at the flashing node address matches the desired electronic key (vendor, product code, product type).

(Cont'd)

(Cont'd)

Code (decimal)	Name	Cause	Action
75	No Messages Received	No network traffic received by the scanner. 10 seconds have elapsed and no network traffic for the module or for any other device have been received by the module.	Verify the scanlist is correctly configured to scan slave devices. Verify DeviceNet network connections.
76	No Message for Scanner	No direct network traffic for the scanner module detected. 10 seconds elapsed and no DeviceNet input being screened by the module has been received.	None. There are other active devices on the network, initiating messages, but none of the messages are for the module.
77	Slave Data Size Mismatch	The data being received from the slave device does not match the configuration in the scanlist.	Either reconfigure the slave device, or change the module's scanlist to match the slave device.
78	No Such Device	Slave device in scanlist does not exist	Either add the device to the DeviceNet network, or delete the device's entry in the scanlist.
79	Transmit Failure	The module has failed to transmit a message.	Make sure that the module is connected to a valid network. Check for disconnected cables.
80	In Idle Mode	Module is in Idle Mode.	Put the controller into RUN mode and enable the RUN bit in the Module Command Array.
81	Scanner Faulted	The scanner module has stopped producing and consuming I/O data. This condition does not affect the scanner's system or messaging modes.	Check the FAULT value in the Module Command Array.
82	Fragmentation Error	Error detected in sequence of fragmented I/O messages from device.	Check scanlist table entry for slave device to make sure that input and output data lengths are correct. Check slave device configuration.
83	Slave Init Error	Slave device is returning error responses when the module attempts to communicate with it.	Check slave device's configuration. Reboot slave device.

(Cont'd)

(Cont'd)

Code (decimal)	Name	Cause	Action
84	Not Yet Initialized	Module has not completed its initial attempt to establish communication with its slaves.	None. This code clears itself once the module properly initializes all slave device on the network.
85	Receive Buffer Overflow	Data size returned is larger than expected.	Configure the slave device for a smaller data size.
86	Device Went Idle	Device is producing idle state.	Check the device configuration and slave node status.
89	Auto Device Replacement (ADR) Error	Slave device responded with an error to the initialization data sent to it by the scanner; or the configuration table in the scanner's flash memory is not valid for a slave node.	Try the ADR download again. If it still fails, try clearing the ADR flash by downloading an empty ADR configuration to the scanner module and then try the ADR configuration again.
90	Disabled Network	DeviceNet Port is disabled.	Check for the DISABLE being set in the Module Command Array.
91	Bus Off	Bus off condition detected on integral DeviceNet port.	Check the DeviceNet connections and physical media integrity. Check system for the failed salve devices or other possible sources of network interference. Check the Baud Rate.
92	No DeviceNet Power	No network power detected on DeviceNet port.	Provide network power. Make sure the module drop cable is providing the proper power to the DeviceNet port.
95	FLASH Update	Flash Update in Progress	None. Do not disconnect the module from the network while a FLASH update is in progress.
98	Firmware Corrupted	Firmware is corrupted.	Reflash module firmware. Do not power cycle the module. Doing so may cause the module to become inoperable. If the problem persists, contact Technical Support.
99	Hard Fault		Cycle power. Reflash module firmware. Contact Technical Support.

6.2-9 Device Net Scanner - Download program

Machine Status	Power supply disconnector ON Air valve OFF
Special Equipment	PC with CD drive and ethernet port Ethernet communication cable

Note! To connect to the CPU module using an ethernet communication cable, the PC must first be configured for this type of communication.
See 6.1-3 PLC - Configure PC and 6.1-4 PLC - Configure RS Linx classic.

Register EDS files

Before downloading to the scanner, you need to register the EDS (Electronic Data Sheets) in your PC. This only needs to be done once per PC.

a) Unzip the compressed file in the EDS folder on the software CD, to an appropriate place (that is desktop).

b) Start RS NETWORK for DEVICE NET.

c) Select EDS WIZARD (1) from the tools menu.

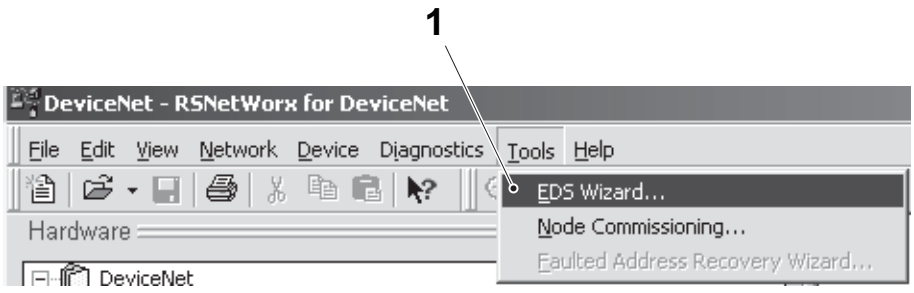

1 EDS Wizard

d) Press NEXT button in the popup window.

e) Select REGISTER AN EDS FILE(S) and press NEXT button.

(Cont'd)

(Cont'd)

f) Select REGISTER A DIRECTORY OF EDS FILES (2).

g) Press BROWSE button and select the UNZIPPED FOLDER (4) from item a) and press OK button (5).

h) Tick the box LOOK IN SUBFOLDER (3).

i) Press NEXT button (6).

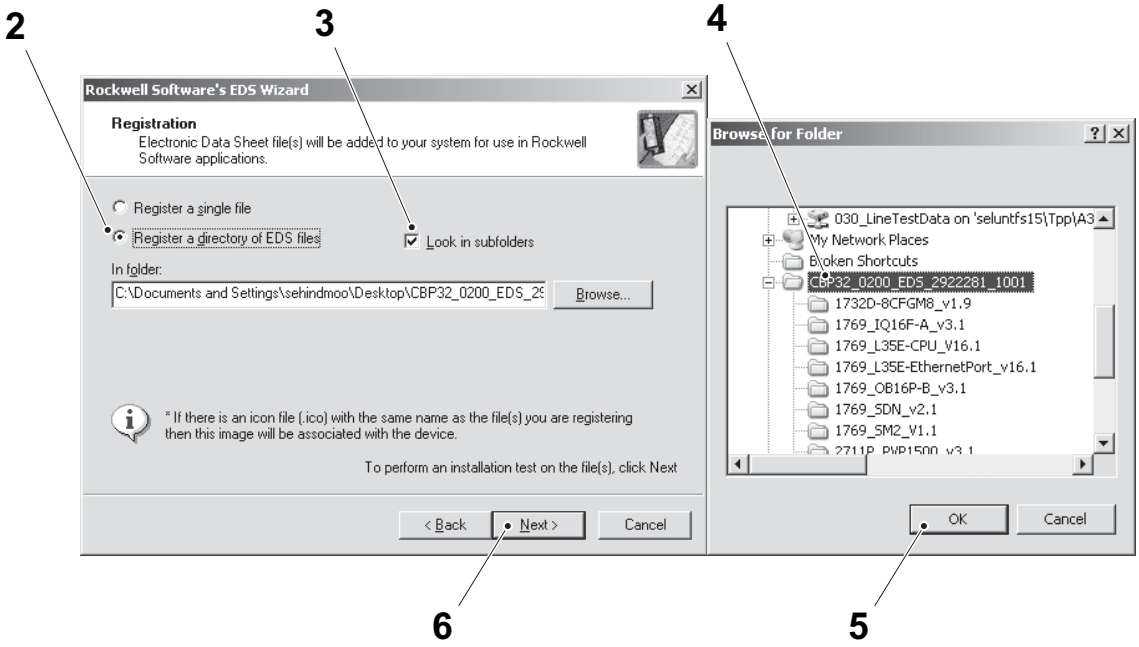

2 Register a directory of EDS files
3 Look in subfolder
4 Unzipped folder
5 OK button
6 NEXT button

j) In the following three windows press NEXT button.

k) In the last window press FINISH button.

(Cont'd)

(Cont'd)

Download program to scanner

a) Connect the ethernet communication cable between a vacant connection port on the ethernet switch (1) and the PC (2).

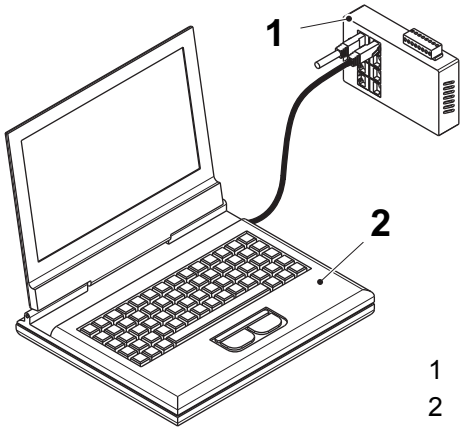

1 Ethernet switch
2 PC

b) Insert the software CD into the PC CD drive.

c) Unzip the compressed file in the DEVICE NET - SOFTWARE folder on the software CD, to an appropriate place (that is desktop).

d) Double click on the program file to automatically start the RSNETWORX program and to open the program file.

e) Turn the key on the CPU module to the PROG mode position.

SET SCANNER ADDRESS AND DATA

If the scanner has been replaced, the address and data rate needs to be set before downloading the program.

f) Select NODE COMMISSIONING (3) from the tools menu.

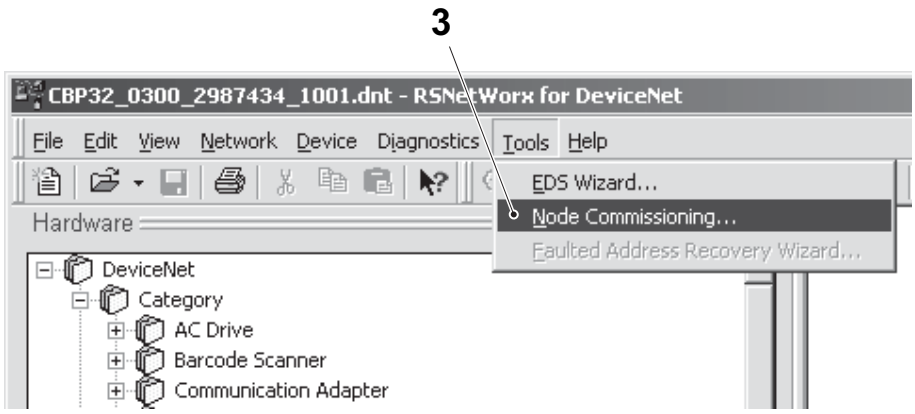

3 NODE COMMISSIONING

(Cont'd)

(Cont'd)

g) Press the BROWSE button (4).

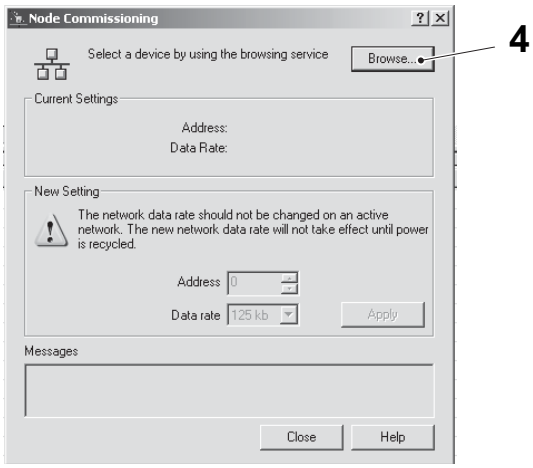

4 BROWSE button

h) SELECT xx,1769-SDN scanner module (5) where xx is the scanner node nr (xx=63 when scanner is new).

i) Press the OK (6) button and answer YES on pop up question.

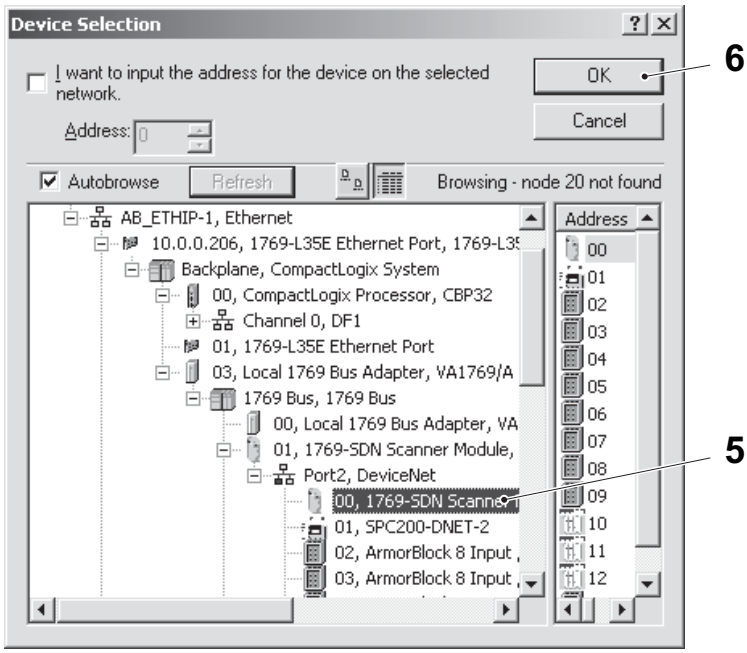

5 xx,1769-SDN scanner module
6 OK button

(Cont'd)

(Cont'd)

j) Change the data rate (7) to 500 kb and press the APPLY button (8). If message box says "The baud rate was successfully changed to 500 KB" continue, otherwise restart at item g).

k) Change the address (9) to 0 and press the APPLY button. If message box says "Node 00 was successfully commissioned" continue, otherwise restart at g).

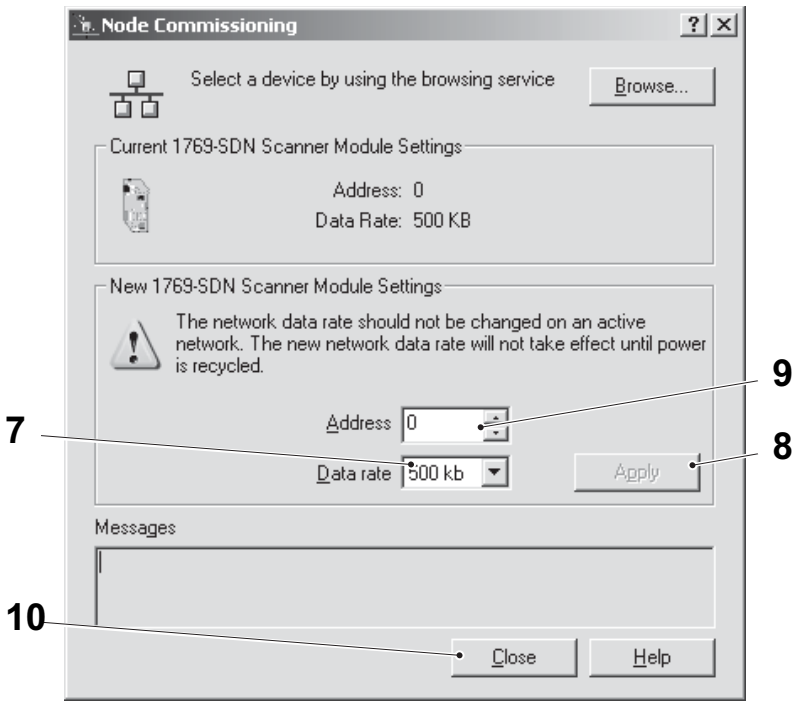

7 Data rate
8 APPLY button
9 Address
10 CLOSE button

l) Press the CLOSE button (10) to exit the NODE COMMISSIONING.

m) Switch off fuse A01F0029 and then switch it on again and wait until device net scanner and PLC has started up.

(Cont'd)

(Cont'd)

DOWNLOAD PROGRAM

n) Select the NETWORK menu (11) and then select ONLINE (12).

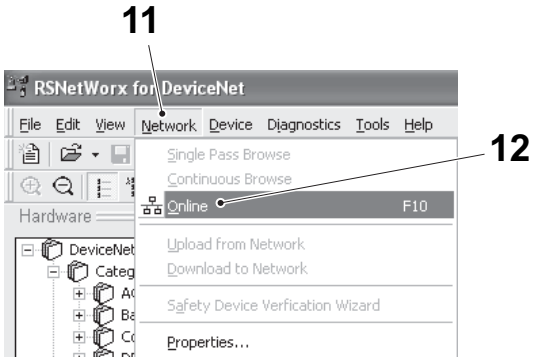

11 NETWORK menu
12 ONLINE

o) If the question SAVE CHANGES? appears, press the NO button (13).

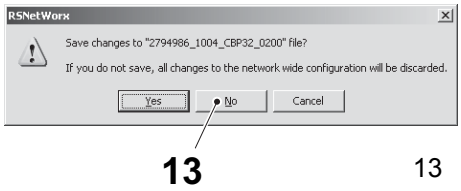

13 NO menu

p) Browse to Port2, DEVICENET (14) and press the OK button (15).

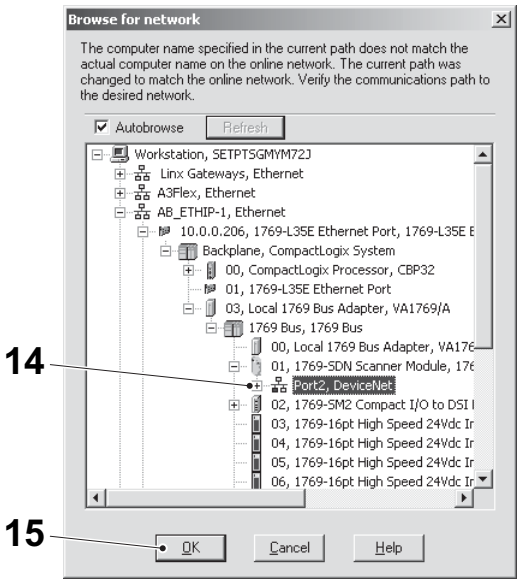

14 DEVICENET menu
15 OK button

(Cont'd)

(Cont'd)

q) When the dialogue box (16) appears, press the OK button (17).

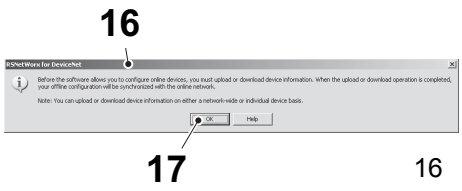

16 Dialogue box
17 OK button

r) Scanner will browse the network for nodes.

Tip! Push CANCEL button to abort, since a download is to be performed.

s) Select NETWORK menu (18) and select DOWNLOAD TO NETWORK (19).

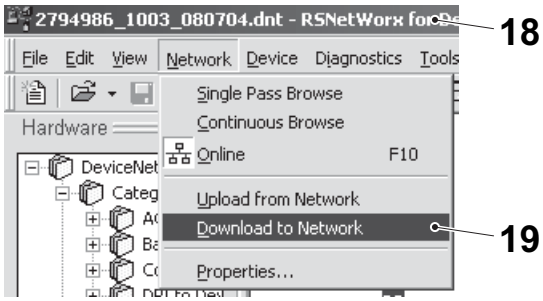

18 NETWORK menu
19 DOWNLOAD TO NETWORK

t) When the dialogue box (20) appears, select the YES button (21) to continue.

Note! Node 01 will fail to download since it is write protected. Nodes 50, 51, 52 and 53 will fail to download if no PTr is connected. This is a normal behaviour.

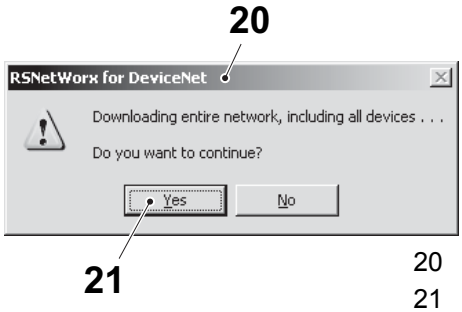

20 Dialogue box
21 YES button

(Cont'd)

(Cont'd)

u) When the download is complete, check if there is any firmware mismatch.

Solve Firmware Mismatch

If any of the modules has a Firmware release, that differs from the project online, the Firmware mismatch symbol (22) appears on the module, and the Identity Mismatch message for the node is displayed. In this case the module configuration (that is parameters, settings and in case of ADN scanner also the scan list) are not downloaded to the module, until the mismatch is solved and a new download is performed.

v) Solve the Firmware mismatch for each module, by repeating the following instructions:

- Double click on the Firmware mismatch symbol (22) of a module.

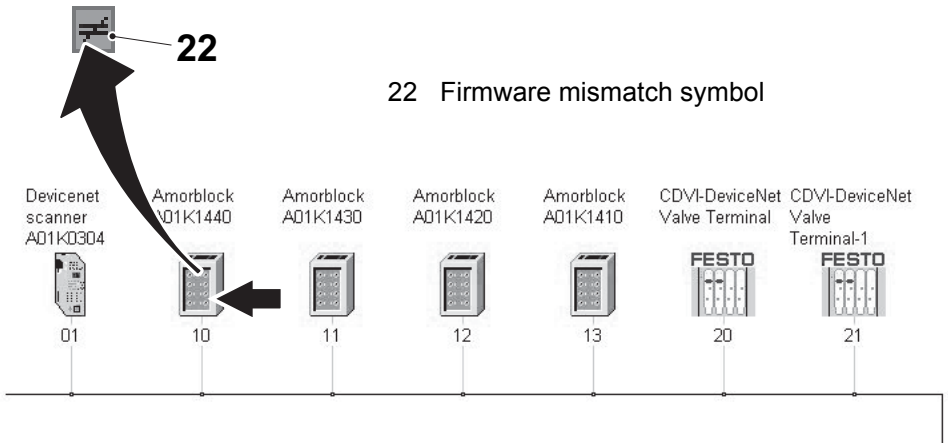

22 Firmware mismatch symbol

(Cont'd)

(Cont'd)

- when the DEVICE MISMATCH DIALOG (23) appears, read carefully what reported and follow the instructions, then select the OK button (24).

Note! If a module has a Firmware release (RSNetworx reports online the Firmware release), that is older than the Firmware release in the project (Offline Firmware release), then it is strongly recommended to substitute the module with one having the latest Firmware release.

w) Close the RSNetWorx program.

x) If the question SAVE CHANGES? occurs, press the NO button.

y) Turn the key on the CPU module to RUN (to start execution) and then turn the key to REM (to allow remote access).

z) Reset any device net alarm on the HMI panel.

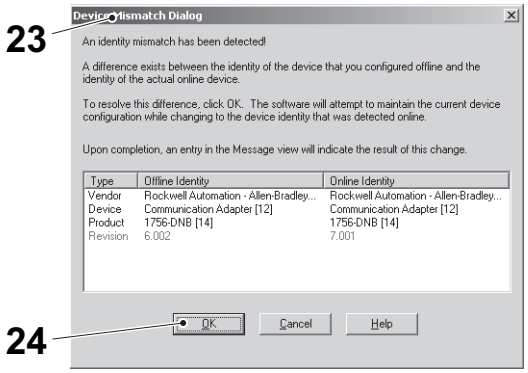

23 Device mismatch dialog
24 OK button

6.3 Frequency Converter

6.3-1 Frequency Converter - Description

SPC Reference	2538100

Controls

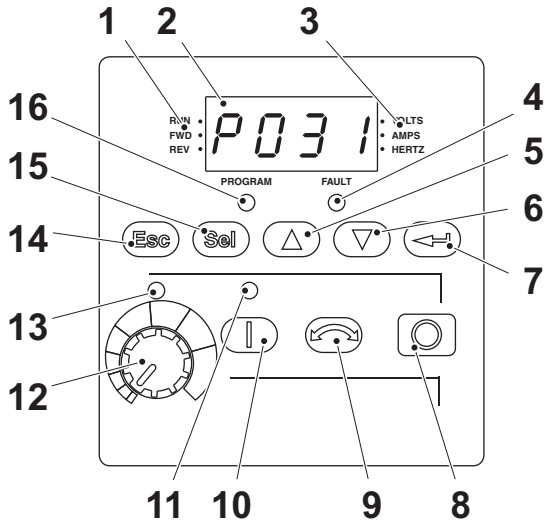

1 Running / Direction status LEDs
2 Display
3 Unit LEDs
4 Error status LED
5 Up / Increase frequency button
6 Down / Decrease frequency button
7 Enter button
8 Stop / Reset button
9 Reverse button
10 Start button
11 Start button status LED
12 Potentiometer
13 Potentiometer status LED
14 Escape button
15 Select button
16 Program status LED

6.3-2 Frequency Converter - Change

Machine Status	Power supply disconnector OFF Air valve OFF
SPC Reference	2538100

DANGER

Risk of electrical shock!

After the power is turned OFF residual voltage remains in the capacitor inside the converter. Do not touch the terminal immediately after turning the power OFF. Failure to observe this information will put your life in danger! Discharge time is at least one minute from the time all indicators on the digital operator go OFF.

a) Press and hold in the tabs (1) on each side of the cover.

b) Pull the cover (2) out and up to release.

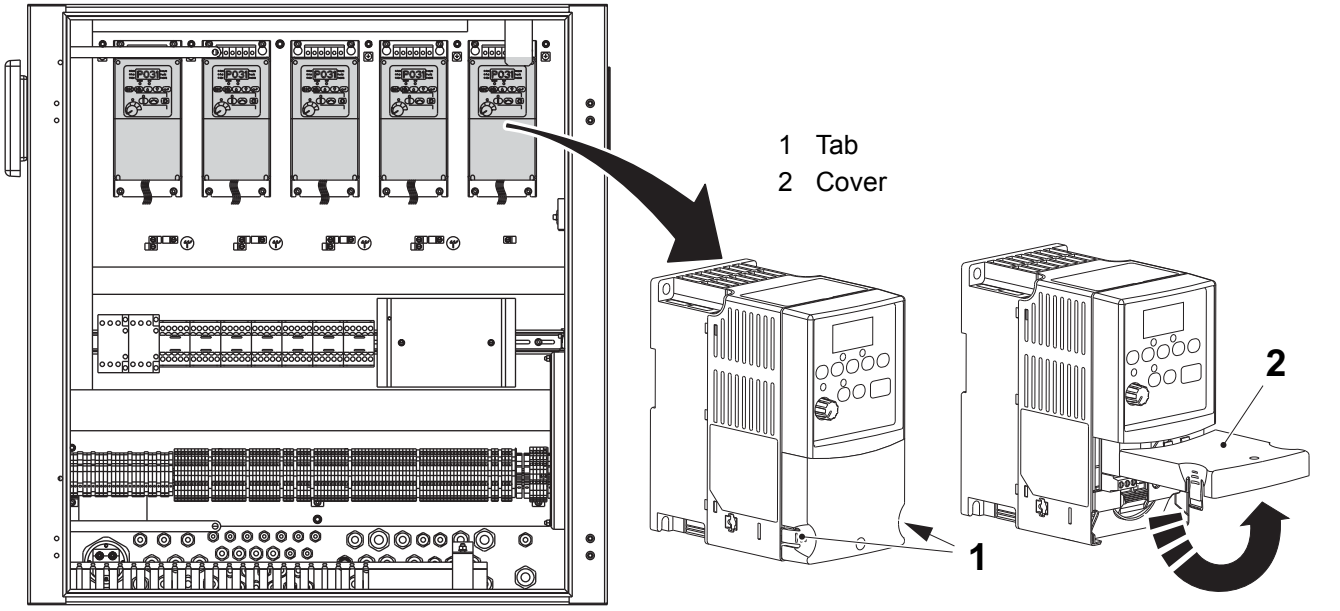

(Cont'd)

(Cont'd)

c) Press in and hold the locking tab (3).

d) Slide the finger guard (4) down and out.

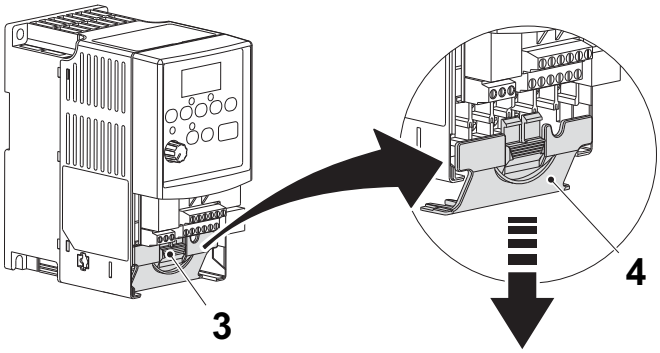

3 Locking tab
4 Finger guard

e) Disconnect the cables (5) between the frequency converter (6) and the filter (7).

f) Remove the screws (8) and the frequency converter (6).

g) Replace the frequency converter (6) and reinstall the screws (8).

h) Connect the cables (5).

i) Reinstall the finger guard (4) and the cover (2).

To set the frequency converter, see <u>6.3-3 Frequency Converter - Set</u>.

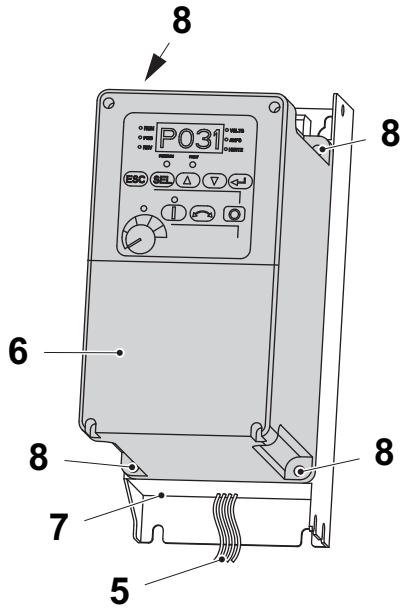

5 Cable
6 Frequency converter
7 Filter
8 Screw

6.3-3 Frequency Converter - Set

Machine Status	Power supply disconnector OFF Air valve OFF
SPC Reference	2538100

Frequency Converter POWER OFF

Switches - Set DIP

Switch according to the illustration below on the frequency converters.

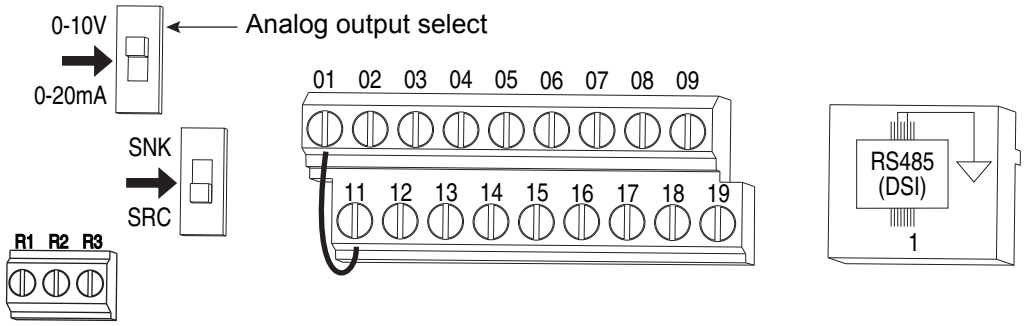

Frequency Converter POWER ON

a) Step to PREHEATING.

b) Reset all safety alarms on HMI to get power on all frequency converters.

c) Only set the com node address and the com data rate according to the table below. The rest is automatically downloaded.

Note! It is only the com node address and the com data rate that needs to be set. The other frequency data will be automatically downloaded when stepping up the machine.

Step / Action	Button	Display
1. Apply mains power to the converter. (Minimum Preheating step, emergency stop is not pulled, doors closed, and light barrier are turned on. The display shows the actual frequency for the display parameter last entered by the user.		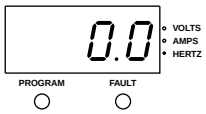
2. Press the escape button once to show the number of the display parameter. The parameter number flashes (for example, 1).	Esc	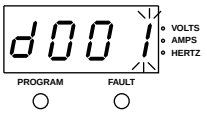
3. Press the escape button again to show the group menu. The group menu letter flashes (for example, d).	Esc	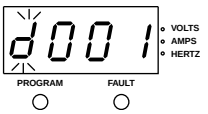
4. Press the up button or the down button to scroll through the group menu. The group menu consists of d (display group), P (program group) and A (advanced program group).	△ ▽	
5. Press the select button or the enter button to select a group.	Sel ↵	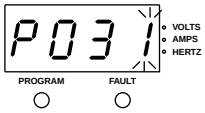
6. Press the up button or the down button to scroll through the parameters in the group.	△ ▽	

Step / Action	Button	Display
7. Press the select button or the enter button to show the value for a parameter. Press the escape button to go back in the menu system.	Sel ⏎ Esc	230 VOLTS AMPS HERTZ PROGRAM FAULT
8. Press the select button or the enter button to go to program state. Use the select button to switch between the digits and change the value of each digit by pressing the up button or the down button. Not valid for group d (display group).	Sel ⏎ △ ▽	230 VOLTS AMPS HERTZ PROGRAM FAULT
9. Press the escape button to cancel the changes or press the enter button to save the changes. Press the escape button to go back in the menu system. Not valid for group d (display group).	Esc ⏎	230 VOLTS AMPS HERTZ PROGRAM FAULT

Settings Infeed Conveyor Motor W30T0010

Parameters		User setting
A103	Comm data rate	4
A104	Comm node addr	100

Settings Transfer Belt Motor T40T0050

Parameters		User setting
A103	Comm data rate	4
A104	Comm node addr	101

Settings Main Shaft Motor T50T0020

Parameters		User setting
A103	Comm data rate	4
A104	Comm node addr	102

Settings Feeding Motor T50T0030

Parameters		User setting
A103	Comm data rate	4
A104	Comm node addr	103

Settings Belt Brake Motor W30T0082

Parameters		User setting
A103	Comm data rate	4
A104	Comm node addr	105

(Cont'd)

(Cont'd)

Explanation of the other parameters
Note! Do NOT change these parameters.

Parameters	Description
P031	Motor NP volts
P032	Motor NP hertz
P033	Motor OL current
P034	Minimum frequency
P035	Maximum frequency
P036	Start source
P037	Stop mode
P038	Speed reference
P039	Acceleration time 1
P040	Deceleration time 1
P041	Reset to defaults
P042	Voltage class
A051	Digital In 1 Sel
A052	Digital In 2 Sel
A053	Digital In 3 Sel
A054	Digital In 4 Sel
A055	Relay out Sel
A056	Relay out Level
A058	Opto Out1 Sel
A059	Opto Out1 Level
A061	Opto Out2 Sel
A062	Opto Out2 Level
A064	Opto Out Logic
A065	Analog Out Sel
A066	Analog Out High
A067	Accel Time 2
A068	Decel Time 2
A069	Internal frequency
A070	Preset frequency 0
A071	Preset frequency 1
A072	Preset frequency 2
A073	Preset frequency 3
A074	Preset frequency 4
A075	Preset frequency 5
A076	Preset frequency 6
A077	Preset frequency 7
A078	Jog frequency
A079	Jog accel/decel

Parameters	Description
A080	DC brake time
A081	DC brake level
A082	DB resistor sel
A083	S curve%
A084	Boost select
A085	Start Boost
A086	Break Voltage
A087	Break Frequency
A088	Maximum voltage
A089	Current limit 1
A090	Motor OL select
A091	PWM frequency
A092	Auto restart tries
A093	Auto restart delay
A094	Start at powerup
A095	Reverse disable
A096	Flying start enable
A097	Compensation
A098	SW current trip
A099	Process factor
A100	Fault clear
A101	Program lock
A102	Testpoint sel
A103	Comm data rate
A104	Comm node addr
A105	Comm loss action
A106	Comm loss time
A107	Comm format
A108	Language
A109	Anlg out setpoint
A110	0-10V analog input low
A111	0-10V analog input high
A112	4-20mA analog input low
A113	4-20mA analog input high
A114	Slip compensation
A115	Process time low
A116	Process time high
A117	Bus reg mode
A118	Current limit 2
A119	Skip frequency
A120	Skip frequency band
A121	Stall fault time
A122	Analog in loss

Parameters	Description
A123	10V Bipolar enable
A124	Var PWM disable
A125	Torque perf mode
A126	Motor NP FLA
A127	Autotune
A128	IR voltage drop
A129	Flux current ref
A130	PID trim high
A131	PID trim low
A132	PID ref sel
A133	PID feedback sel
A134	PID prop gain
A135	PID integ time
A136	PID diff rate
A137	PID setpoint
A138	PID deadband
A139	PID preload
A140	Stp logic 0
A141	Stp logic 1
A142	Stp logic 2
A143	Stp logic 3
A144	Stp logic 4
A145	Stp logic 5
A146	Stp logic 6
A147	Stp logic 7
A150	Stp logic time 0
A151	Stp logic time 1
A152	Stp logic time 2
A153	Stp logic time 3
A154	Stp logic time 4
A155	Stp logic time 5
A156	Stp logic time 6
A157	Stp logic time 7
A160	EM brk off delay
A161	EM brk on delay
A162	MOP reset sel

Display group

By selecting a display parameter the corresponding value can be monitored in run time.

Parameter	Name	Description
d001	Output Freq	Output frequency present at terminals T1, T2 and T3 (U, V and W).
d002	Commanded Freq	Value of the active frequency command. Displays the commanded frequency even if the drive is not running.
d003	Output Current	The output current present at terminals T1, T2 and T3 (U, V and W).
d004	Output Voltage	The output voltage present at terminals T1, T2 and T3 (U, V and W).
d005	DC Bus Voltage	Present DC bus voltage level.
d006	Drive Status	Present operating condition of the drive. 1 = Condition true, 0 = Condition false. 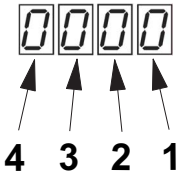 1 Bit 0 = Running 2 Bit 1 = Forward 3 Bit 2 = Accelerating 4 Bit 3 = Decelerating
d007 d008 d009	Fault 1 Code Fault 2 Code Fault 3 Code	A code that represents a drive fault. The codes will appear in these parameters in the order they occur (d007 Fault 1 Code = the most recent fault). Repetitive faults will only be recorded once.
d010	Process Display	32 bit parameter. The output frequency scaled by A099 Process Factor.
d012	Control Source	Displays the active source of the Start command and Speed command which are normaly defined by the settings of P036 Start Source and P038 Speed Reference but may be overridden by digital inputs.
d013	Contrl in Status	Status of the control terminal block control inputs.
d014	Dig in Status	Status of the control terminal block control inputs. 1 = Input present, 0 = Input not present 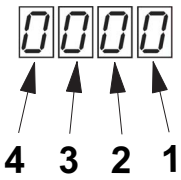 1 Bit 0 = Digital In1 Sel (I/O terminal 05) 2 Bit 1 = Digital In2 Sel (I/O terminal 06) 3 Bit 2 = Digital In3 Sel (I/O terminal 07) 4 Bit 3 = Digital In4 Sel (I/O terminal 08)
d015	Comm Status	Status of the communication ports. 1 = Condition true, 0 = Condition false. 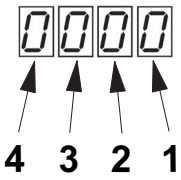 1 Bit 0 = Receiving Data 2 Bit 1 = Transmitting Data 3 Bit 2 = RS485 (DSI) Based Option Connected (Allen-Bradley devices only) 4 Bit 3 = Communication Error Occurred
d016	Control SW Ver	Main Control Board software version.

Parameter	Name	Description
d017	Drive Type	Used by Rockwell Automation service personnel.
d018	Elapsed Run Time	Accumulated time drive is outputting power. Time is displayed in 10 hour increments.
d019	Testpoint Data	The present value of the function selected in A102 Testpoint Sel.
d020	Analog In 0-10 V	The present value of the voltage at I/O terminal 13 (100.0% = 10 volts).
d021	Analog In 4-20 mA	The present value of the current at I/O terminal 15 (0.0% = 4 mA, 100.0% = 20 mA
d022	Output Power	Output power present at terminal T1, T2 and T3 (U, V and W).
d023	Output Powr Fctr	The angle in electrical degrees between motor voltage and motor current.
d024	Drive Temp	Present operating temperature of the drive power section in degree Celsius.
d025	Counter Status	The current value of the counter when counter is enabled.
d026	Timer Status	 32 bit parameter. The current value of the timer when timer is enabled.
d028	Stp Logic Status	When P038 Speed Reference is set to 6 Stp Logic, this parameter will display the current step of the StepLogic profile as defined by parameters A140-A147 Stp Logic x.
d029	Torque Current	The current value of the motor torque current.

6.3-4 Frequency Converter - Fault Codes

SPC Reference	2538100

In the event of a fault, the converter switches off and a fault code appears on the display.

Fault Code	Cause	Description	Action
F2	Auxiliary input	Auxiliary input interlock is open.	Check remote wiring. Verify communications programming for intentional fault.
F3	Power Loss	DC bus voltage remained below 85% of nominal.	Check the incoming AC line for low voltage or line power interruption. Check input fuses.
F4	UnderVoltage	DC bus voltage fell below the minimum value.	Check the incoming AC line for low voltage or line power interruption.
F5	OverVoltage	DC bus voltage exceeded maximum value.	Check the AC line for high line voltage or transient conditions. Bus overvoltage can also be caused by motor regeneration. Extend the decel time or install dynamic brake option.
F6	Motor Stalled	Drive is unable to accelerate motor.	Increase P039 - A067 (Accel Time x) or reduce load so drive output current does not exceed the current set by parameter A089 (Current Limit 1).
F7	Motor Overload	Internal electronic overload trip.	An excessive motor load exists. Reduce load so drive output current does not exceed the current set by parameter P033 (Motor OL Current). Verify A084 (Boost Select) setting.
F8	Heatsink OvrTmp	Heatsink temperature exceeds a predefined value.	Check for blocked or dirty heat sink fins. Verify that ambient temperature has not exceeded 40°C (104 °F) for IP 30/NEMA 1/UL Type 1 installations or 50°C (122 °F) for IP20/Open type installations. Check the fan.
F12	HW OverCurrent	The drive output current has exceeded the hardware current limit.	Check programming. Check for excess load, improper A084 (Boost Select) setting, DC brake volts set too high or other causes of excess current.
F13	Ground Fault	A current path to earth ground has been detected at one or more of the drive output terminals.	Check the motor and external wiring to the drive output terminals for a grounded condition.
F29	Analog Input Loss	An analog input is configured to fault on signal loss. A signal loss has occurred. Configure with A122 (Analog In Loss).	Check parameters. Check for broken/loose connections at inputs.
F33	Auto Rstrt Tries	Drive unsuccessfully attempted to reset a fault and resume running for the programmed number of A092 (Auto Rstrt Tries).	Correct the cause of the fault and reset manually.

Fault Code	Cause	Description	Action
F38	Phase U to ground	A phase to ground fault has been detected between the drive and motor in this phase.	Check the wiring between the drive and motor. Check motor for grounded phase. Replace drive if fault can not be corrected.
F39	Phase V to ground		
F40	Phase W to ground		
F41	Phase UV Short	Excessive current has been detected between these two output terminals.	Check the motor and drive output terminal wiring for a shorted condition. Replace drive if fault can not be corrected.
F42	Phase UW Short		
F43	Phase VW Short		
F48	Params Defaulted	The drive was commanded to write default values to EEPROM.	Clear the fault or cycle power to the drive. Program the drive parameters as needed.
F63	SW OverCurrent	Programmed A098 (SW Current Trip) has been exceeded.	Check load requirements and A098 (SW Current Trip) setting.
F64	Drive Overload	Drive rating of 150% for 1 minute or 200% for 3 seconds has been exceeded.	Reduce load or extend Accel Time.
F70	Power Unit	Failure has been detected in the drive power section.	Cycle power. Replace drive if fault cannot be cleared.
F71	Net Loss	The communication network has faulted.	Cycle power. Check communications cabling. Check network adapter setting. Check external network status.
F80	SVC Autotune	The autotune function was either cancelled by the user or failed.	Restart procedure.
F81	Comm Loss	RS485 (DSI) port stopped communicating.	If adapter was not intentionally disconnected, check wiring to the port. Replace wiring, port expander, adapters or complete drive as required. Check connection. An adapter was intentionally disconnected. Turn off using A105 (Comm Loss Action).
F100	Parameter Checksum	The checksum read from the board does not match the checksum calculated.	Set P041 (Reset To Defaults) to option 1 “Reset Defaults”.
F122	I/O Board Fail	Failure has been detected in the drive control and I/O section.	Cycle power. Replace drive if fault cannot be cleared.

6.4 Servo System

6.4.1 System overview

The SPC200 controls the pneumatic axes and regulates their position. The illustration below describes the positioning system in this machine.

Note! This is only a schematic view of the system and does not represent the real configuration.

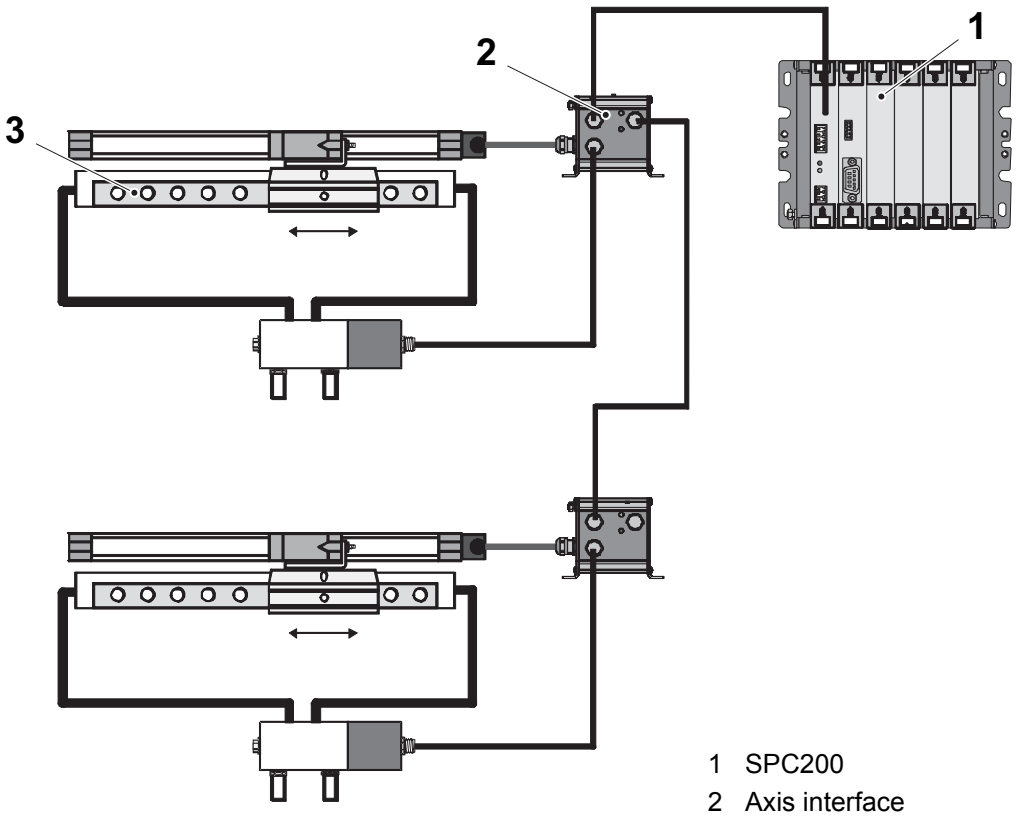

1 SPC200
2 Axis interface
3 Pneumatic axis

6.4.1-1 Removing Modules

Machine Status	Power supply disconnector OFF Air valve OFF

CAUTION
Before inserting or removing modules you must be electrostatically discharged.

Note! When handling the card hold it by the card edges (4). Do not touch the solder side or the component side.

Note! If the rack / CPU (1) is replaced the software must be reinstalled.

The modules are fixed to the rack (1) with safety catches (2). Consequently, no tools are required for insertion or removal. The individual identification of all the fitted components is carried out automatically.

a) Remove the connection cables on the front plate (3).

b) Press both safety catches (2) to unlock and carefully pull out the front plate (3).

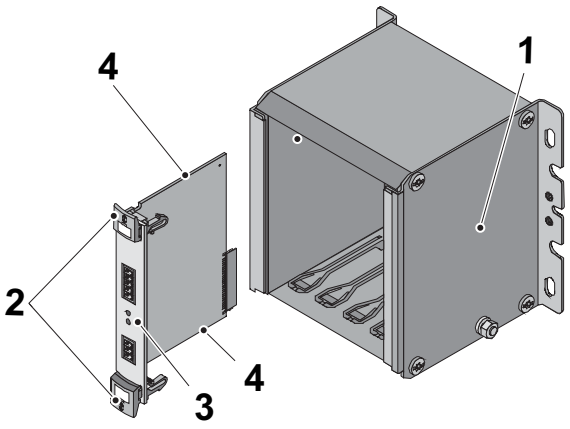

1 Rack / CPU
2 Safety catch
3 Front plate
4 Card edge

6.4.1-2 Installing Modules

Machine Status	Power supply disconnector OFF Air valve OFF

CAUTION
Before inserting or removing modules you must be electrostatically discharged.

Note! When handling the card hold it by the card edges (4). Do not touch the solder side or the component side.

The modules are fixed to the rack (4) with safety catches (2). Consequently, no tools are required for insertion or removal. The individual identification of all the fitted components is carried out automatically.

a) Unlock the safety catches (2) and remove any dummy plate.

b) Let the card edges (4) slide it into the guide rails (5). Be careful not to tilt the module. Make sure that none of the components on the board are damaged.

c) Check that the pins on the connectors are correctly aligned.

d) Then with a light pressure of the fingers push the module into position. The safety catches (2) will then lock automatically.

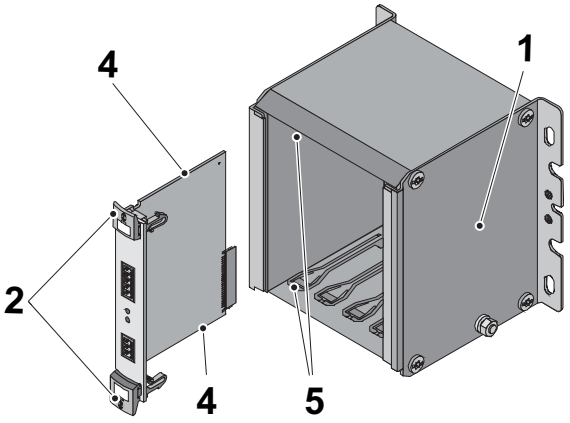

1 Rack / CPU
2 Safety catch
4 Card edge
5 Guide rail

6.4.2 Servo Commissioning

Machine Status	Power supply disconnector ON Air valve ON

6.4.2-1 Grouping Pusher Reference Run

Note! Make sure that the end damper adjustment knobs on the cylinders are fully unscrewed and that there are no packages in the pattern forming. Grouping pusher reference run must always be performed if the machine or the SPC200 has been powered off.

a) Set the machine in step AIR ON.

Tip! If a servo alarm steps down machine in AIR ON, perform item b) to e) in PREHEATING step and then step to AIR ON

b) Press the SETTING button (1). Press the PATTERN FORMING button (2) or the tab for the pattern forming (3).

c) Press the SERVO COMMISSIONING button (4).

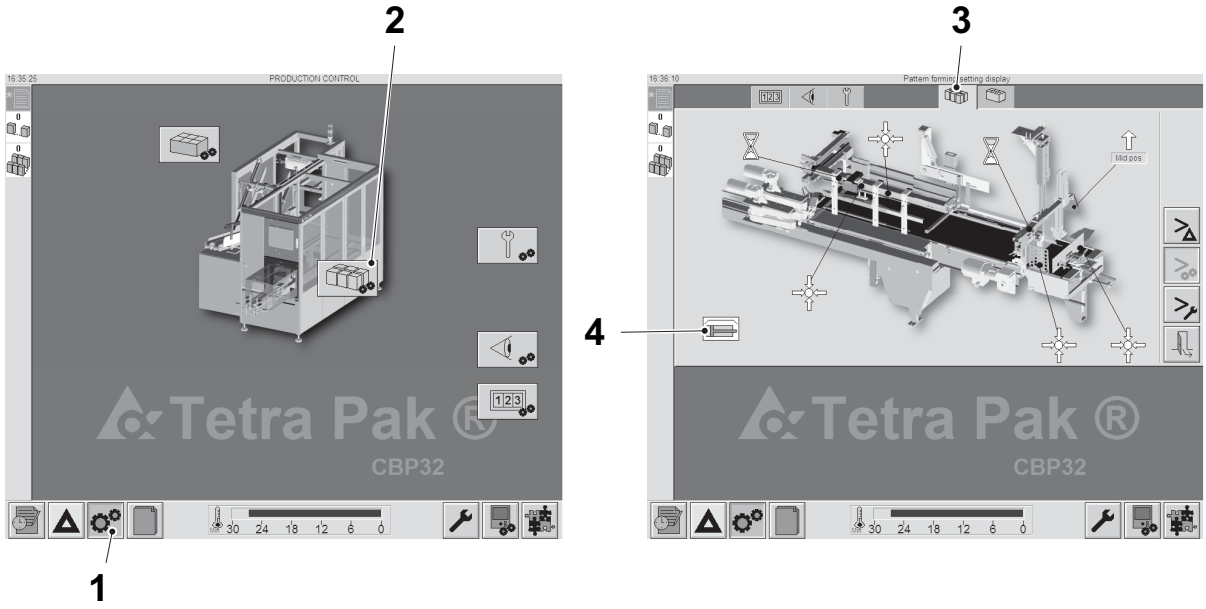

1 SETTING
2 PATTERN FORMING
3 Pattern forming tab
4 SERVO COMMISSIONING

(Cont'd)

(Cont'd)

d) When not in production step the SELECT button (5) is enabled.

e) Press the SELECT button. The cylinders are moving to a position where they do not collide with the grouping pusher or the box pusher. The infeed conveyor stops.
When the air pressure is right, the machine is synchronized and no alarms prevent it, the CONFIRMATION button (7) is shown and the function is ready to be started.

Note! If the main shaft or feed chain is not in synch, the machine will wait for hotmelt temp before synchronizing, thus delaying the display of CONFIRMATION button (7).

f) It is possible to abort the function by pressing the DESELECT button (6) or by stepping to IDLE step.

g) Press the CONFIRMATION button (7). The grouping pusher is moving to minus position.

h) Wait until the SELECT button emits green light. Now the grouping pusher has been referenced and the grouping pusher moves to home position. If the referencing is stopped by for example a door then reset all alarms and restart from item a).

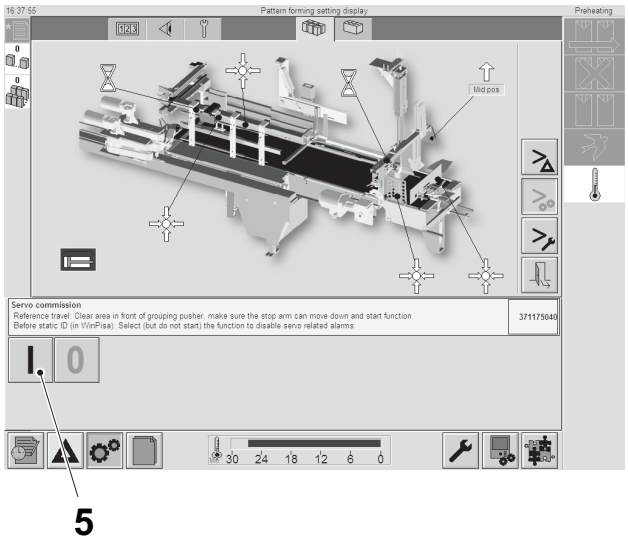

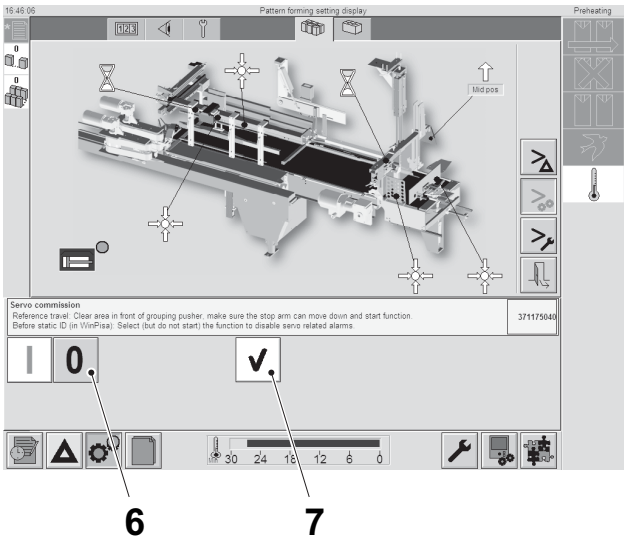

5 SELECT

6 DESELECT

7 CONFIRMATION

6.4.2-2 Axis Identification

Note! Make sure that the positioning range of the axis is free and the correct axis and application parameters are set before running the identification run.

The axis identification is performed during initial commissioning and when the cylinders, valves or CPU racks have been replaced or when the drive configuration has been modified or a project has been downloaded.

Tip! Only perform axis identification on the replaced cylinder or valve. If the rack / CPU is replaced or a project is downloaded, it is necessary to make the axis identification on both cylinders.

The following conditions must be fulfilled to make an axis identification:

- The positioning system must be completely set up, wired and supplied with voltage and compressed air.
- The axis and application parameters must be set correctly.
- The inputs “ENABLE” and “STOP” must supply a 1-signal. This is made via servo commissioning function from the TPOP.

Type	Description
Static identification	In static identification, parameters which effect the behaviour of the system at the beginning and end of a movement are determined. These include static friction of the cylinder and the valve properties in the region of the mid position (valve hysteresis).

Note! In order to guarantee good positioning, always carry out the static identification.

The way of performing the system identification is via a computer, see 6.4.2-3 Axis Identification via the Computer.

6.4.2-3 Axis Identification via the Computer

Make sure that the positioning range of the axis is free and the correct axis and application parameters are set before running the identification run.

Make sure that WinPISA is installed on computer (available on Software CD) and that the festo serial communication cable (spare part no 90459-2395) is connected between computer and SPC200 serial port.

X-axis = Box pusher
Y-axis = Grouping pusher

a) Perform item a) to f) in section 6.4.2-1 Grouping Pusher Reference Run.

b) Start WinPISA.

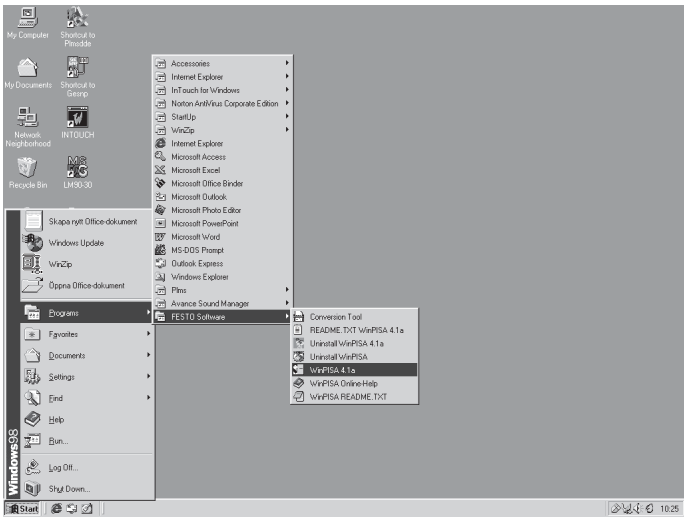

c) Choose ON-LINE MODE.

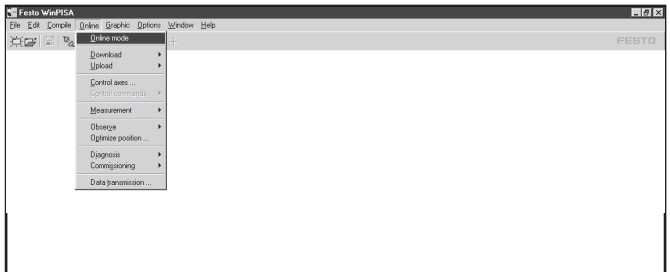

(Cont'd)

(Cont'd)

Static Identification

a) Select IDENTIFICATION from the menu.

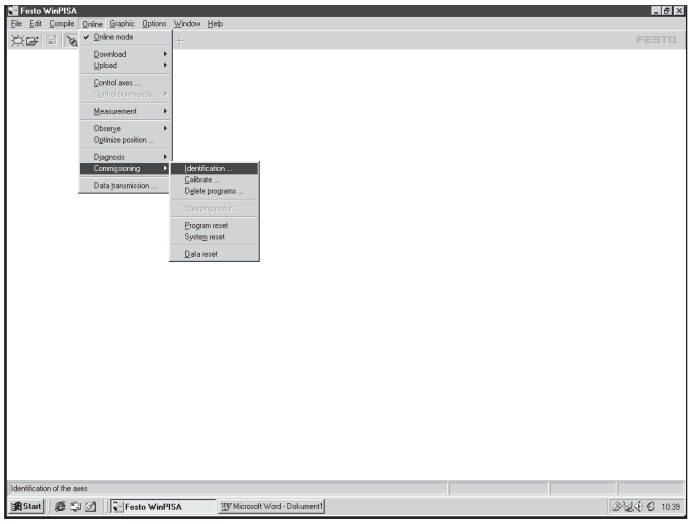

b) Press CONTINUE.

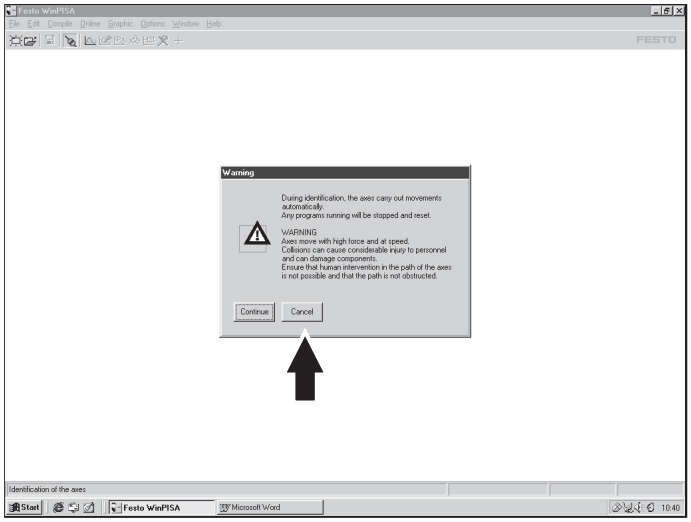

(Cont'd)

(Cont'd)

c) Select AXIS and STATIC identification.

d) Press START.

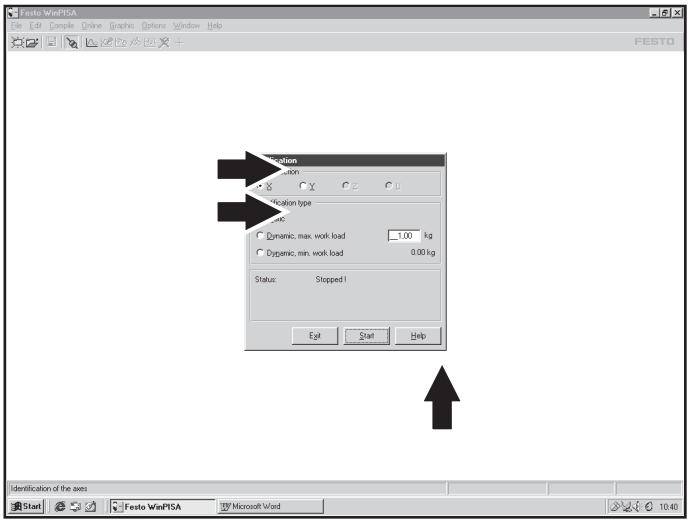

e) The identification begins and the axis starts moving.

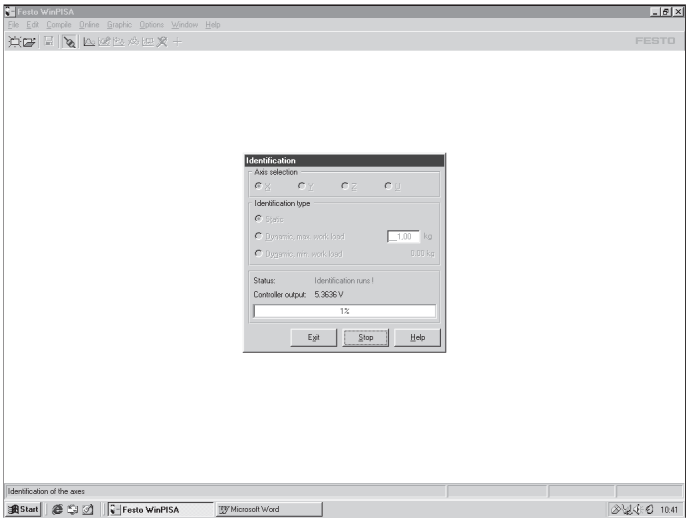

(Cont'd)

(Cont'd)

f) When the identification is completed press OK.



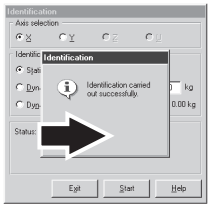



g) Perform a static identification for the second axis, see Static Identification starting from item c)).

h) Exit from WinPISA.

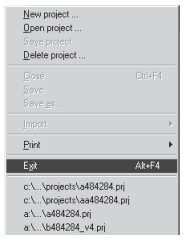

i) Press the DESELECT button (6) on the TPOP for the servo commissioning function.

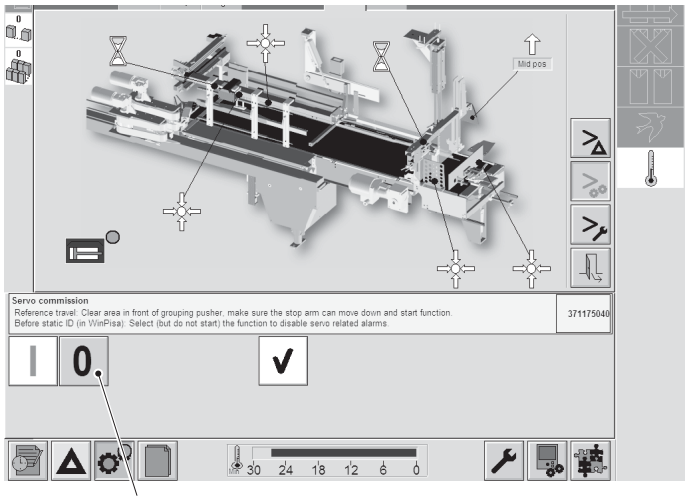

6 DESELECT

6.4.3 Download Software

Make sure that WinPISA is installed on PC (available on Software CD) and that the festo serial communication cable (spare part no 90459-2395) is connected between your PC and SPC200 serial port.

6.4.3-1 Check Firmware Version

If the SPC200 chassis has been replaced, check if the firmware needs to be downloaded before downloading the project as follows.

a) Start the program WinPisa 4.50 on the PC.

b) Select the status display.
Menu: Online - Diagnosis - Status Display.
If there is no communication with WinPisa, switch off power to SPC200 - remove the device net card from the SPC200 - switch on power to SPC200 and try again.

c) Select the TAB SYSTEM.

d) Is it the SOFTWARE VERSIONS V 4.90 and CONTROLLER VERSION V 4.29?

- If NO, proceed to 6.4.3-2 Download Firmware.
- If YES, proceed to 6.4.3-3 Download Project.

(Cont'd)

(Cont'd)

6.4.3-2 Download Firmware

a) Copy the firmware files for SPC200 (from the Software CD firmware folder) to the WinPISA bin folder on the PC.

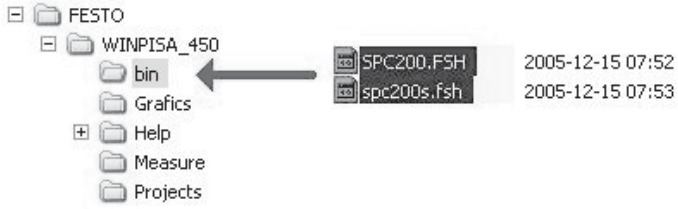

b) Start the program WinPisa 4.50 on the PC.

c) Go online.
Menu: ONLINE - ONLINE MODE



d) If there is no communication with WinPisa, switch off power to SPC200 - remove the device net card from the SPC200 - switch on power to SPC200, otherwise continue on next item.

e) Download firmware 4.9.
Make sure there is power on machine and PC the entire update cycle.
Menu ONLINE - DOWNLOAD - FIRMWARE - SPC200 and choose CONTINUE on the warning pop up.

Note! If power is lost during update, the SPC200 rack might be broken.

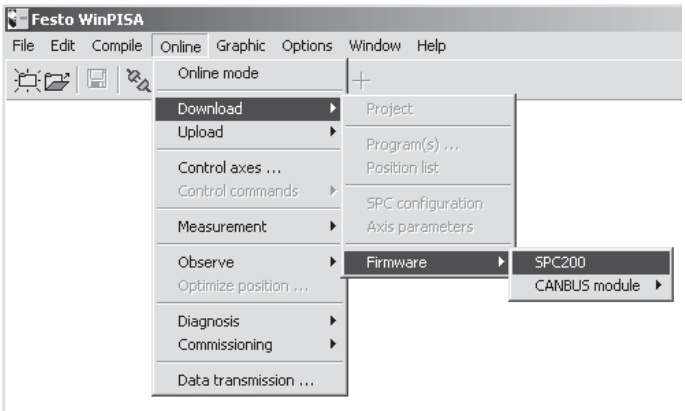

(Cont'd)

(Cont'd)

f) When update is completed: If device net card was removed at item d), switch off power to SPC200 and insert device net card and then switch on power again, otherwise continue to next item.

g) Go online.
Menu: ONLINE - ONLINE MODE



h)) Make a system reset.
Menu: ONLINE - COMMISSIONING - SYSTEM RESET

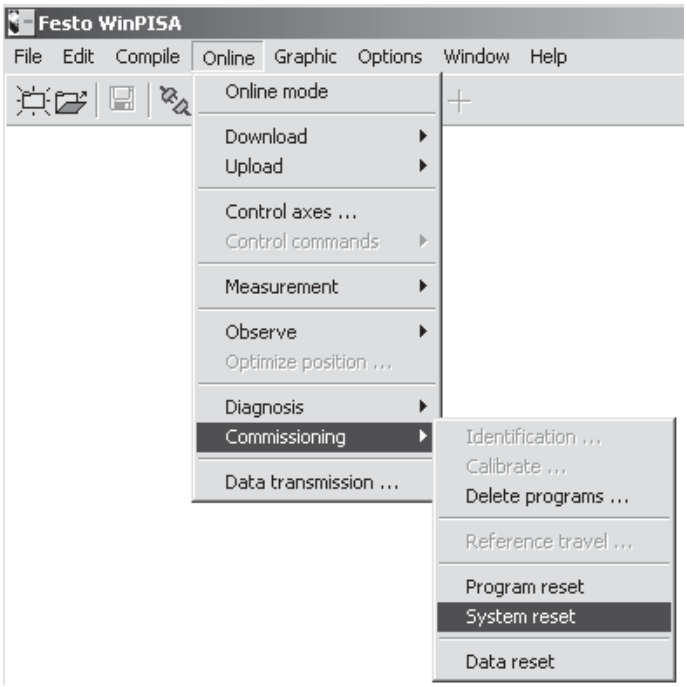

i) Download the project according to 6.4.3-3 Download Project.

(Cont'd)

(Cont'd)

6.4.3-3 Download Project

a) Extract the servo software from the software CD to the PC

b) Start the program WinPisa 4.50 on the PC.

c) Open the project
Menu: FILE - OPEN PROJECT

d) Open the PRJ FILE next to the folder with the same name (not the PRJ-FILE inside the folder).

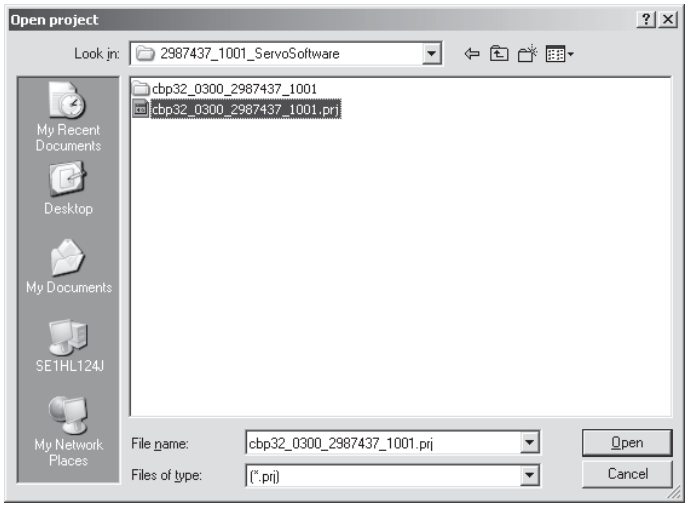

e) Download project.
Menu: ONLINE - DOWNLOAD - PROJECT and choose CONTINUE on the popup.

f) Perform a full servo commissioning according to 6.4.2 Servo Commissioning.

6.4.4 Troubleshooting

Machine Status	Power supply disconnector ON Air valve ON

6.4.4-1 LED info

The LEDs on the power supply module, the axis interface and on the I/O modules (optional) give information about the operating status of the system. The following tables show how the various operating states are indicated by the LEDs. The meaning of the displays is as follows:

Symbols meaning

LED status	Meaning
	LED lights up
	LED out
	LED flashes - continuously without a break or - several times with break (flash sequence corresponding to the error class occurring with a 1 second break.)

6.4.4-1.1 Power card LED info

Status	Sequence	Operating status	Error Remedy
POWER LED ON SPC 200			
 Green LED	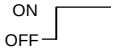	Operating voltage applied.	None
	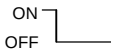	Operating voltage not applied.	Check operating voltage connection of electronic (pin 2).

Status	Sequence	Operating status	Error Remedy
ERROR LED ON SPC 200			
 Red LED	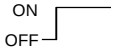	- Starting phase (3...4 seconds) or - Hardware error, SPC200 is not ready for communication.	None Servicing required
	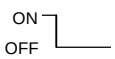	No internal error registered.	None
 Red LED		Lights up briefly once when SPC200 is switched on	None

Status	Sequence	Operating status	Error Remedy
		Flash sequence corresponding to error class occurring with a 1 second break:	
		- Flashes once (error class 1) error in initialization	Install components and modules correctly or replace defective module. 1) 2)
		- Flashes twice (error class 2) reserved.	(reserved)
		- Flashes three times (error class 3)	Carry out data reset and enter or reload data again. 1) 2)
		- Flashes four times (error class 4) hardware error during running time.	Download error message and remedy error. 1)
		- Flashes five times (error class 5) control sequence error	Download error message and remedy error. 1)
		- Flashes six times (error class 6) error in positioning order.	Download error message and remedy error. 1)
		- Flashes seven times (error class 7) pre-parameterizing error.	Download error message and remedy error. 1)
		- No flashing (error class 8)	None
		-Flashes nine times (error class 9).	Carry out data reset and enter or reload data again. 1) 2)
		- Flashes continuously without a break; firmware deleted by user.	Load firmware
1) Download error message and remedy error 2) Or servicing required			

6.4.4-1.2 Servo system device net card

6.4.3-1.3 Axis Interface LED Info

Status	Sequence	Operating status	Error Remedy
POWER LED on the axis interface			
Green LED	ON OFF	Operating voltage applied.	None
○	ON OFF	Operating voltage not applied.	Check operating voltage and load voltage connection on the SPC200 (pin 1 and 2).
ERROR LED on the axis interface			
Red LED	ON OFF	- Starting phase (3...4 seconds) or - hardware error, SPC200 is not ready for communication.	None Servicing required
○	ON OFF	- No internal error registered.	None
Red LED	ON OFF	Lights up briefly once when SPC200 is switched on	None
		Flashes at 1 second intervals:	
		- once (error number 1) axis interface has not been initialized.	Switch on system again if necessary, replace defective axis interface.
		- twice (error number 2) a can module on the bus is in the OFF status	Switch on system again, if necessary, replace defective CP module.
		- three times (error number 3) incorrect type ID loaded	Remove non-permitted module or servicing required.
		- four times emergency stop is activated.	None
		- five times linear potentiometer is in end position or is not connected.	Bring linear potentiometer out of end position or connect.
		- six times timeout	Servicing required
		- seven times load voltage too low	Check load voltage.

6.4.4-2 Error Messages on the HMI of the CBP32

HMI of the CBP32 shows an error code (5) when pressing the servo alarm symbol (8) (if it has an active alarm).

It also displays a simplified error text (6) depending on error code (5). If a reference to a checklist number is mentioned then see 6.4.4-3 Festo Pneumatic servo error message checklist for further info. An errorstack with up to 4 errors can exist and each alarm reset (7), will show the next error.

The error code (5) is used mainly for communication with Festo technicians. The error code (5) contain information about:

- the error class
- the error number
- in some cases additional information

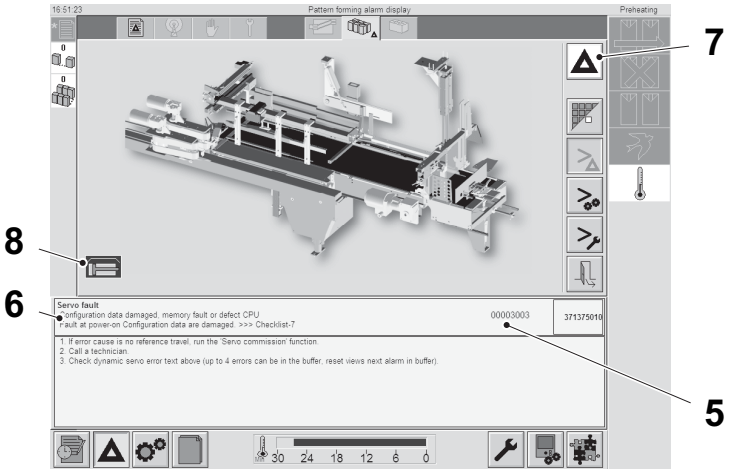

5 Error code
6 Simplified error text
7 Alarm reset
8 Servo alarm symbol

The control panel shows the error code (5) in the form of an eight-position hexa decimal number.

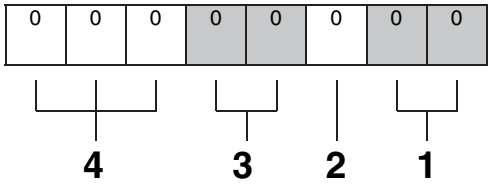

1 Error class (0...9)
2 Axis identifier (...4)
3 Error number
4 Additional information

6.4.4-3 Festo Pneumatic servo error message checklist

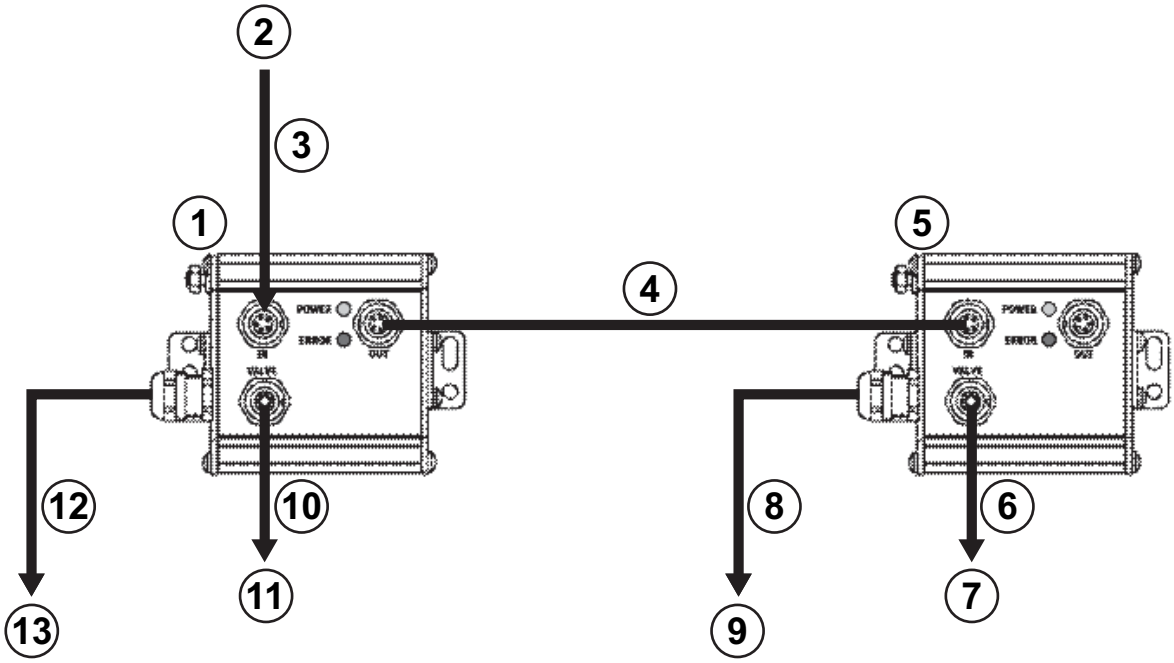

1 AIF-1, box pusher
2 From SPC200
3 1st axis string: Cable-1
4 1st axis string: Cable-2
5 AIF-2, grouping pusher
6 Cable-6
7 To MPYE-2
8 Cable-5
9 To GRP-Pusher DNCI:
2nd measurement system
10 Cable-4
11 To MPYE-1
12 Cable-3
13 To Box-Pusher DGPIL
1st measurement system

(Cont'd)

(Cont'd)

6.4.4-3.1 Check list 1

1.1 Error code

<00102001> or

<00B02001> or

<10102001> or

<10B02001>

Description:
Fault on the axis interface AIF-1, the initialization of the axis string is failed at power-on. Problem with measurement system of the DGPIL (Box Pusher).

What to do - look at the AIF-1:

1. Is the power LED green?

- yes, go to item 2.

- no, go to item 3.

2. Is the red error LED flashing after power-on?

- no, go to item 4.

- yes, how often?

  - 1 time. Axis interface is not initialized: exchange the AIF-1 and perhaps the cable-1.

  - 5 times. Check cable-3 and the connector at the DGPIL (Box Pusher).

  - 6 times. Communication time-out: Exchange the AIF-1 and perhaps the cable -1.

3. Check the operating voltage and the cable-1. Exchange the cable or the AIF-1.

4. Defect measurement system inside the Box Pusher (DGPIL) or problems with the connector or the cable-3 itself is defect.

(Cont'd)

(Cont'd)

1.2. Error code

<00102104> or

<00B02104> or

<10102104> or

<10B02104>

Description: Fault on the AIF-1 at the 1st measuring system during operation status. Problem with measurement system of the DGPIL (Box Pusher).

What to do - look at the AIF-1:

1. Is the power LED green?

- yes, go to item 2.

- no, go to item 3.

2. Is the red error LED flashing after power-on?

- no, go to item 4.

- yes, how often?

  - 1 time. Axis interface is not initialized: Exchange the AIF-1 and perhaps the cable-1.

  - 5 times. Check cable-3 and the connector at the DGPIL (Box Pusher).

  - 6 times. Communication time-out: Exchange the AIF-1 and perhaps the cable -1.

3. Check the cable-1. Exchange the cable or the AIF-1.

4. Defect measurement system inside the DGPIL or problems with the connector or the cable-3 itself is defect.

(Cont'd)

(Cont'd)

1.3. Error code <00003104>

Description: Fault on the AIF-1 and/or the DGPIL (Box Pusher) during operation status. Communication between SPC200 and AIF-1 or DGPIL (Box Pusher) is failed.

What to do - look at the AIF-1:

1. Is the power LED green?

- yes, go to item 2.

- no, go to item 3.

2. Is the red error LED flashing after power-on?

- no, go to item 4.

- yes, how often?

  - 1 time. Axis interface is not initialized: Exchange the AIF-1 and perhaps the cable-1.

  -5 times. Check cable-3 and the connector at the DGPIL (Box Pusher).

6 times. Communication time-out between SPC200 and AIF-1: Exchange the AIF-1 and perhaps the cable -1.

3. Check the cable-1. Exchange the cable or the AIF-1

4. Move the Box Pusher to mid position, make a power-off/on cycle.

The same problem?

- yes, go to item 5.

- no, go to item 6.

(Cont'd)

(Cont'd)

5. Check all connectors and cables at the AIF-1. Exchange the AIF-1 or exchange the DGPIL (Box Pusher).

6. Move the Box Pusher to both end positions. Is the same problem seen?

- yes. Exchange the DGPIL (Box Pusher).

- no. Exchange the AIF-1.

6.4.4-3.2 Checklist 2

2.1 Error code

<00202001> or

<00C02001> or

<10202001> or

<10C02001>

Description:

Fault on the axis interface AIF-2, the initialization of the axis string is failed at power-on. Problem with measurement system of the DNCI (GRP Pusher).

What to do - look at the AIF-2:

1. Is the power LED green?

- yes, go to item 2.

- no, go to item 3.

(Cont'd)

(Cont'd)

2. Is the red error LED flashing after power-on?

- no, go to item 4.

- yes, how often?

  - 1 time. Axis interface is not initialized: Exchange the AIF-2 and perhaps the cable-2.

  - 5 times. The sensor is not connected to the AIF-2:
    Check the sensor cable (cable-5) and/or the sensor of the GRP Pusher.

  - 6 times. Communication time-out between SPC200 and AIF-2:
    Exchange the AIF-2 and perhaps the cable-2.

3. Check the cable-2. Exchange the cable or the AIF-2.

4. Defect measurement system inside the DNCI (GRP Pusher) or the cable-5 (sensor cable) itself is defect. Exchange the sensor of the DNCI.

(Cont'd)

(Cont'd)

2.2. Error code

<00202204>, or

<00C02204> or

<10202204> or

<10C02204>

Description: Fault on the AIF-2 at the 2nd measuring system during operation status. Problem with measurement system of the DNCI (GRP Pusher).

What to do - look at the AIF-2:

1. Is the power LED green?

- yes, go to item 2.

- no, go to item 4.

2. Is the red error LED flashing after power-on?

- no, go to item 4.

- yes, how often?

  - 1 time. Axis interface is not initialized: Exchange the AIF-2 and perhaps the cable-2.

  - 5 times. The sensor is not connected to the AIF-2. Check the sensor cable (cable-5) and/or the sensor of the GRP Pusher.

  - 6 times. Communication time-out between SPC200 and AIF-2: Exchange the AIF-2 and perhaps the cable-2.

3. Check the cable-2. Exchange the cable or the AIF-2.

4. Defect measurement system inside the DNCI (GRP Pusher) or the cable-5 (sensor cable) itself is defect. Exchange the sensor of the DNCI.

(Cont'd)

(Cont'd)

2.3. Error code

<00003204>

Description: Fault on the AIF-2 during operation status. Communication between SPC200 and AIF-2 is failed.

What to do - look at the AIF-2:

1. Is the power LED green?

- yes, go to item 2.

- no, go to item 3.

2. Is the red error LED flashing after power-on?

- no, go to item 4.

- yes, how often?

  - 1 time. Axis interface is not initialized: Exchange the AIF-2 and perhaps the cable-2.

  - 5 times. Check cable-5 and the connector at the DNCI (GRP Pusher).

  - 6 times. Communication time-out between SPC200 and AIF-2: Exchange the AIF-2 and perhaps the cable -5.

3. Check the cable-2. Exchange the cable or the AIF-2.

(Cont'd)

(Cont'd)

4. Move the GRP Pusher to mid position, make a power-off/on cycle.

The same problem?

- yes, go to item 5.

- no, go to item 6.

5. Check all connectors and cables at the AIF-2. Exchange the AIF-2 or exchange the sensor of the DNCI (GRP Pusher).

6. Move the GRP Pusher to both end positions.

Is the same problem seen?

- yes. Exchange the DNCI (GRP Pusher).

- no. Exchange the AIF-2.

6.4.4-3.3 Checklist 3

3.1. Error code

<00302001> or

<00902001> or

<10302001> or

<10902001>

Description: Fault on the AIF-1, the initialization of the axis string is failed at power-on. Problem with AIF-1, the cable-1 or the DGPIL (Box Pusher).

(Cont'd)

(Cont'd)

What to do - look at the AIF-1:

1. Is the power LED green?

- yes, go to item 2.

- no, go to item 3.

2. Is the red error LED flashing after power-on?

- no, go to item 4.

- yes, how often?

  - 1 time. Axis interface is not initialized: Exchange the AIF-1 and perhaps the cable-1.

  - 5 times. Check cable-3 and the connector at the DGPIL (Box Pusher).

  - 6 times. Communication time-out: Exchange the AIF-1 and perhaps the cable -1.

3. Check the operating voltage and the cable-1. Exchange the cable or the AIF-1.

4. Defect measurement system inside the Box Pusher (DGPIL) or problems with the connector or the cable-3 itself is defect.

(Cont'd)

(Cont'd)

3.2. Error code

<00302104> or

<00902104> or

<10302104> or

<10902104>

Description: Fault on the AIF-1, the initialization of the axis string is failed during operation status. Problem with AIF-1, the cable-1 or the DGPIL (Box Pusher).

What to do - look at the AIF-1:

1. Is the power LED green?

- yes, go to item 2.

- no, go to item 3.

2. Is the red error LED flashing after power-on?

no, go to item 4.

yes, how often?

- 1 time. Axis interface is not initialized: Exchange the AIF-1 and perhaps the cable-1.
- 5 times. Check cable-3 and the connector at the DGPIL (Box Pusher).
- 6 times. Communication time-out: Exchange the AIF-1 and perhaps the cable -1.

3. Check the operating voltage and the cable-1. Exchange the cable or the AIF-1.

4. Defect measurement system inside the Box Pusher (DGPIL) or problems with the connector or the cable-3 itself is defect.

(Cont'd)

(Cont'd)

6.4.4-3.4 Checklist 4

4.1. Error code

<00402001> or

<00A02001> or

<10402001> or

<10A02001>

Description: Fault on the AIF-2, the initialization of the axis string is failed at power-on. Problem with AIF-2, the cable or the sensor of the DNCI (GRP Pusher).

What to do - look at the AIF-2:

1. Is the power LED green?

- yes, go to item 2.

- no, go to item 3.

2. Is the red error LED flashing after power-on?

- no, go to item 4.

- yes, how often?

  - 1 time. Axis interface is not initialized: Exchange the AIF-2 and perhaps the cable-2.

  - 5 times. The sensor is not connected to the AIF-2. Check the sensor cable (cable-5) and/or the sensor of the GRP Pusher.

  - 6 times. Communication time-out between SPC200 and AIF-2: Exchange the AIF-2 and perhaps the cable-2.

3. Check the cable-2. Exchange the cable or the AIF-2.

4. Defect measurement system inside the DNCI (GRP Pusher) or the cable-5 (sensor cable) itself is defect. Exchange the sensor of the DNCI.

(Cont'd)

(Cont'd)

4.2. Error code

<00402204> or

<00A02204> or

<10402204> or

<10A02204>

Description: Fault on the AIF-2, the initialization of the axis string is failed during operation status. Problem with AIF-2, the cable or the sensor of the DNCI (GRP Pusher).

What to do - look at the AIF-2:

1. Is the power LED green?

- yes, go to item 2.

- no, go to item 3.

2. Is the red error LED flashing after power-on?

- no, go to item 4.

- yes, how often?

  - 1 time. Axis interface is not initialized: exchange the AIF-2 and perhaps the cable-2.

  - 5 times. The sensor is not connected to the AIF-2. Check the sensor cable (cable-5) and/or the sensor of the GRP Pusher.

  - 6 times. communication time-out between SPC200 and AIF-2: Exchange the AIF-2 and perhaps the cable-2.

3. Check the cable-2. Exchange the cable or the AIF-2.

4. Defect measurement system inside the DNCI (GRP Pusher) or the cable-5 (sensor cable) itself is defect. Exchange the sensor of the DNCI.

(Cont'd)

(Cont'd)

6.4.4-3.5 Checklist 5

5.1. Error code

<00002001> or

<00702001> or

<00802001> or

<00D02001> or

<10002001> or

<10702001> or

<10802001> or

<10D02001>

Description: Fault on the axis string, the initialization is failed at power-on. Problem with AIF-1, AIF-2, the cable-1, cable-2.

What to do:

Step by step exchange the parts:

1. The AIF-1 - axis interface of the Box Pusher
2. The AIF-2 - axis interface of the GRP Pusher
3. The SPC200
4. If nothings helps, call Festo for support.

(Cont'd)

(Cont'd)

5.2. Error code

<00002004> or

<00702004> or

<00802004> or

<00D02004> or

<10002004> or

<10702004> or

<10802004> or

<10D02004>

Description: Fault on the axis string, the initialization is failed during operation status. Problem with AIF-1, AIF-2, the cable-1, cable-2.

What to do:

Step by step exchange the parts:

1. The AIF-1 - axis interface of the Box Pusher

2. The AIF-2 - axis interface of the GRP Pusher

3. The SPC200

4. If nothings helps, call Festo for support.

(Cont'd)

(Cont'd)

6.4.4-3.6 Checklist 6

6.1. Error code

<00004001>

Description: Fault on the system at power-on. The configuration is wrong, one of the axis cannot identified by the SPC200.

What to do - look at the AIF-1:

1. Is the power LED green?

- yes, go to item 2.

- no, go to item 3.

2. Is the red error LED flashing after power-on?

- no, go to item 4.

- yes, how often?

  - 1 time. Axis interface is not initialized: Exchange the AIF-2 and perhaps the cable-2.

  - 6 times. Communication time-out between SPC200 and AIF-2: Exchange the AIF-2 and perhaps the cable -2.

3. Check the cable-1 and exchange it if necessary. After power-on the same problem?

- yes, go to item 5.

- no. Problem solved.

4. Make a power-off/on cycle again.

The same problem?

Check all connectors and cables at the AIF-2. Exchange the AIF-2.

5. Exchange the power card of the SPC200 (left card). Back to (1)

(Cont'd)

(Cont'd)

6.4.4-3.7 Checklist 7

7.1. Error code

<00001003>

Description: Fault in the SPC200 during operation status. The program for the Box Pusher in the SPC200 is damaged.

What to do:

1. Make a power-off/on cycle. Start the program again.

The same error?

- yes, go to item 2.

- no, go to item 3.

2. The probability is high that the SPC200 is faulty. Exchange the SPC200.

Alternatively you can download the program again. You need the software WinPisa for this download.

3. Write down the condition when this problem happened and contact E-liaison, http://e-liaison.tetrapak.com

(Cont'd)

(Cont'd)

7.2. Error code

<00101003>

Description: Fault in the SPC200 during operation status. The program for the GRP Pusher in the SPC200 is damaged.

What to do:

1. Make a power-off/on cycle. Start the program again.

The same error?

- yes, go to item 2.

- no, go to item 3.

2. The probability is high that the SPC200 is faulty. Exchange the SPC200.

Alternatively you can download the program again. You need the software WinPisa for this download.

3. Write down the condition when this problem happened and contact E-liaison, http://e-liaison.tetrapak.com.

(Cont'd)

(Cont'd)

7.3. Error code

<00002003>

Description: Fault in the SPC200 during operation status. The position list of the SPC200 is damaged.

What to do:

1. Make a power-off/on cycle. Start the program again.

The same error?

- yes, go to item 2.

- no, go to item 3.

2. The probability is high that the SPC200 is faulty. Exchange the SPC200. Alternatively you can download the position list again. You need the software WinPisa for this download.

3. Write down the condition when this problem happened and contact E-liaison, http://e-liaison.tetrapak.com.

(Cont'd)

(Cont'd)

7.4. Error code

<00003003>

Description: Fault in the SPC200 during operation status. The SPC200 lost the configuration data.

What to do:

1. Make a power-off/on cycle. Start the program again.

The same error?

- yes, go to item 2.

- no, go to item 3.

2. The probability is high that the SPC200 is faulty. Exchange the SPC200. Alternatively you can download the complete project again. You need the software WinPisa for this download.

3. You get the error 00004001?

- yes. Follow check list 6.

- no. Follow the instruction to the new code.

(Cont'd)

(Cont'd)

7.5. Error code

<00004003>

Description: Fault in the SPC200 during operation status. System data of the SPC200 are damaged.

What to do:

1. Make a power-off/on cycle. Start the program again.

The same error?

- yes, go to item 2.

- no, go to item 3.

2. The probability is high that the SPC200 is faulty. Exchange the SPC200. Alternatively you can download the project again. You need the software WinPisa for this download.

3. Write down the condition when this problem happened and contact E-liaison, http://e-liaison.tetrapak.com.

(Cont'd)

(Cont'd)

7.6. Error code

<00006003>

Description: Fault in the SPC200 during operation status. The data of the static identification are lost.

What to do:

1. Make a power-off/on cycle. Start the program again.

The same error?

- yes, go to item 2.

- no, go to item 3.

2. The probability is high that the SPC200 is faulty. Exchange the SPC200.

Alternatively you can make a static identification of the GRP and Box Pusher again. You need the software WinPisa for this download.

3. Write down the condition when this problem happened and contact E-liaison, http://e-liaison.tetrapak.com.

(Cont'd)

(Cont'd)

7.7. Error code

00009003>

Description: Fault in the SPC200 during operation status. The configuration data of the DeviceNet card is damaged.

What to do:

1. Make a power-off/on cycle. Start the program again.

The same error?

- yes, go to item 2.

- no, go to item 3.

2. The probability is high that the SPC200 is faulty. Exchange the SPC200. Alternatively you can make a new download of the project data again. You need the software WinPisa for this download.

3. Write down the condition when this problem happened and contact E-liaison, http://e-liaison.tetrapak.com.

(Cont'd)

(Cont'd)

6.4.4-3.8 Checklist 8

8.1. Error code

<00006004>

Description: Fault on system during operation status. The load voltages of the valves MPYE-1 or/and -2 is too low.

What to do - look at the AIF-1:

1. Is the power LED green?

- yes, go to item 2.

- no, go to item 3.

2. Is the red error LED flashing after power-on?

- no, go to item 4.

- yes, how often?

  - 7 times. The load voltages is low. Check the load voltages. Check the cable-1.

3. Check the cable-1. Exchange the cable-1. Alternatively exchange the power card of the SPC200 (left card).

4. Look at the AIF-2, is the power LED green?

yes, go to item 5.

no, go to item 6.

(Cont'd)

(Cont'd)

5. Is the red error LED flashing after power-on?

no, go to item 7.

- yes, how often?

  - 7 times the load voltages is low. Check the load voltages. Check the cable-2.

6. Check the cable-2. Exchange the cable-2.

7. Check the load voltages. Exchange the power card of the SPC200 (left card).

8.2. Error code

<00101004>

Description: Fault on system during operation status. During the switch-off phase the Power-Down function of the SPC200 failed.

What to do:

1. Measure the supply voltage of the SPC200. If the value is in the range 22.5 …. 28 “(2). If the value is lower 22.5 voltage or the voltage fluctuation is greater 4V “(3).

2. The probability is high that the power card of the SPC200 (left card) is faulty. Exchange the card. If this doesn't help, exchange the complete SPC200.

3. The supply voltage is bad. Exchange the power supply module of the machine.

6.4.4-4 Errors when not positioning

1) Axis makes small movements backwards and forwards		
Cause	**Remedy**	**Remarks**
Axis or application parameters not correct.	Check axis or application parameters.	
Static identification has not been carried out.	Carry out static identification.	See page 6.4.2-2 Axis Identification.
System is not correctly earthed.	Check earthing measures.	
Measuring system or measuring system cable is defective.	Check measuring system or measuring system cable and replace it if necessary.	Check by manual shifting or movement test, see page 6.4.2 Servo Commissioning.

2) Axis moves against end positions		
Cause	**Remedy**	**Remarks**
Tubing is not correct (incorrect polarity)	Check.	
Measuring system cable is defective or not connected.	Check	
Proportional directional control valve is defective.	Check proportional directional control valve.	Carry out movement test, see page 6.4.2 Servo Commissioning.

6.4.4-5 Errors in Positioning

1) Axis moves against end positions		
Cause	**Remedy**	**Remarks**
Tubing is not correct.	Check.	
Measuring system cable is defective or not connected.	Check.	
Proportional directional control valve is defective.	Check.	Carry out movement test, see page 6.4.2 Servo Commissioning.
Grouping pusher reference faulty	Do reference run	See page 6.4.2-1 Grouping Pusher Reference Run.

2) Axis has bad positioning behaviour		
Cause	**Remedy**	**Remarks**
System is not mounted correctly.	Check mechanical parts.	Check measuring system and cylinder for parallelism, mechanical play and sluggishness.
Static identification has not been carried out.	Carry out static identification	See page 6.4.2-2 Axis Identification.
System is not earthed correctly.	Check.	
Application parameters are not set optimally (mass, working stroke).	Check application parameters.	Check recipe for faulty data, especially package size
Controller parameters are not set optimally (gain, damping).	Optimize controller parameters.	

6.5 Light Barrier Unit

SPC Reference	2834002

6.5-1 Light Barrier Unit - Description

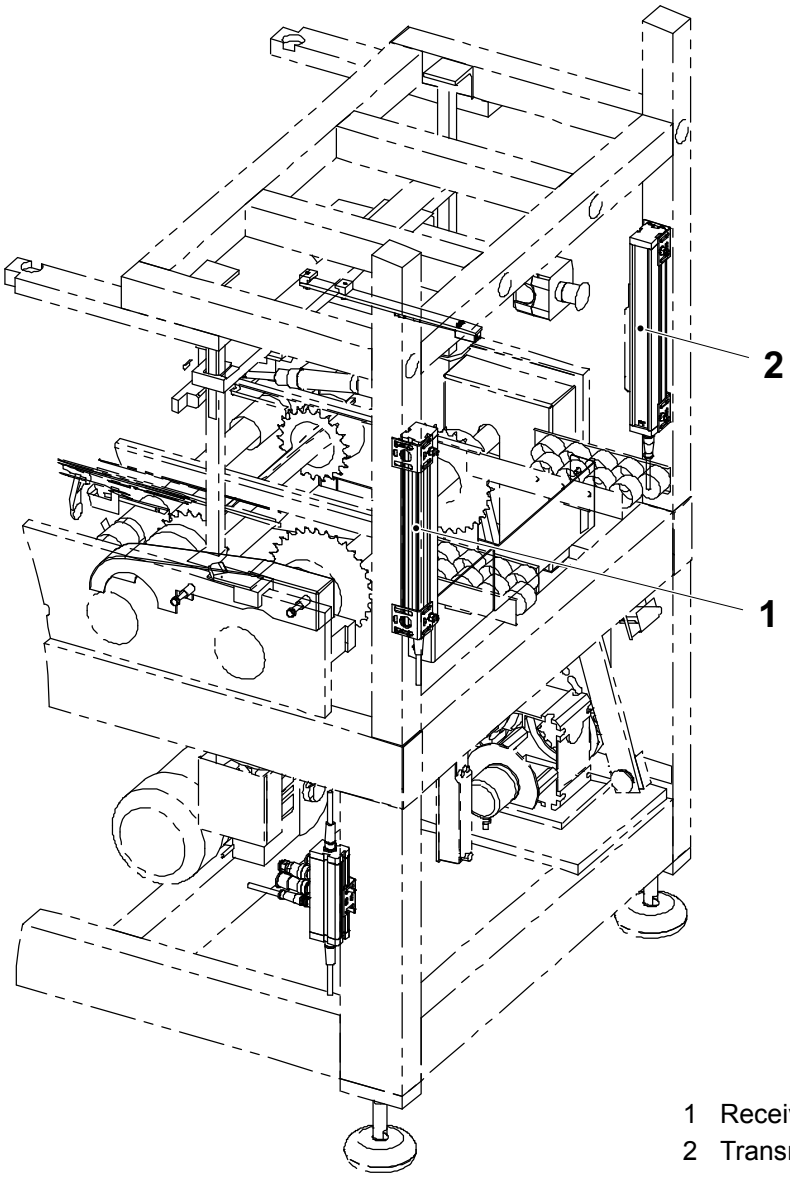

1 Receiver F50F0491
2 Transmitter F50F0490

6.5-2 Light Barrier Unit - Focus, 4 LED Signals in Normal Operation, Description

The operator is able to observe the operating status of the barrier with five LEDs located on the receiver and two LEDs on the transmitter.

The status of the LEDs in the receiver indicate the following:

- POWER (Green):
  This lights to indicate that the receiver is powered ON.
- LOWER (Yellow):
  In alignment mode, this lights to indicate alignment of the optical beam located in the bottom section of the barrier (connector end). In normal working conditions, this LED lights to indicate that dust is present on the front of the barrier. If it flashes, there is a short circuit on the OSSD outputs.
- GUARD (Green):
  This lights to indicate that there are no objects placed between the barrier transmitter and receiver units.
- BREAK (Red):
  This lights to indicate that the barrier has intercepted an object; the outputs are de-energised in this condition.
- UPPER (Yellow):
  When the barrier is in alignment mode, this lights to indicate the alignment of the optical beam located in the top section of the barrier. In normal working conditions, this LED is not lit and only lights when the barrier has interfered with free beams in manual reset mode.

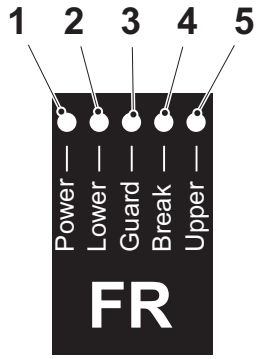

Receiver F50F0491

1 Power (green)
2 Lower (yellow)
3 Guard (green)
4 Break (red)
5 Upper (yellow)

(Cont'd)

(Cont'd)

The LEDs placed in the transmitter indicate the following:

- POWER (Green):
  This lights to indicate that the transmitter is powered ON.
- STATUS OK (Yellow):
  This lights to indicate that the transmitter is working correctly. If it flashes or if it is off, there is a transmitter fault.

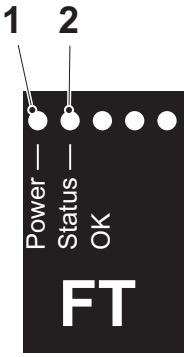

Transmitter F50F0490

1 Power (green)
2 Status OK (yellow)

6.5-3 Light Barrier Unit - Alignment Procedure

The alignment of the light barrier is easy so normally this procedure is not necessary. But if you get problems with the alignment of the light barrier, follow the procedure below.

a) Disconnect the white (WH) wire in cable F50W0493 from A01X004/84.

b) Remove the adapter plug F50F0493 from F50X0490 and disconnect wire connected to pin 4.

c) Connect the adapter plug again.

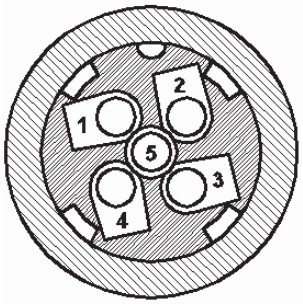

Adapter Plug F50F0493
- 1 Brown
- 2 White
- 3 Blue
- 4 Black
- 5 Grey

d) The leds UPPER (5) and LOWER (2) on the receiver should now be on.

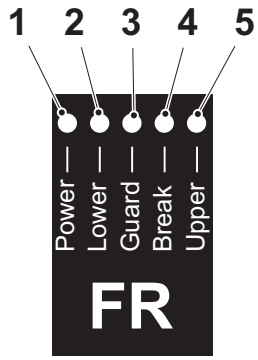

Receiver F50F0491
- 1 Power (green)
- 2 Lower (yellow)
- 3 Guard (green)
- 4 Break (red)
- 5 Upper (yellow)

e) Check that the transmitter and the receiver are mounted in accordance with the illustration below.

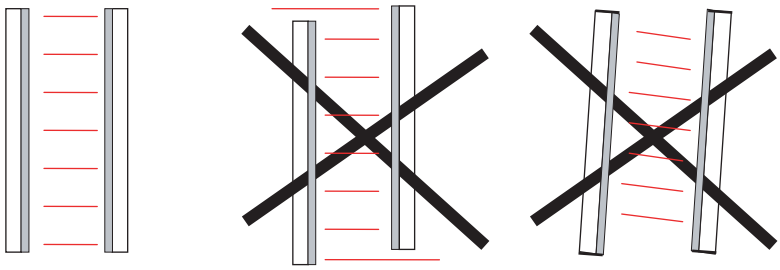

(Cont'd)

(Cont'd)

f) Turn the transmitter vertically, looking at lenses, right and left to find the extreme positions. Then then fix transmitter to centre position.

g) Repeat the procedure f) for the receiver.

h) Reconnect the white wire (WH) in cable F50W0493.

i) Remove the plug F50F0493, and reconnect the wire to pin 4.

j) Connect plug F50F0493.

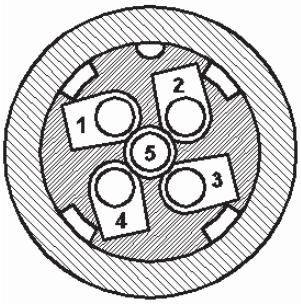

Adapter Plug F50F0493
- 1 Brown
- 2 White
- 3 Blue
- 4 Black
- 5 Grey

k) Now the barrier should be in operating mode, ready and closed.
Transmitter: Power (green) ON, Status (yellow) ON.
Receiver: Power (green) ON, Guard (green) ON.

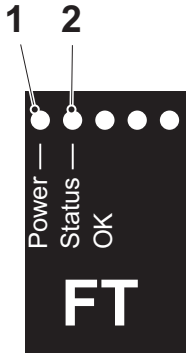

Transmitter F50F0490
- 1 Power (green)
- 2 Status OK (yellow)

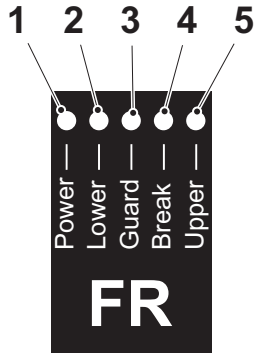

Receiver F50F0491
- 1 Power (green)
- 2 Lower (yellow)
- 3 Guard (green)
- 4 Break (red)
- 5 Upper (yellow)

6.5-4 Light Barrier Unit - Focus, LED Error Signals, Description

If critical errors are detected by tests run by the barrier's processors, either automatically or externally initiated, the LEDs indicate any fault or condition found. The faults/conditions indicated are as follows:

Transmitter

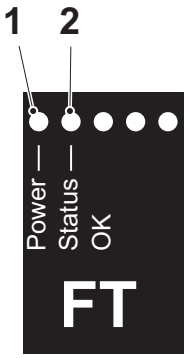

LED indication
- ● Lit
- ○ Out
- ◖ Flashing

Transmitter F50F0490
1 Power (green)
2 Status OK (yellow)

	Transmitter 1 2	Indication	Measure
1	● ●	OK	Transmitter functioning correctly
2	● ○	Voltage error	Check feeding voltage
3	● ◖	Internal error	Send to service

(Cont'd)

(Cont'd)

Receiver

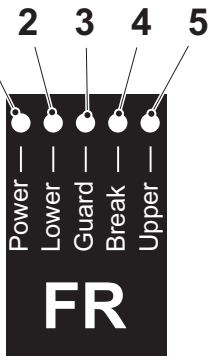

LED indication
- ● Lit
- ○ Out
- ◖ Flashing

Receiver F50F0491
1. Power (green)
2. Lower (yellow)
3. Guard (green)
4. Break (red)
5. Upper (yellow)

	Receiver 1 2 3 4 5	Indication	Measure
4	● ○ ● ○ ○	OSSD on	Focus in correct normal, active condition.
5	● ○ ○ ● ○	Optical field broken	Check alignment or focal aperture.
6	● ○ ○ ● ●	Waiting for reset.	When manual reset is selected.
7	● ○ ○ ○ ◖	Pre-reset	Losing B signal. (connected incorrectly).
8	● ○ ○ ● ◖	Pre-reset	Waiting for outer reset. Flashes for 8 s.
9	● ● ○ ● ○	Alignment	Bottom beam ok. Top beam not ok.
10	● ○ ○ ● ●	Alignment	Top beam ok. Bottom beam not ok.
11	● ● ○ ● ●	Alignment	Top and bottom beams ok. Other beam broken.
12	● ● ● ○ ●	Alignment	Completely adjusted. Reboot.
13	● ● ● ○ ○	Dirt indication	Clean or align.
14	● ◖ ● ○ ○	OSSD error	Outputs overcharged or in contact with 0 V. Check!
15	● ◖ ○ ◖ ◖	OSSD error	Outputs overcharged or in contact with 24 V. Check!
16	● ◖ ● ○ ○	Blanking	Selected and programmed.
17	● ○ ○ ○ ○	Voltage error	Check feeding voltage.
18	● ◖ ○ ○ ◖	Processor error	Check the internal switches A and B. Both must be set in the same way.
19	● ◖ ◖ ○ ◖	Muting indicator error.	Broken or connection error. Check the muting resistor F50R0493 inside the adapter plug F50F0493. Measure the resistance on adapter plug between pin 4 and 5. Shall be 270 Ohm +/- 10%, change if broken, switch voltage on and off.
20	● ◖ ○ ○ ○	Optical error	Check alignment and that no other receiver is disturbing.
21	● ◖ ○ ◖ ○	Blanking	Check that the object has not changed, reprogram if necessary.

6.5-5 Light Barrier Unit - Muting Function

During feed chain movement, muting signal A produced.
When the tray covers the muting photocell, just before the light barrier, muting goes on and the tray is allowed to pass the light barrier.

The muting indicator is the resistor unit F50F0493.

The resistor F50R0493 on FMC “R” has to be connected in order to get a muting.

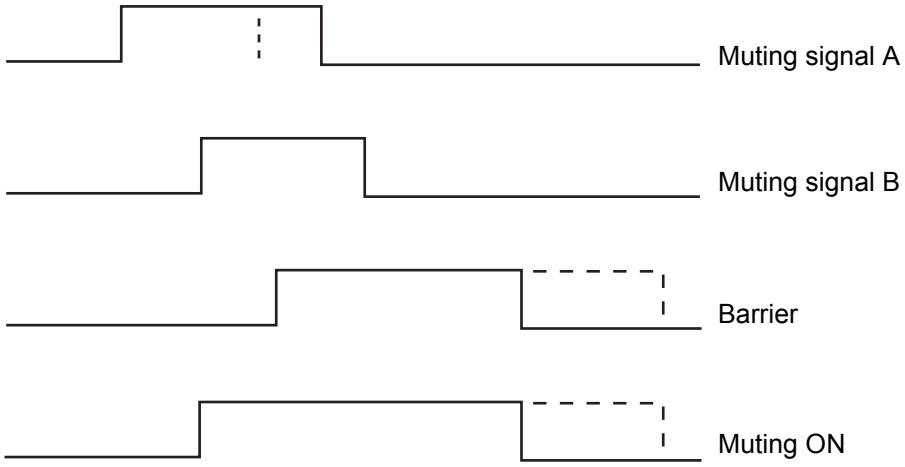

6.5-6 Light Barrier Unit - FMC1

Use connection unit FMC to install the transmitter, receiver, two (or more) muting signals, indication unit FMI 1 (with LMS muting lamp, test/reset button 1, and button for power supply OFF) connected with M12 connectors, and the cable to the cabinet.

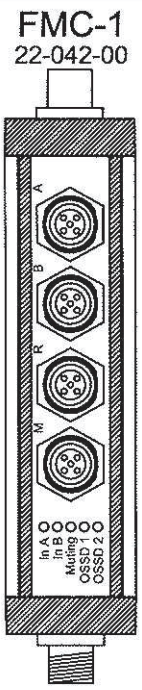

Signals on FMC-1:

In A	Muting signal A ON when signal
In B	Muting signal B ON when signal
Muting ON when pulsating	
OSSD 1	Transmitter signal ON when OK
OSSD 2	Receiver signal ON when OK

6.5-7 Light Barrier Unit - Receiver Unit

The two dip-switch banks in the receiver must be set in the same configuration. The factory default switch settings are: switches 1, 2, and 3 OFF, and switch 4 ON.

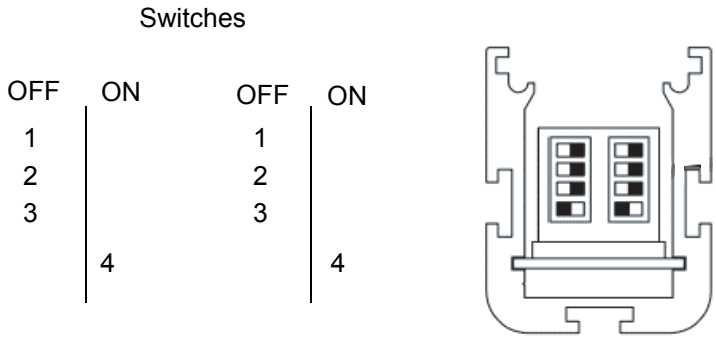

To set the internal dip-switches in the receiver unit:

- Disconnect the barriers power supply and remove the Receivers end cap that has the M12 connector fitted, so that the two banks of dip-switches can be reached.
- Use a suitably sized screwdriver to set the dip-switches according to the required configuration.

6.5-8 Light Barrier Unit - Clean

SPC Reference	2834002

Note! Damage or dirt on the cover does not compromise the safety level of the barriers but may cause operational disturbance. Do not use woollen cloth, solvent or any other material when cleaning, which may scratch or in some way damage the surface of the cover.

6.5-9 Light Barrier Unit - Final Checks

WARNING

Risk of personal injury or machine damages!
Make sure that all emergency stops and safety switches are functioning.
Make sure that all screws and nuts are tightened.
Follow the safety precautions, see Chapter ii Safety Precautions.

- Check that the area protected by the barrier is free of obstacles. Check that, when the protection beams are interrupted, the barrier safety outputs operate correctly, the break LED lights, and the machinery under control stops.
- Check the machine function during muting. Step up the machine to production step. Fill the machine with packages. Make a normal run. When the carrier pushes out the first tray the muting condition occurs. Stop the tray in the barrier zone. Keep it there for approximately 30 seconds to check that the carrier chain does not restart, even if it should normally do so. The carrier chain **must not** start before you take the tray out of the barrier zone and the barrier is in safety condition again. If the carrier chain makes a restart during the muting condition, check the program.

6.6 PLUTO Manager

6.6-1 PLUTO Manager - Description

a) Make sure that the Plutos have the same or latest firmware.

b) Write id-fix addresses for all Plutos.

c) Download program.

- Pluto program files
  - spe Encrypted file, gives no possibility to change.
  - hps Hexadecimal file, compiled program for Pluto.
- Access and registration codes
  - Mute Service engineer, customer. With the spe- and hps-files is it possible to make download and to go on-line with Pluto.
  - License Machine owner, line builder. Requires education. Full access to create and change programs and compile to make a download of the changed program.

The machine owner has access to the safety software sps-file. If required a line builder can get the program from the machine owner. The spe- and hps-file is delivered with the machine.

6.6-2 PLUTO Manger - Install

a) Download the latest `Pluto Manager` from the web site and install.

b) Start the `Pluto Manager` (1).

c) Select `Register Key` (2).

d) Write `Mute` (3) and confirm with `OK`.

e) The software will now acknowledge the registration code. Select `OK` (4).

f) Now the software can be used for downloads and on-line monitoring.

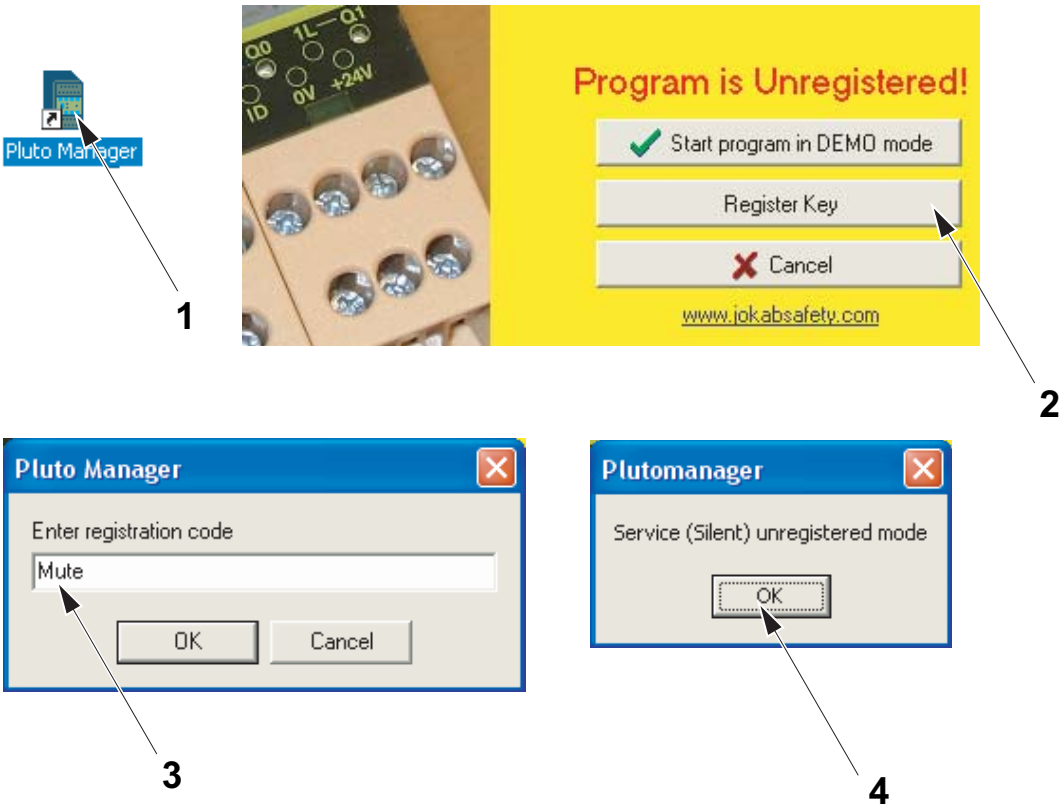

1 PLUTO manager
2 Register key
3 Registration code
4 OK

6.6-3 PLUTO Manager - Set Project

The Pluto project can be set in several ways. This is one example.

a) Start the `Pluto Manager` (1).

b) Select the file (2) and click `open` (3).

c) Chose the actual Pluto project (4).

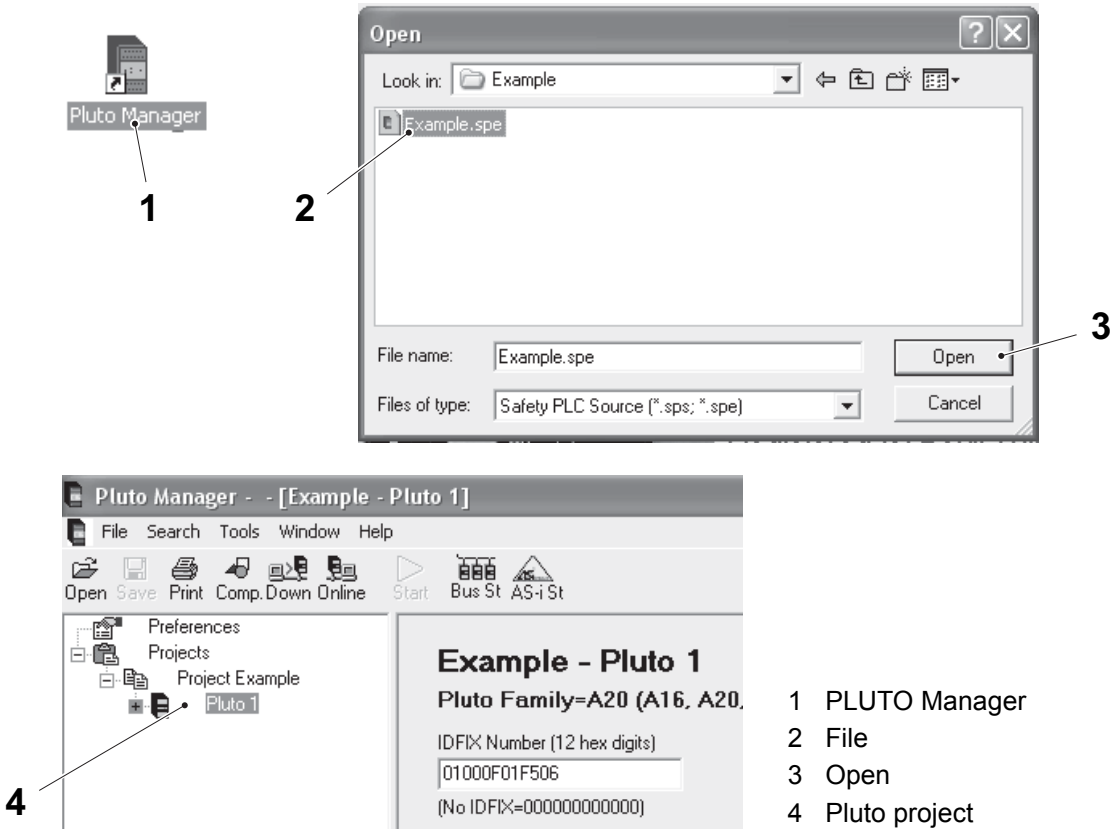

1 PLUTO Manager
2 File
3 Open
4 Pluto project

6.6-4 PLUTO Manager - Check Firmware and Software

This feature can be used to determine the software and firmware status of the Pluto unit.

a) Start the `Pluto Manager` (1).

b) Connect the programming cable between PC and Pluto (2).

c) From the `Tools` menu select `Onlineinfo` and then the `Pluto/ gateway Connected to PC` (3).

d) Read actual data for Pluto (4).

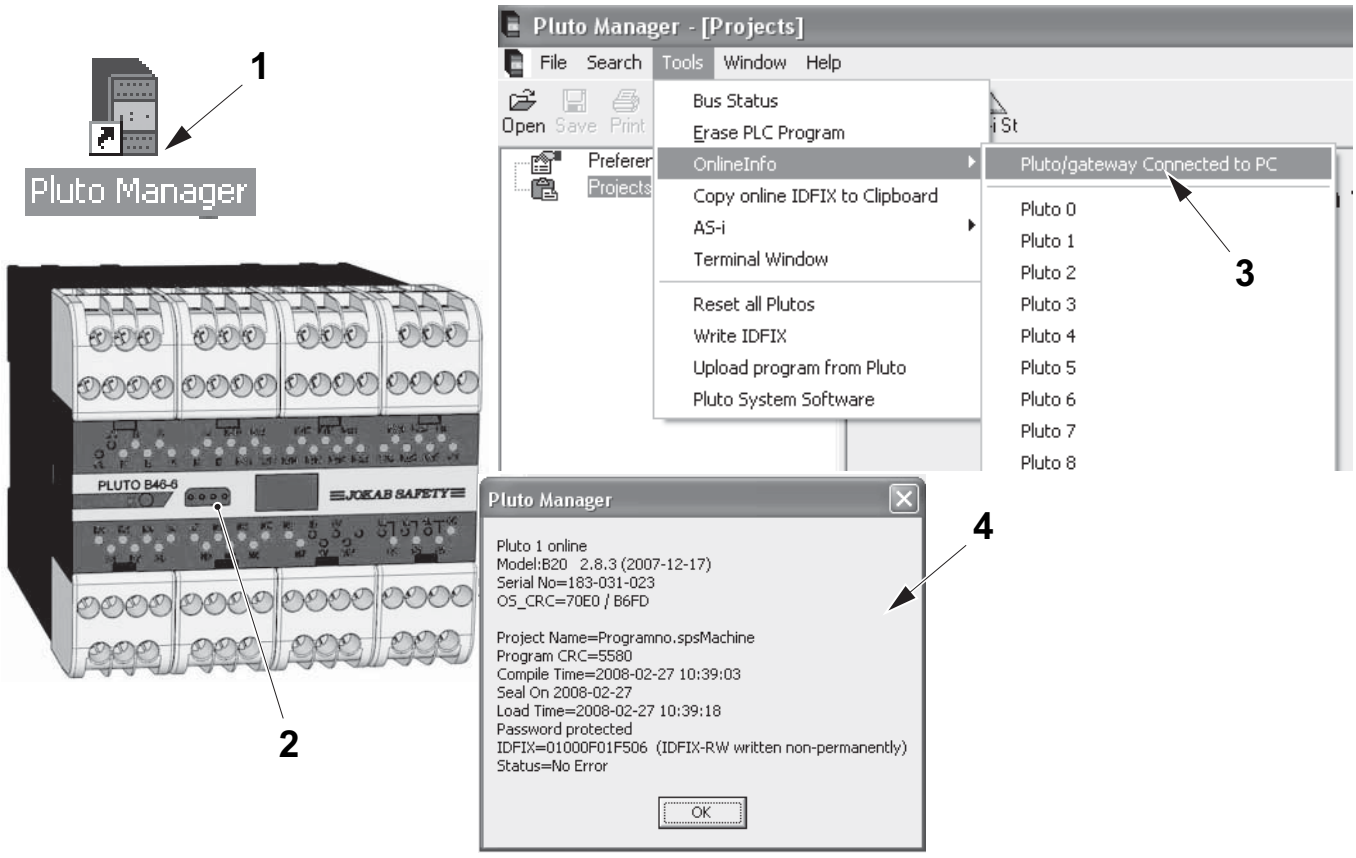

1 PLUTO Manager
2 Programming Cable
3 Pluto/gateway Connected to PC
4 Actual data

6.6-5 PLUTO Manager - Set an ID-Fix address

To set a new address or to change an Id-fix address use the function for programming identifier circuits. This function is fully accessible regardless of the registration code. The Id-fix address is combined by first digits = station number and last digits = Pluto reference number (Letters from A-F, if the letter for e.g. K is used the code will be F).

a) Start by opening the actual Pluto project according to procedure 6.6-3 PLUTO Manager - Set Project.

b) Copy the Id-fix address (1). If registered as **mute**, the copy command does not work. If so, write the ID-fix adress (1) in notepad.

c) From the TOOLS menu select Write IDFIX (2).

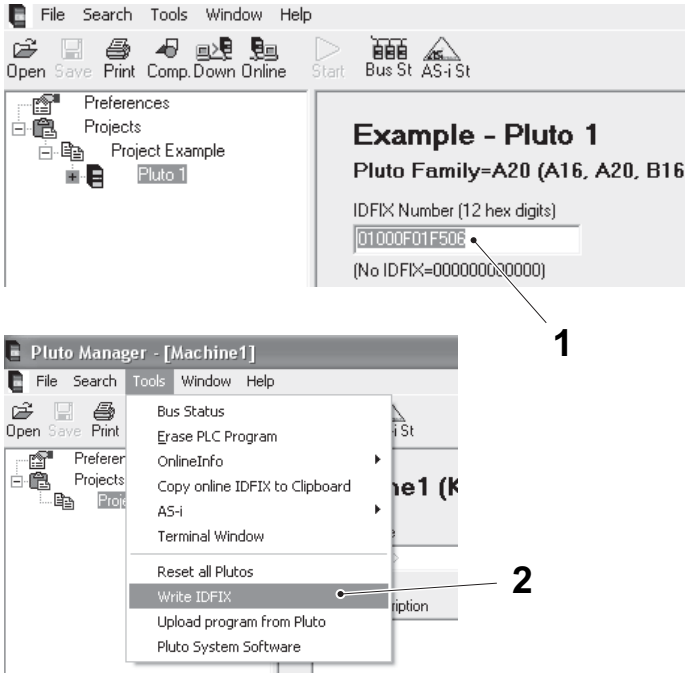

1 Id-fix address
2 Write IDFIX

(Cont'd)

(Cont'd)

d) Paste or type in the Id-fix address (3) from item b) and press Write ID circuit (4).

Note! Never select erase protect ID. This option makes it it's impossible to reprogram the Id circuit.

e) Confirm that the Id-fix address has been written by pressing the OK button (6).

f) The Pluto will now set an alarm because of the changed address. If you are going to download a program continue otherwise reboot, see 6.6-8 PLUTO Manager - Remove Firmware alarms

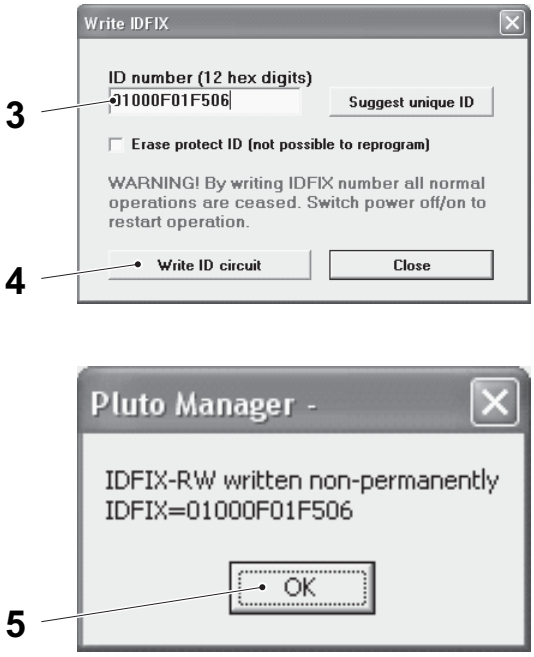

3 Id-fix address
4 Write ID circuit
5 OK button

6.6-6 PLUTO Manager - Install PLUTO without PC

It is possible to make a download to a Pluto under the following conditions:

- A Pluto network with minimum 2 Pluto's.
- Id-fix has to have correct address.
- The new Pluto has to be empty of program = Display indicates Er20.

a) Press the K-button (1) until it starts to flash.

b) Release the button and confirm the program load by pressing the K-button (1) again. The Pluto will now indicate a constant.

c) When the station number appears on the display (2) the Pluto is loaded and running.

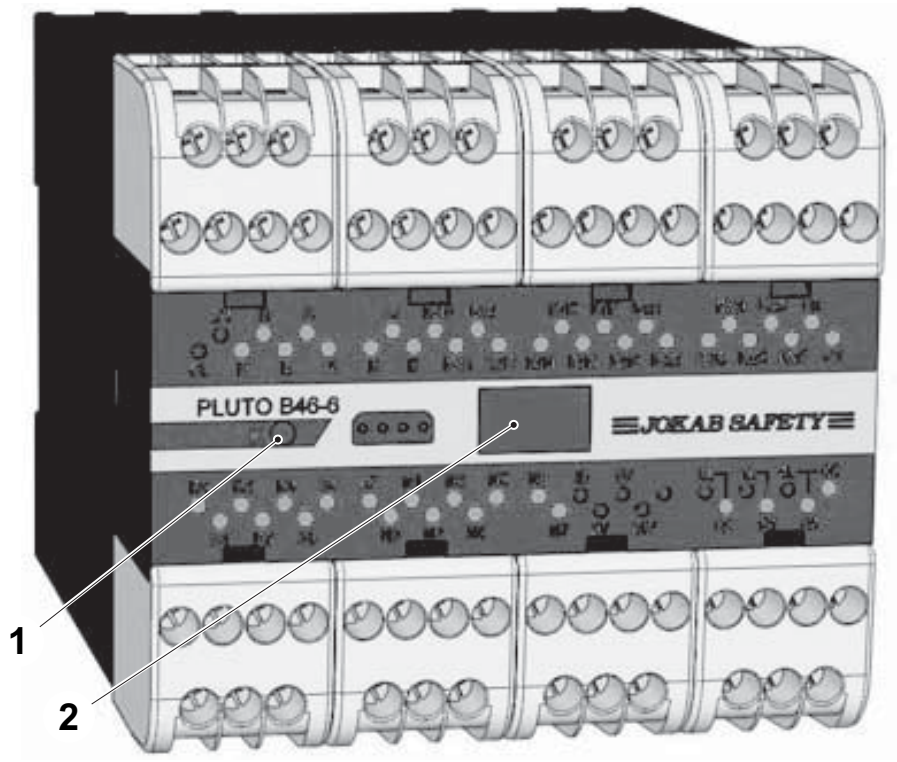

1 K-button
2 Display

6.6-7 PLUTO Manager - Install PLUTO from PC

Using the Pluto Manager registered mute requires spe- (or sps-) and hps-files for the application.

a) Start by opening the actual Pluto project according to procedure 6.6-3 PLUTO Manager - Set Project.

b) Select button `Down` (1) to download the program.

c) Write the password `abc80` (2).

Note! Empty Plutos needs confirming the password.

d) To start execution of program select `YES` (3).

Note! The first time a Pluto receives a program an alarm will be set. For reset of alarms see 6.6-8 PLUTO Manager - Remove Firmware alarms.

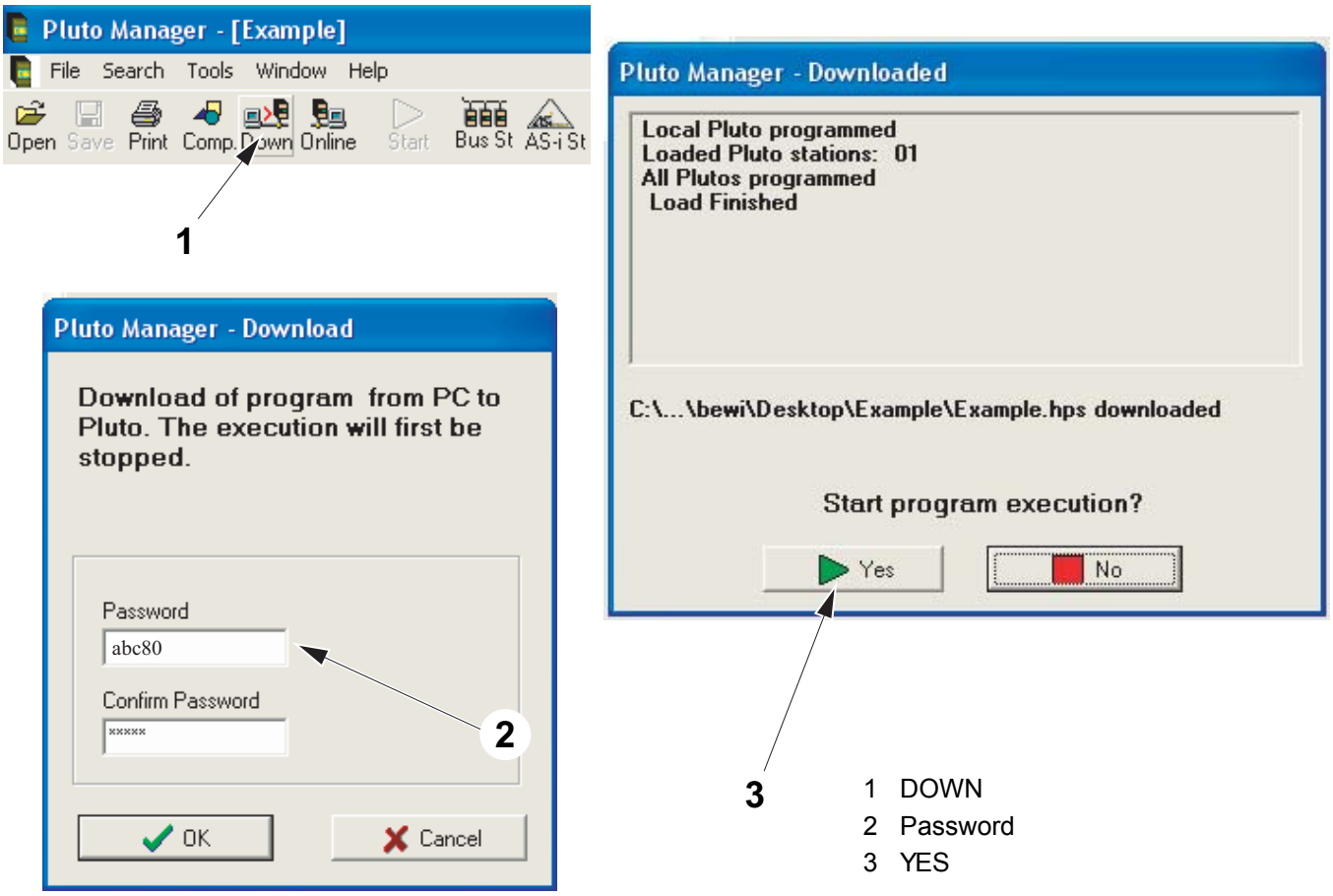

1 DOWN
2 Password
3 YES

6.6-8 PLUTO Manager - Remove Firmware alarms

The Pluto firmware has several status alarms (se Hardware manual). Many of those can be reset via the Pluto Manager when PC is connected to Pluto.

a) Start the `Pluto Manager` and connect communication cable between PC and Pluto.

b) From the `Tools` menu select `Reset All Plutos` (1).

c) Confirm (2) that you want to reboot all Plutos.

Note! All Plutos connected on the bus will be rebooted during this function.

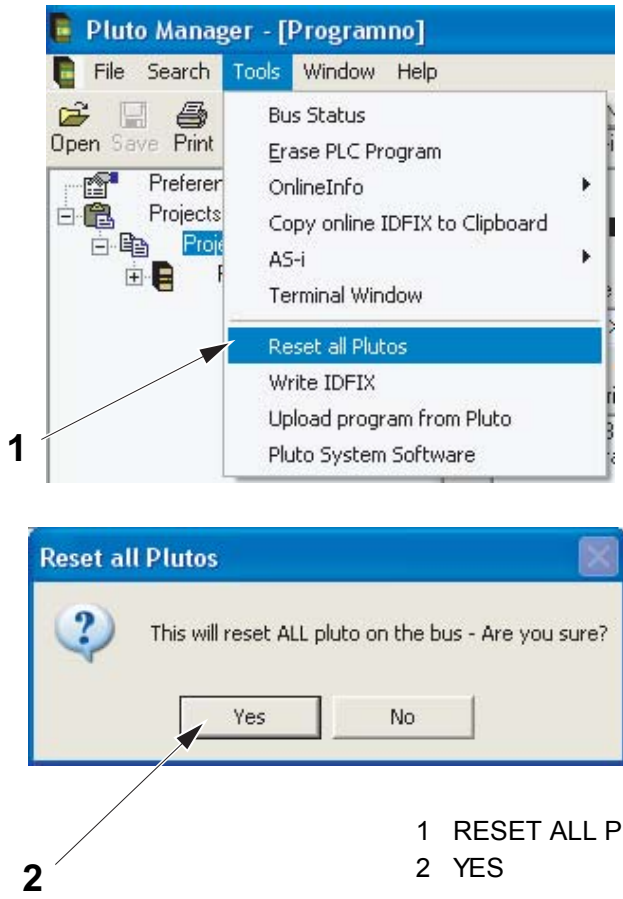

1 RESET ALL PLUTOS
2 YES

6.6-9 PLUTO Manager - Change Firmware

Note! To update the firmware a full licence for Pluto Manager is required. If registered as mute, the copy command does not work.

To check firmware version (1) use on-line info function, see 6.6-4 PLUTO Manager - Check Firmware and Software.

a) Turn off power supply to Pluto.

b) Press the K-button (2) while power is turned on and release the K-button.

Note! The Pluto appears to be dead in this monitor mode.

c) Start the `Pluto Manager` and connect communication cable between PC and Pluto.

d) From the `Tool` menu select `Pluto System Software` (3).

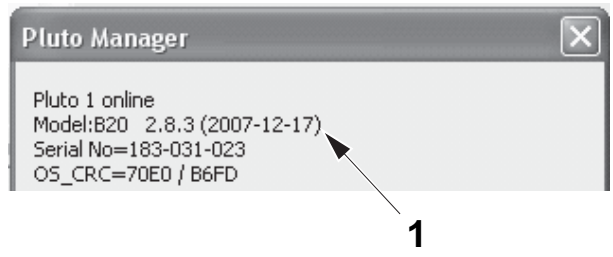

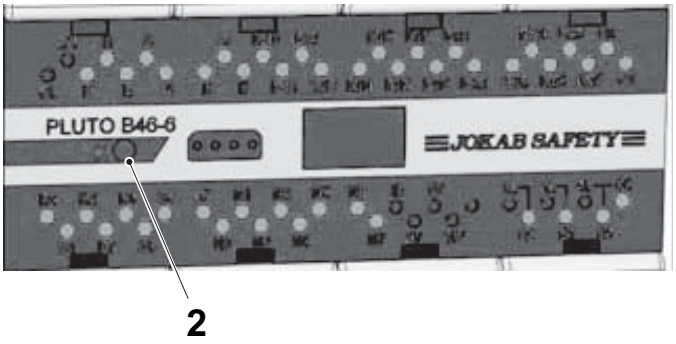

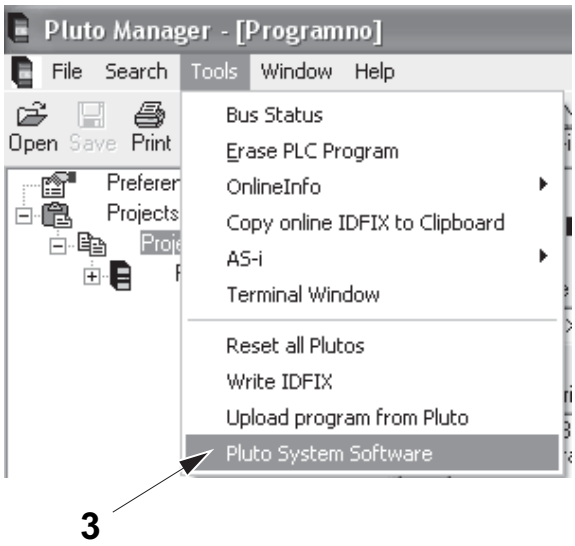

1 FIRMWARE
2 K-button
3 PLUTO SYSTEM SOFTWARE

(Cont'd)

(Cont'd)

e) Select software for processor A (4).
f) Select software for processor B (5).
g) Wait for download of software for processor A and B.
h) Select `Yes` or `No` (6) depending if you are going to update more Plutos.

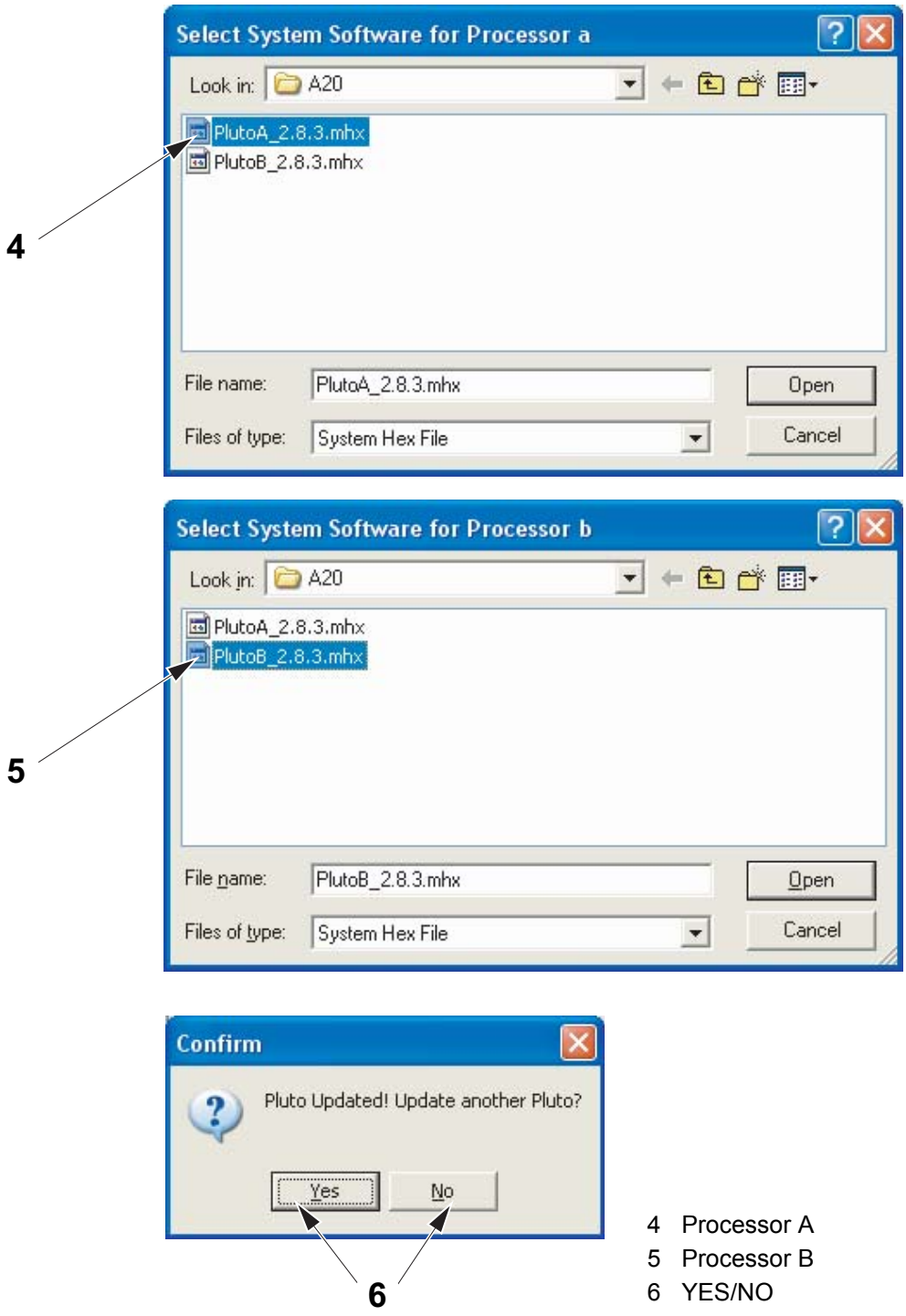

4 Processor A
5 Processor B
6 YES/NO

6.6-10 PLUTO Manager - Troubleshoot Safety System

Machine status	Power supply disconnector OFF Air valve OFF
SPC Reference	2538101

Status Messages

No:	Description
- -	Power up
N n	Run mode (nn = station number)
Lo	Program load mode state. Flashing 'Lo', ready for self programming (program found in other unit)
HA	Program execution stopped from PC computer or not started after program download. Can be started either from PC or by power off-on.

User Fault

No:	Fault and possible reason.	Reset action
Er10	Dynamic output circuited to foreign voltage	Automatically reset
Er11	IQ_ for illuminated push button function. Missing diode	Automatically reset
Er12	Short circuit between two dynamic inputs	Automatically reset
Er13	Static output Q10.17 (Q20.27) short circuited to 0V or safety Q2, Q3 overloaded	Autom. 3 min York" button
Er14	Static output Q10.17 (Q20.27) short circuited to 24V.	Automatically reset
Er15	Power supply below 18V	Autom. 3 min York" button
Er16	Power supply above 30V	Autom. 3 min York" button
Er17		
Er18	CAN-bus fault. (Short circuit, termination resistor, etc.)	Autom. 3 min York" button
Er19	Other unit with same station number on Can-bus	
Er20	PLC-program not loaded	Load of PLC program
Er21	PLC-program CRC-error	Reload with valid PLC-program
Er22	Identifier problem. External identifier can not be read.	Reboot
Er23	Unmatched ID. Identifier doesn't match declaration in program.	Exchange of identifiers or redeclaration of identifier in program.
Er24	Erroneous PLC-code. Invalid PLC-instructions.	Reload with valid code.
Er25	Reload with valid code.	
Er26	Baud rate conflict. Unit programmed for other baud rate than current bus baud rate. Note that Pluto must be rebooted after change of baudrate in the PLC program.	Reprogramming or reboot.
Er27	Wrong checksum for unit member in common program.	Reprogramming or reboot
Er28	PLC program does not match the Pluto family. Families: [A/B/S 20, B16], [B/S 46-6], [Pluto AS-i]	Change to other type of Pluto or change the program.
Er29	Unsupported program version. The program contains instructions only supported by later customer specific operating systems.	Update of operating system

I/O Faults

No:	Fault and possible reason.	Reset action
Er40	Error safety output Q0.5. / Q2,Q3 connected together or to other negative voltage. / Q2,Q3 has to high capacitive load.	“K” button.
Er41	Error output Q2 or Q3. Overload or connected to foreign positive voltage.	“K” button.
Er42	Error relay output. No answer from internal relay monitoring when output is off.	“K” button.
Er43	Error relay output. (Self test of transistors)	Reboot
Er44	Error relay output. Internal relay does not switch on.	“K” button.
Er45	Analogue functions not calibrated.	System must be calibrated
Er49	Error calibration values, analogue functions	Recalibration

Note! Reboot can either be made from PC computer or by power off-on.

CPU Faults

No:	Fault and possible reason.	Reset action
Er50	Input data difference between processor A and B Processor A and B reads an input differently. The fault is often caused by a bad sensor. Corresponding input LED flashes.	Reboot
Er51	Output data difference between processor A and B. Processor A and B sets a global variable different (Q0.Q3, GM0.11). (The problem can be caused by the PLC-program)	Reboot
Er58	AS-i safety code table CRC error	Reboot, Teach AS-i safety codes
Er59	Calibration analogue functions CRC fault	Reboot
Er60	Twin self test monitoring	Reboot
Er61	Timer IRQ monitoring	Reboot
Er62	Internal serial communication	Reboot
Er63	Boot-flash CRC	Reboot
Er64	OS-flash CRC	Reboot, Reload operating system (OS)
Er65	Plc-flash CRC	Reboot, Reload PLC program
Er66	5 volt under/over voltage monitoring	Reboot
Er67	CPU-test error	Reboot
Er68	Ram-test error	Reboot
Er69	Scan cycle time over run, PLC program to big	Reboot
Er70	System, sum of system and stack monitoring	Reboot
Er71	Pluto used for IDFIX writing. Normal operation ceased	Reboot
Er72	System error. No communication AS-i processor	Reboot
Er73	System error. CRC AS-i processor	Reboot
Er80	Undefined self-test error	Reboot

Note! Reboot can either be made from PC computer or by power off-on.

AS-i

No:	Fault and possible reason.	Reset action
AE 01	ASi power missing	
AE 02	No connection with ASi master (By monitor mode)	
AE 03	Safety code missing by code teaching	
AE 04	Wrong code table	
AE 05	Global communication fault.	
AC [node no]	Channel fault in safety node	Switch off both channels
Ab [node no]	AS-i slave with bad or wrong safety code.	Routine “Single slave exchange” or teach safety codes (PC) or exchange defect slave.
An [node no]	Slave profile does not match.	Read AS-i slaves
CC [node no]	Code Change. Pluto prepared for exchange of safety slave, one slave is missing. (Acknowledge by “K” button)	
CC	Code Change. Pluto is prepared for connection of new safety slave.	
CF	Code Found. Code in new safety slave is available. (Acknowledge by “K” button.	

User Error Code (only valid for CBP32)

The PLUTO Window shows the error by toggling between displaying UE and the current error code.

UE-code	I/0	Description	Remark
00	I0, I1	One channel missing	Emergency stop
02	I2, I3	One channel missing	Light Barrier
04	I4, I5	Max. time overrun	Muting function - Light Barrier; Max. time for muting overrun
70	I4, I5	Delta time overrun	Muting function - Light Barrier; Time between inputs exceed limits
01	I0, I1	Two channel fault	Emergency stop
03	I2, I3	Two channel fault	Light barrier
05	I4, I5	Two channel fault	Muting function - Light Barrier
46	I46	Missing feedback	Emergency stop, L12
47	I47	Missing feedback	Door circuit, L13
13	IQ13	Missing feedback	Turner
14	IQ14	Constant reset	Reset
36	I36	Air Valve Fault	Safety Valve did not pass self test.
31	I31	Option conflict	Setting No Turner is set though feedback from Turner IQ14 is active
32	I32	Option conflict	Setting Discharge Tunnel active at the same time as Light Barrier

6.6-11 PLUTO Manager - Safety Switch Fault Codes

Machine status	Power supply disconnector ON Air valve ON
SPC Reference	2538101

Note! See ii Safety Precautions for the locations of the safety switches on the machine.

The LED (1) on the sensor (2) indicates the status of the safety switch as follows:

LED	Description
Fixed green light.	Reflector (3) within the right range and safety switch is closed.
Fixed red light.	Reflector (3) out of range or safety switch is open.
Flashing green light.	Current safety switch is OK but another switch in the system is open or out of range.
Fast flashing red light.	Reflector (3) is in the outer part of the proximity area. Move the reflector (1) and sensor (2) closer to each other until the green light is fixed.

Tip! Make sure that the stripe markings for the sensor (2) and reflector (3) are turned in the same direction

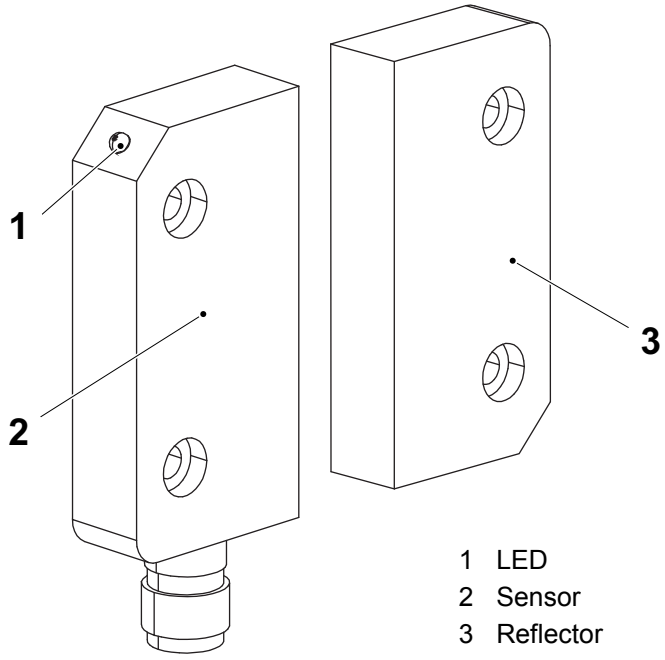

1 LED
2 Sensor
3 Reflector

6.7 Circuit Breaker

6.7.1 Overload Protection

6.7.1-1 Overload Protection - Change Fuse

Machine Status	Power supply disconnector OFF Air valve OFF
SPC Reference	2538101

When one or more of the phases are subject to an overvoltage, the corresponding overvoltage protector (1) fuse will trip to protect the electronics, without breaking the power supply. This is indicated by the overvoltage tripped alarm (2) on the TPOP.

When a fuse has tripped, the colour in that indication window (3) will also change from green to red. The fuse must be replaced for the protection to work.

a) Remove the nuts (4) and the lid (5). Check the colour in the indication window (3).

b) Pull out the tripped fuse (6).

c) Replace the fuse.

d) Reinstall the nuts and the lid.

(Cont'd)

(Cont'd)

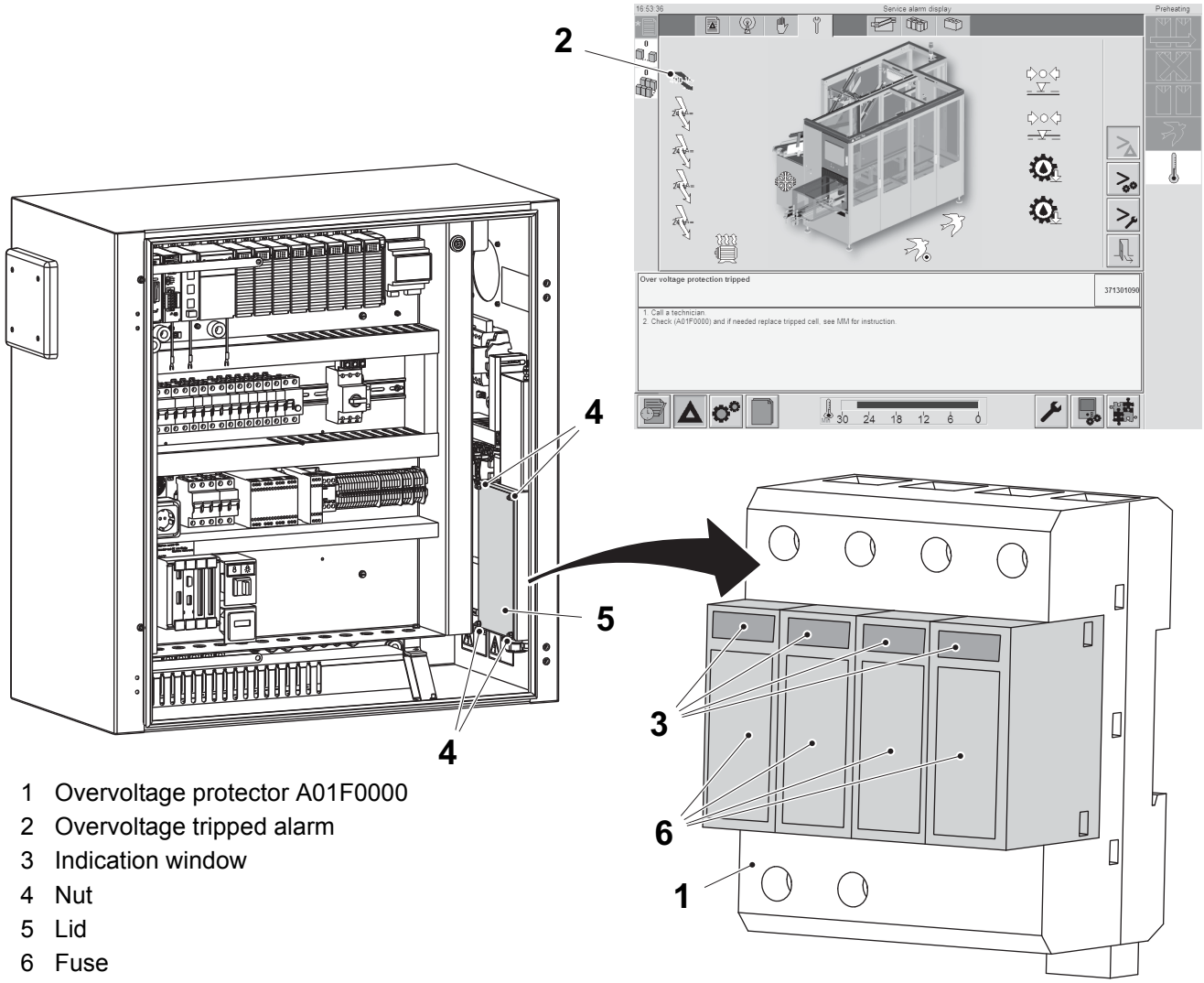

1 Overvoltage protector A01F0000
2 Overvoltage tripped alarm
3 Indication window
4 Nut
5 Lid
6 Fuse

6.7.1-2 Overload Protection - Change Ferraz Fuse

Machine Status	Power supply disconnector OFF Air valve OFF
SPC Reference	2538101

Note! Only used on machines with CSA standard.

a) Pull down the hatch (1).

b) Replace the tripped ferraz fuse (2).

c) Close the hatch (1).

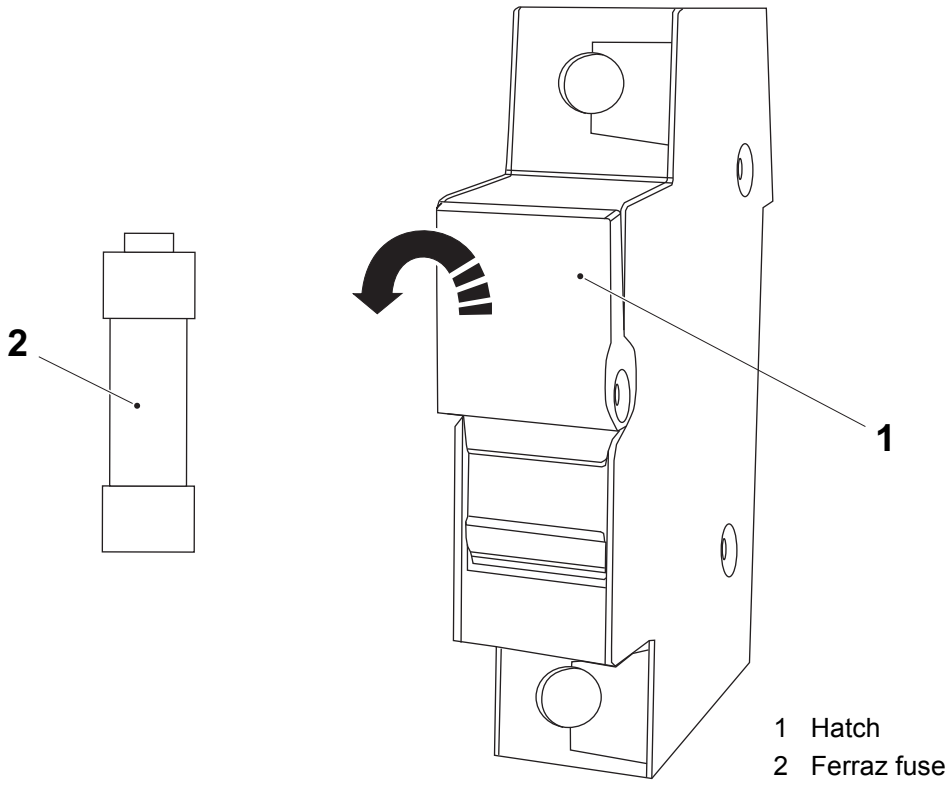

1 Hatch
2 Ferraz fuse

6.7.2 Automatic Fuses

6.7.2-1 Automatic Fuses - Reset Fuse in Miniature Circuit Breaker

Machine Status	Power supply disconnector ON Air valve OFF
SPC Reference	2538101

a) The fuse is tripped when the switch (1) is pointing downwards.

b) Turn back the switch to ON (2).

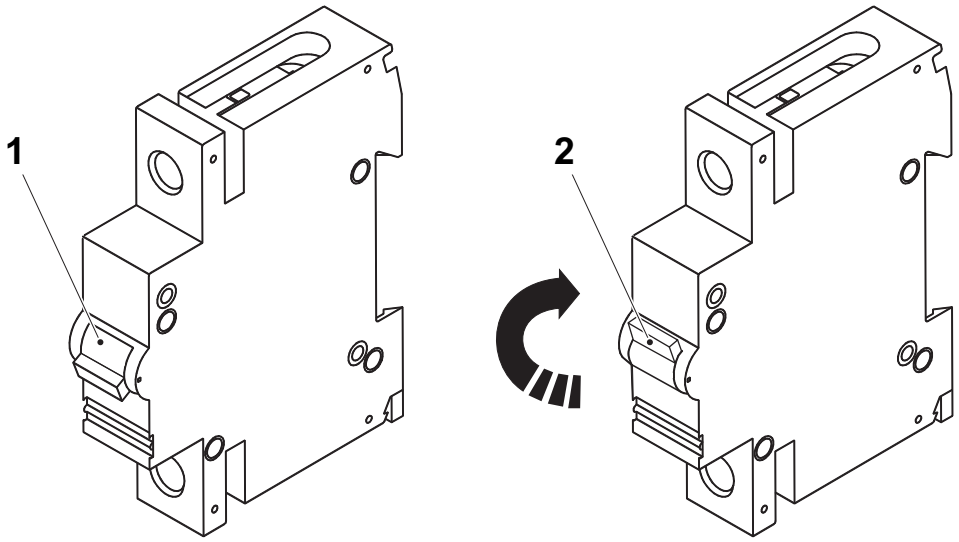

1 Switch (OFF)
2 Switch (ON)

6.7.3 Residual Current Device

6.7.3-1 Residual Current Device - Check Function

Machine Status	Power supply disconnector ON Air valve OFF
SPC Reference	2538101

Note! Not valid for USA and Canada.

DANGER

Hazardous voltage.
Electric shock will cause death or serious injury. Change the residual current device (1) if it does not trip immediately.

Note! Test the function of the residual current device by using the test button monthly.

The residual current device (1) must always be tested before using the socket outlet (2).

a) Make sure that the switch is in position ON (3).

b) Press the test button (4).

c) The residual current device must trip immediately; the switch will jump to position OFF (5).

d) Turn back the switch to position ON (3).

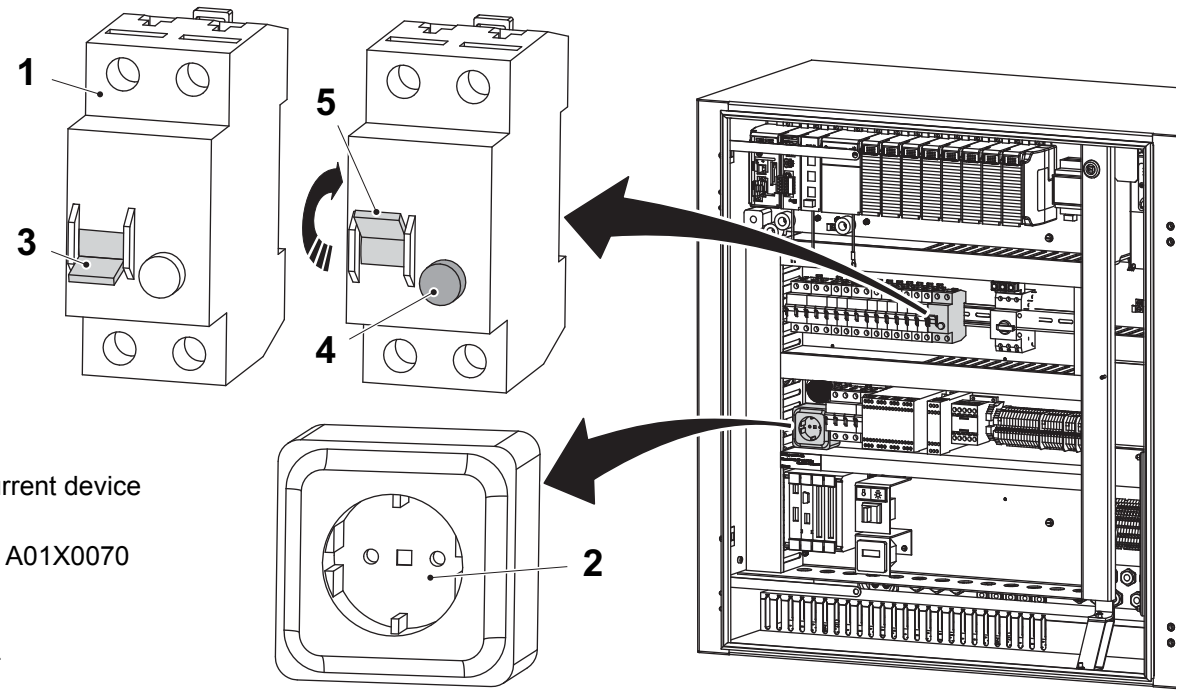

1 Residual current device A01F0070
2 Wall socket A01X0070
3 Switch ON
4 Test button
5 Switch OFF

6.8 TPOP Panel

6.8.1 Change values

6.8.1-1 TPOP Settings - Description

The TPOP display handle different ways of changing settings; single value setting and multi value setting.

Single Value Setting

To select the setting to be changed press the appropriate symbol (1). Change or enter a value using the arrow buttons or pressing the factory default button (6). The values can be changed in increments of:

- 1 x stepsize - with the SINGLE-ARROW button (2)
- 10 x stepsize - with the DOUBLE-ARROW button (3)

Stepsize depends on chosen setting. The current value is shown in the display (4). Confirm the new value with the CONFIRMATION button (5).

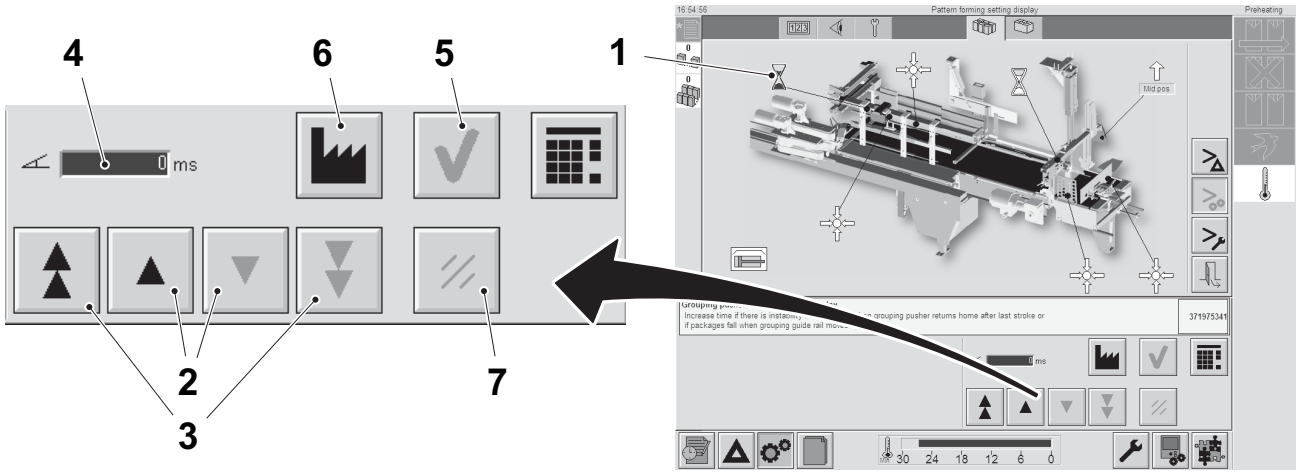

1 Example of a function button
2 SINGLE-ARROW
3 DOUBLE-ARROW
4 Display, current value
5 CONFIRMATION
6 FACTORY DEFAULT
7 RESET

(Cont'd)

(Cont'd)

Multi Value Setting

To select the setting to be changed press the appropriate symbol (1).

The multi settings window (2) is shown for the selected setting. Press the button for the desired setting for example change start point (3) and change length (4).

A Single Value Setting window (5) is present and the value can be changed with the arrow buttons. See Section Single Value Setting.

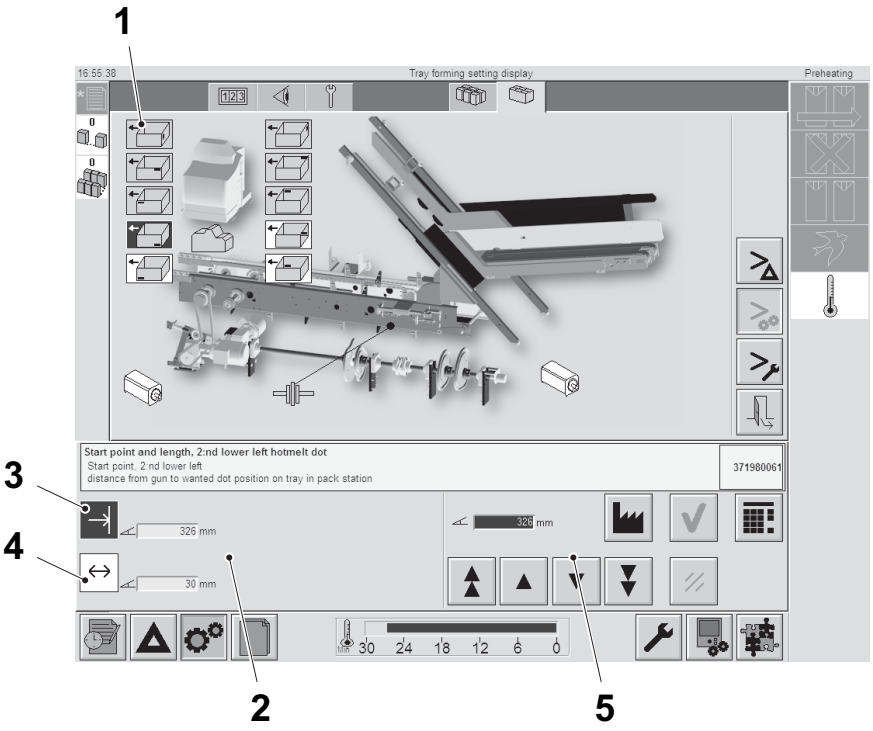

1 Symbol for a setting
2 Multi value setting window
3 Change start point
4 Change length
5 Single value setting window

6.8.2 TPOP Machine Setup

6.8.2-1 Setup - Add Language

a) Press the language button (1).

b) The selectable languages (2) are shown.

c) Press the add language button (3) to add a language.

d) Press the language button (4) multiple times until the desired language is shown.

e) The selected language is now loaded and selectable

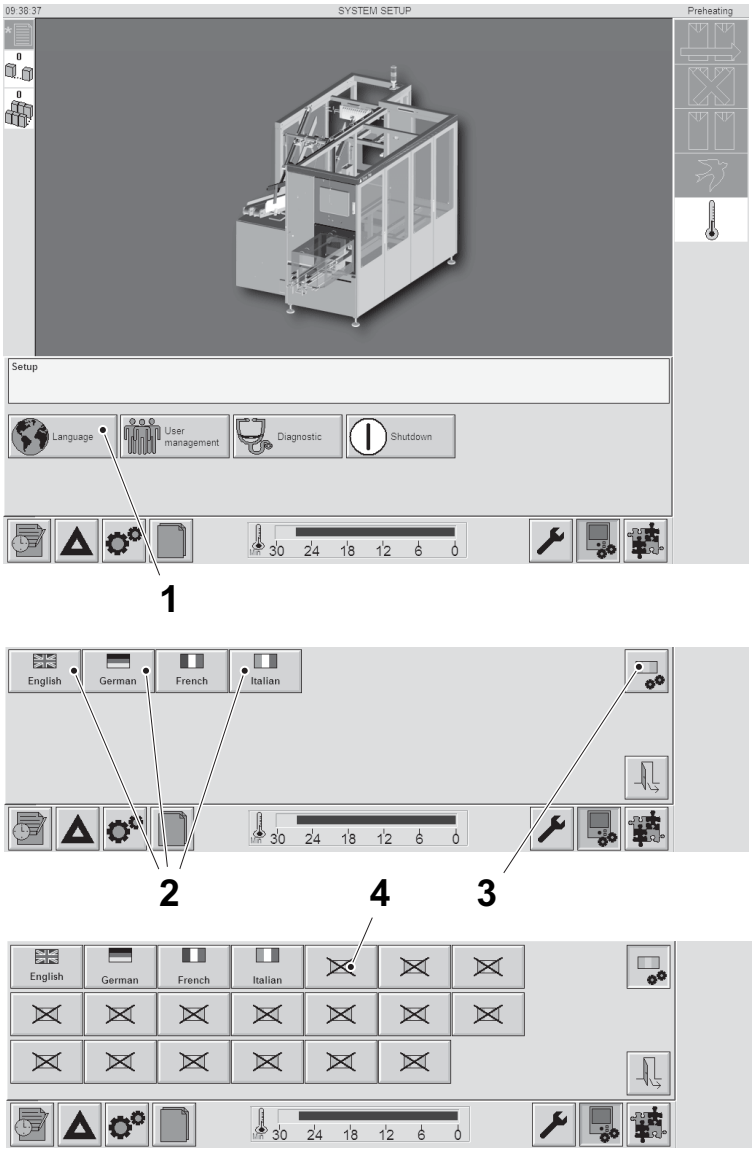

1 LANGUAGE
2 Selectable languages
3 ADD LANGUAGE
4 LANGUAGE

6.8.2-2 Start-Up Language Setup

a) Press the APPLICATION SETTINGS button (1) in the configuration window (2).

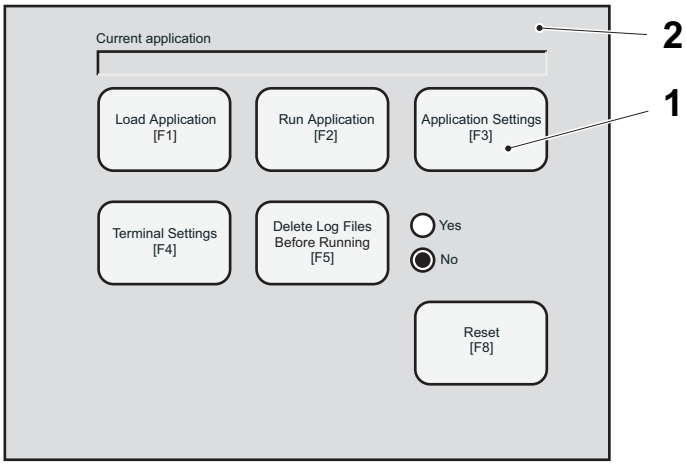

1 APPLICATION SETTINGS button
2 Configuration window

b) Press the ARROW buttons (3) to select Startup Language.

c) Press the ENTER button (4) to confirm.

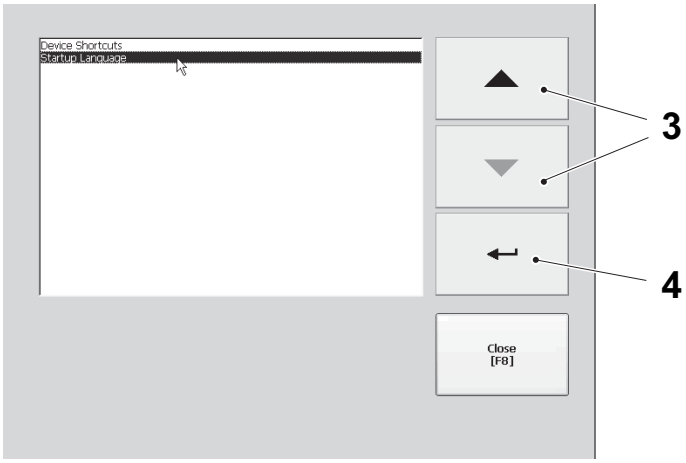

3 ARROW button
4 ENTER button

(Cont'd)

(Cont'd)

d) Press START IN LAST RUNTIME LANGUAGE (5) to select make the TPOP to select the active language after every reboot.

e) Press the OK button (6) to confirm.

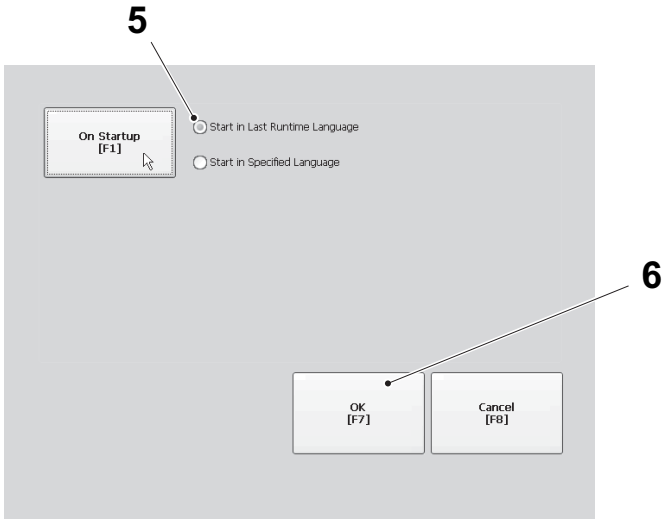

5 START IN LAST RUNTIME LANGUAGE
6 OK button

f) Press the close button (7)to exit.

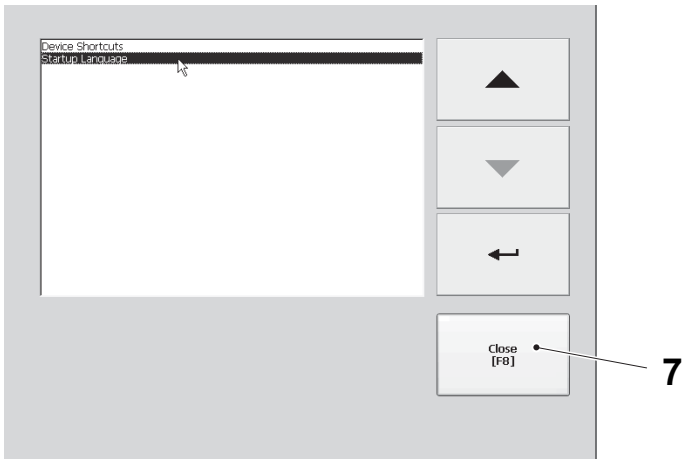

7 CLOSE button

Reboot the TPOP

a) Press the RESET button (1) in the configuration window (2).

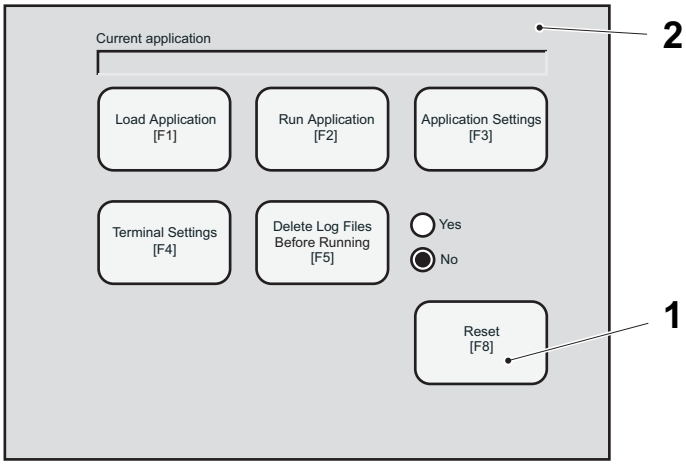

1 RESET button
2 Configuration window

b) Press the YES button (3) to confirm.

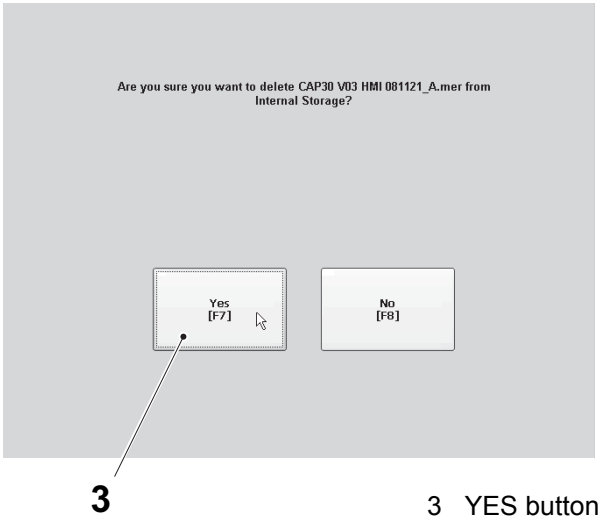

3 YES button

6.8.2-3 Remove Existing Application Program

Before a new application program can be installed, all files associated with the old program must be deleted to make space in the memory for the new program. Proceed as follows:

a) If HMI is running, shut down panel to exit to configuration screen.

b) Press the TERMINAL SETTINGS button (1) in the configuration window (2).

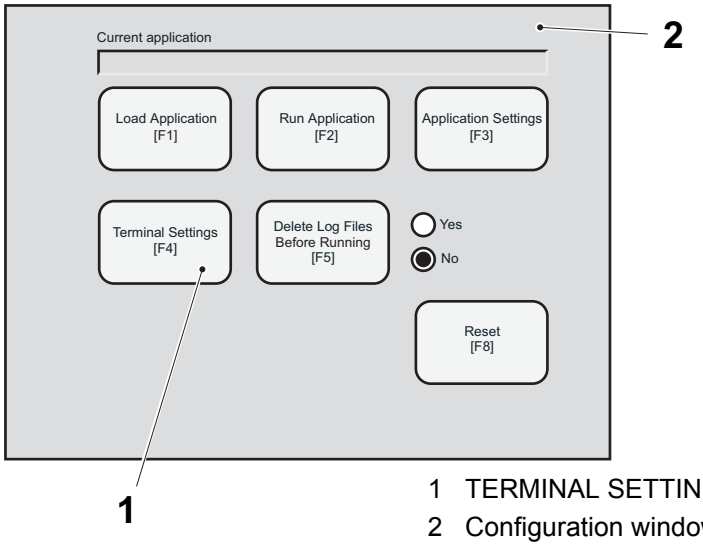

1 TERMINAL SETTINGS button
2 Configuration window

c) Select FILE MANAGEMENT (3) and press the ENTER button (4).

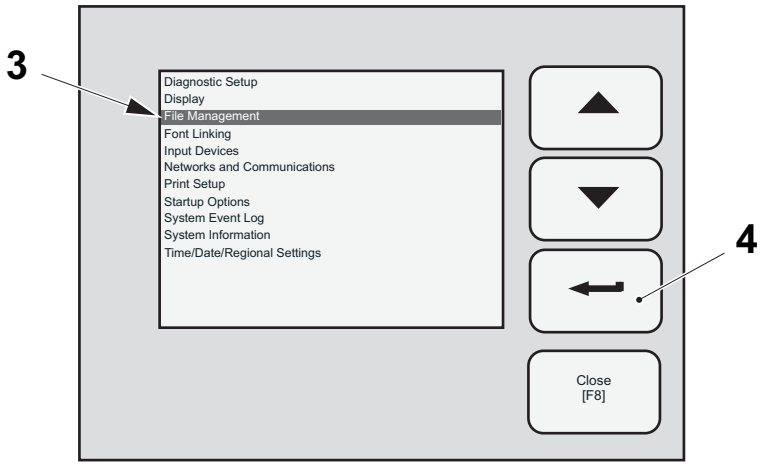

3 FILE MANAGEMENT
4 ENTER button

(Cont'd)

(Cont'd)

d) Select DELETE FILES (5) and press the ENTER button (4).

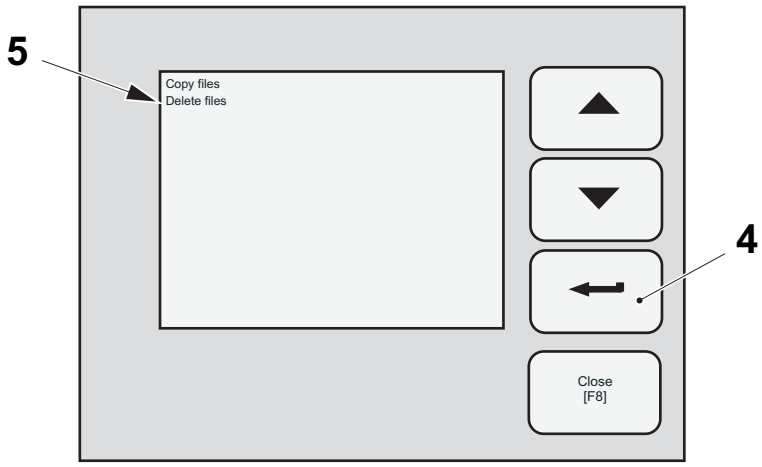

4 ENTER button
5 DELETE FILES

e) Select DELETE APPLICATIONS (6) and press the enter ENTER button (4).

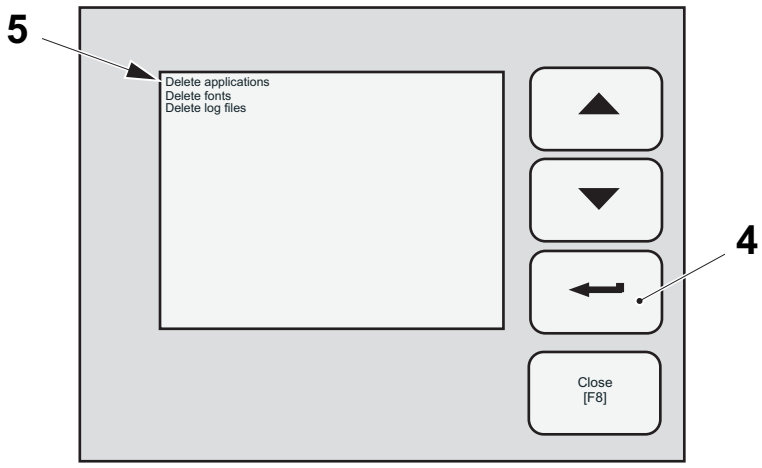

4 ENTER button
6 DELETE APPLICATIONS

(Cont'd)

(Cont'd)

f) Select appropriate application program (7) to be deleted and press the DELETE button (8).

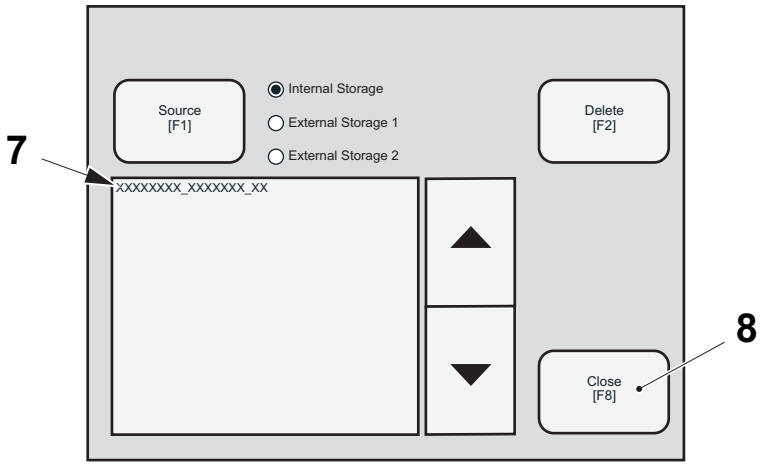

7 APPLICATION PROGRAM
8 CLOSE button

g) Confirm by pressing YES button (9).

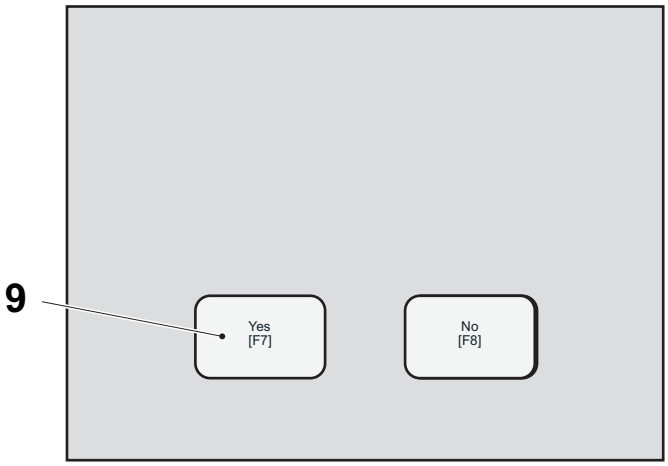

9 YES button

h) Repeatedly press the close button (8) until the configuration window appears. The touch screen now has enough memory available to download the new application program.

6.8.2-4 Download Application Program (Memory media)

Memory media can be either:

USB (Don't use USB flash drives with security or encryption. USB flash drive file system format must be FAT32. Rockwell suggested product: Kingston DataTraveler series) or **Compact flash card** (TP preferred solution).

a) Extract the HMI Project file from software CD directly to the root of a memory media.
When unzipping, a catalogue structure will be automatically created on the drive according to below and the application will be placed inside the “runtime” folder. If not create the path manually and put the *.mer file inside the “runtime” folder.
Path: [Memory media drive letter]:
\RockwellSoftware\RsViewME\Runtime\

b) Insert the Memory media on the rear of the panel and shut down the panel from the system settings page.

c) Press the TERMINAL SETTINGS button (1) in the configuration window (2).

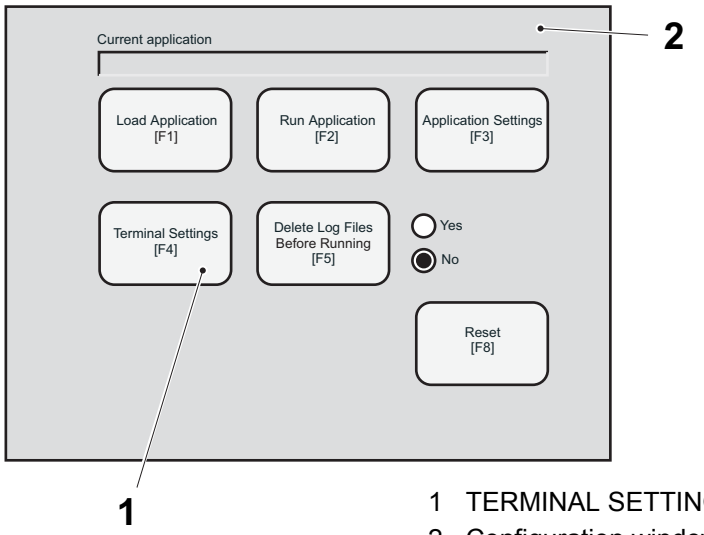

1 TERMINAL SETTINGS button
2 Configuration window

(Cont'd)

(Cont'd)

d) Select FILE MANAGEMENT (3) and press the ENTER button (4).

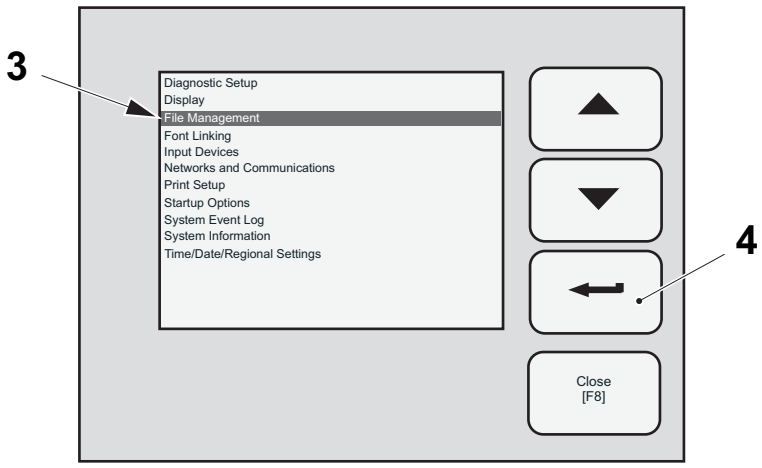

3 FILE MANAGEMENT
4 ENTER button

e) Select COPY FILES (5) and press the ENTER button (4).

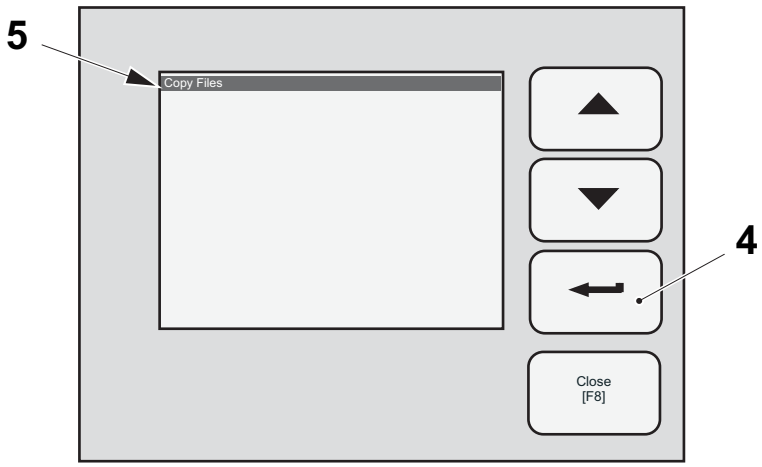

4 ENTER button
5 COPY FILES

(Cont'd)

(Cont'd)

f) Select COPY APPLICATION (6) and press the ENTER button (4).

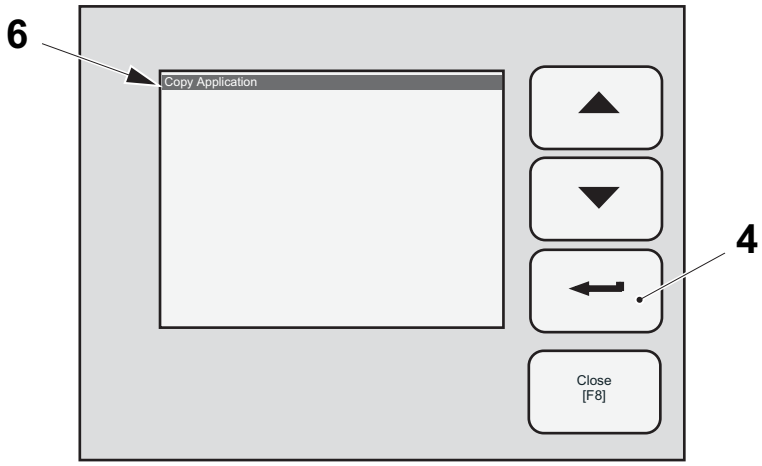

4 ENTER button
6 COPY FILES

g) Press the SOURCE button (7).

h) Choose source EXTERNAL STORAGE 1 (8) if the **USB** is used and EXTERNAL STORAGE 2 (9) if the **Compact flash card** is used. If Memory media drive EXTERNAL STORAGE 1 or 2 is not seen, RESET panel and restart from item b).

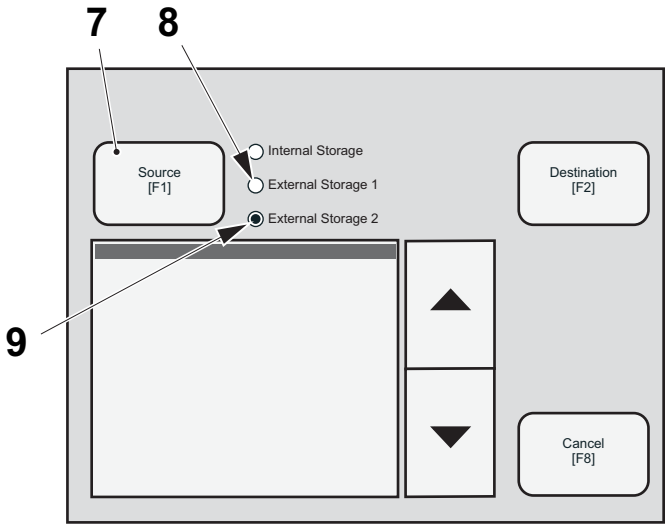

7 SOURCE button
8 EXTERNAL STORAGE 1
9 EXTERNAL STORAGE 2

(Cont'd)

(Cont'd)

i) Press the DESTINATION button (10).

j) Select INTERNAL STORAGE (11).

k) Press the COPY button (12) and wait for file to be copied.

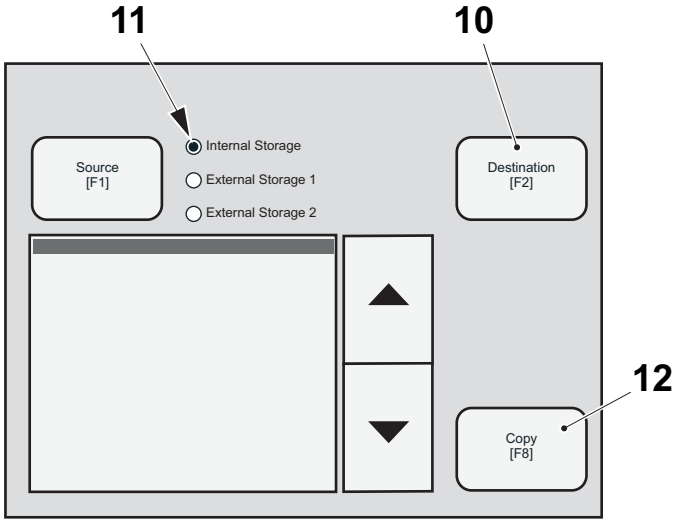

10 DESTINATION button
11 INTERNAL STORAGE
12 COPY button

(Cont'd)

(Cont'd)

l) Return to the main window by pressing the:
CANCEL button (13)
CLOSE button (14)
CLOSE button (15)
CLOSE button (16)

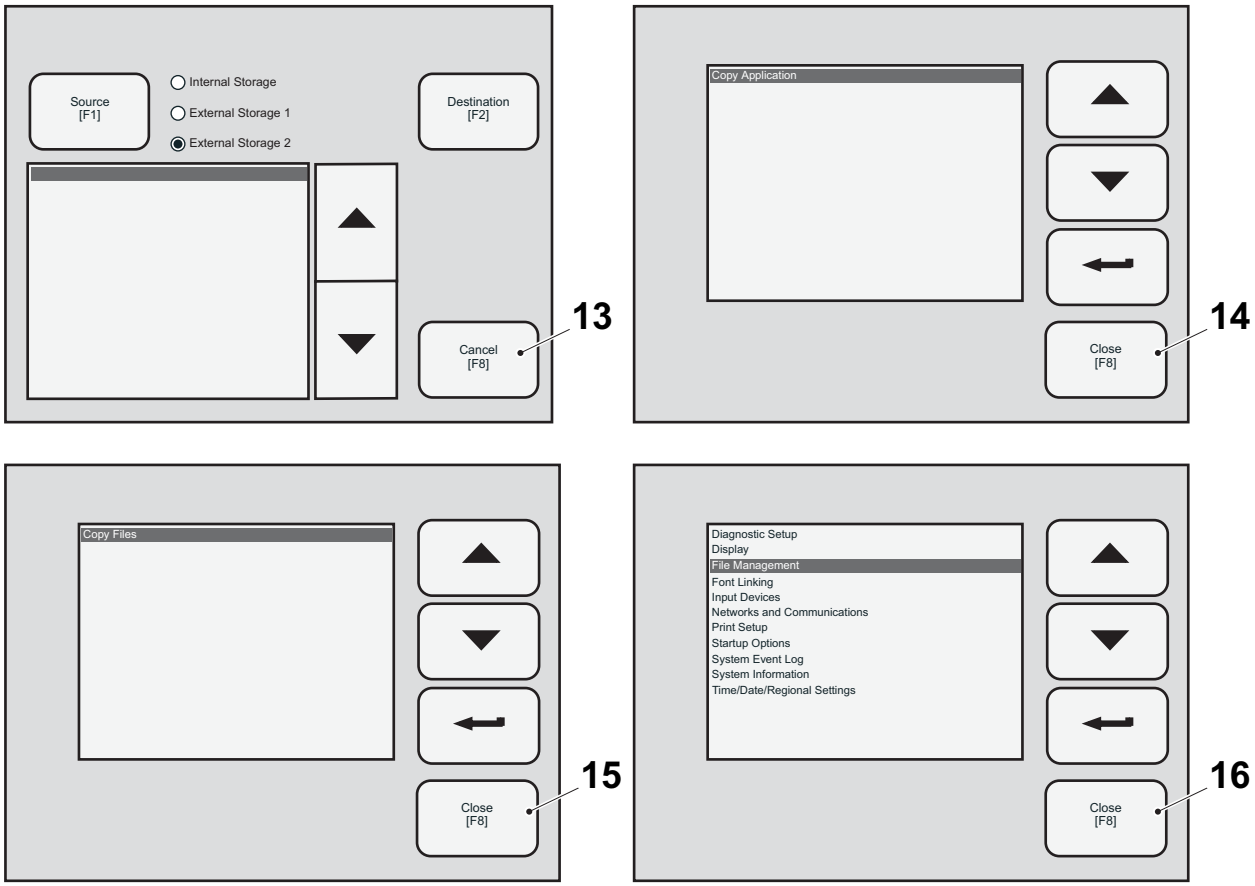

13 CANCEL button
14 CLOSE button
15 CLOSE button
16 CLOSE button

(Cont'd)

(Cont'd)

m) Remove the Memory media.

n) Press the LOAD APPLICATION button (17).

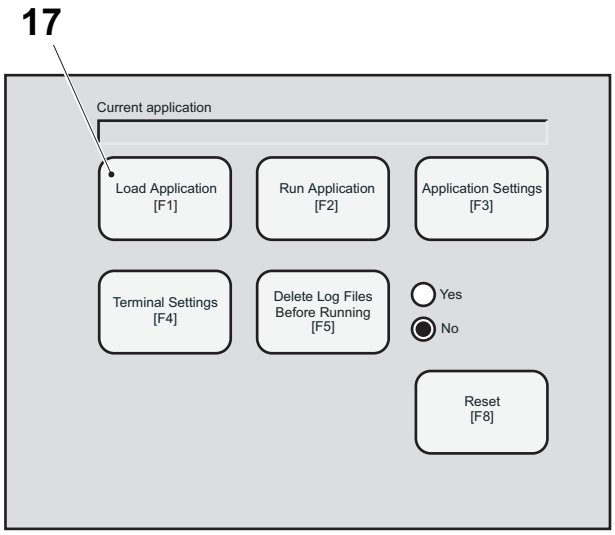

17 LOAD APPLICATION button

o) Check that source is INTERNAL STORAGE (11). If not, select with the SOURCE button (18).

p) Press the LOAD button (19).

q) Confirm by pressing the YES button (20).

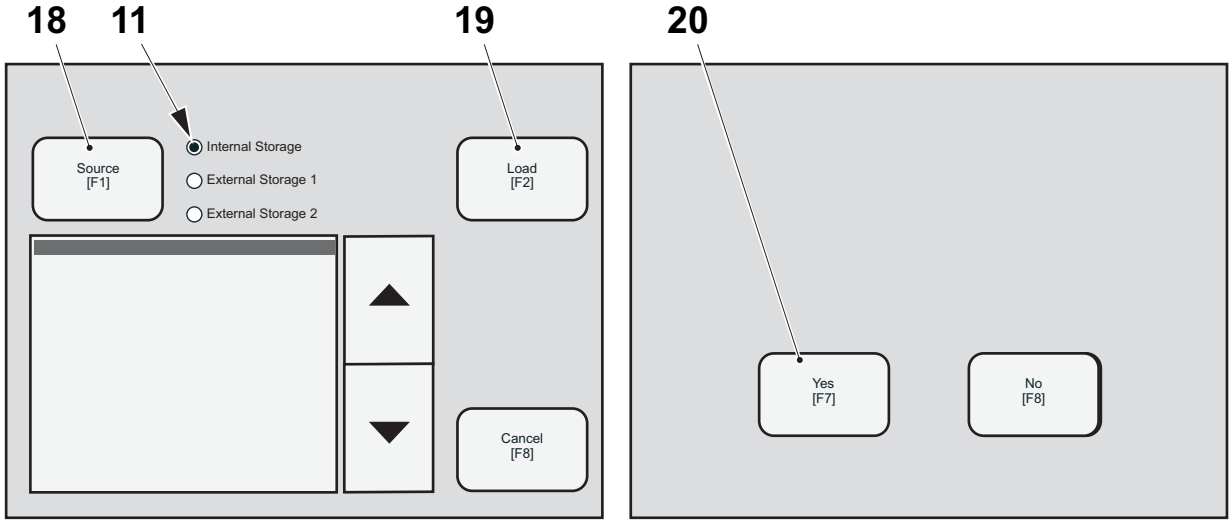

11 INTERNAL STORAGE
18 SOURCE button
19 LOAD button
20 YES button

(Cont'd)

(Cont'd)

r) When the application is loaded (selected run time-file is shown in current application field).
Press the TERMINAL SETTINGS button (21).

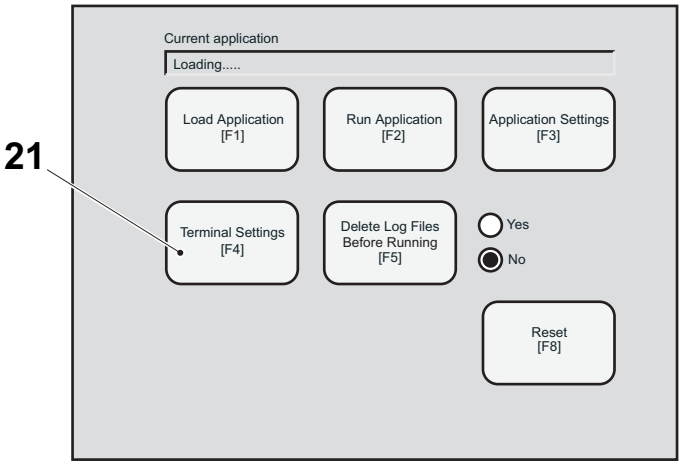

21 TERMINAL SETTING button

s) Select the START UP OPTIONS (22).

t) Press the ENTER button (4).

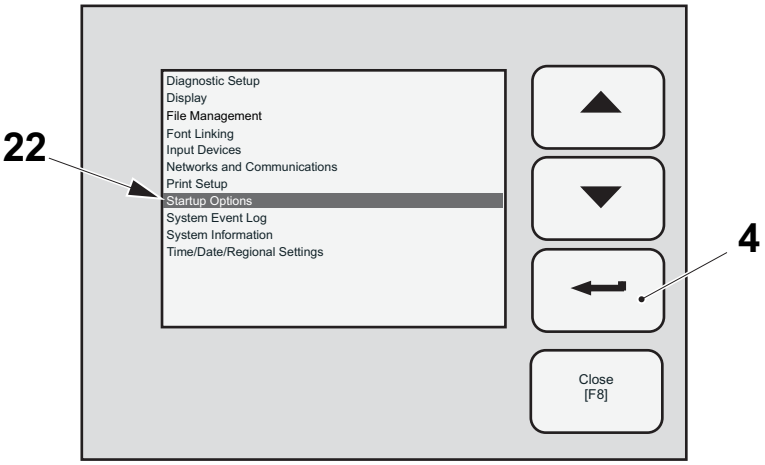

4 ENTER button
22 STARTUP OPTIONS

(Cont'd)

(Cont'd)

u) Select the FACTORY TALK VIEW ME STATION STARTUP (23).

v) Press the ENTER button (4).

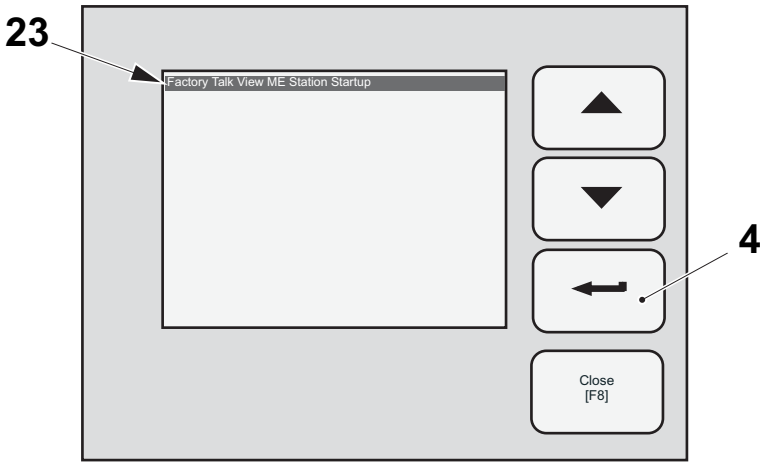

4 ENTER button
23 FACTORY TALK VIEW ME STATION STARTUP

w) Press the ON STARTUP button (24) until RUN CURRENT APPLICATION (25) is selected.

x) Press the RUN OPTION button (26).

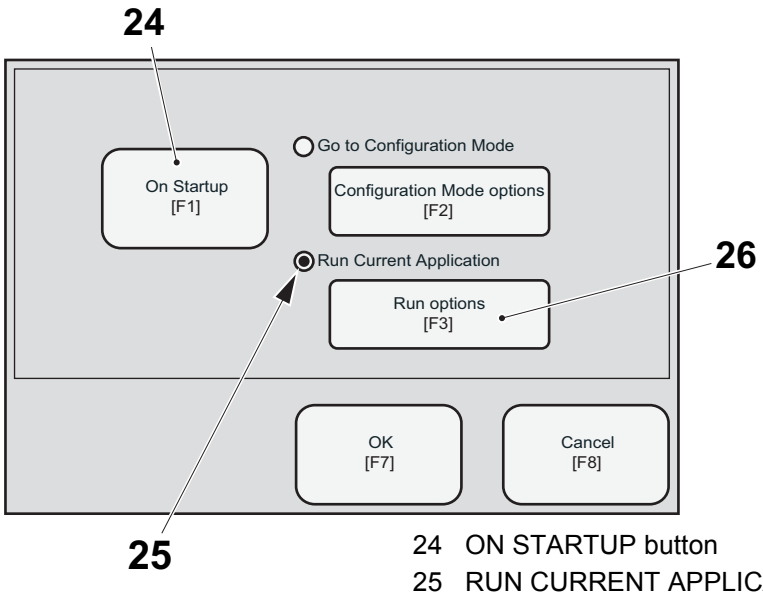

24 ON STARTUP button
25 RUN CURRENT APPLICATION
26 RUN OPTION button

(Cont'd)

(Cont'd)

y) Select YES (27) on option DELETE LOG FILES ON EVERY POWER CYCLE (28).

z) Confirm by pressing the OK button (29).

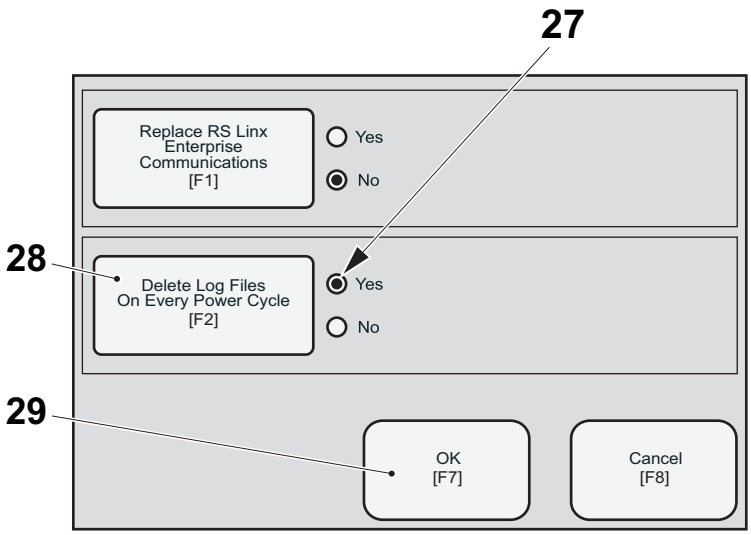

27 YES
28 DELETE LOG FILES ON EVERY POWER CYCLE
29 OK button

aa) Return to main window by pressing:
OK button (30)
CLOSE button.....

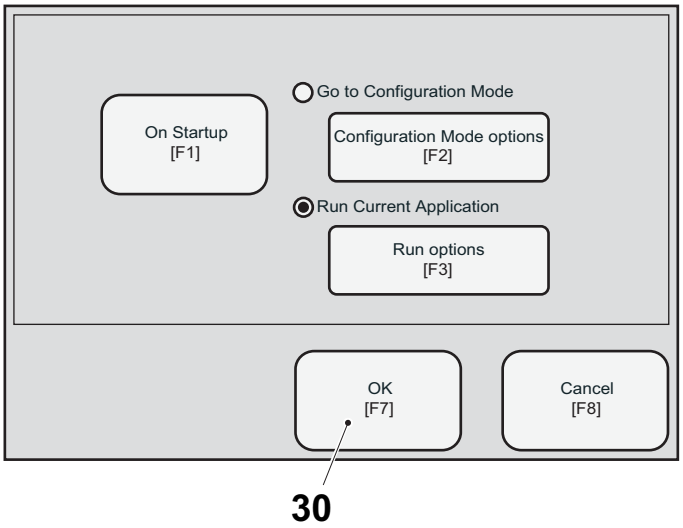

30 OK button

6.8.3 TPOP Configuration Window

a) Press the CONFIGURATION BUTTON (20).

b) Set the machine configuration settings (1 to 19) according to the machine setup on order or to the customer setup.

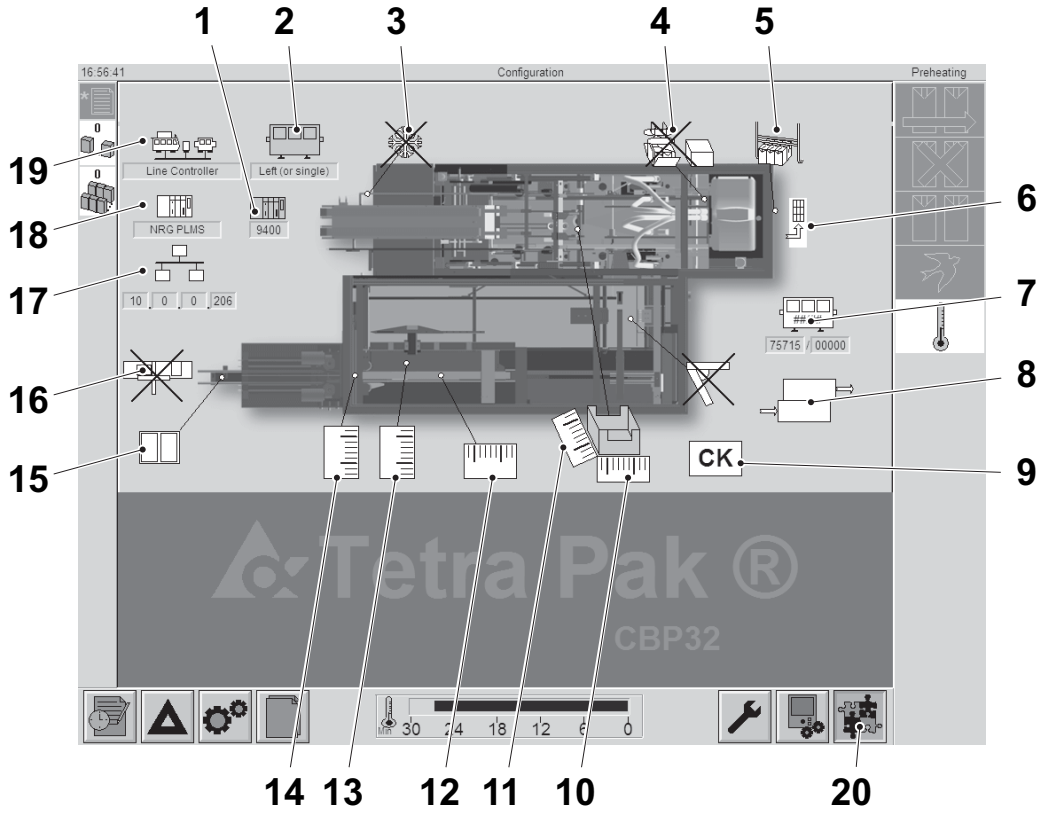

1 PLMS_SNP ID
2 Machine position in line
3 Cooling unit
4 Wraparound unit
5 Light barrier
6 Discharge (multi setting)
7 Machine number
8 Machine variant
9 CK installed (Undies setting 10-14 when set to “1”)
10 Distribution unit max width
11 Distribution unit max length
12 Infeed max length
13 Grouping plate width
14 Infeed max width
15 Infeed conveyor (multi setting)
16 Package turner (multi setting)
17 IP-address PLC
18 PLMS type
19 Line automation type
20 CONFIGURATION BUTTON

6.8.3-1 TPOP Settings - Pattern Forming

Machine Status	Power supply disconnector ON Air valve ON

a) Press the SETTING button (1) and the PATTERN FORMING button (2) or press the PATTERN FORMING tab (3).

b) Perform the required setting. The settings and functions to select are servo commissioning (4), grouping pusher, long stroke back delay (5), grouping pusher, back position (6), grouping pusher guide rail position (7), box pusher back delay (8), set box pusher back position (9), and set pattern at box pusher (ultra sonic) (10).

c) To handle the different ways of changing settings, see Sections Single Value Setting and Multi Value Setting.

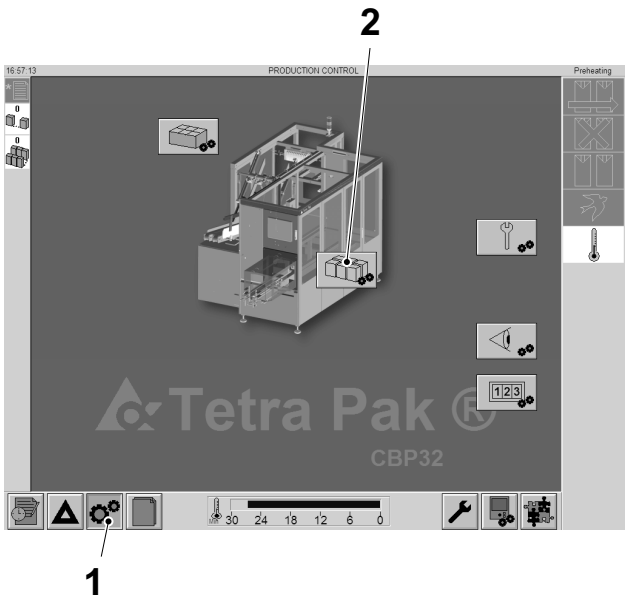

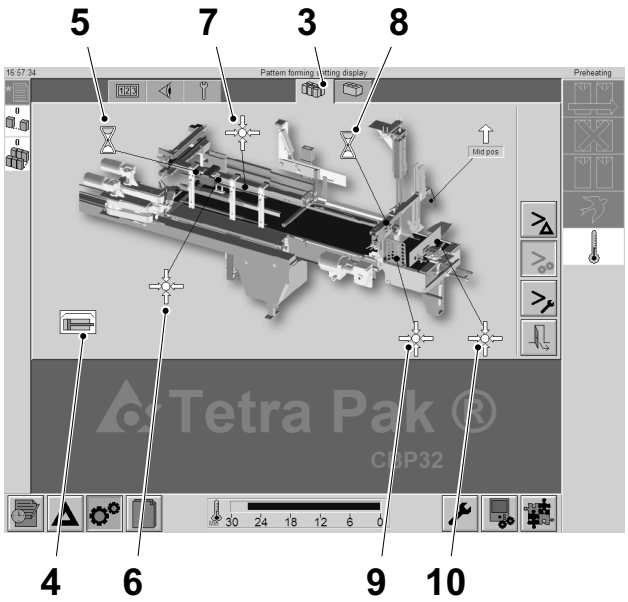

1 SETTING
2 PATTERN FORMING
3 PATTERN FORMING tab
4 Servo commissioning
5 Grouping pusher, long stroke back delay
6 Grouping pusher, back position
7 Grouping pusher guide rail position
8 Box pusher back delay
9 Set box pusher back position
10 Set pattern at box pusher (ultra sonic)

Package counters

a) Press the SETTING button (1) and the Package counters button (2) or press the Package counters tab (3).

b) Observe the counters for packages in (4), out (5) and waste (6) and if necessary reset respective counter (7).

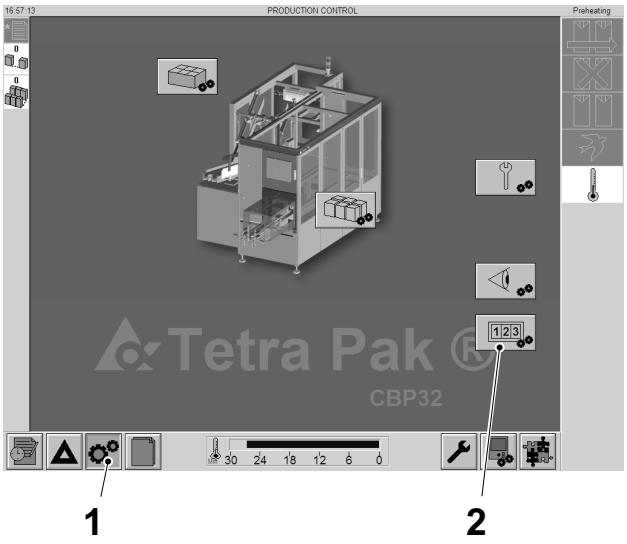

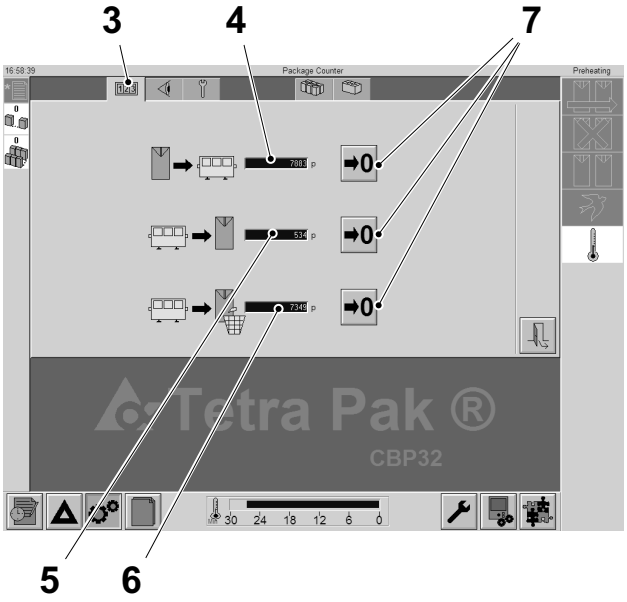

1 SETTINGS
2 PACKAGE COUNTERS
3 PACKAGE COUNTERS tab
4 Counter for number of packages in
5 Counter for number of packages out
6 Counter for number of waste packages
7 Reset counters

Overview

a) Press the SETTING button (1) and the Overview button (2) or press the Overview tab (3).

b) Observe the current settings for the Grouping pusher (4), Number of packages inside infeed section (5), Number of complete pre-grouped rows (6), Box pusher speed forward (7), HMI Software version (8), PLC Software version (9), PLMS Software version revision (10).

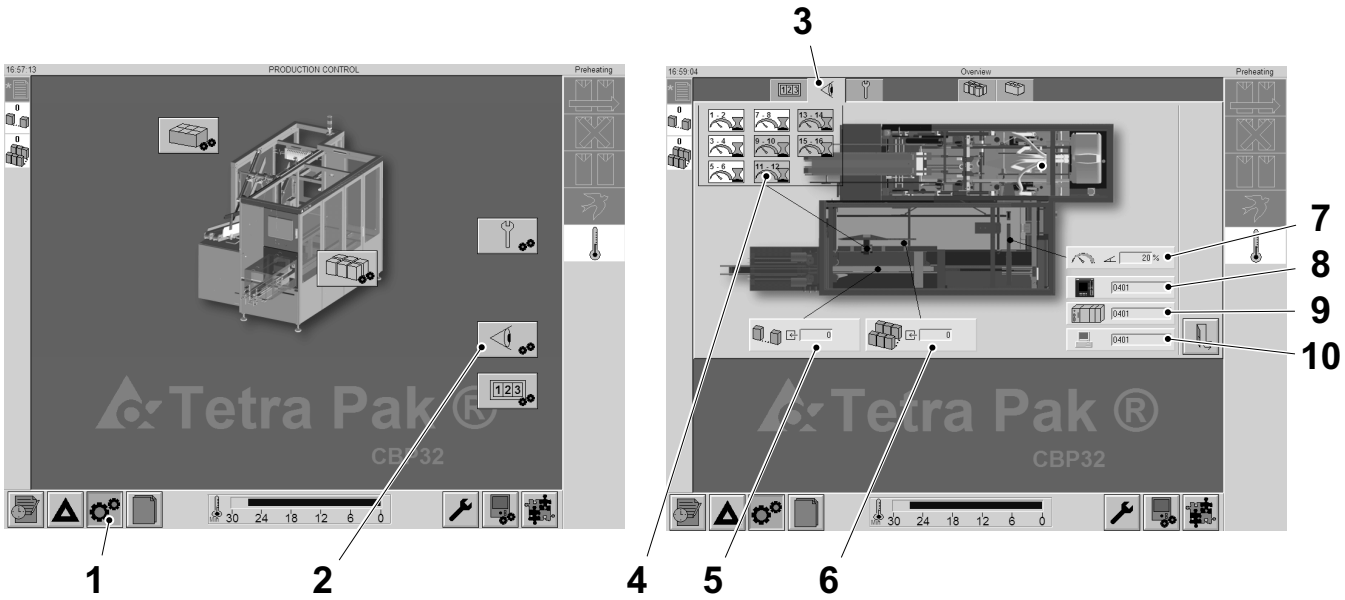

1 SETTINGS
2 OVERVIEW
3 OVERVIEW tab
4 Current settings for the Grouping pusher
5 Number of packages inside infeed section
6 Number of complete pre-grouped rows
7 Box pusher speed forward
8 HMI Software version
9 PLC Software version
10 PLMS Software version revision

Service settings

a) Press the SETTING button (1) and the SERVICE button (2) or press the SERVICE tab (3).

b) Perform the required setting. The settings and functions to select are manual lubrication (4) and Line controller by-pass (5).

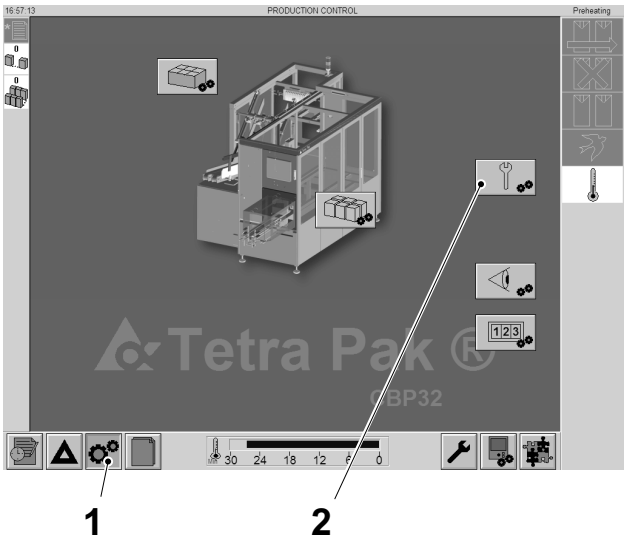

1 SETTINGS
2 SERVICE

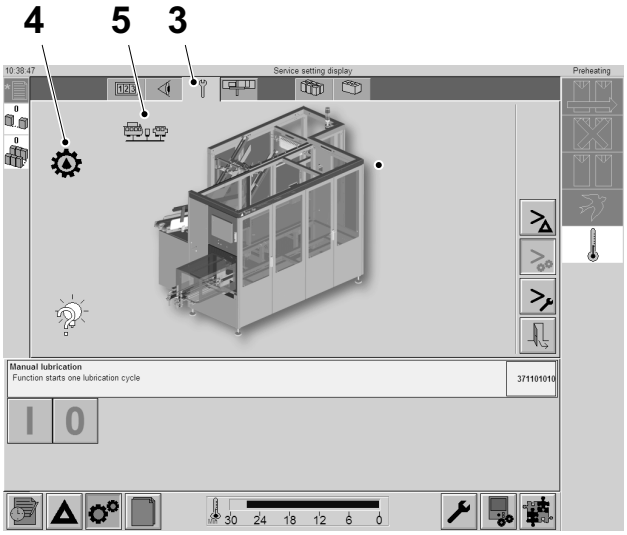

3 SERVICE tab
4 Manual lubrication
5 Line controller by-pass

6.8.3-2 TPOP Settings - Tray Forming

Machine Status	Power supply disconnector ON Air valve ON

a) Press the SETTING button (1) and the TRAY FORMING button (2) or press the TRAY FORMING tab (3).

b) Perform the required setting. The settings and functions to select are the encoder feeding chain position (5), the adhesive dots positions in the hotmelt unit (6), and the encoder main shaft position (7). Carrier clutch (4) only indicates the status of the cluth.

c) To handle the different ways of changing settings, see Sections Single Value Setting and Multi Value Setting.

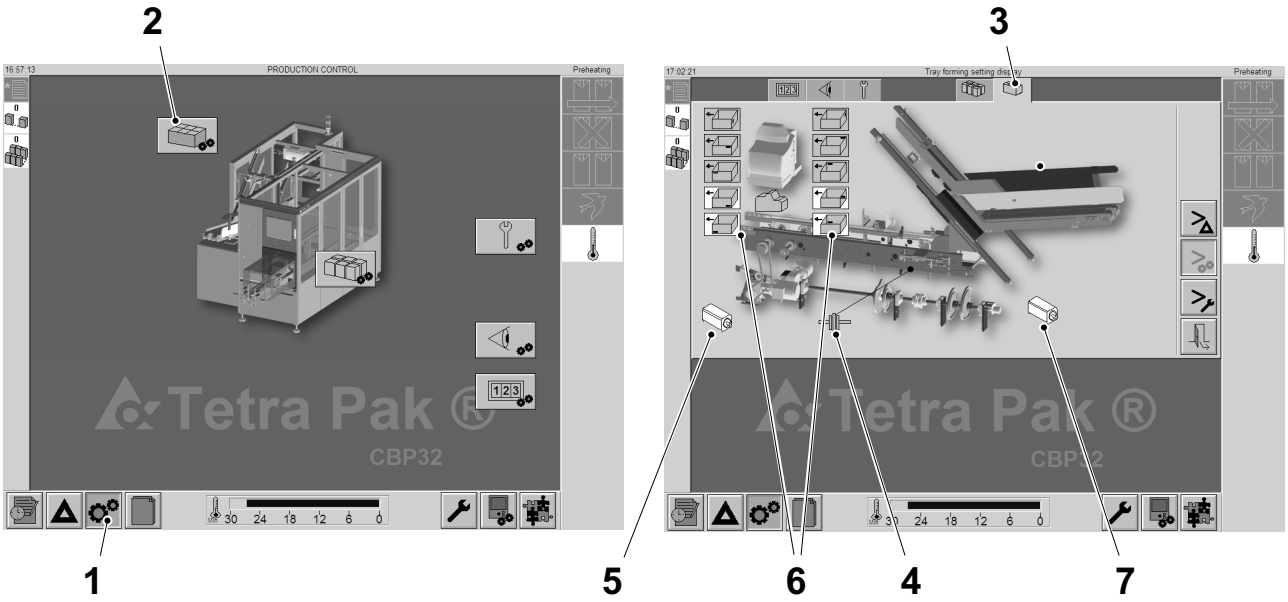

1 SETTING
2 TRAY FORMING
3 TRAY FORMING tab
4 Carrier clutch (Indication only)
5 Encoder feeding chain position function
6 Adhesive dot position hotmelt unit setting
7 Encoder main shaft position function

6.8.3-3 TPOP Open an Existing Recipe

Machine Status	Power supply disconnector ON Air valve ON

The recipe includes all machine settings for a specific package, packing pattern and tray.

a) Press the SETTING button (1) and the RECIPE button (2).

b) Step the machine to PREHEATING or IDLE.

c) Press the OPEN button (3) to open an existing recipe.

d) Step in the list using the ARROW buttons (4) and select a recipe using the CONFIRMATION button (5). Use the CANCEL button (6) to abort selected function.

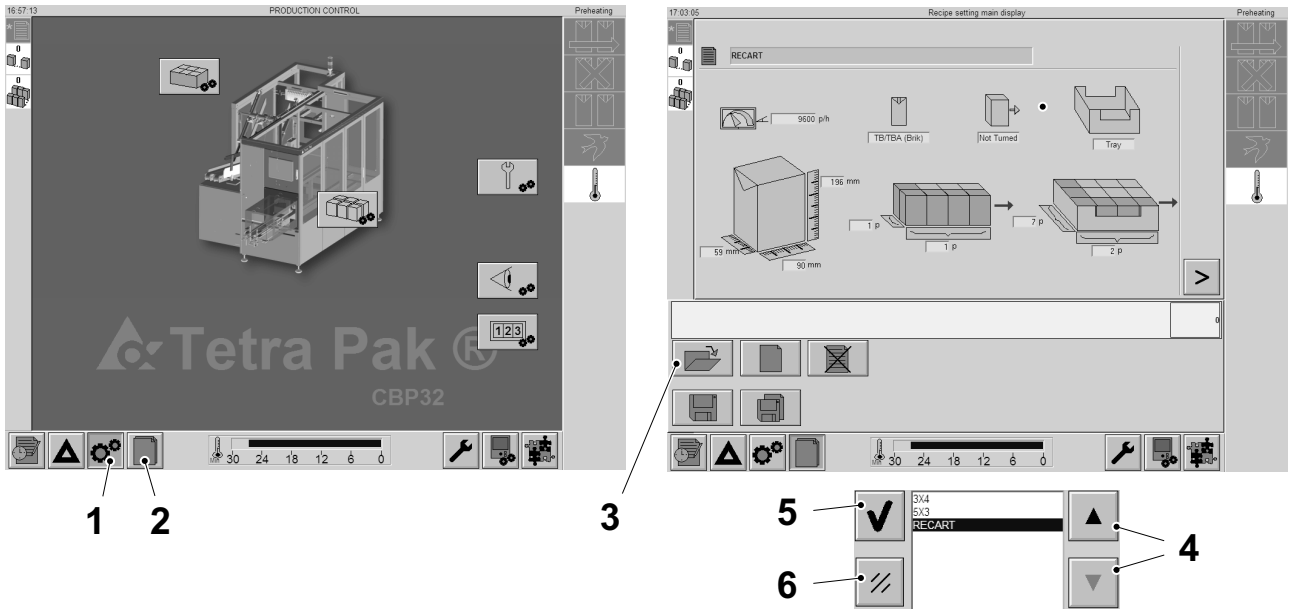

1 SETTING
2 RECIPE button
3 OPEN
4 ARROW
5 CONFIRMATION
6 CANCEL

6.8.3-4 Creating a New Recipe

Machine Status	Power supply disconnector ON Air valve ON

The recipe includes all machine settings for a specific package, packing pattern and tray.

a) Press the SETTING button (1) and the RECIPE button (2).

b) Press NEW RECIPE button (3) to create a new recipe.

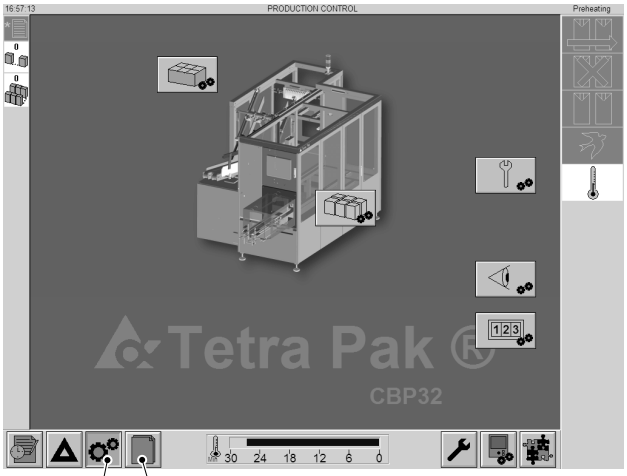

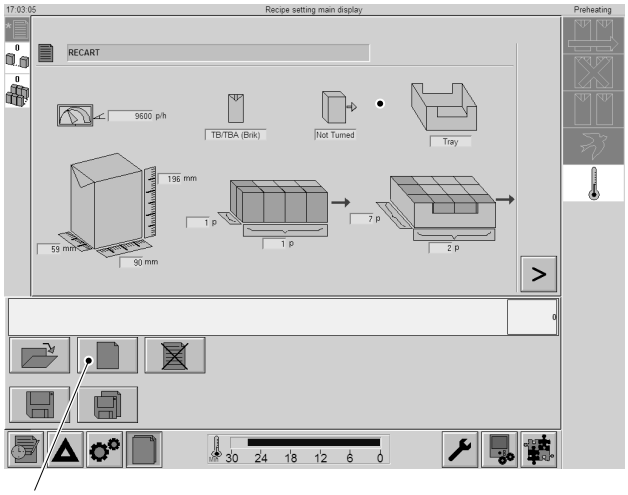

1 SETTING
2 RECIPE button
3 NEW RECIPE

(Cont'd)

(Cont'd)

c) Press MAX CAPACITY button (4) to select the setting.

d) Use ARROWS (5) or the keypad (7) to change the capacity the value.

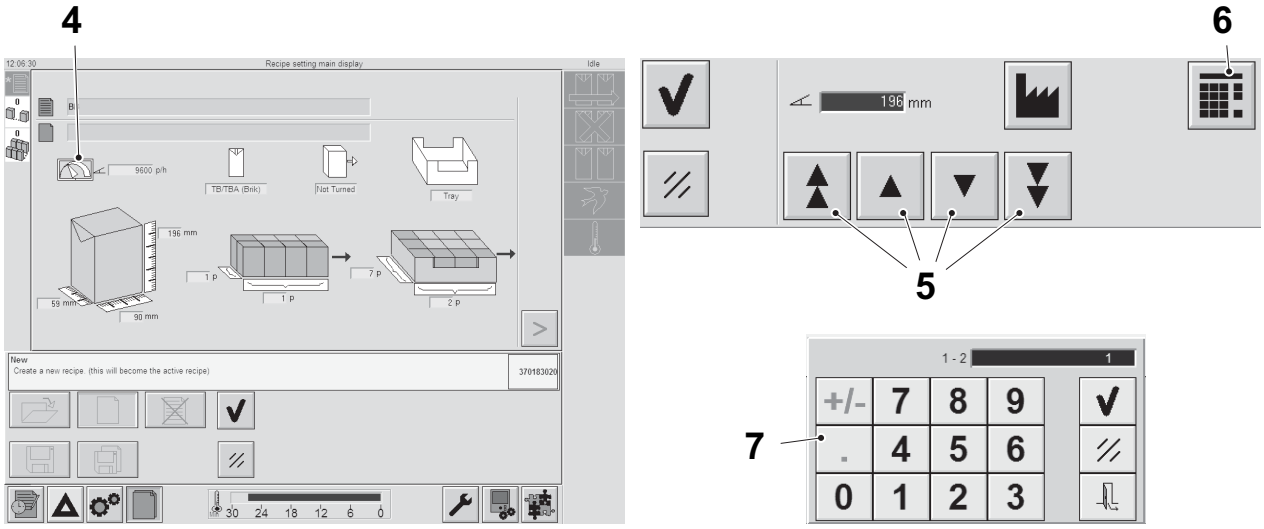

4 MAX CAPACITY
5 ARROW
6 KEYPAD BUTTON
7 KEYPAD

e) Press PACKAGE TYPE button (8) or TRAY TYPE button (9) to select the settings.

f) Use the ARROWS buttons (10) to change package or tray type.

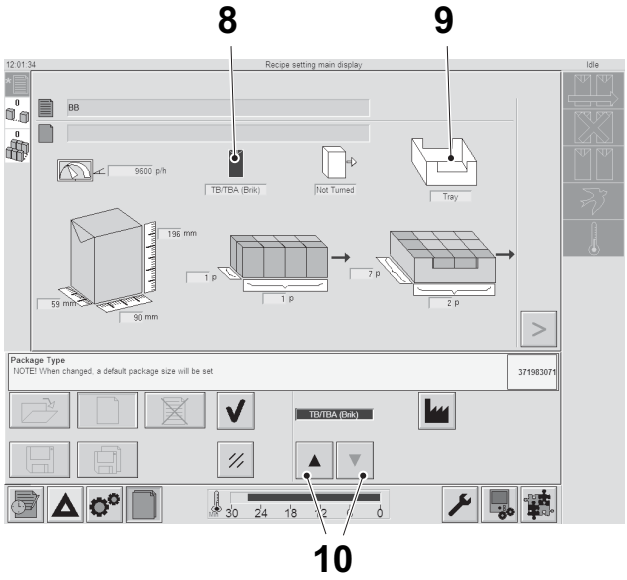

8 PACKAGE TYPE
9 TRAY TYPE
10 ARROW

(Cont'd)

(Cont'd)

g) Press PACKAGE DIRECTION button (11) to select the setting.

h) Use the buttons (12) or the (13) to change package direction.

- 0 = Not turned
- 1 = Turned

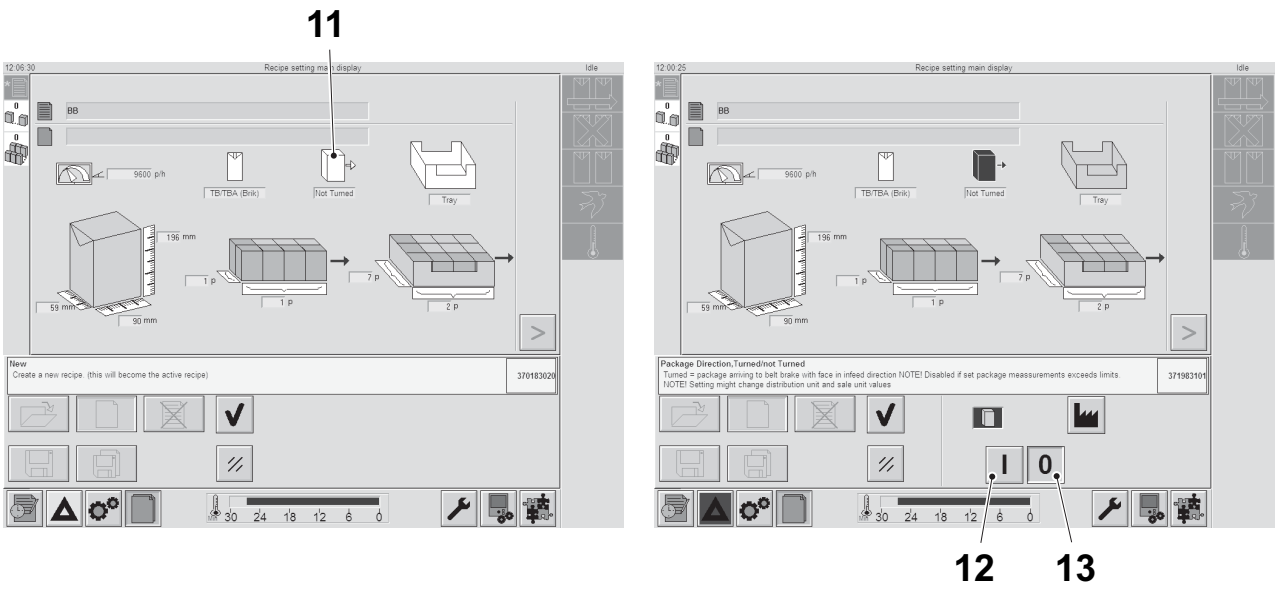

11 PACKAGE DIRECTION
12 NOT TURNED
13 TURNED

(Cont'd)

(Cont'd)

i) Press the white symbols (14) to select the settings.

j) Use ARROWS (5) or the keypad (7) to change package dimensions, infeed unit configuration, and tray configuration.

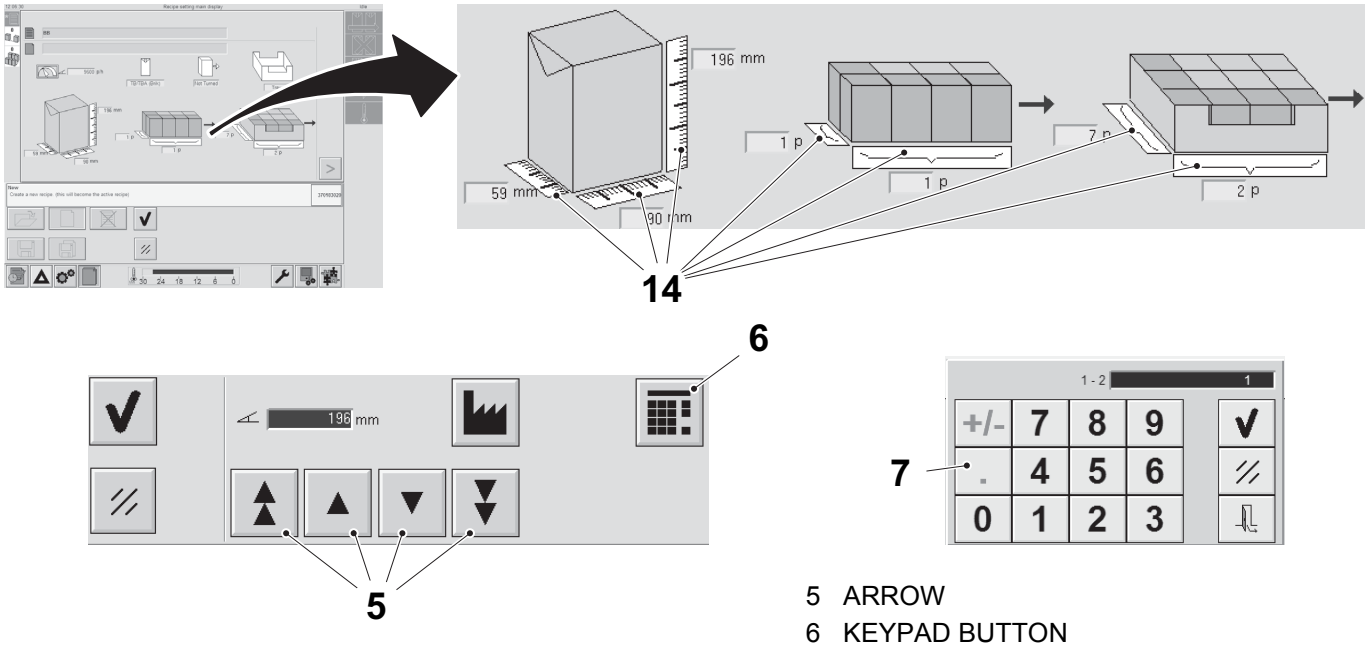

5 ARROW
6 KEYPAD BUTTON
7 KEYPAD
14 PACKAGE DIRECTION

(Cont'd)

(Cont'd)

Infeed Settings

a) Fill in the required settings concerning capacity (1-2) infeed (3-7) and pattern forming (4-17).

Note! The (20-21) can only be choose in the configuration page.

b) Press the ARROW button (18) to view the next sub-recipe page.

c) Press the ARROW button (19) to view the 1st Recipe page.

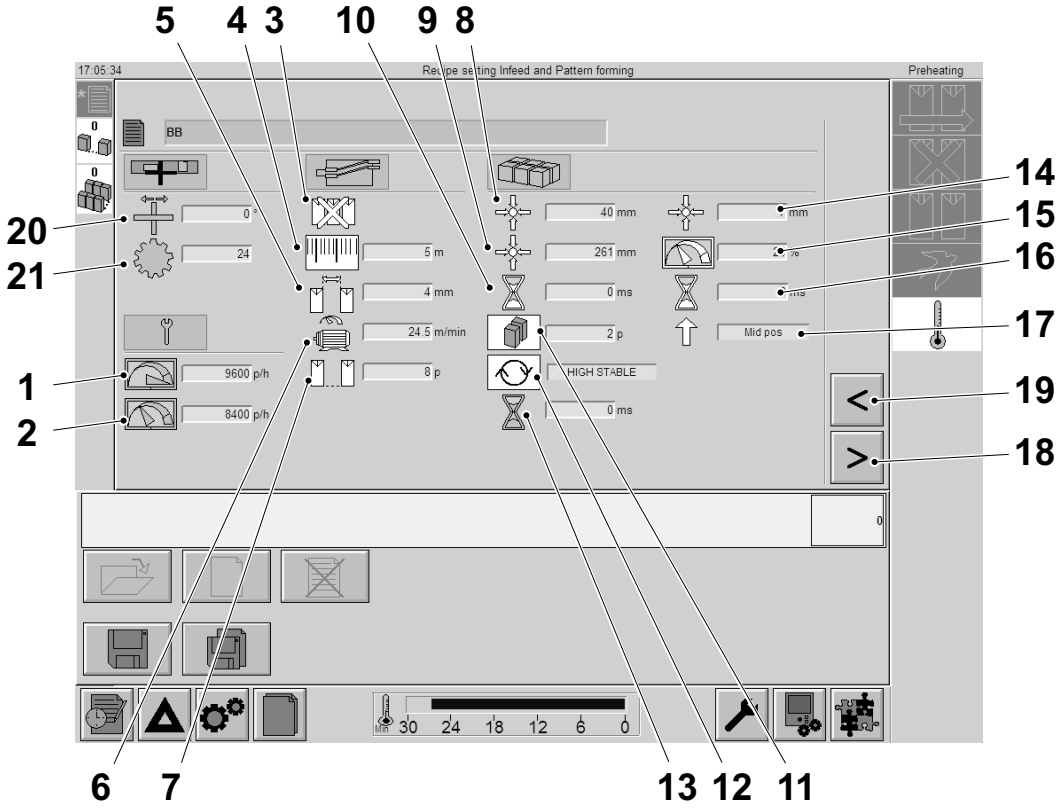

1 Overcapacity
2 Nominal Capacity
3 Wait for queue
4 Conveyor length
5 Infeed unit separation
6 Conveyor speed
7 Nr of packages per row (in front of grouping pusher)
8 Grouping pusher, guide rail position
9 Grouping pusher back position
10 Grouping pusher, long stroke back delay
11 Grouping pusher rail rows
12 Grouping pusher, top support mode
13 Grouping pusher, top support down delay
14 Box pusher back position
15 Box pusher speed forward
16 Box pusher back delay
17 Box pusher dolly up position
18 ARROW
19 ARROW
20 Package turner, angle compensation
21 Cogwheel turner

(Cont'd)

(Cont'd)

Grouping Pusher Settings

a) Fill in the required settings of the grouping pusher speed (1) and the dolly pulse (2) on the sub recipe.

b) Press the ARROW button (3) to view the last sub recipe.

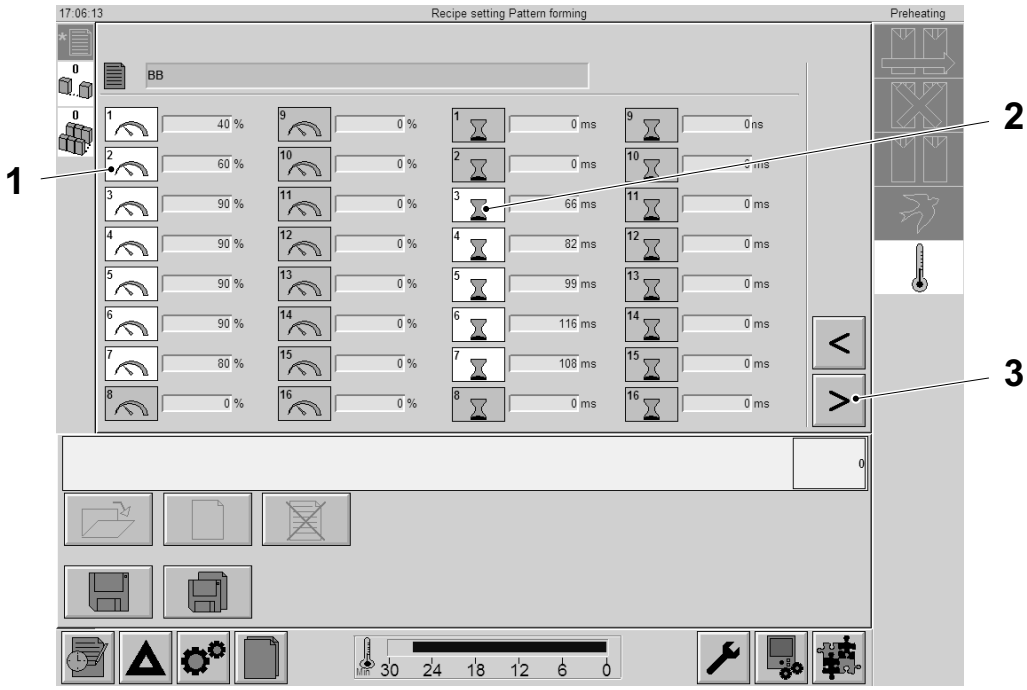

1 Grouping pusher speed
2 Dolly pulse
3 ARROW

(Cont'd)

(Cont'd)

c) Fill in the required settings of the start points of each hotmelt dot 4) and the length of each hotmelt dot (5).

d) Save the recipe, see next page.

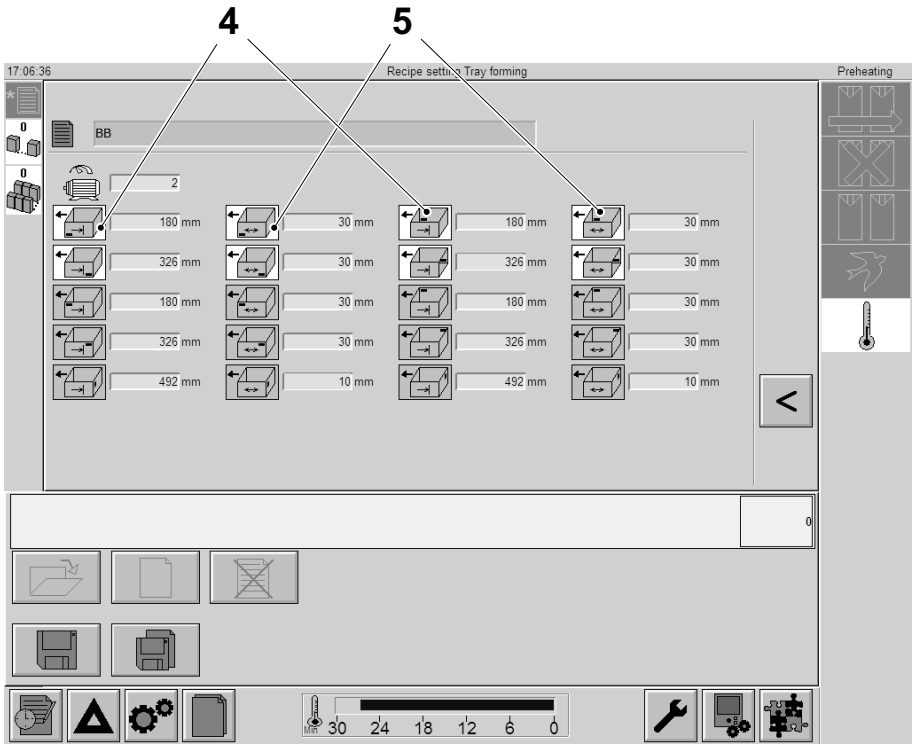

4 Start point of each hotmelt dot
5 Length of each hotmelt dot

(Cont'd)

(Cont'd)

Save Current Recipe

e) Press the SAVE button (6) to save the recipe with the same name. (Save current data.)

f) Press the CONFIRMATION button (8) to start saving the recipe or press the CANCEL button (9) to abort the recipe saving.

Save Recipe with New Name

g) Press the SAVE AS button (7) to save the recipe with another name.

h) Press the CONFIRMATION button (8) to start saving the recipe or press the CANCEL button (9) to abort the recipe saving.

i) Type the recipe name with the keyboard (11) and press ENTER (10).

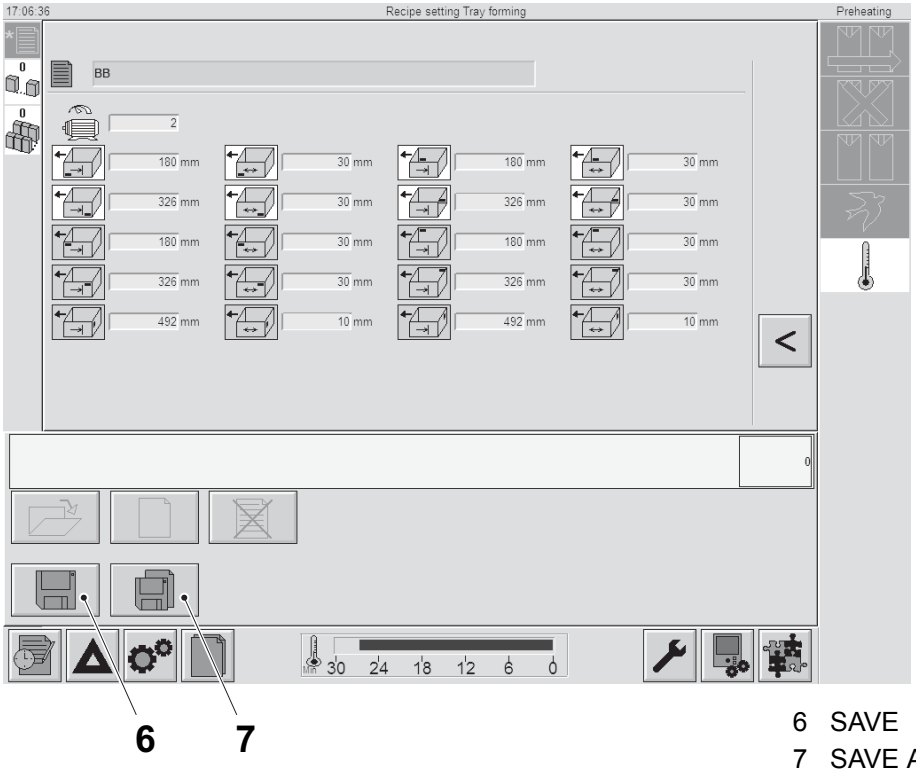

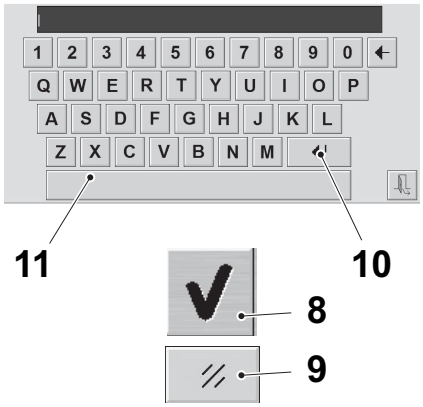

6 SAVE
7 SAVE AS
8 CONFIRMATION
9 CANCEL
10 ENTER
11 Keyboard

6.8.4 TPOP Maintenance

6.8.4-1 TPOP Maintenance - Service

Machine Status	Power supply disconnector ON Air valve ON

a) Press the MAINTENANCE button (1).

b) Perform the required maintenance. The maintenance setting to select is machine capacity overview (2).

c) Press the MACHINE CAPACITY button (3) to view the different capacities current capacity (3), overcapacity (4), and nominal capacity (5).

d) To handle the different ways of changing settings, see Sections Single Value Setting and Multi Value Setting.

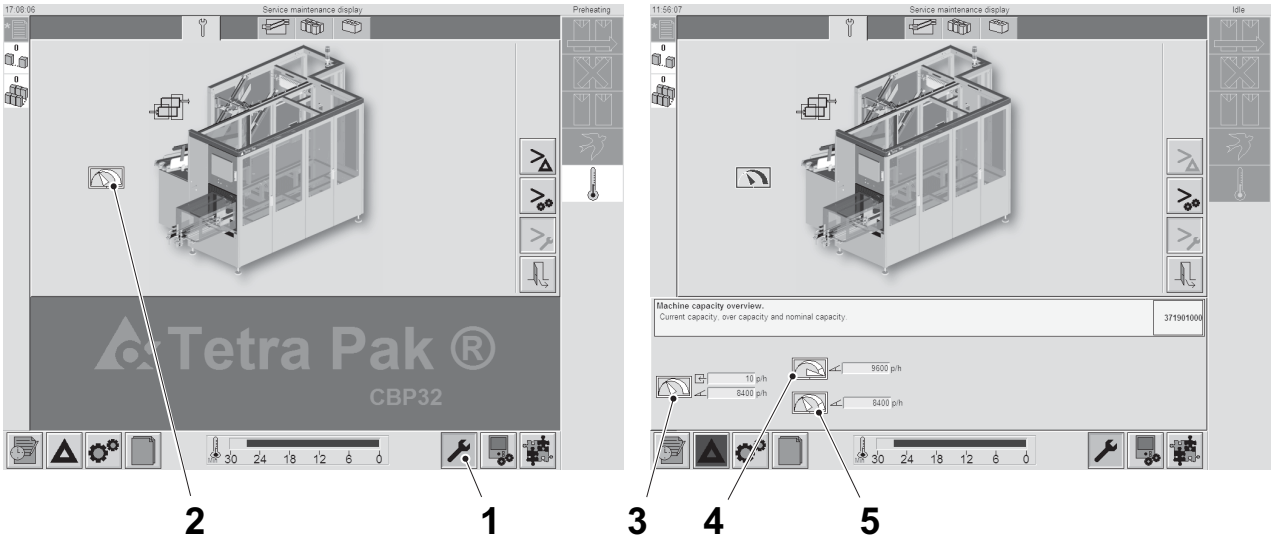

1 MAINTENANCE
2 MACHINE CAPACITY
3 Current capacity
4 Overcapacity
5 Nominal capacity

6.8.4-2 TPOP Maintenance - Infeed

Machine Status	Power supply disconnector ON Air valve ON

a) Press the MAINTENANCE button (1) and the INFEED button (2) or press the INFEED tab (3).

b) Perform the required maintenance. The maintenance settings to select are to set the infeed unit separation (4), the conveyor length (5), the infeed packages (6), and the conveyor speed (7).

c) To handle the different ways of changing settings, see Sections Single Value Setting and Multi Value Setting.

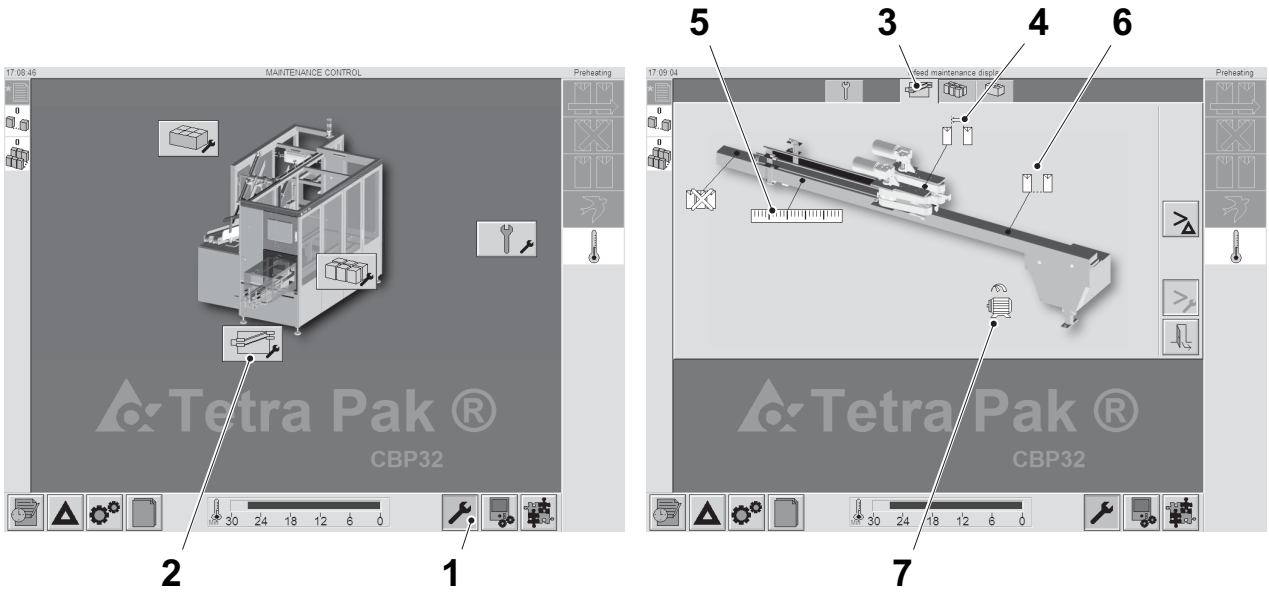

1 MAINTENANCE
2 INFEED
3 INFEED tab
4 Infeed unit separation
5 Conveyor length
6 Infeed packages
7 Conveyor speed

6.8.4-3 TPOP Maintenance - Pattern Forming

Machine Status	Power supply disconnector ON Air valve ON

a) Press the MAINTENANCE button (1) and the PATTERN FORMING button (2) or press the PATTERN FORMING tab (3).

b) Perform the required maintenance. The maintenance settings and functions to select are grouping guide rail row (4), grouping pusher top support down delay (5), grouping pusher speed and dolly pulse for different strokes 1-16 (6), grouping pusher top support mode (7) and box pusher speed forward (8).

c) To handle the different ways of changing settings, see Sections Single Value Setting and Multi Value Setting.

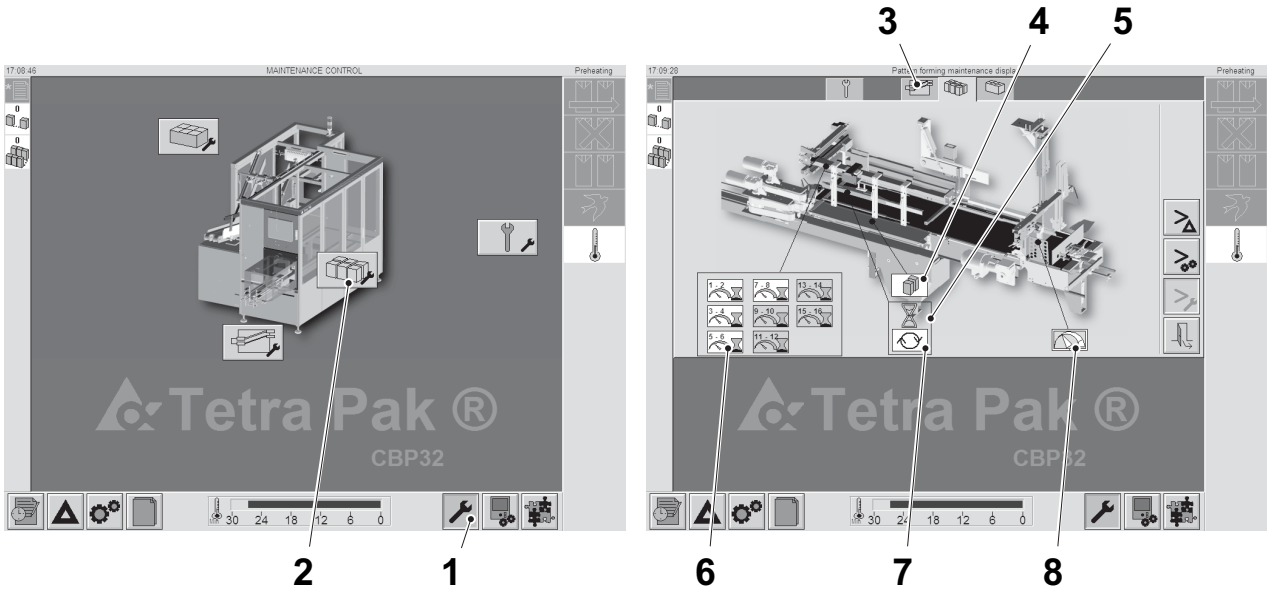

1 MAINTENANCE
2 PATTERN FORMING
3 PATTERN FORMING tab
4 Grouping guide rail rows
5 Grouping pusher top support down delay
6 Grouping pusher speed and dolly pulse for different strokes 1-16
7 Grouping pusher top support mode
8 Box pusher speed forward

6.8.4-4 TPOP Maintenance - Tray Forming

Machine Status	Power supply disconnector ON Air valve ON

a) Press the MAINTENANCE button (1) and the TRAY FORMING button (2) or press the TRAY FORMING tab (3).

b) Perform the required maintenance. The maintenance settings and functions to select are to jog the feeding chain (4), and the speed of the tray forming motors (5).

c) To handle the different ways of changing settings, see Sections Single Value Setting and Multi Value Setting.

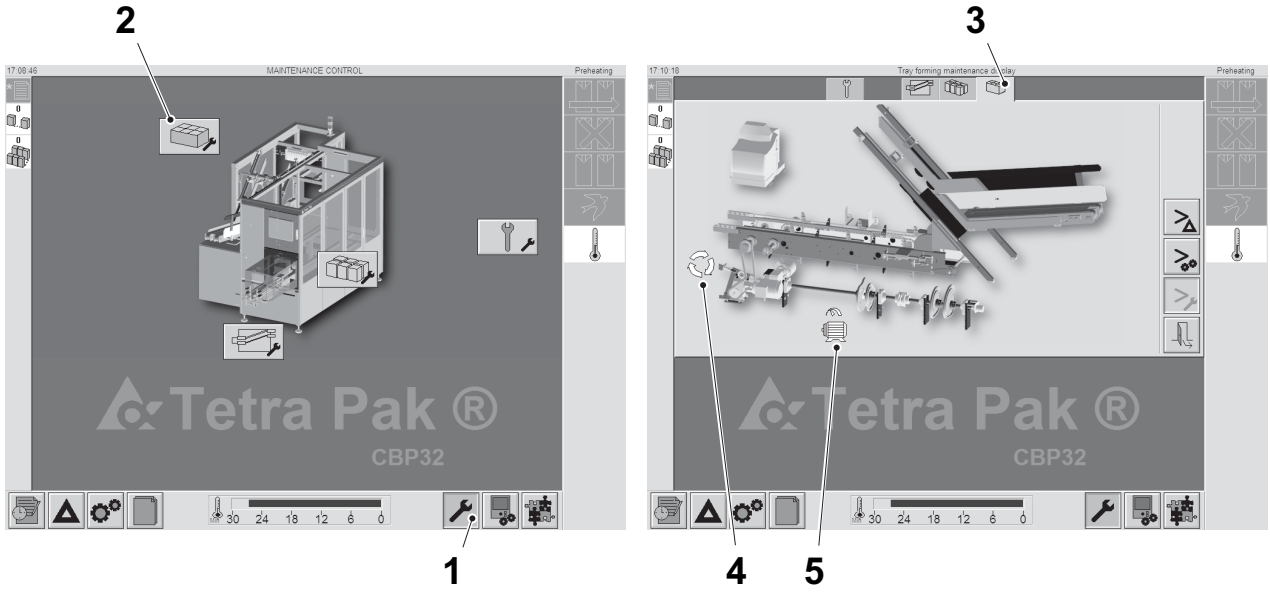

1 MAINTENANCE
2 TRAY FORMING
3 TRAY FORMING tab
4 Feeding chain jog function
5 Speed on tray forming motors

6.8.5 TPOP User Management

6.8.5-1 TPOP User Management - Description

The TPOP includes certain sections which have restricted access and are password protected. Access is permitted and defined by the user profile and the password used to log on, see the table below for a description of each of the available user profiles and the corresponding level of access.

Note! The default machine operator has no user log on profile or access to the restricted areas of the TPOP.

User Profile	User Name	Password	Access Description
TP service technician	tptechnician	not provided	Access to: - production control settings and functions - maintenance control settings and functions - create and delete recipes - software installation and configuration - shutdown - diagnostic - full access to the configuration window

(Cont'd)

(Cont'd)

User Profile	User Name	Password	Access Description
Supervisor	supervisor	shiftsup	Access to: - user administration - production control settings and functions - maintenance control settings and functions - create and delete recipes - software installation and configuration - shutdown - diagnostic - partial access to the configuration window
Service technician	technician	custtech	Access to: - production control settings and functions - maintenance control settings and functions - create and delete recipes - software installation and configuration - partial access to the configuration window
Power operator	pwoperator	expertop	Access to: - production control settings and functions
Operator (default user with no log on)	-	-	-

6.8.5-2 TPOP User Management - Log On as a User

This procedure describes how to log on to the TPOP and to access the restricted password protected sections of the TPOP. The level of access permitted is defined by the user profile, see 8.2.3-1 TPOP User Management - Description on page 8-60.

Note! After 5 minutes of TPOP inactivity the user is automatically logged out.

To log on to the TPOP proceed as described below:

a) On the TPOP, press the SYSTEM SETUP button (1).

b) In the SYSTEM SETUP window, press the USER MANAGEMENT button (2).

c) In the USER MANAGEMENT window, press the LOG ON button (3) to display the LOGIN window (4).

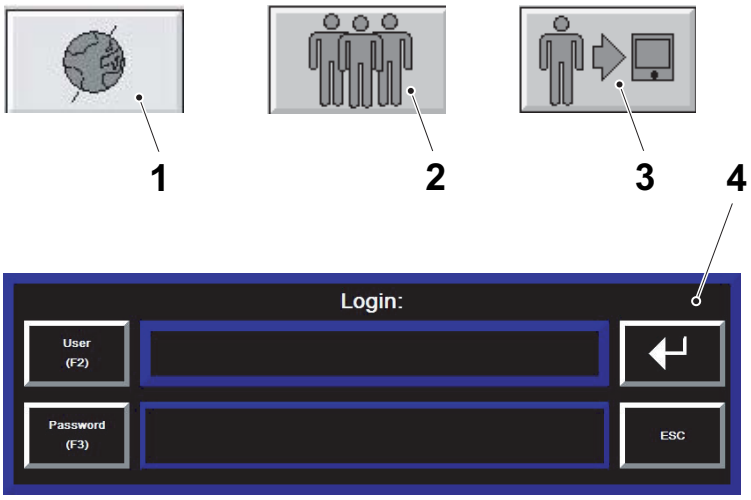

1 SYSTEM SETUP
2 USER MANAGEMENT
3 LOG ON
4 LOGIN

(Cont'd)

d) Press the USER button (5) to display the keyboard (6).

e) Use the keyboard (6) to type your user name, then press the ENTER button (7).

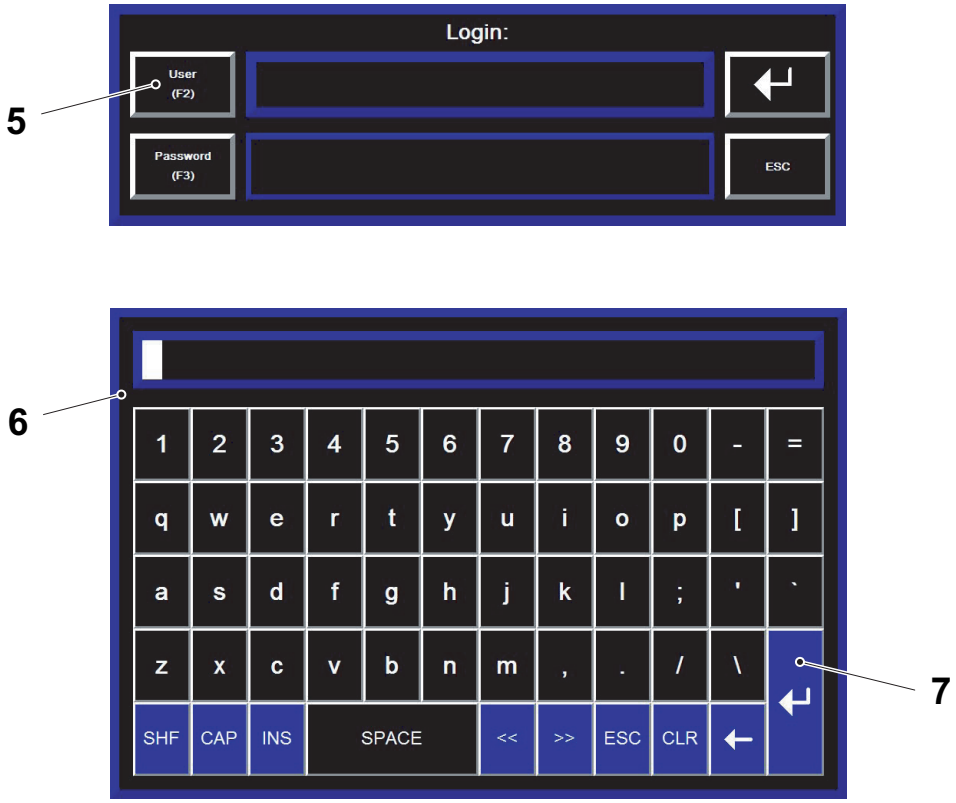

5 USER
6 Keyboard
7 ENTER

(Cont'd)

(Cont'd)

f) Press the PASSWORD button (8) to display the keyboard (6).

g) Use the keyboard (6) to type your password, then press the ENTER button (7).

h) Press the ENTER button (9) to confirm the data entry.

The user is now logged on to the TPOP with the corresponding level of access.

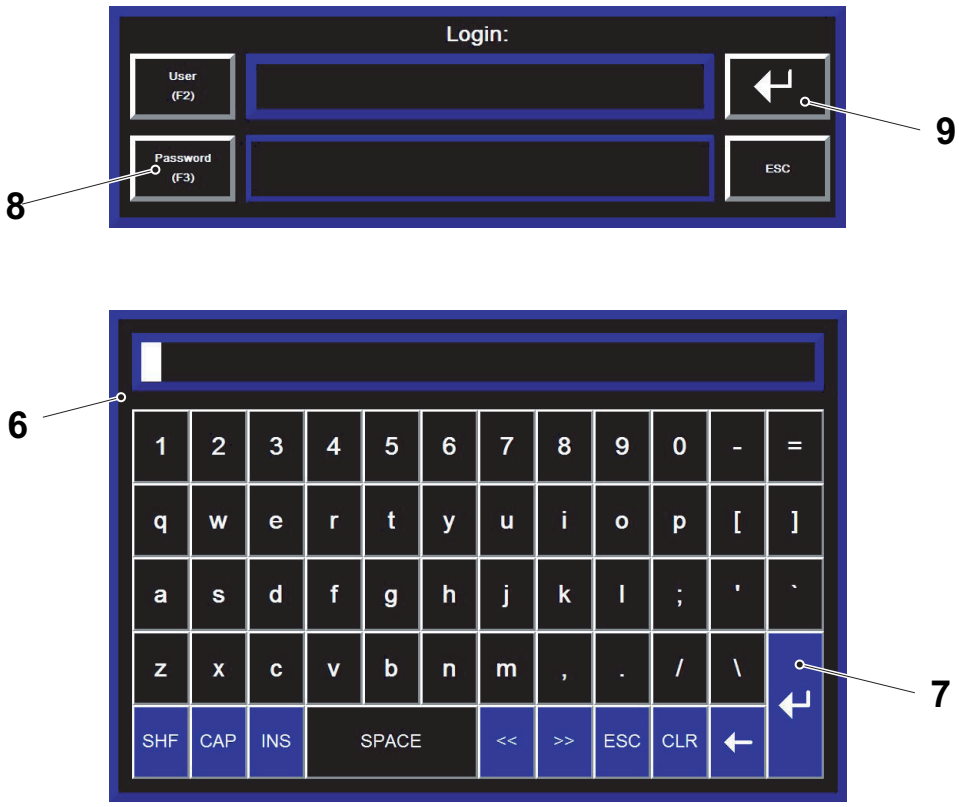

6 Keyboard
7 ENTER
8 PASSWORD
9 ENTER

6.8.5-3 TPOP User Management - Change User Password

CAUTION
Risk of unplanned machine stoppage.
If the default passwords are changed and subsequently forgotten, the TPOP software must be reinstalled before access to the restricted sections of the TPOP is restored.

The user with the profile “supervisor” has the authority to set and change the passwords for the user profiles of “technician” and “pwroperator”. To change the password of either the user profiles proceed as follows:

a) Log on to the TPOP as the user profile “supervisor”, see 6.8.5-2 TPOP User Management - Log On as a User.

b) In the USER MANAGEMENT window, press either the:

c) ENABLE PWROPERATOR CHANGE PASSWORD button (1) for the user profile “pwroperator”.

d) ENABLE TECHNICIAN CHANGE PASSWORD button (2) for the user profile “technician”.

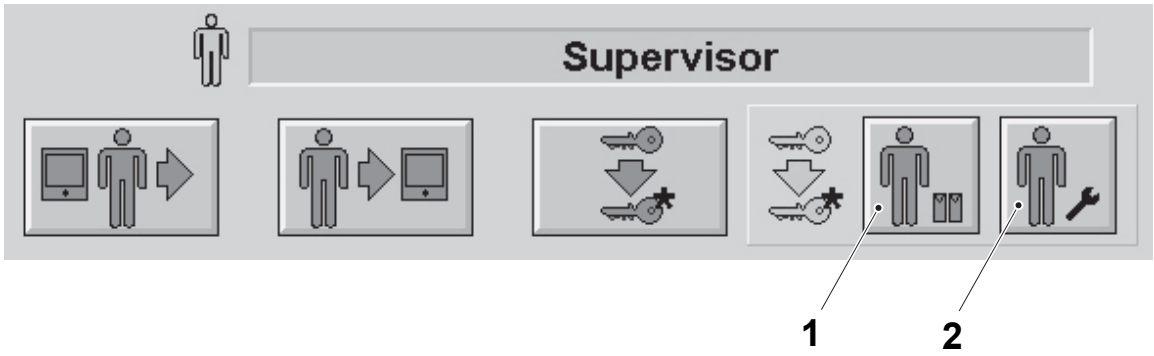

1 ENABLE PWROPERATOR CHANGE PASSWORD
2 ENABLE TECHNICIAN CHANGE PASSWORD

(Cont'd)

(Cont'd)

e) Press the LOG OFF button (3).

f) Log on to the TPOP using the user profile chosen in item b), see 6.8.5-2 TPOP User Management - Log On as a User.

g) The CHANGE PASSWORD button (4) is now enabled in the USER MANAGEMENT window, press the CHANGE PASSWORD button (4) to display the CHANGE PASSWORD window (5).

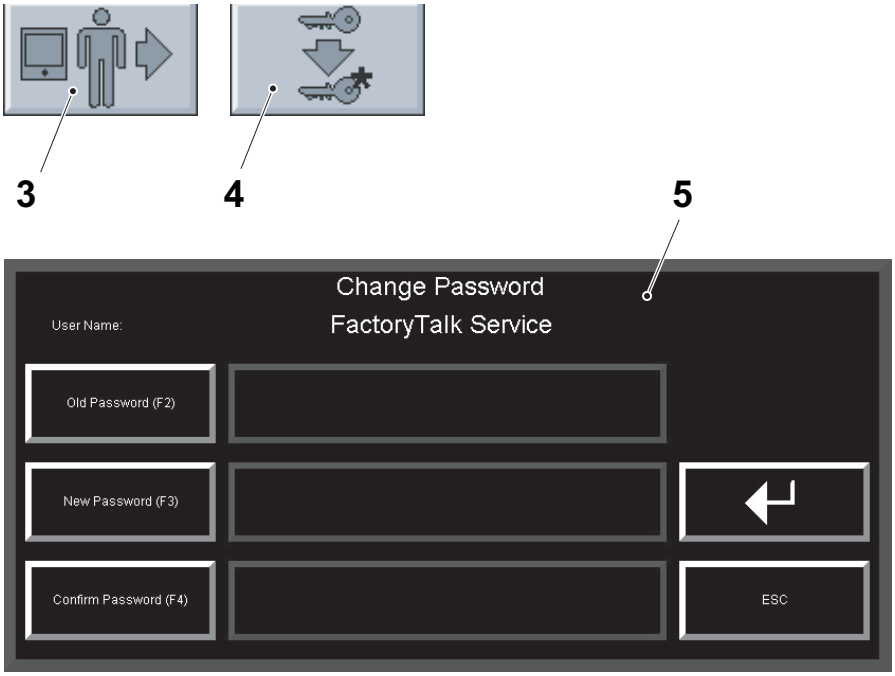

3 LOG OFF
4 CHANGE PASSWORD
5 CHANGE PASSWORD window

(Cont'd)

(Cont'd)

h) Press the OLD PASSWORD button (6) to display the keyboard (8).

i) Use the keyboard (8) to type the current password, then press the ENTER button (9).

j) Press the NEW PASSWORD button (7) to display the keyboard (8).

k) Use the keyboard (8) to type the new password, then press the ENTER button (9).

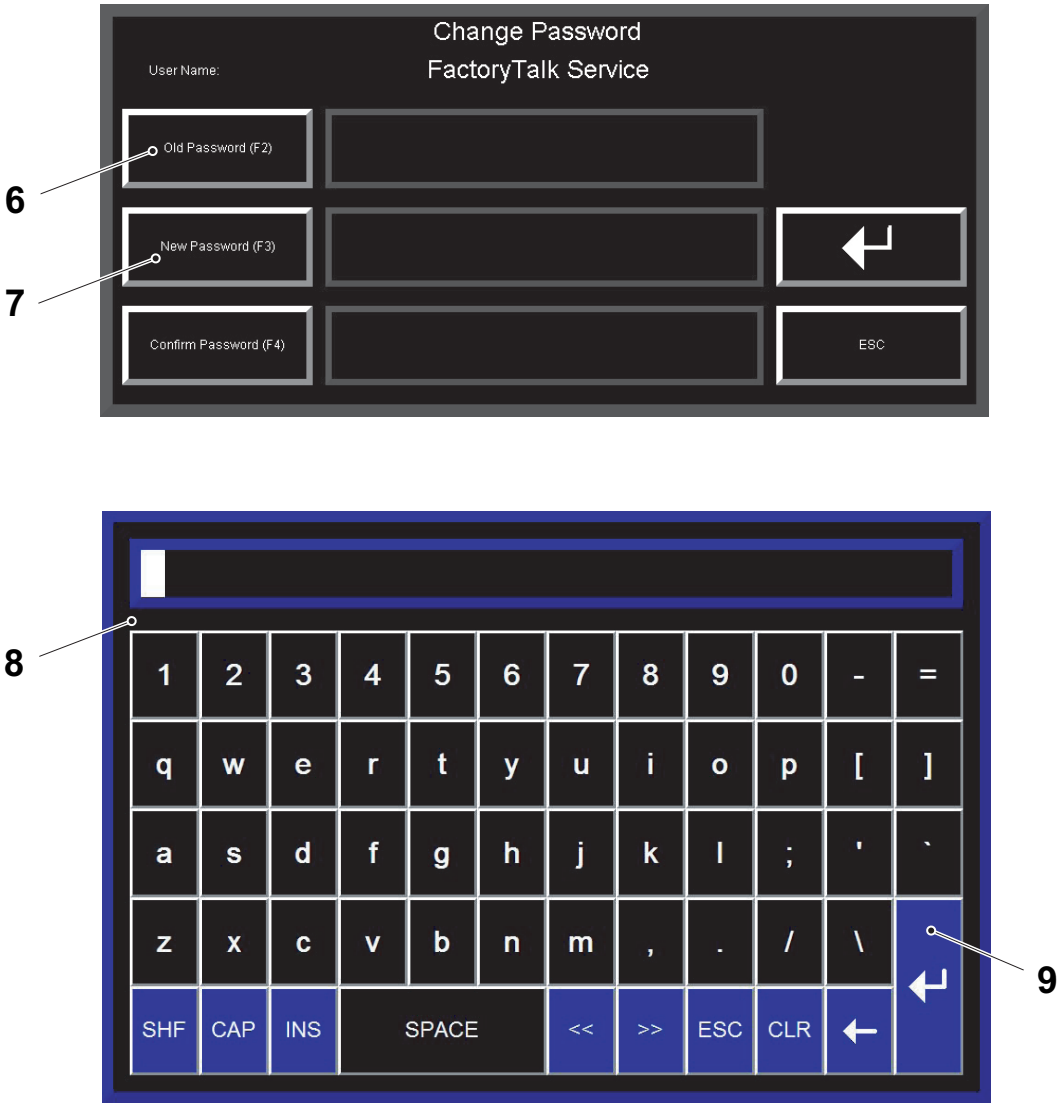

6 OLD PASSWORD
7 NEW PASSWORD
8 Keyboard
9 ENTER

(Cont'd)

(Cont'd)

l) Press the CONFIRM PASSWORD button (10) to display the keyboard (8).

m) Use the keyboard (8) to type and repeat the new password, then press the ENTER button (9).

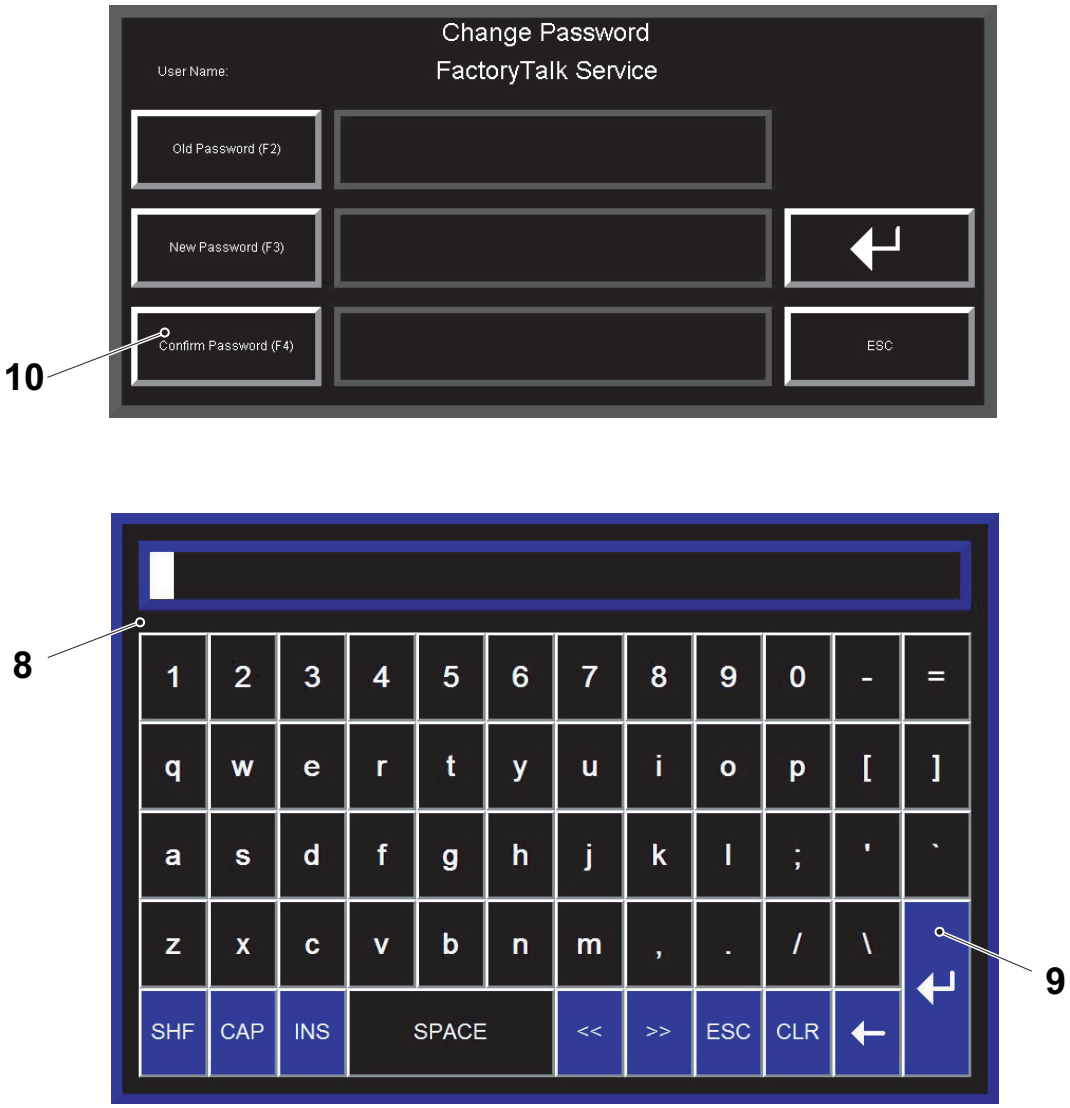

8 Keyboard
9 ENTER
10 CONFIRM PASSWORD

(Cont'd)

(Cont'd)

n) Press the ENTER button (11) to finalise the password change procedure.

If necessary repeat the procedure to change the password for the other user profile. The password for the user profile “supervisor” can be changed by logging on as the “supervisor” and selecting the CHANGE PASSWORD button in the USER MANAGEMENT window.

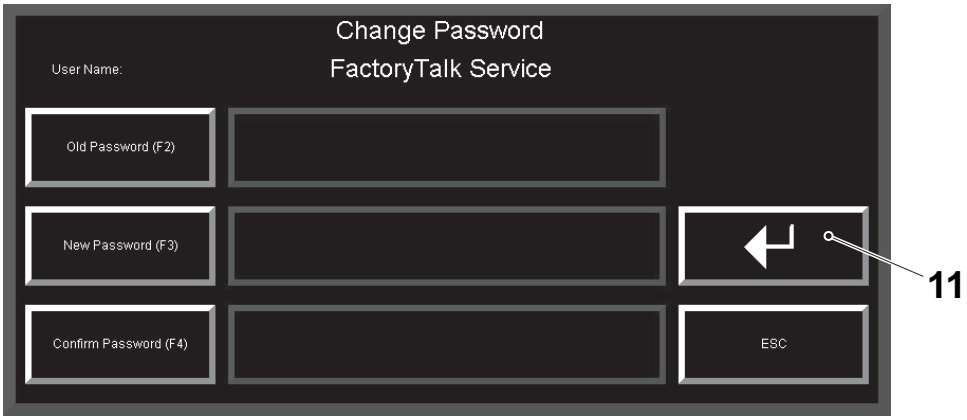

11 ENTER

6.8.6 Communication Configuration between PLC and TPOP

6.8.6-1 TPOP - Check/Set IP Address and Subnet Mask Address

Machine Status	Power supply disconnector ON Air valve ON

a) On the TPOP, log on as: “tptechnician” or “supervisor” or “technician”, 6.8.5-2 TPOP User Management - Log On as a User.

b) Press the SYSTEM SETUP button (1) and the SHUT DOWN button (2), to display the main window below.

c) In the main window, press the TERMINAL SETTINGS button (3).

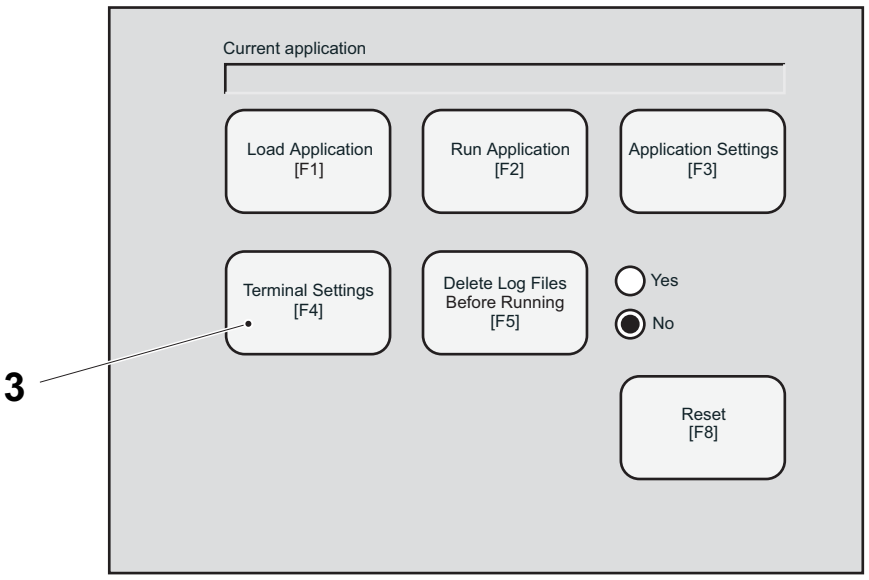

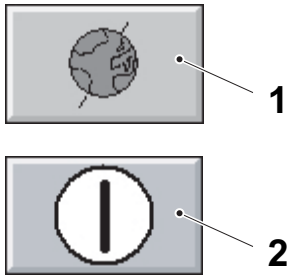

1 SYSTEM SETUP
2 SHUT DOWN
3 TERMINAL SETTINGS

(Cont'd)

(Cont'd)

d) Select Networks and communications (4) and press the ENTER button (5).

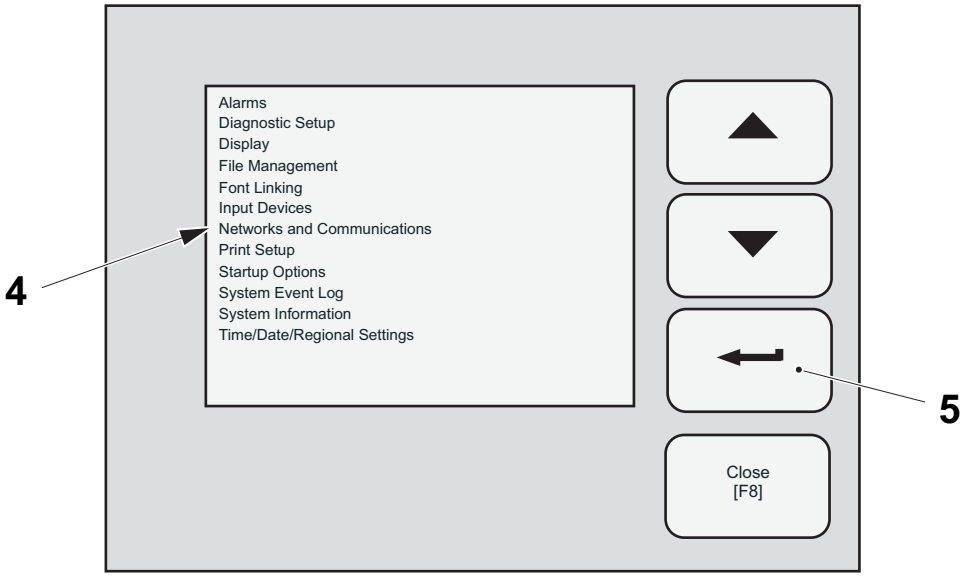

4 Networks and communications
5 ENTER

e) Select Network Connections (6) and press the ENTER button (5).

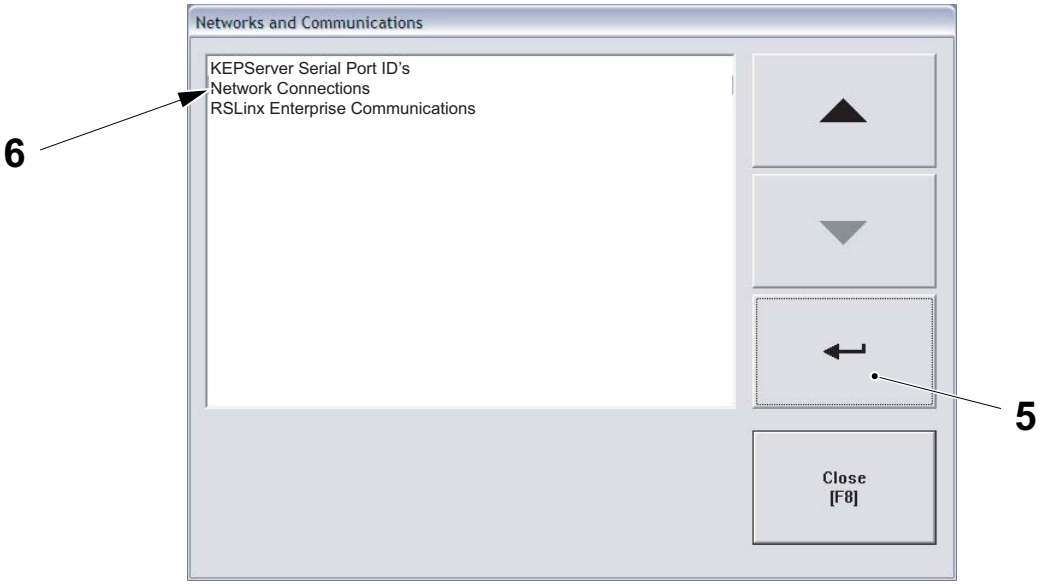

5 ENTER
6 Network Connection

(Cont'd)

(Cont'd)

f) Select Networks Adaptors (7) and press the ENTER button (5).

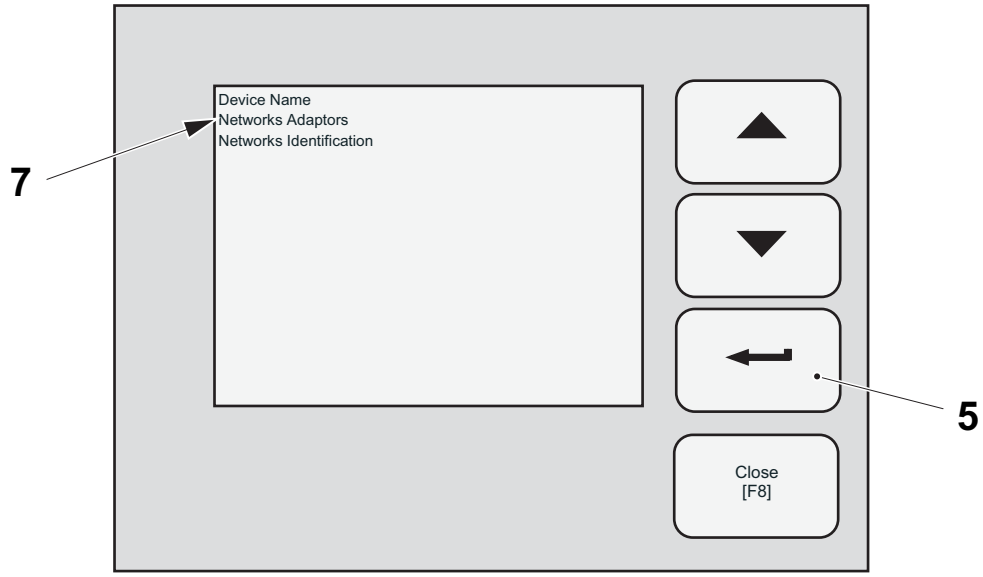

5 ENTER
7 Networks Adaptors

g) Press the Built-in ethernet controller (8) and press the IP address button (9).

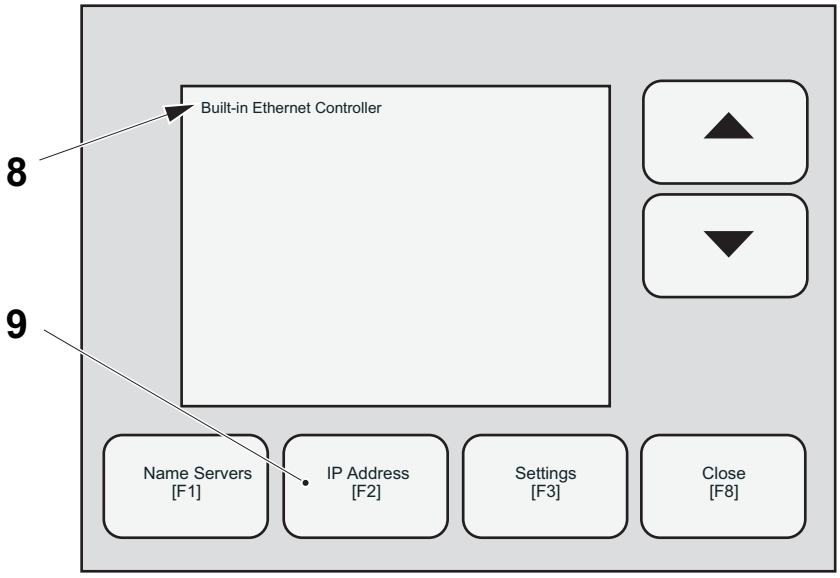

8 Built-in ethernet controller
9 IP ADDRESS

(Cont'd)

(Cont'd)

h) Press the IP ADDRESS button (10).

i) Use the keyboard (11) and type the IP address (12). Look for the IP address in the last version of "Ethernet network structure and IP assignment" file. Press the ENTER button (5).

j) Press the SUBNET MASK button (13).

k) Use the keyboard (10) and type "255.255.0.0" for the SUBNET MASK address (14), then press the ENTER button (5).

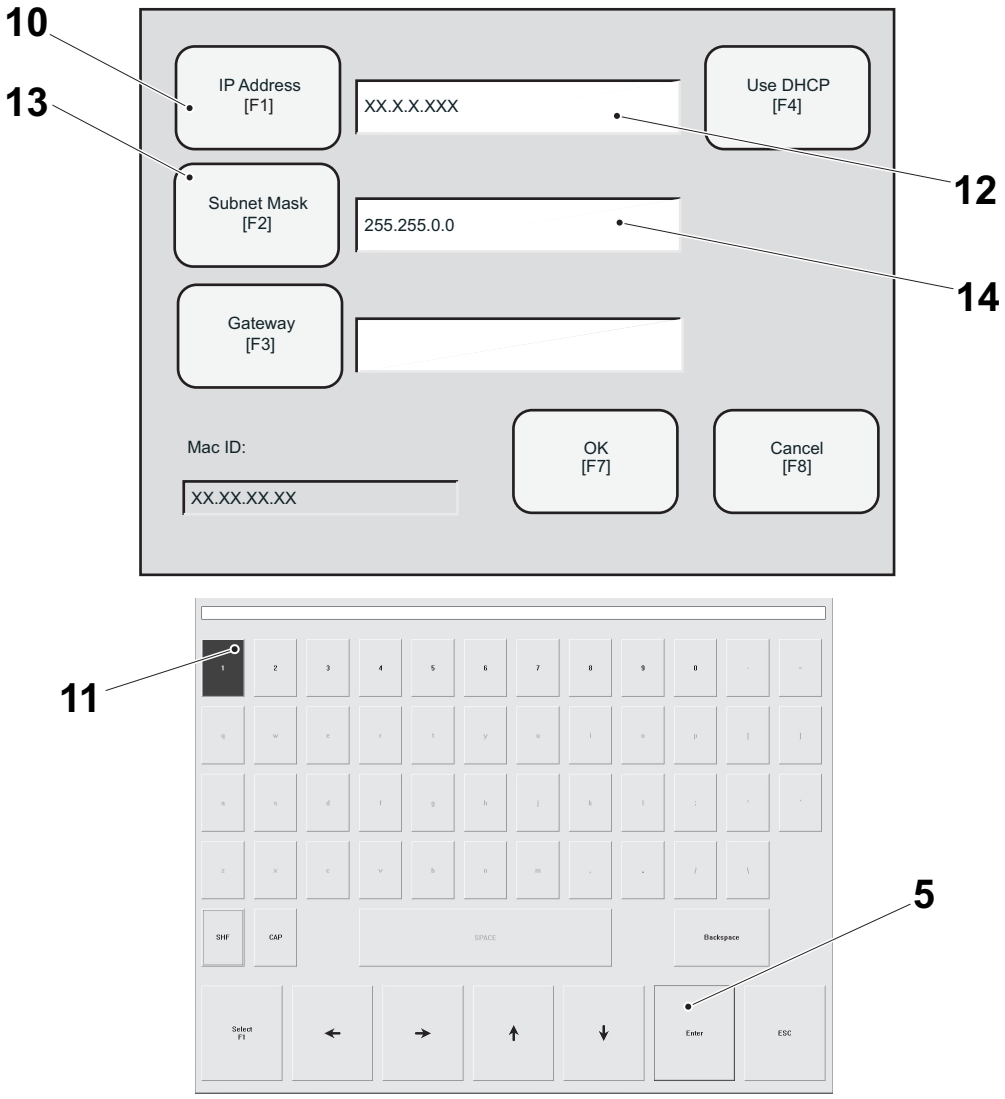

5 ENTER button
10 IP ADDRESS
11 Keyboard
12 IP address
13 SUBNET MASK
14 SUBNET MASK address

(Cont'd)

(Cont'd)

l) Press the OK button (15) twice.

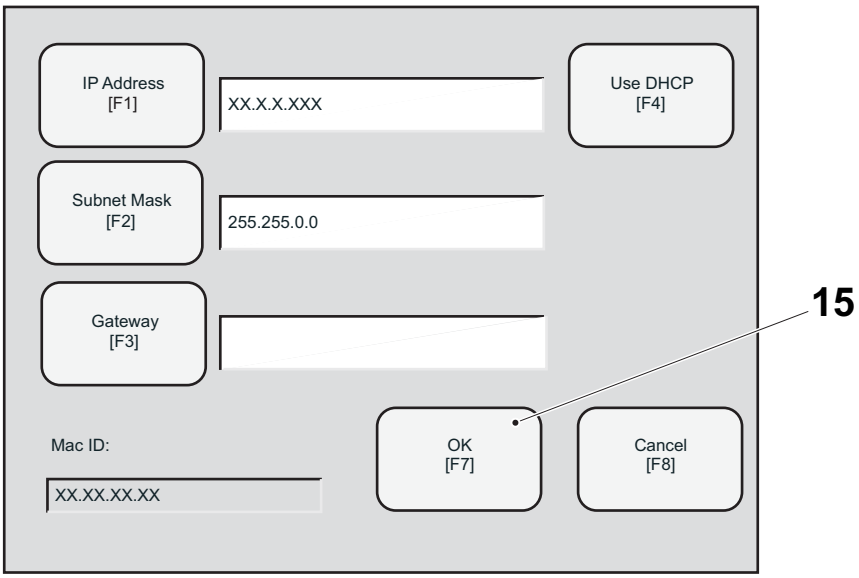

15 OK

m) Repeatedly press the CLOSE button until the main window appears, then press the RESET button (16) and the YES button (17).
The PC can now communicate with the touch screen module.

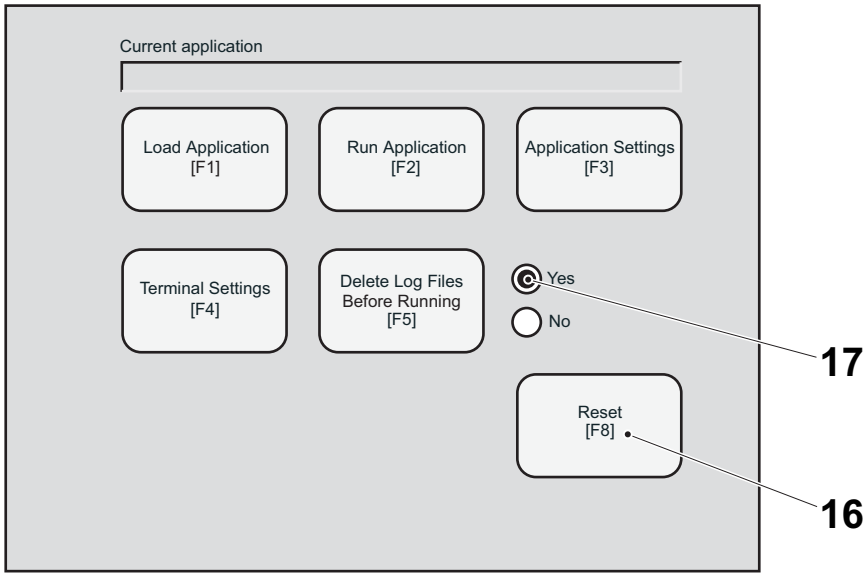

16 RESET
17 YES

(Cont'd)

(Cont'd)

For double line repeat a) to d) for the second Cardboard Packer, then go to n).

n) Select RSLinx Enterprise Communications (18) and press the ENTER button (5).

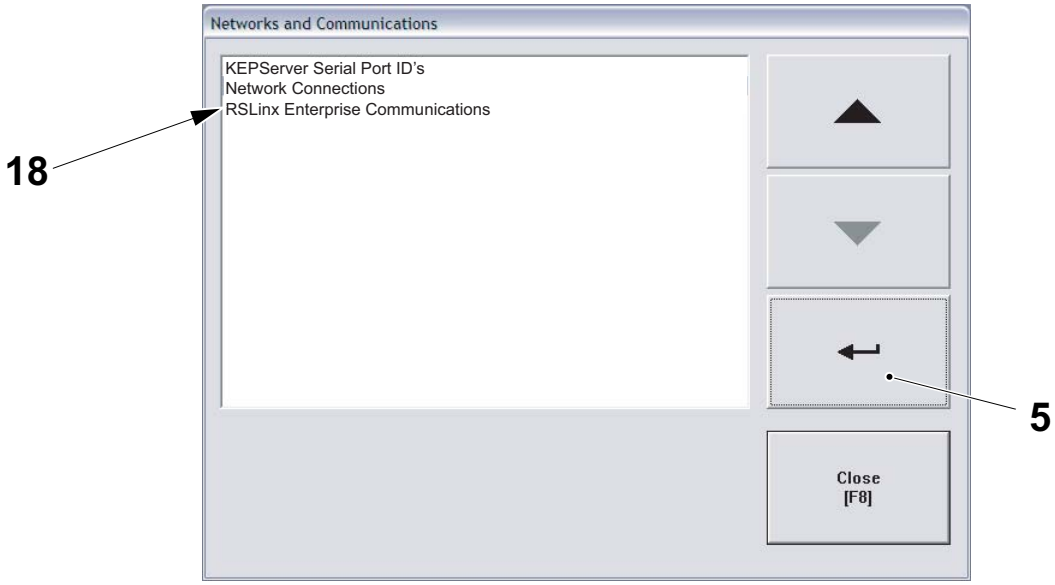

5 ENTER
18 RSLinx Enterprise Communications

o) Select Ethernet Bridge (19) and press the Edit Device [F1] button (20)

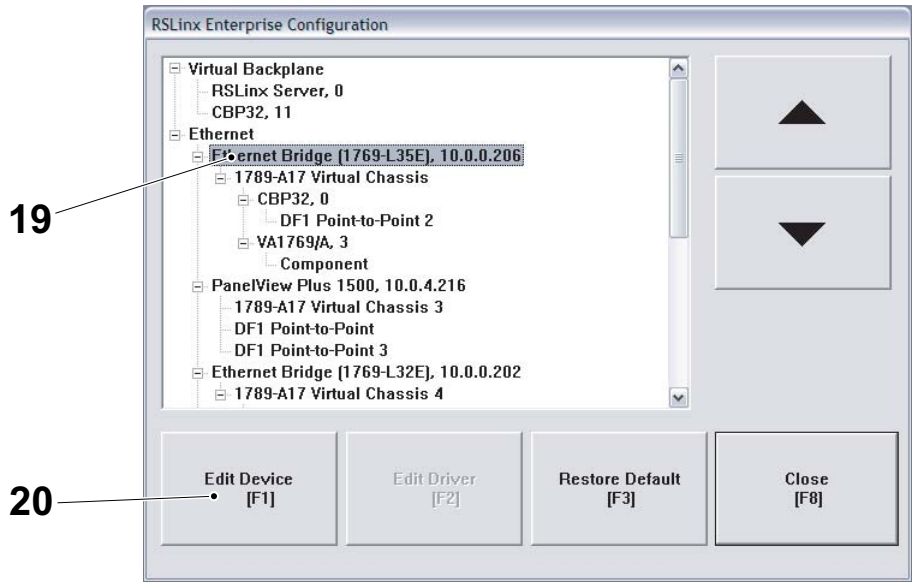

5 ENTER
19 Ethernet Bridge
20 Edit Device [F1]

(Cont'd)

(Cont'd)

p) Press Device Address [F1] button (21), use the keyboard (22) and type the IP address. Press the ENTER button (23) and then press the OK button (24).

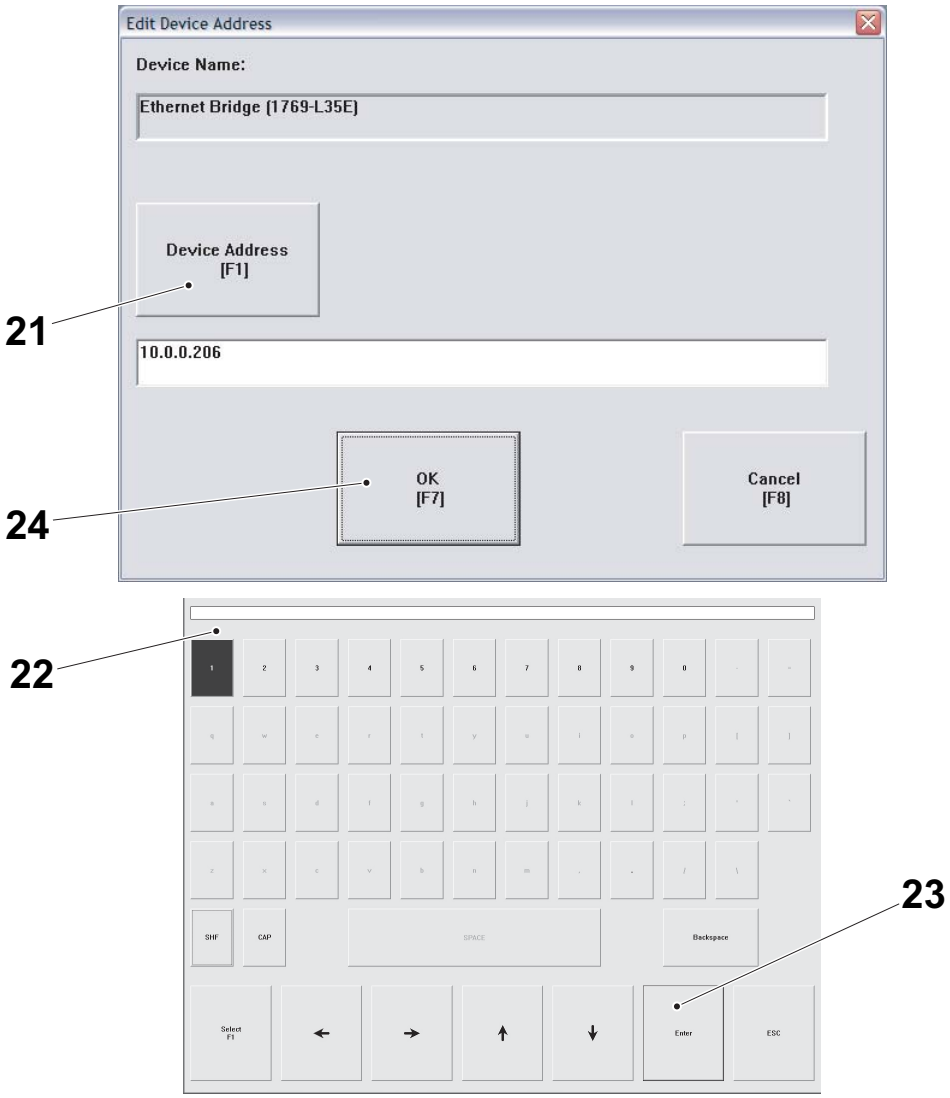

21 Device Address [F1]
22 Keyboard
23 ENTER
24 OK

(Cont'd)

(Cont'd)

q) Repeatedly press the CLOSE button until the main window appears, then press the RUN APPLICATION button (25).
The PC can now communicate with the touch screen module.

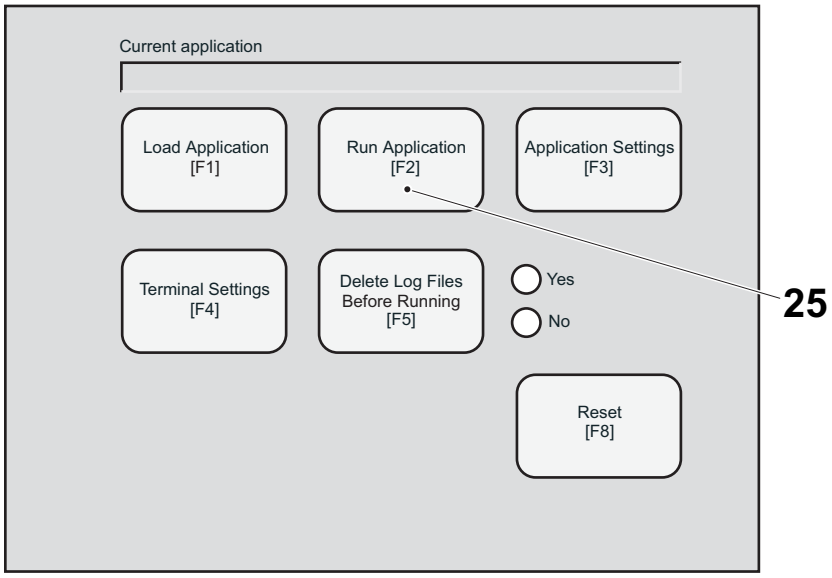

25 RUN APPLICATION

6.8.6-2 TPOP - Download Program

Machine Status	Power supply disconnector ON Air valve ON

a) Connect the ethernet communication cable between a vacant connection port on the ethernet switch (1) and the PC (2).

b) Insert the program CD into the PC CD drive.

c) Set the IP address of the terminal, see 6.8.6-1 TPOP - Check/Set IP Address and Subnet Mask Address.

d) Browse to the CD drive and copy the program file (xxxx.mer) to the PC desktop.

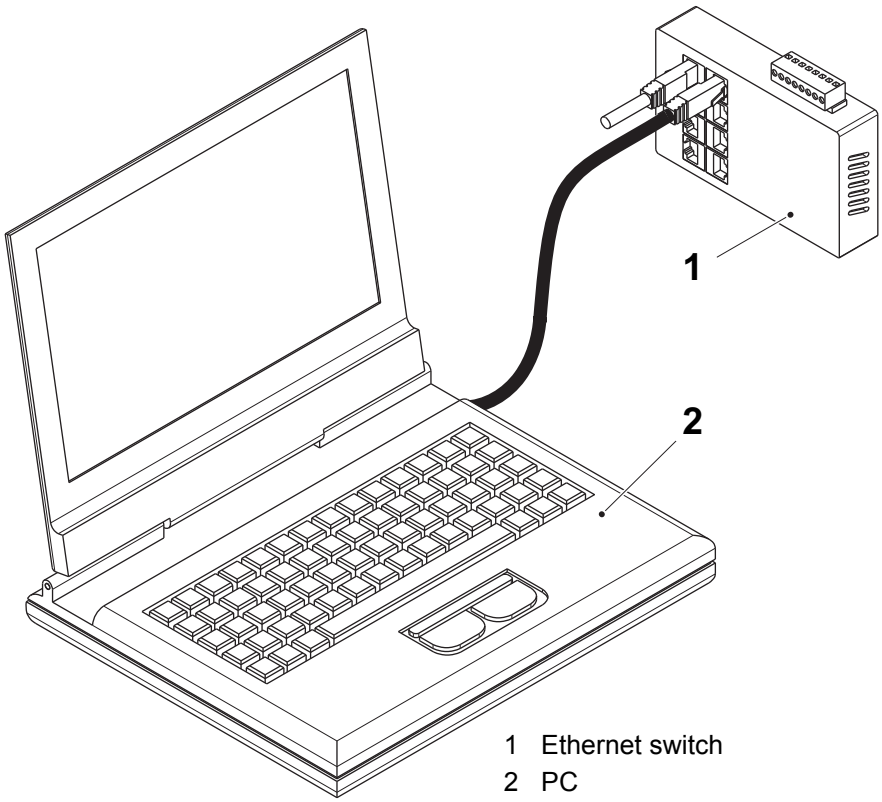

1 Ethernet switch
2 PC

(Cont'd)

(Cont'd)

e) Open the `ME Transfer Utility` (3) program.

f) In the `Transfer Utility` window (4), select the `Download` tab (5).

g) Select the correct `destination terminal` (6).

h) Select the browse button (7).

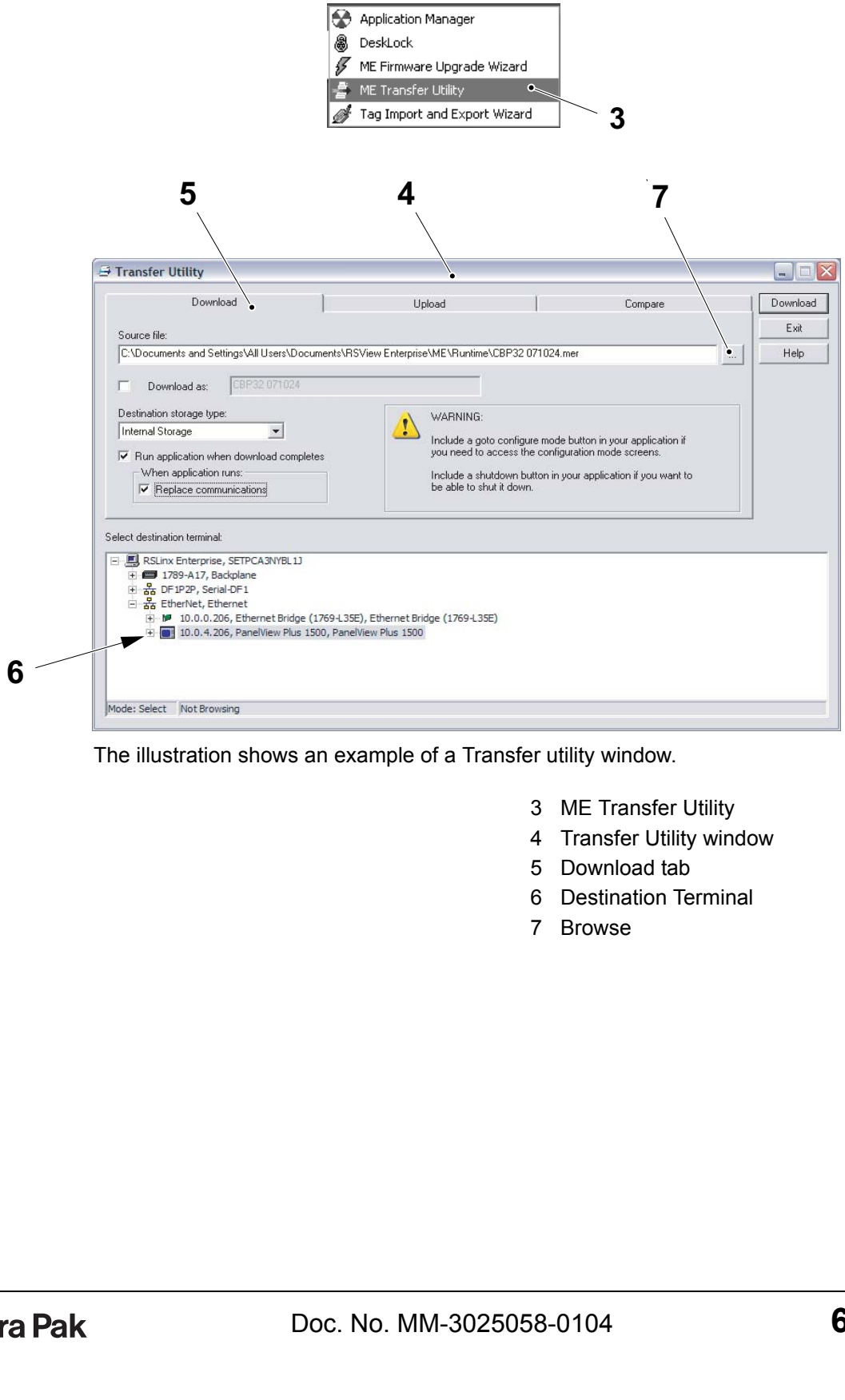

The illustration shows an example of a Transfer utility window.

3 ME Transfer Utility
4 Transfer Utility window
5 Download tab
6 Destination Terminal
7 Browse

(Cont'd)

(Cont'd)

i) Browse and select the program file (8), then select the Open button (9).

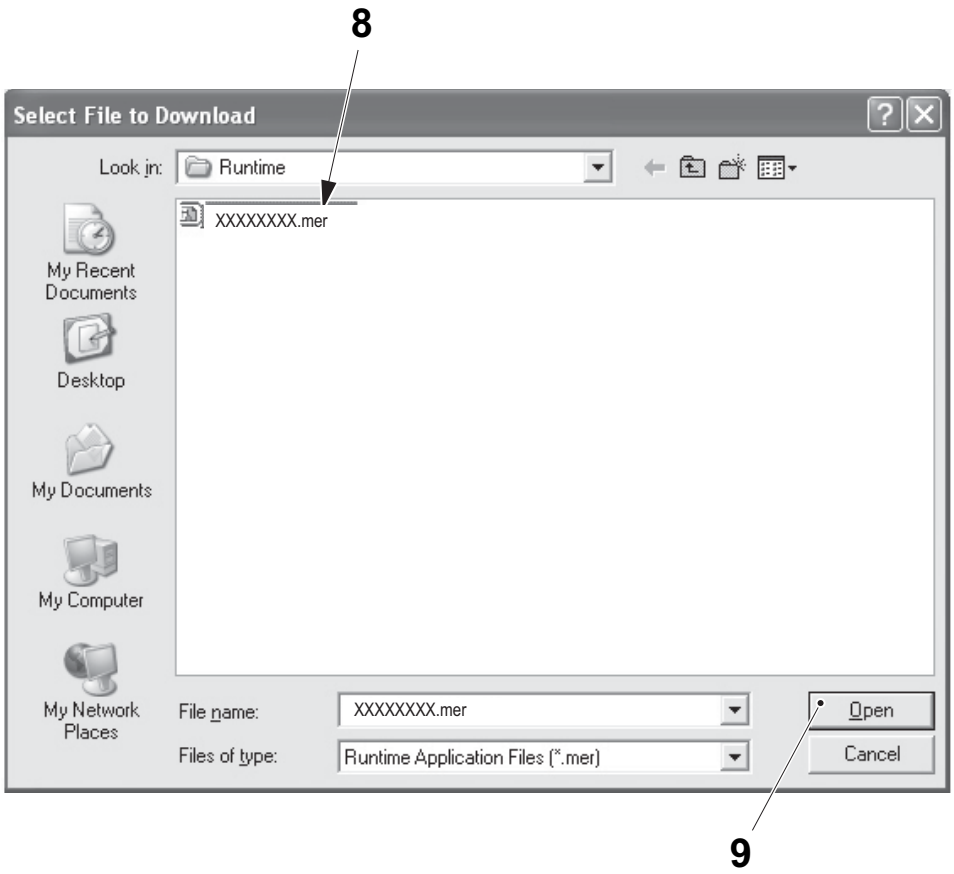

8 Program file
9 Open

(Cont'd)

(Cont'd)

Note! If the downloading is for an old touch screen and for a double production line, **only** select the checkbox (10). Otherwise make sure that both check boxes (10) and (11) are selected.

j) Select the `Download` button (12).

k) If the downloading is for an old touch screen the dialogue box (13) can appear. Select `Yes`.

l) When the Downloading window (14) appears, wait until the downloading process is completed.

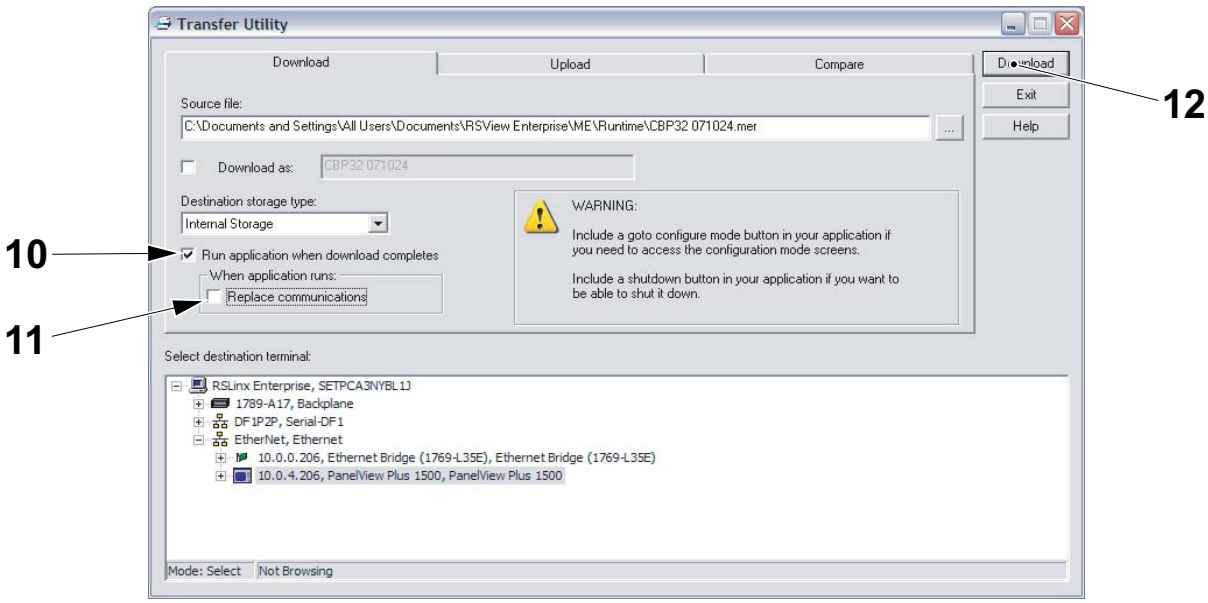

The illustration shows an example of a Transfer utility window.

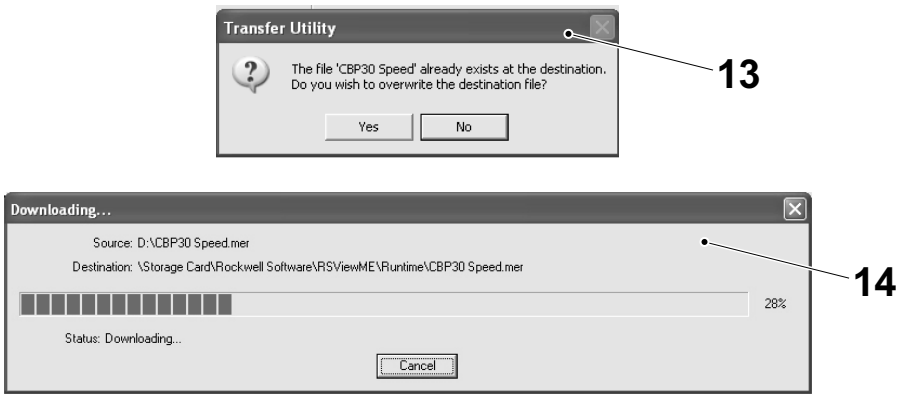

10 Checkbox
11 Checkbox
12 Download
13 Dialogue box
14 Downloading window

(Cont'd)

(Cont'd)

m) When the Transfer Utility window (15) appears, the download procedure is completed, then select the OK button (16) to go back to the main window.

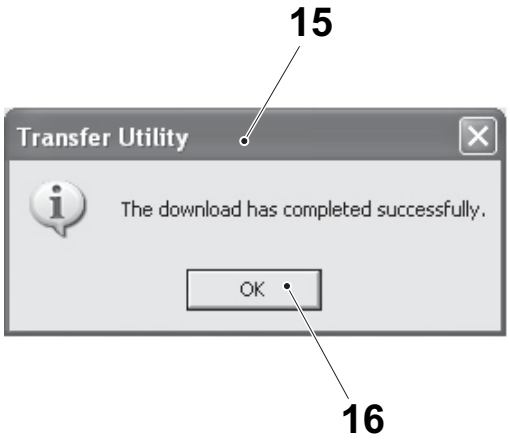

15 Transfer Utility window
16 OK

6.9 Proof Test

6.9-1 Safeguard - Test

Machine Status	Power supply disconnector ON Air valve ON

A manual check that the interlocking guards and other safeguarding means are in place and operational shall be performed regularly on a monthly basis.

The location of each movable guard see ii-13.

Each regular safeguarding test shall be accomplished by:

a) Identify the safety PLC (1) and the safety relay (2) in the electrical cabinet.

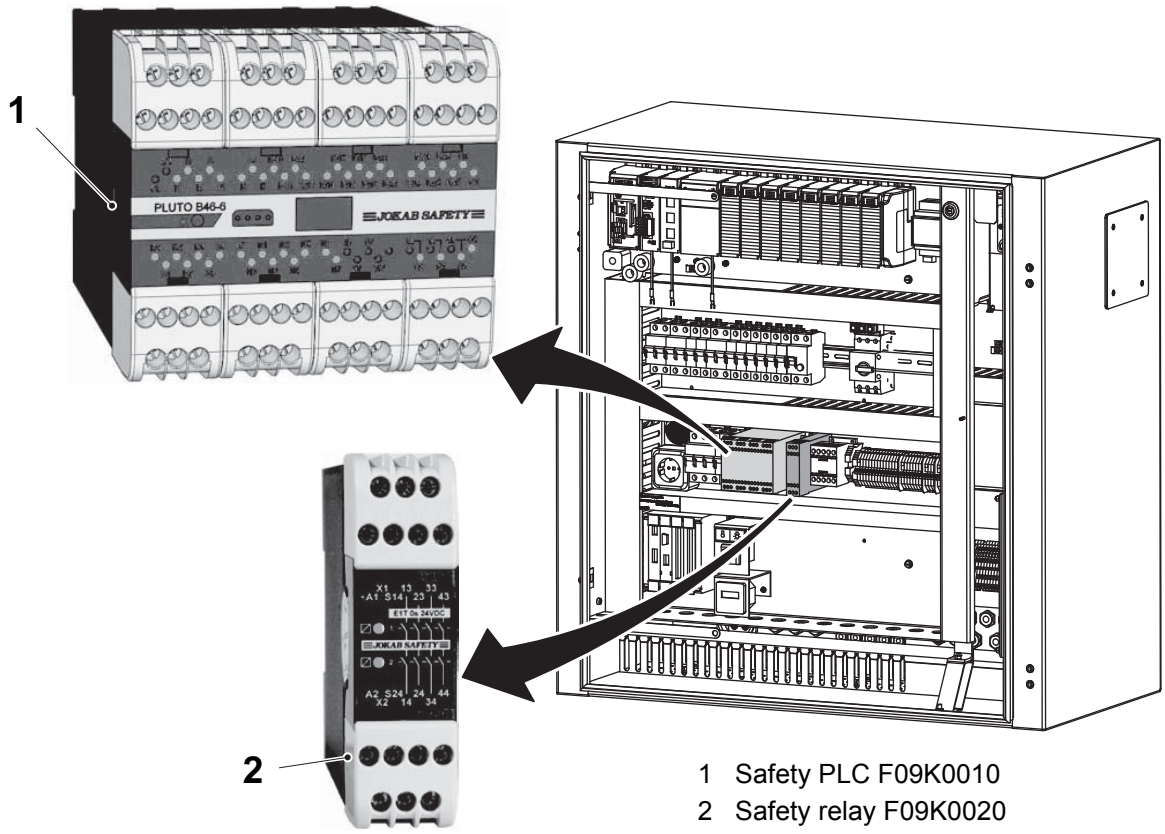

1 Safety PLC F09K0010
2 Safety relay F09K0020

b) Make sure that the machine is stopped in PRODUCTION mode and there are no packages.

(Cont'd)

(Cont'd)

c) Open the first door and make sure that the safety PLC (1) and the safety relay (2) are tripped. On the safety PLC (1) this is indicated by the LEDs IQ11 (3) or IQ12 (4) that should be off. On the safety relay (2) both LEDs (7) and (8) shall be off.

d) Try to start the machine with the safeguard tripped. Check that the machine does not start and check that the safety relay (2) stays tripped.

e) Close the first door and make sure that the LEDs IQ11 (3) and IQ12 (4) are lit. The LEDs (7) and (8) will not be lit until the machine is reset.

f) Open the next door and make sure that the LEDs IQ11 (3) or IQ12 (4) is off. Close the door and make sure that the LEDs IQ11 (3) and IQ12 (4) are lit.

g) Do the same test with all the doors with a safeguard, see procedure in item f).

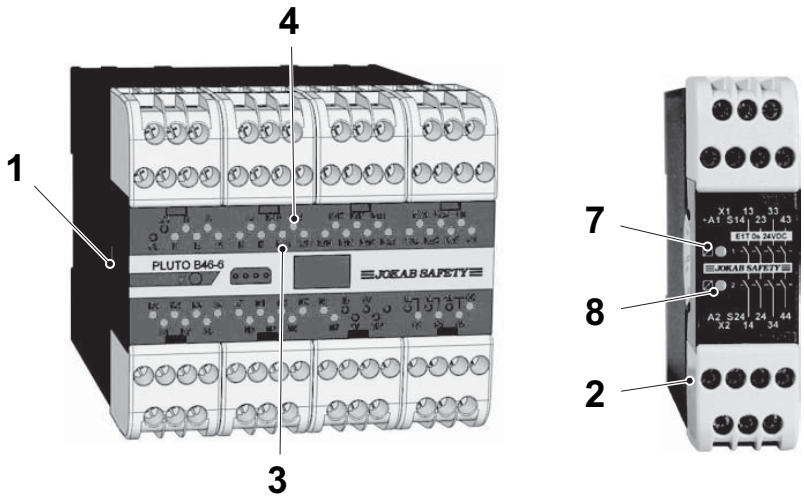

1 Safety PLC F09K0010
2 Safety relay F09K0020
3 LED IQ11
4 LED IQ12
7 LED
8 LED

6.9-2 Emergency Stop - Test

A manual check that selected EMERGENCY STOP buttons are in place and operational shall be performed regularly, preferably on a monthly basis.

The selection of EMERGENCY STOP buttons to be tested each month shall be in such way that all EMERGENCY STOP buttons are checked once a year.

The location of each EMERGENCY STOP button see ii-11.

Each regular emergency stop test shall be accomplished by:

a) Identify the safety PLC (1) and the safety relay (2) in the electrical cabinet, see item a) in 6.9-1 Safeguard - Test.

b) Make sure that the machine is stopped in PRODUCTION mode and there are no packages.

c) Push the first of the selected EMERGENCY STOP buttons and make sure that the safety PLC (1) and safety relay (2) are tripped. On the safety PLC (1) this is indicated by the LEDs I1 (5) and I2 (6) that shall be off. On the safety relay (2) both LEDs (7) and (8) shall be off.

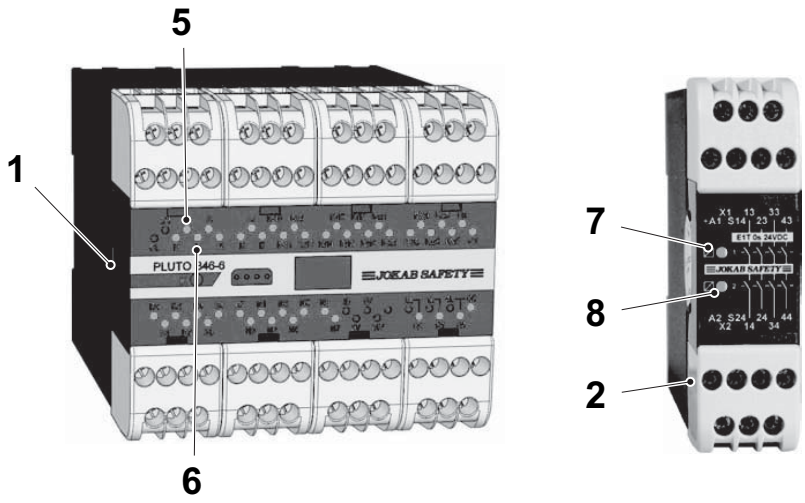

1 Safety PLC F09K0010
2 Safety relay F09K0020
5 LED I1
6 LED I2
7 LED
8 LED

(Cont'd)

(Cont'd)

d) Try to start the machine with the EMERGENCY STOP button latched (in position pushed in). Check that the machine does not start and check that the safety relay (2) stays tripped.

e) Pull out the EMERGENCY STOP button and make sure that the LEDs I1 (5) and I2 (6) are lit. The LEDs (7) and (8) will not be lit until the machine is reset.

f) Try to start the machine with the EMERGENCY STOP button unlatched (in position pulled out). Check that the machine does not start.

g) Continue with the next EMERGENCY STOP button. Push the EMERGENCY STOP button and check that the LEDs I1 (5) and I2 (6) are off.

h) Pull out the EMERGENCY STOP button and make sure that the LEDs I1 (5) and I2 (6) are lit.

i) Do the same test with all the EMERGENCY STOP buttons. Push the EMERGENCY STOP button and make sure that the LEDs I1 (5) and I2 (6) on are lit. Pull out the EMERGENCY STOP button and make sure that the LEDs I1 (5) and I2 (6) are lit.

6.10 Control Devices and Sensors

6.10-1 Control Devices and Sensors - Set Photocells

Machine Status	Power supply disconnector ON Air valve OFF
SPC Reference	673837

WARNING

Risk of personal injury!

Watch your fingers when working in the area where the photocell is. Moving parts can cause serious injuries. In case of accident, use EMERGENCY STOP.

Photocell Proximity switch (SICK)

a) Make sure that the green LED (2) is lit, indicating that power is supplied.

b) Remove the object to be detected.

c) Turn the potentiometer (1) to the right until the orange LED (2) is lit. If you have turned more than seven revs and no orange LED go to d).

d) Turn the potentiometer (1) to the left until the orange LED (2) goes out.

e) Place the object to be detected at the desired position in front of the photocell.

f) Turn the potentiometer (1) to the left and count the revs until the orange LED (2) goes out.

g) Turn the potentiometer (1) to the right, half the number of the revs counted in f).

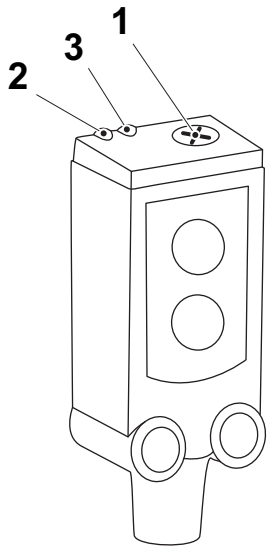

LED	Function
Orange	Status indicator
Green	Power indicator

1 Potentiometer
2 Orange LED
3 Green LED

Photocell Proximity switch (Omron)

a) Remove the object to be detected

b) Make sure that the operator selector is set to light on (L).

c) Turn the distance adjuster (1) to the right until both the orange LED (2) and the green LED (3) are lit. If you hear a click sound before the orange LED (2) is lit, go to e).

d) Turn the distance adjuster (1) to the left until only the green LED (3) is lit.

e) Place the object to be detected. Both the green LED (3) and the orange LED (2) are lit.

f) Turn the distance adjuster (1) to the left and count the revs until only the green LED (3) is lit.

g) Turn the distance adjuster (1) to the right, half the number of revs counted in f).

h) Check the photocell by placing the object to be detected that the orange LED (2) and green LED (3) are lit.And without object that, only the green LED (3) is lit.

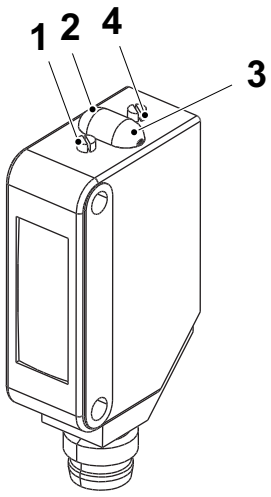

LED	Function
Orange LED	Status indicator
Green LED	Stability indicator

1 Distance adjuster
2 Orange LED
3 Green LED
4 Operation selector

Photocell through beam (Sick)

a) Check that the transmitter green LED (1) is lit, indicating power is supplied.

b) Check that the transmitter emits red light. If not; it is connected incorrectly.

c) Check that the receiver green LED (3) is lit, indicating power is supplied.

d) Remove object to be detected.

e) Check that the transmitter and the receiver are aligned.

f) Check that the receiver orange LED (2) is not lit or flashing.
If lit; it is connected incorrectly
If flashing; they are not aligned, restart at item e).

g) Cover the beam with object to be detected.

h) Check that the receiver orange LED (2) is lit and not flashing.
If flashing; the signal is unstable, check for beam reflecting into surface around the object.

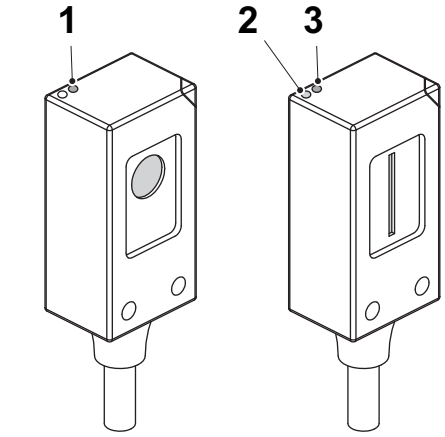

LED	Function
Orange LED	Status indicator
Green LED	Power indicator

1 Green LED
2 Orange LED
3 Green LED

Photocell through beam (Omron)

a) Check that the transmitter red LED (5) is lit, indicating power is supplied.

b) Check that the transmitter and the receiver are aligned.

c) Make sure that the operation selector (1) is set to dark on (D).

d) Turn the sensitivity adjuster (4) to the right until position max.

e) Turn the sensitivity adjuster (4) to the left until both the orange LED (2) and the green LED (3) are lit.

f) Turn the sensitivity adjuster (4) to the right until the green LED (3) is lit.

g) Turn the sensitivity adjuster (4) to the left, half the distance to position max.

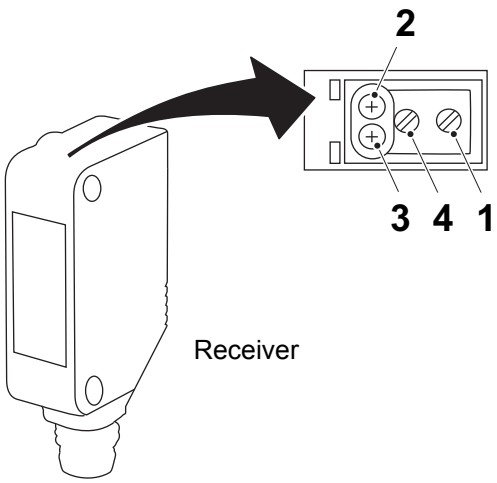

LED	Function
Orange LED	Status receiver
Green LED	Stability receiver
Red LED	Power indicator transmitter

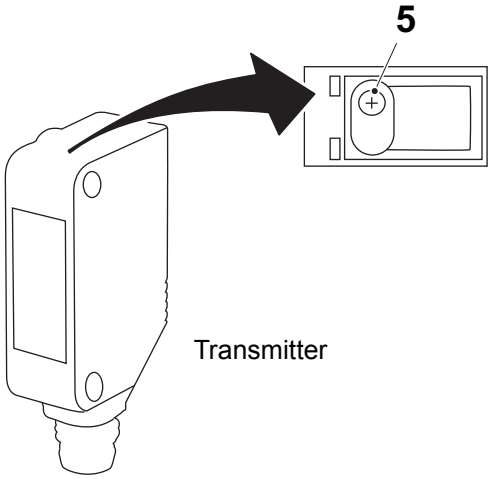

1 Operation selector
2 Orange LED
3 Green LED
4 Sensitivity adjuster
5 Red LED

6.11 Ventilation

6.11-1 Ventilation - Check Filter and Fan

Machine Status	PRODUCTION
SPC Reference	1021904

Check while the fan (1) is running, that it is running without any noise from worn parts. Check also the function of the fan.

Change if necessary.

Check the condition of the filter (2). Clean it if clogged, or change if damaged.

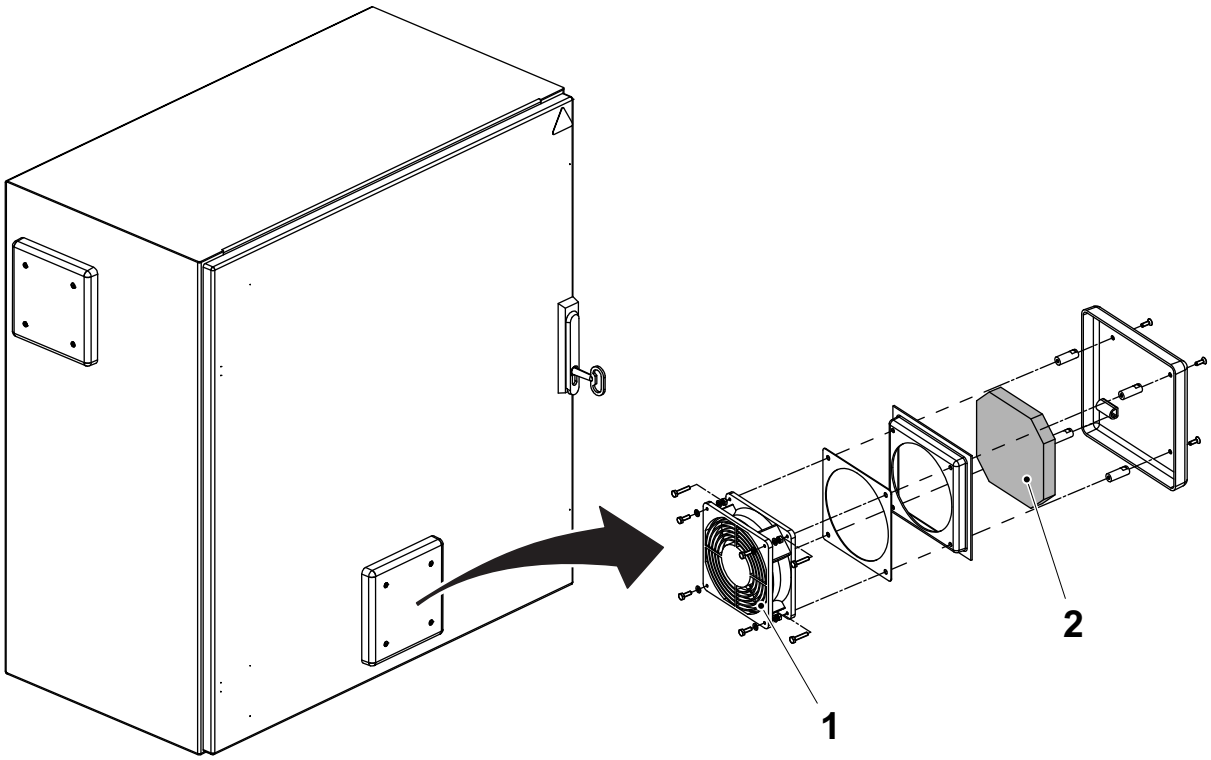

1 Fan (inside the cabinet)
2 Filter

6.12 PLMS NRG Upgrade

6.12-1 PLMS NRG upgrade in filling machine

Machine Status	Filling Machine Power Supply Disconnector ON
Special Equipment	USB Drive (Valid for NRG) PS/2 Keyboard (not with USB to PS/2 adapter)

PLMS NRG

a) Unzip the compressed file in the PLMS - Software folder on the software CD, to an appropriate place (i.e. desktop).

b) Copy the "exe" file from the "NRG110" folder to an USB drive.

Note! All windows related actions in this subchapter is made on the TPOP for the filling machine.

Note! During the PLMS update the filling machine will not be available.

c) Connect an external keyboard to the PS/2 port of the filling machine TPOP panel.

Tip! The port is often located on the rear of the TPOP cabinet after removing the rear cover.

d) Logoff from Windows to close all active applications.

e) Insert the USB drive containing the `*.DE_CFG FILE` or `setup*`.exe into:
– the USB port of the flex box for Innoscan PC on the filling machine or
– directly in the TPOP panel for B&R PC

f) Logon in Windows using:
– Username = `installer`
– Password = `installer`



(Cont'd)

(Cont'd)

g) To open windows explorer:
– Press CTRL+ESC (or Windows Key if available) twice
– Press SHIFT+F10
– Select EXPLORE

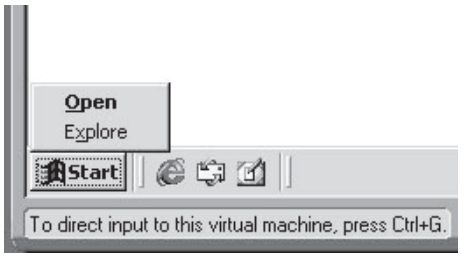

h) Copy the file `*.DE_CFG` to the folder `C:\logger\data\DESetup`.

i) Run the `setup*.exe` file.

j) Run the `PLMS NRG Configurator`.



(Cont'd)

(Cont'd)

k) If it doesn't work, reopen the Windows Explorer which explained in item g and browse to folder `C:\logger\bin` and start program `PLMSNRGConf.exe`

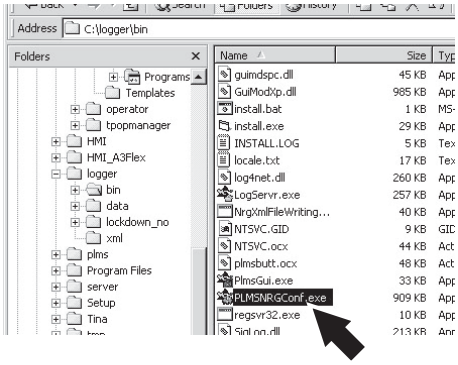

l) Close `PLMS NRG Configurator` and restart TPOP.

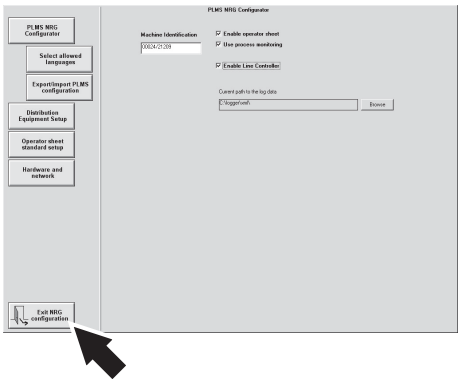

6.13 PLMS SNP (option)

6.13-1 PLMS SNP - Select

Machine Status	Power Supply Disconnector ON
SPC Reference	

From the Home Window, press the CONFIGURATION WINDOW button to display the Configuration Window.

Note! TP technician login is required to access this function.

a) Press the PLMS TYPE button (1).

b) Select SNP from the list.

c) Press the CONFIRM button.

d) Press the PLMS - SNP ID button (2).

e) If needed, change the SNP ID (default for CBP32 is 9400).

f) Press the CONFIRM button.

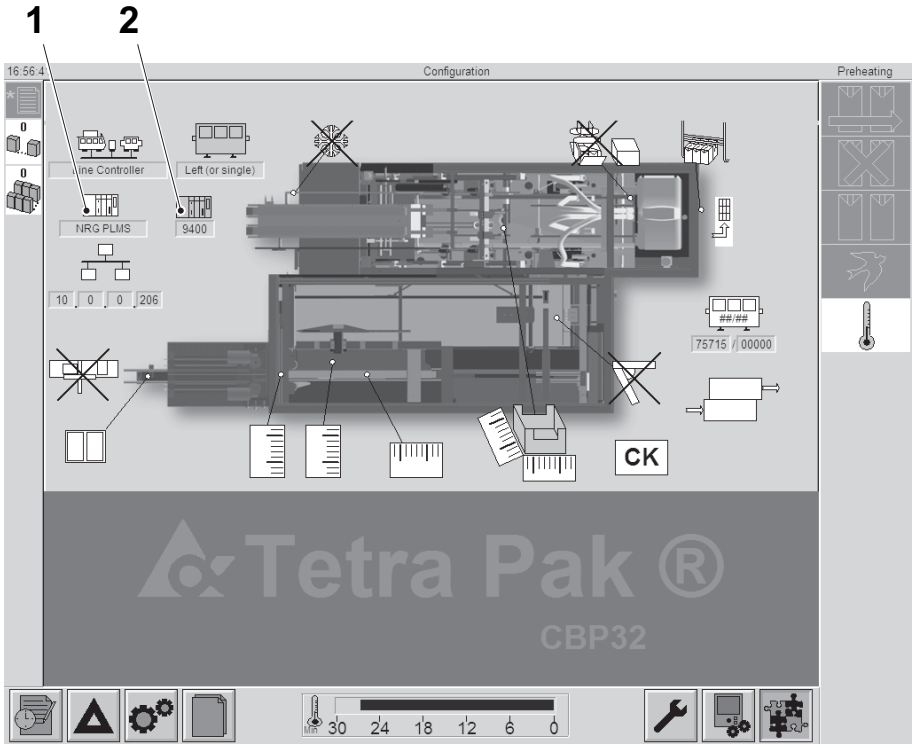

1 PLMS TYPE
2 PLMS - SNP ID

6.13-2 SNP Module - Change

Machine Status	Power Supply Disconnector OFF
SPC Reference	

Remove

a) Disconnect the cables to the SNP module.

b) Use a screw driver and push the button (1) at the same time as pulling the SNP module (2) in the lower part.

c) Lift up the SNP module (2).

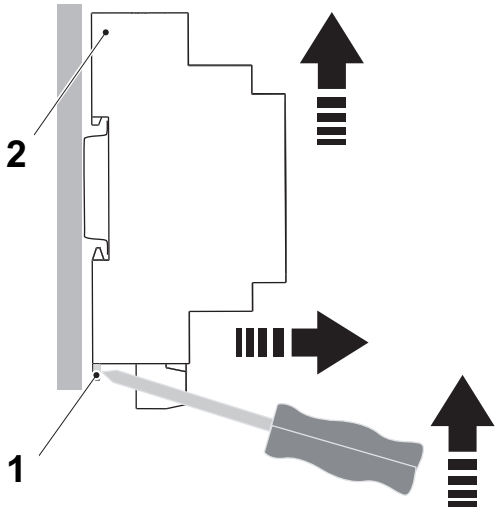

1 Button
2 SNP module

Install

a) Attach the SNP module (2) to the hanger (3) and push the SNP module towards the electrical cabinet (4).

b) Connect the cables to the SNP module.

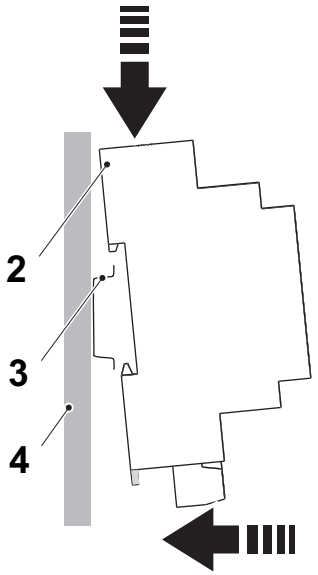

2 SNP module
3 Hanger
4 Electrical cabinet

6.13-3 SNP Module - Set

Machine Status	Power Supply Disconnector OFF
SPC Reference	

Cable Connections

Connect the cables on the SNP module according to the illustrations below. The wiring can be found in EM

SNP module from below

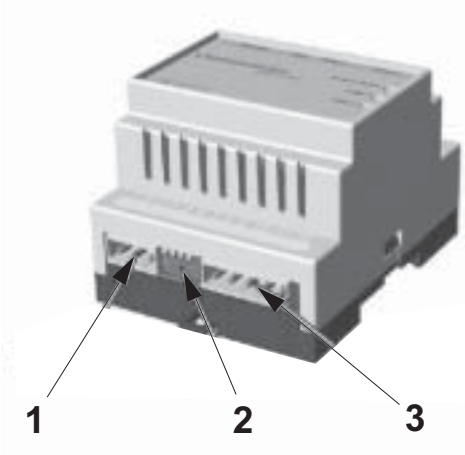

SNP module from above

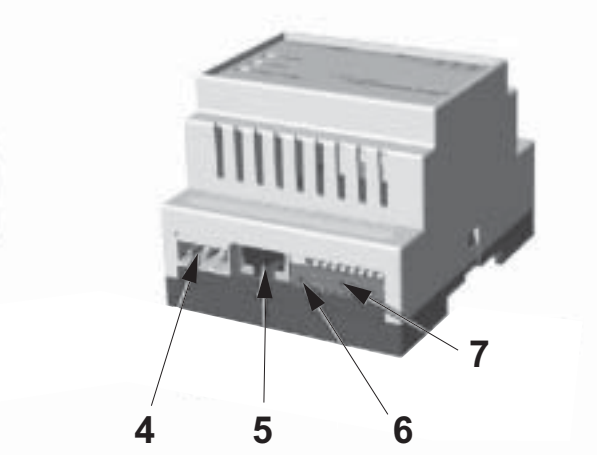

1 Power
2 Dip switches (4-bit)
3 COM2 (RS-422)
4 COM1 (not used)
5 COM3 (RS-232)
6 Term switch (COM1)
7 Dip switches (8-bit)

(Cont'd)

(Cont'd)

Dipswitch

Set the 8-bit dipswitch (1) and the 4-bit dipswitch (2) according to EM.

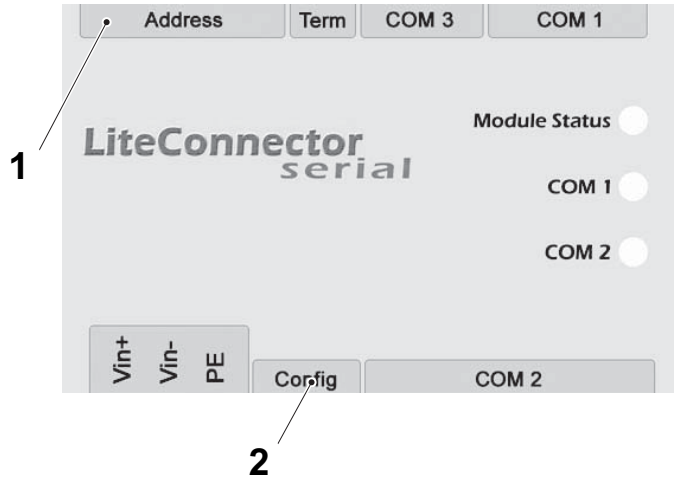

1 8-bit
2 4-bit

6.13-4 LED Description

The gateway is fitted with three LEDs to indicate the different states of the gateway. The LEDs are labelled Module Status (1), DF1 (2) and SNP (3) The table below shows the different states of the LEDs.

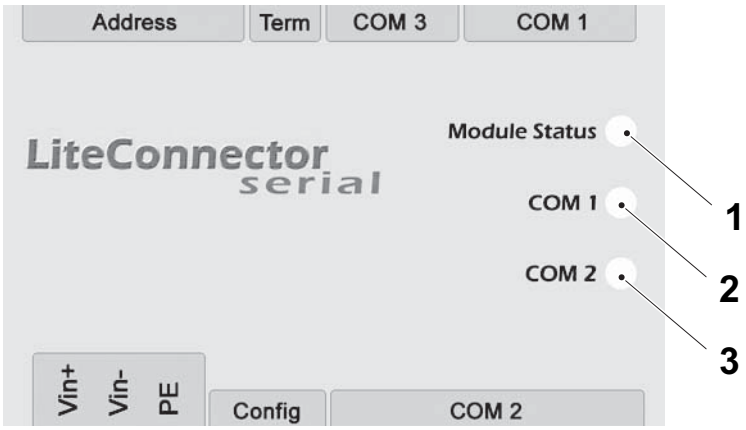

1 Module Status LED
2 DF1 (COM1) LED
3 SNP (COM2) LED

(Cont'd)

(Cont'd)

Module status LED (1)	Description
OFF	Module initializing
Green (ON)	Module initialized and running
Red (flashing)	Hardware error (RAM test fail or flash checksum fail)
Red (ON)	Module fatal error

DF1 (COM1) LED (2)	Description
OFF	Idle - no activity
Red (ON)	Network OFFLINE, no communication with PLC
Green (flashing)	Activity on serial channel

SNP (COM2) LED (3)	Description
OFF	Network OFFLINE, not connected to the master
Green (ON)	Network ONLINE, gateway attached to the master

6.13-5 PLMS SNP DATA COLLECTION

a) Unzip the compressed file in the PLMS - Software folder on the Software CD.

b) Inspect the document in the SNP5 folder to see which CBP32 alarms are logged for each SNP bit. Since there are more alarms in the CBP32 than there are SNP bits, the alarms are clustered according to the document.

c) Make sure the flexbox is updated with the latest available installation files for DE equipment.

This page intentionally left blank

7 Central Lubrication

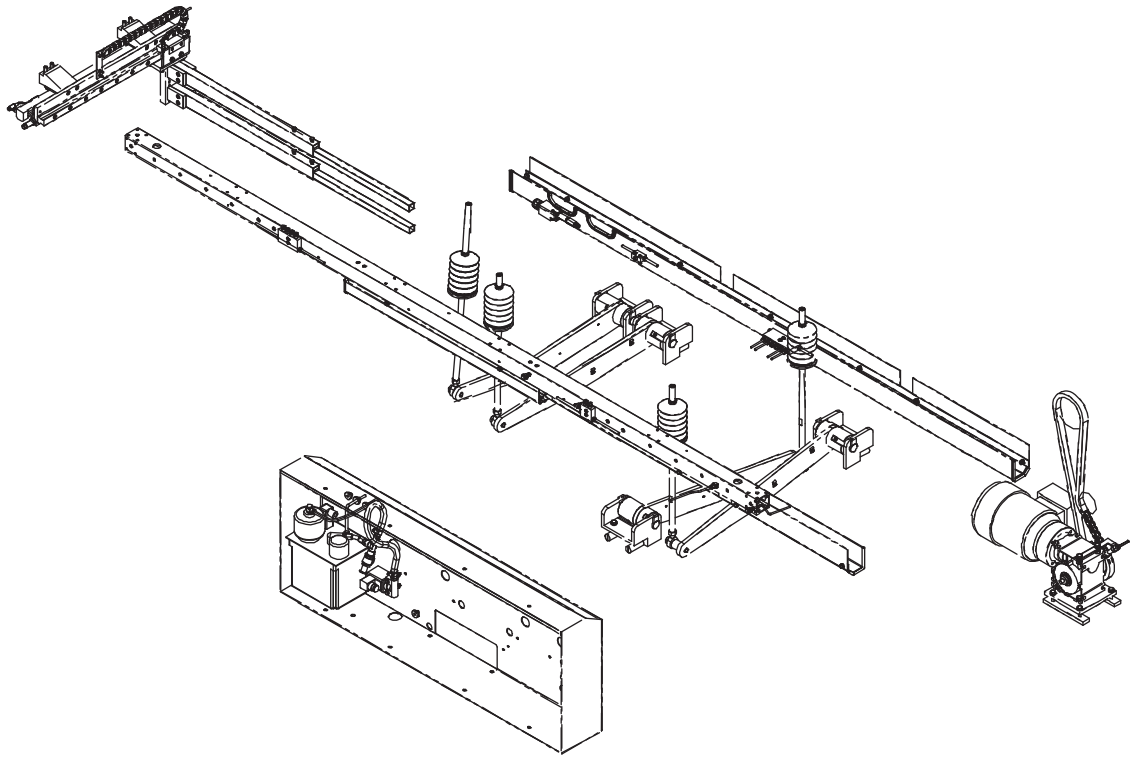

Description

SPC Reference	673834

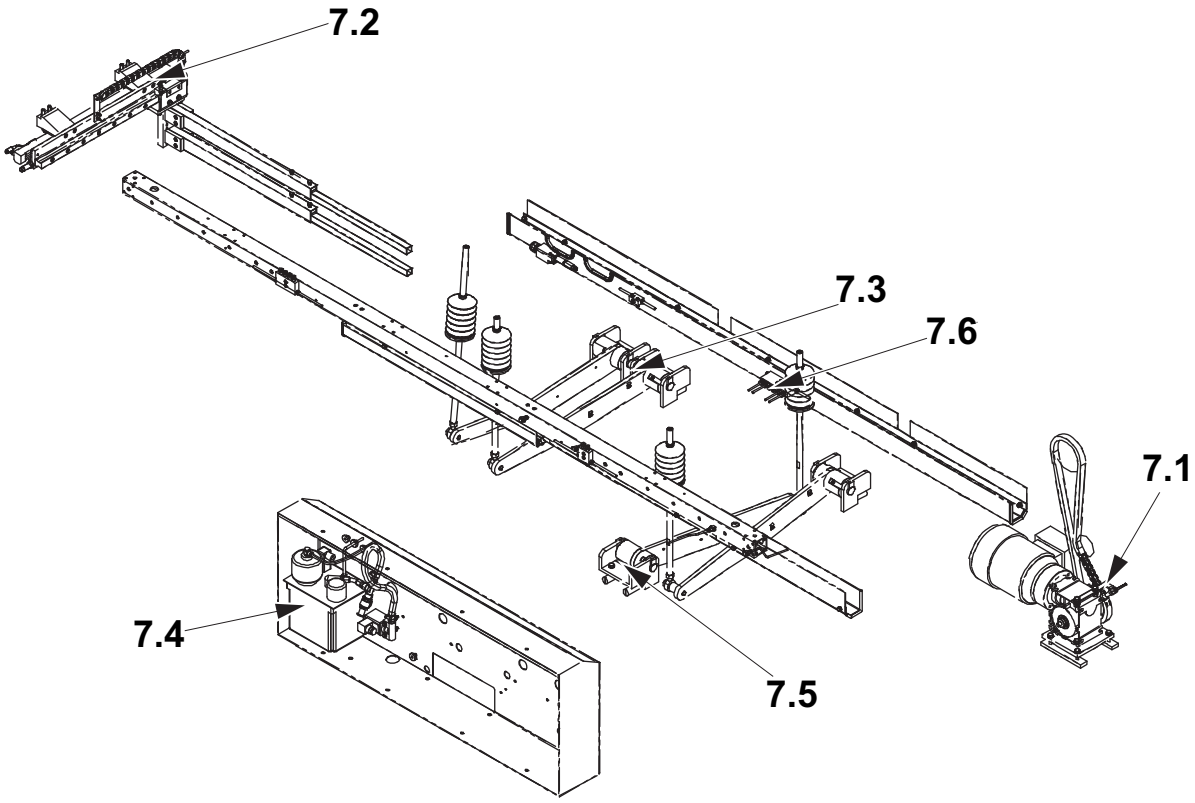

7.1 Feeding lubrication point
7.2 Grp dolly lubrication (no procedure described)
7.3 Curve arm lubrication (no procedure described)
7.4 Lubrication unit
7.5 Pattern forming lubrication system (no procedure described)
7.6 Tray forming lubrication distribution (no procedure described)

Functional Description . . . . . 7 - 5

7.1 Feeding Lubrication Point . . . . . 7 - 6

7.1-1 Feeding Lubrication Point - Check Brushes . . . . 7 - 6

7.1-2 Feeding Lubricaiton Point - Set Brushes . . . . . 7 - 7

7.2 Grp Dolly Lubrication . . . . . 7 - 8

7.2-1 Grp Dolly Lubrication - No Procedure Described 7 - 8

7.3 Curve Arm Lubrication . . . . . 7 - 9

7.3-1 Curve Arm Lubrication - No Procedure Described . . . . . 7 - 9

7.4 Lubrication Unit . . . . . 7 - 10

7.4-1 Lubrication Unit - Check Level Switch . . . . . 7 - 10

7.4-2 Lubrication Unit - Check Pressure Switch . . . . . 7 - 11

7.4-3 Lubrication Unit - Clean Oil Container . . . . . 7 - 12

7.4-4 Lubrication Unit - Assemble Central Lubrication . . . . . 7 - 13

7.4-5 Lubrication Unit - Finding Fault Central Lubrication . . . . . 7 - 14

7.5 Pattern Forming Lubrication System . . . . . 7 - 15

7.5-1 Pattern Forming Lubrication System - No Procedure Described . . . . . 7 - 15

7.6 Tray Forming Lubrication Distribution . . . . . 7 - 16

7.6-1 Tray Forming Lubrication Distribution - No Procedure Described . . . . . 7 - 16

This page intentionally left blank

Functional Description

The central lubrication system is a one-way system and works like a hydraulic system. This means that the system must be bled to achieve a function free from interference. The oil is fed from the central lubrication pump through the main line distribution to the dosing valves. The oil is dosed with a set quantity independent of each other to respective lubrication point connected.

To secure the lubrication, the pump keeps the oil under a certain pressure for a short while after that. The system is decompressed to a pressure of approximately 2 to 5 bar (0.2 to 0.5 MPa). The remaining pressure is important for the function of the system. A remaining pressure that is too high does not give any refilling of the dosing valves. If there is no remaining pressure, air might enter the system through leaks etc.

The time needed for the compression, depends on the viscosity of the lubricant, running temperature and the size of the system. The next lubrication pulse must not start until the dosing valves have been refilled (the system is decompressed).

The lubrication sequence is one lubrication pulse every second hour during production at high speed, every third hour during production at medium speed and every fourth hour during production at low speed.

7.1 Feeding Lubrication Point

7.1-1 Feeding Lubrication Point - Check Brushes

Machine Status	Power supply disconnector OFF Air valve OFF
SPC Reference	1287191

Check the condition of the lubrication brushes (1). Change if necessary. Set according to 7.1-2 Feeding Lubricaiton Point - Set Brushes.

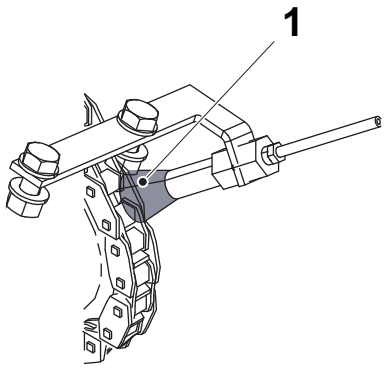

1 Lubrication brush

7.1-2 Feeding Lubricaiton Point - Set Brushes

Machine Status	Power supply disconnector OFF Air valve OFF
SPC Reference	1287191

a) Loosen the screws (1).

b) Set the distance A between the lubrication brush (2) and the chain edge.

c) Tighten the screws (1).

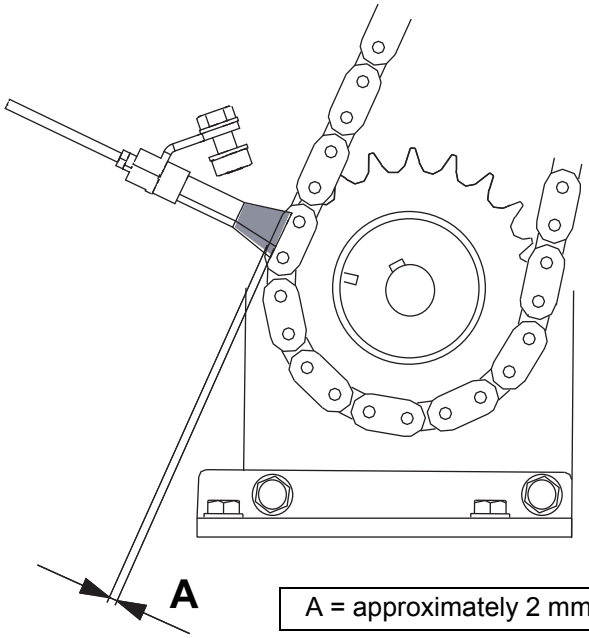

A = approximately 2 mm

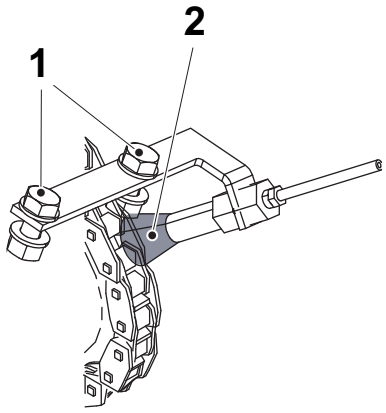

1 Screw
2 Lubrication brush

7.2 Grp Dolly Lubrication

7.2-1 Grp Dolly Lubrication - No Procedure Described

SPC Reference	1287192

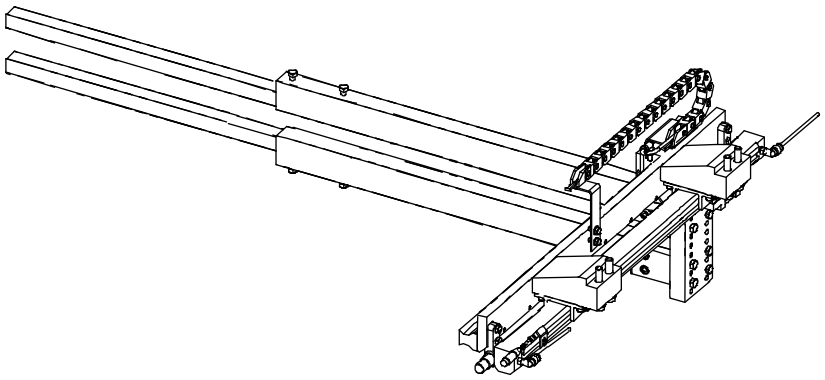

7.3 Curve Arm Lubrication

7.3-1 Curve Arm Lubrication - No Procedure Described

SPC Reference	1287193

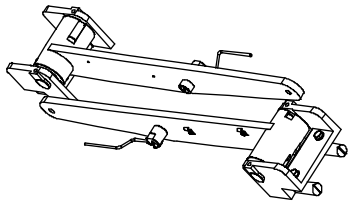

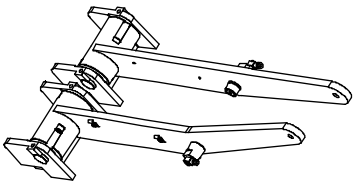

7.4 Lubrication Unit

7.4-1 Lubrication Unit - Check Level Switch

Machine Status	Power supply disconnector OFF Air valve OFF
SPC Reference	2718898

a) Push up the level switch magnetic float (4) to its top position and push down to its bottom position and perform the continuity tests according to b). Make sure that the recessed section of the magnetic float is uppermost.

b) With a wiring tester, check continuity between the contact (3) and the contact (2). Repeat the test between the contact (3) and the contact (1). The test results should be according to the table below. If not, there is no continuity. Change the level switch (6).

High floater	Low floater	Pin1	Pin2
Up	Up	0	1
Up	Down	0	0
Down	Up	1	1
Down	Down	1	0

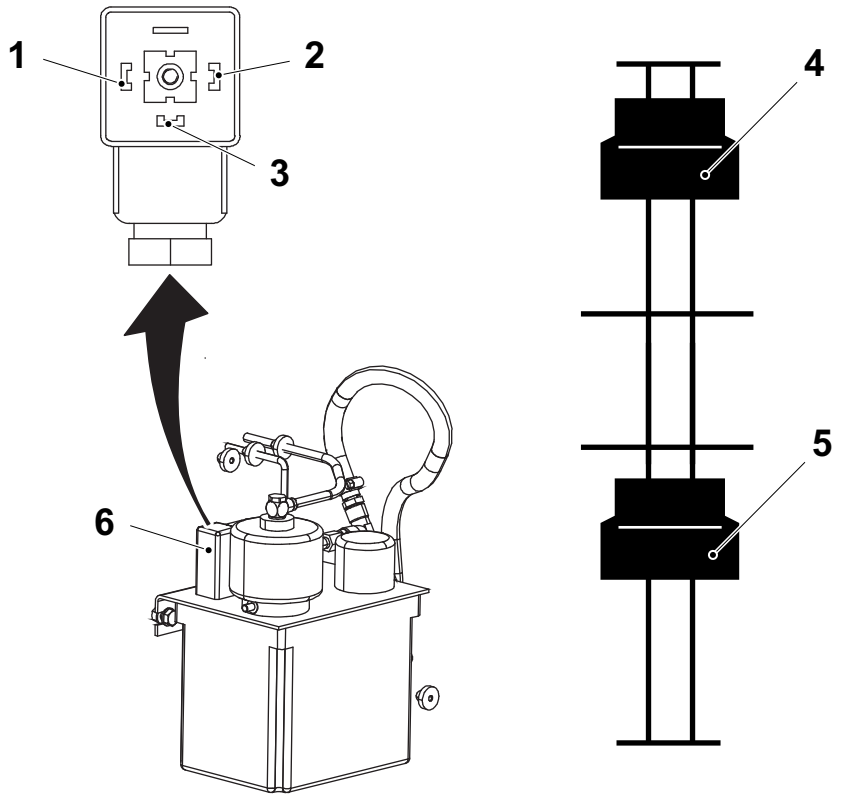

1 Contact, pin1
2 Contact, pin2
3 Contact, pin3
4 Magnetic float (level switch A01B0131)
5 Magnetic float (level switch A01B0131)
6 Level switch A01B0131,

7.4-2 Lubrication Unit - Check Pressure Switch

Machine Status	Power supply disconnector OFF Air valve OFF
SPC Reference	2718898

Unscrew the cap on the pressure switch (1) and check that the pin (2) moves when the solenoid valve for the lubrication pump is actuated and the connection of the switch (3) is closed.

Note! To bleed the system unscrew the cap (4).

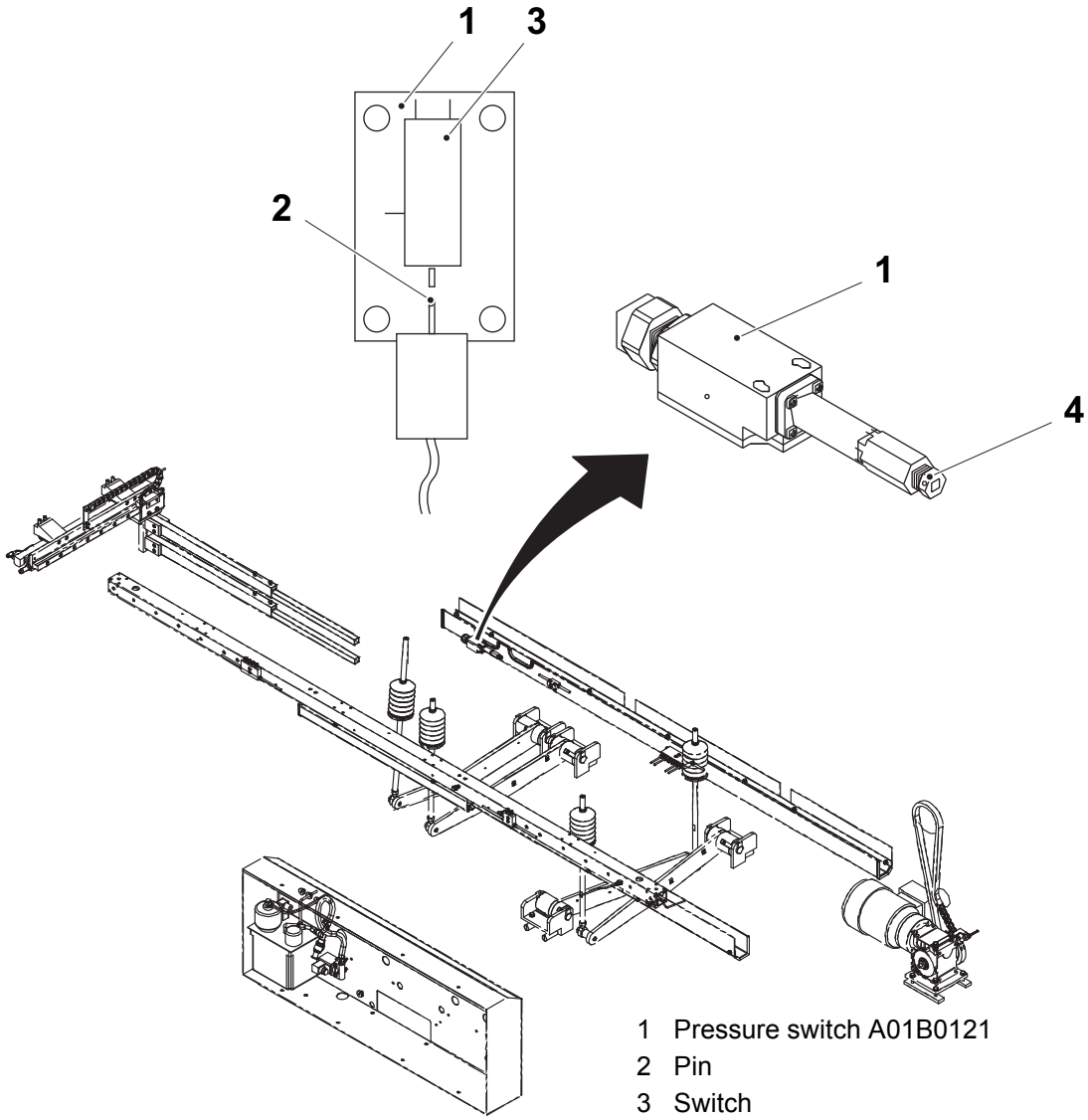

1 Pressure switch A01B0121
2 Pin
3 Switch
4 Cap

7.4-3 Lubrication Unit - Clean Oil Container

Machine Status	Power supply disconnector OFF Air valve OFF
Consumables	3 litres high pressure oil, Shell Omala oil 320, TP no 90 296-75 Shell Omala oil 220, TP no 90 296-73 (used in production plant with start temperature below 5° C)
SPC Reference	2718898

a) Remove the level switch (1) and the hoses (2) and (3).

b) Remove the screws (4) and pull out the oil container.

c) Remove the screws (5). Lift off the lid and empty the container.

d) Assemble in the reverse order.

e) Fill up with oil, code H. The tank contains 3 litres of oil.

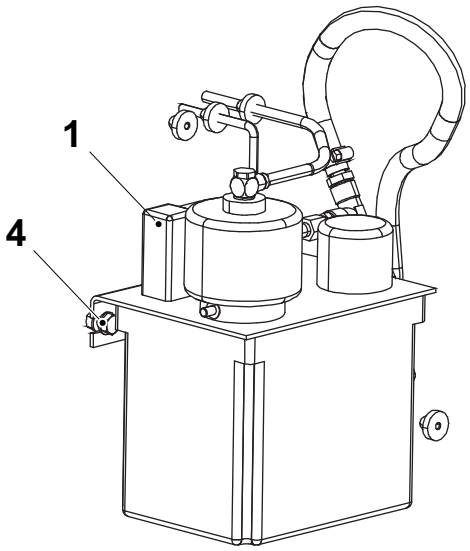

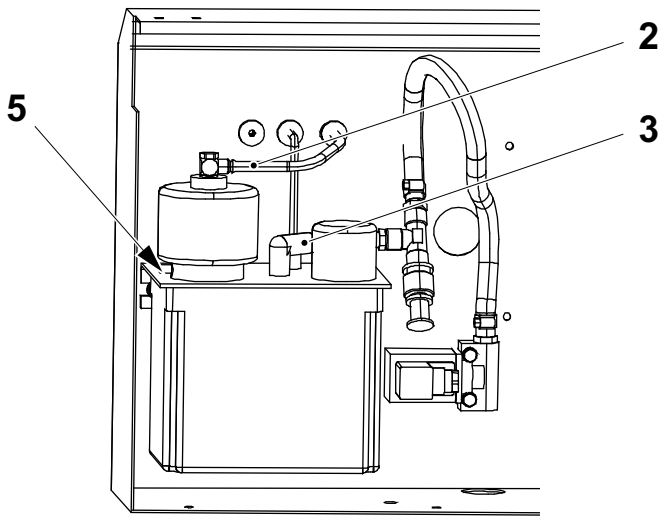

1 Level switch A01B0131
2 Hose
3 Hose
4 Screw (4 pcs)
5 Screw (4 pcs)

7.4-4 Lubrication Unit - Assemble Central Lubrication

Machine Status	Power supply disconnector OFF Air valve OFF
SPC Reference	2718898

Fit a Cone

a) Cut the outer end of the hose to remove dirt. Make sure that the cut is at right angle (90°).

b) Lubricate the connector and the connections.

c) Connect the pipe and check that it is fully home in the seat.

d) Tighten the bushings finger-tight.

e) Tighten the connector one turn (360°) but no more.

Fit a Plug

a) Clean the connections with compressed air.

b) Lubricate threads and surfaces.

c) Tighten finger-tight.

d) Tighten using a tool 1/4 turn (90°).

7.4-5 Lubrication Unit - Finding Fault Central Lubrication

Machine Status	Power supply disconnector OFF Air valve OFF
SPC Reference	2718898

If no pressure builds up in the system
To find the fault do the following:

a) Check the oil level.
b) Disconnect one oil hose and check if there is oil pressure in the hose when the solenoid valve is opened.
c) If there is still no pressure, disconnect the air hose at the pump and check if there is air pressure in the hose when the solenoid valve is opened. Use a pressure gauge (0 to 10 bar). Check that the air pressure to the pump is 4 to 10 bar.
d) Check all pressure lines and manifolds (distribution blocks) for leakage.
e) If all these checks have been carried out without finding any fault, replace the pump. Vent the lubrication system after replacing the pump.

If oil is not delivered to one or more of the lubrication points
To find the fault, do the following:

a) Vent the main oil line concerned.
b) Check the capacity of the pump with the aid of a pressure gauge in accordance with the directives on periodical maintenance.
c) Replace the metering cartridge if all these checks have been carried out without finding any fault.

7.5 Pattern Forming Lubrication System

7.5-1 Pattern Forming Lubrication System - No Procedure Described

SPC Reference	1287195

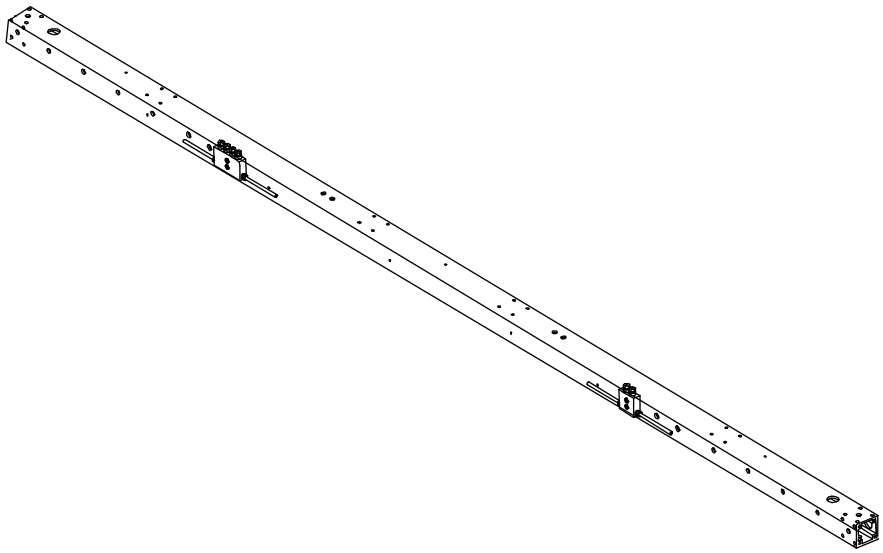

7.6 Tray Forming Lubrication Distribution

7.6-1 Tray Forming Lubrication Distribution - No Procedure Described

SPC Reference	1287196

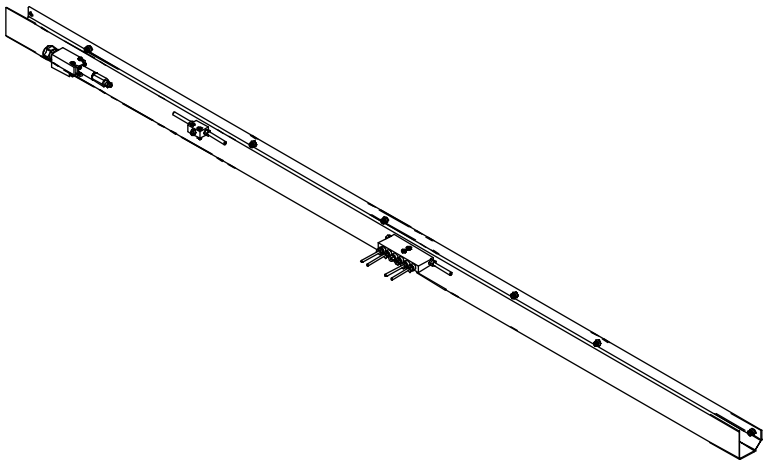

8 Regular Accessories

Description

SPC Reference	673835

This chapter describes which tools that are included in Regular accessories.

8.1 Setting Tools . . . . . 8 - 5

8.2 Bailer. . . . . 8 - 6

This page intentionally left blank

8.1 Setting Tools

SPC Reference	673835

There are two tools included in the machine needed for the resetting between different package sizes and packing patterns.

- Crank (1) for setting the height of the magazine unit and the width of the conveyor. It is placed in a holder at the magazine unit.
- Allen key (2) for setting of components where locking levers can not be used. It is placed at the pneumatic panel.

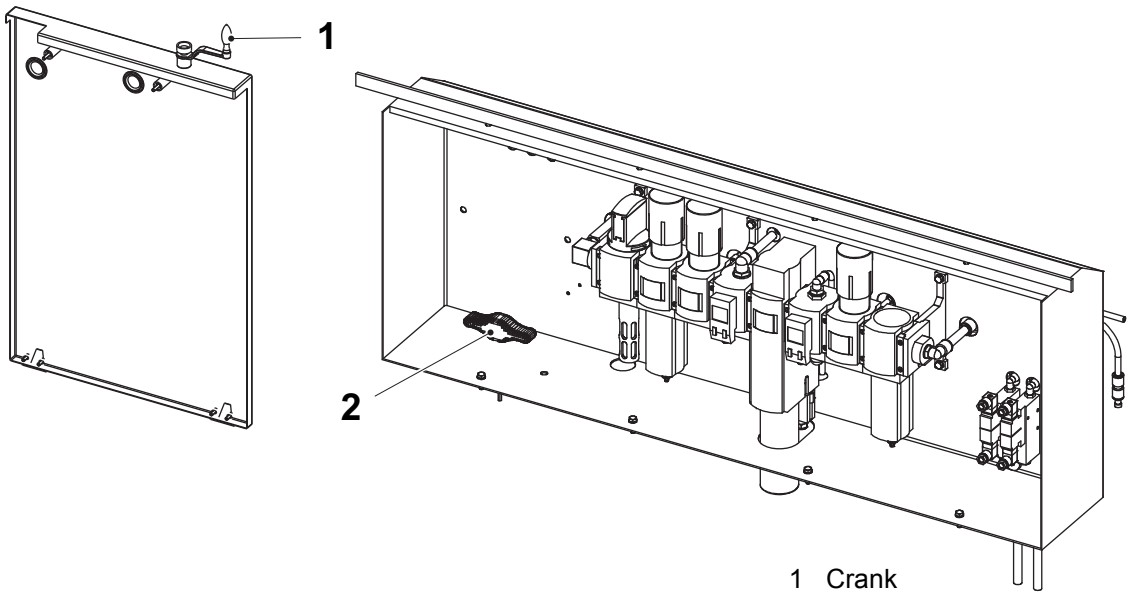

1 Crank
2 Allen key

8.2 Bailer

SPC Reference	673835

The bailer (1) is used to scoop the hotmelt granulate.

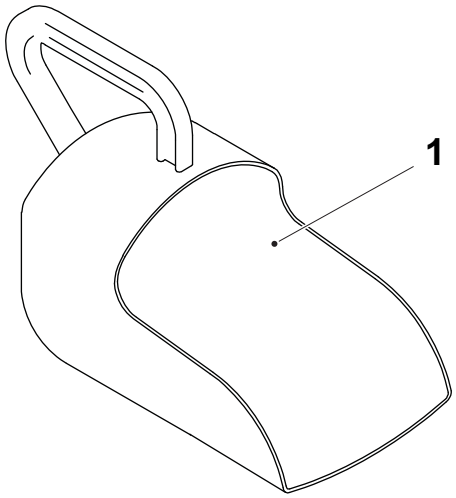

1 Bailer

9 Optional Equipment

Description

SPC Reference	673838

This chapter describes how to check, change and set parts in Optional equipment.

9.1 Illumination . . . . . 9 - 5

9.1-1 Illumination - Change . . . . . 9 - 5

9.2 Light Barrier Unit . . . . . 9 - 6

9.2-1 Light Barrier Unit - No Procedure Described . . . 9 - 6

9.3 Air Jet Gun . . . . . 9 - 7

9.3-1 Air Jet Gun - No Procedure Described . . . . . 9 - 7

9.4 OK Spray Gun . . . . . 9 - 8

9.4-1 OK Spray Gun - No Procedure Described . . . . . 9 - 8

9.5 Discharge Unit, Roller Conveyor . . . . . 9 - 9

9.5-1 Discharge Unit, Roller Conveyor - No Procedure Described . . . . . 9 - 9

9.6 Discharge Conveyor . . . . . 9 - 10

9.6-1 Discharge Conveyor - Change Cylinder . . . . . 9 - 10

9.7 Cooling Unit . . . . . 9 - 11

9.7-1 Cooling Unit - No Procedure Described . . . . . 9 - 11

9.8 Photocell Unit . . . . . 9 - 12

9.8-1 Photocell Unit - No Procedure Described . . . . . 9 - 12

9.9 6 Channel Hotmelt . . . . . 9 - 13

9.9-1 Connection of hoses and cords . . . . . 9 - 13

This page intentionally left blank

9.1 Illumination

9.1-1 Illumination - Change

Machine status	Power supply disconnector OFF Air valve OFF
SPC reference	1287186

Note! Not valid for USA and Canada.

The power switch (S004) for the lamps is located in the electrical cabinet.

Note! The power switch can only be used when the machine is stepped down to IDLE.

When the machine is stepped up to PREHEATING, the lamps will be switched on independently of the power switch position.

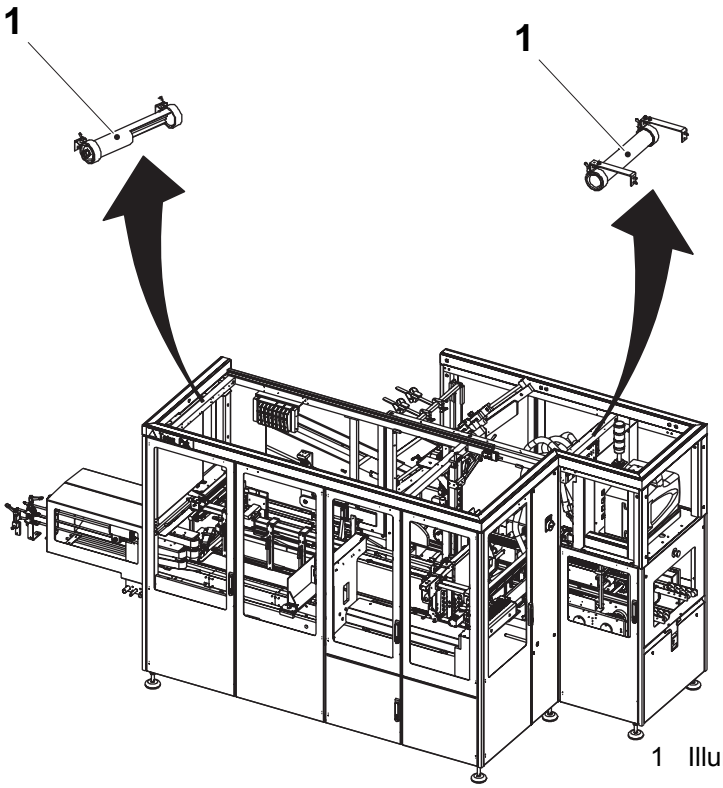

1 Illumination

9.2 Light Barrier Unit

9.2-1 Light Barrier Unit - No Procedure Described

SPC Reference	2834002

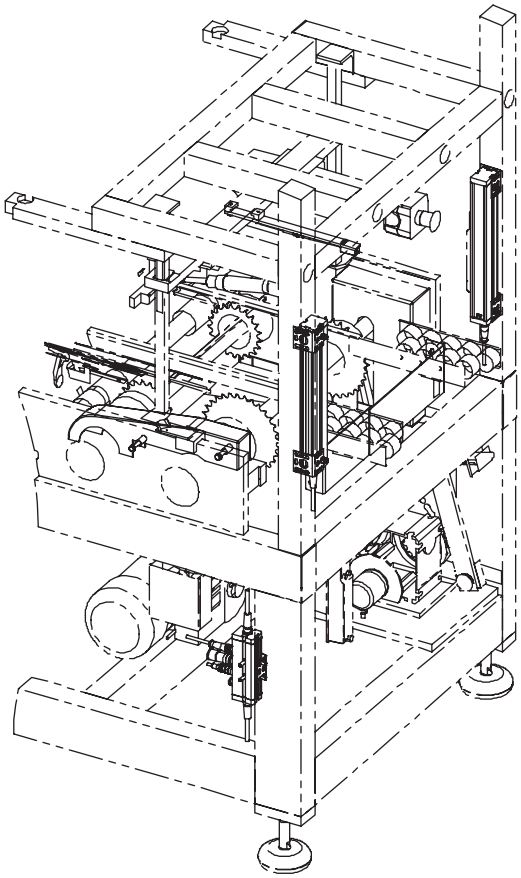

9.3 Air Jet Gun

9.3-1 Air Jet Gun - No Procedure Described

SPC Reference	2802489

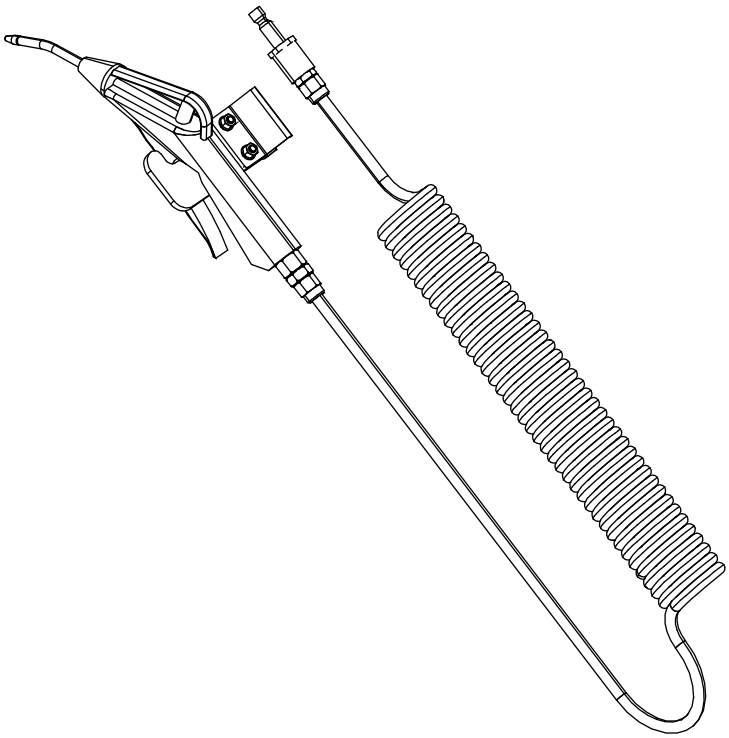

9.4 OK Spray Gun

9.4-1 OK Spray Gun - No Procedure Described

SPC Reference	1287076

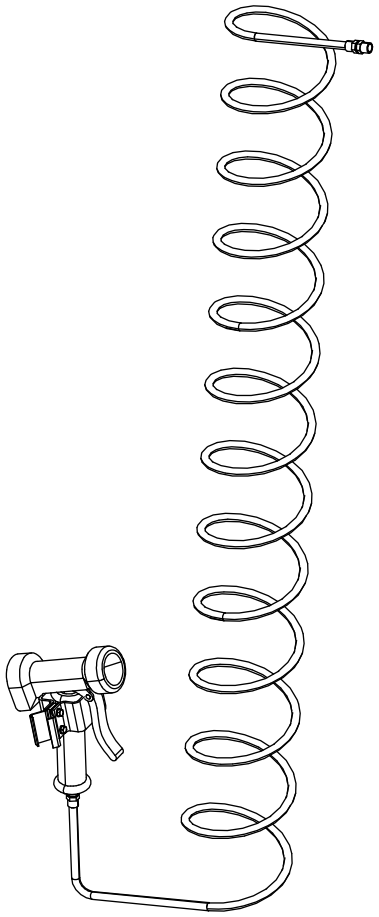

9.5 Discharge Unit, Roller Conveyor

9.5-1 Discharge Unit, Roller Conveyor - No Procedure Described

SPC reference	2511012

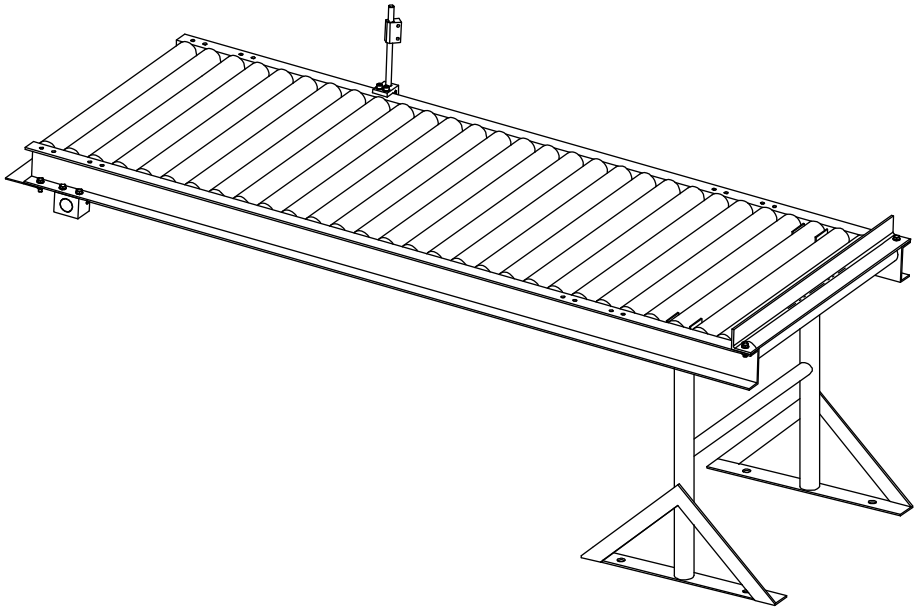

9.6 Discharge Conveyor

9.6-1 Discharge Conveyor - Change Cylinder

Machine Status	Power supply disconnector OFF Air valve OFF
SPC reference	2970888

a) Remove the two air hoses (1).

b) Remove the four screws (2) and the plate (3).

c) Remove the four screws (4), the washers (5), and the cylinder (6).

d) Change the cylinder and assemble in the reverse order.

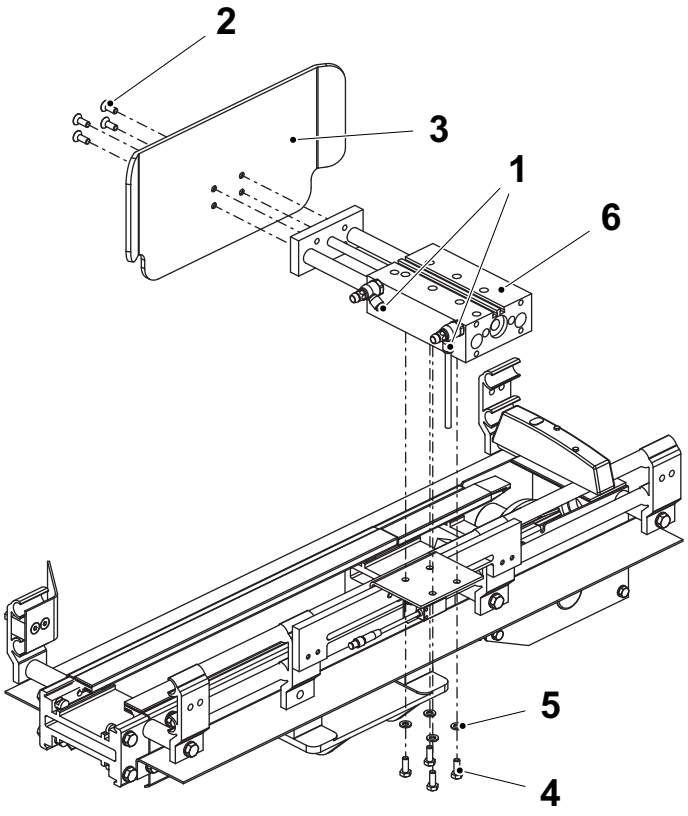

1 Air hose
2 Screw
3 Plate
4 Screw
5 Washer
6 Cylinder

9.7 Cooling Unit

9.7-1 Cooling Unit - No Procedure Described

SPC Reference	2792385

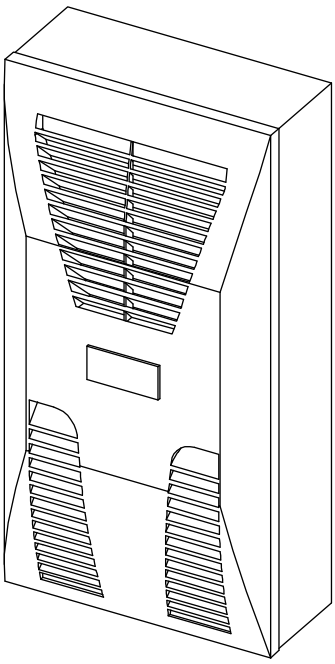

9.8 Photocell Unit

9.8-1 Photocell Unit - No Procedure Described

SPC Reference	2802448

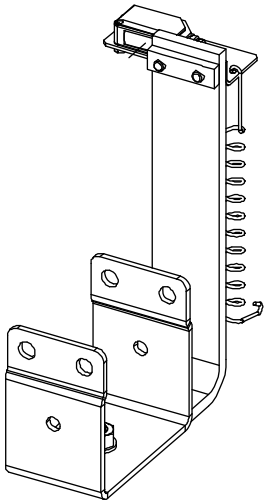

9.9 6 Channel Hotmelt

9.9-1 Connection of hoses and cords

SPC Reference	3090149

The hoses and cords shall be connected as follows:

a) Connect the hoses between the Hotmelt unit and the Hotmelt guns according to the illustration below.

b) Use the type of connection at the Hotmelt unit according to the table.

c) Make sure the hoses are not hit by moving machine parts.

d) See 3.5.1 Hotmelt Equipment for settings and bleeding.

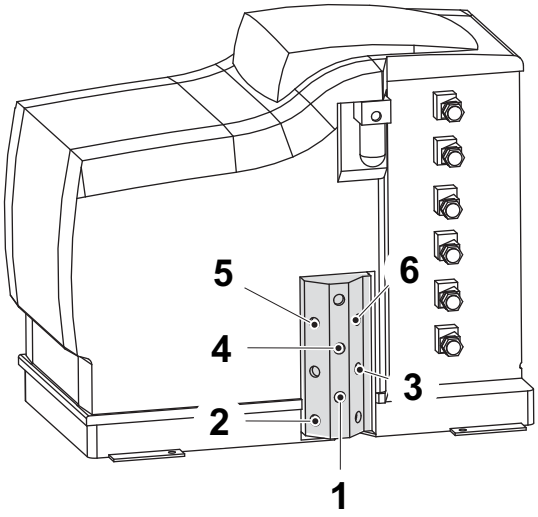

Port	Infeed Z-Left/Right and U-Right	Infeed U-Left
1		
2		
3		
4		
5		
6		

Infeed Z-Left/Right and U-Right	Infeed U-Left
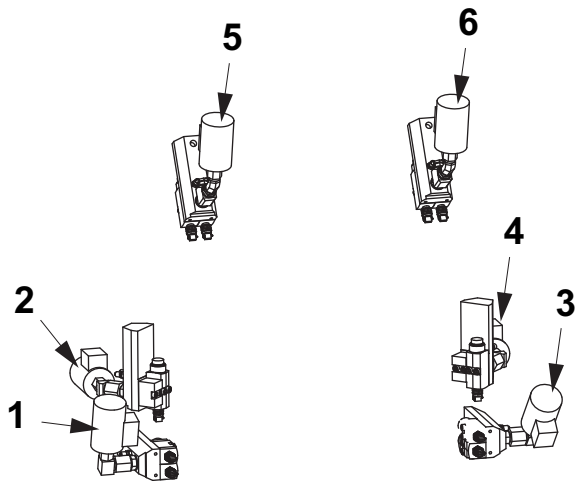	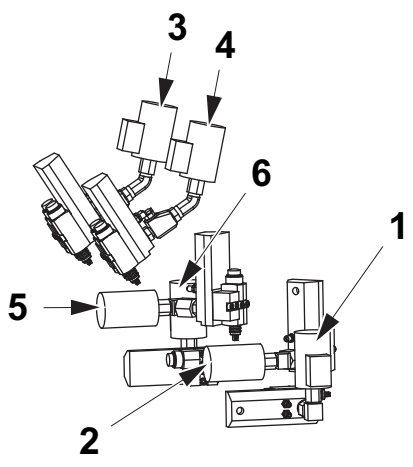

This page intentionally left blank

10 General

Description

This chapter describes how to change production mode. It also consists of schematics diagrams, information about lubricants, cleaning and disinfecting agents used for maintaining the machine.

10.1 Machine Conversion . . . . . 10 - 5

10.1.1 Production Mode Change . . . . . 10 - 5

10.1.1-1 Description . . . . . 10 - 5

10.1.1-2 Packing Pattern Definition . . . . . 10 - 5

10.1.2 Packing Pattern Change . . . . . 10 - 6

10.1.2-1 Change Length . . . . . 10 - 6

10.1.2-2 Change Width . . . . . 10 - 7

10.1.3 Other Infeed Alternative . . . . . 10 - 9

10.1.3-1 Set Single or Multi Pack Infeed . . . . . 10 - 9

10.1.4 Other Tray Type . . . . . 10 - 10

10.1.4-1 Other Tray Type - Change . . . . . 10 - 10

10.1.4-2 Other Tray Type Crease - Change . . . . . 10 - 11

10.1.5 Package Volume Change. . . . . 10 - 12

10.1.5-1 Change within same Bottom Size . . . . . 10 - 12

10.1.5-2 Change Package Bottom Size . . . . . 10 - 13

10.2 Schematics Diagram . . . . . 10 - 14

10.2-1 Pneumatic Diagram . . . . . 10 - 14

10.2-2 Lubrication Diagram . . . . . 10 - 20

10.3 Consumables . . . . . 10 - 21

10.3.1 Lubricants . . . . . 10 - 21

10.3.2 Adhesive . . . . . 10 - 22

This page intentionally left blank

10.1 Machine Conversion

10.1.1 Production Mode Change

10.1.1-1 Description

How to change between different packing patterns, distribution units, and infeed alternatives is described under a number of headings. Follow the description under the appropriate heading below:

- 10.1.2 Packing Pattern Change
- 10.1.3 Other Infeed Alternative
- 10.1.4 Other Tray Type
- 10.1.5 Package Volume Change

In the SPC lists, there is information on what parts to use for different changes of production mode.

The number of the actual SPC list is found in the procedures referred to on the following pages.

10.1.1-2 Packing Pattern Definition

Packing pattern is stated as the position 1 and 2 in the text.

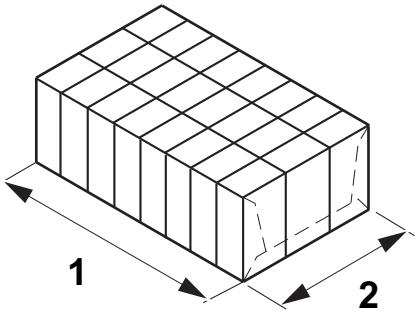

1 Packing pattern length
2 Packing pattern width

10.1.2 Packing Pattern Change

Make sure that the recipe is set for current package, packing pattern and tray, see 6.8.3-3 TPOP Open an Existing Recipe.

10.1.2-1 Change Length

To set the machine when changing packing pattern length (1), do the following:

a) Remove the packages from the infeed and the grouping plate.

b) Remove the blanks from the magazine unit.

c) Set the machine according to the actions in the table below.

Action	See Procedure
Set feed unit	3.3-1 Feed Unit - Set
Set magazine arm	3.4.1-3 Magazine Arm - Set
Set magazine unit	4.1 Magazine Unit
Set transfer guide rail	2.2.3-3 Transfer Guide Rail - Set
Set box pusher plate/dolly	2.2.6-4 Box Pusher Plate/Box Pusher Dolly - Set and subsection Length Position
Set wraparound unit	5.2-3 Wa Squeezer - Set

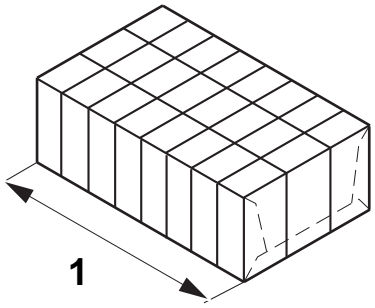

1 Packing pattern length

10.1.2-2 Change Width

To set the machine when changing packing pattern width (2), do the following:

a) Remove the packages from the infeed and the grouping plate.

b) Remove the blanks from the magazine unit.

c) Set the machine according to the actions in the table below.

Action	See Procedure
Set carrier chain inside	3.3.2-1 Carrier Chain Inside - Set
Set folding bar	3.3.8-2 Folding Station - Set
Set bottom folder rail	3.3.16-1 Bottom Folder Rail - Set
Set tray support	3.3.15-3 Tray Support - Set
Set tray holder	3.3.6-3 Tray Holder - Set
Set suction cup	3.4.2-2 Suction Cup - Set
Set packing end stop	3.3.9-3 Packing End Stop - Set
Change volume plate	
Set box pusher plate/box pusher dolly	2.2.6-4 Box Pusher Plate/Box Pusher Dolly - Set
Set magazine unit	4.1 Magazine Unit
Set magazine top unit	4.3-1 Mag Top Unit - Set

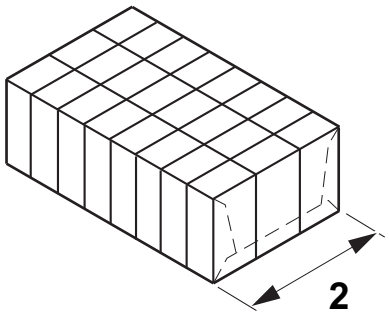

2 Packing pattern width

(Cont'd)

(Cont'd)

If the number of packages is changed and the number of packages in a row in the grouping pusher is divisible with the packing pattern width, do the following:

a) Fill the grouping pusher with packages.

b) Set the machine according to the actions in the table below.

Action	See Procedure
Set end stop grouping	1.5.2-1 End Stop Grouping - Set (page 1-24)
Set rails in grouping pusher	2.2.1-5 Grouping Pusher - Set Rails
Set grouping dolly	2.2.2-3 Grouping Dolly - Set
Set stop arm	2.2.4-2 Stop Arm - Set
Set box pusher end stop	2.2.5-2 Box Pusher End Stop - Set
Set transfer plate guide	2.2.8-3 Transfer Plate Guide - Set
Set box pusher plate/dolly	2.2.6-4 Box Pusher Plate/Box Pusher Dolly - Set
Set grouping top support	1.5.4-2 Grouping Top Support - Set

10.1.3 Other Infeed Alternative

10.1.3-1 Set Single or Multi Pack Infeed

a) Remove the packages from the infeed and the grouping plate.

b) Remove the blanks from the magazine unit.

c) Set the machine according to the actions in the table below.

Action	See Procedure
Set the width of infeed conveyor railing	1.1.1-1 Railing - Set
Set brake unit	1.5.1-2 Brake Unit - Set
Set grouping pusher back position	2.2.1-4 Grouping Pusher - Set Back Position

10.1.4 Other Tray Type

10.1.4-1 Other Tray Type - Change

a) Remove the packages from the infeed and the grouping plate.

b) Remove the blanks from the magazine unit.

c) Set the machine according to the actions in the tables below.

Action	See Procedure
Set magazine unit	4.1 Magazine Unit

d) If necessary also set:

Action	See Procedure
Set magazine top unit	4.3-1 Mag Top Unit - Set

10.1.4-2 Other Tray Type Crease - Change

To set the machine when changing the crease (1) length or width but the same tray type, do the following:

a) Remove the packages from the infeed and the grouping plate.

b) Remove the blanks from the magazine unit.

c) Set the machine according to the actions in the table below.

Action	See Procedure
Set magazine unit	4.1 Magazine Unit
Set volume plate	2.2.9-2 Volume Plate - Set Flap
Set packing end stop	3.3.9-3 Packing End Stop - Set
Set cams	3.1.4-1 Main Shaft Rear - Set Cams
Set wraparound unit	5.2-3 Wa Squeezer - Set
Set bottom squeezer	3.3.10-3 Bottom Squeezer - Set

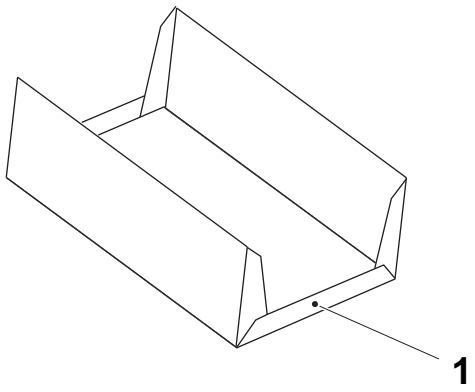

1 Crease

10.1.5 Package Volume Change

10.1.5-1 Change within same Bottom Size

To set the machine when changing to another package volume but the same bottom size, do the following:

a) Remove the packages from the infeed and the grouping plate.

b) Remove the blanks from the magazine unit.

c) Set the machine according to the actions in the table below.

Action	See Procedure
Set magazine unit	4.1 Magazine Unit
Set packing end stop	3.3.9-3 Packing End Stop - Set
Set tray support	3.3.15-3 Tray Support - Set
Set hotmelt gun	3.5.1-6 Hotmelt Equipment - Set Gun
Set wraparound unit	5.2-3 Wa Squeezer - Set
Set end stop grouping	1.5.2-1 End Stop Grouping - Set
Set stop arm	2.2.4-2 Stop Arm - Set
Set box pusher plate/dolly	2.2.6-4 Box Pusher Plate/Box Pusher Dolly - Set

10.1.5-2 Change Package Bottom Size

To change and set the machine when changing the volume, and the package bottom size, do the following:

a) Remove the packages from the infeed and the grouping plate.

b) Remove the blanks from the magazine unit.

c) Set the machine according to the actions in the table below.

Action	See Procedure
Set feed unit	3.3-1 Feed Unit - Set
Set carrier chain inside	3.3.2-1 Carrier Chain Inside - Set
Set folding bar	3.3.8-2 Folding Station - Set
Set bottom folder rail	3.3.16-1 Bottom Folder Rail - Set
Set magazine unit	4.1 Magazine Unit
Set magazine top unit	4.3-1 Mag Top Unit - Set
Set wraparound unit	5.2-3 Wa Squeezer - Set
Set brake unit	1.5.1-2 Brake Unit - Set
Set end stop grouping	1.5.2-1 End Stop Grouping - Set
Set rails in grouping pusher	2.2.1-5 Grouping Pusher - Set Rails
Set grouping dolly	2.2.2-3 Grouping Dolly - Set
Set stop arm	2.2.4-2 Stop Arm - Set
Set transfer guide rail	2.2.3-3 Transfer Guide Rail - Set
Change volume plate	2.2.9-1 Volume Plate - Change
Set box pusher end stop	2.2.5-2 Box Pusher End Stop - Set
Set transfer plate guide	2.2.8-3 Transfer Plate Guide - Set
Set box pusher plate/dolly	2.2.6-4 Box Pusher Plate/Box Pusher Dolly - Set
Set tray support	3.3.15-3 Tray Support - Set
Set tray holder	3.3.6-3 Tray Holder - Set

10.2 Schematics Diagram

10.2-1 **Pneumatic Diagram**

SPC Reference	2970894

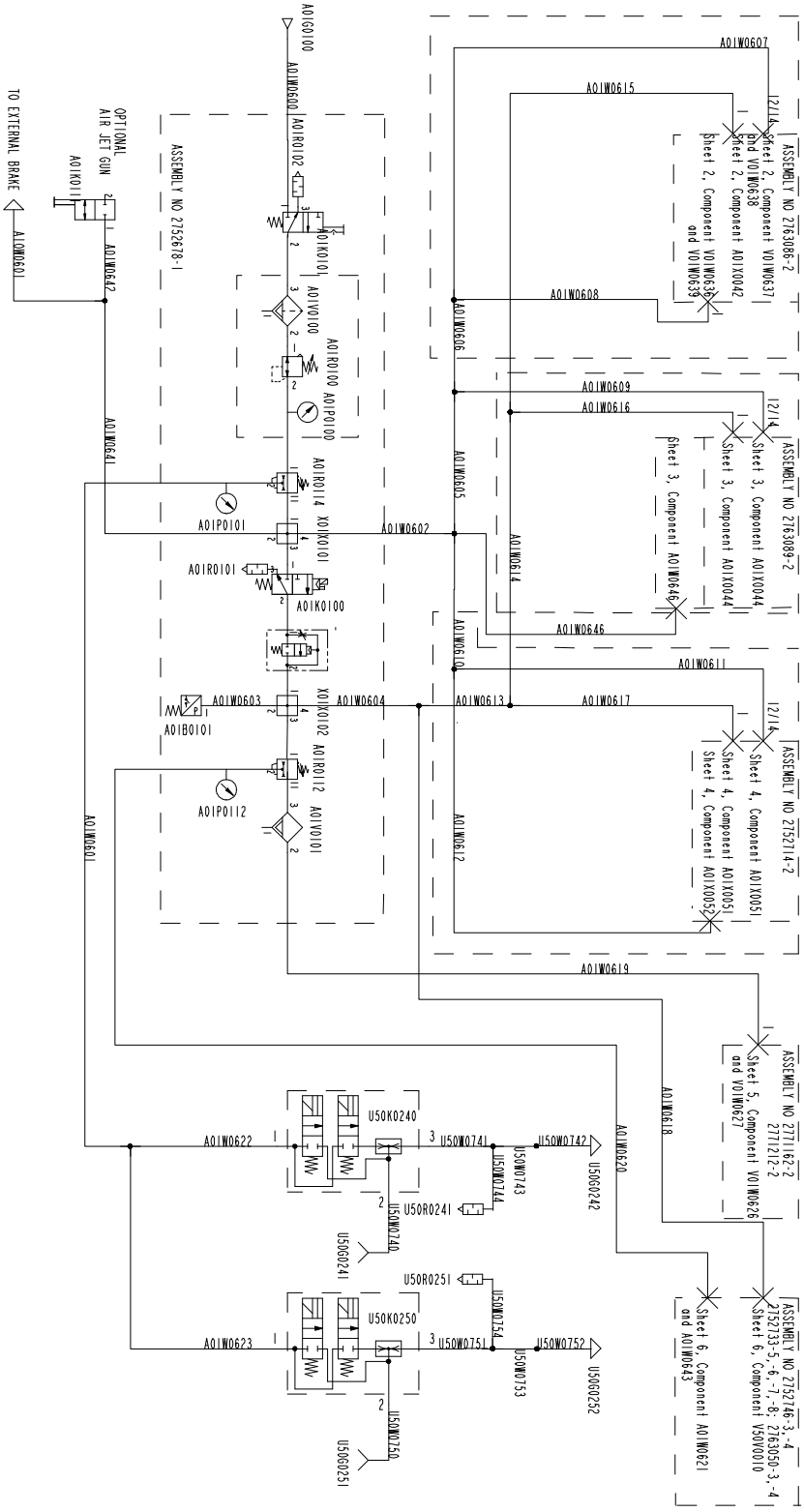

(Cont'd)

(Cont'd)

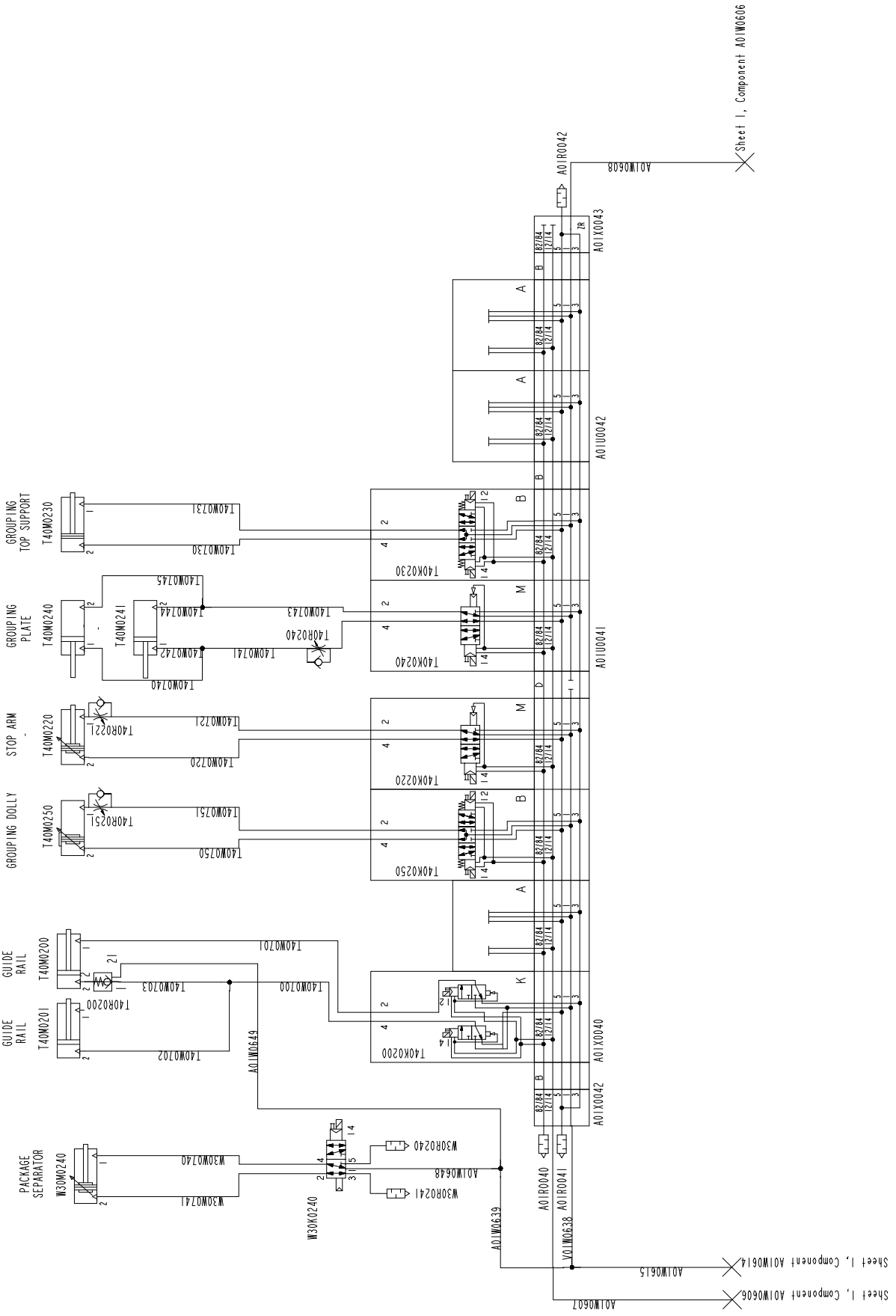
Sheet 1, Component A01W0606
A01W0608
A01R0042
A01X0043
A01U0042
A01U0041
A01X0040
A01X0042
A01R0040
A01R0041
A01W0638
A01W0639
A01W0607
A01W0615
Sheet 1, Component A01W0614
Sheet 1, Component A01W0606
GROUPING TOP SUPPORT
T40M0230
140M0731
140M0730
140K0230
GROUPING PLATE
T40M0240
T40M0241
140M0745
140M0744
140M0743
140M0742
140M0741
140M0740
140R0240
140K0240
STOP ARM
T40M0220
140R0221
140M0721
140M0720
140K0220
GROUPING DOLLY
T40M0250
140R0251
140M0751
140M0750
140K0250
GUIDE RAIL
T40M0200
T40M0201
140R0200
140M0701
140M0703
140M0702
140M0700
140K0200
A01W0649
PACKAGE SEPARATOR
W30M0240
W30M0740
W30M0741
W30K0240
W30R0240
W30R0241
A01W0648

(Cont'd)

(Cont'd)

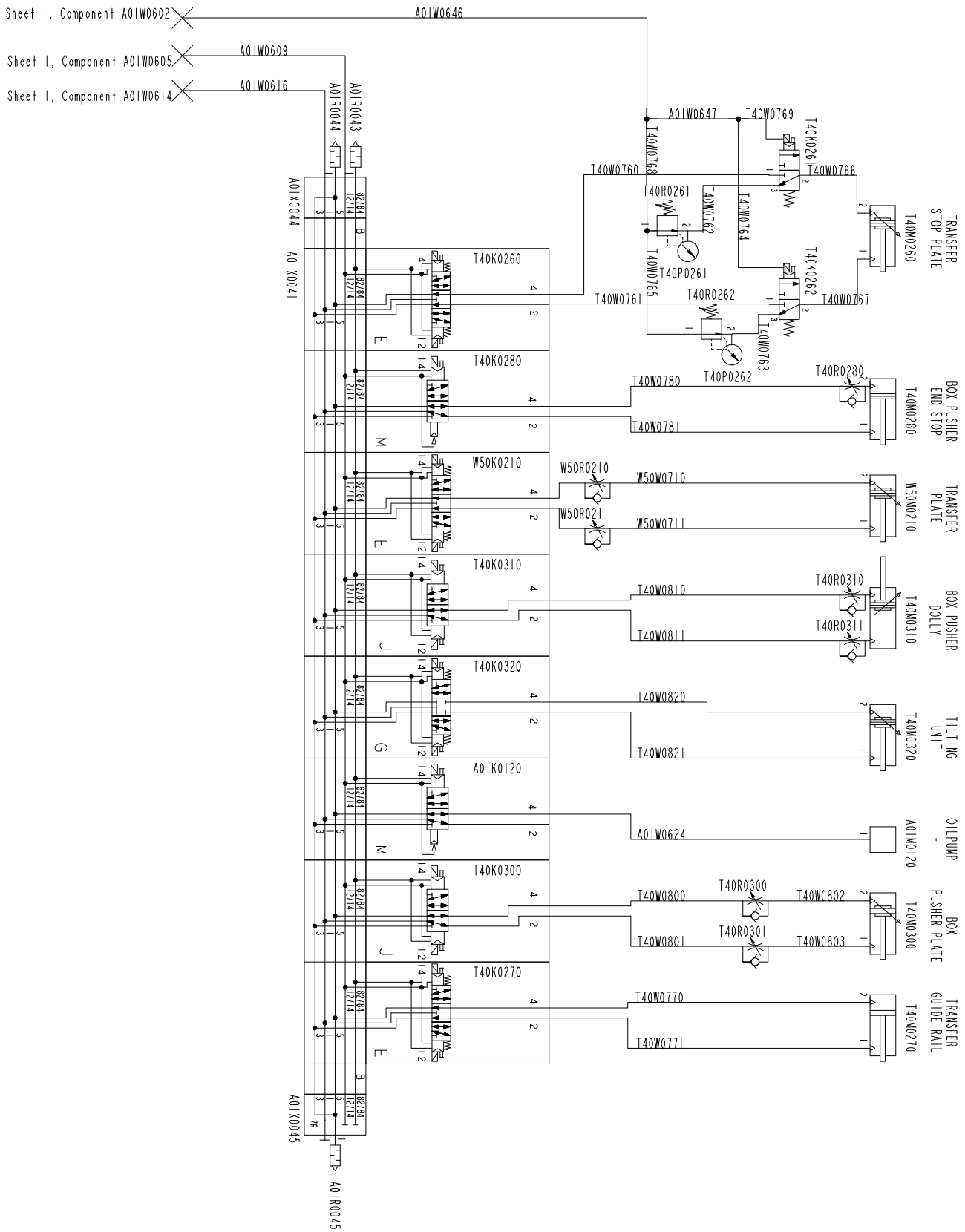
Sheet 1, Component A01W0602
Sheet 1, Component A01W0605
Sheet 1, Component A01W0614
A01W0646
A01W0609
A01W0616
A01R0044
A01R0043
A01X0044
A01X0041
A01W0647
T40W0769
T40K0261
T40W0768
T40W0760
T40W0766
T40R0261
T40W0762
T40W0764
T40P0261
T40W0765
T40K0262
T40R0262
T40W0761
T40W0767
T40W0763
T40P0262
T40K0260
T40K0280
T40R0280
T40W0780
T40W0781
W50K0210
W50R0210
W50W0710
W50R0211
W50W0711
T40K0310
T40R0310
T40W0810
T40R0311
T40W0811
T40K0320
T40W0820
T40W0821
A01K0120
A01W0624
T40K0300
T40R0300
T40W0800
T40W0802
T40R0301
T40W0801
T40W0803
T40K0270
T40W0770
T40W0771
A01X0045
A01R0045
TRANSFER STOP PLATE
T40M0260
BOX PUSHER END STOP
T40M0280
TRANSFER PLATE
W50M0210
BOX PUSHER DOLLY
T40M0310
TILTING UNIT
T40M0320
OILPUMP -
A01M0120
BOX PUSHER PLATE
T40M0300
TRANSFER GUIDE RAIL
T40M0270

(Cont'd)

(Cont'd)

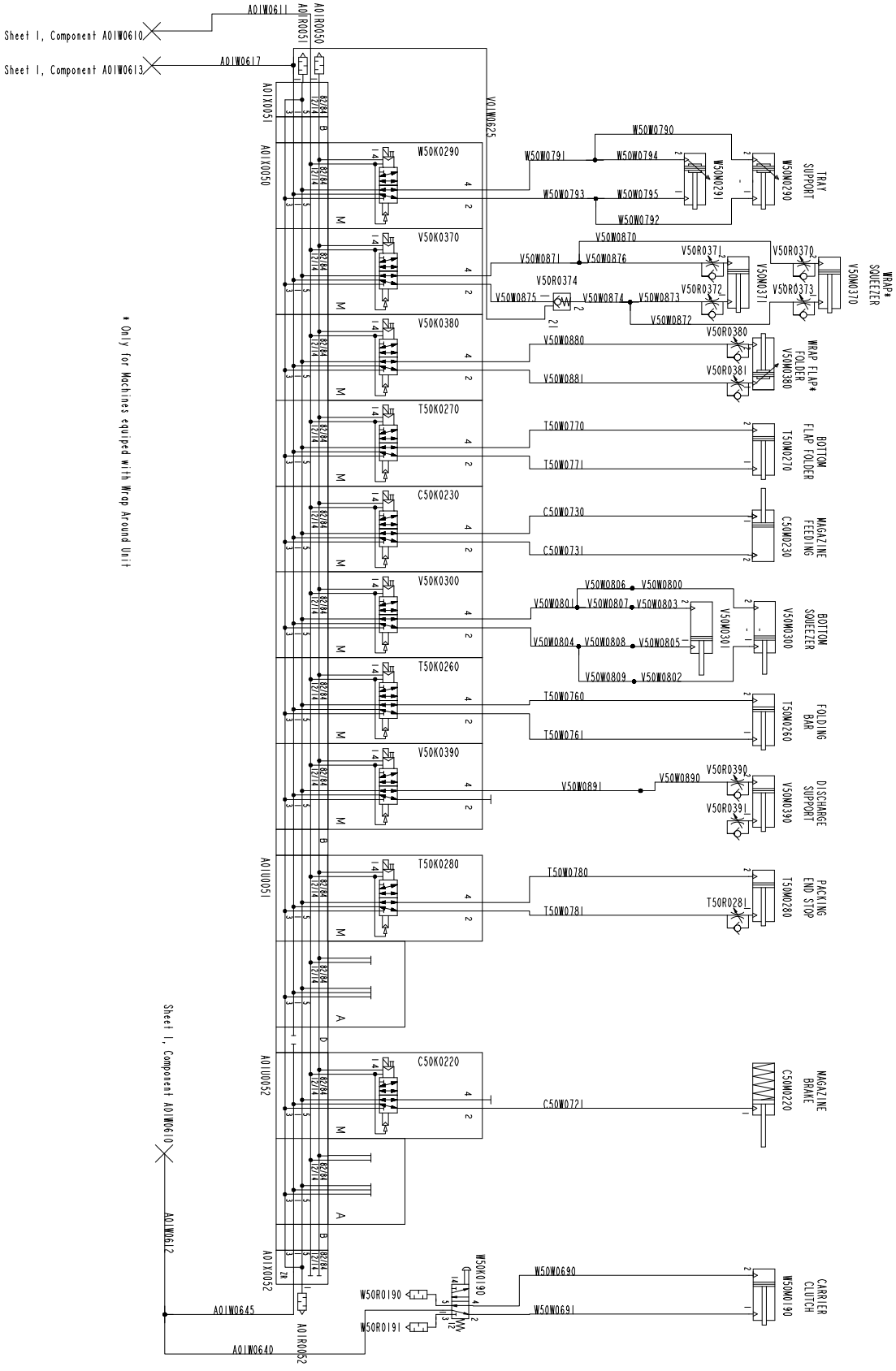
Sheet 1, Component A01W0610
Sheet 1, Component A01W0613
A01W0611
A01R0051
A01W0617
A01X0051
A01X0050
A01W0625
W50K0290
V50K0370
V50K0380
T50K0270
C50K0230
V50K0300
T50K0260
V50K0390
T50K0280
A01U0051
C50K0220
A01U0052
A01X0052
Sheet 1, Component A01W0610
A01W0612
A01W0645
A01W0640
A01R0052
W50W0790
W50W0791
W50W0794
W50W0793
W50W0795
W50W0792
W50M0290
TRAY SUPPORT
V50W0870
V50W0871
V50W0876
V50R0374
V50W0875
V50W0874
V50W0873
V50W0872
V50R0371
V50R0370
V50R0372
V50R0373
V50M0371
V50M0370
WRAP* SQUEEZER
V50W0880
V50W0881
V50R0380
V50R0381
V50M0380
WRAP FLAP* FOLDER
T50W0770
T50W0771
T50M0270
BOTTOM FLAP FOLDER
C50W0730
C50W0731
C50M0230
MAGAZINE FEEDING
V50W0806
V50W0800
V50W0801
V50W0807
V50W0803
V50W0804
V50W0808
V50W0805
V50W0809
V50W0802
V50M0301
V50M0300
BOTTOM SQUEEZER
T50W0760
T50W0761
T50M0260
FOLDING BAR
V50W0891
V50W0890
V50R0390
V50R0391
V50M0390
DISCHARGE SUPPORT
T50W0780
T50W0781
T50R0281
T50M0280
PACKING END STOP
C50W0721
C50M0220
MAGAZINE BRAKE
W50K0190
W50R0190
W50R0191
W50W0690
W50W0691
W50M0190
CARRIER CLUTCH
* Only for Machines equiped with Wrap Around Unit

(Cont'd)

(Cont'd)

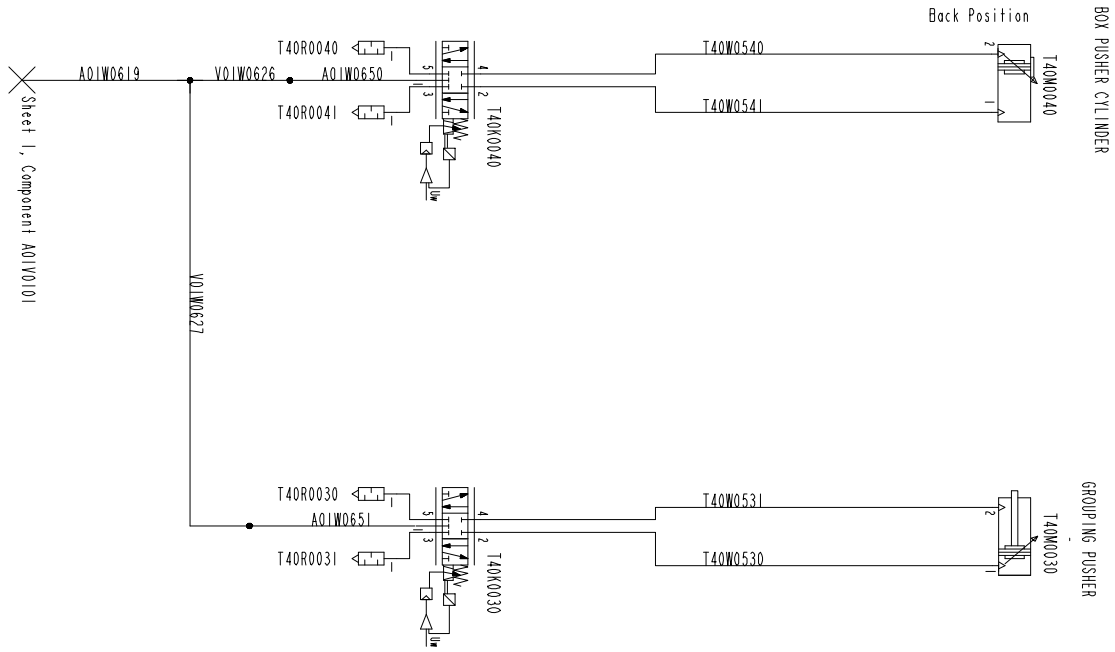
Back Position
BOX PUSHER CYLINDER
T40R0040
A01W0619
V01W0626
A01W0650
T40R0041
T40K0040
T40W0540
T40W0541
T40M0040
Sheet 1, Component A01V0101
V01W0627
T40R0030
A01W0651
T40R0031
T40K0030
T40W0531
T40W0530
T40M0030
GROUPING PUSHER

(Cont'd)

(Cont'd)

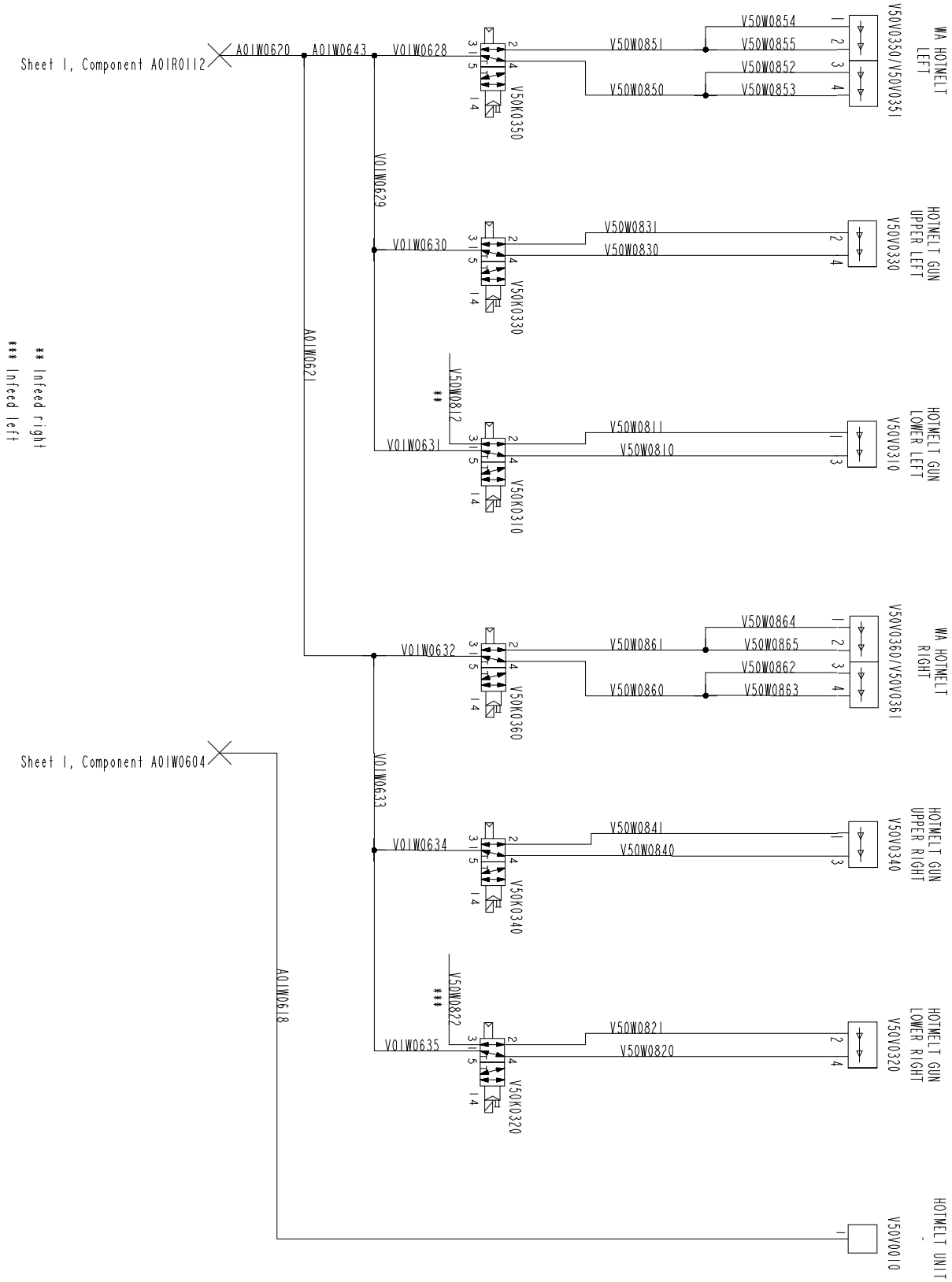
Sheet 1, Component A01R0112
A01W0620
A01W0643
V01W0628
V50W0851
V50W0850
V50W0854
V50W0855
V50W0852
V50W0853
V50K0350
V50V0350/V50V0351
WA HOTMELT LEFT
V01W0629
V01W0630
V50W0831
V50W0830
V50K0330
V50V0330
HOTMELT GUN UPPER LEFT
A01W0621
** Infeed right
*** Infeed left
V50W0812
V01W0631
V50W0811
V50W0810
V50K0310
V50V0310
HOTMELT GUN LOWER LEFT
V01W0632
V50W0861
V50W0860
V50W0864
V50W0865
V50W0862
V50W0863
V50K0360
V50V0360/V50V0361
WA HOTMELT RIGHT
Sheet 1, Component A01W0604
V01W0633
V01W0634
V50W0841
V50W0840
V50K0340
V50V0340
HOTMELT GUN UPPER RIGHT
A01W0618
*** V50W0822
V01W0635
V50W0821
V50W0820
V50K0320
V50V0320
HOTMELT GUN LOWER RIGHT
V50V0010
HOTMELT UNIT -

10.2-2 Lubrication Diagram

SPC Reference	2792360

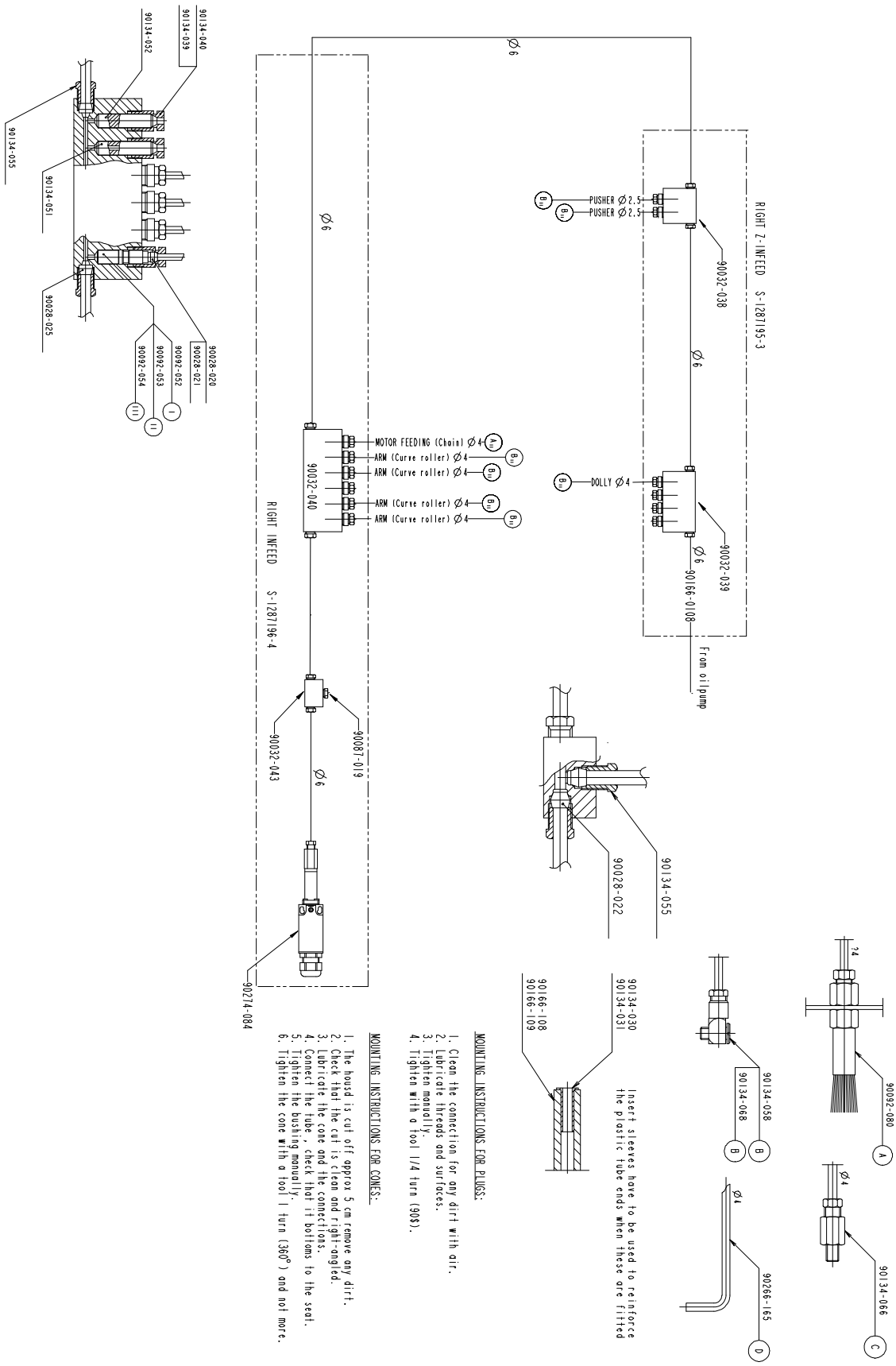

10.3 Consumables

10.3.1 Lubricants

WARNING

Risk of personal injury!

Certain lubricants can cause injury if they come into contact with the eyes, skin, mucous membranes, or clothing. Always follow the manufacturer's instructions for handling chemical products.

The table below lists only a selection of lubricants with their respective designations.

Lubricant specifications may be ordered from:
Tetra Pak Technical Service AB, Ruben Rausings gata, SE-221 86 LUND, Sweden.

Lubricant Code	**Part No. (used when ordering from Tetra Pak)**	**Example**	
		Supplier	**Product Designation** (2005-12)
F Lithium grease, EP type	90 296-68	Shell	Alvania EP2
H High-pressure oil	90 296-75	Shell	Omala oil 320
	90 296-73 For use in production plant with start temperature below 5° C.	Shell	Omala oil 220

(Cont'd)

10.3.2 Adhesive

Adhesive	Ambient temperature	Tank (1)	Hose (2)	Gun (3)
National CM ULTRA 120 TP No. 90 600-3740	5 to 40 °C	≈ 125°C	≈ 130°C	≈ 130°C to 135°C
National ULTRA-MELT 201 TP No. 90 600-3741	5 to 40 °C	≈ 155°C	≈ 160°C	≈ 165°C
National ULTRA-MELT 85 TP No. 90 600-3742	5 to 50 °C	≈ 170°C	≈ 175°C	≈ 180°C
Jowatherm Jowat- TopTherm 256.50 TP No. 90 600-3669	5 to 40 °C	≈ 150°C	≈ 155°C	≈ 160°C

A

Air Jet Gun - No Procedure Described . . . . . 9 - 7

Armor Block - Set Node Address . . . . . 6 - 48

Armor Block - Troubleshooting . . . . . 6 - 50

Automatic Fuses - Reset Fuse in Miniature Circuit Breaker . . . . . 6 - 165

Axis Identification . . . . . 6 - 95

Axis Identification via the Computer . . . . . 6 - 96

B

Bottom Folder Rail - Set . . . . . 3 - 81

Bottom Squeezer - Change . . . . . 3 - 65

Bottom Squeezer - Check . . . . . 3 - 64

Bottom Squeezer - Set . . . . . 3 - 66

Box Pusher Cylinder - Change . . . . . 2 - 64

Box Pusher Cylinder - Check . . . . . 2 - 63

Box Pusher Cylinder - Set . . . . . 2 - 65

Box Pusher Cylinder - Set Back Position . . . . 2 - 66

Box Pusher End Stop - Change Cylinder . . . . 2 - 47

Box Pusher End Stop - Set . . . . . 2 - 49

Box Pusher End Stop - Set Ultrasonic Sensor 2 - 54

Box Pusher Plate/Box Pusher Dolly - Change Bushings and Vibration Dampers . . . 2 - 58

Box Pusher Plate/Box Pusher Dolly - Change Cylinders . . . . . 2 - 57

Box Pusher Plate/Box Pusher Dolly - Check . 2 - 56

Box Pusher Plate/Box Pusher Dolly - Set . . . 2 - 59

Brake Unit - Change . . . . . 1 - 14

Brake Unit - Set . . . . . 1 - 20

Brake Unit - Set Belt Tension . . . . . 1 - 23

C

Carrier Chain Inside - Set . . . . . 3 - 37

Carrier Chain Inside - Set Chain Tension . . . 3 - 40

Carrier Chain Outside - Set . . . . . 3 - 35

Carrier Chain Outside - Set Chain Tension . . 3 - 34

Carrier Clutch - Change Cylinder . . . . . 3 - 72

Carrier Clutch - Set . . . . . 3 - 73

Carrier Frame - Check Wheels . . . . . 3 - 83

Carrier Shaft Inside - Change . . . . . 3 - 69

Carrier Shaft Outside - Change . . . . . 3 - 68

Carrier Sprocket Inside - Change . . . . . 3 - 44

Carrier Sprocket Inside - Check . . . . . 3 - 43

Carrier Sprocket Outside - Change . . . . . 3 - 46

Carrier Sprocket Outside - Check . . . . . 3 - 45

Chain Lubrication - Check Function . . . . . 3 - 41

Chain Lubrication - Set . . . . . 3 - 42

Chain Tensioner - Change . . . . . 3 - 70

Chain Tensioner - Set Tension . . . . . 3 - 71

Change Length . . . . . 10 - 6

Change Package Bottom Size . . . . . 10 - 13

Change Width . . . . . 10 - 7

Change within same Bottom Size . . . . . 10 - 12

Check Firmware Version . . . . . 6 - 100

Control Devices and Sensors - Set Photocells . . . . . 6 - 231

Cooling Unit - No Procedure Described . . . . . 9 - 11

Covering Pattern Forming - No Procedure Described . . . . . 2 - 90

Covering Tray Forming - No Procedure Described . . . . . 3 - 108

Creating a New Recipe . . . . . 6 - 192

Curve Arm Lubrication - No Procedure Described . . . . . 7 - 9

Curve Arm Magazine - Change . . . . . 3 - 12

Curve Arm Magazine - Check . . . . . 3 - 11

Curve Arm Magazine - Set . . . . . 3 - 13

Curve Arm Tray Holder - Change . . . . . 3 - 15

Curve Arm Tray Holder - Check . . . . . 3 - 14

Curve Arms Side Folder - Change . . . . . 3 - 17

Curve Arms Side Folder - Check . . . . . 3 - 16

D

Description . . . . . 10 - 5

Device Net Scanner - Download program . . . . 6 - 68

DeviceNet Scanner - Troubleshoot . . . . . 6 - 63

DeviceNet Scanner (SDN) . . . . . 6 - 62

Discharge Conveyor - Change Cylinder . . . . . 9 - 10

Discharge Unit, Roller Conveyor - No Procedure Described . . . . . 9 - 9

Download Application Program (Memory media) . . . . . 6 - 176
Download Firmware . . . . . 6 - 101
Download Project . . . . . 6 - 103
Drive Unit - Change Timing Belt . . . . . 1 - 11

E

Emergency Stop - Test . . . . . 6 - 229
Encoder Feeding - Set Angle Encoder . . . . . 3 - 29
Encoder Main Shaft - Set Angle Encoder . . . 3 - 23
End Stop Grouping - Set . . . . . 1 - 24
Error Messages on the HMI of the CBP32 . . 6 - 107
Errors in Positioning . . . . . 6 - 134
Errors when not positioning . . . . . 6 - 133

F

Feed Unit - Set . . . . . 3 - 32
Feeding Lubricaiton Point - Set Brushes . . . . . 7 - 7
Feeding Lubrication Point - Check Brushes . . . 7 - 6
Festo Pneumatic servo error message checklist . . . . . 6 - 108
Folding Station - Change . . . . . 3 - 55
Folding Station - Set . . . . . 3 - 56
Frequency Converter - Change . . . . . 6 - 78
Frequency Converter - Description . . . . . 6 - 77
Frequency Converter - Fault Codes . . . . . 6 - 88
Frequency Converter - Set . . . . . 6 - 80

G

Grouping Dolly - Change . . . . . 2 - 35
Grouping Dolly - Check . . . . . 2 - 34
Grouping Dolly - Set . . . . . 2 - 36
Grouping Pusher - Change . . . . . 2 - 26
Grouping Pusher - Check . . . . . 2 - 25
Grouping Pusher - Set Back Position . . . . . 2 - 28
Grouping Pusher - Set Guide Rail Position . . 2 - 32
Grouping Pusher - Set Position . . . . . 2 - 27
Grouping Pusher - Set Rails . . . . . 2 - 30
Grouping Pusher Reference Run . . . . . 6 - 93
Grouping Top Support - Change Cylinder . . . . 1 - 29
Grouping Top Support - Set . . . . . 1 - 30
Grp Dolly Lubrication - No Procedure Described . . . . . 7 - 8

H

Hotmelt Equipment - Bleed System . . . . . 3 - 104
Hotmelt Equipment - Change Adhesive . . . . . 3 - 98
Hotmelt Equipment - Change Filter . . . . . 3 - 99
Hotmelt Equipment - Change Gun . . . . . 3 - 101
Hotmelt Equipment - Check . . . . . 3 - 89
Hotmelt Equipment - Hotmelt Temperature Low Alarm . . . . . 3 - 107
Hotmelt Equipment - Set . . . . . 3 - 90
Hotmelt Equipment - Set Gun . . . . . 3 - 102

I

Illumination - Change . . . . . 9 - 5
Installing Modules . . . . . 6 - 92

L

LED Description . . . . . 6 - 242
LED info . . . . . 6 - 104
Light Barrier Unit - Alignment Procedure . . . . 6 - 138
Light Barrier Unit - Clean . . . . . 6 - 145
Light Barrier Unit - Description . . . . . 6 - 135
Light Barrier Unit - Final Checks . . . . . 6 - 146
Light Barrier Unit - FMC1 . . . . . 6 - 143
Light Barrier Unit - Focus, 4 LED Signals in Normal Operation, Description . . . . . 6 - 136
Light Barrier Unit - Focus, LED Error Signals, Description . . . . . 6 - 140
Light Barrier Unit - Muting Function . . . . . 6 - 142
Light Barrier Unit - No Procedure Described . . . 9 - 6
Light Barrier Unit - Receiver Unit . . . . . 6 - 144
Lubrication Diagram . . . . . 10 - 20
Lubrication Unit - Assemble Central Lubrication . . . . . 7 - 13
Lubrication Unit - Check Level Switch . . . . . 7 - 10
Lubrication Unit - Check Pressure Switch . . . . 7 - 11

Lubrication Unit - Clean Oil Container . . . . . 7 - 12
Lubrication Unit - Finding Fault Central Lubrication . . . . . 7 - 14

M

Mag Side Steering - Set Nozzles . . . . . 4 - 13
Mag Side Steering - Set Photocell . . . . . 4 - 16
Mag Side Steering - Set Side Plates . . . . . 4 - 14
Mag Top Unit - Set . . . . . 4 - 17
Magazine Arm - Change . . . . . 3 - 85
Magazine Arm - Check . . . . . 3 - 84
Magazine Arm - Set . . . . . 3 - 86
Magazine Unit - Set . . . . . 4 - 7
Main Shaft Front - Lubricate . . . . . 3 - 22
Main Shaft Front - Set Cams . . . . . 3 - 20
Main Shaft Rear - Lubricate . . . . . 3 - 19
Main Shaft Rear - Set Cams . . . . . 3 - 18
Motor Feeding - Check . . . . . 3 - 25

O

OK Spray Gun - No Procedure Described . . . . 9 - 8
Other Tray Type - Change . . . . . 10 - 10
Other Tray Type Crease - Change . . . . . 10 - 11
Overload Feeding - Check . . . . . 3 - 26
Overload Feeding - Set Safety Clutch . . . . . 3 - 27
Overload Protection - Change Ferraz Fuse . 6 - 164
Overload Protection - Change Fuse . . . . . 6 - 162

P

Package Separator - Change . . . . . 1 - 26
Package Separator - Set . . . . . 1 - 28
Packing End Stop - Change . . . . . 3 - 58
Packing End Stop - Check . . . . . 3 - 57
Packing End Stop - Set . . . . . 3 - 59
Packing Pattern Definition . . . . . 10 - 5
Pattern Forming Lubrication System - No Procedure Described . . . . . 7 - 15
Photocell Unit - No Procedure Described . . . 9 - 12
PLC - Change CPU Battery . . . . . 6 - 40
PLC - Change Power Supply Fuse . . . . . 6 - 42
PLC - Change Power Supply Module . . . . . 6 - 43
PLC - Configure PC . . . . . 6 - 10
PLC - Configure RS Linx classic . . . . . 6 - 17
PLC - CPU Status indication . . . . . 6 - 8
PLC - Description . . . . . 6 - 7
PLC - Disconnect/Connect Digital I/0 Module Terminal Block . . . . . 6 - 44
PLC - Download PLC Program . . . . . 6 - 22
PLC - Install Module . . . . . 6 - 37
PLC - Remove Module . . . . . 6 - 39
PLC - Set IP Address . . . . . 6 - 20
PLC - SM2 Configuration . . . . . 6 - 45
PLC - SM2 Troubleshooting . . . . . 6 - 46
PLMS NRG upgrade in filling machine . . . . . 6 - 236
PLMS SNP - Select . . . . . 6 - 239
PLMS SNP DATA COLLECTION . . . . . 6 - 243
PLUTO Manager - Change Firmware . . . . . 6 - 156
PLUTO Manager - Check Firmware and Software . . . . . 6 - 150
PLUTO Manager - Description . . . . . 6 - 147
PLUTO Manager - Install PLUTO from PC . . 6 - 154
PLUTO Manager - Install PLUTO without PC 6 - 153
PLUTO Manager - Remove Firmware alarms 6 - 155
PLUTO Manager - Safety Switch Fault Codes . . . . . 6 - 161
PLUTO Manager - Set an ID-Fix address . . . 6 - 151
PLUTO Manager - Set Project . . . . . 6 - 149
PLUTO Manager - Troubleshoot Safety System . . . . . 6 - 158
PLUTO Manger - Install . . . . . 6 - 148
Pneumatic Cabinet - Clean Filter Regulator . . 2 - 11
Pneumatic Cabinet - Set Cylinders . . . . . 2 - 22
Pneumatic Cabinet - Set Filter Regulator . . . . 2 - 13
Pneumatic Cabinet - Set Pressure Regulators 2 - 24
Pneumatic Cabinet - Set Pressure Sensor . . . 2 - 17
Pneumatic Cabinet - Set Safety Valve . . . . . 2 - 14
Pneumatic Cabinet - Set Shut Off Valve . . . . . 2 - 10
Pneumatic Diagram . . . . . 10 - 14

Q

Queue Guard, Double - Set Photocells . . . . . 1 - 8, 1 - 9, 1 - 10, 1 - 13

R

Railing - Set . . . . . 1 - 6, 1 - 9, 1 - 10, 1 - 13
Remove Existing Application Program . . . . . 6 - 173
Removing Modules . . . . . 6 - 91
Residual Current Device - Check Function . 6 - 166

S

Safeguard - Test . . . . . 6 - 227
Servo system device net card . . . . . 6 - 60
Set Single or Multi Pack Infeed . . . . . 10 - 9
Setup - Add Language . . . . . 6 - 169
Side Folder - Change . . . . . 3 - 54
Side Folder - Check . . . . . 3 - 52
Side Folder - Set . . . . . 3 - 53
SNP Module - Change . . . . . 6 - 240
SNP Module - Set . . . . . 6 - 241
Start-Up Language Setup . . . . . 6 - 170
Stop Arm - Change . . . . . 2 - 44
Stop Arm - Set . . . . . 2 - 45
Suction Cup - Check . . . . . 3 - 87
Suction Cup - Set . . . . . 3 - 88

T

Timing Belt - Change . . . . . 4 - 21
Timing Belt - Check . . . . . 4 - 20
Timing Belt - Set Belt Tension . . . . . 4 - 25
TPOP - Check/Set IP Address and Subnet Mask Address . . . . . 6 - 214
TPOP - Download Program . . . . . 6 - 222
TPOP Maintenance - Infeed . . . . . 6 - 201
TPOP Maintenance - Pattern Forming . . . . . 6 - 202
TPOP Maintenance - Service . . . . . 6 - 200
TPOP Maintenance - Tray Forming . . . . . 6 - 203
TPOP Open an Existing Recipe . . . . . 6 - 191
TPOP Settings - Description . . . . . 6 - 167
TPOP Settings - Pattern Forming . . . . . 6 - 186
TPOP Settings - Tray Forming . . . . . 6 - 190
TPOP User Management - Change User Password . . . . . 6 - 209
TPOP User Management - Description . . . . . 6 - 204
TPOP User Management - Log On as a User 6 - 206
Transfer Belt - Change . . . . . 2 - 76
Transfer Belt - Check Chain . . . . . 2 - 75
Transfer Belt, Grouping Plate - Change Cylinders . . . . . 2 - 77
Transfer Belt, Grouping Plate - Set . . . . . 2 - 78
Transfer Belt, Guide Rail - Change Cylinders . 2 - 80
Transfer Belt, Tilting Unit - Change . . . . . 2 - 81
Transfer Belt, Tilting Unit - Set . . . . . 2 - 82
Transfer Guide Rail - Change Cylinder . . . . . 2 - 42
Transfer Guide Rail - Check Cylinder . . . . . 2 - 41
Transfer Guide Rail - Set . . . . . 2 - 43
Transfer Plate Guide - Change Parts . . . . . 2 - 69
Transfer Plate Guide - Check . . . . . 2 - 68
Transfer Plate Guide - Set . . . . . 2 - 70
Transfer Stop Plate - Change . . . . . 2 - 83
Transfer Stop Plate - Set . . . . . 2 - 84
Tray Forming Lubrication Distribution - No Procedure Described . . . . . 7 - 16
Tray Holder - Change . . . . . 3 - 48
Tray Holder - Check . . . . . 3 - 47
Tray Holder - Set . . . . . 3 - 49
Tray Support - Change . . . . . 3 - 75
Tray Support - Check . . . . . 3 - 74
Tray Support - Set . . . . . 3 - 76

V

Valve Panel - Description . . . . . 6 - 53
Valve panel - set device net address . . . . . 6 - 55
Valve panel - Trouble shooting . . . . . 6 - 57
Ventilation - Check Filter and Fan . . . . . 6 - 235
Volume Plate - Change . . . . . 2 - 73
Volume Plate - Set Flap . . . . . 2 - 74

W

Wa Flap Folder - Change Parts . . . . . 5 - 13
Wa Flap Folder - Check . . . . . 5 - 12
Wa Flap Folder - Set . . . . . 5 - 14
Wa Frame - No Procedure Described . . . . . 5 - 17
Wa Height Adjustment - No Procedure Described . . . . . 5 - 6
Wa Hotmelt Equipment - No Procedure Described . . . . . 5 - 18
Wa Squeezer - Change . . . . . 5 - 8
Wa Squeezer - Check . . . . . 5 - 7
Wa Squeezer - Set . . . . . 5 - 9
Wa Valve - No Procedure Described . . . . . 5 - 19

This page intentionally left blank

Tetra Pak

Note! *This page is generated* ***automatically****.*
using the ***variable definitions*** *made in the* ***front page*** *file!*

Cardboard Packer 32 by Tetra Pak
673852-0400
Issue 2010-05 Doc. No. MM-3025058-0104

Cardboard Packer 32 by Tetra Pak 1(2)
673852-0400
Issue 2010-05 Doc. No. MM-3025058-0104

Cardboard Packer 32 by Tetra Pak
673852-0400
Issue 2010-05 Doc. No. MM-3025058-0104

Cardboard Packer 32 by Tetra Pak 1(2)
673852-0400
Issue 2010-05 Doc. No. MM-3025058-0104

Cardboard Packer 32 by Tetra Pak
673852-0400
Issue 2010-05 Doc. No. MM-3025058-0104

Cardboard Packer 32 by Tetra Pak 1(2)
673852-0400
Issue 2010-05 Doc. No. MM-3025058-0104

Cardboard Packer 32 by Tetra Pak
673852-0400
Issue 2010-05 Doc. No. MM-3025058-0104

Cardboard Packer 32 by Tetra Pak 1(2)
673852-0400
Issue 2010-05 Doc. No. MM-3025058-0104

Cardboard Packer 32 by Tetra Pak
673852-0400
Issue 2010-05 Doc. No. MM-3025058-0104

Cardboard Packer 32 by Tetra Pak 2(2)
673852-0400
Issue 2010-05 Doc. No. MM-3025058-0104

Cardboard Packer 32 by Tetra Pak
673852-0400
Issue 2010-05 Doc. No. MM-3025058-0104

Cardboard Packer 32 by Tetra Pak 2(2)
673852-0400
Issue 2010-05 Doc. No. MM-3025058-0104

Cardboard Packer 32 by Tetra Pak
673852-0400
Issue 2010-05 Doc. No. MM-3025058-0104

Cardboard Packer 32 by Tetra Pak 2(2)
673852-0400
Issue 2010-05 Doc. No. MM-3025058-0104

Cardboard Packer 32 by Tetra Pak
673852-0400
Issue 2010-05 Doc. No. MM-3025058-0104

Cardboard Packer 32 by Tetra Pak 2(2)
673852-0400
Issue 2010-05 Doc. No. MM-3025058-0104

Cardboard Packer 32 by Tetra Pak
673852-0400

Issue 2010-05 Doc. No. MM-3025058-0104

Cardboard Packer 32 by Tetra Pak 1(2)
673852-0400

Issue 2010-05 Doc. No. MM-3025058-0104

Cardboard Packer 32 by Tetra Pak
673852-0400

Issue 2010-05 Doc. No. MM-3025058-0104

Cardboard Packer 32 by Tetra Pak 1(2)
673852-0400

Issue 2010-05 Doc. No. MM-3025058-0104

Cardboard Packer 32 by Tetra Pak
673852-0400

Issue 2010-05 Doc. No. MM-3025058-0104

Cardboard Packer 32 by Tetra Pak 1(2)
673852-0400

Issue 2010-05 Doc. No. MM-3025058-0104

Cardboard Packer 32 by Tetra Pak
673852-0400

Issue 2010-05 Doc. No. MM-3025058-0104

Cardboard Packer 32 by Tetra Pak 2(2)
673852-0400

Issue 2010-05 Doc. No. MM-3025058-0104

Cardboard Packer 32 by Tetra Pak
673852-0400

Issue 2010-05 Doc. No. MM-3025058-0104

Cardboard Packer 32 by Tetra Pak 2(2)
673852-0400

Issue 2010-05 Doc. No. MM-3025058-0104

Cardboard Packer 32 by Tetra Pak
673852-0400

Issue 2010-05 Doc. No. MM-3025058-0104

Cardboard Packer 32 by Tetra Pak 2(2)
673852-0400

Issue 2010-05 Doc. No. MM-3025058-0104