SPC

Spare Parts Catalogue

Cardboard Packer 32 by Tetra Pak

673852-0500

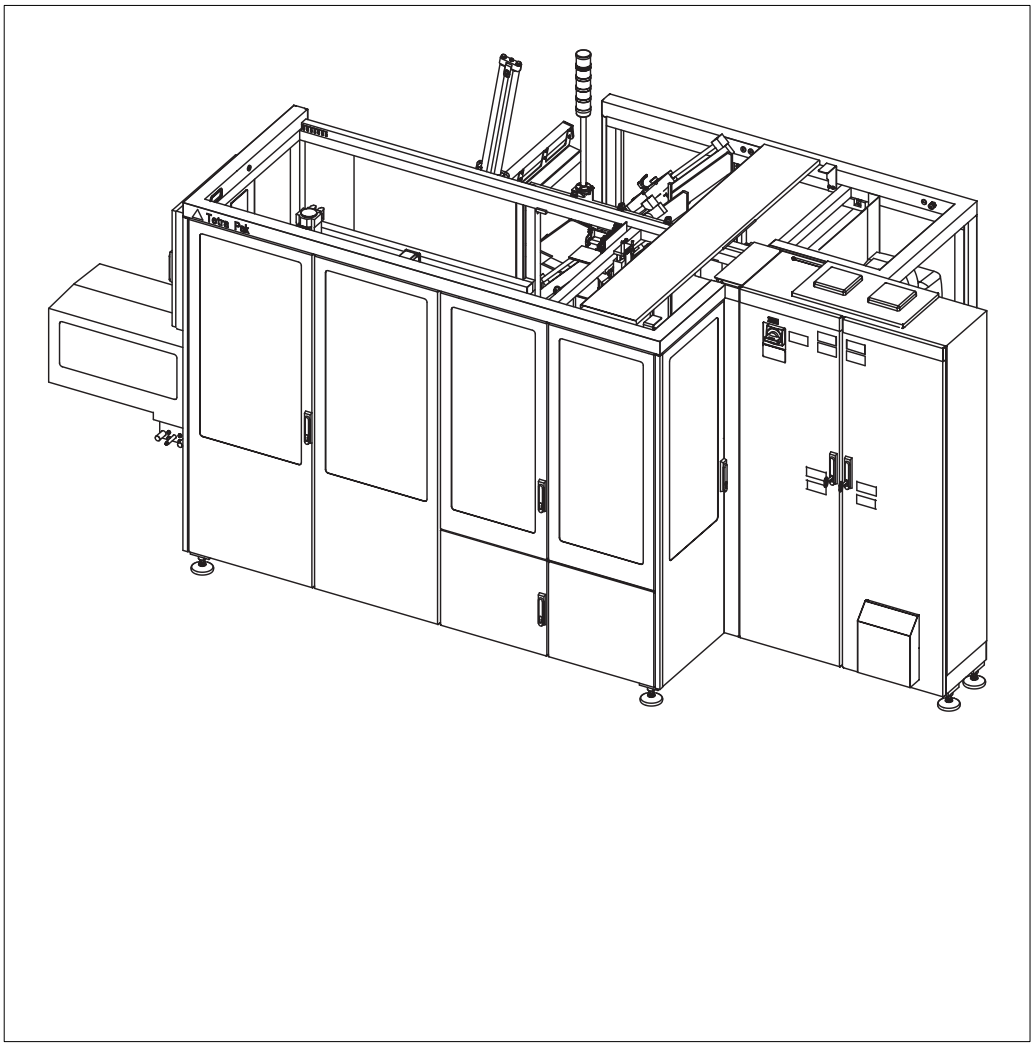

Tetra Pak

Doc. No: SPC-3254225-0108

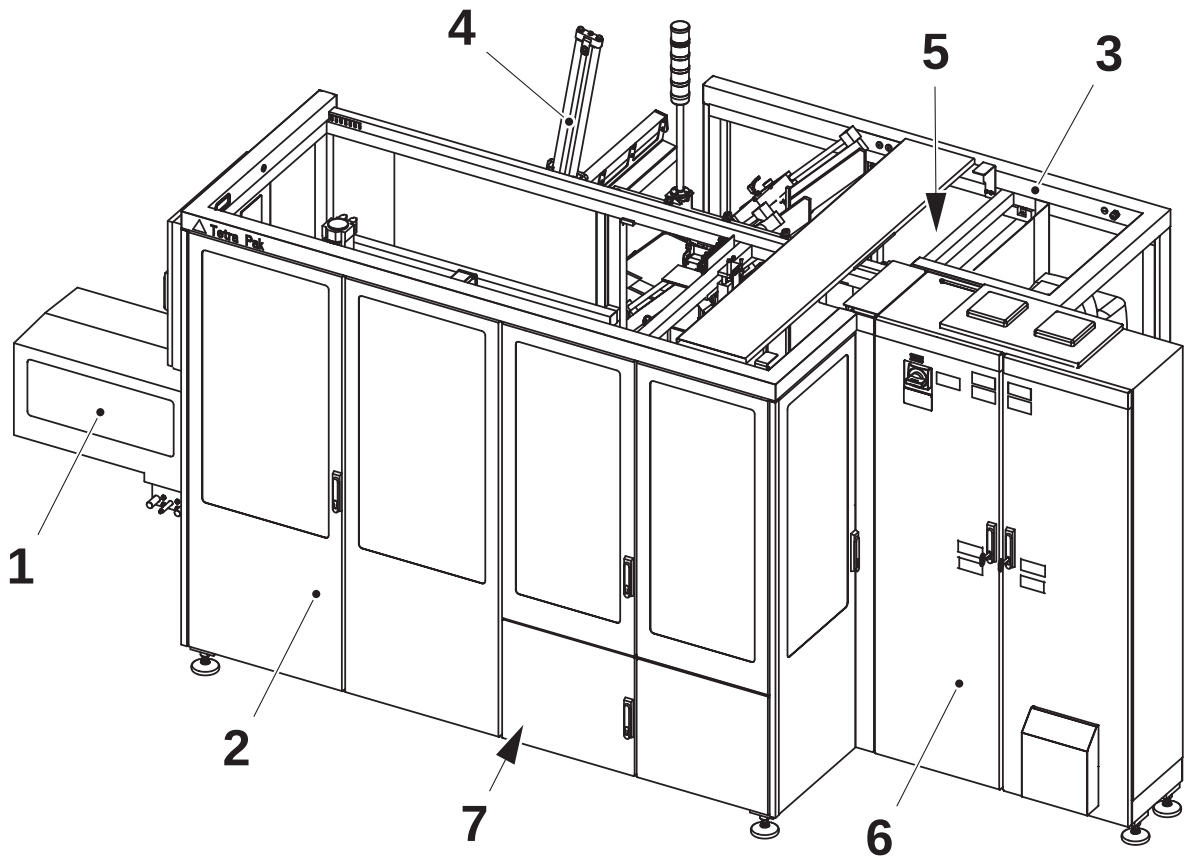

The position numbers in the illustration correspond with the chapter numbers listed on the next page.

Copyright © 2014 Tetra Pak Group

All rights reserved. No part of this document may be reproduced or copied in any form or by any means without written permission from Tetra Pak Packaging Solutions AB.

Tetra Pak and all Tetra Pak products are trademarks belonging to the Tetra Pak Group.

The content of this manual is in accordance with the design and construction of the machine or equipment at the time of publishing. Tetra Pak reserves the right to introduce design modifications without prior notice.

This document was produced by:

Tetra Pak Packaging Solutions AB
Ruben Rausings gata
SE-221 86 Lund
Sweden

Additional copies can be ordered from Tetra Pak. When ordering additional copies, always provide the document number.

Doc. No. SPC-3254225-0108

Issue 2014-03

This document is valid for:

Series No/Machine No Sign.

SPC

Spare Parts Catalogue

Cardboard Packer 32 by Tetra Pak
673852-0500

i Introduction
1 Infeed
2 Pattern Forming
3 Tray Forming
4 Magazine Unit
5 Wrap Around Unit
6 Electric Equipment
7 Central Lubrication
8 Regular Accessories
9 Optional Equipment
ii Part Number Index
iii Alphabetical Index
iv Ref. Des. Parts Index

Machine or equipment configurations that this catalogue is valid for are described on the next page.

Doc. No: SPC-3254225-0108

Issue 2014-03

Tetra Pak

Tetra Pak Packaging Solutions AB

Valid for:

Name	Drawing Specification and Development Step	Additional Information

Update Log for Doc. No. SPC-3254225-0108

This table shows all changes made to this catalogue, including installed rebuilding kits, added or removed pages.

Date	Installed Kit	Added Pages (Doc. No.)	Removed Pages	Signature

Date	Installed Kit	Added Pages (Doc. No.)	Removed Pages	Signature

i Introduction

en About the Introduction Chapter
This chapter contains basic information about this catalogue and related Tetra Pak® equipment.

bg За уводната глава
Тази глава съдържа основна информация за този каталог и приложимото Tetra Pak® оборудване.

cs O kapitole Úvod
Tato kapitola obsahuje základní informace o této příručce a souvisejícím zařízení Tetra Pak®.

da Om indledningen
Kapitlet indeholder grundlæggende oplysninger om dette katalog og tilhørende Tetra Pak®-udstyr.

de Über das Einleitungskapitel
Diese Kapitel enthält grundlegende Informationen über diesen Katalog und die zugehörige Tetra Pak®-Ausrüstung.

el Σχετικά με το Κεφάλαιο 'Εισαγωγή'
Αυτό το κεφάλαιο περιέχει βασικές πληροφορίες για τον παρόντα κατάλογο και τον σχετικό εξοπλισμό της Tetra Pak®.

es Acerca del capítulo Introducción
Este capítulo contiene información básica sobre este catálogo y el equipo Tetra Pak® relacionado.

et Sissejuhatava peatüki kohta
See peatükk sisaldab teavet käesoleva kataloogi ja sellega seonduva Tetra Pak®i seadme kohta.

fi Tietoja Johdanto-luvusta
Tässä luvussa on perustietoja tästä luettelosta ja Tetra Pak®-laitteesta.

fr À propos du chapitre Introduction
Ce chapitre contient les informations de base à propos de ce catalogue et de l'équipement Tetra Pak® concerné.

hr O uvodnom poglavlju
Ovo poglavlje sadrži osnovne informacije o ovome Katalogu i o povezanoj Tetra Pak® opremi.

hu A Bevezetés fejezetről
Ez a fejezet alapvető információkat tartalmaz a katalógusról és a hozzá tartozó Tetra Pak® berendezésről.

is Um inngangskaflann
Þessi kafli inniheldur grundvallarupplýsingar um þennan vörulista og tengdan Tetra Pak® búnað.

it Informazioni sul capitolo Introduzione
Questo capitolo contiene informazioni generali sul presente catalogo e sulla relativa macchina Tetra Pak®.

lt Apie įvadinį skyrių
Šiame skyriuje pateikta pagrindinė informacija apie šį katalogą ir su juo susijusią "Tetra Pak®" įrangą.

lv Par Ievada nodaļu
Šī nodaļa ietver galveno informāciju par šo katalogu un saistītajām Tetra Pak® iekārtām.

nl Over de inleiding
Dit hoofdstuk bevat basisinformatie omtrent deze catalogus en aanverwante Tetra Pak®-installatie.

no Om kapitlet Introduksjon
Dette kapitlet inneholder grunnleggende informasjon om denne katalogen og relatert Tetra Pak®-ustyr.

pl Informacje na temat rozdziału wprowadzającego
Rozdział wprowadzający zawiera podstawowe informacje dotyczące niniejszego katalogu i związanej z nim maszyny Tetra Pak®.

pt Acerca do Capítulo de Introdução
Este capítulo contém informações básicas sobre este catálogo e os equipamentos relacionados da Tetra Pak®.

ro Despre capitolul introductiv
Acest capitol conţine informaţii de bază despre acest catalog şi despre echipamentul Tetra Pak® corelat.

sk O kapitole Úvod

Táto kapitola obsahuje základné informácie o tomto návode a informácie súvisiace so zariadením Tetra Pak®.

sl O uvodnem poglavju

To poglavje vsebuje osnovne informacije o tem katalogu in opremi Tetra Pak®.

sv Om inledningskapitlet

Det här kapitlet innehåller grundläggande information om katalogen och Tetra Pak®-utrustningen.

This page intentionally left blank

Manual Information

Illustrations . . . . . i - 9

English Text . . . . . i - 11

Информация за ръководството

Илюстрации . . . . . i - 9

Текст на български език . . . . . i - 17

Informace o příručce

Obrázky . . . . . i - 9

Český text . . . . . i - 23

Oplysninger om vejledninger

Illustrationer . . . . . i - 9

Dansk tekst . . . . . i - 29

Handbuch-Informationen

Abbildungen . . . . . i - 9

Deutscher Text . . . . . i - 35

Πληροφορίες εγχειριδίου

Εικόνες . . . . . i - 9

Ελληνικό Κείμενο . . . . . i - 41

Información del manual

Ilustraciones . . . . . i - 9

Texto en español . . . . . i - 47

Manuaali informatsioon

Joonised . . . . . i - 9

Eestikeelne tekst . . . . . i - 53

Tiedot käsikirjasta

Kuvat . . . . . i - 9

Suomenkielinen teksti . . . . . i - 59

Information sur le manuel

Illustrations . . . . . i - 9

Texte français . . . . . i - 65

Informacije o priručnicima

Ilustracije . . . . . i - 9

Hrvatska tekst . . . . . i - 71

Kézikönyv információ

Ábrák . . . . . i - 9

Magyar szöveg . . . . . i - 77

Handbókaupplýsingar

Skýringarmyndir . . . . . i - 9

Íslenskur texti . . . . . i - 83

Informazioni sul manuale

Figure . . . . . i - 9

Testo in italiano . . . . . i - 89

Vadovo informacija

Paveikslėliai . . . . . i - 9

Lietuviškas tekstas . . . . . i - 95

Informācija par instrukciju

Ilustrācijas . . . . . i - 9

Teksts latviešu valodā . . . . . i - 101

Handboekinformatie

Afbeeldingen . . . . . i - 9

Nederlands tekst . . . . . i - 107

Informasjon om manualen

Illustrasjoner . . . . . i - 9

Norsk tekst . . . . . i - 113

Informacje na temat instrukcji

Rysunki . . . . . i - 9

Tekst polski . . . . . i - 119

Informação do Manual

Ilustrações . . . . . i - 9

Texto em português . . . . . i - 125

Informaţiile de manual

Ilustraţii . . . . . i - 9

Text în limba română . . . . . i - 131

Informácie o príručke

Ilustrácie . . . . . i - 9

Slovenský text . . . . . i - 137

Informacije o navodilu

Slike . . . . . i - 9

Slovensko besedilo . . . . . i - 143

Information om handboken

Bilder . . . . . i - 9

Svensk text . . . . . i - 149

This page intentionally left blank

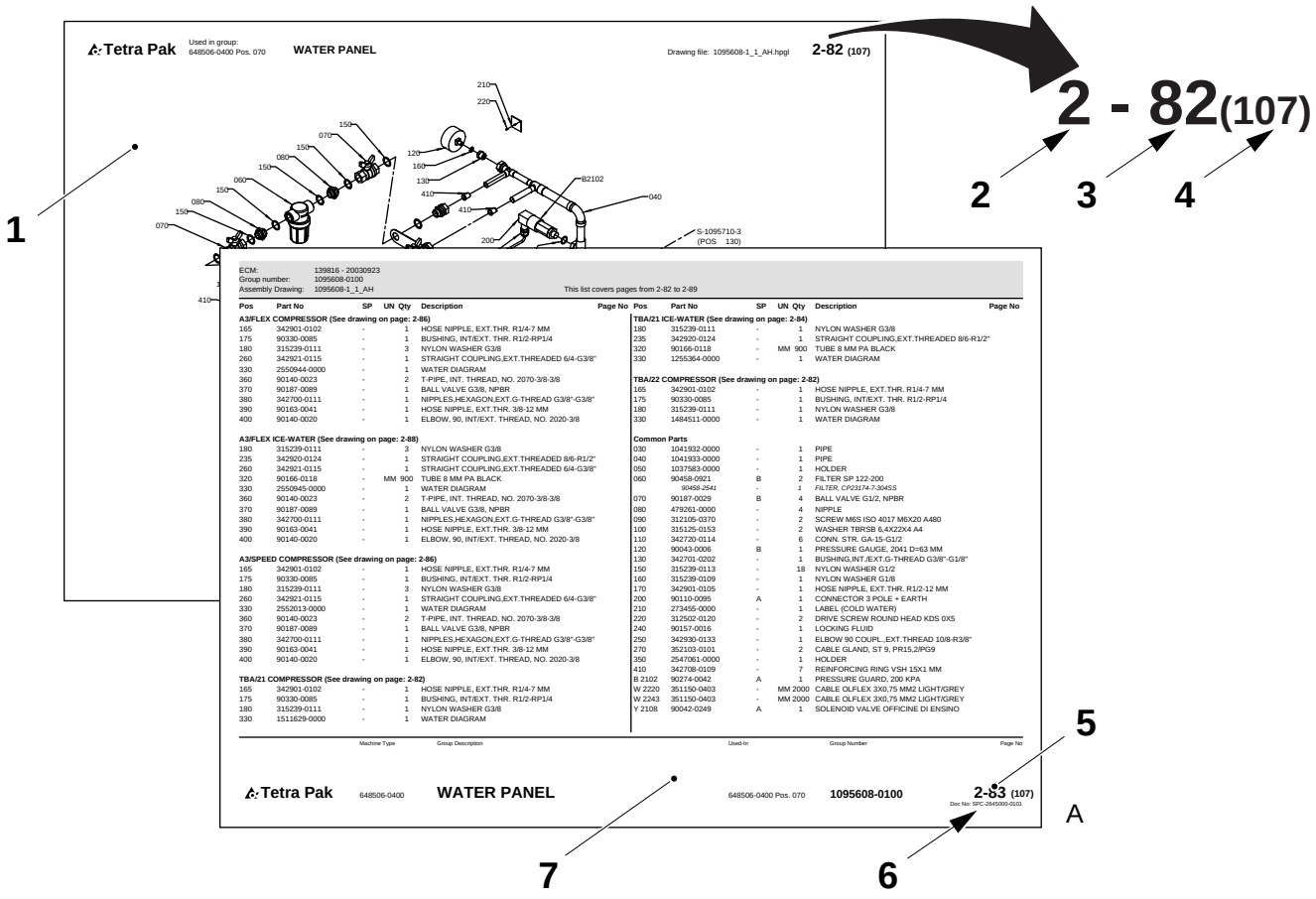
2 - 82(107)
1
2
3
4
5
6
7
A
Tetra Pak
WATER PANEL
2-82 (107)
2-83 (107)
648506-0400
1095608-0100

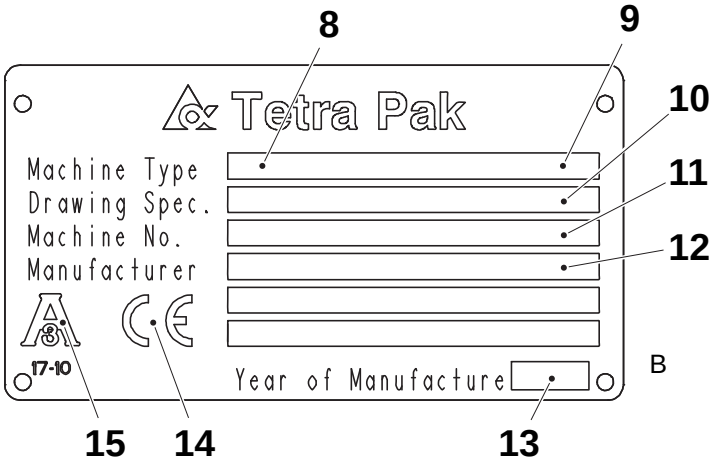
8
9
10
11
12
13
14
15
Tetra Pak
Machine Type
Drawing Spec.
Machine No.
Manufacturer
17-10
Year of Manufacture
B

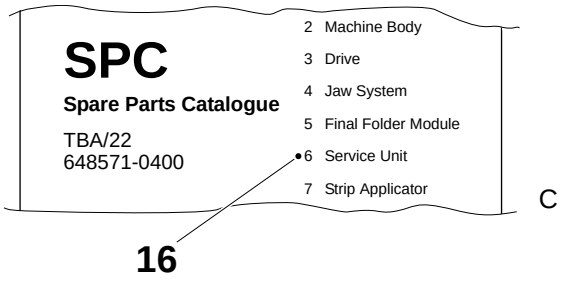
SPC
Spare Parts Catalogue
TBA/22
648571-0400
2 Machine Body
3 Drive
4 Jaw System
5 Final Folder Module
6 Service Unit
7 Strip Applicator
C
16

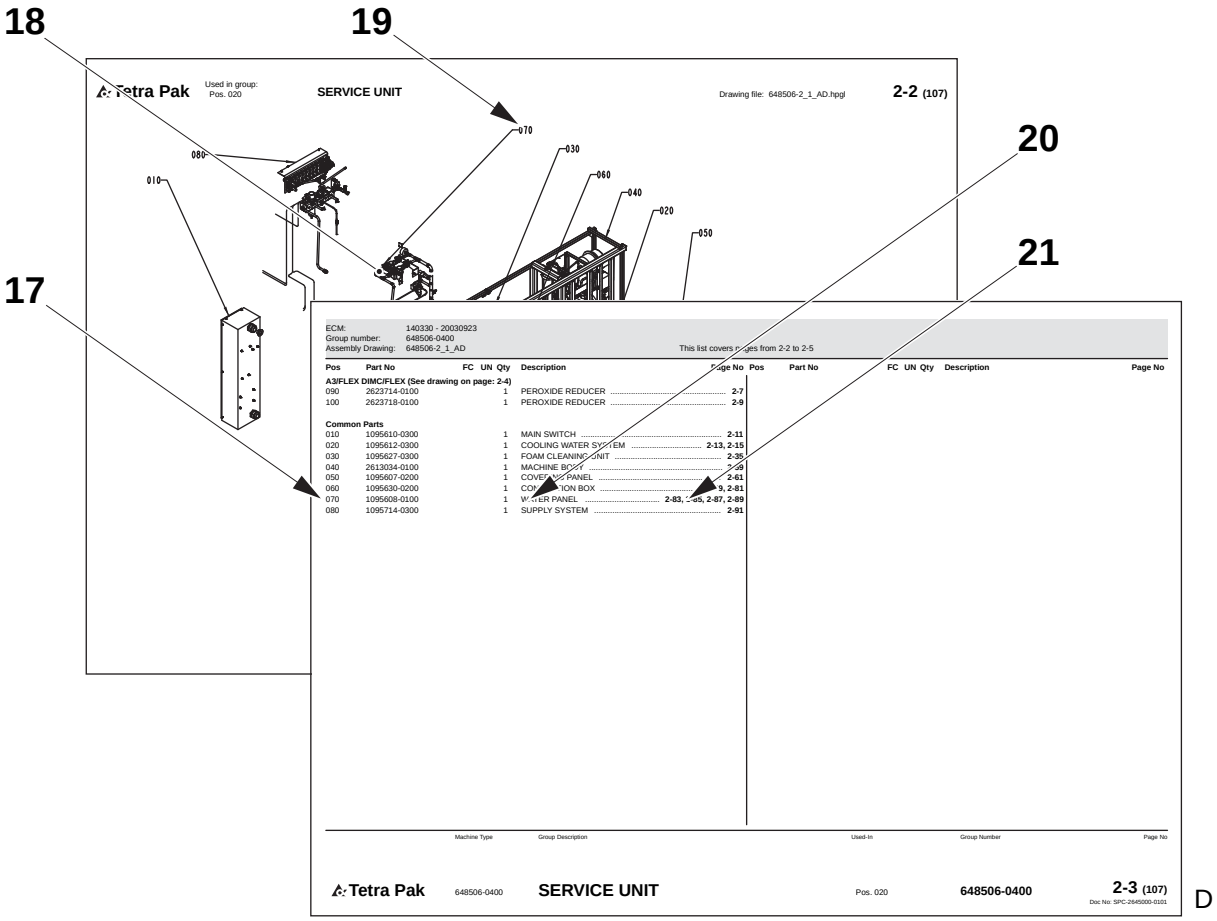
18
19
20
21
17
Tetra Pak
Used in group:
Pos. 020
SERVICE UNIT
Drawing file: 648506-2_1_AD.hpgl
2-2 (107)
070
030
060
040
020
050
080
010
ECM: 140330 - 20030923
Group number: 648506-0400
Assembly Drawing: 648506-2_1_AD
This list covers pages from 2-2 to 2-5
Pos Part No FC UN Qty Description Page No
A3/FLEX DIMC/FLEX (See drawing on page: 2-4)
090 2623714-0100 1 PEROXIDE REDUCER 2-7
100 2623718-0100 1 PEROXIDE REDUCER 2-9
Common Parts
010 1095610-0300 1 MAIN SWITCH 2-11
020 1095612-0300 1 COOLING WATER SYSTEM 2-13, 2-15
030 1095627-0300 1 FOAM CLEANING UNIT 2-35
040 2613034-0100 1 MACHINE BODY 2-59
050 1095607-0200 1 COVER SIDE PANEL 2-61
060 1095630-0200 1 CONNECTION BOX 2-61
070 1095608-0100 1 WATER PANEL 2-83, 2-85, 2-87, 2-89
080 1095714-0300 1 SUPPLY SYSTEM 2-91
Pos Part No FC UN Qty Description Page No
Machine Type
Group Description
Used-In
Group Number
Page No
Tetra Pak
648506-0400
SERVICE UNIT
Pos. 020
648506-0400
2-3 (107)
Doc No: SPC-2645000-0101
D

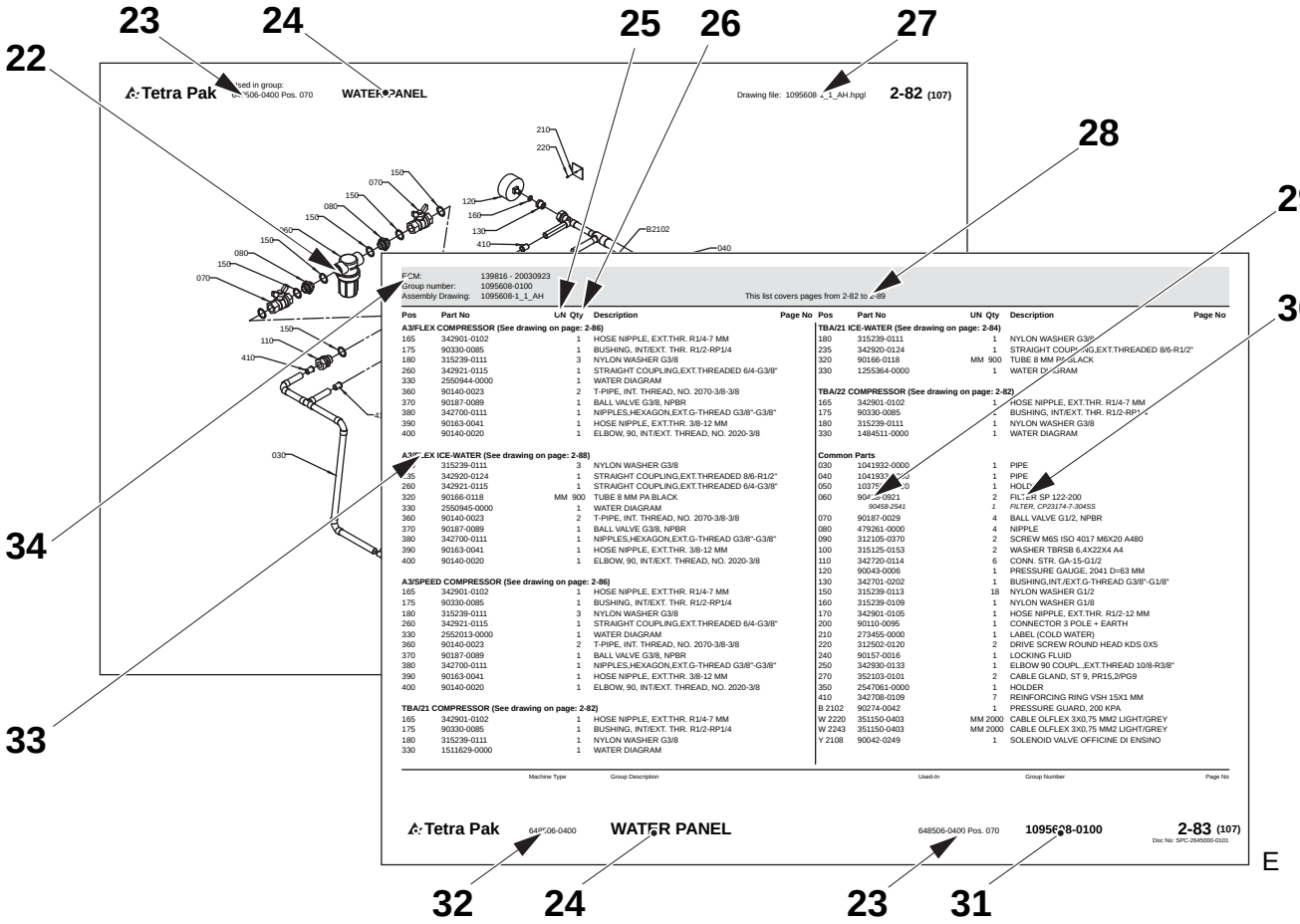
23
24
25
26
27
22
28
29
30
34
33
Tetra Pak
Used in group:
Pos. 070
WATER PANEL
Drawing file: 1095608-1_1_AH.hpgl
2-82 (107)
210
220
150
070
080
120
160
130
410
B2102
040
030
ECM: 139816 - 20030923
Group number: 1095608-0100
Assembly Drawing: 1095608-1_1_AH
This list covers pages from 2-82 to 2-89
Pos Part No UN Qty Description Page No
A3/FLEX COMPRESSOR (See drawing on page: 2-86)
165 342901-0102 1 HOSE NIPPLE, EXT.THR. R1/4-7 MM
175 90330-0085 1 BUSHING, INT/EXT. THR. R1/2-RP1/4
180 315239-0111 3 NYLON WASHER G3/8
260 342921-0115 1 STRAIGHT COUPLING,EXT.THREADED 6/4-G3/8"
330 2552944-0000 1 WATER DIAGRAM
360 90140-0023 2 T-PIPE, INT. THREAD, NO. 2070-3/8-3/8
370 90187-0089 1 BALL VALVE G3/8, NPBR
380 342700-0111 1 NIPPLES,HEXAGON,EXT.G-THREAD G3/8"-G3/8"
390 90163-0041 1 HOSE NIPPLE, EXT.THR. 3/8-12 MM
400 90140-0020 1 ELBOW, 90, INT/EXT. THREAD, NO. 2020-3/8
A3/FLEX ICE-WATER (See drawing on page: 2-88)
235 315239-0111 3 NYLON WASHER G3/8
240 342920-0124 1 STRAIGHT COUPLING,EXT.THREADED 8/6-R1/2"
260 342921-0115 1 STRAIGHT COUPLING,EXT.THREADED 6/4-G3/8"
320 90166-0118 MM 900 TUBE 8 MM PA BLACK
330 2550945-0000 1 WATER DIAGRAM
360 90140-0023 2 T-PIPE, INT. THREAD, NO. 2070-3/8-3/8
370 90187-0089 1 BALL VALVE G3/8, NPBR
380 342700-0111 1 NIPPLES,HEXAGON,EXT.G-THREAD G3/8"-G3/8"
390 90163-0041 1 HOSE NIPPLE, EXT.THR. 3/8-12 MM
400 90140-0020 1 ELBOW, 90, INT/EXT. THREAD, NO. 2020-3/8
A3/SPEED COMPRESSOR (See drawing on page: 2-86)
165 342901-0102 1 HOSE NIPPLE, EXT.THR. R1/4-7 MM
175 90330-0085 1 BUSHING, INT/EXT. THR. R1/2-RP1/4
180 315239-0111 3 NYLON WASHER G3/8
260 342921-0115 1 STRAIGHT COUPLING,EXT.THREADED 6/4-G3/8"
330 2552013-0000 1 WATER DIAGRAM
360 90140-0023 2 T-PIPE, INT. THREAD, NO. 2070-3/8-3/8
370 90187-0089 1 BALL VALVE G3/8, NPBR
380 342700-0111 1 NIPPLES,HEXAGON,EXT.G-THREAD G3/8"-G3/8"
390 90163-0041 1 HOSE NIPPLE, EXT.THR. 3/8-12 MM
400 90140-0020 1 ELBOW, 90, INT/EXT. THREAD, NO. 2020-3/8
TBA/21 COMPRESSOR (See drawing on page: 2-82)
165 342901-0102 1 HOSE NIPPLE, EXT.THR. R1/4-7 MM
175 90330-0085 1 BUSHING, INT/EXT. THR. R1/2-RP1/4
180 315239-0111 1 NYLON WASHER G3/8
330 1511629-0000 1 WATER DIAGRAM
TBA/21 ICE-WATER (See drawing on page: 2-84)
180 315239-0111 1 NYLON WASHER G3/8
235 342920-0124 1 STRAIGHT COUPLING,EXT.THREADED 8/6-R1/2"
320 90166-0118 MM 900 TUBE 8 MM PA BLACK
330 1255364-0000 1 WATER DIAGRAM
TBA/22 COMPRESSOR (See drawing on page: 2-82)
165 342901-0102 1 HOSE NIPPLE, EXT.THR. R1/4-7 MM
175 90330-0085 1 BUSHING, INT/EXT. THR. R1/2-RP1/4
180 315239-0111 1 NYLON WASHER G3/8
330 1484511-0000 1 WATER DIAGRAM
Common Parts
030 1041932-0000 1 PIPE
040 1041933-0000 1 PIPE
050 1037[illegible]-0000 1 HOLDER
060 904[illegible]-0921 2 FILTER SP 122-200
90458-2541 1 FILTER, CP23174-7-30ASS
070 90187-0029 4 BALL VALVE G1/2, NPBR
080 479261-0000 4 NIPPLE
090 312105-0370 2 SCREW M6S ISO 4017 M6X20 A480
100 315125-0153 2 WASHER TBRSB 6,4X22X4 A4
110 342720-0114 6 CONN. STR. GA-15-G1/2
120 90043-0006 1 PRESSURE GAUGE, 2041 D=63 MM
130 342701-0202 1 BUSHING,INT./EXT.G-THREAD G3/8"-G1/8"
150 315239-0113 18 NYLON WASHER G1/2
160 315239-0109 1 NYLON WASHER G1/8
170 342901-0105 1 HOSE NIPPLE, EXT.THR. R1/2-12 MM
200 90110-0095 1 CONNECTOR 3 POLE + EARTH
210 273455-0000 1 LABEL (COLD WATER)
220 312502-0120 2 DRIVE SCREW ROUND HEAD KDS 0X5
240 90157-0016 1 LOCKING FLUID
250 342930-0133 1 ELBOW 90 COUPL.,EXT.THREAD 10/8-R3/8"
270 352103-0101 2 CABLE GLAND, ST 9, PR15,2/PG9
350 2547061-0000 1 HOLDER
410 342708-0109 7 REINFORCING RING VSH 15X1 MM
B 2102 90274-0042 1 PRESSURE GUARD, 200 KPA
W 2220 351150-0403 MM 2000 CABLE OLFLEX 3X0,75 MM2 LIGHT/GREY
W 2243 351150-0403 MM 2000 CABLE OLFLEX 3X0,75 MM2 LIGHT/GREY
Y 2108 90042-0249 1 SOLENOID VALVE OFFICINE DI ENSINO
Pos Part No UN Qty Description Page No
Machine Type
Group Description
Used-In
Group Number
Page No
Tetra Pak
648506-0400
WATER PANEL
648506-0400 Pos. 070
1095608-0100
2-83 (107)
Doc No: SPC-2645000-0101
32
24
23
31
E

Manual Information

Tetra Pak® recommends reading all delivered manuals carefully. Make sure that the delivered manuals are available to personnel who operate or maintain the equipment.

It is important to keep this catalogue for the lifetime of the equipment and to pass the catalogue on to any subsequent holder or user.

Tetra Pak will not be held responsible for any damage to the equipment caused by not following the instructions given in the manuals that accompany this equipment.

Delivered Manuals

Manuals delivered with this equipment:

CM

The Conversion Manual provides technicians with information on converting the equipment between different production modes.

EM

The Electrical Manual provides technicians with information about the equipment’s electrical system.

IM

The Installation Manual provides technicians with information required to safely install the equipment.

MM

The Maintenance Manual provides technicians with information on maintaining the equipment.

OM

The Operation Manual provides the operator with information on handling and operating the equipment before, during, and after production.

RM

The Rebuilding Manual provides technicians with information required to safely install a kit to an installed machine or equipment.

(Cont'd)

(Cont'd)

SPC

The Spare Parts Catalogue provides the information necessary to order spare parts from Tetra Pak®.

TeM

The Technical Manual provides technicians with information which can be:

- information required to safely install the equipment
- information required to maintaining the equipment
- information about the machine's/equipment's electrical system
- information necessary to order spare parts from Tetra Pak
- other technical information

UP

The Update Pages provides new pages to update existing machine manuals.

Page Layout

Refer to the illustration (A) on page i-9: The main pages in a Spare Parts Catalogue consist of an illustration page (1) and a corresponding list page (7). The page number (5) is shown in the header of an illustration page and in the footer of a list page. The document number (6) is shown in the footer of a list page.

Page Numbering

Refer to the illustration (A) on page i-9: A page number (5) has three parts:

- chapter number (2)
- consecutive page number within the chapter (3)
- total number of pages in the chapter (4)

Note! The letters UP may replace the chapter number (2) if the manual includes update pages. The consecutive page number (3) and the total number of pages (4) of update pages do not follow the existing sequential page numbering of the chapter.

Machine Introduction

Manufacturer

For the manufacturer’s name and address, see the second page of this catalogue.

Service

Tetra Pak® does not accept responsibility for any damages or any injuries to equipment, staff or consumers that is caused by spare parts that are not genuine Tetra Pak spare parts.

To order genuine Tetra Pak spare parts for this machine contact the nearest Tetra Pak office.

Identification

CE Classification

This equipment complies with the basic health and safety regulations of the European Economic Area (EEA).

(Cont'd)

(Cont'd)

3-A Compliance

If the machine plate contains the 3-A mark (15) (see illustration (B) on page i-9) this equipment complies with the 3-A Sanitary Standards for Formers, Fillers, and Sealers of Containers for Fluid Milk and Fluid Milk Products, Number 17-10.

Machine Plate

The illustration (B) on page i-9 shows an example of a machine plate. An illustration of the valid machine plate and its location on the equipment is shown in the Introduction chapter of the manuals delivered with this equipment. The machine plate contains the data listed below, needed when contacting Tetra Pak® concerning this specific equipment.

- Machine type (8)
- Volume (9)
- Drawing specifications (10)
- Machine serial number (11)
- Manufacturer (12)
- Year of manufacture (13)
- CE mark (14)
- 3-A mark (if applicable) (15)

Make sure that the equipment data in the front pages of this manual corresponds to the machine plate data and the machine specification.

How to Use This Spare Parts Catalogue

Locate a Spare Part Number

a) Refer to the illustration (C) on page i-9: Go to the chapter number (16) indicated beside the main group that contains the part you want to locate.

Items b) and c) refer to the illustration (D) on page i-10.

b) On the main group illustration, look for the machine subgroup (18) that contains the part or subgroup you are looking for. Note the position number (19) and go to the list page that follows the illustration.

c) Look for the position number/reference designation (17) or the subgroup name (20). Go to the corresponding page number (21) listed in the right-hand column. Tetra Pak has chosen to always use the function oriented structure for reference designation. The prefix indicating function oriented structure (=) is not shown in the reference designation

(Cont'd)

(Cont'd)

Items d) and e) refer to the illustration (E) on page i-10.

d) Locate the part (22) that you are looking for on the subgroup illustration and note the part's position number.

e) The part number (29) and part description (30) are listed beside the position number on the list page.

Information Listed in a Spare Parts Catalogue

The list below refers to the illustration (E) on page i-10. A Spare Parts Catalogue contains the following information about groups, subgroups, and spare parts for the equipment:

- Group structure reference (23). Indicates the next higher group in the equipment list structure.
- Group name (24)
- Unit of measure (25)
- Quantity (26)
- Assembly drawing number (27)
- List page range (28). Included if there are multiple pages in the group illustration or list.
- Part or subgroup number (29)
- Subgroup name or part description (30)
- Group number (31)
- Equipment number (32)
- Group information heading (33). Indicates if the section below the heading is for a specific machine variant or if it is a list of common parts. If a list has more than one variant and each variant has its own assembly drawing, a page reference to the variant's assembly drawing is shown.
- Internal information (34)

Support and Feedback

For assistance when operating this equipment, or other inquiries, comments, or suggestions, pose the questions or give feedback by contacting the nearest Tetra Pak® representative. If access to the Tetra Pak intranet is available, contact Liaison via Query by typing QuTI-P in the address field of your browser. If access to QuTI-P is not available, request access by contacting the Global Service Desk.

Информация за ръководството

Tetra Pak® препоръчва внимателното прочитане на всички доставени ръководства. Уверете се, че всички доставени ръководства са достъпни за персонала, който работи с оборудването или го поддържа.

Важно е да съхранявате това ръководство през целия експлоатационен срок на оборудването и да го предадете на всеки следващ собственик или ползвател.

Tetra Pak няма да носи отговорност за никакви повреди на оборудването, предизвикани от неспазването на инструкциите, дадени в ръководството, което придружава това оборудване.

Доставени ръководства

Ръководства, доставени с това оборудване:

CM

Ръководството за преустройство предоставя на техниците информация за преустройство на оборудването за различните производствени режими.

EM

Електрическият наръчник осигурява на техниците информация за електрическата система на оборудването.

IM

Наръчникът за инсталацията осигурява на техниците информация за безопасно инсталиране на оборудването.

MM

Наръчникът за поддръжка осигурява на техниците информация за поддържане на оборудването.

OM

Ръководството за експлоатация предоставя на оператора информацията, която му е необходима за работата и експлоатацията на оборудването, преди, по време на и след производство.

PP

Ръководството за възстановяване предоставя на техниците информация, необходима за безопасно монтиране на .принадлежности на инсталирана машина или оборудване.

(Продължение)

(Продължение)

SPC

Каталогът за резервни части осигурява информация за поръчка на резервни части от Tetra Pak®.

TeM

Техническите ръководства, осигуряват на техниците информация, която може да бъде:

- информация, необходима за безопасното инсталиране на оборудването
- информация, необходима за поддръжката на оборудването
- информацията за електрическата система на оборудването/машината
- предоставя информацията необходима за поръчката на резервни части от Tetra Pak
- друга техническа информация.

НАГОРЕ

Страниците с актуализации предоставят нови страници за актуализиране на вече съществуващите ръководства за машината.

Разположение на страниците

Вижте илюстрация (A) на страница i-9: Основните страници на Каталога с резервни части съдържат страница с илюстрация (1) и страница със съответен списък (7). Номерът на страницата (5) е даден в горната част на илюстрованата страница и в долната част на страницата със списък.. Номерът на документа (6) е даден в долната част на списъчната страница.

Номериране на страниците

Вижте илюстрация (A) на страница i-9: Номерът на страница (5) има три части:

- номер на глава (2)
- пореден номер на страница (3) в рамките на главата
- общ брой страници (4) в главата.

Забележка! Буквите UP може да заместват номера на главата (2), ако ръководството включва страници с актуализации. Поредният номер на страница (3) и общият брой страници (4) на страниците с актуализации не следват съществуващата поредност в номерата на страниците на главата..

Въведение на машината

Производител

За името на производителя и адреса му, виж на втора страница от този каталог.

Обслужване

Tetra Pak® не носи отговорност за щети или наранявания на оборудване, персонал или клиенти, които са причинени от резервни части, които не са оригинални резервни части Tetra pak.

За да поръчате оригинални резервни части Tetra Pak за тази машина, свържете се с най-близкия офис на Tetra Pak.

Идентификация

CE Класификация

Това оборудване съответства на основните разпоредби за опазване на здравето и безопасност на Европейската Икономическа Зона (EEA).

(Продължение)

(Продължение)

3-A Съответствие

Ако табелката на машината съдържа означението 3-A (15) (виж илюстрация (B) на страница i-7), оборудването съответства на 3-A Санитарните стандарти за формоващи, пълнещи и запечатващи устройства за контейнери за течно мляко и течни млечни продукти, номер 17-10.

Табела с технически данни на машината

Илюстрация (B) на страница i-9 показва примерна табела с технически данни на машината.
Илюстрация на реална табела с технически данни на машината и нейното местоположение върху оборудването е дадена в глава Въведение на ръководството, придружаващо оборудването. Табелата с технически данни за машината съдържа данните, описани по-долу, необходими, когато се свързвате с Tetra Pak® относно това оборудване.

- Тип на машината (8)
- Обем (9)
- Спецификации (10)
- Сериен номер на машината (11)
- Производител (12)
- Година на производство (13)
- CE маркировка (14)
- 3-A маркировка (ако е приложимо) (15)

Уверете се, че данните за оборудването, дадени на първите страници на това ръководство съответстват на данните върху табелата с технически спецификации, и спецификацията на машината.

Как да ползвате Каталога за резервни части

Откриване номер на резервна част

a) Вижте илюстрация (C) на страница i-9: Преминете на глава номер (16), посочена .до основната група, която съдържа частта, която желаете да откриете.

Позиции b) и c) вижте на илюстрации (D) на страница i-10.

b) На главната илюстрация на група, потърсете машинната подгрупа (18), която съдържа частта или подгрупата, която търсите. Отбележете номера на позицията (19) и отидете на страницата със списъка, който следва илюстрацията.

c) Потърсете номера на позиция/вижте обозначението (17) или наименованието на подгрупата (20). Преминете на съответния номер на страница (21), вписан в дясната колона.
От Tetra Pak са избрали, винаги да се използва функционално ориентирана структура за обозначение препратка.
Представката посочва функционално ориентирана структура (=) не се показва в обозначението препратка.

(Продължение)

(Продължение)

Позиции d) и e) вижте на илюстрация (E) на страница i-10.

d) Открийте частта (22), която търсите на илюстрацията с подгрупи и отбележете номера на позицията на частта.

e) Номерът на частта (29) и описанието на частта (30) са вписани до номера на позицията на страницата със списъка.

Информация в Каталога за резервни части

Списъкът по-долу се отнася за илюстрация (E) на страница i-10. Каталогът за резервни части съдържа следната информация за групи, подгрупи и резервни части за оборудването:

- Препратка към структура на групата (23). Посочва по-горната група в структурата на оборудването.
- Наименование на групата (24)
- Мерна единица (25)
- Количество (26)
- Номер от сборния чертеж (27)
- Серия страници със списък (28). Включен, ако има няколко страници в групова илюстрация или списък
- Част или номер на подгрупа (29)
- Наименование на подгрупа или описание на част (30)
- Номер на група (31)
- Номер на оборудването (32)
- Информационен надпис за група (33). Индицира, че раздела под заглавието е за определен модел машина или че е списък на унифицирани части. Ако списъкът има повече от един вариант и всеки вариант има своя монтажна схема, е показана препратка към страница със сборния чертеж.
- Международна информация (34)

Поддръжка и обратна връзка

За съдействие при работа с това оборудване или при други запитвания, коментари или предложения, моля, отправете вашите въпроси или изпратете обратна информация до най-близкия представител на Tetra Pak®. Ако имате достъп до вътрешната мрежа (интранет) се свържете със служител за връзка чрез формуляра, като въведете QuTI-P в полето за адреси на вашия браузър. Ако няма достъп до QuTI-P, направете искане за такъв достъп от Гишето за глобална техническа помощ.

Informace o příručce

Společnost Tetra Pak® doporučuje se důkladně seznámit se všemi dodanými příručkami. Dodané příručky musí být k dispozici pracovníkům, kteří provádějí obsluhu nebo údržbu zařízení.

Tento katalog je třeba uchovávat po celou dobu životnosti zařízení a předat jej každému dalšímu vlastníkovi nebo uživateli.

Společnost Tetra Pak nezodpovídá za škody na zařízení způsobené nedodržováním pokynů uvedených v příručkách, které doprovází toto zařízení.

Dodané příručky

Příručky dodávané s tímto zařízením:

CM

Příručka pro konverzi poskytuje technikům informace o konverzi zařízení mezi různými produkčními režimy.

EM

Příručka elektrického zařízení (EM) poskytuje technikům informace o elektrickém systému zařízení.

IM

Montážní příručka (IM) poskytuje technikům informace nutné pro bezpečné provedení montáže zařízení.

MM

Příručky údržby (MM) poskytuje technikům informace o údržbě zařízení.

OM

Návod k obsluze poskytuje technikům informace o manipulaci a provozu zařízení před, během a po ukončení výroby.

RM

Příručka pro rekonstrukci poskytuje technikům informace požadované pro bezpečnou instalaci soupravy na nainstalovaný stroj nebo zařízení.

(Pokračování)

(Pokračování)

SPC

Katalog náhradních dílů (SPC) obsahuje informace nezbytné pro objednávání náhradních dílů od společnosti Tetra Pak®.

TeM

Technická příručka poskytuje technikům informace, kterými mohou být:

- potřebné informace pro bezpečnou instalaci zařízení
- potřebné pro údržbu zařízení
- informace o elektrickém systému zařízení/stroje
- informace nezbytné pro objednávání náhradních dílů od společnosti Tetra Pak
- ostatní technické informace

UP

Aktualizované stránky poskytují nové stránky k existujícím příručkám k zařízení.

Vzhled stránky

Podívejte se na obrázek (A) na straně i-9: hlavní stránky v Katalogu náhradních dílů tvoří stránky s ilustracemi (1) a odpovídající stránka se seznamem (7). Číslo stránky (5) je uvedeno v záhlaví stránky s ilustrací a v zápatí stránky se seznamem. Číslo dokumentu (6) je uvedeno v zápatí stránky se seznamem.

Číslování stránek

Podívejte se na obrázek (A) na straně i-9: číslo stránky (5) má tři části:

- číslo kapitoly (2)
- číslo další stránky v rámci kapitoly (3),
- celkového počtu stránek v kapitole (4)

Poznámka! Písmena UP mohou nahradit číslo kapitoly (2) v případě, že manuál obsahuje aktualizované stránky. Následující číslo stránky (3) a celkový počet stran (4) aktualizovaných stránek se nedrží existujícího sekvenčního číslování stránek v této kapitole.

Seznámení se zařízením

Výrobce

Jméno a adresu výrobce najdete na druhé straně tohoto katalogu.

Servis

Tetra Pak® nepřebírá odpovědnost za jakékoli škody na zařízení nebo za zranění zaměstnance nebo spotřebitele, které budou způsobeny tím, že se nepoužijí originální náhradní díly Tetra Pak.

Chcete-li pro tento stroj objednat originální náhradní díly Tetra Pak, kontaktujte nejbližší kancelář společnosti Tetra Pak.

Označení

Klasifikace CE

Toto zařízení vyhovuje základním zdravotním a bezpečnostním směrnicím EU.

(Pokračování)

(Pokračování)

3-A Soulad

Pokud štítek stroje obsahuje označení 3-A (15) (viz obrázek (B) na straně i-7), pak je toto zařízení v souladu s hygienickými normami 3-A pro formování, plnění a uzavírání obalů pro tekuté mléko a tekuté mléčné výrobky, číslo 17-10.

Typový štítek

Obrázek (B) na straně i-9 ukazuje příklad typového štítku.
Obrázek platného typového štítku a jeho umístění na zařízení je uvedeno v úvodní kapitole příruček dodaných s tímto zařízením.
Typový štítek obsahuje údaje uvedené níže, tyto údaje jsou zapotřebí, když kontaktujete společnost Tetra Pak® ve věci týkající se tohoto specifického vybavení.

- Typ stroje (8)
- Objem (9)
- Specifikace výkresů (10)
- Sériové číslo stroje (11)
- Výrobce (12)
- Rok výroby (13)
- Symbol CE (14)
- Symbol 3-A (pokud se používá) (15)

Údaje o zařízení uvedené na předních stránkách této příručky musí souhlasit s údaji na typovém štítku a specifikacím zařízení.

Jak používat tento katalog náhradních dílů

Vyhledat číslo náhradního dílu

a) Viz obrázek (C) na straně i-9: Přejít na číslo kapitoly (16) uvedené vedle hlavní skupiny, která obsahuje díl, který chcete najít.

Položky b) a c) se vztahují k obrázku (D) na straně i-10.

b) Na obrázku hlavní skupiny se podívejte na podskupinu stroje (18), která obsahuje díly nebo podskupiny, které hledáte. Poznamenejte si číslo pozice (19) a přejděte na stránku seznamu, který následuje za obrázkem.

c) Podívejte se na číslo pozice/označení reference (17) nebo na název podskupiny (20). Přejděte na odpovídající číslo strany (21) uvedené v seznamu ve sloupci na pravé straně. Firma Tetra Pak si pro referenční označení zvolila vždy používat funkčně orientovanou strukturu. Předpona označující funkčně orientovanou strukturu (=) není uvedena v referenčním označení.

(Pokračování)

(Pokračování)

Položky d) a e) se vztahují k obrázku (E) na straně i-10.

d) Lokalizujte díl (22), který hledáte, na obrázku podskupiny a poznamenejte si číslo pozice dílu.

e) Číslo dílu (29) a popis dílu (30) jsou uvedeny vedle čísla pozice na stránce se seznamem.

Informace uvedené v katalogu náhradních dílů

Níže uvedený seznam se odkazuje na obrázek (E) na stránce i-10.
Katalog náhradních dílů obsahuje následující informace o skupinách, podskupinách a náhradních dílech pro zařízení:

- Reference struktury skupiny (23). Označuje následující vyšší skupinu ve struktuře seznamu výbavy.
- Název skupiny (24)
- Měrná jednotka (25)
- Množství (26)
- Číslo montážního výkresu (27)
- Rozsah stránek se seznamem (28). Zahrnuty, pokud existuje více stránek ve skupině obrázků nebo seznamu.
- Číslo dílu nebo podskupiny (29)
- Název podskupiny nebo popis dílu (30)
- Číslo skupiny (31)
- Číslo výbavy (32)
- Záhlaví informací o skupině (33). Označuje, zdali se část pod záhlavím týká konkrétní varianty stroje, nebo zdali se jedná o seznam společných dílů. Pokud seznam obsahuje více než jednu variantu a každá varianta má své vlastní montážní výkresy, je zobrazen odkaz na stránku s montážním výkresem varianty.
- Vnitřní informace (34)

Podpora a zpětná vazba

Vyžadujete-li pomoc s činností tohoto zařízení nebo máte jiné požadavky, poznámky nebo návrhy, položte otázku nebo podejte zpětnou vazbu na nejbližší zastoupení Tetra Pak®. Pokud máte přístup k intranetu Tetra Pak, navažte kontakt zadáním dotazu tak, že do adresního řádku prohlížeče zadáte QuTI-P. Pokud přístup k QuTI-P není dostupný, vyžádejte si přístup kontaktováním Global Service Desk.

Oplysninger om vejledninger

Tetra Pak® anbefaler, at alle leverede vejledninger læses grundigt. Sørg for, at de leverede vejledninger er til rådighed for det personale, som betjener eller vedligeholder udstyret.

Det er vigtigt, at dette katalog opbevares i hele udstyrets levetid og overdrages til en efterfølgende ejer eller bruger.

Tetra Pak hæfter ikke for skader på udstyret, som skyldes manglende overholdelse af anvisningerne i de vejledninger, som følger med dette udstyr.

Leverede vejledninger

Vejledninger, der leveres sammen med dette udstyr:

CM

Konverteringsvejledningen forsyner teknikere med oplysninger om konvertering af udstyret mellem forskellige produktionstilstande.

EM

Den elektriske vejledning forsyner teknikere med oplysninger om udstyrets elektriske system.

IM

Installationsvejledningen forsyner teknikere med oplysninger, som er nødvendige til sikker installation af udstyret.

MM

Vedligeholdelsesvejledningen forsyner teknikere med oplysninger om vedligeholdelsen af udstyret.

OM

Driftsvejledningen forsyner operatøren med oplysninger om håndteringen og betjeningen af udstyret før, under og efter produktion.

RM

Ombygningsvejledningen forsyner teknikere med oplysninger, der er nødvendige til sikker installation af et sæt på en installeret maskine eller installeret udstyr.

(Forts.)

(Forts.)

SPC

Reservedelskataloget indeholder de oplysninger, som er nødvendige til at bestille reservedele fra Tetra Pak®.

TeM

Den Tekniske vejledning forsyner tekniker med oplysninger, der kan være:

- nødvendige oplysninger til sikker installation af udstyret
- nødvendige oplysninger til vedligeholdelse af udstyret
- oplysninger om maskinens/udstyrets elektriske system
- oplysninger, som er nødvendige til bestilling af reservedele fra Tetra Pak
- andre tekniske oplysninger

UP

Opdateringssiderne indeholder nye sider til opdatering af eksisterende maskinvejledninger.

Sidelayout

Se illustrationen (A) på side i-9: Hovedsiden i et reservedelskatalog består af en illustrationsside (1) og en tilsvarende listeside (7). Sidetallet (5) vises i overskriften på en illustrationsside og i fodteksten på en listeside. Dokumentnumret (6) vises i fodteksten på en listeside.

Sidenummerering

Se illustrationen (A) på side i-9: Et sidetal (5) har tre dele:

- kapitelnummer (2)
- fortløbende sidetal inden for kapitlet (3)
- det samlede antal sider i kapitlet (4)

Bemærk! Bogstaverne UP kan erstatte kapitelnumret (2), hvis vejledningen inkluderer opdateringssider. Det fortløbende sidetal (3) og det samlede antal sider (4) af opdateringssider følger ikke kapitlets eksisterende fortløbende sidenummerering.

Præsentation af maskinen

Producent

For producentens navn og adresse se anden side i dette katalog.

Service

Tetra Pak® påtager sig intet ansvar for skader på udstyret eller kvæstelser af personale eller forbrugere, som forårsages af reservedele, der ikke er ægte reservedele fra Tetra Pak.

For at bestille ægte reservedele fra Tetra Pak til denne maskine kontakt det nærmeste Tetra Pak-kontor.

Identifikation

CE-klassificering

Dette udstyr overholder det Europæiske Økonomiske Samarbejdsområdes (EØS) grundlæggende sundheds- og sikkerhedsbestemmelser.

(Forts.)

(Forts.)

3-A overholdelse

Hvis typeskiltet indeholder 3-A-mærket (15) (se illustration (B) på side i-7), overholder dette udstyr 3-A-sanitetsstandarderne for formnings-, fylde- og forseglingsmaskiner for beholdere til flydende mælk og flydende mælkeprodukter, nummer 17-10.

Maskinens typeskilt

Illustration (B) på side i-9 viser et eksempel på et typeskilt.
En illustration af maskinens gældende typeskilt og dens placering på udstyret vises i kapitlet Indledning af de vejledninger, der leveres sammen med dette udstyr. Maskinens typeskilt indeholder de data, der opføres nedenfor og om der er brug for, hvis der rettes henvendelse til Tetra Pak® vedrørende det specifikke udstyr.

- Maskintype (8)
- Volumen (9)
- Tegningsspecifikationer (10)
- Maskinens serienummer (11)
- Producent (12)
- Fremstillingsår (13)
- CE-mærke (14)
- 3-A mærke (i givet fald) (15)

Kontrollér, at udstyrsdataene på de første sider i denne vejledning svarer til dataene på typeskiltet og maskinens specifikation.

Sådan bruges dette reservedelskatalog

Sådan finder men et reservedelsnummer

a) Se illustrationen (C) på side i-9: Gå til kapitelnumret (16), der vises ved siden af hovedgruppen, som indeholder den del, der skal findes.

Punkterne b) og c) refererer til illustrationen (D) på side i-10.

b) På hovedgruppens illustration søg efter den maskinundergruppe (18), der indeholder den del eller undergruppe, der ledes efter. Notér positionsnumret (19) og gå til den listeside, der følger illustrationen.

c) Søg efter positionsnumret/henvisningsbetegnelsen (17) eller undergruppens navn (20). Gå til det tilsvarende sidetal (21), der er opført i højre spalte. Tetra Pak har valgt altid at bruge funktionen orienteret struktur til henvisningsbetegnelse. Det præfiks, der angiver funktionsorienteret struktur (=) vises ikke i henvisningsbetegnelsen.

(Forts.)

(Forts.)

Punkterne d) og e) refererer til illustrationen (E) på side i-10.

d) Find den del (22), der ledes efter, på undergruppens illustration og notér delens positionsnummer.

e) Delnumret (29) og delbeskrivelsen (30) er opført ved siden af positionsnumret på listesiden.

Oplysninger, der er opført i et reservedelskatalog

Listen nedenfor refererer til illustrationen (E) på side i-10.
Et reservedelskatalog indeholder følgende oplysninger om grupper, undergrupper og reservedele for udstyret:

- Gruppens strukturhenvisning (23). Viser den næste højere gruppe i udstyrets listestruktur.
- Gruppenavn (24)
- Måleenhed (25)
- Mængde (26)
- Monteringstegningens nummer (27)
- Listesideområde (28). Inkluderet, hvis gruppeillustrationen eller listen har flere sider.
- Del- eller undergruppenummer (29)
- Undergruppenavn eller delbeskrivelse (30)
- Gruppenummer (31)
- Udstyrsnummer (32)
- Gruppeinformationsoverskrift (33). Angiver, om afsnittet under overskriften gælder for en bestemt maskinversion eller om det er en liste over fælles dele. Hvis en liste har mere end en version og hver version har en egen monteringstegning, vises der en sidehenvisning til versionens monteringstegning.
- Interne oplysninger (34)

Support og feedback

Hvis man har brug for hjælp med betjeningen af dette udstyr eller har andre forespørgsler, kommentarer eller forslag, kan man stille spørgsmål eller give feedback ved at kontakte den nærmeste Tetra Pak®-repræsentant. Hvis man har adgang til Tetra Paks intranet, kan man kontakte Liaison med forespørgsler ved at indtaste QuTI-P i browserens adressefelt. Hvis man ikke har adgang til QuTI-P, kan man bede om adgang ved at kontakte den globale Service Desk.

Handbuch-Informationen

Tetra Pak® empfiehlt, alle gelieferten Handbücher sorgfältig zu lesen. Es muss sichergestellt werden, dass die gelieferten Handbücher dem Bediener- oder Wartungspersonal der Ausrüstung verfügbar sind.

Es ist wichtig, diesen Katalog während der Lebensdauer der Ausrüstung vorzuhalten und an nachfolgende Halter oder Benutzer weiterzugeben.

Tetra Pak ist nicht verantwortlich für Schäden an der Ausrüstung, die durch die Nichtbefolgung der beiliegenden Anweisungen der Handbücher verursacht werden.

Gelieferte Handbücher

Mit dieser Ausrüstung gelieferte Handbücher

CM

Das Umbauhandbuch liefert den Technikern Informationen über den Umbau der Ausrüstung zwischen den verschiedenen Produktionsweisen.

EM

Das Elektrohandbuch liefert den Technikern Informationen zum Elektrosystem der Ausrüstung.

IM

Das Installationshandbuch liefert den Technikern Informationen für die sichere Installation der Ausrüstung.

MM

Das Wartungshandbuch liefert den Technikern Informationen über die Wartung der Ausrüstung.

OM

Das Betriebshandbuch enthält Informationen für den Bediener zu Handhabung und Betrieb der Ausrüstung vor, während und nach der Produktion.

RM

Das Umbauhandbuchliefert Informationen an die Techniker, die diese benötigen, um die Ausrüstung aus dem Kit sicher zu installieren.

(Forts.)

(Forts.)

SPC

Der Ersatzteilkatalog liefert die für die Bestellung von Ersatzteilen bei Tetra Pak® erforderlichen Informationen.

TeM

Das Technische Handbuch liefert den Technikern folgende Informationen:

- Informationen für die sichere Installation der Ausrüstung
- Informationen für die Wartung der Ausrüstung
- Informationen über das Elektrosystem der Maschine/Ausrüstung.
- Notwendige Informationen für die Bestellung von Ersatzteilen bei Tetra Pak.
- andere technische Informationen

UP

Die Aktualisierungsseiten sind neu, um die Maschinenhandbücher zu aktualisieren.

Seitenlayout

Siehe die Abbildung (A) auf Seite i-9: Die Hauptseiten in einem Ersatzteilkatalog bestehen auf dem Abbildungsseite (1) und einer entsprechenden Listenseite (7). Die Seitennummer (5) ist im Kopf einer Abbildungsseite und im Fuß einer Listenseite aufgeführt.
Die Dokumentennummer (6) ist im Fuß einer Listenseite angegeben.

Seitennummerierung

Siehe die Abbildung (A) auf Seite i-9: Eine Seitennummer (5) hat drei Teile

- Kapitel Nummer (2)
- Fortlaufende Seitennummer (2) innerhalb des Kapitels (3)
- Gesamtanzahl der Seiten im Kapitel (4)

Hinweis! Die Buchstaben UP können die Kapitelnummer (2) ersetzen, wenn das Handbuch aktualisierte Seiten enthält. Die fortlaufende Seitennummer (3) und die Gesamtanzahl der Seiten (4) der aktualisierten Seiten folgen nicht der laufenden Seitennummerierung des Kapitels.

Einführung in die Maschine

Hersteller

Die zweite Seite des Katalogs enthält Name und Anschrift des Herstellers.

Service

Tetra Pak® übernimmt keine Verantwortung für Schäden an Ausrüstungen und Verletzungen von Personen, verursacht durch Ersatzteile, die keine echten Tetra Pak-Ersatzteile sind.

Für die Bestellung echter Tetra Pak-Ersatzteile für die Maschine wende man sich an die nächstgelegene Tetra Pak-Stelle.

Identifizierung

CE-Klassifizierung

Diese Ausrüstung entspricht den grundlegenden Gesundheits- und Sicherheitsvorschriften des Europäischen Wirtschaftsraumes (EWR).

(Forts.)

(Forts.)

3-A Erfüllung

Wenn die Maschinenplatte eine 3-A Markierung (15) enthält (siehe Abbildung (B) auf Seite i-7), entspricht diese Ausrüstung den 3-A Sanitärnormen für Former, Füller und Versiegler von Containern für lose Milch und Milchprodukte Nummer 17-10.

Maschinenschild

Die Abbildung (B) auf Seite i-9 zeigt ein Beispiel eines Maschinenschildes. Eine Abbildung eines gültigen Maschinenschildes und dessen Lage an der Ausrüstung finden Sie in der Einleitung zu dem mit der Ausrüstung gelieferten Handbuch. Das Maschinenschild enthält die nachstehenden Daten, erforderlich für die Kontaktnahme mit Tetra Pak® bezüglich dieser spezifischen Ausrüstung.

- Maschinentyp (8)
- Volumen (9)
- Zeichnungsspezifikationen (10)
- Serien-Nummer der Maschine (11)
- Hersteller (12)
- Baujahr (13)
- CE-Markierung (14)
- 3-A Markierung (falls zutreffend) (15)

Es muss sichergestellt sein, dass die in den Frontseiten dieses Handbuchs aufgeführten Ausrüstungsdaten mit den Daten des Maschinenschildes und der Maschinenspezifikation übereinstimmen.

Benutzung dieses Ersatzteilkatalogs

Lokalisieren einer Teilenummer

a) Bezugnahme auf Abbildung (C) auf Seite i-9: Weiter zu Kapitel Nummer (16) neben der Hauptgruppe, die das entsprechende Teil enthält.

Pos. b) und c) beziehen sich auf die Abb. (D) auf Seite i-10.

b) Auf der Abbildung der Hauptgruppe die Untergruppe (18) der Maschine suchen, welche das Teil oder die Untergruppe enthält, das/die Sie suchen. Die Positionsnummer (19) notieren und zu der Listenseite gehen, die auf die Abbildung folgt.

c) Suchen Sie die Positionsnummer/Referenzbezeichnung (17) oder den Untergruppennamen (20). Weiter zur entsprechenden Seitennummer (21) in der rechten Spalte. Tetra Pak verwendet die funktionsorientierte Struktur für die Referenzbezeichnung. Präfix zur funktionsorientierten Struktur (=) ist in der Referenzbezeichnung nicht dargestellt.

(Forts.)

(Forts.)

Pos. d) und e) beziehen sich auf die Abbildung (E) auf Seite i-10.

d) Das gesuchte Teil (22) auf der Untergruppen-Abbildung suchen und die Positionsnummer (060) des Teils notieren.

e) Die Teilenummer (29) und die Beschreibung (30) des Teils sind neben der Positionsnummer auf der Listenseite angegeben.

Information in einem Ersatzteilkatalog

Nachstehende Liste bezieht sich auf die Abbildung (E) auf Seite i-10.
Ein Ersatzteilkatalog enthält folgende Informationen zu Gruppen, Untergruppen und Ersatzteile der Ausrüstung.

- Verweis auf Gruppenstruktur (23). zeigt die nächsthöhere Gruppe in der Listenstruktur.
- Gruppenbezeichnung (24)
- Maßeinheit (25)
- Menge (26)
- Nummer der Montagezeichnung (27)
- Liste Seitenbereich (28). vorhanden, wenn mehrere Seiten in der Gruppenabbildung oder Liste vorhanden sind.
- Teile- oder Untergruppen-Nummer (29)
- Untergruppenbezeichnung oder Beschreibung des Teils (30)
- Gruppennummer (31)
- Gerätenummer (32)
- Gruppeninformations-Überschrift (33). erläutert, ob der Abschnitt unter der Überschrift für eine spezifische Maschinenvariante gilt oder ob es sich um eine Liste allgemeiner Teile handelt. Hat eine Liste mehr als eine Variante und ist jeder Variante eine eigene Montagezeichnung zugeordnet, wird ein Seiten-Querverweis auf die Montagezeichnung der Variante angegeben.
- Interne Informationen (34)

Unterstützung und Feedback

Benötigen Sie Hilfe zum Betrieb dieser Geräte oder haben Sie andere Anfragen, Kommentare oder Anregungen, fragen Sie uns oder schicken Sie uns Ihr Feedback zu, indem Sie Ihren zuständigen Tetra Pak®-Vertreter kontaktieren. Sollten Sie einen Zugang zum Tetra Pak-Intranet haben, können Sie die Kontaktperson über eine Anfrage ansprechen. Tippen Sie hierfür QuTI-P in das Adressfeld Ihres Browsers ein. Wenn kein Zugang zu QuTI-P verfügbar ist, wenden Sie sich hierzu bitte an den Global Service Desk.

Πληροφορίες εγχειριδίου

Η Tetra Pak® συνιστά να διαβάζετε προσεκτικά όλα τα παρεχόμενα εγχειρίδια. Βεβαιωθείτε ότι τα παρεχόμενα εγχειρίδια είναι διαθέσιμα στο προσωπικό που χειρίζεται ή συντηρεί τον εξοπλισμό.

Είναι σημαντικό να διατηρήσετε το εγχειρίδιο αυτό καθ' όλη τη διάρκεια ζωής του εξοπλισμού και να το μεταβιβάσετε σε οποιονδήποτε επακόλουθο κάτοχο ή χρήστη.

Η Tetra Pak δεν μπορεί να καταστεί υπεύθυνη για οποιαδήποτε ζημιά στον εξοπλισμό που οφείλεται σε μη τήρηση των οδηγιών που παρατίθενται στα εγχειρίδια που συνοδεύουν τον εξοπλισμό.

Παρεχόμενα εγχειρίδια

Τα εγχειρίδια παρέχονται μαζί με αυτό τον εξοπλισμό:

CM

Το Εγχειρίδιο Μετατροπών (CM) παρέχει πληροφορίες στους τεχνικούς σχετικά με τη μετατροπή του εξοπλισμού για τους διαφορετικούς τρόπους παραγωγής.

EM

Το Ηλεκτρολογικό Εγχειρίδιο (EM) παρέχει στους τεχνικούς τις πληροφορίες για το ηλεκτρικό σύστημα του εξοπλισμού.

IM

Το Εγχειρίδιο Εγκατάστασης (IM) παρέχει στους τεχνικούς τις πληροφορίες που απαιτούνται για την ασφαλή τοποθέτηση του εξοπλισμού.

MM

Το Εγχειρίδιο Συντήρησης (MM) παρέχει στους τεχνικούς πληροφορίες σχετικά με τη συντήρηση του εξοπλισμού.

OM

Το Εγχειρίδιο Χειρισμού (OM) παρέχει στο χειριστή πληροφορίες σχετικά με το χειρισμό και τη λειτουργία του εξοπλισμού πριν, κατά και μετά την παραγωγή.

RM

Το Εγχειρίδιο Μετασκευής (RM) παρέχει πληροφορίες στους τεχνικούς σχετικά με την ασφαλή εγκατάσταση ενός κιτ σε μια εγκατεστημένη μηχανή ή εξοπλισμό.

(Συνέχεια)

(Συνέχεια)

SPC

Ο Κατάλογος Ανταλλακτικών (SPC) παρέχει πληροφορίες που είναι απαραίτητες για την παραγγελία ανταλλακτικών από την Tetra Pak®.

TeM

Το Τεχνικό Εγχειρίδιο (TeM) παρέχει στους τεχνικούς πληροφορίες που μπορεί να είναι:

- πληροφορίες που είναι απαραίτητες για την ασφαλή εγκατάσταση του εξοπλισμού
- πληροφορίες που απαιτούνται για τη συντήρηση του εξοπλισμού
- πληροφορίες σχετικά με το ηλεκτρικό σύστημα της μηχανής/ εξοπλισμού.
- απαραίτητες πληροφορίες για να παραγγείλετε ανταλλακτικά από την Tetra Pak.
- άλλες τεχνικές πληροφορίες

ΠΑΝΩ

Οι Σελίδες Ενημέρωσης παρέχουν νέες σελίδες για την ενημέρωση των υφιστάμενων εγχειριδίων της μηχανής.

Διάταξη σελίδας

Βλέπε εικόνα (A) στη σελίδα i-9: Οι κύριες σελίδες του Καταλόγου Ανταλλακτικών αποτελούνται από μία σελίδα με εικόνα (1) και μια σελίδα με αντίστοιχη λίστα (7). Ο αριθμός σελίδας (5) αναγράφεται στο πάνω μέρος της σελίδας με την εικόνα και στο κάτω μέρος της σελίδας με τη λίστα. Ο αριθμός εγγράφου (6) αναγράφεται στο κάτω μέρος της σελίδας με τη λίστα.

Αρίθμηση σελίδων

Βλέπε εικόνα (A) στη σελίδα i-9: Ο αριθμός σελίδας (5) αποτελείται από τρία μέρη:

- τον αριθμό κεφαλαίου (2)
- τον αύξοντα αριθμό σελίδας (3) εντός του κεφαλαίου
- τον συνολικό αριθμό σελίδων (4) στο κεφάλαιο

Σημειωση! Αν το εγχειρίδιο περιέχει σελίδες ενημέρωσης, ο αριθμός κεφαλαίου (2) μπορεί να αντικαθίσταται με τα γράμματα «UP». Ο αύξων αριθμός σελίδας (3) και ο συνολικός αριθμός σελίδων (4) των σελίδων ενημέρωσης δεν ακολουθούν την αρχική αύξουσα αρίθμηση σελίδων του κεφαλαίου.

Εισαγωγικές πληροφορίες για τη μηχανή

Κατασκευαστής

Για το όνομα και τη διεύθυνση του κατασκευαστή, βλέπε τη δεύτερη σελίδα αυτού του καταλόγου.

Τεχνική εξυπηρέτηση

Η Tetra Pak® δεν αναλαμβάνει καμία ευθύνη για οποιαδήποτε ζημιά στον εξοπλισμό ή τραυματισμό του προσωπικού ή των καταναλωτών που οφείλεται σε χρήση ανταλλακτικών που δεν είναι γνήσια ανταλλακτικά της Tetra Pak.

Για να παραγγείλετε γνήσια ανταλλακτικά της Tetra Pak για αυτή τη μηχανή, επικοινωνήστε με το πλησιέστερο γραφείο Tetra Pak.

Αναγνώριση

Ταξινόμηση CE

Ο εξοπλισμός αυτός συμμορφώνεται με τους βασικούς κανονισμούς υγείας και ασφάλειας του Ευρωπαϊκού Οικονομικού Χώρου (ΕΕΑ).

(Συνέχεια)

(Συνέχεια)

Συμμόρφωση 3-A

Αν η πλάκα μηχανής περιλαμβάνει το σήμα 3-A (15) (βλέπε απεικόνιση (B) στη σελίδα i-7), ο εξοπλισμός αυτός συμμορφώνεται με τα υγειονομικά πρότυπα για διαμορφωτές, γεμιστικές μηχανές και διατάξεις σφράγισης των περιεκτών για υγρό γάλα και προϊόντα υγρού γάλακτος, αριθμός 17-10.

Πινακίδα χαρακτηριστικών μηχανής

Η εικόνα (B) στη σελίδα i-9 δείχνει ένα παράδειγμα μιας πινακίδας τύπου. Για μια εικόνα της πινακίδας τύπου της συγκεκριμένης μηχανής και της θέσης της πάνω στον εξοπλισμό, βλέπε το κεφάλαιο «Εισαγωγή» των εγχειριδίων που παραδίδονται μαζί με τον εξοπλισμό. Η πινακίδα τύπου περιέχει τα παρακάτω στοιχεία, τα οποία θα χρειάζεστε όταν επικοινωνείτε με την Tetra Pak® σχετικά με τον συγκεκριμένο εξοπλισμό.

- Τύπος μηχανής (8)
- Όγκος (9)
- Στοιχεία σχεδίου (10)
- Αριθμός σειράς μηχανής (11)
- Κατασκευαστής (12)
- Έτος κατασκευής (13)
- Σήμανση CE (14)
- Σήμανση 3-A (εάν εφαρμόζεται) (15)

Βεβαιωθείτε ότι τα δεδομένα εξοπλισμού στις μπροστινές σελίδες αυτού του εγχειριδίου αντιστοιχούν στην πινακίδα χαρακτηριστικών της μηχανής και τις προδιαγραφής αυτής.

Πως να χρησιμοποιήσετε αυτό τον Κατάλογο Ανταλλακτικών

Παράδειγμα: Εντοπισμός αριθμού ανταλλακτικού

a) Βλέπε εικόνα (C) στη σελίδα i-9: Ανοίξτε το κεφάλαιο (16) που αναφέρεται δίπλα στην κυρίως ομάδα που περιέχει το εξάρτημα που θέλετε να εντοπίσετε.

Τα στοιχεία b) και c) αναφέρονται στην εικόνα (D) στη σελίδα i-10.

b) Στην απεικόνιση της k;yriaw ομάδας αναζητήστε την υποομάδα της μηχανής (18) που περιλαμβάνει το εξάρτημα ή την υποομάδα που αναζητάτε. Σημειώστε τον αριθμό θέσης (19) και μεταβείτε στη σελίδα λίστας που ακολουθεί την απεικόνιση.

c) Αναζητήστε τον αριθμό θέσης / χαρακτηρισμό αναφοράς (17) ή το όνομα της υπο-ομάδας (20). Ανοίξτε την αντίστοιχη σελίδα (21) που αναφέρεται στη δεξιά στήλη. Η Tetra Pak έχει επιλέξει να χρησιμοποιεί πάντα τη διάρθρωση που προσανατολίζεται στη λειτουργία για τον ορισμό αναφοράς. Το πρόθεμα που υποδεικνύει διάρθρωση που προσανατολίζεται στη λειτουργία (=) δεν εμφανίζεται στον ορισμό αναφοράς.

(Συνέχεια)

(Συνέχεια)

Τα στοιχεία d) και e) αναφέρονται στην εικόνα (E) στη σελίδα i-10.

d) Εντοπίστε το εξάρτημα (22) που αναζητάτε στην απεικόνιση της υποομάδας και σημειώστε τον αριθμο θέσης του εξαρτήματος.

e) Ο αριθμός εξαρτήματος (29) και η περιγραφή εξαρτήματος (30) παρατίθενται δίπλα στον αριθμό θέσης στη σελίδα λίστας.

Πληροφορίες που αναφέρονται στον Κατάλογο ανταλλακτικών

Η λίστα που ακολουθεί παραπέμπει στην εικόνα (E) στη σελίδα i-10.
Ο Κατάλογος Ανταλλακτικών περιέχει τις εξής πληροφορίες σχετικά με ομάδες, υπο-ομάδες και ανταλλακτικά για τον εξοπλισμό:

- Αναφορά στη δομή της ομάδας (23). Δείχνει την αμέσως μεγαλύτερη ομάδα στη δομή του καταλόγου του εξοπλισμού.
- Όνομα ομάδας (24)
- Μονάδα μέτρησης (25)
- Ποσότητα (26)
- Αριθμός σχεδίου συναρμολόγησης (27)
- Εύρος σελίδων της λίστας (28). Περιλαμβάνεται όταν υπάρχουν πολλαπλές σελίδες στην ομάδα ή στη λίστα.
- Αριθμός εξαρτήματος ή υποομάδας (29)
- Όνομα υποομάδας ή περιγραφή εξαρτήματος (30)
- Αριθμός ομάδας (31)
- Αριθμός εξοπλισμού (32)
- Επικεφαλίδα πληροφοριών ομάδας (33). Δείχνει αν το τμήμα της λίστας κάτω από την επικεφαλίδα ισχύει για συγκεκριμένη παραλλαγή της μηχανής ή αν πρόκειται για κατάλογο κοινών εξαρτημάτων.
  Αν μια λίστα αναφέρεται σε περισσότερες από μία παραλλαγές και κάθε παραλλαγή έχει το δικό της σχέδιο συναρμολόγησης, υπάρχει εδώ μια παραμπομπή στη σελίδα που δείχνει το σχέδιο συναρμολόγησης της παραλλαγής.
- Εσωτερικές πληροφορίες (34)

Υποστήριξη και σχολιασμός

Για βοήθεια κατά τη διάρκεια λειτουργίας αυτού του εξοπλισμού, ή άλλες αιτήσεις πληροφοριών, σχόλια, ή συμβουλές, θέτετε τις ερωτήσεις ή αποστείλετε σχόλια επικοινωνώντας με την πλησιέστερη αντιπροσωπεία Tetra Pak®. Αν είναι διαθέσιμη η πρόσβαση στο intranet της Tetra Pak, επικοινωνήστε με το Σύνδεσμο μέσω Ερωτήματος πληκτρολογώντας QuTI-P στο πεδίο διεύθυνσης του προγράμματος περιήγησης. Αν η πρόσβαση στο QuTI-P δεν είναι διαθέσιμη, κάντε αίτηση πρόσβασης επικοινωνώντας με το Γραφείο Παγκόσμιας Εξυπηρέτησης.

Información del manual

Tetra Pak® recomienda que se lean cuidadosamente todos los manuales entregados. Comprobar que todos los manuales entregados estén disponibles para el personal que efectúe la operación o el mantenimiento del equipo.

Es importante conservar este manual durante la vida útil del equipo, así como facilitárselo a cualquier propietario o usuario posterior.

Tetra Pak no se responsabilizará de daños en la máquina o equipo debidos a la inobservancia de las instrucciones dadas en los manuales que acompañan este equipo.

Manuales entregados

Manuales entregados con este equipo:

CM

El Manual de conversión proporciona a los técnicos información sobre cómo convertir el equipo entre diferentes modos de producción.

EM

El Manual eléctrico proporciona a los técnicos información acerca del sistema eléctrico del equipo.

IM

El Manual de instalación proporciona a los técnicos la información requerida para instalar el equipo con seguridad.

MM

El Manual de mantenimiento proporciona a los técnicos información sobre el mantenimiento del equipo.

OM

El Manual de servicio proporciona a los operadores información sobre la manipulación y operación del equipo antes, durante y después de la producción.

RM

El Manual de Modificación provee la información necesaria a los técnicos para instalar con seguridad un kit en una máquina o equipo ya instalado.

(Continúa)

(Continuación)

SPC

El Catálogo de piezas de recambio proporciona la información necesaria para pedir piezas de recambio de Tetra Pak®.

TeM

El Manual técnico proporciona información a los técnicos, que puede ser:

- la información requerida para instalar el equipo con seguridad
- información requerida para el mantenimiento del equipo
- información acerca del sistema eléctrico de la máquina/del equipo
- la información necesaria para pedir piezas de recambio a Tetra Pak
- otras informaciones técnicas

PA

Las Páginas de Actualización suministran nuevas páginas para actualizar los manuales de máquinas ya existentes.

Organización de las páginas

Remitirse a la ilustración (A) en la página i-9: Las páginas principales en un Catálogo de piezas de recambio se componen de una página de ilustración (1) y una página de lista correspondiente (7). El número de la página (5) se muestra en el encabezado de una página de ilustración y en el pie de página de una página de lista. El número del documento (6) se muestra en el pie de página de una página de lista.

Numeración de las páginas

Remitirse a la ilustración (A) en la página i-9:
Un número de página (5) se compone de tres partes:

- Número de capítulo (2)
- número de página consecutivo dentro del capítulo (3)
- número total de páginas del capítulo (4).

¡Nota! Las letras UP pueden reemplazar el número del capítulo (2) si el manual incluye páginas de actualización. El número de página consecutivo (3) y el número total de páginas (4) de páginas de actualización no siguen la numeración secuencial de páginas del capítulo.

Introducción a la máquina

Fabricante

Para el nombre y la dirección del fabricante, ver la segunda página de este catálogo.

Servicio

Tetra Pak® no se hace responsable de cualquier daño o lesión al equipo, personal o consumidores que sea causado por piezas de recambio que no sean piezas Tetra Pak genuinas.

Para pedir piezas de recambio Tetra Pak genuinas para esta máquina, comunicarse con la oficina de Tetra Pak más cercana.

Identificación

Clasificación de la CE

Este equipo cumple los requisitos esenciales relativos a la salud y la seguridad del Área Económica Europea (EEA).

(Continúa)

(Continuación)

Conformidad con 3-A

Si la placa de la máquina contiene la marca 3-A (15) (consultar la ilustración (B) en la página i-7), este equipo cumple con las Normas sanitarias 3-A para formadoras, llenadoras y selladoras de envases para para leche fluida y productos de leche fluida 17-10.

Placa de la máquina

La ilustración (B) en la página i-9 muestra un ejemplo de placa de máquina. En la Introducción del capítulo de los manuales entregados con este equipo se muestra una ilustración de la placa de máquina válida y su ubicación en el equipo La placa de máquina contiene los datos listados a continuación requeridos al contactar con Tetra Pak® en relación a este equipo específico.

- Tipo de máquina (8)
- Volumen (9)
- Especificaciones de plano (10)
- Número de serie de la máquina (11)
- Fabricante (12)
- Año de fabricación (13)
- Marca de la CE (14)
- Marca 3-A (si procede) (15)

Asegúrese que los datos de equipo listados en las páginas de cubierta de este manual corresponden a los datos de la placa de máquina y a la especificación máquina.

Cómo utilizar este Catálogo de piezas de recambio

Localizar un número de pieza de recambio

a) Remitirse a la ilustración (C) en la página i-9: Ir al número de capítulo (16) indicado al lado del grupo principal que contiene la pieza que usted desea localizar.

Los items b) y c) se refieren a la ilustración (D) en la página i-10.

b) En la ilustración del grupo principal, buscar el subgrupo máquina (18) que contiene la pieza o subgrupo que usted busca.
Anote el número de posición (19) y vaya a la página de lista que sigue a la ilustración.

c) Buscar el número de posición/designación de referencia (17) o el nombre del subgrupo (20). Vaya al número de página correspondiente (21) listado en la columna de la derecha. Tetra Pak ha elegido utilizar siempre la estructura orientada a la función para la designación de referencia. El prefijo que indica la estructura orientada a la función (=) no se muestra en la designación de referencia

(Continúa)

(Continuación)

Los Items d) y e) se refieren a la ilustración (E) en la página i-10.

d) Localizar la pieza (22) que busca en la ilustración del subgrupo y anotar el número de posición de la pieza.

e) El número de la pieza (29) y la descripción de la pieza (30) están listados al lado del número de posición en la página de lista.

Información listada en un Catálogo de piezas de recambio

La lista a continuación remite a la ilustración (E) en la página i-10.
Un Catálogo de piezas de recambio contiene la siguiente información sobre grupos, subgrupos y piezas de recambio para el equipo:

- Referencia de estructura de grupo (23). Indica el siguiente grupo más alto en la estructura de lista del equipo.
- Nombre de grupo (24)
- Unidad de medida (25)
- Cantidad (26)
- Número de plano de montaje (27)
- Rango de la página de lista (28). Incluida si hay páginas múltiples en la ilustración o lista de grupo.
- Número de pieza o subgrupo (29)
- Nombre del subgrupo o descripción de la pieza (30)
- Número de grupo (31)
- Número de equipo (32)
- Encabezado de información de grupo (33). Indica si la sección debajo del encabezado es para una variante máquina específica o si es una lista de piezas comunes. Si la lista tiene más de una variante y cada variante tiene su propio plano de conjunto, se muestra una referencia página para el plano de conjunto de la variante.
- Información interna (34)

Soporte y retroalimentación

Para obtener asistencia al trabajar con este equipo, o para otras consultas, comentarios o sugerencias, formular las preguntas o enviar los comentarios contactando con el representante de Tetra Pak® más cercano. Si el acceso a la intranet de Tetra Pak estuviese disponible, ponerse en contacto con Liaison mediante Query escribiendo QuTI-P en el campo de la dirección del navegador. Si el acceso a QuTI-P no estuviera disponible, solicitar el acceso poniéndose en contacto con Global Service Desk.

Manuaali informatsioon

Tetra Pak® soovitab kõiki saadetud manuaale hoolikalt lugeda. Kindlustage saadetud manuaalide kättesaadavus seadmetega töötavale või neid hooldavale personalile.

Kataloog tuleb seadmete eluea jooksul alles hoida ning anda üle seadmete järgmisele omanikule või kasutajale.

Tetra Pak ei vastuta seadmete kahjustuste eest, mis on tekkinud seadmetega kaasapandud juhendites antud juhiste eiramise tagajärjel.

Kättetoimetatud manuaalid

Antud seadmega kaasasolevad manuaalid:

CM

Muutmise juhend annab tehnikutele informatsiooni seadmete muutmiseks vastavalt erinevatele tootmisrežiimidele.

EM

Elektrialane kasutusjuhend annab tehnikutele informatsiooni seadmete elektrisüsteemi kohta.

IM

Paigaldusjuhend annab tehnikutele seadmete turvaliseks paigaldamiseks vajalikku informatsiooni.

MM

Hooldusjuhend annab tehnikutele informatsiooni seadmete hooldamiseks.

OM

Kasutusjuhend annab operaatorile informatsiooni seadmete käsitsemiseks ja nendega töötamiseks enne tootmise alustamist, tootmise ajal ja pärast selle lõpetamist.

RM

Ümberehituse juhend annab tehnikutele vajalikku informatsiooni komplekti ohutuks paigaldamiseks eelnevalt paigaldatud masinale või seadmetele.

(Jätkub)

(Jätkub)

SPC

Varuosade kataloog annab vajalikku informatsiooni Tetra Pak®ist varuosade tellimiseks.

TeM

Tehniline juhend annab tehnikutele informatsiooni, mis võib olla näiteks:

- vajalik informatsioon seadmete ohutuks paigaldamiseks
- vajalik informatsioon seadmete hooldamiseks
- informatsioon masina/seadmestiku elektrisüsteemi kohta
- vajalik informatsioon tagavaraosade tellimiseks Tetra Pakist
- muu tehniline informatsioon

UP

Ajakohastatud leheküljed sisaldavad uusi lehekülgi olemasolevate masina juhendite ajakohastamiseks.

Lehekülje kujundus

Vaadake joonist (A) leheküljel i-9: varuosade kataloogi põhileheküljed koosnevad joonise leheküljest (1) ja vastava loendi leheküljest (7). Lehekülje number (5) näidatakse joonise lehekülje päises ja loendi lehekülje jaluses. Dokumendi number (6) näidatakse loendi lehekülje jaluses.

Lehekülgede nummerdamine

Vaadake joonist (A) leheküljel i-9: lehekülje numbril (5) on kolm osa:

- peatüki number (2)
- järjestikune lehekülje number peatükis (3)
- lehekülgede koguarv (4) peatükis

Pange tähele! Kui juhend sisaldab ajakohastatud lehekülgi, võivad peatüki numbrit (2) asendada tähed UP. Ajakohastatud lehekülgede järjestikune lehekülje number (3) ja lehekülgede koguarv (4) ei järgi peatüki olemasolevat järjestikust lehekülgede nummerdamist.

Masina sissejuhatus

Tootja

Tootja nime ja aadressi leiate kataloogi teiselt leheküljelt.

Teenindus

Tetra Pak® ei vastuta seadmetele, töötajatele või tarbijatele põhjustatud kahjustuste või kehavigastuste eest, mis on tekkinud selliste varuosade kasutamise tagajärjel, mis ei ole Tetra Paki originaalvaruosad.

Tetra Paki originaalvaruosade tellimiseks käesoleva masina jaoks pöörduge lähimasse Tetra Paki kontorisse.

Identifikatsioon

CE klassifikatsioon

Need seadmed on vastavuses Euroopa Majanduspiirkonna (EEA) tervisekaitse ja ohutusmeetmete põhireeglitega.

(Jätkub)

(Jätkub)

3-A vastavus

Kui masina andmeplaadil on märk "3-A" (15) (vt joonist (B) lk i-7), vastab käesolev seadmestik piima- ja piimatoodete mahutite vormimis-, villimis- ja sulgemisseadmete sanitaarnormidele 3-A, number 17-10.

Seadmeplaat

Masina andmeplaadi näidis on toodud leheküljel i-9 oleval joonisel (B). Kehtiv andmeplaat ja selle asukoht seadmel on näidatud joonisel, mille leiate koos seadmestikuga tarnitud juhendite sissejuhatavast peatükist. Masina andmeplaat sisaldab allpool loetletud andmeid, mida Te vajate antud seadme asjus Tetra Pak®iga ühenduse võtmisel.

- Masina tüüp (8)
- Maht (9)
- Joonise spetsifikatsioonid (10)
- Masina seerianumber (11)
- Tootja (12)
- Valmistamise aasta (13)
- CE-märgistus (14)
- 3-A-märgistus (kui on asjakohane) (15)

Veenduge, et antud juhendi esilehtedel olevad andmed vastaksid masina andmesildil olevatele andmetele ja masina tehnilistele andmetele.

Varuosade kataloogi kasutamine

Leidke varuosa number

a) Vaadake joonist (C) leheküljel i-9: minge peatüki juurde, mille number (16) on näidatud selle põhigrupi kõrval, mis sisaldab Teie poolt otsitavat varuosa.

Elemendid b) ja c) viitavad joonisele (D) leheküljel i-10.

b) Põhigrupi joonisel otsige masina alamgruppi (18), mis sisaldab Teie poolt otsitavat varuosa või alamgruppi. Märkige üles positsiooni number (19) ja minge loendi leheküljele, mis järgneb joonisele.

c) Otsige üles positsiooni number/viitetähis (17) või alamgrupi nimi (20). Minge vastavale leheküljele, mille numbri (21) leiate parempoolses veerus olevast loetelust. Tetra Pak kasutab viitetähistes alati funktsioonile orienteeritud struktuuri. Prefiksit, mis näitab funktsioonile orienteeritud struktuuri (=), viitetähises ei näidata.

(Jätkub)

(Jätkub)

Elemendid d) ja e) viitavad joonisele (E) leheküljel i-10.

d) Leidke alamgrupi jooniselt üles otsitav varuosa (22) ja pange kirja varuosa positsiooni number.

e) Varuosa numbri (29) ja varuosa kirjelduse (30) leiate loendi leheküljelt positsiooni numbri kõrvalt.

Varuosade kataloogis loetletud informatsioon

Allpool antud loend viitab joonisele (E) leheküljel i-10.
Varuosade kataloog sisaldab alljärgnevat informatsiooni seadmete gruppide, alamgruppide ja varuosade kohta:

- Grupi struktuuri viide (23). Näitab järgmist kõrgemat gruppi seadmete loetelu struktuuris.
- Grupi nimetus (24)
- Mõõtühik (25)
- Kogus (26)
- Koostejoonise number (27)
- Loendi lehekülgede vahemik (28). Lisatakse juhul, kui grupi joonis või loend paiknevad mitmel leheküljel.
- Varuosa või alamgrupi number (29)
- Alamgrupi nimetus või varuosa kirjeldus (30)
- Grupi number (31)
- Seadme number (32)
- Grupis sisalduva informatsiooni pealkiri (33). Näitab, kas pealkirja all olev lõik puudutab konkreetset masina varianti või sisaldab see üldiste varuosade loendit. Kui loendis on variante rohkem kui üks ning nendel kõigil on eraldi koostejoonised, siis näidatakse konkreetse variandi koostejoonise lehekülgede numbrid.
- Siseinformatsioon (34)

Tugi ja tagasiside

Seadme kasutamisel pöörduge küsimuste tekkimisel või muude päringute, kommentaaride või ettepanekute korral või tagasiside edastamiseks lähima Tetra Pak®'i esindaja poole. Kui teil on juurdepääs Tetra Pak'i intranetile, võtke Liaison'iga ühendust päringu Query kaudu, tippides oma brauseri aadressiväljale QuTI-P. Kui juurdepääs üksusesse QuTI-P pole saadaval, paluge endale juurdepääs, pöördudes ülemaailmse teeninduse infolaua Global Service Desk poole.

Tiedot käsikirjasta

Tetra Pak® suosittelee kaikkien toimitettujen käyttöohjeiden huolellista lukemista. Varmista että toimitetut käsikirjat ovat niiden henkilöiden käytettävissä, jotka käyttävät tai huoltavat laitetta.

On tärkeää, että käsikirjaa pidetään tallella koko laitteen käyttöiän ajan ja että käsikirja annetaan jokaiselle laitteen tulevalle omistajalle tai käyttäjälle.

Tetra Pak ei ole vastuussa mistään laitteille aiheutuneista vahingoista, jotka ovat johtuneet tämän käsikirjan ohjeiden noudattamatta jättämisestä.

Toimitetut käsikirjat

Laitteen mukana toimitetut käsikirjat:

CM

Muunnoskäsikirja (CM) palvelee teknikoita antamalla tiedot laitteen muuntamisesta erilaisiin tuotantotiloihin.

EM

Sähkökäsikirja (EM) palvelee teknikoita antamalla tiedot laitteen sähköjärjestelmästä.

IM

Asennuskäsikirja (IM) palvelee teknikoita antamalla tiedot laitteiden turvalliseksi asentamiseksi.

MM

Huoltokäsikirja (MM) palvelee teknikoita antamalla tiedot laitteiden huoltamisesta.

OM

Käyttäjän käsikirja (OM) palvelee käyttäjää antamalla tiedot laitteen käyttämisestä ennen tuotantoa, sen aikana ja sen jälkeen.

RM

Korjaus käsikirja antaa teknikoille vaadittavat tiedot turvallisesti asentaa rakennussarja valmiiseen koneeseen tai laitteeseen.

(Jatkuu)

(Jatkoa)

SPC

Varaosaluettelo antaa ne tarpeelliset tiedot, joiden avulla voi tilata varaosia Tetra Pak®ilta.

TeM

Tekninen käsikirja antaa teknikoille tietoja, joka voi olla:

- tietoja laitteen turvallista asennusta varten
- tietoja, joita tarvitaan laitteita huollettaessa
- tietoja koneen/laitteen sähköjärjestelmästä
- tietoja, joita tarvitaan tilattaessa varaosia Tetra Pakilta.
- muita teknisiä tietoja.

SP

Sivujen Päivitys tarjoaa uusia sivuja jo olemassa oleviin koneen käyttöohjeisiin.

Sivutaitto

Katso kuvaa (A) sivulla i-9: Varaosaluettelon pääsivut koostuvat kuvitetusta sivusta (1) ja sitä vastaavasta luettelo sivusta (7). Sivunumero (5) näkyy kuvasivun otsikossa ja luettelo sivun alatunnisteessa.
Dokumentin numero (6) näkyy luettelo sivun alatunnisteessa.

Sivunumerointi

Katso kuvaa (A) sivulla i-9: sivunumerossa (5) on kolme osaa:

- kappaleen numero (2)
- juokseva sivunumero kappaleessa (2)
- kappaleen kokonaissivumäärä (3)

Huom! Kirjaimet SP voivat korvata kappaleen numeron (2) jos sivujen päivitys sisältyy käyttöohjeisiin. Peräkkäisten sivujen numero (3) ja päivitys sivujen kokonaismäärä (4) eivät noudata käytössä olevaa kappaleiden juoksevaa sivunumerointia.

Koneen esittely

Valmistaja

Katso valmistajan nimi ja osoite tämän luettelon toiselta sivulta.

Huolto

Tetra Pak® ei vastaa sellaisista vahingoista tai mistään työvälineiden, henkilöstön tai kuluttajien vaurioista, jotka johtuvat varaosista, jotka eivät ole aitoja Tetra Pakin varaosia.

Aitoja Tetra Pakin tämän laitteen varaosia voi tilata ottamalla yhteys lähimpään Tetra Pak toimistoon.

Koneen tunnistaminen

CE-luokitus

Tämä laite täyttää Euroopan talousalueen (ETA) perus turvallisuus- ja terveysvaatimukset.

(Jatkuu)

(Jatkoa)

3-A Soveltuvuus

Jos konekilvessä on merkintä A-3 (15) (ks. kuvasta (B) sivulla i-7) se tarkoittaa, että laite täyttää A-3 -standardin puhtausvaatimukset muotoilimille, täyttimille ja tiivisteille astioissa, jotka on tarkoitettu maidolle ja maitotuotteille, numero 17-10.

Konekilpi

Kuva (B) sivulla i-9 näyttää esimerkin konekilvestä.
Esimerkki voimassa olevasta konekilvestä ja sen sijainnista laitteessa näkyy tämän laitteen mukana toimitettujen käyttöohjeiden johdanto luvussa.
Konekilpi sisältää alla luetellut tiedot, joita tarvitaan kun otetaan yhteyttä Tetra Pak®kiin koskien erityisesti tätä laitetta.

- Koneen tyyppi (8)
- Teho (9)
- Piirustus erittelyt (10)
- Koneen sarjanumero (11)
- Valmistaja (12)
- Valmistusvuosi (13)
- CE-merkintä (14)
- 3-A merkintä (tarvittaessa) (15)

Varmista, että tämän käsikirjan etusivuilla olevat tuotetiedot vastaavat konekilven tietoja ja laitteen teknistä erittelyä.

Kuinka tätä varaosaluetteloa käytetään

Löydä ensin varaosan numero

a) Katso kuvaa (C) sivulla i-9: Mene pääryhmän vieressä ilmoitettuun kappaleeseen (16), joka sisältää sen osan, jonka haluat löytää.

Osat b) ja c) katso kuvaa (D) sivulla i-10.

b) Pääryhmän kuvassa etsi sitä koneen alaryhmää (18), joka sisältää etsimäsi osan tai alaryhmän. Huomioi sijaintinumero (19) ja siirry kuvaa seuraavaa luettelosivulle.

c) Etsi sijaintinumeroa/viitenimitystä (17) tai alaryhmän nimeä (20). Siirry vastaavalle sivunumerolle (21), joka on mainittu oikeanpuoleisessa sarakkeessa. Tetra Pak käyttää aina viitteissä toiminnallisia rakenteita. Prefiksi ilmaisin toiminto rakenne (=) ei näy viitenimityksissä.

(Jatkuu)

(Jatkoa)

Osat d) ja e) katso kuvaa (E) sivulla i-10.

d) Paikanna etsimäsi osa (22) alaryhmän piirroksessa ja huomioi osan sijaintinumero.

e) Osanumero (29) ja osan kuvaus (30) on luetteloitu sijaintinumeron vieressä luettelosivulla.

Varaosaluettelossa luetellut tiedot

Seuraava luettelo viittaa kuvaan (E) sivulla i-10. Varaosaluettelo sisältää seuraavat tiedot ryhmistä, alaryhmistä ja varaosista laitteelle:

- Viite ryhmän rakenteeseen (23). Osoittaa seuraavan ylemmän ryhmän laiteluettelon rakenteessa.
- Ryhmän nimi (24)
- Mittayksikkö (25)
- Määrä (26)
- Kokoamispiirustus numero (27)
- Luettelon sivualue (28). Sisällytetty, jos ryhmän kuvissa tai luetteloisssa on useita sivuja.
- Osan tai alaryhmän numero (29)
- Alaryhmän nimi tai osan kuvaus (30)
- Ryhmän numero (31)
- Laitteen numero (32)
- Ryhmätietojen otsikko (33). Ilmoittaa, onko otsikon alla oleva kohta erityiselle konevaihtoehdolle vai onko se luettelo yhteisistä osista. Jos luettelossa on useampi kuin yksi muunnos ja kullakin muunnoksella on oma asennuspiirroksensa, näytetään sivuviite muunnoksen asennuspiirustukseen.
- Sisäinen tiedotus (34)

Tuotetuki ja palaute

Jos tarvitset tukea laitteen käyttämiseen, sinulla on muuta kysyttävää tai haluat esittää kommentteja tai ehdotuksia, ota yhteyttä lähimpään Tetra Pak®in edustajaan. Jos käytettävissäsi on Tetra Pakin intranet, ota yhteyttä kyselytoiminnon avulla kirjoittamalla QuTI-P selaimen osoitekenttään. Jos QuTI-P -sovellus ei ole käytettävissä, pyydä käyttöoikeutta ottamalla yhteyttä maailmanlaajuiseen tukipalveluun.

Information sur le manuel

Tetra Pak® recommande de lire attentivement tous les manuels fournis. S'assurer que les manuels fournis sont accessibles au personnel qui s'occupe du fonctionnement ou de la maintenance de l'équipement.

Il est important de conserver ce manuel pendant toute la durée d'utilisation de la machine et de le transmettre à tout détenteur ou utilisateur ultérieur.

Tetra Pak ne sera pas tenu responsable d'un dommage causé à la machine ou à l'équipement par le fait de ne pas avoir respecté les instructions figurant dans le présent manuel.

Manuels fournis

Manuels fournis avec l'équipement:

CM

Le Manuel de Conversion fournit aux techniciens les informations nécessaires pour convertir la machine en vue des différents modes de production.

EM

Ce manuel électrique fournit aux techniciens les informations sur le système électrique de la machine.

IM

Ce manuel de Mise en place fournit aux techniciens les informations nécessaires pour l'installation de la machine en toute sécurité.

MM

Ce manuel de Maintenance fournit aux techniciens les informations pour la maintenance.

OM

Le Manuel d'Opérateur fournit à l'opérateur les informations sur la manutention et le fonctionnement de l'équipement avant, pendant et après la production.

RM

Le Manuel de Conversion fournit aux techniciens les renseignements nécessaires pour installer en toute sécurité un ensemble sur une machine ou un équipement mis en place.

(Suite à la page suivante)

(Suite de la page précédente)

SPC

Le Catalogue de pièces de rechange fournit les renseignements nécessaires pour commander les pièces de rechange chez Tetra Pak.

TeM

Le Manuel technique offre aux techniciens des informations qui peuvent être:

- des informations nécessaires pour installer l'équipement en toute sécurité,
- des informations nécessaires pour entretenir l'équipement
- des informations concernant le système électrique de l'équipement/des machines.
- des informations nécessaires à la commande de pièces de rechange auprès de Tetra Pak
- d'autres informations techniques.

HAUT

Les pages de Mise à Jour fournissent de nouvelles pages pour mettre à jour les manuels de machine existants.

Présentation d'une page

Se référer à la figure (A) à la page i-9: Les pages principales du Catalogue des Pièces de Rechange sont composées d'une page de figure (1) et d'une page de liste correspondante (7). Le numéro de page (5) est indiqué dans le titre de la page de figure et dans le bas de page d'une page de liste. Le numéro de document (6) est indiqué dans le bas de page de la page de liste.

Numérotation de page

Se référer (A) à la page i-9: Un numéro de page (5) possède trois parties:

- Numéro de chapitre (2)
- numéro de page consécutif (2) à l'intérieur du chapitre (3)
- nombre total de pages dans le chapitre (4)

Remarque! Les lettres UP peuvent remplacer le numéro de chapitre (2), si le manuel comprend des pages de mise à jour. Le numéro de page consécutif (3) et le nombre total de pages (4) des pages de mise à jour ne suivent pas la pagination séquentielle du chapitre.

Présentation de la machine

Fabricant

Pour le nom et l'adresse du fabricant, voir la deuxième page de ce catalogue.

Assistance technique

Tetra Pak® ne sera pas tenu responsable des dommages sur l'équipement ou des blessures au personnel ou aux consommateurs qui pourraient être causés par des pièces de rechange qui ne sont pas des pièces de rechange Tetra Pak originales.

Pour commander les pièces de rechange originales de cette machine, prendre contact avec le bureau Tetra Pak le plus proche.

Identification

Certification CE

Cet équipement est conforme aux réglementations essentielles d'hygiène et de sécurité de la Communauté Économique Européenne (CEE).

(Suite à la page suivante)

(Suite de la page précédente)

3-A Conformité

Si la plaque de machine contient le repère 3-A (15) (voir la figure (B) à la page i-7), cet équipement est conforme aux Normes Sanitaires 3-A pour les moules, les remplisseuses et systèmes de soudure de conteneurs pour lait liquide et produits laitiers liquides, Numéro 17-10.

Plaque signalétique de la machine

La figure (B) à la page i-9 montre un exemple d'une plaque signalétique de machine.
Une représentation de la plaque de machine valable et son emplacement sur l'équipement est indiquée au chapitre Introduction des manuels fournis avec l'équipement. La plaque de machine contient les caractéristiques figurant dans la liste ci-dessous, nécessaires pour prendre contact avec Tetra Pak® au sujet de cet équipement spécifique.

- Type de machine (8)
- Volume (9)
- Spécifications du plan (10)
- Numéro de série de la machine (11)
- Fabricant (12)
- Année de fabrication (13)
- Marquage CE (14)
- Repère 3-A (s'il y a lieu) (15)

S'assurer que les caractéristiques de l'équipement figurant dans la liste des pages de garde de ce manuel correspondent aux caractéristiques de la plaque signalétique de la machine et à ses spécifications.

Comment utiliser ce Catalogue de Pièces de Rechange

Localiser un Numéro de Pièce de rechange.

a) Se référer à la figure (C) à la page i-9: Aller au numéro de chapitre (16) indiqué à côté du groupe principal qui contient la pièce que vous souhaitez localiser.

Les articles b) et c) se réfèrent à la figure (D) à la page i-10.

b) Sur la figure du groupe principal, chercher la sous-groupe de machine (18) qui contient la pièce ou le sous-groupe que recherché. Noter le numéro de repère (19) et aller à la page de liste qui suit la figure.

c) Rechercher le numéro de repère/la désignation de référence (17) ou le nom de sous-groupe (20). Aller au numéro de page correspondant (21) figurant dans la liste de la colonne de droite. Tetra Pak a choisi de toujours utiliser la structure orientée vers la fonction pour la désignation de référence. Le préfixe indiquant la structure orientée vers la fonction (=) n'est pas indiquée dans la désignation de référence.

(Suite à la page suivante)

(Suite de la page précédente)

Les articles d) et e) se réfèrent à la figure (E) à la page i-10.

d) Localiser la pièce (22) recherchée sur la figure de sous-groupe et noter le numéro de repère de la pièce.

e) Le numéro de pièce (29) et la description de la pièce (30) figurent dans la liste à côté du numéro de repère sur la page de liste.

Informations figurant dans la Liste dans un Catalogue de Pièces de Rechange.

La liste ci-dessous se réfère à la figure (E) à la page i-10. Un Catalogue de Pièces de Rechange contient les renseignements suivants relatifs aux groupes, sous-groupes et pièces de rechange de l'équipement.

- Référence de structure de groupe (23). Indique le groupe supérieur suivant dans la structure de liste d'équipement.
- Nom du groupe (24)
- Unité de mesure (25)
- Quantité (26)
- Numéro de plan de montage (27)
- Gamme de la page de liste (28). Incluse s'il y a des pages multiples dans la figure de groupe ou dans la liste.
- Numéro de pièce ou de sous-groupe (29)
- Nom de sous-groupe ou description de la pièce (30)
- No. de groupe (31)
- Numéro de l'équipement (32)
- Titre des informations de groupe (33). Indique si la section sous le titre est pour une variante de machine spécifique ou s'il y a une liste de pièces communes. Si une liste comporte plus d'une variante et que chaque variante possède son propre plan de montage, une référence de page au plan de montage de la variante est alors indiqué.
- Informations internes (34)

Service Assistance et Réaction ("Support and Feeback")

Pour toute assistance relative au fonctionnement de cet équipement, ou autres demandes, commentaires, ou suggestions, envoyer vos questions ou vos réactions en contactant le représentant Tetra Pak® le plus proche. En cas d'accès indisponible à l'intranet Tetra Pak, contacter Liaison via Query en saisissant QuTI-P dans le champ adresse de votre navigateur. Si l'accès à QuTI-P est indisponible, contactez le service après vente global pour solliciter un accès.

Informacije o priručnicima

Tetra Pak® preporučuje da temeljito pročitate sve isporučene priručnike. Osigurajte da su isporučeni priručnici na raspolaganju osobama koje će rukovati ili održavati uređaj.

Sačuvajte ovaj priručnik do isteka radnog vijeka uređaja te ga predajte budućim vlasnicima ili korisnicima.

Tetra Pak neće biti odgovoran za oštećenja uređaja koja su nastala kao posljedica nepridržavanja uputa iz priručnika priloženih uz opremu.

Isporučeni priručnici

Priručnici isporučeni uz ovu opremu:

CM

Priručnik pruža tehničarima informacije o prebacivanju opreme u različite načine rada.

EM

Priručnik pruža tehničarima informacije o električnom sustavu uređaja.

IM

Priručnik pruža tehničarima informacije potrebne za sigurnu ugradnju opreme.

MM

Priručnik pruža tehničarimainformacije potrebne za održavanje opreme.

OM

Priručnik za rukovanje pruža rukovateljima informacije o rukovanju i radu opreme prije, za vrijeme i nakon proizvodnje.

RM

Pruža tehničarima informacije potrebne za sigurnu montažu novih komponenti na već instalirani stroj ili opremu.

(nastavak)

(nastavak)

SPC

Daje informacije potrebne za naručivanje rezervnih dijelova od tvrtke Tetra Pak®.

TeM

Daje tehničarima informacije koje mogu biti sljedeće naravi:

- informacije potrebne za sigurno instaliranje opreme
- informacije potrebne za održavanje opreme
- informacije o električnom sustavu stroja/opreme
- informacije potrebne za naručivanje rezervnih dijelova od tvrtke Tetra Pak
- ostale tehničke informacije

UP

Sadrži nove stranice za ažuriranje postojećih priručnika uz stroj.

Izgled stranica

Pogledajte sliku (A) na stranici i-9: glavne stranice Kataloga rezervnih dijelova sastoje se od stranice s ilustracijom (1) i stranice s odgovarajućim popisom (7). Broj stranice (5) prikazan je u zaglavlju ilustracijske stranice i u podnožju stranice s popisom. Broj dokumenta (6) nalazi se u podnožju stranice s popisom.

Numeriranje stranica

Pogledajte sliku (A) na strani i-9: broj stranice (5) sastoji se od tri dijela:

- broja poglavlja (2)
- rednog broja stranice (3) u poglavlju
- ukupnog broja stranica (4) u poglavlju

Napomena! Slova UP mogu zamijeniti broj poglavlja (2) ako priručnik sadrži ažurirane stranice. Redni broj stranice (3) i ukupni broj stranica (4) ažuriranih stranica ne prate uzastopnu numeraciju poglavlja.

Uvodno o stroju

Proizvođač

Za naziv i adresu proizvođača vidjeti drugu stranicu ovog priručnika.

Rad

Tetra Pak® ne preuzima odgovornost za bilo kakove štete ili ozljede nastale po opremu, osoblje ili potrošače zbog nekorištenja originalnih rezervnih dijelova proizvođača Tetra Pak.

Za nabavu originalnih Tetra Pak rezervnih dijelova za ovaj stroj obratite se najbližem uredu Tetra Pak.

Identifikacija

CE klasifikacija

Ovaj uređaj usklađen je s osnovnim propisima za zdravlje i sigurnost Europske ekonomske zone (EEZ).

(nastavak)

(nastavak)

3-A usklađenost

Ako se na natpisnoj pločici stroja nalazi oznaka 3-A (15) (vidjeti sliku (B) na stranici i-9), oprema je sukladna s 3-A Sanitarnim normama za proizvođače, punitelje i zatvaratelje ambalaže za tekuće mlijeko i tekuće mliječne proizvode, broj 17-10.

Natpisna pločica

Ilustracija (B) na stranici i-9 prikazuje primjer natpisne pločice.
Ilustracija valjane natpisne pločice i njenog smještaja na opremi nalazi se u uvodnim poglavljima priručnika isporučenih uz ovu opremu.
Natpisna pločica sadrži dolje navedene podatke, potrebne za kontakt s tvrtkom Tetra Pak® u vezi s konkretnom opremom.

- Tip stroja (8)
- Volumen (9)
- Specifikaciju tehničkog crteža (10)
- Serijski broj stroja (11)
- Proizvođač (12)
- Godina proizvodnje (13)
- CE oznaka (14)
- 3-A oznaka (ako je primjenjivo) (15)

Provjerite da li podaci o uređaju na početnim stranicama ovoga priručnika odgovaraju podacima na natpisnoj pločici stroja i tehničkim karakteristikama stroja.

Kako se koristiti ovim Katalogom rezervnih dijelova

Kako se koristiti ovim Katalogom rezervnih dijelova

f) Pogledajte ilustraciju (C) na stranici i-9: idite na broj poglavlja (16) naveden uz glavnu skupinu koja sadrži dio koji želite pronaći.

Stavci b) i c) odnose se na ilustraciju (D) na stranici i-10.

g) Na prikazu glavne skupine pronađite podskupinu stroja (18) koja sadrži dio ili podgrupu koju tražite. Zabilježite broj pozicije (19) i pogledajte stranicu s popisom koja se nalazi iza stranice s ilustracijom.

h) Potražite broj pozicije/referentnu oznaku (17) ili naziv podskupine (20). Otiđite na odgovarajući broj stranice (21) naveden u desnom stupcu. Tetra Pak uvijek koristi funkcijski usmjereno strukturiranje referentnih oznaka. Prefiks koji pokazuje funkcijski usmjerenu strukturu (=) nije sadržan u referentnoj oznaci.

(nastavak)

(nastavak)

Stavci d) i e) odnose se na ilustraciju (E) na stranici i-10.

i) Na ilustraciji podskupine pronađite dio (22) koji tražite i zabilježite njegov broj pozicije.

j) Broj dijela (29) i opis (30) nalaze se uz broj pozicije na stranici s popisom.

Informacije navedene u Katalogu rezervnih dijelova

Donji popis odnosi se na sliku (E) na stranici i-10. U Katalogu rezervnih dijelova nalaze se sljedeći podaci o skupinama, podskupinama i rezervnim dijelovima opreme:

- Strukturna referenca skupine (23).
  Označava sljedeću višu skupinu u strukturi popisa opreme.
- Naziv skupine (24)
- Jedinica mjere (25)
- Količina (26)
- Broj konstrukcijskog crteža (27)
- Slijed stranice s popisom (28). Naveden je ako se u ilustraciji skupine ili popisu nalazi više stranica.
- Broj dijela ili podskupine (29)
- Naziv podskupine ili opis dijela (30)
- Broj skupine (31)
- Broj opreme (32)
- Naslov informacije o skupini (33). Ukazuje odnosi li se odjeljak ispod naslova na određeni tip stroja ili je to popis zajedničkih dijelova.
  Ako se na popisu nalazi više tipova i svaki ima svoj vlastiti konstrukcijski crtež, navedena je uputa na stranicu na kojoj je prikazan konstrukcijski crtež.
- Interne informacije (34)

Podrška i povratne informacije

Za pomoć u radu s ovom opremom ili druga pitanja, komentare ili prijedloge postavite pitanje ili pošaljite povratne informacije kontaktiranjem najbližeg predstavnika tvrtke Tetra Pak®. Ako imate pristup intranetu tvrtke Tetra Pak, kontaktirajte Liaison slanjem upita tako da u adresno polje preglednika upišete QuTI-P. Ako nemate pristup za QuTI-P, zatražite ga kontaktiranjem globalne servisne službe.

Kézikönyv információ

A Tetra Pak® az összes leszállított kézikönyv alapos átolvasását javasolja. Gondoskodjon arról, hogy a készüléket üzemeltető és karbantartó személyzet számára elérhetőek legyenek a leszállított kézikönyvek.

Fontos, hogy a kézikönyvet a berendezés teljes élettartama alatt megőrizzék, és továbbadják azt minden későbbi tulajdonosnak és felhasználónak.

A Tetra Pak nem vállal felelősséget semmilyen a készülékben keletkező kárért, amely a berendezéshez mellékelt kézikönyvben lévő utasítások be nem tartásának következménye.

Leszállított kézikönyvek

A berendezéssel leszállított kézikönyvek:

CM

A CM Átállítási kézikönyv ellátja a szakembereket a különböző gyártási üzemmódokra való átállításról szóló információkkal.

EM

Az EM Elektromossági kézikönyv ellátja a szakembereket a készülék elektromos rendszerével kapcsolatos információkkal.

IM

Az IM Telepítési kézikönyv a készülék biztonságos telepítéséhez szolgáltat információkat a szakemberek számára.

MM

Az MM Karbantartási kézikönyv a készülék karbantartásával kapcsolatosan szolgáltat információkat a szakemberek számára.

OM

Az OM Üzemeltetési kézikönyv a kezelők részére szolgáltat információkat a berendezés kezeléséről és működtetéséről a gyártás előtt, alatt és után.

RM

Az RM újraépítési kézikönyv ellátja a szakembereket azokkal az információkkal, amelyek egy készletnek a már telepített gépre való biztonságos felszereléséhez szükségesek.

(Folyt.)

(Folyt.)

SPC

Az SPC Alkatrész-katalógus a Tetra Pak®tól megrendelhető alkatrészek megrendeléséhez szükséges információkat tartalmazza.

TeM

A TeM Műszaki útmutató az alábbi információkkal látja el a technikusokat:

- a berendezés biztonságos felszereléséhez szükséges információkkal,
- a berendezés karbantartásához szükséges információkkal,
- a gép/berendezés elektromos rendszerével kapcsolatos információkkal,
- A Tetra Paktól történő cserealkatrész rendeléshez szükséges információkkal,
- egyéb műszaki információkkal.

UP

A UP Termékfrissítési oldalak új oldalakkal frissíti a gépkönyveket.

Oldal elrendezés

Lásd az (A) ábrát a(z) i-9 oldalon: Az Alkatrész-katalógus fő oldalai egy ábrákat tartalmazó oldalból (1) és a megfelelő listát tartalmazó oldalból (7) állnak. Az oldalszám (5) az ábrákat tartalmazó oldal fejlécében és a listát tartalmazó oldal láblécében jelenik meg. A dokumentumszám a listát tartalmazó oldal (6) láblécében jelenik meg.

Oldalszámozás

Lásd az ábrát (A) a(z) i-9 oldalon: Az oldalszám (5) három részből áll:

- fejezetszám (2)
- fejezeten belüli egymást követő oldalak száma (3)
- a fejezet összoldalszáma (4)

Megjegyzés! A UP betűk helyettesíthetik a fejezetszámot (2), ha a kézikönyv termékfrissítési oldalakat tartalmaz. A termékfrissítési oldalak egymást követő oldalai (3) és összoldalszáma (4) nem igazodik a fejezet egymást követő oldalszámozásához.

Gép bevezetés

Gyártó

A gyártó neve és címe a katalógus második oldalán található.

Szerviz

A Tetra Pak® nem vállal felelősséget a berendezés, személyzet vagy fogyasztók olyan sérüléseiért, amelyet nem eredeti Tetra Pak pótalkatrészek használata okozott.

Eredeti Tetra Pak pótalkatrészeket a legközelebbi Tetra Pak irodából rendelhet.

Azonosítás

CE besorolás

A berendezés megfelel az Európai Gazdasági Térség (EEA) alapvető egészségügyi és biztonsági előírásainak.

(Folyt.)

(Folyt.)

3-A megfelelőség

Ha a gép adattáblája tartalmazza a 3-A jelzést (15) (lásd (B) ábra az i-7 oldalon), akkor ez a berendezés megfelelő a 3-A Egészségügyi szabványok folyékony tej és folyékony tejtermékek csomagolásának alakító, töltő és lezáró eszközeire, 17-10. sz.

Géptábla

A (B) ábra a(z) i-9 oldalon egy példa a géptáblára.
Az érvényes géptáblát és annak a gépen elfoglalt helyét bemutató ábra a berendezéshez mellékelt kézikönyvek bevezető fejezetében található. A géptábla az alább felsorolt adatokat tartalmazza, amelyekre akkor van szükség, amikor felveszi a kapcsolatot a Tetra Pak®kal ezzel a sajátos berendezéssel kapcsolatban.

- Géptípus (8)
- Térfogat (9)
- Tervrajz specifikációk (10)
- Gép gyártási száma (11)
- Gyártó (12)
- Gyártási év (13)
- CE jelölés (14)
- 3-A jelölés (ha van ilyen) (15)

Bizonyosodjon meg arról, hogy a kézikönyv első oldalán található berendezés-adatok megfelelnek a géptábla adatainak és a gép specifikációinak.

Az Alkatrész-katalógus használata

Keresse meg az alkatrész-számot

a) Lásd a (C) ábrát a(z) i-9 oldalon: Ugorjon a fejezetszámra (16), amely a keresett alkatrészt tartalmazó fő csoport mellett található.

A(z) b) és c) adatok a(z) i-10 oldalon található (D) ábrára vonatkoznak.

b) A főcsoport ábráját lásd a gép alcsoportban (18), amely a keresett alkatrészt vagy alcsoportot tartalmazza. Jegyezze fel a pozíció számot (19) és ugorjon az illusztrációt követő lista oldalra.

c) Keresse a pozíció számot/referencia elnevezést (17) vagy az alcsoport nevét (20). Ugorjon a jobboldali oszlopban feltüntetett megfelelő oldalszámra (21). A Tetra Pak úgy döntött, hogy referencia elnevezésre mindig a funkcióorientált szerkezetet alkalmazza. A funkcióorientált szerkezetet jelző előtag (=) nem jelenik meg a referencia elnevezésben.

(Folyt.)

(Folyt.)

A(z) d) és e) adatok a(z) i-10 oldalon található (E) ábrára vonatkoznak.

d) Keresse meg az alkatrészt (22) az alcsoport ábrán és jegyezze fel az alkatrész pozíció számát.

e) Az alkatrész-szám (29) és az alkatrész leírása (30) a lista oldalon a pozíció szám mellett van feltüntetve.

Az Alkatrész-katalógusban feltüntetett információk

Az alábbi lista a(z) i-10 oldalon lévő (E) ábrára vonatkozik.
Az Alkatrész-katalógus a következő információkat tartalmazza a berendezés alcsoportokról, csoportokról és alkatrészekről.

- Csoportszerkezet referencia (23). A következő nagyobb csoportot jelzi a berendezés listaszerkezetében.
- Csoportnév (24)
- Mértékegység (25)
- Mennyiség (26)
- Szerelési rajz száma (27)
- Listaoldal tartomány (28). Akkor található meg, ha több oldalt tartalmaz a csoportábrában vagy a listában.
- Alkatrész vagy alcsoport szám (29)
- Alcsoport név vagy alkatrész leírás (30)
- Csoportszám (31)
- Berendezés szám (32)
- Csoportinformáció címsor (33). Azt jelzi, hogy az alábbi szakaszban a címsor egy bizonyos gépváltozatra vonatkozik, vagy általános alkatrészek egy listája Ha egy lista egynél több változattal rendelkezik, és mindegyik változatnak saját összeszerelési rajza van, a változatok szerelési rajzának egy oldal-hivatkozása jelenik meg.
- Belső információk (34)

Támogatás és visszajelzés

Ha a berendezés üzemeltetéséhez segítségre van szüksége, illetve más jellegű kérdése, megjegyzése vagy javaslata van, kérdéseivel vagy visszajelzéseivel a legközelebbi Tetra Pak® képviselethez fordulhat. Ha a Tetra Pak intranet elérhető, forduljon a kapcsolattartóhoz és böngészője címsorába írja be a következőt: QuTI-P. Ha a QuTI-P nem elérhető, a hozzáférést a globális internetes ügyfélszolgálattól (Global Service Desk) kérheti.

Handbókaupplýsingar

Tetra Pak® mælir með því að allar handbækur séu lesnar vandlega. Gangið úr skugga um að afhentar handbækur séu tiltækar starfsmönnum sem reka tækin eða viðhalda þeim.

Mikilvægt er geyma þessa handbók á endingartíma búnaðarins og afhenda hana arftökum eða öðrum notendum.

Tetra Pak ber ekki ábyrgð á neinu tjóni á tækjunum sem stafar af því að ekki var farið eftir leiðbeiningum í þessari handbók.

Afhentar handbækur

Handbækur sem afhentar voru með þessum tækjum:

CM

Breytingahandbók veitir tæknimönnum upplýsingar um breytingar á tækjunum svo að þau hæfi hinum ýmsu framleiðsluháttum.

EM

Raftækjahandbók veitir tæknimönnum upplýsingar um rafkerfi tækjanna.

IM

Uppsetningarhandbók veitir tæknimönnum nauðsynlegar upplýsingar um örugga uppsetningu tækjanna.

MM

Viðhaldshandbók veitir tæknimönnum upplýsingar um viðhald tækjanna.

OM

Rekstrarhandbók veitir stjórnanda upplýsingar um meðhöndlun og rekstur tækjanna fyrir og eftir framleiðslu.

RM

Endurbyggingarhandbók veitir tæknimönnum nauðsynlegar upplýsingar um örugga uppsetningu viðbótarbúnaðar við þegar uppsetta vél eða tæki.

(frh.)

(frh.)

SPC

Varahlutalisti veitir upplýsingar sem nauðsynlegar eru til að panta varahluti frá Tetra Pak®.

TeM

Í Tæknihandbókinni eru tæknimönnum veittar upplýsingar, svo sem:

- upplýsingar um örugga uppsetningu tækjanna
- upplýsingar um viðhald tækjanna
- upplýsingar um rafkerfi vélarinnar/búnaðarins
- nauðsynlegar upplýsingar um pantanir varahluta frá Tetra Pak
- aðrar tæknilegar upplýsingar

UP

Uppfærslublaðsíður eru nýjar blaðsíður til að uppfæra eldri vélahandbækur.

Umbrot

Vísað er til myndar (A) á bls. i-9: Meginblaðsíður í Varahlutalistanum eru myndablaðsíða (1) og samsvarandi listablaðsíða (7). Blaðsíða númer (5) er sýnd í fyrirsögn myndablaðsíðu og neðst á listablaðsíðu. Skjalsnúmer (6) er neðst á listablaðsíðu.

Blaðsíðunúmer

Vísað er til myndar (A) á blaðsíðu i-9: Blaðsíðunúmer (5) skiptist í þrjá hluta:

- kaflanúmer (2)
- raðnúmer (3) innan kaflans
- heildarfjölda blaðsíðna (4) í kaflanum.

Ath.! Stafirnir UP kunna að koma í stað kaflanúmers (2) ef uppfærslublaðsíður eru í handbókinni. Raðnúmer blaðsíðu (3) og heildarfjöldi síðna (4) af uppfærslublaðsíðum sýna ekki eldri raðnúmer í kaflanum.

Inngangur um vélina

Framleiðandi

Nafn og heimilisfang framleiðanda er birt á 2. bls. þessa vörulista.

Þjónusta

Tetra Pak® ber enga ábyrgð á tjóni eða slysum á tækjum, starfsmönnum eða neytendum af völdum varahluta sem eru ekki ekta Tetra Pak-varahlutir.

Pantanir á ekta Tetra Pak-varahlutum í þessa vél skulu sendar næstu skrifstofu Tetra Pak.

Auðkenni

CE flokkun

Þessi tæki fullnægja grundvallarheilbrigðis- og öryggisreglugerðum Evrópska efnahagssvæðisins (EES).

(frh.)

(frh.)

3-A samræmi

Ef vélarplatan inniheldur 3-A merkingu (15) (sjá mynd (B) á bls. i-7) er þessi búnaður í samræmi við 3-A hreinlætisstaðla fyrir mótara, áfyllara og lokara íláta fyrir mjólkurvökva og mjólkurvökvavörur, nr. 17-10.

Vélarskilti

Myndin (B) á bls. i-9 sýnir dæmi um vélarskilti.
Mynd af gildandi vélarskilti og staðsetning þess á búnaðinun er birt í inngangskafla handbókanna sem afhentar eru með þessum búnaði.
Á vélarskiltinu er að finna þau gögn sem talin eru upp hér að neðan og þörf er fyrir þegar haft er samband við Tetra Pak® vegna þessa sérstaka búnaðar.

- Vélargerð (8)
- Magn (9)
- Tækniteikningar (10)
- Raðnúmer vélar (11)
- Framleiðandi vélar (12)
- Framleiðsluár(13)
- CE-merki (14)
- 3-A-merki (ef við á) (15)

Gangið úr skugga um að gögn um búnaðinn á fyrstu blaðsíðum þessarar handbókar komi heim og saman við vélarskiltið og tæknilýsingu vélarinnar.

Notkun þessa varahlutalista

Finna ber númer varahlutar

a) Vísað er til myndar (C) á bls. i-9: Fletta skal upp á kafla (16) sem birtist við hlið meginhópsins sem hefur að geyma þann hlut sem ætlunin er að finna.

Atriði b) og c) vísa til myndar (D) á bls. i-10.

b) Á mynd af meginhópnum ber að gá að undirflokki (18) vélar sem hefur að geyma hlut eða undirflokk sem leitað er að.
Aðgæta skal staðsetningarnúmerið (19) og fletta upp á listablaðsíðu sem fylgir myndinni.

c) Finna ber staðsetningarnúmer/tilvísaða skilgreiningu (17) eða heiti undirhóps (20). Aðgæta skal viðeigandi blaðsíðunúmer (21) sem birt er í dálkinum hægra megin. Tetra Pak hefur valið að nota ávallt virkniform sem skilgreiningarhlut. Forskeytið, sem bendir til virkniformsins (=), er ekki sýnt í skilgreiningarhlutnum

(frh.)

(frh.)

Atriði d) og e) eiga við um mynd (E) á bls. i-10.

d) Finna ber hlutinn (22) sem leitað er að í undirhópsmyndinni og aðgæta hvert er staðsetningarnúmer hlutarins.

e) Hlutarnúmerið (29) og lýsing hlutarins (30) eru listuð við hlið staðsetningarnúmersins á listablaðsíðunni.

Upplýsingar sem birtar eru í Varahlutalistanum

Listinn hér að neðan á við um mynd (E) á bls. i-10. Í Varahlutalista er að finna eftirfarandi upplýsingar um hópa, undirhópa og varahluti fyrir tækin:

- Skilgreining uppbyggingar hóps (23). Bendir til næsta hóps fyrir ofan í uppbyggingu hlutalistans.
- Heiti hóps (24)
- Mælieiningar (25)
- Magn (26)
- Númer á samsetningarteikningu (27)
- Svið listablaðsíðu (28). Fylgir með ef um er að ræða margar blaðsíður á hópmyndninni eða listanum.
- Númer hlutar eða undirflokks (29)
- Heiti undirhóps eða lýsing hlutar (30)
- Hópnúmer (31)
- Númer búnaðar (32)
- Fyrirsögn upplýsingar um hóp (33). Bendir til þess hvort kaflinn undir fyrirsögninni fjalli um sérstaka gerð vélar eða í honum sé listi yfir almenna hluti. Ef í listanum er að finna fleiri en einn frábrugðinn hlut og birt er samsetningarteikning fyrir sérhvern frábrugðinn hlut er vísað til blaðsíðunnar með samsetningarteikningu hins frábrugðna hlutar.
- Innri upplýsingar (34)

Stuðningur og endurgjöf

Til að fá aðstoð við notkun þessa búnaðar eða til að senda inn fyrirspurnir, athugasemdir eða tillögur skal hafa samband við næsta söluaðila Tetra Pak®. Ef aðgangur að innra neti Tetra Pak er fyrir hendi skal hafa samband við "Liaison via Query" (þjónustudeild) með því að slá inn QuTI-P í vefslóðarreit vafrans. Ef aðgangur að QuTI-P er ekki í boði skal óska eftir aðgangi með því að hafa samband við Global Service Desk (þjónustuborð).

Informazioni sul manuale

Tetra Pak® raccomanda di leggere con attenzione tutti i manuali forniti. Assicurarsi che i manuali forniti siano disponibili per il personale che opera o mantiene in efficienza l'equipaggiamento.

E' importante conservare questo catalogo per tutta la durata dell'equipaggiamento e consegnarlo ad ogni successivo possessore o utilizzatore.

Tetra Pak non si assumerà alcuna responsabilità per qualsiasi danno all'equipaggiamento causato dall'inosservanza delle istruzioni contenute nei manuali forniti con questo equipaggiamento.

Manuali forniti

Manuali forniti con questo equipaggiamento:

CM

Il Manuale di Conversione fornisce ai tecnici le informazioni sulla conversione dell'equipaggiamento tra i diversi modi di produzione.

EM

Il Manuale Elettrico fornisce ai tecnici le informazioni sul sistema elettrico dell'equipaggiamento.

IM

Il Manuale d'Installazione fornisce ai tecnici le informazioni necessarie per installare facilmente l'equipaggiamento.

MM

Il Manuale di Manutenzione fornisce ai tecnici le informazioni sulla manutenzione dell'equipaggiamento.

OM

Il Manuale Operativo fornisce all'operatore informazioni su come movimentare ed azionare l'equipaggiamento prima, durante e dopo la produzione.

RM

Il Manuale di modifica fornisce ai tecnici le informazioni necessarie per installare facilmente un kit ad una macchina o ad un equipaggiamento.

(Continua)

(Continuazione)

SPC

Il Catalogo parti di ricambio fornisce informazioni necessarie per ordinare le parti di ricambio da Tetra Pak®.

TeM

Il Manuale Tecnico fornisce le informazioni ai tecnici che possono essere:

- informazioni necessarie per installare in modo sicuro l'equipaggiamento
- informazioni necessarie per la manutenzione dell'equipaggiamento
- informazioni sul sistema elettrico della macchina/equipaggiamento
- informazioni necessarie per ordinare le parti di ricambio a Tetra Pak.
- altre informazioni tecniche

SU

Le pagine di aggiornamento forniscono nuove pagine per aggiornare i manuali delle macchine esistenti.

Schema pagina

Fare riferimento alla figura (A) a pagina i-9: Le pagine principali in un catalogo parti di ricambio consistono di una pagina di illustrazione (1) ed una corrispondente pagina della lista (7). Il numero di pagina (5) è indicato nell'intestazione di una pagina di illustrazione e nel piè di pagina di una pagina della lista. Il numero di documento (6) è indicato nel piè di pagina di una pagina della lista.

Numerazione pagina

Fare riferimento alla figura (A) a pagina i-9: Un numero di pagina (5) ha tre parti:

- numero capitolo (2)
- numero pagina consecutivo nel capitolo (3)
- numero totale di pagine nel capitolo (4)

Nota! Le lettere UP possono sostituire il numero del capitolo (2) se il manuale include le pagine di aggiornamento. Il numero di pagina consecutivo (3) ed il numero totale di pagine (4) delle pagine di aggiornamento non seguono la numerazione esistente sequenziale delle pagine del capitolo.

Introduzione macchina

Fabbricante

Per il nome e l'indirizzo del fabbricante, vedere la seconda pagina di questo catalogo.

Assistenza

Tetra Pak® non si assume alcuna responsabilità per qualsiasi danno all'equipaggiamento, o lesioni al personale o ai clienti che sia stato causato da parti di ricambio non originali Tetra Pak.

Per ordinare le parti di ricambio originali Tetra Pak per questa macchina, contattare l'ufficio Tetra Pak più vicino.

Identificazione

Classificazione CE

Questa macchina è conforme alle norme sanitarie e di sicurezza dell'Area Economica Europea (EEA).

(Continua)

(Continuazione)

Conformità 3-A

Se la targhetta macchina contiene il marchio 3-A (15) (vedere la figura (B) a pagina i-7), questo equipaggiamento è conforme alle norme sanitarie 3-A per formatrici, riempitrici e saldatori di contenitori per latte liquido e prodotti lattiero-caseari liquidi, numero 17-10.

Targhetta macchina

La figura (B) a pagina i-9 mostra un esempio della targhetta della macchina. Una figura della targhetta della macchina valida e la relativa posizione sull'equipaggiamento è mostrata nel capitolo Introduzione dei manuali forniti con questo equipaggiamento. La targhetta della macchina contiene i dati elencati in basso, necessari quando si contatta Tetra Pak® in merito a questo specifico equipaggiamento.

- Tipo di macchina (8)
- Volume (9)
- Specifiche disegni (10)
- Numero di serie della macchina (11)
- Fabbricante (12)
- Anno di fabbricazione (13)
- Sigla CE (14)
- Marcatura 3-A (se applicabile) (15)

Assicurarsi che i dati dell'equipaggiamento nelle pagine anteriori di questo manuale corrispondano alla targhetta della macchina ed alle specifiche della macchina stessa.

Come usare questo catalogo parti di ricambio

Individuazione di un numero di parte di ricambio

a) Fare riferimento alla figura (C) a pagina i-9: Passare al numero del capitolo (16) indicato accanto al gruppo principale che contiene la parte che si vuole individuare.

Punti b) e c) fare riferimento alla figura (D) a pagina i-10.

b) Sulla figura del gruppo principale, cercare il sottogruppo della macchina (18) che contiene la parte o il sottogruppo che si sta cercando. Annotare il numero di posizione (19) e passare alla pagina della lista che segue la figura.

c) Cercare il numero di posizione/denominazione di riferimento (17) o il nome del sottogruppo (20). Passare al numero di pagina corrispondente (21) elencato nella colonna destra. Tetra Pak ha scelto di utilizzare sempre la funzione della struttura orientata per la denominazione di riferimento. Il prefisso che indica la funzione della struttura orientata (=) non è mostrato nella denominazione di riferimento

(Continua)

(Continuazione)

Punti d) e e) fare riferimento alla figura (E) a pagina i-10 .

d) Individuare la parte (22) che si sta cercando sulla figura del sottogruppo ed annotare il numero di posizione della parte.

e) Il numero della parte (29) e la descrizione della parte (30) sono elencati accanto al numero di posizione nella pagina della lista.

Informazioni elencate nel catalogo parti di ricambio

La lista in basso si riferisce alla figura (E) a pagina i-10. Un catalogo parti di ricambio contiene le seguenti informazioni sui gruppi, sottogruppi e parti di ricambio per l'equipaggiamento:

- Riferimento struttura gruppo (23). Indica il gruppo successivo superiore nella struttura della lista dell'equipaggiamento.
- Nome del gruppo (24)
- Unità di misura (25)
- Quantità (26)
- Numero disegno di montaggio (27)
- Gamma di pagine della lista (28). Inclusa se ci sono pagine multiple nella figura del gruppo o della lista.
- Numero della parte o del sottogruppo (29)
- Nome del sottogruppo o descrizione della parte (30)
- Numero gruppo (31)
- Numero dell'equipaggiamento (32)
- Sezione informazioni del gruppo (33). Indica se la sezione sotto l'intestazione è per una variante macchina specifica o se è una lista di parti comuni. Se una lista ha più di una variante e ogni variante ha il proprio disegno di montaggio, un riferimento della pagina è indicato nel disegno di montaggio della variante.
- Informazioni interne (34)

Supporto e feedback

Per ricevere assistenza durante l'utilizzo della macchina o formulare altre richieste, commenti o suggerimenti, contattare il rappresentante Tetra Pak® più vicino. Se l'accesso all'intranet Tetra Pak è disponibile, rivolgersi a Liaison tramite Query digitando QuTI-P nel campo dell'indirizzo del browser. Se l'accesso a QuTI-P non è disponibile, richiederlo contattando il servizio di assistenza globale.

Vadovo informacija

Tetra Pak® rekomenduoja atidžiai perskaityti visus pristatomus vadovus. Įsitikinkite, kad pristatomi vadovai yra prieinami personalui, kuris dirba su įranga arba ją prižiūri.

Svarbu saugoti šį vadovą visam įrangos gyvavimo laikotarpiui ir perduoti vadovą kiekvienam sekančiam savininkui arba naudotojui.

Tetra Pak neatsako už bet kokius įrangos gedimus, atsiradusius nesilaikant šią įrangą lydinčiuose vadovuose pateiktų instrukcijų.

Pristatomi vadovai

Kartu su šia įranga pristatomi vadovai:

CM

Perjungimų vadove specialistams suteikiama informacija apie įrangos perjungimą tarp įvairių gamybos režimų.

EM

Elektrinės dalies vadove pateikiama informacija specialistams apie įrangos elektros sistemą.

IM

Montavimo vadove pateikiama specialistams informacija, reikalinga saugiam įrangos montavimui

MM

Priežiūros vadove pateikiama specialistams informacija, reikalinga prižiūrint įrangą.

OM

Darbo vadove pateikiama informacija operatoriams apie darbą su įranga ir įrangos valdymą prieš gamybą, gamybos metu ir po gamybos.

RM

Restauravimo vadove pateikiama specialistams informacija, reikalinga saugiai sumontuoti komplektą dalių į sumontuotą mašiną ar įrangą.

(Tęsiama)

(Tęsiama)

SPC

Atsarginių dalių kataloge pateikiama informacija, reikalinga užsakant atsargines dalis iš Tetra Pak®.

TeM

Techniniame vadove pateikiama specialistams informacija, kuri gali būti:

- informacija, reikalinga saugiam įrangos montavimui
- informacija, reikalinga atliekant techninę įrangos priežiūrą
- informacija apie mašinos / įrangos elektros sistemą
- informacija, reikalinga užsakant atsargines dalis iš Tetra Pak
- kitokia techninė informacija

UP

Nauji puslapiai skirti esamų mašinos vadovų atnaujinimui naujais puslapiais.

Puslapio išdėstymas

Vadovaukitės (A) paveikslėliu i-9 puslapyje: atsarginių dalių katalogo pagrindinius puslapius sudaro paveikslėlių puslapis (1) ir atitinkamo sąrašo puslapis (7). Puslapio numeris (5) nurodytas paveikslėlių puslapio antraštėje ir apatinėje sąrašo puslapio poraštėje. Dokumento numeris (6) nurodytas apatinėje sąrašo puslapio poraštėje.

Puslapių numeravimas

Vadovaukitės (A) paveikslėliu i-9 puslapyje: puslapio numerį (5) sudaro trys dalys:

- skyriaus numeris (2)
- puslapio eilės numeris (3) skyriuje
- bendras puslapių skaičius (4) skyriuje

Pastaba! Jei vadove yra atnaujinimų puslapiai, UP raidės gali būti vietoje skyriaus numerio (2). Atnaujinimo puslapio eilės numeris (3) ir bendras atnaujinimo puslapių skaičius (4) neatitinka nuoseklios skyriaus puslapių numeracijos.

Mašinos įvadas

Gamintojas

Apie gamintojo įmonės pavadinimą ir adresą skaitykite antrame šio katalogo puslapyje.

Aptarnavimas

Tetra Pak® neprisiims jokios atsakomybės už žalą ir įrangos gedimus ar darbuotojų arba vartotojų traumas, patirtas naudojant atsargines dalis, kurios nėra originalios Tetra Pak atsarginės dalys.

Norėdami užsakyti originalias Tetra Pak atsargines dalis susisiekite su artimiausia Tetra Pak įstaiga.

Identifikacija

CE klasifikacija

Ši įranga tenkina pagrindines Europos Ekonominės Zonos (EEA) sveikatos ir saugumo taisykles.

(Tęsiama)

(Tęsiama)

3-A atitiktis

Jei mašinos lentelėje yra ženklas 3-A (15) (žr. (B) iliustraciją i-7 puslapyje), ši įranga atitinka 3-A higienos standartus skysto pieno ir skysto prieno produktų talpyklų formuotojams, pripildytojams ir sandarikliams, numeris 17-10.

Mašinos plokštė

Paveikslėlyje (B), esančiame i-9 puslapyje, pavaizduotas įrenginio kortelės pavyzdys.
Mašinos galiojančios kortelės paveikslėlis ir kortelės vieta ant įrangos nurodyta kartu su įranga tiekiamų vadovų įžanginiame skyriuje. Įrangos kortelėje pateikiami išvardinti duomenys, kurių reikia kreipiantis į Tetra Pak® dėl konkrečios įrangos.

- Mašinos tipas (8)
- Tūris (9)
- Brėžinio specifikacijos (10)
- Mašinos serijos numeris (11)
- Gamintojas (12)
- Pagaminimo metai (13)
- CE ženklas (14)
- 3-A ženklas (jei taikomas) (15)

Įsitikinkite, kad šio vadovo pirmuose puslapiuose pateikti įrangos duomenis atitinka duomenis pateiktus mašinos informacinėje lentelėje ir mašinos specifikacijoje.

Kaip naudotis šiuo atsarginių dalių katalogu?

Nustatykite atsarginės dalies numerį

a) Vadovaukitės (C) paveikslėliu, esančiu i-9 puslapyje: atsiverskite skyrių, kurio numeris (16) nurodytas prieš pagrindinę grupę, kurioje yra reikiama surasti dalis.

Elementai b) ir c) atitinka (D) paveikslėlį, esantį i-10 puslapyje.

b) Pagrindinės grupės paveikslėlyje ieškokite mašinos dalinės grupės (18), kurioje yra ieškoma dalis ar dalinė grupė. Įsidėmėkite pozicijos numerį (19) ir atsiverskite už paveikslėlio esantį sąrašo puslapį.

c) Suraskite pozicijos numerio / nuorodos aprašymą (17) ar dalinės grupės pavadinimą (20). Atsiverskite atitinkamą puslapio numerį (21), nurodytą dešiniajame stulpelyje. Tetra Pak nuorodų aprašymams pasirinko visuomet naudoti su atliekama funkcija susietą struktūrą. Nuorodos aprašyme nenaudojamas prieš dėlis, pažymintis su atliekama funkciją susietą struktūrą (=)

(Tęsiama)

(Tęsiama)

Elementai d) ir e) atitinka (E) paveikslėlį, esantį i-10 puslapyje.

d) Ieškomą dalį (22) suraskite dalinės grupės paveikslėlyje ir įsidėmėkite dalies pozicijos numerį.

e) Dalies numeris (29) ir dalies aprašymas (30) nurodyti sąrašo puslapyje prie pozicijos numerio.

Atsarginių dalių kataloge pateikiama informacija

Pateiktas sąrašas atitinka (E) paveikslėlį, esantį i-10 puslapyje. Atsarginių dalių kataloge pateikiama tokia informacija apie įrangos grupes, dalines grupes ir atsargines dalis:

- Grupės struktūros apibūdinimas (23). Nurodo kitą aukščiausią grupę įrangos sąrašo struktūroje.
- Grupės pavadinimas (24)
- Mato vienetas (25)
- Kiekis (26)
- Surinkimo brėžinio numeris (27)
- Sąrašo puslapių intervalas (28). Nurodomas tuomet, kai grupės paveikslėlį ar sąrašą sudaro keli puslapiai.
- Dalies ar dalinės grupės numeris (29)
- Dalinės grupės pavadinimas arba dalies aprašymas (30)
- Grupės numeris (31)
- Įrangos numeris (32)
- Grupės informacijos antraštė (33). Pažymi, ar po antrašte esantis skyrius skirtas konkrečiam mašinos variantui, ar tai bendrų dalių sąrašas. Jei sąrašą sudaro daugiau kaip vienas variantas ir kiekvienas iš jų atitinka skirtingą surinkimo numerį, pateikiama varianto surinkimo brėžinio puslapio nuoroda.
- Vidinė informacija (34)

Techninė pagalba ir grįžtamasis ryšys

Jei reikia pagalbos eksploatuojant įrangą arba turite kitų klausimų, komentarų ar pasiūlymų, pateikite klausimus arba atsiliepimus artimiausiam „Tetra Pak®“ atstovui. Jei turite prieigą prie „Tetra Pak“ intraneto, susisiekite su atsakingu darbuotoju pateikdami užklausą, savo naršyklės adreso laukelyje įvesdami „QuTI-P“. Jei „QuTI-P“ prieigos neturite, paprašykite jos susisiekę su Pasauliniu aptarnavimo centru.

Informācija par instrukciju

Tetra Pak® iesaka uzmanīgi izlasīt visas piegādātās instrukcijas. Nodrošiniet, lai piegādātās instrukcijas būtu pieejamas personālam, kurš ekspluatē un apkalpo iekārtu.

Ir svarīgi saglabāt šo katalogu visā ierīces kalpošanas laikā un nodot to jebkuram sekojošam īpašniekam vai lietotājam.

Tetra Pak neuzņemas atbildību par jebkādiem šīs iekārtas bojājumiem, ko izraisa šim aprīkojumam pievienotajās rokasgrāmatās sniegto instrukciju neievērošana.

Piegādātās instrukcijas

Ar iekārtu piegādātās instrukcijas:

CM

Šī Maiņas instrukcija (CM) nodrošina tehnisko personālu ar informāciju par iekārtas pārvēršanu dažādiem ražošanas režīmiem.

EM

Elektrisko savienojumu instrukcija (EM) nodrošina tehniķus ar informāciju par iekārtas elektrisko sistēmu.

IM

Instalācijas instrukcija (IM) nodrošina tehniķus ar informāciju, kas ir nepieciešama drošai iekārtas instalācijai.

MM

Tehniskās apkopes instrukcija (MM) sniedz tehniķiem informāciju par aprīkojuma tehnisko apkopi.

OM

Ekspluatācijas instrukcija (OM) nodrošina operatorus ar informāciju par rīcību ar iekārtu un tās ekspluatāciju pirms un pēc ražošanas procesa, kā arī tā laikā.

RM

Pārveidošanas instrukcija (RM) sniedz tehniķiem informāciju, kas nepieciešama, lai uz uzstādītas iekārtas vai aprīkojuma droši uzstādītu komplektu.

(Turpinājums seko)

(Turpinājums seko)

SPC

Rezerves daļu katalogs (SPC) sniedz informāciju, kas ir nepieciešama rezerves daļu pasūtīšanai no Tetra Pak®.

TeM

Tehniskā instrukcija (TeM) sniedz tehniķiem informāciju, kas var būt:

- informācija, kura nepieciešama, lai droši uzstādītu aprīkojumu;
- informācija, kura nepieciešama, lai veiktu aprīkojuma tehnisko apkopi;
- informācija par iekārtas/ aprīkojuma elektrosistēmu;
- informācija, kura nepieciešama rezerves daļu pasūtīšanai no Tetra Pak;
- cita tehniskā informācija.

UP

Atjauninājuma lappuses ir jaunas lapas, kas nepieciešamas, lai atjauninātu iekārtas esošās rokasgrāmatas.

Lappuses formāts

Skatiet attēlu (A) lappusē i-9: Rezerves daļu kataloga (SPC) galvenās lapas iekļauj ilustrāciju lapu (1) un attiecīgo saraksta lapu (7). Lappuses numurs (5) ir attēlots ilustrācijas lapas galvenes daļā un saraksta lapas kājenes daļā. Dokumenta numurs (6) ir attēlots saraksta lapas kājenes daļā.

Lappušu numerācija

Skatiet attēlu (A) lappusē i-9: lappuses numuram (5) ir trīs daļas:

- sadaļas numurs (2);
- lappuses kārtas numurs (2) sadaļā;
- kopējais lappušu skaits (3) sadaļā.

Piezīme! Burti UP var aizvietot sadaļas numuru (2), ja rokasgrāmata iekļauj atjauninājumu lappuses. Lappuses kārtas numurs (3) un atjauninājumu lappušu kopējais lappušu skaits (4) neatbilst sadaļas esošajai secīgajai lappušu numerācijai.

Ievads par ierīci

Ražotājs

Ražotāja nosaukumu un adresi skatiet šī kataloga otrajā lappusē.

Serviss

Tetra Pak® neuzņemas atbildību par bojājumiem vai kaitējumu aprīkojumam, personālam vai klientiem, ko rada tādu rezerves daļu izmantošana, kas nav oriģinālas Tetra Pak rezerves daļas.

Lai pasūtītu oriģinālas Tetra Pak rezerves daļas šai iekārtai, sazinieties ar tuvāko Tetra Pak biroju.

Identifikācija

CE klasifikācija

Šī iekārta atbilst Eiropas Ekonomiskās Telpas (EEA) galvenajiem veselības un drošības noteikumiem.

(Turpinājums seko)

(Turpinājums seko)

3-A atbilstība

Ja uz iekārtas datu plāksnītes ir 3-A marķējums (15) (skatīt attēlu (B) lappusē i-7), šāds aprīkojums atbilst 3-A Šķidrā piena un šķidro piena produktu iepakojuma formētāju, pildītāju un sakausētāju sanitārajām normām Nr. 17-10.

Iekārtas datu plāksne

Attēlā (B) lappusē i-9 ir attēlots iekārtas datu plāksnes piemērs. Iekārtas datu plāksnes attēls, kā arī šīs plāksnes atrašanās vieta uz aprīkojuma ir attēlota līdz ar šo iekārtu piegādāto rokasgrāmatu ievada sadaļā. Iekārtas datu plāksnē ir iekļauti tālāk norādītie dati, kas ir nepieciešami, sazinoties ar Tetra Pak® jautājumos, kuri saistīti ar šo specifisko aprīkojumu.

- Iekārtas tips (8)
- Tilpums (9)
- Rasējuma specifikācijas (10)
- Iekārtas sērijas numurs (11)
- Ražotājs (12)
- Ražošanas gads (13)
- CE marķējums (14)
- 3-A marķējums (ja piemērojams) (15)

Pārliecinieties, vai iekārtas dati šīs instrukcijas pirmajā lappusē atbilst datiem iekārtas datu plāksnē un iekārtas specifikācijai.

Kā lietot šo Rezerves daļu katalogu

Atrodiet rezerves daļas numuru

a) Skatiet attēlu (C) lappusē i-9: atrodiet sadaļas numuru (16), kas norādīts līdzās galvenajai grupai, kur atrodas meklējamā detaļa.

Punkti b) un c) attiecas uz attēlu (D) lappusē i-10.

b) Galvenās grupas attēlā atrodiet iekārtas apakšgrupu (18), kur atrodas meklējamā detaļa vai apakšgrupa. Atcerieties pozīcijas numuru (19) un skatiet sarakstu, kas seko pēc šī attēla.

c) Atrodiet pozīcijas numuru/ atsauces apzīmējumu (17) vai apakšgrupas nosaukumu (20). Atšķiriet attiecīgo lappusi (21), kas norādīta labajā ailē. Atsauču apzīmējumiem Tetra Pak vienmēr izvēlas lietot uz funkciju orientētu struktūru. Prefikss, kas apzīmē uz funkciju orientēto struktūru (−), atsauču apzīmējumos nav norādīts.

(Turpinājums seko)

(Turpinājums seko)

Punkti d) un e) attiecas uz attēlu (E) lappusē i-10.

d) Apakšgrupas attēlā atrodiet meklēto detaļu (22) un atcerieties detaļas pozīcijas numuru.

e) Detaļas numurs (29) un detaļas apraksts (30) ir sniegts saraksta lapā blakus pozīcijas numuram.

Informācija, kas sniegta Rezerves daļu katalogā

Tālāk sniegtais saraksts attiecas uz attēlu (E) lappusē i-10.
Rezerves daļu katalogs satur šādu informāciju par grupām, apakšgrupām un aprīkojuma rezerves daļām:

- grupas struktūras atsauci (23). Norāda uz aprīkojuma saraksta struktūras nākamo augstāko grupu.
- Grupas nosaukumu (24).
- Mērvienība (25)
- Daudzums (26)
- Montāžas rasējuma numurs (27)
- Saraksta lappušu diapazons (28). Ja grupas attēli vai saraksts iekļauj vairākas lappuses.
- Detaļas vai apakšgrupas numurs (29)
- Apakšgrupas nosaukums vai detaļas apraksts (30)
- Grupas numurs (31)
- Aprīkojuma numurs (32)
- Grupas informācijas virsraksts (33). Ja sadaļa, kas seko pēc virsraksta, attiecas uz specifisku iekārtas versiju, vai kopēju detaļu saraksta gadījumā. Ja sarakstā ir vairāk nekā viena versija un katrai versijai ir savs montāžas rasējums, ir sniegta atsauce uz konkrētās versijas montāžas rasējuma lappusi.
- Iekšējā informācija (34)

Atbalsts un atgriezeniskā saite

Lai saņemtu palīdzību saistībā ar šīs iekārtas lietošanu, uzdotu jautājumus, sniegtu komentārus, ieteikumus vai atsauksmes, sazinieties ar tuvāko Tetra Pak® pārstāvi. Ja ir pieejams Tetra Pak iekštīkls, sazinieties ar uzņēmuma pārstāvi, pārlūkprogrammas adrešu joslā ievadot QuTI-P. Ja QuTI-P nav pieejams, pieprasiet tam piekļuvi, sazinoties ar vispasaules klientu apkalpošanas daļu.

Handboekinformatie

Tetra Pak® raadt aan alle geleverde documentatie zorgvuldig te lezen. Ga na of de geleverde documentatie ter beschikking is van het personeel dat de machine moet bedienen of servicewerkzaamheden moet uitvoeren.

Het is belangrijk deze catalogus voor de duur van de machine te bewaren en de catalogus door te geven aan elke volgende eigenaar of gebruiker.

Tetra Pak aanvaardt geen verantwoordelijkheid voor om het even welke soort beschadiging aan de machine als gevolg van het niet opvolgen van de in dit handboek gegeven instructies.

Meegeleverde handboeken

Met deze apparatuur meegeleverde handboeken:

CM

Dit conversiehandboek geeft technici informatie over het ombouwen van de apparatuur tussen verschillende productiemodi.

EM

Het Elektrisch Handboek geeft technici informatie betreffende het elektrisch systeem van de apparatuur.

IM

Het Installatiehandboek geeft technici informatie om op veilige wijze de apparatuur te installeren.

MM

Het Onderhoudshandboek geeft technici informatie over het onderhoud van de apparatuur.

OM

Het Bedieningshandboek geeft operators informatie over hoe de machine moet worden bediend en hoe ermee moet worden omgegaan voor, tijdens en na productie.

RM

Het Ombouwhandboek bevat de nodige informatie voor technici om een kit veilig aan een geïnstalleerde machine of apparatuur te installeren.

(Zie volg. blz.)

(Vervolg)

SPC

De Catalogus Reservedelen geeft informatie die nodig is om reserveonderdelen bij Tetra Pak® te bestellen.

TeM

Het Technische Handboek bevat informatie voor technici betreffende:

- het veilig installeren van de apparatuur
- het onderhoud van de apparatuur
- het elektrische systeem van de machine/apparatuur.
- het bestellen van reserveonderdelen bij Tetra Pak
- andere technische informatie

UP

De Update Pages bevat nieuwe bladzijden voor het updaten van de bestaande machinehandboeken.

Pagina lay-out

Zie de illustratie (A) op bladzijde i-9: De belangrijkste bladzijden van een Catalogus Reserveonderdelen bestaan uit een bladzijde met een illustratie (1) en een corresponderende bladzijde met een lijst (7).
Het bladzijdenummer (5) is te vinden in de kop van een illustratiebladzijde en in de voetnoot van de lijstbladzijde. Het documentnummer (6) is te vinden in de voetnoot van een lijstbladzijde.

Bladzijdenummering

Zie de illustratie (A) op bladzijde i-9: een bladzijdenummer (5) bestaat uit drie delen.

- hoofdstuknummer (2)
- opeenvolgende bladzijdenummer in het hoofdstuk (3)
- totaal aantal bladzijden in het hoofdstuk (4)

N.B.! De letters UP kunnen het hoofdstuknummer (2) vervangen als het handboek update-bladzijden omvat. Het opeenvolgende bladzijdenummer (3) en het totale aantal bladzijden (4) van de updatebladzijden volgen niet de bestaande volgordenummering van het hoofdstuk.

Introductie van de machine

Fabrikant

Voor naam en adres van de fabrikant, zie de tweede bladzijde van deze catalogus.

Service

Tetra Pak® wijst elke verantwoordelijkheid af voor schade aan machines of letsels aan personeel of consumenten die zijn veroorzaakt door reserveonderdelen die geen originele Tetra Pak-reserveonderdelen zijn.

Neem voor het bestellen van originele Tetra Pak-reserveonderdelen voor deze machine contact op met het dichtstbijzijnde Tetra Pak-kantoor.

Identificatie

CE-classificatie

Deze apparatuur voldoet aan de basiseisen voor gezondheid en veiligheid voor de Europese Economische Ruimte (EEA).

(Zie volg. blz.)

(Vervolg)

3-A Naleving

Als het machineplaatje het 3-A merkteken (15) bevat (zie illustratie (B) op bladzijde i-7), voldoet deze apparatuur aan de 3-A hygiënenormen voor vorm-, vul- en sluitmachines van containers voor vloeibare melk en vloeibare melkproducten, nummer 17-10.

Machineplaatje

De illustratie (B) op bladzijde i-9 toont een voorbeeld van een machineplaatje.
Een illustratie van het wettige machineplaatje en de plaatsing ervan wordt getoond in het hoofdstuk Introductie van de handboeken, meegeleverd met deze apparatuur. Het machineplaatje bevat onderstaande gegevens die nodig zijn wanneer Tetra Pak® moet worden gecontacteerd betreffende deze apparatuur.

- Machinetype (8)
- Volume (9)
- Tekeningspecificaties (10)
- Serienummer machine (11)
- Fabrikant (12)
- Fabricagejaar (13)
- CE-markering (14)
- Markering 3-A (indien van toepassing) (15)

Controleer of de gegevens betreffende de apparatuur in de voorste bladzijden van dit handboek overeenkomen met de gegevens op het machineplaatje en de machinespecificatie.

Hoe dient deze catalogus reserveonderdelen te worden gebruikt.

Lokaliseren van een nummer van een reserveonderdeel

a) Zie de illustratie (C) op bladzijde i-9: ga naar het hoofdstuknummer (16), naast de hoofdgroep die het gewenste deel bevat.

Items b) en c) refereren naar de illustratie (D) op bladzijde i-10.

b) Zoek in de illustratie van de hoofdgroep de machinesubgroep (18) op die het deel van de gewenste subgroep bevat. Noteer het positienummer (19) en ga naar de lijstbladzijde die op de illustratie volgt.

c) Zoek het positienummer/referentiebenaming (17) of de naam van de subgroep (20). Ga naar het corresponderende bladzijdenummer (21), aangegeven in de rechterkolom. Tetra Pak heeft altijd gekozen voor een functiegerichte structuur voor referentiebenaming. Het prefix dat de functiegerichte structuur aangeeft (=) wordt niet getoond in de referentiebenaming.

(Zie volg. blz.)

(Vervolg)

Items d) en e) refereren naar de illustratie (E) op bladzijde i-10.

d) Lokaliseer het gewenste onderdeel (22) in de illustratie van de subgroep en noteer het positienummer van het onderdeel.

e) Het onderdeelnummer (29) en de beschrijving ervan (30) worden naast het positienummer op de lijstbladzijde weergegeven.

Informatie die in een Catalogus reserveonderdelen wordt gegeven

Onderstaande lijst verwijst naar de illustratie (E) op bladzijde i-10.
Een Catalogus reserveonderdelen bevat de volgende informatie betreffende groepen, subgroepen en reserveonderdelen voor de apparatuur.

- Referentie groepsstructuur (23). Geeft de volgende hoogste groep in de structuur van de apparatuur aan.
- Groepsnaam (24)
- Meeteenheid (25)
- Hoeveelheid (26)
- Nummer montagetekening (27)
- Bereik lijstbladzijde (28). Inclusief indien er meerdere bladzijden in de groepsillustratie of lijst voorkomen.
- Onderdeel of subgroepsnummer (29)
- Naam subgroep of beschrijving onderdeel (30)
- Groepsnummer (31)
- Apparatuurnummer (32)
- Kopregel groepsinformatie (33). Geeft aan of het deel onder de titel bedoeld is voor een specifieke machinevariant dan wel of het een lijst is met algemene onderdelen. Indien een lijst meer dan één variant bevat en elke variant heeft zijn eigen montagetekening, wordt een bladzijdereferentie naar de montagetekening van de variant gegeven.
- Interne informatie (34)

Ondersteuning en feedback

Voor assistentie bij het gebruik van deze apparatuur, andere verzoeken om informatie, opmerkingen of suggesties, kunt u vragen stellen of feedback leveren aan uw dichtstbijzijnde Tetra Pak®-vertegenwoordiger. Als toegang tot het Tetra Pak intranet beschikbaar is, kunt u contact opnemen met Liaison via Query door QuTI-P in het adresveld van uw browser te typen. Vraag, als toegang tot QuTI-P niet beschikbaar is, toegang aan door contact op te nemen met de Global Service Desk.

Informasjon om manualen

Tetra Pak® anbefaler at du leser alle medfølgende manualer nøye. Kontroller at personalet som bruker eller vedlikeholder utstyret har adgang til de medfølgende manualene.

Det er viktig at denne manualen oppbevares trygt gjennom hele utstyrets levetid, og at den gis videre til senere eiere eller brukere av utstyret.

Tetra Pak kan ikke holdes ansvarlig for skader på utstyr som skyldes at instruksjonene i manualene som følger dette utstyret ikke er fulgt.

Medfølgende manualer

Manualer som følger med dette utstyret:

CM

Konverteringsmanualen gir teknikere opplysninger om konvertering av utstyret mellom forskjellige produksjonsmodus.

EM

Denne manualen gir teknikere opplysninger om utstyrets elektriske system.

IM

Denne manualen gir teknikere informasjonen som trengs for sikker installasjon av utstyret.

MM

Denne manualen gir teknikere informasjon om vedlikehold av utstyret.

OM

Driftsmanualen gir operatørene informasjon om håndtering og drift av utstyret før, under og etter produksjon.

RM

Ombyggingsmanualen gir teknikere informasjon som kreves for å installere et sett trygt på en installert maskin eller et utstyr.

(Forts.)

(Forts.)

SPC

Reservedelskatalogen gir nødvendige opplysninger for å kunne bestille reservedeler fra Tetra Pak®.

TeM

Den tekniske manualen gir teknikerne informasjon som kan være:

- informasjon som kreves for en trygg installering av utstyret
- informasjon som kreves for vedlikehold av utstyret
- informasjon om maskinens/utstyrets elektriske system
- nødvendig informasjon for å bestille reservedeler fra Tetra Pak.
- annen teknisk informasjon

OPP

Oppdateringssidene har nye sider for å oppdatere eksisterende maskinmanualer.

Sideoppsett

Gå til illustrasjonen (A) på side i-9: Hovedsidene i en reservedelskatalog består av en illustrasjonsside (1) og en korresponderende oversiktsside (7). Sidenummeret (5) vises i overskriften på en illustrasjonsside og i fotnoten på en oversiktsside. Dokumentnummeret (6) vises i fotnoten på en oversiktsside.

Sidenummerering

Gå til illustrasjon (A) på side i-9: Et sidenummer (5) har tre deler:

- kapittelnummer (2)
- neste sidenummer innen kapitlet (3)
- totalt antall sider i kapitlet (4)

Merk! Bokstavene UP kan erstatte kapittelnummer (2) hvis manualen inkluderer oppdateringssidene. Følgende sidenummer (3) og totalt antall sider (4) på oppdateringssidene følger ikke eksisterende sekvensnummerering av sidene i kapitlet.

Innføring i maskinen

Produsent

For produsentens navn og adresse, se andre siden i denne katalogen.

Service

Tetra Pak® aksepter ikke ansvar for skader eller personskader på utstyr, ansatte eller brukere forårsaket av reservedeler som ikke er originale Tetra Pak reservedeler.

For å bestille originale Tetra Pak reservedeler til denne maskinen, kontakt nærmeste Tetra Pak kontor.

Identifikasjon

CE-klassifisering

Dette utstyret tilfredsstiller grunnleggende helse- og sikkerhetskrav i Det europeiske økonomiske samarbeidsområde (EØS).

(Forts.)

(Forts.)

3-A samsvar

Hvis maskinplaten er 3-A-merket (15) (se illustrasjon (B) på side i-7), er dette utstyret i samsvar med 3-A Sanitærstandarder for formings-, påfyllings-, og tetningssystemer for beholdere for flytende melkeprodukter, nummer 17-10.

Merkeplate

Illustrasjonen (B) på side i-9 viser et eksempel på en maskinplate.
En illustrasjon av gyldig maskinplate og dennes plassering på utstyret vises i introduksjonskapitlet i manualene som følger dette utstyret.
Maskinplaten inneholder dataen som er oppført under, som er nødvendig når du kontakter Tetra Pak® om dette spesifikke utstyret.

- Maskintype (8)
- Volum (9)
- Tegnespesifikasjoner (10)
- Maskinens serienummer (11)
- Produsent (12)
- Produksjonsår (13)
- CE merke (14)
- 3-A merke (hvis relevant) (15)

Pass på at utstyrsdataen på forsidene i denne manualen stemmer overens med merkeplaten og maskinspesifikasjonen.

Hvordan bruke denne reservedelskatalogen

Finn et reservedelsnummer

a) Gå til illustrasjonen (C) på side i-9: Gå til kapittelnummer (16) som er indikert ved siden av hovedgruppen som inneholder delen du ønsker å lokalisere.

Deler b) og c) viser til illustrasjonen (D) på side i-10.

b) På hovedgruppeillustrasjonen, se etter maskinundergruppen (18) som inneholder delen eller undergruppen du ser etter.
Merk posisjonsnummeret (19) og gå til oversiktssiden som følger illustrasjonen.

c) Se etter posisjonsnummer /referanseanvisning (17) eller undergruppenavnet (20). Gå til korresponderende sidenummer (21) oppført i søylen på høyre hånd. Tetra Pak har valgt alltid å bruke funksjonsorientert struktur for referansebestemmelse.
Forinnstilt indikering av funksjonsorientert struktur (=) vises ikke i referansehenvisningen

(Forts.)

(Forts.)

Deler d) og e) viser til illustrasjonen (E) på side i-10.

d) Finn delen (22) som du leter etter i undergruppeillustrasjonen og merk delens posisjonsnummer.

e) Delenummeret (29) og delebeskrivelsen (30) er oppført ved siden av posisjonsnummeret på listesiden.

Informasjon oppført i en reservedelskatalog

Listen under viser til illustrasjonen (E) på side i-10. En reservedelskatalog inneholder følgende informasjon om grupper, undergrupper og reservedeler for utstyret:

- Gruppestrukturreferanse (23). Indikerer den neste gruppen over i utstyrslistestrukturen.
- Gruppenavn (24)
- Måleenhet (25)
- Antall (26)
- Monteringstegningens nummer (27)
- Oversiktssideomfang (28). Inkludert hvis det er mange sider i gruppeillustrasjonen eller listen.
- Delenummer eller undergruppenummer (29)
- Undergruppenavn eller delebeskrivelse (30)
- Gruppenavn (31)
- Utstyrsnummer (32)
- Gruppeinformasjon overskrift (33). Indikerer om seksjonen under overskriften er for en spesiell maskinvariant eller om det er en liste med fellesdeler. Hvis en liste har mer enn en variant og hver variant har sin egen monteringstegning, vil det vises en sidereferanse til denne variantens monteringstegning.
- Intern informasjon (34)

Støtte og tilbakemeldinger

For hjelp ved drift av dette utstyret eller for andre spørsmål, kommentarer, forslag e.l. reiser du spørsmålene eller gir tilbakemeldinger til nærmeste Tetra Pak®-representant. Hvis du ikke har tilgang til Tetra Paks intranett, ta kontakt med den utnevnte kontakten via forespørsel ved å skrive inn QuTI-P i din nettlesers adressefelt. Hvis du ikke har tilgang til QuTI-P, be om tilgang ved å ta kontakt med det internasjonale servicekontoret (Global Service Desk).

Informacje na temat instrukcji

Tetra Pak® zaleca, aby uważnie przeczytano dostarczone instrukcje. Należy dopilnować, aby instrukcje zostały udostępnione pracownikom, którzy obsługują lub wykonują przeglądy urządzenia.

Ważne jest, aby zachować niniejszy katalog przez okres użytkowania maszyny i przekazać go kolejnemu właścicielowi lub użytkownikowi.

Tetra Pak nie ponosi odpowiedzialności za uszkodzenia maszyny spowodowane nieprzestrzeganiem wskazówek podanych w niniejszej instrukcji dołączonej do maszyny.

Dostarczone instrukcje

Instrukcje dostarczone w raz z maszyną:

CM

Instrukcja przestawienia dostarcza technikom informacji na temat przestawiania maszyny między różnymi trybami produkcji.

EM

Instrukcja elektryczna dostarcza technikom informacji na temat układu elektrycznego maszyny.

IM

Instrukcja instalacyjna dostarcza technikom informacji niezbędnych do bezpiecznej instalacji maszyny.

MM

Instrukcja serwisowa dostarcza technikom informacji na temat przeglądów i napraw maszyny.

OM

Instrukcja obsługi dostarcza operatorowi informacji na temat obsługi maszyny przed, w trakcie i po zakończeniu produkcji.

RM

Instrukcja przebudowy dostarcza technikom informacji niezbędnych do wykonania bezpiecznej instalacji zestawu do przebudowy w zainstalowanej maszynie lub wyposażeniu.

(Ciąg dalszy)

(Ciąg dalszy)

SPC

Katalog części zamiennych dostarcza informacji niezbędnych do zamawiania części zamiennych w Tetra Pak®.

TeM

Instrukcja techniczna dostarcza technikom informacji, które mogą być:

- informacjami wymaganymi do bezpiecznej instalacji wyposażenia
- informacjami wymaganymi do wykonywania przeglądów i napraw wyposażenia
- informacjami o systemie elektrycznym maszyny/wyposażenia.
- informacjami niezbędnymi do zamawiania części zamiennych w Tetra Pak.
- innymi informacjami technicznymi

UP

Rozdział Strony aktualizacji zawiera nowe strony użyte do aktualizacji istniejących instrukcji maszyny.

Układ strony

Zapoznaj się z rysunkiem (A) na stronie i-9: Główne strony w Katalogu Części Zamiennych zawierają stronę z rysunkiem (1) i odpowiednią stronę z wykazem (7). Numer strony (5) znajduje się w nagłówku strony z rysunkiem oraz w stopce strony z wykazem. Numer dokumentu (6) znajduje się w stopce strony z wykazem.

Numeracja stron

Zapoznaj się z rysunkiem (A) na stronie i-9: Numer strony (5) składa się z trzech części:

- numer rozdziału (2)
- kolejny numer strony (3) w danym rozdziale
- całkowita ilość stron (4) w rozdziale

Uwaga! Litery UP mogą zastępować numer rozdziału (2) jeśli instrukcja zawiera strony aktualizacji. Kolejny numer strony (3) i całkowita ilość stron (4) aktualizacji nie odpowiada istniejącej numeracji stron rozdziału.

Informacje na temat maszyny

Producent

Nazwa i adres producenta, patrz druga strona niniejszego katalogu.

Serwis

Tetra Pak® nie odpowiada za wszelkie uszkodzenia wyposażenia, obrażenia personelu lub konsumentów spowodowane przez części zamienne, które nie są oryginalnymi częściami zamiennymi Tetra Pak.

W celu zamówienia oryginalnych części zamiennych Tetra Pak dla maszyny, skontaktuj się z najbliższym biurem Tetra Pak.

Identyfikacja

Znak CE

Oznacza on, iż urządzenie spełnia wymagania określone w podstawowych przepisach dotyczących bezpieczeństwa i zdrowia, obowiązujących w Europejskiej Strefie Ekonomicznej (EEA).

(Ciąg dalszy)

(Ciąg dalszy)

Zgodność z normą 3-A

Jeśli tabliczka znamionowa maszyny zawiera znak 3-A (15) (patrz rysunek (B) na stronie i-7), oznacza to, że wyposażenie jest zgodne z normami sanitarnymi 3-A dla jednostek formowania, maszyn napełniających i zgrzewarek pojemników dla mleka płynnego i płynnych produktów mlecznych, numer 17-10.

Tabliczka znamionowa

Na rysunku (B) na stronie i-9 pokazano przykład tabliczki znamionowej. Rysunek tabliczki znamionowej i jej lokalizacja na wyposażeniu znajduje się w rozdziale Wstęp instrukcji dostarczonych wraz z wyposażeniem. Tabliczka znamionowa zawiera dane przedstawione poniżej, które trzeba podać kontaktując się z Tetra Pak® w sprawach dotyczących określonego wyposażenia.

- Typ maszyny (8)
- Pojemność (9)
- Specyfikacje rysunkowe (10)
- Numer seryjny maszyny (11)
- Producent (12)
- Rok produkcji (13)
- Znak CE (14)
- Znak 3-A (jeśli ma zastosowanie) (15)

Upewnij się, czy dane wyposażenia na pierwszych stronach niniejszej instrukcji odpowiadają danym przedstawionym na tabliczce znamionowej maszyny i specyfikacji maszyny.

Jak korzystać z Katalogu Części Zamiennych

Lokalizacja numeru części zamiennej

a) Zapoznaj się z rysunkiem (C) na stronie i-9: Przejdź do numeru rozdziału (16) wskazanego obok głównej grupy, która zawiera część, którą chcesz zlokalizować.

Pozycje b) i c) dotyczą rysunku (D) na stronie i-10.

b) Na rysunku głównej grupy, poszukaj podgrupy maszyny (18), która zawiera część lub podgrupę, której szukasz. Zanotuj numer pozycji (19) i przejdź na stronę z wykazem odpowiadającym rysunkowi.

c) Poszukaj numeru pozycji/oznaczenia referencyjnego (17) lub nazwy podgrupy (20). Przejdź na odpowiedni numer strony (21) podany w prawej kolumnie. Do oznaczania referencyjnego firma Tetra Pak zdecydowała się zawsze wykorzystywać strukturę zorientowaną na funkcję. Przedrostek wskazujący strukturę zorientowaną na funkcję (=) nie jest uwzględniony w oznaczeniu referencyjnym.

(Ciąg dalszy)

(Ciąg dalszy)

Pozycje d) i e) dotyczą rysunku (E) na stronie i-10.

d) Zlokalizuj część (22), której szukasz na rysunku podgrupy i zanotuj jej numer pozycji.

e) Numer części (29) i opis części (30) znajdują się obok numeru pozycji na stronie z wykazem.

Informacje podane w Katalogu Części Zamiennych

Poniższy wykaz dotyczy rysunku (E) na stronie i-10.
Katalog Części Zamiennych zawiera następujące informacje o grupach, podgrupach i częściach zamiennych wyposażenia.

- Odnośnik struktury grupy (23). Wskazuje następną wyższą grupę w strukturze wykazu wyposażenia.
- Nazwa grupy (24)
- Jednostka miary (25)
- Ilość (26)
- Numer rysunku zespołu (27)
- Zakres stron (28). Dołączony, jeśli na wykazie lub rysunku grupy znajdują się strony o numerach wieloczęściowych.
- Numer części lub podgrupy (29)
- Nazwa podgrupy lub opis części (30)
- Numer grupy (31)
- Numer wyposażenia (32)
- Nagłówek z informacją o grupie (33). Wskazuje czy sekcja poniżej nagłówka przynależy do określonej wersji maszyny, lub czy jest wykazem części. Jeśli wykaz ma więcej niż jedną wersję i każda wersja ma swój własny rysunek montażowy, podany będzie numer strony z rysunkiem montażowym danej wersji.
- Informacje wewnętrzne (34)

Wsparcie techniczne i informacje zwrotne

Pomoc w zakresie obsługi tego sprzętu lub inne zapytania, komentarze czy sugestie można przekazywać najbliższemu przedstawicielowi firmy Tetra Pak®. Jeśli jest dostępna sieć intranet firmy Tetra Pak, prosimy o przekazanie informacji, wpisując QuTI-P w pasku adresu przeglądarki internetowej. W przypadku braku dostępu do QuTI-P prosimy o kontakt za pośrednictwem globalnego działu obsługi.

Informação do Manual

A Tetra Pak® recomenda ler cuidadosamente todos os manuais fornecidos. Verificar se os manuais fornecidos estão ao dispor do pessoal que trabalha com o equipamento ou que faz a manutenção do mesmo.

É importante guardar este catálogo durante o tempo útil de vida da máquina ou do equipamento e de entregar o catálogo a qualquer proprietário ou utilizador subsequente.

A Tetra Pak não toma a responsabilidade por quaisquer danos no equipamento causados devido ao facto de que as instruções dadas nos manuais que acompanham este equipamento não foram seguidas.

Manuais fornecidos

Manuais fornecidos com este equipamento:

CM

O Manual de conversão fornece aos técnicos as informações sobre a conversão do equipamento entre os diferentes modos de produção.

EM

Este Manual Eléctrico fornece aos técnicos as informações sobre o sistema eléctrico do equipamento.

IM

Este Manual de Instalação fornece aos técnicos as informações necessárias para instalar seguramente o equipamento.

MM

Este Manual de Manutenção fornece aos técnicos as informações para a manutenção do equipamento.

OM

O Manual de Operação fornece ao operador as informações que ele necessita para manusear e accionar o equipamento antes, durante e depois da produção.

RM

O Manual de Remodelação fornece aos técnicos as informações necessárias para instalar seguramente um conjunto numa máquina ou equipamento instalado.

(Cont.)

(Cont.)

SPC

O Catálogo de Peças Sobressalentes fornece as informações necessárias para se encomendar peças sobressalentes à Tetra Pak®.

TeM

O Manual Técnico fornece os técnicos com informações que podem ser:

- informações necessárias para instalar seguramente o equipamento,
- informações necessárias para a manutenção do equipamento
- informações sobre o sistema eléctrico da máquina/do equipamento.
- informações necessárias para encomendar peças sobressalentes à Tetra Pak.
- outras informações técnicas

UP

As Páginas de Actualização fornecem novas páginas para actualizar os manuais existentes da máquina.

Disposição da página

Referência à ilustração (A) na página i-9: As páginas principais num Catálogo de Peças Sobressalentes consistem numa página ilustrada (1) e numa página com a lista correspondente (7). O número da página (5) é mostrado no cabeçalho de uma página ilustrada e no rodapé de uma página com lista. O número do documento (6) é mostrado no rodapé de uma página com lista.

Numeração da página

Referência à ilustração (A) na página i-9: Um número de página (5) tem três partes:

- Número do capítulo (2)
- número consecutivo da página dentro do capítulo (3)
- número total de páginas no capítulo (4)

Nota! As letras UP podem substituir o número do capítulo (2) se o manual incluir páginas de actualização. O número consecutivo da página (3) e o número total de páginas (4) das páginas de actualização não seguem a numeração sequente das páginas do capítulo.

Introdução da máquina

Fabricante

Para o nome e morada do fabricante, ver a segunda página deste catálogo.

Assistência técnica

Tetra Pak® não aceita responsabilidade por quaisquer danos ou prejuízos no equipamento, equipa ou consumidores que sejam causados por peças sobressalentes não originais da Tetra Pak.

Para encomendar as peças sobressalentes originais para esta máquina, contactar o representante Tetra Pak mais próximo.

Identificação

Classificação CE

Este equipamento está de acordo com os regulamentos de segurança e saúde da Área Económica Europeia (EEA).

(Cont.)

(Cont.)

3-A Concordância

Se a placa da máquina conter a marca 3-A (15) (ver a ilustração (B) na página i-7), este equipamento cumpre com as Normas Sanitárias 3-A para Formadores, Enchedores e Vedadores de Recipientes para Leite Líquido e Produtos de Leite Líquido, Número 17-10.

Placa da máquina

A ilustração (B) na página i-9 mostra um exemplo de uma placa da máquina. Uma ilustração da placa da máquina válida e a sua localização no equipamento é mostrada no capítulo Introdução dos manuais fornecidos com este equipamento. A placa da máquina contem os dados alistados em baixo, necessários quando se contactar a Tetra Pak® relacionando-se a este equipamento em específico.

- Tipo da máquina (8)
- Volume (9)
- Especificações dos desenhos (10)
- Número de série da máquina (11)
- Fabricante (12)
- Ano de construção (13)
- Marca CE (14)
- Marca 3-A (se aplicável) (15)

Verificar se os dados do equipamento indicados nas páginas da frente deste manual correspondem aos dados na placa da máquina e à especificação da máquina.

Como usar este Catálogo de Peças Sobressalentes

Localizar um Número da peça sobressalente

a) Referência à ilustração (C) na página i-9: Para o número do capítulo (16) indicado ao lado do grupo principal que contem a peça que quer localizar.

Itens b) e c) referem-se à ilustração (D) na página i-10.

b) Na ilustração do grupo principal, procurar o subgrupo da máquina (18) que contem a peça ou subgrupo que está à procura. Anotar o número da posição (19) e passar para a página da lista que segue a ilustração.

c) Procurar o número/referência da posição (17) ou o nome do subgrupo (20). Passar para o número da página correspondente (21) alistado na coluna do lado direito. A Tetra Pak escolheu para usar sempre a estrutura orientada na função para a designação da referência.
O prefixo indicando a estrutura orientada na função (=) não está mostrada na designação de referência.

(Cont.)

(Cont.)

Itens d) e e) referem-se à ilustração (E) na página i-10.

d) Localizar a peça (22) que está à procura na ilustração do subgrupo e anotar o número da posição da peça.

e) O número da peça (29) e a descrição da peça (30) estão alistados ao lado do número da posição na página da lista.

Informações indicadas num Catálogo de Peças Sobressalentes

A lista em baixo refere-se à ilustração (E) na página i-10.
Um Catálogo de Peças Sobressalentes contem as seguintes informações sobre grupos, subgrupos e peças sobressalentes para o equipamento:

- Referência da estrutura do grupo (23). Indica o grupo a seguir mais elevado na estrutura da lista do equipamento.
- Nome do grupo (24)
- Unidade de medição (25)
- Quantidade (26)
- Número do desenho de montagem (27)
- Gama da página de lista (28). Incluída se houver páginas múltiplas na ilustração do grupo ou lista.
- Número da peça ou do subgrupo (29)
- Nome do subgrupo ou descrição da peça (30)
- Número do grupo (31)
- Número do equipamento (32)
- Título da informação do grupo (33). Indica se a secção abaixo do título é para uma variante de máquina específica ou se é uma lista de peças comuns. Se uma lista tiver mais do que uma variante e cada variante tiver o seu próprio desenho de montagem, é mostrada uma referência para a página do desenho de montagem da variante.
- Informação interna (34)

Apoio e retro alimentação

Para assistência durante a utilização deste equipamento ou outras perguntas, comentários ou sugestões, formular questões ou transmitir informações, contactar o representante Tetra Pak® mais próximo. Se o acesso à intranet da Tetra Pak estiver disponível, contactar Liaison via Query, digitando QuTI-P no campo do endereço do seu browser. Se o acesso a QuTI-P não estiver disponível, contactar o Global Service Desk para pedir o acesso.

Informaţiile de manual

Tetra Pak® recomandă citirea cu atenţie a tuturor manualelor livrate. Asiguraţi-vă că manuale livrate sunt adecvate pentru personalul ce manipulează sau întreţine instalaţia.

Este important să păstraţi acest catalog pe tot parcursul funcţionării instalaţiei şi să-l transmiteţi următorului utilizator sau proprietar.

Tetra Pak nu îşi asumă nicio responsabilitate pentru nicio defecţiune a instalaţiei cauzată de nerespectarea instrucţiunilor din manualul care însoţeşte instalaţia.

Manuale livrate

Manualele livrate împreună cu instalaţia

CM

Manualul de conversie (CM) furnizează tehnicienilor informaţii pentru conversia (adaptarea) echipamentului la diferite moduri de producţie.

EM

Manualul electric oferă technicienilor informaţii despre sistemul electric al instalaţiei.

IM

Manualul de instalare oferă tehnicienilor informaţii legate de montarea în siguranţă a instalaţiei.

MM

Manualul de întreţinere oferă tehnicienilor informaţii privind întreţinerea instalaţiei.

OM

Manualul de funcţionare (OM) oferă operatorului informaţii despre manipularea şi funcţionarea echipamentului înainte, în timpul şi după procesul tehnologic.

RM

Manualul de reconstrucţie oferă tehnicienilor informaţii necesare pentru montarea în siguranţă a unui set pe un utilaj sau echipament montat.

(se continuă)

(se continuă)

SPC

Catalogul cu piese de schimb oferă informaţii necesare pentru comandarea pieselor de schimb de la Tetra Pak®.

TeM

Manualul tehnic furnizează informaţii tehnicienilor ca de exemplu:

- informaţii necesare pentru a instala în condiţii de siguranţă echipamentul
- informaţii necesare pentru a întreţine echipamentul
- informaţii privind sistemul electric al utilajului/echipamentului
- informaţiile necesare pentru a comanda piesele de schimb de la Tetra Pak.
- alte informaţii tehnice

UP

Paginile pentru actualizare furnizează pagini noi pentru actualizarea manualelor existente ale utilajelor.

Configuraţia paginii

Consultaţi ilustraţia (A) de la pagina i-9: Paginile principale din Catalogul pieselor de schimb sunt formate dintr-o pagină a ilustraţiilor (1) şi o pagină a listei corespunzătoare (7). Numărul paginii (5) este prezentat în antetul unei pagini cu ilustraţii şi în subsolul unei pagini cu lista. Numărul documentului (6) este prezentat în subsolul unei pagini cu lista.

Numerotarea paginilor

Consultaţi ilustraţia (A) de la pagina i-9: Numărul paginii (5) are trei părţi:

- numărul capitolului (2)
- numărul consecutiv al paginii din cadrul capitolului (3)
- numărul total de pagini din capitol (4)

Notă! Literele UP pot înlocui numărul capitolului (2) dacă manualul include pagini actualizate. Numărul consecutiv al paginii (3) şi numărul total de pagini (4) al paginilor actualizate nu urmează numerotarea existentă, secvenţială a paginilor din cadrul capitolului.

Prezentarea aparatului

Producător

Pentru numele şi adresa producătorului, vezi pagina a doua a acestui catalog.

Service

Tetra Pak® nu îşi asumă responsabilitatea pentru nicio avarie sau rănire asupra echipamentului, personalului sau clienţilor, produsă de piese de schimb care nu sunt piese de schimb originale Tetra Pak.

Pentru a comanda piese de schimb originale Tetra Pak pentru acest utilaj, adresaţi-vă celui mai apropiat birou Tetra Pak.

Identificare

Clasificare CE

Acest echipament este în conformitate cu regulamentele de bază sanitare şi de protecţie ale Agenţie Europene de Mediu (EEA).

(se continuă)

(se continuă)

Conformitatea 3-A

Dacă plăcuţa cu numele utilajului conţine marcajul 3-A (15) (vezi ilustraţia (B) de la pagina i-7), acest echipament respectă standardele sanitare 3-A pentru dispozitive de formare, umplere şi etanşare a containerelor pentru lapte lichid şi produse lactate lichide, numărul 17-10.

Plăcuţa maşinii

Ilustraţia (B) de la pagina i-9 prezintă un exemplu al plăcuţei maşinii. O ilustraţie a plăcuţei valabile a maşinii şi a amplasării sale pe echipament este prezentată în capitolul Introducere al manualelor livrate cu acest echipament. Plăcuţa maşinii conţine datele prezentate mai jos, necesare când vă adresaţi Tetra Pak® referitor la acest echipament.

- Tipul utilajului (8)
- Volum (9)
- Specificaţiile desenului (10)
- Numărul de serie al utilajului (11)
- Producător (12)
- Anul de fabricaţie (13)
- Marcaj CE (14)
- Marcaj 3-A (dacă este cazul) (15)

Verificaţi dacă datele instalaţiei din primele pagini ale acestui manual corespund cu datele de pe plăcuţa maşinii şi cu specificaţia maşinii.

Cum să folosiţi acest catalog pentru piese de schimb

Localizaţi numărul piesei de schimb

a) Consultaţi ilustraţia (C) de la pagina i-9: Mergeţi la numărul capitolului (16) indicat lângă grupul principal care conţine piesa pe care doriţi să o localizaţi.

Elementele b) şi c) se referă la ilustraţia (D) de la pagina i-10.

b) Pe ilustraţia grupului principal, căutaţi subgrupul maşinii (18) care conţine piesa sau subgrupul pe care îl căutaţi. Notaţi numărul poziţiei (19) şi mergeţi la pagina listei de după ilustraţie.

c) Căutaţi numărul poziţiei/denumirea referinţei (17) sau numele subgrupului (20). Mergeţi la numărul corespunzător al paginii (21) precizat în coloana din dreapta. Tetra Pak a ales să utilizeze întotdeuana structura orientată pe funcţii pentru denumirea referinţei. Prefixul care indică structura orientată pe funcţii (=) nu este prezentat în denumirea referinţei.

(se continuă)

(se continuă)

Elementele d) şi e) se referă la ilustraţia (E) de la pagina i-10.

d) Localizaţi piesa (22) pe care o căutaţi în ilustraţia subgrupului şi notaţi numărul poziţiei piesei.

e) Numărul piesei (29) şi descrierea piesei (30) sunt listate lângă numărul poziţiei de pe pagina listei.

Informaţiile enumerate în catalogul pentru piese de schimb

Lista de mai jos se referă la ilustraţia (E) de la pagina i-10.
Un Catalog cu piese de schimb conţine următoarele informaţii despre grupuri, subgrupuri şi piese de schimb pentru echipament.

- Referinţa structurii grupului (23). Indică următorul grup superior din structura listei echipamentului.
- Numele grupului (24)
- Unitate de măsură (25)
- Cantitate (26)
- Numărul desenului de ansamblu (27)
- Domeniul paginii listei (28). Inclus dacă există mai multe pagini în ilustraţia sau lista grupului.
- Numărul piesei sau subgrupului (29)
- Numele subgrupului sau descrierea piesei (30)
- Numărul grupului (31)
- Numărul echipamentului (32)
- Titlul cu informaţiile grupului (33). Indică dacă secţiunea de sub titlu este pentru o anumită variantă de maşină sau este o listă de piese comune. Dacă o maşină are mai mult de o variantă şi fiecare variantă îşi are propriul desen de ansamblu, este prezentată o referinţă a paginii la desenul de ansamblu al variantei.
- Informaţii interne (34)

Asistenţă şi feedback

Pentru asistenţă privind utilizarea acestui echipament sau pentru alte întrebări, comentarii ori sugestii, adresaţi întrebările sau trimiteţi un feedback luând legătura cu cel mai apropiat reprezentant Tetra Pak®. Dacă este disponibil accesul la intranet-ul Tetra Pak, contactaţi persoana de contact prin Interogare tastând QuTI-P în câmpul de adresă al browser-ului dvs. Dacă nu este disponibil accesul la QuTI-P, solicitaţi accesul contactând Reprezentanţa tehnică globală.

Informácie o príručke

Tetra Pak® odporúča, aby ste si pozorne prečítali všetky dodané príručky. Presvedčite sa, či sú dodané príručky k dispozícii personálu, ktorý obsluhuje alebo vykonáva údržbu zariadenia.

Je dôležité, aby ste uchovávali tento katalóg po celý čas životnosti zariadenia, a odovzdali katalóg každému ďalšiemu vlastníkovi alebo užívateľovi zariadenia.

Spoločnosť Tetra Pak nezodpovedá za škody na zariadení spôsobené nedodržaním pokynov uvedených v príručkách, ktoré doprevádzajú toto zariadenie.

Dodané príručky

Príručky dodávané s týmto zariadením:

CM

Príručka na adaptáciu poskytuje technikom informácie o adaptácii zariadenia medzi rôznymi výrobnými režimami.

EM

Táto Elektrická príručka poskytuje technikom informácie o elektrickom systéme zariadenia.

IM

Táto Inštalačná príručka poskytuje technikom informácie potrebné pre bezpečnú inštaláciu zariadenia

MM

Táto Údržbárska príručka poskytuje technikom informácie o vykonávaní údržby zariadenia.

OM

Tento Návod na obsluhu poskytuje operátorovi informácie o tom, ako treba manipulovať so strojom a obsluhovať ho pred, počas a po výrobe.

RM

Príručka na prestavbu poskytuje technikom informácie potrebné pre bezpečnú inštaláciu súpravy na nainštalovaný stroj alebo zariadenie.

(Pokrač.)

(Pokrač.)

SPC

Katalóg náhradných dielov poskytuje informácie potrebné pre objednanie náhradných dielov od Tetra Pak®.

TeM

Technická príručka poskytuje technikom informácie, ktorými môžu byť:

- potrebné informácie pre bezpečnú inštaláciu zariadenia
- potrebné informácie pre údržbu zariadenia
- informácie o elektrickom systéme stroja/zariadenia.
- poskytuje informácie potrebné na objednanie náhradných dielov od firmy Tetra Pak
- ostatné technické informácie

NAHOR

Aktualizované stránky poskytujú nové stránky k existujúcim príručkám na zariadenie.

Usporiadanie strany

Pozrite sa na obrázok (A) na strane i-9: hlavné stránky v Katalógu náhradných dielov tvorí stránky s ilustráciami (1) a odpovedajúca stránka so zoznamom (7). Číslo stránky (5) je uvedené v záhlaví stránky s obrázkom a v zápätí stránky so zoznamom. Číslo dokumentu (6) je uvedené v zápätí stránky so zoznamom.

Číslovanie strán

Pozrite sa na obrázok (A) na strane i-9: číslo stránky (5) má tri časti:

- číslo kapitoly (2)
- číslo ďalšej stránky v rámci kapitoly (3),
- celkový počet stránok v kapitole (4)

Poznámka! Písmena UP môžu nahradiť číslo kapitoly (2) v prípade, že manuál obsahuje aktualizované stránky. Nasledujúce číslo stránky (3) a celkový počet strán (4) aktualizovaných stránok sa nedrží existujúceho sekvenčného číslovania stránok v tejto kapitole.

Úvod k zariadeniu

Výrobca

Meno a adresu výrobcu nájdete na druhej strane tohto katalógu.

Servis

Tetra Pak® nepreberá zodpovednosť za akúkoľvek škodu na zariadení alebo za zranení zamestnanca alebo spotrebiteľa, ktoré budú spôsobené tým, že sa nepoužijú originálne náhradné diele Tetra Pak.

Ak chcete pre tento stroj objednať originálne náhradné diely Tetra Pak, kontaktujte najbližšiu kanceláriu spoločnosti Tetra Pak.

Identifikácia

Klasifikácia CE

Toto zariadenie vyhovuje základným zdravotným a bezpečnostným predpisom Európskej hospodárskej oblasti (EEA).

(Pokrač.)

(Pokrač.)

3-A Súlad

Ak štítok stroja obsahuje označenie 3-A (15) (pozri obrázok (B) na strane i-7), potom je toto zariadenie v súlade s hygienickými normami 3-A pre formovanie, plnenie a uzatváranie obalov na tekuté mlieko a tekuté mliečne výrobky, číslo 17 -10.

Štítok zariadenia

Obrázok (B) na strane i-9 ukazuje príklad typového štítku.
Obrázok platného typového štítku a jeho umiestnenia na zariadení je uvedený v úvodnej kapitole príručiek dodaných s týmto zariadením.
Typový štítok obsahuje údaje uvedené nižšie, tieto údaje sú treba, keď kontaktujete spoločnosť Tetra Pak® vo veci týkajúcej sa tohto špecifického vybavenia.

- Typ stroja (8)
- Objem (9)
- Špecifikácie výkresov (10)
- Sériové číslo stroja (11)
- Výrobca (12)
- Rok výroby (13)
- Symbol CE (14)
- Symbol 3-A (ak sa používa) (15)

Presvedčte sa, či dáta uvedené na čelnej strane tohoto manuálu korešpondujú s údajmi na identifikačnom typovom štítku stroja a so špecifikáciou stroja.

Ako používať tento katalóg náhradných dielov

Vyhľadať číslo náhradného dielu

a) Pozrite obrázok (C) na strane i-9: Prejsť na číslo kapitoly (16) uvedené vedľa hlavnej skupiny, ktorá obsahuje diel, ktorý chcete nájsť.

Položky b) a c) sa vzťahujú na obrázok (D) na strane i-10.

b) Na obrázku hlavnej skupiny sa pozrite na podskupinu stroja (18), ktorá obsahuje diely alebo podskupiny, ktoré hľadáte. Poznamenajte si číslo pozície (19) a prejdite na stránku zoznamu, ktorý nasleduje za obrázkom.

c) Pozrite sa na číslo pozície/označenie referencie (17) alebo na názov podskupiny (20). Prejdite na odpovedajúce číslo strany (21) uvedené v zozname v stĺpci na pravej strane. Spoločnosť Tetra Pak si zvolila vždy používať pre referenčné označenie štruktúru zameranú na funkciu. Predpona označujúca funkčne orientovanú štruktúru (=) nie je uvedená v referenčnom označení.

(Pokrač.)

(Pokrač.)

Položky d) a e) sa vzťahujú na obrázok (E) na strane i-10.

d) Lokalizujte diel (22), ktorý hľadáte, na obrázku podskupiny a poznamenajte si číslo pozície dielu.

e) Číslo dielu (29) a popis dielu (30) sú uvedené vedľa čísla pozície na stránke so zoznamom.

Informácie uvedené v katalógu náhradných dielov

Niže uvedený zoznam sa odkazuje na obrázok (E) na stránke i-10. Katalóg náhradných dielov obsahuje nasledujúce informácie o skupinách, podskupinách a náhradných dieloch pre zariadenie:

- Referencia štruktúry skupiny (23). Označuje nasledujúcu vyššiu skupinu vo štruktúre zoznamu výbavy.
- Názov skupiny (24)
- Merná jednotka (25)
- Množstvo (26)
- Číslo montážneho výkresu (27)
- Rozsah stránok so zoznamom (28). Zahrnuté, ak existuje viac stránok v skupine obrázkov alebo v zozname.
- Číslo dielu alebo podskupiny (29)
- Názov podskupiny alebo popis dielu (30)
- Číslo skupiny (31)
- Číslo výbavy (32)
- Záhlavie informácií o skupine (33). Označuje, či sa časť pod záhlavím týka konkrétneho variantu stroja, alebo či sa jedná o zoznam spoločných dielov. Ak zoznam obsahuje viac ako jeden variant a každý variant má svoje vlastné montážne výkresy, je zobrazený odkaz na stránku s montážnym výkresom variantu.
- Vnútorné informácie (34)

Podpora a spätná väzba

Ak potrebujete pomoc pri prevádzkovaní tohto zariadenia, ak potrebujete ďalšie informácie, máte pripomienky alebo návrhy, alebo ak chcete položiť otázky či poskytnúť spätnú väzbu, kontaktujte najbližšieho zástupcu spoločnosti Tetra Pak®. Ak máte k dispozícii prístup na intranet spoločnosti Tetra Pak, spojte sa s kontaktným zamestnancom pomocou položky Query (Otázka) napísaním QuTI-P do riadka na zadanie adresy vo svojom prehľadávači. Ak nemáte prístup ku QuTI-P, o prístup požiadajte Global Service Desk (Globálne servisné oddelenie).

Informacije o navodilu

Tetra Pak® priporoča, da vsa dobavljena navodila pazljivo prebrete. Prepričajte se, da so dobavljena navodila na razpolagu osebju, ki dela s strojem ali pa izvaja vzdrževalna dela na opremi.

Ta navodila je potrebno shraniti do konca življenjske dobe opreme in navodilo predati vsakemu naslednjemu imetniku ali uporabniku.

Tetra Pak ne nosi odgovornosti za poškodbo na opremi, do katere je prišlo zaradi neupoštevanja teh navodilih.

Dobavljena navodila

Navodila, ki se dobavljajo s to opremo:

CM

Navodila za spremembo (CM) oskrbujejo tehnike z informacijami glede zamenjav opreme med različnimi načini proizvodnje.

EM

Električna navodila oskrbujejo tehnike z informacijami glede električnega sistema opreme.

IM

Navodila za inštalacijo oskrbujejo tehnike z informacijami, ki so potrebne za varno inštalacijo opreme.

MM

Navodila za vzdrževanje oskrbujejo tehnika z informacijami glede vzdrževanja opreme.

OM

Navodila za delovanje (OM) oskrbijo strojnike z informacijami glede rokovanja z opremo in delovanjem le-te pred, med in po proizvodnji.

RM

Navodila za predelavo (RM) oskrbujejo tehnike z informacijami, ki so potrebne za varno inštalacijo opreme na inštalirani stroj ali opremo.

(Obrnite)

(Obrnite)

SPC

Katalog rezervnih delov prinaša informacije, ki so potrebne za naročanje rezervnih delov iz podjetja Tetra Pak®.

TeM

Tehnološka navodila tehnikom podajo informacije, ki so lahko:

- potrebne za varno inštalacijo opreme
- potrebne za vzdževanje opreme
- vezane na električni sistem stroja/opreme
- ponujajo informacije, ki so potrebna za naročanje nadomestnih delov pri Tetra Paku
- druge tehnične informacije

GOR

Strani za posodobitev podajo nove strani za posodabljanje obstoječih navodil stroja.

Ureditev strani

Sklicujte se na ilustracijo (A) na strani i-9: Glavne strani v katalogu rezervnih delov so sestavljene iz strani z ilustracijami (1) in stranjo s seznamom (7). Številka strani (5) je prikazana v glavi strani z ilustracijo in v nogi strani s seznamom. Številka dokumenta (6) je prikazana v nogi strani s seznamom.

Oštevilčenje strani

Sklicujte se na ilustracijo (A) na strani i-9: Številka strani (5) ima tri dele:

- številko poglavja (2)
- zaporedno številko strani (2) znotraj poglavja (3)
- skupno število strani v poglavju (4)

Opomba! Črke UP lahko zamenjajo številko poglavja (2), če so v navodilih vključene posodobljene strani. Zaporedna številka strani (3) in skupno število strani (4) posodobljenih strani se ne ujemajo z obstoječim zaporedjem strani v poglavju.

Predstavitev stroja

Proizvajalec

Ime in naslov proizvajalca se nahajata na drugi strani tega kataloga.

Servisiranje

Tetra Pak® ne prevzema odgovornosti za okvare ali poškodbe opreme, osebja ali potrošnikov, ki ga povzročijo rezervni deli, ki niso originalni Tetra Pak rezervni deli.

Za naročanje originalnih Tetra Pak rezervnih delov kontaktirajte najbližjo pisarno Tetra Pak.

Identifikacija

CE klasifikacija

Ta oprema izpolnjuje osnovne zdravstvene in varnostne ukrepe Evropskega ekonomskega prostora (EEA).

(Obrnite)

(Obrnite)

3-A Skladnost

Če ploščica stroja vsebuje oznako 3-A (15) (glejte ilustracijo (B) na strani i-7), ta oprema ustreza sanitetnim standardom 3-A za kalupe, polnilce in tesnila zbiralnikov za tekoče mleko in izdelke iz tekočega mleka, številka 17-10.

Strojna plošča

Ilustracija (B) na strani i-9 prikazuje primer ploščice za identifikacijo stroja. Ilustracija veljavne ploščice za identifikacijo stroja in njene lokacije na opremi je prikazana v uvodnem poglavju navodil, ki so bila dostavljena s to opremo. Ploščica za identifikacijo stroja vsebuje spodaj navedene podatke, ki so potrebni ob kontaktiranju podjetja Tetra Pak® glede te specifične opreme.

- Tip stroja (8)
- Prostornina (9)
- Specifikacije skice (10)
- Serijska številka stroja (11)
- Proizvajalec (12)
- Leto izdelave (13)
- CE oznaka (14)
- 3-A oznaka (če obstaja) (15)

Prepričajte se, da se podatki o opremi, ki se nahajajo na sprednjih straneh teh navodil, v skladu s podatki strojne plošče in specifikacije stroja.

Kako uporabljati ta katalog rezrevnih delov

Poiščite številko rezervnega dela

a) Sklicujte se na ilustracijo (C) na strani i-9: Pojdite na številko poglavja (16), ki se nahaja poleg glavne skupine in ki vsebuje del, ki ga želite poiskati.

Predmeti b) in c) se nanašajo na ilustracijo (D) na strani i-10.

b) Na ilustraciji glavne skupine poiščite podskupino stroja (18), ki vsebuje del ali podskupino, ki jo iščete. Opazite položaj številke (19) in pojdite na stran seznama, ki sledi ilustraciji.

c) Poiščite številko lokacije/referenco (17) ali pa ime podskupine (20). Pojdite na ustrezno številko strani (21), ki je navedena v stolpcu na desni strani. Tetra Pak se je odločil za to, da vedno uporablja funkcijsko naravnano strukturo kot referenco. Predpona, ki nakazuje funkcijsko naravnano strukturo (=), ni prikazana v referenci.

(Obrnite)

(Obrnite)

Predmeti d) in e) se nanašajo na ilustracijo (E) na strani i-10.

d) Poiščite del (22), ki ga iščete, na ilustraciji podskupine in zabeležite številko lokacije dela.

e) Številka dela (29) in opis dela (30) sta navedena poleg lokacije številke na strani s seznamom.

Informacije, ki so navedene v katalogu rezervnih delov

Spodnji seznam se nanaša na ilustracijo (E) na strani i-10. Katalog rezervnih delov vsebuje naslednje informacije o skupinah, podskupinah in rezervnih delih za opremo.

- Referenca strukture skupine (23). Določa naslednjo višjo skupino v strukturi seznama opreme.
- Ime skupine (24)
- Enota merjenja (25)
- Količina (26)
- Številka skice sistema (27)
- Razpon seznama strani (28). Vključeno, če obstaja več strani v ilustraciji skupine ali na seznamu.
- Del ali številka podskupine (29)
- Ime podskupine ali opis dela (30)
- Številka skupine (31)
- Številka opreme (32)
- Naslov informacije o skupini (33). Nakazuje ali je spodnji odsek naslov specifične različice stroja ali pa če gre za seznam splošnih delov. Če ima seznam več kot eno različico in ima vsaka različica svojo skico sistema, je prikazana referenca strani na skici sistema vsake različice.
- Notranje informacije (34)

Podpora in ponovna uporaba

Za pomoč pri uporabi te opreme ali ob drugih poizvedbah, pripombah ali predlogih posredujte svoja vprašanja ali povratne informacije tako, da stopite v stik z najbližjim predstavnikom podjetja Tetra Pak®. Če je na voljo dostop do intraneta podjetja Tetra Pak, stopite v stik s predstavnikom za stike prek možnosti Query (Poizvedba), tako da vtipkate QuTI-P v naslovno polje brskalnika. Če dostop do QuTI-P ni na voljo, stopite v stik z oddelkom za pomoč in zaprosite za dostop.

Information om handboken

Tetra Pak® rekommenderar att alla handböcker läses noggrant.
Se till att handböckerna är tillgängliga för personalen som använder eller underhåller utrustningen.

Det är viktigt att denna katalog behålls under utrustningens livslängd, och att katalogen överlämnas till varje efterföljande innehavare eller användare.

Tetra Pak kan inte hållas ansvarig för eventuella skador på utrustningen som orsakas av man inte följer de instruktioner som ges i de handböcker som medföljer denna utrustning.

Medföljande handböcker

Handböcker som levereras tillsammans med denna utrustning:

CM

Konverteringshandboken ger tekniker information om konvertering av utrustningen mellan olika produktionssätt.

EM

Den elektriska handboken ger teknikerna information om utrustningens elektriska system.

IM

Installationshandboken ger teknikerna information som krävs för att kunna installera utrustningen säkert.

MM

Underhållshandboken ger teknikerna information om hur utrustningen ska underhållas.

OM

Drifthandboken ger operatören information om hur utrustningen ska hanteras före, under och efter produktion.

RM

Ombyggnadshandboken ger teknikerna den information som krävs för att säkert installera en sats på en installerad maskin eller utrustning.

(Forts.)

(Forts.)

SPC

Reservdelskatalogen (SPC) ger den information som krävs för att kunna beställa reservdelar från Tetra Pak®.

TeM

Teknisk handbok ger tekniker information i form av:

- information som krävs för att säkert kunna installera utrustningen
- information som krävs för att underhålla utrustningen
- information om maskinens/utrustningens elsystem
- information som krävs för beställning av reservdelar från Tetra Pak
- annan teknisk information

UPP

Uppdateringssidorna innehåller nya sidor för att uppdatera befintliga maskinhandböcker.

Sidlayout

Se illustration (A) på sidan i-9: Huvudsidorna i en Reservdelskatalog består av en illustrationssida (1) och en tillhörande listsida (7).
Sidnumret (5) visas i sidhuvudet på en illustrationssida och i sidfoten på en listsida. Dokumentnumret (6) visas i sidfoten på listsidan.

Sidnumrering

Se illustration (A) på sidan i-9: Ett sidnummer (5) har tre delar:

- kapitelnummer (2)
- löpande sidnummer inom kapitlet (3)
- totalt sidantal i kapitlet (4)

OBS! Bokstäverna UP kan ersätta kapitelnumret (2) om handboken innehåller uppdateringssidor. Det löpande sidnumret (3) och det totala antalet sidor (4) för uppdateringssidor följer inte den befintliga löpande sidnumreringen av kapitlet.

Introduktion till maskinen

Tillverkare

För tillverkarens namn and adress, se andra sidan i denna katalog.

Service

Tetra Pak® tar inte något ansvar för eventuella skador eller eventuella personskador på utrustning, personal eller konsumenter som orsakas av att reservdelarna inte är original Tetra Pak reservdelar.

Vid beställning av original Tetra Pak reservdelar för denna maskin, kontakta närmaste Tetra Pak-kontor.

Identifiering

CE-klassificering

Denna utrustning uppfyller de grundläggande hälso- och säkerhetskraven inom European Economic Area (EEA).

(Forts.)

(Forts.)

3-A överensstämmelse

Om maskinskylten är märkt med 3-A (15) (se bild (B) på sidan i-7), uppfyller denna utrustning 3-A Hygienstandarder för resare, fyllare och förseglare av behållare för flytande mjölk och flytande mjölkprodukter, Nummer 17-10.

Maskinskylt

Illustration (B) på sidan i-9 visar ett exempel på en maskinskylt.
En illustration av gällande maskinskylt och dess placering på utrustningen visas i Introduktion-kapitlet i de handböcker som levereras med denna utrustning. Maskinskylten innehåller data som listas nedan, vilken behövs för att kontakta Tetra Pak® rörande denna specifika utrustning.

- Maskintyp (8)
- Volym (9)
- Ritningsspecifikationer (10)
- Maskinnummer (11)
- Tillverkare (12)
- Tillverkningsår (13)
- CE-märkning (14)
- 3A-märke (om tillämpligt) (15)

Kontrollera att utrustningsdata som finns på de inledande sidorna i denna handbok överensstämmer med maskinskyltens data och maskinspecifikationen.

Hur man använder denna reservdelskatalog

Hitta ett reservdelsnummer

a) Se illustration (C) på sidan i-9: Gå till det kapitelnummer (16) som anges bredvid huvudgruppen som innehåller delen du vill lokalisera.

Punkterna b) och c) refererar till illustration (D) på sidan i-10.

b) Leta på huvudgruppens bild upp den undergrupp (18) i maskinen som innehåller delen eller undergruppen du letar efter. Notera positionsnumret (19) och gå till listsidan som följer på bilden.

c) Leta upp positionsnummer/referensbeteckning (17) eller undergruppens namn (20). Gå till motsvarande sidnummer (21) som anges i den högra kolumnen. Tetra Pak har valt att alltid använda en funktionsorienterad struktur för referensbeteckning. Prefix som anger funktionsorienterad struktur (=) visas inte i referensbeteckningen.

(Forts.)

(Forts.)

Punkterna d) och e) refererar till illustration (E) på sidan i-10.

d) Leta upp den del (22) som du letar efter på undergruppens bild och notera delens positionsnummer.

e) Artikelnumret (29) och artikelbeskrivningen (30) anges bredvid positionsnumret på listsidan.

Information som anges i en Reservdelskatalog

Listan nedan refererar till illustration (E) på sidan i-10. En Reservdelskatalog innehåller följande information om grupper, undergrupper och reservdelar för utrustningen:

- Gruppstrukturreferens (23). Anger närmast högre grupp i utrustningens liststruktur.
- Gruppnamn (24)
- Måttenhet (25)
- Antal (26)
- Sammanställningsritningens nummer (27)
- Listans sidomfång (28). Anges om det finns flera sidor i gruppens bild eller lista.
- Artikel- eller undergruppnummer (29)
- Undergruppens namn eller beskrivning av delen (30)
- Gruppnummer (31)
- Utrustningsnummer (32)
- Gruppinformationsrubrik (33). Anger om avsnittet under rubriken gäller för en specifik maskinvariant eller om det är en lista över gemensamma delar. Om en lista har mer än en variant och varje variant har sin egen sammanställningsritning, visas en sidreferens till variantens sammanställningsritning.
- Intern information (34)

Support och feedback

För assistans vid användning av denna utrustning, eller för andra förfrågningar, kommentarer eller förslag, kan ni ställa frågor eller ge feedback genom att ta kontakt med närmaste Tetra Pak®-representant. Om ni har tillgång till Tetra Pak intranät, var god kontakta samordningsavdelningen via frågeformuläret genom att skriva in QuTI-P i adressfältet i din webbläsare. Om tillgång till QuTI-P inte föreligger, begär tillgång genom att kontakta Global Service Desk.

This page intentionally left blank

This page intentionally left blank

This page intentionally left blank

SPC
Spare Parts Catalogue

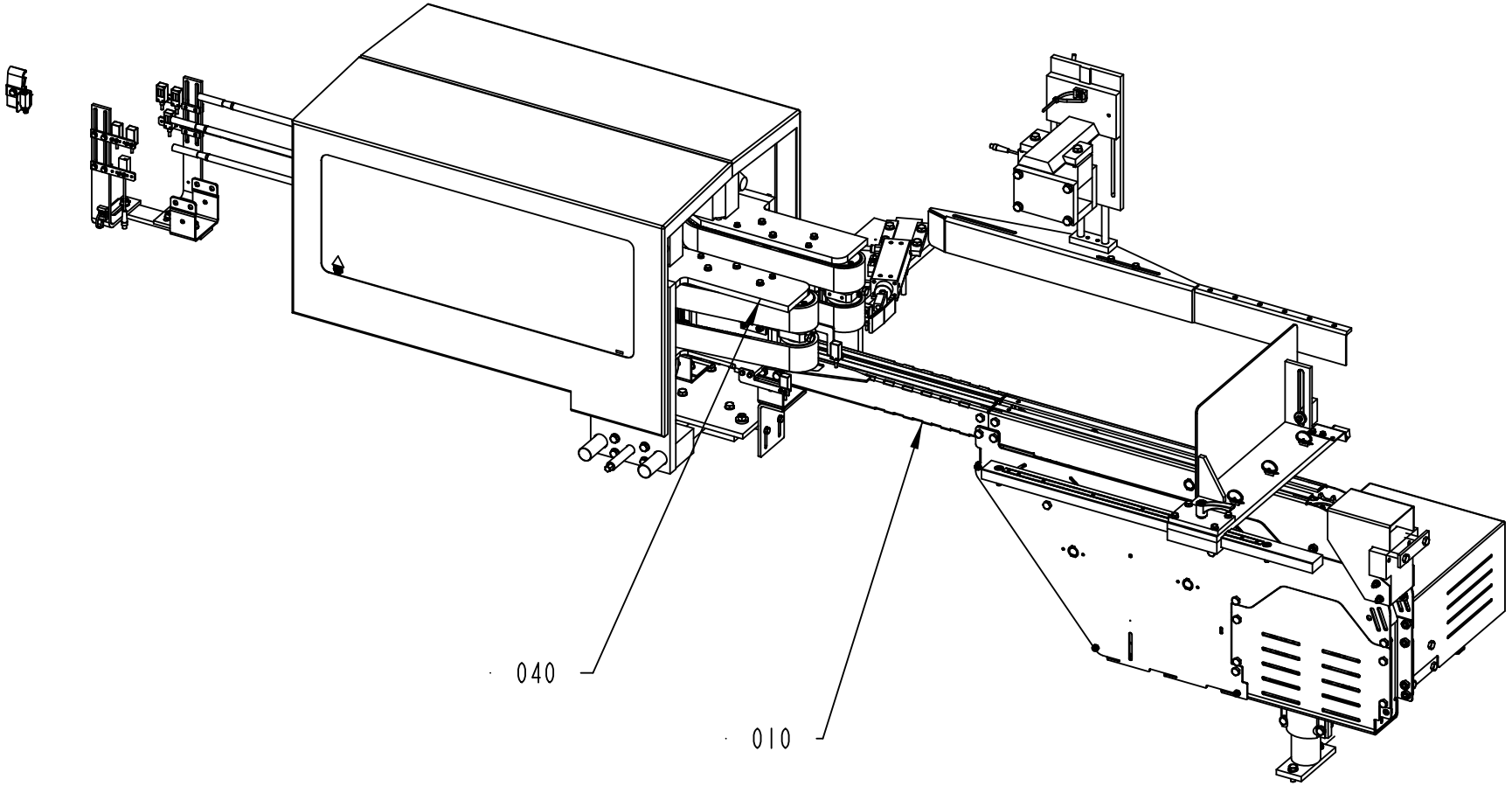

673827-4
579668

ECM: 585716 - 20121116
Group number: 673827-0400
Assembly Drawing: 673827-4_1_AA

Pos	Part No	UN	Qty	Description	Page No
LINF U-FORM UNIT CONVEYOR 54, RINF Z-FORM UNIT CONVEYOR 54, RINF Z-FORM FLEXI CONVEYOR 56, LINF U-FORM FLEXI CONVEYOR 56					
010	2718848-0300		1	UNIT CONVEYOR 54	**1-5**
LINF Z-FORM PCONV 21, RINF U-FORM PCONV 21					
010	2718846-0300		1	PACKAGE CONVEYOR TPC21/TPC53	**1-27**
LINF Z-FORM UNIT CONVEYOR 54, RINF U-FORM UNIT CONVEYOR 54, RINF U-FORM FLEXI CONVEYOR 56, LINF Z-FORM FLEXI CONVEYOR 56					
010	2718848-0300		1	UNIT CONVEYOR 54	**1-5**
LINF Z-FORM UCONV 24, RINF U-FORM UCONV 24					
010	2950328-0200		1	UNIT CONVEYOR 24	**1-41**
PCONV PC23 LINF Z-FORM, PCONV PC23 RINF U-FORM					
010	2718847-0300		1	PACKAGE CONVEYOR 23	**1-67**
PCONV PC23 RINF Z-FORM, PCONV PC23 LINF U-FORM					
010	2718847-0300		1	PACKAGE CONVEYOR 23	**1-67**
RINF Z-FORM PCONV 21, LINF U-FORM PCONV 21					
010	2718846-0300		1	PACKAGE CONVEYOR TPC21/TPC53	**1-27**
RINF Z-FORM UCONV 24, LINF U-FORM UCONV 24					
010	2950328-0200		1	UNIT CONVEYOR 24	**1-41**
Common Parts					
040	2851987-0400		1	INFEED SECTION	**1-89**

Pos	Part No	UN	Qty	Description	Page No

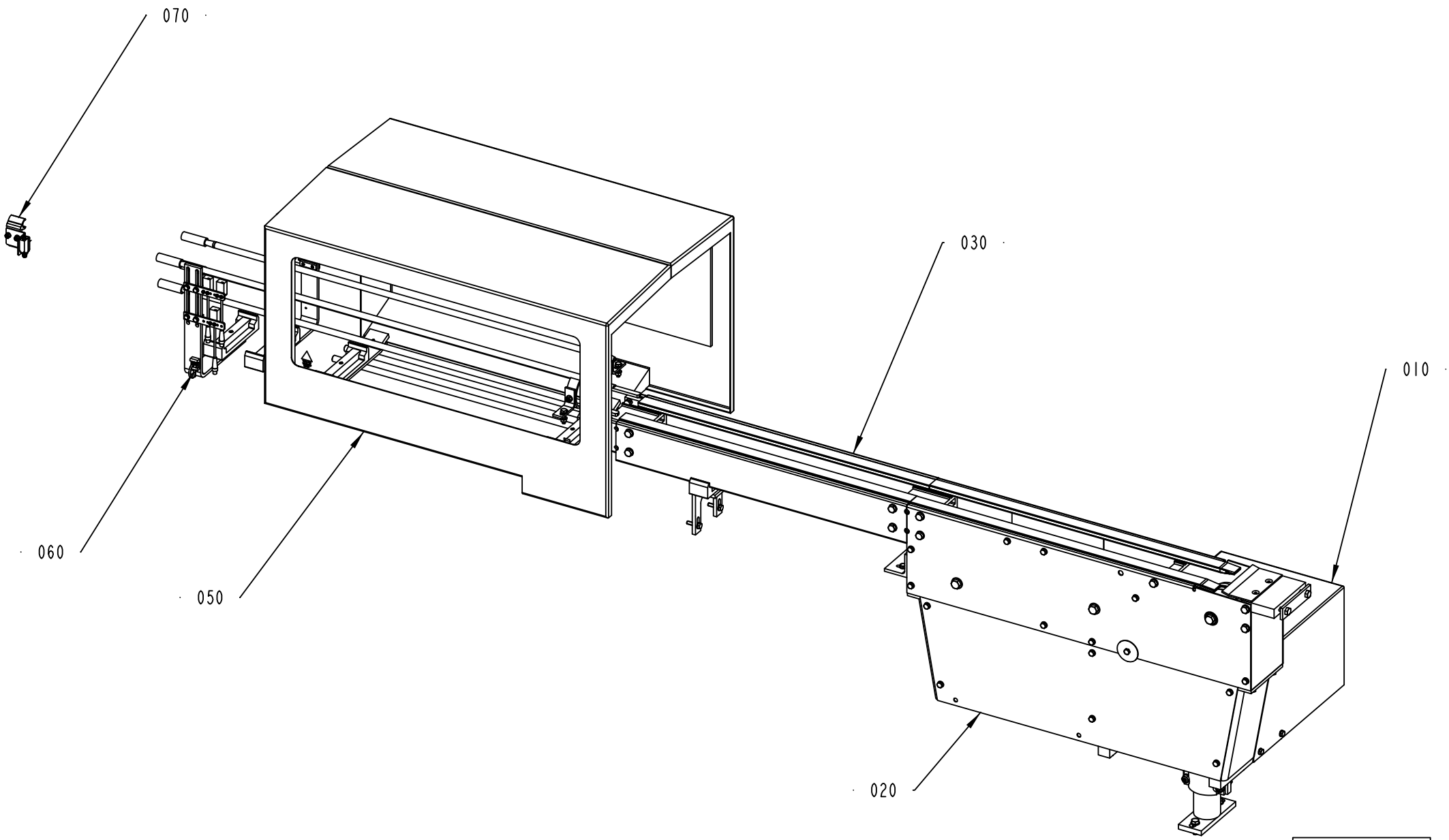
070
030
010
060
050
020
2718848-3
352551

ECM: 353209 - 20080919
Group number: 2718848-0300
Assembly Drawing: 2718848-3_1_AA

Pos	Part No	UN	Qty	Description	Page No
LINF U-FORM UNIT CONVEYOR 54, RINF Z-FORM UNIT CONVEYOR 54					
040	2970845-0100		1	RAILING	**1-7**
LINF Z-FORM UNIT CONVEYOR 54, RINF U-FORM UNIT CONVEYOR 54					
040	2970845-0100		1	RAILING	**1-7**
RINF U-FORM FLEXI CONVEYOR 56, LINF Z-FORM FLEXI CONVEYOR 56					
040	2833998-0100		1	RAILING	**1-9**
RINF Z-FORM FLEXI CONVEYOR 56, LINF U-FORM FLEXI CONVEYOR 56					
040	2833998-0100		1	RAILING	**1-9**
Common Parts					
010	1124028-0300		1	DRIVE MOTOR	**1-11**
020	1124029-0300		1	DRIVE UNIT	**1-13**
030	1124030-0400		1	CONVEYOR BODY STRAIGHT	**1-15**
050	2851973-0100		1	TUNNEL	**1-17**
060	2718858-0200		1	QUEUE GUARD,DOUBLE	**1-19**
070	2959045-0100		1	PHOTOCELL UNIT, OVERFLOW	**1-21**

Pos	Part No	UN	Qty	Description	Page No

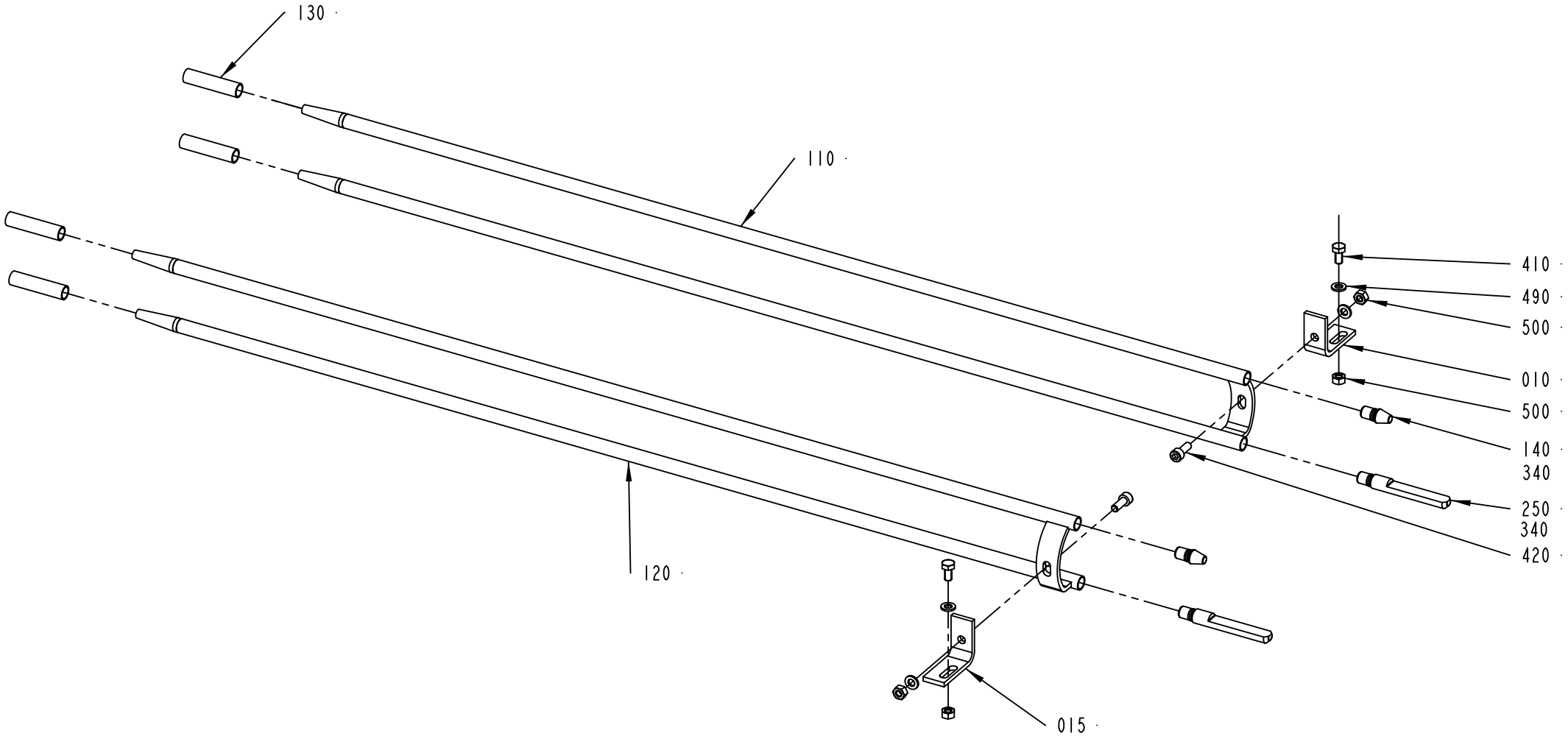

2970845-1
431388

ECM: 436247 - 20100202
Group number: 2970845-0100
Assembly Drawing: 2970845-1_1_AC

Pos	Part No	UN	Qty	Description	Page No
PACK.CONV.53, PCONV21, CONVEYOR PC23, CONVEYOR UC24					
130	2970841-0000		4	PIPE	
UNIT CONVEYOR 54					
130	2970862-0000		4	PIPE	
Common Parts					
010	2833999-0000		1	BRACKET	
015	2834000-0000		1	BRACKET	
110	2970824-0000		1	RAILING	
120	2970826-0000		1	RAILING	
140	540169-0000		2	DOWEL	
250	2851967-0000		2	DOWEL	
410	312105-0366		2	SCREW, M6S ISO 4017 M6X12 A4 80	
420	312115-0368		2	SCREW ISO4762 M6X16 A4 80	
490	315105-0153		4	WASHER PLAIN, 6,4X12X1,5 A4 BRB	
500	312605-0316		4	HEXAGON NUT, M6M M6 A280	

Pos	Part No	UN	Qty	Description	Page No

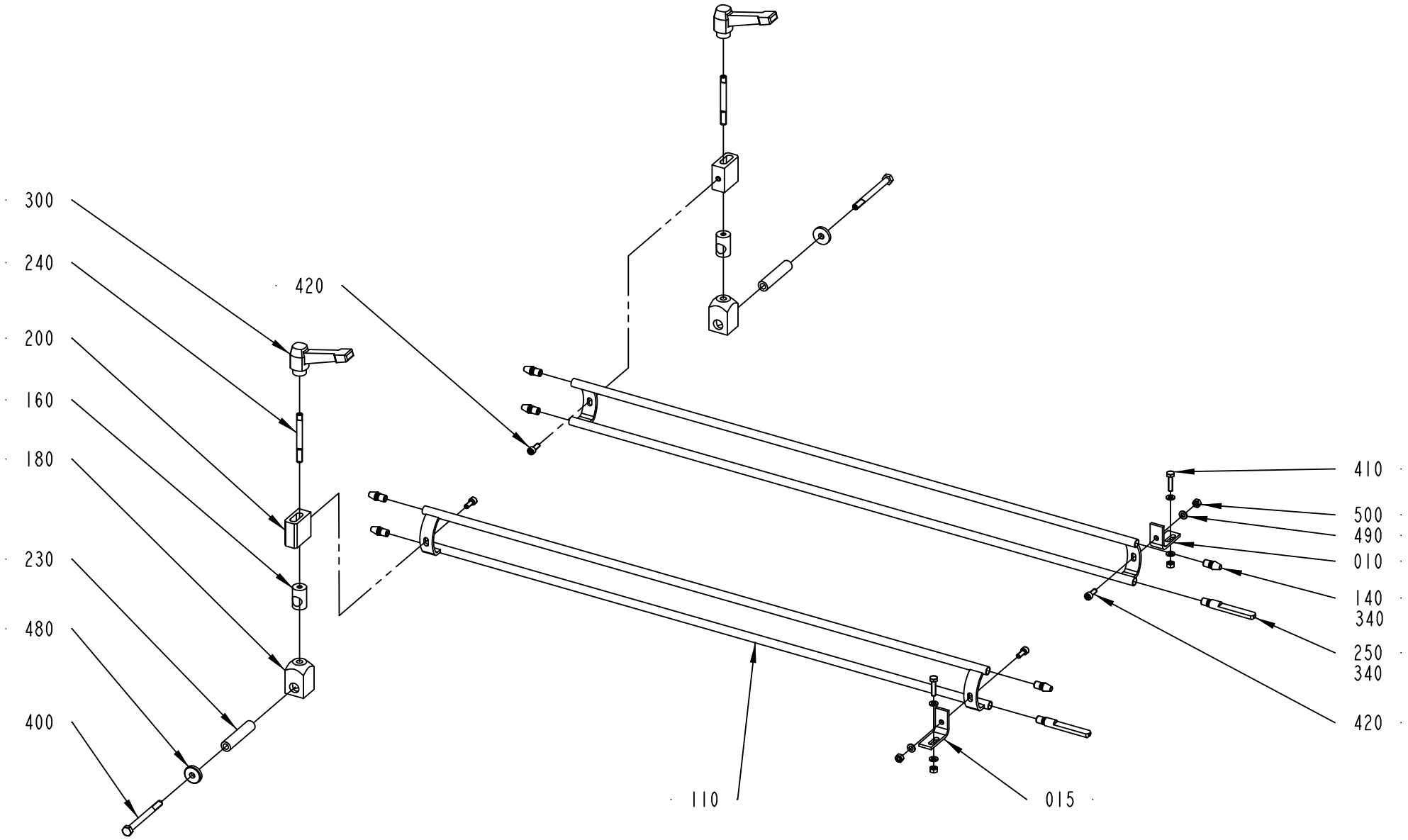

2833998-1
266402

ECM: 266598 - 20070130
Group number: 2833998-0100
Assembly Drawing: 2833998-1_1_AA

Pos	Part No	UN	Qty	Description	Page No
-					
010	2833999-0000		1	BRACKET	
015	2834000-0000		1	BRACKET	
110	2834001-0000		2	RAILING	
140	540169-0000		6	DOWEL	
160	1086637-0000		2	SLEEVE	
180	1086638-0000		2	DOLLY	
200	1086639-0000		2	BRACKET	
230	1086636-0000		2	SPACER	
240	1086640-0000		2	STUD SCREW	
250	2851967-0000		2	DOWEL	
300	90117-0029		2	LOCKING HANDLE, M8/F	
340	90157-0018		1	LOCKING FLUID TYPE 601	
400	312105-0469		2	SCREW, M6S ISO 4014 M8X90 A4 80	
410	312105-0372		2	SCREW, M6S ISO 4017 M6X25 A4 80	
420	312115-0368		4	SCREW ISO4762 M6X16 A4 80	
480	315125-0165		2	WASHER HIGH, TBRSB 8,4X26X5 A4	
490	315105-0153		6	WASHER PLAIN, 6,4X12X1,5 A4 BRB	
500	312605-0316		4	HEXAGON NUT, M6M M6 A280	

Pos	Part No	UN	Qty	Description	Page No

Machine Type	Group Description	Used-In	Group Number	Page No

DRIVE MOTOR

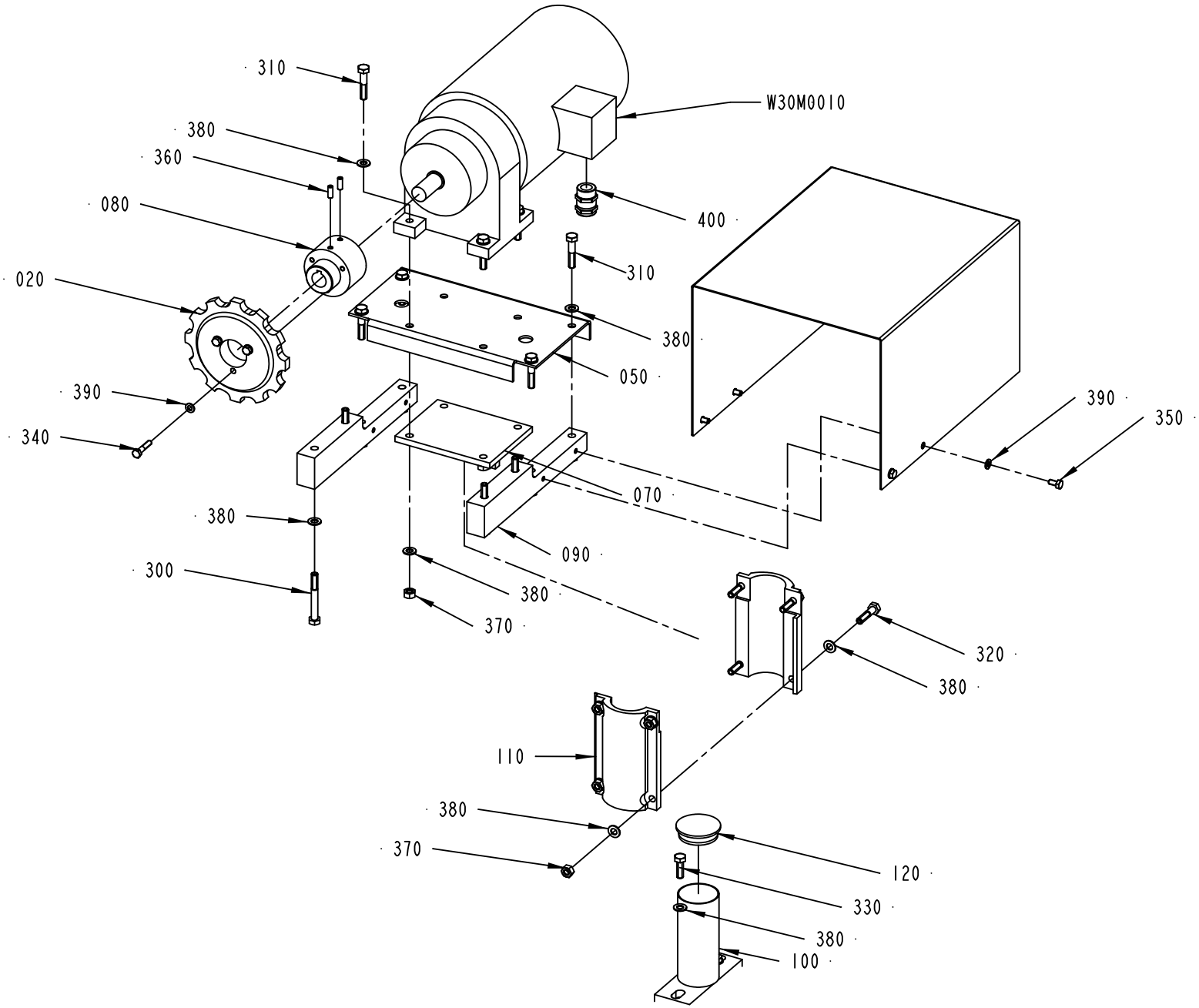

1124028-3
555186

ECM: 567474 - 20120710
Group number: 1124028-0300
Assembly Drawing: 1124028-3_1_AB

Pos	Part No	UN	Qty	Description	Page No
-					
020	90344-0072		1	SPROCKET, 12 TEETH FOR CHAIN RT 114	
050	539096-0000		1	MOTOR SHELF	
060	539103-0000		1	MOTOR COVER	
070	531487-0000		1	BRACKET	
080	539158-0000		1	HUB	
090	1124868-0000		2	BRACKET	
100	1139762-0000		1	SUPPORT LEG	
110	497680-0001		2	HOLDER	
120	497997-0000		1	PLUG	
300	312105-0464		4	SCREW, M6S ISO 4014 M8X65 A4 80	
310	312105-0459		8	SCREW, M6S ISO 4014 M8X40 A4 80	
320	312105-0457		4	SCREW, M6S ISO 4014 M8X35 A4 80	
330	312105-0453		2	SCREW, M6S ISO 4017 M8X25 A4 80	
340	312105-0374		3	SCREW, M6S ISO 4014 M6X30 A4 80	
350	312105-0366		4	SCREW, M6S ISO 4017 M6X12 A4 80	
360	312318-0368		2	SET SCREW, CUP END ISO4029 M6X16 A4	
370	312605-0318		12	HEXAGON NUT, M6M M8 A280	
380	315105-0165		30	FWAS080G0-0S, WASHER PLAIN	
390	315105-0153		7	WASHER PLAIN, 6,4X12X1,5 A4 BRB	
400	90012-0118		1	GLAND, EXTENDED WITH INSERT, PG16	
W30M0010	90603-2448		1	GEARS, HELICAL MOTOR SK01V-8 0S/4 S03	

Pos	Part No	UN	Qty	Description	Page No

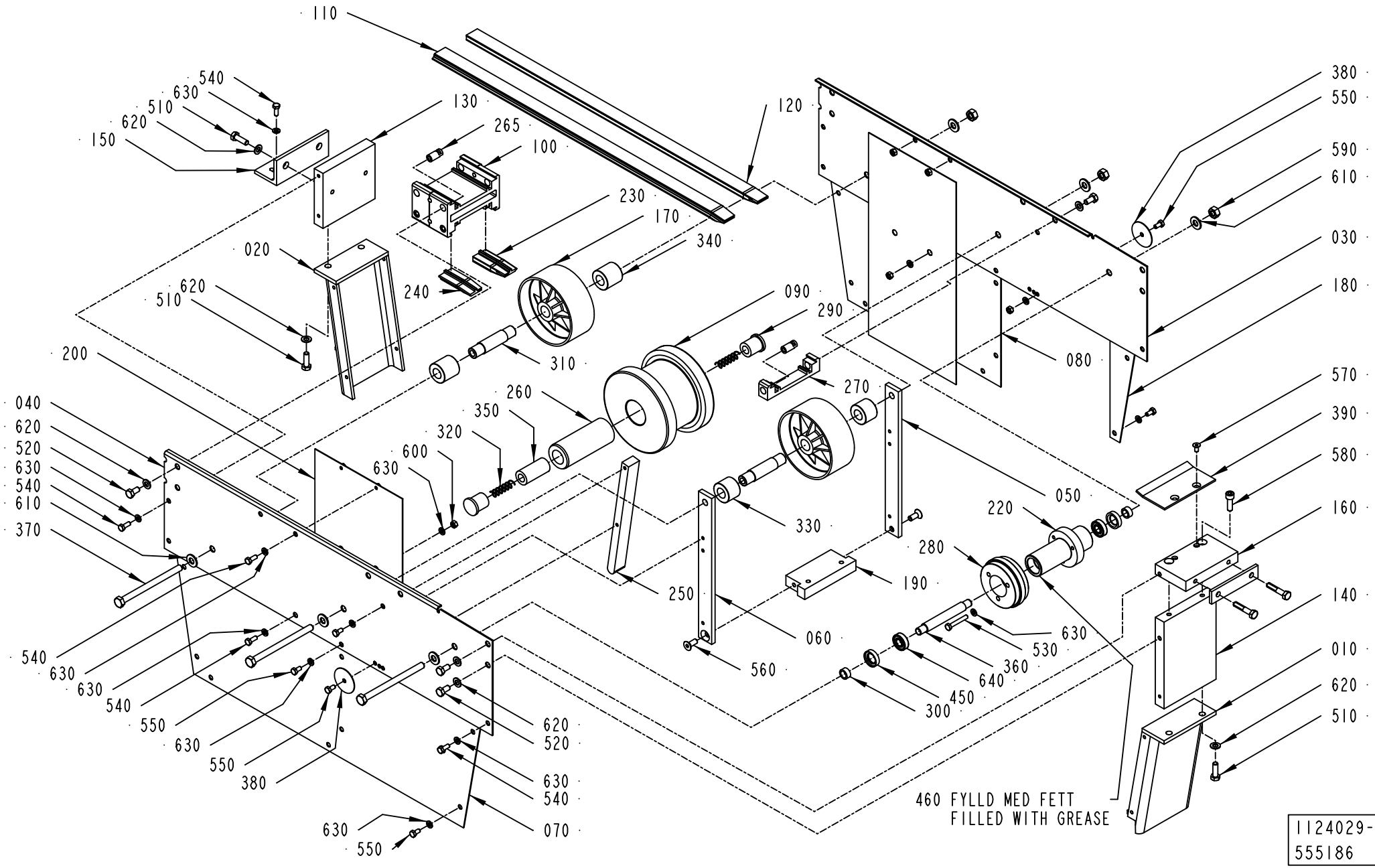
110
540
630
510
620
150
130
265
100
120
380
550
590
610
230
170
340
020
240
620
510
090
290
030
180
200
310
080
260
270
570
040
620
520
630
540
610
370
350
320
600
630
390
580
050
160
330
220
280
190
250
060
560
140
630
530
360
640
450
300
010
620
510
540
630
630
540
550
630
550
380
620
520
630
540
070
630
550
460 FYLLD MED FETT
FILLED WITH GREASE
1124029-3
555186

ECM: 567475 - 20120710
Group number: 1124029-0300
Assembly Drawing: 1124029-3_1_AB

Pos	Part No	UN	Qty	Description	Page No
-					
010	547174-0000		1	CANTILEVER	
020	547175-0000		1	CANTILEVER	
030	1086421-0000		1	SIDE PLATE	
040	1086422-0000		1	SIDE PLATE	
050	538375-0001		1	FASTENING IRON	
060	538375-0002		1	FASTENING IRON	
070	538382-0000		1	COVERING PLATE	
080	538384-0000		1	COVERING PLATE	
090	549646-0000		1	WHEEL	
100	1086383-0000		1	JOINT PIECE	
110	1086423-0000		1	SLIDE RAIL	
120	1086424-0000		1	SLIDE RAIL	
130	1124865-0000		1	GABLE PART	
140	1124866-0000		1	GABLE PART	
150	1139761-0000		1	BRACKET	
160	1124867-0000		1	BRACKET	
170	476975-0000		2	WHEEL	
180	538383-0000		1	COVERING PLATE	
190	547181-0000		1	BRACKET	
200	547183-0000		2	SLIDE SHEET	
220	547187-0000		1	HUB	
230	1086426-0000		1	STEERING RAIL	
240	1086425-0000		1	STEERING RAIL	
250	549644-0000		1	STEERING	
260	549659-0000		1	SLEEVE	
265	1086180-0000		10	SLEEVE	
270	1086384-0000		1	MOUNTING BLOCK	
280	1128906-0000		1	END WHEEL	
290	499777-0000		2	PLUG	
300	530852-0000		2	RING	
310	531499-0000		2	BEARING SLEEVE	
320	532404-0000		2	SPRING	
330	547191-0001		2	SPACER	
340	547191-0002		2	SPACER	
350	547192-0000		1	PLUG	
360	547193-0000		1	BEARING SLEEVE	
370	547194-0000		3	SCREW	
380	549645-0000		2	COVER DISC	
390	1124863-0000		1	PROTECTION PLATE	
450	90091-0004		2	RADIAL SEAL 17X28X7 MM	
460	90603-6233	G	1	KLüBERSYNTH UH1 14-151, ONLY IN BOM	
	90603-6234		*1*	*KLüBERSYNTH UH1 14-151, 400G CARTRIDGE*	
	90603-6253		*1*	*KLüBERSYNTH UH1 14-151, 1 KG TIN*	
470	2808744-0000		1	PLATE	
500	312105-0459		2	SCREW, M6S ISO 4014 M8X40 A4 80	
510	312105-0453		6	SCREW, M6S ISO 4017 M8X25 A4 80	
520	312105-0449		10	SCREW, M6S ISO 4017 M8X16 A4 80	
530	312105-0378		3	SCREW, M6S ISO 4014 M6X40 A4 80	
540	312105-0368		14	SCREW, M6S ISO 4017 M6X16 A4 80	
550	312105-0366		17	SCREW, M6S ISO 4017 M6X12 A4 80	
560	312156-0451		2	SCREW EN 10642 MF6S M8X20 A470	
570	312156-0366		2	SCREW EN 10642 MF6S M6X12 A470	
580	312115-0453		2	SCREW ISO4762 M8X25 A4 80	
590	312605-0320		3	HEXAGON NUT, M6M M10 A280	
600	312605-0316		3	HEXAGON NUT, M6M M6 A280	
610	315105-0173		6	WASHER PLAIN, 10,5X22X2 A4 BRB	
620	315105-0165		16	FWAS080G0-0S, WASHER PLAIN	
630	315105-0153		35	WASHER PLAIN, 6,4X12X1,5 A4 BRB	
640	344224-0201		2	BALL BEARING 12/28X8	

Machine Type	Group Description	Used-In	Group Number	Page No

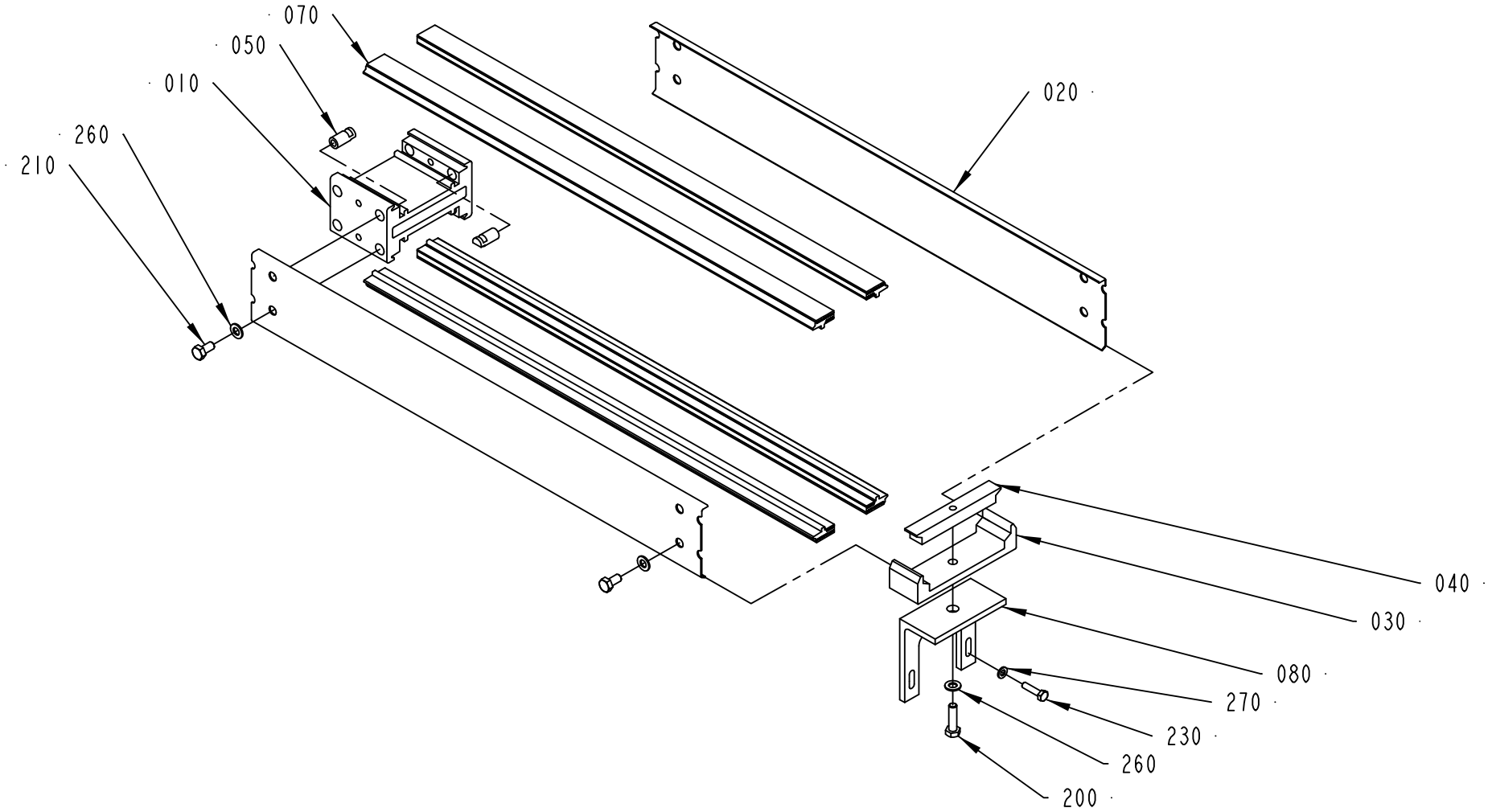

1124030-4
ECM 275785

ECM: 277139 - 20070130
Group number: 1124030-0400
Assembly Drawing: 1124030-4_1_AB

Pos	Part No	UN	Qty	Description	Page No
-					
010	1086222-0000		1	JOINT PIECE	
020	2720927-0000		2	COVER PLATE	
030	548246-0000		1	BRACKET	
040	548247-0000		1	BRACKET	
050	1086180-0000		8	SLEEVE	
070	2720928-0000		4	RAIL	
080	1139759-0000		1	BRACKET	
200	312105-0455		1	SCREW, M6S ISO 4017 M8X30 A4 80	
210	312105-0449		8	SCREW, M6S ISO 4017 M8X16 A4 80	
230	312105-0372		2	SCREW, M6S ISO 4017 M6X25 A4 80	
260	315105-0165		9	FWAS080G0-0S, WASHER PLAIN	
270	315105-0153		2	WASHER PLAIN, 6,4X12X1,5 A4 BRB	

Pos	Part No	UN	Qty	Description	Page No

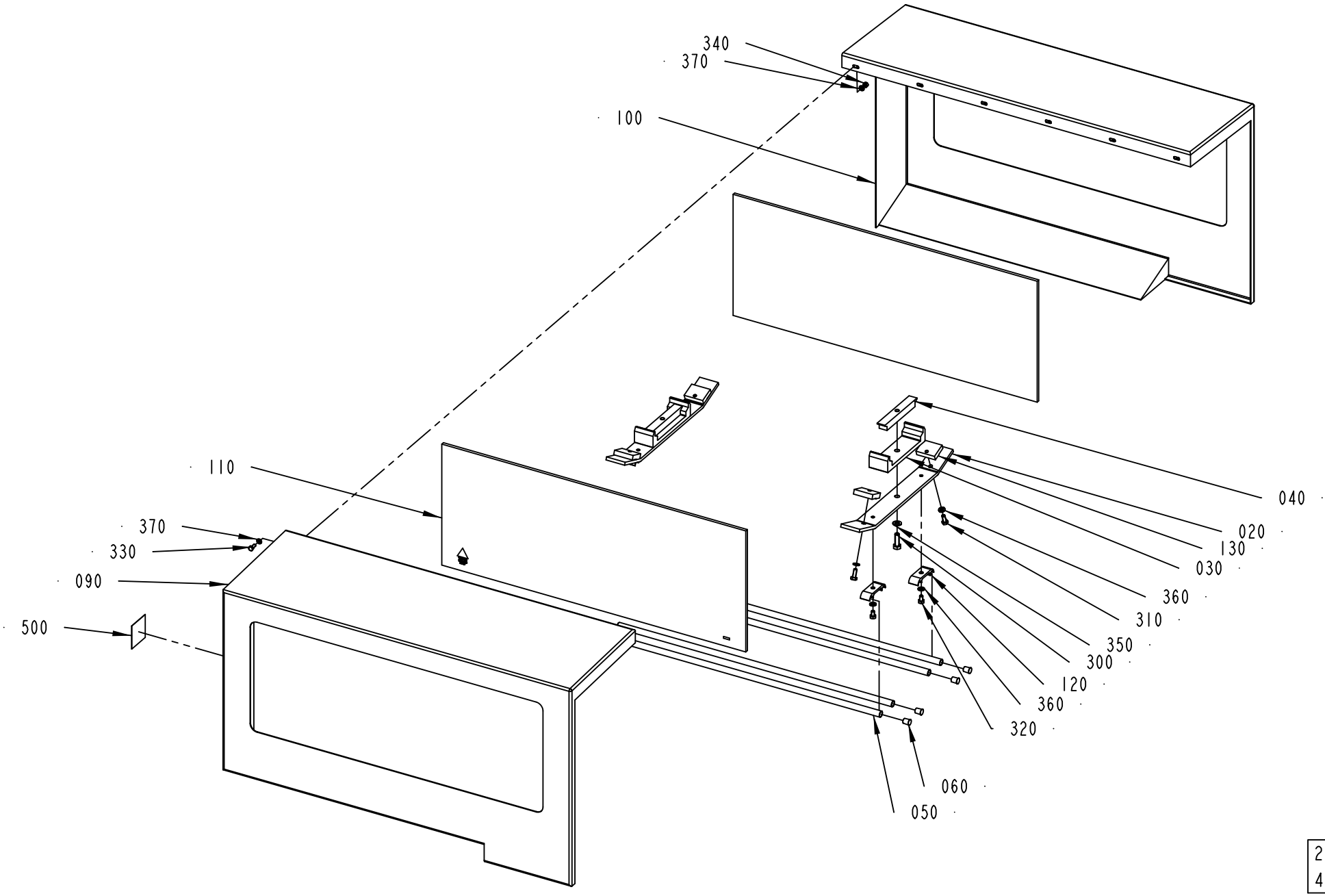

2851973-1
408460

ECM: 414574 - 20090911
Group number: 2851973-0100
Assembly Drawing: 2851973-1_1_AB

Pos	Part No	UN	Qty	Description	Page No
-					
020	2851970-0000		2	BRACKET	
030	548246-0000		2	BRACKET	
040	548247-0000		2	BRACKET	
050	476221-0024		4	PIPE	
060	484701-0000		8	SHUTTER	
090	2851968-0000		1	TUNNEL HALF	
100	2851969-0000		1	TUNNEL HALF	
110	2802466-0005		2	GLASS	
120	1020634-0001		4	HOLDER	
130	2864530-0000		4	CLAMPING PLATE	
200	90157-0041	L	1	SEALING COMPOUND, RHODORSEAL 5651	
300	312105-0453		2	SCREW, M6S ISO 4017 M8X25 A4 80	
310	312105-0368		4	SCREW, M6S ISO 4017 M6X16 A4 80	
320	312105-0364		4	SCREW, M6S ISO 4017 M6X10 A4 80	
330	312105-0327		6	SCREW, M6S ISO 4017 M5X12 A4 80	
340	312605-0314		6	HEXAGON NUT, M6M M5 A280	
350	315105-0165		2	FWAS080G0-0S, WASHER PLAIN	
360	315105-0153		8	WASHER PLAIN, 6,4X12X1,5 A4 BRB	
370	315105-0146		12	WASHER PLAIN, 5,3X10X1 A4 BRB	
500	90459-7584		1	PROHOBITION SIGN ISO, DO NOT REACH IN	

Pos	Part No	UN	Qty	Description	Page No

QUEUE GUARD,DOUBLE

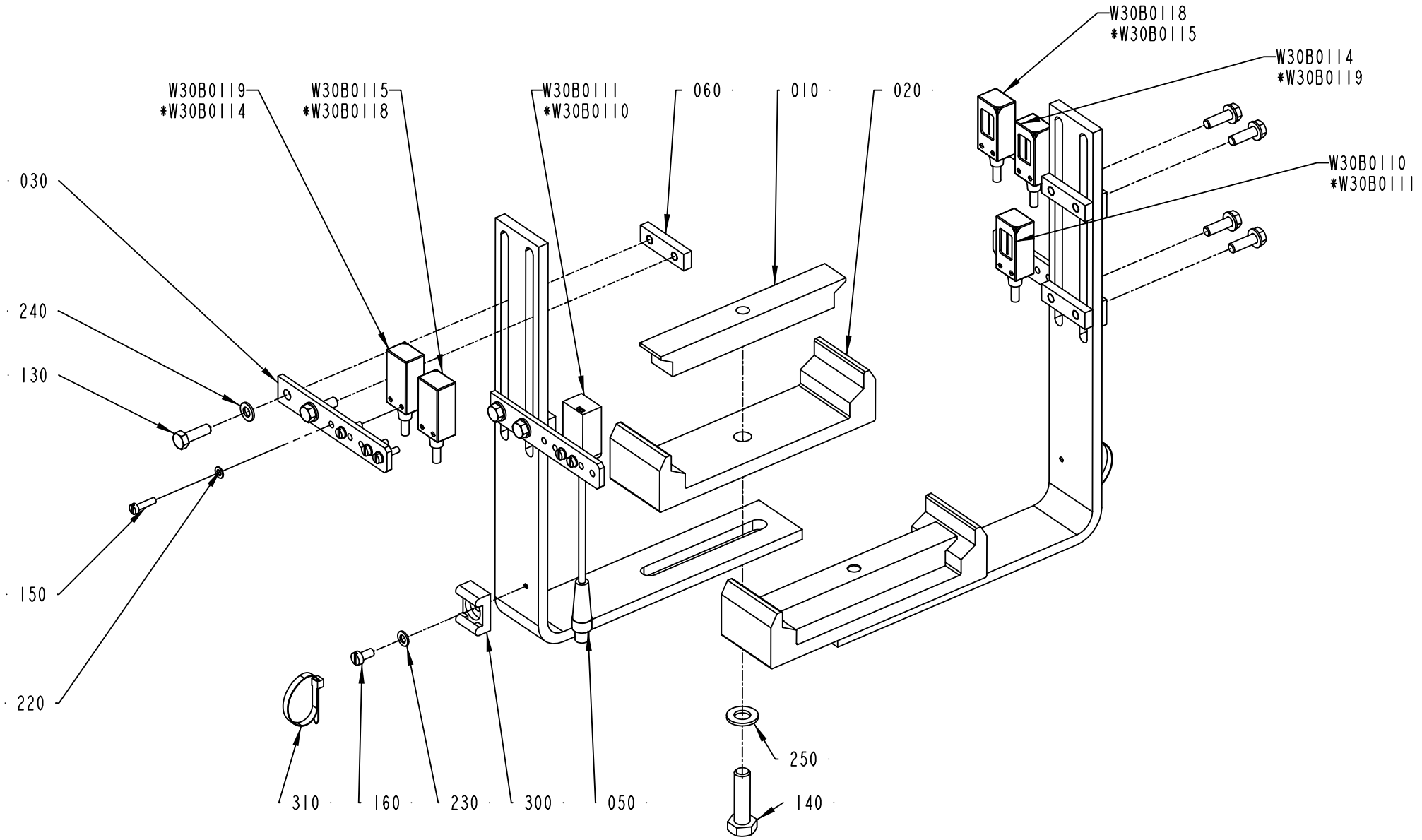

* INFEED RIGHT Z-FORM AND INFEED LEFT U-FORM

2718858-2
ECM 352552

ECM: 355530 - 20080919
Group number: 2718858-0200
Assembly Drawing: 2718858-2_1_AC

Pos	Part No	UN	Qty	Description	Page No
-					
010	548247-0000		2	BRACKET	
020	548246-0000		2	BRACKET	
030	2895035-0000		4	PHOTOCELL BRACKET	
050	2920748-0000		2	HOLDER	
060	2504290-0000		4	PLATE	
130	312105-0329		8	SCREW, M6S ISO 4017 M5X16 A4 80	
140	312105-0455		2	SCREW, M6S ISO 4017 M8X30 A4 80	
150	312125-0226		12	SLOTTED HEAD SCREW, ISO1207 M3X12 A4	
160	312125-0287		2	SLOTTED HEAD SCREW, ISO1207 M4X8 A4	
220	315105-0124		12	WASHER PLAIN, 3,2X6X0,5 A4 BRB	
230	315105-0136		2	WASHER PLAIN, 4,3X9X0,8 A4 BRB	
240	315105-0146		8	WASHER PLAIN, 5,3X10X1 A4 BRB	
250	315105-0165		2	FWAS080G0-0S, WASHER PLAIN	
300	352113-0203		2	ANCHOR PLATES FOR STRIPS, TM3S8-M0	
310	352113-0101		2	CABLE TIE,BLACK 92X	
W30B0110	90600-3673		1	PHOTOCELL, WE4-3F3130S03	
W30B0111	90600-3322		1	PHOTOCELL, WS4-3D3130F20	
W30B0114	90600-3673		1	PHOTOCELL, WE4-3F3130S03	
W30B0115	90600-3723		1	PHOTOCELL, WS4-3D3130S05	
W30B0118	90600-3673		1	PHOTOCELL, WE4-3F3130S03	
W30B0119	90600-3723		1	PHOTOCELL, WS4-3D3130S05	

Pos	Part No	UN	Qty	Description	Page No

This page is intentionally left blank.

ECM: 353206 - 20080919
Group number: 2959045-0100
Assembly Drawing:

Pos	Part No	UN	Qty	Description	Page No
TCF56 ETHERNET, TRC					
	2959044-0100		1	PHOTOCELL UNIT, OVERFLOW	**1-23**
UNIT CONVEYOR 54 ETHERNET, TRC					
	2959043-0100		1	PHOTOCELL UNIT, OVERFLOW	**1-25**

Pos	Part No	UN	Qty	Description	Page No

PHOTOCELL UNIT, OVERFLOW

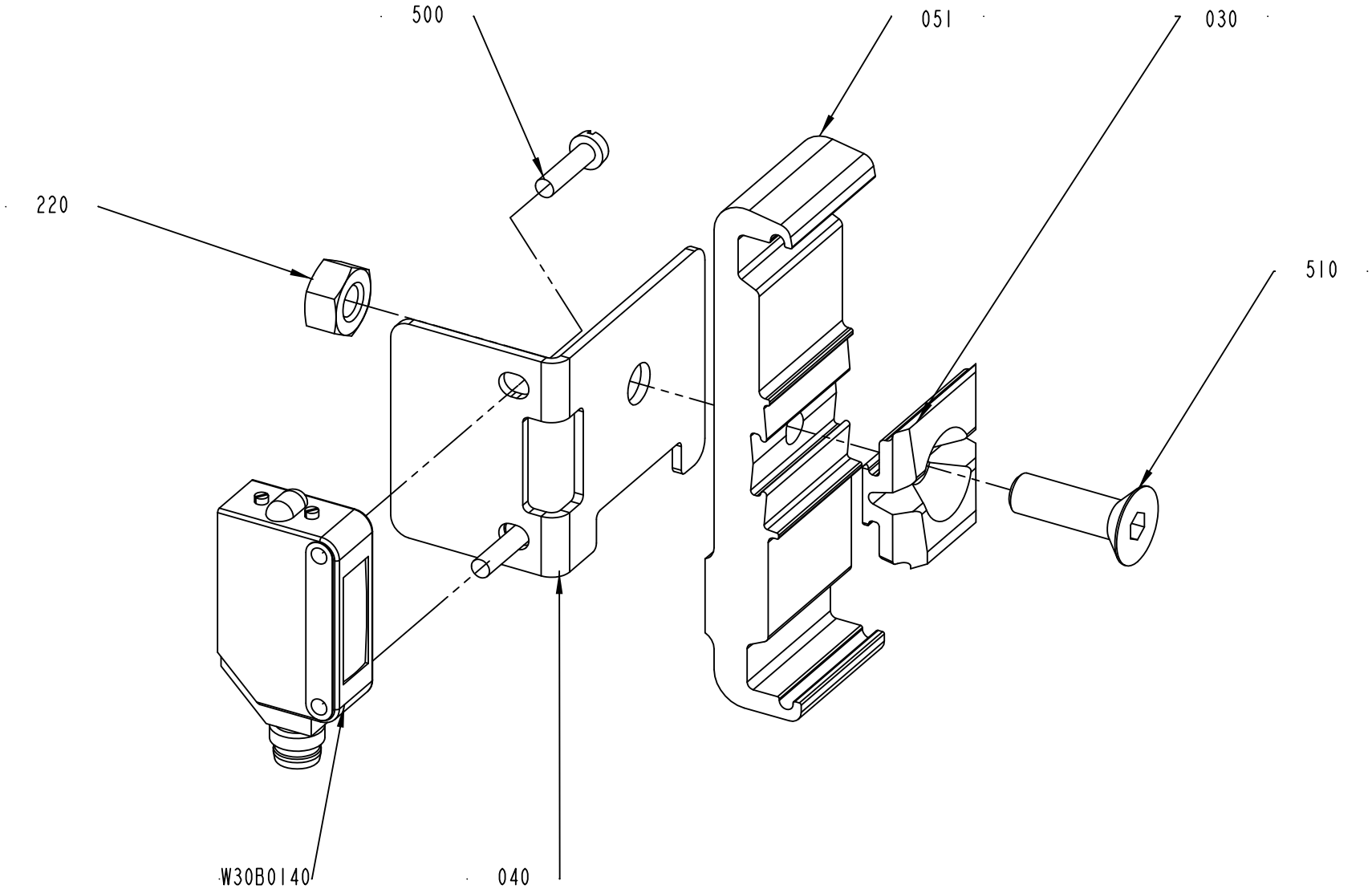

2959044-1
352551

ECM: 352551 - 20080919
Group number: 2959044-0100
Assembly Drawing: 2959044-1_1_AA

Pos	Part No	UN	Qty	Description	Page No
-					
030	1138130-0000		1	LOCKING BLOCK	
040	2959047-0000		1	BRACKET	
051	2912730-0000		1	HOLDER	
220	312605-0316		1	HEXAGON NUT, M6M M6 A280	
500	312125-0226		2	SLOTTED HEAD SCREW, ISO1207 M3X12 A4	
510	312155-0370		1	SCREW DIN 7991 MF6S M6X20 A4 70	
W30B0140	90459-2986		1	PHOTOCELL, E3Z-LS86	

Pos	Part No	UN	Qty	Description	Page No

PHOTOCELL UNIT, OVERFLOW

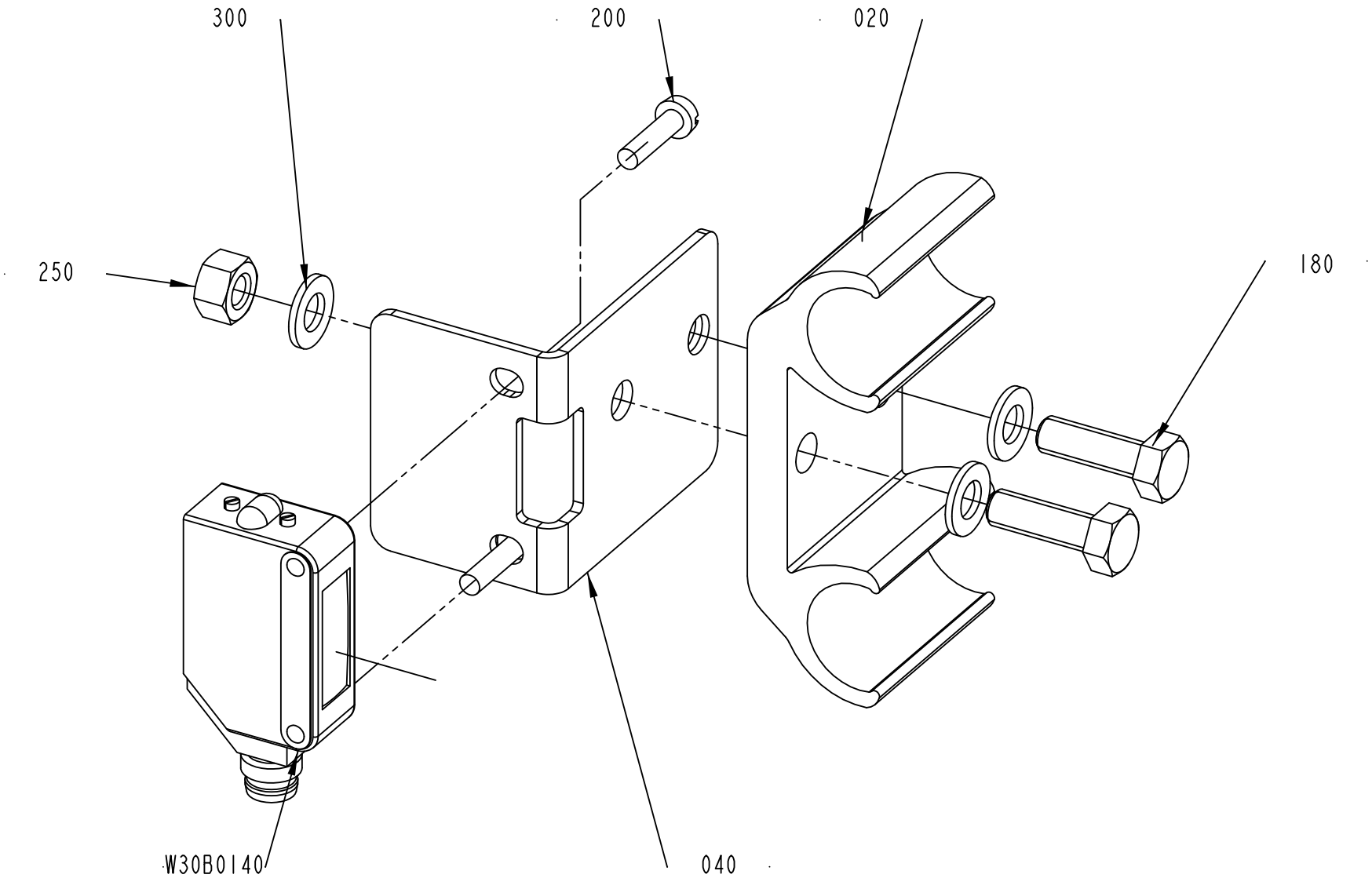

2959043-1
347756

ECM: 349785 - 20080919
Group number: 2959043-0100
Assembly Drawing: 2959043-1_1_AA

Pos	Part No	UN	Qty	Description	Page No
-					
020	1086175-0000		1	HOLDER	
040	2959049-0000		1	BRACKET	
180	312105-0329		2	SCREW, M6S ISO 4017 M5X16 A4 80	
200	312125-0226		2	SLOTTED HEAD SCREW, ISO1207 M3X12 A4	
250	312605-0314		2	HEXAGON NUT, M6M M5 A280	
300	315105-0146		4	WASHER PLAIN, 5,3X10X1 A4 BRB	
W30B0140	90459-2986		1	PHOTOCELL, E3Z-LS86	

Pos	Part No	UN	Qty	Description	Page No

PACKAGE CONVEYOR TPC21/TPC53

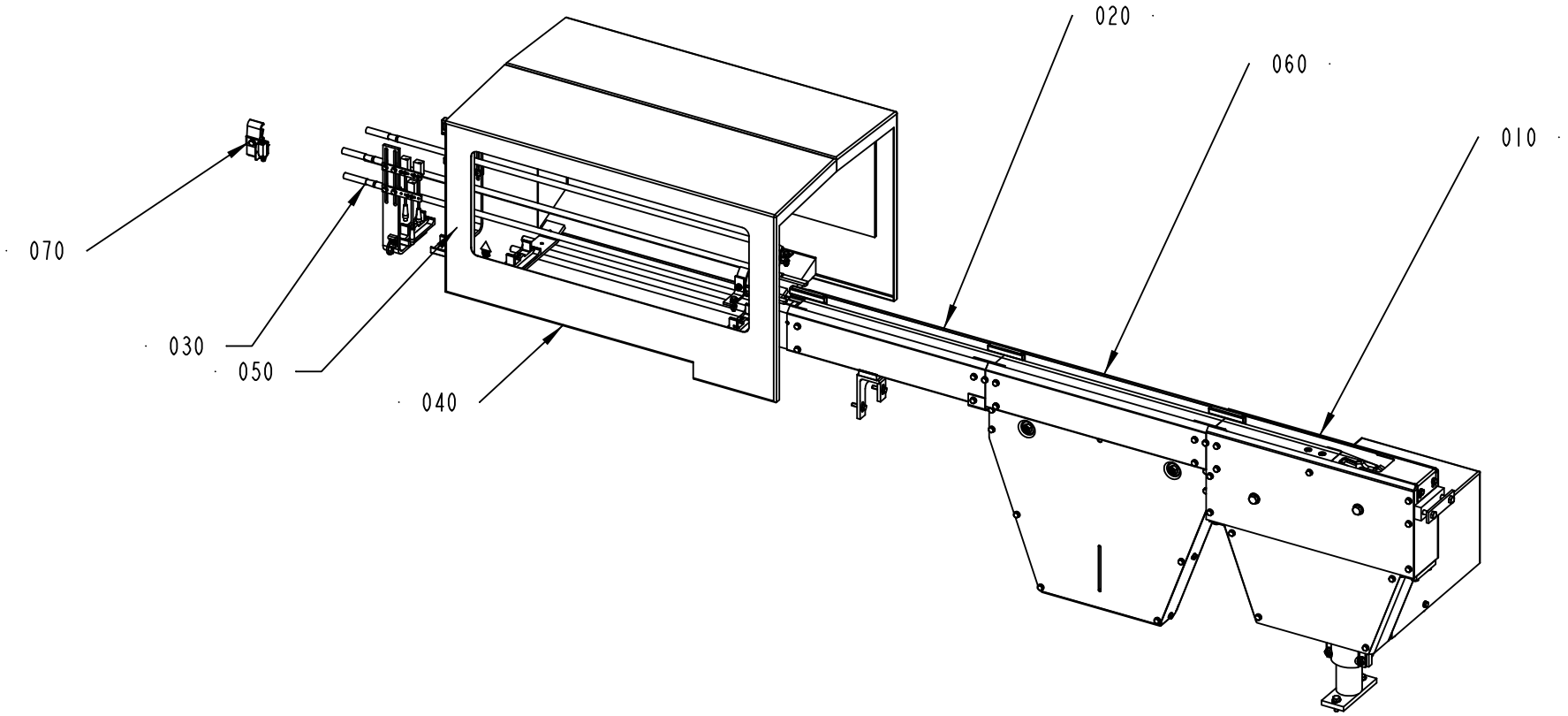

2718846-3
352551

ECM: 353207 - 20080919
Group number: 2718846-0300
Assembly Drawing: 2718846-3_1_AA

Pos	Part No	UN	Qty	Description	Page No
LINF U-FORM ETHERNET, TRC, RINF Z-FORM ETHERNET, TRC					
070	2959042-0100		1	PHOTOCELL UNIT, OVERFLOW	**1-29**
RINF U-FORM ETHERNET, TRC, LINF Z-FORM ETHERNET, TRC					
070	2959042-0100		1	PHOTOCELL UNIT, OVERFLOW	**1-29**
Common Parts					
010	1124008-0400		1	DRIVE UNIT	**1-31**
020	2851984-0100		1	CONVEYOR BODY	**1-33**
030	2970845-0100		1	RAILING	**1-7**
040	2851972-0100		1	TUNNEL	**1-35**
050	2718856-0200		1	QUEUE GUARD,DOUBLE	**1-37**
060	2851985-0100		1	CHAIN TENSIONER	**1-39**

Pos	Part No	UN	Qty	Description	Page No

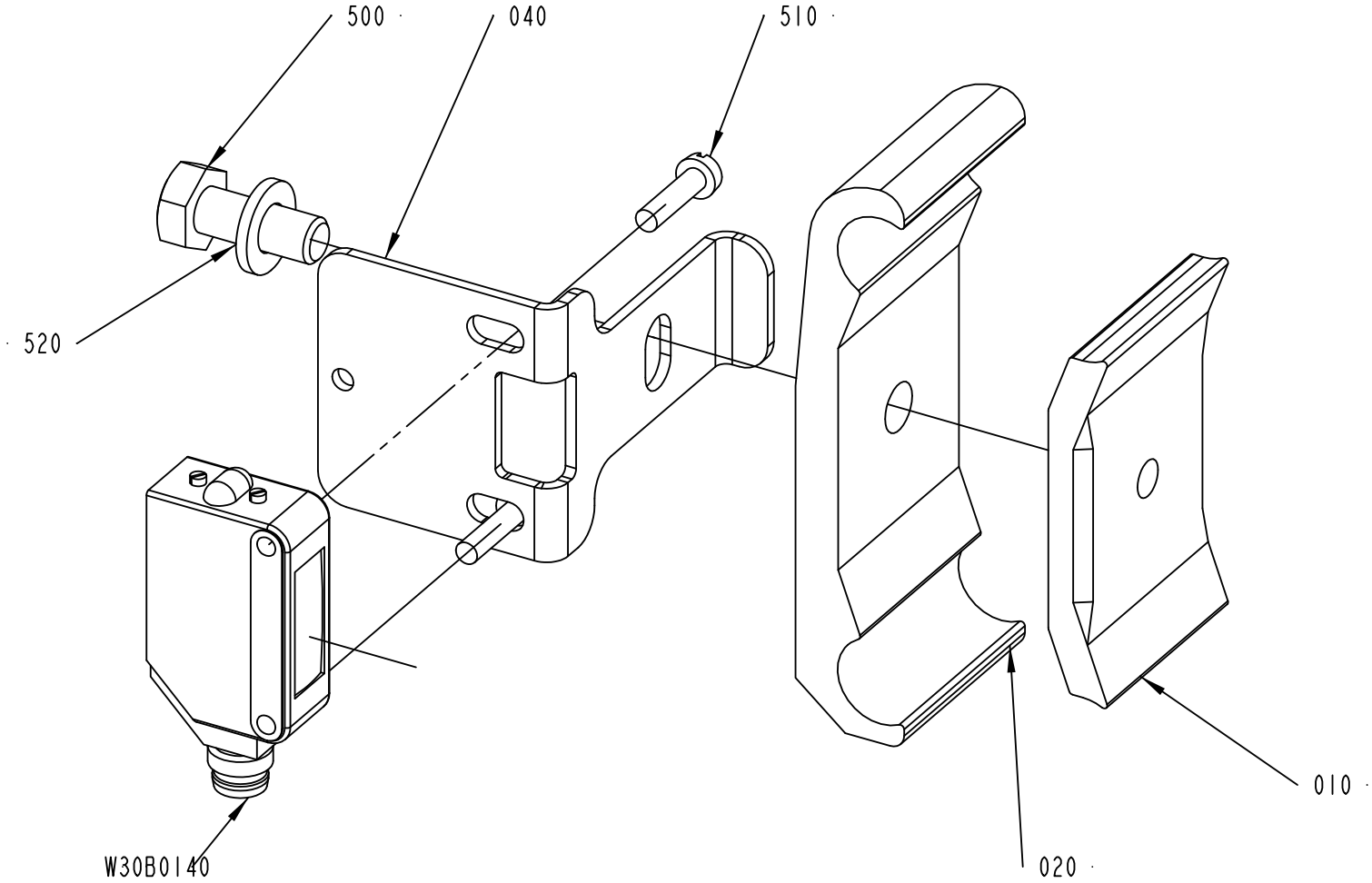

2959042-1
347756

ECM: 349784 - 20080919
Group number: 2959042-0100
Assembly Drawing: 2959042-1_1_AA

Pos	Part No	UN	Qty	Description	Page No
-					
010	1366727-0000		1	CLAMP	
020	1366750-0000		1	HOLDER	
040	2959046-0000		1	BRACKET	
500	312105-0368		1	SCREW, M6S ISO 4017 M6X16 A4 80	
510	312121-0226		2	SCREW ISO 1207 M3X12 4.8-5.8 Z.PL.	
520	315105-0153		1	WASHER PLAIN, 6,4X12X1,5 A4 BRB	
W30B0140	90459-2986		1	PHOTOCELL, E3Z-LS86	

Pos	Part No	UN	Qty	Description	Page No

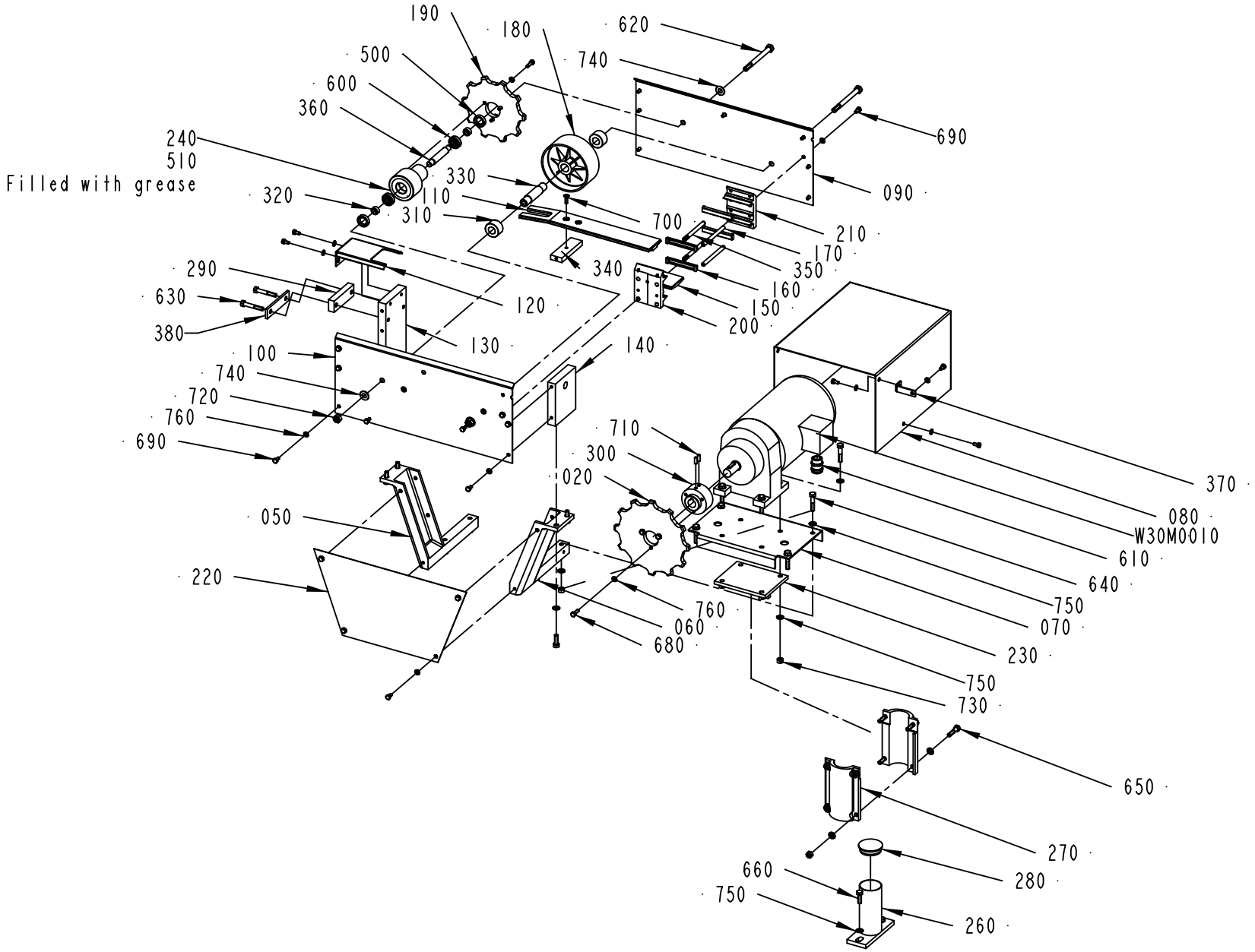

1124008-4
555186

ECM: 567471 - 20120710
Group number: 1124008-0400
Assembly Drawing: 1124008-4_1_AD

Pos	Part No	UN	Qty	Description	Page No
RINF U-FORM CHAIN MOD02, LINF Z-FORM CHAIN MOD02					
020	1550607-0000		1	SPROCKET	
190	1550606-0000		1	SPROCKET	
RINF U-FORM CHAIN MOD86, LINF Z-FORM CHAIN MOD86					
020	486860-0000		1	SPROCKET	
190	486858-0000		1	SPROCKET	
RINF Z-FORM CHAIN MOD02, LINF U-FORM CHAIN MOD02					
020	1550607-0000		1	SPROCKET	
190	1550606-0000		1	SPROCKET	
RINF Z-FORM CHAIN MOD86, LINF U-FORM CHAIN MOD86					
020	486860-0000		1	SPROCKET	
190	486858-0000		1	SPROCKET	
Common Parts					
050	486896-0001		1	CANTILEVER	
060	486896-0002		1	CANTILEVER	
070	486886-0000		1	MOTOR SHELF	
080	1124490-0000		1	MOTOR COVER	
090	531484-0002		1	SIDE PLATE	
100	531484-0001		1	SIDE PLATE	
110	531503-0000		1	SLIDE RAIL	
120	531506-0000		1	PROTECTION PLATE	
130	1124874-0000		1	GABLE PART	
140	2909534-0000		1	GABLE PART	
150	464071-0007		1	SLIDE RAIL	
160	466074-0002		4	SLIDER	
170	476220-0000		2	SPACER	
180	476975-0000		1	WHEEL	
200	486918-0001		1	JOINT PIECE	
210	486918-0002		1	JOINT PIECE	
220	497678-0000		1	COVERING PLATE	
230	531487-0000		1	BRACKET	
240	531953-0000		1	HUB	
260	1139762-0000		1	SUPPORT LEG	
270	497680-0001		2	HOLDER	
280	497997-0000		1	PLUG	
290	1124700-0000		1	SPACER	
300	497635-0000		1	HUB	
310	497637-0003		2	SPACER	
320	530852-0000		2	RING	
330	531499-0000		1	BEARING SLEEVE	
340	531502-0000		1	MOUNTING BLOCK	
350	531948-0000		2	SPACER	
360	531952-0000		1	BEARING SLEEVE	
370	1124491-0000		1	BRACKET	
380	2808743-0000		1	PLATE	
500	90091-0004		2	RADIAL SEAL 17X28X7 MM	
510	90603-6233	G	1	KLüBERSYNTH UH1 14-151, ONLY IN BOM	
	90603-6234		*1*	*KLüBERSYNTH UH1 14-151, 400G CARTRIDGE*	
	90603-6253		*1*	*KLüBERSYNTH UH1 14-151, 1 KG TIN*	
600	344224-0201		2	BALL BEARING 12/28X8	
610	90012-0118		1	GLAND, EXTENDED WITH INSERT, PG16	
620	312105-0513		2	SCREW, M6S ISO 4014 M10X110 A4 80	
630	312105-0461		2	SCREW, M6S ISO 4014 M8X50 A4 80	
640	312105-0459		8	SCREW, M6S ISO 4014 M8X40 A4 80	
650	312105-0457		4	SCREW, M6S ISO 4014 M8X35 A4 80	
660	312105-0453		6	SCREW, M6S ISO 4017 M8X25 A4 80	
680	312105-0370		6	SCREW, M6S ISO 4017 M6X20 A4 80	
690	312105-0366		26	SCREW, M6S ISO 4017 M6X12 A4 80	
700	312155-0370		1	SCREW DIN 7991 MF6S M6X20 A4 70	
710	312318-0368		2	SET SCREW, CUP END ISO4029 M6X16 A4	
720	312605-0320		2	HEXAGON NUT, M6M M10 A280	
730	312605-0318		12	HEXAGON NUT, M6M M8 A280	
740	315105-0173		4	WASHER PLAIN, 10,5X22X2 A4 BRB	
750	315105-0165		30	FWAS080G0-0S, WASHER PLAIN	
760	315105-0153		32	WASHER PLAIN, 6,4X12X1,5 A4 BRB	
W30M0010	90603-5337		1	GEARS, HELICAL MOTOR SK01V-80S/4S03	

Machine Type | Group Description | Used-In | Group Number | Page No

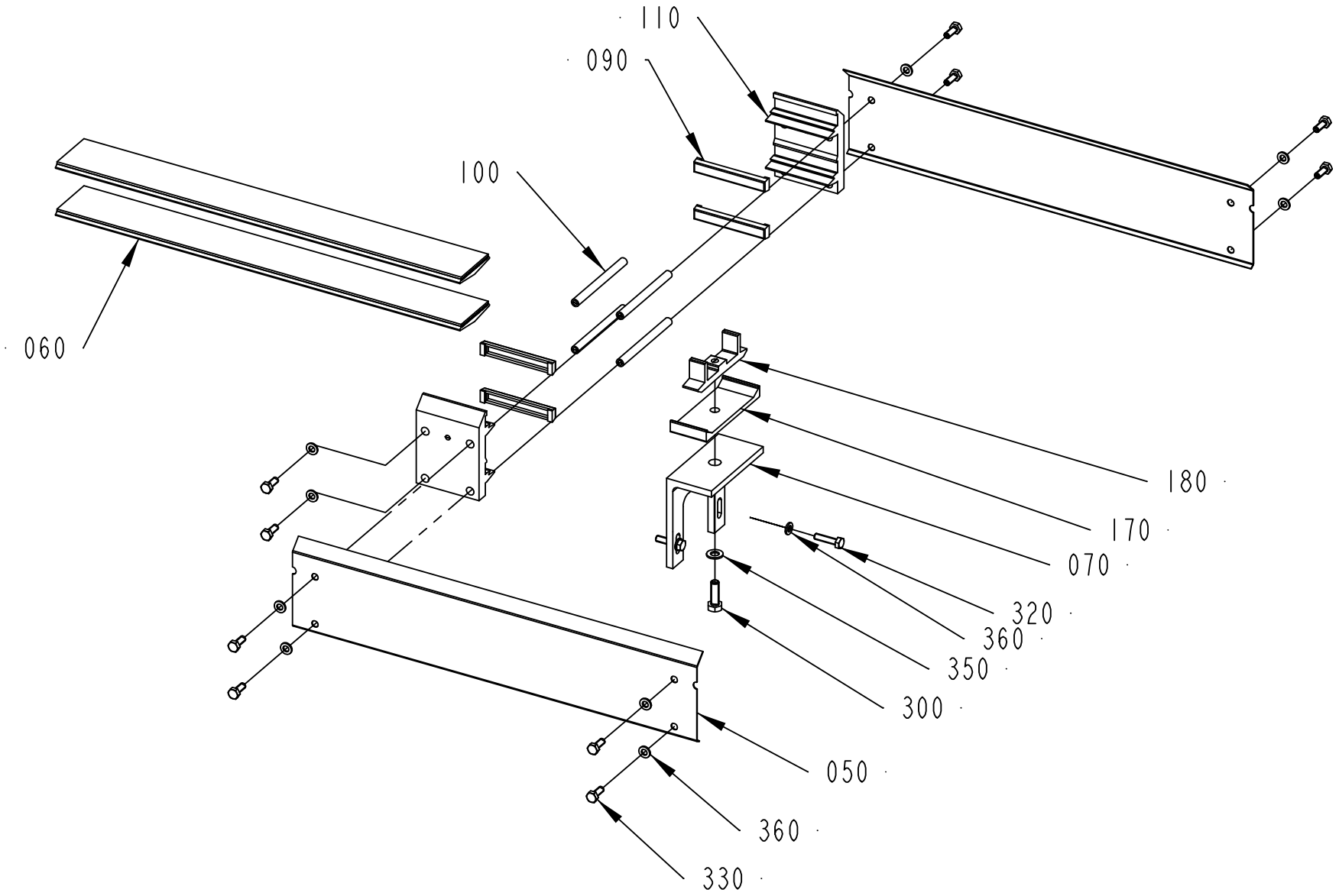

2851984-1
ECM 275785

ECM: 275785 - 20070130
Group number: 2851984-0100
Assembly Drawing: 2851984-1_1_AA

Pos	Part No	UN	Qty	Description	Page No
-					
050	2851982-0000		2	COVERING PLATE	
060	2851983-0000		2	SLIDE RAIL	
070	1139759-0000		1	BRACKET	
090	466074-0002		4	SLIDER	
100	476220-0000		4	SPACER	
110	457696-0001		4	JOINT PIECE	
170	537483-0000		1	BRACKET	
180	537482-0000		1	BRACKET	
300	312105-0453		1	SCREW, M6S ISO 4017 M8X25 A4 80	
320	312105-0372		2	SCREW, M6S ISO 4017 M6X25 A4 80	
330	312105-0368		10	SCREW, M6S ISO 4017 M6X16 A4 80	
350	315105-0165		1	FWAS080G0-0S, WASHER PLAIN	
360	315105-0153		12	WASHER PLAIN, 6,4X12X1,5 A4 BRB	

Pos	Part No	UN	Qty	Description	Page No

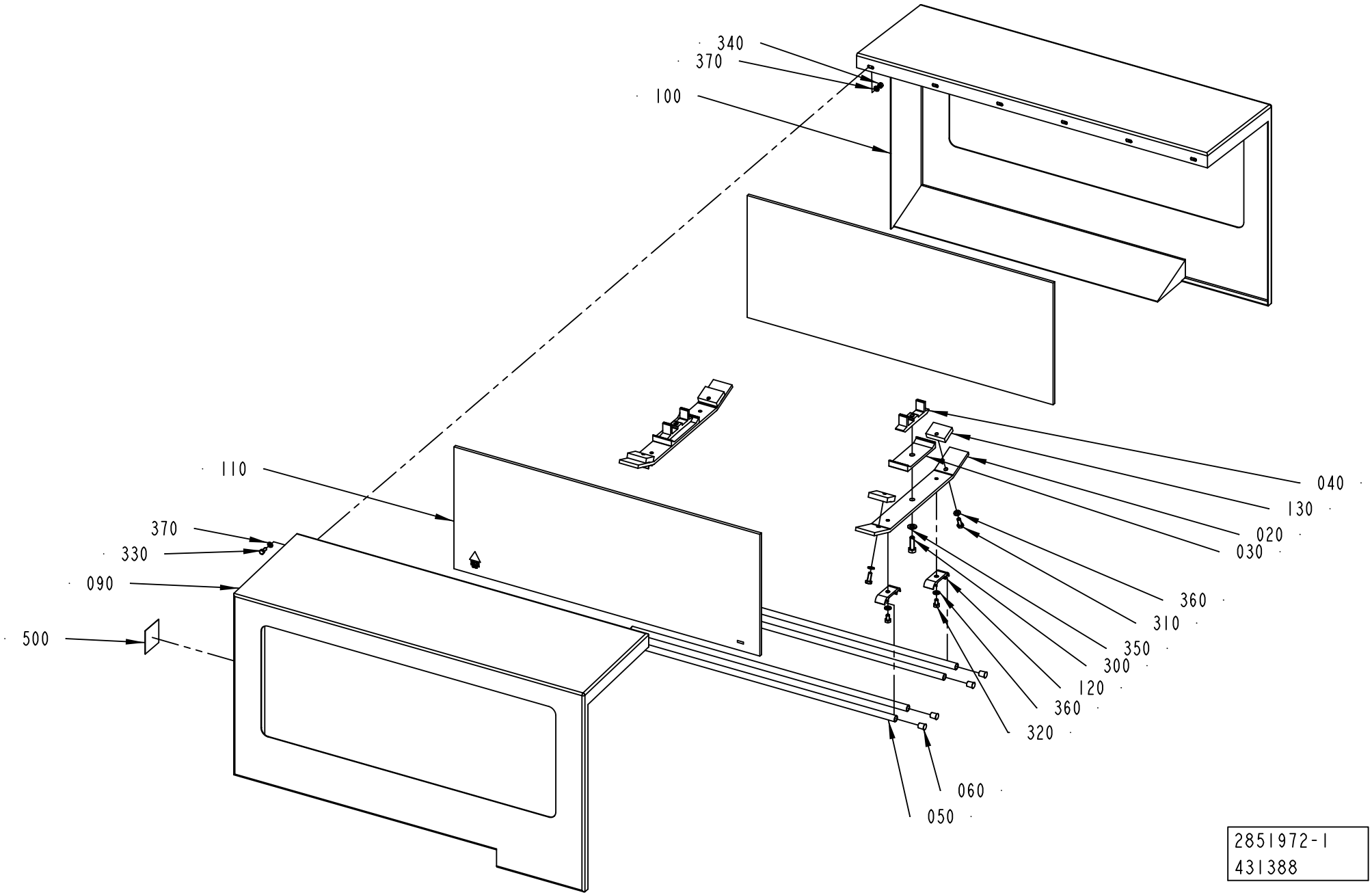
340
370
100
110
370
330
090
500
040
130
020
030
360
310
350
300
120
360
320
060
050
2851972-1
431388

ECM: 436248 - 20100202
Group number: 2851972-0100
Assembly Drawing: 2851972-1_1_AC

Pos	Part No	UN	Qty	Description	Page No
-					
020	2851970-0000		2	BRACKET	
030	537483-0000		2	BRACKET	
040	537482-0000		2	BRACKET	
050	476221-0024		4	PIPE	
060	484701-0000		8	SHUTTER	
090	2851968-0000		1	TUNNEL HALF	
100	2851969-0000		1	TUNNEL HALF	
110	2802466-0005		2	GLASS	
120	1020634-0001		4	HOLDER	
130	2864530-0000		4	CLAMPING PLATE	
200	90157-0041	L	1	SEALING COMPOUND, RHODORSEAL 5651	
300	312105-0453		2	SCREW, M6S ISO 4017 M8X25 A4 80	
310	312105-0368		4	SCREW, M6S ISO 4017 M6X16 A4 80	
320	312105-0364		4	SCREW, M6S ISO 4017 M6X10 A4 80	
330	312105-0327		6	SCREW, M6S ISO 4017 M5X12 A4 80	
340	312605-0314		6	HEXAGON NUT, M6M M5 A280	
350	315105-0165		2	FWAS080G0-0S, WASHER PLAIN	
360	315105-0153		8	WASHER PLAIN, 6,4X12X1,5 A4 BRB	
370	315105-0146		12	WASHER PLAIN, 5,3X10X1 A4 BRB	
500	90459-7584		1	PROHOBITION SIGN ISO, DO NOT REACH IN	

Pos	Part No	UN	Qty	Description	Page No

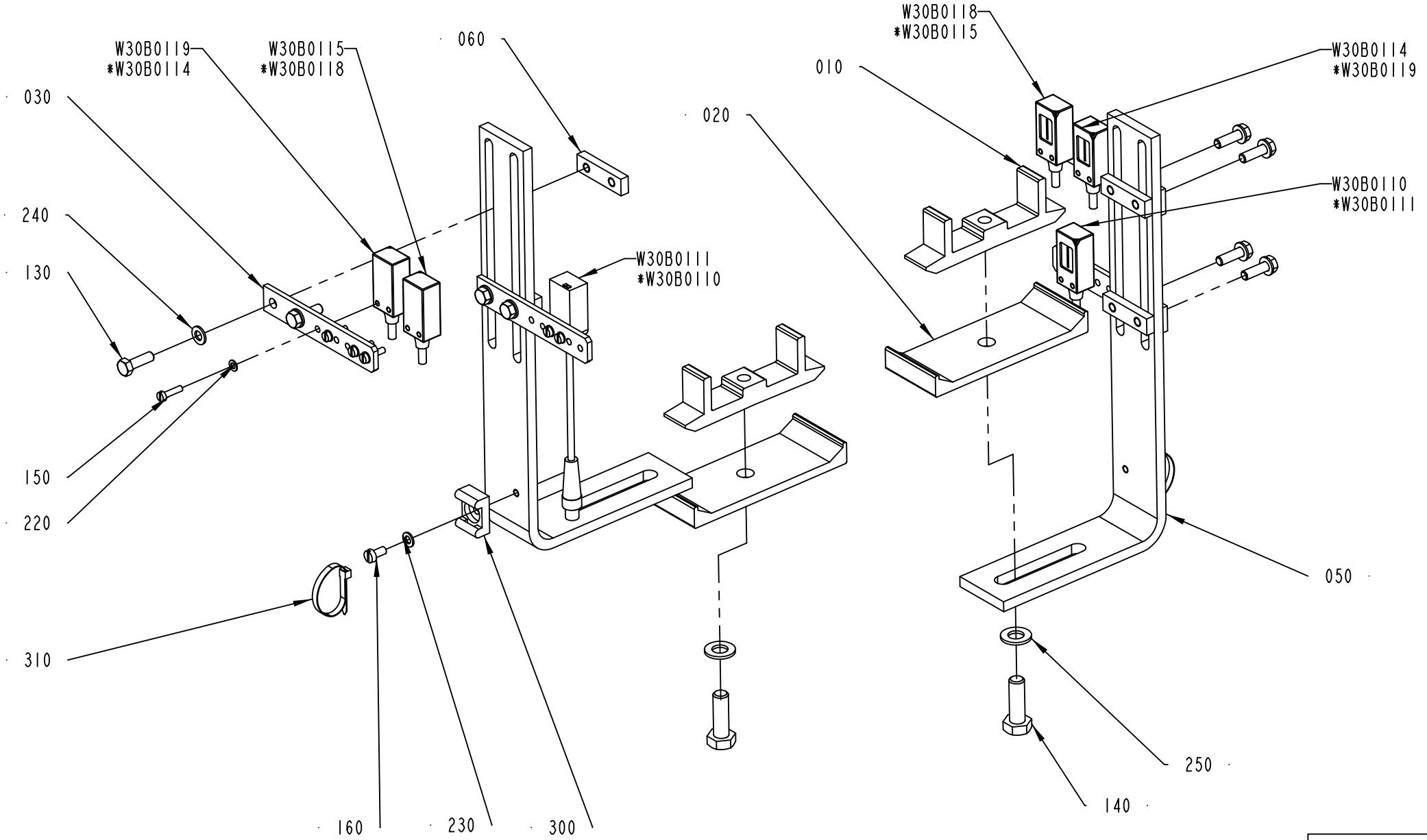

* INFEED RIGHT Z-FORM AND INFEED LEFT U-FORM

2718856-2
431388

ECM: 436249 - 20100202
Group number: 2718856-0200
Assembly Drawing: 2718856-2_1_AD

Pos	Part No	UN	Qty	Description	Page No
-					
010	537482-0000		2	BRACKET	
020	537483-0000		2	BRACKET	
030	2895035-0000		4	PHOTOCELL BRACKET	
050	2920752-0000		2	HOLDER	
060	2504290-0000		4	PLATE	
130	312105-0329		8	SCREW, M6S ISO 4017 M5X16 A4 80	
140	312105-0453		2	SCREW, M6S ISO 4017 M8X25 A4 80	
150	312125-0226		12	SLOTTED HEAD SCREW, ISO1207 M3X12 A4	
160	312125-0287		2	SLOTTED HEAD SCREW, ISO1207 M4X8 A4	
220	315105-0124		12	WASHER PLAIN, 3,2X6X0,5 A4 BRB	
230	315105-0136		2	WASHER PLAIN, 4,3X9X0,8 A4 BRB	
240	315105-0146		8	WASHER PLAIN, 5,3X10X1 A4 BRB	
250	315105-0165		2	FWAS080G0-0S, WASHER PLAIN	
300	352113-0203		2	ANCHOR PLATES FOR STRIPS, TM3S8-M0	
310	352113-0101		2	CABLE TIE,BLACK 92X	
W30B0110	90600-3673		1	PHOTOCELL, WE4-3F3130S03	
W30B0111	90600-3322		1	PHOTOCELL, WS4-3D3130F20	
W30B0114	90600-3673		1	PHOTOCELL, WE4-3F3130S03	
W30B0115	90600-3723		1	PHOTOCELL, WS4-3D3130S05	
W30B0118	90600-3673		1	PHOTOCELL, WE4-3F3130S03	
W30B0119	90600-3723		1	PHOTOCELL, WS4-3D3130S05	

Pos	Part No	UN	Qty	Description	Page No

CHAIN TENSIONER

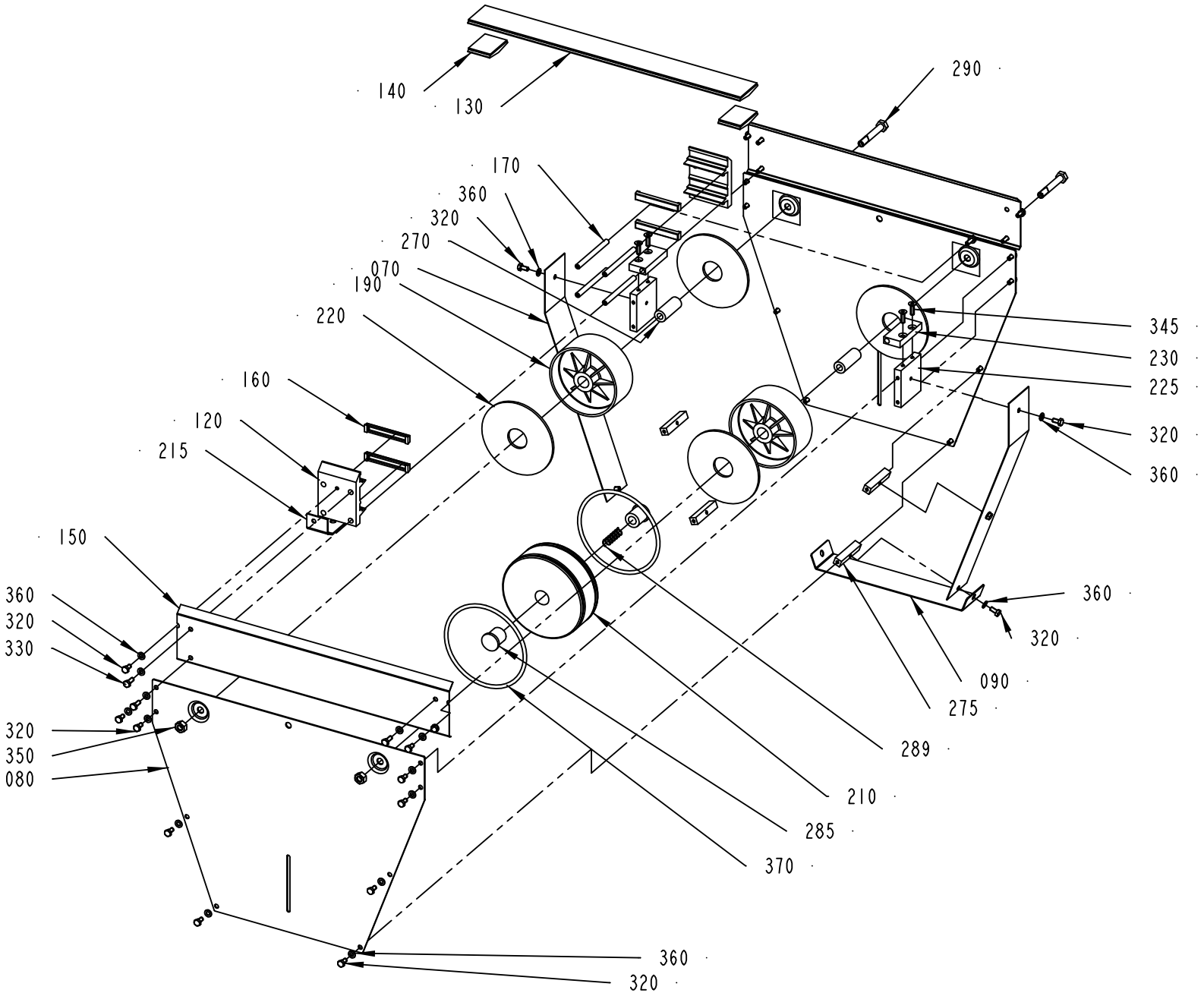

2851985-1
275785

ECM: 277138 - 20070130
Group number: 2851985-0100
Assembly Drawing: 2851985-1_1_AA

Pos	Part No	UN	Qty	Description	Page No
-					
070	497679-0000		2	COVERING PLATE	
080	532382-0000		2	SIDE PLATE	
090	1138602-0000		1	PROTECTION PLATE	
120	457696-0001		2	JOINT PIECE	
130	464071-0002		1	SLIDE RAIL	
140	464071-0006		2	SLIDE RAIL	
150	466072-0002		2	COVERING PLATE	
160	466074-0002		4	SLIDER	
170	476220-0000		4	SPACER	
190	476975-0000		2	WHEEL	
210	497676-0000		1	WHEEL	
215	499770-0000		1	BRACKET	
220	532381-0000		4	GUIDE SHEET	
225	537477-0000		2	BRACKET	
230	2851986-0000		2	MOUNTING BLOCK	
270	229207-0000		2	BEARING SLEEVE	
275	436536-0010		4	BRACKET	
285	499777-0000		2	PLUG	
289	532404-0000		1	SPRING	
290	532405-0000		2	SCREW	
320	312105-0366		26	SCREW, M6S ISO 4017 M6X12 A4 80	
330	312105-0368		8	SCREW, M6S ISO 4017 M6X16 A4 80	
345	312155-0370		4	SCREW DIN 7991 MF6S M6X20 A4 70	
350	312605-0320		2	HEXAGON NUT, M6M M10 A280	
360	315105-0153		34	WASHER PLAIN, 6,4X12X1,5 A4 BRB	
370	315202-0245		2	O-RING 139,3X5,7 MM	

Pos	Part No	UN	Qty	Description	Page No

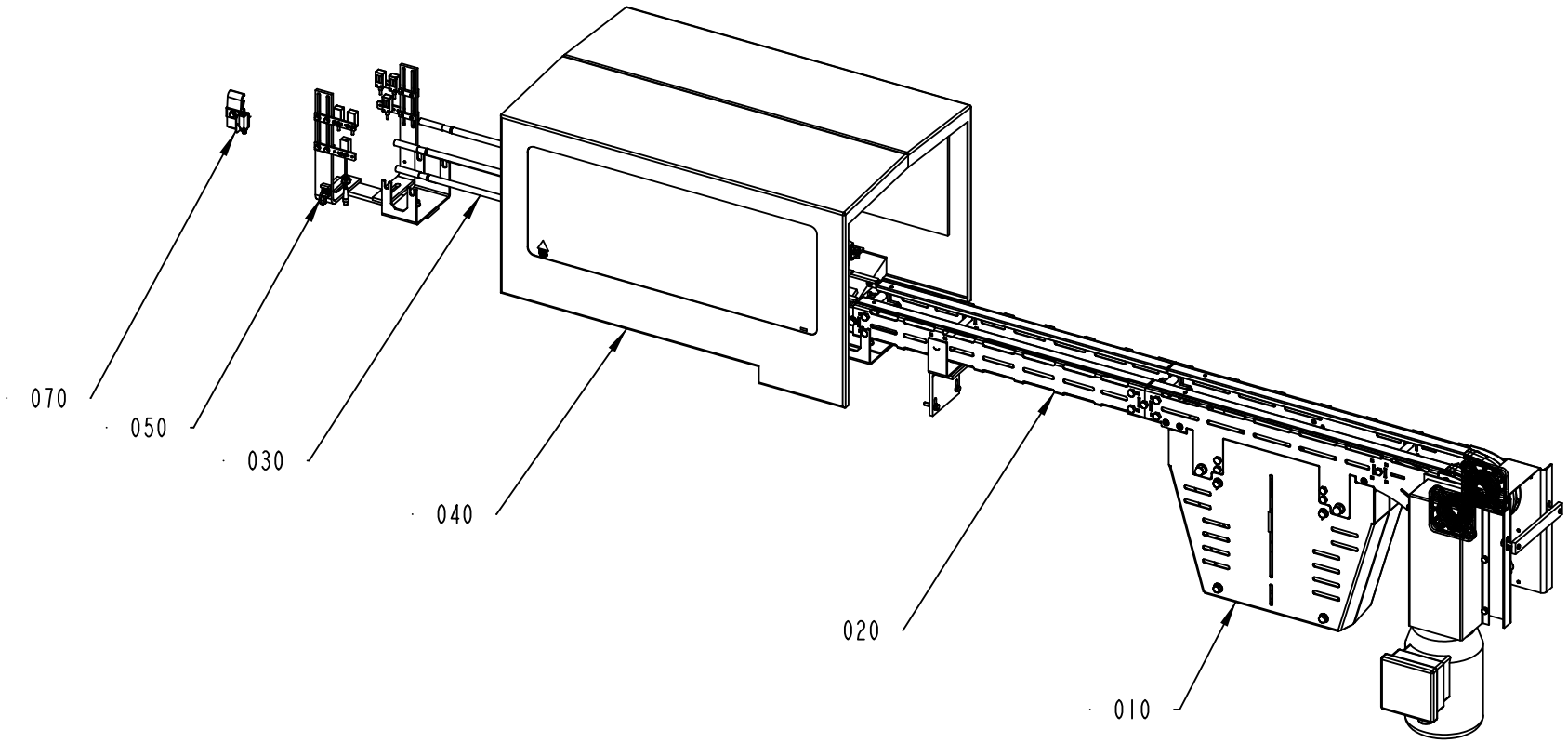

2950328-2
579668

ECM: 585718 - 20121116
Group number: 2950328-0200
Assembly Drawing: 2950328-2_1_AA

Pos	Part No	UN	Qty	Description	Page No
LINF U-FORM ETHERNET, TRC, RINF Z-FORM ETHERNET, TRC					
070	2959042-0100		1	PHOTOCELL UNIT, OVERFLOW	**1-29**
RINF U-FORM ETHERNET, TRC, LINF Z-FORM ETHERNET, TRC					
070	2959042-0100		1	PHOTOCELL UNIT, OVERFLOW	**1-29**
Common Parts					
010	2933260-0200		1	DRIVE UNIT	**1-43**
020	2939231-0100		1	CONVEYOR BODY	**1-61**
030	2970845-0100		1	RAILING	**1-7**
040	2950336-0100		1	TUNNEL	**1-63**
050	2950341-0100		1	QUEUE GUARD,DOUBLE	**1-65**

Pos	Part No	UN	Qty	Description	Page No

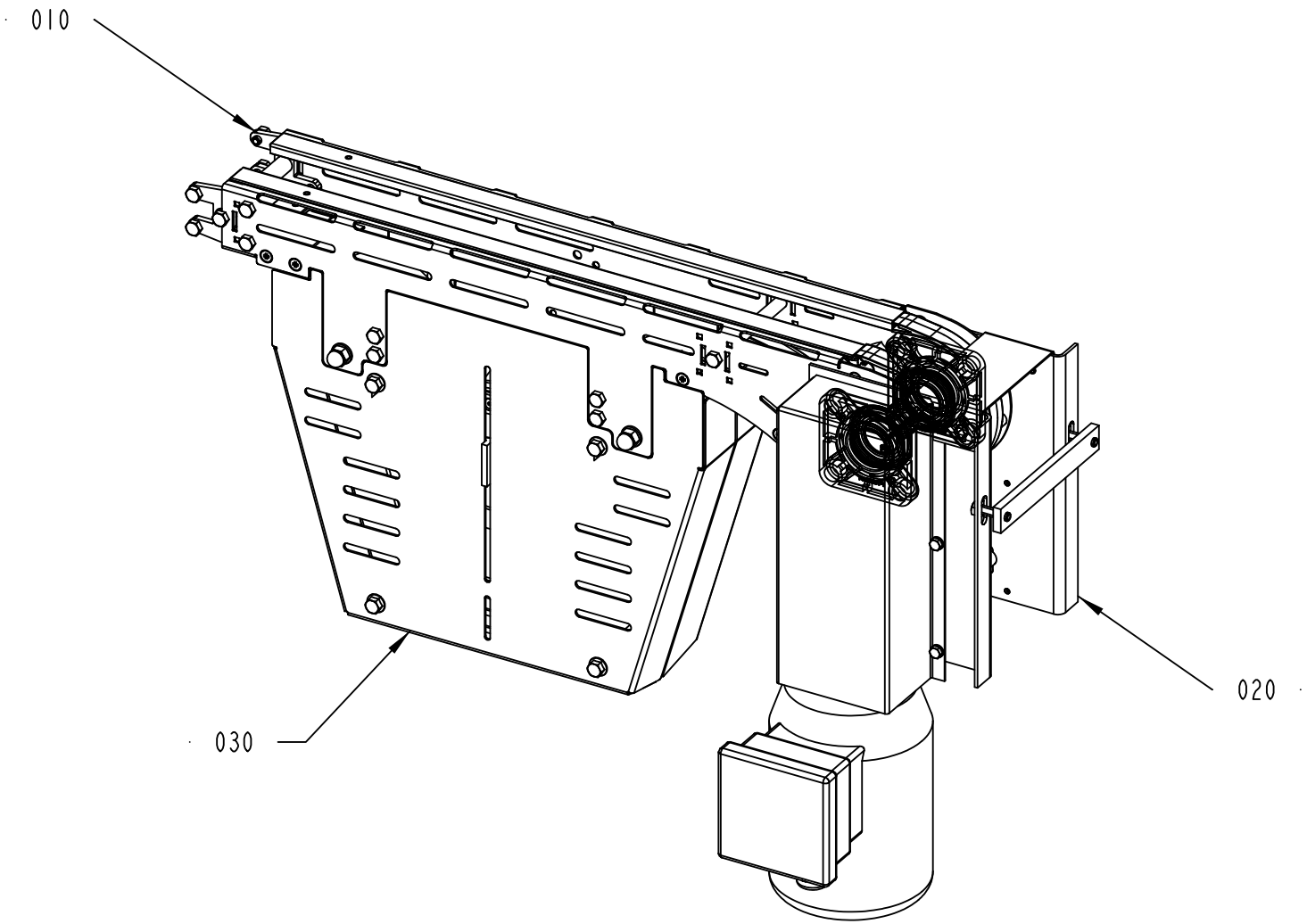

2933260-2
579668

ECM: 585719 - 20121116
Group number: 2933260-0200
Assembly Drawing: 2933260-2_1_AA

Pos	Part No	UN	Qty	Description	Page No
-					
010	3264446-0100		1	CONVEYOR BODY	**1-45**
020	2933263-0200		1	CONVEYOR BODY	**1-53**
030	2807893-0200		1	CHAIN TENSIONER	**1-55**

Pos	Part No	UN	Qty	Description	Page No

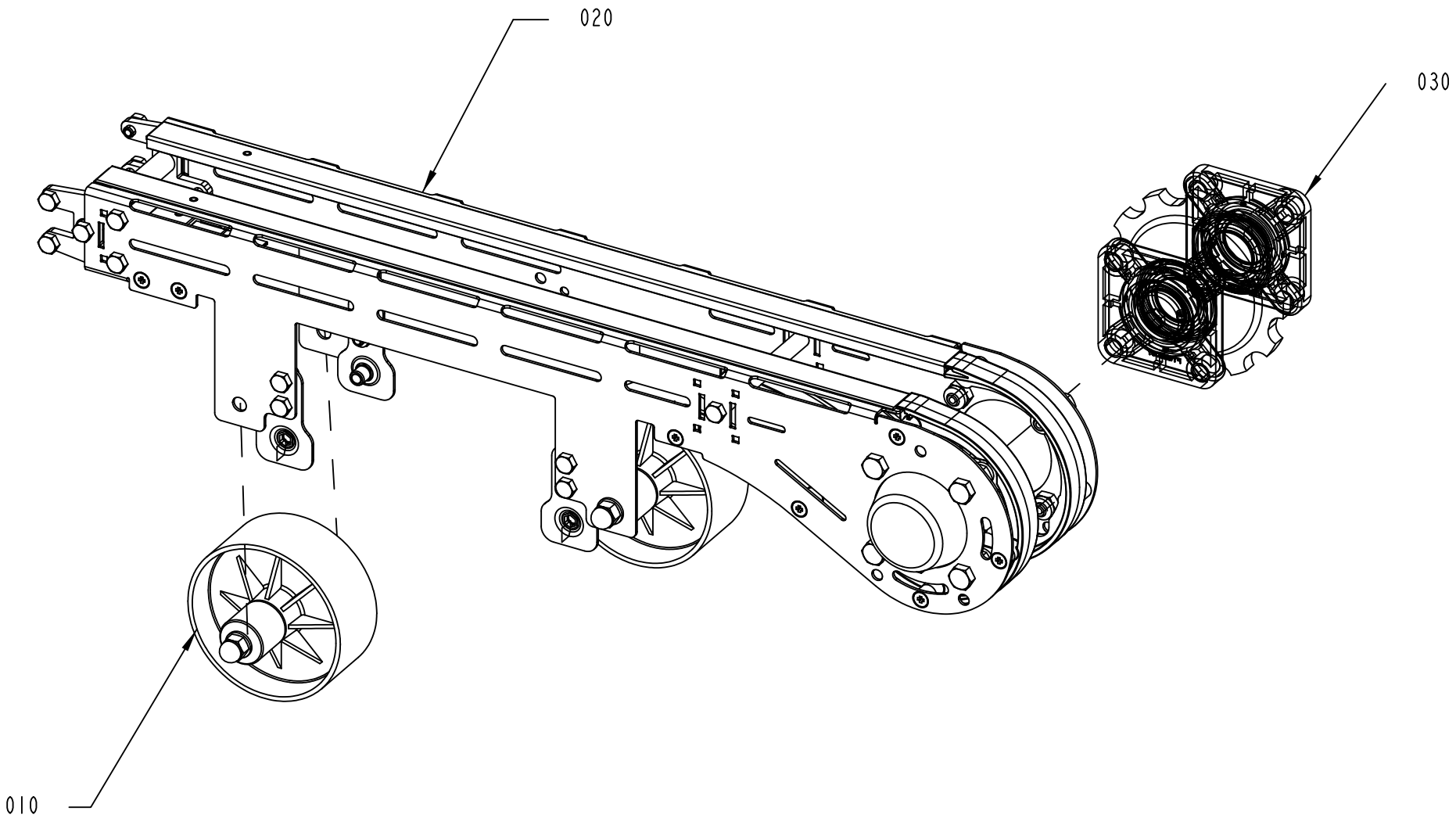

3264446-1
579668

ECM: 585776 - 20121116
Group number: 3264446-0100
Assembly Drawing: 3264446-1_1_AA

Pos	Part No	UN	Qty	Description	Page No
-					
010	3091991-0100		2	TURNING WHEEL	**1-47**
020	3264447-0100		1	CONVEYOR BODY	**1-49**
030	3264448-0100		1	TURNING WHEEL	**1-51**

Pos	Part No	UN	Qty	Description	Page No

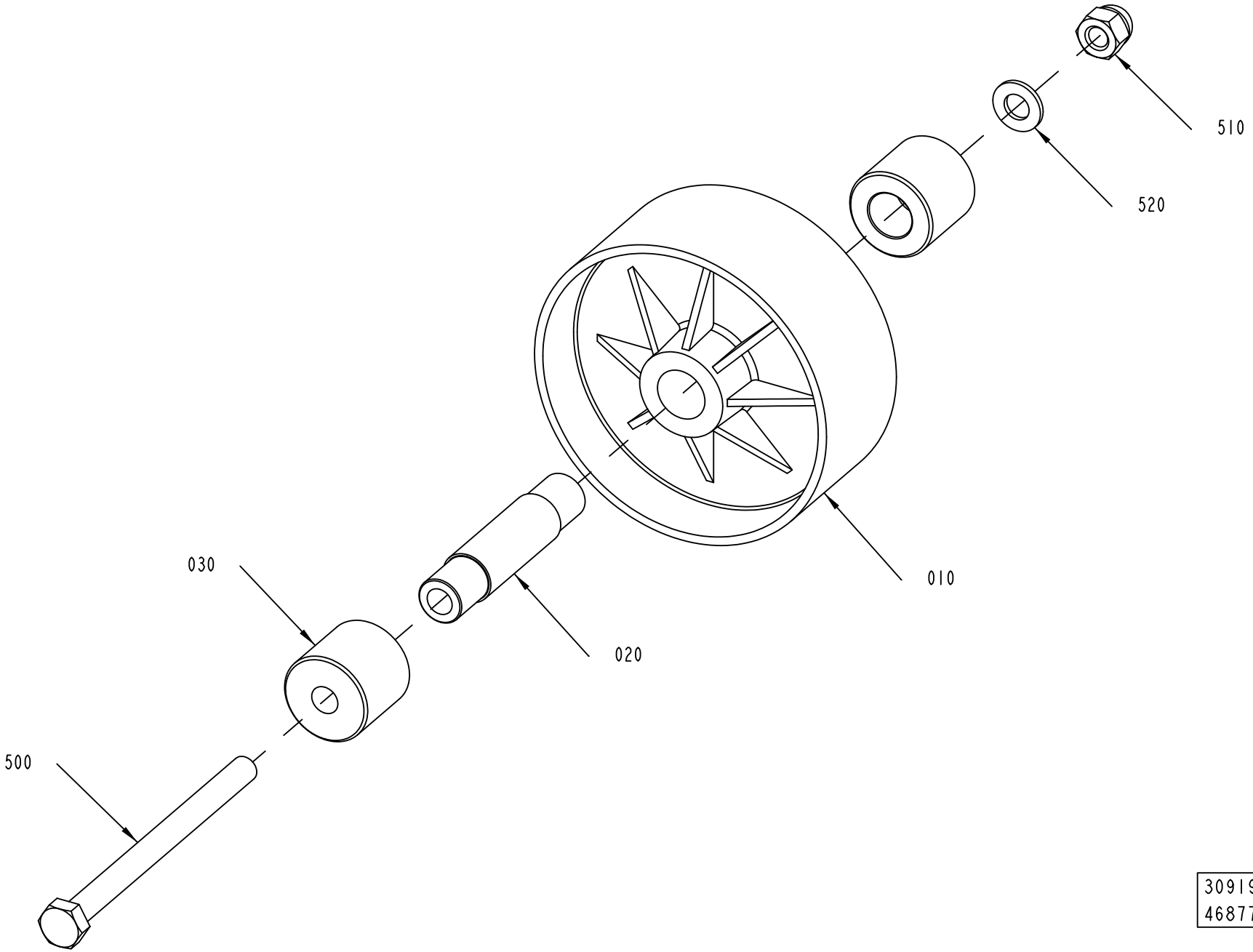

3091991-1
468777

ECM: 472840 - 20101214
Group number: 3091991-0100
Assembly Drawing: 3091991-1_1_AA

Pos	Part No	UN	Qty	Description	Page No
-					
010	476975-0000		1	WHEEL	
020	531499-0000		1	BEARING SLEEVE	
030	3090049-0000		2	SPACER	
500	312105-0517		1	SCREW, M6S ISO 4014 M10X130 A4 80	
510	312705-0320		1	NUT HEX. DOMED CAP MHM-6 M10 A280	
520	315106-0173		1	WASHER PLAIN, M10 ISO7089-10-200 HV A4	

Pos	Part No	UN	Qty	Description	Page No

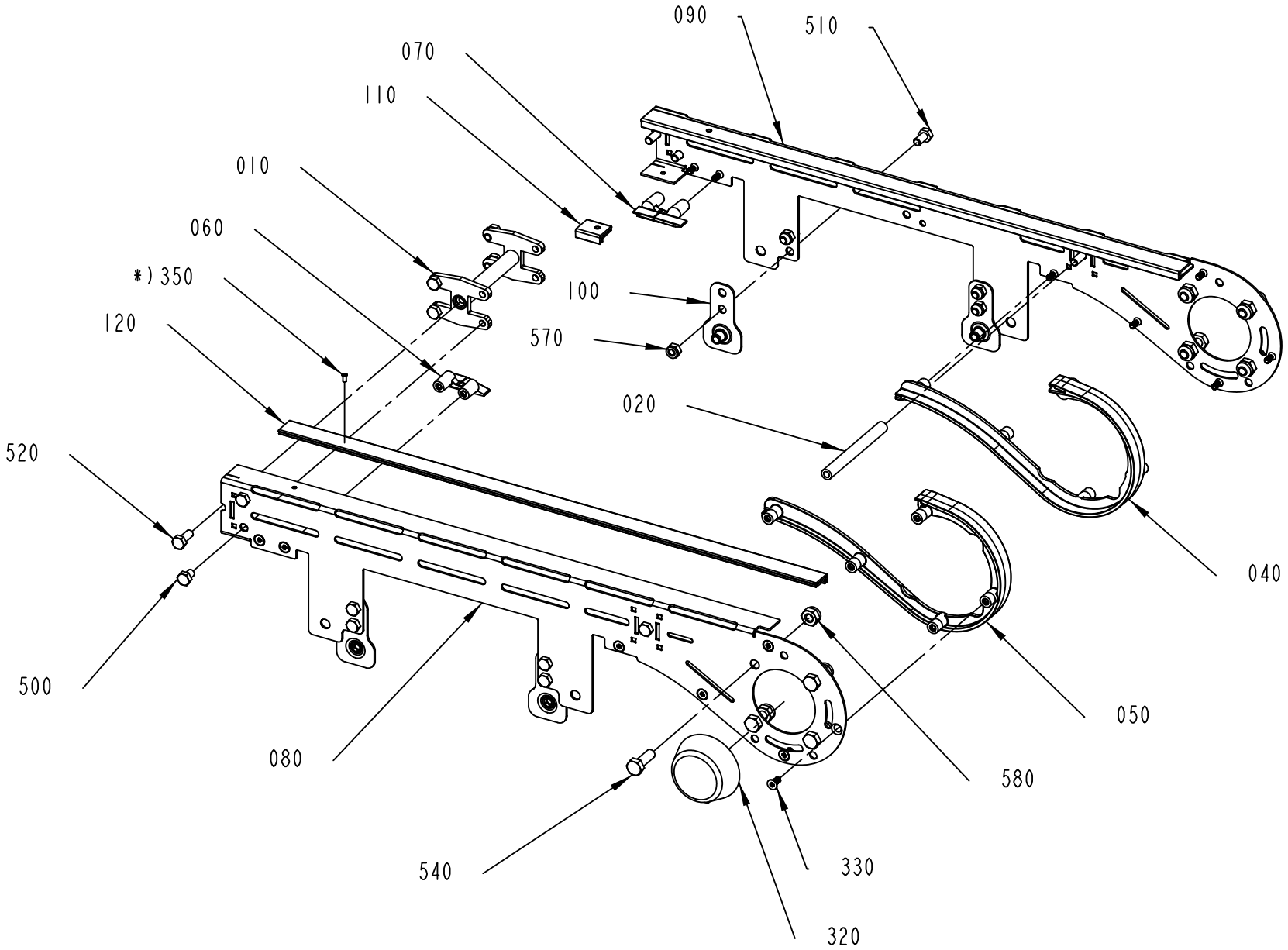

3264447-1
579668

ECM: 585775 - 20121116
Group number: 3264447-0100
Assembly Drawing: 3264447-1_1_AA

Pos	Part No	UN	Qty	Description	Page No
-					
010	2807824-0000		1	JOINT PIECE	
020	2807831-0000		1	SPACER	
040	2807935-0000		1	CHAIN GUIDE	
050	2807936-0000		1	CHAIN GUIDE	
060	2807937-0000		1	GUIDE	
070	2807938-0000		1	GUIDE	
080	3111405-0000		1	SIDE PLATE	
090	3111406-0000		1	SIDE PLATE	
100	3111407-0000		4	BRACKET	
110	3127713-0000		2	SLIDING STRIP	
120	3127714-0000		2	SLIDING STRIP	
320	90345-0310		1	END COVER, ECY 207	
330	90459-3923		14	SCREW, A06361	
350	90601-7790		4	TUBULAR RIVET	
500	312105-0447		8	SCREW M6S ISO 4017 M8X12 A480	
510	312105-0449		8	SCREW, M6S ISO 4017 M8X16 A4 80	
520	312105-0451		4	SCREW, M6S ISO 4017 M8X20 A4 80	
540	312105-0495		8	SCREW, M6S ISO 4017 M10X30 A4 80	
570	312812-0318		8	HEXAGON NUT, NY-LOCK M8 A4 80	
580	312812-0320		8	HEXAGON NUT, NY-LOCK M10 A4 80	

Pos	Part No	UN	Qty	Description	Page No

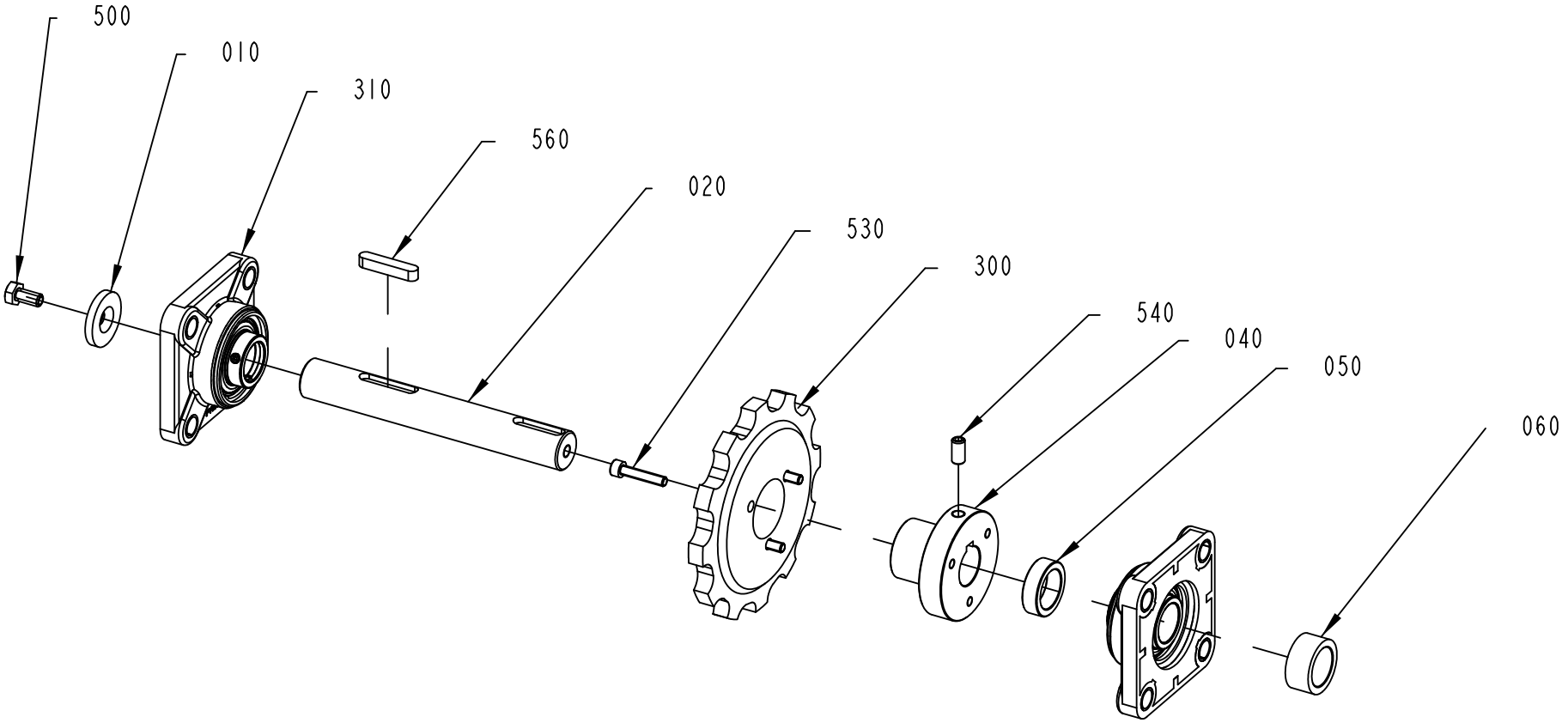

3264448-1
602279

ECM: 614501 - 20130618
Group number: 3264448-0100
Assembly Drawing: 3264448-1_1_AB

Pos	Part No	UN	Qty	Description	Page No
-					
010	2807885-0000		1	SPACER	
020	2933261-0000		1	SHAFT	
040	2807933-0000		1	HUB	
050	3264449-0000		1	SPACER	
060	3272873-0000		1	SPACER	
300	90344-0072		1	SPROCKET, 12 TEETH FOR CHAIN RT 114	
310	90604-7744		2	FLANGE BALL BEARING, 25X95X38,8 MM	
500	312105-0449		1	SCREW, M6S ISO 4017 M8X16 A4 80	
530	312115-0374		3	SCREW ISO4762 M6X30 A4 80	
540	312318-0449		1	SET SCREW, CUP END ISO4029 M8X16 A4	
560	315705-0270		1	PARALLEL KEY W. ROUND ENDS, 8X7X40 MM	

Pos	Part No	UN	Qty	Description	Page No

CONVEYOR BODY

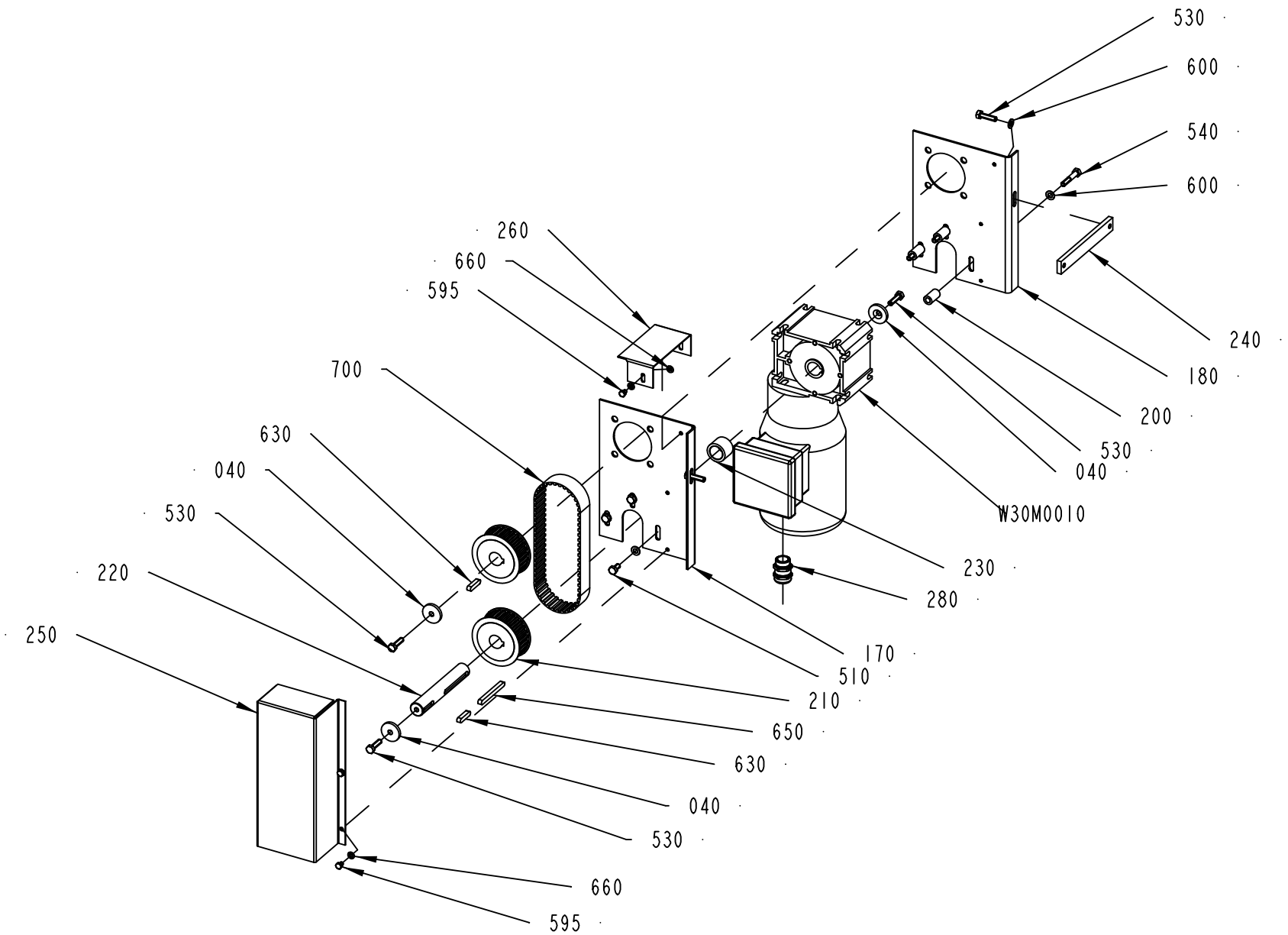

2933263-2
627532

ECM: 630413 - 20130919
Group number: 2933263-0200
Assembly Drawing: 2933263-2_1_AB

Pos	Part No	UN	Qty	Description	Page No
LINF U-FORM, RINF Z-FORM					
250	2970911-0000		1	COVER	
LINF Z-FORM, RINF U-FORM					
250	2995237-0000		1	COVER	
Common Parts					
040	2807885-0000		3	SPACER	
170	2933264-0000		1	BRACKET	
180	2933265-0000		1	BRACKET	
200	2933267-0000		3	SPACER	
210	2933268-0000		2	TOOTHED PULLEY Z=28	
220	2933269-0000		1	SHAFT	
230	2933270-0000		1	SPACER	
240	2933271-0000		1	PLATE	
260	2970910-0000		1	PROTECTION PLATE	
280	344202-0010		1	CABLE GLAND, MS-SC-M-XL 9-16,5MM M25X1,5	
510	312105-0449		3	SCREW, M6S ISO 4017 M8X16 A4 80	
530	312105-0455		5	SCREW, M6S ISO 4017 M8X30 A4 80	
540	312105-0460		3	SCREW, M6S ISO 4014 M8X45 A4 80	
595	312105-0362		4	SCREW, M6S ISO 4017 M6X8 A4 80	
600	315105-0165		8	FWAS080G0-0S, WASHER PLAIN	
630	315705-0269		2	PARALLEL KEY W. ROUND ENDS, 8X7X35 MM	
650	315705-0277		1	PARALLEL KEY W. ROUND ENDS, 8X7X80 MM	
660	315103-0153		5	WASHER PLAIN, 6,4X12X1,5 BR NI PL	
700	318175-0137		1	TIMING BELT 32T10/610 PU	
W30M0010	90603-2563		1	GEARS, WORM MOTOR SK1SI50 IEC80 80LH4	

Pos	Part No	UN	Qty	Description	Page No

CHAIN TENSIONER

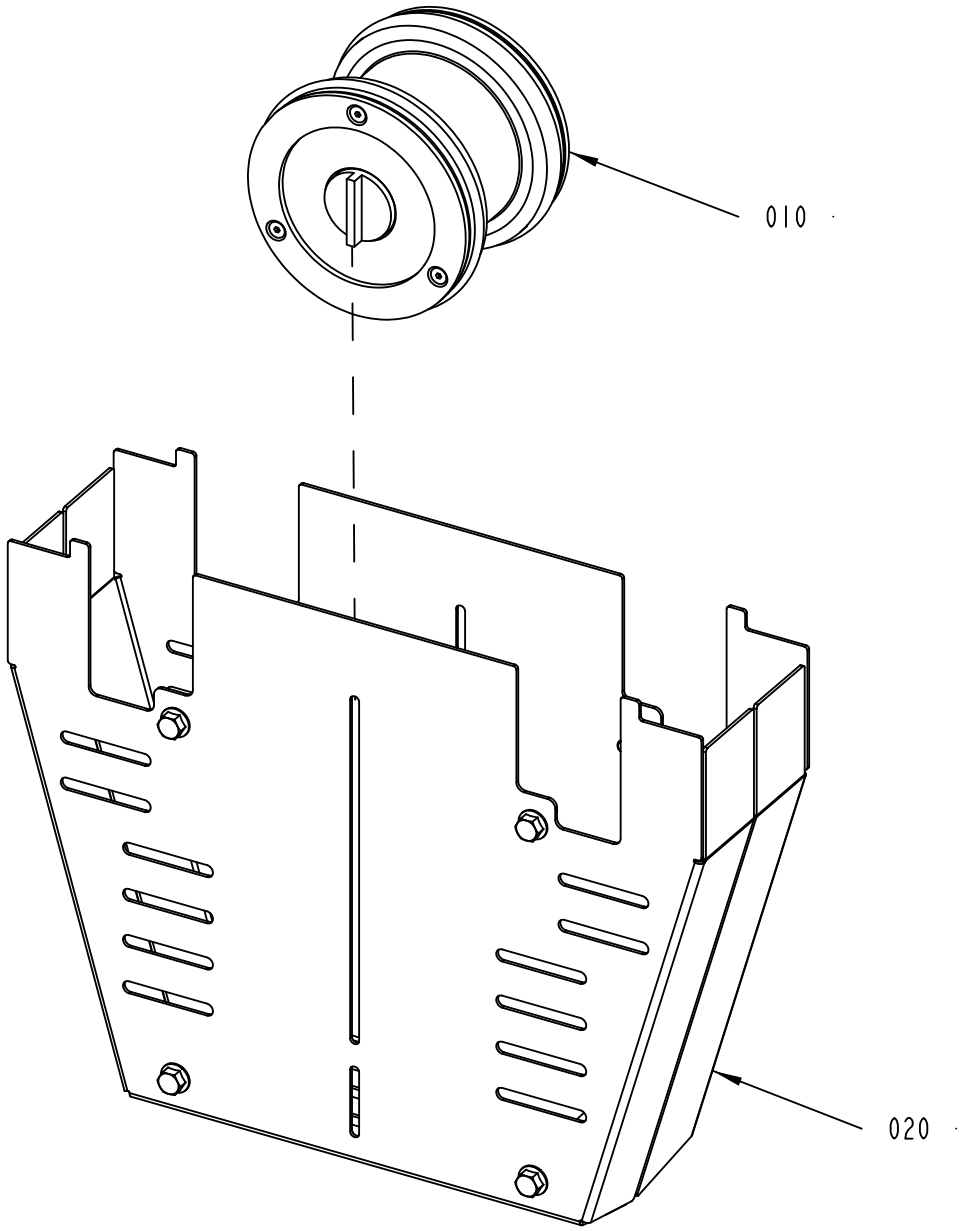

2807893-2
468777

ECM: 473050 - 20101214
Group number: 2807893-0200
Assembly Drawing: 2807893-2_1_AA

Pos	Part No	UN	Qty	Description	Page No
-					
010	3091992-0100		1	CHAIN TIGHTENER WHEEL	**1-57**
020	3111404-0100		1	COVER	**1-59**

Pos	Part No	UN	Qty	Description	Page No

Machine Type | Group Description | Used-In | Group Number | Page No

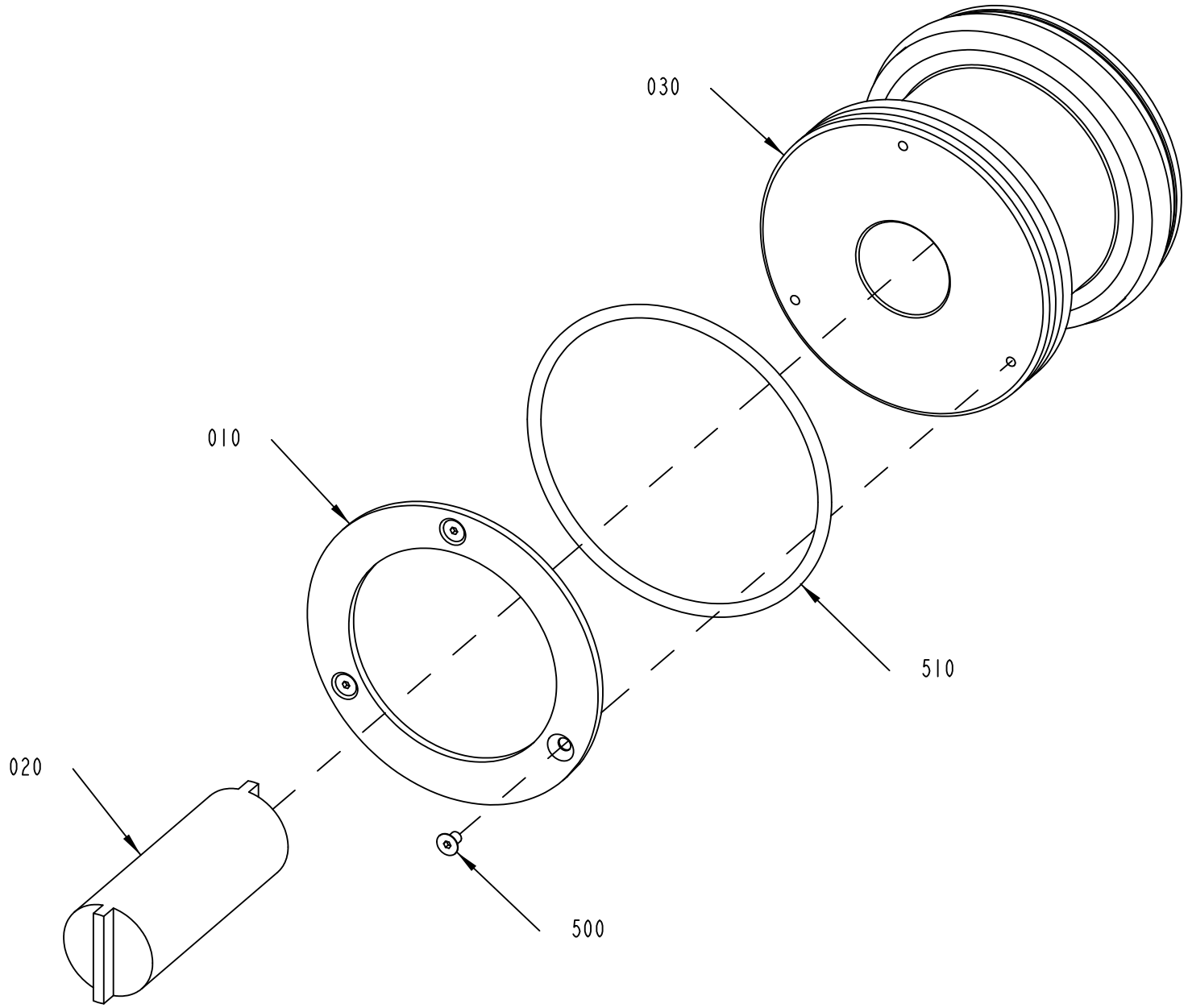

3091992-1
468777

ECM: 472847 - 20101214
Group number: 3091992-0100
Assembly Drawing: 3091992-1_1_AA

Pos	Part No	UN	Qty	Description	Page No
-					
010	2656682-0000		2	SLIDE PLATE	
020	3020219-0000		1	SHAFT	
030	3091993-0000		1	WHEEL	
500	312155-0323		6	SCREW DIN 7991 MF6S M5X8 A4 70	
510	315202-0244		2	O-RING 134,3X5,7 MM	

Pos	Part No	UN	Qty	Description	Page No

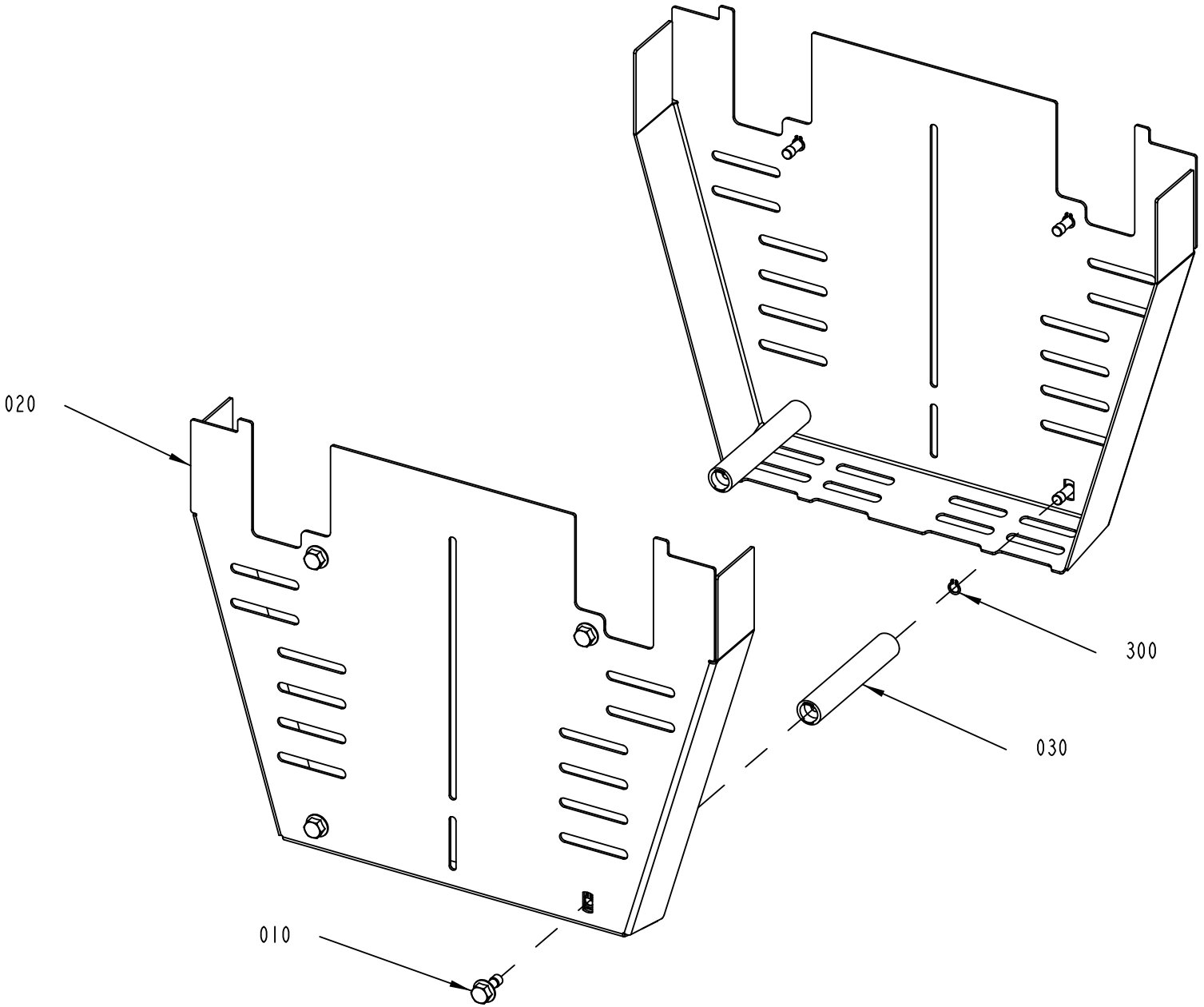

3111404-1
468777

ECM: 532750 - 20120116
Group number: 3111404-0100
Assembly Drawing: 3111404-1_1_AA

Pos	Part No	UN	Qty	Description	Page No
-					
010	3111400-0000		8	SCREW	
020	3111403-0000		2	COVERING PLATE	
030	3127719-0000		2	SHAFT	
300	90141-0015		8	RETAINING RING FOR SHAFT DIN 471 8 SS	

Pos	Part No	UN	Qty	Description	Page No

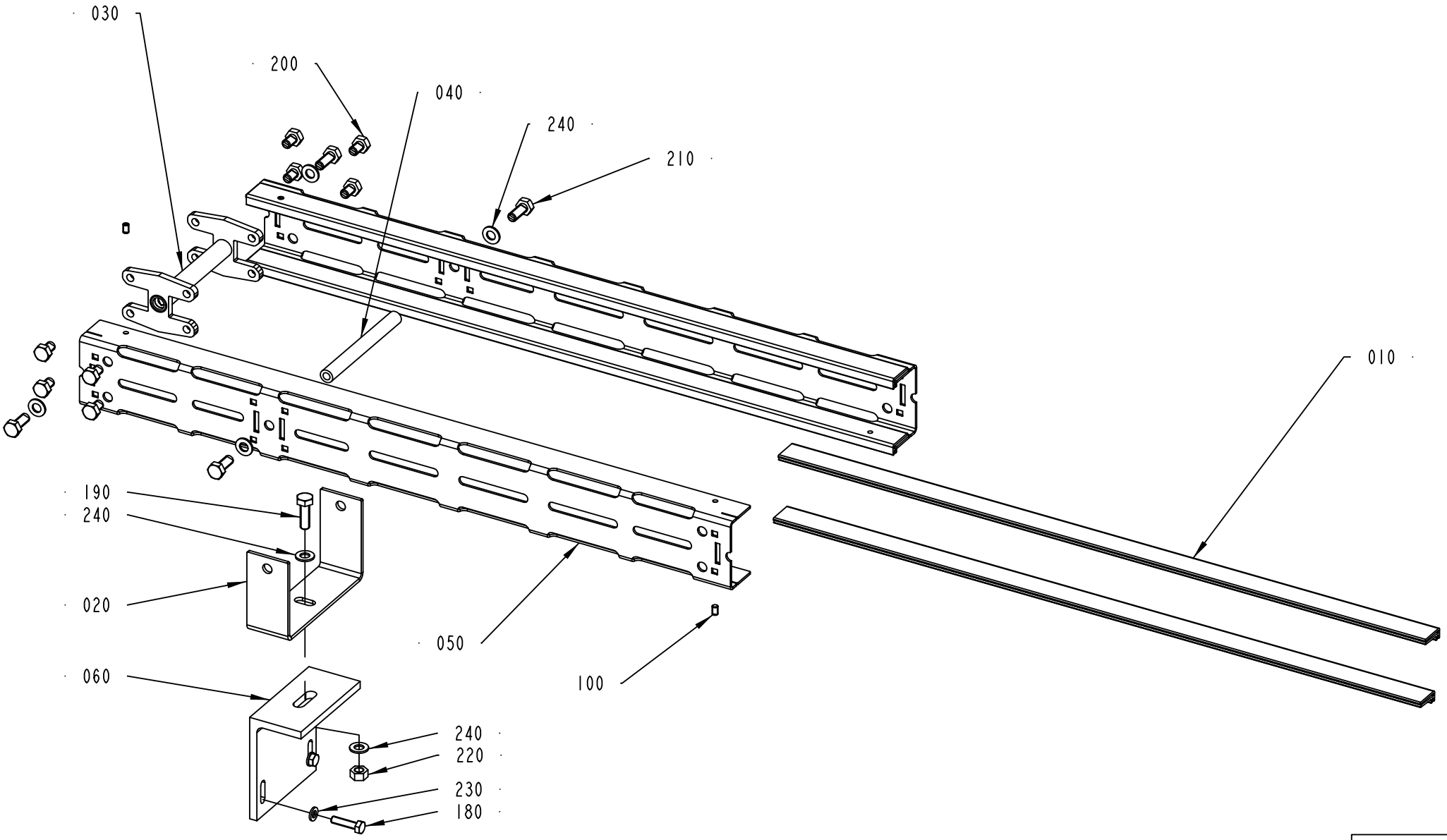

2939231-1
318004

ECM: 330895 - 20080919
Group number: 2939231-0100
Assembly Drawing: 2939231-1_1_AA

Pos	Part No	UN	Qty	Description	Page No
-					
010	2807859-0631		4	SLIDING STRIP	
020	2939234-0000		1	BRACKET	
030	2807824-0000		1	JOINT PIECE	
040	2807831-0000		1	SPACER	
050	2939232-0000		2	SIDE PLATE	
060	2959031-0000		1	BRACKET	
100	90459-7293		4	SET SCREW DIN 551M5X8 PA66	
180	312105-0372		2	SCREW, M6S ISO 4017 M6X25 A4 80	
190	312105-0453		1	SCREW, M6S ISO 4017 M8X25 A4 80	
200	312105-0447		8	SCREW M6S ISO 4017 M8X12 A480	
210	312105-0451		4	SCREW, M6S ISO 4017 M8X20 A4 80	
220	312607-0318		1	HEXAGON NUT, EN 24032 M6M M8 A480	
230	315105-0153		2	WASHER PLAIN, 6,4X12X1,5 A4 BRB	
240	315105-0165		6	FWAS080G0-0S, WASHER PLAIN	

Pos	Part No	UN	Qty	Description	Page No

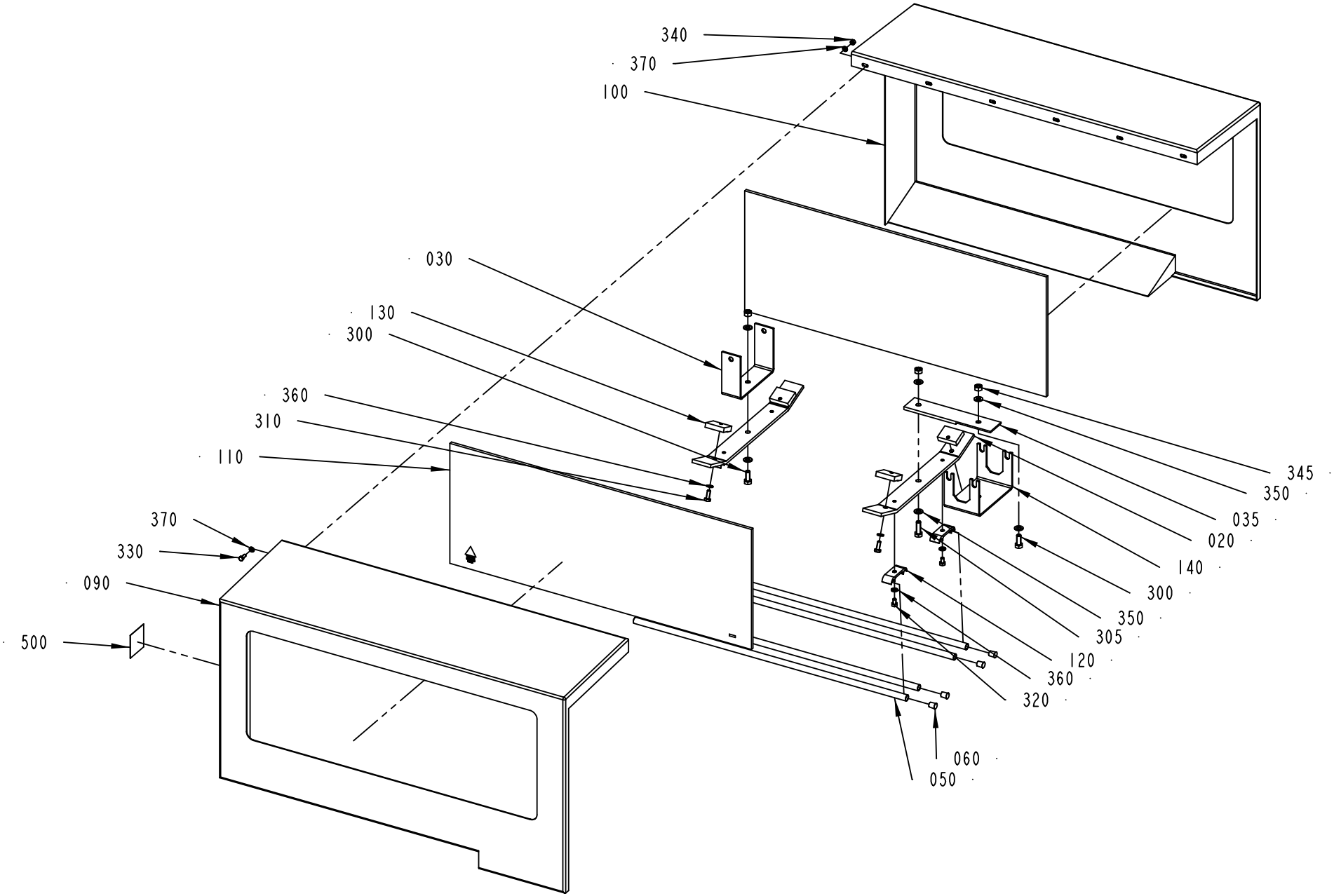

2950336-1
408460

ECM: 414575 - 20090911
Group number: 2950336-0100
Assembly Drawing: 2950336-1_1_AC

Pos	Part No	UN	Qty	Description	Page No
-					
020	2851970-0000		2	BRACKET	
030	2950337-0000		1	BRACKET	
035	2950338-0000		1	BRACKET	
050	476221-0024		4	PIPE	
060	484701-0000		8	SHUTTER	
090	2851968-0000		1	TUNNEL HALF	
100	2851969-0000		1	TUNNEL HALF	
110	2802466-0005		2	GLASS	
120	1020634-0001		4	HOLDER	
130	2864530-0000		4	CLAMPING PLATE	
140	2808055-0000		1	BRACKET	
200	90157-0041	L	1	SEALING COMPOUND, RHODORSEAL 5651	
300	312105-0451		2	SCREW, M6S ISO 4017 M8X20 A4 80	
305	312105-0453		1	SCREW, M6S ISO 4017 M8X25 A4 80	
310	312105-0368		4	SCREW, M6S ISO 4017 M6X16 A4 80	
320	312105-0364		4	SCREW, M6S ISO 4017 M6X10 A4 80	
330	312105-0327		6	SCREW, M6S ISO 4017 M5X12 A4 80	
340	312605-0314		6	HEXAGON NUT, M6M M5 A280	
345	312605-0318		3	HEXAGON NUT, M6M M8 A280	
350	315105-0165		6	FWAS080G0-0S, WASHER PLAIN	
360	315105-0153		8	WASHER PLAIN, 6,4X12X1,5 A4 BRB	
370	315105-0146		12	WASHER PLAIN, 5,3X10X1 A4 BRB	
500	90459-7584		1	PROHOBITION SIGN ISO, DO NOT REACH IN	

Pos	Part No	UN	Qty	Description	Page No

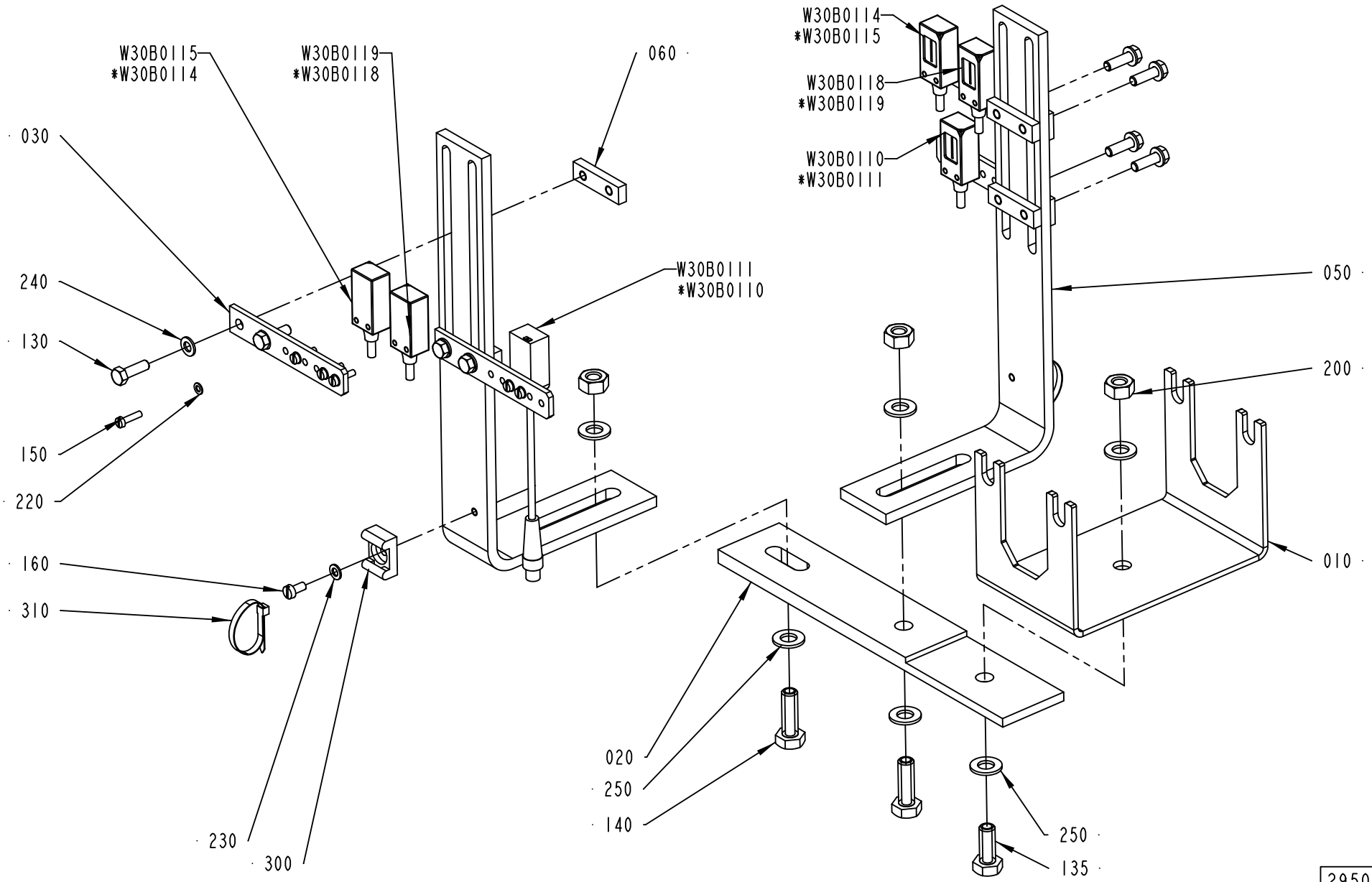

* INFEED RIGHT Z-FORM AND INFEED LEFT U-FORM

2950341-1
512713

ECM: 519920 - 20110923
Group number: 2950341-0100
Assembly Drawing: 2950341-1_1_AC

Pos	Part No	UN	Qty	Description	Page No
-					
010	2808055-0000		1	BRACKET	
020	2970863-0000		1	BRACKET	
030	2895035-0000		4	PHOTOCELL BRACKET	
050	2920752-0000		2	HOLDER	
060	2504290-0000		4	PLATE	
130	312105-0329		8	SCREW, M6S ISO 4017 M5X16 A4 80	
135	312105-0451		1	SCREW, M6S ISO 4017 M8X20 A4 80	
140	312105-0453		2	SCREW, M6S ISO 4017 M8X25 A4 80	
150	312125-0226		12	SLOTTED HEAD SCREW, ISO1207 M3X12 A4	
160	312125-0287		2	SLOTTED HEAD SCREW, ISO1207 M4X8 A4	
200	312605-0318		3	HEXAGON NUT, M6M M8 A280	
220	315105-0124		12	WASHER PLAIN, 3,2X6X0,5 A4 BRB	
230	315105-0136		2	WASHER PLAIN, 4,3X9X0,8 A4 BRB	
240	315105-0146		8	WASHER PLAIN, 5,3X10X1 A4 BRB	
250	315105-0165		6	FWAS080G0-0S, WASHER PLAIN	
300	352113-0203		2	ANCHOR PLATES FOR STRIPS, TM3S8-M0	
310	352113-0101		2	CABLE TIE,BLACK 92X	
W30B0110	90600-3673		1	PHOTOCELL, WE4-3F3130S03	
W30B0111	90600-3322		1	PHOTOCELL, WS4-3D3130F20	
W30B0114	90600-3673		1	PHOTOCELL, WE4-3F3130S03	
W30B0115	90600-3723		1	PHOTOCELL, WS4-3D3130S05	
W30B0118	90600-3673		1	PHOTOCELL, WE4-3F3130S03	
W30B0119	90600-3723		1	PHOTOCELL, WS4-3D3130S05	

Pos	Part No	UN	Qty	Description	Page No

PACKAGE CONVEYOR 23

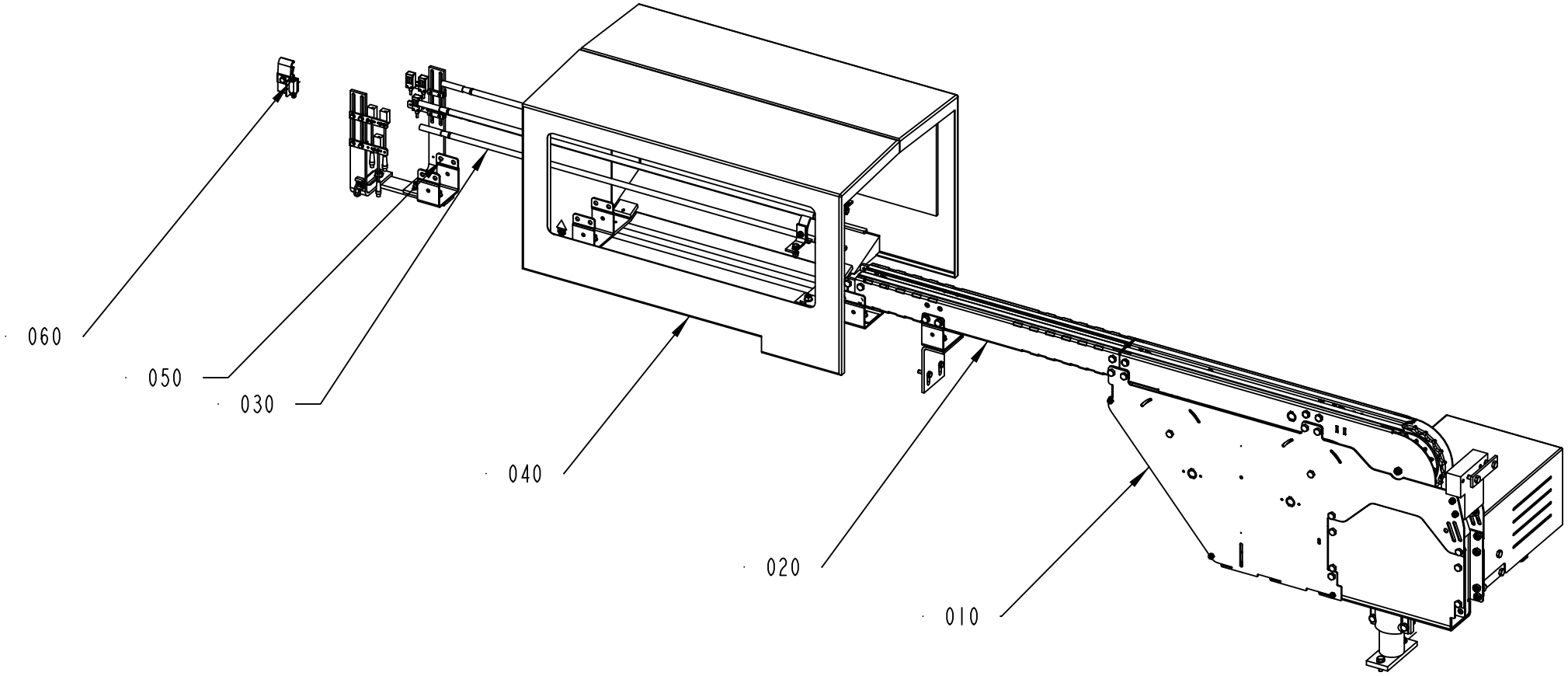

2718847-3
352551

ECM: 353208 - 20080919
Group number: 2718847-0300
Assembly Drawing: 2718847-3_1_AA

Pos	Part No	UN	Qty	Description	Page No
LINF U-FORM ETHERNET, TRC, RINF Z-FORM ETHERNET, TRC					
060	2959042-0100		1	PHOTOCELL UNIT, OVERFLOW	**1-29**
RINF U-FORM ETHERNET, TRC, LINF Z-FORM ETHERNET, TRC					
060	2959042-0100		1	PHOTOCELL UNIT, OVERFLOW	**1-29**
Common Parts					
010	2718838-0200		1	DRIVE UNIT	**1-69**
020	2718874-0100		1	CONVEYOR BODY	**1-83**
030	2970845-0100		1	RAILING	**1-7**
040	2851971-0100		1	TUNNEL	**1-85**
050	2718883-0200		1	QUEUE GUARD,DOUBLE	**1-87**

Pos	Part No	UN	Qty	Description	Page No

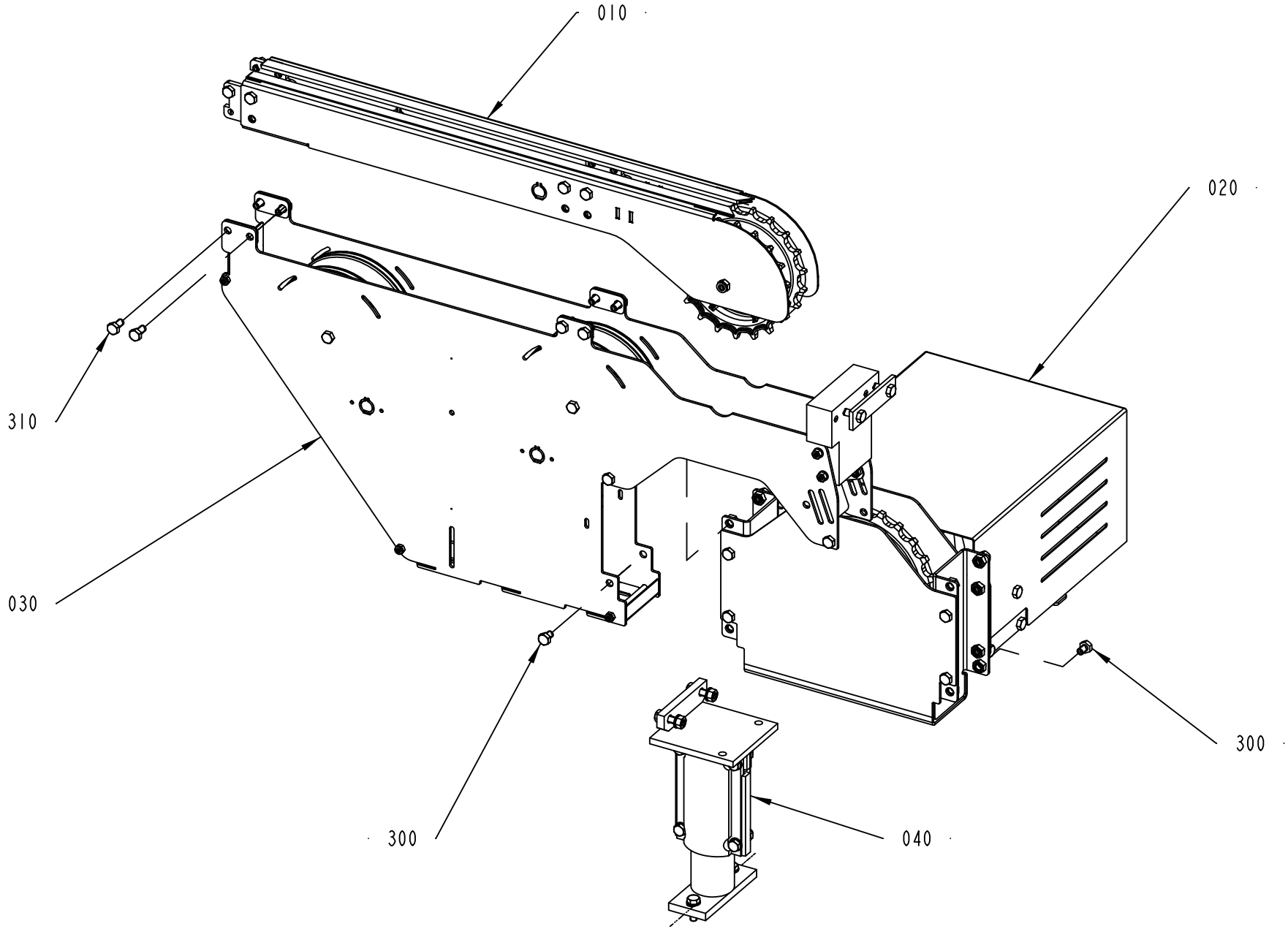

2718838-2
300718

ECM: 614499 - 20130618
Group number: 2718838-0200
Assembly Drawing: 2718838-2_1_AA

Pos	Part No	UN	Qty	Description	Page No
-					
010	2718866-0100		1	INFEED	**1-71**
020	2718849-0200		1	MOTOR UNIT	**1-75**
030	2718867-0100		1	CHAIN TENSIONER	**1-77**
040	2718850-0100		1	SUPPORT	**1-81**
050	90603-0188		1	CONVEYOR CHAIN, WHP 1775 L1775633213 ZER	
300	312105-0447		15	SCREW M6S ISO 4017 M8X12 A480	
310	312105-0449		8	SCREW, M6S ISO 4017 M8X16 A4 80	

Pos	Part No	UN	Qty	Description	Page No

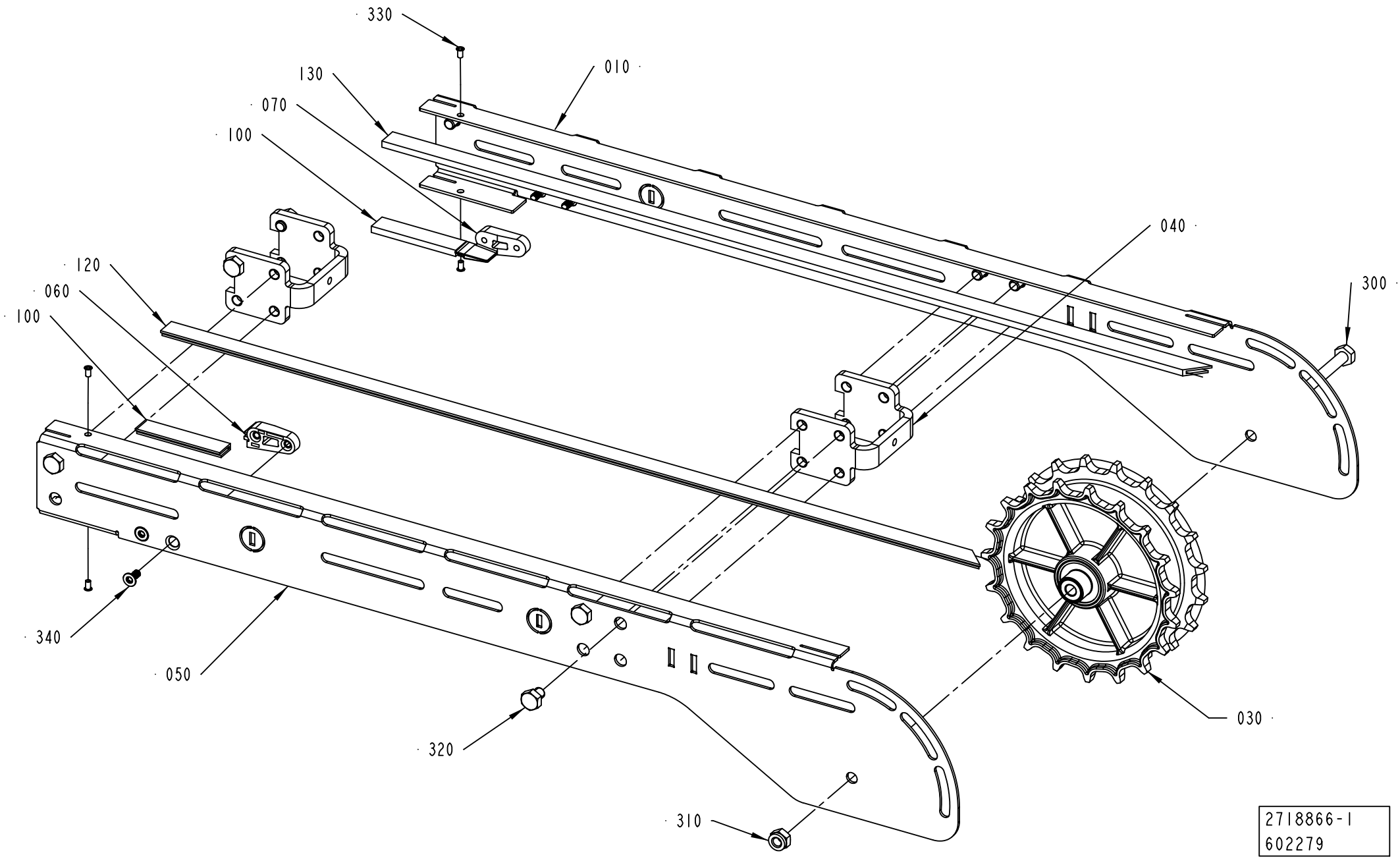
330
010
130
070
100
040
300
120
060
100
340
050
320
030
310
2718866-1
602279

ECM: 614500 - 20130618
Group number: 2718866-0100
Assembly Drawing: 2718866-1_1_AE

Pos	Part No	UN	Qty	Description	Page No
-					
010	2881039-0000		1	SIDE PLATE	
030	2561244-0200		1	DRIVE WHEEL	**1-73**
040	2561206-0000		2	SPACER	
050	2881040-0000		1	SIDE PLATE	
060	3133290-0000		1	GUIDE	
070	3133291-0000		1	GUIDE	
100	1550595-0680		2	SLIDING STRIP	
120	1550595-6603		1	SLIDING STRIP	
130	1550595-6604		1	SLIDING STRIP	
300	312105-0469		1	SCREW, M6S ISO 4014 M8X90 A4 80	
310	312810-0318		1	HEXAGON NUT, NY-LOCK M8 FZB	
320	90459-4735		8	SCREW, M6S ISO 4017 M8X10 A4 80	
330	90600-6183		4	TUBULAR RIVET 3,5X6,2	
340	90600-1933		4	SCREW 5X12, DELTA PT 50X12 WN5454 A4	

Pos	Part No	UN	Qty	Description	Page No

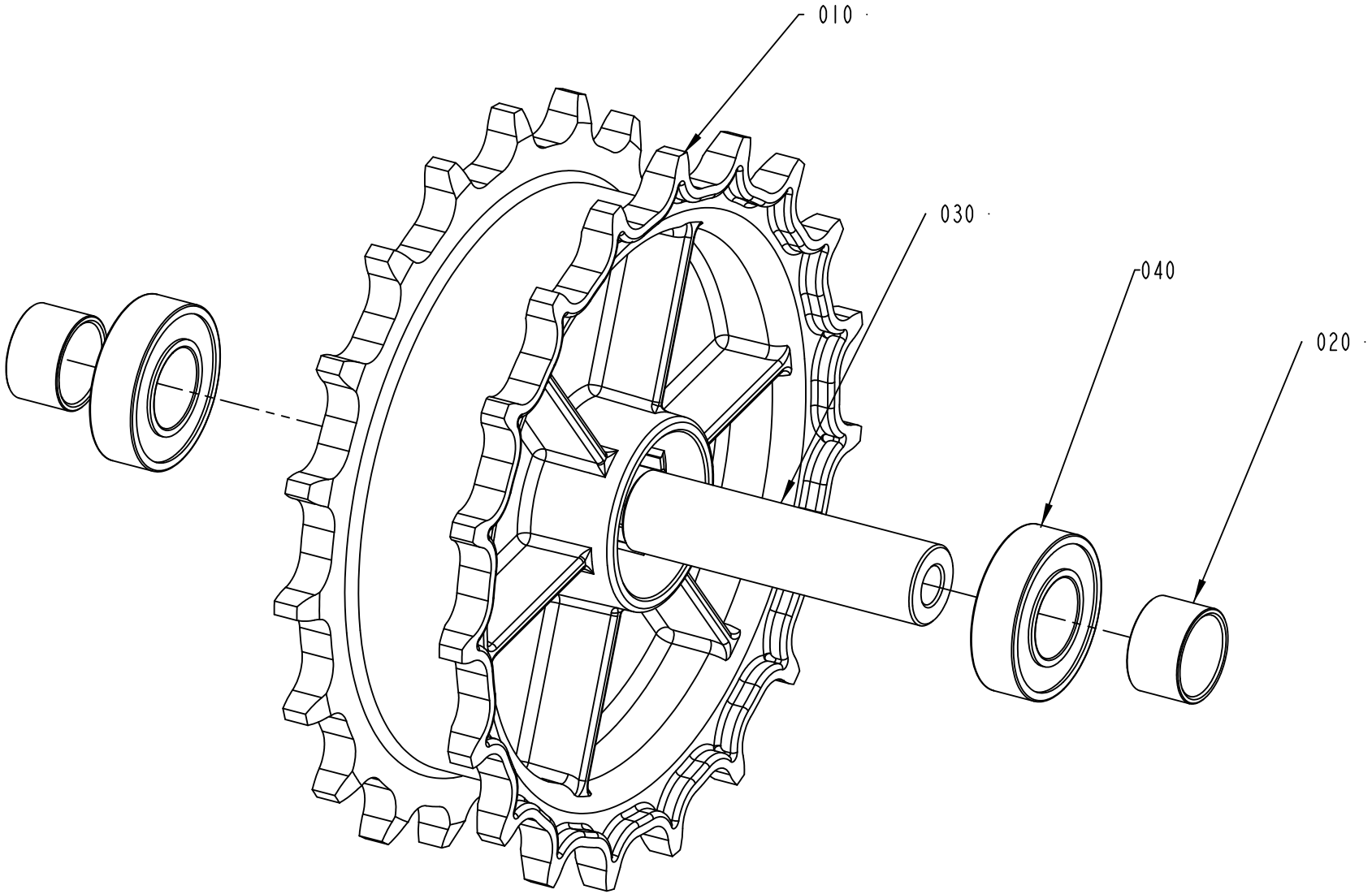

2561244-2
517993

ECM: 590330 - 20121220
Group number: 2561244-0200
Assembly Drawing: 2561244-2_1_AC

Pos	Part No	UN	Qty	Description	Page No
-					
010	2656672-0000		1	SPROCKET	
020	2656673-0000		2	SPACER	
030	2561267-0000		1	SHAFT	
040	90603-2325		2	BALL BEARING 17/35X10	

Pos	Part No	UN	Qty	Description	Page No

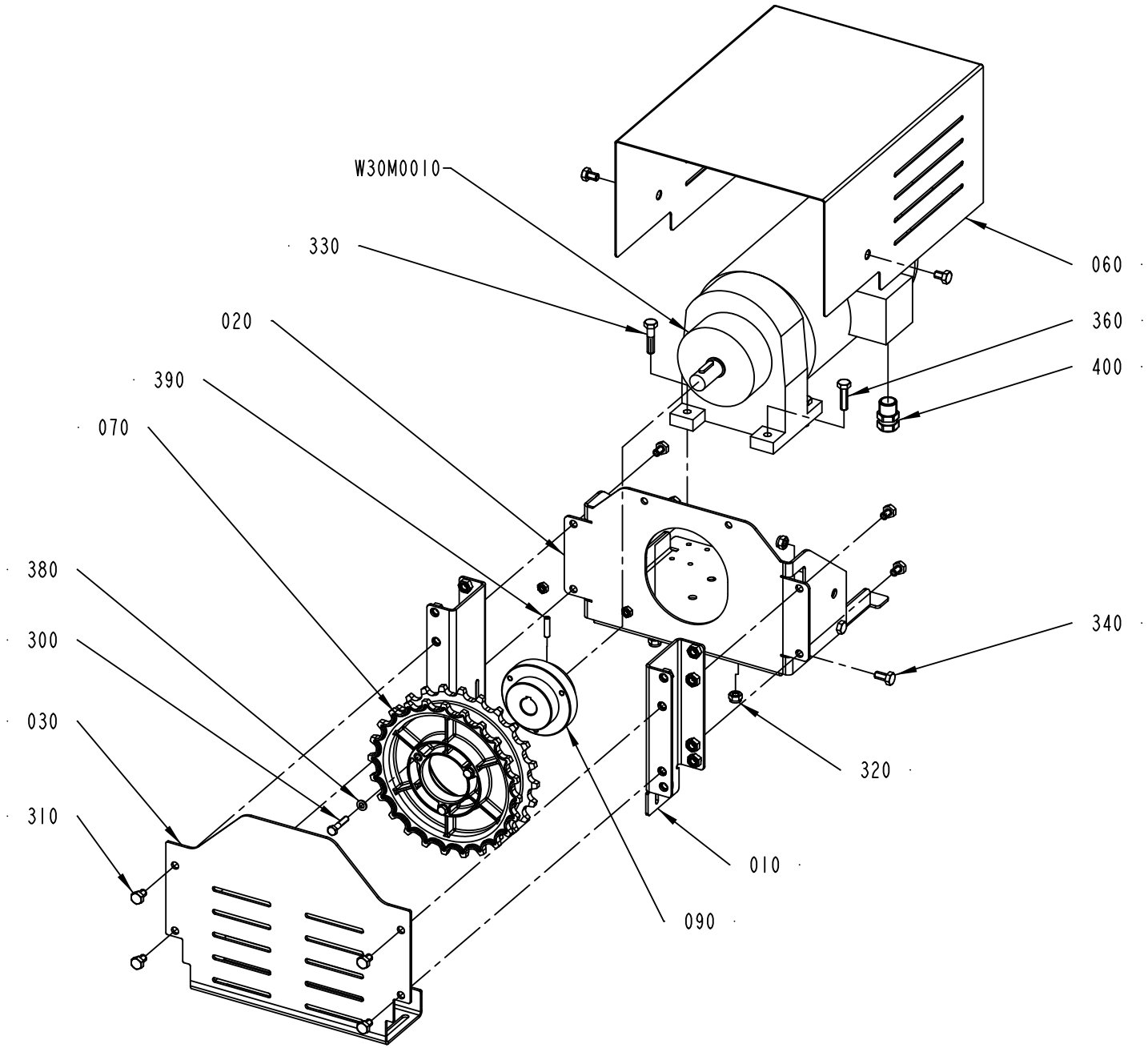

2718849-2
582005

ECM: 589995 - 20130124
Group number: 2718849-0200
Assembly Drawing: 2718849-2_1_AD

Pos	Part No	UN	Qty	Description	Page No
-					
010	2561147-0000		2	BRACKET	
020	2561148-0000		1	MOTOR SHELF	
030	2561149-0000		1	SIDE PLATE	
060	2592288-0000		1	COVER	
070	2656677-0000		1	SPROCKET	
090	2590155-0000		1	HUB	
300	312105-0374		3	SCREW, M6S ISO 4014 M6X30 A4 80	
310	312105-0447		10	SCREW M6S ISO 4017 M8X12 A480	
320	312812-0318		6	HEXAGON NUT, NY-LOCK M8 A4 80	
330	312105-0457		2	SCREW, M6S ISO 4014 M8X35 A4 80	
340	312105-0449		2	SCREW, M6S ISO 4017 M8X16 A4 80	
360	312105-0455		2	SCREW, M6S ISO 4017 M8X30 A4 80	
380	315105-0153		3	WASHER PLAIN, 6,4X12X1,5 A4 BRB	
390	312318-0372		1	SET SCREW, CUP END ISO4029 M6X25 A4	
400	90459-3658		1	GLAND,EXTENDED WITH INSERT, M20X1,5-LONG	
W30M0010	90603-5337		1	GEARS, HELICAL MOTOR SK01V-80S/4S03	

Pos	Part No	UN	Qty	Description	Page No

CHAIN TENSIONER

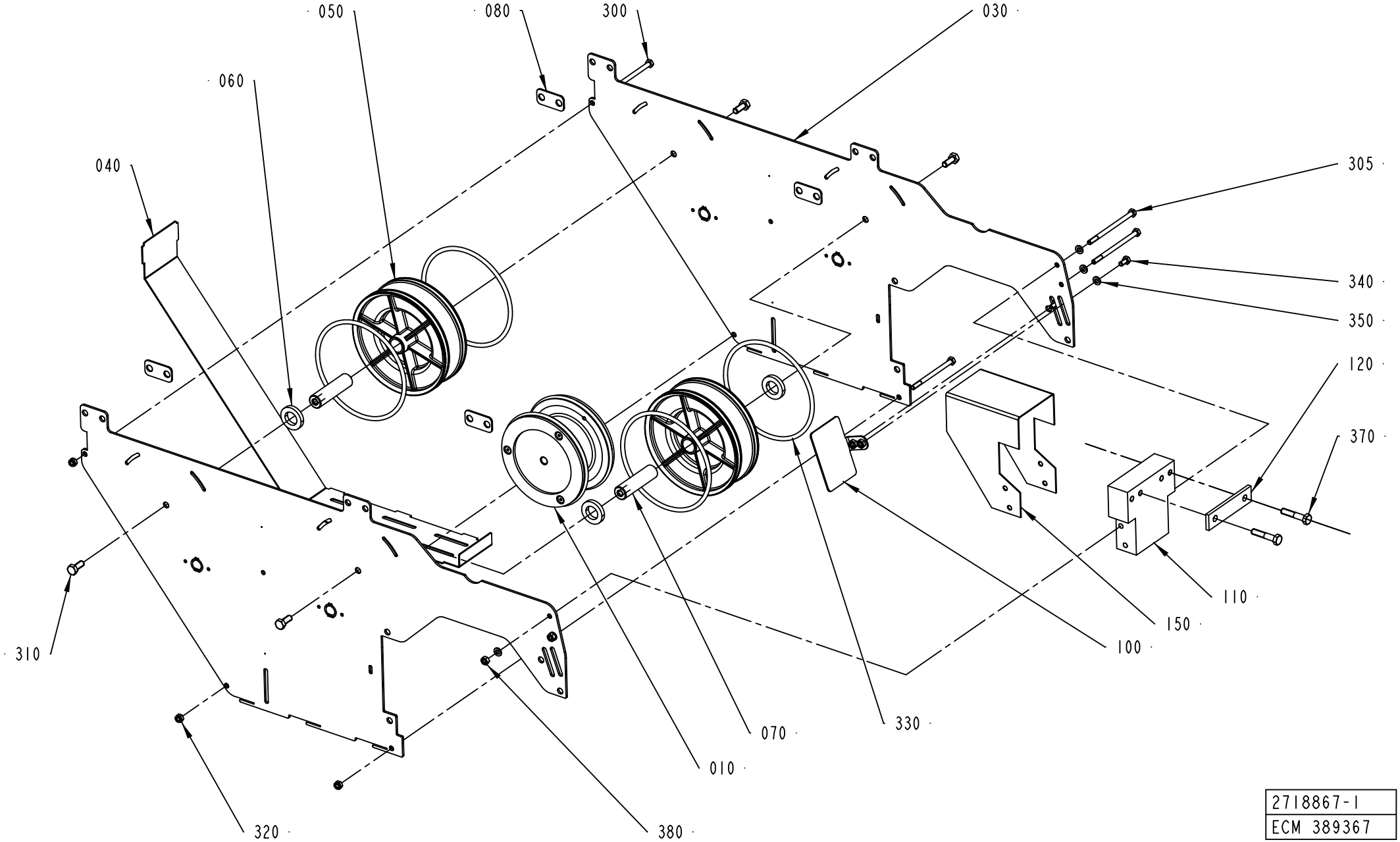

2718867-1
ECM 389367

ECM: 390877 - 20090702
Group number: 2718867-0100
Assembly Drawing: 2718867-1_1_AC

Pos	Part No	UN	Qty	Description	Page No
-					
010	2718868-0100		1	GUIDE SPROCKET	**1-79**
030	2681810-0000		2	SIDE PLATE	
040	2561229-0000		1	PROTECTION	
050	2656679-0000		2	WHEEL	
060	2561226-0000		4	SPACER	
070	2561227-0001		2	SHAFT	
080	2561230-0001		4	SPACER	
100	2589831-0000		1	COVER	
110	2851988-0000		1	BRACKET	
120	2808743-0000		1	PLATE	
150	2995252-0000		1	PROTECTION PLATE	
300	312105-0388		3	SCREW, M6S ISO 4014 M6X90 A4 80	
305	312105-0390		2	SCREW, M6S ISO 4014 M6X100 A4 80	
310	312105-0451		4	SCREW, M6S ISO 4017 M8X20 A4 80	
320	312812-0316		3	HEXAGON NUT, NY-LOCK M6 A4 80	
330	315202-0246		4	O-RING 144,3X5,7 MM	
340	312105-0366		2	SCREW, M6S ISO 4017 M6X12 A4 80	
350	315105-0153		6	WASHER PLAIN, 6,4X12X1,5 A4 BRB	
370	312105-0459		2	SCREW, M6S ISO 4014 M8X40 A4 80	
380	312605-0316		2	HEXAGON NUT, M6M M6 A280	

Pos	Part No	UN	Qty	Description	Page No

GUIDE SPROCKET

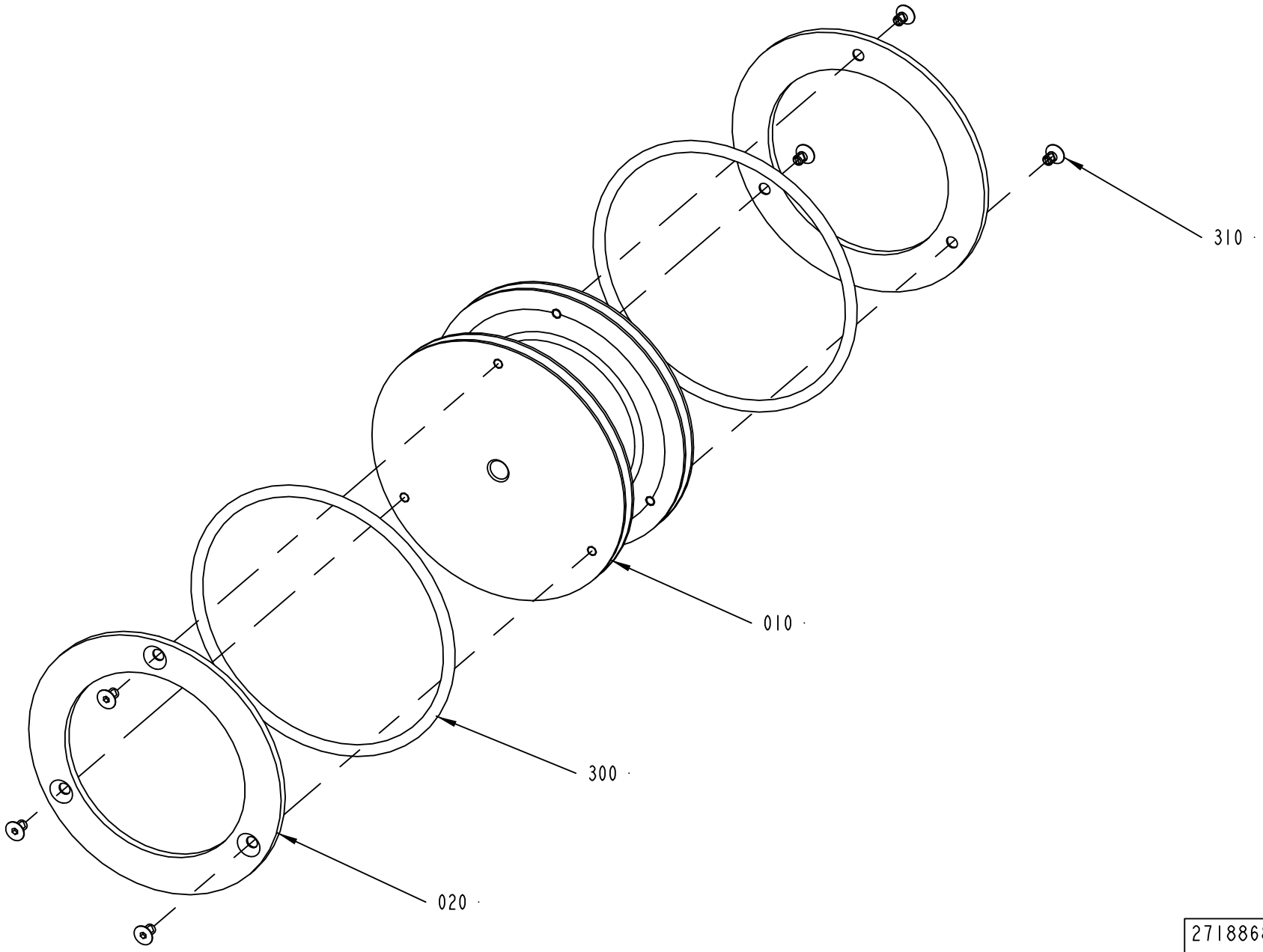

2718868-1
194696

ECM: 199358 - 20060612
Group number: 2718868-0100
Assembly Drawing: 2718868-1_1_AA

Pos	Part No	UN	Qty	Description	Page No
-					
010	2656683-0000		1	WHEEL	
020	2656682-0000		2	SLIDE PLATE	
300	315202-0242		2	O-RING 124,3X5,7 MM	
310	312156-0323		6	SCREW EN 10642 MF6S M5X8 A470	

Pos	Part No	UN	Qty	Description	Page No

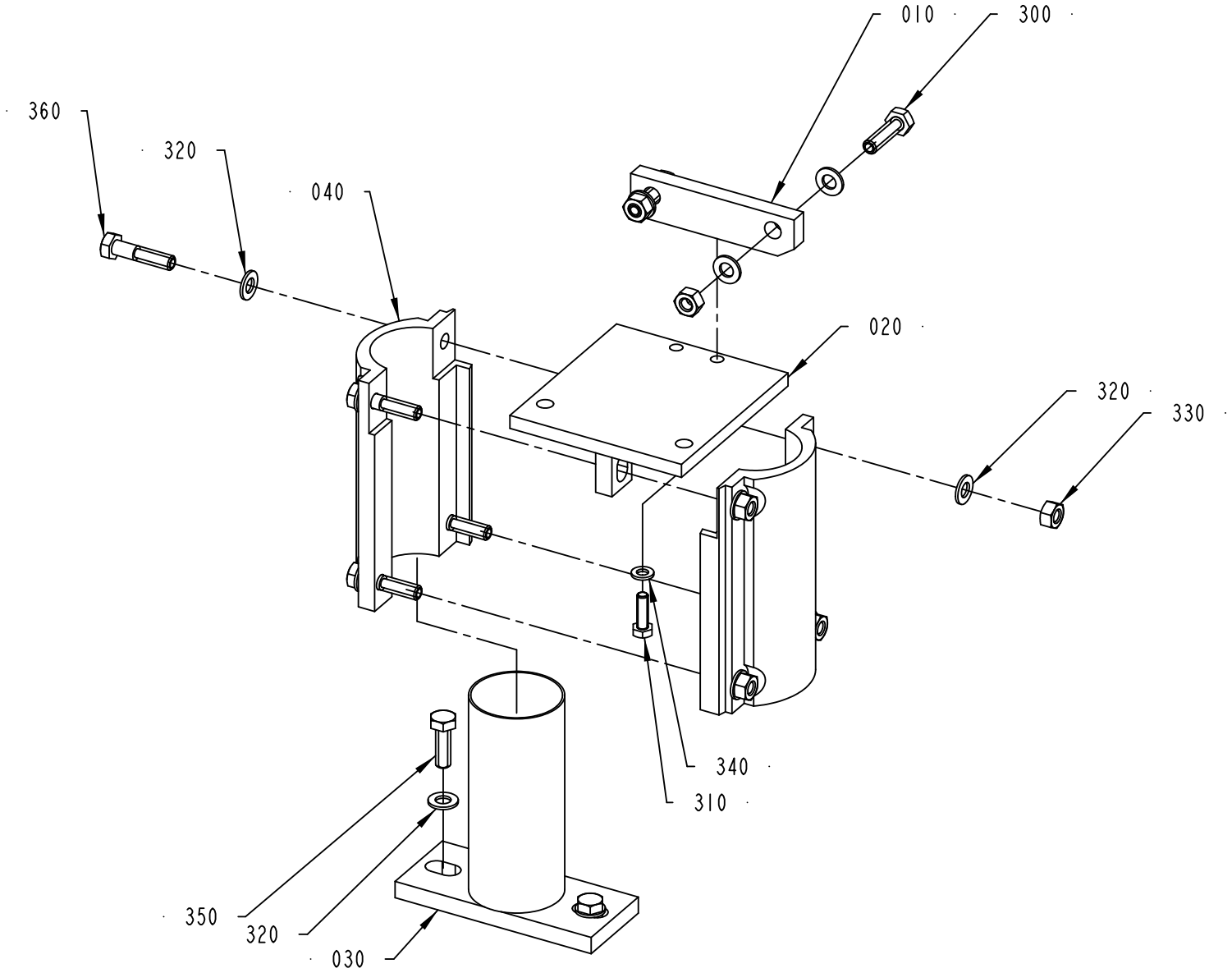

2718850-1
630884

ECM: 646204 - 20131125
Group number: 2718850-0100
Assembly Drawing: 2718850-1_1_AB

Pos	Part No	UN	Qty	Description	Page No
-					
010	2592244-0000		1	BRACKET	
020	2592285-0000		1	BRACKET	
030	2592286-0000		1	SUPPORT LEG	
040	497680-0001		2	HOLDER	
300	312105-0455		2	SCREW, M6S ISO 4017 M8X30 A4 80	
310	312105-0370		1	SCREW, M6S ISO 4017 M6X20 A4 80	
320	315105-0165		14	FWAS080G0-0S, WASHER PLAIN	
330	312605-0318		6	HEXAGON NUT, M6M M8 A280	
340	315105-0153		1	WASHER PLAIN, 6,4X12X1,5 A4 BRB	
350	312105-0453		2	SCREW, M6S ISO 4017 M8X25 A4 80	
360	312105-0457		4	SCREW, M6S ISO 4014 M8X35 A4 80	

Pos	Part No	UN	Qty	Description	Page No

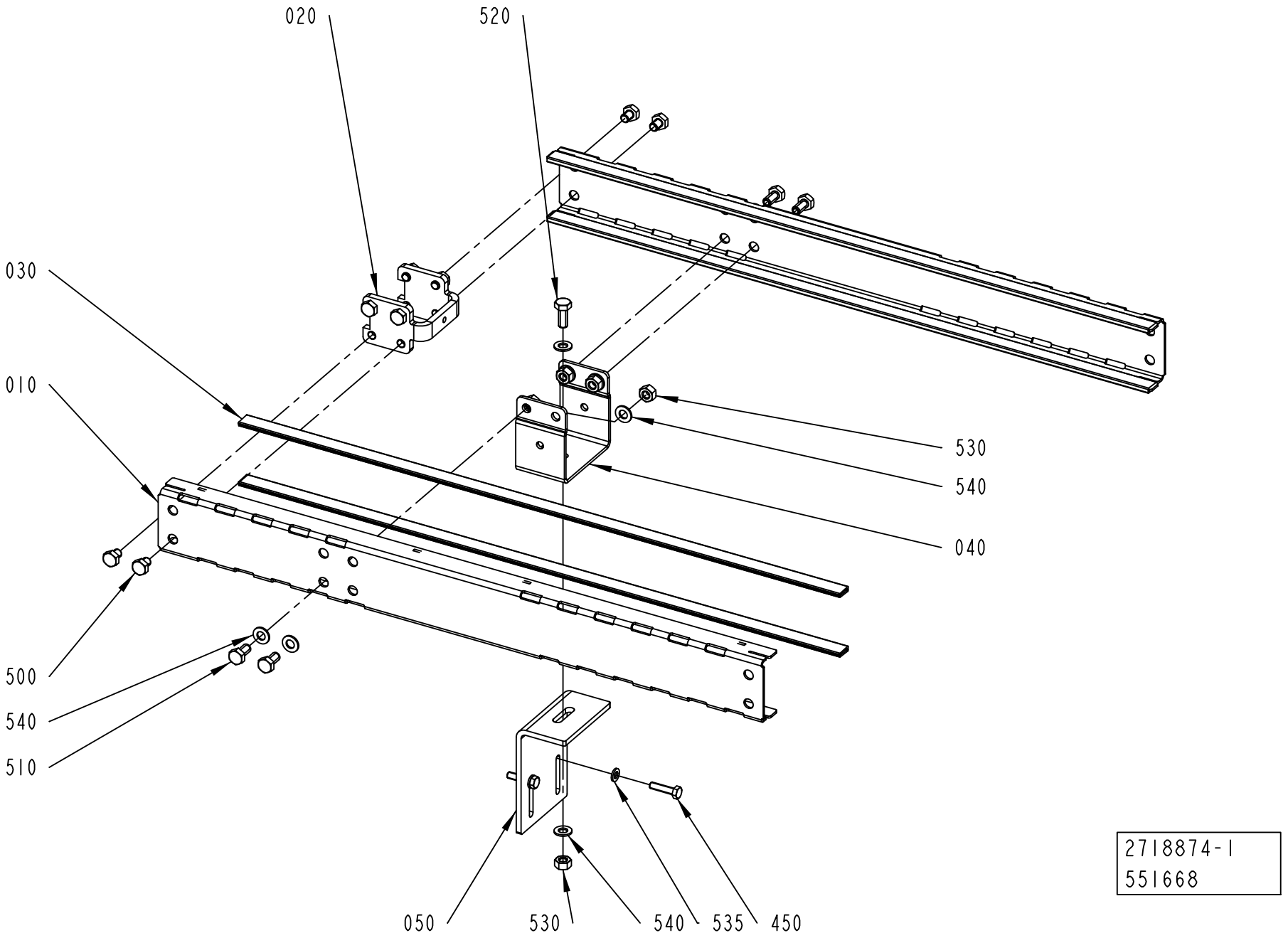
020
520
030
010
530
540
040
500
540
510
050
530
540
535
450
2718874-1
551668

ECM: 562559 - 20120613
Group number: 2718874-0100
Assembly Drawing: 2718874-1_1_AC

Pos	Part No	UN	Qty	Description	Page No
-					
010	2718879-0000		2	SLIDE PLATE	
020	2561206-0000		1	SPACER	
030	1550595-6180		4	SLIDING STRIP	
040	1550874-0000		1	BRACKET FOR LEG PC23	
050	2592245-0000		1	BRACKET	
450	312105-0372		2	SCREW, M6S ISO 4017 M6X25 A4 80	
500	90459-4735		8	SCREW, M6S ISO 4017 M8X10 A4 80	
510	312105-0449		4	SCREW, M6S ISO 4017 M8X16 A4 80	
520	312105-0451		1	SCREW, M6S ISO 4017 M8X20 A4 80	
530	312605-0318		5	HEXAGON NUT, M6M M8 A280	
535	315105-0153		2	WASHER PLAIN, 6,4X12X1,5 A4 BRB	
540	315105-0165		10	FWAS080G0-0S, WASHER PLAIN	

Pos	Part No	UN	Qty	Description	Page No

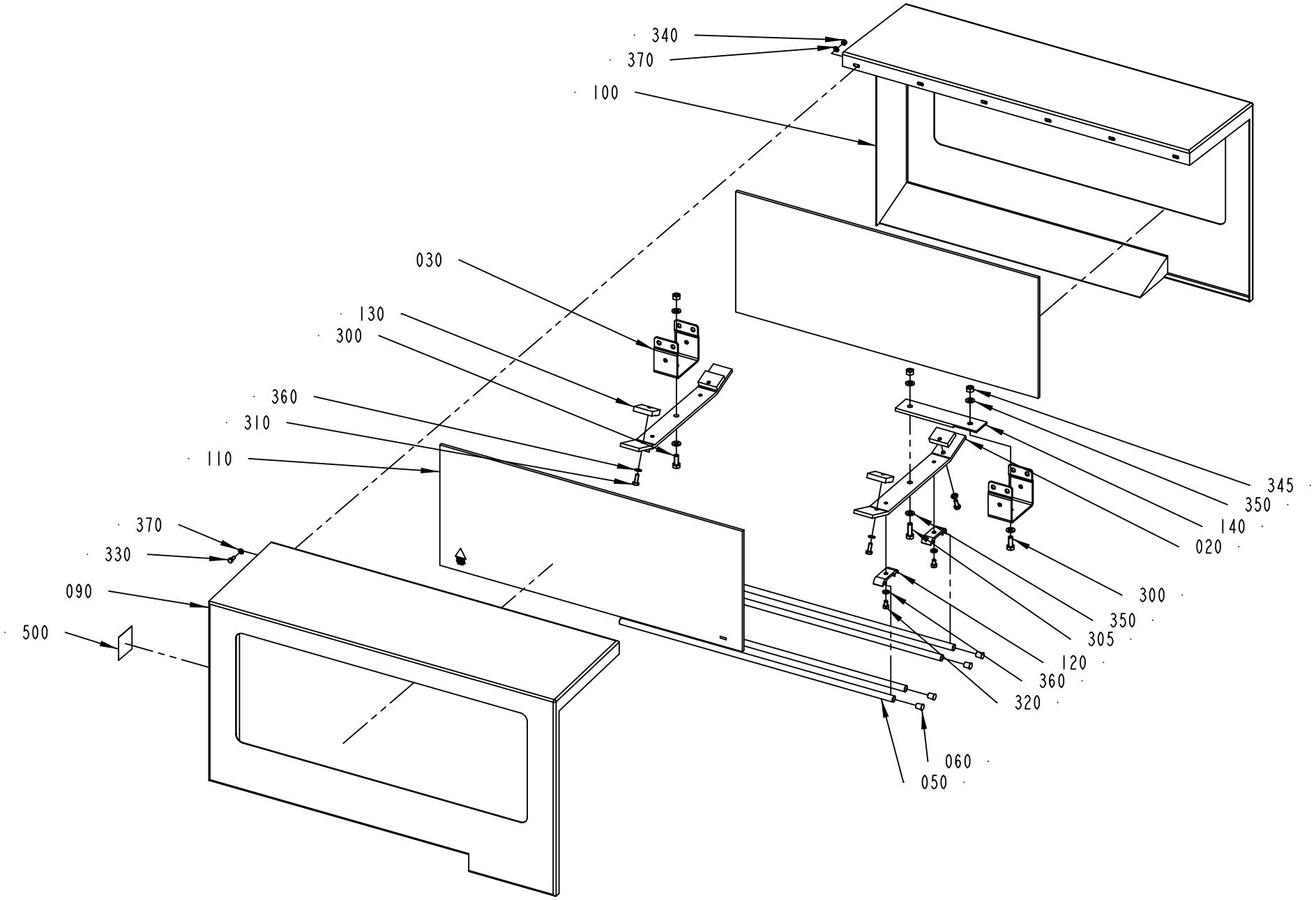

2851971-1
408460

ECM: 414572 - 20090911
Group number: 2851971-0100
Assembly Drawing: 2851971-1_1_AB

Pos	Part No	UN	Qty	Description	Page No
-					
020	2851970-0000		2	BRACKET	
030	1550874-0000		2	BRACKET FOR LEG PC23	
050	476221-0024		4	PIPE	
060	484701-0000		8	SHUTTER	
090	2851968-0000		1	TUNNEL HALF	
100	2851969-0000		1	TUNNEL HALF	
110	2802466-0005		2	GLASS	
120	1020634-0001		4	HOLDER	
130	2864530-0000		4	CLAMPING PLATE	
140	2851976-0000		1	BRACKET	
200	90157-0041	L	1	SEALING COMPOUND, RHODORSEAL 5651	
300	312105-0451		2	SCREW, M6S ISO 4017 M8X20 A4 80	
305	312105-0453		1	SCREW, M6S ISO 4017 M8X25 A4 80	
310	312105-0368		4	SCREW, M6S ISO 4017 M6X16 A4 80	
320	312105-0364		4	SCREW, M6S ISO 4017 M6X10 A4 80	
330	312105-0327		6	SCREW, M6S ISO 4017 M5X12 A4 80	
340	312605-0314		6	HEXAGON NUT, M6M M5 A280	
345	312605-0318		3	HEXAGON NUT, M6M M8 A280	
350	315106-0165		6	WASHER PLAIN, M8 ISO7089-8-200 HV A4	
360	315106-0153		8	WASHER PLAIN, M6 ISO7089-6-200 HV A4	
370	315106-0146		12	WASHER PLAIN, M5 ISO7089-5-200 HV A4	
500	90459-7584		1	PROHOBITION SIGN ISO, DO NOT REACH IN	

Pos	Part No	UN	Qty	Description	Page No

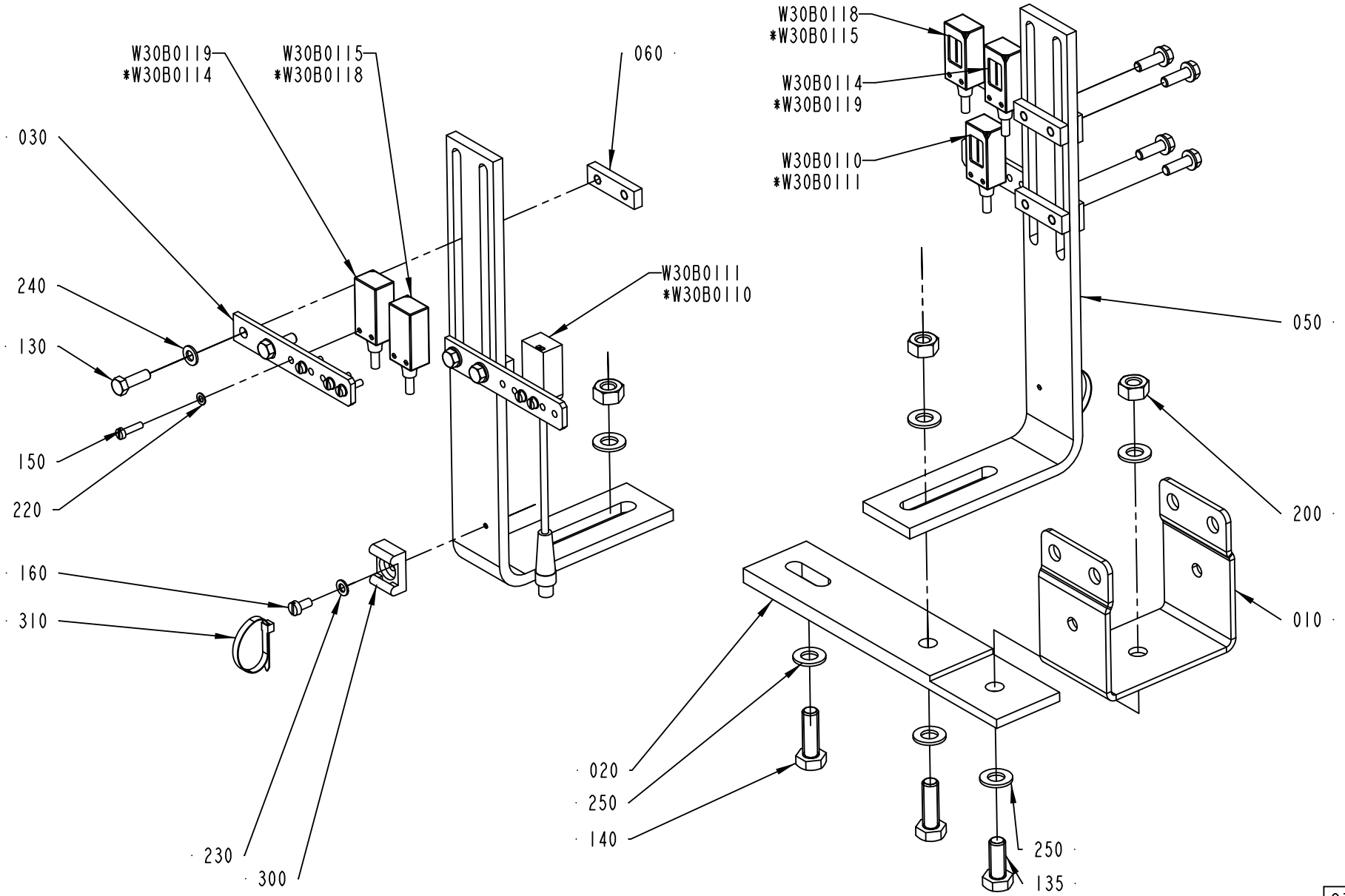

* INFEED RIGHT Z-FORM AND INFEED LEFT U-FORM

2718883-2
ECM 352552

ECM: 355532 - 20080919
Group number: 2718883-0200
Assembly Drawing: 2718883-2_1_AC

Pos	Part No	UN	Qty	Description	Page No
-					
010	1550874-0000		1	BRACKET FOR LEG PC23	
020	2718884-0000		1	BRACKET	
030	2895035-0000		4	PHOTOCELL BRACKET	
050	2920752-0000		2	HOLDER	
060	2504290-0000		4	PLATE	
130	312105-0329		8	SCREW, M6S ISO 4017 M5X16 A4 80	
135	312105-0451		1	SCREW, M6S ISO 4017 M8X20 A4 80	
140	312105-0453		2	SCREW, M6S ISO 4017 M8X25 A4 80	
150	312125-0226		12	SLOTTED HEAD SCREW, ISO1207 M3X12 A4	
160	312125-0287		2	SLOTTED HEAD SCREW, ISO1207 M4X8 A4	
200	312605-0318		3	HEXAGON NUT, M6M M8 A280	
220	315105-0124		12	WASHER PLAIN, 3,2X6X0,5 A4 BRB	
230	315105-0136		2	WASHER PLAIN, 4,3X9X0,8 A4 BRB	
240	315105-0146		8	WASHER PLAIN, 5,3X10X1 A4 BRB	
250	315105-0165		6	FWAS080G0-0S, WASHER PLAIN	
300	352113-0203		2	ANCHOR PLATES FOR STRIPS, TM3S8-M0	
310	352113-0101		2	CABLE TIE,BLACK 92X	
W30B0110	90600-3673		1	PHOTOCELL, WE4-3F3130S03	
W30B0111	90600-3322		1	PHOTOCELL, WS4-3D3130F20	
W30B0114	90600-3673		1	PHOTOCELL, WE4-3F3130S03	
W30B0115	90600-3723		1	PHOTOCELL, WS4-3D3130S05	
W30B0118	90600-3673		1	PHOTOCELL, WE4-3F3130S03	
W30B0119	90600-3723		1	PHOTOCELL, WS4-3D3130S05	

Pos	Part No	UN	Qty	Description	Page No

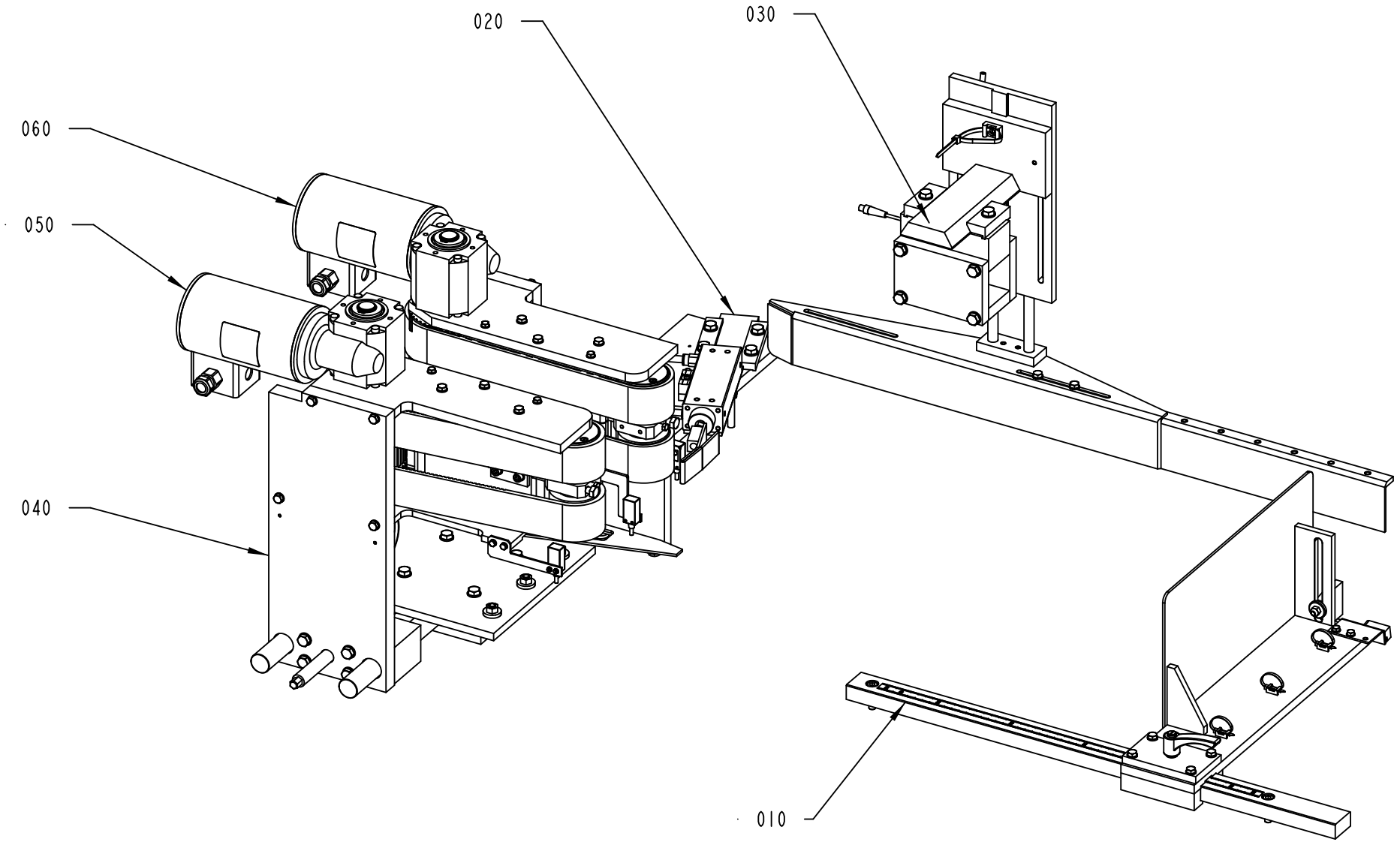

2851987-4
568933

ECM: 577151 - 20120924
Group number: 2851987-0400
Assembly Drawing: 2851987-4_1_AA

Pos	Part No	UN	Qty	Description	Page No
-					
010	2895021-0200		1	END STOP GROUPING	**1-91**
020	2752732-0300		1	PACKAGE SEPARATOR	**1-93**
030	2763068-0400		1	GROUPING TOP SUPPORT	**1-95**
040	2834011-0200		1	SIDE ADJUSTER	**1-97**
050	2834009-0200		1	BRAKE UNIT	**1-99**
060	2834010-0200		1	BRAKE UNIT	**1-101**

Pos	Part No	UN	Qty	Description	Page No

END STOP GROUPING

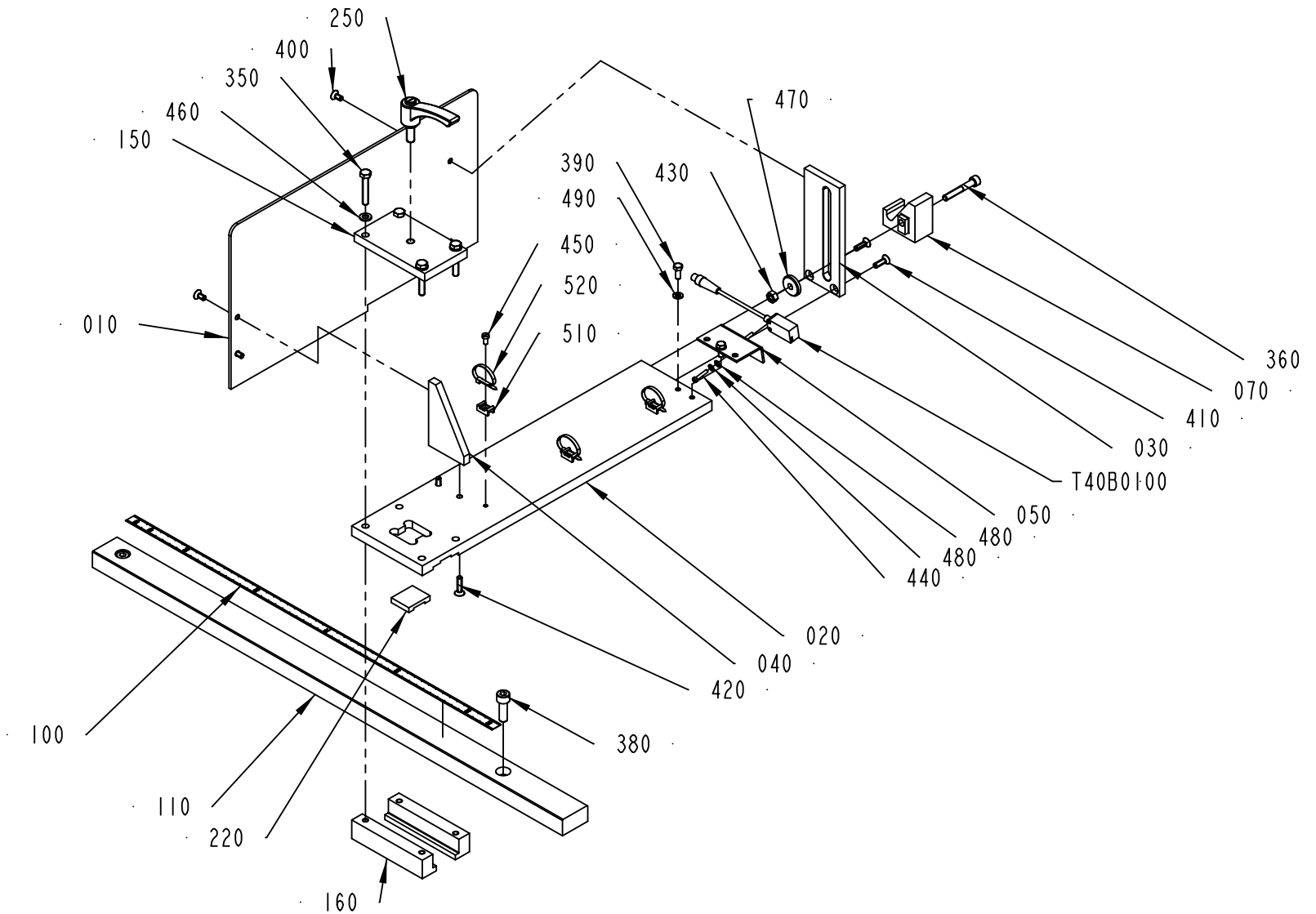

2895021-2
587728

ECM: 589779 - 20121210
Group number: 2895021-0200
Assembly Drawing: 2895021-2_1_AB

Pos	Part No	UN	Qty	Description	Page No
LINF U-FORM with RECAP3, RINF Z-FORM with RECAP3					
010	3109101-0000		1	STOP PLATE	
020	2895013-0000		1	PLATE	
070	3097794-0000		1	HOLDER	
LINF U-FORM without RECAP3, RINF Z-FORM without RECAP3					
010	2895012-0000		1	STOP PLATE	
020	2895013-0000		1	PLATE	
070	3097794-0000		1	HOLDER	
LINF Z-FORM with RECAP3, RINF U-FORM with RECAP3					
010	3109104-0000		1	STOP PLATE	
020	2895025-0000		1	PLATE	
070	3097795-0000		1	HOLDER	
LINF Z-FORM without RECAP3, RINF U-FORM without RECAP3					
010	2895027-0000		1	STOP PLATE	
020	2895025-0000		1	PLATE	
070	3097795-0000		1	HOLDER	
Common Parts					
030	2895016-0000		1	BRACKET	
040	2895015-0000		1	BRACKET	
050	2909532-0000		1	PHOTOCELL BRACKET	
100	90458-2780		1	SCALE ,1000-0 MM ADHESIVE	
110	2895018-0000		1	RAIL	
150	1466434-0000		1	PLATE	
160	1466436-0000		2	CLAMP RAIL	
220	2895014-0000		1	WASHER	
250	90458-2092		1	LOCKING LEVER, 239455 ERZ.63 SST-P-M8X20	
350	312109-0376		4	SCREW, M6S ISO 4017 M6X35 A4 80	
360	312115-0378		1	SCREW ISO4762 M6X40 A4 80	
380	312115-0453		2	SCREW ISO4762 M8X25 A4 80	
390	312105-0327		2	SCREW, M6S ISO 4017 M5X12 A4 80	
400	312155-0325		4	SCREW DIN 7991 MF6S M5X10 A4 70	
410	312155-0329		2	SCREW DIN 7991 MF6S M5X16 A4 70	
420	312155-0331		2	SCREW DIN 7991 MF6S M5X20 A4 70	
430	312605-0316		1	HEXAGON NUT, M6M M6 A280	
440	312125-0228		2	SLOTTED HEAD SCREW, ISO1207 M3X16 A4	
450	312125-0287		3	SLOTTED HEAD SCREW, ISO1207 M4X8 A4	
460	315105-0153		4	WASHER PLAIN, 6,4X12X1,5 A4 BRB	
470	315125-0153		1	WASHER HIGH, TBRSB 6,4X22X4 A4	
480	315106-0124		4	WASHER PLAIN, M3 ISO7089-3-200 HV A4	
490	315105-0146		2	WASHER PLAIN, 5,3X10X1 A4 BRB	
510	352113-0205		3	ANCHOR PLATES FOR STRIPS, TM2S8-C100	
520	352113-0101		3	CABLE TIE,BLACK 92X	

Pos	Part No	UN	Qty	Description	Page No
T40B0100	90600-3323		1	PHOTOCELL, WE4-3F3130F20	

Machine Type | Group Description | Used-In | Group Number | Page No

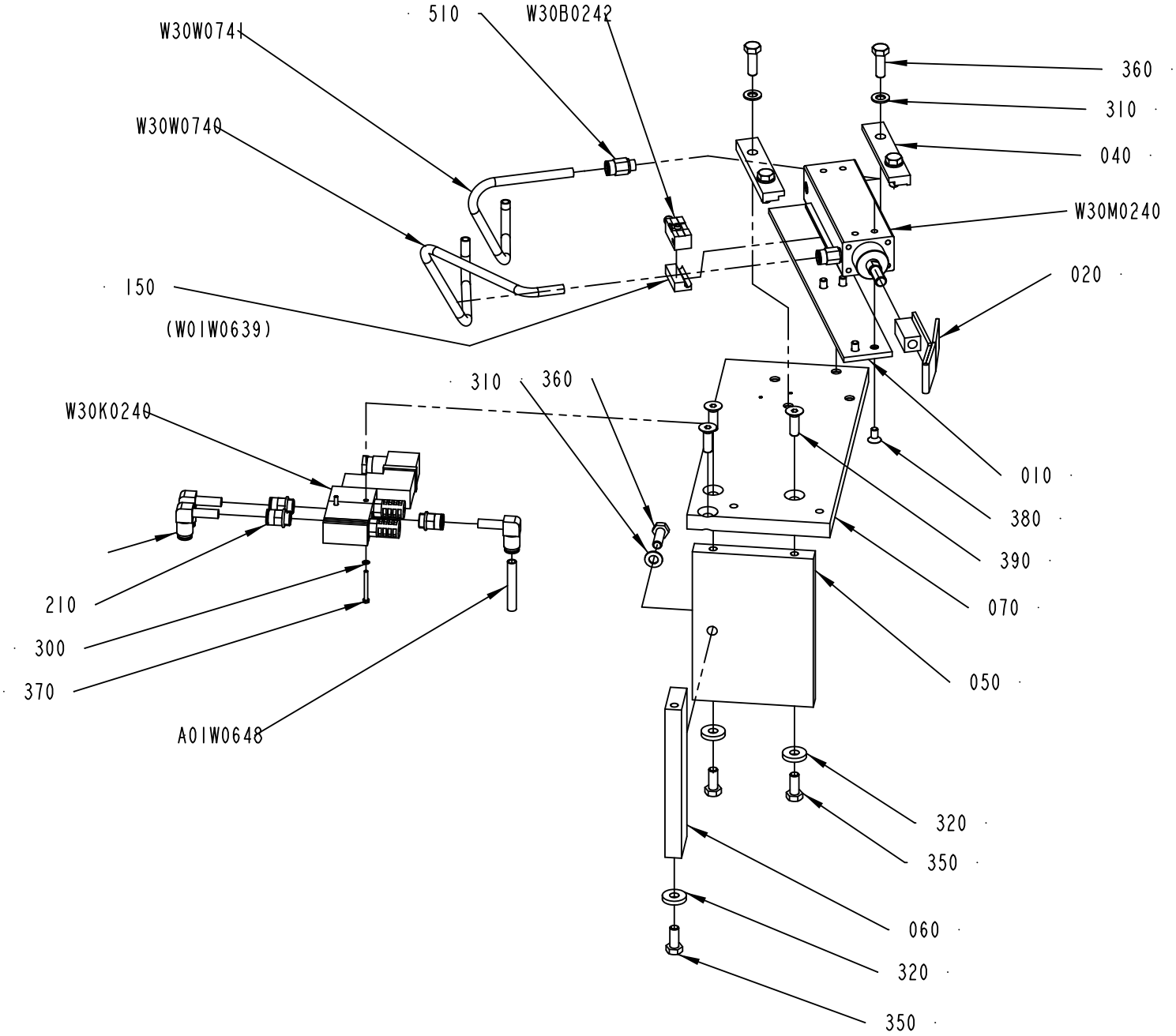

2752732-3
555186

ECM: 567476 - 20120710
Group number: 2752732-0300
Assembly Drawing: 2752732-3_1_AE

Pos	Part No	UN	Qty	Description	Page No
LINF U-FORM PHE 131-279, RINF Z-FORM PHE131-279					
020	2909545-0000		1	RULE PLATE	
LINF U-FORM PHE 70-130, RINF Z-FORM PHE 70-130					
020	2771156-0000		1	RULE PLATE	
LINF Z-FORM PHE131-279, RINF U-FORM PHE 131-279					
020	2909544-0000		1	RULE PLATE	
LINF Z-FORM PHE 70-130, RINF U-FORM PHE 70-130					
020	2771156-0000		1	RULE PLATE	
Common Parts					
010	2792388-0000		1	MOUNTING PLATE	
040	2792390-0000		2	CLAMP RAIL	
050	2504259-0000		1	PLATE	
060	2504260-0000		1	PLATE	
070	2851981-0000		1	PLATE	
150	90239-0571		1	SENSOR BRACKET, FOR SMEO-1, SMTO-1	
200	90600-1175		3	ELBOW WITH TAILPIECE 8/8 MM	
210	90600-2720		3	PUSH-IN FITTING KQH08-U02	
300	315105-0124		2	WASHER PLAIN, 3,2X6X0,5 A4 BRB	
310	315105-0165		5	FWAS080G0-0S, WASHER PLAIN	
320	548599-0000		3	WASHER	
350	312105-0451		3	SCREW, M6S ISO 4017 M8X20 A4 80	
360	312105-0453		5	SCREW, M6S ISO 4017 M8X25 A4 80	
370	312125-0234		2	SLOTTED HEAD SCREW, ISO1207 M3X30 A4	
380	312155-0366		4	SCREW DIN 7991 MF6S M6X12 A4 70	
390	312155-0453		3	SCREW DIN 7991 MF6S M8X25 A4 70	
510	350001-0007		2	PUSH-IN FITTING QS-F-G1/8-8	
A01W0648	315400-0004	M	1.1	TUBE PUN-H-8X1,25-BL	
W30B0242	90459-2136		1	PROX. SENSOR, SMEO-1-S-LED-24-B	
W30K0240	90459-6327		1	SOLENOID VALVE, SOLIDBLUE, 1053894	
	90459-6332		*1*	*MUFFLER, 1/8 INCH, 105 8058*	
	90042-0392		*1*	*CONTACT 2 POLE + EARTH*	
W30M0240	90604-4767		1	CYLINDER, DZH-32-50-PPV-A-H1-SE	
W30W0740	315400-0004	M	0.5	TUBE PUN-H-8X1,25-BL	
W30W0741	315400-0004	M	0.5	TUBE PUN-H-8X1,25-BL	

Pos	Part No	UN	Qty	Description	Page No

Machine Type | Group Description | Used-In | Group Number | Page No

GROUPING TOP SUPPORT

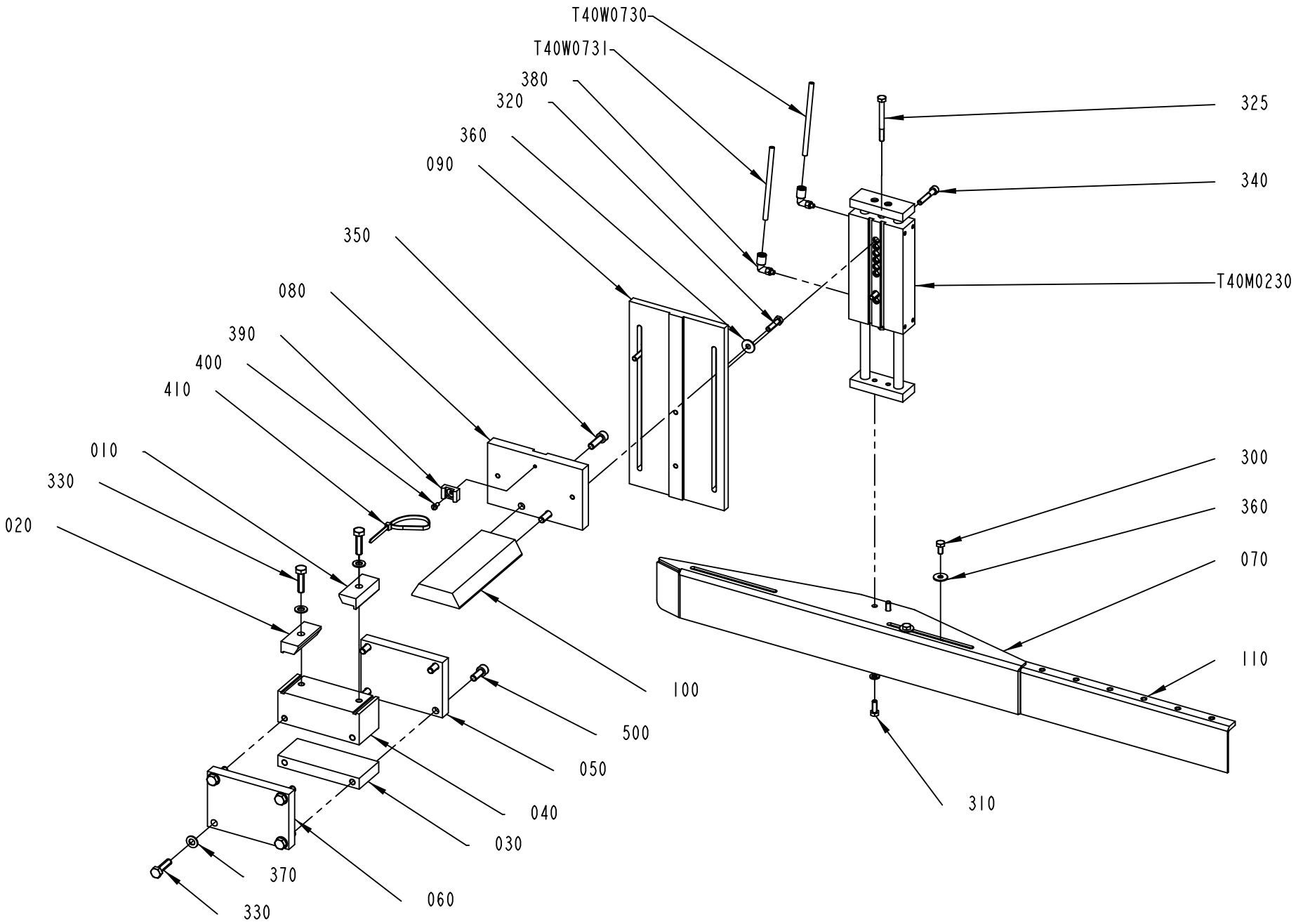

2763068-3
627532

ECM: 630412 - 20130919
Group number: 2763068-0400
Assembly Drawing: 2763068-3_1_AC

Pos	Part No	UN	Qty	Description	Page No
LINF U-FORM, RINF Z-FORM					
070	2995216-0000		1	GUIDE	
LINF Z-FORM, RINF U-FORM					
070	2995217-0000		1	GUIDE	
Common Parts					
010	2763094-0000		1	CLAMP RAIL	
020	2763095-0000		1	CLAMP RAIL	
030	3128765-0000		1	BRACKET	
040	3128763-0000		1	BRACKET	
050	3128766-0000		1	BRACKET	
060	3128764-0000		1	PLATE	
080	2763101-0000		1	PLATE	
090	2763102-0000		1	PLATE	
100	2763103-0000		1	PLATE	
110	2995218-0000		1	GUIDE RAIL	
300	312105-0366		2	SCREW, M6S ISO 4017 M6X12 A4 80	
310	312105-0368		2	SCREW, M6S ISO 4017 M6X16 A4 80	
320	312105-0372		2	SCREW, M6S ISO 4017 M6X25 A4 80	
325	312105-0382		1	SCREW, M6S ISO 4014 M6X60 A4 80	
330	312105-0455		6	SCREW, M6S ISO 4017 M8X30 A4 80	
340	312115-0376		2	SCREW ISO4762 M6X35 A4 80	
350	312115-0453		2	SCREW ISO4762 M8X25 A4 80	
360	90005-0060		4	WASHER PLAIN, RBS 6,4/M6)/18,H=1,5	
370	315105-0165		6	FWAS080G0-0S, WASHER PLAIN	
380	350002-0002		2	PUSH-IN L-FITTING QSL-F-M5-6	
390	352113-0203		1	ANCHOR PLATES FOR STRIPS, TM3S8-M0	
400	312125-0287		1	SLOTTED HEAD SCREW, ISO1207 M4X8 A4	
410	352113-0102		1	CABLE TIE, BLACK 188X4,8 MM	
500	312115-0451		4	SCREW ISO4762 M8X20 A4 80	
T40M0230	90604-4765		1	CYLINDER SPEC. WITH INT. GUIDING BORE 25	
T40W0730	315400-0001	M	3	6-4E PUN-H-6X1-BL	
T40W0731	315400-0001	M	3	6-4E PUN-H-6X1-BL	

Pos	Part No	UN	Qty	Description	Page No

SIDE ADJUSTER

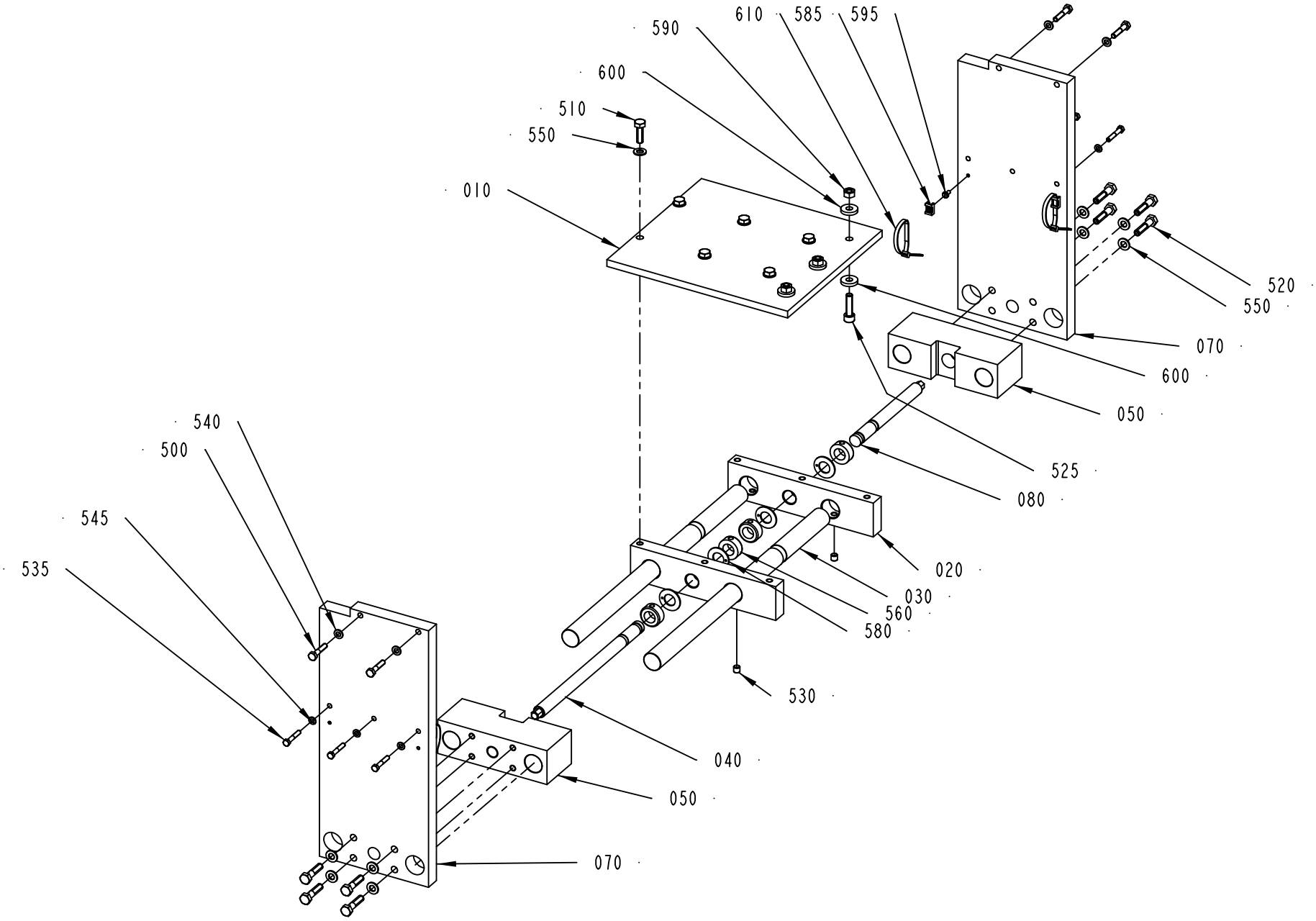

2834011-2
630890

ECM: 646205 - 20131125
Group number: 2834011-0200
Assembly Drawing: 2834011-2_1_AE

Pos	Part No	UN	Qty	Description	Page No
-					
010	2829374-0000		1	PLATE	
020	2829375-0000		2	PLATE	
030	2829376-0000		2	SHAFT	
040	2829377-0000		1	SHAFT	
050	2829378-0000		2	BEARING HOUSING	
070	2877467-0000		2	BRACKET	
080	2833962-0000		1	SHAFT	
500	312105-0374		4	SCREW, M6S ISO 4014 M6X30 A4 80	
510	312105-0453		6	SCREW, M6S ISO 4017 M8X25 A4 80	
520	312105-0457		8	SCREW, M6S ISO 4014 M8X35 A4 80	
525	312115-0455		3	SCREW ISO4762 M8X30 A4 80	
530	312318-0443		4	SET SCREW, CUP END ISO4029 M8X8 A4	
535	312105-0335		6	SCREW, M6S ISO 4014 M5X30 A4 80	
540	315105-0153		4	WASHER PLAIN, 6,4X12X1,5 A4 BRB	
545	315106-0146		6	WASHER PLAIN, M5 ISO7089-5-200 HV A4	
550	315105-0165		14	FWAS080G0-0S, WASHER PLAIN	
560	315741-0112		4	RETAINING RING, DIN 705 A2 16	
580	321131-0220		4	THRUST WASHER, 16X22X1,5 MM	
585	352113-0205		4	ANCHOR PLATES FOR STRIPS, TM2S8-C100	
590	312605-0318		3	HEXAGON NUT, M6M M8 A280	
595	312132-0287		4	SLOTTED HEAD, PAN SCREW, MSCS M4X8	
600	548599-0000		6	WASHER	
610	352113-0102		4	CABLE TIE, BLACK 188X4,8 MM	

Pos	Part No	UN	Qty	Description	Page No

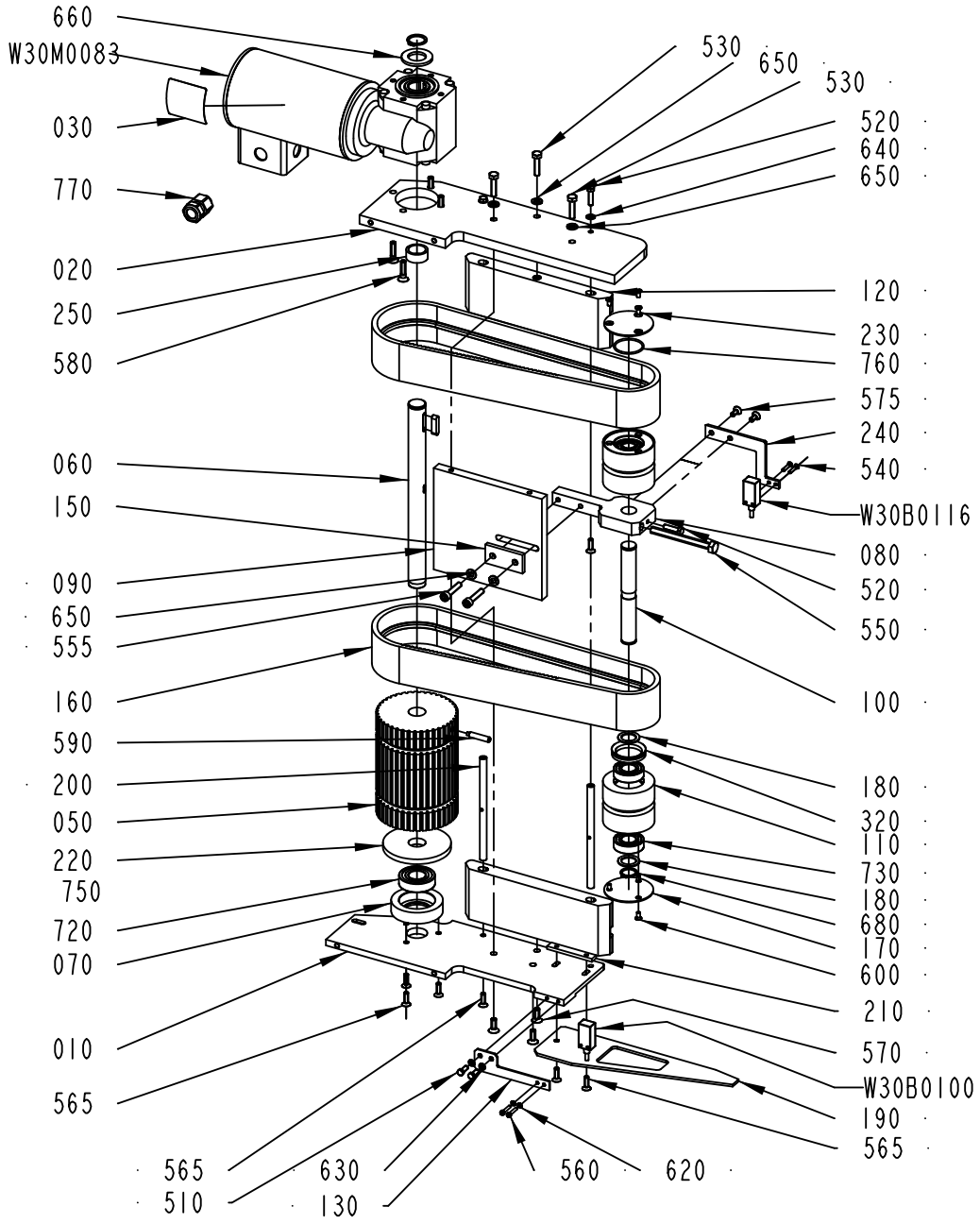

2834009-2
555186

ECM: 578345 - 20120924
Group number: 2834009-0200
Assembly Drawing: 2834009-2_1_AG

Pos	Part No	UN	Qty	Description	Page No
LINF U-FORM ANSI, RINF Z-FORM ANSI					
010	2909542-0000		1	FASTENING PLATE	
020	2877468-0000		1	FASTENING PLATE	
030	359725-0116		1	WARNING SIGN ANSI (H), HOT SURFACE	
040	359725-0100		1	WARNING SIGN ANSI (H), ENTANGLEMENT	
190	2851960-0000		1	GUIDE	
240	2909535-0000		1	PHOTOCELL BRACKET	
LINF U-FORM ISO, RINF Z-FORM ISO					
010	2909542-0000		1	FASTENING PLATE	
020	2877468-0000		1	FASTENING PLATE	
030	1128853-0000		1	CAUTION SIGN	
040	359705-0001		1	WARNING SIGN ISO, ENTANGLEMENT	
190	2851960-0000		1	GUIDE	
240	2909535-0000		1	PHOTOCELL BRACKET	
LINF Z-FORM ANSI, RINF U-FORM ANSI					
010	2909543-0000		1	FASTENING PLATE	
020	2877475-0000		1	FASTENING PLATE	
030	359725-0116		1	WARNING SIGN ANSI (H), HOT SURFACE	
040	359725-0100		1	WARNING SIGN ANSI (H), ENTANGLEMENT	
190	2851966-0000		1	GUIDE	
240	2909536-0000		1	PHOTOCELL BRACKET	
LINF Z-FORM ISO, RINF U-FORM ISO					
010	2909543-0000		1	FASTENING PLATE	
020	2877475-0000		1	FASTENING PLATE	
030	1128853-0000		1	CAUTION SIGN	
040	359705-0001		1	WARNING SIGN ISO, ENTANGLEMENT	
190	2851966-0000		1	GUIDE	
240	2909536-0000		1	PHOTOCELL BRACKET	
Common Parts					
050	2877470-0000		1	TOOTHED PULLEY	
060	2877469-0000		1	SHAFT	
070	2833967-0000		1	BEARING HOUSING	
080	2851956-0000		1	BRACKET	
090	2851957-0000		1	PLATE	
100	2851954-0000		1	SHAFT	
110	2851953-0000		2	RUNNER	
120	2851958-0000		2	SUPPORT PLATE	
130	2895038-0000		1	BRACKET	
150	2851959-0000		1	PLATE	
160	90601-0786		2	TIMING BELT TK5K6 800X50 MM	
170	2511001-0000		1	WASHER	
180	2851955-0000		4	WASHER	
200	2851961-0000		2	ROD	
210	2851962-0000		1	BRACKET	
220	2851977-0000		1	END SECTION	
230	2851978-0000		1	WASHER	
250	2933259-0000		1	SPACER	
320	90091-0418		2	V-RING 31X39X7,5 MM V-35A	
510	312105-0291		2	SCREW, M6S ISO 4017 M4X12 A4 70	
520	312105-0331		3	SCREW, M6S ISO 4017 M5X20 A4 80	
530	312105-0372		3	SCREW, M6S ISO 4017 M6X25 A4 80	
540	312155-0228		2	SCREW DIN 7991 MF6S M3X16 A4 70	
550	312109-0467		1	SCREW, M6S ISO 4017 M8X80 A4 80	
555	312115-0374		2	SCREW ISO4762 M6X30 A4 80	
560	312125-0228		2	SLOTTED HEAD SCREW, ISO1207 M3X16 A4	
565	312155-0329		7	SCREW DIN 7991 MF6S M5X16 A4 70	
570	312155-0368		3	SCREW DIN 7991 MF6S M6X16 A4 70	
575	312155-0327		2	SCREW DIN 7991 MF6S M5X12 A4 70	
580	312155-0372		4	SCREW DIN 7991 MF6S M6X25 A4 70	
590	312311-0374		1	SET SCREW, DOG POINT ISO4028 M6X30 FZB	
600	312145-0287		6	SCREW ISO 2009 MFS M4X8 A4	
620	315105-0124		2	WASHER PLAIN, 3,2X6X0,5 A4 BRB	
630	315105-0136		2	WASHER PLAIN, 4,3X9X0,8 A4 BRB	
640	315105-0146		2	WASHER PLAIN, 5,3X10X1 A4 BRB	
650	315105-0153		5	WASHER PLAIN, 6,4X12X1,5 A4 BRB	
660	315105-0192		1	WASHER PLAIN, 21X36X3 A4 BRB	
670	315705-0234		1	PARALLEL KEY W. ROUND ENDS, 6X6X25 MM	
680	90141-0017		2	RETAINING RING FOR SHAFT DIN 471 17 SS	
690	315751-0116		1	RETAINING RING FOR SHAFT DIN 471 20 SS	
720	344224-0204		1	BALL BEARING 20/42X12	
730	344224-0203		4	BALL BEARING 17/35X10	
750	90153-0053		1	ADHESIVE, LOCTITE 648 TEMP 150`C 50ML	
760	315207-0714		1	O-RING 31,47X1,78 MM	
770	90459-2953		1	GLAND, EXTENDED WITH INSERT, M16X1,5	
W30B0100	90600-3673		1	PHOTOCELL, WE4-3F3130S03	
W30B0116	90600-3673		1	PHOTOCELL, WE4-3F3130S03	
W30M0083	90600-2981		1	GEARS, WORM MOTOR D9582/SC401-H/1600099	

Machine Type	Group Description	Used-In	Group Number	Page No

BRAKE UNIT

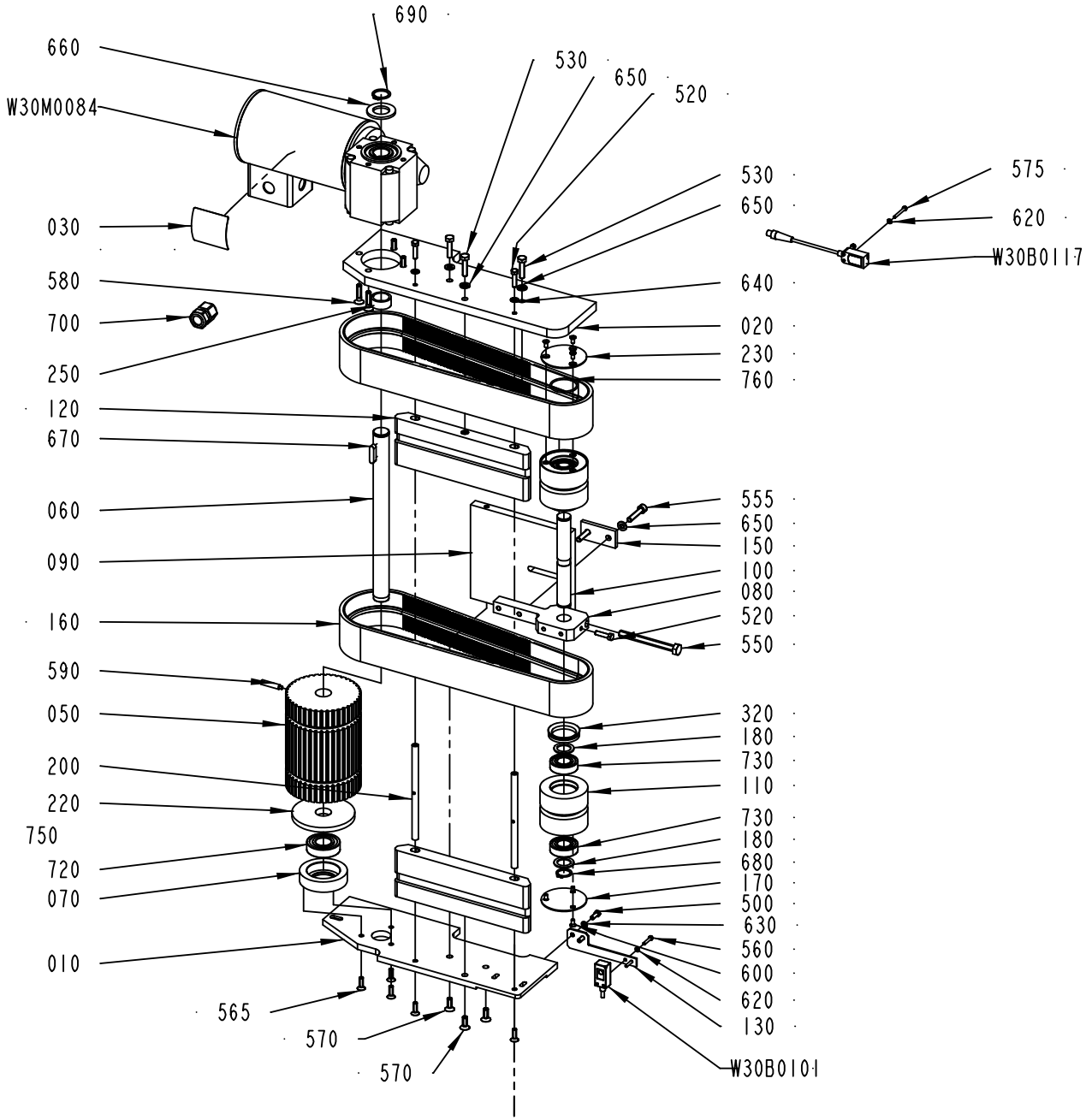

2834010-2
555186

ECM: 578351 - 20120924
Group number: 2834010-0200
Assembly Drawing: 2834010-2_1_AG

Pos	Part No	UN	Qty	Description	Page No
LINF U-FORM ANSI, RINF Z-FORM ANSI					
	359725-0100		1	WARNING SIGN ANSI (H), ENTANGLEMENT	
010	2909543-0000		1	FASTENING PLATE	
020	2877475-0000		1	FASTENING PLATE	
030	359725-0116		1	WARNING SIGN ANSI (H), HOT SURFACE	
LINF U-FORM ISO, RINF Z-FORM ISO					
	359705-0001		1	WARNING SIGN ISO, ENTANGLEMENT	
010	2909543-0000		1	FASTENING PLATE	
020	2877475-0000		1	FASTENING PLATE	
030	1128853-0000		1	CAUTION SIGN	
LINF Z-FORM ANSI, RINF U-FORM ANSI					
	359725-0100		1	WARNING SIGN ANSI (H), ENTANGLEMENT	
010	2909542-0000		1	FASTENING PLATE	
020	2877468-0000		1	FASTENING PLATE	
030	359725-0116		1	WARNING SIGN ANSI (H), HOT SURFACE	
LINF Z-FORM ISO, RINF U-FORM ISO					
	359705-0001		1	WARNING SIGN ISO, ENTANGLEMENT	
010	2909542-0000		1	FASTENING PLATE	
020	2877468-0000		1	FASTENING PLATE	
030	1128853-0000		1	CAUTION SIGN	
Common Parts					
050	2877470-0000		1	TOOTHED PULLEY	
060	2877469-0000		1	SHAFT	
070	2833967-0000		1	BEARING HOUSING	
080	2851956-0000		1	BRACKET	
090	2851957-0000		1	PLATE	
100	2851954-0000		1	SHAFT	
110	2851953-0000		2	RUNNER	
120	2851958-0000		2	SUPPORT PLATE	
130	2895038-0000		1	BRACKET	
150	2851959-0000		1	PLATE	
160	90601-0786		2	TIMING BELT TK5K6 800X50 MM	
170	2511001-0000		1	WASHER	
180	2851955-0000		4	WASHER	
200	2851961-0000		2	ROD	
220	2851977-0000		1	END SECTION	
230	2851978-0000		1	WASHER	
250	2933259-0000		1	SPACER	
320	90091-0418		2	V-RING 31X39X7,5 MM V-35A	
510	312105-0291		2	SCREW, M6S ISO 4017 M4X12 A4 70	
520	312105-0331		3	SCREW, M6S ISO 4017 M5X20 A4 80	
530	312105-0372		3	SCREW, M6S ISO 4017 M6X25 A4 80	
550	312109-0467		1	SCREW, M6S ISO 4017 M8X80 A4 80	
555	312115-0374		2	SCREW ISO4762 M6X30 A4 80	
560	312125-0228		2	SLOTTED HEAD SCREW, ISO1207 M3X16 A4	
565	312155-0329		5	SCREW DIN 7991 MF6S M5X16 A4 70	
570	312155-0368		3	SCREW DIN 7991 MF6S M6X16 A4 70	
575	312125-0232		2	SLOTTED HEAD SCREW, ISO1207 M3X25 A4	
580	312155-0372		4	SCREW DIN 7991 MF6S M6X25 A4 70	
590	312311-0374		1	SET SCREW, DOG POINT ISO4028 M6X30 FZB	
600	312145-0287		6	SCREW ISO 2009 MFS M4X8 A4	
620	315105-0124		4	WASHER PLAIN, 3,2X6X0,5 A4 BRB	
630	315105-0136		2	WASHER PLAIN, 4,3X9X0,8 A4 BRB	
640	315105-0146		2	WASHER PLAIN, 5,3X10X1 A4 BRB	
650	315105-0153		5	WASHER PLAIN, 6,4X12X1,5 A4 BRB	
660	315105-0192		1	WASHER PLAIN, 21X36X3 A4 BRB	
670	315705-0234		1	PARALLEL KEY W. ROUND ENDS, 6X6X25 MM	
680	90141-0017		2	RETAINING RING FOR SHAFT DIN 471 17 SS	
690	315751-0116		1	RETAINING RING FOR SHAFT DIN 471 20 SS	
700	90459-2953		1	GLAND, EXTENDED WITH INSERT, M16X1,5	
720	344224-0204		1	BALL BEARING 20/42X12	
730	344224-0203		4	BALL BEARING 17/35X10	
750	90153-0053		1	ADHESIVE, LOCTITE 648 TEMP 150`C 50ML	
760	315207-0714		1	O-RING 31,47X1,78 MM	
W30B0101	90600-3723		1	PHOTOCELL, WS4-3D3130S05	
W30B0117	90600-3322		1	PHOTOCELL, WS4-3D3130F20	
W30M0084	90600-2981		1	GEARS, WORM MOTOR D9582/SC401-H/1600099	

Machine Type	Group Description	Used-In	Group Number	Page No

Tetra Pak

SPC
Spare Parts Catalogue

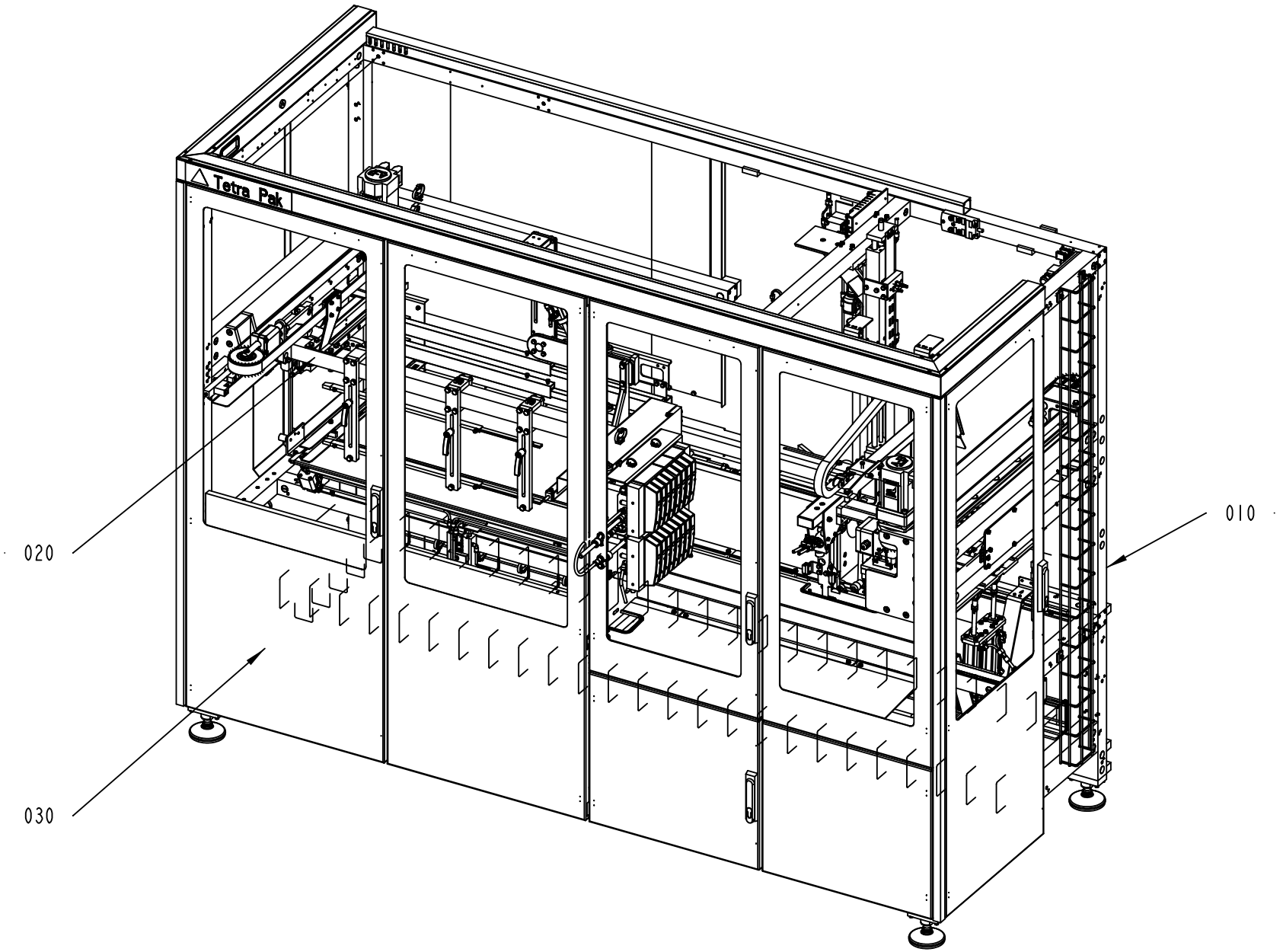

673833-5
555186

ECM: 567202 - 20120710
Group number: 673833-0500
Assembly Drawing: 673833-5_1_AA

Pos	Part No	UN	Qty	Description	Page No
-					
010	2782787-0500		1	PATTERN FORMING FRAME	**2-5, 2-7**
020	2792365-0500		1	TRANSFER UNIT	**2-55**
030	2787855-0300		1	COVERING PATTERN FORMING	**2-121, 2-123**

Pos	Part No	UN	Qty	Description	Page No

PATTERN FORMING FRAME

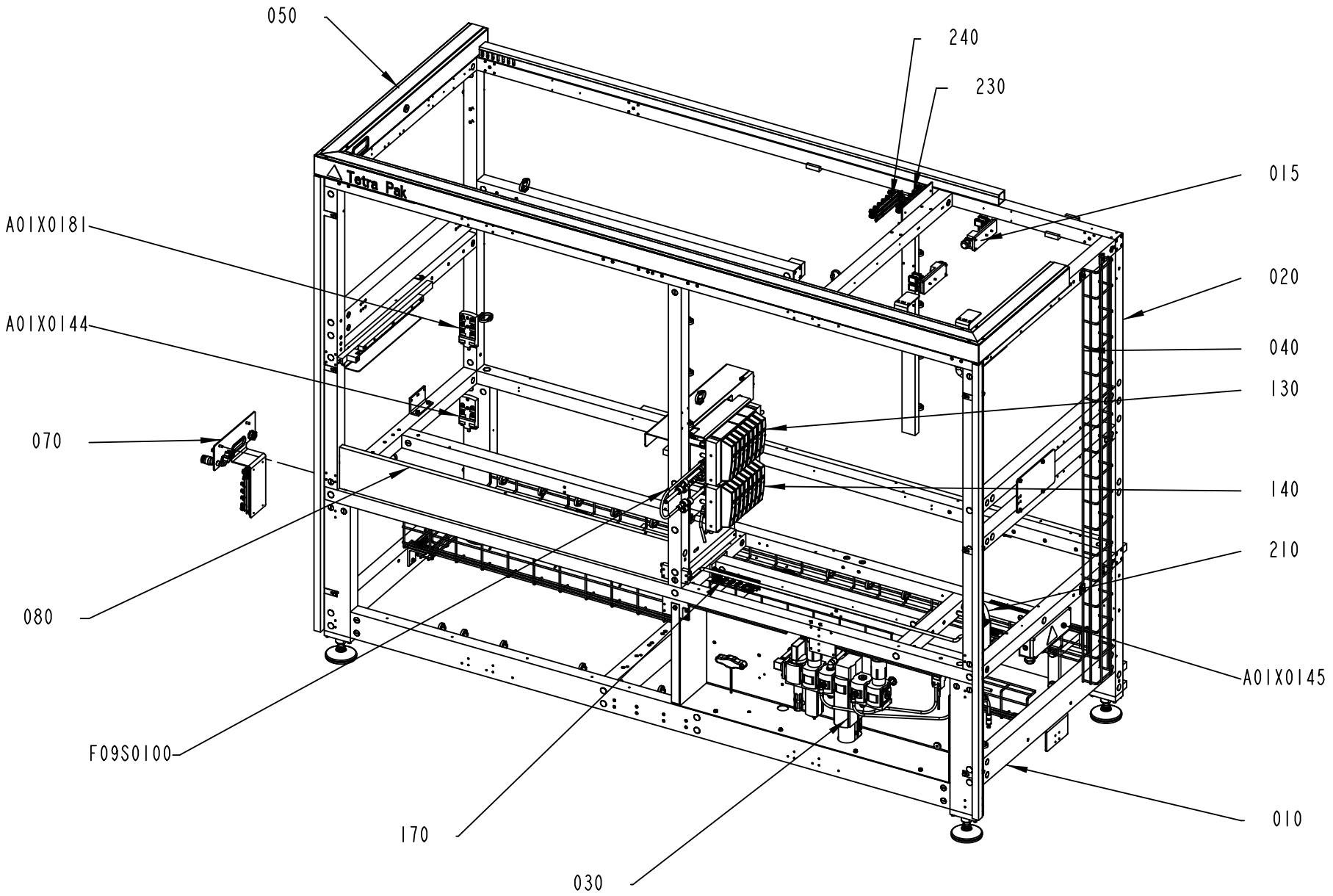

2782787-11
602279

ECM: 616333 - 20130618
Group number: 2782787-0500
Assembly Drawing: 2782787-11_1_AC

This list covers pages from 2-4 to 2-7

Pos	Part No	UN	Qty	Description	Page No
-					
010	3241259-0100		1	FRAME BOTTOM	**2-9**
015	2787864-0300		1	CONNECTION DEVICE	**2-11**
020	2782761-0400		1	FRAME UPPER	**2-13, 2-15**
030	2752678-0500		1	PNEUMATIC CABINET	**2-17, 2-19**
040	3241280-0100		1	CABLE DUCT	**2-23**
050	2720930-0400		1	CABLE DUCT	**2-25, 2-27**
060	2844970-0200		1	FRAME BRACKET	**2-29**
070	1124096-0500		1	LEAD-IN PLATE	**2-31**
080	2771160-0400		1	FRAME GROUPING PUSHER	**2-33**
130	2763086-0500		1	VALVE RAMP	**2-35**
140	2763089-0400		1	VALVE RAMP	**2-37**
170	2763113-0300		1	REMOTE I/O	**2-39**
210	2723236-0500		1	SUPPLY CONNECTION	**2-41**
230	2763117-0300		1	REMOTE I/O	**2-43**
240	2920765-0200		1	REMOTE I/O	**2-45**
A01X0144	2802452-0200		1	CONNECTION DEVICE	**2-47**
A01X0145	1065905-0300		1	CONNECTION BOX	**2-49**
A01X0181	2787865-0200		1	CONNECTION DEVICE	**2-51**
F09S0100	3249952-0100		1	EMERGENCY STOP	**2-53**

Pos	Part No	UN	Qty	Description	Page No

Machine Type | Group Description | Used-In | Group Number | Page No

PATTERN FORMING FRAME

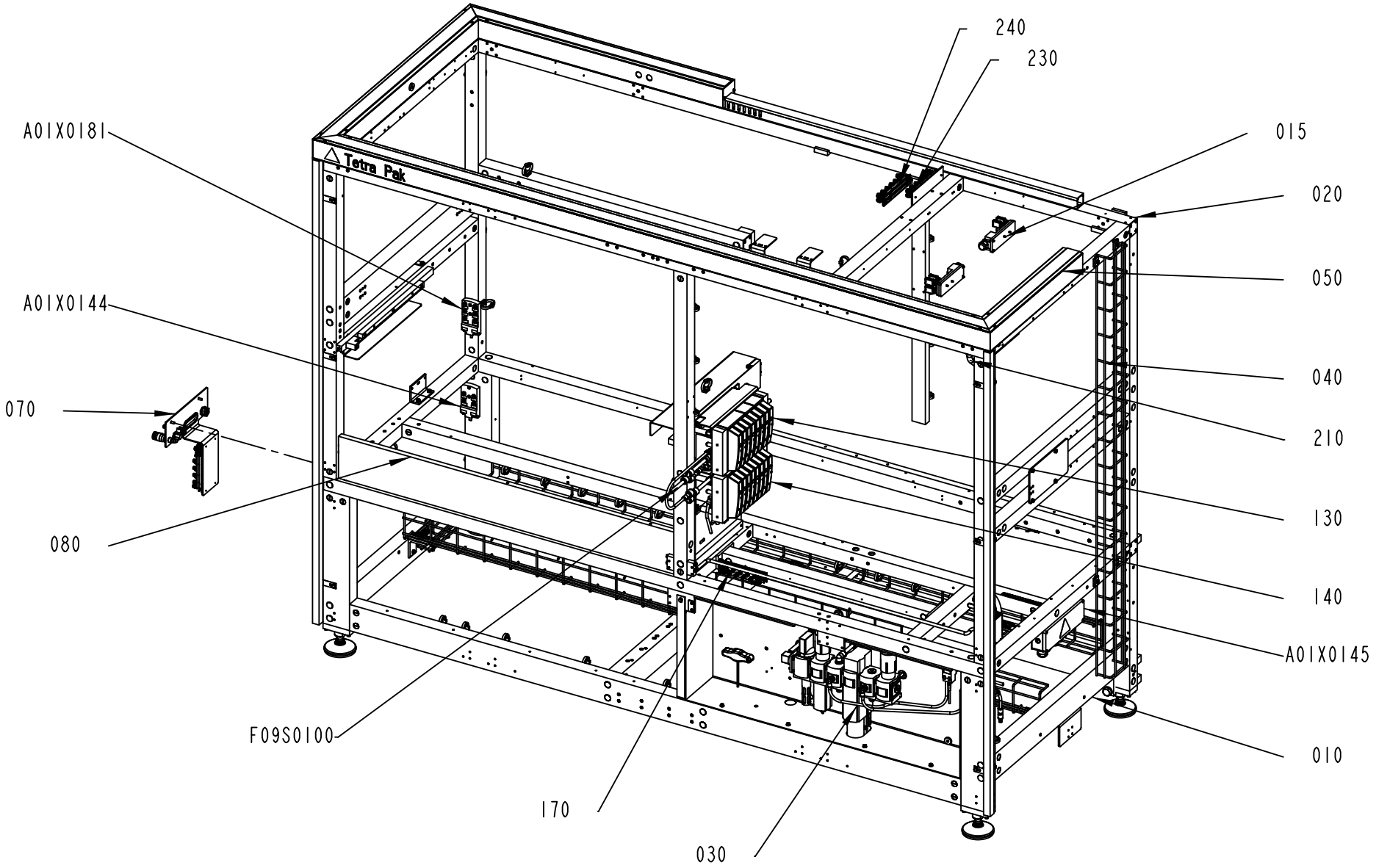

2782787-12
602279

ECM: 616333 - 20130618
Group number: 2782787-0500
Assembly Drawing: 2782787-12_1_AC

This list covers pages from 2-4 to 2-7

Pos	Part No	UN	Qty	Description	Page No
-					
010	3241259-0100		1	FRAME BOTTOM	**2-9**
015	2787864-0300		1	CONNECTION DEVICE	**2-11**
020	2782761-0400		1	FRAME UPPER	**2-13, 2-15**
030	2752678-0500		1	PNEUMATIC CABINET	**2-17, 2-19**
040	3241280-0100		1	CABLE DUCT	**2-23**
050	2720930-0400		1	CABLE DUCT	**2-25, 2-27**
060	2844970-0200		1	FRAME BRACKET	**2-29**
070	1124096-0500		1	LEAD-IN PLATE	**2-31**
080	2771160-0400		1	FRAME GROUPING PUSHER	**2-33**
130	2763086-0500		1	VALVE RAMP	**2-35**
140	2763089-0400		1	VALVE RAMP	**2-37**
170	2763113-0300		1	REMOTE I/O	**2-39**
210	2723236-0500		1	SUPPLY CONNECTION	**2-41**
230	2763117-0300		1	REMOTE I/O	**2-43**
240	2920765-0200		1	REMOTE I/O	**2-45**
A01X0144	2802452-0200		1	CONNECTION DEVICE	**2-47**
A01X0145	1065905-0300		1	CONNECTION BOX	**2-49**
A01X0181	2787865-0200		1	CONNECTION DEVICE	**2-51**
F09S0100	3249952-0100		1	EMERGENCY STOP	**2-53**

Pos	Part No	UN	Qty	Description	Page No

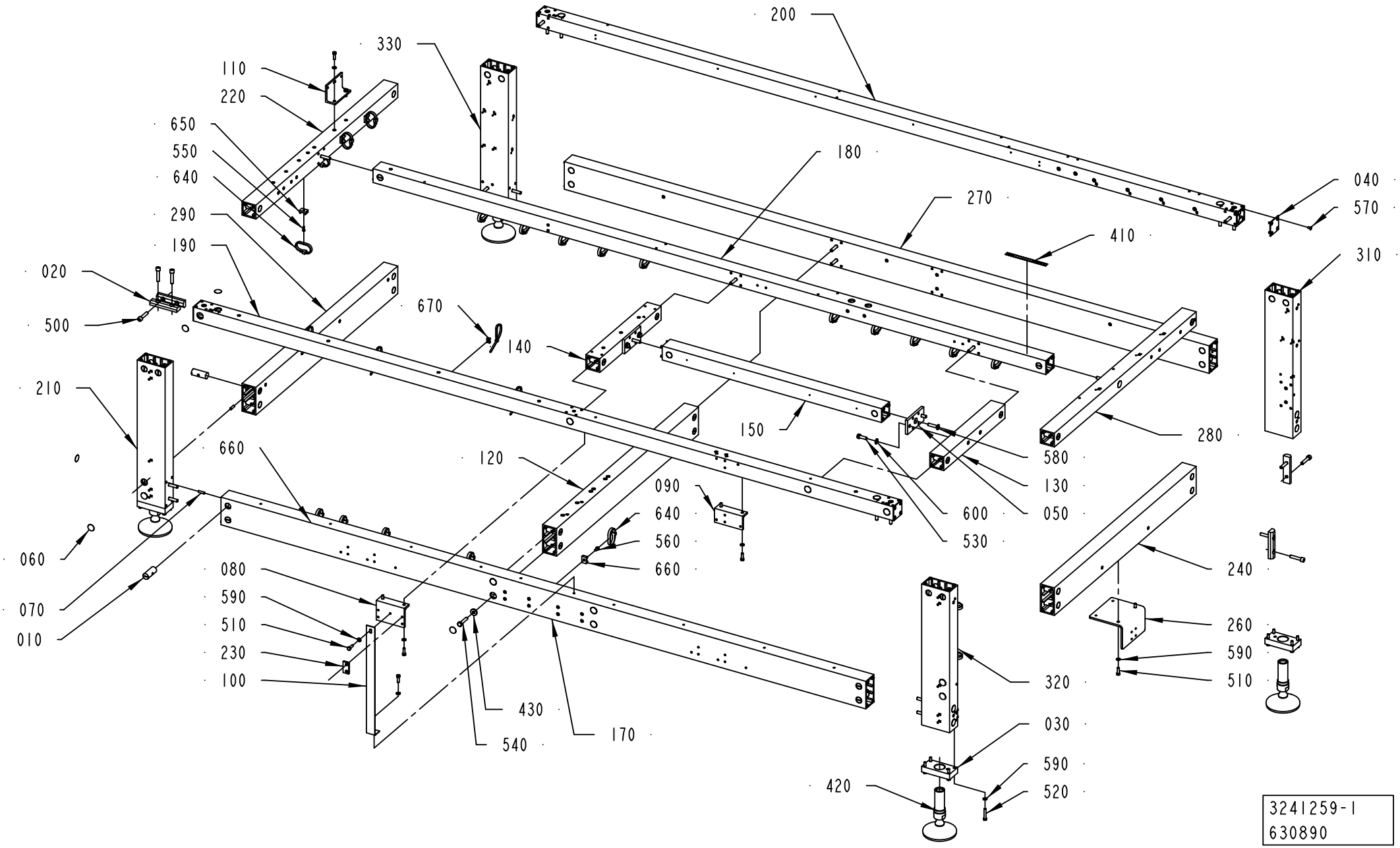
200
330
110
220
650
550
640
290
190
180
270
040
570
410
310
020
500
670
140
210
150
280
660
120
580
130
050
600
530
090
640
560
660
060
070
010
080
590
510
230
100
430
540
170
240
260
590
510
320
030
590
520
420
3241259-1
630890

ECM: 646206 - 20131125
Group number: 3241259-0100
Assembly Drawing: 3241259-1_1_AC

Pos	Part No	UN	Qty	Description	Page No
LINF U-FORM, RINF Z-FORM					
180	3252796-0000		1	PROFILE 50X50	
190	3241278-0000		1	PROFILE 50X50	
200	3241279-0000		1	PROFILE 50X50	
210	3241272-0000		1	PROFILE 50X100	
220	2851989-0000		1	PROFILE 50X50	
310	3241274-0000		1	PROFILE 50X100	
320	3241275-0000		1	PROFILE 50X100	
330	3241273-0000		1	PROFILE 50X100	
LINF Z-FORM, RINF U-FORM					
180	3252797-0000		1	PROFILE 50X50	
190	3252798-0000		1	PROFILE 50X50	
200	3252801-0000		1	PROFILE 50X50	
210	3252799-0000		1	PROFILE 50X100	
220	2851993-0000		1	PROFILE 50X50	
310	3252800-0000		1	PROFILE 50X100	
320	3252803-0000		1	PROFILE 50X100	
330	3252802-0000		1	PROFILE 50X100	
Common Parts					
010	486268-0000		40	NUT	
020	3023843-0000		16	FORCE PLATE	
030	3234425-0000		4	FRAME BRACKET	
040	556604-0000		4	COVER PLATE	
050	556624-0000		2	FRAME BRACKET	
060	1021933-0000		38	TAPE	
070	1065410-0000		104	SLOTTED PIN	
080	1124524-0000		1	BRACKET	
090	1124718-0000		1	BRACKET	
100	1124720-0000		1	COVER SLIP	
110	1139204-0000		1	BRACKET	
120	2720878-0000		1	PROFILE	
130	2720880-0000		1	PROFILE	
140	2720881-0000		1	PROFILE	
150	3252775-0000		1	INFEED DOUBLE	
170	3241276-0000		1	PROFILE 50X100	
230	3051574-0000		1	SPACER	
240	3122203-0000		1	PROFILE 50X100	
260	3138439-0000		1	FASTENING BRACKET	
270	3241277-0000		1	PROFILE 50X100	
280	3256230-0000		1	PROFILE 50X50	
290	3252795-0000		1	PROFILE 50X100	
410	90458-2780		1	SCALE ,1000-0 MM ADHESIVE	
420	90604-9686		4	FOOT 2200KG, XH105-XH-HL-3A-FA-Ø36X24	
430	90600-5066		10	WASHER PLAIN, DIN7349 8,4X21X4 A4	
500	312115-0459		28	SCREW ISO4762 M8X40 A4 80	
510	312105-0370		10	SCREW, M6S ISO 4017 M6X20 A4 80	
520	312105-0376		16	SCREW, M6S ISO 4014 M6X35 A4 80	
530	312105-0453		4	SCREW, M6S ISO 4017 M8X25 A4 80	
540	312105-0459		10	SCREW, M6S ISO 4014 M8X40 A4 80	
550	312125-0291		22	SLOTTED HEAD SCREW, ISO1207 M4X12 A4	
560	312125-0364		6	SCREW ISO 1207 M6X10 A4	
570	312145-0325		16	SCREW ISO 2009 MFS M5X10 A4	
580	312155-0457		2	SCREW DIN 7991 MF6S M8X35 A4 70	
590	315105-0153		26	WASHER PLAIN, 6,4X12X1,5 A4 BRB	
600	315105-0165		4	FWAS080G0-0S, WASHER PLAIN	
630	352113-0102		4	CABLE TIE, BLACK 188X4,8 MM	
640	352113-0103		24	CABLE TIE, BLACK 290X7,6 MM	
650	352113-0203		18	ANCHOR PLATES FOR STRIPS, TM3S8-M0	
660	352113-0204		6	ANCHOR PLATES FOR STRIPS, TM3S25-M	
670	352113-0205		4	ANCHOR PLATES FOR STRIPS, TM2S8-C100	

Machine Type	Group Description	Used-In	Group Number	Page No

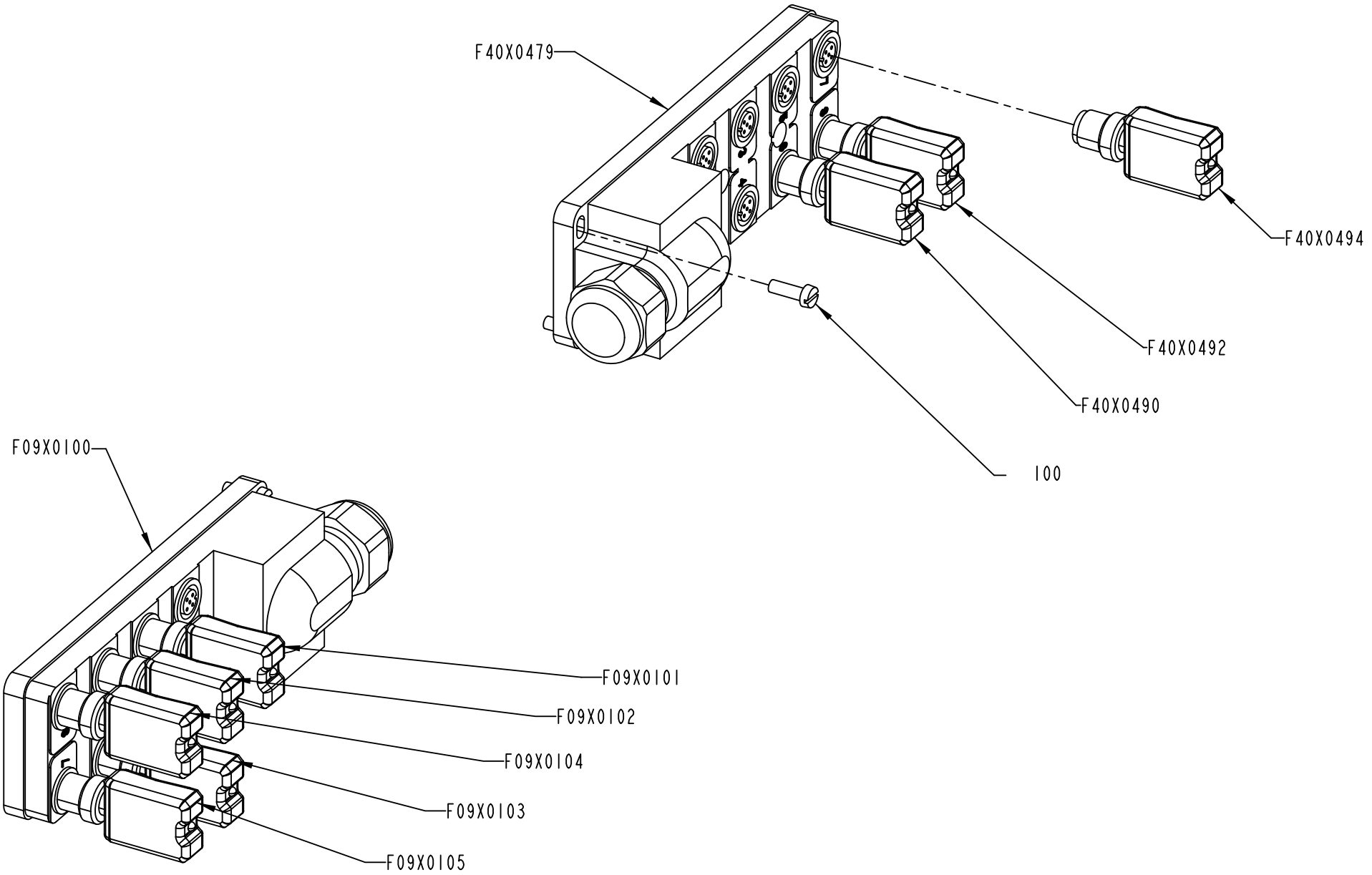

2787864-3
579668

ECM: 585726 - 20121116
Group number: 2787864-0300
Assembly Drawing: 2787864-3_1_AC

Pos	Part No	UN	Qty	Description	Page No
-					
100	312125-0291		8	SLOTTED HEAD SCREW, ISO1207 M4X12 A4	
F09X0100	90604-0094		1	CONNECTION BLOCK, TINA 8A	
F09X0101	90459-5627		1	CONNECTION, TINA 1-A	
F09X0102	90459-5627		1	CONNECTION, TINA 1-A	
F09X0103	90459-5627		1	CONNECTION, TINA 1-A	
F09X0104	90459-5627		1	CONNECTION, TINA 1-A	
F09X0105	90459-5627		1	CONNECTION, TINA 1-A	
F40X0479	90604-0094		1	CONNECTION BLOCK, TINA 8A	
F40X0490	90459-5627		1	CONNECTION, TINA 1-A	
F40X0492	90459-5627		1	CONNECTION, TINA 1-A	
F40X0494	90459-5627		1	CONNECTION, TINA 1-A	

Pos	Part No	UN	Qty	Description	Page No

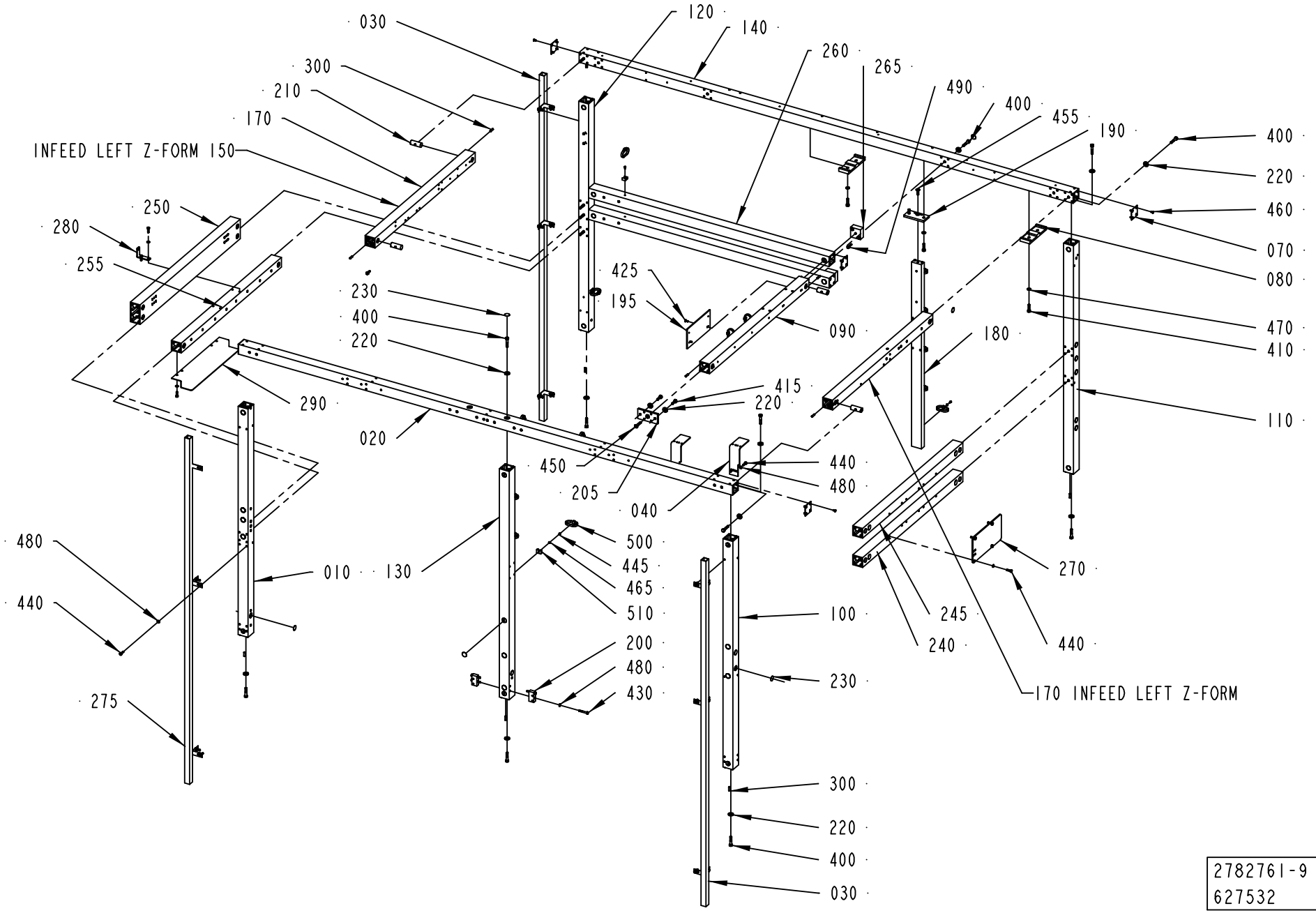
030
300
210
170
INFEED LEFT Z-FORM 150
250
280
255
230
400
220
290
020
120
140
260
265
490
400
455
190
425
195
090
180
400
220
460
070
080
470
410
110
415
220
450
205
040
440
480
500
445
465
510
200
480
430
010
130
480
440
275
100
230
300
220
400
030
270
245
240
440
170 INFEED LEFT Z-FORM
2782761-9
627532

ECM: 630415 - 20130919
Group number: 2782761-0400
Assembly Drawing: 2782761-9_1_AD

This list covers pages from 2-12 to 2-15

Pos	Part No	UN	Qty	Description	Page No
LINF U-FORM (See drawing on page: 2-14)					
030	1124645-0000		3	CORNER STRIP	
100	3096220-0000		1	PROFILE 50X50	
110	3252780-0000		1	PROFILE 50X50	
120	3096221-0000		1	PROFILE 50X50	
150	3252779-0000		1	PROFILE 50X50	
170	2872728-0000		1	PROFILE 50X50	
260	3096194-0000		2	PROFILE 50X50	
LINF Z-FORM (See drawing on page: 2-12)					
030	1124645-0000		2	CORNER STRIP	
100	3090604-0000		1	PROFILE 50X50	
110	3252781-0000		1	PROFILE 50X50	
120	3090608-0000		1	PROFILE 50X50	
150	2872727-0000		1	PROFILE 50X50	
170	3252778-0000		1	PROFILE 50X50	
260	3096193-0000		2	PROFILE 50X50	
275	3060172-0000		1	CORNER STRIP	
RINF U-FORM (See drawing on page: 2-14)					
030	1124645-0000		3	CORNER STRIP	
100	3090604-0000		1	PROFILE 50X50	
110	3252781-0000		1	PROFILE 50X50	
120	3090608-0000		1	PROFILE 50X50	
150	2872727-0000		1	PROFILE 50X50	
170	3252778-0000		1	PROFILE 50X50	
260	3096194-0000		2	PROFILE 50X50	
RINF Z-FORM (See drawing on page: 2-12)					
030	1124645-0000		2	CORNER STRIP	
100	3096220-0000		1	PROFILE 50X50	
110	3252780-0000		1	PROFILE 50X50	
120	3096221-0000		1	PROFILE 50X50	
150	3252779-0000		1	PROFILE 50X50	
170	2872728-0000		1	PROFILE 50X50	
260	3096193-0000		2	PROFILE 50X50	
275	3060171-0000		1	CORNER STRIP	
Common Parts					
010	3096191-0000		1	PROFILE 50X50	
020	2844957-0000		1	PROFILE 50X50	
040	3046679-0000		2	PLATE	
070	556604-0000		6	COVER PLATE	
080	1139255-0000		2	BRACKET	
090	2782758-0000		1	PROFILE 50X50	
130	1124670-0000		1	PROFILE	
140	2844959-0000		1	PROFILE 50X50	
180	2895001-0000		1	BEAM	
190	2557002-0000		1	BRACKET	
195	2920766-0000		1	BRACKET	
200	1124723-0000		2	BRACKET	
205	556624-0000		1	FRAME BRACKET	
210	486268-0000		27	NUT	
220	90600-5066		30	WASHER PLAIN, DIN7349 8,4X21X4 A4	
230	1021933-0000		56	TAPE	
240	3046535-0000		1	PROFILE 50X50	
245	3046536-0000		1	PROFILE 50X50	
250	3090606-0000		1	PROFILE 50X100	
255	3090607-0000		1	PROFILE 50X50	
265	3096211-0000		2	DISTANCE	
270	3096217-0000		1	SUPPORT PLATE	
280	3133500-0000		1	BRACKET	
290	3136746-0000		1	PROTECTION PLATE	
300	1065410-0000		102	SLOTTED PIN	
400	312105-0459		26	SCREW, M6S ISO 4014 M8X40 A4 80	
410	312105-0455		6	SCREW, M6S ISO 4017 M8X30 A4 80	
415	312105-0453		2	SCREW, M6S ISO 4017 M8X25 A4 80	
425	312155-0327		2	SCREW DIN 7991 MF6S M5X12 A4 70	
430	312105-0378		4	SCREW, M6S ISO 4014 M6X40 A4 80	
440	312105-0370		37	SCREW, M6S ISO 4017 M6X20 A4 80	
445	312125-0287		14	SLOTTED HEAD SCREW, ISO1207 M4X8 A4	
450	312155-0459		1	SCREW DIN 7991 MF6S M8X40 A4 70	
455	312155-0453		1	SCREW DIN 7991 MF6S M8X25 A4 70	
460	312145-0325		24	SCREW ISO 2009 MFS M5X10 A4	
465	315105-0136		13	WASHER PLAIN, 4,3X9X0,8 A4 BRB	
470	315105-0165		4	FWAS080G0-0S, WASHER PLAIN	
480	315105-0153		41	WASHER PLAIN, 6,4X12X1,5 A4 BRB	
490	312155-0374		4	SCREW DIN 7991 MF6S M6X30 A4 70	
500	352113-0103		14	CABLE TIE, BLACK 290X7,6 MM	
510	352113-0203		14	ANCHOR PLATES FOR STRIPS, TM3S8-M0	

Machine Type | Group Description | Used-In | Group Number | Page No

FRAME UPPER

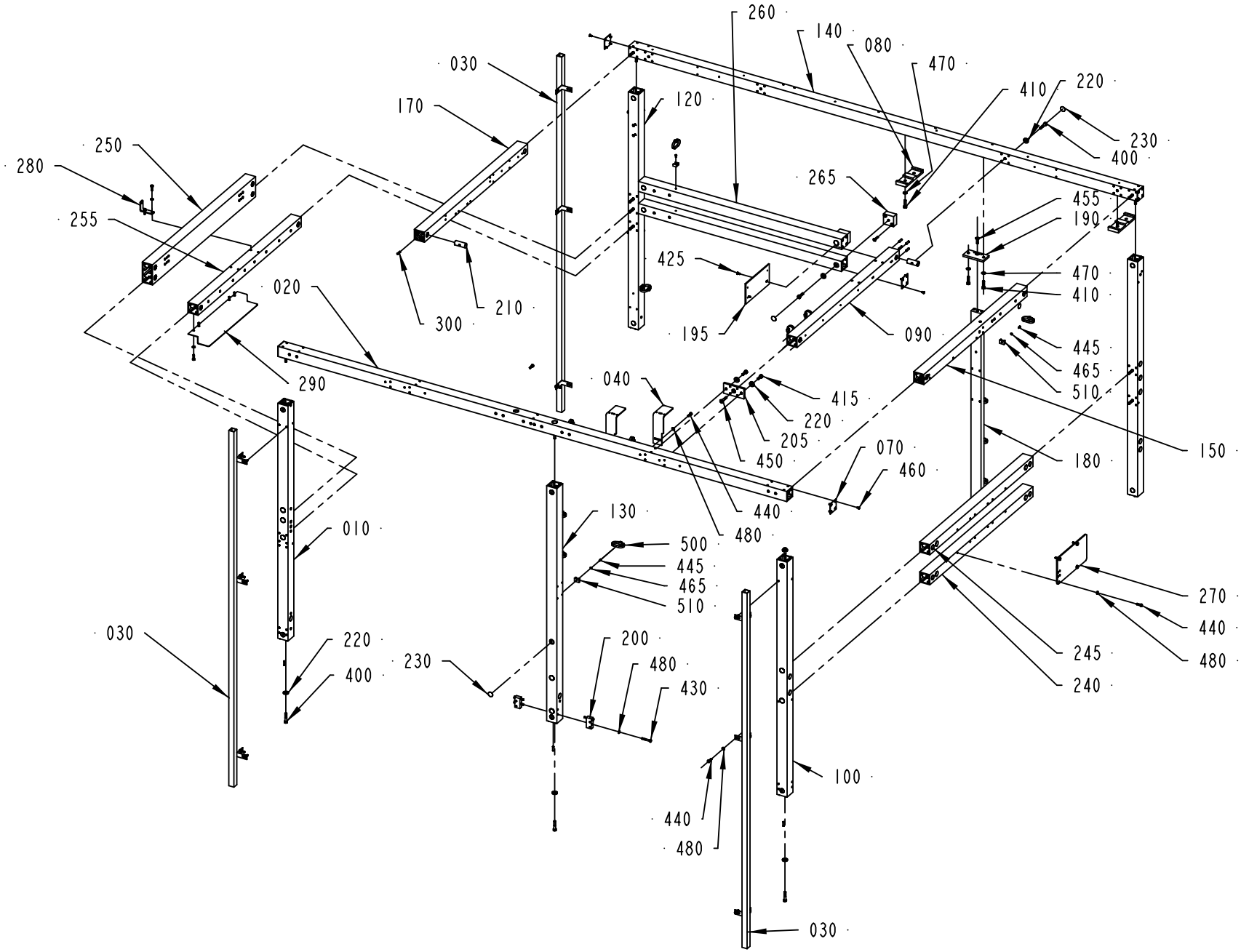

2782761-10
627532

ECM: 630415 - 20130919
Group number: 2782761-0400
Assembly Drawing: 2782761-10_1_AD

This list covers pages from 2-12 to 2-15

Pos	Part No	UN	Qty	Description	Page No
LINF U-FORM (See drawing on page: 2-14)					
030	1124645-0000		3	CORNER STRIP	
100	3096220-0000		1	PROFILE 50X50	
110	3252780-0000		1	PROFILE 50X50	
120	3096221-0000		1	PROFILE 50X50	
150	3252779-0000		1	PROFILE 50X50	
170	2872728-0000		1	PROFILE 50X50	
260	3096194-0000		2	PROFILE 50X50	
LINF Z-FORM (See drawing on page: 2-12)					
030	1124645-0000		2	CORNER STRIP	
100	3090604-0000		1	PROFILE 50X50	
110	3252781-0000		1	PROFILE 50X50	
120	3090608-0000		1	PROFILE 50X50	
150	2872727-0000		1	PROFILE 50X50	
170	3252778-0000		1	PROFILE 50X50	
260	3096193-0000		2	PROFILE 50X50	
275	3060172-0000		1	CORNER STRIP	
RINF U-FORM (See drawing on page: 2-14)					
030	1124645-0000		3	CORNER STRIP	
100	3090604-0000		1	PROFILE 50X50	
110	3252781-0000		1	PROFILE 50X50	
120	3090608-0000		1	PROFILE 50X50	
150	2872727-0000		1	PROFILE 50X50	
170	3252778-0000		1	PROFILE 50X50	
260	3096194-0000		2	PROFILE 50X50	
RINF Z-FORM (See drawing on page: 2-12)					
030	1124645-0000		2	CORNER STRIP	
100	3096220-0000		1	PROFILE 50X50	
110	3252780-0000		1	PROFILE 50X50	
120	3096221-0000		1	PROFILE 50X50	
150	3252779-0000		1	PROFILE 50X50	
170	2872728-0000		1	PROFILE 50X50	
260	3096193-0000		2	PROFILE 50X50	
275	3060171-0000		1	CORNER STRIP	
Common Parts					
010	3096191-0000		1	PROFILE 50X50	
020	2844957-0000		1	PROFILE 50X50	
040	3046679-0000		2	PLATE	
070	556604-0000		6	COVER PLATE	
080	1139255-0000		2	BRACKET	
090	2782758-0000		1	PROFILE 50X50	
130	1124670-0000		1	PROFILE	
140	2844959-0000		1	PROFILE 50X50	
180	2895001-0000		1	BEAM	
190	2557002-0000		1	BRACKET	
195	2920766-0000		1	BRACKET	
200	1124723-0000		2	BRACKET	
205	556624-0000		1	FRAME BRACKET	
210	486268-0000		27	NUT	
220	90600-5066		30	WASHER PLAIN, DIN7349 8,4X21X4 A4	
230	1021933-0000		56	TAPE	
240	3046535-0000		1	PROFILE 50X50	
245	3046536-0000		1	PROFILE 50X50	
250	3090606-0000		1	PROFILE 50X100	
255	3090607-0000		1	PROFILE 50X50	
265	3096211-0000		2	DISTANCE	
270	3096217-0000		1	SUPPORT PLATE	
280	3133500-0000		1	BRACKET	
290	3136746-0000		1	PROTECTION PLATE	
300	1065410-0000		102	SLOTTED PIN	
400	312105-0459		26	SCREW, M6S ISO 4014 M8X40 A4 80	
410	312105-0455		6	SCREW, M6S ISO 4017 M8X30 A4 80	
415	312105-0453		2	SCREW, M6S ISO 4017 M8X25 A4 80	
425	312155-0327		2	SCREW DIN 7991 MF6S M5X12 A4 70	
430	312105-0378		4	SCREW, M6S ISO 4014 M6X40 A4 80	
440	312105-0370		37	SCREW, M6S ISO 4017 M6X20 A4 80	
445	312125-0287		14	SLOTTED HEAD SCREW, ISO1207 M4X8 A4	
450	312155-0459		1	SCREW DIN 7991 MF6S M8X40 A4 70	
455	312155-0453		1	SCREW DIN 7991 MF6S M8X25 A4 70	
460	312145-0325		24	SCREW ISO 2009 MFS M5X10 A4	
465	315105-0136		13	WASHER PLAIN, 4,3X9X0,8 A4 BRB	
470	315105-0165		4	FWAS080G0-0S, WASHER PLAIN	
480	315105-0153		41	WASHER PLAIN, 6,4X12X1,5 A4 BRB	
490	312155-0374		4	SCREW DIN 7991 MF6S M6X30 A4 70	
500	352113-0103		14	CABLE TIE, BLACK 290X7,6 MM	
510	352113-0203		14	ANCHOR PLATES FOR STRIPS, TM3S8-M0	

Machine Type | Group Description | Used-In | Group Number | Page No

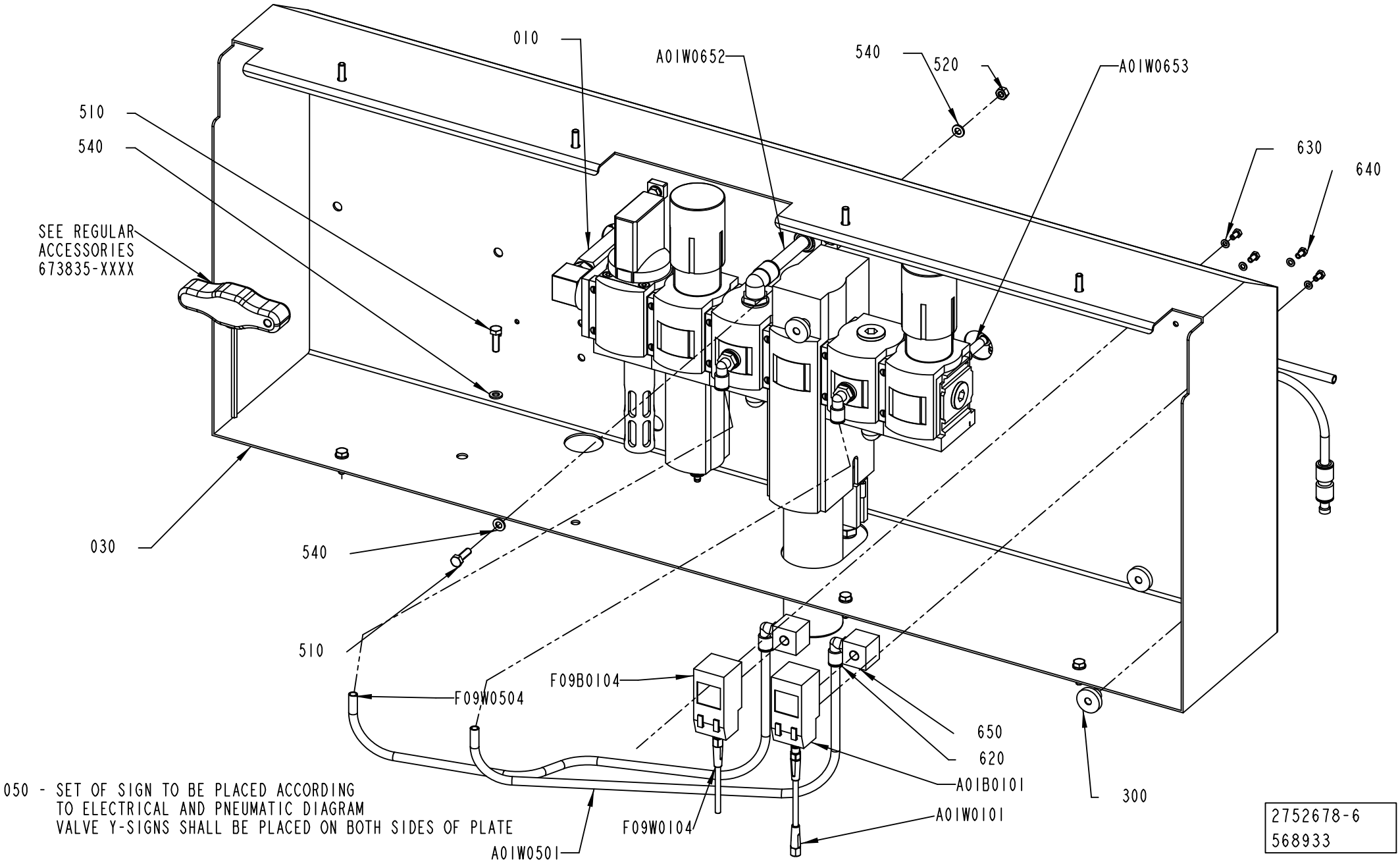

050 - SET OF SIGN TO BE PLACED ACCORDING TO ELECTRICAL AND PNEUMATIC DIAGRAM
VALVE Y-SIGNS SHALL BE PLACED ON BOTH SIDES OF PLATE

2752678-6
568933

ECM: 577157 - 20120924
Group number: 2752678-0500
Assembly Drawing: 2752678-6_1_AB

This list covers pages from 2-16 to 2-19

Pos	Part No	UN	Qty	Description	Page No
-					
010	2591888-0600		1	AIR SUPPLY UNIT	2-21
030	3241260-0000		1	PNEUMATIC PANEL	
050	2970909-0000		1	SET OF SIGNS	
300	90015-0023		4	LEAD-IN, TET 7-10, E1458019	
310	350015-0003		2	PUSH-IN Y-CONNECTOR QSY-F-8	
315	90055-0271		3	Y-CONNECTION, 12-12	
320	90055-0204		1	ELBOW WITH TAILPIECE 8/8 MM LONG	
340	350004-0003		1	PUSH-IN L-FITTING QSL-F-8	
420	342715-0103		1	BLIND PLUG 8 MM	
430	342716-0209		2	REDUCER 8-12	
440	350004-0005		3	PUSH-IN L-FITTING QSL-F-12	
450	342748-0109		3	T-CONNECTION 12MM	
510	312105-0370		14	SCREW, M6S ISO 4017 M6X20 A4 80	
520	312605-0316		6	HEXAGON NUT, M6M M6 A280	
540	315105-0153		20	WASHER PLAIN, 6,4X12X1,5 A4 BRB	
590	350006-0007		1	PUSH-IN FITTING QS-F-12H-6	
600	350006-0008		1	PUSH-IN FITTING QS-F-12H-8	
610	350009-0003		1	PUSH-IN FITTING QS-F-8	
620	350002-0007		2	PUSH-IN L-FITTING QSL-F-G1/8-8	
630	315105-0136		4	WASHER PLAIN, 4,3X9X0,8 A4 BRB	
640	312105-0287		4	SCREW, M6S ISO 4017 M4X8 A4 70	
650	90459-2134		2	BRACKET, SDE1	
660	350012-0005		1	SLEEVE QSH-F-12	
A01B0101	90458-2730		1	PRESSURE SENS. SDE1-D10-G2-R18-C-P1-M8	
A01W0101	344257-0050		1	SENSOR CABLE, EVT146	
A01W0501	315400-0004	MM	500	TUBE PUN-H-8X1,25-BL	
A01W0602	315400-0010	MM	70	TUBE PUN-H-12X2-BL	
A01W0604	315400-0010	MM	70	TUBE PUN-H-12X2-BL	
A01W0605	315400-0010	MM	100	TUBE PUN-H-12X2-BL	
A01W0614	315400-0010	MM	250	TUBE PUN-H-12X2-BL	
A01W0620	315400-0004	M	3.5	TUBE PUN-H-8X1,25-BL	
A01W0621	315400-0004	M	3.5	TUBE PUN-H-8X1,25-BL	
A01W0641	315400-0010	M	2	TUBE PUN-H-12X2-BL	
A01W0642	315400-0004	MM	500	TUBE PUN-H-8X1,25-BL	
A01W0643	315400-0004	M	1	TUBE PUN-H-8X1,25-BL	
A01W0646	315400-0001	M	4	6-4E PUN-H-6X1-BL	
A01W0652	315400-0010	MM	70	TUBE PUN-H-12X2-BL	
A01W0653	315400-0004	MM	60	TUBE PUN-H-8X1,25-BL	
A01W0654	315400-0010	MM	60	TUBE PUN-H-12X2-BL	
A01W0656	315400-0010	MM	100	TUBE PUN-H-12X2-BL	
A01W0657	315400-0004	MM	50	TUBE PUN-H-8X1,25-BL	
A10W0601	315400-0010	M	2	TUBE PUN-H-12X2-BL	
F09B0104	90458-2730		1	PRESSURE SENS. SDE1-D10-G2-R18-C-P1-M8	
F09W0104	344245-0020		1	SENSOR CABLE, EVT122	
F09W0504	315400-0004	MM	500	TUBE PUN-H-8X1,25-BL	
W50W0900	315400-0004	M	5	TUBE PUN-H-8X1,25-BL	

Machine Type | Group Description | Used-In | Group Number | Page No

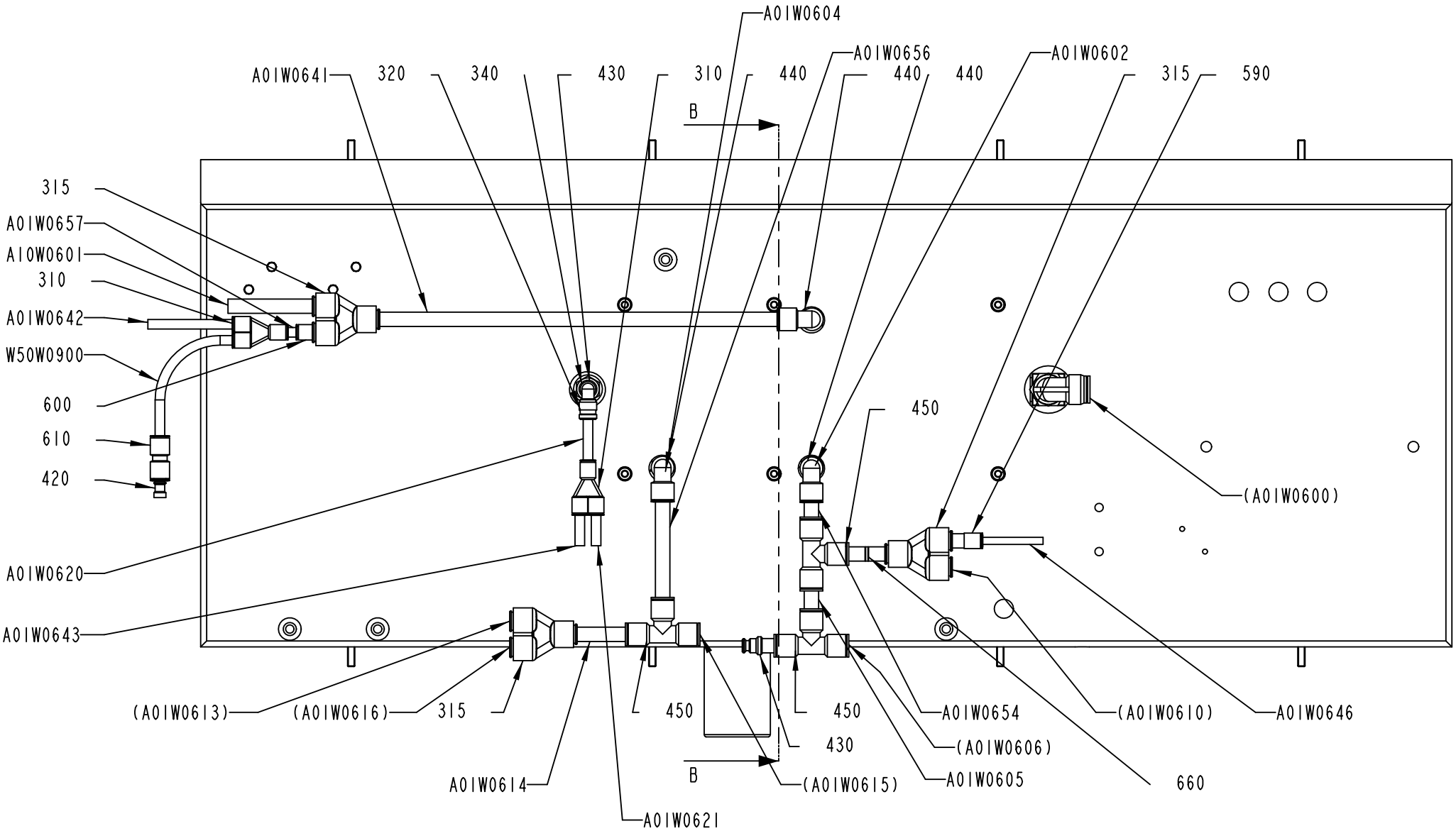

2752678-6
568933

ECM: 577157 - 20120924
Group number: 2752678-0500
Assembly Drawing: 2752678-6_2_AB

This list covers pages from 2-16 to 2-19

Pos	Part No	UN	Qty	Description	Page No
-					
010	2591888-0600		1	AIR SUPPLY UNIT	**2-21**
030	3241260-0000		1	PNEUMATIC PANEL	
050	2970909-0000		1	SET OF SIGNS	
300	90015-0023		4	LEAD-IN, TET 7-10, E1458019	
310	350015-0003		2	PUSH-IN Y-CONNECTOR QSY-F-8	
315	90055-0271		3	Y-CONNECTION, 12-12	
320	90055-0204		1	ELBOW WITH TAILPIECE 8/8 MM LONG	
340	350004-0003		1	PUSH-IN L-FITTING QSL-F-8	
420	342715-0103		1	BLIND PLUG 8 MM	
430	342716-0209		2	REDUCER 8-12	
440	350004-0005		3	PUSH-IN L-FITTING QSL-F-12	
450	342748-0109		3	T-CONNECTION 12MM	
510	312105-0370		14	SCREW, M6S ISO 4017 M6X20 A4 80	
520	312605-0316		6	HEXAGON NUT, M6M M6 A280	
540	315105-0153		20	WASHER PLAIN, 6,4X12X1,5 A4 BRB	
590	350006-0007		1	PUSH-IN FITTING QS-F-12H-6	
600	350006-0008		1	PUSH-IN FITTING QS-F-12H-8	
610	350009-0003		1	PUSH-IN FITTING QS-F-8	
620	350002-0007		2	PUSH-IN L-FITTING QSL-F-G1/8-8	
630	315105-0136		4	WASHER PLAIN, 4,3X9X0,8 A4 BRB	
640	312105-0287		4	SCREW, M6S ISO 4017 M4X8 A4 70	
650	90459-2134		2	BRACKET, SDE1	
660	350012-0005		1	SLEEVE QSH-F-12	
A01B0101	90458-2730		1	PRESSURE SENS. SDE1-D10-G2-R18-C-P1-M8	
A01W0101	344257-0050		1	SENSOR CABLE, EVT146	
A01W0501	315400-0004	MM	500	TUBE PUN-H-8X1,25-BL	
A01W0602	315400-0010	MM	70	TUBE PUN-H-12X2-BL	
A01W0604	315400-0010	MM	70	TUBE PUN-H-12X2-BL	
A01W0605	315400-0010	MM	100	TUBE PUN-H-12X2-BL	
A01W0614	315400-0010	MM	250	TUBE PUN-H-12X2-BL	
A01W0620	315400-0004	M	3.5	TUBE PUN-H-8X1,25-BL	
A01W0621	315400-0004	M	3.5	TUBE PUN-H-8X1,25-BL	
A01W0641	315400-0010	M	2	TUBE PUN-H-12X2-BL	
A01W0642	315400-0004	MM	500	TUBE PUN-H-8X1,25-BL	
A01W0643	315400-0004	M	1	TUBE PUN-H-8X1,25-BL	
A01W0646	315400-0001	M	4	6-4E PUN-H-6X1-BL	
A01W0652	315400-0010	MM	70	TUBE PUN-H-12X2-BL	
A01W0653	315400-0004	MM	60	TUBE PUN-H-8X1,25-BL	
A01W0654	315400-0010	MM	60	TUBE PUN-H-12X2-BL	
A01W0656	315400-0010	MM	100	TUBE PUN-H-12X2-BL	
A01W0657	315400-0004	MM	50	TUBE PUN-H-8X1,25-BL	
A10W0601	315400-0010	M	2	TUBE PUN-H-12X2-BL	
F09B0104	90458-2730		1	PRESSURE SENS. SDE1-D10-G2-R18-C-P1-M8	
F09W0104	344245-0020		1	SENSOR CABLE, EVT122	
F09W0504	315400-0004	MM	500	TUBE PUN-H-8X1,25-BL	
W50W0900	315400-0004	M	5	TUBE PUN-H-8X1,25-BL	

Machine Type | Group Description | Used-In | Group Number | Page No

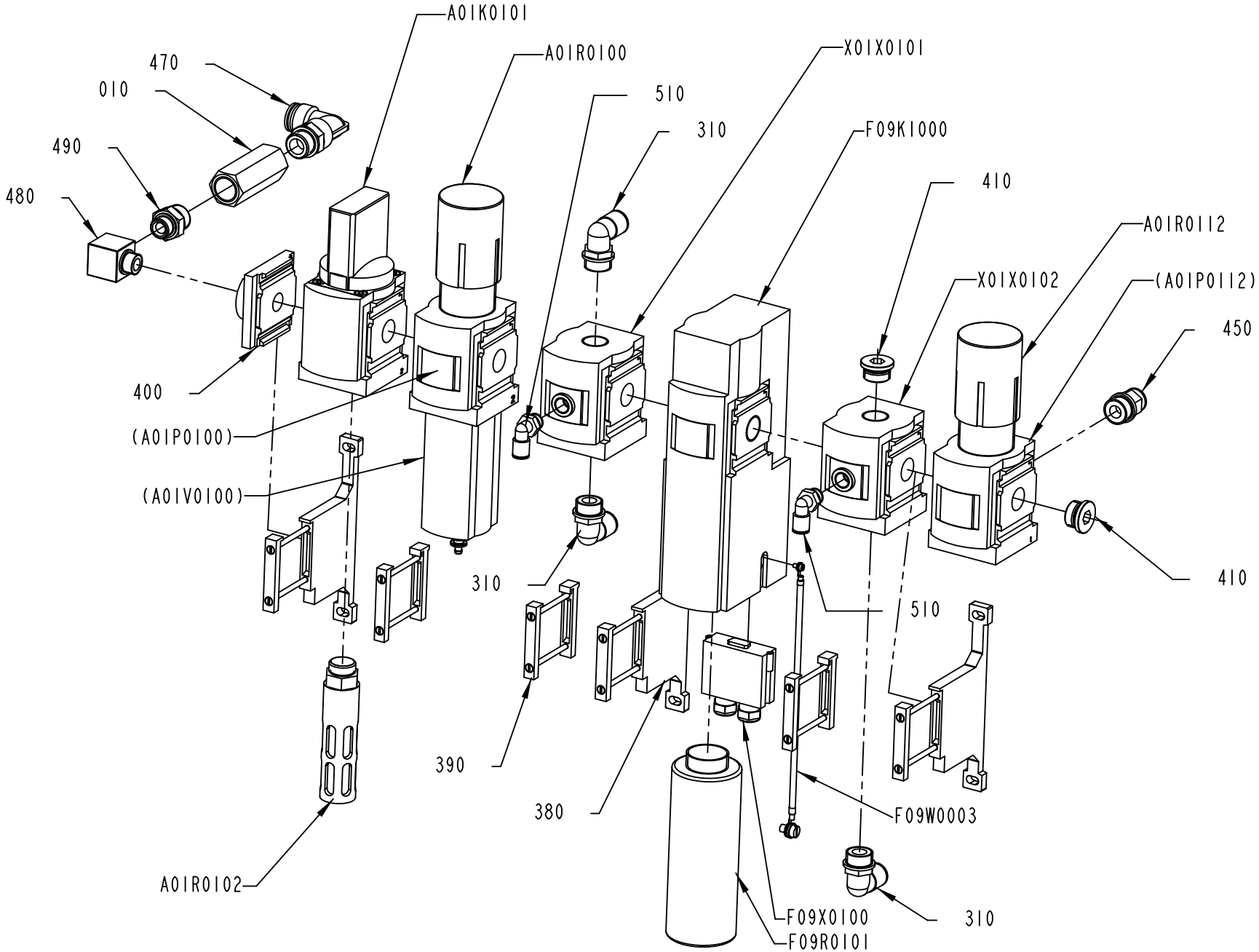

2591888-7
588798

ECM: 589782 - 20121210
Group number: 2591888-0600
Assembly Drawing: 2591888-7_1_AC

Pos	Part No	UN	Qty	Description	Page No
-					
010	3033755-0000		1	ATTACHMENT PIPE	
310	350002-0016		3	PUSH-IN L-FITTING QSL-F-G1/2-12	
380	90601-1587		3	BRACKET, MS6-WPB	
390	90459-1859		3	BRACKET, MS6-MV	
400	90459-1860		1	END PLATE, MS6-AGC	
410	90604-6025		2	PLUG, EXT. THREAD HEX. SOCKET. G1/2	
450	350001-0016		1	PUSH-IN FITTING QS-F-G1/2-12	
470	90459-1826		1	ELBOW PIPE JOINT, EXT.THREAD,D=16MM-G1/2	
480	90459-2581		1	ELBOW, 90 INT/EXT, G-3/8-A/I	
490	90459-2582		1	NIPPLES,EXT THREAD,HEXAGON, G3/8 - G1/2	
510	350002-0009		2	PUSH-IN L-FITTING QSL-F-G1/4-8	
A01K0101	90459-1852		1	SHUT OFF VALVE, MS6-EM1-1/2	
A01R0100	90459-1853		1	FILTER REGULATOR, MS6-LFR-1/2-D7-ERV-AS	
	90459-3809		*1*	*FILTER CARTRIDGE, MS6-LFP-E*	
A01R0102	90459-5787		1	SILENCER, U-1/2-B	
A01R0112	90459-1851		1	REGULATOR, MS6-LRB-1/2-D7-AS	
F09K1000	90601-1126		1	SAFETY VALVE, MS6-SV-1/2-E-10V24-AG	
F09R0101	90601-1586		1	SILENCER, G1"	
F09W0003	3263656-0000		1	EARTH WIRE	
F09X0100	90601-1168		1	SOCKET CONNECTOR, NECA-S1G9-P9-MP3	
X01X0101	90459-3001		1	DISTRIBUTOR, MS6-FRM-1/2-A4	
X01X0102	90459-3001		1	DISTRIBUTOR, MS6-FRM-1/2-A4	

Pos	Part No	UN	Qty	Description	Page No

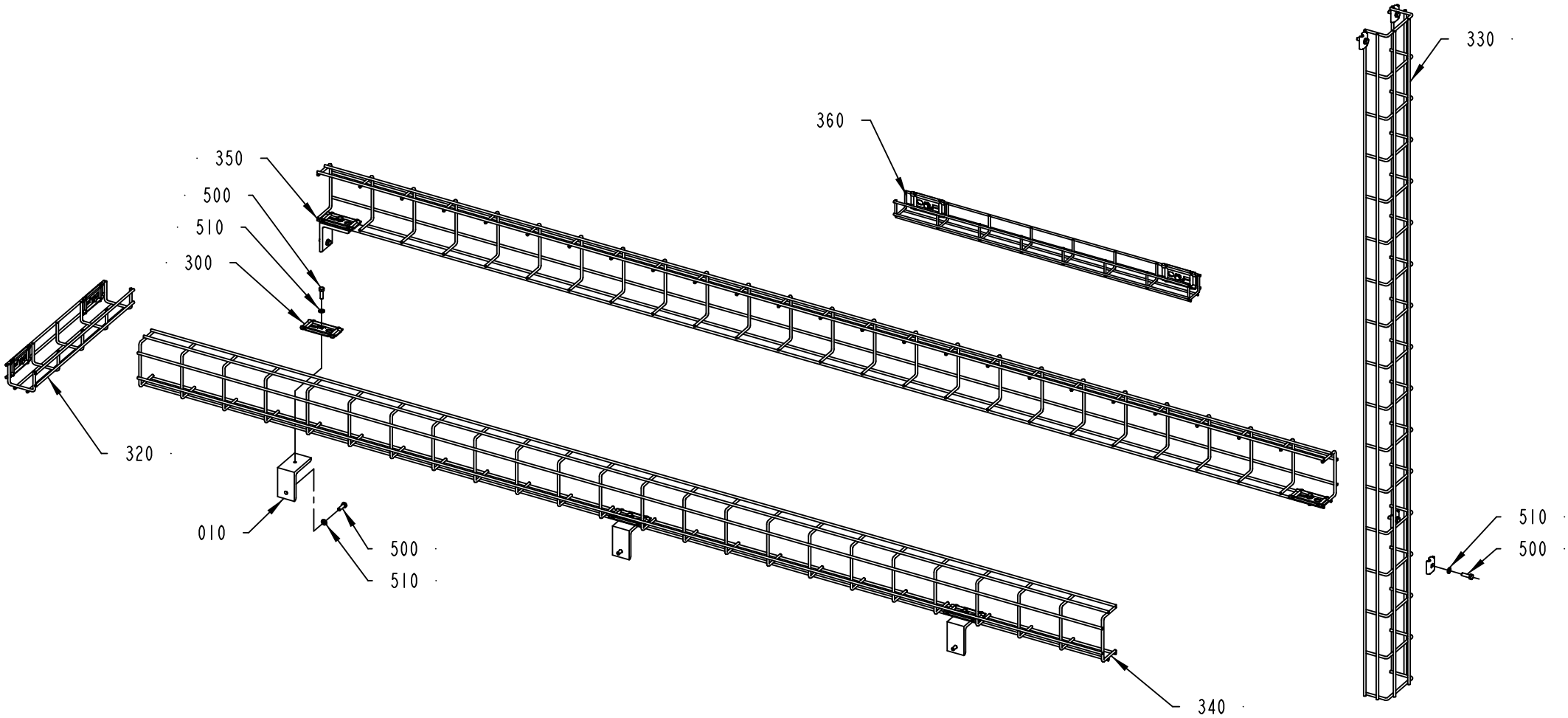

3241280-1
630884

ECM: 647558 - 20131125
Group number: 3241280-0100
Assembly Drawing: 3241280-1_1_AB

Pos	Part No	UN	Qty	Description	Page No
-					
010	1074738-0000		4	BRACKET	
300	90181-0182		9	BRACKET, 1149354	
310	90181-0183		4	CABLE DUCT, FITTING, SB-102-S	
320	90600-2606		1	CABLE DUCT, 75X55 MM	
330	90600-3574		1	CABLE DUCT, 120X60 MM	
340	90600-3574		1	CABLE DUCT, 120X60 MM	
350	90600-3574		1	CABLE DUCT, 120X60 MM	
360	90600-5980		1	CABLE DUCT, WIRE, 53X45 MM	
500	312105-0370		17	SCREW, M6S ISO 4017 M6X20 A4 80	
510	315105-0153		17	WASHER PLAIN, 6,4X12X1,5 A4 BRB	

Pos	Part No	UN	Qty	Description	Page No

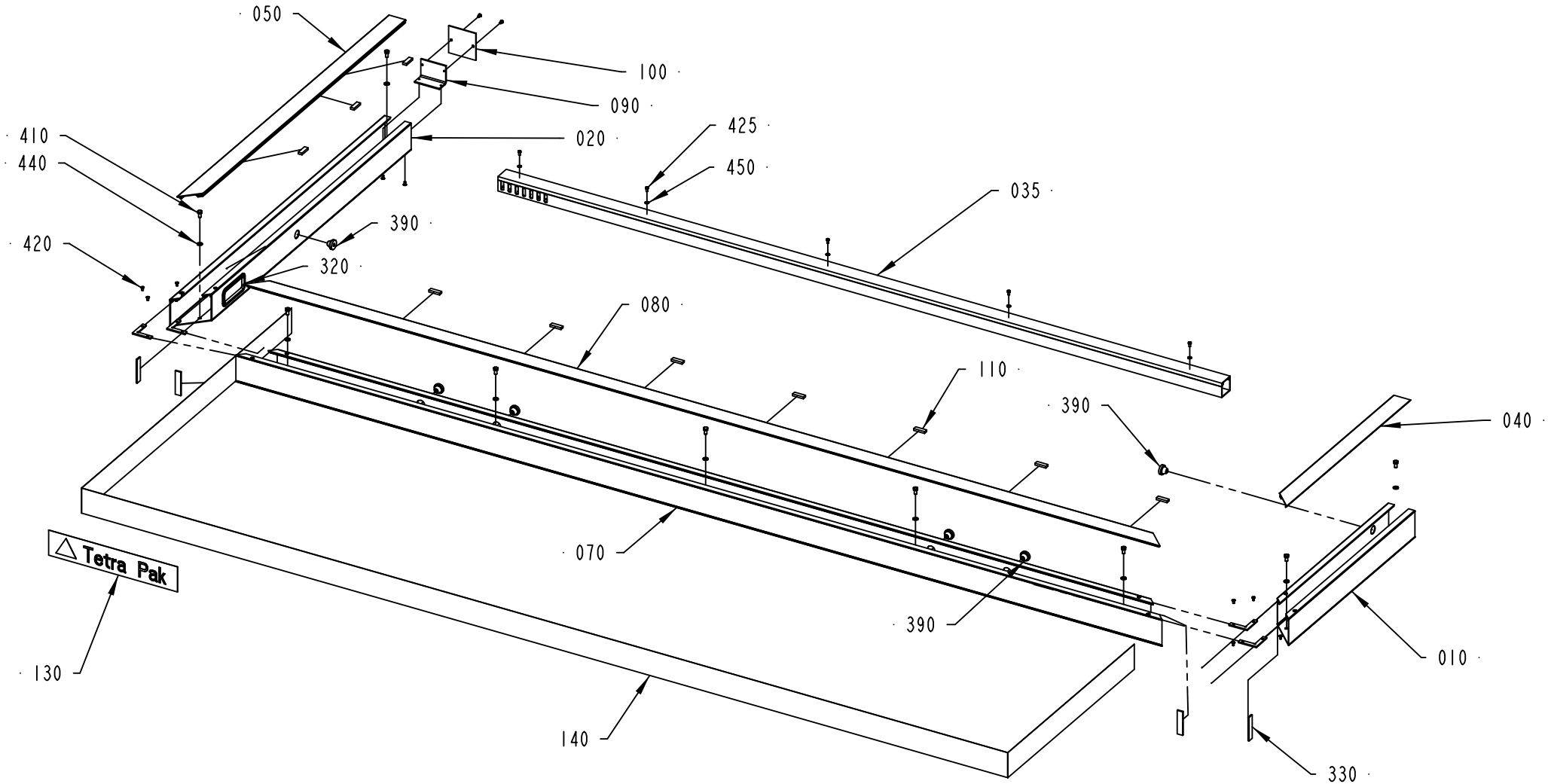

2720930-7
598985

ECM: 662293 - 20140312
Group number: 2720930-0400
Assembly Drawing: 2720930-7_1_AC

This list covers pages from 2-24 to 2-27

Pos	Part No	UN	Qty	Description	Page No
LINF U-FORM (See drawing on page: 2-26)					
010	2723257-0000		1	CABLE DUCT	
020	3256228-0000		1	CABLE DUCT	
030	2844967-0000		1	CABLE DUCT	
035	2920767-0000		1	CABLE DUCT	
040	2723255-0000		1	LID	
050	3256229-0000		1	LID	
060	2844969-0000		1	LID	
105	1065696-0000		1	COVERING PLATE	
110	975939-0000		13	SEAL	
410	312105-0366		11	SCREW, M6S ISO 4017 M6X12 A4 80	
420	312145-0287		14	SCREW ISO 2009 MFS M4X8 A4	
440	315105-0153		11	WASHER PLAIN, 6,4X12X1,5 A4 BRB	
460	1021933-0000		2	TAPE	
LINF Z-FORM (See drawing on page: 2-24)					
010	3256227-0000		1	CABLE DUCT	
020	3060174-0000		1	CABLE DUCT	
035	90181-0038	M	2	CABLE DUCT, PLASTIC, 40X40	
040	3256226-0000		1	LID	
050	2723248-0000		1	LID	
110	975939-0000		12	SEAL	
320	90143-0060	MM	300	EDGE STRIP 9,5X6,3MM BLACK PVC	
410	312105-0366		9	SCREW, M6S ISO 4017 M6X12 A4 80	
420	312145-0287		16	SCREW ISO 2009 MFS M4X8 A4	
440	315105-0153		9	WASHER PLAIN, 6,4X12X1,5 A4 BRB	
RINF U-FORM (See drawing on page: 2-26)					
010	2723257-0000		1	CABLE DUCT	
020	3256227-0000		1	CABLE DUCT	
030	2844966-0000		1	CABLE DUCT	
035	2920767-0000		1	CABLE DUCT	
040	2723255-0000		1	LID	
050	3256226-0000		1	LID	
060	2844968-0000		1	LID	
105	1065696-0000		1	COVERING PLATE	
110	975939-0000		13	SEAL	
410	312105-0366		11	SCREW, M6S ISO 4017 M6X12 A4 80	
420	312145-0287		14	SCREW ISO 2009 MFS M4X8 A4	
440	315105-0153		11	WASHER PLAIN, 6,4X12X1,5 A4 BRB	
460	1021933-0000		2	TAPE	
RINF Z-FORM (See drawing on page: 2-24)					
010	3256228-0000		1	CABLE DUCT	
020	3060173-0000		1	CABLE DUCT	
035	90181-0038	M	2	CABLE DUCT, PLASTIC, 40X40	
040	3256229-0000		1	LID	
050	2720940-0000		1	LID	
110	975939-0000		12	SEAL	
320	90143-0060	MM	300	EDGE STRIP 9,5X6,3MM BLACK PVC	
410	312105-0366		9	SCREW, M6S ISO 4017 M6X12 A4 80	
420	312145-0287		16	SCREW ISO 2009 MFS M4X8 A4	
440	315105-0153		9	WASHER PLAIN, 6,4X12X1,5 A4 BRB	
Common Parts					
070	2844964-0000		1	CABLE DUCT	
080	2844965-0000		1	LID	
090	1065697-0000		1	BRACKET	
100	1065696-0000		1	COVERING PLATE	
120	975934-0000		6	GUSSET PLATE	
130	90511-0145		1	LOGOTYPE "TETRA PAK" FOR STRIPE 70MM	
140	90511-8563	M	4.2	STRIPE HEIGHT 70MM, ROLL LENGTH 25M	
330	90143-0073	M	1	FLAT GASKET TAPE W. ADHESIVE, 15X3.0	
390	90015-0023		6	LEAD-IN, TET 7-10, E1458019	
425	312125-0287		5	SLOTTED HEAD SCREW, ISO1207 M4X8 A4	
430	312605-0312		12	HEXAGON NUT, M6M M4 A280	
450	315106-0136		5	WASHER PLAIN, M4 ISO7089-4-200 HV A4	

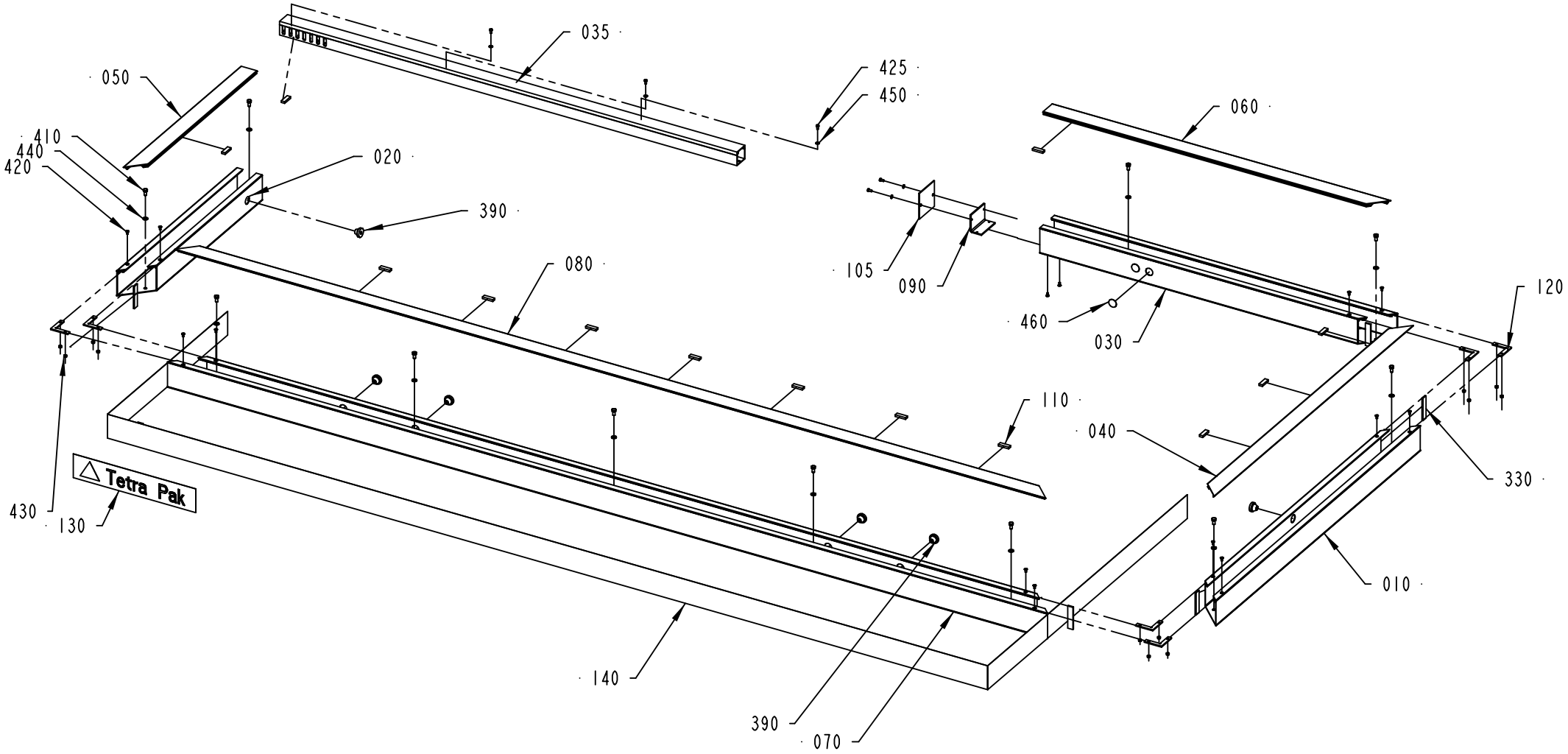

2720930-8
630890

ECM: 662293 - 20140312
Group number: 2720930-0400
Assembly Drawing: 2720930-8_1_AD

This list covers pages from 2-24 to 2-27

Pos	Part No	UN	Qty	Description	Page No
LINF U-FORM (See drawing on page: 2-26)					
010	2723257-0000		1	CABLE DUCT	
020	3256228-0000		1	CABLE DUCT	
030	2844967-0000		1	CABLE DUCT	
035	2920767-0000		1	CABLE DUCT	
040	2723255-0000		1	LID	
050	3256229-0000		1	LID	
060	2844969-0000		1	LID	
105	1065696-0000		1	COVERING PLATE	
110	975939-0000		13	SEAL	
410	312105-0366		11	SCREW, M6S ISO 4017 M6X12 A4 80	
420	312145-0287		14	SCREW ISO 2009 MFS M4X8 A4	
440	315105-0153		11	WASHER PLAIN, 6,4X12X1,5 A4 BRB	
460	1021933-0000		2	TAPE	
LINF Z-FORM (See drawing on page: 2-24)					
010	3256227-0000		1	CABLE DUCT	
020	3060174-0000		1	CABLE DUCT	
035	90181-0038	M	2	CABLE DUCT, PLASTIC, 40X40	
040	3256226-0000		1	LID	
050	2723248-0000		1	LID	
110	975939-0000		12	SEAL	
320	90143-0060	MM	300	EDGE STRIP 9,5X6,3MM BLACK PVC	
410	312105-0366		9	SCREW, M6S ISO 4017 M6X12 A4 80	
420	312145-0287		16	SCREW ISO 2009 MFS M4X8 A4	
440	315105-0153		9	WASHER PLAIN, 6,4X12X1,5 A4 BRB	
RINF U-FORM (See drawing on page: 2-26)					
010	2723257-0000		1	CABLE DUCT	
020	3256227-0000		1	CABLE DUCT	
030	2844966-0000		1	CABLE DUCT	
035	2920767-0000		1	CABLE DUCT	
040	2723255-0000		1	LID	
050	3256226-0000		1	LID	
060	2844968-0000		1	LID	
105	1065696-0000		1	COVERING PLATE	
110	975939-0000		13	SEAL	
410	312105-0366		11	SCREW, M6S ISO 4017 M6X12 A4 80	
420	312145-0287		14	SCREW ISO 2009 MFS M4X8 A4	
440	315105-0153		11	WASHER PLAIN, 6,4X12X1,5 A4 BRB	
460	1021933-0000		2	TAPE	
RINF Z-FORM (See drawing on page: 2-24)					
010	3256228-0000		1	CABLE DUCT	
020	3060173-0000		1	CABLE DUCT	
035	90181-0038	M	2	CABLE DUCT, PLASTIC, 40X40	
040	3256229-0000		1	LID	
050	2720940-0000		1	LID	
110	975939-0000		12	SEAL	
320	90143-0060	MM	300	EDGE STRIP 9,5X6,3MM BLACK PVC	
410	312105-0366		9	SCREW, M6S ISO 4017 M6X12 A4 80	
420	312145-0287		16	SCREW ISO 2009 MFS M4X8 A4	
440	315105-0153		9	WASHER PLAIN, 6,4X12X1,5 A4 BRB	
Common Parts					
070	2844964-0000		1	CABLE DUCT	
080	2844965-0000		1	LID	
090	1065697-0000		1	BRACKET	
100	1065696-0000		1	COVERING PLATE	
120	975934-0000		6	GUSSET PLATE	
130	90511-0145		1	LOGOTYPE "TETRA PAK" FOR STRIPE 70MM	
140	90511-8563	M	4.2	STRIPE HEIGHT 70MM, ROLL LENGTH 25M	
330	90143-0073	M	1	FLAT GASKET TAPE W. ADHESIVE, 15X3.0	
390	90015-0023		6	LEAD-IN, TET 7-10, E1458019	
425	312125-0287		5	SLOTTED HEAD SCREW, ISO1207 M4X8 A4	
430	312605-0312		12	HEXAGON NUT, M6M M4 A280	
450	315106-0136		5	WASHER PLAIN, M4 ISO7089-4-200 HV A4	

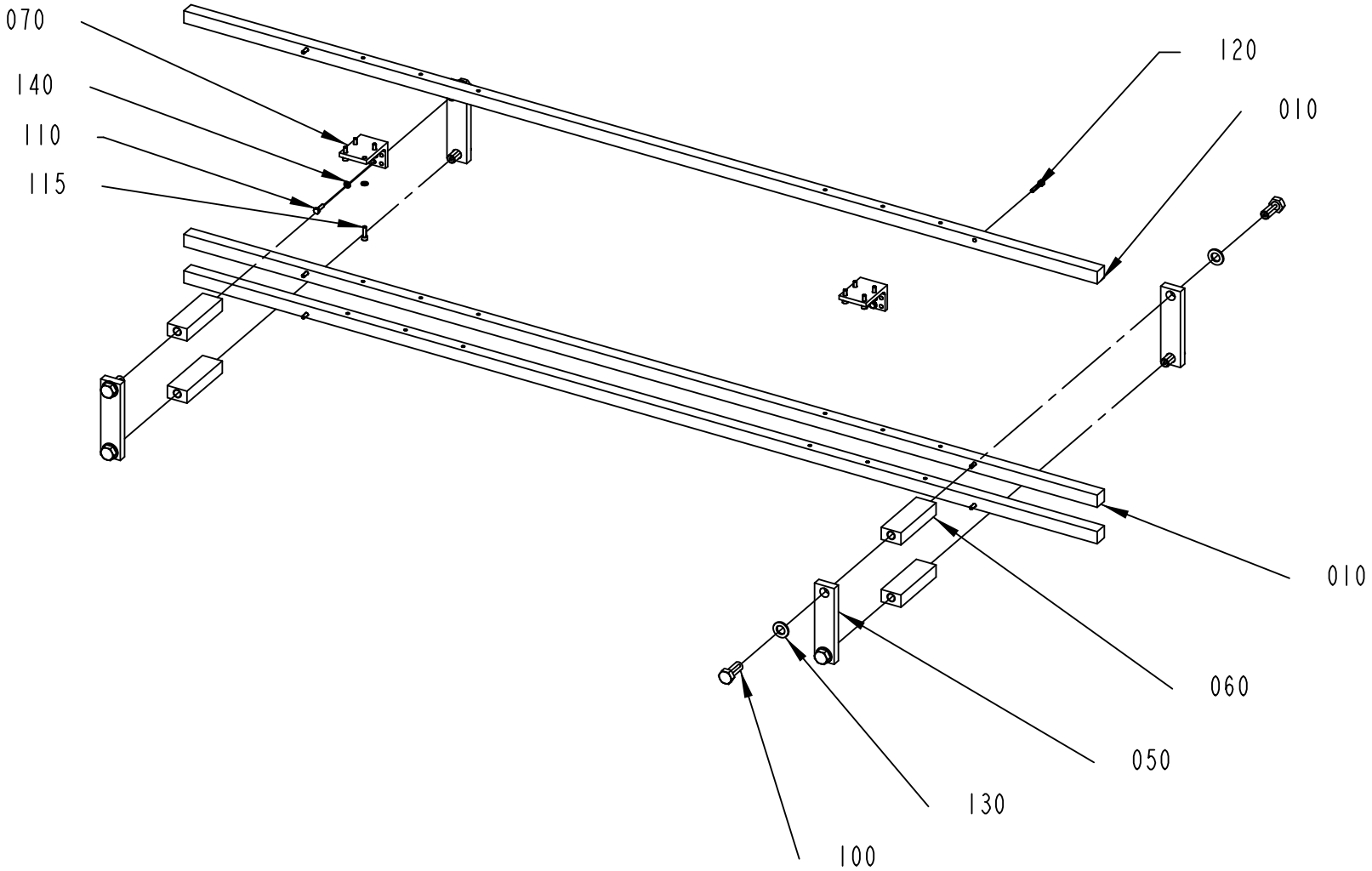

2844970-2
555186

ECM: 567206 - 20120710
Group number: 2844970-0200
Assembly Drawing: 2844970-2_1_AA

Pos	Part No	UN	Qty	Description	Page No
LINF U-FORM					
010	3257289-0000		3	SPACER	
LINF Z-FORM					
010	3257290-0000		3	SPACER	
RINF U-FORM					
010	3257289-0000		3	SPACER	
RINF Z-FORM					
010	3257290-0000		3	SPACER	
Common Parts					
050	1074206-0000		4	HOLDER	
060	1124527-0000		4	HOLDER	
070	1124503-0000		2	BRACKET	
100	312105-0628		8	SCREW, M6S ISO 4017 M16X40 A4 80	
110	312105-0370		8	SCREW, M6S ISO 4017 M6X20 A4 80	
115	312115-0370		8	SCREW ISO4762 M6X20 A4 80	
120	312115-0374		6	SCREW ISO4762 M6X30 A4 80	
130	315105-0186		8	WASHER PLAIN, 17X30X3 A4 BRB	
140	315105-0153		16	WASHER PLAIN, 6,4X12X1,5 A4 BRB	

Pos	Part No	UN	Qty	Description	Page No

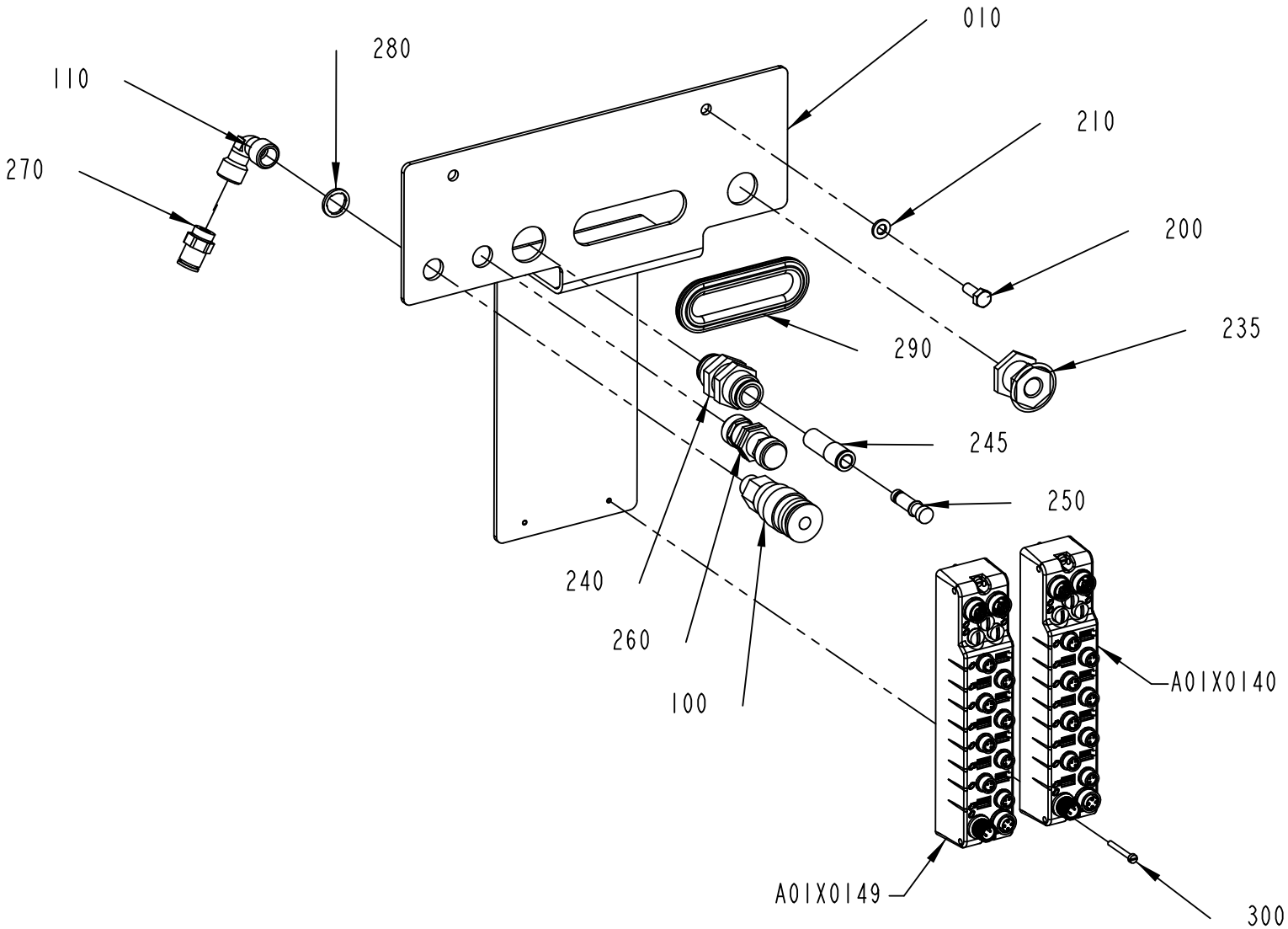

1124096-6
627532

ECM: 630414 - 20130919
Group number: 1124096-0500
Assembly Drawing: 1124096-6_1_AB

Pos	Part No	UN	Qty	Description	Page No
LINF U-FORM, RINF Z-FORM					
010	3093453-0000		1	PLATE	
LINF Z-FORM, RINF U-FORM					
010	3093446-0000		1	PLATE	
Common Parts					
100	90163-0008		1	CONNECTION 1/4"	
110	90140-0019		1	ELBOW, 90, INT. THREAD, NO. 2013-1/4	
200	312105-0368		2	SCREW, M6S ISO 4017 M6X16 A4 80	
210	315105-0153		2	WASHER PLAIN, 6,4X12X1,5 A4 BRB	
235	342767-0104		1	BULKHEAD LEAD-IN, G1/4	
240	350010-0005		1	PUSH-IN BULKHEAD FITTING QSS-F-12	
245	350006-0008		1	PUSH-IN FITTING QS-F-12H-8	
250	342715-0103		1	BLIND PLUG 8 MM	
260	342960-0133		1	BULKHEAD COUPLING 10/8	
270	342722-0205		1	STRAIGHT COUPLING D=8-G1/4"	
280	315239-0110		1	NYLON WASHER G1/4, 1/4RRP	
290	90143-0060	MM	200	EDGE STRIP 9,5X6,3MM BLACK PVC	
300	312125-0232		4	SLOTTED HEAD SCREW, ISO1207 M3X25 A4	
A01X0140	90605-2702		1	ARMORBLOCK MODULE, 1732E-8CFGM8R, SER. A	
A01X0149	90605-2702		1	ARMORBLOCK MODULE, 1732E-8CFGM8R, SER. A	

Pos	Part No	UN	Qty	Description	Page No

FRAME GROUPING PUSHER

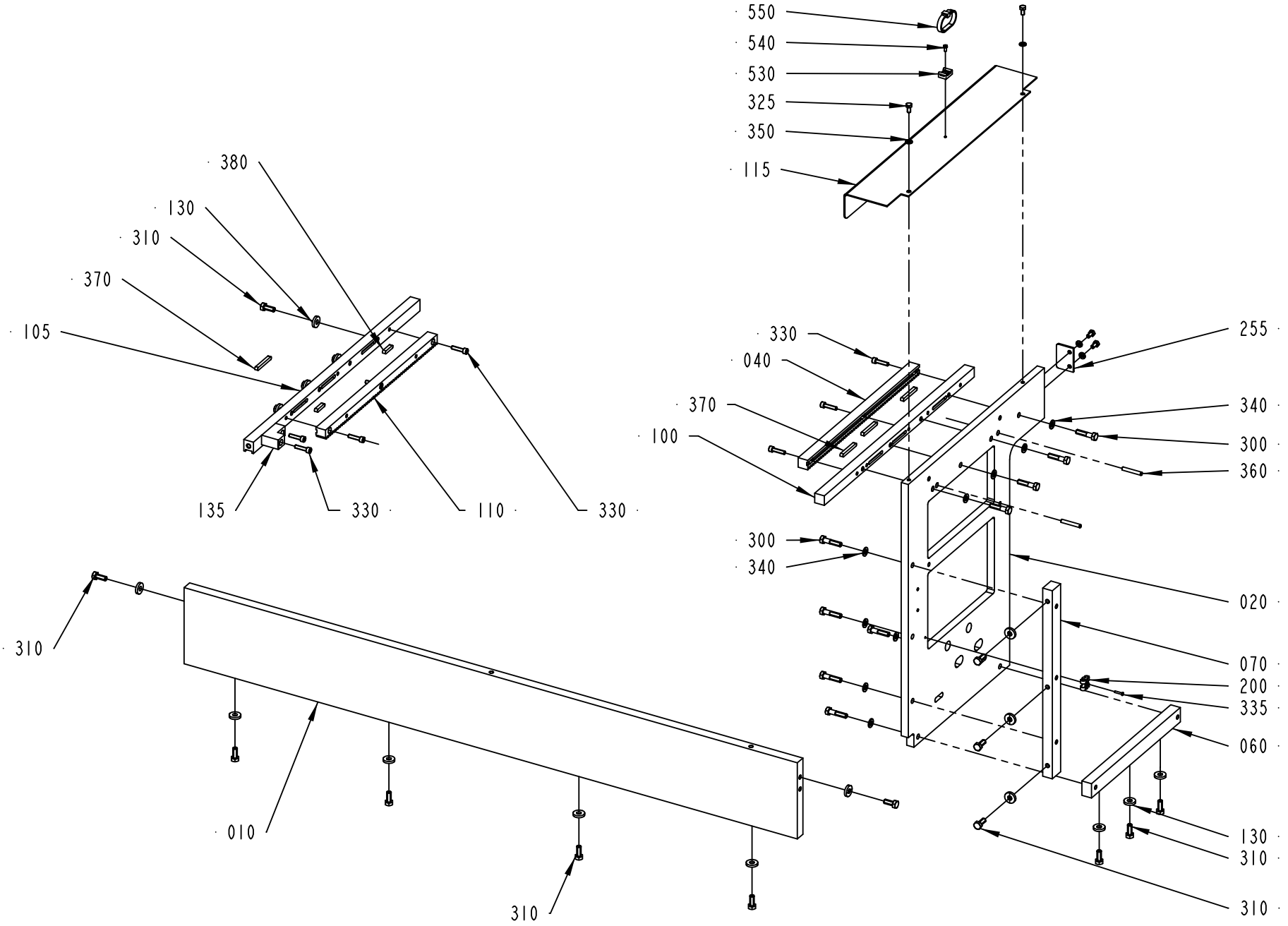

2771160-5
630890

ECM: 646209 - 20131125
Group number: 2771160-0400
Assembly Drawing: 2771160-5_1_AF

Pos	Part No	UN	Qty	Description	Page No
LINF Z-FORM, RINF U-FORM					
530	352113-0203		1	ANCHOR PLATES FOR STRIPS, TM3S8-M0	
540	312125-0287		1	SLOTTED HEAD SCREW, ISO1207 M4X8 A4	
550	352113-0103		1	CABLE TIE, BLACK 290X7,6 MM	
Common Parts					
010	2720912-0000		1	PLATE	
020	3249951-0000		1	PLATE	
040	2771155-0000		1	RACK	
060	2787870-0000		1	BRACKET	
070	1124705-0000		1	BRACKET	
100	2720903-0000		1	RAIL	
105	3090583-0000		1	RAIL	
110	2864528-0000		1	RACK	
115	3097798-0000		1	PROTECTION PLATE	
130	90600-5066		16	WASHER PLAIN, DIN7349 8,4X21X4 A4	
135	3201946-0000		1	STOP BLOCK	
200	90165-0087		1	T-CLIP T6 FOR TUBE D=6 - 7 MM	
255	3113459-0000		1	PLATE	
300	312105-0457		9	SCREW, M6S ISO 4014 M8X35 A4 80	
310	312105-0451		16	SCREW, M6S ISO 4017 M8X20 A4 80	
325	312105-0366		4	SCREW, M6S ISO 4017 M6X12 A4 80	
330	312115-0372		8	SCREW ISO4762 M6X25 A4 80	
335	312145-0228		1	SCREW ISO 2009 MFS M3X16 A4	
340	315105-0165		9	FWAS080G0-0S, WASHER PLAIN	
350	315105-0153		4	WASHER PLAIN, 6,4X12X1,5 A4 BRB	
360	311103-0361		4	PARALLEL PIN ISO 2338 6M6X40 A1	
370	315705-0241		4	PARALLEL KEY W. ROUND ENDS, 6X6X50 MM	
380	315705-0235		2	PARALLEL KEY W. ROUND ENDS, 6X6X28 MM	

Pos	Part No	UN	Qty	Description	Page No

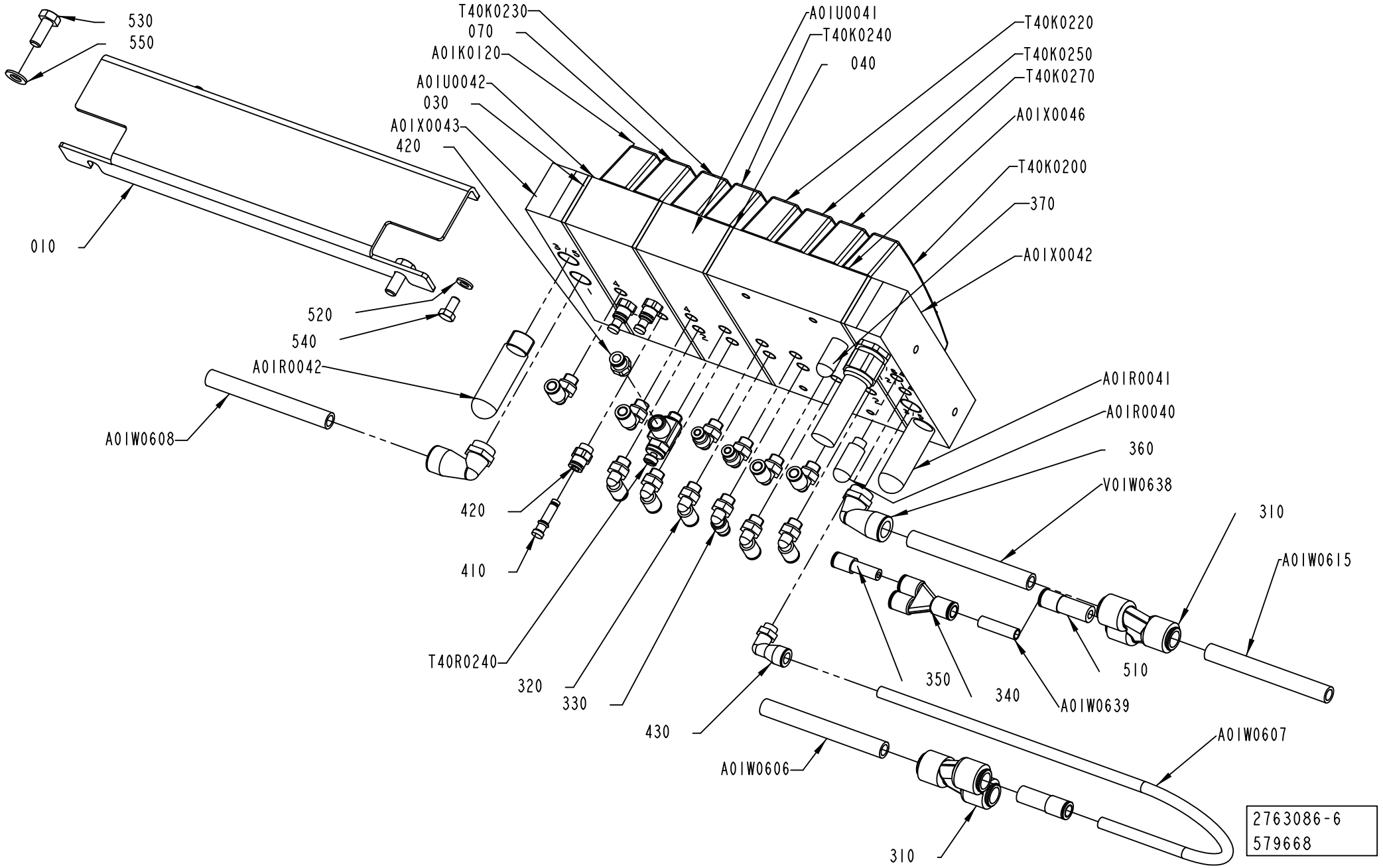
530
550
010
T40K0230
070
A01K0120
A01U0042
030
A01X0043
420
520
540
A01R0042
A01W0608
420
410
T40R0240
320
330
430
A01W0606
310
A01U0041
T40K0240
040
T40K0220
T40K0250
T40K0270
A01X0046
T40K0200
370
A01X0042
A01R0041
A01R0040
360
V01W0638
310
A01W0615
510
350
340
A01W0639
A01W0607
2763086-6
579668

ECM: 585728 - 20121116
Group number: 2763086-0500
Assembly Drawing: 2763086-6_1_AB

Pos	Part No	UN	Qty	Description	Page No
-					
010	3252783-0000		1	PLATE	
030	90458-1207		3	SEALING, STANDARD	
040	90458-1208		1	SEALING, CHANNEL 1 BLOCKED	
070	90458-1215		1	COVER PLATE, EMPTY VALVE POSITION	
310	90055-0271		2	Y-CONNECTION, 12-12	
320	350002-0006		9	PUSH-IN L-FITTING QSL-F-G1/8-6	
330	350002-0005		3	PUSH-IN L-FITTING QSL-F-G1/8-4	
340	350015-0003		1	PUSH-IN Y-CONNECTOR QSY-F-8	
350	350006-0003		1	PUSH-IN FITTING QS-F-8H-6	
360	90458-2960		2	ELBOW PIPE JOINT	
370	90328-0047		1	SILENCER, G1/8"	
410	342715-0102		3	BLIND PLUG 6 MM	
420	342722-0202		4	PIPE COUPLING 1/8" D=6MM	
430	90458-2964		1	ELBOW PIPE JOINT, EXT.THREAD, D=8MM-G1/8	
510	350006-0008		2	PUSH-IN FITTING QS-F-12H-8	
520	315105-0153		2	WASHER PLAIN, 6,4X12X1,5 A4 BRB	
530	312105-0451		2	SCREW, M6S ISO 4017 M8X20 A4 80	
540	312105-0366		2	SCREW, M6S ISO 4017 M6X12 A4 80	
550	315105-0165		2	FWAS080G0-0S, WASHER PLAIN	
A01K0120	90458-1194		1	VALVE, 5/2 MONOSTABLE	
A01R0040	90328-0047		1	SILENCER, G1/8"	
A01R0041	90328-0024		1	SILENCER, G3/8"	
A01R0042	90328-0024		1	SILENCER, G3/8"	
A01U0041	90458-1206		1	EXP. SUB-BASE 2 VALVES, CDVI5.0-EB	
A01U0042	90458-1206		1	EXP. SUB-BASE 2 VALVES, CDVI5.0-EB	
A01W0606	315400-0010	M	2	TUBE PUN-H-12X2-BL	
A01W0607	315400-0004	MM	600	TUBE PUN-H-8X1,25-BL	
A01W0608	315400-0010	MM	400	TUBE PUN-H-12X2-BL	
A01W0615	315400-0010	M	3	TUBE PUN-H-12X2-BL	
A01W0639	315400-0004	M	1	TUBE PUN-H-8X1,25-BL	
A01X0042	90458-1211		1	LEFT ENDPLATE INCL. 5M CABLE	
A01X0043	90458-1214		1	RIGHT ENDPL EXT. PILOT AIR,CDVI5.0-EPR-S	
A01X0046	90458-1204		1	BASIC SUB-BASE 4 VALVES, CDVI5.0-GB4-MP	
T40K0190	90458-1194		1	VALVE, 5/2 MONOSTABLE	
T40K0200	90458-1202		1	VALVES 2X3/2, CLOSED	
T40K0220	90458-1194		1	VALVE, 5/2 MONOSTABLE	
T40K0230	90458-1198		1	VALVE OPEN IN MID-POSITION, 5/3	
T40K0240	90458-1194		1	VALVE, 5/2 MONOSTABLE	
T40K0250	90458-1198		1	VALVE OPEN IN MID-POSITION, 5/3	
T40K0270	90458-1200		1	VALVE OPEN IN MID-POSITION 5/3	
T40R0240	90235-0817		1	THROTTLE CHECK VALVE, G1/8", MANUAL	
V01W0638	315400-0010	MM	400	TUBE PUN-H-12X2-BL	

Machine Type	Group Description	Used-In	Group Number	Page No

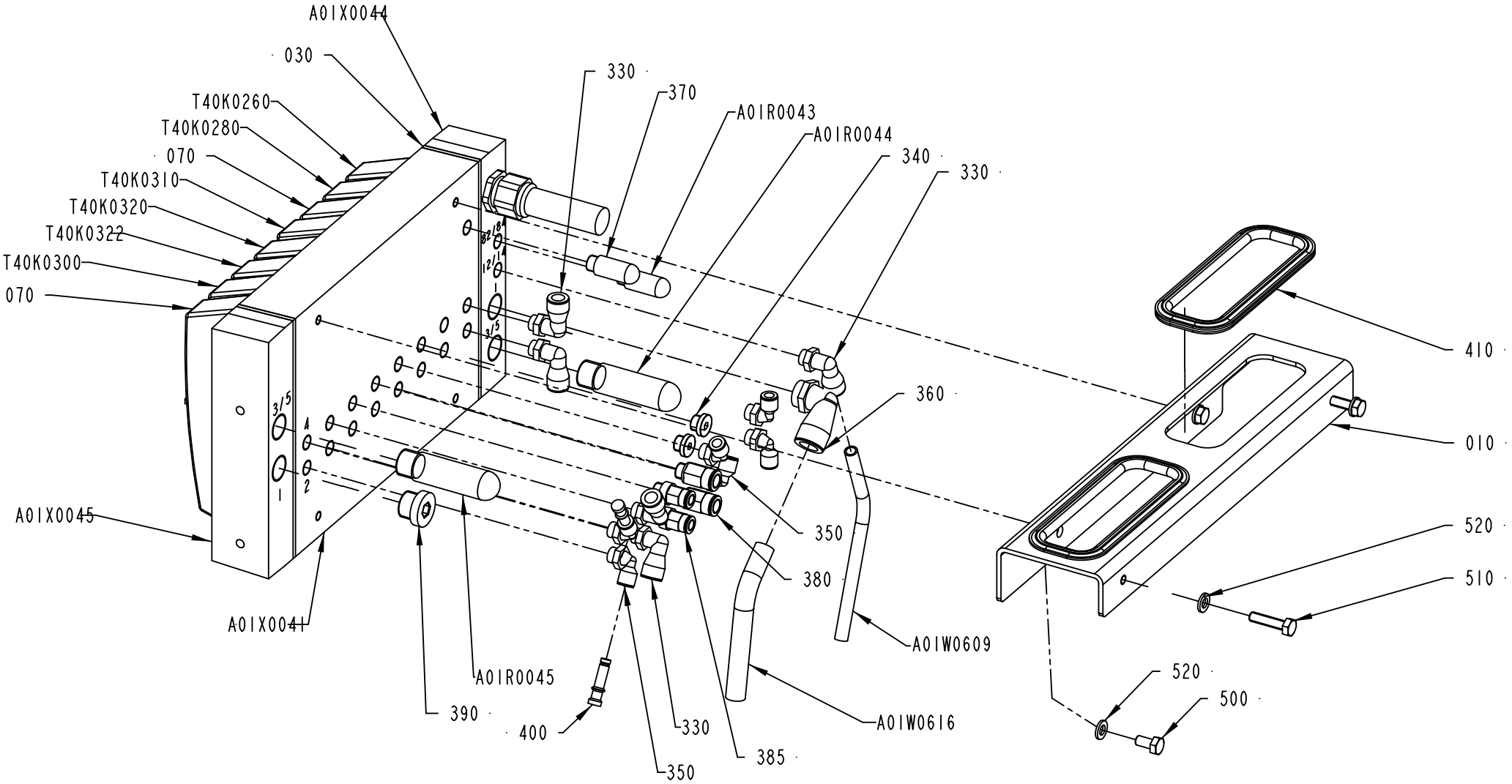

2763089-5
630884

ECM: 646208 - 20131125
Group number: 2763089-0400
Assembly Drawing: 2763089-5_1_AD

Pos	Part No	UN	Qty	Description	Page No
-					
010	3252782-0000		1	PLATE	
030	90458-1207		2	SEALING, STANDARD	
070	90458-1215		2	COVER PLATE, EMPTY VALVE POSITION	
330	90458-2964		5	ELBOW PIPE JOINT, EXT.THREAD, D=8MM-G1/8	
340	344373-0030		2	BLANKING PLUG G1/8, QSC-F-G1/8-I	
350	90458-2956		6	ELBOW PIPE JOINT, EXT.THREAD, D=6MM-G1/8	
360	90458-2960		1	ELBOW PIPE JOINT	
370	90328-0047		1	SILENCER, G1/8"	
380	350001-0007		2	PUSH-IN FITTING QS-F-G1/8-8	
385	350001-0006		2	PUSH-IN FITTING QS-F-G1/8-6	
390	90600-6055		1	PLUG, EXT THREAD HEX SOCKET B-3/8	
400	342715-0102		2	BLIND PLUG 6 MM	
410	90143-0060	MM	640	EDGE STRIP 9,5X6,3MM BLACK PVC	
500	312105-0366		2	SCREW, M6S ISO 4017 M6X12 A4 80	
510	312105-0372		2	SCREW, M6S ISO 4017 M6X25 A4 80	
520	315105-0153		4	WASHER PLAIN, 6,4X12X1,5 A4 BRB	
A01R0043	90328-0047		1	SILENCER, G1/8"	
A01R0044	90328-0024		1	SILENCER, G3/8"	
A01R0045	90328-0024		1	SILENCER, G3/8"	
A01W0609	315400-0004	M	2	TUBE PUN-H-8X1,25-BL	
A01W0616	315400-0010	M	2	TUBE PUN-H-12X2-BL	
A01X0041	90458-1205		1	BASIC SUB-BASE 8 VALVES, CDVI5.0-GB8-MP	
A01X0044	90458-1211		1	LEFT ENDPLATE INCL. 5M CABLE	
A01X0045	90458-1214		1	RIGHT ENDPL EXT. PILOT AIR,CDVI5.0-EPR-S	
T40K0260	90458-1200		1	VALVE OPEN IN MID-POSITION 5/3	
T40K0280	90458-1194		1	VALVE, 5/2 MONOSTABLE	
T40K0300	90458-1197		1	VALVE, 5/2 BISTABLE	
T40K0310	90458-1197		1	VALVE, 5/2 BISTABLE	
T40K0320	90458-1199		1	VALVE CLOSED IN MID-POSITION, 5/3	
T40K0322	90458-1199		1	VALVE CLOSED IN MID-POSITION, 5/3	

Pos	Part No	UN	Qty	Description	Page No

Machine Type	Group Description	Used-In	Group Number	Page No

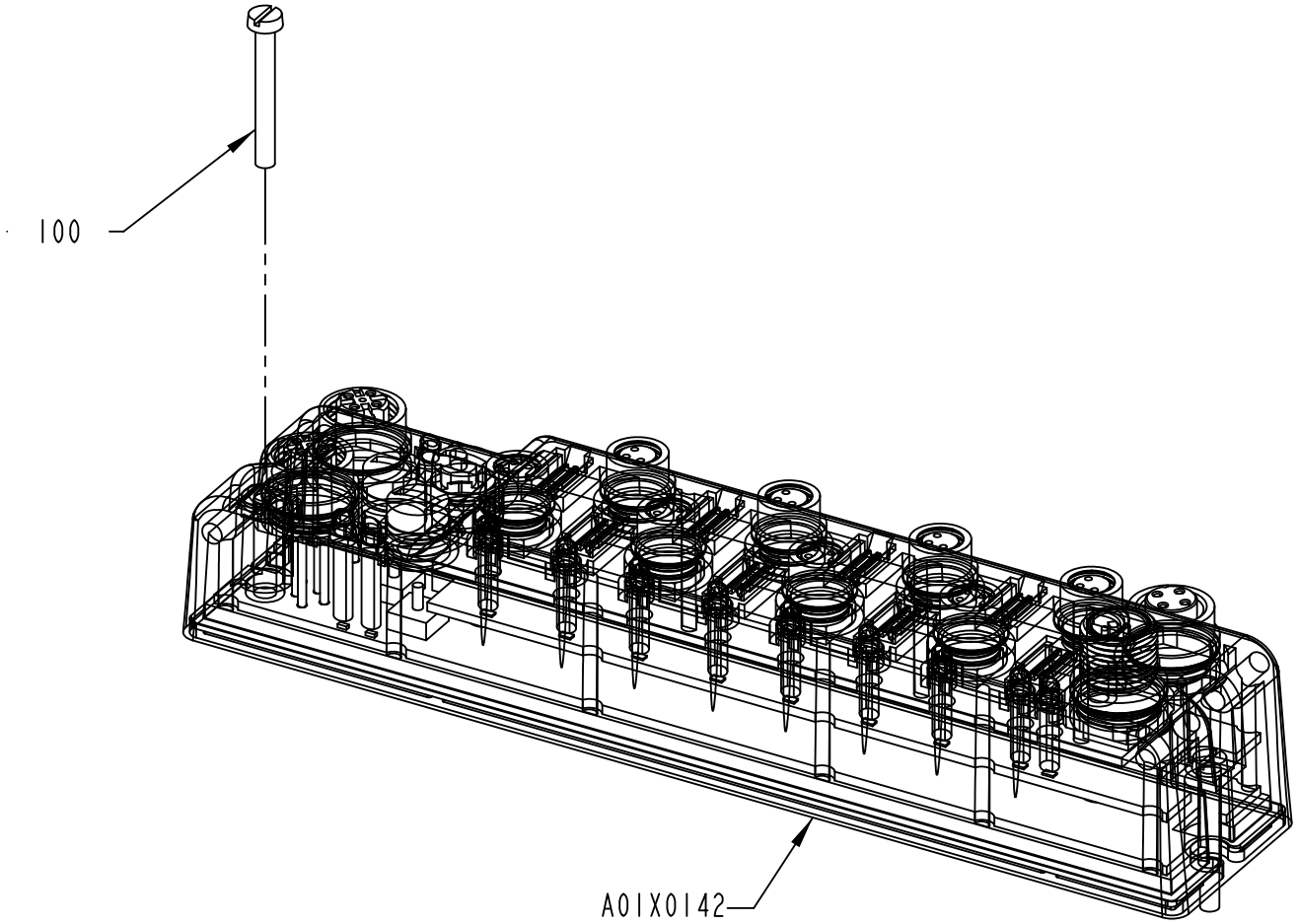

2763113-3
579668

ECM: 585729 - 20121116
Group number: 2763113-0300
Assembly Drawing: 2763113-3_1_AB

Pos	Part No	UN	Qty	Description	Page No
-					
100	312125-0232		2	SLOTTED HEAD SCREW, ISO1207 M3X25 A4	
150	90603-3976		1	PROTECTIVE CAP M8, E11256	
A01X0142	90605-2702		1	ARMORBLOCK MODULE, 1732E-8CFGM8R, SER. A	

Pos	Part No	UN	Qty	Description	Page No

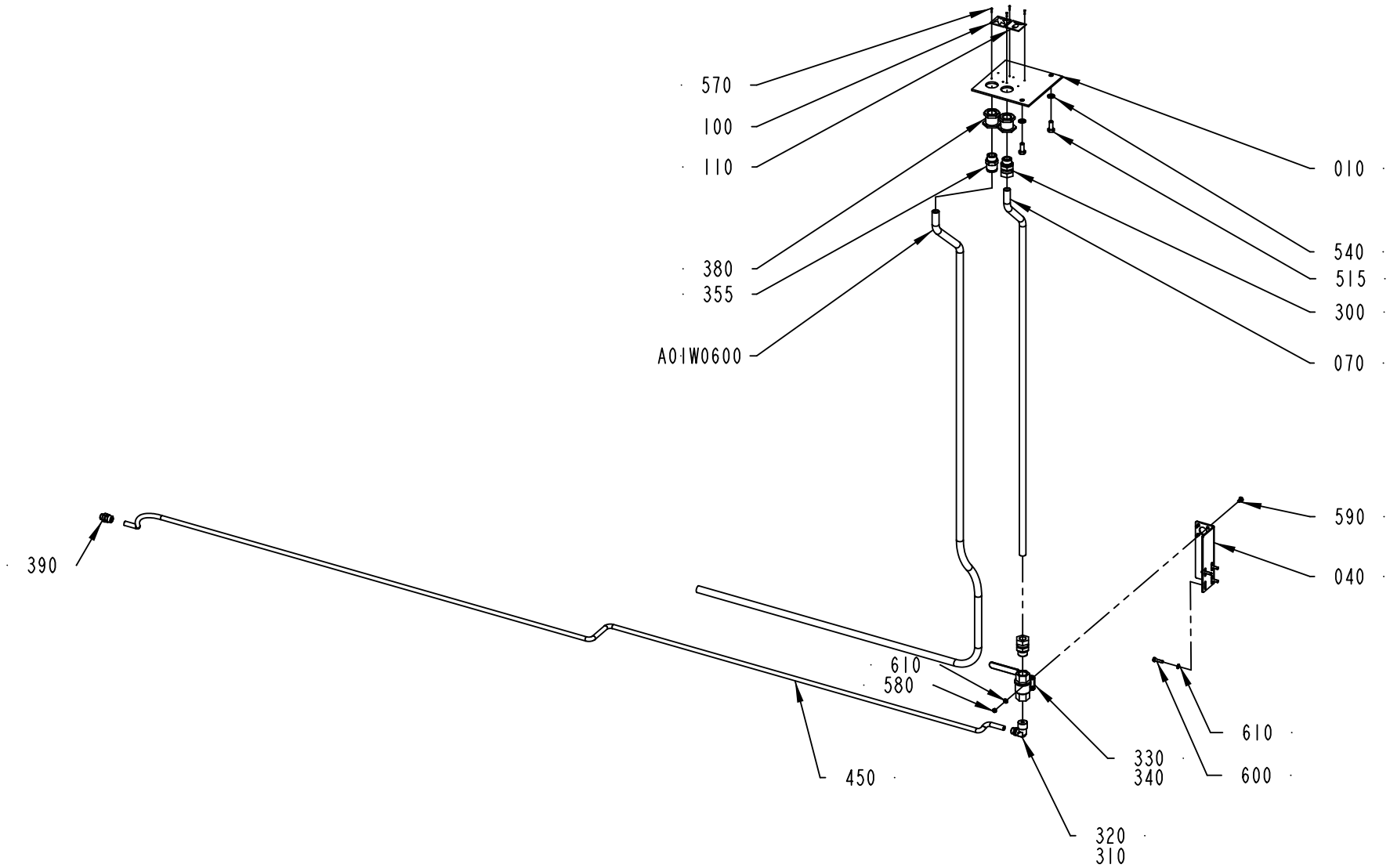

2723236-6
630884

ECM: 646210 - 20131125
Group number: 2723236-0500
Assembly Drawing: 2723236-6_1_AC

Pos	Part No	UN	Qty	Description	Page No
LINF U-FORM, RINF Z-FORM					
010	3252776-0000		1	PLATE	
040	3136747-0000		1	BRACKET	
LINF Z-FORM, RINF U-FORM					
010	3252777-0000		1	PLATE	
040	3136748-0000		1	BRACKET	
Common Parts					
070	2787874-0000		1	PIPE	
100	273458-0000		1	SIGN, AIR	
110	273455-0000		1	SIGN, COLD WATER	
300	90030-0188		2	CONN. STR. GE15LRED71	
310	90602-4847		1	THREAD LOCKING, LOCTITE 243 50 ML	
320	342930-0134		1	ELBOW 90 COUPL., EXT. THREAD 10/8-R1/2"	
330	90600-3779		1	BALL VALVE, 700000 F-F-G1/2	
340	90157-0021		1	LOCKING FLUID LOCTITE 270	
355	90459-2215		1	STRAIGHT COUPLING, D=16 MM - G1/2"	
380	342767-0114		2	BULKHEAD LEAD-IN, G1/2	
390	342921-0132		1	STRAIGHT COUPLING, EXT.THREAD 10/8-G1/4	
450	90166-0141	M	2.5	TUBE 10 MM PA TRANSP.	
515	312105-0451		2	SCREW, M6S ISO 4017 M8X20 A4 80	
540	315105-0165		2	FWAS080G0-0S, WASHER PLAIN	
570	90457-0105		4	BLANK RIVET 2X9	
580	312625-0314		4	HEXAGON THIN NUT, EN 24035 ML6M M5 A4	
590	312155-0327		4	SCREW DIN 7991 MF6S M5X12 A4 70	
600	312105-0331		4	SCREW, M6S ISO 4017 M5X20 A4 80	
610	315105-0146		8	WASHER PLAIN, 5,3X10X1 A4 BRB	
A01W0600	315400-0013	M	2.5	TUBE PUN-H-16-2,5-BL	

Pos	Part No	UN	Qty	Description	Page No

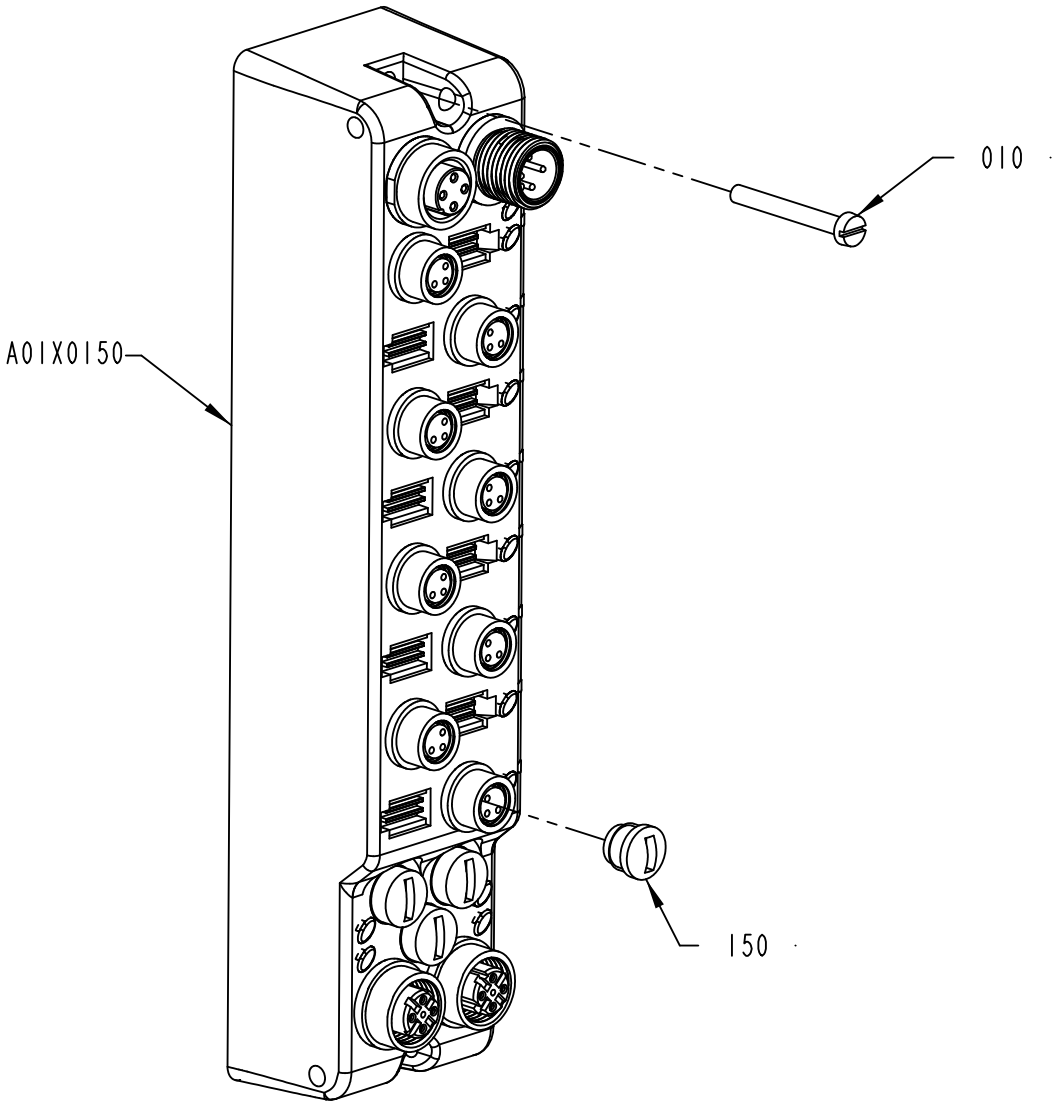

2763117-3
598985

ECM: 599048 - 20130314
Group number: 2763117-0300
Assembly Drawing: 2763117-3_1_AB

Pos	Part No	UN	Qty	Description	Page No
-					
010	312125-0232		2	SLOTTED HEAD SCREW, ISO1207 M3X25 A4	
150	90603-3976		1	PROTECTIVE CAP M8, E11256	
A01X0150	90605-2702		1	ARMORBLOCK MODULE, 1732E-8CFGM8R, SER. A	

Pos	Part No	UN	Qty	Description	Page No

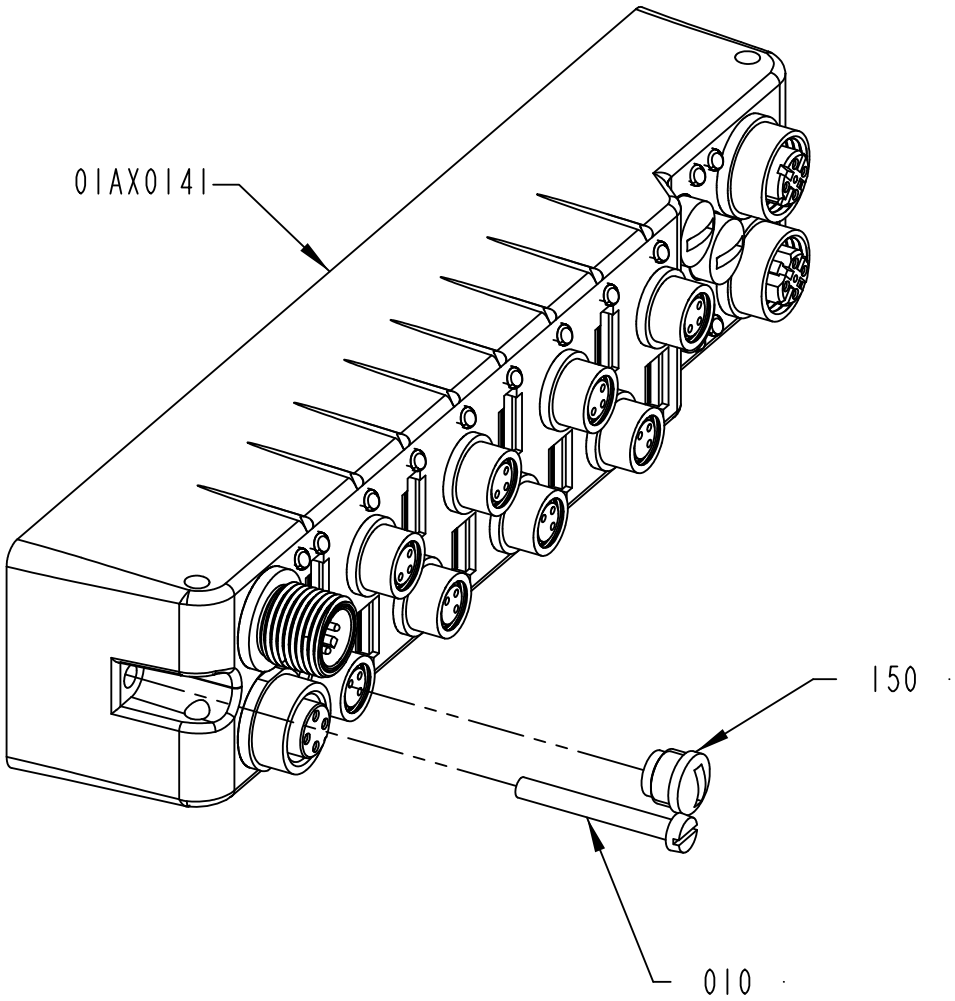

2920765-2
572955

ECM: 599049 - 20130314
Group number: 2920765-0200
Assembly Drawing: 2920765-2_1_AB

Pos	Part No	UN	Qty	Description	Page No
-					
010	312125-0232		2	SLOTTED HEAD SCREW, ISO1207 M3X25 A4	
150	90603-3976		1	PROTECTIVE CAP M8, E11256	
A01X0141	90605-2702		1	ARMORBLOCK MODULE, 1732E-8CFGM8R, SER. A	

Pos	Part No	UN	Qty	Description	Page No

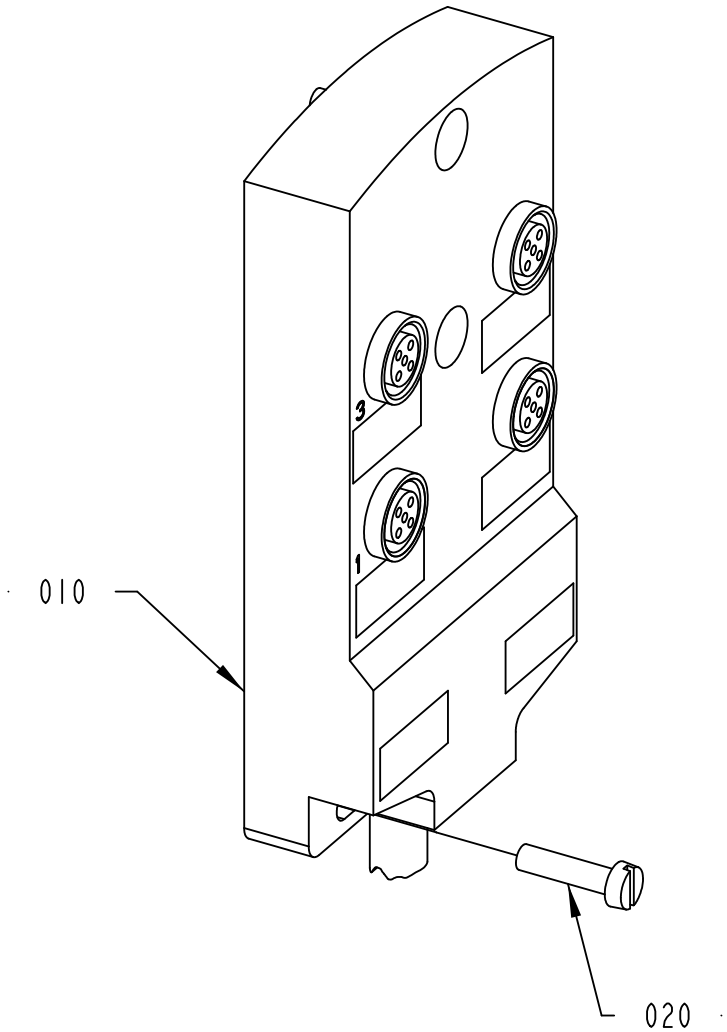

2802452-2
555186

ECM: 567227 - 20120710
Group number: 2802452-0200
Assembly Drawing: 2802452-2_1_AA

Pos	Part No	UN	Qty	Description	Page No
-					
010	90603-3972		1	SPLITTER BOX, EBC026	
020	312125-0293		3	SLOTTED HEAD SCREW, ISO1207 M4X16 A4	

Pos	Part No	UN	Qty	Description	Page No

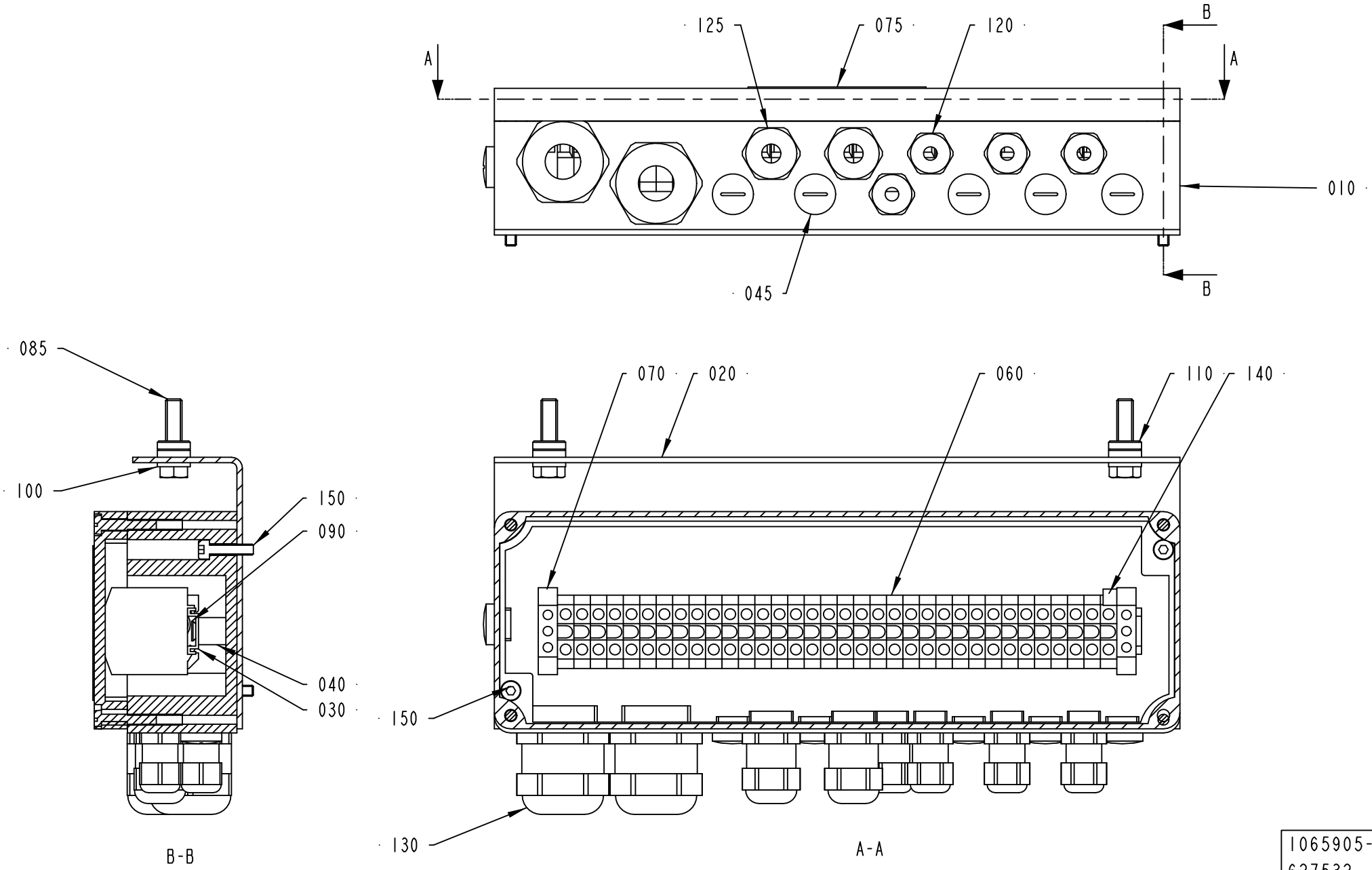

1065905-2
627532

ECM: 630416 - 20130919
Group number: 1065905-0300
Assembly Drawing: 1065905-2_1_AD

Pos	Part No	UN	Qty	Description	Page No
ANSI					
075	359715-0100		1	WARNING SIGN ANSI (H), ELECTRIC SHOCK	
ISO					
075	359705-0015		1	WARNING SIGN ISO, RISK OF ELECTRIC SHOCK	
Common Parts					
010	2557035-0000		1	CONNECTION BOX	
020	1021746-0000		1	BRACKET	
030	8490-0010		1	MOUNTING RAIL	
040	479110-0000		2	SPACER	
045	90458-1306		6	BLIND PLUG CIRCULAR, M12X1,5 514GFK/212	
060	90077-0079		34	TERMINAL PLINTH, AKZ 4	
070	90135-0026		2	EARTH TERMINAL AKE 4	
085	312105-0372		2	SCREW, M6S ISO 4017 M6X25 A4 80	
090	312145-0293		2	SCREW ISO 2009 MFS M4X16 A4	
100	315105-0153		2	WASHER PLAIN, 6,4X12X1,5 A4 BRB	
110	315115-0153		4	WASHER PLAIN, TBRB 6,4/12 H=3	
120	90458-0305		4	CABLE GLAND, M12X1,5, 5311 1000	
125	90458-0306		2	CABLE GLAND, M16X1,5, 5311 1010	
130	90458-0308		2	CABLE GLAND, M25X1,5, 5311 1030	
140	359011-0821		1	MARKING, DEK 6 FW 1-50	
150	312115-0293		2	SCREW ISO4762 M4X16 A4 80	

Pos	Part No	UN	Qty	Description	Page No

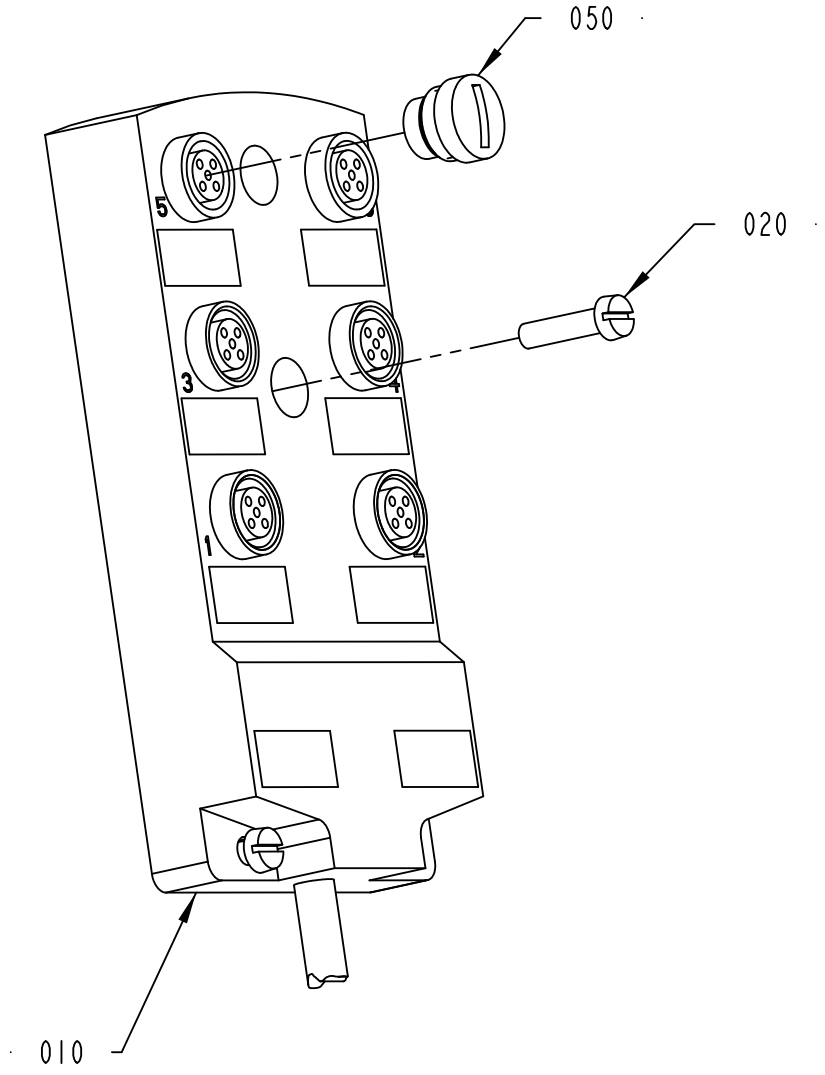

2787865-2
555186

ECM: 567222 - 20120710
Group number: 2787865-0200
Assembly Drawing: 2787865-2_1_AA

Pos	Part No	UN	Qty	Description	Page No
-					
010	90603-3970		1	SPLITTER BOX, EBC043	
020	312125-0293		3	SLOTTED HEAD SCREW, ISO1207 M4X16 A4	
050	90603-3975		1	PROTECTIVE CAP M12, E70297	

Pos	Part No	UN	Qty	Description	Page No

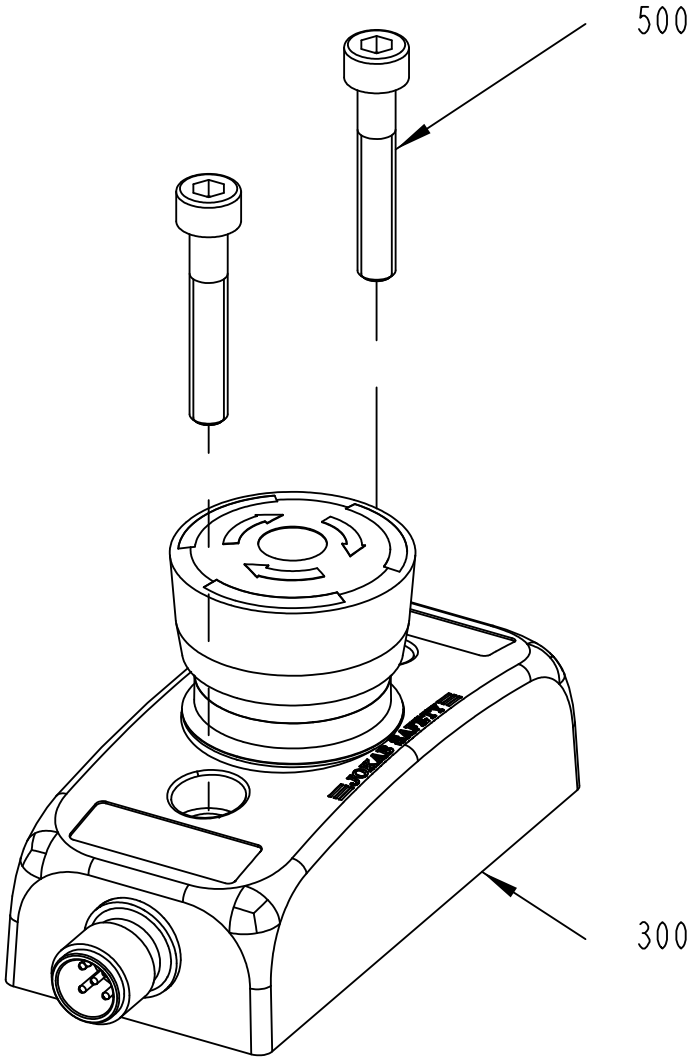

3249952-1
627532

ECM: 630418 - 20130919
Group number: 3249952-0100
Assembly Drawing: 3249952-1_1_AB

Pos	Part No	UN	Qty	Description	Page No
-					
300	90600-6048		1	EMERG. STOP SMILE 11 EA TINA, 30-050-00	
500	312115-0335		2	SCREW ISO4762 M5X30 A4 80	

Pos	Part No	UN	Qty	Description	Page No

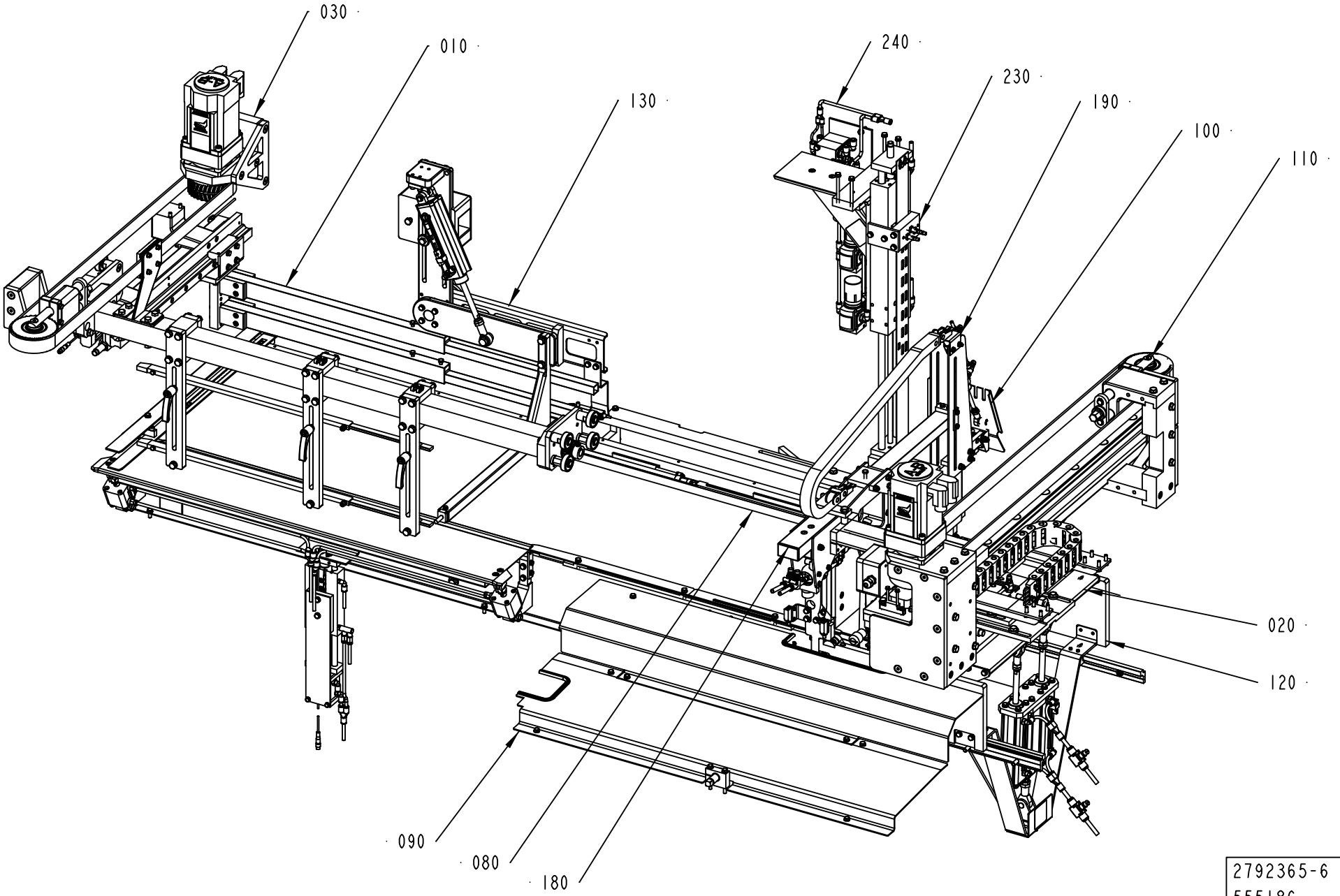
030
010
130
240
230
190
100
110
020
120
090
080
180
2792365-6
555186

ECM: 567231 - 20120710
Group number: 2792365-0500
Assembly Drawing: 2792365-6_1_AA

Pos	Part No	UN	Qty	Description	Page No
LINF U-FORM, RINF Z-FORM (See drawing on page: 2-54)					
030	3113457-0100		1	GROUPING PUSHER	**2-57**
110	3066679-0100		1	DRIVE UNIT BOX PUSHER	**2-63, 2-65**
130	3096198-0100		1	STOP ARM	**2-69**
180	3081055-0100		1	BOX PUSHER PLATE	**2-71**
LINF Z-FORM, RINF U-FORM (See drawing on page: 2-54)					
030	3113457-0100		1	GROUPING PUSHER	**2-57**
110	3066679-0100		1	DRIVE UNIT BOX PUSHER	**2-63, 2-65**
130	3096198-0100		1	STOP ARM	**2-69**
180	3081055-0100		1	BOX PUSHER PLATE	**2-71**
TBA & E up to 145 mm height, TB & E up to 145 mm height					
100	3136755-0100		1	VOLUME PLATE	**2-73**
Common Parts					
010	2718873-0300		1	GROUPING DOLLY	**2-75**
020	3241263-0100		1	BOX PUSHER END STOP	**2-77**
080	2752731-0300		1	TRANSFER GUIDE RAIL	**2-79, 2-81**
090	3241261-0100		1	PROTECTION PLATE	**2-83**
100	2844976-0300		1	VOLUME PLATE	**2-85**
120	2787868-0500		1	TRANSFER BELT	**2-87**
190	2504338-0500		1	BOX PUSHER DOLLY	**2-115**
230	3241264-0100		1	TRANSFER STOP PLATE	**2-117**
240	2808763-0300		1	VALVE GROUP	**2-119**

Pos	Part No	UN	Qty	Description	Page No

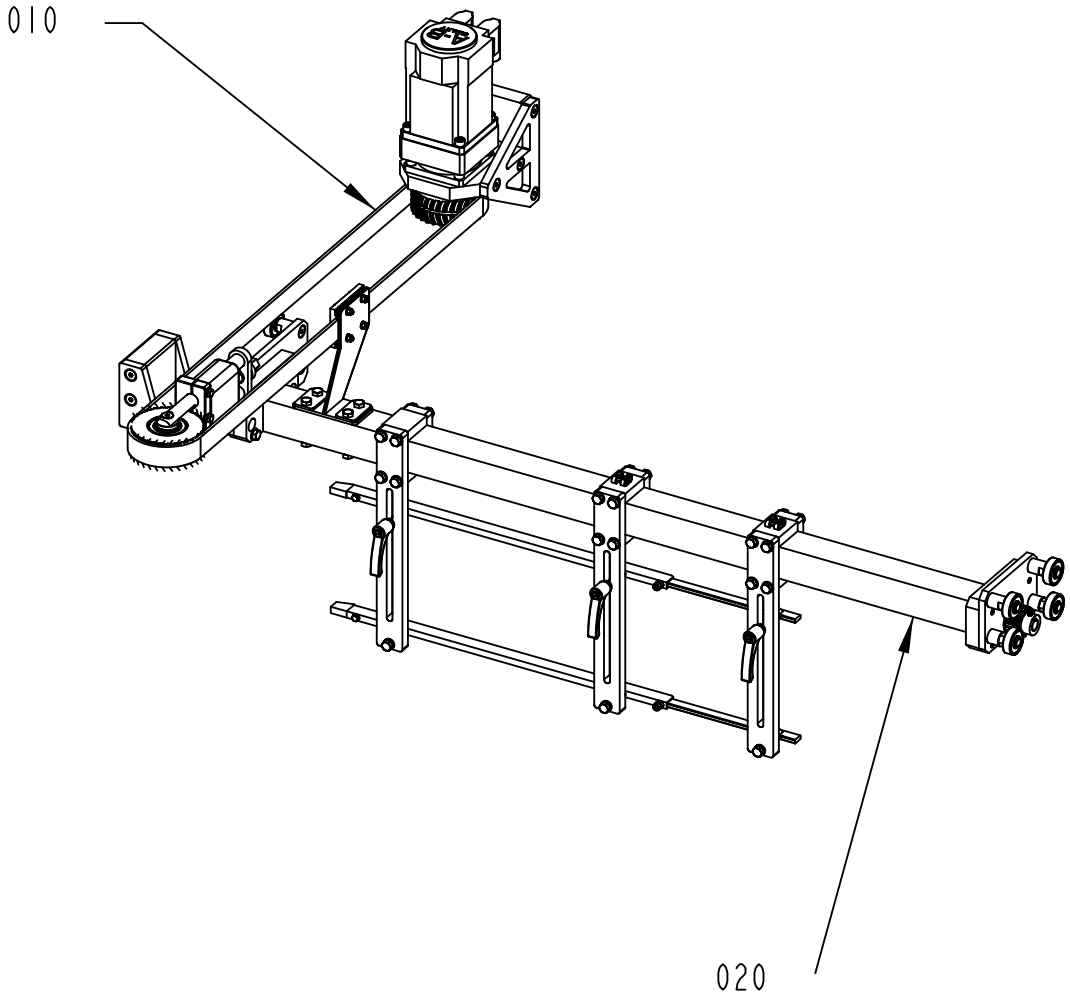

3113457-1
488512

ECM: 577165 - 20120924
Group number: 3113457-0100
Assembly Drawing: 3113457-1_1_AB

Pos	Part No	UN	Qty	Description	Page No
-					
010	3077550-0100		1	DRIVE UNIT	**2-59**
020	3066694-0100		1	GROUPING PUSHER	**2-61**

Pos	Part No	UN	Qty	Description	Page No

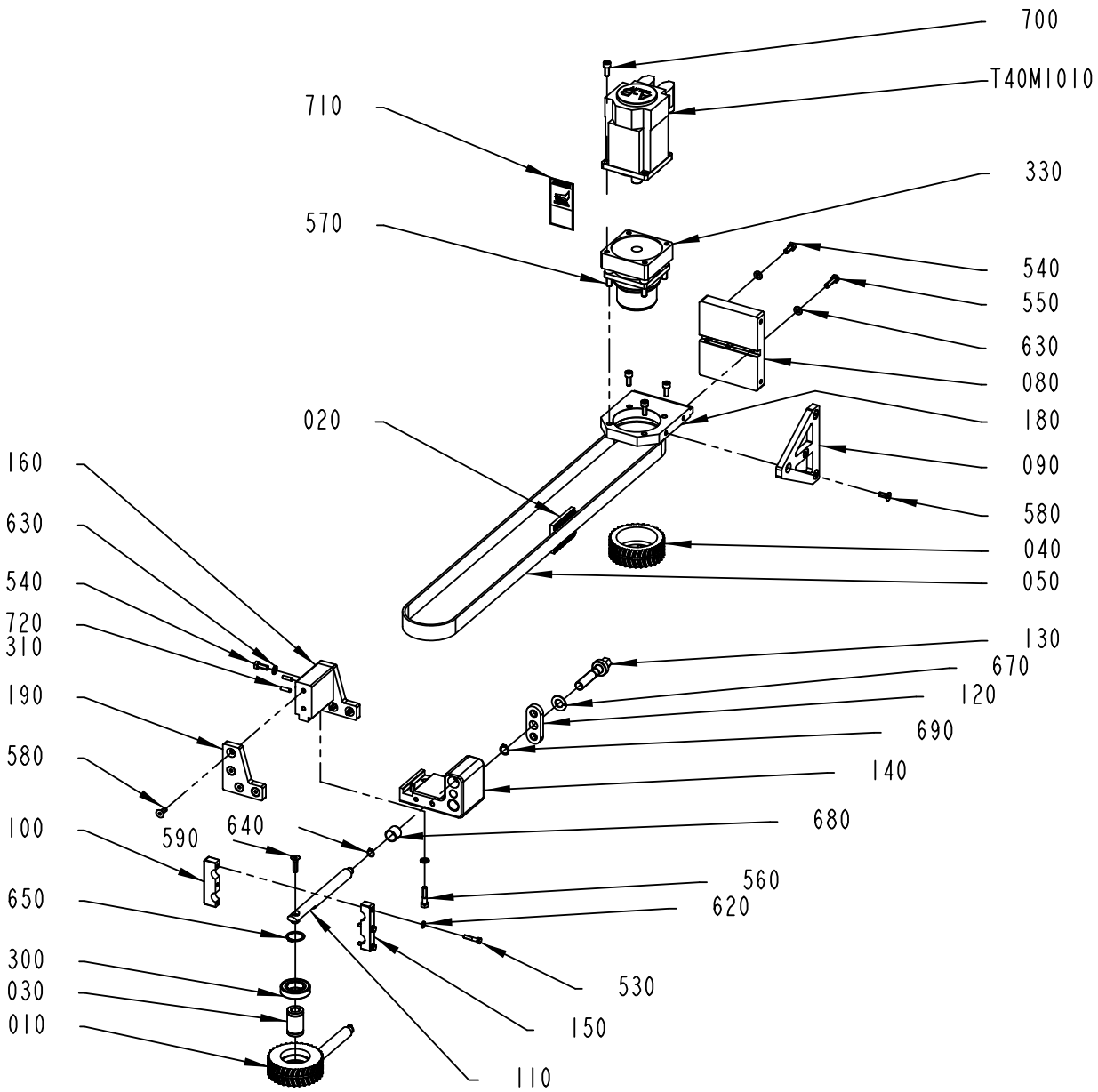

3077550-1
630884

ECM: 646220 - 20131125
Group number: 3077550-0100
Assembly Drawing: 3077550-1_1_AG

Pos	Part No	UN	Qty	Description	Page No
FINAL DEST. CANADA, FINAL DEST. USA					
710	359725-0117		1	WARNING SIGN ANSI (V), HOT SURFACE	
OTHER COUNTRIES NOT USA/CANADA					
710	1128853-0000		1	CAUTION SIGN	
Common Parts					
010	3096212-0000		1	TOOTHED PULLEY	
020	3046526-0000		1	CLAMPING PLATE	
030	3046530-0000		1	SHAFT	
040	3066680-0000		1	TOOTHED PULLEY	
050	3066687-0000		1	TIMING BELT	
080	3077553-0000		1	BRACKET	
090	3077554-0000		1	PLATE	
100	3090586-0000		1	CAP	
110	3090593-0000		2	AXLE	
120	3090594-0000		1	THRUST WASHER	
130	3090595-0000		1	SETTING SCREW	
140	3090596-0000		1	BEARING HOUSING	
150	3090597-0000		1	CAP	
160	3090598-0000		1	BRACKET	
180	3090601-0000		1	BRACKET	
190	3090602-0000		2	PLATE	
300	90603-2316		2	BALL BEARING 30/55X13	
310	90157-0021		1	LOCKING FLUID LOCTITE 270	
330	90604-9244		1	GEARS, PLAN. LBP090F-MF1-5-0G1/MPL-B420P	
530	312105-0374		3	SCREW, M6S ISO 4014 M6X30 A4 80	
540	312105-0451		8	SCREW, M6S ISO 4017 M8X20 A4 80	
550	312105-0455		3	SCREW, M6S ISO 4017 M8X30 A4 80	
560	312105-0457		2	SCREW, M6S ISO 4014 M8X35 A4 80	
570	312115-0495		4	SCREW ISO4762 M10X30 A4 80	
580	312155-0451		12	SCREW DIN 7991 MF6S M8X20 A4 70	
590	312155-0455		2	SCREW DIN 7991 MF6S M8X30 A4 70	
620	315106-0153		3	WASHER PLAIN, M6 ISO7089-6-200 HV A4	
630	315106-0165		13	WASHER PLAIN, M8 ISO7089-8-200 HV A4	
640	315751-0109		2	RETAINING RING FOR SHAFT DIN 471 12 SS	
650	315751-0122		2	RETAINING RING FOR SHAFT DIN 471 30 SS	
670	321130-0220		1	THRUST WASHER, 16X30X1,5 MM	
680	321133-0260		4	BUSHING IGLIDUR G 20X23X20	
690	315751-0113		1	RETAINING RING FOR SHAFT DIN 471 16 SS	
700	312115-0451		4	SCREW ISO4762 M8X20 A4 80	
720	311103-0353		2	PARALLEL PIN ISO 2338 6M6X20 A1	
T40M1010	90601-5850		1	5008103, MPL-B420P-SK72AA SERIES A	

Pos	Part No	UN	Qty	Description	Page No

Machine Type | Group Description | Used-In | Group Number | Page No

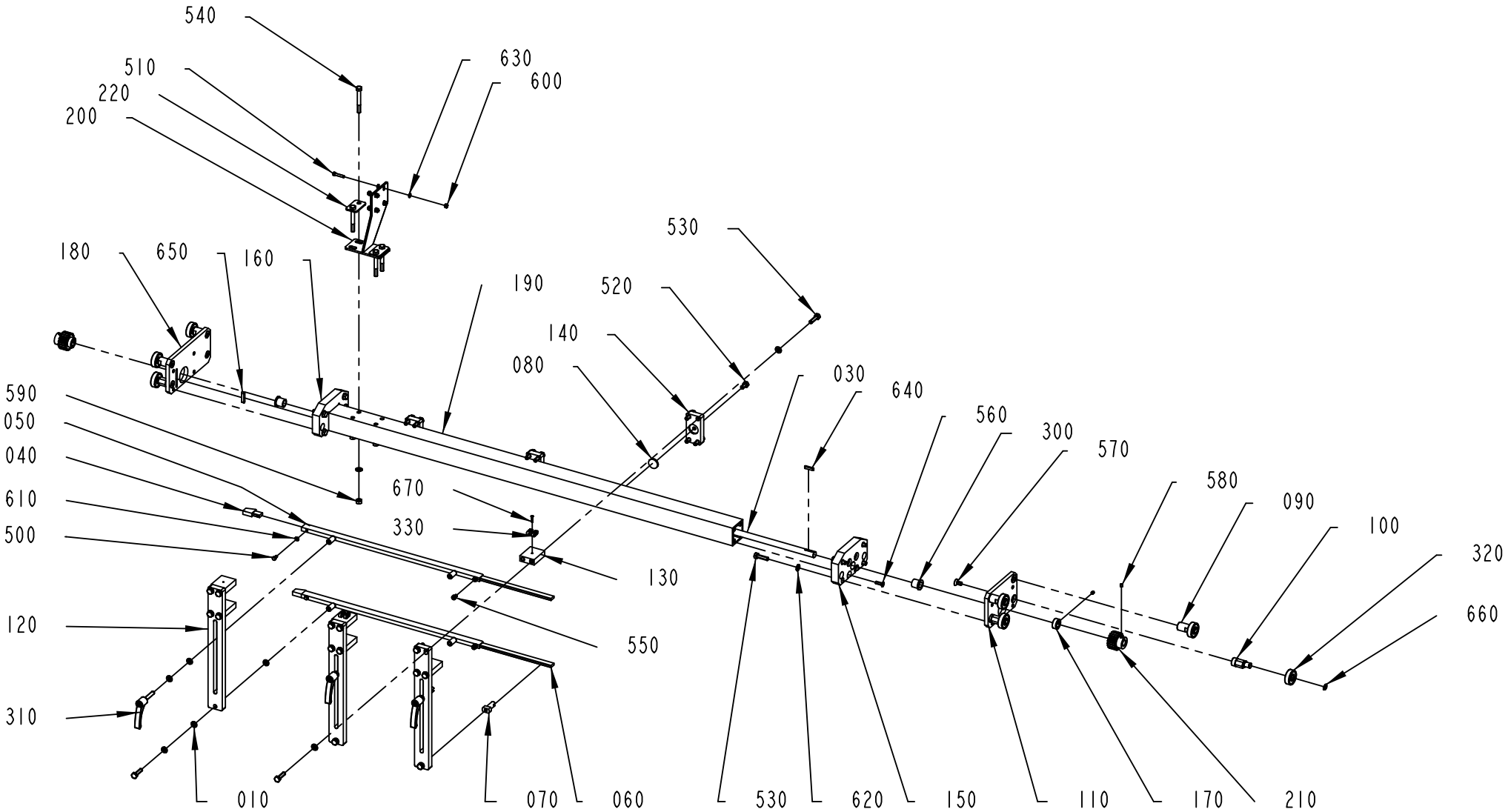

3066694-1
627532

ECM: 630421 - 20130919
Group number: 3066694-0100
Assembly Drawing: 3066694-1_1_AD

Pos	Part No	UN	Qty	Description	Page No
LINF U-FORM, RINF Z-FORM					
180	3096218-0000		1	PLATE	
LINF Z-FORM, RINF U-FORM					
180	3090581-0000		1	PLATE	
Common Parts					
010	1074233-0000		14	WASHER	
030	2763045-0000		1	SHAFT	
040	2771124-0000		2	GUIDE	
050	2771125-0000		2	RAIL	
060	2771126-0000		2	RAIL	
070	2802469-0000		2	SLEEVE	
080	2802488-0000		3	PLATE	
090	3066697-0000		4	AXLE PIN	
100	3066698-0000		4	AXLE PIN	
110	3066699-0000		1	PLATE	
120	3077533-0000		3	BRACKET	
130	3077534-0000		6	BRACKET	
140	3077535-0000		3	PLATE	
150	3077558-0000		1	PLATE	
160	3077562-0000		1	PLATE	
170	3090580-0000		2	SPACER SLEEVE	
190	3090582-0000		1	PROFILE 50X50	
200	3096210-0000		1	TRANSFER PLATE	
210	1124759-0000		2	GEAR WHEEL Z=20	
220	3136754-0000		2	WASHER	
300	90240-0222		2	FLANGE BUSHING, 15X20X20 MM	
310	90458-0984		3	LOCKING LEVER 239643 ERZ.63SST-P-M8X40	
320	90603-2945		8	BALL BEARING 12/37X12	
330	90165-0087		2	T-CLIP T6 FOR TUBE D=6 - 7 MM	
500	312105-0325		2	SCREW, M6S ISO 4017 M5X10 A4 80	
510	312105-0333		4	SCREW, M6S ISO 4017 M5X25 A4 80	
520	312105-0449		3	SCREW, M6S ISO 4017 M8X16 A4 80	
530	312105-0455		35	SCREW, M6S ISO 4017 M8X30 A4 80	
540	312105-0464		4	SCREW, M6S ISO 4014 M8X65 A4 80	
550	312115-0362		2	SCREW ISO4762 M6X8 A4 80	
560	312155-0370		8	SCREW DIN 7991 MF6S M6X20 A4 70	
570	312155-0449		8	SCREW DIN 7991 MF6S M8X16 A4 70	
580	312318-0360		4	SET SCREW, CUP END ISO4029 M6X6 A4	
590	312605-0318		4	HEXAGON NUT, M6M M8 A280	
600	312607-0314		4	HEXAGON NUT, EN 24032 M6M M5 A480	
610	315105-0146		2	WASHER PLAIN, 5,3X10X1 A4 BRB	
620	315105-0165		36	FWAS080G0-0S, WASHER PLAIN	
630	315106-0146		8	WASHER PLAIN, M5 ISO7089-5-200 HV A4	
640	315705-0202		2	PARALLEL KEY W. ROUND ENDS, 5X5X25MM	
650	315705-0236		1	PARALLEL KEY W. ROUND ENDS, 6X6X30 MM	
660	315751-0109		8	RETAINING RING FOR SHAFT DIN 471 12 SS	
670	312155-0228		2	SCREW DIN 7991 MF6S M3X16 A4 70	

Machine Type	Group Description	Used-In	Group Number	Page No

DRIVE UNIT BOX PUSHER

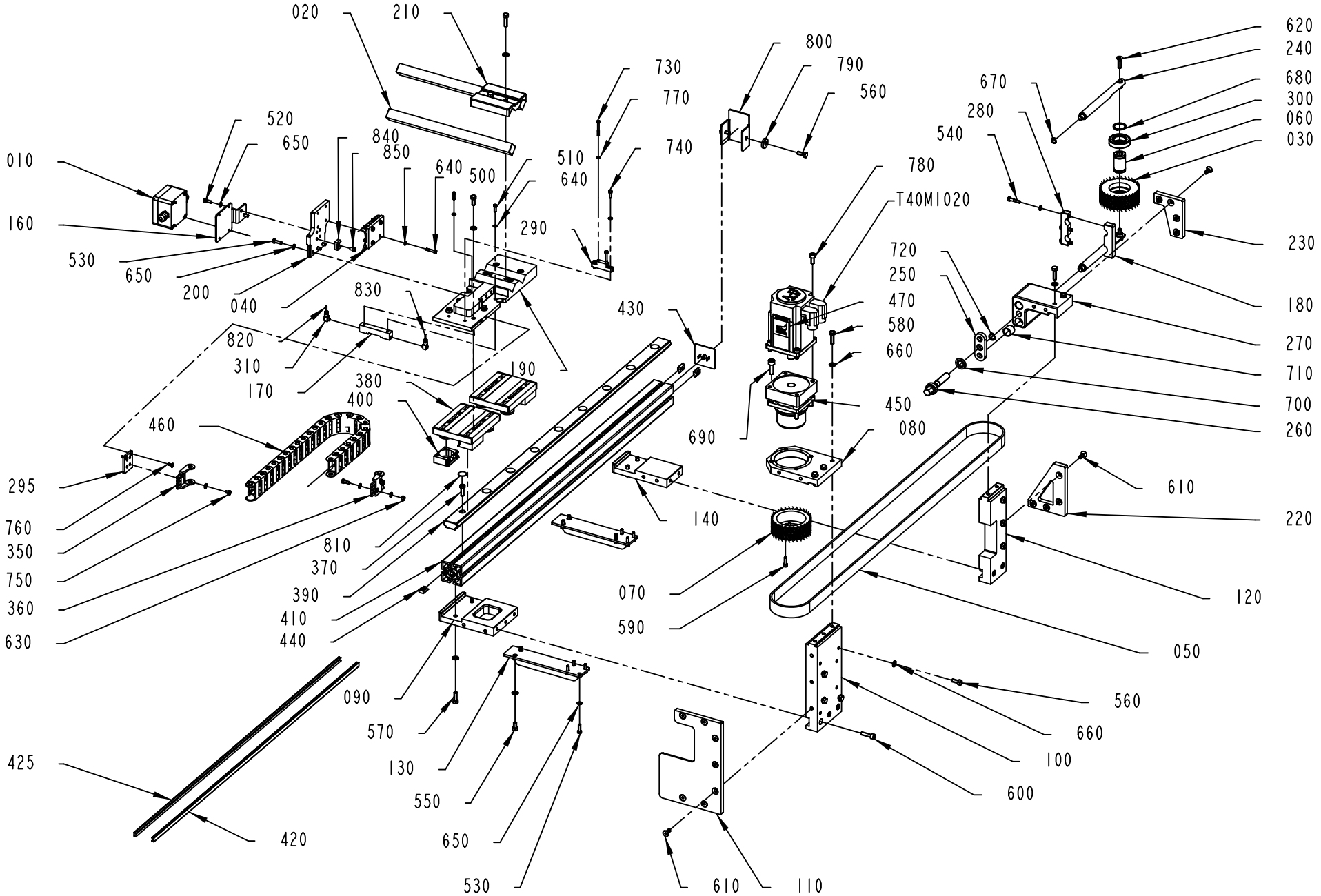

3066679-1
630890

ECM: 646221 - 20131125
Group number: 3066679-0100
Assembly Drawing: 3066679-1_1_AJ

This list covers pages from 2-62 to 2-65

Pos	Part No	UN	Qty	Description	Page No
FINAL DEST. CANADA, FINAL DEST. USA					
470	359725-0117		1	WARNING SIGN ANSI (V), HOT SURFACE	
LINF U-FORM					
020	3136650-0000		2	ROD	
110	3077539-0000		1	SUPPORT PLATE	
120	3096216-0000		1	BRACKET	
LINF Z-FORM					
020	2950358-0000		2	SHAFT	
110	3096219-0000		1	SUPPORT PLATE	
120	3077542-0000		1	BRACKET	
OTHER COUNTRIES					
470	1128853-0000		1	CAUTION SIGN	
RINF U-FORM					
020	3136650-0000		2	ROD	
110	3096219-0000		1	SUPPORT PLATE	
120	3077542-0000		1	BRACKET	
RINF Z-FORM					
020	2950358-0000		2	SHAFT	
110	3077539-0000		1	SUPPORT PLATE	
120	3096216-0000		1	BRACKET	
Common Parts					
010	2752681-0100		1	CONNECTION BOX	**2-67**
030	3096212-0000		1	TOOTHED PULLEY	
040	3046526-0000		1	CLAMPING PLATE	
050	3046527-0000		1	TIMING BELT	
060	3046530-0000		1	SHAFT	
070	3066680-0000		1	TOOTHED PULLEY	
080	3066683-0000		1	BRACKET	
090	3077537-0000		1	SUPPORT PLATE	
100	3077538-0000		1	BRACKET	
130	3077543-0000		2	BRACKET	
140	3077544-0000		1	SUPPORT PLATE	
160	3077547-0000		1	PLATE	
170	3096228-0000		1	LUBRICATOR	
180	3090586-0000		1	CAP	
190	3090588-0000		1	PLATE	
200	3090589-0000		1	TRANSFER PLATE	
210	3090590-0000		1	CAP	
220	3090591-0000		1	PLATE	
230	3090592-0000		1	PLATE	
240	3090593-0000		2	AXLE	
250	3090594-0000		1	THRUST WASHER	
260	3090595-0000		1	SETTING SCREW	
270	3090596-0000		1	BEARING HOUSING	
280	3090597-0000		1	CAP	
290	3096214-0000		1	DISTANCE	
295	3096215-0000		1	FASTENING PLATE	
300	90603-2316		2	BALL BEARING 30/55X13	
310	90134-0058		2	CONNECTION	
350	90459-1363		1	END LINK, 1038.1PZ, FOR CHAIN 10 NEW	
360	90459-1364		1	END LINK, 1038.2PZ , FOR CHAIN 10 NEW	
370	90600-2022		9	SCREW DIN7984 M8X25 AISI304	
380	90603-0208		2	CARRIAGE, LFCL42-RB	
390	90603-0228		1	GUIDE RAIL, LFS42-C-RB-1106	
400	90603-0231		4	LUBRICATOR, AB.LFR5201	
410	90603-0288		1	PROFILE L=1100MM, 3 842 990 350	
420	90603-0649		1	COVER STRIP, 3842518367	
425	90603-0649		1	COVER STRIP, 3842518367	
430	90603-0308		1	END CAP 60X60MM, 3 842 511 874	
440	90603-0350		19	NUT, T-SLOT M8	
450	90604-9244		1	GEARS, PLAN. LBP090F-MF1-5-0G1/MPL-B420P	
460	90603-0668		1	FLEXIBLE CHAIN, L=732?? MM	
500	312105-0333		4	SCREW, M6S ISO 4017 M5X25 A4 80	
510	312105-0329		2	SCREW, M6S ISO 4017 M5X16 A4 80	
520	312105-0368		4	SCREW, M6S ISO 4017 M6X16 A4 80	
530	312105-0370		11	SCREW, M6S ISO 4017 M6X20 A4 80	
540	312105-0374		3	SCREW, M6S ISO 4014 M6X30 A4 80	
550	312105-0449		4	SCREW, M6S ISO 4017 M8X16 A4 80	
560	312105-0451		13	SCREW, M6S ISO 4017 M8X20 A4 80	
570	312105-0453		4	SCREW, M6S ISO 4017 M8X25 A4 80	
580	312105-0455		7	SCREW, M6S ISO 4017 M8X30 A4 80	
590	312115-0370		7	SCREW ISO4762 M6X20 A4 80	
600	312115-0455		9	SCREW ISO4762 M8X30 A4 80	
610	312155-0451		15	SCREW DIN 7991 MF6S M8X20 A4 70	
620	312155-0455		2	SCREW DIN 7991 MF6S M8X30 A4 70	
630	312607-0316		2	HEXAGON NUT, EN 24032 M6M M6 A480	
640	315106-0146		8	WASHER PLAIN, M5 ISO7089-5-200 HV A4	
650	315106-0153		22	WASHER PLAIN, M6 ISO7089-6-200 HV A4	
660	315106-0165		26	WASHER PLAIN, M8 ISO7089-8-200 HV A4	
670	315751-0109		2	RETAINING RING FOR SHAFT DIN 471 12 SS	
680	315751-0122		2	RETAINING RING FOR SHAFT DIN 471 30 SS	
690	312115-0495		4	SCREW ISO4762 M10X30 A4 80	
700	321130-0220		1	THRUST WASHER, 16X30X1,5 MM	
710	321133-0260		4	BUSHING IGLIDUR G 20X23X20	

DRIVE UNIT BOX PUSHER

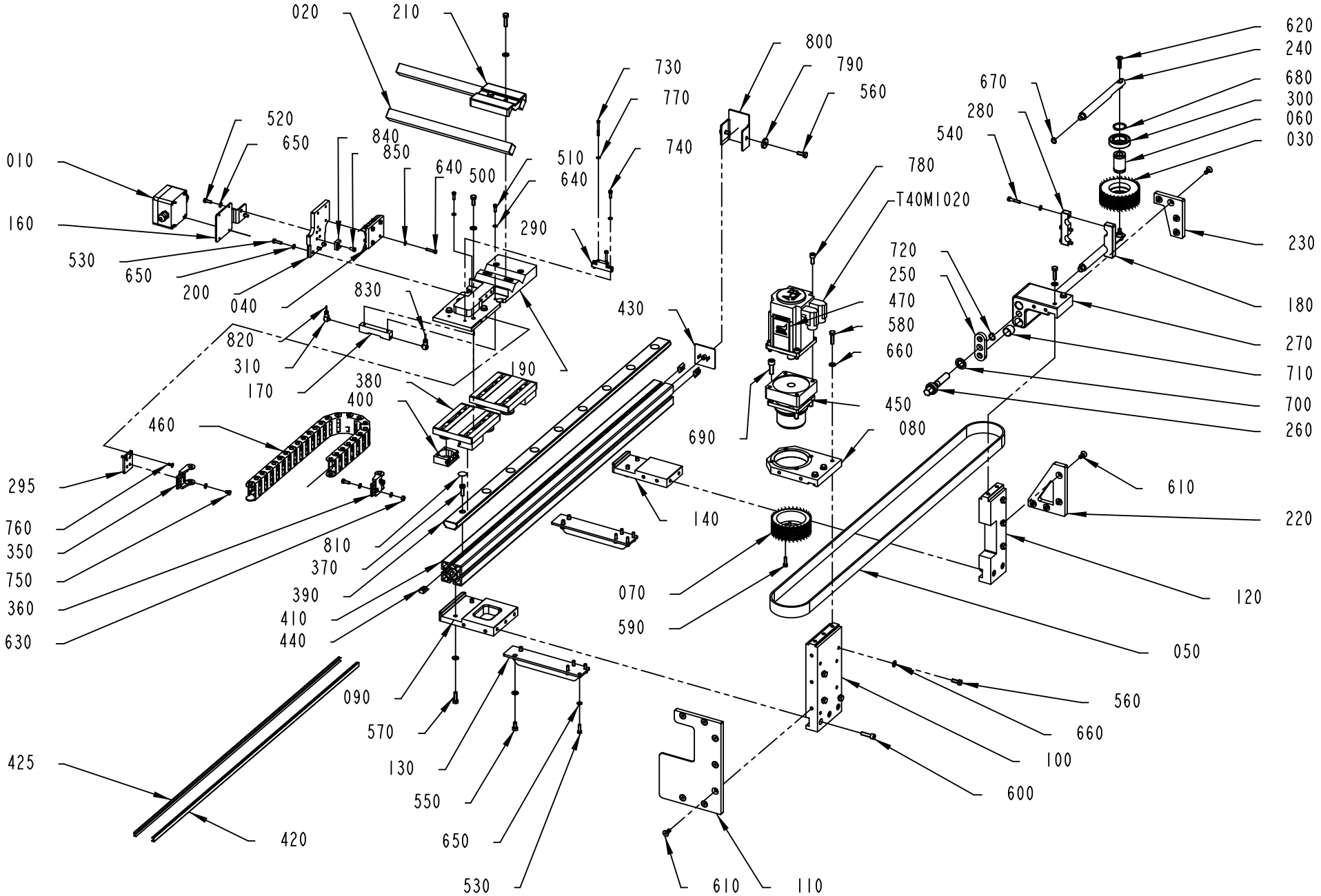

3066679-1
630890

Pos	Part No	UN	Qty	Description	Page No
Common Parts (Cont'd)					
720	315751-0113		1	RETAINING RING FOR SHAFT DIN 471 16 SS	
730	312105-0303		2	SCREW, M6S ISO 4017 M4X40 A4 70	
740	312105-0329		2	SCREW, M6S ISO 4017 M5X16 A4 80	
750	312105-0362		2	SCREW, M6S ISO 4017 M6X8 A4 80	
760	312155-0327		2	SCREW DIN 7991 MF6S M5X12 A4 70	
770	315106-0136		2	WASHER PLAIN, M4 ISO7089-4-200 HV A4	
780	312115-0451		4	SCREW ISO4762 M8X20 A4 80	
790	315125-0165		2	WASHER HIGH, TBRSB 8,4X26X5 A4	
800	3136220-0000		1	BRACKET	
810	1021933-0000		9	TAPE	
820	90166-0143	M	5.5	TUBE 2,5 MM PA TRANSP.	
830	90166-0143	M	5.5	TUBE 2,5 MM PA TRANSP.	
840	352113-0204		1	ANCHOR PLATES FOR STRIPS, TM3S25-M	
850	312125-0364		1	SCREW ISO 1207 M6X10 A4	
T40M1020	90601-5850		1	5008103, MPL-B420P-SK72AA SERIES A	

Pos	Part No	UN	Qty	Description	Page No

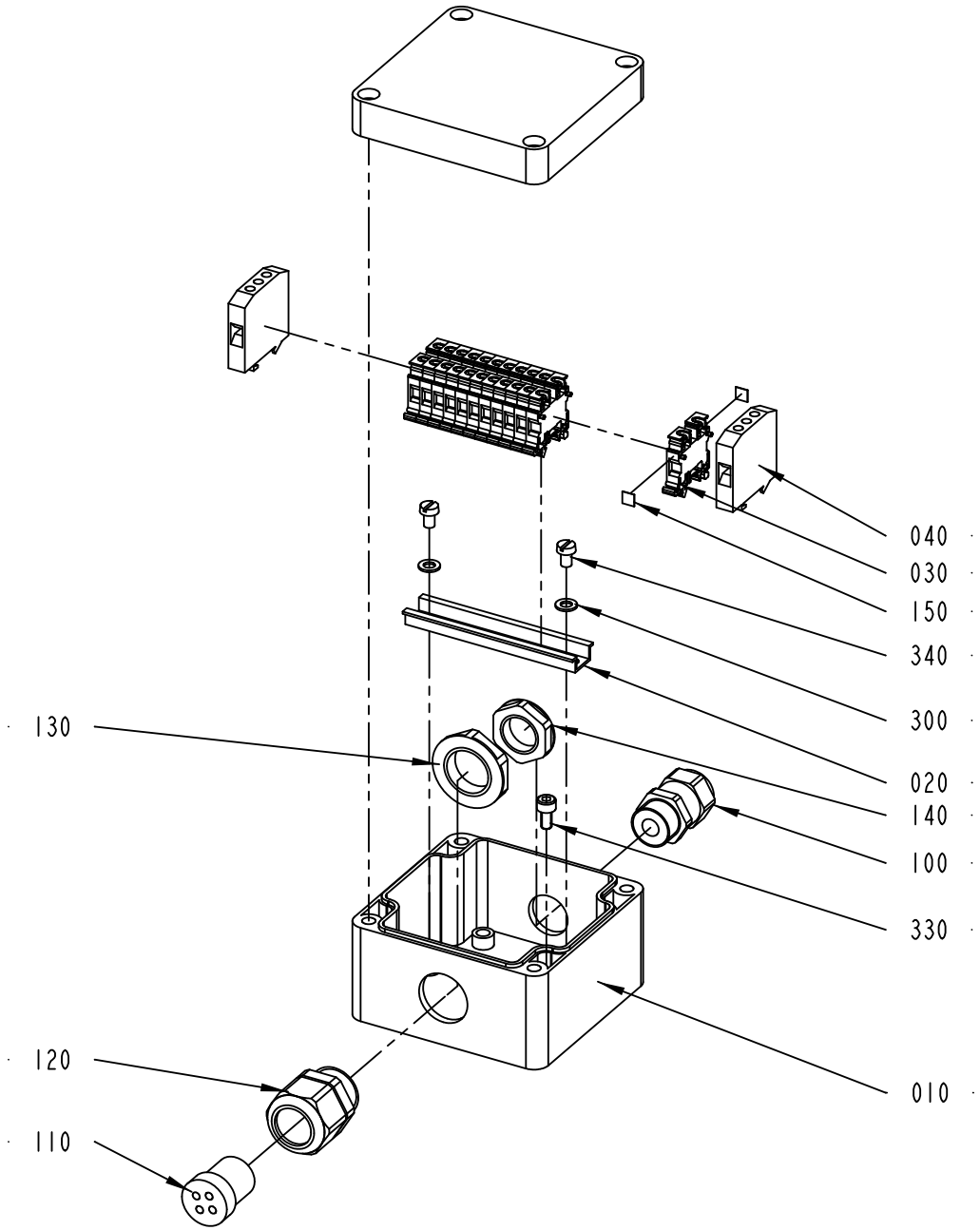

2752681-1
627532

ECM: 630423 - 20130919
Group number: 2752681-0100
Assembly Drawing: 2752681-1_1_AB

Pos	Part No	UN	Qty	Description	Page No
-					
010	1466715-0000		1	CONNECTION BOX	
020	90077-0328	MM	72	RAIL, TS15/5	
030	90077-0123		12	TERMINAL FEED THROUGH	
040	90135-0026		2	EARTH TERMINAL AKE 4	
100	90458-0306		1	CABLE GLAND, M16X1,5, 5311 1010	
110	353249-0052		1	INSERT, MULTI HOLE, E152M 4X3	
120	90458-0406		1	CABLE GLAND, VK 22052Y	
130	90458-0323		1	NUT, M20X1,5	
140	90458-0322		1	NUT, M16X1,5	
150	359011-0807		2	MARKING, DEK 5 FW 1-50	
300	315105-0136		2	WASHER PLAIN, 4,3X9X0,8 A4 BRB	
330	312115-0287		4	SCREW ISO4762 M4X8 A4 80	
340	312125-0285		2	SLOTTED HEAD SCREW, ISO1207 M4X6 A4	

Pos	Part No	UN	Qty	Description	Page No

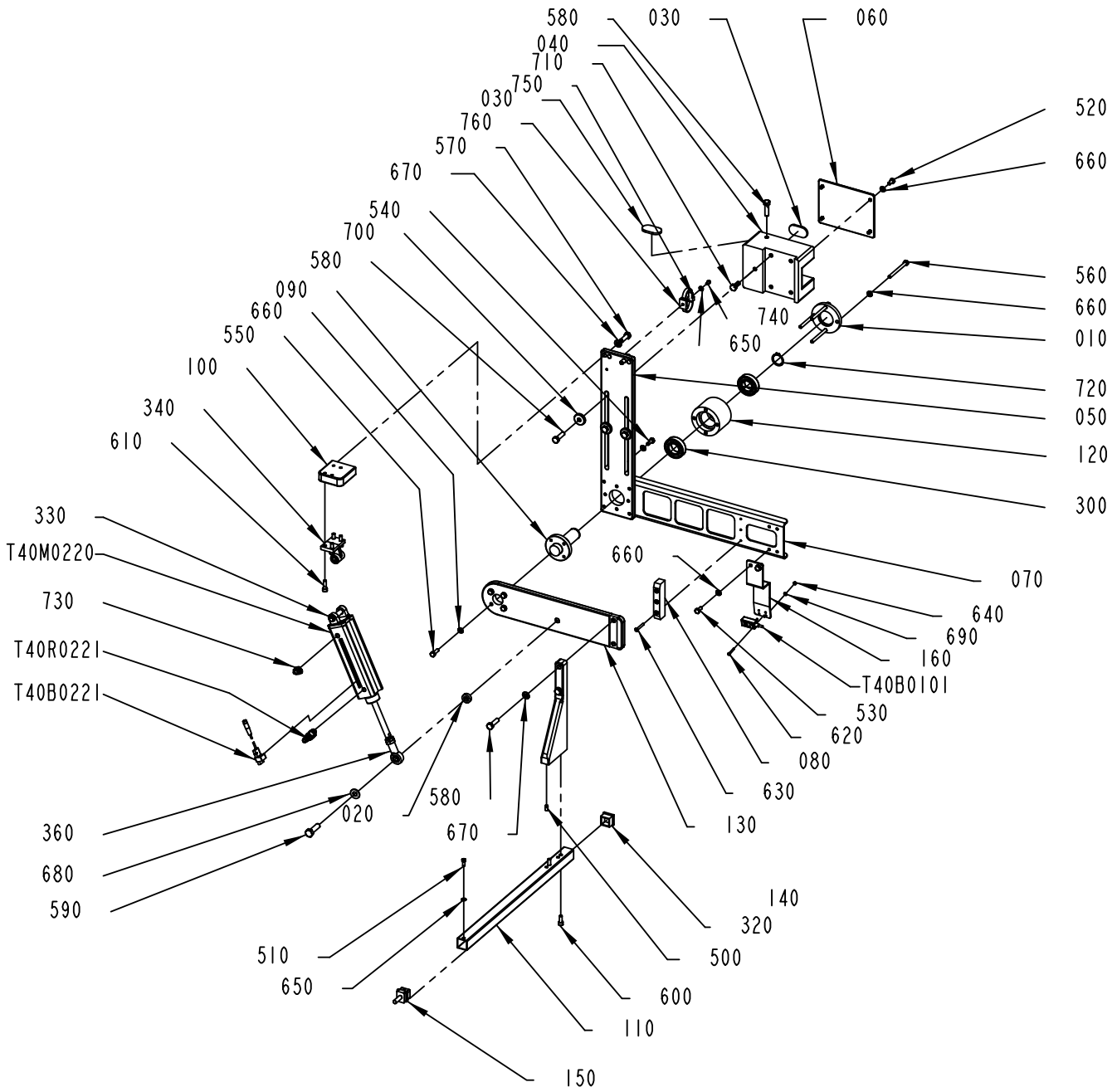

3096198-1
555186

ECM: 567255 - 20120710
Group number: 3096198-0100
Assembly Drawing: 3096198-1_1_AD

Pos	Part No	UN	Qty	Description	Page No
-					
010	1139845-0000		1	LID	
020	2718897-0000		1	SPACER	
030	3136752-0000		2	PLATE	
040	3136749-0000		1	BRACKET	
050	3136750-0000		1	PLATE	
060	3136751-0000		1	PLATE	
070	3096199-0000		1	PLATE	
080	3096200-0000		1	SLIDING STRIP	
090	3096202-0000		1	AXLE PIN	
100	3096203-0000		1	BRACKET	
110	3096204-0000		1	ROD	
120	3096205-0000		1	BEARING HOUSING	
130	3096206-0000		1	BRACKET	
140	3096207-0000		1	ARM	
150	3096208-0000		1	GUIDE PIN	
160	3096209-0000		1	BRACKET	
300	90603-3541		2	BALL BEARING 25/47X12 SOLID OLI	
320	90261-0048		1	SQUARE PLUG GPN 260/Q2525	
330	90459-0399		1	BRACKET, REAR, EYE WITH AXLE 32	
340	90459-0400		1	BRACKET, REAR CLEVIS FLANGE FOOT, 32	
360	90459-3117		1	ROD END, BALL JOINT EYE M10X1,25	
500	311103-0349		2	PARALLEL PIN ISO 2338 6M6X12 A1	
510	312105-0327		1	SCREW, M6S ISO 4017 M5X12 A4 80	
520	312105-0366		4	SCREW, M6S ISO 4017 M6X12 A4 80	
530	312105-0367		2	SCREW, M6S ISO 4017 M6X14 A4 80	
540	312105-0368		4	SCREW, M6S ISO 4017 M6X16 A4 80	
550	312105-0370		4	SCREW, M6S ISO 4017 M6X20 A4 80	
560	312105-0384		4	SCREW, M6S ISO 4014 M6X70 A4 80	
570	312105-0453		2	SCREW, M6S ISO 4017 M8X25 A4 80	
580	312105-0455		6	SCREW, M6S ISO 4017 M8X30 A4 80	
590	312105-0497		1	SCREW, M6S ISO 4017 M10X35 A4 80	
600	312115-0368		2	SCREW ISO4762 M6X16 A4 80	
610	312115-0370		4	SCREW ISO4762 M6X20 A4 80	
620	312125-0230		2	SLOTTED HEAD SCREW, ISO1207 M3X20 A4	
630	312155-0299		3	SCREW DIN 7991 MF6S M4X30 A4 70	
640	312605-0310		2	HEXAGON NUT, M6M M3 A280	
650	315105-0146		2	WASHER PLAIN, 5,3X10X1 A4 BRB	
660	315105-0153		18	WASHER PLAIN, 6,4X12X1,5 A4 BRB	
670	315105-0165		4	FWAS080G0-0S, WASHER PLAIN	
680	315105-0173		1	WASHER PLAIN, 10,5X22X2 A4 BRB	
690	315106-0124		2	WASHER PLAIN, M3 ISO7089-3-200 HV A4	
700	315125-0165		3	WASHER HIGH, TBRSB 8,4X26X5 A4	
710	312105-0451		1	SCREW, M6S ISO 4017 M8X20 A4 80	
720	315751-0119		1	RETAINING RING FOR SHAFT DIN 471 25 SS	
730	350002-0005		1	PUSH-IN L-FITTING QSL-F-G1/8-4	
740	312125-0287		1	SLOTTED HEAD SCREW, ISO1207 M4X8 A4	
750	352113-0103		1	CABLE TIE, BLACK 290X7,6 MM	
760	352113-0203		1	ANCHOR PLATES FOR STRIPS, TM3S8-M0	
T40B0101	90600-3672		1	PHOTOCELL, WS4-3D3130S03	
T40B0221	90459-2392		1	PROX. SENSOR, SMT-C1-PS-24V-K0,3-M8-SA	
T40M0220	90603-5843		1	DOUBLE ACTING, PROFILE, CYL 32-80	
T40R0221	90235-0846		1	THROTTLE CHECK VALVE G1/8", MANUAL, 6	

Machine Type	Group Description	Used-In	Group Number	Page No

BOX PUSHER PLATE

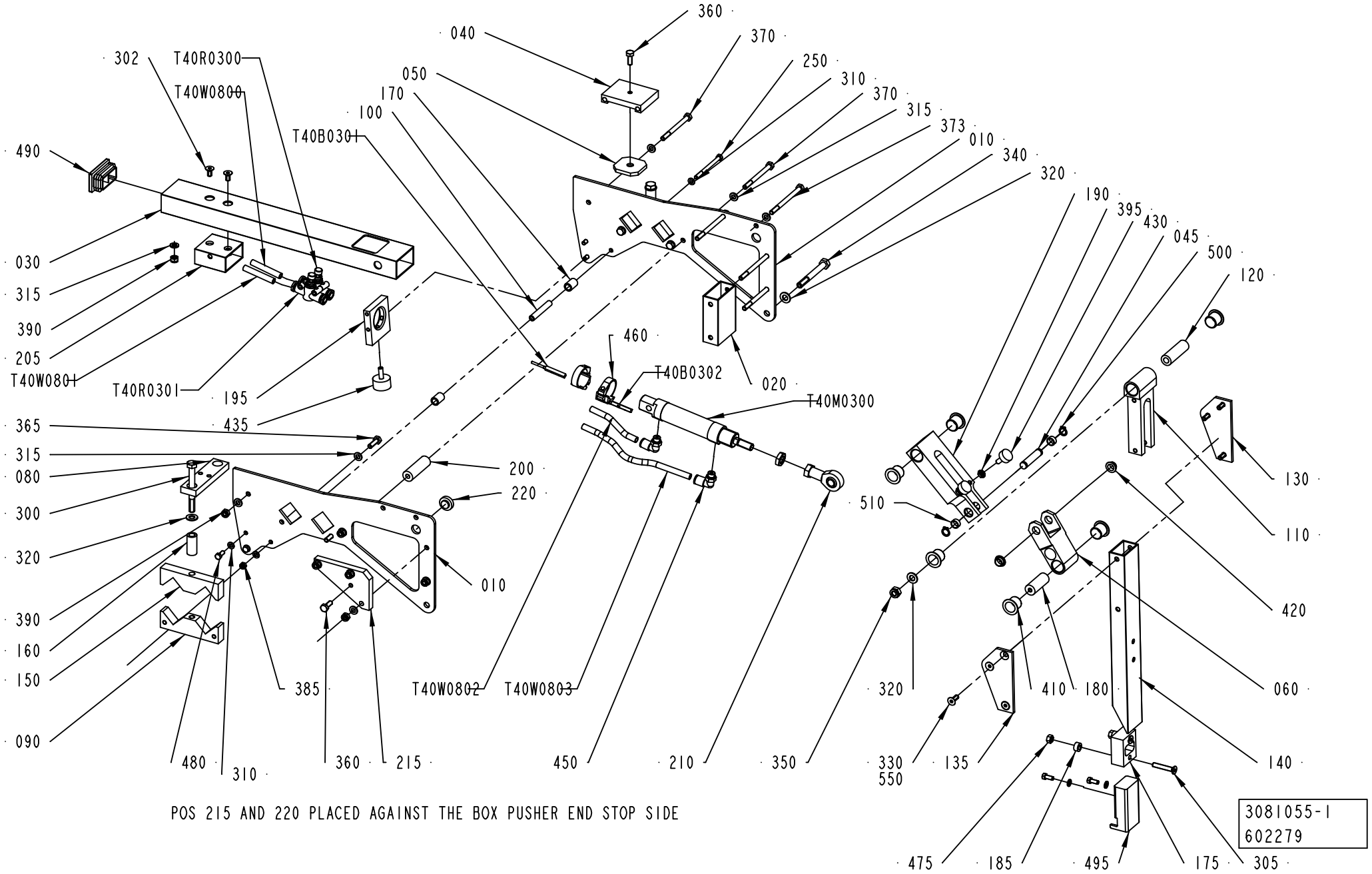

POS 215 AND 220 PLACED AGAINST THE BOX PUSHER END STOP SIDE

ECM: 614506 - 20130618
Group number: 3081055-0100
Assembly Drawing: 3081055-1_1_AE

Pos	Part No	UN	Qty	Description	Page No
-					
010	3081059-0000		2	PLATE	
020	2504187-0000		1	BEAM	
030	2829380-0000		1	BEAM	
040	2995245-0000		1	BRACKET	
045	3092039-0000		1	CYLINDRICAL PIN	
050	2504180-0000		1	LOCKING LUG	
060	3245228-0000		1	LINK ARM	
080	2995246-0000		1	BRACKET	
090	2959006-0000		2	BRACKET	
100	2959013-0000		1	SHAFT	
110	3081058-0000		1	BRACKET	
120	2877482-0000		1	SHAFT	
130	3081056-0000		1	BRACKET	
135	3097792-0000		1	BRACKET	
140	3081057-0000		1	BRACKET	
150	2959007-0000		2	BRACKET	
160	2959016-0000		2	SPACER	
170	2504313-0000		2	SLEEVE	
175	2718828-0000		1	SPACER	
180	3097793-0000		1	SHAFT	
185	2718829-0000		2	WASHER	
190	3092050-0000		1	LINK ARM	
195	2718827-0000		1	BRACKET	
200	2877481-0000		1	SHAFT	
205	2829381-0000		1	SPACER	
210	90115-0134		1	ROD END, ID=10 MM, M10X1,25	
215	2995244-0000		1	PLATE	
220	2995243-0000		1	WASHER	
250	312101-0344		1	SCREW M6S M5X65 FZB	
300	312105-0466		2	SCREW, M6S ISO 4014 M8X75 A4 80	
302	312155-0366		2	SCREW DIN 7991 MF6S M6X12 A4 70	
305	312155-0376		2	SCREW DIN 7991 MF6S M6X35 A4 70	
310	315105-0146		6	WASHER PLAIN, 5,3X10X1 A4 BRB	
315	315105-0153		18	WASHER PLAIN, 6,4X12X1,5 A4 BRB	
320	315105-0165		4	FWAS080G0-0S, WASHER PLAIN	
330	312155-0368		6	SCREW DIN 7991 MF6S M6X16 A4 70	
340	312105-0465		1	SCREW, M6S ISO 4014 M8X70 A4 80	
350	312812-0318		1	HEXAGON NUT, NY-LOCK M8 A4 80	
360	312105-0368		2	SCREW, M6S ISO 4017 M6X16 A4 80	
365	312105-0370		4	SCREW, M6S ISO 4017 M6X20 A4 80	
370	312105-0384		3	SCREW, M6S ISO 4014 M6X70 A4 80	
373	312105-0386		3	SCREW, M6S ISO 4014 M6X80 A4 80	
385	312812-0314		1	HEXAGON NUT, NY-LOCK M5 A4 80	
390	312812-0316		8	HEXAGON NUT, NY-LOCK M6 A4 80	
395	312625-0316		2	HEXAGON THIN NUT, EN 24035 ML6M M6 A4	
410	321154-0221		6	FLANGE BUSHING, IGLIDUR W300 16X18X17	
420	321153-0136		2	FLANGE BUSHING, IGLIDUR G 10X12X6	
430	90347-0007		2	VIBRATION DAMPER	
435	90347-0034		1	VIBRATION DAMPER	
450	350002-0007		2	PUSH-IN L-FITTING QSL-F-G1/8-8	
460	90450-0808		2	SENSOR BRACKET, FOR CYL 25	
475	312607-0316		2	HEXAGON NUT, EN 24032 M6M M6 A480	
480	312105-0327		6	SCREW, M6S ISO 4017 M5X12 A4 80	
490	90601-7970		1	END PIECE, VL 50X30X1,5-2,5	
495	3092052-0000		1	GUIDE	
500	90141-0016		2	RETAINING RING FOR SHAFT DIN 471 10 SS	
510	90240-0257		2	BUSHING, IGLIDUR G 10X12X6	
550	90157-0021		1	LOCKING FLUID LOCTITE 270	
T40B0301	90600-3272		1	PROX. SENSOR, SMT-8M-PS-24V-K-5,0-OE	
T40B0302	90600-3272		1	PROX. SENSOR, SMT-8M-PS-24V-K-5,0-OE	
T40M0300	90603-4872		1	DOUBLE ACTING, MINI-ISO, CYL. 25-40	
T40R0300	90459-2777		1	FLOW CONTROL VALVE, GR-QS-8	
T40R0301	90459-2777		1	FLOW CONTROL VALVE, GR-QS-8	
T40W0800	315400-0004	M	3	TUBE PUN-H-8X1,25-BL	
T40W0801	315400-0004	M	3	TUBE PUN-H-8X1,25-BL	
T40W0802	315400-0004	MM	80	TUBE PUN-H-8X1,25-BL	
T40W0803	315400-0004	MM	175	TUBE PUN-H-8X1,25-BL	

Machine Type	Group Description	Used-In	Group Number	Page No

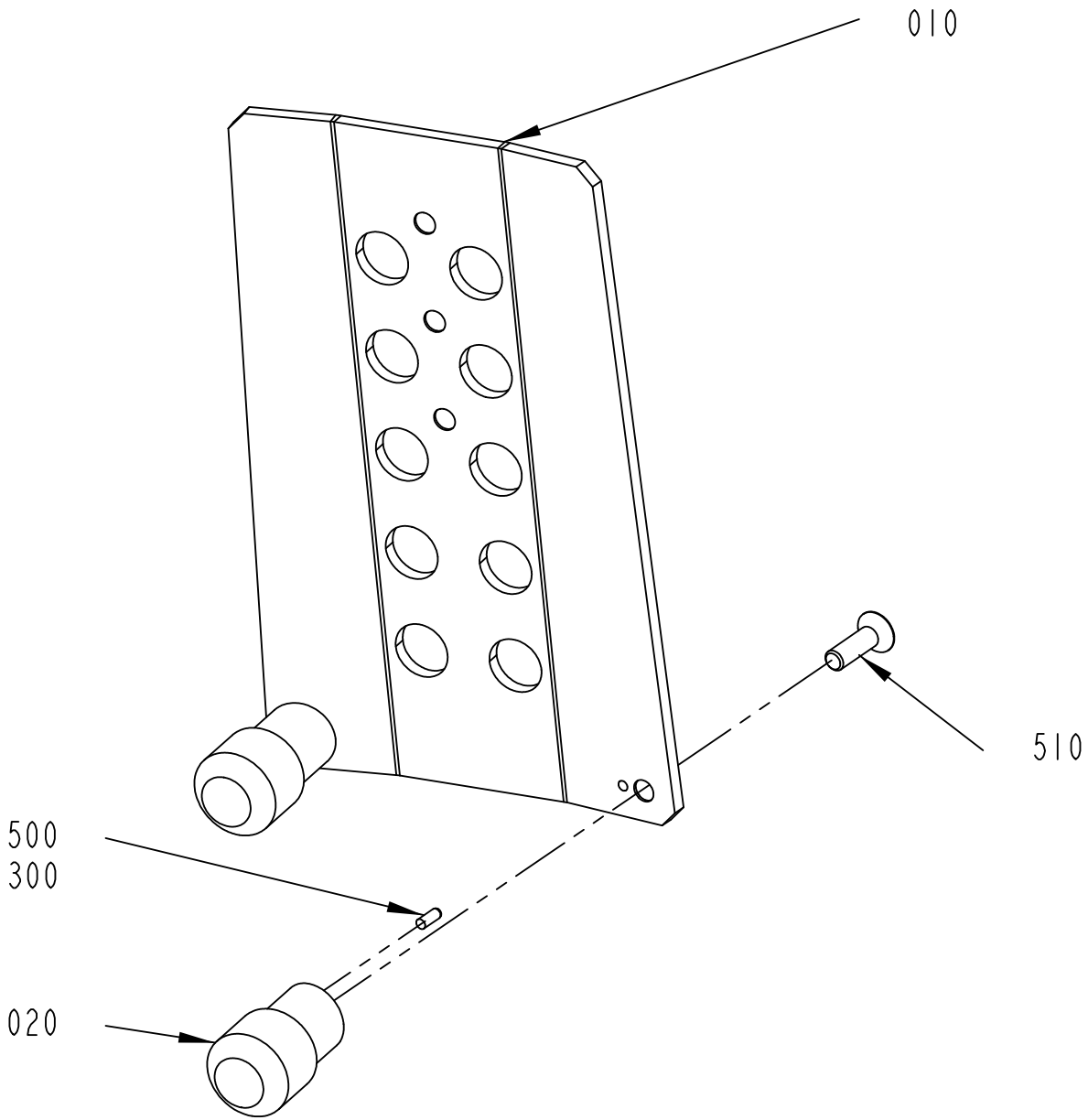

3136755-1
478585

ECM: 486188 - 20110315
Group number: 3136755-0100
Assembly Drawing: 3136755-1_1_AB

Pos	Part No	UN	Qty	Description	Page No
PACKW145-154 all combinations					
010	3132444-0000		1	PUSHER PLATE	
PACKW195-204 all combinations					
010	3132445-0000		1	PUSHER PLATE	
Common Parts					
020	3132447-0000		2	GUIDE PIN	
300	90600-1671		1	ADHESIVE LOCTITE GEL 454, TUBE 20 GRAM	
500	311103-0232		2	PARALLEL PIN ISO 2338 3M6X8 A1	
510	312155-0370		2	SCREW DIN 7991 MF6S M6X20 A4 70	

Pos	Part No	UN	Qty	Description	Page No

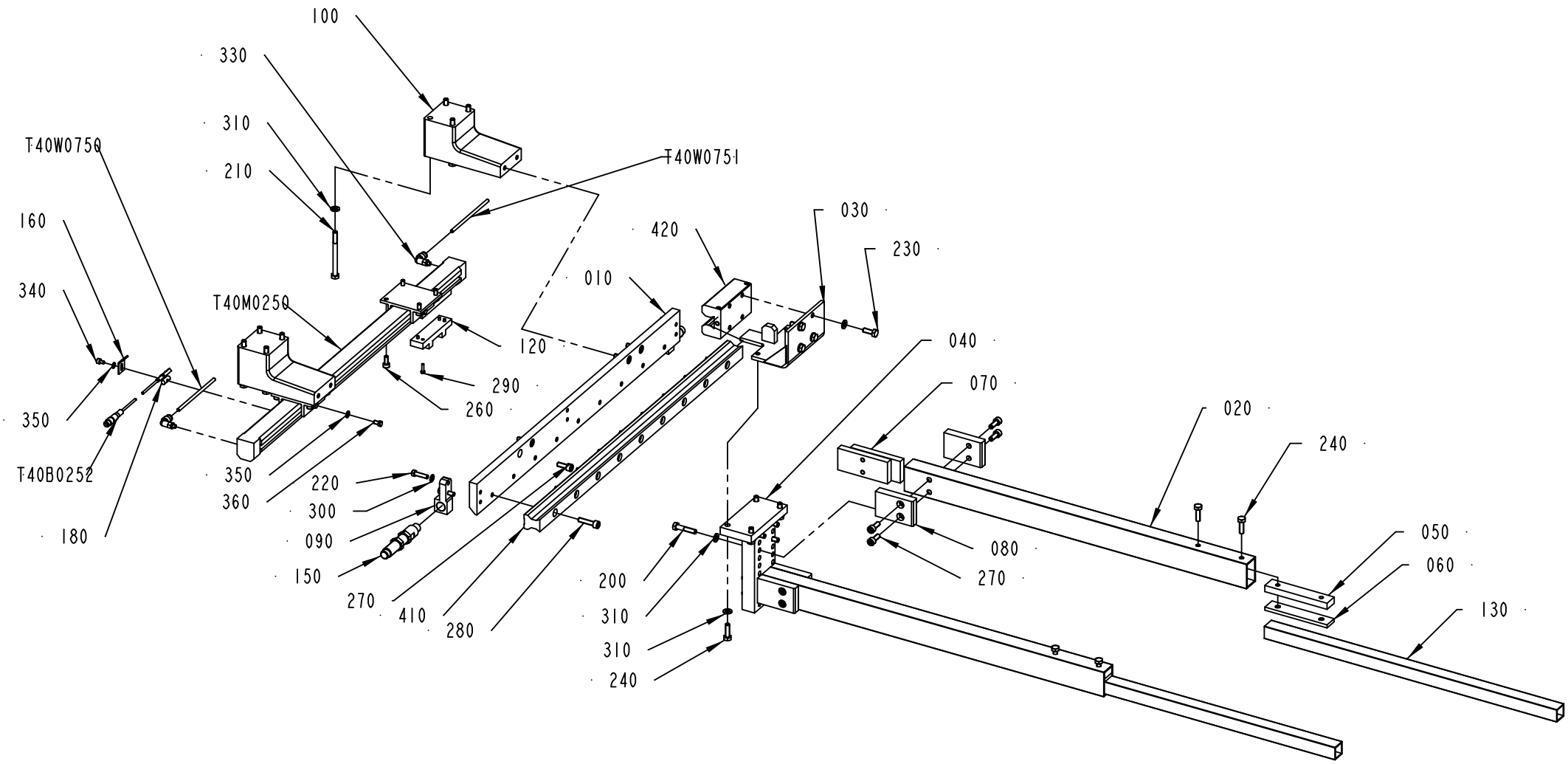

2718873-3
579668

ECM: 585731 - 20121116
Group number: 2718873-0300
Assembly Drawing: 2718873-3_1_AB

Pos	Part No	UN	Qty	Description	Page No
LINF U-FORM, RINF Z-FORM					
010	2718870-0000		1	BEAM	
LINF Z-FORM, RINF U-FORM					
010	2771206-0000		1	BEAM	
Common Parts					
020	2771164-0000		2	PROFILE	
030	2718871-0000		1	BRACKET	
040	2771163-0000		1	BRACKET	
050	2771166-0000		2	BRACKET	
060	2771167-0000		2	BRACKET	
070	2771168-0000		4	BRACKET	
080	2771169-0000		4	BRACKET	
090	2771170-0000		2	BRACKET	
100	3096192-0000		2	BRACKET	
120	2718862-0000		1	PLATE	
130	2771165-0000		2	PROFILE	
150	2787843-0000		2	SHOCK ABSORBER	
160	2802459-0000		1	PLATE	
180	2802463-0000		1	NUT	
200	312105-0374		8	SCREW, M6S ISO 4014 M6X30 A4 80	
210	312105-0384		8	SCREW, M6S ISO 4014 M6X70 A4 80	
220	312105-0331		4	SCREW, M6S ISO 4017 M5X20 A4 80	
230	312105-0368		4	SCREW, M6S ISO 4017 M6X16 A4 80	
240	312105-0370		8	SCREW, M6S ISO 4017 M6X20 A4 80	
260	312115-0327		8	SCREW ISO4762 M5X12 A4 80	
270	312115-0368		12	SCREW ISO4762 M6X16 A4 80	
280	312115-0372		9	SCREW ISO4762 M6X25 A4 80	
290	312125-0226		4	SLOTTED HEAD SCREW, ISO1207 M3X12 A4	
300	315105-0146		4	WASHER PLAIN, 5,3X10X1 A4 BRB	
310	315105-0153		24	WASHER PLAIN, 6,4X12X1,5 A4 BRB	
330	350002-0001		2	PUSH-IN L-FITTING QSL-F-M5-4	
340	312115-0285		1	SCREW ISO4762 M4X6 A4 80	
350	315105-0136		5	WASHER PLAIN, 4,3X9X0,8 A4 BRB	
360	312105-0287		4	SCREW, M6S ISO 4017 M4X8 A4 70	
410	90459-6758		1	GUIDE RAIL, R2045 26431	
420	90459-6761		1	CARRIAGE, R201121404	
T40B0252	90600-3273		1	PROX. SENSOR, SMT-8M-PS-24V-K-0,3-M8D	
T40M0250	90603-3565		1	CYLINDER, SHUTTLE 16-465	
T40W0750	315400-0016	M	2	TUBE PUN-H-4X0,75-BL	
T40W0751	315400-0016	M	2	TUBE PUN-H-4X0,75-BL	

Pos	Part No	UN	Qty	Description	Page No

Machine Type | Group Description | Used-In | Group Number | Page No

BOX PUSHER END STOP

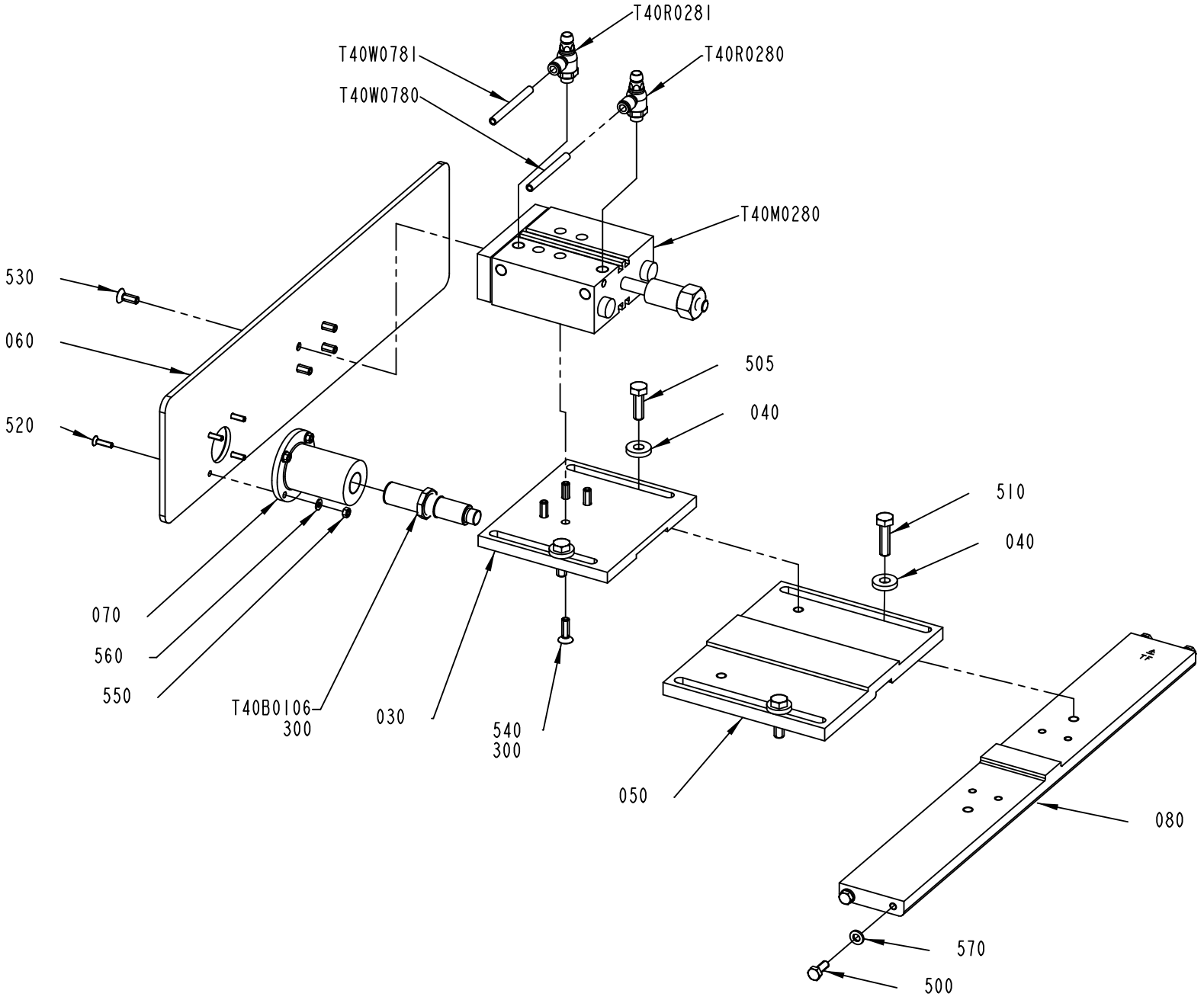

3241263-1
630884

ECM: 646212 - 20131125
Group number: 3241263-0100
Assembly Drawing: 3241263-1_1_AC

Pos	Part No	UN	Qty	Description	Page No
LINF U-FORM, RINF Z-FORM					
060	2995259-0000		1	PLATE	
LINF Z-FORM, RINF U-FORM					
060	2995260-0000		1	PLATE	
Common Parts					
030	2844952-0000		1	PLATE	
040	2864529-0000		4	WASHER	
050	3125473-0000		1	PLATE	
070	2995519-0000		1	BRACKET	
080	3101120-0000		1	PLATE	
300	90602-4847		1	THREAD LOCKING, LOCTITE 243 50 ML	
500	312105-0368		4	SCREW, M6S ISO 4017 M6X16 A4 80	
505	312105-0453		2	SCREW, M6S ISO 4017 M8X25 A4 80	
510	312105-0455		2	SCREW, M6S ISO 4017 M8X30 A4 80	
520	312155-0293		4	SCREW DIN 7991 MF6S M4X16 A4 70	
530	312155-0368		4	SCREW DIN 7991 MF6S M6X16 A4 70	
540	312155-0370		4	SCREW DIN 7991 MF6S M6X20 A4 70	
550	312607-0312		4	HEXAGON NUT, EN 24032 M6M M4 A480	
560	315106-0136		4	WASHER PLAIN, M4 ISO7089-4-200 HV A4	
570	315106-0153		4	WASHER PLAIN, M6 ISO7089-6-200 HV A4	
T40B0106	90600-0387		1	ULTRASONIC SENSOR, UM18-51111	
T40M0280	90604-4766		1	CYLINDER, WITH INT. GUIDING BORE 25	
T40R0280	90235-0846		1	THROTTLE CHECK VALVE G1/8", MANUAL, 6	
T40R0281	90235-0846		1	THROTTLE CHECK VALVE G1/8", MANUAL, 6	
T40W0780	315400-0001	M	2	6-4E PUN-H-6X1-BL	
T40W0781	315400-0001	M	2	6-4E PUN-H-6X1-BL	

Pos	Part No	UN	Qty	Description	Page No

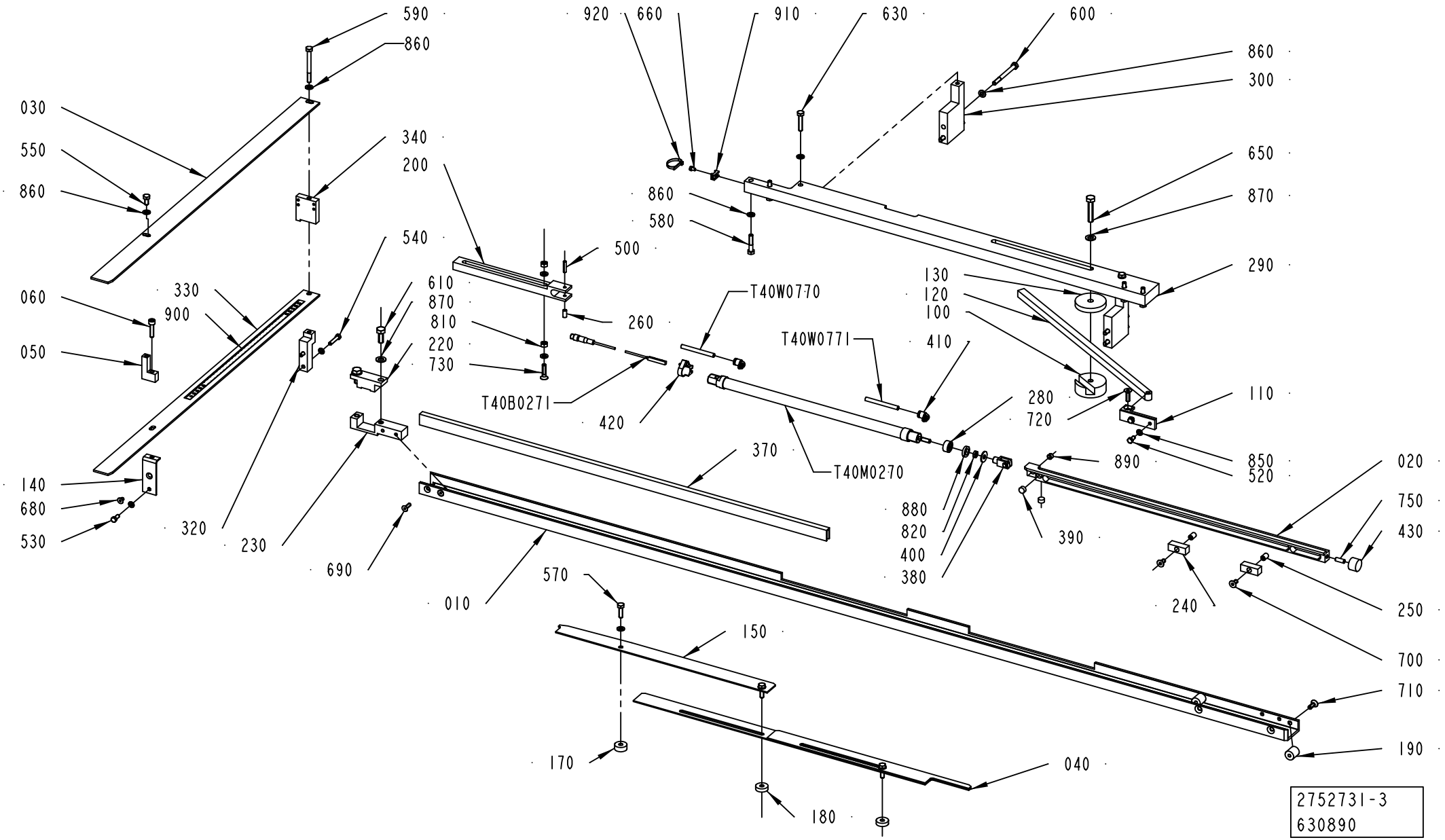

2752731-3
630890

ECM: 646214 - 20131125
Group number: 2752731-0300
Assembly Drawing: 2752731-3_1_AJ

This list covers pages from 2-78 to 2-81

Pos	Part No	UN	Qty	Description	Page No
LINF U-FORM PHE 131-279, RINF Z-FORM PHE131-279					
010	2970829-0000		1	GUIDE RAIL	
020	2970840-0000		1	STEERING RAIL	
040	2959051-0000		1	GUIDE RAIL	
LINF U-FORM PHE 70-130, RINF Z-FORM PHE 70-130					
010	2970829-0000		1	GUIDE RAIL	
020	2970840-0000		1	STEERING RAIL	
030	2970861-0000		1	GUIDE RAIL	
040	2959051-0000		1	GUIDE RAIL	
050	2970860-0000		1	BRACKET	
060	312115-0372		1	SCREW ISO4762 M6X25 A4 80	
LINF Z-FORM PHE131-279, RINF U-FORM PHE 131-279					
010	2970830-0000		1	GUIDE RAIL	
020	2970864-0000		1	STEERING RAIL	
040	2970816-0000		1	GUIDE RAIL	
LINF Z-FORM PHE 70-130, RINF U-FORM PHE 70-130					
010	2970830-0000		1	GUIDE RAIL	
020	2970864-0000		1	STEERING RAIL	
030	2970861-0000		1	GUIDE RAIL	
040	2970816-0000		1	GUIDE RAIL	
050	2970860-0000		1	BRACKET	
060	312115-0372		1	SCREW ISO4762 M6X25 A4 80	
Common Parts					
100	1124736-0000		1	WASHER	
110	2721835-0000		1	BRACKET	
120	2844994-0000		1	ARM	
130	2844996-0000		1	WASHER	
140	2844997-0000		1	BRACKET	
150	2959050-0000		1	GUIDE RAIL	
170	2970820-0000		1	SPACER	
180	2970821-0000		2	SPACER	
190	2970831-0000		2	ACER	
200	2970833-0000		1	BRACKET	
220	2970842-0000		1	BRACKET	
230	2970843-0000		1	BRACKET	
240	2970847-0000		2	STEERING	
250	2970848-0000		2	GUIDE PIN	
260	2970849-0000		1	BUSHING	
280	2970851-0000		1	SPACER	
290	2970852-0000		1	BRACKET	
300	2970853-0000		2	BRACKET	
320	2970856-0000		1	BRACKET	
330	2970857-0000		1	GUIDE RAIL	
340	2970859-0000		1	BRACKET	
370	2970867-0000		1	PROFILE	
380	2535552-0000		1	PISTON ROD COUPLING	
390	2970880-0000		2	PLASTIC PLUG	
400	90005-0060		1	WASHER PLAIN, RBS 6,4/M6)/18,H=1,5	
410	90457-0922		2	ELBOW PIPE JOINT, EXT.THREAD, D=6MM M5	
420	90458-2598		1	SENSOR BRACKET, FOR CYL 16	
430	90347-0011		1	VIBRATION DAMPER MEGI 781056	
500	311112-0256		1	SPRING PIN, ISO 8752 4X20 A2	
520	312105-0325		2	SCREW, M6S ISO 4017 M5X10 A4 80	
530	312105-0327		1	SCREW, M6S ISO 4017 M5X12 A4 80	
540	312105-0333		2	SCREW, M6S ISO 4017 M5X25 A4 80	
550	312105-0366		1	SCREW, M6S ISO 4017 M6X12 A4 80	
570	312105-0370		3	SCREW, M6S ISO 4017 M6X20 A4 80	
580	312105-0374		4	SCREW, M6S ISO 4014 M6X30 A4 80	
590	312105-0382		1	SCREW, M6S ISO 4014 M6X60 A4 80	
600	312105-0383		4	SCREW, M6S ISO 4014 M6X65 A4 80	
610	312105-0451		2	SCREW, M6S ISO 4017 M8X20 A4 80	
630	312109-0374		2	SCREW, M6S ISO 4017 M6X30 A4 80	
650	312109-0459		1	SCREW, M6S ISO 4017 M8X40 A4 80	
660	312125-0285		1	SLOTTED HEAD SCREW, ISO1207 M4X6 A4	
680	312155-0323		1	SCREW DIN 7991 MF6S M5X8 A4 70	
690	312155-0329		2	SCREW DIN 7991 MF6S M5X16 A4 70	
700	312155-0366		2	SCREW DIN 7991 MF6S M6X12 A4 70	
710	312155-0368		2	SCREW DIN 7991 MF6S M6X16 A4 70	
720	312155-0370		1	SCREW DIN 7991 MF6S M6X20 A4 70	
730	312155-0372		1	SCREW DIN 7991 MF6S M6X25 A4 70	
750	312318-0368		1	SET SCREW, CUP END ISO4029 M6X16 A4	
810	312605-0316		2	HEXAGON NUT, M6M M6 A280	
820	312625-0316		1	HEXAGON THIN NUT, EN 24035 ML6M M6 A4	
850	315105-0146		5	WASHER PLAIN, 5,3X10X1 A4 BRB	
860	315105-0153		17	WASHER PLAIN, 6,4X12X1,5 A4 BRB	
870	315105-0165		3	FWAS080G0-0S, WASHER PLAIN	
880	315229-0101		1	SQUARE RING, 10,4X17,4X3,7 MM 1/2" FDA	
890	321141-0060		1	BEARING BUSHING, 6X8X6 MM	
900	90458-2780		1	SCALE ,1000-0 MM ADHESIVE	
910	352113-0205		1	ANCHOR PLATES FOR STRIPS, TM2S8-C100	
920	352113-0101		1	CABLE TIE,BLACK 92X	
T40B0271	90600-3273		1	PROX. SENSOR, SMT-8M-PS-24V-K-0,3-M8D	
T40M0270	90603-5550		1	DOUBLE ACTING, MINI-ISO, CYL. 16-300	
T40W0770	315400-0001	M	3.2	6-4E PUN-H-6X1-BL	

Machine Type	Group Description	Used-In	Group Number	Page No

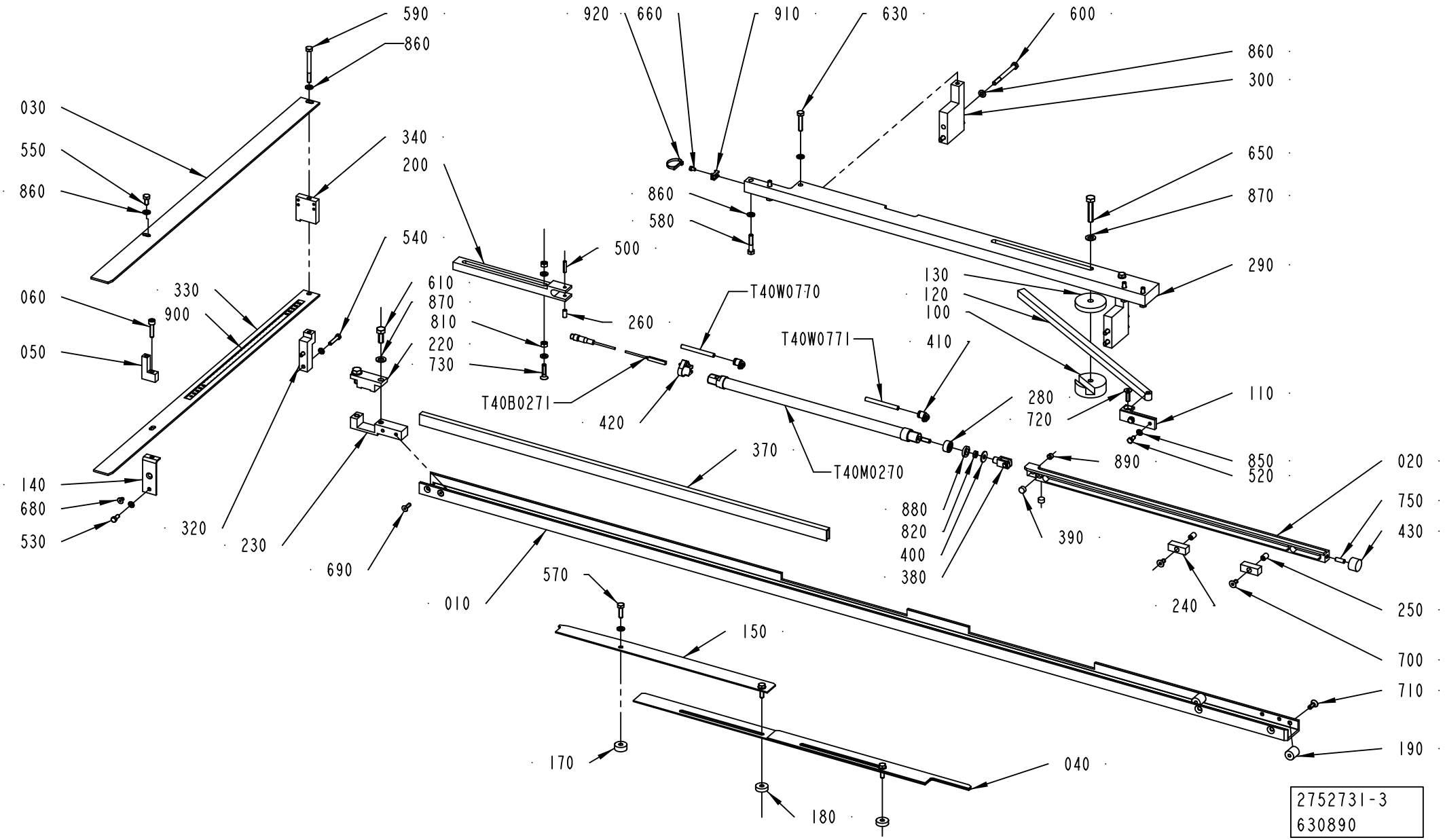
590
860
030
550
860
340
200
540
330
900
060
050
140
680
530
320
230
690
010
610
870
810
220
730
500
260
T40B0271
420
T40W0770
T40W0771
410
370
T40M0270
920
660
910
630
600
860
580
860
300
650
870
290
130
120
100
280
720
110
850
520
890
880
820
400
380
390
240
020
750
430
250
700
710
190
570
150
170
180
040
2752731-3
630890

Pos	Part No	UN	Qty	Description	Page No
Common Parts (Cont'd)					
T40W0771	315400-0001	M	3.2	6-4E PUN-H-6X1-BL	

Pos	Part No	UN	Qty	Description	Page No

PROTECTION PLATE

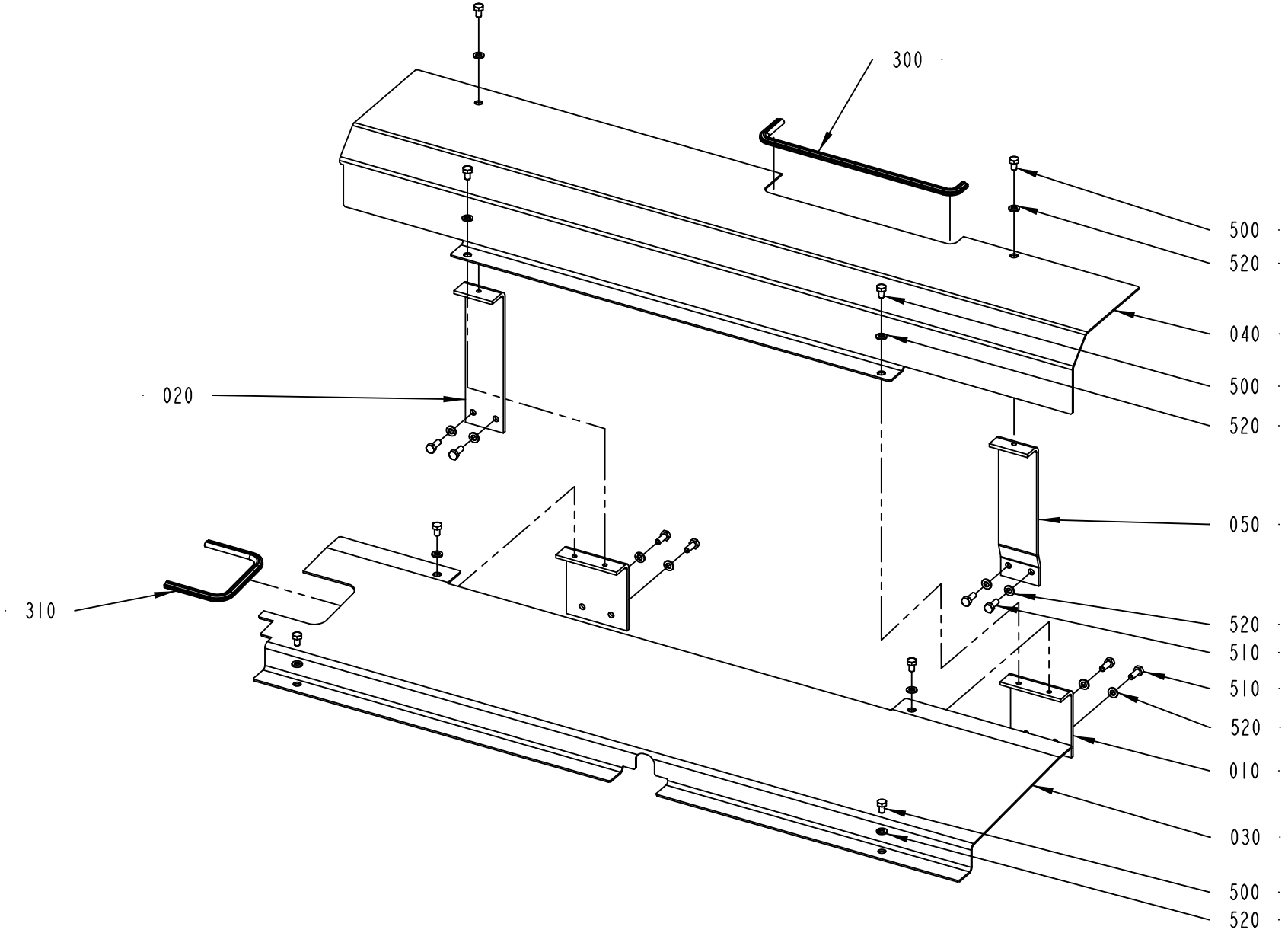

3241261-1
555186

ECM: 567303 - 20120710
Group number: 3241261-0100
Assembly Drawing: 3241261-1_1_AA

Pos	Part No	UN	Qty	Description	Page No
LINF U-FORM, RINF Z-FORM					
030	3092053-0000		1	PLATE	
040	3103253-0000		1	PLATE	
LINF Z-FORM, RINF U-FORM					
030	3097789-0000		1	PLATE	
040	3103254-0000		1	PLATE	
Common Parts					
010	2792358-0000		2	BRACKET	
020	2894985-0000		1	BRACKET	
050	3103255-0000		1	BRACKET	
300	90143-0060	MM	300	EDGE STRIP 9,5X6,3MM BLACK PVC	
310	90143-0060	MM	240	EDGE STRIP 9,5X6,3MM BLACK PVC	
500	312105-0364		8	SCREW, M6S ISO 4017 M6X10 A4 80	
510	312105-0368		8	SCREW, M6S ISO 4017 M6X16 A4 80	
520	315106-0153		16	WASHER PLAIN, M6 ISO7089-6-200 HV A4	

Pos	Part No	UN	Qty	Description	Page No

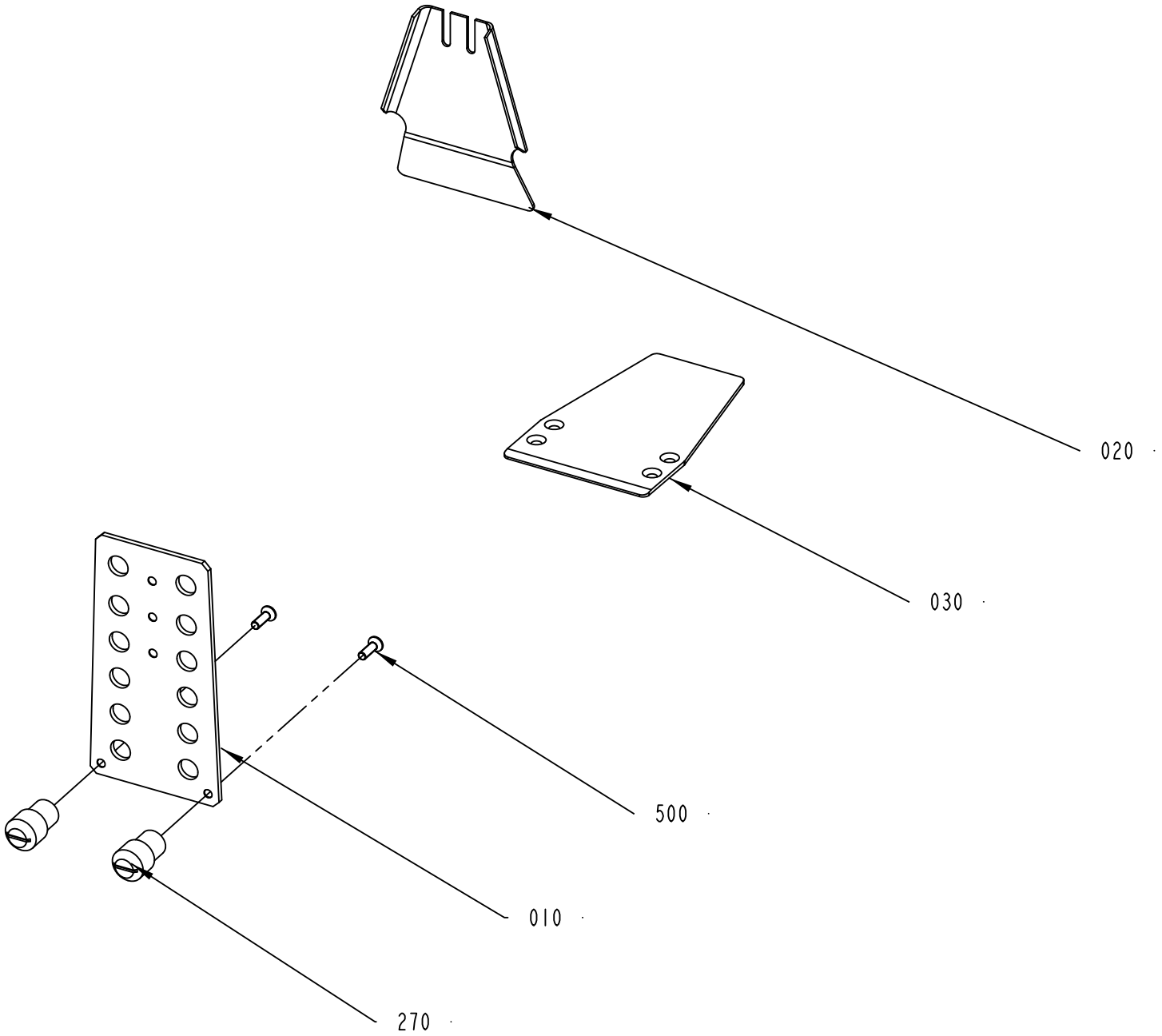

2844976-3
555186

ECM: 630424 - 20130919
Group number: 2844976-0300
Assembly Drawing: 2844976-3_1_AA

Pos	Part No	UN	Qty	Description	Page No
PACKW120-134 all combinations					
010	2939267-0000		1	PUSHER PLATE	
020	3149726-0000		1	DOLLY	
030	3215907-0001		1	FLAP	
PACKW135-144 all combinations					
010	2808746-0000		1	PUSHER PLATE	
020	2970819-0000		1	DOLLY	
030	3215907-0002		1	FLAP	
PACKW145-154 all combinations					
010	2752694-0000		1	PUSHER PLATE	
020	2970822-0000		1	DOLLY	
030	3215907-0003		1	FLAP	
PACKW155-164 all combinations					
010	2752695-0000		1	PUSHER PLATE	
020	2970823-0000		1	DOLLY	
030	3215907-0004		1	FLAP	
PACKW165-174 all combinations					
010	2752696-0000		1	PUSHER PLATE	
020	2970825-0000		1	DOLLY	
030	3215907-0005		1	FLAP	
PACKW175-184 all combinations					
010	2752697-0000		1	PUSHER PLATE	
020	2970827-0000		1	DOLLY	
030	3215907-0006		1	FLAP	
PACKW185-194 all combinations					
010	2752698-0000		1	PUSHER PLATE	
020	2970828-0000		1	DOLLY	
030	3215907-0007		1	FLAP	
PACKW195-204 all combinations					
010	2752704-0000		1	PUSHER PLATE	
020	2970832-0000		1	DOLLY	
030	3215907-0008		1	FLAP	
PACKW205-214 all combinations					
010	2752699-0000		1	PUSHER PLATE	
020	2970834-0000		1	DOLLY	
030	3215907-0009		1	FLAP	
PACKW215-224 all combinations					
010	2752700-0000		1	PUSHER PLATE	
020	2970835-0000		1	DOLLY	
030	3215907-0010		1	FLAP	
PACKW225-234 all combinations					
010	2752701-0000		1	PUSHER PLATE	
020	2970836-0000		1	DOLLY	
030	3215907-0011		1	FLAP	
PACKW235-244 all combinations					
010	2752702-0000		1	PUSHER PLATE	
020	2970837-0000		1	DOLLY	
030	3215907-0012		1	FLAP	
PACKW245-254 all combinations					
010	2752703-0000		1	PUSHER PLATE	
020	2970838-0000		1	DOLLY	
030	3215907-0013		1	FLAP	
PACKW255-264 all combinations					
010	2844977-0000		1	PUSHER PLATE	
020	2970839-0000		1	DOLLY	
030	3215907-0014		1	FLAP	
Common Parts					
270	2808748-0000		2	GUIDE PIN	
500	312155-0370		2	SCREW DIN 7991 MF6S M6X20 A4 70	

Machine Type | Group Description | Used-In | Group Number | Page No

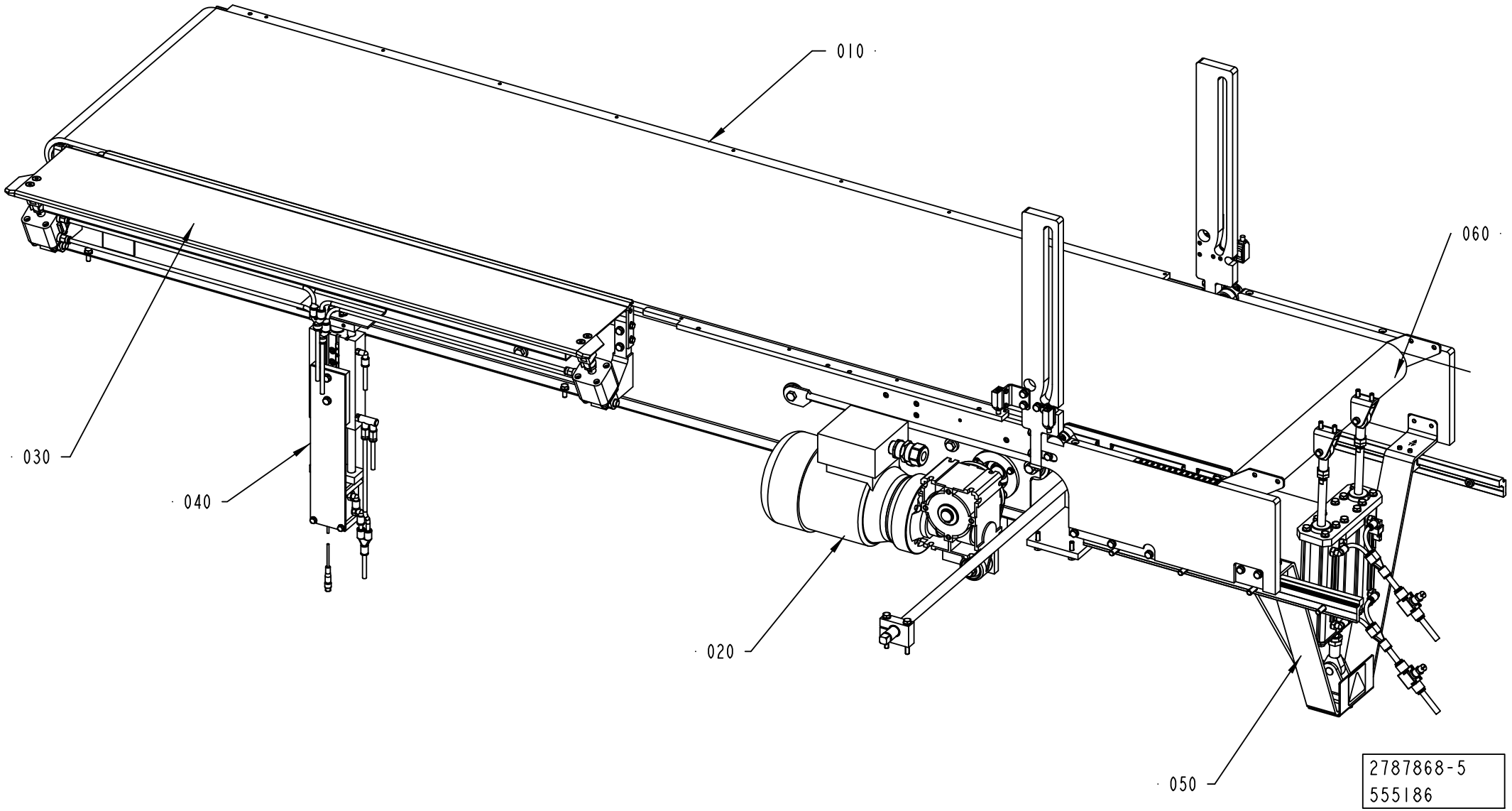
010
020
030
040
050
060
2787868-5
555186

ECM: 567240 - 20120710
Group number: 2787868-0500
Assembly Drawing: 2787868-5_1_AA

Pos	Part No	UN	Qty	Description	Page No
-					
010	3241262-0100		1	TRANSFER BODY	**2-89**
020	1124043-0600		1	TRANSFER BELT MOTOR	**2-99**
030	2718824-0400		1	GROUPING PLATE	**2-101**
040	2752706-0400		1	GUIDE RAIL	**2-103**
050	3241266-0100		1	TILTING UNIT	**2-105**
060	3241265-0100		1	BENDING ROLLER	**2-113**

Pos	Part No	UN	Qty	Description	Page No

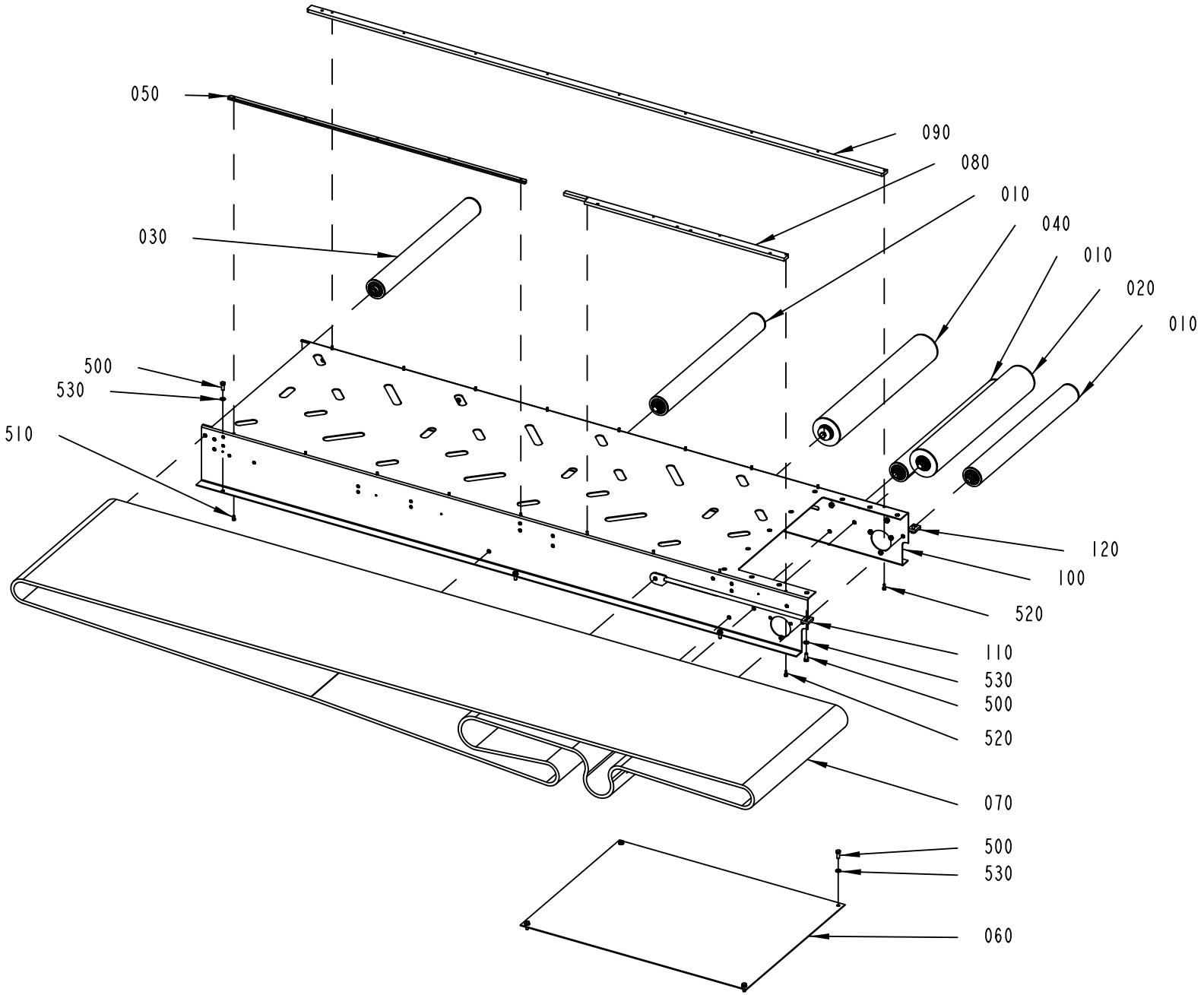

3241262-1
630890

ECM: 646215 - 20131125
Group number: 3241262-0100
Assembly Drawing: 3241262-1_1_AB

Pos	Part No	UN	Qty	Description	Page No
-					
010	1124044-0400		3	BENDING ROLLER	**2-91, 9-51**
020	2782792-0100		1	BENDING ROLLER	**2-93**
030	2787828-0100		1	BENDING ROLLER	**2-95**
040	2787856-0100		1	BENDING ROLLER	**2-97**
050	2720926-0000		1	SLIDE RAIL	
060	2792380-0000		1	PLATE	
070	3275931-0000		1	CHAIN	
080	2895009-0000		1	SLIDE RAIL	
090	2895010-0000		1	SLIDE RAIL	
100	2970878-0000		1	SHEET	
110	3104410-0000		1	ROD	
120	3104411-0000		1	ROD	
500	312105-0368		12	SCREW, M6S ISO 4017 M6X16 A4 80	
510	312115-0287		5	SCREW ISO4762 M4X8 A4 80	
520	312115-0289		13	SCREW ISO4762 M4X10 A4 80	
530	315106-0153		12	WASHER PLAIN, M6 ISO7089-6-200 HV A4	

Pos	Part No	UN	Qty	Description	Page No

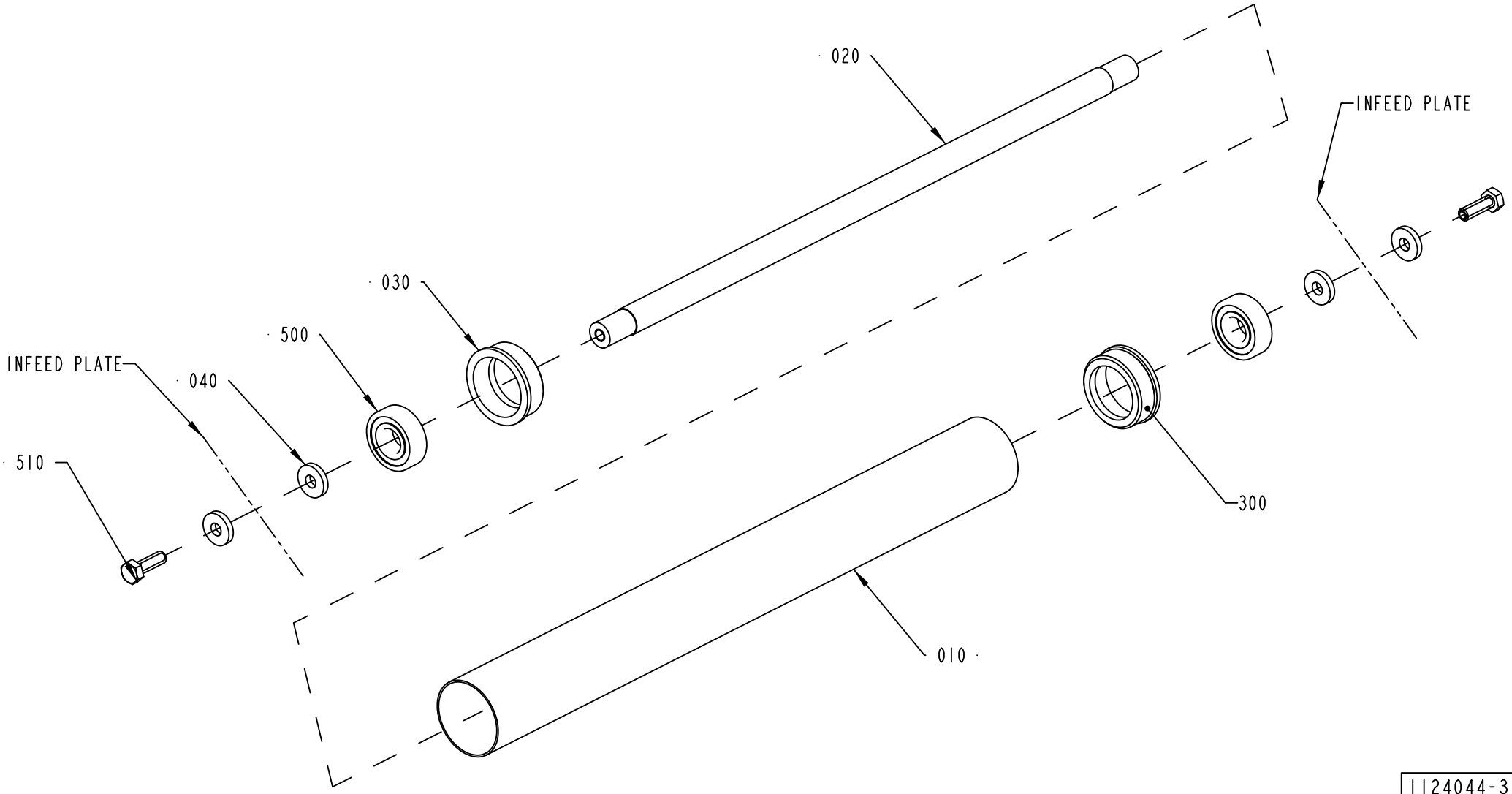

1124044-3
555186

ECM: 567241 - 20120710
Group number: 1124044-0400
Assembly Drawing: 1124044-3_1_AD

Pos	Part No	UN	Qty	Description	Page No
-					
010	1502535-0000		1	ROLLER	
020	1502560-0000		1	SHAFT	
030	1287041-0000		2	BUSHING	
040	548599-0000		4	WASHER	
300	90153-0047		1	ADHESIVE, MULTI-BOND 330; AKTIVATOR 738	
500	344226-0103		2	BALL BEARING 17/40X12	
510	312105-0453		2	SCREW, M6S ISO 4017 M8X25 A4 80	

Pos	Part No	UN	Qty	Description	Page No

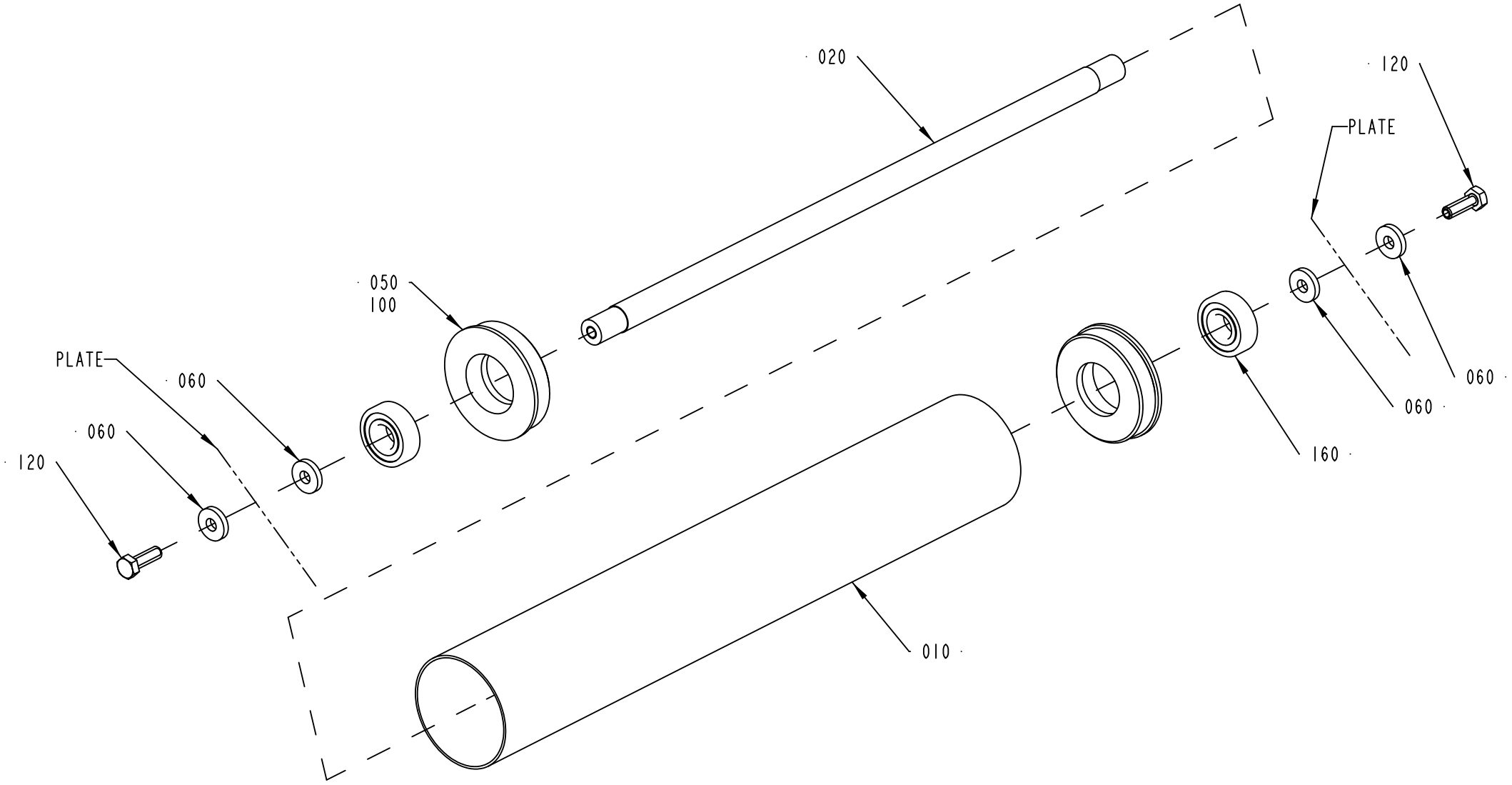

2782792-1
555186

ECM: 567242 - 20120710
Group number: 2782792-0100
Assembly Drawing: 2782792-1_1_AC

Pos	Part No	UN	Qty	Description	Page No
-					
010	2782793-0000		1	ROLL	
020	1502560-0000		1	SHAFT	
050	2787827-0000		2	BUSHING	
060	548599-0000		4	WASHER	
100	90153-0047		0.001	ADHESIVE, MULTI-BOND 330; AKTIVATOR 738	
120	312105-0453		2	SCREW, M6S ISO 4017 M8X25 A4 80	
160	344226-0103		2	BALL BEARING 17/40X12	

Pos	Part No	UN	Qty	Description	Page No

BENDING ROLLER

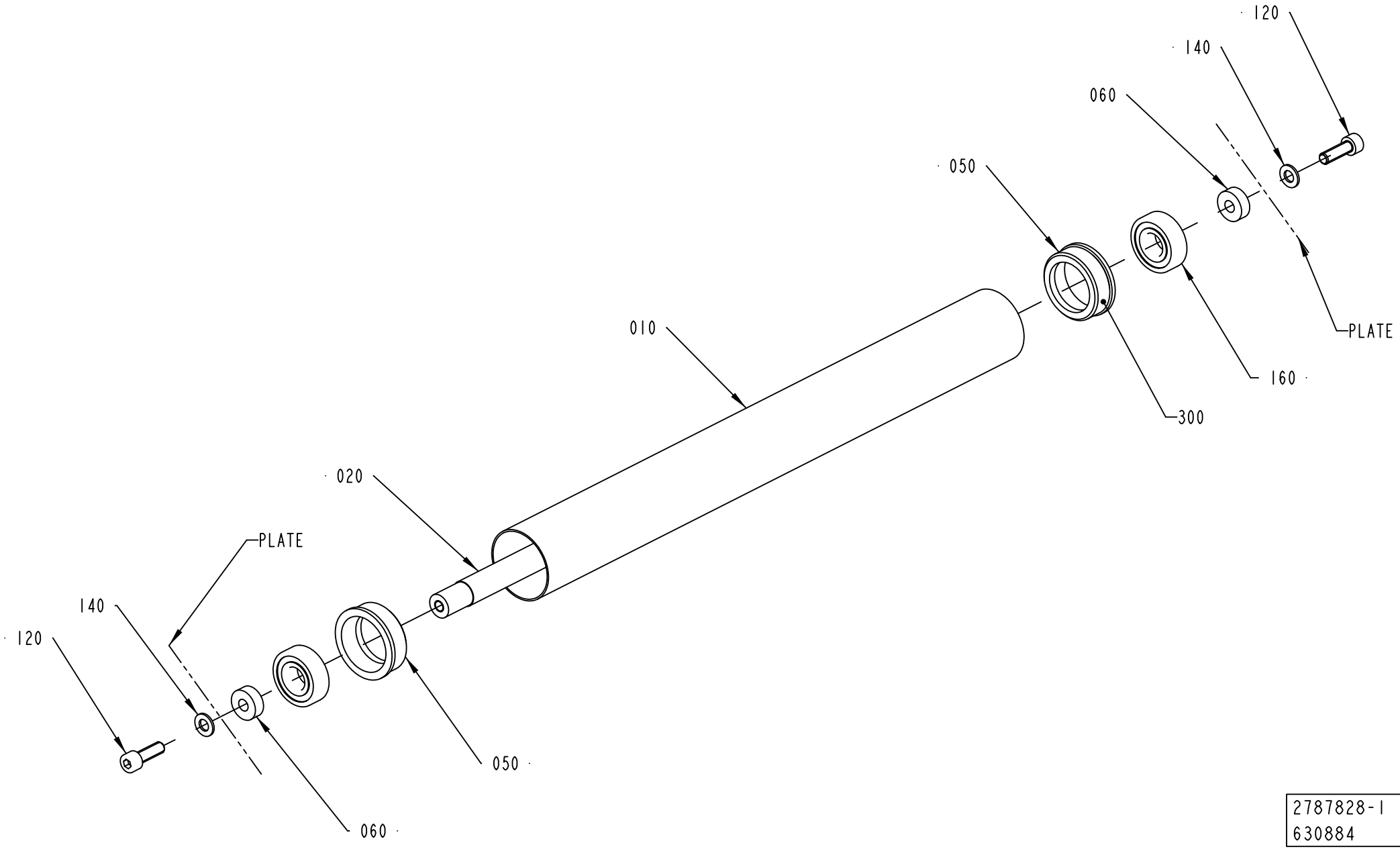

2787828-1
630884

ECM: 646216 - 20131125
Group number: 2787828-0100
Assembly Drawing: 2787828-1_1_AD

Pos	Part No	UN	Qty	Description	Page No
-					
010	2787829-0000		1	ROLL	
020	2787830-0000		1	SHAFT	
050	1287041-0000		2	BUSHING	
060	2787832-0000		2	WASHER	
120	312115-0453		2	SCREW ISO4762 M8X25 A4 80	
140	315105-0165		2	FWAS080G0-0S, WASHER PLAIN	
160	344226-0103		2	BALL BEARING 17/40X12	
300	90153-0047		1	ADHESIVE, MULTI-BOND 330; AKTIVATOR 738	

Pos	Part No	UN	Qty	Description	Page No

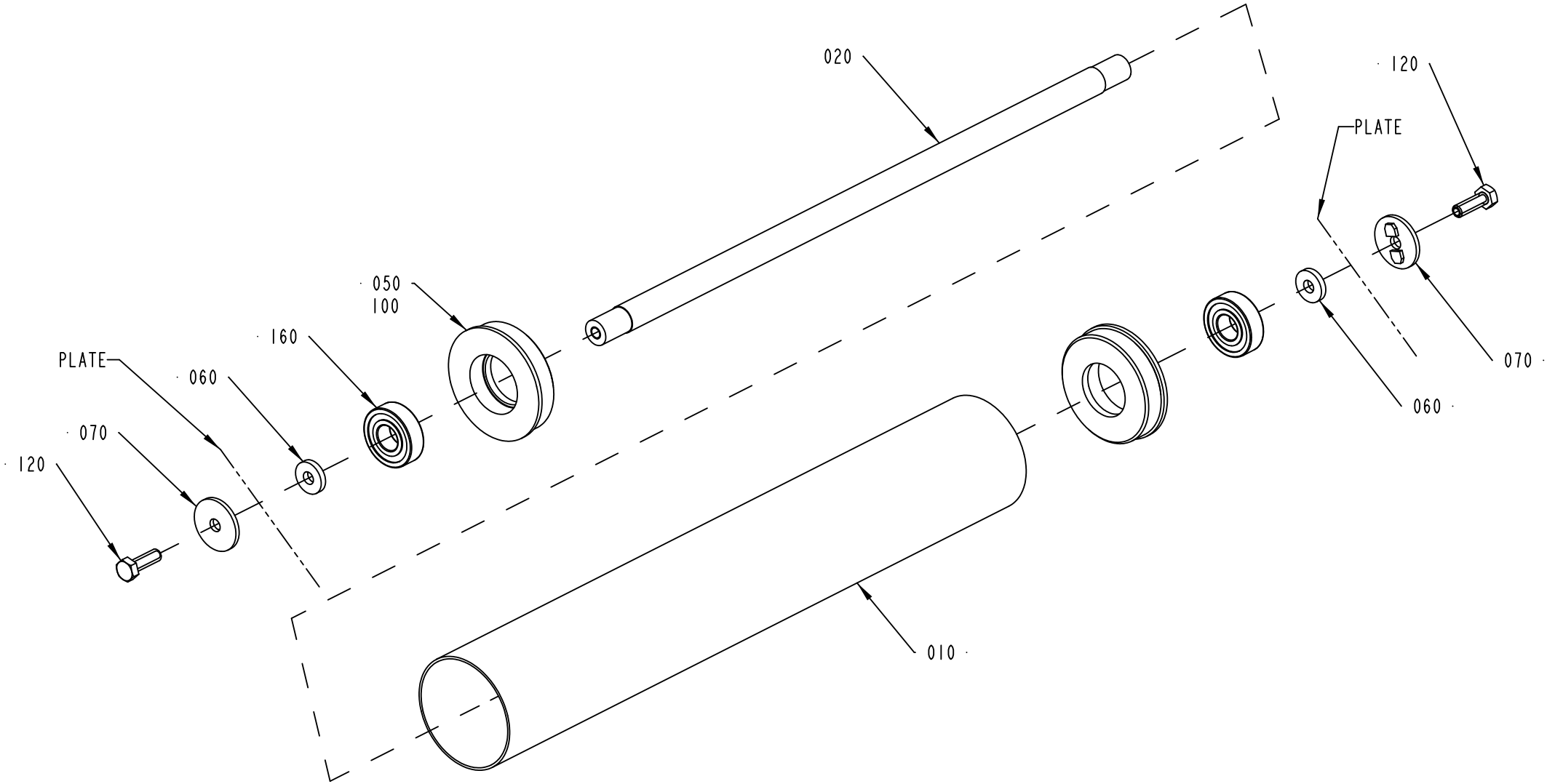

2787856-1
555186

ECM: 567244 - 20120710
Group number: 2787856-0100
Assembly Drawing: 2787856-1_1_AC

Pos	Part No	UN	Qty	Description	Page No
-					
010	2782793-0000		1	ROLL	
020	1502560-0000		1	SHAFT	
050	2787827-0000		2	BUSHING	
060	548599-0000		4	WASHER	
070	2787859-0000		2	WASHER	
100	90153-0047		0.001	ADHESIVE, MULTI-BOND 330; AKTIVATOR 738	
120	312105-0453		2	SCREW, M6S ISO 4017 M8X25 A4 80	
160	344226-0103		2	BALL BEARING 17/40X12	

Pos	Part No	UN	Qty	Description	Page No

TRANSFER BELT MOTOR

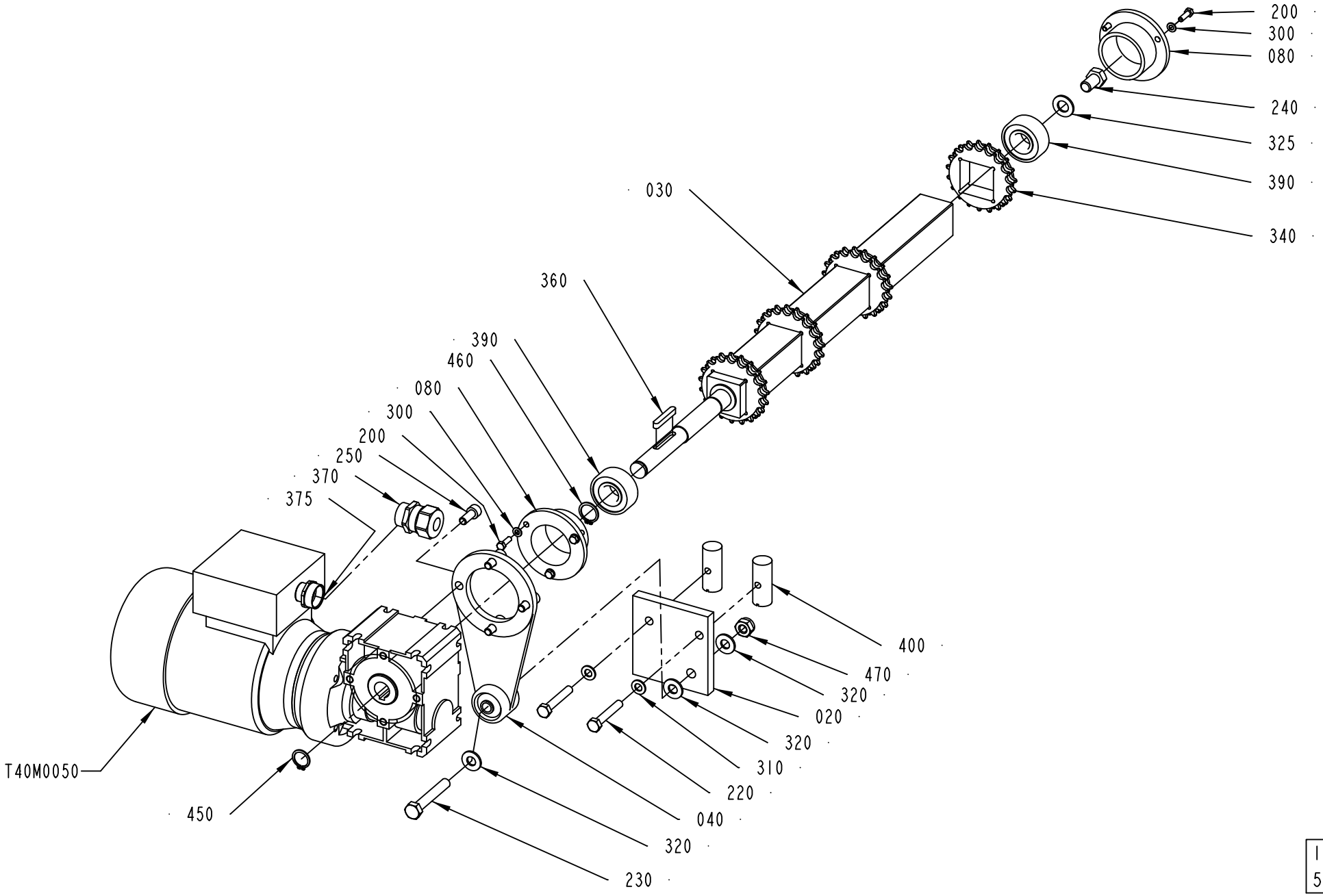

1124043-6
555186

ECM: 599053 - 20130314
Group number: 1124043-0600
Assembly Drawing: 1124043-6_1_AE

Pos	Part No	UN	Qty	Description	Page No
-					
020	2894978-0000		1	MOTOR PLATE	
030	2894977-0000		1	SHAFT	
040	2877543-0000		1	LEVER BAR	
080	1502474-0000		2	BEARING HOUSING	
200	312105-0329		6	SCREW, M6S ISO 4017 M5X16 A4 80	
220	312105-0461		2	SCREW, M6S ISO 4014 M8X50 A4 80	
230	312105-0504		1	SCREW, M6S ISO 4014 M10X65 A4 80	
240	312105-0532		1	SCREW, M6S ISO 4017 M12X20 A4 80	
250	312115-0451		4	SCREW ISO4762 M8X20 A4 80	
300	315105-0146		6	WASHER PLAIN, 5,3X10X1 A4 BRB	
310	315105-0165		2	FWAS080G0-0S, WASHER PLAIN	
320	315105-0173		3	WASHER PLAIN, 10,5X22X2 A4 BRB	
325	315105-0178		1	WASHER PLAIN, 13X24X2,5 A4 BRB	
340	2750061-0000		4	GEAR WHEEL	
360	315705-0239		1	PARALLEL KEY W. ROUND ENDS, 6X6X40 MM	
370	90458-0440		1	GLAND, EXTENDED WITH INSERT, M25X1,5	
375	90459-2323		1	REDUCER, M25/M20	
390	90603-4534		2	SPHERICAL BALL BEARING 20/47X18	
400	486268-0000		2	NUT	
450	315751-0115		1	RETAINING RING FOR SHAFT DIN 471 18 SS	
460	315751-0116		1	RETAINING RING FOR SHAFT DIN 471 20 SS	
470	312812-0320		1	HEXAGON NUT, NY-LOCK M10 A4 80	
T40M0050	90603-3620		1	GEARS, WORM MOTOR SK 1SI40-IEC 71-71L/4	

Pos	Part No	UN	Qty	Description	Page No

Machine Type	Group Description	Used-In	Group Number	Page No

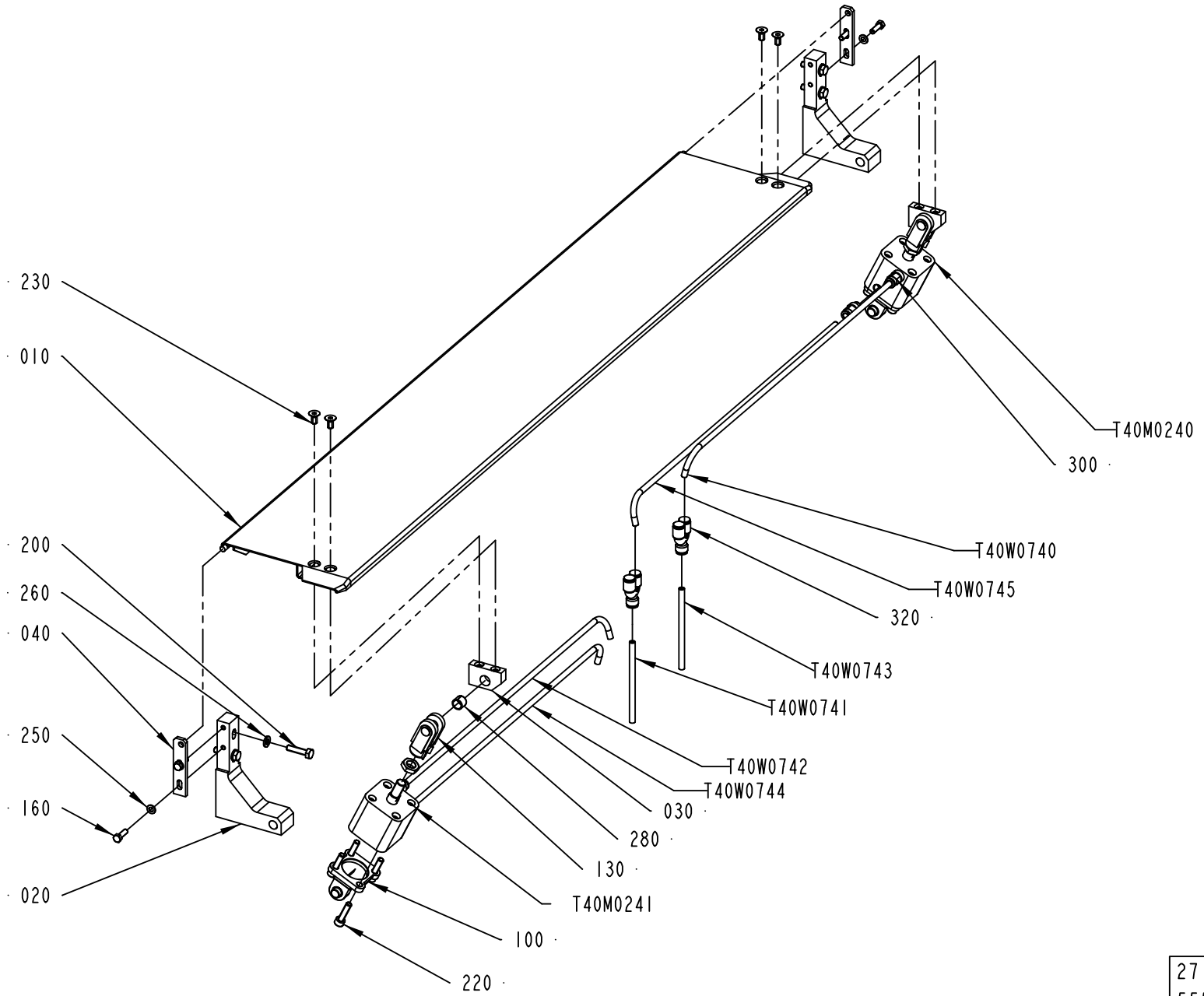

2718824-4
555186

ECM: 567247 - 20120710
Group number: 2718824-0400
Assembly Drawing: 2718824-4_1_AA

Pos	Part No	UN	Qty	Description	Page No
-					
010	2959035-0000		1	PLATE	
020	2718832-0000		2	BRACKET	
030	2718833-0000		2	BRACKET	
040	2718834-0000		2	HOLDER	
100	90459-0399		2	BRACKET, REAR, EYE WITH AXLE 32	
130	90459-2881		2	ROD CLEVIS SG-M10X1,25	
160	312105-0329		4	SCREW, M6S ISO 4017 M5X16 A4 80	
200	312105-0372		4	SCREW, M6S ISO 4017 M6X25 A4 80	
220	312115-0372		8	SCREW ISO4762 M6X25 A4 80	
230	312155-0366		4	SCREW DIN 7991 MF6S M6X12 A4 70	
250	315105-0146		4	WASHER PLAIN, 5,3X10X1 A4 BRB	
260	315105-0153		4	WASHER PLAIN, 6,4X12X1,5 A4 BRB	
280	321141-0140		2	BEARING BUSHING, 10X12X10 MM	
300	350001-0006		4	PUSH-IN FITTING QS-F-G1/8-6	
320	90055-0257		2	PUSH-IN Y-CONNECTOR QSY-6	
T40M0240	90603-7533		1	DOUBLE ACTING, SHORT STROKE. CYL 32-5	
T40M0241	90603-7533		1	DOUBLE ACTING, SHORT STROKE. CYL 32-5	
T40W0740	315400-0001	MM	440	6-4E PUN-H-6X1-BL	
T40W0741	315400-0001	M	3	6-4E PUN-H-6X1-BL	
T40W0742	315400-0001	MM	440	6-4E PUN-H-6X1-BL	
T40W0743	315400-0001	M	3	6-4E PUN-H-6X1-BL	
T40W0744	315400-0001	MM	440	6-4E PUN-H-6X1-BL	
T40W0745	315400-0001	MM	440	6-4E PUN-H-6X1-BL	

Pos	Part No	UN	Qty	Description	Page No

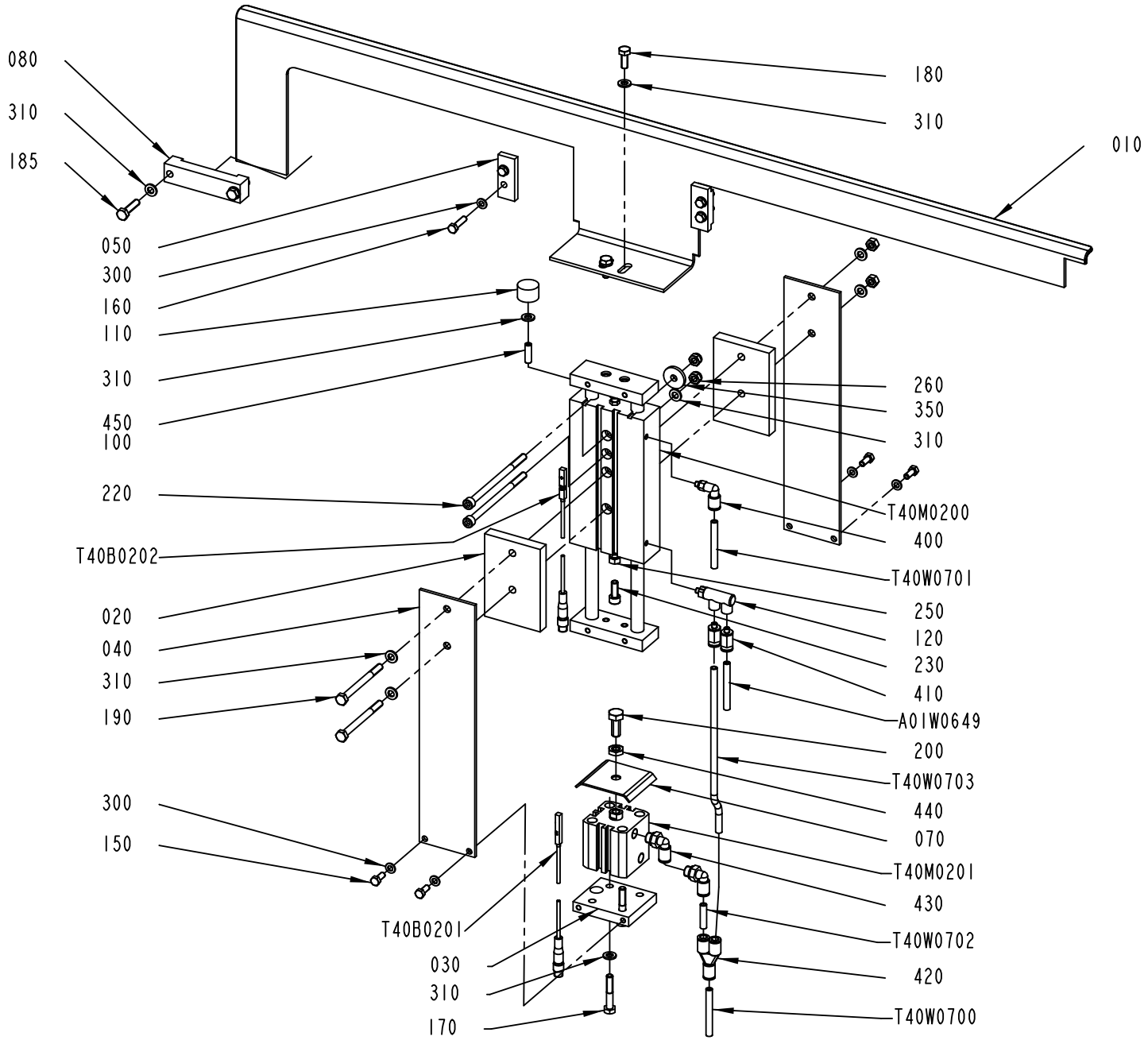

2752706-4
627532

ECM: 630419 - 20130919
Group number: 2752706-0400
Assembly Drawing: 2752706-4_1_AF

Pos	Part No	UN	Qty	Description	Page No
LINF U-FORM, RINF Z-FORM					
010	2959033-0000		1	GUIDE RAIL	
LINF Z-FORM, RINF U-FORM					
010	2959034-0000		1	GUIDE RAIL	
Common Parts					
020	3180710-0000		2	PLATE	
030	3226045-0000		1	BRACKET	
040	3180552-0000		2	PLATE	
050	2503974-0000		2	SUPPORT	
070	3180554-0000		1	PLATE	
080	2920751-0000		1	STEERING GUIDE	
100	90157-0021	KG	0.001	LOCKING FLUID LOCTITE 270	
110	90347-0011		1	VIBRATION DAMPER MEGI 781056	
120	90600-2713		1	NON-RETURN VALVE, HGL-M5-B	
150	312105-0327		4	SCREW, M6S ISO 4017 M5X12 A4 80	
160	312105-0331		4	SCREW, M6S ISO 4017 M5X20 A4 80	
170	312105-0376		2	SCREW, M6S ISO 4014 M6X35 A4 80	
180	312105-0368		2	SCREW, M6S ISO 4017 M6X16 A4 80	
185	312105-0372		2	SCREW, M6S ISO 4017 M6X25 A4 80	
190	312105-0384		2	SCREW, M6S ISO 4014 M6X70 A4 80	
200	312105-0451		1	SCREW, M6S ISO 4017 M8X20 A4 80	
220	312111-0390		2	SCREW HEX.SOCK.HD.MC6S 6X100 88 FZB	
230	312115-0368		1	SCREW ISO4762 M6X16 A4 80	
250	312605-0316		3	HEXAGON NUT, M6M M6 A280	
260	312812-0316		2	HEXAGON NUT, NY-LOCK M6 A4 80	
300	315105-0146		8	WASHER PLAIN, 5,3X10X1 A4 BRB	
310	315105-0153		12	WASHER PLAIN, 6,4X12X1,5 A4 BRB	
350	315125-0153		1	WASHER HIGH, TBRSB 6,4X22X4 A4	
400	350002-0002		1	PUSH-IN L-FITTING QSL-F-M5-6	
410	350001-0002		2	PUSH-IN FITTING QS-F-M5-6	
420	350015-0001		1	PUSH-IN Y-CONNECTOR QSY-F-6	
430	350002-0006		2	PUSH-IN L-FITTING QSL-F-G1/8-6	
440	312625-0318		1	HEXAGON THIN NUT, EN 24035 ML6M M8 A4	
450	312318-0370		1	SET SCREW, CUP END ISO4029 M6X20 A4	
A01W0649	315400-0001	M	1	6-4E PUN-H-6X1-BL	
T40B0201	90600-3273		1	PROX. SENSOR, SMT-8M-PS-24V-K-0,3-M8D	
T40B0202	90600-3273		1	PROX. SENSOR, SMT-8M-PS-24V-K-0,3-M8D	
T40M0200	90604-4765		1	CYLINDER SPEC. WITH INT. GUIDING BORE 25	
T40M0201	90604-8604		1	DOUBLE ACTING, COMPACT, 32-5	
T40W0700	315400-0001	M	3	6-4E PUN-H-6X1-BL	
T40W0701	315400-0001	M	3	6-4E PUN-H-6X1-BL	
T40W0702	315400-0001	MM	100	6-4E PUN-H-6X1-BL	
T40W0703	315400-0001	MM	100	6-4E PUN-H-6X1-BL	

Machine Type	Group Description	Used-In	Group Number	Page No

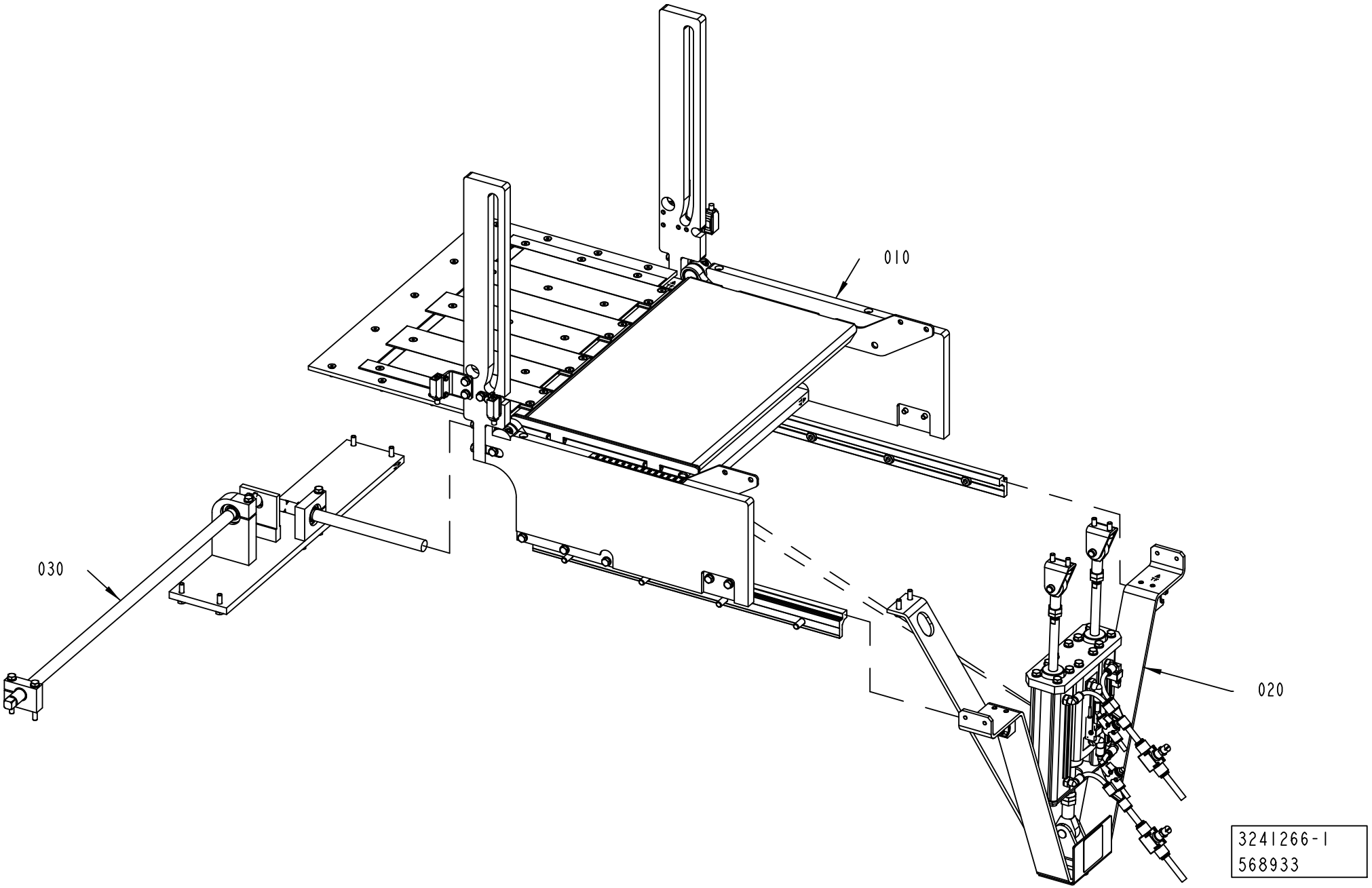
010
020
030
3241266-1
568933

ECM: 577161 - 20120924
Group number: 3241266-0100
Assembly Drawing: 3241266-1_1_AB

Pos	Part No	UN	Qty	Description	Page No
-					
010	3241268-0100		1	TILTER	**2-107**
020	3241269-0100		1	PNEUMATIC UNIT	**2-109**
030	3241267-0100		1	POSITIONING SCREW	**2-111**

Pos	Part No	UN	Qty	Description	Page No

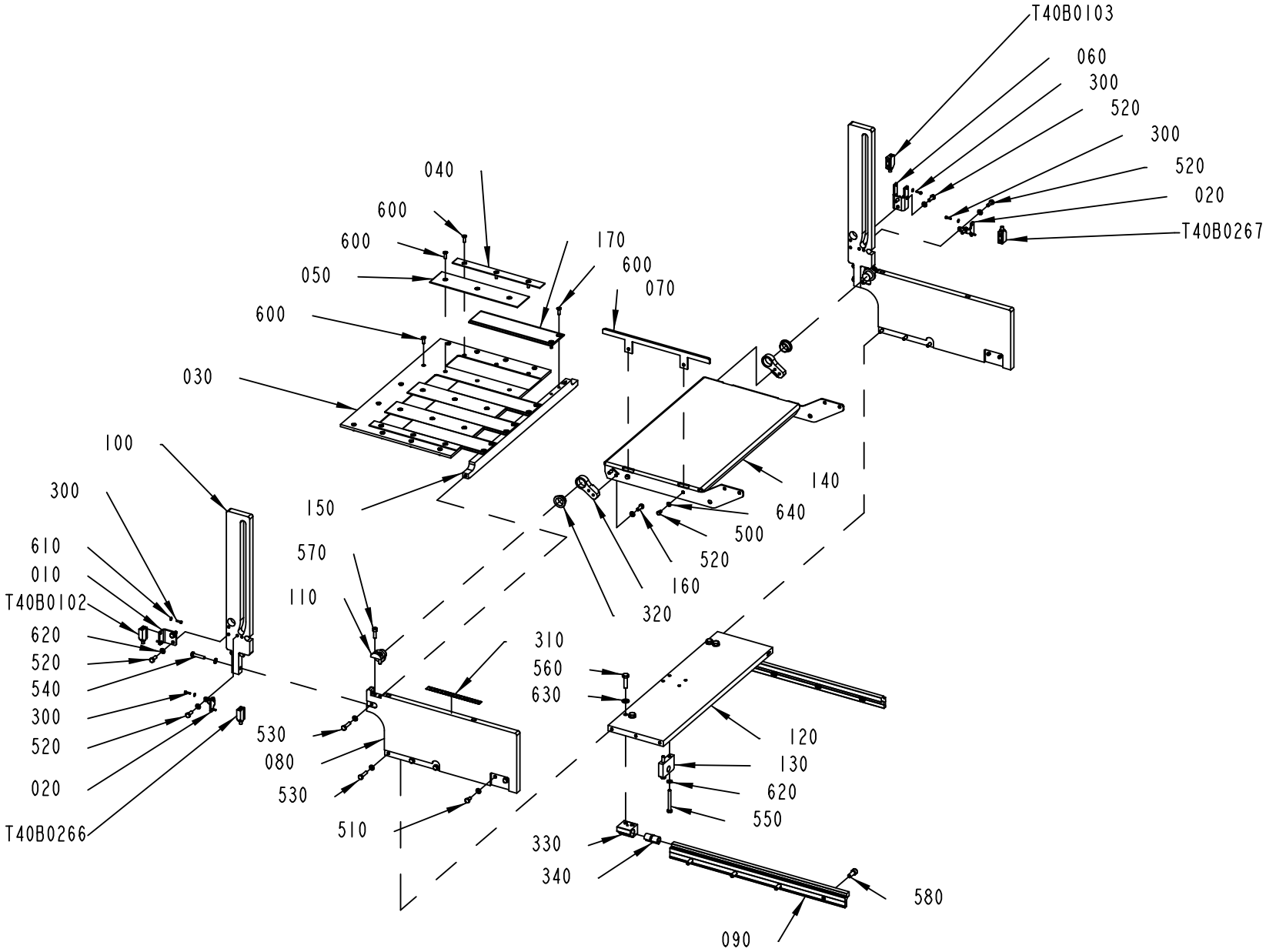

3241268-1
630890

ECM: 646217 - 20131125
Group number: 3241268-0100
Assembly Drawing: 3241268-1_1_AB

Pos	Part No	UN	Qty	Description	Page No
-					
010	2771216-0000		1	BRACKET	
020	3213487-0000		2	PHOTOCELL BRACKET	
030	2844933-0000		1	PLATE	
040	2844935-0000		2	SLIDE SHEET	
050	2844936-0000		3	SLIDE SHEET	
060	2877486-0000		1	BRACKET	
070	2959039-0000		1	GUIDE	
080	3093547-0000		2	SIDE PLATE	
090	3095152-0000		2	RAIL	
100	3213484-0000		2	CURVE RAIL	
110	3095156-0000		2	BEARING BOLT	
120	3095160-0000		1	BOTTOM PLATE	
130	3095162-0000		1	NUT	
140	3095167-0000		1	PLATE	
150	3095168-0000		1	CROSS BAR	
160	3095169-0000		2	PIVOT BRACKET	
170	3103241-0000		4	GUIDE PLATE	
300	312125-0226		8	SLOTTED HEAD SCREW, ISO1207 M3X12 A4	
310	90458-2780		1	SCALE ,1000-0 MM ADHESIVE	
320	90459-0679		2	FLANGE BUSHING, IGLIDUR W300 20X23X11,5	
330	90602-9074		2	BEARING HOUSING, WM-01-16	
340	90602-9075		2	BUSHING INSERT, J200QM-01-16	
500	312105-0323		2	FSCR05080-10, SCREW, M6S	
510	312105-0366		4	SCREW, M6S ISO 4017 M6X12 A4 80	
520	312105-0368		12	SCREW, M6S ISO 4017 M6X16 A4 80	
530	312105-0372		8	SCREW, M6S ISO 4017 M6X25 A4 80	
540	312105-0374		4	SCREW, M6S ISO 4014 M6X30 A4 80	
550	312105-0381		2	SCREW, M6S ISO 4014 M6X55 A4 80	
560	312105-0455		4	SCREW, M6S ISO 4017 M8X30 A4 80	
570	312115-0370		4	SCREW ISO4762 M6X20 A4 80	
580	312115-0451		8	SCREW ISO4762 M8X20 A4 80	
600	312155-0329		34	SCREW DIN 7991 MF6S M5X16 A4 70	
610	315106-0124		8	WASHER PLAIN, M3 ISO7089-3-200 HV A4	
620	315106-0153		30	WASHER PLAIN, M6 ISO7089-6-200 HV A4	
630	315106-0165		4	WASHER PLAIN, M8 ISO7089-8-200 HV A4	
640	315106-0146		2	WASHER PLAIN, M5 ISO7089-5-200 HV A4	
T40B0102	90459-5531		1	PHOTOCELL E3Z-T86A-D RECIEVER	
T40B0103	90459-5530		1	PHOTOCELL E3Z-T86A-L SENDER	
T40B0266	90459-5531		1	PHOTOCELL E3Z-T86A-D RECIEVER	
T40B0267	90459-5530		1	PHOTOCELL E3Z-T86A-L SENDER	

Pos	Part No	UN	Qty	Description	Page No

Machine Type	Group Description	Used-In	Group Number	Page No

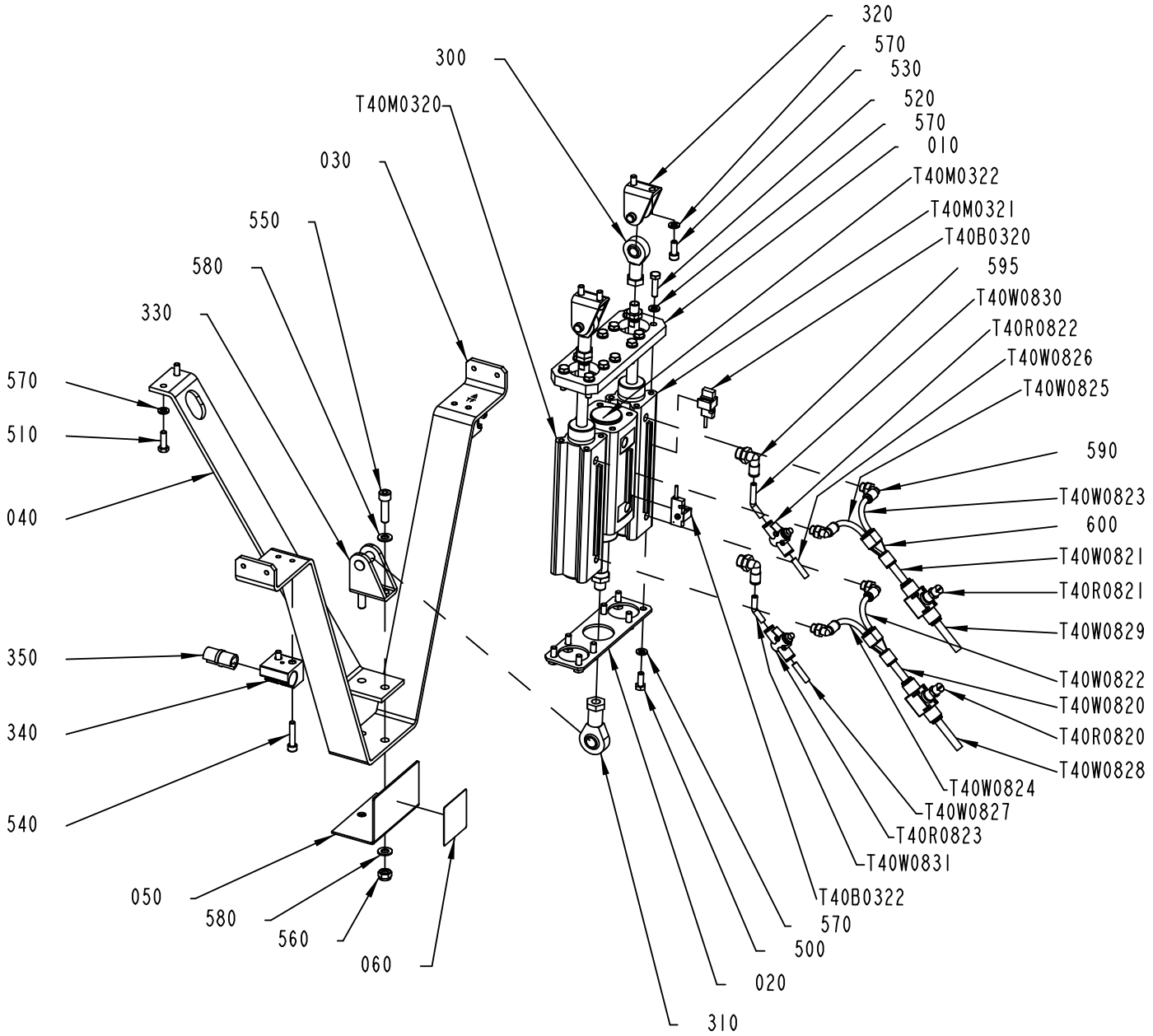

3241269-2
555186

ECM: 630420 - 20130919
Group number: 3241269-0100
Assembly Drawing: 3241269-2_1_AA

Pos	Part No	UN	Qty	Description	Page No
ANSI					
060	359725-0124		1	WARNING SIGN ANSI (H), PNEUMATIC ENERGY	
ISO					
060	1128854-0000		1	CAUTION SIGN	
Common Parts					
010	3095150-0000		1	PLATE	
020	3095151-0000		1	PLATE	
030	3095153-0000		1	CYLINDER BRACKET	
040	3095154-0000		1	STRUT	
050	3104412-0000		1	LABEL HOLDER	
300	90115-0134		2	ROD END, ID=10 MM, M10X1,25	
310	90115-0183		1	ROD END, ID=12 MM, M12X1,25	
320	90459-5949		2	REAR CLEVIS FOOT MOUNTING, CRLBN-32	
330	90601-1806		1	REAR CLEVIS FOOT MOUNTING, CRLBN-40	
340	90602-9074		2	BEARING HOUSING, WM-01-16	
350	90602-9075		2	BUSHING INSERT, J200QM-01-16	
500	312105-0368		8	SCREW, M6S ISO 4017 M6X16 A4 80	
510	312105-0370		2	SCREW, M6S ISO 4017 M6X20 A4 80	
520	312105-0372		12	SCREW, M6S ISO 4017 M6X25 A4 80	
530	312115-0368		4	SCREW ISO4762 M6X16 A4 80	
540	312115-0374		4	SCREW ISO4762 M6X30 A4 80	
550	312115-0455		2	SCREW ISO4762 M8X30 A4 80	
560	312812-0318		2	HEXAGON NUT, NY-LOCK M8 A4 80	
570	315106-0153		26	WASHER PLAIN, M6 ISO7089-6-200 HV A4	
580	315106-0165		4	WASHER PLAIN, M8 ISO7089-8-200 HV A4	
590	350002-0006		4	PUSH-IN L-FITTING QSL-F-G1/8-6	
595	350002-0008		2	PUSH-IN L-FITTING QSL-F-G1/4-6	
600	350015-0004		2	PUSH-IN Y-CONNECTOR QSY-F-8-6	
610	312605-0324		1	HEXAGON NUT, M6M M16 A280	
T40B0320	90459-2392		1	PROX. SENSOR, SMT-C1-PS-24V-K0,3-M8-SA	
T40B0322	90459-2392		1	PROX. SENSOR, SMT-C1-PS-24V-K0,3-M8-SA	
T40M0320	90603-5843		1	DOUBLE ACTING, PROFILE, CYL 32-80	
T40M0321	90603-5843		1	DOUBLE ACTING, PROFILE, CYL 32-80	
T40M0322	90601-1807		1	DOUBLE ACTING, PROFILE, CYL 40-30	
T40R0820	90603-0056		1	THROTTLE CHECK VALVE, MANUAL, 8MM	
T40R0821	90603-0056		1	THROTTLE CHECK VALVE, MANUAL, 8MM	
T40R0822	90235-0839		1	THROTTLE CHECK VALVE, AS2002F-06	
T40R0823	90235-0839		1	THROTTLE CHECK VALVE, AS2002F-06	
T40W0820	315400-0004	MM	50	TUBE PUN-H-8X1,25-BL	
T40W0821	315400-0004	MM	50	TUBE PUN-H-8X1,25-BL	
T40W0822	315400-0001	MM	100	6-4E PUN-H-6X1-BL	
T40W0823	315400-0001	MM	100	6-4E PUN-H-6X1-BL	
T40W0824	315400-0001	MM	100	6-4E PUN-H-6X1-BL	
T40W0825	315400-0001	MM	100	6-4E PUN-H-6X1-BL	
T40W0826	315400-0001	M	1.6	6-4E PUN-H-6X1-BL	
T40W0827	315400-0001	M	1.6	6-4E PUN-H-6X1-BL	
T40W0828	315400-0004	M	1.6	TUBE PUN-H-8X1,25-BL	
T40W0829	315400-0004	M	1.6	TUBE PUN-H-8X1,25-BL	
T40W0830	315400-0001	MM	50	6-4E PUN-H-6X1-BL	
T40W0831	315400-0001	MM	50	6-4E PUN-H-6X1-BL	

Machine Type	Group Description	Used-In	Group Number	Page No

POSITIONING SCREW

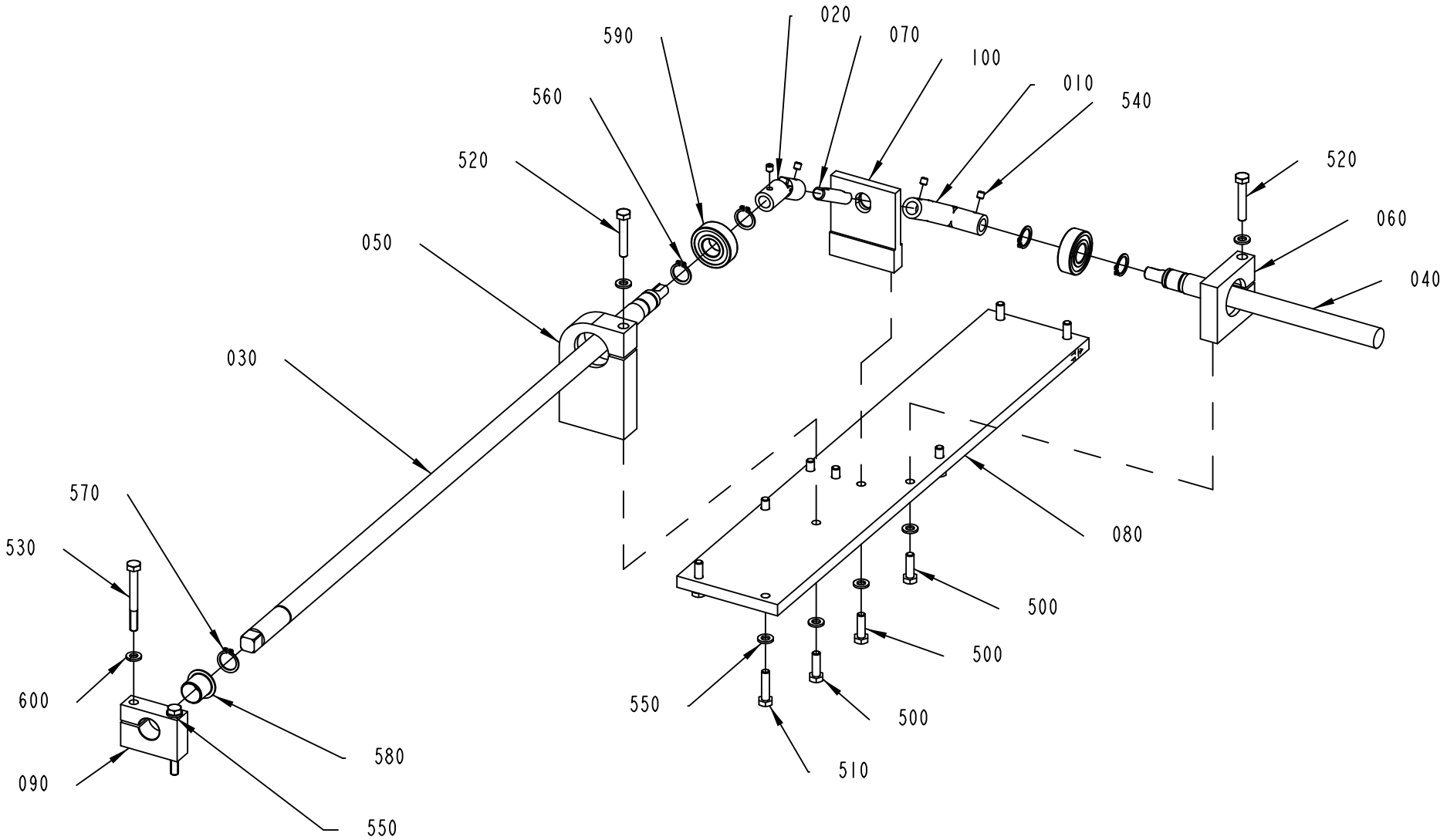

3241267-1
555186

ECM: 567310 - 20120710
Group number: 3241267-0100
Assembly Drawing: 3241267-1_1_AA

Pos	Part No	UN	Qty	Description	Page No
-					
010	2565180-0000		1	BALL COUPLING	
020	2565181-0000		1	BALL COUPLING	
030	3095157-0000		1	AXLE	
040	3095158-0000		1	ADJUSTING SCREW	
050	3095161-0000		1	BEARING HOUSING	
060	3095163-0000		1	BEARING HOUSING	
070	3095164-0000		1	AXLE	
080	3241270-0000		1	PLATE	
090	3095166-0000		1	BRACKET	
100	3119621-0000		1	GUIDE	
500	312105-0370		7	SCREW, M6S ISO 4017 M6X20 A4 80	
510	312105-0372		4	SCREW, M6S ISO 4017 M6X25 A4 80	
520	312105-0376		2	SCREW, M6S ISO 4014 M6X35 A4 80	
530	312105-0381		2	SCREW, M6S ISO 4014 M6X55 A4 80	
540	312318-0320		4	SET SCREW, CUP END ISO4029 M5X5 A4	
550	315106-0153		14	WASHER PLAIN, M6 ISO7089-6-200 HV A4	
560	315751-0112		4	RETAINING RING FOR SHAFT DIN 471 15 SS	
570	315751-0113		1	RETAINING RING FOR SHAFT DIN 471 16 SS	
580	321155-0221		1	FLANGE BUSHING, IGLIDUR X 16X18X17	
590	344226-0102		2	BALL BEARING 15/35X11	
600	315402-0150		1	LOCK WASHER, DIN127B 6,1 A4, M6	

Pos	Part No	UN	Qty	Description	Page No

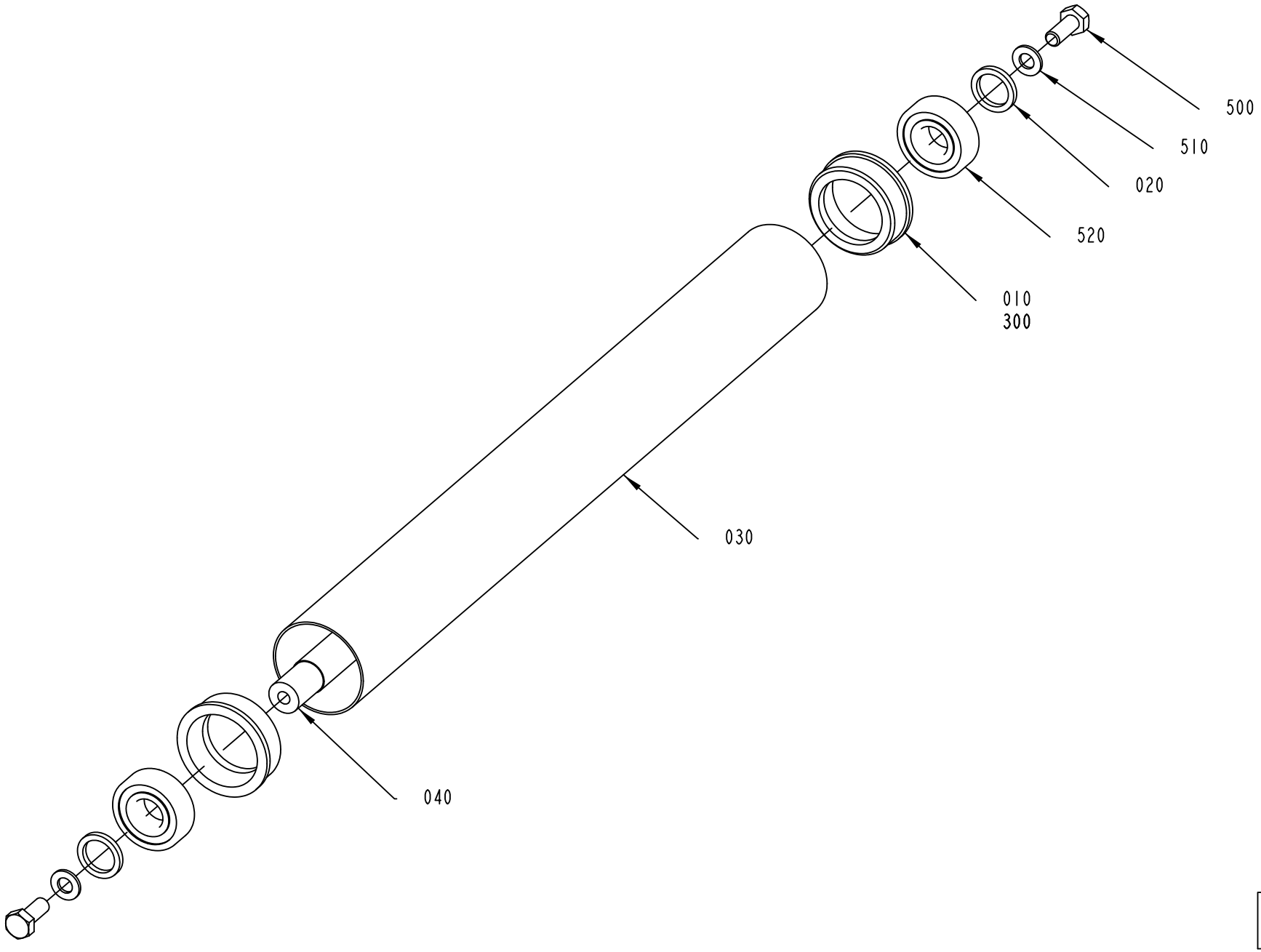

3241265-1
555186

ECM: 646218 - 20131125
Group number: 3241265-0100
Assembly Drawing: 3241265-1_1_AA

Pos	Part No	UN	Qty	Description	Page No
-					
010	1287041-0000		2	BUSHING	
020	1287940-0000		2	WASHER	
030	3101124-0000		1	ROLL	
040	3101125-0000		1	SHAFT	
300	90153-0047		1	ADHESIVE, MULTI-BOND 330; AKTIVATOR 738	
500	312105-0451		2	SCREW, M6S ISO 4017 M8X20 A4 80	
510	315106-0165		2	WASHER PLAIN, M8 ISO7089-8-200 HV A4	
520	344226-0103		2	BALL BEARING 17/40X12	

Pos	Part No	UN	Qty	Description	Page No

BOX PUSHER DOLLY

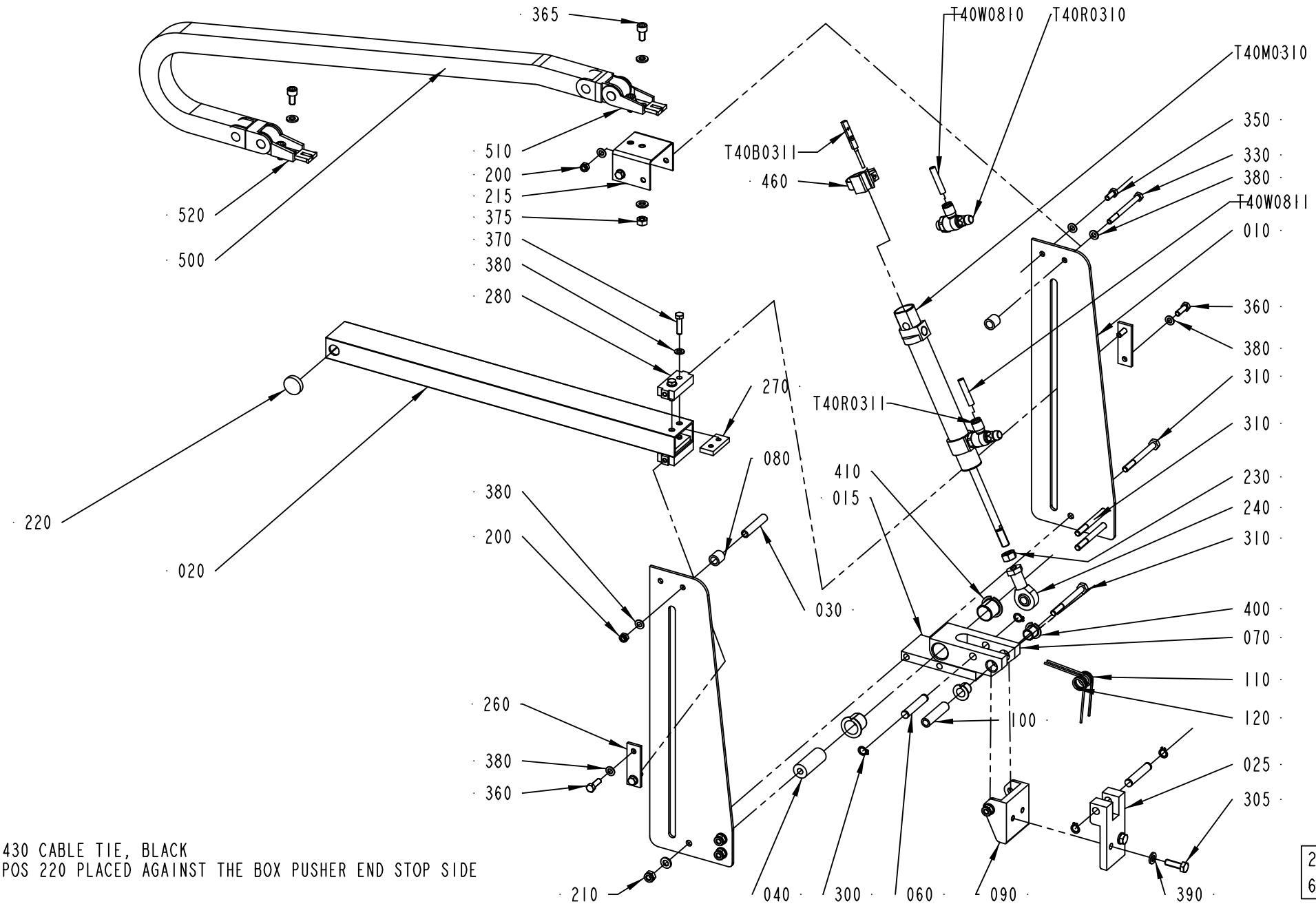

430 CABLE TIE, BLACK
POS 220 PLACED AGAINST THE BOX PUSHER END STOP SIDE

2504338-4
630890

ECM: 646219 - 20131125
Group number: 2504338-0500
Assembly Drawing: 2504338-4_1_AG

Pos	Part No	UN	Qty	Description	Page No
-					
010	2950347-0000		2	PLATE	
015	2950348-0000		1	3LATE	
020	2959020-0000		1	BEAM	
025	2950349-0000		1	BRACKET	
030	2950350-0000		1	SHAFT	
040	2950351-0000		1	SHAFT	
060	2504197-0000		2	SHAFT	
070	2950354-0000		1	ARM	
080	2504194-0000		2	SLEEVE	
090	2504293-0000		1	BRACKET	
100	2950352-0000		1	SHAFT	
110	90459-1355		1	TORS. SPRING SS 2388 RIGHT	
120	90459-1356		1	TORS. SPRING SS 2388 LEFT	
200	312812-0314		3	HEXAGON NUT, NY-LOCK M5 A4 80	
210	312812-0316		4	HEXAGON NUT, NY-LOCK M6 A4 80	
215	2995242-0000		1	BRACKET	
220	2995243-0000		1	WASHER	
230	312605-0318		1	HEXAGON NUT, M6M M8 A280	
240	90115-0139		1	ROD END, ID=8 MM, M8X1,25	
260	2802441-0000		2	PLATE	
270	2771149-0000		2	BRACKET	
280	2792402-0000		2	GUIDE	
300	90141-0015		4	RETAINING RING FOR SHAFT DIN 471 8 SS	
305	312105-0370		2	SCREW, M6S ISO 4017 M6X20 A4 80	
310	312105-0382		4	SCREW, M6S ISO 4014 M6X60 A4 80	
330	312105-0343		1	SCREW, M6S ISO 4014 M5X60 A4 80	
350	312105-0327		2	SCREW, M6S ISO 4017 M5X12 A4 80	
360	312105-0329		4	SCREW, M6S ISO 4017 M5X16 A4 80	
365	312115-0366		4	SCREW ISO4762 M6X12 A4 80	
370	312105-0331		4	SCREW, M6S ISO 4017 M5X20 A4 80	
375	312605-0316		2	HEXAGON NUT, M6M M6 A280	
380	315105-0146		14	WASHER PLAIN, 5,3X10X1 A4 BRB	
390	315105-0153		16	WASHER PLAIN, 6,4X12X1,5 A4 BRB	
400	321161-0142		2	FLANGE BEARING, 10X12X12 MM	
410	321161-0221		2	FLANGE BEARING, 16X18X17 MM	
430	352113-0101		10	CABLE TIE,BLACK 92X	
460	90458-0531		1	SENSOR BRACKET, FOR CYL 20	
500	90181-0199		2	LINK ,10.015.048.0, FOR FLEX CHAIN 10	
510	90181-0202		1	END LINK	
520	90181-0203		1	LINK, 10.1015. 2PZ, FOR FLEX.CHAIN10	
T40B0311	90600-3272		1	PROX. SENSOR, SMT-8M-PS-24V-K-5,0-OE	
T40M0310	90603-5549		1	DOUBLE ACTING, MINI-ISO, CYL. 20-80	
T40R0310	90235-0846		2	THROTTLE CHECK VALVE G1/8", MANUAL, 6	
T40R0311	90235-0846		1	THROTTLE CHECK VALVE G1/8", MANUAL, 6	
T40W0810	315400-0001	M	3.5	6-4E PUN-H-6X1-BL	
T40W0811	315400-0001	M	3.5	6-4E PUN-H-6X1-BL	

Machine Type | Group Description | Used-In | Group Number | Page No

TRANSFER STOP PLATE

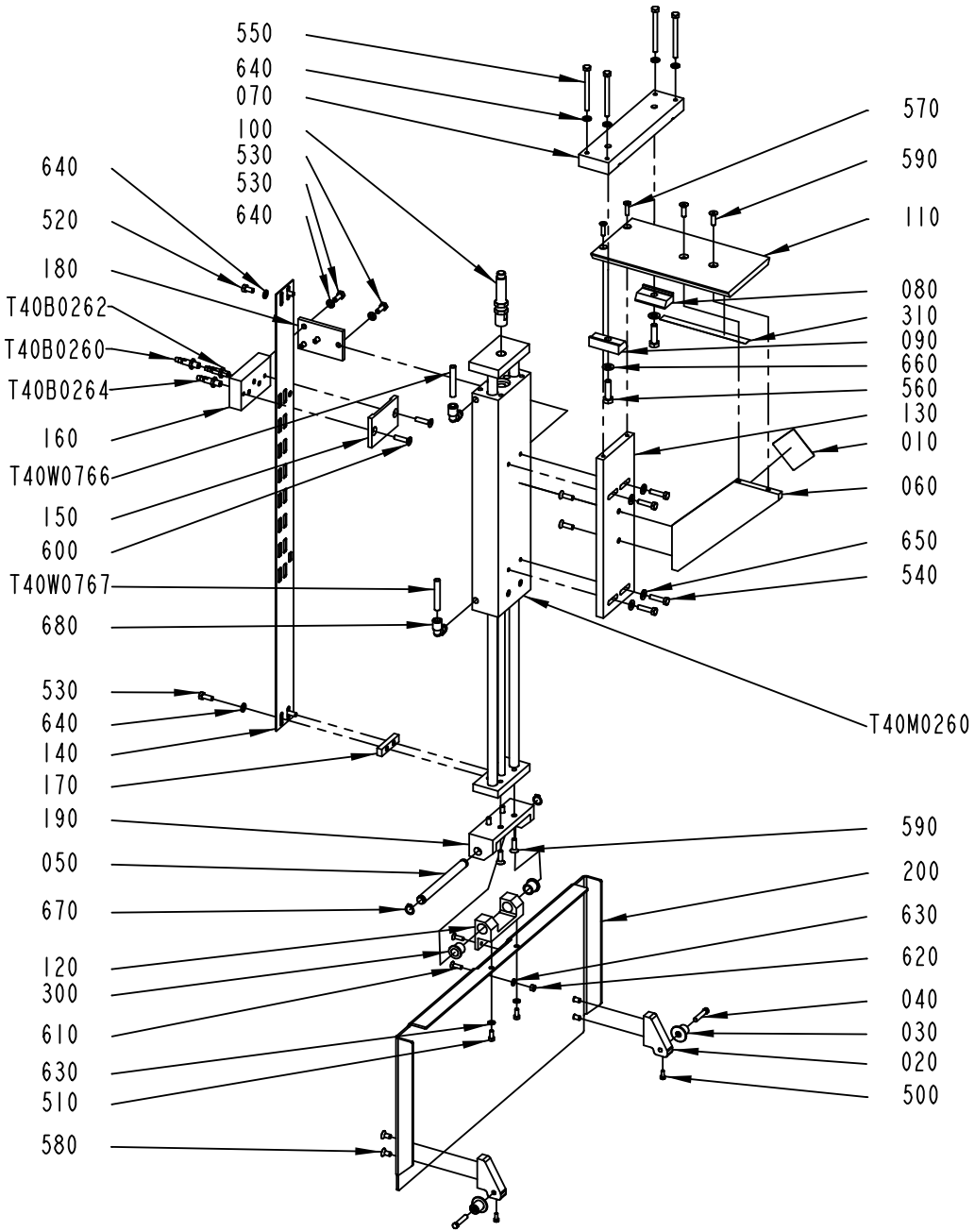

3241264-1
598985

ECM: 599059 - 20130314
Group number: 3241264-0100
Assembly Drawing: 3241264-1_1_AB

Pos	Part No	UN	Qty	Description	Page No
LINF U-FORM ANSI, LINF U-FORM ISO, RINF Z-FORM ANSI, RINF Z-FORM ISO					
010	359725-0125		1	WARNING SIGN ANSI (V), PNEUMATIC ENERGY	
LINF Z-FORM ANSI, LINF Z-FORM ISO, RINF U-FORM ANSI, RINF U-FORM ISO					
010	1128854-0000		1	CAUTION SIGN	
Common Parts					
020	3213486-0000		2	BRACKET	
030	2771221-0000		2	ROLL	
040	2771222-0000		2	SHAFT	
050	2782745-0000		1	SHAFT	
060	2782748-0000		1	REINFORCEMENT	
070	2782749-0000		1	PLATE	
080	2782756-0000		1	CLAMP RAIL	
090	2782757-0000		1	CLAMP RAIL	
100	2787843-0000		1	SHOCK ABSORBER	
110	2844975-0000		1	FASTENING PLATE	
120	2845006-0000		1	BRACKET	
130	2845018-0000		1	CYLINDER BRACKET	
140	2872735-0000		1	PLATE	
150	2872736-0000		1	SLIDE PLATE	
160	2872737-0000		1	SLIDE PLATE	
170	2920759-0000		1	SPACER	
180	2920760-0000		1	BRACKET	
190	2970877-0000		1	BRACKET	
200	3213485-0000		1	PLATE	
300	90240-0204		2	FLANGE BUSHING, 12X16X16 MM	
310	90458-2779		1	SCALE , 0-1000MM ADHESIVE	
500	312105-0289		2	SCREW, M6S ISO 4017 M4X10 A4 70	
510	312105-0327		2	SCREW, M6S ISO 4017 M5X12 A4 80	
520	312105-0366		2	SCREW, M6S ISO 4017 M6X12 A4 80	
530	312105-0368		6	SCREW, M6S ISO 4017 M6X16 A4 80	
540	312105-0372		4	SCREW, M6S ISO 4017 M6X25 A4 80	
550	312105-0384		4	SCREW, M6S ISO 4014 M6X70 A4 80	
560	312105-0455		2	SCREW, M6S ISO 4017 M8X30 A4 80	
570	312155-0331		2	SCREW DIN 7991 MF6S M5X20 A4 70	
580	312155-0366		4	SCREW DIN 7991 MF6S M6X12 A4 70	
590	312155-0370		8	SCREW DIN 7991 MF6S M6X20 A4 70	
600	312155-0372		2	SCREW DIN 7991 MF6S M6X25 A4 70	
610	312155-0329		2	SCREW DIN 7991 MF6S M5X16 A4 70	
620	312605-0314		2	HEXAGON NUT, M6M M5 A280	
630	315106-0146		4	WASHER PLAIN, M5 ISO7089-5-200 HV A4	
640	315106-0153		12	WASHER PLAIN, M6 ISO7089-6-200 HV A4	
650	315105-0156		4	WASHER PLAIN, 6,7X14X1,5 A4 BRB	
660	315106-0165		2	WASHER PLAIN, M8 ISO7089-8-200 HV A4	
670	315751-0109		2	RETAINING RING FOR SHAFT DIN 471 12 SS	
680	350002-0007		2	PUSH-IN L-FITTING QSL-F-G1/8-8	
T40B0260	90600-0472		1	INDUCTIVE SWITCH, E2A-S08KS01-M3-B1-TP	
T40B0262	90600-0472		1	INDUCTIVE SWITCH, E2A-S08KS01-M3-B1-TP	
T40B0264	90600-0472		1	INDUCTIVE SWITCH, E2A-S08KS01-M3-B1-TP	
T40M0260	90603-7495		1	CYLINDER, WITH INT. GUIDING BORE 25	
T40W0766	315400-0004	M	1	TUBE PUN-H-8X1,25-BL	
T40W0767	315400-0004	M	1	TUBE PUN-H-8X1,25-BL	

Machine Type | Group Description | Used-In | Group Number | Page No

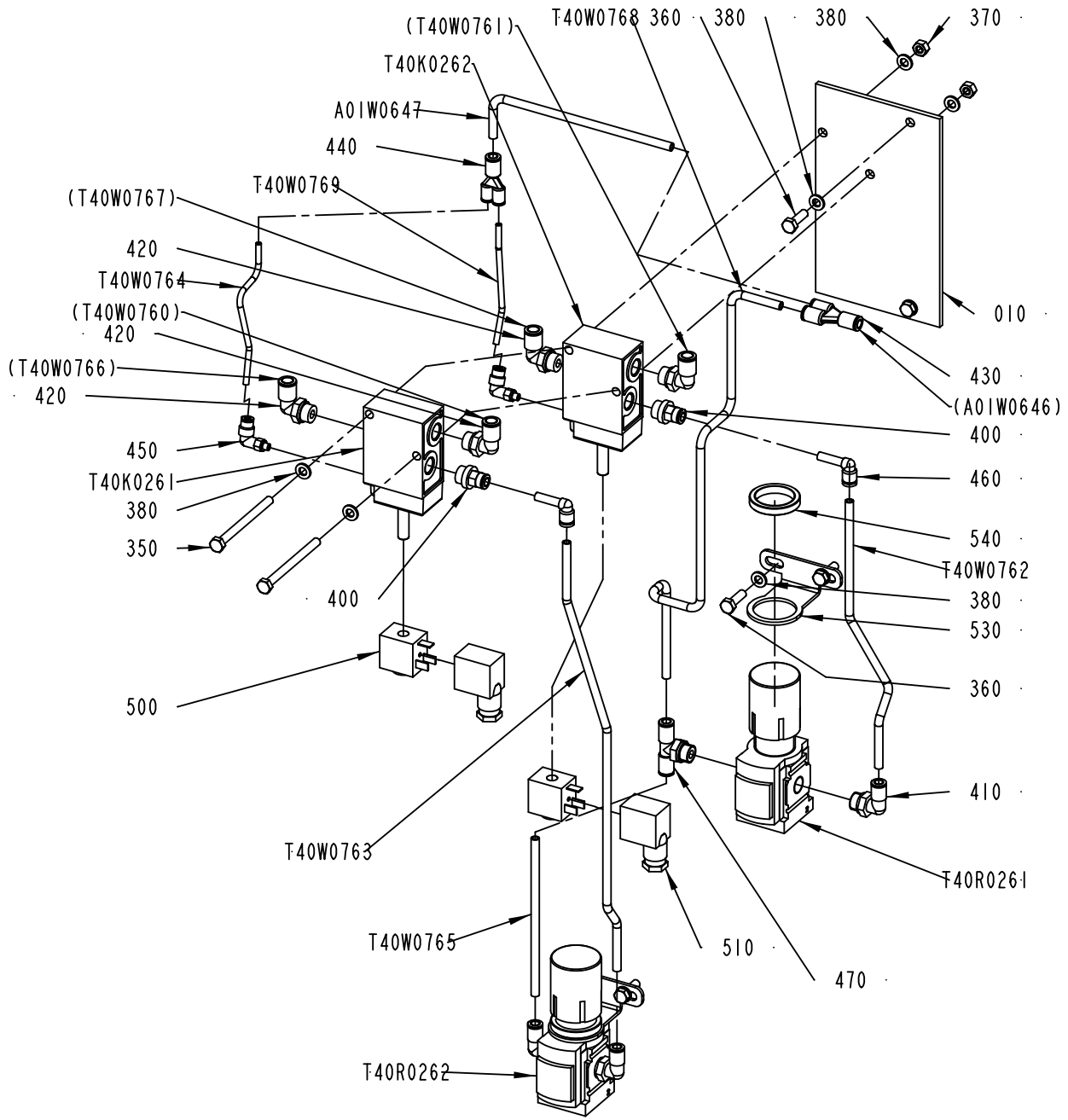

2808763-6
555186

ECM: 567250 - 20120710
Group number: 2808763-0300
Assembly Drawing: 2808763-6_1_AA

Pos	Part No	UN	Qty	Description	Page No
-					
010	2895000-0000		1	MOUNTING BRACKET	
350	90287-0312		2	SCREW, M6S ISO 4014 M6X75 A4 80	
360	312105-0370		6	SCREW, M6S ISO 4017 M6X20 A4 80	
370	312605-0316		2	HEXAGON NUT, M6M M6 A280	
380	315105-0153		10	WASHER PLAIN, 6,4X12X1,5 A4 BRB	
400	350001-0008		2	PUSH-IN FITTING QS-F-G1/4-6	
410	350002-0008		3	PUSH-IN L-FITTING QSL-F-G1/4-6	
420	350002-0009		4	PUSH-IN L-FITTING QSL-F-G1/4-8	
430	350015-0001		1	PUSH-IN Y-CONNECTOR QSY-F-6	
440	350015-0002		1	PUSH-IN Y-CONNECTOR QSY-F-6-4	
450	350002-0001		2	PUSH-IN L-FITTING QSL-F-M5-4	
460	90055-0217		2	ELBOW PIPE JOINT	
470	350007-0008		1	PUSH-IN T-FITTING QST-F-G1/4-6	
500	90042-0604		2	COIL	
510	90042-0392		2	CONTACT 2 POLE + EARTH	
530	90459-2389		2	BRACKET, MS4-LR-WR	
540	90459-2390		2	NUT, MS-LR-10	
A01W0647	315400-0001	M	0.2	6-4E PUN-H-6X1-BL	
T40K0261	90459-5410		1	VALVE BODY, 3/2 MONOSTABLE NC	
T40K0262	90459-5410		1	VALVE BODY, 3/2 MONOSTABLE NC	
T40R0261	90459-2387		1	REGULATOR, MS4-LR-1/4-D5-AS	
T40R0262	90459-2653		1	REGULATOR, MS4-LR-1/4-D6-AS	
T40W0762	315400-0001	M	0.25	6-4E PUN-H-6X1-BL	
T40W0763	315400-0001	M	0.4	6-4E PUN-H-6X1-BL	
T40W0764	315400-0016	M	0.5	TUBE PUN-H-4X0,75-BL	
T40W0765	315400-0001	M	0.14	6-4E PUN-H-6X1-BL	
T40W0768	315400-0001	M	0.5	6-4E PUN-H-6X1-BL	
T40W0769	315400-0016	M	0.5	TUBE PUN-H-4X0,75-BL	

Pos	Part No	UN	Qty	Description	Page No

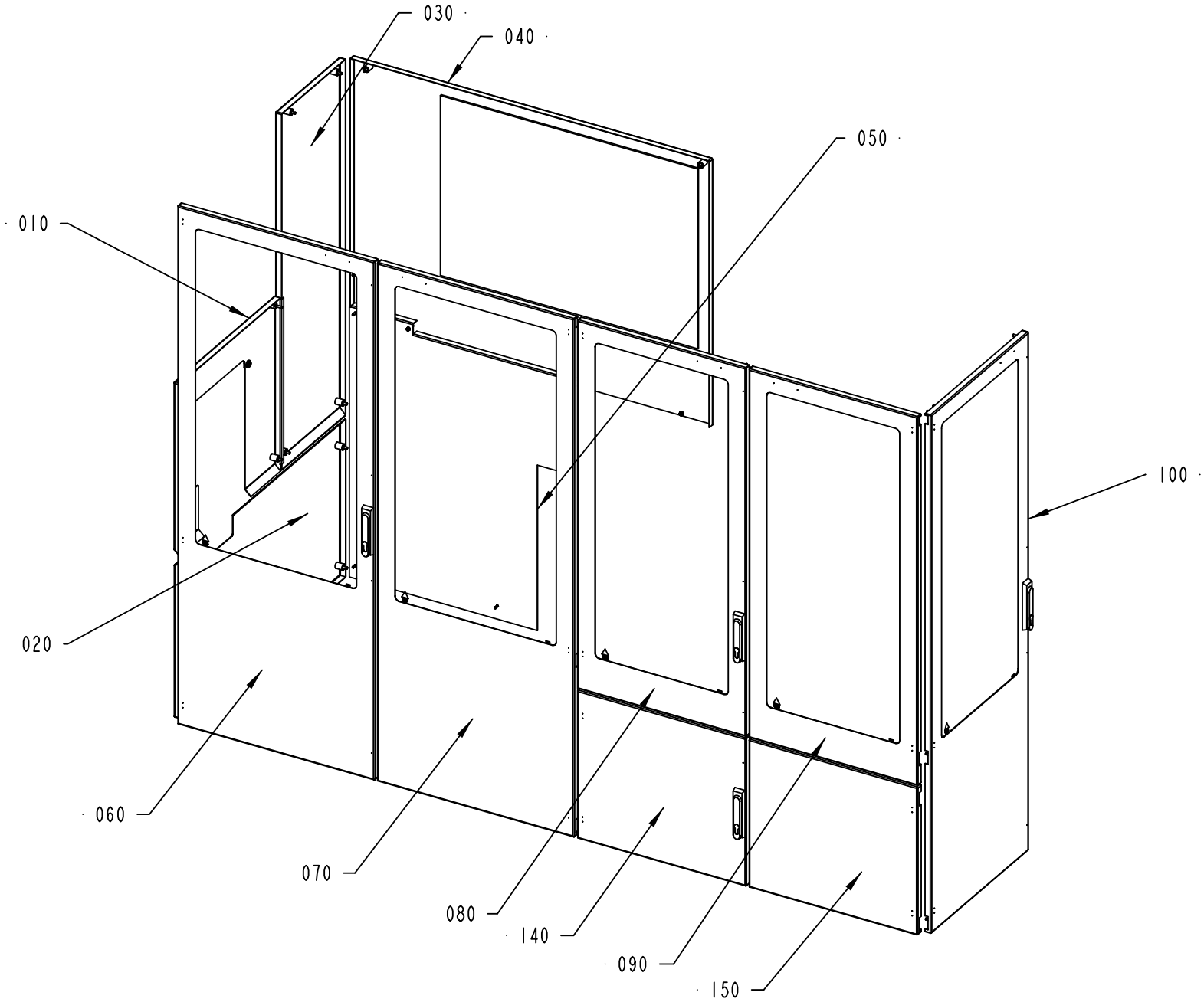

2787855-7
568933

ECM: 577168 - 20120924
Group number: 2787855-0300
Assembly Drawing: 2787855-7_1_AB

This list covers pages from 2-120 to 2-123

Pos	Part No	UN	Qty	Description	Page No
LINF U-FORM (See drawing on page: 2-122)					
120	2877452-0200		1	COVERING PLATE	**2-125**
130	1124067-0400		1	COVERING PLATE	**2-127**
LINF Z-FORM (See drawing on page: 2-120)					
040	3204620-0100		1	COVERING PLATE	**2-129**
050	3264176-0100		1	COVERING PLATE	**2-131**
RINF U-FORM (See drawing on page: 2-122)					
120	2877452-0200		1	COVERING PLATE	**2-125**
130	1124067-0400		1	COVERING PLATE	**2-127**
RINF Z-FORM (See drawing on page: 2-120)					
040	3204620-0100		1	COVERING PLATE	**2-129**
050	3264176-0100		1	COVERING PLATE	**2-131**
Common Parts					
010	1124071-0600		1	COVERING PLATE	**2-133**
020	2557141-0300		1	COVER PLATE	**2-135**
030	1124080-0400		1	COVERING PLATE	**2-137**
060	2833983-0100		1	GLASS DOOR	**2-139**
070	2866317-0100		1	GLASS DOOR	**2-141**
080	3051570-0100		1	GLASS DOOR	**2-143**
090	3051572-0100		1	GLASS DOOR	**2-145**
100	3241283-0100		1	GLASS DOOR	**2-147**
140	3051567-0100		1	DOOR	**2-149**
150	3051565-0100		1	DOOR	**2-151**

Pos	Part No	UN	Qty	Description	Page No

COVERING PATTERN FORMING

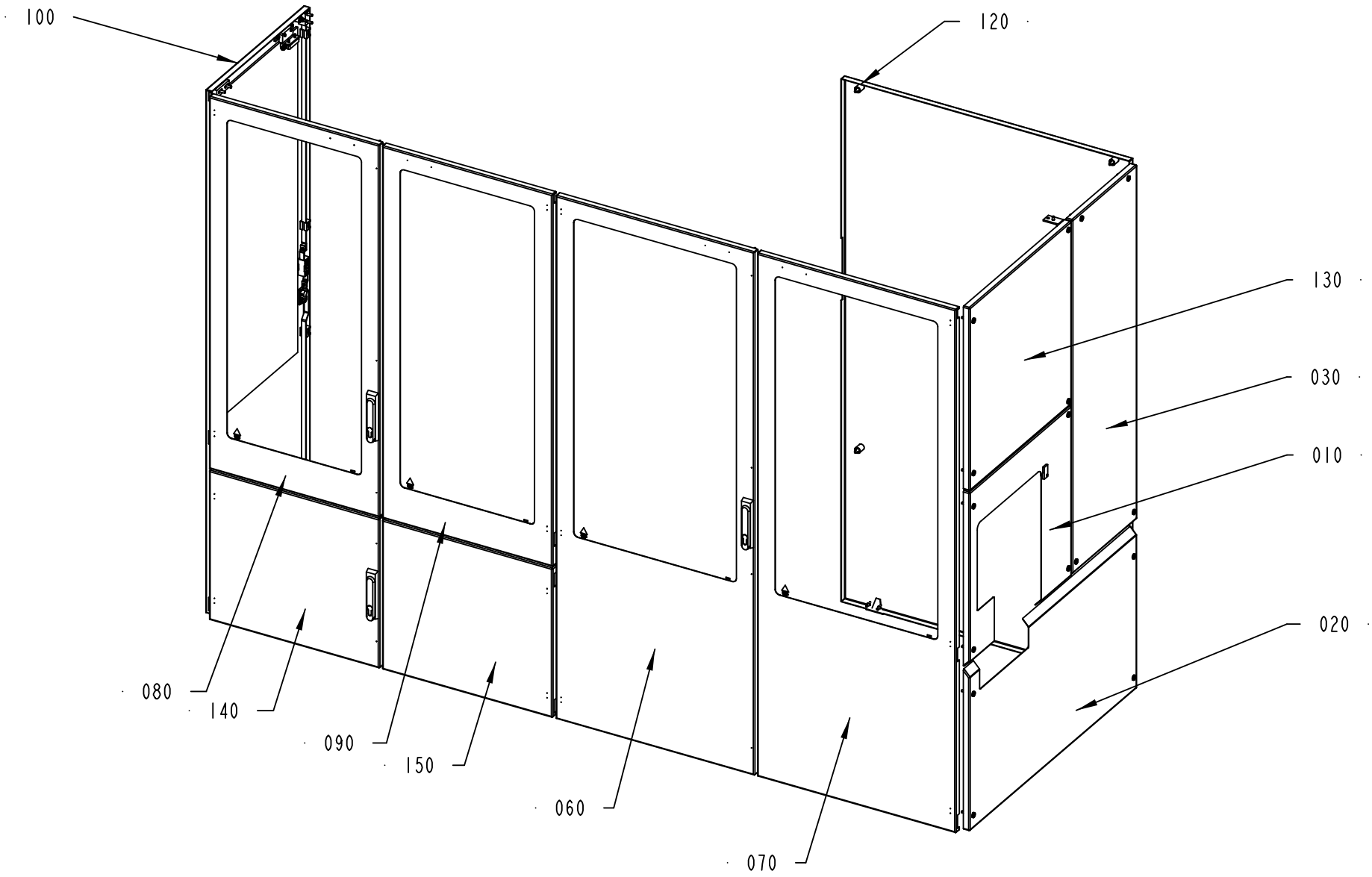

2787855-8
555186

ECM: 577168 - 20120924
Group number: 2787855-0300
Assembly Drawing: 2787855-8_1_AA

This list covers pages from 2-120 to 2-123

Pos	Part No	UN	Qty	Description	Page No
LINF U-FORM (See drawing on page: 2-122)					
120	2877452-0200		1	COVERING PLATE	**2-125**
130	1124067-0400		1	COVERING PLATE	**2-127**
LINF Z-FORM (See drawing on page: 2-120)					
040	3204620-0100		1	COVERING PLATE	**2-129**
050	3264176-0100		1	COVERING PLATE	**2-131**
RINF U-FORM (See drawing on page: 2-122)					
120	2877452-0200		1	COVERING PLATE	**2-125**
130	1124067-0400		1	COVERING PLATE	**2-127**
RINF Z-FORM (See drawing on page: 2-120)					
040	3204620-0100		1	COVERING PLATE	**2-129**
050	3264176-0100		1	COVERING PLATE	**2-131**
Common Parts					
010	1124071-0600		1	COVERING PLATE	**2-133**
020	2557141-0300		1	COVER PLATE	**2-135**
030	1124080-0400		1	COVERING PLATE	**2-137**
060	2833983-0100		1	GLASS DOOR	**2-139**
070	2866317-0100		1	GLASS DOOR	**2-141**
080	3051570-0100		1	GLASS DOOR	**2-143**
090	3051572-0100		1	GLASS DOOR	**2-145**
100	3241283-0100		1	GLASS DOOR	**2-147**
140	3051567-0100		1	DOOR	**2-149**
150	3051565-0100		1	DOOR	**2-151**

Pos	Part No	UN	Qty	Description	Page No

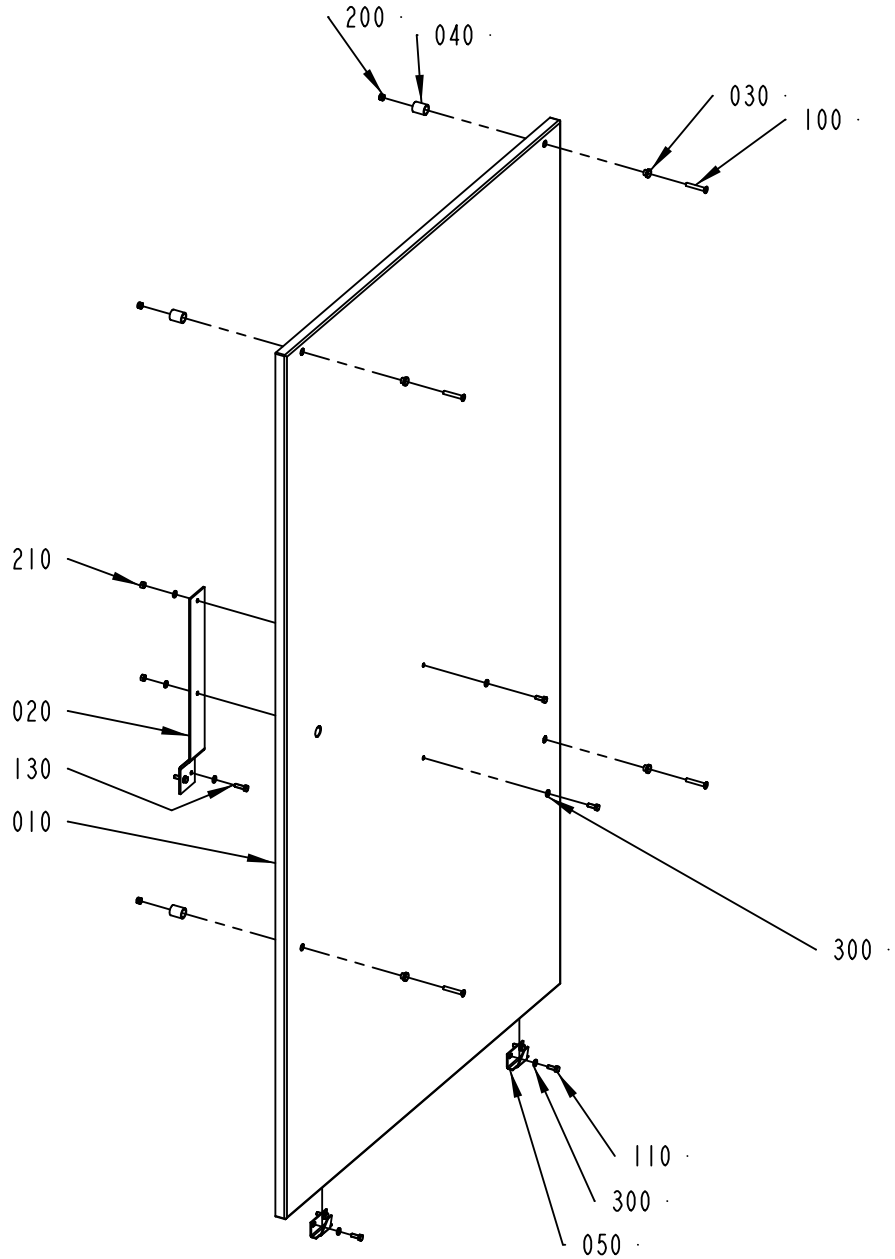

2877452-2
555186

ECM: 567259 - 20120710
Group number: 2877452-0200
Assembly Drawing: 2877452-2_1_AA

Pos	Part No	UN	Qty	Description	Page No
LINF U-FORM, RINF Z-FORM					
010	3256225-0000		1	COVERING PLATE	
LINF Z-FORM, RINF U-FORM					
010	3256224-0000		1	COVERING PLATE	
Common Parts					
020	2970865-0000		1	BRACKET	
030	578196-0000		4	SLEEVE	
040	578197-0000		4	SPACER	
050	975887-0000		2	CATCH	
100	312155-0378		4	SCREW DIN 7991 MF6S M6X40 A4 70	
110	312105-0368		6	SCREW, M6S ISO 4017 M6X16 A4 80	
130	312105-0370		2	SCREW, M6S ISO 4017 M6X20 A4 80	
200	312812-0316		4	HEXAGON NUT, NY-LOCK M6 A4 80	
210	312605-0316		2	HEXAGON NUT, M6M M6 A280	
300	315105-0153		10	WASHER PLAIN, 6,4X12X1,5 A4 BRB	

Pos	Part No	UN	Qty	Description	Page No

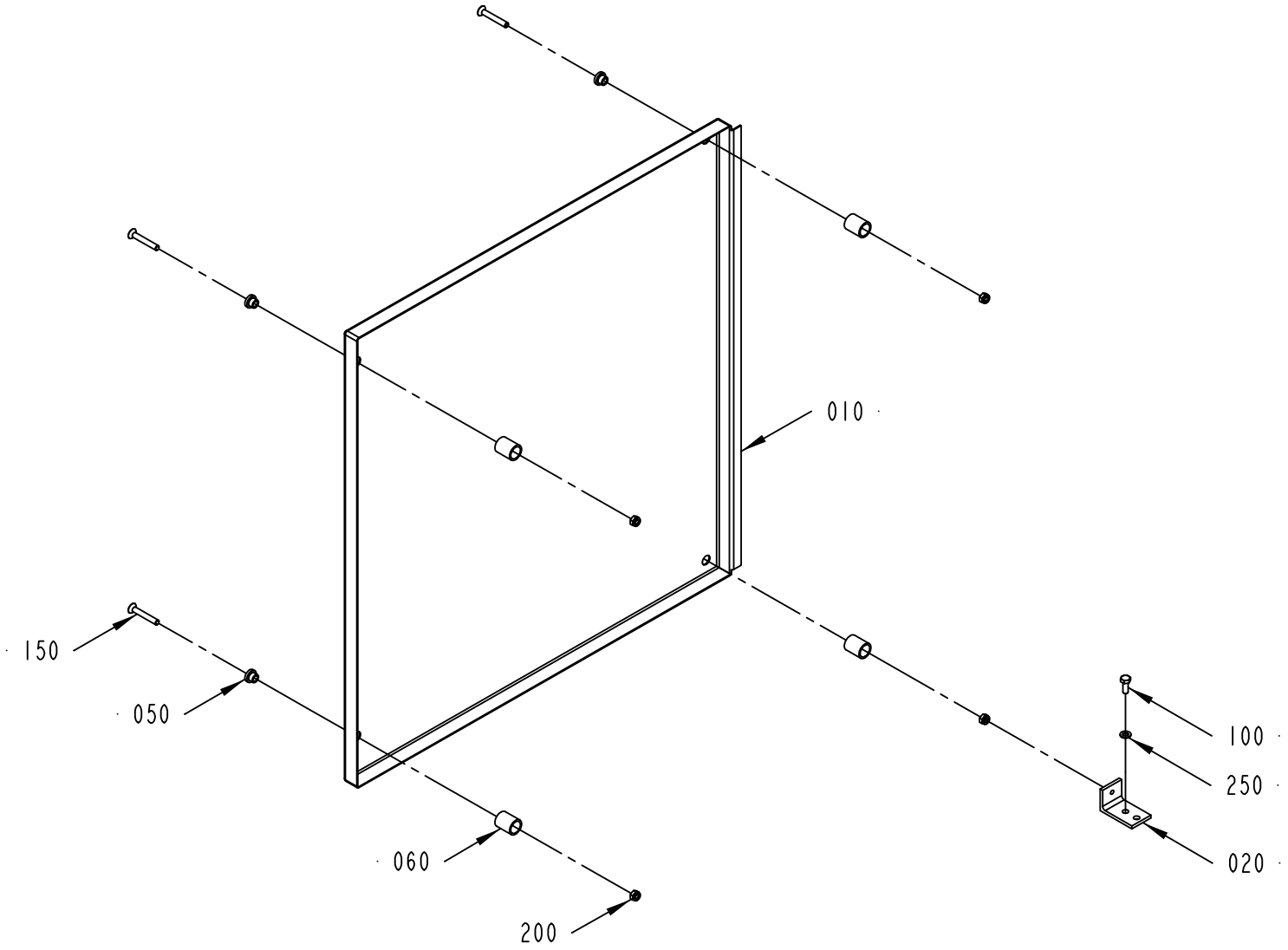

1124067-3
ECN 294896

ECM: 297691 - 20070529
Group number: 1124067-0400
Assembly Drawing: 1124067-3_1_AA

Pos	Part No	UN	Qty	Description	Page No
-					
010	2877495-0000		1	COVERING PLATE	
020	1124564-0000		1	BRACKET	
050	578196-0000		4	SLEEVE	
060	578197-0000		4	SPACER	
100	312105-0368		1	SCREW, M6S ISO 4017 M6X16 A4 80	
150	312155-0378		4	SCREW DIN 7991 MF6S M6X40 A4 70	
200	312812-0316		4	HEXAGON NUT, NY-LOCK M6 A4 80	
250	315105-0153		1	WASHER PLAIN, 6,4X12X1,5 A4 BRB	

Pos	Part No	UN	Qty	Description	Page No

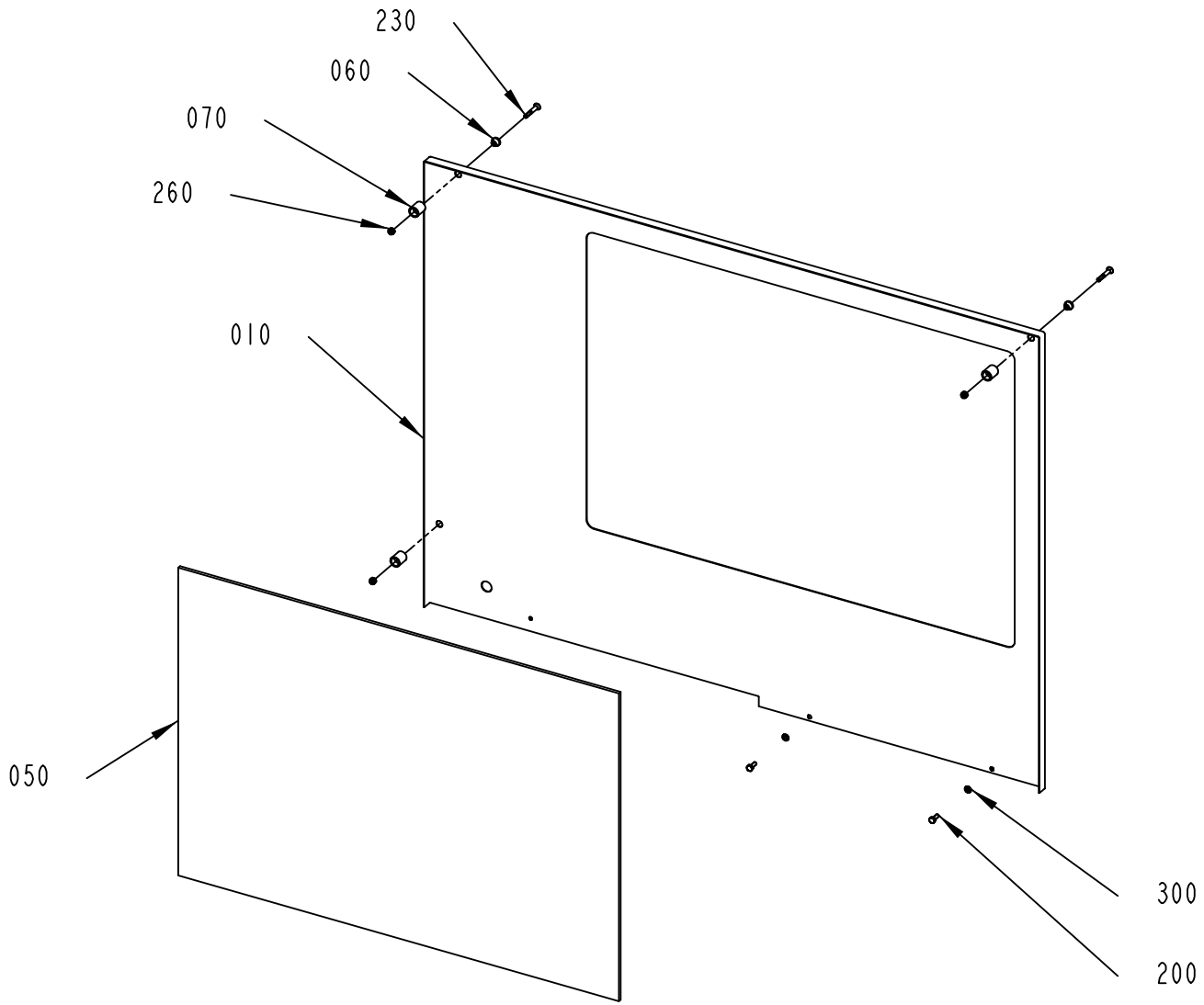

3204620-1
523697

ECM: 531516 - 20111209
Group number: 3204620-0100
Assembly Drawing: 3204620-1_1_AA

Pos	Part No	UN	Qty	Description	Page No
LINF Z-FORM					
010	3204619-0000		1	COVERING PLATE	
RINF Z-FORM					
010	3204618-0000		1	COVERING PLATE	
Common Parts					
050	2802466-0003		1	GLASS	
060	578196-0000		3	SLEEVE	
070	578197-0000		3	SPACER	
080	90157-0041	L	1	SEALING COMPOUND, RHODORSEAL 5651	
200	312105-0368		2	SCREW, M6S ISO 4017 M6X16 A4 80	
230	312155-0378		3	SCREW DIN 7991 MF6S M6X40 A4 70	
260	312812-0316		3	HEXAGON NUT, NY-LOCK M6 A4 80	
300	315105-0153		2	WASHER PLAIN, 6,4X12X1,5 A4 BRB	

Pos	Part No	UN	Qty	Description	Page No

COVERING PLATE

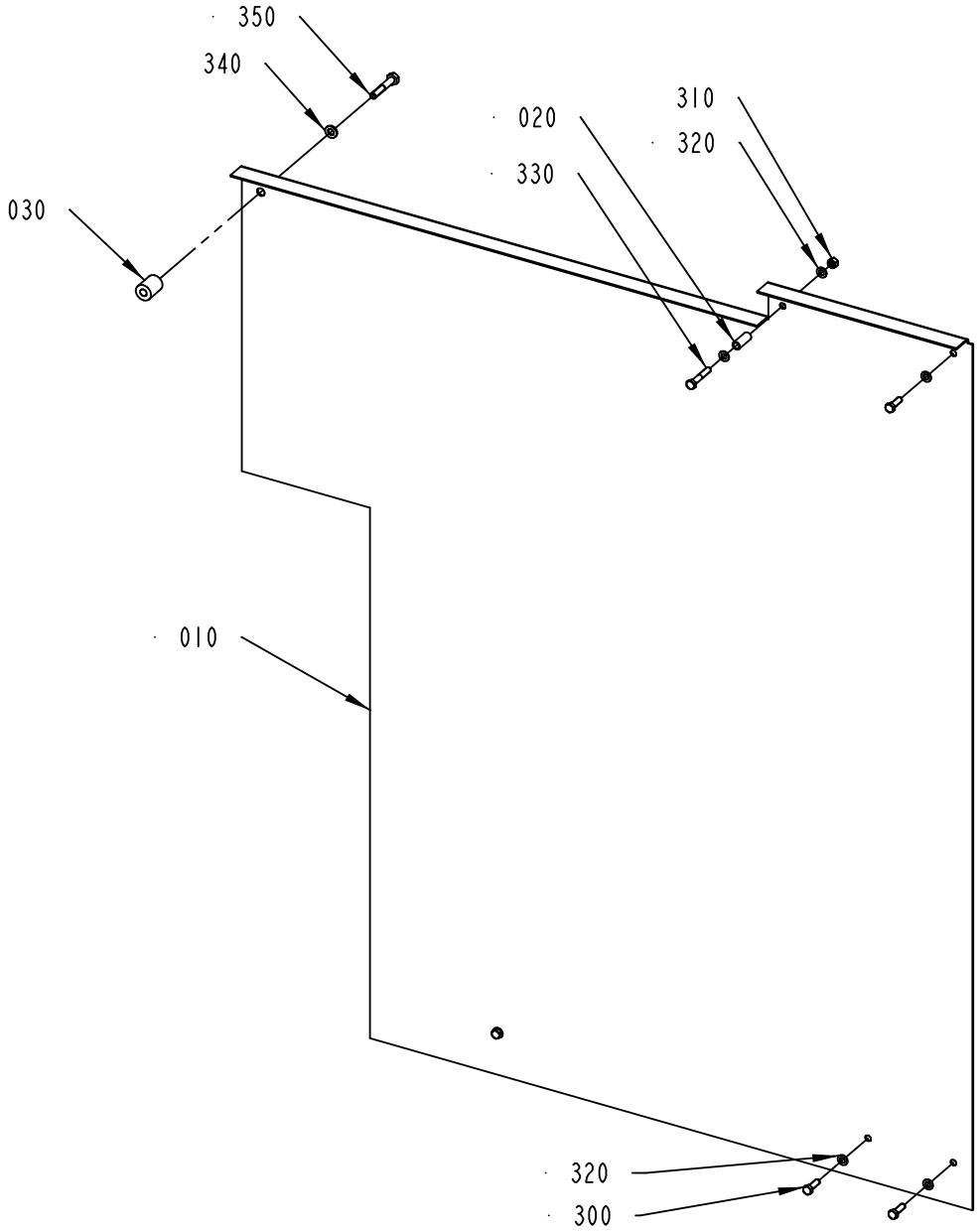

3264176-1
568933

ECM: 577170 - 20120924
Group number: 3264176-0100
Assembly Drawing: 3264176-1_1_AA

Pos	Part No	UN	Qty	Description	Page No
LINF Z-FORM					
010	3264178-0000		1	COVERING PLATE	
RINF Z-FORM					
010	3264177-0000		1	COVERING PLATE	
Common Parts					
020	90266-0167	MM	20.5	PIPE	
030	3264179-0000		1	SPACER	
300	312105-0329		4	SCREW, M6S ISO 4017 M5X16 A4 80	
310	312605-0314		1	HEXAGON NUT, M6M M5 A280	
320	315105-0146		6	WASHER PLAIN, 5,3X10X1 A4 BRB	
330	312105-0335		1	SCREW, M6S ISO 4014 M5X30 A4 80	
340	315106-0153		1	WASHER PLAIN, M6 ISO7089-6-200 HV A4	
350	312105-0376		1	SCREW, M6S ISO 4014 M6X35 A4 80	

Pos	Part No	UN	Qty	Description	Page No

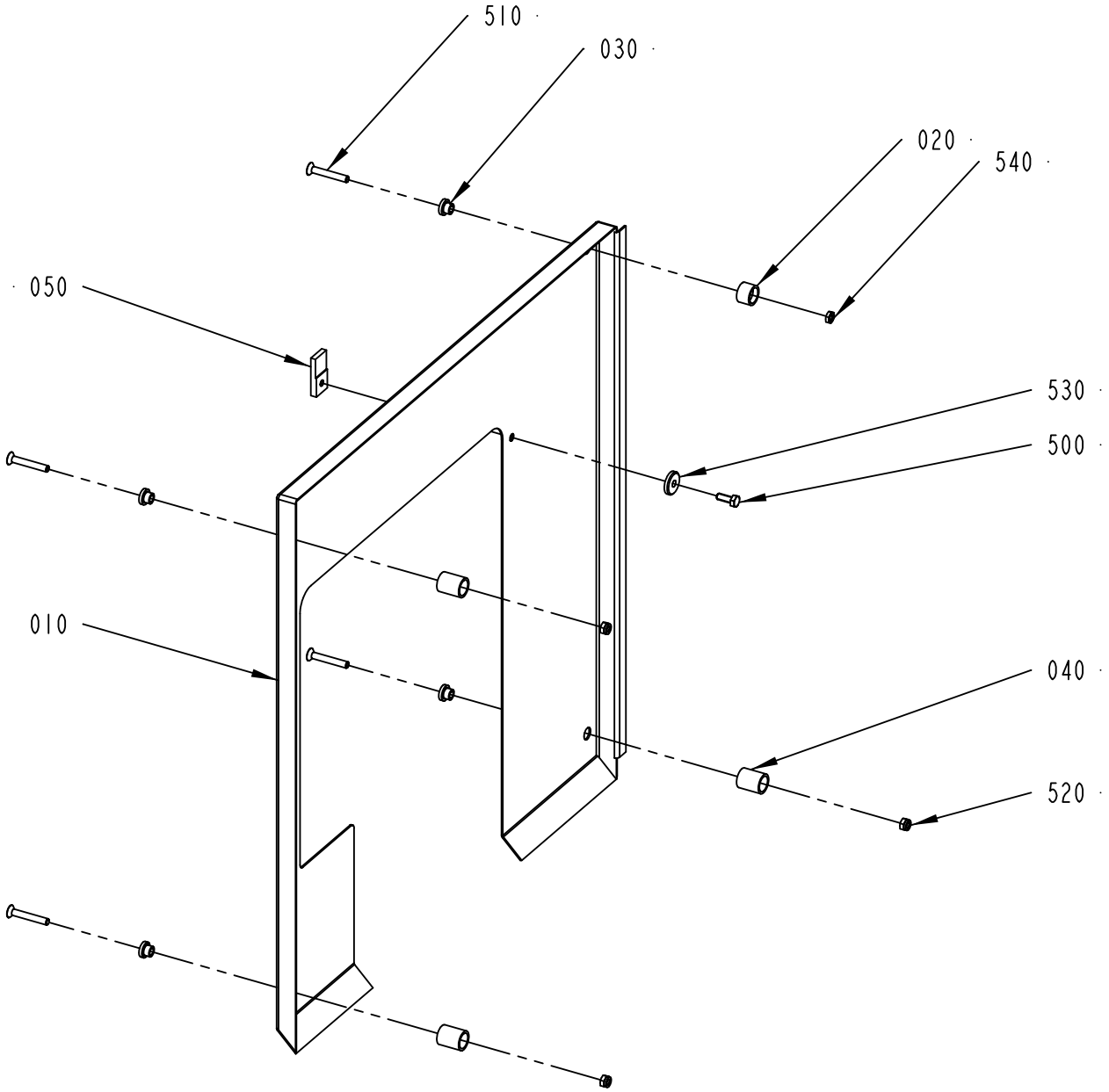

1124071-6
587728

ECM: 589785 - 20121210
Group number: 1124071-0600
Assembly Drawing: 1124071-6_1_AB

Pos	Part No	UN	Qty	Description	Page No
LINF U-FORM, RINF Z-FORM					
010	2851975-0000		1	COVER PLATE	
LINF Z-FORM, RINF U-FORM					
010	2851974-0000		1	COVER PLATE	
Common Parts					
020	3136753-0000		1	SPACER	
030	578196-0000		4	SLEEVE	
040	578197-0000		3	SPACER	
050	2995251-0000		1	BRACKET	
500	312105-0368		1	SCREW, M6S ISO 4017 M6X16 A4 80	
510	312155-0378		4	SCREW DIN 7991 MF6S M6X40 A4 70	
520	312812-0316		3	HEXAGON NUT, NY-LOCK M6 A4 80	
530	315125-0153		1	WASHER HIGH, TBRSB 6,4X22X4 A4	
540	312625-0316		1	HEXAGON THIN NUT, EN 24035 ML6M M6 A4	

Pos	Part No	UN	Qty	Description	Page No

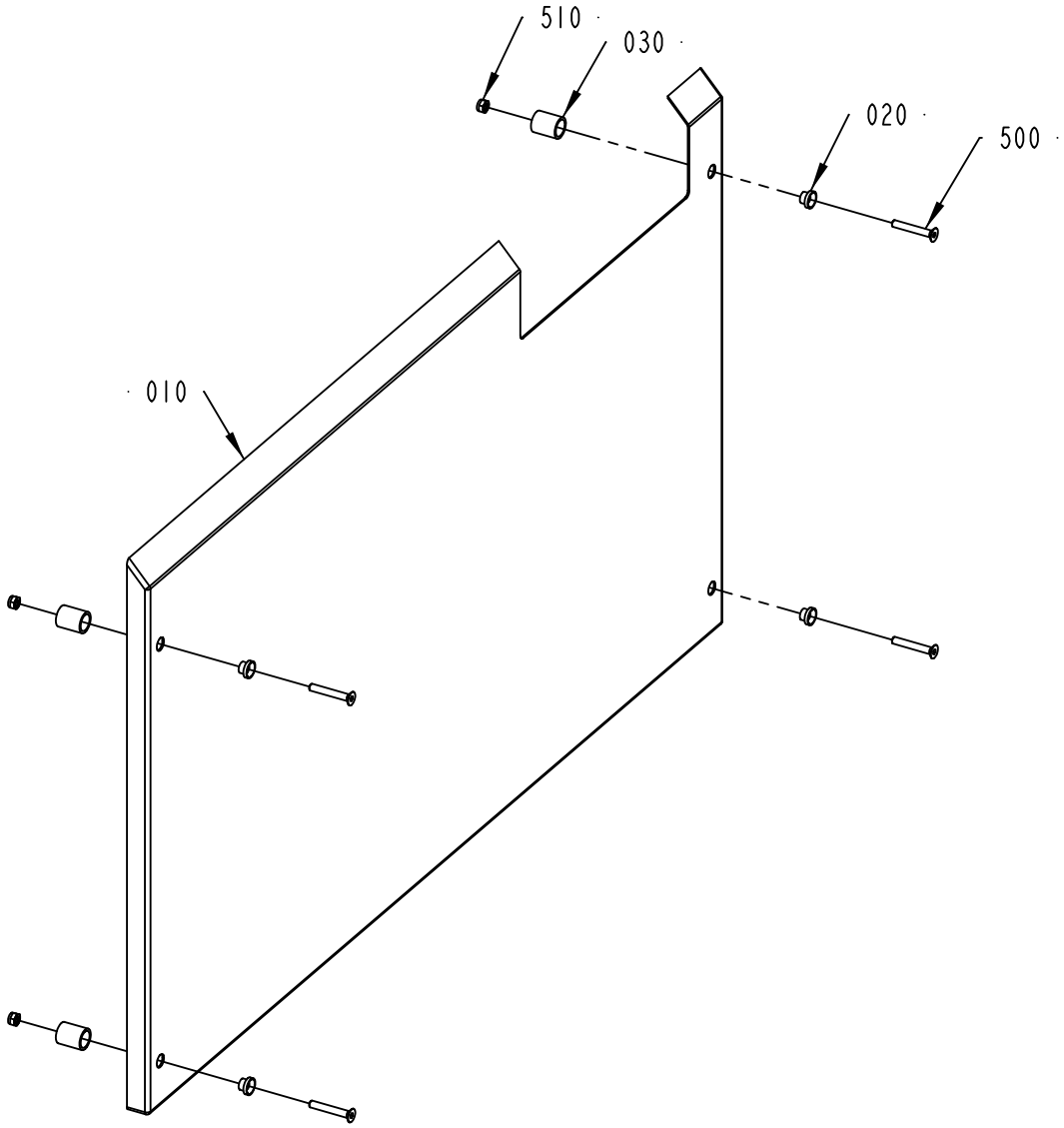

2557141-4
555186

ECM: 577338 - 20120924
Group number: 2557141-0300
Assembly Drawing: 2557141-4_1_AA

Pos	Part No	UN	Qty	Description	Page No
LINF U-FORM, RINF Z-FORM					
010	2851991-0000		1	COVERING PLATE	
LINF Z-FORM, RINF U-FORM					
010	2851992-0000		1	COVERING PLATE	
Common Parts					
020	578196-0000		4	SLEEVE	
030	578197-0000		4	SPACER	
500	312155-0378		4	SCREW DIN 7991 MF6S M6X40 A4 70	
510	312812-0316		4	HEXAGON NUT, NY-LOCK M6 A4 80	

Pos	Part No	UN	Qty	Description	Page No

COVERING PLATE

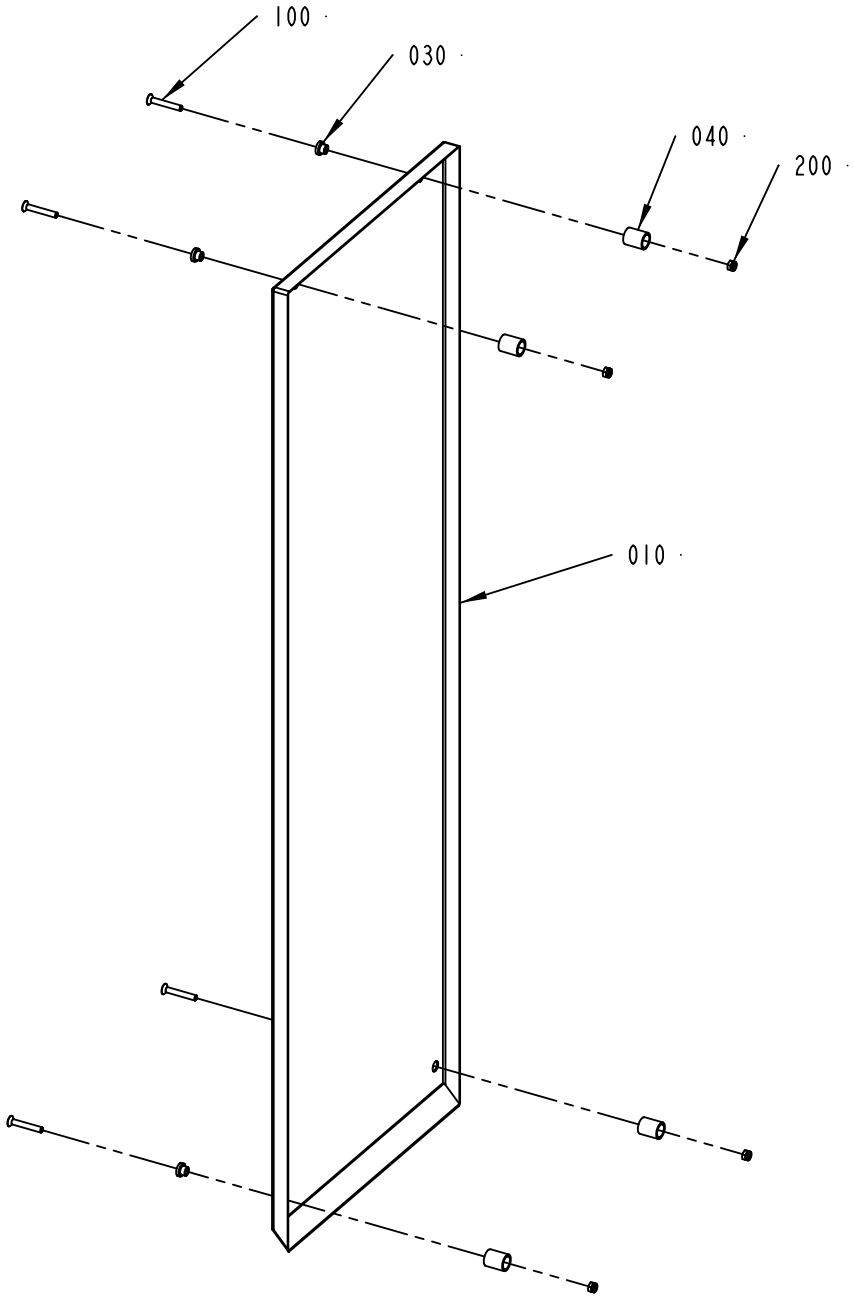

1124080-4
431388

ECM: 473294 - 20110630
Group number: 1124080-0400
Assembly Drawing: 1124080-4_1_AB

Pos	Part No	UN	Qty	Description	Page No
WITH ILINE-XT					
010	3119169-0000		1	COVERING PLATE	
WITHOUT ILINE-XT					
010	2877494-0000		1	COVERING PLATE	
Common Parts					
030	578196-0000		4	SLEEVE	
040	578197-0000		4	SPACER	
100	312155-0378		4	SCREW DIN 7991 MF6S M6X40 A4 70	
200	312812-0316		4	HEXAGON NUT, NY-LOCK M6 A4 80	

Pos	Part No	UN	Qty	Description	Page No

GLASS DOOR

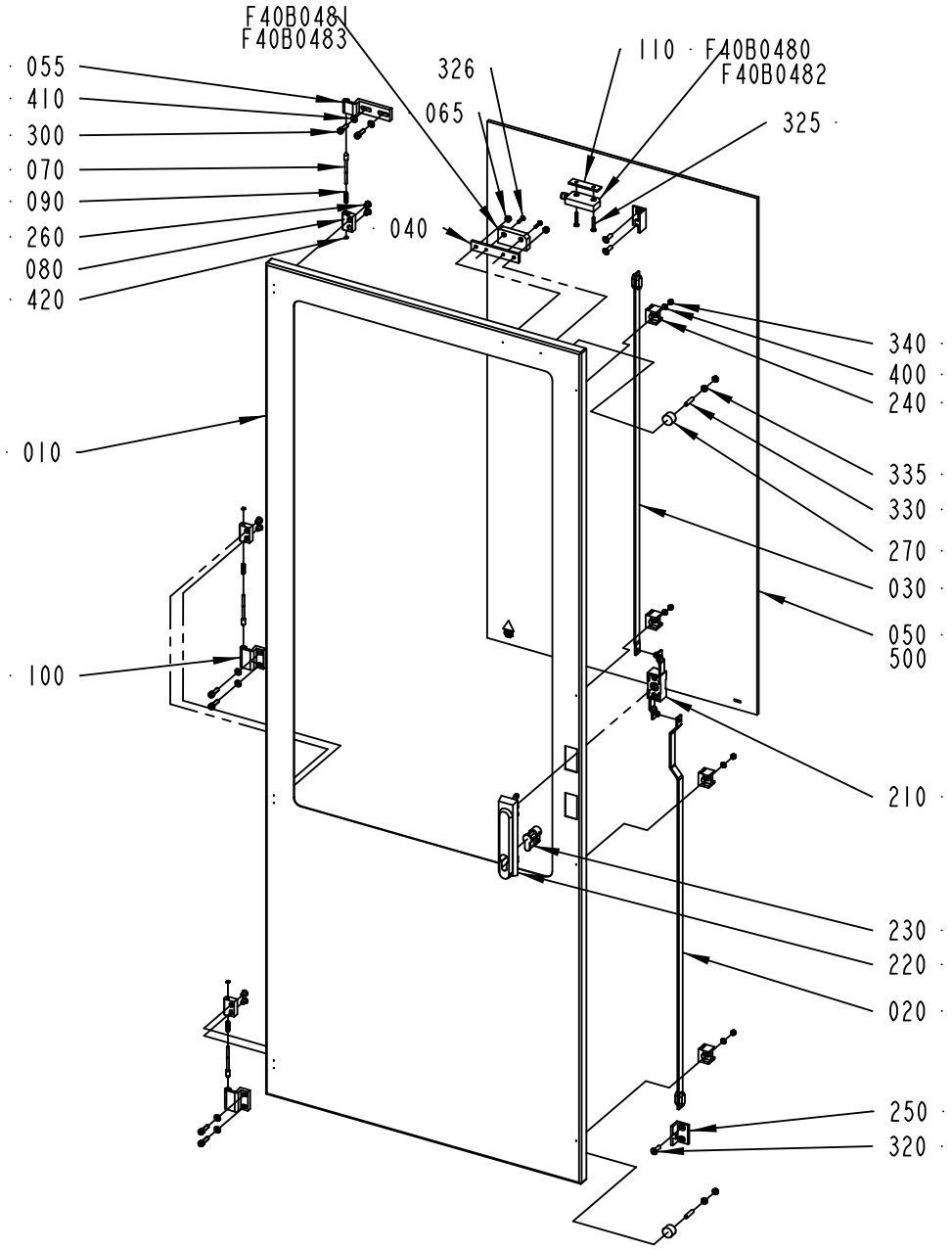

2833983-1
627532

ECM: 630425 - 20130919
Group number: 2833983-0100
Assembly Drawing: 2833983-1_1_AD

Pos	Part No	UN	Qty	Description	Page No
LINF U-FORM, RINF Z-FORM					
F40B0480	90459-4142		1	SAFETY SENSOR, ADAM M12, 20-051-00	
F40B0481	90458-2794		1	SAFETY SENSOR, EVA 20-046-00	
LINF Z-FORM, RINF U-FORM					
F40B0482	90459-4142		1	SAFETY SENSOR, ADAM M12, 20-051-00	
F40B0483	90458-2794		1	SAFETY SENSOR, EVA 20-046-00	
Common Parts					
010	2833982-0000		1	HATCH	
020	2833984-0000		1	STRUT	
030	2833985-0000		1	STRUT	
040	2868042-0000		1	BRACKET	
050	2802466-0009		1	GLASS	
055	975927-0000		1	HINGE FLANGE	
065	575034-0000		2	ROUND NUT	
070	959656-0000		3	COTTER	
080	959657-0000		3	HINGE FLANGE	
090	959658-0000		3	SPRING	
100	975880-0000		2	HINGE FLANGE	
110	2868106-0000		1	WASHER	
210	90237-0123		1	LOCK, 1121-U10C	
220	90237-0175		1	TURNING HANDLE, 1125-U185-0A	
230	90237-0128		1	LOCK CYLINDER, 1109-SU125	
240	90237-0144		4	GUIDE, 1121-SU540	
250	90237-0145		2	CATCH, 1121-53-01P	
260	90287-0205		6	SCREW	
270	90347-0011		2	VIBRATION DAMPER MEGI 781056	
300	312115-0370		6	SCREW ISO4762 M6X20 A4 80	
320	312155-0370		4	SCREW DIN 7991 MF6S M6X20 A4 70	
325	90459-4165		2	SAFETY SCREW, SM4X25	
326	2872726-0000		2	SCREW	
330	312318-0372		2	SET SCREW, CUP END ISO4029 M6X25 A4	
335	312625-0316		4	HEXAGON THIN NUT, EN 24035 ML6M M6 A4	
340	312812-0314		4	HEXAGON NUT, NY-LOCK M5 A4 80	
400	315105-0146		4	WASHER PLAIN, 5,3X10X1 A4 BRB	
410	315105-0153		6	WASHER PLAIN, 6,4X12X1,5 A4 BRB	
420	315755-0105		3	RETAINING RING SHAFT DIN 6799 3,2 SS	
500	90157-0041	L	0.001	SEALING COMPOUND, RHODORSEAL 5651	

Pos	Part No	UN	Qty	Description	Page No

Machine Type | Group Description | Used-In | Group Number | Page No

GLASS DOOR

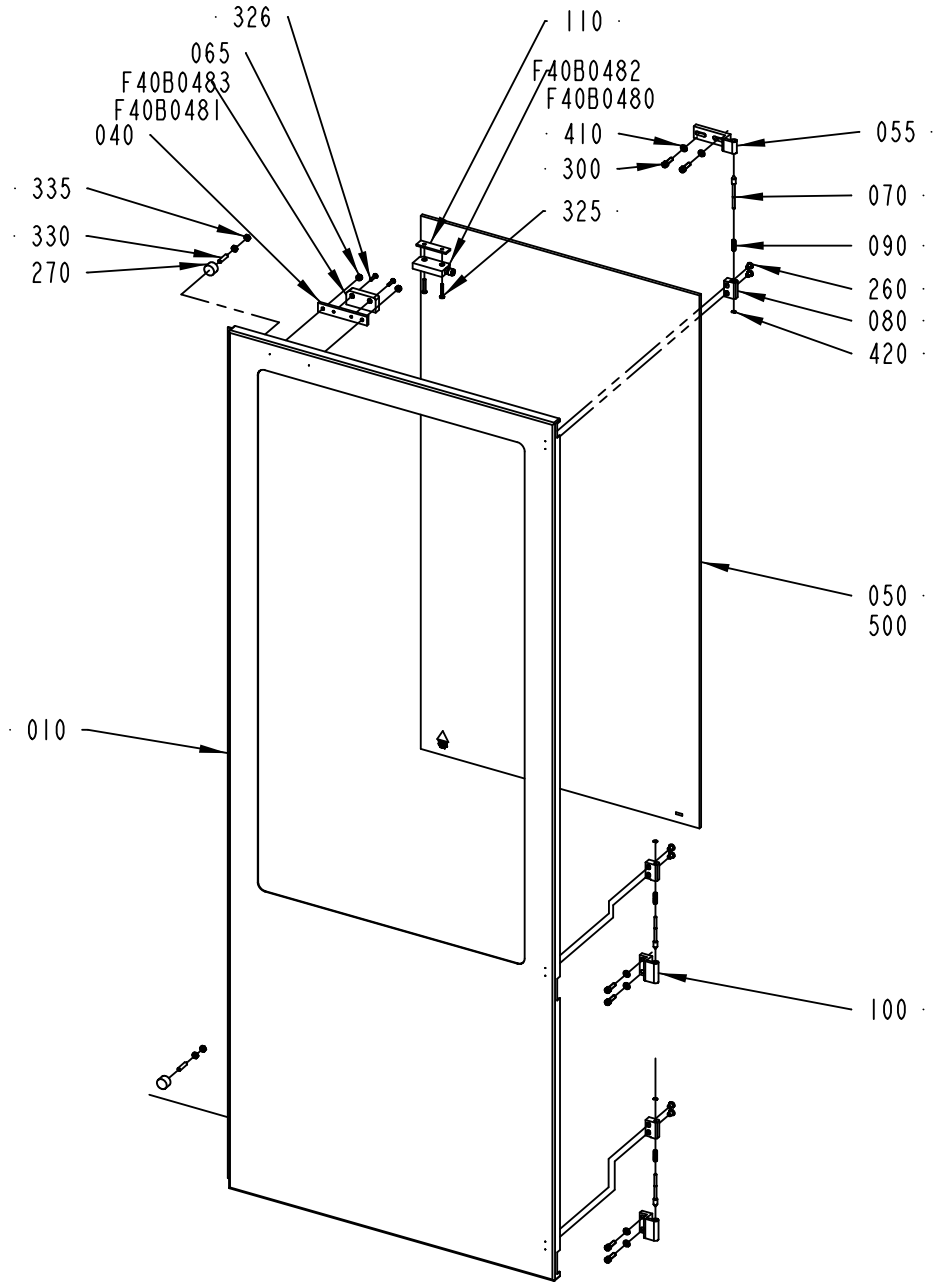

2866317-1
627532

ECM: 630426 - 20130919
Group number: 2866317-0100
Assembly Drawing: 2866317-1_1_AC

Pos	Part No	UN	Qty	Description	Page No
LINF U-FORM, RINF Z-FORM					
F40B0482	90459-4142		1	SAFETY SENSOR, ADAM M12, 20-051-00	
F40B0483	90458-2794		1	SAFETY SENSOR, EVA 20-046-00	
LINF Z-FORM, RINF U-FORM					
F40B0480	90459-4142		1	SAFETY SENSOR, ADAM M12, 20-051-00	
F40B0481	90458-2794		1	SAFETY SENSOR, EVA 20-046-00	
Common Parts					
010	2866318-0000		1	HATCH	
040	2868042-0000		1	BRACKET	
050	2802466-0009		1	GLASS	
055	975927-0000		1	HINGE FLANGE	
065	575034-0000		2	ROUND NUT	
070	959656-0000		3	COTTER	
080	959657-0000		3	HINGE FLANGE	
090	959658-0000		3	SPRING	
100	975880-0000		2	HINGE FLANGE	
110	2868106-0000		1	WASHER	
260	90287-0205		6	SCREW	
270	90347-0011		2	VIBRATION DAMPER MEGI 781056	
300	312115-0370		6	SCREW ISO4762 M6X20 A4 80	
325	90459-4165		2	SAFETY SCREW, SM4X25	
326	2872726-0000		2	SCREW	
330	312318-0372		2	SET SCREW, CUP END ISO4029 M6X25 A4	
335	312625-0316		4	HEXAGON THIN NUT, EN 24035 ML6M M6 A4	
410	315105-0153		6	WASHER PLAIN, 6,4X12X1,5 A4 BRB	
420	315755-0105		3	RETAINING RING SHAFT DIN 6799 3,2 SS	
500	90157-0041	L	0.001	SEALING COMPOUND, RHODORSEAL 5651	

Pos	Part No	UN	Qty	Description	Page No

GLASS DOOR

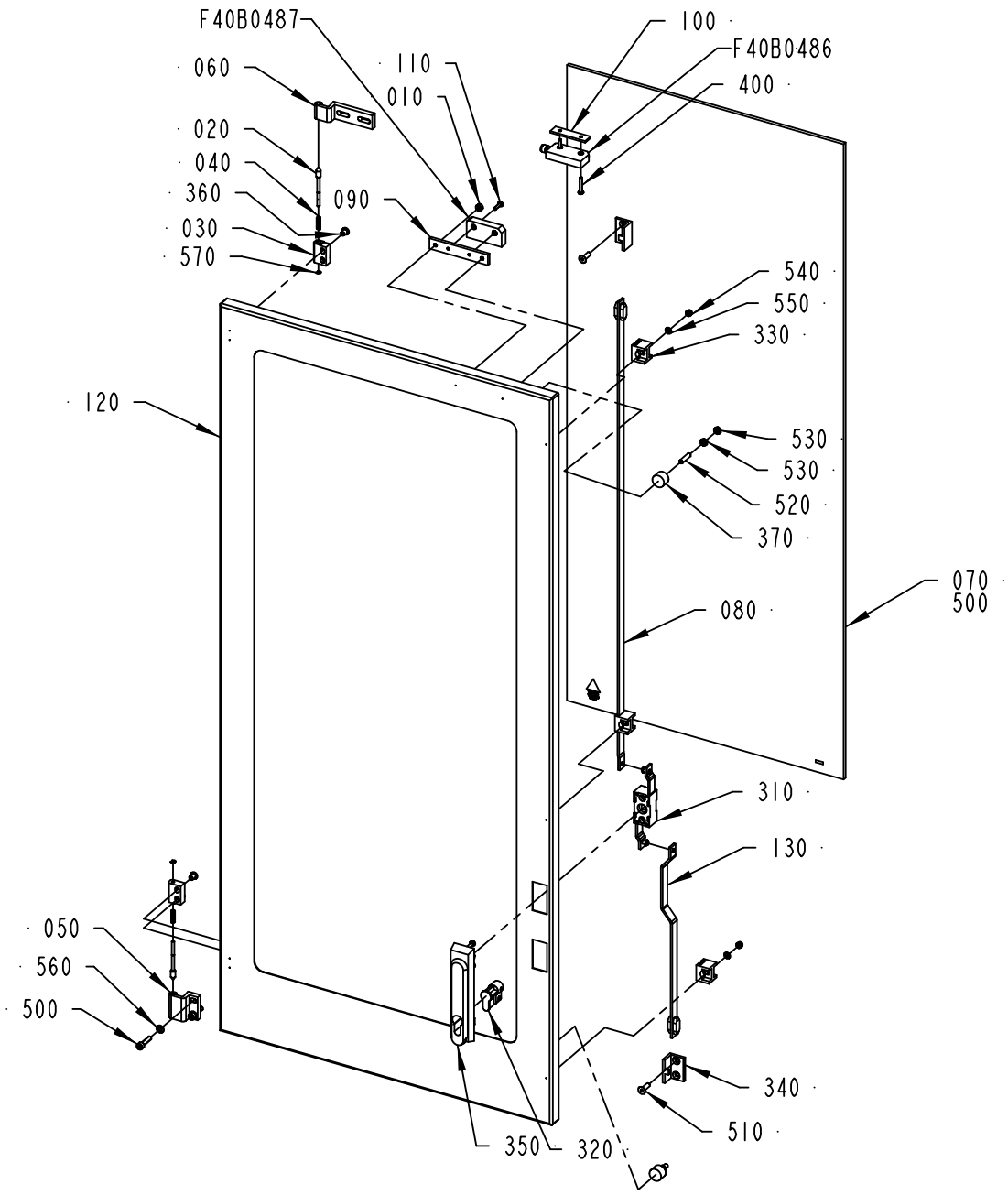

3051570-1
568933

ECM: 577174 - 20120924
Group number: 3051570-0100
Assembly Drawing: 3051570-1_1_AC

Pos	Part No	UN	Qty	Description	Page No
-					
010	575034-0000		2	ROUND NUT	
020	959656-0000		2	COTTER	
030	959657-0000		2	HINGE FLANGE	
040	959658-0000		2	SPRING	
050	975880-0000		1	HINGE FLANGE	
060	975927-0000		1	HINGE FLANGE	
070	2802466-0010		1	GLASS	
080	2833985-0000		1	STRUT	
090	2868042-0000		1	BRACKET	
100	2868106-0000		1	WASHER	
110	2872726-0000		2	SCREW	
120	3051569-0000		1	HATCH	
130	3051571-0000		1	STRUT	
300	90157-0041	L	0.001	SEALING COMPOUND, RHODORSEAL 5651	
310	90237-0123		1	LOCK, 1121-U10C	
320	90237-0128		1	LOCK CYLINDER, 1109-SU125	
330	90237-0144		3	GUIDE, 1121-SU540	
340	90237-0145		2	CATCH, 1121-53-01P	
350	90237-0175		1	TURNING HANDLE, 1125-U185-0A	
360	90287-0205		4	SCREW	
370	90347-0011		2	VIBRATION DAMPER MEGI 781056	
400	90459-4165		2	SAFETY SCREW, SM4X25	
500	312115-0372		4	SCREW ISO4762 M6X25 A4 80	
510	312155-0370		4	SCREW DIN 7991 MF6S M6X20 A4 70	
520	312318-0372		2	SET SCREW, CUP END ISO4029 M6X25 A4	
530	312625-0316		4	HEXAGON THIN NUT, EN 24035 ML6M M6 A4	
540	312812-0314		3	HEXAGON NUT, NY-LOCK M5 A4 80	
550	315105-0146		3	WASHER PLAIN, 5,3X10X1 A4 BRB	
560	315105-0153		4	WASHER PLAIN, 6,4X12X1,5 A4 BRB	
570	315755-0105		2	RETAINING RING SHAFT DIN 6799 3,2 SS	
F40B0486	90459-4142		1	SAFETY SENSOR, ADAM M12, 20-051-00	
F40B0487	90458-2794		1	SAFETY SENSOR, EVA 20-046-00	

Pos	Part No	UN	Qty	Description	Page No

Machine Type | Group Description | Used-In | Group Number | Page No

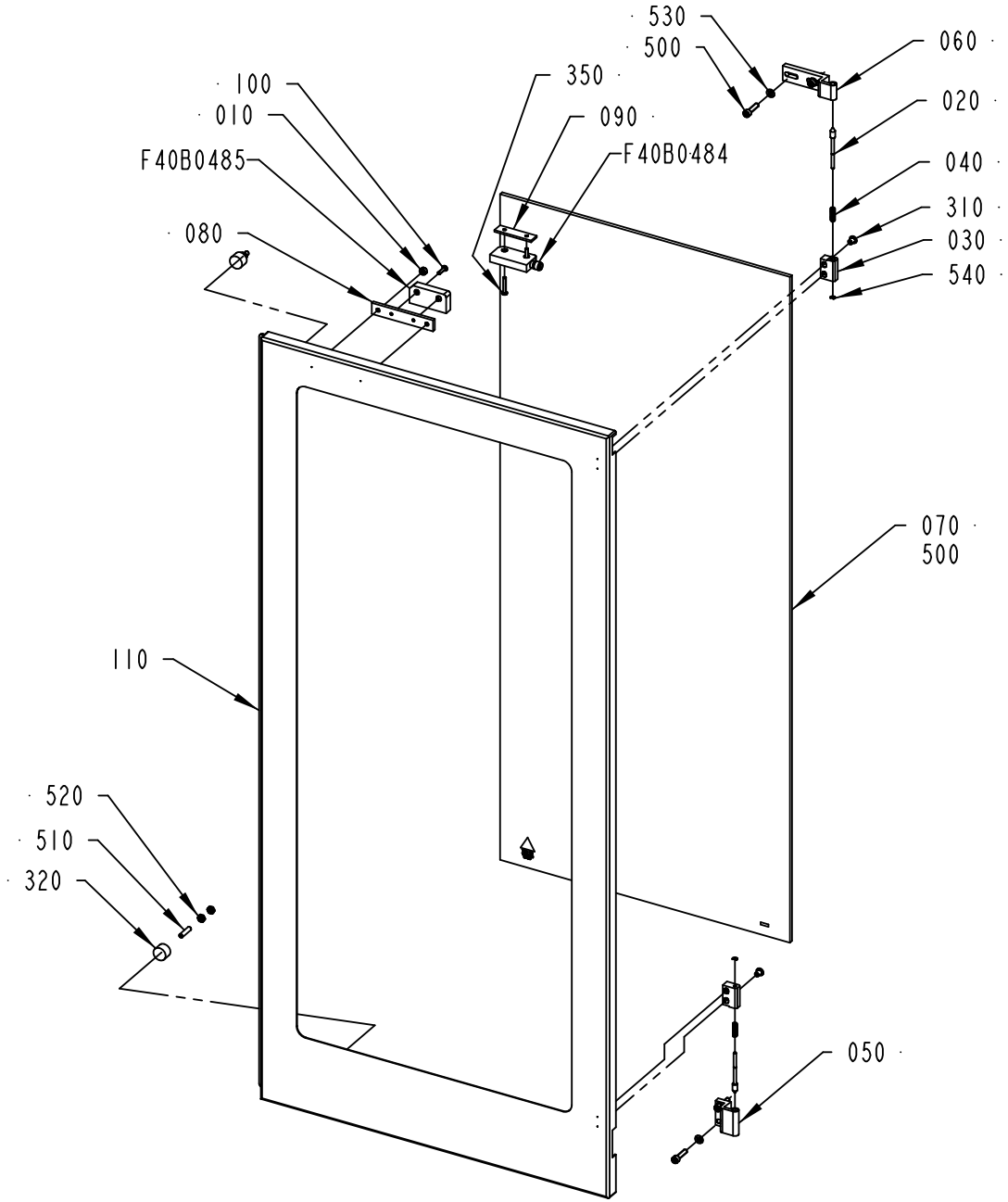

3051572-1
568933

ECM: 577175 - 20120924
Group number: 3051572-0100
Assembly Drawing: 3051572-1_1_AB

Pos	Part No	UN	Qty	Description	Page No
-					
010	575034-0000		2	ROUND NUT	
020	959656-0000		2	COTTER	
030	959657-0000		2	HINGE FLANGE	
040	959658-0000		2	SPRING	
050	975880-0000		1	HINGE FLANGE	
060	975927-0000		1	HINGE FLANGE	
070	2802466-0010		1	GLASS	
080	2868042-0000		1	BRACKET	
090	2868106-0000		1	WASHER	
100	2872726-0000		2	SCREW	
110	3051573-0000		1	HATCH	
300	90157-0041	L	0.001	SEALING COMPOUND, RHODORSEAL 5651	
310	90287-0205		4	SCREW	
320	90347-0011		2	VIBRATION DAMPER MEGI 781056	
350	90459-4165		2	SAFETY SCREW, SM4X25	
500	312115-0372		4	SCREW ISO4762 M6X25 A4 80	
510	312318-0372		2	SET SCREW, CUP END ISO4029 M6X25 A4	
520	312625-0316		4	HEXAGON THIN NUT, EN 24035 ML6M M6 A4	
530	315105-0153		4	WASHER PLAIN, 6,4X12X1,5 A4 BRB	
540	315755-0105		2	RETAINING RING SHAFT DIN 6799 3,2 SS	
F40B0484	90459-4142		1	SAFETY SENSOR, ADAM M12, 20-051-00	
F40B0485	90458-2794		1	SAFETY SENSOR, EVA 20-046-00	

Pos	Part No	UN	Qty	Description	Page No

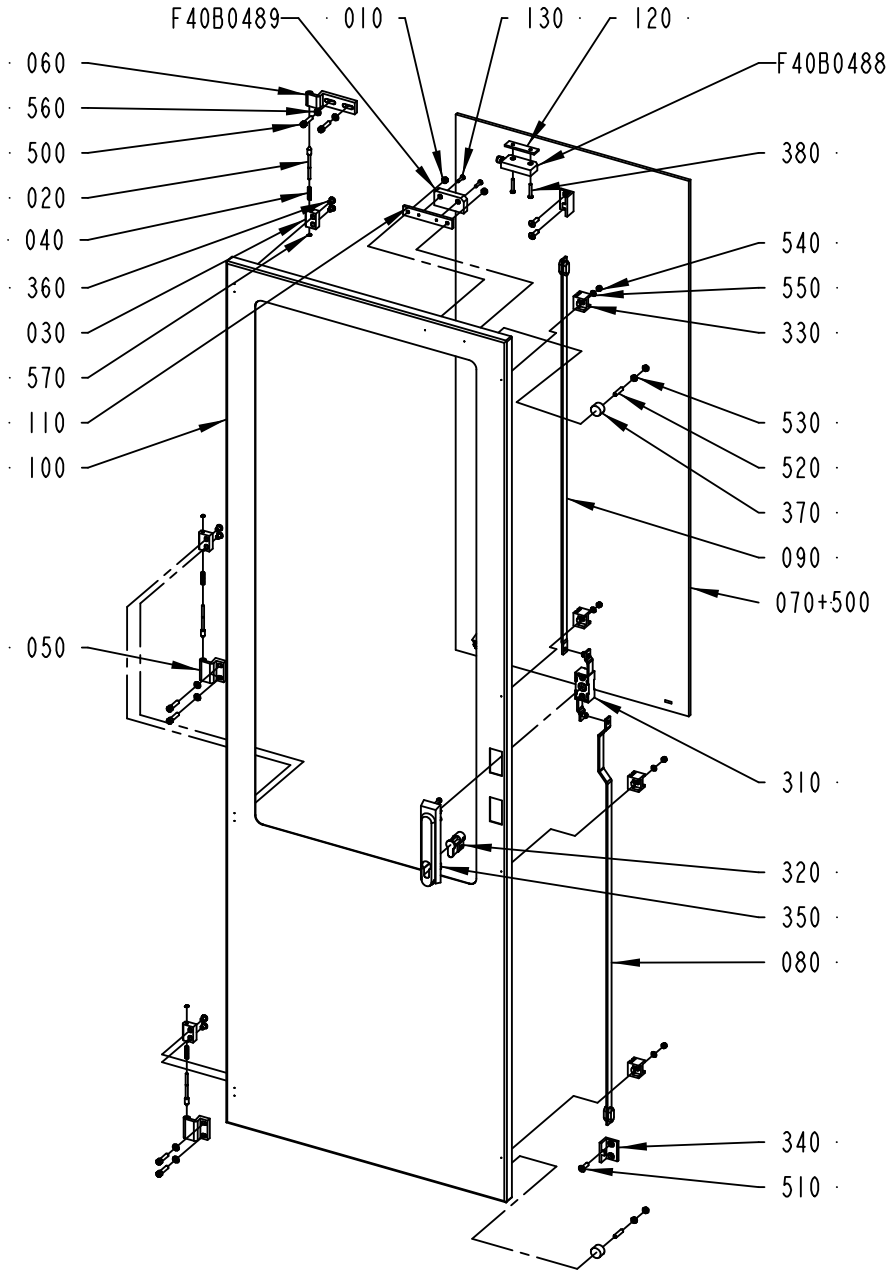

3241283-1
568933

ECM: 577176 - 20120924
Group number: 3241283-0100
Assembly Drawing: 3241283-1_1_AB

Pos	Part No	UN	Qty	Description	Page No
LINF U-FORM, RINF Z-FORM					
100	2866320-0000		1	HATCH	
LINF Z-FORM, RINF U-FORM					
100	3138436-0000		1	HATCH	
Common Parts					
010	575034-0000		2	ROUND NUT	
020	959656-0000		3	COTTER	
030	959657-0000		3	HINGE FLANGE	
040	959658-0000		3	SPRING	
050	975880-0000		2	HINGE FLANGE	
060	975927-0000		1	HINGE FLANGE	
070	2802466-0010		1	GLASS	
080	2833984-0000		1	STRUT	
090	2833985-0000		1	STRUT	
110	2868042-0000		1	BRACKET	
120	2868106-0000		1	WASHER	
130	2872726-0000		2	SCREW	
300	90157-0041	L	1	SEALING COMPOUND, RHODORSEAL 5651	
310	90237-0123		1	LOCK, 1121-U10C	
320	90237-0128		1	LOCK CYLINDER, 1109-SU125	
330	90237-0144		4	GUIDE, 1121-SU540	
340	90237-0145		2	CATCH, 1121-53-01P	
350	90237-0175		1	TURNING HANDLE, 1125-U185-0A	
360	90287-0205		6	SCREW	
370	90347-0011		2	VIBRATION DAMPER MEGI 781056	
380	90459-4165		2	SAFETY SCREW, SM4X25	
500	312115-0372		6	SCREW ISO4762 M6X25 A4 80	
510	312155-0370		4	SCREW DIN 7991 MF6S M6X20 A4 70	
520	312318-0372		2	SET SCREW, CUP END ISO4029 M6X25 A4	
530	312625-0316		4	HEXAGON THIN NUT, EN 24035 ML6M M6 A4	
540	312812-0314		4	HEXAGON NUT, NY-LOCK M5 A4 80	
550	315105-0146		4	WASHER PLAIN, 5,3X10X1 A4 BRB	
560	315105-0153		6	WASHER PLAIN, 6,4X12X1,5 A4 BRB	
570	315755-0105		3	RETAINING RING SHAFT DIN 6799 3,2 SS	
F40B0488	90459-4142		1	SAFETY SENSOR, ADAM M12, 20-051-00	
F40B0489	90458-2794		1	SAFETY SENSOR, EVA 20-046-00	

Pos	Part No	UN	Qty	Description	Page No

Machine Type | Group Description | Used-In | Group Number | Page No

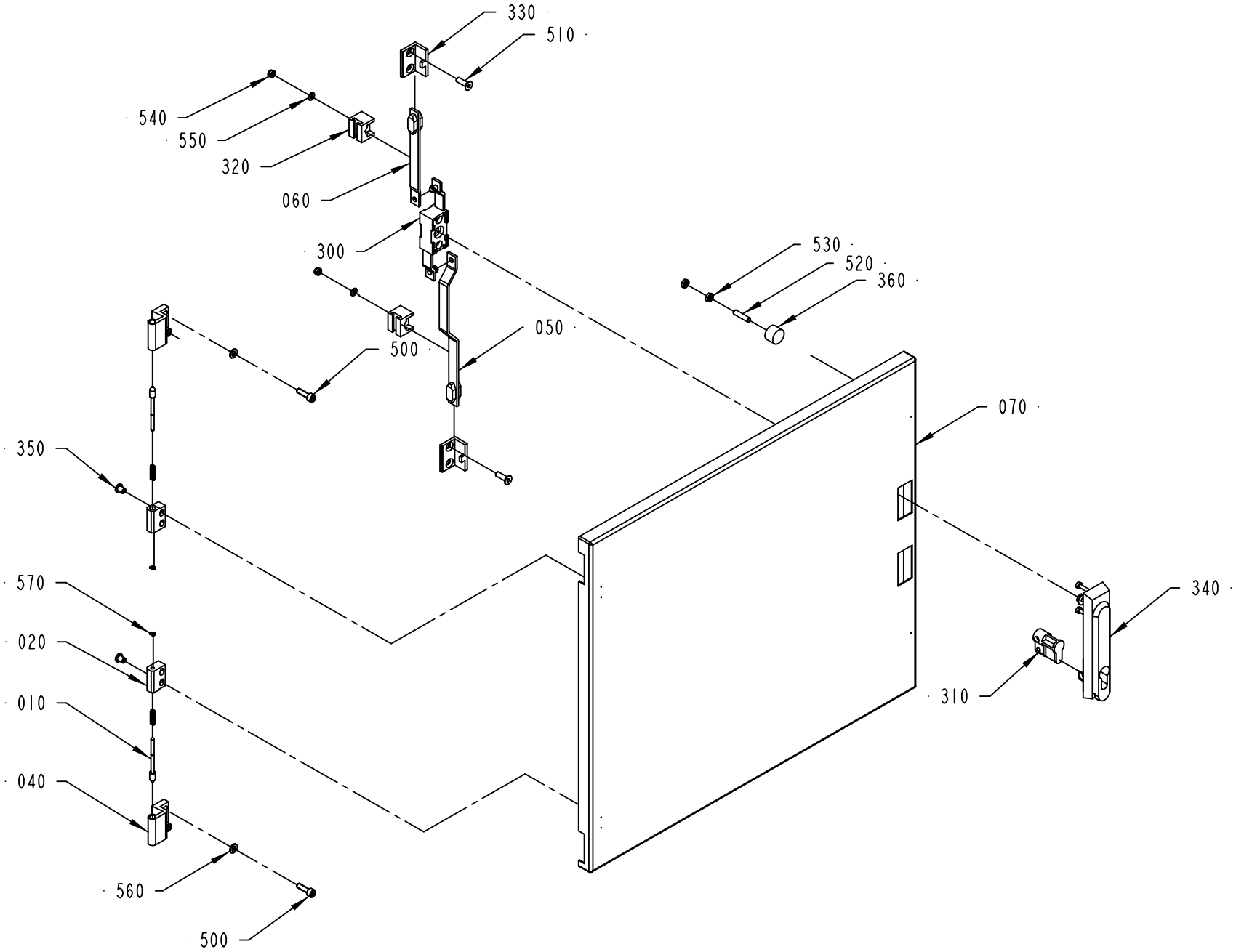

3051567-1
627532

ECM: 630427 - 20130919
Group number: 3051567-0100
Assembly Drawing: 3051567-1_1_AB

Pos	Part No	UN	Qty	Description	Page No
-					
010	959656-0000		2	COTTER	
020	959657-0000		2	HINGE FLANGE	
030	959658-0000		2	SPRING	
040	975880-0000		2	HINGE FLANGE	
050	975888-0002		1	STRUT	
060	975889-0005		1	STRUT	
070	3051568-0000		1	HATCH	
300	90237-0123		1	LOCK, 1121-U10C	
310	90237-0128		1	LOCK CYLINDER, 1109-SU125	
320	90237-0144		2	GUIDE, 1121-SU540	
330	90237-0145		2	CATCH, 1121-53-01P	
340	90237-0175		1	TURNING HANDLE, 1125-U185-0A	
350	90287-0205		4	SCREW	
360	90347-0011		2	VIBRATION DAMPER MEGI 781056	
500	312115-0370		4	SCREW ISO4762 M6X20 A4 80	
510	312155-0370		4	SCREW DIN 7991 MF6S M6X20 A4 70	
520	312318-0372		2	SET SCREW, CUP END ISO4029 M6X25 A4	
530	312625-0316		4	HEXAGON THIN NUT, EN 24035 ML6M M6 A4	
540	312812-0314		2	HEXAGON NUT, NY-LOCK M5 A4 80	
550	315105-0146		2	WASHER PLAIN, 5,3X10X1 A4 BRB	
560	315105-0153		4	WASHER PLAIN, 6,4X12X1,5 A4 BRB	
570	315755-0105		2	RETAINING RING SHAFT DIN 6799 3,2 SS	

Pos	Part No	UN	Qty	Description	Page No

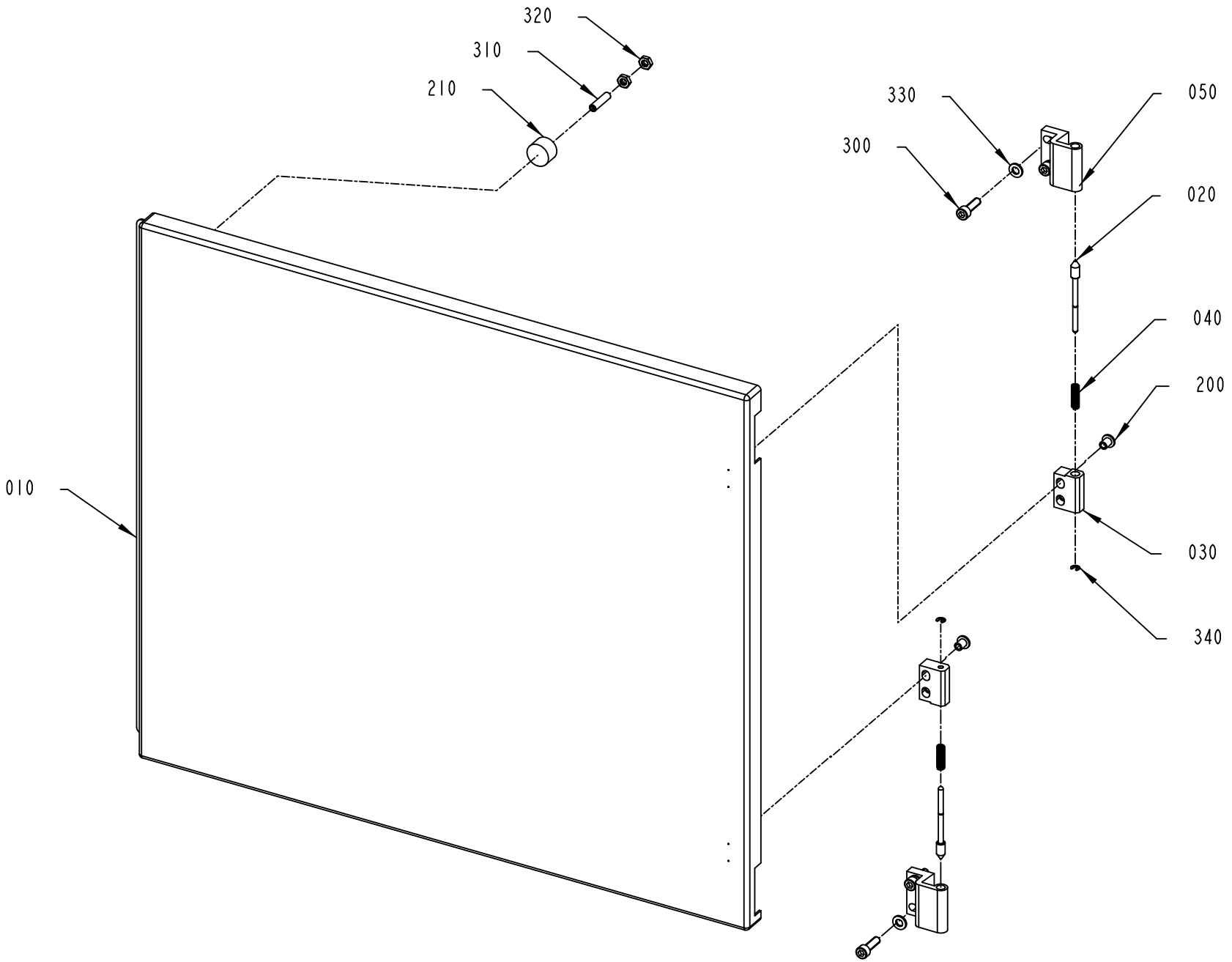

3051565-1
627532

ECM: 630428 - 20130919
Group number: 3051565-0100
Assembly Drawing: 3051565-1_1_AB

Pos	Part No	UN	Qty	Description	Page No
-					
010	3051566-0000		1	HATCH	
020	959656-0000		2	COTTER	
030	959657-0000		2	HINGE FLANGE	
040	959658-0000		2	SPRING	
050	975880-0000		2	HINGE FLANGE	
200	90287-0205		4	SCREW	
210	90347-0011		2	VIBRATION DAMPER MEGI 781056	
300	312115-0370		4	SCREW ISO4762 M6X20 A4 80	
310	312318-0372		2	SET SCREW, CUP END ISO4029 M6X25 A4	
320	312625-0316		4	HEXAGON THIN NUT, EN 24035 ML6M M6 A4	
330	315105-0153		4	WASHER PLAIN, 6,4X12X1,5 A4 BRB	
340	315755-0105		2	RETAINING RING SHAFT DIN 6799 3,2 SS	

Pos	Part No	UN	Qty	Description	Page No

Tetra Pak

SPC
Spare Parts Catalogue

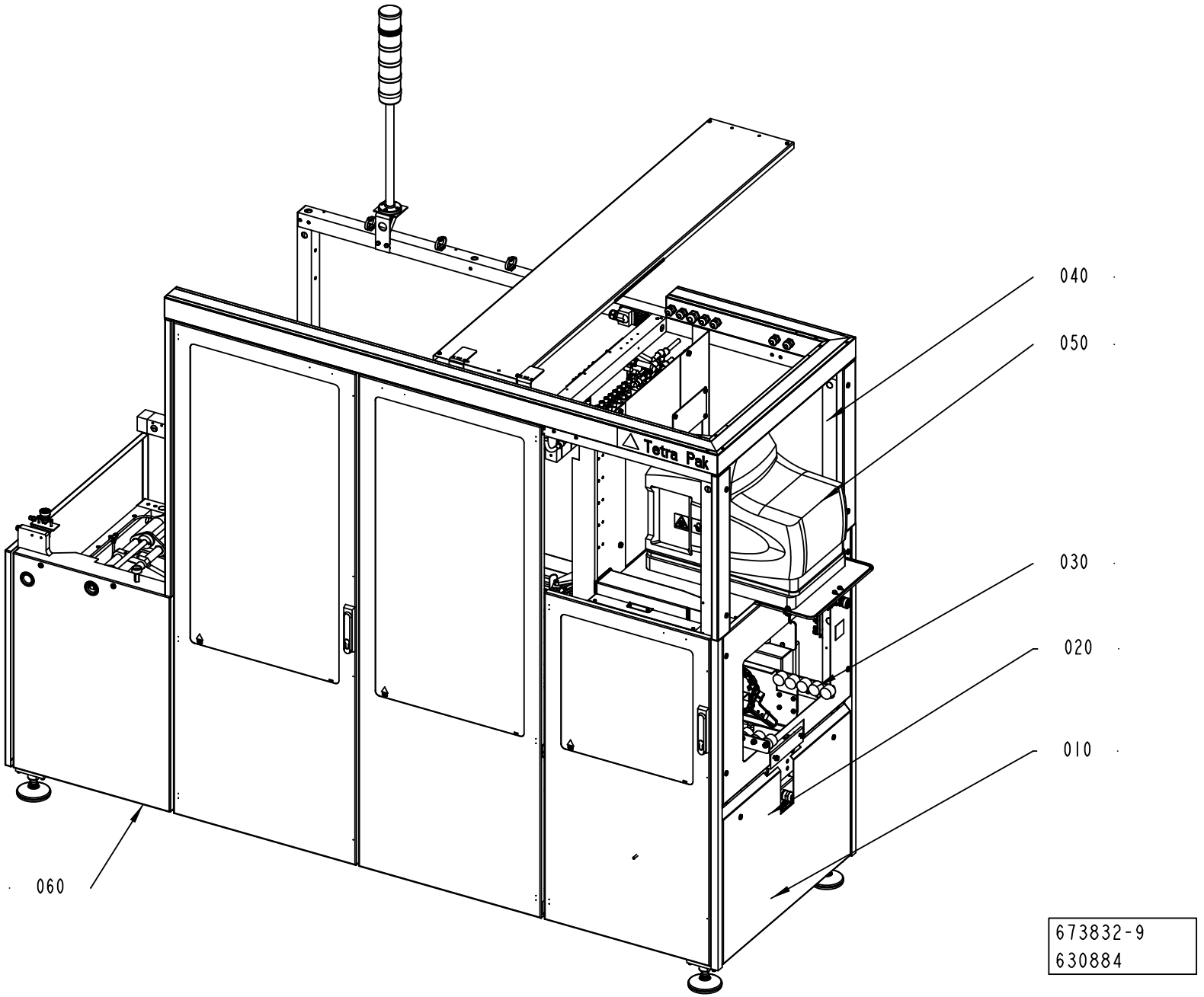
040
050
030
020
010
060
Tetra Pak
673832-9
630884

ECM: 662294 - 20140312
Group number: 673832-0500
Assembly Drawing: 673832-9_1_AB

This list covers pages from 3-2 to 3-5

Pos	Part No	UN	Qty	Description	Page No
-					
010	2771136-0500		1	BOTTOM SECTION	**3-7**
020	3249942-0100		1	DRIVE UNIT	**3-29**
030	3223850-0100		1	FEED UNIT	**3-39**
040	2771175-0500		1	UPPER SECTION	**3-91, 3-93, 3-95, 3-97**
050	2771176-0400		1	HOTMELT UNIT	**3-131**
060	2771151-0500		1	COVERING TRAY FORMING	**3-145, 3-147**

Pos	Part No	UN	Qty	Description	Page No

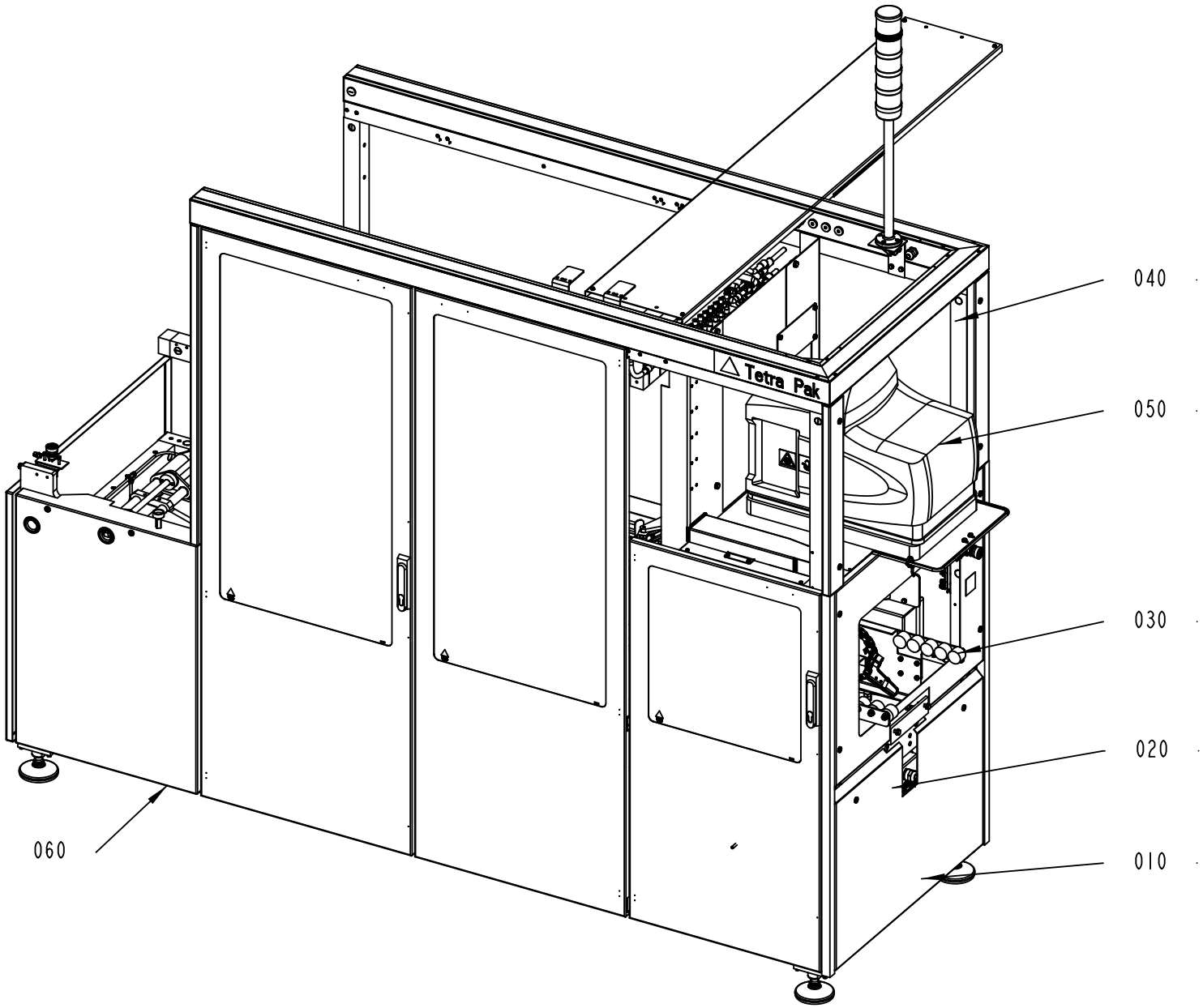

673832-10
630884

ECM: 662294 - 20140312
Group number: 673832-0500
Assembly Drawing: 673832-10_1_AB

This list covers pages from 3-2 to 3-5

Pos	Part No	UN	Qty	Description	Page No
-					
010	2771136-0500		1	BOTTOM SECTION	**3-7**
020	3249942-0100		1	DRIVE UNIT	**3-29**
030	3223850-0100		1	FEED UNIT	**3-39**
040	2771175-0500		1	UPPER SECTION	**3-91, 3-93, 3-95, 3-97**
050	2771176-0400		1	HOTMELT UNIT	**3-131**
060	2771151-0500		1	COVERING TRAY FORMING	**3-145, 3-147**

Pos	Part No	UN	Qty	Description	Page No

BOTTOM SECTION

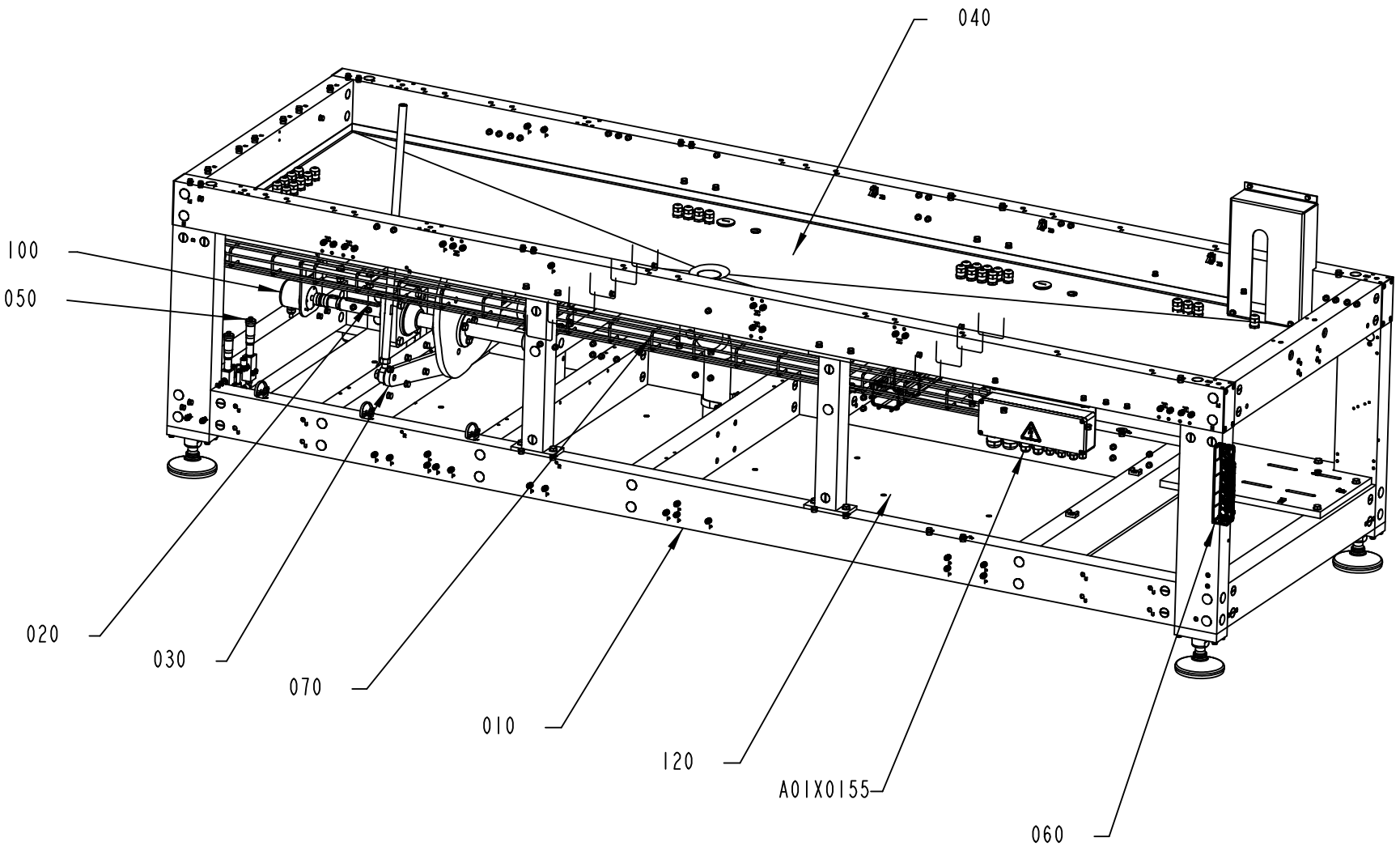

2771136-5
555186

ECM: 567455 - 20120710
Group number: 2771136-0500
Assembly Drawing: 2771136-5_1_AA

Pos	Part No	UN	Qty	Description	Page No
-					
010	3241271-0100		1	LOWER MACHINE BODY	**3-9**
020	3238154-0100		1	MAIN SHAFT	**3-11**
030	1021000-0600		1	CURVE ARM MAGAZINE	**3-13**
040	3238136-0100		1	COVERING PLATE	**3-15**
050	3251394-0100		1	EJECTOR	**3-17**
060	2763114-0300		1	REMOTE I/O	**3-19**
070	3249934-0100		1	CABLE DUCT	**3-21**
100	3238157-0100		1	ENCODER MAIN SHAFT	**3-23**
120	1128833-0400		1	COVERING PLATE	**3-25**
A01X0155	1021897-0500		1	CONNECTION BOX	**3-27**

Pos	Part No	UN	Qty	Description	Page No

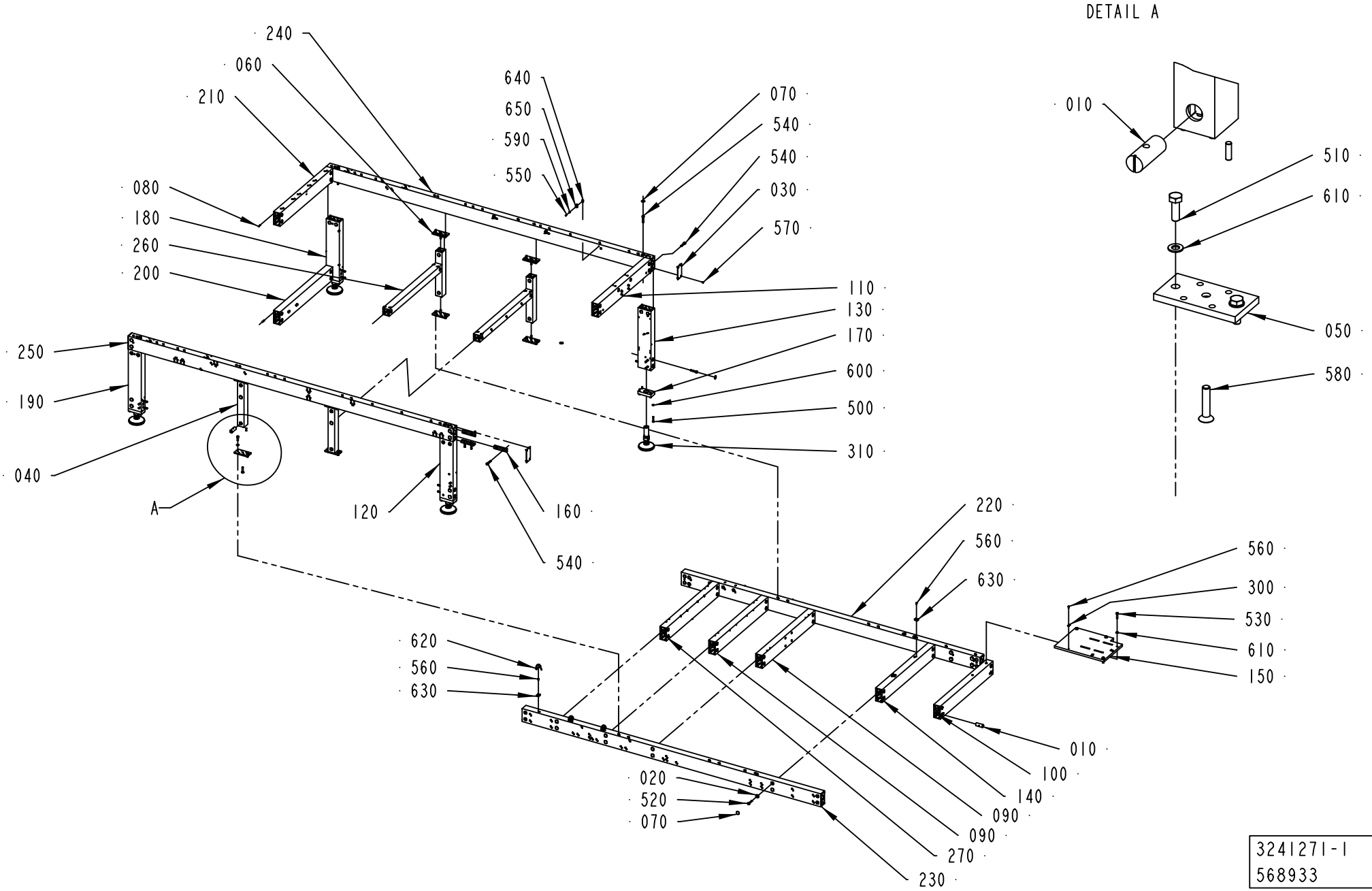
DETAIL A
240
060
210
640
650
590
550
070
540
540
030
570
080
180
260
200
110
130
170
600
500
310
250
190
040
A
120
160
540
220
560
630
620
560
630
020
520
070
270
230
090
090
140
100
010
010
510
610
050
580
560
300
530
610
150
3241271-1
568933

ECM: 577177 - 20120924
Group number: 3241271-0100
Assembly Drawing: 3241271-1_1_AB

Pos	Part No	UN	Qty	Description	Page No
-					
010	486268-0000		60	NUT	
020	90600-5066		20	WASHER PLAIN, DIN7349 8,4X21X4 A4	
030	556603-0000		4	COVER PLATE	
040	556620-0000		4	PROFILE	
050	556624-0000		4	FRAME BRACKET	
060	1021031-0000		4	BRACKET	
070	1021933-0000		83	TAPE	
080	1065410-0000		144	SLOTTED PIN	
090	1521213-0000		2	PROFILE	
100	1521235-0000		1	PROFILE	
110	2771131-0000		1	PROFILE 50X100	
120	2877471-0000		1	PROFILE 50X100	
130	2877474-0000		1	PROFILE 50X100	
140	2894954-0000		1	PROFILE 50X100	
150	2920754-0000		1	MOTOR PLATE	
160	3023843-0000		20	FORCE PLATE	
170	3234425-0000		4	FRAME BRACKET	
180	3249924-0000		1	PROFILE 50X100	
190	3249925-0000		1	PROFILE 50X100	
200	3249926-0000		1	PROFILE 50X100	
210	3249928-0000		1	PROFILE 50X100	
220	3249929-0000		1	PROFILE 50X100	
230	3249930-0000		1	PROFILE 50X100	
240	3249931-0000		1	PROFILE 50X100	
250	3249932-0000		1	PROFILE 50X100	
260	3249933-0000		2	PROFILE 50X50	
270	3249943-0000		1	PROFILE 50X100	
300	90165-0003		3	PE CLIP FOR TUBE D=4 MM	
310	90604-9686		4	FOOT 2200KG, XH105-XH-HL-3A-FA-Ø36X24	
500	312105-0376		16	SCREW, M6S ISO 4014 M6X35 A4 80	
510	312105-0453		16	SCREW, M6S ISO 4017 M8X25 A4 80	
520	312105-0459		20	SCREW, M6S ISO 4014 M8X40 A4 80	
530	312109-0457		4	SCREW, M6S ISO 4017 M8X35 A4 80	
540	312115-0459		32	SCREW ISO4762 M8X40 A4 80	
550	312125-0289		3	SCREW	
560	312132-0289		8	SLOTTED HEAD, PAN SCREW, MSCS M4X10	
570	312145-0325		16	SCREW ISO 2009 MFS M5X10 A4	
580	312155-0459		8	SCREW DIN 7991 MF6S M8X40 A4 70	
590	315105-0136		3	WASHER PLAIN, 4,3X9X0,8 A4 BRB	
600	315105-0153		16	WASHER PLAIN, 6,4X12X1,5 A4 BRB	
610	315105-0165		20	FWAS080G0-0S, WASHER PLAIN	
620	352113-0102		3	CABLE TIE, BLACK 188X4,8 MM	
630	352113-0203		5	ANCHOR PLATES FOR STRIPS, TM3S8-M0	
640	352113-0205		3	ANCHOR PLATES FOR STRIPS, TM2S8-C100	
650	352113-0102		3	CABLE TIE, BLACK 188X4,8 MM	

Machine Type	Group Description	Used-In	Group Number	Page No

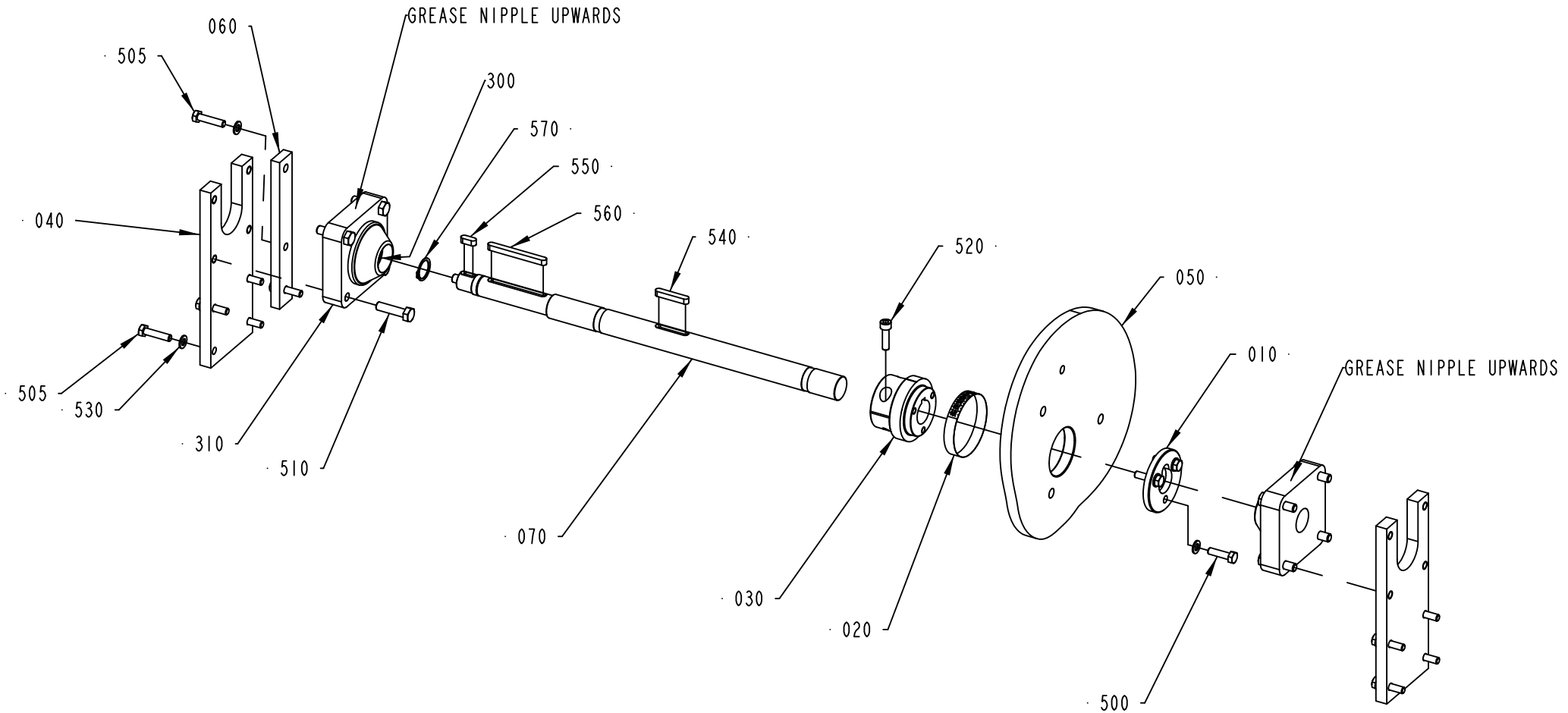

3238154-1
630884

ECM: 646225 - 20131125
Group number: 3238154-0100
Assembly Drawing: 3238154-1_1_AC

Pos	Part No	UN	Qty	Description	Page No
-					
010	556649-0000		1	WASHER	
020	1021946-0000		1	DIAL	
030	1466149-0000		1	HUB	
040	1502071-0000		2	BEARING PLATE	
050	1502074-0000		1	CAM	
060	2877541-0000		1	BAR	
070	3238155-0000		1	SHAFT	
300	90296-0068		1	SHELL ALVANIA GREASE EP 2 (CARTR.400G)	
310	90345-0075		2	FLANGE BEARING 30X110X55 MM	
500	312105-0455		3	SCREW, M6S ISO 4017 M8X30 A4 80	
505	312105-0457		10	SCREW, M6S ISO 4014 M8X35 A4 80	
510	312105-0499		8	SCREW, M6S ISO 4014 M10X40 A4 80	
520	312115-0455		2	SCREW ISO4762 M8X30 A4 80	
530	315106-0165		13	WASHER PLAIN, M8 ISO7089-8-200 HV A4	
540	315701-0271		1	PARALLEL KEY W. ROUND ENDS, 8X7X45 MM	
550	315705-0263		1	PARALLEL KEY W. ROUND ENDS, 8X7X20 MM	
560	315705-0277		1	PARALLEL KEY W. ROUND ENDS, 8X7X80 MM	
570	315751-0119		1	RETAINING RING FOR SHAFT DIN 471 25 SS	

Pos	Part No	UN	Qty	Description	Page No

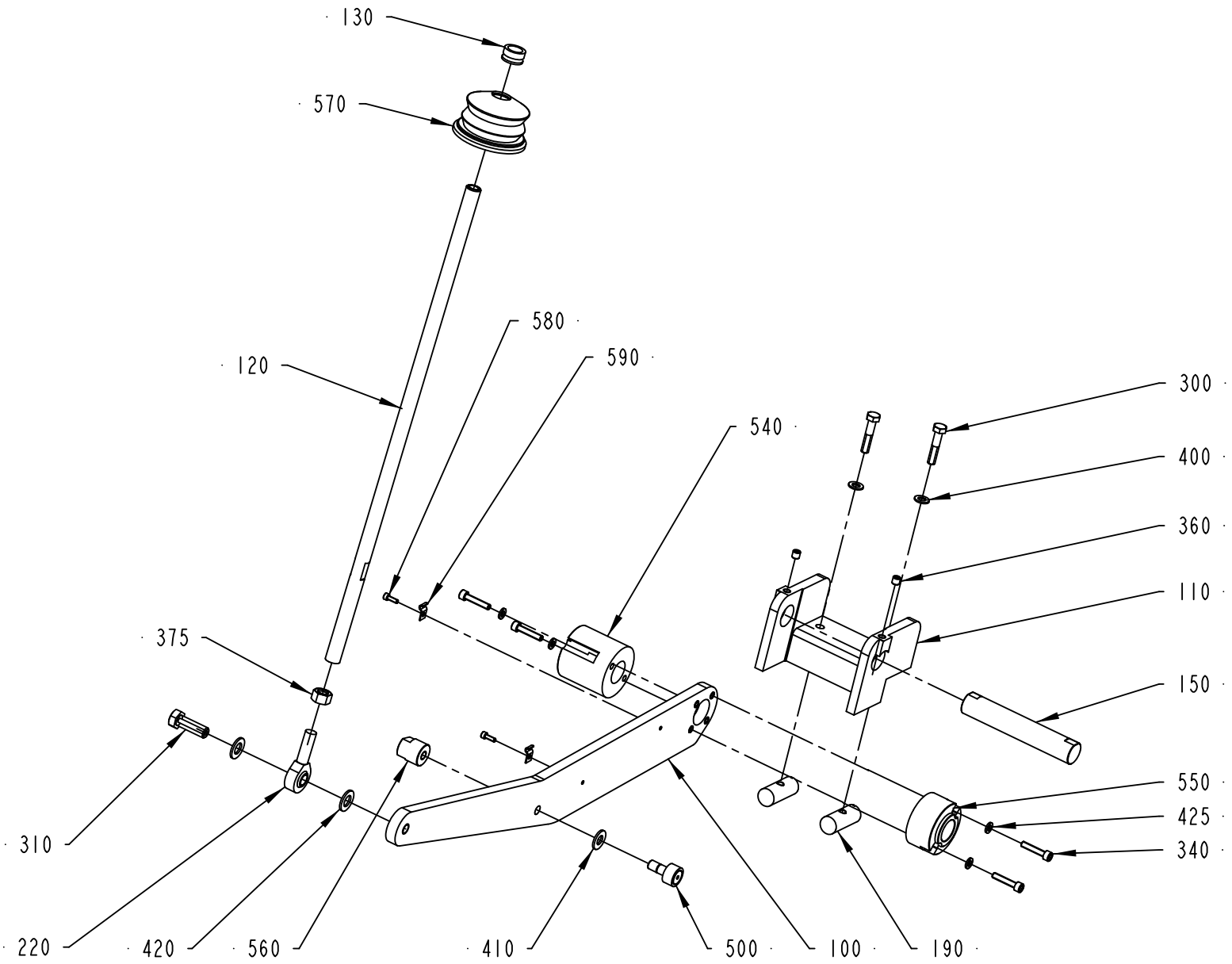

1021000-5
602279

ECM: 614511 - 20130618
Group number: 1021000-0600
Assembly Drawing: 1021000-5_1_AC

Pos	Part No	UN	Qty	Description	Page No
-					
100	1502076-0000		1	ARM	
110	556657-0000		1	HOLDER	
120	2995212-0000		1	LINK ARM	
130	2995213-0000		1	SPACER RING	
150	1021004-0000		1	SHAFT	
190	486268-0000		2	NUT	
220	90115-0152		1	ROD END, ID=12 MM, M12X1,75 LH	
300	312105-0459		2	SCREW, M6S ISO 4014 M8X40 A4 80	
310	312105-0538		1	SCREW, M6S ISO 4017 M12X35 A4 80	
340	312115-0374		4	SCREW ISO4762 M6X30 A4 80	
360	312318-0443		2	SET SCREW, CUP END ISO4029 M8X8 A4	
375	312902-0322		1	NUT HEX. LEFT THREAD, M12 A280	
400	315101-0165		2	WASHER PLAIN, BRB, 8,4/16 H=1,5	
410	315105-0173		1	WASHER PLAIN, 10,5X22X2 A4 BRB	
420	315105-0178		2	WASHER PLAIN, 13X24X2,5 A4 BRB	
425	315106-0153		4	WASHER PLAIN, M6 ISO7089-6-200 HV A4	
500	321582-0149		1	CAM ROLLER, 10X22X36 MM	
540	1502078-0000		1	BEARING	
550	1502079-0000		1	BEARING	
560	2504040-0000		1	NIPPLE	
570	90600-5886		1	BELLOWS, YJYG000055WC615	
580	312115-0291		2	SCREW ISO4762 M4X12 A4 80	
590	90165-0003		2	PE CLIP FOR TUBE D=4 MM	

Pos	Part No	UN	Qty	Description	Page No

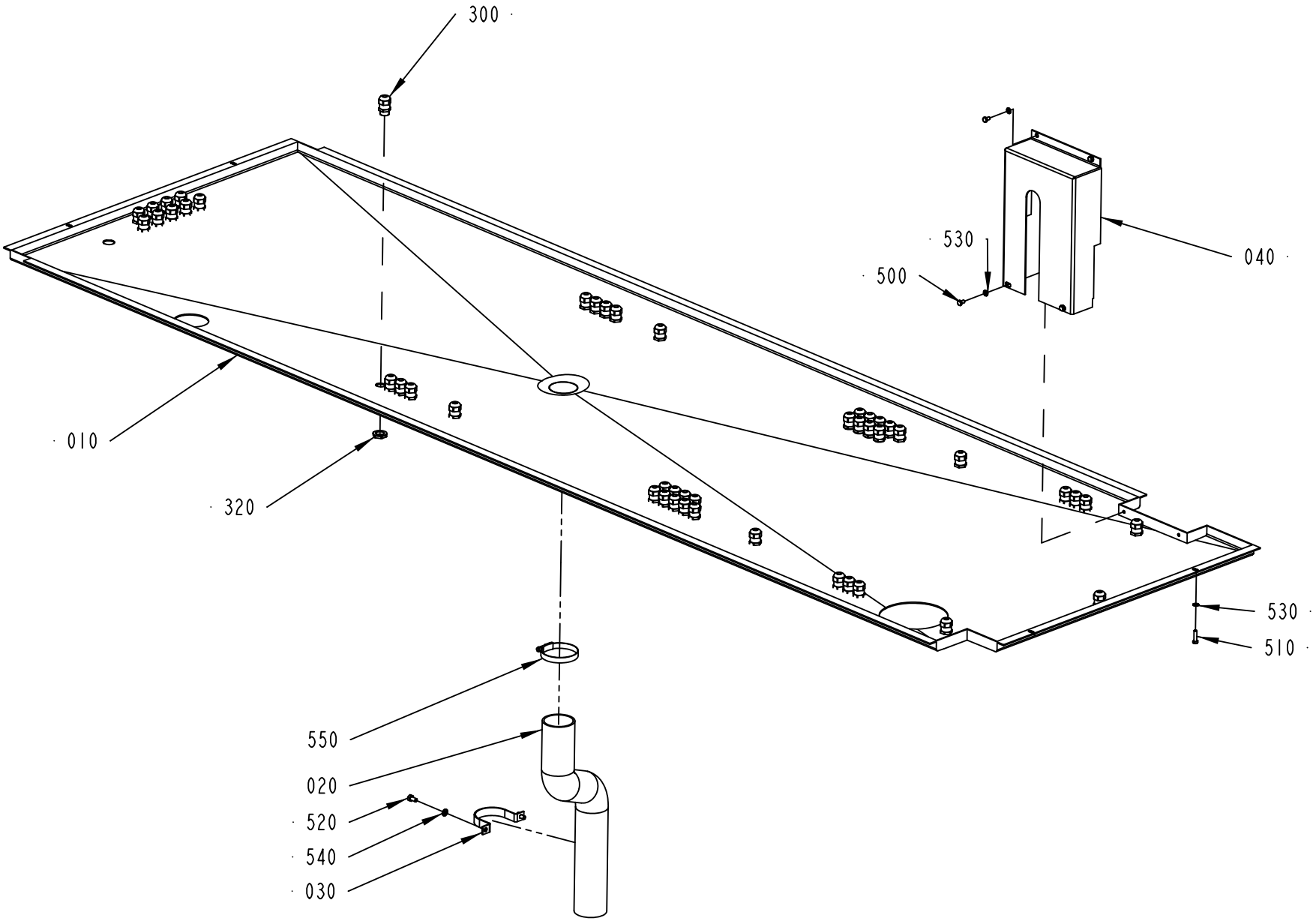

3238136-1
630890

ECM: 646224 - 20131125
Group number: 3238136-0100
Assembly Drawing: 3238136-1_1_AC

Pos	Part No	UN	Qty	Description	Page No
-					
010	3238151-0000		1	COVERING PLATE	
020	1139124-0000		1	HOSE	
030	1139125-0000		1	HOLDER	
040	1543684-0000		1	CHAIN GUARD	
300	90458-0306		48	CABLE GLAND, M16X1,5, 5311 1010	
320	90458-0322		48	NUT, M16X1,5	
500	312105-0323		4	FSCR05080-10, SCREW, M6S	
510	312105-0331		4	SCREW, M6S ISO 4017 M5X20 A4 80	
520	312105-0366		2	SCREW, M6S ISO 4017 M6X12 A4 80	
530	315105-0146		8	WASHER PLAIN, 5,3X10X1 A4 BRB	
540	315105-0153		2	WASHER PLAIN, 6,4X12X1,5 A4 BRB	
550	342991-0110		1	HOSE CLIP,WORM DRIVE TYPE (50)-65	

Pos	Part No	UN	Qty	Description	Page No

This page is intentionally left blank.

ECM: 662295 - 20140312
Group number: 3251394-0100
Assembly Drawing:

Pos	Part No	UN	Qty	Description	Page No
-					
300	90459-0698		2	PLUG, G1/8EXT, G1/8	
500	312105-0337		4	SCREW, M6S ISO 4014 M5X35 A4 80	
510	315106-0146		4	WASHER PLAIN, M5 ISO7089-5-200 HV A4	
520	350002-0007		4	PUSH-IN L-FITTING QSL-F-G1/8-8	
530	350005-0003		1	PUSH-IN T-FITTING QST-F-8	
540	350012-0003		2	SLEEVE QSH-F-8	
A01W0601	315400-0004	M	4.6	TUBE PUN-H-8X1,25-BL	
U50K0260	90604-6804		1	PIAB 811-0003	
U50K0270	90604-6804		1	PIAB 811-0003	

Pos	Part No	UN	Qty	Description	Page No

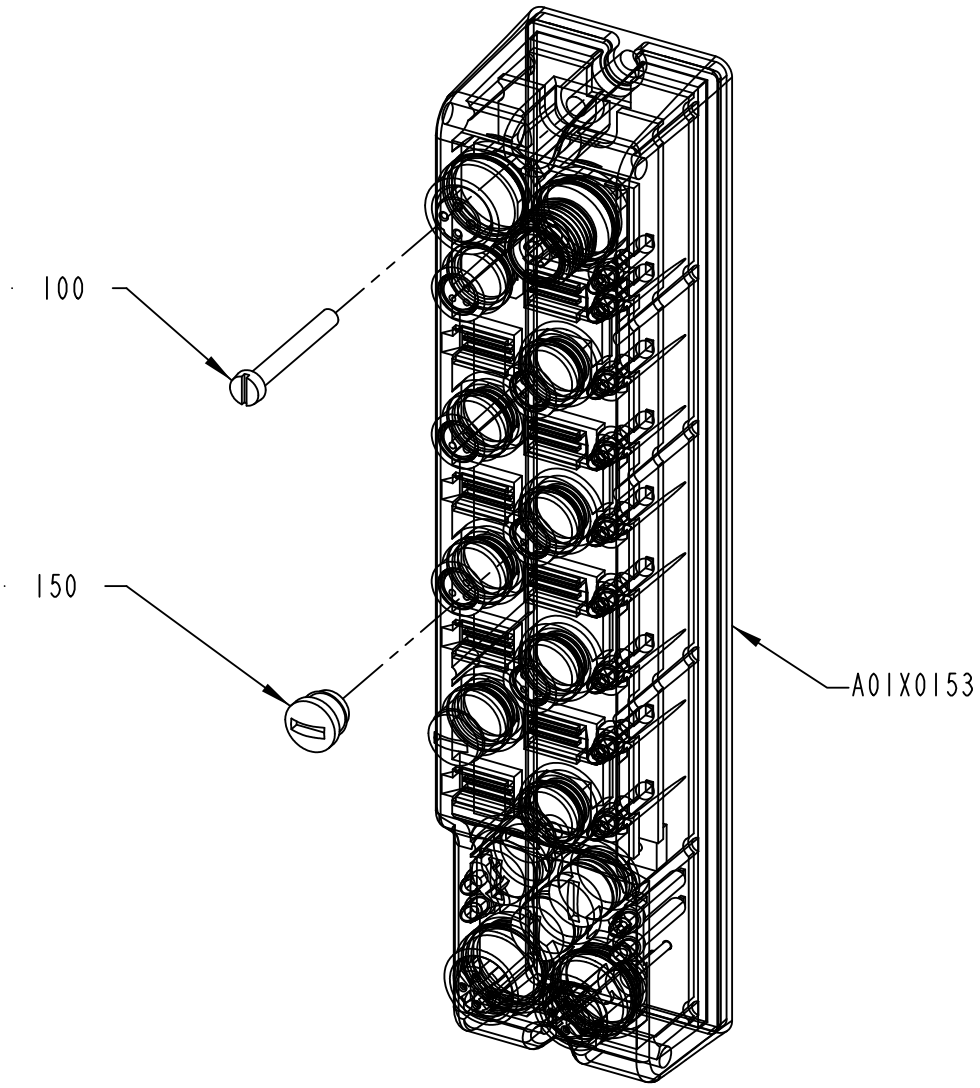

2763114-3
555186

ECM: 567456 - 20120710
Group number: 2763114-0300
Assembly Drawing: 2763114-3_1_AA

Pos	Part No	UN	Qty	Description	Page No
-					
100	312125-0232		2	SLOTTED HEAD SCREW, ISO1207 M3X25 A4	
150	90603-3976		3	PROTECTIVE CAP M8, E11256	
A01X0153	90605-2702		1	ARMORBLOCK MODULE, 1732E-8CFGM8R, SER. A	

Pos	Part No	UN	Qty	Description	Page No

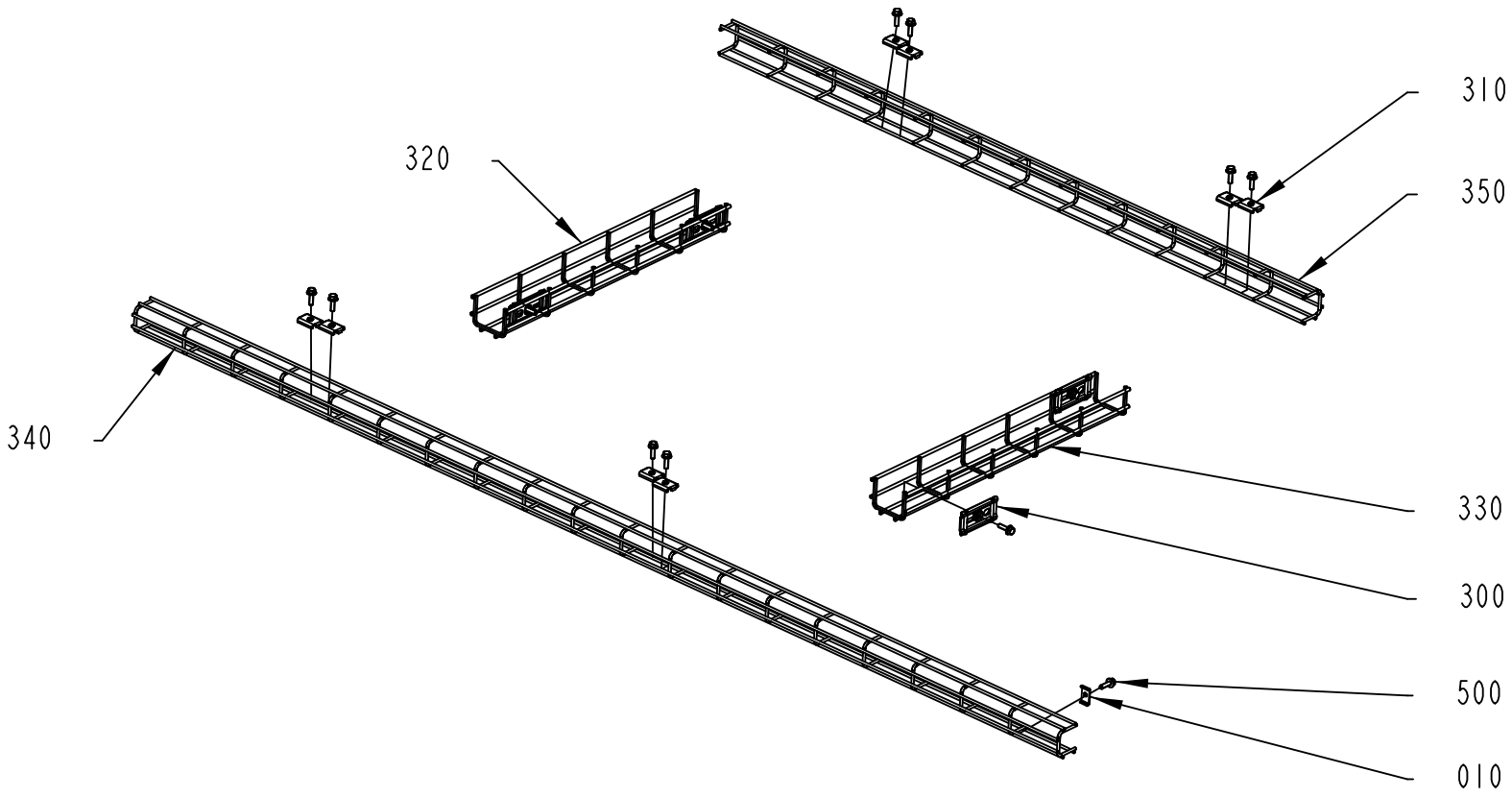

3249934-1
630884

ECM: 646223 - 20131125
Group number: 3249934-0100
Assembly Drawing: 3249934-1_1_AD

Pos	Part No	UN	Qty	Description	Page No
-					
010	3249935-0000		1	BRACKET	
300	90181-0182		4	BRACKET, 1149354	
310	90181-0183		8	CABLE DUCT, FITTING, SB-102-S	
320	90600-2606		1	CABLE DUCT, 75X55 MM	
330	90600-2606		1	CABLE DUCT, 75X55 MM	
340	90600-5980		1	CABLE DUCT, WIRE, 53X45 MM	
350	90600-5980		1	CABLE DUCT, WIRE, 53X45 MM	
500	312108-0370		13	SCREW EN 1665 TYPE F M6X20 A270	

Pos	Part No	UN	Qty	Description	Page No

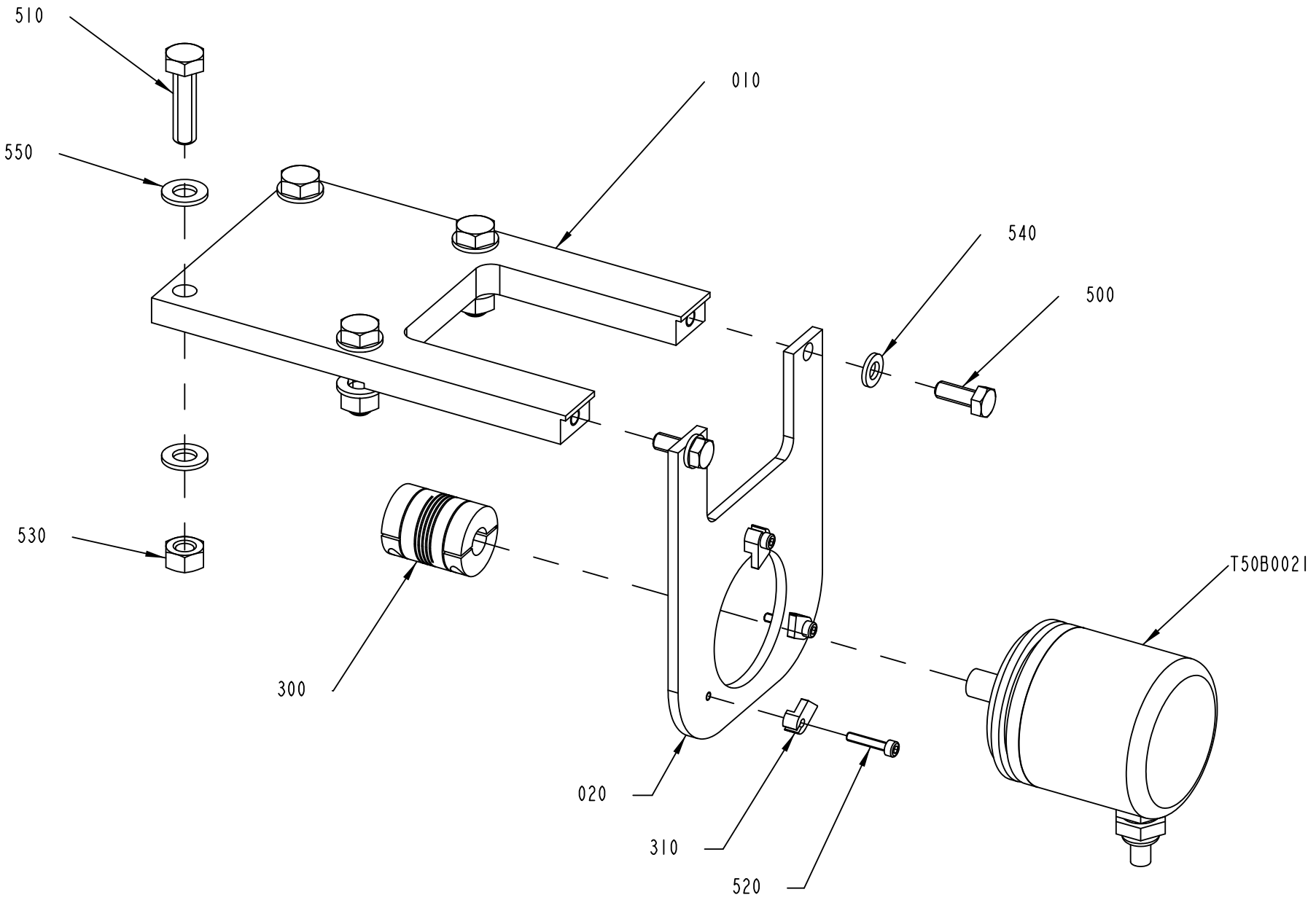

3238157-1
56N9599919

ECM: 567389 - 20120710
Group number: 3238157-0100
Assembly Drawing: 3238157-1_1_AA

Pos	Part No	UN	Qty	Description	Page No
-					
010	3251373-0000		1	BRACKET	
020	3251374-0000		1	MOUNTING SHEET	
300	90355-0031		1	TORQUE RIGID COUPLING, 10X10 MM	
310	90458-1863		3	CLAMPING PIECE, 00203005	
500	312105-0368		2	SCREW, M6S ISO 4017 M6X16 A4 80	
510	312105-0455		4	SCREW, M6S ISO 4017 M8X30 A4 80	
520	312115-0228		3	SCREW ISO4762 M3X16 A4 80	
530	312602-0318		4	HEXAGON NUT, EN 24032 M6M M8 NIPLBR	
540	315106-0153		2	WASHER PLAIN, M6 ISO7089-6-200 HV A4	
550	315106-0165		8	WASHER PLAIN, M8 ISO7089-8-200 HV A4	
T50B0021	90061-0027		1	ANGLE ENCODER, 670900035	

Pos	Part No	UN	Qty	Description	Page No

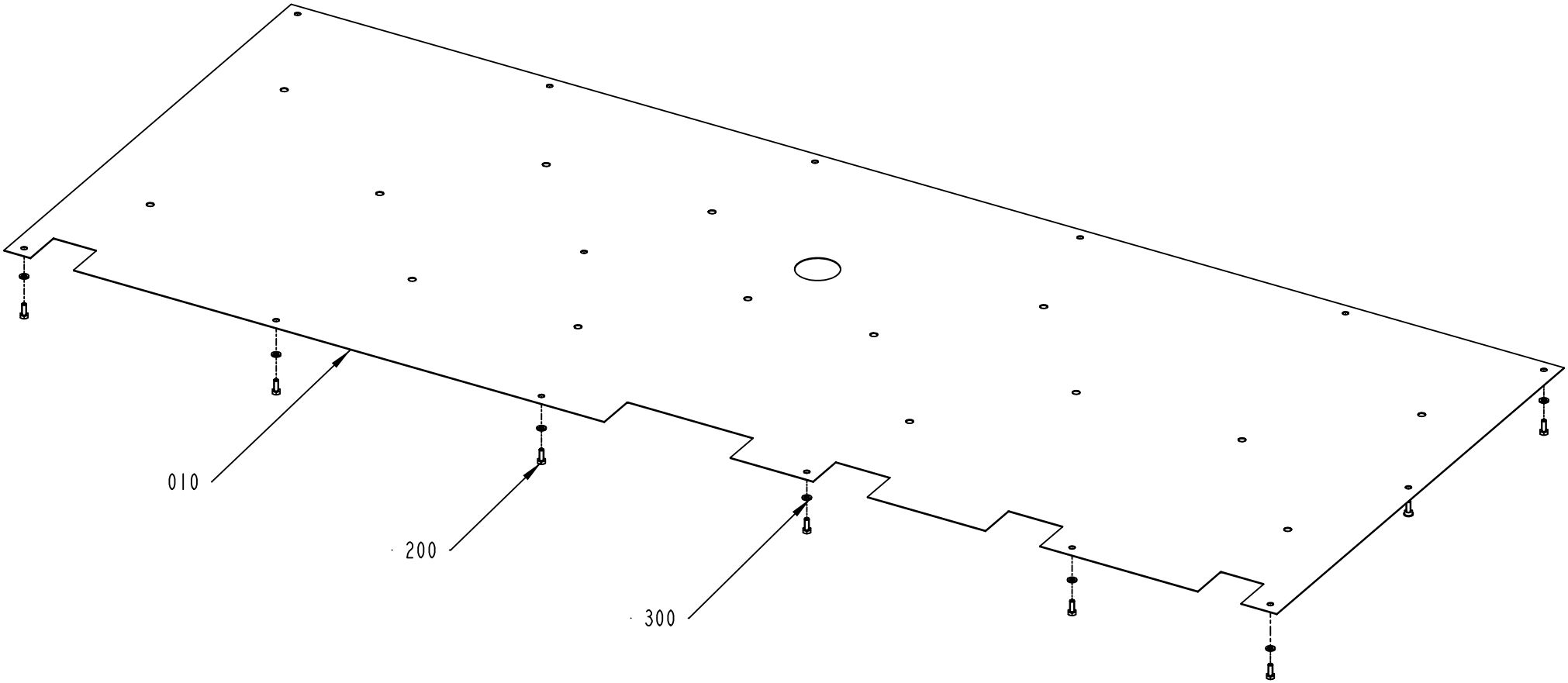

1128833-3
431388

ECM: 436279 - 20100202
Group number: 1128833-0400
Assembly Drawing: 1128833-3_1_AC

Pos	Part No	UN	Qty	Description	Page No
-					
010	1521216-0000		1	PLATE	
200	312105-0368		14	SCREW, M6S ISO 4017 M6X16 A4 80	
300	315105-0153		14	WASHER PLAIN, 6,4X12X1,5 A4 BRB	

Pos	Part No	UN	Qty	Description	Page No

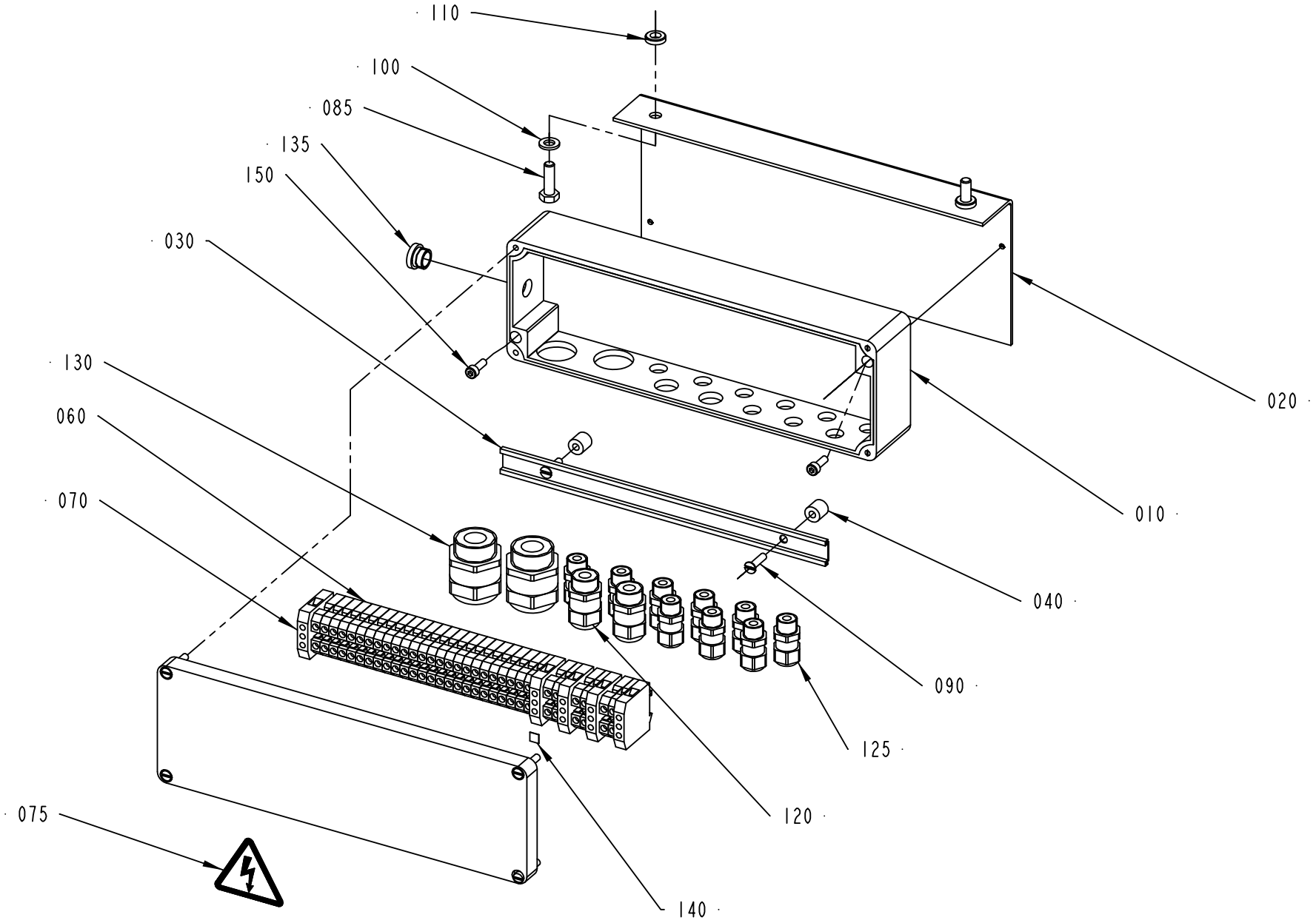

1021897-4
336540

ECM: 344008 - 20080919
Group number: 1021897-0500
Assembly Drawing: 1021897-4_1_AB

Pos	Part No	UN	Qty	Description	Page No
ANSI					
075	359715-0100		1	WARNING SIGN ANSI (H), ELECTRIC SHOCK	
ISO					
075	359705-0015		1	WARNING SIGN ISO, RISK OF ELECTRIC SHOCK	
Common Parts					
010	2557035-0000		1	CONNECTION BOX	
020	2950355-0000		1	BRACKET	
030	8490-0010		1	MOUNTING RAIL	
040	479110-0000		2	SPACER	
060	90077-0079		31	TERMINAL PLINTH, AKZ 4	
070	90135-0026		5	EARTH TERMINAL AKE 4	
085	312105-0370		2	SCREW, M6S ISO 4017 M6X20 A4 80	
090	312145-0293		2	SCREW ISO 2009 MFS M4X16 A4	
100	315105-0153		2	WASHER PLAIN, 6,4X12X1,5 A4 BRB	
110	315115-0153		2	WASHER PLAIN, TBRB 6,4/12 H=3	
120	90458-0306		2	CABLE GLAND, M16X1,5, 5311 1010	
125	90458-0305		9	CABLE GLAND, M12X1,5, 5311 1000	
130	90458-0308		2	CABLE GLAND, M25X1,5, 5311 1030	
135	90458-1306		1	BLIND PLUG CIRCULAR, M12X1,5 514GFK/212	
140	359011-0821		1	MARKING, DEK 6 FW 1-50	
150	312115-0291		2	SCREW ISO4762 M4X12 A4 80	

Pos	Part No	UN	Qty	Description	Page No

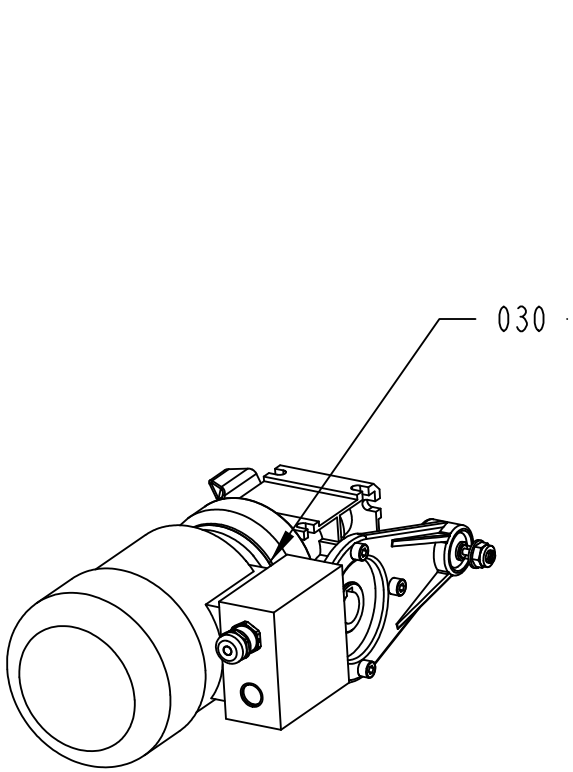

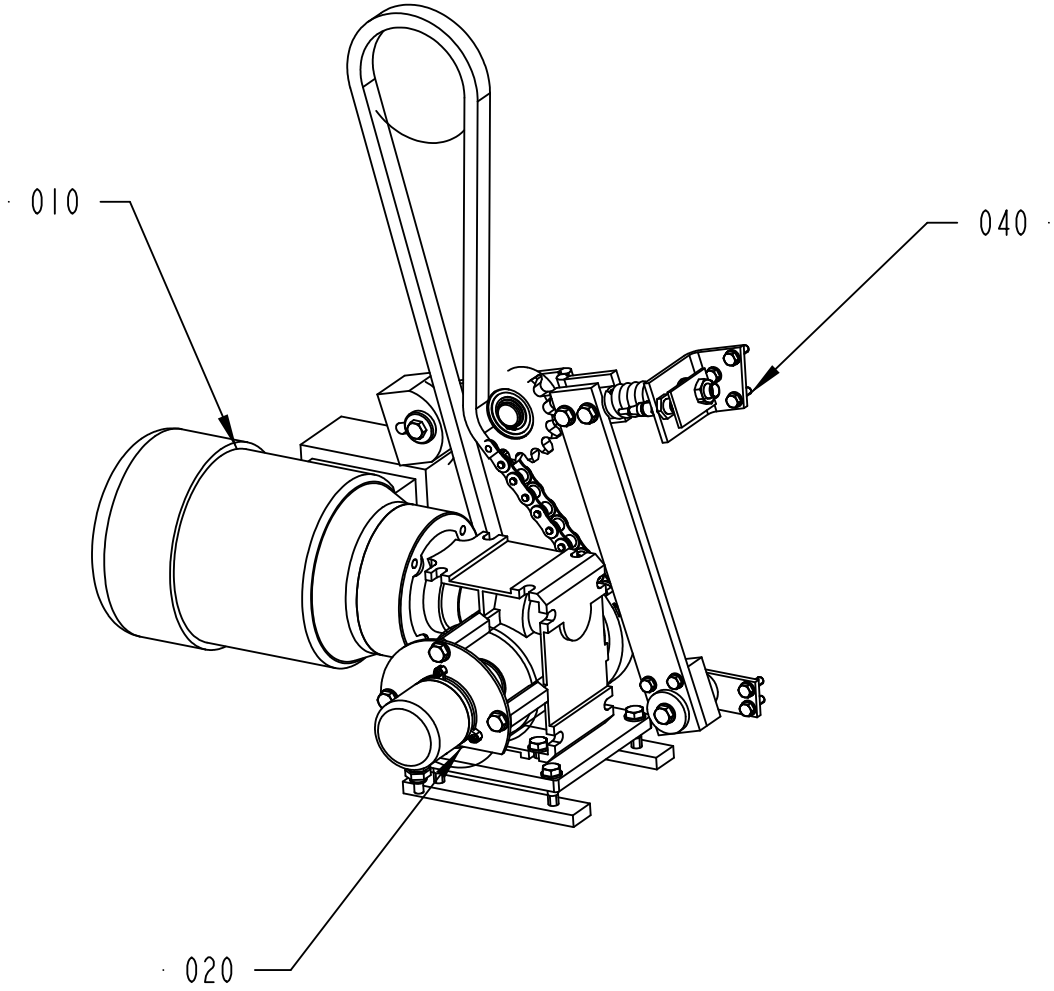

3249942-1
555186

ECM: 567316 - 20120710
Group number: 3249942-0100
Assembly Drawing: 3249942-1_1_AA

Pos	Part No	UN	Qty	Description	Page No
-					
010	556626-0700		1	MOTOR FEEDING	**3-31**
020	556636-0500		1	ENCODER FEEDING	**3-33**
030	3238156-0100		1	MOTOR MAIN SHAFT	**3-35**
040	3249941-0100		1	OVERLOAD FEEDING	**3-37**

Pos	Part No	UN	Qty	Description	Page No

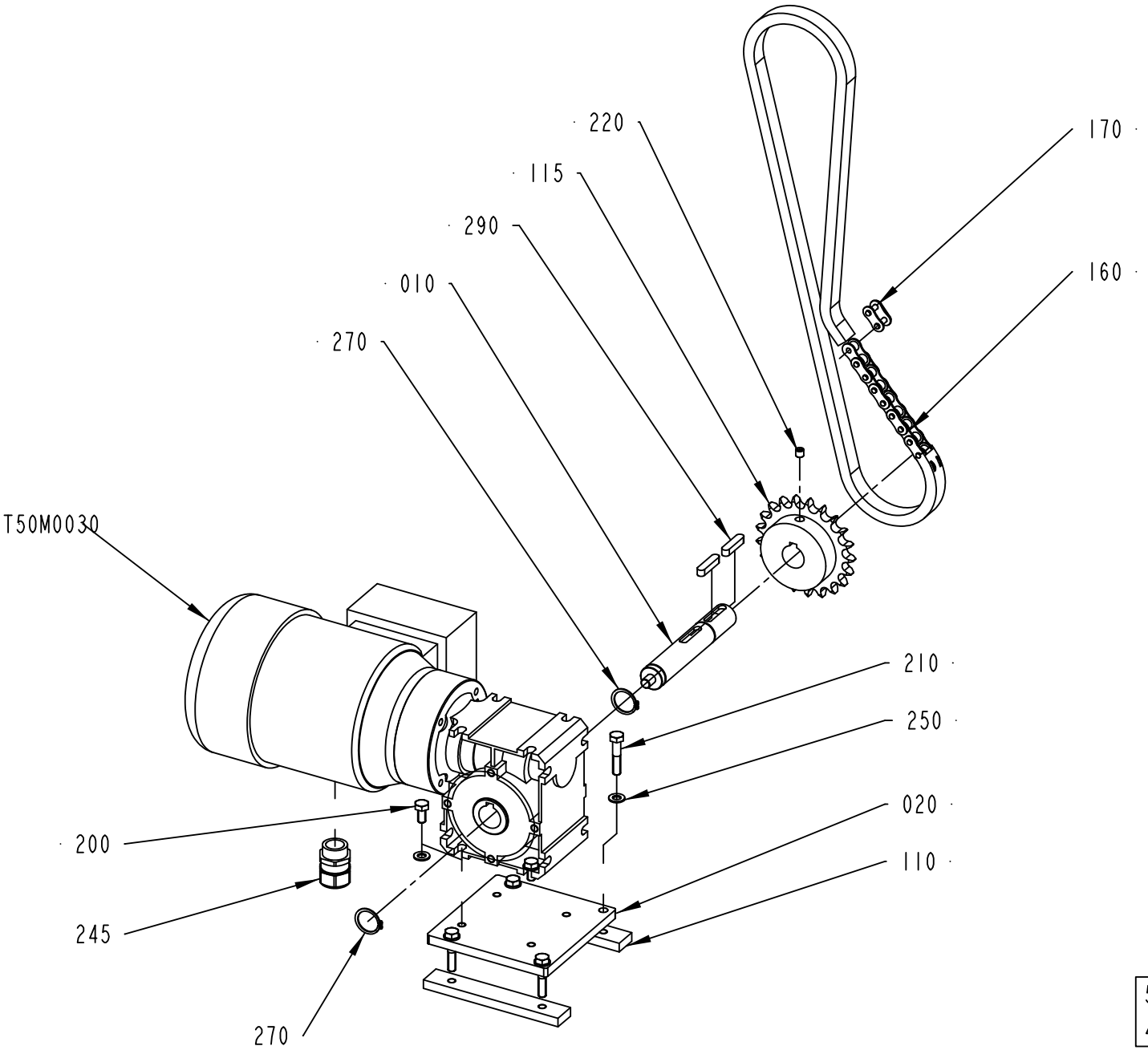

556626-7
496516

ECM: 507103 - 20110627
Group number: 556626-0700
Assembly Drawing: 556626-7_1_AB

Pos	Part No	UN	Qty	Description	Page No
-					
010	2894968-0000		1	SHAFT	
020	2894966-0000		1	MOTOR BRACKET	
110	1543716-0000		2	RAIL	
115	1021324-0000		1	SPROCKET	
160	318213-0080		1	ROLLER CHAIN, SIMPLEX 5/8 -80, SS	
170	90288-0317		1	CONNECTION LINK, SIMPLEX 5/8", SS	
200	312105-0449		4	SCREW, M6S ISO 4017 M8X16 A4 80	
210	312105-0459		4	SCREW, M6S ISO 4014 M8X40 A4 80	
220	312318-0443		1	SET SCREW, CUP END ISO4029 M8X8 A4	
245	90458-0440		1	GLAND, EXTENDED WITH INSERT, M25X1,5	
250	315105-0165		8	FWAS080G0-0S, WASHER PLAIN	
270	315751-0119		2	RETAINING RING FOR SHAFT DIN 471 25 SS	
290	315701-0801		2	PARALLEL KEY W. ROUND ENDS, 8X7X36 MM	
T50M0030	90603-2429		1	GEARS, WORM MOTOR SK 1SI50-IEC80-80LH/4	

Pos	Part No	UN	Qty	Description	Page No

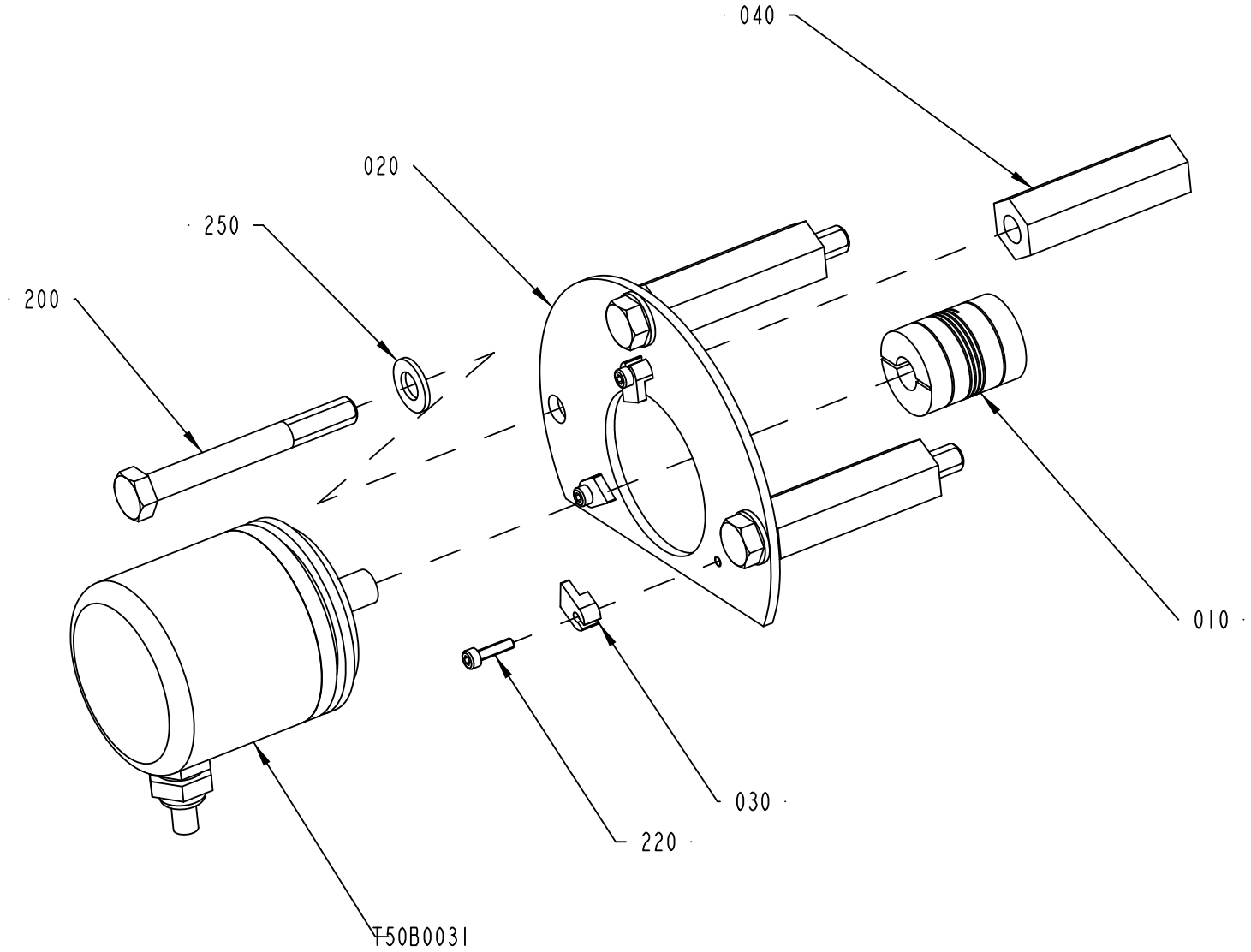

556636-5
602279

ECM: 614513 - 20130618
Group number: 556636-0500
Assembly Drawing: 556636-5_1_AC

Pos	Part No	UN	Qty	Description	Page No
-					
010	90355-0031		1	TORQUE RIGID COUPLING, 10X10 MM	
020	2894982-0000		1	MOUNTING SHEET	
030	90458-1863		3	CLAMPING PIECE, 00203005	
040	2894981-0000		3	SPACER	
200	312105-0465		3	SCREW, M6S ISO 4014 M8X70 A4 80	
220	312115-0226		3	SCREW ISO4762 M3X12 A4 80	
250	315105-0165		3	FWAS080G0-0S, WASHER PLAIN	
T50B0031	90061-0027		1	ANGLE ENCODER, 670900035	

Pos	Part No	UN	Qty	Description	Page No

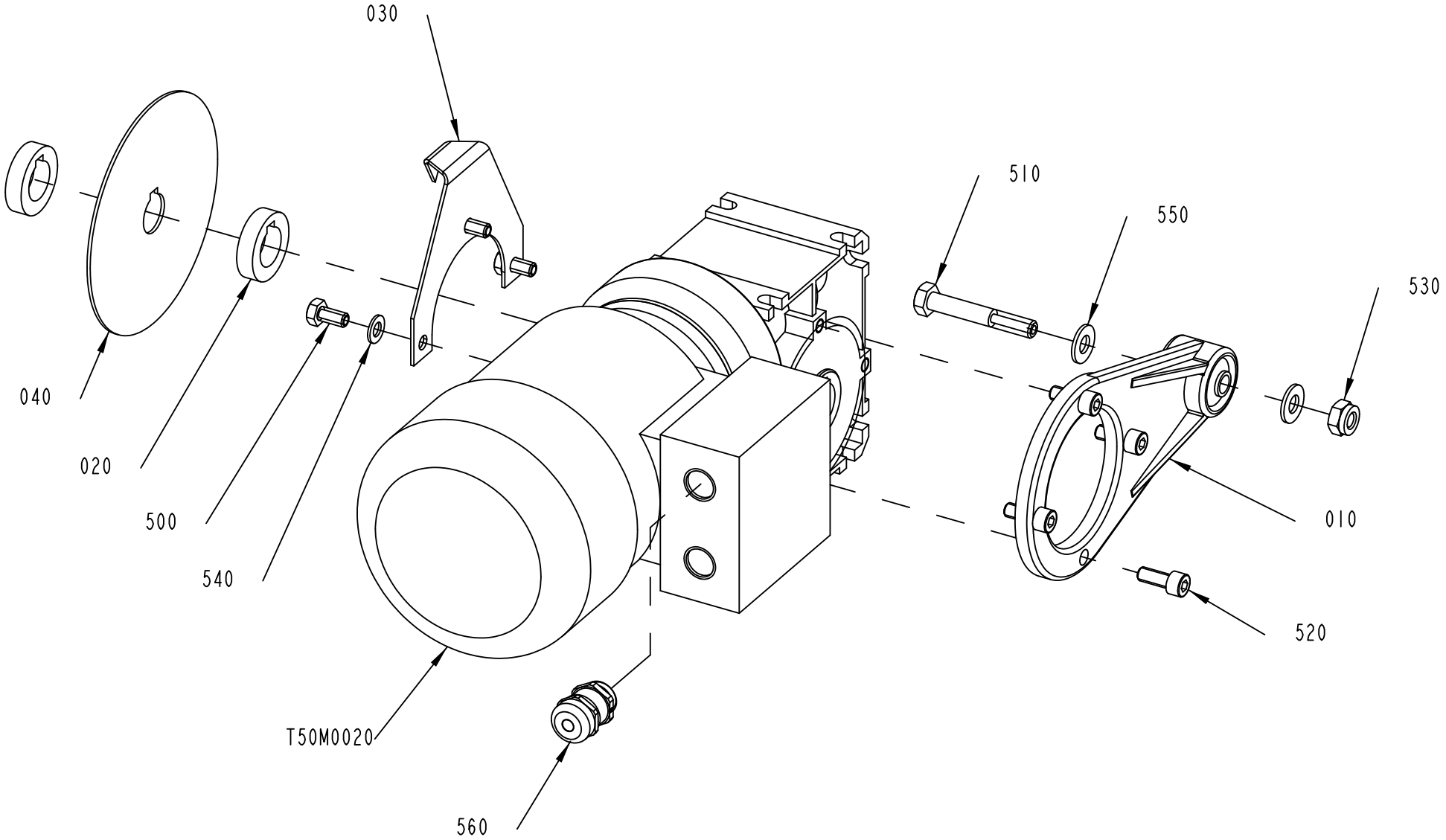

3238156-1
559919

ECM: 567393 - 20120710
Group number: 3238156-0100
Assembly Drawing: 3238156-1_1_AA

Pos	Part No	UN	Qty	Description	Page No
-					
010	2877542-0000		1	LEVER BAR	
020	2894958-0000		2	SPACER	
030	2894961-0000		1	SCALE POINTER	
040	3251372-0000		1	PROTRACTOR	
500	312105-0449		3	SCREW, M6S ISO 4017 M8X16 A4 80	
510	312105-0504		1	SCREW, M6S ISO 4014 M10X65 A4 80	
520	312115-0451		4	SCREW ISO4762 M8X20 A4 80	
530	312812-0320		1	HEXAGON NUT, NY-LOCK M10 A4 80	
540	315105-0165		3	FWAS080G0-0S, WASHER PLAIN	
550	315105-0173		2	WASHER PLAIN, 10,5X22X2 A4 BRB	
560	344202-0003		1	CABLE GLAND; MS-SC-M, 7-12,5MM, M20X1,5	
T50M0020	90603-3622		1	GEARS, WORM MOTOR SK 1SI50-IEC 71-71L/4	

Pos	Part No	UN	Qty	Description	Page No

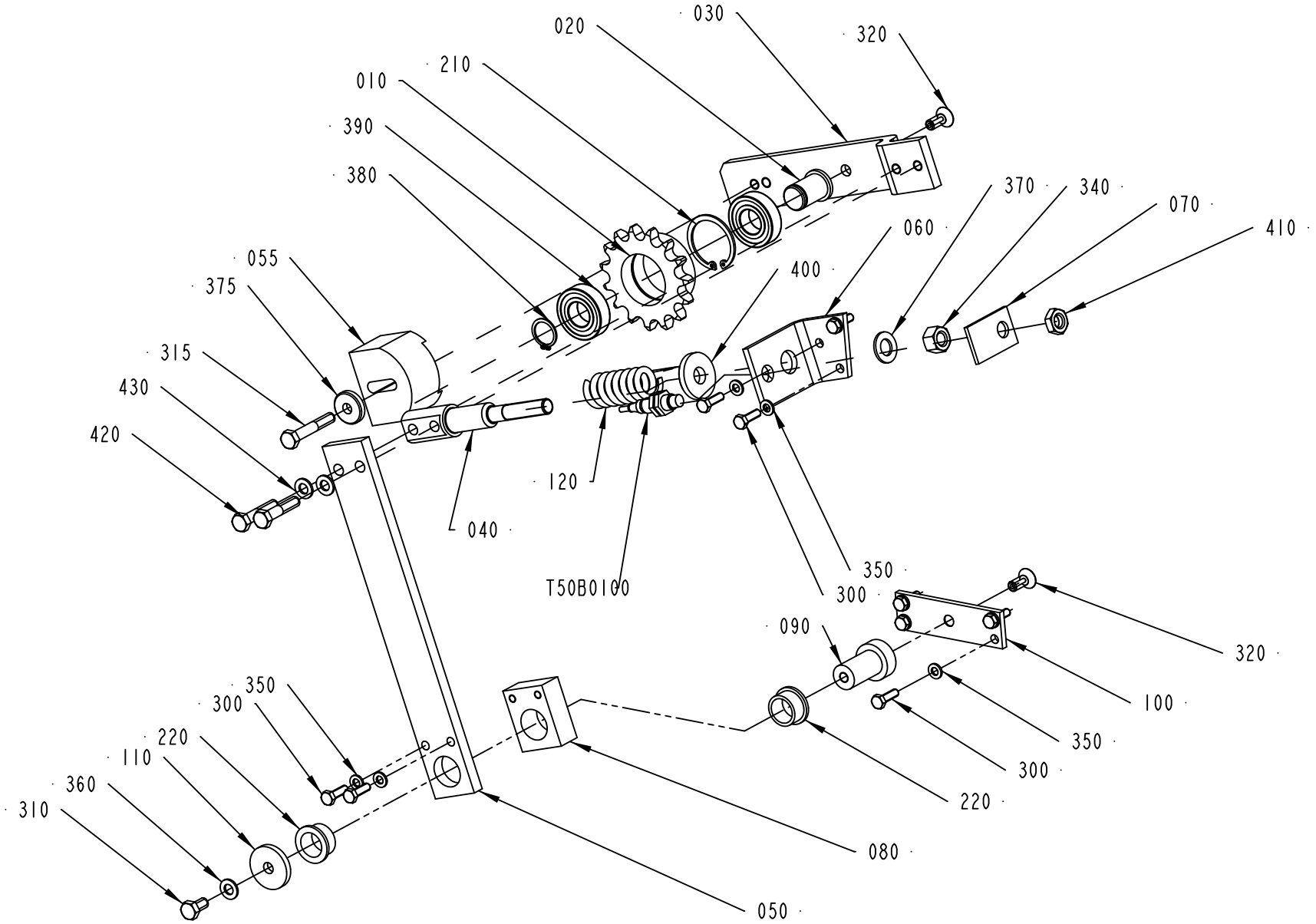

3249941-1
598985

ECM: 599062 - 20130314
Group number: 3249941-0100
Assembly Drawing: 3249941-1_1_AC

Pos	Part No	UN	Qty	Description	Page No
-					
010	1065841-0000		1	SPROCKET Z=15	
020	1065842-0000		1	SHAFT	
030	3264169-0000		1	BRACKET	
040	3249939-0000		1	SPRING GUIDE	
050	1065847-0000		1	STRUT	
055	1139155-0000		1	SLIDER	
060	1065845-0000		1	HOLDER	
070	1065846-0000		1	FLAG	
080	1065848-0000		1	BEARING HOUSING	
090	1065849-0000		1	SHAFT	
100	1065850-0000		1	HOLDER	
110	1065851-0000		1	WASHER	
120	1257145-0000		1	SPRING	
210	90141-0020		1	RETAINING RING FOR BORE DIN 472 42 SS	
220	90240-0221		2	FLANGE BUSHING, 20X25X14 MM	
300	312105-0370		9	SCREW, M6S ISO 4017 M6X20 A4 80	
310	312105-0449		1	SCREW, M6S ISO 4017 M8X16 A4 80	
315	312105-0461		1	SCREW, M6S ISO 4014 M8X50 A4 80	
320	312155-0451		2	SCREW DIN 7991 MF6S M8X20 A4 70	
340	312605-0322		1	HEXAGON NUT, M6M M12 A280	
350	315105-0153		9	WASHER PLAIN, 6,4X12X1,5 A4 BRB	
360	315105-0165		1	FWAS080G0-0S, WASHER PLAIN	
370	315105-0178		1	WASHER PLAIN, 13X24X2,5 A4 BRB	
375	315125-0165		1	WASHER HIGH, TBRSB 8,4X26X5 A4	
380	315751-0116		1	RETAINING RING FOR SHAFT DIN 471 20 SS	
390	344224-0204		2	BALL BEARING 20/42X12	
400	315121-0178		1	WASHER PLAIN, TBRSB 13/36 H=6	
410	312625-0322		1	HEXAGON THIN NUT, EN 24035 ML6M M12 A4	
420	312105-0459		2	SCREW, M6S ISO 4014 M8X40 A4 80	
430	315106-0165		2	WASHER PLAIN, M8 ISO7089-8-200 HV A4	
T50B0100	90600-0459		1	INDUCTIVE SWITCH, E2A-M12KN05-WP-B1 5M	

Pos	Part No	UN	Qty	Description	Page No

Machine Type	Group Description	Used-In	Group Number	Page No

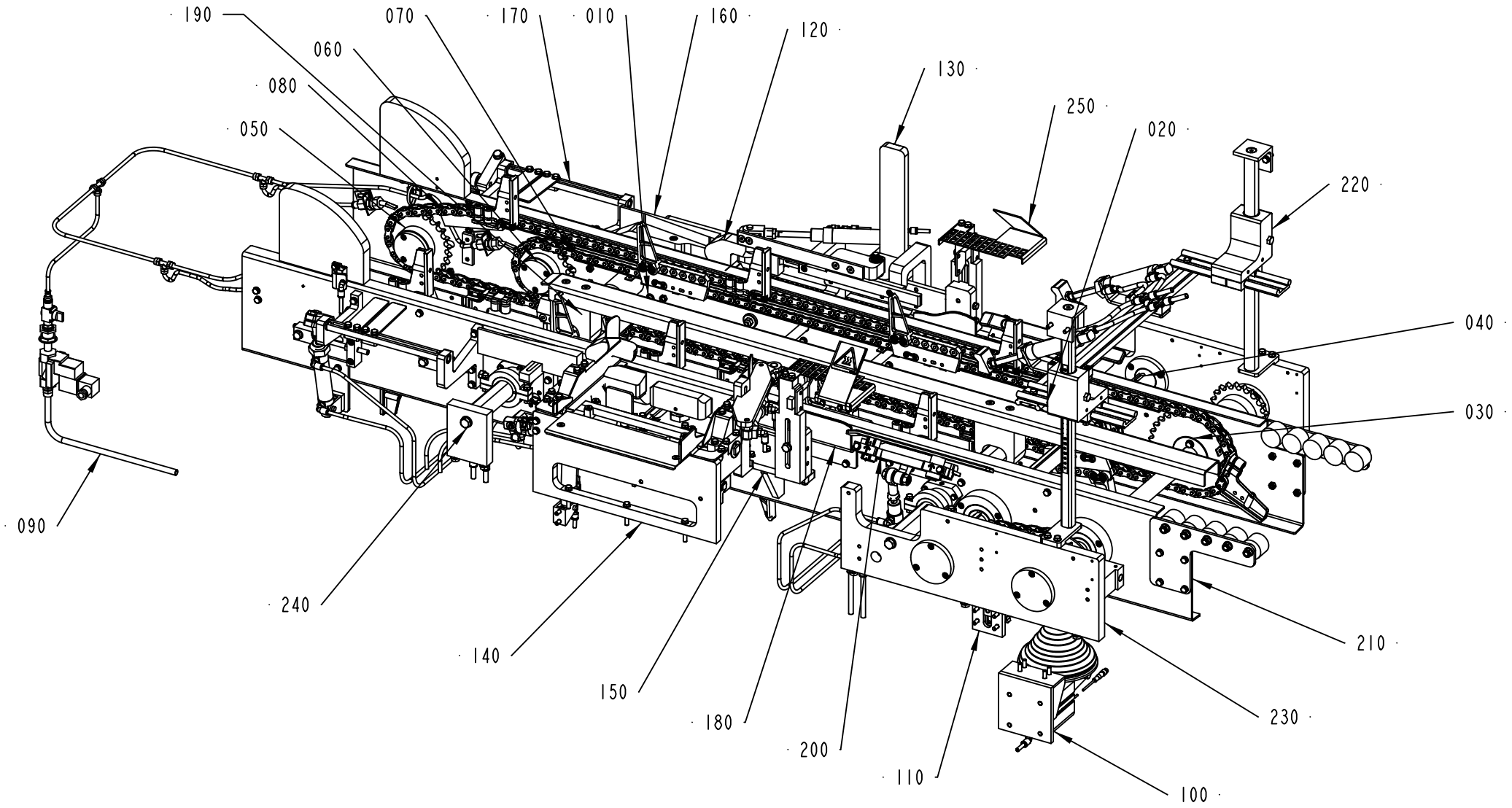

3223850-1
579668

ECM: 585735 - 20121116
Group number: 3223850-0100
Assembly Drawing: 3223850-1_1_AB

Pos	Part No	UN	Qty	Description	Page No
-					
010	1021032-0600		1	SIDE ADJUST REAR	**3-41**
020	1021041-0600		1	SIDE ADJUST FRONT	**3-43**
030	1021052-0400		1	CARRIER SHAFT OUTSIDE	**3-45**
040	1021060-0500		1	CARRIER SHAFT INSIDE	**3-47**
050	1021067-0400		2	CARRIER SPROCKET OUTSIDE	**3-49**
060	1021072-0400		2	CARRIER SPROCKET INSIDE	**3-51**
070	1021093-0300		1	CARRIER CHAIN INSIDE	**3-53**
080	1021096-0200		1	CARRIER CHAIN OUTSIDE	**3-55**
090	1287010-0400		1	CHAIN LUBRICATION	**3-57**
100	2504342-0400		1	CARRIER CLUTCH	**3-59**
110	1021326-0500		1	CHAIN TENSIONER	**3-61**
120	3196746-0100		1	SIDE FOLDER	**3-63**
130	3196748-0100		1	PACKING END STOP	**3-65**
140	3196751-0100		1	TRANSFER PLATE GUIDE	**3-67**
150	3197444-0100		1	FOLDING STATION	**3-69**
160	3197450-0100		1	FLAP GUIDE	**3-71**
170	3199159-0100		1	TRAY HOLDER	**3-73**
180	3213482-0100		1	BOTTOM FLAP GUIDE	**3-75**
190	3215911-0100		1	BOTTOM SUPPORT	**3-77**
200	3223851-0100		1	BOTTOM SQUEEZER	**3-79**
210	3223852-0100		1	CARRIER FRAME	**3-81**
220	3231386-0100		1	TRAY SUPPORT	**3-83**
230	3251388-0100		1	STEERING FRONT	**3-85**
240	3251389-0100		1	STEERING REAR	**3-87**
250	3251393-0100		1	GUN HOLDER	**3-89**

Pos	Part No	UN	Qty	Description	Page No

SIDE ADJUST REAR

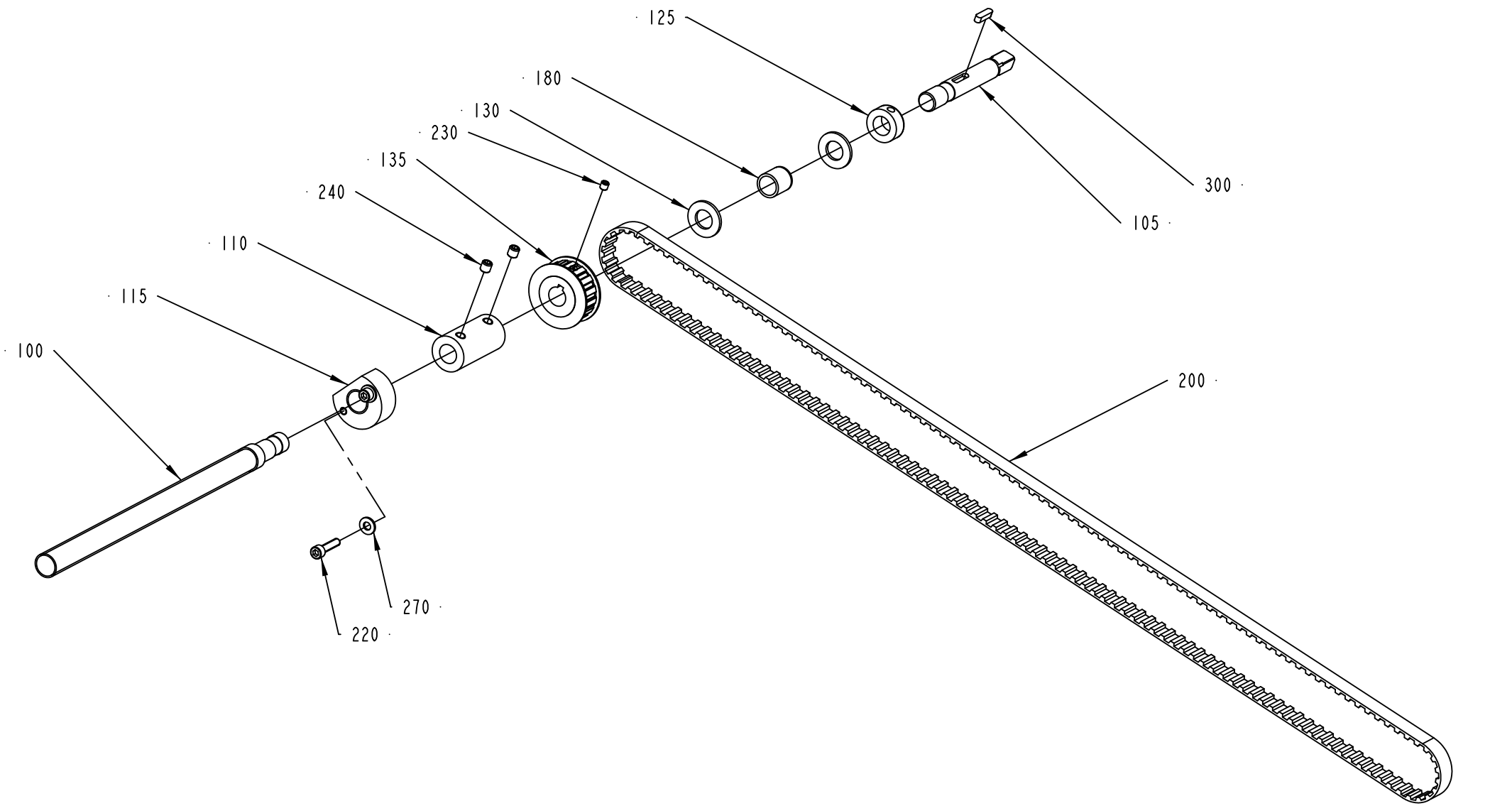

ECM: 436292 - 20100202
Group number: 1021032-0600
Assembly Drawing: 1021032-5_1_AB

Pos	Part No	UN	Qty	Description	Page No
-					
100	2504387-0000		1	ADJUSTING SCREW	
105	2959003-0000		1	SHAFT	
110	2959002-0000		1	SLEEVE	
115	1502086-0000		1	NUT	
125	315741-0112		1	RETAINING RING, DIN 705 A2 16	
130	1021039-0000		2	WASHER	
135	2950359-0000		1	TOOTHED PULLEY	
180	90240-0205		1	BEAR. BUSHING W/O FL. 16X20X20MM	
200	90417-0148		1	TIMING BELT 16T10/1750 PU	
220	312115-0372		2	SCREW ISO4762 M6X25 A4 80	
230	312318-0360		1	SET SCREW, CUP END ISO4029 M6X6 A4	
240	312318-0443		2	SET SCREW, CUP END ISO4029 M8X8 A4	
270	315105-0156		2	WASHER PLAIN, 6,7X14X1,5 A4 BRB	
300	315701-0201		1	PARALLEL KEY W. ROUND ENDS, 5X5X20 MM	

Pos	Part No	UN	Qty	Description	Page No

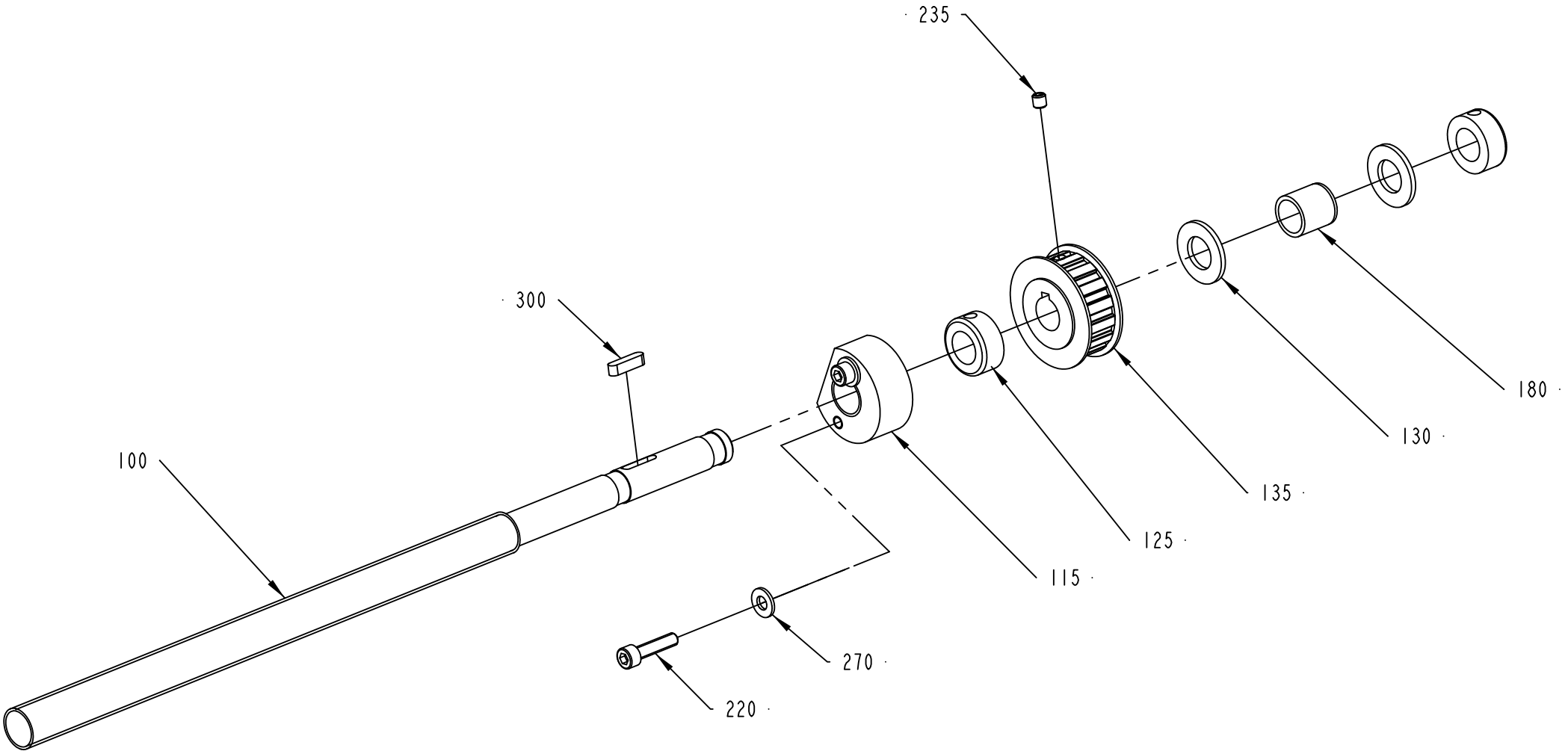

1021041-5
431388

ECM: 436291 - 20100202
Group number: 1021041-0600
Assembly Drawing: 1021041-5_1_AB

Pos	Part No	UN	Qty	Description	Page No
-					
100	2950360-0000		1	ADJUSTING SCREW	
115	1502086-0000		1	NUT	
125	315741-0112		2	RETAINING RING, DIN 705 A2 16	
130	1021039-0000		2	WASHER	
135	2950359-0000		1	TOOTHED PULLEY	
180	90240-0205		1	BEAR. BUSHING W/O FL. 16X20X20MM	
220	312115-0372		2	SCREW ISO4762 M6X25 A4 80	
235	312318-0360		1	SET SCREW, CUP END ISO4029 M6X6 A4	
270	315105-0156		2	WASHER PLAIN, 6,7X14X1,5 A4 BRB	
300	315701-0201		1	PARALLEL KEY W. ROUND ENDS, 5X5X20 MM	

Pos	Part No	UN	Qty	Description	Page No

CARRIER SHAFT OUTSIDE

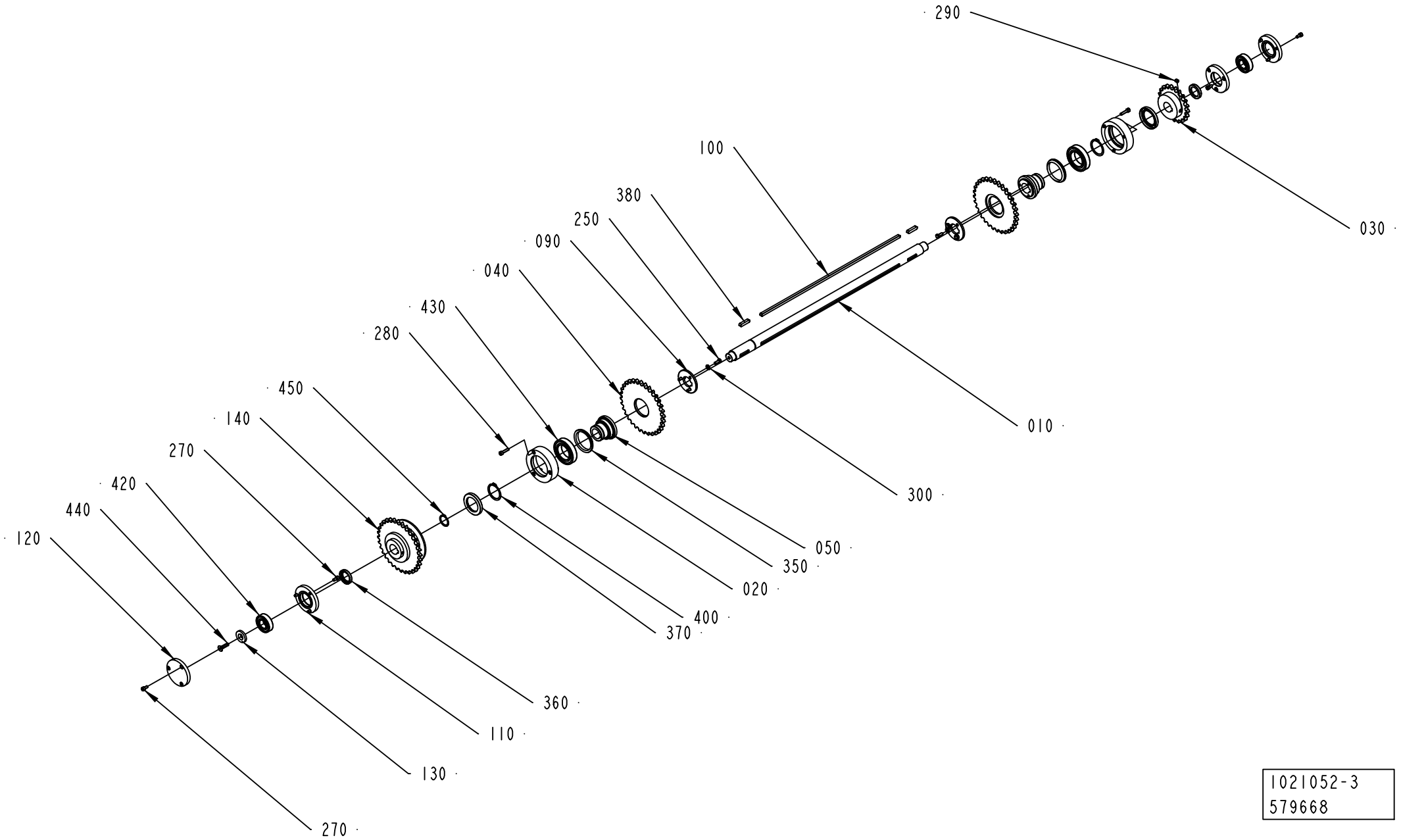

1021052-3
579668

ECM: 585736 - 20121116
Group number: 1021052-0400
Assembly Drawing: 1021052-3_1_AD

Pos	Part No	UN	Qty	Description	Page No
-					
010	2557201-0000		1	SHAFT	
020	1021054-0000		2	BEARING HOUSING	
030	1506072-0000		1	SPROCKET	
040	1506077-0000		2	SPROCKET	
050	1021057-0000		2	HUB	
090	1021059-0000		2	WASHER	
100	2557261-0000		1	FLAT WEDGE	
110	1021064-0000		2	BEARING COVER	
120	1021065-0000		2	BEARING COVER	
130	2557202-0000		1	WASHER	
140	2591902-0000		1	CLUTCH	
250	312105-0368		6	SCREW, M6S ISO 4017 M6X16 A4 80	
270	312115-0366		12	SCREW ISO4762 M6X12 A4 80	
280	312115-0372		6	SCREW ISO4762 M6X25 A4 80	
290	312318-0443		1	SET SCREW, CUP END ISO4029 M8X8 A4	
300	315105-0156		6	WASHER PLAIN, 6,7X14X1,5 A4 BRB	
350	315220-0204		2	V-RING 49X59X13 MM V-55S	
360	90091-0200		2	RADIAL SEAL 30X42X7 MM DUST LIP	
370	90091-0304		2	RADIAL SEAL 45X65X8 MM DUST LIP	
380	315701-0801		2	PARALLEL KEY W. ROUND ENDS, 8X7X36 MM	
400	315750-0129		2	RETAINING RING FOR SHAFT DIN 471 45	
420	344226-0105		2	BALL BEARING 25/52X15	
430	344224-0209		2	BALL BEARING 45/75X16	
440	312155-0455		1	SCREW DIN 7991 MF6S M8X30 A4 70	
450	315751-0122		1	RETAINING RING FOR SHAFT DIN 471 30 SS	

Pos	Part No	UN	Qty	Description	Page No

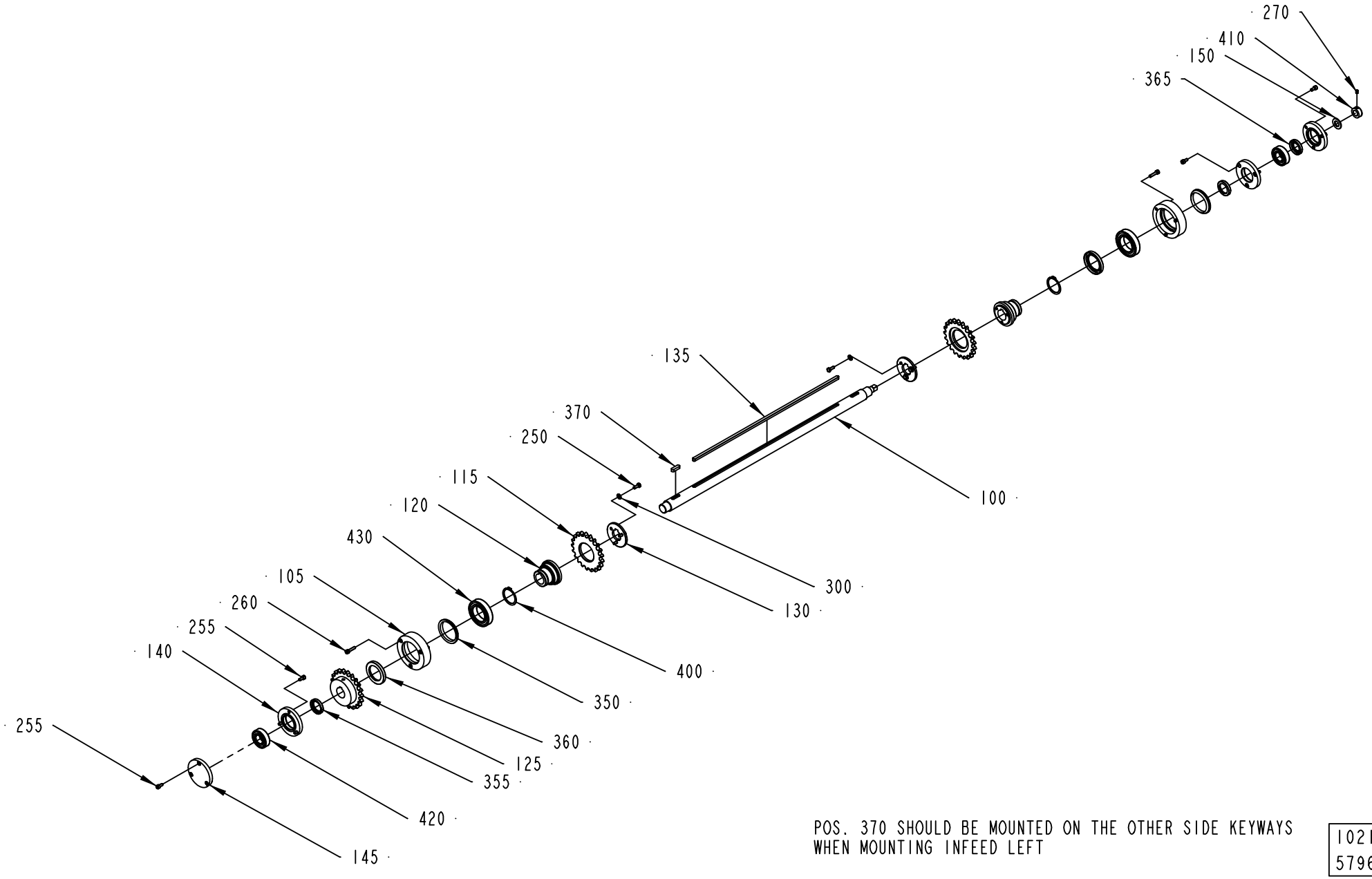

POS. 370 SHOULD BE MOUNTED ON THE OTHER SIDE KEYWAYS WHEN MOUNTING INFEED LEFT

1021060-4
579668

ECM: 585737 - 20121116
Group number: 1021060-0500
Assembly Drawing: 1021060-4_1_AA

Pos	Part No	UN	Qty	Description	Page No
-					
100	3249938-0000		1	SHAFT	
105	1021054-0000		2	BEARING HOUSING	
115	1506076-0000		2	SPROCKET	
120	1021057-0000		2	HUB	
125	1506075-0000		1	SPROCKET	
130	1021059-0000		2	WASHER	
135	2557261-0000		1	FLAT WEDGE	
140	1021064-0000		3	BEARING COVER	
145	1021065-0000		1	BEARING COVER	
150	1021039-0000		1	WASHER	
250	312105-0368		6	SCREW, M6S ISO 4017 M6X16 A4 80	
255	312115-0366		12	SCREW ISO4762 M6X12 A4 80	
260	312115-0372		6	SCREW ISO4762 M6X25 A4 80	
270	312318-0362		1	SET SCREW, CUP END ISO4029 M6X8 A4	
300	315105-0156		6	WASHER PLAIN, 6,7X14X1,5 A4 BRB	
350	315220-0204		2	V-RING 49X59X13 MM V-55S	
355	90091-0200		2	RADIAL SEAL 30X42X7 MM DUST LIP	
360	90091-0304		2	RADIAL SEAL 45X65X8 MM DUST LIP	
365	90091-0322		1	RADIAL SEAL 25X42X7 MM DUST LIP	
370	315701-0266		1	PARALLEL KEY W. ROUND ENDS, 8X7X28 MM	
400	315750-0129		2	RETAINING RING FOR SHAFT DIN 471 45	
410	315741-0112		1	RETAINING RING, DIN 705 A2 16	
420	344226-0105		2	BALL BEARING 25/52X15	
430	344224-0209		2	BALL BEARING 45/75X16	

Pos	Part No	UN	Qty	Description	Page No

CARRIER SPROCKET OUTSIDE

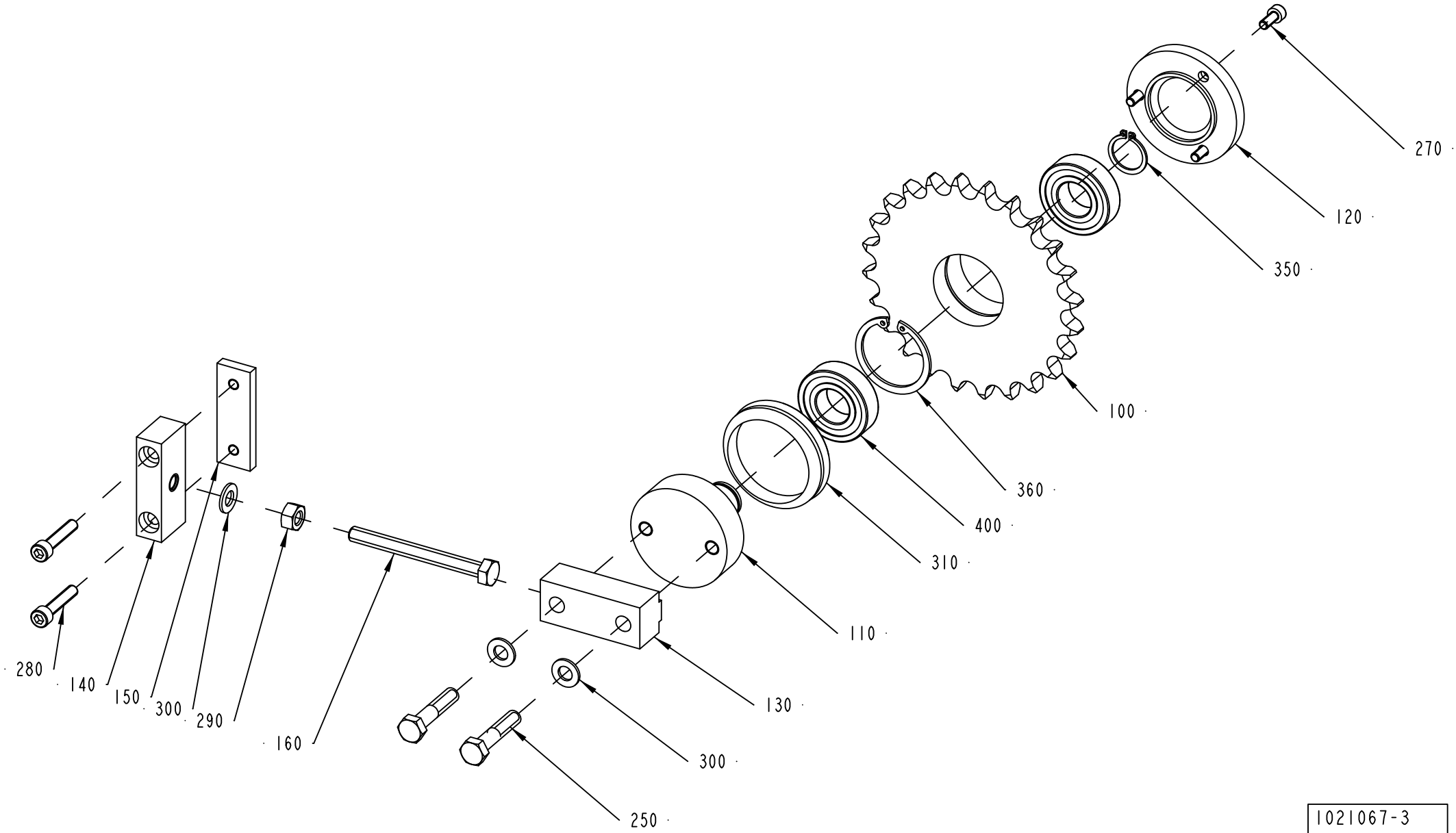

1021067-3
579668

ECM: 585738 - 20121116
Group number: 1021067-0400
Assembly Drawing: 1021067-3_1_AC

Pos	Part No	UN	Qty	Description	Page No
-					
100	1506074-0000		1	SPROCKET	
110	1502810-0000		1	SHAFT	
120	1021070-0000		1	BEARING COVER	
130	1502811-0000		1	LOCKING LUG	
140	1021074-0000		1	HOLDER	
150	1021075-0000		1	LOCK PLATE	
160	312104-0467		1	SCREW M6S M8X80H FZB	
250	312105-0459		2	SCREW, M6S ISO 4014 M8X40 A4 80	
270	312115-0327		3	SCREW ISO4762 M5X12 A4 80	
280	312115-0374		2	SCREW ISO4762 M6X30 A4 80	
290	312605-0318		1	HEXAGON NUT, M6M M8 A280	
300	315105-0165		3	FWAS080G0-0S, WASHER PLAIN	
310	315220-0204		1	V-RING 49X59X13 MM V-55S	
350	315751-0116		1	RETAINING RING FOR SHAFT DIN 471 20 SS	
360	90141-0020		1	RETAINING RING FOR BORE DIN 472 42 SS	
400	344224-0204		2	BALL BEARING 20/42X12	

Pos	Part No	UN	Qty	Description	Page No

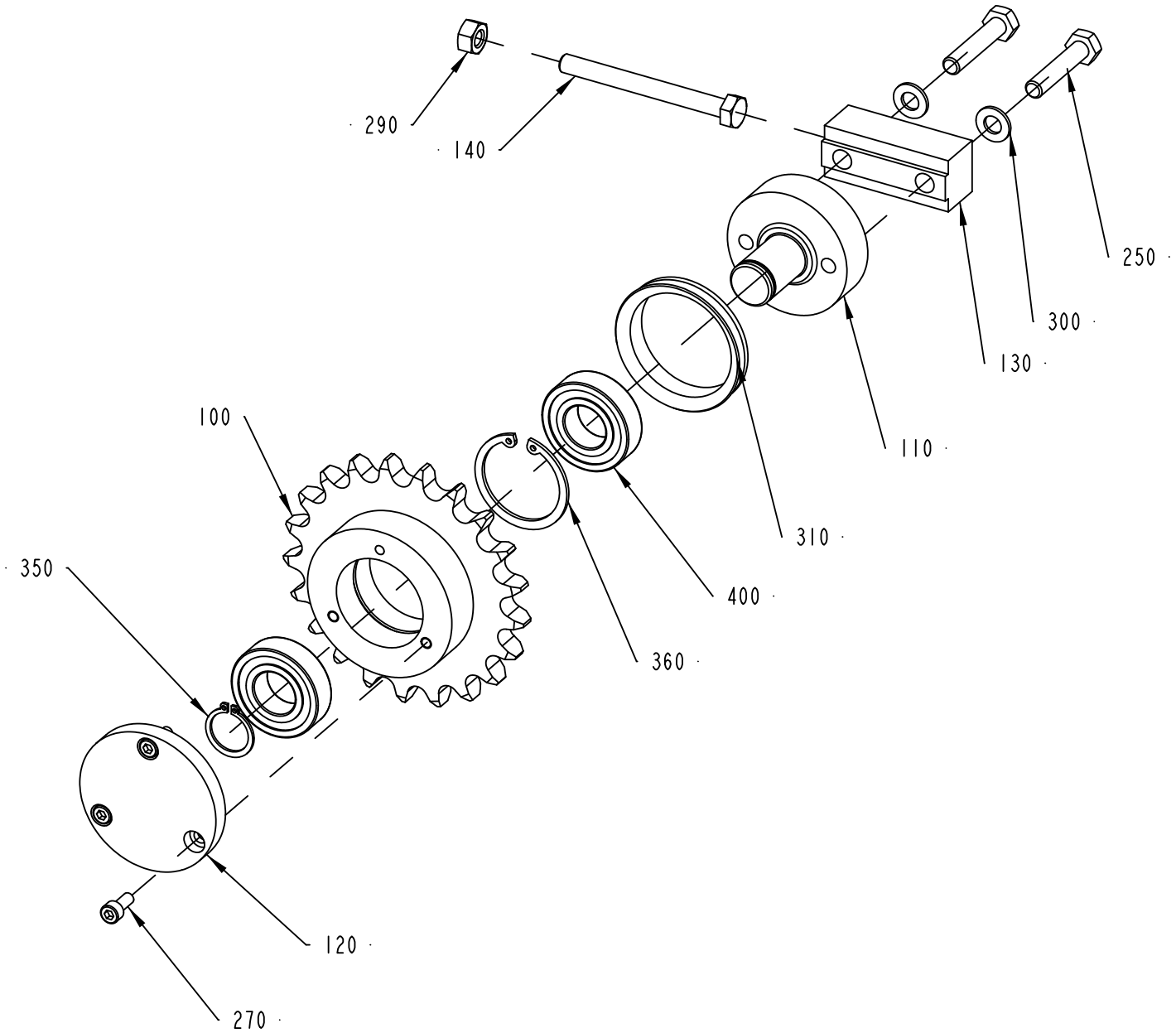

1021072-3
579668

ECM: 585741 - 20121116
Group number: 1021072-0400
Assembly Drawing: 1021072-3_1_AC

Pos	Part No	UN	Qty	Description	Page No
-					
100	1506073-0000		1	SPROCKET	
110	1502810-0000		1	SHAFT	
120	1021070-0000		1	BEARING COVER	
130	1502811-0000		1	LOCKING LUG	
140	312104-0467		1	SCREW M6S M8X80H FZB	
250	312105-0459		2	SCREW, M6S ISO 4014 M8X40 A4 80	
270	312115-0327		3	SCREW ISO4762 M5X12 A4 80	
290	312605-0318		1	HEXAGON NUT, M6M M8 A280	
300	315105-0165		2	FWAS080G0-0S, WASHER PLAIN	
310	315220-0204		1	V-RING 49X59X13 MM V-55S	
350	315751-0116		1	RETAINING RING FOR SHAFT DIN 471 20 SS	
360	90141-0020		1	RETAINING RING FOR BORE DIN 472 42 SS	
400	344224-0204		2	BALL BEARING 20/42X12	

Pos	Part No	UN	Qty	Description	Page No

CARRIER CHAIN INSIDE

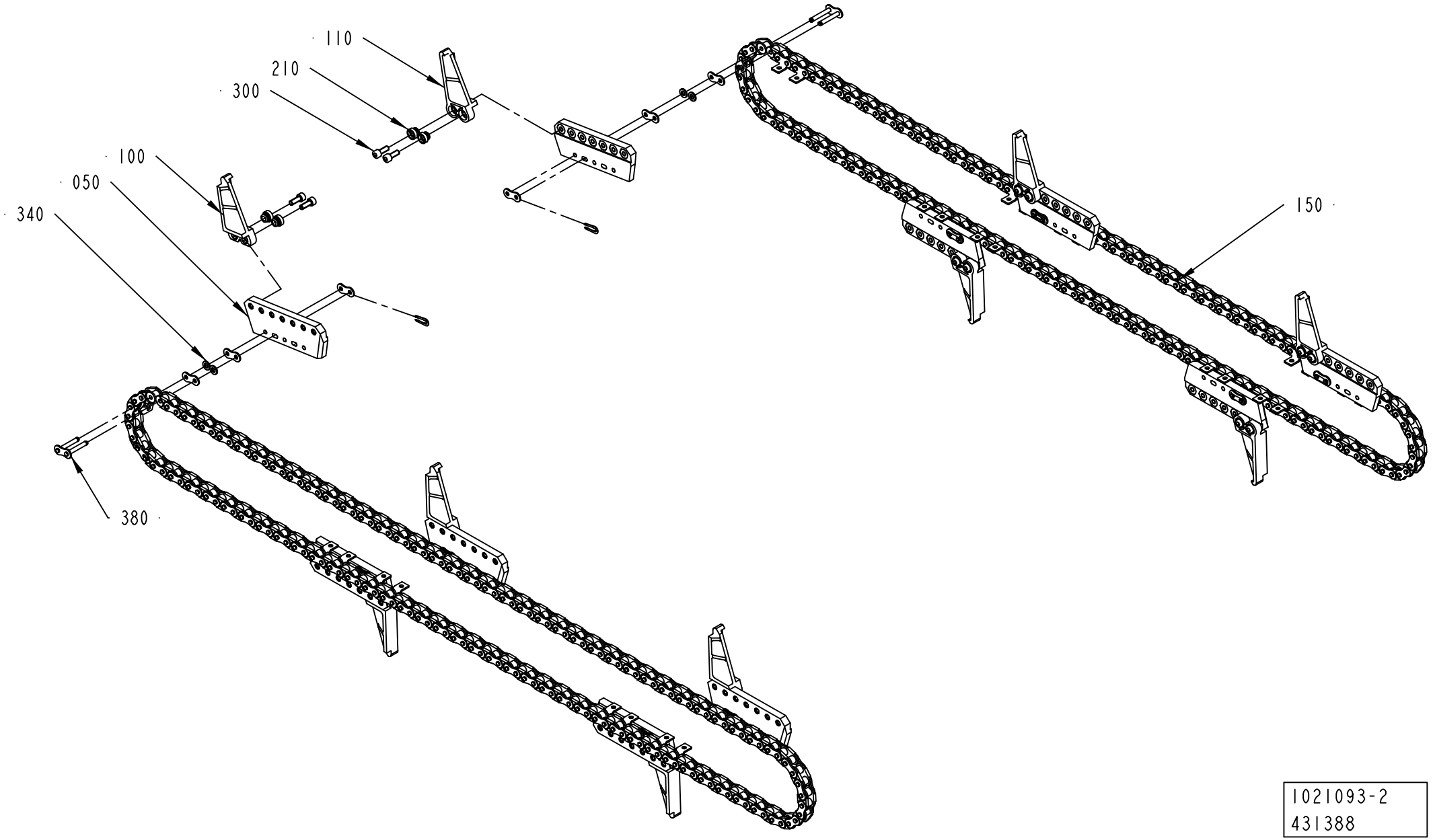

1021093-2
431388

ECM: 436284 - 20100202
Group number: 1021093-0300
Assembly Drawing: 1021093-2_1_AD

Pos	Part No	UN	Qty	Description	Page No
-					
050	1466541-0000		10	CARRIER	
100	1466543-0000		5	CARRIER	
110	1466544-0000		5	CARRIER	
150	1466474-0000		10	CHAIN	
210	1466554-0000		20	SPACER	
300	312115-0368		20	SCREW ISO4762 M6X16 A4 80	
340	315105-0153		20	WASHER PLAIN, 6,4X12X1,5 A4 BRB	
380	318219-0389		10	CONNECTION LINK, DUPLEX 5/8", SS	

Pos	Part No	UN	Qty	Description	Page No

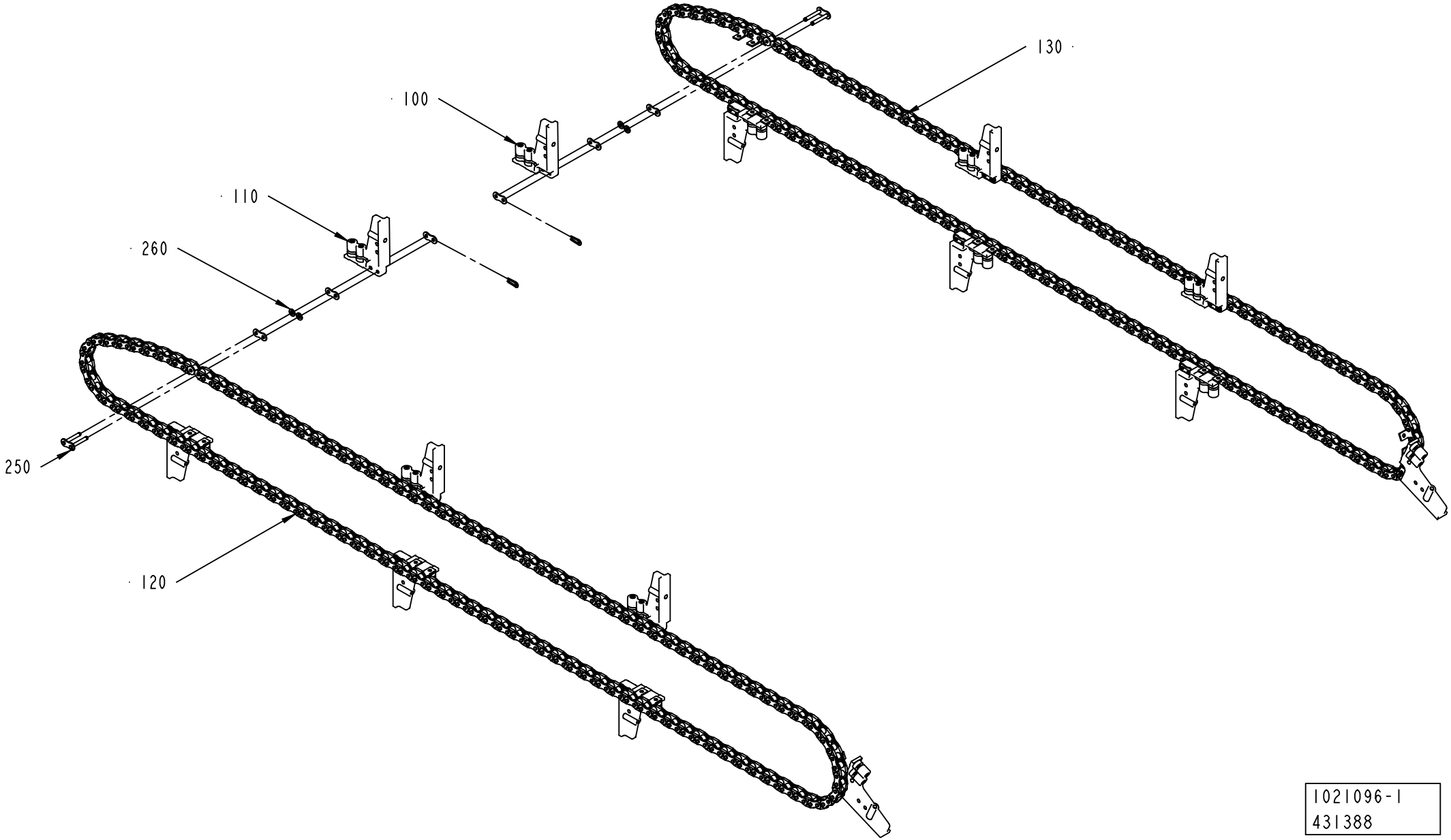
130
100
110
260
250
120
1021096-1
431388

ECM: 436287 - 20100202
Group number: 1021096-0200
Assembly Drawing: 1021096-1_1_AD

Pos	Part No	UN	Qty	Description	Page No
PHE131-279_WAMF_WAIF_WASF, PHE131-279_TRAY_TRAY OVER, PHE70-130_TRAY_TRAY OVER					
100	1021095-0002		7	LINK	
110	1021095-0001		7	LINK	
PHE70-130_WAMF_WAIF_WASF					
100	1065878-0001		7	LINK	
110	1065878-0002		7	LINK	
Common Parts					
120	1021091-0000		7	CHAIN	
130	1021090-0000		7	CHAIN	
250	318219-0389		14	CONNECTION LINK, DUPLEX 5/8", SS	
260	315105-0153		28	WASHER PLAIN, 6,4X12X1,5 A4 BRB	

Pos	Part No	UN	Qty	Description	Page No

CHAIN LUBRICATION

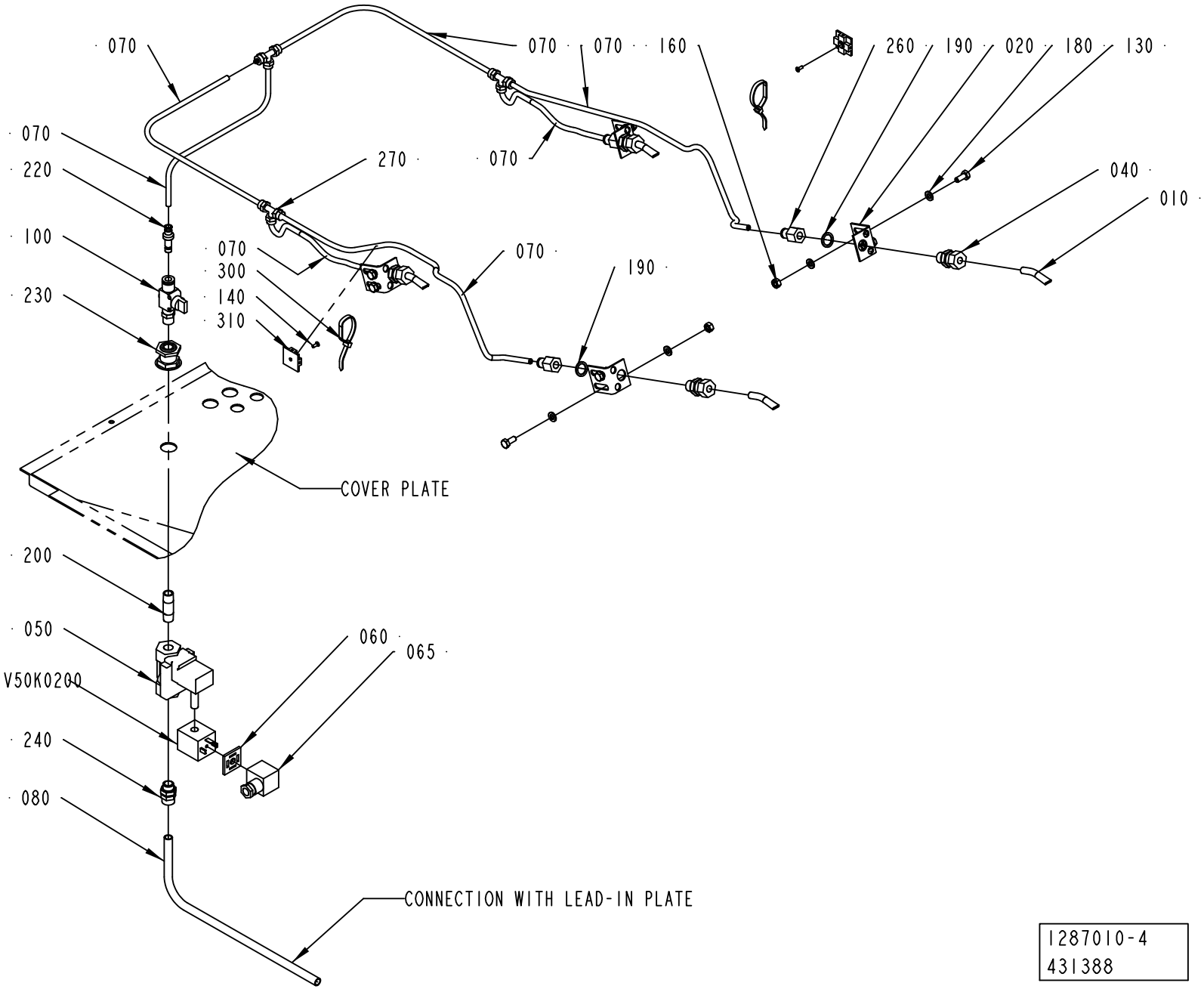

1287010-4
431388

ECM: 436293 - 20100202
Group number: 1287010-0400
Assembly Drawing: 1287010-4_1_AB

Pos	Part No	UN	Qty	Description	Page No
-					
010	1287040-0000		4	AIR NOZZLE	
020	1287043-0000		4	BRACKET	
040	90030-0185		4	CONN. STR., GE08LRED71	
050	90042-0273		1	SOLENOID VALVE MN1H-2-1/4-MS	
060	90042-0564		1	ILLUMINATING SEALS, MC-LD-12-24DC	
065	90110-0095		1	CONNECTOR, PLUG SOCKET, MSSD-C-4P	
070	315400-0002	M	4	TUBE PUN-H-6X1-NT	
080	315400-0008	M	2	TUBE PUN-H-10X1,5-NT	
100	90187-0189		1	BALL VALVE, R1/4, 8 MM	
130	312105-0367		8	SCREW, M6S ISO 4017 M6X14 A4 80	
140	312145-0222		2	SCREW ISO 2009 MFS M3X8 A4	
160	312605-0316		8	HEXAGON NUT, M6M M6 A280	
180	315105-0153		16	WASHER PLAIN, 6,4X12X1,5 A4 BRB	
190	315234-0110		6	WASHER,PL.RND.CU.13,5/18 H=1,5	
200	342216-0102		1	NIPPLES, EXT. THREAD	
220	342716-0203		1	REDUCER 6-8	
230	342767-0104		1	BULKHEAD LEAD-IN, G1/4	
240	342921-0132		1	STRAIGHT COUPLING, EXT.THREAD 10/8-G1/4	
260	342923-0114		4	STRAIGHT COUPL.,INT.THREADED 6/4-G1/4"	
270	342946-0112		3	T-COUPLING,UNION 6/4	
300	352113-0102		2	CABLE TIE, BLACK 188X4,8 MM	
310	352113-0206		2	ANCHOR PLATES FOR STRIPS, ABM100-AT	
V50K0200	90042-0595		1	COIL MSN1G-24 V	

Pos	Part No	UN	Qty	Description	Page No

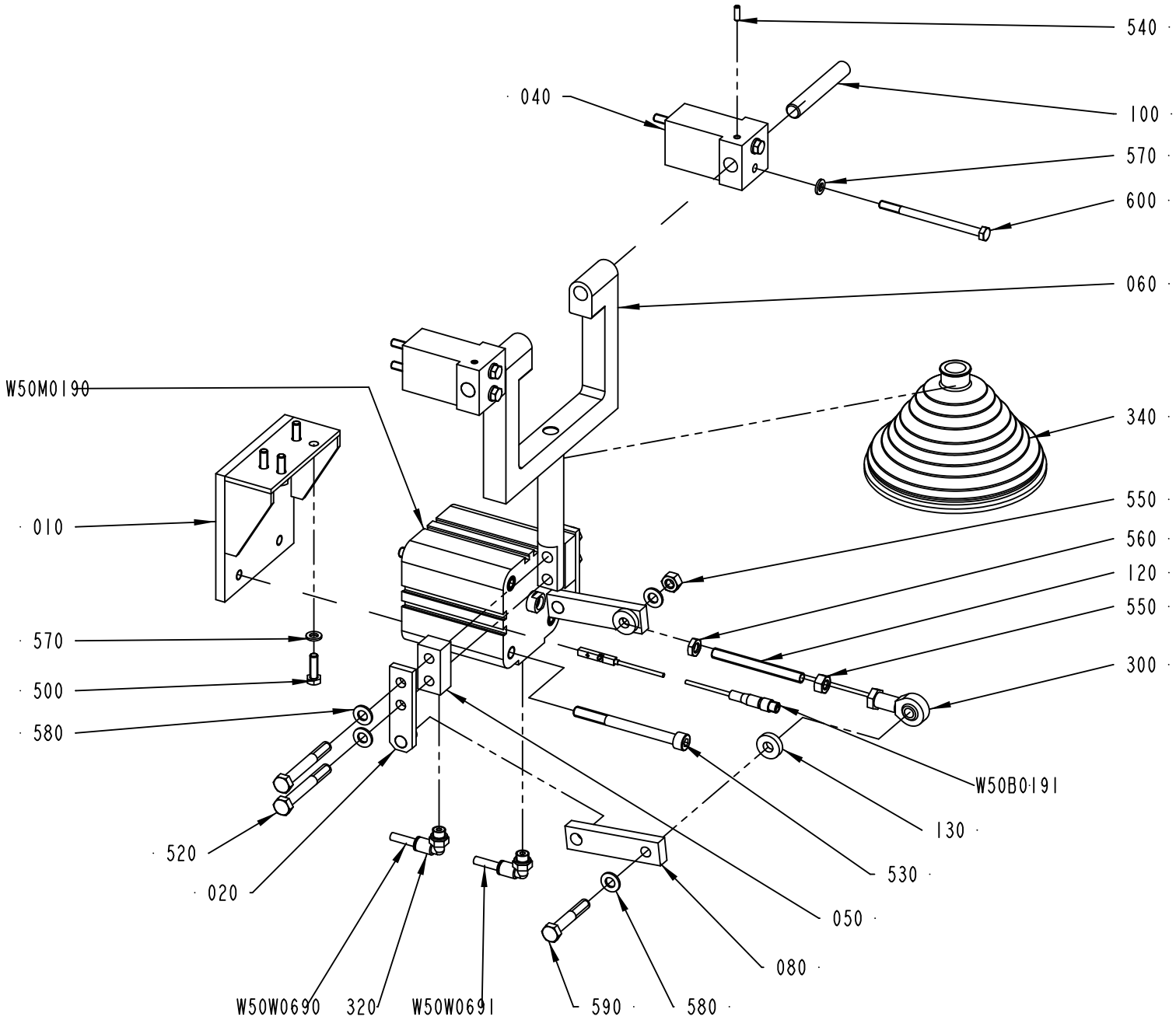

2504342-4
602279

ECM: 614514 - 20130618
Group number: 2504342-0400
Assembly Drawing: 2504342-4_1_AB

Pos	Part No	UN	Qty	Description	Page No
-					
010	3264180-0000		1	BRACKET	
020	2504324-0000		2	BRACKET	
040	3264181-0000		2	BRACKET	
050	2860936-0000		2	SPACER	
060	2504300-0000		1	FORK	
080	2504322-0000		2	LINK ARM	
100	2504323-0000		2	SHAFT	
120	2504325-0000		1	SHAFT	
130	2504330-0000		2	SHAFT	
300	90115-0139		1	ROD END, ID=8 MM, M8X1,25	
320	350002-0006		2	PUSH-IN L-FITTING QSL-F-G1/8-6	
340	1502998-0000		1	RUBBER BELLOWS	
500	312105-0370		4	SCREW, M6S ISO 4017 M6X20 A4 80	
520	312105-0464		2	SCREW, M6S ISO 4014 M8X65 A4 80	
530	90287-0335		4	SCREW MC6S M8X90 A280	
540	312318-0291		2	SET SCREW, CUP END ISO4029 M4X12 A4	
550	312605-0318		4	HEXAGON NUT, M6M M8 A280	
560	312625-0318		1	HEXAGON THIN NUT, EN 24035 ML6M M8 A4	
570	315106-0153		8	WASHER PLAIN, M6 ISO7089-6-200 HV A4	
580	315106-0165		6	WASHER PLAIN, M8 ISO7089-8-200 HV A4	
590	312105-0462		1	SCREW, M6S ISO 4014 M8X55 A4 8002	
600	312105-0388		4	SCREW, M6S ISO 4014 M6X90 A4 80	
W50B0191	90600-3273		1	PROX. SENSOR, SMT-8M-PS-24V-K-0,3-M8D	
W50M0190	90459-1697		1	DOUBLE ACTING, COMPACT, CYL 63-40	
W50W0690	315400-0001	MM	1500	6-4E PUN-H-6X1-BL	
W50W0691	315400-0001	MM	1500	6-4E PUN-H-6X1-BL	

Pos	Part No	UN	Qty	Description	Page No

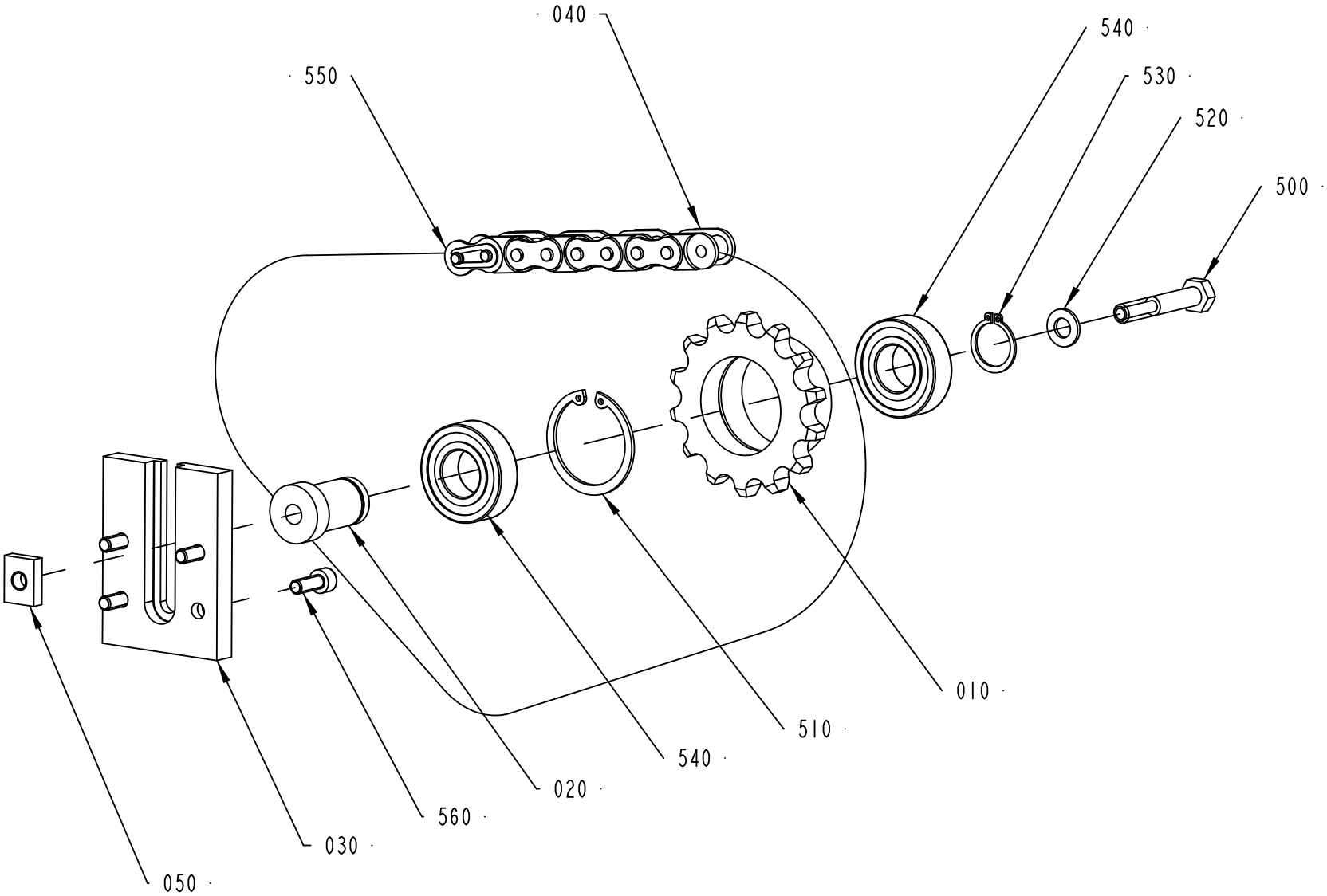

1021326-5
579668

ECM: 585745 - 20121116
Group number: 1021326-0500
Assembly Drawing: 1021326-5_1_AA

Pos	Part No	UN	Qty	Description	Page No
-					
010	2782768-0000		1	SPROCKET	
020	3264182-0000		1	SHAFT	
030	3264183-0000		1	GUIDE PLATE	
040	2787857-0000		1	CHAIN	
050	3264184-0000		1	NUT WASHER	
500	312105-0461		1	SCREW, M6S ISO 4014 M8X50 A4 80	
510	90141-0020		1	RETAINING RING FOR BORE DIN 472 42 SS	
520	315106-0165		1	WASHER PLAIN, M8 ISO7089-8-200 HV A4	
530	315751-0116		1	RETAINING RING FOR SHAFT DIN 471 20 SS	
540	344224-0204		2	BALL BEARING 20/42X12	
550	90288-0333		1	CONNECTION LINK, SIMPLEX 5/8",SS	
560	312115-0368		4	SCREW ISO4762 M6X16 A4 80	

Pos	Part No	UN	Qty	Description	Page No

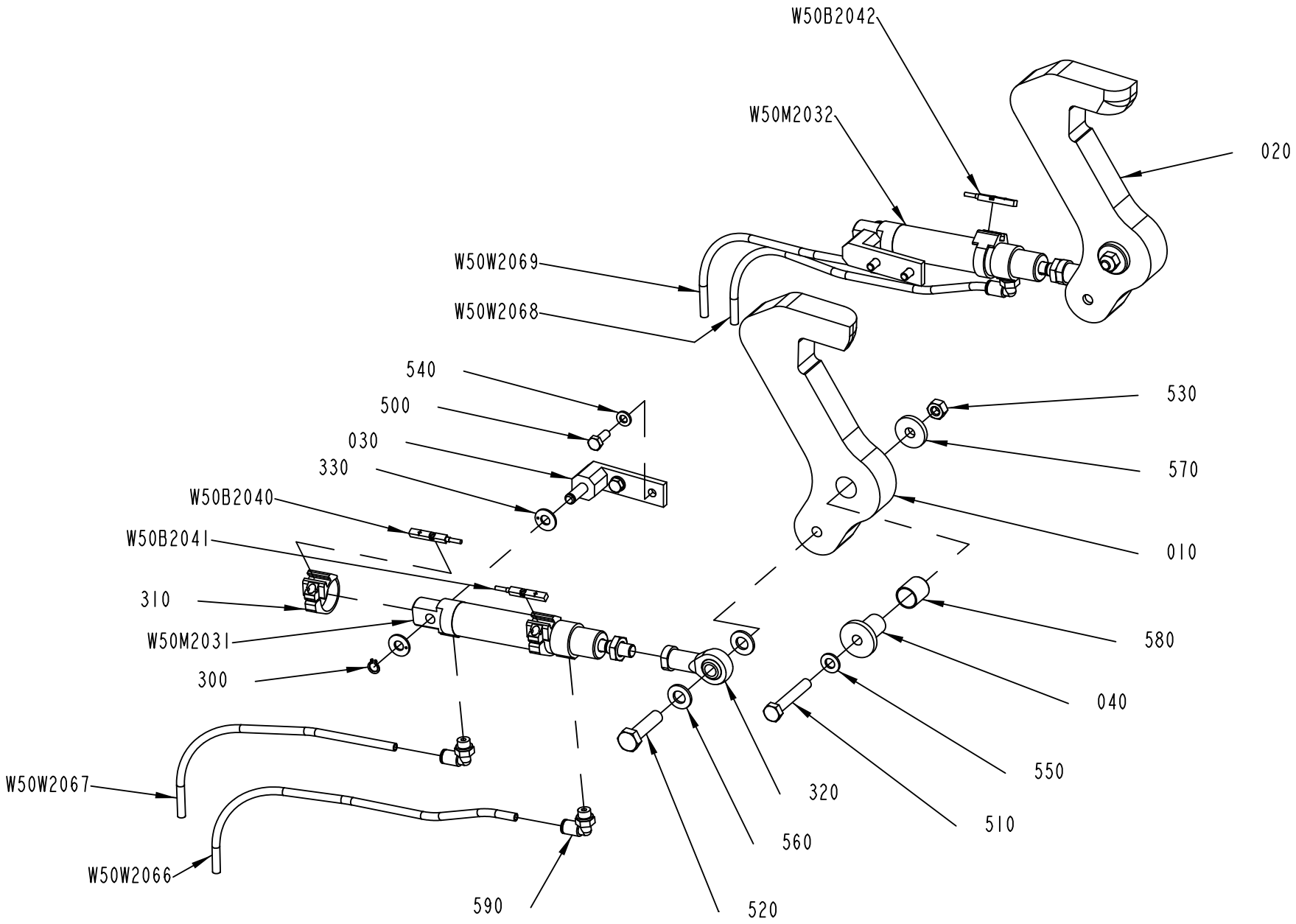

3196746-1
572955

ECM: 599063 - 20130314
Group number: 3196746-0100
Assembly Drawing: 3196746-1_1_AB

Pos	Part No	UN	Qty	Description	Page No
-					
010	3196744-0000		1	LUG	
020	3196745-0000		1	LUG	
030	3196747-0000		2	FASTENING PLATE	
040	3196749-0000		2	SPACER SLEEVE	
300	90141-0015		2	RETAINING RING FOR SHAFT DIN 471 8 SS	
310	90450-0808		3	SENSOR BRACKET, FOR CYL 25	
320	90459-1018		2	ROD END, BALL JOINT EYE M10X1,25	
330	90459-3826		4	THRUST WASHER, 8X18X1,5 MM	
500	312105-0368		4	SCREW, M6S ISO 4017 M6X16 A4 80	
510	312105-0461		2	SCREW, M6S ISO 4014 M8X50 A4 80	
520	312105-0499		2	SCREW, M6S ISO 4014 M10X40 A4 80	
530	312605-0318		2	HEXAGON NUT, M6M M8 A280	
540	315106-0153		4	WASHER PLAIN, M6 ISO7089-6-200 HV A4	
550	315106-0165		2	WASHER PLAIN, M8 ISO7089-8-200 HV A4	
560	315106-0173		4	WASHER PLAIN, M10 ISO7089-10-200 HV A4	
570	315125-0165		2	WASHER HIGH, TBRSB 8,4X26X5 A4	
580	321133-0224		2	BUSHING IGLIDUR G 16X18X20	
590	350002-0006		4	PUSH-IN L-FITTING QSL-F-G1/8-6	
W50B2040	90600-3273		1	PROX. SENSOR, SMT-8M-PS-24V-K-0,3-M8D	
W50B2041	90600-3273		1	PROX. SENSOR, SMT-8M-PS-24V-K-0,3-M8D	
W50B2042	90600-3273		1	PROX. SENSOR, SMT-8M-PS-24V-K-0,3-M8D	
W50M2031	90603-5110		1	DOUBLE ACTING, MINI-ISO, CYL. 25-50	
W50M2032	90603-5110		1	DOUBLE ACTING, MINI-ISO, CYL. 25-50	
W50W2066	315400-0001	M	4.8	6-4E PUN-H-6X1-BL	
W50W2067	315400-0001	M	4.8	6-4E PUN-H-6X1-BL	
W50W2068	315400-0001	M	4.8	6-4E PUN-H-6X1-BL	
W50W2069	315400-0001	M	4.8	6-4E PUN-H-6X1-BL	

Pos	Part No	UN	Qty	Description	Page No

PACKING END STOP

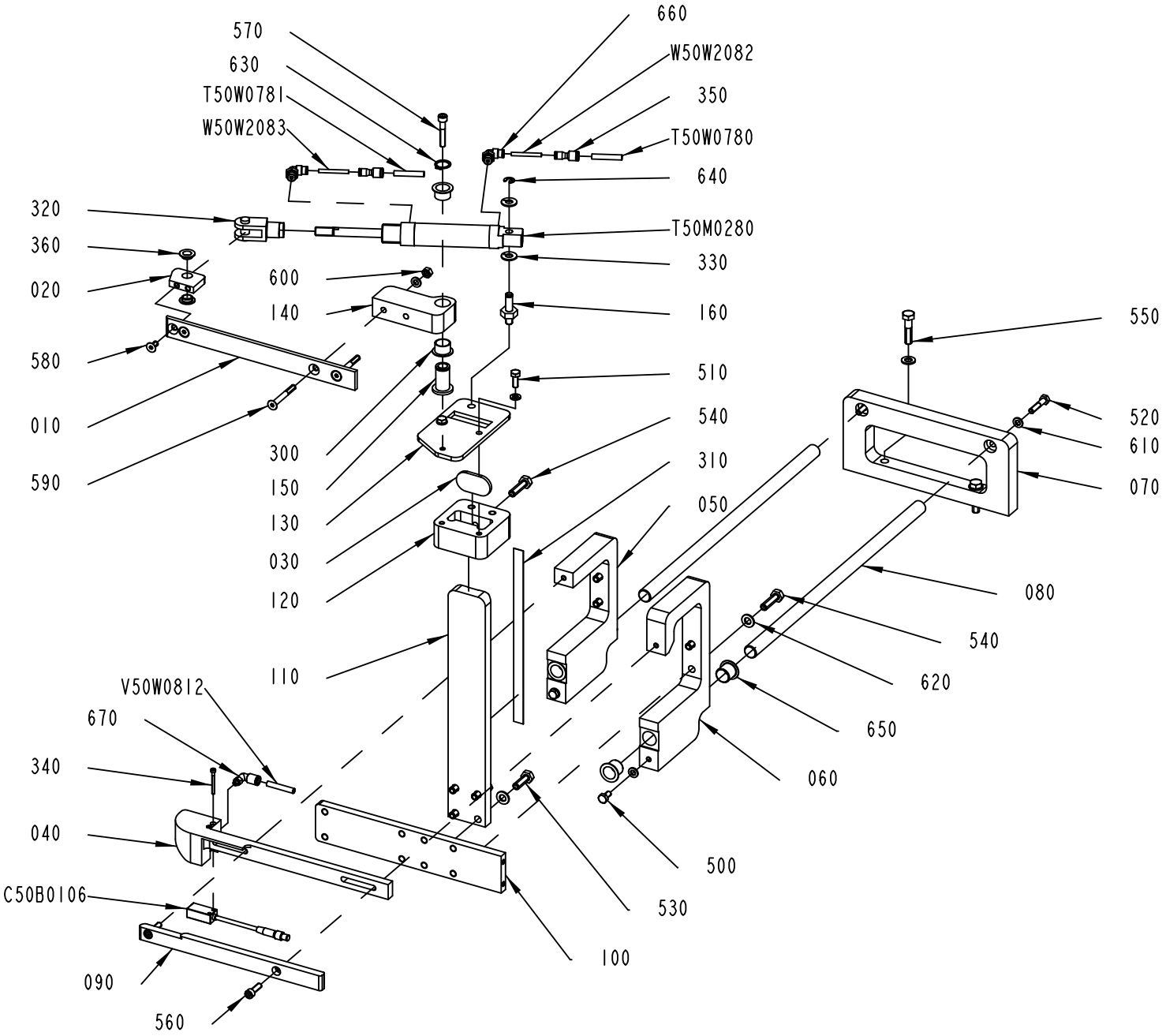

3196748-1
559919

ECM: 577182 - 20120924
Group number: 3196748-0100
Assembly Drawing: 3196748-1_1_AA

Pos	Part No	UN	Qty	Description	Page No
FEEDSIDE = LEFT					
040	3196753-0000		1	GUIDE RAIL	
090	3196759-0000		1	GUIDE RAIL	
FEEDSIDE = RIGHT					
040	3196752-0000		1	GUIDE RAIL	
090	3196758-0000		1	GUIDE RAIL	
Common Parts					
010	3238152-0000		1	RAIL	
020	3238153-0000		1	BRACKET	
030	3136752-0000		1	PLATE	
050	3196754-0000		1	BEARING BRACKET	
060	3196755-0000		1	BEARING BRACKET	
070	3196756-0000		1	SUPPORT PLATE	
080	3196757-0000		2	SHAFT	
100	3196760-0000		1	BRACKET	
110	3196761-0000		1	BRACKET	
120	3196762-0000		1	BRACKET	
130	3196763-0000		1	PLATE	
140	3196764-0000		1	BRACKET	
150	3196765-0000		1	SHAFT	
160	3213478-0000		1	SHAFT	
300	90240-0325		2	FLANGE BUSHING, IGLIDUR X 16X18X12	
310	90458-2780		1	SCALE ,1000-0 MM ADHESIVE	
320	90459-1696		1	ROD END, CLEVIS WITH AXLE M10X1,25	
330	90459-3826		2	THRUST WASHER, 8X18X1,5 MM	
340	90459-0215		2	SCREW MC6S M3X30 A4	
350	90055-0237		2	HOSE,NIPPLE,REDUCER,TUBE, 4/6MM	
360	90459-3828		2	FLANGE BUSHING, IGLIDUR W300 10X12X5	
500	312105-0366		2	SCREW, M6S ISO 4017 M6X12 A4 80	
510	312105-0368		2	SCREW, M6S ISO 4017 M6X16 A4 80	
520	312105-0374		2	SCREW, M6S ISO 4014 M6X30 A4 80	
530	312105-0453		4	SCREW, M6S ISO 4017 M8X25 A4 80	
540	312105-0455		5	SCREW, M6S ISO 4017 M8X30 A4 80	
550	312105-0457		2	SCREW, M6S ISO 4014 M8X35 A4 80	
560	312115-0370		2	SCREW ISO4762 M6X20 A4 80	
570	312115-0376		1	SCREW ISO4762 M6X35 A4 80	
580	312155-0366		2	SCREW DIN 7991 MF6S M6X12 A4 70	
590	312155-0380		2	SCREW DIN 7991 MF6S M6X50 A4 70	
600	312605-0316		2	HEXAGON NUT, M6M M6 A280	
610	315106-0153		8	WASHER PLAIN, M6 ISO7089-6-200 HV A4	
620	315106-0165		10	WASHER PLAIN, M8 ISO7089-8-200 HV A4	
630	315751-0113		1	RETAINING RING FOR SHAFT DIN 471 16 SS	
640	315755-0108		1	RETAINING RING SHAFT DIN 6799 6 SS	
650	321153-0221		4	FLANGE BUSHING, IGLIDUR G 16X18X17	
660	350002-0005		2	PUSH-IN L-FITTING QSL-F-G1/8-4	
670	350002-0002		1	PUSH-IN L-FITTING QSL-F-M5-6	
C50B0106	90459-7366		1	PHOTOCELL, WTB4-3P3161 F20	
T50M0280	90603-5110		1	DOUBLE ACTING, MINI-ISO, CYL. 25-50	
T50W0780	315400-0001	M	4.2	6-4E PUN-H-6X1-BL	
T50W0781	315400-0001	M	4.2	6-4E PUN-H-6X1-BL	
V50W0812	315400-0001	M	1	6-4E PUN-H-6X1-BL	
W50W2082	315400-0016	MM	300	TUBE PUN-H-4X0,75-BL	
W50W2083	315400-0016	MM	300	TUBE PUN-H-4X0,75-BL	

Machine Type	Group Description	Used-In	Group Number	Page No

TRANSFER PLATE GUIDE

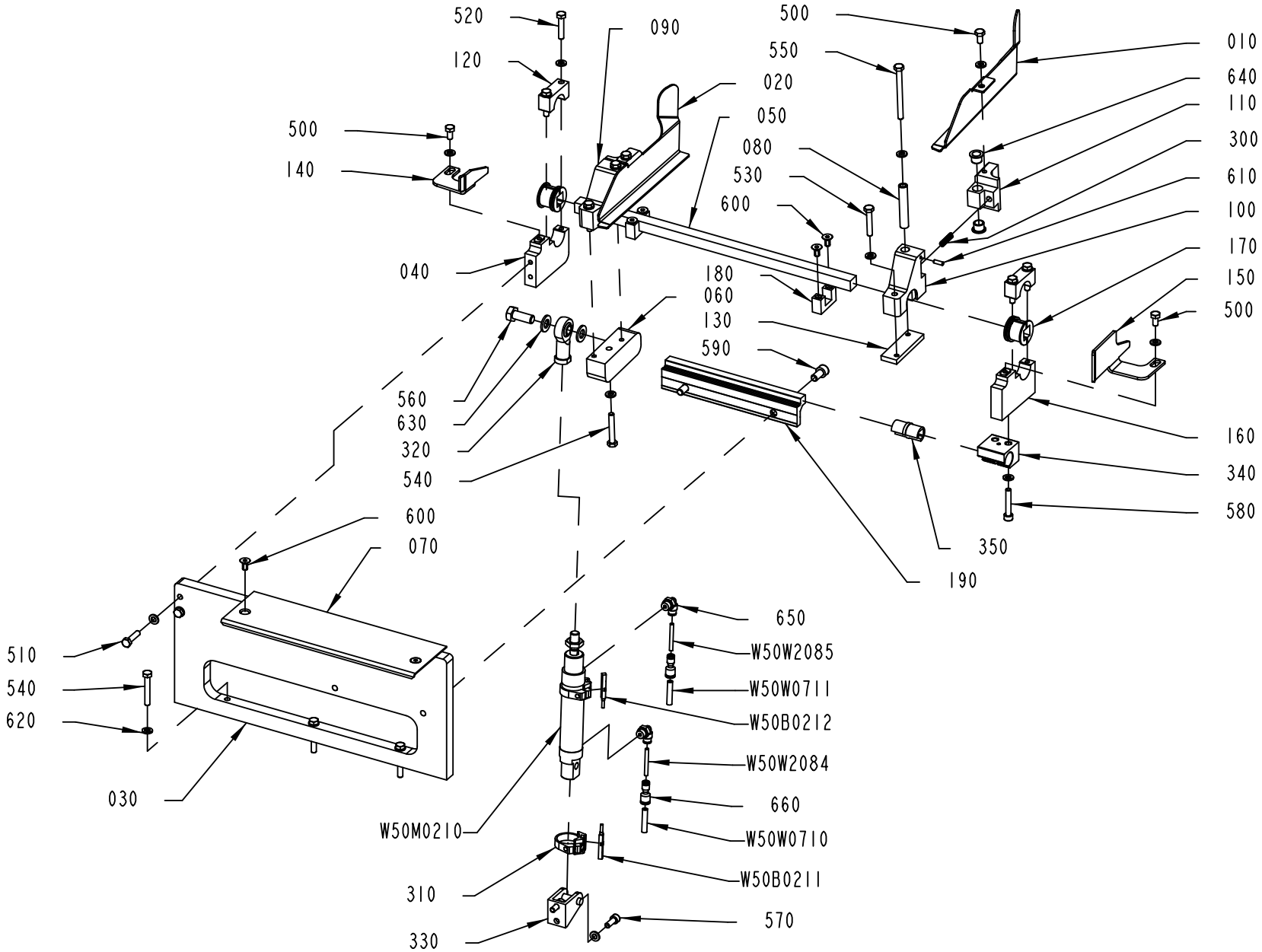

3196751-1
627532

ECM: 630429 - 20130919
Group number: 3196751-0100
Assembly Drawing: 3196751-1_1_AC

Pos	Part No	UN	Qty	Description	Page No
LINF U-FORM					
060	3251375-0000		1	LEVER	
140	3197440-0000		1	GUIDE PLATE	
150	3197442-0000		1	GUIDE PLATE	
LINF Z-FORM					
060	3251375-0000		1	LEVER	
140	3197443-0000		1	GUIDE PLATE	
150	3197441-0000		1	GUIDE PLATE	
RINF U-FORM					
060	3196771-0000		1	LEVER	
140	3197443-0000		1	GUIDE PLATE	
150	3197441-0000		1	GUIDE PLATE	
RINF Z-FORM					
060	3196771-0000		1	LEVER	
140	3197440-0000		1	GUIDE PLATE	
150	3197442-0000		1	GUIDE PLATE	
Common Parts					
010	3196766-0000		1	GUIDE PLATE	
020	3196767-0000		1	GUIDE PLATE	
030	3196768-0000		1	PLATE	
040	3196769-0000		1	HOLDER	
050	3196770-0000		1	SHAFT	
070	3196772-0000		1	PLATE	
080	3196773-0000		2	SHAFT	
090	3196785-0000		1	HOLDER	
100	3196786-0000		1	HOLDER	
110	3197434-0000		2	HOLDER	
120	3197435-0000		2	HOLDER	
130	3197436-0000		1	NUT WASHER	
160	3215908-0000		1	HOLDER	
170	3215909-0000		2	BUSHING	
180	3215910-0000		2	HOLDER	
190	3223849-0000		1	RAIL	
300	90335-0031		2	COMP. SPRING, 21880, 1X6X24	
310	90450-0808		2	SENSOR BRACKET, FOR CYL 25	
320	90459-1018		1	ROD END, BALL JOINT EYE M10X1,25	
330	90459-4932		1	REAR CLEVIS FOOT MOUNTING, CRLBN-20/25	
340	90602-9074		1	BEARING HOUSING, WM-01-16	
350	90602-9075		1	BUSHING INSERT, J200QM-01-16	
500	312105-0366		4	SCREW, M6S ISO 4017 M6X12 A4 80	
510	312105-0372		2	SCREW, M6S ISO 4017 M6X25 A4 80	
520	312105-0374		4	SCREW, M6S ISO 4014 M6X30 A4 80	
530	312105-0376		2	SCREW, M6S ISO 4014 M6X35 A4 80	
540	312105-0378		4	SCREW, M6S ISO 4014 M6X40 A4 80	
550	312105-0384		2	SCREW, M6S ISO 4014 M6X70 A4 80	
560	312105-0493		1	SCREW, M6S ISO 4017 M10X25 A4 80	
570	312115-0368		2	SCREW ISO4762 M6X16 A4 80	
580	312115-0376		1	SCREW ISO4762 M6X35 A4 80	
590	312115-0449		2	SCREW ISO4762 M8X16 A4 80	
600	312155-0366		6	SCREW DIN 7991 MF6S M6X12 A4 70	
610	312318-0291		2	SET SCREW, CUP END ISO4029 M4X12 A4	
620	315106-0153		21	WASHER PLAIN, M6 ISO7089-6-200 HV A4	
630	315106-0173		2	WASHER PLAIN, M10 ISO7089-10-200 HV A4	
640	321153-0140		4	FLANGE BUSHING, IGLIDUR G 10X12X10	
650	350002-0005		2	PUSH-IN L-FITTING QSL-F-G1/8-4	
660	90055-0237		2	HOSE,NIPPLE,REDUCER,TUBE, 4/6MM	
W50B0211	90600-3273		1	PROX. SENSOR, SMT-8M-PS-24V-K-0,3-M8D	
W50B0212	90600-3273		1	PROX. SENSOR, SMT-8M-PS-24V-K-0,3-M8D	
W50M0210	90603-5110		1	DOUBLE ACTING, MINI-ISO, CYL. 25-50	
W50W0710	315400-0001	M	3.5	6-4E PUN-H-6X1-BL	
W50W0711	315400-0001	M	3.5	6-4E PUN-H-6X1-BL	
W50W2084	315400-0016	MM	100	TUBE PUN-H-4X0,75-BL	
W50W2085	315400-0016	MM	100	TUBE PUN-H-4X0,75-BL	

Machine Type	Group Description	Used-In	Group Number	Page No

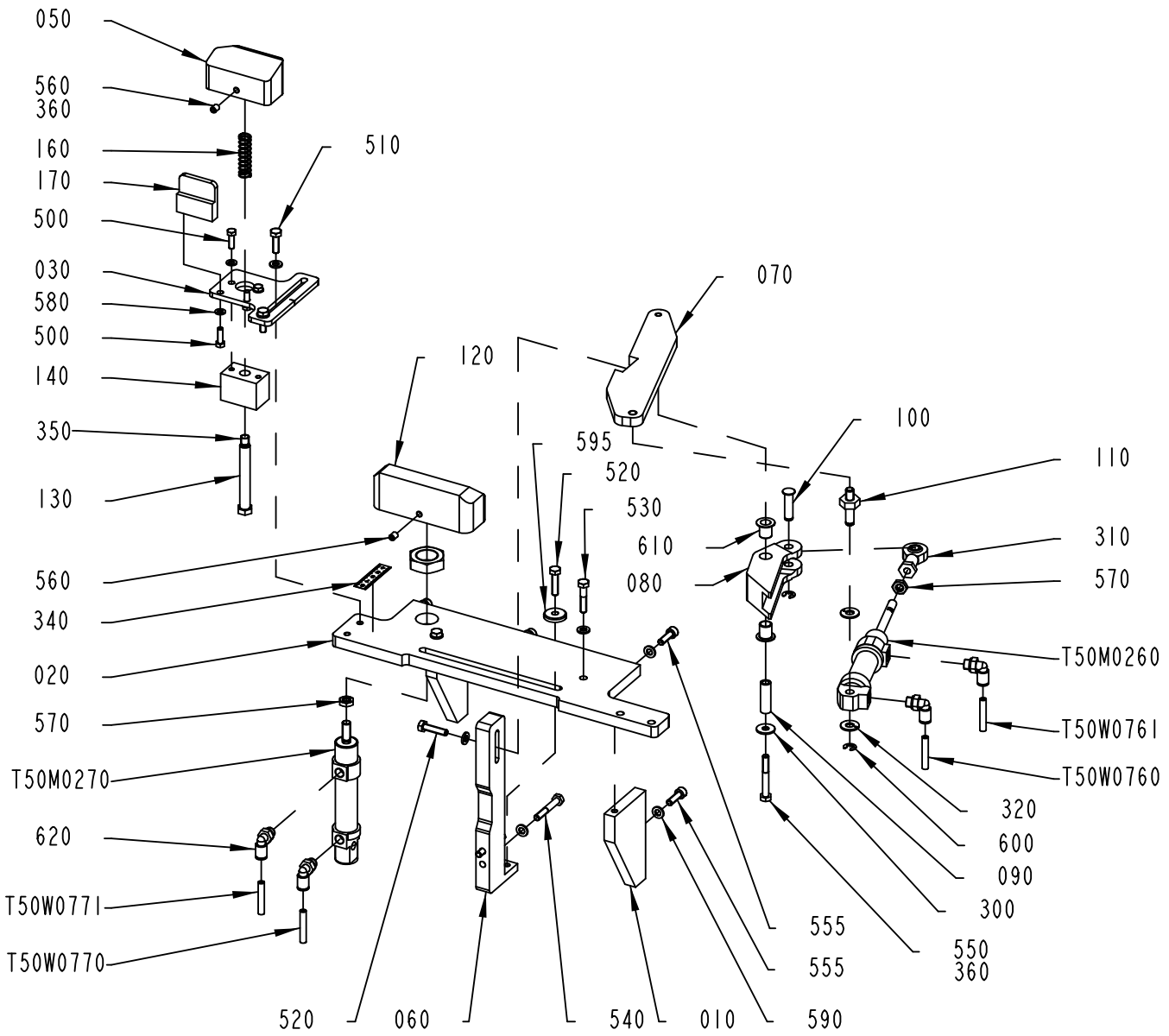

3197444-1
630884

ECM: 662296 - 20140312
Group number: 3197444-0100
Assembly Drawing: 3197444-1_1_AD

Pos	Part No	UN	Qty	Description	Page No
FEEDSIDE = LEFT					
050	3266387-0000		1	GUIDE	
FEEDSIDE = RIGHT					
050	3266388-0000		1	GUIDE	
Common Parts					
010	1021284-0000		2	SUPPORT	
020	3197445-0000		1	PLATE	
030	3266394-0000		1	GUIDE BRACKET	
060	3213473-0000		1	HOLDER	
070	3213474-0000		1	BRACKET	
080	3213475-0000		1	FOLDER	
090	3213476-0000		1	SHAFT	
100	3213477-0000		1	SHAFT	
110	3213478-0000		1	SHAFT	
120	3213479-0000		1	FLAP GUIDE	
130	3266389-0000		1	SHAFT	
140	3266390-0000		1	BUSHING	
160	1497848-0000		1	COMPRESSION SPRING	
170	3266395-0000		1	GUIDE PLATE	
300	90005-0060		1	WASHER PLAIN, RBS 6,4/M6)/18,H=1,5	
310	90115-0139		1	ROD END, ID=8 MM, M8X1,25	
320	90459-3826		2	THRUST WASHER, 8X18X1,5 MM	
340	90458-2780		1	SCALE ,1000-0 MM ADHESIVE	
350	90157-0012	G	1	LOCKING FLUID LOCTITE 242 50 ML	
360	90157-0021		1	LOCKING FLUID LOCTITE 270	
500	312105-0329		4	SCREW, M6S ISO 4017 M5X16 A4 80	
510	312105-0370		2	SCREW, M6S ISO 4017 M6X20 A4 80	
520	312105-0372		2	SCREW, M6S ISO 4017 M6X25 A4 80	
530	312105-0374		2	SCREW, M6S ISO 4014 M6X30 A4 80	
540	312105-0378		2	SCREW, M6S ISO 4014 M6X40 A4 80	
550	312105-0379		1	SCREW, M6S ISO 4014 M6X45 A4 80	
555	312115-0370		5	SCREW ISO4762 M6X20 A4 80	
560	312316-0362		2	SET SCREW, CUP END ISO4029 M6X8 FZB	
570	312625-0318		2	HEXAGON THIN NUT, EN 24035 ML6M M8 A4	
580	315106-0146		4	WASHER PLAIN, M5 ISO7089-5-200 HV A4	
590	315106-0153		12	WASHER PLAIN, M6 ISO7089-6-200 HV A4	
595	315125-0153		1	WASHER HIGH, TBRSB 6,4X22X4 A4	
600	315755-0108		2	RETAINING RING SHAFT DIN 6799 6 SS	
610	321153-0145		2	FLANGE BUSHING, IGLIDUR G 10X12X15	
620	350002-0006		4	PUSH-IN L-FITTING QSL-F-G1/8-6	
T50M0260	90239-0847		1	DOUBLE ACTING, MINI-ISO, CYL.20-50	
T50M0270	90603-5311		1	DOUBLE ACTING, MINI-ISO, CYL. 20-25	
T50W0760	315400-0001	M	3.5	6-4E PUN-H-6X1-BL	
T50W0761	315400-0001	M	3.5	6-4E PUN-H-6X1-BL	
T50W0770	315400-0001	M	3.7	6-4E PUN-H-6X1-BL	
T50W0771	315400-0001	M	3.7	6-4E PUN-H-6X1-BL	

Machine Type | Group Description | Used-In | Group Number | Page No

FLAP GUIDE

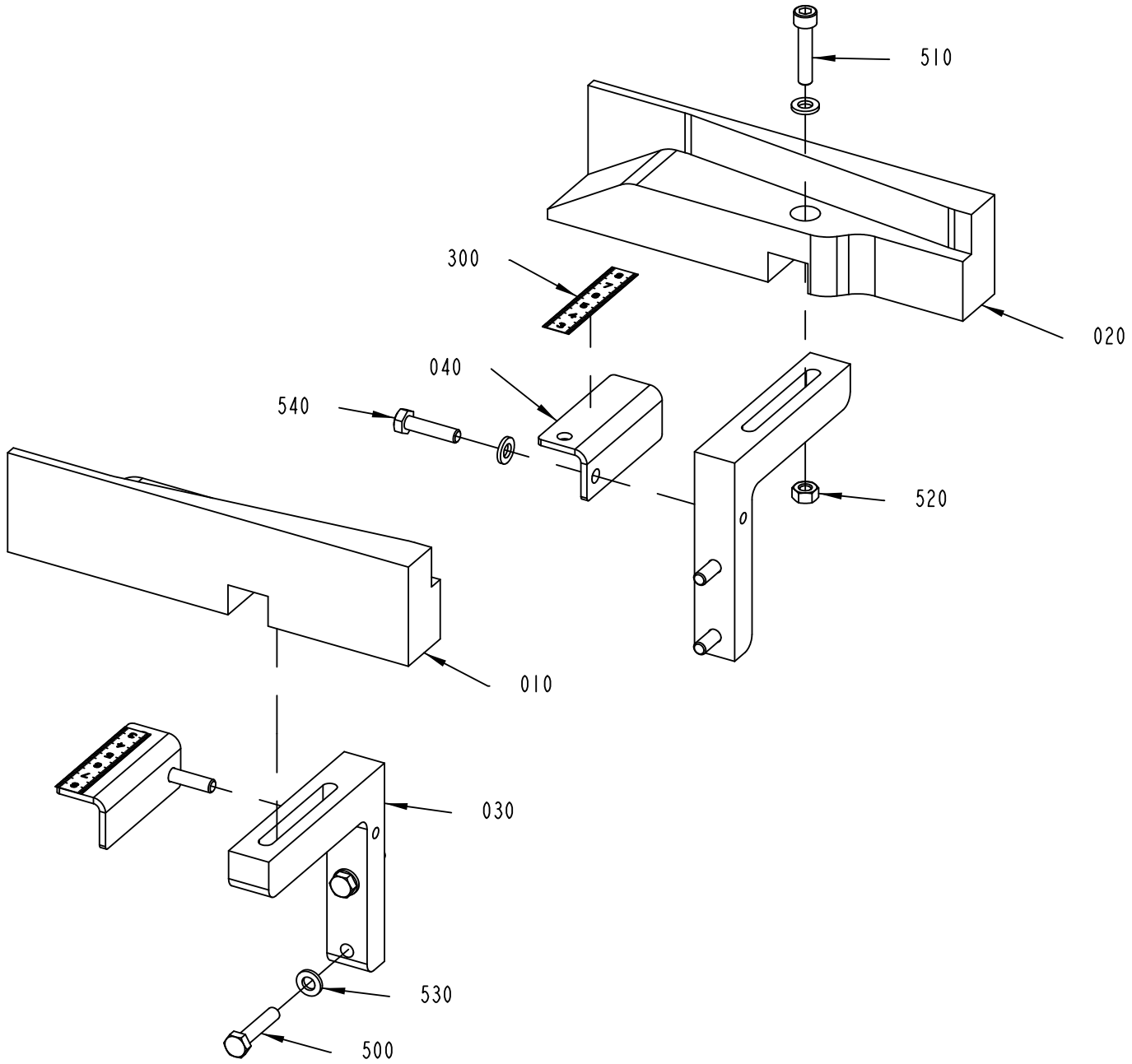

3197450-1
559919

ECM: 567407 - 20120710
Group number: 3197450-0100
Assembly Drawing: 3197450-1_1_AA

Pos	Part No	UN	Qty	Description	Page No
-					
010	3197451-0000		1	FLAP GUIDE	
020	3197452-0000		1	FLAP GUIDE	
030	3197453-0000		2	GUIDE BRACKET	
040	3251380-0000		2	ANGLE	
300	90458-2780		2	SCALE ,1000-0 MM ADHESIVE	
500	312105-0374		4	SCREW, M6S ISO 4014 M6X30 A4 80	
510	312115-0374		2	SCREW ISO4762 M6X30 A4 80	
520	312605-0316		2	HEXAGON NUT, M6M M6 A280	
530	315106-0153		8	WASHER PLAIN, M6 ISO7089-6-200 HV A4	
540	312105-0372		2	SCREW, M6S ISO 4017 M6X25 A4 80	

Pos	Part No	UN	Qty	Description	Page No

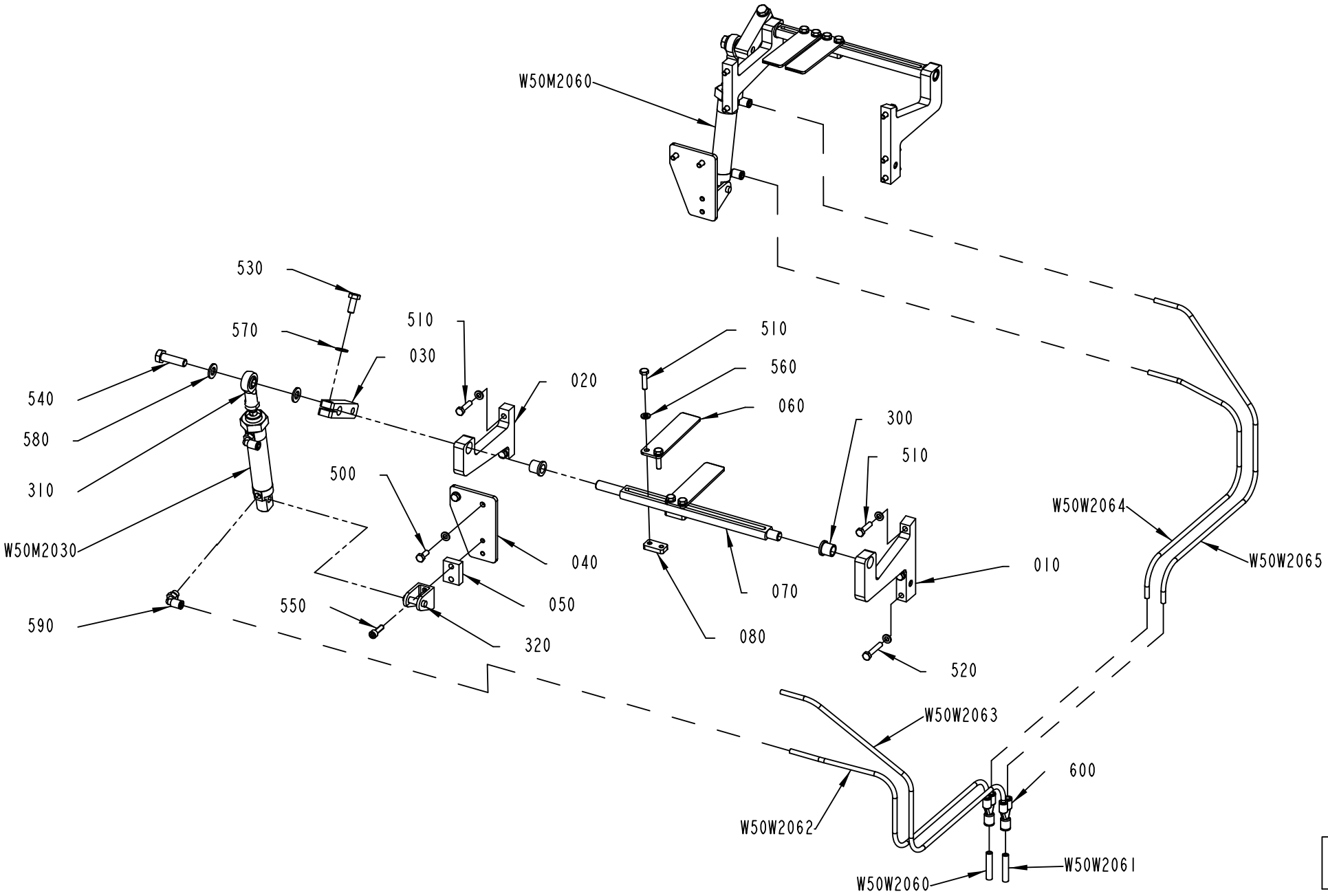

3199159-1
559919

ECM: 577186 - 20120924
Group number: 3199159-0100
Assembly Drawing: 3199159-1_1_AA

Pos	Part No	UN	Qty	Description	Page No
-					
010	3199146-0000		2	BRACKET	
020	3199147-0000		2	BRACKET	
030	3199151-0000		2	ARM	
040	3231405-0000		2	BRACKET	
050	3231408-0000		2	SPACER BLOCK	
060	3251367-0000		4	PLATE	
070	3251368-0000		2	SHAFT	
080	3251369-0000		4	NUT PLATE	
300	90240-0204		4	FLANGE BUSHING, 12X16X16 MM	
310	90459-1018		2	ROD END, BALL JOINT EYE M10X1,25	
320	90459-4932		2	REAR CLEVIS FOOT MOUNTING, CRLBN-20/25	
500	312105-0368		4	SCREW, M6S ISO 4017 M6X16 A4 80	
510	312105-0372		14	SCREW, M6S ISO 4017 M6X25 A4 80	
520	312105-0376		4	SCREW, M6S ISO 4014 M6X35 A4 80	
530	312105-0451		2	SCREW, M6S ISO 4017 M8X20 A4 80	
540	312105-0497		2	SCREW, M6S ISO 4017 M10X35 A4 80	
550	312115-0370		4	SCREW ISO4762 M6X20 A4 80	
560	315106-0153		22	WASHER PLAIN, M6 ISO7089-6-200 HV A4	
570	315106-0165		2	WASHER PLAIN, M8 ISO7089-8-200 HV A4	
580	315106-0173		4	WASHER PLAIN, M10 ISO7089-10-200 HV A4	
590	350002-0006		4	PUSH-IN L-FITTING QSL-F-G1/8-6	
600	350015-0004		2	PUSH-IN Y-CONNECTOR QSY-F-8-6	
W50M2030	90603-5110		1	DOUBLE ACTING, MINI-ISO, CYL. 25-50	
W50M2060	90603-5110		1	DOUBLE ACTING, MINI-ISO, CYL. 25-50	
W50W2060	315400-0004	M	4.6	TUBE PUN-H-8X1,25-BL	
W50W2061	315400-0004	M	4.6	TUBE PUN-H-8X1,25-BL	
W50W2062	315400-0001	M	1	6-4E PUN-H-6X1-BL	
W50W2063	315400-0001	M	1	6-4E PUN-H-6X1-BL	
W50W2064	315400-0001	M	1	6-4E PUN-H-6X1-BL	
W50W2065	315400-0001	M	1	6-4E PUN-H-6X1-BL	

Pos	Part No	UN	Qty	Description	Page No

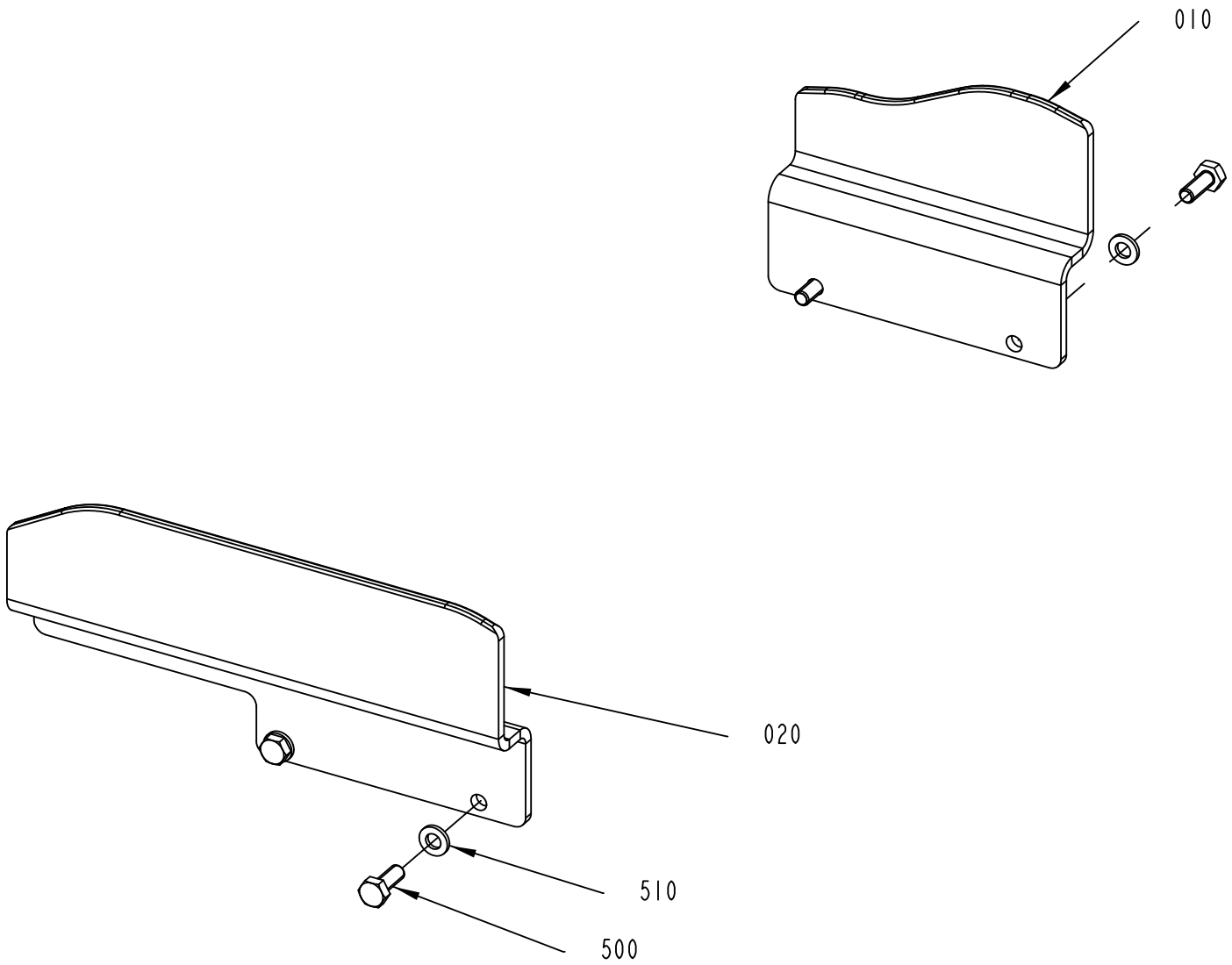

3213482-1
559919

ECM: 567395 - 20120710
Group number: 3213482-0100
Assembly Drawing: 3213482-1_1_AA

Pos	Part No	UN	Qty	Description	Page No
FEEDSIDE = LEFT					
010	3197439-0000		1	RAIL	
020	3213481-0000		1	RAIL	
FEEDSIDE = RIGHT					
010	3197438-0000		1	RAIL	
020	3213480-0000		1	RAIL	
Common Parts					
500	312105-0368		4	SCREW, M6S ISO 4017 M6X16 A4 80	
510	315106-0153		4	WASHER PLAIN, M6 ISO7089-6-200 HV A4	

Pos	Part No	UN	Qty	Description	Page No

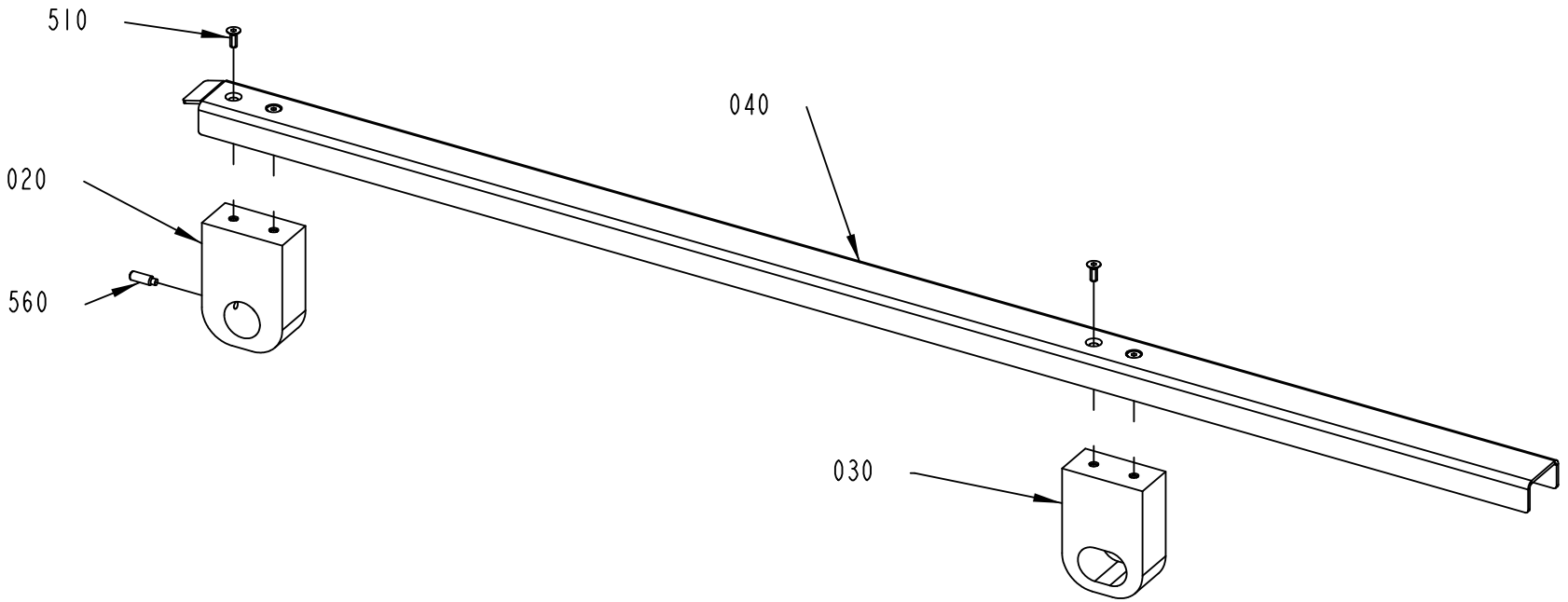

3215911-1
579668

ECM: 585746 - 20121116
Group number: 3215911-0100
Assembly Drawing: 3215911-1_1_AB

Pos	Part No	UN	Qty	Description	Page No
-					
020	3215912-0000		1	BRACKET	
030	3215913-0000		1	BRACKET	
040	3215914-0000		1	SUPPORTING SHEET	
510	312155-0368		4	SCREW DIN 7991 MF6S M6X16 A4 70	
560	344324-0453		1	SET SCREW, DOG POINT ISO4028 M8X25 A2	

Pos	Part No	UN	Qty	Description	Page No

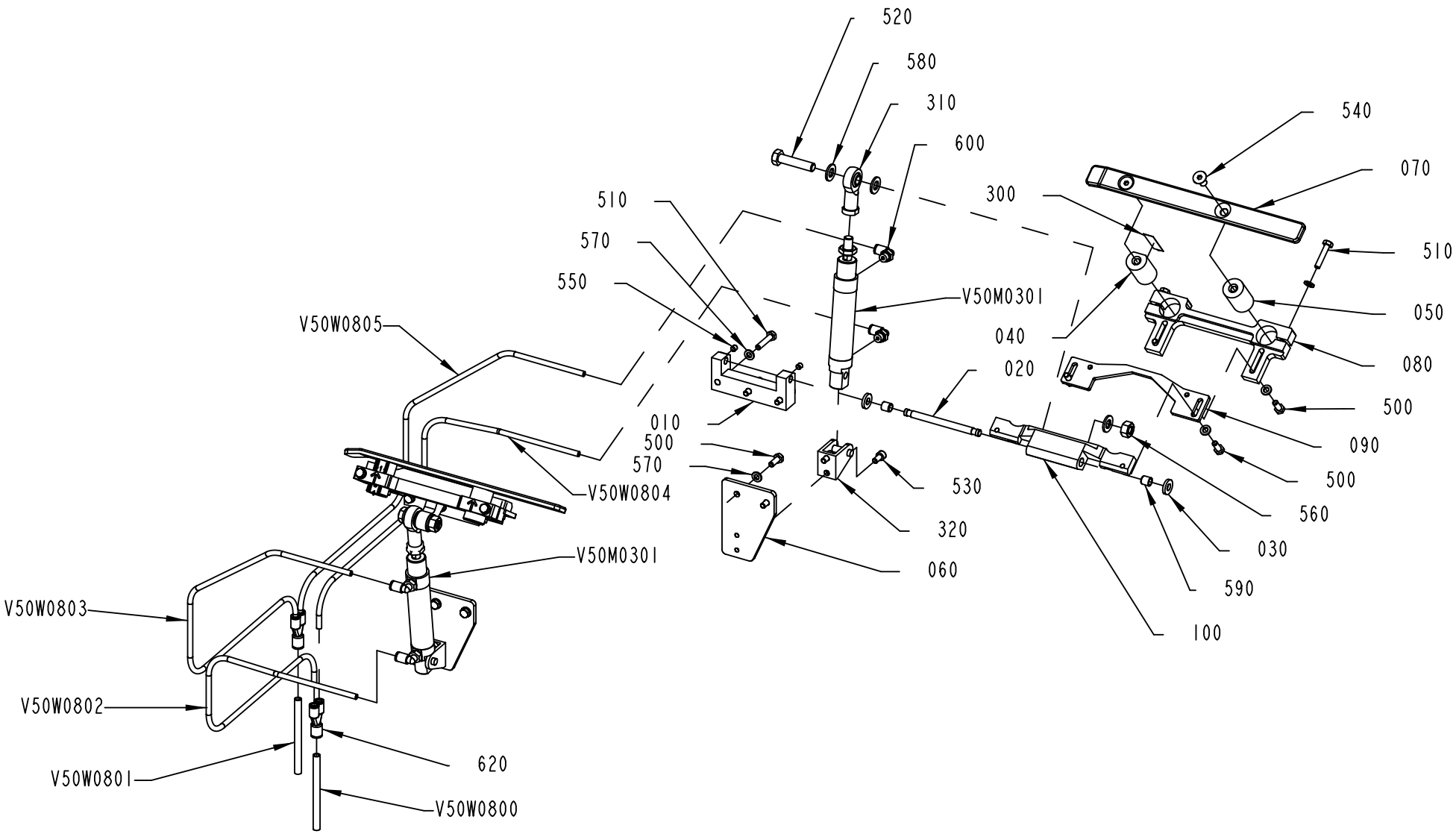

3223851-1
559919

ECM: 567403 - 20120710
Group number: 3223851-0100
Assembly Drawing: 3223851-1_1_AA

Pos	Part No	UN	Qty	Description	Page No
-					
010	1021127-0000		2	HOLDER	
020	1021129-0000		2	SHAFT	
030	1021130-0000		4	WASHER	
040	3173376-0000		2	SHAFT	
050	3173382-0000		2	SHAFT	
060	3231405-0000		2	BRACKET	
070	3231409-0000		2	PRESSURE RAIL	
080	3231410-0000		2	BRACKET	
090	3231411-0000		2	BRACKET	
100	3231412-0000		2	BRACKET	
300	90458-2779		2	SCALE , 0-1000MM ADHESIVE	
310	90459-1018		2	ROD END, BALL JOINT EYE M10X1,25	
320	90459-4932		2	REAR CLEVIS FOOT MOUNTING, CRLBN-20/25	
500	312105-0368		12	SCREW, M6S ISO 4017 M6X16 A4 80	
510	312105-0374		10	SCREW, M6S ISO 4014 M6X30 A4 80	
520	312105-0500		2	SCREW, M6S ISO 4014 M10X45 A4 80	
530	312115-0366		4	SCREW ISO4762 M6X12 A4 80	
540	312155-0449		4	SCREW DIN 7991 MF6S M8X16 A4 70	
550	312318-0360		4	SET SCREW, CUP END ISO4029 M6X6 A4	
560	312605-0320		2	HEXAGON NUT, M6M M10 A280	
570	315106-0153		22	WASHER PLAIN, M6 ISO7089-6-200 HV A4	
580	315106-0173		6	WASHER PLAIN, M10 ISO7089-10-200 HV A4	
590	321134-0102		4	BUSHING IGLIDUR W300 8X10X10	
600	350002-0006		4	PUSH-IN L-FITTING QSL-F-G1/8-6	
620	350015-0004		2	PUSH-IN Y-CONNECTOR QSY-F-8-6	
V50M0300	90603-5110		1	DOUBLE ACTING, MINI-ISO, CYL. 25-50	
V50M0301	90603-5110		1	DOUBLE ACTING, MINI-ISO, CYL. 25-50	
V50W0800	315400-0004	M	3.5	TUBE PUN-H-8X1,25-BL	
V50W0801	315400-0004	M	3.5	TUBE PUN-H-8X1,25-BL	
V50W0802	315400-0001	MM	800	6-4E PUN-H-6X1-BL	
V50W0803	315400-0001	MM	800	6-4E PUN-H-6X1-BL	
V50W0804	315400-0001	MM	800	6-4E PUN-H-6X1-BL	
V50W0805	315400-0001	MM	800	6-4E PUN-H-6X1-BL	

Pos	Part No	UN	Qty	Description	Page No

Machine Type | Group Description | Used-In | Group Number | Page No

CARRIER FRAME

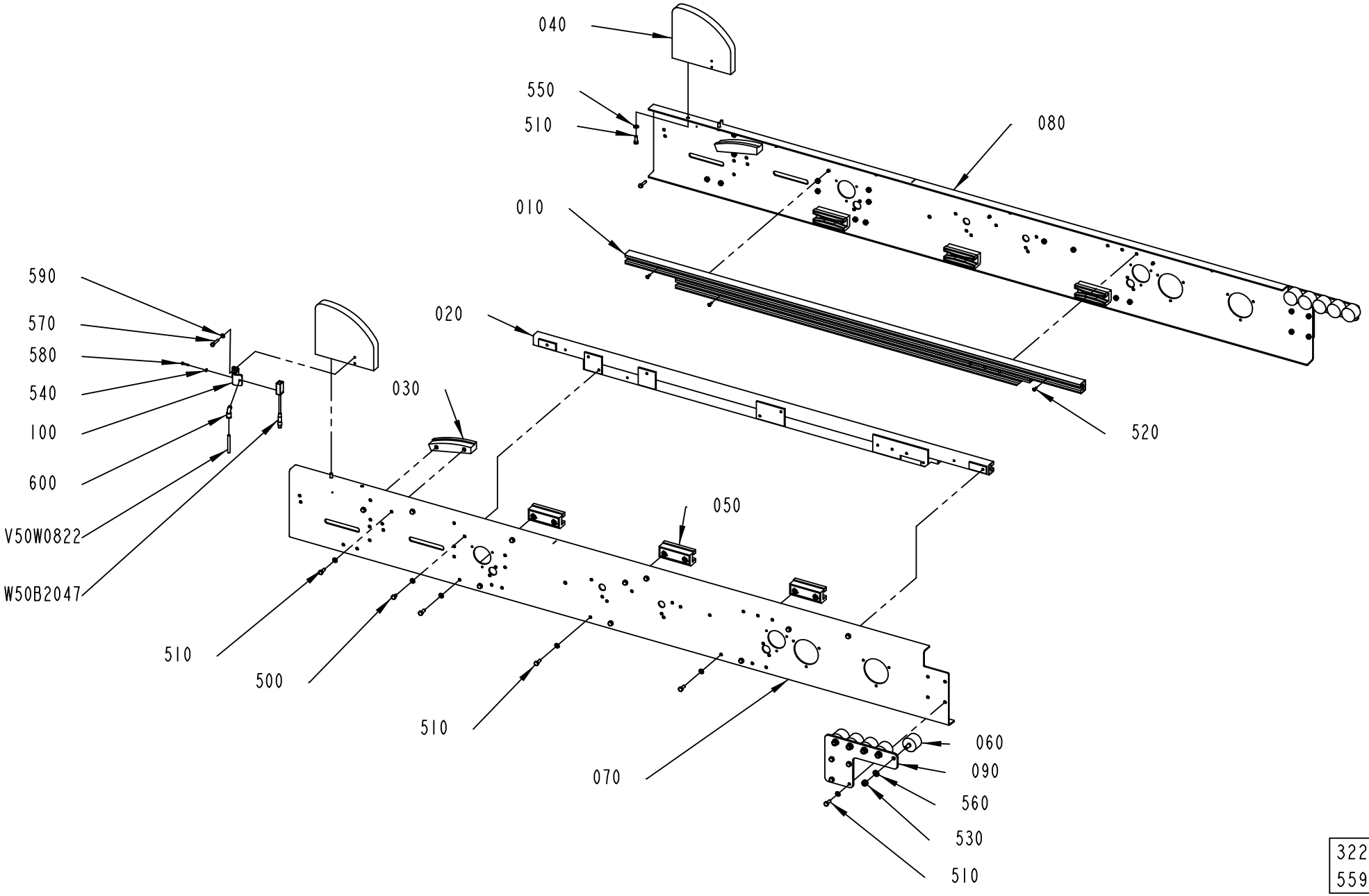

3223852-1
559919

ECM: 567404 - 20120710
Group number: 3223852-0100
Assembly Drawing: 3223852-1_1_AA

Pos	Part No	UN	Qty	Description	Page No
-					
010	1021085-0000		1	SLIDE RAIL	
020	1021086-0000		1	SLIDE RAIL	
030	1021087-0000		2	SLIDE RAIL	
040	3251371-0000		2	GUIDE	
050	1466401-0000		6	SLIDER	
060	2535553-0000		10	WHEEL	
070	3227806-0000		1	SIDE PLATE	
080	3227807-0000		1	SIDE PLATE	
090	3231407-0000		2	SUPPORT PLATE	
100	3251370-0000		1	PHOTOCELL BRACKET	
500	312105-0364		14	SCREW, M6S ISO 4017 M6X10 A4 80	
510	312105-0368		28	SCREW, M6S ISO 4017 M6X16 A4 80	
520	312155-0291		6	SCREW DIN 7991 MF6S M4X12 A4 70	
530	312812-0318		10	HEXAGON NUT, NY-LOCK M8 A4 80	
540	315106-0124		2	WASHER PLAIN, M3 ISO7089-3-200 HV A4	
550	315106-0153		42	WASHER PLAIN, M6 ISO7089-6-200 HV A4	
560	315106-0165		10	WASHER PLAIN, M8 ISO7089-8-200 HV A4	
570	312105-0333		2	SCREW, M6S ISO 4017 M5X25 A4 80	
580	312115-0228		2	SCREW ISO4762 M3X16 A4 80	
590	315106-0146		2	WASHER PLAIN, M5 ISO7089-5-200 HV A4	
600	350001-0002		1	PUSH-IN FITTING QS-F-M5-6	
V50W0822	315400-0001	M	2	6-4E PUN-H-6X1-BL	
W50B2047	90459-7366		1	PHOTOCELL, WTB4-3P3161 F20	

Pos	Part No	UN	Qty	Description	Page No

TRAY SUPPORT

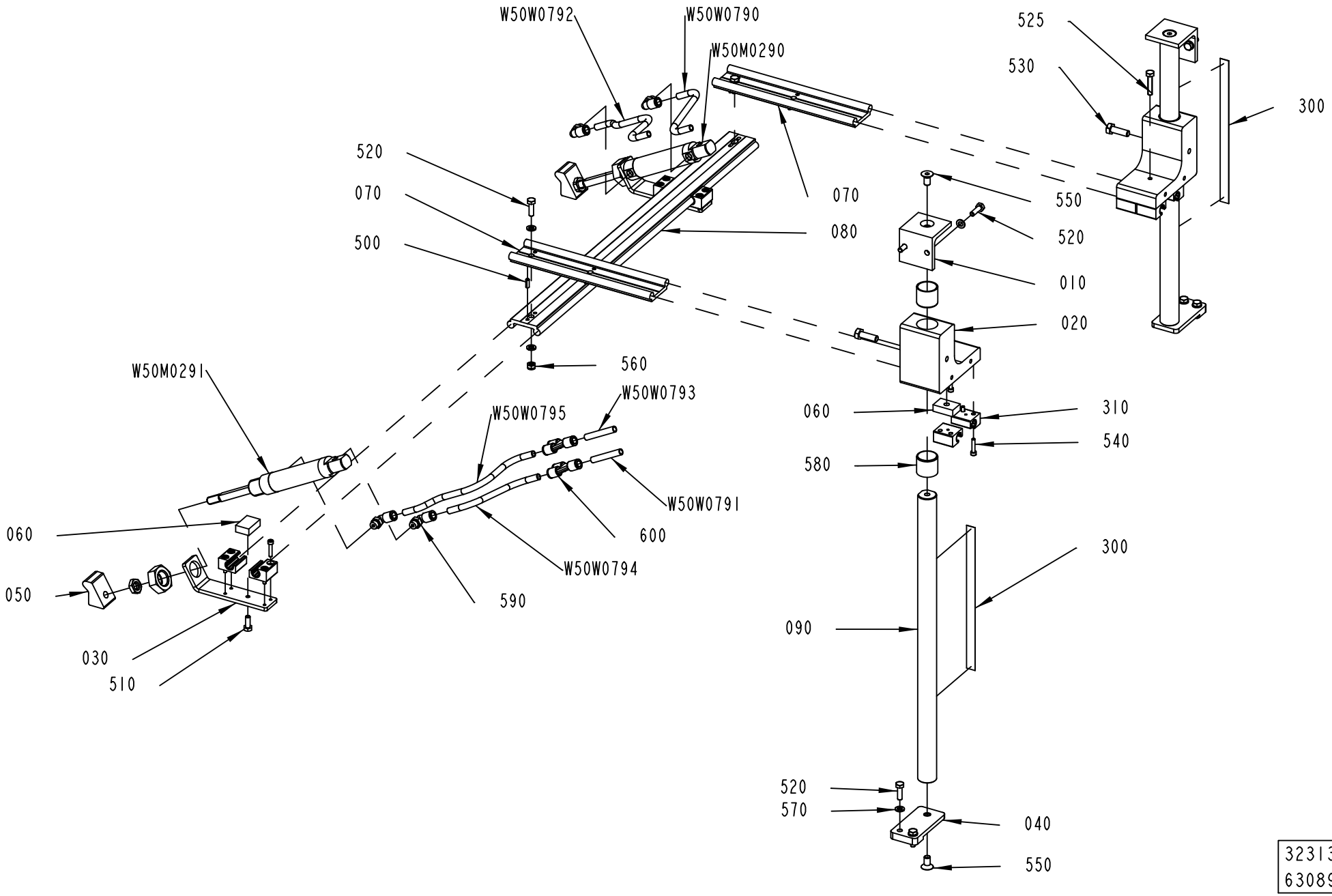

3231386-1
630890

ECM: 646227 - 20131125
Group number: 3231386-0100
Assembly Drawing: 3231386-1_1_AC

Pos	Part No	UN	Qty	Description	Page No
-					
010	2877511-0000		2	BRACKET	
020	3238141-0000		2	CARRIAGE	
030	3238142-0000		2	CYLINDER BRACKET	
040	3238143-0000		2	FASTENING PLATE	
050	3238144-0000		2	FLAP FOLDER	
060	3238145-0000		4	LOCKING BLOCK	
070	3238146-0000		2	SLIDE RAIL	
080	3238147-0000		1	SLIDE RAIL	
090	3238148-0000		2	SHAFT	
300	90458-2780		2	SCALE ,1000-0 MM ADHESIVE	
310	3238150-0000		12	BEARING HOUSING	
500	311112-0252		8	SPRING PIN, ISO 8752 4X12 A2	
510	312105-0368		2	SCREW, M6S ISO 4017 M6X16 A4 80	
520	312105-0370		10	SCREW, M6S ISO 4017 M6X20 A4 80	
525	312109-0374		2	SCREW, M6S ISO 4017 M6X30 A4 80	
530	312105-0453		2	SCREW, M6S ISO 4017 M8X25 A4 80	
540	312115-0295		24	SCREW ISO4762 M4X20 A4 80	
550	312155-0449		4	SCREW DIN 7991 MF6S M8X16 A4 70	
560	312812-0316		2	HEXAGON NUT, NY-LOCK M6 A4 80	
570	315106-0153		12	WASHER PLAIN, M6 ISO7089-6-200 HV A4	
580	321133-0300		4	BUSHING IGLIDUR G 25X28X25	
590	350002-0007		4	PUSH-IN L-FITTING QSL-F-G1/8-8	
600	350015-0003		2	PUSH-IN Y-CONNECTOR QSY-F-8	
W50M0290	90605-1265		1	DOUBLE ACTING, MINI-ISO, CYL. 25-50	
W50M0291	90605-1265		1	DOUBLE ACTING, MINI-ISO, CYL. 25-50	
W50W0790	315400-0004	MM	300	TUBE PUN-H-8X1,25-BL	
W50W0791	315400-0004	M	2	TUBE PUN-H-8X1,25-BL	
W50W0792	315400-0004	MM	400	TUBE PUN-H-8X1,25-BL	
W50W0793	315400-0004	M	2	TUBE PUN-H-8X1,25-BL	
W50W0794	315400-0004	MM	300	TUBE PUN-H-8X1,25-BL	
W50W0795	315400-0004	MM	400	TUBE PUN-H-8X1,25-BL	

Pos	Part No	UN	Qty	Description	Page No

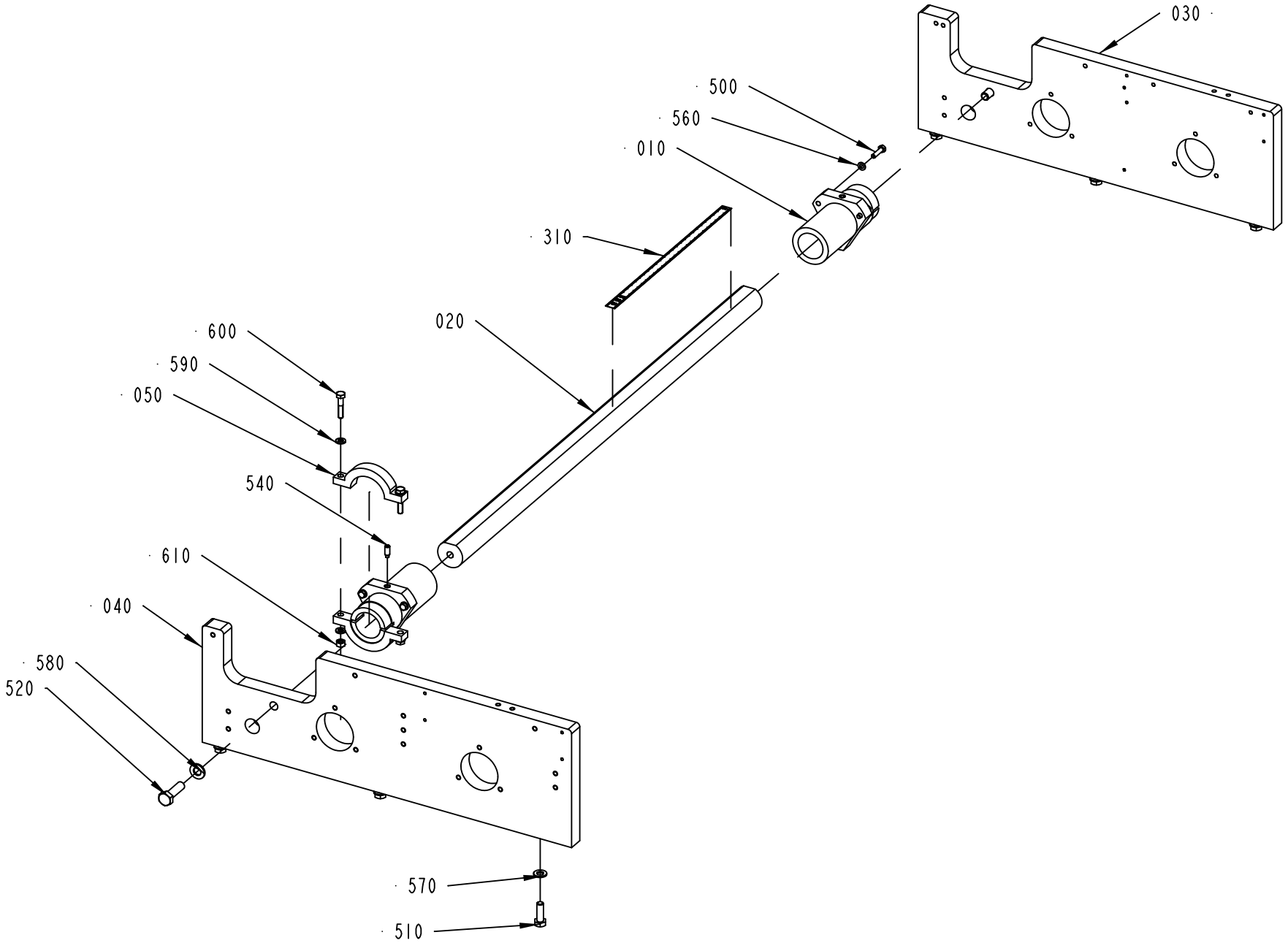

3251388-1
579668

ECM: 585747 - 20121116
Group number: 3251388-0100
Assembly Drawing: 3251388-1_1_AC

Pos	Part No	UN	Qty	Description	Page No
-					
010	1502347-0000		2	BEARING HOUSING	
020	3231406-0000		1	PILLAR	
030	3251390-0000		1	HOLDER	
040	3264187-0000		1	HOLDER	
050	3264175-0000		2	CLAMPING PIECE	
310	90458-2779		1	SCALE , 0-1000MM ADHESIVE	
500	312105-0331		6	SCREW, M6S ISO 4017 M5X20 A4 80	
510	312105-0453		6	SCREW, M6S ISO 4017 M8X25 A4 80	
520	312105-0497		2	SCREW, M6S ISO 4017 M10X35 A4 80	
540	312311-0368		1	SET SCREW, DOG POINT ISO4028 M6X16 FZB	
560	315106-0146		6	WASHER PLAIN, M5 ISO7089-5-200 HV A4	
570	315106-0165		6	WASHER PLAIN, M8 ISO7089-8-200 HV A4	
580	315106-0173		2	WASHER PLAIN, M10 ISO7089-10-200 HV A4	
590	315106-0153		4	WASHER PLAIN, M6 ISO7089-6-200 HV A4	
600	312105-0374		2	SCREW, M6S ISO 4014 M6X30 A4 80	
610	312605-0316		2	HEXAGON NUT, M6M M6 A280	

Pos	Part No	UN	Qty	Description	Page No

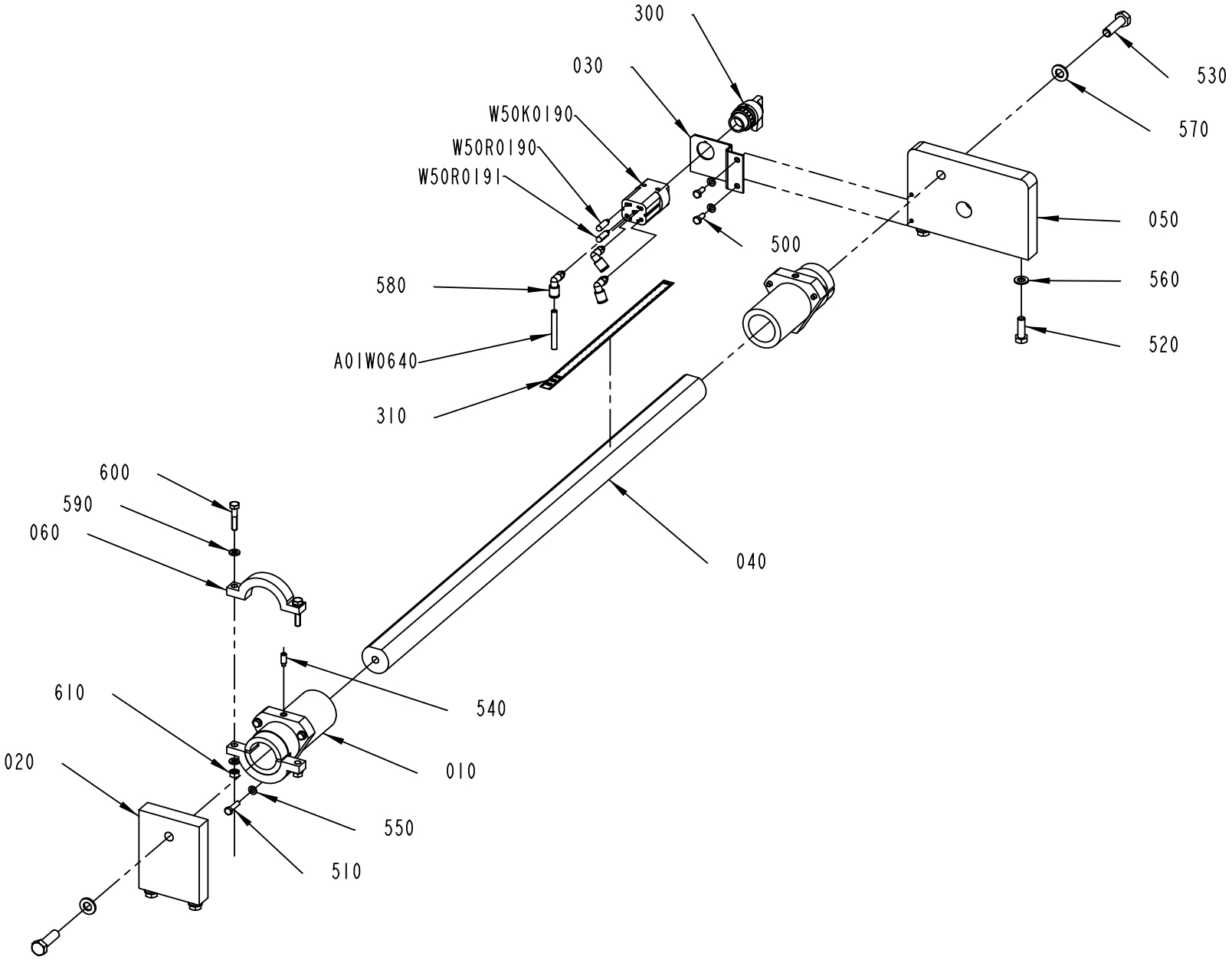

3251389-1
568933

ECM: 614516 - 20130618
Group number: 3251389-0100
Assembly Drawing: 3251389-1_1_AB

Pos	Part No	UN	Qty	Description	Page No
FEEDSIDE = LEFT					
030	2959037-0000		1	PLATE	
FEEDSIDE = RIGHT					
030	2959036-0000		1	PLATE	
Common Parts					
010	1502347-0000		2	BEARING HOUSING	
020	1502570-0000		1	HOLDER	
040	3231406-0000		1	PILLAR	
050	3251392-0000		1	HOLDER	
060	3264175-0000		2	CLAMPING PIECE	
300	90235-0451		1	SELECTOR ACTUATOR, N-22-SW	
310	90458-2779		1	SCALE , 0-1000MM ADHESIVE	
500	312105-0327		1	SCREW, M6S ISO 4017 M5X12 A4 80	
510	312105-0331		6	SCREW, M6S ISO 4017 M5X20 A4 80	
520	312105-0453		4	SCREW, M6S ISO 4017 M8X25 A4 80	
530	312105-0497		2	SCREW, M6S ISO 4017 M10X35 A4 80	
540	312311-0368		1	SET SCREW, DOG POINT ISO4028 M6X16 FZB	
550	315106-0146		7	WASHER PLAIN, M5 ISO7089-5-200 HV A4	
560	315106-0165		4	WASHER PLAIN, M8 ISO7089-8-200 HV A4	
570	315106-0173		2	WASHER PLAIN, M10 ISO7089-10-200 HV A4	
580	350002-0002		3	PUSH-IN L-FITTING QSL-F-M5-6	
590	315106-0153		4	WASHER PLAIN, M6 ISO7089-6-200 HV A4	
600	312105-0374		2	SCREW, M6S ISO 4014 M6X30 A4 80	
610	312605-0316		2	HEXAGON NUT, M6M M6 A280	
A01W0640	315400-0001	M	3	6-4E PUN-H-6X1-BL	
W50K0190	90235-0756		1	FRONT PANEL VALVE, SV-5-M5-B	
W50R0190	90328-0029		1	SILENCER, M5	
W50R0191	90328-0029		1	SILENCER, M5	

Pos	Part No	UN	Qty	Description	Page No

GUN HOLDER

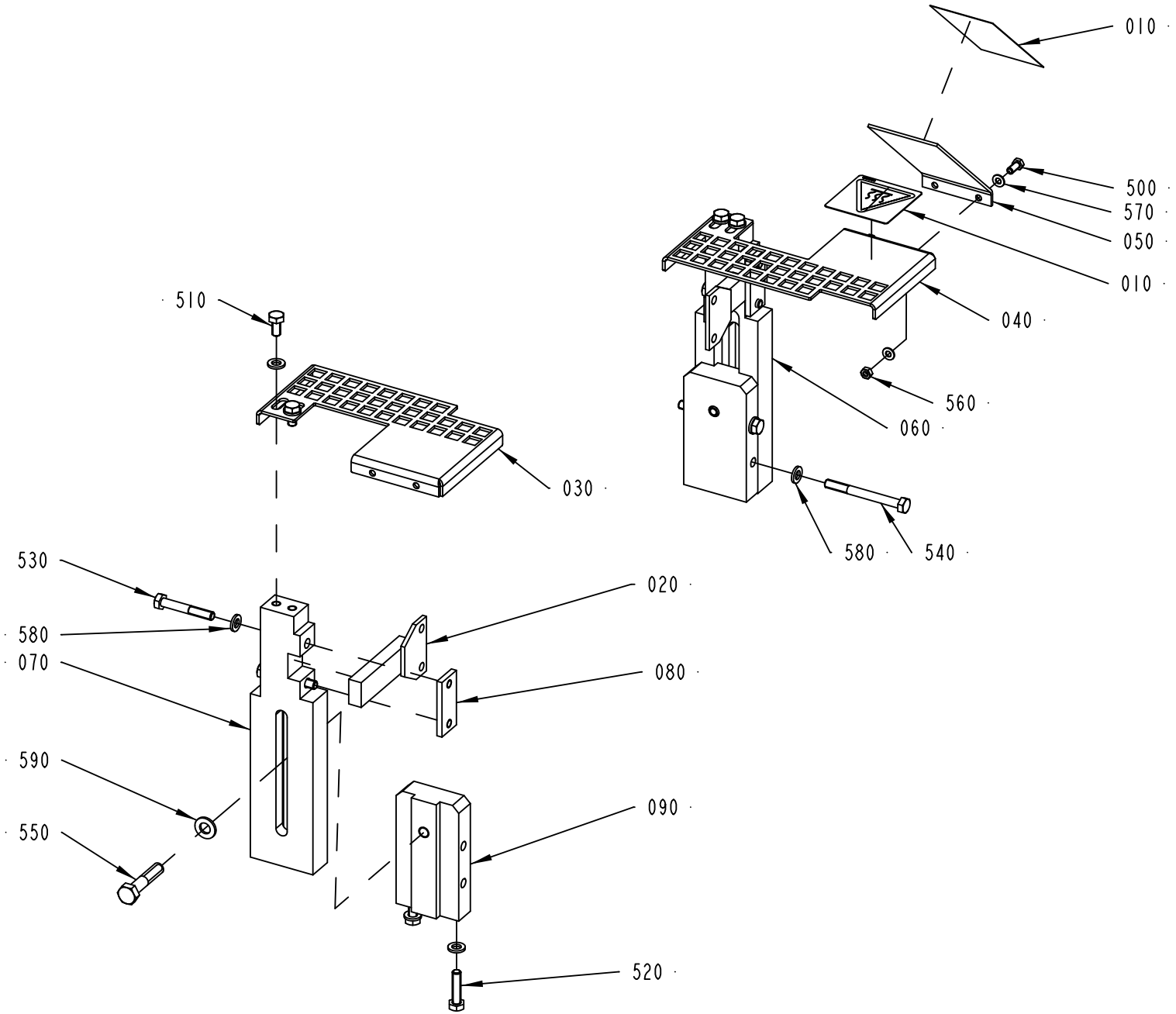

3251393-1
602279

ECM: 646228 - 20131125
Group number: 3251393-0100
Assembly Drawing: 3251393-1_1_AB

Pos	Part No	UN	Qty	Description	Page No
LINF ANSI					
010	359725-0117		1	WARNING SIGN ANSI (V), HOT SURFACE	
050	2557455-0000		1	PLATE	
500	312105-0289		2	SCREW, M6S ISO 4017 M4X10 A4 70	
560	312605-0312		2	HEXAGON NUT, M6M M4 A280	
570	315106-0136		4	WASHER PLAIN, M4 ISO7089-4-200 HV A4	
LINF ISO					
010	1128853-0000		1	CAUTION SIGN	
RINF ANSI					
010	359725-0117		1	WARNING SIGN ANSI (V), HOT SURFACE	
050	2557455-0000		1	PLATE	
500	312105-0289		2	SCREW, M6S ISO 4017 M4X10 A4 70	
560	312605-0312		2	HEXAGON NUT, M6M M4 A280	
570	315106-0136		4	WASHER PLAIN, M4 ISO7089-4-200 HV A4	
RINF ISO					
010	1128853-0000		1	CAUTION SIGN	
Common Parts					
020	1021298-0000		2	STEERING	
030	1543690-0000		1	PROTECTION	
040	1543691-0000		1	PROTECTION	
060	2833972-0000		1	GUIDE	
070	2833973-0000		1	GUIDE	
080	2833974-0000		2	LOCK PLATE	
090	3197437-0000		2	SUPPORT	
510	312105-0366		4	SCREW, M6S ISO 4017 M6X12 A4 80	
520	312105-0372		2	SCREW, M6S ISO 4017 M6X25 A4 80	
530	312105-0378		4	SCREW, M6S ISO 4014 M6X40 A4 80	
540	312105-0382		2	SCREW, M6S ISO 4014 M6X60 A4 80	
550	312105-0459		2	SCREW, M6S ISO 4014 M8X40 A4 80	
580	315106-0153		12	WASHER PLAIN, M6 ISO7089-6-200 HV A4	
590	315106-0165		2	WASHER PLAIN, M8 ISO7089-8-200 HV A4	

Pos	Part No	UN	Qty	Description	Page No

UPPER SECTION

Make sure that the length of cable P01W0102 is 9m. This is for making it possible to move A01P0102 in its different positions marked with *.

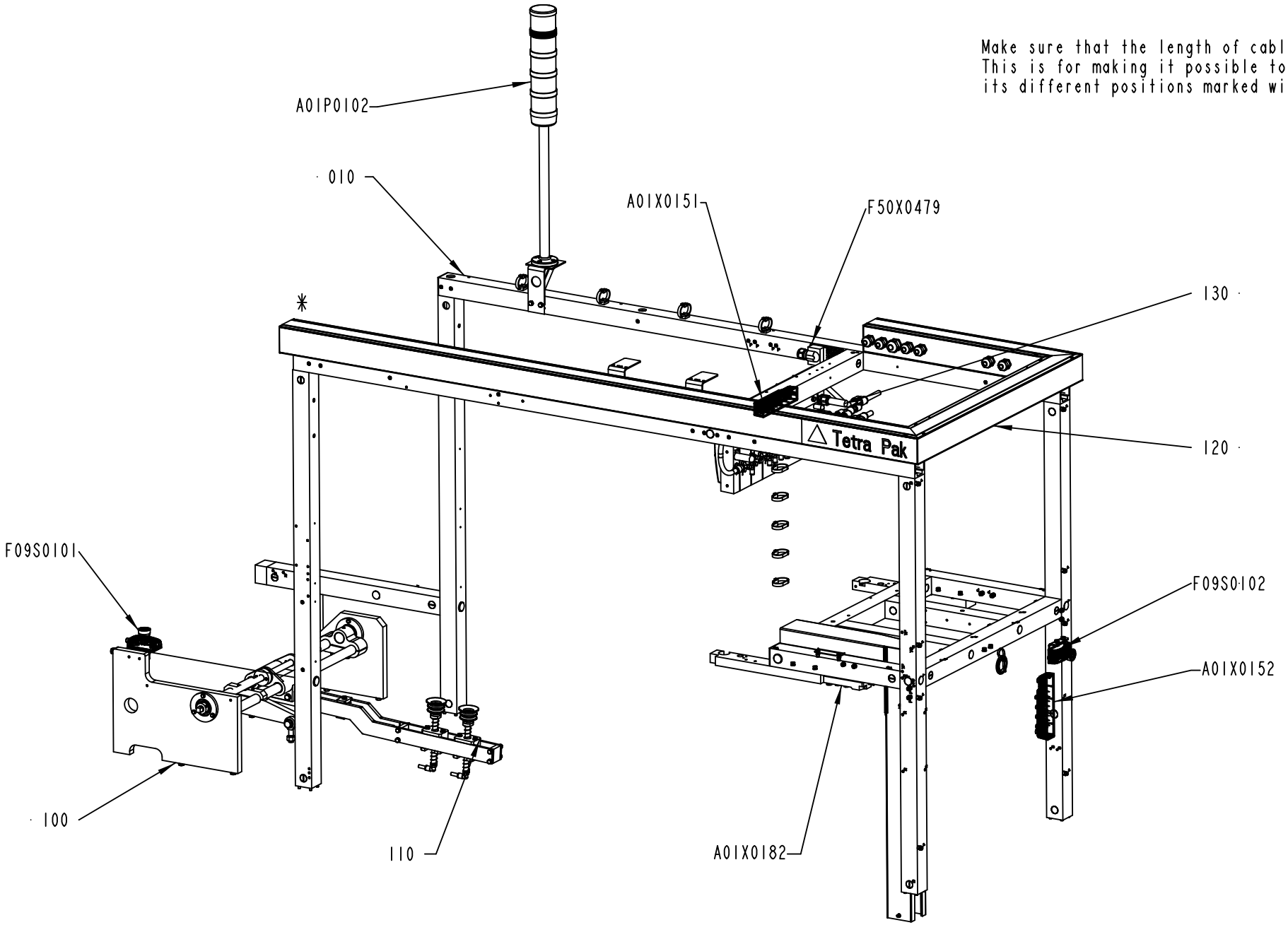

2771175-17
602279

ECM: 614518 - 20130618
Group number: 2771175-0500
Assembly Drawing: 2771175-17_1_AC

This list covers pages from 3-90 to 3-97

Pos	Part No	UN	Qty	Description	Page No
LINF U-FORM (See drawing on page: 3-94)					
F09S0102	3297497-0100		1	EMERGENCY STOP	**3-99**
LINF Z-FORM (See drawing on page: 3-90)					
F09S0102	3297497-0100		1	EMERGENCY STOP	**3-99**
RINF U-FORM (See drawing on page: 3-96)					
F09S0102	3249944-0100		1	EMERGENCY STOP	**3-101**
RINF Z-FORM (See drawing on page: 3-92)					
F09S0102	3249944-0100		1	EMERGENCY STOP	**3-101**
Common Parts					
010	2877455-0300		1	FRAME UPPER	**3-103, 3-105**
100	3199157-0100		1	MAGAZINE ARM	**3-107**
110	3199158-0100		1	SUCTION CUP	**3-109**
120	2872741-0200		1	CABLE DUCT	**3-111, 3-113, 3-115, 3-117**
130	3251384-0100		1	VALVE RAMP	**3-119**
A01P0102	3241287-0100		1	WARNING LAMP	**3-121**
A01X0151	2763116-0300		1	REMOTE I/O	**3-123**
A01X0152	2763115-0300		1	REMOTE I/O	**3-125**
A01X0182	3252699-0100		1	CONNECTION DEVICE	**3-127**
F09S0101	3249944-0100		1	EMERGENCY STOP	**3-101**
F50X0479	2894997-0200		1	CONNECTION DEVICE	**3-129**

Pos	Part No	UN	Qty	Description	Page No

Make sure that the length of cable P01W0102 is 9m. This is for making it possible to move A01P0102 in its different positions marked with ✳.

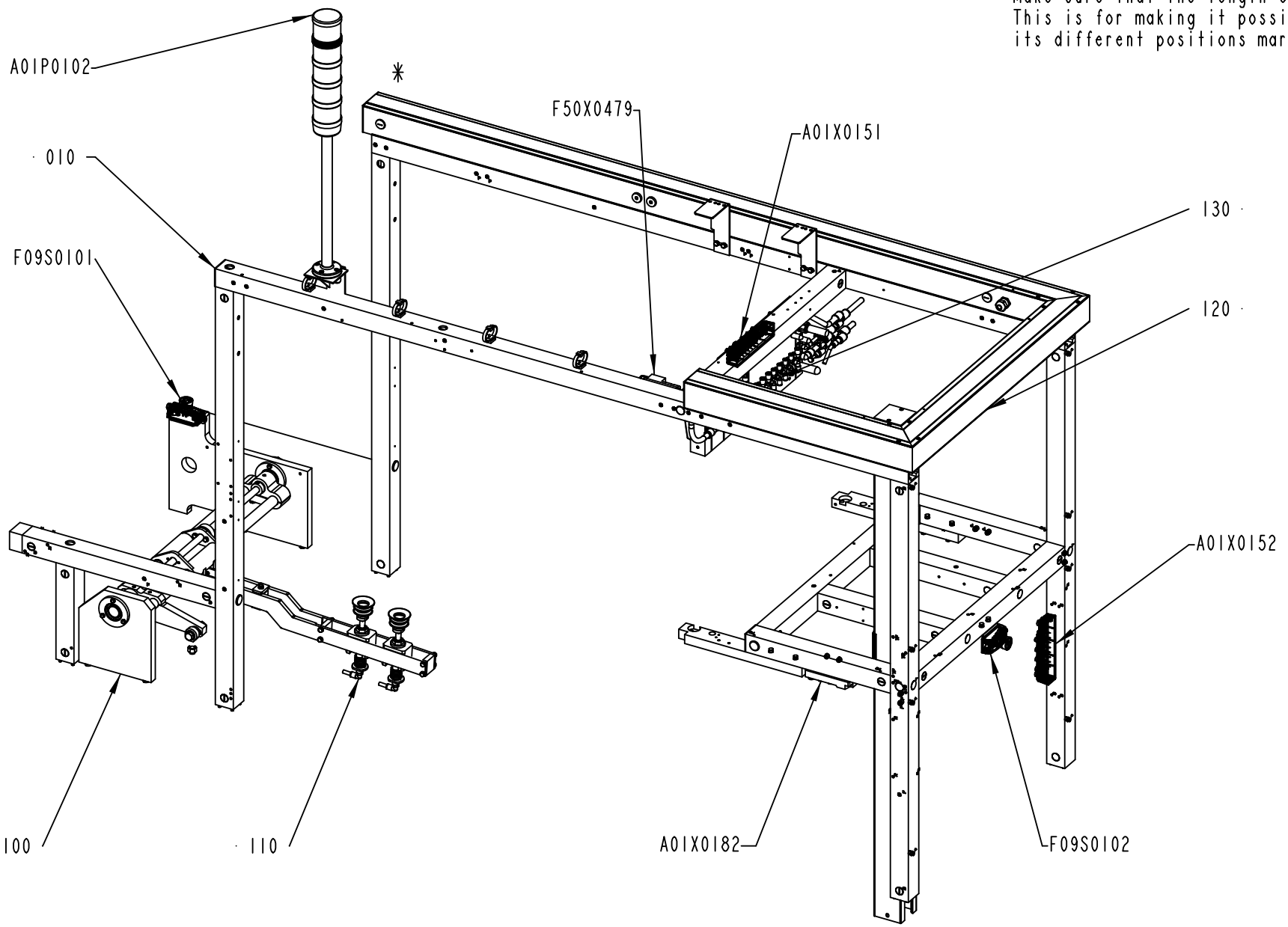

2771175-18
568933

ECM: 614518 - 20130618
Group number: 2771175-0500
Assembly Drawing: 2771175-18_1_AB

This list covers pages from 3-90 to 3-97

Pos	Part No	UN	Qty	Description	Page No
LINF U-FORM (See drawing on page: 3-94)					
F09S0102	3297497-0100		1	EMERGENCY STOP	**3-99**
LINF Z-FORM (See drawing on page: 3-90)					
F09S0102	3297497-0100		1	EMERGENCY STOP	**3-99**
RINF U-FORM (See drawing on page: 3-96)					
F09S0102	3249944-0100		1	EMERGENCY STOP	**3-101**
RINF Z-FORM (See drawing on page: 3-92)					
F09S0102	3249944-0100		1	EMERGENCY STOP	**3-101**
Common Parts					
010	2877455-0300		1	FRAME UPPER	**3-103, 3-105**
100	3199157-0100		1	MAGAZINE ARM	**3-107**
110	3199158-0100		1	SUCTION CUP	**3-109**
120	2872741-0200		1	CABLE DUCT	**3-111, 3-113, 3-115, 3-117**
130	3251384-0100		1	VALVE RAMP	**3-119**
A01P0102	3241287-0100		1	WARNING LAMP	**3-121**
A01X0151	2763116-0300		1	REMOTE I/O	**3-123**
A01X0152	2763115-0300		1	REMOTE I/O	**3-125**
A01X0182	3252699-0100		1	CONNECTION DEVICE	**3-127**
F09S0101	3249944-0100		1	EMERGENCY STOP	**3-101**
F50X0479	2894997-0200		1	CONNECTION DEVICE	**3-129**

Pos	Part No	UN	Qty	Description	Page No

Make sure that the length of cable P01W0102 is 9m. This is for making it possible to move A01P0102 in its different positions marked with ✳.

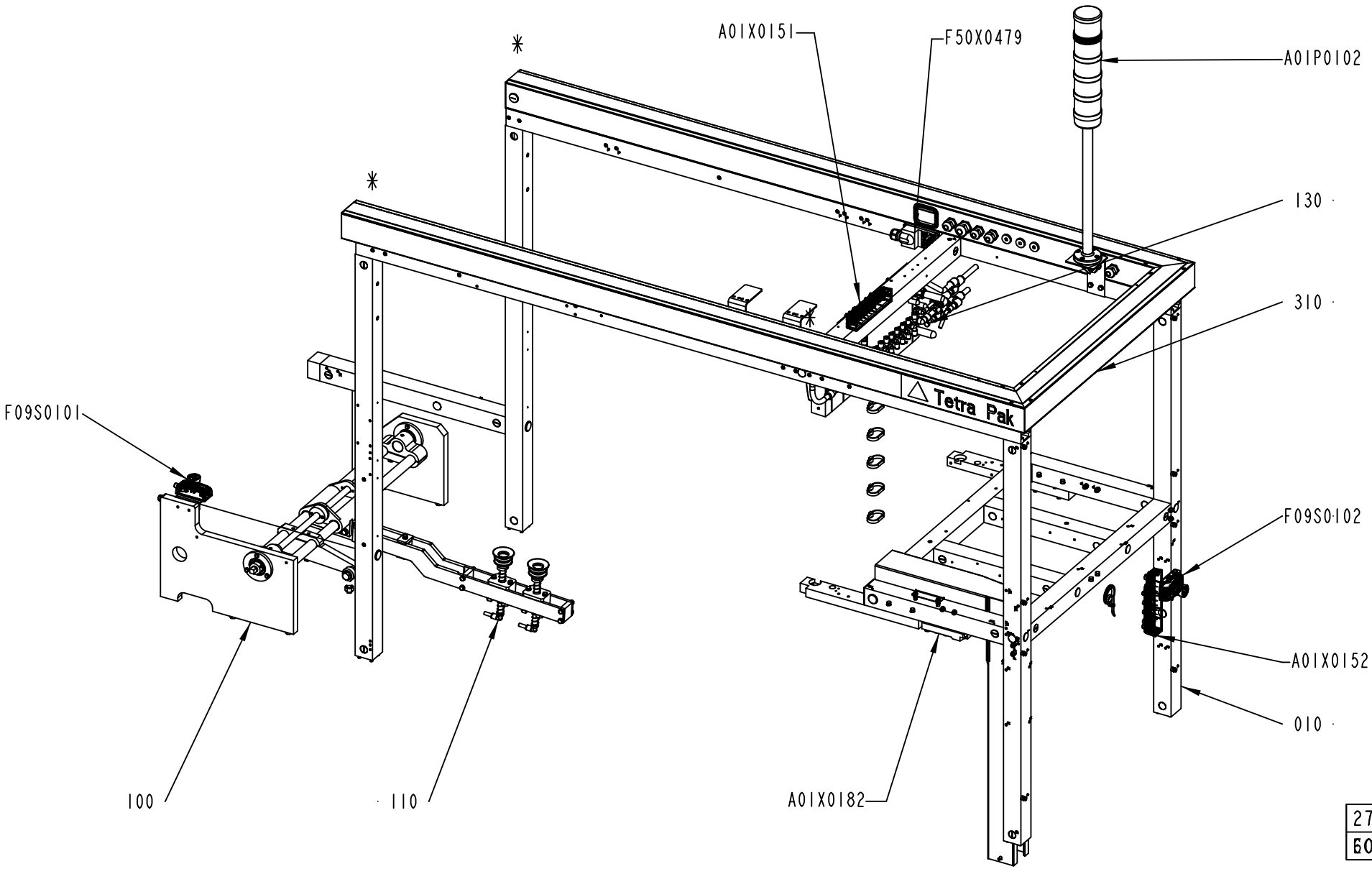

2771175-19
60M2702279

ECM: 614518 - 20130618
Group number: 2771175-0500
Assembly Drawing: 2771175-19_1_AC

This list covers pages from 3-90 to 3-97

Pos	Part No	UN	Qty	Description	Page No
LINF U-FORM (See drawing on page: 3-94)					
F09S0102	3297497-0100		1	EMERGENCY STOP	**3-99**
LINF Z-FORM (See drawing on page: 3-90)					
F09S0102	3297497-0100		1	EMERGENCY STOP	**3-99**
RINF U-FORM (See drawing on page: 3-96)					
F09S0102	3249944-0100		1	EMERGENCY STOP	**3-101**
RINF Z-FORM (See drawing on page: 3-92)					
F09S0102	3249944-0100		1	EMERGENCY STOP	**3-101**
Common Parts					
010	2877455-0300		1	FRAME UPPER	**3-103, 3-105**
100	3199157-0100		1	MAGAZINE ARM	**3-107**
110	3199158-0100		1	SUCTION CUP	**3-109**
120	2872741-0200		1	CABLE DUCT	**3-111, 3-113, 3-115, 3-117**
130	3251384-0100		1	VALVE RAMP	**3-119**
A01P0102	3241287-0100		1	WARNING LAMP	**3-121**
A01X0151	2763116-0300		1	REMOTE I/O	**3-123**
A01X0152	2763115-0300		1	REMOTE I/O	**3-125**
A01X0182	3252699-0100		1	CONNECTION DEVICE	**3-127**
F09S0101	3249944-0100		1	EMERGENCY STOP	**3-101**
F50X0479	2894997-0200		1	CONNECTION DEVICE	**3-129**

Pos	Part No	UN	Qty	Description	Page No

Machine Type | Group Description | Used-In | Group Number | Page No

Make sure that the length of cable P01W0102 is 9m. This is for making it possible to move A01P0102 in its different positions marked with ✳.

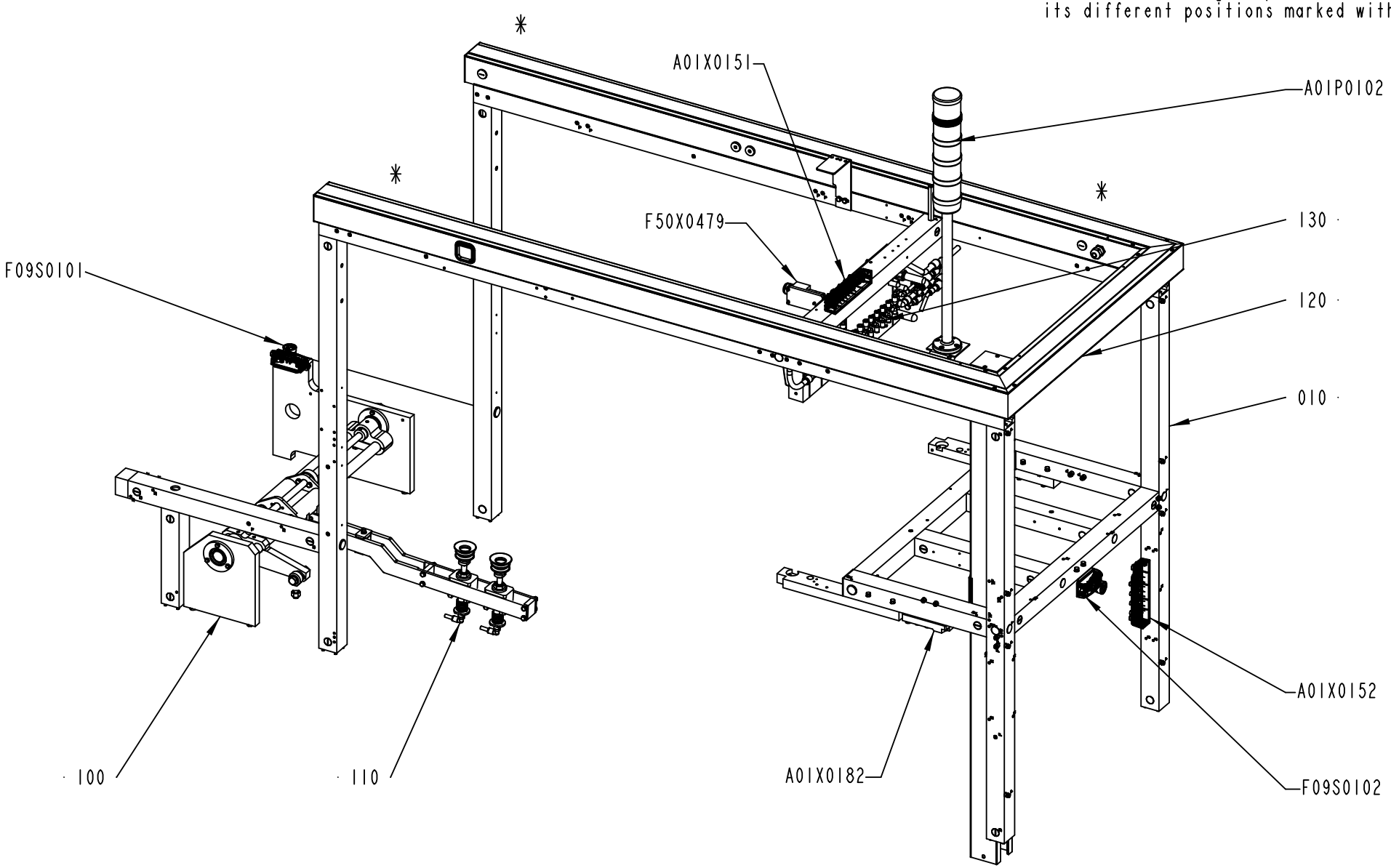

2771175-20
568933

ECM: 614518 - 20130618
Group number: 2771175-0500
Assembly Drawing: 2771175-20_1_AB

This list covers pages from 3-90 to 3-97

Pos	Part No	UN	Qty	Description	Page No
LINF U-FORM (See drawing on page: 3-94)					
F09S0102	3297497-0100		1	EMERGENCY STOP	**3-99**
LINF Z-FORM (See drawing on page: 3-90)					
F09S0102	3297497-0100		1	EMERGENCY STOP	**3-99**
RINF U-FORM (See drawing on page: 3-96)					
F09S0102	3249944-0100		1	EMERGENCY STOP	**3-101**
RINF Z-FORM (See drawing on page: 3-92)					
F09S0102	3249944-0100		1	EMERGENCY STOP	**3-101**
Common Parts					
010	2877455-0300		1	FRAME UPPER	**3-103, 3-105**
100	3199157-0100		1	MAGAZINE ARM	**3-107**
110	3199158-0100		1	SUCTION CUP	**3-109**
120	2872741-0200		1	CABLE DUCT	**3-111, 3-113, 3-115, 3-117**
130	3251384-0100		1	VALVE RAMP	**3-119**
A01P0102	3241287-0100		1	WARNING LAMP	**3-121**
A01X0151	2763116-0300		1	REMOTE I/O	**3-123**
A01X0152	2763115-0300		1	REMOTE I/O	**3-125**
A01X0182	3252699-0100		1	CONNECTION DEVICE	**3-127**
F09S0101	3249944-0100		1	EMERGENCY STOP	**3-101**
F50X0479	2894997-0200		1	CONNECTION DEVICE	**3-129**

Pos	Part No	UN	Qty	Description	Page No

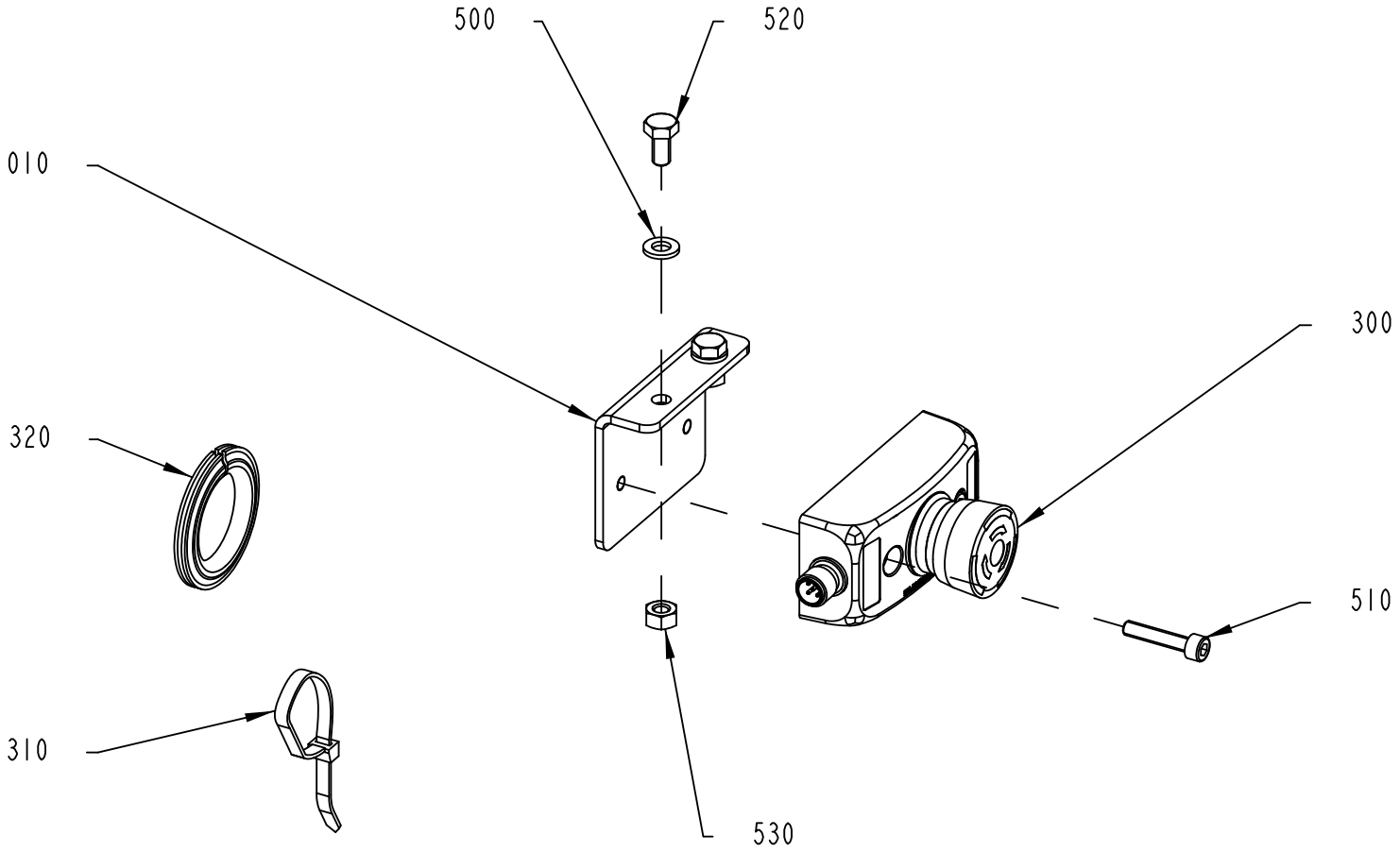

3297497-1
602279

ECM: 614548 - 20130618
Group number: 3297497-0100
Assembly Drawing: 3297497-1_1_AA

Pos	Part No	UN	Qty	Description	Page No
-					
010	3249945-0000		1	BRACKET	
300	90600-6048		1	EMERG. STOP SMILE 11 EA TINA, 30-050-00	
310	352113-0102		1	CABLE TIE, BLACK 188X4,8 MM	
320	90143-0060	MM	160	EDGE STRIP 9,5X6,3MM BLACK PVC	
500	315105-0153		2	WASHER PLAIN, 6,4X12X1,5 A4 BRB	
510	312115-0333		2	SCREW ISO4762 M5X25 A4 80	
520	312105-0366		2	SCREW, M6S ISO 4017 M6X12 A4 80	
530	312605-0316		2	HEXAGON NUT, M6M M6 A280	

Pos	Part No	UN	Qty	Description	Page No

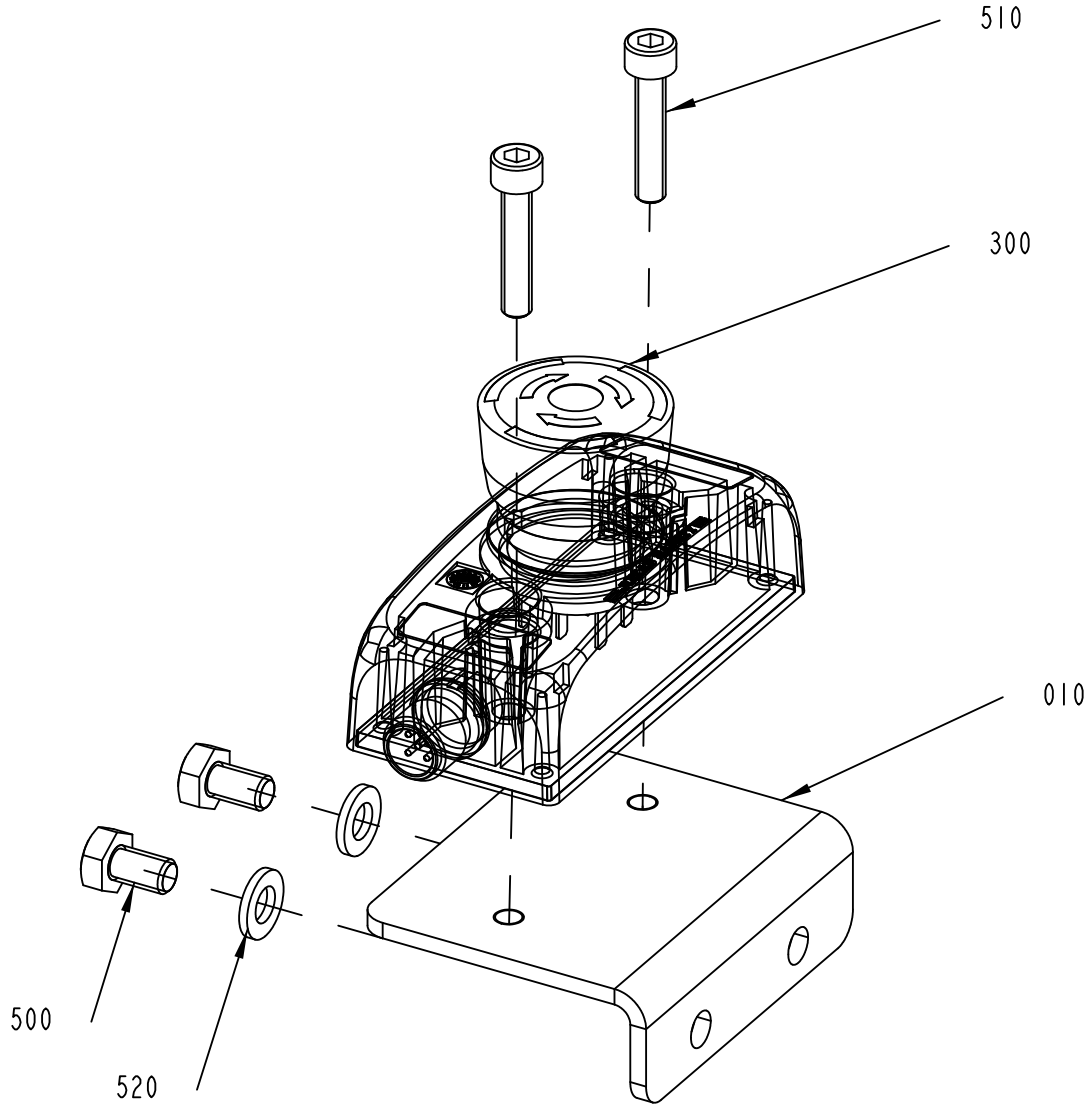

3249944-1
555186

ECM: 567319 - 20120710
Group number: 3249944-0100
Assembly Drawing: 3249944-1_1_AA

Pos	Part No	UN	Qty	Description	Page No
-					
010	3249945-0000		1	BRACKET	
300	90600-6048		1	EMERG. STOP SMILE 11 EA TINA, 30-050-00	
500	312105-0364		2	SCREW, M6S ISO 4017 M6X10 A4 80	
510	312115-0333		2	SCREW ISO4762 M5X25 A4 80	
520	315105-0153		2	WASHER PLAIN, 6,4X12X1,5 A4 BRB	

Pos	Part No	UN	Qty	Description	Page No

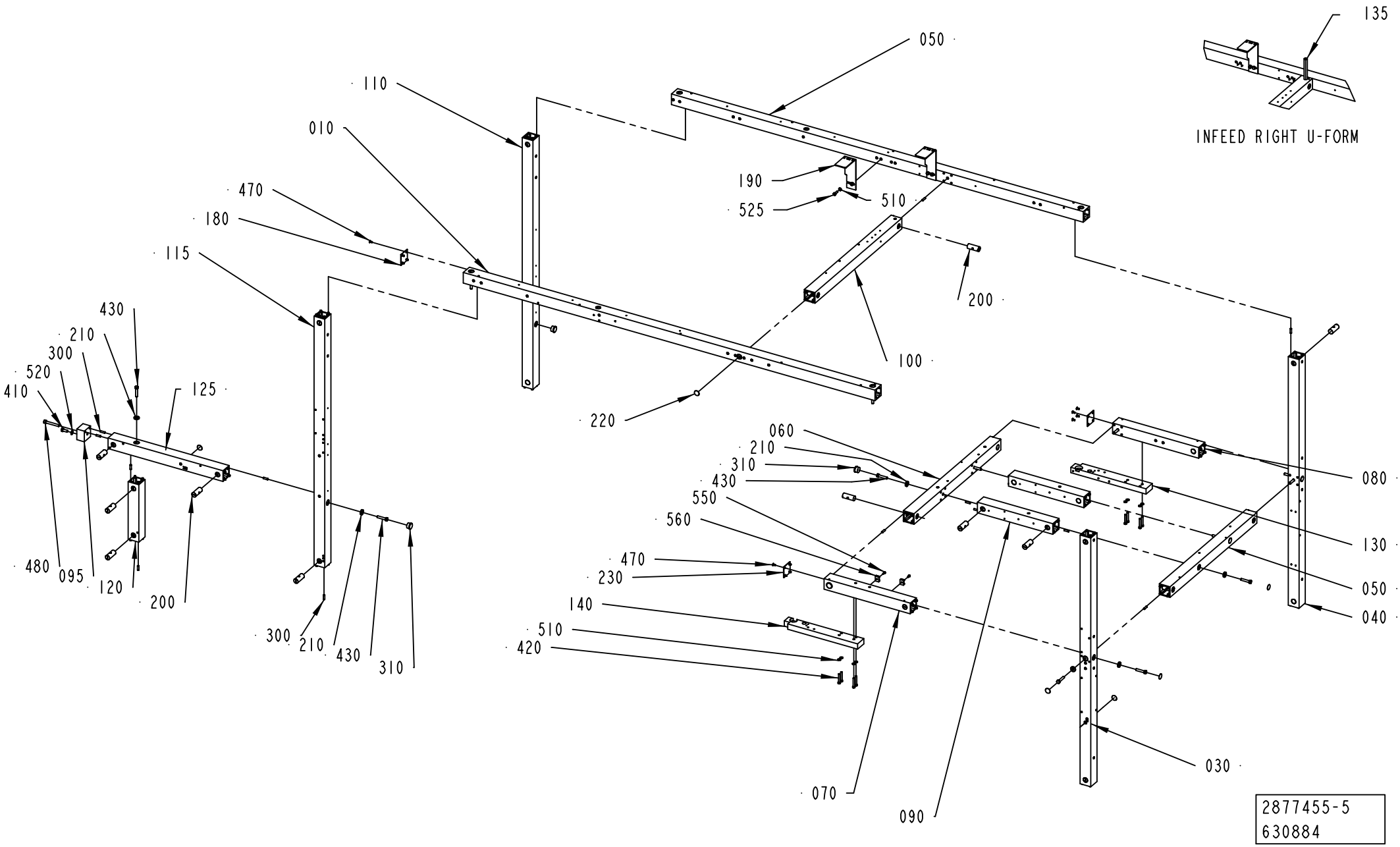
135
INFEED RIGHT U-FORM
050
110
010
470
180
115
190
525
510
200
100
220
430
210
300
520
410
125
480
095
120
200
300
210
430
310
060
210
310
430
550
560
470
230
140
510
420
080
130
050
040
030
070
090
2877455-5
630884

ECM: 646231 - 20131125
Group number: 2877455-0300
Assembly Drawing: 2877455-5_1_AC

This list covers pages from 3-102 to 3-105

Pos	Part No	UN	Qty	Description	Page No
LINF U-FORM (See drawing on page: 3-104)					
030	3256761-0000		1	PROFILE 50X50	
040	3249948-0000		1	PROFILE 50X50	
105	3249949-0000		1	PROFILE 50X50	
190	3046679-0000		2	PLATE	
470	312145-0325		8	SCREW ISO 2009 MFS M5X10 A4	
LINF Z-FORM (See drawing on page: 3-104)					
030	3256761-0000		1	PROFILE 50X50	
040	3249948-0000		1	PROFILE 50X50	
105	3249949-0000		1	PROFILE 50X50	
180	1139254-0000		1	COVER PLATE	
190	3046679-0000		2	PLATE	
470	312145-0325		12	SCREW ISO 2009 MFS M5X10 A4	
RINF U-FORM (See drawing on page: 3-102)					
030	3249946-0000		1	PROFILE 50X50	
040	3256762-0000		1	PROFILE 50X50	
125	3249947-0000		1	PROFILE 50X50	
135	3046681-0000		1	SPACER	
190	3046679-0000		1	PLATE	
470	312145-0325		8	SCREW ISO 2009 MFS M5X10 A4	
RINF Z-FORM (See drawing on page: 3-102)					
030	3249946-0000		1	PROFILE 50X50	
040	3256762-0000		1	PROFILE 50X50	
125	3249947-0000		1	PROFILE 50X50	
180	1139254-0000		1	COVER PLATE	
190	3046679-0000		2	PLATE	
470	312145-0325		12	SCREW ISO 2009 MFS M5X10 A4	
Common Parts					
010	2877460-0000		1	PROFILE 50X50	
020	2877461-0000		1	PROFILE 50X50	
050	3249950-0000		1	PROFILE 50X50	
060	2557253-0000		1	PROFILE	
070	3252700-0000		1	PROFILE 50X50	
080	3257295-0000		1	PROFILE 50X50	
090	2557252-0000		2	PROFILE	
095	1287340-0000		1	BRACKET	
100	1287059-0000		1	PROFILE	
110	1466343-0000		1	PROFILE	
115	1466344-0000		1	PROFILE	
120	1021315-0000		1	PROFILE	
130	2877458-0000		1	AXLE SUPPORT	
140	2877459-0000		1	AXLE SUPPORT	
200	486268-0000		23	NUT	
210	90600-5066		15	WASHER PLAIN, DIN7349 8,4X21X4 A4	
220	1021933-0000		11	TAPE	
230	556604-0000		2	COVER PLATE	
300	1065410-0000		90	SLOTTED PIN	
310	90261-0060		6	PLUG, BLIND, PLASTIC, NO. IKPK25X1, 5	
410	312105-0451		1	SCREW, M6S ISO 4017 M8X20 A4 80	
420	312105-0378		8	SCREW, M6S ISO 4014 M6X40 A4 80	
430	312105-0459		15	SCREW, M6S ISO 4014 M8X40 A4 80	
480	312115-0463		1	SCREW ISO4762 M8X60 A4 80	
510	315105-0153		12	WASHER PLAIN, 6,4X12X1,5 A4 BRB	
520	315105-0165		1	FWAS080G0-0S, WASHER PLAIN	
525	312105-0370		4	SCREW, M6S ISO 4017 M6X20 A4 80	
550	312132-0289		2	SLOTTED HEAD, PAN SCREW, MSCS M4X10	
560	352113-0203		2	ANCHOR PLATES FOR STRIPS, TM3S8-M0	

Machine Type | Group Description | Used-In | Group Number | Page No

FRAME UPPER

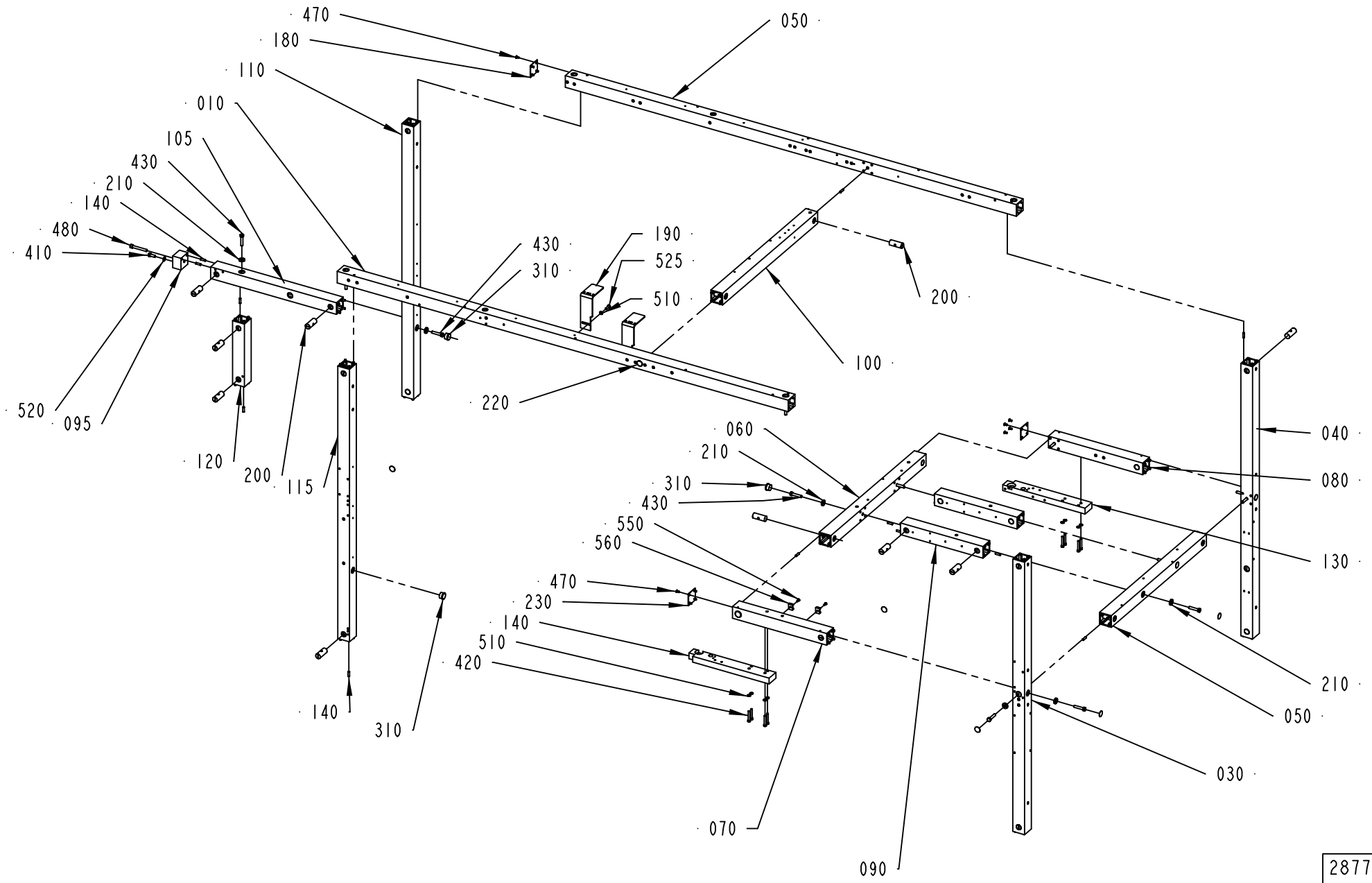

2877455-6
630884

ECM: 646231 - 20131125
Group number: 2877455-0300
Assembly Drawing: 2877455-6_1_AC

This list covers pages from 3-102 to 3-105

Pos	Part No	UN	Qty	Description	Page No
LINF U-FORM (See drawing on page: 3-104)					
030	3256761-0000		1	PROFILE 50X50	
040	3249948-0000		1	PROFILE 50X50	
105	3249949-0000		1	PROFILE 50X50	
190	3046679-0000		2	PLATE	
470	312145-0325		8	SCREW ISO 2009 MFS M5X10 A4	
LINF Z-FORM (See drawing on page: 3-104)					
030	3256761-0000		1	PROFILE 50X50	
040	3249948-0000		1	PROFILE 50X50	
105	3249949-0000		1	PROFILE 50X50	
180	1139254-0000		1	COVER PLATE	
190	3046679-0000		2	PLATE	
470	312145-0325		12	SCREW ISO 2009 MFS M5X10 A4	
RINF U-FORM (See drawing on page: 3-102)					
030	3249946-0000		1	PROFILE 50X50	
040	3256762-0000		1	PROFILE 50X50	
125	3249947-0000		1	PROFILE 50X50	
135	3046681-0000		1	SPACER	
190	3046679-0000		1	PLATE	
470	312145-0325		8	SCREW ISO 2009 MFS M5X10 A4	
RINF Z-FORM (See drawing on page: 3-102)					
030	3249946-0000		1	PROFILE 50X50	
040	3256762-0000		1	PROFILE 50X50	
125	3249947-0000		1	PROFILE 50X50	
180	1139254-0000		1	COVER PLATE	
190	3046679-0000		2	PLATE	
470	312145-0325		12	SCREW ISO 2009 MFS M5X10 A4	
Common Parts					
010	2877460-0000		1	PROFILE 50X50	
020	2877461-0000		1	PROFILE 50X50	
050	3249950-0000		1	PROFILE 50X50	
060	2557253-0000		1	PROFILE	
070	3252700-0000		1	PROFILE 50X50	
080	3257295-0000		1	PROFILE 50X50	
090	2557252-0000		2	PROFILE	
095	1287340-0000		1	BRACKET	
100	1287059-0000		1	PROFILE	
110	1466343-0000		1	PROFILE	
115	1466344-0000		1	PROFILE	
120	1021315-0000		1	PROFILE	
130	2877458-0000		1	AXLE SUPPORT	
140	2877459-0000		1	AXLE SUPPORT	
200	486268-0000		23	NUT	
210	90600-5066		15	WASHER PLAIN, DIN7349 8,4X21X4 A4	
220	1021933-0000		11	TAPE	
230	556604-0000		2	COVER PLATE	
300	1065410-0000		90	SLOTTED PIN	
310	90261-0060		6	PLUG, BLIND, PLASTIC, NO. IKPK25X1, 5	
410	312105-0451		1	SCREW, M6S ISO 4017 M8X20 A4 80	
420	312105-0378		8	SCREW, M6S ISO 4014 M6X40 A4 80	
430	312105-0459		15	SCREW, M6S ISO 4014 M8X40 A4 80	
480	312115-0463		1	SCREW ISO4762 M8X60 A4 80	
510	315105-0153		12	WASHER PLAIN, 6,4X12X1,5 A4 BRB	
520	315105-0165		1	FWAS080G0-0S, WASHER PLAIN	
525	312105-0370		4	SCREW, M6S ISO 4017 M6X20 A4 80	
550	312132-0289		2	SLOTTED HEAD, PAN SCREW, MSCS M4X10	
560	352113-0203		2	ANCHOR PLATES FOR STRIPS, TM3S8-M0	

MAGAZINE ARM

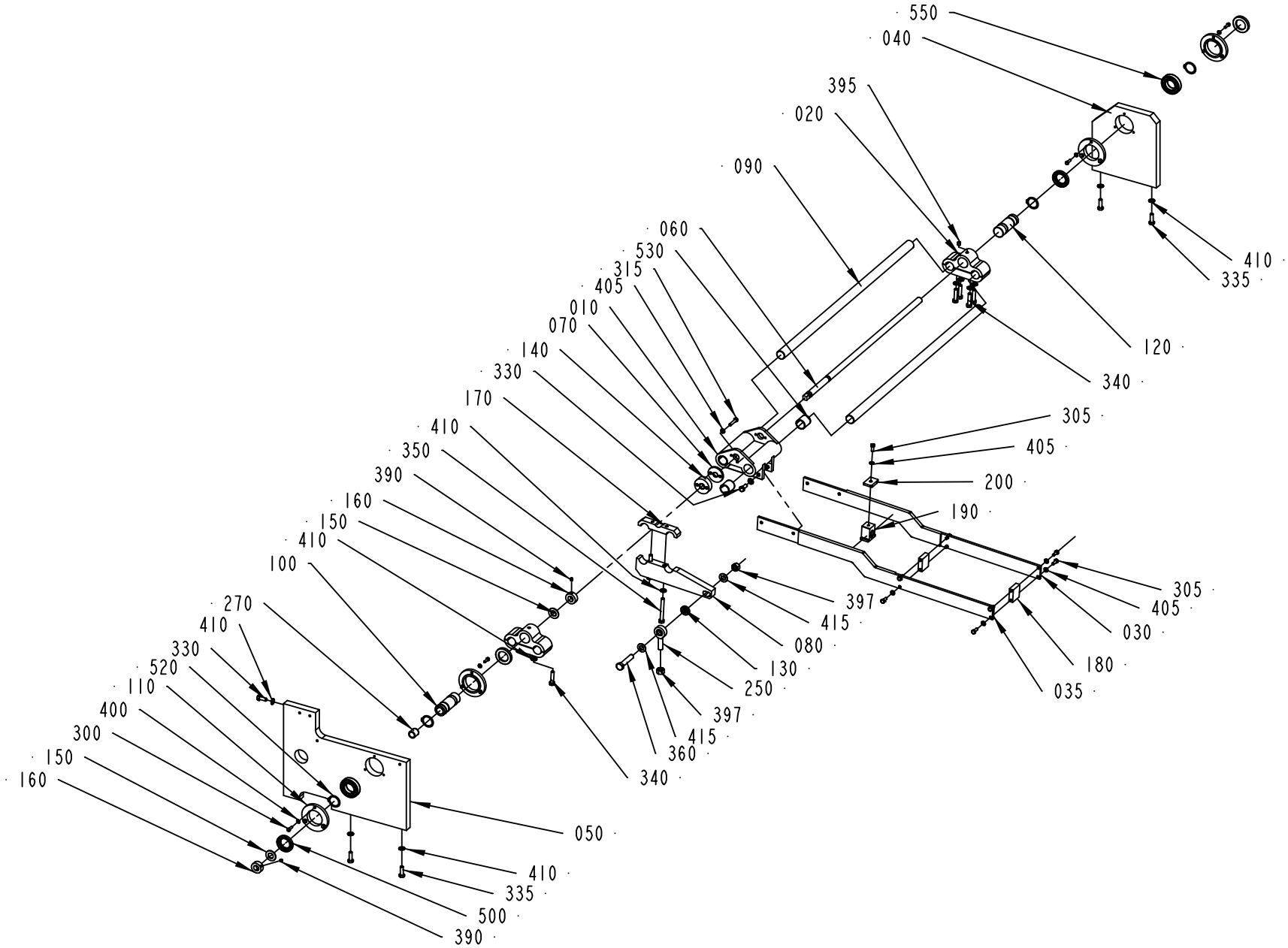

3199157-1
559919

ECM: 567410 - 20120710
Group number: 3199157-0100
Assembly Drawing: 3199157-1_1_AA

Pos	Part No	UN	Qty	Description	Page No
-					
010	1021144-0000		1	GUIDE	
020	1021145-0000		2	CLAMPING PIECE	
030	3180695-0000		1	ARM	
035	3180696-0000		1	ARM	
040	1021147-0000		1	PLATE	
050	2763134-0000		1	PLATE	
060	1021149-0000		1	ADJUSTING SCREW	
070	2970881-0000		1	BRAKE WASHER	
080	2895006-0000		1	ARM	
090	1021148-0000		2	SHAFT	
100	1021150-0000		1	SHAFT	
110	1021153-0000		4	LID	
120	1021159-0000		1	SHAFT	
130	1021152-0000		1	WASHER	
140	1021154-0000		1	NUT	
150	1021155-0000		2	WASHER	
160	1021156-0000		2	RETAINING RING	
170	1021157-0000		1	CLAMPING PIECE	
180	3180697-0000		2	SPACER	
190	3199155-0000		1	HOSE HOLDER	
200	3199156-0000		1	CLAMP BLOCK	
250	90115-0135		1	ROD END ID=12MM M12X1,75	
270	90240-0205		1	BEAR. BUSHING W/O FL. 16X20X20MM	
300	312105-0329		12	SCREW, M6S ISO 4017 M5X16 A4 80	
305	312105-0368		9	SCREW, M6S ISO 4017 M6X16 A4 80	
315	312105-0374		2	SCREW, M6S ISO 4014 M6X30 A4 80	
330	312105-0451		5	SCREW, M6S ISO 4017 M8X20 A4 80	
335	312105-0453		4	SCREW, M6S ISO 4017 M8X25 A4 80	
340	312105-0457		8	SCREW, M6S ISO 4014 M8X35 A4 80	
350	312105-0465		2	SCREW, M6S ISO 4014 M8X70 A4 80	
360	312105-0544		1	SCREW, M6S ISO 4014 M12X60 A4 80	
390	312318-0360		4	SET SCREW, CUP END ISO4029 M6X6 A4	
395	312318-0443		2	SET SCREW, CUP END ISO4029 M8X8 A4	
397	312605-0322		2	HEXAGON NUT, M6M M12 A280	
400	315106-0146		12	WASHER PLAIN, M5 ISO7089-5-200 HV A4	
405	315106-0153		11	WASHER PLAIN, M6 ISO7089-6-200 HV A4	
410	315106-0165		19	WASHER PLAIN, M8 ISO7089-8-200 HV A4	
415	315106-0178		2	WASHER PLAIN, M12 ISO7089-12-200 HV A4	
500	90091-0306		4	RADIAL SEAL 30X47X7 MM DUST LIP	
520	315750-0122		4	RETAINING RING FOR SHAFT DIN 471 30	
530	321141-0305		4	BEARING BUSHING, 25X28X30 MM	
550	344224-0206		2	BALL BEARING 30/55X13	

Machine Type	Group Description	Used-In	Group Number	Page No

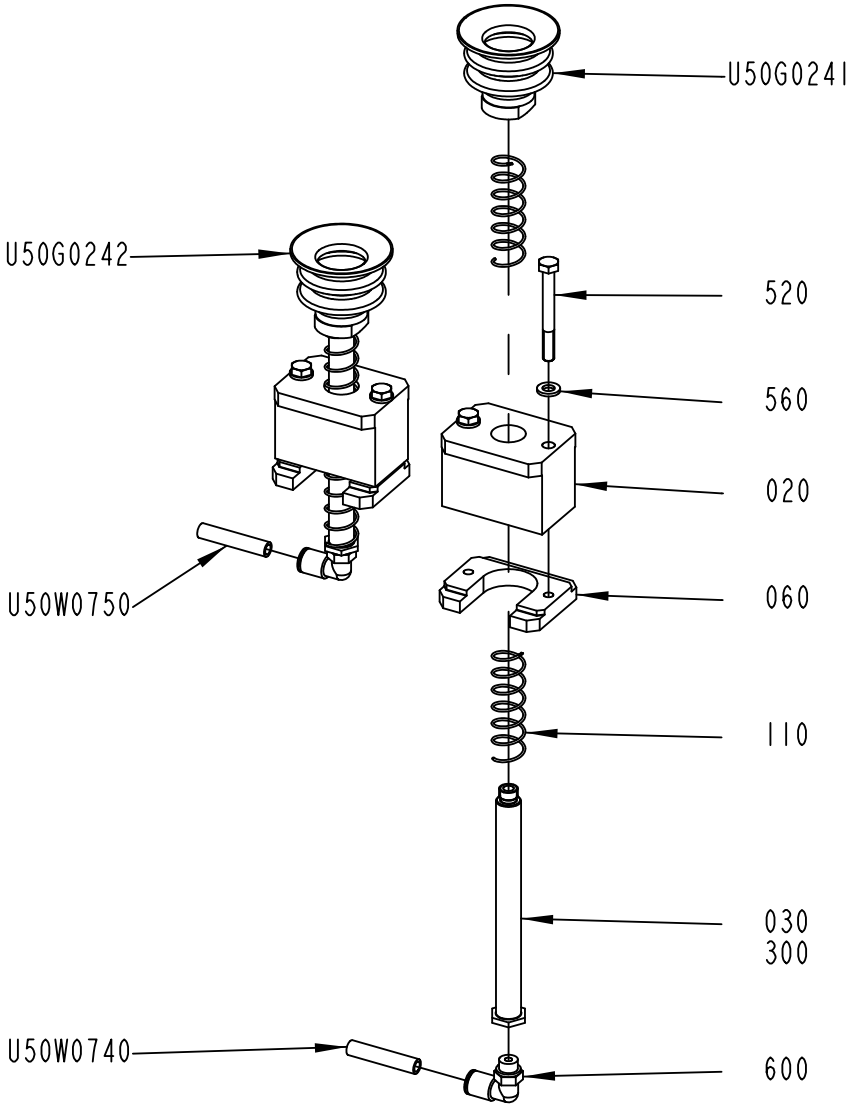

3199158-1
630884

ECM: 646229 - 20131125
Group number: 3199158-0100
Assembly Drawing: 3199158-1_1_AC

Pos	Part No	UN	Qty	Description	Page No
-					
020	3266396-0000		2	BEARING HOUSING	
030	3266397-0000		2	GUIDE PIPE	
060	3180699-0000		2	CLAMP PLATE	
110	1021166-0000		4	SPRING	
300	90157-0021		1	LOCKING FLUID LOCTITE 270	
520	312105-0381		4	SCREW, M6S ISO 4014 M6X55 A4 80	
560	315106-0153		4	WASHER PLAIN, M6 ISO7089-6-200 HV A4	
600	350002-0007		2	PUSH-IN L-FITTING QSL-F-G1/8-8	
U50G0241	90604-6808		1	PIAB BX52P WITH FILTER, 0106044	
U50G0242	90604-6808		1	PIAB BX52P WITH FILTER, 0106044	
U50W0740	315400-0004	MM	1500	TUBE PUN-H-8X1,25-BL	
U50W0750	315400-0004	MM	1500	TUBE PUN-H-8X1,25-BL	

Pos	Part No	UN	Qty	Description	Page No

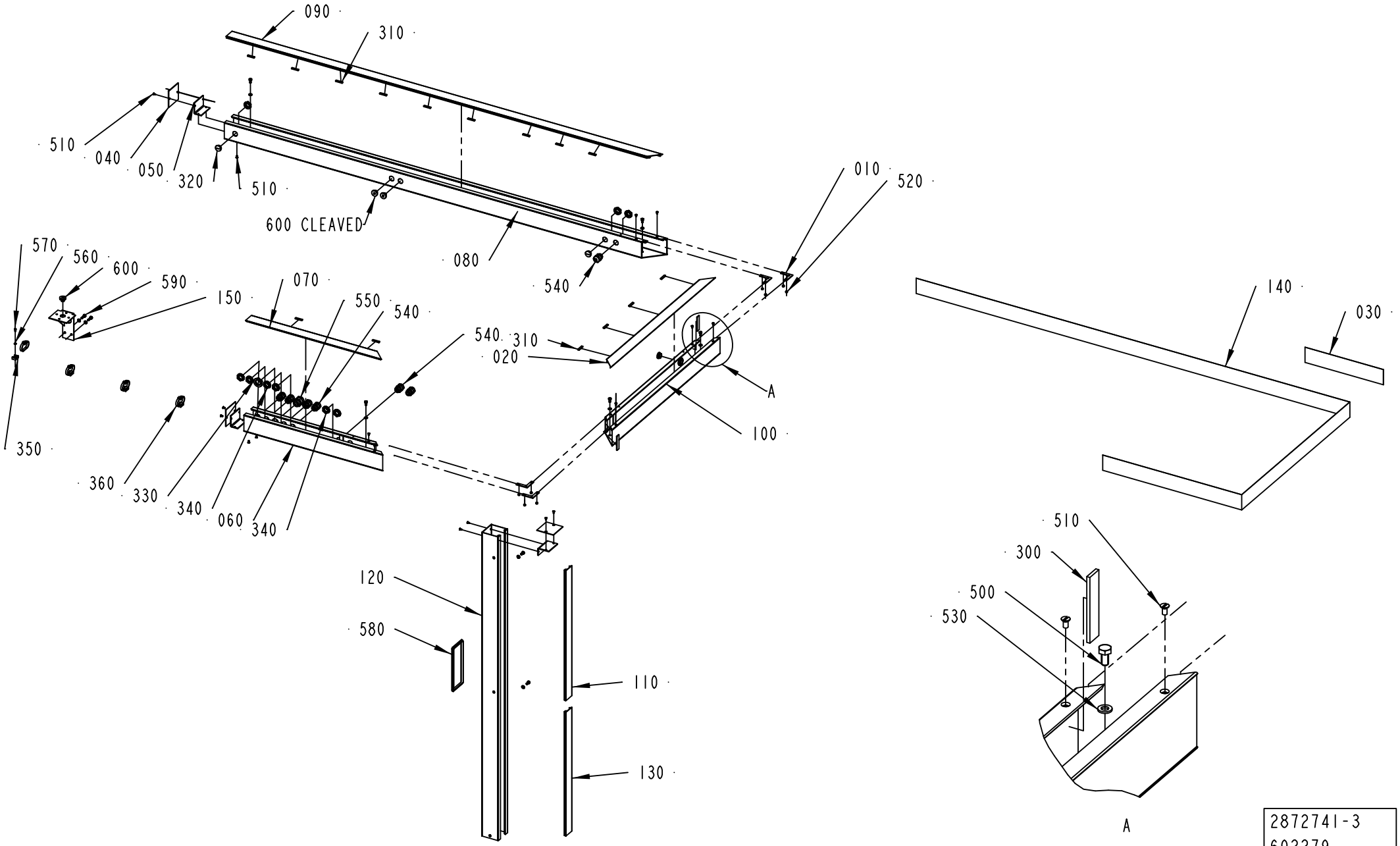
090
310
510
040
050
320
510
600 CLEAVED
080
540
010
520
570
560
600
590
150
070
550
540
540
310
020
A
100
350
360
330
340
060
340
120
580
110
130
140
030
510
300
500
530
A
2872741-3
602279

ECM: 614519 - 20130618
Group number: 2872741-0200
Assembly Drawing: 2872741-3_1_AC

This list covers pages from 3-110 to 3-117

Pos	Part No	UN	Qty	Description	Page No
LINF U-FORM (See drawing on page: 3-116)					
040	1065696-0000		2	COVERING PLATE	
050	1065697-0000		2	BRACKET	
060	3257291-0000		1	CABLE DUCT	
070	3257292-0000		1	LID	
080	2503991-0000		1	CABLE DUCT	
090	2503993-0000		1	LID	
100	3272880-0000		1	CABLE DUCT	
110	3272882-0000		1	LID	
120	3272874-0000		1	CABLE DUCT	
140	90511-8563	M	5.4	STRIPE HEIGHT 70MM, ROLL LENGTH 25M	
190	3272876-0000		1	CABLE DUCT	
260	90143-0060	MM	160	EDGE STRIP 9,5X6,3MM BLACK PVC	
310	975939-0000		13	SEAL	
320	90458-1308		3	BLIND PLUG CIRCULAR, M20X1,5 514GFK/220	
340	90458-0323		9	NUT, M20X1,5	
360	352113-0103		6	CABLE TIE, BLACK 290X7,6 MM	
500	312105-0366		14	SCREW, M6S ISO 4017 M6X12 A4 80	
505	312105-0327		4	SCREW, M6S ISO 4017 M5X12 A4 80	
510	312145-0287		12	SCREW ISO 2009 MFS M4X8 A4	
525	312605-0314		2	HEXAGON NUT, M6M M5 A280	
530	315105-0153		16	WASHER PLAIN, 6,4X12X1,5 A4 BRB	
535	315105-0146		6	WASHER PLAIN, 5,3X10X1 A4 BRB	
540	90458-0307		6	CABLE GLAND, M20X1,5, 5311 1020	
600	90015-0023		6	LEAD-IN, TET 7-10, E1458019	
610	90143-0060	MM	71	EDGE STRIP 9,5X6,3MM BLACK PVC	
620	90143-0060	MM	185	EDGE STRIP 9,5X6,3MM BLACK PVC	
630	90143-0060	MM	185	EDGE STRIP 9,5X6,3MM BLACK PVC	
640	90143-0060	MM	203	EDGE STRIP 9,5X6,3MM BLACK PVC	
650	90143-0060	MM	203	EDGE STRIP 9,5X6,3MM BLACK PVC	
LINF Z-FORM (See drawing on page: 3-114)					
040	1065696-0000		2	COVERING PLATE	
050	1065697-0000		2	BRACKET	
060	3256233-0000		1	CABLE DUCT	
070	3257288-0000		1	LID	
080	2503991-0000		1	CABLE DUCT	
090	2503993-0000		1	LID	
100	3272880-0000		1	CABLE DUCT	
110	3272882-0000		1	LID	
120	3272874-0000		1	CABLE DUCT	
140	90511-8563	M	3.5	STRIPE HEIGHT 70MM, ROLL LENGTH 25M	
190	3272876-0000		1	CABLE DUCT	
310	975939-0000		15	SEAL	
320	90458-1308		2	BLIND PLUG CIRCULAR, M20X1,5 514GFK/220	
340	90458-0323		9	NUT, M20X1,5	
350	352113-0203		4	ANCHOR PLATES FOR STRIPS, TM3S8-M0	
360	352113-0103		10	CABLE TIE, BLACK 290X7,6 MM	
500	312105-0366		11	SCREW, M6S ISO 4017 M6X12 A4 80	
505	312105-0327		4	SCREW, M6S ISO 4017 M5X12 A4 80	
510	312145-0287		12	SCREW ISO 2009 MFS M4X8 A4	
525	312605-0314		2	HEXAGON NUT, M6M M5 A280	
530	315105-0153		13	WASHER PLAIN, 6,4X12X1,5 A4 BRB	
535	315105-0146		6	WASHER PLAIN, 5,3X10X1 A4 BRB	
540	90458-0307		7	CABLE GLAND, M20X1,5, 5311 1020	
560	315105-0136		4	WASHER PLAIN, 4,3X9X0,8 A4 BRB	
570	312125-0287		4	SLOTTED HEAD SCREW, ISO1207 M4X8 A4	
600	90015-0023		3	LEAD-IN, TET 7-10, E1458019	
610	90143-0060	MM	71	EDGE STRIP 9,5X6,3MM BLACK PVC	
620	90143-0060	MM	185	EDGE STRIP 9,5X6,3MM BLACK PVC	
630	90143-0060	MM	185	EDGE STRIP 9,5X6,3MM BLACK PVC	
650	90143-0060	MM	203	EDGE STRIP 9,5X6,3MM BLACK PVC	
RINF U-FORM (See drawing on page: 3-112)					
040	1065696-0000		3	COVERING PLATE	
050	1065697-0000		3	BRACKET	
060	3257293-0000		1	CABLE DUCT	
070	3257294-0000		1	LID	
080	1521835-0000		1	CABLE DUCT	
090	1521836-0000		1	LID	
100	1521850-0000		1	CABLE DUCT	
110	1521851-0000		1	LID	
120	2894979-0000		1	CABLE DUCT	
140	90511-8563	M	5.4	STRIPE HEIGHT 70MM, ROLL LENGTH 25M	
260	90143-0060	MM	160	EDGE STRIP 9,5X6,3MM BLACK PVC	
310	975939-0000		13	SEAL	
320	90458-1308		4	BLIND PLUG CIRCULAR, M20X1,5 514GFK/220	
340	90458-0323		10	NUT, M20X1,5	
500	312105-0366		11	SCREW, M6S ISO 4017 M6X12 A4 80	
510	312145-0287		20	SCREW ISO 2009 MFS M4X8 A4	
530	315105-0153		16	WASHER PLAIN, 6,4X12X1,5 A4 BRB	
540	90458-0307		6	CABLE GLAND, M20X1,5, 5311 1020	
600	90015-0023		6	LEAD-IN, TET 7-10, E1458019	
RINF Z-FORM (See drawing on page: 3-110)					
040	1065696-0000		3	COVERING PLATE	
050	1065697-0000		3	BRACKET	

Machine Type | Group Description | Used-In | Group Number | Page No

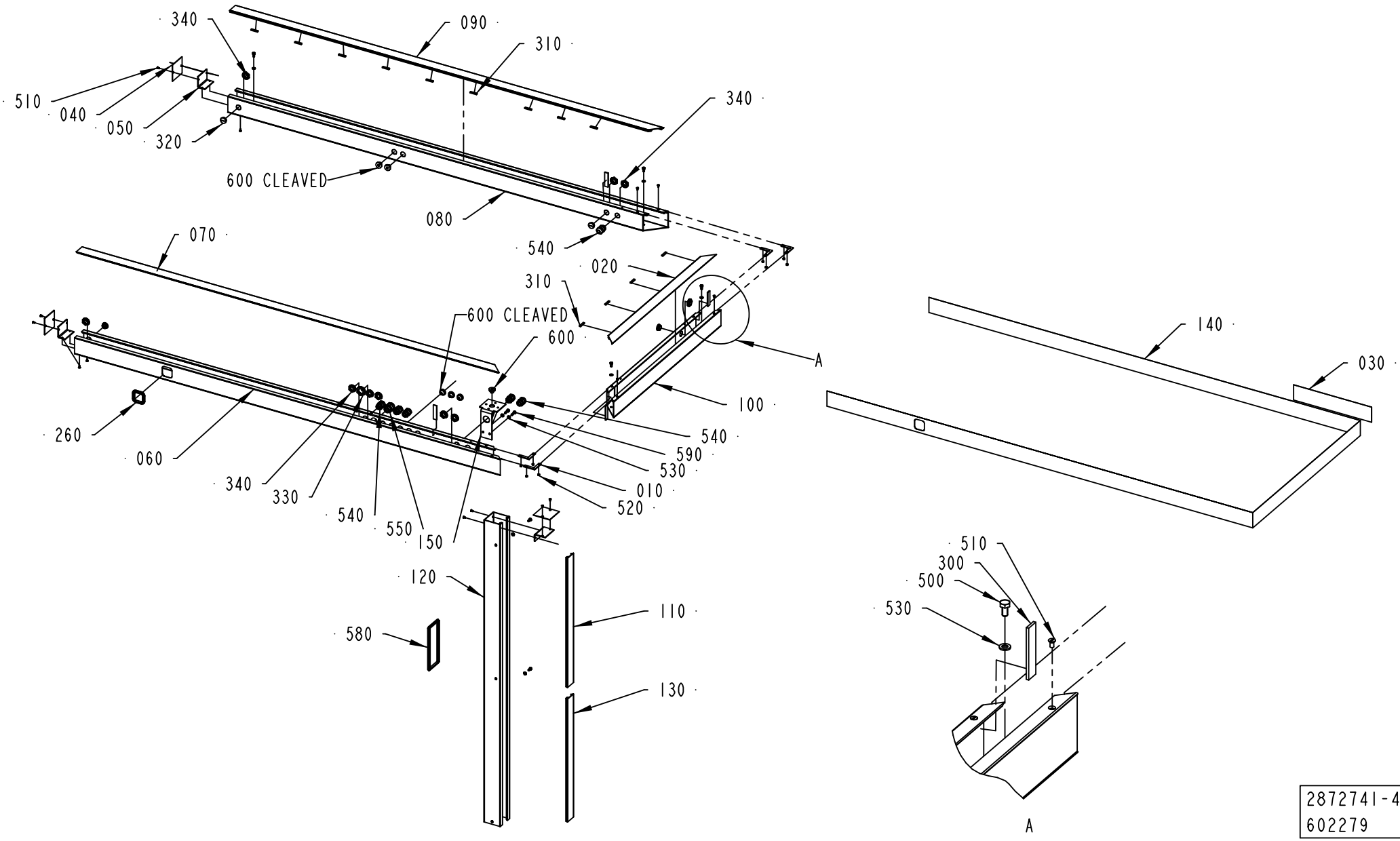
340
090
310
510
040
050
320
340
600 CLEAVED
080
540
070
020
310
600 CLEAVED
600
A
140
030
100
260
060
540
590
530
340
330
540
550
150
010
520
120
110
580
130
510
300
500
530
A
2872741-4
602279

Pos	Part No	UN	Qty	Description	Page No
RINF Z-FORM (Cont'd) (See drawing on page: 3-110)					
060	3256231-0000		1	CABLE DUCT	
070	3256232-0000		1	LID	
080	1521835-0000		1	CABLE DUCT	
090	1521836-0000		1	LID	
100	1521850-0000		1	CABLE DUCT	
110	1521851-0000		1	LID	
120	2894979-0000		1	CABLE DUCT	
140	90511-8563	M	3.5	STRIPE HEIGHT 70MM, ROLL LENGTH 25M	
310	975939-0000		15	SEAL	
320	90458-1308		3	BLIND PLUG CIRCULAR, M20X1,5 514GFK/220	
340	90458-0323		10	NUT, M20X1,5	
350	352113-0203		4	ANCHOR PLATES FOR STRIPS, TM3S8-M0	
360	352113-0103		4	CABLE TIE, BLACK 290X7,6 MM	
500	312105-0366		11	SCREW, M6S ISO 4017 M6X12 A4 80	
510	312145-0287		20	SCREW ISO 2009 MFS M4X8 A4	
530	315105-0153		13	WASHER PLAIN, 6,4X12X1,5 A4 BRB	
540	90458-0307		7	CABLE GLAND, M20X1,5, 5311 1020	
560	315105-0136		4	WASHER PLAIN, 4,3X9X0,8 A4 BRB	
570	312125-0287		4	SLOTTED HEAD SCREW, ISO1207 M4X8 A4	
600	90015-0023		3	LEAD-IN, TET 7-10, E1458019	
Common Parts					
010	975934-0000		4	GUSSET PLATE	
020	1021518-0000		1	LID	
030	90511-0145		1	LOGOTYPE "TETRA PAK" FOR STRIPE 70MM	
130	1543529-0000		1	LID	
150	2504292-0000		1	BRACKET	
300	90143-0073	M	5	FLAT GASKET TAPE W. ADHESIVE, 15X3.0	
330	90458-0324		1	NUT, M25X1,5	
520	312605-0312		8	HEXAGON NUT, M6M M4 A280	
550	90458-0308		1	CABLE GLAND, M25X1,5, 5311 1030	
580	90143-0060	MM	525	EDGE STRIP 9,5X6,3MM BLACK PVC	
590	312105-0370		2	SCREW, M6S ISO 4017 M6X20 A4 80	

Pos	Part No	UN	Qty	Description	Page No

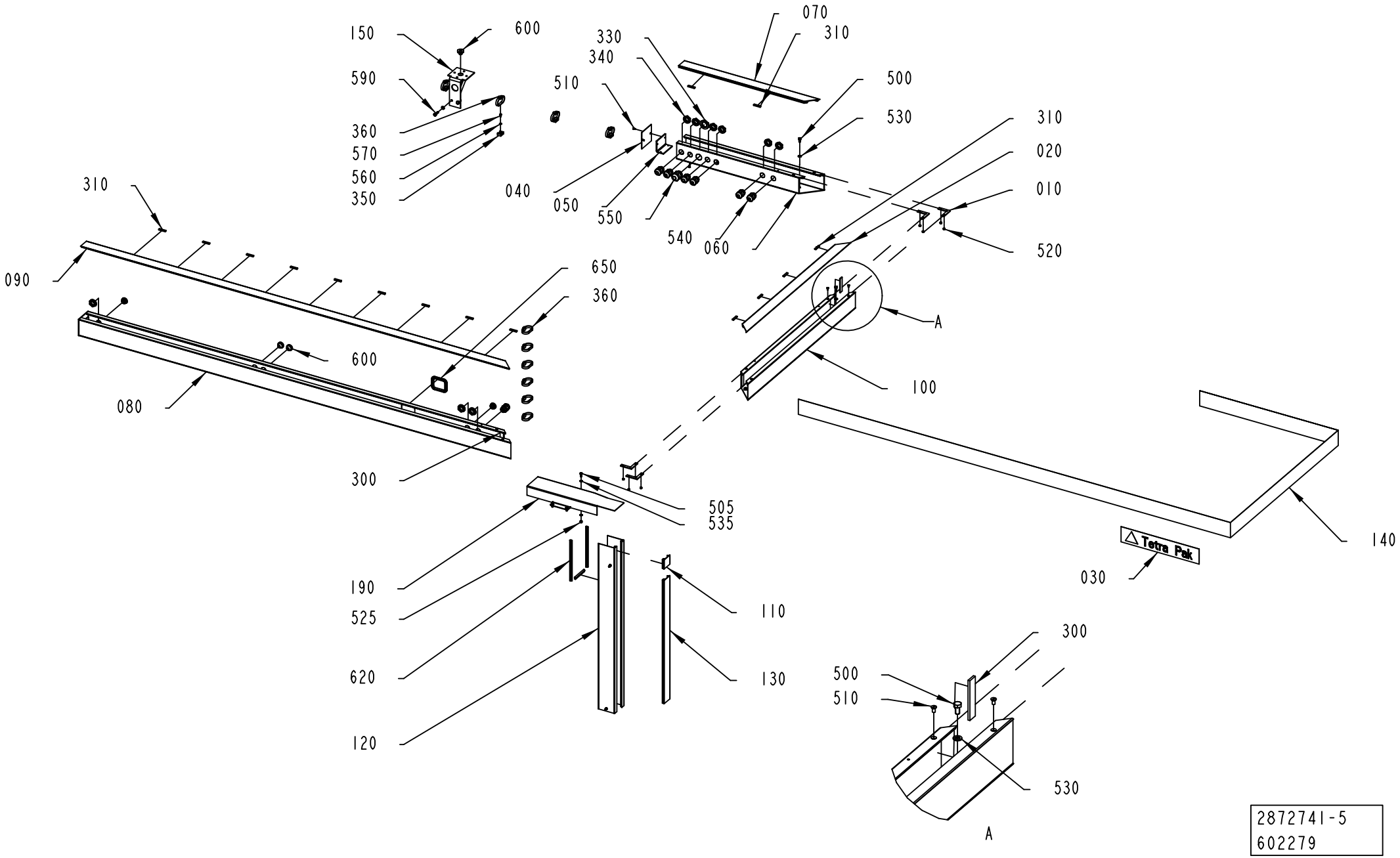
150
600
590
360
570
560
350
330
340
510
070
310
500
530
040
050
550
540
060
310
020
010
520
310
090
650
360
600
080
A
100
300
505
535
140
030
190
525
620
120
110
130
300
500
510
530
A
2872741-5
602279

Pos	Part No	UN	Qty	Description	Page No	Pos	Part No	UN	Qty	Description	Page No

SEE PREVIOUS LISTS PAGES: 3-111, 3-113.

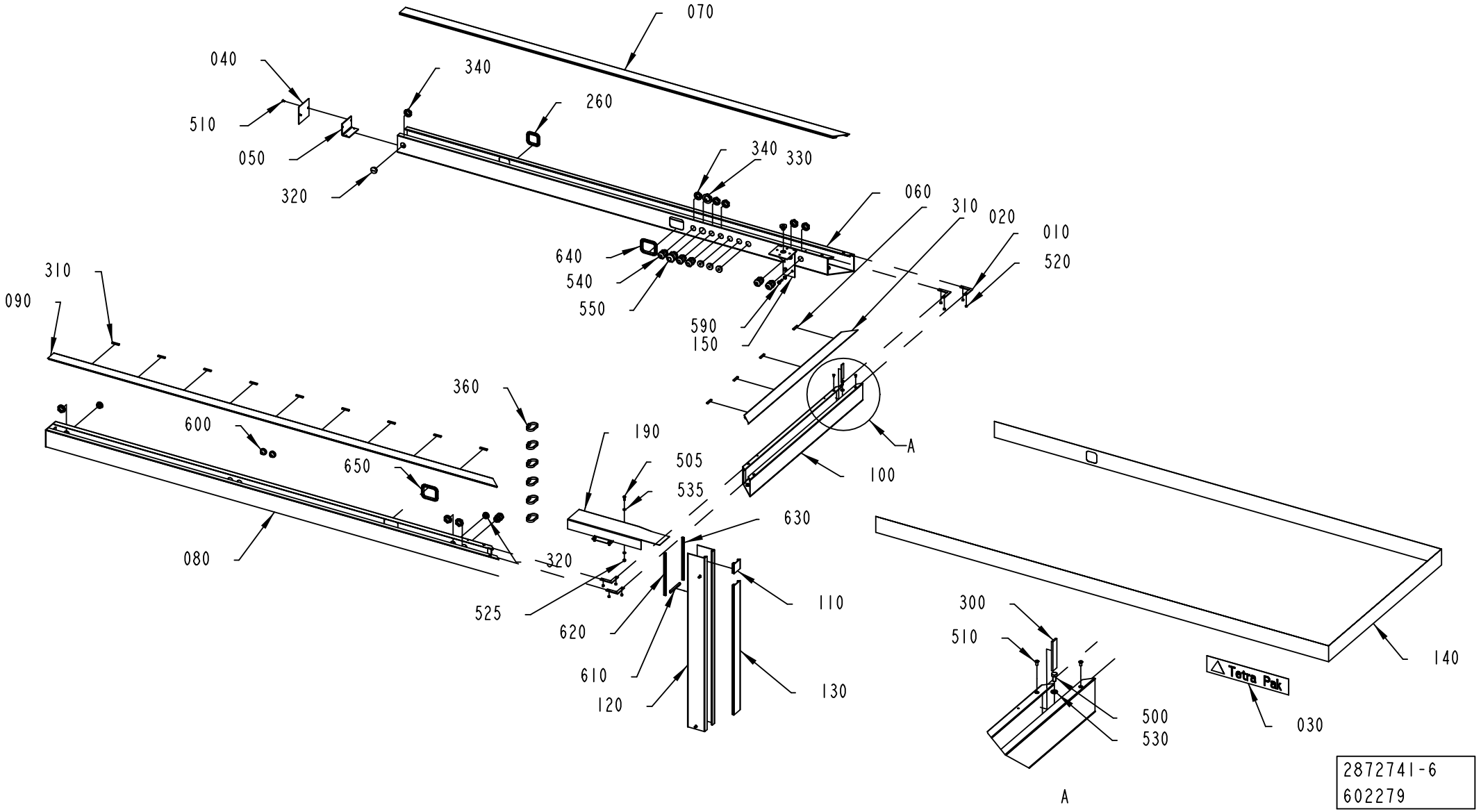
070
040
340
260
510
050
320
340
330
060
310
020
010
520
640
540
550
590
150
310
090
360
600
650
190
505
535
630
080
320
525
620
610
120
110
130
A
100
300
510
500
530
140
030
Tetra Pak
2872741-6
602279
A

ECM: 614519 - 20130618
Group number: 2872741-0200
Assembly Drawing: 2872741-6_1_AC

This list covers pages from 3-110 to 3-117

Pos	Part No	UN	Qty	Description	Page No	Pos	Part No	UN	Qty	Description	Page No

SEE PREVIOUS LISTS PAGES: 3-111, 3-113.

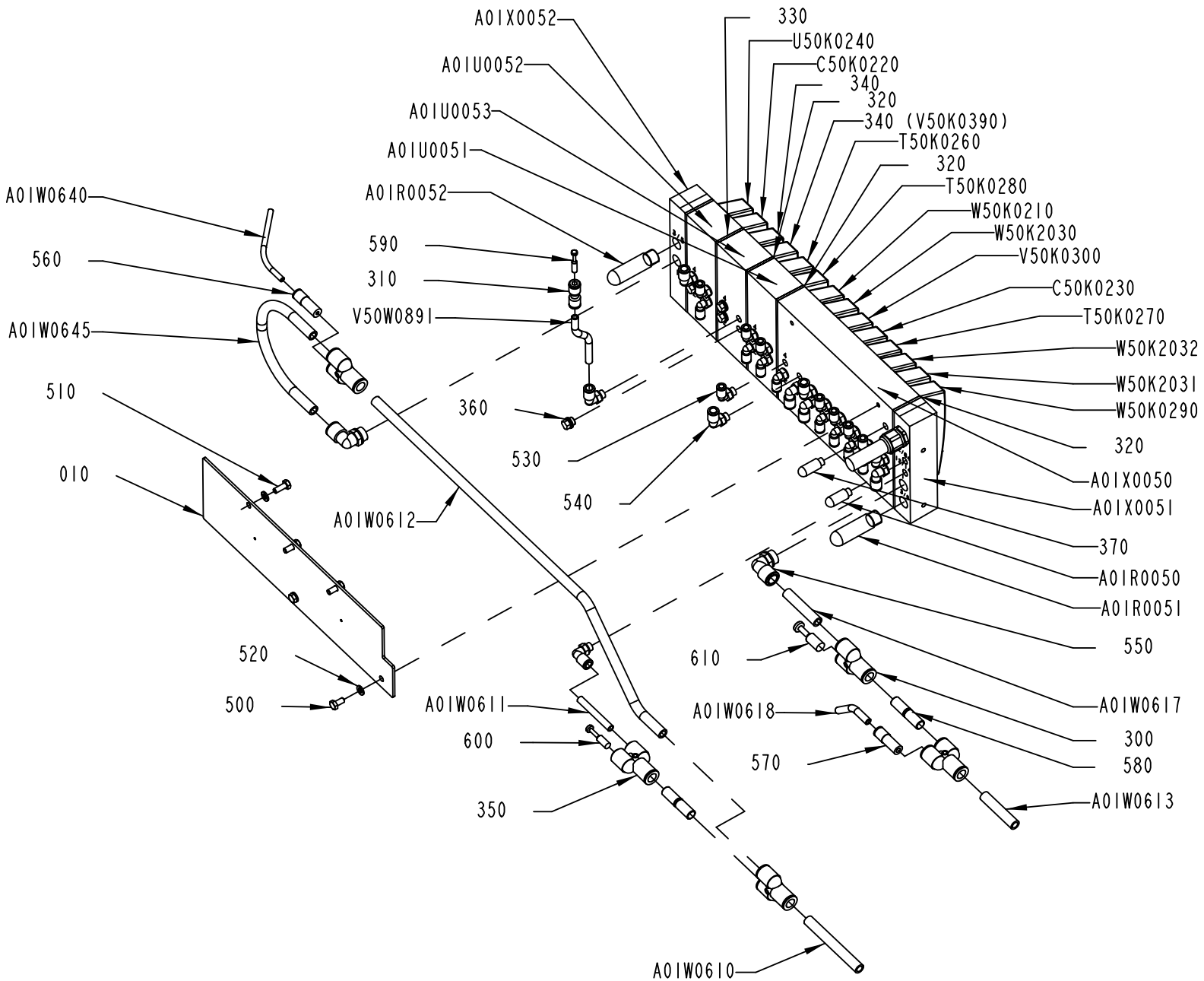

3251384-1
568933

ECM: 577193 - 20120924
Group number: 3251384-0100
Assembly Drawing: 3251384-1_1_AB

Pos	Part No	UN	Qty	Description	Page No
-					
010	3251386-0000		1	PLATE	
300	90055-0147		4	PUSH-IN Y-CONNECTOR QSY-12	
310	90055-0189		1	HOSE,NIPPLE,REDUCER,TUBE, 6/8M	
320	90458-1207		4	SEALING, STANDARD	
330	90458-1208		1	SEALING, CHANNEL 1 BLOCKED	
340	90458-1215		2	COVER PLATE, EMPTY VALVE POSITION	
350	90459-6065		1	PUSH-IN Y-CONNECTOR QSY-12-8	
360	90459-0698		4	PLUG, G1/8EXT, G1/8	
370	90328-0047		1	SILENCER, G1/8"	
500	312105-0366		2	SCREW, M6S ISO 4017 M6X12 A4 80	
510	312105-0368		3	SCREW, M6S ISO 4017 M6X16 A4 80	
520	315106-0153		5	WASHER PLAIN, M6 ISO7089-6-200 HV A4	
530	350002-0006		16	PUSH-IN L-FITTING QSL-F-G1/8-6	
540	350002-0007		9	PUSH-IN L-FITTING QSL-F-G1/8-8	
550	350002-0014		2	PUSH-IN L-FITTING QSL-F-G3/8-12	
560	350006-0007		1	PUSH-IN FITTING QS-F-12H-6	
570	350006-0008		1	PUSH-IN FITTING QS-F-12H-8	
580	350012-0005		2	SLEEVE QSH-F-12	
590	350013-0002		1	PLUG QSC-6H	
600	350013-0003		1	PLUG QSC-8H	
610	350013-0005		1	PLUG QSC-12H	
A01R0050	90328-0047		1	SILENCER, G1/8"	
A01R0051	90328-0024		1	SILENCER, G3/8"	
A01R0052	90328-0024		1	SILENCER, G3/8"	
A01U0051	90600-4922		1	EXP. SUB-BASE 2 VALVES,CDVI5.0-EB2-MP-MO	
A01U0052	90458-1206		1	EXP. SUB-BASE 2 VALVES, CDVI5.0-EB	
A01U0053	90600-4922		1	EXP. SUB-BASE 2 VALVES,CDVI5.0-EB2-MP-MO	
A01W0610	315400-0010	M	5	TUBE PUN-H-12X2-BL	
A01W0611	315400-0004	MM	100	TUBE PUN-H-8X1,25-BL	
A01W0612	315400-0010	MM	300	TUBE PUN-H-12X2-BL	
A01W0613	315400-0010	M	5	TUBE PUN-H-12X2-BL	
A01W0617	315400-0010	MM	200	TUBE PUN-H-12X2-BL	
A01W0618	315400-0004	MM	600	TUBE PUN-H-8X1,25-BL	
A01W0640	315400-0001	M	5	6-4E PUN-H-6X1-BL	
A01W0645	315400-0010	MM	500	TUBE PUN-H-12X2-BL	
A01X0050	90458-1205		1	BASIC SUB-BASE 8 VALVES, CDVI5.0-GB8-MP	
A01X0051	90458-1212		1	LEFT ENDPLATE INCL. 10M CABLE	
A01X0052	90458-1214		1	RIGHT ENDPL EXT. PILOT AIR,CDVI5.0-EPR-S	
C50K0220	90458-1194		1	VALVE, 5/2 MONOSTABLE	
C50K0230	90458-1194		1	VALVE, 5/2 MONOSTABLE	
T50K0260	90458-1194		1	VALVE, 5/2 MONOSTABLE	
T50K0270	90458-1194		1	VALVE, 5/2 MONOSTABLE	
T50K0280	90458-1194		1	VALVE, 5/2 MONOSTABLE	
U50K0240	90458-1197		1	VALVE, 5/2 BISTABLE	
V50K0300	90458-1194		1	VALVE, 5/2 MONOSTABLE	
V50W0891	315400-0004	M	3	TUBE PUN-H-8X1,25-BL	
W50K0210	90458-1200		1	VALVE OPEN IN MID-POSITION 5/3	
W50K0290	90458-1194		1	VALVE, 5/2 MONOSTABLE	
W50K2030	90458-1197		1	VALVE, 5/2 BISTABLE	
W50K2031	90458-1197		1	VALVE, 5/2 BISTABLE	
W50K2032	90458-1197		1	VALVE, 5/2 BISTABLE	

Machine Type | Group Description | Used-In | Group Number | Page No

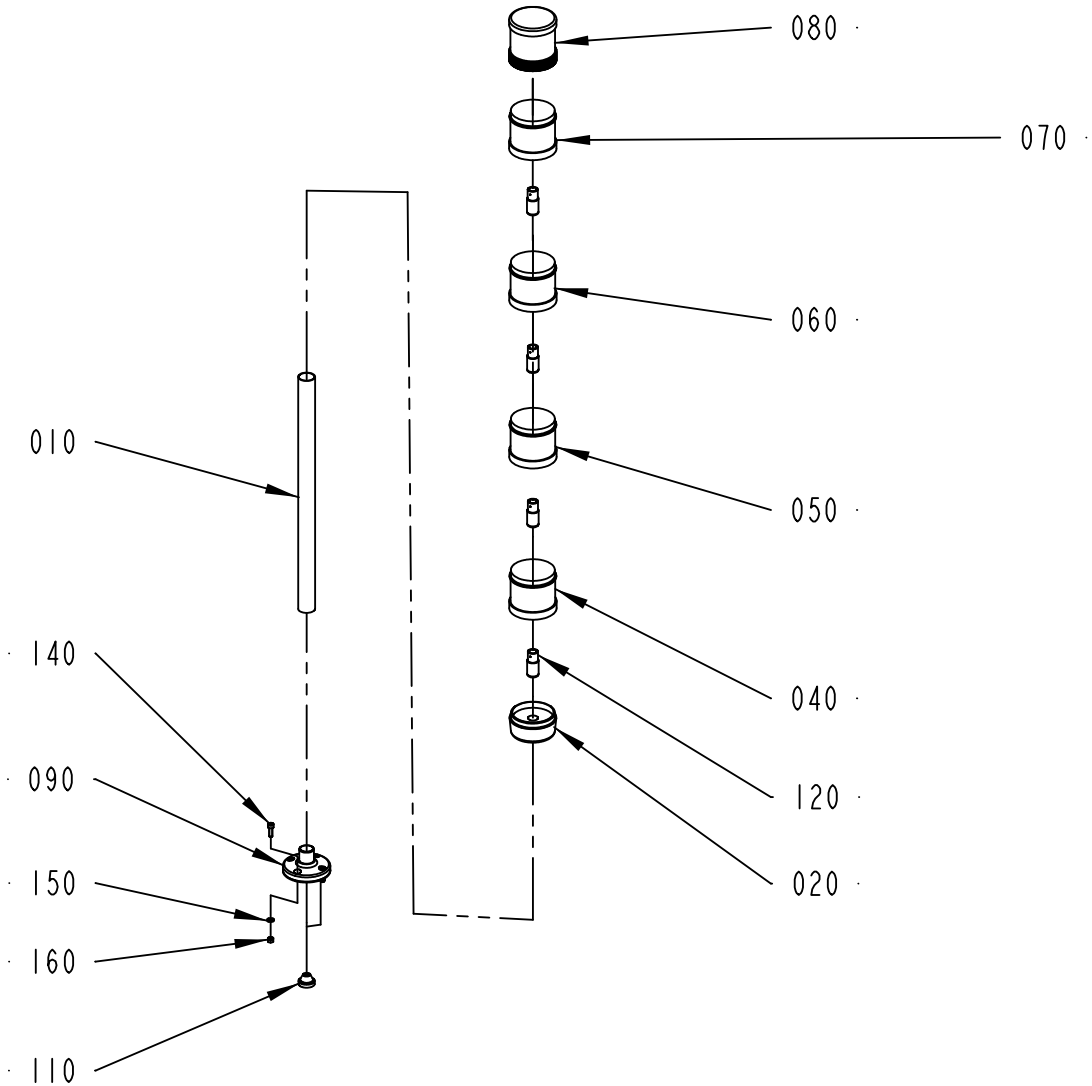

3241287-1
611176

ECM: 614520 - 20130618
Group number: 3241287-0100
Assembly Drawing: 3241287-1_1_AC

Pos	Part No	UN	Qty	Description	Page No
-					
010	90458-0725		1	TUBE 400MM, PSD-S ME T-M 400	
020	90602-4627		1	TERMINAL ELEMENT, PSD-S CE-TM SPRING	
040	90602-4061		1	LIGHT ELEMENT, GREEN, PSD-S OE LED GN	
050	90602-4060		1	LIGHT ELEMENT, BLUE, PSD-S OE LED BU	
060	90602-4063		1	LIGHT ELEMENT, YELLOW, PSD-S OE LED YE	
070	90602-4062		1	LIGHT ELEMENT, RED, PSD-S OE LED RD	
080	90602-4631		1	SIREN 100DB, PSD-S AE SM8-5 100DB/1	
090	90458-0298		1	BASE FOR TUBE, PSD-S ME B-P	
110	90015-0023		1	LEAD-IN, TET 7-10, E1458019	
120	90036-0068		4	BULB 5W 24V, SL-L24 205348	
140	312115-0329		4	SCREW ISO4762 M5X16 A4 80	
150	315105-0146		8	WASHER PLAIN, 5,3X10X1 A4 BRB	
160	312605-0314		4	HEXAGON NUT, M6M M5 A280	

Pos	Part No	UN	Qty	Description	Page No

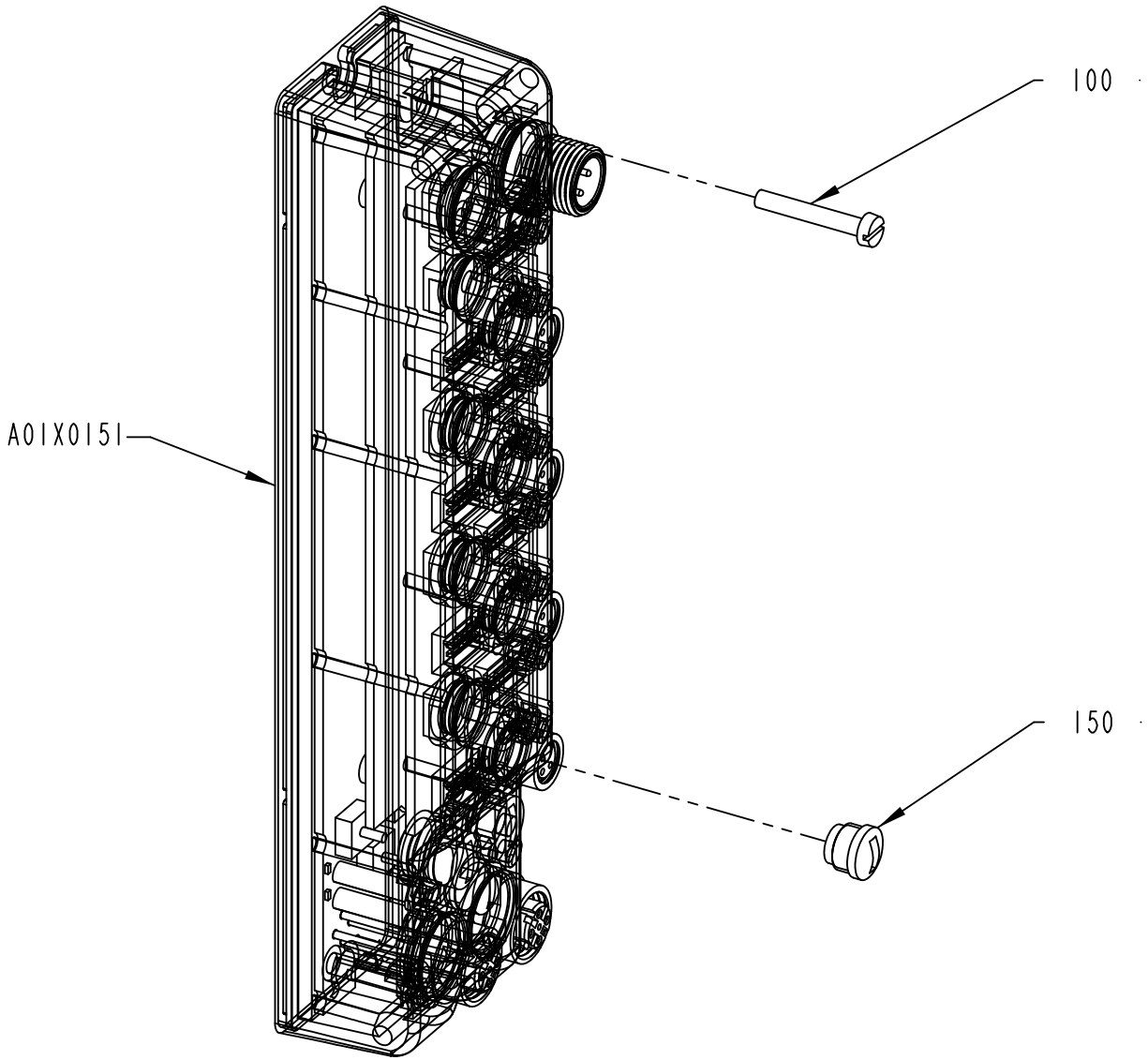

2763116-3
555186

ECM: 567462 - 20120710
Group number: 2763116-0300
Assembly Drawing: 2763116-3_1_AA

Pos	Part No	UN	Qty	Description	Page No
-					
010	312125-0230		2	SLOTTED HEAD SCREW, ISO1207 M3X20 A4	
150	90603-3976		1	PROTECTIVE CAP M8, E11256	
A01X0151	90605-2702		1	ARMORBLOCK MODULE, 1732E-8CFGM8R, SER. A	

Pos	Part No	UN	Qty	Description	Page No

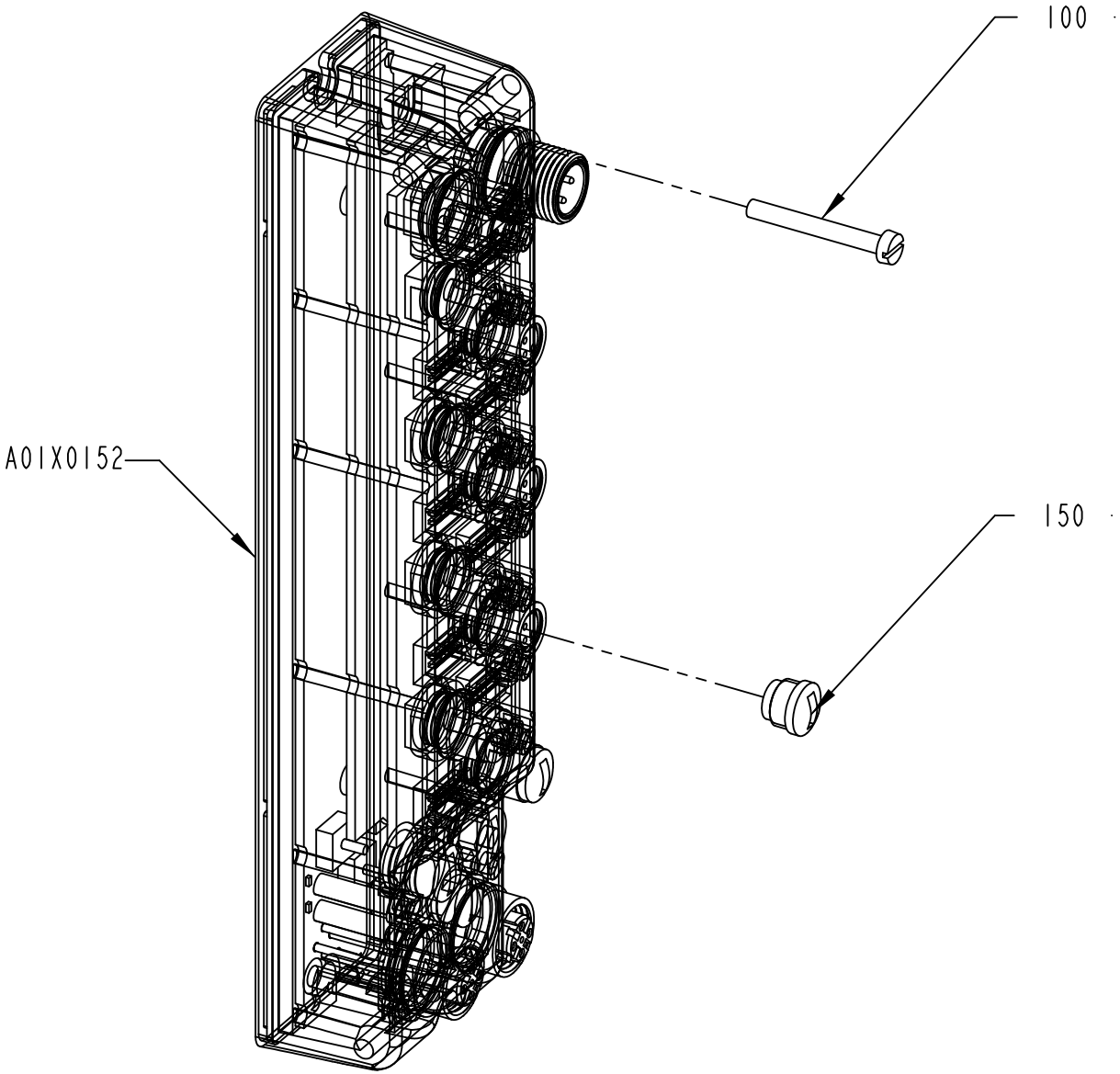

2763115-3
555186

ECM: 567460 - 20120710
Group number: 2763115-0300
Assembly Drawing: 2763115-3_1_AA

Pos	Part No	UN	Qty	Description	Page No
-					
100	312125-0232		2	SLOTTED HEAD SCREW, ISO1207 M3X25 A4	
150	90603-3976		3	PROTECTIVE CAP M8, E11256	
A01X0152	90605-2702		1	ARMORBLOCK MODULE, 1732E-8CFGM8R, SER. A	

Pos	Part No	UN	Qty	Description	Page No

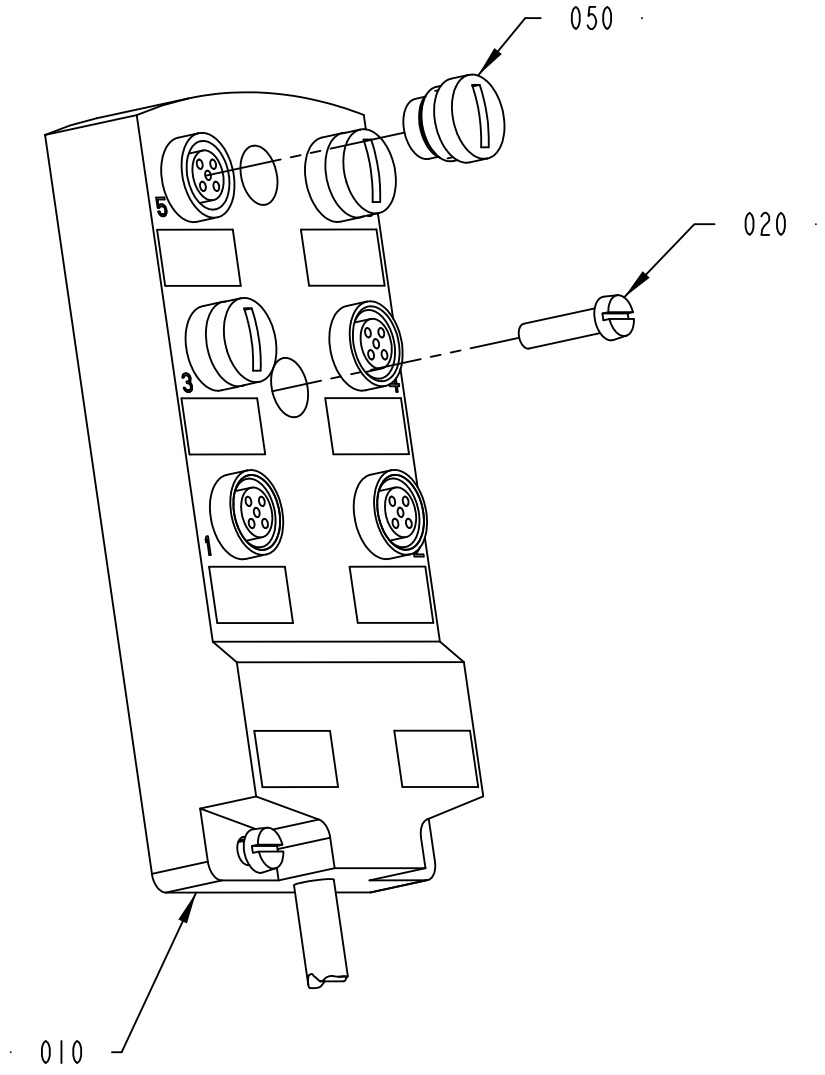

3252699-1
555186

ECM: 567371 - 20120710
Group number: 3252699-0100
Assembly Drawing: 3252699-1_1_AA

Pos	Part No	UN	Qty	Description	Page No
-					
010	90603-3970		1	SPLITTER BOX, EBC043	
020	312125-0293		3	SLOTTED HEAD SCREW, ISO1207 M4X16 A4	
050	90603-3975		1	PROTECTIVE CAP M12, E70297	

Pos	Part No	UN	Qty	Description	Page No

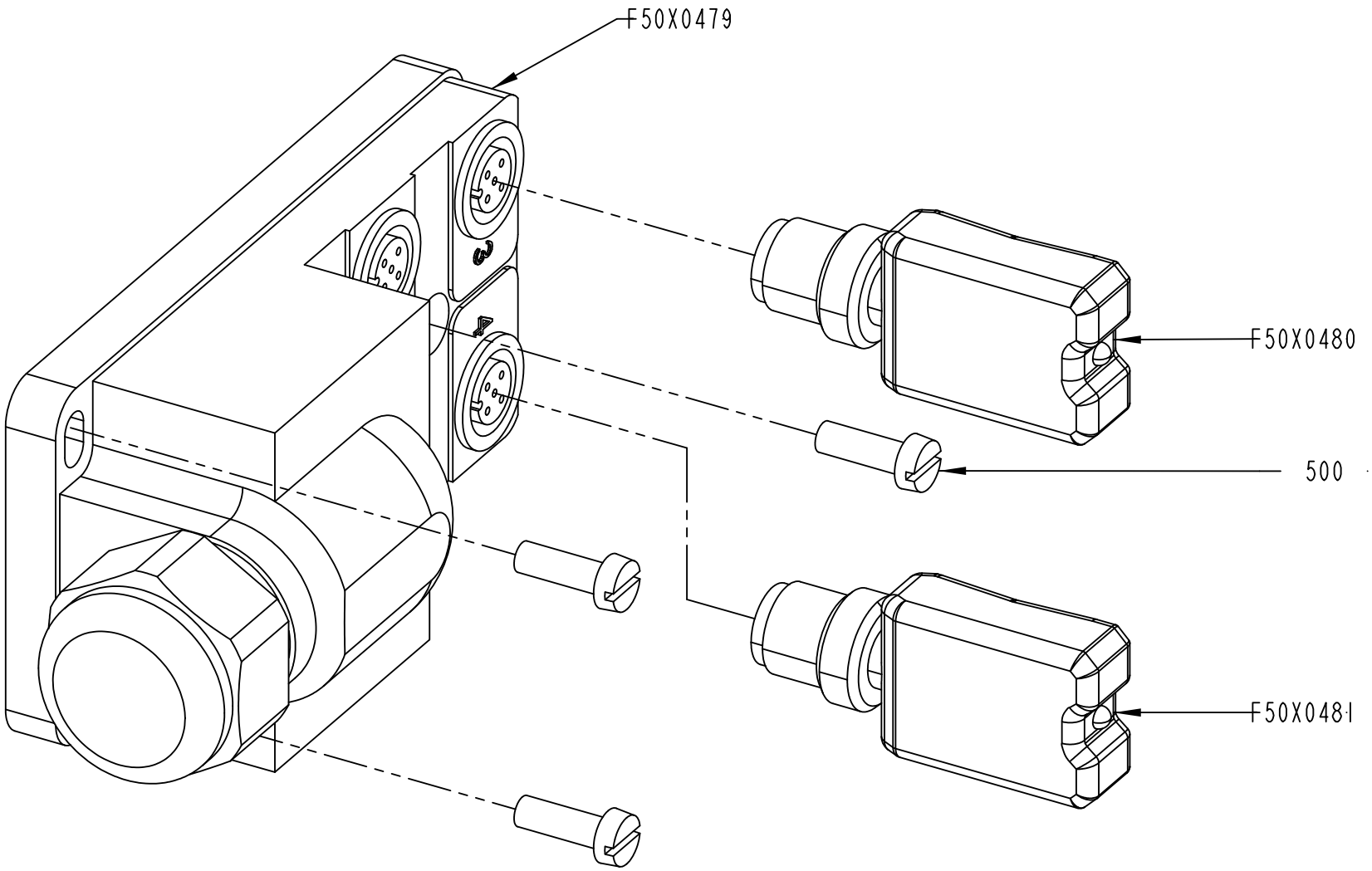

2894997-2
611176

ECM: 615978 - 20130618
Group number: 2894997-0200
Assembly Drawing: 2894997-2_1_AB

Pos	Part No	UN	Qty	Description	Page No
-					
500	312125-0291		3	SLOTTED HEAD SCREW, ISO1207 M4X12 A4	
F50X0479	90604-0093		1	CONNECTION BLOCK, TINA4A 2TLJ020054R0300	
F50X0480	90459-5627		1	CONNECTION, TINA 1-A	
F50X0481	90459-5627		1	CONNECTION, TINA 1-A	

Pos	Part No	UN	Qty	Description	Page No

HOTMELT UNIT

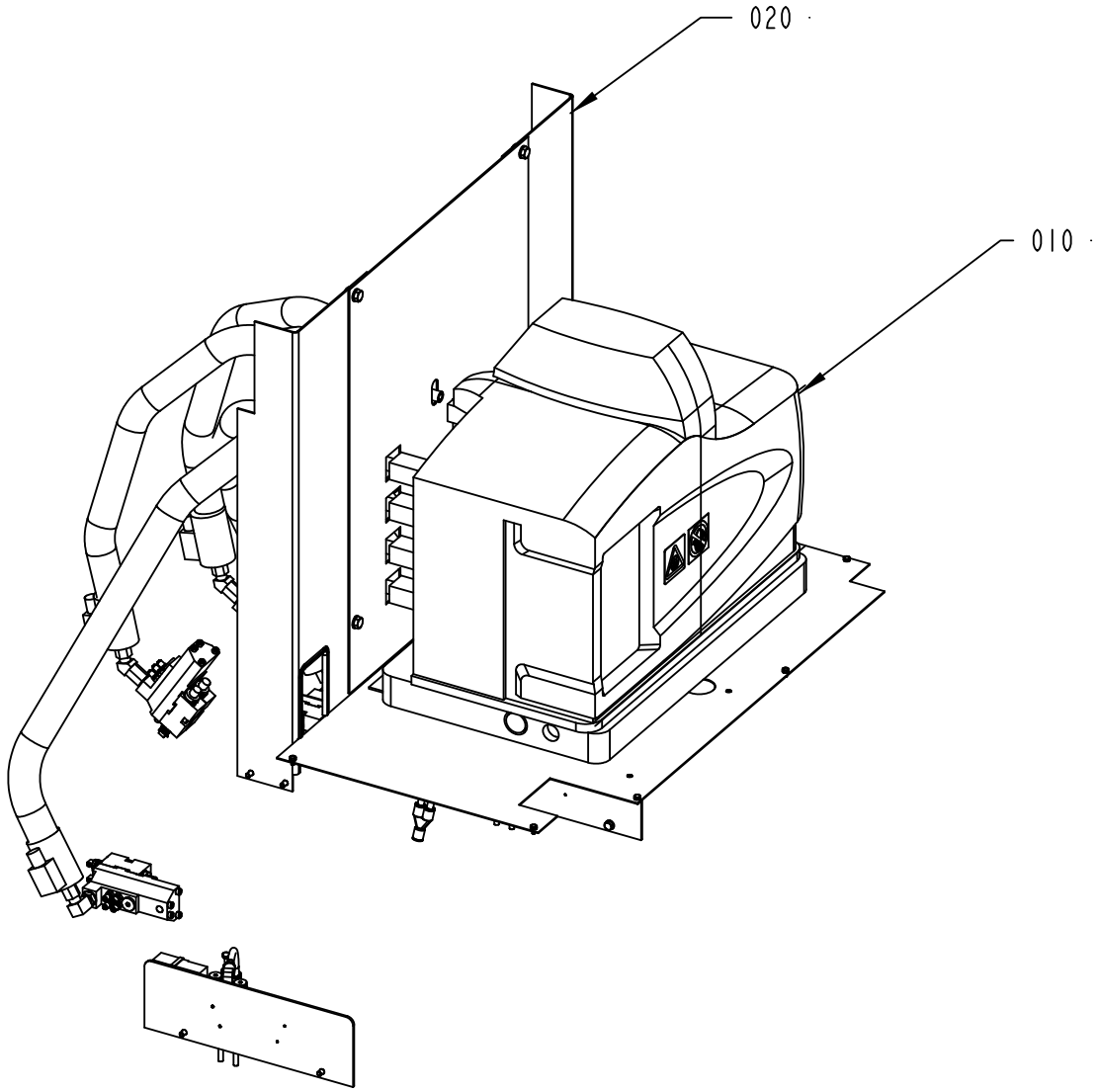

2771176-4
555186

ECM: 614521 - 20130618
Group number: 2771176-0400
Assembly Drawing: 2771176-4_1_AA

Pos	Part No	UN	Qty	Description	Page No
-					
010	2752733-0400		1	HOTMELT EQUIPMENT	**3-133, 3-135, 3-137, 3-139**
020	2752746-0400		1	HOTMELT SHELF	**3-141, 3-143**

Pos	Part No	UN	Qty	Description	Page No

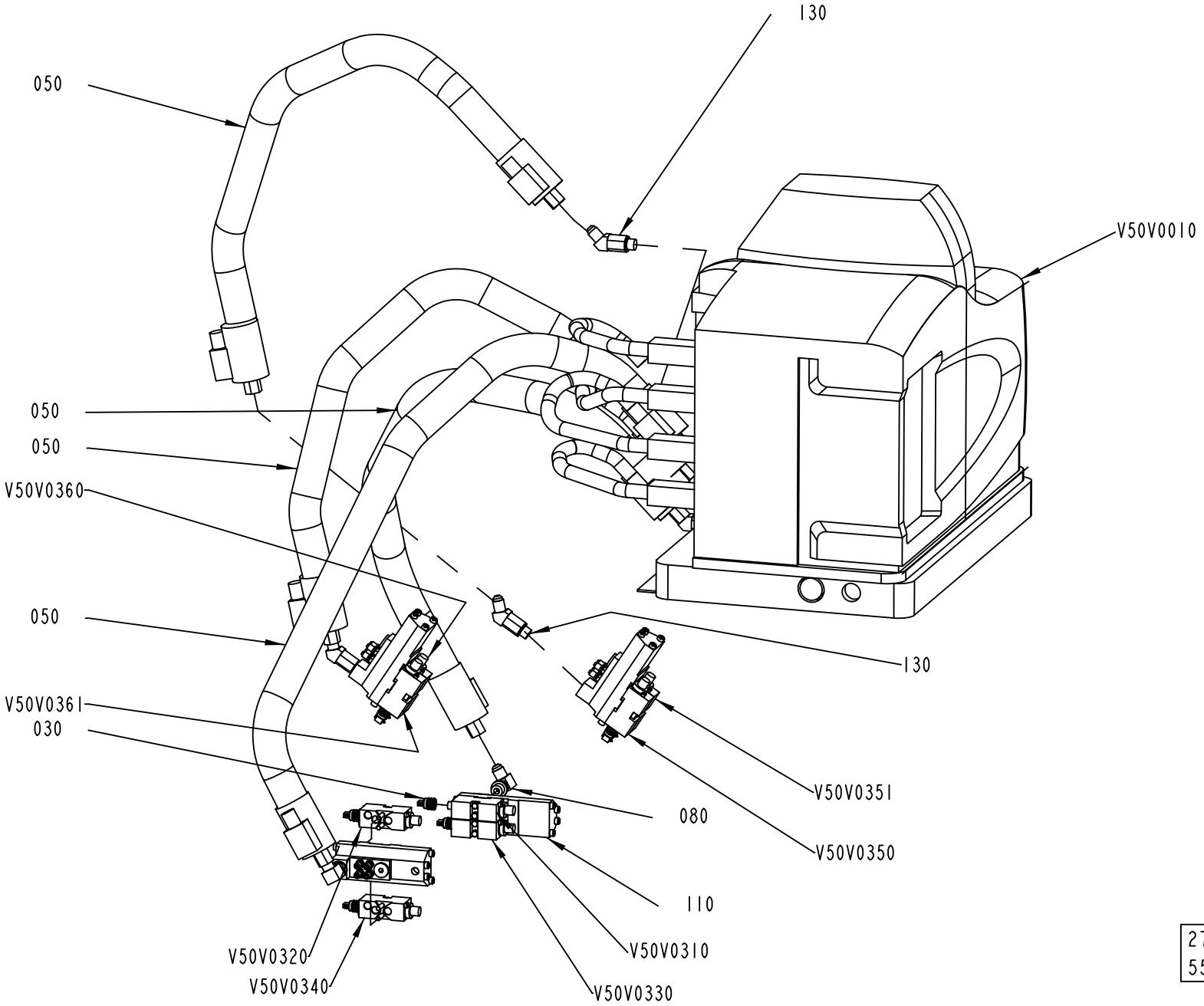

2752733-13
555186

ECM: 614523 - 20130618
Group number: 2752733-0400
Assembly Drawing: 2752733-13_1_AA

This list covers pages from 3-132 to 3-139

Pos	Part No	UN	Qty	Description	Page No
TRAY LINF U-FORM, TRAY LINF Z-FORM (See drawing on page: 3-138)					
030	90439-0236		2	SATURN RIGHT-ANGLE NOZZLE, 1011012	
050	90458-1745		1	RTD HOT MELT HOSE, 276740	
055	90459-1325		1	RTD HOT MELT HOSE, 276741	
110	90459-6328		2	HOT MELT GUN, SOLIDBLUE A, 1060939	
	342921-0111		*1*	*STRAIGHT COUPLING,EXT.THREAD 6/4-M5*	
	90459-6331		*1*	*FILTER KIT, MESH M14, 104 5506*	
	90459-2231		*1*	*CORDSET, WATER WASH W. EYELET, 223 804*	
	90439-0238		*1*	*HEATING ELEMENT*	
140	90439-0241		2	ELBOW CONNECTION, 972646	
150	90459-6330		2	MODULE BLANK, CLASSICBLUE, 1054951	
V50V0010	90604-3320		1	HOT MELT UNIT PROBLUE 4, 104 9296 H1	
	90602-5788		*1*	*REBUILING KIT, PUMP 1:6, 110 0297*	
	90459-1989		*1*	*CHASSIS, P4, 1099401*	
	90459-1988		*1*	*SUB BASE P4, 1021661*	
	90459-1987		*1*	*SERVICE KIT, PNEUM. PANEL ASSY, 1028307*	
	90459-1986		*1*	*FILTER ASSY, 100 MESH, 1028305*	
	90459-1985		*1*	*SERVICE KIT, PUMP PISTON, 1028304*	
	90459-1984		*1*	*KIT, PUMP PISTON, 1028303*	
	90459-1983		*1*	*HEATER BLOCK KIT, 1064649*	
	90459-1982		*1*	*SERVICE KIT, PRESS. DISC. VALVE, 1028308*	
	90459-1981		*1*	*SERVICE KIT, MANIFOLD ASSY, 1028309*	
	90459-1980		*1*	*SERVICE KIT, MANIFOLD ASSY, 106 4651*	
	90459-1979		*1*	*SERV. KIT, THERMOSTAT, 1028321*	
	90459-1978		*1*	*KIT, RTD TEMP. SENSOR, 1028320*	
	90459-1977		*1*	*SERVICE KIT, TANK P4, 1051033*	
	90459-1976		*1*	*KIT, OPERATOR PANEL/ ENCLOSURE, 1028326*	
	90459-1975		*1*	*DISPLAY, CPU BOARD SERV. KIT, 1028325*	
	90459-1974		*1*	*FUSE KIT, MAIN CIRC.BOARD, 1028329*	
	90459-1973		*1*	*MAIN PCA SERV.KIT, 1028322*	
	90459-1972		*1*	*FUSE KIT, HOSE/GUN, 1028331*	
	90459-1971		*1*	*HOSE/GUN MODULE KIT, 1028328*	
TRAY RINF U-FORM, TRAY RINF Z-FORM (See drawing on page: 3-136)					
030	90439-0236		2	SATURN RIGHT-ANGLE NOZZLE, 1011012	
050	90600-7806		2	RTD HOT MELT HOSE AWW, 1088273	
110	90459-6328		2	HOT MELT GUN, SOLIDBLUE A, 1060939	
	342921-0111		*1*	*STRAIGHT COUPLING,EXT.THREAD 6/4-M5*	
	90459-6331		*1*	*FILTER KIT, MESH M14, 104 5506*	
	90459-2231		*1*	*CORDSET, WATER WASH W. EYELET, 223 804*	
	90439-0238		*1*	*HEATING ELEMENT*	
130	90458-1344		2	NON HEATED CONNECTION 45°, 972 647	
150	90459-6330		2	MODULE BLANK, CLASSICBLUE, 1054951	
V50V0010	90604-3320		1	HOT MELT UNIT PROBLUE 4, 104 9296 H1	
	90602-5788		*1*	*REBUILING KIT, PUMP 1:6, 110 0297*	
	90459-1989		*1*	*CHASSIS, P4, 1099401*	
	90459-1988		*1*	*SUB BASE P4, 1021661*	
	90459-1987		*1*	*SERVICE KIT, PNEUM. PANEL ASSY, 1028307*	
	90459-1986		*1*	*FILTER ASSY, 100 MESH, 1028305*	
	90459-1985		*1*	*SERVICE KIT, PUMP PISTON, 1028304*	
	90459-1984		*1*	*KIT, PUMP PISTON, 1028303*	
	90459-1983		*1*	*HEATER BLOCK KIT, 1064649*	
	90459-1982		*1*	*SERVICE KIT, PRESS. DISC. VALVE, 1028308*	
	90459-1981		*1*	*SERVICE KIT, MANIFOLD ASSY, 1028309*	
	90459-1980		*1*	*SERVICE KIT, MANIFOLD ASSY, 106 4651*	
	90459-1979		*1*	*SERV. KIT, THERMOSTAT, 1028321*	
	90459-1978		*1*	*KIT, RTD TEMP. SENSOR, 1028320*	
	90459-1977		*1*	*SERVICE KIT, TANK P4, 1051033*	
	90459-1976		*1*	*KIT, OPERATOR PANEL/ ENCLOSURE, 1028326*	
	90459-1975		*1*	*DISPLAY, CPU BOARD SERV. KIT, 1028325*	
	90459-1974		*1*	*FUSE KIT, MAIN CIRC.BOARD, 1028329*	
	90459-1973		*1*	*MAIN PCA SERV.KIT, 1028322*	
	90459-1972		*1*	*FUSE KIT, HOSE/GUN, 1028331*	
	90459-1971		*1*	*HOSE/GUN MODULE KIT, 1028328*	
TRAYOVER LINF U-FORM, WAMEETING LINF U-FORM, TRAYOVER LINF Z-FORM, WAMEETING LINF Z-FORM (See drawing on page: 3-138)					
030	90439-0236		4	SATURN RIGHT-ANGLE NOZZLE, 1011012	
050	90458-1745		1	RTD HOT MELT HOSE, 276740	
055	90459-1325		1	RTD HOT MELT HOSE, 276741	
110	90459-6328		2	HOT MELT GUN, SOLIDBLUE A, 1060939	
	342921-0111		*1*	*STRAIGHT COUPLING,EXT.THREAD 6/4-M5*	
	90459-6331		*1*	*FILTER KIT, MESH M14, 104 5506*	
	90459-2231		*1*	*CORDSET, WATER WASH W. EYELET, 223 804*	
	90439-0238		*1*	*HEATING ELEMENT*	
140	90439-0241		2	ELBOW CONNECTION, 972646	
V50V0010	90604-3320		1	HOT MELT UNIT PROBLUE 4, 104 9296 H1	
	90602-5788		*1*	*REBUILING KIT, PUMP 1:6, 110 0297*	
	90459-1989		*1*	*CHASSIS, P4, 1099401*	
	90459-1988		*1*	*SUB BASE P4, 1021661*	
	90459-1987		*1*	*SERVICE KIT, PNEUM. PANEL ASSY, 1028307*	
	90459-1986		*1*	*FILTER ASSY, 100 MESH, 1028305*	
	90459-1985		*1*	*SERVICE KIT, PUMP PISTON, 1028304*	
	90459-1984		*1*	*KIT, PUMP PISTON, 1028303*	
	90459-1983		*1*	*HEATER BLOCK KIT, 1064649*	
	90459-1982		*1*	*SERVICE KIT, PRESS. DISC. VALVE, 1028308*	

Machine Type | Group Description | Used-In | Group Number | Page No

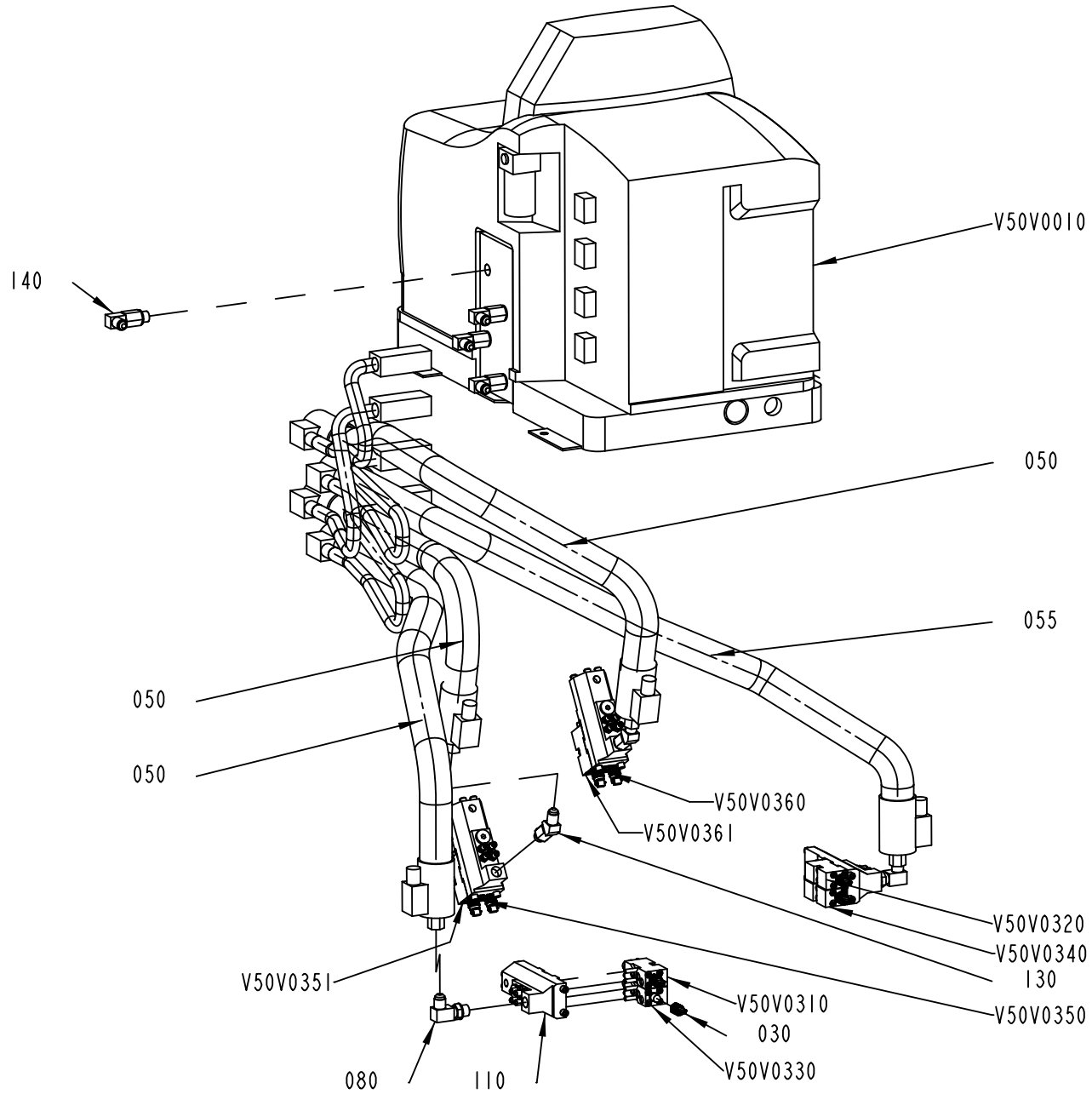

2752733-14
602279

Pos	Part No	UN	Qty	Description	Page No
TRAYOVER LINF U-FORM, WAMEETING LINF U-FORM, TRAYOVER LINF Z-FORM, WAMEETING LINF Z-FORM (Cont'd) (See drawing on page: 3-138)					
V50V0330	90459-6329		1	MODULE SOLIDBLUE A, 1052927	
V50V0340	90459-6329		1	MODULE SOLIDBLUE A, 1052927	
TRAYOVER RINF U-FORM, TRAYOVER RINF Z-FORM, WAMEETING RINF U-FORM, WAMEETING RINF Z-FORM (See drawing on page: 3-136)					
030	90439-0236		4	SATURN RIGHT-ANGLE NOZZLE, 1011012	
050	90600-7806		2	RTD HOT MELT HOSE AWW, 1088273	
110	90459-6328		2	HOT MELT GUN, SOLIDBLUE A, 1060939	
	342921-0111		*1*	*STRAIGHT COUPLING,EXT.THREAD 6/4-M5*	
	90459-6331		*1*	*FILTER KIT, MESH M14, 104 5506*	
	90459-2231		*1*	*CORDSET, WATER WASH W. EYELET, 223 804*	
	90439-0238		*1*	*HEATING ELEMENT*	
130	90458-1344		2	NON HEATED CONNECTION 45°, 972 647	
V50V0010	90604-3320		1	HOT MELT UNIT PROBLUE 4, 104 9296 H1	
	90602-5788		*1*	*REBUILING KIT, PUMP 1:6, 110 0297*	
	90459-1989		*1*	*CHASSIS, P4, 1099401*	
	90459-1988		*1*	*SUB BASE P4, 1021661*	
	90459-1987		*1*	*SERVICE KIT, PNEUM. PANEL ASSY, 1028307*	
	90459-1986		*1*	*FILTER ASSY, 100 MESH, 1028305*	
	90459-1985		*1*	*SERVICE KIT, PUMP PISTON, 1028304*	
	90459-1984		*1*	*KIT, PUMP PISTON, 1028303*	
	90459-1983		*1*	*HEATER BLOCK KIT, 1064649*	
	90459-1982		*1*	*SERVICE KIT, PRESS. DISC. VALVE, 1028308*	
	90459-1981		*1*	*SERVICE KIT, MANIFOLD ASSY, 1028309*	
	90459-1980		*1*	*SERVICE KIT, MANIFOLD ASSY, 106 4651*	
	90459-1979		*1*	*SERV. KIT, THERMOSTAT, 1028321*	
	90459-1978		*1*	*KIT, RTD TEMP. SENSOR, 1028320*	
	90459-1977		*1*	*SERVICE KIT, TANK P4, 1051033*	
	90459-1976		*1*	*KIT, OPERATOR PANEL/ ENCLOSURE, 1028326*	
	90459-1975		*1*	*DISPLAY, CPU BOARD SERV. KIT, 1028325*	
	90459-1974		*1*	*FUSE KIT, MAIN CIRC.BOARD, 1028329*	
	90459-1973		*1*	*MAIN PCA SERV.KIT, 1028322*	
	90459-1972		*1*	*FUSE KIT, HOSE/GUN, 1028331*	
	90459-1971		*1*	*HOSE/GUN MODULE KIT, 1028328*	
V50V0330	90459-6329		1	MODULE SOLIDBLUE A, 1052927	
V50V0340	90459-6329		1	MODULE SOLIDBLUE A, 1052927	
WAINSIDE RINF U-FORM, WAINSIDE RINF Z-FORM, WASIDE RINF U-FORM, WASIDE RINF Z-FORM (See drawing on page: 3-132)					
030	90439-0236		8	SATURN RIGHT-ANGLE NOZZLE, 1011012	
050	90600-7806		4	RTD HOT MELT HOSE AWW, 1088273	
110	90459-6328		4	HOT MELT GUN, SOLIDBLUE A, 1060939	
	342921-0111		*1*	*STRAIGHT COUPLING,EXT.THREAD 6/4-M5*	
	90459-6331		*1*	*FILTER KIT, MESH M14, 104 5506*	
	90459-2231		*1*	*CORDSET, WATER WASH W. EYELET, 223 804*	
	90439-0238		*1*	*HEATING ELEMENT*	
130	90458-1344		6	NON HEATED CONNECTION 45°, 972 647	
V50V0010	90604-9645		1	HOT MELT UNIT PROBLUE 4, 104 9297 H1	
	90459-1989		*1*	*CHASSIS, P4, 1099401*	
	90459-1988		*1*	*SUB BASE P4, 1021661*	
	90459-1987		*1*	*SERVICE KIT, PNEUM. PANEL ASSY, 1028307*	
	90459-1986		*1*	*FILTER ASSY, 100 MESH, 1028305*	
	90459-1985		*1*	*SERVICE KIT, PUMP PISTON, 1028304*	
	90459-1984		*1*	*KIT, PUMP PISTON, 1028303*	
	90459-1983		*1*	*HEATER BLOCK KIT, 1064649*	
	90459-1982		*1*	*SERVICE KIT, PRESS. DISC. VALVE, 1028308*	
	90459-1981		*1*	*SERVICE KIT, MANIFOLD ASSY, 1028309*	
	90459-1980		*1*	*SERVICE KIT, MANIFOLD ASSY, 106 4651*	
	90459-1979		*1*	*SERV. KIT, THERMOSTAT, 1028321*	
	90459-1978		*1*	*KIT, RTD TEMP. SENSOR, 1028320*	
	90459-1977		*1*	*SERVICE KIT, TANK P4, 1051033*	
	90459-1976		*1*	*KIT, OPERATOR PANEL/ ENCLOSURE, 1028326*	
	90459-1975		*1*	*DISPLAY, CPU BOARD SERV. KIT, 1028325*	
	90459-1974		*1*	*FUSE KIT, MAIN CIRC.BOARD, 1028329*	
	90459-1973		*1*	*MAIN PCA SERV.KIT, 1028322*	
	90459-1972		*1*	*FUSE KIT, HOSE/GUN, 1028331*	
	90459-1971		*1*	*HOSE/GUN MODULE KIT, 1028328*	
1	*90602-5788*		*1*	*REBUILING KIT, PUMP 1:6, 110 0297*	
V50V0330	90459-6329		1	MODULE SOLIDBLUE A, 1052927	
V50V0340	90459-6329		1	MODULE SOLIDBLUE A, 1052927	
V50V0350	90459-6329		1	MODULE SOLIDBLUE A, 1052927	
V50V0351	90459-6329		1	MODULE SOLIDBLUE A, 1052927	
V50V0360	90459-6329		1	MODULE SOLIDBLUE A, 1052927	
V50V0361	90459-6329		1	MODULE SOLIDBLUE A, 1052927	
WASIDE LINF U-FORM, WAINSIDE LINF U-FORM, WAINSIDE LINF Z-FORM, WASIDE LINF Z-FORM (See drawing on page: 3-134)					
030	90439-0236		8	SATURN RIGHT-ANGLE NOZZLE, 1011012	
050	90458-1745		3	RTD HOT MELT HOSE, 276740	
055	90459-1325		1	RTD HOT MELT HOSE, 276741	
110	90459-6328		4	HOT MELT GUN, SOLIDBLUE A, 1060939	
	342921-0111		*1*	*STRAIGHT COUPLING,EXT.THREAD 6/4-M5*	
	90459-6331		*1*	*FILTER KIT, MESH M14, 104 5506*	
	90459-2231		*1*	*CORDSET, WATER WASH W. EYELET, 223 804*	
	90439-0238		*1*	*HEATING ELEMENT*	

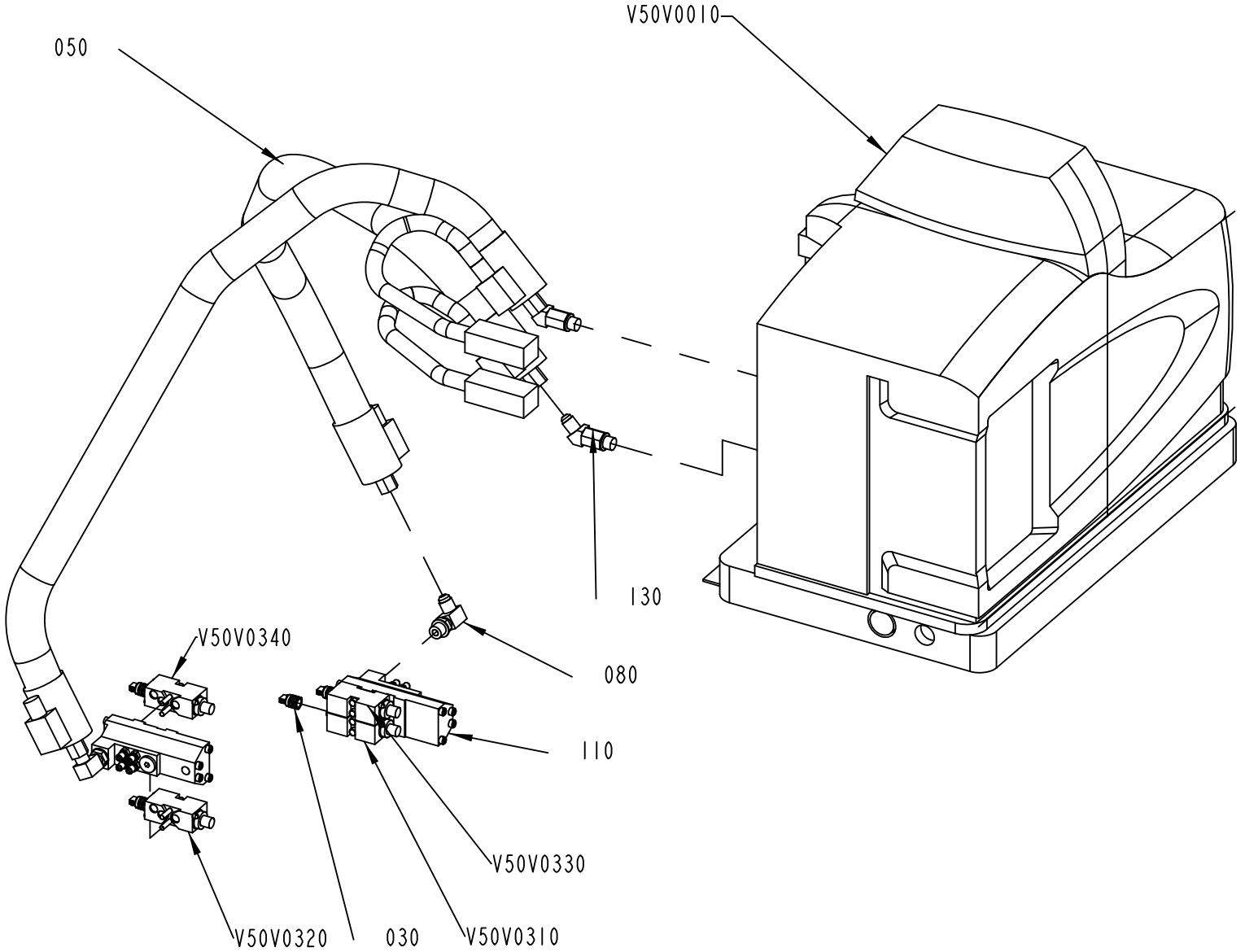

2752733-15
555186

Pos	Part No	UN	Qty	Description	Page No
WASIDE LINF U-FORM, WAINSIDE LINF U-FORM, WAINSIDE LINF Z-FORM, WASIDE LINF Z-FORM (Cont'd)					
(See drawing on page: 3-134)					
130	90458-1344		2	NON HEATED CONNECTION 45°, 972 647	
140	90439-0241		4	ELBOW CONNECTION, 972646	
V50V0010	90604-9645		1	HOT MELT UNIT PROBLUE 4, 104 9297 H1	
	90459-1989		*1*	*CHASSIS, P4, 1099401*	
	90459-1988		*1*	*SUB BASE P4, 1021661*	
	90459-1987		*1*	*SERVICE KIT, PNEUM. PANEL ASSY, 1028307*	
	90459-1986		*1*	*FILTER ASSY, 100 MESH, 1028305*	
	90459-1985		*1*	*SERVICE KIT, PUMP PISTON, 1028304*	
	90459-1984		*1*	*KIT, PUMP PISTON, 1028303*	
	90459-1983		*1*	*HEATER BLOCK KIT, 1064649*	
	90459-1982		*1*	*SERVICE KIT, PRESS. DISC. VALVE, 1028308*	
	90459-1981		*1*	*SERVICE KIT, MANIFOLD ASSY, 1028309*	
	90459-1980		*1*	*SERVICE KIT, MANIFOLD ASSY, 106 4651*	
	90459-1979		*1*	*SERV. KIT, THERMOSTAT, 1028321*	
	90459-1978		*1*	*KIT, RTD TEMP. SENSOR, 1028320*	
	90459-1977		*1*	*SERVICE KIT, TANK P4, 1051033*	
	90459-1976		*1*	*KIT, OPERATOR PANEL/ ENCLOSURE, 1028326*	
	90459-1975		*1*	*DISPLAY, CPU BOARD SERV. KIT, 1028325*	
	90459-1974		*1*	*FUSE KIT, MAIN CIRC.BOARD, 1028329*	
	90459-1973		*1*	*MAIN PCA SERV.KIT, 1028322*	
	90459-1972		*1*	*FUSE KIT, HOSE/GUN, 1028331*	
	90459-1971		*1*	*HOSE/GUN MODULE KIT, 1028328*	
1	*90602-5788*		*1*	*REBUILING KIT, PUMP 1:6, 110 0297*	
V50V0330	90459-6329		1	MODULE SOLIDBLUE A, 1052927	
V50V0340	90459-6329		1	MODULE SOLIDBLUE A, 1052927	
V50V0350	90459-6329		1	MODULE SOLIDBLUE A, 1052927	
V50V0351	90459-6329		1	MODULE SOLIDBLUE A, 1052927	
V50V0360	90459-6329		1	MODULE SOLIDBLUE A, 1052927	
V50V0361	90459-6329		1	MODULE SOLIDBLUE A, 1052927	
Common Parts					
080	90459-6350		2	90° NIPPLE, SHORT HOSE/GUN, 274 180	
V50V0310	90459-6329		1	MODULE SOLIDBLUE A, 1052927	
V50V0320	90459-6329		1	MODULE SOLIDBLUE A, 1052927	

Pos	Part No	UN	Qty	Description	Page No

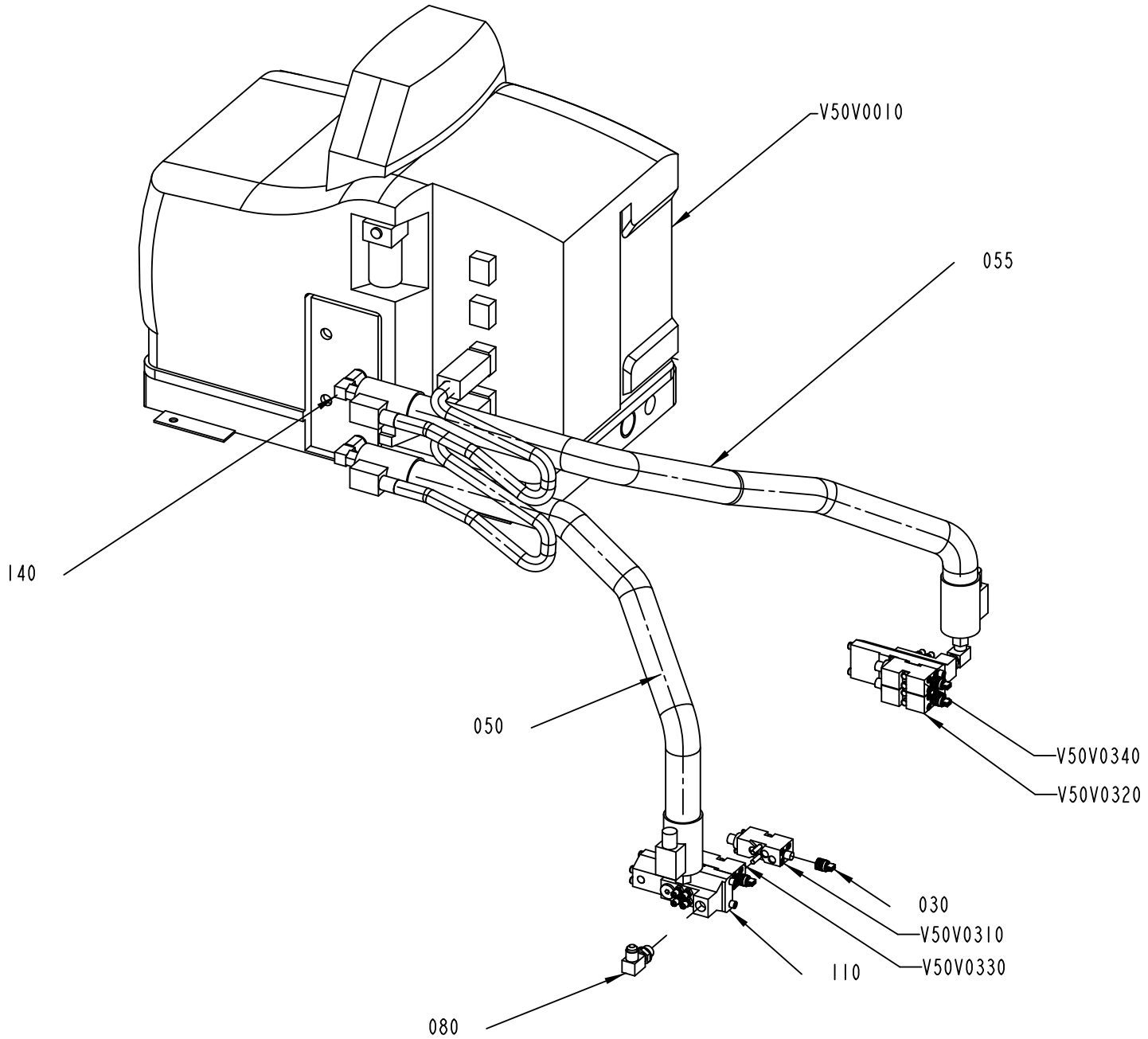

2752733-16
602279

Pos	Part No	UN	Qty	Description	Page No	Pos	Part No	UN	Qty	Description	Page No

SEE PREVIOUS LISTS PAGES: 3-133, 3-135, 3-137.

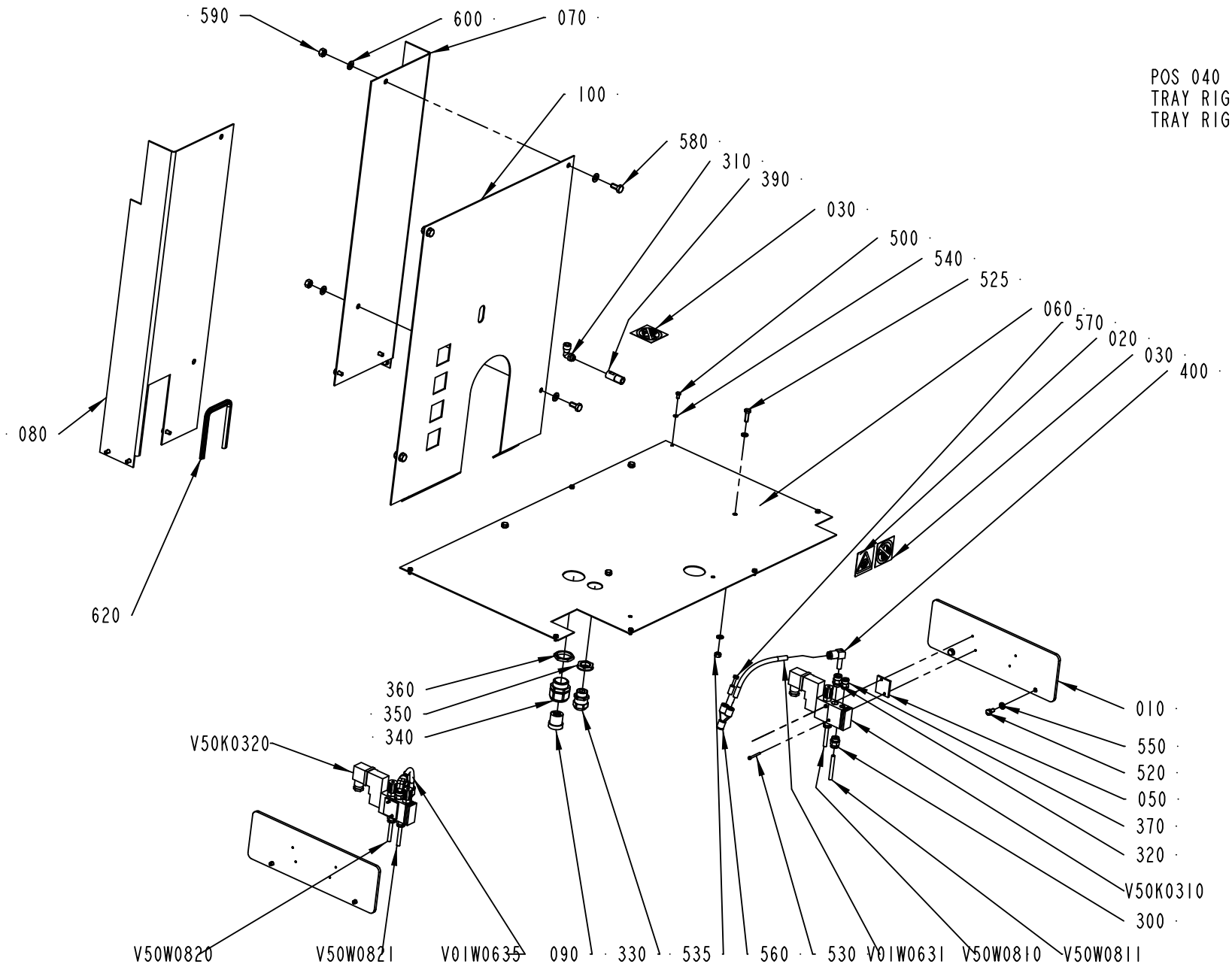

POS 040 IS ONLY USE ON VARIANTS
TRAY RIGHT INFEED Z-FORM
TRAY RIGHT INFEED U-FORM

2752746-7
602279

ECM: 646232 - 20131125
Group number: 2752746-0400
Assembly Drawing: 2752746-7_1_AA

This list covers pages from 3-140 to 3-143

Pos	Part No	UN	Qty	Description	Page No
TRAY LINF U-FORM ANSI, TRAY LINF Z-FORM ANSI (See drawing on page: 3-142)					
020	359725-0121		1	WARNING SIGN ANSI, HEAT ENERGY	
060	3297492-0000		1	BOTTOM PANEL	
070	3297493-0000		1	GUARD PLATE	
080	3272883-0000		1	GUARD PLATE	
100	3297489-0000		1	GUARD PLATE	
120	3297491-0000		1	PLATE	
500	312105-0287		4	SCREW, M6S ISO 4017 M4X8 A4 70	
520	312105-0366		10	SCREW, M6S ISO 4017 M6X12 A4 80	
535	312605-0316		5	HEXAGON NUT, M6M M6 A280	
540	315105-0136		4	WASHER PLAIN, 4,3X9X0,8 A4 BRB	
550	315105-0153		26	WASHER PLAIN, 6,4X12X1,5 A4 BRB	
620	90143-0060	MM	43	EDGE STRIP 9,5X6,3MM BLACK PVC	
630	312105-0368		5	SCREW, M6S ISO 4017 M6X16 A4 80	
640	90143-0060	MM	741	EDGE STRIP 9,5X6,3MM BLACK PVC	
650	90143-0060	MM	131	EDGE STRIP 9,5X6,3MM BLACK PVC	
660	90143-0060	MM	78	EDGE STRIP 9,5X6,3MM BLACK PVC	
TRAY LINF U-FORM ISO, TRAY LINF Z-FORM ISO (See drawing on page: 3-142)					
020	1128844-0000		1	CAUTION SIGN	
060	3297492-0000		1	BOTTOM PANEL	
070	3297493-0000		1	GUARD PLATE	
080	3272883-0000		1	GUARD PLATE	
100	3297489-0000		1	GUARD PLATE	
120	3297491-0000		1	PLATE	
500	312105-0287		4	SCREW, M6S ISO 4017 M4X8 A4 70	
520	312105-0366		10	SCREW, M6S ISO 4017 M6X12 A4 80	
535	312605-0316		5	HEXAGON NUT, M6M M6 A280	
540	315105-0136		4	WASHER PLAIN, 4,3X9X0,8 A4 BRB	
550	315105-0153		26	WASHER PLAIN, 6,4X12X1,5 A4 BRB	
620	90143-0060	MM	43	EDGE STRIP 9,5X6,3MM BLACK PVC	
630	312105-0368		5	SCREW, M6S ISO 4017 M6X16 A4 80	
640	90143-0060	MM	741	EDGE STRIP 9,5X6,3MM BLACK PVC	
650	90143-0060	MM	131	EDGE STRIP 9,5X6,3MM BLACK PVC	
660	90143-0060	MM	78	EDGE STRIP 9,5X6,3MM BLACK PVC	
TRAY RINF U-FORM ANSI, TRAY RINF Z-FORM ANSI (See drawing on page: 3-140)					
020	359725-0121		1	WARNING SIGN ANSI, HEAT ENERGY	
040	2557262-0000		1	COVERING PLATE	
060	2920762-0000		1	PLATE	
070	2721919-0000		1	PROTECTION PLATE	
080	2894984-0000		1	PROTECTION PLATE	
100	2682031-0000		1	PROTECTION PLATE	
500	312105-0287		7	SCREW, M6S ISO 4017 M4X8 A4 70	
520	312105-0366		15	SCREW, M6S ISO 4017 M6X12 A4 80	
535	312605-0316		1	HEXAGON NUT, M6M M6 A280	
540	315105-0136		7	WASHER PLAIN, 4,3X9X0,8 A4 BRB	
550	315105-0153		20	WASHER PLAIN, 6,4X12X1,5 A4 BRB	
620	90143-0060	MM	265	EDGE STRIP 9,5X6,3MM BLACK PVC	
TRAY RINF U-FORM ISO, TRAY RINF Z-FORM ISO (See drawing on page: 3-140)					
020	1128844-0000		1	CAUTION SIGN	
040	2557262-0000		1	COVERING PLATE	
060	2920762-0000		1	PLATE	
070	2721919-0000		1	PROTECTION PLATE	
080	2894984-0000		1	PROTECTION PLATE	
100	2682031-0000		1	PROTECTION PLATE	
500	312105-0287		7	SCREW, M6S ISO 4017 M4X8 A4 70	
520	312105-0366		15	SCREW, M6S ISO 4017 M6X12 A4 80	
535	312605-0316		1	HEXAGON NUT, M6M M6 A280	
540	315105-0136		7	WASHER PLAIN, 4,3X9X0,8 A4 BRB	
550	315105-0153		20	WASHER PLAIN, 6,4X12X1,5 A4 BRB	
620	90143-0060	MM	265	EDGE STRIP 9,5X6,3MM BLACK PVC	
TRAYOVER LINF U-FORM ANSI, WAMEETING LINF U-FORM ANSI, TRAYOVER LINF Z-FORM ANSI, WAMEETING LINF Z-FORM ANSI, WAINSIDE LINF U-FORM ANSI, WASIDE LINF U-FORM ANSI, WAINSIDE LINF Z-FORM ANSI, WASIDE LINF Z-FORM ANSI (See drawing on page: 3-142)					
020	359725-0121		1	WARNING SIGN ANSI, HEAT ENERGY	
060	3297492-0000		1	BOTTOM PANEL	
070	3297490-0000		1	PROTECTION PLATE	
080	3272884-0000		1	GUARD PLATE	
100	3297489-0000		1	GUARD PLATE	
120	3297491-0000		1	PLATE	
500	312105-0287		4	SCREW, M6S ISO 4017 M4X8 A4 70	
520	312105-0366		10	SCREW, M6S ISO 4017 M6X12 A4 80	
535	312605-0316		5	HEXAGON NUT, M6M M6 A280	
540	315105-0136		4	WASHER PLAIN, 4,3X9X0,8 A4 BRB	
550	315105-0153		24	WASHER PLAIN, 6,4X12X1,5 A4 BRB	
620	90143-0060	MM	43	EDGE STRIP 9,5X6,3MM BLACK PVC	
630	312105-0368		5	SCREW, M6S ISO 4017 M6X16 A4 80	
640	90143-0060	MM	741	EDGE STRIP 9,5X6,3MM BLACK PVC	
650	90143-0060	MM	131	EDGE STRIP 9,5X6,3MM BLACK PVC	
660	90143-0060	MM	78	EDGE STRIP 9,5X6,3MM BLACK PVC	
TRAYOVER LINF U-FORM ISO, WAMEETING LINF U-FORM ISO, TRAYOVER LINF Z-FORM ISO, WAMEETING LINF Z-FORM ISO, WAINSIDE LINF U-FORM ISO, WAINSIDE LINF Z-FORM ISO, WASIDE LINF U-FORM ISO, WASIDE LINF Z-FORM ISO (See drawing on page: 3-142)					
020	1128844-0000		1	CAUTION SIGN	
060	3297492-0000		1	BOTTOM PANEL	

Machine Type | Group Description | Used-In | Group Number | Page No

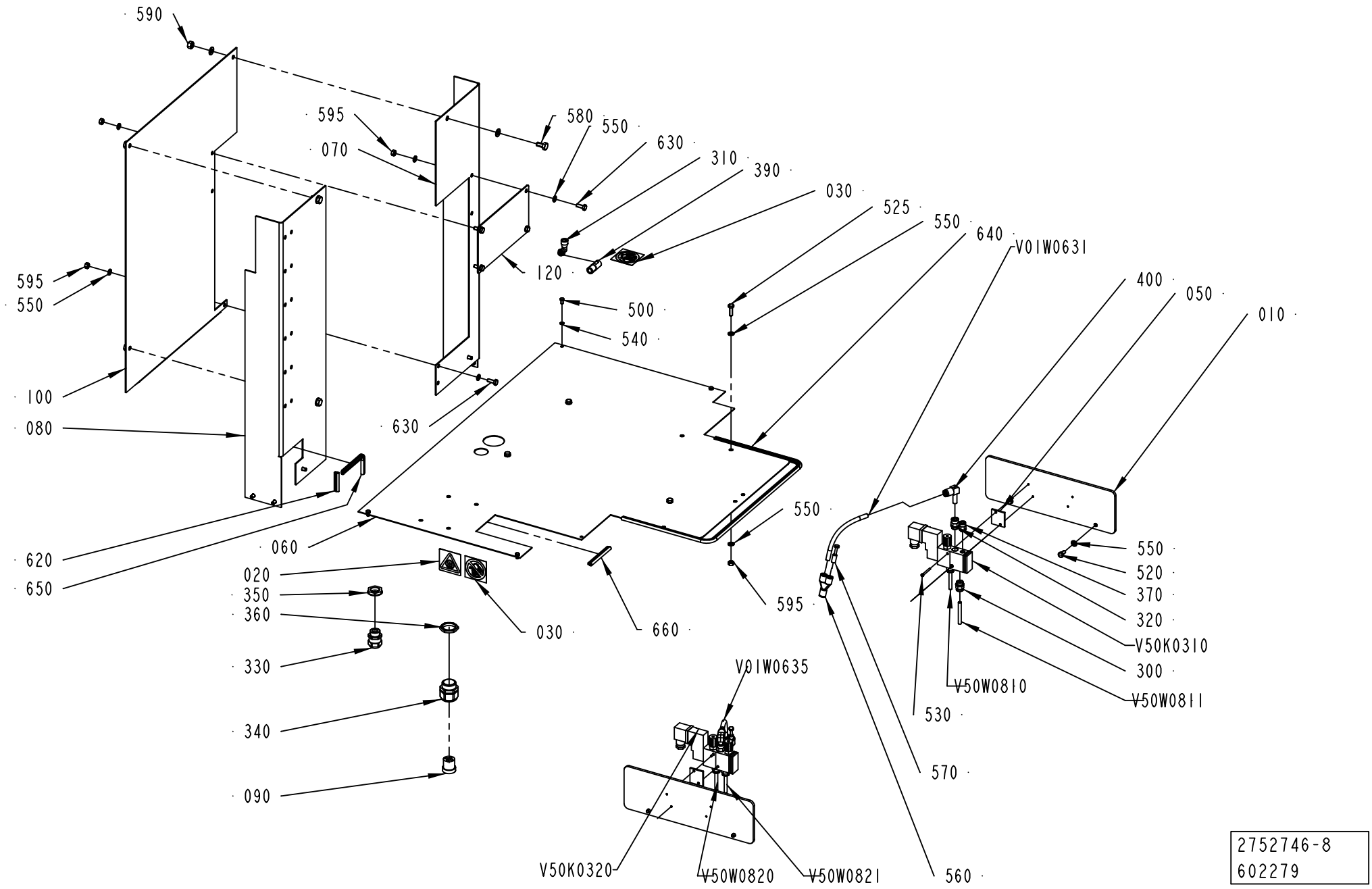
590
595
070
580
550
630
310
390
030
525
550
640
V01W0631
595
550
120
500
540
400
050
010
100
080
630
620
650
060
020
350
360
330
340
090
030
660
550
595
550
520
370
320
V50K0310
300
V50W0811
V50W0810
530
570
560
V01W0635
V50K0320
V50W0820
V50W0821
2752746-8
602279

Pos	Part No	UN	Qty	Description	Page No
TRAYOVER LINF U-FORM ISO, WAMEETING LINF U-FORM ISO, TRAYOVER LINF Z-FORM ISO, WAMEETING LINF Z-FORM ISO, WAINSIDE LINF U-FORM ISO, WAINSIDE LINF Z-FORM ISO, WASIDE LINF U-FORM ISO, WASIDE LINF Z-FORM ISO (Cont'd) (See drawing on page: 3-142)					
070	3297490-0000		1	PROTECTION PLATE	
080	3272884-0000		1	GUARD PLATE	
100	3297489-0000		1	GUARD PLATE	
120	3297491-0000		1	PLATE	
500	312105-0287		4	SCREW, M6S ISO 4017 M4X8 A4 70	
520	312105-0366		10	SCREW, M6S ISO 4017 M6X12 A4 80	
535	312605-0316		5	HEXAGON NUT, M6M M6 A280	
540	315105-0136		4	WASHER PLAIN, 4,3X9X0,8 A4 BRB	
550	315105-0153		24	WASHER PLAIN, 6,4X12X1,5 A4 BRB	
620	90143-0060	MM	43	EDGE STRIP 9,5X6,3MM BLACK PVC	
630	312105-0368		5	SCREW, M6S ISO 4017 M6X16 A4 80	
640	90143-0060	MM	741	EDGE STRIP 9,5X6,3MM BLACK PVC	
650	90143-0060	MM	131	EDGE STRIP 9,5X6,3MM BLACK PVC	
660	90143-0060	MM	78	EDGE STRIP 9,5X6,3MM BLACK PVC	
TRAYOVER RINF U-FORM ANSI, TRAYOVER RINF Z-FORM ANSI, WAMEETING RINF U-FORM ANSI, WAMEETING RINF Z-FORM ANSI, WAINSIDE RINF U-FORM ANSI, WAINSIDE RINF Z-FORM ANSI, WASIDE RINF U-FORM ANSI, WASIDE RINF Z-FORM ANSI (See drawing on page: 3-140)					
020	359725-0121		1	WARNING SIGN ANSI, HEAT ENERGY	
060	2920762-0000		1	PLATE	
070	2721917-0000		1	PROTECTION PLATE	
080	2894976-0000		1	PROTECTION PLATE	
100	2682031-0000		1	PROTECTION PLATE	
500	312105-0287		7	SCREW, M6S ISO 4017 M4X8 A4 70	
520	312105-0366		11	SCREW, M6S ISO 4017 M6X12 A4 80	
535	312605-0316		1	HEXAGON NUT, M6M M6 A280	
540	315105-0136		7	WASHER PLAIN, 4,3X9X0,8 A4 BRB	
550	315105-0153		19	WASHER PLAIN, 6,4X12X1,5 A4 BRB	
620	90143-0060	MM	265	EDGE STRIP 9,5X6,3MM BLACK PVC	
TRAYOVER RINF U-FORM ISO, TRAYOVER RINF Z-FORM ISO, WAMEETING RINF U-FORM ISO, WAMEETING RINF Z-FORM ISO, WAINSIDE RINF U-FORM ISO, WAINSIDE RINF Z-FORM ISO, WASIDE RINF U-FORM ISO, WASIDE RINF Z-FORM ISO (See drawing on page: 3-140)					
020	1128844-0000		1	CAUTION SIGN	
060	2920762-0000		1	PLATE	
070	2721917-0000		1	PROTECTION PLATE	
080	2894976-0000		1	PROTECTION PLATE	
100	2682031-0000		1	PROTECTION PLATE	
500	312105-0287		7	SCREW, M6S ISO 4017 M4X8 A4 70	
520	312105-0366		11	SCREW, M6S ISO 4017 M6X12 A4 80	
535	312605-0316		1	HEXAGON NUT, M6M M6 A280	
540	315105-0136		7	WASHER PLAIN, 4,3X9X0,8 A4 BRB	
550	315105-0153		19	WASHER PLAIN, 6,4X12X1,5 A4 BRB	
620	90143-0060	MM	265	EDGE STRIP 9,5X6,3MM BLACK PVC	
Common Parts					
010	2894999-0000		2	PLATE	
030	90459-2265		2	PROHIBITION SIGN ISO, DO NOT WASH	
050	2763037-0000		2	SPACER	
090	2763040-0000		1	INSERT	
300	90600-2719		4	PUSH-IN FITTING KQH06-U02	
310	90458-2964		1	ELBOW PIPE JOINT, EXT.THREAD, D=8MM-G1/8	
320	90600-2720		2	PUSH-IN FITTING KQH08-U02	
330	90458-0315		1	CABLE GLAND, M20X1,5, 5311 1120	
340	353240-0005		1	COMPRESSION GLAND, VK 154Y	
350	90458-0323		1	NUT, M20X1,5	
360	90099-0004		1	NUT	
370	90600-2718		1	PUSH-IN FITTING KQH06-U01	
390	975755-0000		1	ATTACHMENT	
400	90600-1175		2	ELBOW WITH TAILPIECE 8/8 MM	
510	312105-0327		4	SCREW, M6S ISO 4017 M5X12 A4 80	
525	312105-0370		4	SCREW, M6S ISO 4017 M6X20 A4 80	
530	312125-0234		4	SLOTTED HEAD SCREW, ISO1207 M3X30 A4	
560	350015-0003		2	PUSH-IN Y-CONNECTOR QSY-F-8	
570	350013-0003		2	PLUG QSC-8H	
580	312105-0449		4	SCREW, M6S ISO 4017 M8X16 A4 80	
590	312605-0318		4	HEXAGON NUT, M6M M8 A280	
595	312605-0316		4	HEXAGON NUT, M6M M6 A280	
600	315105-0165		6	FWAS080G0-0S, WASHER PLAIN	
V50K0310	90459-6327		1	SOLENOID VALVE, SOLIDBLUE, 1053894	
	90459-6332		*1*	*MUFFLER, 1/8 INCH, 105 8058*	
	90042-0392		*1*	*CONTACT 2 POLE + EARTH*	
V50K0320	90459-6327		1	SOLENOID VALVE, SOLIDBLUE, 1053894	
	90459-6332		*1*	*MUFFLER, 1/8 INCH, 105 8058*	
	90042-0392		*1*	*CONTACT 2 POLE + EARTH*	
V01W0631	315400-0004	MM	500	TUBE PUN-H-8X1,25-BL	
V01W0635	315400-0004	MM	500	TUBE PUN-H-8X1,25-BL	
V50W0810	90166-0202	MM	500	TEFLON PIPE	
V50W0811	90166-0202	MM	500	TEFLON PIPE	
V50W0820	90166-0202	MM	500	TEFLON PIPE	
V50W0821	90166-0202	MM	500	TEFLON PIPE	

Machine Type	Group Description	Used-In	Group Number	Page No

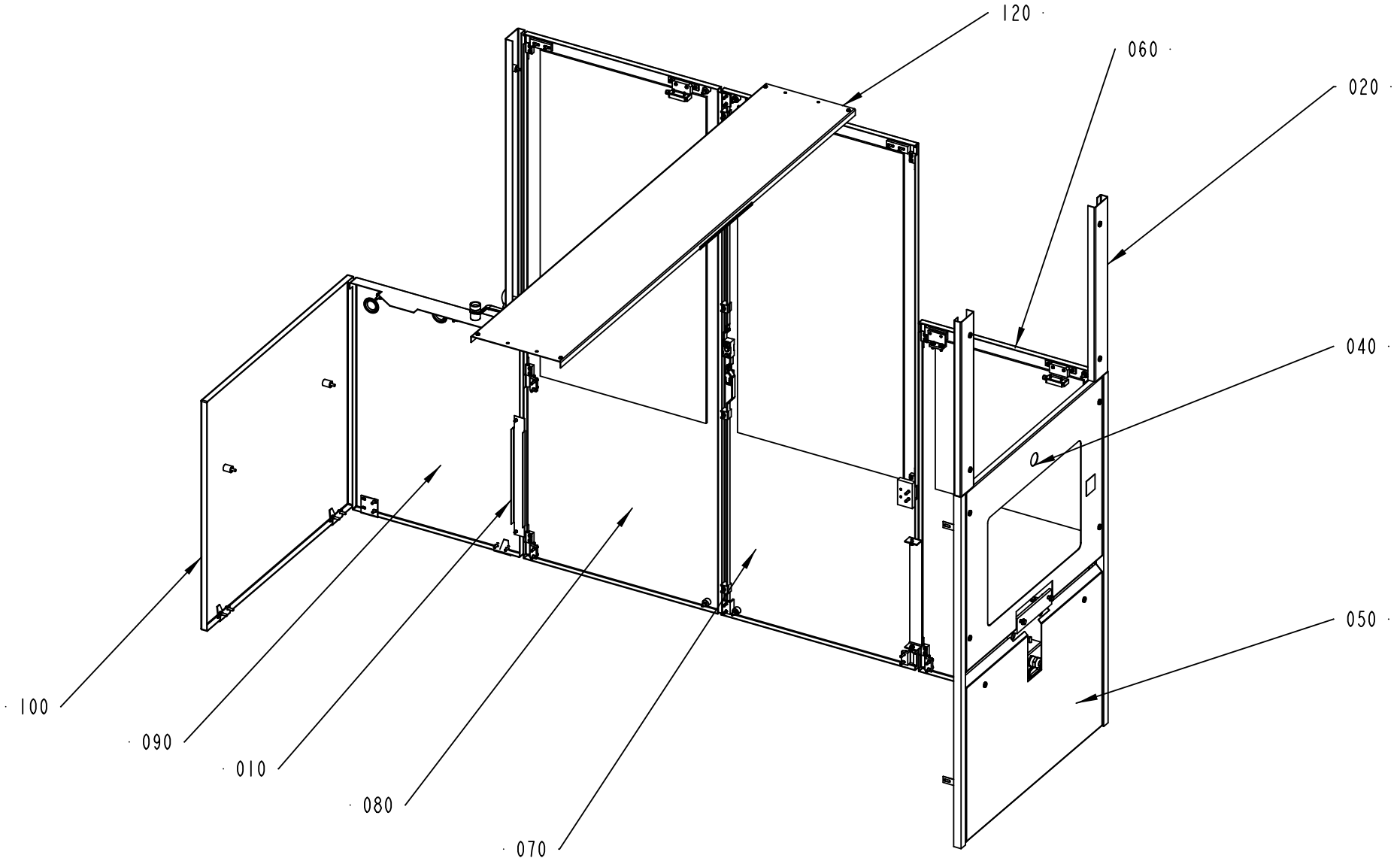

2771151-9
630884

ECM: 646233 - 20131125
Group number: 2771151-0500
Assembly Drawing: 2771151-9_1_AA

This list covers pages from 3-144 to 3-147

Pos	Part No	UN	Qty	Description	Page No
LINF U-FORM (See drawing on page: 3-146)					
060	2870738-0100		1	GLASS DOOR	**3-149**
LINF Z-FORM (See drawing on page: 3-144)					
060	2870738-0100		1	GLASS DOOR	**3-149**
RINF U-FORM (See drawing on page: 3-146)					
060	2870740-0100		1	GLASS DOOR	**3-151**
RINF Z-FORM (See drawing on page: 3-144)					
060	2870740-0100		1	GLASS DOOR	**3-151**
Common Parts					
010	2871974-0200		1	COVERING MISCELLANEOUS	**3-153, 3-155**
020	1021785-0600		1	CORNER STRIP	**3-157, 3-159**
040	3241285-0100		1	COVERING PLATE	**3-161**
050	1021703-0400		1	COVERING PLATE	**3-163**
070	2870742-0100		1	GLASS DOOR	**3-165**
080	2870744-0100		1	GLASS DOOR	**3-167**
090	2870746-0200		1	COVER PLATE	**3-169**
100	3241284-0100		1	COVERING PLATE	**3-171**
120	3046680-0100		1	TOP SECTION	**3-173**

Pos	Part No	UN	Qty	Description	Page No

COVERING TRAY FORMING

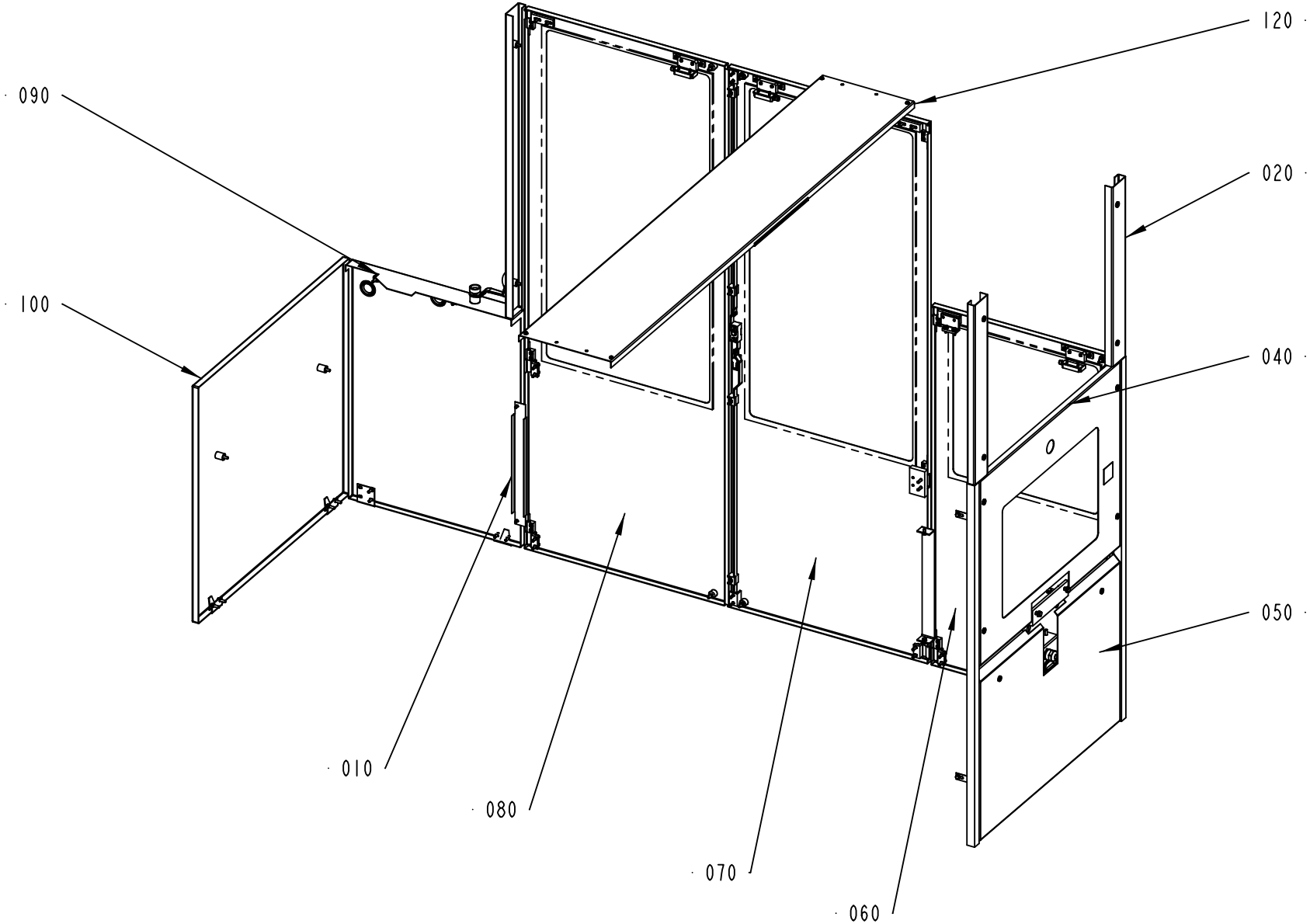

2771151-10
630884

Pos	Part No	UN	Qty	Description	Page No
LINF U-FORM (See drawing on page: 3-146)					
060	2870738-0100		1	GLASS DOOR	**3-149**
LINF Z-FORM (See drawing on page: 3-144)					
060	2870738-0100		1	GLASS DOOR	**3-149**
RINF U-FORM (See drawing on page: 3-146)					
060	2870740-0100		1	GLASS DOOR	**3-151**
RINF Z-FORM (See drawing on page: 3-144)					
060	2870740-0100		1	GLASS DOOR	**3-151**
Common Parts					
010	2871974-0200		1	COVERING MISCELLANEOUS	**3-153, 3-155**
020	1021785-0600		1	CORNER STRIP	**3-157, 3-159**
040	3241285-0100		1	COVERING PLATE	**3-161**
050	1021703-0400		1	COVERING PLATE	**3-163**
070	2870742-0100		1	GLASS DOOR	**3-165**
080	2870744-0100		1	GLASS DOOR	**3-167**
090	2870746-0200		1	COVER PLATE	**3-169**
100	3241284-0100		1	COVERING PLATE	**3-171**
120	3046680-0100		1	TOP SECTION	**3-173**

Pos	Part No	UN	Qty	Description	Page No

GLASS DOOR

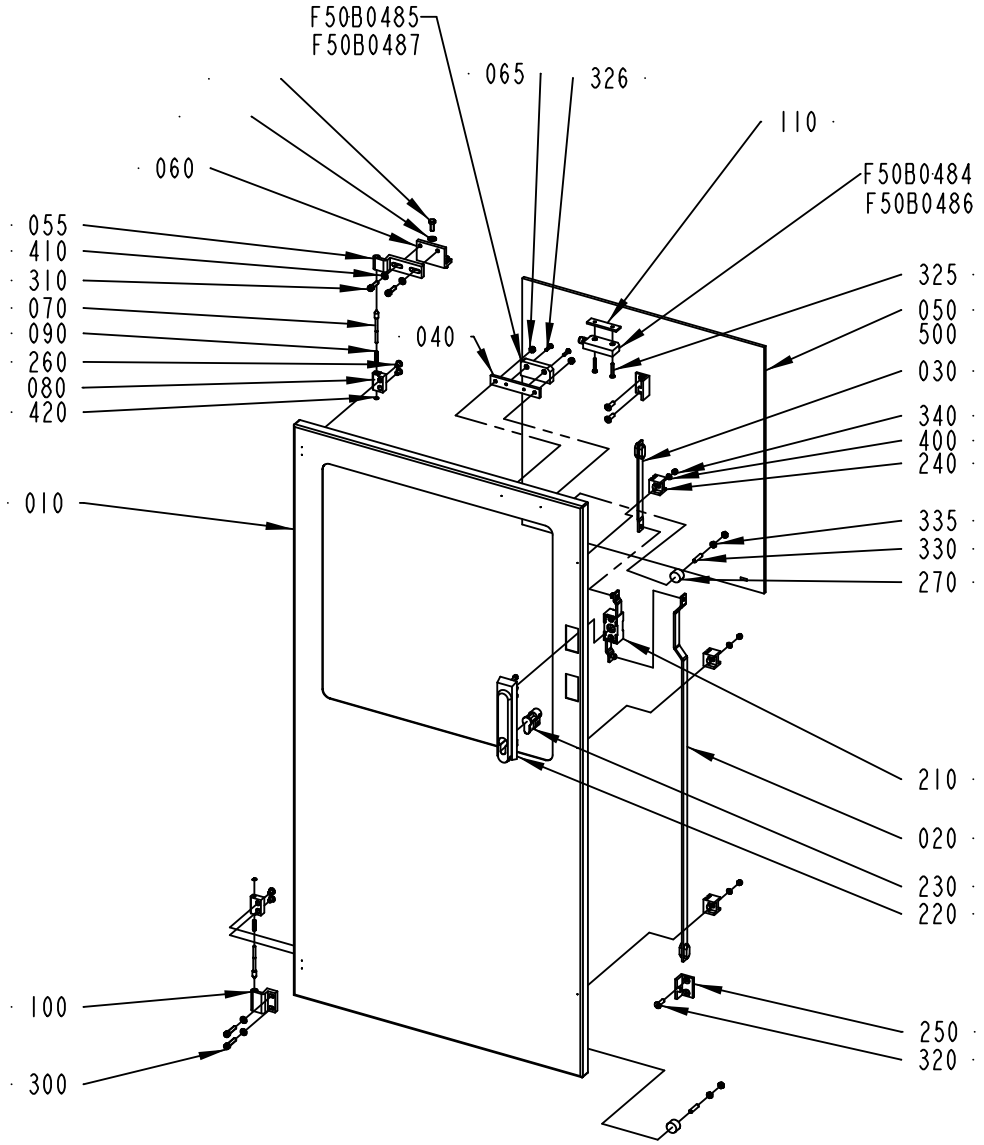

2870738-1
568933

ECM: 577195 - 20120924
Group number: 2870738-0100
Assembly Drawing: 2870738-1_1_AC

Pos	Part No	UN	Qty	Description	Page No
LINF U-FORM, LINF Z-FORM					
F50B0484	90459-4142		1	SAFETY SENSOR, ADAM M12, 20-051-00	
F50B0485	90458-2794		1	SAFETY SENSOR, EVA 20-046-00	
RINF Z-FORM					
F50B0486	90459-4142		1	SAFETY SENSOR, ADAM M12, 20-051-00	
F50B0487	90458-2794		1	SAFETY SENSOR, EVA 20-046-00	
Common Parts					
010	2870739-0000		1	HATCH	
020	2870749-0000		1	STRUT	
030	2870750-0000		1	STRUT	
040	2868042-0000		1	BRACKET	
050	2802466-0011		1	GLASS	
055	975927-0000		1	HINGE FLANGE	
060	2504120-0000		1	BRACKET	
065	575034-0000		2	ROUND NUT	
070	959656-0000		2	COTTER	
080	959657-0000		2	HINGE FLANGE	
090	959658-0000		2	SPRING	
100	975880-0000		1	HINGE FLANGE	
110	2868106-0000		1	WASHER	
210	90237-0123		1	LOCK, 1121-U10C	
220	90237-0175		1	TURNING HANDLE, 1125-U185-0A	
230	90237-0128		1	LOCK CYLINDER, 1109-SU125	
240	90237-0144		3	GUIDE, 1121-SU540	
250	90237-0145		2	CATCH, 1121-53-01P	
260	90287-0205		4	SCREW	
270	90347-0011		2	VIBRATION DAMPER MEGI 781056	
300	312115-0372		2	SCREW ISO4762 M6X25 A4 80	
310	312115-0370		2	SCREW ISO4762 M6X20 A4 80	
315	312105-0368		2	SCREW, M6S ISO 4017 M6X16 A4 80	
320	312155-0370		4	SCREW DIN 7991 MF6S M6X20 A4 70	
325	90459-4165		2	SAFETY SCREW, SM4X25	
326	2872726-0000		2	SCREW	
330	312318-0372		2	SET SCREW, CUP END ISO4029 M6X25 A4	
335	312625-0316		4	HEXAGON THIN NUT, EN 24035 ML6M M6 A4	
340	312812-0314		3	HEXAGON NUT, NY-LOCK M5 A4 80	
400	315105-0146		3	WASHER PLAIN, 5,3X10X1 A4 BRB	
410	315105-0153		4	WASHER PLAIN, 6,4X12X1,5 A4 BRB	
420	315755-0105		2	RETAINING RING SHAFT DIN 6799 3,2 SS	
430	315105-0156		2	WASHER PLAIN, 6,7X14X1,5 A4 BRB	
500	90157-0041	L	0.001	SEALING COMPOUND, RHODORSEAL 5651	

Pos	Part No	UN	Qty	Description	Page No

Machine Type | Group Description | Used-In | Group Number | Page No

GLASS DOOR

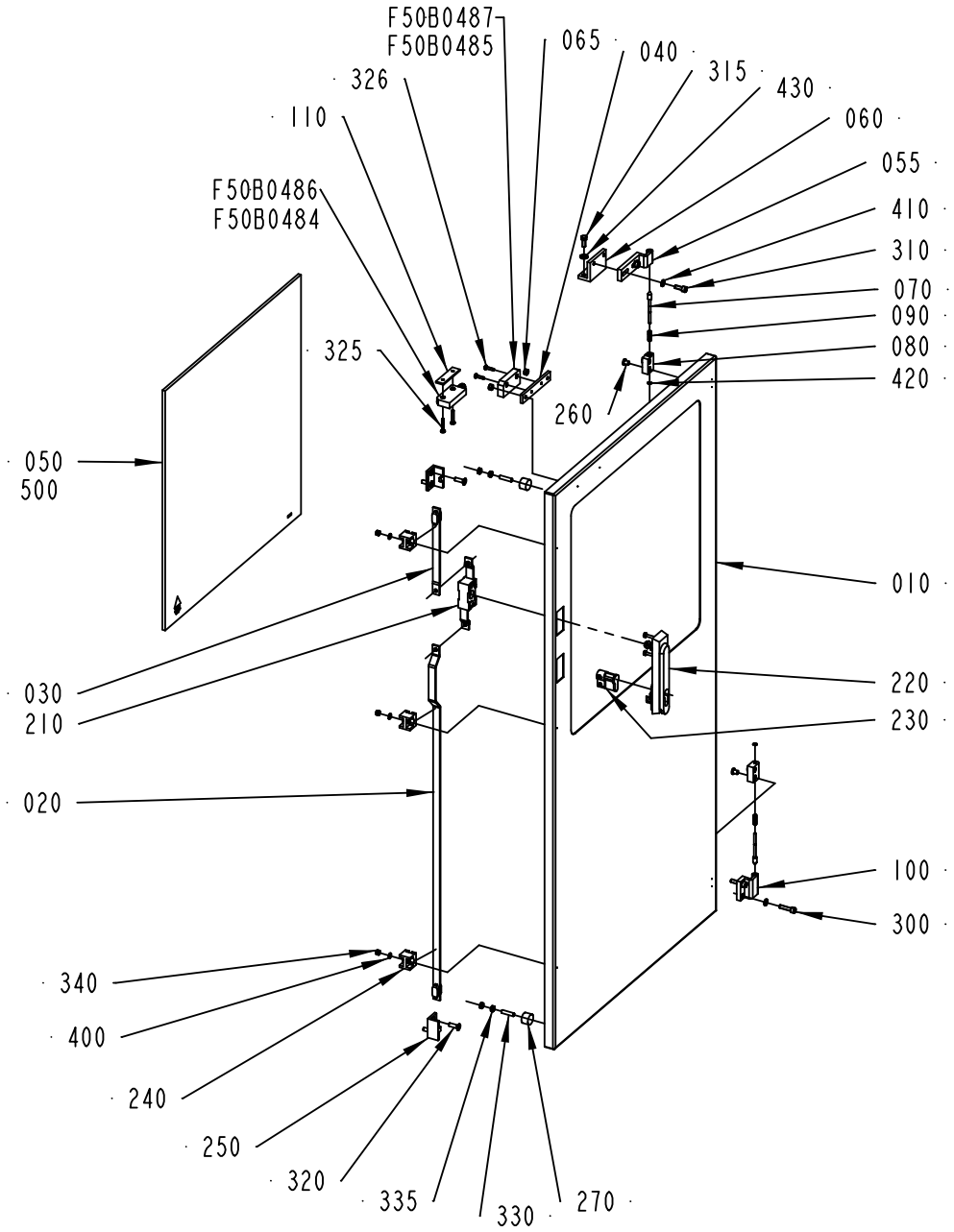

2870740-1
630884

ECM: 646235 - 20131125
Group number: 2870740-0100
Assembly Drawing: 2870740-1_1_AD

Pos	Part No	UN	Qty	Description	Page No
LINF Z-FORM					
F50B0486	90459-4142		1	SAFETY SENSOR, ADAM M12, 20-051-00	
F50B0487	90458-2794		1	SAFETY SENSOR, EVA 20-046-00	
RINF Z-FORM, RINF U-FORM					
F50B0484	90459-4142		1	SAFETY SENSOR, ADAM M12, 20-051-00	
F50B0485	90458-2794		1	SAFETY SENSOR, EVA 20-046-00	
Common Parts					
010	2870741-0000		1	HATCH	
020	2870749-0000		1	STRUT	
030	2870750-0000		1	STRUT	
040	2868042-0000		1	BRACKET	
050	2802466-0011		1	GLASS	
055	975927-0000		1	HINGE FLANGE	
060	2504121-0000		1	BRACKET	
065	575034-0000		2	ROUND NUT	
070	959656-0000		2	COTTER	
080	959657-0000		2	HINGE FLANGE	
090	959658-0000		2	SPRING	
100	975880-0000		1	HINGE FLANGE	
110	2868106-0000		1	WASHER	
210	90237-0123		1	LOCK, 1121-U10C	
220	90237-0175		1	TURNING HANDLE, 1125-U185-0A	
230	90237-0128		1	LOCK CYLINDER, 1109-SU125	
240	90237-0144		3	GUIDE, 1121-SU540	
250	90237-0145		2	CATCH, 1121-53-01P	
260	90287-0205		4	SCREW	
270	90347-0011		2	VIBRATION DAMPER MEGI 781056	
300	312115-0372		2	SCREW ISO4762 M6X25 A4 80	
310	312115-0368		2	SCREW ISO4762 M6X16 A4 80	
315	312105-0368		2	SCREW, M6S ISO 4017 M6X16 A4 80	
320	312155-0370		4	SCREW DIN 7991 MF6S M6X20 A4 70	
325	90459-4165		2	SAFETY SCREW, SM4X25	
326	2872726-0000		2	SCREW	
330	312318-0372		2	SET SCREW, CUP END ISO4029 M6X25 A4	
335	312625-0316		4	HEXAGON THIN NUT, EN 24035 ML6M M6 A4	
340	312812-0314		3	HEXAGON NUT, NY-LOCK M5 A4 80	
400	315105-0146		3	WASHER PLAIN, 5,3X10X1 A4 BRB	
410	315105-0153		4	WASHER PLAIN, 6,4X12X1,5 A4 BRB	
420	315755-0105		2	RETAINING RING SHAFT DIN 6799 3,2 SS	
430	315105-0156		2	WASHER PLAIN, 6,7X14X1,5 A4 BRB	
500	90157-0041	L	0.001	SEALING COMPOUND, RHODORSEAL 5651	

Pos	Part No	UN	Qty	Description	Page No

Machine Type | Group Description | Used-In | Group Number | Page No

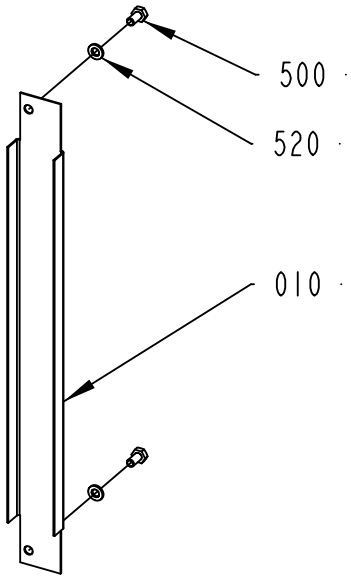

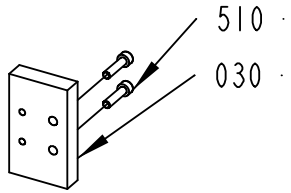

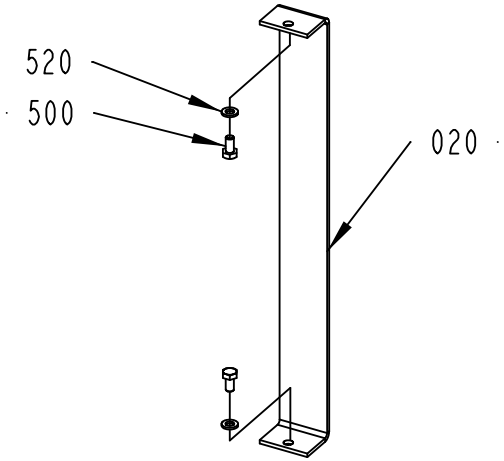

2871974-3
630884

ECM: 646234 - 20131125
Group number: 2871974-0200
Assembly Drawing: 2871974-3_1_AA

This list covers pages from 3-152 to 3-155

Pos	Part No	UN	Qty	Description	Page No
-					
010	2871975-0000		1	COVER SLIP	
020	2871976-0000		1	COVER SLIP	
030	2871977-0000		1	BRACKET	
500	312105-0366		4	SCREW, M6S ISO 4017 M6X12 A4 80	
510	312115-0372		2	SCREW ISO4762 M6X25 A4 80	
520	315105-0153		4	WASHER PLAIN, 6,4X12X1,5 A4 BRB	

Pos	Part No	UN	Qty	Description	Page No

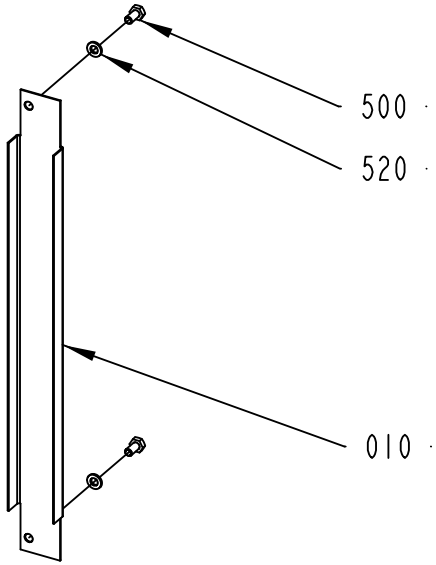

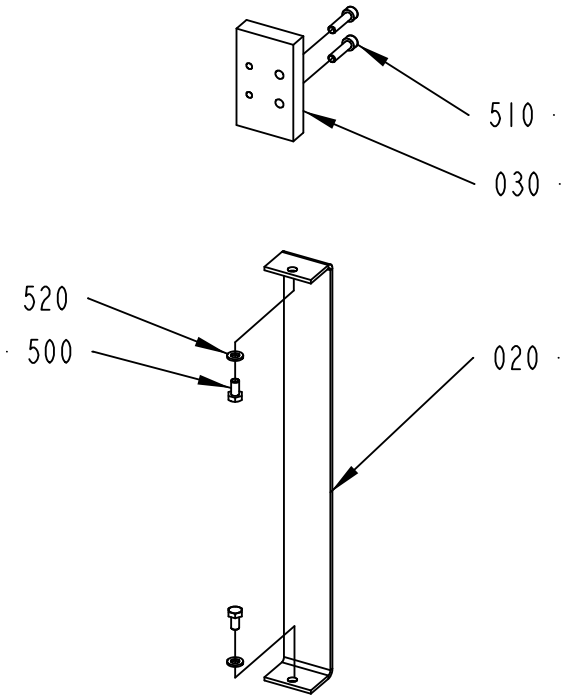

2871974-4
630884

ECM: 646234 - 20131125
Group number: 2871974-0200
Assembly Drawing: 2871974-4_1_AA

This list covers pages from 3-152 to 3-155

Pos	Part No	UN	Qty	Description	Page No
-					
010	2871975-0000		1	COVER SLIP	
020	2871976-0000		1	COVER SLIP	
030	2871977-0000		1	BRACKET	
500	312105-0366		4	SCREW, M6S ISO 4017 M6X12 A4 80	
510	312115-0372		2	SCREW ISO4762 M6X25 A4 80	
520	315105-0153		4	WASHER PLAIN, 6,4X12X1,5 A4 BRB	

Pos	Part No	UN	Qty	Description	Page No

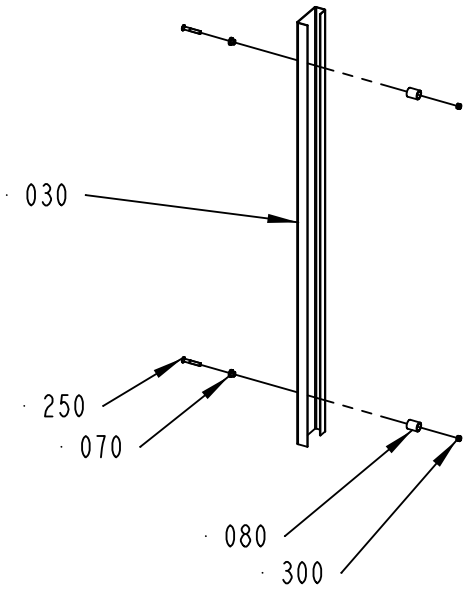

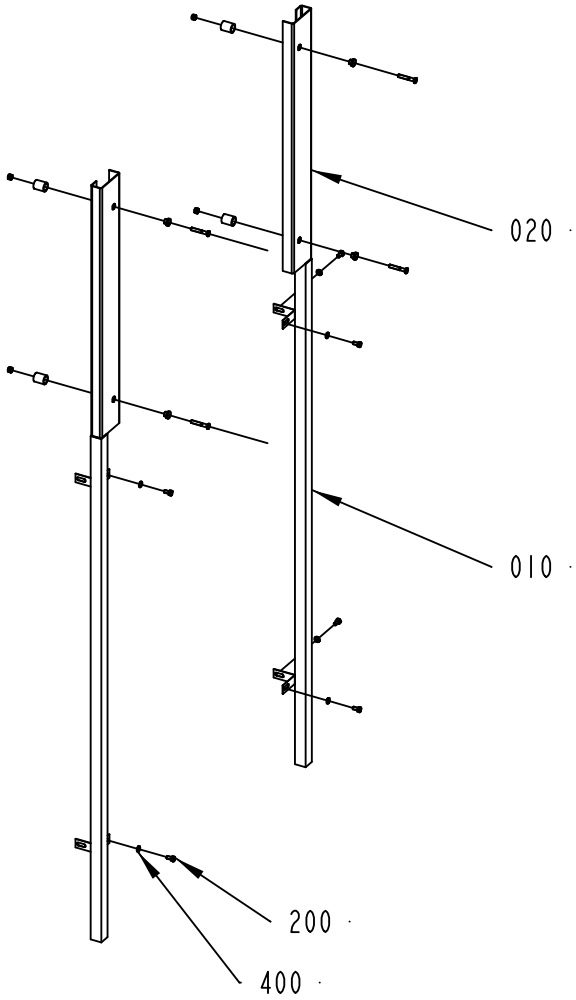

1021785-7
587728

ECM: 589787 - 20121210
Group number: 1021785-0600
Assembly Drawing: 1021785-7_1_AC

This list covers pages from 3-156 to 3-159

Pos	Part No	UN	Qty	Description	Page No
LINF U-FORM (See drawing on page: 3-158)					
200	312105-0366		8	SCREW, M6S ISO 4017 M6X12 A4 80	
400	315105-0153		8	WASHER PLAIN, 6,4X12X1,5 A4 BRB	
LINF Z-FORM (See drawing on page: 3-156)					
200	312105-0366		6	SCREW, M6S ISO 4017 M6X12 A4 80	
400	315105-0153		6	WASHER PLAIN, 6,4X12X1,5 A4 BRB	
RINF U-FORM (See drawing on page: 3-158)					
200	312105-0366		8	SCREW, M6S ISO 4017 M6X12 A4 80	
400	315105-0153		8	WASHER PLAIN, 6,4X12X1,5 A4 BRB	
RINF Z-FORM (See drawing on page: 3-156)					
200	312105-0366		6	SCREW, M6S ISO 4017 M6X12 A4 80	
400	315105-0153		6	WASHER PLAIN, 6,4X12X1,5 A4 BRB	
Common Parts					
010	2592041-0000		2	CORNER STRIP	
020	2877491-0000		2	CORNER STRIP	
030	2995236-0000		1	CORNER STRIP	
070	578196-0000		6	SLEEVE	
080	578197-0000		6	SPACER	
210	312105-0335		4	SCREW, M6S ISO 4014 M5X30 A4 80	
250	312155-0378		6	SCREW DIN 7991 MF6S M6X40 A4 70	
300	312812-0316		6	HEXAGON NUT, NY-LOCK M6 A4 80	
410	315106-0146		4	WASHER PLAIN, M5 ISO7089-5-200 HV A4	

Pos	Part No	UN	Qty	Description	Page No

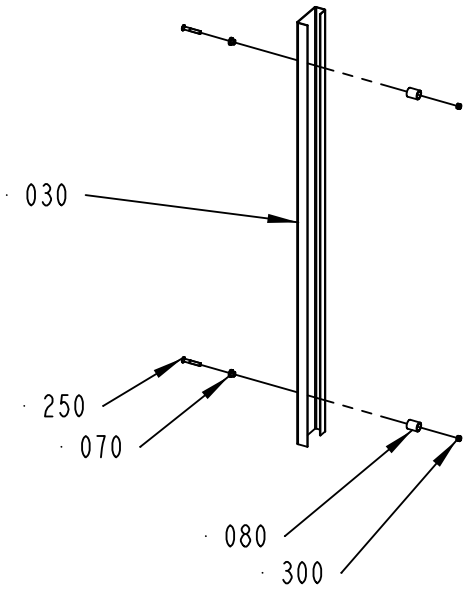

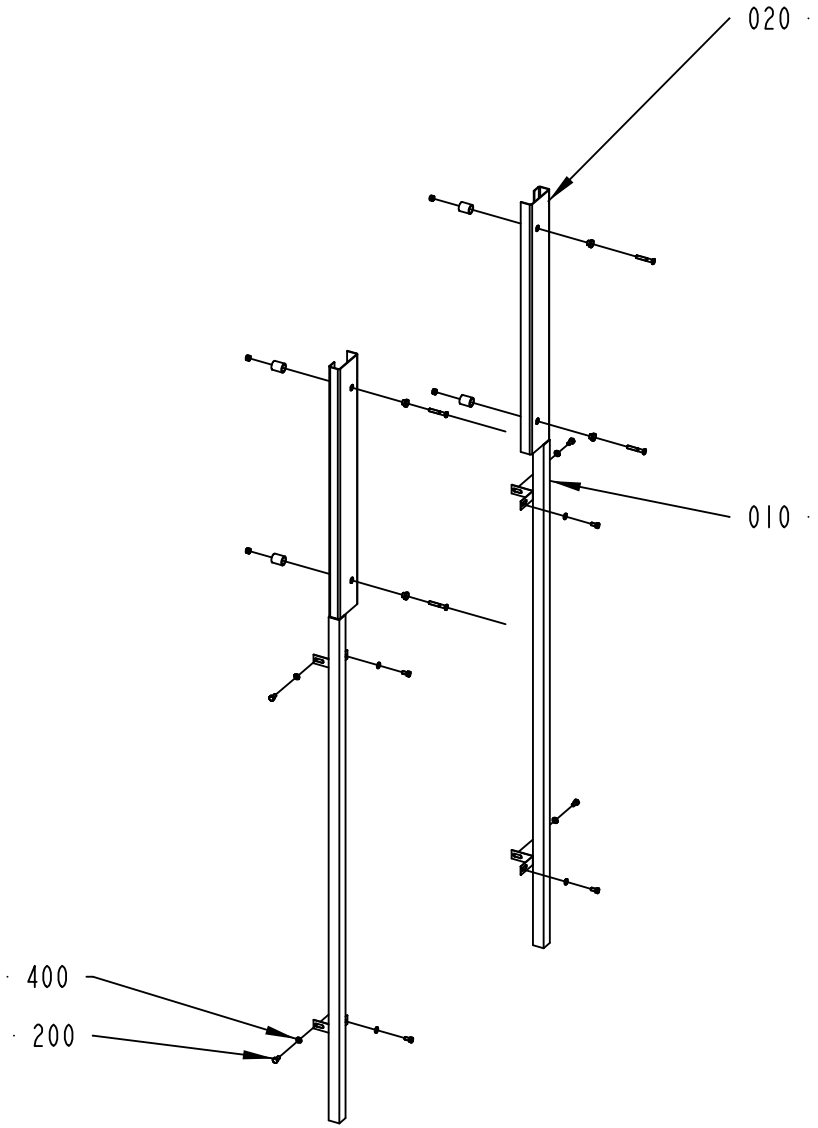

1021785-8
587728

ECM: 589787 - 20121210
Group number: 1021785-0600
Assembly Drawing: 1021785-8_1_AC

This list covers pages from 3-156 to 3-159

Pos	Part No	UN	Qty	Description	Page No
LINF U-FORM (See drawing on page: 3-158)					
200	312105-0366		8	SCREW, M6S ISO 4017 M6X12 A4 80	
400	315105-0153		8	WASHER PLAIN, 6,4X12X1,5 A4 BRB	
LINF Z-FORM (See drawing on page: 3-156)					
200	312105-0366		6	SCREW, M6S ISO 4017 M6X12 A4 80	
400	315105-0153		6	WASHER PLAIN, 6,4X12X1,5 A4 BRB	
RINF U-FORM (See drawing on page: 3-158)					
200	312105-0366		8	SCREW, M6S ISO 4017 M6X12 A4 80	
400	315105-0153		8	WASHER PLAIN, 6,4X12X1,5 A4 BRB	
RINF Z-FORM (See drawing on page: 3-156)					
200	312105-0366		6	SCREW, M6S ISO 4017 M6X12 A4 80	
400	315105-0153		6	WASHER PLAIN, 6,4X12X1,5 A4 BRB	
Common Parts					
010	2592041-0000		2	CORNER STRIP	
020	2877491-0000		2	CORNER STRIP	
030	2995236-0000		1	CORNER STRIP	
070	578196-0000		6	SLEEVE	
080	578197-0000		6	SPACER	
210	312105-0335		4	SCREW, M6S ISO 4014 M5X30 A4 80	
250	312155-0378		6	SCREW DIN 7991 MF6S M6X40 A4 70	
300	312812-0316		6	HEXAGON NUT, NY-LOCK M6 A4 80	
410	315106-0146		4	WASHER PLAIN, M5 ISO7089-5-200 HV A4	

Pos	Part No	UN	Qty	Description	Page No

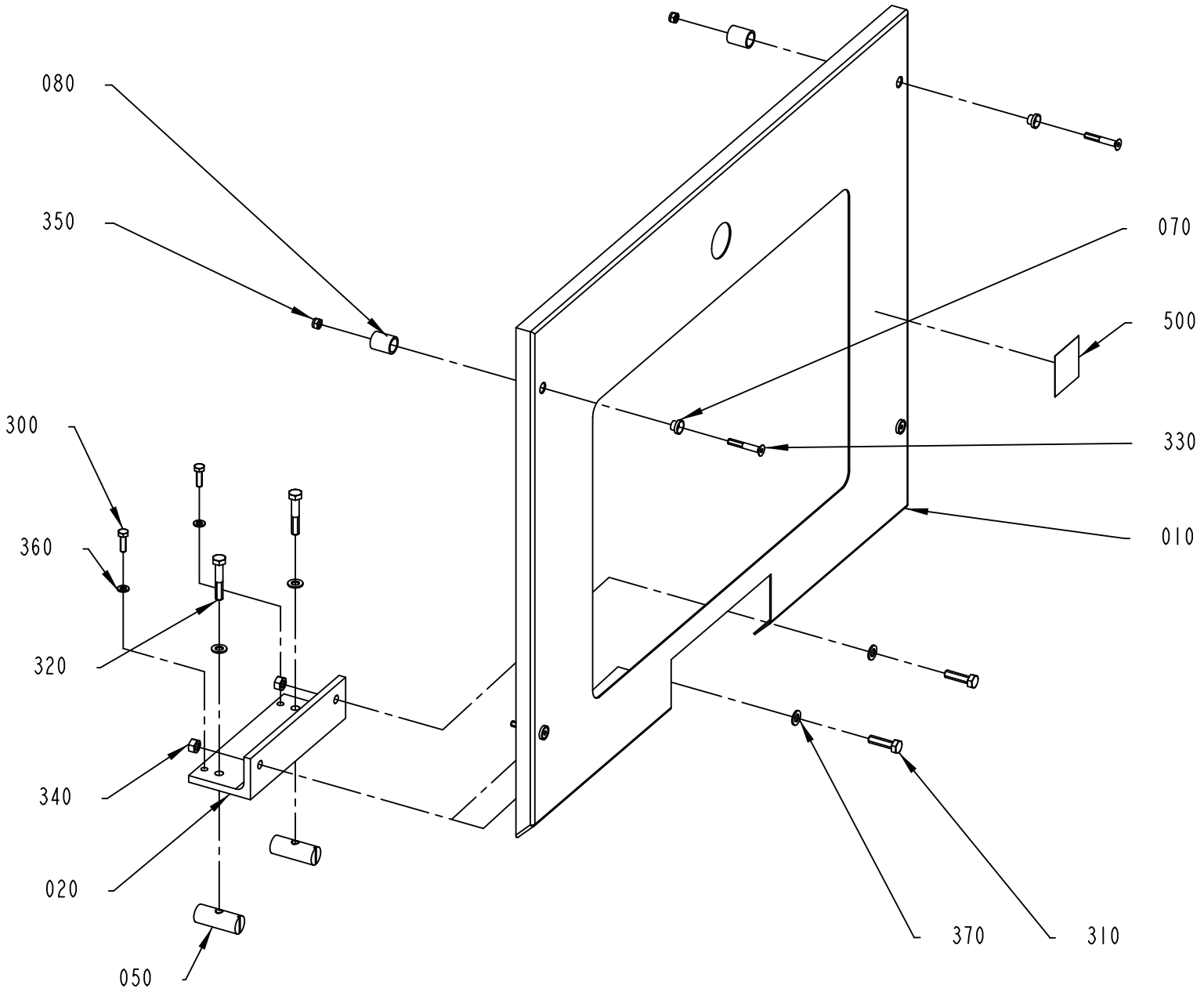

3241285-1
602279

ECM: 614524 - 20130618
Group number: 3241285-0100
Assembly Drawing: 3241285-1_1_AB

Pos	Part No	UN	Qty	Description	Page No
-					
010	3241286-0000		1	PROTECTION PLATE	
020	3186426-0000		1	BRACKET	
050	486268-0000		2	NUT	
070	578196-0000		4	SLEEVE	
080	578197-0000		4	SPACER	
300	312105-0370		2	SCREW, M6S ISO 4017 M6X20 A4 80	
310	312105-0455		2	SCREW, M6S ISO 4017 M8X30 A4 80	
320	312105-0460		2	SCREW, M6S ISO 4014 M8X45 A4 80	
330	312155-0378		4	SCREW DIN 7991 MF6S M6X40 A4 70	
340	312605-0318		2	HEXAGON NUT, M6M M8 A280	
350	312812-0316		4	HEXAGON NUT, NY-LOCK M6 A4 80	
360	315105-0153		2	WASHER PLAIN, 6,4X12X1,5 A4 BRB	
370	315105-0165		4	FWAS080G0-0S, WASHER PLAIN	
500	90459-7584		1	PROHOBITION SIGN ISO, DO NOT REACH IN	

Pos	Part No	UN	Qty	Description	Page No

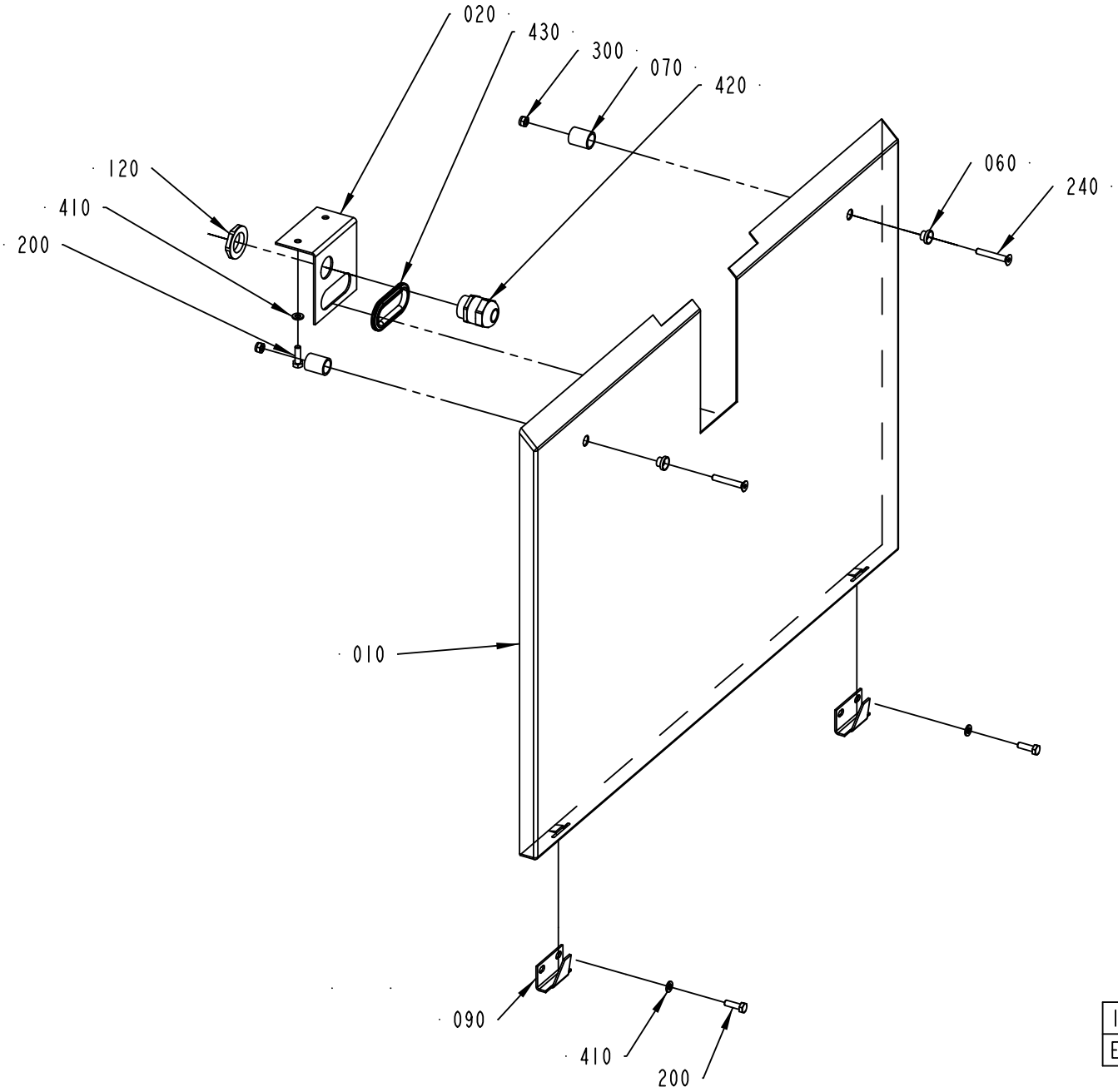

1021703-4
ECM 294896

ECM: 374488 - 20090331
Group number: 1021703-0400
Assembly Drawing: 1021703-4_1_AA

Pos	Part No	UN	Qty	Description	Page No
-					
010	2877493-0000		1	PROTECTION PLATE	
020	2894998-0000		1	BRACKET	
060	578196-0000		2	SLEEVE	
070	578197-0000		2	SPACER	
090	975887-0000		2	CATCH	
120	90458-0324		1	NUT, M25X1,5	
200	312105-0370		6	SCREW, M6S ISO 4017 M6X20 A4 80	
240	312155-0378		2	SCREW DIN 7991 MF6S M6X40 A4 70	
300	312812-0316		2	HEXAGON NUT, NY-LOCK M6 A4 80	
410	315105-0153		6	WASHER PLAIN, 6,4X12X1,5 A4 BRB	
420	90458-0316		1	CABLE GLAND, M25X1,5, 5311 1130	
430	90143-0060	MM	200	EDGE STRIP 9,5X6,3MM BLACK PVC	

Pos	Part No	UN	Qty	Description	Page No

GLASS DOOR

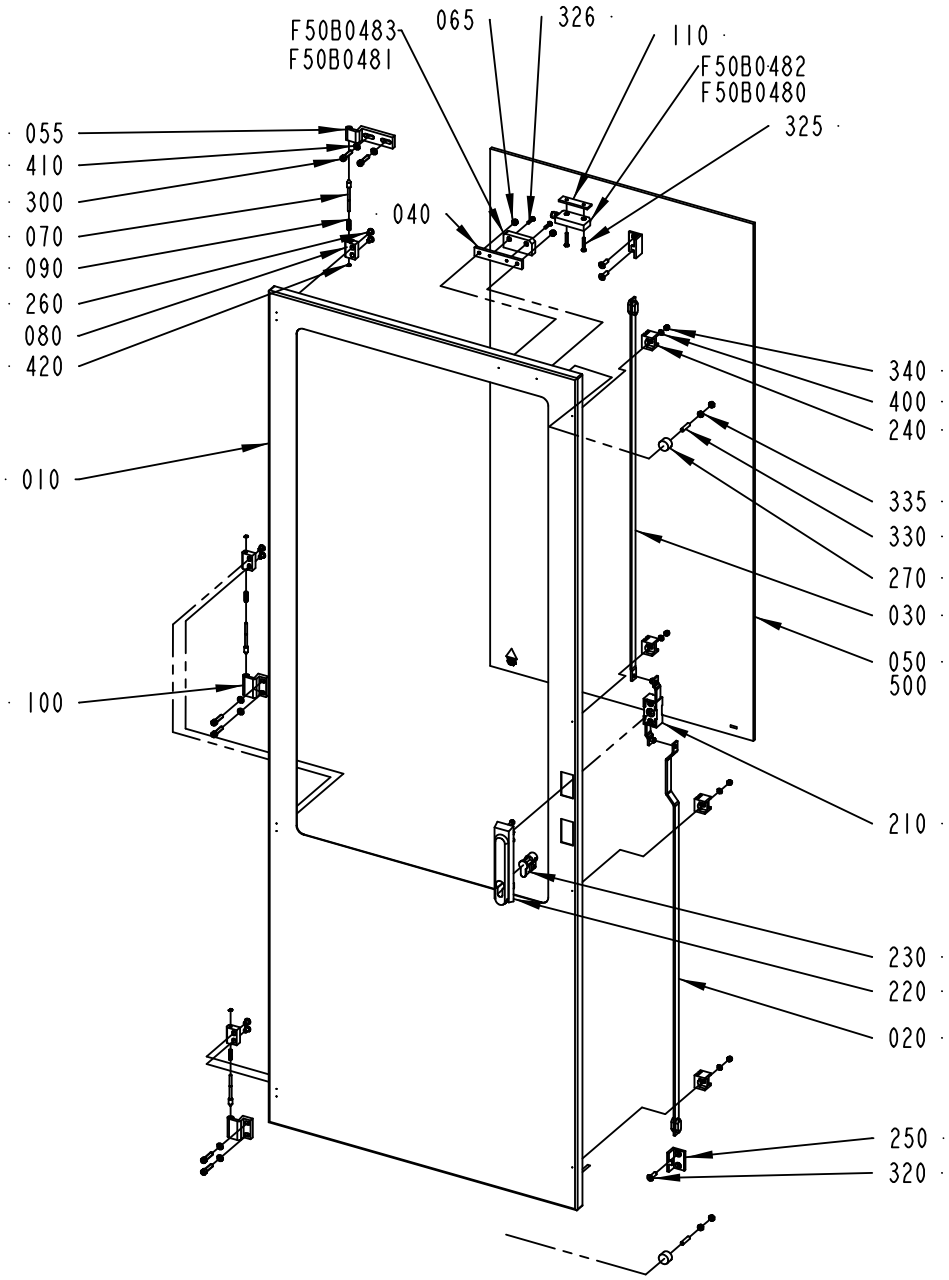

2870742-1
568933

ECM: 577197 - 20120924
Group number: 2870742-0100
Assembly Drawing: 2870742-1_1_AC

Pos	Part No	UN	Qty	Description	Page No
FEEDSIDE = LEFT					
F50B0480	90459-4142		1	SAFETY SENSOR, ADAM M12, 20-051-00	
F50B0481	90458-2794		1	SAFETY SENSOR, EVA 20-046-00	
FEEDSIDE = RIGHT					
F50B0482	90459-4142		1	SAFETY SENSOR, ADAM M12, 20-051-00	
F50B0483	90458-2794		1	SAFETY SENSOR, EVA 20-046-00	
Common Parts					
010	2870743-0000		1	HATCH	
020	2833984-0000		1	STRUT	
030	2833985-0000		1	STRUT	
040	2868042-0000		1	BRACKET	
050	2802466-0012		1	GLASS	
055	975927-0000		1	HINGE FLANGE	
065	575034-0000		2	ROUND NUT	
070	959656-0000		3	COTTER	
080	959657-0000		3	HINGE FLANGE	
090	959658-0000		3	SPRING	
100	975880-0000		2	HINGE FLANGE	
110	2868106-0000		1	WASHER	
210	90237-0123		1	LOCK, 1121-U10C	
220	90237-0175		1	TURNING HANDLE, 1125-U185-0A	
230	90237-0128		1	LOCK CYLINDER, 1109-SU125	
240	90237-0144		4	GUIDE, 1121-SU540	
250	90237-0145		2	CATCH, 1121-53-01P	
260	90287-0205		6	SCREW	
270	90347-0011		2	VIBRATION DAMPER MEGI 781056	
300	312115-0372		6	SCREW ISO4762 M6X25 A4 80	
320	312155-0370		4	SCREW DIN 7991 MF6S M6X20 A4 70	
325	90459-4165		2	SAFETY SCREW, SM4X25	
326	2872726-0000		2	SCREW	
330	312318-0372		2	SET SCREW, CUP END ISO4029 M6X25 A4	
335	312625-0316		4	HEXAGON THIN NUT, EN 24035 ML6M M6 A4	
340	312812-0314		4	HEXAGON NUT, NY-LOCK M5 A4 80	
400	315105-0146		4	WASHER PLAIN, 5,3X10X1 A4 BRB	
410	315105-0153		6	WASHER PLAIN, 6,4X12X1,5 A4 BRB	
420	315755-0105		3	RETAINING RING SHAFT DIN 6799 3,2 SS	
500	90157-0041	L	0.001	SEALING COMPOUND, RHODORSEAL 5651	

Pos	Part No	UN	Qty	Description	Page No

Machine Type | Group Description | Used-In | Group Number | Page No

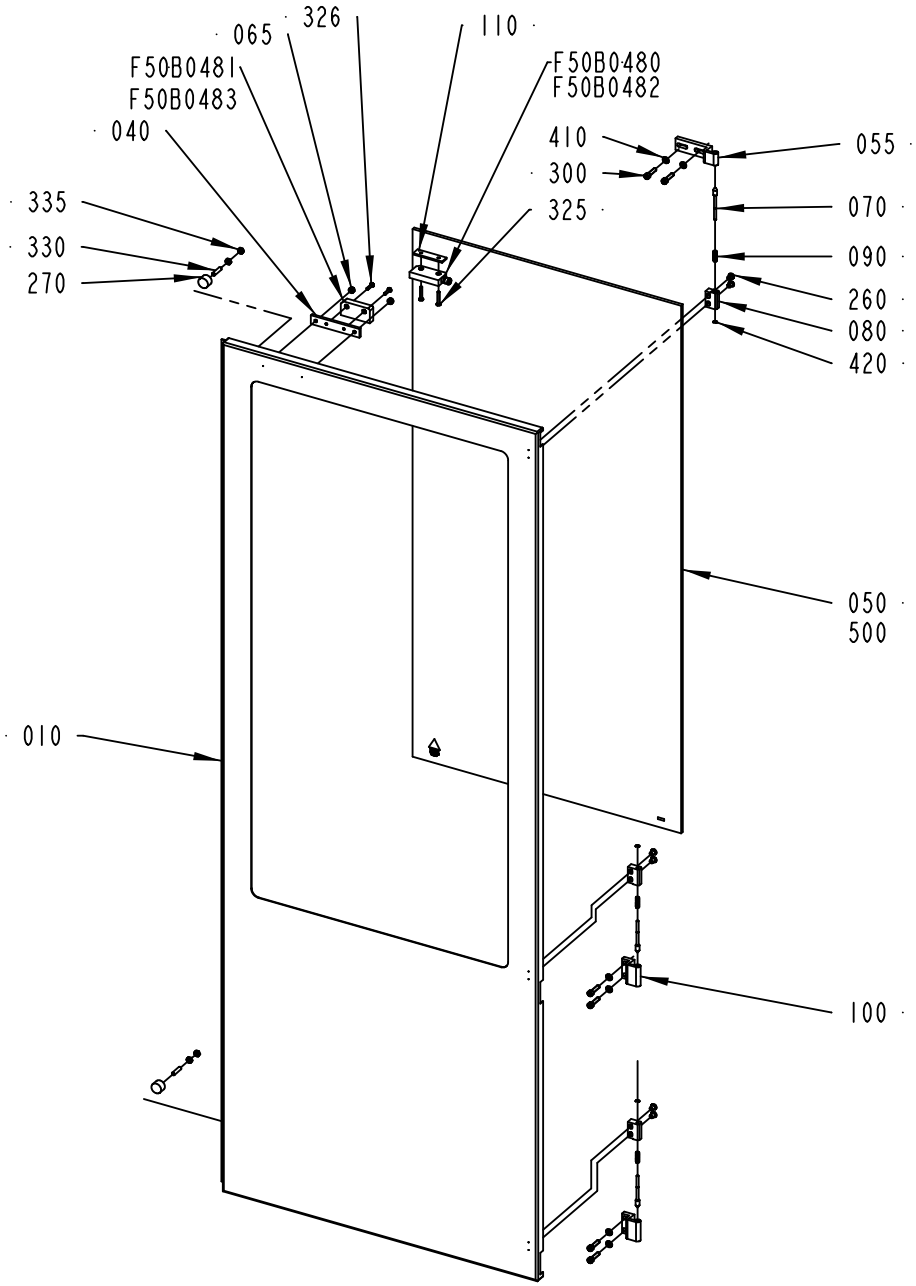

2870744-1
568933

ECM: 577198 - 20120924
Group number: 2870744-0100
Assembly Drawing: 2870744-1_1_AB

Pos	Part No	UN	Qty	Description	Page No
FEEDSIDE = LEFT					
F50B0482	90459-4142		1	SAFETY SENSOR, ADAM M12, 20-051-00	
F50B0483	90458-2794		1	SAFETY SENSOR, EVA 20-046-00	
FEEDSIDE = RIGHT					
F50B0480	90459-4142		1	SAFETY SENSOR, ADAM M12, 20-051-00	
F50B0481	90458-2794		1	SAFETY SENSOR, EVA 20-046-00	
Common Parts					
010	2870745-0000		1	HATCH	
040	2868042-0000		1	BRACKET	
050	2802466-0012		1	GLASS	
055	975927-0000		1	HINGE FLANGE	
065	575034-0000		2	ROUND NUT	
070	959656-0000		3	COTTER	
080	959657-0000		3	HINGE FLANGE	
090	959658-0000		3	SPRING	
100	975880-0000		2	HINGE FLANGE	
110	2868106-0000		1	WASHER	
260	90287-0205		6	SCREW	
270	90347-0011		2	VIBRATION DAMPER MEGI 781056	
300	312115-0372		6	SCREW ISO4762 M6X25 A4 80	
325	90459-4165		2	SAFETY SCREW, SM4X25	
326	2872726-0000		2	SCREW	
330	312318-0372		2	SET SCREW, CUP END ISO4029 M6X25 A4	
335	312625-0316		4	HEXAGON THIN NUT, EN 24035 ML6M M6 A4	
410	315105-0153		6	WASHER PLAIN, 6,4X12X1,5 A4 BRB	
420	315755-0105		3	RETAINING RING SHAFT DIN 6799 3,2 SS	
500	90157-0041	L	0.001	SEALING COMPOUND, RHODORSEAL 5651	

Pos	Part No	UN	Qty	Description	Page No

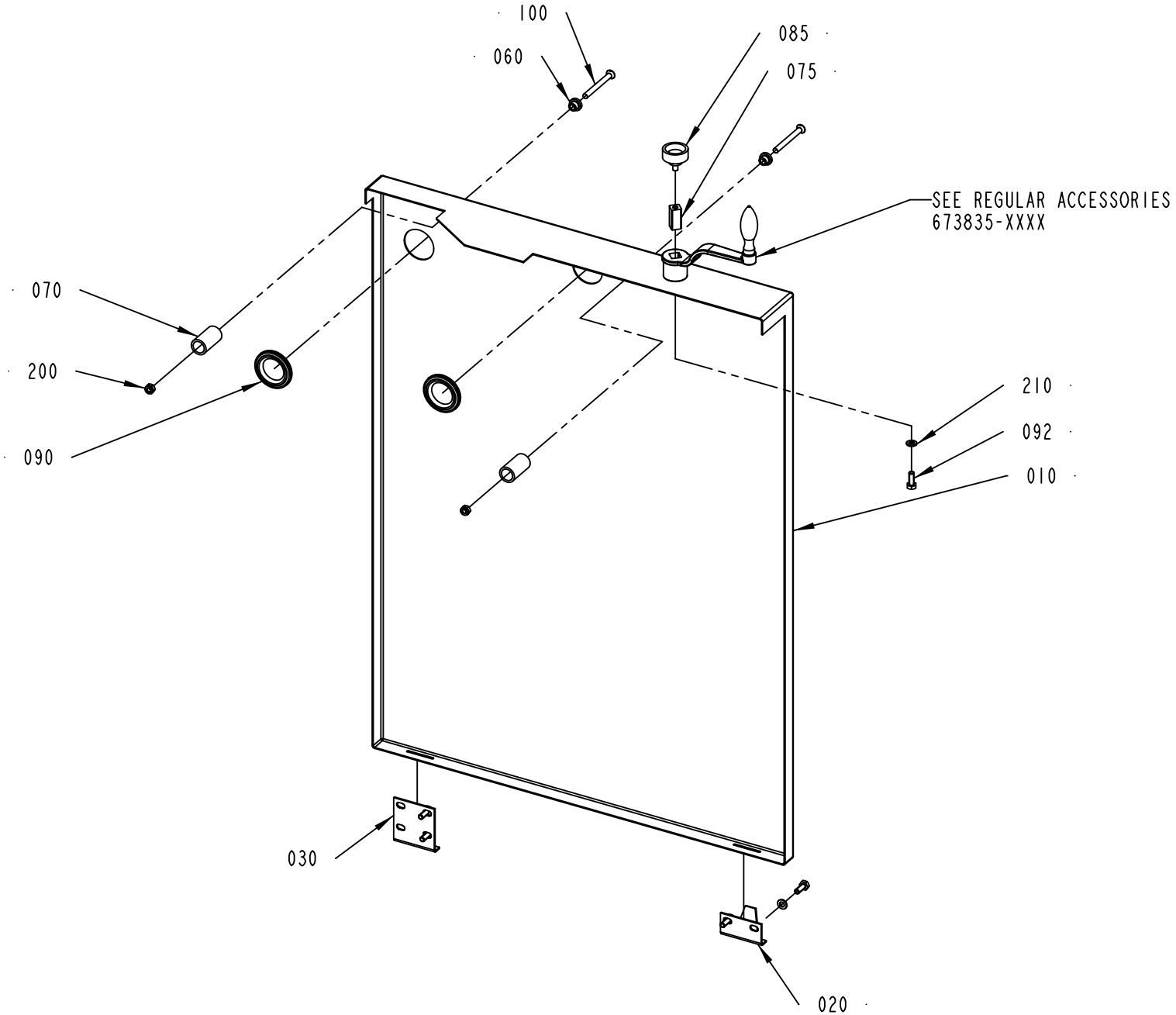

2870746-2
568933

ECM: 577199 - 20120924
Group number: 2870746-0200
Assembly Drawing: 2870746-2_1_AD

Pos	Part No	UN	Qty	Description	Page No
FEEDSIDE = LEFT					
010	2995234-0000		1	PROTECTION PLATE	
FEEDSIDE = RIGHT					
010	2995233-0000		1	PROTECTION PLATE	
Common Parts					
020	975887-0000		1	CATCH	
030	3264170-0000		1	CATCH	
060	578196-0000		2	SLEEVE	
070	2763128-0000		2	SPACER	
075	1466553-0000		1	SPACER	
085	90051-0075		1	KNOB, EXTERNAL THREAD. NO. 8308-1518	
090	90143-0060	M	2	EDGE STRIP 9,5X6,3MM BLACK PVC	
092	312105-0368		5	SCREW, M6S ISO 4017 M6X16 A4 80	
100	312145-0382		2	SCREW ISO 2009 MFS M6X60 A4	
200	312812-0316		2	HEXAGON NUT, NY-LOCK M6 A4 80	
210	315105-0153		5	WASHER PLAIN, 6,4X12X1,5 A4 BRB	

Pos	Part No	UN	Qty	Description	Page No

COVERING PLATE

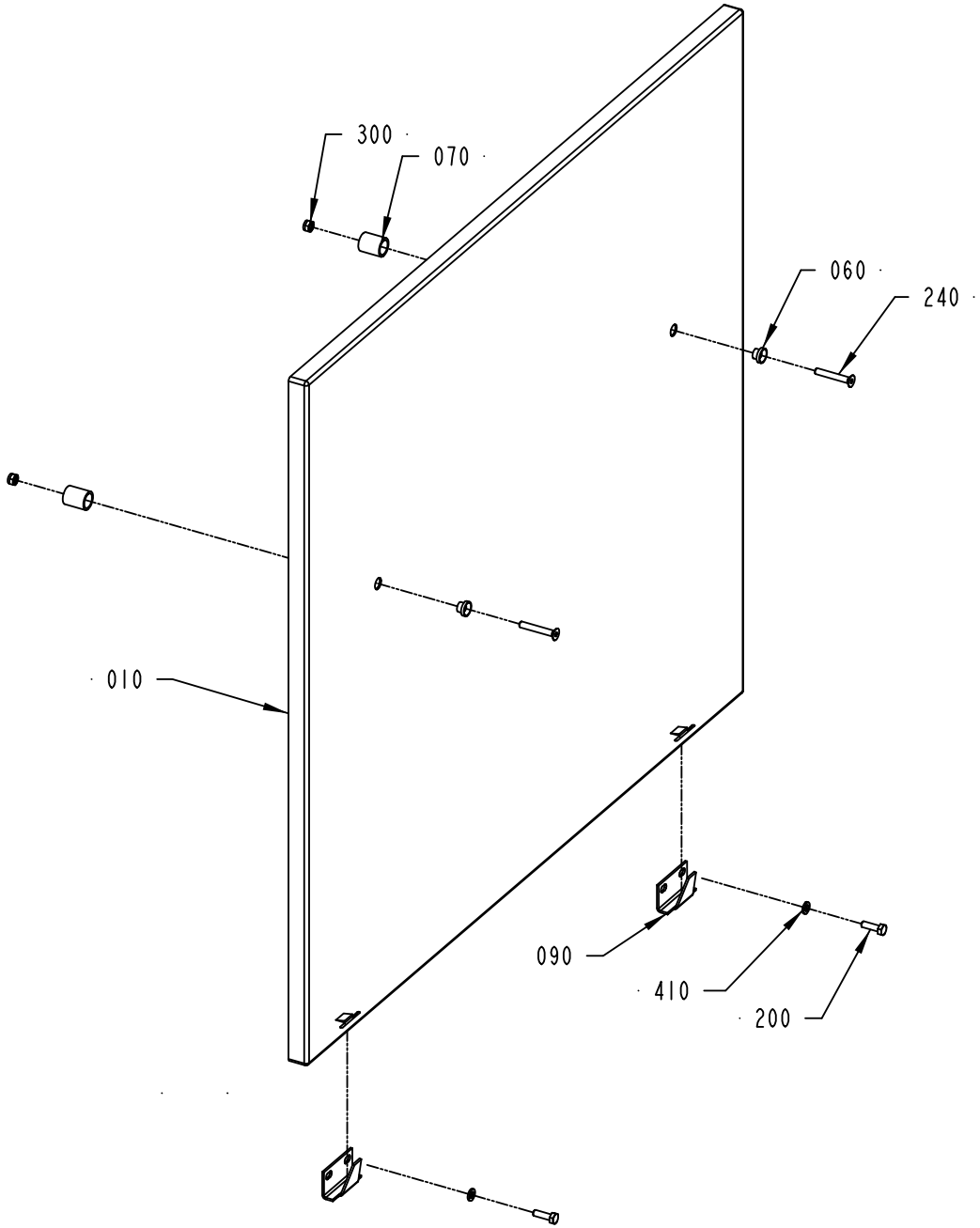

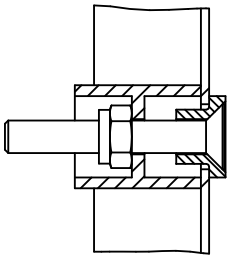

3241284-1
555186

ECM: 567320 - 20120710
Group number: 3241284-0100
Assembly Drawing: 3241284-1_1_AA

Pos	Part No	UN	Qty	Description	Page No
-					
010	3138404-0000		1	PROTECTION PLATE	
060	578196-0000		2	SLEEVE	
070	578197-0000		2	SPACER	
090	975887-0000		2	CATCH	
200	312105-0370		4	SCREW, M6S ISO 4017 M6X20 A4 80	
240	312155-0378		2	SCREW DIN 7991 MF6S M6X40 A4 70	
300	312812-0316		2	HEXAGON NUT, NY-LOCK M6 A4 80	
410	315105-0153		4	WASHER PLAIN, 6,4X12X1,5 A4 BRB	

Pos	Part No	UN	Qty	Description	Page No

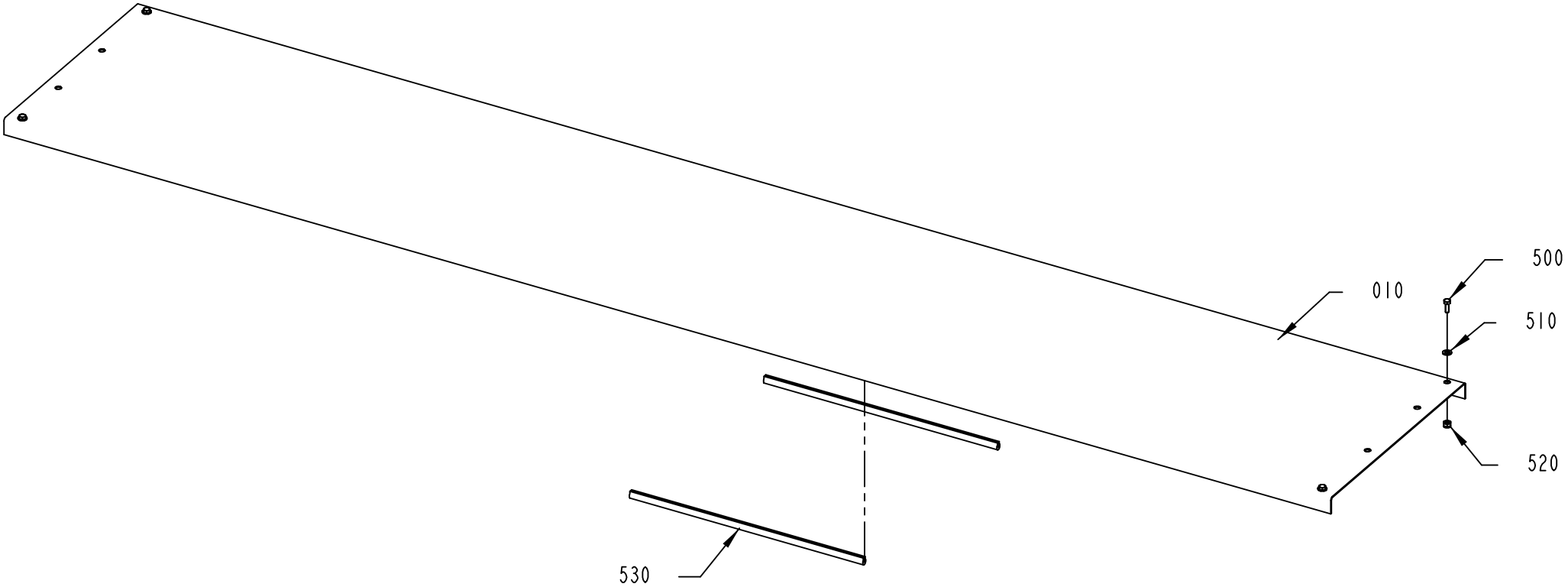

3046680-1
422481

ECM: 428364 - 20100121
Group number: 3046680-0100
Assembly Drawing: 3046680-1_1_AB

Pos	Part No	UN	Qty	Description	Page No
-					
010	3046678-0000		1	SPLASH GUARD	
500	312105-0291		4	SCREW, M6S ISO 4017 M4X12 A4 70	
510	315106-0146		4	WASHER PLAIN, M5 ISO7089-5-200 HV A4	
520	312812-0314		4	HEXAGON NUT, NY-LOCK M5 A4 80	
530	90143-0060	MM	600	EDGE STRIP 9,5X6,3MM BLACK PVC	

Pos	Part No	UN	Qty	Description	Page No

Tetra Pak

SPC
Spare Parts Catalogue

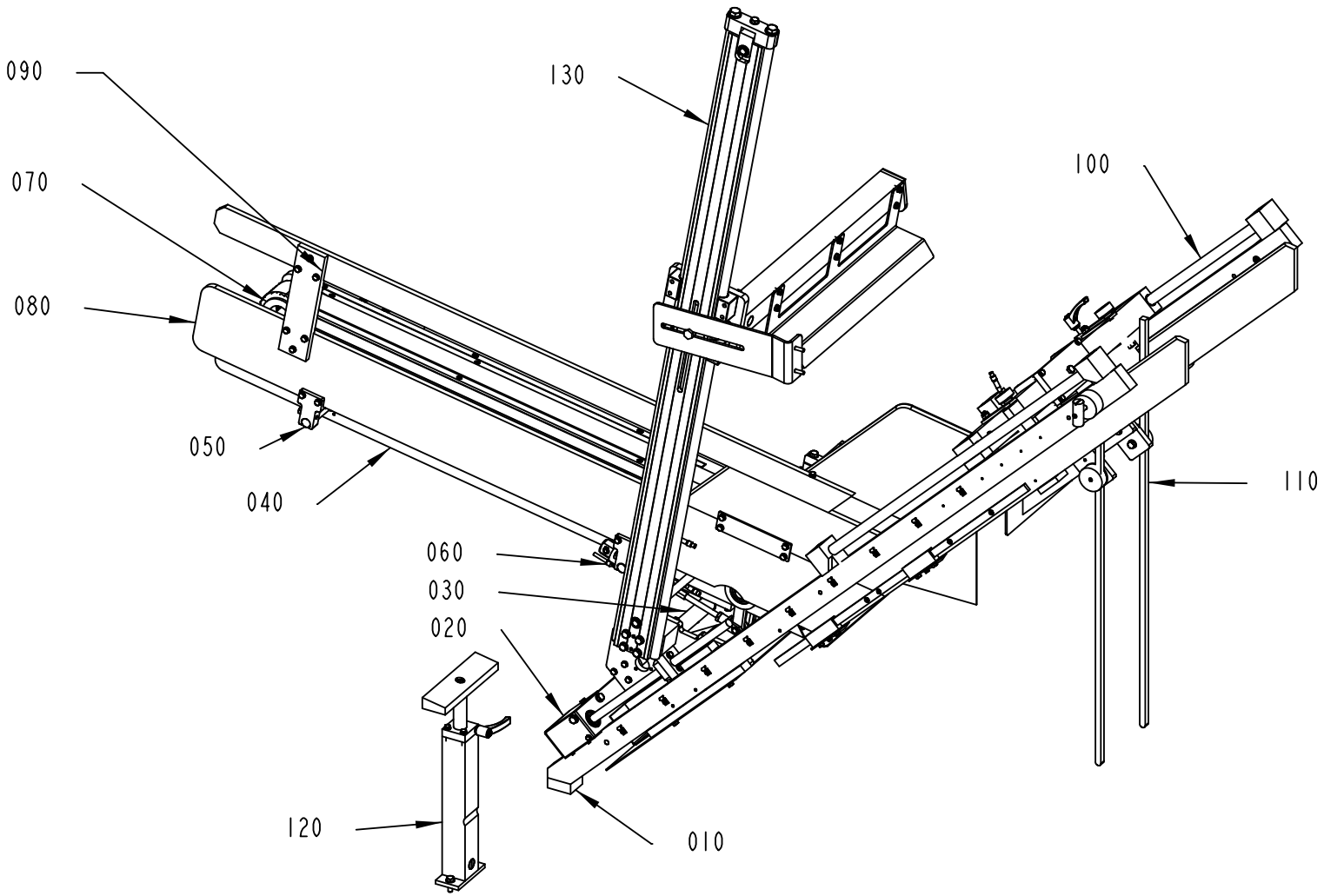

673828-5
568933

ECM: 577567 - 20120924
Group number: 673828-0500
Assembly Drawing: 673828-5_1_AB

Pos	Part No	UN	Qty	Description	Page No
-					
010	3238135-0100		1	MAG FRAME	**4-5**
020	3231387-0100		1	MAG HEIGHT ADJUSTER	**4-7**
030	3139172-0100		1	MAG SIDE ADJUSTER	**4-9**
040	3231388-0100		1	MAG BODY	**4-13**
050	3231389-0100		1	MAG WIDTH ADJUSTER	**4-15**
060	3238137-0100		1	MAG DRIVE ROLLER	**4-17**
070	3238138-0100		1	MAG ROLLER REAR	**4-19**
080	3231390-0100		1	SIDE STEERING	**4-21**
090	1074259-0500		1	MAG SIDE SUPPORT	**4-23**
100	1021222-0700		1	MAG TOP FLAP ADJUSTER	**4-25**
110	3223853-0100		1	MAG TOP UNIT	**4-27**
120	1128047-0300		1	MAG SUPPORT LEG	**4-29**
130	3227827-0100		1	TOP SUPPORT	**4-31**

Pos	Part No	UN	Qty	Description	Page No

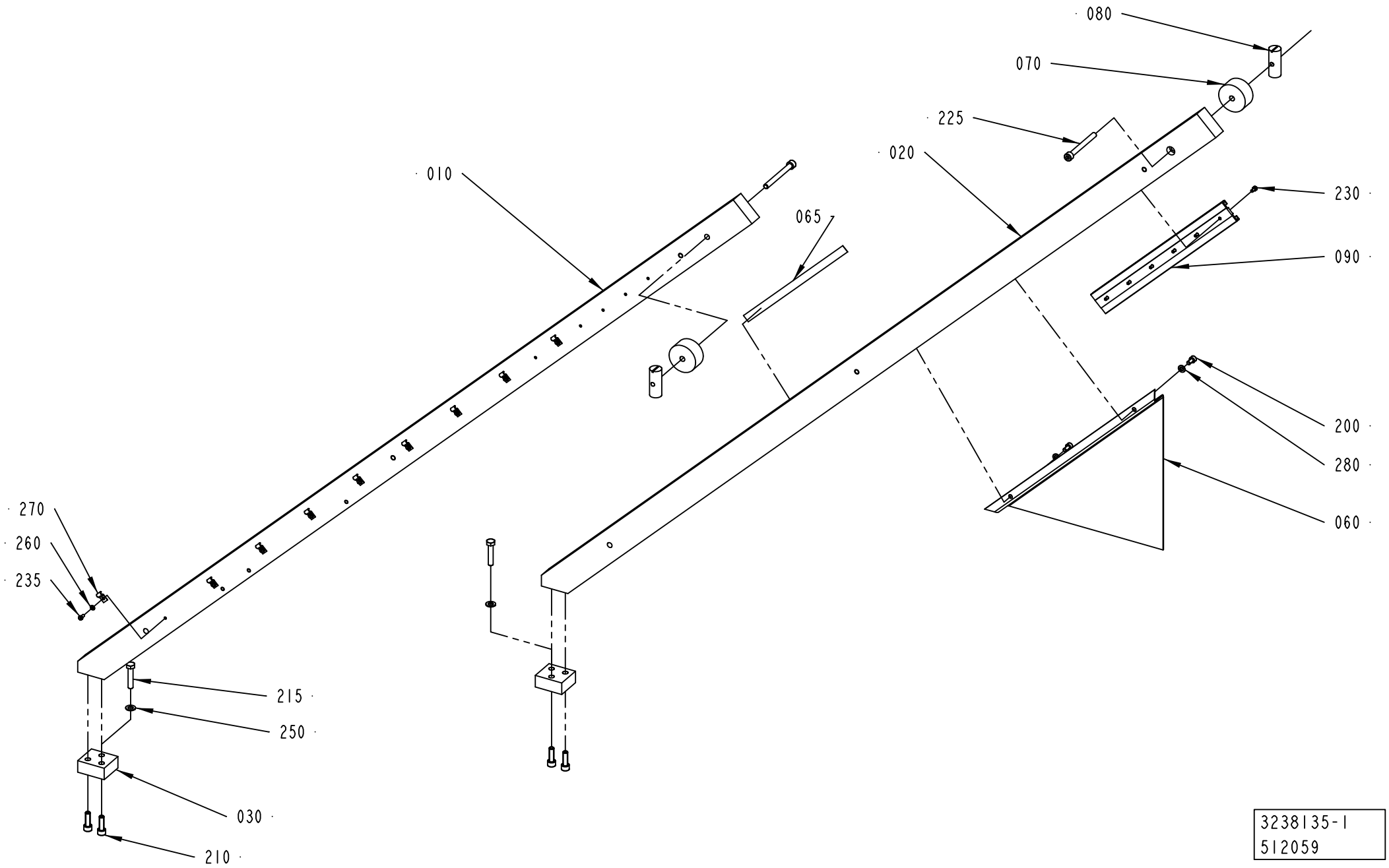

3238135-1
512059

ECM: 599072 - 20130314
Group number: 3238135-0100
Assembly Drawing: 3238135-1_1_AA

Pos	Part No	UN	Qty	Description	Page No
-					
010	3179469-0000		1	BEAM	
020	3179470-0000		1	BEAM	
030	1287534-0000		2	BRACKET	
060	3179471-0000		1	PROTECTION	
065	90458-2779		1	SCALE , 0-1000MM ADHESIVE	
070	1287533-0000		2	SPACER	
080	486268-0000		2	NUT	
090	3165933-0000		1	RAIL	
200	312115-0366		2	SCREW ISO4762 M6X12 A4 80	
210	312115-0453		4	SCREW ISO4762 M8X25 A4 80	
215	312109-0459		2	SCREW, M6S ISO 4017 M8X40 A4 80	
225	312115-0467		2	SCREW ISO4762 M8X80 A4 80	
230	312115-0287		6	SCREW ISO4762 M4X8 A4 80	
235	312125-0287		9	SLOTTED HEAD SCREW, ISO1207 M4X8 A4	
250	315105-0165		2	FWAS080G0-0S, WASHER PLAIN	
260	315105-0136		9	WASHER PLAIN, 4,3X9X0,8 A4 BRB	
270	90165-0003		9	PE CLIP FOR TUBE D=4 MM	
280	315105-0153		2	WASHER PLAIN, 6,4X12X1,5 A4 BRB	

Pos	Part No	UN	Qty	Description	Page No

MAG HEIGHT ADJUSTER

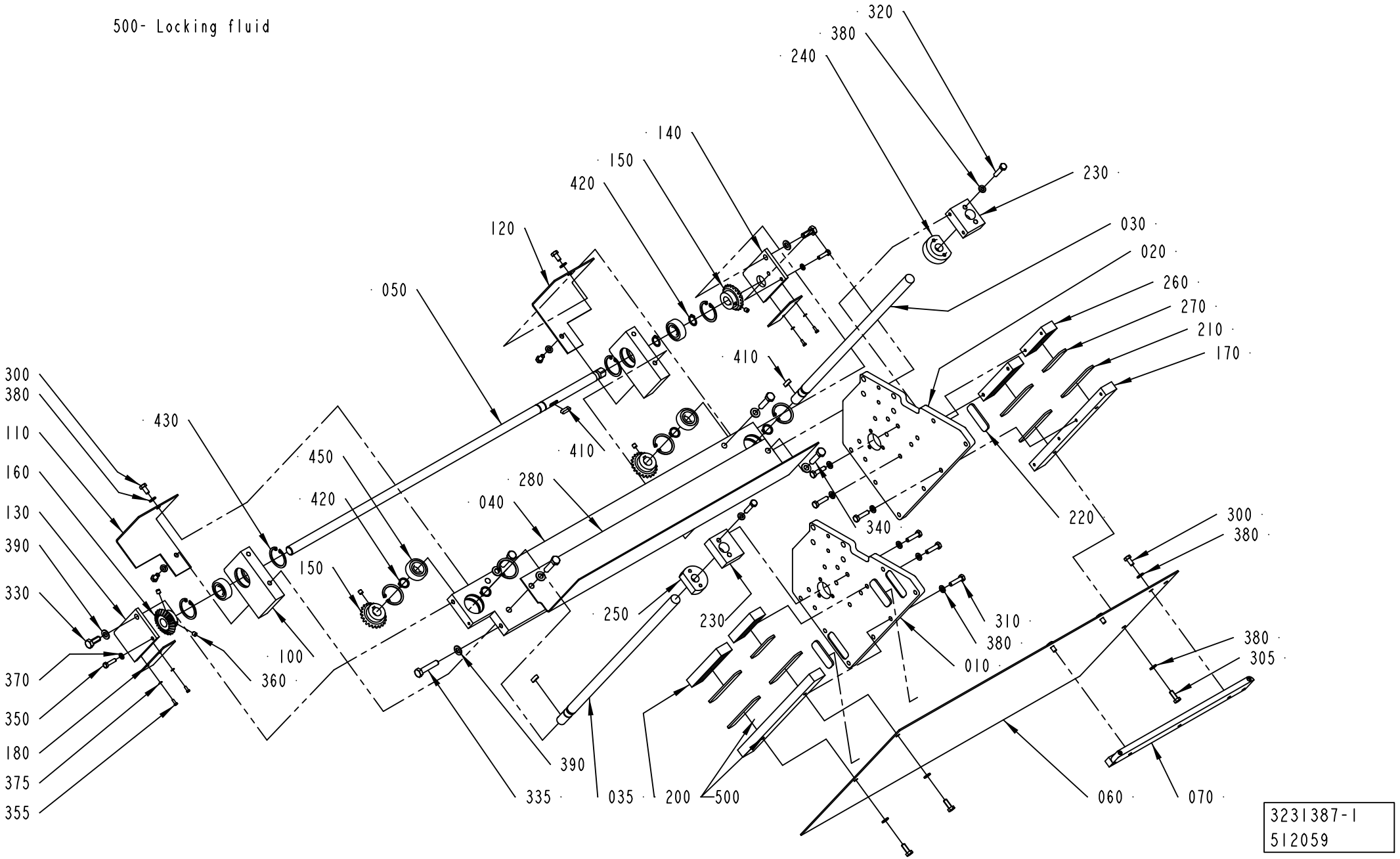

ECM: 558811 - 20120514
Group number: 3231387-0100
Assembly Drawing: 3231387-1_1_AA

Pos	Part No	UN	Qty	Description	Page No
-					
010	3231400-0000		1	GABLE PART	
020	3231401-0000		1	GABLE PART	
030	1021212-0000		1	ADJUSTING SCREW	
035	1021508-0000		1	ADJUSTING SCREW	
040	1021213-0000		1	PLATE	
050	1021215-0000		1	SHAFT	
060	3179467-0000		1	PROTECTION PLATE	
070	3156686-0000		1	GUIDE	
100	1021214-0000		2	BEARING HOUSING	
110	1021216-0000		1	COVER	
120	1021217-0000		1	COVER	
130	1287537-0000		1	SUPPORT	
140	1287531-0000		1	SUPPORT	
150	1021220-0000		3	GEAR WHEEL	
160	1021221-0000		1	GEAR WHEEL	
170	1021949-0000		2	RAIL	
180	1287535-0000		2	COVERING PLATE	
200	1021207-0000		2	RAIL	
210	1021208-0000		6	SLIDING STRIP	
220	1021209-0000		4	SLIDING STRIP	
230	1021210-0000		2	HOLDER	
240	1021211-0000		1	NUT	
250	1021507-0000		1	NUT	
260	1065370-0000		2	RAIL	
270	1065371-0000		2	SLIDING STRIP	
280	2925890-0000		1	PROTECTION PLATE	
300	312105-0366		7	SCREW, M6S ISO 4017 M6X12 A4 80	
305	312105-0368		3	SCREW, M6S ISO 4017 M6X16 A4 80	
310	312105-0372		20	SCREW, M6S ISO 4017 M6X25 A4 80	
320	312105-0374		4	SCREW, M6S ISO 4014 M6X30 A4 80	
330	312105-0451		2	SCREW, M6S ISO 4017 M8X20 A4 80	
335	312109-0459		2	SCREW, M6S ISO 4017 M8X40 A4 80	
340	312105-0457		4	SCREW, M6S ISO 4014 M8X35 A4 80	
350	312105-0331		2	SCREW, M6S ISO 4017 M5X20 A4 80	
355	312125-0222		4	SLOTTED HEAD SCREW, ISO1207 M3X8 A4	
360	312318-0360		5	SET SCREW, CUP END ISO4029 M6X6 A4	
370	315105-0146		2	WASHER PLAIN, 5,3X10X1 A4 BRB	
375	315105-0124		4	WASHER PLAIN, 3,2X6X0,5 A4 BRB	
380	315105-0153		34	WASHER PLAIN, 6,4X12X1,5 A4 BRB	
390	315105-0165		8	FWAS080G0-0S, WASHER PLAIN	
410	315701-0200		3	PARALLEL KEY W. ROUND ENDS, 5X5X18 MM	
420	315751-0112		6	RETAINING RING FOR SHAFT DIN 471 15 SS	
430	315753-0124		8	RETAINING RING FOR BORE DIN 472 35 SS	
450	344226-0102		4	BALL BEARING 15/35X11	
500	90602-4847		1	THREAD LOCKING, LOCTITE 243 50 ML	

Machine Type	Group Description	Used-In	Group Number	Page No

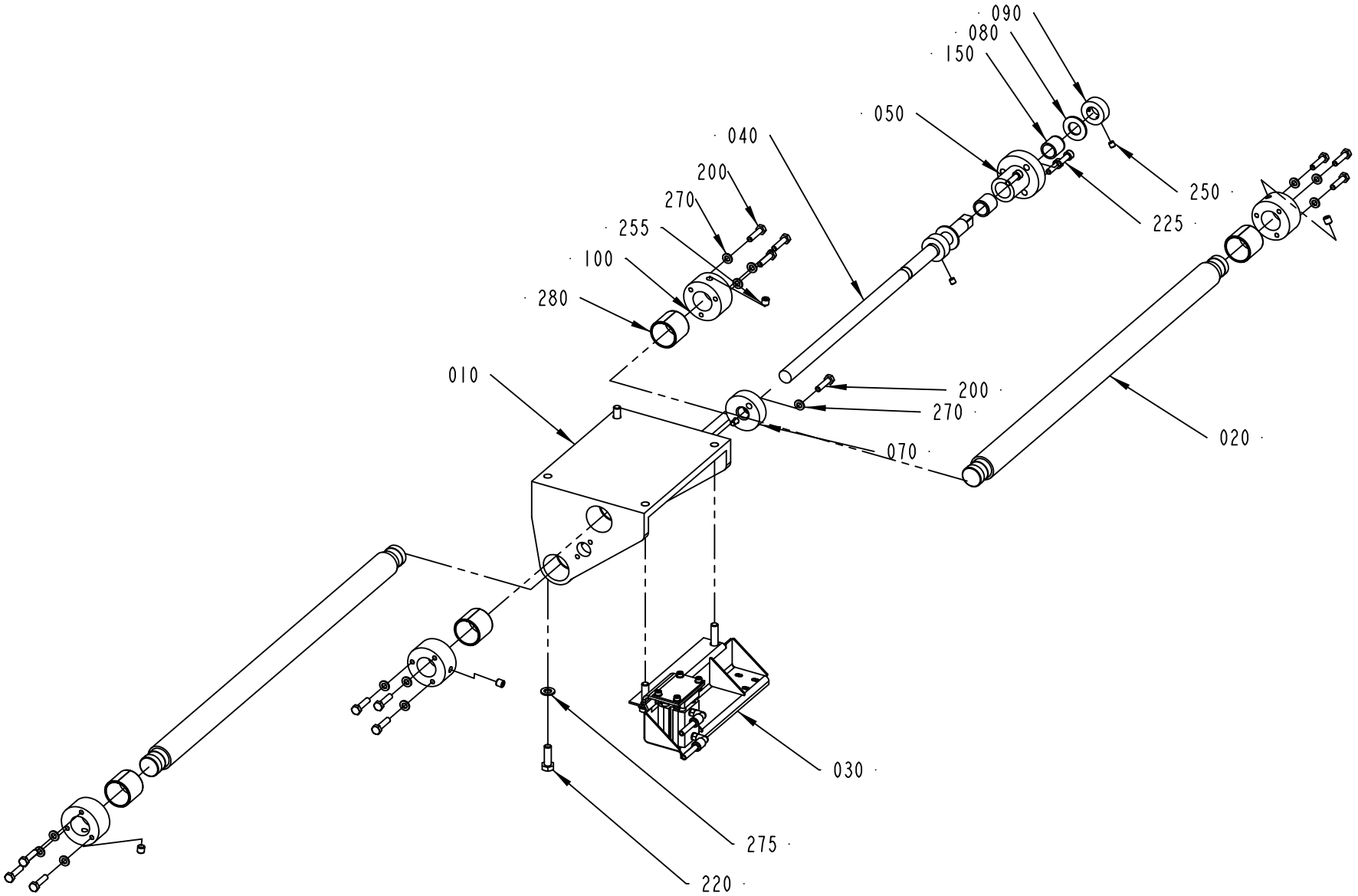

3139172-1
478943

ECM: 479835 - 20110113
Group number: 3139172-0100
Assembly Drawing: 3139172-1_1_AA

Pos	Part No	UN	Qty	Description	Page No
-					
010	1021198-0000		1	GUIDE	
020	1021199-0000		2	SHAFT	
030	3133867-0100		1	BRAKE UNIT	**4-11**
040	2834003-0000		1	ADJUSTING SCREW	
050	1021201-0000		1	BEARING HOUSING	
070	1021154-0000		1	NUT	
080	1021155-0000		2	WASHER	
090	1021156-0000		2	RETAINING RING	
100	1021202-0000		4	HUB	
150	90240-0205		2	BEAR. BUSHING W/O FL. 16X20X20MM	
200	312105-0372		14	SCREW, M6S ISO 4017 M6X25 A4 80	
220	312105-0453		2	SCREW, M6S ISO 4017 M8X25 A4 80	
225	312115-0370		3	SCREW ISO4762 M6X20 A4 80	
250	312318-0360		4	SET SCREW, CUP END ISO4029 M6X6 A4	
255	312318-0443		4	SET SCREW, CUP END ISO4029 M8X8 A4	
270	315105-0153		14	WASHER PLAIN, 6,4X12X1,5 A4 BRB	
275	315105-0165		2	FWAS080G0-0S, WASHER PLAIN	
280	321141-0340		4	BEARING BUSHING, 30X34X30 MM	

Pos	Part No	UN	Qty	Description	Page No

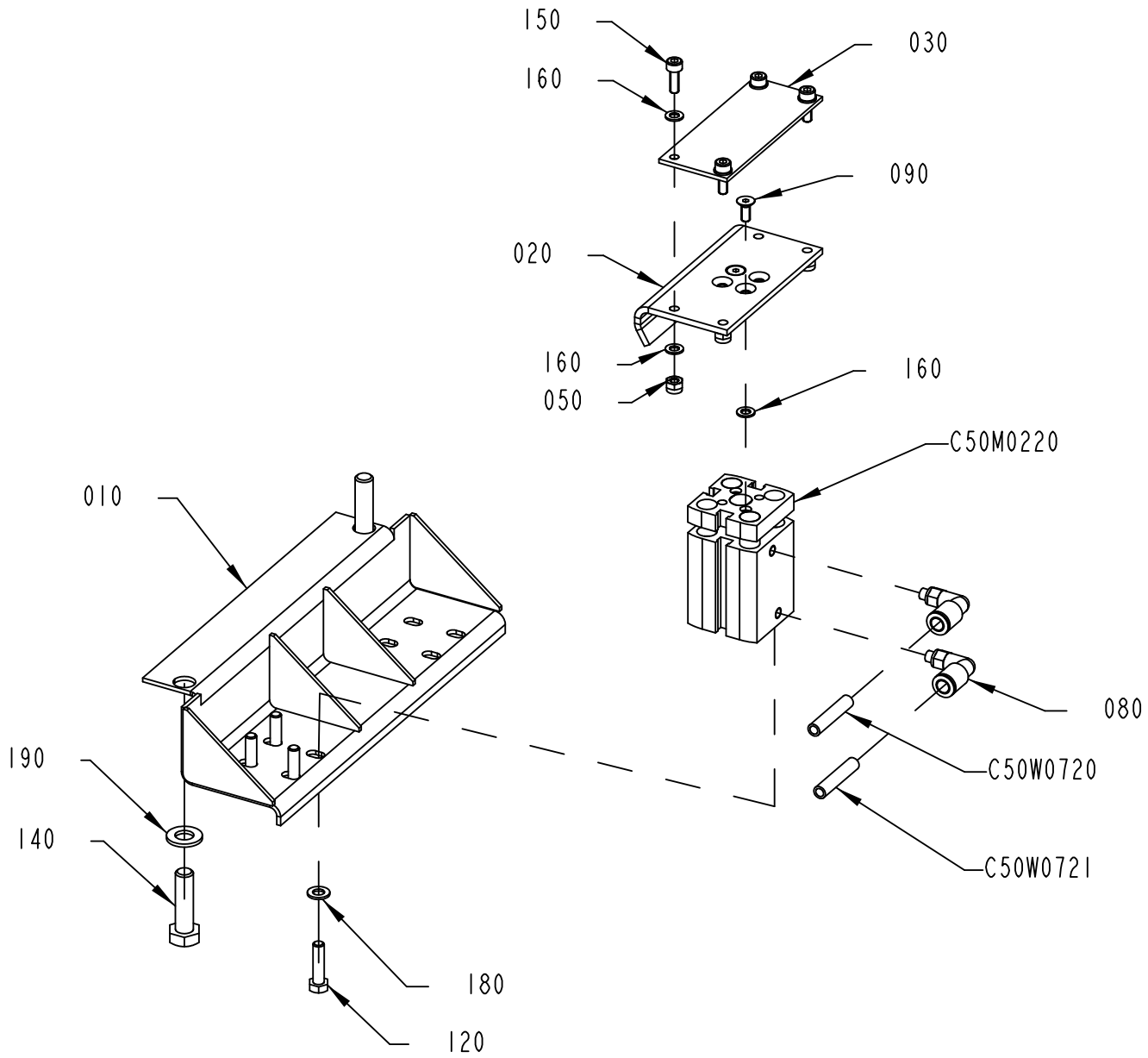

3133867-1
482349

ECM: 482349 - 20110113
Group number: 3133867-0100
Assembly Drawing: 3133867-1_1_AB

Pos	Part No	UN	Qty	Description	Page No
-					
010	3123791-0000		1	BRACKET	
020	3133868-0000		1	BRACKET	
030	3133920-0000		1	RUBBER PLATE	
050	312812-0312		4	HEXAGON NUT, NY-LOCK M4 A4 80	
080	350002-0002		2	PUSH-IN L-FITTING QSL-F-M5-6	
090	312155-0289		2	SCREW DIN 7991 MF6S M4X10 A4 70	
120	312105-0331		4	SCREW, M6S ISO 4017 M5X20 A4 80	
140	312105-0455		2	SCREW, M6S ISO 4017 M8X30 A4 80	
150	312115-0291		4	SCREW ISO4762 M4X12 A4 80	
160	315105-0136		10	WASHER PLAIN, 4,3X9X0,8 A4 BRB	
180	315105-0146		4	WASHER PLAIN, 5,3X10X1 A4 BRB	
190	315105-0165		2	FWAS080G0-0S, WASHER PLAIN	
200	90459-7369		4	MARKING FOR PNEUM. TUBING, PRZ06	
C50M0220	90600-5535		1	CYLINDER, WITH INT. GUIDING BORE 20	
C50W0720	315400-0001	M	7	6-4E PUN-H-6X1-BL	
C50W0721	315400-0001	M	7	6-4E PUN-H-6X1-BL	

Pos	Part No	UN	Qty	Description	Page No

Machine Type	Group Description	Used-In	Group Number	Page No

MAG BODY

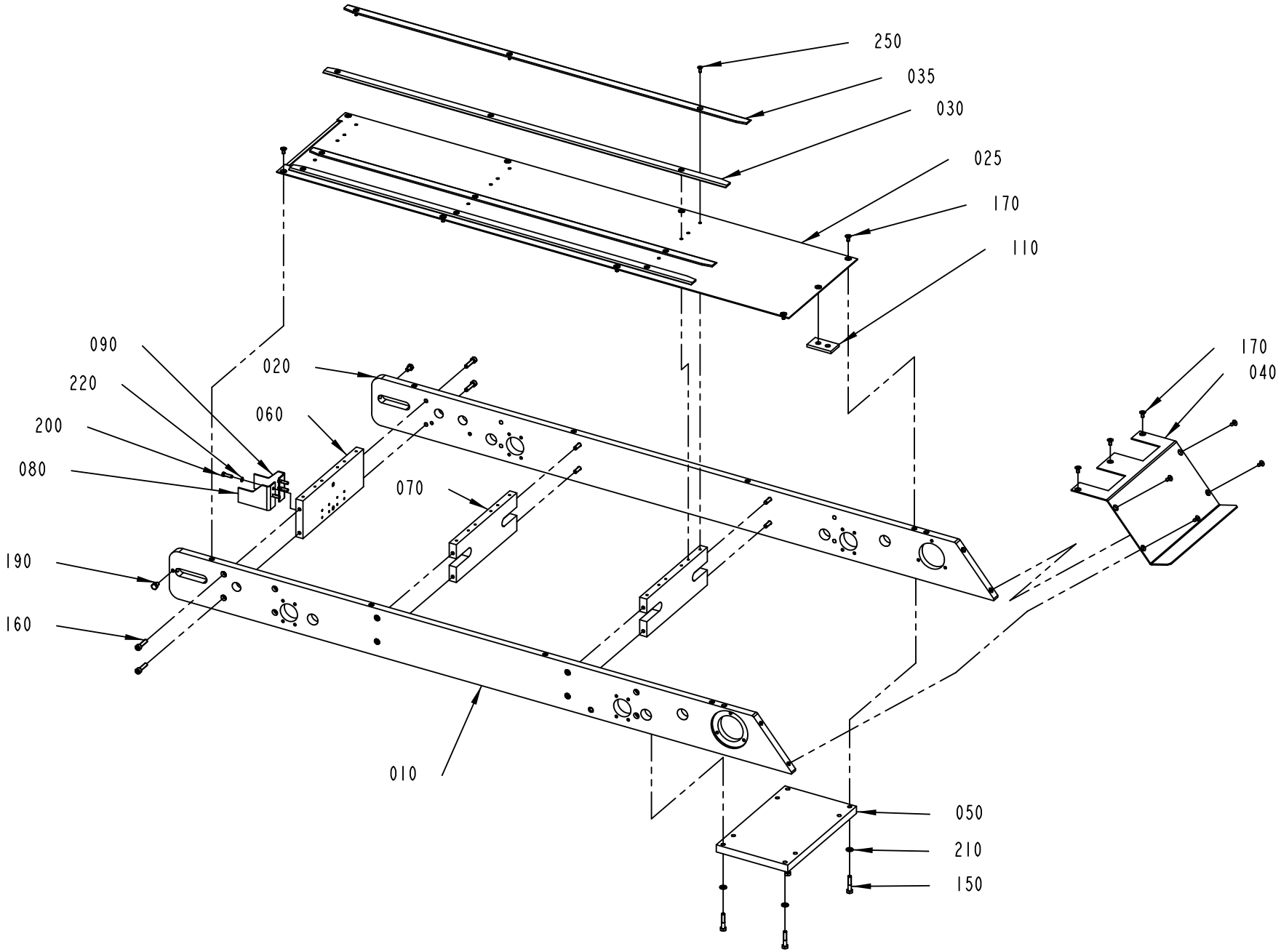

3231388-1
559919

ECM: 567426 - 20120710
Group number: 3231388-0100
Assembly Drawing: 3231388-1_1_AB

Pos	Part No	UN	Qty	Description	Page No
FEEDSIDE = LEFT					
010	3231402-0000		1	SIDE PLATE	
020	3231403-0000		1	SIDE PLATE	
FEEDSIDE = RIGHT					
010	3231391-0000		1	SIDE PLATE	
020	3231392-0000		1	SIDE PLATE	
Common Parts					
025	2995229-0000		1	COVER PLATE	
030	3151077-0000		2	GUIDE	
035	3151078-0000		2	GUIDE	
040	3193247-0000		1	COVER PLATE	
050	2763039-0000		1	PLATE	
060	2995231-0000		1	PLATE	
070	2995230-0000		2	PLATE	
080	2995248-0000		1	PROTECTION PLATE	
090	2995249-0000		1	PROTECTION PLATE	
110	2909541-0000		1	SUPPORT	
150	312105-0374		4	SCREW, M6S ISO 4014 M6X30 A4 80	
160	312115-0372		12	SCREW ISO4762 M6X25 A4 80	
170	312155-0325		16	SCREW DIN 7991 MF6S M5X10 A4 70	
190	312105-0364		2	SCREW, M6S ISO 4017 M6X10 A4 80	
200	312105-0293		4	SCREW, M6S ISO 4017 M4X16 A4 70	
210	315105-0153		4	WASHER PLAIN, 6,4X12X1,5 A4 BRB	
220	315105-0136		4	WASHER PLAIN, 4,3X9X0,8 A4 BRB	
250	312155-0289		12	SCREW DIN 7991 MF6S M4X10 A4 70	

Pos	Part No	UN	Qty	Description	Page No

MAG WIDTH ADJUSTER

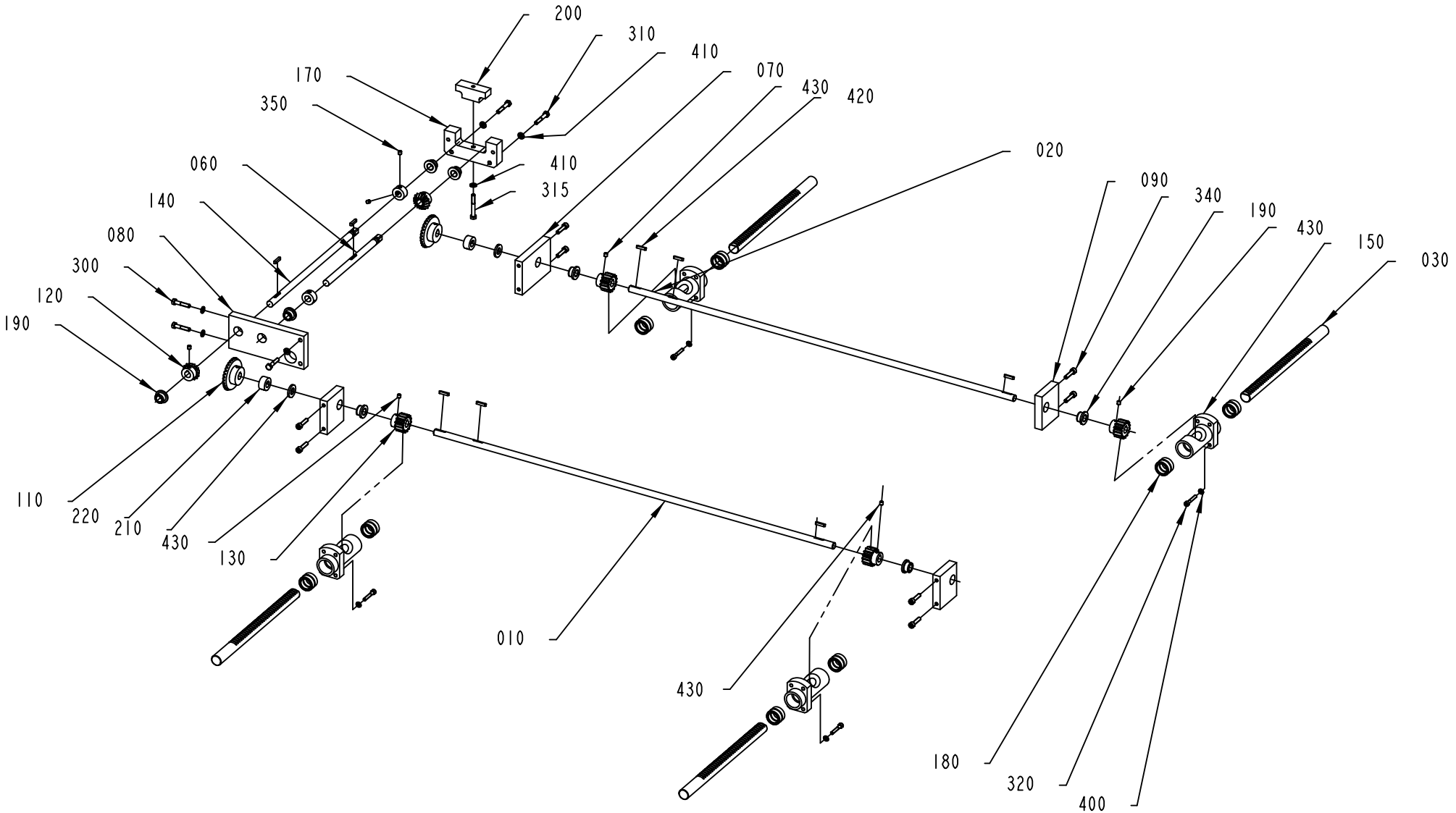

3231389-1
630884

ECM: 646237 - 20131125
Group number: 3231389-0100
Assembly Drawing: 3231389-1_1_AB

Pos	Part No	UN	Qty	Description	Page No
-					
010	3231396-0000		1	SHAFT	
020	3231395-0000		1	SHAFT	
030	3231397-0000		4	RACK GEAR	
060	2771132-0000		1	SHAFT	
070	2752748-0000		1	BEARING HOLDER	
080	2787834-0000		1	BEARING HOLDER	
090	2752721-0000		3	BEARING HOLDER	
110	1021253-0000		2	CONICAL GEAR	
120	1021254-0000		2	CONICAL GEAR	
130	1021255-0000		4	GEAR WHEEL	
140	2771133-0000		1	SHAFT	
150	1021257-0000		4	BEARING HOUSING	
170	2895029-0000		1	HOLDER	
180	230462-0000		8	BUSHING	
190	493768-0000		8	BUSHING	
200	2895030-0000		1	CLAMP	
210	1021262-0000		2	WASHER	
220	1021263-0000		4	RETAINING RING	
300	312105-0374		4	SCREW, M6S ISO 4014 M6X30 A4 80	
310	312105-0376		2	SCREW, M6S ISO 4014 M6X35 A4 80	
315	312105-0379		1	SCREW, M6S ISO 4014 M6X45 A4 80	
320	312115-0335		16	SCREW ISO4762 M5X30 A4 80	
340	312115-0372		8	SCREW ISO4762 M6X25 A4 80	
350	312318-0360		16	SET SCREW, CUP END ISO4029 M6X6 A4	
400	315105-0146		16	WASHER PLAIN, 5,3X10X1 A4 BRB	
410	315105-0153		7	WASHER PLAIN, 6,4X12X1,5 A4 BRB	
420	315701-0170		8	PARALLEL KEY W. ROUND ENDS, 4X4X20 MM	
430	90157-0021		1	LOCKING FLUID LOCTITE 270	

Pos	Part No	UN	Qty	Description	Page No

MAG DRIVE ROLLER

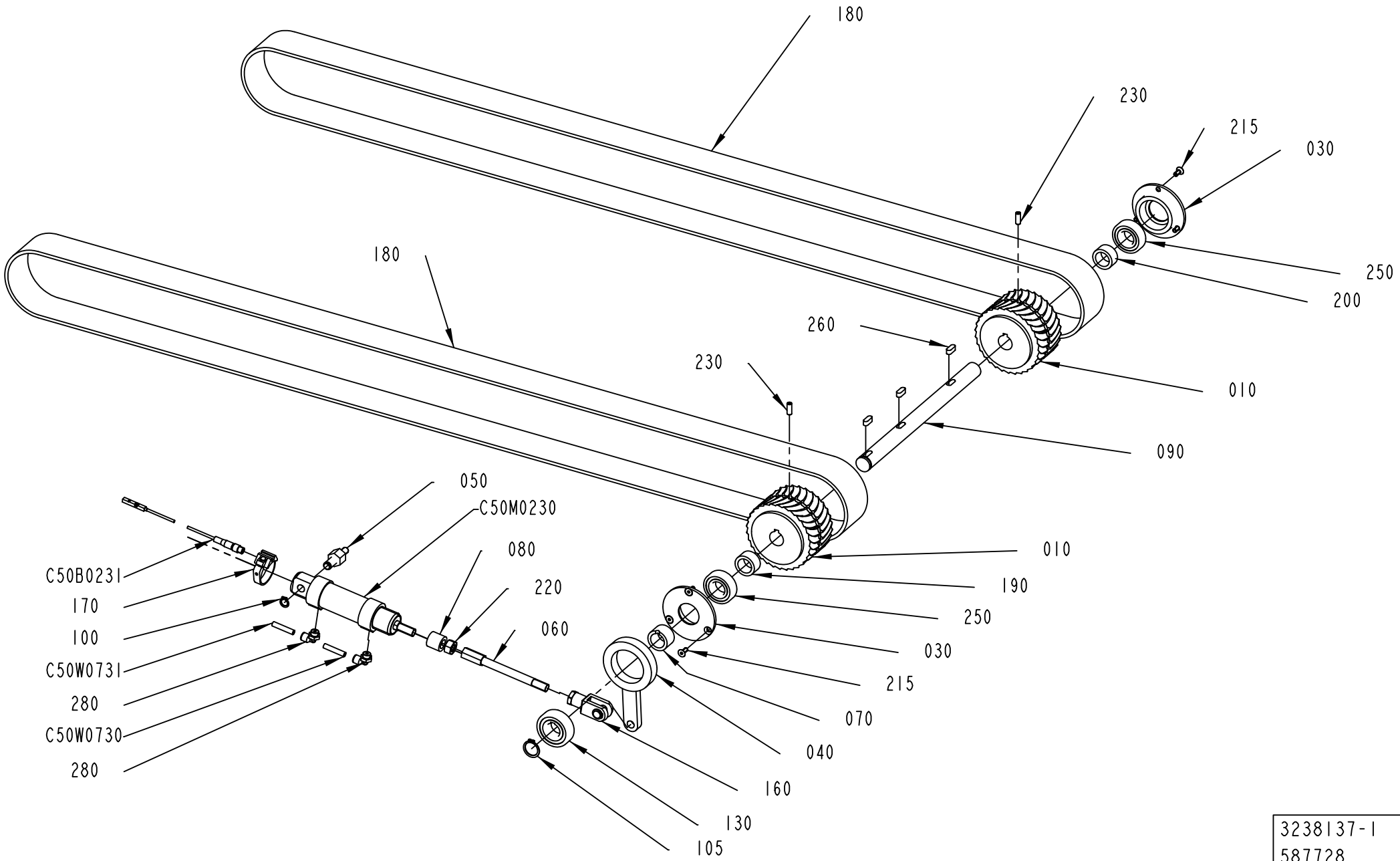

3238137-1
587728

ECM: 589788 - 20121210
Group number: 3238137-0100
Assembly Drawing: 3238137-1_1_AC

Pos	Part No	UN	Qty	Description	Page No
-					
010	3193241-0000		2	TOOTHED PULLEY	
030	2752741-0000		2	BEARING HOUSING	
040	1287151-0000		1	ARM	
050	3264172-0000		1	BRACKET	
060	1287492-0000		1	ROD	
070	1287153-0000		1	SPACER	
080	3264171-0000		1	SPACER	
090	3193242-0000		1	SHAFT	
100	90141-0016		1	RETAINING RING FOR SHAFT DIN 471 10 SS	
105	315751-0116		1	RETAINING RING FOR SHAFT DIN 471 20 SS	
130	90348-0033		1	FREE-WHEEL COUPLING, 20X47 MM	
160	90239-0357		1	ROD END, CLEVIS WITH AXLE M10X1,25	
170	90459-2780		1	SENSOR BRACKET, SMBR-8-32	
180	90605-5443		2	TIMING BELT 50ATK10/2560 PU	
190	3193237-0000		1	SPACER	
200	3193243-0000		1	SPACER	
215	312155-0327		6	SCREW DIN 7991 MF6S M5X12 A4 70	
220	312631-0321		1	HEX.NUT FINE, EN 24032 M6M M10X1,25 FZB8	
230	312318-0368		2	SET SCREW, CUP END ISO4029 M6X16 A4	
250	321308-0204		2	BALL BEARING 20/42X12	
260	315701-0230		3	PARALLEL KEY W. ROUND ENDS, 6X6X16 MM	
280	90458-2956		2	ELBOW PIPE JOINT, EXT.THREAD, D=6MM-G1/8	
C50B0231	90600-3273		1	PROX. SENSOR, SMT-8M-PS-24V-K-0,3-M8D	
C50M0230	90605-4582		1	DOUBLE ACTING, MINI-ISO, CYL. 32-25	
C50W0730	315400-0001	M	6	6-4E PUN-H-6X1-BL	
C50W0731	315400-0001	M	6	6-4E PUN-H-6X1-BL	

Pos	Part No	UN	Qty	Description	Page No

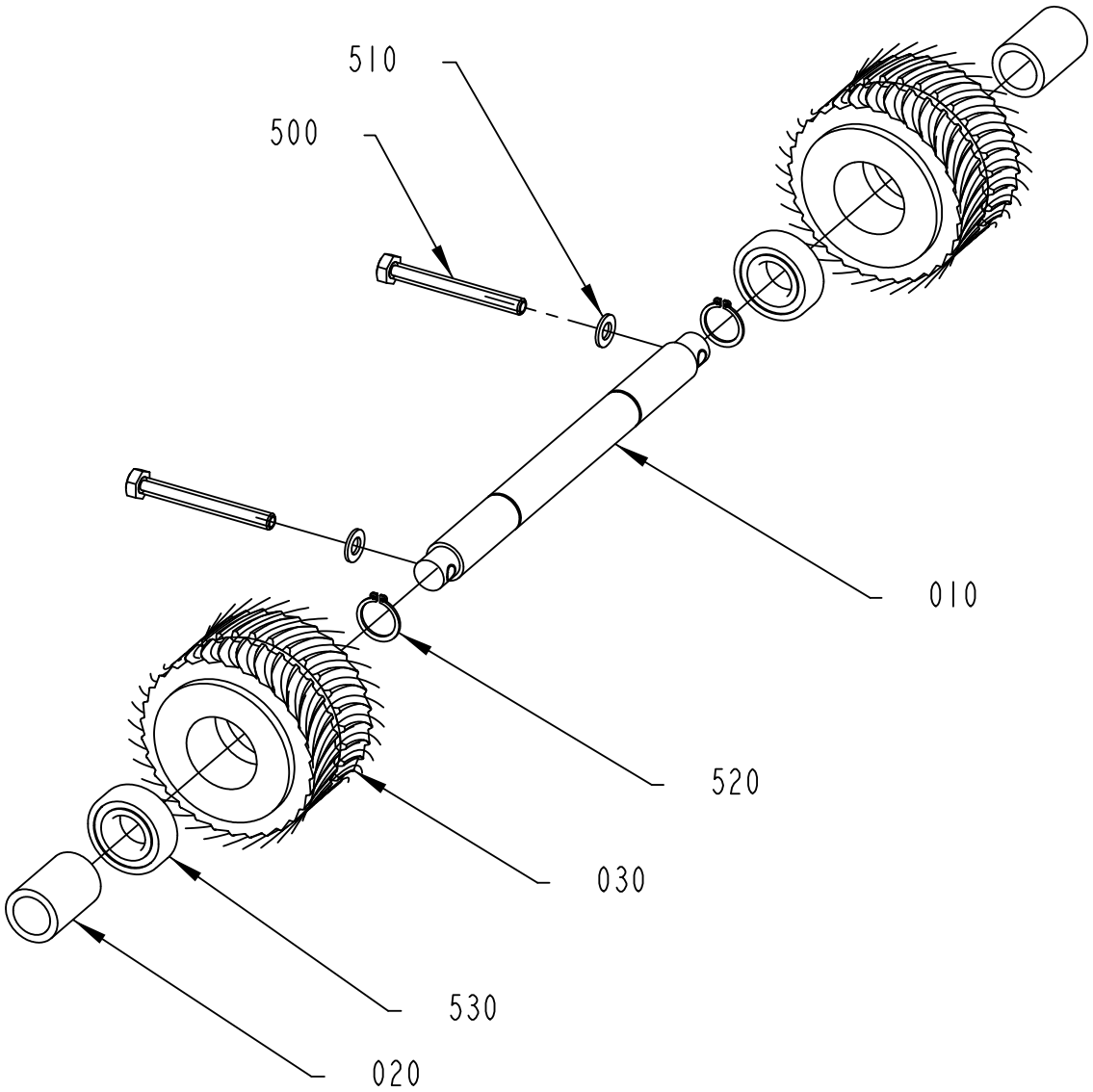

3238138-1
602279

ECM: 614525 - 20130618
Group number: 3238138-0100
Assembly Drawing: 3238138-1_1_AC

Pos	Part No	UN	Qty	Description	Page No
-					
010	3137723-0000		1	SHAFT	
020	3137724-0000		2	SPACER	
030	3193240-0000		2	TOOTHED PULLEY	
500	312109-0465		2	SCREW, M6S ISO 4017 M8X70 A4 80	
510	315105-0165		2	FWAS080G0-0S, WASHER PLAIN	
520	315751-0116		2	RETAINING RING FOR SHAFT DIN 471 20 SS	
530	344224-0204		2	BALL BEARING 20/42X12	

Pos	Part No	UN	Qty	Description	Page No

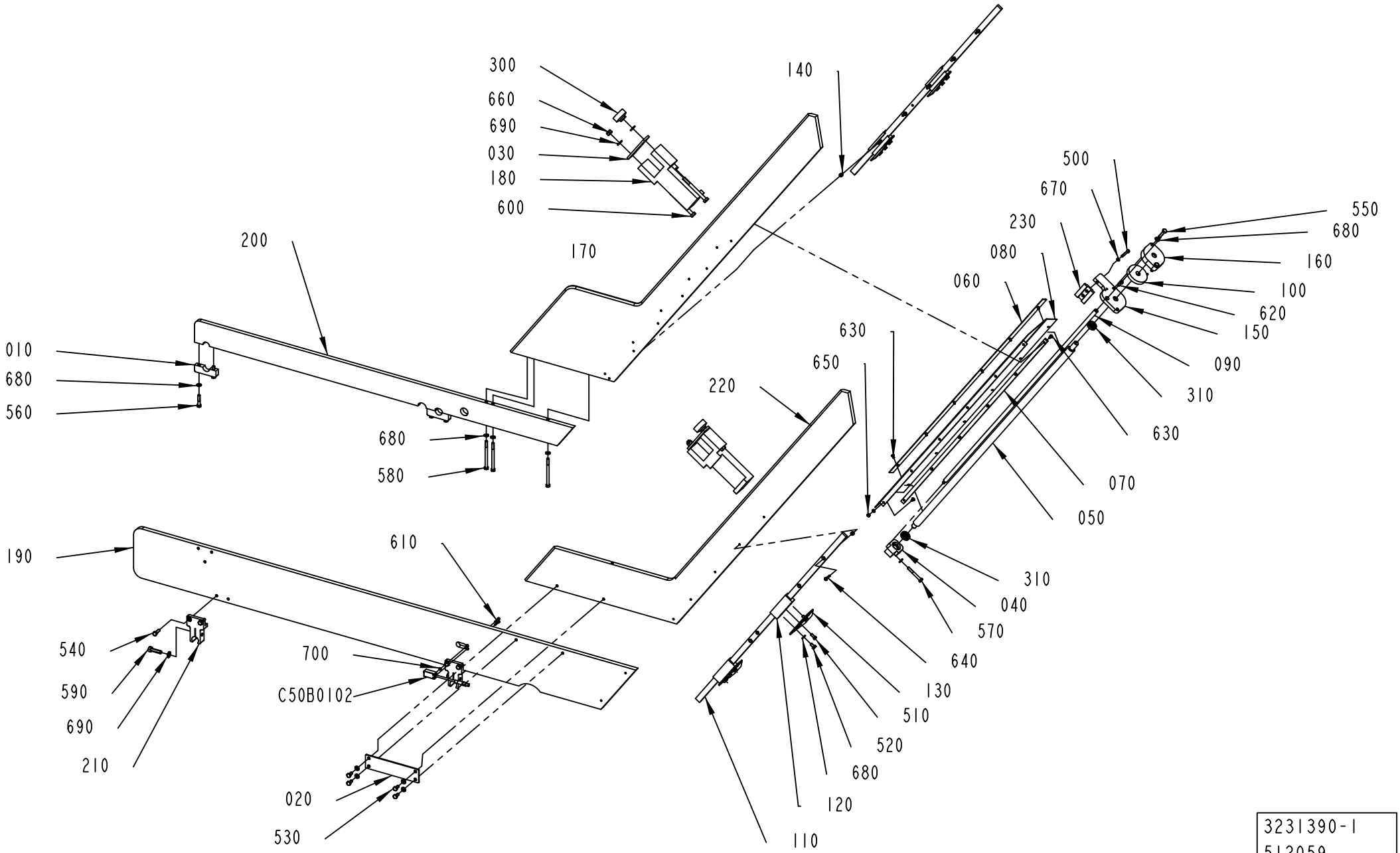

3231390-1
512059

ECM: 558808 - 20120514
Group number: 3231390-0100
Assembly Drawing: 3231390-1_1_AA

Pos	Part No	UN	Qty	Description	Page No
FEEDSIDE = LEFT					
150	3165931-0000		1	BRACKET	
FEEDSIDE = RIGHT					
150	3165930-0000		1	BRACKET	
Common Parts					
010	1021893-0000		2	HOLDER	
020	1128883-0000		1	BRACKET	
030	1466212-0000		2	PLATE	
040	3156680-0000		1	BEARING HOUSING	
050	3156681-0000		1	SHAFT	
060	3156682-0000		1	MOUNTING BAR	
070	3156683-0000		1	MOUNTING BAR	
080	3156684-0000		1	COVER	
090	3156685-0000		1	SHAFT	
100	3156687-0000		1	SPRING	
110	3157073-0000		2	MOUNTING BAR	
120	3157074-0000		4	BRACKET	
130	3157075-0000		4	PLATE	
140	3157079-0000		11	SPACER	
160	3165932-0000		1	SPRING HOUSING	
170	3179468-0000		1	STEERING	
180	3186441-0000		2	GUIDE FORK	
190	3231393-0000		1	SIDE PLATE	
200	3231394-0000		1	SIDE PLATE	
210	3231398-0000		2	CLAMP BRACKET	
220	3231399-0000		1	STEERING	
230	3238140-0000		1	CARRIAGE	
300	90051-0040		2	KNOB, INTERNAL THREAD, NO. 8308-0627	
310	90214-0112		2	BALL BEARING 12/24X6	
500	312105-0299		1	SCREW, M6S ISO 4017 M4X30 A4 70	
510	312105-0327		4	SCREW, M6S ISO 4017 M5X12 A4 80	
520	312105-0364		8	SCREW, M6S ISO 4017 M6X10 A4 80	
530	312105-0366		4	SCREW, M6S ISO 4017 M6X12 A4 80	
540	312105-0370		4	SCREW, M6S ISO 4017 M6X20 A4 80	
550	312105-0372		2	SCREW, M6S ISO 4017 M6X25 A4 80	
560	312105-0374		4	SCREW, M6S ISO 4014 M6X30 A4 80	
570	312105-0379		1	SCREW, M6S ISO 4014 M6X45 A4 80	
580	312105-0386		3	SCREW, M6S ISO 4014 M6X80 A4 80	
590	312105-0455		2	SCREW, M6S ISO 4017 M8X30 A4 80	
600	312105-0467		4	SCREW, M6S ISO 4014 M8X80 A4 80	
610	312115-0228		2	SCREW ISO4762 M3X16 A4 80	
620	312115-0327		1	SCREW ISO4762 M5X12 A4 80	
630	312155-0287		12	SCREW DIN 7991 MF6S M4X8 A4 70	
640	312155-0295		11	SCREW DIN 7991 MF6S M4X20 A4 70	
650	312605-0312		1	HEXAGON NUT, M6M M4 A280	
660	312812-0318		2	HEXAGON NUT, NY-LOCK M8 A4 80	
670	315105-0136		2	WASHER PLAIN, 4,3X9X0,8 A4 BRB	
680	315105-0153		26	WASHER PLAIN, 6,4X12X1,5 A4 BRB	
690	315105-0165		6	FWAS080G0-0S, WASHER PLAIN	
700	315106-0124		2	WASHER PLAIN, M3 ISO7089-3-200 HV A4	
C50B0102	90459-7366		1	PHOTOCELL, WTB4-3P3161 F20	

Machine Type	Group Description	Used-In	Group Number	Page No

MAG SIDE SUPPORT

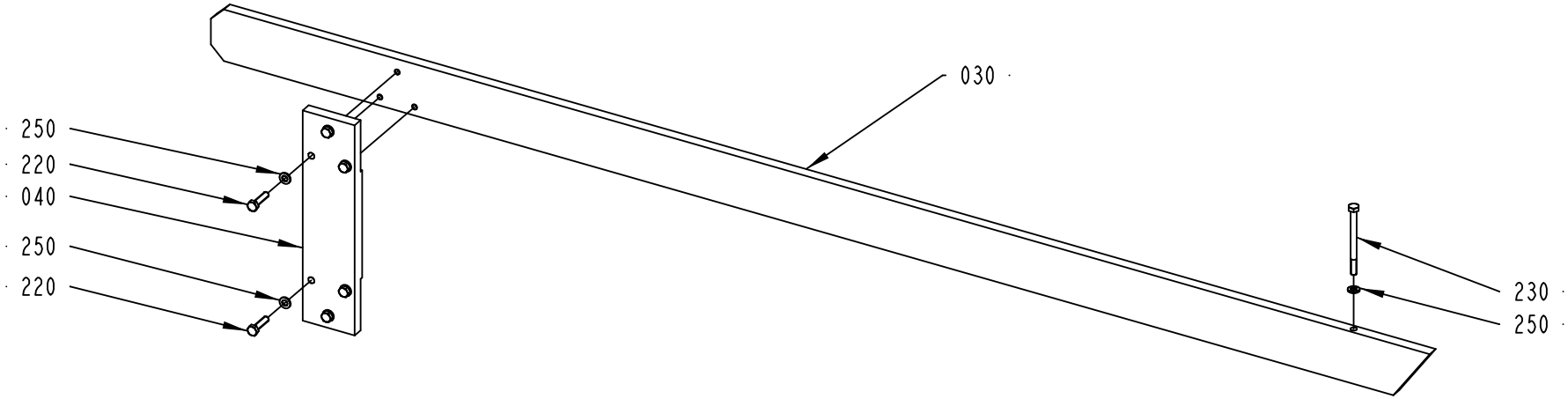

1074259-5
630884

ECM: 646236 - 20131125
Group number: 1074259-0500
Assembly Drawing: 1074259-5_1_AB

Pos	Part No	UN	Qty	Description	Page No
-					
030	3251396-0000		1	SIDE PLATE	
040	1074329-0000		1	HOLDER	
220	312105-0372		6	SCREW, M6S ISO 4017 M6X25 A4 80	
230	90287-0312		1	SCREW, M6S ISO 4014 M6X75 A4 80	
250	315105-0153		7	WASHER PLAIN, 6,4X12X1,5 A4 BRB	

Pos	Part No	UN	Qty	Description	Page No

MAG TOP FLAP ADJUSTER

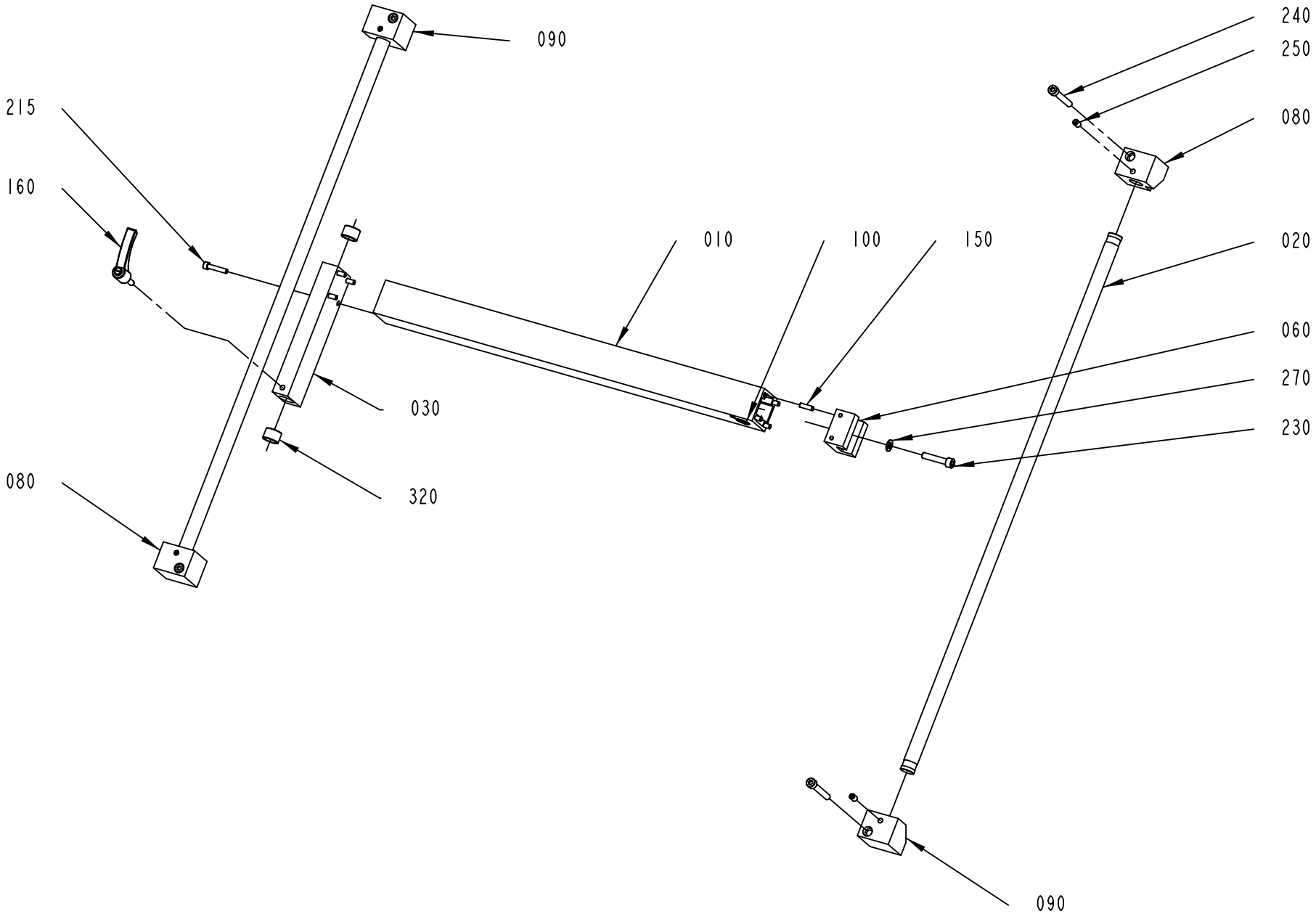

1021222-7
378835

ECM: 378835 - 20090331
Group number: 1021222-0700
Assembly Drawing: 1021222-7_1_AA

Pos	Part No	UN	Qty	Description	Page No
-					
010	2995239-0000		1	PROFILE 50X50	
020	1287532-0000		2	PILLAR	
030	2995240-0000		1	BEARING HOUSING	
060	1021228-0000		1	STEERING	
080	1287529-0000		2	BRACKET	
090	1287528-0000		2	BRACKET	
100	486268-0000		1	NUT	
150	1065410-0000		4	SLOTTED PIN	
160	90458-0901		1	LOCKING LEVER 239457 ERZ.63SST-P-M8X25	
215	312115-0374		4	SCREW ISO4762 M6X30 A4 80	
230	312115-0459		1	SCREW ISO4762 M8X40 A4 80	
240	312115-0463		4	SCREW ISO4762 M8X60 A4 80	
250	312318-0447		4	SET SCREW, CUP END ISO4029 M8X12 A4	
270	315105-0165		1	FWAS080G0-0S, WASHER PLAIN	
320	321141-0255		2	BEARING BUSHING, 20X23X15 MM	

Pos	Part No	UN	Qty	Description	Page No

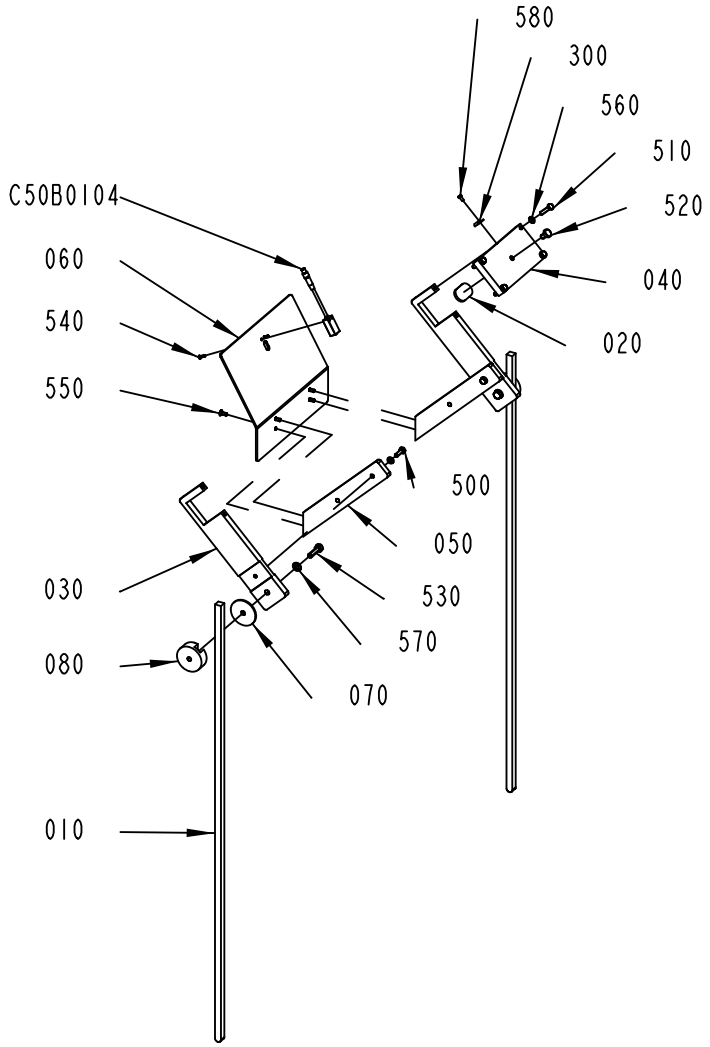

3223853-1
579668

ECM: 585750 - 20121116
Group number: 3223853-0100
Assembly Drawing: 3223853-1_1_AB

Pos	Part No	UN	Qty	Description	Page No
-					
010	1466382-0000		2	FOLDING ARM	
020	3136752-0000		1	PLATE	
030	3227808-0000		2	FASTENING PLATE	
040	3227809-0000		1	PLATE	
050	3227810-0000		2	MOUNTING BAR	
060	3227811-0000		1	PLATE	
070	3227812-0000		2	RUBBER WASHER	
080	3227813-0000		2	NUT PLATE	
300	90165-0003		1	PE CLIP FOR TUBE D=4 MM	
500	312105-0370		2	SCREW, M6S ISO 4017 M6X20 A4 80	
510	312105-0372		4	SCREW, M6S ISO 4017 M6X25 A4 80	
520	312105-0447		1	SCREW M6S ISO 4017 M8X12 A480	
530	312105-0455		2	SCREW, M6S ISO 4017 M8X30 A4 80	
540	312155-0226		2	SCREW DIN 7991 MF6S M3X12 A4 70	
550	312155-0327		4	SCREW DIN 7991 MF6S M5X12 A4 70	
560	315106-0153		6	WASHER PLAIN, M6 ISO7089-6-200 HV A4	
570	315106-0165		2	WASHER PLAIN, M8 ISO7089-8-200 HV A4	
580	312125-0287		1	SLOTTED HEAD SCREW, ISO1207 M4X8 A4	
C50B0104	90459-7366		1	PHOTOCELL, WTB4-3P3161 F20	

Pos	Part No	UN	Qty	Description	Page No

MAG SUPPORT LEG

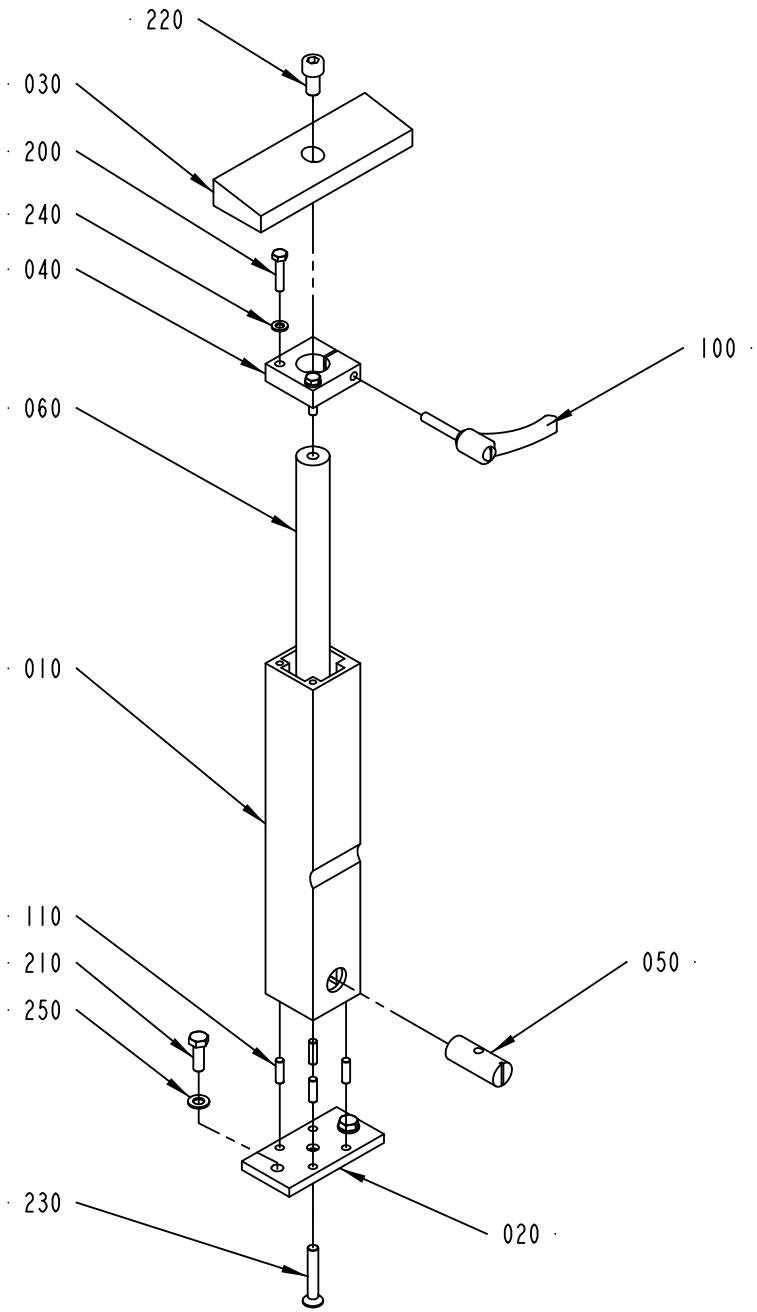

1128047-3
ECM 217700

ECM: 599071 - 20130314
Group number: 1128047-0300
Assembly Drawing: 1128047-3_1_AA

Pos	Part No	UN	Qty	Description	Page No
-					
010	1287362-0000		1	PROFILE	
020	556624-0000		1	FRAME BRACKET	
030	2763106-0000		1	SUPPORT PLATE	
040	1128880-0000		1	CLAMPING PIECE	
050	486268-0000		1	NUT	
060	1128886-0000		1	SHAFT	
100	90458-0984		1	LOCKING LEVER 239643 ERZ.63SST-P-M8X40	
110	1065410-0000		4	SLOTTED PIN	
200	312105-0374		2	SCREW, M6S ISO 4014 M6X30 A4 80	
210	312105-0453		2	SCREW, M6S ISO 4017 M8X25 A4 80	
220	312115-0491		1	SCREW ISO4762 M10X20 A4 80	
230	312156-0459		1	SCREW EN 10642 MF6S M8X40 A470	
240	315105-0153		2	WASHER PLAIN, 6,4X12X1,5 A4 BRB	
250	315105-0165		2	FWAS080G0-0S, WASHER PLAIN	

Pos	Part No	UN	Qty	Description	Page No

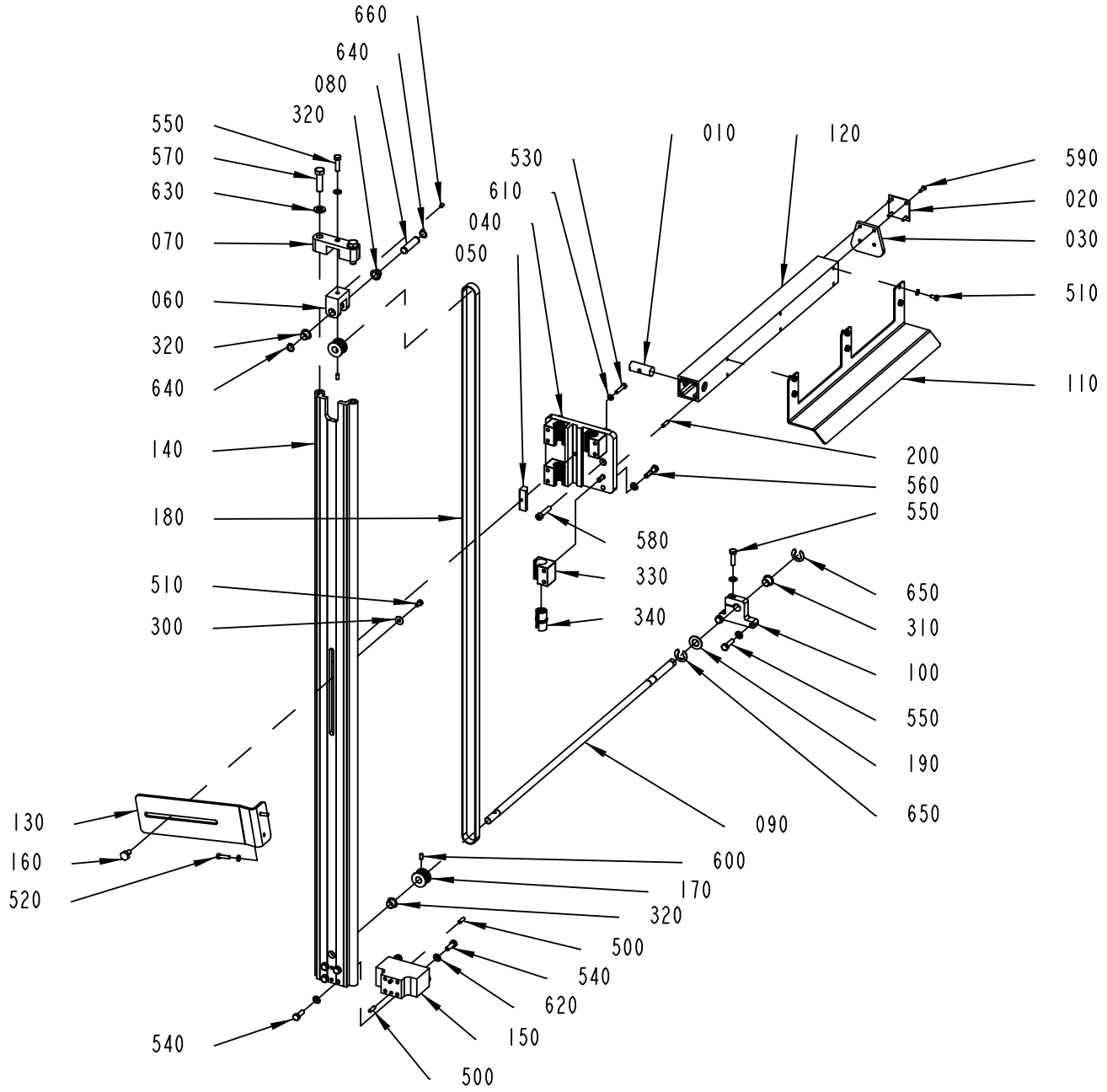

3227827-1
630890

ECM: 646238 - 20131125
Group number: 3227827-0100
Assembly Drawing: 3227827-1_1_AE

Pos	Part No	UN	Qty	Description	Page No
-					
010	486268-0000		1	NUT	
020	556604-0000		1	COVER PLATE	
030	1258875-0000		1	RUBBER PLATE	
040	3227814-0000		1	CARRIAGE	
050	3227815-0000		1	CLAMPING PLATE	
060	3227816-0000		1	BELT TENSIONER	
070	3227817-0000		1	BRACKET	
080	3227818-0000		1	SHAFT	
090	3227819-0000		1	SHAFT	
100	3227820-0000		1	CLAMPING PLATE	
110	3227821-0000		1	SUPPORT PLATE	
120	3227822-0000		1	PROFILE 50X50	
130	3227823-0000		1	SUPPORTING SHEET	
140	3227824-0000		1	SLIDE RAIL	
150	3227825-0000		1	BRACKET	
160	3227826-0000		1	HEXAGON FLANGE NUT	
170	3238129-0000		2	TIMING BELT PULLEY	
180	90605-5445		1	TIMING BELT 16T5/2800 PU	
190	1021155-0000		1	WASHER	
200	1065410-0000		4	SLOTTED PIN	
300	90005-0060		1	WASHER PLAIN, RBS 6,4/M6)/18,H=1,5	
310	90240-0263		1	FLANGE BUSHING, IGLIDUR X 15X17X12	
320	90240-0273		3	FLANGE BUSHING, IGLIDUR G 14X16X12	
330	90600-0429		4	SLIDER, WM-01-20	
340	90600-0431		4	BUSHING INSERT, J200UMO-01-20	
500	311103-0353		4	PARALLEL PIN ISO 2338 6M6X20 A1	
510	312105-0366		7	SCREW, M6S ISO 4017 M6X12 A4 80	
520	312105-0372		2	SCREW, M6S ISO 4017 M6X25 A4 80	
530	312105-0374		1	SCREW, M6S ISO 4014 M6X30 A4 80	
540	312105-0453		8	SCREW, M6S ISO 4017 M8X25 A4 80	
550	312105-0455		4	SCREW, M6S ISO 4017 M8X30 A4 80	
560	312105-0457		8	SCREW, M6S ISO 4014 M8X35 A4 80	
570	312105-0541		2	SCREW, M6S ISO 4014 M12X45 A4 80	
580	312115-0459		1	SCREW ISO4762 M8X40 A4 80	
590	312145-0329		4	SCREW ISO 2009 MFS M5X16 A4	
600	312318-0366		2	SET SCREW, CUP END ISO4029 M6X12 A4	
610	315106-0153		9	WASHER PLAIN, M6 ISO7089-6-200 HV A4	
620	315106-0165		20	WASHER PLAIN, M8 ISO7089-8-200 HV A4	
630	315106-0178		2	WASHER PLAIN, M12 ISO7089-12-200 HV A4	
640	315751-0111		2	RETAINING RING FOR SHAFT DIN 471 14 SS	
650	315755-0112		2	RETAINING RING SHAFT DIN 6799 12 SS	
660	312309-0362		1	SCREW ISO4026 M6X8 A4	

Machine Type	Group Description	Used-In	Group Number	Page No

Tetra Pak

SPC
Spare Parts Catalogue

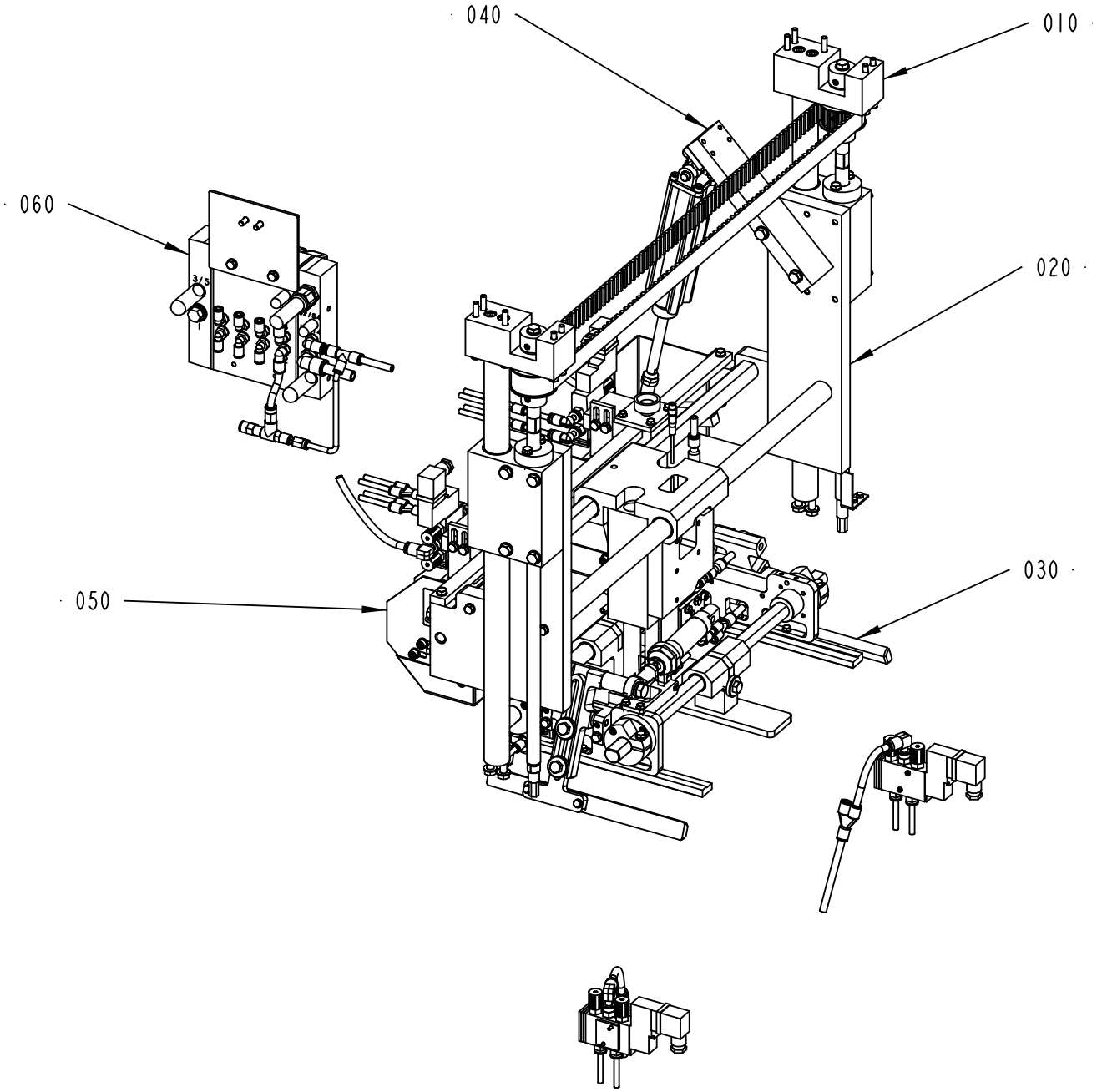

673836-5
559919

ECM: 567372 - 20120710
Group number: 673836-0500
Assembly Drawing: 673836-5_1_AA

Pos	Part No	UN	Qty	Description	Page No
-					
010	1074251-0600		1	WA HEIGHT ADJUSTMENT	**5-5**
020	3251381-0100		1	WA FRAME	**5-7**
030	3207672-0100		1	WA SQUEEZER	**5-9**
040	3251382-0100		1	FLAP FOLDER	**5-21**
050	2763050-0300		1	WA HOTMELT EQUIPMENT	**5-23, 5-25**
060	3251385-0100		1	VALVE RAMP	**5-27**

Pos	Part No	UN	Qty	Description	Page No

WA HEIGHT ADJUSTMENT

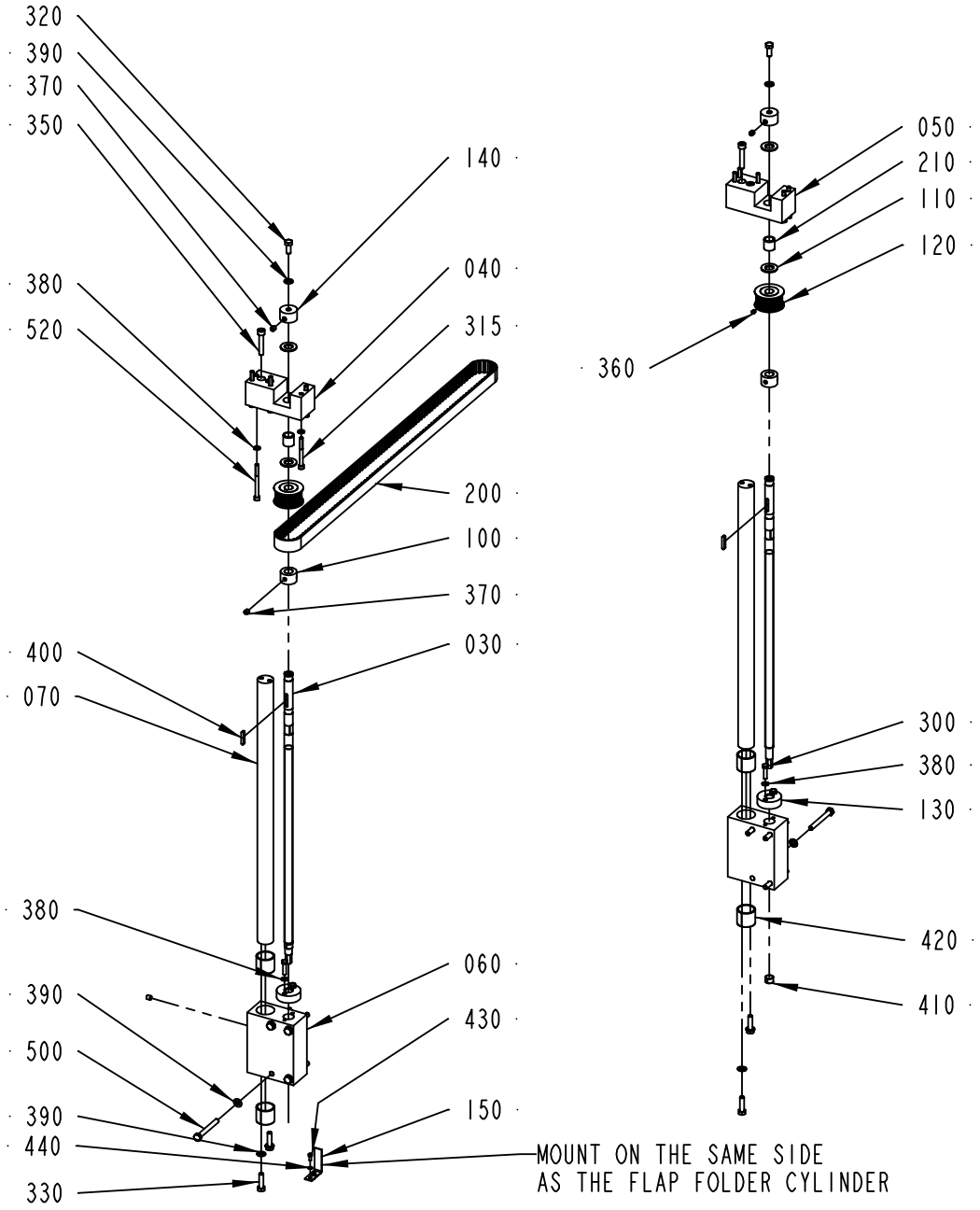

1074251-7
ECN 422209

ECM: 429664 - 20100121
Group number: 1074251-0600
Assembly Drawing: 1074251-7_1_AB

Pos	Part No	UN	Qty	Description	Page No
-					
030	2808733-0000		2	ADJUSTING SCREW	
040	1074261-0000		1	HOLDER	
050	1074262-0000		1	HOLDER	
060	2970905-0000		2	HOLDER	
070	2970907-0000		2	SHAFT	
100	1021038-0000		2	RETAINING RING	
110	1021039-0000		4	WASHER	
120	1287250-0000		2	TOOTHED PULLEY Z=16	
130	1021154-0000		2	NUT	
140	1074270-0000		2	HOLDER	
150	2504085-0000		1	ANGLE	
200	90417-0069		1	TIMING BELT 25T10/1610 PU	
210	90240-0205		2	BEAR. BUSHING W/O FL. 16X20X20MM	
300	312105-0372		4	SCREW, M6S ISO 4017 M6X25 A4 80	
315	312115-0382		4	SCREW ISO4762 M6X60 A4 80	
320	312105-0451		2	SCREW, M6S ISO 4017 M8X20 A4 80	
330	312105-0455		4	SCREW, M6S ISO 4017 M8X30 A4 80	
350	312115-0460		4	SCREW ISO4762 M8X45 A4 80	
360	312318-0360		2	SET SCREW, CUP END ISO4029 M6X6 A4	
370	312318-0443		12	SET SCREW, CUP END ISO4029 M8X8 A4	
380	315105-0153		14	WASHER PLAIN, 6,4X12X1,5 A4 BRB	
390	315105-0165		14	FWAS080G0-0S, WASHER PLAIN	
400	315701-0204		2	PARALLEL KEY W. ROUND ENDS, 5X5X28 MM	
410	321141-0194		2	BEARING BUSHING, 13X15X10 MM	
420	321141-0340		4	BEARING BUSHING, 30X34X30 MM	
430	312105-0289		2	SCREW, M6S ISO 4017 M4X10 A4 70	
440	315105-0136		2	WASHER PLAIN, 4,3X9X0,8 A4 BRB	
500	312105-0465		8	SCREW, M6S ISO 4014 M8X70 A4 80	
520	312115-0384		6	SCREW ISO4762 M6X70 A4 80	

Pos	Part No	UN	Qty	Description	Page No

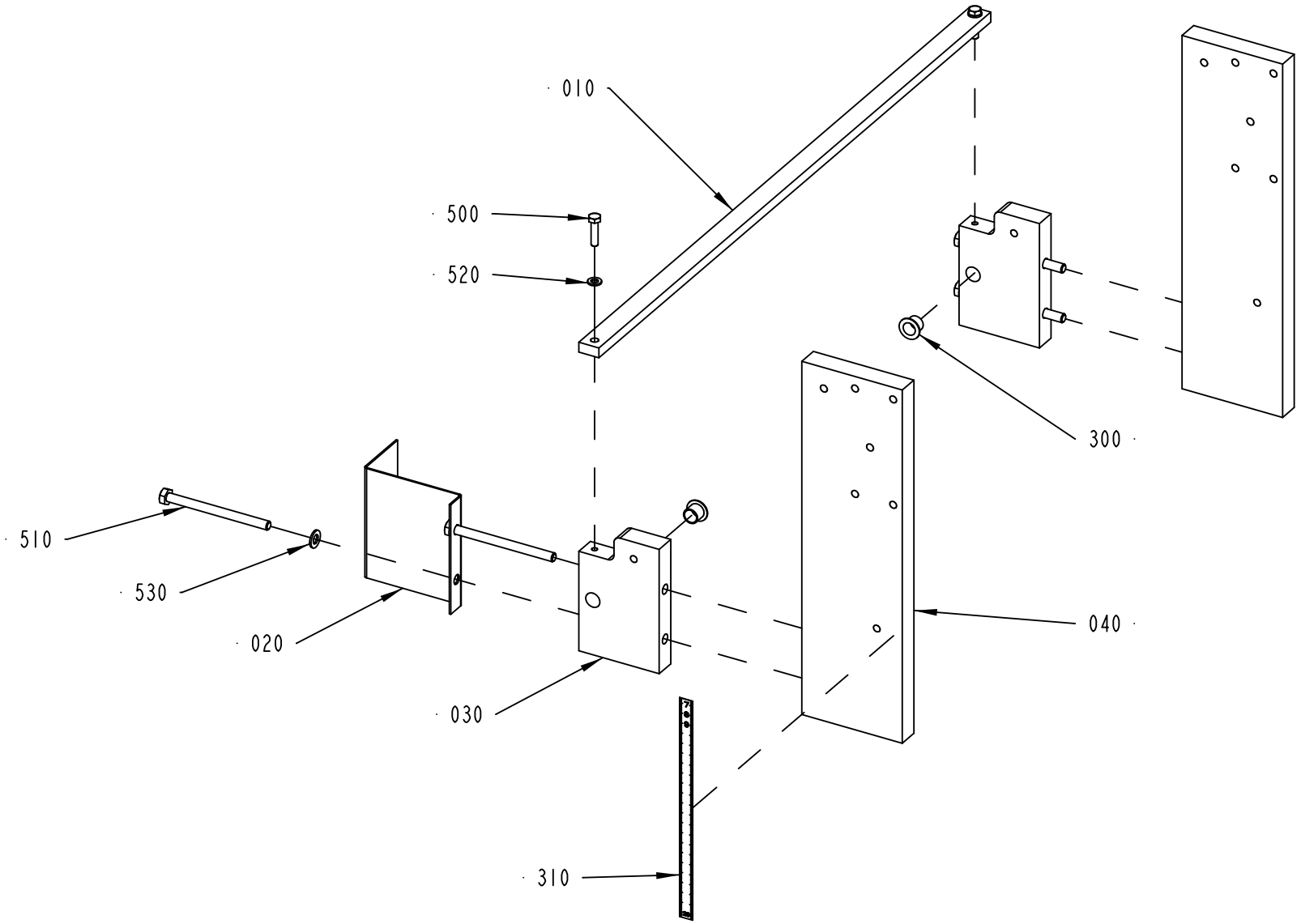

3251381-1
559919

ECM: 567415 - 20120710
Group number: 3251381-0100
Assembly Drawing: 3251381-1_1_AA

Pos	Part No	UN	Qty	Description	Page No
-					
010	1543729-0000		1	RAIL	
020	2894967-0000		1	COVER	
030	3207666-0000		2	SIDE PIECE	
040	3207670-0000		2	SIDE PIECE	
300	90240-0262		2	FLANGE BUSHING, IGLIDUR X 12X14X12	
310	90458-2779		1	SCALE , 0-1000MM ADHESIVE	
500	312105-0372		2	SCREW, M6S ISO 4017 M6X25 A4 80	
510	312105-0471		4	SCREW, M6S ISO 4014 M8X100 A4 80	
520	315105-0153		2	WASHER PLAIN, 6,4X12X1,5 A4 BRB	
530	315105-0165		4	FWAS080G0-0S, WASHER PLAIN	

Pos	Part No	UN	Qty	Description	Page No

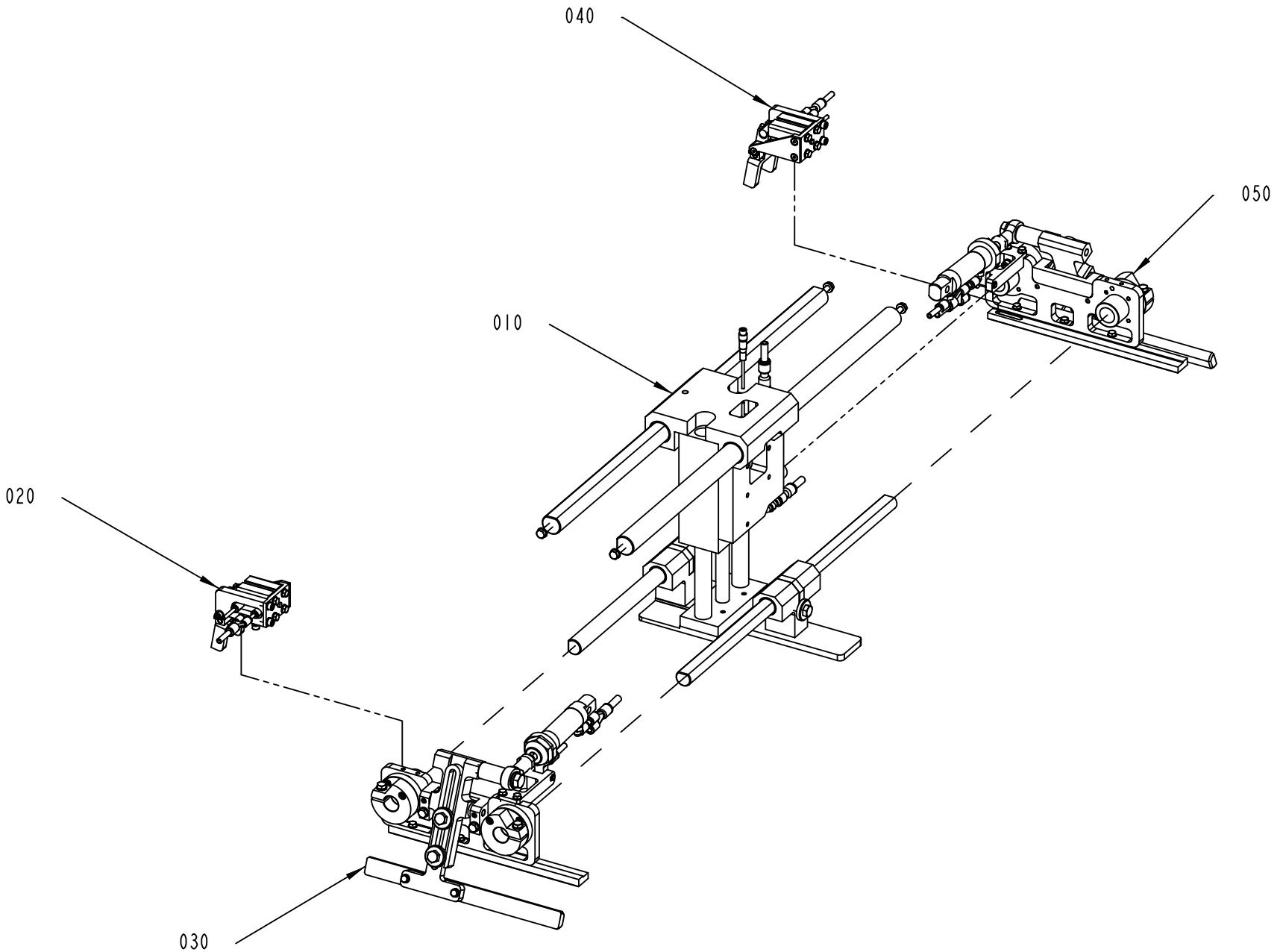

3207672-1
559919

ECM: 567420 - 20120710
Group number: 3207672-0100
Assembly Drawing: 3207672-1_1_AA

Pos	Part No	UN	Qty	Description	Page No
-					
010	3207663-0100		1	WA SQUEEZER	**5-11**
020	3207667-0100		1	PRESSURE UNIT	**5-13**
030	3207668-0100		1	PRESSURE UNIT	**5-15**
040	3207669-0100		1	PRESSURE UNIT	**5-17**
050	3207671-0100		1	PRESSURE UNIT	**5-19**

Pos	Part No	UN	Qty	Description	Page No

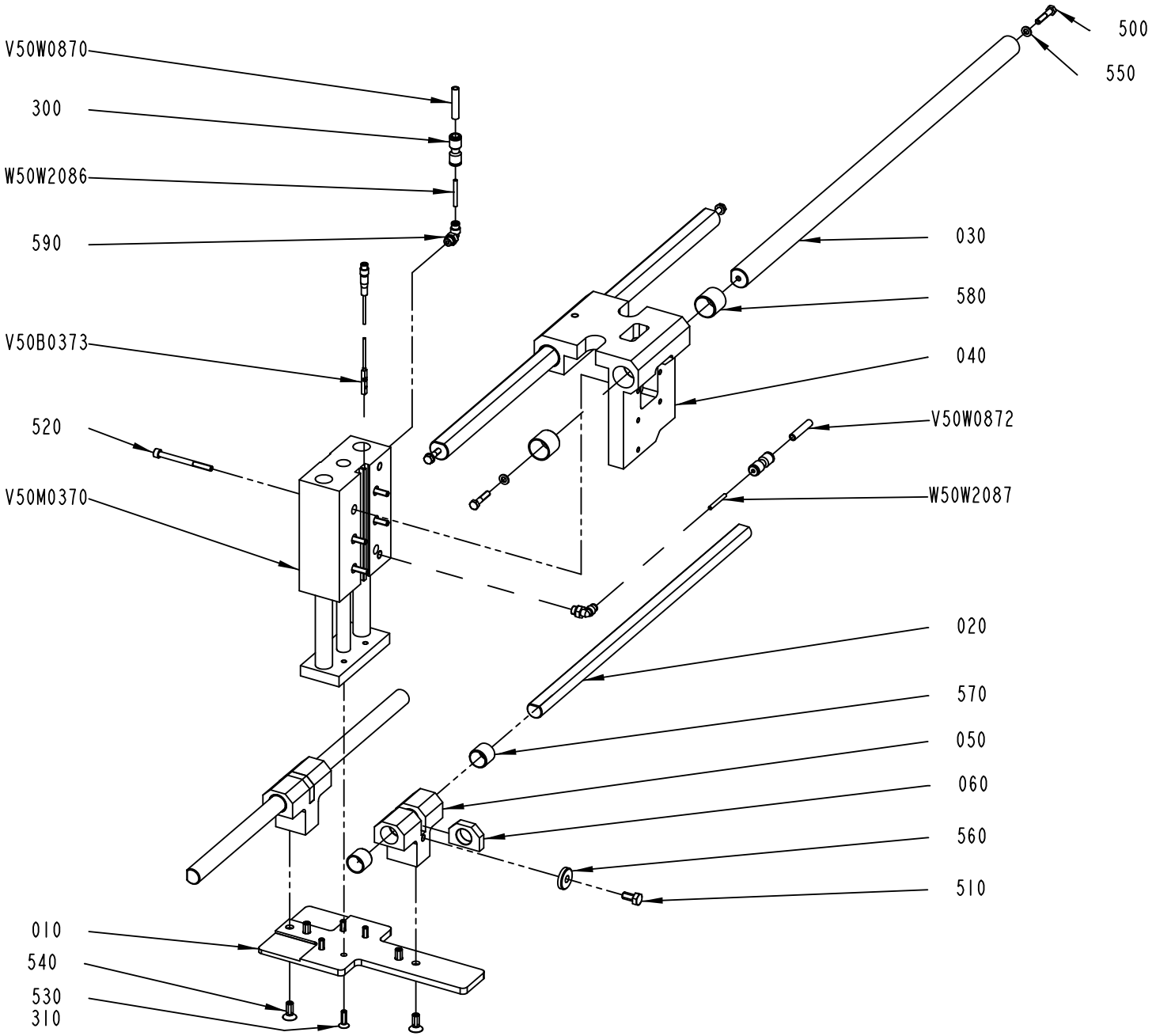

3207663-1
602279

ECM: 614527 - 20130618
Group number: 3207663-0100
Assembly Drawing: 3207663-1_1_AB

Pos	Part No	UN	Qty	Description	Page No
-					
010	3199162-0000		1	PRESSURE PLATE	
020	3199164-0000		2	SHAFT	
030	3199172-0000		2	SHAFT	
040	3199173-0000		1	BRACKET	
050	3199175-0000		2	BRACKET	
060	3207656-0000		2	COMPRESSION RING	
300	90055-0238		2	HOSE,NIPPLE,REDUCER,TUBE, 4/8MM	
310	90157-0021		1	LOCKING FLUID LOCTITE 270	
500	312105-0374		4	SCREW, M6S ISO 4014 M6X30 A4 80	
510	312105-0449		2	SCREW, M6S ISO 4017 M8X16 A4 80	
520	312115-0384		5	SCREW ISO4762 M6X70 A4 80	
530	312155-0370		4	SCREW DIN 7991 MF6S M6X20 A4 70	
540	312155-0451		4	SCREW DIN 7991 MF6S M8X20 A4 70	
550	315106-0153		4	WASHER PLAIN, M6 ISO7089-6-200 HV A4	
560	315125-0165		2	WASHER HIGH, TBRSB 8,4X26X5 A4	
570	321133-0260		4	BUSHING IGLIDUR G 20X23X20	
580	321133-0300		4	BUSHING IGLIDUR G 25X28X25	
590	350002-0005		2	PUSH-IN L-FITTING QSL-F-G1/8-4	
V50B0373	90600-3273		1	PROX. SENSOR, SMT-8M-PS-24V-K-0,3-M8D	
V50M0370	90458-2121		1	CYLINDER, WITH INT. GUIDING BORE 40	
V50W0870	315400-0004	M	1.4	TUBE PUN-H-8X1,25-BL	
V50W0872	315400-0004	M	1.4	TUBE PUN-H-8X1,25-BL	
W50W2086	315400-0016	MM	100	TUBE PUN-H-4X0,75-BL	
W50W2087	315400-0016	MM	100	TUBE PUN-H-4X0,75-BL	

Pos	Part No	UN	Qty	Description	Page No

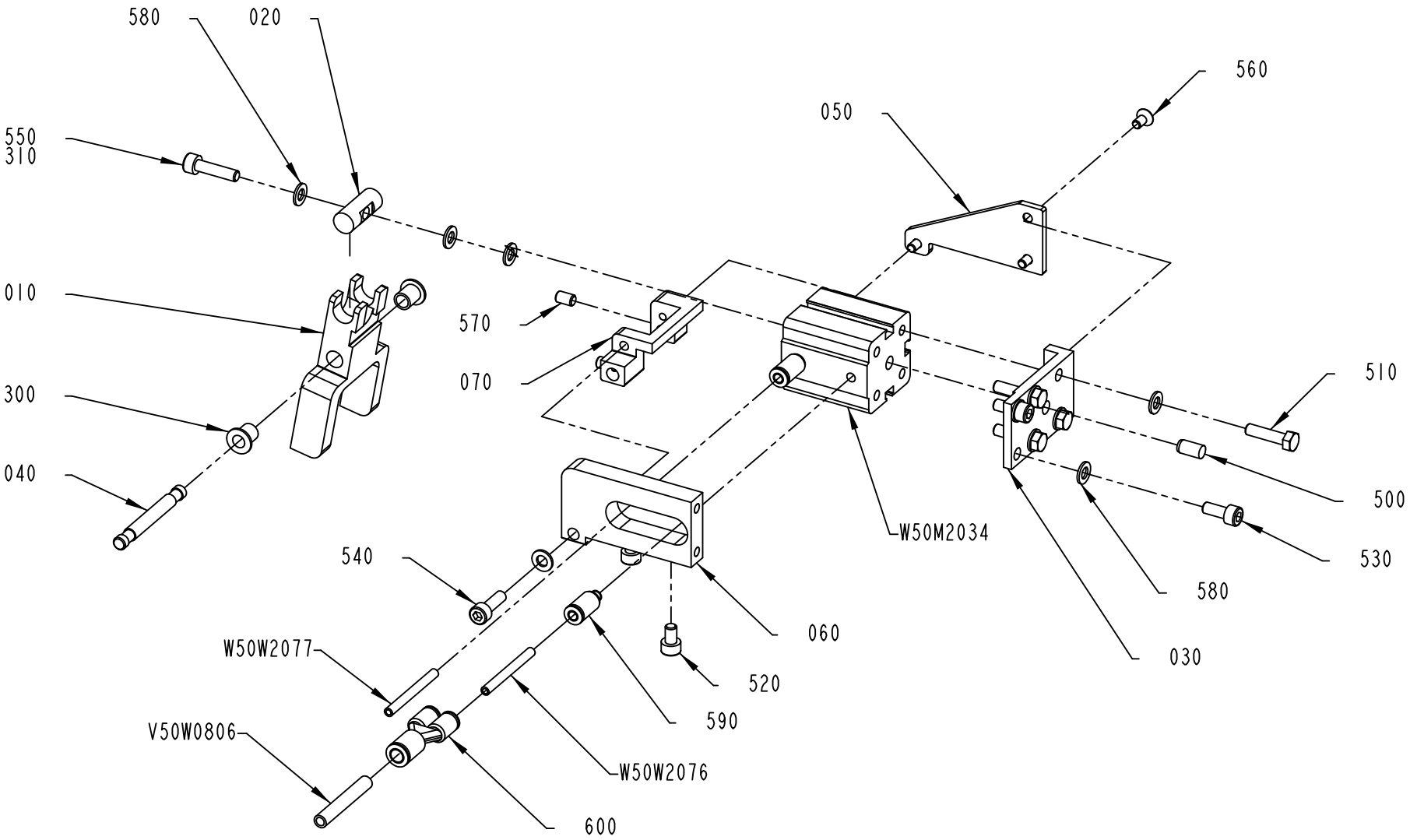

3207667-1
630884

ECM: 646202 - 20131125
Group number: 3207667-0100
Assembly Drawing: 3207667-1_1_AB

Pos	Part No	UN	Qty	Description	Page No
-					
010	3199169-0000		1	SQUEEZER	
020	3207644-0000		1	FASTENER	
030	3207646-0000		1	BRACKET	
040	3207657-0000		1	SHAFT	
050	3207659-0000		1	GABLE PLATE	
060	3207664-0000		1	SIDE PLATE	
070	3207665-0000		1	BRACKET	
300	90240-0256		2	FLANGE BUSHING, IGLIDUR G 6X8X10	
300	90157-0021	G	1	LOCKING FLUID LOCTITE 270	
500	311103-0349		1	PARALLEL PIN ISO 2338 6M6X12 A1	
510	312105-0331		4	SCREW, M6S ISO 4017 M5X20 A4 80	
520	312115-0323		2	SCREW ISO4762 M5X8 A4 80	
530	312115-0327		2	SCREW ISO4762 M5X12 A4 80	
540	312115-0329		1	SCREW ISO4762 M5X16 A4 80	
550	312115-0331		1	SCREW ISO4762 M5X20 A4 80	
560	312155-0287		3	SCREW DIN 7991 MF6S M4X8 A4 70	
570	312318-0323		2	SET SCREW, CUP END ISO4029 M5X8 A4	
580	315106-0146		10	WASHER PLAIN, M5 ISO7089-5-200 HV A4	
590	350003-0001		2	PUSH-IN FITTING QS-F-M5-4-I	
600	350015-0002		1	PUSH-IN Y-CONNECTOR QSY-F-6-4	
V50W0806	315400-0001	M	1.2	6-4E PUN-H-6X1-BL	
W50M2034	90459-6337		1	DOUBLE ACTING, COMPACT, 20-5	
W50W2076	315400-0016	MM	600	TUBE PUN-H-4X0,75-BL	
W50W2077	315400-0016	MM	600	TUBE PUN-H-4X0,75-BL	

Pos	Part No	UN	Qty	Description	Page No

Machine Type	Group Description	Used-In	Group Number	Page No

PRESSURE UNIT

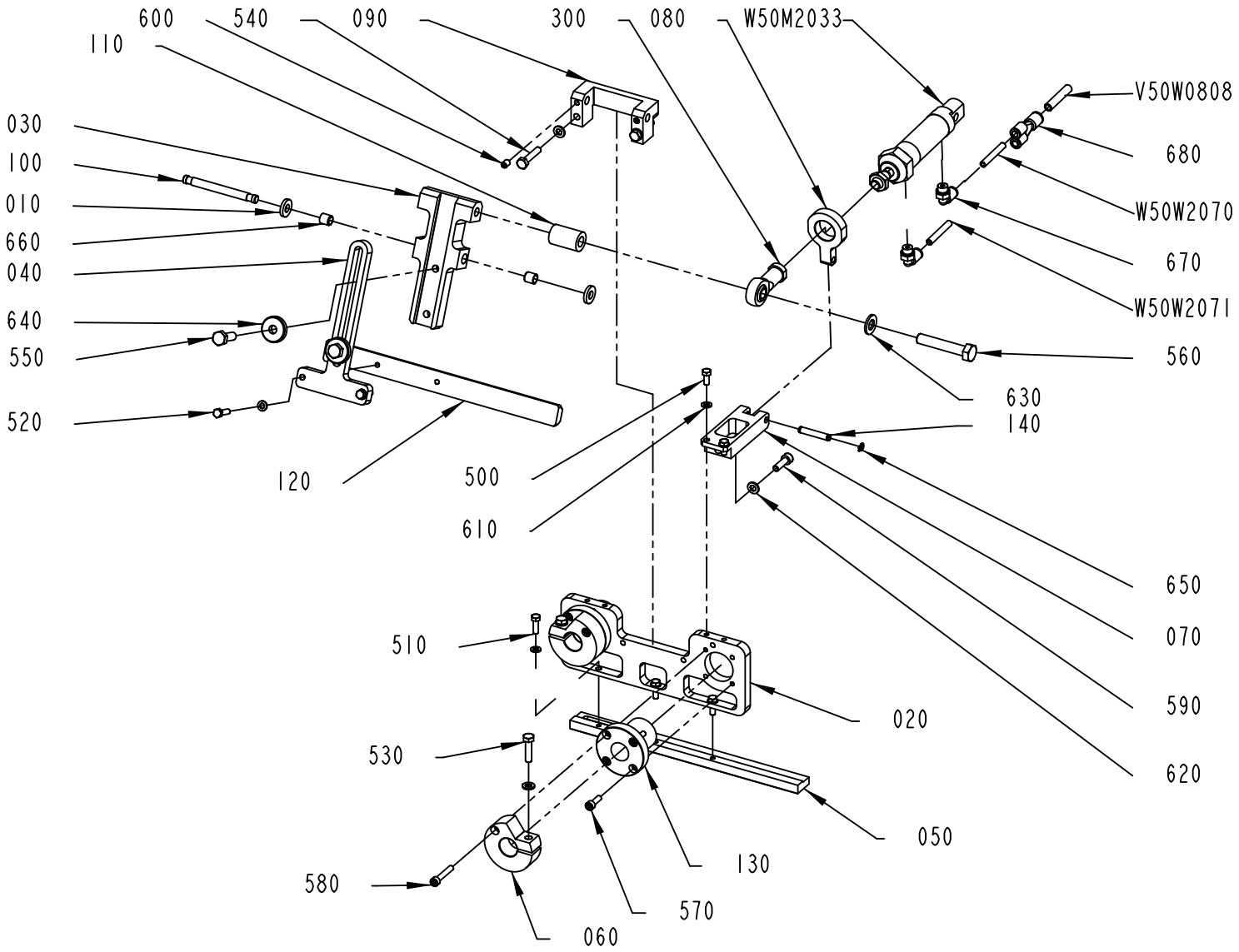

3207668-1
559919

ECM: 567423 - 20120710
Group number: 3207668-0100
Assembly Drawing: 3207668-1_1_AA

Pos	Part No	UN	Qty	Description	Page No
-					
010	1021130-0000		2	WASHER	
020	3199165-0000		1	FASTENING PLATE	
030	3199166-0000		1	CYLINDER BRACKET	
040	3199167-0000		1	ADJUSTMENT PLATE	
050	3199170-0000		1	PRESSURE PLATE	
060	3199174-0000		2	CLAMPING SLEEVE	
070	3207647-0000		1	BRACKET	
080	3207648-0000		1	PENDULUM SUSPENSION	
090	3207650-0000		1	PIVOT BRACKET	
100	3207651-0000		1	SHAFT	
110	3207652-0000		1	SPACER SLEEVE	
120	3207655-0000		1	PRESSURE RAIL	
130	3207673-0000		2	BUSHING	
140	3238128-0000		1	LOCKING FINGER	
300	90459-1018		1	ROD END, BALL JOINT EYE M10X1,25	
500	312105-0327		2	SCREW, M6S ISO 4017 M5X12 A4 80	
510	312105-0329		3	SCREW, M6S ISO 4017 M5X16 A4 80	
520	312105-0331		2	SCREW, M6S ISO 4017 M5X20 A4 80	
530	312105-0372		2	SCREW, M6S ISO 4017 M6X25 A4 80	
540	312105-0374		2	SCREW, M6S ISO 4014 M6X30 A4 80	
550	312105-0453		2	SCREW, M6S ISO 4017 M8X25 A4 80	
560	312105-0502		1	SCREW, M6S ISO 4014 M10X55 A4 80	
570	312115-0329		6	SCREW ISO4762 M5X16 A4 80	
580	312115-0335		2	SCREW ISO4762 M5X30 A4 80	
590	312115-0370		1	SCREW ISO4762 M6X20 A4 80	
600	312318-0362		2	SET SCREW, CUP END ISO4029 M6X8 A4	
610	315106-0146		7	WASHER PLAIN, M5 ISO7089-5-200 HV A4	
620	315106-0153		5	WASHER PLAIN, M6 ISO7089-6-200 HV A4	
630	315106-0173		1	WASHER PLAIN, M10 ISO7089-10-200 HV A4	
640	315125-0165		2	WASHER HIGH, TBRSB 8,4X26X5 A4	
650	315751-0103		2	RETAINING RING FOR SHAFT DIN 471 6X 0.7C	
660	321134-0102		2	BUSHING IGLIDUR W300 8X10X10	
670	350002-0006		2	PUSH-IN L-FITTING QSL-F-G1/8-6	
680	350015-0004		1	PUSH-IN Y-CONNECTOR QSY-F-8-6	
V50W0808	315400-0004	M	1.2	TUBE PUN-H-8X1,25-BL	
W50M2033	90604-3331		1	DOUBLE ACTING, MINI-ISO, CYL. 25-20	
W50W2070	315400-0001	MM	500	6-4E PUN-H-6X1-BL	
W50W2071	315400-0001	MM	500	6-4E PUN-H-6X1-BL	

Pos	Part No	UN	Qty	Description	Page No

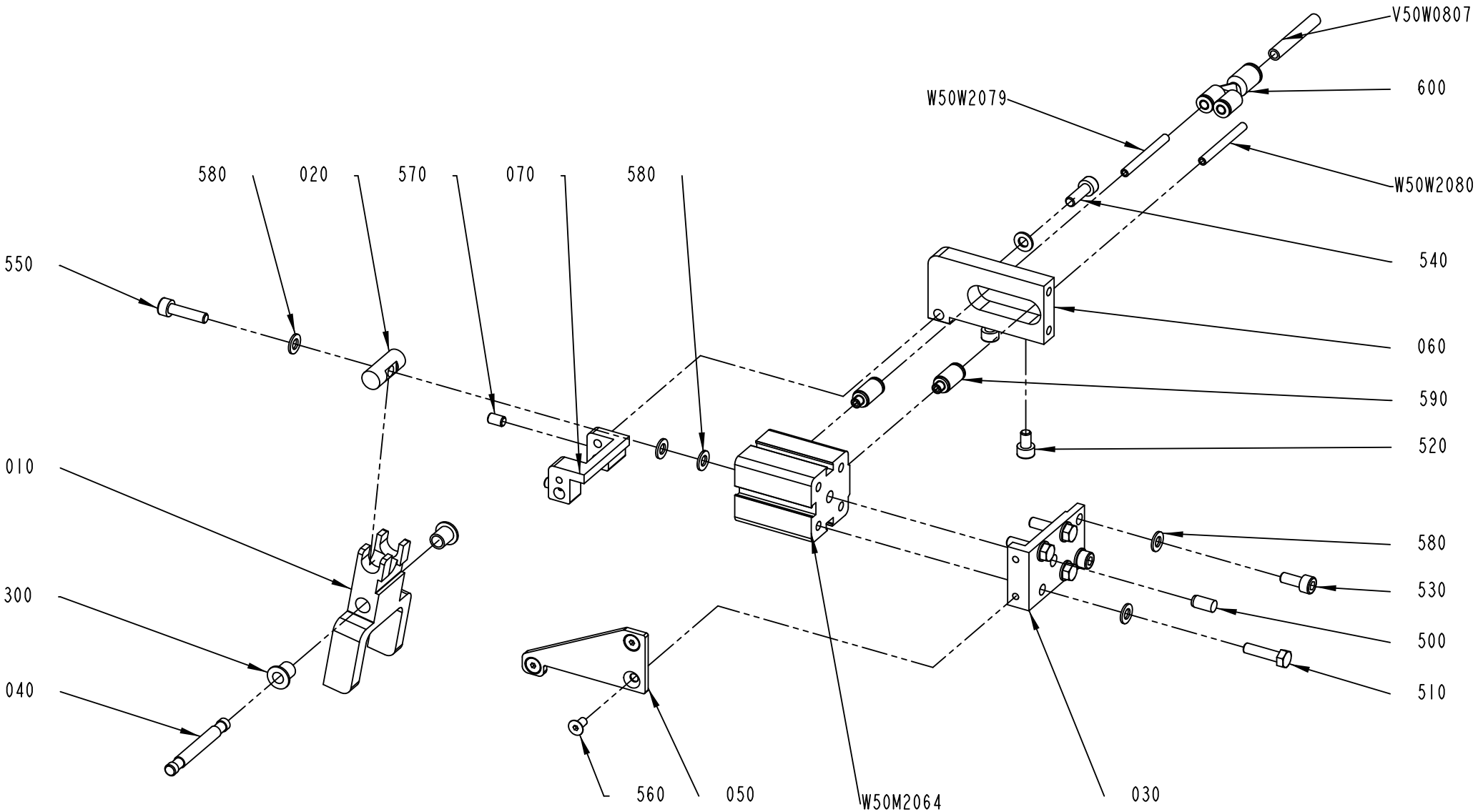

3207669-1
559919

ECM: 567424 - 20120710
Group number: 3207669-0100
Assembly Drawing: 3207669-1_1_AA

Pos	Part No	UN	Qty	Description	Page No
-					
010	3199169-0000		1	SQUEEZER	
020	3207644-0000		1	FASTENER	
030	3207646-0000		1	BRACKET	
040	3207657-0000		1	SHAFT	
050	3207662-0000		1	GABLE PLATE	
060	3207664-0000		1	SIDE PLATE	
070	3207661-0000		1	BRACKET	
300	90240-0256		2	FLANGE BUSHING, IGLIDUR G 6X8X10	
500	311103-0349		1	PARALLEL PIN ISO 2338 6M6X12 A1	
510	312105-0331		4	SCREW, M6S ISO 4017 M5X20 A4 80	
520	312115-0323		2	SCREW ISO4762 M5X8 A4 80	
530	312115-0327		2	SCREW ISO4762 M5X12 A4 80	
540	312115-0329		1	SCREW ISO4762 M5X16 A4 80	
550	312115-0331		1	SCREW ISO4762 M5X20 A4 80	
560	312155-0287		3	SCREW DIN 7991 MF6S M4X8 A4 70	
570	312318-0323		2	SET SCREW, CUP END ISO4029 M5X8 A4	
580	315106-0146		10	WASHER PLAIN, M5 ISO7089-5-200 HV A4	
590	350003-0001		2	PUSH-IN FITTING QS-F-M5-4-I	
600	350015-0002		1	PUSH-IN Y-CONNECTOR QSY-F-6-4	
V50W0807	315400-0001	M	1.2	6-4E PUN-H-6X1-BL	
W50M2064	90459-6337		1	DOUBLE ACTING, COMPACT, 20-5	
W50W2079	315400-0016	MM	600	TUBE PUN-H-4X0,75-BL	
W50W2080	315400-0016	MM	600	TUBE PUN-H-4X0,75-BL	

Pos	Part No	UN	Qty	Description	Page No

PRESSURE UNIT

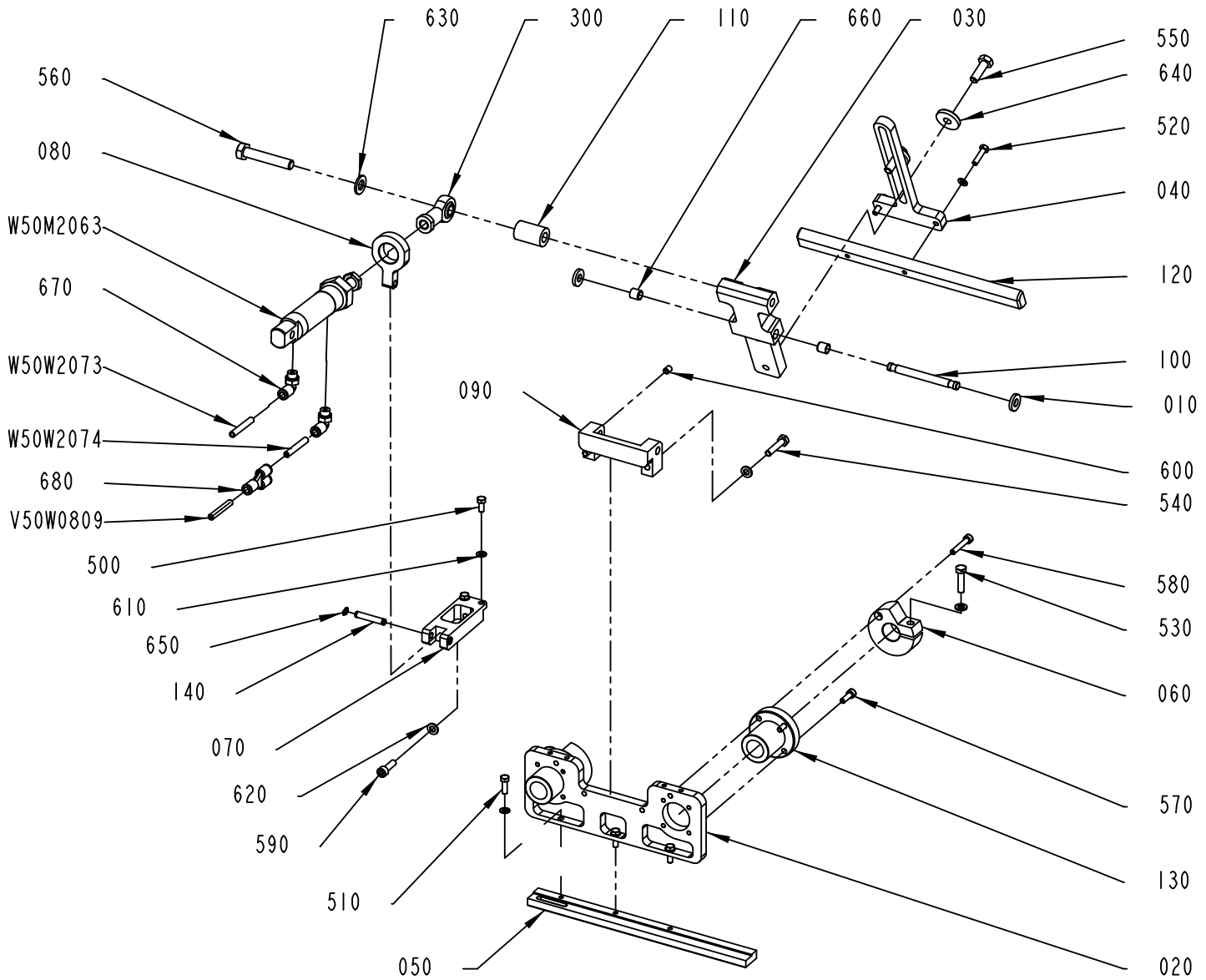

3207671-1
630890

ECM: 646203 - 20131125
Group number: 3207671-0100
Assembly Drawing: 3207671-1_1_AB

Pos	Part No	UN	Qty	Description	Page No
-					
010	1021130-0000		2	WASHER	
020	3199165-0000		1	FASTENING PLATE	
030	3199166-0000		1	CYLINDER BRACKET	
040	3199167-0000		1	ADJUSTMENT PLATE	
050	3207660-0000		1	PRESSURE PLATE	
060	3199174-0000		2	CLAMPING SLEEVE	
070	3207647-0000		1	BRACKET	
080	3207648-0000		1	PENDULUM SUSPENSION	
090	3207650-0000		1	PIVOT BRACKET	
100	3207651-0000		1	SHAFT	
110	3207652-0000		1	SPACER SLEEVE	
120	3207655-0000		1	PRESSURE RAIL	
130	3207673-0000		2	BUSHING	
140	3238128-0000		1	LOCKING FINGER	
300	90459-1018		1	ROD END, BALL JOINT EYE M10X1,25	
500	312105-0327		2	SCREW, M6S ISO 4017 M5X12 A4 80	
510	312105-0329		3	SCREW, M6S ISO 4017 M5X16 A4 80	
520	312105-0331		2	SCREW, M6S ISO 4017 M5X20 A4 80	
530	312105-0372		2	SCREW, M6S ISO 4017 M6X25 A4 80	
540	312105-0374		2	SCREW, M6S ISO 4014 M6X30 A4 80	
550	312105-0453		2	SCREW, M6S ISO 4017 M8X25 A4 80	
560	312105-0502		1	SCREW, M6S ISO 4014 M10X55 A4 80	
570	312115-0329		6	SCREW ISO4762 M5X16 A4 80	
580	312115-0335		2	SCREW ISO4762 M5X30 A4 80	
590	312115-0370		1	SCREW ISO4762 M6X20 A4 80	
600	312318-0362		2	SET SCREW, CUP END ISO4029 M6X8 A4	
610	315106-0146		7	WASHER PLAIN, M5 ISO7089-5-200 HV A4	
620	315106-0153		5	WASHER PLAIN, M6 ISO7089-6-200 HV A4	
630	315106-0173		1	WASHER PLAIN, M10 ISO7089-10-200 HV A4	
640	315125-0165		2	WASHER HIGH, TBRSB 8,4X26X5 A4	
650	315751-0103		2	RETAINING RING FOR SHAFT DIN 471 6X 0.7C	
660	321134-0102		2	BUSHING IGLIDUR W300 8X10X10	
670	350002-0006		2	PUSH-IN L-FITTING QSL-F-G1/8-6	
680	350015-0001		1	PUSH-IN Y-CONNECTOR QSY-F-6	
V50W0809	315400-0001	M	1.2	6-4E PUN-H-6X1-BL	
W50M2063	90604-3331		1	DOUBLE ACTING, MINI-ISO, CYL. 25-20	
W50W2073	315400-0001	MM	500	6-4E PUN-H-6X1-BL	
W50W2074	315400-0001	MM	500	6-4E PUN-H-6X1-BL	

Pos	Part No	UN	Qty	Description	Page No

Machine Type | Group Description | Used-In | Group Number | Page No

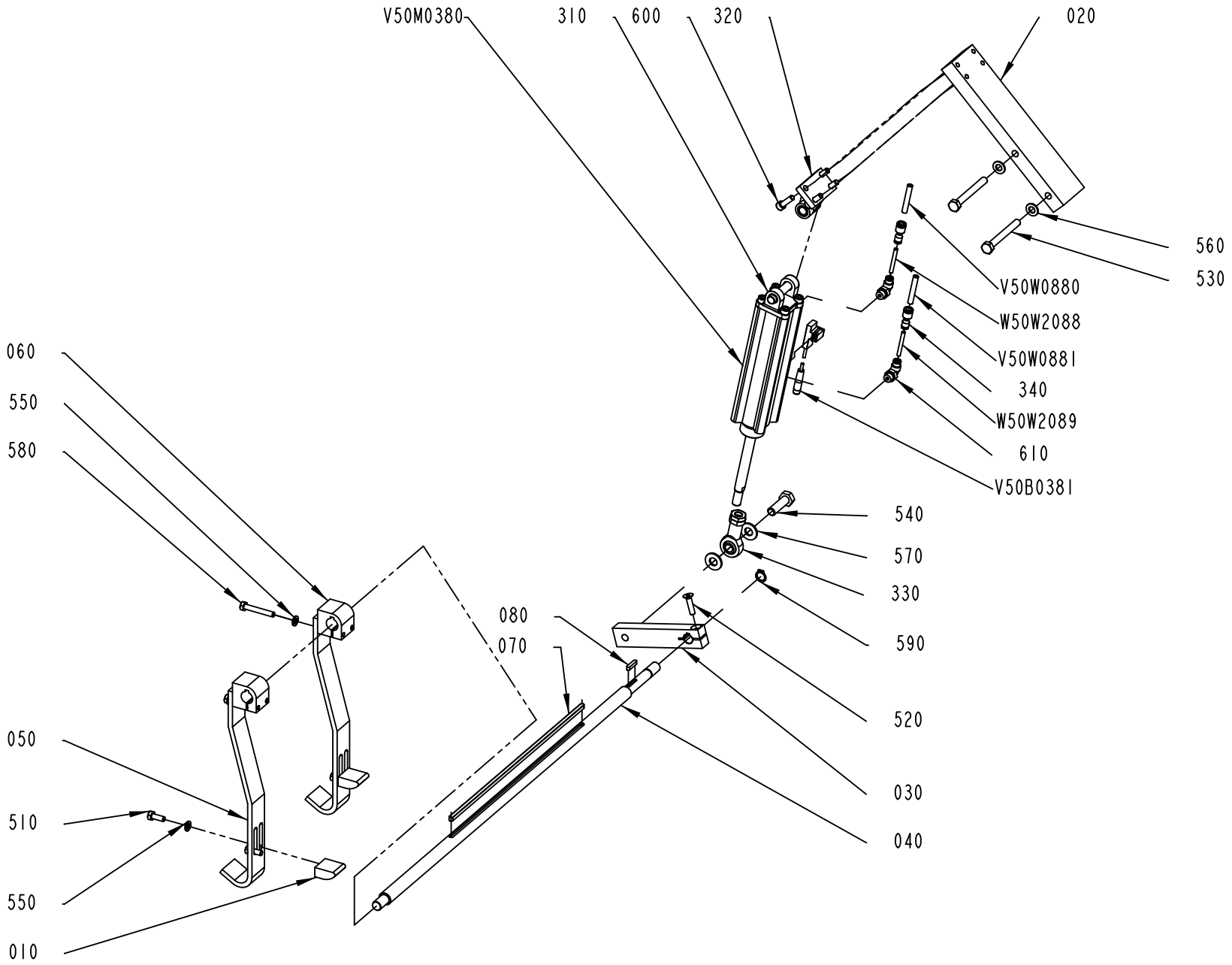

3251382-1
579668

ECM: 614528 - 20130618
Group number: 3251382-0100
Assembly Drawing: 3251382-1_1_AB

Pos	Part No	UN	Qty	Description	Page No
LINF U-FORM WASF, LINF Z-FORM WASF					
050	2995261-0000		2	HOLDER	
550	315105-0153		4	WASHER PLAIN, 6,4X12X1,5 A4 BRB	
LINF Z-FORM WAIF, LINF U-FORM WAIF, LINF U-FORM TRAYOVER, LINF Z-FORM TRAYOVER, LINF U-FORM WAMF, LINF Z-FORM WAMF					
010	1074308-0000		2	LOCATING PIECE	
050	2504067-0000		2	HOLDER	
510	312105-0368		4	SCREW, M6S ISO 4017 M6X16 A4 80	
550	315105-0153		8	WASHER PLAIN, 6,4X12X1,5 A4 BRB	
RINF U-FORM WAIF, RINF Z-FORM WAIF, RINF U-FORM TRAYOVER, RINF Z-FORM TRAYOVER, RINF U-FORM WAMF, RINF Z-FORM WAMF					
010	1074308-0000		2	LOCATING PIECE	
050	2504067-0000		2	HOLDER	
510	312105-0368		4	SCREW, M6S ISO 4017 M6X16 A4 80	
550	315105-0153		8	WASHER PLAIN, 6,4X12X1,5 A4 BRB	
RINF Z-FORM WASF, RINF U-FORM WASF					
050	2995261-0000		2	HOLDER	
550	315105-0153		4	WASHER PLAIN, 6,4X12X1,5 A4 BRB	
Common Parts					
020	2771134-0000		1	BRACKET	
030	2504063-0000		1	ARM	
040	2504052-0000		1	SHAFT	
060	3251383-0000		2	HOLDER	
070	1543562-0000		1	FLAT WEDGE	
080	315701-0170		1	PARALLEL KEY W. ROUND ENDS, 4X4X20 MM	
310	90459-0399		1	BRACKET, REAR, EYE WITH AXLE 32	
320	90459-0400		1	BRACKET, REAR CLEVIS FLANGE FOOT, 32	
330	90459-1018		1	ROD END, BALL JOINT EYE M10X1,25	
340	90055-0237		2	HOSE,NIPPLE,REDUCER,TUBE, 4/6MM	
520	312155-0372		1	SCREW DIN 7991 MF6S M6X25 A4 70	
530	312105-0465		2	SCREW, M6S ISO 4014 M8X70 A4 80	
540	312105-0497		1	SCREW, M6S ISO 4017 M10X35 A4 80	
560	315105-0165		2	FWAS080G0-0S, WASHER PLAIN	
570	315105-0173		2	WASHER PLAIN, 10,5X22X2 A4 BRB	
580	312105-0378		4	SCREW, M6S ISO 4014 M6X40 A4 80	
590	315751-0109		1	RETAINING RING FOR SHAFT DIN 471 12 SS	
600	312115-0370		8	SCREW ISO4762 M6X20 A4 80	
610	350002-0005		2	PUSH-IN L-FITTING QSL-F-G1/8-4	
V50B0381	90459-2392		1	PROX. SENSOR, SMT-C1-PS-24V-K0,3-M8-SA	
V50M0380	90603-5843		1	DOUBLE ACTING, PROFILE, CYL 32-80	
V50W0880	315400-0001	MM	800	6-4E PUN-H-6X1-BL	
V50W0881	315400-0001	MM	800	6-4E PUN-H-6X1-BL	
W50W2088	315400-0016	MM	100	TUBE PUN-H-4X0,75-BL	
W50W2089	315400-0016	MM	100	TUBE PUN-H-4X0,75-BL	

Machine Type	Group Description	Used-In	Group Number	Page No

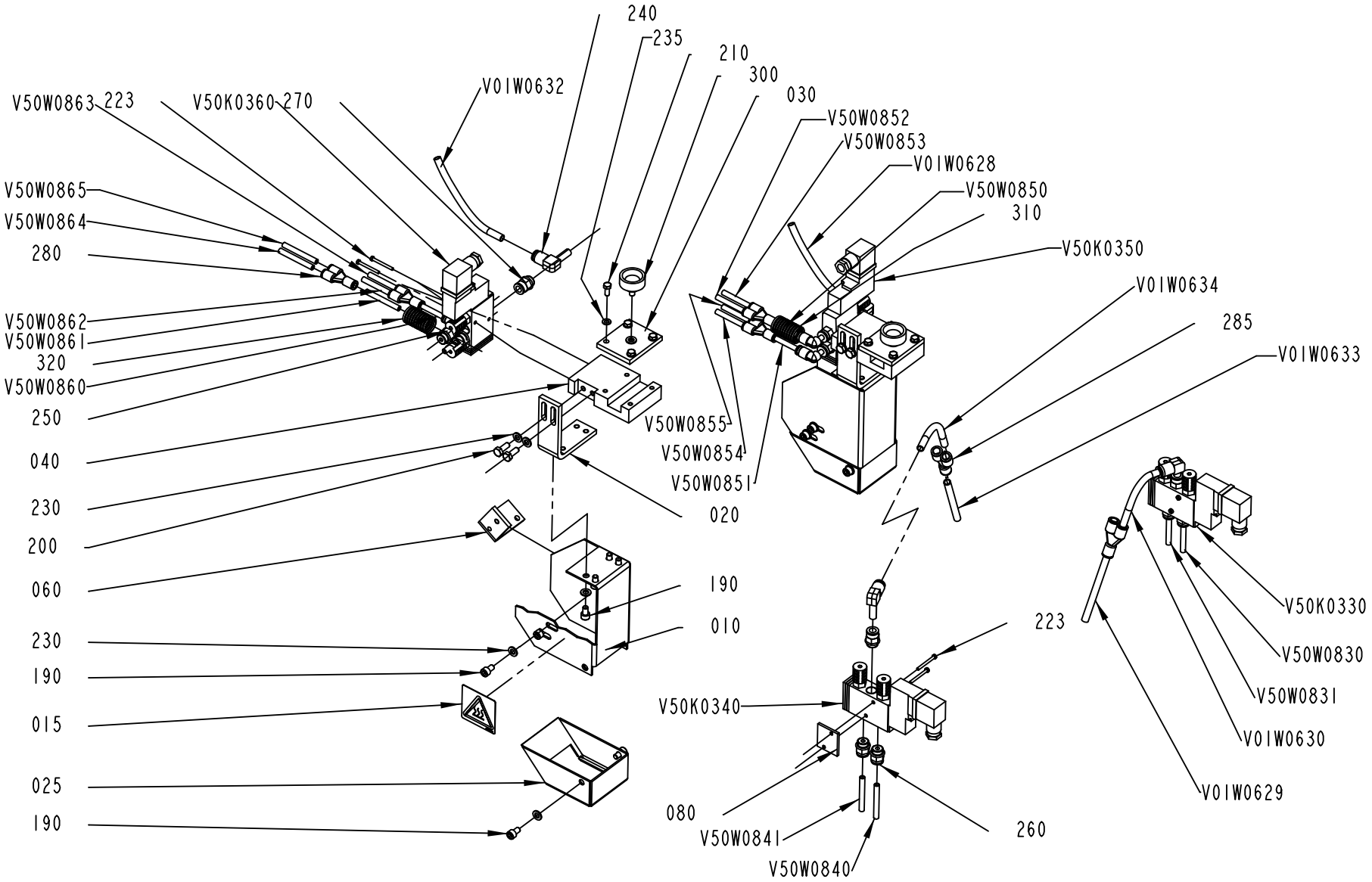

2763050-5
627532

Pos	Part No	UN	Qty	Description	Page No
TRAYOVER ISO, TRAYOVER ANSI, WAMEETING ISO, WAMEETING ANSI (See drawing on page: 5-24)					
223	312125-0232		4	SLOTTED HEAD SCREW, ISO1207 M3X25 A4	
240	90600-1175		2	ELBOW WITH TAILPIECE 8/8 MM	
260	90600-2719		4	PUSH-IN FITTING KQH06-U02	
270	90600-2720		2	PUSH-IN FITTING KQH08-U02	
290	350013-0003		2	PLUG QSC-8H	
WAINSIDE ANSI, WASIDE ANSI (See drawing on page: 5-22)					
010	2829366-0000		2	PROTECTION	
015	359725-0121		2	WARNING SIGN ANSI, HEAT ENERGY	
020	2504047-0000		2	HOLDER	
025	1074323-0000		2	PROTECTION	
030	1543779-0000		2	LID	
040	2782772-0000		2	HOLDER	
060	1074325-0000		2	BRACKET	
190	312115-0364		16	SCREW ISO4762 M6X10 A4 80	
200	312105-0368		4	SCREW, M6S ISO 4017 M6X16 A4 80	
210	312105-0327		8	SCREW, M6S ISO 4017 M5X12 A4 80	
223	312125-0232		8	SLOTTED HEAD SCREW, ISO1207 M3X25 A4	
230	315105-0153		22	WASHER PLAIN, 6,4X12X1,5 A4 BRB	
235	315105-0146		8	WASHER PLAIN, 5,3X10X1 A4 BRB	
240	90600-1175		4	ELBOW WITH TAILPIECE 8/8 MM	
250	90055-0222		4	ELBOW WITH TAILPIECE 6/6 MM	
260	90600-2719		8	PUSH-IN FITTING KQH06-U02	
270	90600-2720		4	PUSH-IN FITTING KQH08-U02	
280	350015-0001		4	PUSH-IN Y-CONNECTOR QSY-F-6	
300	90051-0075		2	KNOB, EXTERNAL THREAD. NO. 8308-1518	
V50K0330	90459-6327		1	SOLENOID VALVE, SOLIDBLUE, 1053894	
	90459-6332		*1*	*MUFFLER, 1/8 INCH, 105 8058*	
	90042-0392		*1*	*CONTACT 2 POLE + EARTH*	
V50K0340	90459-6327		1	SOLENOID VALVE, SOLIDBLUE, 1053894	
	90459-6332		*1*	*MUFFLER, 1/8 INCH, 105 8058*	
	90042-0392		*1*	*CONTACT 2 POLE + EARTH*	
V01W0628	315400-0004	M	3	TUBE PUN-H-8X1,25-BL	
V01W0632	315400-0004	M	3	TUBE PUN-H-8X1,25-BL	
V50W0850	90166-0202	MM	300	TEFLON PIPE	
V50W0851	90166-0202	MM	300	TEFLON PIPE	
V50W0852	90166-0202	MM	100	TEFLON PIPE	
V50W0853	90166-0202	MM	100	TEFLON PIPE	
V50W0854	90166-0202	MM	100	TEFLON PIPE	
V50W0855	90166-0202	MM	100	TEFLON PIPE	
V50W0860	90166-0202	MM	300	TEFLON PIPE	
V50W0861	90166-0202	MM	300	TEFLON PIPE	
V50W0862	90166-0202	MM	100	TEFLON PIPE	
V50W0863	90166-0202	MM	100	TEFLON PIPE	
V50W0864	90166-0202	MM	100	TEFLON PIPE	
V50W0865	90166-0202	MM	100	TEFLON PIPE	
WAINSIDE ISO, WASIDE ISO (See drawing on page: 5-22)					
010	2829366-0000		2	PROTECTION	
015	1128853-0000		2	CAUTION SIGN	
020	2504047-0000		2	HOLDER	
025	1074323-0000		2	PROTECTION	
030	1543779-0000		2	LID	
040	2782772-0000		2	HOLDER	
060	1074325-0000		2	BRACKET	
190	312115-0364		16	SCREW ISO4762 M6X10 A4 80	
200	312105-0368		4	SCREW, M6S ISO 4017 M6X16 A4 80	
210	312105-0327		8	SCREW, M6S ISO 4017 M5X12 A4 80	
223	312125-0232		8	SLOTTED HEAD SCREW, ISO1207 M3X25 A4	
230	315105-0153		22	WASHER PLAIN, 6,4X12X1,5 A4 BRB	
235	315105-0146		8	WASHER PLAIN, 5,3X10X1 A4 BRB	
240	90600-1175		4	ELBOW WITH TAILPIECE 8/8 MM	
250	90055-0222		4	ELBOW WITH TAILPIECE 6/6 MM	
260	90600-2719		8	PUSH-IN FITTING KQH06-U02	
270	90600-2720		4	PUSH-IN FITTING KQH08-U02	
280	350015-0001		4	PUSH-IN Y-CONNECTOR QSY-F-6	
300	90051-0075		2	KNOB, EXTERNAL THREAD. NO. 8308-1518	
V50K0330	90459-6327		1	SOLENOID VALVE, SOLIDBLUE, 1053894	
	90459-6332		*1*	*MUFFLER, 1/8 INCH, 105 8058*	
	90042-0392		*1*	*CONTACT 2 POLE + EARTH*	
V50K0340	90459-6327		1	SOLENOID VALVE, SOLIDBLUE, 1053894	
	90459-6332		*1*	*MUFFLER, 1/8 INCH, 105 8058*	
	90042-0392		*1*	*CONTACT 2 POLE + EARTH*	
V01W0628	315400-0004	M	3	TUBE PUN-H-8X1,25-BL	
V01W0632	315400-0004	M	3	TUBE PUN-H-8X1,25-BL	
V50W0850	90166-0202	MM	300	TEFLON PIPE	
V50W0851	90166-0202	MM	300	TEFLON PIPE	
V50W0852	90166-0202	MM	100	TEFLON PIPE	
V50W0853	90166-0202	MM	100	TEFLON PIPE	
V50W0854	90166-0202	MM	100	TEFLON PIPE	
V50W0855	90166-0202	MM	100	TEFLON PIPE	
V50W0860	90166-0202	MM	300	TEFLON PIPE	
V50W0861	90166-0202	MM	300	TEFLON PIPE	
V50W0862	90166-0202	MM	100	TEFLON PIPE	
V50W0863	90166-0202	MM	100	TEFLON PIPE	

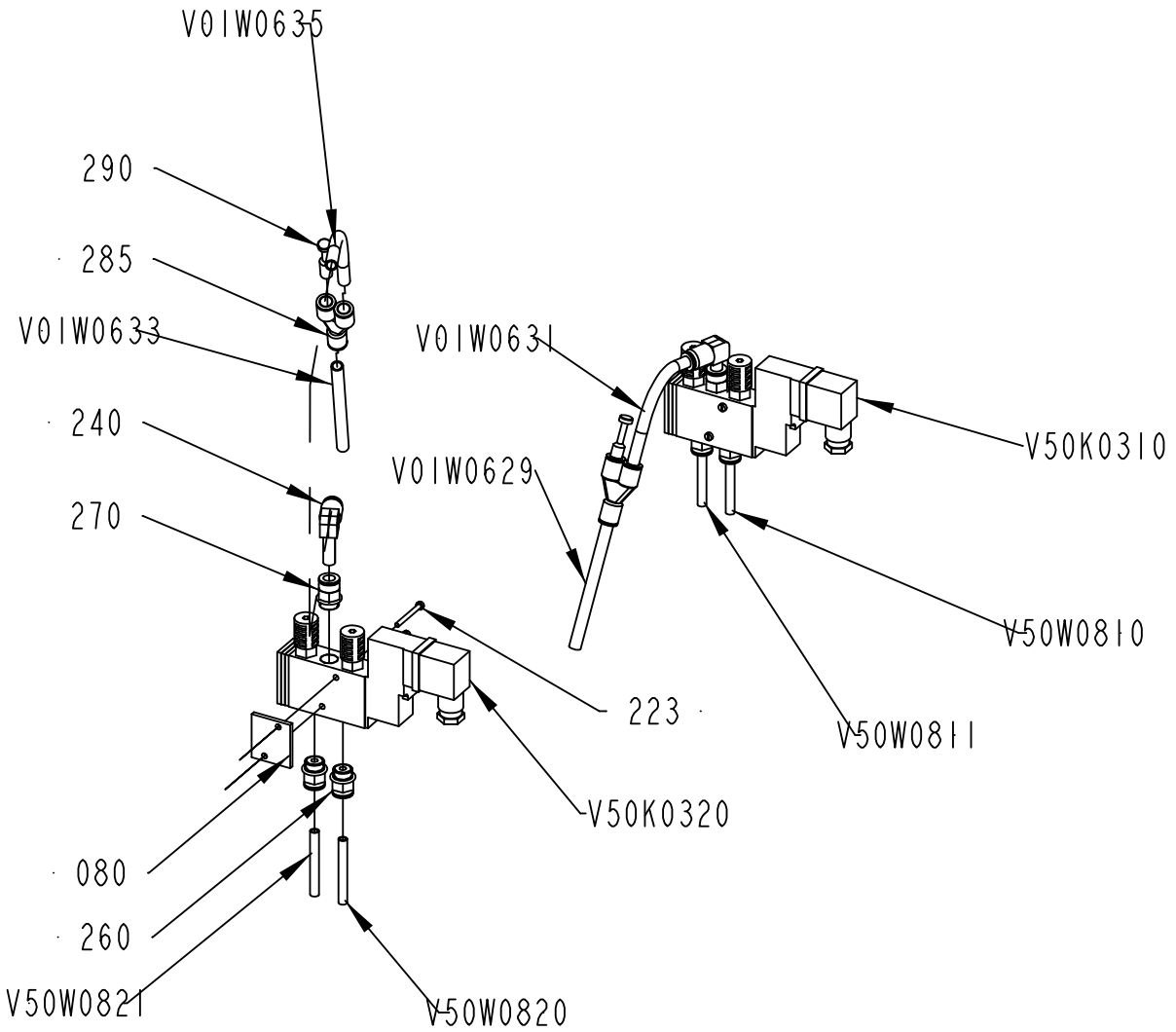

2763050-6
ECM 332599

Pos	Part No	UN	Qty	Description	Page No
WAINSIDE ISO, WASIDE ISO (Cont'd) (See drawing on page: 5-22)					
V50W0864	90166-0202	MM	100	TEFLON PIPE	
V50W0865	90166-0202	MM	100	TEFLON PIPE	
Common Parts					
080	2763037-0000		2	SPACER	
285	350015-0003		2	PUSH-IN Y-CONNECTOR QSY-F-8	
310	90459-7057	MM	300	HOSE, 21,1MM PA BLACK	
320	90459-7057	MM	300	HOSE, 21,1MM PA BLACK	
V50K0350	90459-6327		1	SOLENOID VALVE, SOLIDBLUE, 1053894	
	90459-6332		*1*	*MUFFLER, 1/8 INCH, 105 8058*	
	90042-0392		*1*	*CONTACT 2 POLE + EARTH*	
V50K0360	90459-6327		1	SOLENOID VALVE, SOLIDBLUE, 1053894	
	90459-6332		*1*	*MUFFLER, 1/8 INCH, 105 8058*	
	90042-0392		*1*	*CONTACT 2 POLE + EARTH*	
V01W0629	315400-0004	M	1	TUBE PUN-H-8X1,25-BL	
V01W0630	315400-0004	MM	600	TUBE PUN-H-8X1,25-BL	
V01W0633	315400-0004	M	1	TUBE PUN-H-8X1,25-BL	
V01W0634	315400-0004	MM	600	TUBE PUN-H-8X1,25-BL	
V50W0830	90166-0202	MM	500	TEFLON PIPE	
V50W0831	90166-0202	MM	500	TEFLON PIPE	
V50W0840	90166-0202	MM	500	TEFLON PIPE	
V50W0841	90166-0202	MM	500	TEFLON PIPE	

Pos	Part No	UN	Qty	Description	Page No

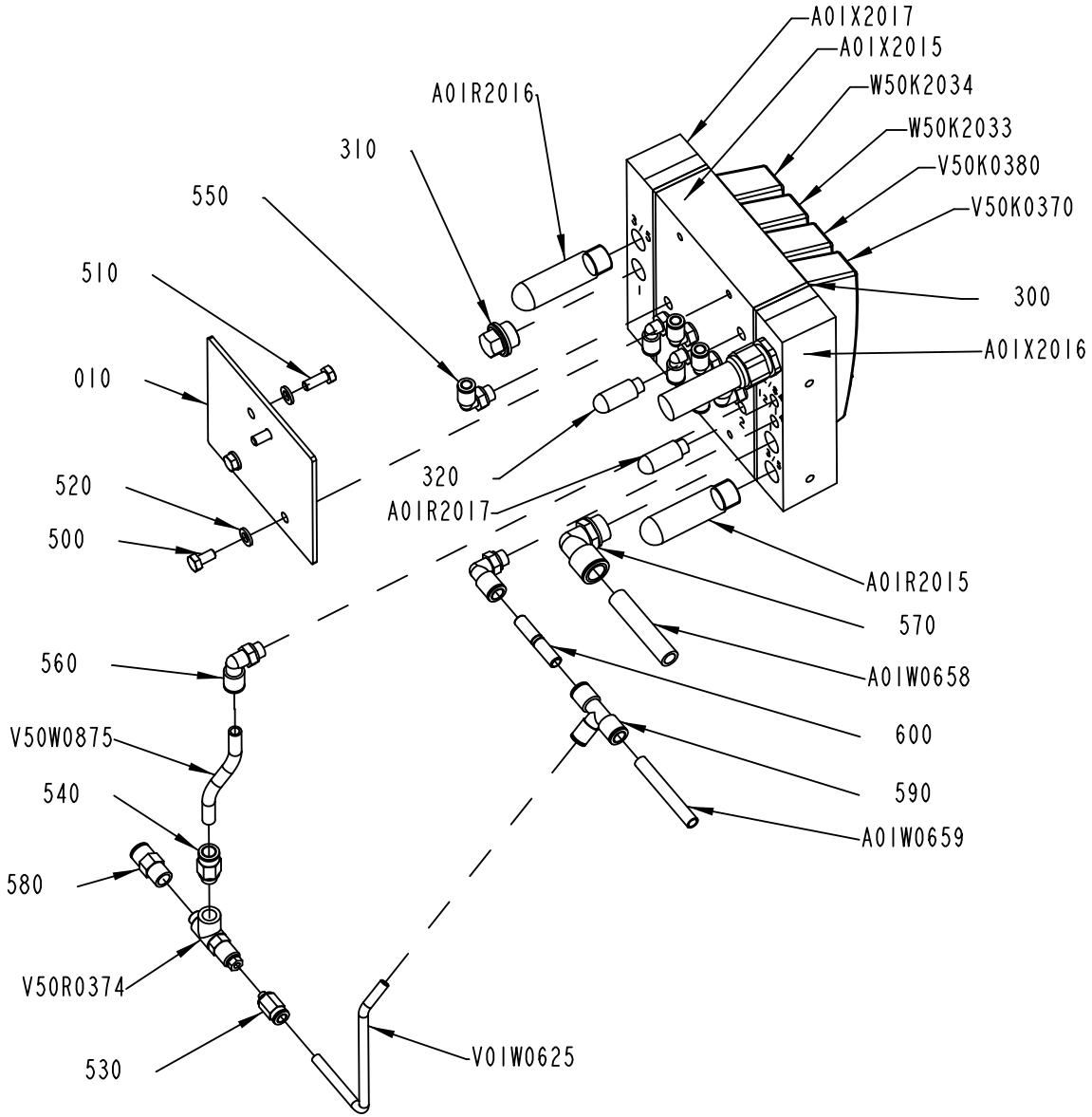

3251385-1
559919

ECM: 567413 - 20120710
Group number: 3251385-0100
Assembly Drawing: 3251385-1_1_AA

Pos	Part No	UN	Qty	Description	Page No
-					
010	3251387-0000		1	PLATE	
300	90458-1207		2	SEALING, STANDARD	
310	90459-0699		1	BLANKING PLUG, CDVI5.0-B-G3/8	
320	90328-0047		1	SILENCER, G1/8"	
500	312105-0366		2	SCREW, M6S ISO 4017 M6X12 A4 80	
510	312105-0368		2	SCREW, M6S ISO 4017 M6X16 A4 80	
520	315106-0153		4	WASHER PLAIN, M6 ISO7089-6-200 HV A4	
530	350001-0002		1	PUSH-IN FITTING QS-F-M5-6	
540	350001-0007		1	PUSH-IN FITTING QS-F-G1/8-8	
550	350002-0006		6	PUSH-IN L-FITTING QSL-F-G1/8-6	
560	350002-0007		3	PUSH-IN L-FITTING QSL-F-G1/8-8	
570	350002-0014		1	PUSH-IN L-FITTING QSL-F-G3/8-12	
580	350008-0005		1	PUSH-IN FITTING QSF-F-G1/8-8	
590	350011-0002		1	PUSH-IN T-FITTING QST-F-8-6	
600	350012-0003		1	SLEEVE QSH-F-8	
A01R2015	90328-0024		1	SILENCER, G3/8"	
A01R2016	90328-0024		1	SILENCER, G3/8"	
A01R2017	90328-0047		1	SILENCER, G1/8"	
A01W0658	315400-0010	M	1	TUBE PUN-H-12X2-BL	
A01W0659	315400-0004	M	1	TUBE PUN-H-8X1,25-BL	
A01X2015	90458-1204		1	BASIC SUB-BASE 4 VALVES, CDVI5.0-GB4-MP	
A01X2016	90458-1212		1	LEFT ENDPLATE INCL. 10M CABLE	
A01X2017	90458-1214		1	RIGHT ENDPL EXT. PILOT AIR,CDVI5.0-EPR-S	
V50K0370	90458-1194		1	VALVE, 5/2 MONOSTABLE	
V50K0380	90458-1194		1	VALVE, 5/2 MONOSTABLE	
V50R0374	90459-7377		1	NON-RETURN VALVE, HGL-1/8-B	
V01W0625	315400-0001	MM	200	6-4E PUN-H-6X1-BL	
V50W0875	315400-0004	MM	100	TUBE PUN-H-8X1,25-BL	
W50K2033	90458-1194		1	VALVE, 5/2 MONOSTABLE	
W50K2034	90458-1194		1	VALVE, 5/2 MONOSTABLE	

Pos	Part No	UN	Qty	Description	Page No

Machine Type | Group Description | Used-In | Group Number | Page No

Tetra Pak

SPC
Spare Parts Catalogue

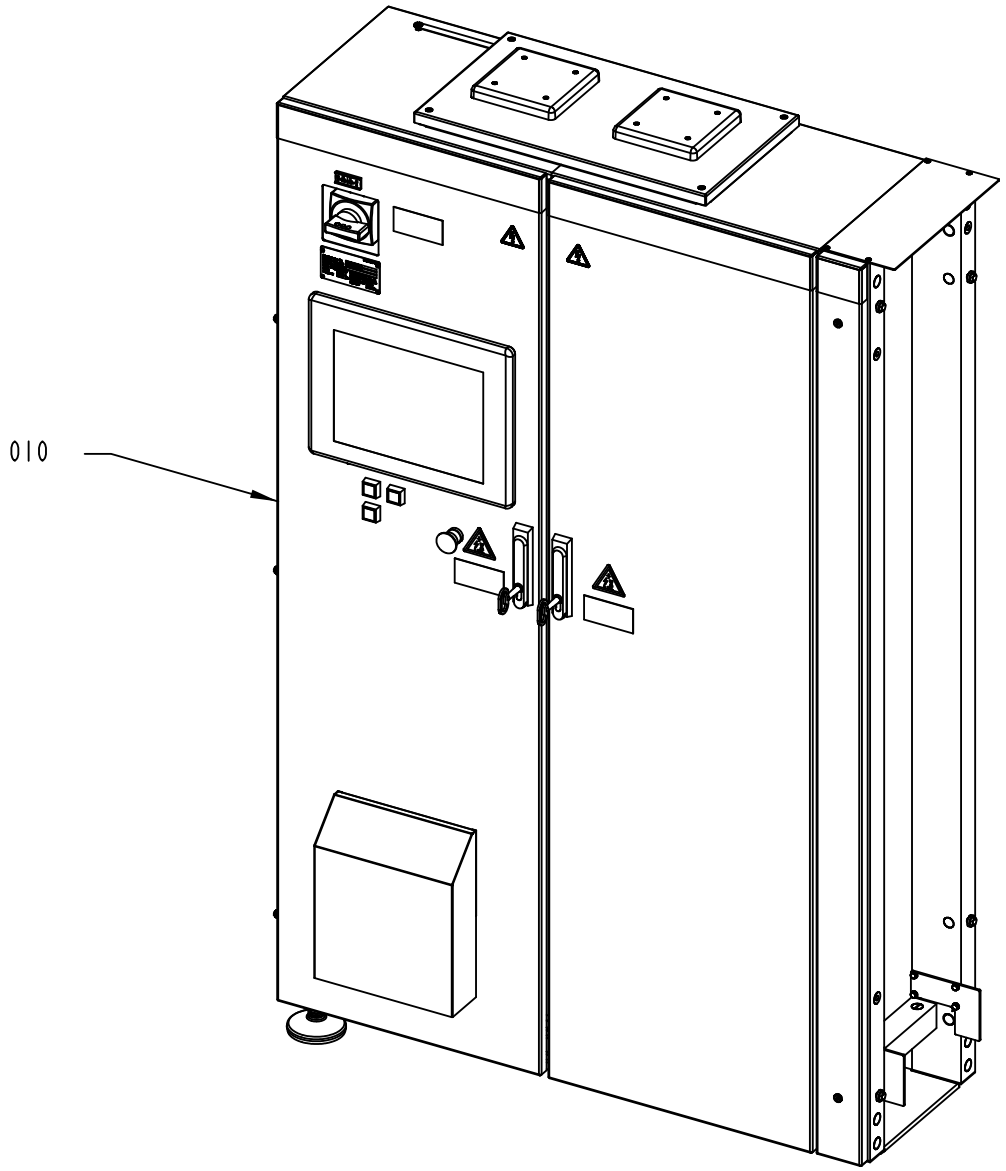

030 MACHINE
040 SOFTWARE CD
050 ELECTRICAL DOCUMENT

673837-2
561992

ECM: 647941 - 20140313
Group number: 673837-0500
Assembly Drawing: 673837-2_1_AA

This list covers pages from 6-2 to 6-5

Pos	Part No	UN	Qty	Description	Page No
LINF Z-FORM (See drawing on pages: 6-2, 6-4)					
020	3263651-0100		1	PANEL	**6-7**
RINF Z-FORM (See drawing on pages: 6-2, 6-4)					
020	3263651-0100		1	PANEL	**6-7**
Common Parts					
010	3250570-0100		1	ELECTRICAL CABINET	**6-17, 6-19**
030	2794980-0500		1	MACHINE	**6-89, 6-91**
040	3265401-0004		1	SOFTWARE CD	**6-97**
050	2794979-0500		1	ELECTRICAL DOCUMENT	

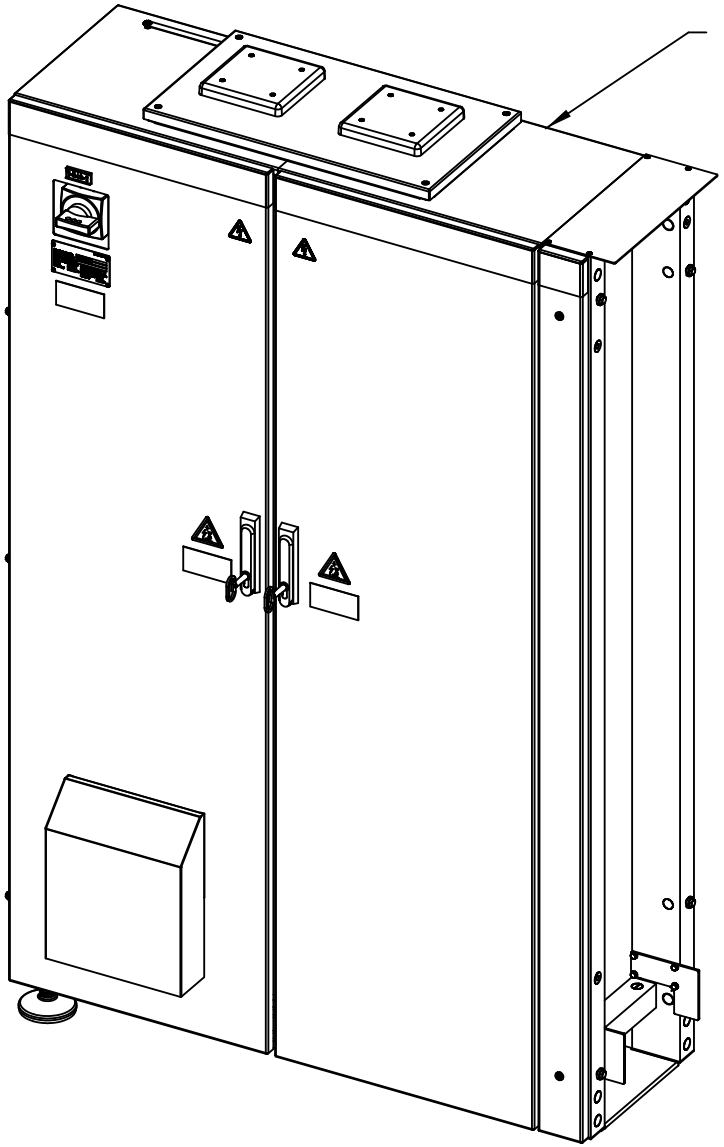

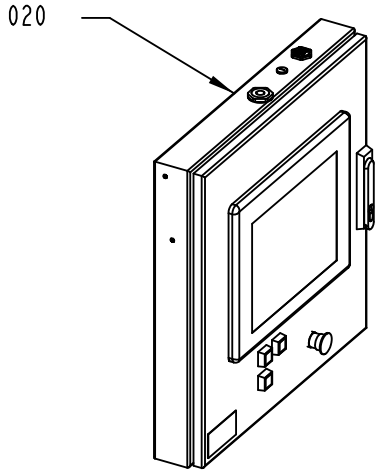

030 MACHINE
040 SOFTWARE CD
050 ELECTRICAL DOCUMENT

673837-3
561992

ECM: 647941 - 20140313
Group number: 673837-0500
Assembly Drawing: 673837-3_1_AA

This list covers pages from 6-2 to 6-5

Pos	Part No	UN	Qty	Description	Page No
LINF Z-FORM (See drawing on pages: 6-2, 6-4)					
020	3263651-0100		1	PANEL	**6-7**
RINF Z-FORM (See drawing on pages: 6-2, 6-4)					
020	3263651-0100		1	PANEL	**6-7**
Common Parts					
010	3250570-0100		1	ELECTRICAL CABINET	**6-17, 6-19**
030	2794980-0500		1	MACHINE	**6-89, 6-91**
040	3265401-0004		1	SOFTWARE CD	**6-97**
050	2794979-0500		1	ELECTRICAL DOCUMENT	

Pos	Part No	UN	Qty	Description	Page No

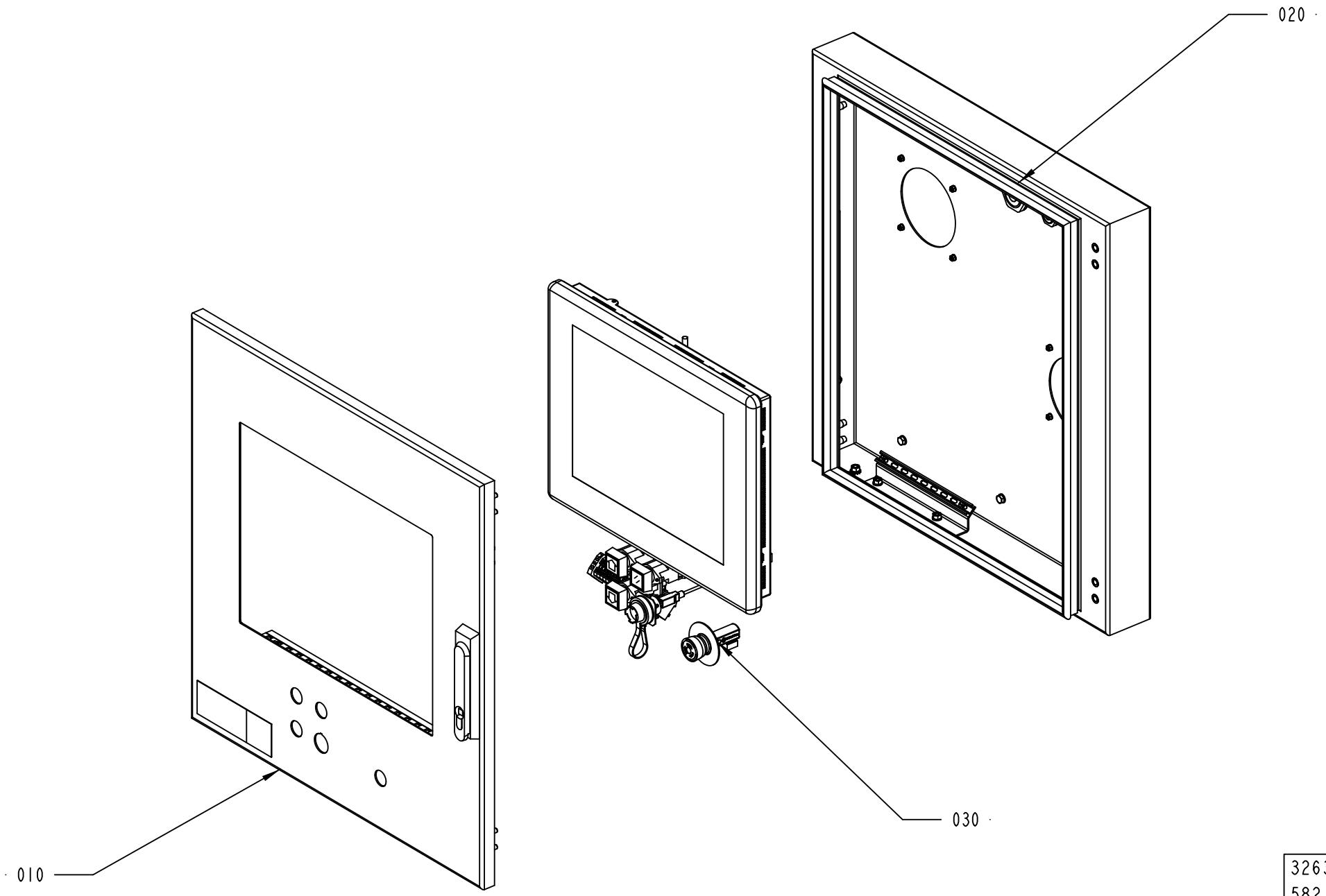

3263651-1
582188

ECM: 585767 - 20121116
Group number: 3263651-0100
Assembly Drawing: 3263651-1_1_AB

Pos	Part No	UN	Qty	Description	Page No
-					
010	3263653-0100		1	PANEL DOOR	**6-9**
020	2802470-0300		1	CABINET	**6-11**
030	2802458-0400		1	ELECTRIC EQUIPMENT	**6-13**

Pos	Part No	UN	Qty	Description	Page No

PANEL DOOR

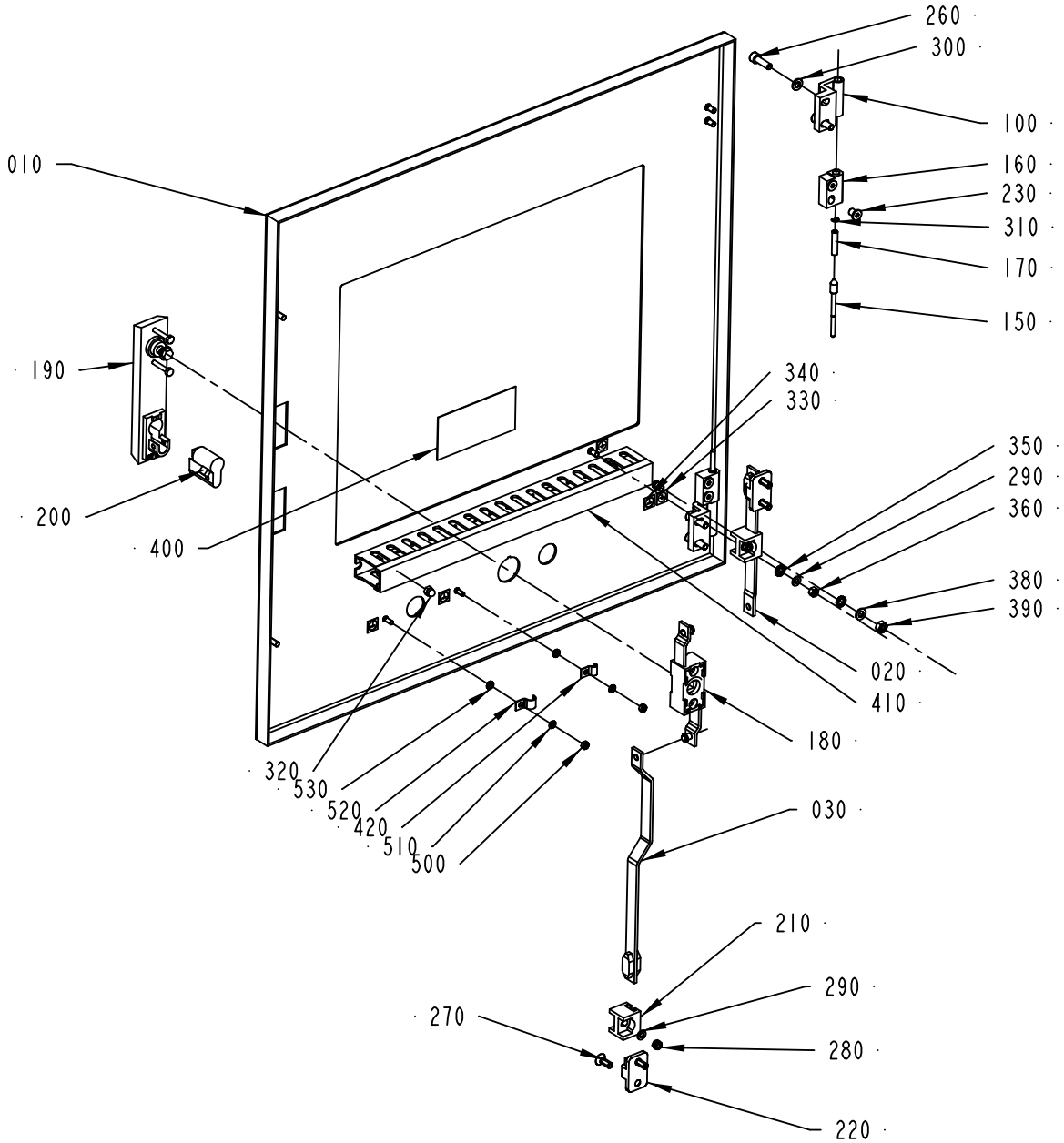

3263653-1
611176

ECM: 614537 - 20130618
Group number: 3263653-0100
Assembly Drawing: 3263653-1_1_AC

Pos	Part No	UN	Qty	Description	Page No
ANSI					
400	90600-5233		1	WARNING SIGN ANSI (H), READ MANUAL, AUTO	
ISO					
400	90600-5235		1	MANDATORY ACTION SIGN ISO, READ MANUAL	
Common Parts					
010	3263654-0000		1	COVER	
020	975889-0011		1	STRUT	
030	975888-0009		1	STRUT	
100	975880-0000		2	HINGE FLANGE	
150	959656-0000		2	COTTER	
160	959657-0000		2	HINGE FLANGE	
170	959658-0000		2	SPRING	
180	90237-0123		1	LOCK, 1121-U10C	
190	90237-0175		1	TURNING HANDLE, 1125-U185-0A	
200	90237-0129		1	LOCK CYLINDER, 1109-U6	
210	90237-0144		2	GUIDE, 1121-SU540	
220	90237-0147		2	LOCKING LUG, NO. 1121-53-0P	
230	90287-0205		4	SCREW	
260	312115-0370		4	SCREW ISO4762 M6X20 A4 80	
270	312155-0368		4	SCREW DIN 7991 MF6S M6X16 A4 70	
280	312812-0314		2	HEXAGON NUT, NY-LOCK M5 A4 80	
290	315105-0146		3	WASHER PLAIN, 5,3X10X1 A4 BRB	
300	315105-0153		4	WASHER PLAIN, 6,4X12X1,5 A4 BRB	
310	315755-0105		2	RETAINING RING SHAFT DIN 6799 3,2 SS	
320	90099-0193		2	NUT HEX. DOMED CAP MHM-6.6 M5 PL	
330	90194-0152		2	SIGN, EARTH	
340	90459-2928		3	LABEL 60417-2-IEC-5020, COMM. REF. POT.	
350	90062-0015		2	LOCK WASHER SERRAT.EXT.GEAR,6,4/11 H=0,7	
360	312605-0314		1	HEXAGON NUT, M6M M5 A280	
380	315101-0153		1	WASHER PLAIN, BRB, 6,4/12 H=1,5	
390	312605-0316		1	HEXAGON NUT, M6M M6 A280	
410	90181-0037	MM	350	CABLE DUCT, PLASTIC, 25X40	
420	90165-0060		1	PIPE CLIP FOR TUBE D=5 MM	
500	312605-0312		2	HEXAGON NUT, M6M M4 A280	
510	315105-0136		2	WASHER PLAIN, 4,3X9X0,8 A4 BRB	
520	90458-0721		1	PIPE CLIP FOR TUBE D=8 MMSZ 2367080	
530	90062-0059		2	LOCK WASKER SERRAT.EXT.GEAR,4,3/8 H=0,5	

Pos	Part No	UN	Qty	Description	Page No

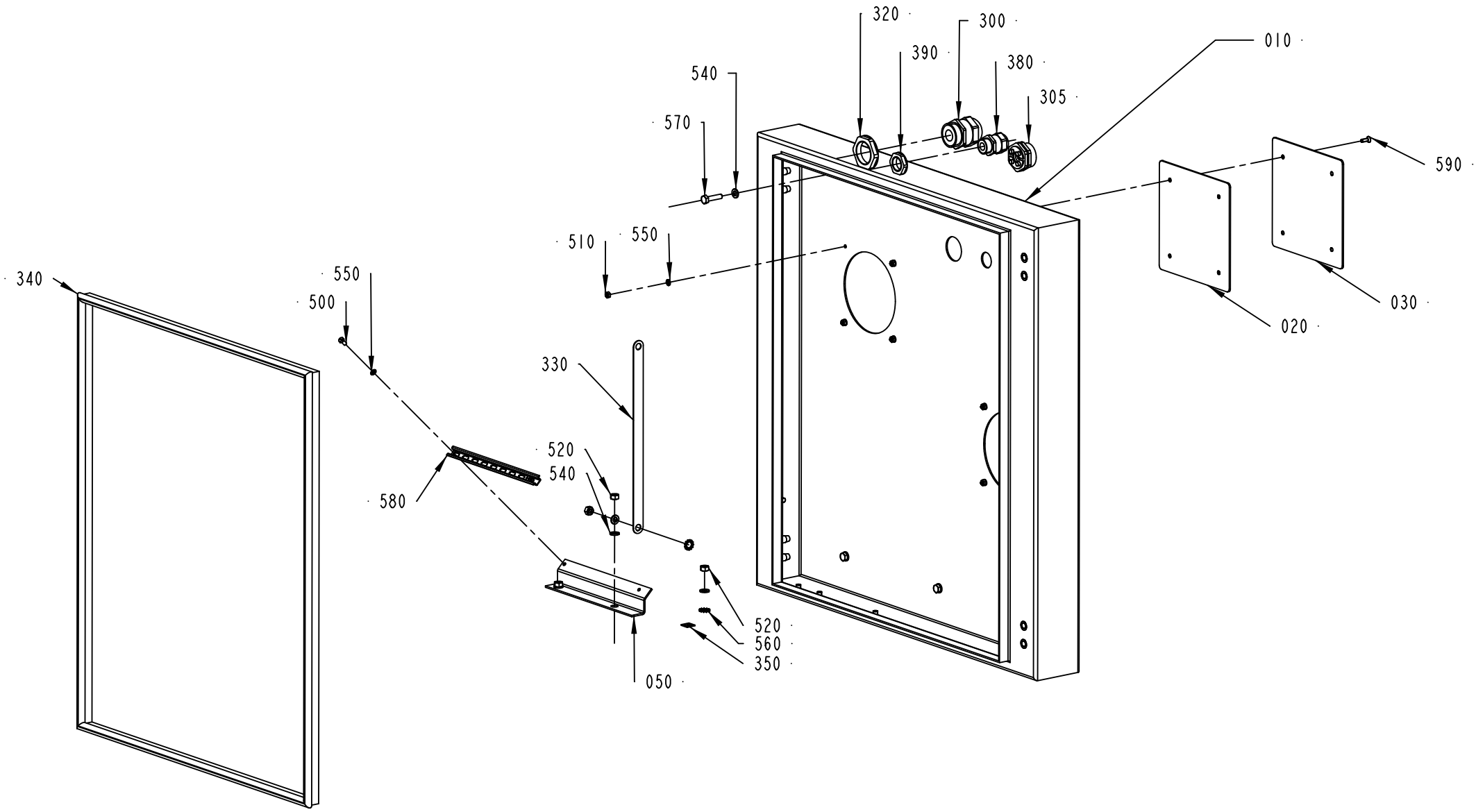

2802470-3
582188

ECM: 614536 - 20130618
Group number: 2802470-0300
Assembly Drawing: 2802470-3_1_AB

Pos	Part No	UN	Qty	Description	Page No
-					
010	3263655-0000		1	CABINET	
020	2974842-0000		2	RUBBER GASKET	
030	2974843-0000		2	COVER PLATE	
050	2557494-0000		1	BRACKET	
300	90458-0309		1	CABLE GLAND, M32X1,5, 5311 1040	
305	90600-0232		1	CABLE GLAND, C RS T 25	
320	90458-0325		1	NUT, M32X1,5	
330	90600-2904		1	EARTH BRAID, 250/16/8,5	
340	90143-0057	M	2.2	STRIP EMKA 1011-05 21X11MM	
350	90194-0152		1	SIGN, EARTH	
380	90458-0307		1	CABLE GLAND, M20X1,5, 5311 1020	
390	90458-0323		1	NUT, M20X1,5	
500	312121-0287		2	SCREW ISO 1207 M4X8 4.8-5.8 Z.PL.	
510	312605-0312		8	HEXAGON NUT, M6M M4 A280	
520	312605-0316		4	HEXAGON NUT, M6M M6 A280	
540	315105-0153		10	WASHER PLAIN, 6,4X12X1,5 A4 BRB	
550	315105-0136		10	WASHER PLAIN, 4,3X9X0,8 A4 BRB	
560	90062-0016		2	LOCK WASHER SERRAT.EXT.GEAR,8,4/15 H=0,8	
570	312105-0372		6	SCREW, M6S ISO 4017 M6X25 A4 80	
580	90077-0328	MM	185	RAIL, TS15/5	
590	312155-0291		8	SCREW DIN 7991 MF6S M4X12 A4 70	

Pos	Part No	UN	Qty	Description	Page No

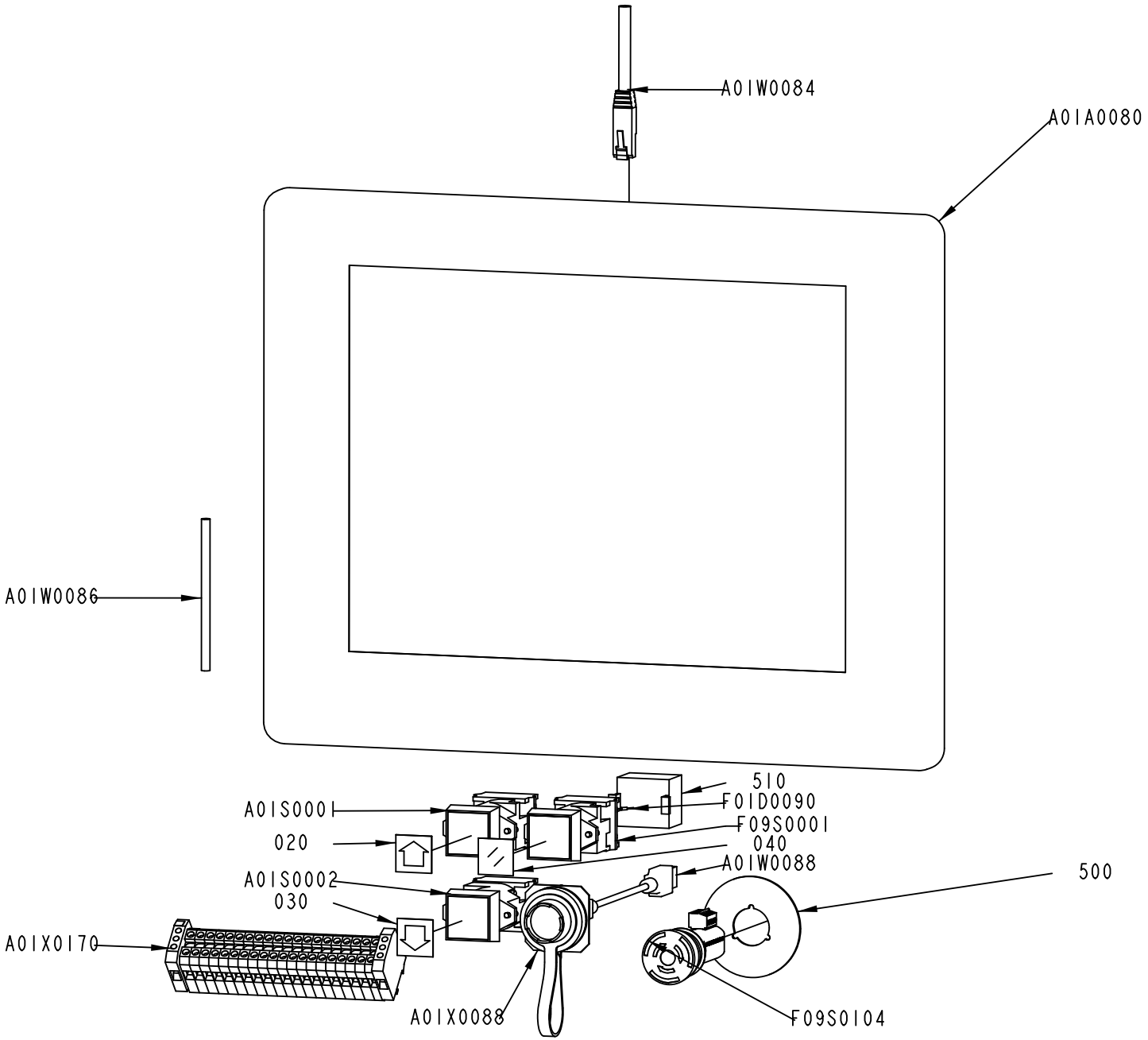

2802458-4
611176

ECM: 614538 - 20130618
Group number: 2802458-0400
Assembly Drawing: 2802458-4_1_AC

Pos	Part No	UN	Qty	Description	Page No
-					
020	359301-0001		1	BUTTON SIGN, UP	
030	359301-0005		1	BUTTON SIGN, DOWN	
040	359301-0504		1	BUTTON SIGN, RESET	
500	90600-9809		1	ES SIGN, FOR INCA	
510	90064-0322		1	CONTACT BLOCK, 704.901.5/A	
A01A0080	90604-3805		1	OPER. PANEL 15" , 2711P-T15C4D8TP, SER A	
A01S0001	90064-0082		1	PUSH BUTTON, WHITE	
	90036-0057		*1*	*LIGHT BULB, BA9S 28V*	
A01S0002	90064-0082		1	PUSH BUTTON, WHITE	
	90036-0057		*1*	*LIGHT BULB, BA9S 28V*	
A01W0084	351501-0100		1	ETHERNET PATCH CABLE, FL CAT5 PATCH 10,0	
A01W0086	90600-1160	MM	90	CU SCREEN BRAIDING TYPE CU 410 , 4,14MM2	
A01W0088	90603-3198		1	USB CAB. VS-04-2X2X26C7/7-SDA/SDB/1,0	
A01X0088	90600-4778		1	USB CABLE SET, 5A9000.54	
A01X0170	2802461-0100		1	TERMINAL	**6-15**
F01D0090	90038-0021		1	DIODE, 1A 800V	
F09S0001	90064-0082		1	PUSH BUTTON, WHITE	
	90036-0057		*1*	*LIGHT BULB, BA9S 28V*	
F09S0104	90600-6050		1	EMERGENCY STOP INCA 1 TINA, 30-054-00	

Pos	Part No	UN	Qty	Description	Page No

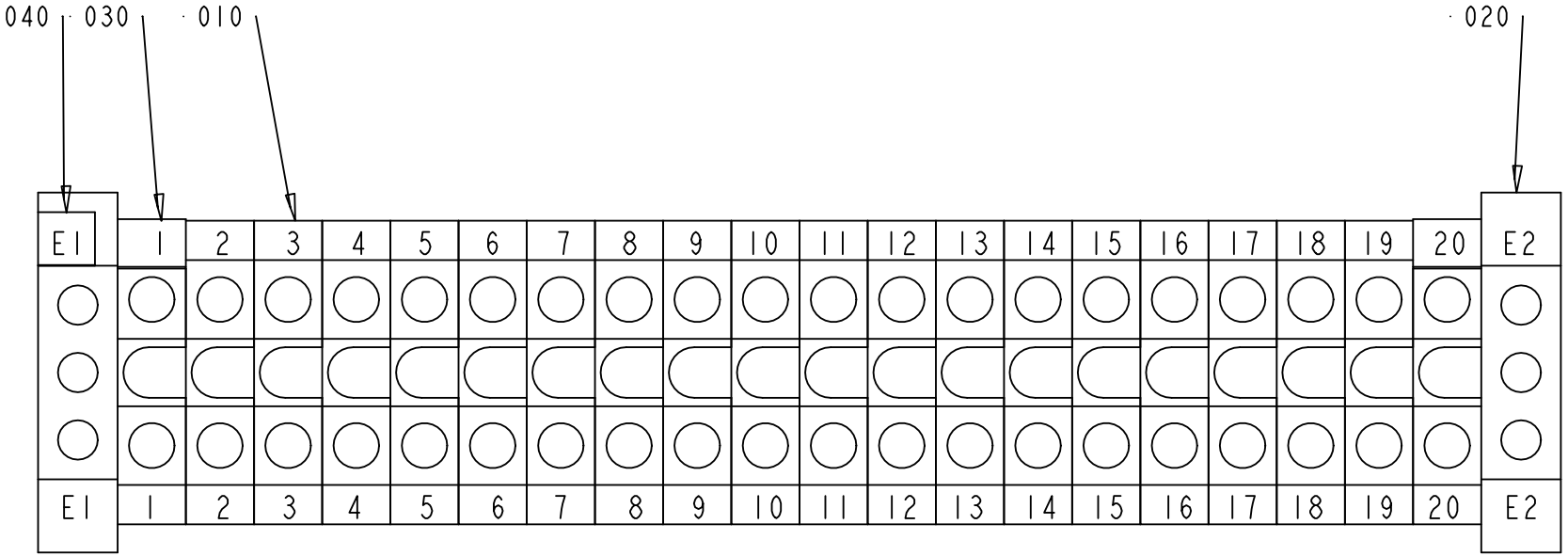

2802461-1
ECM 198628

ECM: 250663 - 20060612
Group number: 2802461-0100
Assembly Drawing: 2802461-1_1_AA

Pos	Part No	UN	Qty	Description	Page No
-					
010	90077-0079		20	TERMINAL PLINTH, AKZ 4	
020	90135-0026		2	EARTH TERMINAL AKE 4	
030	359011-0821		2	MARKING, DEK 6 FW 1-50	
040	90459-0606		1	MARKING, DKE 5 MARKED E1-E50	

Pos	Part No	UN	Qty	Description	Page No

SIGN 100 TO BE PLACED ON OPPOSITE SIDE OF FRAME 050

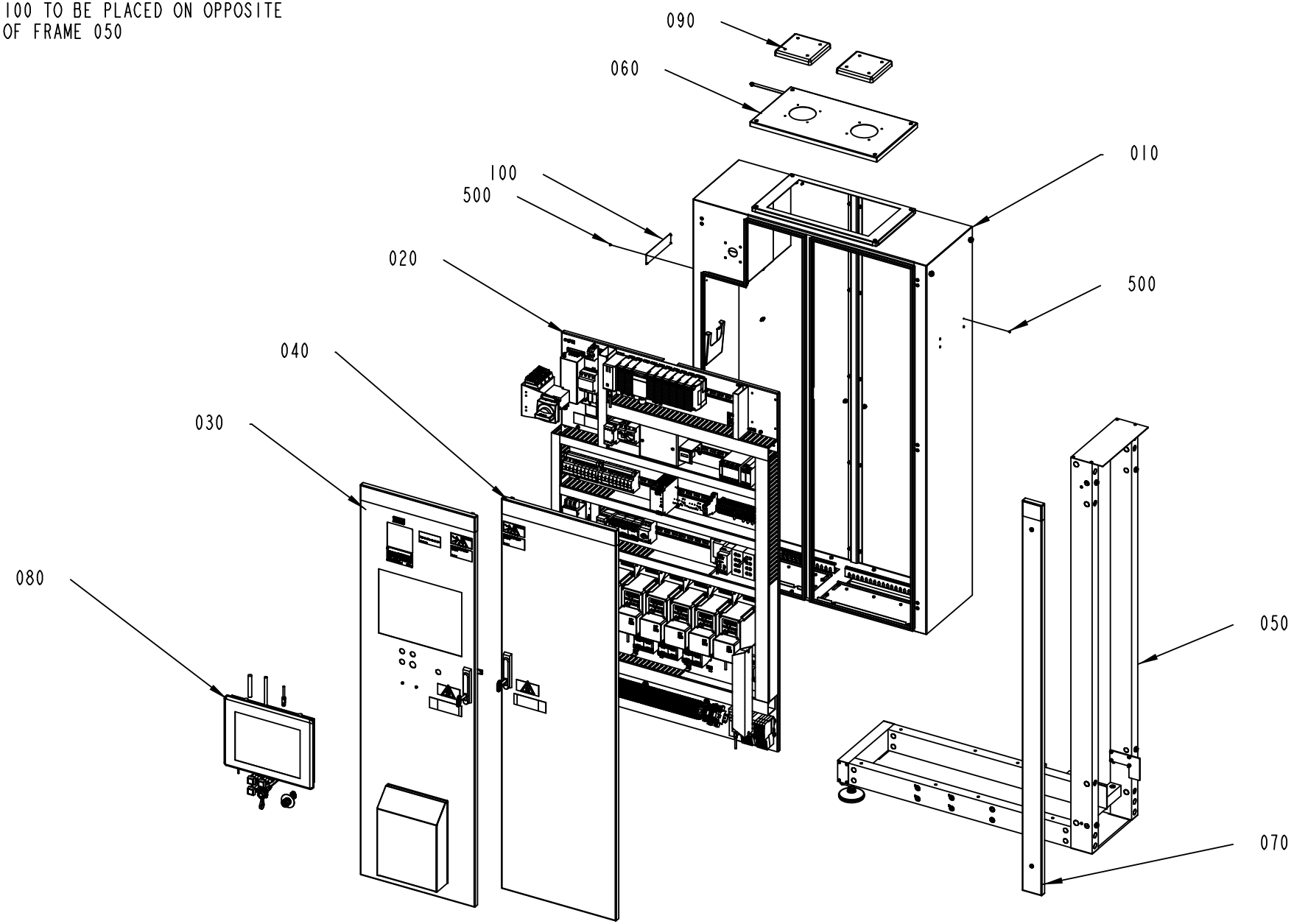

3250570-1
611176

Pos	Part No	UN	Qty	Description	Page No
LINF U-FORM (See drawing on page: 6-16)					
080	3253290-0100		1	ELECTRIC EQUIPMENT	**6-21**
RINF U-FORM (See drawing on pages: 6-16, 6-18)					
080	3253290-0100		1	ELECTRIC EQUIPMENT	**6-21**
Common Parts					
010	3250571-0100		1	ELECTRICAL CABINET	**6-23**
020	3250572-0100		1	MOUNTING PLATE	**6-25, 6-27**
030	3250586-0100		1	DOOR	**6-69, 6-71, 6-73**
040	3250585-0100		1	DOOR	**6-75, 6-77, 6-79**
050	3250589-0100		1	FRAME	**6-81**
060	3112719-0100		1	COVER	**6-83**
070	3138433-0100		1	COVERING PANEL	**6-85**
090	599749-0100		2	COOLING AIR OUTLET	**6-87**
100	580923-0000		1	MACHINE SIGN CE	
500	311523-0142		8	BLIND RIVET ISO 15983 -3.2X6 A2/A2	

Pos	Part No	UN	Qty	Description	Page No

ELECTRICAL CABINET

SIGN 100 TO BE PLACED ON OPPOSITE SIDE OF FRAME 050

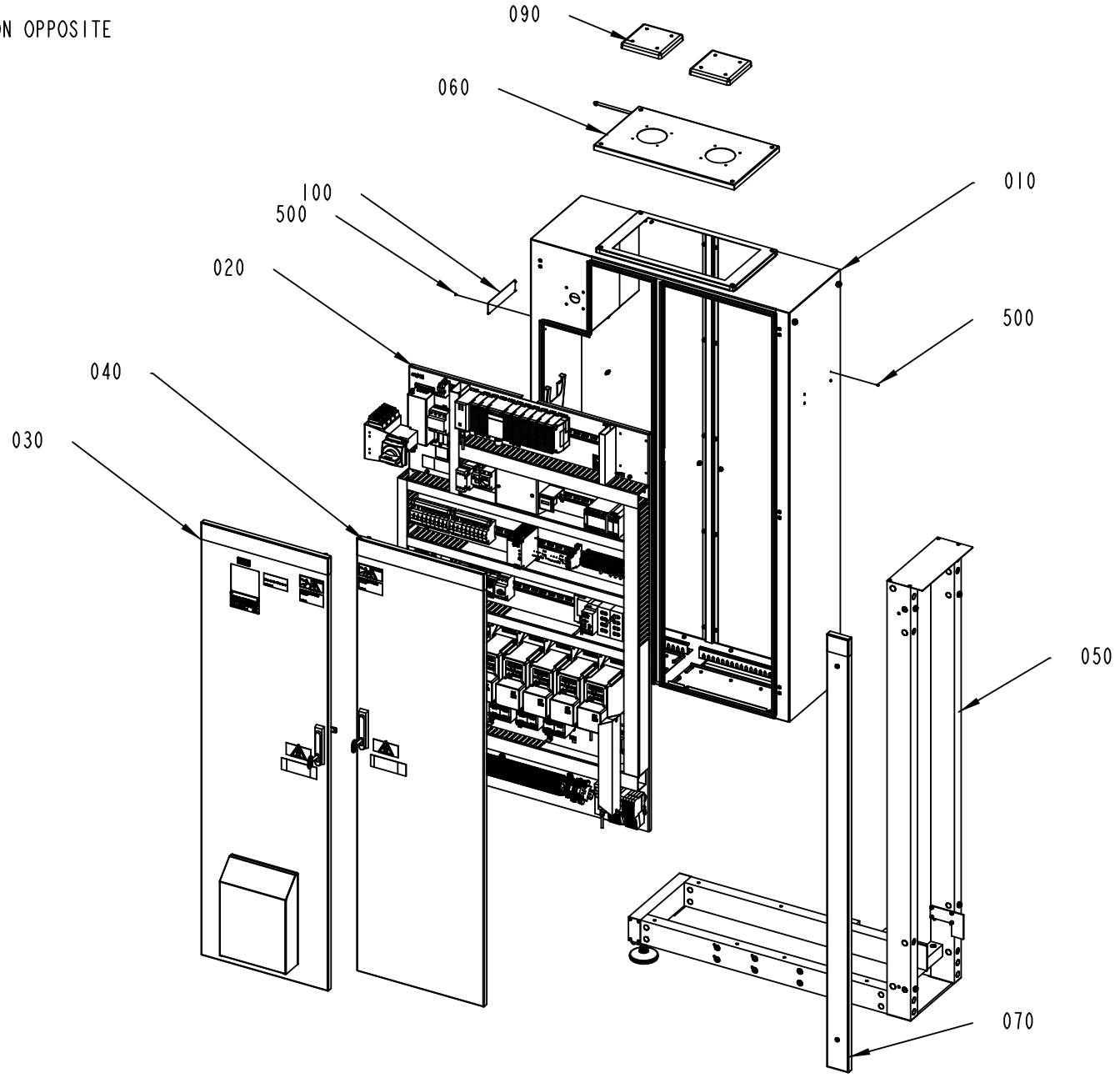

3250570-2
611176

ECM: 614530 - 20130618
Group number: 3250570-0100
Assembly Drawing: 3250570-2_1_AB

This list covers pages from 6-16 to 6-19

Pos	Part No	UN	Qty	Description	Page No
LINF U-FORM (See drawing on page: 6-16)					
080	3253290-0100		1	ELECTRIC EQUIPMENT	**6-21**
RINF U-FORM (See drawing on pages: 6-16, 6-18)					
080	3253290-0100		1	ELECTRIC EQUIPMENT	**6-21**
Common Parts					
010	3250571-0100		1	ELECTRICAL CABINET	**6-23**
020	3250572-0100		1	MOUNTING PLATE	**6-25, 6-27**
030	3250586-0100		1	DOOR	**6-69, 6-71, 6-73**
040	3250585-0100		1	DOOR	**6-75, 6-77, 6-79**
050	3250589-0100		1	FRAME	**6-81**
060	3112719-0100		1	COVER	**6-83**
070	3138433-0100		1	COVERING PANEL	**6-85**
090	599749-0100		2	COOLING AIR OUTLET	**6-87**
100	580923-0000		1	MACHINE SIGN CE	
500	311523-0142		8	BLIND RIVET ISO 15983 -3.2X6 A2/A2	

Pos	Part No	UN	Qty	Description	Page No

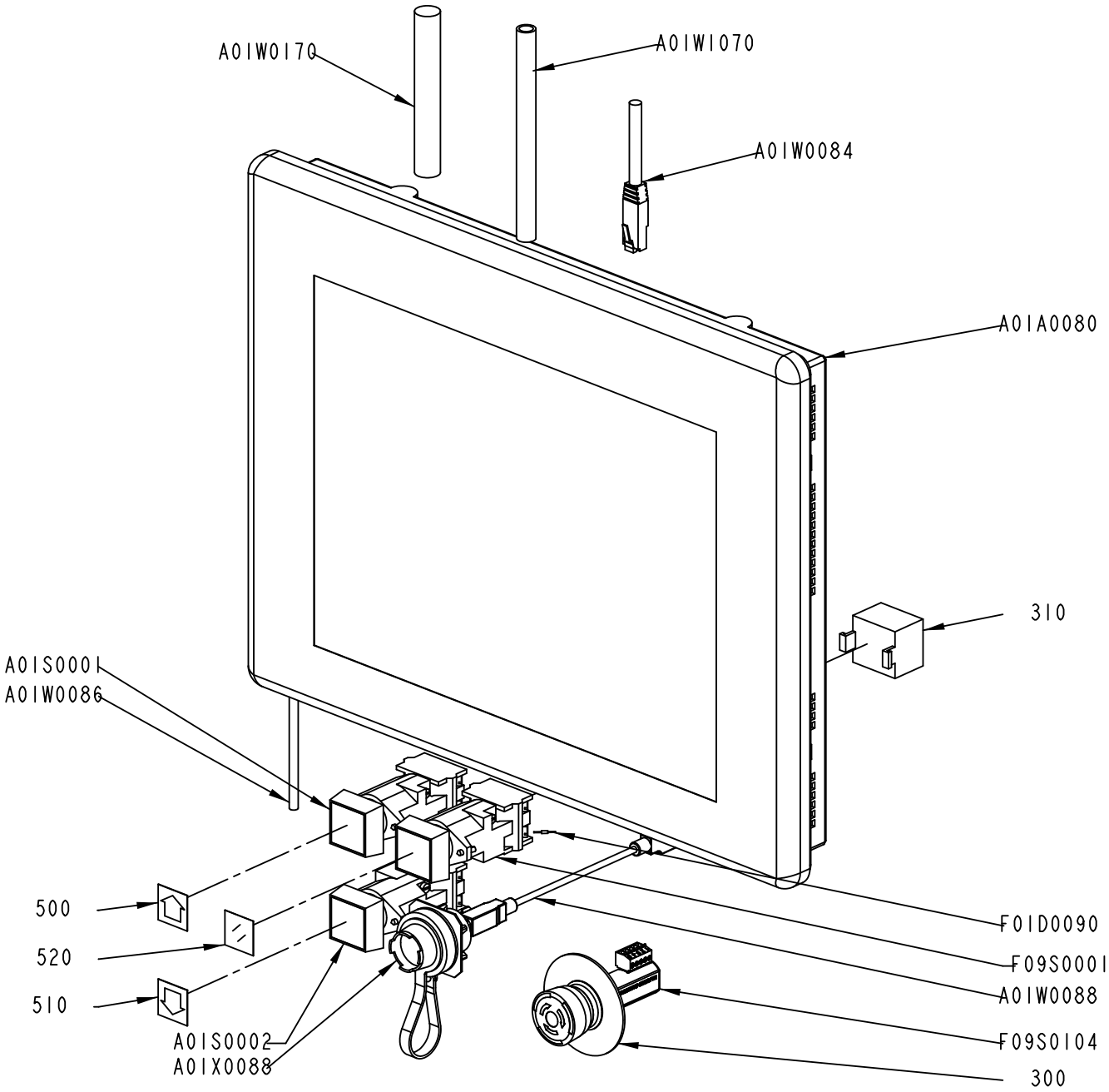

3253290-1
611176

ECM: 614535 - 20130618
Group number: 3253290-0100
Assembly Drawing: 3253290-1_1_AD

Pos	Part No	UN	Qty	Description	Page No
FINAL DEST. CANADA, FINAL DEST. USA					
A01W0170	315743-0006	M	3	ÖLFLEX CONTROL TM 18G1, 281818	
A01W1070	315756-0003	M	3	ÖLFLEX CONTROL TM CY 5G1, 281805CY	
OTHER COUNTRIES					
A01W0170	351150-0424	M	3	CABLE OLFLEX 18X0,75 MM2 LIGHT/GREY	
A01W1070	351422-0004	M	3	CABLE ÖLFLEX 150CY QUATTRO 5X0,75	
Common Parts					
300	90600-9809		1	ES SIGN, FOR INCA	
310	90064-0322		1	CONTACT BLOCK, 704.901.5/A	
500	359301-0001		1	BUTTON SIGN, UP	
510	359301-0005		1	BUTTON SIGN, DOWN	
520	359301-0504		1	BUTTON SIGN, RESET	
A01A0080	90604-3805		1	OPER. PANEL 15" , 2711P-T15C4D8TP, SER A	
A01S0001	90064-0082		1	PUSH BUTTON, WHITE	
	90036-0057		*1*	*LIGHT BULB, BA9S 28V*	
A01S0002	90064-0082		1	PUSH BUTTON, WHITE	
	90036-0057		*1*	*LIGHT BULB, BA9S 28V*	
A01W0084	351501-0030		1	ETHERNET PATCH CABLE, FL CAT5 PATCH 3,0	
A01W0086	90600-1160	MM	90	CU SCREEN BRAIDING TYPE CU 410 , 4,14MM2	
A01W0088	90603-3198		1	USB CAB. VS-04-2X2X26C7/7-SDA/SDB/1,0	
A01X0088	90600-4778		1	USB CABLE SET, 5A9000.54	
F01D0090	90038-0021		1	DIODE, 1A 800V	
F09S0001	90064-0082		1	PUSH BUTTON, WHITE	
	90036-0057		*1*	*LIGHT BULB, BA9S 28V*	
F09S0104	90600-6050		1	EMERGENCY STOP INCA 1 TINA, 30-054-00	

Pos	Part No	UN	Qty	Description	Page No

This page is intentionally left blank.

ECM: 662297 - 20140312
Group number: 3250571-0100
Assembly Drawing:

Pos	Part No	UN	Qty	Description	Page No
-					
010	2837851-0000		1	CD BOX	
020	3119119-0000		2	BRACKET	
030	3245366-0000		1	STIFFENING PLATE	
040	3250590-0000		1	CABINET	
050	3253274-0000		1	COVER PLATE	
060	3253275-0000		1	COVER PLATE	
070	3253276-0000		2	RAIL	
080	3253277-0000		2	SLIDE PLATE	
090	3253278-0000		4	GASKET	
100	3253279-0000		2	PLATE	
110	3119181-0000		2	SPACER	
120	3245363-0000		1	STIFFENING PLATE	
130	3245335-0000		1	SIGN	
300	90143-0057	MM	4400	STRIP EMKA 1011-05 21X11MM	
310	90143-0057	MM	4400	STRIP EMKA 1011-05 21X11MM	
320	90600-5066		4	WASHER PLAIN, DIN7349 8,4X21X4 A4	
330	90099-0103		1	PLUG, PR 47 (PG36)	
340	90458-0721		1	PIPE CLIP FOR TUBE D=8 MMSZ 2367080	
350	90459-2928		1	LABEL 60417-2-IEC-5020, COMM. REF. POT.	
360	90005-0060		16	WASHER PLAIN, RBS 6,4/M6)/18,H=1,5	
500	312105-0325		8	SCREW, M6S ISO 4017 M5X10 A4 80	
510	312105-0366		4	SCREW, M6S ISO 4017 M6X12 A4 80	
520	312605-0314		8	HEXAGON NUT, M6M M5 A280	
530	312605-0316		46	HEXAGON NUT, M6M M6 A280	
540	315106-0146		8	WASHER PLAIN, M5 ISO7089-5-200 HV A4	
550	315106-0153		42	WASHER PLAIN, M6 ISO7089-6-200 HV A4	
560	353240-0007		1	COMPRESSION GLAND, VK 156Y	
570	312105-0461		2	SCREW, M6S ISO 4014 M8X50 A4 80	
580	312105-0453		2	SCREW, M6S ISO 4017 M8X25 A4 80	
590	312113-0287		9	SCREW, SERRATED COMBI TORX M4X8 A2	
600	353249-0054		1	INSERT, SINGLE HOLE, EK156 25	
610	90143-0060	MM	500	EDGE STRIP 9,5X6,3MM BLACK PVC	
620	90143-0060	MM	500	EDGE STRIP 9,5X6,3MM BLACK PVC	
630	312105-0368		8	SCREW, M6S ISO 4017 M6X16 A4 80	

Pos	Part No	UN	Qty	Description	Page No

Machine Type	Group Description	Used-In	Group Number	Page No

MOUNTING PLATE

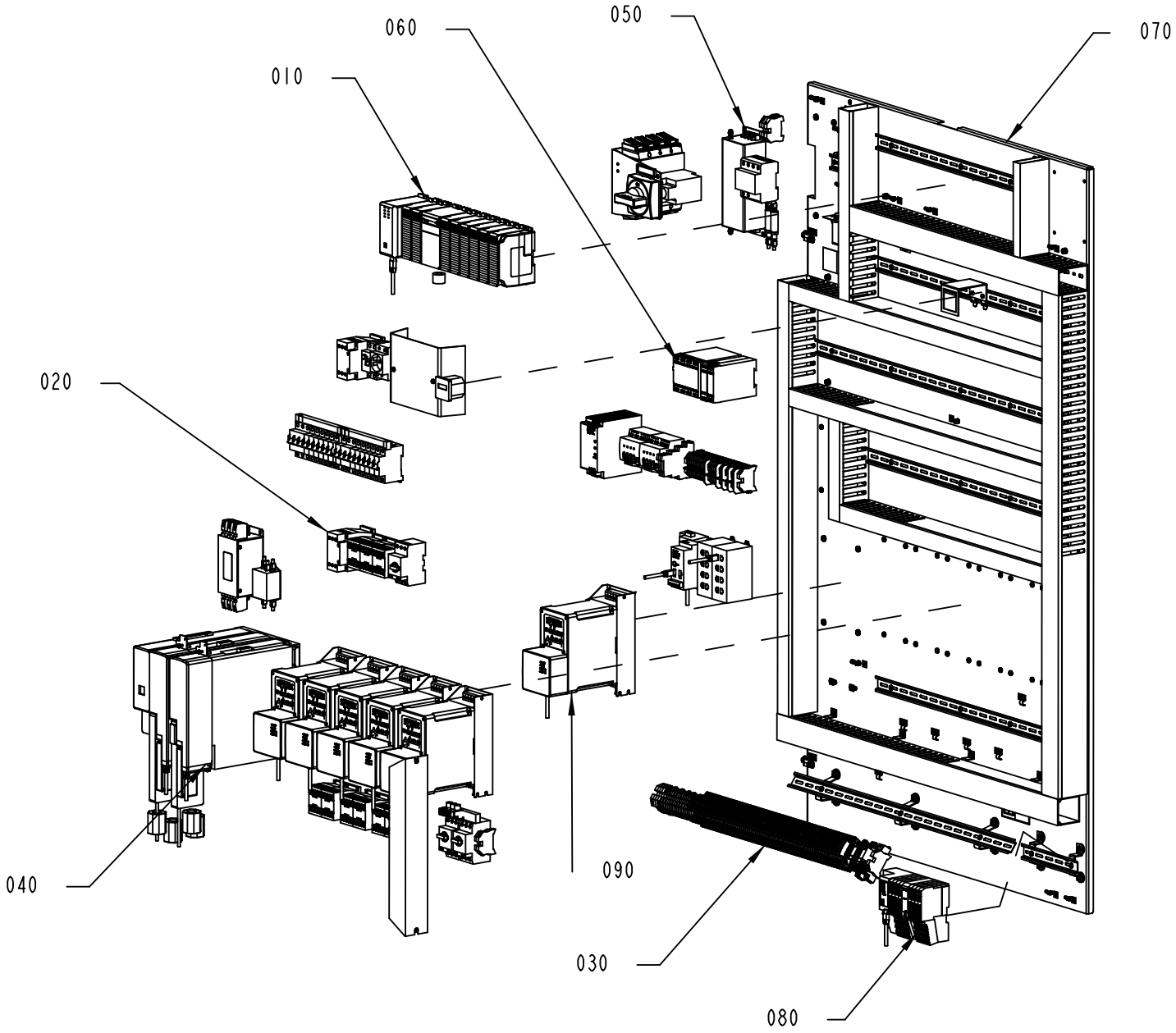

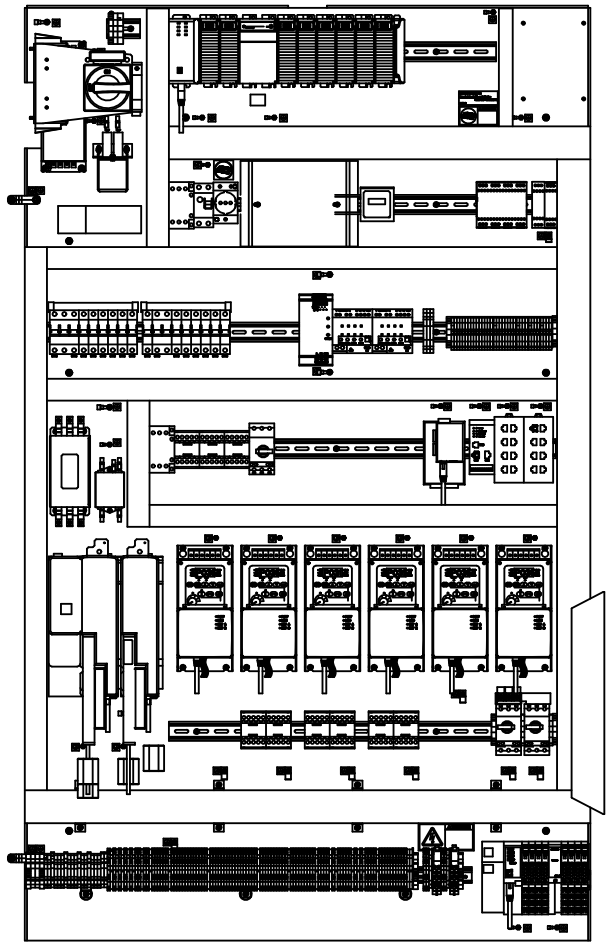

3250572-1
599405

ECM: 600115 - 20130314
Group number: 3250572-0100
Assembly Drawing: 3250572-1_1_AD

This list covers pages from 6-24 to 6-27

Pos	Part No	UN	Qty	Description	Page No
CANADA and External Discharge Unit, USA and External Discharge Unit (See drawing on page: 6-26)					
090	3263708-0100		1	ELECTRICAL EQUIPMENT	**6-29**
OTHER COUNTRIES and External Discharge Unit (See drawing on pages: 6-24, 6-26)					
090	3263708-0100		1	ELECTRICAL EQUIPMENT	**6-29**
Common Parts					
010	3250574-0100		1	ELECTRIC EQUIPMENT	**6-31**
020	3250575-0100		1	ELECTRIC EQUIPMENT	**6-33, 6-35**
030	3250578-0100		1	ELECTRIC EQUIPMENT	**6-39**
040	3250581-0100		1	ELECTRIC EQUIPMENT	**6-49**
050	3250587-0100		1	ELECTRICAL MATERIALS	**6-51, 6-53**
060	3250582-0100		1	ELECTRIC EQUIPMENT	**6-59, 6-61**
070	3250573-0100		1	MOUNTING PLATE	**6-65**
080	3253291-0100		1	REMOTE I/O	**6-67**

Pos	Part No	UN	Qty	Description	Page No

MOUNTING PLATE

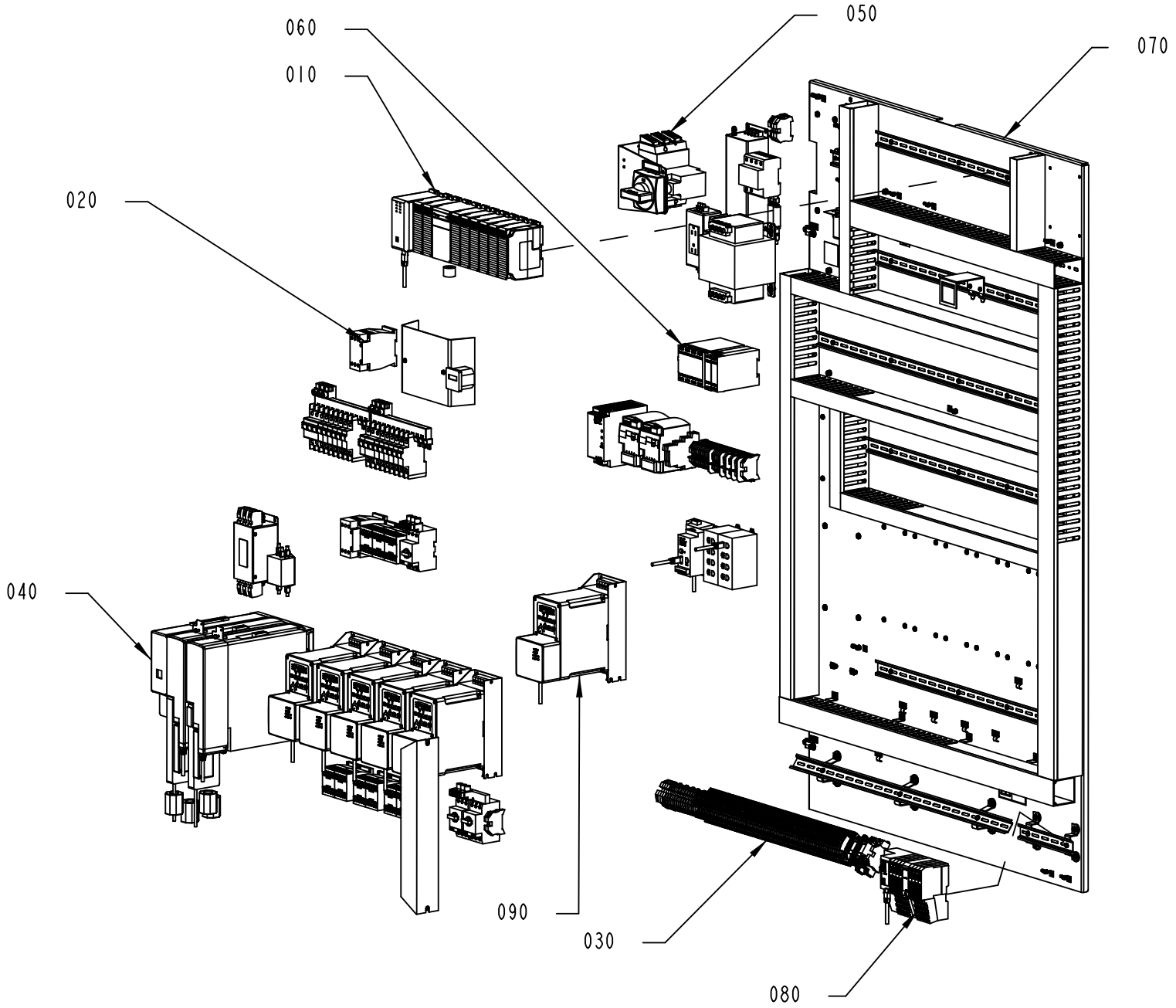

3250572-2
599405

ECM: 600115 - 20130314
Group number: 3250572-0100
Assembly Drawing: 3250572-2_1_AC

This list covers pages from 6-24 to 6-27

Pos	Part No	UN	Qty	Description	Page No
CANADA and External Discharge Unit, USA and External Discharge Unit (See drawing on page: 6-26)					
090	3263708-0100		1	ELECTRICAL EQUIPMENT	**6-29**
OTHER COUNTRIES and External Discharge Unit (See drawing on pages: 6-24, 6-26)					
090	3263708-0100		1	ELECTRICAL EQUIPMENT	**6-29**
Common Parts					
010	3250574-0100		1	ELECTRIC EQUIPMENT	**6-31**
020	3250575-0100		1	ELECTRIC EQUIPMENT	**6-33, 6-35**
030	3250578-0100		1	ELECTRIC EQUIPMENT	**6-39**
040	3250581-0100		1	ELECTRIC EQUIPMENT	**6-49**
050	3250587-0100		1	ELECTRICAL MATERIALS	**6-51, 6-53**
060	3250582-0100		1	ELECTRIC EQUIPMENT	**6-59, 6-61**
070	3250573-0100		1	MOUNTING PLATE	**6-65**
080	3253291-0100		1	REMOTE I/O	**6-67**

Pos	Part No	UN	Qty	Description	Page No

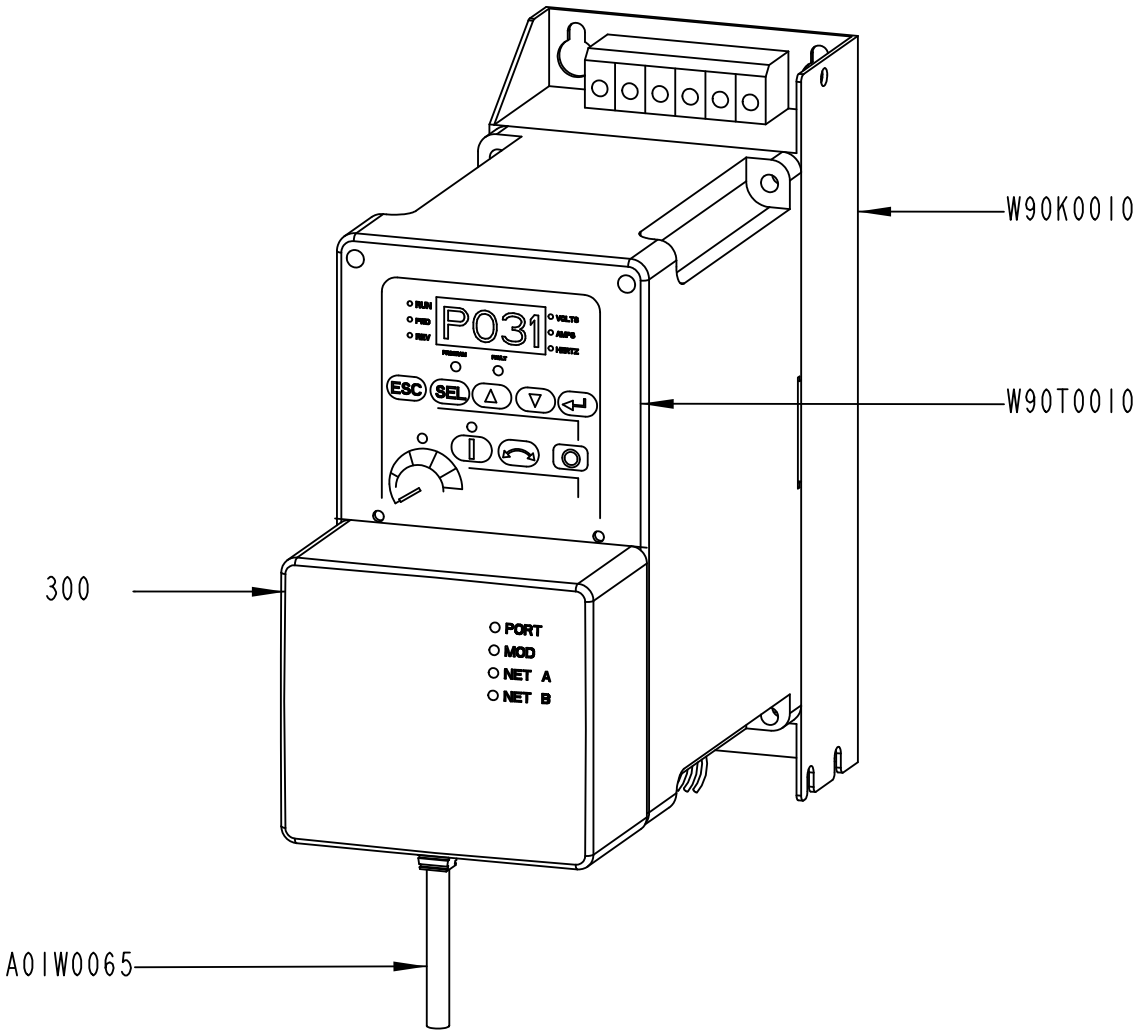

3263708-1
590658

ECM: 591511 - 20121220
Group number: 3263708-0100
Assembly Drawing: 3263708-1_1_AA

Pos	Part No	UN	Qty	Description	Page No
-					
300	90459-2795		1	FRONT LID FOR POWERFLEX 40, 22B-CCB	
A01W0065	351501-0020		1	ETHERNET PATCH CABLE, FL CAT5 PATCH 2,0	
W90K0010	90459-3454		1	FOOTPRINT FILTER 1 PHASE 18A	
W90T0010	90600-3972		1	5008274, ETHERNET ADAPTOR	
W90T0010	90459-3442		1	FREQ. CONV., 22B-A5P0N104	

Pos	Part No	UN	Qty	Description	Page No

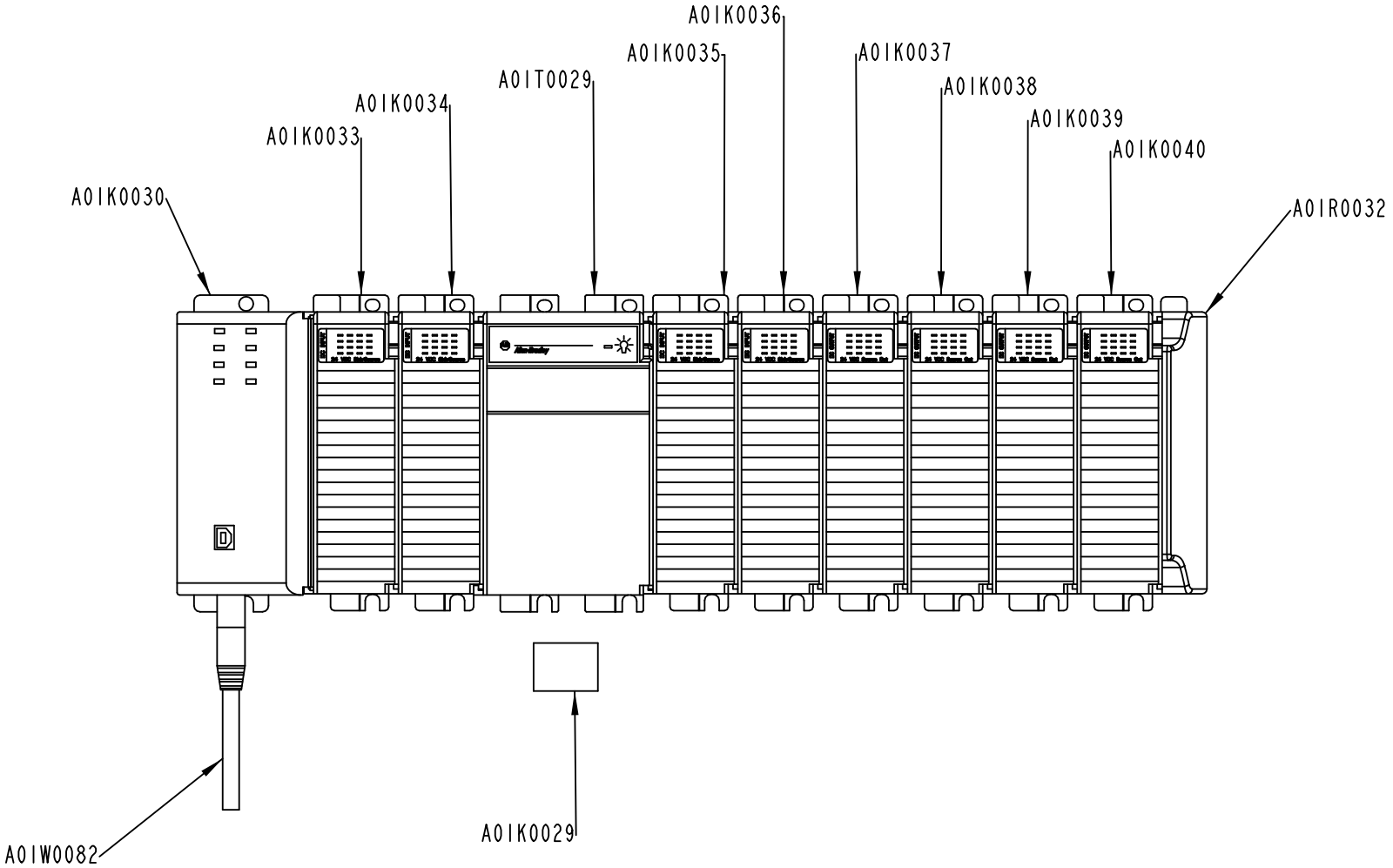

3250574-1
573083

ECM: 577601 - 20120924
Group number: 3250574-0100
Assembly Drawing: 3250574-1_1_AB

Pos	Part No	UN	Qty	Description	Page No
-					
A01K0029	90600-5249		1	FERRITE, B64290L616X38	
A01K0030	90604-9026		1	PROCESSOR L36, 1769-L36ERM SERIE A	
A01K0033	90459-2473		1	EPLC120G3-2A, DIG INP. MOD.16 PTS FAST	
A01K0034	90459-2473		1	EPLC120G3-2A, DIG INP. MOD.16 PTS FAST	
A01K0035	90459-2473		1	EPLC120G3-2A, DIG INP. MOD.16 PTS FAST	
A01K0036	90459-2473		1	EPLC120G3-2A, DIG INP. MOD.16 PTS FAST	
A01K0037	90459-2476		1	EPLC120G4-0A, DIGIT. OUT. MOD. 16 P ESCP	
A01K0038	90459-2476		1	EPLC120G4-0A, DIGIT. OUT. MOD. 16 P ESCP	
A01K0039	90459-2476		1	EPLC120G4-0A, DIGIT. OUT. MOD. 16 P ESCP	
A01K0040	90459-2476		1	EPLC120G4-0A, DIGIT. OUT. MOD. 16 P ESCP	
A01R0032	90459-2491		1	PLC RIGHT END CAP/TERMINATOR, 1769-ECR	
A01T0029	90459-2457		1	POWER SUPPLY (4A@5V)	
A01W0082	351501-0020		1	ETHERNET PATCH CABLE, FL CAT5 PATCH 2,0	

Pos	Part No	UN	Qty	Description	Page No

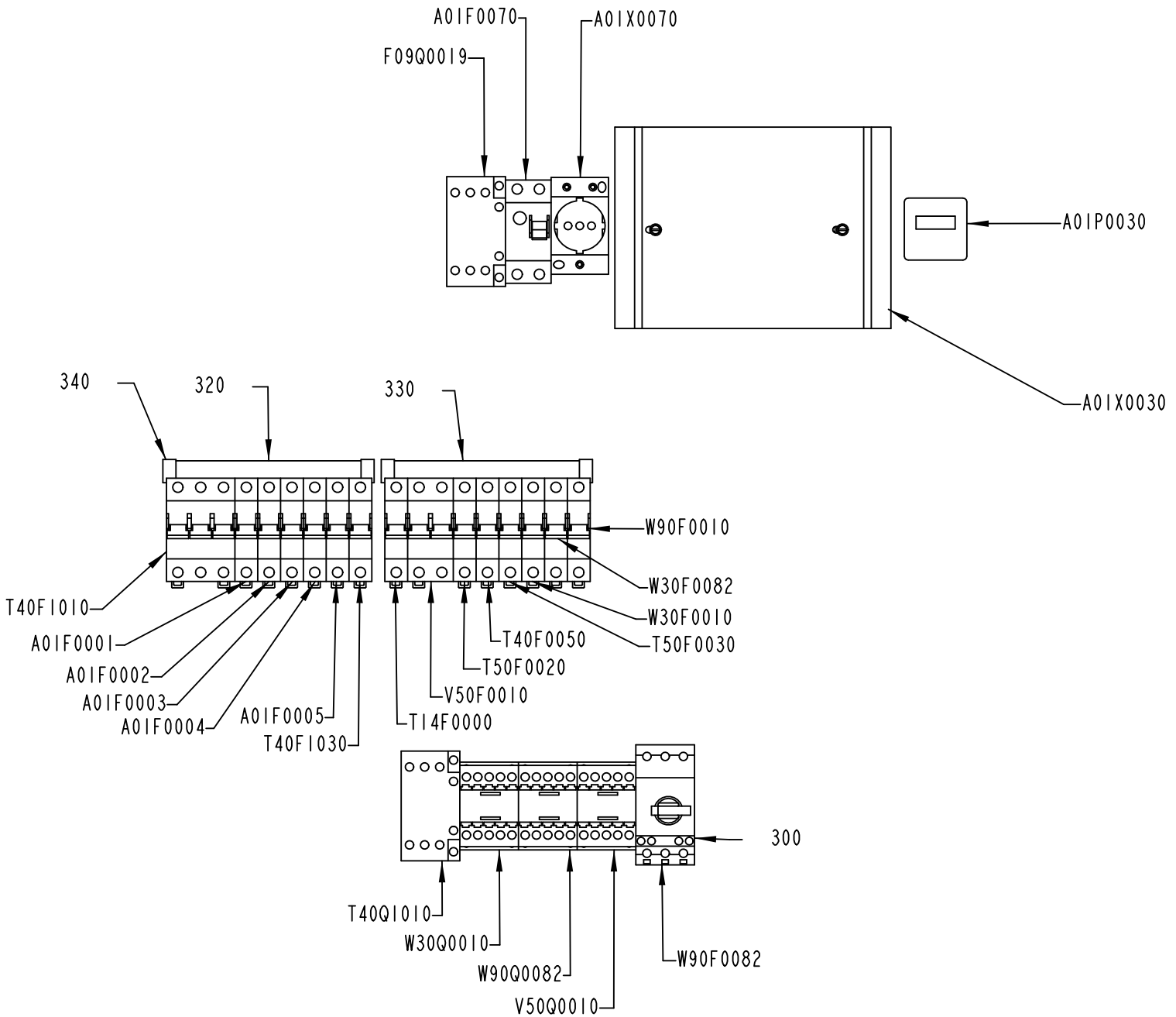

3250575-1
611176

Pos	Part No	UN	Qty	Description	Page No
FINAL DEST. CANADA, FINAL DEST. USA (See drawing on page: 6-34)					
310	90600-1461		1	INCOMING TERMINAL, BK25/3-PKZ0-E	
350	90600-5525		2	BUSBAR, Z-SV/UL-16/3P-3TE/12 104899	
360	90600-5527		6	BUSBAR COVER, ZV-BS-UL 104904	
370	90600-5528		6	EXTENSION TERMINAL, Z-EK/35/UL 104901	
A01F0001	315744-0060		1	MINIATURE CIRCUIT BREAKER, FAZ-C6/1-NA	
A01F0002	315744-0020		1	MINIATURE CIRCUIT BREAKER, FAZ-C2/1-NA	
A01F0003	315744-0060		1	MINIATURE CIRCUIT BREAKER, FAZ-C6/1-NA	
A01F0004	315744-0060		1	MINIATURE CIRCUIT BREAKER, FAZ-C6/1-NA	
A01F0005	315744-0020		1	MINIATURE CIRCUIT BREAKER, FAZ-C2/1-NA	
T14F0000	315744-0100		1	MINIATURE CIRCUIT BREAKER, FAZ-C10/1-NA	
T40F0050	315744-0100		1	MINIATURE CIRCUIT BREAKER, FAZ-C10/1-NA	
T40F1010	315746-0160		1	MINIATURE CIRCUIT BREAKER, FAZ-C16/3-NA	
T40F1030	315744-0060		1	MINIATURE CIRCUIT BREAKER, FAZ-C6/1-NA	
T50F0020	315744-0100		1	MINIATURE CIRCUIT BREAKER, FAZ-C10/1-NA	
T50F0030	315744-0100		1	MINIATURE CIRCUIT BREAKER, FAZ-C10/1-NA	
V50F0010	315745-0100		1	MINIATURE CIRCUIT BREAKER, FAZ-C10/2-NA	
W30F0010	315744-0100		1	MINIATURE CIRCUIT BREAKER, FAZ-C10/1-NA	
W30F0082	315744-0100		1	MINIATURE CIRCUIT BREAKER, FAZ-C10/1-NA	
W90F0010	315744-0100		1	MINIATURE CIRCUIT BREAKER, FAZ-C10/1-NA	
OTHER COUNTRIES (See drawing on page: 6-32)					
320	90459-5884	MM	160	COMMONING BUSBAR, Z-GV-10/3P-4TE	
330	90459-5884	MM	160	COMMONING BUSBAR, Z-GV-10/3P-4TE	
340	90600-3898		4	END CAP, Z-GV-10/2+3P	
A01F0001	354000-0060		1	MINIATURE CIRCUIT BREAKER, FAZ-C6/1	
A01F0002	354000-0020		1	MINIATURE CIRCUIT BREAKER, FAZ-C2/1	
A01F0003	354000-0060		1	MINIATURE CIRCUIT BREAKER, FAZ-C6/1	
A01F0004	354000-0060		1	MINIATURE CIRCUIT BREAKER, FAZ-C6/1	
A01F0005	354000-0060		1	MINIATURE CIRCUIT BREAKER, FAZ-C6/1	
A01F0070	90459-5811		1	RESIDUAL CURRENT DEVICE, FI-25/2/003-A	
A01X0070	90459-3845		1	WALL SOCKET, Z-SD230	
T14F0000	354000-0100		1	MINIATURE CIRCUIT BREAKER, FAZ-C10/1	
T40F0050	354000-0100		1	MINIATURE CIRCUIT BREAKER, FAZ-C10/1	
T40F1010	354002-0160		1	MINIATURE CIRCUIT BREAKER, FAZ-C16/3	
T40F1030	354000-0060		1	MINIATURE CIRCUIT BREAKER, FAZ-C6/1	
T50F0020	354000-0100		1	MINIATURE CIRCUIT BREAKER, FAZ-C10/1	
T50F0030	354000-0100		1	MINIATURE CIRCUIT BREAKER, FAZ-C10/1	
V50F0010	354001-0100		1	MINIATURE CIRCUIT BREAKER, FAZ-C10/2	
W30F0010	354000-0100		1	MINIATURE CIRCUIT BREAKER, FAZ-C10/1	
W30F0082	354000-0100		1	MINIATURE CIRCUIT BREAKER, FAZ-C10/1	
W90F0010	354000-0100		1	MINIATURE CIRCUIT BREAKER, FAZ-C10/1	
Common Parts					

Pos	Part No	UN	Qty	Description	Page No
300	90600-1649		1	AUXILIARY SWITCH, NHI-E-11-PKZ0	
A01P0030	90178-0007		1	HOUR COUNTER, BG 40,17-1 12-48VDC	
A01X0030	3250577-0100		1	TERMINAL	**6-37**
F09Q0019	90459-5443		1	CONTACTOR 11KW 24VDC, DILM25-01	
T40Q1010	90459-5444		1	CONTACTOR 15KW 24VDC, DILM32-01	
V50Q0010	90459-5440		1	CONTACTOR 4KW 24VDC, DILM9-01	
W90F0082	90459-5325		1	OVERLOAD PROTECTION, PKZM0-2,5	
W30Q0010	90459-5440		1	CONTACTOR 4KW 24VDC, DILM9-01	
W90Q0082	90459-5440		1	CONTACTOR 4KW 24VDC, DILM9-01	

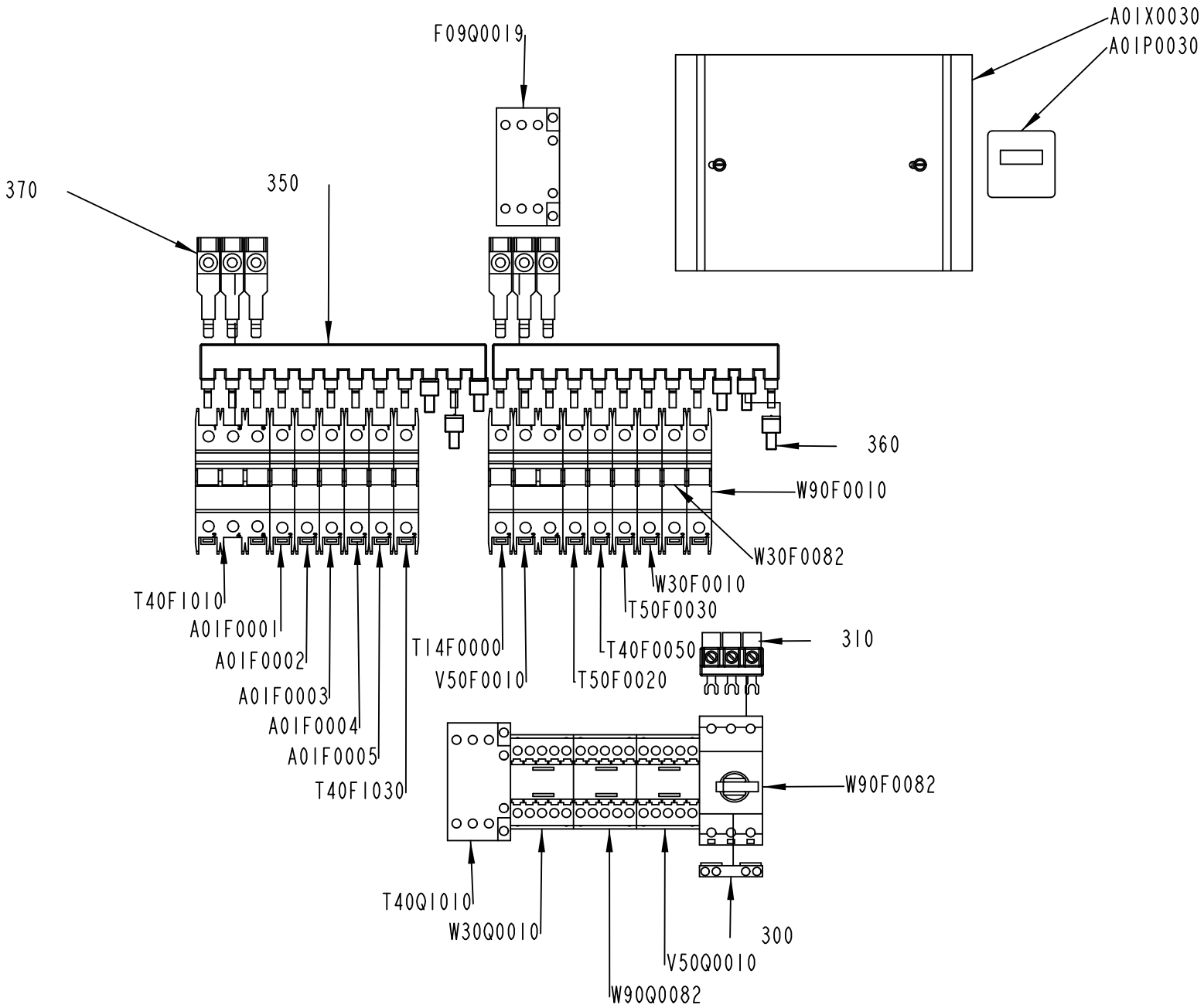

3250575-2
590658

Pos	Part No	UN	Qty	Description	Page No
FINAL DEST. CANADA, FINAL DEST. USA (See drawing on page: 6-34)					
310	90600-1461		1	INCOMING TERMINAL, BK25/3-PKZ0-E	
350	90600-5525		2	BUSBAR, Z-SV/UL-16/3P-3TE/12 104899	
360	90600-5527		6	BUSBAR COVER, ZV-BS-UL 104904	
370	90600-5528		6	EXTENSION TERMINAL, Z-EK/35/UL 104901	
A01F0001	315744-0060		1	MINIATURE CIRCUIT BREAKER, FAZ-C6/1-NA	
A01F0002	315744-0020		1	MINIATURE CIRCUIT BREAKER, FAZ-C2/1-NA	
A01F0003	315744-0060		1	MINIATURE CIRCUIT BREAKER, FAZ-C6/1-NA	
A01F0004	315744-0060		1	MINIATURE CIRCUIT BREAKER, FAZ-C6/1-NA	
A01F0005	315744-0020		1	MINIATURE CIRCUIT BREAKER, FAZ-C2/1-NA	
T14F0000	315744-0100		1	MINIATURE CIRCUIT BREAKER, FAZ-C10/1-NA	
T40F0050	315744-0100		1	MINIATURE CIRCUIT BREAKER, FAZ-C10/1-NA	
T40F1010	315746-0160		1	MINIATURE CIRCUIT BREAKER, FAZ-C16/3-NA	
T40F1030	315744-0060		1	MINIATURE CIRCUIT BREAKER, FAZ-C6/1-NA	
T50F0020	315744-0100		1	MINIATURE CIRCUIT BREAKER, FAZ-C10/1-NA	
T50F0030	315744-0100		1	MINIATURE CIRCUIT BREAKER, FAZ-C10/1-NA	
V50F0010	315745-0100		1	MINIATURE CIRCUIT BREAKER, FAZ-C10/2-NA	
W30F0010	315744-0100		1	MINIATURE CIRCUIT BREAKER, FAZ-C10/1-NA	
W30F0082	315744-0100		1	MINIATURE CIRCUIT BREAKER, FAZ-C10/1-NA	
W90F0010	315744-0100		1	MINIATURE CIRCUIT BREAKER, FAZ-C10/1-NA	
OTHER COUNTRIES (See drawing on page: 6-32)					
320	90459-5884	MM	160	COMMONING BUSBAR, Z-GV-10/3P-4TE	
330	90459-5884	MM	160	COMMONING BUSBAR, Z-GV-10/3P-4TE	
340	90600-3898		4	END CAP, Z-GV-10/2+3P	
A01F0001	354000-0060		1	MINIATURE CIRCUIT BREAKER, FAZ-C6/1	
A01F0002	354000-0020		1	MINIATURE CIRCUIT BREAKER, FAZ-C2/1	
A01F0003	354000-0060		1	MINIATURE CIRCUIT BREAKER, FAZ-C6/1	
A01F0004	354000-0060		1	MINIATURE CIRCUIT BREAKER, FAZ-C6/1	
A01F0005	354000-0060		1	MINIATURE CIRCUIT BREAKER, FAZ-C6/1	
A01F0070	90459-5811		1	RESIDUAL CURRENT DEVICE, FI-25/2/003-A	
A01X0070	90459-3845		1	WALL SOCKET, Z-SD230	
T14F0000	354000-0100		1	MINIATURE CIRCUIT BREAKER, FAZ-C10/1	
T40F0050	354000-0100		1	MINIATURE CIRCUIT BREAKER, FAZ-C10/1	
T40F1010	354002-0160		1	MINIATURE CIRCUIT BREAKER, FAZ-C16/3	
T40F1030	354000-0060		1	MINIATURE CIRCUIT BREAKER, FAZ-C6/1	
T50F0020	354000-0100		1	MINIATURE CIRCUIT BREAKER, FAZ-C10/1	
T50F0030	354000-0100		1	MINIATURE CIRCUIT BREAKER, FAZ-C10/1	
V50F0010	354001-0100		1	MINIATURE CIRCUIT BREAKER, FAZ-C10/2	
W30F0010	354000-0100		1	MINIATURE CIRCUIT BREAKER, FAZ-C10/1	
W30F0082	354000-0100		1	MINIATURE CIRCUIT BREAKER, FAZ-C10/1	
W90F0010	354000-0100		1	MINIATURE CIRCUIT BREAKER, FAZ-C10/1	
Common Parts					

Pos	Part No	UN	Qty	Description	Page No
300	90600-1649		1	AUXILIARY SWITCH, NHI-E-11-PKZ0	
A01P0030	90178-0007		1	HOUR COUNTER, BG 40,17-1 12-48VDC	
A01X0030	3250577-0100		1	TERMINAL	**6-37**
F09Q0019	90459-5443		1	CONTACTOR 11KW 24VDC, DILM25-01	
T40Q1010	90459-5444		1	CONTACTOR 15KW 24VDC, DILM32-01	
V50Q0010	90459-5440		1	CONTACTOR 4KW 24VDC, DILM9-01	
W90F0082	90459-5325		1	OVERLOAD PROTECTION, PKZM0-2,5	
W30Q0010	90459-5440		1	CONTACTOR 4KW 24VDC, DILM9-01	
W90Q0082	90459-5440		1	CONTACTOR 4KW 24VDC, DILM9-01	

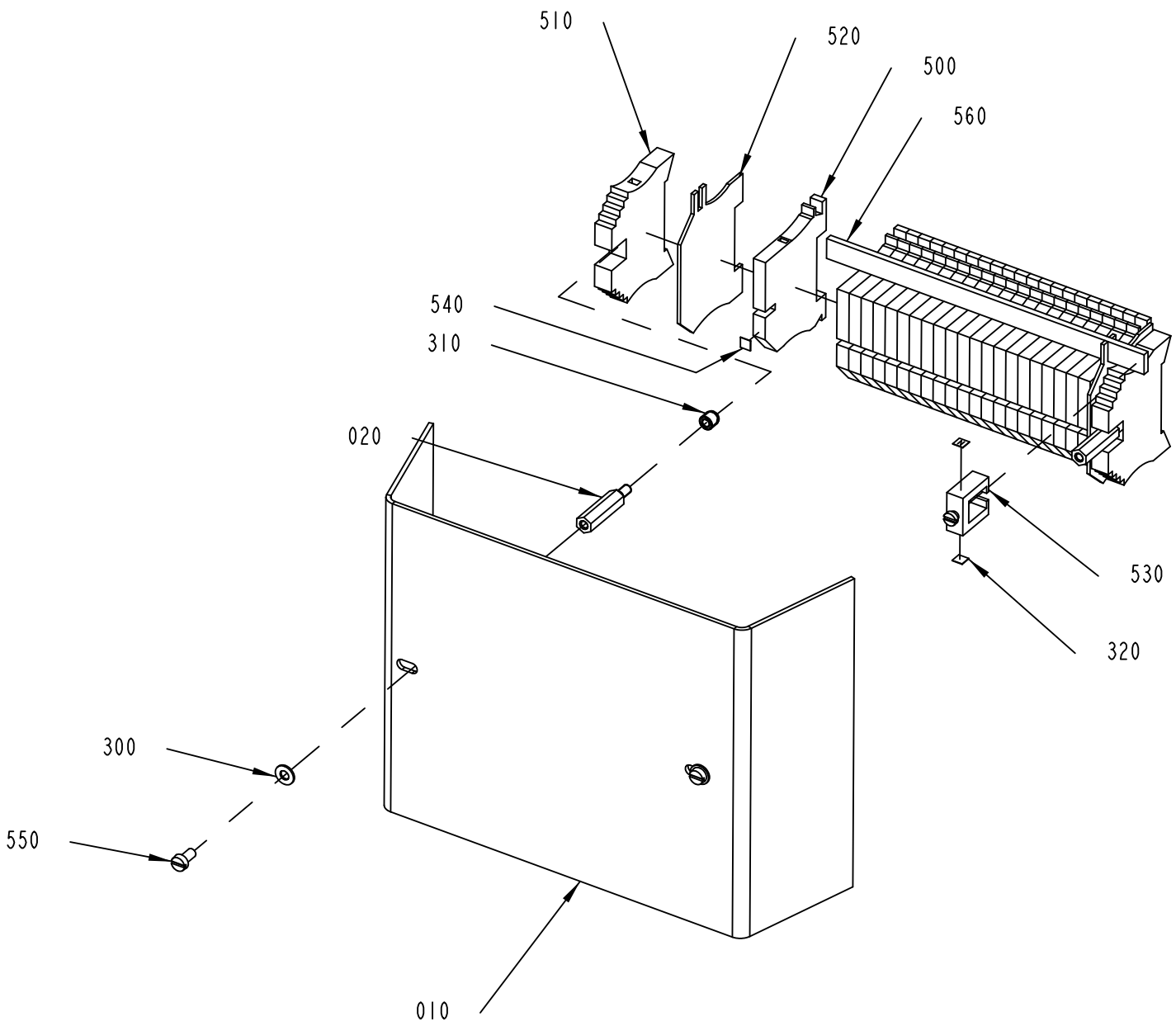

3250577-1
573083

ECM: 577765 - 20120924
Group number: 3250577-0100
Assembly Drawing: 3250577-1_1_AB

Pos	Part No	UN	Qty	Description	Page No
-					
010	3245365-0000		1	COVER	
020	570482-0000		2	SPACER	
300	90005-0064		2	WASHER PL.RND.NYL.4,3/9, H=0,8	
310	90459-6477		2	THREADED INSERTS, BUSHING, M4	
320	90600-0719		2	MARKING, PLATE DEK 5 GW N	
500	353022-0002		22	TERMINAL WNT 4 10X3	
510	353031-0203		2	END BRACKET, WEW 35/2	
520	353033-0104		2	END PLATE, WHP2,5-35N/10X3 BL	
530	353041-0003		1	EARTH BAR	
540	359011-0807		1	MARKING, DEK 5 FW 1-50	
550	312125-0287		2	SLOTTED HEAD SCREW, ISO1207 M4X8 A4	
560	353041-0001	MM	158	BUS BAR RAIL 10X3MM SSCH	

Pos	Part No	UN	Qty	Description	Page No

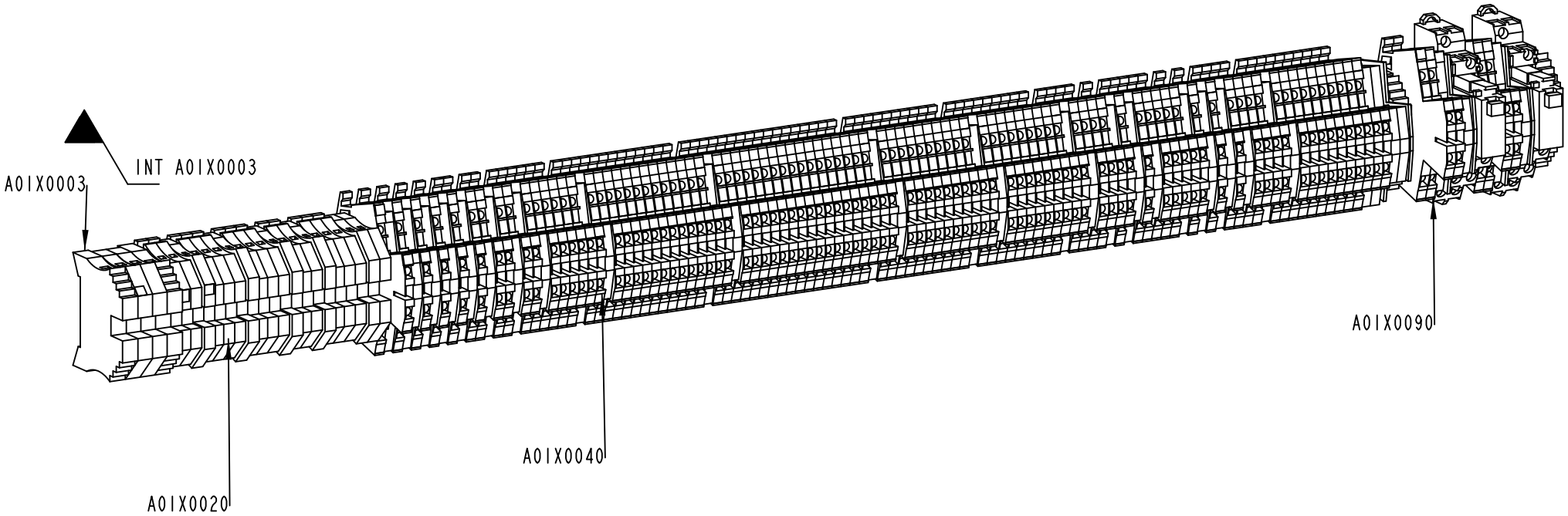

3250578-1
573083

ECM: 577603 - 20120924
Group number: 3250578-0100
Assembly Drawing: 3250578-1_1_AB

Pos	Part No	UN	Qty	Description	Page No
-					
A01X0003	3245364-0100		1	EARTH TERMINAL	**6-41**
A01X0020	3250579-0100		1	TERMINAL	**6-43**
A01X0040	3250580-0100		1	TERMINAL	**6-45**
A01X0090	3253292-0100		1	TERMINAL	**6-47**

Pos	Part No	UN	Qty	Description	Page No

Machine Type | Group Description | Used-In | Group Number | Page No

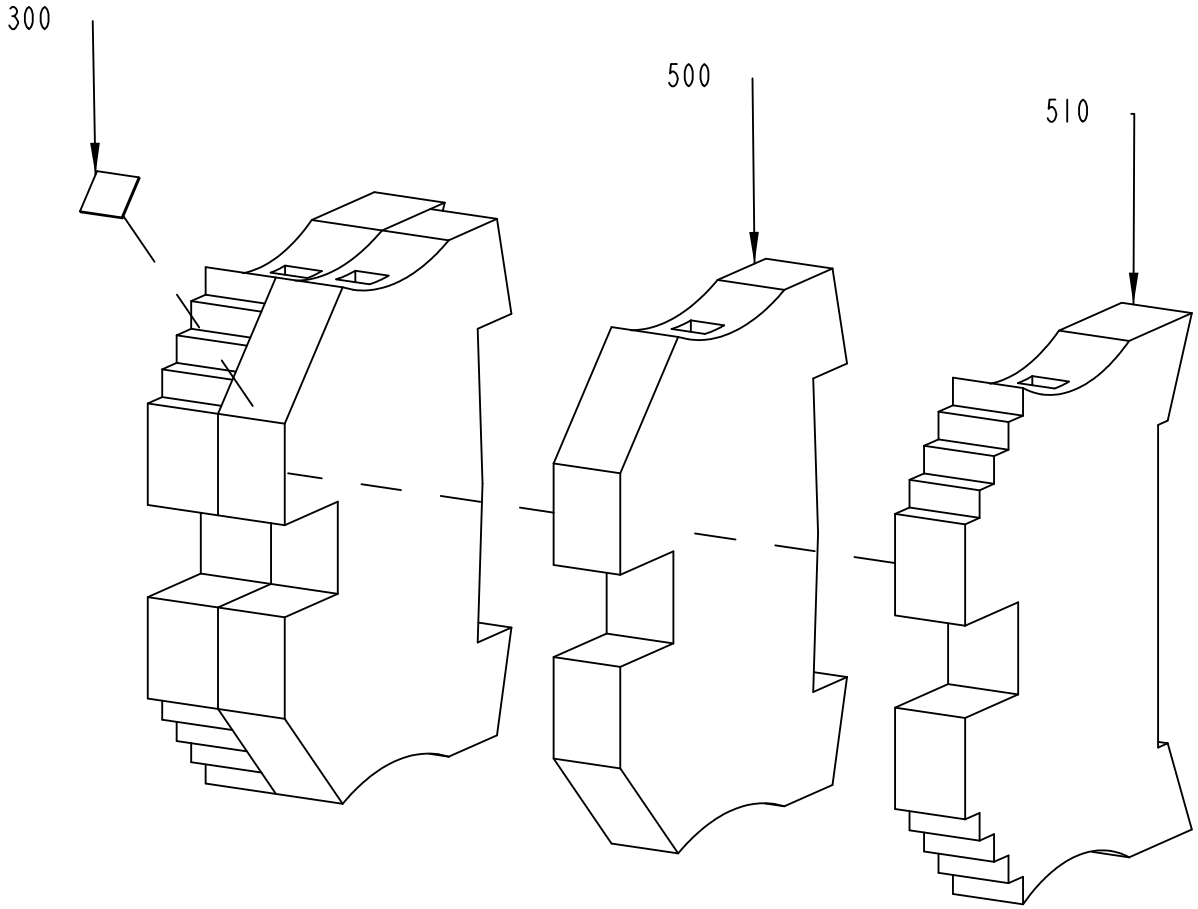

3245364-1
573083

ECM: 577711 - 20120924
Group number: 3245364-0100
Assembly Drawing: 3245364-1_1_AA

Pos	Part No	UN	Qty	Description	Page No
-					
300	90459-0606		1	MARKING, DKE 5 MARKED E1-E50	
500	353024-0206		2	EARTH TERMINAL WPE 6	
510	353031-0203		2	END BRACKET, WEW 35/2	

Pos	Part No	UN	Qty	Description	Page No

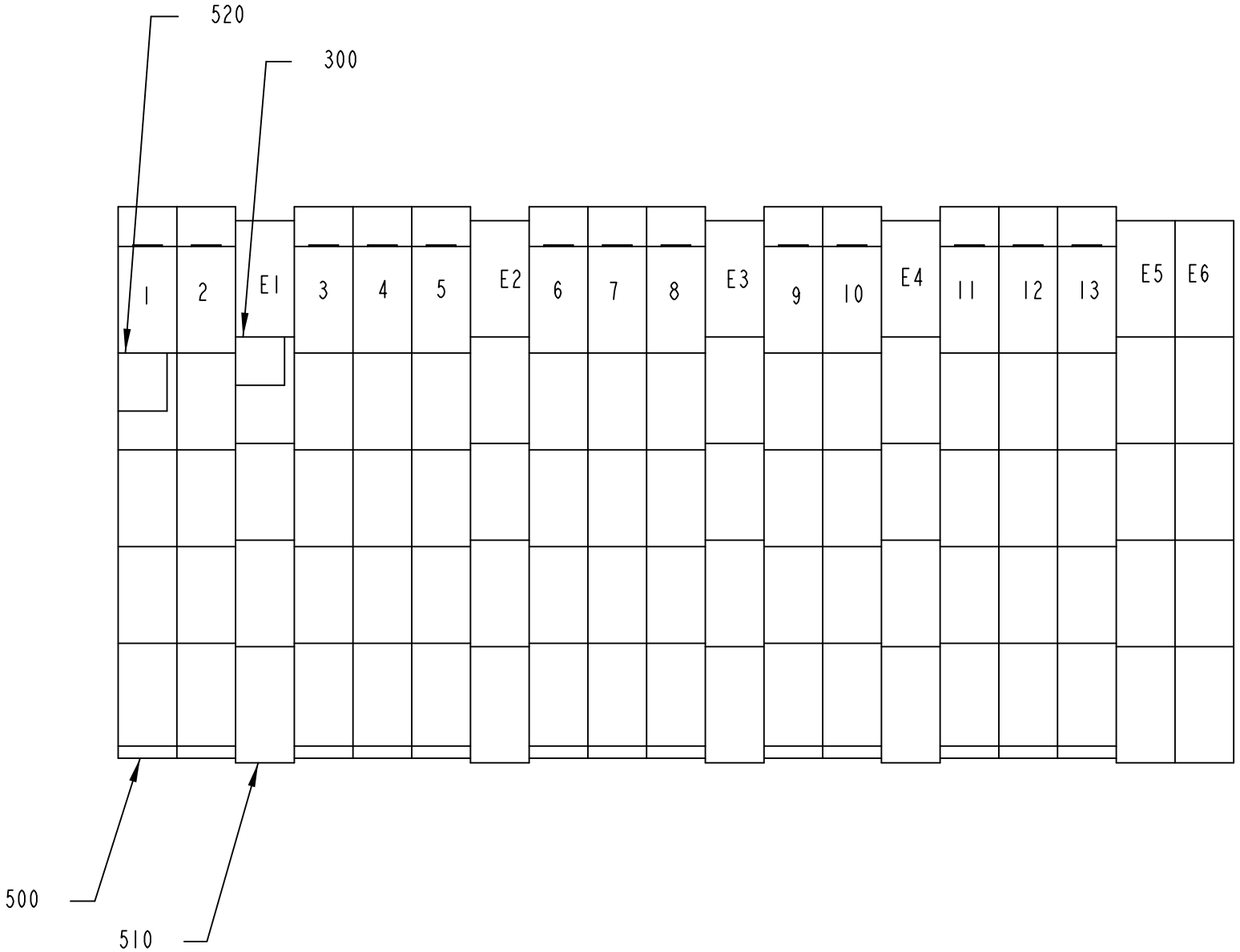

3250579-1
561992

ECM: 567366 - 20120710
Group number: 3250579-0100
Assembly Drawing: 3250579-1_1_AA

Pos	Part No	UN	Qty	Description	Page No
-					
300	90459-0606		1	MARKING, DKE 5 MARKED E1-E50	
500	353021-0213		13	FEED THROUGH TERMINAL, WDU 4	
510	353024-0205		6	EARTH TERMINAL WPE 4	
520	359011-0821		1	MARKING, DEK 6 FW 1-50	

Pos	Part No	UN	Qty	Description	Page No

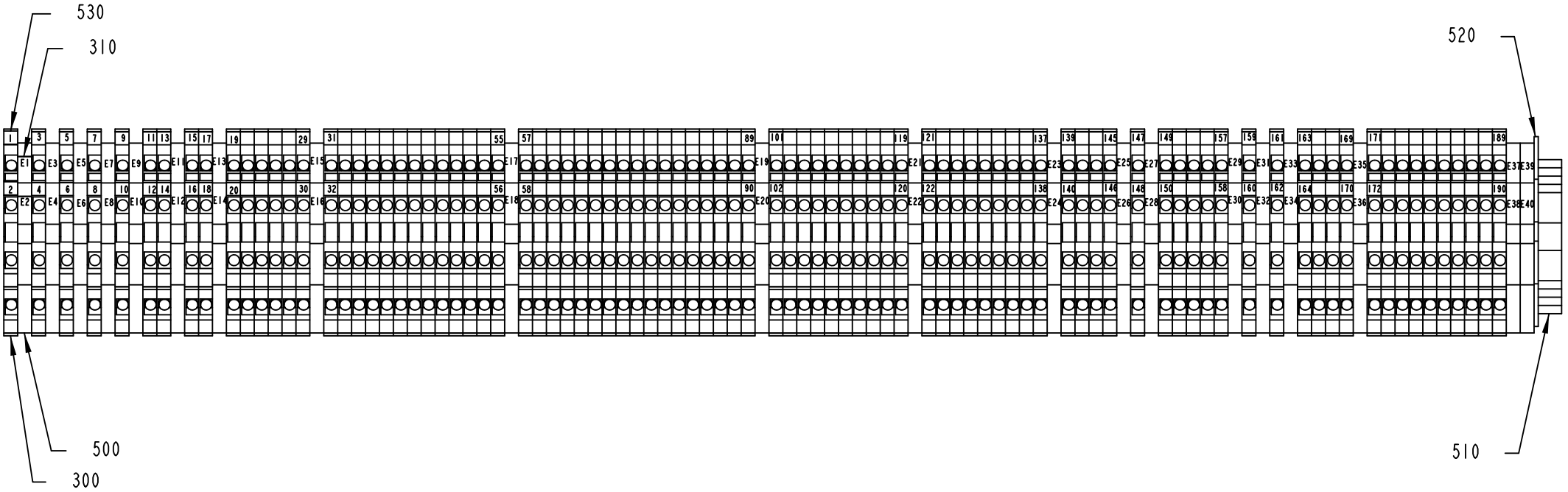

3250580-1
561992

ECM: 567367 - 20120710
Group number: 3250580-0100
Assembly Drawing: 3250580-1_1_AA

Pos	Part No	UN	Qty	Description	Page No
-					
300	90077-0113		90	TERMINAL BLOCK WDK 2.5	
310	90459-0606		2	MARKING, DKE 5 MARKED E1-E50	
500	353024-0212		20	EARTH TERMINAL WDK 2,5 PE	
510	353031-0203		1	END BRACKET, WEW 35/2	
520	353032-0009		1	END PLATE, WAP WDK 2,5	
530	359011-0806		2	MARKING, DEK 5 FW 1-200	

Pos	Part No	UN	Qty	Description	Page No

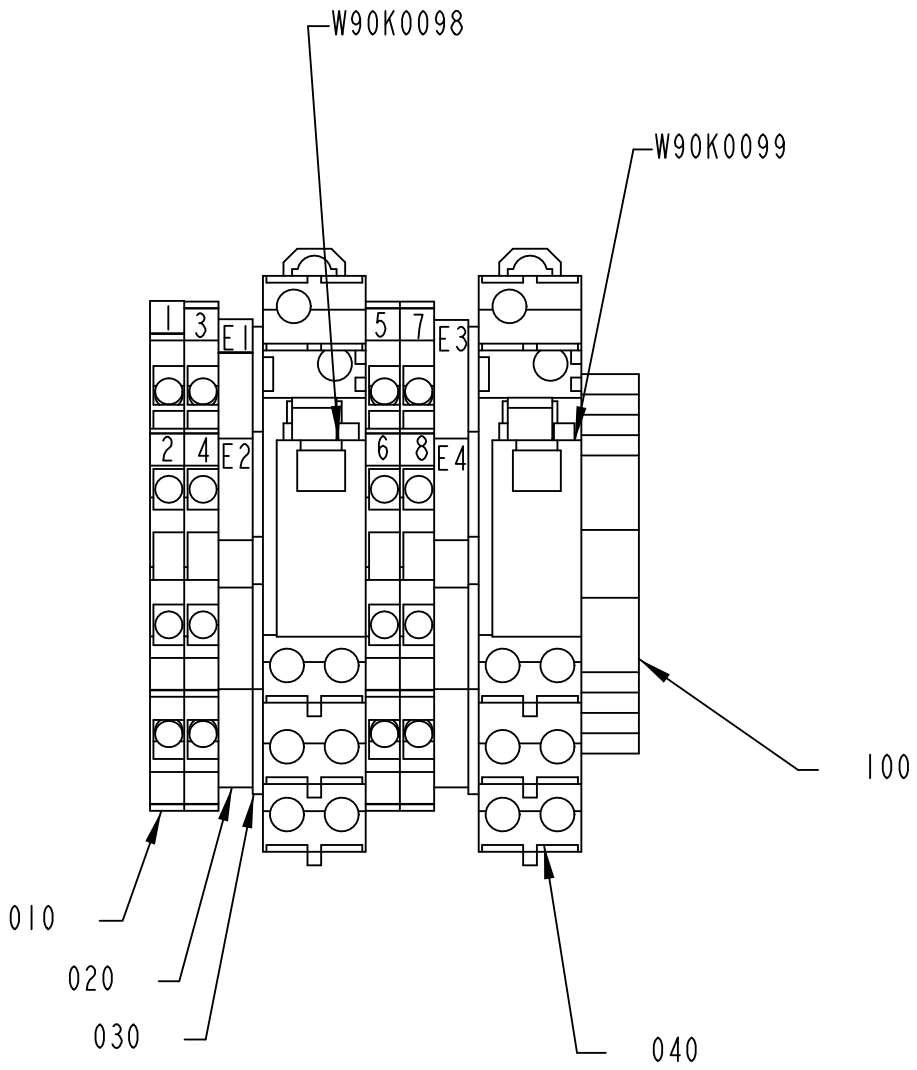

3253292-1
573083

ECM: 577604 - 20120924
Group number: 3253292-0100
Assembly Drawing: 3253292-1_1_AB

Pos	Part No	UN	Qty	Description	Page No
-					
010	90077-0113		4	TERMINAL BLOCK WDK 2.5	
020	353024-0212		2	EARTH TERMINAL WDK 2,5 PE	
030	353032-0009		2	END PLATE, WAP WDK 2,5	
040	90129-0018		2	BASE, P2RF-08-E	
070	90459-0606		2	MARKING, DKE 5 MARKED E1-E50	
080	359011-0807		2	MARKING, DEK 5 FW 1-50	
100	353031-0203		1	END BRACKET, WEW 35/2	
W90K0098	90119-0108		1	RELAY OMRON G2R-2-SNI-24DC	
	90129-0018		*1*	*BASE, P2RF-08-E*	
W90K0099	90119-0108		1	RELAY OMRON G2R-2-SNI-24DC	
	90129-0018		*1*	*BASE, P2RF-08-E*	

Pos	Part No	UN	Qty	Description	Page No

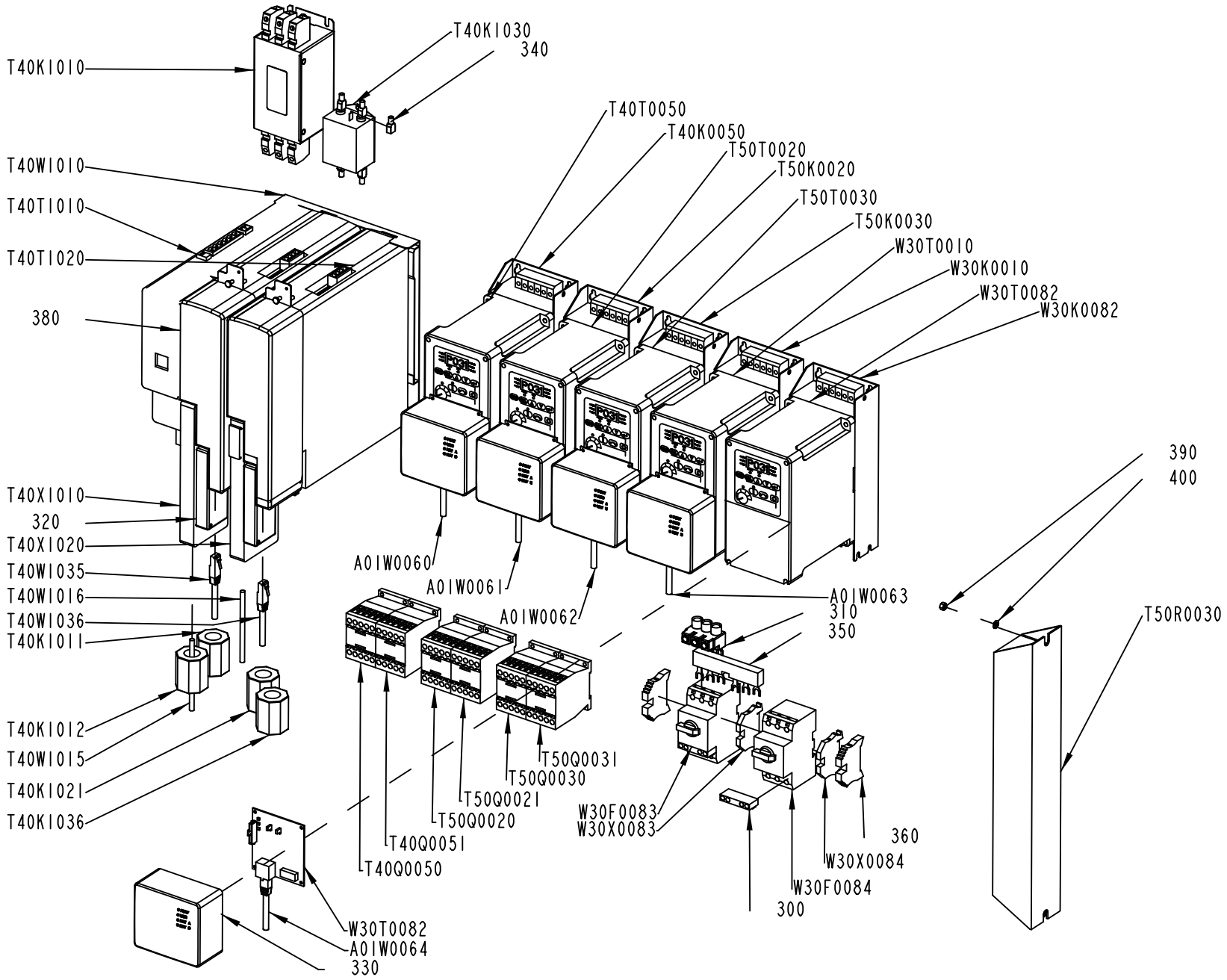

3250581-1
599405

ECM: 600116 - 20130314
Group number: 3250581-0100
Assembly Drawing: 3250581-1_1_AE

Pos	Part No	UN	Qty	Description	Page No
-					
300	90600-1649		2	AUXILIARY SWITCH, NHI-E-11-PKZ0	
310	90600-1461		1	INCOMING TERMINAL, BK25/3-PKZ0-E	
320	90459-2551		2	CONNECTOR, MOTOR FEEDBACK 15 PIN MALE	
330	90459-2795		5	FRONT LID FOR POWERFLEX 40, 22B-CCB	
340	90459-3352		5	FLAT PIN SOCKET, 6,3X0,8	
350	90259-0315		1	CIRCUIT BREAKER , B3.1/2-PKZ0	
360	353031-0203		2	END BRACKET, WEW 35/2	
380	90603-6096		2	CONTROL MODULE,2094-EN02D-M01-S0,SER.A	
390	312605-0314		2	HEXAGON NUT, M6M M5 A280	
400	315106-0146		2	WASHER PLAIN, M5 ISO7089-5-200 HV A4	
A01W0060	351501-0020		1	ETHERNET PATCH CABLE, FL CAT5 PATCH 2,0	
A01W0061	351501-0020		1	ETHERNET PATCH CABLE, FL CAT5 PATCH 2,0	
A01W0062	351501-0020		1	ETHERNET PATCH CABLE, FL CAT5 PATCH 2,0	
A01W0063	351501-0015		1	ETHERNET PATCH CABLE, FL CAT5 PATCH 1,5	
A01W0064	351501-0015		1	ETHERNET PATCH CABLE, FL CAT5 PATCH 1,5	
T40K0050	90459-3454		1	FOOTPRINT FILTER 1 PHASE 18A	
T40K1010	90600-5258		1	LINE FILTER, B84143A35R106	
T40K1011	90605-2062		1	FERRITE, 2090-XXFF-S39	
T40K1012	90605-2062		1	FERRITE, 2090-XXFF-S39	
T40K1021	90605-2062		1	FERRITE, 2090-XXFF-S39	
T40K1030	90600-5252		1	LINE FILTER, B84113HB30	
T40K1036	90605-2062		1	FERRITE, 2090-XXFF-S39	
T50K0020	90459-3454		1	FOOTPRINT FILTER 1 PHASE 18A	
T50K0030	90459-3454		1	FOOTPRINT FILTER 1 PHASE 18A	
T40Q0050	90459-5440		1	CONTACTOR 4KW 24VDC, DILM9-01	
T40Q0051	90459-5440		1	CONTACTOR 4KW 24VDC, DILM9-01	
T50Q0020	90459-5440		1	CONTACTOR 4KW 24VDC, DILM9-01	
T50Q0021	90459-5440		1	CONTACTOR 4KW 24VDC, DILM9-01	
T50Q0030	90459-5440		1	CONTACTOR 4KW 24VDC, DILM9-01	
T50Q0031	90459-5440		1	CONTACTOR 4KW 24VDC, DILM9-01	
T50R0030	90459-4036		1	BRAKING RESISTOR, 260W 120OHM	
T40T0050	90600-3972		1	5008274, ETHERNET ADAPTOR	
T40T0050	90459-3442		1	FREQ. CONV., 22B-A5P0N104	
T40T1010	90603-5702		1	AXIS MOD. KINETIX 6500,2094-BC01-M01-M,A	
T40T1020	90603-5644		1	AXIS MOD. KINETIX 6500,2094-BM01-M SER A	
T50T0020	90459-3442		1	FREQ. CONV., 22B-A5P0N104	
T50T0020	90600-3972		1	5008274, ETHERNET ADAPTOR	
T50T0030	90459-3442		1	FREQ. CONV., 22B-A5P0N104	
T50T0030	90600-3972		1	5008274, ETHERNET ADAPTOR	
T40W1010	90459-5189		1	SLIM POWER RAIL, KINETIX, 2 AXIS	
T40W1015	351423-0005	MM	3250	CABLE UNITRONIC LICY 4X0,34	
T40W1016	351423-0005	MM	750	CABLE UNITRONIC LICY 4X0,34	
T40W1035	351501-0030		1	ETHERNET PATCH CABLE, FL CAT5 PATCH 3,0	
T40W1036	351501-0003		1	ETHERNET PATCH CABLE, FL CAT5 PATCH 0,3	
T40X1010	90603-5503		1	LOW-PROFILE I/O CONNECTOR,2090-K6CK-D44M	
T40X1020	90603-5503		1	LOW-PROFILE I/O CONNECTOR,2090-K6CK-D44M	
W30F0083	90459-5323		1	OVERLOAD PROTECTION, PKZM0-1	
W30F0084	90459-5323		1	OVERLOAD PROTECTION, PKZM0-1	
W30K0010	90459-3454		1	FOOTPRINT FILTER 1 PHASE 18A	
W30K0082	90459-3454		1	FOOTPRINT FILTER 1 PHASE 18A	
W30T0010	90459-3442		1	FREQ. CONV., 22B-A5P0N104	
W30T0010	90600-3972		1	5008274, ETHERNET ADAPTOR	
W30T0082	90600-3972		1	5008274, ETHERNET ADAPTOR	
W30T0082	90459-3442		1	FREQ. CONV., 22B-A5P0N104	
W30X0083	353021-0213		1	FEED THROUGH TERMINAL, WDU 4	
W30X0084	353021-0213		1	FEED THROUGH TERMINAL, WDU 4	

Machine Type	Group Description	Used-In	Group Number	Page No

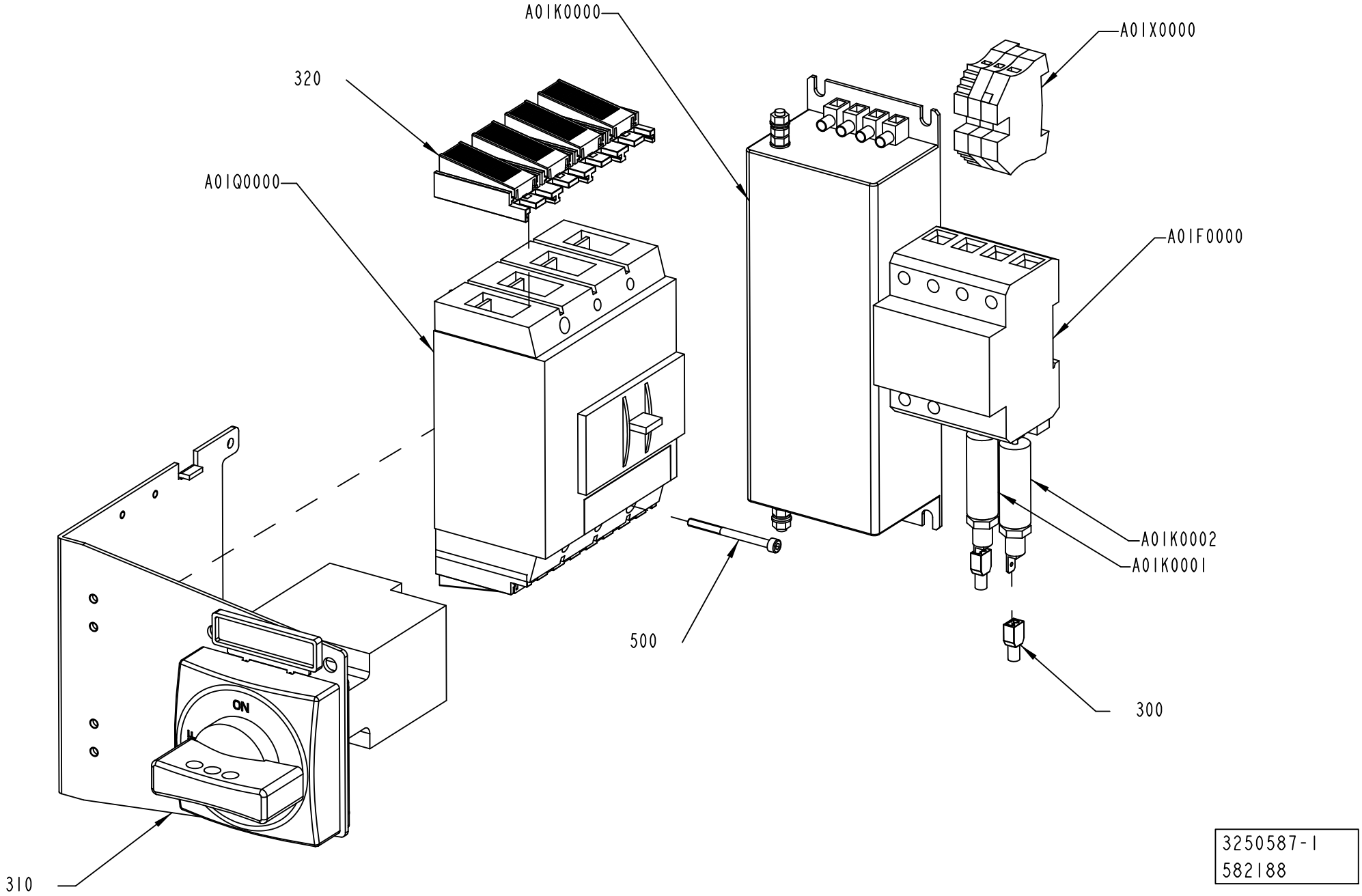

3250587-1
582188

Pos	Part No	UN	Qty	Description	Page No
FINAL DEST. CANADA, FINAL DEST. USA (See drawing on page: 6-52)					
330	90459-6616		6	PROTECTION, NZM1-4-XIPA	
A01Q0000	351436-0020		1	CIRCUIT BREAKER, NZMB1-A20-NA	
OTHER COUNTRIES (See drawing on page: 6-50)					
320	90603-9054		2	PROTECTION IP2X 4-POLE, NZM1-4-XIPK	
A01Q0000	351435-0020		1	CIRCUIT BREAKER, NZMB1-4-A20	
Common Parts					
300	90459-3352		4	FLAT PIN SOCKET, 6,3X0,8	
310	90603-8333		1	DOOR COUPLING ROTARY HANDLE, NZM1-XSM-L	
500	312115-0305		2	SCREW ISO4762 M4X50 A4 80	
510	353105-0147		12	PIN CABLE SHOE 4-6MM2 YELLOW A4630SR	
A01F0000	90600-7487		1	SURGE PROTECTION DEV., VAL-MS 230/3+1 FM	
	90600-7489		*1*	*SURGE PROTECTION DEV., SP, F-MS 12 ST*	
	90600-7488		*1*	*SURGE PROTECTION DEV., SP, VAL-MS 230 ST*	
A01K0000	90600-5261		1	LINE FILTER, B84144A25R120	
A01K0001	90600-5266		1	FEED THROUGH FILTER, B85321A2502W160	
A01K0002	90600-5266		1	FEED THROUGH FILTER, B85321A2502W160	
A01X0000	3250588-0100		1	TERMINAL	**6-55, 6-57**

Pos	Part No	UN	Qty	Description	Page No

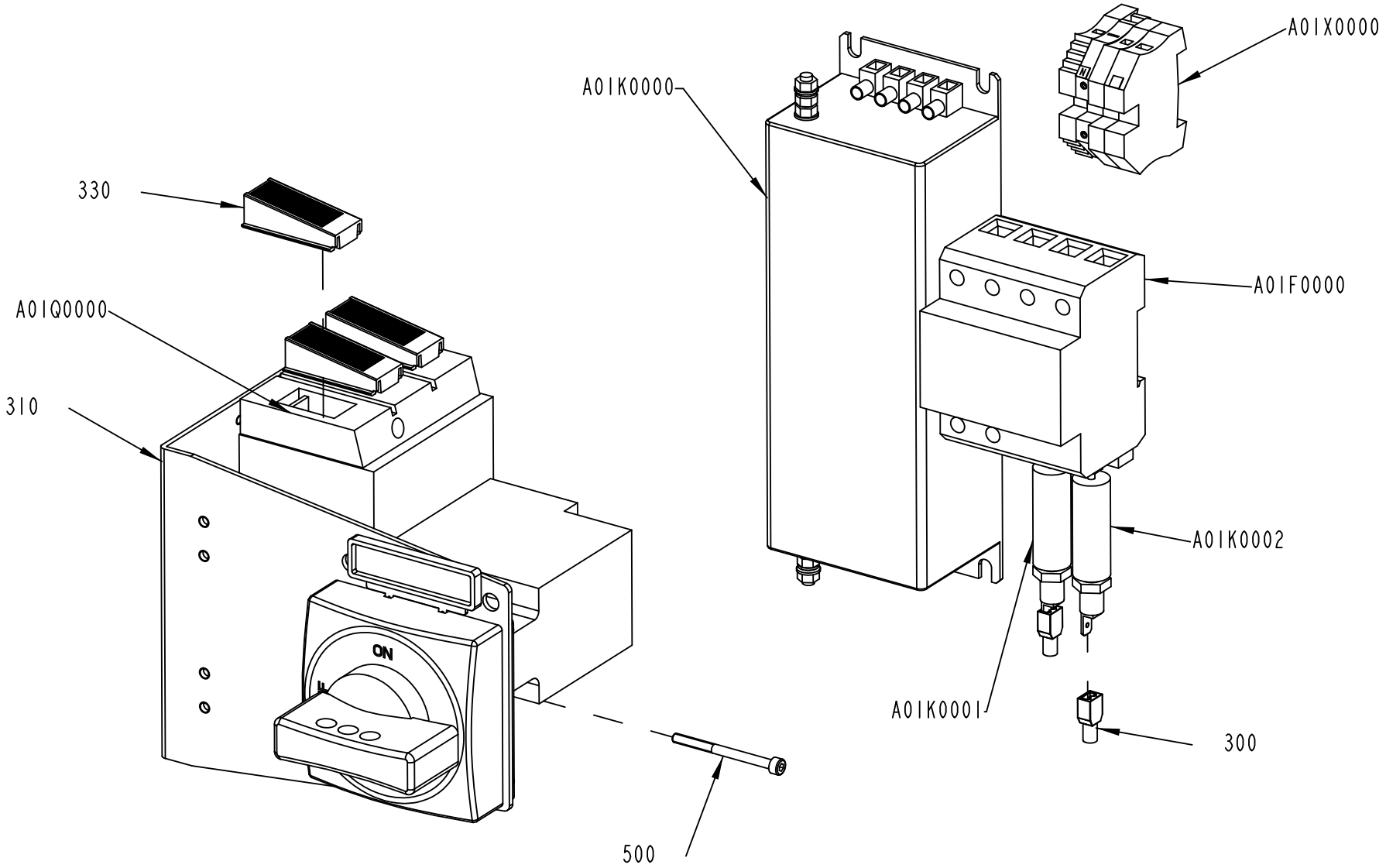

3250587-2
582188

Pos	Part No	UN	Qty	Description	Page No
FINAL DEST. CANADA, FINAL DEST. USA (See drawing on page: 6-52)					
330	90459-6616		6	PROTECTION, NZM1-4-XIPA	
A01Q0000	351436-0020		1	CIRCUIT BREAKER, NZMB1-A20-NA	
OTHER COUNTRIES (See drawing on page: 6-50)					
320	90603-9054		2	PROTECTION IP2X 4-POLE, NZM1-4-XIPK	
A01Q0000	351435-0020		1	CIRCUIT BREAKER, NZMB1-4-A20	
Common Parts					
300	90459-3352		4	FLAT PIN SOCKET, 6,3X0,8	
310	90603-8333		1	DOOR COUPLING ROTARY HANDLE, NZM1-XSM-L	
500	312115-0305		2	SCREW ISO4762 M4X50 A4 80	
510	353105-0147		12	PIN CABLE SHOE 4-6MM2 YELLOW A4630SR	
A01F0000	90600-7487		1	SURGE PROTECTION DEV., VAL-MS 230/3+1 FM	
	90600-7489		*1*	*SURGE PROTECTION DEV., SP, F-MS 12 ST*	
	90600-7488		*1*	*SURGE PROTECTION DEV., SP, VAL-MS 230 ST*	
A01K0000	90600-5261		1	LINE FILTER, B84144A25R120	
A01K0001	90600-5266		1	FEED THROUGH FILTER, B85321A2502W160	
A01K0002	90600-5266		1	FEED THROUGH FILTER, B85321A2502W160	
A01X0000	3250588-0100		1	TERMINAL	**6-55, 6-57**

Pos	Part No	UN	Qty	Description	Page No

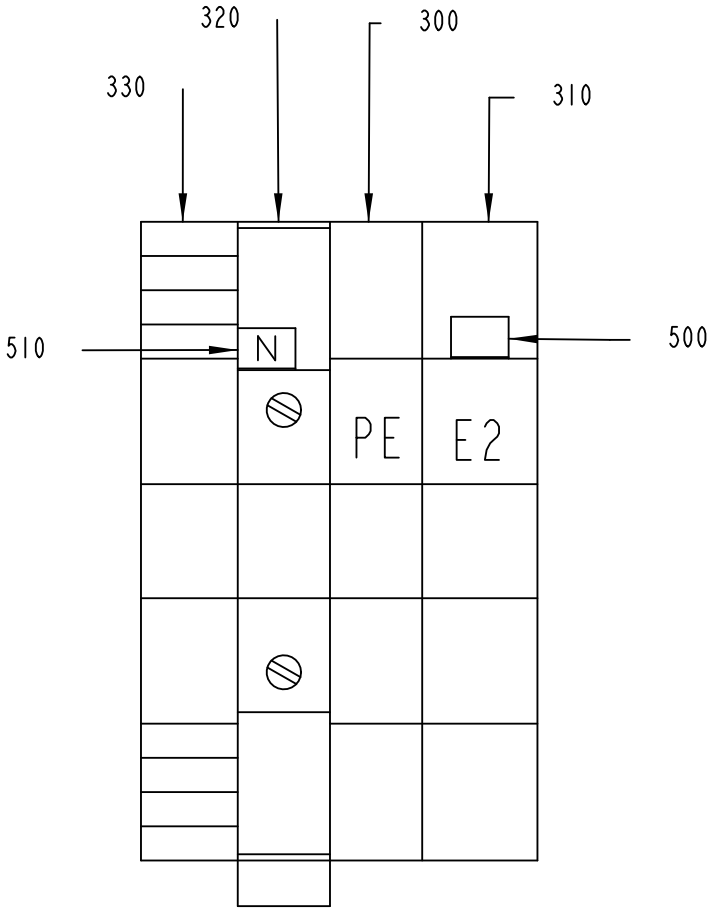

3250588-1
573083

ECM: 589794 - 20121210
Group number: 3250588-0100
Assembly Drawing: 3250588-1_1_AB

This list covers pages from 6-54 to 6-57

Pos	Part No	UN	Qty	Description	Page No
FINAL DEST. CANADA, FINAL DEST. USA (See drawing on page: 6-54)					
320	353021-0223		1	FEED THROUGH TERMINAL, WDU 6 BL	
510	90600-0719		1	MARKING, PLATE DEK 5 GW N	
Common Parts					
300	353024-0206		1	EARTH TERMINAL WPE 6	
310	353024-0207		1	EARTH TERMINAL WPE 10	
330	353031-0203		1	END BRACKET, WEW 35/2	
500	90459-0606		1	MARKING, DKE 5 MARKED E1-E50	

Pos	Part No	UN	Qty	Description	Page No

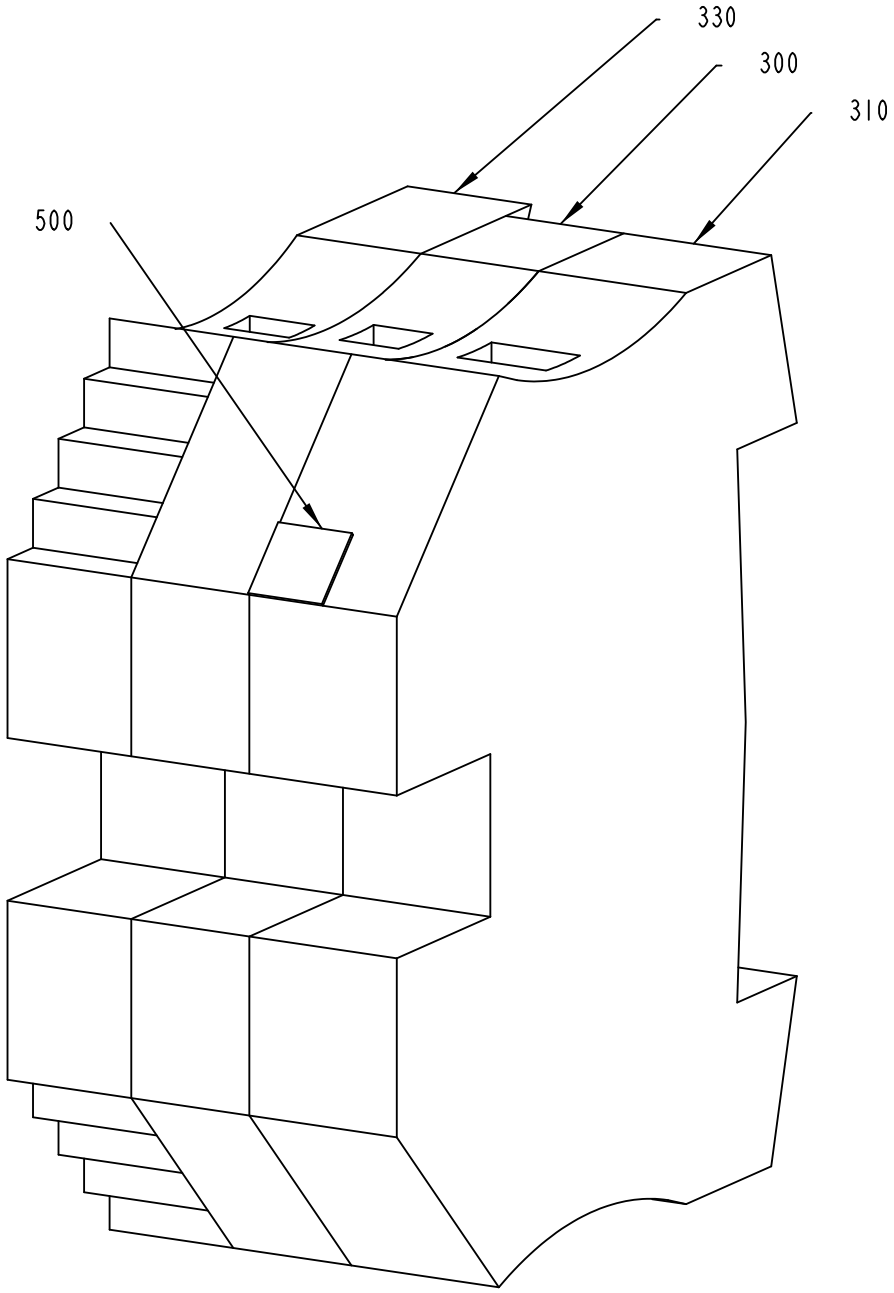

3250588-2
582188

ECM: 589794 - 20121210
Group number: 3250588-0100
Assembly Drawing: 3250588-2_1_AA

This list covers pages from 6-54 to 6-57

Pos	Part No	UN	Qty	Description	Page No
FINAL DEST. CANADA, FINAL DEST. USA (See drawing on page: 6-54)					
320	353021-0223		1	FEED THROUGH TERMINAL, WDU 6 BL	
510	90600-0719		1	MARKING, PLATE DEK 5 GW N	
Common Parts					
300	353024-0206		1	EARTH TERMINAL WPE 6	
310	353024-0207		1	EARTH TERMINAL WPE 10	
330	353031-0203		1	END BRACKET, WEW 35/2	
500	90459-0606		1	MARKING, DKE 5 MARKED E1-E50	

Pos	Part No	UN	Qty	Description	Page No

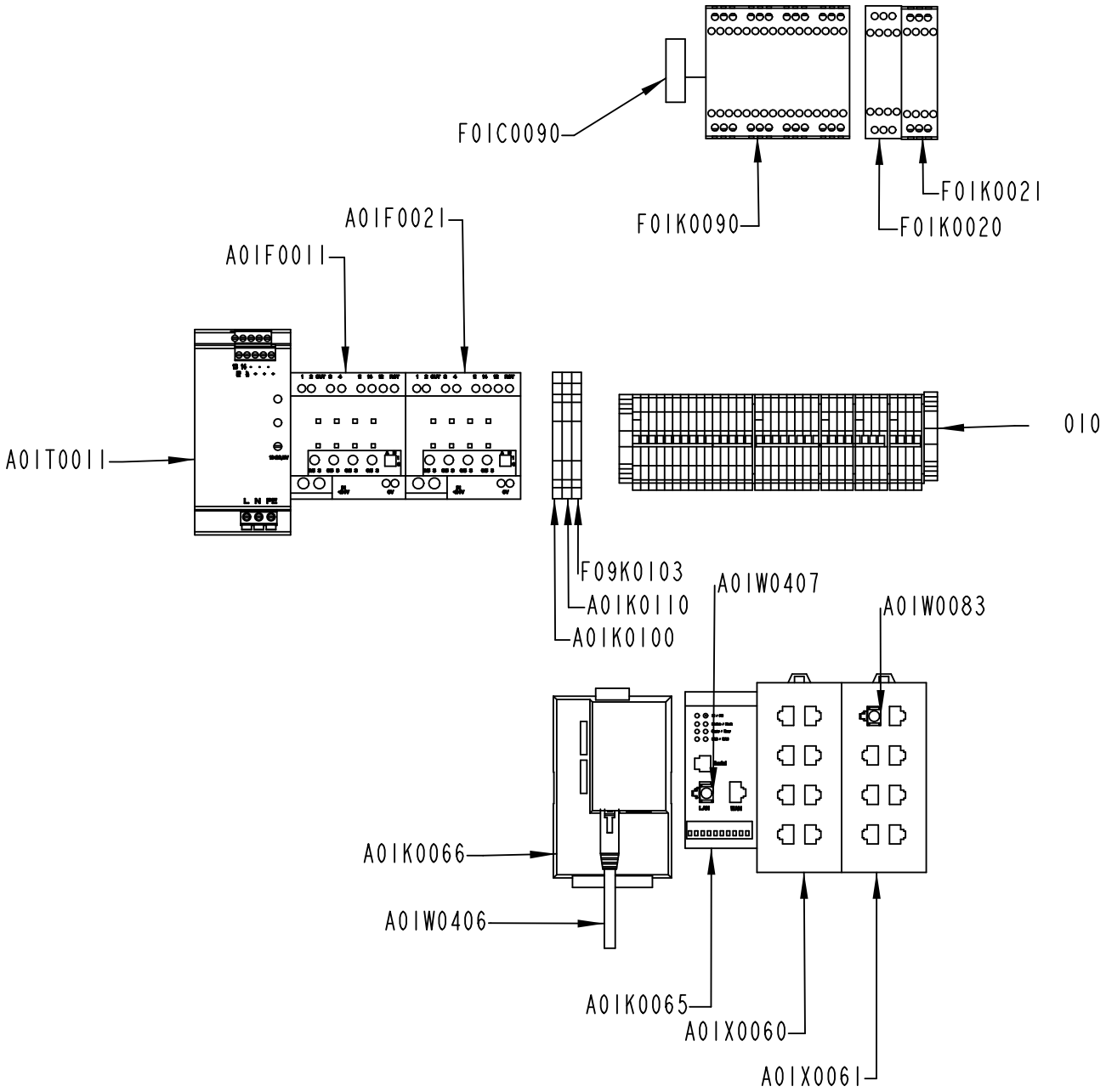

3250582-1
611176

Pos	Part No	UN	Qty	Description	Page No
FINAL DEST. CANADA, FINAL DEST. USA (See drawing on page: 6-60)					
500	312113-0366		4	SCREW, SERRATED COMBI TORX M6X12 A2	
A01F0011	90602-3770		1	DIGITAL MULTICIRCUIT PROT., S8M-CP04-RS	
A01F0021	90602-3770		1	DIGITAL MULTICIRCUIT PROT., S8M-CP04-RS	
A01F0071	315744-0040		1	MINIATURE CIRCUIT BREAKER, FAZ-C4/1-NA	
A01T0070	90603-2683		1	TRANSFORMER, 1-PH 500VA	
A01X0070	90603-2684		1	WALL SOCKET, RECEPTACLE 7599-DIN	
OTHER COUNTRIES (See drawing on page: 6-58)					
A01F0011	90603-2454		1	MULTI CIRCUIT PROT., SITOP PSE200U 3A	
A01F0021	90603-2453		1	MULTI CIRCUIT PROT., SITOP PSE200U 10A	
LINE COMMUNICATION SNP					
A01K0066	90604-5464		1	QUICKSERVER GATEWAY, FS-QS-1230-0705	
A01W0406	351501-0010		1	ETHERNET PATCH CABLE, FL CAT5 PATCH 1,0	
Common Parts					
010	3250584-0100		1	TERMINAL	**6-63**
A01K0065	90603-3659		1	ETHERNET NAT ROUTER, FL MGUARD RS-B	
A01K0100	90601-6650		1	RELAY, PLC-RSC-24DC/21	
A01K0110	90601-6650		1	RELAY, PLC-RSC-24DC/21	
A01T0011	90602-8627		1	POWER SUPPLY, QUINT-PS/1AC/24DC/10	
A01W0083	351501-0003		1	ETHERNET PATCH CABLE, FL CAT5 PATCH 0,3	
A01W0407	351501-0003		1	ETHERNET PATCH CABLE, FL CAT5 PATCH 0,3	
A01X0060	90600-1848		1	ETHERNET SW, FL SWITCH SFN 8TX	
A01X0061	90600-1848		1	ETHERNET SW, FL SWITCH SFN 8TX	
F01C0090	90459-4891		1	IDENTIFIER, ID-FIX RW	
F01K0020	90459-1131		1	SAFETY RELAY, E1T	
F01K0021	90459-2291		1	SAFETY RELAY, E1T	
F01K0090	90601-7290		1	SAFETY PLC, PLUTO B46 20-070-17	
F09K0103	90601-6650		1	RELAY, PLC-RSC-24DC/21	

Pos	Part No	UN	Qty	Description	Page No

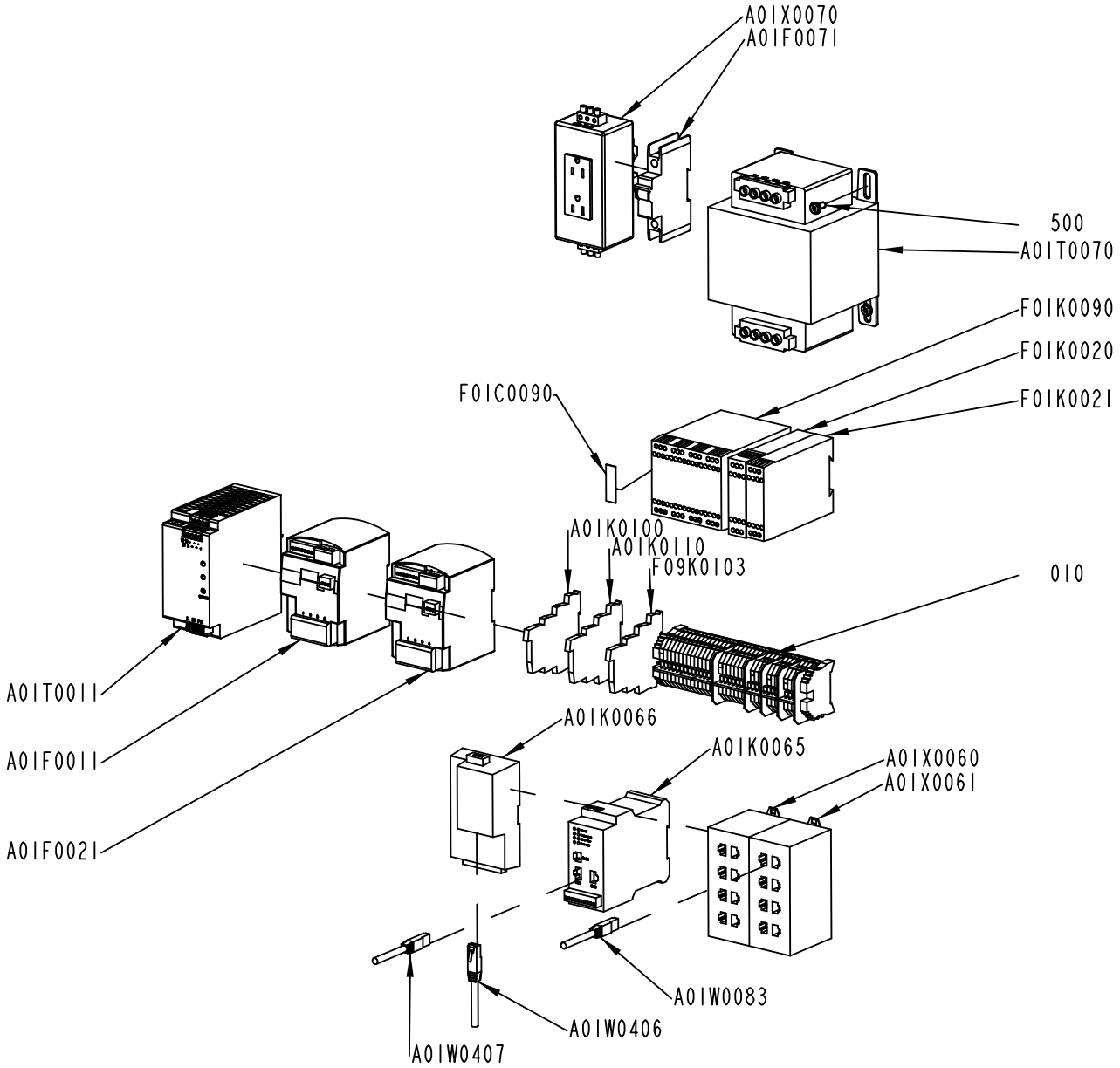

3250582-2
611176

Pos	Part No	UN	Qty	Description	Page No
FINAL DEST. CANADA, FINAL DEST. USA (See drawing on page: 6-60)					
500	312113-0366		4	SCREW, SERRATED COMBI TORX M6X12 A2	
A01F0011	90602-3770		1	DIGITAL MULTICIRCUIT PROT., S8M-CP04-RS	
A01F0021	90602-3770		1	DIGITAL MULTICIRCUIT PROT., S8M-CP04-RS	
A01F0071	315744-0040		1	MINIATURE CIRCUIT BREAKER, FAZ-C4/1-NA	
A01T0070	90603-2683		1	TRANSFORMER, 1-PH 500VA	
A01X0070	90603-2684		1	WALL SOCKET, RECEPTACLE 7599-DIN	
OTHER COUNTRIES (See drawing on page: 6-58)					
A01F0011	90603-2454		1	MULTI CIRCUIT PROT., SITOP PSE200U 3A	
A01F0021	90603-2453		1	MULTI CIRCUIT PROT., SITOP PSE200U 10A	
LINE COMMUNICATION SNP					
A01K0066	90604-5464		1	QUICKSERVER GATEWAY, FS-QS-1230-0705	
A01W0406	351501-0010		1	ETHERNET PATCH CABLE, FL CAT5 PATCH 1,0	
Common Parts					
010	3250584-0100		1	TERMINAL	**6-63**
A01K0065	90603-3659		1	ETHERNET NAT ROUTER, FL MGUARD RS-B	
A01K0100	90601-6650		1	RELAY, PLC-RSC-24DC/21	
A01K0110	90601-6650		1	RELAY, PLC-RSC-24DC/21	
A01T0011	90602-8627		1	POWER SUPPLY, QUINT-PS/1AC/24DC/10	
A01W0083	351501-0003		1	ETHERNET PATCH CABLE, FL CAT5 PATCH 0,3	
A01W0407	351501-0003		1	ETHERNET PATCH CABLE, FL CAT5 PATCH 0,3	
A01X0060	90600-1848		1	ETHERNET SW, FL SWITCH SFN 8TX	
A01X0061	90600-1848		1	ETHERNET SW, FL SWITCH SFN 8TX	
F01C0090	90459-4891		1	IDENTIFIER, ID-FIX RW	
F01K0020	90459-1131		1	SAFETY RELAY, E1T	
F01K0021	90459-2291		1	SAFETY RELAY, E1T	
F01K0090	90601-7290		1	SAFETY PLC, PLUTO B46 20-070-17	
F09K0103	90601-6650		1	RELAY, PLC-RSC-24DC/21	

Pos	Part No	UN	Qty	Description	Page No

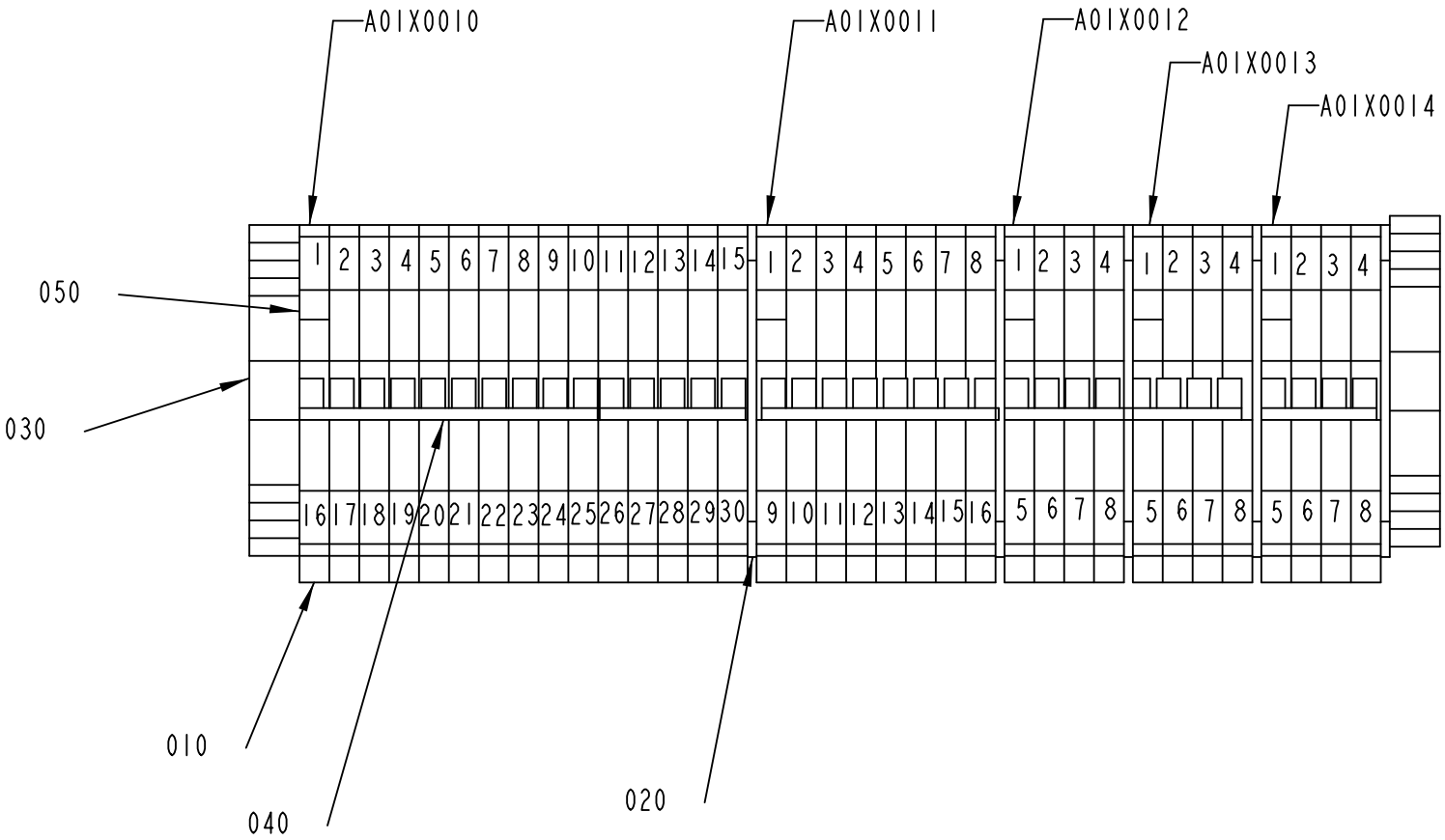

3250584-1
561992

ECM: 567387 - 20120710
Group number: 3250584-0100
Assembly Drawing: 3250584-1_1_AA

Pos	Part No	UN	Qty	Description	Page No
-					
010	353021-0212		35	FEED THROUGH TERMINAL, WDU 2,5	
020	353033-0105		5	END PLATE, WAP 16+35 WTW 2,5-10	
030	353031-0203		2	END BRACKET, WEW 35/2	
040	353034-0030		4	BRIDGE CONNECTOR WQV 2,5/10	
050	359011-0807		6	MARKING, DEK 5 FW 1-50	

Pos	Part No	UN	Qty	Description	Page No

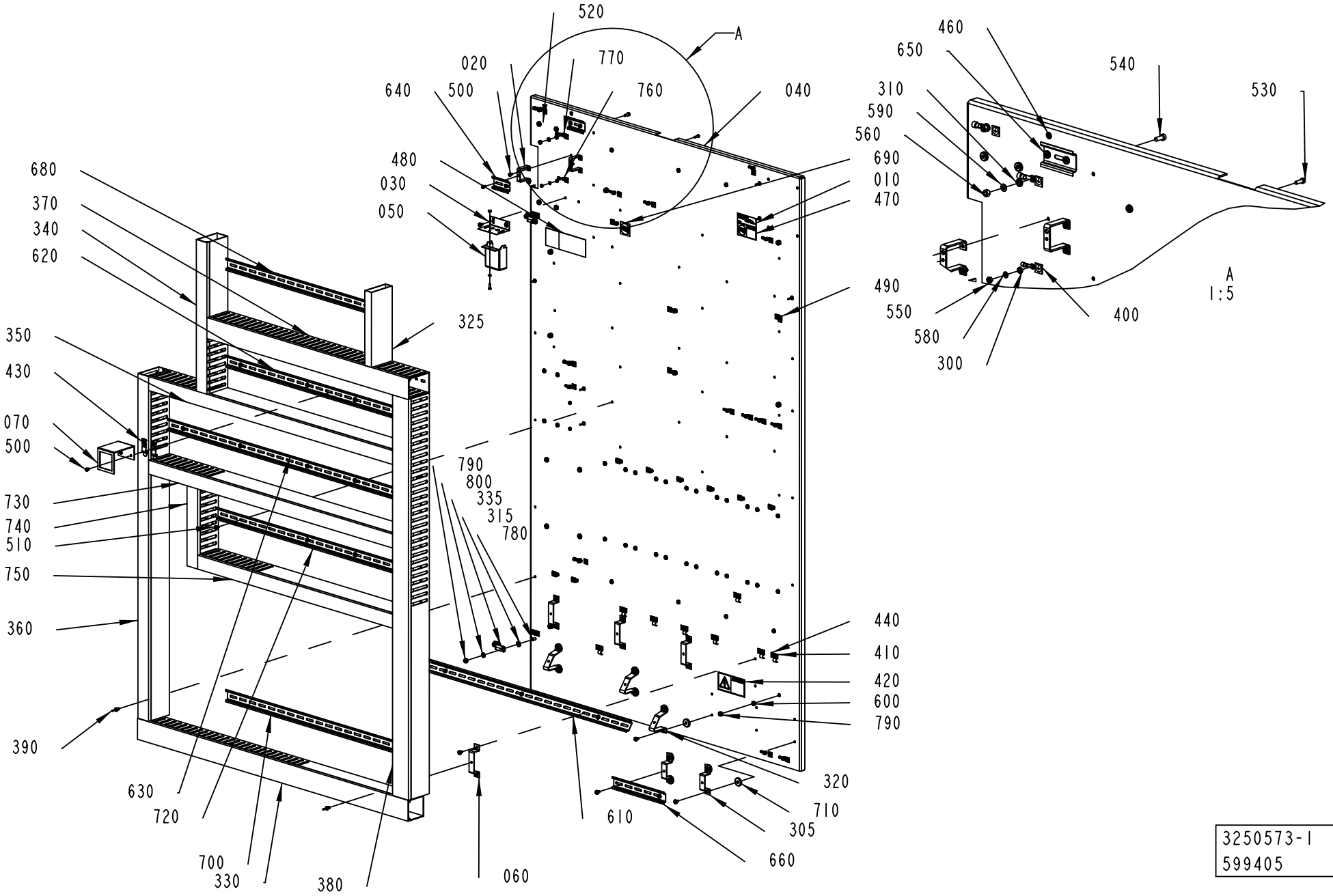

3250573-1
599405

ECM: 599405 - 20130314
Group number: 3250573-0100
Assembly Drawing: 3250573-1_1_AE

Pos	Part No	UN	Qty	Description	Page No
ANSI					
010	3263647-0000		1	SIGN & MARKING	
420	90458-2634		1	WARNING SIGN ANSI (H), EXTERNAL VOLTAGE	
470	90600-5591		1	WARNING SIGN ANSI (H), HAZARDOUS VOLTAGE	
480	90600-5233		1	WARNING SIGN ANSI (H), READ MANUAL, AUTO	
ISO					
420	359705-0015		1	WARNING SIGN ISO, RISK OF ELECTRIC SHOCK	
480	90600-5235		1	MANDATORY ACTION SIGN ISO, READ MANUAL	
690	90459-3902		1	MANDATORY ACTION SIGN ISO, READ MAINTENA	
Common Parts					
020	2756309-0000		2	BRACKET	
030	3059446-0000		1	PROTECTIVE COVER	
040	3250591-0000		1	MOUNTING PLATE	
050	3112737-0000		1	TOUCH GUARD	
060	3112741-0000		4	BRACKET	
070	583570-0000		1	BRACKET	
300	90062-0059		21	LOCK WASKER SERRAT.EXT.GEAR,4,3/8 H=0,5	
305	90458-1447		2	MOUNTING RAIL SUPPORT, TST 128660	
310	90062-0060		6	LOCK WASHER 5,3/10 H=0,6 FZB	
315	90062-0016		4	LOCK WASHER SERRAT.EXT.GEAR,8,4/15 H=0,8	
320	90099-0005		3	MOUNTING RAIL SUPPORT, TSTW 5/M5	
325	90181-0052	MM	215	CABLE DUCT, PLASTIC, 25X80	
330	90181-0046	MM	1020	CABLE DUCT, PLASTIC, 60X60	
335	90600-2904		2	EARTH BRAID, 250/16/8,5	
340	90181-0053	MM	435	CABLE DUCT, PLASTIC, 40X80	
350	90181-0053	MM	920	CABLE DUCT, PLASTIC, 40X80	
360	90181-0053	MM	990	CABLE DUCT, PLASTIC, 40X80	
370	90181-0054	MM	760	CABLE DUCT, PLASTIC, 60X80	
380	90181-0054	MM	1150	CABLE DUCT, PLASTIC, 60X80	
390	90181-0088		34	PLASTIC RIVET, PR 52314	
400	90194-0152		27	SIGN, EARTH	
410	90458-0721		8	PIPE CLIP FOR TUBE D=8 MMSZ 2367080	
430	90459-2563		2	BRACKET FOR RAIL, FM 4	
440	90459-2928		10	LABEL 60417-2-IEC-5020, COMM. REF. POT.	
460	90111-0344		1	SIGN, PE, GREEN/YELLOW	
490	90459-6646		1	CABLE CLIPS, D=4 MM	
500	312113-0287		18	SCREW, SERRATED COMBI TORX M4X8 A2	
510	312113-0323		75	SCREW, SERRATED COMBI TORX M5X8 A2	
520	312113-0366		8	SCREW, SERRATED COMBI TORX M6X12 A2	
530	312125-0291		21	SLOTTED HEAD SCREW, ISO1207 M4X12 A4	
540	312125-0327		6	SLOTTED HEAD SCREW, ISO1207 M5X12 A4	
550	312605-0312		21	HEXAGON NUT, M6M M4 A280	
560	312605-0314		6	HEXAGON NUT, M6M M5 A280	
580	315105-0136		21	WASHER PLAIN, 4,3X9X0,8 A4 BRB	
590	315105-0146		6	WASHER PLAIN, 5,3X10X1 A4 BRB	
600	315105-0153		7	WASHER PLAIN, 6,4X12X1,5 A4 BRB	
610	353042-0004	MM	800	RAIL, TS 35/7,5	
620	353042-0004	MM	698	RAIL, TS 35/7,5	
630	353042-0004	MM	918	RAIL, TS 35/7,5	
640	353042-0004	MM	60	RAIL, TS 35/7,5	
650	353042-0004	MM	60	RAIL, TS 35/7,5	
660	353042-0004	MM	195	RAIL, TS 35/7,5	
680	353042-0004	MM	590	RAIL, TS 35/7,5	
700	353042-0004	MM	700	RAIL, TS 35/7,5	
710	315125-0153		10	WASHER HIGH, TBRSB 6,4X22X4 A4	
720	353042-0004	MM	733	RAIL, TS 35/7,5	
730	90181-0053	MM	920	CABLE DUCT, PLASTIC, 40X80	
740	90181-0053	MM	230	CABLE DUCT, PLASTIC, 40X80	
750	90181-0053	MM	735	CABLE DUCT, PLASTIC, 40X80	
760	353101-0130		21	CABLE SHOE 1,5-2,5MM2 M4 BLUE	
770	353101-0152		6	CABLE SHOE 4,0-6,0MM2 M5 YELLOW	
780	312125-0366		2	SLOTTED HEAD SCREW, ISO1207 M6X12 A4	
790	312812-0316		11	HEXAGON NUT, NY-LOCK M6 A4 80	
800	315106-0153		4	WASHER PLAIN, M6 ISO7089-6-200 HV A4	

Machine Type | Group Description | Used-In | Group Number | Page No

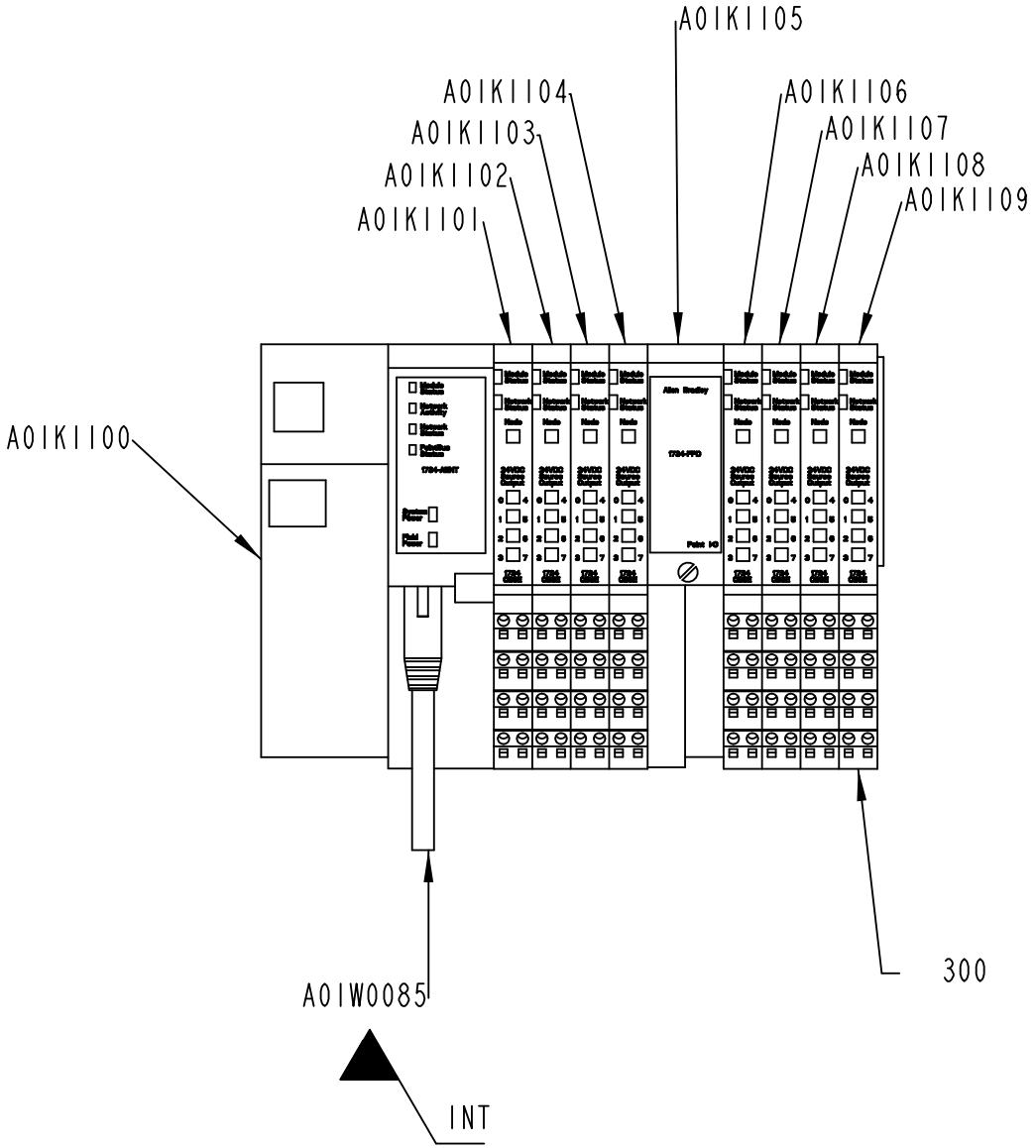

3253291-1
573083

ECM: 586011 - 20121116
Group number: 3253291-0100
Assembly Drawing: 3253291-1_1_AB

Pos	Part No	UN	Qty	Description	Page No
-					
300	90459-2526		8	REMOTE I/O BASE MODULE 8 POINTS, 1734-TB	
A01K1100	90603-5953		1	POINT I/O ADAPT. MOD.,1734-AENTR SERIEA	
A01K1101	90459-6560		1	DIGITAL OUTPUT 8 PTS, 1734-OB8E/C	
A01K1102	90459-6560		1	DIGITAL OUTPUT 8 PTS, 1734-OB8E/C	
A01K1103	90459-6560		1	DIGITAL OUTPUT 8 PTS, 1734-OB8E/C	
A01K1104	90459-6560		1	DIGITAL OUTPUT 8 PTS, 1734-OB8E/C	
A01K1105	90459-2501		1	5006526, 1734-FPD	
A01K1106	90459-6560		1	DIGITAL OUTPUT 8 PTS, 1734-OB8E/C	
A01K1107	90459-6560		1	DIGITAL OUTPUT 8 PTS, 1734-OB8E/C	
A01K1108	90459-6560		1	DIGITAL OUTPUT 8 PTS, 1734-OB8E/C	
A01K1109	90459-6560		1	DIGITAL OUTPUT 8 PTS, 1734-OB8E/C	
A01W0085	351501-0020		1	ETHERNET PATCH CABLE, FL CAT5 PATCH 2,0	

Pos	Part No	UN	Qty	Description	Page No

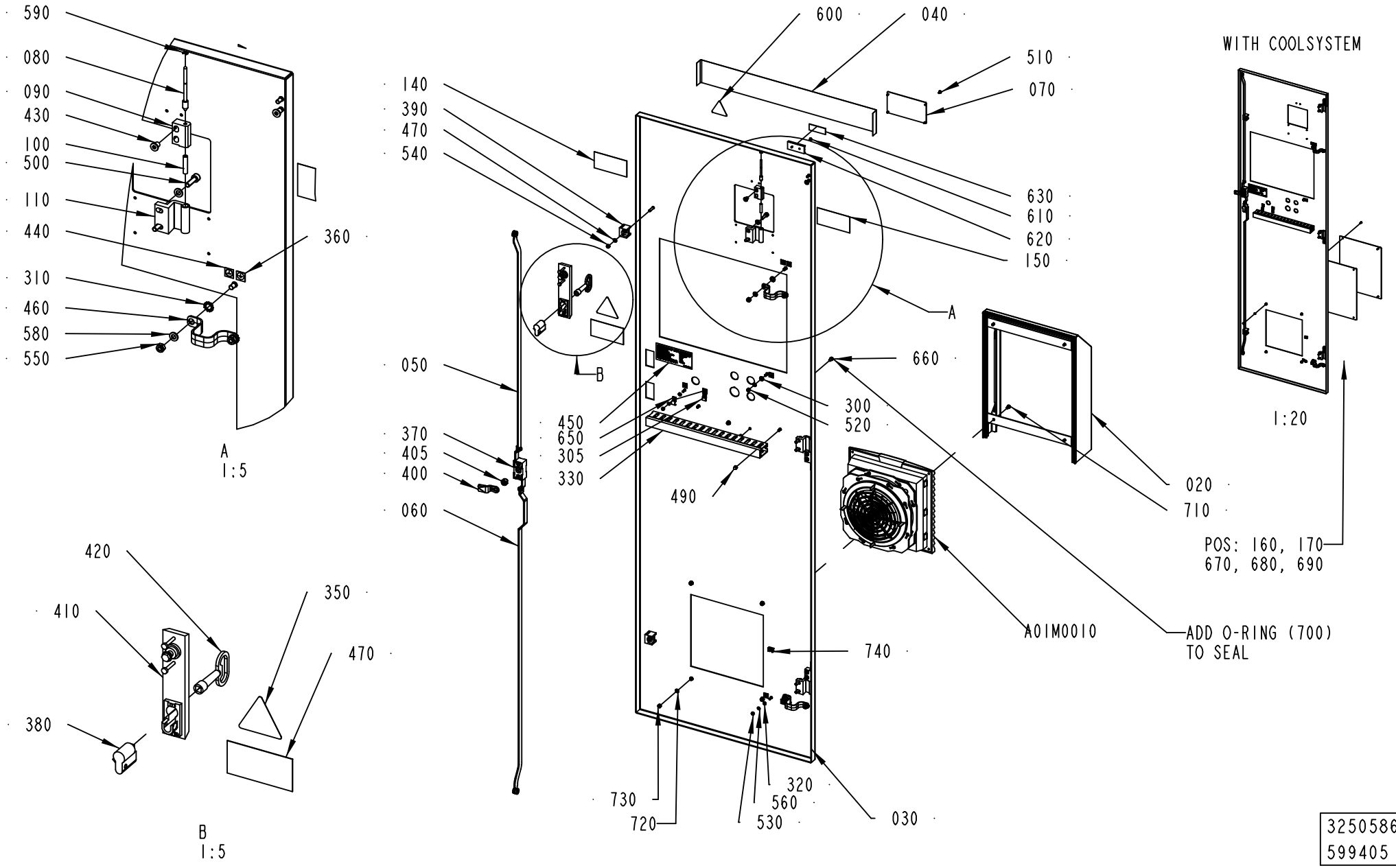

3250586-1
599405

Pos	Part No	UN	Qty	Description	Page No
LINF U-FORM No Cooling Other Countries, LINF U-FORM Cooling Other Countries, RINF Z-FORM Cooling Other Countries, RINF Z-FORM No Cooling Other Countries (See drawing on page: 6-70)					
030	3250595-0000		1	DOOR	
070	3263737-0000		1	SIGN	
120	90603-5463		1	DELIVERED DESIGN SIGN, 90603-5463	
130	3245368-0000		1	FUSE PANEL SIGN	
350	90194-0118		1	SIGN, RESIDUAL VOLTAGE, WAIT 5 MIN.	
470	90600-5235		1	MANDATORY ACTION SIGN ISO, READ MANUAL	
600	359705-0015		1	WARNING SIGN ISO, RISK OF ELECTRIC SHOCK	
LINF U-FORM No Cooling USA/Canada, LINF U-FORM Cooling USA/CANADA, RINF Z-FORM Cooling USA/CANADA, RINF Z-FORM No Cooling USA/CANADA (See drawing on page: 6-70)					
030	3250595-0000		1	DOOR	
070	3245374-0000		1	SIGN & MARKING	
120	3245369-0000		1	DELIVERED DESIGN	
130	3245367-0000		1	FUSE PANEL SIGN	
140	3245372-0000		1	SIGN & MARKING	
150	3151627-0000		1	SIGN & MARKING	
350	90603-0054		1	DANGER SIGN ANSI (H), HAZARDOUS VOLTAGE	
470	90600-5233		1	WARNING SIGN ANSI (H), READ MANUAL, AUTO	
600	359715-0100		1	WARNING SIGN ANSI (H), ELECTRIC SHOCK	
LINF Z-FORM Cooling Other Countries (See drawing on page: 6-70)					
030	3250595-0000		1	DOOR	
070	3263737-0000		1	SIGN	
350	90194-0118		1	SIGN, RESIDUAL VOLTAGE, WAIT 5 MIN.	
470	90600-5235		1	MANDATORY ACTION SIGN ISO, READ MANUAL	
530	312605-0312		2	HEXAGON NUT, M6M M4 A280	
560	315105-0136		1	WASHER PLAIN, 4,3X9X0,8 A4 BRB	
600	359705-0015		1	WARNING SIGN ISO, RISK OF ELECTRIC SHOCK	
LINF Z-FORM Cooling USA/CANADA (See drawing on page: 6-70)					
030	3250595-0000		1	DOOR	
070	3245374-0000		1	SIGN & MARKING	
140	3245372-0000		1	SIGN & MARKING	
150	3151627-0000		1	SIGN & MARKING	
350	90603-0054		1	DANGER SIGN ANSI (H), HAZARDOUS VOLTAGE	
470	90600-5233		1	WARNING SIGN ANSI (H), READ MANUAL, AUTO	
530	312605-0312		2	HEXAGON NUT, M6M M4 A280	
560	315105-0136		1	WASHER PLAIN, 4,3X9X0,8 A4 BRB	
600	359715-0100		1	WARNING SIGN ANSI (H), ELECTRIC SHOCK	
LINF Z-FORM No Cooling Other Countries (See drawing on page: 6-70)					
020	315757-4080		1	HOOD, SK 3240.080	
030	3253282-0000		1	DOOR	
070	3263737-0000		1	SIGN	
350	90194-0118		1	SIGN, RESIDUAL VOLTAGE, WAIT 5 MIN.	
470	90600-5235		1	MANDATORY ACTION SIGN ISO, READ MANUAL	
530	312605-0312		3	HEXAGON NUT, M6M M4 A280	
560	315105-0136		1	WASHER PLAIN, 4,3X9X0,8 A4 BRB	
600	359705-0015		1	WARNING SIGN ISO, RISK OF ELECTRIC SHOCK	
710	312105-0323		4	FSCR05080-10, SCREW, M6S	
720	315106-0146		4	WASHER PLAIN, M5 ISO7089-5-200 HV A4	
730	312605-0314		4	HEXAGON NUT, M6M M5 A280	
740	352113-0205		1	ANCHOR PLATES FOR STRIPS, TM2S8-C100	
A01M0010	315757-5100		1	TOP THERM FILTER FAN, SK 3241.100	
LINF Z-FORM No Cooling USA/CANADA (See drawing on page: 6-70)					
020	315757-4080		1	HOOD, SK 3240.080	
030	3253282-0000		1	DOOR	
070	3245374-0000		1	SIGN & MARKING	
140	3245372-0000		1	SIGN & MARKING	
150	3151627-0000		1	SIGN & MARKING	
350	90603-0054		1	DANGER SIGN ANSI (H), HAZARDOUS VOLTAGE	
470	90600-5233		1	WARNING SIGN ANSI (H), READ MANUAL, AUTO	
530	312605-0312		3	HEXAGON NUT, M6M M4 A280	
560	315105-0136		1	WASHER PLAIN, 4,3X9X0,8 A4 BRB	
600	359715-0100		1	WARNING SIGN ANSI (H), ELECTRIC SHOCK	
710	312105-0323		4	FSCR05080-10, SCREW, M6S	
720	315106-0146		4	WASHER PLAIN, M5 ISO7089-5-200 HV A4	
730	312605-0314		4	HEXAGON NUT, M6M M5 A280	
740	352113-0205		1	ANCHOR PLATES FOR STRIPS, TM2S8-C100	
A01M0010	315757-5100		1	TOP THERM FILTER FAN, SK 3241.100	
RINF U-FORM Cooling Other Countries (See drawing on page: 6-68)					
030	3250594-0000		1	DOOR	
070	3263737-0000		1	SIGN	
160	3263735-0000		1	RUBBER GASKET	
170	3263736-0000		1	COVER PLATE	
300	90062-0015		1	LOCK WASHER SERRAT.EXT.GEAR,6,4/11 H=0,7	
305	90165-0060		1	PIPE CLIP FOR TUBE D=5 MM	
320	90062-0059		3	LOCK WASKER SERRAT.EXT.GEAR,4,3/8 H=0,5	
330	90181-0037	MM	350	CABLE DUCT, PLASTIC, 25X40	
350	90194-0118		1	SIGN, RESIDUAL VOLTAGE, WAIT 5 MIN.	
470	90600-5235		1	MANDATORY ACTION SIGN ISO, READ MANUAL	
490	90099-0193		2	NUT HEX. DOMED CAP MHM-6.6 M5 PL	
520	312601-0314		1	HEXAGON NUT, DIN 934 M5 8 FZB	
530	312605-0312		8	HEXAGON NUT, M6M M4 A280	
560	315105-0136		6	WASHER PLAIN, 4,3X9X0,8 A4 BRB	
600	359705-0015		1	WARNING SIGN ISO, RISK OF ELECTRIC SHOCK	

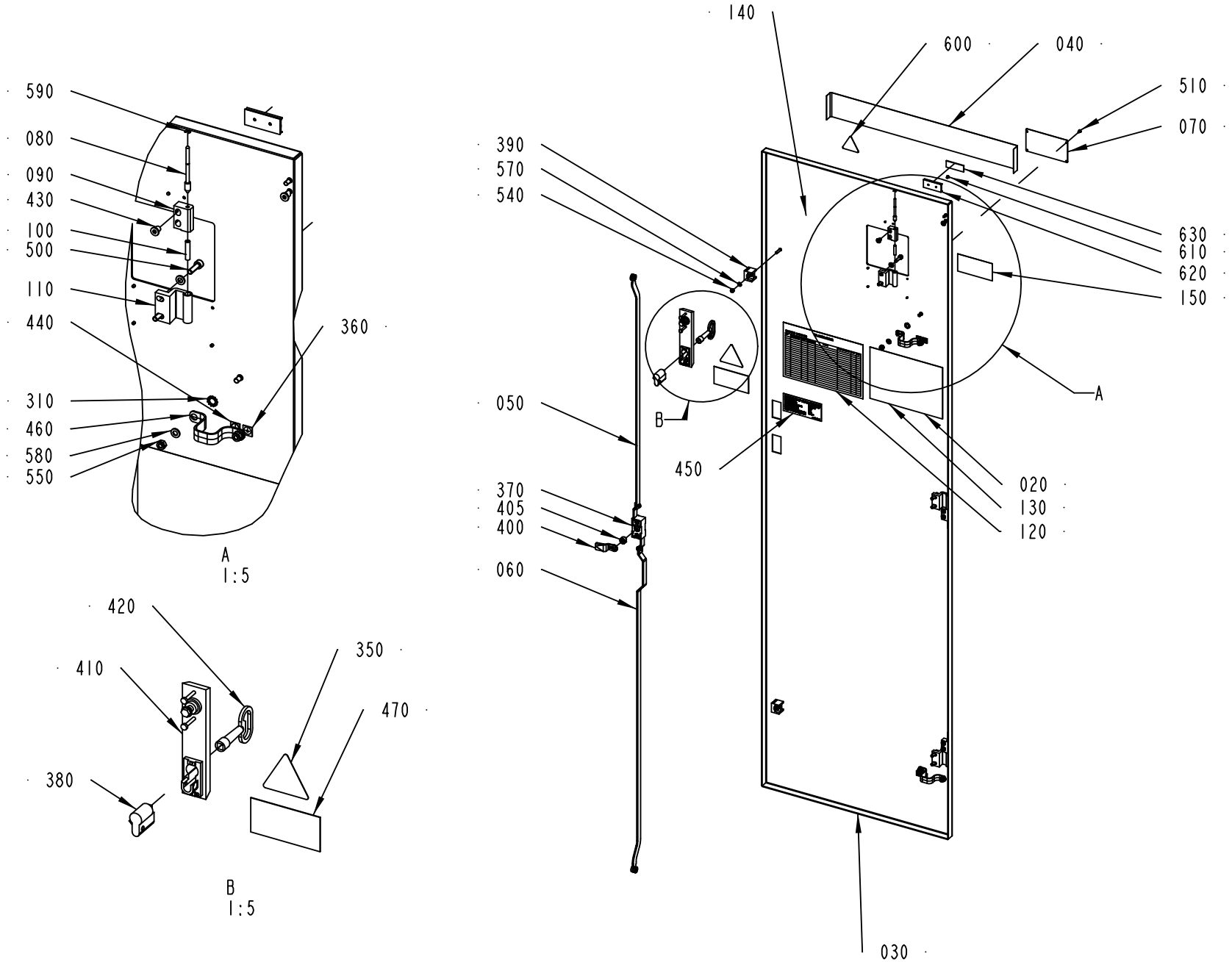

3250586-2
599405

Pos	Part No	UN	Qty	Description	Page No
RINF U-FORM Cooling Other Countries (Cont'd) (See drawing on page: 6-68)					
670	312155-0291		4	SCREW DIN 7991 MF6S M4X12 A4 70	
680	315106-0136		4	WASHER PLAIN, M4 ISO7089-4-200 HV A4	
690	312607-0312		4	HEXAGON NUT, EN 24032 M6M M4 A480	
700	315202-0504		2	O-RING 5,28X1,78 MM	
740	352113-0205		1	ANCHOR PLATES FOR STRIPS, TM2S8-C100	
RINF U-FORM Cooling USA/CANADA (See drawing on page: 6-68)					
030	3250594-0000		1	DOOR	
070	3245374-0000		1	SIGN & MARKING	
140	3245372-0000		1	SIGN & MARKING	
150	3151627-0000		1	SIGN & MARKING	
160	3263735-0000		1	RUBBER GASKET	
170	3263736-0000		1	COVER PLATE	
300	90062-0015		1	LOCK WASHER SERRAT.EXT.GEAR,6,4/11 H=0,7	
305	90165-0060		1	PIPE CLIP FOR TUBE D=5 MM	
320	90062-0059		3	LOCK WASKER SERRAT.EXT.GEAR,4,3/8 H=0,5	
330	90181-0037	MM	350	CABLE DUCT, PLASTIC, 25X40	
350	90603-0054		1	DANGER SIGN ANSI (H), HAZARDOUS VOLTAGE	
470	90600-5233		1	WARNING SIGN ANSI (H), READ MANUAL, AUTO	
490	90099-0193		2	NUT HEX. DOMED CAP MHM-6.6 M5 PL	
520	312601-0314		1	HEXAGON NUT, DIN 934 M5 8 FZB	
530	312605-0312		8	HEXAGON NUT, M6M M4 A280	
560	315105-0136		6	WASHER PLAIN, 4,3X9X0,8 A4 BRB	
600	359715-0100		1	WARNING SIGN ANSI (H), ELECTRIC SHOCK	
670	312155-0291		4	SCREW DIN 7991 MF6S M4X12 A4 70	
680	315106-0136		4	WASHER PLAIN, M4 ISO7089-4-200 HV A4	
690	312607-0312		4	HEXAGON NUT, EN 24032 M6M M4 A480	
700	315202-0504		2	O-RING 5,28X1,78 MM	
740	352113-0205		1	ANCHOR PLATES FOR STRIPS, TM2S8-C100	
RINF U-FORM No Cooling Other Countries (See drawing on page: 6-68)					
020	315757-4080		1	HOOD, SK 3240.080	
030	3250594-0000		1	DOOR	
070	3263737-0000		1	SIGN	
300	90062-0015		1	LOCK WASHER SERRAT.EXT.GEAR,6,4/11 H=0,7	
305	90165-0060		1	PIPE CLIP FOR TUBE D=5 MM	
320	90062-0059		3	LOCK WASKER SERRAT.EXT.GEAR,4,3/8 H=0,5	
330	90181-0037	MM	350	CABLE DUCT, PLASTIC, 25X40	
350	90194-0118		1	SIGN, RESIDUAL VOLTAGE, WAIT 5 MIN.	
470	90600-5235		1	MANDATORY ACTION SIGN ISO, READ MANUAL	
490	90099-0193		2	NUT HEX. DOMED CAP MHM-6.6 M5 PL	
520	312601-0314		1	HEXAGON NUT, DIN 934 M5 8 FZB	
530	312605-0312		4	HEXAGON NUT, M6M M4 A280	
560	315105-0136		2	WASHER PLAIN, 4,3X9X0,8 A4 BRB	
600	359705-0015		1	WARNING SIGN ISO, RISK OF ELECTRIC SHOCK	
700	315202-0504		2	O-RING 5,28X1,78 MM	
710	312105-0323		4	FSCR05080-10, SCREW, M6S	
720	315106-0146		4	WASHER PLAIN, M5 ISO7089-5-200 HV A4	
730	312605-0314		4	HEXAGON NUT, M6M M5 A280	
740	352113-0205		1	ANCHOR PLATES FOR STRIPS, TM2S8-C100	
A01M0010	315757-5100		1	TOP THERM FILTER FAN, SK 3241.100	
RINF U-FORM No Cooling USA/CANADA (See drawing on page: 6-68)					
020	315757-4080		1	HOOD, SK 3240.080	
030	3250594-0000		1	DOOR	
070	3245374-0000		1	SIGN & MARKING	
140	3245372-0000		1	SIGN & MARKING	
150	3151627-0000		1	SIGN & MARKING	
300	90062-0015		1	LOCK WASHER SERRAT.EXT.GEAR,6,4/11 H=0,7	
305	90165-0060		1	PIPE CLIP FOR TUBE D=5 MM	
320	90062-0059		3	LOCK WASKER SERRAT.EXT.GEAR,4,3/8 H=0,5	
330	90181-0037	MM	350	CABLE DUCT, PLASTIC, 25X40	
350	90603-0054		1	DANGER SIGN ANSI (H), HAZARDOUS VOLTAGE	
470	90600-5233		1	WARNING SIGN ANSI (H), READ MANUAL, AUTO	
490	90099-0193		2	NUT HEX. DOMED CAP MHM-6.6 M5 PL	
520	312601-0314		1	HEXAGON NUT, DIN 934 M5 8 FZB	
530	312605-0312		4	HEXAGON NUT, M6M M4 A280	
560	315105-0136		2	WASHER PLAIN, 4,3X9X0,8 A4 BRB	
600	359715-0100		1	WARNING SIGN ANSI (H), ELECTRIC SHOCK	
700	315202-0504		2	O-RING 5,28X1,78 MM	
710	312105-0323		4	FSCR05080-10, SCREW, M6S	
720	315106-0146		4	WASHER PLAIN, M5 ISO7089-5-200 HV A4	
730	312605-0314		4	HEXAGON NUT, M6M M5 A280	
740	352113-0205		1	ANCHOR PLATES FOR STRIPS, TM2S8-C100	
A01M0010	315757-5100		1	TOP THERM FILTER FAN, SK 3241.100	
Common Parts					
040	3250596-0000		1	TAPE	
050	3245370-0000		1	STRUT	
060	3245373-0000		1	STRUT	
080	959656-0000		3	COTTER	
090	975880-0000		3	HINGE FLANGE	
100	959658-0000		3	SPRING	
110	975880-0000		3	HINGE FLANGE	
310	90062-0016		4	LOCK WASHER SERRAT.EXT.GEAR,8,4/15 H=0,8	
360	90194-0152		4	SIGN, EARTH	
370	90237-0123		1	LOCK, 1121-U10C	

See previous drawings pages: 6-68, 6-70.

Pos	Part No	UN	Qty	Description	Page No
Common Parts (Cont'd)					
380	90237-0129		1	LOCK CYLINDER, 1109-U6	
390	90237-0144		2	GUIDE, 1121-SU540	
400	90237-0342		1	LOCKING CATCH	
405	90237-0214		1	LOCK ADAPTER, 1121-U40	
410	90237-0175		1	TURNING HANDLE, 1125-U185-0A	
420	90237-0324		1	KEY, 1104-02 FOR SQUARE 8 MM	
430	90287-0205		6	SCREW	
440	90459-2928		4	LABEL 60417-2-IEC-5020, COMM. REF. POT.	
450	90603-4138		1	MARKING, IDENTIFICATION OF SINGLE CONDUC	
460	90600-2904		2	EARTH BRAID, 250/16/8,5	
500	312115-0370		8	SCREW ISO4762 M6X20 A4 80	
510	311523-0142		4	BLIND RIVET ISO 15983 -3.2X6 A2/A2	
540	312812-0314		2	HEXAGON NUT, NY-LOCK M5 A4 80	
550	312812-0316		6	HEXAGON NUT, NY-LOCK M6 A4 80	
570	315105-0146		5	WASHER PLAIN, 5,3X10X1 A4 BRB	
580	315106-0153		12	WASHER PLAIN, M6 ISO7089-6-200 HV A4	
590	315755-0105		4	RETAINING RING SHAFT DIN 6799 3,2 SS	
610	311521-0143		2	RIVET, BLANK 3,2X8	
620	359240-0100		1	SIGN HOLDER FOR 359240-0001	
630	359241-0803		1	SIGN: "SUPPLY DISCONNECTING DEVICE"	
650	90165-0060		1	PIPE CLIP FOR TUBE D=5 MM	
660	312125-0323		2	SLOTTED HEAD SCREW, ISO1207 M5X8 A4	

Pos	Part No	UN	Qty	Description	Page No

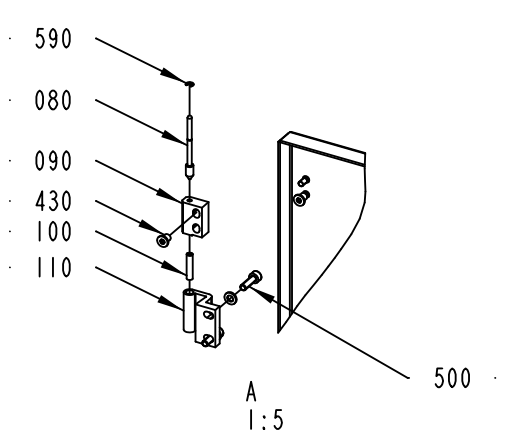

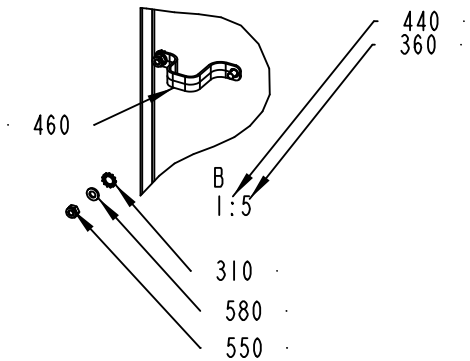

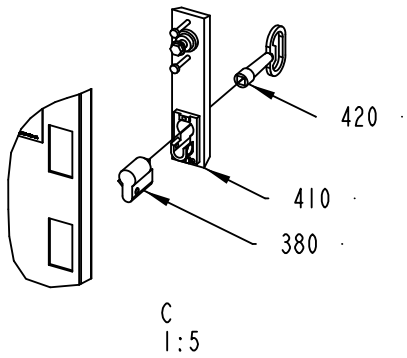

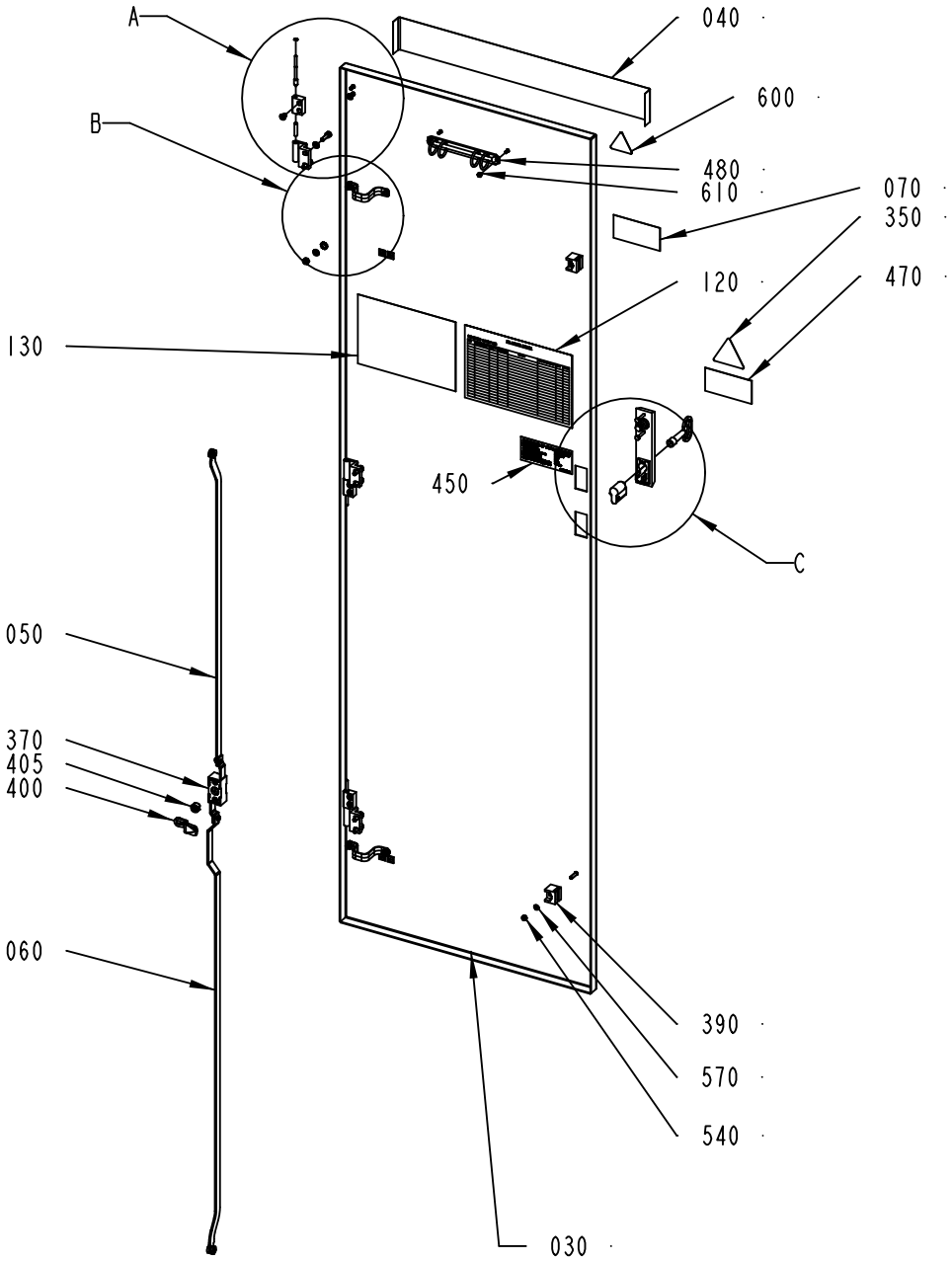

3250585-1
599405

Pos	Part No	UN	Qty	Description	Page No
LINF U-FORM Cooling Other Countries (See drawing on page: 6-76)					
030	3250593-0000		1	DOOR	
120	90603-5463		1	DELIVERED DESIGN SIGN, 90603-5463	
130	3245368-0000		1	FUSE PANEL SIGN	
140	3263735-0000		1	RUBBER GASKET	
150	3263736-0000		1	COVER PLATE	
300	90062-0015		1	LOCK WASHER SERRAT.EXT.GEAR,6,4/11 H=0,7	
320	90062-0059		3	LOCK WASKER SERRAT.EXT.GEAR,4,3/8 H=0,5	
330	90181-0037	MM	350	CABLE DUCT, PLASTIC, 25X40	
350	90194-0118		1	SIGN, RESIDUAL VOLTAGE, WAIT 5 MIN.	
470	90600-5235		1	MANDATORY ACTION SIGN ISO, READ MANUAL	
475	90165-0060		1	PIPE CLIP FOR TUBE D=5 MM	
485	312125-0323		2	SLOTTED HEAD SCREW, ISO1207 M5X8 A4	
490	90099-0193		2	NUT HEX. DOMED CAP MHM-6.6 M5 PL	
520	312601-0314		1	HEXAGON NUT, DIN 934 M5 8 FZB	
540	312812-0314		2	HEXAGON NUT, NY-LOCK M5 A4 80	
560	315105-0136		1	WASHER PLAIN, 4,3X9X0,8 A4 BRB	
600	359705-0015		1	WARNING SIGN ISO, RISK OF ELECTRIC SHOCK	
620	312155-0291		4	SCREW DIN 7991 MF6S M4X12 A4 70	
630	315106-0136		5	WASHER PLAIN, M4 ISO7089-4-200 HV A4	
640	312607-0312		4	HEXAGON NUT, EN 24032 M6M M4 A480	
700	315202-0504		2	O-RING 5,28X1,78 MM	
740	90458-0721		1	PIPE CLIP FOR TUBE D=8 MMSZ 2367080	
LINF U-FORM Cooling USA/CANADA (See drawing on page: 6-76)					
030	3250593-0000		1	DOOR	
120	3245369-0000		1	DELIVERED DESIGN	
130	3245367-0000		1	FUSE PANEL SIGN	
140	3263735-0000		1	RUBBER GASKET	
150	3263736-0000		1	COVER PLATE	
300	90062-0015		1	LOCK WASHER SERRAT.EXT.GEAR,6,4/11 H=0,7	
320	90062-0059		3	LOCK WASKER SERRAT.EXT.GEAR,4,3/8 H=0,5	
330	90181-0037	MM	350	CABLE DUCT, PLASTIC, 25X40	
350	90603-0054		1	DANGER SIGN ANSI (H), HAZARDOUS VOLTAGE	
470	90600-5233		1	WARNING SIGN ANSI (H), READ MANUAL, AUTO	
475	90165-0060		1	PIPE CLIP FOR TUBE D=5 MM	
485	312125-0323		2	SLOTTED HEAD SCREW, ISO1207 M5X8 A4	
490	90099-0193		2	NUT HEX. DOMED CAP MHM-6.6 M5 PL	
520	312601-0314		1	HEXAGON NUT, DIN 934 M5 8 FZB	
540	312812-0314		2	HEXAGON NUT, NY-LOCK M5 A4 80	
560	315105-0136		1	WASHER PLAIN, 4,3X9X0,8 A4 BRB	
600	359715-0100		1	WARNING SIGN ANSI (H), ELECTRIC SHOCK	
620	312155-0291		4	SCREW DIN 7991 MF6S M4X12 A4 70	
630	315106-0136		5	WASHER PLAIN, M4 ISO7089-4-200 HV A4	
640	312607-0312		4	HEXAGON NUT, EN 24032 M6M M4 A480	
700	315202-0504		2	O-RING 5,28X1,78 MM	
740	90458-0721		1	PIPE CLIP FOR TUBE D=8 MMSZ 2367080	
LINF U-FORM No Cooling Other Countries (See drawing on page: 6-76)					
020	315757-4080		1	HOOD, SK 3240.080	
030	3250593-0000		1	DOOR	
120	90603-5463		1	DELIVERED DESIGN SIGN, 90603-5463	
130	3245368-0000		1	FUSE PANEL SIGN	
300	90062-0015		1	LOCK WASHER SERRAT.EXT.GEAR,6,4/11 H=0,7	
320	90062-0059		3	LOCK WASKER SERRAT.EXT.GEAR,4,3/8 H=0,5	
330	90181-0037	MM	350	CABLE DUCT, PLASTIC, 25X40	
350	90194-0118		1	SIGN, RESIDUAL VOLTAGE, WAIT 5 MIN.	
470	90600-5235		1	MANDATORY ACTION SIGN ISO, READ MANUAL	
475	90165-0060		1	PIPE CLIP FOR TUBE D=5 MM	
485	312125-0323		2	SLOTTED HEAD SCREW, ISO1207 M5X8 A4	
490	90099-0193		2	NUT HEX. DOMED CAP MHM-6.6 M5 PL	
520	312601-0314		1	HEXAGON NUT, DIN 934 M5 8 FZB	
530	312605-0316		1	HEXAGON NUT, M6M M6 A280	
540	312812-0314		2	HEXAGON NUT, NY-LOCK M5 A4 80	
560	315105-0136		6	WASHER PLAIN, 4,3X9X0,8 A4 BRB	
600	359705-0015		1	WARNING SIGN ISO, RISK OF ELECTRIC SHOCK	
700	315202-0504		2	O-RING 5,28X1,78 MM	
710	312105-0323		4	FSCR05080-10, SCREW, M6S	
720	315106-0146		4	WASHER PLAIN, M5 ISO7089-5-200 HV A4	
730	312605-0314		4	HEXAGON NUT, M6M M5 A280	
740	90458-0721		1	PIPE CLIP FOR TUBE D=8 MMSZ 2367080	
750	352113-0205		1	ANCHOR PLATES FOR STRIPS, TM2S8-C100	
A01M0010	315757-5100		1	TOP THERM FILTER FAN, SK 3241.100	
LINF U-FORM No Cooling USA/Canada (See drawing on page: 6-76)					
020	315757-4080		1	HOOD, SK 3240.080	
030	3250593-0000		1	DOOR	
120	3245369-0000		1	DELIVERED DESIGN	
130	3245367-0000		1	FUSE PANEL SIGN	
300	90062-0015		1	LOCK WASHER SERRAT.EXT.GEAR,6,4/11 H=0,7	
320	90062-0059		3	LOCK WASKER SERRAT.EXT.GEAR,4,3/8 H=0,5	
330	90181-0037	MM	350	CABLE DUCT, PLASTIC, 25X40	
350	90603-0054		1	DANGER SIGN ANSI (H), HAZARDOUS VOLTAGE	
470	90600-5233		1	WARNING SIGN ANSI (H), READ MANUAL, AUTO	
475	90165-0060		1	PIPE CLIP FOR TUBE D=5 MM	
485	312125-0323		2	SLOTTED HEAD SCREW, ISO1207 M5X8 A4	
490	90099-0193		2	NUT HEX. DOMED CAP MHM-6.6 M5 PL	

Machine Type | Group Description | Used-In | Group Number | Page No

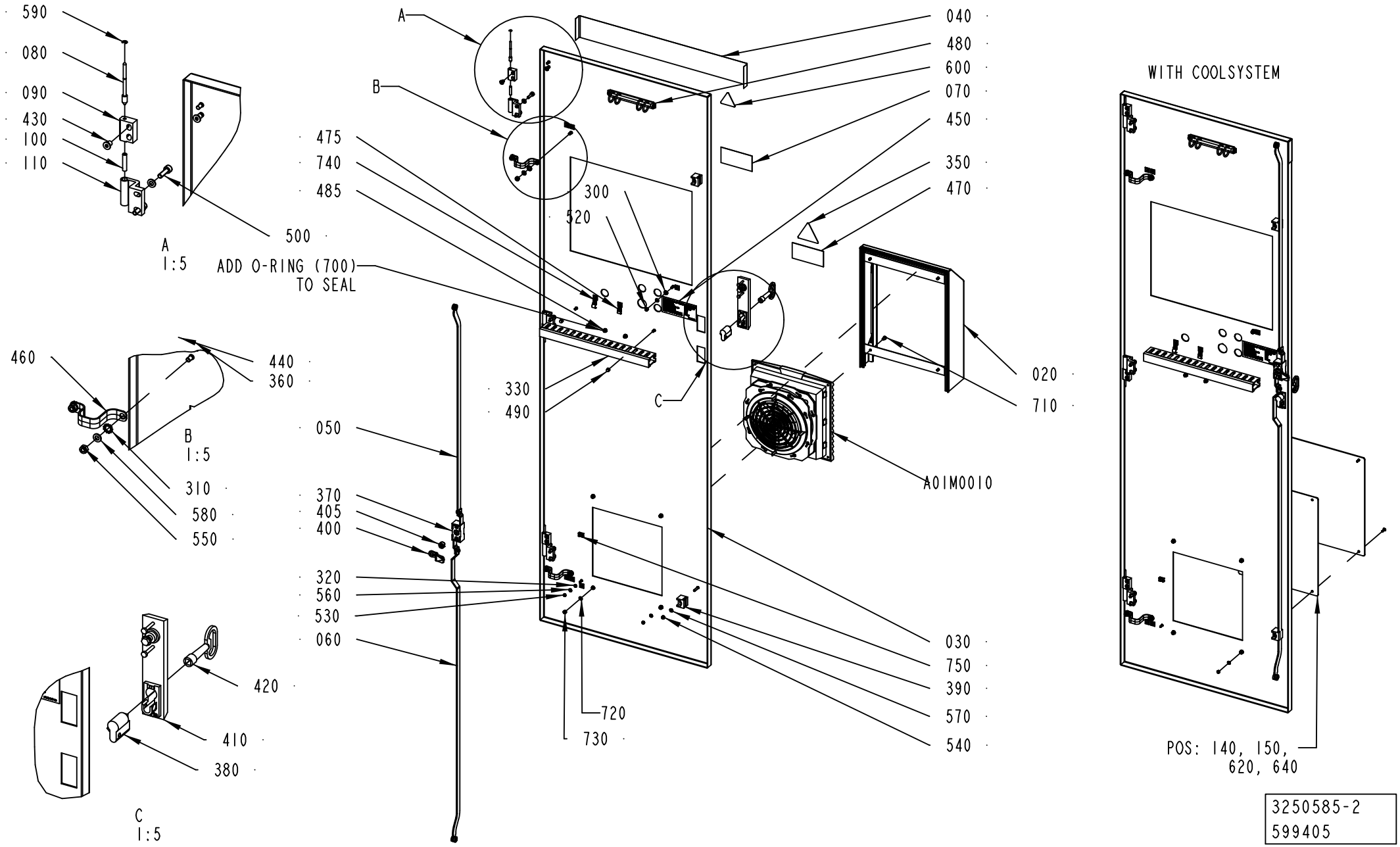
590
080
090
430
100
110
500
A
1:5
ADD O-RING (700)
TO SEAL
460
440
360
B
1:5
310
580
550
C
1:5
420
410
380
A
B
475
740
485
300
520
330
490
050
370
405
400
320
560
530
060
720
730
040
480
600
070
450
350
470
020
710
C
A01M0010
030
750
390
570
540
WITH COOLSYSTEM
POS: 140, 150,
620, 640
3250585-2
599405

Pos	Part No	UN	Qty	Description	Page No
LINF U-FORM No Cooling USA/Canada (Cont'd) (See drawing on page: 6-76)					
520	312601-0314		1	HEXAGON NUT, DIN 934 M5 8 FZB	
530	312605-0316		1	HEXAGON NUT, M6M M6 A280	
540	312812-0314		2	HEXAGON NUT, NY-LOCK M5 A4 80	
560	315105-0136		6	WASHER PLAIN, 4,3X9X0,8 A4 BRB	
600	359715-0100		1	WARNING SIGN ANSI (H), ELECTRIC SHOCK	
700	315202-0504		2	O-RING 5,28X1,78 MM	
710	312105-0323		4	FSCR05080-10, SCREW, M6S	
720	315106-0146		4	WASHER PLAIN, M5 ISO7089-5-200 HV A4	
730	312605-0314		4	HEXAGON NUT, M6M M5 A280	
740	90458-0721		1	PIPE CLIP FOR TUBE D=8 MMSZ 2367080	
750	352113-0205		1	ANCHOR PLATES FOR STRIPS, TM2S8-C100	
A01M0010	315757-5100		1	TOP THERM FILTER FAN, SK 3241.100	
RINF U-FORM No Cooling Other Countries, RINF U-FORM Cooling Other Countries, RINF Z-FORM Cooling Other Countries, LINF Z-FORM Cooling Other Countries, LINF Z-FORM No Cooling Other Countries (See drawing on page: 6-74)					
030	3250592-0000		1	DOOR	
120	90603-5463		1	DELIVERED DESIGN SIGN, 90603-5463	
130	3245368-0000		1	FUSE PANEL SIGN	
350	90194-0118		1	SIGN, RESIDUAL VOLTAGE, WAIT 5 MIN.	
470	90600-5235		1	MANDATORY ACTION SIGN ISO, READ MANUAL	
600	359705-0015		1	WARNING SIGN ISO, RISK OF ELECTRIC SHOCK	
RINF U-FORM No Cooling USA/CANADA, RINF U-FORM Cooling USA/CANADA, RINF Z-FORM Cooling USA/CANADA, LINF Z-FORM Cooling USA/CANADA, LINF Z-FORM No Cooling USA/CANADA (See drawing on page: 6-74)					
030	3250592-0000		1	DOOR	
120	3245369-0000		1	DELIVERED DESIGN	
130	3245367-0000		1	FUSE PANEL SIGN	
350	90603-0054		1	DANGER SIGN ANSI (H), HAZARDOUS VOLTAGE	
470	90600-5233		1	WARNING SIGN ANSI (H), READ MANUAL, AUTO	
600	359715-0100		1	WARNING SIGN ANSI (H), ELECTRIC SHOCK	
RINF Z-FORM No Cooling Other Countries (See drawing on page: 6-76)					
020	315757-4080		1	HOOD, SK 3240.080	
030	3253281-0000		1	DOOR	
120	90603-5463		1	DELIVERED DESIGN SIGN, 90603-5463	
130	3245368-0000		1	FUSE PANEL SIGN	
350	90194-0118		1	SIGN, RESIDUAL VOLTAGE, WAIT 5 MIN.	
470	90600-5235		1	MANDATORY ACTION SIGN ISO, READ MANUAL	
530	312605-0316		1	HEXAGON NUT, M6M M6 A280	
560	315105-0136		1	WASHER PLAIN, 4,3X9X0,8 A4 BRB	
600	359705-0015		1	WARNING SIGN ISO, RISK OF ELECTRIC SHOCK	
710	312105-0323		4	FSCR05080-10, SCREW, M6S	
720	315106-0146		4	WASHER PLAIN, M5 ISO7089-5-200 HV A4	
730	312605-0314		4	HEXAGON NUT, M6M M5 A280	
750	352113-0205		1	ANCHOR PLATES FOR STRIPS, TM2S8-C100	
A01M0010	315757-5100		1	TOP THERM FILTER FAN, SK 3241.100	
RINF Z-FORM No Cooling USA/CANADA (See drawing on page: 6-76)					
020	315757-4080		1	HOOD, SK 3240.080	
030	3253281-0000		1	DOOR	
120	3245369-0000		1	DELIVERED DESIGN	
130	3245367-0000		1	FUSE PANEL SIGN	
350	90603-0054		1	DANGER SIGN ANSI (H), HAZARDOUS VOLTAGE	
470	90600-5233		1	WARNING SIGN ANSI (H), READ MANUAL, AUTO	
530	312605-0316		1	HEXAGON NUT, M6M M6 A280	
560	315105-0136		1	WASHER PLAIN, 4,3X9X0,8 A4 BRB	
600	359715-0100		1	WARNING SIGN ANSI (H), ELECTRIC SHOCK	
710	312105-0323		4	FSCR05080-10, SCREW, M6S	
720	315106-0146		4	WASHER PLAIN, M5 ISO7089-5-200 HV A4	
730	312605-0314		4	HEXAGON NUT, M6M M5 A280	
750	352113-0205		1	ANCHOR PLATES FOR STRIPS, TM2S8-C100	
A01M0010	315757-5100		1	TOP THERM FILTER FAN, SK 3241.100	
Common Parts					
040	3250596-0000		1	TAPE	
050	3245370-0000		1	STRUT	
060	3245371-0000		1	STRUT	
070	3245372-0000		1	SIGN & MARKING	
080	959656-0000		3	COTTER	
090	959657-0000		3	HINGE FLANGE	
100	959658-0000		3	SPRING	
110	975880-0000		3	HINGE FLANGE	
310	90062-0016		6	LOCK WASHER SERRAT.EXT.GEAR,8,4/15 H=0,8	
320	90062-0059		1	LOCK WASKER SERRAT.EXT.GEAR,4,3/8 H=0,5	
360	90194-0152		2	SIGN, EARTH	
370	90237-0123		1	LOCK, 1121-U10C	
380	90237-0129		1	LOCK CYLINDER, 1109-U6	
390	90237-0144		2	GUIDE, 1121-SU540	
400	90237-0342		1	LOCKING CATCH	
405	90237-0214		1	LOCK ADAPTER, 1121-U40	
410	90237-0175		1	TURNING HANDLE, 1125-U185-0A	
420	90237-0324		1	KEY, 1104-02 FOR SQUARE 8 MM	
430	90287-0205		6	SCREW	
440	90459-2928		4	LABEL 60417-2-IEC-5020, COMM. REF. POT.	
450	90603-4138		1	MARKING, IDENTIFICATION OF SINGLE CONDUC	
460	90600-2904		2	EARTH BRAID, 250/16/8,5	

See previous drawings pages: 6-74, 6-76.

Pos	Part No	UN	Qty	Description	Page No
Common Parts (Cont'd)					
480	90243-0169		1	BINDER CLIP, DIAM.29 MM, NO. 4670819	
500	312115-0370		6	SCREW ISO4762 M6X20 A4 80	
540	312812-0314		2	HEXAGON NUT, NY-LOCK M5 A4 80	
550	312812-0316		4	HEXAGON NUT, NY-LOCK M6 A4 80	
570	315105-0146		4	WASHER PLAIN, 5,3X10X1 A4 BRB	
580	315106-0153		10	WASHER PLAIN, M6 ISO7089-6-200 HV A4	
590	315755-0105		3	RETAINING RING SHAFT DIN 6799 3,2 SS	
610	312605-0312		5	HEXAGON NUT, M6M M4 A280	

Pos	Part No	UN	Qty	Description	Page No

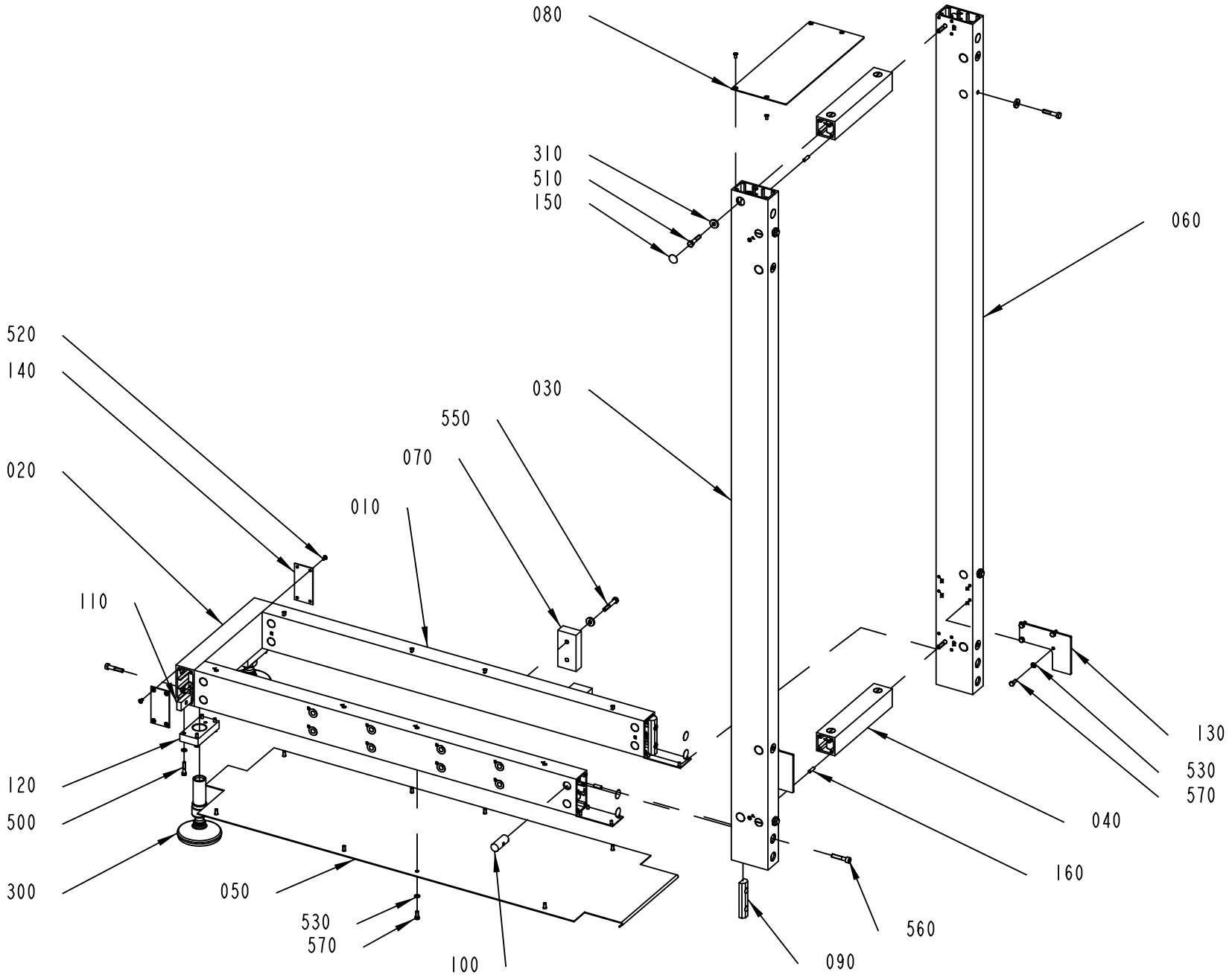

3250589-1
627532

ECM: 630431 - 20130919
Group number: 3250589-0100
Assembly Drawing: 3250589-1_1_AE

Pos	Part No	UN	Qty	Description	Page No
-					
010	3250597-0000		2	PROFILE 50X100	
020	3253273-0000		1	PROFILE 50X100	
030	3250598-0000		1	PROFILE 50X100	
040	3119183-0000		2	PROFILE 50X50	
050	3253272-0000		1	BOTTOM PLATE	
060	3250599-0000		1	PROFILE 50X100	
070	3119185-0000		2	SPACER	
080	3119184-0000		1	COVER PLATE	
090	3023843-0000		2	FORCE PLATE	
100	486268-0000		16	NUT	
110	3234421-0000		4	FORCE PLATE	
120	3234425-0000		2	FRAME BRACKET	
130	3253283-0000		2	PLATE	
140	556603-0000		4	COVER PLATE	
150	1021933-0000		32	TAPE	
160	1065410-0000		32	SLOTTED PIN	
300	90604-9686		2	FOOT 2200KG, XH105-XH-HL-3A-FA-Ø36X24	
310	90600-5066		12	WASHER PLAIN, DIN7349 8,4X21X4 A4	
500	312105-0374		8	SCREW, M6S ISO 4014 M6X30 A4 80	
510	312105-0459		12	SCREW, M6S ISO 4014 M8X40 A4 80	
520	312145-0325		20	SCREW ISO 2009 MFS M5X10 A4	
530	315106-0153		24	WASHER PLAIN, M6 ISO7089-6-200 HV A4	
550	312105-0461		4	SCREW, M6S ISO 4014 M8X50 A4 80	
560	312115-0459		8	SCREW ISO4762 M8X40 A4 80	
570	312105-0368		16	SCREW, M6S ISO 4017 M6X16 A4 80	

Pos	Part No	UN	Qty	Description	Page No

Machine Type | Group Description | Used-In | Group Number | Page No

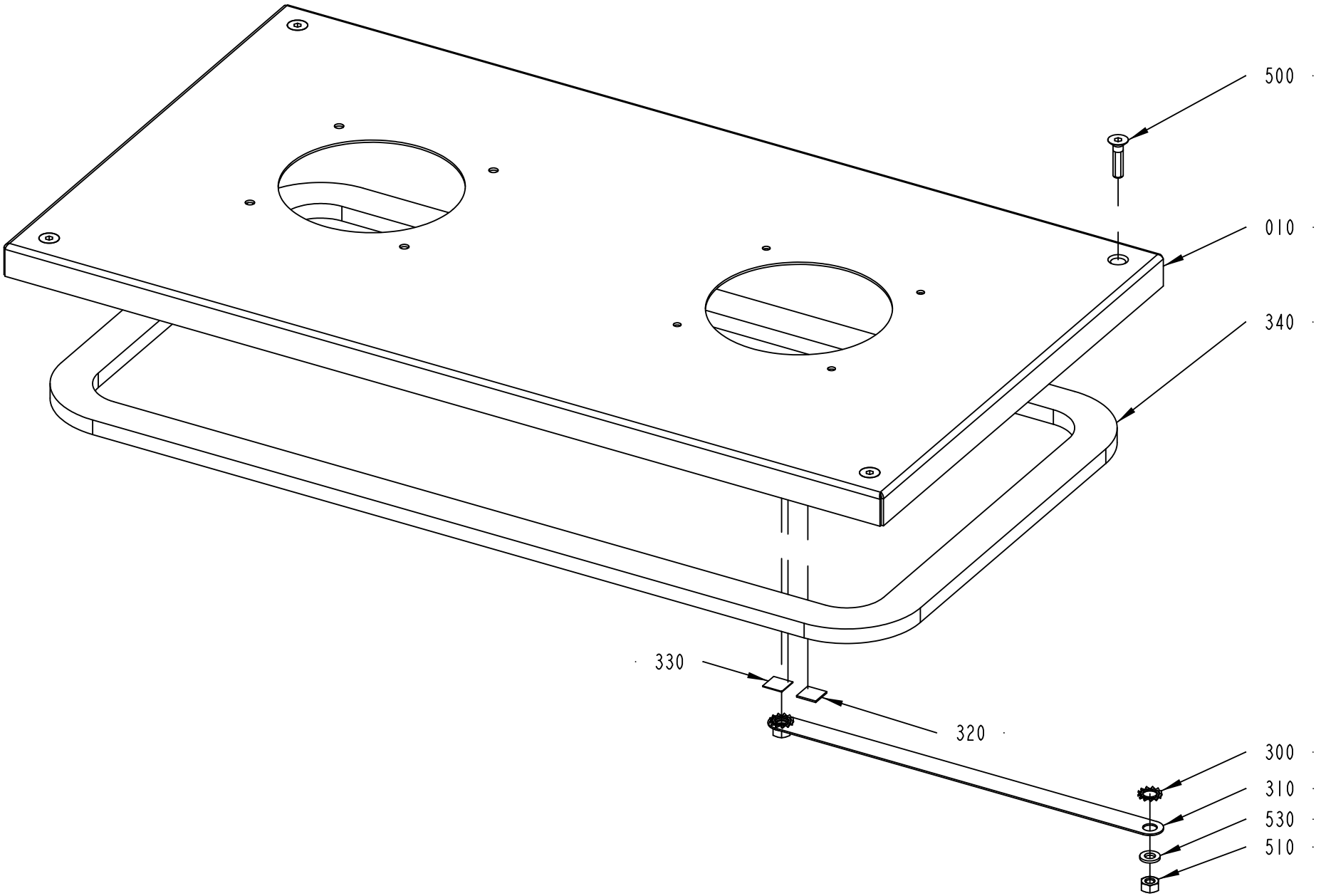

3112719-1
473358

ECM: 577613 - 20120924
Group number: 3112719-0100
Assembly Drawing: 3112719-1_1_AA

Pos	Part No	UN	Qty	Description	Page No
-					
010	3112734-0000		1	COVER PLATE	
300	90062-0016		2	LOCK WASHER SERRAT.EXT.GEAR,8,4/15 H=0,8	
310	90600-2904		1	EARTH BRAID, 250/16/8,5	
320	90194-0152		1	SIGN, EARTH	
330	90459-2928		1	LABEL 60417-2-IEC-5020, COMM. REF. POT.	
340	90459-2199	MM	1850	FOAM RUBBER STRIP, NEOPRENE, 1016-117	
500	312155-0372		4	SCREW DIN 7991 MF6S M6X25 A4 70	
510	312605-0316		2	HEXAGON NUT, M6M M6 A280	
530	315101-0153		2	WASHER PLAIN, BRB, 6,4/12 H=1,5	

Pos	Part No	UN	Qty	Description	Page No

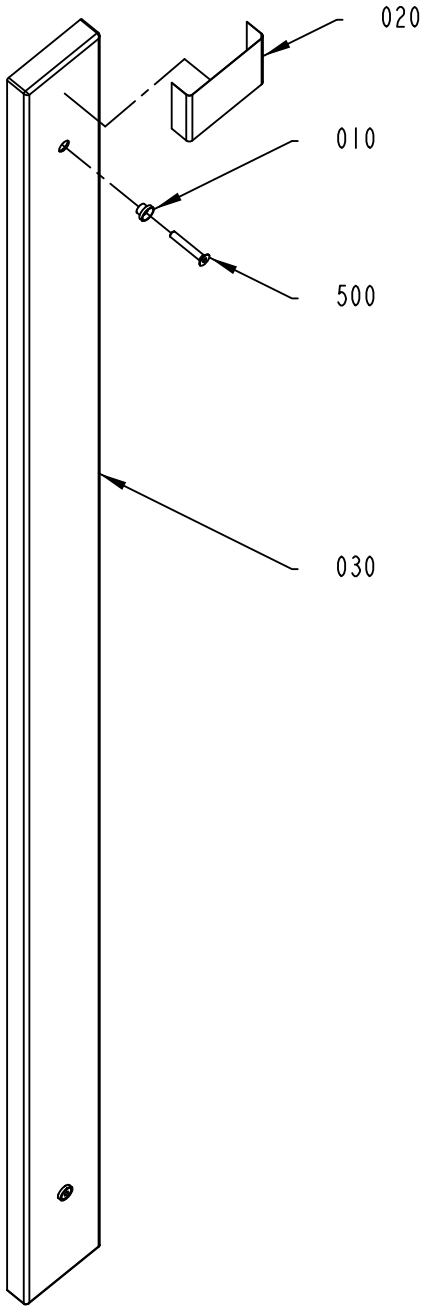

3138433-1
473358

ECM: 482939 - 20101216
Group number: 3138433-0100
Assembly Drawing: 3138433-1_1_AA

Pos	Part No	UN	Qty	Description	Page No
-					
010	578196-0000		2	SLEEVE	
020	90511-8563	MM	134	STRIPE HEIGHT 70MM, ROLL LENGTH 25M	
030	3138434-0000		1	COVERING PANEL	
500	312155-0378		2	SCREW DIN 7991 MF6S M6X40 A4 70	

Pos	Part No	UN	Qty	Description	Page No

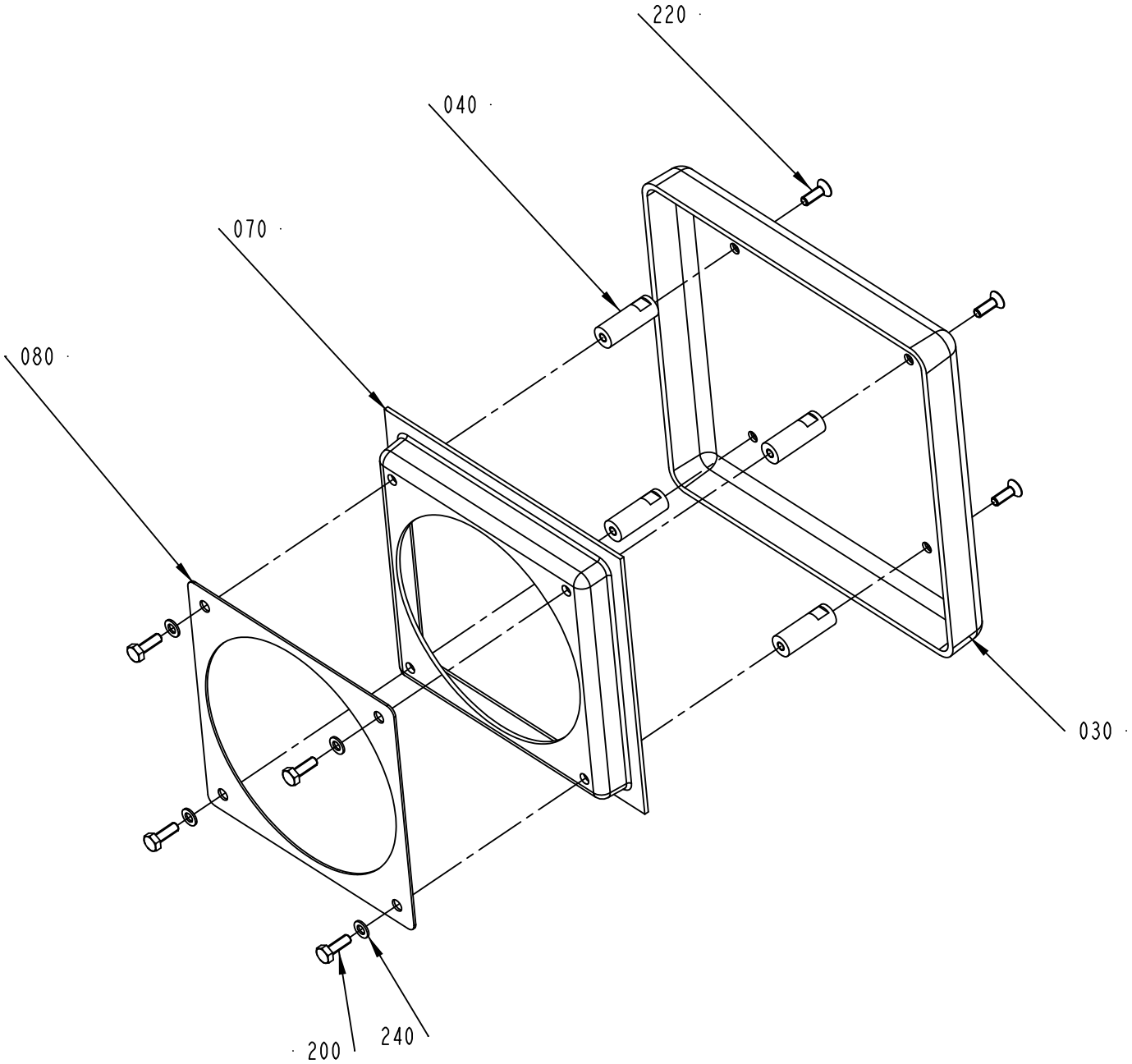

599749-1
478946

ECM: 479130 - 20110531
Group number: 599749-0100
Assembly Drawing: 599749-1_1_AC

Pos	Part No	UN	Qty	Description	Page No
-					
030	599752-0000		1	COVER	
040	599753-0000		4	SPACER	
070	599751-0000		1	INSERT	
080	599755-0000		1	GASKET	
200	312105-0291		4	SCREW, M6S ISO 4017 M4X12 A4 70	
220	312155-0291		4	SCREW DIN 7991 MF6S M4X12 A4 70	
240	315105-0136		4	WASHER PLAIN, 4,3X9X0,8 A4 BRB	

Pos	Part No	UN	Qty	Description	Page No

Machine Type | Group Description | Used-In | Group Number | Page No

This page is intentionally left blank.

ECM: 615974 - 20130618
Group number: 2794980-0500
Assembly Drawing:

This list covers pages from 6-88 to 6-91

Pos	Part No	UN	Qty	Description	Page No
LAMP					
A01W0103	90458-1737		1	CABLE INCLUDED IN THE MATERIAL	
A01W0104	90458-1737		1	CABLE INCLUDED IN THE MATERIAL	
LINF U-FORM, RINF U-FORM					
C50W0102	344257-0050		1	SENSOR CABLE, EVT146	
C50W0231	344257-0050		1	SENSOR CABLE, EVT146	
LINF Z-FORM, RINF Z-FORM					
C50W0102	344257-0020		1	SENSOR CABLE, EVT145	
C50W0231	344257-0020		1	SENSOR CABLE, EVT145	
OTHER COUNTRIES					
010	3267903-0100		1	CABLE SET	**6-93**
USA, CANADA					
010	3267904-0100		1	CABLE SET	**6-95**
Common Parts					
A01W0001	351162-0107	M	3	WIRE AWM 1X6 MM2 YELLOW-GREEN	
A01W0040	90458-1737		1	CABLE INCLUDED IN THE MATERIAL	
A01W0041	90458-1737		1	CABLE INCLUDED IN THE MATERIAL	
A01W0050	90458-1737		1	CABLE INCLUDED IN THE MATERIAL	
A01W0101	344257-0010		1	SENSOR CABLE, EVT144	
A01W0140	344267-0015		1	SENSOR CABLE, EVT288	
A01W0141	344267-0050		1	SENSOR CABLE, EVT044	
A01W0142	344267-0050		1	SENSOR CABLE, EVT044	
A01W0144	90458-1737		1	CABLE INCLUDED IN THE MATERIAL	
A01W0149	344267-0015		1	SENSOR CABLE, EVT288	
A01W0150	344267-0050		1	SENSOR CABLE, EVT044	
A01W0151	344267-0020		1	SENSOR CABLE, EVT043	
A01W0152	344267-0015		1	SENSOR CABLE, EVT288	
A01W0153	344267-0020		1	SENSOR CABLE, EVT043	
A01W0181	90458-1737		1	CABLE INCLUDED IN THE MATERIAL	
A01W0182	90458-1737		1	CABLE INCLUDED IN THE MATERIAL	
A01W0420	351501-3100		1	ETH. P. CAB. VS-M12MSD-IP20-LI-93P/10,0	
A01W0421	351501-2010		1	ETH. P CAB.SAC-4P-M12MSD/ 1,0-PVC/M12MSD	
A01W0422	351501-2050		1	ETH. P CAB.SAC-4P-M12MSD/ 5,0-PVC/M12MSD	
A01W0423	351501-2100		1	ETH. P CAB.SAC-4P-M12MSD/10,0-PVC/M12MSD	
A01W0424	351501-2020		1	ETH. P CAB.SAC-4P-M12MSD/2,0-PVC/M12MSD-	
A01W0425	351501-2050		1	ETH. P CAB.SAC-4P-M12MSD/ 5,0-PVC/M12MSD	
A01W0426	351501-2100		1	ETH. P CAB.SAC-4P-M12MSD/10,0-PVC/M12MSD	
A01W0427	351501-2010		1	ETH. P CAB.SAC-4P-M12MSD/ 1,0-PVC/M12MSD	
A01W2015	90458-1737		1	CABLE INCLUDED IN THE MATERIAL	
A40W0148	351178-0107	M	5	CABLE OLFLEX FD 891 7X0,75 MM2 BLACK	
C50W0104	344257-0050		1	SENSOR CABLE, EVT146	
C50W0106	344257-0050		1	SENSOR CABLE, EVT146	
F09W0100	90459-4876		2	FOCUS JUMPER CABLE M12 5P 3M, 20-056-21	
F09W0101	90459-4876		2	FOCUS JUMPER CABLE M12 5P 3M, 20-056-21	
F09W0102	90459-4876		2	FOCUS JUMPER CABLE M12 5P 3M, 20-056-21	
F09W0103	90459-4876		1	FOCUS JUMPER CABLE M12 5P 3M, 20-056-21	
F09W1000	90600-5930	M	5	CABLE C9, 20-057-15	
F40W0480	90459-4876		2	FOCUS JUMPER CABLE M12 5P 3M, 20-056-21	
F40W0482	90459-4876		2	FOCUS JUMPER CABLE M12 5P 3M, 20-056-21	
F40W0484	90459-4876		1	FOCUS JUMPER CABLE M12 5P 3M, 20-056-21	
F40W0486	90459-4876		1	FOCUS JUMPER CABLE M12 5P 3M, 20-056-21	
F40W0488	90459-4876		1	FOCUS JUMPER CABLE M12 5P 3M, 20-056-21	
F50W0480	90459-4876		2	FOCUS JUMPER CABLE M12 5P 3M, 20-056-21	
F50W0482	90459-4876		2	FOCUS JUMPER CABLE M12 5P 3M, 20-056-21	
F50W0484	90459-4876		1	FOCUS JUMPER CABLE M12 5P 3M, 20-056-21	
F50W0486	90459-4876		1	FOCUS JUMPER CABLE M12 5P 3M, 20-056-21	
F50W0488	90459-4876		2	FOCUS JUMPER CABLE M12 5P 3M, 20-056-21	
T40W0100	344257-0015		1	SENSOR CABLE, EVT202	
T40W0101	344257-0020		1	SENSOR CABLE, EVT145	
T40W0102	344259-0010		1	SENSOR CABLE, EVT281	
T40W0103	344259-0020		1	SENSOR CABLE, EVT203	
T40W0106	90603-2799		1	SENSOR CABLE, EVC071	
T40W0201	344257-0015		1	SENSOR CABLE, EVT202	
T40W0202	344257-0015		1	SENSOR CABLE, EVT202	
T40W0221	344257-0050		1	SENSOR CABLE, EVT146	
T40W0252	344257-0015		1	SENSOR CABLE, EVT202	
T40W0260	344249-0050		1	SENSOR CABLE, EVT135	
T40W0261	344269-0020		1	SENSOR CABLE, EVT217	
T40W0262	344259-0015		1	SENSOR CABLE, EVT28	
T40W0263	344269-0020		1	SENSOR CABLE, EVT217	
T40W0264	344249-0050		1	SENSOR CABLE, EVT135	
T40W0266	344260-0020		1	SENSOR CABLE, EVT211	
T40W0267	344259-0020		1	SENSOR CABLE, EVT203	
T40W0271	344257-0050		1	SENSOR CABLE, EVT146	
T40W0301	90458-1737		1	CABLE INCLUDED IN THE MATERIAL	
T40W0302	90458-1737		1	CABLE INCLUDED IN THE MATERIAL	
T40W0311	90458-1737		1	CABLE INCLUDED IN THE MATERIAL	
T40W0320	344257-0020		1	SENSOR CABLE, EVT145	
T40W0322	344257-0020		1	SENSOR CABLE, EVT145	
T40W1010	90458-1737		1	CABLE INCLUDED IN THE MATERIAL	
T40W1011	351429-1612		1	MOTOR POWER CABLE 2090-CPWM7DF-16AA12	
T40W1012	351428-0012		1	MOTOR FEEDBACK CABLE 2090-CFBM7DF-CEAA12	
T40W1021	351429-1607		1	MOTOR POWER CABLE 2090-CPWM7DF-16AA07	
T40W1022	351428-0007		1	MOTOR FEEDBACK CABLE 2090-CFBM7DF-CEAA07	

Machine Type | Group Description | Used-In | Group Number | Page No

This page is intentionally left blank.

Pos	Part No	UN	Qty	Description	Page No
Common Parts (Cont'd)					
T50W0021	90458-1737		1	CABLE INCLUDED IN THE MATERIAL	
T50W0031	90458-1737		1	CABLE INCLUDED IN THE MATERIAL	
T50W0100	90458-1737		1	CABLE INCLUDED IN THE MATERIAL	
U01W0103	90458-1737		1	CABLE INCLUDED IN THE MATERIAL	
U01W0104	90458-1737		1	CABLE INCLUDED IN THE MATERIAL	
V50W0011	344269-0020		1	SENSOR CABLE, EVT217	
V50W0013	344269-0020		1	SENSOR CABLE, EVT217	
V50W0014	344269-0020		1	SENSOR CABLE, EVT217	
V50W0015	344269-0020		1	SENSOR CABLE, EVT217	
V50W0018	344269-0020		1	SENSOR CABLE, EVT217	
V50W0373	344257-0010		1	SENSOR CABLE, EVT144	
V50W0381	344257-0006		1	SENSOR CABLE, EVT143	
W10W0902	90458-1737		1	CABLE INCLUDED IN THE MATERIAL	
W10W0903	90458-1737		1	CABLE INCLUDED IN THE MATERIAL	
W10W0904	90458-1737		1	CABLE INCLUDED IN THE MATERIAL	
W10W0905	90458-1737		1	CABLE INCLUDED IN THE MATERIAL	
W10W0906	344259-0050		1	SENSOR CABLE, EVT204	
W30W0100	344263-0020		1	SENSOR CABLE, EVT239	
W30W0101	344263-0015		1	SENSOR CABLE, EVT241	
W30W0110	344257-0020		1	SENSOR CABLE, EVT145	
W30W0111	344257-0020		1	SENSOR CABLE, EVT145	
W30W0114	344257-0020		1	SENSOR CABLE, EVT145	
W30W0115	344257-0020		1	SENSOR CABLE, EVT145	
W30W0116	344263-0015		1	SENSOR CABLE, EVT241	
W30W0117	344263-0020		1	SENSOR CABLE, EVT239	
W30W0118	344257-0020		1	SENSOR CABLE, EVT145	
W30W0119	344257-0020		1	SENSOR CABLE, EVT145	
W30W0140	344260-0050		1	SENSOR CABLE, EVT286	
W30W0242	344257-0050		1	SENSOR CABLE, EVT146	
W50W0116	344259-0015		1	SENSOR CABLE, EVT28	
W50W0118	344257-0015		1	SENSOR CABLE, EVT202	
W50W0191	90458-1737		1	CABLE INCLUDED IN THE MATERIAL	
W50W0211	344257-0050		1	SENSOR CABLE, EVT146	
W50W0212	344257-0050		1	SENSOR CABLE, EVT146	
W50W0400	344269-0020		1	SENSOR CABLE, EVT217	
W50W2040	344257-0050		1	SENSOR CABLE, EVT146	
W50W2041	344257-0050		1	SENSOR CABLE, EVT146	
W50W2042	344257-0050		1	SENSOR CABLE, EVT146	
W90W0910	344259-0050		1	SENSOR CABLE, EVT204	

Pos	Part No	UN	Qty	Description	Page No

This page is intentionally left blank.

ECM: 615971 - 20130618
Group number: 3267903-0100
Assembly Drawing:

Pos	Part No	UN	Qty	Description	Page No
LAMP					
A01W0105	351150-0403	M	8	CABLE OLFLEX 3X0,75 MM2 LIGHT/GREY 35	
A01W0106	351150-0403	M	8	CABLE OLFLEX 3X0,75 MM2 LIGHT/GREY 35	
LINF Z-FORM, RINF Z-FORM					
A01W0170	351150-0424	M	11	CABLE OLFLEX 18X0,75 MM2 LIGHT/GREY	
A01W1070	351422-0004	M	10	CABLE ÖLFLEX 150CY QUATTRO 5X0,75	
Common Parts					
A01W0102	351150-0406	M	7	CABLE OLFLEX 7X0,75 MM2 LIGHT/GREY	
A01W0121	351150-0431	M	2	CABLE OLFLEX 2X0,75 MM2 LIGHT/GREY	
A01W0130	351150-0403	M	3	CABLE OLFLEX 3X0,75 MM2 LIGHT/GREY 35	
A01W0131	351150-0404	M	3	CABLE OLFLEX 4X0,75 MM2 LIGHT/GREY	
A01W0145	351150-0407	M	6	CABLE OLFLEX 12X0,75 MM2 LIGHT/GREY	
A01W0147	351150-0406	M	6	CABLE OLFLEX 7X0,75 MM2 LIGHT/GREY	
A50W0155	351150-0407	M	4	CABLE OLFLEX 12X0,75 MM2 LIGHT/GREY	
F09W1001	351422-0004	M	6	CABLE ÖLFLEX 150CY QUATTRO 5X0,75	
F40W0479	351422-0004	M	6	CABLE ÖLFLEX 150CY QUATTRO 5X0,75	
F50W0479	351422-0004	M	8	CABLE ÖLFLEX 150CY QUATTRO 5X0,75	
T40W0050	351422-0203	M	8	CABLE ÖLFLEX 150CY QUATTRO 4X1,5	
T50W0020	351422-0203	M	8	CABLE ÖLFLEX 150CY QUATTRO 4X1,5	
T50W0030	351422-0203	M	8	CABLE ÖLFLEX 150CY QUATTRO 4X1,5	
T50W0032	351150-0407	M	4	CABLE OLFLEX 12X0,75 MM2 LIGHT/GREY	
V10W0950	351150-0403	M	4	CABLE OLFLEX 3X0,75 MM2 LIGHT/GREY 35	
V50W0010	351150-0166	M	8	CABLE OLFLEX 4X4 MM2 LIGHT/GREY	
V50W0200	351150-0403	M	4	CABLE OLFLEX 3X0,75 MM2 LIGHT/GREY 35	
V50W0310	351150-0403	M	4	CABLE OLFLEX 3X0,75 MM2 LIGHT/GREY 35	
V50W0320	351150-0403	M	4	CABLE OLFLEX 3X0,75 MM2 LIGHT/GREY 35	
V50W0330	351150-0403	M	4	CABLE OLFLEX 3X0,75 MM2 LIGHT/GREY 35	
V50W0340	351150-0403	M	4	CABLE OLFLEX 3X0,75 MM2 LIGHT/GREY 35	
V50W0350	351150-0403	M	4	CABLE OLFLEX 3X0,75 MM2 LIGHT/GREY 35	
V50W0360	351150-0403	M	4	CABLE OLFLEX 3X0,75 MM2 LIGHT/GREY 35	
W10W0900	351150-0406	M	12	CABLE OLFLEX 7X0,75 MM2 LIGHT/GREY	
W10W0901	351150-0403	M	1	CABLE OLFLEX 3X0,75 MM2 LIGHT/GREY 35	
W30W0010	351422-0203	M	7	CABLE ÖLFLEX 150CY QUATTRO 4X1,5	
W30W0083	351422-0003	M	10	CABLE ÖLFLEX 150CY QUATTRO 4X0,75	
W30W0084	351422-0003	M	10	CABLE ÖLFLEX 150CY QUATTRO 4X0,75	
W30W0240	351150-0403	M	6	CABLE OLFLEX 3X0,75 MM2 LIGHT/GREY 35	
W90W0010	351422-0203	M	10	CABLE ÖLFLEX 150CY QUATTRO 4X1,5	
W90W0082	351150-0413	M	5	CABLE OLFLEX 4GX1,5 MM2 LIGHT/GREY	

Pos	Part No	UN	Qty	Description	Page No

This page is intentionally left blank.

ECM: 615972 - 20130618
Group number: 3267904-0100
Assembly Drawing:

Pos	Part No	UN	Qty	Description	Page No
LAMP					
A01W0105	315743-0001	M	8	ÖLFLEX CONTROL TM 3G1, 281803	
A01W0106	315743-0001	M	8	ÖLFLEX CONTROL TM 3G1, 281803	
LINF Z-FORM, RINF Z-FORM					
A01W0170	315743-0006	M	11	ÖLFLEX CONTROL TM 18G1, 281818	
A01W1070	315756-0003	M	10	ÖLFLEX CONTROL TM CY 5G1, 281805CY	
Common Parts					
A01W0102	315743-0004	M	7	ÖLFLEX CONTROL TM 7G1, 281807	
A01W0121	315743-0001	M	2	ÖLFLEX CONTROL TM 3G1, 281803	
A01W0130	315743-0001	M	3	ÖLFLEX CONTROL TM 3G1, 281803	
A01W0131	315743-0002	M	3	ÖLFLEX CONTROL TM 4G1, 281804	
A01W0145	315743-0005	M	6	ÖLFLEX CONTROL TM 12G1, 281812	
A01W0147	315743-0004	M	6	ÖLFLEX CONTROL TM 7G1, 281807	
A50W0155	315743-0005	M	4	ÖLFLEX CONTROL TM 12G1, 281812	
F09W1001	315756-0003	M	6	ÖLFLEX CONTROL TM CY 5G1, 281805CY	
F40W0479	315756-0003	M	6	ÖLFLEX CONTROL TM CY 5G1, 281805CY	
F50W0479	315756-0003	M	8	ÖLFLEX CONTROL TM CY 5G1, 281805CY	
T40W0050	315756-0009	M	8	ÖLFLEX CONTROL TM CY 4G1,5, 281604CY	
T50W0020	315756-0009	M	8	ÖLFLEX CONTROL TM CY 4G1,5, 281604CY	
T50W0030	315756-0009	M	8	ÖLFLEX CONTROL TM CY 4G1,5, 281604CY	
T50W0032	315743-0005	M	4	ÖLFLEX CONTROL TM 12G1, 281812	
V10W0950	315743-0001	M	4	ÖLFLEX CONTROL TM 3G1, 281803	
V50W0010	315743-0019	M	8	ÖLFLEX CONTROL TM 4G4, 281204	
V50W0200	315743-0001	M	4	ÖLFLEX CONTROL TM 3G1, 281803	
V50W0310	315743-0001	M	4	ÖLFLEX CONTROL TM 3G1, 281803	
V50W0320	315743-0001	M	4	ÖLFLEX CONTROL TM 3G1, 281803	
V50W0330	315743-0001	M	4	ÖLFLEX CONTROL TM 3G1, 281803	
V50W0340	315743-0001	M	4	ÖLFLEX CONTROL TM 3G1, 281803	
V50W0350	315743-0001	M	4	ÖLFLEX CONTROL TM 3G1, 281803	
V50W0360	315743-0001	M	4	ÖLFLEX CONTROL TM 3G1, 281803	
W10W0900	315743-0004	M	12	ÖLFLEX CONTROL TM 7G1, 281807	
W10W0901	315743-0001	M	1	ÖLFLEX CONTROL TM 3G1, 281803	
W30W0010	315756-0009	M	7	ÖLFLEX CONTROL TM CY 4G1,5, 281604CY	
W30W0083	315756-0002	M	10	ÖLFLEX CONTROL TM CY 4G1, 281804CY	
W30W0084	315756-0002	M	10	ÖLFLEX CONTROL TM CY 4G1, 281804CY	
W30W0240	315743-0001	M	6	ÖLFLEX CONTROL TM 3G1, 281803	
W90W0010	315756-0009	M	10	ÖLFLEX CONTROL TM CY 4G1,5, 281604CY	
W90W0082	315743-0009	M	5	ÖLFLEX CONTROL TM 4G1,5, 281604	

Pos	Part No	UN	Qty	Description	Page No

Machine Type | Group Description | Used-In | Group Number | Page No

This page is intentionally left blank.

ECM: 647942 - 20140313
Group number: 3265401-0004
Assembly Drawing:

Pos	Part No	UN	Qty	Description	Page No
-					
0130	3265400-0000		1	LABEL CD	
0140	90458-0118		1	COMPACT DISC, RECORDABLE	
0150	3265401-1004		1	P.O.C. COMPL. CD	
0160	3265393-1002		1	FIRMWARE	
0170	3265392-1001		1	EDS	
0180	3265391-1003		1	PLMS NRG CONFIG FILE	
0190	3265394-1004		1	PLC	
0200	3265395-1001		1	ROUTER CONFIG	
0210	3258900-1001		1	SAFETY PLC SOFTWARE	
0220	3265396-1003		1	TPOP HMI	

Pos	Part No	UN	Qty	Description	Page No

Tetra Pak

SPC
Spare Parts Catalogue

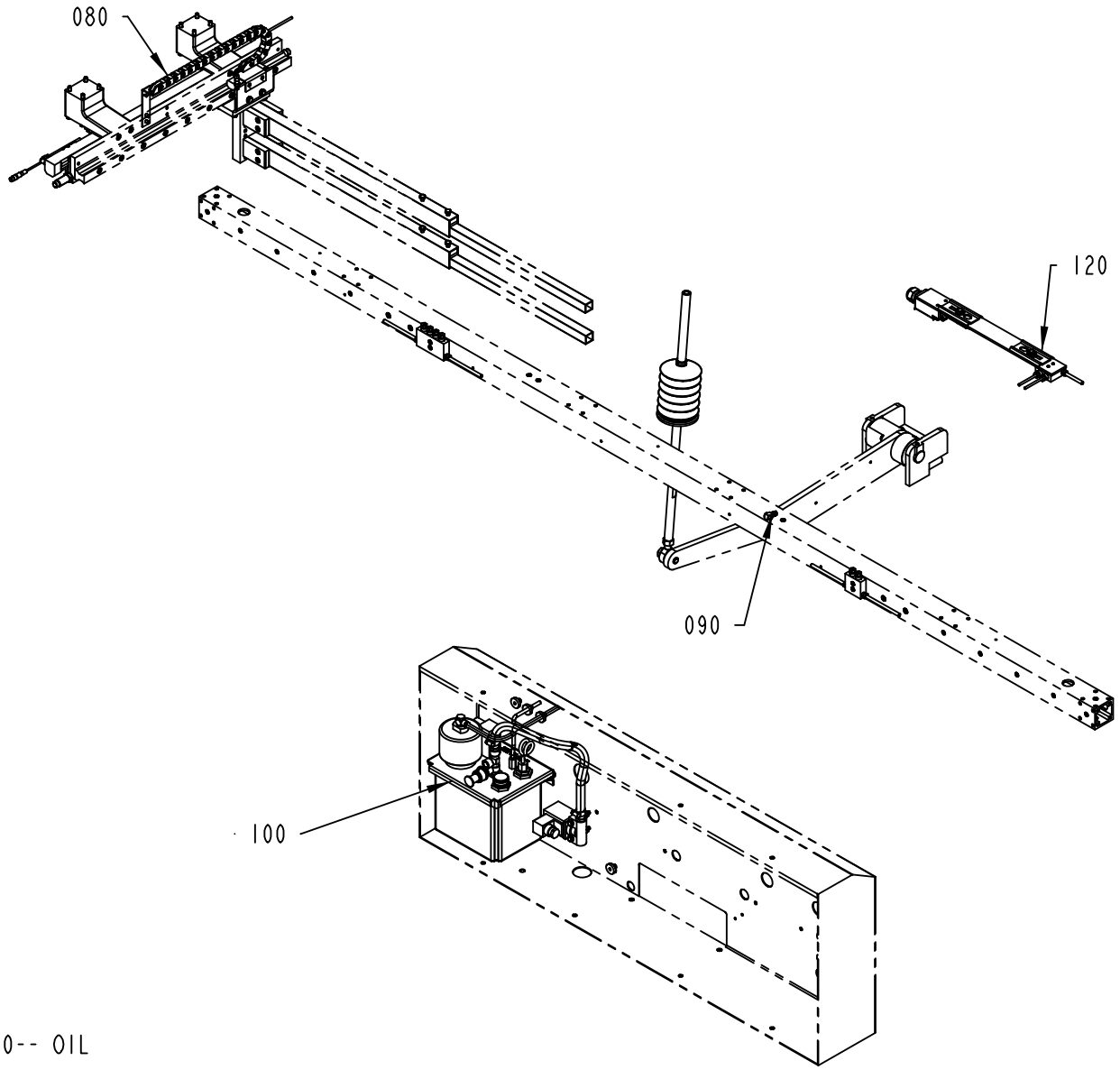

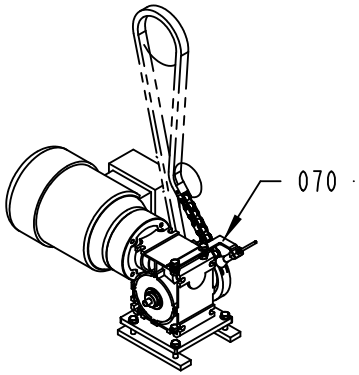

673834-3
568933

ECM: 577209 - 20120924
Group number: 673834-0300
Assembly Drawing: 673834-3_1_AB

Pos	Part No	UN	Qty	Description	Page No
-					
070	1287191-0300		1	FEEDING LUBRICATION POINT	**7-5**
080	1287192-0400		1	GRP DOLLY LUBR.	**7-7**
090	1287193-0500		1	CURVE ARM LUBRICATION	**7-9**
100	2718898-0300		1	LUBRICATION UNIT	**7-11, 7-13**
110	1287195-0400		1	PATTERN FORMING LUBRICATION SYSTEM	**7-15**
120	1287196-0600		1	TRAY FORMING LUBRICATION DISTRIBUTION	**7-17**
300	90603-5339	L	1	KLüBEROIL 4 UH1 320 N, ONLY IN BOM	
	90603-6454		*1*	*KLüBEROIL 4 UH1 320 N, 20 L CANISTER*	
	90603-6434		*1*	*KLUBEROIL 4 UH1 320 N, 5 L CANISTER*	

Pos	Part No	UN	Qty	Description	Page No

FEEDING LUBRICATION POINT

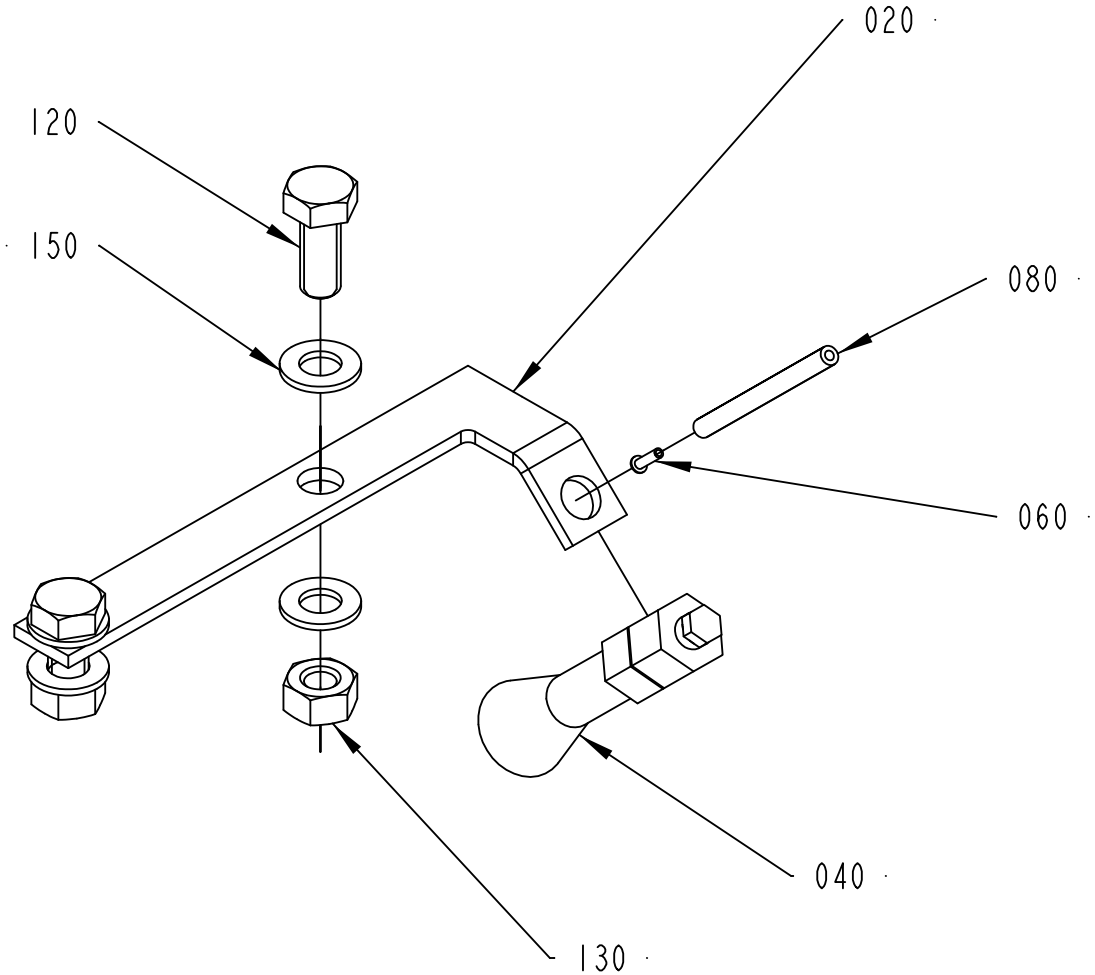

1287191-3
316668

ECM: 599075 - 20130314
Group number: 1287191-0300
Assembly Drawing: 1287191-3_1_AB

Pos	Part No	UN	Qty	Description	Page No
-					
020	2894986-0000		1	ANGLE BRACKET	
040	90092-0080		1	OIL BRUSH FOR D=4 MM TUBE, D=11, 4	
060	90134-0031		1	SLEEVE FOR PLASTIC TUBE	
080	90166-0109	M	4	TUBE 4 MM PA TRANSP.	
120	312105-0451		2	SCREW, M6S ISO 4017 M8X20 A4 80	
130	312605-0318		2	HEXAGON NUT, M6M M8 A280	
150	315105-0165		4	FWAS080G0-0S, WASHER PLAIN	

Pos	Part No	UN	Qty	Description	Page No

GRP DOLLY LUBR.

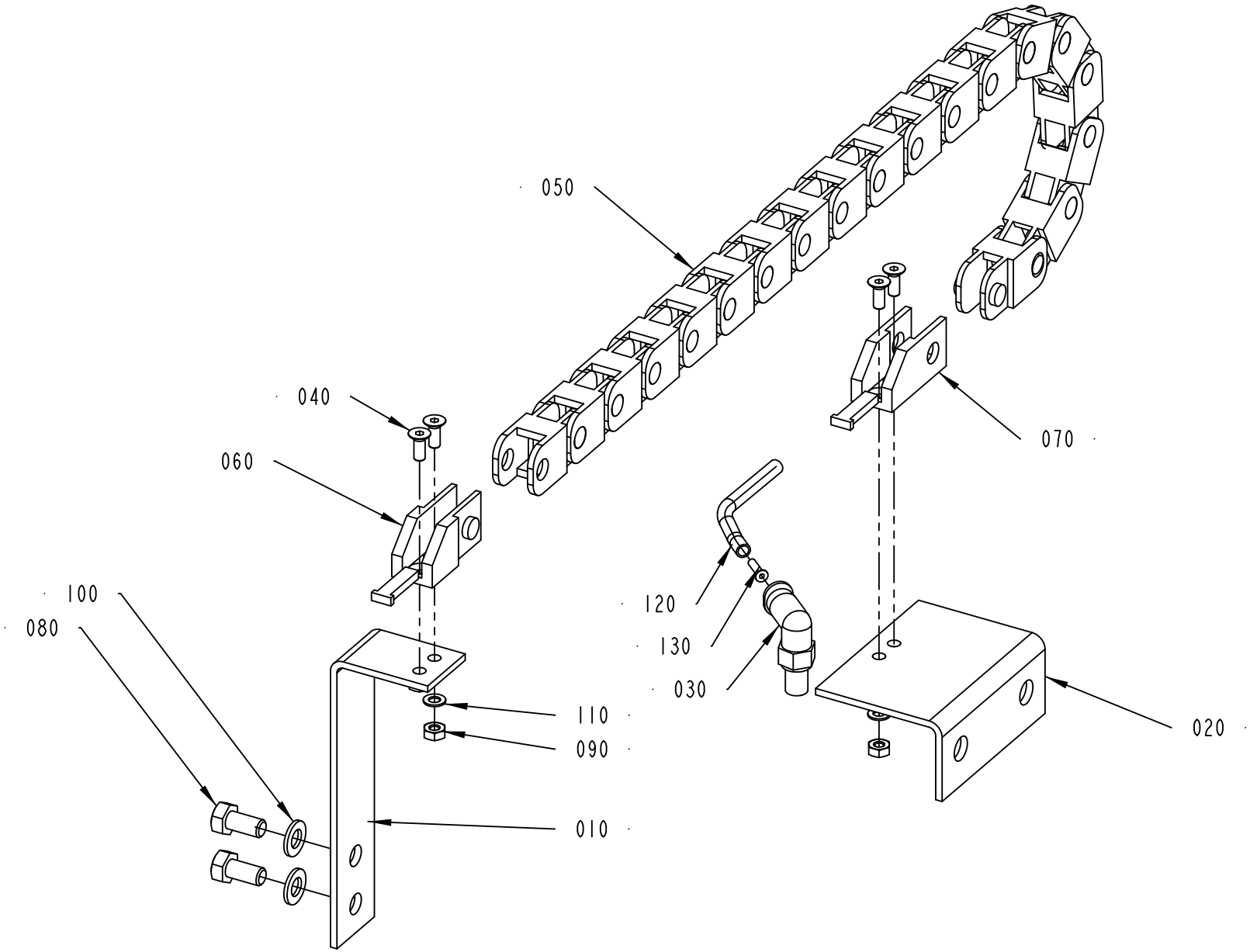

1287192-4
598985

ECM: 599076 - 20130314
Group number: 1287192-0400
Assembly Drawing: 1287192-4_1_AC

Pos	Part No	UN	Qty	Description	Page No
-					
010	2895032-0000		1	BRACKET	
020	2895031-0000		1	BRACKET	
030	90600-0236		1	ANGLE COUPLING M6 TUBE 4 MM	
040	90287-0295		4	SCREW HEX.SOCK.COUNT.MF6S M3X8 A280	
050	90458-2097		1	FLEXIBLE CHAIN, L=380 MM	
060	90458-2101		1	BRACKET, 060.06.2PZ, FOR CHAIN 06	
070	90458-2119		1	BRACKET, 060.06.1PZ, FOR CHAIN 06	
080	312105-0325		2	SCREW, M6S ISO 4017 M5X10 A4 80	
090	312605-0310		4	HEXAGON NUT, M6M M3 A280	
100	315105-0146		2	WASHER PLAIN, 5,3X10X1 A4 BRB	
110	315105-0124		4	WASHER PLAIN, 3,2X6X0,5 A4 BRB	
120	90166-0109	M	2	TUBE 4 MM PA TRANSP.	
130	90134-0031		1	SLEEVE FOR PLASTIC TUBE	

Pos	Part No	UN	Qty	Description	Page No

CURVE ARM LUBRICATION

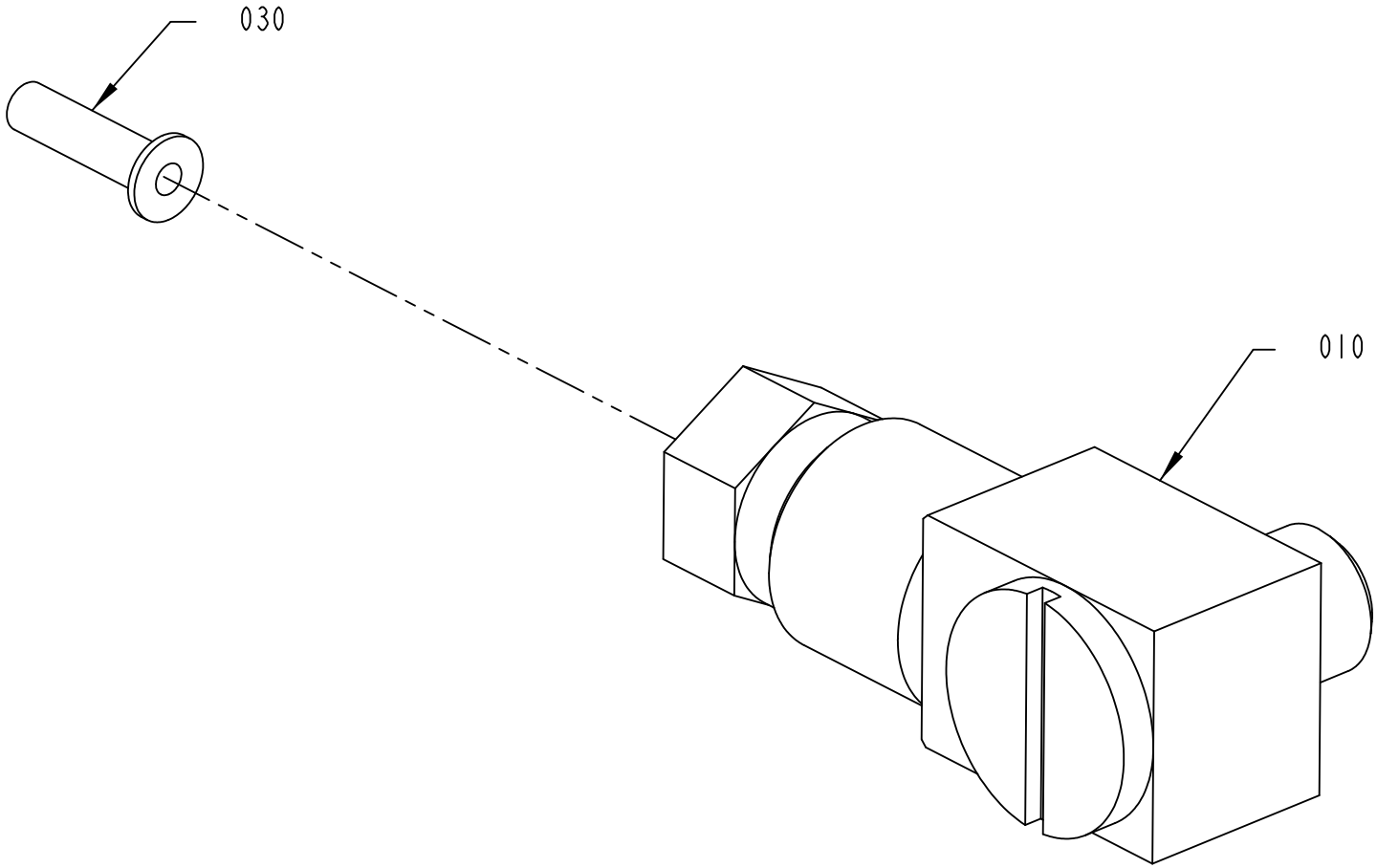

1287193-5
555186

ECM: 614539 - 20130618
Group number: 1287193-0500
Assembly Drawing: 1287193-5_1_AA

Pos	Part No	UN	Qty	Description	Page No
-					
010	90134-0068		4	CONNECTION	
030	90134-0031		4	SLEEVE FOR PLASTIC TUBE	

Pos	Part No	UN	Qty	Description	Page No

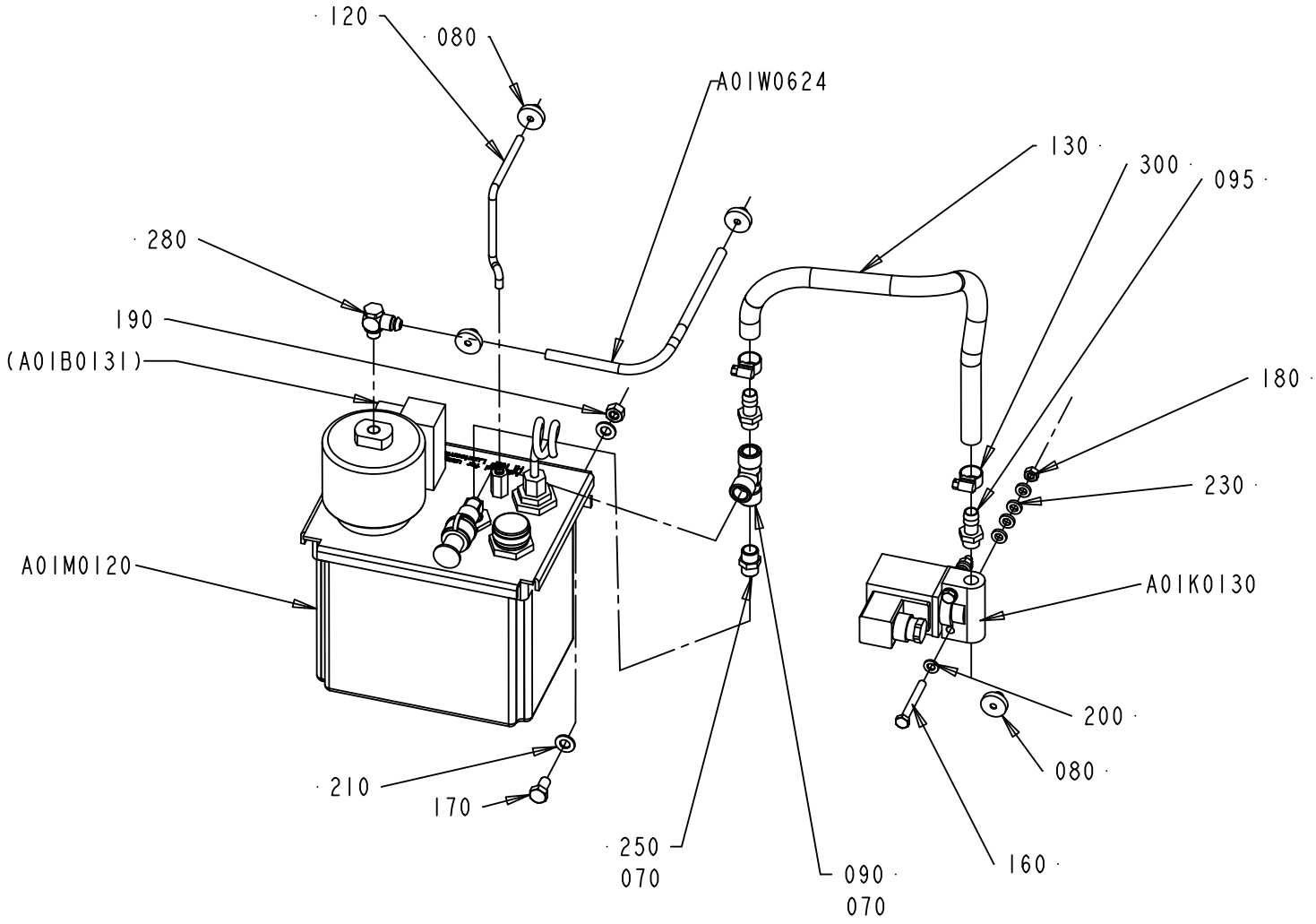

Pos 010: CENTRAL LUBRICATION DIAGRAM

2718898-5
555186

ECM: 646239 - 20131125
Group number: 2718898-0300
Assembly Drawing: 2718898-5_1_AA

This list covers pages from 7-10 to 7-13

Pos	Part No	UN	Qty	Description	Page No
AUTO (See drawing on page: 7-10)					
090	90140-0018		1	T-PIPE, INT. THREAD, 2003-1/4	
095	90163-0052		2	HOSE NIPPLE, EXT.THR. G1/4-12 MM	
130	90166-0113	MM	350	HOSE	
160	312109-0380		2	SCREW, M6S ISO 4017 M6X50 A4 80	
180	312605-0316		2	HEXAGON NUT, M6M M6 A280	
200	315105-0153		2	WASHER PLAIN, 6,4X12X1,5 A4 BRB	
230	315115-0153		8	WASHER PLAIN, TBRB 6,4/12 H=3	
250	342700-0110		1	NIPPLE, EXT.THREAD, HEXAGON, G1/4-G1/4	
300	342991-0101		2	HOSE CLIP,WORM DRIVE TYPE (11)-17	
A01K0130	90042-0107		1	SOLENOID VALVE, 256 2/2 NC	
Common Parts					
010	3272870-0000		1	CENTRAL LUBRIC. DIAGRAM	
070	90157-0037	ML	1	THREAD SEALANT LOCTITE 542	
080	90015-0020		4	LEAD-IN, TET5-7, E-1458016	
120	90166-0108	M	5	TUBE 6 MM PA TRANSP.	
170	312105-0449		2	SCREW, M6S ISO 4017 M8X16 A4 80	
190	312605-0318		2	HEXAGON NUT, M6M M8 A280	
210	315105-0165		4	FWAS080G0-0S, WASHER PLAIN	
280	90459-5522		1	CONN. BANJO, COR8PB6M10	
A01M0120	90603-0408		1	LUBRICATION UNIT, 10P-P4-H1 LM12	
	90604-6568		*1*	*AIR VENT, 90605-9354 LM12*	
	90604-6566		*1*	*CAP, MTC/Z-1/2*	
	90604-5445		*1*	*PISTON PUMP, 90048-041 H1*	
	90274-0052		*1*	*LEVEL GUARD, 2.855432.1*	
A01W0624	315400-0001	M	2	6-4E PUN-H-6X1-BL	

Pos	Part No	UN	Qty	Description	Page No

Machine Type | Group Description | Used-In | Group Number | Page No

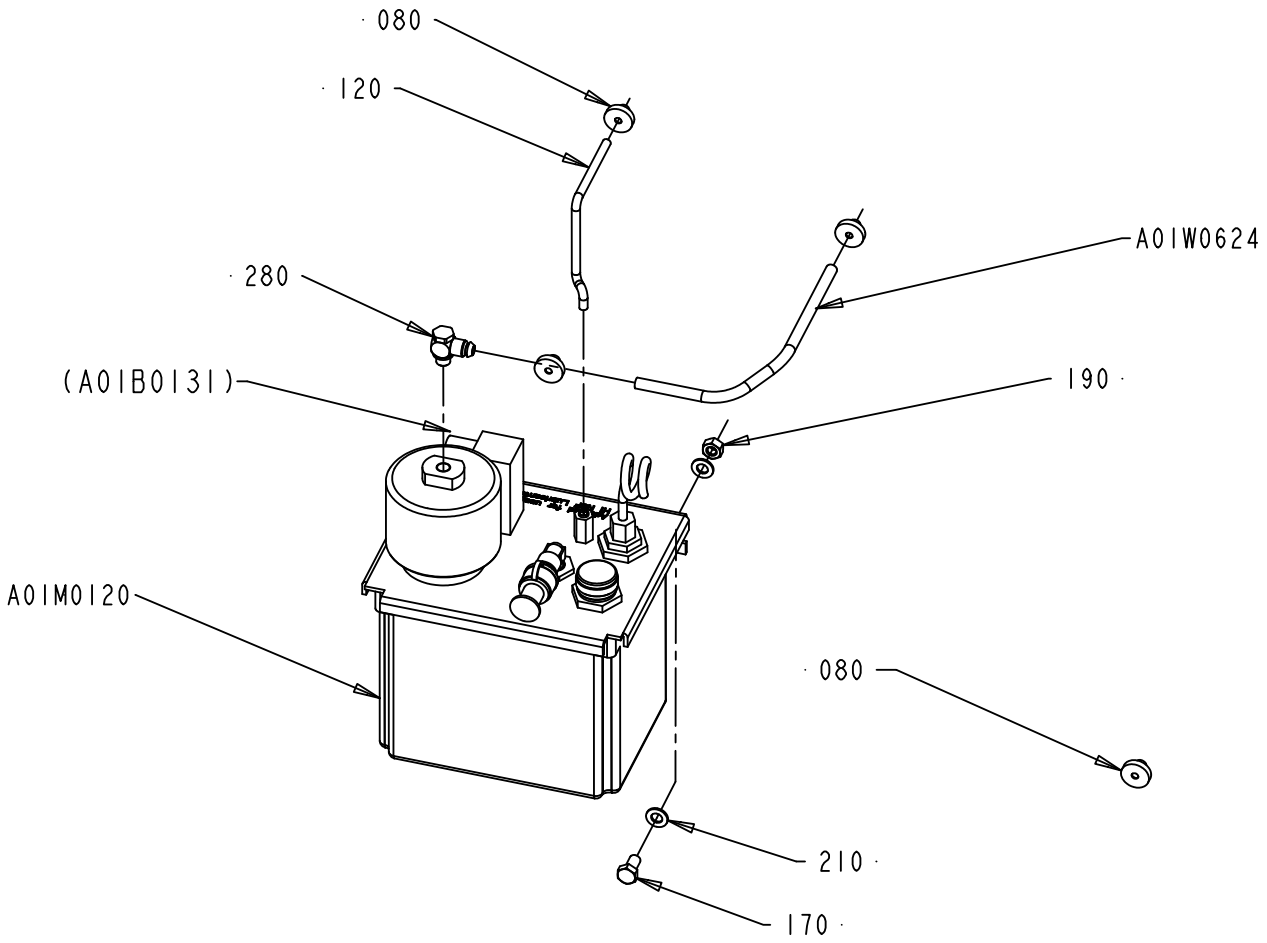

Pos 010: CENTRAL LUBRICATION DIAGRAM

2718898-6
555186

Pos	Part No	UN	Qty	Description	Page No
AUTO (See drawing on page: 7-10)					
090	90140-0018		1	T-PIPE, INT. THREAD, 2003-1/4	
095	90163-0052		2	HOSE NIPPLE, EXT.THR. G1/4-12 MM	
130	90166-0113	MM	350	HOSE	
160	312109-0380		2	SCREW, M6S ISO 4017 M6X50 A4 80	
180	312605-0316		2	HEXAGON NUT, M6M M6 A280	
200	315105-0153		2	WASHER PLAIN, 6,4X12X1,5 A4 BRB	
230	315115-0153		8	WASHER PLAIN, TBRB 6,4/12 H=3	
250	342700-0110		1	NIPPLE, EXT.THREAD, HEXAGON, G1/4-G1/4	
300	342991-0101		2	HOSE CLIP,WORM DRIVE TYPE (11)-17	
A01K0130	90042-0107		1	SOLENOID VALVE, 256 2/2 NC	
Common Parts					
010	3272870-0000		1	CENTRAL LUBRIC. DIAGRAM	
070	90157-0037	ML	1	THREAD SEALANT LOCTITE 542	
080	90015-0020		4	LEAD-IN, TET5-7, E-1458016	
120	90166-0108	M	5	TUBE 6 MM PA TRANSP.	
170	312105-0449		2	SCREW, M6S ISO 4017 M8X16 A4 80	
190	312605-0318		2	HEXAGON NUT, M6M M8 A280	
210	315105-0165		4	FWAS080G0-0S, WASHER PLAIN	
280	90459-5522		1	CONN. BANJO, COR8PB6M10	
A01M0120	90603-0408		1	LUBRICATION UNIT, 10P-P4-H1 LM12	
	90604-6568		*1*	*AIR VENT, 90605-9354 LM12*	
	90604-6566		*1*	*CAP, MTC/Z-1/2*	
	90604-5445		*1*	*PISTON PUMP, 90048-041 H1*	
	90274-0052		*1*	*LEVEL GUARD, 2.855432.1*	
A01W0624	315400-0001	M	2	6-4E PUN-H-6X1-BL	

Pos	Part No	UN	Qty	Description	Page No

PATTERN FORMING LUBRICATION SYSTEM

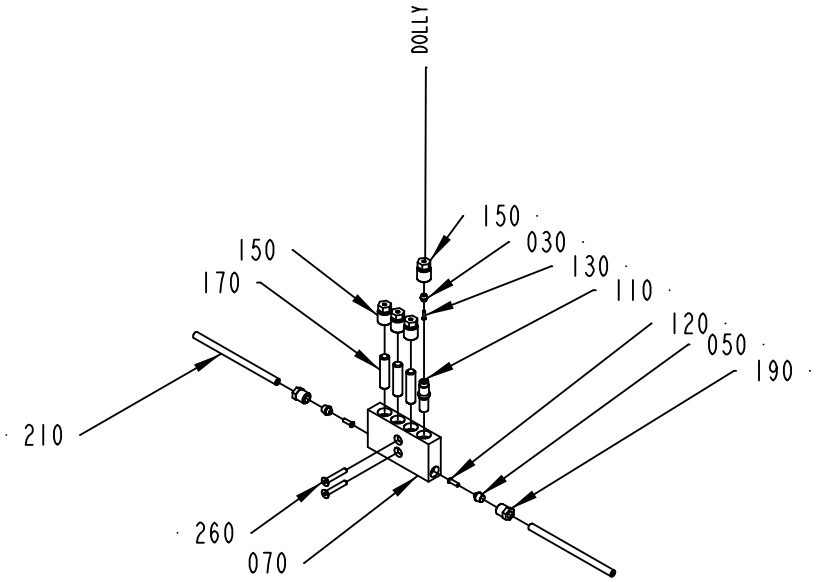

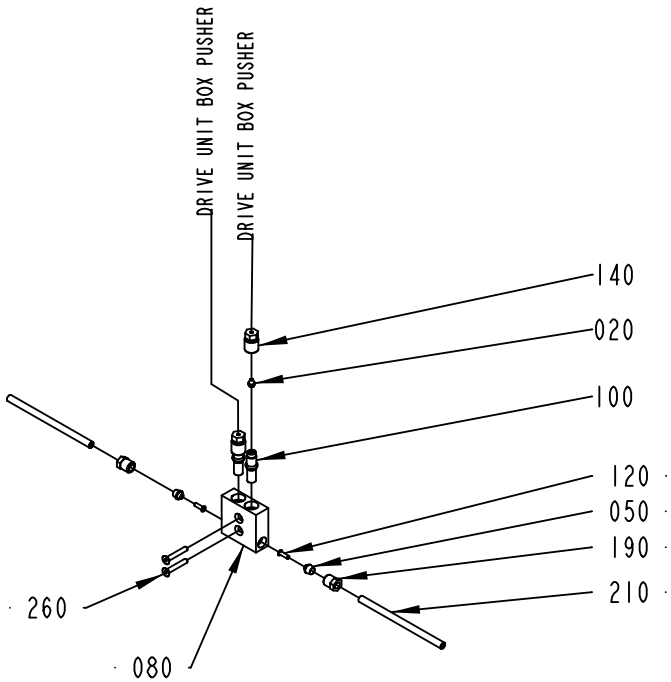

1287195-5
627532

ECM: 630432 - 20130919
Group number: 1287195-0400
Assembly Drawing: 1287195-5_1_AB

Pos	Part No	UN	Qty	Description	Page No
-					
020	90028-0020		2	CONE TUBE 2,5MM	
030	90028-0021		1	CONE TUBE 4 MM	
050	90028-0025		4	CONE TUBE 6 MM	
070	90032-0039		1	BLOCK 4 WAYS	
080	90032-0038		1	BLOCK 2 WAYS	
100	90092-0052		2	METERING VALVE 10 MM3	
110	90092-0054		1	METERING VALVE 50 MM3	
120	90134-0030		4	SLEEVE FOR PLASTIC TUBE	
130	90134-0031		1	SLEEVE FOR PLASTIC TUBE	
140	90134-0039		2	BUSHING VALVE CONNECTION 2,5 MM	
150	90134-0040		4	BUSHING VALVE CONNECTION 4 MM	
170	90134-0052		3	PLUG DOSING BLOCK	
190	90134-0055		4	BUSHING/NUT INLET/OUTLET 6 MM	
210	90166-0108	M	12	TUBE 6 MM PA TRANSP.	
260	312155-0297		4	SCREW DIN 7991 MF6S M4X25 A4 70	

Pos	Part No	UN	Qty	Description	Page No

Machine Type | Group Description | Used-In | Group Number | Page No

TRAY FORMING LUBRICATION DISTRIBUTION

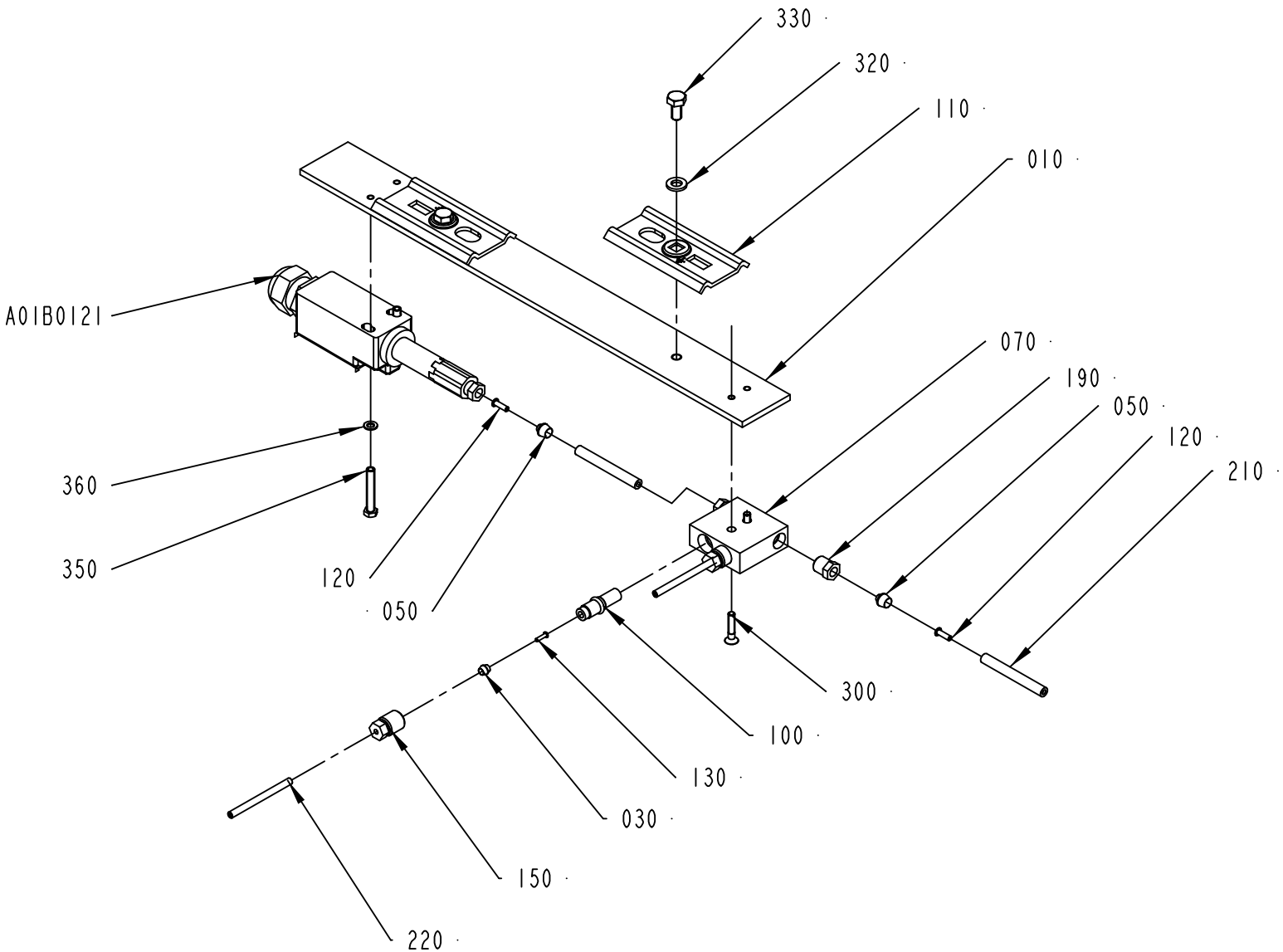

1287196-6
568933

ECM: 577211 - 20120924
Group number: 1287196-0600
Assembly Drawing: 1287196-6_1_AB

Pos	Part No	UN	Qty	Description	Page No
-					
010	3241290-0000		1	FASTENING PLATE	
030	90028-0021		2	CONE TUBE 4 MM	
050	90028-0025		3	CONE TUBE 6 MM	
070	90032-0038		1	BLOCK 2 WAYS	
100	90092-0053		2	METERING VALVE 30 MM3	
110	90181-0182		2	BRACKET, 1149354	
120	90134-0030		3	SLEEVE FOR PLASTIC TUBE	
130	90134-0031		2	SLEEVE FOR PLASTIC TUBE	
150	90134-0040		2	BUSHING VALVE CONNECTION 4 MM	
190	90134-0055		2	BUSHING/NUT INLET/OUTLET 6 MM	
210	90166-0108	M	8	TUBE 6 MM PA TRANSP.	
220	90166-0109	M	20	TUBE 4 MM PA TRANSP.	
300	312155-0297		2	SCREW DIN 7991 MF6S M4X25 A4 70	
320	315106-0153		2	WASHER PLAIN, M6 ISO7089-6-200 HV A4	
330	312105-0366		2	SCREW, M6S ISO 4017 M6X12 A4 80	
350	312105-0299		2	SCREW, M6S ISO 4017 M4X30 A4 70	
360	315105-0136		2	WASHER PLAIN, 4,3X9X0,8 A4 BRB	
A01B0121	90603-1938		1	PRESSURE SWITCH, 1800 KPA, 28545-251-2	

Pos	Part No	UN	Qty	Description	Page No

Machine Type	Group Description	Used-In	Group Number	Page No

Tetra Pak

SPC
Spare Parts Catalogue

This page is intentionally left blank.

ECM: 662298 - 20140312
Group number: 673835-0500
Assembly Drawing:

Pos	Part No	UN	Qty	Description	Page No
ANSI WITH LIGHTBARRIER					
150	2557347-0500		1	CAUTION SIGN MAP ANSI	**8-5**
ANSI WITHOUT LIGHTBARRIER					
070	1074441-0300		1	GUARD PLATE	**8-7**
150	2557347-0500		1	CAUTION SIGN MAP ANSI	**8-5**
ISO WITH LIGHTBARRIER					
150	1466390-0700		1	CAUTION SIGN MAP ISO	**8-9**
ISO WITHOUT LIGHTBARRIER					
070	1074441-0300		1	GUARD PLATE	**8-7**
150	1466390-0700		1	CAUTION SIGN MAP ISO	**8-9**
Common Parts					
010	1021942-0200		1	START-UP KIT	**8-11**
120	3251395-0000		1	PNEUMATIC DIAGRAM	
160	2970844-0100		1	DOWNSTREAM QUEUEGUARD	**8-13**
200	90243-0209		1	BAILER	
230	1466537-0000		1	CRANK	
240	90458-1465		1	ALLEN KEY 5MM	

Pos	Part No	UN	Qty	Description	Page No

Machine Type | Group Description | Used-In | Group Number | Page No

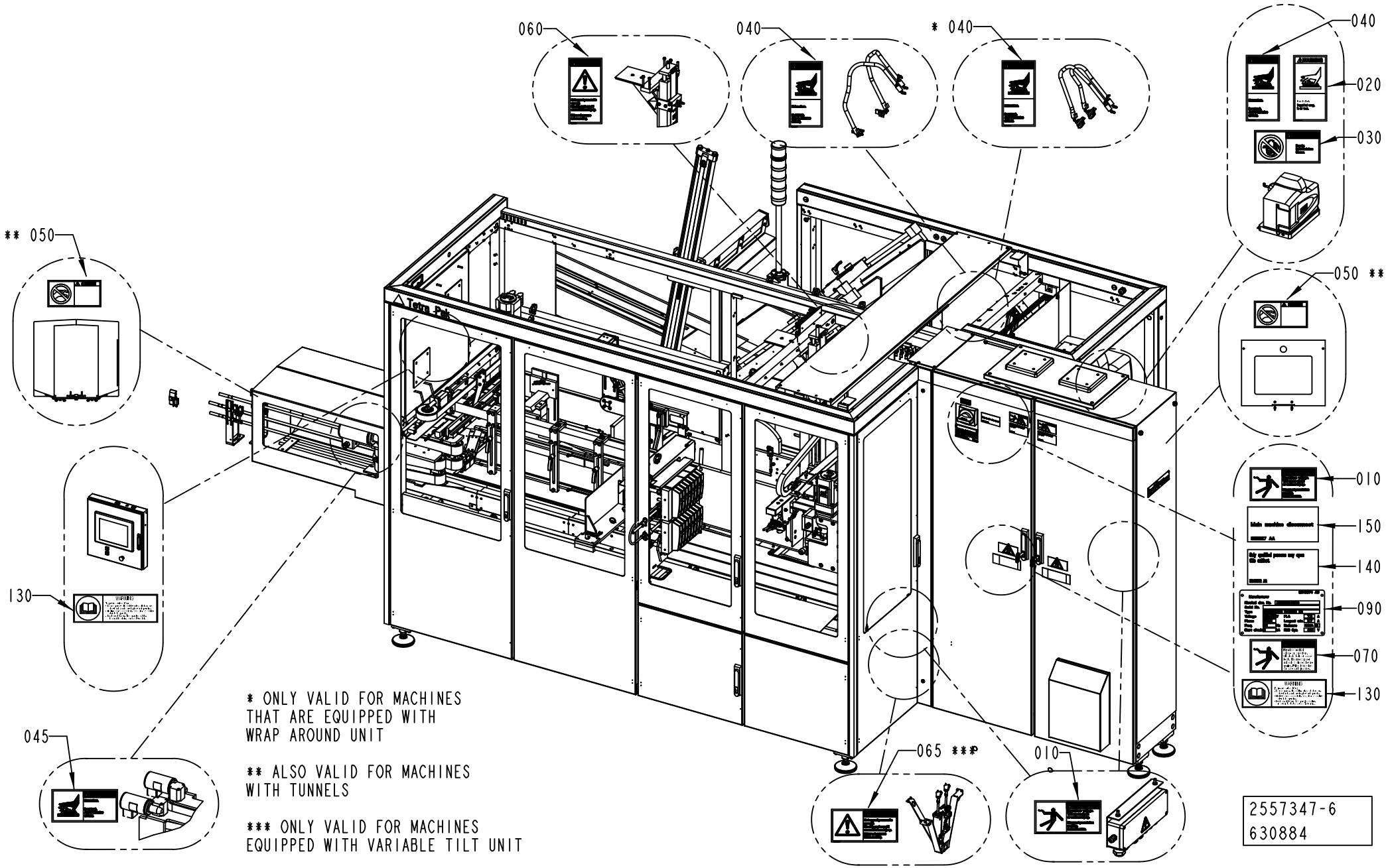
060
040
* 040
040
020
030
** 050
050 **
010
150
140
090
070
130
130
045
065 ***
010
* ONLY VALID FOR MACHINES THAT ARE EQUIPPED WITH WRAP AROUND UNIT
** ALSO VALID FOR MACHINES WITH TUNNELS
*** ONLY VALID FOR MACHINES EQUIPPED WITH VARIABLE TILT UNIT
2557347-6
630884

ECM: 646240 - 20131125
Group number: 2557347-0500
Assembly Drawing: 2557347-6_1_AC

Pos	Part No	UN	Qty	Description	Page No
-					
010	359715-0100		3	WARNING SIGN ANSI (H), ELECTRIC SHOCK	
020	359725-0121		1	WARNING SIGN ANSI, HEAT ENERGY	
030	90459-2232		1	WARNING SIGN ANSI (H), DO NOT WASH	
040	359725-0117		5	WARNING SIGN ANSI (V), HOT SURFACE	
045	359725-0116		2	WARNING SIGN ANSI (H), HOT SURFACE	
050	90600-4040		2	CAUTION SIGN ANSI (H), DO NOT REACH IN	
060	359725-0125		1	WARNING SIGN ANSI (V), PNEUMATIC ENERGY	
065	359725-0124		1	WARNING SIGN ANSI (H), PNEUMATIC ENERGY	
070	90603-0054		2	DANGER SIGN ANSI (H), HAZARDOUS VOLTAGE	
090	3245374-0000		1	SIGN & MARKING	
130	90600-5233		3	WARNING SIGN ANSI (H), READ MANUAL, AUTO	
140	3245372-0000		2	SIGN & MARKING	
150	3151627-0000		1	SIGN & MARKING	

Pos	Part No	UN	Qty	Description	Page No

GUARD PLATE

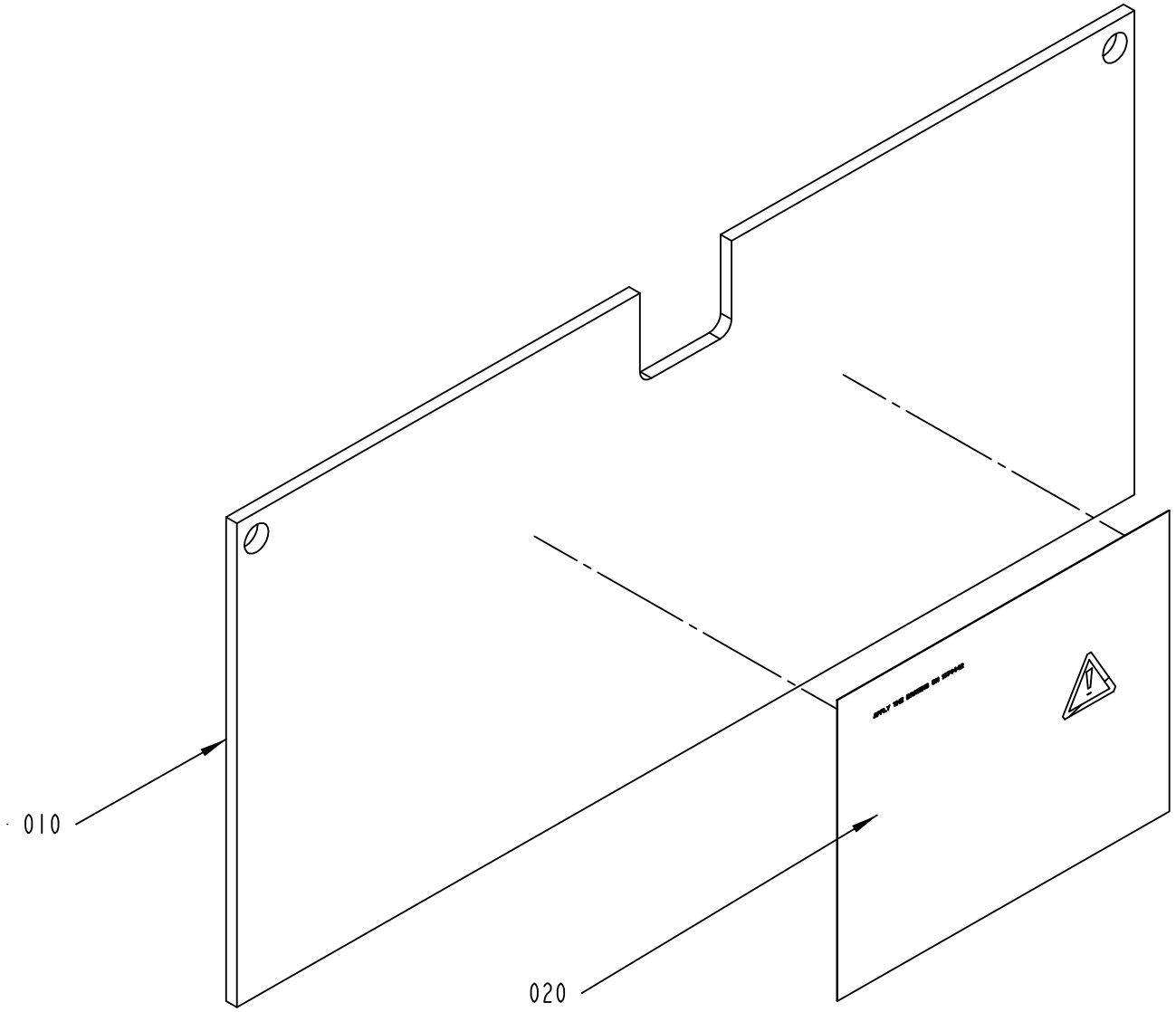

1074441-2
344890

ECM: 347478 - 20080919
Group number: 1074441-0300
Assembly Drawing: 1074441-2_1_AB

Pos	Part No	UN	Qty	Description	Page No
-					
010	2959026-0000		1	PLATE	
020	2834005-0000		1	SIGN	

Pos	Part No	UN	Qty	Description	Page No

CAUTION SIGN MAP ISO

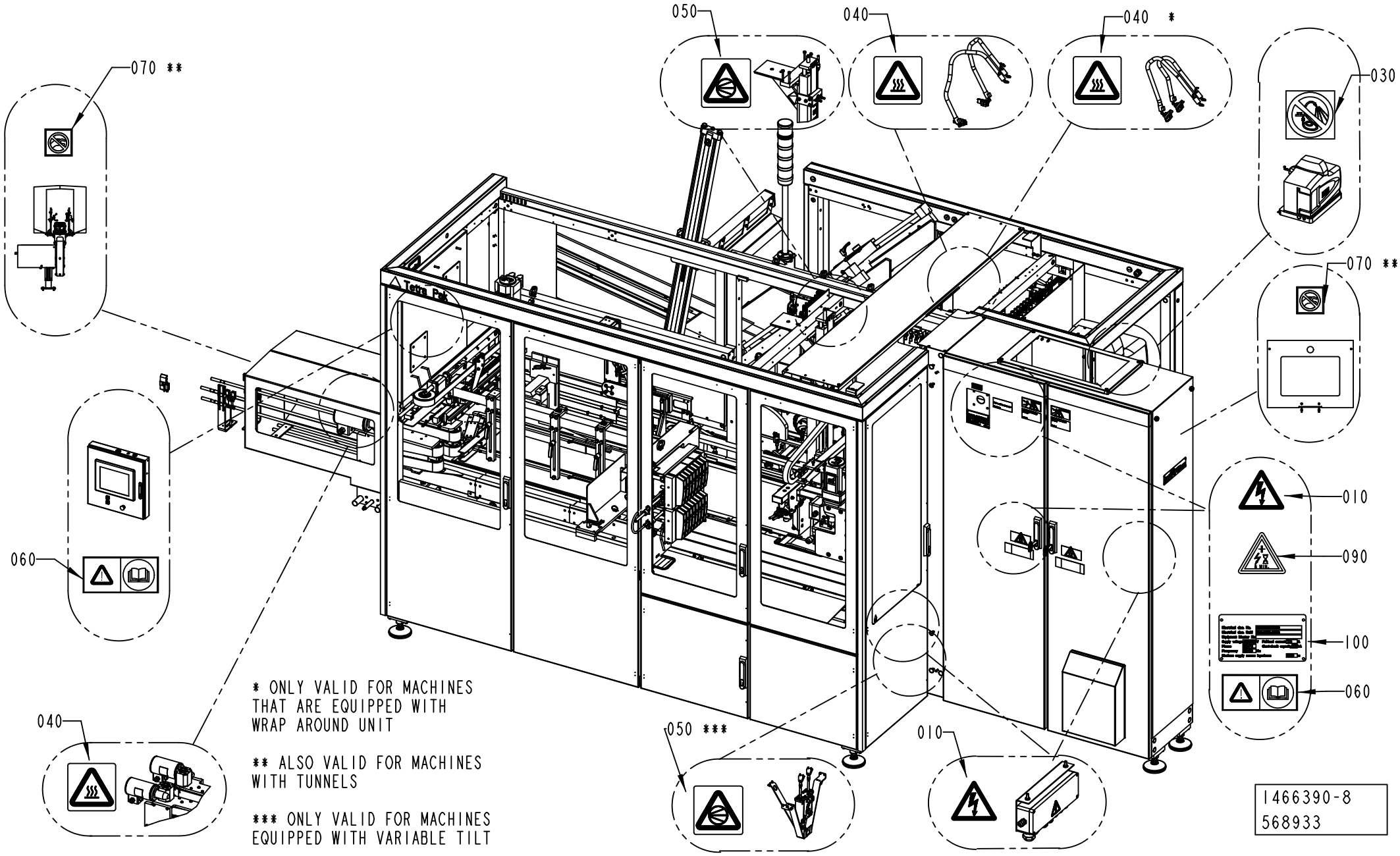

ECM: 630550 - 20130919
Group number: 1466390-0700
Assembly Drawing: 1466390-8_1_AB

Pos	Part No	UN	Qty	Description	Page No
-					
010	359705-0015		4	WARNING SIGN ISO, RISK OF ELECTRIC SHOCK	
020	1128844-0000		1	CAUTION SIGN	
030	90459-2265		3	PROHIBITION SIGN ISO, DO NOT WASH	
040	1128853-0000		7	CAUTION SIGN	
050	1128854-0000		2	CAUTION SIGN	
060	90600-5235		3	MANDATORY ACTION SIGN ISO, READ MANUAL	
070	90459-7584		2	PROHOBITION SIGN ISO, DO NOT REACH IN	
090	90194-0118		1	SIGN, RESIDUAL VOLTAGE, WAIT 5 MIN.	
100	3263737-0000		1	SIGN	

Pos	Part No	UN	Qty	Description	Page No

This page is intentionally left blank.

ECM: 474207 - 20110629
Group number: 1021942-0200
Assembly Drawing:

Pos	Part No	UN	Qty	Description	Page No
-					
010	90600-3740		1	ADHESIVE CM ULTRA 120, 134-646B 12.5KG	

Pos	Part No	UN	Qty	Description	Page No

This page is intentionally left blank.

ECM: 656602 - 20140122
Group number: 2970844-0100
Assembly Drawing:

Pos	Part No	UN	Qty	Description	Page No
-					
W90B0910	90459-2986		1	PHOTOCELL, E3Z-LS86	
W90W0910	344260-0050		1	SENSOR CABLE, EVT286	

Pos	Part No	UN	Qty	Description	Page No

Machine Type | Group Description | Used-In | Group Number | Page No

Tetra Pak

SPC
Spare Parts Catalogue

This page is intentionally left blank.

ECM: 632956 - 20130919
Group number: 673838-0500
Assembly Drawing:

Pos	Part No	UN	Qty	Description	Page No
AIRJET GUN					
030	2802489-0200		1	AIR JET GUN	**9-5**
With Discharge Unit Roller					
050	2511012-0400		1	DISCHARGE UNIT,ROLLER CONVEYOR	**9-7, 9-9**
DISCHARGEUNIT					
060	2970888-0200		1	DISCHARGE CONV.	**9-19**
EXT DISCHARGE UNIT					
130	3266375-0100		1	EXTENDED DISCHARGE UNIT	**9-47**
SPRAY GUN					
040	1287076-0300		1	OK SPRAY GUN	**9-67**
WITH ILINE-XT					
120	3157212-0200		1	ILINE-XT	**9-69**
With 6 Chanel Hotmelt Unit					
090	3090149-0300		1	6 CHANNEL HOTMELT	**9-75**
With Coolsystem					
070	3263648-0100		1	COOLING UNIT	**9-87**
With Lightbarrier					
020	2834002-0300		1	LIGHT BARRIER	**9-89**
With Photocell Unit					
080	2802448-0300		1	PHOTOCELL UNIT, COM. START CONV.	**9-97**
Common Parts					
010	1287186-0400		1	ILLUMINATION	**9-105, 9-107, 9-109**

Pos	Part No	UN	Qty	Description	Page No

Machine Type	Group Description	Used-In	Group Number	Page No

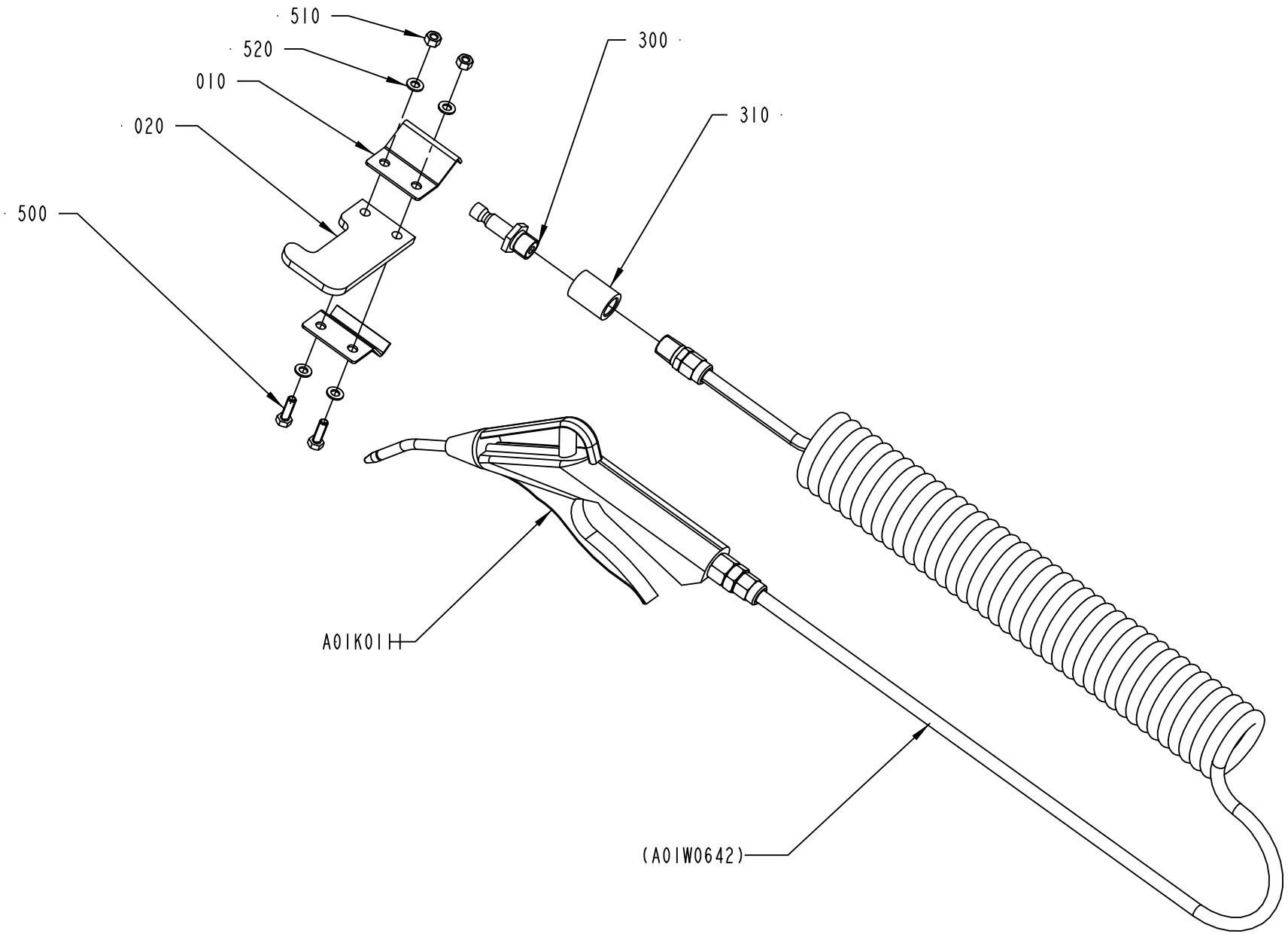

2802489-2
ECM 303823

ECM: 303911 - 20070529
Group number: 2802489-0200
Assembly Drawing: 2802489-2_1_AA

Pos	Part No	UN	Qty	Description	Page No
-					
010	2506937-0000		2	BRACKET	
020	2895036-0000		1	HOLDER	
300	90163-0007		1	CONNECTION	
310	90330-0102		1	SLEEVE, INT, THREAD, NO., R-201R1/4	
500	312105-0329		2	SCREW, M6S ISO 4017 M5X16 A4 80	
510	312605-0314		2	HEXAGON NUT, M6M M5 A280	
520	315106-0146		4	WASHER PLAIN, M5 ISO7089-5-200 HV A4	
A01K0111	90458-1740		1	AIR GUN ASSEMBLY, CEJN 199589668	

Pos	Part No	UN	Qty	Description	Page No

DISCHARGE UNIT,ROLLER CONVEYOR

005 - PACKING DESCRIPTION / PACKNINGSINSTRUKTION

055 - ASSEMBLY INSTRUCTION / MONTERINGSINSTRUKTION

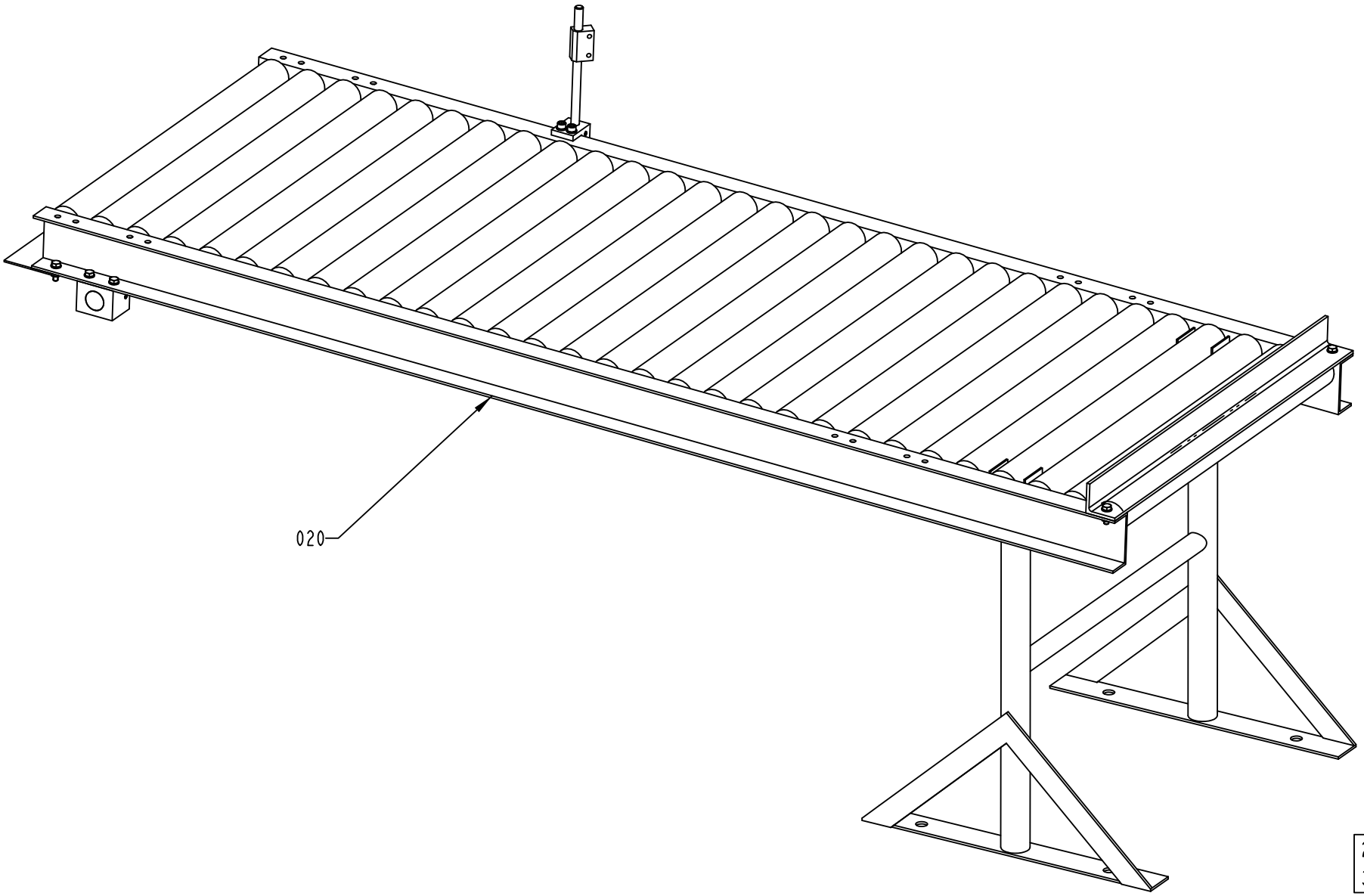

2511012-6
303823

ECM: 304805 - 20070529
Group number: 2511012-0400
Assembly Drawing: 2511012-6_1_AA

This list covers pages from 9-6 to 9-9

Pos	Part No	UN	Qty	Description	Page No
Without Lightbarrier (See drawing on page: 9-8)					
005	2525711-0100		1	PACKING DESCRIPTION	**9-11**
010	2525709-0400		1	DISCHARGE TUNNEL	**9-13**
With Lightbarrier (See drawing on page: 9-6)					
005	2525712-0100		1	PACKING DESCRIPTION	**9-15**
Common Parts					
020	2525710-0200		1	ROLLER CONVEYOR, S-OUT	**9-17**
055	1111896-0000		1	ASSEMBLY INSTRUCTION	

Pos	Part No	UN	Qty	Description	Page No

005 - PACKING DESCRIPTION / PACKNINGSINSTRUKTION

055 - ASSEMBLY INSTRUCTION / MONTERINGSINSTRUKTION

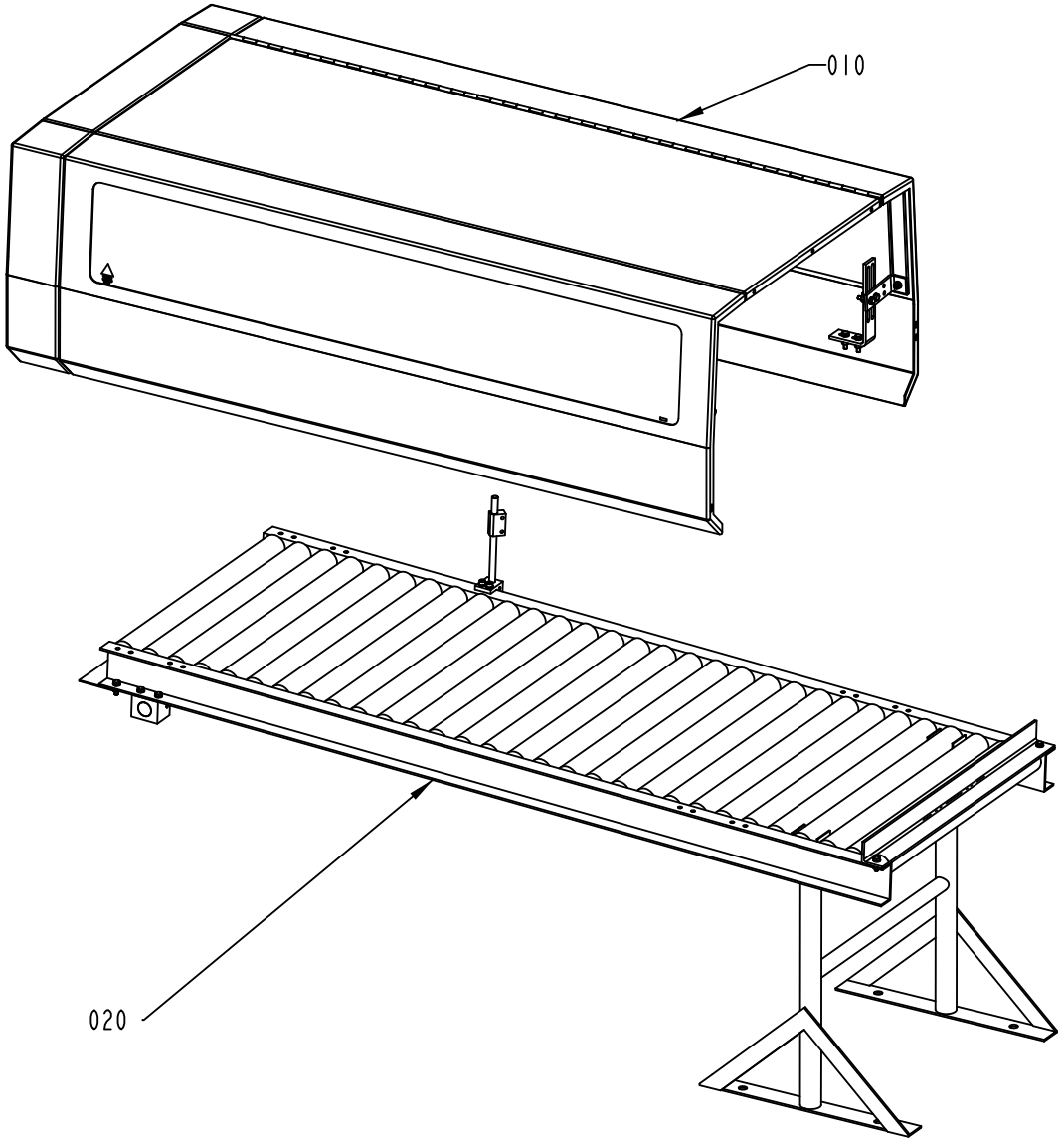

2511012-7
ECM 303823

ECM: 304805 - 20070529
Group number: 2511012-0400
Assembly Drawing: 2511012-7_1_AA

This list covers pages from 9-6 to 9-9

Pos	Part No	UN	Qty	Description	Page No
Without Lightbarrier (See drawing on page: 9-8)					
005	2525711-0100		1	PACKING DESCRIPTION	**9-11**
010	2525709-0400		1	DISCHARGE TUNNEL	**9-13**
With Lightbarrier (See drawing on page: 9-6)					
005	2525712-0100		1	PACKING DESCRIPTION	**9-15**
Common Parts					
020	2525710-0200		1	ROLLER CONVEYOR, S-OUT	**9-17**
055	1111896-0000		1	ASSEMBLY INSTRUCTION	

Pos	Part No	UN	Qty	Description	Page No

This page is intentionally left blank.

ECM: 105207 - 20020301
Group number: 2525711-0100
Assembly Drawing:

Pos	Part No	UN	Qty	Description	Page No
-					
010	1020424-0000		1	BOX	
020	1086622-0000		1	LABEL TAPE	

Pos	Part No	UN	Qty	Description	Page No

Machine Type | Group Description | Used-In | Group Number | Page No

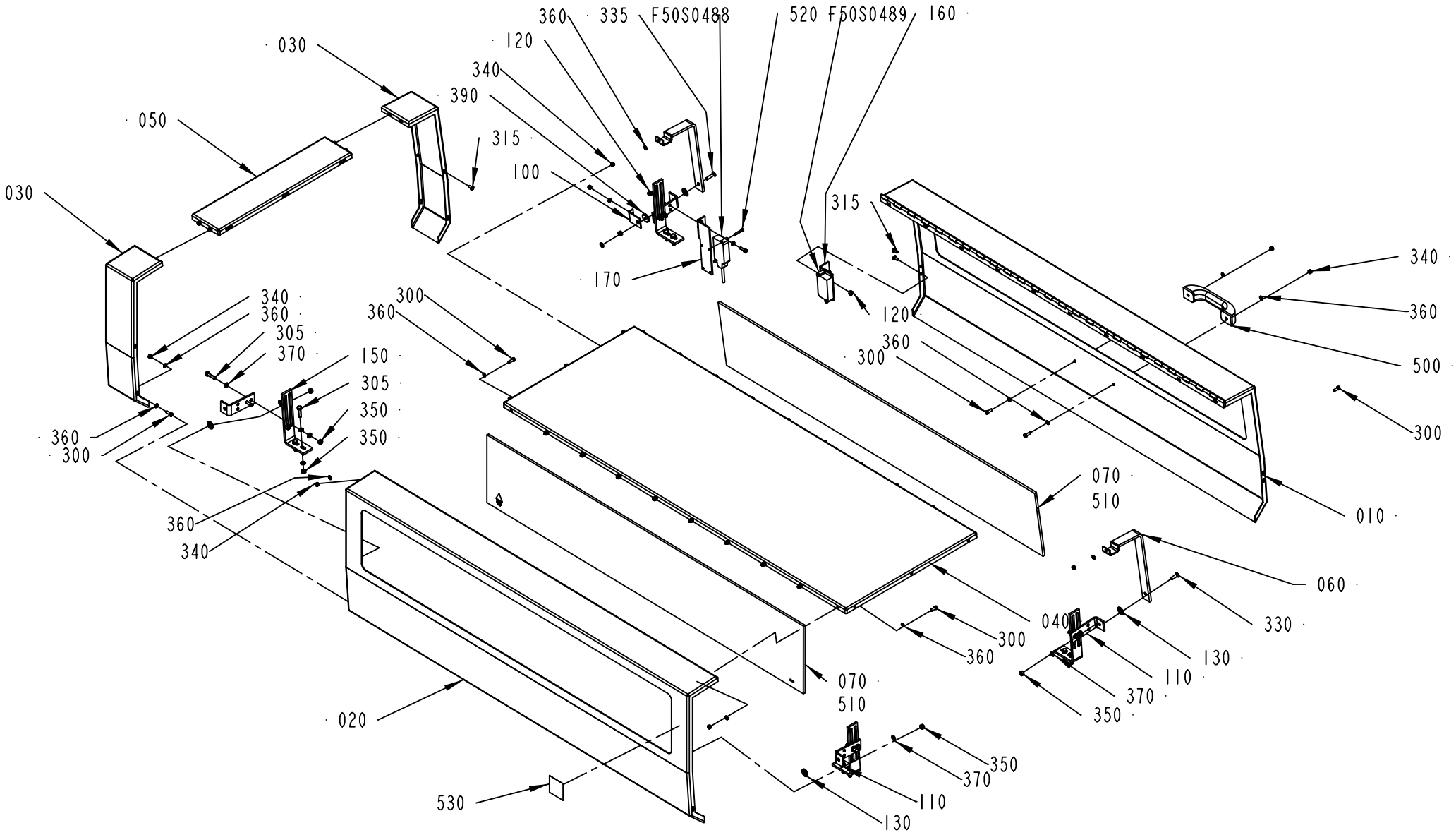

2525709-4
ECM 408460

ECM: 414571 - 20090911
Group number: 2525709-0400
Assembly Drawing: 2525709-4_1_AB

Pos	Part No	UN	Qty	Description	Page No
-					
010	1466273-0000		1	TUNNEL	
020	1466274-0000		1	TUNNEL	
030	1466275-0000		2	TUNNEL	
040	1074384-0000		1	INTERMEDIATE PART	
050	1466276-0000		1	SPACER	
060	2802483-0000		2	STRUT	
070	2802466-0008		2	GLASS	
075	2802473-0000		1	SET OF SIGNS	
100	2802476-0000		1	BRACKET	
110	2802481-0000		4	BRACKET	
120	575034-0000		4	ROUND NUT	
130	575418-0000		4	WASHER	
150	1074408-0000		4	BRACKET	
160	2802479-0000		1	BRACKET	
170	2802480-0000		1	BRACKET	
300	312105-0328		30	SCREW M6S ISO 4017 M5X14 A4 80	
305	312105-0372		16	SCREW, M6S ISO 4017 M6X25 A4 80	
310	312115-0329		2	SCREW ISO4762 M5X16 A4 80	
315	312155-0327		3	SCREW DIN 7991 MF6S M5X12 A4 70	
330	312155-0370		1	SCREW DIN 7991 MF6S M6X20 A4 70	
335	312155-0372		1	SCREW DIN 7991 MF6S M6X25 A4 70	
340	312605-0314		31	HEXAGON NUT, M6M M5 A280	
350	312605-0316		20	HEXAGON NUT, M6M M6 A280	
360	315105-0146		53	WASHER PLAIN, 5,3X10X1 A4 BRB	
370	315105-0153		36	WASHER PLAIN, 6,4X12X1,5 A4 BRB	
390	315125-0153		1	WASHER HIGH, TBRSB 6,4X22X4 A4	
500	90017-0018		1	HANDLE, NO.1/30357	
510	90157-0041	L	1	SEALING COMPOUND, RHODORSEAL 5651	
520	90459-4165		4	SAFETY SCREW, SM4X25	
530	90459-7584		1	PROHOBITION SIGN ISO, DO NOT REACH IN	
F50S0488	90459-4088		1	SAFETY SENSOR, ADAM E 10M	
F50S0489	90459-4089		1	SAFETY SENSOR, EVA E, 20-046-06	

Pos	Part No	UN	Qty	Description	Page No

Machine Type	Group Description	Used-In	Group Number	Page No

This page is intentionally left blank.

ECM: 105207 - 20020301
Group number: 2525712-0100
Assembly Drawing:

Pos	Part No	UN	Qty	Description	Page No
-					
010	1020424-0000		1	BOX	
020	1086622-0000		1	LABEL TAPE	

Pos	Part No	UN	Qty	Description	Page No

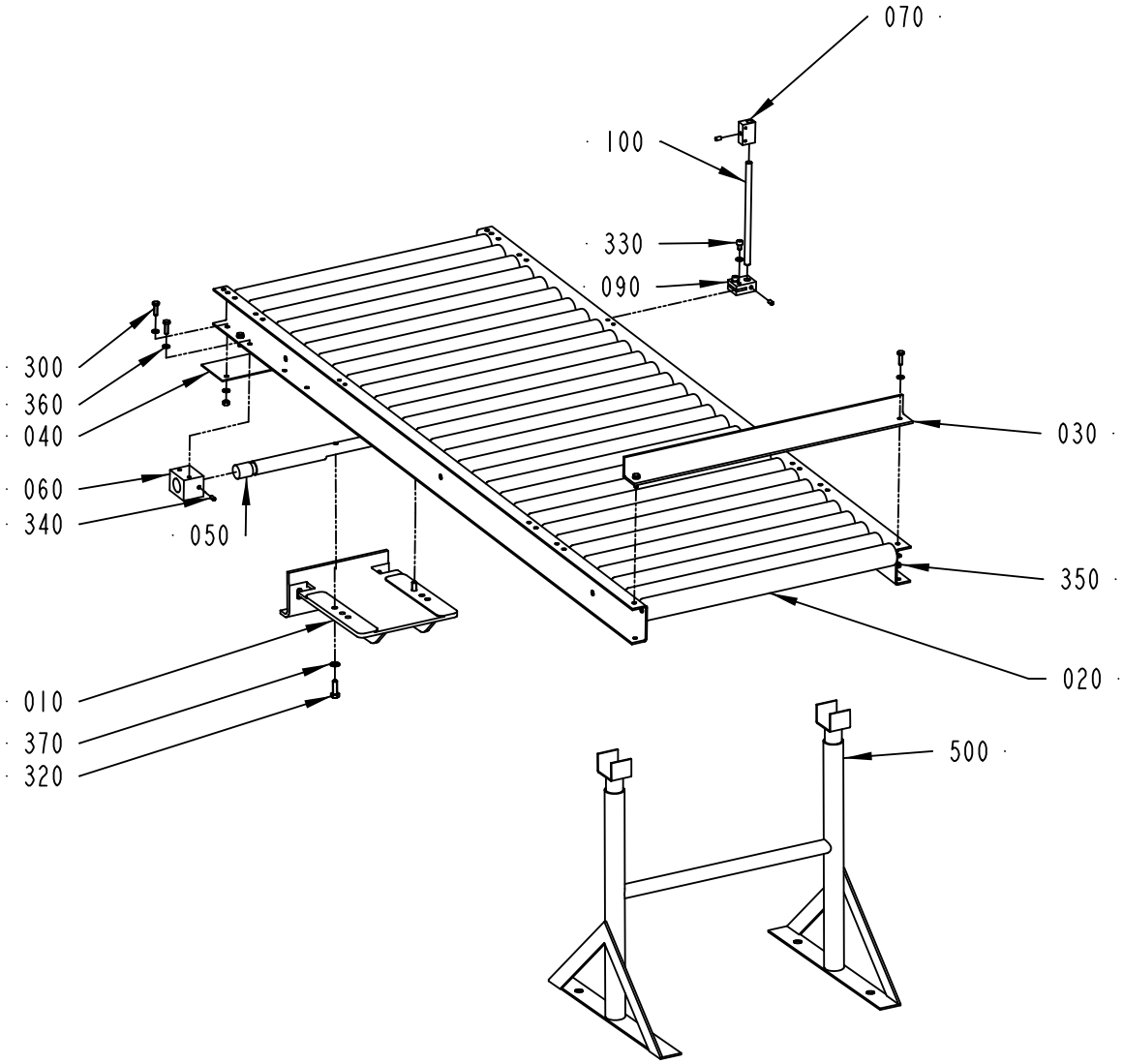

2525710-2
478585

ECM: 478586 - 20110315
Group number: 2525710-0200
Assembly Drawing: 2525710-2_1_AB

Pos	Part No	UN	Qty	Description	Page No
-					
010	1074368-0000		1	BRACKET	
020	1353593-0000		1	ROLLER CONVEYOR	
030	1111895-0000		1	STOP RAIL	
040	1128901-0000		1	PROTECTION PLATE	
050	1074390-0000		1	SHAFT	
060	1074391-0000		2	MOUNTING BLOCK	
070	2959032-0000		1	MOUNTING BLOCK	
090	1074409-0000		1	BRACKET	
100	1074429-0000		1	ROD	
300	312105-0370		8	SCREW, M6S ISO 4017 M6X20 A4 80	
320	312105-0453		2	SCREW, M6S ISO 4017 M8X25 A4 80	
330	312115-0364		2	SCREW ISO4762 M6X10 A4 80	
340	312318-0364		4	SET SCREW, CUP END ISO4029 M6X10 A4	
350	312605-0316		4	HEXAGON NUT, M6M M6 A280	
360	315105-0153		14	WASHER PLAIN, 6,4X12X1,5 A4 BRB	
370	315105-0146		2	WASHER PLAIN, 5,3X10X1 A4 BRB	
500	90068-0305		1	CONVEYOR SUPPORT LEG, 500 - 900 MM	

Pos	Part No	UN	Qty	Description	Page No

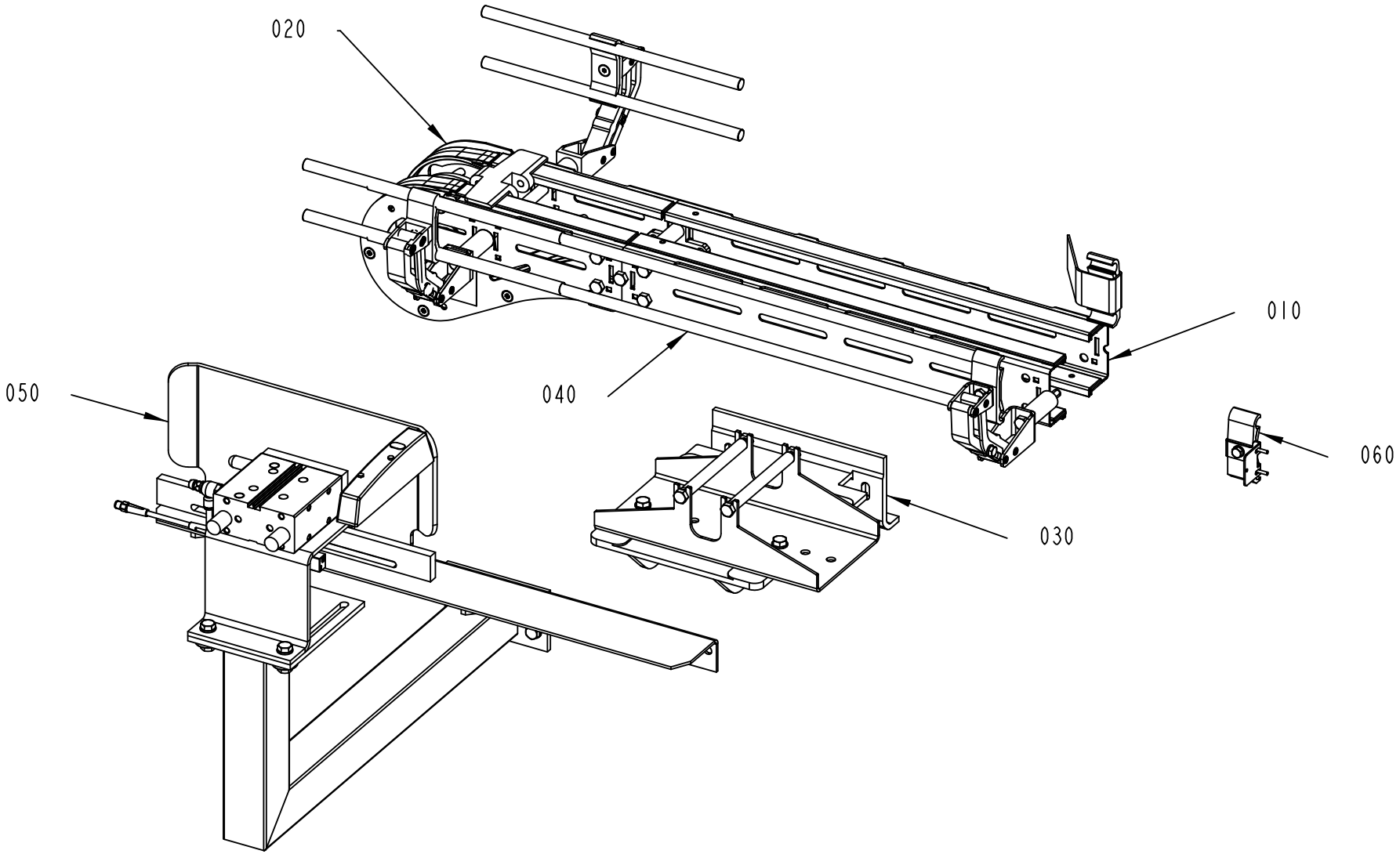

2970888-2
559919

ECM: 567416 - 20120710
Group number: 2970888-0200
Assembly Drawing: 2970888-2_1_AA

Pos	Part No	UN	Qty	Description	Page No
L-OUT					
020	2807900-0203		1	END UNIT	**9-21**
R-OUT					
020	2807900-0203		1	END UNIT	**9-21**
Common Parts					
010	2807825-0100		1	CONVEYOR BODY	**9-35**
030	2970882-0200		1	CONVEYOR SUPPORT	**9-37**
040	2970883-0100		1	RAILING KIT	**9-39, 9-41**
050	2970887-0200		1	DISCHARGE SUPPORT	**9-43**
060	2970893-0100		1	PHOTOCELL BRACKET	**9-45**

Pos	Part No	UN	Qty	Description	Page No

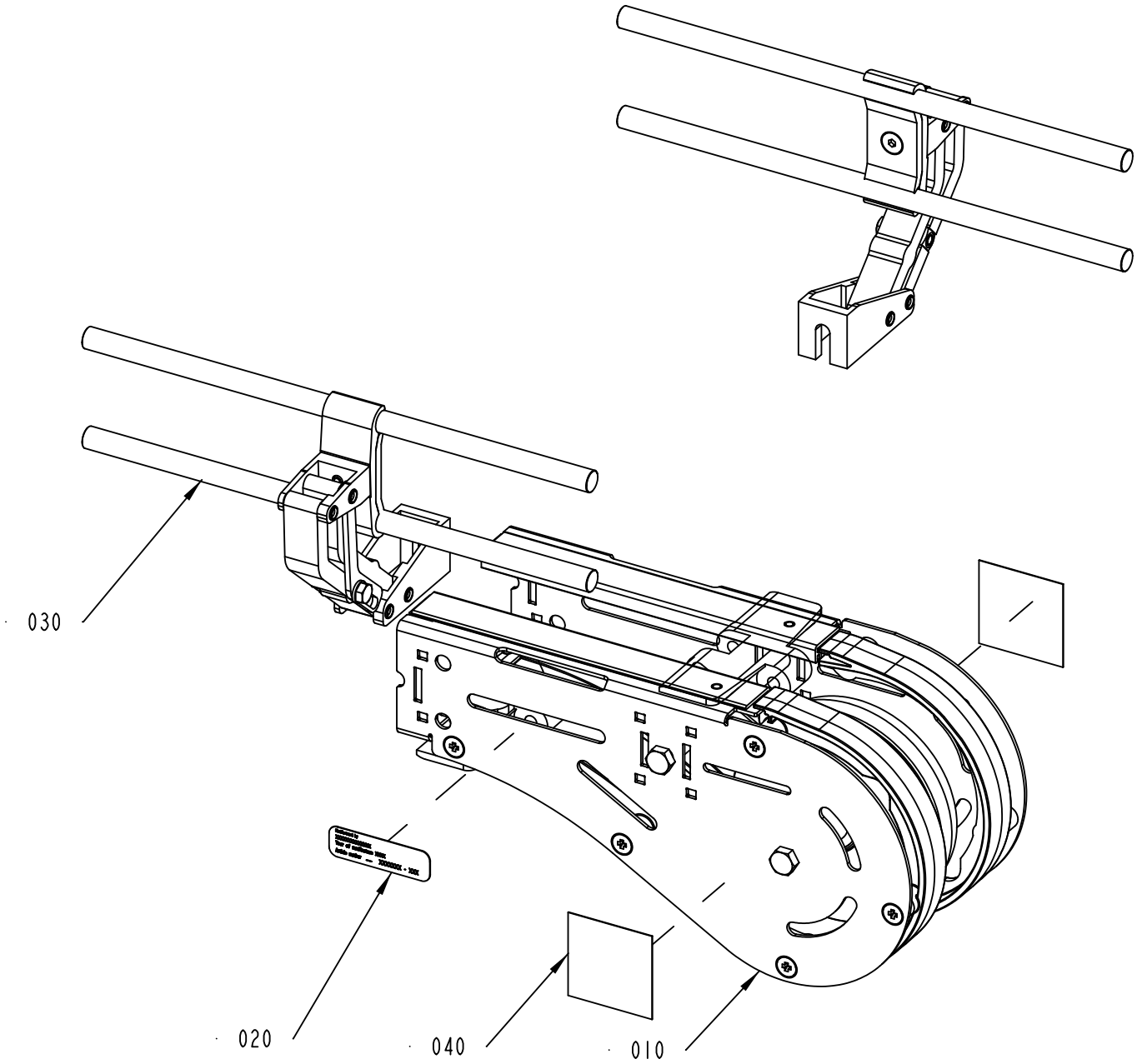

2807900-2
400069

ECM: 400069 -
Group number: 2807900-0203
Assembly Drawing: 2807900-2_1_AA

Pos	Part No	UN	Qty	Description	Page No
UC040-250					
050	2958928-0100		1	PACKING DESCRIPTION	**9-23**
UC140-350					
030	2940164-0100		1	RAILING KIT	**9-25**
050	2958928-0100		1	PACKING DESCRIPTION	**9-23**
Common Parts					
010	2807988-0100		1	CONVEYOR BODY	**9-29**
020	1086870-0000		1	SIGN	
040	90459-7584		2	PROHOBITION SIGN ISO, DO NOT REACH IN	
050	2838848-0100		1	PACKING DESCRIPTION	**9-31**
900	3132459-0100		1	SET OF ANSI SIGN	**9-33**

Pos	Part No	UN	Qty	Description	Page No

This page is intentionally left blank.

ECM: 349002 - 20080611
Group number: 2958928-0100
Assembly Drawing:

Pos	Part No	UN	Qty	Description	Page No
-					
010	543267-0000		2	LABEL TAPE	
020	1086871-0000		1	LABEL TAPE	
030	2958998-0000		2	SUPPORT BLOCK	
040	2960810-0000		1	SUPPORT BLOCK	
050	2960811-0000		1	PACKING DESCRIPTION	

Pos	Part No	UN	Qty	Description	Page No

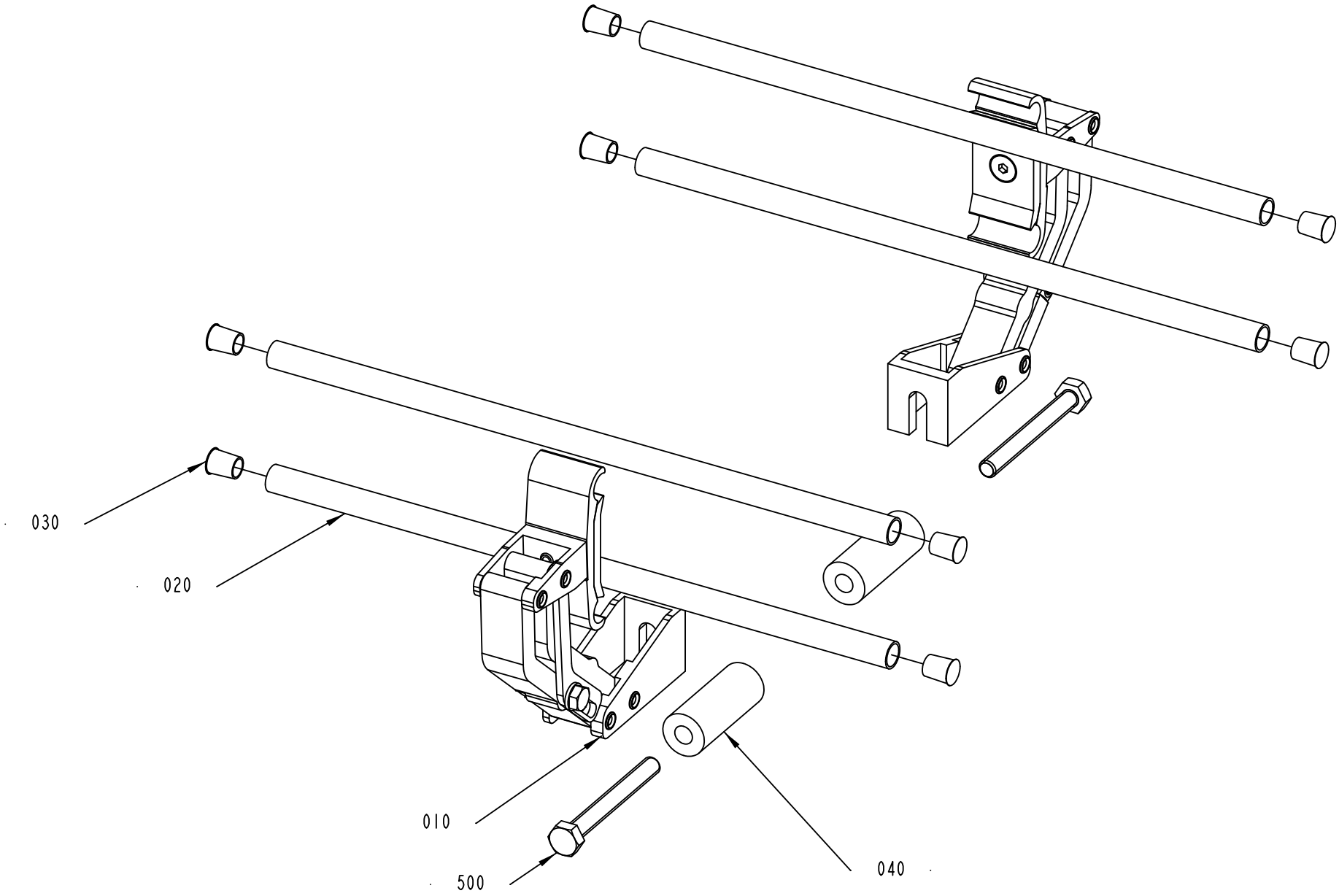

2940164-1
389728

ECM: 393231 - 20090512
Group number: 2940164-0100
Assembly Drawing: 2940164-1_1_AB

Pos	Part No	UN	Qty	Description	Page No
-					
010	2968390-0100		2	RAIL HOLDER	**9-27**
020	476221-0001		4	PIPE	
030	484701-0000		8	SHUTTER	
040	1086173-0004		2	SPACER	
500	312109-0465		2	SCREW, M6S ISO 4017 M8X70 A4 80	

Pos	Part No	UN	Qty	Description	Page No

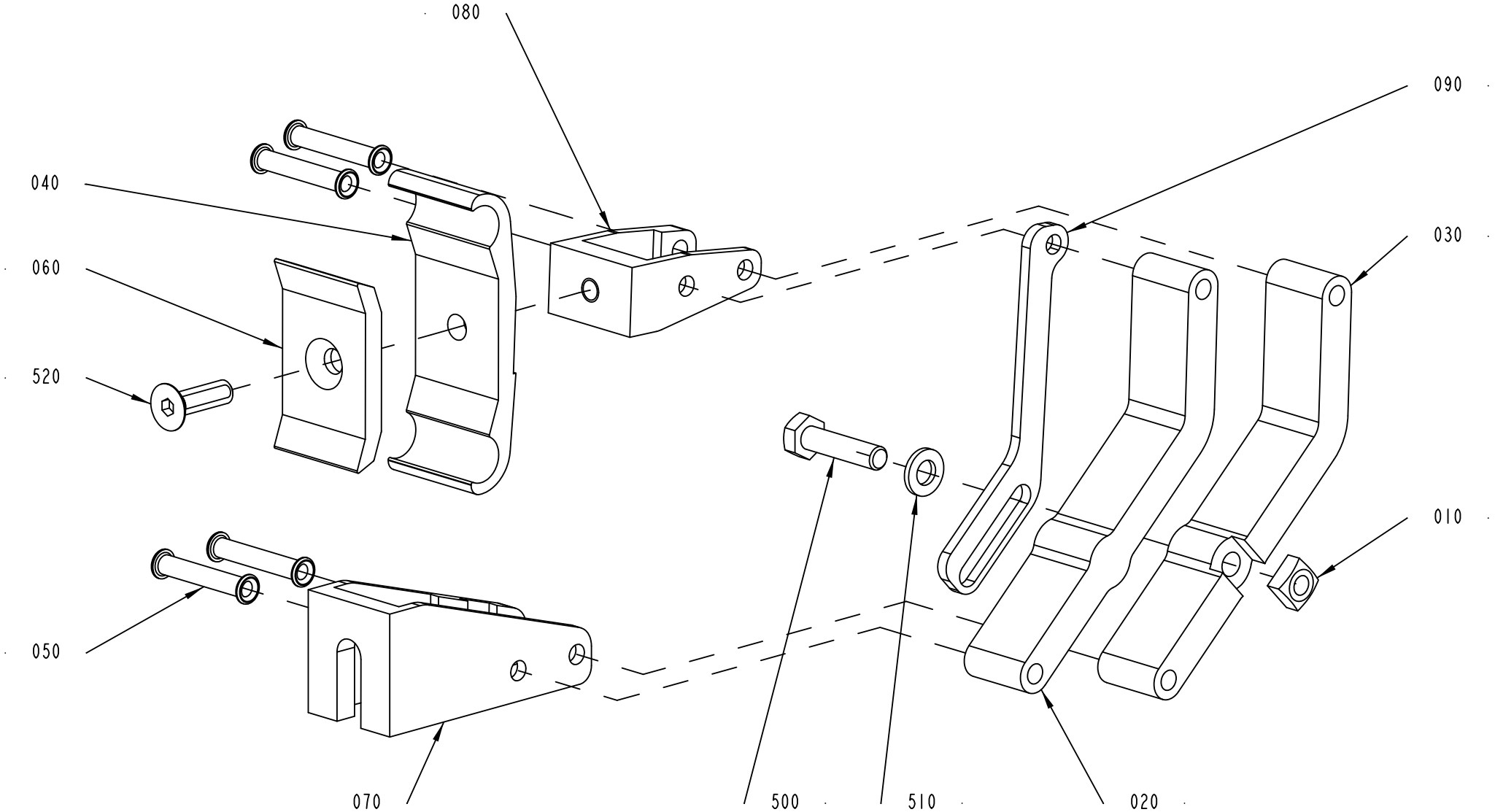
080
090
040
030
060
520
010
050
070
500
510
020
2968390-1
477358

ECM: 480867 - 20101214
Group number: 2968390-0100
Assembly Drawing: 2968390-1_1_AC

Pos	Part No	UN	Qty	Description	Page No
-					
010	1359565-0000		1	NUT	
020	2894331-0000		1	ARM	
030	2909855-0000		1	ARM	
040	2909864-0000		1	HOLDER	
050	2936871-0000		4	RIVET	
060	2936873-0000		1	CLAMP	
070	2940647-0000		1	CANTILEVER	
080	2940648-0000		1	CANTILEVER	
090	2958674-0000		1	LOCK SHEET	
500	312105-0372		1	SCREW, M6S ISO 4017 M6X25 A4 80	
510	315105-0153		1	WASHER PLAIN, 6,4X12X1,5 A4 BRB	
520	312155-0370		1	SCREW DIN 7991 MF6S M6X20 A4 70	

Pos	Part No	UN	Qty	Description	Page No

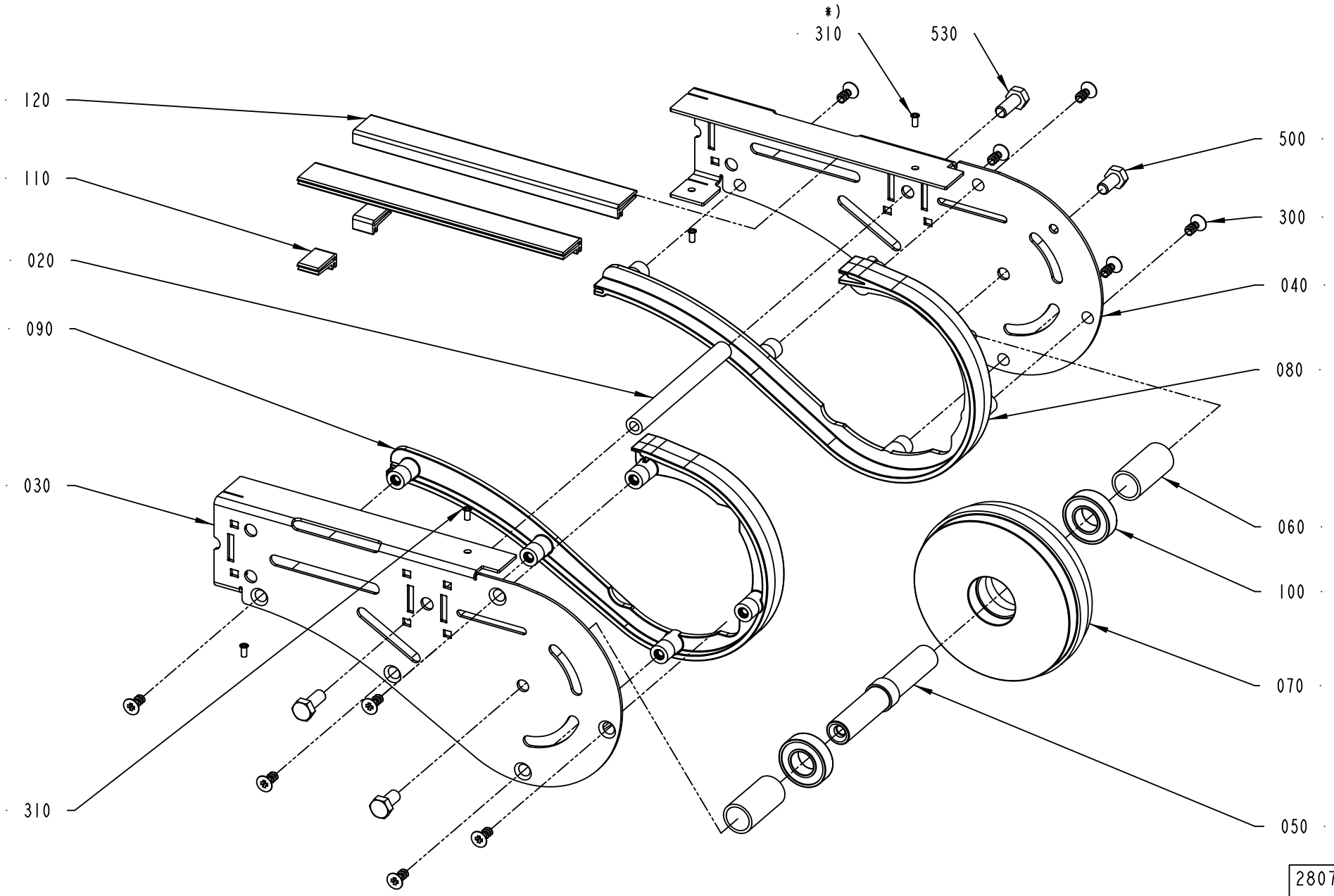
*)
310
530
120
110
020
090
030
310
500
300
040
080
060
100
070
050
2807988-1
518683

ECM: 518683 - 20111102
Group number: 2807988-0100
Assembly Drawing: 2807988-1_1_AD

Pos	Part No	UN	Qty	Description	Page No
-					
020	2807831-0000		1	SPACER	
030	2807901-0000		1	SIDE PLATE	
040	2807902-0000		1	SIDE PLATE	
050	2807903-0000		1	SHAFT	
060	2807904-0000		2	SPACER	
070	2807905-0000		1	WHEEL	
080	2807935-0000		1	CHAIN GUIDE	
090	2807936-0000		1	CHAIN GUIDE	
100	90603-2325		2	BALL BEARING 17/35X10	
110	2807859-0015		2	SLIDING STRIP	
120	2807859-0199		2	SLIDING STRIP	
300	90459-3923		10	SCREW, A06361	
310	90601-7790		4	TUBULAR RIVET	
500	312105-0449		2	SCREW, M6S ISO 4017 M8X16 A4 80	
530	312105-0451		2	SCREW, M6S ISO 4017 M8X20 A4 80	

Pos	Part No	UN	Qty	Description	Page No

This page is intentionally left blank.

ECM: 271409 - 20061211
Group number: 2838848-0100
Assembly Drawing:

Pos	Part No	UN	Qty	Description	Page No
-					
010	543267-0000		2	LABEL TAPE	
020	975317-0000		1	CORRUGATED CARDBOARD BOX	
030	1086871-0000		1	LABEL TAPE	

Pos	Part No	UN	Qty	Description	Page No

Machine Type | Group Description | Used-In | Group Number | Page No

This page is intentionally left blank.

ECM: 476220 - 20101214
Group number: 3132459-0100
Assembly Drawing:

Pos	Part No	UN	Qty	Description	Page No
-					
010	3021412-0000		1	ASSEMBLY INSTRUCTION	
300	90003-0512		1	BAG	
310	90600-4040		2	CAUTION SIGN ANSI (H), DO NOT REACH IN	

Pos	Part No	UN	Qty	Description	Page No

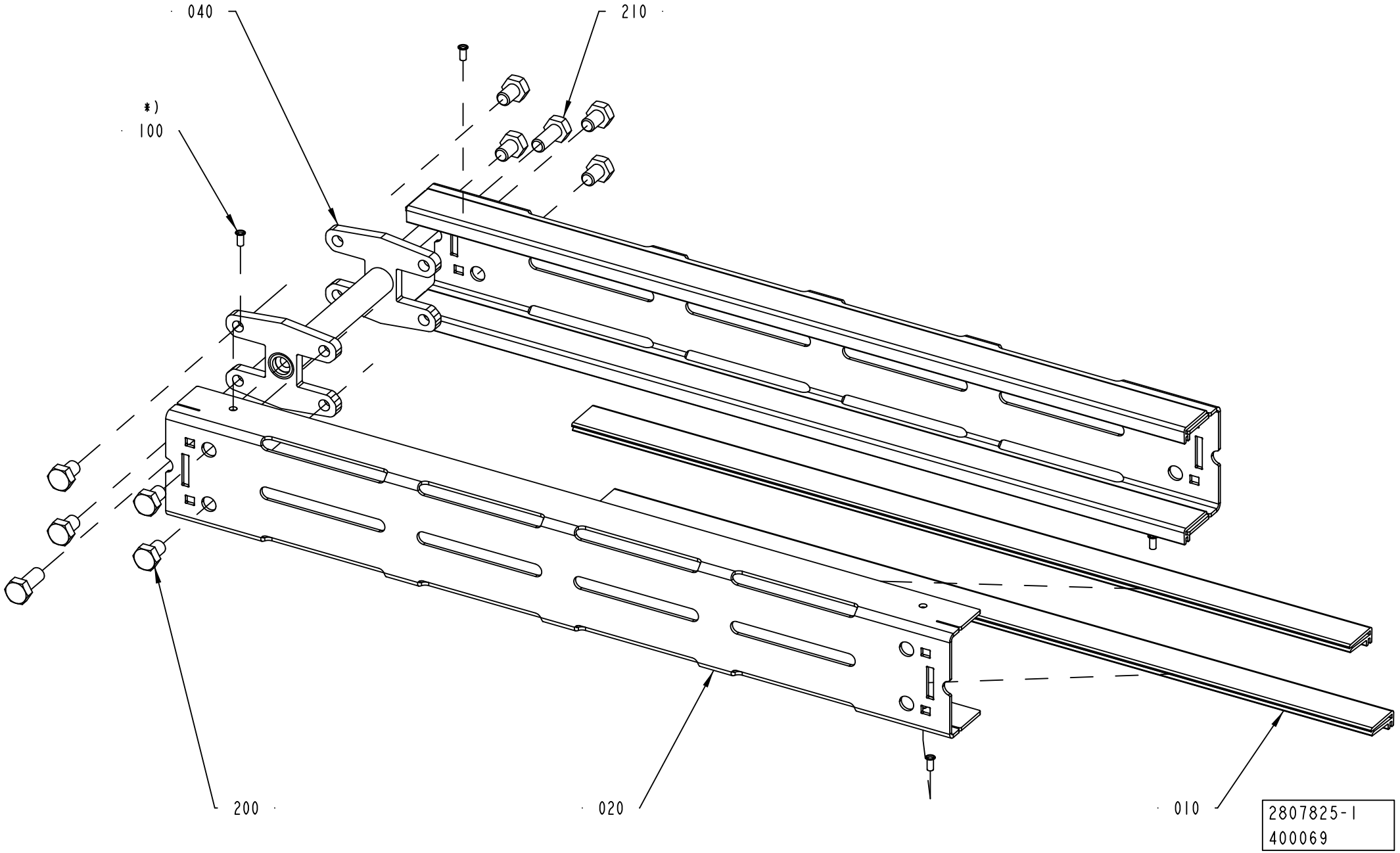
040
210
*)
100
200
020
010
2807825-1
400069

ECM: 400069 - 20091008
Group number: 2807825-0100
Assembly Drawing: 2807825-1_1_AC

Pos	Part No	UN	Qty	Description	Page No
-					
010	2807859-0496		4	SLIDING STRIP	
020	2807821-0000		2	SIDE PLATE	
040	2807824-0000		1	JOINT PIECE	
100	90601-7790		4	TUBULAR RIVET	
200	312105-0447		8	SCREW M6S ISO 4017 M8X12 A480	
210	312105-0451		2	SCREW, M6S ISO 4017 M8X20 A4 80	

Pos	Part No	UN	Qty	Description	Page No

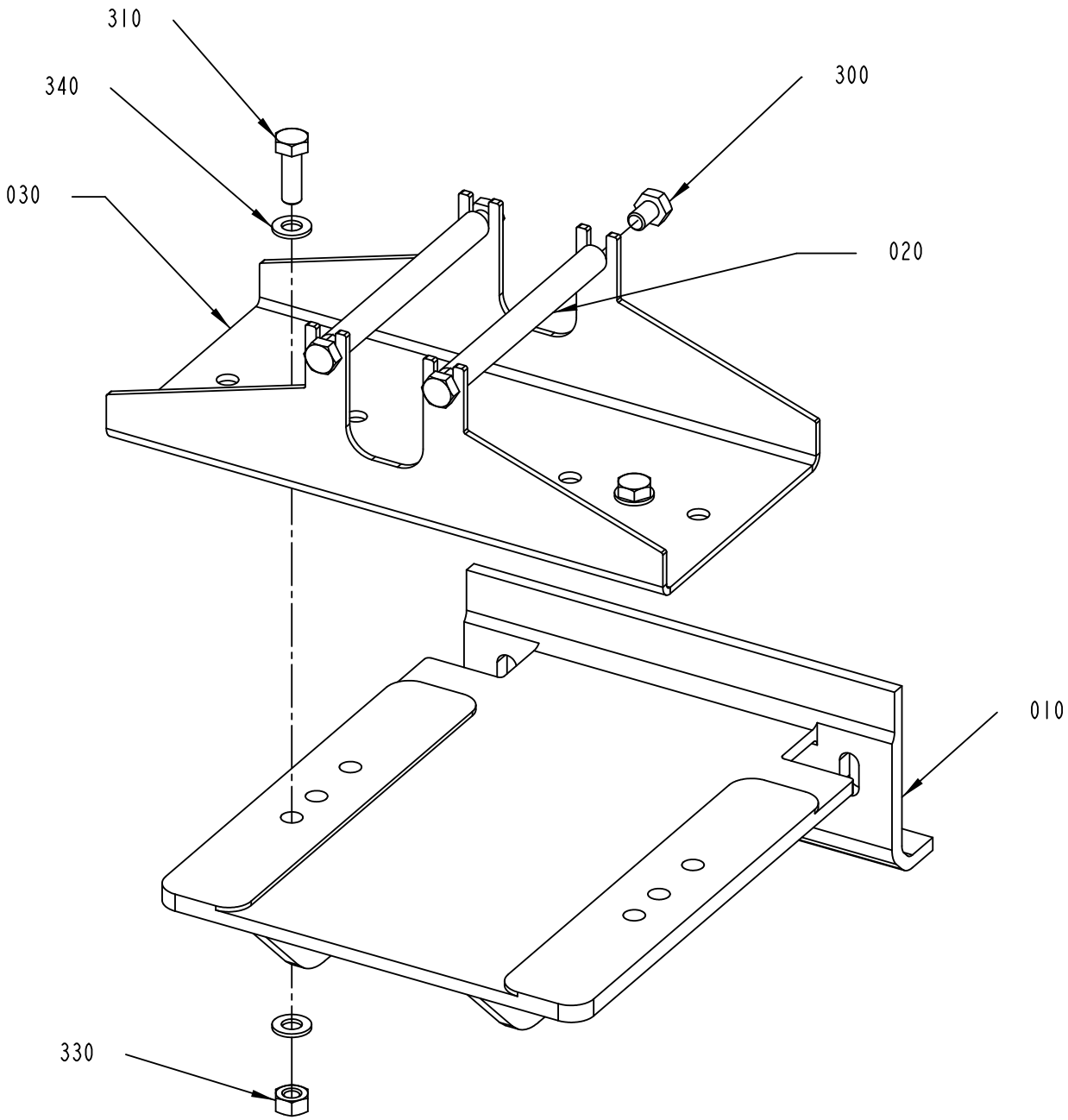

2970882-2
559919

ECM: 567417 - 20120710
Group number: 2970882-0200
Assembly Drawing: 2970882-2_1_AA

Pos	Part No	UN	Qty	Description	Page No
-					
010	1074368-0000		1	BRACKET	
020	2807831-0000		2	SPACER	
030	3186427-0000		1	BRACKET	
300	312105-0447		4	SCREW M6S ISO 4017 M8X12 A480	
310	312105-0453		2	SCREW, M6S ISO 4017 M8X25 A4 80	
330	312605-0318		2	HEXAGON NUT, M6M M8 A280	
340	315106-0165		4	WASHER PLAIN, M8 ISO7089-8-200 HV A4	

Pos	Part No	UN	Qty	Description	Page No

RAILING KIT

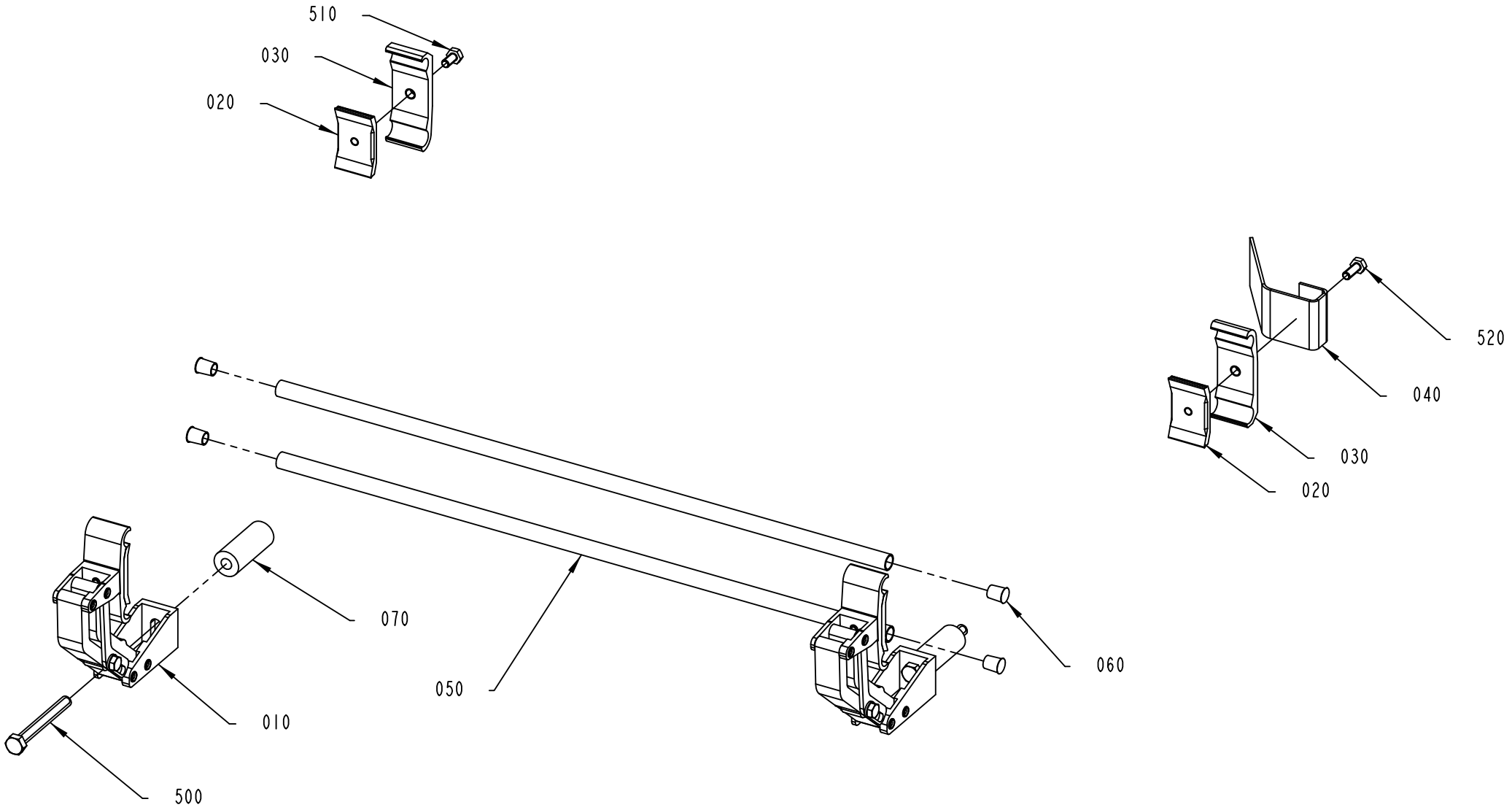

2970883-1
602279

ECM: 614542 - 20130618
Group number: 2970883-0100
Assembly Drawing: 2970883-1_1_AC

This list covers pages from 9-38 to 9-41

Pos	Part No	UN	Qty	Description	Page No
L-OUT (See drawing on page: 9-40)					
010	2968390-0100		1	RAIL HOLDER	**9-27**
020	1366727-0000		1	CLAMP	
030	1366750-0000		1	HOLDER	
050	476221-0014		2	PIPE	
070	1086173-0004		1	SPACER	
500	312109-0465		1	SCREW, M6S ISO 4017 M8X70 A4 80	
R-OUT (See drawing on page: 9-40)					
010	2968390-0100		1	RAIL HOLDER	**9-27**
020	1366727-0000		1	CLAMP	
030	1366750-0000		1	HOLDER	
050	476221-0014		2	PIPE	
070	1086173-0004		1	SPACER	
500	312109-0465		1	SCREW, M6S ISO 4017 M8X70 A4 80	
THR (See drawing on page: 9-38)					
010	2968390-0100		2	RAIL HOLDER	**9-27**
020	1366727-0000		2	CLAMP	
030	1366750-0000		2	HOLDER	
050	476221-0002		2	PIPE	
070	1086173-0004		2	SPACER	
500	312109-0465		2	SCREW, M6S ISO 4017 M8X70 A4 80	
510	312105-0366		1	SCREW, M6S ISO 4017 M6X12 A4 80	
Common Parts					
040	2970891-0000		1	PLATE	
060	484701-0000		4	SHUTTER	
520	312105-0368		1	SCREW, M6S ISO 4017 M6X16 A4 80	

Pos	Part No	UN	Qty	Description	Page No

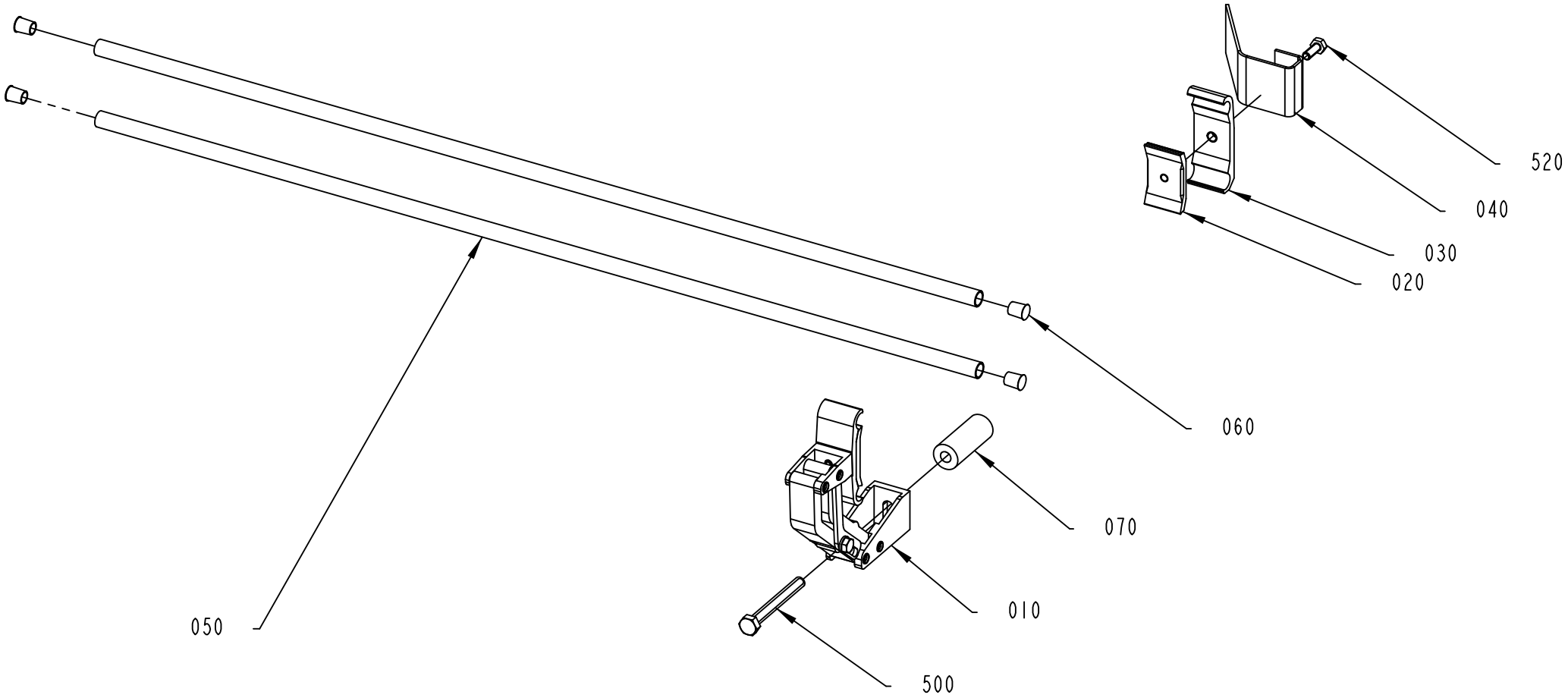

2970883-2
602279

ECM: 614542 - 20130618
Group number: 2970883-0100
Assembly Drawing: 2970883-2_1_AC

This list covers pages from 9-38 to 9-41

Pos	Part No	UN	Qty	Description	Page No
L-OUT (See drawing on page: 9-40)					
010	2968390-0100		1	RAIL HOLDER	**9-27**
020	1366727-0000		1	CLAMP	
030	1366750-0000		1	HOLDER	
050	476221-0014		2	PIPE	
070	1086173-0004		1	SPACER	
500	312109-0465		1	SCREW, M6S ISO 4017 M8X70 A4 80	
R-OUT (See drawing on page: 9-40)					
010	2968390-0100		1	RAIL HOLDER	**9-27**
020	1366727-0000		1	CLAMP	
030	1366750-0000		1	HOLDER	
050	476221-0014		2	PIPE	
070	1086173-0004		1	SPACER	
500	312109-0465		1	SCREW, M6S ISO 4017 M8X70 A4 80	
THR (See drawing on page: 9-38)					
010	2968390-0100		2	RAIL HOLDER	**9-27**
020	1366727-0000		2	CLAMP	
030	1366750-0000		2	HOLDER	
050	476221-0002		2	PIPE	
070	1086173-0004		2	SPACER	
500	312109-0465		2	SCREW, M6S ISO 4017 M8X70 A4 80	
510	312105-0366		1	SCREW, M6S ISO 4017 M6X12 A4 80	
Common Parts					
040	2970891-0000		1	PLATE	
060	484701-0000		4	SHUTTER	
520	312105-0368		1	SCREW, M6S ISO 4017 M6X16 A4 80	

Pos	Part No	UN	Qty	Description	Page No

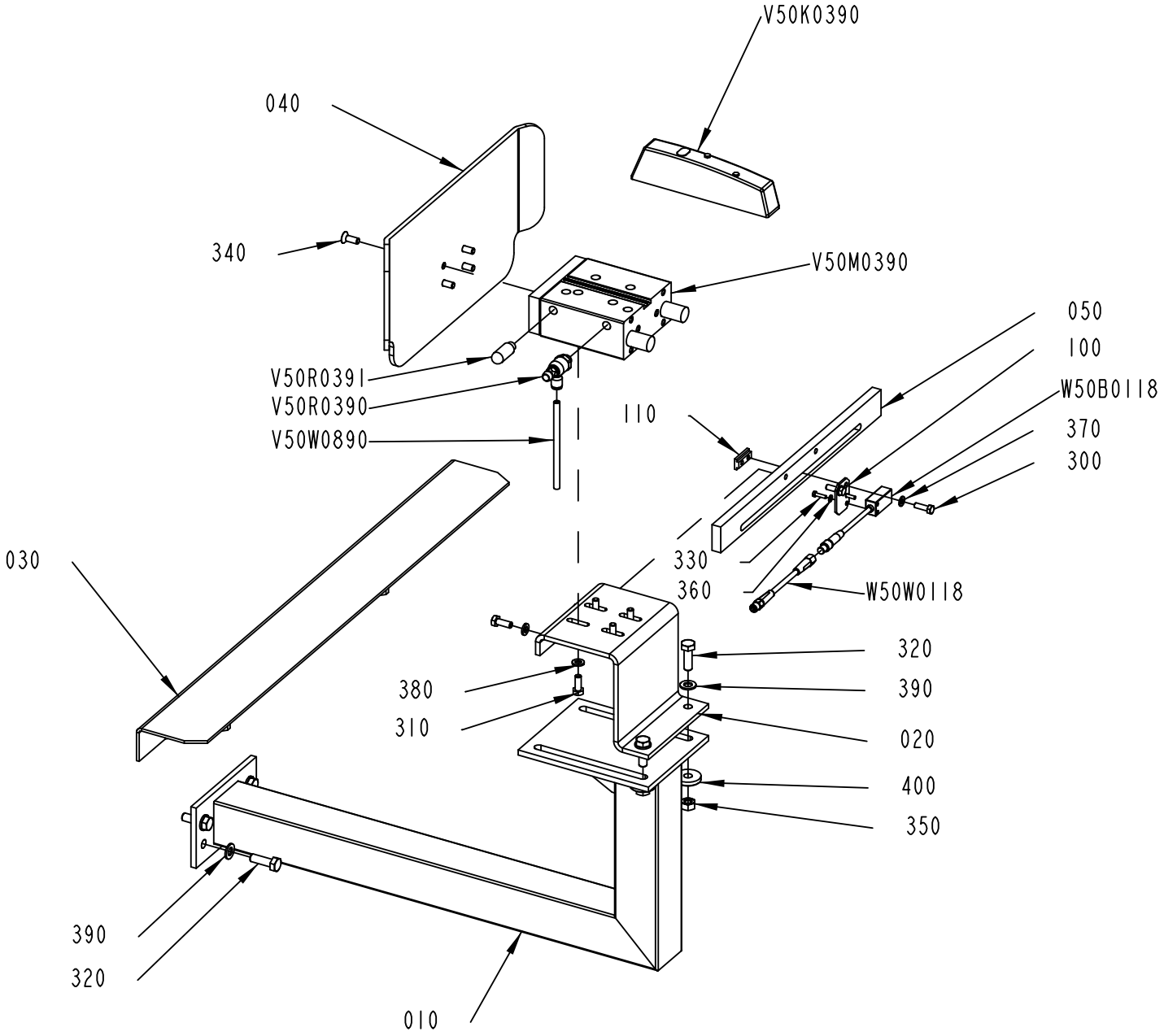

2970887-2
559919

ECM: 567418 - 20120710
Group number: 2970887-0200
Assembly Drawing: 2970887-2_1_AA

Pos	Part No	UN	Qty	Description	Page No
L-OUT					
030	3179211-0000		1	SUPPORTING SHEET	
R-OUT					
030	3186428-0000		1	SUPPORTING SHEET	
THR					
030	3186429-0000		1	SUPPORTING SHEET	
Common Parts					
010	3179208-0000		1	CYLINDER CONSOLE	
020	3179210-0000		1	BRACKET	
040	2920776-0000		1	DAMPER	
050	3186422-0000		1	PLATE	
100	2920775-0000		1	PHOTOCELL BRACKET	
110	2920777-0000		1	CLAMP LUG	
300	312105-0329		2	SCREW, M6S ISO 4017 M5X16 A4 80	
310	312105-0368		6	SCREW, M6S ISO 4017 M6X16 A4 80	
320	312105-0453		6	SCREW, M6S ISO 4017 M8X25 A4 80	
330	312125-0226		2	SLOTTED HEAD SCREW, ISO1207 M3X12 A4	
340	312155-0368		4	SCREW DIN 7991 MF6S M6X16 A4 70	
350	312605-0318		2	HEXAGON NUT, M6M M8 A280	
360	315106-0124		2	WASHER PLAIN, M3 ISO7089-3-200 HV A4	
370	315106-0146		2	WASHER PLAIN, M5 ISO7089-5-200 HV A4	
380	315106-0153		6	WASHER PLAIN, M6 ISO7089-6-200 HV A4	
390	315106-0165		6	WASHER PLAIN, M8 ISO7089-8-200 HV A4	
400	315125-0165		2	WASHER HIGH, TBRSB 8,4X26X5 A4	
V50K0390	90458-1194		1	VALVE, 5/2 MONOSTABLE	
V50M0390	90459-4204		1	CYLINDER, WITH INT. GUIDING BORE 25	
V50R0390	90235-0846		1	THROTTLE CHECK VALVE G1/8", MANUAL, 6	
V50R0391	90328-0047		1	SILENCER, G1/8"	
V50W0890	315400-0001	M	1	6-4E PUN-H-6X1-BL	
W50B0118	90459-7366		1	PHOTOCELL, WTB4-3P3161 F20	
W50W0118	344257-0015		1	SENSOR CABLE, EVT202	

Pos	Part No	UN	Qty	Description	Page No

PHOTOCELL BRACKET

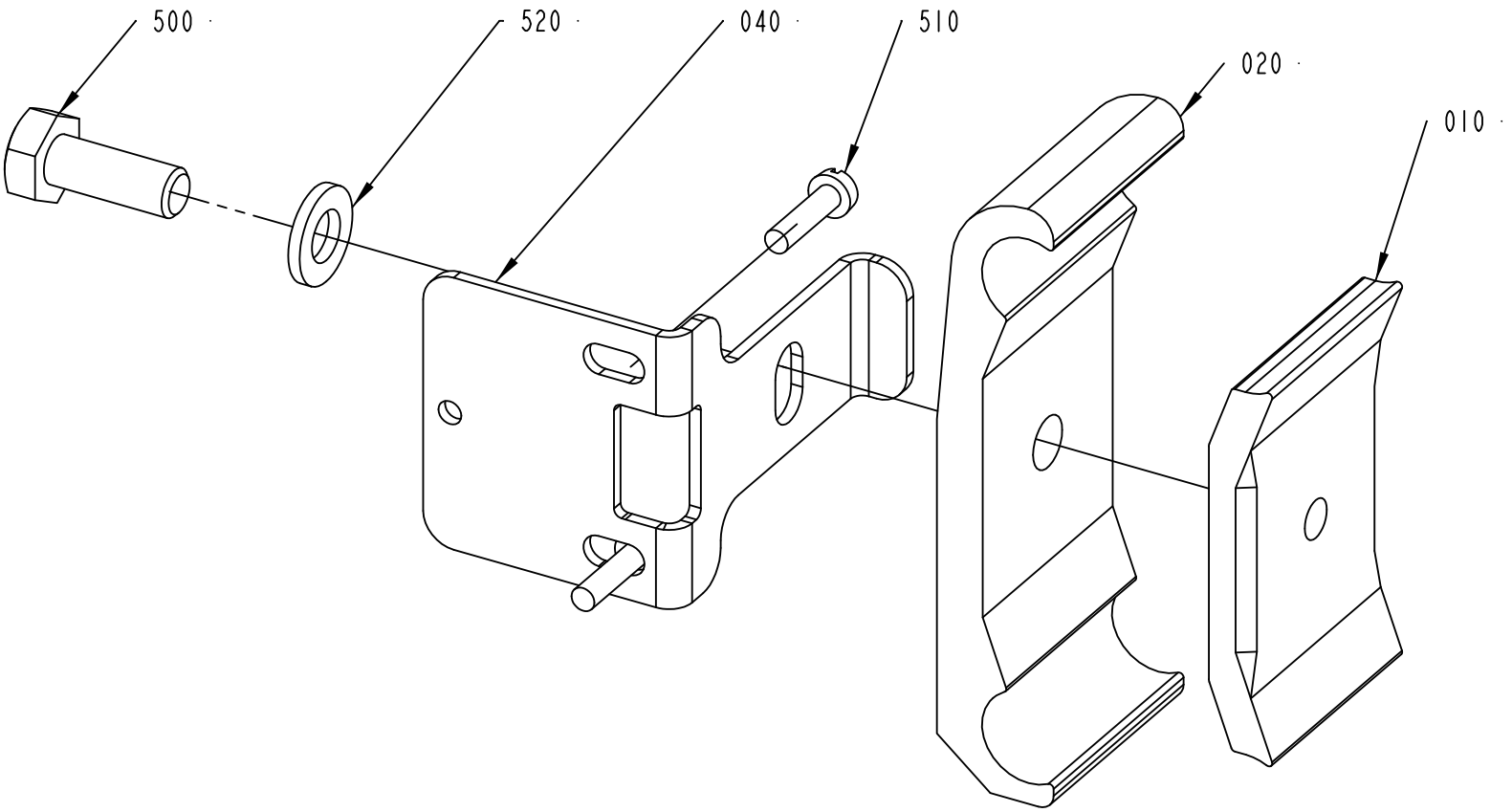

2970893-1
360995

ECM: 360995 - 20080919
Group number: 2970893-0100
Assembly Drawing: 2970893-1_1_AA

Pos	Part No	UN	Qty	Description	Page No
-					
010	1366727-0000		1	CLAMP	
020	1366750-0000		1	HOLDER	
040	2959046-0000		1	BRACKET	
500	312105-0368		1	SCREW, M6S ISO 4017 M6X16 A4 80	
510	312121-0226		2	SCREW ISO 1207 M3X12 4.8-5.8 Z.PL.	
520	315105-0153		1	WASHER PLAIN, 6,4X12X1,5 A4 BRB	

Pos	Part No	UN	Qty	Description	Page No

Machine Type | Group Description | Used-In | Group Number | Page No

EXTENDED DISCHARGE UNIT

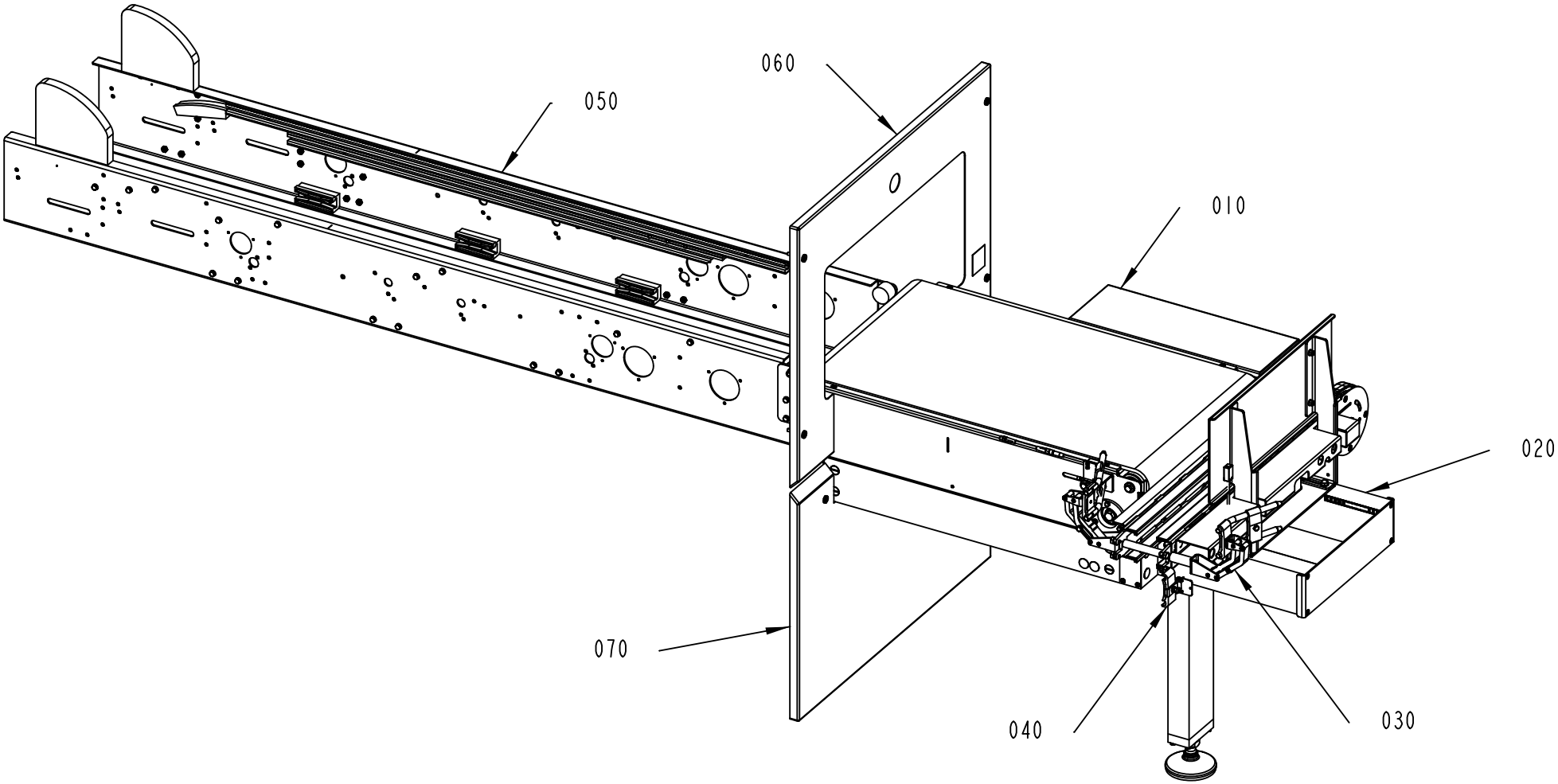

3266375-1
575137

ECM: 591520 - 20121220
Group number: 3266375-0100
Assembly Drawing: 3266375-1_1_AA

Pos	Part No	UN	Qty	Description	Page No
-					
010	3265482-0100		1	DISCHARGE UNIT	**9-49**
020	3265506-0100		1	DISCHARGE CONVEYOR	**9-55**
030	3265507-0100		1	RAILING	**9-59**
040	2970893-0100		1	PHOTOCELL BRACKET	**9-45**
050	3266374-0100		1	CARRIER FRAME	**9-61**
060	3265508-0100		1	COVER PLATE	**9-63**
070	3265509-0100		1	COVER PLATE	**9-65**

Pos	Part No	UN	Qty	Description	Page No

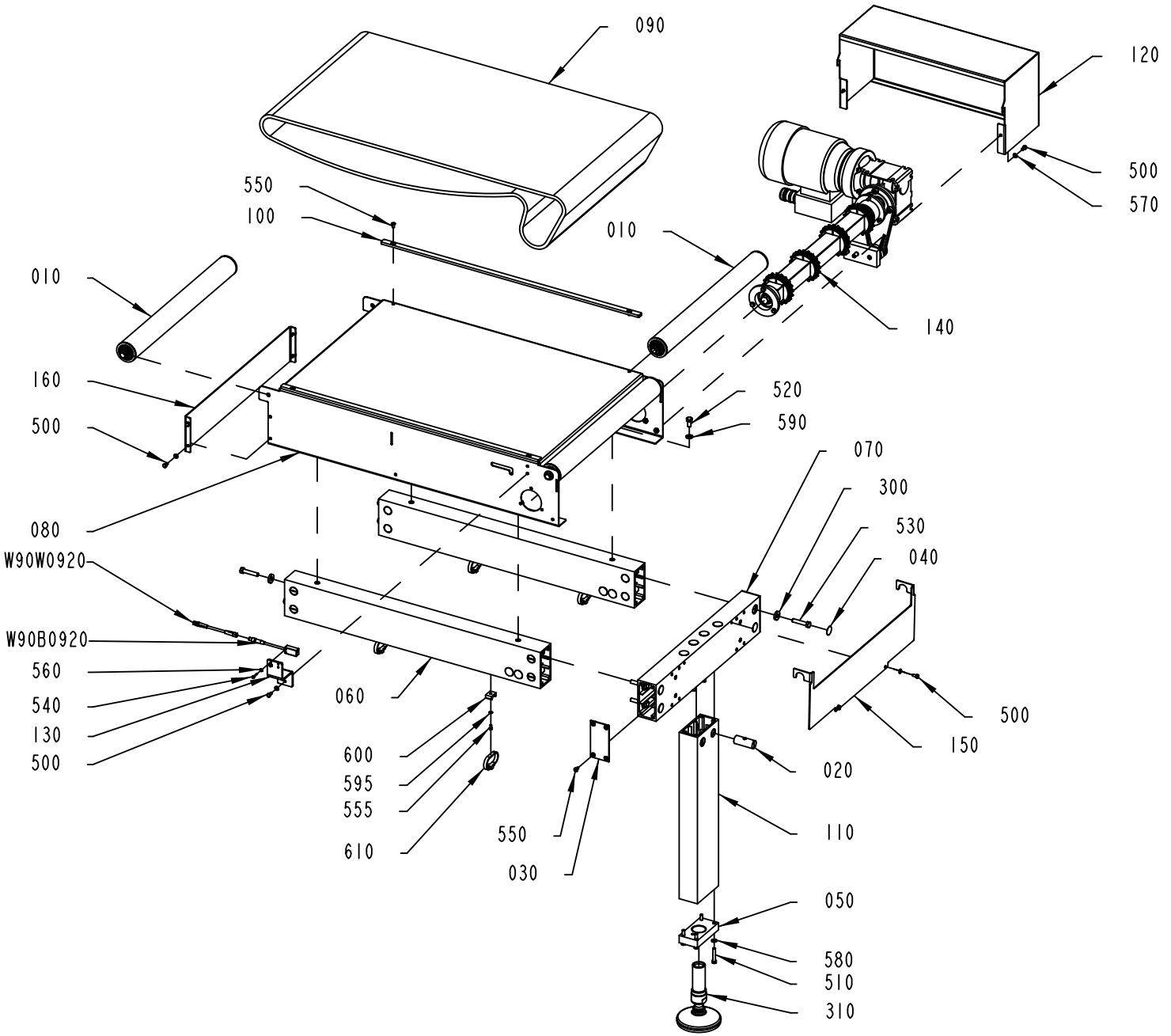

3265482-1
630884

ECM: 646242 - 20131125
Group number: 3265482-0100
Assembly Drawing: 3265482-1_1_AB

Pos	Part No	UN	Qty	Description	Page No
-					
010	1124044-0400		3	BENDING ROLLER	**2-91, 9-51**
020	486268-0000		10	NUT	
030	556603-0000		2	COVER PLATE	
040	1021933-0000		14	TAPE	
050	3234425-0000		1	FRAME BRACKET	
060	3265483-0000		2	PROFILE 50X100	
070	3265484-0000		1	PROFILE 50X100	
080	3265485-0000		1	SHEET	
090	3265487-0000		1	CHAIN	
100	3265498-0000		2	EDGE GUIDE	
110	3265499-0000		1	PROFILE 50X100	
120	3265501-0000		1	COVER PLATE	
130	3265502-0000		1	PHOTOCELL BRACKET	
140	3265503-0100		1	DRIVE SHAFT	**9-53**
150	3266378-0000		1	PROTECTION PLATE	
160	3266379-0000		1	PROTECTION PLATE	
300	90600-5066		10	WASHER PLAIN, DIN7349 8,4X21X4 A4	
310	90604-9686		1	FOOT 2200KG, XH105-XH-HL-3A-FA-Ø36X24	
500	312105-0325		10	SCREW, M6S ISO 4017 M5X10 A4 80	
510	312105-0376		4	SCREW, M6S ISO 4014 M6X35 A4 80	
520	312105-0449		4	SCREW, M6S ISO 4017 M8X16 A4 80	
530	312105-0459		10	SCREW, M6S ISO 4014 M8X40 A4 80	
540	312115-0228		2	SCREW ISO4762 M3X16 A4 80	
550	312145-0325		12	SCREW ISO 2009 MFS M5X10 A4	
555	312125-0287		4	SLOTTED HEAD SCREW, ISO1207 M4X8 A4	
560	315106-0124		2	WASHER PLAIN, M3 ISO7089-3-200 HV A4	
570	315106-0146		10	WASHER PLAIN, M5 ISO7089-5-200 HV A4	
580	315106-0153		4	WASHER PLAIN, M6 ISO7089-6-200 HV A4	
590	315106-0165		4	WASHER PLAIN, M8 ISO7089-8-200 HV A4	
595	315105-0136		4	WASHER PLAIN, 4,3X9X0,8 A4 BRB	
600	352113-0203		4	ANCHOR PLATES FOR STRIPS, TM3S8-M0	
610	352113-0103		4	CABLE TIE, BLACK 290X7,6 MM	
W90B0920	90459-7366		1	PHOTOCELL, WTB4-3P3161 F20	
W90W0920	344257-0015		1	SENSOR CABLE, EVT202	

Pos	Part No	UN	Qty	Description	Page No

BENDING ROLLER

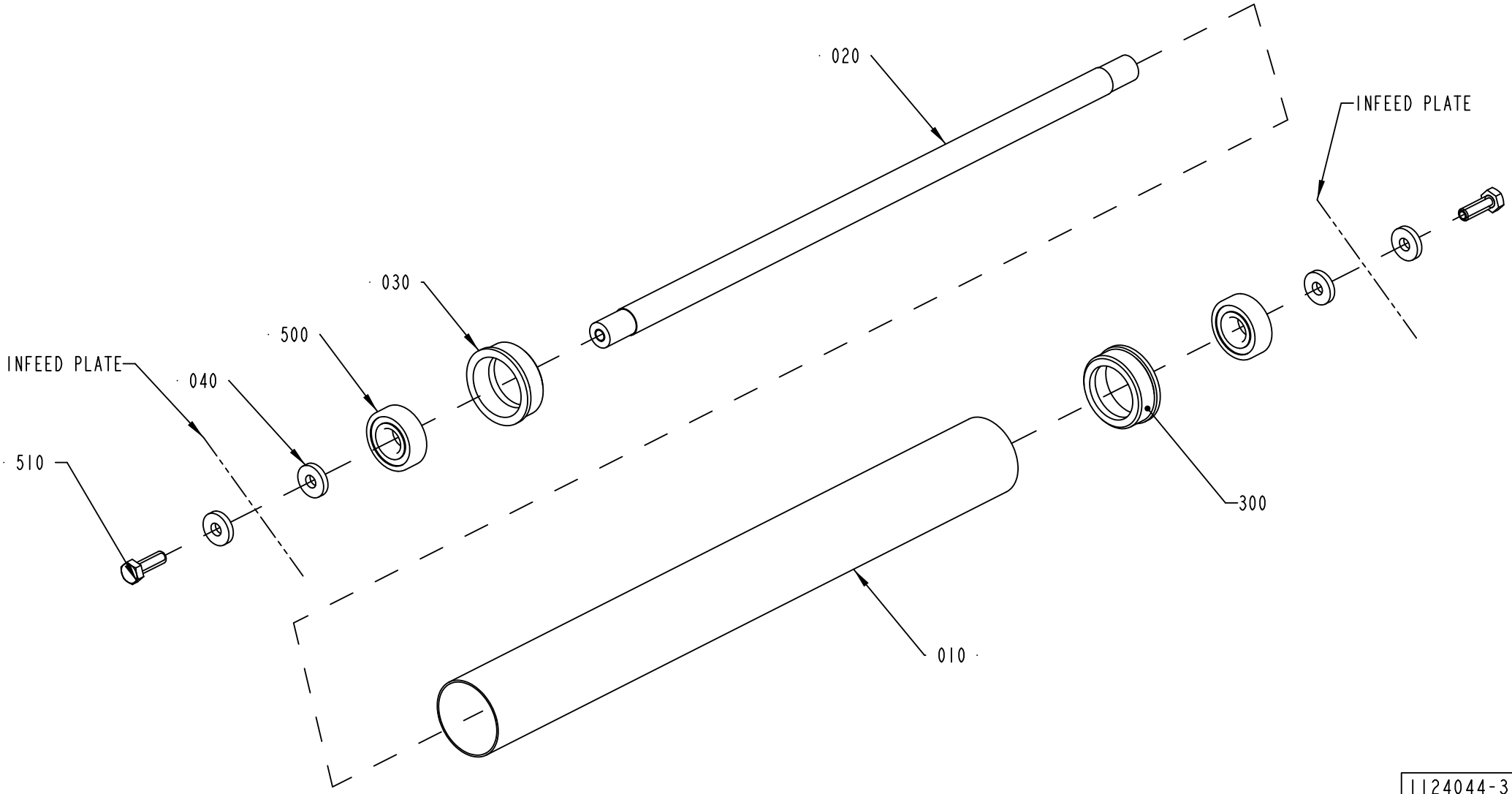

1124044-3
555186

ECM: 567241 - 20120710
Group number: 1124044-0400
Assembly Drawing: 1124044-3_1_AD

Pos	Part No	UN	Qty	Description	Page No
-					
010	1502535-0000		1	ROLLER	
020	1502560-0000		1	SHAFT	
030	1287041-0000		2	BUSHING	
040	548599-0000		4	WASHER	
300	90153-0047		1	ADHESIVE, MULTI-BOND 330; AKTIVATOR 738	
500	344226-0103		2	BALL BEARING 17/40X12	
510	312105-0453		2	SCREW, M6S ISO 4017 M8X25 A4 80	

Pos	Part No	UN	Qty	Description	Page No

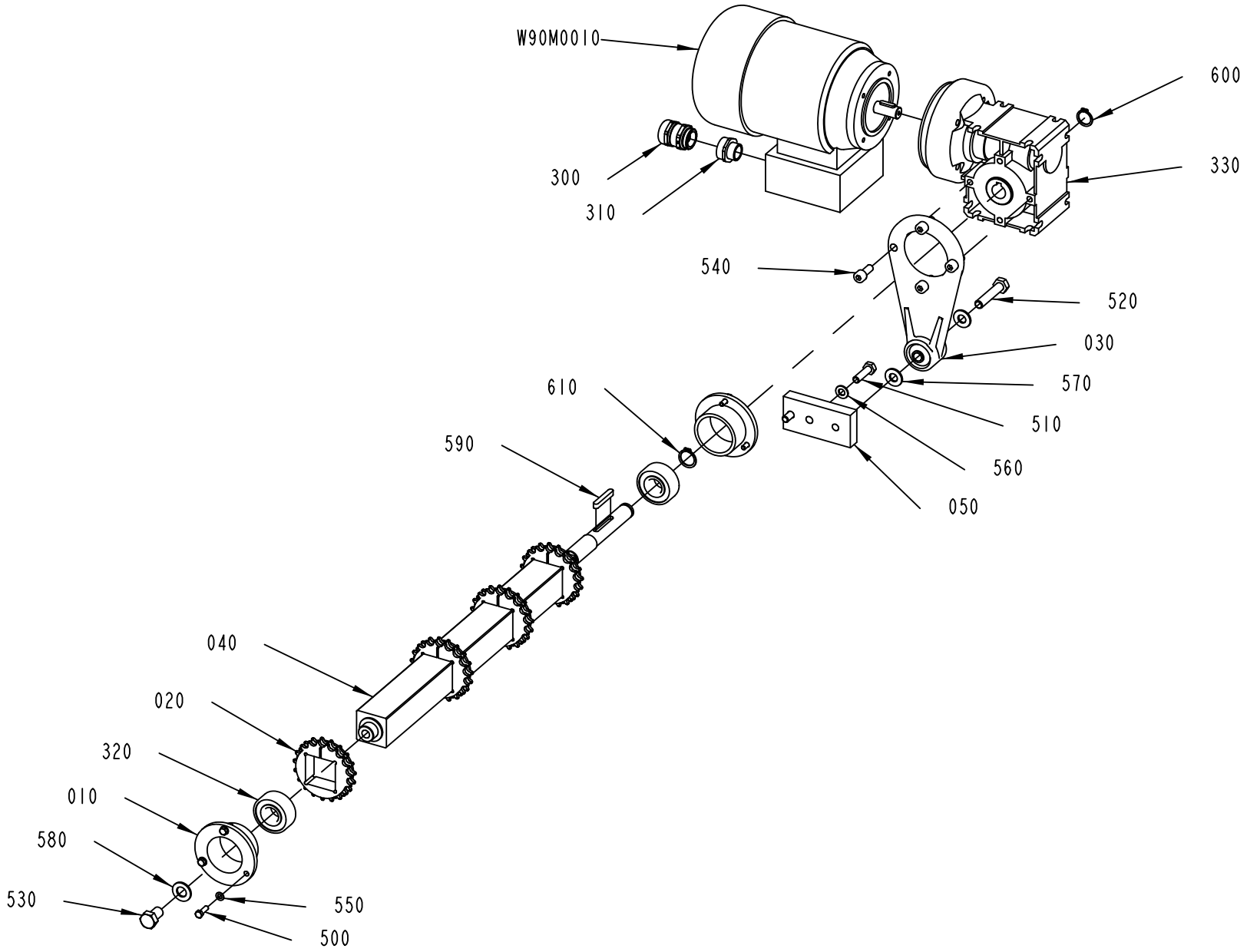

3265503-1
575137

ECM: 591504 - 20121220
Group number: 3265503-0100
Assembly Drawing: 3265503-1_1_AA

Pos	Part No	UN	Qty	Description	Page No
-					
010	1502474-0000		2	BEARING HOUSING	
020	2750061-0000		4	GEAR WHEEL	
030	2877543-0000		1	LEVER BAR	
040	3265504-0000		1	SHAFT	
050	3265505-0000		1	BRACKET	
300	344202-0004		1	CABLE GLAND, MS-SC-M, 9-16,5MM, M25X1,5	
310	90459-2323		1	REDUCER, M25/M20	
320	90603-4534		2	SPHERICAL BALL BEARING 20/47X18	
330	90605-7874		1	WORM GEAR SK 1SI40-IEC 71	
500	312105-0329		6	SCREW, M6S ISO 4017 M5X16 A4 80	
510	312105-0455		2	SCREW, M6S ISO 4017 M8X30 A4 80	
520	312105-0501		1	SCREW, M6S ISO 4014 M10X50 A4 80	
530	312105-0532		1	SCREW, M6S ISO 4017 M12X20 A4 80	
540	312115-0451		4	SCREW ISO4762 M8X20 A4 80	
550	315105-0146		6	WASHER PLAIN, 5,3X10X1 A4 BRB	
560	315105-0165		2	FWAS080G0-0S, WASHER PLAIN	
570	315105-0173		2	WASHER PLAIN, 10,5X22X2 A4 BRB	
580	315105-0178		1	WASHER PLAIN, 13X24X2,5 A4 BRB	
590	315705-0239		1	PARALLEL KEY W. ROUND ENDS, 6X6X40 MM	
600	315751-0115		1	RETAINING RING FOR SHAFT DIN 471 18 SS	
610	315751-0116		1	RETAINING RING FOR SHAFT DIN 471 20 SS	
W90M0010	90600-2712		1	GEAR MOTOR, 71L/4 B14 C105	

Pos	Part No	UN	Qty	Description	Page No

Machine Type | Group Description | Used-In | Group Number | Page No

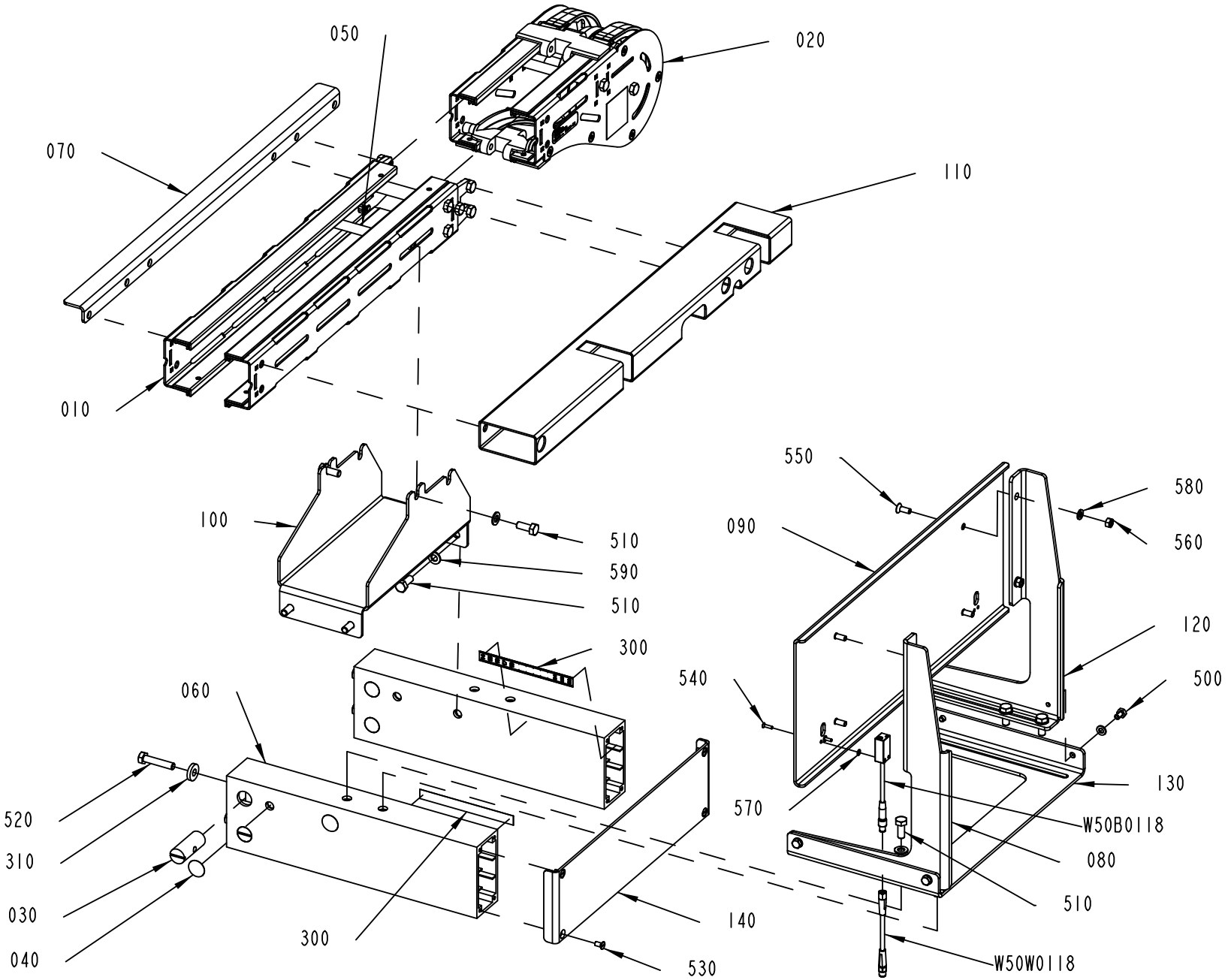

3265506-1
575137

ECM: 591505 - 20121220
Group number: 3265506-0100
Assembly Drawing: 3265506-1_1_AA

Pos	Part No	UN	Qty	Description	Page No
LOUT					
110	3265496-0000		1	SUPPORT	
ROUT					
110	3265495-0000		1	SUPPORT	
Common Parts					
010	2807825-0100		1	CONVEYOR BODY	**9-35**
020	2807900-0201		1	END UNIT	**9-57**
030	486268-0000		4	NUT	
040	1021933-0000		4	TAPE	
050	2807831-0000		1	SPACER	
060	3265488-0000		2	PROFILE 50X100	
070	3265489-0000		1	SUPPORTING SHEET	
080	3265490-0000		1	BRACKET	
090	3265491-0000		1	STOP PLATE	
100	3265494-0000		1	CONVEYOR SUPPORT	
120	3265497-0000		1	BRACKET	
130	3266376-0000		1	SUPPORT PLATE	
140	3266377-0000		1	PROTECTION PLATE	
300	90458-2779		2	SCALE , 0-1000MM ADHESIVE	
310	90600-5066		4	WASHER PLAIN, DIN7349 8,4X21X4 A4	
500	312105-0364		4	SCREW, M6S ISO 4017 M6X10 A4 80	
510	312105-0451		10	SCREW, M6S ISO 4017 M8X20 A4 80	
520	312105-0459		4	SCREW, M6S ISO 4014 M8X40 A4 80	
530	312145-0325		4	SCREW ISO 2009 MFS M5X10 A4	
540	312155-0226		2	SCREW DIN 7991 MF6S M3X12 A4 70	
550	312155-0368		4	SCREW DIN 7991 MF6S M6X16 A4 70	
560	312605-0316		4	HEXAGON NUT, M6M M6 A280	
570	315106-0124		2	WASHER PLAIN, M3 ISO7089-3-200 HV A4	
580	315106-0153		8	WASHER PLAIN, M6 ISO7089-6-200 HV A4	
590	315106-0165		10	WASHER PLAIN, M8 ISO7089-8-200 HV A4	
W50B0118	90459-7366		1	PHOTOCELL, WTB4-3P3161 F20	
W50W0118	344257-0015		1	SENSOR CABLE, EVT202	

Pos	Part No	UN	Qty	Description	Page No

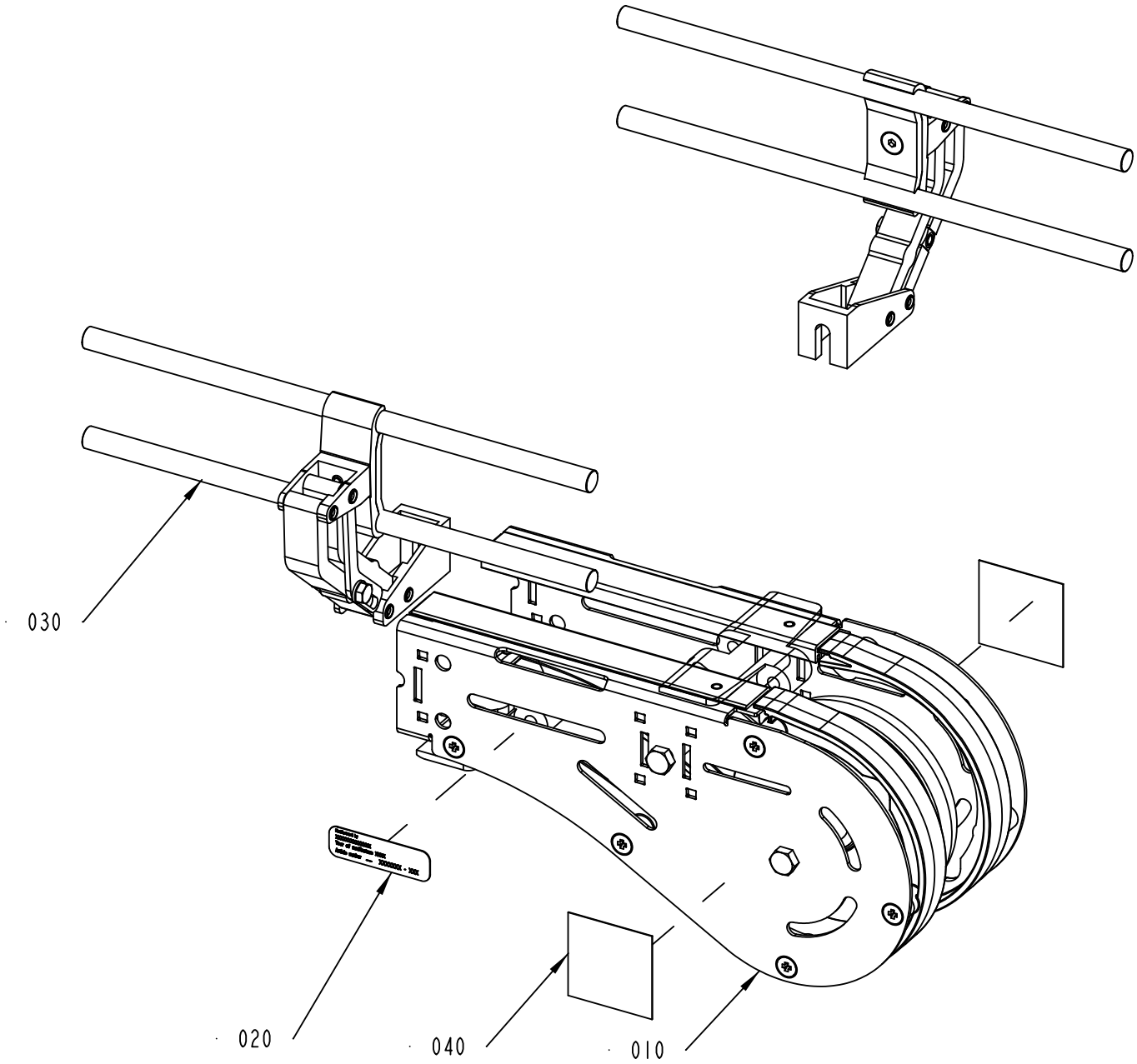

2807900-2
400069

ECM: 400069 -
Group number: 2807900-0201
Assembly Drawing: 2807900-2_1_AA

Pos	Part No	UN	Qty	Description	Page No
UC NO RAILS					
050	2838848-0100		1	PACKING DESCRIPTION	**9-31**
Common Parts					
010	2807988-0100		1	CONVEYOR BODY	**9-29**
020	1086870-0000		1	SIGN	
030	2940164-0100		1	RAILING KIT	**9-25**
040	90459-7584		2	PROHOBITION SIGN ISO, DO NOT REACH IN	
050	2958928-0100		1	PACKING DESCRIPTION	**9-23**
900	3132459-0100		1	SET OF ANSI SIGN	**9-33**

Pos	Part No	UN	Qty	Description	Page No

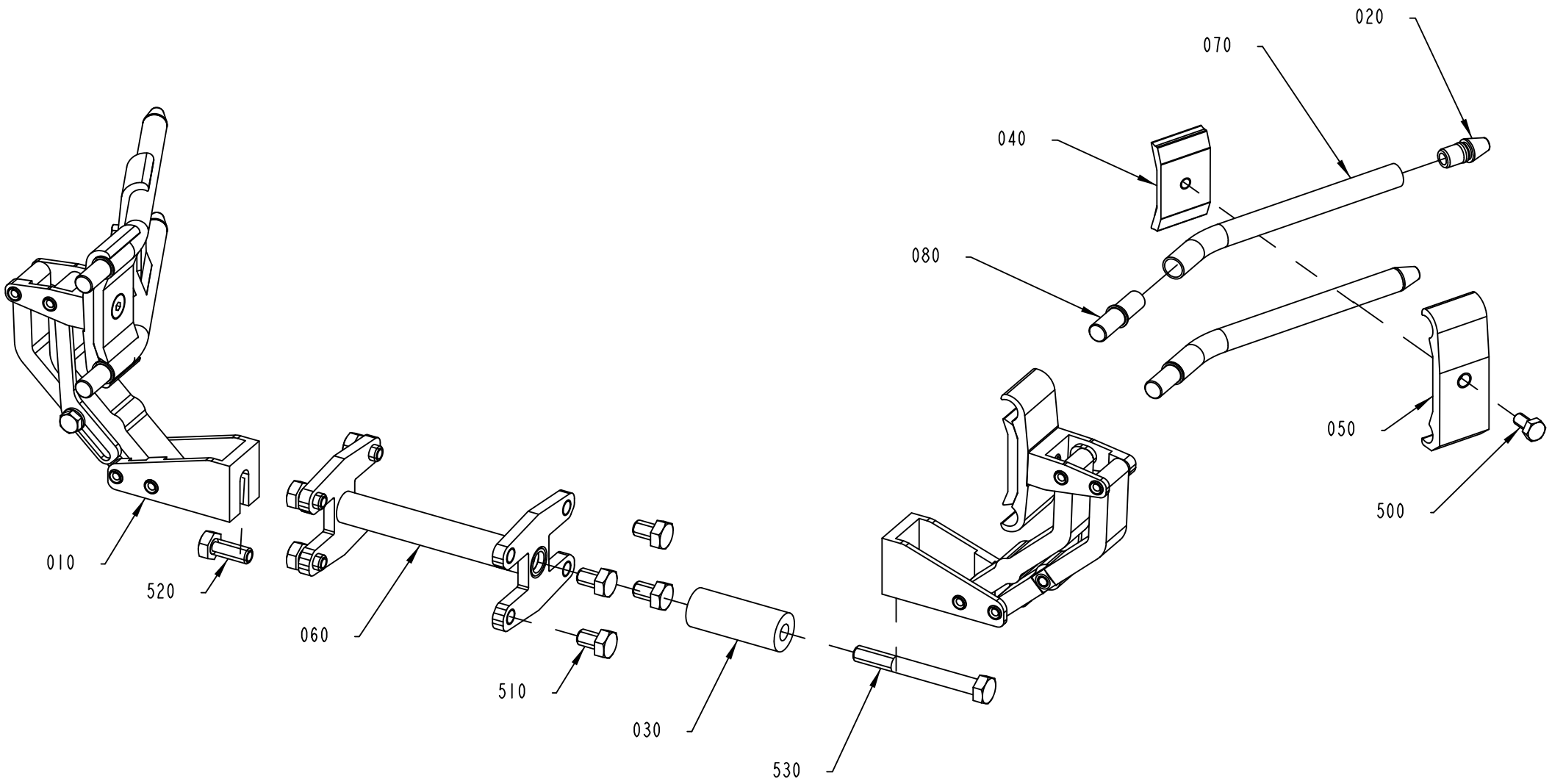

3265507-1
602279

ECM: 614547 - 20130618
Group number: 3265507-0100
Assembly Drawing: 3265507-1_1_AB

Pos	Part No	UN	Qty	Description	Page No
-					
010	2968390-0100		2	RAIL HOLDER	**9-27**
020	540169-0000		4	DOWEL	
030	1086173-0004		1	SPACER	
040	1366727-0000		2	CLAMP	
050	1366750-0000		2	HOLDER	
060	2807824-0000		1	JOINT PIECE	
070	3265492-0000		4	RAIL	
080	3265493-0000		4	PIN	
500	312105-0366		2	SCREW, M6S ISO 4017 M6X12 A4 80	
510	312105-0447		8	SCREW M6S ISO 4017 M8X12 A480	
520	312105-0451		1	SCREW, M6S ISO 4017 M8X20 A4 80	
530	312105-0465		1	SCREW, M6S ISO 4014 M8X70 A4 80	

Pos	Part No	UN	Qty	Description	Page No

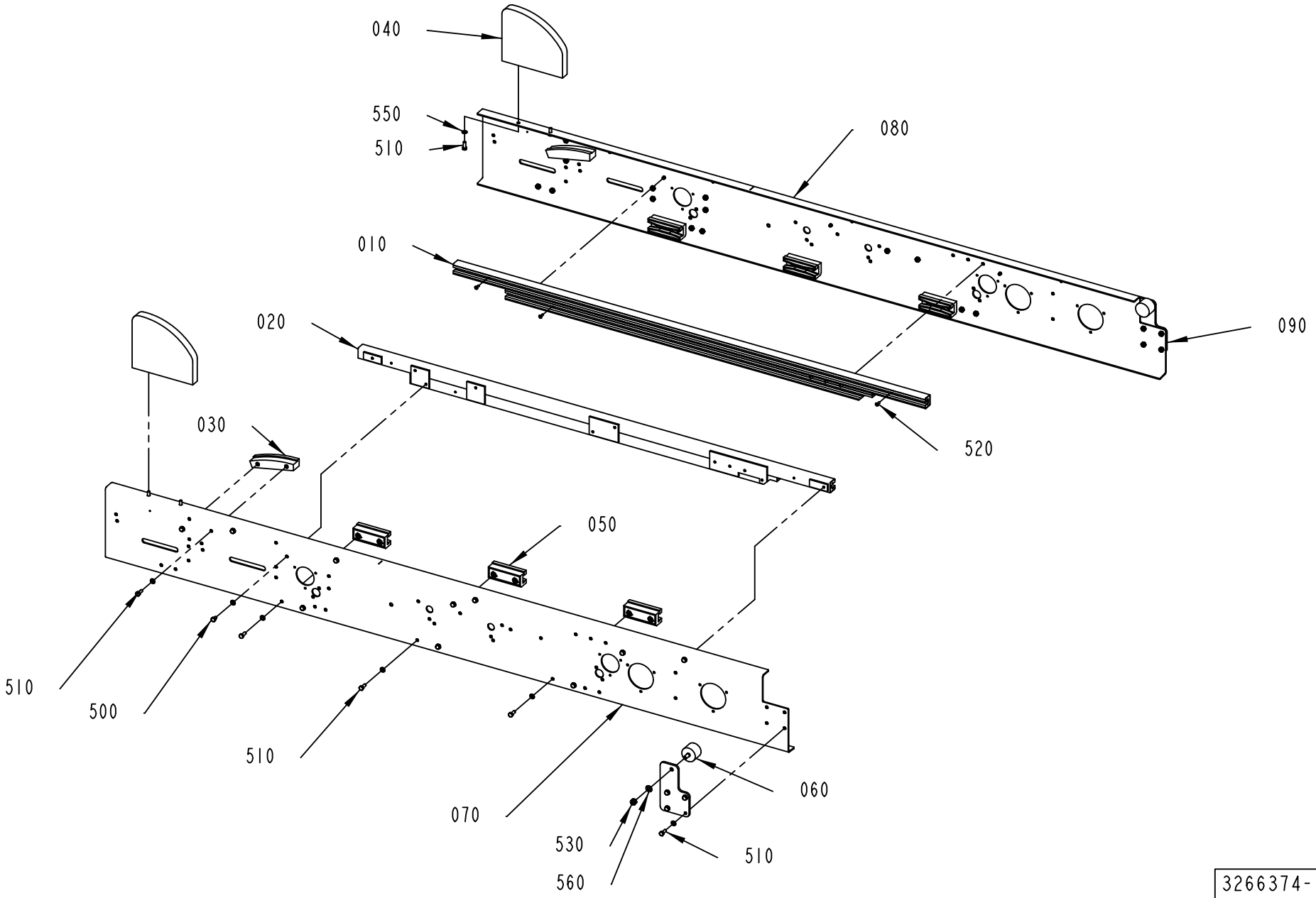

3266374-1
575137

ECM: 591507 - 20121220
Group number: 3266374-0100
Assembly Drawing: 3266374-1_1_AA

Pos	Part No	UN	Qty	Description	Page No
-					
010	1021085-0000		1	SLIDE RAIL	
020	1021086-0000		1	SLIDE RAIL	
030	1021087-0000		2	SLIDE RAIL	
040	1065918-0000		2	STEERING	
050	1466401-0000		6	SLIDER	
060	2535553-0000		2	WHEEL	
070	3227806-0000		1	SIDE PLATE	
080	3227807-0000		1	SIDE PLATE	
090	3265500-0000		2	SUPPORT PLATE	
500	312105-0364		14	SCREW, M6S ISO 4017 M6X10 A4 80	
510	312105-0368		28	SCREW, M6S ISO 4017 M6X16 A4 80	
520	312155-0291		6	SCREW DIN 7991 MF6S M4X12 A4 70	
530	312812-0318		2	HEXAGON NUT, NY-LOCK M8 A4 80	
550	315106-0153		42	WASHER PLAIN, M6 ISO7089-6-200 HV A4	
560	315106-0165		2	WASHER PLAIN, M8 ISO7089-8-200 HV A4	

Pos	Part No	UN	Qty	Description	Page No

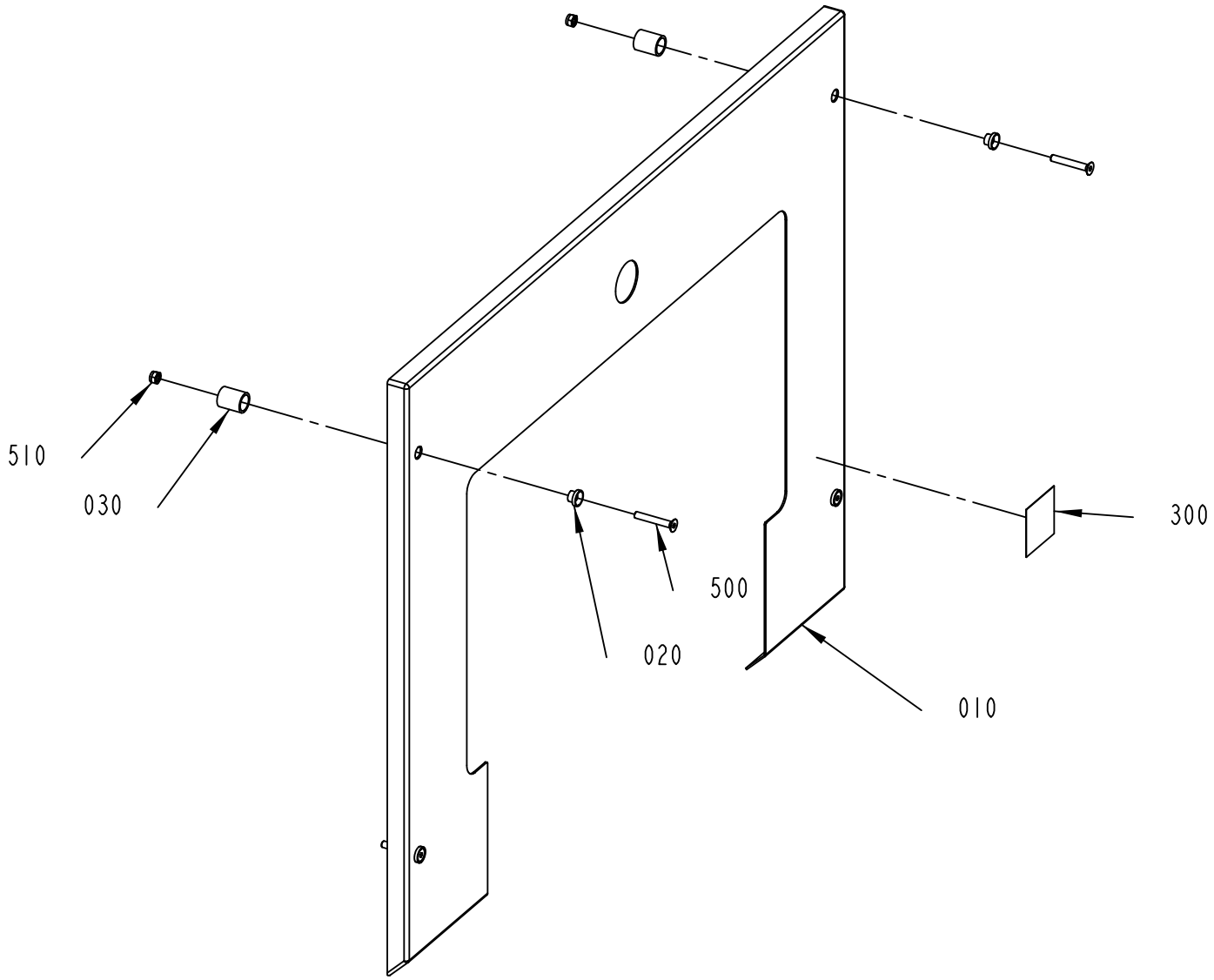

3265508-1
575137

ECM: 591508 - 20121220
Group number: 3265508-0100
Assembly Drawing: 3265508-1_1_AA

Pos	Part No	UN	Qty	Description	Page No
-					
010	3265510-0000		1	PROTECTION PLATE	
020	578196-0000		4	SLEEVE	
030	578197-0000		4	SPACER	
300	90459-7584		1	PROHOBITION SIGN ISO, DO NOT REACH IN	
500	312155-0378		4	SCREW DIN 7991 MF6S M6X40 A4 70	
510	312812-0316		4	HEXAGON NUT, NY-LOCK M6 A4 80	

Pos	Part No	UN	Qty	Description	Page No

COVER PLATE

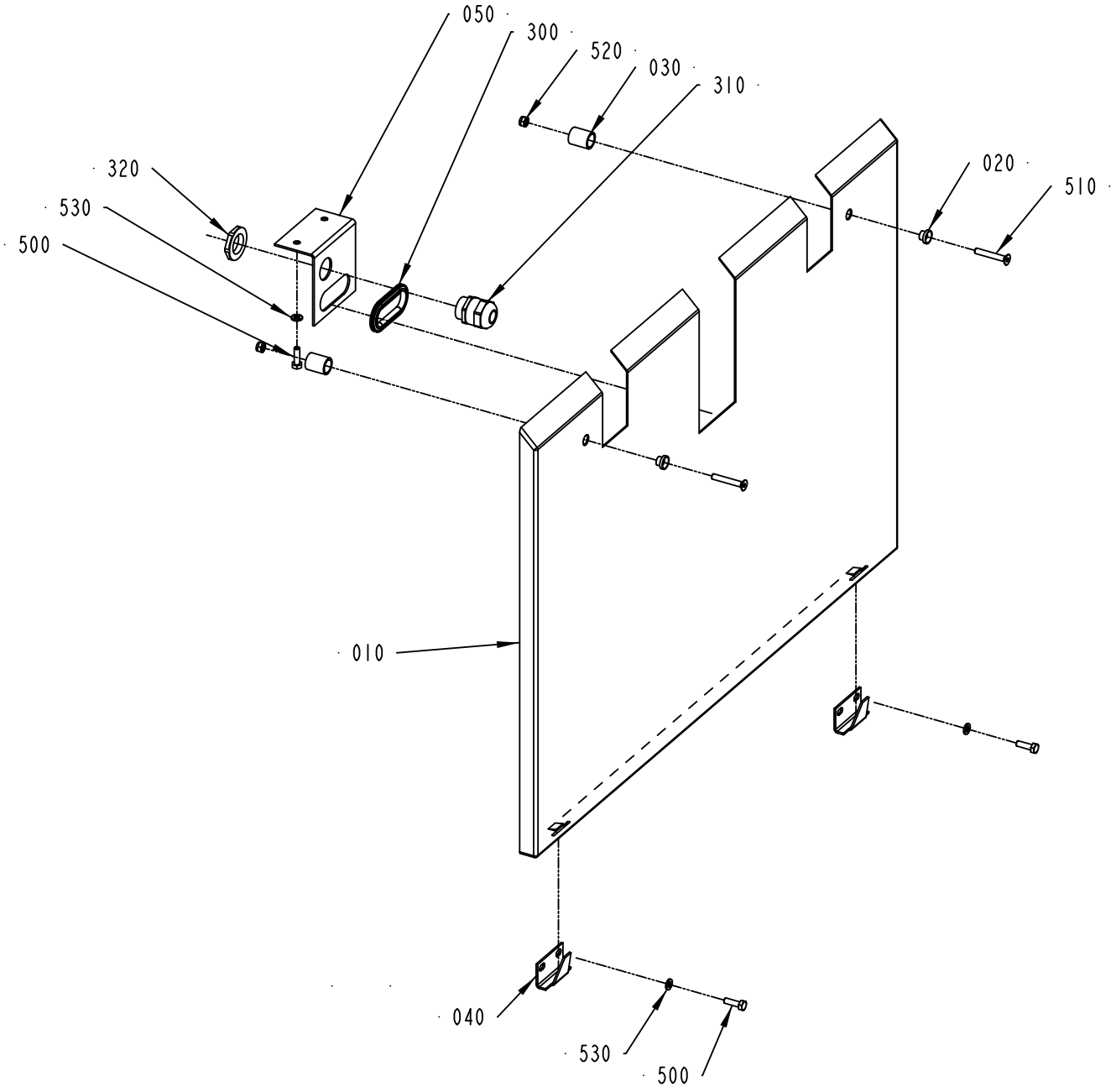

3265509-1
575137

ECM: 591509 - 20121220
Group number: 3265509-0100
Assembly Drawing: 3265509-1_1_AA

Pos	Part No	UN	Qty	Description	Page No
-					
010	3265511-0000		1	PROTECTION PLATE	
020	578196-0000		2	SLEEVE	
030	578197-0000		2	SPACER	
040	975887-0000		2	CATCH	
050	2894998-0000		1	BRACKET	
300	90143-0060	MM	200	EDGE STRIP 9,5X6,3MM BLACK PVC	
310	90458-0316		1	CABLE GLAND, M25X1,5, 5311 1130	
320	90458-0324		1	NUT, M25X1,5	
500	312105-0370		6	SCREW, M6S ISO 4017 M6X20 A4 80	
510	312155-0378		2	SCREW DIN 7991 MF6S M6X40 A4 70	
520	312812-0316		2	HEXAGON NUT, NY-LOCK M6 A4 80	
530	315106-0153		6	WASHER PLAIN, M6 ISO7089-6-200 HV A4	

Pos	Part No	UN	Qty	Description	Page No

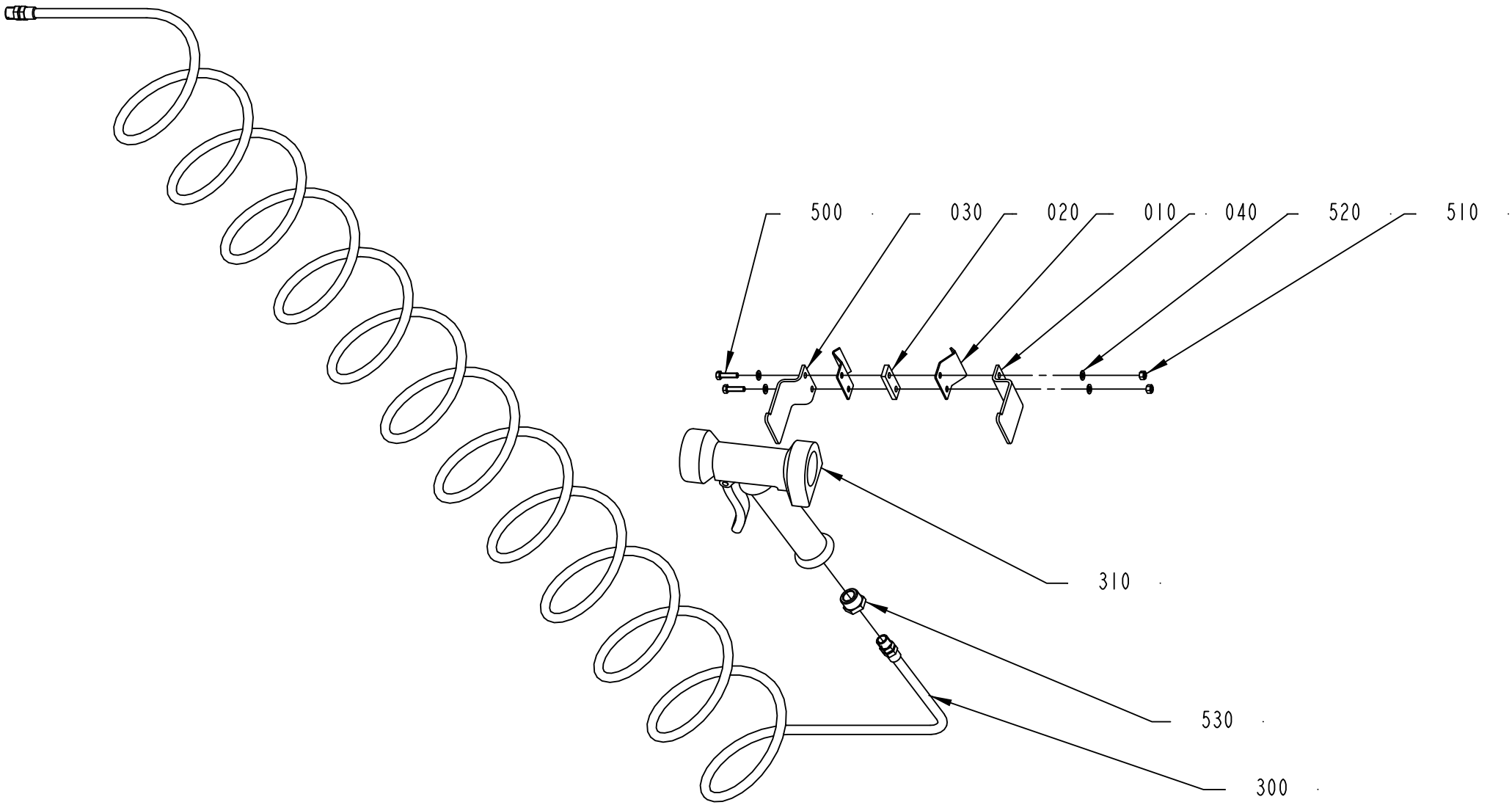

1287076-2
309196

ECM: 309196 - 20070529
Group number: 1287076-0300
Assembly Drawing: 1287076-2_1_AA

Pos	Part No	UN	Qty	Description	Page No
-					
010	2506937-0000		2	BRACKET	
020	2895039-0000		1	BRACKET	
030	2895040-0000		1	HOLDER	
040	2895041-0000		1	HOLDER	
300	90152-0017		1	HOSE (SPIRAL)	
310	90426-0003		1	HAND SHOWER, 361100	
500	312105-0331		2	SCREW, M6S ISO 4017 M5X20 A4 80	
510	312605-0314		2	HEXAGON NUT, M6M M5 A280	
520	315106-0146		4	WASHER PLAIN, M5 ISO7089-5-200 HV A4	
530	342701-0205		1	BUSHING, INT/EXT, G 1/2 - G1/4	

Pos	Part No	UN	Qty	Description	Page No

This page is intentionally left blank.

ECM: 614546 - 20130618
Group number: 3157212-0200
Assembly Drawing:

Pos	Part No	UN	Qty	Description	Page No
-					
010	3149479-0200		1	BARCODE SCANNER	**9-71**

Pos	Part No	UN	Qty	Description	Page No

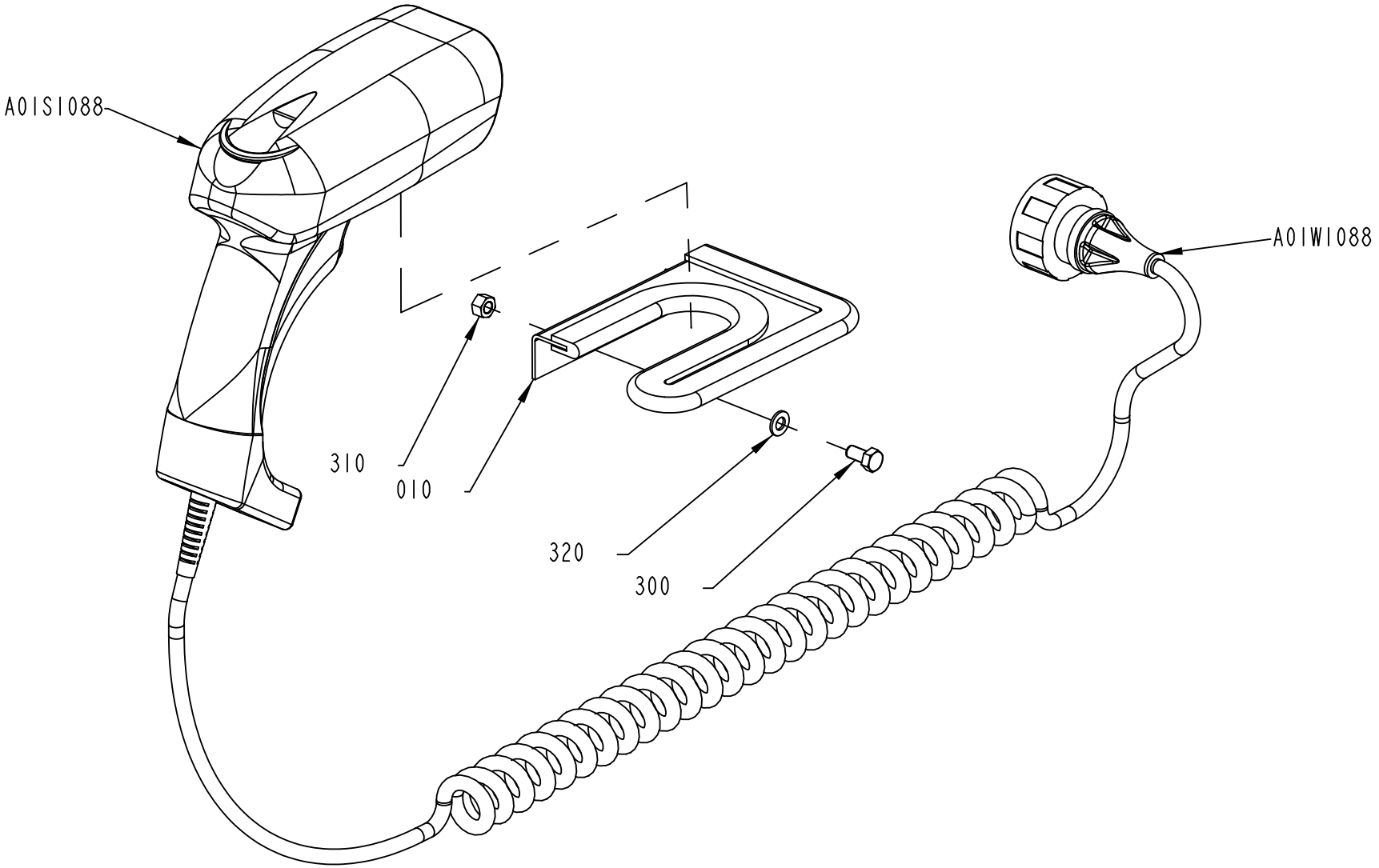

3149479-3
606882

ECM: 608422 - 20130418
Group number: 3149479-0200
Assembly Drawing: 3149479-3_1_AA

Pos	Part No	UN	Qty	Description	Page No
-					
010	3060156-0100		1	SUPPORT	**9-73**
300	312105-0325		2	SCREW, M6S ISO 4017 M5X10 A4 80	
310	312607-0314		2	HEXAGON NUT, EN 24032 M6M M5 A480	
320	315106-0146		2	WASHER PLAIN, M5 ISO7089-5-200 HV A4	
A01S1088	90603-5602		1	BAR CODE READER, D8330 SR-902151265+CAB-	
A01W1088	90601-6430		1	USB CABLE, 90601-6430	

Pos	Part No	UN	Qty	Description	Page No

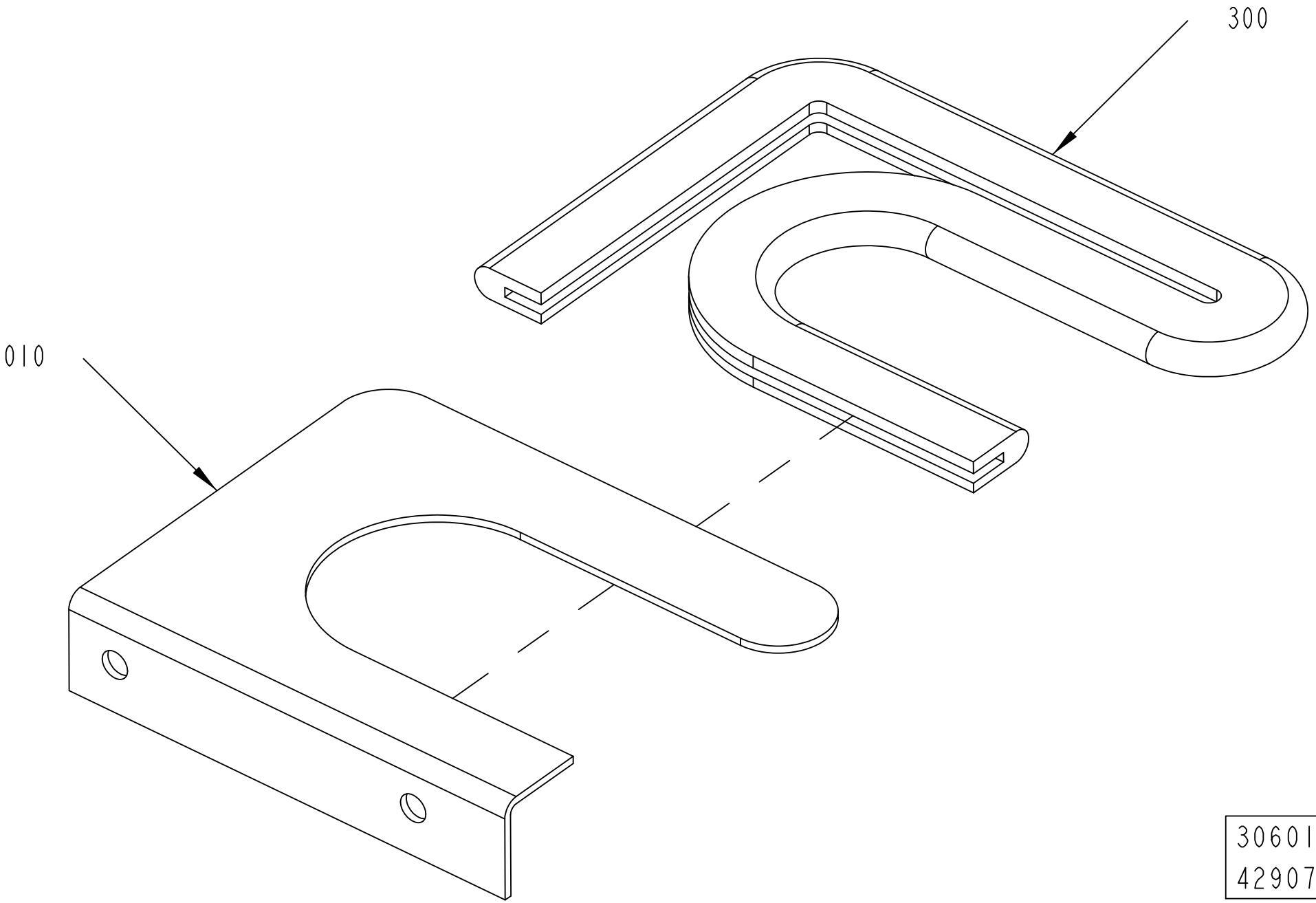

3060156-1
429078

ECM: 506189 - 20110610
Group number: 3060156-0100
Assembly Drawing: 3060156-1_1_AA

Pos	Part No	UN	Qty	Description	Page No
-					
010	2844260-0000		1	BRACKET	
300	90143-0097	MM	370	SELF GRIPPING GASKET, 1011-24	

Pos	Part No	UN	Qty	Description	Page No

Machine Type	Group Description	Used-In	Group Number	Page No

This page is intentionally left blank.

ECM: 614543 - 20130618
Group number: 3090149-0300
Assembly Drawing:

Pos	Part No	UN	Qty	Description	Page No
-					
020	3090140-0300		1	HOTMELT EQUIPMENT NORDSON	**9-77, 9-79**
030	3090150-0300		1	GUN HOLDER	**9-81**
040	3090145-0300		1	HOTMELT SHELF	**9-83, 9-85**

Pos	Part No	UN	Qty	Description	Page No

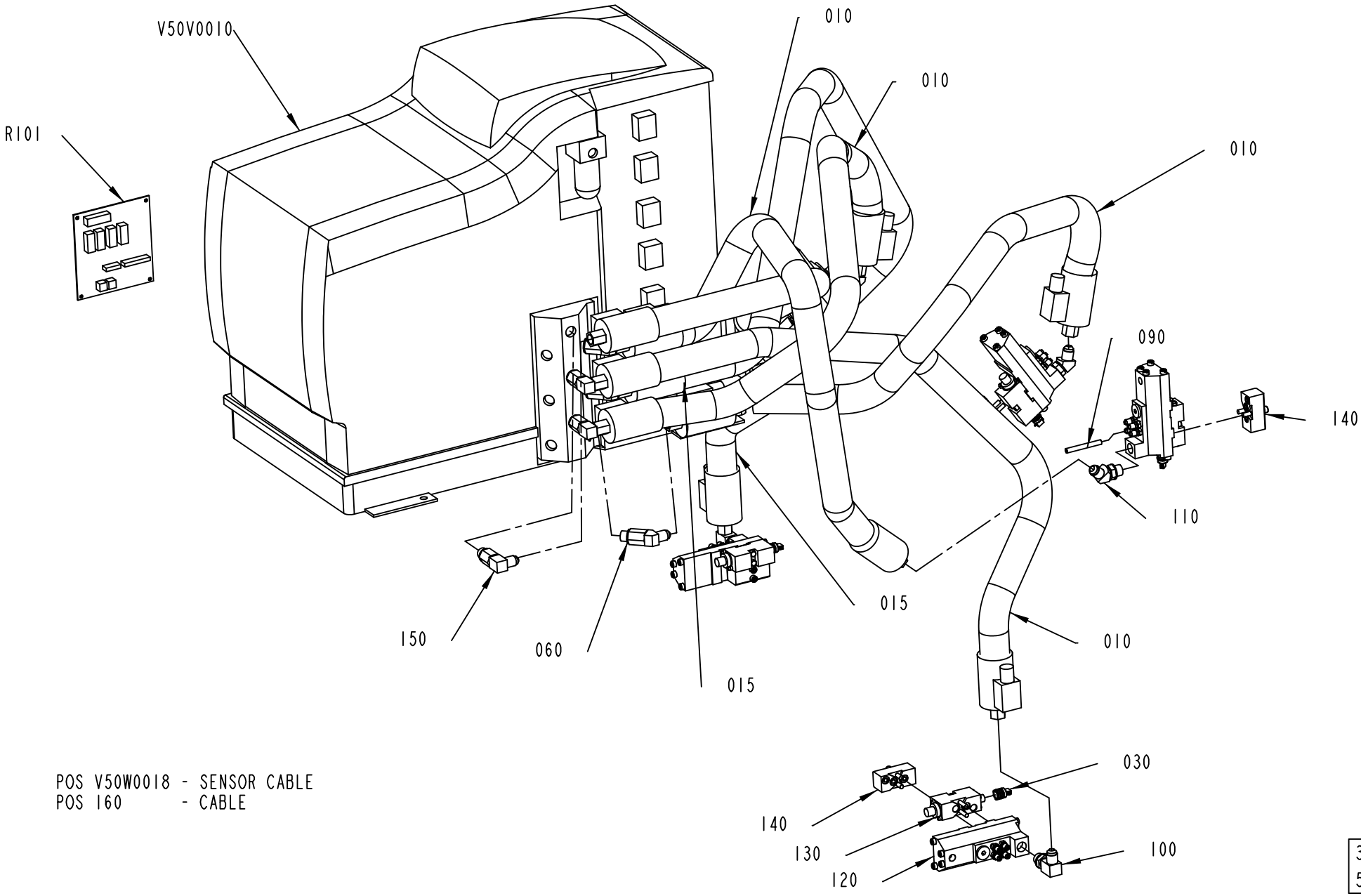

POS V50W0018 - SENSOR CABLE
POS 160 - CABLE

3090140-5
572955

ECM: 614544 - 20130618
Group number: 3090140-0300
Assembly Drawing: 3090140-5_1_AB

This list covers pages from 9-76 to 9-79

Pos	Part No	UN	Qty	Description	Page No
TRAYOVER LINF U-FORM, WAMEETING LINF U-FORM, WASIDE LINF U-FORM, WAINSIDE LINF U-FORM, WAINSIDE LINF Z-FORM, WASIDE LINF Z-FORM, TRAYOVER LINF Z-FORM, WAMEETING LINF Z-FORM (See drawing on page: 9-76)					
010	90458-1745		4	RTD HOT MELT HOSE, 276740	
015	90459-1325		2	RTD HOT MELT HOSE, 276741	
060	90458-1344		3	NON HEATED CONNECTION 45°, 972 647	
150	90439-0241		3	ELBOW CONNECTION, 972646	
WAINSIDE RINF U-FORM, WAINSIDE RINF Z-FORM, WASIDE RINF U-FORM, WASIDE RINF Z-FORM, TRAYOVER RINF U-FORM, TRAYOVER RINF Z-FORM, WAMEETING RINF U-FORM, WAMEETING RINF Z-FORM (See drawing on page: 9-78)					
010	90458-1745		6	RTD HOT MELT HOSE, 276740	
060	90458-1344		6	NON HEATED CONNECTION 45°, 972 647	
Common Parts					
030	90439-0236		8	SATURN RIGHT-ANGLE NOZZLE, 1011012	
090	90166-0202	M	2	TEFLON PIPE	
100	90459-6350		2	90° NIPPLE, SHORT HOSE/GUN, 274 180	
110	90459-6351		4	45° NIPPLE, SHORT HOSE/GUN, 274 179	
120	90459-6328		6	HOT MELT GUN, SOLIDBLUE A, 1060939	
	342921-0111		*1*	*STRAIGHT COUPLING,EXT.THREAD 6/4-M5*	
	90459-6331		*1*	*FILTER KIT, MESH M14, 104 5506*	
	90459-2231		*1*	*CORDSET, WATER WASH W. EYELET, 223 804*	
	90439-0238		*1*	*HEATING ELEMENT*	
130	90459-6329		8	MODULE SOLIDBLUE A, 1052927	
140	90459-6330		4	MODULE BLANK, CLASSICBLUE, 1054951	
160	351160-0102	M	2	ECAB01011-6L, WIRE AWM 1X0,75 MM2 DARKBL	
R101	3090142-0000		1	EXPANSION CARD	
V50V0010	90604-9746		1	HOT MELT UNIT PROBLUE 10, 1022236 H1	
	90459-1971		*1*	*HOSE/GUN MODULE KIT, 1028328*	
	90459-1972		*1*	*FUSE KIT, HOSE/GUN, 1028331*	
	90459-1974		*1*	*FUSE KIT, MAIN CIRC.BOARD, 1028329*	
	90459-1975		*1*	*DISPLAY, CPU BOARD SERV. KIT, 1028325*	
	90459-1978		*1*	*KIT, RTD TEMP. SENSOR, 1028320*	
	90459-1979		*1*	*SERV. KIT, THERMOSTAT, 1028321*	
	90459-1981		*1*	*SERVICE KIT, MANIFOLD ASSY, 1028309*	
	90459-1982		*1*	*SERVICE KIT, PRESS. DISC. VALVE, 1028308*	
	90459-1983		*1*	*HEATER BLOCK KIT, 1064649*	
	90459-1984		*1*	*KIT, PUMP PISTON, 1028303*	
	90459-1985		*1*	*SERVICE KIT, PUMP PISTON, 1028304*	
	90459-1986		*1*	*FILTER ASSY, 100 MESH, 1028305*	
	90459-1987		*1*	*SERVICE KIT, PNEUM. PANEL ASSY, 1028307*	
	90459-6068		*1*	*SVC KIT, MANIFOLD 6 HOSE, W.HTR BLOCK*	
	90459-6069		*1*	*SUBBASE MOUNTING PLATE, 1120193*	
	90459-6070		*1*	*CHASSIS, P7/P10, 1018822*	
	90459-6071		*1*	*SERVICE KIT, MAIN PCA, 1028323*	
	90459-6073		*1*	*KIT, 6 HOSE EXTENSION BOARD P10, 1028324*	
	90459-6074		*1*	*SERVICE KIT,OPER.PANEL/ENCL. P10,1028327*	
	90459-6075		*1*	*GUARD KIT, ASSY VENT. SCREEN P10,1048884*	
	90459-6076		*1*	*SERVICE KIT, TANK P10 230 V, 1051035*	
V50W0018	344269-0020		1	SENSOR CABLE, EVT217	

Machine Type | Group Description | Used-In | Group Number | Page No

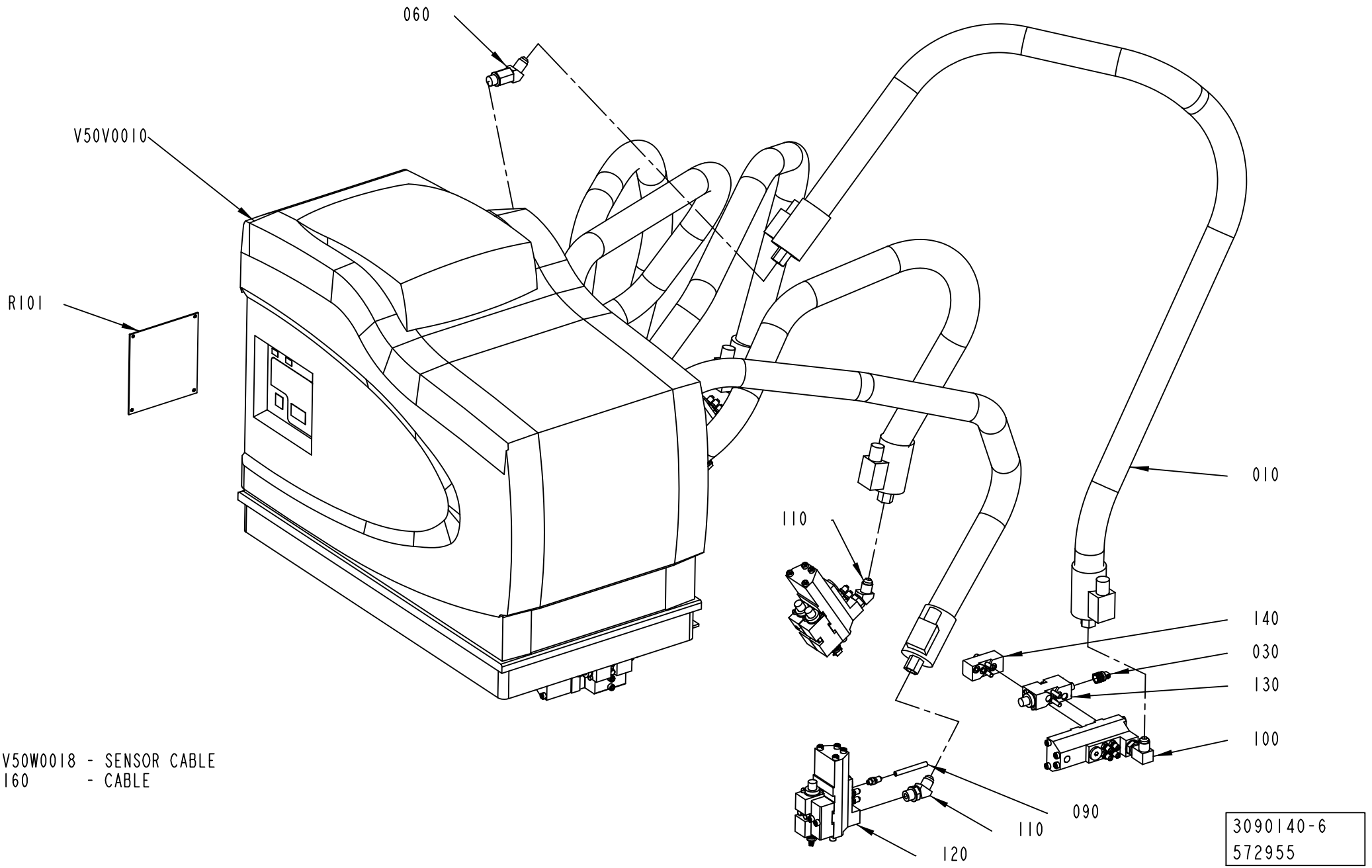

POS V50W0018 - SENSOR CABLE
POS 160 - CABLE

Pos	Part No	UN	Qty	Description	Page No
TRAYOVER LINF U-FORM, WAMEETING LINF U-FORM, WASIDE LINF U-FORM, WAINSIDE LINF U-FORM, WAINSIDE LINF Z-FORM, WASIDE LINF Z-FORM, TRAYOVER LINF Z-FORM, WAMEETING LINF Z-FORM (See drawing on page: 9-76)					
010	90458-1745		4	RTD HOT MELT HOSE, 276740	
015	90459-1325		2	RTD HOT MELT HOSE, 276741	
060	90458-1344		3	NON HEATED CONNECTION 45°, 972 647	
150	90439-0241		3	ELBOW CONNECTION, 972646	
WAINSIDE RINF U-FORM, WAINSIDE RINF Z-FORM, WASIDE RINF U-FORM, WASIDE RINF Z-FORM, TRAYOVER RINF U-FORM, TRAYOVER RINF Z-FORM, WAMEETING RINF U-FORM, WAMEETING RINF Z-FORM (See drawing on page: 9-78)					
010	90458-1745		6	RTD HOT MELT HOSE, 276740	
060	90458-1344		6	NON HEATED CONNECTION 45°, 972 647	
Common Parts					
030	90439-0236		8	SATURN RIGHT-ANGLE NOZZLE, 1011012	
090	90166-0202	M	2	TEFLON PIPE	
100	90459-6350		2	90° NIPPLE, SHORT HOSE/GUN, 274 180	
110	90459-6351		4	45° NIPPLE, SHORT HOSE/GUN, 274 179	
120	90459-6328		6	HOT MELT GUN, SOLIDBLUE A, 1060939	
	342921-0111		*1*	*STRAIGHT COUPLING,EXT.THREAD 6/4-M5*	
	90459-6331		*1*	*FILTER KIT, MESH M14, 104 5506*	
	90459-2231		*1*	*CORDSET, WATER WASH W. EYELET, 223 804*	
	90439-0238		*1*	*HEATING ELEMENT*	
130	90459-6329		8	MODULE SOLIDBLUE A, 1052927	
140	90459-6330		4	MODULE BLANK, CLASSICBLUE, 1054951	
160	351160-0102	M	2	ECAB01011-6L, WIRE AWM 1X0,75 MM2 DARKBL	
R101	3090142-0000		1	EXPANSION CARD	
V50V0010	90604-9746		1	HOT MELT UNIT PROBLUE 10, 1022236 H1	
	90459-1971		*1*	*HOSE/GUN MODULE KIT, 1028328*	
	90459-1972		*1*	*FUSE KIT, HOSE/GUN, 1028331*	
	90459-1974		*1*	*FUSE KIT, MAIN CIRC.BOARD, 1028329*	
	90459-1975		*1*	*DISPLAY, CPU BOARD SERV. KIT, 1028325*	
	90459-1978		*1*	*KIT, RTD TEMP. SENSOR, 1028320*	
	90459-1979		*1*	*SERV. KIT, THERMOSTAT, 1028321*	
	90459-1981		*1*	*SERVICE KIT, MANIFOLD ASSY, 1028309*	
	90459-1982		*1*	*SERVICE KIT, PRESS. DISC. VALVE, 1028308*	
	90459-1983		*1*	*HEATER BLOCK KIT, 1064649*	
	90459-1984		*1*	*KIT, PUMP PISTON, 1028303*	
	90459-1985		*1*	*SERVICE KIT, PUMP PISTON, 1028304*	
	90459-1986		*1*	*FILTER ASSY, 100 MESH, 1028305*	
	90459-1987		*1*	*SERVICE KIT, PNEUM. PANEL ASSY, 1028307*	
	90459-6068		*1*	*SVC KIT, MANIFOLD 6 HOSE, W.HTR BLOCK*	
	90459-6069		*1*	*SUBBASE MOUNTING PLATE, 1120193*	
	90459-6070		*1*	*CHASSIS, P7/P10, 1018822*	
	90459-6071		*1*	*SERVICE KIT, MAIN PCA, 1028323*	
	90459-6073		*1*	*KIT, 6 HOSE EXTENSION BOARD P10, 1028324*	
	90459-6074		*1*	*SERVICE KIT,OPER.PANEL/ENCL. P10,1028327*	
	90459-6075		*1*	*GUARD KIT, ASSY VENT. SCREEN P10,1048884*	
	90459-6076		*1*	*SERVICE KIT, TANK P10 230 V, 1051035*	
V50W0018	344269-0020		1	SENSOR CABLE, EVT217	

Machine Type | Group Description | Used-In | Group Number | Page No

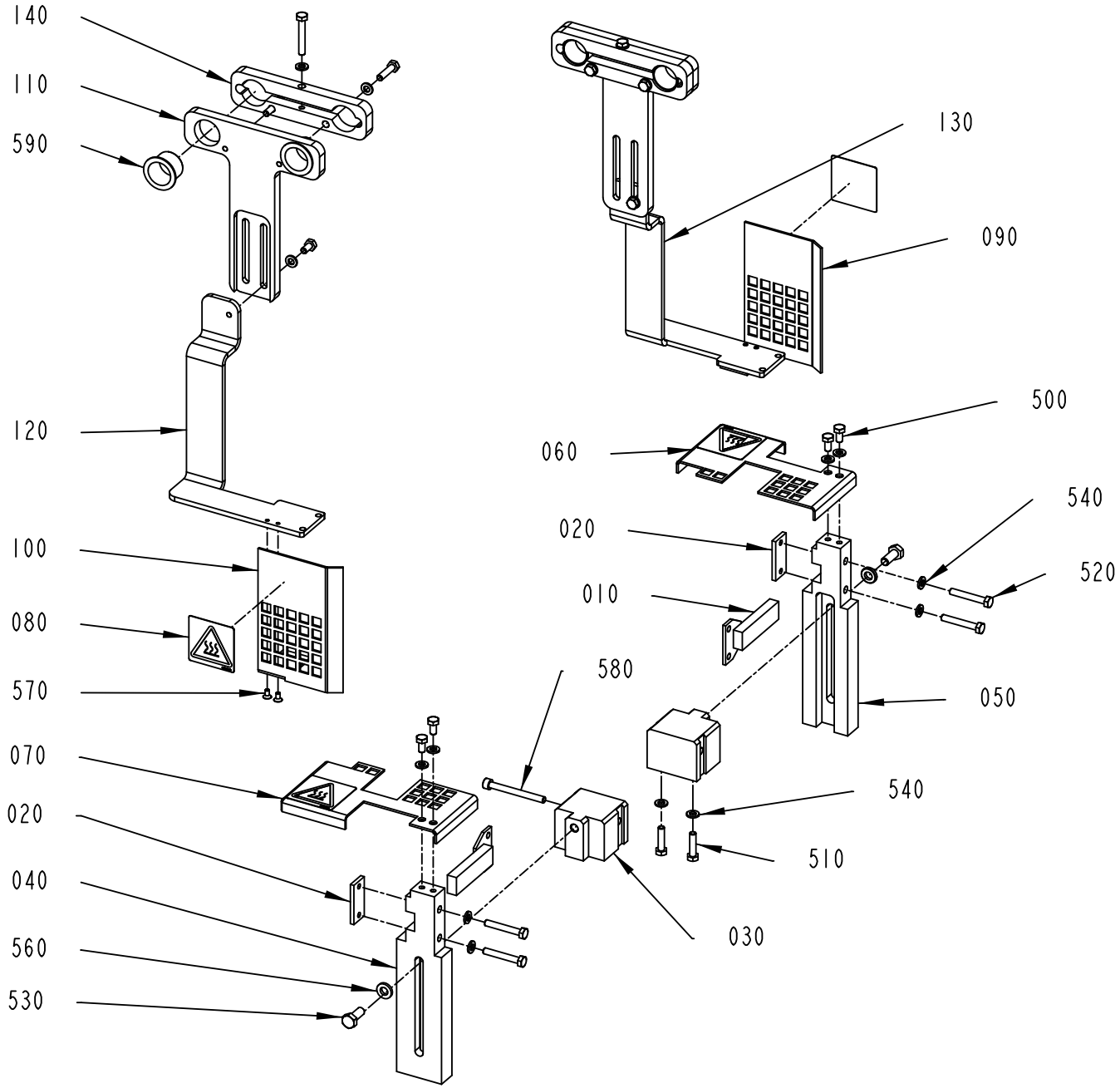

3090150-3
568933

ECM: 577719 - 20120924
Group number: 3090150-0300
Assembly Drawing: 3090150-3_1_AA

Pos	Part No	UN	Qty	Description	Page No
ANSI					
080	359725-0117		4	WARNING SIGN ANSI (V), HOT SURFACE	
ISO					
080	1128853-0000		4	CAUTION SIGN	
Common Parts					
010	1021298-0000		2	STEERING	
020	2833974-0000		2	LOCK PLATE	
030	3266372-0000		2	STEER PLATE	
040	3163183-0000		1	GUIDE	
050	3163184-0000		1	GUIDE	
060	3161728-0000		1	PROTECTION	
070	3161729-0000		1	PROTECTION	
090	3161725-0000		1	PROTECTION	
100	3161726-0000		1	PROTECTION	
110	3266369-0000		2	BRACKET	
120	3266370-0000		1	ANGLE BRACKET	
130	3266371-0000		1	ANGLE BRACKET	
140	3266373-0000		2	CLAMP BRACKET	
500	312105-0366		6	SCREW, M6S ISO 4017 M6X12 A4 80	
510	312105-0372		6	SCREW, M6S ISO 4017 M6X25 A4 80	
520	312105-0378		6	SCREW, M6S ISO 4014 M6X40 A4 80	
530	312105-0451		2	SCREW, M6S ISO 4017 M8X20 A4 80	
540	315106-0153		18	WASHER PLAIN, M6 ISO7089-6-200 HV A4	
560	315115-0165		2	WASHER PLAIN, TBRB 8,4/16 H=3	
570	312155-0287		4	SCREW DIN 7991 MF6S M4X8 A4 70	
580	312115-0382		1	SCREW ISO4762 M6X60 A4 80	
590	321153-0296		4	FLANGE BUSHING, IGLIDUR G 25X28X21,5	

Pos	Part No	UN	Qty	Description	Page No

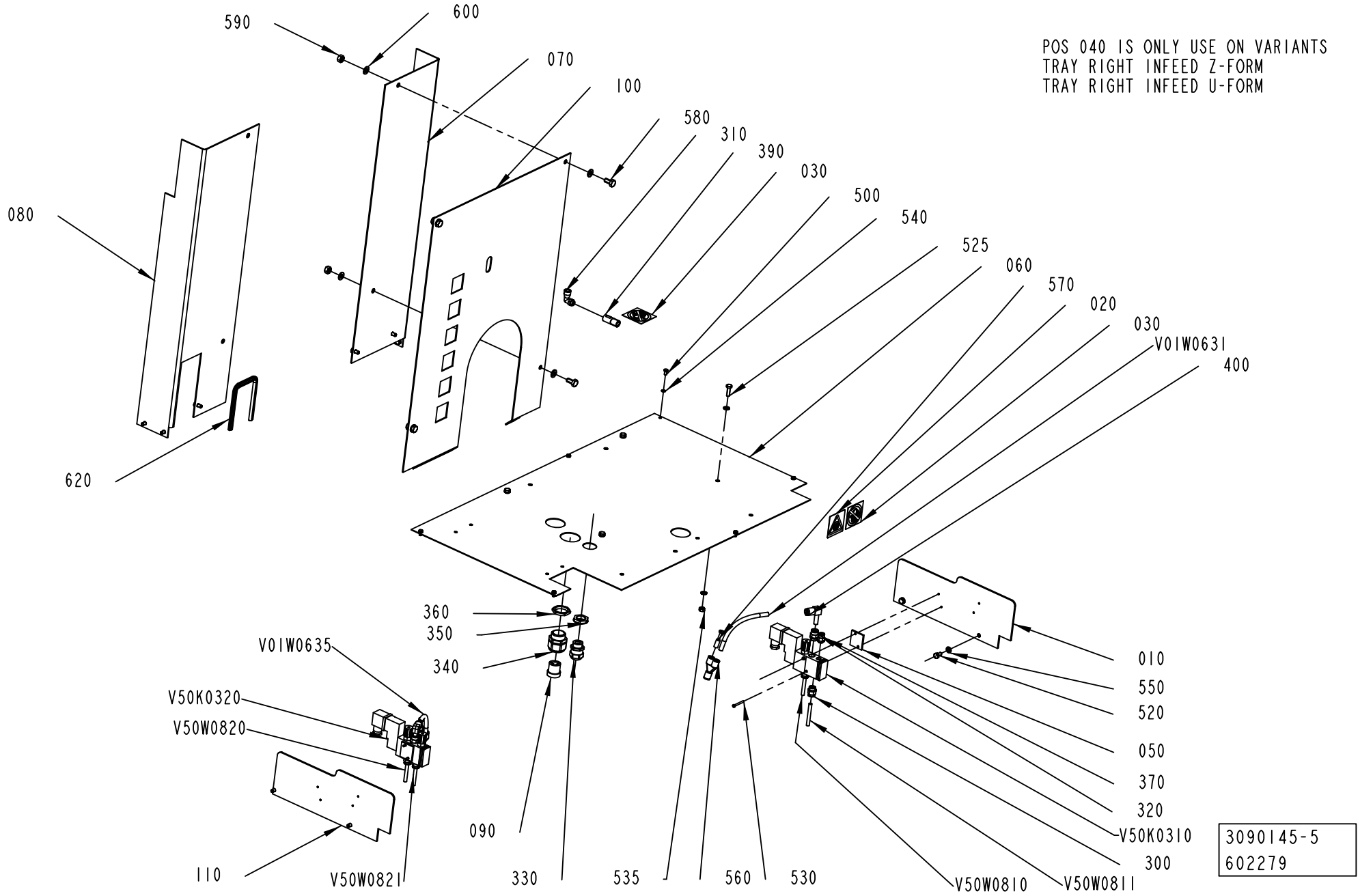
POS 040 IS ONLY USE ON VARIANTS
TRAY RIGHT INFEED Z-FORM
TRAY RIGHT INFEED U-FORM
590
600
070
100
580
310
390
030
500
540
525
060
570
020
030
V01W0631
400
080
620
360
350
340
V01W0635
V50K0320
V50W0820
110
V50W0821
090
330
535
560
530
010
550
520
050
370
320
V50K0310
300
V50W0810
V50W0811
3090145-5
602279

ECM: 614545 - 20130618
Group number: 3090145-0300
Assembly Drawing: 3090145-5_1_AA

This list covers pages from 9-82 to 9-85

Pos	Part No	UN	Qty	Description	Page No
TRAY LINF U-FORM ANSI, TRAY LINF Z-FORM ANSI (See drawing on page: 9-84)					
020	359725-0121		1	WARNING SIGN ANSI, HEAT ENERGY	
060	3297492-0000		1	BOTTOM PANEL	
070	3297493-0000		1	GUARD PLATE	
080	3272883-0000		1	GUARD PLATE	
100	3297489-0000		1	GUARD PLATE	
500	312105-0287		4	SCREW, M6S ISO 4017 M4X8 A4 70	
520	312105-0366		12	SCREW, M6S ISO 4017 M6X12 A4 80	
540	315105-0136		4	WASHER PLAIN, 4,3X9X0,8 A4 BRB	
550	315105-0153		18	WASHER PLAIN, 6,4X12X1,5 A4 BRB	
620	90143-0060	MM	130	EDGE STRIP 9,5X6,3MM BLACK PVC	
630	312105-0368		1	SCREW, M6S ISO 4017 M6X16 A4 80	
640	90143-0060	MM	741	EDGE STRIP 9,5X6,3MM BLACK PVC	
650	90143-0060	MM	43	EDGE STRIP 9,5X6,3MM BLACK PVC	
660	90143-0060	MM	78	EDGE STRIP 9,5X6,3MM BLACK PVC	
TRAY LINF U-FORM ISO, TRAY LINF Z-FORM ISO (See drawing on page: 9-84)					
020	1128844-0000		1	CAUTION SIGN	
060	3297492-0000		1	BOTTOM PANEL	
070	3297493-0000		1	GUARD PLATE	
080	3272883-0000		1	GUARD PLATE	
100	3297489-0000		1	GUARD PLATE	
500	312105-0287		4	SCREW, M6S ISO 4017 M4X8 A4 70	
520	312105-0366		12	SCREW, M6S ISO 4017 M6X12 A4 80	
540	315105-0136		4	WASHER PLAIN, 4,3X9X0,8 A4 BRB	
550	315105-0153		18	WASHER PLAIN, 6,4X12X1,5 A4 BRB	
620	90143-0060	MM	130	EDGE STRIP 9,5X6,3MM BLACK PVC	
630	312105-0368		1	SCREW, M6S ISO 4017 M6X16 A4 80	
640	90143-0060	MM	741	EDGE STRIP 9,5X6,3MM BLACK PVC	
650	90143-0060	MM	43	EDGE STRIP 9,5X6,3MM BLACK PVC	
660	90143-0060	MM	78	EDGE STRIP 9,5X6,3MM BLACK PVC	
TRAY RINF U-FORM ANSI, TRAY RINF Z-FORM ANSI (See drawing on page: 9-82)					
020	359725-0121		1	WARNING SIGN ANSI, HEAT ENERGY	
040	2557262-0000		1	COVERING PLATE	
060	3090153-0000		1	PLATE	
070	2721919-0000		1	PROTECTION PLATE	
080	2894984-0000		1	PROTECTION PLATE	
100	3090141-0000		1	PROTECTION PLATE	
500	312105-0287		6	SCREW, M6S ISO 4017 M4X8 A4 70	
520	312105-0366		15	SCREW, M6S ISO 4017 M6X12 A4 80	
540	315105-0136		6	WASHER PLAIN, 4,3X9X0,8 A4 BRB	
550	315105-0153		20	WASHER PLAIN, 6,4X12X1,5 A4 BRB	
620	90143-0060	MM	265	EDGE STRIP 9,5X6,3MM BLACK PVC	
TRAY RINF U-FORM ISO, TRAY RINF Z-FORM ISO (See drawing on page: 9-82)					
020	1128844-0000		1	CAUTION SIGN	
040	2557262-0000		1	COVERING PLATE	
060	3090153-0000		1	PLATE	
070	2721919-0000		1	PROTECTION PLATE	
080	2894984-0000		1	PROTECTION PLATE	
100	3090141-0000		1	PROTECTION PLATE	
500	312105-0287		6	SCREW, M6S ISO 4017 M4X8 A4 70	
520	312105-0366		15	SCREW, M6S ISO 4017 M6X12 A4 80	
540	315105-0136		6	WASHER PLAIN, 4,3X9X0,8 A4 BRB	
550	315105-0153		20	WASHER PLAIN, 6,4X12X1,5 A4 BRB	
620	90143-0060	MM	265	EDGE STRIP 9,5X6,3MM BLACK PVC	
TRAYOVER LINF U-FORM ANSI, WAMEETING LINF U-FORM ANSI, TRAYOVER LINF Z-FORM ANSI, WAMEETING LINF Z-FORM ANSI, WAINSIDE LINF U-FORM ANSI, WASIDE LINF U-FORM ANSI, WAINSIDE LINF Z-FORM ANSI, WASIDE LINF Z-FORM ANSI (See drawing on page: 9-84)					
020	359725-0121		1	WARNING SIGN ANSI, HEAT ENERGY	
060	3297492-0000		1	BOTTOM PANEL	
070	3297490-0000		1	PROTECTION PLATE	
080	3272884-0000		1	GUARD PLATE	
100	3297489-0000		1	GUARD PLATE	
500	312105-0287		4	SCREW, M6S ISO 4017 M4X8 A4 70	
520	312105-0366		10	SCREW, M6S ISO 4017 M6X12 A4 80	
540	315105-0136		4	WASHER PLAIN, 4,3X9X0,8 A4 BRB	
550	315105-0153		16	WASHER PLAIN, 6,4X12X1,5 A4 BRB	
620	90143-0060	MM	130	EDGE STRIP 9,5X6,3MM BLACK PVC	
630	312105-0368		1	SCREW, M6S ISO 4017 M6X16 A4 80	
640	90143-0060	MM	741	EDGE STRIP 9,5X6,3MM BLACK PVC	
650	90143-0060	MM	43	EDGE STRIP 9,5X6,3MM BLACK PVC	
660	90143-0060	MM	78	EDGE STRIP 9,5X6,3MM BLACK PVC	
TRAYOVER LINF U-FORM ISO, WAMEETING LINF U-FORM ISO, TRAYOVER LINF Z-FORM ISO, WAMEETING LINF Z-FORM ISO, WAINSIDE LINF U-FORM ISO, WAINSIDE LINF Z-FORM ISO, WASIDE LINF U-FORM ISO, WASIDE LINF Z-FORM ISO (See drawing on page: 9-84)					
020	1128844-0000		1	CAUTION SIGN	
060	3297492-0000		1	BOTTOM PANEL	
070	3297490-0000		1	PROTECTION PLATE	
080	3272884-0000		1	GUARD PLATE	
100	3297489-0000		1	GUARD PLATE	
500	312105-0287		4	SCREW, M6S ISO 4017 M4X8 A4 70	
520	312105-0366		10	SCREW, M6S ISO 4017 M6X12 A4 80	
540	315105-0136		4	WASHER PLAIN, 4,3X9X0,8 A4 BRB	
550	315105-0153		16	WASHER PLAIN, 6,4X12X1,5 A4 BRB	
620	90143-0060	MM	130	EDGE STRIP 9,5X6,3MM BLACK PVC	

Machine Type | Group Description | Used-In | Group Number | Page No

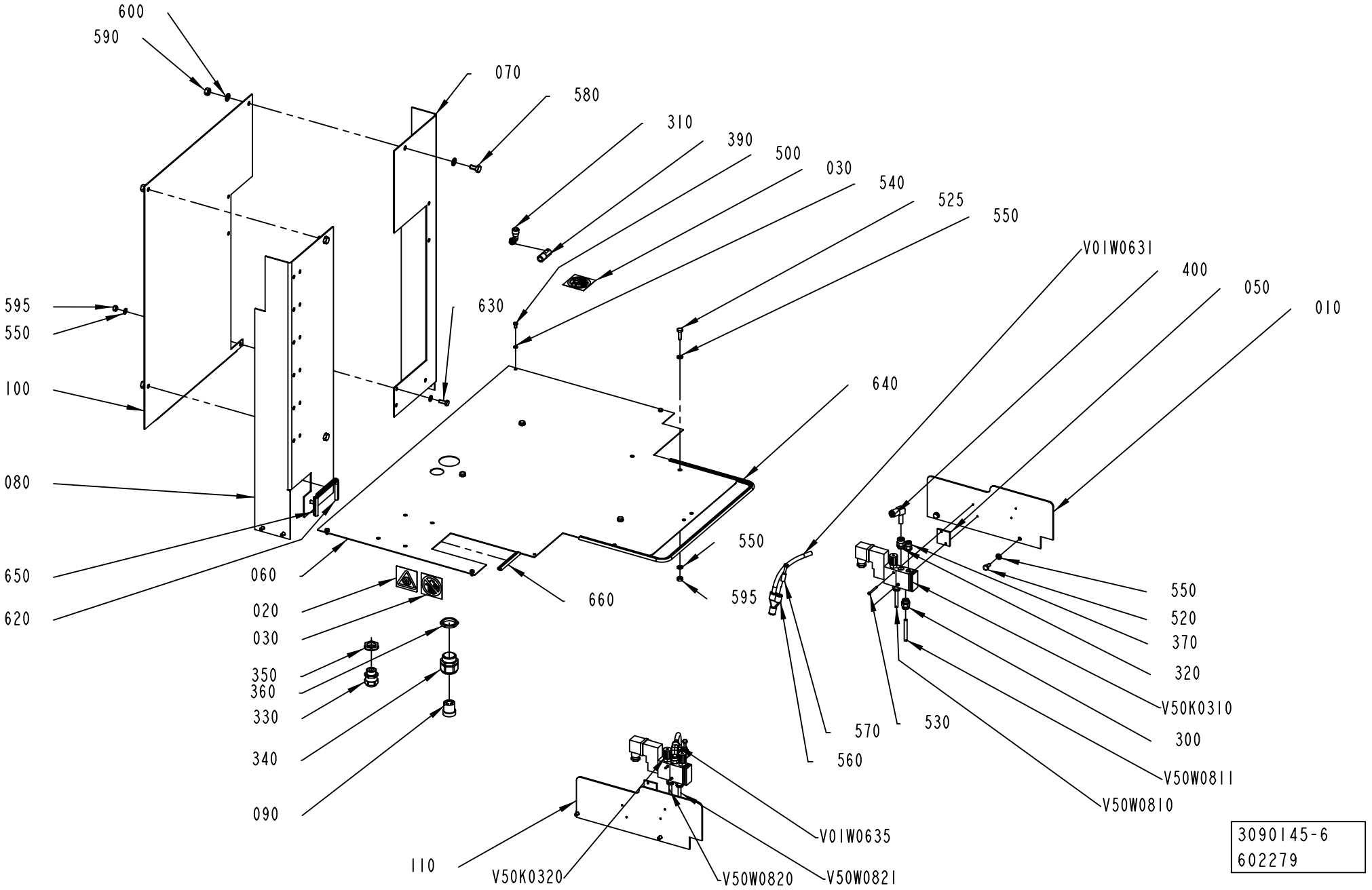
600
590
070
580
310
390
500
030
540
525
550
V01W0631
400
050
010
595
550
630
100
640
080
550
650
060
595
620
020
660
030
350
360
330
340
090
570
530
560
520
370
320
V50K0310
300
V50W0811
V50W0810
110
V50K0320
V50W0820
V01W0635
V50W0821
3090145-6
602279

Pos	Part No	UN	Qty	Description	Page No
TRAYOVER LINF U-FORM ISO, WAMEETING LINF U-FORM ISO, TRAYOVER LINF Z-FORM ISO, WAMEETING LINF Z-FORM ISO, WAINSIDE LINF U-FORM ISO, WAINSIDE LINF Z-FORM ISO, WASIDE LINF U-FORM ISO, WASIDE LINF Z-FORM ISO (Cont'd) (See drawing on page: 9-84)					
630	312105-0368		1	SCREW, M6S ISO 4017 M6X16 A4 80	
640	90143-0060	MM	741	EDGE STRIP 9,5X6,3MM BLACK PVC	
650	90143-0060	MM	43	EDGE STRIP 9,5X6,3MM BLACK PVC	
660	90143-0060	MM	78	EDGE STRIP 9,5X6,3MM BLACK PVC	
TRAYOVER RINF U-FORM ANSI, TRAYOVER RINF Z-FORM ANSI, WAMEETING RINF U-FORM ANSI, WAMEETING RINF Z-FORM ANSI, WAINSIDE RINF U-FORM ANSI, WAINSIDE RINF Z-FORM ANSI, WASIDE RINF U-FORM ANSI, WASIDE RINF Z-FORM ANSI (See drawing on page: 9-82)					
020	359725-0121		1	WARNING SIGN ANSI, HEAT ENERGY	
060	3090153-0000		1	PLATE	
070	2721917-0000		1	PROTECTION PLATE	
080	2894976-0000		1	PROTECTION PLATE	
100	3090141-0000		1	PROTECTION PLATE	
500	312105-0287		6	SCREW, M6S ISO 4017 M4X8 A4 70	
520	312105-0366		11	SCREW, M6S ISO 4017 M6X12 A4 80	
540	315105-0136		6	WASHER PLAIN, 4,3X9X0,8 A4 BRB	
550	315105-0153		19	WASHER PLAIN, 6,4X12X1,5 A4 BRB	
620	90143-0060	MM	265	EDGE STRIP 9,5X6,3MM BLACK PVC	
TRAYOVER RINF U-FORM ISO, TRAYOVER RINF Z-FORM ISO, WAMEETING RINF U-FORM ISO, WAMEETING RINF Z-FORM ISO, WAINSIDE RINF U-FORM ISO, WAINSIDE RINF Z-FORM ISO, WASIDE RINF U-FORM ISO, WASIDE RINF Z-FORM ISO (See drawing on page: 9-82)					
020	1128844-0000		1	CAUTION SIGN	
060	3090153-0000		1	PLATE	
070	2721917-0000		1	PROTECTION PLATE	
080	2894976-0000		1	PROTECTION PLATE	
100	3090141-0000		1	PROTECTION PLATE	
500	312105-0287		6	SCREW, M6S ISO 4017 M4X8 A4 70	
520	312105-0366		11	SCREW, M6S ISO 4017 M6X12 A4 80	
540	315105-0136		6	WASHER PLAIN, 4,3X9X0,8 A4 BRB	
550	315105-0153		19	WASHER PLAIN, 6,4X12X1,5 A4 BRB	
620	90143-0060	MM	265	EDGE STRIP 9,5X6,3MM BLACK PVC	
Common Parts					
010	3161723-0000		1	PLATE	
030	90459-2265		2	PROHIBITION SIGN ISO, DO NOT WASH	
050	2763037-0000		2	SPACER	
090	90457-0028		1	INSERT, MULTI HOLE, E154M5X5	
110	3161732-0000		1	PLATE	
300	90600-2719		4	PUSH-IN FITTING KQH06-U02	
310	90458-2964		1	ELBOW PIPE JOINT, EXT.THREAD, D=8MM-G1/8	
320	90600-2720		2	PUSH-IN FITTING KQH08-U02	
330	90458-0315		1	CABLE GLAND, M20X1,5, 5311 1120	
340	353240-0005		1	COMPRESSION GLAND, VK 154Y	
350	90458-0323		1	NUT, M20X1,5	
360	90099-0004		1	NUT	
370	90600-2718		1	PUSH-IN FITTING KQH06-U01	
390	975755-0000		1	ATTACHMENT	
400	90600-1175		2	ELBOW WITH TAILPIECE 8/8 MM	
525	312105-0370		4	SCREW, M6S ISO 4017 M6X20 A4 80	
530	312125-0234		4	SLOTTED HEAD SCREW, ISO1207 M3X30 A4	
535	312605-0316		1	HEXAGON NUT, M6M M6 A280	
560	350015-0003		2	PUSH-IN Y-CONNECTOR QSY-F-8	
570	350013-0003		2	PLUG QSC-8H	
580	312105-0449		3	SCREW, M6S ISO 4017 M8X16 A4 80	
590	312605-0318		3	HEXAGON NUT, M6M M8 A280	
595	312605-0316		4	HEXAGON NUT, M6M M6 A280	
600	315105-0165		6	FWAS080G0-0S, WASHER PLAIN	
610	312105-0153		4	SCREW EN 10642 MF6S M5X25 A480	
V50K0310	90459-6327		1	SOLENOID VALVE, SOLIDBLUE, 1053894	
	90459-6332		*1*	*MUFFLER, 1/8 INCH, 105 8058*	
	90042-0392		*1*	*CONTACT 2 POLE + EARTH*	
V50K0320	90459-6327		1	SOLENOID VALVE, SOLIDBLUE, 1053894	
	90459-6332		*1*	*MUFFLER, 1/8 INCH, 105 8058*	
	90042-0392		*1*	*CONTACT 2 POLE + EARTH*	
V01W0631	315400-0004	MM	500	TUBE PUN-H-8X1,25-BL	
V01W0635	315400-0004	MM	500	TUBE PUN-H-8X1,25-BL	
V50W0810	90166-0202	MM	500	TEFLON PIPE	
V50W0811	90166-0202	MM	500	TEFLON PIPE	
V50W0820	90166-0202	MM	500	TEFLON PIPE	
V50W0821	90166-0202	MM	500	TEFLON PIPE	

Machine Type	Group Description	Used-In	Group Number	Page No

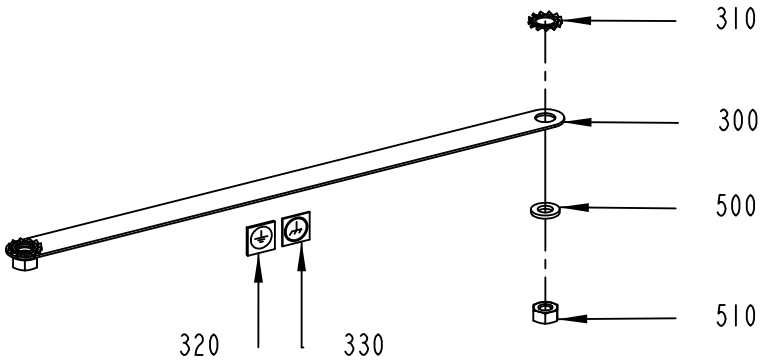

A
2:5

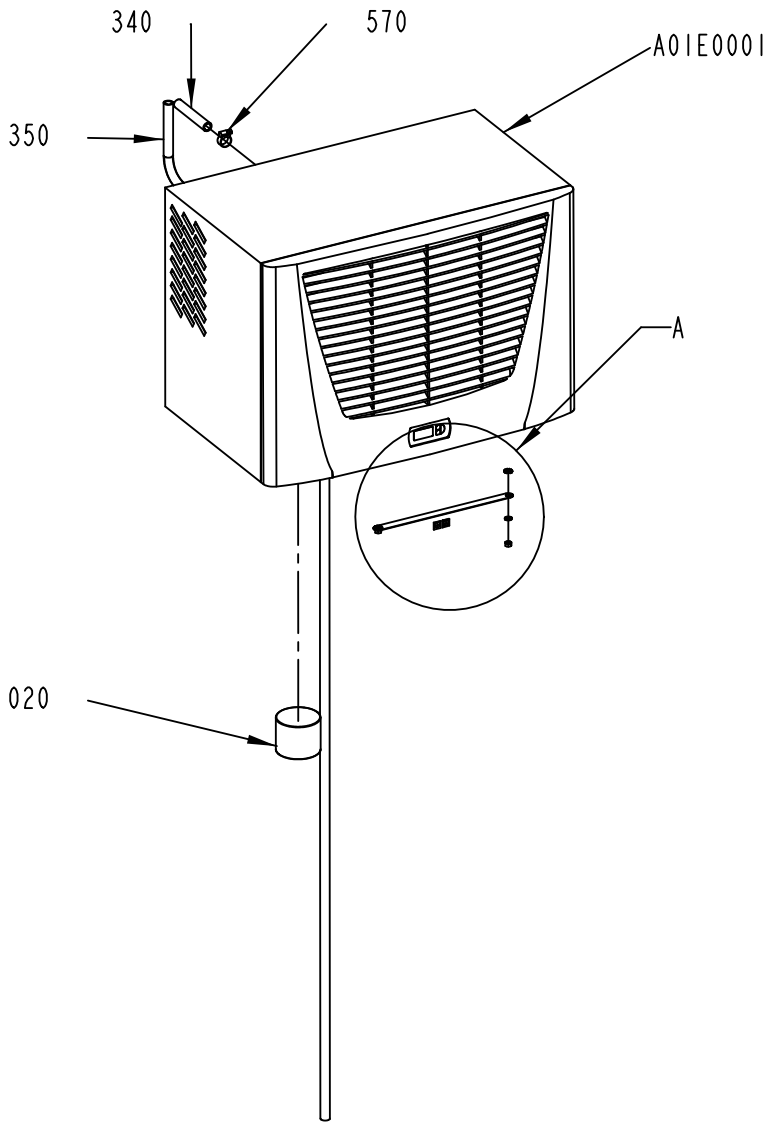

3263648-1
627532

ECM: 630434 - 20130919
Group number: 3263648-0100
Assembly Drawing: 3263648-1_1_AD

Pos	Part No	UN	Qty	Description	Page No
-					
020	3263650-0000		1	COVER	
300	90600-2904		1	EARTH BRAID, 250/16/8,5	
310	90062-0016		2	LOCK WASHER SERRAT.EXT.GEAR,8,4/15 H=0,8	
320	90194-0152		1	SIGN, EARTH	
330	90459-2928		1	LABEL 60417-2-IEC-5020, COMM. REF. POT.	
340	90459-6690	MM	100	HOSE PVC, 12/16 MM	
350	90459-6690	MM	2300	HOSE PVC, 12/16 MM	
500	315101-0153		2	WASHER PLAIN, BRB, 6,4/12 H=1,5	
510	312605-0316		2	HEXAGON NUT, M6M M6 A280	
570	342991-0102		1	HOSE CLIP,WORM DRIVE TYPE (13)-20	
A01E0001	351439-1103		1	TOP THERM BLUE-E ROOFMOUNT SS, 3359.600	

Pos	Part No	UN	Qty	Description	Page No

This page is intentionally left blank.

ECM: 567469 - 20120710
Group number: 2834002-0300
Assembly Drawing:

Pos	Part No	UN	Qty	Description	Page No
-					
010	3252774-0100		1	LIGHT BARRIER	**9-91**

Pos	Part No	UN	Qty	Description	Page No

Machine Type | Group Description | Used-In | Group Number | Page No

LIGHT BARRIER

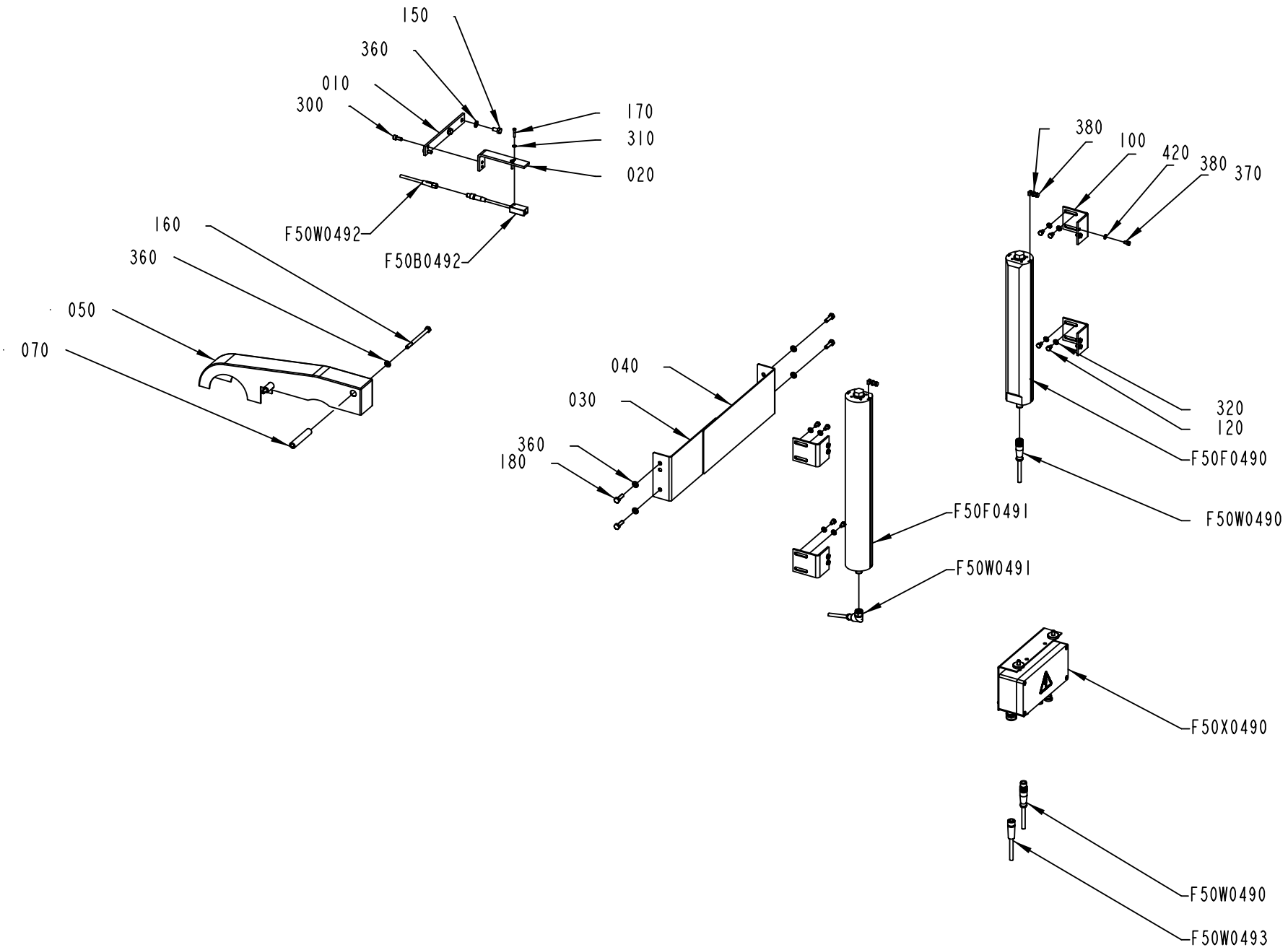

3252774-1
630890

ECM: 646241 - 20131125
Group number: 3252774-0100
Assembly Drawing: 3252774-1_1_AD

Pos	Part No	UN	Qty	Description	Page No
EXT DISCHARGE UNIT					
360	315106-0153		4	WASHER PLAIN, M6 ISO7089-6-200 HV A4	
Without EXT DISCHARGE UNIT					
030	2782770-0000		1	BRACKET	
040	2782771-0000		1	BRACKET	
180	312105-0370		4	SCREW, M6S ISO 4017 M6X20 A4 80	
360	315106-0153		8	WASHER PLAIN, M6 ISO7089-6-200 HV A4	
Common Parts					
010	3264173-0000		1	FASTENING IRON	
020	3264174-0000		1	FASTENING IRON	
050	3264185-0000		1	CHAIN GUARD	
070	3264186-0000		2	DISTANCE	
100	3190605-0000		2	MOUNTING KIT	
120	312105-0323		8	FSCR05080-10, SCREW, M6S	
150	312105-0366		2	SCREW, M6S ISO 4017 M6X12 A4 80	
160	312105-0386		2	SCREW, M6S ISO 4014 M6X80 A4 80	
170	312125-0228		2	SLOTTED HEAD SCREW, ISO1207 M3X16 A4	
300	312115-0327		2	SCREW ISO4762 M5X12 A4 80	
310	315106-0124		2	WASHER PLAIN, M3 ISO7089-3-200 HV A4	
320	315106-0146		8	WASHER PLAIN, M5 ISO7089-5-200 HV A4	
370	312105-0287		8	SCREW, M6S ISO 4017 M4X8 A4 70	
380	315106-0136		12	WASHER PLAIN, M4 ISO7089-4-200 HV A4	
420	3190604-0000		4	BRACKET	
F50B0492	90459-7366		1	PHOTOCELL, WTB4-3P3161 F20	
F50F0490	90603-9794		1	SAFETY LIGHT BARRIER,TRANSM. SLC425I-E02	
F50F0491	90603-9795		1	SAFETY LIGHT BARRIER, REC. SLC425I-R0250	
F50W0490	90459-4876		1	FOCUS JUMPER CABLE M12 5P 3M, 20-056-21	
F50W0491	344297-0030		1	SENSOR CABLE, SAC-8P-3,0-PVC/M12FR SH VA	
F50W0492	344245-0050		1	SENSOR CABLE, EVT123	
F50W0493	90459-4877		1	FOCUS CABLE M12 8P 6M, 20-056-30	
F50X0490	3190602-0100		1	CONNECTION BOX	**9-93, 9-95**

Pos	Part No	UN	Qty	Description	Page No

Machine Type | Group Description | Used-In | Group Number | Page No

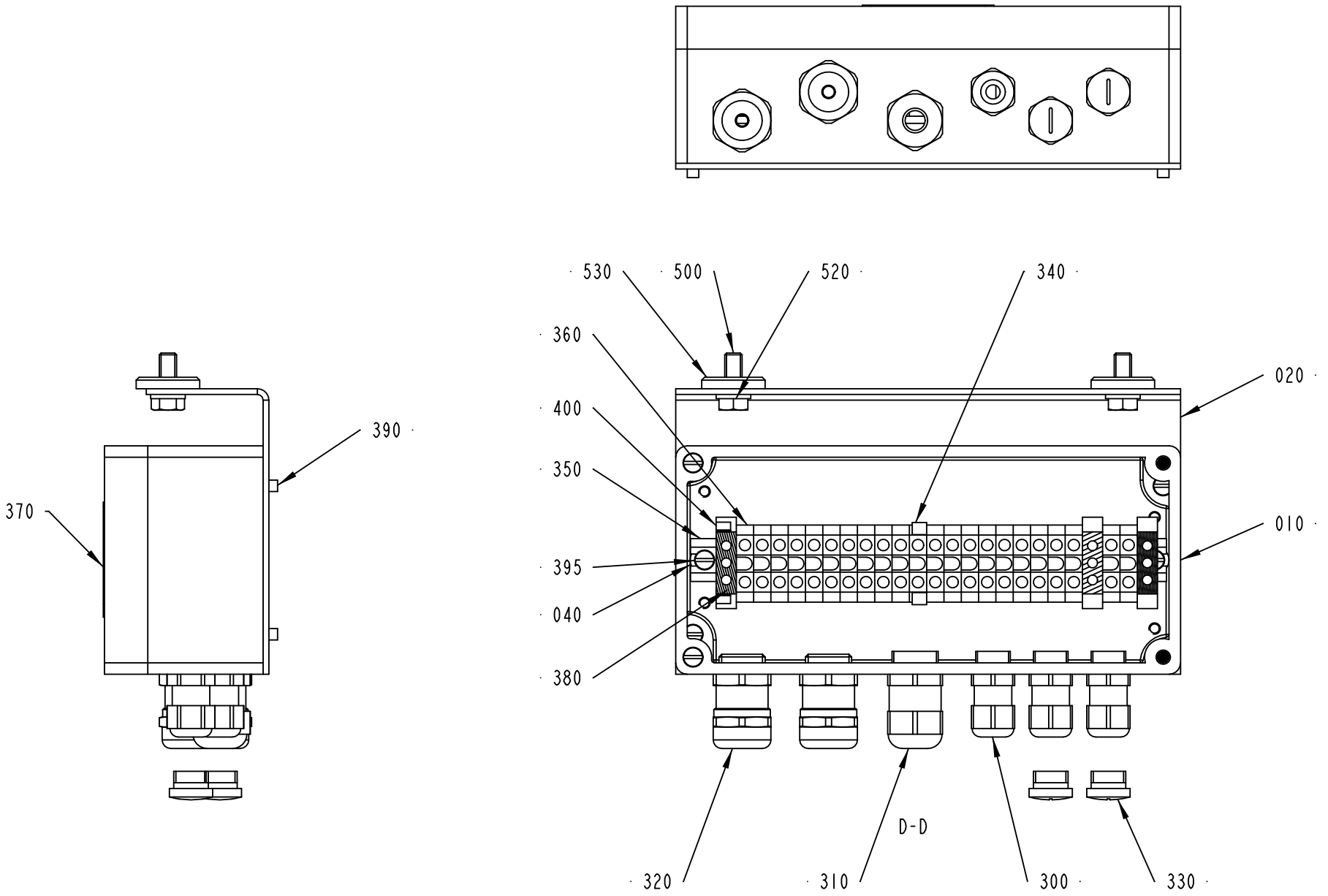

3190602-1
602279

Pos	Part No	UN	Qty	Description	Page No
FINAL DEST. CANADA, FINAL DEST. USA					
370	359715-0100		1	WARNING SIGN ANSI (H), ELECTRIC SHOCK	
OTHER COUNTRIES					
370	359705-0015		1	WARNING SIGN ISO, RISK OF ELECTRIC SHOCK	
Common Parts					
010	3190601-0000		1	CONNECTION BOX	
020	3190603-0000		1	BRACKET	
300	90458-0305		3	CABLE GLAND, M12X1,5, 5311 1000	
310	90458-0306		1	CABLE GLAND, M16X1,5, 5311 1010	
320	344202-0002		2	CABLE GLAND, MS-SC-M, 4,5-9MM, M16X1,5	
330	90458-1306		2	BLIND PLUG CIRCULAR, M12X1,5 514GFK/212	
340	359011-0821		2	MARKING, DEK 6 FW 1-50	
350	90077-0328	MM	165	RAIL, TS15/5	
360	90077-0079		22	TERMINAL PLINTH, AKZ 4	
380	90135-0026		3	EARTH TERMINAL AKE 4	
390	312125-0291		2	SLOTTED HEAD SCREW, ISO1207 M4X12 A4	
395	312125-0293		2	SLOTTED HEAD SCREW, ISO1207 M4X16 A4	
400	90459-0606		2	MARKING, DKE 5 MARKED E1-E50	
500	312105-0368		2	SCREW, M6S ISO 4017 M6X16 A4 80	
520	315105-0153		2	WASHER PLAIN, 6,4X12X1,5 A4 BRB	
530	315125-0153		2	WASHER HIGH, TBRSB 6,4X22X4 A4	

Pos	Part No	UN	Qty	Description	Page No

CABLES

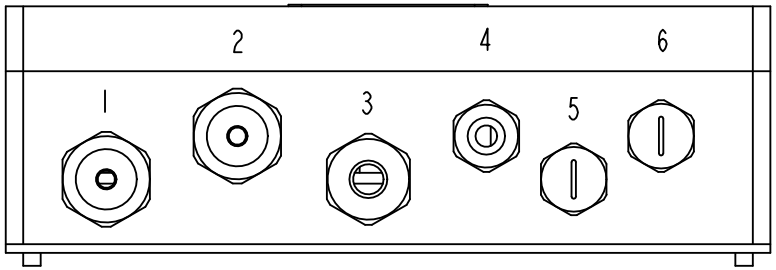

REFDES

	1	2	3	4
CBP70-0600-1200	W260	W262	W261	W265
CBP32-0100	50W493	F50W0491	F50W0490	F50W0495
CBP32-0200-0500	F50W0493	F50W0491	F50W0490	F50W0495

3190602-1
602279

Pos	Part No	UN	Qty	Description	Page No
FINAL DEST. CANADA, FINAL DEST. USA					
370	359715-0100		1	WARNING SIGN ANSI (H), ELECTRIC SHOCK	
OTHER COUNTRIES					
370	359705-0015		1	WARNING SIGN ISO, RISK OF ELECTRIC SHOCK	
Common Parts					
010	3190601-0000		1	CONNECTION BOX	
020	3190603-0000		1	BRACKET	
300	90458-0305		3	CABLE GLAND, M12X1,5, 5311 1000	
310	90458-0306		1	CABLE GLAND, M16X1,5, 5311 1010	
320	344202-0002		2	CABLE GLAND, MS-SC-M, 4,5-9MM, M16X1,5	
330	90458-1306		2	BLIND PLUG CIRCULAR, M12X1,5 514GFK/212	
340	359011-0821		2	MARKING, DEK 6 FW 1-50	
350	90077-0328	MM	165	RAIL, TS15/5	
360	90077-0079		22	TERMINAL PLINTH, AKZ 4	
380	90135-0026		3	EARTH TERMINAL AKE 4	
390	312125-0291		2	SLOTTED HEAD SCREW, ISO1207 M4X12 A4	
395	312125-0293		2	SLOTTED HEAD SCREW, ISO1207 M4X16 A4	
400	90459-0606		2	MARKING, DKE 5 MARKED E1-E50	
500	312105-0368		2	SCREW, M6S ISO 4017 M6X16 A4 80	
520	315105-0153		2	WASHER PLAIN, 6,4X12X1,5 A4 BRB	
530	315125-0153		2	WASHER HIGH, TBRSB 6,4X22X4 A4	

Pos	Part No	UN	Qty	Description	Page No

This page is intentionally left blank.

ECM: 347477 - 20080919
Group number: 2802448-0300
Assembly Drawing:

Pos	Part No	UN	Qty	Description	Page No
CONVEYOR FLEXI 56					
	2959023-0100		1	PHOTOCELL UNIT, COM. START CONV.	**9-99**
CONVEYOR TPC21/TPC53, CONVEYOR PC23, CONVEYOR UC24					
	2959021-0100		1	PHOTOCELL UNIT, COM. START CONV.	**9-101**
UNIT CONVEYOR 54					
	2959022-0100		1	PHOTOCELL UNIT, COM. START CONV.	**9-103**

Pos	Part No	UN	Qty	Description	Page No

Machine Type | Group Description | Used-In | Group Number | Page No

PHOTOCELL UNIT, COM. START CONV.

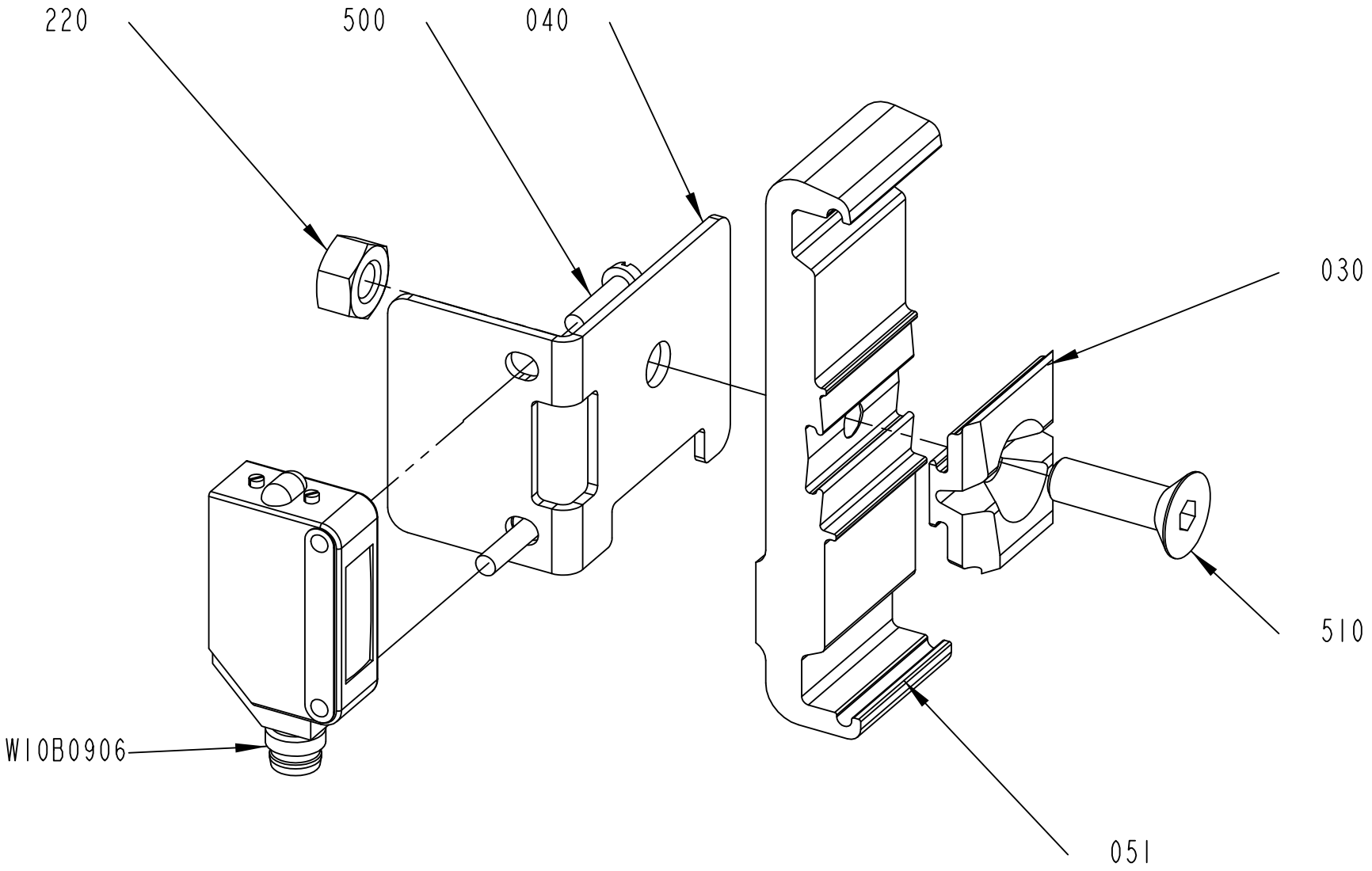

2959023-1
347756

ECM: 347756 - 20080919
Group number: 2959023-0100
Assembly Drawing: 2959023-1_1_AA

Pos	Part No	UN	Qty	Description	Page No
-					
030	1138130-0000		1	LOCKING BLOCK	
040	2959047-0000		1	BRACKET	
051	2912730-0000		1	HOLDER	
220	312605-0316		1	HEXAGON NUT, M6M M6 A280	
500	312125-0226		2	SLOTTED HEAD SCREW, ISO1207 M3X12 A4	
510	312155-0370		1	SCREW DIN 7991 MF6S M6X20 A4 70	
W10B0906	90459-2986		1	PHOTOCELL, E3Z-LS86	

Pos	Part No	UN	Qty	Description	Page No

PHOTOCELL UNIT, COM. START CONV.

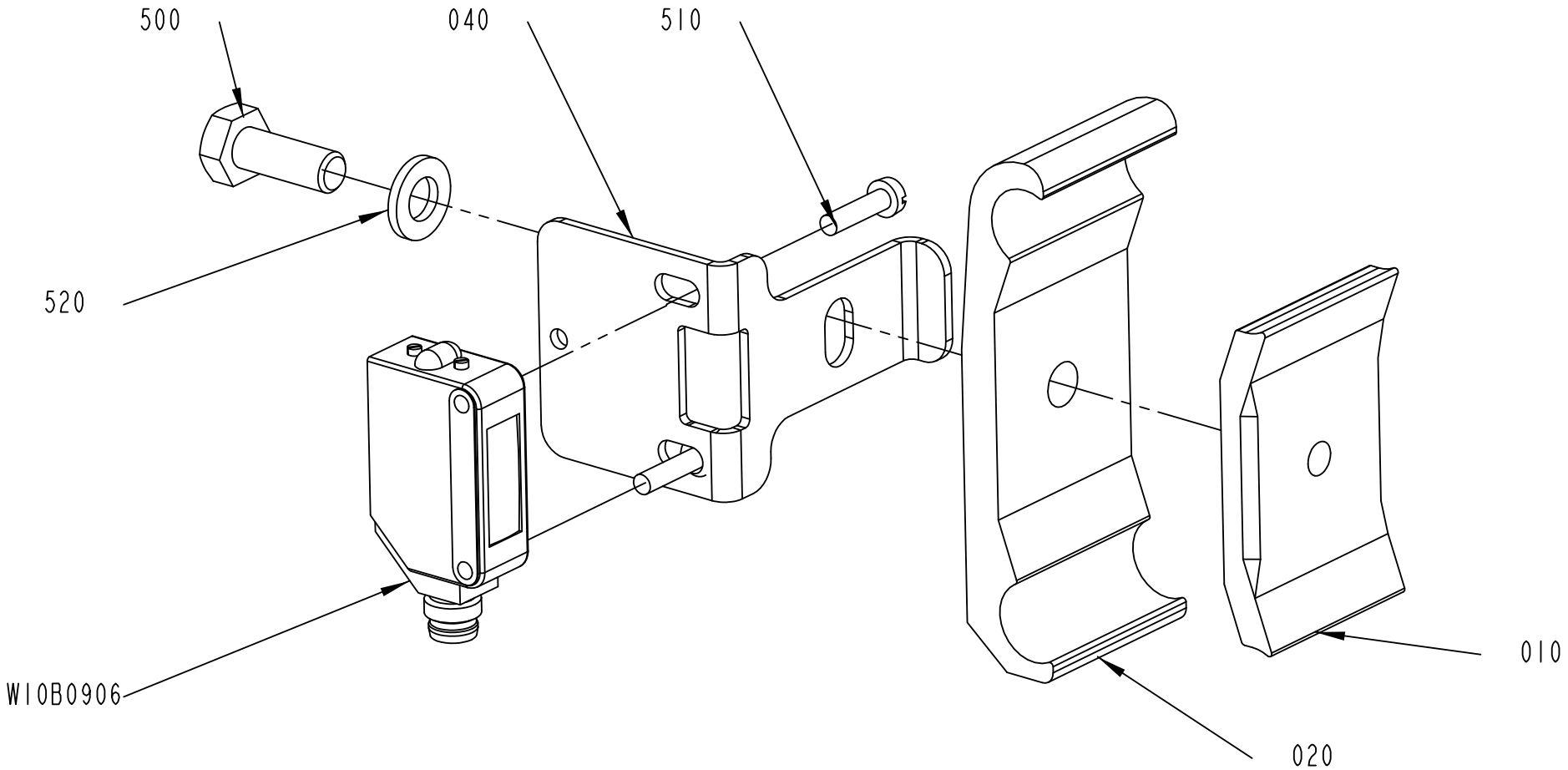

2959021-1
347756

ECM: 347756 - 20080919
Group number: 2959021-0100
Assembly Drawing: 2959021-1_1_AA

Pos	Part No	UN	Qty	Description	Page No
-					
010	1366727-0000		1	CLAMP	
020	1366750-0000		1	HOLDER	
040	2959046-0000		1	BRACKET	
500	312105-0368		1	SCREW, M6S ISO 4017 M6X16 A4 80	
510	312121-0226		2	SCREW ISO 1207 M3X12 4.8-5.8 Z.PL.	
520	315105-0153		1	WASHER PLAIN, 6,4X12X1,5 A4 BRB	
W10B0906	90459-2986		1	PHOTOCELL, E3Z-LS86	

Pos	Part No	UN	Qty	Description	Page No

PHOTOCELL UNIT, COM. START CONV.

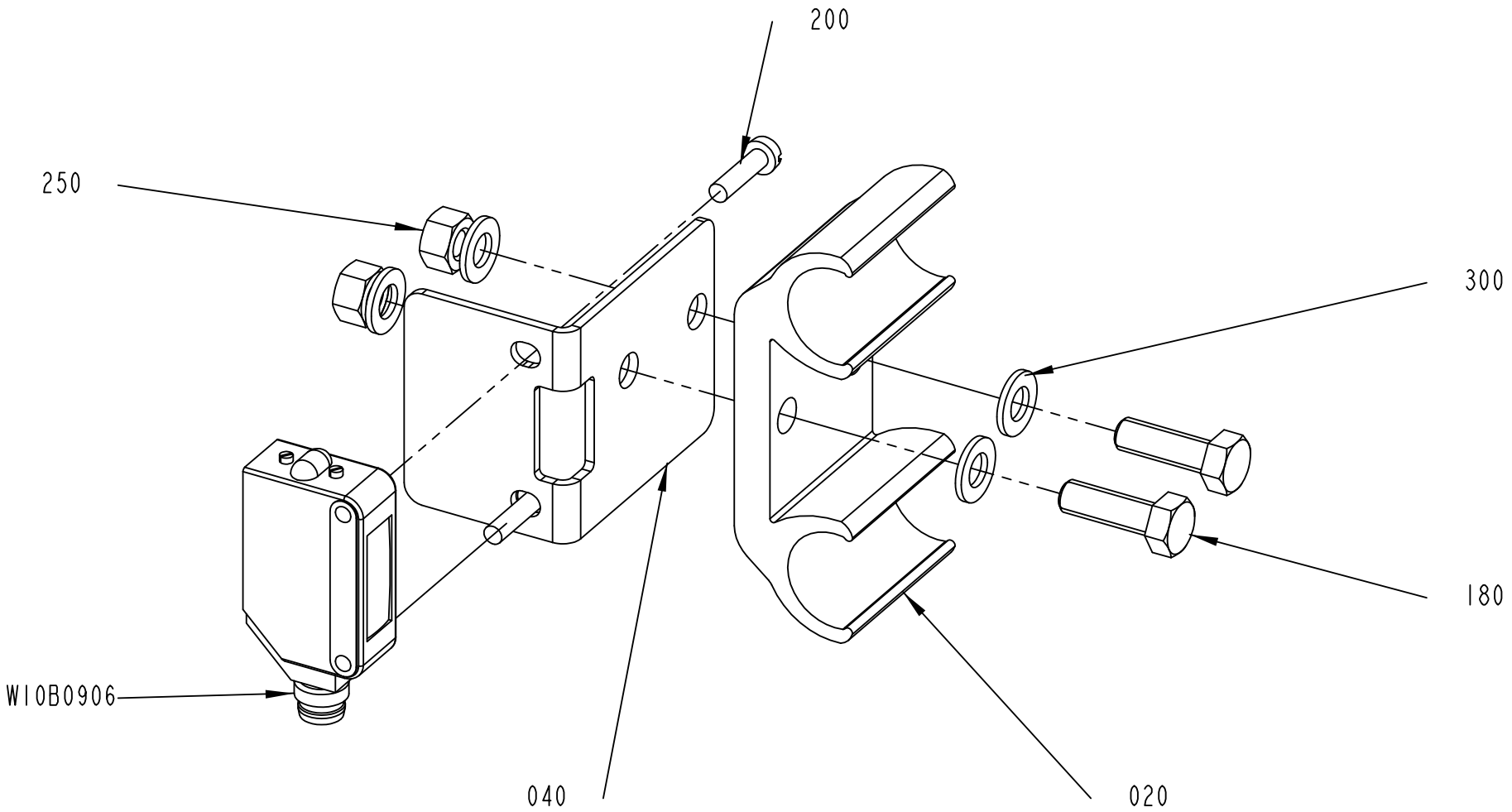

2959022-1
347756

ECM: 347756 - 20080919
Group number: 2959022-0100
Assembly Drawing: 2959022-1_1_AA

Pos	Part No	UN	Qty	Description	Page No
-					
020	1086175-0000		1	HOLDER	
040	2959049-0000		1	BRACKET	
180	312105-0329		2	SCREW, M6S ISO 4017 M5X16 A4 80	
200	312125-0226		2	SLOTTED HEAD SCREW, ISO1207 M3X12 A4	
250	312605-0314		2	HEXAGON NUT, M6M M5 A280	
300	315105-0146		4	WASHER PLAIN, 5,3X10X1 A4 BRB	
W10B0906	90459-2986		1	PHOTOCELL, E3Z-LS86	

Pos	Part No	UN	Qty	Description	Page No

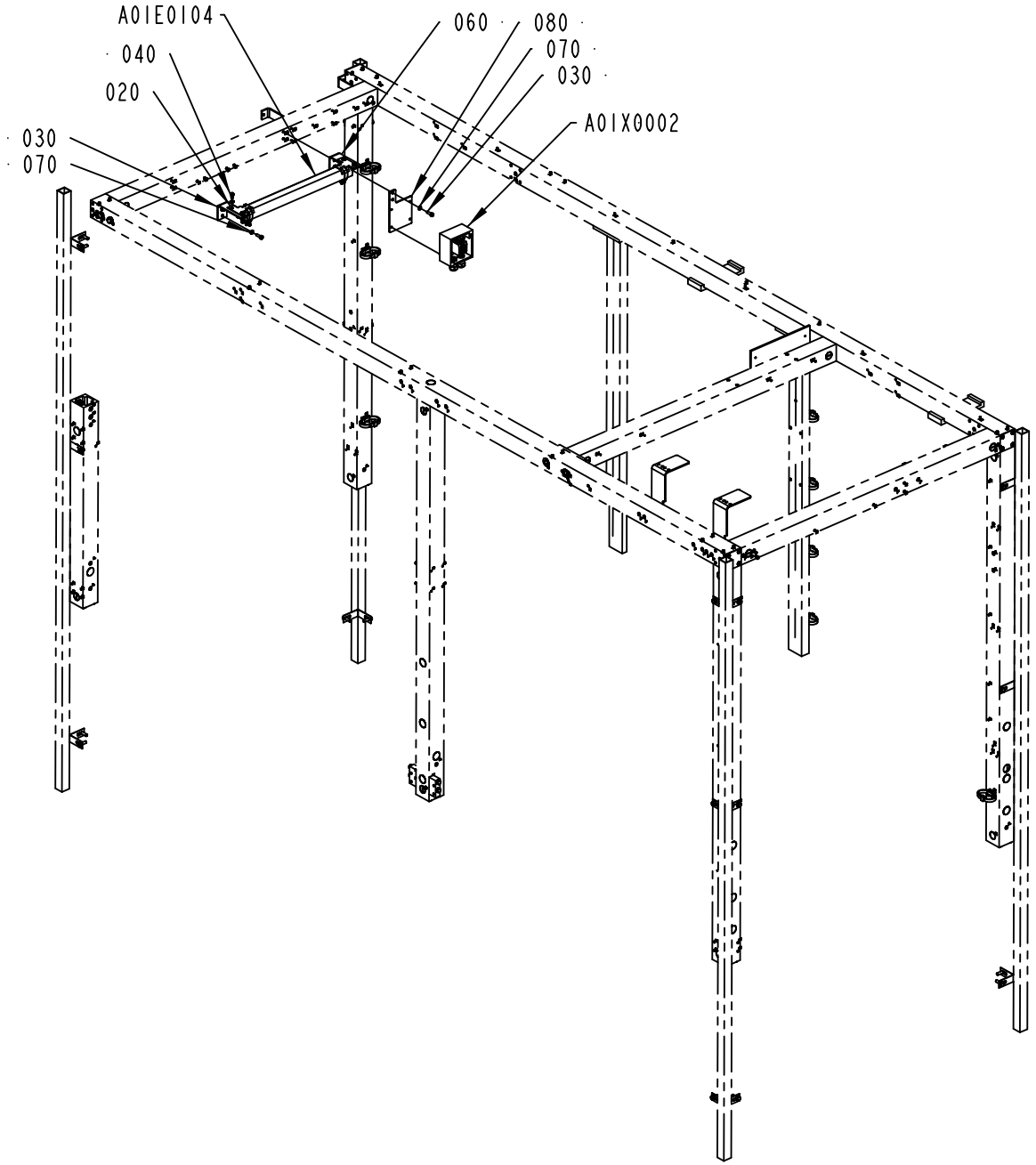

1287186-10
568933

ECM: 614540 - 20130618
Group number: 1287186-0400
Assembly Drawing: 1287186-10_1_AB

This list covers pages from 9-104 to 9-109

Pos	Part No	UN	Qty	Description	Page No
-					
010	3200721-0000		2	BRACKET	
020	90603-0808		4	LIGHT FIXTURE, BRACKET 190 174 029	
030	312105-0329		8	SCREW, M6S ISO 4017 M5X16 A4 80	
040	312105-0323		8	FSCR05080-10, SCREW, M6S	
055	312105-0368		2	SCREW, M6S ISO 4017 M6X16 A4 80	
060	3200733-0000		2	BRACKET	
065	315105-0153		2	WASHER PLAIN, 6,4X12X1,5 A4 BRB	
070	315105-0146		16	WASHER PLAIN, 5,3X10X1 A4 BRB	
080	3218517-0000		1	BRACKET	
090	3218516-0000		1	BRACKET	
A01E0103	90603-0472		1	LIGHT FIXTURE, MACH LED -MTAL 2S	
A01E0104	90603-0472		1	LIGHT FIXTURE, MACH LED -MTAL 2S	
A01X0001	3201967-0100		1	CONNECTION BOX	**9-111**
A01X0002	3201967-0100		1	CONNECTION BOX	**9-111**

Pos	Part No	UN	Qty	Description	Page No

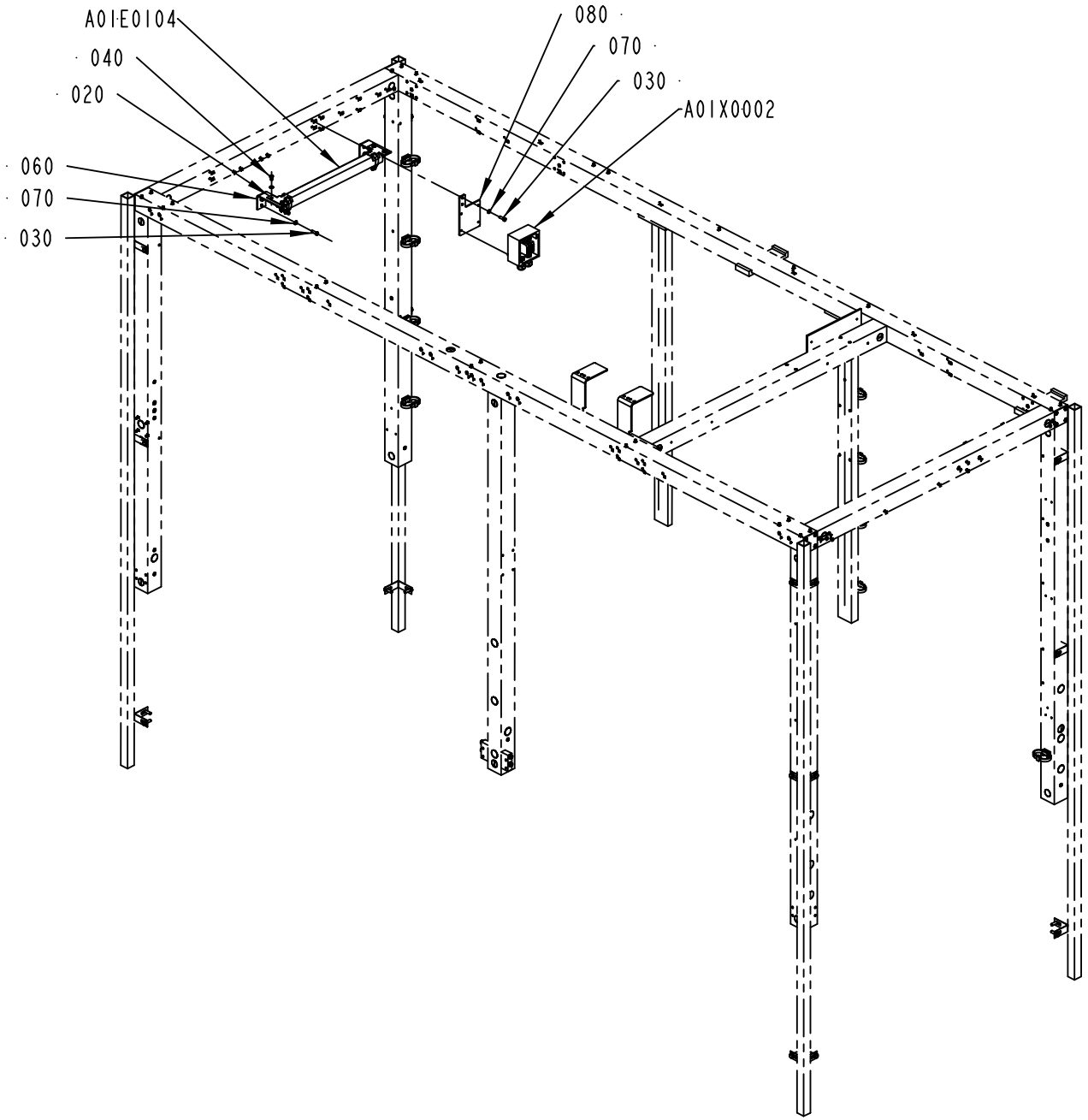

1287186-11
568933

ECM: 614540 - 20130618
Group number: 1287186-0400
Assembly Drawing: 1287186-11_1_AB

This list covers pages from 9-104 to 9-109

Pos	Part No	UN	Qty	Description	Page No
-					
010	3200721-0000		2	BRACKET	
020	90603-0808		4	LIGHT FIXTURE, BRACKET 190 174 029	
030	312105-0329		8	SCREW, M6S ISO 4017 M5X16 A4 80	
040	312105-0323		8	FSCR05080-10, SCREW, M6S	
055	312105-0368		2	SCREW, M6S ISO 4017 M6X16 A4 80	
060	3200733-0000		2	BRACKET	
065	315105-0153		2	WASHER PLAIN, 6,4X12X1,5 A4 BRB	
070	315105-0146		16	WASHER PLAIN, 5,3X10X1 A4 BRB	
080	3218517-0000		1	BRACKET	
090	3218516-0000		1	BRACKET	
A01E0103	90603-0472		1	LIGHT FIXTURE, MACH LED -MTAL 2S	
A01E0104	90603-0472		1	LIGHT FIXTURE, MACH LED -MTAL 2S	
A01X0001	3201967-0100		1	CONNECTION BOX	**9-111**
A01X0002	3201967-0100		1	CONNECTION BOX	**9-111**

Pos	Part No	UN	Qty	Description	Page No

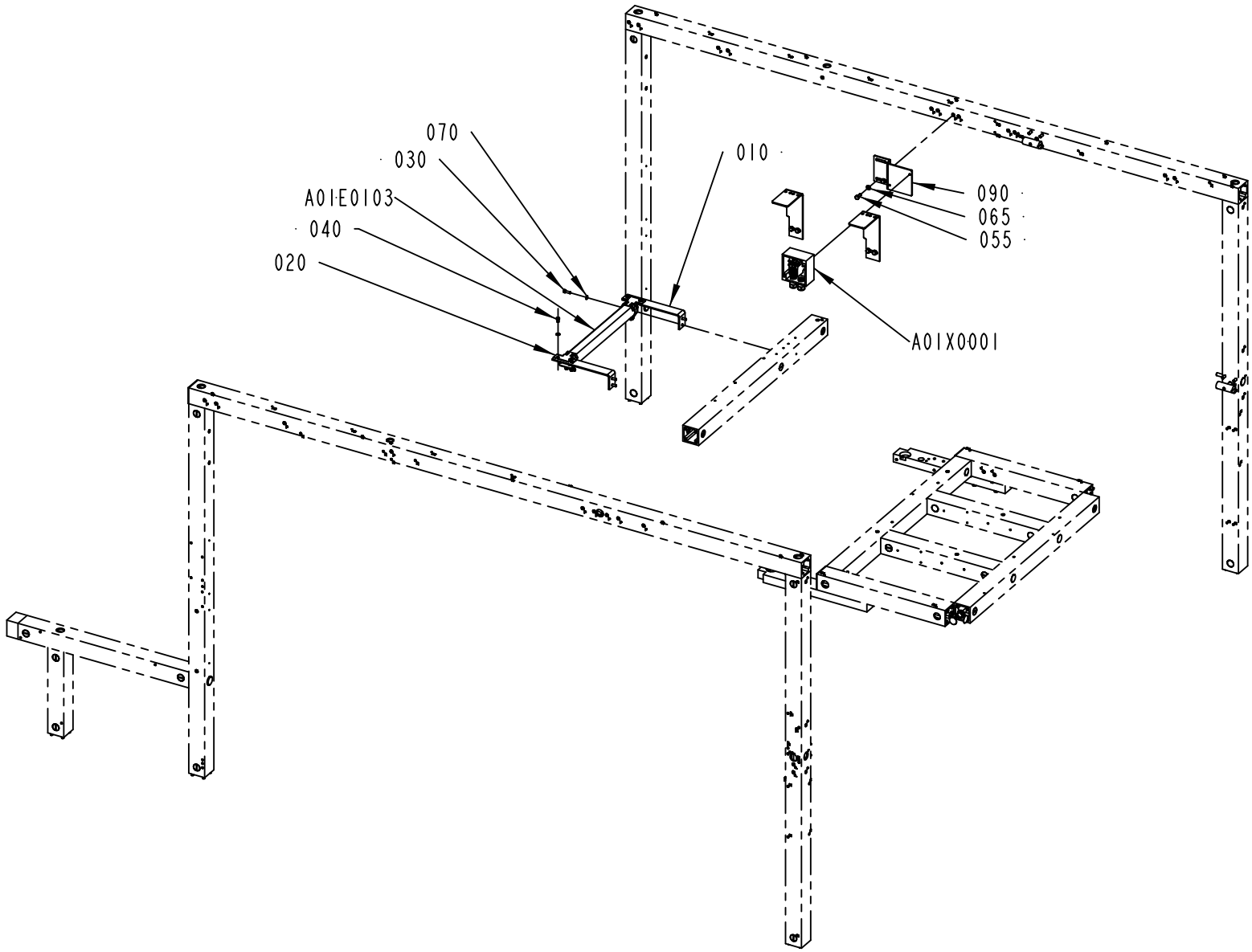

1287186-12
568933

ECM: 614540 - 20130618
Group number: 1287186-0400
Assembly Drawing: 1287186-12_1_AB

This list covers pages from 9-104 to 9-109

Pos	Part No	UN	Qty	Description	Page No
-					
010	3200721-0000		2	BRACKET	
020	90603-0808		4	LIGHT FIXTURE, BRACKET 190 174 029	
030	312105-0329		8	SCREW, M6S ISO 4017 M5X16 A4 80	
040	312105-0323		8	FSCR05080-10, SCREW, M6S	
055	312105-0368		2	SCREW, M6S ISO 4017 M6X16 A4 80	
060	3200733-0000		2	BRACKET	
065	315105-0153		2	WASHER PLAIN, 6,4X12X1,5 A4 BRB	
070	315105-0146		16	WASHER PLAIN, 5,3X10X1 A4 BRB	
080	3218517-0000		1	BRACKET	
090	3218516-0000		1	BRACKET	
A01E0103	90603-0472		1	LIGHT FIXTURE, MACH LED -MTAL 2S	
A01E0104	90603-0472		1	LIGHT FIXTURE, MACH LED -MTAL 2S	
A01X0001	3201967-0100		1	CONNECTION BOX	**9-111**
A01X0002	3201967-0100		1	CONNECTION BOX	**9-111**

Pos	Part No	UN	Qty	Description	Page No

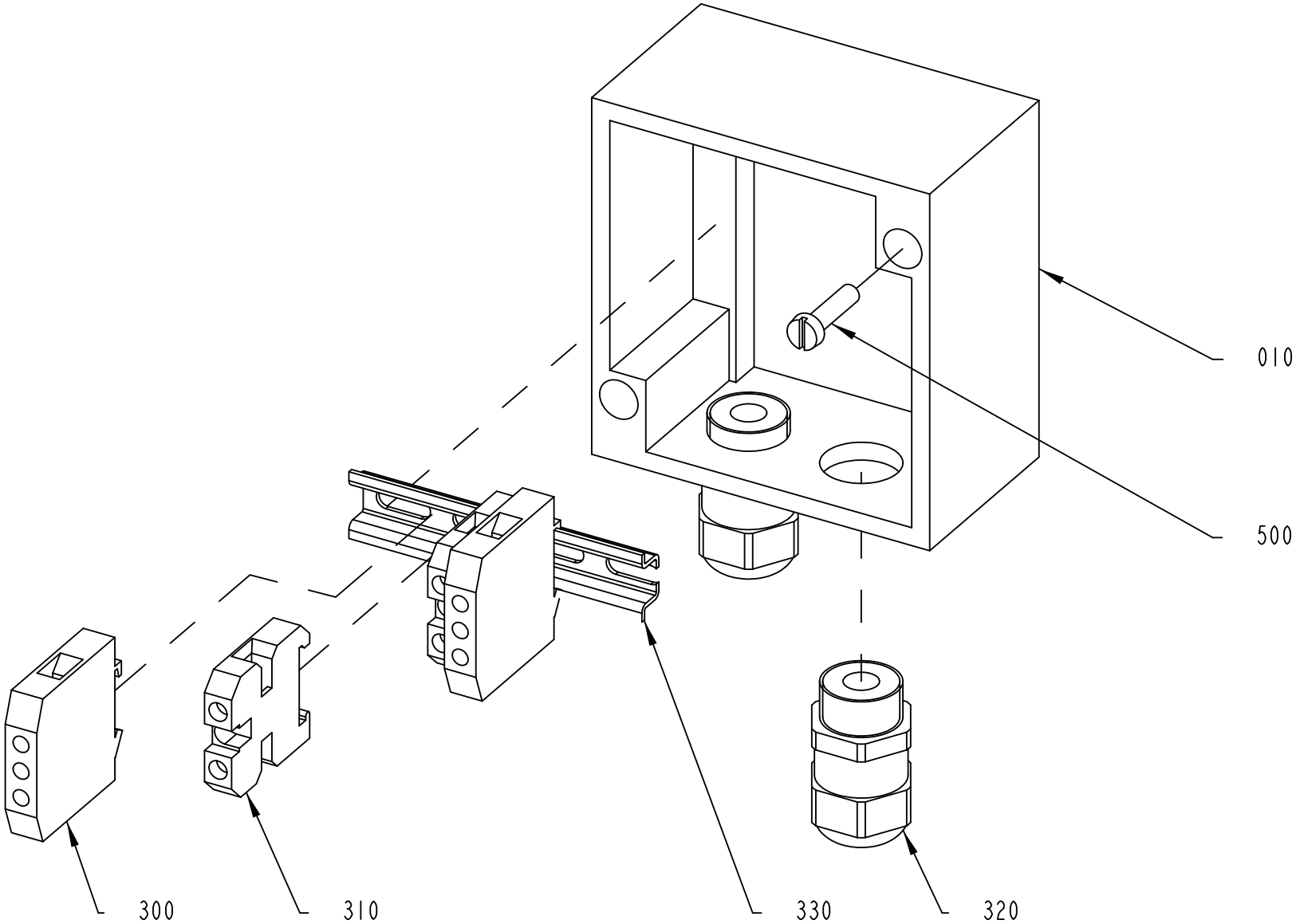

3201967-1
598985

ECM: 599079 - 20130314
Group number: 3201967-0100
Assembly Drawing: 3201967-1_1_AB

Pos	Part No	UN	Qty	Description	Page No
-					
010	3201968-0000		1	CONNECTION BOX	
300	90135-0026		2	EARTH TERMINAL AKE 4	
310	90077-0079		2	TERMINAL PLINTH, AKZ 4	
320	90458-0306		2	CABLE GLAND, M16X1,5, 5311 1010	
330	90077-0328	MM	65	RAIL, TS15/5	
500	312125-0293		2	SLOTTED HEAD SCREW, ISO1207 M4X16 A4	

Pos	Part No	UN	Qty	Description	Page No

Tetra Pak

SPC
Spare Parts Catalogue

Part No	Description	Page No
8490-0010	MOUNTING RAIL	2-49, 3-27
90003-0512	BAG	9-33
90005-0060	WASHER PLAIN, RBS 6,4/M6)/18,H=1,5	1-95, 2-79, 2-81, 3-69, 4-31, 6-23
90005-0064	WASHER PL.RND.NYL.4,3/9, H=0,8	6-37
90012-0118	GLAND, EXTENDED WITH INSERT, PG16	1-11, 1-31
90015-0020	LEAD-IN, TET5-7, E-1458016	7-11, 7-13
90015-0023	LEAD-IN, TET 7-10, E1458019	2-17, 2-19, 2-25, 2-27, 3-111, 3-113, 3-121
90017-0018	HANDLE, NO.1/30357	9-13
90028-0020	CONE TUBE 2,5MM	7-15
90028-0021	CONE TUBE 4 MM	7-15, 7-17
90028-0025	CONE TUBE 6 MM	7-15, 7-17
90030-0185	CONN. STR., GE08LRED71	3-57
90030-0188	CONN. STR. GE15LRED71	2-41
90032-0038	BLOCK 2 WAYS	7-15, 7-17
90032-0039	BLOCK 4 WAYS	7-15
90036-0068	BULB 5W 24V, SL-L24 205348	3-121
90038-0021	DIODE, 1A 800V	6-13, 6-21
90042-0107	SOLENOID VALVE, 256 2/2 NC	7-11, 7-13
90042-0273	SOLENOID VALVE MN1H-2-1/4-MS	3-57
90042-0392	CONTACT 2 POLE + EARTH	2-119
90042-0564	ILLUMINATING SEALS, MC-LD-12-24DC	3-57
90042-0595	COIL MSN1G-24 V	3-57
90042-0604	COIL	2-119
90051-0040	KNOB, INTERNAL THREAD, NO. 8308-0627	4-21
90051-0075	KNOB, EXTERNAL THREAD. NO. 8308-1518	3-169, 5-23, 5-25
90055-0147	PUSH-IN Y-CONNECTOR QSY-12	3-119
90055-0189	HOSE,NIPPLE,REDUCER,TUBE, 6/8M	3-119
90055-0204	ELBOW WITH TAILPIECE 8/8 MM LONG	2-17, 2-19
90055-0217	ELBOW PIPE JOINT	2-119
90055-0222	ELBOW WITH TAILPIECE 6/6 MM	5-23, 5-25
90055-0237	HOSE,NIPPLE,REDUCER,TUBE, 4/6MM	3-65, 3-67, 5-21
90055-0238	HOSE,NIPPLE,REDUCER,TUBE, 4/8MM	5-11
90055-0257	PUSH-IN Y-CONNECTOR QSY-6	2-101
90055-0271	Y-CONNECTION, 12-12	2-17, 2-19, 2-35
90061-0027	ANGLE ENCODER, 670900035	3-23, 3-33
90062-0015	LOCK WASHER SERRAT.EXT.GEAR,6,4/11 H=0,7	6-9, 6-69, 6-71, 6-73, 6-75, 6-77, 6-79
90062-0016	LOCK WASHER SERRAT.EXT.GEAR,8,4/15 H=0,8	6-11, 6-65, 6-69, 6-71, 6-73, 6-75, 6-77, 6-79, 6-83, 9-87
90062-0059	LOCK WASKER SERRAT.EXT.GEAR,4,3/8 H=0,5	6-9, 6-65, 6-69, 6-71, 6-73, 6-75, 6-77, 6-79
90062-0060	LOCK WASHER 5,3/10 H=0,6 FZB	6-65
90064-0082	PUSH BUTTON, WHITE	6-13, 6-21
90064-0322	CONTACT BLOCK, 704.901.5/A	6-13, 6-21
90068-0305	CONVEYOR SUPPORT LEG, 500 - 900 MM	9-17
90077-0079	TERMINAL PLINTH, AKZ 4	2-49, 3-27, 6-15, 9-93, 9-95, 9-111
90077-0113	TERMINAL BLOCK WDK 2.5	6-45, 6-47
90077-0123	TERMINAL FEED THROUGH	2-67
90077-0328	RAIL, TS15/5	2-67, 6-11, 9-93, 9-95, 9-111
90091-0004	RADIAL SEAL 17X28X7 MM	1-13, 1-31
90091-0200	RADIAL SEAL 30X42X7 MM DUST LIP	3-45, 3-47
90091-0304	RADIAL SEAL 45X65X8 MM DUST LIP	3-45, 3-47
90091-0306	RADIAL SEAL 30X47X7 MM DUST LIP	3-107
90091-0322	RADIAL SEAL 25X42X7 MM DUST LIP	3-47
90091-0418	V-RING 31X39X7,5 MM V-35A	1-99, 1-101
90092-0052	METERING VALVE 10 MM3	7-15
90092-0053	METERING VALVE 30 MM3	7-17
90092-0054	METERING VALVE 50 MM3	7-15
90092-0080	OIL BRUSH FOR D=4 MM TUBE, D=11, 4	7-5
90099-0004	NUT	3-141, 3-143, 9-83, 9-85
90099-0005	MOUNTING RAIL SUPPORT, TSTW 5/M5	6-65
90099-0103	PLUG, PR 47 (PG36)	6-23
90099-0193	NUT HEX. DOMED CAP MHM-6.6 M5 PL	6-9, 6-69, 6-71, 6-73, 6-75, 6-77, 6-79
90110-0095	CONNECTOR, PLUG SOCKET, MSSD-C-4P	3-57
90111-0344	SIGN, PE, GREEN/YELLOW	6-65
90115-0134	ROD END, ID=10 MM, M10X1,25	2-71, 2-109
90115-0135	ROD END ID=12MM M12X1,75	3-107
90115-0139	ROD END, ID=8 MM, M8X1,25	2-115, 3-59, 3-69
90115-0152	ROD END, ID=12 MM, M12X1,75 LH	3-13
90115-0183	ROD END, ID=12 MM, M12X1,25	2-109
90117-0029	LOCKING HANDLE, M8/F	1-9
90119-0108	RELAY OMRON G2R-2-SNI-24DC	6-47
90129-0018	BASE, P2RF-08-E	6-47
90134-0030	SLEEVE FOR PLASTIC TUBE	7-15, 7-17
90134-0031	SLEEVE FOR PLASTIC TUBE	7-5, 7-7, 7-9, 7-15, 7-17
90134-0039	BUSHING VALVE CONNECTION 2,5 MM	7-15
90134-0040	BUSHING VALVE CONNECTION 4 MM	7-15, 7-17
90134-0052	PLUG DOSING BLOCK	7-15
90134-0055	BUSHING/NUT INLET/OUTLET 6 MM	7-15, 7-17
90134-0058	CONNECTION	2-63, 2-65
90134-0068	CONNECTION	7-9
90135-0026	EARTH TERMINAL AKE 4	2-49, 2-67, 3-27, 6-15, 9-93, 9-95, 9-111
90140-0018	T-PIPE, INT. THREAD, 2003-1/4	7-11, 7-13
90140-0019	ELBOW, 90, INT. THREAD, NO. 2013-1/4	2-31
90141-0015	RETAINING RING FOR SHAFT DIN 471 8 SS	1-59, 2-115, 3-63
90141-0016	RETAINING RING FOR SHAFT DIN 471 10 SS	2-71, 4-17

Part No	Description	Page No
90141-0017	RETAINING RING FOR SHAFT DIN 471 17 SS	1-99, 1-101
90141-0020	RETAINING RING FOR BORE DIN 472 42 SS	3-37, 3-49, 3-51, 3-61
90143-0057	STRIP EMKA 1011-05 21X11MM	6-11, 6-23
90143-0060	EDGE STRIP 9,5X6,3MM BLACK PVC	2-25, 2-27, 2-31, 2-37, 2-83, 3-99, 3-111, 3-113, 3-141, 3-143, 3-163, 3-169, 3-173, 6-23, 9-65, 9-83, 9-85
90143-0073	FLAT GASKET TAPE W. ADHESIVE, 15X3.0	2-25, 2-27, 3-111, 3-113
90143-0097	SELF GRIPPING GASKET, 1011-24	9-73
90152-0017	HOSE (SPIRAL)	9-67
90153-0047	ADHESIVE, MULTI-BOND 330; AKTIVATOR 738	2-91, 2-93, 2-95, 2-97, 2-113, 9-51
90153-0053	ADHESIVE, LOCTITE 648 TEMP 150`C 50ML	1-99, 1-101
90157-0012	LOCKING FLUID LOCTITE 242 50 ML	3-69
90157-0018	LOCKING FLUID TYPE 601	1-9
90157-0021	LOCKING FLUID LOCTITE 270	2-41, 2-59, 2-71, 2-103, 3-69, 3-109, 4-15, 5-11, 5-13
90157-0037	THREAD SEALANT LOCTITE 542	7-11, 7-13
90157-0041	SEALING COMPOUND, RHODORSEAL 5651	1-17, 1-35, 1-63, 1-85, 2-129, 2-139, 2-141, 2-143, 2-145, 2-147, 3-149, 3-151, 3-165, 3-167, 9-13
90163-0007	CONNECTION	9-5
90163-0008	CONNECTION 1/4"	2-31
90163-0052	HOSE NIPPLE, EXT.THR. G1/4-12 MM	7-11, 7-13
90165-0003	PE CLIP FOR TUBE D=4 MM	3-9, 3-13, 4-5, 4-27
90165-0060	PIPE CLIP FOR TUBE D=5 MM	6-9, 6-69, 6-71, 6-73, 6-75, 6-77, 6-79
90165-0087	T-CLIP T6 FOR TUBE D=6 - 7 MM	2-33, 2-61
90166-0108	TUBE 6 MM PA TRANSP.	7-11, 7-13, 7-15, 7-17
90166-0109	TUBE 4 MM PA TRANSP.	7-5, 7-7, 7-17
90166-0113	HOSE	7-11, 7-13
90166-0141	TUBE 10 MM PA TRANSP.	2-41
90166-0143	TUBE 2,5 MM PA TRANSP.	2-63, 2-65
90166-0202	TEFLON PIPE	3-141, 3-143, 5-23, 5-25, 9-77, 9-79, 9-83, 9-85
90178-0007	HOUR COUNTER, BG 40,17-1 12-48VDC	6-33, 6-35
90181-0037	CABLE DUCT, PLASTIC, 25X40	6-9, 6-69, 6-71, 6-73, 6-75, 6-77, 6-79
90181-0038	CABLE DUCT, PLASTIC, 40X40	2-25, 2-27
90181-0046	CABLE DUCT, PLASTIC, 60X60	6-65
90181-0052	CABLE DUCT, PLASTIC, 25X80	6-65
90181-0053	CABLE DUCT, PLASTIC, 40X80	6-65
90181-0054	CABLE DUCT, PLASTIC, 60X80	6-65
90181-0088	PLASTIC RIVET, PR 52314	6-65
90181-0182	BRACKET, 1149354	2-23, 3-21, 7-17
90181-0183	CABLE DUCT, FITTING, SB-102-S	2-23, 3-21
90181-0199	LINK ,10.015.048.0, FOR FLEX CHAIN 10	2-115
90181-0202	END LINK	2-115
90181-0203	LINK, 10.1015. 2PZ, FOR FLEX.CHAIN10	2-115
90187-0189	BALL VALVE, R1/4, 8 MM	3-57
90194-0118	SIGN, RESIDUAL VOLTAGE, WAIT 5 MIN.	6-69, 6-71, 6-73, 6-75, 6-77, 6-79, 8-9
90194-0152	SIGN, EARTH	6-9, 6-11, 6-65, 6-69, 6-71, 6-73, 6-75, 6-77, 6-79, 6-83, 9-87
90214-0112	BALL BEARING 12/24X6	4-21
90235-0451	SELECTOR ACTUATOR, N-22-SW	3-87
90235-0756	FRONT PANEL VALVE, SV-5-M5-B	3-87
90235-0817	THROTTLE CHECK VALVE, G1/8", MANUAL	2-35
90235-0839	THROTTLE CHECK VALVE, AS2002F-06	2-109
90235-0846	THROTTLE CHECK VALVE G1/8", MANUAL, 6	2-69, 2-77, 2-115, 9-43
90237-0123	LOCK, 1121-U10C	2-139, 2-143, 2-147, 2-149, 3-149, 3-151, 3-165, 6-9, 6-69, 6-71, 6-73, 6-75, 6-77, 6-79
90237-0128	LOCK CYLINDER, 1109-SU125	2-139, 2-143, 2-147, 2-149, 3-149, 3-151, 3-165
90237-0129	LOCK CYLINDER, 1109-U6	6-9, 6-69, 6-71, 6-73, 6-75, 6-77, 6-79
90237-0144	GUIDE, 1121-SU540	2-139, 2-143, 2-147, 2-149, 3-149, 3-151, 3-165, 6-9, 6-69, 6-71, 6-73, 6-75, 6-77, 6-79
90237-0145	CATCH, 1121-53-01P	2-139, 2-143, 2-147, 2-149, 3-149, 3-151, 3-165
90237-0147	LOCKING LUG, NO. 1121-53-0P	6-9
90237-0175	TURNING HANDLE, 1125-U185-0A	2-139, 2-143, 2-147, 2-149, 3-149, 3-151, 3-165, 6-9, 6-69, 6-71, 6-73, 6-75, 6-77, 6-79
90237-0214	LOCK ADAPTER, 1121-U40	6-69, 6-71, 6-73, 6-75, 6-77, 6-79
90237-0324	KEY, 1104-02 FOR SQUARE 8 MM	6-69, 6-71, 6-73, 6-75, 6-77, 6-79
90237-0342	LOCKING CATCH	6-69, 6-71, 6-73, 6-75, 6-77, 6-79
90239-0357	ROD END, CLEVIS WITH AXLE M10X1,25	4-17
90239-0571	SENSOR BRACKET, FOR SMEO-1, SMTO-1	1-93
90239-0847	DOUBLE ACTING, MINI-ISO, CYL.20-50	3-69
90240-0204	FLANGE BUSHING, 12X16X16 MM	2-117, 3-73
90240-0205	BEAR. BUSHING W/O FL. 16X20X20MM	3-41, 3-43, 3-107, 4-9, 5-5
90240-0221	FLANGE BUSHING, 20X25X14 MM	3-37
90240-0222	FLANGE BUSHING, 15X20X20 MM	2-61
90240-0256	FLANGE BUSHING, IGLIDUR G 6X8X10	5-13, 5-17
90240-0257	BUSHING, IGLIDUR G 10X12X6	2-71
90240-0262	FLANGE BUSHING, IGLIDUR X 12X14X12	5-7
90240-0263	FLANGE BUSHING, IGLIDUR X 15X17X12	4-31
90240-0273	FLANGE BUSHING, IGLIDUR G 14X16X12	4-31
90240-0325	FLANGE BUSHING, IGLIDUR X 16X18X12	3-65
90243-0169	BINDER CLIP, DIAM.29 MM, NO. 4670819	6-75, 6-77, 6-79
90243-0209	BAILER	8-3
90259-0315	CIRCUIT BREAKER , B3.1/2-PKZ0	6-49
90261-0048	SQUARE PLUG GPN 260/Q2525	2-69
90261-0060	PLUG, BLIND, PLASTIC, NO. IKPK25X1, 5	3-103, 3-105
90266-0167	PIPE	2-131
90287-0205	SCREW	2-139, 2-141, 2-143, 2-145, 2-147, 2-149, 2-151, 3-149, 3-151, 3-165, 3-167, 6-9, 6-69, 6-71, 6-73, 6-75, 6-77, 6-79

Part No	Description	Page No
90287-0295	SCREW HEX.SOCK.COUNT.MF6S M3X8 A280	7-7
90287-0312	SCREW, M6S ISO 4014 M6X75 A4 80	2-119, 4-23
90287-0335	SCREW MC6S M8X90 A280	3-59
90288-0317	CONNECTION LINK, SIMPLEX 5/8", SS	3-31
90288-0333	CONNECTION LINK, SIMPLEX 5/8",SS	3-61
90296-0068	SHELL ALVANIA GREASE EP 2 (CARTR.400G)	3-11
90328-0024	SILENCER, G3/8"	2-35, 2-37, 3-119, 5-27
90328-0029	SILENCER, M5	3-87
90328-0047	SILENCER, G1/8"	2-35, 2-37, 3-119, 5-27, 9-43
90330-0102	SLEEVE, INT, THREAD, NO., R-201R1/4	9-5
90335-0031	COMP. SPRING, 21880, 1X6X24	3-67
90344-0072	SPROCKET, 12 TEETH FOR CHAIN RT 114	1-11, 1-51
90345-0075	FLANGE BEARING 30X110X55 MM	3-11
90345-0310	END COVER, ECY 207	1-49
90347-0007	VIBRATION DAMPER	2-71
90347-0011	VIBRATION DAMPER MEGI 781056	2-79, 2-81, 2-103, 2-139, 2-141, 2-143, 2-145, 2-147, 2-149, 2-151, 3-149, 3-151, 3-165, 3-167
90347-0034	VIBRATION DAMPER	2-71
90348-0033	FREE-WHEEL COUPLING, 20X47 MM	4-17
90355-0031	TORQUE RIGID COUPLING, 10X10 MM	3-23, 3-33
90417-0069	TIMING BELT 25T10/1610 PU	5-5
90417-0148	TIMING BELT 16T10/1750 PU	3-41
90426-0003	HAND SHOWER, 361100	9-67
90439-0236	SATURN RIGHT-ANGLE NOZZLE, 1011012	3-133, 3-135, 3-137, 9-77, 9-79
90439-0241	ELBOW CONNECTION, 972646	3-133, 3-135, 3-137, 9-77, 9-79
90450-0808	SENSOR BRACKET, FOR CYL 25	2-71, 3-63, 3-67
90457-0028	INSERT, MULTI HOLE, E154M5X5	9-83, 9-85
90457-0105	BLANK RIVET 2X9	2-41
90457-0922	ELBOW PIPE JOINT, EXT.THREAD, D=6MM M5	2-79, 2-81
90458-0118	COMPACT DISC, RECORDABLE	6-97
90458-0298	BASE FOR TUBE, PSD-S ME B-P	3-121
90458-0305	CABLE GLAND, M12X1,5, 5311 1000	2-49, 3-27, 9-93, 9-95
90458-0306	CABLE GLAND, M16X1,5, 5311 1010	2-49, 2-67, 3-15, 3-27, 9-93, 9-95, 9-111
90458-0307	CABLE GLAND, M20X1,5, 5311 1020	3-111, 3-113, 6-11
90458-0308	CABLE GLAND, M25X1,5, 5311 1030	2-49, 3-27, 3-111, 3-113
90458-0309	CABLE GLAND, M32X1,5, 5311 1040	6-11
90458-0315	CABLE GLAND, M20X1,5, 5311 1120	3-141, 3-143, 9-83, 9-85
90458-0316	CABLE GLAND, M25X1,5, 5311 1130	3-163, 9-65
90458-0322	NUT, M16X1,5	2-67, 3-15
90458-0323	NUT, M20X1,5	2-67, 3-111, 3-113, 3-141, 3-143, 6-11, 9-83, 9-85
90458-0324	NUT, M25X1,5	3-111, 3-113, 3-163, 9-65
90458-0325	NUT, M32X1,5	6-11
90458-0406	CABLE GLAND, VK 22052Y	2-67
90458-0440	GLAND, EXTENDED WITH INSERT, M25X1,5	2-99, 3-31
90458-0531	SENSOR BRACKET, FOR CYL 20	2-115
90458-0721	PIPE CLIP FOR TUBE D=8 MMSZ 2367080	6-9, 6-23, 6-65, 6-75, 6-77, 6-79
90458-0725	TUBE 400MM, PSD-S ME T-M 400	3-121
90458-0901	LOCKING LEVER 239457 ERZ.63SST-P-M8X25	4-25
90458-0984	LOCKING LEVER 239643 ERZ.63SST-P-M8X40	2-61, 4-29
90458-1194	VALVE, 5/2 MONOSTABLE	2-35, 2-37, 3-119, 5-27, 9-43
90458-1197	VALVE, 5/2 BISTABLE	2-37, 3-119
90458-1198	VALVE OPEN IN MID-POSITION, 5/3	2-35
90458-1199	VALVE CLOSED IN MID-POSITION, 5/3	2-37
90458-1200	VALVE OPEN IN MID-POSITION 5/3	2-35, 2-37, 3-119
90458-1202	VALVES 2X3/2, CLOSED	2-35
90458-1204	BASIC SUB-BASE 4 VALVES, CDVI5.0-GB4-MP	2-35, 5-27
90458-1205	BASIC SUB-BASE 8 VALVES, CDVI5.0-GB8-MP	2-37, 3-119
90458-1206	EXP. SUB-BASE 2 VALVES, CDVI5.0-EB	2-35, 3-119
90458-1207	SEALING, STANDARD	2-35, 2-37, 3-119, 5-27
90458-1208	SEALING, CHANNEL 1 BLOCKED	2-35, 3-119
90458-1211	LEFT ENDPLATE INCL. 5M CABLE	2-35, 2-37
90458-1212	LEFT ENDPLATE INCL. 10M CABLE	3-119, 5-27
90458-1214	RIGHT ENDPL EXT. PILOT AIR,CDVI5.0-EPR-S	2-35, 2-37, 3-119, 5-27
90458-1215	COVER PLATE, EMPTY VALVE POSITION	2-35, 2-37, 3-119
90458-1306	BLIND PLUG CIRCULAR, M12X1,5 514GFK/212	2-49, 3-27, 9-93, 9-95
90458-1308	BLIND PLUG CIRCULAR, M20X1,5 514GFK/220	3-111, 3-113
90458-1344	NON HEATED CONNECTION 45°, 972 647	3-133, 3-135, 3-137, 9-77, 9-79
90458-1447	MOUNTING RAIL SUPPORT, TST 128660	6-65
90458-1465	ALLEN KEY 5MM	8-3
90458-1737	CABLE INCLUDED IN THE MATERIAL	6-89, 6-91
90458-1740	AIR GUN ASSEMBLY, CEJN 199589668	9-5
90458-1745	RTD HOT MELT HOSE, 276740	3-133, 3-135, 3-137, 9-77, 9-79
90458-1863	CLAMPING PIECE, 00203005	3-23, 3-33
90458-2092	LOCKING LEVER, 239455 ERZ.63 SST-P-M8X20	1-91
90458-2097	FLEXIBLE CHAIN, L=380 MM	7-7
90458-2101	BRACKET, 060.06.2PZ, FOR CHAIN 06	7-7
90458-2119	BRACKET, 060.06.1PZ, FOR CHAIN 06	7-7
90458-2121	CYLINDER, WITH INT. GUIDING BORE 40	5-11
90458-2598	SENSOR BRACKET, FOR CYL 16	2-79, 2-81
90458-2634	WARNING SIGN ANSI (H), EXTERNAL VOLTAGE	6-65
90458-2730	PRESSURE SENS. SDE1-D10-G2-R18-C-P1-M8	2-17, 2-19
90458-2779	SCALE , 0-1000MM ADHESIVE	2-117, 3-79, 3-85, 3-87, 4-5, 5-7, 9-55
90458-2780	SCALE ,1000-0 MM ADHESIVE	1-91, 2-9, 2-79, 2-81, 2-107, 3-65, 3-69, 3-71, 3-83
90458-2794	SAFETY SENSOR, EVA 20-046-00	2-139, 2-141, 2-143, 2-145, 2-147, 3-149, 3-151, 3-165

Part No	Description	Page No
		3-167
90458-2956	ELBOW PIPE JOINT, EXT.THREAD, D=6MM-G1/8	2-37, 4-17
90458-2960	ELBOW PIPE JOINT	2-35, 2-37
90458-2964	ELBOW PIPE JOINT, EXT.THREAD, D=8MM-G1/8	2-35, 2-37, 3-141, 3-143, 9-83, 9-85
90459-0215	SCREW MC6S M3X30 A4	3-65
90459-0399	BRACKET, REAR, EYE WITH AXLE 32	2-69, 2-101, 5-21
90459-0400	BRACKET, REAR CLEVIS FLANGE FOOT, 32	2-69, 5-21
90459-0606	MARKING, DKE 5 MARKED E1-E50	6-15, 6-41, 6-43, 6-45, 6-47, 6-55, 6-57, 9-93, 9-95
90459-0679	FLANGE BUSHING, IGLIDUR W300 20X23X11,5	2-107
90459-0698	PLUG, G1/8EXT, G1/8	3-17, 3-119
90459-0699	BLANKING PLUG, CDVI5.0-B-G3/8	5-27
90459-1018	ROD END, BALL JOINT EYE M10X1,25	3-63, 3-67, 3-73, 3-79, 5-15, 5-19, 5-21
90459-1131	SAFETY RELAY, E1T	6-59, 6-61
90459-1325	RTD HOT MELT HOSE, 276741	3-133, 3-135, 3-137, 9-77, 9-79
90459-1355	TORS. SPRING SS 2388 RIGHT	2-115
90459-1356	TORS. SPRING SS 2388 LEFT	2-115
90459-1363	END LINK, 1038.1PZ, FOR CHAIN 10 NEW	2-63, 2-65
90459-1364	END LINK, 1038.2PZ , FOR CHAIN 10 NEW	2-63, 2-65
90459-1696	ROD END, CLEVIS WITH AXLE M10X1,25	3-65
90459-1697	DOUBLE ACTING, COMPACT, CYL 63-40	3-59
90459-1826	ELBOW PIPE JOINT, EXT.THREAD,D=16MM-G1/2	2-21
90459-1851	REGULATOR, MS6-LRB-1/2-D7-AS	2-21
90459-1852	SHUT OFF VALVE, MS6-EM1-1/2	2-21
90459-1853	FILTER REGULATOR, MS6-LFR-1/2-D7-ERV-AS	2-21
90459-1859	BRACKET, MS6-MV	2-21
90459-1860	END PLATE, MS6-AGC	2-21
90459-2134	BRACKET, SDE1	2-17, 2-19
90459-2136	PROX. SENSOR, SMEO-1-S-LED-24-B	1-93
90459-2199	FOAM RUBBER STRIP, NEOPRENE, 1016-117	6-83
90459-2215	STRAIGHT COUPLING, D=16 MM - G1/2"	2-41
90459-2232	WARNING SIGN ANSI (H), DO NOT WASH	8-5
90459-2265	PROHIBITION SIGN ISO, DO NOT WASH	3-141, 3-143, 8-9, 9-83, 9-85
90459-2291	SAFETY RELAY, E1T	6-59, 6-61
90459-2323	REDUCER, M25/M20	2-99, 9-53
90459-2387	REGULATOR, MS4-LR-1/4-D5-AS	2-119
90459-2389	BRACKET, MS4-LR-WR	2-119
90459-2390	NUT, MS-LR-10	2-119
90459-2392	PROX. SENSOR, SMT-C1-PS-24V-K0,3-M8-SA	2-69, 2-109, 5-21
90459-2457	POWER SUPPLY (4A@5V)	6-31
90459-2473	EPLC120G3-2A, DIG INP. MOD.16 PTS FAST	6-31
90459-2476	EPLC120G4-0A, DIGIT. OUT. MOD. 16 P ESCP	6-31
90459-2491	PLC RIGHT END CAP/TERMINATOR, 1769-ECR	6-31
90459-2501	5006526, 1734-FPD	6-67
90459-2526	REMOTE I/O BASE MODULE 8 POINTS, 1734-TB	6-67
90459-2551	CONNECTOR, MOTOR FEEDBACK 15 PIN MALE	6-49
90459-2563	BRACKET FOR RAIL, FM 4	6-65
90459-2581	ELBOW, 90 INT/EXT, G-3/8-A/I	2-21
90459-2582	NIPPLES,EXT THREAD,HEXAGON, G3/8 - G1/2	2-21
90459-2653	REGULATOR, MS4-LR-1/4-D6-AS	2-119
90459-2777	FLOW CONTROL VALVE, GR-QS-8	2-71
90459-2780	SENSOR BRACKET, SMBR-8-32	4-17
90459-2795	FRONT LID FOR POWERFLEX 40, 22B-CCB	6-29, 6-49
90459-2881	ROD CLEVIS SG-M10X1,25	2-101
90459-2928	LABEL 60417-2-IEC-5020, COMM. REF. POT.	6-9, 6-23, 6-65, 6-69, 6-71, 6-73, 6-75, 6-77, 6-79, 6-83, 9-87
90459-2953	GLAND, EXTENDED WITH INSERT, M16X1,5	1-99, 1-101
90459-2986	PHOTOCELL, E3Z-LS86	1-23, 1-25, 1-29, 8-13, 9-99, 9-101, 9-103
90459-3001	DISTRIBUTOR, MS6-FRM-1/2-A4	2-21
90459-3117	ROD END, BALL JOINT EYE M10X1,25	2-69
90459-3352	FLAT PIN SOCKET, 6,3X0,8	6-49, 6-51, 6-53
90459-3442	FREQ. CONV., 22B-A5P0N104	6-29, 6-49
90459-3454	FOOTPRINT FILTER 1 PHASE 18A	6-29, 6-49
90459-3658	GLAND,EXTENDED WITH INSERT, M20X1,5-LONG	1-75
90459-3826	THRUST WASHER, 8X18X1,5 MM	3-63, 3-65, 3-69
90459-3828	FLANGE BUSHING, IGLIDUR W300 10X12X5	3-65
90459-3845	WALL SOCKET, Z-SD230	6-33, 6-35
90459-3902	MANDATORY ACTION SIGN ISO, READ MAINTENA	6-65
90459-3923	SCREW, A06361	1-49, 9-29
90459-4036	BRAKING RESISTOR, 260W 120OHM	6-49
90459-4088	SAFETY SENSOR, ADAM E 10M	9-13
90459-4089	SAFETY SENSOR, EVA E, 20-046-06	9-13
90459-4142	SAFETY SENSOR, ADAM M12, 20-051-00	2-139, 2-141, 2-143, 2-145, 2-147, 3-149, 3-151, 3-165, 3-167
90459-4165	SAFETY SCREW, SM4X25	2-139, 2-141, 2-143, 2-145, 2-147, 3-149, 3-151, 3-165, 3-167, 9-13
90459-4204	CYLINDER, WITH INT. GUIDING BORE 25	9-43
90459-4735	SCREW, M6S ISO 4017 M8X10 A4 80	1-71, 1-83
90459-4876	FOCUS JUMPER CABLE M12 5P 3M, 20-056-21	6-89, 6-91, 9-91
90459-4877	FOCUS CABLE M12 8P 6M, 20-056-30	9-91
90459-4891	IDENTIFIER, ID-FIX RW	6-59, 6-61
90459-4932	REAR CLEVIS FOOT MOUNTING, CRLBN-20/25	3-67, 3-73, 3-79
90459-5189	SLIM POWER RAIL, KINETIX, 2 AXIS	6-49
90459-5323	OVERLOAD PROTECTION, PKZM0-1	6-49
90459-5325	OVERLOAD PROTECTION, PKZM0-2,5	6-33, 6-35
90459-5410	VALVE BODY, 3/2 MONOSTABLE NC	2-119

Machine Type Group Description Page No

Part No	Description	Page No
90459-5440	CONTACTOR 4KW 24VDC, DILM9-01	6-33, 6-35, 6-49
90459-5443	CONTACTOR 11KW 24VDC, DILM25-01	6-33, 6-35
90459-5444	CONTACTOR 15KW 24VDC, DILM32-01	6-33, 6-35
90459-5522	CONN. BANJO, COR8PB6M10	7-11, 7-13
90459-5530	PHOTOCELL E3Z-T86A-L SENDER	2-107
90459-5531	PHOTOCELL E3Z-T86A-D RECIEVER	2-107
90459-5627	CONNECTION, TINA 1-A	2-11, 3-129
90459-5787	SILENCER, U-1/2-B	2-21
90459-5811	RESIDUAL CURRENT DEVICE, FI-25/2/003-A	6-33, 6-35
90459-5884	COMMONING BUSBAR, Z-GV-10/3P-4TE	6-33, 6-35
90459-5949	REAR CLEVIS FOOT MOUNTING, CRLBN-32	2-109
90459-6065	PUSH-IN Y-CONNECTOR QSY-12-8	3-119
90459-6327	SOLENOID VALVE, SOLIDBLUE, 1053894	1-93, 3-141, 3-143, 5-23, 5-25, 9-83, 9-85
90459-6328	HOT MELT GUN, SOLIDBLUE A, 1060939	3-133, 3-135, 3-137, 9-77, 9-79
90459-6329	MODULE SOLIDBLUE A, 1052927	3-133, 3-135, 3-137, 9-77, 9-79
90459-6330	MODULE BLANK, CLASSICBLUE, 1054951	3-133, 3-135, 3-137, 9-77, 9-79
90459-6337	DOUBLE ACTING, COMPACT, 20-5	5-13, 5-17
90459-6350	90° NIPPLE, SHORT HOSE/GUN, 274 180	3-133, 3-135, 3-137, 9-77, 9-79
90459-6351	45° NIPPLE, SHORT HOSE/GUN, 274 179	9-77, 9-79
90459-6477	THREADED INSERTS, BUSHING, M4	6-37
90459-6560	DIGITAL OUTPUT 8 PTS, 1734-OB8E/C	6-67
90459-6616	PROTECTION, NZM1-4-XIPA	6-51, 6-53
90459-6646	CABLE CLIPS, D=4 MM	6-65
90459-6690	HOSE PVC, 12/16 MM	9-87
90459-6758	GUIDE RAIL, R2045 26431	2-75
90459-6761	CARRIAGE, R201121404	2-75
90459-7057	HOSE, 21,1MM PA BLACK	5-23, 5-25
90459-7293	SET SCREW DIN 551M5X8 PA66	1-61
90459-7366	PHOTOCELL, WTB4-3P3161 F20	3-65, 3-81, 4-21, 4-27, 9-43, 9-49, 9-55, 9-91
90459-7369	MARKING FOR PNEUM. TUBING, PRZ06	4-11
90459-7377	NON-RETURN VALVE, HGL-1/8-B	5-27
90459-7584	PROHOBITION SIGN ISO, DO NOT REACH IN	1-17, 1-35, 1-63, 1-85, 3-161, 8-9, 9-13, 9-21, 9-57, 9-63
90511-0145	LOGOTYPE "TETRA PAK" FOR STRIPE 70MM	2-25, 2-27, 3-111, 3-113
90511-8563	STRIPE HEIGHT 70MM, ROLL LENGTH 25M	2-25, 2-27, 3-111, 3-113, 6-85
90600-0232	CABLE GLAND, C RS T 25	6-11
90600-0236	ANGLE COUPLING M6 TUBE 4 MM	7-7
90600-0387	ULTRASONIC SENSOR, UM18-51111	2-77
90600-0429	SLIDER, WM-01-20	4-31
90600-0431	BUSHING INSERT, J200UMO-01-20	4-31
90600-0459	INDUCTIVE SWITCH, E2A-M12KN05-WP-B1 5M	3-37
90600-0472	INDUCTIVE SWITCH, E2A-S08KS01-M3-B1-TP	2-117
90600-0719	MARKING, PLATE DEK 5 GW N	6-37, 6-55, 6-57
90600-1160	CU SCREEN BRAIDING TYPE CU 410 , 4,14MM2	6-13, 6-21
90600-1175	ELBOW WITH TAILPIECE 8/8 MM	1-93, 3-141, 3-143, 5-23, 5-25, 9-83, 9-85
90600-1461	INCOMING TERMINAL, BK25/3-PKZ0-E	6-33, 6-35, 6-49
90600-1649	AUXILIARY SWITCH, NHI-E-11-PKZ0	6-33, 6-35, 6-49
90600-1671	ADHESIVE LOCTITE GEL 454, TUBE 20 GRAM	2-73
90600-1848	ETHERNET SW, FL SWITCH SFN 8TX	6-59, 6-61
90600-1933	SCREW 5X12, DELTA PT 50X12 WN5454 A4	1-71
90600-2022	SCREW DIN7984 M8X25 AISI304	2-63, 2-65
90600-2606	CABLE DUCT, 75X55 MM	2-23, 3-21
90600-2712	GEAR MOTOR, 71L/4 B14 C105	9-53
90600-2713	NON-RETURN VALVE, HGL-M5-B	2-103
90600-2718	PUSH-IN FITTING KQH06-U01	3-141, 3-143, 9-83, 9-85
90600-2719	PUSH-IN FITTING KQH06-U02	3-141, 3-143, 5-23, 5-25, 9-83, 9-85
90600-2720	PUSH-IN FITTING KQH08-U02	1-93, 3-141, 3-143, 5-23, 5-25, 9-83, 9-85
90600-2904	EARTH BRAID, 250/16/8,5	6-11, 6-65, 6-69, 6-71, 6-73, 6-75, 6-77, 6-79, 6-83, 9-87
90600-2981	GEARS, WORM MOTOR D9582/SC401-H/1600099	1-99, 1-101
90600-3272	PROX. SENSOR, SMT-8M-PS-24V-K-5,0-OE	2-71, 2-115
90600-3273	PROX. SENSOR, SMT-8M-PS-24V-K-0,3-M8D	2-75, 2-79, 2-81, 2-103, 3-59, 3-63, 3-67, 4-17, 5-11
90600-3322	PHOTOCELL, WS4-3D3130F20	1-19, 1-37, 1-65, 1-87, 1-101
90600-3323	PHOTOCELL, WE4-3F3130F20	1-91
90600-3574	CABLE DUCT, 120X60 MM	2-23
90600-3672	PHOTOCELL, WS4-3D3130S03	2-69
90600-3673	PHOTOCELL, WE4-3F3130S03	1-19, 1-37, 1-65, 1-87, 1-99
90600-3723	PHOTOCELL, WS4-3D3130S05	1-19, 1-37, 1-65, 1-87, 1-101
90600-3740	ADHESIVE CM ULTRA 120, 134-646B 12.5KG	8-11
90600-3779	BALL VALVE, 700000 F-F-G1/2	2-41
90600-3898	END CAP, Z-GV-10/2+3P	6-33, 6-35
90600-3972	5008274, ETHERNET ADAPTOR	6-29, 6-49
90600-4040	CAUTION SIGN ANSI (H), DO NOT REACH IN	8-5, 9-33
90600-4778	USB CABLE SET, 5A9000.54	6-13, 6-21
90600-4922	EXP. SUB-BASE 2 VALVES,CDVI5.0-EB2-MP-MO	3-119
90600-5066	WASHER PLAIN, DIN7349 8,4X21X4 A4	2-9, 2-13, 2-15, 2-33, 3-9, 3-103, 3-105, 6-23, 6-81, 9-49, 9-55
90600-5233	WARNING SIGN ANSI (H), READ MANUAL, AUTO	6-9, 6-65, 6-69, 6-71, 6-73, 6-75, 6-77, 6-79, 8-5
90600-5235	MANDATORY ACTION SIGN ISO, READ MANUAL	6-9, 6-65, 6-69, 6-71, 6-73, 6-75, 6-77, 6-79, 8-9
90600-5249	FERRITE, B64290L616X38	6-31
90600-5252	LINE FILTER, B84113HB30	6-49
90600-5258	LINE FILTER, B84143A35R106	6-49
90600-5261	LINE FILTER, B84144A25R120	6-51, 6-53
90600-5266	FEED THROUGH FILTER, B85321A2502W160	6-51, 6-53
90600-5525	BUSBAR, Z-SV/UL-16/3P-3TE/12 104899	6-33, 6-35

Part No	Description	Page No
90600-5527	BUSBAR COVER, ZV-BS-UL 104904	6-33, 6-35
90600-5528	EXTENSION TERMINAL, Z-EK/35/UL 104901	6-33, 6-35
90600-5535	CYLINDER, WITH INT. GUIDING BORE 20	4-11
90600-5591	WARNING SIGN ANSI (H), HAZARDOUS VOLTAGE	6-65
90600-5886	BELLOWS, YJYG000055WC615	3-13
90600-5930	CABLE C9, 20-057-15	6-89, 6-91
90600-5980	CABLE DUCT, WIRE, 53X45 MM	2-23, 3-21
90600-6048	EMERG. STOP SMILE 11 EA TINA, 30-050-00	2-53, 3-99, 3-101
90600-6050	EMERGENCY STOP INCA 1 TINA, 30-054-00	6-13, 6-21
90600-6055	PLUG, EXT THREAD HEX SOCKET B-3/8	2-37
90600-6183	TUBULAR RIVET 3,5X6,2	1-71
90600-7487	SURGE PROTECTION DEV., VAL-MS 230/3+1 FM	6-51, 6-53
90600-7806	RTD HOT MELT HOSE AWW, 1088273	3-133, 3-135, 3-137
90600-9809	ES SIGN, FOR INCA	6-13, 6-21
90601-0786	TIMING BELT TK5K6 800X50 MM	1-99, 1-101
90601-1126	SAFETY VALVE, MS6-SV-1/2-E-10V24-AG	2-21
90601-1168	SOCKET CONNECTOR, NECA-S1G9-P9-MP3	2-21
90601-1586	SILENCER, G1"	2-21
90601-1587	BRACKET, MS6-WPB	2-21
90601-1806	REAR CLEVIS FOOT MOUNTING, CRLBN-40	2-109
90601-1807	DOUBLE ACTING, PROFILE, CYL 40-30	2-109
90601-5850	5008103, MPL-B420P-SK72AA SERIES A	2-59, 2-63, 2-65
90601-6430	USB CABLE, 90601-6430	9-71
90601-6650	RELAY, PLC-RSC-24DC/21	6-59, 6-61
90601-7290	SAFETY PLC, PLUTO B46 20-070-17	6-59, 6-61
90601-7790	TUBULAR RIVET	1-49, 9-29, 9-35
90601-7970	END PIECE, VL 50X30X1,5-2,5	2-71
90602-3770	DIGITAL MULTICIRCUIT PROT., S8M-CP04-RS	6-59, 6-61
90602-4060	LIGHT ELEMENT, BLUE, PSD-S OE LED BU	3-121
90602-4061	LIGHT ELEMENT, GREEN, PSD-S OE LED GN	3-121
90602-4062	LIGHT ELEMENT, RED, PSD-S OE LED RD	3-121
90602-4063	LIGHT ELEMENT, YELLOW, PSD-S OE LED YE	3-121
90602-4627	TERMINAL ELEMENT, PSD-S CE-TM SPRING	3-121
90602-4631	SIREN 100DB, PSD-S AE SM8-5 100DB/1	3-121
90602-4847	THREAD LOCKING, LOCTITE 243 50 ML	2-41, 2-77, 4-7
90602-8627	POWER SUPPLY, QUINT-PS/1AC/24DC/10	6-59, 6-61
90602-9074	BEARING HOUSING, WM-01-16	2-107, 2-109, 3-67
90602-9075	BUSHING INSERT, J200QM-01-16	2-107, 2-109, 3-67
90603-0054	DANGER SIGN ANSI (H), HAZARDOUS VOLTAGE	6-69, 6-71, 6-73, 6-75, 6-77, 6-79, 8-5
90603-0056	THROTTLE CHECK VALVE, MANUAL, 8MM	2-109
90603-0188	CONVEYOR CHAIN, WHP 1775 L1775633213 ZER	1-69
90603-0208	CARRIAGE, LFCL42-RB	2-63, 2-65
90603-0228	GUIDE RAIL, LFS42-C-RB-1106	2-63, 2-65
90603-0231	LUBRICATOR, AB.LFR5201	2-63, 2-65
90603-0288	PROFILE L=1100MM, 3 842 990 350	2-63, 2-65
90603-0308	END CAP 60X60MM, 3 842 511 874	2-63, 2-65
90603-0350	NUT, T-SLOT M8	2-63, 2-65
90603-0408	LUBRICATION UNIT, 10P-P4-H1 LM12	7-11, 7-13
90603-0472	LIGHT FIXTURE, MACH LED -MTAL 2S	9-105, 9-107, 9-109
90603-0649	COVER STRIP, 3842518367	2-63, 2-65
90603-0668	FLEXIBLE CHAIN, L=732?? MM	2-63, 2-65
90603-0808	LIGHT FIXTURE, BRACKET 190 174 029	9-105, 9-107, 9-109
90603-1938	PRESSURE SWITCH, 1800 KPA, 28545-251-2	7-17
90603-2316	BALL BEARING 30/55X13	2-59, 2-63, 2-65
90603-2325	BALL BEARING 17/35X10	1-73, 9-29
90603-2429	GEARS, WORM MOTOR SK 1SI50-IEC80-80LH/4	3-31
90603-2448	GEARS, HELICAL MOTOR SK01V-8 0S/4 S03	1-11
90603-2453	MULTI CIRCUIT PROT., SITOP PSE200U 10A	6-59, 6-61
90603-2454	MULTI CIRCUIT PROT., SITOP PSE200U 3A	6-59, 6-61
90603-2563	GEARS, WORM MOTOR SK1SI50 IEC80 80LH4	1-53
90603-2683	TRANSFORMER, 1-PH 500VA	6-59, 6-61
90603-2684	WALL SOCKET, RECEPTACLE 7599-DIN	6-59, 6-61
90603-2799	SENSOR CABLE, EVC071	6-89, 6-91
90603-2945	BALL BEARING 12/37X12	2-61
90603-3198	USB CAB. VS-04-2X2X26C7/7-SDA/SDB/1,0	6-13, 6-21
90603-3541	BALL BEARING 25/47X12 SOLID OLI	2-69
90603-3565	CYLINDER, SHUTTLE 16-465	2-75
90603-3620	GEARS, WORM MOTOR SK 1SI40-IEC 71-71L/4	2-99
90603-3622	GEARS, WORM MOTOR SK 1SI50-IEC 71-71L/4	3-35
90603-3659	ETHERNET NAT ROUTER, FL MGUARD RS-B	6-59, 6-61
90603-3970	SPLITTER BOX, EBC043	2-51, 3-127
90603-3972	SPLITTER BOX, EBC026	2-47
90603-3975	PROTECTIVE CAP M12, E70297	2-51, 3-127
90603-3976	PROTECTIVE CAP M8, E11256	2-39, 2-43, 2-45, 3-19, 3-123, 3-125
90603-4138	MARKING, IDENTIFICATION OF SINGLE CONDUC	6-69, 6-71, 6-73, 6-75, 6-77, 6-79
90603-4534	SPHERICAL BALL BEARING 20/47X18	2-99, 9-53
90603-4872	DOUBLE ACTING, MINI-ISO, CYL. 25-40	2-71
90603-5110	DOUBLE ACTING, MINI-ISO, CYL. 25-50	3-63, 3-65, 3-67, 3-73, 3-79
90603-5311	DOUBLE ACTING, MINI-ISO, CYL. 20-25	3-69
90603-5337	GEARS, HELICAL MOTOR SK01V-80S/4S03	1-31, 1-75
90603-5339	KLüBEROIL 4 UH1 320 N, ONLY IN BOM	7-3
90603-5463	DELIVERED DESIGN SIGN, 90603-5463	6-69, 6-71, 6-73, 6-75, 6-77, 6-79
90603-5503	LOW-PROFILE I/O CONNECTOR,2090-K6CK-D44M	6-49
90603-5549	DOUBLE ACTING, MINI-ISO, CYL. 20-80	2-115

Machine Type Group Description Page No

Part No	Description	Page No
90603-5550	DOUBLE ACTING, MINI-ISO, CYL. 16-300	2-79, 2-81
90603-5602	BAR CODE READER, D8330 SR-902151265+CAB-	9-71
90603-5644	AXIS MOD. KINETIX 6500,2094-BM01-M SER A	6-49
90603-5702	AXIS MOD. KINETIX 6500,2094-BC01-M01-M,A	6-49
90603-5843	DOUBLE ACTING, PROFILE, CYL 32-80	2-69, 2-109, 5-21
90603-5953	POINT I/O ADAPT. MOD.,1734-AENTR SERIEA	6-67
90603-6096	CONTROL MODULE,2094-EN02D-M01-S0,SER.A	6-49
90603-6233	KLüBERSYNTH UH1 14-151, ONLY IN BOM	1-13, 1-31
90603-7495	CYLINDER, WITH INT. GUIDING BORE 25	2-117
90603-7533	DOUBLE ACTING, SHORT STROKE. CYL 32-5	2-101
90603-8333	DOOR COUPLING ROTARY HANDLE, NZM1-XSM-L	6-51, 6-53
90603-9054	PROTECTION IP2X 4-POLE, NZM1-4-XIPK	6-51, 6-53
90603-9794	SAFETY LIGHT BARRIER,TRANSM. SLC425I-E02	9-91
90603-9795	SAFETY LIGHT BARRIER, REC. SLC425I-R0250	9-91
90604-0093	CONNECTION BLOCK, TINA4A 2TLJ020054R0300	3-129
90604-0094	CONNECTION BLOCK, TINA 8A	2-11
90604-3320	HOT MELT UNIT PROBLUE 4, 104 9296 H1	3-133, 3-135, 3-137
90604-3331	DOUBLE ACTING, MINI-ISO, CYL. 25-20	5-15, 5-19
90604-3805	OPER. PANEL 15" , 2711P-T15C4D8TP, SER A	6-13, 6-21
90604-4765	CYLINDER SPEC. WITH INT. GUIDING BORE 25	1-95, 2-103
90604-4766	CYLINDER, WITH INT. GUIDING BORE 25	2-77
90604-4767	CYLINDER, DZH-32-50-PPV-A-H1-SE	1-93
90604-5464	QUICKSERVER GATEWAY, FS-QS-1230-0705	6-59, 6-61
90604-6025	PLUG, EXT. THREAD HEX. SOCKET. G1/2	2-21
90604-6804	PIAB 811-0003	3-17
90604-6808	PIAB BX52P WITH FILTER, 0106044	3-109
90604-7744	FLANGE BALL BEARING, 25X95X38,8 MM	1-51
90604-8604	DOUBLE ACTING, COMPACT, 32-5	2-103
90604-9026	PROCESSOR L36, 1769-L36ERM SERIE A	6-31
90604-9244	GEARS, PLAN. LBP090F-MF1-5-0G1/MPL-B420P	2-59, 2-63, 2-65
90604-9645	HOT MELT UNIT PROBLUE 4, 104 9297 H1	3-133, 3-135, 3-137
90604-9686	FOOT 2200KG, XH105-XH-HL-3A-FA-Ø36X24	2-9, 3-9, 6-81, 9-49
90604-9746	HOT MELT UNIT PROBLUE 10, 1022236 H1	9-77, 9-79
90605-1265	DOUBLE ACTING, MINI-ISO, CYL. 25-50	3-83
90605-2062	FERRITE, 2090-XXFF-S39	6-49
90605-2702	ARMORBLOCK MODULE, 1732E-8CFGM8R, SER. A	2-31, 2-39, 2-43, 2-45, 3-19, 3-123, 3-125
90605-4582	DOUBLE ACTING, MINI-ISO, CYL. 32-25	4-17
90605-5443	TIMING BELT 50ATK10/2560 PU	4-17
90605-5445	TIMING BELT 16T5/2800 PU	4-31
90605-7874	WORM GEAR SK 1SI40-IEC 71	9-53
229207-0000 ..	BEARING SLEEVE	1-39
230462-0000 ..	BUSHING	4-15
273455-0000 ..	SIGN, COLD WATER	2-41
273458-0000 ..	SIGN, AIR	2-41
311103-0232 ..	PARALLEL PIN ISO 2338 3M6X8 A1	2-73
311103-0349 ..	PARALLEL PIN ISO 2338 6M6X12 A1	2-69, 5-13, 5-17
311103-0353 ..	PARALLEL PIN ISO 2338 6M6X20 A1	2-59, 4-31
311103-0361 ..	PARALLEL PIN ISO 2338 6M6X40 A1	2-33
311112-0252 ..	SPRING PIN, ISO 8752 4X12 A2	3-83
311112-0256 ..	SPRING PIN, ISO 8752 4X20 A2	2-79, 2-81
311521-0143 ..	RIVET, BLANK 3,2X8	6-69, 6-71, 6-73
311523-0142 ..	BLIND RIVET ISO 15983 -3.2X6 A2/A2	6-17, 6-19, 6-69, 6-71, 6-73
312101-0344 ..	SCREW M6S M5X65 FZB	2-71
312104-0467 ..	SCREW M6S M8X80H FZB	3-49, 3-51
312105-0153 ..	SCREW EN 10642 MF6S M5X25 A480	9-83, 9-85
312105-0287 ..	SCREW, M6S ISO 4017 M4X8 A4 70	2-17, 2-19, 2-75, 3-141, 3-143, 9-83, 9-85, 9-91
312105-0289 ..	SCREW, M6S ISO 4017 M4X10 A4 70	2-117, 3-89, 5-5
312105-0291 ..	SCREW, M6S ISO 4017 M4X12 A4 70	1-99, 1-101, 3-173, 6-87
312105-0293 ..	SCREW, M6S ISO 4017 M4X16 A4 70	4-13
312105-0299 ..	SCREW, M6S ISO 4017 M4X30 A4 70	4-21, 7-17
312105-0303 ..	SCREW, M6S ISO 4017 M4X40 A4 70	2-63, 2-65
312105-0323 ..	FSCR05080-10, SCREW, M6S	2-107, 3-15, 6-69, 6-71, 6-73, 6-75, 6-77, 6-79, 9-91, 9-105, 9-107, 9-109
312105-0325 ..	SCREW, M6S ISO 4017 M5X10 A4 80	2-61, 2-79, 2-81, 6-23, 7-7, 9-49, 9-71
312105-0327 ..	SCREW, M6S ISO 4017 M5X12 A4 80	1-17, 1-35, 1-63, 1-85, 1-91, 2-69, 2-71, 2-79, 2-81, 2-103, 2-115, 2-117, 3-87, 3-111, 3-113, 3-141, 3-143, 4-21, 5-15, 5-19, 5-23, 5-25
312105-0328 ..	SCREW M6S ISO 4017 M5X14 A4 80	9-13
312105-0329 ..	SCREW, M6S ISO 4017 M5X16 A4 80	1-19, 1-25, 1-37, 1-65, 1-87, 2-63, 2-65, 2-99, 2-101, 2-115, 2-131, 3-69, 3-107, 5-15, 5-19, 9-5, 9-43, 9-53, 9-103, 9-105, 9-107, 9-109
312105-0331 ..	SCREW, M6S ISO 4017 M5X20 A4 80	1-99, 1-101, 2-41, 2-75, 2-103, 2-115, 3-15, 3-85, 3-87, 4-7, 4-11, 5-13, 5-15, 5-17, 5-19, 9-67
312105-0333 ..	SCREW, M6S ISO 4017 M5X25 A4 80	2-61, 2-63, 2-65, 2-79, 2-81, 3-81
312105-0335 ..	SCREW, M6S ISO 4014 M5X30 A4 80	1-97, 2-131, 3-157, 3-159
312105-0337 ..	SCREW, M6S ISO 4014 M5X35 A4 80	3-17
312105-0343 ..	SCREW, M6S ISO 4014 M5X60 A4 80	2-115
312105-0362 ..	SCREW, M6S ISO 4017 M6X8 A4 80	1-53, 2-63, 2-65
312105-0364 ..	SCREW, M6S ISO 4017 M6X10 A4 80	1-17, 1-35, 1-63, 1-85, 2-83, 3-81, 3-101, 4-13, 4-21, 9-55, 9-61
312105-0366 ..	SCREW, M6S ISO 4017 M6X12 A4 80	1-7, 1-11, 1-13, 1-31, 1-39, 1-77, 1-95, 2-25, 2-27, 2-33, 2-35, 2-37, 2-69, 2-79, 2-81, 2-107, 2-117, 3-15, 3-65, 3-67, 3-89, 3-99, 3-111, 3-113, 3-119, 3-141, 3-143, 3-153, 3-155, 3-157, 3-159, 4-7, 4-21, 4-31, 5-27, 6-23, 7-17, 9-39, 9-41, 9-59, 9-81, 9-83, 9-85, 9-91
312105-0367 ..	SCREW, M6S ISO 4017 M6X14 A4 80	2-69, 3-57
312105-0368 ..	SCREW, M6S ISO 4017 M6X16 A4 80	1-13, 1-17, 1-29, 1-33, 1-35, 1-39, 1-63, 1-85, 1-95, 2-31

Part No	Description	Page No
		2-63, 2-65, 2-69, 2-71, 2-75, 2-77, 2-83, 2-89, 2-103, 2-107, 2-109, 2-117, 2-125, 2-127, 2-129
		2-133, 3-23, 3-25, 3-45, 3-47, 3-63, 3-65, 3-73, 3-75, 3-79, 3-81, 3-83, 3-107, 3-119, 3-141, 3-143
		3-149, 3-151, 3-169, 4-7, 5-21, 5-23, 5-25, 5-27, 6-23, 6-81, 9-39, 9-41, 9-43, 9-45, 9-61, 9-83
		9-85, 9-93, 9-95, 9-101, 9-105, 9-107, 9-109
312105-0370 ..	SCREW, M6S ISO 4017 M6X20 A4 80	1-31, 1-81, 2-9, 2-13, 2-15, 2-17, 2-19, 2-23, 2-29, 2-63
		2-65, 2-69, 2-71, 2-75, 2-79, 2-81, 2-109, 2-111, 2-115, 2-119, 2-125, 3-27, 3-37, 3-59, 3-69, 3-83
		3-103, 3-105, 3-111, 3-113, 3-141, 3-143, 3-161, 3-163, 3-171, 4-21, 4-27, 9-17, 9-65, 9-83, 9-85, 9-91
312105-0372 ..	SCREW, M6S ISO 4017 M6X25 A4 80	1-9, 1-15, 1-33, 1-61, 1-83, 1-95, 1-99, 1-101, 2-37, 2-49
		2-101, 2-103, 2-107, 2-109, 2-111, 2-117, 3-67, 3-69, 3-71, 3-73, 3-89, 4-7, 4-9, 4-21, 4-23, 4-27
		4-31, 5-5, 5-7, 5-15, 5-19, 6-11, 9-13, 9-27, 9-81
312105-0374 ..	SCREW, M6S ISO 4014 M6X30 A4 80	1-11, 1-75, 1-97, 2-59, 2-63, 2-65, 2-75, 2-79, 2-81, 2-107
		3-65, 3-67, 3-69, 3-71, 3-79, 3-85, 3-87, 3-107, 4-7, 4-13, 4-15, 4-21, 4-29, 4-31, 5-11, 5-15, 5-19, 6-81
312105-0376 ..	SCREW, M6S ISO 4014 M6X35 A4 80	2-9, 2-103, 2-111, 2-131, 3-9, 3-67, 3-73, 4-15, 9-49
312105-0378 ..	SCREW, M6S ISO 4014 M6X40 A4 80	1-13, 2-13, 2-15, 3-67, 3-69, 3-89, 3-103, 3-105, 5-21, 9-81
312105-0379 ..	SCREW, M6S ISO 4014 M6X45 A4 80	3-69, 4-15, 4-21
312105-0381 ..	SCREW, M6S ISO 4014 M6X55 A4 80	2-107, 2-111, 3-109
312105-0382 ..	SCREW, M6S ISO 4014 M6X60 A4 80	1-95, 2-79, 2-81, 2-115, 3-89
312105-0383 ..	SCREW, M6S ISO 4014 M6X65 A4 80	2-79, 2-81
312105-0384 ..	SCREW, M6S ISO 4014 M6X70 A4 80	2-69, 2-71, 2-75, 2-103, 2-117, 3-67
312105-0386 ..	SCREW, M6S ISO 4014 M6X80 A4 80	2-71, 4-21, 9-91
312105-0388 ..	SCREW, M6S ISO 4014 M6X90 A4 80	1-77, 3-59
312105-0390 ..	SCREW, M6S ISO 4014 M6X100 A4 80	1-77
312105-0447 ..	SCREW M6S ISO 4017 M8X12 A480	1-49, 1-61, 1-69, 1-75, 4-27, 9-35, 9-37, 9-59
312105-0449 ..	SCREW, M6S ISO 4017 M8X16 A4 80	1-13, 1-15, 1-49, 1-51, 1-53, 1-69, 1-75, 1-83, 2-61, 2-63
		2-65, 3-31, 3-35, 3-37, 3-141, 3-143, 5-11, 7-11, 7-13, 9-29, 9-49, 9-83, 9-85
312105-0451 ..	SCREW, M6S ISO 4017 M8X20 A4 80	1-49, 1-61, 1-63, 1-65, 1-77, 1-83, 1-85, 1-87, 1-93, 2-33
		2-35, 2-41, 2-59, 2-63, 2-65, 2-69, 2-79, 2-81, 2-103, 2-113, 3-73, 3-103, 3-105, 3-107, 4-7, 5-5
		7-5, 9-29, 9-35, 9-55, 9-59, 9-81
312105-0453 ..	SCREW, M6S ISO 4017 M8X25 A4 80	1-11, 1-13, 1-17, 1-31, 1-33, 1-35, 1-37, 1-61, 1-63, 1-65
		1-81, 1-85, 1-87, 1-93, 1-97, 2-9, 2-13, 2-15, 2-63, 2-65, 2-69, 2-77, 2-91, 2-93, 2-97, 3-9, 3-65
		3-83, 3-85, 3-87, 3-107, 4-9, 4-29, 4-31, 5-15, 5-19, 6-23, 9-17, 9-37, 9-43, 9-51
312105-0455 ..	SCREW, M6S ISO 4017 M8X30 A4 80	1-15, 1-19, 1-53, 1-75, 1-81, 1-95, 2-13, 2-15, 2-59, 2-61
		2-63, 2-65, 2-69, 2-77, 2-107, 2-117, 3-11, 3-23, 3-65, 3-161, 4-11, 4-21, 4-27, 4-31, 5-5, 9-53
312105-0457 ..	SCREW, M6S ISO 4014 M8X35 A4 80	1-11, 1-31, 1-75, 1-81, 1-97, 2-33, 2-59, 3-11, 3-65, 3-107
		4-7, 4-31
312105-0459 ..	SCREW, M6S ISO 4014 M8X40 A4 80	1-11, 1-13, 1-31, 1-77, 2-9, 2-13, 2-15, 3-9, 3-13, 3-31
		3-37, 3-49, 3-51, 3-89, 3-103, 3-105, 6-81, 9-49, 9-55
312105-0460 ..	SCREW, M6S ISO 4014 M8X45 A4 80	1-53, 3-161
312105-0461 ..	SCREW, M6S ISO 4014 M8X50 A4 80	1-31, 2-99, 3-37, 3-61, 3-63, 6-23, 6-81
312105-0462 ..	SCREW, M6S ISO 4014 M8X55 A4 8002	3-59
312105-0464 ..	SCREW, M6S ISO 4014 M8X65 A4 80	1-11, 2-61, 3-59
312105-0465 ..	SCREW, M6S ISO 4014 M8X70 A4 80	2-71, 3-33, 3-107, 5-5, 5-21, 9-59
312105-0466 ..	SCREW, M6S ISO 4014 M8X75 A4 80	2-71
312105-0467 ..	SCREW, M6S ISO 4014 M8X80 A4 80	4-21
312105-0469 ..	SCREW, M6S ISO 4014 M8X90 A4 80	1-9, 1-71
312105-0471 ..	SCREW, M6S ISO 4014 M8X100 A4 80	5-7
312105-0493 ..	SCREW, M6S ISO 4017 M10X25 A4 80	3-67
312105-0495 ..	SCREW, M6S ISO 4017 M10X30 A4 80	1-49
312105-0497 ..	SCREW, M6S ISO 4017 M10X35 A4 80	2-69, 3-73, 3-85, 3-87, 5-21
312105-0499 ..	SCREW, M6S ISO 4014 M10X40 A4 80	3-11, 3-63
312105-0500 ..	SCREW, M6S ISO 4014 M10X45 A4 80	3-79
312105-0501 ..	SCREW, M6S ISO 4014 M10X50 A4 80	9-53
312105-0502 ..	SCREW, M6S ISO 4014 M10X55 A4 80	5-15, 5-19
312105-0504 ..	SCREW, M6S ISO 4014 M10X65 A4 80	2-99, 3-35
312105-0513 ..	SCREW, M6S ISO 4014 M10X110 A4 80	1-31
312105-0517 ..	SCREW, M6S ISO 4014 M10X130 A4 80	1-47
312105-0532 ..	SCREW, M6S ISO 4017 M12X20 A4 80	2-99, 9-53
312105-0538 ..	SCREW, M6S ISO 4017 M12X35 A4 80	3-13
312105-0541 ..	SCREW, M6S ISO 4014 M12X45 A4 80	4-31
312105-0544 ..	SCREW, M6S ISO 4014 M12X60 A4 80	3-107
312105-0628 ..	SCREW, M6S ISO 4017 M16X40 A4 80	2-29
312108-0370 ..	SCREW EN 1665 TYPE F M6X20 A270	3-21
312109-0374 ..	SCREW, M6S ISO 4017 M6X30 A4 80	2-79, 2-81, 3-83
312109-0376 ..	SCREW, M6S ISO 4017 M6X35 A4 80	1-91
312109-0380 ..	SCREW, M6S ISO 4017 M6X50 A4 80	7-11, 7-13
312109-0457 ..	SCREW, M6S ISO 4017 M8X35 A4 80	3-9
312109-0459 ..	SCREW, M6S ISO 4017 M8X40 A4 80	2-79, 2-81, 4-5, 4-7
312109-0465 ..	SCREW, M6S ISO 4017 M8X70 A4 80	4-19, 9-25, 9-39, 9-41
312109-0467 ..	SCREW, M6S ISO 4017 M8X80 A4 80	1-99, 1-101
312111-0390 ..	SCREW HEX.SOCK.HD.MC6S 6X100 88 FZB	2-103
312113-0287 ..	SCREW, SERRATED COMBI TORX M4X8 A2	6-23, 6-65
312113-0323 ..	SCREW, SERRATED COMBI TORX M5X8 A2	6-65
312113-0366 ..	SCREW, SERRATED COMBI TORX M6X12 A2	6-59, 6-61, 6-65
312115-0226 ..	SCREW ISO4762 M3X12 A4 80	3-33
312115-0228 ..	SCREW ISO4762 M3X16 A4 80	3-23, 3-81, 4-21, 9-49
312115-0285 ..	SCREW ISO4762 M4X6 A4 80	2-75
312115-0287 ..	SCREW ISO4762 M4X8 A4 80	2-67, 2-89, 4-5
312115-0289 ..	SCREW ISO4762 M4X10 A4 80	2-89
312115-0291 ..	SCREW ISO4762 M4X12 A4 80	3-13, 3-27, 4-11
312115-0293 ..	SCREW ISO4762 M4X16 A4 80	2-49
312115-0295 ..	SCREW ISO4762 M4X20 A4 80	3-83
312115-0305 ..	SCREW ISO4762 M4X50 A4 80	6-51, 6-53
312115-0323 ..	SCREW ISO4762 M5X8 A4 80	5-13, 5-17
312115-0327 ..	SCREW ISO4762 M5X12 A4 80	2-75, 3-49, 3-51, 4-21, 5-13, 5-17, 9-91

Part No	Description	Page No
312115-0329 ..	SCREW ISO4762 M5X16 A4 80	3-121, 5-13, 5-15, 5-17, 5-19, 9-13
312115-0331 ..	SCREW ISO4762 M5X20 A4 80	5-13, 5-17
312115-0333 ..	SCREW ISO4762 M5X25 A4 80	3-99, 3-101
312115-0335 ..	SCREW ISO4762 M5X30 A4 80	2-53, 4-15, 5-15, 5-19
312115-0362 ..	SCREW ISO4762 M6X8 A4 80	2-61
312115-0364 ..	SCREW ISO4762 M6X10 A4 80	5-23, 5-25, 9-17
312115-0366 ..	SCREW ISO4762 M6X12 A4 80	2-115, 3-45, 3-47, 3-79, 4-5
312115-0368 ..	SCREW ISO4762 M6X16 A4 80	1-7, 1-9, 2-69, 2-75, 2-103, 2-109, 3-53, 3-61, 3-67, 3-151
312115-0370 ..	SCREW ISO4762 M6X20 A4 80	2-29, 2-63, 2-65, 2-69, 2-107, 2-139, 2-141, 2-149, 2-151, 3-65, 3-69, 3-73, 3-149, 4-9, 5-15, 5-19, 5-21, 6-9, 6-69, 6-71, 6-73, 6-75, 6-77, 6-79
312115-0372 ..	SCREW ISO4762 M6X25 A4 80	2-33, 2-75, 2-79, 2-81, 2-101, 2-143, 2-145, 2-147, 3-41, 3-43, 3-45, 3-47, 3-149, 3-151, 3-153, 3-155, 3-165, 3-167, 4-13, 4-15
312115-0374 ..	SCREW ISO4762 M6X30 A4 80	1-51, 1-99, 1-101, 2-29, 2-109, 3-13, 3-49, 3-71, 4-25
312115-0376 ..	SCREW ISO4762 M6X35 A4 80	1-95, 3-65, 3-67
312115-0378 ..	SCREW ISO4762 M6X40 A4 80	1-91
312115-0382 ..	SCREW ISO4762 M6X60 A4 80	5-5, 9-81
312115-0384 ..	SCREW ISO4762 M6X70 A4 80	5-5, 5-11
312115-0449 ..	SCREW ISO4762 M8X16 A4 80	3-67
312115-0451 ..	SCREW ISO4762 M8X20 A4 80	1-95, 2-59, 2-63, 2-65, 2-99, 2-107, 3-35, 9-53
312115-0453 ..	SCREW ISO4762 M8X25 A4 80	1-13, 1-91, 1-95, 2-95, 4-5
312115-0455 ..	SCREW ISO4762 M8X30 A4 80	1-97, 2-63, 2-65, 2-109, 3-11
312115-0459 ..	SCREW ISO4762 M8X40 A4 80	2-9, 3-9, 4-25, 4-31, 6-81
312115-0460 ..	SCREW ISO4762 M8X45 A4 80	5-5
312115-0463 ..	SCREW ISO4762 M8X60 A4 80	3-103, 3-105, 4-25
312115-0467 ..	SCREW ISO4762 M8X80 A4 80	4-5
312115-0491 ..	SCREW ISO4762 M10X20 A4 80	4-29
312115-0495 ..	SCREW ISO4762 M10X30 A4 80	2-59, 2-63, 2-65
312121-0226 ..	SCREW ISO 1207 M3X12 4.8-5.8 Z.PL.	1-29, 9-45, 9-101
312121-0287 ..	SCREW ISO 1207 M4X8 4.8-5.8 Z.PL.	6-11
312125-0222 ..	SLOTTED HEAD SCREW, ISO1207 M3X8 A4	4-7
312125-0226 ..	SLOTTED HEAD SCREW, ISO1207 M3X12 A4	1-19, 1-23, 1-25, 1-37, 1-65, 1-87, 2-75, 2-107, 9-43, 9-99, 9-103
312125-0228 ..	SLOTTED HEAD SCREW, ISO1207 M3X16 A4	1-91, 1-99, 1-101, 9-91
312125-0230 ..	SLOTTED HEAD SCREW, ISO1207 M3X20 A4	2-69, 3-123
312125-0232 ..	SLOTTED HEAD SCREW, ISO1207 M3X25 A4	1-101, 2-31, 2-39, 2-43, 2-45, 3-19, 3-125, 5-23, 5-25
312125-0234 ..	SLOTTED HEAD SCREW, ISO1207 M3X30 A4	1-93, 3-141, 3-143, 9-83, 9-85
312125-0285 ..	SLOTTED HEAD SCREW, ISO1207 M4X6 A4	2-67, 2-79, 2-81
312125-0287 ..	SLOTTED HEAD SCREW, ISO1207 M4X8 A4	1-19, 1-37, 1-65, 1-87, 1-91, 1-95, 2-13, 2-15, 2-25, 2-27, 2-33, 2-69, 3-111, 3-113, 4-5, 4-27, 6-37, 9-49
312125-0289 ..	SCREW	3-9
312125-0291 ..	SLOTTED HEAD SCREW, ISO1207 M4X12 A4	2-9, 2-11, 3-129, 6-65, 9-93, 9-95
312125-0293 ..	SLOTTED HEAD SCREW, ISO1207 M4X16 A4	2-47, 2-51, 3-127, 9-93, 9-95, 9-111
312125-0323 ..	SLOTTED HEAD SCREW, ISO1207 M5X8 A4	6-69, 6-71, 6-73, 6-75, 6-77, 6-79
312125-0327 ..	SLOTTED HEAD SCREW, ISO1207 M5X12 A4	6-65
312125-0364 ..	SCREW ISO 1207 M6X10 A4	2-9, 2-63, 2-65
312125-0366 ..	SLOTTED HEAD SCREW, ISO1207 M6X12 A4	6-65
312132-0287 ..	SLOTTED HEAD, PAN SCREW, MSCS M4X8	1-97
312132-0289 ..	SLOTTED HEAD, PAN SCREW, MSCS M4X10	3-9, 3-103, 3-105
312145-0222 ..	SCREW ISO 2009 MFS M3X8 A4	3-57
312145-0228 ..	SCREW ISO 2009 MFS M3X16 A4	2-33
312145-0287 ..	SCREW ISO 2009 MFS M4X8 A4	1-99, 1-101, 2-25, 2-27, 3-111, 3-113
312145-0293 ..	SCREW ISO 2009 MFS M4X16 A4	2-49, 3-27
312145-0325 ..	SCREW ISO 2009 MFS M5X10 A4	2-9, 2-13, 2-15, 3-9, 3-103, 3-105, 6-81, 9-49, 9-55
312145-0329 ..	SCREW ISO 2009 MFS M5X16 A4	4-31
312145-0382 ..	SCREW ISO 2009 MFS M6X60 A4	3-169
312155-0226 ..	SCREW DIN 7991 MF6S M3X12 A4 70	4-27, 9-55
312155-0228 ..	SCREW DIN 7991 MF6S M3X16 A4 70	1-99, 2-61
312155-0287 ..	SCREW DIN 7991 MF6S M4X8 A4 70	4-21, 5-13, 5-17, 9-81
312155-0289 ..	SCREW DIN 7991 MF6S M4X10 A4 70	4-11, 4-13
312155-0291 ..	SCREW DIN 7991 MF6S M4X12 A4 70	3-81, 6-11, 6-69, 6-71, 6-73, 6-75, 6-77, 6-79, 6-87, 9-61
312155-0293 ..	SCREW DIN 7991 MF6S M4X16 A4 70	2-77
312155-0295 ..	SCREW DIN 7991 MF6S M4X20 A4 70	4-21
312155-0297 ..	SCREW DIN 7991 MF6S M4X25 A4 70	7-15, 7-17
312155-0299 ..	SCREW DIN 7991 MF6S M4X30 A4 70	2-69
312155-0323 ..	SCREW DIN 7991 MF6S M5X8 A4 70	1-57, 2-79, 2-81
312155-0325 ..	SCREW DIN 7991 MF6S M5X10 A4 70	1-91, 4-13
312155-0327 ..	SCREW DIN 7991 MF6S M5X12 A4 70	1-99, 2-13, 2-15, 2-41, 2-63, 2-65, 4-17, 4-27, 9-13
312155-0329 ..	SCREW DIN 7991 MF6S M5X16 A4 70	1-91, 1-99, 1-101, 2-79, 2-81, 2-107, 2-117
312155-0331 ..	SCREW DIN 7991 MF6S M5X20 A4 70	1-91, 2-117
312155-0366 ..	SCREW DIN 7991 MF6S M6X12 A4 70	1-93, 2-71, 2-79, 2-81, 2-101, 2-117, 3-65, 3-67
312155-0368 ..	SCREW DIN 7991 MF6S M6X16 A4 70	1-99, 1-101, 2-71, 2-77, 2-79, 2-81, 3-77, 6-9, 9-43, 9-55
312155-0370 ..	SCREW DIN 7991 MF6S M6X20 A4 70	1-23, 1-31, 1-39, 2-61, 2-73, 2-77, 2-79, 2-81, 2-85, 2-117, 2-139, 2-143, 2-147, 2-149, 3-149, 3-151, 3-165, 5-11, 9-13, 9-27, 9-99
312155-0372 ..	SCREW DIN 7991 MF6S M6X25 A4 70	1-99, 1-101, 2-79, 2-81, 2-117, 5-21, 6-83, 9-13
312155-0374 ..	SCREW DIN 7991 MF6S M6X30 A4 70	2-13, 2-15
312155-0376 ..	SCREW DIN 7991 MF6S M6X35 A4 70	2-71
312155-0378 ..	SCREW DIN 7991 MF6S M6X40 A4 70	2-125, 2-127, 2-129, 2-133, 2-135, 2-137, 3-157, 3-159, 3-161, 3-163, 3-171, 6-85, 9-63, 9-65
312155-0380 ..	SCREW DIN 7991 MF6S M6X50 A4 70	3-65
312155-0449 ..	SCREW DIN 7991 MF6S M8X16 A4 70	2-61, 3-79, 3-83
312155-0451 ..	SCREW DIN 7991 MF6S M8X20 A4 70	2-59, 2-63, 2-65, 3-37, 5-11
312155-0453 ..	SCREW DIN 7991 MF6S M8X25 A4 70	1-93, 2-13, 2-15
312155-0455 ..	SCREW DIN 7991 MF6S M8X30 A4 70	2-59, 2-63, 2-65, 3-45

Part No	Description	Page No
312155-0457 ..	SCREW DIN 7991 MF6S M8X35 A4 70	2-9
312155-0459 ..	SCREW DIN 7991 MF6S M8X40 A4 70	2-13, 2-15, 3-9
312156-0323 ..	SCREW EN 10642 MF6S M5X8 A470	1-79
312156-0366 ..	SCREW EN 10642 MF6S M6X12 A470	1-13
312156-0451 ..	SCREW EN 10642 MF6S M8X20 A470	1-13
312156-0459 ..	SCREW EN 10642 MF6S M8X40 A470	4-29
312309-0362 ..	SCREW ISO4026 M6X8 A4	4-31
312311-0368 ..	SET SCREW, DOG POINT ISO4028 M6X16 FZB	3-85, 3-87
312311-0374 ..	SET SCREW, DOG POINT ISO4028 M6X30 FZB	1-99, 1-101
312316-0362 ..	SET SCREW, CUP END ISO4029 M6X8 FZB	3-69
312318-0291 ..	SET SCREW, CUP END ISO4029 M4X12 A4	3-59, 3-67
312318-0320 ..	SET SCREW, CUP END ISO4029 M5X5 A4	2-111
312318-0323 ..	SET SCREW, CUP END ISO4029 M5X8 A4	5-13, 5-17
312318-0360 ..	SET SCREW, CUP END ISO4029 M6X6 A4	2-61, 3-41, 3-43, 3-79, 3-107, 4-7, 4-9, 4-15, 5-5
312318-0362 ..	SET SCREW, CUP END ISO4029 M6X8 A4	3-47, 5-15, 5-19
312318-0364 ..	SET SCREW, CUP END ISO4029 M6X10 A4	9-17
312318-0366 ..	SET SCREW, CUP END ISO4029 M6X12 A4	4-31
312318-0368 ..	SET SCREW, CUP END ISO4029 M6X16 A4	1-11, 1-31, 2-79, 2-81, 4-17
312318-0370 ..	SET SCREW, CUP END ISO4029 M6X20 A4	2-103
312318-0372 ..	SET SCREW, CUP END ISO4029 M6X25 A4	1-75, 2-139, 2-141, 2-143, 2-145, 2-147, 2-149, 2-151, 3-149, 3-151, 3-165, 3-167
312318-0443 ..	SET SCREW, CUP END ISO4029 M8X8 A4	1-97, 3-13, 3-31, 3-41, 3-45, 3-107, 4-9, 5-5
312318-0447 ..	SET SCREW, CUP END ISO4029 M8X12 A4	4-25
312318-0449 ..	SET SCREW, CUP END ISO4029 M8X16 A4	1-51
312601-0314 ..	HEXAGON NUT, DIN 934 M5 8 FZB	6-69, 6-71, 6-73, 6-75, 6-77, 6-79
312602-0318 ..	HEXAGON NUT, EN 24032 M6M M8 NIPLBR	3-23
312605-0310 ..	HEXAGON NUT, M6M M3 A280	2-69, 7-7
312605-0312 ..	HEXAGON NUT, M6M M4 A280	2-25, 2-27, 3-89, 3-111, 3-113, 4-21, 6-9, 6-11, 6-65, 6-69, 6-71, 6-73, 6-75, 6-77, 6-79
312605-0314 ..	HEXAGON NUT, M6M M5 A280	1-17, 1-25, 1-35, 1-63, 1-85, 2-117, 2-131, 3-111, 3-113, 3-121, 6-9, 6-23, 6-49, 6-65, 6-69, 6-71, 6-73, 6-75, 6-77, 6-79, 9-5, 9-13, 9-67, 9-103
312605-0316 ..	HEXAGON NUT, M6M M6 A280	1-7, 1-9, 1-13, 1-23, 1-77, 1-91, 2-17, 2-19, 2-79, 2-81, 2-103, 2-115, 2-119, 2-125, 3-57, 3-65, 3-71, 3-85, 3-87, 3-99, 3-141, 3-143, 6-9, 6-11, 6-23, 6-75, 6-77, 6-79, 6-83, 7-11, 7-13, 9-13, 9-17, 9-55, 9-83, 9-85, 9-87, 9-99
312605-0318 ..	HEXAGON NUT, M6M M8 A280	1-11, 1-31, 1-63, 1-65, 1-81, 1-83, 1-85, 1-87, 1-97, 2-61, 2-115, 3-49, 3-51, 3-59, 3-63, 3-141, 3-143, 3-161, 7-5, 7-11, 7-13, 9-37, 9-43, 9-83, 9-85
312605-0320 ..	HEXAGON NUT, M6M M10 A280	1-13, 1-31, 1-39, 3-79
312605-0322 ..	HEXAGON NUT, M6M M12 A280	3-37, 3-107
312605-0324 ..	HEXAGON NUT, M6M M16 A280	2-109
312607-0312 ..	HEXAGON NUT, EN 24032 M6M M4 A480	2-77, 6-69, 6-71, 6-73, 6-75, 6-77, 6-79
312607-0314 ..	HEXAGON NUT, EN 24032 M6M M5 A480	2-61, 9-71
312607-0316 ..	HEXAGON NUT, EN 24032 M6M M6 A480	2-63, 2-65, 2-71
312607-0318 ..	HEXAGON NUT, EN 24032 M6M M8 A480	1-61
312625-0314 ..	HEXAGON THIN NUT, EN 24035 ML6M M5 A4	2-41
312625-0316 ..	HEXAGON THIN NUT, EN 24035 ML6M M6 A4	2-71, 2-79, 2-81, 2-133, 2-139, 2-141, 2-143, 2-145, 2-147, 2-149, 2-151, 3-149, 3-151, 3-165, 3-167
312625-0318 ..	HEXAGON THIN NUT, EN 24035 ML6M M8 A4	2-103, 3-59, 3-69
312625-0322 ..	HEXAGON THIN NUT, EN 24035 ML6M M12 A4	3-37
312631-0321 ..	HEX.NUT FINE, EN 24032 M6M M10X1,25 FZB8	4-17
312705-0320 ..	NUT HEX. DOMED CAP MHM-6 M10 A280	1-47
312810-0318 ..	HEXAGON NUT, NY-LOCK M8 FZB	1-71
312812-0312 ..	HEXAGON NUT, NY-LOCK M4 A4 80	4-11
312812-0314 ..	HEXAGON NUT, NY-LOCK M5 A4 80	2-71, 2-115, 2-139, 2-143, 2-147, 2-149, 3-149, 3-151, 3-165, 3-173, 6-9, 6-69, 6-71, 6-73, 6-75, 6-77, 6-79
312812-0316 ..	HEXAGON NUT, NY-LOCK M6 A4 80	1-77, 2-71, 2-103, 2-115, 2-125, 2-127, 2-129, 2-133, 2-135, 2-137, 3-83, 3-157, 3-159, 3-161, 3-163, 3-169, 3-171, 6-65, 6-69, 6-71, 6-73, 6-75, 6-77, 6-79, 9-63, 9-65
312812-0318 ..	HEXAGON NUT, NY-LOCK M8 A4 80	1-49, 1-75, 2-71, 2-109, 3-81, 4-21, 9-61
312812-0320 ..	HEXAGON NUT, NY-LOCK M10 A4 80	1-49, 2-99, 3-35
312902-0322 ..	NUT HEX. LEFT THREAD, M12 A280	3-13
315101-0153 ..	WASHER PLAIN, BRB, 6,4/12 H=1,5	6-9, 6-83, 9-87
315101-0165 ..	WASHER PLAIN, BRB, 8,4/16 H=1,5	3-13
315103-0153 ..	WASHER PLAIN, 6,4X12X1,5 BR NI PL	1-53
315105-0124 ..	WASHER PLAIN, 3,2X6X0,5 A4 BRB	1-19, 1-37, 1-65, 1-87, 1-93, 1-99, 1-101, 4-7, 7-7
315105-0136 ..	WASHER PLAIN, 4,3X9X0,8 A4 BRB	1-19, 1-37, 1-65, 1-87, 1-99, 1-101, 2-13, 2-15, 2-17, 2-19, 2-67, 2-75, 3-9, 3-111, 3-113, 3-141, 3-143, 4-5, 4-11, 4-13, 4-21, 5-5, 6-9, 6-11, 6-65, 6-69, 6-71, 6-73, 6-75, 6-77, 6-79, 6-87, 7-17, 9-49, 9-83, 9-85
315105-0146 ..	WASHER PLAIN, 5,3X10X1 A4 BRB	1-17, 1-19, 1-25, 1-35, 1-37, 1-63, 1-65, 1-87, 1-91, 1-99, 1-101, 2-41, 2-61, 2-69, 2-71, 2-75, 2-79, 2-81, 2-99, 2-101, 2-103, 2-115, 2-131, 2-139, 2-143, 2-147, 2-149, 3-15, 3-111, 3-113, 3-121, 3-149, 3-151, 3-165, 4-7, 4-11, 4-15, 5-23, 5-25, 6-9, 6-65, 6-69, 6-71, 6-73, 6-75, 6-77, 6-79, 7-7, 9-13, 9-17, 9-53, 9-103, 9-105, 9-107, 9-109
315105-0153 ..	WASHER PLAIN, 6,4X12X1,5 A4 BRB	1-7, 1-9, 1-11, 1-13, 1-15, 1-17, 1-29, 1-31, 1-33, 1-35, 1-39, 1-61, 1-63, 1-75, 1-77, 1-81, 1-83, 1-91, 1-97, 1-99, 1-101, 2-9, 2-13, 2-15, 2-17, 2-19, 2-23, 2-25, 2-27, 2-29, 2-31, 2-33, 2-35, 2-37, 2-49, 2-69, 2-71, 2-75, 2-79, 2-81, 2-101, 2-103, 2-115, 2-119, 2-125, 2-127, 2-129, 2-139, 2-141, 2-143, 2-145, 2-147, 2-149, 2-151, 3-9, 3-15, 3-25, 3-27, 3-37, 3-53, 3-55, 3-57, 3-99, 3-101, 3-103, 3-105, 3-111, 3-113, 3-141, 3-143, 3-149, 3-151, 3-153, 3-155, 3-157, 3-159, 3-161, 3-163, 3-165, 3-167, 3-169, 3-171, 4-5, 4-7, 4-9, 4-13, 4-15, 4-21, 4-23, 4-29, 5-5, 5-7, 5-21, 5-23, 5-25, 6-9, 6-11, 6-65, 7-11, 7-13, 9-13, 9-17, 9-27, 9-45, 9-83, 9-85, 9-93, 9-95, 9-101, 9-105, 9-107, 9-109
315105-0156 ..	WASHER PLAIN, 6,7X14X1,5 A4 BRB	2-117, 3-41, 3-43, 3-45, 3-47, 3-149, 3-151
315105-0165 ..	FWAS080G0-0S, WASHER PLAIN	1-11, 1-13, 1-15, 1-17, 1-19, 1-31, 1-33, 1-35, 1-37, 1-53, 1-61, 1-63, 1-65, 1-81, 1-83, 1-87, 1-93, 1-95, 1-97, 2-9, 2-13, 2-15, 2-33, 2-35, 2-41, 2-61, 2-69, 2-71, 2-79, 2-81, 2-95, 2-99, 3-9, 3-31, 3-33, 3-35, 3-37, 3-49, 3-51, 3-103, 3-105, 3-141, 3-143, 3-161, 4-5, 4-7, 4-9, 4-11, 4-19, 4-21, 4-25, 4-29, 5-5, 5-7, 5-21, 7-5, 7-11, 7-13, 9-53, 9-83, 9-85

Part No	Description	Page No
315105-0173 ..	WASHER PLAIN, 10,5X22X2 A4 BRB	1-13, 1-31, 2-69, 2-99, 3-13, 3-35, 5-21, 9-53
315105-0178 ..	WASHER PLAIN, 13X24X2,5 A4 BRB	2-99, 3-13, 3-37, 9-53
315105-0186 ..	WASHER PLAIN, 17X30X3 A4 BRB	2-29
315105-0192 ..	WASHER PLAIN, 21X36X3 A4 BRB	1-99, 1-101
315106-0124 ..	WASHER PLAIN, M3 ISO7089-3-200 HV A4	1-91, 2-69, 2-107, 3-81, 4-21, 9-43, 9-49, 9-55, 9-91
315106-0136 ..	WASHER PLAIN, M4 ISO7089-4-200 HV A4	2-25, 2-27, 2-63, 2-65, 2-77, 3-89, 6-69, 6-71, 6-73, 6-75, 6-77, 6-79, 9-91
315106-0146 ..	WASHER PLAIN, M5 ISO7089-5-200 HV A4	1-85, 1-97, 2-61, 2-63, 2-65, 2-107, 2-117, 3-17, 3-69, 3-81, 3-85, 3-87, 3-107, 3-157, 3-159, 3-173, 5-13, 5-15, 5-17, 5-19, 6-23, 6-49, 6-69, 6-71, 6-73, 6-75, 6-77, 6-79, 9-5, 9-43, 9-49, 9-67, 9-71, 9-91
315106-0153 ..	WASHER PLAIN, M6 ISO7089-6-200 HV A4	1-85, 2-59, 2-63, 2-65, 2-77, 2-83, 2-89, 2-107, 2-109, 2-111, 2-117, 2-131, 3-13, 3-23, 3-59, 3-63, 3-65, 3-67, 3-69, 3-71, 3-73, 3-75, 3-79, 3-81, 3-83, 3-85, 3-87, 3-89, 3-107, 3-109, 3-119, 4-27, 4-31, 5-11, 5-15, 5-19, 5-27, 6-23, 6-65, 6-69, 6-71, 6-73, 6-75, 6-77, 6-79, 6-81, 7-17, 9-43, 9-49, 9-55, 9-61, 9-65, 9-81, 9-91
315106-0165 ..	WASHER PLAIN, M8 ISO7089-8-200 HV A4	1-85, 2-59, 2-63, 2-65, 2-107, 2-109, 2-113, 2-117, 3-11, 3-23, 3-37, 3-59, 3-61, 3-63, 3-65, 3-73, 3-81, 3-85, 3-87, 3-89, 3-107, 4-27, 4-31, 9-37, 9-43, 9-49, 9-55, 9-61
315106-0173 ..	WASHER PLAIN, M10 ISO7089-10-200 HV A4	1-47, 3-63, 3-67, 3-73, 3-79, 3-85, 3-87, 5-15, 5-19
315106-0178 ..	WASHER PLAIN, M12 ISO7089-12-200 HV A4	3-107, 4-31
315115-0153 ..	WASHER PLAIN, TBRB 6,4/12 H=3	2-49, 3-27, 7-11, 7-13
315115-0165 ..	WASHER PLAIN, TBRB 8,4/16 H=3	9-81
315121-0178 ..	WASHER PLAIN, TBRSB 13/36 H=6	3-37
315125-0153 ..	WASHER HIGH, TBRSB 6,4X22X4 A4	1-91, 2-103, 2-133, 3-69, 6-65, 9-13, 9-93, 9-95
315125-0165 ..	WASHER HIGH, TBRSB 8,4X26X5 A4	1-9, 2-63, 2-65, 2-69, 3-37, 3-63, 5-11, 5-15, 5-19, 9-43
315202-0242 ..	O-RING 124,3X5,7 MM	1-79
315202-0244 ..	O-RING 134,3X5,7 MM	1-57
315202-0245 ..	O-RING 139,3X5,7 MM	1-39
315202-0246 ..	O-RING 144,3X5,7 MM	1-77
315202-0504 ..	O-RING 5,28X1,78 MM	6-69, 6-71, 6-73, 6-75, 6-77, 6-79
315207-0714 ..	O-RING 31,47X1,78 MM	1-99, 1-101
315220-0204 ..	V-RING 49X59X13 MM V-55S	3-45, 3-47, 3-49, 3-51
315229-0101 ..	SQUARE RING, 10,4X17,4X3,7 MM 1/2" FDA	2-79, 2-81
315234-0110 ..	WASHER,PL.RND.CU.13,5/18 H=1,5	3-57
315239-0110 ..	NYLON WASHER G1/4, 1/4RRP	2-31
315400-0001 ..	6-4E PUN-H-6X1-BL	1-95, 2-17, 2-19, 2-77, 2-79, 2-81, 2-101, 2-103, 2-109, 2-115, 2-119, 3-59, 3-63, 3-65, 3-67, 3-69, 3-73, 3-79, 3-81, 3-87, 3-119, 4-11, 4-17, 5-13, 5-15, 5-17, 5-19, 5-21, 5-27, 7-11, 7-13, 9-43
315400-0002 ..	TUBE PUN-H-6X1-NT	3-57
315400-0004 ..	TUBE PUN-H-8X1,25-BL	1-93, 2-17, 2-19, 2-35, 2-37, 2-71, 2-109, 2-117, 3-17, 3-73, 3-79, 3-83, 3-109, 3-119, 3-141, 3-143, 5-11, 5-15, 5-23, 5-25, 5-27, 9-83, 9-85
315400-0008 ..	TUBE PUN-H-10X1,5-NT	3-57
315400-0010 ..	TUBE PUN-H-12X2-BL	2-17, 2-19, 2-35, 2-37, 3-119, 5-27
315400-0013 ..	TUBE PUN-H-16-2,5-BL	2-41
315400-0016 ..	TUBE PUN-H-4X0,75-BL	2-75, 2-119, 3-65, 3-67, 5-11, 5-13, 5-17, 5-21
315402-0150 ..	LOCK WASHER, DIN127B 6,1 A4, M6	2-111
315701-0170 ..	PARALLEL KEY W. ROUND ENDS, 4X4X20 MM	4-15, 5-21
315701-0200 ..	PARALLEL KEY W. ROUND ENDS, 5X5X18 MM	4-7
315701-0201 ..	PARALLEL KEY W. ROUND ENDS, 5X5X20 MM	3-41, 3-43
315701-0204 ..	PARALLEL KEY W. ROUND ENDS, 5X5X28 MM	5-5
315701-0230 ..	PARALLEL KEY W. ROUND ENDS, 6X6X16 MM	4-17
315701-0266 ..	PARALLEL KEY W. ROUND ENDS, 8X7X28 MM	3-47
315701-0271 ..	PARALLEL KEY W. ROUND ENDS, 8X7X45 MM	3-11
315701-0801 ..	PARALLEL KEY W. ROUND ENDS, 8X7X36 MM	3-31, 3-45
315705-0202 ..	PARALLEL KEY W. ROUND ENDS, 5X5X25MM	2-61
315705-0234 ..	PARALLEL KEY W. ROUND ENDS, 6X6X25 MM	1-99, 1-101
315705-0235 ..	PARALLEL KEY W. ROUND ENDS, 6X6X28 MM	2-33
315705-0236 ..	PARALLEL KEY W. ROUND ENDS, 6X6X30 MM	2-61
315705-0239 ..	PARALLEL KEY W. ROUND ENDS, 6X6X40 MM	2-99, 9-53
315705-0241 ..	PARALLEL KEY W. ROUND ENDS, 6X6X50 MM	2-33
315705-0263 ..	PARALLEL KEY W. ROUND ENDS, 8X7X20 MM	3-11
315705-0269 ..	PARALLEL KEY W. ROUND ENDS, 8X7X35 MM	1-53
315705-0270 ..	PARALLEL KEY W. ROUND ENDS, 8X7X40 MM	1-51
315705-0277 ..	PARALLEL KEY W. ROUND ENDS, 8X7X80 MM	1-53, 3-11
315741-0112 ..	RETAINING RING, DIN 705 A2 16	1-97, 3-41, 3-43, 3-47
315743-0001 ..	ÖLFLEX CONTROL TM 3G1, 281803	6-95
315743-0002 ..	ÖLFLEX CONTROL TM 4G1, 281804	6-95
315743-0004 ..	ÖLFLEX CONTROL TM 7G1, 281807	6-95
315743-0005 ..	ÖLFLEX CONTROL TM 12G1, 281812	6-95
315743-0006 ..	ÖLFLEX CONTROL TM 18G1, 281818	6-21, 6-95
315743-0009 ..	ÖLFLEX CONTROL TM 4G1,5, 281604	6-95
315743-0019 ..	ÖLFLEX CONTROL TM 4G4, 281204	6-95
315744-0020 ..	MINIATURE CIRCUIT BREAKER, FAZ-C2/1-NA	6-33, 6-35
315744-0040 ..	MINIATURE CIRCUIT BREAKER, FAZ-C4/1-NA	6-59, 6-61
315744-0060 ..	MINIATURE CIRCUIT BREAKER, FAZ-C6/1-NA	6-33, 6-35
315744-0100 ..	MINIATURE CIRCUIT BREAKER, FAZ-C10/1-NA	6-33, 6-35
315745-0100 ..	MINIATURE CIRCUIT BREAKER, FAZ-C10/2-NA	6-33, 6-35
315746-0160 ..	MINIATURE CIRCUIT BREAKER, FAZ-C16/3-NA	6-33, 6-35
315750-0122 ..	RETAINING RING FOR SHAFT DIN 471 30	3-107
315750-0129 ..	RETAINING RING FOR SHAFT DIN 471 45	3-45, 3-47
315751-0103 ..	RETAINING RING FOR SHAFT DIN 471 6X 0.7C	5-15, 5-19
315751-0109 ..	RETAINING RING FOR SHAFT DIN 471 12 SS	2-59, 2-61, 2-63, 2-65, 2-117, 5-21
315751-0111 ..	RETAINING RING FOR SHAFT DIN 471 14 SS	4-31
315751-0112 ..	RETAINING RING FOR SHAFT DIN 471 15 SS	2-111, 4-7
315751-0113 ..	RETAINING RING FOR SHAFT DIN 471 16 SS	2-59, 2-63, 2-65, 2-111, 3-65

Part No	Description	Page No
315751-0115 ..	RETAINING RING FOR SHAFT DIN 471 18 SS	2-99, 9-53
315751-0116 ..	RETAINING RING FOR SHAFT DIN 471 20 SS	1-99, 1-101, 2-99, 3-37, 3-49, 3-51, 3-61, 4-17, 4-19, 9-53
315751-0119 ..	RETAINING RING FOR SHAFT DIN 471 25 SS	2-69, 3-11, 3-31
315751-0122 ..	RETAINING RING FOR SHAFT DIN 471 30 SS	2-59, 2-63, 2-65, 3-45
315753-0124 ..	RETAINING RING FOR BORE DIN 472 35 SS	4-7
315755-0105 ..	RETAINING RING SHAFT DIN 6799 3,2 SS	2-139, 2-141, 2-143, 2-145, 2-147, 2-149, 2-151, 3-149, 3-151, 3-165, 3-167, 6-9, 6-69, 6-71, 6-73, 6-75, 6-77, 6-79
315755-0108 ..	RETAINING RING SHAFT DIN 6799 6 SS	3-65, 3-69
315755-0112 ..	RETAINING RING SHAFT DIN 6799 12 SS	4-31
315756-0002 ..	ÖLFLEX CONTROL TM CY 4G1, 281804CY	6-95
315756-0003 ..	ÖLFLEX CONTROL TM CY 5G1, 281805CY	6-21, 6-95
315756-0009 ..	ÖLFLEX CONTROL TM CY 4G1,5, 281604CY	6-95
315757-4080 ..	HOOD, SK 3240.080	6-69, 6-71, 6-73, 6-75, 6-77, 6-79
315757-5100 ..	TOP THERM FILTER FAN, SK 3241.100	6-69, 6-71, 6-73, 6-75, 6-77, 6-79
318175-0137 ..	TIMING BELT 32T10/610 PU	1-53
318213-0080 ..	ROLLER CHAIN, SIMPLEX 5/8 -80, SS	3-31
318219-0389 ..	CONNECTION LINK, DUPLEX 5/8", SS	3-53, 3-55
321130-0220 ..	THRUST WASHER, 16X30X1,5 MM	2-59, 2-63, 2-65
321131-0220 ..	THRUST WASHER, 16X22X1,5 MM	1-97
321133-0224 ..	BUSHING IGLIDUR G 16X18X20	3-63
321133-0260 ..	BUSHING IGLIDUR G 20X23X20	2-59, 2-63, 2-65, 5-11
321133-0300 ..	BUSHING IGLIDUR G 25X28X25	3-83, 5-11
321134-0102 ..	BUSHING IGLIDUR W300 8X10X10	3-79, 5-15, 5-19
321141-0060 ..	BEARING BUSHING, 6X8X6 MM	2-79, 2-81
321141-0140 ..	BEARING BUSHING, 10X12X10 MM	2-101
321141-0194 ..	BEARING BUSHING, 13X15X10 MM	5-5
321141-0255 ..	BEARING BUSHING, 20X23X15 MM	4-25
321141-0305 ..	BEARING BUSHING, 25X28X30 MM	3-107
321141-0340 ..	BEARING BUSHING, 30X34X30 MM	4-9, 5-5
321153-0136 ..	FLANGE BUSHING, IGLIDUR G 10X12X6	2-71
321153-0140 ..	FLANGE BUSHING, IGLIDUR G 10X12X10	3-67
321153-0145 ..	FLANGE BUSHING, IGLIDUR G 10X12X15	3-69
321153-0221 ..	FLANGE BUSHING, IGLIDUR G 16X18X17	3-65
321153-0296 ..	FLANGE BUSHING, IGLIDUR G 25X28X21,5	9-81
321154-0221 ..	FLANGE BUSHING, IGLIDUR W300 16X18X17	2-71
321155-0221 ..	FLANGE BUSHING, IGLIDUR X 16X18X17	2-111
321161-0142 ..	FLANGE BEARING, 10X12X12 MM	2-115
321161-0221 ..	FLANGE BEARING, 16X18X17 MM	2-115
321308-0204 ..	BALL BEARING 20/42X12	4-17
321582-0149 ..	CAM ROLLER, 10X22X36 MM	3-13
342216-0102 ..	NIPPLES, EXT. THREAD	3-57
342700-0110 ..	NIPPLE, EXT.THREAD, HEXAGON, G1/4-G1/4	7-11, 7-13
342701-0205 ..	BUSHING, INT/EXT, G 1/2 - G1/4	9-67
342715-0102 ..	BLIND PLUG 6 MM	2-35, 2-37
342715-0103 ..	BLIND PLUG 8 MM	2-17, 2-19, 2-31
342716-0203 ..	REDUCER 6-8	3-57
342716-0209 ..	REDUCER 8-12	2-17, 2-19
342722-0202 ..	PIPE COUPLING 1/8" D=6MM	2-35
342722-0205 ..	STRAIGHT COUPLING D=8-G1/4"	2-31
342748-0109 ..	T-CONNECTION 12MM	2-17, 2-19
342767-0104 ..	BULKHEAD LEAD-IN, G1/4	2-31, 3-57
342767-0114 ..	BULKHEAD LEAD-IN, G1/2	2-41
342921-0132 ..	STRAIGHT COUPLING, EXT.THREAD 10/8-G1/4	2-41, 3-57
342923-0114 ..	STRAIGHT COUPL.,INT.THREADED 6/4-G1/4"	3-57
342930-0134 ..	ELBOW 90 COUPL., EXT. THREAD 10/8-R1/2"	2-41
342946-0112 ..	T-COUPLING,UNION 6/4	3-57
342960-0133 ..	BULKHEAD COUPLING 10/8	2-31
342991-0101 ..	HOSE CLIP,WORM DRIVE TYPE (11)-17	7-11, 7-13
342991-0102 ..	HOSE CLIP,WORM DRIVE TYPE (13)-20	9-87
342991-0110 ..	HOSE CLIP,WORM DRIVE TYPE (50)-65	3-15
344202-0002 ..	CABLE GLAND, MS-SC-M, 4,5-9MM, M16X1,5	9-93, 9-95
344202-0003 ..	CABLE GLAND; MS-SC-M, 7-12,5MM, M20X1,5	3-35
344202-0004 ..	CABLE GLAND, MS-SC-M, 9-16,5MM, M25X1,5	9-53
344202-0010 ..	CABLE GLAND, MS-SC-M-XL 9-16,5MM M25X1,5	1-53
344224-0201 ..	BALL BEARING 12/28X8	1-13, 1-31
344224-0203 ..	BALL BEARING 17/35X10	1-99, 1-101
344224-0204 ..	BALL BEARING 20/42X12	1-99, 1-101, 3-37, 3-49, 3-51, 3-61, 4-19
344224-0206 ..	BALL BEARING 30/55X13	3-107
344224-0209 ..	BALL BEARING 45/75X16	3-45, 3-47
344226-0102 ..	BALL BEARING 15/35X11	2-111, 4-7
344226-0103 ..	BALL BEARING 17/40X12	2-91, 2-93, 2-95, 2-97, 2-113, 9-51
344226-0105 ..	BALL BEARING 25/52X15	3-45, 3-47
344245-0020 ..	SENSOR CABLE, EVT122	2-17, 2-19
344245-0050 ..	SENSOR CABLE, EVT123	9-91
344249-0050 ..	SENSOR CABLE, EVT135	6-89, 6-91
344257-0006 ..	SENSOR CABLE, EVT143	6-89, 6-91
344257-0010 ..	SENSOR CABLE, EVT144	6-89, 6-91
344257-0015 ..	SENSOR CABLE, EVT202	6-89, 6-91, 9-43, 9-49, 9-55
344257-0020 ..	SENSOR CABLE, EVT145	6-89, 6-91
344257-0050 ..	SENSOR CABLE, EVT146	2-17, 2-19, 6-89, 6-91
344259-0010 ..	SENSOR CABLE, EVT281	6-89, 6-91
344259-0015 ..	SENSOR CABLE, EVT28	6-89, 6-91
344259-0020 ..	SENSOR CABLE, EVT203	6-89, 6-91

Part No	Description	Page No
344259-0050 ..	SENSOR CABLE, EVT204	6-89, 6-91
344260-0020 ..	SENSOR CABLE, EVT211	6-89, 6-91
344260-0050 ..	SENSOR CABLE, EVT286	6-89, 6-91, 8-13
344263-0015 ..	SENSOR CABLE, EVT241	6-89, 6-91
344263-0020 ..	SENSOR CABLE, EVT239	6-89, 6-91
344267-0015 ..	SENSOR CABLE, EVT288	6-89, 6-91
344267-0020 ..	SENSOR CABLE, EVT043	6-89, 6-91
344267-0050 ..	SENSOR CABLE, EVT044	6-89, 6-91
344269-0020 ..	SENSOR CABLE, EVT217	6-89, 6-91, 9-77, 9-79
344297-0030 ..	SENSOR CABLE, SAC-8P-3,0-PVC/M12FR SH VA	9-91
344324-0453 ..	SET SCREW, DOG POINT ISO4028 M8X25 A2	3-77
344373-0030 ..	BLANKING PLUG G1/8, QSC-F-G1/8-I	2-37
350001-0002 ..	PUSH-IN FITTING QS-F-M5-6	2-103, 3-81, 5-27
350001-0006 ..	PUSH-IN FITTING QS-F-G1/8-6	2-37, 2-101
350001-0007 ..	PUSH-IN FITTING QS-F-G1/8-8	1-93, 2-37, 5-27
350001-0008 ..	PUSH-IN FITTING QS-F-G1/4-6	2-119
350001-0016 ..	PUSH-IN FITTING QS-F-G1/2-12	2-21
350002-0001 ..	PUSH-IN L-FITTING QSL-F-M5-4	2-75, 2-119
350002-0002 ..	PUSH-IN L-FITTING QSL-F-M5-6	1-95, 2-103, 3-65, 3-87, 4-11
350002-0005 ..	PUSH-IN L-FITTING QSL-F-G1/8-4	2-35, 2-69, 3-65, 3-67, 5-11, 5-21
350002-0006 ..	PUSH-IN L-FITTING QSL-F-G1/8-6	2-35, 2-103, 2-109, 3-59, 3-63, 3-69, 3-73, 3-79, 3-119, 5-15, 5-19, 5-27
350002-0007 ..	PUSH-IN L-FITTING QSL-F-G1/8-8	2-17, 2-19, 2-71, 2-117, 3-17, 3-83, 3-109, 3-119, 5-27
350002-0008 ..	PUSH-IN L-FITTING QSL-F-G1/4-6	2-109, 2-119
350002-0009 ..	PUSH-IN L-FITTING QSL-F-G1/4-8	2-21, 2-119
350002-0014 ..	PUSH-IN L-FITTING QSL-F-G3/8-12	3-119, 5-27
350002-0016 ..	PUSH-IN L-FITTING QSL-F-G1/2-12	2-21
350003-0001 ..	PUSH-IN FITTING QS-F-M5-4-I	5-13, 5-17
350004-0003 ..	PUSH-IN L-FITTING QSL-F-8	2-17, 2-19
350004-0005 ..	PUSH-IN L-FITTING QSL-F-12	2-17, 2-19
350005-0003 ..	PUSH-IN T-FITTING QST-F-8	3-17
350006-0003 ..	PUSH-IN FITTING QS-F-8H-6	2-35
350006-0007 ..	PUSH-IN FITTING QS-F-12H-6	2-17, 2-19, 3-119
350006-0008 ..	PUSH-IN FITTING QS-F-12H-8	2-17, 2-19, 2-31, 2-35, 3-119
350007-0008 ..	PUSH-IN T-FITTING QST-F-G1/4-6	2-119
350008-0005 ..	PUSH-IN FITTING QSF-F-G1/8-8	5-27
350009-0003 ..	PUSH-IN FITTING QS-F-8	2-17, 2-19
350010-0005 ..	PUSH-IN BULKHEAD FITTING QSS-F-12	2-31
350011-0002 ..	PUSH-IN T-FITTING QST-F-8-6	5-27
350012-0003 ..	SLEEVE QSH-F-8	3-17, 5-27
350012-0005 ..	SLEEVE QSH-F-12	2-17, 2-19, 3-119
350013-0002 ..	PLUG QSC-6H	3-119
350013-0003 ..	PLUG QSC-8H	3-119, 3-141, 3-143, 5-23, 5-25, 9-83, 9-85
350013-0005 ..	PLUG QSC-12H	3-119
350015-0001 ..	PUSH-IN Y-CONNECTOR QSY-F-6	2-103, 2-119, 5-19, 5-23, 5-25
350015-0002 ..	PUSH-IN Y-CONNECTOR QSY-F-6-4	2-119, 5-13, 5-17
350015-0003 ..	PUSH-IN Y-CONNECTOR QSY-F-8	2-17, 2-19, 2-35, 3-83, 3-141, 3-143, 5-23, 5-25, 9-83, 9-85
350015-0004 ..	PUSH-IN Y-CONNECTOR QSY-F-8-6	2-109, 3-73, 3-79, 5-15
351150-0166 ..	CABLE OLFLEX 4X4 MM2 LIGHT/GREY	6-93
351150-0403 ..	CABLE OLFLEX 3X0,75 MM2 LIGHT/GREY 35	6-93
351150-0404 ..	CABLE OLFLEX 4X0,75 MM2 LIGHT/GREY	6-93
351150-0406 ..	CABLE OLFLEX 7X0,75 MM2 LIGHT/GREY	6-93
351150-0407 ..	CABLE OLFLEX 12X0,75 MM2 LIGHT/GREY	6-93
351150-0413 ..	CABLE OLFLEX 4GX1,5 MM2 LIGHT/GREY	6-93
351150-0424 ..	CABLE OLFLEX 18X0,75 MM2 LIGHT/GREY	6-21, 6-93
351150-0431 ..	CABLE OLFLEX 2X0,75 MM2 LIGHT/GREY	6-93
351160-0102 ..	ECAB01011-6L, WIRE AWM 1X0,75 MM2 DARKBL	9-77, 9-79
351162-0107 ..	WIRE AWM 1X6 MM2 YELLOW-GREEN	6-89, 6-91
351178-0107 ..	CABLE OLFLEX FD 891 7X0,75 MM2 BLACK	6-89, 6-91
351422-0003 ..	CABLE ÖLFLEX 150CY QUATTRO 4X0,75	6-93
351422-0004 ..	CABLE ÖLFLEX 150CY QUATTRO 5X0,75	6-21, 6-93
351422-0203 ..	CABLE ÖLFLEX 150CY QUATTRO 4X1,5	6-93
351423-0005 ..	CABLE UNITRONIC LICY 4X0,34	6-49
351428-0007 ..	MOTOR FEEDBACK CABLE 2090-CFBM7DF-CEAA07	6-89, 6-91
351428-0012 ..	MOTOR FEEDBACK CABLE 2090-CFBM7DF-CEAA12	6-89, 6-91
351429-1607 ..	MOTOR POWER CABLE 2090-CPWM7DF-16AA07	6-89, 6-91
351429-1612 ..	MOTOR POWER CABLE 2090-CPWM7DF-16AA12	6-89, 6-91
351435-0020 ..	CIRCUIT BREAKER, NZMB1-4-A20	6-51, 6-53
351436-0020 ..	CIRCUIT BREAKER, NZMB1-A20-NA	6-51, 6-53
351439-1103 ..	TOP THERM BLUE-E ROOFMOUNT SS, 3359.600	9-87
351501-0003 ..	ETHERNET PATCH CABLE, FL CAT5 PATCH 0,3	6-49, 6-59, 6-61
351501-0010 ..	ETHERNET PATCH CABLE, FL CAT5 PATCH 1,0	6-59, 6-61
351501-0015 ..	ETHERNET PATCH CABLE, FL CAT5 PATCH 1,5	6-49
351501-0020 ..	ETHERNET PATCH CABLE, FL CAT5 PATCH 2,0	6-29, 6-31, 6-49, 6-67
351501-0030 ..	ETHERNET PATCH CABLE, FL CAT5 PATCH 3,0	6-21, 6-49
351501-0100 ..	ETHERNET PATCH CABLE, FL CAT5 PATCH 10,0	6-13
351501-2010 ..	ETH. P CAB.SAC-4P-M12MSD/ 1,0-PVC/M12MSD	6-89, 6-91
351501-2020 ..	ETH. P CAB.SAC-4P-M12MSD/2,0-PVC/M12MSD-	6-89, 6-91
351501-2050 ..	ETH. P CAB.SAC-4P-M12MSD/ 5,0-PVC/M12MSD	6-89, 6-91
351501-2100 ..	ETH. P CAB.SAC-4P-M12MSD/10,0-PVC/M12MSD	6-89, 6-91
351501-3100 ..	ETH. P. CAB. VS-M12MSD-IP20-LI-93P/10,0	6-89, 6-91
352113-0101 ..	CABLE TIE,BLACK 92X	1-19, 1-37, 1-65, 1-87, 1-91, 2-79, 2-81, 2-115
352113-0102 ..	CABLE TIE, BLACK 188X4,8 MM	1-95, 1-97, 2-9, 3-9, 3-57, 3-99
352113-0103 ..	CABLE TIE, BLACK 290X7,6 MM	2-9, 2-13, 2-15, 2-33, 2-69, 3-111, 3-113, 9-49

Part No	Description	Page No
352113-0203 ..	ANCHOR PLATES FOR STRIPS, TM3S8-M0	1-19, 1-37, 1-65, 1-87, 1-95, 2-9, 2-13, 2-15, 2-33, 2-69, 3-9, 3-103, 3-105, 3-111, 3-113, 9-49
352113-0204 ..	ANCHOR PLATES FOR STRIPS, TM3S25-M	2-9, 2-63, 2-65
352113-0205 ..	ANCHOR PLATES FOR STRIPS, TM2S8-C100	1-91, 1-97, 2-9, 2-79, 2-81, 3-9, 6-69, 6-71, 6-73, 6-75, 6-77, 6-79
352113-0206 ..	ANCHOR PLATES FOR STRIPS, ABM100-AT	3-57
353021-0212 ..	FEED THROUGH TERMINAL, WDU 2,5	6-63
353021-0213 ..	FEED THROUGH TERMINAL, WDU 4	6-43, 6-49
353021-0223 ..	FEED THROUGH TERMINAL, WDU 6 BL	6-55, 6-57
353022-0002 ..	TERMINAL WNT 4 10X3	6-37
353024-0205 ..	EARTH TERMINAL WPE 4	6-43
353024-0206 ..	EARTH TERMINAL WPE 6	6-41, 6-55, 6-57
353024-0207 ..	EARTH TERMINAL WPE 10	6-55, 6-57
353024-0212 ..	EARTH TERMINAL WDK 2,5 PE	6-45, 6-47
353031-0203 ..	END BRACKET, WEW 35/2	6-37, 6-41, 6-45, 6-47, 6-49, 6-55, 6-57, 6-63
353032-0009 ..	END PLATE, WAP WDK 2,5	6-45, 6-47
353033-0104 ..	END PLATE, WHP2,5-35N/10X3 BL	6-37
353033-0105 ..	END PLATE, WAP 16+35 WTW 2,5-10	6-63
353034-0030 ..	BRIDGE CONNECTOR WQV 2,5/10	6-63
353041-0001 ..	BUS BAR RAIL 10X3MM SSCH	6-37
353041-0003 ..	EARTH BAR	6-37
353042-0004 ..	RAIL, TS 35/7,5	6-65
353101-0130 ..	CABLE SHOE 1,5-2,5MM2 M4 BLUE	6-65
353101-0152 ..	CABLE SHOE 4,0-6,0MM2 M5 YELLOW	6-65
353105-0147 ..	PIN CABLE SHOE 4-6MM2 YELLOW A4630SR	6-51, 6-53
353240-0005 ..	COMPRESSION GLAND, VK 154Y	3-141, 3-143, 9-83, 9-85
353240-0007 ..	COMPRESSION GLAND, VK 156Y	6-23
353249-0052 ..	INSERT, MULTI HOLE, E152M 4X3	2-67
353249-0054 ..	INSERT, SINGLE HOLE, EK156 25	6-23
354000-0020 ..	MINIATURE CIRCUIT BREAKER, FAZ-C2/1	6-33, 6-35
354000-0060 ..	MINIATURE CIRCUIT BREAKER, FAZ-C6/1	6-33, 6-35
354000-0100 ..	MINIATURE CIRCUIT BREAKER, FAZ-C10/1	6-33, 6-35
354001-0100 ..	MINIATURE CIRCUIT BREAKER, FAZ-C10/2	6-33, 6-35
354002-0160 ..	MINIATURE CIRCUIT BREAKER, FAZ-C16/3	6-33, 6-35
359011-0806 ..	MARKING, DEK 5 FW 1-200	6-45
359011-0807 ..	MARKING, DEK 5 FW 1-50	2-67, 6-37, 6-47, 6-63
359011-0821 ..	MARKING, DEK 6 FW 1-50	2-49, 3-27, 6-15, 6-43, 9-93, 9-95
359240-0100 ..	SIGN HOLDER FOR 359240-0001	6-69, 6-71, 6-73
359241-0803 ..	SIGN: "SUPPLY DISCONNECTING DEVICE"	6-69, 6-71, 6-73
359301-0001 ..	BUTTON SIGN, UP	6-13, 6-21
359301-0005 ..	BUTTON SIGN, DOWN	6-13, 6-21
359301-0504 ..	BUTTON SIGN, RESET	6-13, 6-21
359705-0001 ..	WARNING SIGN ISO, ENTANGLEMENT	1-99, 1-101
359705-0015 ..	WARNING SIGN ISO, RISK OF ELECTRIC SHOCK	2-49, 3-27, 6-65, 6-69, 6-71, 6-73, 6-75, 6-77, 6-79, 8-9, 9-93, 9-95
359715-0100 ..	WARNING SIGN ANSI (H), ELECTRIC SHOCK	2-49, 3-27, 6-69, 6-71, 6-73, 6-75, 6-77, 6-79, 8-5, 9-93, 9-95
359725-0100 ..	WARNING SIGN ANSI (H), ENTANGLEMENT	1-99, 1-101
359725-0116 ..	WARNING SIGN ANSI (H), HOT SURFACE	1-99, 1-101, 8-5
359725-0117 ..	WARNING SIGN ANSI (V), HOT SURFACE	2-59, 2-63, 2-65, 3-89, 8-5, 9-81
359725-0121 ..	WARNING SIGN ANSI, HEAT ENERGY	3-141, 3-143, 5-23, 5-25, 8-5, 9-83, 9-85
359725-0124 ..	WARNING SIGN ANSI (H), PNEUMATIC ENERGY	2-109, 8-5
359725-0125 ..	WARNING SIGN ANSI (V), PNEUMATIC ENERGY	2-117, 8-5
436536-0010 ..	BRACKET	1-39
457696-0001 ..	JOINT PIECE	1-33, 1-39
464071-0002 ..	SLIDE RAIL	1-39
464071-0006 ..	SLIDE RAIL	1-39
464071-0007 ..	SLIDE RAIL	1-31
466072-0002 ..	COVERING PLATE	1-39
466074-0002 ..	SLIDER	1-31, 1-33, 1-39
476220-0000 ..	SPACER	1-31, 1-33, 1-39
476221-0001 ..	PIPE	9-25
476221-0002 ..	PIPE	9-39, 9-41
476221-0014 ..	PIPE	9-39, 9-41
476221-0024 ..	PIPE	1-17, 1-35, 1-63, 1-85
476975-0000 ..	WHEEL	1-13, 1-31, 1-39, 1-47
479110-0000 ..	SPACER	2-49, 3-27
484701-0000 ..	SHUTTER	1-17, 1-35, 1-63, 1-85, 9-25, 9-39, 9-41
486268-0000 ..	NUT	2-9, 2-13, 2-15, 2-99, 3-9, 3-13, 3-103, 3-105, 3-161, 4-5, 4-25, 4-29, 4-31, 6-81, 9-49, 9-55
486858-0000 ..	SPROCKET	1-31
486860-0000 ..	SPROCKET	1-31
486886-0000 ..	MOTOR SHELF	1-31
486896-0001 ..	CANTILEVER	1-31
486896-0002 ..	CANTILEVER	1-31
486918-0001 ..	JOINT PIECE	1-31
486918-0002 ..	JOINT PIECE	1-31
493768-0000 ..	BUSHING	4-15
497635-0000 ..	HUB	1-31
497637-0003 ..	SPACER	1-31
497676-0000 ..	WHEEL	1-39
497678-0000 ..	COVERING PLATE	1-31
497679-0000 ..	COVERING PLATE	1-39
497680-0001 ..	HOLDER	1-11, 1-31, 1-81
497997-0000 ..	PLUG	1-11, 1-31

Part No	Description	Page No
499770-0000 ..	BRACKET	1-39
499777-0000 ..	PLUG	1-13, 1-39
530852-0000 ..	RING	1-13, 1-31
531484-0001 ..	SIDE PLATE	1-31
531484-0002 ..	SIDE PLATE	1-31
531487-0000 ..	BRACKET	1-11, 1-31
531499-0000 ..	BEARING SLEEVE	1-13, 1-31, 1-47
531502-0000 ..	MOUNTING BLOCK	1-31
531503-0000 ..	SLIDE RAIL	1-31
531506-0000 ..	PROTECTION PLATE	1-31
531948-0000 ..	SPACER	1-31
531952-0000 ..	BEARING SLEEVE	1-31
531953-0000 ..	HUB	1-31
532381-0000 ..	GUIDE SHEET	1-39
532382-0000 ..	SIDE PLATE	1-39
532404-0000 ..	SPRING	1-13, 1-39
532405-0000 ..	SCREW	1-39
537477-0000 ..	BRACKET	1-39
537482-0000 ..	BRACKET	1-33, 1-35, 1-37
537483-0000 ..	BRACKET	1-33, 1-35, 1-37
538375-0001 ..	FASTENING IRON	1-13
538375-0002 ..	FASTENING IRON	1-13
538382-0000 ..	COVERING PLATE	1-13
538383-0000 ..	COVERING PLATE	1-13
538384-0000 ..	COVERING PLATE	1-13
539096-0000 ..	MOTOR SHELF	1-11
539103-0000 ..	MOTOR COVER	1-11
539158-0000 ..	HUB	1-11
540169-0000 ..	DOWEL	1-7, 1-9, 9-59
543267-0000 ..	LABEL TAPE	9-23, 9-31
547174-0000 ..	CANTILEVER	1-13
547175-0000 ..	CANTILEVER	1-13
547181-0000 ..	BRACKET	1-13
547183-0000 ..	SLIDE SHEET	1-13
547187-0000 ..	HUB	1-13
547191-0001 ..	SPACER	1-13
547191-0002 ..	SPACER	1-13
547192-0000 ..	PLUG	1-13
547193-0000 ..	BEARING SLEEVE	1-13
547194-0000 ..	SCREW	1-13
548246-0000 ..	BRACKET	1-15, 1-17, 1-19
548247-0000 ..	BRACKET	1-15, 1-17, 1-19
548599-0000 ..	WASHER	1-93, 1-97, 2-91, 2-93, 2-97, 9-51
549644-0000 ..	STEERING	1-13
549645-0000 ..	COVER DISC	1-13
549646-0000 ..	WHEEL	1-13
549659-0000 ..	SLEEVE	1-13
556603-0000 ..	COVER PLATE	3-9, 6-81, 9-49
556604-0000 ..	COVER PLATE	2-9, 2-13, 2-15, 3-103, 3-105, 4-31
556620-0000 ..	PROFILE	3-9
556624-0000 ..	FRAME BRACKET	2-9, 2-13, 2-15, 3-9, 4-29
556626-0700 ..	MOTOR FEEDING	3-29
556636-0500 ..	ENCODER FEEDING	3-29
556649-0000 ..	WASHER	3-11
556657-0000 ..	HOLDER	3-13
570482-0000 ..	SPACER	6-37
575034-0000 ..	ROUND NUT	2-139, 2-141, 2-143, 2-145, 2-147, 3-149, 3-151, 3-165, 3-167, 9-13
575418-0000 ..	WASHER	9-13
578196-0000 ..	SLEEVE	2-125, 2-127, 2-129, 2-133, 2-135, 2-137, 3-157, 3-159, 3-161, 3-163, 3-169, 3-171, 6-85, 9-63, 9-65
578197-0000 ..	SPACER	2-125, 2-127, 2-129, 2-133, 2-135, 2-137, 3-157, 3-159, 3-161, 3-163, 3-171, 9-63, 9-65
580923-0000 ..	MACHINE SIGN CE	6-17, 6-19
583570-0000 ..	BRACKET	6-65
599749-0100 ..	COOLING AIR OUTLET	6-17, 6-19
599751-0000 ..	INSERT	6-87
599752-0000 ..	COVER	6-87
599753-0000 ..	SPACER	6-87
599755-0000 ..	GASKET	6-87
959656-0000 ..	COTTER	2-139, 2-141, 2-143, 2-145, 2-147, 2-149, 2-151, 3-149, 3-151, 3-165, 3-167, 6-9, 6-69, 6-71, 6-73, 6-75, 6-77, 6-79
959657-0000 ..	HINGE FLANGE	2-139, 2-141, 2-143, 2-145, 2-147, 2-149, 2-151, 3-149, 3-151, 3-165, 3-167, 6-9, 6-75, 6-77, 6-79
959658-0000 ..	SPRING	2-139, 2-141, 2-143, 2-145, 2-147, 2-149, 2-151, 3-149, 3-151, 3-165, 3-167, 6-9, 6-69, 6-71, 6-73, 6-75, 6-77, 6-79
975317-0000 ..	CORRUGATED CARDBOARD BOX	9-31
975755-0000 ..	ATTACHMENT	3-141, 3-143, 9-83, 9-85
975880-0000 ..	HINGE FLANGE	2-139, 2-141, 2-143, 2-145, 2-147, 2-149, 2-151, 3-149, 3-151, 3-165, 3-167, 6-9, 6-69, 6-71, 6-73, 6-75, 6-77, 6-79
975887-0000 ..	CATCH	2-125, 3-163, 3-169, 3-171, 9-65
975888-0002 ..	STRUT	2-149
975888-0009 ..	STRUT	6-9
975889-0005 ..	STRUT	2-149
975889-0011 ..	STRUT	6-9
975927-0000 ..	HINGE FLANGE	2-139, 2-141, 2-143, 2-145, 2-147, 3-149, 3-151, 3-165, 3-167

Part No	Description	Page No
975934-0000 ..	GUSSET PLATE	2-25, 2-27, 3-111, 3-113
975939-0000 ..	SEAL	2-25, 2-27, 3-111, 3-113
1020424-0000 .	BOX	9-11, 9-15
1020634-0001 .	HOLDER	1-17, 1-35, 1-63, 1-85
1021000-0600 .	CURVE ARM MAGAZINE	3-7
1021004-0000 .	SHAFT	3-13
1021031-0000 .	BRACKET	3-9
1021032-0600 .	SIDE ADJUST REAR	3-39
1021038-0000 .	RETAINING RING	5-5
1021039-0000 .	WASHER	3-41, 3-43, 3-47, 5-5
1021041-0600 .	SIDE ADJUST FRONT	3-39
1021052-0400 .	CARRIER SHAFT OUTSIDE	3-39
1021054-0000 .	BEARING HOUSING	3-45, 3-47
1021057-0000 .	HUB	3-45, 3-47
1021059-0000 .	WASHER	3-45, 3-47
1021060-0500 .	CARRIER SHAFT INSIDE	3-39
1021064-0000 .	BEARING COVER	3-45, 3-47
1021065-0000 .	BEARING COVER	3-45, 3-47
1021067-0400 .	CARRIER SPROCKET OUTSIDE	3-39
1021070-0000 .	BEARING COVER	3-49, 3-51
1021072-0400 .	CARRIER SPROCKET INSIDE	3-39
1021074-0000 .	HOLDER	3-49
1021075-0000 .	LOCK PLATE	3-49
1021085-0000 .	SLIDE RAIL	3-81, 9-61
1021086-0000 .	SLIDE RAIL	3-81, 9-61
1021087-0000 .	SLIDE RAIL	3-81, 9-61
1021090-0000 .	CHAIN	3-55
1021091-0000 .	CHAIN	3-55
1021093-0300 .	CARRIER CHAIN INSIDE	3-39
1021095-0001 .	LINK	3-55
1021095-0002 .	LINK	3-55
1021096-0200 .	CARRIER CHAIN OUTSIDE	3-39
1021127-0000 .	HOLDER	3-79
1021129-0000 .	SHAFT	3-79
1021130-0000 .	WASHER	3-79, 5-15, 5-19
1021144-0000 .	GUIDE	3-107
1021145-0000 .	CLAMPING PIECE	3-107
1021147-0000 .	PLATE	3-107
1021148-0000 .	SHAFT	3-107
1021149-0000 .	ADJUSTING SCREW	3-107
1021150-0000 .	SHAFT	3-107
1021152-0000 .	WASHER	3-107
1021153-0000 .	LID	3-107
1021154-0000 .	NUT	3-107, 4-9, 5-5
1021155-0000 .	WASHER	3-107, 4-9, 4-31
1021156-0000 .	RETAINING RING	3-107, 4-9
1021157-0000 .	CLAMPING PIECE	3-107
1021159-0000 .	SHAFT	3-107
1021166-0000 .	SPRING	3-109
1021198-0000 .	GUIDE	4-9
1021199-0000 .	SHAFT	4-9
1021201-0000 .	BEARING HOUSING	4-9
1021202-0000 .	HUB	4-9
1021207-0000 .	RAIL	4-7
1021208-0000 .	SLIDING STRIP	4-7
1021209-0000 .	SLIDING STRIP	4-7
1021210-0000 .	HOLDER	4-7
1021211-0000 .	NUT	4-7
1021212-0000 .	ADJUSTING SCREW	4-7
1021213-0000 .	PLATE	4-7
1021214-0000 .	BEARING HOUSING	4-7
1021215-0000 .	SHAFT	4-7
1021216-0000 .	COVER	4-7
1021217-0000 .	COVER	4-7
1021220-0000 .	GEAR WHEEL	4-7
1021221-0000 .	GEAR WHEEL	4-7
1021222-0700 .	MAG TOP FLAP ADJUSTER	4-3
1021228-0000 .	STEERING	4-25
1021253-0000 .	CONICAL GEAR	4-15
1021254-0000 .	CONICAL GEAR	4-15
1021255-0000 .	GEAR WHEEL	4-15
1021257-0000 .	BEARING HOUSING	4-15
1021262-0000 .	WASHER	4-15
1021263-0000 .	RETAINING RING	4-15
1021284-0000 .	SUPPORT	3-69
1021298-0000 .	STEERING	3-89, 9-81
1021315-0000 .	PROFILE	3-103, 3-105
1021324-0000 .	SPROCKET	3-31
1021326-0500 .	CHAIN TENSIONER	3-39
1021507-0000 .	NUT	4-7
1021508-0000 .	ADJUSTING SCREW	4-7
1021518-0000 .	LID	3-111, 3-113
1021703-0400 .	COVERING PLATE	3-145, 3-147
1021746-0000 .	BRACKET	2-49

Part No	Description	Page No
1021785-0600	.CORNER STRIP	3-145, 3-147
1021893-0000	.HOLDER	4-21
1021897-0500	.CONNECTION BOX	3-7
1021933-0000	.TAPE	2-9, 2-13, 2-15, 2-25, 2-27, 2-63, 2-65, 3-9, 3-103, 3-105, 6-81, 9-49, 9-55
1021942-0200	.START-UP KIT	8-3
1021946-0000	.DIAL	3-11
1021949-0000	.RAIL	4-7
1065370-0000	.RAIL	4-7
1065371-0000	.SLIDING STRIP	4-7
1065410-0000	.SLOTTED PIN	2-9, 2-13, 2-15, 3-9, 3-103, 3-105, 4-25, 4-29, 4-31, 6-81
1065696-0000	.COVERING PLATE	2-25, 2-27, 3-111, 3-113
1065697-0000	.BRACKET	2-25, 2-27, 3-111, 3-113
1065841-0000	.SPROCKET Z=15	3-37
1065842-0000	.SHAFT	3-37
1065845-0000	.HOLDER	3-37
1065846-0000	.FLAG	3-37
1065847-0000	.STRUT	3-37
1065848-0000	.BEARING HOUSING	3-37
1065849-0000	.SHAFT	3-37
1065850-0000	.HOLDER	3-37
1065851-0000	.WASHER	3-37
1065878-0001	.LINK	3-55
1065878-0002	.LINK	3-55
1065905-0300	.CONNECTION BOX	2-5, 2-7
1065918-0000	.STEERING	9-61
1074206-0000	.HOLDER	2-29
1074233-0000	.WASHER	2-61
1074251-0600	.WA HEIGHT ADJUSTMENT	5-3
1074259-0500	.MAG SIDE SUPPORT	4-3
1074261-0000	.HOLDER	5-5
1074262-0000	.HOLDER	5-5
1074270-0000	.HOLDER	5-5
1074308-0000	.LOCATING PIECE	5-21
1074323-0000	.PROTECTION	5-23, 5-25
1074325-0000	.BRACKET	5-23, 5-25
1074329-0000	.HOLDER	4-23
1074368-0000	.BRACKET	9-17, 9-37
1074384-0000	.INTERMEDIATE PART	9-13
1074390-0000	.SHAFT	9-17
1074391-0000	.MOUNTING BLOCK	9-17
1074408-0000	.BRACKET	9-13
1074409-0000	.BRACKET	9-17
1074429-0000	.ROD	9-17
1074441-0300	.GUARD PLATE	8-3
1074738-0000	.BRACKET	2-23
1086173-0004	.SPACER	9-25, 9-39, 9-41, 9-59
1086175-0000	.HOLDER	1-25, 9-103
1086180-0000	.SLEEVE	1-13, 1-15
1086222-0000	.JOINT PIECE	1-15
1086383-0000	.JOINT PIECE	1-13
1086384-0000	.MOUNTING BLOCK	1-13
1086421-0000	.SIDE PLATE	1-13
1086422-0000	.SIDE PLATE	1-13
1086423-0000	.SLIDE RAIL	1-13
1086424-0000	.SLIDE RAIL	1-13
1086425-0000	.STEERING RAIL	1-13
1086426-0000	.STEERING RAIL	1-13
1086622-0000	.LABEL TAPE	9-11, 9-15
1086636-0000	.SPACER	1-9
1086637-0000	.SLEEVE	1-9
1086638-0000	.DOLLY	1-9
1086639-0000	.BRACKET	1-9
1086640-0000	.STUD SCREW	1-9
1086870-0000	.SIGN	9-21, 9-57
1086871-0000	.LABEL TAPE	9-23, 9-31
1111895-0000	.STOP RAIL	9-17
1111896-0000	.ASSEMBLY INSTRUCTION	9-7, 9-9
1124008-0400	.DRIVE UNIT	1-27
1124028-0300	.DRIVE MOTOR	1-5
1124029-0300	.DRIVE UNIT	1-5
1124030-0400	.CONVEYOR BODY STRAIGHT	1-5
1124043-0600	.TRANSFER BELT MOTOR	2-87
1124044-0400	.BENDING ROLLER	2-89, 9-49
1124067-0400	.COVERING PLATE	2-121, 2-123
1124071-0600	.COVERING PLATE	2-121, 2-123
1124080-0400	.COVERING PLATE	2-121, 2-123
1124096-0500	.LEAD-IN PLATE	2-5, 2-7
1124490-0000	.MOTOR COVER	1-31
1124491-0000	.BRACKET	1-31
1124503-0000	.BRACKET	2-29
1124524-0000	.BRACKET	2-9
1124527-0000	.HOLDER	2-29
1124564-0000	.BRACKET	2-127
1124645-0000	.CORNER STRIP	2-13, 2-15

Part No	Description	Page No
1124670-0000	.PROFILE	2-13, 2-15
1124700-0000	.SPACER	1-31
1124705-0000	.BRACKET	2-33
1124718-0000	.BRACKET	2-9
1124720-0000	.COVER SLIP	2-9
1124723-0000	.BRACKET	2-13, 2-15
1124736-0000	.WASHER	2-79, 2-81
1124759-0000	.GEAR WHEEL Z=20	2-61
1124863-0000	.PROTECTION PLATE	1-13
1124865-0000	.GABLE PART	1-13
1124866-0000	.GABLE PART	1-13
1124867-0000	.BRACKET	1-13
1124868-0000	.BRACKET	1-11
1124874-0000	.GABLE PART	1-31
1128047-0300	.MAG SUPPORT LEG	4-3
1128833-0400	.COVERING PLATE	3-7
1128844-0000	.CAUTION SIGN	3-141, 3-143, 8-9, 9-83, 9-85
1128853-0000	.CAUTION SIGN	1-99, 1-101, 2-59, 2-63, 2-65, 3-89, 5-23, 5-25, 8-9, 9-81
1128854-0000	.CAUTION SIGN	2-109, 2-117, 8-9
1128880-0000	.CLAMPING PIECE	4-29
1128883-0000	.BRACKET	4-21
1128886-0000	.SHAFT	4-29
1128901-0000	.PROTECTION PLATE	9-17
1128906-0000	.END WHEEL	1-13
1138130-0000	.LOCKING BLOCK	1-23, 9-99
1138602-0000	.PROTECTION PLATE	1-39
1139124-0000	.HOSE	3-15
1139125-0000	.HOLDER	3-15
1139155-0000	.SLIDER	3-37
1139204-0000	.BRACKET	2-9
1139254-0000	.COVER PLATE	3-103, 3-105
1139255-0000	.BRACKET	2-13, 2-15
1139759-0000	.BRACKET	1-15, 1-33
1139761-0000	.BRACKET	1-13
1139762-0000	.SUPPORT LEG	1-11, 1-31
1139845-0000	.LID	2-69
1257145-0000	.SPRING	3-37
1258875-0000	.RUBBER PLATE	4-31
1287010-0400	.CHAIN LUBRICATION	3-39
1287040-0000	.AIR NOZZLE	3-57
1287041-0000	.BUSHING	2-91, 2-95, 2-113, 9-51
1287043-0000	.BRACKET	3-57
1287059-0000	.PROFILE	3-103, 3-105
1287076-0300	.OK SPRAY GUN	9-3
1287151-0000	.ARM	4-17
1287153-0000	.SPACER	4-17
1287186-0400	.ILLUMINATION	9-3
1287191-0300	.FEEDING LUBRICATION POINT	7-3
1287192-0400	.GRP DOLLY LUBR.	7-3
1287193-0500	.CURVE ARM LUBRICATION	7-3
1287195-0400	.PATTERN FORMING LUBRICATION SYSTEM	7-3
1287196-0600	.TRAY FORMING LUBRICATION DISTRIBUTION	7-3
1287250-0000	.TOOTHED PULLEY Z=16	5-5
1287340-0000	.BRACKET	3-103, 3-105
1287362-0000	.PROFILE	4-29
1287492-0000	.ROD	4-17
1287528-0000	.BRACKET	4-25
1287529-0000	.BRACKET	4-25
1287531-0000	.SUPPORT	4-7
1287532-0000	.PILLAR	4-25
1287533-0000	.SPACER	4-5
1287534-0000	.BRACKET	4-5
1287535-0000	.COVERING PLATE	4-7
1287537-0000	.SUPPORT	4-7
1287940-0000	.WASHER	2-113
1353593-0000	.ROLLER CONVEYOR	9-17
1359565-0000	.NUT	9-27
1366727-0000	.CLAMP	1-29, 9-39, 9-41, 9-45, 9-59, 9-101
1366750-0000	.HOLDER	1-29, 9-39, 9-41, 9-45, 9-59, 9-101
1466149-0000	.HUB	3-11
1466212-0000	.PLATE	4-21
1466273-0000	.TUNNEL	9-13
1466274-0000	.TUNNEL	9-13
1466275-0000	.TUNNEL	9-13
1466276-0000	.SPACER	9-13
1466343-0000	.PROFILE	3-103, 3-105
1466344-0000	.PROFILE	3-103, 3-105
1466382-0000	.FOLDING ARM	4-27
1466390-0700	.CAUTION SIGN MAP ISO	8-3
1466401-0000	.SLIDER	3-81, 9-61
1466434-0000	.PLATE	1-91
1466436-0000	.CLAMP RAIL	1-91
1466474-0000	.CHAIN	3-53
1466537-0000	.CRANK	8-3

Part No	Description	Page No
1466541-0000	.CARRIER	3-53
1466543-0000	.CARRIER	3-53
1466544-0000	.CARRIER	3-53
1466553-0000	.SPACER	3-169
1466554-0000	.SPACER	3-53
1466715-0000	.CONNECTION BOX	2-67
1497848-0000	.COMPRESSION SPRING	3-69
1502071-0000	.BEARING PLATE	3-11
1502074-0000	.CAM	3-11
1502076-0000	.ARM	3-13
1502078-0000	.BEARING	3-13
1502079-0000	.BEARING	3-13
1502086-0000	.NUT	3-41, 3-43
1502347-0000	.BEARING HOUSING	3-85, 3-87
1502474-0000	.BEARING HOUSING	2-99, 9-53
1502535-0000	.ROLLER	2-91, 9-51
1502560-0000	.SHAFT	2-91, 2-93, 2-97, 9-51
1502570-0000	.HOLDER	3-87
1502810-0000	.SHAFT	3-49, 3-51
1502811-0000	.LOCKING LUG	3-49, 3-51
1502998-0000	.RUBBER BELLOWS	3-59
1506072-0000	.SPROCKET	3-45
1506073-0000	.SPROCKET	3-51
1506074-0000	.SPROCKET	3-49
1506075-0000	.SPROCKET	3-47
1506076-0000	.SPROCKET	3-47
1506077-0000	.SPROCKET	3-45
1521213-0000	.PROFILE	3-9
1521216-0000	.PLATE	3-25
1521235-0000	.PROFILE	3-9
1521835-0000	.CABLE DUCT	3-111, 3-113
1521836-0000	.LID	3-111, 3-113
1521850-0000	.CABLE DUCT	3-111, 3-113
1521851-0000	.LID	3-111, 3-113
1543529-0000	.LID	3-111, 3-113
1543562-0000	.FLAT WEDGE	5-21
1543684-0000	.CHAIN GUARD	3-15
1543690-0000	.PROTECTION	3-89
1543691-0000	.PROTECTION	3-89
1543716-0000	.RAIL	3-31
1543729-0000	.RAIL	5-7
1543779-0000	.LID	5-23, 5-25
1550595-0680	.SLIDING STRIP	1-71
1550595-6180	.SLIDING STRIP	1-83
1550595-6603	.SLIDING STRIP	1-71
1550595-6604	.SLIDING STRIP	1-71
1550606-0000	.SPROCKET	1-31
1550607-0000	.SPROCKET	1-31
1550874-0000	.BRACKET FOR LEG PC23	1-83, 1-85, 1-87
2503974-0000	.SUPPORT	2-103
2503991-0000	.CABLE DUCT	3-111, 3-113
2503993-0000	.LID	3-111, 3-113
2504040-0000	.NIPPLE	3-13
2504047-0000	.HOLDER	5-23, 5-25
2504052-0000	.SHAFT	5-21
2504063-0000	.ARM	5-21
2504067-0000	.HOLDER	5-21
2504085-0000	.ANGLE	5-5
2504120-0000	.BRACKET	3-149
2504121-0000	.BRACKET	3-151
2504180-0000	.LOCKING LUG	2-71
2504187-0000	.BEAM	2-71
2504194-0000	.SLEEVE	2-115
2504197-0000	.SHAFT	2-115
2504259-0000	.PLATE	1-93
2504260-0000	.PLATE	1-93
2504290-0000	.PLATE	1-19, 1-37, 1-65, 1-87
2504292-0000	.BRACKET	3-111, 3-113
2504293-0000	.BRACKET	2-115
2504300-0000	.FORK	3-59
2504313-0000	.SLEEVE	2-71
2504322-0000	.LINK ARM	3-59
2504323-0000	.SHAFT	3-59
2504324-0000	.BRACKET	3-59
2504325-0000	.SHAFT	3-59
2504330-0000	.SHAFT	3-59
2504338-0500	.BOX PUSHER DOLLY	2-55
2504342-0400	.CARRIER CLUTCH	3-39
2504387-0000	.ADJUSTING SCREW	3-41
2506937-0000	.BRACKET	9-5, 9-67
2511001-0000	.WASHER	1-99, 1-101
2511012-0400	.DISCHARGE UNIT,ROLLER CONVEYOR	9-3
2525709-0400	.DISCHARGE TUNNEL	9-7, 9-9
2525710-0200	.ROLLER CONVEYOR, S-OUT	9-7, 9-9

Part No	Description	Page No
2525711-0100	.PACKING DESCRIPTION	9-7, 9-9
2525712-0100	.PACKING DESCRIPTION	9-7, 9-9
2535552-0000	.PISTON ROD COUPLING	2-79, 2-81
2535553-0000	.WHEEL	3-81, 9-61
2557002-0000	.BRACKET	2-13, 2-15
2557035-0000	.CONNECTION BOX	2-49, 3-27
2557141-0300	.COVER PLATE	2-121, 2-123
2557201-0000	.SHAFT	3-45
2557202-0000	.WASHER	3-45
2557252-0000	.PROFILE	3-103, 3-105
2557253-0000	.PROFILE	3-103, 3-105
2557261-0000	.FLAT WEDGE	3-45, 3-47
2557262-0000	.COVERING PLATE	3-141, 3-143, 9-83, 9-85
2557347-0500	.CAUTION SIGN MAP ANSI	8-3
2557455-0000	.PLATE	3-89
2557494-0000	.BRACKET	6-11
2561147-0000	.BRACKET	1-75
2561148-0000	.MOTOR SHELF	1-75
2561149-0000	.SIDE PLATE	1-75
2561206-0000	.SPACER	1-71, 1-83
2561226-0000	.SPACER	1-77
2561227-0001	.SHAFT	1-77
2561229-0000	.PROTECTION	1-77
2561230-0001	.SPACER	1-77
2561244-0200	.DRIVE WHEEL	1-71
2561267-0000	.SHAFT	1-73
2565180-0000	.BALL COUPLING	2-111
2565181-0000	.BALL COUPLING	2-111
2589831-0000	.COVER	1-77
2590155-0000	.HUB	1-75
2591888-0600	.AIR SUPPLY UNIT	2-17, 2-19
2591902-0000	.CLUTCH	3-45
2592041-0000	.CORNER STRIP	3-157, 3-159
2592244-0000	.BRACKET	1-81
2592245-0000	.BRACKET	1-83
2592285-0000	.BRACKET	1-81
2592286-0000	.SUPPORT LEG	1-81
2592288-0000	.COVER	1-75
2656672-0000	.SPROCKET	1-73
2656673-0000	.SPACER	1-73
2656677-0000	.SPROCKET	1-75
2656679-0000	.WHEEL	1-77
2656682-0000	.SLIDE PLATE	1-57, 1-79
2656683-0000	.WHEEL	1-79
2681810-0000	.SIDE PLATE	1-77
2682031-0000	.PROTECTION PLATE	3-141, 3-143
2718824-0400	.GROUPING PLATE	2-87
2718827-0000	.BRACKET	2-71
2718828-0000	.SPACER	2-71
2718829-0000	.WASHER	2-71
2718832-0000	.BRACKET	2-101
2718833-0000	.BRACKET	2-101
2718834-0000	.HOLDER	2-101
2718838-0200	.DRIVE UNIT	1-67
2718846-0300	.PACKAGE CONVEYOR TPC21/TPC53	1-3
2718847-0300	.PACKAGE CONVEYOR 23	1-3
2718848-0300	.UNIT CONVEYOR 54	1-3
2718849-0200	.MOTOR UNIT	1-69
2718850-0100	.SUPPORT	1-69
2718856-0200	.QUEUE GUARD,DOUBLE	1-27
2718858-0200	.QUEUE GUARD,DOUBLE	1-5
2718862-0000	.PLATE	2-75
2718866-0100	.INFEED	1-69
2718867-0100	.CHAIN TENSIONER	1-69
2718868-0100	.GUIDE SPROCKET	1-77
2718870-0000	.BEAM	2-75
2718871-0000	.BRACKET	2-75
2718873-0300	.GROUPING DOLLY	2-55
2718874-0100	.CONVEYOR BODY	1-67
2718879-0000	.SLIDE PLATE	1-83
2718883-0200	.QUEUE GUARD,DOUBLE	1-67
2718884-0000	.BRACKET	1-87
2718897-0000	.SPACER	2-69
2718898-0300	.LUBRICATION UNIT	7-3
2720878-0000	.PROFILE	2-9
2720880-0000	.PROFILE	2-9
2720881-0000	.PROFILE	2-9
2720903-0000	.RAIL	2-33
2720912-0000	.PLATE	2-33
2720926-0000	.SLIDE RAIL	2-89
2720927-0000	.COVER PLATE	1-15
2720928-0000	.RAIL	1-15
2720930-0400	.CABLE DUCT	2-5, 2-7
2720940-0000	.LID	2-25, 2-27

Part No	Description	Page No
2721835-0000	.BRACKET	2-79, 2-81
2721917-0000	.PROTECTION PLATE	3-141, 3-143, 9-83, 9-85
2721919-0000	.PROTECTION PLATE	3-141, 3-143, 9-83, 9-85
2723236-0500	.SUPPLY CONNECTION	2-5, 2-7
2723248-0000	.LID	2-25, 2-27
2723255-0000	.LID	2-25, 2-27
2723257-0000	.CABLE DUCT	2-25, 2-27
2750061-0000	.GEAR WHEEL	2-99, 9-53
2752678-0500	.PNEUMATIC CABINET	2-5, 2-7
2752681-0100	.CONNECTION BOX	2-63, 2-65
2752694-0000	.PUSHER PLATE	2-85
2752695-0000	.PUSHER PLATE	2-85
2752696-0000	.PUSHER PLATE	2-85
2752697-0000	.PUSHER PLATE	2-85
2752698-0000	.PUSHER PLATE	2-85
2752699-0000	.PUSHER PLATE	2-85
2752700-0000	.PUSHER PLATE	2-85
2752701-0000	.PUSHER PLATE	2-85
2752702-0000	.PUSHER PLATE	2-85
2752703-0000	.PUSHER PLATE	2-85
2752704-0000	.PUSHER PLATE	2-85
2752706-0400	.GUIDE RAIL	2-87
2752721-0000	.BEARING HOLDER	4-15
2752731-0300	.TRANSFER GUIDE RAIL	2-55
2752732-0300	.PACKAGE SEPARATOR	1-89
2752733-0400	.HOTMELT EQUIPMENT	3-131
2752741-0000	.BEARING HOUSING	4-17
2752746-0400	.HOTMELT SHELF	3-131
2752748-0000	.BEARING HOLDER	4-15
2756309-0000	.BRACKET	6-65
2763037-0000	.SPACER	3-141, 3-143, 5-23, 5-25, 9-83, 9-85
2763039-0000	.PLATE	4-13
2763040-0000	.INSERT	3-141, 3-143
2763045-0000	.SHAFT	2-61
2763050-0300	.WA HOTMELT EQUIPMENT	5-3
2763068-0400	.GROUPING TOP SUPPORT	1-89
2763086-0500	.VALVE RAMP	2-5, 2-7
2763089-0400	.VALVE RAMP	2-5, 2-7
2763094-0000	.CLAMP RAIL	1-95
2763095-0000	.CLAMP RAIL	1-95
2763101-0000	.PLATE	1-95
2763102-0000	.PLATE	1-95
2763103-0000	.PLATE	1-95
2763106-0000	.SUPPORT PLATE	4-29
2763113-0300	.REMOTE I/O	2-5, 2-7
2763114-0300	.REMOTE I/O	3-7
2763115-0300	.REMOTE I/O	3-91, 3-93, 3-95, 3-97
2763116-0300	.REMOTE I/O	3-91, 3-93, 3-95, 3-97
2763117-0300	.REMOTE I/O	2-5, 2-7
2763128-0000	.SPACER	3-169
2763134-0000	.PLATE	3-107
2771124-0000	.GUIDE	2-61
2771125-0000	.RAIL	2-61
2771126-0000	.RAIL	2-61
2771131-0000	.PROFILE 50X100	3-9
2771132-0000	.SHAFT	4-15
2771133-0000	.SHAFT	4-15
2771134-0000	.BRACKET	5-21
2771136-0500	.BOTTOM SECTION	3-3, 3-5
2771149-0000	.BRACKET	2-115
2771151-0500	.COVERING TRAY FORMING	3-3, 3-5
2771155-0000	.RACK	2-33
2771156-0000	.RULE PLATE	1-93
2771160-0400	.FRAME GROUPING PUSHER	2-5, 2-7
2771163-0000	.BRACKET	2-75
2771164-0000	.PROFILE	2-75
2771165-0000	.PROFILE	2-75
2771166-0000	.BRACKET	2-75
2771167-0000	.BRACKET	2-75
2771168-0000	.BRACKET	2-75
2771169-0000	.BRACKET	2-75
2771170-0000	.BRACKET	2-75
2771175-0500	.UPPER SECTION	3-3, 3-5
2771176-0400	.HOTMELT UNIT	3-3, 3-5
2771206-0000	.BEAM	2-75
2771216-0000	.BRACKET	2-107
2771221-0000	.ROLL	2-117
2771222-0000	.SHAFT	2-117
2782745-0000	.SHAFT	2-117
2782748-0000	.REINFORCEMENT	2-117
2782749-0000	.PLATE	2-117
2782756-0000	.CLAMP RAIL	2-117
2782757-0000	.CLAMP RAIL	2-117
2782758-0000	.PROFILE 50X50	2-13, 2-15

Part No	Description	Page No
2782761-0400	.FRAME UPPER	2-5, 2-7
2782768-0000	.SPROCKET	3-61
2782770-0000	.BRACKET	9-91
2782771-0000	.BRACKET	9-91
2782772-0000	.HOLDER	5-23, 5-25
2782787-0500	.PATTERN FORMING FRAME	2-3
2782792-0100	.BENDING ROLLER	2-89
2782793-0000	.ROLL	2-93, 2-97
2787827-0000	.BUSHING	2-93, 2-97
2787828-0100	.BENDING ROLLER	2-89
2787829-0000	.ROLL	2-95
2787830-0000	.SHAFT	2-95
2787832-0000	.WASHER	2-95
2787834-0000	.BEARING HOLDER	4-15
2787843-0000	.SHOCK ABSORBER	2-75, 2-117
2787855-0300	.COVERING PATTERN FORMING	2-3
2787856-0100	.BENDING ROLLER	2-89
2787857-0000	.CHAIN	3-61
2787859-0000	.WASHER	2-97
2787864-0300	.CONNECTION DEVICE	2-5, 2-7
2787865-0200	.CONNECTION DEVICE	2-5, 2-7
2787868-0500	.TRANSFER BELT	2-55
2787870-0000	.BRACKET	2-33
2787874-0000	.PIPE	2-41
2792358-0000	.BRACKET	2-83
2792365-0500	.TRANSFER UNIT	2-3
2792380-0000	.PLATE	2-89
2792388-0000	.MOUNTING PLATE	1-93
2792390-0000	.CLAMP RAIL	1-93
2792402-0000	.GUIDE	2-115
2794979-0500	.ELECTRICAL DOCUMENT	6-3, 6-5
2794980-0500	.MACHINE	6-3, 6-5
2802441-0000	.PLATE	2-115
2802448-0300	.PHOTOCELL UNIT, COM. START CONV.	9-3
2802452-0200	.CONNECTION DEVICE	2-5, 2-7
2802458-0400	.ELECTRIC EQUIPMENT	6-7
2802459-0000	.PLATE	2-75
2802461-0100	.TERMINAL	6-13
2802463-0000	.NUT	2-75
2802466-0003	.GLASS	2-129
2802466-0005	.GLASS	1-17, 1-35, 1-63, 1-85
2802466-0008	.GLASS	9-13
2802466-0009	.GLASS	2-139, 2-141
2802466-0010	.GLASS	2-143, 2-145, 2-147
2802466-0011	.GLASS	3-149, 3-151
2802466-0012	.GLASS	3-165, 3-167
2802469-0000	.SLEEVE	2-61
2802470-0300	.CABINET	6-7
2802473-0000	.SET OF SIGNS	9-13
2802476-0000	.BRACKET	9-13
2802479-0000	.BRACKET	9-13
2802480-0000	.BRACKET	9-13
2802481-0000	.BRACKET	9-13
2802483-0000	.STRUT	9-13
2802488-0000	.PLATE	2-61
2802489-0200	.AIR JET GUN	9-3
2807821-0000	.SIDE PLATE	9-35
2807824-0000	.JOINT PIECE	1-49, 1-61, 9-35, 9-59
2807825-0100	.CONVEYOR BODY	9-19, 9-55
2807831-0000	.SPACER	1-49, 1-61, 9-29, 9-37, 9-55
2807859-0015	.SLIDING STRIP	9-29
2807859-0199	.SLIDING STRIP	9-29
2807859-0496	.SLIDING STRIP	9-35
2807859-0631	.SLIDING STRIP	1-61
2807885-0000	.SPACER	1-51, 1-53
2807893-0200	.CHAIN TENSIONER	1-43
2807900-0201	.END UNIT	9-55
2807900-0203	.END UNIT	9-19
2807901-0000	.SIDE PLATE	9-29
2807902-0000	.SIDE PLATE	9-29
2807903-0000	.SHAFT	9-29
2807904-0000	.SPACER	9-29
2807905-0000	.WHEEL	9-29
2807933-0000	.HUB	1-51
2807935-0000	.CHAIN GUIDE	1-49, 9-29
2807936-0000	.CHAIN GUIDE	1-49, 9-29
2807937-0000	.GUIDE	1-49
2807938-0000	.GUIDE	1-49
2807988-0100	.CONVEYOR BODY	9-21, 9-57
2808055-0000	.BRACKET	1-63, 1-65
2808733-0000	.ADJUSTING SCREW	5-5
2808743-0000	.PLATE	1-31, 1-77
2808744-0000	.PLATE	1-13
2808746-0000	.PUSHER PLATE	2-85

Part No	Description	Page No
2808748-0000	.GUIDE PIN	2-85
2808763-0300	.VALVE GROUP	2-55
2829366-0000	.PROTECTION	5-23, 5-25
2829374-0000	.PLATE	1-97
2829375-0000	.PLATE	1-97
2829376-0000	.SHAFT	1-97
2829377-0000	.SHAFT	1-97
2829378-0000	.BEARING HOUSING	1-97
2829380-0000	.BEAM	2-71
2829381-0000	.SPACER	2-71
2833962-0000	.SHAFT	1-97
2833967-0000	.BEARING HOUSING	1-99, 1-101
2833972-0000	.GUIDE	3-89
2833973-0000	.GUIDE	3-89
2833974-0000	.LOCK PLATE	3-89, 9-81
2833982-0000	.HATCH	2-139
2833983-0100	.GLASS DOOR	2-121, 2-123
2833984-0000	.STRUT	2-139, 2-147, 3-165
2833985-0000	.STRUT	2-139, 2-143, 2-147, 3-165
2833998-0100	.RAILING	1-5
2833999-0000	.BRACKET	1-7, 1-9
2834000-0000	.BRACKET	1-7, 1-9
2834001-0000	.RAILING	1-9
2834002-0300	.LIGHT BARRIER	9-3
2834003-0000	.ADJUSTING SCREW	4-9
2834005-0000	.SIGN	8-7
2834009-0200	.BRAKE UNIT	1-89
2834010-0200	.BRAKE UNIT	1-89
2834011-0200	.SIDE ADJUSTER	1-89
2837851-0000	.CD BOX	6-23
2838848-0100	.PACKING DESCRIPTION	9-21, 9-57
2844260-0000	.BRACKET	9-73
2844933-0000	.PLATE	2-107
2844935-0000	.SLIDE SHEET	2-107
2844936-0000	.SLIDE SHEET	2-107
2844952-0000	.PLATE	2-77
2844957-0000	.PROFILE 50X50	2-13, 2-15
2844959-0000	.PROFILE 50X50	2-13, 2-15
2844964-0000	.CABLE DUCT	2-25, 2-27
2844965-0000	.LID	2-25, 2-27
2844966-0000	.CABLE DUCT	2-25, 2-27
2844967-0000	.CABLE DUCT	2-25, 2-27
2844968-0000	.LID	2-25, 2-27
2844969-0000	.LID	2-25, 2-27
2844970-0200	.FRAME BRACKET	2-5, 2-7
2844975-0000	.FASTENING PLATE	2-117
2844976-0300	.VOLUME PLATE	2-55
2844977-0000	.PUSHER PLATE	2-85
2844994-0000	.ARM	2-79, 2-81
2844996-0000	.WASHER	2-79, 2-81
2844997-0000	.BRACKET	2-79, 2-81
2845006-0000	.BRACKET	2-117
2845018-0000	.CYLINDER BRACKET	2-117
2851953-0000	.RUNNER	1-99, 1-101
2851954-0000	.SHAFT	1-99, 1-101
2851955-0000	.WASHER	1-99, 1-101
2851956-0000	.BRACKET	1-99, 1-101
2851957-0000	.PLATE	1-99, 1-101
2851958-0000	.SUPPORT PLATE	1-99, 1-101
2851959-0000	.PLATE	1-99, 1-101
2851960-0000	.GUIDE	1-99
2851961-0000	.ROD	1-99, 1-101
2851962-0000	.BRACKET	1-99
2851966-0000	.GUIDE	1-99
2851967-0000	.DOWEL	1-7, 1-9
2851968-0000	.TUNNEL HALF	1-17, 1-35, 1-63, 1-85
2851969-0000	.TUNNEL HALF	1-17, 1-35, 1-63, 1-85
2851970-0000	.BRACKET	1-17, 1-35, 1-63, 1-85
2851971-0100	.TUNNEL	1-67
2851972-0100	.TUNNEL	1-27
2851973-0100	.TUNNEL	1-5
2851974-0000	.COVER PLATE	2-133
2851975-0000	.COVER PLATE	2-133
2851976-0000	.BRACKET	1-85
2851977-0000	.END SECTION	1-99, 1-101
2851978-0000	.WASHER	1-99, 1-101
2851981-0000	.PLATE	1-93
2851982-0000	.COVERING PLATE	1-33
2851983-0000	.SLIDE RAIL	1-33
2851984-0100	.CONVEYOR BODY	1-27
2851985-0100	.CHAIN TENSIONER	1-27
2851986-0000	.MOUNTING BLOCK	1-39
2851987-0400	.INFEED SECTION	1-3
2851988-0000	.BRACKET	1-77

Part No	Description	Page No
2851989-0000	.PROFILE 50X50	2-9
2851991-0000	.COVERING PLATE	2-135
2851992-0000	.COVERING PLATE	2-135
2851993-0000	.PROFILE 50X50	2-9
2860936-0000	.SPACER	3-59
2864528-0000	.RACK	2-33
2864529-0000	.WASHER	2-77
2864530-0000	.CLAMPING PLATE	1-17, 1-35, 1-63, 1-85
2866317-0100	.GLASS DOOR	2-121, 2-123
2866318-0000	.HATCH	2-141
2866320-0000	.HATCH	2-147
2868042-0000	.BRACKET	2-139, 2-141, 2-143, 2-145, 2-147, 3-149, 3-151, 3-165, 3-167
2868106-0000	.WASHER	2-139, 2-141, 2-143, 2-145, 2-147, 3-149, 3-151, 3-165, 3-167
2870738-0100	.GLASS DOOR	3-145, 3-147
2870739-0000	.HATCH	3-149
2870740-0100	.GLASS DOOR	3-145, 3-147
2870741-0000	.HATCH	3-151
2870742-0100	.GLASS DOOR	3-145, 3-147
2870743-0000	.HATCH	3-165
2870744-0100	.GLASS DOOR	3-145, 3-147
2870745-0000	.HATCH	3-167
2870746-0200	.COVER PLATE	3-145, 3-147
2870749-0000	.STRUT	3-149, 3-151
2870750-0000	.STRUT	3-149, 3-151
2871974-0200	.COVERING MISCELLANEOUS	3-145, 3-147
2871975-0000	.COVER SLIP	3-153, 3-155
2871976-0000	.COVER SLIP	3-153, 3-155
2871977-0000	.BRACKET	3-153, 3-155
2872726-0000	.SCREW	2-139, 2-141, 2-143, 2-145, 2-147, 3-149, 3-151, 3-165, 3-167
2872727-0000	.PROFILE 50X50	2-13, 2-15
2872728-0000	.PROFILE 50X50	2-13, 2-15
2872735-0000	.PLATE	2-117
2872736-0000	.SLIDE PLATE	2-117
2872737-0000	.SLIDE PLATE	2-117
2872741-0200	.CABLE DUCT	3-91, 3-93, 3-95, 3-97
2877452-0200	.COVERING PLATE	2-121, 2-123
2877455-0300	.FRAME UPPER	3-91, 3-93, 3-95, 3-97
2877458-0000	.AXLE SUPPORT	3-103, 3-105
2877459-0000	.AXLE SUPPORT	3-103, 3-105
2877460-0000	.PROFILE 50X50	3-103, 3-105
2877461-0000	.PROFILE 50X50	3-103, 3-105
2877467-0000	.BRACKET	1-97
2877468-0000	.FASTENING PLATE	1-99, 1-101
2877469-0000	.SHAFT	1-99, 1-101
2877470-0000	.TOOTHED PULLEY	1-99, 1-101
2877471-0000	.PROFILE 50X100	3-9
2877474-0000	.PROFILE 50X100	3-9
2877475-0000	.FASTENING PLATE	1-99, 1-101
2877481-0000	.SHAFT	2-71
2877482-0000	.SHAFT	2-71
2877486-0000	.BRACKET	2-107
2877491-0000	.CORNER STRIP	3-157, 3-159
2877493-0000	.PROTECTION PLATE	3-163
2877494-0000	.COVERING PLATE	2-137
2877495-0000	.COVERING PLATE	2-127
2877511-0000	.BRACKET	3-83
2877541-0000	.BAR	3-11
2877542-0000	.LEVER BAR	3-35
2877543-0000	.LEVER BAR	2-99, 9-53
2881039-0000	.SIDE PLATE	1-71
2881040-0000	.SIDE PLATE	1-71
2894331-0000	.ARM	9-27
2894954-0000	.PROFILE 50X100	3-9
2894958-0000	.SPACER	3-35
2894961-0000	.SCALE POINTER	3-35
2894966-0000	.MOTOR BRACKET	3-31
2894967-0000	.COVER	5-7
2894968-0000	.SHAFT	3-31
2894976-0000	.PROTECTION PLATE	3-141, 3-143, 9-83, 9-85
2894977-0000	.SHAFT	2-99
2894978-0000	.MOTOR PLATE	2-99
2894979-0000	.CABLE DUCT	3-111, 3-113
2894981-0000	.SPACER	3-33
2894982-0000	.MOUNTING SHEET	3-33
2894984-0000	.PROTECTION PLATE	3-141, 3-143, 9-83, 9-85
2894985-0000	.BRACKET	2-83
2894986-0000	.ANGLE BRACKET	7-5
2894997-0200	.CONNECTION DEVICE	3-91, 3-93, 3-95, 3-97
2894998-0000	.BRACKET	3-163, 9-65
2894999-0000	.PLATE	3-141, 3-143
2895000-0000	.MOUNTING BRACKET	2-119
2895001-0000	.BEAM	2-13, 2-15
2895006-0000	.ARM	3-107
2895009-0000	.SLIDE RAIL	2-89

Machine Type Group Description Page No

Part No	Description	Page No
2895010-0000	.SLIDE RAIL	2-89
2895012-0000	.STOP PLATE	1-91
2895013-0000	.PLATE	1-91
2895014-0000	.WASHER	1-91
2895015-0000	.BRACKET	1-91
2895016-0000	.BRACKET	1-91
2895018-0000	.RAIL	1-91
2895021-0200	.END STOP GROUPING	1-89
2895025-0000	.PLATE	1-91
2895027-0000	.STOP PLATE	1-91
2895029-0000	.HOLDER	4-15
2895030-0000	.CLAMP	4-15
2895031-0000	.BRACKET	7-7
2895032-0000	.BRACKET	7-7
2895035-0000	.PHOTOCELL BRACKET	1-19, 1-37, 1-65, 1-87
2895036-0000	.HOLDER	9-5
2895038-0000	.BRACKET	1-99, 1-101
2895039-0000	.BRACKET	9-67
2895040-0000	.HOLDER	9-67
2895041-0000	.HOLDER	9-67
2909532-0000	.PHOTOCELL BRACKET	1-91
2909534-0000	.GABLE PART	1-31
2909535-0000	.PHOTOCELL BRACKET	1-99
2909536-0000	.PHOTOCELL BRACKET	1-99
2909541-0000	.SUPPORT	4-13
2909542-0000	.FASTENING PLATE	1-99, 1-101
2909543-0000	.FASTENING PLATE	1-99, 1-101
2909544-0000	.RULE PLATE	1-93
2909545-0000	.RULE PLATE	1-93
2909855-0000	.ARM	9-27
2909864-0000	.HOLDER	9-27
2912730-0000	.HOLDER	1-23, 9-99
2920748-0000	.HOLDER	1-19
2920751-0000	.STEERING GUIDE	2-103
2920752-0000	.HOLDER	1-37, 1-65, 1-87
2920754-0000	.MOTOR PLATE	3-9
2920759-0000	.SPACER	2-117
2920760-0000	.BRACKET	2-117
2920762-0000	.PLATE	3-141, 3-143
2920765-0200	.REMOTE I/O	2-5, 2-7
2920766-0000	.BRACKET	2-13, 2-15
2920767-0000	.CABLE DUCT	2-25, 2-27
2920775-0000	.PHOTOCELL BRACKET	9-43
2920776-0000	.DAMPER	9-43
2920777-0000	.CLAMP LUG	9-43
2925890-0000	.PROTECTION PLATE	4-7
2933259-0000	.SPACER	1-99, 1-101
2933260-0200	.DRIVE UNIT	1-41
2933261-0000	.SHAFT	1-51
2933263-0200	.CONVEYOR BODY	1-43
2933264-0000	.BRACKET	1-53
2933265-0000	.BRACKET	1-53
2933267-0000	.SPACER	1-53
2933268-0000	.TOOTHED PULLEY Z=28	1-53
2933269-0000	.SHAFT	1-53
2933270-0000	.SPACER	1-53
2933271-0000	.PLATE	1-53
2936871-0000	.RIVET	9-27
2936873-0000	.CLAMP	9-27
2939231-0100	.CONVEYOR BODY	1-41
2939232-0000	.SIDE PLATE	1-61
2939234-0000	.BRACKET	1-61
2939267-0000	.PUSHER PLATE	2-85
2940164-0100	.RAILING KIT	9-21, 9-57
2940647-0000	.CANTILEVER	9-27
2940648-0000	.CANTILEVER	9-27
2950328-0200	.UNIT CONVEYOR 24	1-3
2950336-0100	.TUNNEL	1-41
2950337-0000	.BRACKET	1-63
2950338-0000	.BRACKET	1-63
2950341-0100	.QUEUE GUARD,DOUBLE	1-41
2950347-0000	.PLATE	2-115
2950348-0000	.3LATE	2-115
2950349-0000	.BRACKET	2-115
2950350-0000	.SHAFT	2-115
2950351-0000	.SHAFT	2-115
2950352-0000	.SHAFT	2-115
2950354-0000	.ARM	2-115
2950355-0000	.BRACKET	3-27
2950358-0000	.SHAFT	2-63, 2-65
2950359-0000	.TOOTHED PULLEY	3-41, 3-43
2950360-0000	.ADJUSTING SCREW	3-43
2958674-0000	.LOCK SHEET	9-27
2958928-0100	.PACKING DESCRIPTION	9-21, 9-57

Part No	Description	Page No
2958998-0000	.SUPPORT BLOCK	9-23
2959002-0000	.SLEEVE	3-41
2959003-0000	.SHAFT	3-41
2959006-0000	.BRACKET	2-71
2959007-0000	.BRACKET	2-71
2959013-0000	.SHAFT	2-71
2959016-0000	.SPACER	2-71
2959020-0000	.BEAM	2-115
2959021-0100	.PHOTOCELL UNIT, COM. START CONV.	9-97
2959022-0100	.PHOTOCELL UNIT, COM. START CONV.	9-97
2959023-0100	.PHOTOCELL UNIT, COM. START CONV.	9-97
2959026-0000	.PLATE	8-7
2959031-0000	.BRACKET	1-61
2959032-0000	.MOUNTING BLOCK	9-17
2959033-0000	.GUIDE RAIL	2-103
2959034-0000	.GUIDE RAIL	2-103
2959035-0000	.PLATE	2-101
2959036-0000	.PLATE	3-87
2959037-0000	.PLATE	3-87
2959039-0000	.GUIDE	2-107
2959042-0100	.PHOTOCELL UNIT, OVERFLOW	1-27, 1-41, 1-67
2959043-0100	.PHOTOCELL UNIT, OVERFLOW	1-21
2959044-0100	.PHOTOCELL UNIT, OVERFLOW	1-21
2959045-0100	.PHOTOCELL UNIT, OVERFLOW	1-5
2959046-0000	.BRACKET	1-29, 9-45, 9-101
2959047-0000	.BRACKET	1-23, 9-99
2959049-0000	.BRACKET	1-25, 9-103
2959050-0000	.GUIDE RAIL	2-79, 2-81
2959051-0000	.GUIDE RAIL	2-79, 2-81
2960810-0000	.SUPPORT BLOCK	9-23
2960811-0000	.PACKING DESCRIPTION	9-23
2968390-0100	.RAIL HOLDER	9-25, 9-39, 9-41, 9-59
2970816-0000	.GUIDE RAIL	2-79, 2-81
2970819-0000	.DOLLY	2-85
2970820-0000	.SPACER	2-79, 2-81
2970821-0000	.SPACER	2-79, 2-81
2970822-0000	.DOLLY	2-85
2970823-0000	.DOLLY	2-85
2970824-0000	.RAILING	1-7
2970825-0000	.DOLLY	2-85
2970826-0000	.RAILING	1-7
2970827-0000	.DOLLY	2-85
2970828-0000	.DOLLY	2-85
2970829-0000	.GUIDE RAIL	2-79, 2-81
2970830-0000	.GUIDE RAIL	2-79, 2-81
2970831-0000	.ACER	2-79, 2-81
2970832-0000	.DOLLY	2-85
2970833-0000	.BRACKET	2-79, 2-81
2970834-0000	.DOLLY	2-85
2970835-0000	.DOLLY	2-85
2970836-0000	.DOLLY	2-85
2970837-0000	.DOLLY	2-85
2970838-0000	.DOLLY	2-85
2970839-0000	.DOLLY	2-85
2970840-0000	.STEERING RAIL	2-79, 2-81
2970841-0000	.PIPE	1-7
2970842-0000	.BRACKET	2-79, 2-81
2970843-0000	.BRACKET	2-79, 2-81
2970844-0100	.DOWNSTREAM QUEUEGUARD	8-3
2970845-0100	.RAILING	1-5, 1-27, 1-41, 1-67
2970847-0000	.STEERING	2-79, 2-81
2970848-0000	.GUIDE PIN	2-79, 2-81
2970849-0000	.BUSHING	2-79, 2-81
2970851-0000	.SPACER	2-79, 2-81
2970852-0000	.BRACKET	2-79, 2-81
2970853-0000	.BRACKET	2-79, 2-81
2970856-0000	.BRACKET	2-79, 2-81
2970857-0000	.GUIDE RAIL	2-79, 2-81
2970859-0000	.BRACKET	2-79, 2-81
2970860-0000	.BRACKET	2-79, 2-81
2970861-0000	.GUIDE RAIL	2-79, 2-81
2970862-0000	.PIPE	1-7
2970863-0000	.BRACKET	1-65
2970864-0000	.STEERING RAIL	2-79, 2-81
2970865-0000	.BRACKET	2-125
2970867-0000	.PROFILE	2-79, 2-81
2970877-0000	.BRACKET	2-117
2970878-0000	.SHEET	2-89
2970880-0000	.PLASTIC PLUG	2-79, 2-81
2970881-0000	.BRAKE WASHER	3-107
2970882-0200	.CONVEYOR SUPPORT	9-19
2970883-0100	.RAILING KIT	9-19
2970887-0200	.DISCHARGE SUPPORT	9-19
2970888-0200	.DISCHARGE CONV.	9-3

Part No	Description	Page No
2970891-0000	.PLATE	9-39, 9-41
2970893-0100	.PHOTOCELL BRACKET	9-19, 9-47
2970905-0000	.HOLDER	5-5
2970907-0000	.SHAFT	5-5
2970909-0000	.SET OF SIGNS	2-17, 2-19
2970910-0000	.PROTECTION PLATE	1-53
2970911-0000	.COVER	1-53
2974842-0000	.RUBBER GASKET	6-11
2974843-0000	.COVER PLATE	6-11
2995212-0000	.LINK ARM	3-13
2995213-0000	.SPACER RING	3-13
2995216-0000	.GUIDE	1-95
2995217-0000	.GUIDE	1-95
2995218-0000	.GUIDE RAIL	1-95
2995229-0000	.COVER PLATE	4-13
2995230-0000	.PLATE	4-13
2995231-0000	.PLATE	4-13
2995233-0000	.PROTECTION PLATE	3-169
2995234-0000	.PROTECTION PLATE	3-169
2995236-0000	.CORNER STRIP	3-157, 3-159
2995237-0000	.COVER	1-53
2995239-0000	.PROFILE 50X50	4-25
2995240-0000	.BEARING HOUSING	4-25
2995242-0000	.BRACKET	2-115
2995243-0000	.WASHER	2-71, 2-115
2995244-0000	.PLATE	2-71
2995245-0000	.BRACKET	2-71
2995246-0000	.BRACKET	2-71
2995248-0000	.PROTECTION PLATE	4-13
2995249-0000	.PROTECTION PLATE	4-13
2995251-0000	.BRACKET	2-133
2995252-0000	.PROTECTION PLATE	1-77
2995259-0000	.PLATE	2-77
2995260-0000	.PLATE	2-77
2995261-0000	.HOLDER	5-21
2995519-0000	.BRACKET	2-77
3020219-0000	.SHAFT	1-57
3021412-0000	.ASSEMBLY INSTRUCTION	9-33
3023843-0000	.FORCE PLATE	2-9, 3-9, 6-81
3033755-0000	.ATTACHMENT PIPE	2-21
3046526-0000	.CLAMPING PLATE	2-59, 2-63, 2-65
3046527-0000	.TIMING BELT	2-63, 2-65
3046530-0000	.SHAFT	2-59, 2-63, 2-65
3046535-0000	.PROFILE 50X50	2-13, 2-15
3046536-0000	.PROFILE 50X50	2-13, 2-15
3046678-0000	.SPLASH GUARD	3-173
3046679-0000	.PLATE	2-13, 2-15, 3-103, 3-105
3046680-0100	.TOP SECTION	3-145, 3-147
3046681-0000	.SPACER	3-103, 3-105
3051565-0100	.DOOR	2-121, 2-123
3051566-0000	.HATCH	2-151
3051567-0100	.DOOR	2-121, 2-123
3051568-0000	.HATCH	2-149
3051569-0000	.HATCH	2-143
3051570-0100	.GLASS DOOR	2-121, 2-123
3051571-0000	.STRUT	2-143
3051572-0100	.GLASS DOOR	2-121, 2-123
3051573-0000	.HATCH	2-145
3051574-0000	.SPACER	2-9
3059446-0000	.PROTECTIVE COVER	6-65
3060156-0100	.SUPPORT	9-71
3060171-0000	.CORNER STRIP	2-13, 2-15
3060172-0000	.CORNER STRIP	2-13, 2-15
3060173-0000	.CABLE DUCT	2-25, 2-27
3060174-0000	.CABLE DUCT	2-25, 2-27
3066679-0100	.DRIVE UNIT BOX PUSHER	2-55
3066680-0000	.TOOTHED PULLEY	2-59, 2-63, 2-65
3066683-0000	.BRACKET	2-63, 2-65
3066687-0000	.TIMING BELT	2-59
3066694-0100	.GROUPING PUSHER	2-57
3066697-0000	.AXLE PIN	2-61
3066698-0000	.AXLE PIN	2-61
3066699-0000	.PLATE	2-61
3077533-0000	.BRACKET	2-61
3077534-0000	.BRACKET	2-61
3077535-0000	.PLATE	2-61
3077537-0000	.SUPPORT PLATE	2-63, 2-65
3077538-0000	.BRACKET	2-63, 2-65
3077539-0000	.SUPPORT PLATE	2-63, 2-65
3077542-0000	.BRACKET	2-63, 2-65
3077543-0000	.BRACKET	2-63, 2-65
3077544-0000	.SUPPORT PLATE	2-63, 2-65
3077547-0000	.PLATE	2-63, 2-65
3077550-0100	.DRIVE UNIT	2-57

Part No	Description	Page No
3077553-0000	.BRACKET	2-59
3077554-0000	.PLATE	2-59
3077558-0000	.PLATE	2-61
3077562-0000	.PLATE	2-61
3081055-0100	.BOX PUSHER PLATE	2-55
3081056-0000	.BRACKET	2-71
3081057-0000	.BRACKET	2-71
3081058-0000	.BRACKET	2-71
3081059-0000	.PLATE	2-71
3090049-0000	.SPACER	1-47
3090140-0300	.HOTMELT EQUIPMENT NORDSON	9-75
3090141-0000	.PROTECTION PLATE	9-83, 9-85
3090142-0000	.EXPANSION CARD	9-77, 9-79
3090145-0300	.HOTMELT SHELF	9-75
3090149-0300	.6 CHANNEL HOTMELT	9-3
3090150-0300	.GUN HOLDER	9-75
3090153-0000	.PLATE	9-83, 9-85
3090580-0000	.SPACER SLEEVE	2-61
3090581-0000	.PLATE	2-61
3090582-0000	.PROFILE 50X50	2-61
3090583-0000	.RAIL	2-33
3090586-0000	.CAP	2-59, 2-63, 2-65
3090588-0000	.PLATE	2-63, 2-65
3090589-0000	.TRANSFER PLATE	2-63, 2-65
3090590-0000	.CAP	2-63, 2-65
3090591-0000	.PLATE	2-63, 2-65
3090592-0000	.PLATE	2-63, 2-65
3090593-0000	.AXLE	2-59, 2-63, 2-65
3090594-0000	.THRUST WASHER	2-59, 2-63, 2-65
3090595-0000	.SETTING SCREW	2-59, 2-63, 2-65
3090596-0000	.BEARING HOUSING	2-59, 2-63, 2-65
3090597-0000	.CAP	2-59, 2-63, 2-65
3090598-0000	.BRACKET	2-59
3090601-0000	.BRACKET	2-59
3090602-0000	.PLATE	2-59
3090604-0000	.PROFILE 50X50	2-13, 2-15
3090606-0000	.PROFILE 50X100	2-13, 2-15
3090607-0000	.PROFILE 50X50	2-13, 2-15
3090608-0000	.PROFILE 50X50	2-13, 2-15
3091991-0100	.TURNING WHEEL	1-45
3091992-0100	.CHAIN TIGHTENER WHEEL	1-55
3091993-0000	.WHEEL	1-57
3092039-0000	.CYLINDRICAL PIN	2-71
3092050-0000	.LINK ARM	2-71
3092052-0000	.GUIDE	2-71
3092053-0000	.PLATE	2-83
3093446-0000	.PLATE	2-31
3093453-0000	.PLATE	2-31
3093547-0000	.SIDE PLATE	2-107
3095150-0000	.PLATE	2-109
3095151-0000	.PLATE	2-109
3095152-0000	.RAIL	2-107
3095153-0000	.CYLINDER BRACKET	2-109
3095154-0000	.STRUT	2-109
3095156-0000	.BEARING BOLT	2-107
3095157-0000	.AXLE	2-111
3095158-0000	.ADJUSTING SCREW	2-111
3095160-0000	.BOTTOM PLATE	2-107
3095161-0000	.BEARING HOUSING	2-111
3095162-0000	.NUT	2-107
3095163-0000	.BEARING HOUSING	2-111
3095164-0000	.AXLE	2-111
3095166-0000	.BRACKET	2-111
3095167-0000	.PLATE	2-107
3095168-0000	.CROSS BAR	2-107
3095169-0000	.PIVOT BRACKET	2-107
3096191-0000	.PROFILE 50X50	2-13, 2-15
3096192-0000	.BRACKET	2-75
3096193-0000	.PROFILE 50X50	2-13, 2-15
3096194-0000	.PROFILE 50X50	2-13, 2-15
3096198-0100	.STOP ARM	2-55
3096199-0000	.PLATE	2-69
3096200-0000	.SLIDING STRIP	2-69
3096202-0000	.AXLE PIN	2-69
3096203-0000	.BRACKET	2-69
3096204-0000	.ROD	2-69
3096205-0000	.BEARING HOUSING	2-69
3096206-0000	.BRACKET	2-69
3096207-0000	.ARM	2-69
3096208-0000	.GUIDE PIN	2-69
3096209-0000	.BRACKET	2-69
3096210-0000	.TRANSFER PLATE	2-61
3096211-0000	.DISTANCE	2-13, 2-15
3096212-0000	.TOOTHED PULLEY	2-59, 2-63, 2-65

Part No	Description	Page No
3096214-0000	.DISTANCE	2-63, 2-65
3096215-0000	.FASTENING PLATE	2-63, 2-65
3096216-0000	.BRACKET	2-63, 2-65
3096217-0000	.SUPPORT PLATE	2-13, 2-15
3096218-0000	.PLATE	2-61
3096219-0000	.SUPPORT PLATE	2-63, 2-65
3096220-0000	.PROFILE 50X50	2-13, 2-15
3096221-0000	.PROFILE 50X50	2-13, 2-15
3096228-0000	.LUBRICATOR	2-63, 2-65
3097789-0000	.PLATE	2-83
3097792-0000	.BRACKET	2-71
3097793-0000	.SHAFT	2-71
3097794-0000	.HOLDER	1-91
3097795-0000	.HOLDER	1-91
3097798-0000	.PROTECTION PLATE	2-33
3101120-0000	.PLATE	2-77
3101124-0000	.ROLL	2-113
3101125-0000	.SHAFT	2-113
3103241-0000	.GUIDE PLATE	2-107
3103253-0000	.PLATE	2-83
3103254-0000	.PLATE	2-83
3103255-0000	.BRACKET	2-83
3104410-0000	.ROD	2-89
3104411-0000	.ROD	2-89
3104412-0000	.LABEL HOLDER	2-109
3109101-0000	.STOP PLATE	1-91
3109104-0000	.STOP PLATE	1-91
3111400-0000	.SCREW	1-59
3111403-0000	.COVERING PLATE	1-59
3111404-0100	.COVER	1-55
3111405-0000	.SIDE PLATE	1-49
3111406-0000	.SIDE PLATE	1-49
3111407-0000	.BRACKET	1-49
3112719-0100	.COVER	6-17, 6-19
3112734-0000	.COVER PLATE	6-83
3112737-0000	.TOUCH GUARD	6-65
3112741-0000	.BRACKET	6-65
3113457-0100	.GROUPING PUSHER	2-55
3113459-0000	.PLATE	2-33
3119119-0000	.BRACKET	6-23
3119169-0000	.COVERING PLATE	2-137
3119181-0000	.SPACER	6-23
3119183-0000	.PROFILE 50X50	6-81
3119184-0000	.COVER PLATE	6-81
3119185-0000	.SPACER	6-81
3119621-0000	.GUIDE	2-111
3122203-0000	.PROFILE 50X100	2-9
3123791-0000	.BRACKET	4-11
3125473-0000	.PLATE	2-77
3127713-0000	.SLIDING STRIP	1-49
3127714-0000	.SLIDING STRIP	1-49
3127719-0000	.SHAFT	1-59
3128763-0000	.BRACKET	1-95
3128764-0000	.PLATE	1-95
3128765-0000	.BRACKET	1-95
3128766-0000	.BRACKET	1-95
3132444-0000	.PUSHER PLATE	2-73
3132445-0000	.PUSHER PLATE	2-73
3132447-0000	.GUIDE PIN	2-73
3132459-0100	.SET OF ANSI SIGN	9-21, 9-57
3133290-0000	.GUIDE	1-71
3133291-0000	.GUIDE	1-71
3133500-0000	.BRACKET	2-13, 2-15
3133867-0100	.BRAKE UNIT	4-9
3133868-0000	.BRACKET	4-11
3133920-0000	.RUBBER PLATE	4-11
3136220-0000	.BRACKET	2-63, 2-65
3136650-0000	.ROD	2-63, 2-65
3136746-0000	.PROTECTION PLATE	2-13, 2-15
3136747-0000	.BRACKET	2-41
3136748-0000	.BRACKET	2-41
3136749-0000	.BRACKET	2-69
3136750-0000	.PLATE	2-69
3136751-0000	.PLATE	2-69
3136752-0000	.PLATE	2-69, 3-65, 4-27
3136753-0000	.SPACER	2-133
3136754-0000	.WASHER	2-61
3136755-0100	.VOLUME PLATE	2-55
3137723-0000	.SHAFT	4-19
3137724-0000	.SPACER	4-19
3138404-0000	.PROTECTION PLATE	3-171
3138433-0100	.COVERING PANEL	6-17, 6-19
3138434-0000	.COVERING PANEL	6-85
3138436-0000	.HATCH	2-147

Part No	Description	Page No
3138439-0000	.FASTENING BRACKET	2-9
3139172-0100	.MAG SIDE ADJUSTER	4-3
3149479-0200	.BARCODE SCANNER	9-69
3149726-0000	.DOLLY	2-85
3151077-0000	.GUIDE	4-13
3151078-0000	.GUIDE	4-13
3151627-0000	.SIGN & MARKING	6-69, 6-71, 6-73, 8-5
3156680-0000	.BEARING HOUSING	4-21
3156681-0000	.SHAFT	4-21
3156682-0000	.MOUNTING BAR	4-21
3156683-0000	.MOUNTING BAR	4-21
3156684-0000	.COVER	4-21
3156685-0000	.SHAFT	4-21
3156686-0000	.GUIDE	4-7
3156687-0000	.SPRING	4-21
3157073-0000	.MOUNTING BAR	4-21
3157074-0000	.BRACKET	4-21
3157075-0000	.PLATE	4-21
3157079-0000	.SPACER	4-21
3157212-0200	.ILINE-XT	9-3
3161723-0000	.PLATE	9-83, 9-85
3161725-0000	.PROTECTION	9-81
3161726-0000	.PROTECTION	9-81
3161728-0000	.PROTECTION	9-81
3161729-0000	.PROTECTION	9-81
3161732-0000	.PLATE	9-83, 9-85
3163183-0000	.GUIDE	9-81
3163184-0000	.GUIDE	9-81
3165930-0000	.BRACKET	4-21
3165931-0000	.BRACKET	4-21
3165932-0000	.SPRING HOUSING	4-21
3165933-0000	.RAIL	4-5
3173376-0000	.SHAFT	3-79
3173382-0000	.SHAFT	3-79
3179208-0000	.CYLINDER CONSOLE	9-43
3179210-0000	.BRACKET	9-43
3179211-0000	.SUPPORTING SHEET	9-43
3179467-0000	.PROTECTION PLATE	4-7
3179468-0000	.STEERING	4-21
3179469-0000	.BEAM	4-5
3179470-0000	.BEAM	4-5
3179471-0000	.PROTECTION	4-5
3180552-0000	.PLATE	2-103
3180554-0000	.PLATE	2-103
3180695-0000	.ARM	3-107
3180696-0000	.ARM	3-107
3180697-0000	.SPACER	3-107
3180699-0000	.CLAMP PLATE	3-109
3180710-0000	.PLATE	2-103
3186422-0000	.PLATE	9-43
3186426-0000	.BRACKET	3-161
3186427-0000	.BRACKET	9-37
3186428-0000	.SUPPORTING SHEET	9-43
3186429-0000	.SUPPORTING SHEET	9-43
3186441-0000	.GUIDE FORK	4-21
3190601-0000	.CONNECTION BOX	9-93, 9-95
3190602-0100	.CONNECTION BOX	9-91
3190603-0000	.BRACKET	9-93, 9-95
3190604-0000	.BRACKET	9-91
3190605-0000	.MOUNTING KIT	9-91
3193237-0000	.SPACER	4-17
3193240-0000	.TOOTHED PULLEY	4-19
3193241-0000	.TOOTHED PULLEY	4-17
3193242-0000	.SHAFT	4-17
3193243-0000	.SPACER	4-17
3193247-0000	.COVER PLATE	4-13
3196744-0000	.LUG	3-63
3196745-0000	.LUG	3-63
3196746-0100	.SIDE FOLDER	3-39
3196747-0000	.FASTENING PLATE	3-63
3196748-0100	.PACKING END STOP	3-39
3196749-0000	.SPACER SLEEVE	3-63
3196751-0100	.TRANSFER PLATE GUIDE	3-39
3196752-0000	.GUIDE RAIL	3-65
3196753-0000	.GUIDE RAIL	3-65
3196754-0000	.BEARING BRACKET	3-65
3196755-0000	.BEARING BRACKET	3-65
3196756-0000	.SUPPORT PLATE	3-65
3196757-0000	.SHAFT	3-65
3196758-0000	.GUIDE RAIL	3-65
3196759-0000	.GUIDE RAIL	3-65
3196760-0000	.BRACKET	3-65
3196761-0000	.BRACKET	3-65
3196762-0000	.BRACKET	3-65

Part No	Description	Page No
3196763-0000	.PLATE	3-65
3196764-0000	.BRACKET	3-65
3196765-0000	.SHAFT	3-65
3196766-0000	.GUIDE PLATE	3-67
3196767-0000	.GUIDE PLATE	3-67
3196768-0000	.PLATE	3-67
3196769-0000	.HOLDER	3-67
3196770-0000	.SHAFT	3-67
3196771-0000	.LEVER	3-67
3196772-0000	.PLATE	3-67
3196773-0000	.SHAFT	3-67
3196785-0000	.HOLDER	3-67
3196786-0000	.HOLDER	3-67
3197434-0000	.HOLDER	3-67
3197435-0000	.HOLDER	3-67
3197436-0000	.NUT WASHER	3-67
3197437-0000	.SUPPORT	3-89
3197438-0000	.RAIL	3-75
3197439-0000	.RAIL	3-75
3197440-0000	.GUIDE PLATE	3-67
3197441-0000	.GUIDE PLATE	3-67
3197442-0000	.GUIDE PLATE	3-67
3197443-0000	.GUIDE PLATE	3-67
3197444-0100	.FOLDING STATION	3-39
3197445-0000	.PLATE	3-69
3197450-0100	.FLAP GUIDE	3-39
3197451-0000	.FLAP GUIDE	3-71
3197452-0000	.FLAP GUIDE	3-71
3197453-0000	.GUIDE BRACKET	3-71
3199146-0000	.BRACKET	3-73
3199147-0000	.BRACKET	3-73
3199151-0000	.ARM	3-73
3199155-0000	.HOSE HOLDER	3-107
3199156-0000	.CLAMP BLOCK	3-107
3199157-0100	.MAGAZINE ARM	3-91, 3-93, 3-95, 3-97
3199158-0100	.SUCTION CUP	3-91, 3-93, 3-95, 3-97
3199159-0100	.TRAY HOLDER	3-39
3199162-0000	.PRESSURE PLATE	5-11
3199164-0000	.SHAFT	5-11
3199165-0000	.FASTENING PLATE	5-15, 5-19
3199166-0000	.CYLINDER BRACKET	5-15, 5-19
3199167-0000	.ADJUSTMENT PLATE	5-15, 5-19
3199169-0000	.SQUEEZER	5-13, 5-17
3199170-0000	.PRESSURE PLATE	5-15
3199172-0000	.SHAFT	5-11
3199173-0000	.BRACKET	5-11
3199174-0000	.CLAMPING SLEEVE	5-15, 5-19
3199175-0000	.BRACKET	5-11
3200721-0000	.BRACKET	9-105, 9-107, 9-109
3200733-0000	.BRACKET	9-105, 9-107, 9-109
3201946-0000	.STOP BLOCK	2-33
3201967-0100	.CONNECTION BOX	9-105, 9-107, 9-109
3201968-0000	.CONNECTION BOX	9-111
3204618-0000	.COVERING PLATE	2-129
3204619-0000	.COVERING PLATE	2-129
3204620-0100	.COVERING PLATE	2-121, 2-123
3207644-0000	.FASTENER	5-13, 5-17
3207646-0000	.BRACKET	5-13, 5-17
3207647-0000	.BRACKET	5-15, 5-19
3207648-0000	.PENDULUM SUSPENSION	5-15, 5-19
3207650-0000	.PIVOT BRACKET	5-15, 5-19
3207651-0000	.SHAFT	5-15, 5-19
3207652-0000	.SPACER SLEEVE	5-15, 5-19
3207655-0000	.PRESSURE RAIL	5-15, 5-19
3207656-0000	.COMPRESSION RING	5-11
3207657-0000	.SHAFT	5-13, 5-17
3207659-0000	.GABLE PLATE	5-13
3207660-0000	.PRESSURE PLATE	5-19
3207661-0000	.BRACKET	5-17
3207662-0000	.GABLE PLATE	5-17
3207663-0100	.WA SQUEEZER	5-9
3207664-0000	.SIDE PLATE	5-13, 5-17
3207665-0000	.BRACKET	5-13
3207666-0000	.SIDE PIECE	5-7
3207667-0100	.PRESSURE UNIT	5-9
3207668-0100	.PRESSURE UNIT	5-9
3207669-0100	.PRESSURE UNIT	5-9
3207670-0000	.SIDE PIECE	5-7
3207671-0100	.PRESSURE UNIT	5-9
3207672-0100	.WA SQUEEZER	5-3
3207673-0000	.BUSHING	5-15, 5-19
3213473-0000	.HOLDER	3-69
3213474-0000	.BRACKET	3-69
3213475-0000	.FOLDER	3-69

Part No	Description	Page No
3213476-0000	.SHAFT	3-69
3213477-0000	.SHAFT	3-69
3213478-0000	.SHAFT	3-65, 3-69
3213479-0000	.FLAP GUIDE	3-69
3213480-0000	.RAIL	3-75
3213481-0000	.RAIL	3-75
3213482-0100	.BOTTOM FLAP GUIDE	3-39
3213484-0000	.CURVE RAIL	2-107
3213485-0000	.PLATE	2-117
3213486-0000	.BRACKET	2-117
3213487-0000	.PHOTOCELL BRACKET	2-107
3215907-0001	.FLAP	2-85
3215907-0002	.FLAP	2-85
3215907-0003	.FLAP	2-85
3215907-0004	.FLAP	2-85
3215907-0005	.FLAP	2-85
3215907-0006	.FLAP	2-85
3215907-0007	.FLAP	2-85
3215907-0008	.FLAP	2-85
3215907-0009	.FLAP	2-85
3215907-0010	.FLAP	2-85
3215907-0011	.FLAP	2-85
3215907-0012	.FLAP	2-85
3215907-0013	.FLAP	2-85
3215907-0014	.FLAP	2-85
3215908-0000	.HOLDER	3-67
3215909-0000	.BUSHING	3-67
3215910-0000	.HOLDER	3-67
3215911-0100	.BOTTOM SUPPORT	3-39
3215912-0000	.BRACKET	3-77
3215913-0000	.BRACKET	3-77
3215914-0000	.SUPPORTING SHEET	3-77
3218516-0000	.BRACKET	9-105, 9-107, 9-109
3218517-0000	.BRACKET	9-105, 9-107, 9-109
3223849-0000	.RAIL	3-67
3223850-0100	.FEED UNIT	3-3, 3-5
3223851-0100	.BOTTOM SQUEEZER	3-39
3223852-0100	.CARRIER FRAME	3-39
3223853-0100	.MAG TOP UNIT	4-3
3226045-0000	.BRACKET	2-103
3227806-0000	.SIDE PLATE	3-81, 9-61
3227807-0000	.SIDE PLATE	3-81, 9-61
3227808-0000	.FASTENING PLATE	4-27
3227809-0000	.PLATE	4-27
3227810-0000	.MOUNTING BAR	4-27
3227811-0000	.PLATE	4-27
3227812-0000	.RUBBER WASHER	4-27
3227813-0000	.NUT PLATE	4-27
3227814-0000	.CARRIAGE	4-31
3227815-0000	.CLAMPING PLATE	4-31
3227816-0000	.BELT TENSIONER	4-31
3227817-0000	.BRACKET	4-31
3227818-0000	.SHAFT	4-31
3227819-0000	.SHAFT	4-31
3227820-0000	.CLAMPING PLATE	4-31
3227821-0000	.SUPPORT PLATE	4-31
3227822-0000	.PROFILE 50X50	4-31
3227823-0000	.SUPPORTING SHEET	4-31
3227824-0000	.SLIDE RAIL	4-31
3227825-0000	.BRACKET	4-31
3227826-0000	.HEXAGON FLANGE NUT	4-31
3227827-0100	.TOP SUPPORT	4-3
3231386-0100	.TRAY SUPPORT	3-39
3231387-0100	.MAG HEIGHT ADJUSTER	4-3
3231388-0100	.MAG BODY	4-3
3231389-0100	.MAG WIDTH ADJUSTER	4-3
3231390-0100	.SIDE STEERING	4-3
3231391-0000	.SIDE PLATE	4-13
3231392-0000	.SIDE PLATE	4-13
3231393-0000	.SIDE PLATE	4-21
3231394-0000	.SIDE PLATE	4-21
3231395-0000	.SHAFT	4-15
3231396-0000	.SHAFT	4-15
3231397-0000	.RACK GEAR	4-15
3231398-0000	.CLAMP BRACKET	4-21
3231399-0000	.STEERING	4-21
3231400-0000	.GABLE PART	4-7
3231401-0000	.GABLE PART	4-7
3231402-0000	.SIDE PLATE	4-13
3231403-0000	.SIDE PLATE	4-13
3231405-0000	.BRACKET	3-73, 3-79
3231406-0000	.PILLAR	3-85, 3-87
3231407-0000	.SUPPORT PLATE	3-81
3231408-0000	.SPACER BLOCK	3-73

Part No	Description	Page No
3231409-0000	.PRESSURE RAIL	3-79
3231410-0000	.BRACKET	3-79
3231411-0000	.BRACKET	3-79
3231412-0000	.BRACKET	3-79
3234421-0000	.FORCE PLATE	6-81
3234425-0000	.FRAME BRACKET	2-9, 3-9, 6-81, 9-49
3238128-0000	.LOCKING FINGER	5-15, 5-19
3238129-0000	.TIMING BELT PULLEY	4-31
3238135-0100	.MAG FRAME	4-3
3238136-0100	.COVERING PLATE	3-7
3238137-0100	.MAG DRIVE ROLLER	4-3
3238138-0100	.MAG ROLLER REAR	4-3
3238140-0000	.CARRIAGE	4-21
3238141-0000	.CARRIAGE	3-83
3238142-0000	.CYLINDER BRACKET	3-83
3238143-0000	.FASTENING PLATE	3-83
3238144-0000	.FLAP FOLDER	3-83
3238145-0000	.LOCKING BLOCK	3-83
3238146-0000	.SLIDE RAIL	3-83
3238147-0000	.SLIDE RAIL	3-83
3238148-0000	.SHAFT	3-83
3238150-0000	.BEARING HOUSING	3-83
3238151-0000	.COVERING PLATE	3-15
3238152-0000	.RAIL	3-65
3238153-0000	.BRACKET	3-65
3238154-0100	.MAIN SHAFT	3-7
3238155-0000	.SHAFT	3-11
3238156-0100	.MOTOR MAIN SHAFT	3-29
3238157-0100	.ENCODER MAIN SHAFT	3-7
3241259-0100	.FRAME BOTTOM	2-5, 2-7
3241260-0000	.PNEUMATIC PANEL	2-17, 2-19
3241261-0100	.PROTECTION PLATE	2-55
3241262-0100	.TRANSFER BODY	2-87
3241263-0100	.BOX PUSHER END STOP	2-55
3241264-0100	.TRANSFER STOP PLATE	2-55
3241265-0100	.BENDING ROLLER	2-87
3241266-0100	.TILTING UNIT	2-87
3241267-0100	.POSITIONING SCREW	2-105
3241268-0100	.TILTER	2-105
3241269-0100	.PNEUMATIC UNIT	2-105
3241270-0000	.PLATE	2-111
3241271-0100	.LOWER MACHINE BODY	3-7
3241272-0000	.PROFILE 50X100	2-9
3241273-0000	.PROFILE 50X100	2-9
3241274-0000	.PROFILE 50X100	2-9
3241275-0000	.PROFILE 50X100	2-9
3241276-0000	.PROFILE 50X100	2-9
3241277-0000	.PROFILE 50X100	2-9
3241278-0000	.PROFILE 50X50	2-9
3241279-0000	.PROFILE 50X50	2-9
3241280-0100	.CABLE DUCT	2-5, 2-7
3241283-0100	.GLASS DOOR	2-121, 2-123
3241284-0100	.COVERING PLATE	3-145, 3-147
3241285-0100	.COVERING PLATE	3-145, 3-147
3241286-0000	.PROTECTION PLATE	3-161
3241287-0100	.WARNING LAMP	3-91, 3-93, 3-95, 3-97
3241290-0000	.FASTENING PLATE	7-17
3245228-0000	.LINK ARM	2-71
3245335-0000	.SIGN	6-23
3245363-0000	.STIFFENING PLATE	6-23
3245364-0100	.EARTH TERMINAL	6-39
3245365-0000	.COVER	6-37
3245366-0000	.STIFFENING PLATE	6-23
3245367-0000	.FUSE PANEL SIGN	6-69, 6-71, 6-73, 6-75, 6-77, 6-79
3245368-0000	.FUSE PANEL SIGN	6-69, 6-71, 6-73, 6-75, 6-77, 6-79
3245369-0000	.DELIVERED DESIGN	6-69, 6-71, 6-73, 6-75, 6-77, 6-79
3245370-0000	.STRUT	6-69, 6-71, 6-73, 6-75, 6-77, 6-79
3245371-0000	.STRUT	6-75, 6-77, 6-79
3245372-0000	.SIGN & MARKING	6-69, 6-71, 6-73, 6-75, 6-77, 6-79, 8-5
3245373-0000	.STRUT	6-69, 6-71, 6-73
3245374-0000	.SIGN & MARKING	6-69, 6-71, 6-73, 8-5
3249924-0000	.PROFILE 50X100	3-9
3249925-0000	.PROFILE 50X100	3-9
3249926-0000	.PROFILE 50X100	3-9
3249928-0000	.PROFILE 50X100	3-9
3249929-0000	.PROFILE 50X100	3-9
3249930-0000	.PROFILE 50X100	3-9
3249931-0000	.PROFILE 50X100	3-9
3249932-0000	.PROFILE 50X100	3-9
3249933-0000	.PROFILE 50X50	3-9
3249934-0100	.CABLE DUCT	3-7
3249935-0000	.BRACKET	3-21
3249938-0000	.SHAFT	3-47
3249939-0000	.SPRING GUIDE	3-37

Part No	Description	Page No
3249941-0100	.OVERLOAD FEEDING	3-29
3249942-0100	.DRIVE UNIT	3-3, 3-5
3249943-0000	.PROFILE 50X100	3-9
3249944-0100	.EMERGENCY STOP	3-91, 3-93, 3-95, 3-97
3249945-0000	.BRACKET	3-99, 3-101
3249946-0000	.PROFILE 50X50	3-103, 3-105
3249947-0000	.PROFILE 50X50	3-103, 3-105
3249948-0000	.PROFILE 50X50	3-103, 3-105
3249949-0000	.PROFILE 50X50	3-103, 3-105
3249950-0000	.PROFILE 50X50	3-103, 3-105
3249951-0000	.PLATE	2-33
3249952-0100	.EMERGENCY STOP	2-5, 2-7
3250570-0100	.ELECTRICAL CABINET	6-3, 6-5
3250571-0100	.ELECTRICAL CABINET	6-17, 6-19
3250572-0100	.MOUNTING PLATE	6-17, 6-19
3250573-0100	.MOUNTING PLATE	6-25, 6-27
3250574-0100	.ELECTRIC EQUIPMENT	6-25, 6-27
3250575-0100	.ELECTRIC EQUIPMENT	6-25, 6-27
3250577-0100	.TERMINAL	6-33, 6-35
3250578-0100	.ELECTRIC EQUIPMENT	6-25, 6-27
3250579-0100	.TERMINAL	6-39
3250580-0100	.TERMINAL	6-39
3250581-0100	.ELECTRIC EQUIPMENT	6-25, 6-27
3250582-0100	.ELECTRIC EQUIPMENT	6-25, 6-27
3250584-0100	.TERMINAL	6-59, 6-61
3250585-0100	.DOOR	6-17, 6-19
3250586-0100	.DOOR	6-17, 6-19
3250587-0100	.ELECTRICAL MATERIALS	6-25, 6-27
3250588-0100	.TERMINAL	6-51, 6-53
3250589-0100	.FRAME	6-17, 6-19
3250590-0000	.CABINET	6-23
3250591-0000	.MOUNTING PLATE	6-65
3250592-0000	.DOOR	6-75, 6-77, 6-79
3250593-0000	.DOOR	6-75, 6-77, 6-79
3250594-0000	.DOOR	6-69, 6-71, 6-73
3250595-0000	.DOOR	6-69, 6-71, 6-73
3250596-0000	.TAPE	6-69, 6-71, 6-73, 6-75, 6-77, 6-79
3250597-0000	.PROFILE 50X100	6-81
3250598-0000	.PROFILE 50X100	6-81
3250599-0000	.PROFILE 50X100	6-81
3251367-0000	.PLATE	3-73
3251368-0000	.SHAFT	3-73
3251369-0000	.NUT PLATE	3-73
3251370-0000	.PHOTOCELL BRACKET	3-81
3251371-0000	.GUIDE	3-81
3251372-0000	.PROTRACTOR	3-35
3251373-0000	.BRACKET	3-23
3251374-0000	.MOUNTING SHEET	3-23
3251375-0000	.LEVER	3-67
3251380-0000	.ANGLE	3-71
3251381-0100	.WA FRAME	5-3
3251382-0100	.FLAP FOLDER	5-3
3251383-0000	.HOLDER	5-21
3251384-0100	.VALVE RAMP	3-91, 3-93, 3-95, 3-97
3251385-0100	.VALVE RAMP	5-3
3251386-0000	.PLATE	3-119
3251387-0000	.PLATE	5-27
3251388-0100	.STEERING FRONT	3-39
3251389-0100	.STEERING REAR	3-39
3251390-0000	.HOLDER	3-85
3251392-0000	.HOLDER	3-87
3251393-0100	.GUN HOLDER	3-39
3251394-0100	.EJECTOR	3-7
3251395-0000	.PNEUMATIC DIAGRAM	8-3
3251396-0000	.SIDE PLATE	4-23
3252699-0100	.CONNECTION DEVICE	3-91, 3-93, 3-95, 3-97
3252700-0000	.PROFILE 50X50	3-103, 3-105
3252774-0100	.LIGHT BARRIER	9-89
3252775-0000	.INFEED DOUBLE	2-9
3252776-0000	.PLATE	2-41
3252777-0000	.PLATE	2-41
3252778-0000	.PROFILE 50X50	2-13, 2-15
3252779-0000	.PROFILE 50X50	2-13, 2-15
3252780-0000	.PROFILE 50X50	2-13, 2-15
3252781-0000	.PROFILE 50X50	2-13, 2-15
3252782-0000	.PLATE	2-37
3252783-0000	.PLATE	2-35
3252795-0000	.PROFILE 50X100	2-9
3252796-0000	.PROFILE 50X50	2-9
3252797-0000	.PROFILE 50X50	2-9
3252798-0000	.PROFILE 50X50	2-9
3252799-0000	.PROFILE 50X100	2-9
3252800-0000	.PROFILE 50X100	2-9
3252801-0000	.PROFILE 50X50	2-9

Part No	Description	Page No
3252802-0000	.PROFILE 50X100	2-9
3252803-0000	.PROFILE 50X100	2-9
3253272-0000	.BOTTOM PLATE	6-81
3253273-0000	.PROFILE 50X100	6-81
3253274-0000	.COVER PLATE	6-23
3253275-0000	.COVER PLATE	6-23
3253276-0000	.RAIL	6-23
3253277-0000	.SLIDE PLATE	6-23
3253278-0000	.GASKET	6-23
3253279-0000	.PLATE	6-23
3253281-0000	.DOOR	6-75, 6-77, 6-79
3253282-0000	.DOOR	6-69, 6-71, 6-73
3253283-0000	.PLATE	6-81
3253290-0100	.ELECTRIC EQUIPMENT	6-17, 6-19
3253291-0100	.REMOTE I/O	6-25, 6-27
3253292-0100	.TERMINAL	6-39
3256224-0000	.COVERING PLATE	2-125
3256225-0000	.COVERING PLATE	2-125
3256226-0000	.LID	2-25, 2-27
3256227-0000	.CABLE DUCT	2-25, 2-27
3256228-0000	.CABLE DUCT	2-25, 2-27
3256229-0000	.LID	2-25, 2-27
3256230-0000	.PROFILE 50X50	2-9
3256231-0000	.CABLE DUCT	3-111, 3-113
3256232-0000	.LID	3-111, 3-113
3256233-0000	.CABLE DUCT	3-111, 3-113
3256761-0000	.PROFILE 50X50	3-103, 3-105
3256762-0000	.PROFILE 50X50	3-103, 3-105
3257288-0000	.LID	3-111, 3-113
3257289-0000	.SPACER	2-29
3257290-0000	.SPACER	2-29
3257291-0000	.CABLE DUCT	3-111, 3-113
3257292-0000	.LID	3-111, 3-113
3257293-0000	.CABLE DUCT	3-111, 3-113
3257294-0000	.LID	3-111, 3-113
3257295-0000	.PROFILE 50X50	3-103, 3-105
3258900-1001	.SAFETY PLC SOFTWARE	6-97
3263647-0000	.SIGN & MARKING	6-65
3263648-0100	.COOLING UNIT	9-3
3263650-0000	.COVER	9-87
3263651-0100	.PANEL	6-3, 6-5
3263653-0100	.PANEL DOOR	6-7
3263654-0000	.COVER	6-9
3263655-0000	.CABINET	6-11
3263656-0000	.EARTH WIRE	2-21
3263708-0100	.ELECTRICAL EQUIPMENT	6-25, 6-27
3263735-0000	.RUBBER GASKET	6-69, 6-71, 6-73, 6-75, 6-77, 6-79
3263736-0000	.COVER PLATE	6-69, 6-71, 6-73, 6-75, 6-77, 6-79
3263737-0000	.SIGN	6-69, 6-71, 6-73, 8-9
3264169-0000	.BRACKET	3-37
3264170-0000	.CATCH	3-169
3264171-0000	.SPACER	4-17
3264172-0000	.BRACKET	4-17
3264173-0000	.FASTENING IRON	9-91
3264174-0000	.FASTENING IRON	9-91
3264175-0000	.CLAMPING PIECE	3-85, 3-87
3264176-0100	.COVERING PLATE	2-121, 2-123
3264177-0000	.COVERING PLATE	2-131
3264178-0000	.COVERING PLATE	2-131
3264179-0000	.SPACER	2-131
3264180-0000	.BRACKET	3-59
3264181-0000	.BRACKET	3-59
3264182-0000	.SHAFT	3-61
3264183-0000	.GUIDE PLATE	3-61
3264184-0000	.NUT WASHER	3-61
3264185-0000	.CHAIN GUARD	9-91
3264186-0000	.DISTANCE	9-91
3264187-0000	.HOLDER	3-85
3264446-0100	.CONVEYOR BODY	1-43
3264447-0100	.CONVEYOR BODY	1-45
3264448-0100	.TURNING WHEEL	1-45
3264449-0000	.SPACER	1-51
3265391-1003	.PLMS NRG CONFIG FILE	6-97
3265392-1001	.EDS	6-97
3265393-1002	.FIRMWARE	6-97
3265394-1004	.PLC	6-97
3265395-1001	.ROUTER CONFIG	6-97
3265396-1003	.TPOP HMI	6-97
3265400-0000	.LABEL CD	6-97
3265401-0004	.SOFTWARE CD	6-3, 6-5
3265401-1004	.P.O.C. COMPL. CD	6-97
3265482-0100	.DISCHARGE UNIT	9-47
3265483-0000	.PROFILE 50X100	9-49
3265484-0000	.PROFILE 50X100	9-49

Part No	Description	Page No
3265485-0000	.SHEET	9-49
3265487-0000	.CHAIN	9-49
3265488-0000	.PROFILE 50X100	9-55
3265489-0000	.SUPPORTING SHEET	9-55
3265490-0000	.BRACKET	9-55
3265491-0000	.STOP PLATE	9-55
3265492-0000	.RAIL	9-59
3265493-0000	.PIN	9-59
3265494-0000	.CONVEYOR SUPPORT	9-55
3265495-0000	.SUPPORT	9-55
3265496-0000	.SUPPORT	9-55
3265497-0000	.BRACKET	9-55
3265498-0000	.EDGE GUIDE	9-49
3265499-0000	.PROFILE 50X100	9-49
3265500-0000	.SUPPORT PLATE	9-61
3265501-0000	.COVER PLATE	9-49
3265502-0000	.PHOTOCELL BRACKET	9-49
3265503-0100	.DRIVE SHAFT	9-49
3265504-0000	.SHAFT	9-53
3265505-0000	.BRACKET	9-53
3265506-0100	.DISCHARGE CONVEYOR	9-47
3265507-0100	.RAILING	9-47
3265508-0100	.COVER PLATE	9-47
3265509-0100	.COVER PLATE	9-47
3265510-0000	.PROTECTION PLATE	9-63
3265511-0000	.PROTECTION PLATE	9-65
3266369-0000	.BRACKET	9-81
3266370-0000	.ANGLE BRACKET	9-81
3266371-0000	.ANGLE BRACKET	9-81
3266372-0000	.STEER PLATE	9-81
3266373-0000	.CLAMP BRACKET	9-81
3266374-0100	.CARRIER FRAME	9-47
3266375-0100	.EXTENDED DISCHARGE UNIT	9-3
3266376-0000	.SUPPORT PLATE	9-55
3266377-0000	.PROTECTION PLATE	9-55
3266378-0000	.PROTECTION PLATE	9-49
3266379-0000	.PROTECTION PLATE	9-49
3266387-0000	.GUIDE	3-69
3266388-0000	.GUIDE	3-69
3266389-0000	.SHAFT	3-69
3266390-0000	.BUSHING	3-69
3266394-0000	.GUIDE BRACKET	3-69
3266395-0000	.GUIDE PLATE	3-69
3266396-0000	.BEARING HOUSING	3-109
3266397-0000	.GUIDE PIPE	3-109
3267903-0100	.CABLE SET	6-89, 6-91
3267904-0100	.CABLE SET	6-89, 6-91
3272870-0000	.CENTRAL LUBRIC. DIAGRAM	7-11, 7-13
3272873-0000	.SPACER	1-51
3272874-0000	.CABLE DUCT	3-111, 3-113
3272876-0000	.CABLE DUCT	3-111, 3-113
3272880-0000	.CABLE DUCT	3-111, 3-113
3272882-0000	.LID	3-111, 3-113
3272883-0000	.GUARD PLATE	3-141, 3-143, 9-83, 9-85
3272884-0000	.GUARD PLATE	3-141, 3-143, 9-83, 9-85
3275931-0000	.CHAIN	2-89
3297489-0000	.GUARD PLATE	3-141, 3-143, 9-83, 9-85
3297490-0000	.PROTECTION PLATE	3-141, 3-143, 9-83, 9-85
3297491-0000	.PLATE	3-141, 3-143
3297492-0000	.BOTTOM PANEL	3-141, 3-143, 9-83, 9-85
3297493-0000	.GUARD PLATE	3-141, 3-143, 9-83, 9-85
3297497-0100	.EMERGENCY STOP	3-91, 3-93, 3-95, 3-97

Tetra Pak

SPC
Spare Parts Catalogue

Part No	Description	Page No
2950348-0000	.3LATE	2-115
90459-6351	45° NIPPLE, SHORT HOSE/GUN, 274 179	9-77, 9-79
90459-2501	5006526, 1734-FPD	6-67
90601-5850	5008103, MPL-B420P-SK72AA SERIES A	2-59, 2-63, 2-65
90600-3972	5008274, ETHERNET ADAPTOR	6-29, 6-49
3090149-0300	.6 CHANNEL HOTMELT	9-3
315400-0001 ..	6-4E PUN-H-6X1-BL	1-95, 2-17, 2-19, 2-77, 2-79, 2-81, 2-101, 2-103, 2-109, 2-115, 2-119, 3-59 3-63, 3-65, 3-67, 3-69, 3-73, 3-79, 3-81, 3-87, 3-119, 4-11, 4-17, 5-13, 5-15, 5-17, 5-19, 5-21, 5-27 7-11, 7-13, 9-43
90459-6350	90° NIPPLE, SHORT HOSE/GUN, 274 180	3-133, 3-135, 3-137, 9-77, 9-79
2970831-0000	.ACER	2-79, 2-81
90600-3740	ADHESIVE CM ULTRA 120, 134-646B 12.5KG	8-11
90600-1671	ADHESIVE LOCTITE GEL 454, TUBE 20 GRAM	2-73
90153-0053	ADHESIVE, LOCTITE 648 TEMP 150`C 50ML	1-99, 1-101
90153-0047	ADHESIVE, MULTI-BOND 330; AKTIVATOR 738	2-91, 2-93, 2-95, 2-97, 2-113, 9-51
1021149-0000	.ADJUSTING SCREW	3-107
1021212-0000	.ADJUSTING SCREW	4-7
1021508-0000	.ADJUSTING SCREW	4-7
2504387-0000	.ADJUSTING SCREW	3-41
2808733-0000	.ADJUSTING SCREW	5-5
2834003-0000	.ADJUSTING SCREW	4-9
2950360-0000	.ADJUSTING SCREW	3-43
3095158-0000	.ADJUSTING SCREW	2-111
3199167-0000	.ADJUSTMENT PLATE	5-15, 5-19
90458-1740	AIR GUN ASSEMBLY, CEJN 199589668	9-5
2802489-0200	.AIR JET GUN	9-3
1287040-0000	.AIR NOZZLE	3-57
2591888-0600	.AIR SUPPLY UNIT	2-17, 2-19
90458-1465	ALLEN KEY 5MM	8-3
352113-0206 ..	ANCHOR PLATES FOR STRIPS, ABM100-AT	3-57
352113-0205 ..	ANCHOR PLATES FOR STRIPS, TM2S8-C100	1-91, 1-97, 2-9, 2-79, 2-81, 3-9, 6-69, 6-71, 6-73 6-75, 6-77, 6-79
352113-0204 ..	ANCHOR PLATES FOR STRIPS, TM3S25-M	2-9, 2-63, 2-65
352113-0203 ..	ANCHOR PLATES FOR STRIPS, TM3S8-M0	1-19, 1-37, 1-65, 1-87, 1-95, 2-9, 2-13, 2-15, 2-33 2-69, 3-9, 3-103, 3-105, 3-111, 3-113, 9-49
2504085-0000	.ANGLE	5-5
3251380-0000	.ANGLE	3-71
2894986-0000	.ANGLE BRACKET	7-5
3266370-0000	.ANGLE BRACKET	9-81
3266371-0000	.ANGLE BRACKET	9-81
90600-0236	ANGLE COUPLING M6 TUBE 4 MM	7-7
90061-0027	ANGLE ENCODER, 670900035	3-23, 3-33
1287151-0000	.ARM	4-17
1502076-0000	.ARM	3-13
2504063-0000	.ARM	5-21
2844994-0000	.ARM	2-79, 2-81
2894331-0000	.ARM	9-27
2895006-0000	.ARM	3-107
2909855-0000	.ARM	9-27
2950354-0000	.ARM	2-115
3096207-0000	.ARM	2-69
3180695-0000	.ARM	3-107
3180696-0000	.ARM	3-107
3199151-0000	.ARM	3-73
90605-2702	ARMORBLOCK MODULE, 1732E-8CFGM8R, SER. A	2-31, 2-39, 2-43, 2-45, 3-19, 3-123, 3-125
1111896-0000	.ASSEMBLY INSTRUCTION	9-7, 9-9
3021412-0000	.ASSEMBLY INSTRUCTION	9-33
975755-0000 ..	ATTACHMENT	3-141, 3-143, 9-83, 9-85
3033755-0000	.ATTACHMENT PIPE	2-21
90600-1649	AUXILIARY SWITCH, NHI-E-11-PKZ0	6-33, 6-35, 6-49
90603-5702	AXIS MOD. KINETIX 6500,2094-BC01-M01-M,A	6-49
90603-5644	AXIS MOD. KINETIX 6500,2094-BM01-M SER A	6-49
3090593-0000	.AXLE	2-59, 2-63, 2-65
3095157-0000	.AXLE	2-111
3095164-0000	.AXLE	2-111
3066697-0000	.AXLE PIN	2-61
3066698-0000	.AXLE PIN	2-61
3096202-0000	.AXLE PIN	2-69
2877458-0000	.AXLE SUPPORT	3-103, 3-105
2877459-0000	.AXLE SUPPORT	3-103, 3-105
90003-0512	BAG	9-33
90243-0209	BAILER	8-3
90214-0112	BALL BEARING 12/24X6	4-21
344224-0201 ..	BALL BEARING 12/28X8	1-13, 1-31
90603-2945	BALL BEARING 12/37X12	2-61
344226-0102 ..	BALL BEARING 15/35X11	2-111, 4-7
90603-2325	BALL BEARING 17/35X10	1-73, 9-29
344224-0203 ..	BALL BEARING 17/35X10	1-99, 1-101
344226-0103 ..	BALL BEARING 17/40X12	2-91, 2-93, 2-95, 2-97, 2-113, 9-51
321308-0204 ..	BALL BEARING 20/42X12	4-17
344224-0204 ..	BALL BEARING 20/42X12	1-99, 1-101, 3-37, 3-49, 3-51, 3-61, 4-19
90603-3541	BALL BEARING 25/47X12 SOLID OLI	2-69
344226-0105 ..	BALL BEARING 25/52X15	3-45, 3-47
90603-2316	BALL BEARING 30/55X13	2-59, 2-63, 2-65

Part No	Description	Page No
344224-0206 ..	BALL BEARING 30/55X13	3-107
344224-0209 ..	BALL BEARING 45/75X16	3-45, 3-47
2565180-0000 .	BALL COUPLING	2-111
2565181-0000 .	BALL COUPLING	2-111
90600-3779	BALL VALVE, 700000 F-F-G1/2	2-41
90187-0189	BALL VALVE, R1/4, 8 MM	3-57
2877541-0000 .	BAR	3-11
90603-5602	BAR CODE READER, D8330 SR-902151265+CAB-	9-71
3149479-0200 .	BARCODE SCANNER	9-69
90458-0298	BASE FOR TUBE, PSD-S ME B-P	3-121
90129-0018	BASE, P2RF-08-E	6-47
90458-1204	BASIC SUB-BASE 4 VALVES, CDVI5.0-GB4-MP	2-35, 5-27
90458-1205	BASIC SUB-BASE 8 VALVES, CDVI5.0-GB8-MP	2-37, 3-119
2504187-0000 .	BEAM	2-71
2718870-0000 .	BEAM	2-75
2771206-0000 .	BEAM	2-75
2829380-0000 .	BEAM	2-71
2895001-0000 .	BEAM	2-13, 2-15
2959020-0000 .	BEAM	2-115
3179469-0000 .	BEAM	4-5
3179470-0000 .	BEAM	4-5
90240-0205	BEAR. BUSHING W/O FL. 16X20X20MM	3-41, 3-43, 3-107, 4-9, 5-5
1502078-0000 .	BEARING	3-13
1502079-0000 .	BEARING	3-13
3095156-0000 .	BEARING BOLT	2-107
3196754-0000 .	BEARING BRACKET	3-65
3196755-0000 .	BEARING BRACKET	3-65
321141-0140 ..	BEARING BUSHING, 10X12X10 MM	2-101
321141-0194 ..	BEARING BUSHING, 13X15X10 MM	5-5
321141-0255 ..	BEARING BUSHING, 20X23X15 MM	4-25
321141-0305 ..	BEARING BUSHING, 25X28X30 MM	3-107
321141-0340 ..	BEARING BUSHING, 30X34X30 MM	4-9, 5-5
321141-0060 ..	BEARING BUSHING, 6X8X6 MM	2-79, 2-81
1021064-0000 .	BEARING COVER	3-45, 3-47
1021065-0000 .	BEARING COVER	3-45, 3-47
1021070-0000 .	BEARING COVER	3-49, 3-51
2752721-0000 .	BEARING HOLDER	4-15
2752748-0000 .	BEARING HOLDER	4-15
2787834-0000 .	BEARING HOLDER	4-15
1021054-0000 .	BEARING HOUSING	3-45, 3-47
1021201-0000 .	BEARING HOUSING	4-9
1021214-0000 .	BEARING HOUSING	4-7
1021257-0000 .	BEARING HOUSING	4-15
1065848-0000 .	BEARING HOUSING	3-37
1502347-0000 .	BEARING HOUSING	3-85, 3-87
1502474-0000 .	BEARING HOUSING	2-99, 9-53
2752741-0000 .	BEARING HOUSING	4-17
2829378-0000 .	BEARING HOUSING	1-97
2833967-0000 .	BEARING HOUSING	1-99, 1-101
2995240-0000 .	BEARING HOUSING	4-25
3090596-0000 .	BEARING HOUSING	2-59, 2-63, 2-65
3095161-0000 .	BEARING HOUSING	2-111
3095163-0000 .	BEARING HOUSING	2-111
3096205-0000 .	BEARING HOUSING	2-69
3156680-0000 .	BEARING HOUSING	4-21
3238150-0000 .	BEARING HOUSING	3-83
3266396-0000 .	BEARING HOUSING	3-109
90602-9074	BEARING HOUSING, WM-01-16	2-107, 2-109, 3-67
1502071-0000 .	BEARING PLATE	3-11
229207-0000 ..	BEARING SLEEVE	1-39
531499-0000 ..	BEARING SLEEVE	1-13, 1-31, 1-47
531952-0000 ..	BEARING SLEEVE	1-31
547193-0000 ..	BEARING SLEEVE	1-13
90600-5886	BELLOWS, YJYG000055WC615	3-13
3227816-0000 .	BELT TENSIONER	4-31
1124044-0400 .	BENDING ROLLER	2-89, 9-49
2782792-0100 .	BENDING ROLLER	2-89
2787828-0100 .	BENDING ROLLER	2-89
2787856-0100 .	BENDING ROLLER	2-89
3241265-0100 .	BENDING ROLLER	2-87
90243-0169	BINDER CLIP, DIAM.29 MM, NO. 4670819	6-75, 6-77, 6-79
90457-0105	BLANK RIVET 2X9	2-41
344373-0030 ..	BLANKING PLUG G1/8, QSC-F-G1/8-I	2-37
90459-0699	BLANKING PLUG, CDVI5.0-B-G3/8	5-27
342715-0102 ..	BLIND PLUG 6 MM	2-35, 2-37
342715-0103 ..	BLIND PLUG 8 MM	2-17, 2-19, 2-31
90458-1306	BLIND PLUG CIRCULAR, M12X1,5 514GFK/212	2-49, 3-27, 9-93, 9-95
90458-1308	BLIND PLUG CIRCULAR, M20X1,5 514GFK/220	3-111, 3-113
311523-0142 ..	BLIND RIVET ISO 15983 -3.2X6 A2/A2	6-17, 6-19, 6-69, 6-71, 6-73
90032-0038	BLOCK 2 WAYS	7-15, 7-17
90032-0039	BLOCK 4 WAYS	7-15
3213482-0100 .	BOTTOM FLAP GUIDE	3-39
3297492-0000 .	BOTTOM PANEL	3-141, 3-143, 9-83, 9-85
3095160-0000 .	BOTTOM PLATE	2-107

Part No	Description	Page No
3253272-0000	.BOTTOM PLATE	6-81
2771136-0500	.BOTTOM SECTION	3-3, 3-5
3223851-0100	.BOTTOM SQUEEZER	3-39
3215911-0100	.BOTTOM SUPPORT	3-39
1020424-0000	.BOX	9-11, 9-15
2504338-0500	.BOX PUSHER DOLLY	2-55
3241263-0100	.BOX PUSHER END STOP	2-55
3081055-0100	.BOX PUSHER PLATE	2-55
436536-0010	.. BRACKET	1-39
499770-0000	.. BRACKET	1-39
531487-0000	.. BRACKET	1-11, 1-31
537477-0000	.. BRACKET	1-39
537482-0000	.. BRACKET	1-33, 1-35, 1-37
537483-0000	.. BRACKET	1-33, 1-35, 1-37
547181-0000	.. BRACKET	1-13
548246-0000	.. BRACKET	1-15, 1-17, 1-19
548247-0000	.. BRACKET	1-15, 1-17, 1-19
583570-0000	.. BRACKET	6-65
1021031-0000	.BRACKET	3-9
1021746-0000	.BRACKET	2-49
1065697-0000	.BRACKET	2-25, 2-27, 3-111, 3-113
1074325-0000	.BRACKET	5-23, 5-25
1074368-0000	.BRACKET	9-17, 9-37
1074408-0000	.BRACKET	9-13
1074409-0000	.BRACKET	9-17
1074738-0000	.BRACKET	2-23
1086639-0000	.BRACKET	1-9
1124491-0000	.BRACKET	1-31
1124503-0000	.BRACKET	2-29
1124524-0000	.BRACKET	2-9
1124564-0000	.BRACKET	2-127
1124705-0000	.BRACKET	2-33
1124718-0000	.BRACKET	2-9
1124723-0000	.BRACKET	2-13, 2-15
1124867-0000	.BRACKET	1-13
1124868-0000	.BRACKET	1-11
1128883-0000	.BRACKET	4-21
1139204-0000	.BRACKET	2-9
1139255-0000	.BRACKET	2-13, 2-15
1139759-0000	.BRACKET	1-15, 1-33
1139761-0000	.BRACKET	1-13
1287043-0000	.BRACKET	3-57
1287340-0000	.BRACKET	3-103, 3-105
1287528-0000	.BRACKET	4-25
1287529-0000	.BRACKET	4-25
1287534-0000	.BRACKET	4-5
2504120-0000	.BRACKET	3-149
2504121-0000	.BRACKET	3-151
2504292-0000	.BRACKET	3-111, 3-113
2504293-0000	.BRACKET	2-115
2504324-0000	.BRACKET	3-59
2506937-0000	.BRACKET	9-5, 9-67
2557002-0000	.BRACKET	2-13, 2-15
2557494-0000	.BRACKET	6-11
2561147-0000	.BRACKET	1-75
2592244-0000	.BRACKET	1-81
2592245-0000	.BRACKET	1-83
2592285-0000	.BRACKET	1-81
2718827-0000	.BRACKET	2-71
2718832-0000	.BRACKET	2-101
2718833-0000	.BRACKET	2-101
2718871-0000	.BRACKET	2-75
2718884-0000	.BRACKET	1-87
2721835-0000	.BRACKET	2-79, 2-81
2756309-0000	.BRACKET	6-65
2771134-0000	.BRACKET	5-21
2771149-0000	.BRACKET	2-115
2771163-0000	.BRACKET	2-75
2771166-0000	.BRACKET	2-75
2771167-0000	.BRACKET	2-75
2771168-0000	.BRACKET	2-75
2771169-0000	.BRACKET	2-75
2771170-0000	.BRACKET	2-75
2771216-0000	.BRACKET	2-107
2782770-0000	.BRACKET	9-91
2782771-0000	.BRACKET	9-91
2787870-0000	.BRACKET	2-33
2792358-0000	.BRACKET	2-83
2802476-0000	.BRACKET	9-13
2802479-0000	.BRACKET	9-13
2802480-0000	.BRACKET	9-13
2802481-0000	.BRACKET	9-13
2808055-0000	.BRACKET	1-63, 1-65
2833999-0000	.BRACKET	1-7, 1-9

Part No	Description	Page No
2834000-0000	.BRACKET	1-7, 1-9
2844260-0000	.BRACKET	9-73
2844997-0000	.BRACKET	2-79, 2-81
2845006-0000	.BRACKET	2-117
2851956-0000	.BRACKET	1-99, 1-101
2851962-0000	.BRACKET	1-99
2851970-0000	.BRACKET	1-17, 1-35, 1-63, 1-85
2851976-0000	.BRACKET	1-85
2851988-0000	.BRACKET	1-77
2868042-0000	.BRACKET	2-139, 2-141, 2-143, 2-145, 2-147, 3-149, 3-151, 3-165, 3-167
2871977-0000	.BRACKET	3-153, 3-155
2877467-0000	.BRACKET	1-97
2877486-0000	.BRACKET	2-107
2877511-0000	.BRACKET	3-83
2894985-0000	.BRACKET	2-83
2894998-0000	.BRACKET	3-163, 9-65
2895015-0000	.BRACKET	1-91
2895016-0000	.BRACKET	1-91
2895031-0000	.BRACKET	7-7
2895032-0000	.BRACKET	7-7
2895038-0000	.BRACKET	1-99, 1-101
2895039-0000	.BRACKET	9-67
2920760-0000	.BRACKET	2-117
2920766-0000	.BRACKET	2-13, 2-15
2933264-0000	.BRACKET	1-53
2933265-0000	.BRACKET	1-53
2939234-0000	.BRACKET	1-61
2950337-0000	.BRACKET	1-63
2950338-0000	.BRACKET	1-63
2950349-0000	.BRACKET	2-115
2950355-0000	.BRACKET	3-27
2959006-0000	.BRACKET	2-71
2959007-0000	.BRACKET	2-71
2959031-0000	.BRACKET	1-61
2959046-0000	.BRACKET	1-29, 9-45, 9-101
2959047-0000	.BRACKET	1-23, 9-99
2959049-0000	.BRACKET	1-25, 9-103
2970833-0000	.BRACKET	2-79, 2-81
2970842-0000	.BRACKET	2-79, 2-81
2970843-0000	.BRACKET	2-79, 2-81
2970852-0000	.BRACKET	2-79, 2-81
2970853-0000	.BRACKET	2-79, 2-81
2970856-0000	.BRACKET	2-79, 2-81
2970859-0000	.BRACKET	2-79, 2-81
2970860-0000	.BRACKET	2-79, 2-81
2970863-0000	.BRACKET	1-65
2970865-0000	.BRACKET	2-125
2970877-0000	.BRACKET	2-117
2995242-0000	.BRACKET	2-115
2995245-0000	.BRACKET	2-71
2995246-0000	.BRACKET	2-71
2995251-0000	.BRACKET	2-133
2995519-0000	.BRACKET	2-77
3066683-0000	.BRACKET	2-63, 2-65
3077533-0000	.BRACKET	2-61
3077534-0000	.BRACKET	2-61
3077538-0000	.BRACKET	2-63, 2-65
3077542-0000	.BRACKET	2-63, 2-65
3077543-0000	.BRACKET	2-63, 2-65
3077553-0000	.BRACKET	2-59
3081056-0000	.BRACKET	2-71
3081057-0000	.BRACKET	2-71
3081058-0000	.BRACKET	2-71
3090598-0000	.BRACKET	2-59
3090601-0000	.BRACKET	2-59
3095166-0000	.BRACKET	2-111
3096192-0000	.BRACKET	2-75
3096203-0000	.BRACKET	2-69
3096206-0000	.BRACKET	2-69
3096209-0000	.BRACKET	2-69
3096216-0000	.BRACKET	2-63, 2-65
3097792-0000	.BRACKET	2-71
3103255-0000	.BRACKET	2-83
3111407-0000	.BRACKET	1-49
3112741-0000	.BRACKET	6-65
3119119-0000	.BRACKET	6-23
3123791-0000	.BRACKET	4-11
3128763-0000	.BRACKET	1-95
3128765-0000	.BRACKET	1-95
3128766-0000	.BRACKET	1-95
3133500-0000	.BRACKET	2-13, 2-15
3133868-0000	.BRACKET	4-11
3136220-0000	.BRACKET	2-63, 2-65
3136747-0000	.BRACKET	2-41

Part No	Description	Page No
3136748-0000	.BRACKET	2-41
3136749-0000	.BRACKET	2-69
3157074-0000	.BRACKET	4-21
3165930-0000	.BRACKET	4-21
3165931-0000	.BRACKET	4-21
3179210-0000	.BRACKET	9-43
3186426-0000	.BRACKET	3-161
3186427-0000	.BRACKET	9-37
3190603-0000	.BRACKET	9-93, 9-95
3190604-0000	.BRACKET	9-91
3196760-0000	.BRACKET	3-65
3196761-0000	.BRACKET	3-65
3196762-0000	.BRACKET	3-65
3196764-0000	.BRACKET	3-65
3199146-0000	.BRACKET	3-73
3199147-0000	.BRACKET	3-73
3199173-0000	.BRACKET	5-11
3199175-0000	.BRACKET	5-11
3200721-0000	.BRACKET	9-105, 9-107, 9-109
3200733-0000	.BRACKET	9-105, 9-107, 9-109
3207646-0000	.BRACKET	5-13, 5-17
3207647-0000	.BRACKET	5-15, 5-19
3207661-0000	.BRACKET	5-17
3207665-0000	.BRACKET	5-13
3213474-0000	.BRACKET	3-69
3213486-0000	.BRACKET	2-117
3215912-0000	.BRACKET	3-77
3215913-0000	.BRACKET	3-77
3218516-0000	.BRACKET	9-105, 9-107, 9-109
3218517-0000	.BRACKET	9-105, 9-107, 9-109
3226045-0000	.BRACKET	2-103
3227817-0000	.BRACKET	4-31
3227825-0000	.BRACKET	4-31
3231405-0000	.BRACKET	3-73, 3-79
3231410-0000	.BRACKET	3-79
3231411-0000	.BRACKET	3-79
3231412-0000	.BRACKET	3-79
3238153-0000	.BRACKET	3-65
3249935-0000	.BRACKET	3-21
3249945-0000	.BRACKET	3-99, 3-101
3251373-0000	.BRACKET	3-23
3264169-0000	.BRACKET	3-37
3264172-0000	.BRACKET	4-17
3264180-0000	.BRACKET	3-59
3264181-0000	.BRACKET	3-59
3265490-0000	.BRACKET	9-55
3265497-0000	.BRACKET	9-55
3265505-0000	.BRACKET	9-53
3266369-0000	.BRACKET	9-81
1550874-0000	.BRACKET FOR LEG PC23	1-83, 1-85, 1-87
90459-2563	.... BRACKET FOR RAIL, FM 4	6-65
90458-2119	.... BRACKET, 060.06.1PZ, FOR CHAIN 06	7-7
90458-2101	.... BRACKET, 060.06.2PZ, FOR CHAIN 06	7-7
90181-0182	.... BRACKET, 1149354	2-23, 3-21, 7-17
90459-2389	.... BRACKET, MS4-LR-WR	2-119
90459-1859	.... BRACKET, MS6-MV	2-21
90601-1587	.... BRACKET, MS6-WPB	2-21
90459-0400	.... BRACKET, REAR CLEVIS FLANGE FOOT, 32	2-69, 5-21
90459-0399	.... BRACKET, REAR, EYE WITH AXLE 32	2-69, 2-101, 5-21
90459-2134	.... BRACKET, SDE1	2-17, 2-19
2834009-0200	.BRAKE UNIT	1-89
2834010-0200	.BRAKE UNIT	1-89
3133867-0100	.BRAKE UNIT	4-9
2970881-0000	.BRAKE WASHER	3-107
90459-4036	.... BRAKING RESISTOR, 260W 120OHM	6-49
353034-0030	.. BRIDGE CONNECTOR WQV 2,5/10	6-63
90036-0068	.... BULB 5W 24V, SL-L24 205348	3-121
342960-0133	.. BULKHEAD COUPLING 10/8	2-31
342767-0114	.. BULKHEAD LEAD-IN, G1/2	2-41
342767-0104	.. BULKHEAD LEAD-IN, G1/4	2-31, 3-57
353041-0001	.. BUS BAR RAIL 10X3MM SSCH	6-37
90600-5527	.... BUSBAR COVER, ZV-BS-UL 104904	6-33, 6-35
90600-5525	.... BUSBAR, Z-SV/UL-16/3P-3TE/12 104899	6-33, 6-35
230462-0000	.. BUSHING	4-15
493768-0000	.. BUSHING	4-15
1287041-0000	.BUSHING	2-91, 2-95, 2-113, 9-51
2787827-0000	.BUSHING	2-93, 2-97
2970849-0000	.BUSHING	2-79, 2-81
3207673-0000	.BUSHING	5-15, 5-19
3215909-0000	.BUSHING	3-67
3266390-0000	.BUSHING	3-69
321133-0224	.. BUSHING IGLIDUR G 16X18X20	3-63
321133-0260	.. BUSHING IGLIDUR G 20X23X20	2-59, 2-63, 2-65, 5-11
321133-0300	.. BUSHING IGLIDUR G 25X28X25	3-83, 5-11

Part No	Description	Page No
321134-0102 ..	BUSHING IGLIDUR W300 8X10X10	3-79, 5-15, 5-19
90602-9075	BUSHING INSERT, J200QM-01-16	2-107, 2-109, 3-67
90600-0431	BUSHING INSERT, J200UMO-01-20	4-31
90134-0039	BUSHING VALVE CONNECTION 2,5 MM	7-15
90134-0040	BUSHING VALVE CONNECTION 4 MM	7-15, 7-17
90240-0257	BUSHING, IGLIDUR G 10X12X6	2-71
342701-0205 ..	BUSHING, INT/EXT, G 1/2 - G1/4	9-67
90134-0055	BUSHING/NUT INLET/OUTLET 6 MM	7-15, 7-17
359301-0005 ..	BUTTON SIGN, DOWN	6-13, 6-21
359301-0504 ..	BUTTON SIGN, RESET	6-13, 6-21
359301-0001 ..	BUTTON SIGN, UP	6-13, 6-21
2802470-0300 .	CABINET	6-7
3250590-0000 .	CABINET	6-23
3263655-0000 .	CABINET	6-11
90600-5930	CABLE C9, 20-057-15	6-89, 6-91
90459-6646	CABLE CLIPS, D=4 MM	6-65
1521835-0000 .	CABLE DUCT	3-111, 3-113
1521850-0000 .	CABLE DUCT	3-111, 3-113
2503991-0000 .	CABLE DUCT	3-111, 3-113
2720930-0400 .	CABLE DUCT	2-5, 2-7
2723257-0000 .	CABLE DUCT	2-25, 2-27
2844964-0000 .	CABLE DUCT	2-25, 2-27
2844966-0000 .	CABLE DUCT	2-25, 2-27
2844967-0000 .	CABLE DUCT	2-25, 2-27
2872741-0200 .	CABLE DUCT	3-91, 3-93, 3-95, 3-97
2894979-0000 .	CABLE DUCT	3-111, 3-113
2920767-0000 .	CABLE DUCT	2-25, 2-27
3060173-0000 .	CABLE DUCT	2-25, 2-27
3060174-0000 .	CABLE DUCT	2-25, 2-27
3241280-0100 .	CABLE DUCT	2-5, 2-7
3249934-0100 .	CABLE DUCT	3-7
3256227-0000 .	CABLE DUCT	2-25, 2-27
3256228-0000 .	CABLE DUCT	2-25, 2-27
3256231-0000 .	CABLE DUCT	3-111, 3-113
3256233-0000 .	CABLE DUCT	3-111, 3-113
3257291-0000 .	CABLE DUCT	3-111, 3-113
3257293-0000 .	CABLE DUCT	3-111, 3-113
3272874-0000 .	CABLE DUCT	3-111, 3-113
3272876-0000 .	CABLE DUCT	3-111, 3-113
3272880-0000 .	CABLE DUCT	3-111, 3-113
90600-3574	CABLE DUCT, 120X60 MM	2-23
90600-2606	CABLE DUCT, 75X55 MM	2-23, 3-21
90181-0183	CABLE DUCT, FITTING, SB-102-S	2-23, 3-21
90181-0037	CABLE DUCT, PLASTIC, 25X40	6-9, 6-69, 6-71, 6-73, 6-75, 6-77, 6-79
90181-0052	CABLE DUCT, PLASTIC, 25X80	6-65
90181-0038	CABLE DUCT, PLASTIC, 40X40	2-25, 2-27
90181-0053	CABLE DUCT, PLASTIC, 40X80	6-65
90181-0046	CABLE DUCT, PLASTIC, 60X60	6-65
90181-0054	CABLE DUCT, PLASTIC, 60X80	6-65
90600-5980	CABLE DUCT, WIRE, 53X45 MM	2-23, 3-21
90600-0232	CABLE GLAND, C RS T 25	6-11
90458-0305	CABLE GLAND, M12X1,5, 5311 1000	2-49, 3-27, 9-93, 9-95
90458-0306	CABLE GLAND, M16X1,5, 5311 1010	2-49, 2-67, 3-15, 3-27, 9-93, 9-95, 9-111
90458-0307	CABLE GLAND, M20X1,5, 5311 1020	3-111, 3-113, 6-11
90458-0315	CABLE GLAND, M20X1,5, 5311 1120	3-141, 3-143, 9-83, 9-85
90458-0308	CABLE GLAND, M25X1,5, 5311 1030	2-49, 3-27, 3-111, 3-113
90458-0316	CABLE GLAND, M25X1,5, 5311 1130	3-163, 9-65
90458-0309	CABLE GLAND, M32X1,5, 5311 1040	6-11
344202-0002 ..	CABLE GLAND, MS-SC-M, 4,5-9MM, M16X1,5	9-93, 9-95
344202-0004 ..	CABLE GLAND, MS-SC-M, 9-16,5MM, M25X1,5	9-53
344202-0010 ..	CABLE GLAND, MS-SC-M-XL 9-16,5MM M25X1,5	1-53
90458-0406	CABLE GLAND, VK 22052Y	2-67
344202-0003 ..	CABLE GLAND; MS-SC-M, 7-12,5MM, M20X1,5	3-35
90458-1737	CABLE INCLUDED IN THE MATERIAL	6-89, 6-91
351150-0407 ..	CABLE OLFLEX 12X0,75 MM2 LIGHT/GREY	6-93
351150-0424 ..	CABLE OLFLEX 18X0,75 MM2 LIGHT/GREY	6-21, 6-93
351150-0431 ..	CABLE OLFLEX 2X0,75 MM2 LIGHT/GREY	6-93
351150-0403 ..	CABLE OLFLEX 3X0,75 MM2 LIGHT/GREY 35	6-93
351150-0413 ..	CABLE OLFLEX 4GX1,5 MM2 LIGHT/GREY	6-93
351150-0404 ..	CABLE OLFLEX 4X0,75 MM2 LIGHT/GREY	6-93
351150-0166 ..	CABLE OLFLEX 4X4 MM2 LIGHT/GREY	6-93
351150-0406 ..	CABLE OLFLEX 7X0,75 MM2 LIGHT/GREY	6-93
351178-0107 ..	CABLE OLFLEX FD 891 7X0,75 MM2 BLACK	6-89, 6-91
3267903-0100 .	CABLE SET	6-89, 6-91
3267904-0100 .	CABLE SET	6-89, 6-91
353101-0130 ..	CABLE SHOE 1,5-2,5MM2 M4 BLUE	6-65
353101-0152 ..	CABLE SHOE 4,0-6,0MM2 M5 YELLOW	6-65
352113-0102 ..	CABLE TIE, BLACK 188X4,8 MM	1-95, 1-97, 2-9, 3-9, 3-57, 3-99
352113-0103 ..	CABLE TIE, BLACK 290X7,6 MM	2-9, 2-13, 2-15, 2-33, 2-69, 3-111, 3-113, 9-49
352113-0101 ..	CABLE TIE,BLACK 92X	1-19, 1-37, 1-65, 1-87, 1-91, 2-79, 2-81, 2-115
351423-0005 ..	CABLE UNITRONIC LICY 4X0,34	6-49
351422-0003 ..	CABLE ÖLFLEX 150CY QUATTRO 4X0,75	6-93
351422-0203 ..	CABLE ÖLFLEX 150CY QUATTRO 4X1,5	6-93
351422-0004 ..	CABLE ÖLFLEX 150CY QUATTRO 5X0,75	6-21, 6-93

Part No	Description	Page No
1502074-0000	CAM	3-11
321582-0149 ..	CAM ROLLER, 10X22X36 MM	3-13
486896-0001 ..	CANTILEVER	1-31
486896-0002 ..	CANTILEVER	1-31
547174-0000 ..	CANTILEVER	1-13
547175-0000 ..	CANTILEVER	1-13
2940647-0000	CANTILEVER	9-27
2940648-0000	CANTILEVER	9-27
3090586-0000	CAP	2-59, 2-63, 2-65
3090590-0000	CAP	2-63, 2-65
3090597-0000	CAP	2-59, 2-63, 2-65
3227814-0000	CARRIAGE	4-31
3238140-0000	CARRIAGE	4-21
3238141-0000	CARRIAGE	3-83
90603-0208	CARRIAGE, LFCL42-RB	2-63, 2-65
90459-6761	CARRIAGE, R201121404	2-75
1466541-0000	CARRIER	3-53
1466543-0000	CARRIER	3-53
1466544-0000	CARRIER	3-53
1021093-0300	CARRIER CHAIN INSIDE	3-39
1021096-0200	CARRIER CHAIN OUTSIDE	3-39
2504342-0400	CARRIER CLUTCH	3-39
3223852-0100	CARRIER FRAME	3-39
3266374-0100	CARRIER FRAME	9-47
1021060-0500	CARRIER SHAFT INSIDE	3-39
1021052-0400	CARRIER SHAFT OUTSIDE	3-39
1021072-0400	CARRIER SPROCKET INSIDE	3-39
1021067-0400	CARRIER SPROCKET OUTSIDE	3-39
975887-0000 ..	CATCH	2-125, 3-163, 3-169, 3-171, 9-65
3264170-0000	CATCH	3-169
90237-0145	CATCH, 1121-53-01P	2-139, 2-143, 2-147, 2-149, 3-149, 3-151, 3-165
1128844-0000	CAUTION SIGN	3-141, 3-143, 8-9, 9-83, 9-85
1128853-0000	CAUTION SIGN	1-99, 1-101, 2-59, 2-63, 2-65, 3-89, 5-23, 5-25, 8-9, 9-81
1128854-0000	CAUTION SIGN	2-109, 2-117, 8-9
90600-4040	CAUTION SIGN ANSI (H), DO NOT REACH IN	8-5, 9-33
2557347-0500	CAUTION SIGN MAP ANSI	8-3
1466390-0700	CAUTION SIGN MAP ISO	8-3
2837851-0000	CD BOX	6-23
3272870-0000	CENTRAL LUBRIC. DIAGRAM	7-11, 7-13
1021090-0000	CHAIN	3-55
1021091-0000	CHAIN	3-55
1466474-0000	CHAIN	3-53
2787857-0000	CHAIN	3-61
3265487-0000	CHAIN	9-49
3275931-0000	CHAIN	2-89
1543684-0000	CHAIN GUARD	3-15
3264185-0000	CHAIN GUARD	9-91
2807935-0000	CHAIN GUIDE	1-49, 9-29
2807936-0000	CHAIN GUIDE	1-49, 9-29
1287010-0400	CHAIN LUBRICATION	3-39
1021326-0500	CHAIN TENSIONER	3-39
2718867-0100	CHAIN TENSIONER	1-69
2807893-0200	CHAIN TENSIONER	1-43
2851985-0100	CHAIN TENSIONER	1-27
3091992-0100	CHAIN TIGHTENER WHEEL	1-55
90259-0315	CIRCUIT BREAKER , B3.1/2-PKZ0	6-49
351435-0020 ..	CIRCUIT BREAKER, NZMB1-4-A20	6-51, 6-53
351436-0020 ..	CIRCUIT BREAKER, NZMB1-A20-NA	6-51, 6-53
1366727-0000	CLAMP	1-29, 9-39, 9-41, 9-45, 9-59, 9-101
2895030-0000	CLAMP	4-15
2936873-0000	CLAMP	9-27
3199156-0000	CLAMP BLOCK	3-107
3231398-0000	CLAMP BRACKET	4-21
3266373-0000	CLAMP BRACKET	9-81
2920777-0000	CLAMP LUG	9-43
3180699-0000	CLAMP PLATE	3-109
1466436-0000	CLAMP RAIL	1-91
2763094-0000	CLAMP RAIL	1-95
2763095-0000	CLAMP RAIL	1-95
2782756-0000	CLAMP RAIL	2-117
2782757-0000	CLAMP RAIL	2-117
2792390-0000	CLAMP RAIL	1-93
1021145-0000	CLAMPING PIECE	3-107
1021157-0000	CLAMPING PIECE	3-107
1128880-0000	CLAMPING PIECE	4-29
3264175-0000	CLAMPING PIECE	3-85, 3-87
90458-1863	CLAMPING PIECE, 00203005	3-23, 3-33
2864530-0000	CLAMPING PLATE	1-17, 1-35, 1-63, 1-85
3046526-0000	CLAMPING PLATE	2-59, 2-63, 2-65
3227815-0000	CLAMPING PLATE	4-31
3227820-0000	CLAMPING PLATE	4-31
3199174-0000	CLAMPING SLEEVE	5-15, 5-19
2591902-0000	CLUTCH	3-45
90042-0604	COIL	2-119

Part No	Description	Page No
90042-0595	COIL MSN1G-24 V	3-57
90459-5884	COMMONING BUSBAR, Z-GV-10/3P-4TE	6-33, 6-35
90335-0031	COMP. SPRING, 21880, 1X6X24	3-67
90458-0118	COMPACT DISC, RECORDABLE	6-97
353240-0005 ..	COMPRESSION GLAND, VK 154Y	3-141, 3-143, 9-83, 9-85
353240-0007 ..	COMPRESSION GLAND, VK 156Y	6-23
3207656-0000 .	COMPRESSION RING	5-11
1497848-0000 .	COMPRESSION SPRING	3-69
90028-0020	CONE TUBE 2,5MM	7-15
90028-0021	CONE TUBE 4 MM	7-15, 7-17
90028-0025	CONE TUBE 6 MM	7-15, 7-17
1021253-0000 .	CONICAL GEAR	4-15
1021254-0000 .	CONICAL GEAR	4-15
90459-5522	CONN. BANJO, COR8PB6M10	7-11, 7-13
90030-0188	CONN. STR. GE15LRED71	2-41
90030-0185	CONN. STR., GE08LRED71	3-57
90134-0058	CONNECTION	2-63, 2-65
90134-0068	CONNECTION	7-9
90163-0007	CONNECTION	9-5
90163-0008	CONNECTION 1/4"	2-31
90604-0094	CONNECTION BLOCK, TINA 8A	2-11
90604-0093	CONNECTION BLOCK, TINA4A 2TLJ020054R0300	3-129
1021897-0500 .	CONNECTION BOX	3-7
1065905-0300 .	CONNECTION BOX	2-5, 2-7
1466715-0000 .	CONNECTION BOX	2-67
2557035-0000 .	CONNECTION BOX	2-49, 3-27
2752681-0100 .	CONNECTION BOX	2-63, 2-65
3190601-0000 .	CONNECTION BOX	9-93, 9-95
3190602-0100 .	CONNECTION BOX	9-91
3201967-0100 .	CONNECTION BOX	9-105, 9-107, 9-109
3201968-0000 .	CONNECTION BOX	9-111
2787864-0300 .	CONNECTION DEVICE	2-5, 2-7
2787865-0200 .	CONNECTION DEVICE	2-5, 2-7
2802452-0200 .	CONNECTION DEVICE	2-5, 2-7
2894997-0200 .	CONNECTION DEVICE	3-91, 3-93, 3-95, 3-97
3252699-0100 .	CONNECTION DEVICE	3-91, 3-93, 3-95, 3-97
318219-0389 ..	CONNECTION LINK, DUPLEX 5/8", SS	3-53, 3-55
90288-0317	CONNECTION LINK, SIMPLEX 5/8", SS	3-31
90288-0333	CONNECTION LINK, SIMPLEX 5/8",SS	3-61
90459-5627	CONNECTION, TINA 1-A	2-11, 3-129
90459-2551	CONNECTOR, MOTOR FEEDBACK 15 PIN MALE	6-49
90110-0095	CONNECTOR, PLUG SOCKET, MSSD-C-4P	3-57
90042-0392	CONTACT 2 POLE + EARTH	2-119
90064-0322	CONTACT BLOCK, 704.901.5/A	6-13, 6-21
90459-5443	CONTACTOR 11KW 24VDC, DILM25-01	6-33, 6-35
90459-5444	CONTACTOR 15KW 24VDC, DILM32-01	6-33, 6-35
90459-5440	CONTACTOR 4KW 24VDC, DILM9-01	6-33, 6-35, 6-49
90603-6096	CONTROL MODULE,2094-EN02D-M01-S0,SER.A	6-49
2718874-0100 .	CONVEYOR BODY	1-67
2807825-0100 .	CONVEYOR BODY	9-19, 9-55
2807988-0100 .	CONVEYOR BODY	9-21, 9-57
2851984-0100 .	CONVEYOR BODY	1-27
2933263-0200 .	CONVEYOR BODY	1-43
2939231-0100 .	CONVEYOR BODY	1-41
3264446-0100 .	CONVEYOR BODY	1-43
3264447-0100 .	CONVEYOR BODY	1-45
1124030-0400 .	CONVEYOR BODY STRAIGHT	1-5
90603-0188	CONVEYOR CHAIN, WHP 1775 L1775633213 ZER	1-69
2970882-0200 .	CONVEYOR SUPPORT	9-19
3265494-0000 .	CONVEYOR SUPPORT	9-55
90068-0305	CONVEYOR SUPPORT LEG, 500 - 900 MM	9-17
599749-0100 ..	COOLING AIR OUTLET	6-17, 6-19
3263648-0100 .	COOLING UNIT	9-3
1021785-0600 .	CORNER STRIP	3-145, 3-147
1124645-0000 .	CORNER STRIP	2-13, 2-15
2592041-0000 .	CORNER STRIP	3-157, 3-159
2877491-0000 .	CORNER STRIP	3-157, 3-159
2995236-0000 .	CORNER STRIP	3-157, 3-159
3060171-0000 .	CORNER STRIP	2-13, 2-15
3060172-0000 .	CORNER STRIP	2-13, 2-15
975317-0000 ..	CORRUGATED CARDBOARD BOX	9-31
959656-0000 ..	COTTER	2-139, 2-141, 2-143, 2-145, 2-147, 2-149, 2-151, 3-149, 3-151, 3-165, 3-167, 6-9, 6-69, 6-71, 6-73, 6-75, 6-77, 6-79
599752-0000 ..	COVER	6-87
1021216-0000 .	COVER	4-7
1021217-0000 .	COVER	4-7
2589831-0000 .	COVER	1-77
2592288-0000 .	COVER	1-75
2894967-0000 .	COVER	5-7
2970911-0000 .	COVER	1-53
2995237-0000 .	COVER	1-53
3111404-0100 .	COVER	1-55
3112719-0100 .	COVER	6-17, 6-19
3156684-0000 .	COVER	4-21

Part No	Description	Page No
3245365-0000	.COVER	6-37
3263650-0000	.COVER	9-87
3263654-0000	.COVER	6-9
549645-0000	.. COVER DISC	1-13
556603-0000	.. COVER PLATE	3-9, 6-81, 9-49
556604-0000	.. COVER PLATE	2-9, 2-13, 2-15, 3-103, 3-105, 4-31
1139254-0000	.COVER PLATE	3-103, 3-105
2557141-0300	.COVER PLATE	2-121, 2-123
2720927-0000	.COVER PLATE	1-15
2851974-0000	.COVER PLATE	2-133
2851975-0000	.COVER PLATE	2-133
2870746-0200	.COVER PLATE	3-145, 3-147
2974843-0000	.COVER PLATE	6-11
2995229-0000	.COVER PLATE	4-13
3112734-0000	.COVER PLATE	6-83
3119184-0000	.COVER PLATE	6-81
3193247-0000	.COVER PLATE	4-13
3253274-0000	.COVER PLATE	6-23
3253275-0000	.COVER PLATE	6-23
3263736-0000	.COVER PLATE	6-69, 6-71, 6-73, 6-75, 6-77, 6-79
3265501-0000	.COVER PLATE	9-49
3265508-0100	.COVER PLATE	9-47
3265509-0100	.COVER PLATE	9-47
90458-1215	.... COVER PLATE, EMPTY VALVE POSITION	2-35, 2-37, 3-119
1124720-0000	.COVER SLIP	2-9
2871975-0000	.COVER SLIP	3-153, 3-155
2871976-0000	.COVER SLIP	3-153, 3-155
90603-0649	.... COVER STRIP, 3842518367	2-63, 2-65
2871974-0200	.COVERING MISCELLANEOUS	3-145, 3-147
3138433-0100	.COVERING PANEL	6-17, 6-19
3138434-0000	.COVERING PANEL	6-85
2787855-0300	.COVERING PATTERN FORMING	2-3
466072-0002	.. COVERING PLATE	1-39
497678-0000	.. COVERING PLATE	1-31
497679-0000	.. COVERING PLATE	1-39
538382-0000	.. COVERING PLATE	1-13
538383-0000	.. COVERING PLATE	1-13
538384-0000	.. COVERING PLATE	1-13
1021703-0400	.COVERING PLATE	3-145, 3-147
1065696-0000	.COVERING PLATE	2-25, 2-27, 3-111, 3-113
1124067-0400	.COVERING PLATE	2-121, 2-123
1124071-0600	.COVERING PLATE	2-121, 2-123
1124080-0400	.COVERING PLATE	2-121, 2-123
1128833-0400	.COVERING PLATE	3-7
1287535-0000	.COVERING PLATE	4-7
2557262-0000	.COVERING PLATE	3-141, 3-143, 9-83, 9-85
2851982-0000	.COVERING PLATE	1-33
2851991-0000	.COVERING PLATE	2-135
2851992-0000	.COVERING PLATE	2-135
2877452-0200	.COVERING PLATE	2-121, 2-123
2877494-0000	.COVERING PLATE	2-137
2877495-0000	.COVERING PLATE	2-127
3111403-0000	.COVERING PLATE	1-59
3119169-0000	.COVERING PLATE	2-137
3204618-0000	.COVERING PLATE	2-129
3204619-0000	.COVERING PLATE	2-129
3204620-0100	.COVERING PLATE	2-121, 2-123
3238136-0100	.COVERING PLATE	3-7
3238151-0000	.COVERING PLATE	3-15
3241284-0100	.COVERING PLATE	3-145, 3-147
3241285-0100	.COVERING PLATE	3-145, 3-147
3256224-0000	.COVERING PLATE	2-125
3256225-0000	.COVERING PLATE	2-125
3264176-0100	.COVERING PLATE	2-121, 2-123
3264177-0000	.COVERING PLATE	2-131
3264178-0000	.COVERING PLATE	2-131
2771151-0500	.COVERING TRAY FORMING	3-3, 3-5
1466537-0000	.CRANK	8-3
3095168-0000	.CROSS BAR	2-107
90600-1160	.... CU SCREEN BRAIDING TYPE CU 410 , 4,14MM2	6-13, 6-21
1287193-0500	.CURVE ARM LUBRICATION	7-3
1021000-0600	.CURVE ARM MAGAZINE	3-7
3213484-0000	.CURVE RAIL	2-107
2845018-0000	.CYLINDER BRACKET	2-117
3095153-0000	.CYLINDER BRACKET	2-109
3199166-0000	.CYLINDER BRACKET	5-15, 5-19
3238142-0000	.CYLINDER BRACKET	3-83
3179208-0000	.CYLINDER CONSOLE	9-43
90604-4765	.... CYLINDER SPEC. WITH INT. GUIDING BORE 25	1-95, 2-103
90604-4767	.... CYLINDER, DZH-32-50-PPV-A-H1-SE	1-93
90603-3565	.... CYLINDER, SHUTTLE 16-465	2-75
90600-5535	.... CYLINDER, WITH INT. GUIDING BORE 20	4-11
90459-4204	.... CYLINDER, WITH INT. GUIDING BORE 25	9-43
90603-7495	.... CYLINDER, WITH INT. GUIDING BORE 25	2-117

Part No	Description	Page No
90604-4766	CYLINDER, WITH INT. GUIDING BORE 25	2-77
90458-2121	CYLINDER, WITH INT. GUIDING BORE 40	5-11
3092039-0000 .	CYLINDRICAL PIN	2-71
2920776-0000 .	DAMPER	9-43
90603-0054	DANGER SIGN ANSI (H), HAZARDOUS VOLTAGE	6-69, 6-71, 6-73, 6-75, 6-77, 6-79, 8-5
3245369-0000 .	DELIVERED DESIGN	6-69, 6-71, 6-73, 6-75, 6-77, 6-79
90603-5463	DELIVERED DESIGN SIGN, 90603-5463	6-69, 6-71, 6-73, 6-75, 6-77, 6-79
1021946-0000 .	DIAL	3-11
90602-3770	DIGITAL MULTICIRCUIT PROT., S8M-CP04-RS	6-59, 6-61
90459-6560	DIGITAL OUTPUT 8 PTS, 1734-OB8E/C	6-67
90038-0021	DIODE, 1A 800V	6-13, 6-21
2970888-0200 .	DISCHARGE CONV.	9-3
3265506-0100 .	DISCHARGE CONVEYOR	9-47
2970887-0200 .	DISCHARGE SUPPORT	9-19
2525709-0400 .	DISCHARGE TUNNEL	9-7, 9-9
3265482-0100 .	DISCHARGE UNIT	9-47
2511012-0400 .	DISCHARGE UNIT,ROLLER CONVEYOR	9-3
3096211-0000 .	DISTANCE	2-13, 2-15
3096214-0000 .	DISTANCE	2-63, 2-65
3264186-0000 .	DISTANCE	9-91
90459-3001	DISTRIBUTOR, MS6-FRM-1/2-A4	2-21
1086638-0000 .	DOLLY	1-9
2970819-0000 .	DOLLY	2-85
2970822-0000 .	DOLLY	2-85
2970823-0000 .	DOLLY	2-85
2970825-0000 .	DOLLY	2-85
2970827-0000 .	DOLLY	2-85
2970828-0000 .	DOLLY	2-85
2970832-0000 .	DOLLY	2-85
2970834-0000 .	DOLLY	2-85
2970835-0000 .	DOLLY	2-85
2970836-0000 .	DOLLY	2-85
2970837-0000 .	DOLLY	2-85
2970838-0000 .	DOLLY	2-85
2970839-0000 .	DOLLY	2-85
3149726-0000 .	DOLLY	2-85
3051565-0100 .	DOOR	2-121, 2-123
3051567-0100 .	DOOR	2-121, 2-123
3250585-0100 .	DOOR	6-17, 6-19
3250586-0100 .	DOOR	6-17, 6-19
3250592-0000 .	DOOR	6-75, 6-77, 6-79
3250593-0000 .	DOOR	6-75, 6-77, 6-79
3250594-0000 .	DOOR	6-69, 6-71, 6-73
3250595-0000 .	DOOR	6-69, 6-71, 6-73
3253281-0000 .	DOOR	6-75, 6-77, 6-79
3253282-0000 .	DOOR	6-69, 6-71, 6-73
90603-8333	DOOR COUPLING ROTARY HANDLE, NZM1-XSM-L	6-51, 6-53
90459-6337	DOUBLE ACTING, COMPACT, 20-5	5-13, 5-17
90604-8604	DOUBLE ACTING, COMPACT, 32-5	2-103
90459-1697	DOUBLE ACTING, COMPACT, CYL 63-40	3-59
90603-5550	DOUBLE ACTING, MINI-ISO, CYL. 16-300	2-79, 2-81
90603-5311	DOUBLE ACTING, MINI-ISO, CYL. 20-25	3-69
90603-5549	DOUBLE ACTING, MINI-ISO, CYL. 20-80	2-115
90604-3331	DOUBLE ACTING, MINI-ISO, CYL. 25-20	5-15, 5-19
90603-4872	DOUBLE ACTING, MINI-ISO, CYL. 25-40	2-71
90603-5110	DOUBLE ACTING, MINI-ISO, CYL. 25-50	3-63, 3-65, 3-67, 3-73, 3-79
90605-1265	DOUBLE ACTING, MINI-ISO, CYL. 25-50	3-83
90605-4582	DOUBLE ACTING, MINI-ISO, CYL. 32-25	4-17
90239-0847	DOUBLE ACTING, MINI-ISO, CYL.20-50	3-69
90603-5843	DOUBLE ACTING, PROFILE, CYL 32-80	2-69, 2-109, 5-21
90601-1807	DOUBLE ACTING, PROFILE, CYL 40-30	2-109
90603-7533	DOUBLE ACTING, SHORT STROKE. CYL 32-5	2-101
540169-0000 ..	DOWEL	1-7, 1-9, 9-59
2851967-0000 .	DOWEL	1-7, 1-9
2970844-0100 .	DOWNSTREAM QUEUEGUARD	8-3
1124028-0300 .	DRIVE MOTOR	1-5
3265503-0100 .	DRIVE SHAFT	9-49
1124008-0400 .	DRIVE UNIT	1-27
1124029-0300 .	DRIVE UNIT	1-5
2718838-0200 .	DRIVE UNIT	1-67
2933260-0200 .	DRIVE UNIT	1-41
3077550-0100 .	DRIVE UNIT	2-57
3249942-0100 .	DRIVE UNIT	3-3, 3-5
3066679-0100 .	DRIVE UNIT BOX PUSHER	2-55
2561244-0200 .	DRIVE WHEEL	1-71
353041-0003 ..	EARTH BAR	6-37
90600-2904	EARTH BRAID, 250/16/8,5	6-11, 6-65, 6-69, 6-71, 6-73, 6-75, 6-77, 6-79, 6-83, 9-87
3245364-0100 .	EARTH TERMINAL	6-39
90135-0026	EARTH TERMINAL AKE 4	2-49, 2-67, 3-27, 6-15, 9-93, 9-95, 9-111
353024-0212 ..	EARTH TERMINAL WDK 2,5 PE	6-45, 6-47
353024-0207 ..	EARTH TERMINAL WPE 10	6-55, 6-57
353024-0205 ..	EARTH TERMINAL WPE 4	6-43
353024-0206 ..	EARTH TERMINAL WPE 6	6-41, 6-55, 6-57
3263656-0000 .	EARTH WIRE	2-21

Part No	Description	Page No
351160-0102 ..	ECAB01011-6L, WIRE AWM 1X0,75 MM2 DARKBL	9-77, 9-79
3265498-0000 .	EDGE GUIDE	9-49
90143-0060	EDGE STRIP 9,5X6,3MM BLACK PVC	2-25, 2-27, 2-31, 2-37, 2-83, 3-99, 3-111, 3-113, 3-141, 3-143, 3-163, 3-169, 3-173, 6-23, 9-65, 9-83, 9-85
3265392-1001 .	EDS	6-97
3251394-0100 .	EJECTOR	3-7
342930-0134 ..	ELBOW 90 COUPL., EXT. THREAD 10/8-R1/2"	2-41
90439-0241	ELBOW CONNECTION, 972646	3-133, 3-135, 3-137, 9-77, 9-79
90055-0217	ELBOW PIPE JOINT	2-119
90458-2960	ELBOW PIPE JOINT	2-35, 2-37
90457-0922	ELBOW PIPE JOINT, EXT.THREAD, D=6MM M5	2-79, 2-81
90458-2956	ELBOW PIPE JOINT, EXT.THREAD, D=6MM-G1/8	2-37, 4-17
90458-2964	ELBOW PIPE JOINT, EXT.THREAD, D=8MM-G1/8	2-35, 2-37, 3-141, 3-143, 9-83, 9-85
90459-1826	ELBOW PIPE JOINT, EXT.THREAD,D=16MM-G1/2	2-21
90055-0222	ELBOW WITH TAILPIECE 6/6 MM	5-23, 5-25
90600-1175	ELBOW WITH TAILPIECE 8/8 MM	1-93, 3-141, 3-143, 5-23, 5-25, 9-83, 9-85
90055-0204	ELBOW WITH TAILPIECE 8/8 MM LONG	2-17, 2-19
90459-2581	ELBOW, 90 INT/EXT, G-3/8-A/I	2-21
90140-0019	ELBOW, 90, INT. THREAD, NO. 2013-1/4	2-31
2802458-0400 .	ELECTRIC EQUIPMENT	6-7
3250574-0100 .	ELECTRIC EQUIPMENT	6-25, 6-27
3250575-0100 .	ELECTRIC EQUIPMENT	6-25, 6-27
3250578-0100 .	ELECTRIC EQUIPMENT	6-25, 6-27
3250581-0100 .	ELECTRIC EQUIPMENT	6-25, 6-27
3250582-0100 .	ELECTRIC EQUIPMENT	6-25, 6-27
3253290-0100 .	ELECTRIC EQUIPMENT	6-17, 6-19
3250570-0100 .	ELECTRICAL CABINET	6-3, 6-5
3250571-0100 .	ELECTRICAL CABINET	6-17, 6-19
2794979-0500 .	ELECTRICAL DOCUMENT	6-3, 6-5
3263708-0100 .	ELECTRICAL EQUIPMENT	6-25, 6-27
3250587-0100 .	ELECTRICAL MATERIALS	6-25, 6-27
90600-6048	EMERG. STOP SMILE 11 EA TINA, 30-050-00	2-53, 3-99, 3-101
3249944-0100 .	EMERGENCY STOP	3-91, 3-93, 3-95, 3-97
3249952-0100 .	EMERGENCY STOP	2-5, 2-7
3297497-0100 .	EMERGENCY STOP	3-91, 3-93, 3-95, 3-97
90600-6050	EMERGENCY STOP INCA 1 TINA, 30-054-00	6-13, 6-21
556636-0500 ..	ENCODER FEEDING	3-29
3238157-0100 .	ENCODER MAIN SHAFT	3-7
353031-0203 ..	END BRACKET, WEW 35/2	6-37, 6-41, 6-45, 6-47, 6-49, 6-55, 6-57, 6-63
90603-0308	END CAP 60X60MM, 3 842 511 874	2-63, 2-65
90600-3898	END CAP, Z-GV-10/2+3P	6-33, 6-35
90345-0310	END COVER, ECY 207	1-49
90181-0202	END LINK	2-115
90459-1363	END LINK, 1038.1PZ, FOR CHAIN 10 NEW	2-63, 2-65
90459-1364	END LINK, 1038.2PZ , FOR CHAIN 10 NEW	2-63, 2-65
90601-7970	END PIECE, VL 50X30X1,5-2,5	2-71
90459-1860	END PLATE, MS6-AGC	2-21
353033-0105 ..	END PLATE, WAP 16+35 WTW 2,5-10	6-63
353032-0009 ..	END PLATE, WAP WDK 2,5	6-45, 6-47
353033-0104 ..	END PLATE, WHP2,5-35N/10X3 BL	6-37
2851977-0000 .	END SECTION	1-99, 1-101
2895021-0200 .	END STOP GROUPING	1-89
2807900-0201 .	END UNIT	9-55
2807900-0203 .	END UNIT	9-19
1128906-0000 .	END WHEEL	1-13
90459-2473	EPLC120G3-2A, DIG INP. MOD.16 PTS FAST	6-31
90459-2476	EPLC120G4-0A, DIGIT. OUT. MOD. 16 P ESCP	6-31
90600-9809	ES SIGN, FOR INCA	6-13, 6-21
351501-2010 ..	ETH. P CAB.SAC-4P-M12MSD/ 1,0-PVC/M12MSD	6-89, 6-91
351501-2050 ..	ETH. P CAB.SAC-4P-M12MSD/ 5,0-PVC/M12MSD	6-89, 6-91
351501-2100 ..	ETH. P CAB.SAC-4P-M12MSD/10,0-PVC/M12MSD	6-89, 6-91
351501-2020 ..	ETH. P CAB.SAC-4P-M12MSD/2,0-PVC/M12MSD-	6-89, 6-91
351501-3100 ..	ETH. P. CAB. VS-M12MSD-IP20-LI-93P/10,0	6-89, 6-91
90603-3659	ETHERNET NAT ROUTER, FL MGUARD RS-B	6-59, 6-61
351501-0003 ..	ETHERNET PATCH CABLE, FL CAT5 PATCH 0,3	6-49, 6-59, 6-61
351501-0010 ..	ETHERNET PATCH CABLE, FL CAT5 PATCH 1,0	6-59, 6-61
351501-0015 ..	ETHERNET PATCH CABLE, FL CAT5 PATCH 1,5	6-49
351501-0100 ..	ETHERNET PATCH CABLE, FL CAT5 PATCH 10,0	6-13
351501-0020 ..	ETHERNET PATCH CABLE, FL CAT5 PATCH 2,0	6-29, 6-31, 6-49, 6-67
351501-0030 ..	ETHERNET PATCH CABLE, FL CAT5 PATCH 3,0	6-21, 6-49
90600-1848	ETHERNET SW, FL SWITCH SFN 8TX	6-59, 6-61
90458-1206	EXP. SUB-BASE 2 VALVES, CDVI5.0-EB	2-35, 3-119
90600-4922	EXP. SUB-BASE 2 VALVES,CDVI5.0-EB2-MP-MO	3-119
3090142-0000 .	EXPANSION CARD	9-77, 9-79
3266375-0100 .	EXTENDED DISCHARGE UNIT	9-3
90600-5528	EXTENSION TERMINAL, Z-EK/35/UL 104901	6-33, 6-35
3207644-0000 .	FASTENER	5-13, 5-17
3138439-0000 .	FASTENING BRACKET	2-9
538375-0001 ..	FASTENING IRON	1-13
538375-0002 ..	FASTENING IRON	1-13
3264173-0000 .	FASTENING IRON	9-91
3264174-0000 .	FASTENING IRON	9-91
2844975-0000 .	FASTENING PLATE	2-117
2877468-0000 .	FASTENING PLATE	1-99, 1-101

Part No	Description	Page No
2877475-0000	.FASTENING PLATE	1-99, 1-101
2909542-0000	.FASTENING PLATE	1-99, 1-101
2909543-0000	.FASTENING PLATE	1-99, 1-101
3096215-0000	.FASTENING PLATE	2-63, 2-65
3196747-0000	.FASTENING PLATE	3-63
3199165-0000	.FASTENING PLATE	5-15, 5-19
3227808-0000	.FASTENING PLATE	4-27
3238143-0000	.FASTENING PLATE	3-83
3241290-0000	.FASTENING PLATE	7-17
90600-5266	.... FEED THROUGH FILTER, B85321A2502W160	6-51, 6-53
353021-0212	.. FEED THROUGH TERMINAL, WDU 2,5	6-63
353021-0213	.. FEED THROUGH TERMINAL, WDU 4	6-43, 6-49
353021-0223	.. FEED THROUGH TERMINAL, WDU 6 BL	6-55, 6-57
3223850-0100	.FEED UNIT	3-3, 3-5
1287191-0300	.FEEDING LUBRICATION POINT	7-3
90605-2062	.... FERRITE, 2090-XXFF-S39	6-49
90600-5249	.... FERRITE, B64290L616X38	6-31
90459-1853	.... FILTER REGULATOR, MS6-LFR-1/2-D7-ERV-AS	2-21
3265393-1002	.FIRMWARE	6-97
1065846-0000	.FLAG	3-37
90604-7744	.... FLANGE BALL BEARING, 25X95X38,8 MM	1-51
90345-0075	.... FLANGE BEARING 30X110X55 MM	3-11
321161-0142	.. FLANGE BEARING, 10X12X12 MM	2-115
321161-0221	.. FLANGE BEARING, 16X18X17 MM	2-115
90240-0204	.... FLANGE BUSHING, 12X16X16 MM	2-117, 3-73
90240-0222	.... FLANGE BUSHING, 15X20X20 MM	2-61
90240-0221	.... FLANGE BUSHING, 20X25X14 MM	3-37
321153-0140	.. FLANGE BUSHING, IGLIDUR G 10X12X10	3-67
321153-0145	.. FLANGE BUSHING, IGLIDUR G 10X12X15	3-69
321153-0136	.. FLANGE BUSHING, IGLIDUR G 10X12X6	2-71
90240-0273	.... FLANGE BUSHING, IGLIDUR G 14X16X12	4-31
321153-0221	.. FLANGE BUSHING, IGLIDUR G 16X18X17	3-65
321153-0296	.. FLANGE BUSHING, IGLIDUR G 25X28X21,5	9-81
90240-0256	.... FLANGE BUSHING, IGLIDUR G 6X8X10	5-13, 5-17
90459-3828	.... FLANGE BUSHING, IGLIDUR W300 10X12X5	3-65
321154-0221	.. FLANGE BUSHING, IGLIDUR W300 16X18X17	2-71
90459-0679	.... FLANGE BUSHING, IGLIDUR W300 20X23X11,5	2-107
90240-0262	.... FLANGE BUSHING, IGLIDUR X 12X14X12	5-7
90240-0263	.... FLANGE BUSHING, IGLIDUR X 15X17X12	4-31
90240-0325	.... FLANGE BUSHING, IGLIDUR X 16X18X12	3-65
321155-0221	.. FLANGE BUSHING, IGLIDUR X 16X18X17	2-111
3215907-0001	.FLAP	2-85
3215907-0002	.FLAP	2-85
3215907-0003	.FLAP	2-85
3215907-0004	.FLAP	2-85
3215907-0005	.FLAP	2-85
3215907-0006	.FLAP	2-85
3215907-0007	.FLAP	2-85
3215907-0008	.FLAP	2-85
3215907-0009	.FLAP	2-85
3215907-0010	.FLAP	2-85
3215907-0011	.FLAP	2-85
3215907-0012	.FLAP	2-85
3215907-0013	.FLAP	2-85
3215907-0014	.FLAP	2-85
3238144-0000	.FLAP FOLDER	3-83
3251382-0100	.FLAP FOLDER	5-3
3197450-0100	.FLAP GUIDE	3-39
3197451-0000	.FLAP GUIDE	3-71
3197452-0000	.FLAP GUIDE	3-71
3213479-0000	.FLAP GUIDE	3-69
90143-0073	.... FLAT GASKET TAPE W. ADHESIVE, 15X3.0	2-25, 2-27, 3-111, 3-113
90459-3352	.... FLAT PIN SOCKET, 6,3X0,8	6-49, 6-51, 6-53
1543562-0000	.FLAT WEDGE	5-21
2557261-0000	.FLAT WEDGE	3-45, 3-47
90458-2097	.... FLEXIBLE CHAIN, L=380 MM	7-7
90603-0668	.... FLEXIBLE CHAIN, L=732?? MM	2-63, 2-65
90459-2777	.... FLOW CONTROL VALVE, GR-QS-8	2-71
90459-2199	.... FOAM RUBBER STRIP, NEOPRENE, 1016-117	6-83
90459-4877	.... FOCUS CABLE M12 8P 6M, 20-056-30	9-91
90459-4876	.... FOCUS JUMPER CABLE M12 5P 3M, 20-056-21	6-89, 6-91, 9-91
3213475-0000	.FOLDER	3-69
1466382-0000	.FOLDING ARM	4-27
3197444-0100	.FOLDING STATION	3-39
90604-9686	.... FOOT 2200KG, XH105-XH-HL-3A-FA-Ø36X24	2-9, 3-9, 6-81, 9-49
90459-3454	.... FOOTPRINT FILTER 1 PHASE 18A	6-29, 6-49
3023843-0000	.FORCE PLATE	2-9, 3-9, 6-81
3234421-0000	.FORCE PLATE	6-81
2504300-0000	.FORK	3-59
3250589-0100	.FRAME	6-17, 6-19
3241259-0100	.FRAME BOTTOM	2-5, 2-7
556624-0000	.. FRAME BRACKET	2-9, 2-13, 2-15, 3-9, 4-29
2844970-0200	.FRAME BRACKET	2-5, 2-7
3234425-0000	.FRAME BRACKET	2-9, 3-9, 6-81, 9-49

Part No	Description	Page No
2771160-0400	.FRAME GROUPING PUSHER	2-5, 2-7
2782761-0400	.FRAME UPPER	2-5, 2-7
2877455-0300	.FRAME UPPER	3-91, 3-93, 3-95, 3-97
90348-0033	.... FREE-WHEEL COUPLING, 20X47 MM	4-17
90459-3442	.... FREQ. CONV., 22B-A5P0N104	6-29, 6-49
90459-2795	.... FRONT LID FOR POWERFLEX 40, 22B-CCB	6-29, 6-49
90235-0756	.... FRONT PANEL VALVE, SV-5-M5-B	3-87
312105-0323	.. FSCR05080-10, SCREW, M6S	2-107, 3-15, 6-69, 6-71, 6-73, 6-75, 6-77, 6-79, 9-91, 9-105 9-107, 9-109
3245367-0000	.FUSE PANEL SIGN	6-69, 6-71, 6-73, 6-75, 6-77, 6-79
3245368-0000	.FUSE PANEL SIGN	6-69, 6-71, 6-73, 6-75, 6-77, 6-79
315105-0165	.. FWAS080G0-0S, WASHER PLAIN	1-11, 1-13, 1-15, 1-17, 1-19, 1-31, 1-33, 1-35, 1-37, 1-53 1-61, 1-63, 1-65, 1-81, 1-83, 1-87, 1-93, 1-95, 1-97, 2-9, 2-13, 2-15, 2-33, 2-35, 2-41, 2-61, 2-69 2-71, 2-79, 2-81, 2-95, 2-99, 3-9, 3-31, 3-33, 3-35, 3-37, 3-49, 3-51, 3-103, 3-105, 3-141, 3-143 . 3-161, 4-5, 4-7, 4-9, 4-11, 4-19, 4-21, 4-25, 4-29, 5-5, 5-7, 5-21, 7-5, 7-11, 7-13, 9-53, 9-83, 9-85
1124865-0000	.GABLE PART	1-13
1124866-0000	.GABLE PART	1-13
1124874-0000	.GABLE PART	1-31
2909534-0000	.GABLE PART	1-31
3231400-0000	.GABLE PART	4-7
3231401-0000	.GABLE PART	4-7
3207659-0000	.GABLE PLATE	5-13
3207662-0000	.GABLE PLATE	5-17
599755-0000	.. GASKET	6-87
3253278-0000	.GASKET	6-23
90600-2712	.... GEAR MOTOR, 71L/4 B14 C105	9-53
1021220-0000	.GEAR WHEEL	4-7
1021221-0000	.GEAR WHEEL	4-7
1021255-0000	.GEAR WHEEL	4-15
2750061-0000	.GEAR WHEEL	2-99, 9-53
1124759-0000	.GEAR WHEEL Z=20	2-61
90603-2448	.... GEARS, HELICAL MOTOR SK01V-8 0S/4 S03	1-11
90603-5337	.... GEARS, HELICAL MOTOR SK01V-80S/4S03	1-31, 1-75
90604-9244	.... GEARS, PLAN. LBP090F-MF1-5-0G1/MPL-B420P	2-59, 2-63, 2-65
90600-2981	.... GEARS, WORM MOTOR D9582/SC401-H/1600099	1-99, 1-101
90603-3620	.... GEARS, WORM MOTOR SK 1SI40-IEC 71-71L/4	2-99
90603-3622	.... GEARS, WORM MOTOR SK 1SI50-IEC 71-71L/4	3-35
90603-2429	.... GEARS, WORM MOTOR SK 1SI50-IEC80-80LH/4	3-31
90603-2563	.... GEARS, WORM MOTOR SK1SI50 IEC80 80LH4	1-53
90459-2953	.... GLAND, EXTENDED WITH INSERT, M16X1,5	1-99, 1-101
90458-0440	.... GLAND, EXTENDED WITH INSERT, M25X1,5	2-99, 3-31
90012-0118	.... GLAND, EXTENDED WITH INSERT, PG16	1-11, 1-31
90459-3658	.... GLAND,EXTENDED WITH INSERT, M20X1,5-LONG	1-75
2802466-0003	.GLASS	2-129
2802466-0005	.GLASS	1-17, 1-35, 1-63, 1-85
2802466-0008	.GLASS	9-13
2802466-0009	.GLASS	2-139, 2-141
2802466-0010	.GLASS	2-143, 2-145, 2-147
2802466-0011	.GLASS	3-149, 3-151
2802466-0012	.GLASS	3-165, 3-167
2833983-0100	.GLASS DOOR	2-121, 2-123
2866317-0100	.GLASS DOOR	2-121, 2-123
2870738-0100	.GLASS DOOR	3-145, 3-147
2870740-0100	.GLASS DOOR	3-145, 3-147
2870742-0100	.GLASS DOOR	3-145, 3-147
2870744-0100	.GLASS DOOR	3-145, 3-147
3051570-0100	.GLASS DOOR	2-121, 2-123
3051572-0100	.GLASS DOOR	2-121, 2-123
3241283-0100	.GLASS DOOR	2-121, 2-123
2718873-0300	.GROUPING DOLLY	2-55
2718824-0400	.GROUPING PLATE	2-87
3066694-0100	.GROUPING PUSHER	2-57
3113457-0100	.GROUPING PUSHER	2-55
2763068-0400	.GROUPING TOP SUPPORT	1-89
1287192-0400	.GRP DOLLY LUBR.	7-3
1074441-0300	.GUARD PLATE	8-3
3272883-0000	.GUARD PLATE	3-141, 3-143, 9-83, 9-85
3272884-0000	.GUARD PLATE	3-141, 3-143, 9-83, 9-85
3297489-0000	.GUARD PLATE	3-141, 3-143, 9-83, 9-85
3297493-0000	.GUARD PLATE	3-141, 3-143, 9-83, 9-85
1021144-0000	.GUIDE	3-107
1021198-0000	.GUIDE	4-9
2771124-0000	.GUIDE	2-61
2792402-0000	.GUIDE	2-115
2807937-0000	.GUIDE	1-49
2807938-0000	.GUIDE	1-49
2833972-0000	.GUIDE	3-89
2833973-0000	.GUIDE	3-89
2851960-0000	.GUIDE	1-99
2851966-0000	.GUIDE	1-99
2959039-0000	.GUIDE	2-107
2995216-0000	.GUIDE	1-95
2995217-0000	.GUIDE	1-95
3092052-0000	.GUIDE	2-71

Part No	Description	Page No
3119621-0000	.GUIDE	2-111
3133290-0000	.GUIDE	1-71
3133291-0000	.GUIDE	1-71
3151077-0000	.GUIDE	4-13
3151078-0000	.GUIDE	4-13
3156686-0000	.GUIDE	4-7
3163183-0000	.GUIDE	9-81
3163184-0000	.GUIDE	9-81
3251371-0000	.GUIDE	3-81
3266387-0000	.GUIDE	3-69
3266388-0000	.GUIDE	3-69
3197453-0000	.GUIDE BRACKET	3-71
3266394-0000	.GUIDE BRACKET	3-69
3186441-0000	.GUIDE FORK	4-21
2808748-0000	.GUIDE PIN	2-85
2970848-0000	.GUIDE PIN	2-79, 2-81
3096208-0000	.GUIDE PIN	2-69
3132447-0000	.GUIDE PIN	2-73
3266397-0000	.GUIDE PIPE	3-109
3103241-0000	.GUIDE PLATE	2-107
3196766-0000	.GUIDE PLATE	3-67
3196767-0000	.GUIDE PLATE	3-67
3197440-0000	.GUIDE PLATE	3-67
3197441-0000	.GUIDE PLATE	3-67
3197442-0000	.GUIDE PLATE	3-67
3197443-0000	.GUIDE PLATE	3-67
3264183-0000	.GUIDE PLATE	3-61
3266395-0000	.GUIDE PLATE	3-69
2752706-0400	.GUIDE RAIL	2-87
2959033-0000	.GUIDE RAIL	2-103
2959034-0000	.GUIDE RAIL	2-103
2959050-0000	.GUIDE RAIL	2-79, 2-81
2959051-0000	.GUIDE RAIL	2-79, 2-81
2970816-0000	.GUIDE RAIL	2-79, 2-81
2970829-0000	.GUIDE RAIL	2-79, 2-81
2970830-0000	.GUIDE RAIL	2-79, 2-81
2970857-0000	.GUIDE RAIL	2-79, 2-81
2970861-0000	.GUIDE RAIL	2-79, 2-81
2995218-0000	.GUIDE RAIL	1-95
3196752-0000	.GUIDE RAIL	3-65
3196753-0000	.GUIDE RAIL	3-65
3196758-0000	.GUIDE RAIL	3-65
3196759-0000	.GUIDE RAIL	3-65
90603-0228	.... GUIDE RAIL, LFS42-C-RB-1106	2-63, 2-65
90459-6758	.... GUIDE RAIL, R2045 26431	2-75
532381-0000	.. GUIDE SHEET	1-39
2718868-0100	.GUIDE SPROCKET	1-77
90237-0144	.... GUIDE, 1121-SU540	2-139, 2-143, 2-147, 2-149, 3-149, 3-151, 3-165, 6-9, 6-69, 6-71, 6-73, 6-75, 6-77, 6-79
3090150-0300	.GUN HOLDER	9-75
3251393-0100	.GUN HOLDER	3-39
975934-0000	.. GUSSET PLATE	2-25, 2-27, 3-111, 3-113
90426-0003	.... HAND SHOWER, 361100	9-67
90017-0018	.... HANDLE, NO.1/30357	9-13
2833982-0000	.HATCH	2-139
2866318-0000	.HATCH	2-141
2866320-0000	.HATCH	2-147
2870739-0000	.HATCH	3-149
2870741-0000	.HATCH	3-151
2870743-0000	.HATCH	3-165
2870745-0000	.HATCH	3-167
3051566-0000	.HATCH	2-151
3051568-0000	.HATCH	2-149
3051569-0000	.HATCH	2-143
3051573-0000	.HATCH	2-145
3138436-0000	.HATCH	2-147
312631-0321	.. HEX.NUT FINE, EN 24032 M6M M10X1,25 FZB8	4-17
3227826-0000	.HEXAGON FLANGE NUT	4-31
312601-0314	.. HEXAGON NUT, DIN 934 M5 8 FZB	6-69, 6-71, 6-73, 6-75, 6-77, 6-79
312607-0312	.. HEXAGON NUT, EN 24032 M6M M4 A480	2-77, 6-69, 6-71, 6-73, 6-75, 6-77, 6-79
312607-0314	.. HEXAGON NUT, EN 24032 M6M M5 A480	2-61, 9-71
312607-0316	.. HEXAGON NUT, EN 24032 M6M M6 A480	2-63, 2-65, 2-71
312607-0318	.. HEXAGON NUT, EN 24032 M6M M8 A480	1-61
312602-0318	.. HEXAGON NUT, EN 24032 M6M M8 NIPLBR	3-23
312605-0320	.. HEXAGON NUT, M6M M10 A280	1-13, 1-31, 1-39, 3-79
312605-0322	.. HEXAGON NUT, M6M M12 A280	3-37, 3-107
312605-0324	.. HEXAGON NUT, M6M M16 A280	2-109
312605-0310	.. HEXAGON NUT, M6M M3 A280	2-69, 7-7
312605-0312	.. HEXAGON NUT, M6M M4 A280	2-25, 2-27, 3-89, 3-111, 3-113, 4-21, 6-9, 6-11, 6-65, 6-69, 6-71, 6-73, 6-75, 6-77, 6-79
312605-0314	.. HEXAGON NUT, M6M M5 A280	1-17, 1-25, 1-35, 1-63, 1-85, 2-117, 2-131, 3-111, 3-113, 3-121, 6-9, 6-23, 6-49, 6-65, 6-69, 6-71, 6-73, 6-75, 6-77, 6-79, 9-5, 9-13, 9-67, 9-103
312605-0316	.. HEXAGON NUT, M6M M6 A280	1-7, 1-9, 1-13, 1-23, 1-77, 1-91, 2-17, 2-19, 2-79, 2-81, 2-103, 2-115, 2-119, 2-125, 3-57, 3-65, 3-71, 3-85, 3-87, 3-99, 3-141, 3-143, 6-9, 6-11, 6-23, 6-75, 6-77

Part No	Description	Page No
		6-79, 6-83, 7-11, 7-13, 9-13, 9-17, 9-55, 9-83, 9-85, 9-87, 9-99
312605-0318 ..	HEXAGON NUT, M6M M8 A280	1-11, 1-31, 1-63, 1-65, 1-81, 1-83, 1-85, 1-87, 1-97, 2-61, 2-115
		3-49, 3-51, 3-59, 3-63, 3-141, 3-143, 3-161, 7-5, 7-11, 7-13, 9-37, 9-43, 9-83, 9-85
312812-0320 ..	HEXAGON NUT, NY-LOCK M10 A4 80	1-49, 2-99, 3-35
312812-0312 ..	HEXAGON NUT, NY-LOCK M4 A4 80	4-11
312812-0314 ..	HEXAGON NUT, NY-LOCK M5 A4 80	2-71, 2-115, 2-139, 2-143, 2-147, 2-149, 3-149, 3-151
		3-165, 3-173, 6-9, 6-69, 6-71, 6-73, 6-75, 6-77, 6-79
312812-0316 ..	HEXAGON NUT, NY-LOCK M6 A4 80	1-77, 2-71, 2-103, 2-115, 2-125, 2-127, 2-129, 2-133
		2-135, 2-137, 3-83, 3-157, 3-159, 3-161, 3-163, 3-169, 3-171, 6-65, 6-69, 6-71, 6-73, 6-75, 6-77
		6-79, 9-63, 9-65
312812-0318 ..	HEXAGON NUT, NY-LOCK M8 A4 80	1-49, 1-75, 2-71, 2-109, 3-81, 4-21, 9-61
312810-0318 ..	HEXAGON NUT, NY-LOCK M8 FZB	1-71
312625-0322 ..	HEXAGON THIN NUT, EN 24035 ML6M M12 A4	3-37
312625-0314 ..	HEXAGON THIN NUT, EN 24035 ML6M M5 A4	2-41
312625-0316 ..	HEXAGON THIN NUT, EN 24035 ML6M M6 A4	2-71, 2-79, 2-81, 2-133, 2-139, 2-141, 2-143
		2-145, 2-147, 2-149, 2-151, 3-149, 3-151, 3-165, 3-167
312625-0318 ..	HEXAGON THIN NUT, EN 24035 ML6M M8 A4	2-103, 3-59, 3-69
959657-0000 ..	HINGE FLANGE	2-139, 2-141, 2-143, 2-145, 2-147, 2-149, 2-151, 3-149, 3-151, 3-165, 3-167
		6-9, 6-75, 6-77, 6-79
975880-0000 ..	HINGE FLANGE	2-139, 2-141, 2-143, 2-145, 2-147, 2-149, 2-151, 3-149, 3-151, 3-165, 3-167
		6-9, 6-69, 6-71, 6-73, 6-75, 6-77, 6-79
975927-0000 ..	HINGE FLANGE	2-139, 2-141, 2-143, 2-145, 2-147, 3-149, 3-151, 3-165, 3-167
497680-0001 ..	HOLDER	1-11, 1-31, 1-81
556657-0000 ..	HOLDER	3-13
1020634-0001 .	HOLDER	1-17, 1-35, 1-63, 1-85
1021074-0000 .	HOLDER	3-49
1021127-0000 .	HOLDER	3-79
1021210-0000 .	HOLDER	4-7
1021893-0000 .	HOLDER	4-21
1065845-0000 .	HOLDER	3-37
1065850-0000 .	HOLDER	3-37
1074206-0000 .	HOLDER	2-29
1074261-0000 .	HOLDER	5-5
1074262-0000 .	HOLDER	5-5
1074270-0000 .	HOLDER	5-5
1074329-0000 .	HOLDER	4-23
1086175-0000 .	HOLDER	1-25, 9-103
1124527-0000 .	HOLDER	2-29
1139125-0000 .	HOLDER	3-15
1366750-0000 .	HOLDER	1-29, 9-39, 9-41, 9-45, 9-59, 9-101
1502570-0000 .	HOLDER	3-87
2504047-0000 .	HOLDER	5-23, 5-25
2504067-0000 .	HOLDER	5-21
2718834-0000 .	HOLDER	2-101
2782772-0000 .	HOLDER	5-23, 5-25
2895029-0000 .	HOLDER	4-15
2895036-0000 .	HOLDER	9-5
2895040-0000 .	HOLDER	9-67
2895041-0000 .	HOLDER	9-67
2909864-0000 .	HOLDER	9-27
2912730-0000 .	HOLDER	1-23, 9-99
2920748-0000 .	HOLDER	1-19
2920752-0000 .	HOLDER	1-37, 1-65, 1-87
2970905-0000 .	HOLDER	5-5
2995261-0000 .	HOLDER	5-21
3097794-0000 .	HOLDER	1-91
3097795-0000 .	HOLDER	1-91
3196769-0000 .	HOLDER	3-67
3196785-0000 .	HOLDER	3-67
3196786-0000 .	HOLDER	3-67
3197434-0000 .	HOLDER	3-67
3197435-0000 .	HOLDER	3-67
3213473-0000 .	HOLDER	3-69
3215908-0000 .	HOLDER	3-67
3215910-0000 .	HOLDER	3-67
3251383-0000 .	HOLDER	5-21
3251390-0000 .	HOLDER	3-85
3251392-0000 .	HOLDER	3-87
3264187-0000 .	HOLDER	3-85
315757-4080 ..	HOOD, SK 3240.080	6-69, 6-71, 6-73, 6-75, 6-77, 6-79
90166-0113	HOSE	7-11, 7-13
1139124-0000 .	HOSE	3-15
90152-0017	HOSE (SPIRAL)	9-67
342991-0101 ..	HOSE CLIP,WORM DRIVE TYPE (11)-17	7-11, 7-13
342991-0102 ..	HOSE CLIP,WORM DRIVE TYPE (13)-20	9-87
342991-0110 ..	HOSE CLIP,WORM DRIVE TYPE (50)-65	3-15
3199155-0000 .	HOSE HOLDER	3-107
90163-0052	HOSE NIPPLE, EXT.THR. G1/4-12 MM	7-11, 7-13
90459-6690	HOSE PVC, 12/16 MM	9-87
90459-7057	HOSE, 21,1MM PA BLACK	5-23, 5-25
90055-0237	HOSE,NIPPLE,REDUCER,TUBE, 4/6MM	3-65, 3-67, 5-21
90055-0238	HOSE,NIPPLE,REDUCER,TUBE, 4/8MM	5-11
90055-0189	HOSE,NIPPLE,REDUCER,TUBE, 6/8M	3-119

Part No	Description	Page No
90459-6328	HOT MELT GUN, SOLIDBLUE A, 1060939	3-133, 3-135, 3-137, 9-77, 9-79
90604-9746	HOT MELT UNIT PROBLUE 10, 1022236 H1	9-77, 9-79
90604-3320	HOT MELT UNIT PROBLUE 4, 104 9296 H1	3-133, 3-135, 3-137
90604-9645	HOT MELT UNIT PROBLUE 4, 104 9297 H1	3-133, 3-135, 3-137
2752733-0400 .	HOTMELT EQUIPMENT	3-131
3090140-0300 .	HOTMELT EQUIPMENT NORDSON	9-75
2752746-0400 .	HOTMELT SHELF	3-131
3090145-0300 .	HOTMELT SHELF	9-75
2771176-0400 .	HOTMELT UNIT	3-3, 3-5
90178-0007	HOUR COUNTER, BG 40,17-1 12-48VDC	6-33, 6-35
497635-0000 ..	HUB	1-31
531953-0000 ..	HUB	1-31
539158-0000 ..	HUB	1-11
547187-0000 ..	HUB	1-13
1021057-0000 .	HUB	3-45, 3-47
1021202-0000 .	HUB	4-9
1466149-0000 .	HUB	3-11
2590155-0000 .	HUB	1-75
2807933-0000 .	HUB	1-51
90459-4891	IDENTIFIER, ID-FIX RW	6-59, 6-61
3157212-0200 .	ILINE-XT	9-3
90042-0564	ILLUMINATING SEALS, MC-LD-12-24DC	3-57
1287186-0400 .	ILLUMINATION	9-3
90600-1461	INCOMING TERMINAL, BK25/3-PKZ0-E	6-33, 6-35, 6-49
90600-0459	INDUCTIVE SWITCH, E2A-M12KN05-WP-B1 5M	3-37
90600-0472	INDUCTIVE SWITCH, E2A-S08KS01-M3-B1-TP	2-117
2718866-0100 .	INFEED	1-69
3252775-0000 .	INFEED DOUBLE	2-9
2851987-0400 .	INFEED SECTION	1-3
599751-0000 ..	INSERT	6-87
2763040-0000 .	INSERT	3-141, 3-143
353249-0052 ..	INSERT, MULTI HOLE, E152M 4X3	2-67
90457-0028	INSERT, MULTI HOLE, E154M5X5	9-83, 9-85
353249-0054 ..	INSERT, SINGLE HOLE, EK156 25	6-23
1074384-0000 .	INTERMEDIATE PART	9-13
457696-0001 ..	JOINT PIECE	1-33, 1-39
486918-0001 ..	JOINT PIECE	1-31
486918-0002 ..	JOINT PIECE	1-31
1086222-0000 .	JOINT PIECE	1-15
1086383-0000 .	JOINT PIECE	1-13
2807824-0000 .	JOINT PIECE	1-49, 1-61, 9-35, 9-59
90237-0324	KEY, 1104-02 FOR SQUARE 8 MM	6-69, 6-71, 6-73, 6-75, 6-77, 6-79
90603-5339	KLüBEROIL 4 UH1 320 N, ONLY IN BOM	7-3
90603-6233	KLüBERSYNTH UH1 14-151, ONLY IN BOM	1-13, 1-31
90051-0075	KNOB, EXTERNAL THREAD. NO. 8308-1518	3-169, 5-23, 5-25
90051-0040	KNOB, INTERNAL THREAD, NO. 8308-0627	4-21
90459-2928	LABEL 60417-2-IEC-5020, COMM. REF. POT.	6-9, 6-23, 6-65, 6-69, 6-71, 6-73, 6-75, 6-77, 6-79, 6-83, 9-87
3265400-0000 .	LABEL CD	6-97
3104412-0000 .	LABEL HOLDER	2-109
543267-0000 ..	LABEL TAPE	9-23, 9-31
1086622-0000 .	LABEL TAPE	9-11, 9-15
1086871-0000 .	LABEL TAPE	9-23, 9-31
1124096-0500 .	LEAD-IN PLATE	2-5, 2-7
90015-0023	LEAD-IN, TET 7-10, E1458019	2-17, 2-19, 2-25, 2-27, 3-111, 3-113, 3-121
90015-0020	LEAD-IN, TET5-7, E-1458016	7-11, 7-13
90458-1212	LEFT ENDPLATE INCL. 10M CABLE	3-119, 5-27
90458-1211	LEFT ENDPLATE INCL. 5M CABLE	2-35, 2-37
3196771-0000 .	LEVER	3-67
3251375-0000 .	LEVER	3-67
2877542-0000 .	LEVER BAR	3-35
2877543-0000 .	LEVER BAR	2-99, 9-53
1021153-0000 .	LID	3-107
1021518-0000 .	LID	3-111, 3-113
1139845-0000 .	LID	2-69
1521836-0000 .	LID	3-111, 3-113
1521851-0000 .	LID	3-111, 3-113
1543529-0000 .	LID	3-111, 3-113
1543779-0000 .	LID	5-23, 5-25
2503993-0000 .	LID	3-111, 3-113
2720940-0000 .	LID	2-25, 2-27
2723248-0000 .	LID	2-25, 2-27
2723255-0000 .	LID	2-25, 2-27
2844965-0000 .	LID	2-25, 2-27
2844968-0000 .	LID	2-25, 2-27
2844969-0000 .	LID	2-25, 2-27
3256226-0000 .	LID	2-25, 2-27
3256229-0000 .	LID	2-25, 2-27
3256232-0000 .	LID	3-111, 3-113
3257288-0000 .	LID	3-111, 3-113
3257292-0000 .	LID	3-111, 3-113
3257294-0000 .	LID	3-111, 3-113
3272882-0000 .	LID	3-111, 3-113
2834002-0300 .	LIGHT BARRIER	9-3

Part No	Description	Page No
3252774-0100	LIGHT BARRIER	9-89
90602-4060	LIGHT ELEMENT, BLUE, PSD-S OE LED BU	3-121
90602-4061	LIGHT ELEMENT, GREEN, PSD-S OE LED GN	3-121
90602-4062	LIGHT ELEMENT, RED, PSD-S OE LED RD	3-121
90602-4063	LIGHT ELEMENT, YELLOW, PSD-S OE LED YE	3-121
90603-0808	LIGHT FIXTURE, BRACKET 190 174 029	9-105, 9-107, 9-109
90603-0472	LIGHT FIXTURE, MACH LED -MTAL 2S	9-105, 9-107, 9-109
90600-5252	LINE FILTER, B84113HB30	6-49
90600-5258	LINE FILTER, B84143A35R106	6-49
90600-5261	LINE FILTER, B84144A25R120	6-51, 6-53
1021095-0001	LINK	3-55
1021095-0002	LINK	3-55
1065878-0001	LINK	3-55
1065878-0002	LINK	3-55
90181-0199	LINK ,10.015.048.0, FOR FLEX CHAIN 10	2-115
2504322-0000	LINK ARM	3-59
2995212-0000	LINK ARM	3-13
3092050-0000	LINK ARM	2-71
3245228-0000	LINK ARM	2-71
90181-0203	LINK, 10.1015. 2PZ, FOR FLEX.CHAIN10	2-115
1074308-0000	LOCATING PIECE	5-21
90237-0214	LOCK ADAPTER, 1121-U40	6-69, 6-71, 6-73, 6-75, 6-77, 6-79
90237-0128	LOCK CYLINDER, 1109-SU125	2-139, 2-143, 2-147, 2-149, 3-149, 3-151, 3-165
90237-0129	LOCK CYLINDER, 1109-U6	6-9, 6-69, 6-71, 6-73, 6-75, 6-77, 6-79
1021075-0000	LOCK PLATE	3-49
2833974-0000	LOCK PLATE	3-89, 9-81
2958674-0000	LOCK SHEET	9-27
90062-0060	LOCK WASHER 5,3/10 H=0,6 FZB	6-65
90062-0015	LOCK WASHER SERRAT.EXT.GEAR,6,4/11 H=0,7	6-9, 6-69, 6-71, 6-73, 6-75, 6-77, 6-79
90062-0016	LOCK WASHER SERRAT.EXT.GEAR,8,4/15 H=0,8	6-11, 6-65, 6-69, 6-71, 6-73, 6-75, 6-77, 6-79, 6-83, 9-87
315402-0150	LOCK WASHER, DIN127B 6,1 A4, M6	2-111
90062-0059	LOCK WASKER SERRAT.EXT.GEAR,4,3/8 H=0,5	6-9, 6-65, 6-69, 6-71, 6-73, 6-75, 6-77, 6-79
90237-0123	LOCK, 1121-U10C	2-139, 2-143, 2-147, 2-149, 3-149, 3-151, 3-165, 6-9, 6-69, 6-71, 6-73, 6-75, 6-77, 6-79
1138130-0000	LOCKING BLOCK	1-23, 9-99
3238145-0000	LOCKING BLOCK	3-83
90237-0342	LOCKING CATCH	6-69, 6-71, 6-73, 6-75, 6-77, 6-79
3238128-0000	LOCKING FINGER	5-15, 5-19
90157-0012	LOCKING FLUID LOCTITE 242 50 ML	3-69
90157-0021	LOCKING FLUID LOCTITE 270	2-41, 2-59, 2-71, 2-103, 3-69, 3-109, 4-15, 5-11, 5-13
90157-0018	LOCKING FLUID TYPE 601	1-9
90117-0029	LOCKING HANDLE, M8/F	1-9
90458-0901	LOCKING LEVER 239457 ERZ.63SST-P-M8X25	4-25
90458-0984	LOCKING LEVER 239643 ERZ.63SST-P-M8X40	2-61, 4-29
90458-2092	LOCKING LEVER, 239455 ERZ.63 SST-P-M8X20	1-91
1502811-0000	LOCKING LUG	3-49, 3-51
2504180-0000	LOCKING LUG	2-71
90237-0147	LOCKING LUG, NO. 1121-53-0P	6-9
90511-0145	LOGOTYPE "TETRA PAK" FOR STRIPE 70MM	2-25, 2-27, 3-111, 3-113
90603-5503	LOW-PROFILE I/O CONNECTOR,2090-K6CK-D44M	6-49
3241271-0100	LOWER MACHINE BODY	3-7
2718898-0300	LUBRICATION UNIT	7-3
90603-0408	LUBRICATION UNIT, 10P-P4-H1 LM12	7-11, 7-13
3096228-0000	LUBRICATOR	2-63, 2-65
90603-0231	LUBRICATOR, AB.LFR5201	2-63, 2-65
3196744-0000	LUG	3-63
3196745-0000	LUG	3-63
2794980-0500	MACHINE	6-3, 6-5
580923-0000	MACHINE SIGN CE	6-17, 6-19
3231388-0100	MAG BODY	4-3
3238137-0100	MAG DRIVE ROLLER	4-3
3238135-0100	MAG FRAME	4-3
3231387-0100	MAG HEIGHT ADJUSTER	4-3
3238138-0100	MAG ROLLER REAR	4-3
3139172-0100	MAG SIDE ADJUSTER	4-3
1074259-0500	MAG SIDE SUPPORT	4-3
1128047-0300	MAG SUPPORT LEG	4-3
1021222-0700	MAG TOP FLAP ADJUSTER	4-3
3223853-0100	MAG TOP UNIT	4-3
3231389-0100	MAG WIDTH ADJUSTER	4-3
3199157-0100	MAGAZINE ARM	3-91, 3-93, 3-95, 3-97
3238154-0100	MAIN SHAFT	3-7
90459-3902	MANDATORY ACTION SIGN ISO, READ MAINTENA	6-65
90600-5235	MANDATORY ACTION SIGN ISO, READ MANUAL	6-9, 6-65, 6-69, 6-71, 6-73, 6-75, 6-77, 6-79, 8-9
90459-7369	MARKING FOR PNEUM. TUBING, PRZ06	4-11
359011-0806	MARKING, DEK 5 FW 1-200	6-45
359011-0807	MARKING, DEK 5 FW 1-50	2-67, 6-37, 6-47, 6-63
359011-0821	MARKING, DEK 6 FW 1-50	2-49, 3-27, 6-15, 6-43, 9-93, 9-95
90459-0606	MARKING, DKE 5 MARKED E1-E50	6-15, 6-41, 6-43, 6-45, 6-47, 6-55, 6-57, 9-93, 9-95
90603-4138	MARKING, IDENTIFICATION OF SINGLE CONDUC	6-69, 6-71, 6-73, 6-75, 6-77, 6-79
90600-0719	MARKING, PLATE DEK 5 GW N	6-37, 6-55, 6-57
90092-0052	METERING VALVE 10 MM3	7-15
90092-0053	METERING VALVE 30 MM3	7-17

Part No	Description	Page No
90092-0054	METERING VALVE 50 MM3	7-15
354000-0100 ..	MINIATURE CIRCUIT BREAKER, FAZ-C10/1	6-33, 6-35
315744-0100 ..	MINIATURE CIRCUIT BREAKER, FAZ-C10/1-NA	6-33, 6-35
354001-0100 ..	MINIATURE CIRCUIT BREAKER, FAZ-C10/2	6-33, 6-35
315745-0100 ..	MINIATURE CIRCUIT BREAKER, FAZ-C10/2-NA	6-33, 6-35
354002-0160 ..	MINIATURE CIRCUIT BREAKER, FAZ-C16/3	6-33, 6-35
315746-0160 ..	MINIATURE CIRCUIT BREAKER, FAZ-C16/3-NA	6-33, 6-35
354000-0020 ..	MINIATURE CIRCUIT BREAKER, FAZ-C2/1	6-33, 6-35
315744-0020 ..	MINIATURE CIRCUIT BREAKER, FAZ-C2/1-NA	6-33, 6-35
315744-0040 ..	MINIATURE CIRCUIT BREAKER, FAZ-C4/1-NA	6-59, 6-61
354000-0060 ..	MINIATURE CIRCUIT BREAKER, FAZ-C6/1	6-33, 6-35
315744-0060 ..	MINIATURE CIRCUIT BREAKER, FAZ-C6/1-NA	6-33, 6-35
90459-6330	MODULE BLANK, CLASSICBLUE, 1054951	3-133, 3-135, 3-137, 9-77, 9-79
90459-6329	MODULE SOLIDBLUE A, 1052927	3-133, 3-135, 3-137, 9-77, 9-79
2894966-0000 .	MOTOR BRACKET	3-31
539103-0000 ..	MOTOR COVER	1-11
1124490-0000 .	MOTOR COVER	1-31
351428-0007 ..	MOTOR FEEDBACK CABLE 2090-CFBM7DF-CEAA07	6-89, 6-91
351428-0012 ..	MOTOR FEEDBACK CABLE 2090-CFBM7DF-CEAA12	6-89, 6-91
556626-0700 ..	MOTOR FEEDING	3-29
3238156-0100 .	MOTOR MAIN SHAFT	3-29
2894978-0000 .	MOTOR PLATE	2-99
2920754-0000 .	MOTOR PLATE	3-9
351429-1607 ..	MOTOR POWER CABLE 2090-CPWM7DF-16AA07	6-89, 6-91
351429-1612 ..	MOTOR POWER CABLE 2090-CPWM7DF-16AA12	6-89, 6-91
486886-0000 ..	MOTOR SHELF	1-31
539096-0000 ..	MOTOR SHELF	1-11
2561148-0000 .	MOTOR SHELF	1-75
2718849-0200 .	MOTOR UNIT	1-69
3156682-0000 .	MOUNTING BAR	4-21
3156683-0000 .	MOUNTING BAR	4-21
3157073-0000 .	MOUNTING BAR	4-21
3227810-0000 .	MOUNTING BAR	4-27
531502-0000 ..	MOUNTING BLOCK	1-31
1074391-0000 .	MOUNTING BLOCK	9-17
1086384-0000 .	MOUNTING BLOCK	1-13
2851986-0000 .	MOUNTING BLOCK	1-39
2959032-0000 .	MOUNTING BLOCK	9-17
2895000-0000 .	MOUNTING BRACKET	2-119
3190605-0000 .	MOUNTING KIT	9-91
2792388-0000 .	MOUNTING PLATE	1-93
3250572-0100 .	MOUNTING PLATE	6-17, 6-19
3250573-0100 .	MOUNTING PLATE	6-25, 6-27
3250591-0000 .	MOUNTING PLATE	6-65
8490-0010	MOUNTING RAIL	2-49, 3-27
90099-0005	MOUNTING RAIL SUPPORT, TSTW 5/M5	6-65
90458-1447	MOUNTING RAIL SUPPORT, TST 128660	6-65
2894982-0000 .	MOUNTING SHEET	3-33
3251374-0000 .	MOUNTING SHEET	3-23
90603-2453	MULTI CIRCUIT PROT., SITOP PSE200U 10A	6-59, 6-61
90603-2454	MULTI CIRCUIT PROT., SITOP PSE200U 3A	6-59, 6-61
2504040-0000 .	NIPPLE	3-13
342700-0110 ..	NIPPLE, EXT.THREAD, HEXAGON, G1/4-G1/4	7-11, 7-13
342216-0102 ..	NIPPLES, EXT. THREAD	3-57
90459-2582	NIPPLES,EXT THREAD,HEXAGON, G3/8 - G1/2	2-21
90458-1344	NON HEATED CONNECTION 45°, 972 647	3-133, 3-135, 3-137, 9-77, 9-79
90459-7377	NON-RETURN VALVE, HGL-1/8-B	5-27
90600-2713	NON-RETURN VALVE, HGL-M5-B	2-103
90099-0004	NUT	3-141, 3-143, 9-83, 9-85
486268-0000 ..	NUT	2-9, 2-13, 2-15, 2-99, 3-9, 3-13, 3-103, 3-105, 3-161, 4-5, 4-25, 4-29, 4-31, 6-81, 9-49, 9-55
1021154-0000 .	NUT	3-107, 4-9, 5-5
1021211-0000 .	NUT	4-7
1021507-0000 .	NUT	4-7
1359565-0000 .	NUT	9-27
1502086-0000 .	NUT	3-41, 3-43
2802463-0000 .	NUT	2-75
3095162-0000 .	NUT	2-107
312705-0320 ..	NUT HEX. DOMED CAP MHM-6 M10 A280	1-47
90099-0193	NUT HEX. DOMED CAP MHM-6.6 M5 PL	6-9, 6-69, 6-71, 6-73, 6-75, 6-77, 6-79
312902-0322 ..	NUT HEX. LEFT THREAD, M12 A280	3-13
3227813-0000 .	NUT PLATE	4-27
3251369-0000 .	NUT PLATE	3-73
3197436-0000 .	NUT WASHER	3-67
3264184-0000 .	NUT WASHER	3-61
90458-0322	NUT, M16X1,5	2-67, 3-15
90458-0323	NUT, M20X1,5	2-67, 3-111, 3-113, 3-141, 3-143, 6-11, 9-83, 9-85
90458-0324	NUT, M25X1,5	3-111, 3-113, 3-163, 9-65
90458-0325	NUT, M32X1,5	6-11
90459-2390	NUT, MS-LR-10	2-119
90603-0350	NUT, T-SLOT M8	2-63, 2-65
315239-0110 ..	NYLON WASHER G1/4, 1/4RRP	2-31
315202-0242 ..	O-RING 124,3X5,7 MM	1-79
315202-0244 ..	O-RING 134,3X5,7 MM	1-57
315202-0245 ..	O-RING 139,3X5,7 MM	1-39

Part No	Description	Page No
315202-0246 ..	O-RING 144,3X5,7 MM	1-77
315207-0714 ..	O-RING 31,47X1,78 MM	1-99, 1-101
315202-0504 ..	O-RING 5,28X1,78 MM	6-69, 6-71, 6-73, 6-75, 6-77, 6-79
90092-0080	OIL BRUSH FOR D=4 MM TUBE, D=11, 4	7-5
1287076-0300 .	OK SPRAY GUN	9-3
90604-3805	OPER. PANEL 15" , 2711P-T15C4D8TP, SER A	6-13, 6-21
3249941-0100 .	OVERLOAD FEEDING	3-29
90459-5323	OVERLOAD PROTECTION, PKZM0-1	6-49
90459-5325	OVERLOAD PROTECTION, PKZM0-2,5	6-33, 6-35
3265401-1004 .	P.O.C. COMPL. CD	6-97
2718847-0300 .	PACKAGE CONVEYOR 23	1-3
2718846-0300 .	PACKAGE CONVEYOR TPC21/TPC53	1-3
2752732-0300 .	PACKAGE SEPARATOR	1-89
2525711-0100 .	PACKING DESCRIPTION	9-7, 9-9
2525712-0100 .	PACKING DESCRIPTION	9-7, 9-9
2838848-0100 .	PACKING DESCRIPTION	9-21, 9-57
2958928-0100 .	PACKING DESCRIPTION	9-21, 9-57
2960811-0000 .	PACKING DESCRIPTION	9-23
3196748-0100 .	PACKING END STOP	3-39
3263651-0100 .	PANEL	6-3, 6-5
3263653-0100 .	PANEL DOOR	6-7
315701-0170 ..	PARALLEL KEY W. ROUND ENDS, 4X4X20 MM	4-15, 5-21
315701-0200 ..	PARALLEL KEY W. ROUND ENDS, 5X5X18 MM	4-7
315701-0201 ..	PARALLEL KEY W. ROUND ENDS, 5X5X20 MM	3-41, 3-43
315705-0202 ..	PARALLEL KEY W. ROUND ENDS, 5X5X25MM	2-61
315701-0204 ..	PARALLEL KEY W. ROUND ENDS, 5X5X28 MM	5-5
315701-0230 ..	PARALLEL KEY W. ROUND ENDS, 6X6X16 MM	4-17
315705-0234 ..	PARALLEL KEY W. ROUND ENDS, 6X6X25 MM	1-99, 1-101
315705-0235 ..	PARALLEL KEY W. ROUND ENDS, 6X6X28 MM	2-33
315705-0236 ..	PARALLEL KEY W. ROUND ENDS, 6X6X30 MM	2-61
315705-0239 ..	PARALLEL KEY W. ROUND ENDS, 6X6X40 MM	2-99, 9-53
315705-0241 ..	PARALLEL KEY W. ROUND ENDS, 6X6X50 MM	2-33
315705-0263 ..	PARALLEL KEY W. ROUND ENDS, 8X7X20 MM	3-11
315701-0266 ..	PARALLEL KEY W. ROUND ENDS, 8X7X28 MM	3-47
315705-0269 ..	PARALLEL KEY W. ROUND ENDS, 8X7X35 MM	1-53
315701-0801 ..	PARALLEL KEY W. ROUND ENDS, 8X7X36 MM	3-31, 3-45
315705-0270 ..	PARALLEL KEY W. ROUND ENDS, 8X7X40 MM	1-51
315701-0271 ..	PARALLEL KEY W. ROUND ENDS, 8X7X45 MM	3-11
315705-0277 ..	PARALLEL KEY W. ROUND ENDS, 8X7X80 MM	1-53, 3-11
311103-0232 ..	PARALLEL PIN ISO 2338 3M6X8 A1	2-73
311103-0349 ..	PARALLEL PIN ISO 2338 6M6X12 A1	2-69, 5-13, 5-17
311103-0353 ..	PARALLEL PIN ISO 2338 6M6X20 A1	2-59, 4-31
311103-0361 ..	PARALLEL PIN ISO 2338 6M6X40 A1	2-33
2782787-0500 .	PATTERN FORMING FRAME	2-3
1287195-0400 .	PATTERN FORMING LUBRICATION SYSTEM	7-3
90165-0003	PE CLIP FOR TUBE D=4 MM	3-9, 3-13, 4-5, 4-27
3207648-0000 .	PENDULUM SUSPENSION	5-15, 5-19
2895035-0000 .	PHOTOCELL BRACKET	1-19, 1-37, 1-65, 1-87
2909532-0000 .	PHOTOCELL BRACKET	1-91
2909535-0000 .	PHOTOCELL BRACKET	1-99
2909536-0000 .	PHOTOCELL BRACKET	1-99
2920775-0000 .	PHOTOCELL BRACKET	9-43
2970893-0100 .	PHOTOCELL BRACKET	9-19, 9-47
3213487-0000 .	PHOTOCELL BRACKET	2-107
3251370-0000 .	PHOTOCELL BRACKET	3-81
3265502-0000 .	PHOTOCELL BRACKET	9-49
90459-5531	PHOTOCELL E3Z-T86A-D RECIEVER	2-107
90459-5530	PHOTOCELL E3Z-T86A-L SENDER	2-107
2802448-0300 .	PHOTOCELL UNIT, COM. START CONV.	9-3
2959021-0100 .	PHOTOCELL UNIT, COM. START CONV.	9-97
2959022-0100 .	PHOTOCELL UNIT, COM. START CONV.	9-97
2959023-0100 .	PHOTOCELL UNIT, COM. START CONV.	9-97
2959042-0100 .	PHOTOCELL UNIT, OVERFLOW	1-27, 1-41, 1-67
2959043-0100 .	PHOTOCELL UNIT, OVERFLOW	1-21
2959044-0100 .	PHOTOCELL UNIT, OVERFLOW	1-21
2959045-0100 .	PHOTOCELL UNIT, OVERFLOW	1-5
90459-2986	PHOTOCELL, E3Z-LS86	1-23, 1-25, 1-29, 8-13, 9-99, 9-101, 9-103
90600-3323	PHOTOCELL, WE4-3F3130F20	1-91
90600-3673	PHOTOCELL, WE4-3F3130S03	1-19, 1-37, 1-65, 1-87, 1-99
90600-3322	PHOTOCELL, WS4-3D3130F20	1-19, 1-37, 1-65, 1-87, 1-101
90600-3672	PHOTOCELL, WS4-3D3130S03	2-69
90600-3723	PHOTOCELL, WS4-3D3130S05	1-19, 1-37, 1-65, 1-87, 1-101
90459-7366	PHOTOCELL, WTB4-3P3161 F20	3-65, 3-81, 4-21, 4-27, 9-43, 9-49, 9-55, 9-91
90604-6804	PIAB 811-0003	3-17
90604-6808	PIAB BX52P WITH FILTER, 0106044	3-109
1287532-0000 .	PILLAR	4-25
3231406-0000 .	PILLAR	3-85, 3-87
3265493-0000 .	PIN	9-59
353105-0147 ..	PIN CABLE SHOE 4-6MM2 YELLOW A4630SR	6-51, 6-53
90266-0167	PIPE	2-131
476221-0001 ..	PIPE	9-25
476221-0002 ..	PIPE	9-39, 9-41
476221-0014 ..	PIPE	9-39, 9-41
476221-0024 ..	PIPE	1-17, 1-35, 1-63, 1-85

Part No	Description	Page No
2787874-0000	PIPE	2-41
2970841-0000	PIPE	1-7
2970862-0000	PIPE	1-7
90165-0060	PIPE CLIP FOR TUBE D=5 MM	6-9, 6-69, 6-71, 6-73, 6-75, 6-77, 6-79
90458-0721	PIPE CLIP FOR TUBE D=8 MMSZ 2367080	6-9, 6-23, 6-65, 6-75, 6-77, 6-79
342722-0202 ..	PIPE COUPLING 1/8" D=6MM	2-35
2535552-0000	PISTON ROD COUPLING	2-79, 2-81
3095169-0000	PIVOT BRACKET	2-107
3207650-0000	PIVOT BRACKET	5-15, 5-19
2970880-0000	PLASTIC PLUG	2-79, 2-81
90181-0088	PLASTIC RIVET, PR 52314	6-65
1021147-0000	PLATE	3-107
1021213-0000	PLATE	4-7
1466212-0000	PLATE	4-21
1466434-0000	PLATE	1-91
1521216-0000	PLATE	3-25
2504259-0000	PLATE	1-93
2504260-0000	PLATE	1-93
2504290-0000	PLATE	1-19, 1-37, 1-65, 1-87
2557455-0000	PLATE	3-89
2718862-0000	PLATE	2-75
2720912-0000	PLATE	2-33
2763039-0000	PLATE	4-13
2763101-0000	PLATE	1-95
2763102-0000	PLATE	1-95
2763103-0000	PLATE	1-95
2763134-0000	PLATE	3-107
2782749-0000	PLATE	2-117
2792380-0000	PLATE	2-89
2802441-0000	PLATE	2-115
2802459-0000	PLATE	2-75
2802488-0000	PLATE	2-61
2808743-0000	PLATE	1-31, 1-77
2808744-0000	PLATE	1-13
2829374-0000	PLATE	1-97
2829375-0000	PLATE	1-97
2844933-0000	PLATE	2-107
2844952-0000	PLATE	2-77
2851957-0000	PLATE	1-99, 1-101
2851959-0000	PLATE	1-99, 1-101
2851981-0000	PLATE	1-93
2872735-0000	PLATE	2-117
2894999-0000	PLATE	3-141, 3-143
2895013-0000	PLATE	1-91
2895025-0000	PLATE	1-91
2920762-0000	PLATE	3-141, 3-143
2933271-0000	PLATE	1-53
2950347-0000	PLATE	2-115
2959026-0000	PLATE	8-7
2959035-0000	PLATE	2-101
2959036-0000	PLATE	3-87
2959037-0000	PLATE	3-87
2970891-0000	PLATE	9-39, 9-41
2995230-0000	PLATE	4-13
2995231-0000	PLATE	4-13
2995244-0000	PLATE	2-71
2995259-0000	PLATE	2-77
2995260-0000	PLATE	2-77
3046679-0000	PLATE	2-13, 2-15, 3-103, 3-105
3066699-0000	PLATE	2-61
3077535-0000	PLATE	2-61
3077547-0000	PLATE	2-63, 2-65
3077554-0000	PLATE	2-59
3077558-0000	PLATE	2-61
3077562-0000	PLATE	2-61
3081059-0000	PLATE	2-71
3090153-0000	PLATE	9-83, 9-85
3090581-0000	PLATE	2-61
3090588-0000	PLATE	2-63, 2-65
3090591-0000	PLATE	2-63, 2-65
3090592-0000	PLATE	2-63, 2-65
3090602-0000	PLATE	2-59
3092053-0000	PLATE	2-83
3093446-0000	PLATE	2-31
3093453-0000	PLATE	2-31
3095150-0000	PLATE	2-109
3095151-0000	PLATE	2-109
3095167-0000	PLATE	2-107
3096199-0000	PLATE	2-69
3096218-0000	PLATE	2-61
3097789-0000	PLATE	2-83
3101120-0000	PLATE	2-77
3103253-0000	PLATE	2-83
3103254-0000	PLATE	2-83

Part No	Description	Page No
3113459-0000	.PLATE	2-33
3125473-0000	.PLATE	2-77
3128764-0000	.PLATE	1-95
3136750-0000	.PLATE	2-69
3136751-0000	.PLATE	2-69
3136752-0000	.PLATE	2-69, 3-65, 4-27
3157075-0000	.PLATE	4-21
3161723-0000	.PLATE	9-83, 9-85
3161732-0000	.PLATE	9-83, 9-85
3180552-0000	.PLATE	2-103
3180554-0000	.PLATE	2-103
3180710-0000	.PLATE	2-103
3186422-0000	.PLATE	9-43
3196763-0000	.PLATE	3-65
3196768-0000	.PLATE	3-67
3196772-0000	.PLATE	3-67
3197445-0000	.PLATE	3-69
3213485-0000	.PLATE	2-117
3227809-0000	.PLATE	4-27
3227811-0000	.PLATE	4-27
3241270-0000	.PLATE	2-111
3249951-0000	.PLATE	2-33
3251367-0000	.PLATE	3-73
3251386-0000	.PLATE	3-119
3251387-0000	.PLATE	5-27
3252776-0000	.PLATE	2-41
3252777-0000	.PLATE	2-41
3252782-0000	.PLATE	2-37
3252783-0000	.PLATE	2-35
3253279-0000	.PLATE	6-23
3253283-0000	.PLATE	6-81
3297491-0000	.PLATE	3-141, 3-143
3265394-1004	.PLC	6-97
90459-2491	.... PLC RIGHT END CAP/TERMINATOR, 1769-ECR	6-31
3265391-1003	.PLMS NRG CONFIG FILE	6-97
497997-0000	.. PLUG	1-11, 1-31
499777-0000	.. PLUG	1-13, 1-39
547192-0000	.. PLUG	1-13
90134-0052	.... PLUG DOSING BLOCK	7-15
350013-0005	.. PLUG QSC-12H	3-119
350013-0002	.. PLUG QSC-6H	3-119
350013-0003	.. PLUG QSC-8H	3-119, 3-141, 3-143, 5-23, 5-25, 9-83, 9-85
90261-0060	.... PLUG, BLIND, PLASTIC, NO. IKPK25X1, 5	3-103, 3-105
90600-6055	.... PLUG, EXT THREAD HEX SOCKET B-3/8	2-37
90604-6025	.... PLUG, EXT. THREAD HEX. SOCKET. G1/2	2-21
90459-0698	.... PLUG, G1/8EXT, G1/8	3-17, 3-119
90099-0103	.... PLUG, PR 47 (PG36)	6-23
2752678-0500	.PNEUMATIC CABINET	2-5, 2-7
3251395-0000	.PNEUMATIC DIAGRAM	8-3
3241260-0000	.PNEUMATIC PANEL	2-17, 2-19
3241269-0100	.PNEUMATIC UNIT	2-105
90603-5953	.... POINT I/O ADAPT. MOD.,1734-AENTR SERIEA	6-67
3241267-0100	.POSITIONING SCREW	2-105
90459-2457	.... POWER SUPPLY (4A@5V)	6-31
90602-8627	.... POWER SUPPLY, QUINT-PS/1AC/24DC/10	6-59, 6-61
3199162-0000	.PRESSURE PLATE	5-11
3199170-0000	.PRESSURE PLATE	5-15
3207660-0000	.PRESSURE PLATE	5-19
3207655-0000	.PRESSURE RAIL	5-15, 5-19
3231409-0000	.PRESSURE RAIL	3-79
90458-2730	.... PRESSURE SENS. SDE1-D10-G2-R18-C-P1-M8	2-17, 2-19
90603-1938	.... PRESSURE SWITCH, 1800 KPA, 28545-251-2	7-17
3207667-0100	.PRESSURE UNIT	5-9
3207668-0100	.PRESSURE UNIT	5-9
3207669-0100	.PRESSURE UNIT	5-9
3207671-0100	.PRESSURE UNIT	5-9
90604-9026	.... PROCESSOR L36, 1769-L36ERM SERIE A	6-31
556620-0000	.. PROFILE	3-9
1021315-0000	.PROFILE	3-103, 3-105
1124670-0000	.PROFILE	2-13, 2-15
1287059-0000	.PROFILE	3-103, 3-105
1287362-0000	.PROFILE	4-29
1466343-0000	.PROFILE	3-103, 3-105
1466344-0000	.PROFILE	3-103, 3-105
1521213-0000	.PROFILE	3-9
1521235-0000	.PROFILE	3-9
2557252-0000	.PROFILE	3-103, 3-105
2557253-0000	.PROFILE	3-103, 3-105
2720878-0000	.PROFILE	2-9
2720880-0000	.PROFILE	2-9
2720881-0000	.PROFILE	2-9
2771164-0000	.PROFILE	2-75
2771165-0000	.PROFILE	2-75
2970867-0000	.PROFILE	2-79, 2-81

Part No	Description	Page No
2771131-0000	.PROFILE 50X100	3-9
2877471-0000	.PROFILE 50X100	3-9
2877474-0000	.PROFILE 50X100	3-9
2894954-0000	.PROFILE 50X100	3-9
3090606-0000	.PROFILE 50X100	2-13, 2-15
3122203-0000	.PROFILE 50X100	2-9
3241272-0000	.PROFILE 50X100	2-9
3241273-0000	.PROFILE 50X100	2-9
3241274-0000	.PROFILE 50X100	2-9
3241275-0000	.PROFILE 50X100	2-9
3241276-0000	.PROFILE 50X100	2-9
3241277-0000	.PROFILE 50X100	2-9
3249924-0000	.PROFILE 50X100	3-9
3249925-0000	.PROFILE 50X100	3-9
3249926-0000	.PROFILE 50X100	3-9
3249928-0000	.PROFILE 50X100	3-9
3249929-0000	.PROFILE 50X100	3-9
3249930-0000	.PROFILE 50X100	3-9
3249931-0000	.PROFILE 50X100	3-9
3249932-0000	.PROFILE 50X100	3-9
3249943-0000	.PROFILE 50X100	3-9
3250597-0000	.PROFILE 50X100	6-81
3250598-0000	.PROFILE 50X100	6-81
3250599-0000	.PROFILE 50X100	6-81
3252795-0000	.PROFILE 50X100	2-9
3252799-0000	.PROFILE 50X100	2-9
3252800-0000	.PROFILE 50X100	2-9
3252802-0000	.PROFILE 50X100	2-9
3252803-0000	.PROFILE 50X100	2-9
3253273-0000	.PROFILE 50X100	6-81
3265483-0000	.PROFILE 50X100	9-49
3265484-0000	.PROFILE 50X100	9-49
3265488-0000	.PROFILE 50X100	9-55
3265499-0000	.PROFILE 50X100	9-49
2782758-0000	.PROFILE 50X50	2-13, 2-15
2844957-0000	.PROFILE 50X50	2-13, 2-15
2844959-0000	.PROFILE 50X50	2-13, 2-15
2851989-0000	.PROFILE 50X50	2-9
2851993-0000	.PROFILE 50X50	2-9
2872727-0000	.PROFILE 50X50	2-13, 2-15
2872728-0000	.PROFILE 50X50	2-13, 2-15
2877460-0000	.PROFILE 50X50	3-103, 3-105
2877461-0000	.PROFILE 50X50	3-103, 3-105
2995239-0000	.PROFILE 50X50	4-25
3046535-0000	.PROFILE 50X50	2-13, 2-15
3046536-0000	.PROFILE 50X50	2-13, 2-15
3090582-0000	.PROFILE 50X50	2-61
3090604-0000	.PROFILE 50X50	2-13, 2-15
3090607-0000	.PROFILE 50X50	2-13, 2-15
3090608-0000	.PROFILE 50X50	2-13, 2-15
3096191-0000	.PROFILE 50X50	2-13, 2-15
3096193-0000	.PROFILE 50X50	2-13, 2-15
3096194-0000	.PROFILE 50X50	2-13, 2-15
3096220-0000	.PROFILE 50X50	2-13, 2-15
3096221-0000	.PROFILE 50X50	2-13, 2-15
3119183-0000	.PROFILE 50X50	6-81
3227822-0000	.PROFILE 50X50	4-31
3241278-0000	.PROFILE 50X50	2-9
3241279-0000	.PROFILE 50X50	2-9
3249933-0000	.PROFILE 50X50	3-9
3249946-0000	.PROFILE 50X50	3-103, 3-105
3249947-0000	.PROFILE 50X50	3-103, 3-105
3249948-0000	.PROFILE 50X50	3-103, 3-105
3249949-0000	.PROFILE 50X50	3-103, 3-105
3249950-0000	.PROFILE 50X50	3-103, 3-105
3252700-0000	.PROFILE 50X50	3-103, 3-105
3252778-0000	.PROFILE 50X50	2-13, 2-15
3252779-0000	.PROFILE 50X50	2-13, 2-15
3252780-0000	.PROFILE 50X50	2-13, 2-15
3252781-0000	.PROFILE 50X50	2-13, 2-15
3252796-0000	.PROFILE 50X50	2-9
3252797-0000	.PROFILE 50X50	2-9
3252798-0000	.PROFILE 50X50	2-9
3252801-0000	.PROFILE 50X50	2-9
3256230-0000	.PROFILE 50X50	2-9
3256761-0000	.PROFILE 50X50	3-103, 3-105
3256762-0000	.PROFILE 50X50	3-103, 3-105
3257295-0000	.PROFILE 50X50	3-103, 3-105
90603-0288	.... PROFILE L=1100MM, 3 842 990 350	2-63, 2-65
90459-2265	.... PROHIBITION SIGN ISO, DO NOT WASH	3-141, 3-143, 8-9, 9-83, 9-85
90459-7584	.... PROHOBITION SIGN ISO, DO NOT REACH IN	1-17, 1-35, 1-63, 1-85, 3-161, 8-9, 9-13, 9-21 9-57, 9-63
1074323-0000	.PROTECTION	5-23, 5-25
1543690-0000	.PROTECTION	3-89

Machine Type Group Description Page No

Part No	Description	Page No
1543691-0000	PROTECTION	3-89
2561229-0000	PROTECTION	1-77
2829366-0000	PROTECTION	5-23, 5-25
3161725-0000	PROTECTION	9-81
3161726-0000	PROTECTION	9-81
3161728-0000	PROTECTION	9-81
3161729-0000	PROTECTION	9-81
3179471-0000	PROTECTION	4-5
90603-9054	PROTECTION IP2X 4-POLE, NZM1-4-XIPK	6-51, 6-53
531506-0000	PROTECTION PLATE	1-31
1124863-0000	PROTECTION PLATE	1-13
1128901-0000	PROTECTION PLATE	9-17
1138602-0000	PROTECTION PLATE	1-39
2682031-0000	PROTECTION PLATE	3-141, 3-143
2721917-0000	PROTECTION PLATE	3-141, 3-143, 9-83, 9-85
2721919-0000	PROTECTION PLATE	3-141, 3-143, 9-83, 9-85
2877493-0000	PROTECTION PLATE	3-163
2894976-0000	PROTECTION PLATE	3-141, 3-143, 9-83, 9-85
2894984-0000	PROTECTION PLATE	3-141, 3-143, 9-83, 9-85
2925890-0000	PROTECTION PLATE	4-7
2970910-0000	PROTECTION PLATE	1-53
2995233-0000	PROTECTION PLATE	3-169
2995234-0000	PROTECTION PLATE	3-169
2995248-0000	PROTECTION PLATE	4-13
2995249-0000	PROTECTION PLATE	4-13
2995252-0000	PROTECTION PLATE	1-77
3090141-0000	PROTECTION PLATE	9-83, 9-85
3097798-0000	PROTECTION PLATE	2-33
3136746-0000	PROTECTION PLATE	2-13, 2-15
3138404-0000	PROTECTION PLATE	3-171
3179467-0000	PROTECTION PLATE	4-7
3241261-0100	PROTECTION PLATE	2-55
3241286-0000	PROTECTION PLATE	3-161
3265510-0000	PROTECTION PLATE	9-63
3265511-0000	PROTECTION PLATE	9-65
3266377-0000	PROTECTION PLATE	9-55
3266378-0000	PROTECTION PLATE	9-49
3266379-0000	PROTECTION PLATE	9-49
3297490-0000	PROTECTION PLATE	3-141, 3-143, 9-83, 9-85
90459-6616	PROTECTION, NZM1-4-XIPA	6-51, 6-53
90603-3975	PROTECTIVE CAP M12, E70297	2-51, 3-127
90603-3976	PROTECTIVE CAP M8, E11256	2-39, 2-43, 2-45, 3-19, 3-123, 3-125
3059446-0000	PROTECTIVE COVER	6-65
3251372-0000	PROTRACTOR	3-35
90600-3273	PROX. SENSOR, SMT-8M-PS-24V-K-0,3-M8D	2-75, 2-79, 2-81, 2-103, 3-59, 3-63, 3-67, 4-17, 5-11
90459-2136	PROX. SENSOR, SMEO-1-S-LED-24-B	1-93
90600-3272	PROX. SENSOR, SMT-8M-PS-24V-K-5,0-OE	2-71, 2-115
90459-2392	PROX. SENSOR, SMT-C1-PS-24V-K0,3-M8-SA	2-69, 2-109, 5-21
90064-0082	PUSH BUTTON, WHITE	6-13, 6-21
90459-6065	PUSH-IN Y-CONNECTOR QSY-12-8	3-119
350015-0003	PUSH-IN Y-CONNECTOR QSY-F-8	2-17, 2-19, 2-35, 3-83, 3-141, 3-143, 5-23, 5-25, 9-83, 9-85
350010-0005	PUSH-IN BULKHEAD FITTING QSS-F-12	2-31
90600-2718	PUSH-IN FITTING KQH06-U01	3-141, 3-143, 9-83, 9-85
90600-2719	PUSH-IN FITTING KQH06-U02	3-141, 3-143, 5-23, 5-25, 9-83, 9-85
90600-2720	PUSH-IN FITTING KQH08-U02	1-93, 3-141, 3-143, 5-23, 5-25, 9-83, 9-85
350006-0007	PUSH-IN FITTING QS-F-12H-6	2-17, 2-19, 3-119
350006-0008	PUSH-IN FITTING QS-F-12H-8	2-17, 2-19, 2-31, 2-35, 3-119
350009-0003	PUSH-IN FITTING QS-F-8	2-17, 2-19
350006-0003	PUSH-IN FITTING QS-F-8H-6	2-35
350001-0016	PUSH-IN FITTING QS-F-G1/2-12	2-21
350001-0008	PUSH-IN FITTING QS-F-G1/4-6	2-119
350001-0006	PUSH-IN FITTING QS-F-G1/8-6	2-37, 2-101
350001-0007	PUSH-IN FITTING QS-F-G1/8-8	1-93, 2-37, 5-27
350003-0001	PUSH-IN FITTING QS-F-M5-4-I	5-13, 5-17
350001-0002	PUSH-IN FITTING QS-F-M5-6	2-103, 3-81, 5-27
350008-0005	PUSH-IN FITTING QSF-F-G1/8-8	5-27
350004-0005	PUSH-IN L-FITTING QSL-F-12	2-17, 2-19
350004-0003	PUSH-IN L-FITTING QSL-F-8	2-17, 2-19
350002-0016	PUSH-IN L-FITTING QSL-F-G1/2-12	2-21
350002-0008	PUSH-IN L-FITTING QSL-F-G1/4-6	2-109, 2-119
350002-0009	PUSH-IN L-FITTING QSL-F-G1/4-8	2-21, 2-119
350002-0005	PUSH-IN L-FITTING QSL-F-G1/8-4	2-35, 2-69, 3-65, 3-67, 5-11, 5-21
350002-0006	PUSH-IN L-FITTING QSL-F-G1/8-6	2-35, 2-103, 2-109, 3-59, 3-63, 3-69, 3-73, 3-79, 3-119, 5-15, 5-19, 5-27
350002-0007	PUSH-IN L-FITTING QSL-F-G1/8-8	2-17, 2-19, 2-71, 2-117, 3-17, 3-83, 3-109, 3-119, 5-27
350002-0014	PUSH-IN L-FITTING QSL-F-G3/8-12	3-119, 5-27
350002-0001	PUSH-IN L-FITTING QSL-F-M5-4	2-75, 2-119
350002-0002	PUSH-IN L-FITTING QSL-F-M5-6	1-95, 2-103, 3-65, 3-87, 4-11
350005-0003	PUSH-IN T-FITTING QST-F-8	3-17
350011-0002	PUSH-IN T-FITTING QST-F-8-6	5-27
350007-0008	PUSH-IN T-FITTING QST-F-G1/4-6	2-119
350015-0001	PUSH-IN Y-CONNECTOR QSY-F-6	2-103, 2-119, 5-19, 5-23, 5-25
350015-0002	PUSH-IN Y-CONNECTOR QSY-F-6-4	2-119, 5-13, 5-17
350015-0004	PUSH-IN Y-CONNECTOR QSY-F-8-6	2-109, 3-73, 3-79, 5-15

Part No	Description	Page No
90055-0147	PUSH-IN Y-CONNECTOR QSY-12	3-119
90055-0257	PUSH-IN Y-CONNECTOR QSY-6	2-101
2752694-0000 .	PUSHER PLATE	2-85
2752695-0000 .	PUSHER PLATE	2-85
2752696-0000 .	PUSHER PLATE	2-85
2752697-0000 .	PUSHER PLATE	2-85
2752698-0000 .	PUSHER PLATE	2-85
2752699-0000 .	PUSHER PLATE	2-85
2752700-0000 .	PUSHER PLATE	2-85
2752701-0000 .	PUSHER PLATE	2-85
2752702-0000 .	PUSHER PLATE	2-85
2752703-0000 .	PUSHER PLATE	2-85
2752704-0000 .	PUSHER PLATE	2-85
2808746-0000 .	PUSHER PLATE	2-85
2844977-0000 .	PUSHER PLATE	2-85
2939267-0000 .	PUSHER PLATE	2-85
3132444-0000 .	PUSHER PLATE	2-73
3132445-0000 .	PUSHER PLATE	2-73
2718856-0200 .	QUEUE GUARD,DOUBLE	1-27
2718858-0200 .	QUEUE GUARD,DOUBLE	1-5
2718883-0200 .	QUEUE GUARD,DOUBLE	1-67
2950341-0100 .	QUEUE GUARD,DOUBLE	1-41
90604-5464	QUICKSERVER GATEWAY, FS-QS-1230-0705	6-59, 6-61
2771155-0000 .	RACK	2-33
2864528-0000 .	RACK	2-33
3231397-0000 .	RACK GEAR	4-15
90091-0004	RADIAL SEAL 17X28X7 MM	1-13, 1-31
90091-0322	RADIAL SEAL 25X42X7 MM DUST LIP	3-47
90091-0200	RADIAL SEAL 30X42X7 MM DUST LIP	3-45, 3-47
90091-0306	RADIAL SEAL 30X47X7 MM DUST LIP	3-107
90091-0304	RADIAL SEAL 45X65X8 MM DUST LIP	3-45, 3-47
1021207-0000 .	RAIL	4-7
1021949-0000 .	RAIL	4-7
1065370-0000 .	RAIL	4-7
1543716-0000 .	RAIL	3-31
1543729-0000 .	RAIL	5-7
2720903-0000 .	RAIL	2-33
2720928-0000 .	RAIL	1-15
2771125-0000 .	RAIL	2-61
2771126-0000 .	RAIL	2-61
2895018-0000 .	RAIL	1-91
3090583-0000 .	RAIL	2-33
3095152-0000 .	RAIL	2-107
3165933-0000 .	RAIL	4-5
3197438-0000 .	RAIL	3-75
3197439-0000 .	RAIL	3-75
3213480-0000 .	RAIL	3-75
3213481-0000 .	RAIL	3-75
3223849-0000 .	RAIL	3-67
3238152-0000 .	RAIL	3-65
3253276-0000 .	RAIL	6-23
3265492-0000 .	RAIL	9-59
2968390-0100 .	RAIL HOLDER	9-25, 9-39, 9-41, 9-59
353042-0004 ..	RAIL, TS 35/7,5	6-65
90077-0328	RAIL, TS15/5	2-67, 6-11, 9-93, 9-95, 9-111
2833998-0100 .	RAILING	1-5
2834001-0000 .	RAILING	1-9
2970824-0000 .	RAILING	1-7
2970826-0000 .	RAILING	1-7
2970845-0100 .	RAILING	1-5, 1-27, 1-41, 1-67
3265507-0100 .	RAILING	9-47
2940164-0100 .	RAILING KIT	9-21, 9-57
2970883-0100 .	RAILING KIT	9-19
90459-4932	REAR CLEVIS FOOT MOUNTING, CRLBN-20/25	3-67, 3-73, 3-79
90459-5949	REAR CLEVIS FOOT MOUNTING, CRLBN-32	2-109
90601-1806	REAR CLEVIS FOOT MOUNTING, CRLBN-40	2-109
342716-0203 ..	REDUCER 6-8	3-57
342716-0209 ..	REDUCER 8-12	2-17, 2-19
90459-2323	REDUCER, M25/M20	2-99, 9-53
90459-2387	REGULATOR, MS4-LR-1/4-D5-AS	2-119
90459-2653	REGULATOR, MS4-LR-1/4-D6-AS	2-119
90459-1851	REGULATOR, MS6-LRB-1/2-D7-AS	2-21
2782748-0000 .	REINFORCEMENT	2-117
90119-0108	RELAY OMRON G2R-2-SNI-24DC	6-47
90601-6650	RELAY, PLC-RSC-24DC/21	6-59, 6-61
2763113-0300 .	REMOTE I/O	2-5, 2-7
2763114-0300 .	REMOTE I/O	3-7
2763115-0300 .	REMOTE I/O	3-91, 3-93, 3-95, 3-97
2763116-0300 .	REMOTE I/O	3-91, 3-93, 3-95, 3-97
2763117-0300 .	REMOTE I/O	2-5, 2-7
2920765-0200 .	REMOTE I/O	2-5, 2-7
3253291-0100 .	REMOTE I/O	6-25, 6-27
90459-2526	REMOTE I/O BASE MODULE 8 POINTS, 1734-TB	6-67
90459-5811	RESIDUAL CURRENT DEVICE, FI-25/2/003-A	6-33, 6-35

Machine Type Group Description Page No

Part No	Description	Page No
1021038-0000	RETAINING RING	5-5
1021156-0000	RETAINING RING	3-107, 4-9
1021263-0000	RETAINING RING	4-15
315753-0124	RETAINING RING FOR BORE DIN 472 35 SS	4-7
90141-0020	RETAINING RING FOR BORE DIN 472 42 SS	3-37, 3-49, 3-51, 3-61
90141-0016	RETAINING RING FOR SHAFT DIN 471 10 SS	2-71, 4-17
315751-0109	RETAINING RING FOR SHAFT DIN 471 12 SS	2-59, 2-61, 2-63, 2-65, 2-117, 5-21
315751-0111	RETAINING RING FOR SHAFT DIN 471 14 SS	4-31
315751-0112	RETAINING RING FOR SHAFT DIN 471 15 SS	2-111, 4-7
315751-0113	RETAINING RING FOR SHAFT DIN 471 16 SS	2-59, 2-63, 2-65, 2-111, 3-65
90141-0017	RETAINING RING FOR SHAFT DIN 471 17 SS	1-99, 1-101
315751-0115	RETAINING RING FOR SHAFT DIN 471 18 SS	2-99, 9-53
315751-0116	RETAINING RING FOR SHAFT DIN 471 20 SS	1-99, 1-101, 2-99, 3-37, 3-49, 3-51, 3-61, 4-17, 4-19, 9-53
315751-0119	RETAINING RING FOR SHAFT DIN 471 25 SS	2-69, 3-11, 3-31
315750-0122	RETAINING RING FOR SHAFT DIN 471 30	3-107
315751-0122	RETAINING RING FOR SHAFT DIN 471 30 SS	2-59, 2-63, 2-65, 3-45
315750-0129	RETAINING RING FOR SHAFT DIN 471 45	3-45, 3-47
315751-0103	RETAINING RING FOR SHAFT DIN 471 6X 0.7C	5-15, 5-19
90141-0015	RETAINING RING FOR SHAFT DIN 471 8 SS	1-59, 2-115, 3-63
315755-0112	RETAINING RING SHAFT DIN 6799 12 SS	4-31
315755-0105	RETAINING RING SHAFT DIN 6799 3,2 SS	2-139, 2-141, 2-143, 2-145, 2-147, 2-149, 2-151, 3-149, 3-151, 3-165, 3-167, 6-9, 6-69, 6-71, 6-73, 6-75, 6-77, 6-79
315755-0108	RETAINING RING SHAFT DIN 6799 6 SS	3-65, 3-69
315741-0112	RETAINING RING, DIN 705 A2 16	1-97, 3-41, 3-43, 3-47
90458-1214	RIGHT ENDPL EXT. PILOT AIR,CDVI5.0-EPR-S	2-35, 2-37, 3-119, 5-27
530852-0000	RING	1-13, 1-31
2936871-0000	RIVET	9-27
311521-0143	RIVET, BLANK 3,2X8	6-69, 6-71, 6-73
1074429-0000	ROD	9-17
1287492-0000	ROD	4-17
2851961-0000	ROD	1-99, 1-101
3096204-0000	ROD	2-69
3104410-0000	ROD	2-89
3104411-0000	ROD	2-89
3136650-0000	ROD	2-63, 2-65
90459-2881	ROD CLEVIS SG-M10X1,25	2-101
90115-0135	ROD END ID=12MM M12X1,75	3-107
90459-1018	ROD END, BALL JOINT EYE M10X1,25	3-63, 3-67, 3-73, 3-79, 5-15, 5-19, 5-21
90459-3117	ROD END, BALL JOINT EYE M10X1,25	2-69
90239-0357	ROD END, CLEVIS WITH AXLE M10X1,25	4-17
90459-1696	ROD END, CLEVIS WITH AXLE M10X1,25	3-65
90115-0134	ROD END, ID=10 MM, M10X1,25	2-71, 2-109
90115-0183	ROD END, ID=12 MM, M12X1,25	2-109
90115-0152	ROD END, ID=12 MM, M12X1,75 LH	3-13
90115-0139	ROD END, ID=8 MM, M8X1,25	2-115, 3-59, 3-69
2771221-0000	ROLL	2-117
2782793-0000	ROLL	2-93, 2-97
2787829-0000	ROLL	2-95
3101124-0000	ROLL	2-113
1502535-0000	ROLLER	2-91, 9-51
318213-0080	ROLLER CHAIN, SIMPLEX 5/8 -80, SS	3-31
1353593-0000	ROLLER CONVEYOR	9-17
2525710-0200	ROLLER CONVEYOR, S-OUT	9-7, 9-9
575034-0000	ROUND NUT	2-139, 2-141, 2-143, 2-145, 2-147, 3-149, 3-151, 3-165, 3-167, 9-13
3265395-1001	ROUTER CONFIG	6-97
90600-7806	RTD HOT MELT HOSE AWW, 1088273	3-133, 3-135, 3-137
90458-1745	RTD HOT MELT HOSE, 276740	3-133, 3-135, 3-137, 9-77, 9-79
90459-1325	RTD HOT MELT HOSE, 276741	3-133, 3-135, 3-137, 9-77, 9-79
1502998-0000	RUBBER BELLOWS	3-59
2974842-0000	RUBBER GASKET	6-11
3263735-0000	RUBBER GASKET	6-69, 6-71, 6-73, 6-75, 6-77, 6-79
1258875-0000	RUBBER PLATE	4-31
3133920-0000	RUBBER PLATE	4-11
3227812-0000	RUBBER WASHER	4-27
2771156-0000	RULE PLATE	1-93
2909544-0000	RULE PLATE	1-93
2909545-0000	RULE PLATE	1-93
2851953-0000	RUNNER	1-99, 1-101
90603-9795	SAFETY LIGHT BARRIER, REC. SLC425I-R0250	9-91
90603-9794	SAFETY LIGHT BARRIER,TRANSM. SLC425I-E02	9-91
3258900-1001	SAFETY PLC SOFTWARE	6-97
90601-7290	SAFETY PLC, PLUTO B46 20-070-17	6-59, 6-61
90459-1131	SAFETY RELAY, E1T	6-59, 6-61
90459-2291	SAFETY RELAY, E1T	6-59, 6-61
90459-4165	SAFETY SCREW, SM4X25	2-139, 2-141, 2-143, 2-145, 2-147, 3-149, 3-151, 3-165, 3-167, 9-13
90459-4088	SAFETY SENSOR, ADAM E 10M	9-13
90459-4142	SAFETY SENSOR, ADAM M12, 20-051-00	2-139, 2-141, 2-143, 2-145, 2-147, 3-149, 3-151, 3-165, 3-167
90458-2794	SAFETY SENSOR, EVA 20-046-00	2-139, 2-141, 2-143, 2-145, 2-147, 3-149, 3-151, 3-165, 3-167
90459-4089	SAFETY SENSOR, EVA E, 20-046-06	9-13
90601-1126	SAFETY VALVE, MS6-SV-1/2-E-10V24-AG	2-21
90439-0236	SATURN RIGHT-ANGLE NOZZLE, 1011012	3-133, 3-135, 3-137, 9-77, 9-79

Part No	Description	Page No
90458-2779	SCALE , 0-1000MM ADHESIVE	2-117, 3-79, 3-85, 3-87, 4-5, 5-7, 9-55
90458-2780	SCALE ,1000-0 MM ADHESIVE	1-91, 2-9, 2-79, 2-81, 2-107, 3-65, 3-69, 3-71, 3-83
2894961-0000 .	SCALE POINTER	3-35
90287-0205	SCREW	2-139, 2-141, 2-143, 2-145, 2-147, 2-149, 2-151, 3-149, 3-151, 3-165, 3-167, 6-9, 6-69, 6-71, 6-73, 6-75, 6-77, 6-79
312125-0289 ..	SCREW	3-9
532405-0000 ..	SCREW	1-39
547194-0000 ..	SCREW	1-13
2872726-0000 .	SCREW	2-139, 2-141, 2-143, 2-145, 2-147, 3-149, 3-151, 3-165, 3-167
3111400-0000 .	SCREW	1-59
90600-1933	SCREW 5X12, DELTA PT 50X12 WN5454 A4	1-71
312155-0226 ..	SCREW DIN 7991 MF6S M3X12 A4 70	4-27, 9-55
312155-0228 ..	SCREW DIN 7991 MF6S M3X16 A4 70	1-99, 2-61
312155-0289 ..	SCREW DIN 7991 MF6S M4X10 A4 70	4-11, 4-13
312155-0291 ..	SCREW DIN 7991 MF6S M4X12 A4 70	3-81, 6-11, 6-69, 6-71, 6-73, 6-75, 6-77, 6-79, 6-87, 9-61
312155-0293 ..	SCREW DIN 7991 MF6S M4X16 A4 70	2-77
312155-0295 ..	SCREW DIN 7991 MF6S M4X20 A4 70	4-21
312155-0297 ..	SCREW DIN 7991 MF6S M4X25 A4 70	7-15, 7-17
312155-0299 ..	SCREW DIN 7991 MF6S M4X30 A4 70	2-69
312155-0287 ..	SCREW DIN 7991 MF6S M4X8 A4 70	4-21, 5-13, 5-17, 9-81
312155-0325 ..	SCREW DIN 7991 MF6S M5X10 A4 70	1-91, 4-13
312155-0327 ..	SCREW DIN 7991 MF6S M5X12 A4 70	1-99, 2-13, 2-15, 2-41, 2-63, 2-65, 4-17, 4-27, 9-13
312155-0329 ..	SCREW DIN 7991 MF6S M5X16 A4 70	1-91, 1-99, 1-101, 2-79, 2-81, 2-107, 2-117
312155-0331 ..	SCREW DIN 7991 MF6S M5X20 A4 70	1-91, 2-117
312155-0323 ..	SCREW DIN 7991 MF6S M5X8 A4 70	1-57, 2-79, 2-81
312155-0366 ..	SCREW DIN 7991 MF6S M6X12 A4 70	1-93, 2-71, 2-79, 2-81, 2-101, 2-117, 3-65, 3-67
312155-0368 ..	SCREW DIN 7991 MF6S M6X16 A4 70	1-99, 1-101, 2-71, 2-77, 2-79, 2-81, 3-77, 6-9, 9-43, 9-55
312155-0370 ..	SCREW DIN 7991 MF6S M6X20 A4 70	1-23, 1-31, 1-39, 2-61, 2-73, 2-77, 2-79, 2-81, 2-85, 2-117, 2-139, 2-143, 2-147, 2-149, 3-149, 3-151, 3-165, 5-11, 9-13, 9-27, 9-99
312155-0372 ..	SCREW DIN 7991 MF6S M6X25 A4 70	1-99, 1-101, 2-79, 2-81, 2-117, 5-21, 6-83, 9-13
312155-0374 ..	SCREW DIN 7991 MF6S M6X30 A4 70	2-13, 2-15
312155-0376 ..	SCREW DIN 7991 MF6S M6X35 A4 70	2-71
312155-0378 ..	SCREW DIN 7991 MF6S M6X40 A4 70	2-125, 2-127, 2-129, 2-133, 2-135, 2-137, 3-157, 3-159, 3-161, 3-163, 3-171, 6-85, 9-63, 9-65
312155-0380 ..	SCREW DIN 7991 MF6S M6X50 A4 70	3-65
312155-0449 ..	SCREW DIN 7991 MF6S M8X16 A4 70	2-61, 3-79, 3-83
312155-0451 ..	SCREW DIN 7991 MF6S M8X20 A4 70	2-59, 2-63, 2-65, 3-37, 5-11
312155-0453 ..	SCREW DIN 7991 MF6S M8X25 A4 70	1-93, 2-13, 2-15
312155-0455 ..	SCREW DIN 7991 MF6S M8X30 A4 70	2-59, 2-63, 2-65, 3-45
312155-0457 ..	SCREW DIN 7991 MF6S M8X35 A4 70	2-9
312155-0459 ..	SCREW DIN 7991 MF6S M8X40 A4 70	2-13, 2-15, 3-9
90600-2022	SCREW DIN7984 M8X25 AISI304	2-63, 2-65
312105-0153 ..	SCREW EN 10642 MF6S M5X25 A480	9-83, 9-85
312156-0323 ..	SCREW EN 10642 MF6S M5X8 A470	1-79
312156-0366 ..	SCREW EN 10642 MF6S M6X12 A470	1-13
312156-0451 ..	SCREW EN 10642 MF6S M8X20 A470	1-13
312156-0459 ..	SCREW EN 10642 MF6S M8X40 A470	4-29
312108-0370 ..	SCREW EN 1665 TYPE F M6X20 A270	3-21
90287-0295	SCREW HEX.SOCK.COUNT.MF6S M3X8 A280	7-7
312111-0390 ..	SCREW HEX.SOCK.HD.MC6S 6X100 88 FZB	2-103
312121-0226 ..	SCREW ISO 1207 M3X12 4.8-5.8 Z.PL.	1-29, 9-45, 9-101
312121-0287 ..	SCREW ISO 1207 M4X8 4.8-5.8 Z.PL.	6-11
312125-0364 ..	SCREW ISO 1207 M6X10 A4	2-9, 2-63, 2-65
312145-0228 ..	SCREW ISO 2009 MFS M3X16 A4	2-33
312145-0222 ..	SCREW ISO 2009 MFS M3X8 A4	3-57
312145-0293 ..	SCREW ISO 2009 MFS M4X16 A4	2-49, 3-27
312145-0287 ..	SCREW ISO 2009 MFS M4X8 A4	1-99, 1-101, 2-25, 2-27, 3-111, 3-113
312145-0325 ..	SCREW ISO 2009 MFS M5X10 A4	2-9, 2-13, 2-15, 3-9, 3-103, 3-105, 6-81, 9-49, 9-55
312145-0329 ..	SCREW ISO 2009 MFS M5X16 A4	4-31
312145-0382 ..	SCREW ISO 2009 MFS M6X60 A4	3-169
312309-0362 ..	SCREW ISO4026 M6X8 A4	4-31
312115-0491 ..	SCREW ISO4762 M10X20 A4 80	4-29
312115-0495 ..	SCREW ISO4762 M10X30 A4 80	2-59, 2-63, 2-65
312115-0226 ..	SCREW ISO4762 M3X12 A4 80	3-33
312115-0228 ..	SCREW ISO4762 M3X16 A4 80	3-23, 3-81, 4-21, 9-49
312115-0289 ..	SCREW ISO4762 M4X10 A4 80	2-89
312115-0291 ..	SCREW ISO4762 M4X12 A4 80	3-13, 3-27, 4-11
312115-0293 ..	SCREW ISO4762 M4X16 A4 80	2-49
312115-0295 ..	SCREW ISO4762 M4X20 A4 80	3-83
312115-0305 ..	SCREW ISO4762 M4X50 A4 80	6-51, 6-53
312115-0285 ..	SCREW ISO4762 M4X6 A4 80	2-75
312115-0287 ..	SCREW ISO4762 M4X8 A4 80	2-67, 2-89, 4-5
312115-0327 ..	SCREW ISO4762 M5X12 A4 80	2-75, 3-49, 3-51, 4-21, 5-13, 5-17, 9-91
312115-0329 ..	SCREW ISO4762 M5X16 A4 80	3-121, 5-13, 5-15, 5-17, 5-19, 9-13
312115-0331 ..	SCREW ISO4762 M5X20 A4 80	5-13, 5-17
312115-0333 ..	SCREW ISO4762 M5X25 A4 80	3-99, 3-101
312115-0335 ..	SCREW ISO4762 M5X30 A4 80	2-53, 4-15, 5-15, 5-19
312115-0323 ..	SCREW ISO4762 M5X8 A4 80	5-13, 5-17
312115-0364 ..	SCREW ISO4762 M6X10 A4 80	5-23, 5-25, 9-17
312115-0366 ..	SCREW ISO4762 M6X12 A4 80	2-115, 3-45, 3-47, 3-79, 4-5
312115-0368 ..	SCREW ISO4762 M6X16 A4 80	1-7, 1-9, 2-69, 2-75, 2-103, 2-109, 3-53, 3-61, 3-67, 3-151
312115-0370 ..	SCREW ISO4762 M6X20 A4 80	2-29, 2-63, 2-65, 2-69, 2-107, 2-139, 2-141, 2-149, 2-151, 3-65, 3-69, 3-73, 3-149, 4-9, 5-15, 5-19, 5-21, 6-9, 6-69, 6-71, 6-73, 6-75, 6-77, 6-79
312115-0372 ..	SCREW ISO4762 M6X25 A4 80	2-33, 2-75, 2-79, 2-81, 2-101, 2-143, 2-145, 2-147, 3-41, 3-43

Part No	Description	Page No
		3-45, 3-47, 3-149, 3-151, 3-153, 3-155, 3-165, 3-167, 4-13, 4-15
312115-0374 ..	SCREW ISO4762 M6X30 A4 80	1-51, 1-99, 1-101, 2-29, 2-109, 3-13, 3-49, 3-71, 4-25
312115-0376 ..	SCREW ISO4762 M6X35 A4 80	1-95, 3-65, 3-67
312115-0378 ..	SCREW ISO4762 M6X40 A4 80	1-91
312115-0382 ..	SCREW ISO4762 M6X60 A4 80	5-5, 9-81
312115-0384 ..	SCREW ISO4762 M6X70 A4 80	5-5, 5-11
312115-0362 ..	SCREW ISO4762 M6X8 A4 80	2-61
312115-0449 ..	SCREW ISO4762 M8X16 A4 80	3-67
312115-0451 ..	SCREW ISO4762 M8X20 A4 80	1-95, 2-59, 2-63, 2-65, 2-99, 2-107, 3-35, 9-53
312115-0453 ..	SCREW ISO4762 M8X25 A4 80	1-13, 1-91, 1-95, 2-95, 4-5
312115-0455 ..	SCREW ISO4762 M8X30 A4 80	1-97, 2-63, 2-65, 2-109, 3-11
312115-0459 ..	SCREW ISO4762 M8X40 A4 80	2-9, 3-9, 4-25, 4-31, 6-81
312115-0460 ..	SCREW ISO4762 M8X45 A4 80	5-5
312115-0463 ..	SCREW ISO4762 M8X60 A4 80	3-103, 3-105, 4-25
312115-0467 ..	SCREW ISO4762 M8X80 A4 80	4-5
312105-0328 ..	SCREW M6S ISO 4017 M5X14 A4 80	9-13
312105-0447 ..	SCREW M6S ISO 4017 M8X12 A480	1-49, 1-61, 1-69, 1-75, 4-27, 9-35, 9-37, 9-59
312101-0344 ..	SCREW M6S M5X65 FZB	2-71
312104-0467 ..	SCREW M6S M8X80H FZB	3-49, 3-51
90459-0215	SCREW MC6S M3X30 A4	3-65
90287-0335	SCREW MC6S M8X90 A280	3-59
90459-3923	SCREW, A06361	1-49, 9-29
312105-0513 ..	SCREW, M6S ISO 4014 M10X110 A4 80	1-31
312105-0517 ..	SCREW, M6S ISO 4014 M10X130 A4 80	1-47
312105-0499 ..	SCREW, M6S ISO 4014 M10X40 A4 80	3-11, 3-63
312105-0500 ..	SCREW, M6S ISO 4014 M10X45 A4 80	3-79
312105-0501 ..	SCREW, M6S ISO 4014 M10X50 A4 80	9-53
312105-0502 ..	SCREW, M6S ISO 4014 M10X55 A4 80	5-15, 5-19
312105-0504 ..	SCREW, M6S ISO 4014 M10X65 A4 80	2-99, 3-35
312105-0541 ..	SCREW, M6S ISO 4014 M12X45 A4 80	4-31
312105-0544 ..	SCREW, M6S ISO 4014 M12X60 A4 80	3-107
312105-0335 ..	SCREW, M6S ISO 4014 M5X30 A4 80	1-97, 2-131, 3-157, 3-159
312105-0337 ..	SCREW, M6S ISO 4014 M5X35 A4 80	3-17
312105-0343 ..	SCREW, M6S ISO 4014 M5X60 A4 80	2-115
312105-0390 ..	SCREW, M6S ISO 4014 M6X100 A4 80	1-77
312105-0374 ..	SCREW, M6S ISO 4014 M6X30 A4 80	1-11, 1-75, 1-97, 2-59, 2-63, 2-65, 2-75, 2-79, 2-81, 2-107 3-65, 3-67, 3-69, 3-71, 3-79, 3-85, 3-87, 3-107, 4-7, 4-13, 4-15, 4-21, 4-29, 4-31, 5-11, 5-15, 5-19, 6-81
312105-0376 ..	SCREW, M6S ISO 4014 M6X35 A4 80	2-9, 2-103, 2-111, 2-131, 3-9, 3-67, 3-73, 4-15, 9-49
312105-0378 ..	SCREW, M6S ISO 4014 M6X40 A4 80	1-13, 2-13, 2-15, 3-67, 3-69, 3-89, 3-103, 3-105, 5-21, 9-81
312105-0379 ..	SCREW, M6S ISO 4014 M6X45 A4 80	3-69, 4-15, 4-21
312105-0381 ..	SCREW, M6S ISO 4014 M6X55 A4 80	2-107, 2-111, 3-109
312105-0382 ..	SCREW, M6S ISO 4014 M6X60 A4 80	1-95, 2-79, 2-81, 2-115, 3-89
312105-0383 ..	SCREW, M6S ISO 4014 M6X65 A4 80	2-79, 2-81
312105-0384 ..	SCREW, M6S ISO 4014 M6X70 A4 80	2-69, 2-71, 2-75, 2-103, 2-117, 3-67
90287-0312	SCREW, M6S ISO 4014 M6X75 A4 80	2-119, 4-23
312105-0386 ..	SCREW, M6S ISO 4014 M6X80 A4 80	2-71, 4-21, 9-91
312105-0388 ..	SCREW, M6S ISO 4014 M6X90 A4 80	1-77, 3-59
312105-0471 ..	SCREW, M6S ISO 4014 M8X100 A4 80	5-7
312105-0457 ..	SCREW, M6S ISO 4014 M8X35 A4 80	1-11, 1-31, 1-75, 1-81, 1-97, 2-33, 2-59, 3-11, 3-65 3-107, 4-7, 4-31
312105-0459 ..	SCREW, M6S ISO 4014 M8X40 A4 80	1-11, 1-13, 1-31, 1-77, 2-9, 2-13, 2-15, 3-9, 3-13, 3-31 3-37, 3-49, 3-51, 3-89, 3-103, 3-105, 6-81, 9-49, 9-55
312105-0460 ..	SCREW, M6S ISO 4014 M8X45 A4 80	1-53, 3-161
312105-0461 ..	SCREW, M6S ISO 4014 M8X50 A4 80	1-31, 2-99, 3-37, 3-61, 3-63, 6-23, 6-81
312105-0462 ..	SCREW, M6S ISO 4014 M8X55 A4 8002	3-59
312105-0464 ..	SCREW, M6S ISO 4014 M8X65 A4 80	1-11, 2-61, 3-59
312105-0465 ..	SCREW, M6S ISO 4014 M8X70 A4 80	2-71, 3-33, 3-107, 5-5, 5-21, 9-59
312105-0466 ..	SCREW, M6S ISO 4014 M8X75 A4 80	2-71
312105-0467 ..	SCREW, M6S ISO 4014 M8X80 A4 80	4-21
312105-0469 ..	SCREW, M6S ISO 4014 M8X90 A4 80	1-9, 1-71
312105-0493 ..	SCREW, M6S ISO 4017 M10X25 A4 80	3-67
312105-0495 ..	SCREW, M6S ISO 4017 M10X30 A4 80	1-49
312105-0497 ..	SCREW, M6S ISO 4017 M10X35 A4 80	2-69, 3-73, 3-85, 3-87, 5-21
312105-0532 ..	SCREW, M6S ISO 4017 M12X20 A4 80	2-99, 9-53
312105-0538 ..	SCREW, M6S ISO 4017 M12X35 A4 80	3-13
312105-0628 ..	SCREW, M6S ISO 4017 M16X40 A4 80	2-29
312105-0289 ..	SCREW, M6S ISO 4017 M4X10 A4 70	2-117, 3-89, 5-5
312105-0291 ..	SCREW, M6S ISO 4017 M4X12 A4 70	1-99, 1-101, 3-173, 6-87
312105-0293 ..	SCREW, M6S ISO 4017 M4X16 A4 70	4-13
312105-0299 ..	SCREW, M6S ISO 4017 M4X30 A4 70	4-21, 7-17
312105-0303 ..	SCREW, M6S ISO 4017 M4X40 A4 70	2-63, 2-65
312105-0287 ..	SCREW, M6S ISO 4017 M4X8 A4 70	2-17, 2-19, 2-75, 3-141, 3-143, 9-83, 9-85, 9-91
312105-0325 ..	SCREW, M6S ISO 4017 M5X10 A4 80	2-61, 2-79, 2-81, 6-23, 7-7, 9-49, 9-71
312105-0327 ..	SCREW, M6S ISO 4017 M5X12 A4 80	1-17, 1-35, 1-63, 1-85, 1-91, 2-69, 2-71, 2-79, 2-81 2-103, 2-115, 2-117, 3-87, 3-111, 3-113, 3-141, 3-143, 4-21, 5-15, 5-19, 5-23, 5-25
312105-0329 ..	SCREW, M6S ISO 4017 M5X16 A4 80	1-19, 1-25, 1-37, 1-65, 1-87, 2-63, 2-65, 2-99, 2-101 2-115, 2-131, 3-69, 3-107, 5-15, 5-19, 9-5, 9-43, 9-53, 9-103, 9-105, 9-107, 9-109
312105-0331 ..	SCREW, M6S ISO 4017 M5X20 A4 80	1-99, 1-101, 2-41, 2-75, 2-103, 2-115, 3-15, 3-85, 3-87 4-7, 4-11, 5-13, 5-15, 5-17, 5-19, 9-67
312105-0333 ..	SCREW, M6S ISO 4017 M5X25 A4 80	2-61, 2-63, 2-65, 2-79, 2-81, 3-81
312105-0364 ..	SCREW, M6S ISO 4017 M6X10 A4 80	1-17, 1-35, 1-63, 1-85, 2-83, 3-81, 3-101, 4-13, 4-21 9-55, 9-61
312105-0366 ..	SCREW, M6S ISO 4017 M6X12 A4 80	1-7, 1-11, 1-13, 1-31, 1-39, 1-77, 1-95, 2-25, 2-27, 2-33

Part No	Description	Page No
		2-35, 2-37, 2-69, 2-79, 2-81, 2-107, 2-117, 3-15, 3-65, 3-67, 3-89, 3-99, 3-111, 3-113, 3-119, 3-141 3-143, 3-153, 3-155, 3-157, 3-159, 4-7, 4-21, 4-31, 5-27, 6-23, 7-17, 9-39, 9-41, 9-59, 9-81, 9-83 9-85, 9-91
312105-0367 ..	SCREW, M6S ISO 4017 M6X14 A4 80	2-69, 3-57
312105-0368 ..	SCREW, M6S ISO 4017 M6X16 A4 80	1-13, 1-17, 1-29, 1-33, 1-35, 1-39, 1-63, 1-85, 1-95, 2-31 2-63, 2-65, 2-69, 2-71, 2-75, 2-77, 2-83, 2-89, 2-103, 2-107, 2-109, 2-117, 2-125, 2-127, 2-129 2-133, 3-23, 3-25, 3-45, 3-47, 3-63, 3-65, 3-73, 3-75, 3-79, 3-81, 3-83, 3-107, 3-119, 3-141, 3-143 3-149, 3-151, 3-169, 4-7, 5-21, 5-23, 5-25, 5-27, 6-23, 6-81, 9-39, 9-41, 9-43, 9-45, 9-61, 9-83 9-85, 9-93, 9-95, 9-101, 9-105, 9-107, 9-109
312105-0370 ..	SCREW, M6S ISO 4017 M6X20 A4 80	1-31, 1-81, 2-9, 2-13, 2-15, 2-17, 2-19, 2-23, 2-29, 2-63 2-65, 2-69, 2-71, 2-75, 2-79, 2-81, 2-109, 2-111, 2-115, 2-119, 2-125, 3-27, 3-37, 3-59, 3-69, 3-83 3-103, 3-105, 3-111, 3-113, 3-141, 3-143, 3-161, 3-163, 3-171, 4-21, 4-27, 9-17, 9-65, 9-83, 9-85, 9-91
312105-0372 ..	SCREW, M6S ISO 4017 M6X25 A4 80	1-9, 1-15, 1-33, 1-61, 1-83, 1-95, 1-99, 1-101, 2-37, 2-49 2-101, 2-103, 2-107, 2-109, 2-111, 2-117, 3-67, 3-69, 3-71, 3-73, 3-89, 4-7, 4-9, 4-21, 4-23, 4-27 4-31, 5-5, 5-7, 5-15, 5-19, 6-11, 9-13, 9-27, 9-81
312109-0374 ..	SCREW, M6S ISO 4017 M6X30 A4 80	2-79, 2-81, 3-83
312109-0376 ..	SCREW, M6S ISO 4017 M6X35 A4 80	1-91
312109-0380 ..	SCREW, M6S ISO 4017 M6X50 A4 80	7-11, 7-13
312105-0362 ..	SCREW, M6S ISO 4017 M6X8 A4 80	1-53, 2-63, 2-65
90459-4735	SCREW, M6S ISO 4017 M8X10 A4 80	1-71, 1-83
312105-0449 ..	SCREW, M6S ISO 4017 M8X16 A4 80	1-13, 1-15, 1-49, 1-51, 1-53, 1-69, 1-75, 1-83, 2-61, 2-63 2-65, 3-31, 3-35, 3-37, 3-141, 3-143, 5-11, 7-11, 7-13, 9-29, 9-49, 9-83, 9-85
312105-0451 ..	SCREW, M6S ISO 4017 M8X20 A4 80	1-49, 1-61, 1-63, 1-65, 1-77, 1-83, 1-85, 1-87, 1-93, 2-33 2-35, 2-41, 2-59, 2-63, 2-65, 2-69, 2-79, 2-81, 2-103, 2-113, 3-73, 3-103, 3-105, 3-107, 4-7, 5-5 7-5, 9-29, 9-35, 9-55, 9-59, 9-81
312105-0453 ..	SCREW, M6S ISO 4017 M8X25 A4 80	1-11, 1-13, 1-17, 1-31, 1-33, 1-35, 1-37, 1-61, 1-63, 1-65 1-81, 1-85, 1-87, 1-93, 1-97, 2-9, 2-13, 2-15, 2-63, 2-65, 2-69, 2-77, 2-91, 2-93, 2-97, 3-9, 3-65 3-83, 3-85, 3-87, 3-107, 4-9, 4-29, 4-31, 5-15, 5-19, 6-23, 9-17, 9-37, 9-43, 9-51
312105-0455 ..	SCREW, M6S ISO 4017 M8X30 A4 80	1-15, 1-19, 1-53, 1-75, 1-81, 1-95, 2-13, 2-15, 2-59, 2-61 2-63, 2-65, 2-69, 2-77, 2-107, 2-117, 3-11, 3-23, 3-65, 3-161, 4-11, 4-21, 4-27, 4-31, 5-5, 9-53
312109-0457 ..	SCREW, M6S ISO 4017 M8X35 A4 80	3-9
312109-0459 ..	SCREW, M6S ISO 4017 M8X40 A4 80	2-79, 2-81, 4-5, 4-7
312109-0465 ..	SCREW, M6S ISO 4017 M8X70 A4 80	4-19, 9-25, 9-39, 9-41
312109-0467 ..	SCREW, M6S ISO 4017 M8X80 A4 80	1-99, 1-101
312113-0287 ..	SCREW, SERRATED COMBI TORX M4X8 A2	6-23, 6-65
312113-0323 ..	SCREW, SERRATED COMBI TORX M5X8 A2	6-65
312113-0366 ..	SCREW, SERRATED COMBI TORX M6X12 A2	6-59, 6-61, 6-65
975939-0000 ..	SEAL	2-25, 2-27, 3-111, 3-113
90157-0041	SEALING COMPOUND, RHODORSEAL 5651	1-17, 1-35, 1-63, 1-85, 2-129, 2-139, 2-141, 2-143 2-145, 2-147, 3-149, 3-151, 3-165, 3-167, 9-13
90458-1208	SEALING, CHANNEL 1 BLOCKED	2-35, 3-119
90458-1207	SEALING, STANDARD	2-35, 2-37, 3-119, 5-27
90235-0451	SELECTOR ACTUATOR, N-22-SW	3-87
90143-0097	SELF GRIPPING GASKET, 1011-24	9-73
90239-0571	SENSOR BRACKET, FOR SMEO-1, SMTO-1	1-93
90458-2598	SENSOR BRACKET, FOR CYL 16	2-79, 2-81
90458-0531	SENSOR BRACKET, FOR CYL 20	2-115
90450-0808	SENSOR BRACKET, FOR CYL 25	2-71, 3-63, 3-67
90459-2780	SENSOR BRACKET, SMBR-8-32	4-17
344269-0020 ..	SENSOR CABLE, EVT217	6-89, 6-91, 9-77, 9-79
90603-2799	SENSOR CABLE, EVC071	6-89, 6-91
344267-0020 ..	SENSOR CABLE, EVT043	6-89, 6-91
344267-0050 ..	SENSOR CABLE, EVT044	6-89, 6-91
344245-0020 ..	SENSOR CABLE, EVT122	2-17, 2-19
344245-0050 ..	SENSOR CABLE, EVT123	9-91
344249-0050 ..	SENSOR CABLE, EVT135	6-89, 6-91
344257-0006 ..	SENSOR CABLE, EVT143	6-89, 6-91
344257-0010 ..	SENSOR CABLE, EVT144	6-89, 6-91
344257-0020 ..	SENSOR CABLE, EVT145	6-89, 6-91
344257-0050 ..	SENSOR CABLE, EVT146	2-17, 2-19, 6-89, 6-91
344257-0015 ..	SENSOR CABLE, EVT202	6-89, 6-91, 9-43, 9-49, 9-55
344259-0020 ..	SENSOR CABLE, EVT203	6-89, 6-91
344259-0050 ..	SENSOR CABLE, EVT204	6-89, 6-91
344260-0020 ..	SENSOR CABLE, EVT211	6-89, 6-91
344263-0020 ..	SENSOR CABLE, EVT239	6-89, 6-91
344263-0015 ..	SENSOR CABLE, EVT241	6-89, 6-91
344259-0015 ..	SENSOR CABLE, EVT28	6-89, 6-91
344259-0010 ..	SENSOR CABLE, EVT281	6-89, 6-91
344260-0050 ..	SENSOR CABLE, EVT286	6-89, 6-91, 8-13
344267-0015 ..	SENSOR CABLE, EVT288	6-89, 6-91
344297-0030 ..	SENSOR CABLE, SAC-8P-3,0-PVC/M12FR SH VA	9-91
3132459-0100 .	SET OF ANSI SIGN	9-21, 9-57
2802473-0000 .	SET OF SIGNS	9-13
2970909-0000 .	SET OF SIGNS	2-17, 2-19
90459-7293	SET SCREW DIN 551M5X8 PA66	1-61
312318-0291 ..	SET SCREW, CUP END ISO4029 M4X12 A4	3-59, 3-67
312318-0320 ..	SET SCREW, CUP END ISO4029 M5X5 A4	2-111
312318-0323 ..	SET SCREW, CUP END ISO4029 M5X8 A4	5-13, 5-17
312318-0364 ..	SET SCREW, CUP END ISO4029 M6X10 A4	9-17
312318-0366 ..	SET SCREW, CUP END ISO4029 M6X12 A4	4-31
312318-0368 ..	SET SCREW, CUP END ISO4029 M6X16 A4	1-11, 1-31, 2-79, 2-81, 4-17
312318-0370 ..	SET SCREW, CUP END ISO4029 M6X20 A4	2-103
312318-0372 ..	SET SCREW, CUP END ISO4029 M6X25 A4	1-75, 2-139, 2-141, 2-143, 2-145, 2-147, 2-149

Part No	Description	Page No
		2-151, 3-149, 3-151, 3-165, 3-167
312318-0360 ..	SET SCREW, CUP END ISO4029 M6X6 A4	2-61, 3-41, 3-43, 3-79, 3-107, 4-7, 4-9, 4-15, 5-5
312318-0362 ..	SET SCREW, CUP END ISO4029 M6X8 A4	3-47, 5-15, 5-19
312316-0362 ..	SET SCREW, CUP END ISO4029 M6X8 FZB	3-69
312318-0447 ..	SET SCREW, CUP END ISO4029 M8X12 A4	4-25
312318-0449 ..	SET SCREW, CUP END ISO4029 M8X16 A4	1-51
312318-0443 ..	SET SCREW, CUP END ISO4029 M8X8 A4	1-97, 3-13, 3-31, 3-41, 3-45, 3-107, 4-9, 5-5
312311-0368 ..	SET SCREW, DOG POINT ISO4028 M6X16 FZB	3-85, 3-87
312311-0374 ..	SET SCREW, DOG POINT ISO4028 M6X30 FZB	1-99, 1-101
344324-0453 ..	SET SCREW, DOG POINT ISO4028 M8X25 A2	3-77
3090595-0000 .	SETTING SCREW	2-59, 2-63, 2-65
1021004-0000 .	SHAFT	3-13
1021129-0000 .	SHAFT	3-79
1021148-0000 .	SHAFT	3-107
1021150-0000 .	SHAFT	3-107
1021159-0000 .	SHAFT	3-107
1021199-0000 .	SHAFT	4-9
1021215-0000 .	SHAFT	4-7
1065842-0000 .	SHAFT	3-37
1065849-0000 .	SHAFT	3-37
1074390-0000 .	SHAFT	9-17
1128886-0000 .	SHAFT	4-29
1502560-0000 .	SHAFT	2-91, 2-93, 2-97, 9-51
1502810-0000 .	SHAFT	3-49, 3-51
2504052-0000 .	SHAFT	5-21
2504197-0000 .	SHAFT	2-115
2504323-0000 .	SHAFT	3-59
2504325-0000 .	SHAFT	3-59
2504330-0000 .	SHAFT	3-59
2557201-0000 .	SHAFT	3-45
2561227-0001 .	SHAFT	1-77
2561267-0000 .	SHAFT	1-73
2763045-0000 .	SHAFT	2-61
2771132-0000 .	SHAFT	4-15
2771133-0000 .	SHAFT	4-15
2771222-0000 .	SHAFT	2-117
2782745-0000 .	SHAFT	2-117
2787830-0000 .	SHAFT	2-95
2807903-0000 .	SHAFT	9-29
2829376-0000 .	SHAFT	1-97
2829377-0000 .	SHAFT	1-97
2833962-0000 .	SHAFT	1-97
2851954-0000 .	SHAFT	1-99, 1-101
2877469-0000 .	SHAFT	1-99, 1-101
2877481-0000 .	SHAFT	2-71
2877482-0000 .	SHAFT	2-71
2894968-0000 .	SHAFT	3-31
2894977-0000 .	SHAFT	2-99
2933261-0000 .	SHAFT	1-51
2933269-0000 .	SHAFT	1-53
2950350-0000 .	SHAFT	2-115
2950351-0000 .	SHAFT	2-115
2950352-0000 .	SHAFT	2-115
2950358-0000 .	SHAFT	2-63, 2-65
2959003-0000 .	SHAFT	3-41
2959013-0000 .	SHAFT	2-71
2970907-0000 .	SHAFT	5-5
3020219-0000 .	SHAFT	1-57
3046530-0000 .	SHAFT	2-59, 2-63, 2-65
3097793-0000 .	SHAFT	2-71
3101125-0000 .	SHAFT	2-113
3127719-0000 .	SHAFT	1-59
3137723-0000 .	SHAFT	4-19
3156681-0000 .	SHAFT	4-21
3156685-0000 .	SHAFT	4-21
3173376-0000 .	SHAFT	3-79
3173382-0000 .	SHAFT	3-79
3193242-0000 .	SHAFT	4-17
3196757-0000 .	SHAFT	3-65
3196765-0000 .	SHAFT	3-65
3196770-0000 .	SHAFT	3-67
3196773-0000 .	SHAFT	3-67
3199164-0000 .	SHAFT	5-11
3199172-0000 .	SHAFT	5-11
3207651-0000 .	SHAFT	5-15, 5-19
3207657-0000 .	SHAFT	5-13, 5-17
3213476-0000 .	SHAFT	3-69
3213477-0000 .	SHAFT	3-69
3213478-0000 .	SHAFT	3-65, 3-69
3227818-0000 .	SHAFT	4-31
3227819-0000 .	SHAFT	4-31
3231395-0000 .	SHAFT	4-15
3231396-0000 .	SHAFT	4-15

Part No	Description	Page No
3238148-0000	SHAFT	3-83
3238155-0000	SHAFT	3-11
3249938-0000	SHAFT	3-47
3251368-0000	SHAFT	3-73
3264182-0000	SHAFT	3-61
3265504-0000	SHAFT	9-53
3266389-0000	SHAFT	3-69
2970878-0000	SHEET	2-89
3265485-0000	SHEET	9-49
90296-0068	SHELL ALVANIA GREASE EP 2 (CARTR.400G)	3-11
2787843-0000	SHOCK ABSORBER	2-75, 2-117
90459-1852	SHUT OFF VALVE, MS6-EM1-1/2	2-21
484701-0000 ..	SHUTTER	1-17, 1-35, 1-63, 1-85, 9-25, 9-39, 9-41
1021041-0600	SIDE ADJUST FRONT	3-39
1021032-0600	SIDE ADJUST REAR	3-39
2834011-0200	SIDE ADJUSTER	1-89
3196746-0100	SIDE FOLDER	3-39
3207666-0000	SIDE PIECE	5-7
3207670-0000	SIDE PIECE	5-7
531484-0001 ..	SIDE PLATE	1-31
531484-0002 ..	SIDE PLATE	1-31
532382-0000 ..	SIDE PLATE	1-39
1086421-0000	SIDE PLATE	1-13
1086422-0000	SIDE PLATE	1-13
2561149-0000	SIDE PLATE	1-75
2681810-0000	SIDE PLATE	1-77
2807821-0000	SIDE PLATE	9-35
2807901-0000	SIDE PLATE	9-29
2807902-0000	SIDE PLATE	9-29
2881039-0000	SIDE PLATE	1-71
2881040-0000	SIDE PLATE	1-71
2939232-0000	SIDE PLATE	1-61
3093547-0000	SIDE PLATE	2-107
3111405-0000	SIDE PLATE	1-49
3111406-0000	SIDE PLATE	1-49
3207664-0000	SIDE PLATE	5-13, 5-17
3227806-0000	SIDE PLATE	3-81, 9-61
3227807-0000	SIDE PLATE	3-81, 9-61
3231391-0000	SIDE PLATE	4-13
3231392-0000	SIDE PLATE	4-13
3231393-0000	SIDE PLATE	4-21
3231394-0000	SIDE PLATE	4-21
3231402-0000	SIDE PLATE	4-13
3231403-0000	SIDE PLATE	4-13
3251396-0000	SIDE PLATE	4-23
3231390-0100	SIDE STEERING	4-3
1086870-0000	SIGN	9-21, 9-57
2834005-0000	SIGN	8-7
3245335-0000	SIGN	6-23
3263737-0000	SIGN	6-69, 6-71, 6-73, 8-9
3151627-0000	SIGN & MARKING	6-69, 6-71, 6-73, 8-5
3245372-0000	SIGN & MARKING	6-69, 6-71, 6-73, 6-75, 6-77, 6-79, 8-5
3245374-0000	SIGN & MARKING	6-69, 6-71, 6-73, 8-5
3263647-0000	SIGN & MARKING	6-65
359240-0100 ..	SIGN HOLDER FOR 359240-0001	6-69, 6-71, 6-73
273458-0000 ..	SIGN, AIR	2-41
273455-0000 ..	SIGN, COLD WATER	2-41
90194-0152	SIGN, EARTH	6-9, 6-11, 6-65, 6-69, 6-71, 6-73, 6-75, 6-77, 6-79, 6-83, 9-87
90111-0344	SIGN, PE, GREEN/YELLOW	6-65
90194-0118	SIGN, RESIDUAL VOLTAGE, WAIT 5 MIN.	6-69, 6-71, 6-73, 6-75, 6-77, 6-79, 8-9
359241-0803 ..	SIGN: "SUPPLY DISCONNECTING DEVICE"	6-69, 6-71, 6-73
90601-1586	SILENCER, G1"	2-21
90328-0047	SILENCER, G1/8"	2-35, 2-37, 3-119, 5-27, 9-43
90328-0024	SILENCER, G3/8"	2-35, 2-37, 3-119, 5-27
90328-0029	SILENCER, M5	3-87
90459-5787	SILENCER, U-1/2-B	2-21
90602-4631	SIREN 100DB, PSD-S AE SM8-5 100DB/1	3-121
549659-0000 ..	SLEEVE	1-13
578196-0000 ..	SLEEVE	2-125, 2-127, 2-129, 2-133, 2-135, 2-137, 3-157, 3-159, 3-161, 3-163, 3-169, 3-171, 6-85, 9-63, 9-65
1086180-0000	SLEEVE	1-13, 1-15
1086637-0000	SLEEVE	1-9
2504194-0000	SLEEVE	2-115
2504313-0000	SLEEVE	2-71
2802469-0000	SLEEVE	2-61
2959002-0000	SLEEVE	3-41
90134-0030	SLEEVE FOR PLASTIC TUBE	7-15, 7-17
90134-0031	SLEEVE FOR PLASTIC TUBE	7-5, 7-7, 7-9, 7-15, 7-17
350012-0005 ..	SLEEVE QSH-F-12	2-17, 2-19, 3-119
350012-0003 ..	SLEEVE QSH-F-8	3-17, 5-27
90330-0102	SLEEVE, INT, THREAD, NO., R-201R1/4	9-5
2656682-0000	SLIDE PLATE	1-57, 1-79
2718879-0000	SLIDE PLATE	1-83
2872736-0000	SLIDE PLATE	2-117

Part No	Description	Page No
2872737-0000	SLIDE PLATE	2-117
3253277-0000	SLIDE PLATE	6-23
464071-0002 ..	SLIDE RAIL	1-39
464071-0006 ..	SLIDE RAIL	1-39
464071-0007 ..	SLIDE RAIL	1-31
531503-0000 ..	SLIDE RAIL	1-31
1021085-0000	SLIDE RAIL	3-81, 9-61
1021086-0000	SLIDE RAIL	3-81, 9-61
1021087-0000	SLIDE RAIL	3-81, 9-61
1086423-0000	SLIDE RAIL	1-13
1086424-0000	SLIDE RAIL	1-13
2720926-0000	SLIDE RAIL	2-89
2851983-0000	SLIDE RAIL	1-33
2895009-0000	SLIDE RAIL	2-89
2895010-0000	SLIDE RAIL	2-89
3227824-0000	SLIDE RAIL	4-31
3238146-0000	SLIDE RAIL	3-83
3238147-0000	SLIDE RAIL	3-83
547183-0000 ..	SLIDE SHEET	1-13
2844935-0000	SLIDE SHEET	2-107
2844936-0000	SLIDE SHEET	2-107
466074-0002 ..	SLIDER	1-31, 1-33, 1-39
1139155-0000	SLIDER	3-37
1466401-0000	SLIDER	3-81, 9-61
90600-0429	SLIDER, WM-01-20	4-31
1021208-0000	SLIDING STRIP	4-7
1021209-0000	SLIDING STRIP	4-7
1065371-0000	SLIDING STRIP	4-7
1550595-0680	SLIDING STRIP	1-71
1550595-6180	SLIDING STRIP	1-83
1550595-6603	SLIDING STRIP	1-71
1550595-6604	SLIDING STRIP	1-71
2807859-0015	SLIDING STRIP	9-29
2807859-0199	SLIDING STRIP	9-29
2807859-0496	SLIDING STRIP	9-35
2807859-0631	SLIDING STRIP	1-61
3096200-0000	SLIDING STRIP	2-69
3127713-0000	SLIDING STRIP	1-49
3127714-0000	SLIDING STRIP	1-49
90459-5189	SLIM POWER RAIL, KINETIX, 2 AXIS	6-49
312125-0226 ..	SLOTTED HEAD SCREW, ISO1207 M3X12 A4	1-19, 1-23, 1-25, 1-37, 1-65, 1-87, 2-75, 2-107, 9-43, 9-99, 9-103
312125-0228 ..	SLOTTED HEAD SCREW, ISO1207 M3X16 A4	1-91, 1-99, 1-101, 9-91
312125-0230 ..	SLOTTED HEAD SCREW, ISO1207 M3X20 A4	2-69, 3-123
312125-0232 ..	SLOTTED HEAD SCREW, ISO1207 M3X25 A4	1-101, 2-31, 2-39, 2-43, 2-45, 3-19, 3-125, 5-23, 5-25
312125-0234 ..	SLOTTED HEAD SCREW, ISO1207 M3X30 A4	1-93, 3-141, 3-143, 9-83, 9-85
312125-0222 ..	SLOTTED HEAD SCREW, ISO1207 M3X8 A4	4-7
312125-0291 ..	SLOTTED HEAD SCREW, ISO1207 M4X12 A4	2-9, 2-11, 3-129, 6-65, 9-93, 9-95
312125-0293 ..	SLOTTED HEAD SCREW, ISO1207 M4X16 A4	2-47, 2-51, 3-127, 9-93, 9-95, 9-111
312125-0285 ..	SLOTTED HEAD SCREW, ISO1207 M4X6 A4	2-67, 2-79, 2-81
312125-0287 ..	SLOTTED HEAD SCREW, ISO1207 M4X8 A4	1-19, 1-37, 1-65, 1-87, 1-91, 1-95, 2-13, 2-15, 2-25, 2-27, 2-33, 2-69, 3-111, 3-113, 4-5, 4-27, 6-37, 9-49
312125-0327 ..	SLOTTED HEAD SCREW, ISO1207 M5X12 A4	6-65
312125-0323 ..	SLOTTED HEAD SCREW, ISO1207 M5X8 A4	6-69, 6-71, 6-73, 6-75, 6-77, 6-79
312125-0366 ..	SLOTTED HEAD SCREW, ISO1207 M6X12 A4	6-65
312132-0289 ..	SLOTTED HEAD, PAN SCREW, MSCS M4X10	3-9, 3-103, 3-105
312132-0287 ..	SLOTTED HEAD, PAN SCREW, MSCS M4X8	1-97
1065410-0000	SLOTTED PIN	2-9, 2-13, 2-15, 3-9, 3-103, 3-105, 4-25, 4-29, 4-31, 6-81
90601-1168	SOCKET CONNECTOR, NECA-S1G9-P9-MP3	2-21
3265401-0004	SOFTWARE CD	6-3, 6-5
90042-0273	SOLENOID VALVE MN1H-2-1/4-MS	3-57
90042-0107	SOLENOID VALVE, 256 2/2 NC	7-11, 7-13
90459-6327	SOLENOID VALVE, SOLIDBLUE, 1053894	1-93, 3-141, 3-143, 5-23, 5-25, 9-83, 9-85
476220-0000 ..	SPACER	1-31, 1-33, 1-39
479110-0000 ..	SPACER	2-49, 3-27
497637-0003 ..	SPACER	1-31
531948-0000 ..	SPACER	1-31
547191-0001 ..	SPACER	1-13
547191-0002 ..	SPACER	1-13
570482-0000 ..	SPACER	6-37
578197-0000 ..	SPACER	2-125, 2-127, 2-129, 2-133, 2-135, 2-137, 3-157, 3-159, 3-161, 3-163, 3-171, 9-63, 9-65
599753-0000 ..	SPACER	6-87
1086173-0004	SPACER	9-25, 9-39, 9-41, 9-59
1086636-0000	SPACER	1-9
1124700-0000	SPACER	1-31
1287153-0000	SPACER	4-17
1287533-0000	SPACER	4-5
1466276-0000	SPACER	9-13
1466553-0000	SPACER	3-169
1466554-0000	SPACER	3-53
2561206-0000	SPACER	1-71, 1-83
2561226-0000	SPACER	1-77
2561230-0001	SPACER	1-77

Part No	Description	Page No
2656673-0000	.SPACER	1-73
2718828-0000	.SPACER	2-71
2718897-0000	.SPACER	2-69
2763037-0000	.SPACER	3-141, 3-143, 5-23, 5-25, 9-83, 9-85
2763128-0000	.SPACER	3-169
2807831-0000	.SPACER	1-49, 1-61, 9-29, 9-37, 9-55
2807885-0000	.SPACER	1-51, 1-53
2807904-0000	.SPACER	9-29
2829381-0000	.SPACER	2-71
2860936-0000	.SPACER	3-59
2894958-0000	.SPACER	3-35
2894981-0000	.SPACER	3-33
2920759-0000	.SPACER	2-117
2933259-0000	.SPACER	1-99, 1-101
2933267-0000	.SPACER	1-53
2933270-0000	.SPACER	1-53
2959016-0000	.SPACER	2-71
2970820-0000	.SPACER	2-79, 2-81
2970821-0000	.SPACER	2-79, 2-81
2970851-0000	.SPACER	2-79, 2-81
3046681-0000	.SPACER	3-103, 3-105
3051574-0000	.SPACER	2-9
3090049-0000	.SPACER	1-47
3119181-0000	.SPACER	6-23
3119185-0000	.SPACER	6-81
3136753-0000	.SPACER	2-133
3137724-0000	.SPACER	4-19
3157079-0000	.SPACER	4-21
3180697-0000	.SPACER	3-107
3193237-0000	.SPACER	4-17
3193243-0000	.SPACER	4-17
3257289-0000	.SPACER	2-29
3257290-0000	.SPACER	2-29
3264171-0000	.SPACER	4-17
3264179-0000	.SPACER	2-131
3264449-0000	.SPACER	1-51
3272873-0000	.SPACER	1-51
3231408-0000	.SPACER BLOCK	3-73
2995213-0000	.SPACER RING	3-13
3090580-0000	.SPACER SLEEVE	2-61
3196749-0000	.SPACER SLEEVE	3-63
3207652-0000	.SPACER SLEEVE	5-15, 5-19
90603-4534	.... SPHERICAL BALL BEARING 20/47X18	2-99, 9-53
3046678-0000	.SPLASH GUARD	3-173
90603-3972	.... SPLITTER BOX, EBC026	2-47
90603-3970	.... SPLITTER BOX, EBC043	2-51, 3-127
532404-0000	.. SPRING	1-13, 1-39
959658-0000	.. SPRING	2-139, 2-141, 2-143, 2-145, 2-147, 2-149, 2-151, 3-149, 3-151, 3-165, 3-167, 6-9, 6-69, 6-71, 6-73, 6-75, 6-77, 6-79
1021166-0000	.SPRING	3-109
1257145-0000	.SPRING	3-37
3156687-0000	.SPRING	4-21
3249939-0000	.SPRING GUIDE	3-37
3165932-0000	.SPRING HOUSING	4-21
311112-0252	.. SPRING PIN, ISO 8752 4X12 A2	3-83
311112-0256	.. SPRING PIN, ISO 8752 4X20 A2	2-79, 2-81
486858-0000	.. SPROCKET	1-31
486860-0000	.. SPROCKET	1-31
1021324-0000	.SPROCKET	3-31
1506072-0000	.SPROCKET	3-45
1506073-0000	.SPROCKET	3-51
1506074-0000	.SPROCKET	3-49
1506075-0000	.SPROCKET	3-47
1506076-0000	.SPROCKET	3-47
1506077-0000	.SPROCKET	3-45
1550606-0000	.SPROCKET	1-31
1550607-0000	.SPROCKET	1-31
2656672-0000	.SPROCKET	1-73
2656677-0000	.SPROCKET	1-75
2782768-0000	.SPROCKET	3-61
1065841-0000	.SPROCKET Z=15	3-37
90344-0072	.... SPROCKET, 12 TEETH FOR CHAIN RT 114	1-11, 1-51
90261-0048	.... SQUARE PLUG GPN 260/Q2525	2-69
315229-0101	.. SQUARE RING, 10,4X17,4X3,7 MM 1/2" FDA	2-79, 2-81
3199169-0000	.SQUEEZER	5-13, 5-17
1021942-0200	.START-UP KIT	8-3
3266372-0000	.STEER PLATE	9-81
549644-0000	.. STEERING	1-13
1021228-0000	.STEERING	4-25
1021298-0000	.STEERING	3-89, 9-81
1065918-0000	.STEERING	9-61
2970847-0000	.STEERING	2-79, 2-81
3179468-0000	.STEERING	4-21
3231399-0000	.STEERING	4-21

Part No	Description	Page No
3251388-0100	.STEERING FRONT	3-39
2920751-0000	.STEERING GUIDE	2-103
1086425-0000	.STEERING RAIL	1-13
1086426-0000	.STEERING RAIL	1-13
2970840-0000	.STEERING RAIL	2-79, 2-81
2970864-0000	.STEERING RAIL	2-79, 2-81
3251389-0100	.STEERING REAR	3-39
3245363-0000	.STIFFENING PLATE	6-23
3245366-0000	.STIFFENING PLATE	6-23
3096198-0100	.STOP ARM	2-55
3201946-0000	.STOP BLOCK	2-33
2895012-0000	.STOP PLATE	1-91
2895027-0000	.STOP PLATE	1-91
3109101-0000	.STOP PLATE	1-91
3109104-0000	.STOP PLATE	1-91
3265491-0000	.STOP PLATE	9-55
1111895-0000	.STOP RAIL	9-17
342923-0114	.. STRAIGHT COUPL.,INT.THREADED 6/4-G1/4"	3-57
342722-0205	.. STRAIGHT COUPLING D=8-G1/4"	2-31
90459-2215	.... STRAIGHT COUPLING, D=16 MM - G1/2"	2-41
342921-0132	.. STRAIGHT COUPLING, EXT.THREAD 10/8-G1/4	2-41, 3-57
90143-0057	.... STRIP EMKA 1011-05 21X11MM	6-11, 6-23
90511-8563	.... STRIPE HEIGHT 70MM, ROLL LENGTH 25M	2-25, 2-27, 3-111, 3-113, 6-85
975888-0002	.. STRUT	2-149
975888-0009	.. STRUT	6-9
975889-0005	.. STRUT	2-149
975889-0011	.. STRUT	6-9
1065847-0000	.STRUT	3-37
2802483-0000	.STRUT	9-13
2833984-0000	.STRUT	2-139, 2-147, 3-165
2833985-0000	.STRUT	2-139, 2-143, 2-147, 3-165
2870749-0000	.STRUT	3-149, 3-151
2870750-0000	.STRUT	3-149, 3-151
3051571-0000	.STRUT	2-143
3095154-0000	.STRUT	2-109
3245370-0000	.STRUT	6-69, 6-71, 6-73, 6-75, 6-77, 6-79
3245371-0000	.STRUT	6-75, 6-77, 6-79
3245373-0000	.STRUT	6-69, 6-71, 6-73
1086640-0000	.STUD SCREW	1-9
3199158-0100	.SUCTION CUP	3-91, 3-93, 3-95, 3-97
2723236-0500	.SUPPLY CONNECTION	2-5, 2-7
1021284-0000	.SUPPORT	3-69
1287531-0000	.SUPPORT	4-7
1287537-0000	.SUPPORT	4-7
2503974-0000	.SUPPORT	2-103
2718850-0100	.SUPPORT	1-69
2909541-0000	.SUPPORT	4-13
3060156-0100	.SUPPORT	9-71
3197437-0000	.SUPPORT	3-89
3265495-0000	.SUPPORT	9-55
3265496-0000	.SUPPORT	9-55
2958998-0000	.SUPPORT BLOCK	9-23
2960810-0000	.SUPPORT BLOCK	9-23
1139762-0000	.SUPPORT LEG	1-11, 1-31
2592286-0000	.SUPPORT LEG	1-81
2763106-0000	.SUPPORT PLATE	4-29
2851958-0000	.SUPPORT PLATE	1-99, 1-101
3077537-0000	.SUPPORT PLATE	2-63, 2-65
3077539-0000	.SUPPORT PLATE	2-63, 2-65
3077544-0000	.SUPPORT PLATE	2-63, 2-65
3096217-0000	.SUPPORT PLATE	2-13, 2-15
3096219-0000	.SUPPORT PLATE	2-63, 2-65
3196756-0000	.SUPPORT PLATE	3-65
3227821-0000	.SUPPORT PLATE	4-31
3231407-0000	.SUPPORT PLATE	3-81
3265500-0000	.SUPPORT PLATE	9-61
3266376-0000	.SUPPORT PLATE	9-55
3179211-0000	.SUPPORTING SHEET	9-43
3186428-0000	.SUPPORTING SHEET	9-43
3186429-0000	.SUPPORTING SHEET	9-43
3215914-0000	.SUPPORTING SHEET	3-77
3227823-0000	.SUPPORTING SHEET	4-31
3265489-0000	.SUPPORTING SHEET	9-55
90600-7487	.... SURGE PROTECTION DEV., VAL-MS 230/3+1 FM	6-51, 6-53
90165-0087	.... T-CLIP T6 FOR TUBE D=6 - 7 MM	2-33, 2-61
342748-0109	.. T-CONNECTION 12MM	2-17, 2-19
342946-0112	.. T-COUPLING,UNION 6/4	3-57
90140-0018	.... T-PIPE, INT. THREAD, 2003-1/4	7-11, 7-13
1021933-0000	.TAPE	2-9, 2-13, 2-15, 2-25, 2-27, 2-63, 2-65, 3-9, 3-103, 3-105, 6-81, 9-49, 9-55
3250596-0000	.TAPE	6-69, 6-71, 6-73, 6-75, 6-77, 6-79
90166-0202	.... TEFLON PIPE	3-141, 3-143, 5-23, 5-25, 9-77, 9-79, 9-83, 9-85
2802461-0100	.TERMINAL	6-13
3250577-0100	.TERMINAL	6-33, 6-35
3250579-0100	.TERMINAL	6-39

Part No	Description	Page No
3250580-0100	TERMINAL	6-39
3250584-0100	TERMINAL	6-59, 6-61
3250588-0100	TERMINAL	6-51, 6-53
3253292-0100	TERMINAL	6-39
90077-0113	TERMINAL BLOCK WDK 2.5	6-45, 6-47
90602-4627	TERMINAL ELEMENT, PSD-S CE-TM SPRING	3-121
90077-0123	TERMINAL FEED THROUGH	2-67
90077-0079	TERMINAL PLINTH, AKZ 4	2-49, 3-27, 6-15, 9-93, 9-95, 9-111
353022-0002	TERMINAL WNT 4 10X3	6-37
90602-4847	THREAD LOCKING, LOCTITE 243 50 ML	2-41, 2-77, 4-7
90157-0037	THREAD SEALANT LOCTITE 542	7-11, 7-13
90459-6477	THREADED INSERTS, BUSHING, M4	6-37
90235-0846	THROTTLE CHECK VALVE G1/8", MANUAL, 6	2-69, 2-77, 2-115, 9-43
90235-0839	THROTTLE CHECK VALVE, AS2002F-06	2-109
90235-0817	THROTTLE CHECK VALVE, G1/8", MANUAL	2-35
90603-0056	THROTTLE CHECK VALVE, MANUAL, 8MM	2-109
3090594-0000	THRUST WASHER	2-59, 2-63, 2-65
321131-0220	THRUST WASHER, 16X22X1,5 MM	1-97
321130-0220	THRUST WASHER, 16X30X1,5 MM	2-59, 2-63, 2-65
90459-3826	THRUST WASHER, 8X18X1,5 MM	3-63, 3-65, 3-69
3241268-0100	TILTER	2-105
3241266-0100	TILTING UNIT	2-87
3046527-0000	TIMING BELT	2-63, 2-65
3066687-0000	TIMING BELT	2-59
90417-0148	TIMING BELT 16T10/1750 PU	3-41
90605-5445	TIMING BELT 16T5/2800 PU	4-31
90417-0069	TIMING BELT 25T10/1610 PU	5-5
318175-0137	TIMING BELT 32T10/610 PU	1-53
90605-5443	TIMING BELT 50ATK10/2560 PU	4-17
3238129-0000	TIMING BELT PULLEY	4-31
90601-0786	TIMING BELT TK5K6 800X50 MM	1-99, 1-101
2877470-0000	TOOTHED PULLEY	1-99, 1-101
2950359-0000	TOOTHED PULLEY	3-41, 3-43
3066680-0000	TOOTHED PULLEY	2-59, 2-63, 2-65
3096212-0000	TOOTHED PULLEY	2-59, 2-63, 2-65
3193240-0000	TOOTHED PULLEY	4-19
3193241-0000	TOOTHED PULLEY	4-17
1287250-0000	TOOTHED PULLEY Z=16	5-5
2933268-0000	TOOTHED PULLEY Z=28	1-53
3046680-0100	TOP SECTION	3-145, 3-147
3227827-0100	TOP SUPPORT	4-3
351439-1103	TOP THERM BLUE-E ROOFMOUNT SS, 3359.600	9-87
315757-5100	TOP THERM FILTER FAN, SK 3241.100	6-69, 6-71, 6-73, 6-75, 6-77, 6-79
90355-0031	TORQUE RIGID COUPLING, 10X10 MM	3-23, 3-33
90459-1356	TORS. SPRING SS 2388 LEFT	2-115
90459-1355	TORS. SPRING SS 2388 RIGHT	2-115
3112737-0000	TOUCH GUARD	6-65
3265396-1003	TPOP HMI	6-97
2787868-0500	TRANSFER BELT	2-55
1124043-0600	TRANSFER BELT MOTOR	2-87
3241262-0100	TRANSFER BODY	2-87
2752731-0300	TRANSFER GUIDE RAIL	2-55
3090589-0000	TRANSFER PLATE	2-63, 2-65
3096210-0000	TRANSFER PLATE	2-61
3196751-0100	TRANSFER PLATE GUIDE	3-39
3241264-0100	TRANSFER STOP PLATE	2-55
2792365-0500	TRANSFER UNIT	2-3
90603-2683	TRANSFORMER, 1-PH 500VA	6-59, 6-61
1287196-0600	TRAY FORMING LUBRICATION DISTRIBUTION	7-3
3199159-0100	TRAY HOLDER	3-39
3231386-0100	TRAY SUPPORT	3-39
90166-0141	TUBE 10 MM PA TRANSP.	2-41
90166-0143	TUBE 2,5 MM PA TRANSP.	2-63, 2-65
90166-0109	TUBE 4 MM PA TRANSP.	7-5, 7-7, 7-17
90458-0725	TUBE 400MM, PSD-S ME T-M 400	3-121
90166-0108	TUBE 6 MM PA TRANSP.	7-11, 7-13, 7-15, 7-17
315400-0008	TUBE PUN-H-10X1,5-NT	3-57
315400-0010	TUBE PUN-H-12X2-BL	2-17, 2-19, 2-35, 2-37, 3-119, 5-27
315400-0013	TUBE PUN-H-16-2,5-BL	2-41
315400-0016	TUBE PUN-H-4X0,75-BL	2-75, 2-119, 3-65, 3-67, 5-11, 5-13, 5-17, 5-21
315400-0002	TUBE PUN-H-6X1-NT	3-57
315400-0004	TUBE PUN-H-8X1,25-BL	1-93, 2-17, 2-19, 2-35, 2-37, 2-71, 2-109, 2-117, 3-17, 3-73, 3-79, 3-83, 3-109, 3-119, 3-141, 3-143, 5-11, 5-15, 5-23, 5-25, 5-27, 9-83, 9-85
90601-7790	TUBULAR RIVET	1-49, 9-29, 9-35
90600-6183	TUBULAR RIVET 3,5X6,2	1-71
1466273-0000	TUNNEL	9-13
1466274-0000	TUNNEL	9-13
1466275-0000	TUNNEL	9-13
2851971-0100	TUNNEL	1-67
2851972-0100	TUNNEL	1-27
2851973-0100	TUNNEL	1-5
2950336-0100	TUNNEL	1-41
2851968-0000	TUNNEL HALF	1-17, 1-35, 1-63, 1-85
2851969-0000	TUNNEL HALF	1-17, 1-35, 1-63, 1-85

Part No	Description	Page No
90237-0175	TURNING HANDLE, 1125-U185-0A	2-139, 2-143, 2-147, 2-149, 3-149, 3-151, 3-165, 6-9, 6-69, 6-71, 6-73, 6-75, 6-77, 6-79
3091991-0100 .	TURNING WHEEL	1-45
3264448-0100 .	TURNING WHEEL	1-45
90600-0387	ULTRASONIC SENSOR, UM18-51111	2-77
2950328-0200 .	UNIT CONVEYOR 24	1-3
2718848-0300 .	UNIT CONVEYOR 54	1-3
2771175-0500 .	UPPER SECTION	3-3, 3-5
90603-3198	USB CAB. VS-04-2X2X26C7/7-SDA/SDB/1,0	6-13, 6-21
90600-4778	USB CABLE SET, 5A9000.54	6-13, 6-21
90601-6430	USB CABLE, 90601-6430	9-71
90091-0418	V-RING 31X39X7,5 MM V-35A	1-99, 1-101
315220-0204 ..	V-RING 49X59X13 MM V-55S	3-45, 3-47, 3-49, 3-51
90459-5410	VALVE BODY, 3/2 MONOSTABLE NC	2-119
90458-1199	VALVE CLOSED IN MID-POSITION, 5/3	2-37
2808763-0300 .	VALVE GROUP	2-55
90458-1200	VALVE OPEN IN MID-POSITION 5/3	2-35, 2-37, 3-119
90458-1198	VALVE OPEN IN MID-POSITION, 5/3	2-35
2763086-0500 .	VALVE RAMP	2-5, 2-7
2763089-0400 .	VALVE RAMP	2-5, 2-7
3251384-0100 .	VALVE RAMP	3-91, 3-93, 3-95, 3-97
3251385-0100 .	VALVE RAMP	5-3
90458-1197	VALVE, 5/2 BISTABLE	2-37, 3-119
90458-1194	VALVE, 5/2 MONOSTABLE	2-35, 2-37, 3-119, 5-27, 9-43
90458-1202	VALVES 2X3/2, CLOSED	2-35
90347-0007	VIBRATION DAMPER	2-71
90347-0034	VIBRATION DAMPER	2-71
90347-0011	VIBRATION DAMPER MEGI 781056	2-79, 2-81, 2-103, 2-139, 2-141, 2-143, 2-145, 2-147, 2-149, 2-151, 3-149, 3-151, 3-165, 3-167
2844976-0300 .	VOLUME PLATE	2-55
3136755-0100 .	VOLUME PLATE	2-55
3251381-0100 .	WA FRAME	5-3
1074251-0600 .	WA HEIGHT ADJUSTMENT	5-3
2763050-0300 .	WA HOTMELT EQUIPMENT	5-3
3207663-0100 .	WA SQUEEZER	5-9
3207672-0100 .	WA SQUEEZER	5-3
90603-2684	WALL SOCKET, RECEPTACLE 7599-DIN	6-59, 6-61
90459-3845	WALL SOCKET, Z-SD230	6-33, 6-35
3241287-0100 .	WARNING LAMP	3-91, 3-93, 3-95, 3-97
90459-2232	WARNING SIGN ANSI (H), DO NOT WASH	8-5
359715-0100 ..	WARNING SIGN ANSI (H), ELECTRIC SHOCK	2-49, 3-27, 6-69, 6-71, 6-73, 6-75, 6-77, 6-79, 8-5, 9-93, 9-95
359725-0100 ..	WARNING SIGN ANSI (H), ENTANGLEMENT	1-99, 1-101
90458-2634	WARNING SIGN ANSI (H), EXTERNAL VOLTAGE	6-65
90600-5591	WARNING SIGN ANSI (H), HAZARDOUS VOLTAGE	6-65
359725-0116 ..	WARNING SIGN ANSI (H), HOT SURFACE	1-99, 1-101, 8-5
359725-0124 ..	WARNING SIGN ANSI (H), PNEUMATIC ENERGY	2-109, 8-5
90600-5233	WARNING SIGN ANSI (H), READ MANUAL, AUTO	6-9, 6-65, 6-69, 6-71, 6-73, 6-75, 6-77, 6-79, 8-5
359725-0117 ..	WARNING SIGN ANSI (V), HOT SURFACE	2-59, 2-63, 2-65, 3-89, 8-5, 9-81
359725-0125 ..	WARNING SIGN ANSI (V), PNEUMATIC ENERGY	2-117, 8-5
359725-0121 ..	WARNING SIGN ANSI, HEAT ENERGY	3-141, 3-143, 5-23, 5-25, 8-5, 9-83, 9-85
359705-0001 ..	WARNING SIGN ISO, ENTANGLEMENT	1-99, 1-101
359705-0015 ..	WARNING SIGN ISO, RISK OF ELECTRIC SHOCK	2-49, 3-27, 6-65, 6-69, 6-71, 6-73, 6-75, 6-77, 6-79, 8-9, 9-93, 9-95
548599-0000 ..	WASHER	1-93, 1-97, 2-91, 2-93, 2-97, 9-51
556649-0000 ..	WASHER	3-11
575418-0000 ..	WASHER	9-13
1021039-0000 .	WASHER	3-41, 3-43, 3-47, 5-5
1021059-0000 .	WASHER	3-45, 3-47
1021130-0000 .	WASHER	3-79, 5-15, 5-19
1021152-0000 .	WASHER	3-107
1021155-0000 .	WASHER	3-107, 4-9, 4-31
1021262-0000 .	WASHER	4-15
1065851-0000 .	WASHER	3-37
1074233-0000 .	WASHER	2-61
1124736-0000 .	WASHER	2-79, 2-81
1287940-0000 .	WASHER	2-113
2511001-0000 .	WASHER	1-99, 1-101
2557202-0000 .	WASHER	3-45
2718829-0000 .	WASHER	2-71
2787832-0000 .	WASHER	2-95
2787859-0000 .	WASHER	2-97
2844996-0000 .	WASHER	2-79, 2-81
2851955-0000 .	WASHER	1-99, 1-101
2851978-0000 .	WASHER	1-99, 1-101
2864529-0000 .	WASHER	2-77
2868106-0000 .	WASHER	2-139, 2-141, 2-143, 2-145, 2-147, 3-149, 3-151, 3-165, 3-167
2895014-0000 .	WASHER	1-91
2995243-0000 .	WASHER	2-71, 2-115
3136754-0000 .	WASHER	2-61
315125-0153 ..	WASHER HIGH, TBRSB 6,4X22X4 A4	1-91, 2-103, 2-133, 3-69, 6-65, 9-13, 9-93, 9-95
315125-0165 ..	WASHER HIGH, TBRSB 8,4X26X5 A4	1-9, 2-63, 2-65, 2-69, 3-37, 3-63, 5-11, 5-15, 5-19, 9-43
90005-0064	WASHER PL.RND.NYL.4,3/9, H=0,8	6-37
90600-5066	WASHER PLAIN, DIN7349 8,4X21X4 A4	2-9, 2-13, 2-15, 2-33, 3-9, 3-103, 3-105, 6-23, 6-81

Part No	Description	Page No
		9-49, 9-55
315105-0173 ..	WASHER PLAIN, 10,5X22X2 A4 BRB	1-13, 1-31, 2-69, 2-99, 3-13, 3-35, 5-21, 9-53
315105-0178 ..	WASHER PLAIN, 13X24X2,5 A4 BRB	2-99, 3-13, 3-37, 9-53
315105-0186 ..	WASHER PLAIN, 17X30X3 A4 BRB	2-29
315105-0192 ..	WASHER PLAIN, 21X36X3 A4 BRB	1-99, 1-101
315105-0124 ..	WASHER PLAIN, 3,2X6X0,5 A4 BRB	1-19, 1-37, 1-65, 1-87, 1-93, 1-99, 1-101, 4-7, 7-7
315105-0136 ..	WASHER PLAIN, 4,3X9X0,8 A4 BRB	1-19, 1-37, 1-65, 1-87, 1-99, 1-101, 2-13, 2-15, 2-17, 2-19 2-67, 2-75, 3-9, 3-111, 3-113, 3-141, 3-143, 4-5, 4-11, 4-13, 4-21, 5-5, 6-9, 6-11, 6-65, 6-69, 6-71 6-73, 6-75, 6-77, 6-79, 6-87, 7-17, 9-49, 9-83, 9-85
315105-0146 ..	WASHER PLAIN, 5,3X10X1 A4 BRB	1-17, 1-19, 1-25, 1-35, 1-37, 1-63, 1-65, 1-87, 1-91, 1-99 1-101, 2-41, 2-61, 2-69, 2-71, 2-75, 2-79, 2-81, 2-99, 2-101, 2-103, 2-115, 2-131, 2-139, 2-143 2-147, 2-149, 3-15, 3-111, 3-113, 3-121, 3-149, 3-151, 3-165, 4-7, 4-11, 4-15, 5-23, 5-25, 6-9, 6-65 6-69, 6-71, 6-73, 6-75, 6-77, 6-79, 7-7, 9-13, 9-17, 9-53, 9-103, 9-105, 9-107, 9-109
315105-0153 ..	WASHER PLAIN, 6,4X12X1,5 A4 BRB	1-7, 1-9, 1-11, 1-13, 1-15, 1-17, 1-29, 1-31, 1-33, 1-35 1-39, 1-61, 1-63, 1-75, 1-77, 1-81, 1-83, 1-91, 1-97, 1-99, 1-101, 2-9, 2-13, 2-15, 2-17, 2-19, 2-23 2-25, 2-27, 2-29, 2-31, 2-33, 2-35, 2-37, 2-49, 2-69, 2-71, 2-75, 2-79, 2-81, 2-101, 2-103, 2-115 2-119, 2-125, 2-127, 2-129, 2-139, 2-141, 2-143, 2-145, 2-147, 2-149, 2-151, 3-9, 3-15, 3-25, 3-27 3-37, 3-53, 3-55, 3-57, 3-99, 3-101, 3-103, 3-105, 3-111, 3-113, 3-141, 3-143, 3-149, 3-151, 3-153 3-155, 3-157, 3-159, 3-161, 3-163, 3-165, 3-167, 3-169, 3-171, 4-5, 4-7, 4-9, 4-13, 4-15, 4-21, 4-23 4-29, 5-5, 5-7, 5-21, 5-23, 5-25, 6-9, 6-11, 6-65, 7-11, 7-13, 9-13, 9-17, 9-27, 9-45, 9-83, 9-85, 9-93 9-95, 9-101, 9-105, 9-107, 9-109
315103-0153 ..	WASHER PLAIN, 6,4X12X1,5 BR NI PL	1-53
315105-0156 ..	WASHER PLAIN, 6,7X14X1,5 A4 BRB	2-117, 3-41, 3-43, 3-45, 3-47, 3-149, 3-151
315101-0153 ..	WASHER PLAIN, BRB, 6,4/12 H=1,5	6-9, 6-83, 9-87
315101-0165 ..	WASHER PLAIN, BRB, 8,4/16 H=1,5	3-13
315106-0173 ..	WASHER PLAIN, M10 ISO7089-10-200 HV A4	1-47, 3-63, 3-67, 3-73, 3-79, 3-85, 3-87, 5-15, 5-19
315106-0178 ..	WASHER PLAIN, M12 ISO7089-12-200 HV A4	3-107, 4-31
315106-0124 ..	WASHER PLAIN, M3 ISO7089-3-200 HV A4	1-91, 2-69, 2-107, 3-81, 4-21, 9-43, 9-49, 9-55, 9-91
315106-0136 ..	WASHER PLAIN, M4 ISO7089-4-200 HV A4	2-25, 2-27, 2-63, 2-65, 2-77, 3-89, 6-69, 6-71, 6-73 6-75, 6-77, 6-79, 9-91
315106-0146 ..	WASHER PLAIN, M5 ISO7089-5-200 HV A4	1-85, 1-97, 2-61, 2-63, 2-65, 2-107, 2-117, 3-17 3-69, 3-81, 3-85, 3-87, 3-107, 3-157, 3-159, 3-173, 5-13, 5-15, 5-17, 5-19, 6-23, 6-49, 6-69, 6-71 6-73, 6-75, 6-77, 6-79, 9-5, 9-43, 9-49, 9-67, 9-71, 9-91
315106-0153 ..	WASHER PLAIN, M6 ISO7089-6-200 HV A4	1-85, 2-59, 2-63, 2-65, 2-77, 2-83, 2-89, 2-107 2-109, 2-111, 2-117, 2-131, 3-13, 3-23, 3-59, 3-63, 3-65, 3-67, 3-69, 3-71, 3-73, 3-75, 3-79, 3-81 3-83, 3-85, 3-87, 3-89, 3-107, 3-109, 3-119, 4-27, 4-31, 5-11, 5-15, 5-19, 5-27, 6-23, 6-65, 6-69 6-71, 6-73, 6-75, 6-77, 6-79, 6-81, 7-17, 9-43, 9-49, 9-55, 9-61, 9-65, 9-81, 9-91
315106-0165 ..	WASHER PLAIN, M8 ISO7089-8-200 HV A4	1-85, 2-59, 2-63, 2-65, 2-107, 2-109, 2-113, 2-117 3-11, 3-23, 3-37, 3-59, 3-61, 3-63, 3-65, 3-73, 3-81, 3-85, 3-87, 3-89, 3-107, 4-27, 4-31, 9-37, 9-43 9-49, 9-55, 9-61
90005-0060	WASHER PLAIN, RBS 6,4/M6)/18,H=1,5	1-95, 2-79, 2-81, 3-69, 4-31, 6-23
315115-0153 ..	WASHER PLAIN, TBRB 6,4/12 H=3	2-49, 3-27, 7-11, 7-13
315115-0165 ..	WASHER PLAIN, TBRB 8,4/16 H=3	9-81
315121-0178 ..	WASHER PLAIN, TBRSB 13/36 H=6	3-37
315234-0110 ..	WASHER,PL.RND.CU.13,5/18 H=1,5	3-57
476975-0000 ..	WHEEL	1-13, 1-31, 1-39, 1-47
497676-0000 ..	WHEEL	1-39
549646-0000 ..	WHEEL	1-13
2535553-0000 .	WHEEL	3-81, 9-61
2656679-0000 .	WHEEL	1-77
2656683-0000 .	WHEEL	1-79
2807905-0000 .	WHEEL	9-29
3091993-0000 .	WHEEL	1-57
351162-0107 ..	WIRE AWM 1X6 MM2 YELLOW-GREEN	6-89, 6-91
90605-7874	WORM GEAR SK 1SI40-IEC 71	9-53
90055-0271	Y-CONNECTION, 12-12	2-17, 2-19, 2-35
315743-0005 ..	ÖLFLEX CONTROL TM 12G1, 281812	6-95
315743-0006 ..	ÖLFLEX CONTROL TM 18G1, 281818	6-21, 6-95
315743-0001 ..	ÖLFLEX CONTROL TM 3G1, 281803	6-95
315743-0002 ..	ÖLFLEX CONTROL TM 4G1, 281804	6-95
315743-0009 ..	ÖLFLEX CONTROL TM 4G1,5, 281604	6-95
315743-0019 ..	ÖLFLEX CONTROL TM 4G4, 281204	6-95
315743-0004 ..	ÖLFLEX CONTROL TM 7G1, 281807	6-95
315756-0002 ..	ÖLFLEX CONTROL TM CY 4G1, 281804CY	6-95
315756-0009 ..	ÖLFLEX CONTROL TM CY 4G1,5, 281604CY	6-95
315756-0003 ..	ÖLFLEX CONTROL TM CY 5G1, 281805CY	6-21, 6-95

Tetra Pak

SPC
Spare Parts Catalogue

Pos	Part No	Description	Page No
A			
A01A0080	90604-3805	OPER. PANEL 15" , 2711P-T15C4D8TP, SER A	6-13, 6-21
B			
A01B0101	90458-2730	PRESSURE SENS. SDE1-D10-G2-R18-C-P1-M8	2-17, 2-19
A01B0121	90603-1938	PRESSURE SWITCH, 1800 KPA, 28545-251-2	7-17
C50B0102	90459-7366	PHOTOCELL, WTB4-3P3161 F20	4-21
C50B0104	90459-7366	PHOTOCELL, WTB4-3P3161 F20	4-27
C50B0106	90459-7366	PHOTOCELL, WTB4-3P3161 F20	3-65
C50B0231	90600-3273	PROX. SENSOR, SMT-8M-PS-24V-K-0,3-M8D	4-17
F09B0104	90458-2730	PRESSURE SENS. SDE1-D10-G2-R18-C-P1-M8	2-17, 2-19
F40B0480	90459-4142	SAFETY SENSOR, ADAM M12, 20-051-00	2-139, 2-141
F40B0481	90458-2794	SAFETY SENSOR, EVA 20-046-00	2-139, 2-141
F40B0482	90459-4142	SAFETY SENSOR, ADAM M12, 20-051-00	2-139, 2-141
F40B0483	90458-2794	SAFETY SENSOR, EVA 20-046-00	2-139, 2-141
F40B0484	90459-4142	SAFETY SENSOR, ADAM M12, 20-051-00	2-145
F40B0485	90458-2794	SAFETY SENSOR, EVA 20-046-00	2-145
F40B0486	90459-4142	SAFETY SENSOR, ADAM M12, 20-051-00	2-143
F40B0487	90458-2794	SAFETY SENSOR, EVA 20-046-00	2-143
F40B0488	90459-4142	SAFETY SENSOR, ADAM M12, 20-051-00	2-147
F40B0489	90458-2794	SAFETY SENSOR, EVA 20-046-00	2-147
F50B0480	90459-4142	SAFETY SENSOR, ADAM M12, 20-051-00	3-165, 3-167
F50B0481	90458-2794	SAFETY SENSOR, EVA 20-046-00	3-165, 3-167
F50B0482	90459-4142	SAFETY SENSOR, ADAM M12, 20-051-00	3-165, 3-167
F50B0483	90458-2794	SAFETY SENSOR, EVA 20-046-00	3-165, 3-167
F50B0484	90459-4142	SAFETY SENSOR, ADAM M12, 20-051-00	3-149, 3-151
F50B0485	90458-2794	SAFETY SENSOR, EVA 20-046-00	3-149, 3-151
F50B0486	90459-4142	SAFETY SENSOR, ADAM M12, 20-051-00	3-149, 3-151
F50B0487	90458-2794	SAFETY SENSOR, EVA 20-046-00	3-149, 3-151
F50B0492	90459-7366	PHOTOCELL, WTB4-3P3161 F20	9-91
T40B0100	90600-3323	PHOTOCELL, WE4-3F3130F20	1-91
T40B0101	90600-3672	PHOTOCELL, WS4-3D3130S03	2-69
T40B0102	90459-5531	PHOTOCELL E3Z-T86A-D RECIEVER	2-107
T40B0103	90459-5530	PHOTOCELL E3Z-T86A-L SENDER	2-107
T40B0106	90600-0387	ULTRASONIC SENSOR, UM18-51111	2-77
T40B0201	90600-3273	PROX. SENSOR, SMT-8M-PS-24V-K-0,3-M8D	2-103
T40B0202	90600-3273	PROX. SENSOR, SMT-8M-PS-24V-K-0,3-M8D	2-103
T40B0221	90459-2392	PROX. SENSOR, SMT-C1-PS-24V-K0,3-M8-SA	2-69
T40B0252	90600-3273	PROX. SENSOR, SMT-8M-PS-24V-K-0,3-M8D	2-75
T40B0260	90600-0472	INDUCTIVE SWITCH, E2A-S08KS01-M3-B1-TP	2-117
T40B0262	90600-0472	INDUCTIVE SWITCH, E2A-S08KS01-M3-B1-TP	2-117
T40B0264	90600-0472	INDUCTIVE SWITCH, E2A-S08KS01-M3-B1-TP	2-117
T40B0266	90459-5531	PHOTOCELL E3Z-T86A-D RECIEVER	2-107
T40B0267	90459-5530	PHOTOCELL E3Z-T86A-L SENDER	2-107
T40B0271	90600-3273	PROX. SENSOR, SMT-8M-PS-24V-K-0,3-M8D	2-79, 2-81
T40B0301	90600-3272	PROX. SENSOR, SMT-8M-PS-24V-K-5,0-OE	2-71
T40B0302	90600-3272	PROX. SENSOR, SMT-8M-PS-24V-K-5,0-OE	2-71
T40B0311	90600-3272	PROX. SENSOR, SMT-8M-PS-24V-K-5,0-OE	2-115
T40B0320	90459-2392	PROX. SENSOR, SMT-C1-PS-24V-K0,3-M8-SA	2-109
T40B0322	90459-2392	PROX. SENSOR, SMT-C1-PS-24V-K0,3-M8-SA	2-109
T50B0021	90061-0027	ANGLE ENCODER, 670900035	3-23
T50B0031	90061-0027	ANGLE ENCODER, 670900035	3-33
T50B0100	90600-0459	INDUCTIVE SWITCH, E2A-M12KN05-WP-B1 5M	3-37
V50B0373	90600-3273	PROX. SENSOR, SMT-8M-PS-24V-K-0,3-M8D	5-11
V50B0381	90459-2392	PROX. SENSOR, SMT-C1-PS-24V-K0,3-M8-SA	5-21
W10B0906	90459-2986	PHOTOCELL, E3Z-LS86	9-99, 9-101, 9-103
W30B0100	90600-3673	PHOTOCELL, WE4-3F3130S03	1-99
W30B0101	90600-3723	PHOTOCELL, WS4-3D3130S05	1-101
W30B0110	90600-3673	PHOTOCELL, WE4-3F3130S03	1-19, 1-37, 1-65, 1-87
W30B0111	90600-3322	PHOTOCELL, WS4-3D3130F20	1-19, 1-37, 1-65, 1-87
W30B0114	90600-3673	PHOTOCELL, WE4-3F3130S03	1-19, 1-37, 1-65, 1-87
W30B0115	90600-3723	PHOTOCELL, WS4-3D3130S05	1-19, 1-37, 1-65, 1-87
W30B0116	90600-3673	PHOTOCELL, WE4-3F3130S03	1-99
W30B0117	90600-3322	PHOTOCELL, WS4-3D3130F20	1-101
W30B0118	90600-3673	PHOTOCELL, WE4-3F3130S03	1-19, 1-37, 1-65, 1-87
W30B0119	90600-3723	PHOTOCELL, WS4-3D3130S05	1-19, 1-37, 1-65, 1-87
W30B0140	90459-2986	PHOTOCELL, E3Z-LS86	1-23, 1-25, 1-29
W30B0242	90459-2136	PROX. SENSOR, SMEO-1-S-LED-24-B	1-93
W50B0118	90459-7366	PHOTOCELL, WTB4-3P3161 F20	9-43, 9-55
W50B0191	90600-3273	PROX. SENSOR, SMT-8M-PS-24V-K-0,3-M8D	3-59
W50B0211	90600-3273	PROX. SENSOR, SMT-8M-PS-24V-K-0,3-M8D	3-67
W50B0212	90600-3273	PROX. SENSOR, SMT-8M-PS-24V-K-0,3-M8D	3-67
W50B2040	90600-3273	PROX. SENSOR, SMT-8M-PS-24V-K-0,3-M8D	3-63
W50B2041	90600-3273	PROX. SENSOR, SMT-8M-PS-24V-K-0,3-M8D	3-63
W50B2042	90600-3273	PROX. SENSOR, SMT-8M-PS-24V-K-0,3-M8D	3-63
W50B2047	90459-7366	PHOTOCELL, WTB4-3P3161 F20	3-81
W90B0910	90459-2986	PHOTOCELL, E3Z-LS86	8-13
W90B0920	90459-7366	PHOTOCELL, WTB4-3P3161 F20	9-49
C			
F01C0090	90459-4891	IDENTIFIER, ID-FIX RW	6-59, 6-61
D			
F01D0090	90038-0021	DIODE, 1A 800V	6-13, 6-21
E			
A01E0001	351439-1103	TOP THERM BLUE-E ROOFMOUNT SS, 3359.600	9-87

Pos	Part No	Description	Page No
E			
A01E0103	90603-0472	LIGHT FIXTURE, MACH LED -MTAL 2S	9-105, 9-107, 9-109
A01E0104	90603-0472	LIGHT FIXTURE, MACH LED -MTAL 2S	9-105, 9-107, 9-109
F			
A01F0000	90600-7487	SURGE PROTECTION DEV., VAL-MS 230/3+1 FM	6-51, 6-53
A01F0001	315744-0060	MINIATURE CIRCUIT BREAKER, FAZ-C6/1-NA	6-33, 6-35
A01F0001	354000-0060	MINIATURE CIRCUIT BREAKER, FAZ-C6/1	6-33, 6-35
A01F0002	315744-0020	MINIATURE CIRCUIT BREAKER, FAZ-C2/1-NA	6-33, 6-35
A01F0002	354000-0020	MINIATURE CIRCUIT BREAKER, FAZ-C2/1	6-33, 6-35
A01F0003	315744-0060	MINIATURE CIRCUIT BREAKER, FAZ-C6/1-NA	6-33, 6-35
A01F0003	354000-0060	MINIATURE CIRCUIT BREAKER, FAZ-C6/1	6-33, 6-35
A01F0004	315744-0060	MINIATURE CIRCUIT BREAKER, FAZ-C6/1-NA	6-33, 6-35
A01F0004	354000-0060	MINIATURE CIRCUIT BREAKER, FAZ-C6/1	6-33, 6-35
A01F0005	315744-0020	MINIATURE CIRCUIT BREAKER, FAZ-C2/1-NA	6-33, 6-35
A01F0005	354000-0060	MINIATURE CIRCUIT BREAKER, FAZ-C6/1	6-33, 6-35
A01F0011	90602-3770	DIGITAL MULTICIRCUIT PROT., S8M-CP04-RS	6-59, 6-61
A01F0011	90603-2454	MULTI CIRCUIT PROT., SITOP PSE200U 3A	6-59, 6-61
A01F0021	90602-3770	DIGITAL MULTICIRCUIT PROT., S8M-CP04-RS	6-59, 6-61
A01F0021	90603-2453	MULTI CIRCUIT PROT., SITOP PSE200U 10A	6-59, 6-61
A01F0070	90459-5811	RESIDUAL CURRENT DEVICE, FI-25/2/003-A	6-33, 6-35
A01F0071	315744-0040	MINIATURE CIRCUIT BREAKER, FAZ-C4/1-NA	6-59, 6-61
F50F0490	90603-9794	SAFETY LIGHT BARRIER,TRANSM. SLC425I-E02	9-91
F50F0491	90603-9795	SAFETY LIGHT BARRIER, REC. SLC425I-R0250	9-91
T14F0000	315744-0100	MINIATURE CIRCUIT BREAKER, FAZ-C10/1-NA	6-33, 6-35
T14F0000	354000-0100	MINIATURE CIRCUIT BREAKER, FAZ-C10/1	6-33, 6-35
T40F0050	315744-0100	MINIATURE CIRCUIT BREAKER, FAZ-C10/1-NA	6-33, 6-35
T40F0050	354000-0100	MINIATURE CIRCUIT BREAKER, FAZ-C10/1	6-33, 6-35
T40F1010	315746-0160	MINIATURE CIRCUIT BREAKER, FAZ-C16/3-NA	6-33, 6-35
T40F1010	354002-0160	MINIATURE CIRCUIT BREAKER, FAZ-C16/3	6-33, 6-35
T40F1030	315744-0060	MINIATURE CIRCUIT BREAKER, FAZ-C6/1-NA	6-33, 6-35
T40F1030	354000-0060	MINIATURE CIRCUIT BREAKER, FAZ-C6/1	6-33, 6-35
T50F0020	315744-0100	MINIATURE CIRCUIT BREAKER, FAZ-C10/1-NA	6-33, 6-35
T50F0020	354000-0100	MINIATURE CIRCUIT BREAKER, FAZ-C10/1	6-33, 6-35
T50F0030	315744-0100	MINIATURE CIRCUIT BREAKER, FAZ-C10/1-NA	6-33, 6-35
T50F0030	354000-0100	MINIATURE CIRCUIT BREAKER, FAZ-C10/1	6-33, 6-35
V50F0010	315745-0100	MINIATURE CIRCUIT BREAKER, FAZ-C10/2-NA	6-33, 6-35
V50F0010	354001-0100	MINIATURE CIRCUIT BREAKER, FAZ-C10/2	6-33, 6-35
W30F0010	315744-0100	MINIATURE CIRCUIT BREAKER, FAZ-C10/1-NA	6-33, 6-35
W30F0010	354000-0100	MINIATURE CIRCUIT BREAKER, FAZ-C10/1	6-33, 6-35
W30F0082	315744-0100	MINIATURE CIRCUIT BREAKER, FAZ-C10/1-NA	6-33, 6-35
W30F0082	354000-0100	MINIATURE CIRCUIT BREAKER, FAZ-C10/1	6-33, 6-35
W30F0083	90459-5323	OVERLOAD PROTECTION, PKZM0-1	6-49
W30F0084	90459-5323	OVERLOAD PROTECTION, PKZM0-1	6-49
W90F0010	315744-0100	MINIATURE CIRCUIT BREAKER, FAZ-C10/1-NA	6-33, 6-35
W90F0010	354000-0100	MINIATURE CIRCUIT BREAKER, FAZ-C10/1	6-33, 6-35
W90F0082	90459-5325	OVERLOAD PROTECTION, PKZM0-2,5	6-33, 6-35
G			
U50G0241	90604-6808	PIAB BX52P WITH FILTER, 0106044	3-109
U50G0242	90604-6808	PIAB BX52P WITH FILTER, 0106044	3-109
K			
A01K0000	90600-5261	LINE FILTER, B84144A25R120	6-51, 6-53
A01K0001	90600-5266	FEED THROUGH FILTER, B85321A2502W160	6-51, 6-53
A01K0002	90600-5266	FEED THROUGH FILTER, B85321A2502W160	6-51, 6-53
A01K0029	90600-5249	FERRITE, B64290L616X38	6-31
A01K0030	90604-9026	PROCESSOR L36, 1769-L36ERM SERIE A	6-31
A01K0033	90459-2473	EPLC120G3-2A, DIG INP. MOD.16 PTS FAST	6-31
A01K0034	90459-2473	EPLC120G3-2A, DIG INP. MOD.16 PTS FAST	6-31
A01K0035	90459-2473	EPLC120G3-2A, DIG INP. MOD.16 PTS FAST	6-31
A01K0036	90459-2473	EPLC120G3-2A, DIG INP. MOD.16 PTS FAST	6-31
A01K0037	90459-2476	EPLC120G4-0A, DIGIT. OUT. MOD. 16 P ESCP	6-31
A01K0038	90459-2476	EPLC120G4-0A, DIGIT. OUT. MOD. 16 P ESCP	6-31
A01K0039	90459-2476	EPLC120G4-0A, DIGIT. OUT. MOD. 16 P ESCP	6-31
A01K0040	90459-2476	EPLC120G4-0A, DIGIT. OUT. MOD. 16 P ESCP	6-31
A01K0065	90603-3659	ETHERNET NAT ROUTER, FL MGUARD RS-B	6-59, 6-61
A01K0066	90604-5464	QUICKSERVER GATEWAY, FS-QS-1230-0705	6-59, 6-61
A01K0100	90601-6650	RELAY, PLC-RSC-24DC/21	6-59, 6-61
A01K0101	90459-1852	SHUT OFF VALVE, MS6-EM1-1/2	2-21
A01K0110	90601-6650	RELAY, PLC-RSC-24DC/21	6-59, 6-61
A01K0111	90458-1740	AIR GUN ASSEMBLY, CEJN 199589668	9-5
A01K0120	90458-1194	VALVE, 5/2 MONOSTABLE	2-35
A01K0130	90042-0107	SOLENOID VALVE, 256 2/2 NC	7-11, 7-13
A01K1100	90603-5953	POINT I/O ADAPT. MOD.,1734-AENTR SERIEA	6-67
A01K1101	90459-6560	DIGITAL OUTPUT 8 PTS, 1734-OB8E/C	6-67
A01K1102	90459-6560	DIGITAL OUTPUT 8 PTS, 1734-OB8E/C	6-67
A01K1103	90459-6560	DIGITAL OUTPUT 8 PTS, 1734-OB8E/C	6-67
A01K1104	90459-6560	DIGITAL OUTPUT 8 PTS, 1734-OB8E/C	6-67
A01K1105	90459-2501	5006526, 1734-FPD	6-67
A01K1106	90459-6560	DIGITAL OUTPUT 8 PTS, 1734-OB8E/C	6-67
A01K1107	90459-6560	DIGITAL OUTPUT 8 PTS, 1734-OB8E/C	6-67
A01K1108	90459-6560	DIGITAL OUTPUT 8 PTS, 1734-OB8E/C	6-67
A01K1109	90459-6560	DIGITAL OUTPUT 8 PTS, 1734-OB8E/C	6-67
C50K0220	90458-1194	VALVE, 5/2 MONOSTABLE	3-119
C50K0230	90458-1194	VALVE, 5/2 MONOSTABLE	3-119

Machine Type Group Description Page No

Pos	Part No	Description	Page No
K			
F01K0020	90459-1131	SAFETY RELAY, E1T	6-59, 6-61
F01K0021	90459-2291	SAFETY RELAY, E1T	6-59, 6-61
F01K0090	90601-7290	SAFETY PLC, PLUTO B46 20-070-17	6-59, 6-61
F09K0103	90601-6650	RELAY, PLC-RSC-24DC/21	6-59, 6-61
F09K1000	90601-1126	SAFETY VALVE, MS6-SV-1/2-E-10V24-AG	2-21
T40K0050	90459-3454	FOOTPRINT FILTER 1 PHASE 18A	6-49
T40K0190	90458-1194	VALVE, 5/2 MONOSTABLE	2-35
T40K0200	90458-1202	VALVES 2X3/2, CLOSED	2-35
T40K0220	90458-1194	VALVE, 5/2 MONOSTABLE	2-35
T40K0230	90458-1198	VALVE OPEN IN MID-POSITION, 5/3	2-35
T40K0240	90458-1194	VALVE, 5/2 MONOSTABLE	2-35
T40K0250	90458-1198	VALVE OPEN IN MID-POSITION, 5/3	2-35
T40K0260	90458-1200	VALVE OPEN IN MID-POSITION 5/3	2-37
T40K0261	90459-5410	VALVE BODY, 3/2 MONOSTABLE NC	2-119
T40K0262	90459-5410	VALVE BODY, 3/2 MONOSTABLE NC	2-119
T40K0270	90458-1200	VALVE OPEN IN MID-POSITION 5/3	2-35
T40K0280	90458-1194	VALVE, 5/2 MONOSTABLE	2-37
T40K0300	90458-1197	VALVE, 5/2 BISTABLE	2-37
T40K0310	90458-1197	VALVE, 5/2 BISTABLE	2-37
T40K0320	90458-1199	VALVE CLOSED IN MID-POSITION, 5/3	2-37
T40K0322	90458-1199	VALVE CLOSED IN MID-POSITION, 5/3	2-37
T40K1010	90600-5258	LINE FILTER, B84143A35R106	6-49
T40K1011	90605-2062	FERRITE, 2090-XXFF-S39	6-49
T40K1012	90605-2062	FERRITE, 2090-XXFF-S39	6-49
T40K1021	90605-2062	FERRITE, 2090-XXFF-S39	6-49
T40K1030	90600-5252	LINE FILTER, B84113HB30	6-49
T40K1036	90605-2062	FERRITE, 2090-XXFF-S39	6-49
T50K0020	90459-3454	FOOTPRINT FILTER 1 PHASE 18A	6-49
T50K0030	90459-3454	FOOTPRINT FILTER 1 PHASE 18A	6-49
T50K0260	90458-1194	VALVE, 5/2 MONOSTABLE	3-119
T50K0270	90458-1194	VALVE, 5/2 MONOSTABLE	3-119
T50K0280	90458-1194	VALVE, 5/2 MONOSTABLE	3-119
U50K0240	90458-1197	VALVE, 5/2 BISTABLE	3-119
U50K0260	90604-6804	PIAB 811-0003	3-17
U50K0270	90604-6804	PIAB 811-0003	3-17
V50K0200	90042-0595	COIL MSN1G-24 V	3-57
V50K0300	90458-1194	VALVE, 5/2 MONOSTABLE	3-119
V50K0310	90459-6327	SOLENOID VALVE, SOLIDBLUE, 1053894	3-141, 3-143, 9-83, 9-85
V50K0320	90459-6327	SOLENOID VALVE, SOLIDBLUE, 1053894	3-141, 3-143, 9-83, 9-85
V50K0330	90459-6327	SOLENOID VALVE, SOLIDBLUE, 1053894	5-23, 5-25
V50K0340	90459-6327	SOLENOID VALVE, SOLIDBLUE, 1053894	5-23, 5-25
V50K0350	90459-6327	SOLENOID VALVE, SOLIDBLUE, 1053894	5-23, 5-25
V50K0360	90459-6327	SOLENOID VALVE, SOLIDBLUE, 1053894	5-23, 5-25
V50K0370	90458-1194	VALVE, 5/2 MONOSTABLE	5-27
V50K0380	90458-1194	VALVE, 5/2 MONOSTABLE	5-27
V50K0390	90458-1194	VALVE, 5/2 MONOSTABLE	9-43
W30K0010	90459-3454	FOOTPRINT FILTER 1 PHASE 18A	6-49
W30K0082	90459-3454	FOOTPRINT FILTER 1 PHASE 18A	6-49
W30K0240	90459-6327	SOLENOID VALVE, SOLIDBLUE, 1053894	1-93
W50K0190	90235-0756	FRONT PANEL VALVE, SV-5-M5-B	3-87
W50K0210	90458-1200	VALVE OPEN IN MID-POSITION 5/3	3-119
W50K0290	90458-1194	VALVE, 5/2 MONOSTABLE	3-119
W50K2030	90458-1197	VALVE, 5/2 BISTABLE	3-119
W50K2031	90458-1197	VALVE, 5/2 BISTABLE	3-119
W50K2032	90458-1197	VALVE, 5/2 BISTABLE	3-119
W50K2033	90458-1194	VALVE, 5/2 MONOSTABLE	5-27
W50K2034	90458-1194	VALVE, 5/2 MONOSTABLE	5-27
W90K0010	90459-3454	FOOTPRINT FILTER 1 PHASE 18A	6-29
W90K0098	90119-0108	RELAY OMRON G2R-2-SNI-24DC	6-47
W90K0099	90119-0108	RELAY OMRON G2R-2-SNI-24DC	6-47
M			
A01M0010	315757-5100	TOP THERM FILTER FAN, SK 3241.100	6-69, 6-71, 6-73, 6-75, 6-77, 6-79
A01M0120	90603-0408	LUBRICATION UNIT, 10P-P4-H1 LM12	7-11, 7-13
C50M0220	90600-5535	CYLINDER, WITH INT. GUIDING BORE 20	4-11
C50M0230	90605-4582	DOUBLE ACTING, MINI-ISO, CYL. 32-25	4-17
T40M0050	90603-3620	GEARS, WORM MOTOR SK 1SI40-IEC 71-71L/4	2-99
T40M0200	90604-4765	CYLINDER SPEC. WITH INT. GUIDING BORE 25	2-103
T40M0201	90604-8604	DOUBLE ACTING, COMPACT, 32-5	2-103
T40M0220	90603-5843	DOUBLE ACTING, PROFILE, CYL 32-80	2-69
T40M0230	90604-4765	CYLINDER SPEC. WITH INT. GUIDING BORE 25	1-95
T40M0240	90603-7533	DOUBLE ACTING, SHORT STROKE. CYL 32-5	2-101
T40M0241	90603-7533	DOUBLE ACTING, SHORT STROKE. CYL 32-5	2-101
T40M0250	90603-3565	CYLINDER, SHUTTLE 16-465	2-75
T40M0260	90603-7495	CYLINDER, WITH INT. GUIDING BORE 25	2-117
T40M0270	90603-5550	DOUBLE ACTING, MINI-ISO, CYL. 16-300	2-79, 2-81
T40M0280	90604-4766	CYLINDER, WITH INT. GUIDING BORE 25	2-77
T40M0300	90603-4872	DOUBLE ACTING, MINI-ISO, CYL. 25-40	2-71
T40M0310	90603-5549	DOUBLE ACTING, MINI-ISO, CYL. 20-80	2-115
T40M0320	90603-5843	DOUBLE ACTING, PROFILE, CYL 32-80	2-109
T40M0321	90603-5843	DOUBLE ACTING, PROFILE, CYL 32-80	2-109
T40M0322	90601-1807	DOUBLE ACTING, PROFILE, CYL 40-30	2-109
T40M1010	90601-5850	5008103, MPL-B420P-SK72AA SERIES A	2-59

Pos	Part No	Description	Page No
M			
T40M1020	90601-5850	5008103, MPL-B420P-SK72AA SERIES A	2-63, 2-65
T50M0020	90603-3622	GEARS, WORM MOTOR SK 1SI50-IEC 71-71L/4	3-35
T50M0030	90603-2429	GEARS, WORM MOTOR SK 1SI50-IEC80-80LH/4	3-31
T50M0260	90239-0847	DOUBLE ACTING, MINI-ISO, CYL.20-50	3-69
T50M0270	90603-5311	DOUBLE ACTING, MINI-ISO, CYL. 20-25	3-69
T50M0280	90603-5110	DOUBLE ACTING, MINI-ISO, CYL. 25-50	3-65
V50M0300	90603-5110	DOUBLE ACTING, MINI-ISO, CYL. 25-50	3-79
V50M0301	90603-5110	DOUBLE ACTING, MINI-ISO, CYL. 25-50	3-79
V50M0370	90458-2121	CYLINDER, WITH INT. GUIDING BORE 40	5-11
V50M0380	90603-5843	DOUBLE ACTING, PROFILE, CYL 32-80	5-21
V50M0390	90459-4204	CYLINDER, WITH INT. GUIDING BORE 25	9-43
W30M0010	90603-2448	GEARS, HELICAL MOTOR SK01V-8 0S/4 S03	1-11
W30M0010	90603-2563	GEARS, WORM MOTOR SK1SI50 IEC80 80LH4	1-53
W30M0010	90603-5337	GEARS, HELICAL MOTOR SK01V-80S/4S03	1-31, 1-75
W30M0083	90600-2981	GEARS, WORM MOTOR D9582/SC401-H/1600099	1-99
W30M0084	90600-2981	GEARS, WORM MOTOR D9582/SC401-H/1600099	1-101
W30M0240	90604-4767	CYLINDER, DZH-32-50-PPV-A-H1-SE	1-93
W50M0190	90459-1697	DOUBLE ACTING, COMPACT, CYL 63-40	3-59
W50M0210	90603-5110	DOUBLE ACTING, MINI-ISO, CYL. 25-50	3-67
W50M0290	90605-1265	DOUBLE ACTING, MINI-ISO, CYL. 25-50	3-83
W50M0291	90605-1265	DOUBLE ACTING, MINI-ISO, CYL. 25-50	3-83
W50M2030	90603-5110	DOUBLE ACTING, MINI-ISO, CYL. 25-50	3-73
W50M2031	90603-5110	DOUBLE ACTING, MINI-ISO, CYL. 25-50	3-63
W50M2032	90603-5110	DOUBLE ACTING, MINI-ISO, CYL. 25-50	3-63
W50M2033	90604-3331	DOUBLE ACTING, MINI-ISO, CYL. 25-20	5-15
W50M2034	90459-6337	DOUBLE ACTING, COMPACT, 20-5	5-13
W50M2060	90603-5110	DOUBLE ACTING, MINI-ISO, CYL. 25-50	3-73
W50M2063	90604-3331	DOUBLE ACTING, MINI-ISO, CYL. 25-20	5-19
W50M2064	90459-6337	DOUBLE ACTING, COMPACT, 20-5	5-17
W90M0010	90600-2712	GEAR MOTOR, 71L/4 B14 C105	9-53
P			
A01P0030	90178-0007	HOUR COUNTER, BG 40,17-1 12-48VDC	6-33, 6-35
A01P0102	3241287-0100	WARNING LAMP	3-91, 3-93, 3-95, 3-97
Q			
A01Q0000	351435-0020	CIRCUIT BREAKER, NZMB1-4-A20	6-51, 6-53
A01Q0000	351436-0020	CIRCUIT BREAKER, NZMB1-A20-NA	6-51, 6-53
F09Q0019	90459-5443	CONTACTOR 11KW 24VDC, DILM25-01	6-33, 6-35
T40Q0050	90459-5440	CONTACTOR 4KW 24VDC, DILM9-01	6-49
T40Q0051	90459-5440	CONTACTOR 4KW 24VDC, DILM9-01	6-49
T40Q1010	90459-5444	CONTACTOR 15KW 24VDC, DILM32-01	6-33, 6-35
T50Q0020	90459-5440	CONTACTOR 4KW 24VDC, DILM9-01	6-49
T50Q0021	90459-5440	CONTACTOR 4KW 24VDC, DILM9-01	6-49
T50Q0030	90459-5440	CONTACTOR 4KW 24VDC, DILM9-01	6-49
T50Q0031	90459-5440	CONTACTOR 4KW 24VDC, DILM9-01	6-49
V50Q0010	90459-5440	CONTACTOR 4KW 24VDC, DILM9-01	6-33, 6-35
W30Q0010	90459-5440	CONTACTOR 4KW 24VDC, DILM9-01	6-33, 6-35
W90Q0082	90459-5440	CONTACTOR 4KW 24VDC, DILM9-01	6-33, 6-35
R			
R101	3090142-0000	EXPANSION CARD	9-77, 9-79
A01R0032	90459-2491	PLC RIGHT END CAP/TERMINATOR, 1769-ECR	6-31
A01R0040	90328-0047	SILENCER, G1/8"	2-35
A01R0041	90328-0024	SILENCER, G3/8"	2-35
A01R0042	90328-0024	SILENCER, G3/8"	2-35
A01R0043	90328-0047	SILENCER, G1/8"	2-37
A01R0044	90328-0024	SILENCER, G3/8"	2-37
A01R0045	90328-0024	SILENCER, G3/8"	2-37
A01R0050	90328-0047	SILENCER, G1/8"	3-119
A01R0051	90328-0024	SILENCER, G3/8"	3-119
A01R0052	90328-0024	SILENCER, G3/8"	3-119
A01R0100	90459-1853	FILTER REGULATOR, MS6-LFR-1/2-D7-ERV-AS	2-21
A01R0102	90459-5787	SILENCER, U-1/2-B	2-21
A01R0112	90459-1851	REGULATOR, MS6-LRB-1/2-D7-AS	2-21
A01R2015	90328-0024	SILENCER, G3/8"	5-27
A01R2016	90328-0024	SILENCER, G3/8"	5-27
A01R2017	90328-0047	SILENCER, G1/8"	5-27
F09R0101	90601-1586	SILENCER, G1"	2-21
T40R0221	90235-0846	THROTTLE CHECK VALVE G1/8", MANUAL, 6	2-69
T40R0240	90235-0817	THROTTLE CHECK VALVE, G1/8", MANUAL	2-35
T40R0261	90459-2387	REGULATOR, MS4-LR-1/4-D5-AS	2-119
T40R0262	90459-2653	REGULATOR, MS4-LR-1/4-D6-AS	2-119
T40R0280	90235-0846	THROTTLE CHECK VALVE G1/8", MANUAL, 6	2-77
T40R0281	90235-0846	THROTTLE CHECK VALVE G1/8", MANUAL, 6	2-77
T40R0300	90459-2777	FLOW CONTROL VALVE, GR-QS-8	2-71
T40R0301	90459-2777	FLOW CONTROL VALVE, GR-QS-8	2-71
T40R0310	90235-0846	THROTTLE CHECK VALVE G1/8", MANUAL, 6	2-115
T40R0311	90235-0846	THROTTLE CHECK VALVE G1/8", MANUAL, 6	2-115
T40R0820	90603-0056	THROTTLE CHECK VALVE, MANUAL, 8MM	2-109
T40R0821	90603-0056	THROTTLE CHECK VALVE, MANUAL, 8MM	2-109
T40R0822	90235-0839	THROTTLE CHECK VALVE, AS2002F-06	2-109
T40R0823	90235-0839	THROTTLE CHECK VALVE, AS2002F-06	2-109
T50R0030	90459-4036	BRAKING RESISTOR, 260W 120OHM	6-49
V50R0374	90459-7377	NON-RETURN VALVE, HGL-1/8-B	5-27

Pos	Part No	Description	Page No
R			
V50R0390	90235-0846	THROTTLE CHECK VALVE G1/8", MANUAL, 6	9-43
V50R0391	90328-0047	SILENCER, G1/8"	9-43
W50R0190	90328-0029	SILENCER, M5	3-87
W50R0191	90328-0029	SILENCER, M5	3-87
S			
A01S0001	90064-0082	PUSH BUTTON, WHITE	6-13, 6-21
A01S0002	90064-0082	PUSH BUTTON, WHITE	6-13, 6-21
A01S1088	90603-5602	BAR CODE READER, D8330 SR-902151265+CAB-	9-71
F09S0001	90064-0082	PUSH BUTTON, WHITE	6-13, 6-21
F09S0100	3249952-0100	EMERGENCY STOP	2-5, 2-7
F09S0101	3249944-0100	EMERGENCY STOP	3-91, 3-93, 3-95, 3-97
F09S0102	3249944-0100	EMERGENCY STOP	3-91, 3-93, 3-95, 3-97
F09S0102	3297497-0100	EMERGENCY STOP	3-91, 3-93, 3-95, 3-97
F09S0104	90600-6050	EMERGENCY STOP INCA 1 TINA, 30-054-00	6-13, 6-21
F50S0488	90459-4088	SAFETY SENSOR, ADAM E 10M	9-13
F50S0489	90459-4089	SAFETY SENSOR, EVA E, 20-046-06	9-13
T			
A01T0011	90602-8627	POWER SUPPLY, QUINT-PS/1AC/24DC/10	6-59, 6-61
A01T0029	90459-2457	POWER SUPPLY (4A@5V)	6-31
A01T0070	90603-2683	TRANSFORMER, 1-PH 500VA	6-59, 6-61
T40T0050	90459-3442	FREQ. CONV., 22B-A5P0N104	6-49
T40T0050	90600-3972	5008274, ETHERNET ADAPTOR	6-49
T40T1010	90603-5702	AXIS MOD. KINETIX 6500,2094-BC01-M01-M,A	6-49
T40T1020	90603-5644	AXIS MOD. KINETIX 6500,2094-BM01-M SER A	6-49
T50T0020	90459-3442	FREQ. CONV., 22B-A5P0N104	6-49
T50T0020	90600-3972	5008274, ETHERNET ADAPTOR	6-49
T50T0030	90459-3442	FREQ. CONV., 22B-A5P0N104	6-49
T50T0030	90600-3972	5008274, ETHERNET ADAPTOR	6-49
W30T0010	90459-3442	FREQ. CONV., 22B-A5P0N104	6-49
W30T0010	90600-3972	5008274, ETHERNET ADAPTOR	6-49
W30T0082	90459-3442	FREQ. CONV., 22B-A5P0N104	6-49
W30T0082	90600-3972	5008274, ETHERNET ADAPTOR	6-49
W90T0010	90459-3442	FREQ. CONV., 22B-A5P0N104	6-29
W90T0010	90600-3972	5008274, ETHERNET ADAPTOR	6-29
U			
A01U0041	90458-1206	EXP. SUB-BASE 2 VALVES, CDVI5.0-EB	2-35
A01U0042	90458-1206	EXP. SUB-BASE 2 VALVES, CDVI5.0-EB	2-35
A01U0051	90600-4922	EXP. SUB-BASE 2 VALVES,CDVI5.0-EB2-MP-MO	3-119
A01U0052	90458-1206	EXP. SUB-BASE 2 VALVES, CDVI5.0-EB	3-119
A01U0053	90600-4922	EXP. SUB-BASE 2 VALVES,CDVI5.0-EB2-MP-MO	3-119

Pos	Part No	Description	Page No
V			
V50V0010	90604-3320	HOT MELT UNIT PROBLUE 4, 104 9296 H1	3-133, 3-135, 3-137
V50V0010	90604-9645	HOT MELT UNIT PROBLUE 4, 104 9297 H1	3-133, 3-135, 3-137
V50V0010	90604-9746	HOT MELT UNIT PROBLUE 10, 1022236 H1	9-77, 9-79
V50V0310	90459-6329	MODULE SOLIDBLUE A, 1052927	3-133, 3-135, 3-137
V50V0320	90459-6329	MODULE SOLIDBLUE A, 1052927	3-133, 3-135, 3-137
V50V0330	90459-6329	MODULE SOLIDBLUE A, 1052927	3-133, 3-135, 3-137
V50V0340	90459-6329	MODULE SOLIDBLUE A, 1052927	3-133, 3-135, 3-137
V50V0350	90459-6329	MODULE SOLIDBLUE A, 1052927	3-133, 3-135, 3-137
V50V0351	90459-6329	MODULE SOLIDBLUE A, 1052927	3-133, 3-135, 3-137
V50V0360	90459-6329	MODULE SOLIDBLUE A, 1052927	3-133, 3-135, 3-137
V50V0361	90459-6329	MODULE SOLIDBLUE A, 1052927	3-133, 3-135, 3-137
W			
A01W0001	351162-0107	WIRE AWM 1X6 MM2 YELLOW-GREEN	6-89, 6-91
A01W0040	90458-1737	CABLE INCLUDED IN THE MATERIAL	6-89, 6-91
A01W0041	90458-1737	CABLE INCLUDED IN THE MATERIAL	6-89, 6-91
A01W0050	90458-1737	CABLE INCLUDED IN THE MATERIAL	6-89, 6-91
A01W0060	351501-0020	ETHERNET PATCH CABLE, FL CAT5 PATCH 2,0	6-49
A01W0061	351501-0020	ETHERNET PATCH CABLE, FL CAT5 PATCH 2,0	6-49
A01W0062	351501-0020	ETHERNET PATCH CABLE, FL CAT5 PATCH 2,0	6-49
A01W0063	351501-0015	ETHERNET PATCH CABLE, FL CAT5 PATCH 1,5	6-49
A01W0064	351501-0015	ETHERNET PATCH CABLE, FL CAT5 PATCH 1,5	6-49
A01W0065	351501-0020	ETHERNET PATCH CABLE, FL CAT5 PATCH 2,0	6-29
A01W0082	351501-0020	ETHERNET PATCH CABLE, FL CAT5 PATCH 2,0	6-31
A01W0083	351501-0003	ETHERNET PATCH CABLE, FL CAT5 PATCH 0,3	6-59, 6-61
A01W0084	351501-0030	ETHERNET PATCH CABLE, FL CAT5 PATCH 3,0	6-21
A01W0084	351501-0100	ETHERNET PATCH CABLE, FL CAT5 PATCH 10,0	6-13
A01W0085	351501-0020	ETHERNET PATCH CABLE, FL CAT5 PATCH 2,0	6-67
A01W0086	90600-1160	CU SCREEN BRAIDING TYPE CU 410 , 4,14MM2	6-13, 6-21
A01W0088	90603-3198	USB CAB. VS-04-2X2X26C7/7-SDA/SDB/1,0	6-13, 6-21
A01W0101	344257-0010	SENSOR CABLE, EVT144	6-89, 6-91
A01W0101	344257-0050	SENSOR CABLE, EVT146	2-17, 2-19
A01W0102	315743-0004	ÖLFLEX CONTROL TM 7G1, 281807	6-95
A01W0102	351150-0406	CABLE OLFLEX 7X0,75 MM2 LIGHT/GREY	6-93
A01W0103	90458-1737	CABLE INCLUDED IN THE MATERIAL	6-89, 6-91
A01W0104	90458-1737	CABLE INCLUDED IN THE MATERIAL	6-89, 6-91
A01W0105	315743-0001	ÖLFLEX CONTROL TM 3G1, 281803	6-95
A01W0105	351150-0403	CABLE OLFLEX 3X0,75 MM2 LIGHT/GREY 35	6-93
A01W0106	315743-0001	ÖLFLEX CONTROL TM 3G1, 281803	6-95
A01W0106	351150-0403	CABLE OLFLEX 3X0,75 MM2 LIGHT/GREY 35	6-93
A01W0121	315743-0001	ÖLFLEX CONTROL TM 3G1, 281803	6-95
A01W0121	351150-0431	CABLE OLFLEX 2X0,75 MM2 LIGHT/GREY	6-93

Pos	Part No	Description	Page No
W			
A01W0130	315743-0001	ÖLFLEX CONTROL TM 3G1, 281803	6-95
A01W0130	351150-0403	CABLE OLFLEX 3X0,75 MM2 LIGHT/GREY 35	6-93
A01W0131	315743-0002	ÖLFLEX CONTROL TM 4G1, 281804	6-95
A01W0131	351150-0404	CABLE OLFLEX 4X0,75 MM2 LIGHT/GREY	6-93
A01W0140	344267-0015	SENSOR CABLE, EVT288	6-89, 6-91
A01W0141	344267-0050	SENSOR CABLE, EVT044	6-89, 6-91
A01W0142	344267-0050	SENSOR CABLE, EVT044	6-89, 6-91
A01W0144	90458-1737	CABLE INCLUDED IN THE MATERIAL	6-89, 6-91
A01W0145	315743-0005	ÖLFLEX CONTROL TM 12G1, 281812	6-95
A01W0145	351150-0407	CABLE OLFLEX 12X0,75 MM2 LIGHT/GREY	6-93
A01W0147	315743-0004	ÖLFLEX CONTROL TM 7G1, 281807	6-95
A01W0147	351150-0406	CABLE OLFLEX 7X0,75 MM2 LIGHT/GREY	6-93
A01W0149	344267-0015	SENSOR CABLE, EVT288	6-89, 6-91
A01W0150	344267-0050	SENSOR CABLE, EVT044	6-89, 6-91
A01W0151	344267-0020	SENSOR CABLE, EVT043	6-89, 6-91
A01W0152	344267-0015	SENSOR CABLE, EVT288	6-89, 6-91
A01W0153	344267-0020	SENSOR CABLE, EVT043	6-89, 6-91
A01W0170	315743-0006	ÖLFLEX CONTROL TM 18G1, 281818	6-21, 6-95
A01W0170	351150-0424	CABLE OLFLEX 18X0,75 MM2 LIGHT/GREY	6-21, 6-93
A01W0181	90458-1737	CABLE INCLUDED IN THE MATERIAL	6-89, 6-91
A01W0182	90458-1737	CABLE INCLUDED IN THE MATERIAL	6-89, 6-91
A01W0406	351501-0010	ETHERNET PATCH CABLE, FL CAT5 PATCH 1,0	6-59, 6-61
A01W0407	351501-0003	ETHERNET PATCH CABLE, FL CAT5 PATCH 0,3	6-59, 6-61
A01W0420	351501-3100	ETH. P. CAB. VS-M12MSD-IP20-LI-93P/10,0	6-89, 6-91
A01W0421	351501-2010	ETH. P CAB.SAC-4P-M12MSD/ 1,0-PVC/M12MSD	6-89, 6-91
A01W0422	351501-2050	ETH. P CAB.SAC-4P-M12MSD/ 5,0-PVC/M12MSD	6-89, 6-91
A01W0423	351501-2100	ETH. P CAB.SAC-4P-M12MSD/10,0-PVC/M12MSD	6-89, 6-91
A01W0424	351501-2020	ETH. P CAB.SAC-4P-M12MSD/2,0-PVC/M12MSD-	6-89, 6-91
A01W0425	351501-2050	ETH. P CAB.SAC-4P-M12MSD/ 5,0-PVC/M12MSD	6-89, 6-91
A01W0426	351501-2100	ETH. P CAB.SAC-4P-M12MSD/10,0-PVC/M12MSD	6-89, 6-91
A01W0427	351501-2010	ETH. P CAB.SAC-4P-M12MSD/ 1,0-PVC/M12MSD	6-89, 6-91
A01W0501	315400-0004	TUBE PUN-H-8X1,25-BL	2-17, 2-19
A01W0600	315400-0013	TUBE PUN-H-16-2,5-BL	2-41
A01W0601	315400-0004	TUBE PUN-H-8X1,25-BL	3-17
A01W0602	315400-0010	TUBE PUN-H-12X2-BL	2-17, 2-19
A01W0604	315400-0010	TUBE PUN-H-12X2-BL	2-17, 2-19
A01W0605	315400-0010	TUBE PUN-H-12X2-BL	2-17, 2-19
A01W0606	315400-0010	TUBE PUN-H-12X2-BL	2-35
A01W0607	315400-0004	TUBE PUN-H-8X1,25-BL	2-35
A01W0608	315400-0010	TUBE PUN-H-12X2-BL	2-35
A01W0609	315400-0004	TUBE PUN-H-8X1,25-BL	2-37
A01W0610	315400-0010	TUBE PUN-H-12X2-BL	3-119
A01W0611	315400-0004	TUBE PUN-H-8X1,25-BL	3-119
A01W0612	315400-0010	TUBE PUN-H-12X2-BL	3-119
A01W0613	315400-0010	TUBE PUN-H-12X2-BL	3-119
A01W0614	315400-0010	TUBE PUN-H-12X2-BL	2-17, 2-19
A01W0615	315400-0010	TUBE PUN-H-12X2-BL	2-35
A01W0616	315400-0010	TUBE PUN-H-12X2-BL	2-37
A01W0617	315400-0010	TUBE PUN-H-12X2-BL	3-119
A01W0618	315400-0004	TUBE PUN-H-8X1,25-BL	3-119
A01W0620	315400-0004	TUBE PUN-H-8X1,25-BL	2-17, 2-19
A01W0621	315400-0004	TUBE PUN-H-8X1,25-BL	2-17, 2-19
A01W0624	315400-0001	6-4E PUN-H-6X1-BL	7-11, 7-13
A01W0639	315400-0004	TUBE PUN-H-8X1,25-BL	2-35
A01W0640	315400-0001	6-4E PUN-H-6X1-BL	3-87, 3-119
A01W0641	315400-0010	TUBE PUN-H-12X2-BL	2-17, 2-19
A01W0642	315400-0004	TUBE PUN-H-8X1,25-BL	2-17, 2-19
A01W0643	315400-0004	TUBE PUN-H-8X1,25-BL	2-17, 2-19
A01W0645	315400-0010	TUBE PUN-H-12X2-BL	3-119
A01W0646	315400-0001	6-4E PUN-H-6X1-BL	2-17, 2-19
A01W0647	315400-0001	6-4E PUN-H-6X1-BL	2-119
A01W0648	315400-0004	TUBE PUN-H-8X1,25-BL	1-93
A01W0649	315400-0001	6-4E PUN-H-6X1-BL	2-103
A01W0652	315400-0010	TUBE PUN-H-12X2-BL	2-17, 2-19
A01W0653	315400-0004	TUBE PUN-H-8X1,25-BL	2-17, 2-19
A01W0654	315400-0010	TUBE PUN-H-12X2-BL	2-17, 2-19
A01W0656	315400-0010	TUBE PUN-H-12X2-BL	2-17, 2-19
A01W0657	315400-0004	TUBE PUN-H-8X1,25-BL	2-17, 2-19
A01W0658	315400-0010	TUBE PUN-H-12X2-BL	5-27
A01W0659	315400-0004	TUBE PUN-H-8X1,25-BL	5-27
A01W1070	315756-0003	ÖLFLEX CONTROL TM CY 5G1, 281805CY	6-21, 6-95
A01W1070	351422-0004	CABLE ÖLFLEX 150CY QUATTRO 5X0,75	6-21, 6-93
A01W1088	90601-6430	USB CABLE, 90601-6430	9-71
A01W2015	90458-1737	CABLE INCLUDED IN THE MATERIAL	6-89, 6-91
A10W0601	315400-0010	TUBE PUN-H-12X2-BL	2-17, 2-19
A40W0148	351178-0107	CABLE OLFLEX FD 891 7X0,75 MM2 BLACK	6-89, 6-91
A50W0155	315743-0005	ÖLFLEX CONTROL TM 12G1, 281812	6-95
A50W0155	351150-0407	CABLE OLFLEX 12X0,75 MM2 LIGHT/GREY	6-93
C50W0102	344257-0020	SENSOR CABLE, EVT145	6-89, 6-91
C50W0102	344257-0050	SENSOR CABLE, EVT146	6-89, 6-91
C50W0104	344257-0050	SENSOR CABLE, EVT146	6-89, 6-91
C50W0106	344257-0050	SENSOR CABLE, EVT146	6-89, 6-91

W

Pos	Part No	Description	Page No
C50W0231	344257-0020	SENSOR CABLE, EVT145	6-89, 6-91
C50W0231	344257-0050	SENSOR CABLE, EVT146	6-89, 6-91
C50W0720	315400-0001	6-4E PUN-H-6X1-BL	4-11
C50W0721	315400-0001	6-4E PUN-H-6X1-BL	4-11
C50W0730	315400-0001	6-4E PUN-H-6X1-BL	4-17
C50W0731	315400-0001	6-4E PUN-H-6X1-BL	4-17
F09W0003	3263656-0000	EARTH WIRE	2-21
F09W0100	90459-4876	FOCUS JUMPER CABLE M12 5P 3M, 20-056-21	6-89, 6-91
F09W0101	90459-4876	FOCUS JUMPER CABLE M12 5P 3M, 20-056-21	6-89, 6-91
F09W0102	90459-4876	FOCUS JUMPER CABLE M12 5P 3M, 20-056-21	6-89, 6-91
F09W0103	90459-4876	FOCUS JUMPER CABLE M12 5P 3M, 20-056-21	6-89, 6-91
F09W0104	344245-0020	SENSOR CABLE, EVT122	2-17, 2-19
F09W0504	315400-0004	TUBE PUN-H-8X1,25-BL	2-17, 2-19
F09W1000	90600-5930	CABLE C9, 20-057-15	6-89, 6-91
F09W1001	315756-0003	ÖLFLEX CONTROL TM CY 5G1, 281805CY	6-95
F09W1001	351422-0004	CABLE ÖLFLEX 150CY QUATTRO 5X0,75	6-93
F40W0479	315756-0003	ÖLFLEX CONTROL TM CY 5G1, 281805CY	6-95
F40W0479	351422-0004	CABLE ÖLFLEX 150CY QUATTRO 5X0,75	6-93
F40W0480	90459-4876	FOCUS JUMPER CABLE M12 5P 3M, 20-056-21	6-89, 6-91
F40W0482	90459-4876	FOCUS JUMPER CABLE M12 5P 3M, 20-056-21	6-89, 6-91
F40W0484	90459-4876	FOCUS JUMPER CABLE M12 5P 3M, 20-056-21	6-89, 6-91
F40W0486	90459-4876	FOCUS JUMPER CABLE M12 5P 3M, 20-056-21	6-89, 6-91
F40W0488	90459-4876	FOCUS JUMPER CABLE M12 5P 3M, 20-056-21	6-89, 6-91
F50W0479	315756-0003	ÖLFLEX CONTROL TM CY 5G1, 281805CY	6-95
F50W0479	351422-0004	CABLE ÖLFLEX 150CY QUATTRO 5X0,75	6-93
F50W0480	90459-4876	FOCUS JUMPER CABLE M12 5P 3M, 20-056-21	6-89, 6-91
F50W0482	90459-4876	FOCUS JUMPER CABLE M12 5P 3M, 20-056-21	6-89, 6-91
F50W0484	90459-4876	FOCUS JUMPER CABLE M12 5P 3M, 20-056-21	6-89, 6-91
F50W0486	90459-4876	FOCUS JUMPER CABLE M12 5P 3M, 20-056-21	6-89, 6-91
F50W0488	90459-4876	FOCUS JUMPER CABLE M12 5P 3M, 20-056-21	6-89, 6-91
F50W0490	90459-4876	FOCUS JUMPER CABLE M12 5P 3M, 20-056-21	9-91
F50W0491	344297-0030	SENSOR CABLE, SAC-8P-3,0-PVC/M12FR SH VA	9-91
F50W0492	344245-0050	SENSOR CABLE, EVT123	9-91
F50W0493	90459-4877	FOCUS CABLE M12 8P 6M, 20-056-30	9-91
T40W0050	315756-0009	ÖLFLEX CONTROL TM CY 4G1,5, 281604CY	6-95
T40W0050	351422-0203	CABLE ÖLFLEX 150CY QUATTRO 4X1,5	6-93
T40W0100	344257-0015	SENSOR CABLE, EVT202	6-89, 6-91
T40W0101	344257-0020	SENSOR CABLE, EVT145	6-89, 6-91
T40W0102	344259-0010	SENSOR CABLE, EVT281	6-89, 6-91
T40W0103	344259-0020	SENSOR CABLE, EVT203	6-89, 6-91
T40W0106	90603-2799	SENSOR CABLE, EVC071	6-89, 6-91
T40W0201	344257-0015	SENSOR CABLE, EVT202	6-89, 6-91
T40W0202	344257-0015	SENSOR CABLE, EVT202	6-89, 6-91
T40W0221	344257-0050	SENSOR CABLE, EVT146	6-89, 6-91
T40W0252	344257-0015	SENSOR CABLE, EVT202	6-89, 6-91
T40W0260	344249-0050	SENSOR CABLE, EVT135	6-89, 6-91
T40W0261	344269-0020	SENSOR CABLE, EVT217	6-89, 6-91
T40W0262	344259-0015	SENSOR CABLE, EVT28	6-89, 6-91
T40W0263	344269-0020	SENSOR CABLE, EVT217	6-89, 6-91
T40W0264	344249-0050	SENSOR CABLE, EVT135	6-89, 6-91
T40W0266	344260-0020	SENSOR CABLE, EVT211	6-89, 6-91
T40W0267	344259-0020	SENSOR CABLE, EVT203	6-89, 6-91
T40W0271	344257-0050	SENSOR CABLE, EVT146	6-89, 6-91
T40W0301	90458-1737	CABLE INCLUDED IN THE MATERIAL	6-89, 6-91
T40W0302	90458-1737	CABLE INCLUDED IN THE MATERIAL	6-89, 6-91
T40W0311	90458-1737	CABLE INCLUDED IN THE MATERIAL	6-89, 6-91
T40W0320	344257-0020	SENSOR CABLE, EVT145	6-89, 6-91
T40W0322	344257-0020	SENSOR CABLE, EVT145	6-89, 6-91
T40W0700	315400-0001	6-4E PUN-H-6X1-BL	2-103
T40W0701	315400-0001	6-4E PUN-H-6X1-BL	2-103
T40W0702	315400-0001	6-4E PUN-H-6X1-BL	2-103
T40W0703	315400-0001	6-4E PUN-H-6X1-BL	2-103
T40W0730	315400-0001	6-4E PUN-H-6X1-BL	1-95
T40W0740	315400-0001	6-4E PUN-H-6X1-BL	2-101
T40W0741	315400-0001	6-4E PUN-H-6X1-BL	2-101
T40W0742	315400-0001	6-4E PUN-H-6X1-BL	2-101
T40W0743	315400-0001	6-4E PUN-H-6X1-BL	2-101
T40W0744	315400-0001	6-4E PUN-H-6X1-BL	2-101
T40W0745	315400-0001	6-4E PUN-H-6X1-BL	2-101
T40W0750	315400-0016	TUBE PUN-H-4X0,75-BL	2-75
T40W0751	315400-0016	TUBE PUN-H-4X0,75-BL	2-75
T40W0762	315400-0001	6-4E PUN-H-6X1-BL	2-119
T40W0763	315400-0001	6-4E PUN-H-6X1-BL	2-119
T40W0764	315400-0016	TUBE PUN-H-4X0,75-BL	2-119
T40W0765	315400-0001	6-4E PUN-H-6X1-BL	2-119
T40W0766	315400-0004	TUBE PUN-H-8X1,25-BL	2-117
T40W0767	315400-0004	TUBE PUN-H-8X1,25-BL	2-117
T40W0768	315400-0001	6-4E PUN-H-6X1-BL	2-119
T40W0769	315400-0016	TUBE PUN-H-4X0,75-BL	2-119
T40W0770	315400-0001	6-4E PUN-H-6X1-BL	2-79, 2-81
T40W0771	315400-0001	6-4E PUN-H-6X1-BL	2-79, 2-81
T40W0780	315400-0001	6-4E PUN-H-6X1-BL	2-77

Pos	Part No	Description	Page No
W			
T40W0781	315400-0001	6-4E PUN-H-6X1-BL	2-77
T40W0800	315400-0004	TUBE PUN-H-8X1,25-BL	2-71
T40W0801	315400-0004	TUBE PUN-H-8X1,25-BL	2-71
T40W0802	315400-0004	TUBE PUN-H-8X1,25-BL	2-71
T40W0803	315400-0004	TUBE PUN-H-8X1,25-BL	2-71
T40W0810	315400-0001	6-4E PUN-H-6X1-BL	2-115
T40W0811	315400-0001	6-4E PUN-H-6X1-BL	2-115
T40W0820	315400-0004	TUBE PUN-H-8X1,25-BL	2-109
T40W0821	315400-0004	TUBE PUN-H-8X1,25-BL	2-109
T40W0822	315400-0001	6-4E PUN-H-6X1-BL	2-109
T40W0823	315400-0001	6-4E PUN-H-6X1-BL	2-109
T40W0824	315400-0001	6-4E PUN-H-6X1-BL	2-109
T40W0825	315400-0001	6-4E PUN-H-6X1-BL	2-109
T40W0826	315400-0001	6-4E PUN-H-6X1-BL	2-109
T40W0827	315400-0001	6-4E PUN-H-6X1-BL	2-109
T40W0828	315400-0004	TUBE PUN-H-8X1,25-BL	2-109
T40W0829	315400-0004	TUBE PUN-H-8X1,25-BL	2-109
T40W0830	315400-0001	6-4E PUN-H-6X1-BL	2-109
T40W0831	315400-0001	6-4E PUN-H-6X1-BL	2-109
T40W1010	90458-1737	CABLE INCLUDED IN THE MATERIAL	6-89, 6-91
T40W1010	90459-5189	SLIM POWER RAIL, KINETIX, 2 AXIS	6-49
T40W1011	351429-1612	MOTOR POWER CABLE 2090-CPWM7DF-16AA12	6-89, 6-91
T40W1012	351428-0012	MOTOR FEEDBACK CABLE 2090-CFBM7DF-CEAA12	6-89, 6-91
T40W1015	351423-0005	CABLE UNITRONIC LICY 4X0,34	6-49
T40W1016	351423-0005	CABLE UNITRONIC LICY 4X0,34	6-49
T40W1021	351429-1607	MOTOR POWER CABLE 2090-CPWM7DF-16AA07	6-89, 6-91
T40W1022	351428-0007	MOTOR FEEDBACK CABLE 2090-CFBM7DF-CEAA07	6-89, 6-91
T40W1035	351501-0030	ETHERNET PATCH CABLE, FL CAT5 PATCH 3,0	6-49
T40W1036	351501-0003	ETHERNET PATCH CABLE, FL CAT5 PATCH 0,3	6-49
T50W0020	315756-0009	ÖLFLEX CONTROL TM CY 4G1,5, 281604CY	6-95
T50W0020	351422-0203	CABLE ÖLFLEX 150CY QUATTRO 4X1,5	6-93
T50W0021	90458-1737	CABLE INCLUDED IN THE MATERIAL	6-89, 6-91
T50W0030	315756-0009	ÖLFLEX CONTROL TM CY 4G1,5, 281604CY	6-95
T50W0030	351422-0203	CABLE ÖLFLEX 150CY QUATTRO 4X1,5	6-93
T50W0031	90458-1737	CABLE INCLUDED IN THE MATERIAL	6-89, 6-91
T50W0032	315743-0005	ÖLFLEX CONTROL TM 12G1, 281812	6-95
T50W0032	351150-0407	CABLE OLFLEX 12X0,75 MM2 LIGHT/GREY	6-93
T50W0100	90458-1737	CABLE INCLUDED IN THE MATERIAL	6-89, 6-91
T50W0760	315400-0001	6-4E PUN-H-6X1-BL	3-69
T50W0761	315400-0001	6-4E PUN-H-6X1-BL	3-69
T50W0770	315400-0001	6-4E PUN-H-6X1-BL	3-69
T50W0771	315400-0001	6-4E PUN-H-6X1-BL	3-69
T50W0780	315400-0001	6-4E PUN-H-6X1-BL	3-65
T50W0781	315400-0001	6-4E PUN-H-6X1-BL	3-65
U01W0103	90458-1737	CABLE INCLUDED IN THE MATERIAL	6-89, 6-91
U01W0104	90458-1737	CABLE INCLUDED IN THE MATERIAL	6-89, 6-91
U50W0740	315400-0004	TUBE PUN-H-8X1,25-BL	3-109
U50W0750	315400-0004	TUBE PUN-H-8X1,25-BL	3-109
V01W0625	315400-0001	6-4E PUN-H-6X1-BL	5-27
V01W0628	315400-0004	TUBE PUN-H-8X1,25-BL	5-23, 5-25
V01W0629	315400-0004	TUBE PUN-H-8X1,25-BL	5-23, 5-25
V01W0630	315400-0004	TUBE PUN-H-8X1,25-BL	5-23, 5-25
V01W0631	315400-0004	TUBE PUN-H-8X1,25-BL	3-141, 3-143, 9-83, 9-85
V01W0632	315400-0004	TUBE PUN-H-8X1,25-BL	5-23, 5-25
V01W0633	315400-0004	TUBE PUN-H-8X1,25-BL	5-23, 5-25
V01W0634	315400-0004	TUBE PUN-H-8X1,25-BL	5-23, 5-25
V01W0635	315400-0004	TUBE PUN-H-8X1,25-BL	3-141, 3-143, 9-83, 9-85
V01W0638	315400-0010	TUBE PUN-H-12X2-BL	2-35
V10W0950	315743-0001	ÖLFLEX CONTROL TM 3G1, 281803	6-95
V10W0950	351150-0403	CABLE OLFLEX 3X0,75 MM2 LIGHT/GREY 35	6-93
V50W0010	315743-0019	ÖLFLEX CONTROL TM 4G4, 281204	6-95
V50W0010	351150-0166	CABLE OLFLEX 4X4 MM2 LIGHT/GREY	6-93
V50W0011	344269-0020	SENSOR CABLE, EVT217	6-89, 6-91
V50W0013	344269-0020	SENSOR CABLE, EVT217	6-89, 6-91
V50W0014	344269-0020	SENSOR CABLE, EVT217	6-89, 6-91
V50W0015	344269-0020	SENSOR CABLE, EVT217	6-89, 6-91
V50W0018	344269-0020	SENSOR CABLE, EVT217	6-89, 6-91, 9-77, 9-79
V50W0200	315743-0001	ÖLFLEX CONTROL TM 3G1, 281803	6-95
V50W0200	351150-0403	CABLE OLFLEX 3X0,75 MM2 LIGHT/GREY 35	6-93
V50W0310	315743-0001	ÖLFLEX CONTROL TM 3G1, 281803	6-95
V50W0310	351150-0403	CABLE OLFLEX 3X0,75 MM2 LIGHT/GREY 35	6-93
V50W0320	315743-0001	ÖLFLEX CONTROL TM 3G1, 281803	6-95
V50W0320	351150-0403	CABLE OLFLEX 3X0,75 MM2 LIGHT/GREY 35	6-93
V50W0330	315743-0001	ÖLFLEX CONTROL TM 3G1, 281803	6-95
V50W0330	351150-0403	CABLE OLFLEX 3X0,75 MM2 LIGHT/GREY 35	6-93
V50W0340	315743-0001	ÖLFLEX CONTROL TM 3G1, 281803	6-95
V50W0340	351150-0403	CABLE OLFLEX 3X0,75 MM2 LIGHT/GREY 35	6-93
V50W0350	315743-0001	ÖLFLEX CONTROL TM 3G1, 281803	6-95
V50W0350	351150-0403	CABLE OLFLEX 3X0,75 MM2 LIGHT/GREY 35	6-93
V50W0360	315743-0001	ÖLFLEX CONTROL TM 3G1, 281803	6-95
V50W0360	351150-0403	CABLE OLFLEX 3X0,75 MM2 LIGHT/GREY 35	6-93
V50W0373	344257-0010	SENSOR CABLE, EVT144	6-89, 6-91

W

Pos	Part No	Description	Page No
V50W0381	344257-0006	SENSOR CABLE, EVT143	6-89, 6-91
V50W0800	315400-0004	TUBE PUN-H-8X1,25-BL	3-79
V50W0801	315400-0004	TUBE PUN-H-8X1,25-BL	3-79
V50W0802	315400-0001	6-4E PUN-H-6X1-BL	3-79
V50W0803	315400-0001	6-4E PUN-H-6X1-BL	3-79
V50W0804	315400-0001	6-4E PUN-H-6X1-BL	3-79
V50W0805	315400-0001	6-4E PUN-H-6X1-BL	3-79
V50W0806	315400-0001	6-4E PUN-H-6X1-BL	5-13
V50W0807	315400-0001	6-4E PUN-H-6X1-BL	5-17
V50W0808	315400-0004	TUBE PUN-H-8X1,25-BL	5-15
V50W0809	315400-0001	6-4E PUN-H-6X1-BL	5-19
V50W0810	90166-0202	TEFLON PIPE	3-141, 3-143, 9-83, 9-85
V50W0811	90166-0202	TEFLON PIPE	3-141, 3-143, 9-83, 9-85
V50W0812	315400-0001	6-4E PUN-H-6X1-BL	3-65
V50W0820	90166-0202	TEFLON PIPE	3-141, 3-143, 9-83, 9-85
V50W0821	90166-0202	TEFLON PIPE	3-141, 3-143, 9-83, 9-85
V50W0822	315400-0001	6-4E PUN-H-6X1-BL	3-81
V50W0830	90166-0202	TEFLON PIPE	5-23, 5-25
V50W0831	90166-0202	TEFLON PIPE	5-23, 5-25
V50W0840	90166-0202	TEFLON PIPE	5-23, 5-25
V50W0841	90166-0202	TEFLON PIPE	5-23, 5-25
V50W0850	90166-0202	TEFLON PIPE	5-23, 5-25
V50W0851	90166-0202	TEFLON PIPE	5-23, 5-25
V50W0852	90166-0202	TEFLON PIPE	5-23, 5-25
V50W0853	90166-0202	TEFLON PIPE	5-23, 5-25
V50W0854	90166-0202	TEFLON PIPE	5-23, 5-25
V50W0855	90166-0202	TEFLON PIPE	5-23, 5-25
V50W0860	90166-0202	TEFLON PIPE	5-23, 5-25
V50W0861	90166-0202	TEFLON PIPE	5-23, 5-25
V50W0862	90166-0202	TEFLON PIPE	5-23, 5-25
V50W0863	90166-0202	TEFLON PIPE	5-23, 5-25
V50W0864	90166-0202	TEFLON PIPE	5-23, 5-25
V50W0865	90166-0202	TEFLON PIPE	5-23, 5-25
V50W0870	315400-0004	TUBE PUN-H-8X1,25-BL	5-11
V50W0872	315400-0004	TUBE PUN-H-8X1,25-BL	5-11
V50W0875	315400-0004	TUBE PUN-H-8X1,25-BL	5-27
V50W0880	315400-0001	6-4E PUN-H-6X1-BL	5-21
V50W0881	315400-0001	6-4E PUN-H-6X1-BL	5-21
V50W0890	315400-0001	6-4E PUN-H-6X1-BL	9-43
V50W0891	315400-0004	TUBE PUN-H-8X1,25-BL	3-119
W10W0900	315743-0004	ÖLFLEX CONTROL TM 7G1, 281807	6-95
W10W0900	351150-0406	CABLE OLFLEX 7X0,75 MM2 LIGHT/GREY	6-93
W10W0901	315743-0001	ÖLFLEX CONTROL TM 3G1, 281803	6-95
W10W0901	351150-0403	CABLE OLFLEX 3X0,75 MM2 LIGHT/GREY 35	6-93
W10W0902	90458-1737	CABLE INCLUDED IN THE MATERIAL	6-89, 6-91
W10W0903	90458-1737	CABLE INCLUDED IN THE MATERIAL	6-89, 6-91
W10W0904	90458-1737	CABLE INCLUDED IN THE MATERIAL	6-89, 6-91
W10W0905	90458-1737	CABLE INCLUDED IN THE MATERIAL	6-89, 6-91
W10W0906	344259-0050	SENSOR CABLE, EVT204	6-89, 6-91
W30W0010	315756-0009	ÖLFLEX CONTROL TM CY 4G1,5, 281604CY	6-95
W30W0010	351422-0203	CABLE ÖLFLEX 150CY QUATTRO 4X1,5	6-93
W30W0083	315756-0002	ÖLFLEX CONTROL TM CY 4G1, 281804CY	6-95
W30W0083	351422-0003	CABLE ÖLFLEX 150CY QUATTRO 4X0,75	6-93
W30W0084	315756-0002	ÖLFLEX CONTROL TM CY 4G1, 281804CY	6-95
W30W0084	351422-0003	CABLE ÖLFLEX 150CY QUATTRO 4X0,75	6-93
W30W0100	344263-0020	SENSOR CABLE, EVT239	6-89, 6-91
W30W0101	344263-0015	SENSOR CABLE, EVT241	6-89, 6-91
W30W0110	344257-0020	SENSOR CABLE, EVT145	6-89, 6-91
W30W0111	344257-0020	SENSOR CABLE, EVT145	6-89, 6-91
W30W0114	344257-0020	SENSOR CABLE, EVT145	6-89, 6-91
W30W0115	344257-0020	SENSOR CABLE, EVT145	6-89, 6-91
W30W0116	344263-0015	SENSOR CABLE, EVT241	6-89, 6-91
W30W0117	344263-0020	SENSOR CABLE, EVT239	6-89, 6-91
W30W0118	344257-0020	SENSOR CABLE, EVT145	6-89, 6-91
W30W0119	344257-0020	SENSOR CABLE, EVT145	6-89, 6-91
W30W0140	344260-0050	SENSOR CABLE, EVT286	6-89, 6-91
W30W0240	315743-0001	ÖLFLEX CONTROL TM 3G1, 281803	6-95
W30W0240	351150-0403	CABLE OLFLEX 3X0,75 MM2 LIGHT/GREY 35	6-93
W30W0242	344257-0050	SENSOR CABLE, EVT146	6-89, 6-91
W50W0116	344259-0015	SENSOR CABLE, EVT28	6-89, 6-91
W50W0118	344257-0015	SENSOR CABLE, EVT202	6-89, 6-91, 9-43, 9-55
W50W0191	90458-1737	CABLE INCLUDED IN THE MATERIAL	6-89, 6-91
W50W0211	344257-0050	SENSOR CABLE, EVT146	6-89, 6-91
W50W0212	344257-0050	SENSOR CABLE, EVT146	6-89, 6-91
W50W0400	344269-0020	SENSOR CABLE, EVT217	6-89, 6-91
W50W0690	315400-0001	6-4E PUN-H-6X1-BL	3-59
W50W0691	315400-0001	6-4E PUN-H-6X1-BL	3-59
W50W0710	315400-0001	6-4E PUN-H-6X1-BL	3-67
W50W0711	315400-0001	6-4E PUN-H-6X1-BL	3-67
W50W0790	315400-0004	TUBE PUN-H-8X1,25-BL	3-83
W50W0791	315400-0004	TUBE PUN-H-8X1,25-BL	3-83
W50W0792	315400-0004	TUBE PUN-H-8X1,25-BL	3-83

Pos	Part No	Description	Page No
W			
W50W0793	315400-0004	TUBE PUN-H-8X1,25-BL	3-83
W50W0794	315400-0004	TUBE PUN-H-8X1,25-BL	3-83
W50W0795	315400-0004	TUBE PUN-H-8X1,25-BL	3-83
W50W0900	315400-0004	TUBE PUN-H-8X1,25-BL	2-17, 2-19
W50W2040	344257-0050	SENSOR CABLE, EVT146	6-89, 6-91
W50W2041	344257-0050	SENSOR CABLE, EVT146	6-89, 6-91
W50W2042	344257-0050	SENSOR CABLE, EVT146	6-89, 6-91
W50W2060	315400-0004	TUBE PUN-H-8X1,25-BL	3-73
W50W2061	315400-0004	TUBE PUN-H-8X1,25-BL	3-73
W50W2062	315400-0001	6-4E PUN-H-6X1-BL	3-73
W50W2063	315400-0001	6-4E PUN-H-6X1-BL	3-73
W50W2064	315400-0001	6-4E PUN-H-6X1-BL	3-73
W50W2065	315400-0001	6-4E PUN-H-6X1-BL	3-73
W50W2066	315400-0001	6-4E PUN-H-6X1-BL	3-63
W50W2067	315400-0001	6-4E PUN-H-6X1-BL	3-63
W50W2068	315400-0001	6-4E PUN-H-6X1-BL	3-63
W50W2069	315400-0001	6-4E PUN-H-6X1-BL	3-63
W50W2070	315400-0001	6-4E PUN-H-6X1-BL	5-15
W50W2071	315400-0001	6-4E PUN-H-6X1-BL	5-15
W50W2073	315400-0001	6-4E PUN-H-6X1-BL	5-19
W50W2074	315400-0001	6-4E PUN-H-6X1-BL	5-19
W50W2076	315400-0016	TUBE PUN-H-4X0,75-BL	5-13
W50W2077	315400-0016	TUBE PUN-H-4X0,75-BL	5-13
W50W2079	315400-0016	TUBE PUN-H-4X0,75-BL	5-17
W50W2080	315400-0016	TUBE PUN-H-4X0,75-BL	5-17
W50W2082	315400-0016	TUBE PUN-H-4X0,75-BL	3-65
W50W2083	315400-0016	TUBE PUN-H-4X0,75-BL	3-65
W50W2084	315400-0016	TUBE PUN-H-4X0,75-BL	3-67
W50W2085	315400-0016	TUBE PUN-H-4X0,75-BL	3-67
W50W2086	315400-0016	TUBE PUN-H-4X0,75-BL	5-11
W50W2087	315400-0016	TUBE PUN-H-4X0,75-BL	5-11
W50W2088	315400-0016	TUBE PUN-H-4X0,75-BL	5-21
W50W2089	315400-0016	TUBE PUN-H-4X0,75-BL	5-21
W90W0010	315756-0009	ÖLFLEX CONTROL TM CY 4G1,5, 281604CY	6-95
W90W0010	351422-0203	CABLE ÖLFLEX 150CY QUATTRO 4X1,5	6-93
W90W0082	315743-0009	ÖLFLEX CONTROL TM 4G1,5, 281604	6-95
W90W0082	351150-0413	CABLE OLFLEX 4GX1,5 MM2 LIGHT/GREY	6-93
W90W0910	344259-0050	SENSOR CABLE, EVT204	6-89, 6-91
W90W0910	344260-0050	SENSOR CABLE, EVT286	8-13
W90W0920	344257-0015	SENSOR CABLE, EVT202	9-49

Pos	Part No	Description	Page No
X			
A01X0000	3250588-0100	TERMINAL	6-51, 6-53
A01X0001	3201967-0100	CONNECTION BOX	9-105, 9-107, 9-109
A01X0002	3201967-0100	CONNECTION BOX	9-105, 9-107, 9-109
A01X0003	3245364-0100	EARTH TERMINAL	6-39
A01X0020	3250579-0100	TERMINAL	6-39
A01X0030	3250577-0100	TERMINAL	6-33, 6-35
A01X0040	3250580-0100	TERMINAL	6-39
A01X0041	90458-1205	BASIC SUB-BASE 8 VALVES, CDVI5.0-GB8-MP	2-37
A01X0042	90458-1211	LEFT ENDPLATE INCL. 5M CABLE	2-35
A01X0043	90458-1214	RIGHT ENDPL EXT. PILOT AIR,CDVI5.0-EPR-S	2-35
A01X0044	90458-1211	LEFT ENDPLATE INCL. 5M CABLE	2-37
A01X0045	90458-1214	RIGHT ENDPL EXT. PILOT AIR,CDVI5.0-EPR-S	2-37
A01X0046	90458-1204	BASIC SUB-BASE 4 VALVES, CDVI5.0-GB4-MP	2-35
A01X0050	90458-1205	BASIC SUB-BASE 8 VALVES, CDVI5.0-GB8-MP	3-119
A01X0051	90458-1212	LEFT ENDPLATE INCL. 10M CABLE	3-119
A01X0052	90458-1214	RIGHT ENDPL EXT. PILOT AIR,CDVI5.0-EPR-S	3-119
A01X0060	90600-1848	ETHERNET SW, FL SWITCH SFN 8TX	6-59, 6-61
A01X0061	90600-1848	ETHERNET SW, FL SWITCH SFN 8TX	6-59, 6-61
A01X0070	90459-3845	WALL SOCKET, Z-SD230	6-33, 6-35
A01X0070	90603-2684	WALL SOCKET, RECEPTACLE 7599-DIN	6-59, 6-61
A01X0088	90600-4778	USB CABLE SET, 5A9000.54	6-13, 6-21
A01X0090	3253292-0100	TERMINAL	6-39
A01X0140	90605-2702	ARMORBLOCK MODULE, 1732E-8CFGM8R, SER. A	2-31
A01X0141	90605-2702	ARMORBLOCK MODULE, 1732E-8CFGM8R, SER. A	2-45
A01X0142	90605-2702	ARMORBLOCK MODULE, 1732E-8CFGM8R, SER. A	2-39
A01X0144	2802452-0200	CONNECTION DEVICE	2-5, 2-7
A01X0145	1065905-0300	CONNECTION BOX	2-5, 2-7
A01X0149	90605-2702	ARMORBLOCK MODULE, 1732E-8CFGM8R, SER. A	2-31
A01X0150	90605-2702	ARMORBLOCK MODULE, 1732E-8CFGM8R, SER. A	2-43
A01X0151	90605-2702	ARMORBLOCK MODULE, 1732E-8CFGM8R, SER. A	3-123
A01X0151	2763116-0300	REMOTE I/O	3-91, 3-93, 3-95, 3-97
A01X0152	90605-2702	ARMORBLOCK MODULE, 1732E-8CFGM8R, SER. A	3-125
A01X0152	2763115-0300	REMOTE I/O	3-91, 3-93, 3-95, 3-97
A01X0153	90605-2702	ARMORBLOCK MODULE, 1732E-8CFGM8R, SER. A	3-19
A01X0155	1021897-0500	CONNECTION BOX	3-7
A01X0170	2802461-0100	TERMINAL	6-13
A01X0181	2787865-0200	CONNECTION DEVICE	2-5, 2-7
A01X0182	3252699-0100	CONNECTION DEVICE	3-91, 3-93, 3-95, 3-97
A01X2015	90458-1204	BASIC SUB-BASE 4 VALVES, CDVI5.0-GB4-MP	5-27
A01X2016	90458-1212	LEFT ENDPLATE INCL. 10M CABLE	5-27
A01X2017	90458-1214	RIGHT ENDPL EXT. PILOT AIR,CDVI5.0-EPR-S	5-27

Pos	Part No	Description	Page No
X			
F09X0100	90601-1168	SOCKET CONNECTOR, NECA-S1G9-P9-MP3	2-21
F09X0100	90604-0094	CONNECTION BLOCK, TINA 8A	2-11
F09X0101	90459-5627	CONNECTION, TINA 1-A	2-11
F40X0479	90604-0094	CONNECTION BLOCK, TINA 8A	2-11
F40X0490	90459-5627	CONNECTION, TINA 1-A	2-11
F50X0479	90604-0093	CONNECTION BLOCK, TINA4A 2TLJ020054R0300	3-129
F50X0479	2894997-0200	CONNECTION DEVICE	3-91, 3-93, 3-95, 3-97
F50X0480	90459-5627	CONNECTION, TINA 1-A	3-129
F50X0481	90459-5627	CONNECTION, TINA 1-A	3-129
F50X0490	3190602-0100	CONNECTION BOX	9-91
T40X1010	90603-5503	LOW-PROFILE I/O CONNECTOR,2090-K6CK-D44M	6-49
T40X1020	90603-5503	LOW-PROFILE I/O CONNECTOR,2090-K6CK-D44M	6-49
W30X0083	353021-0213	FEED THROUGH TERMINAL, WDU 4	6-49
W30X0084	353021-0213	FEED THROUGH TERMINAL, WDU 4	6-49
X01X0101	90459-3001	DISTRIBUTOR, MS6-FRM-1/2-A4	2-21

Pos	Part No	Description	Page No

Pos	Part No	Description	Page No	Pos	Part No	Description	Page No

Tetra Pak

Label for 80 mm binder **Note!** *This page is generated* **automatically.**

Cardboard Packer 32 by Tetra Pak
673852-0500 Issue 2014-03
Doc No. SPC-3254225-0108

Cardboard Packer 32 by Tetra Pak
673852-0500 Issue 2014-03
Doc No. SPC-3254225-0108

Cardboard Packer 32 by Tetra Pak
673852-0500 Issue 2014-03
Doc No. SPC-3254225-0108

Cardboard Packer 32 by Tetra Pak 1(3)
673852-0500 Issue 2014-03
Doc No. SPC-3254225-0108

Cardboard Packer 32 by Tetra Pak 1(2)
673852-0500 Issue 2014-03
Doc No. SPC-3254225-0108

Cardboard Packer 32 by Tetra Pak 2(3)
673852-0500 Issue 2014-03
Doc No. SPC-3254225-0108

Cardboard Packer 32 by Tetra Pak 2(2)
673852-0500 Issue 2014-03
Doc No. SPC-3254225-0108

Cardboard Packer 32 by Tetra Pak 3(3)
673852-0500 Issue 2014-03
Doc No. SPC-3254225-0108

Label for 55 mm binder **Note!** *This page is generated* **automatically.**

Cardboard Packer 32 by Tetra Pak
673852-0500 Issue 2014-03
Doc No. SPC-3254225-0108

Cardboard Packer 32 by Tetra Pak 1(2)
673852-0500 Issue 2014-03
Doc No. SPC-3254225-0108

Cardboard Packer 32 by Tetra Pak
673852-0500 Issue 2014-03
Doc No. SPC-3254225-0108

Cardboard Packer 32 by Tetra Pak 2(2)
673852-0500 Issue 2014-03
Doc No. SPC-3254225-0108

Cardboard Packer 32 by Tetra Pak
673852-0500 Issue 2014-03
Doc No. SPC-3254225-0108

Cardboard Packer 32 by Tetra Pak 1(3)
673852-0500 Issue 2014-03
Doc No. SPC-3254225-0108

Cardboard Packer 32 by Tetra Pak
673852-0500 Issue 2014-03
Doc No. SPC-3254225-0108

Cardboard Packer 32 by Tetra Pak 2(3)
673852-0500 Issue 2014-03
Doc No. SPC-3254225-0108

Cardboard Packer 32 by Tetra Pak
673852-0500 Issue 2014-03
Doc No. SPC-3254225-0108

Cardboard Packer 32 by Tetra Pak 3(3)
673852-0500 Issue 2014-03
Doc No. SPC-3254225-0108

Cardboard Packer 32 by Tetra Pak
673852-0500 Issue 2014-03
Doc No. SPC-3254225-0108

Cardboard Packer 32 by Tetra Pak 3(3)
673852-0500 Issue 2014-03
Doc No. SPC-3254225-0108

Label for 40 mm binder **Note!** *This page is generated* **automatically.**

Cardboard Packer 32 by Tetra Pak
673852-0500 Issue 2014-03
Doc No. SPC-3254225-0108

Cardboard Packer 32 by Tetra Pak 1(2)
673852-0500 Issue 2014-03
Doc No. SPC-3254225-0108

Cardboard Packer 32 by Tetra Pak
673852-0500 Issue 2014-03
Doc No. SPC-3254225-0108

Cardboard Packer 32 by Tetra Pak 2(2)
673852-0500 Issue 2014-03
Doc No. SPC-3254225-0108

Cardboard Packer 32 by Tetra Pak
673852-0500 Issue 2014-03
Doc No. SPC-3254225-0108

Cardboard Packer 32 by Tetra Pak 1(2)
673852-0500 Issue 2014-03
Doc No. SPC-3254225-0108

Cardboard Packer 32 by Tetra Pak
673852-0500 Issue 2014-03
Doc No. SPC-3254225-0108

Cardboard Packer 32 by Tetra Pak 2(2)
673852-0500 Issue 2014-03
Doc No. SPC-3254225-0108

Cardboard Packer 32 by Tetra Pak
673852-0500 Issue 2014-03
Doc No. SPC-3254225-0108

Cardboard Packer 32 by Tetra Pak 1(3)
673852-0500 Issue 2014-03
Doc No. SPC-3254225-0108

Cardboard Packer 32 by Tetra Pak
673852-0500 Issue 2014-03
Doc No. SPC-3254225-0108

Cardboard Packer 32 by Tetra Pak 2(3)
673852-0500 Issue 2014-03
Doc No. SPC-3254225-0108

Cardboard Packer 32 by Tetra Pak
673852-0500 Issue 2014-03
Doc No. SPC-3254225-0108

Cardboard Packer 32 by Tetra Pak 3(3)
673852-0500 Issue 2014-03
Doc No. SPC-3254225-0108

Cardboard Packer 32 by Tetra Pak
673852-0500 Issue 2014-03
Doc No. SPC-3254225-0108

Cardboard Packer 32 by Tetra Pak 3(3)
673852-0500 Issue 2014-03
Doc No. SPC-3254225-0108